Dist	COUNTY	ROUTE	POST MILES TOTAL PROJECT	SHEET No.	TOTAL SHEETS
04	Sol	12	20.6/23.5	101	138

REGISTERED CIVIL ENGINEER 9-20-12 DATE

3-4-13
PLANS APPROVAL DATE

REGISTERED PROFESSIONAL ENGINEER William H. Fong No. 61187 Exp. 6-30-13 CIVIL STATE OF CALIFORNIA

THE STATE OF CALIFORNIA OR ITS OFFICERS OR AGENTS SHALL NOT BE RESPONSIBLE FOR THE ACCURACY OR COMPLETENESS OF SCANNED COPIES OF THIS PLAN SHEET.

NOTE:

FOR ACCURATE RIGHT OF WAY DATA, CONTACT RIGHT OF WAY ENGINEERING AT THE DISTRICT OFFICE.

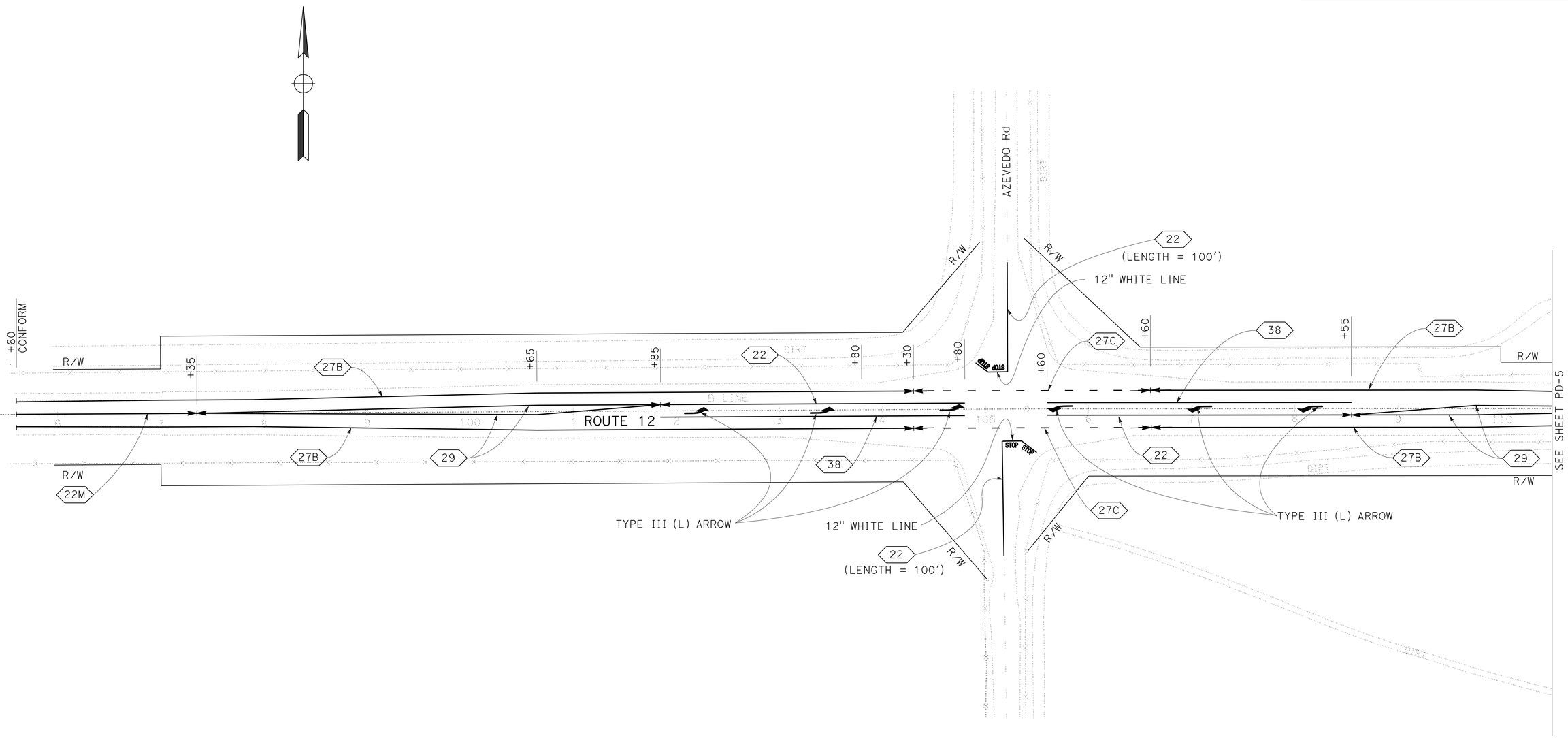

PAVEMENT DELINEATION PLAN

SCALE: 1" = 50'

APPROVED FOR PAVEMENT DELINEATION WORK ONLY

FOR LEGEND, SEE SHEET PD-1

PD-4

STATE OF CALIFORNIA - DEPARTMENT OF TRANSPORTATION

Caltrans® DESIGN

FUNCTIONAL SUPERVISOR: STEWART LEE

CALCULATED-DESIGNED BY: WILLIAM FONG

CHECKED BY: STEWART LEE

REVISED BY | DATE REVISED

LAST REVISION 11-06-12 | DATE PLOTTED => 04-MAR-2013 | TIME PLOTTED => 13:12

Dist	COUNTY	ROUTE	POST MILES TOTAL PROJECT	SHEET No.	TOTAL SHEETS
04	Sol	12	20.6/23.5	102	138

REGISTERED CIVIL ENGINEER 9-20-12 DATE

3-4-13
PLANS APPROVAL DATE

REGISTERED PROFESSIONAL ENGINEER
William H. Fong
No. 61187
Exp. 6-30-13
CIVIL
STATE OF CALIFORNIA

THE STATE OF CALIFORNIA OR ITS OFFICERS OR AGENTS SHALL NOT BE RESPONSIBLE FOR THE ACCURACY OR COMPLETENESS OF SCANNED COPIES OF THIS PLAN SHEET.

NOTE:

FOR ACCURATE RIGHT OF WAY DATA, CONTACT RIGHT OF WAY ENGINEERING AT THE DISTRICT OFFICE.

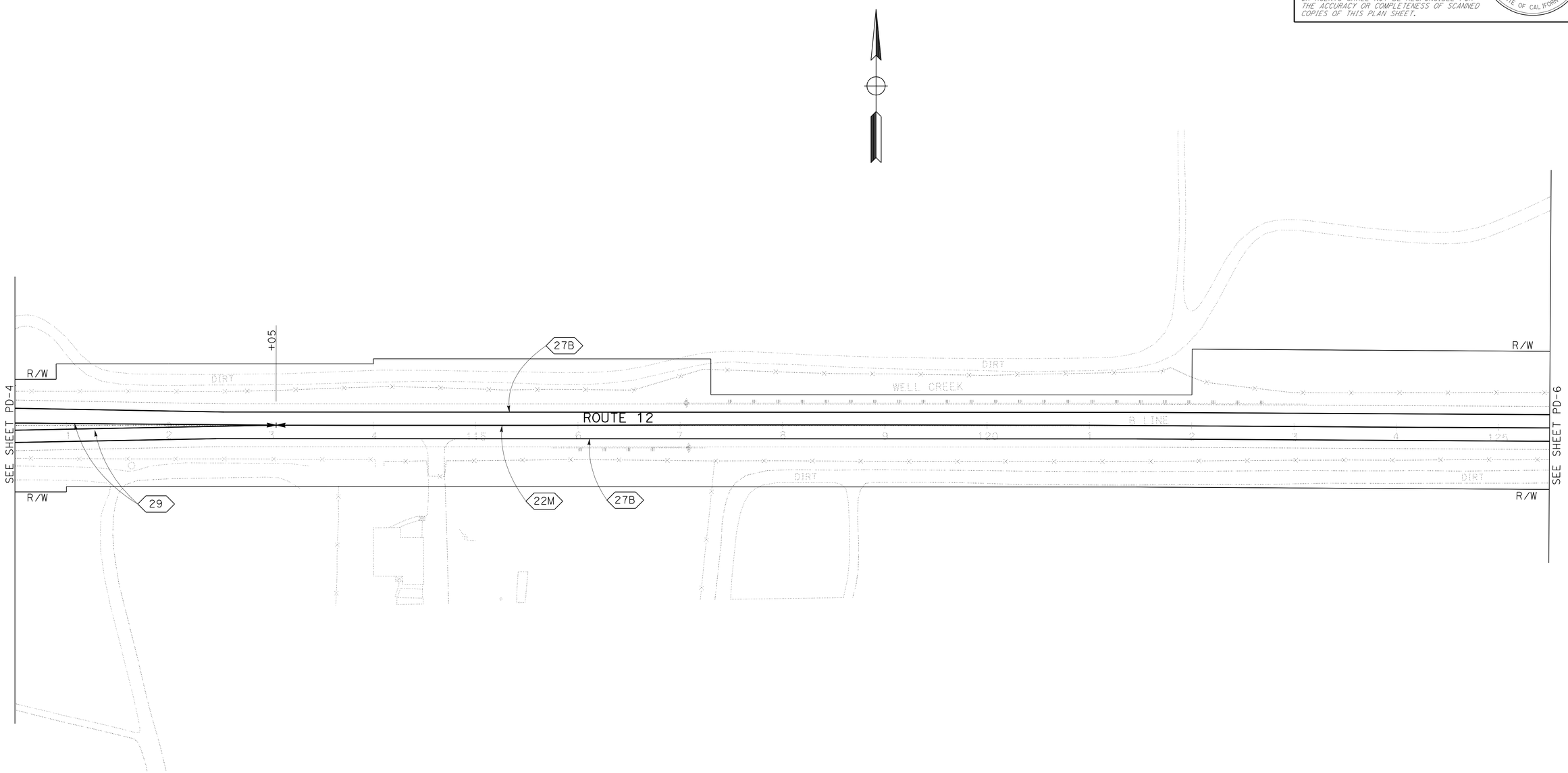

PAVEMENT DELINEATION PLAN

SCALE: 1" = 50'

APPROVED FOR PAVEMENT DELINEATION WORK ONLY

FOR LEGEND, SEE SHEET PD-1

PD-5

STATE OF CALIFORNIA - DEPARTMENT OF TRANSPORTATION
Caltrans
DESIGN

WILLIAM FONG
STEWART LEE

CALCULATED-DESIGNED BY
CHECKED BY

FUNCTIONAL SUPERVISOR
STEWART LEE

REVISED BY
DATE REVISED

LAST REVISION 11-06-12
DATE PLOTTED => 04-MAR-2013
TIME PLOTTED => 13:12

Dist	COUNTY	ROUTE	POST MILES TOTAL PROJECT	SHEET No.	TOTAL SHEETS
04	Sol	12	20.6/23.5	103	138

William H. Fong 9-20-12
REGISTERED CIVIL ENGINEER DATE

3-4-13
PLANS APPROVAL DATE

REGISTERED PROFESSIONAL ENGINEER
William H. Fong
No. 61187
Exp. 6-30-13
CIVIL
STATE OF CALIFORNIA

THE STATE OF CALIFORNIA OR ITS OFFICERS OR AGENTS SHALL NOT BE RESPONSIBLE FOR THE ACCURACY OR COMPLETENESS OF SCANNED COPIES OF THIS PLAN SHEET.

NOTE:

FOR ACCURATE RIGHT OF WAY DATA, CONTACT
RIGHT OF WAY ENGINEERING AT THE DISTRICT OFFICE.

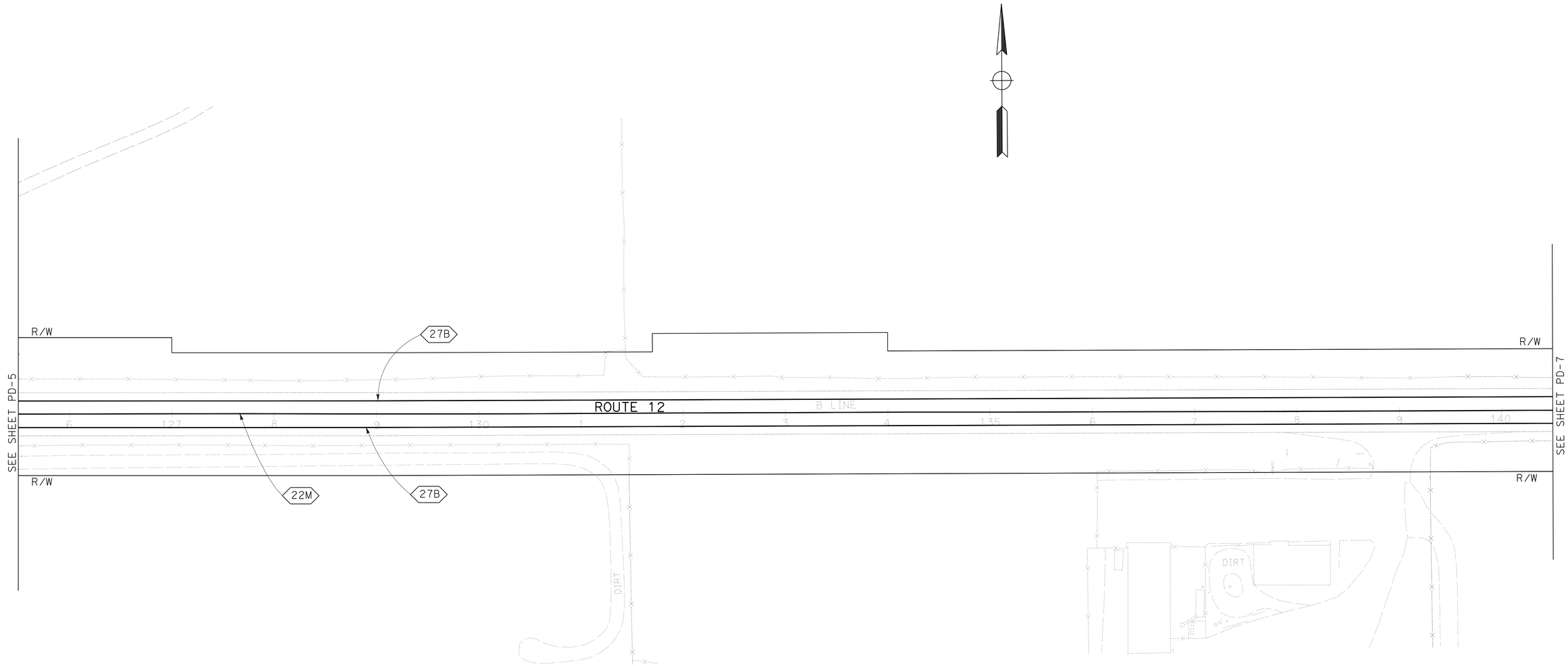

PAVEMENT DELINEATION PLAN

SCALE: 1" = 50'

APPROVED FOR PAVEMENT DELINEATION WORK ONLY

FOR LEGEND, SEE SHEET PD-1

PD-6

REVISED BY | DATE REVISED
WILLIAM FONG | STEWART LEE
CALCULATED-DESIGNED BY | CHECKED BY
FUNCTIONAL SUPERVISOR: STEWART LEE
STATE OF CALIFORNIA - DEPARTMENT OF TRANSPORTATION
Caltrans
DESIGN

LAST REVISION 10-02-12
DATE PLOTTED => 04-MAR-2013
TIME PLOTTED => 13:12

Dist	COUNTY	ROUTE	POST MILES TOTAL PROJECT	SHEET No.	TOTAL SHEETS
04	Sol	12	20.6/23.5	104	138

REGISTERED CIVIL ENGINEER 9-20-12 DATE

3-4-13
PLANS APPROVAL DATE

REGISTERED PROFESSIONAL ENGINEER
William H. Fong
No. 61187
Exp. 6-30-13
CIVIL
STATE OF CALIFORNIA

THE STATE OF CALIFORNIA OR ITS OFFICERS OR AGENTS SHALL NOT BE RESPONSIBLE FOR THE ACCURACY OR COMPLETENESS OF SCANNED COPIES OF THIS PLAN SHEET.

NOTE:

FOR ACCURATE RIGHT OF WAY DATA, CONTACT RIGHT OF WAY ENGINEERING AT THE DISTRICT OFFICE.

PAVEMENT DELINEATION PLAN

SCALE: 1" = 50'

APPROVED FOR PAVEMENT DELINEATION WORK ONLY

FOR LEGEND, SEE SHEET PD-1

PD-7

STATE OF CALIFORNIA - DEPARTMENT OF TRANSPORTATION
Caltrans
DESIGN

FUNCTIONAL SUPERVISOR: STEWART LEE

CALCULATED-DESIGNED BY: WILLIAM FONG
CHECKED BY: STEWART LEE

REVISED BY
DATE REVISED

LAST REVISION 10-03-12
DATE PLOTTED => 04-MAR-2013
TIME PLOTTED => 13:12

Dist	COUNTY	ROUTE	POST MILES TOTAL PROJECT	SHEET No.	TOTAL SHEETS
04	Sol	12	20.6/23.5	105	138

William H. Fong 9-20-12
REGISTERED CIVIL ENGINEER DATE

3-4-13
PLANS APPROVAL DATE

REGISTERED PROFESSIONAL ENGINEER William H. Fong No. 61187 Exp. 6-30-13 CIVIL STATE OF CALIFORNIA

THE STATE OF CALIFORNIA OR ITS OFFICERS OR AGENTS SHALL NOT BE RESPONSIBLE FOR THE ACCURACY OR COMPLETENESS OF SCANNED COPIES OF THIS PLAN SHEET.

TRAFFIC STRIPES, PAVEMENT MARKINGS AND PAVEMENT MARKERS

SHEET No.	STATION LIMITS	Loc	DETAIL No.	REMOVE YELLOW THERMOPLASTIC TRAFFIC STRIPE (HAZARDOUS WASTE)	REMOVE THERMOPLASTIC TRAFFIC STRIPE	REMOVE PAVEMENT MARKER	REMOVE CHANNELIZER	PAVEMENT MARKER (RETROREFLECTIVE) TYPE G	PAVEMENT MARKER (RETROREFLECTIVE) TYPE D	THERMOPLASTIC TRAFFIC STRIPE 4" SOLID YELLOW	THERMOPLASTIC TRAFFIC STRIPE 4" SOLID WHITE	THERMOPLASTIC TRAFFIC STRIPE 4" BROKEN (12-3) WHITE	THERMOPLASTIC TRAFFIC STRIPE 4" BROKEN (17-7) WHITE	THERMOPLASTIC TRAFFIC STRIPE 8" SOLID WHITE	THERMOPLASTIC PAVEMENT MARKING	CHANNELIZER (SURFACE MOUNTED) (LEFT IN PLACE)
				LF		EA		EA		LF					SQFT	EA
PD-1	A 100+00 TO 107+50		22						10	200						
			22M	1340		170	29		52	400						10
		L+	27B		750						750					
		L+	29						40	1880						
		L+	9					5					187			
		R+	27B		670						645					
		R+	27C									105				
		R+	STOP(2)												44	
		R+	LIMIT LINE												44	
PD-1,PD-2	A 107+50 TO 118+20	R+	22						26	590						
		L+	22M	2140		270	45		84	650						14
		L+	27B		1070						1100					
		L+	29						40	1800						
		L+	38					13						295		
		L+	TYPE III ARROW												126	
		R+	27B		1070						970					
		R+	27C									100				
PD-2,PD-3	A 123+50 TO 134+20	L+	22						36	790						
		L+	22M	2000		252	43		66	504						14
		L+	27B		1000						900					
		L+	27C									170				
		L+	29						40	1812						
		L+	STOP(2)												44	
		L+	LIMIT LINE												44	
		R+	27B		1070						1070					
		R+	38					13						295		
		R+	TYPE III ARROW												126	
PD-3	A 134+20 TO 141+40	L+	22M	1440		182	31		64	500						12
		L+	27B		720						640					
		L+	27C									80				
		L+	29						42	1880						
		R+	27B		720						720					
PD-4	B 95+60 TO 105+60		22						36	790						
		L+	22M	1840		232	40		46	350						8
		L+	27B		920						870					
		L+	27C									130				
		L+	29						40	1800						
		L+	STOP (2)												44	
		L+	LIMIT LINE												44	
SHEET TOTAL				8760	7990	1106	188	31	622	13946	7665	585	187	590	516	58

NOTE: FOR TOTALS, SEE SHEET PDQ-2

PAVEMENT DELINEATION QUANTITIES

PDQ-1

REVISED BY | DATE REVISED
WILLIAM FONG | STEWART LEE
CALCULATED-DESIGNED BY | CHECKED BY
FUNCTIONAL SUPERVISOR: STEWART LEE
STATE OF CALIFORNIA - DEPARTMENT OF TRANSPORTATION
Caltrans® DESIGN

LAST REVISION 11-06-12 | DATE PLOTTED => 04-MAR-2013 | TIME PLOTTED => 14:42

Dist	COUNTY	ROUTE	POST MILES TOTAL PROJECT	SHEET No.	TOTAL SHEETS
04	Sol	12	20.6/23.5	106	138

REGISTERED CIVIL ENGINEER 9-20-12 DATE

3-4-13
PLANS APPROVAL DATE

REGISTERED PROFESSIONAL ENGINEER William H. Fong No. 61187 Exp. 6-30-13 CIVIL STATE OF CALIFORNIA

THE STATE OF CALIFORNIA OR ITS OFFICERS OR AGENTS SHALL NOT BE RESPONSIBLE FOR THE ACCURACY OR COMPLETENESS OF SCANNED COPIES OF THIS PLAN SHEET.

TRAFFIC STRIPES, PAVEMENT MARKINGS AND PAVEMENT MARKERS

SHEET No.	STATION LIMITS	Loc	DETAIL No.	REMOVE YELLOW THERMOPLASTIC TRAFFIC STRIPE (HAZARDOUS WASTE)	REMOVE THERMOPLASTIC TRAFFIC STRIPE	REMOVE PAVEMENT MARKER	REMOVE CHANNELIZER	PAVEMENT MARKER (RETROREFLECTIVE) TYPE G	PAVEMENT MARKER (RETROREFLECTIVE) TYPE D	THERMOPLASTIC TRAFFIC STRIPE 4" SOLID YELLOW	THERMOPLASTIC TRAFFIC STRIPE 4" SOLID WHITE	THERMOPLASTIC TRAFFIC STRIPE 4" BROKEN (12-3) WHITE	THERMOPLASTIC TRAFFIC STRIPE 4" BROKEN (17-7) WHITE	THERMOPLASTIC TRAFFIC STRIPE 8" SOLID WHITE	THERMOPLASTIC PAVEMENT MARKING	CHANNELIZER (SURFACE MOUNTED) (LEFT IN PLACE)
				LF		EA		EA		LF					SQFT	EA
PD-4	B 95+60 TO 105+60	R†	27B		920						870					
		R†	27C									130				
		R†	38					13						295		
		R†	TYPE III ARROW												126	
		R†	STOP (2)												44	
		R†	LIMIT LINE												44	
PD-4 PD-5 PD-6 PD-7	B 105+60 TO 147+20	R†	22						26	590						
		L†	22M	8320		1042	175		856	6830						144
		L†	27B		4160						4060					
		L†	27C									100				
		L†	29						40	1800						
		L†	38					13						295		
		L†	TYPE III ARROW												126	
		R†	27B		4160						4060					
		R†	27C									100				
SHEET 2 TOTAL				8320	9240	1042	175	26	922	9220	8990	330		590	340	144
SHEET 1 TOTAL				8760	7990	1106	188	31	622	13946	7665	585	187	590	516	58
GRAND TOTAL				17080	17230	2148	363	1601		39821		915	187	1180	856	202

PAVEMENT DELINEATION QUANTITIES

PDQ-2

REVISED BY | DATE REVISED
WILLIAM FONG | STEWART LEE
CALCULATED-DESIGNED BY | CHECKED BY
FUNCTIONAL SUPERVISOR: STEWART LEE
STATE OF CALIFORNIA - DEPARTMENT OF TRANSPORTATION
Caltrans® DESIGN

LAST REVISION 11-06-12 | DATE PLOTTED => 05-MAR-2013 | TIME PLOTTED => 10:18

Dist	COUNTY	ROUTE	POST MILES TOTAL PROJECT	SHEET No.	TOTAL SHEETS
04	Sol	12	20.6/23.5	107	138

Parwin W. Sarwary 9-20-12
REGISTERED CIVIL ENGINEER DATE

3-4-13
PLANS APPROVAL DATE

REGISTERED PROFESSIONAL ENGINEER Parwin W. Sarwary No. 79545 Exp. 9-30-14 CIVIL STATE OF CALIFORNIA

THE STATE OF CALIFORNIA OR ITS OFFICERS OR AGENTS SHALL NOT BE RESPONSIBLE FOR THE ACCURACY OR COMPLETENESS OF SCANNED COPIES OF THIS PLAN SHEET.

NOTES:

1. EXACT LOCATION AND POSITION OF ROADSIDE SIGNS TO BE DETERMINED BY THE ENGINEER.
2. POST SIZE AND LENGTH GIVEN ARE APPROXIMATE. EXACT SIZE AND LENGTH TO BE DETERMINED BY THE ENGINEER.
3. ALL SIGNS TO BE MOUNTED ON S4S WOOD POSTS, UNLESS OTHERWISE INDICATED.

LEGEND:

(No.) ROADSIDE SIGN NUMBER
■ REMOVE ROADSIDE SIGN
✳ Exist SIGN TO REMAIN

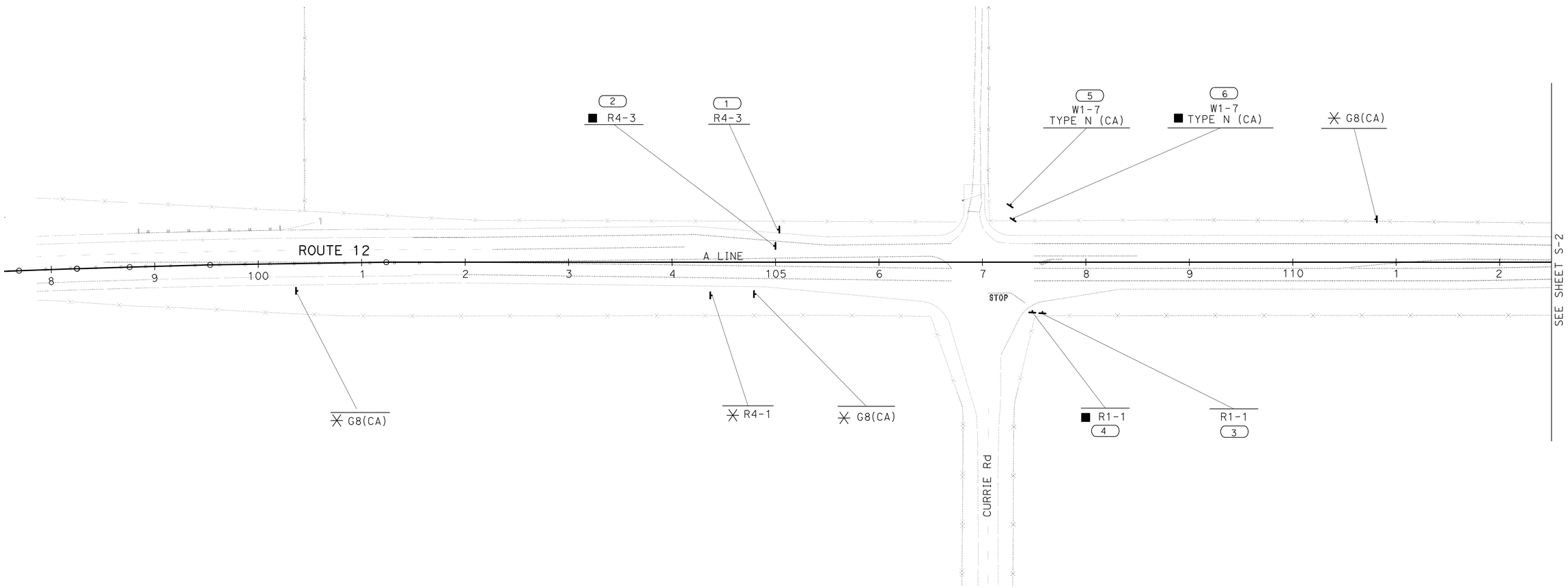

SIGN PLAN
NO SCALE

APPROVED FOR SIGN WORK ONLY

S-1

STATE OF CALIFORNIA - DEPARTMENT OF TRANSPORTATION
Caltrans
TRAFFIC

FUNCTIONAL SUPERVISOR: LOURDES DAVID
CALCULATED-DESIGNED BY: PARWIN SARWARY
CHECKED BY: CLAUDIA FANG
REVISED BY
DATE REVISED

LAST REVISION 09-21-12
DATE PLOTTED => 04-MAR-2013
TIME PLOTTED => 14:42

Dist	COUNTY	ROUTE	POST MILES TOTAL PROJECT	SHEET No.	TOTAL SHEETS
04	Sol	12	20.6/23.5	108	138

Parwin W. Sarwary 9-20-12
REGISTERED CIVIL ENGINEER DATE

3-4-13
PLANS APPROVAL DATE

REGISTERED PROFESSIONAL ENGINEER
Parwin W. Sarwary
No. 79545
Exp. 9-30-14
CIVIL
STATE OF CALIFORNIA

THE STATE OF CALIFORNIA OR ITS OFFICERS OR AGENTS SHALL NOT BE RESPONSIBLE FOR THE ACCURACY OR COMPLETENESS OF SCANNED COPIES OF THIS PLAN SHEET.

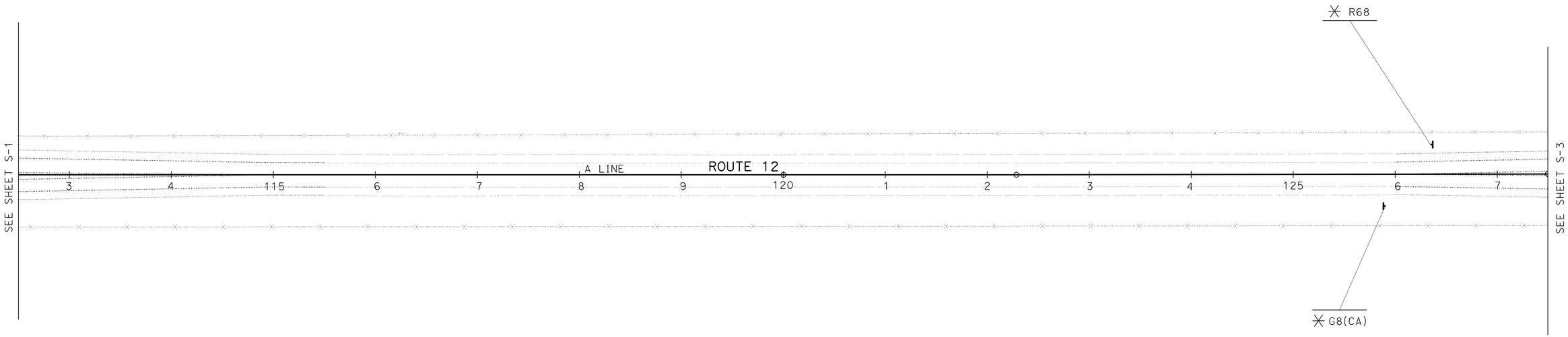

SIGN PLAN
NO SCALE

APPROVED FOR SIGN WORK ONLY

FOR NOTES AND LEGEND, SEE SHEET S-1

S-2

STATE OF CALIFORNIA - DEPARTMENT OF TRANSPORTATION
Caltrans
TRAFFIC

FUNCTIONAL SUPERVISOR: LOURDES DAVID
CALCULATED-DESIGNED BY: PARWIN SARWARY
CHECKED BY: CLAUDIA FANG
REVISED BY
DATE REVISED

LAST REVISION 04-15-11
DATE PLOTTED => 04-MAR-2013
TIME PLOTTED => 14:42

Dist	COUNTY	ROUTE	POST MILES TOTAL PROJECT	SHEET No.	TOTAL SHEETS
04	Sol	12	20.6/23.5	109	138

Parwin W. Sarwary 9-20-12
REGISTERED CIVIL ENGINEER DATE

3-4-13
PLANS APPROVAL DATE

REGISTERED PROFESSIONAL ENGINEER
Parwin W. Sarwary
No. 79545
Exp. 9-30-14
CIVIL
STATE OF CALIFORNIA

THE STATE OF CALIFORNIA OR ITS OFFICERS OR AGENTS SHALL NOT BE RESPONSIBLE FOR THE ACCURACY OR COMPLETENESS OF SCANNED COPIES OF THIS PLAN SHEET.

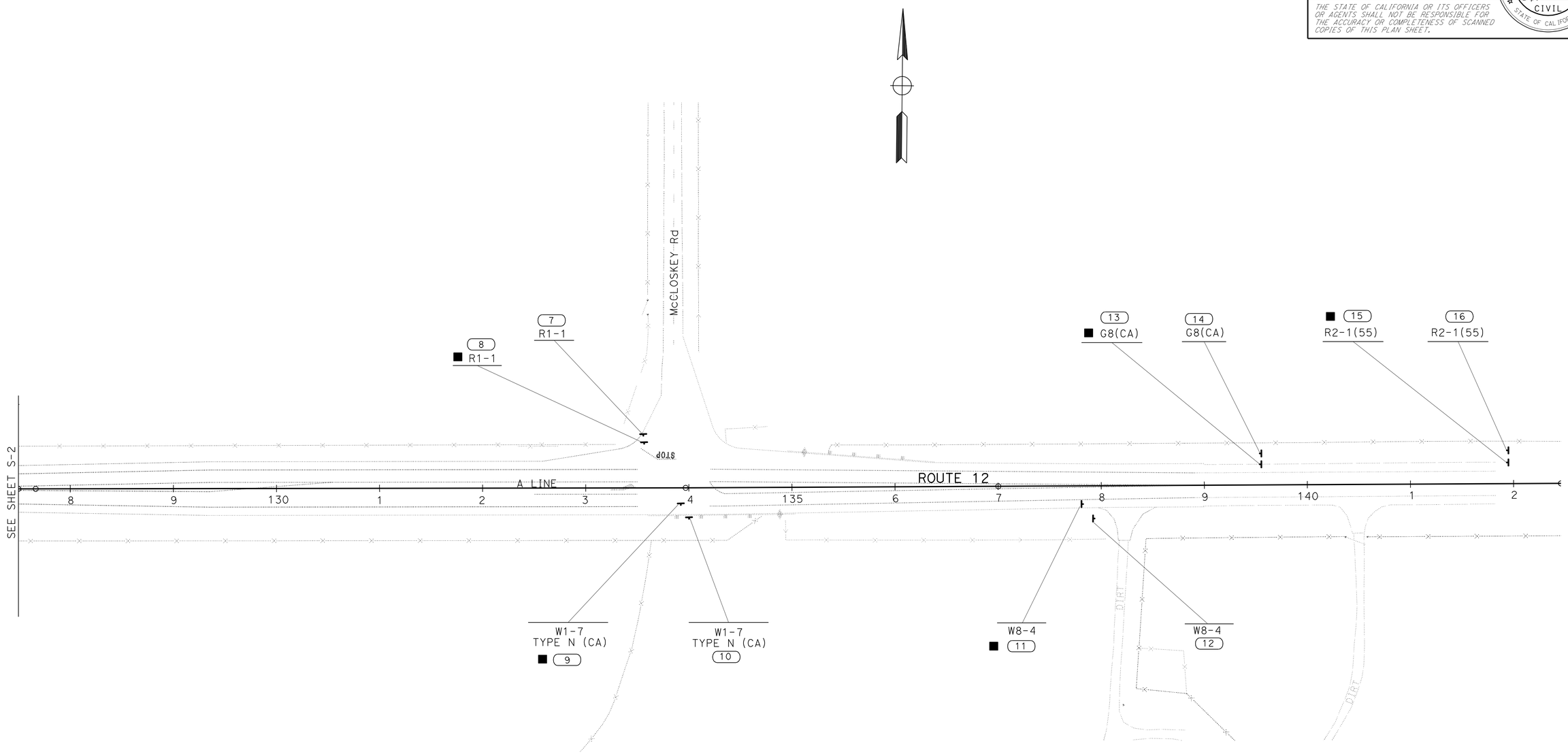

SIGN PLAN

NO SCALE

APPROVED FOR SIGN WORK ONLY

FOR NOTES AND LEGEND, SEE SHEET S-1

S-3

STATE OF CALIFORNIA - DEPARTMENT OF TRANSPORTATION
Caltrans
TRAFFIC

FUNCTIONAL SUPERVISOR: LOURDES DAVID
CALCULATED-DESIGNED BY: PARWIN SARWARY
CHECKED BY: CLAUDIA FANG
REVISED BY
DATE REVISED

LAST REVISION: DATE PLOTTED => 04-MAR-2013
009-21-12 TIME PLOTTED => 14:42

BORDER LAST REVISED 7/2/2010
USERNAME => s113946
DGN FILE => 04000008320a003.dgn
RELATIVE BORDER SCALE IS IN INCHES 0 1 2 3
UNIT 0701
PROJECT NUMBER & PHASE 04000008321

Dist	COUNTY	ROUTE	POST MILES TOTAL PROJECT	SHEET No.	TOTAL SHEETS
04	Sol	12	20.6/23.5	110	138

Parwin W. Sarwary 9-20-12
REGISTERED CIVIL ENGINEER DATE

3-4-13
PLANS APPROVAL DATE

REGISTERED PROFESSIONAL ENGINEER
Parwin W. Sarwary
No. 79545
Exp. 9-30-14
CIVIL
STATE OF CALIFORNIA

THE STATE OF CALIFORNIA OR ITS OFFICERS OR AGENTS SHALL NOT BE RESPONSIBLE FOR THE ACCURACY OR COMPLETENESS OF SCANNED COPIES OF THIS PLAN SHEET.

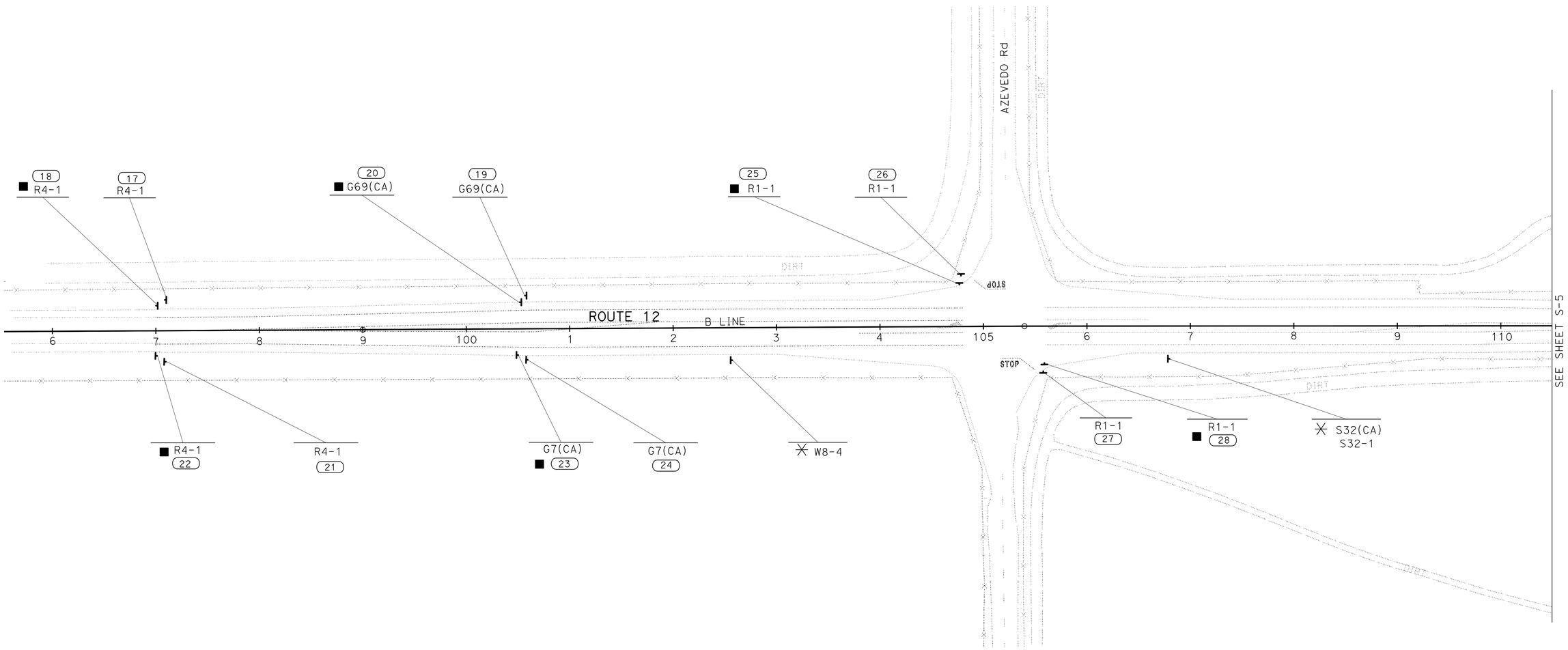

SIGN PLAN
NO SCALE

APPROVED FOR SIGN WORK ONLY

FOR NOTES AND LEGEND, SEE SHEET S-1

S-4

REVISED BY	DATE REVISED

CALCULATED-DESIGNED BY: PARWIN SARWARY
CHECKED BY: CLAUDIA FANG
FUNCTIONAL SUPERVISOR: LOURDES DAVID

STATE OF CALIFORNIA - DEPARTMENT OF TRANSPORTATION
Caltrans
TRAFFIC

LAST REVISION 09-21-12
DATE PLOTTED => 04-MAR-2013
TIME PLOTTED => 14:42

Dist	COUNTY	ROUTE	POST MILES TOTAL PROJECT	SHEET No.	TOTAL SHEETS
04	Sol	12	20.6/23.5	111	138

Parwin W. Sarwary 9-20-12
REGISTERED CIVIL ENGINEER DATE

3-4-13
PLANS APPROVAL DATE

REGISTERED PROFESSIONAL ENGINEER
Parwin W. Sarwary
No. 79545
Exp. 9-30-14
CIVIL
STATE OF CALIFORNIA

THE STATE OF CALIFORNIA OR ITS OFFICERS OR AGENTS SHALL NOT BE RESPONSIBLE FOR THE ACCURACY OR COMPLETENESS OF SCANNED COPIES OF THIS PLAN SHEET.

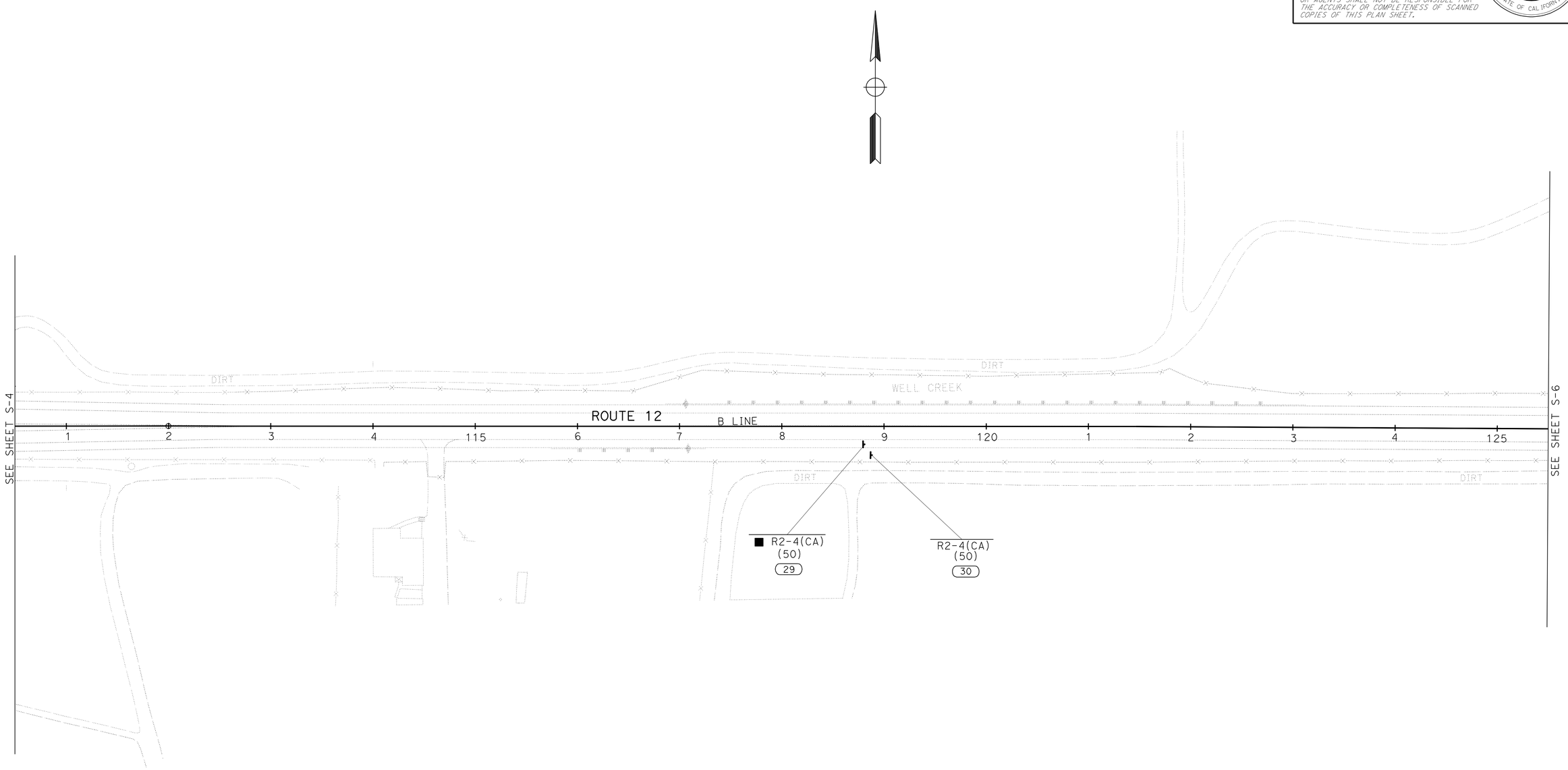

SIGN PLAN
NO SCALE

APPROVED FOR SIGN WORK ONLY

FOR NOTES AND LEGEND, SEE SHEET S-1

S-5

STATE OF CALIFORNIA - DEPARTMENT OF TRANSPORTATION
Caltrans
TRAFFIC

FUNCTIONAL SUPERVISOR: LOURDES DAVID
CALCULATED-DESIGNED BY: PARWIN SARWARY
CHECKED BY: CLAUDIA FANG
REVISED BY
DATE REVISED

LAST REVISION 05-31-11
DATE PLOTTED => 04-MAR-2013
TIME PLOTTED => 14:42

Dist	COUNTY	ROUTE	POST MILES TOTAL PROJECT	SHEET No.	TOTAL SHEETS
04	Sol	12	20.6/23.5	112	138

Parwin W. Sarwary 9-20-12
REGISTERED CIVIL ENGINEER DATE

3-4-13
PLANS APPROVAL DATE

REGISTERED PROFESSIONAL ENGINEER
Parwin W. Sarwary
No. 79545
Exp. 9-30-14
CIVIL
STATE OF CALIFORNIA

THE STATE OF CALIFORNIA OR ITS OFFICERS OR AGENTS SHALL NOT BE RESPONSIBLE FOR THE ACCURACY OR COMPLETENESS OF SCANNED COPIES OF THIS PLAN SHEET.

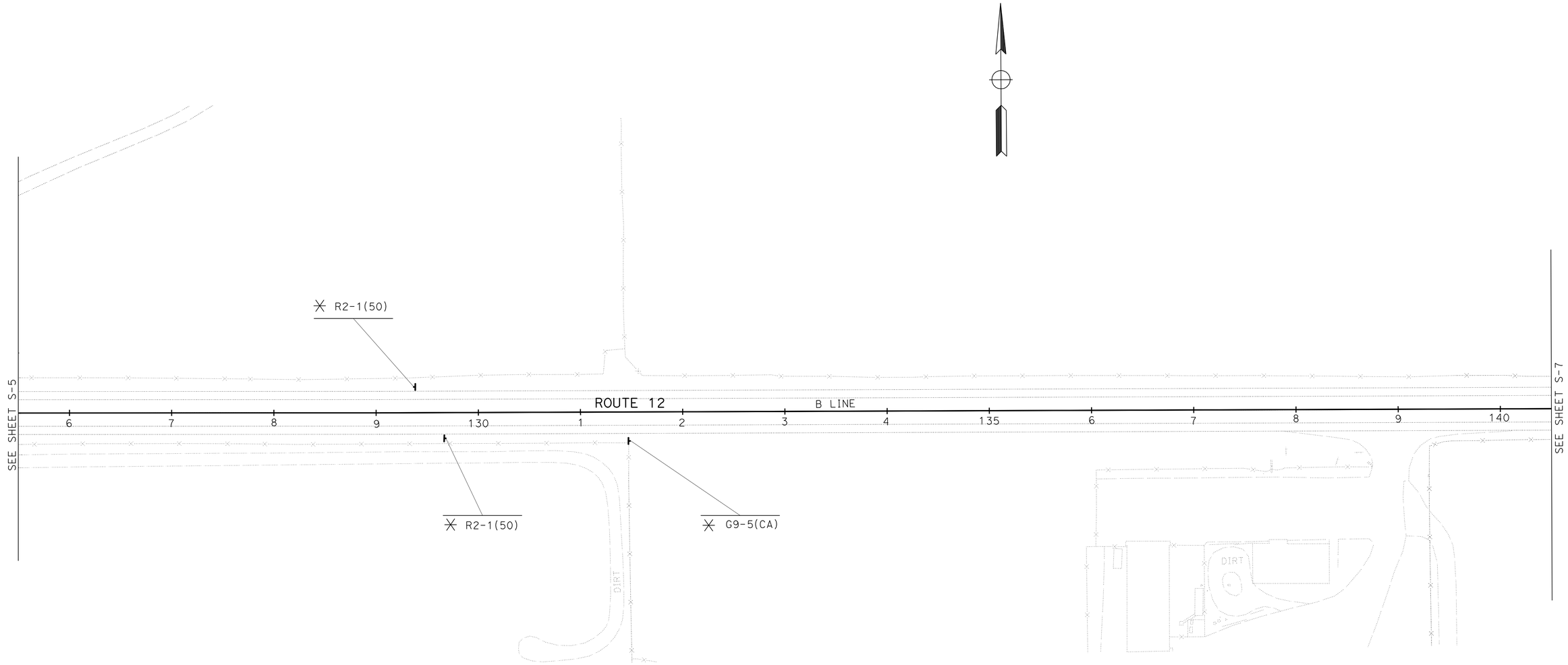

SIGN PLAN

NO SCALE

APPROVED FOR SIGN WORK ONLY

FOR NOTES AND LEGEND, SEE SHEET S-1

S-6

REVISED BY	PARWIN SARWARY
DATE REVISED	CLAUDIA FANG
CALCULATED-DESIGNED BY	
CHECKED BY	
FUNCTIONAL SUPERVISOR	LOURDES DAVID

STATE OF CALIFORNIA - DEPARTMENT OF TRANSPORTATION
Caltrans
TRAFFIC

LAST REVISION 04-15-11 | DATE PLOTTED => 04-MAR-2013 | TIME PLOTTED => 14:42

Dist	COUNTY	ROUTE	POST MILES TOTAL PROJECT	SHEET No.	TOTAL SHEETS
04	Sol	12	20.6/23.5	113	138

Parwin W. Sarwary 9-20-12
REGISTERED CIVIL ENGINEER DATE

3-4-13
PLANS APPROVAL DATE

REGISTERED PROFESSIONAL ENGINEER
Parwin W. Sarwary
No. 79545
Exp. 9-30-14
CIVIL
STATE OF CALIFORNIA

THE STATE OF CALIFORNIA OR ITS OFFICERS OR AGENTS SHALL NOT BE RESPONSIBLE FOR THE ACCURACY OR COMPLETENESS OF SCANNED COPIES OF THIS PLAN SHEET.

SIGN PLAN
NO SCALE

APPROVED FOR SIGN WORK ONLY

FOR NOTES AND LEGEND, SEE SHEET S-1

S-7

STATE OF CALIFORNIA - DEPARTMENT OF TRANSPORTATION
Caltrans
TRAFFIC

FUNCTIONAL SUPERVISOR: LOURDES DAVID
CALCULATED-DESIGNED BY: PARWIN SARWARY
CHECKED BY: CLAUDIA FANG
REVISED BY
DATE REVISED

LAST REVISION 05-31-11
DATE PLOTTED => 04-MAR-2013
TIME PLOTTED => 14:42

BORDER LAST REVISED 7/2/2010
USERNAME => s113946
DGN FILE => 0400000832oa007.dgn
RELATIVE BORDER SCALE IS IN INCHES 0 1 2 3
UNIT 0701
PROJECT NUMBER & PHASE 04000008321

Dist	COUNTY	ROUTE	POST MILES TOTAL PROJECT	SHEET No.	TOTAL SHEETS
04	Sol	12	20.6/23.5	114	138

Parwin W. Sarwary 9-20-12
REGISTERED CIVIL ENGINEER DATE

3-4-13
PLANS APPROVAL DATE

REGISTERED PROFESSIONAL ENGINEER
Parwin W. Sarwary
No. 79545
Exp. 9-30-14
CIVIL
STATE OF CALIFORNIA

THE STATE OF CALIFORNIA OR ITS OFFICERS OR AGENTS SHALL NOT BE RESPONSIBLE FOR THE ACCURACY OR COMPLETENESS OF SCANNED COPIES OF THIS PLAN SHEET.

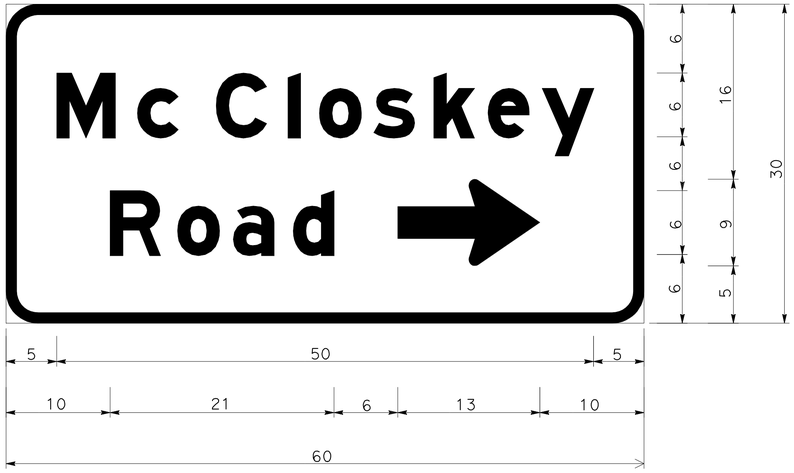

3" RADIUS, 1" BORDER, WHITE ON GREEN;

"MCCLOSKEY" E Mod; "ROAD" E MOD;

STANDARD ARROW CUSTOM 13" x 8" 0{;

SIGN 14

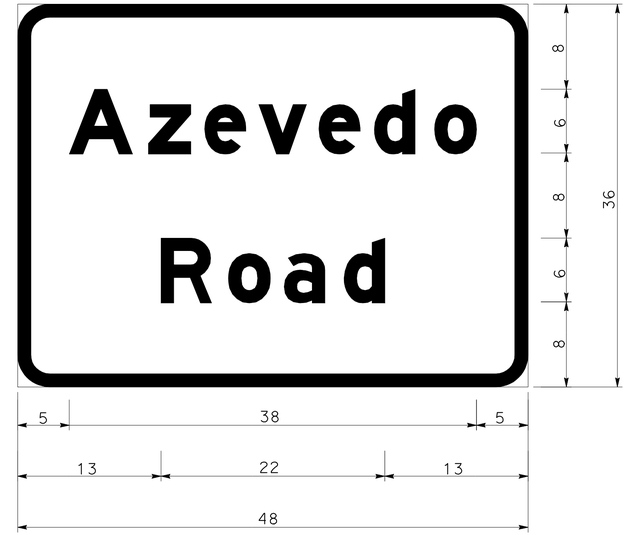

3" RADIUS, 1" BORDER, WHITE ON GREEN;

"AZEVEDO" E Mod; "ROAD" E Mod;

SIGN 24

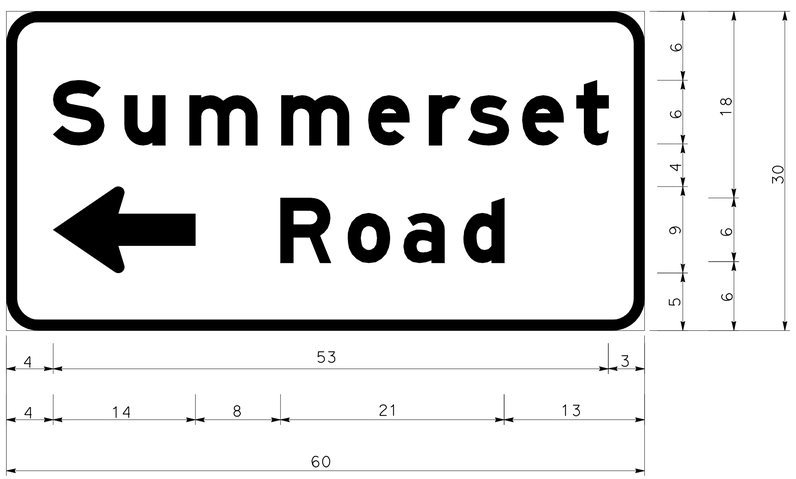

3" RADIUS, 1" BORDER, WHITE ON GREEN;

"SUMMERSET" E Mod;

STANDARD ARROW CUSTOM 13" x 8" 180{;

"ROAD" E Mod;

SIGN 31

APPROVED FOR SIGN WORK ONLY

FOR NOTES AND LEGEND, SEE SHEET S-1

SIGN DETAILS
NO SCALE

SD-1

STATE OF CALIFORNIA - DEPARTMENT OF TRANSPORTATION
Caltrans®
TRAFFIC

FUNCTIONAL SUPERVISOR: LOURDES DAVID
CALCULATED-DESIGNED BY: PARWIN SARWARY
CHECKED BY: CLAUDIA FANG
REVISED BY
DATE REVISED

LAST REVISION 09-25-12
DATE PLOTTED => 04-MAR-2013
TIME PLOTTED => 14:42

Dist	COUNTY	ROUTE	POST MILES TOTAL PROJECT	SHEET No.	TOTAL SHEETS
04	Sol	12	20.6/23.5	115	138

REGISTERED CIVIL ENGINEER 9-20-12 DATE

3-4-13
PLANS APPROVAL DATE

REGISTERED PROFESSIONAL ENGINEER Parwin W. Sarwary No. 79545 Exp. 9-30-14 CIVIL STATE OF CALIFORNIA

THE STATE OF CALIFORNIA OR ITS OFFICERS OR AGENTS SHALL NOT BE RESPONSIBLE FOR THE ACCURACY OR COMPLETENESS OF SCANNED COPIES OF THIS PLAN SHEET.

ROADSIDE SIGN QUANTITIES

SIGN No.	SIGN CODE	PANEL SIZE	POST SIZE AND LENGTH		ROADSIDE SIGN		REMOVE ROADSIDE SIGN	SINGLE FACE	BACKGROUND		LEGEND		PROTECTIVE FILM	FURNISH SINGLE SHEET ALUMINUM SIGN		REMARKS
			4"x4"	4"x6"	ONE POST	TWO POST			SHEETING COLOR	RETROREFLECTIVE ASTM TYPE	SHEETING COLOR	RETROREFLECTIVE ASTM TYPE	PREMIUM	UNFRAMED 0.08"	UNFRAMED 0.063"	
		INCHES	FT		EA									SQFT		
1	R4-3	36x48		15.50	1			×	WHITE	III	BLACK	PLAIN	×		12.00	
2	R4-3						1									
3	R1-1	30 OCT	13.0		1			×	RED	IV	WHITE	III	×		5.18	"OCT" (OCTAGON)
4	R1-1						1									
5	W1-7	48x24	12.5		1			×	YELLOW	III	BLACK	PLAIN	×	8		
	TYPE N (CA)	18x18						×	YELLOW	III	BLACK	PLAIN	×		2.25	
6	W1-7						1									
	TYPE N (CA)															
7	R1-1	30 OCT	13.0		1			×	RED	IV	WHITE	III	×		5.18	"OCT" (OCTAGON)
8	R1-1						1									
9	W1-7						1									
	TYPE N (CA)															
10	W1-7	48x24	12.5		1			×	YELLOW	III	BLACK	PLAIN	×	8		
	TYPE N (CA)	18x18						×	YELLOW	III	BLACK	PLAIN	×		2.25	
11	W8-4						1									
12	W8-4	36x36	14.5		1			×	YELLOW	III	BLACK	PLAIN			9.00	
13	G8(CA)						1									
14	G8(CA)	60x30	13.0			1		×	GREEN	IV	WHITE	IV	×		12.50	
15	R2-1(55)						1									
16	R2-1(55)	24x30	13.0		1			×	WHITE	III	BLACK	PLAIN	×		5.00	
17	R4-1	24x30	13.0					×	WHITE	III	BLACK	PLAIN	×		5.00	
18	R4-1						1									
19	G69(CA)	48x36		14.50		1		×	GREEN	IV	WHITE	PLAIN	×		12.00	PASSING LANE 1½ MILES
20	G69(CA)						1									
21	R4-1	24x30	13.0		1			×	WHITE	III	BLACK	PLAIN	×		5.00	
22	R4-1						1									
23	G7(CA)						1									
24	G7(CA)	48x36		14.50	1			×	GREEN	IV	WHITE	PLAIN	×		12.00	
25	R1-1						1									
26	R1-1	30 OCT	13.0		1			×	RED	IV	WHITE	PLAIN	×		5.18	"OCT" (OCTAGON)
27	R1-1	30 OCT	13.0		1			×	RED	IV	WHITE	PLAIN	×		5.18	"OCT" (OCTAGON)
28	R1-1						1									
29	R2-4(CA)50						1									
30	R2-4(CA)50	36x45		15.25	1			×	WHITE	III	BLACK	PLAIN	×		11.25	
31	G8(CA)	60x30	13.0			1		×	GREEN	IV	WHITE	IV	×		12.50	
32	G8(CA)						1									
TOTAL					12	3	16							16	121.47	

SIGN QUANTITIES

SQ-1

STATE OF CALIFORNIA - DEPARTMENT OF TRANSPORTATION
TRAFFIC
Caltrans

PARWIN SARWARY | REVISED BY
FLORANTE PEREZ | DATE REVISED
CALCULATED-DESIGNED BY
CHECKED BY
FUNCTIONAL SUPERVISOR
LOURDES DAVID

LAST REVISION 10-29-12 | DATE PLOTTED => 05-MAR-2013 | TIME PLOTTED => 07:33

Dist	COUNTY	ROUTE	POST MILES TOTAL PROJECT	SHEET No.	TOTAL SHEETS
04	Sol	12	20.6/23.5	116	138

REGISTERED CIVIL ENGINEER 9-20-12 DATE

3-4-13
PLANS APPROVAL DATE

REGISTERED PROFESSIONAL ENGINEER William H. Fong No. 61187 Exp. 6-30-13 CIVIL STATE OF CALIFORNIA

THE STATE OF CALIFORNIA OR ITS OFFICERS OR AGENTS SHALL NOT BE RESPONSIBLE FOR THE ACCURACY OR COMPLETENESS OF SCANNED COPIES OF THIS PLAN SHEET.

ROADWAY QUANTITIES

SHEET No.	STATION	HOT MIX ASPHALT (TYPE A)	CLASS 2 AGGREGATE BASE	CLASS 4 AGGREGATE SUBBASE	TACK COAT	LIQUID ASPHALT (PRIME COAT)	ROADWAY EXCAVATION	EMBANKMENT (N)	COLD PLANE AC PAVEMENT (0.25' Max)
		TON	CY		TON		CY		SQYD
L-1, L-2	A 100+00 TO 116+50	5612.12	1376.58	2097.64	9.56	4.35	5690.70	374.06	530
L-2, L-3	A 125+00 TO 140+00	5780.00	1466.06	2233.98	9.58	4.08	5538.06	822.59	520
L-4	B 96+00 TO 110+50	5036.20	1525.37	2324.28	12.05	4.89	5686.55	598.42	510
L-5	B 110+50 TO 125+50	4706.49	1482.40	2258.89	12.16	4.15	6055.59	2019.14	
L-6	B 125+50 TO 140+50	4356.36	1392.22	2154.08	7.74	4.14	6579.34	1762.57	300
L-7	B 140+50 TO 146+00	1320.53	369.44	562.96	3.35	1.11	1472.02	314.83	540
SAFETY EDGE		312.00							
TOTAL		27123.70	7612.07	11631.83	54.44	22.72	31022.26	5891.61	2400

(N) NOT A PAY ITEM, FOR INFORMATION ONLY

METAL BEAM GUARD RAILING

SHEET NO.	STATION	Loc	LAYOUT TYPE	TREATED WOODWASTE	REMOVE MBGR	MBGR (WOOD POST)	MBGR ALTERNATIVE FLARED TERMINAL SYSTEM	MBGR ALTERNATIVE IN-LINE TERMINAL SYSTEM	MBGR END ANCHOR ASSEMBLY (TYPE SFT)	MBGR TRANSITION RAILING (TYPE WB)	OBJECT MARKERS TYPE L-1	VEGETATION CONTROL (MINOR CONCRETE)
				LB	LF		EA					SQYD
L-1	A 100+00.00 TO 100+60.85	Lt	11B	800	60.85	25	1		1		1	4.33
L-3	A 134+19.91 TO 135+57.78	Rt		1800	137.87							
L-3	A 133+85.58 TO 134+72.81	Rt	12A			12.5		1		1	1	6.20
L-3	A 134+36.61 TO 135+74.87	Lt		1800	138.26							
L-3	A 135+26.57 TO 136+25.87	Lt	12A			25		1		1	1	6.18
L-5	B 115+99.41 TO 116+86.91	Rt	12A			12.5		1		1	1	6.22
L-5	B 117+25.17 TO 123+12.17	Lt	12A			512.5		1		1	1	46.22
TOTAL				4400	336.98	575	1	4	1	4	5	69.16

CONCRETE BARRIER AND RAILING

SHEET NO.	STATION	Loc	CONCRETE BARRIER TYPE 732A Mod	CHAIN LINK RAILING
			LF	
L-5	B 116+86.23 TO 117+27.17	Lt	32.74	32.74
L-3	A 134+70.81 TO 135+02.70	Rt	31.89	31.89
L-5	B 116+84.91 TO 117+25.70	Rt	40.79	40.79
L-3	A 134+95.83 TO 135+28.57	Lt	40.94	40.84
TOTAL			146.36	146.36

GATE

SHEET No.	STATION	Loc	WIRE MESH GATE(20 FT) REMOVE	WIRE MESH GATE(20 FT) INSTALL
			EA	
L-1	A 107+05.75 TO 112+50.00	Lt	1	1
TOTAL			1	1

SUMMARY OF QUANTITIES

Q-1

REVISED BY | DATE REVISED
WILLIAM FONG | STEWART LEE
CALCULATED-DESIGNED BY | CHECKED BY
FUNCTIONAL SUPERVISOR: STEWART LEE
STATE OF CALIFORNIA - DEPARTMENT OF TRANSPORTATION
Caltrans DESIGN

LAST REVISION 02-14-13 | DATE PLOTTED => 04-MAR-2013 | TIME PLOTTED => 14:42

Dist	COUNTY	ROUTE	POST MILES TOTAL PROJECT	SHEET No.	TOTAL SHEETS
04	Sol	12	20.6/23.5	117	138

REGISTERED CIVIL ENGINEER 9-20-12 DATE

3-4-13
PLANS APPROVAL DATE

REGISTERED PROFESSIONAL ENGINEER William H. Fong No. 61187 Exp. 6-30-13 CIVIL STATE OF CALIFORNIA

THE STATE OF CALIFORNIA OR ITS OFFICERS OR AGENTS SHALL NOT BE RESPONSIBLE FOR THE ACCURACY OR COMPLETENESS OF SCANNED COPIES OF THIS PLAN SHEET.

RUMBLE STRIP

SHEET No.	STATION	Loc	SHOULDERS	CENTER LINE
			STA	
L-1, L-2	A 100+00 TO 115+50	L+	13.5	13.0
		R+	12.5	
L-2, L-3	A 126+00 TO 139+00	L+	10.5	10.0
		R+	12.0	
L-4	B 97+00 TO 110+50	L+	10.5	6.8
		R+	10.5	
L-5	B 110+50 TO 125+50	L+	15.0	15.0
		R+	15.0	
L-6	B 125+50 TO 140+50	L+	15.0	15.0
		R+	15.0	
L-7	B 140+50 TO 145+28	L+	4.8	4.8
		R+	4.8	
TOTAL			139.1	64.6

REMOVE RUMBLE STRIP

STATION	Loc	COLD PLANE Exist PAVEMENT (0.5" DEPTH)	HOT Mix ASPHALT
		SQYD	TON (*)
A 100+00 TO 116+50	CENTER LINE	3	6
	SHOULDERS	6	13
A 125+00 TO 140+00	CENTER LINE	3	6
	SHOULDERS	6	12
B 96+00 TO 146+00	CENTER LINE	9	18
TOTAL		27	54

* SEE Q-1 SHEET FOR TOTAL QUANTITIES

HOT MIX ASPHALT DIKES

SHEET NO.	STATION	Loc	HMA DIKE TYPE C	HMA DIKE TYPE F	HMA (TYPE A)
			LF		TON
L-1	A 100+00.00 TO 100+57.87	L+	87.16	24.92	0.87
L-3	A 133+60.53 TO 134+47.72	R+	87.19		0.67
L-3	A 134+47.72 TO 134+72.81	R+		25.09	0.33
L-3	A 135+26.57 TO 135+51.49	L+		24.92	0.33
L-3	A 135+51.49 TO 136+38.65	L+	87.16		0.67
L-5	B 115+74.41 TO 116+61.91	R+	87.50		0.67
L-5	B 116+61.91 TO 116+86.91	R+	25.00		0.20
L-5	B 117+25.17 TO 123+62.17	L+	25.00	610.00	4.95
TOTAL			399.01	684.93	8.69

STEEL SHEET PILING

SHEET No.	STATION	LOCATION	FURNISH	DRIVE
			SQFT	
L-5	B 117+20 TO 122+25	L+	12625	12625
TOTAL			12625	12625

CRACK TREATMENT

SHEET No.	STATION	CRACK TREATMENT
		LANE MILE
L-1, L-2	A 100+00 TO 115+50	0.55
L-2, L-3	A 126+00 TO 139+00	0.47
L-4	B 97+00 TO 110+50	0.47
L-5	B 110+50 TO 125+50	0.57
L-6	B 125+50 TO 140+50	0.57
L-7	B 140+50 TO 145+28	0.18
TOTAL		2.81

EXISTING SURFACING TREATMENT

STATION	Loc	LENGTH (N)	WIDTH (N)	COLD PLANE AC PAVEMENT (0.25' Max)	COLD PLANE AC PAVEMENT (0.50' Max)	GEOSYNTHETIC PAVEMENT INTERLAYER	HMA (TYPE A)	TACK COAT
		LF		SQYD			TON	
A 107+80 TO 115+00	L+	720.00	6.00	480.00			81.00	0.14
A 107+80 TO 115+00	R+	720.00	6.00	480.00			81.00	0.14
A 126+00 TO 129+50	L+	350.00	6.00	233.32			39.38	0.07
A 126+00 TO 139+00	R+	1300.00	6.00	866.67			146.25	0.25
B 97+00 TO 117+00	L+	2000.00	6.00	1333.33			225.00	0.39
B 97+00 TO 117+00	R+	2000.00	6.00	1333.33			225.00	0.39
B 117+00 TO 123+80	L+	680.00	12.00		906.67	906.67	306.00	0.78
B 117+00 TO 123+80	R+	680.00	12.00		906.67	906.67	306.00	0.78
B 131+40 TO 145+00	L+	1360.00	6.00	906.67			153.00	0.26
B 131+40 TO 145+00	R+	1360.00	6.00	906.67			153.00	0.26
Total		11170.00		6539.99	1813.33	1813.33	1715.63	3.46

SUMMARY OF QUANTITIES

Q-2

STATE OF CALIFORNIA - DEPARTMENT OF TRANSPORTATION
Caltrans® DESIGN
FUNCTIONAL SUPERVISOR STEWART LEE
CALCULATED-DESIGNED BY WILLIAM FONG
CHECKED BY STEWART LEE
REVISED BY
DATE REVISED

LAST REVISION 02-21-13
DATE PLOTTED => 05-MAR-2013
TIME PLOTTED => 07:19

Dist	COUNTY	ROUTE	POST MILES TOTAL PROJECT	SHEET No.	TOTAL SHEETS
04	Sol	12	20.6/23.5	118	138

William H. Fong 9-20-12
REGISTERED CIVIL ENGINEER DATE

3-4-13
PLANS APPROVAL DATE

REGISTERED PROFESSIONAL ENGINEER William H. Fong No. 61187 Exp. 6-30-13 CIVIL STATE OF CALIFORNIA

THE STATE OF CALIFORNIA OR ITS OFFICERS OR AGENTS SHALL NOT BE RESPONSIBLE FOR THE ACCURACY OR COMPLETENESS OF SCANNED COPIES OF THIS PLAN SHEET.

FENCE

SHEET No.	STATION	Loc	REMOVE FENCE	FENCE (TYPE WM, METAL POST)	WILDLIFE EXCLUSION	TEMPORARY FENCE (TYPE ESA)	TEMPORARY FENCE (TYPE WM)
			LT				
L-1	A 100+00 TO 104+78.89	R+			635.80	478.89	
	A 104+78.89 TO 106+81	R+	202.11	202.11	544.25	202.11	
	A 107+31 TO 110+75	R+			344.00	344.00	
	A 100+00 TO 100+45	L+			45.00	45.00	
	A 100+45 TO 106+81	L+	636.00	636.00	636.00	636.00	
	A 107+05 TO 110+75	L+			370.00	370.00	
L-1 AND L-2	A 107+31 TO 110+85	R+	354.00	354.00			
	A 110+85 TO 115+00	R+	415.00	415.00	415.00	415.00	
	A 115+00 TO 116+15	R+			115.00	115.00	
	A 107+05 TO 110+85	L+	380.00	380.00			
	A 110+85 TO 115+00	L+	415.00	415.00	415.00	415.00	
	A 115+00 OT 116+15	L+			115.00	115.00	
L-2	A 116+25 TO 123+91	R+	766.00				
	A 116+25 TO 123.91	L+	766.00			766.00	
L-2 AND L-3	A 124+01 TO 126+00	R+			199.00	199.00	
	A 126+00 TO 134+71	R+	871.00	871.00	871.00	871.00	
	A 124+01 TO 126+00	L+			199.00	199.00	
	A 126+00 TO 133+56	L+	756.00	756.00	756.00	756.00	
L-3	A 134+93 TO 139+00	R+	407.00	407.00	407.00	407.00	
	A 139+00 TO 140+00	R+			100.00	100.00	
	A 134+10 TO 139+00	L+	490.00	490.00	490.00	490.00	
	A 139+00 TO 140+00	L+			100.00	100.00	
L-4	B 96+00 TO 97+00	R+			100.00	100.00	
	B 97+00 TO 100+04	R+	304.00	304.00	304.00	304.00	
	B 100+04 TO 104+14	R+	10.00	10.00			
	B 100+14 TO 104+97.99	R+	483.99	483.99	483.99	483.99	
	B 96+00 TO 97+00	L+			100.00	100.00	
	B 97+00 TO 100+04	L+	304.00	304.00	304.00	304.00	
	B 100+04 TO 100+14	L+	10.00	10.00			
	B 100+14 TO 104+97	L+	483.00	483.00	483.00	483.00	
L-4 AND L-5	B 105+38 TO 117+00	R+	1162.00	1162.00	1162.00	1162.00	
	B 105+44 TO 117+00	L+	1156.00	1156.00	1156.00	1156.00	
	B117+00 TO 117+27.28	L+	27.28	27.28			
L-5	B 117+16 TO 124+45	R+	729.00		729.00	729.00	
	B 117+16 TO 124+45	L+			729.00	729.00	
L-5 AND L-6	B 117+16 TO 124+55	R+	739.00	739.00			
	B 120+00 TO 140+00	R+					2000
	B 124+55 TO 132+80	R+	825.00	825.00	825.00	825.00	
	B 132+80 TO 138+71	R+	591.00	591.00			
	B 124+55 TO 132+80	L+			825.00	825.00	
L-6	B 132+90 TO 138+71	R+		581.00	581.00	581.00	
L-6 AND L-7	B 139+30 TO 146+00	R+		670.00	670.00	670.00	
	B 146+00 TO 147+00	R+			100.00		
	B 132+90 TO 145+15	L+			1225.00	1225.00	
L-7	B 145+37 TO 146+99.09	L+		162.09	162.09	162.09	
TOTAL			12331.38	11853.47	16696.13	16863.08	2000

SUMMARY OF QUANTITIES

Q-3

WILLIAM FONG — REVISED BY
STEWART LEE — DATE REVISED
CALCULATED-DESIGNED BY
CHECKED BY
STEWART LEE — FUNCTIONAL SUPERVISOR
STATE OF CALIFORNIA - DEPARTMENT OF TRANSPORTATION
Caltrans® DESIGN

LAST REVISION 08-00-12
DATE PLOTTED => 05-MAR-2013
TIME PLOTTED => 10:18

Dist	COUNTY	ROUTE	POST MILES TOTAL PROJECT	SHEET No.	TOTAL SHEETS
04	Sol	12	20.6/23.5	119	138

William H Fong 2-22-13
REGISTERED CIVIL ENGINEER DATE

3-4-13
PLANS APPROVAL DATE

REGISTERED PROFESSIONAL ENGINEER
William H. Fong
No. 61187
Exp. 6-30-13
CIVIL
STATE OF CALIFORNIA

THE STATE OF CALIFORNIA OR ITS OFFICERS OR AGENTS SHALL NOT BE RESPONSIBLE FOR THE ACCURACY OR COMPLETENESS OF SCANNED COPIES OF THIS PLAN SHEET.

SPECIAL MARKER

SHEET No.	STATION	LOCATION	SIGN CODE	LINE 1 MESSAGE	LINE 2, 3 & 4 MESSAGE	PANEL SIZE	No. OF POSTS & TYPE (N)	No. OF SIGNS EA
EC-1	A 102+07	L†	G11-10 (CA)	END	ESA	8" x 30"	1 - MP	1
	A 108+52	L†	G11-10 (CA)	N/A	ESA	8" x 30"	1 - MP	1
EC-2	A 114+97	L†	G11-10 (CA)	BEGIN	ESA	8" x 30"	1 - MP	1
EC-4	B 101+60	L†	G11-10 (CA)	END	ESA	8" x 30"	1 - MP	1
	B 101+78	R†	G11-10 (CA)	BEGIN	ESA	8" x 30"	1 - MP	1
	B 110+30	L†	G11-10 (CA)	N/A	ESA	8" x 30"	1 - MP	1
	B 110+48	R†	G11-10 (CA)	N/A	ESA	8" x 30"	1 - MP	1
EC-5	B 116+50	L†	G11-10 (CA)	N/A	ESA	8" x 30"	1 - MP	1
	B 119+18	R†	G11-10 (CA)	N/A	ESA	8" x 30"	1 - MP	1
EC-6	B 126+45	L†	G11-10 (CA)	N/A	ESA	8" x 30"	1 - MP	1
	B 127+88	R†	G11-10 (CA)	N/A	ESA	8" x 30"	1 - MP	1
	B 136+40	L†	G11-10 (CA)	N/A	ESA	8" x 30"	1 - MP	1
	B 136+58	R†	G11-10 (CA)	N/A	ESA	8" x 30"	1 - MP	1
EC-7	B 145+02	L†	G11-10 (CA)	BEGIN	ESA	8" x 30"	1 - MP	1
	B 145+20	R†	G11-10 (CA)	END	ESA	8" x 30"	1 - MP	1
TOTAL								15

(N) - NOT A SEPARATE PAY ITEM, FOR INFORMATION ONLY
"N/A" DENOTES NO LINE 1 MESSAGE FOR THIS SIGN
MP - METAL POST

SAFETY EDGE

SHEET No.	LOCATION	SAFETY EDGE (N) LF
L-1	A 100+00.00 TO 112+50.00	1905
L-2	A 112+50.00 TO 127+50.00	1300
L-3	A 127+50.00 TO 140+00.00	1244
L-4	B 96+00.00 TO 110+50.00	2354
L-5	B 110+50.00 TO 125+50.00	656
L-6	B 125+50.00 TO 140+50.00	3000
L-7	B 140+50.00 TO 144+97.00	997
TOTAL		11456

(N) - NOT A SEPARATE PAY ITEM, FOR INFORMATION ONLY

SUMMARY OF QUANTITIES

Q-4

STATE OF CALIFORNIA - DEPARTMENT OF TRANSPORTATION
Caltrans DESIGN

WILLIAM FONG — REVISED BY
STEWART LEE — DATE REVISED
CALCULATED-DESIGNED BY
CHECKED BY
FUNCTIONAL SUPERVISOR
STEWART LEE

LAST REVISION 02-11-13 | DATE PLOTTED => 04-MAR-2013 | TIME PLOTTED => 13:47

DIST	COUNTY	ROUTE	POST MILES TOTAL PROJECT	SHEET No	TOTAL SHEETS
04	Sol	12	20.6/23.5	120	138

REGISTERED CIVIL ENGINEER 07/16/08

3-4-13
PLANS APPROVAL DATE

REGISTERED PROFESSIONAL ENGINEER Samuel Awad No. 64589 Exp. 6-30-09 CIVIL STATE OF CALIFORNIA

The State of California or its officers or agents shall not be responsible for the accuracy or completeness of electronic copies of this plan sheet.

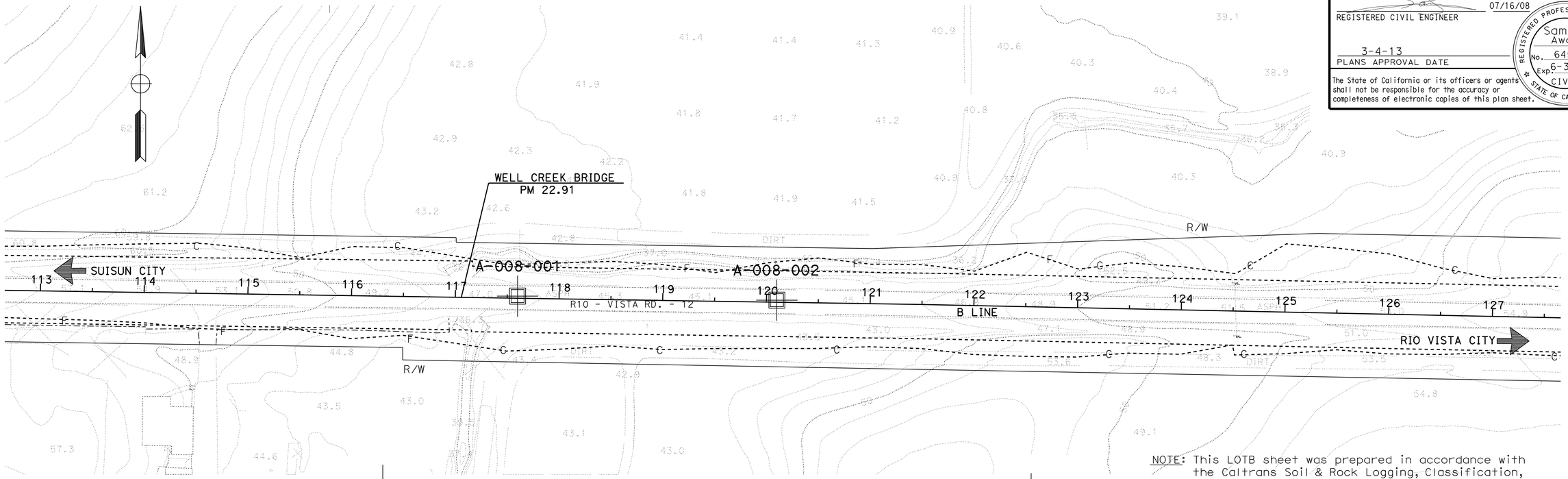

NOTE: This LOTB sheet was prepared in accordance with the Caltrans Soil & Rock Logging, Classification, and Presentation Manual (June 2007).

PLAN
1"=50'

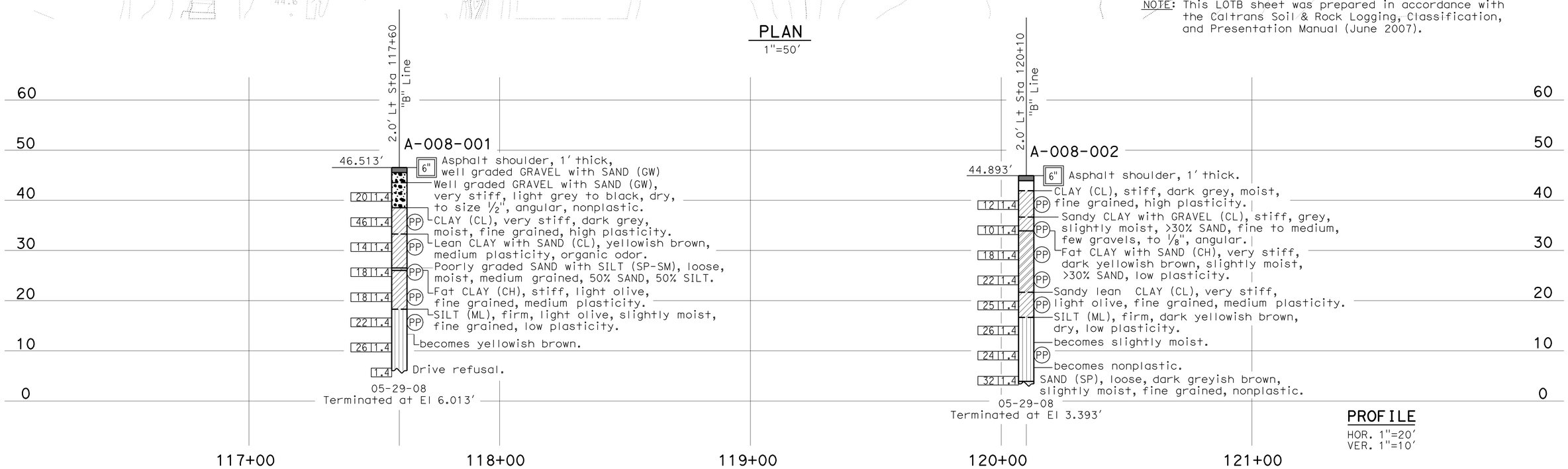

PROFILE
HOR. 1"=20'
VER. 1"=10'

ENGINEERING SERVICES	GEOTECHNICAL SERVICES	STATE OF CALIFORNIA DEPARTMENT OF TRANSPORTATION	GEOTECHNICAL SERVICES OFFICE OF GEOTECHNICAL DESIGN BRANCH	BRIDGE NO. / POST MILES 22.9	LEFT TURN LANE LOG OF TEST BORINGS
FUNCTIONAL SUPERVISOR	DRAWN BY: M. Reynolds: 07-08	FIELD INVESTIGATION BY: S. Awad			
NAME:	CHECKED BY: A. Kaddoura				

OGS CIVIL LOG OF TEST BORINGS SHEET

ORIGINAL SCALE IN INCHES FOR REDUCED PLANS 0 1 2 3

CU 04223
EA 2A6200

DISREGARD PRINTS BEARING EARLIER REVISION DATES → 11-18-08

REVISION DATES

SHEET 1 OF 3

FILE => 2a6201_logoftestborings-1of3.dgn

USERNAME => s123631 DATE PLOTTED => 04-MAR-2013 TIME PLOTTED => 13:47

DIST	COUNTY	ROUTE	KILOMETER POST TOTAL PROJECT	SHEET No	TOTAL SHEETS
04	Sol	12	20.6/23.5	121	138

REGISTERED CIVIL ENGINEER 07-16-08 DATE

3-4-13
PLANS APPROVAL DATE

REGISTERED PROFESSIONAL ENGINEER Samuel Awad No. 64589 Exp. 6-30-09 CIVIL STATE OF CALIFORNIA

The State of California or its officers or agents shall not be responsible for the accuracy or completeness of electronic copies of this plan sheet.

REFERENCE: CALTRANS SOIL & ROCK LOGGING, CLASSIFICATION, AND PRESENTATION MANUAL (JUNE 2007)

CEMENTATION

Description	Criteria
Weak	Crumbles or breaks with handling or little finger pressure.
Moderate	Crumbles or breaks with considerable finger pressure.
Strong	Will not crumble or break with finger pressure.

CONSISTENCY OF COHESIVE SOILS

Description	Unconfined Compressive Strength (tsf)	Pocket Penetrometer Measurement (tsf)	Torvane Measurement (tsf)	Field Approximation
Very Soft	< 0.25	< 0.25	< 0.12	Easily penetrated several inches by fist
Soft	0.25 to 0.50	0.25 to 0.50	0.12 to 0.25	Easily penetrated several inches by thumb
Medium Stiff	0.50 to 1.0	0.50 to 1.0	0.25 to 0.50	Penetrated several inches by thumb with moderate effort
Stiff	1 to 2	1 to 2	0.50 to 1.0	Readily indented by thumb but penetrated only with great effort
Very Stiff	2 to 4	2 to 4	1.0 to 2.0	Readily indented by thumbnail
Hard	> 4.0	> 4.0	> 2.0	Indented by thumbnail with difficulty

BOREHOLE IDENTIFICATION

Symbol	Hole Type	Description
Size	A	Auger Boring
Size	R P	Rotary drilled boring Rotary percussion boring (air)
Size	R	Rotary drilled diamond core
Size	HD HA	Hand driven (1-inch soil tube) Hand Auger
●	D	Dynamic Cone Penetration Boring
▲	CPT	Cone Penetration Test (ASTM D 5778-95)
⬚	O	Other

Note: Size in inches.

PLASTICITY OF FINE-GRAINED SOILS

Description	Criteria
Nonplastic	A 1/8-inch thread cannot be rolled at any water content.
Low	The thread can barely be rolled and the lump cannot be formed when drier than the plastic limit.
Medium	The thread is easy to roll and not much time is required to reach the plastic limit. The thread cannot be rerolled after reaching the plastic limit. The lump crumbles when drier than the plastic limit.
High	It takes considerable time rolling and kneading to reach the plastic limit. The thread can be rerolled several times after reaching the plastic limit. The lump can be formed without crumbling when drier than the plastic limit.

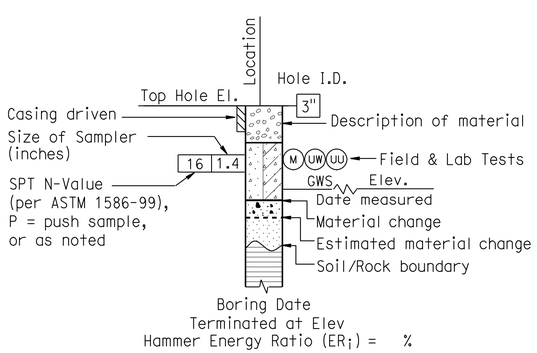

ROTARY BORING

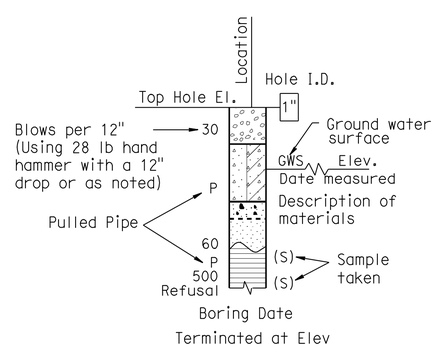

HAND BORING

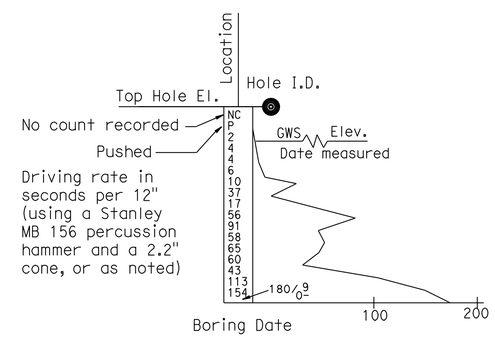

DYNAMIC CONE PENETRATION BORING

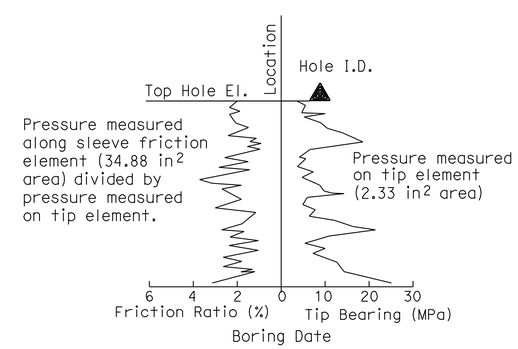

CONE PENETRATION TEST (CPT) SOUNDING

ENGINEERING SERVICES	GEOTECHNICAL SERVICES
M. Reynolds PREPARED BY	
A. Kaddoura CHECKED BY	S. Awad

STATE OF CALIFORNIA DEPARTMENT OF TRANSPORTATION

GEOTECHNICAL SERVICES OFFICE OF GEOTECHNICAL DESIGN BRANCH

BRIDGE NO.

POST MILE 22.9

SOIL LEGEND
LOG OF TEST BORINGS

GS LOTB SOIL LEGEND

ORIGINAL SCALE IN INCHES FOR REDUCED PLANS 0 1 2 3

CU 04223
EA 2A6200

DISREGARD PRINTS BEARING EARLIER REVISION DATES

REVISION DATES 11-18-08

SHEET 2 OF 3

FILE => 2a6201_logoftestborings-2of3.dgn

USERNAME => s123631 DATE PLOTTED => 04-MAR-2013 TIME PLOTTED => 13:47

DIST	COUNTY	ROUTE	KILOMETER POST TOTAL PROJECT	SHEET No	TOTAL SHEETS
04	Sol	12	20.6/23.5	122	138

07-16-08
REGISTERED CIVIL ENGINEER DATE

3-4-13
PLANS APPROVAL DATE

REGISTERED PROFESSIONAL ENGINEER Samuel Awad No. 64589 Exp. 6-30-09 CIVIL STATE OF CALIFORNIA

The State of California or its officers or agents shall not be responsible for the accuracy or completeness of electronic copies of this plan sheet.

REFERENCE: CALTRANS SOIL & ROCK LOGGING, CLASSIFICATION, AND PRESENTATION MANUAL (JUNE 2007)

GROUP SYMBOLS AND NAMES

Graphic/Symbol	Group Names	Graphic/Symbol	Group Names
GW	Well-graded GRAVEL Well-graded GRAVEL with SAND	CL	Lean CLAY Lean CLAY with SAND Lean CLAY with GRAVEL SANDY lean CLAY SANDY lean CLAY with GRAVEL GRAVELLY lean CLAY GRAVELLY lean CLAY with SAND
GP	Poorly graded GRAVEL Poorly graded GRAVEL with SAND		
GW-GM	Well-graded GRAVEL with SILT Well-graded GRAVEL with SILT and SAND	CL-ML	SILTY CLAY SILTY CLAY with SAND SILTY CLAY with GRAVEL SANDY SILTY CLAY SANDY SILTY CLAY with GRAVEL GRAVELLY SILTY CLAY GRAVELLY SILTY CLAY with SAND
GW-GC	Well-graded GRAVEL with CLAY (or SILTY CLAY) Well-graded GRAVEL with CLAY and SAND (or SILTY CLAY and SAND)		
GP-GM	Poorly graded GRAVEL with SILT Poorly graded GRAVEL with SILT and SAND	ML	SILT SILT with SAND SILT with GRAVEL SANDY SILT SANDY SILT with GRAVEL GRAVELLY SILT GRAVELLY SILT with SAND
GP-GC	Poorly graded GRAVEL with CLAY (or SILTY CLAY) Poorly graded GRAVEL with CLAY and SAND (or SILTY CLAY and SAND)		
GM	SILTY GRAVEL SILTY GRAVEL with SAND	OL	ORGANIC lean CLAY ORGANIC lean CLAY with SAND ORGANIC lean CLAY with GRAVEL SANDY ORGANIC lean CLAY SANDY ORGANIC lean CLAY with GRAVEL GRAVELLY ORGANIC lean CLAY GRAVELLY ORGANIC lean CLAY with SAND
GC	CLAYEY GRAVEL CLAYEY GRAVEL with SAND		
GC-GM	SILTY, CLAYEY GRAVEL SILTY, CLAYEY GRAVEL with SAND	OL	ORGANIC SILT ORGANIC SILT with SAND ORGANIC SILT with GRAVEL SANDY ORGANIC SILT SANDY ORGANIC SILT with GRAVEL GRAVELLY ORGANIC SILT GRAVELLY ORGANIC SILT with SAND
SW	Well-graded SAND Well-graded SAND with GRAVEL		
SP	Poorly graded SAND Poorly graded SAND with GRAVEL	CH	Fat CLAY Fat CLAY with SAND Fat CLAY with GRAVEL SANDY fat CLAY SANDY fat CLAY with GRAVEL GRAVELLY fat CLAY GRAVELLY fat CLAY with SAND
SW-SM	Well-graded SAND with SILT Well-graded SAND with SILT and GRAVEL		
SW-SC	Well-graded SAND with CLAY (or SILTY CLAY) Well-graded SAND with CLAY and GRAVEL (or SILTY CLAY and GRAVEL)	MH	Elastic SILT Elastic SILT with SAND Elastic SILT with GRAVEL SANDY elastic SILT SANDY elastic SILT with GRAVEL GRAVELLY elastic SILT GRAVELLY elastic SILT with SAND
SP-SM	Poorly graded SAND with SILT Poorly graded SAND with SILT and GRAVEL		
SP-SC	Poorly graded SAND with CLAY (or SILTY CLAY) Poorly graded SAND with CLAY and GRAVEL (or SILTY CLAY and GRAVEL)	OH	ORGANIC fat CLAY ORGANIC fat CLAY with SAND ORGANIC fat CLAY with GRAVEL SANDY ORGANIC fat CLAY SANDY ORGANIC fat CLAY with GRAVEL GRAVELLY ORGANIC fat CLAY GRAVELLY ORGANIC fat CLAY with SAND
SM	SILTY SAND SILTY SAND with GRAVEL		
SC	CLAYEY SAND CLAYEY SAND with GRAVEL	OH	ORGANIC elastic SILT ORGANIC elastic SILT with SAND ORGANIC elastic SILT with GRAVEL SANDY ORGANIC elastic SILT SANDY ORGANIC elastic SILT with GRAVEL GRAVELLY ORGANIC elastic SILT GRAVELLY ORGANIC elastic SILT with SAND
SC-SM	SILTY, CLAYEY SAND SILTY, CLAYEY SAND with GRAVEL		
PT	PEAT	OL/OH	ORGANIC SOIL ORGANIC SOIL with SAND ORGANIC SOIL with GRAVEL SANDY ORGANIC SOIL SANDY ORGANIC SOIL with GRAVEL GRAVELLY ORGANIC SOIL GRAVELLY ORGANIC SOIL with SAND
	COBBLES COBBLES and BOULDERS BOULDERS		

FIELD AND LABORATORY TESTING

- (C) Consolidation (ASTM D 2435)
- (CL) Collapse Potential (ASTM D 5333)
- (CP) Compaction Curve (CTM 216)
- (CR) Corrosivity Testing (CTM 643, CTM 422, CTM 417)
- (CU) Consolidated Undrained Triaxial (ASTM D 4767)
- (DS) Direct Shear (ASTM D 3080)
- (EI) Expansion Index (ASTM D 4829)
- (M) Moisture Content (ASTM D 2216)
- (OC) Organic Content-% (ASTM D 2974)
- (P) Permeability (CTM 220)
- (PA) Particle Size Analysis (ASTM D 422)
- (PI) Plasticity Index (AASHTO T 90) Liquid Limit (AASHTO T 89)
- (PL) Point Load Index (ASTM D 5731)
- (PM) Pressure Meter
- (PP) Pocket Penetrometer
- (R) R-Value (CTM 301)
- (SE) Sand Equivalent (CTM 217)
- (SG) Specific Gravity (AASHTO T 100)
- (SL) Shrinkage Limit (ASTM D 427)
- (SW) Swell Potential (ASTM D 4546)
- (TV) Pocket Torvane
- (UC) Unconfined Compression-Soil (ASTM D 2166) Unconfined Compression-Rock (ASTM D 2938)
- (UU) Unconsolidated Undrained Triaxial (ASTM D 2850)
- (UW) Unit Weight (ASTM D 4767)
- (VS) Vane Shear (AASHTO T 223)

APPARENT DENSITY OF COHESIONLESS SOILS

Description	SPT N_{60} (Blows / 12 inches)
Very loose	0 - 4
Loose	5 - 10
Medium Dense	11 - 30
Dense	31 - 50
Very Dense	> 50

MOISTURE

Description	Criteria
Dry	Absence of moisture, dusty, dry to the touch
Moist	Damp but no visible water
Wet	Visible free water, usually soil is below water table

PERCENT OR PROPORTION OF SOILS

Description	Criteria
Trace	Particles are present but estimated to be less than 5%
Few	5 to 10%
Little	15 to 25%
Some	30 to 45%
Mostly	50 to 100%

PARTICLE SIZE

Description		Size
Boulder		> 12"
Cobble		3" to 12"
Gravel	Coarse	3/4" to 3"
	Fine	No. 4 to 3/4"
Sand	Coarse	No. 10 to No. 4
	Medium	No. 40 to No. 10
	Fine	No. 200 to No. 40

ENGINEERING SERVICES		GEOTECHNICAL SERVICES
M. Reynolds 07-08	PREPARED BY	
A. Kaddoura	CHECKED BY	S. Awad

STATE OF CALIFORNIA DEPARTMENT OF TRANSPORTATION

GEOTECHNICAL SERVICES OFFICE OF GEOTECHNICAL DESIGN BRANCH

BRIDGE NO.

POST MILE 22.9

SOIL LEGEND
LOG OF TEST BORINGS

GS LOTB SOIL LEGEND

ORIGINAL SCALE IN INCHES FOR REDUCED PLANS 0 1 2 3

CU 04223
EA 2A6200

DISREGARD PRINTS BEARING EARLIER REVISION DATES

REVISION DATES 11-18-08

SHEET 3 OF 3

FILE => 2a6201_logoftestborings-3of3.dgn

USERNAME => s123631 DATE PLOTTED => 04-MAR-2013 TIME PLOTTED => 13:47

Dist	COUNTY	ROUTE	POST MILES TOTAL PROJECT	SHEET No.	TOTAL SHEETS
04	Sol	12	20.6/23.5	123	138

REGISTERED CIVIL ENGINEER 12-7-12 DATE

3-4-13
PLANS APPROVAL DATE

REGISTERED PROFESSIONAL ENGINEER Gurinderpal Bhullar No. C48815 Exp. 9-30-14 CIVIL STATE OF CALIFORNIA

THE STATE OF CALIFORNIA OR ITS OFFICERS OR AGENTS SHALL NOT BE RESPONSIBLE FOR THE ACCURACY OR COMPLETENESS OF SCANNED COPIES OF THIS PLAN SHEET.

NOTES:

Unless otherwise specified in the special provisions, all temporary warning signs shall have black legend on orange background.

California code are designated by (CA). Otherwise, Federal (MUTCD) codes are shown.

TYPICAL LANE CLOSURE WITH REVERSIBLE CONTROL

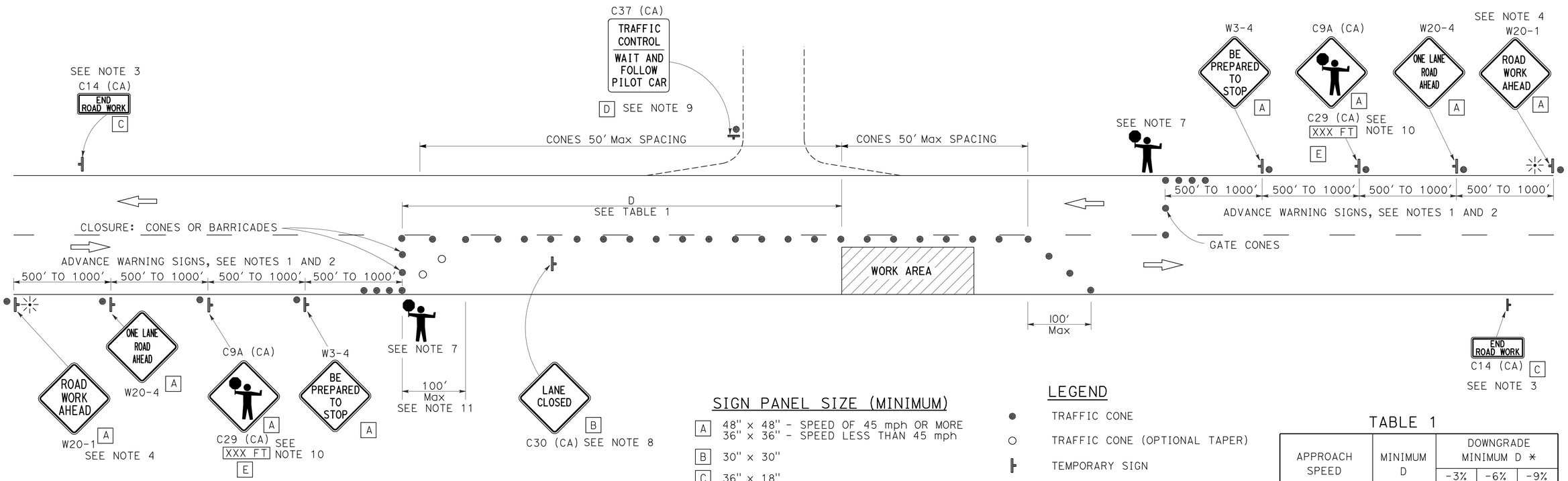

SIGN PANEL SIZE (MINIMUM)

- A: 48" x 48" - SPEED OF 45 mph OR MORE; 36" x 36" - SPEED LESS THAN 45 mph
- B: 30" x 30"
- C: 36" x 18"
- D: 36" x 42"
- E: 36" x 9"

LEGEND

- TRAFFIC CONE
- TRAFFIC CONE (OPTIONAL TAPER)
- TEMPORARY SIGN
- PORTABLE FLASHING BEACON
- FLAGGER

TABLE 1

APPROACH SPEED	MINIMUM D	DOWNGRADE MINIMUM D *		
		-3%	-6%	-9%
mph	ft	ft	ft	ft
25 AND BELOW	155	158	165	173
30	200	205	215	227
35	250	257	271	287
40	305	315	333	354
45	360	378	400	427
50	425	446	474	507
55	495	520	553	593
60	570	598	638	686
65	645	682	728	785

* USE ON SUSTAINED DOWNGRADE STEEPER THAN -3 PERCENT AND LONGER THAN 1 MILE.

NOTES:

1. Where approach speeds are low, advance warning signs may be placed at 300' spacing, and closer in urban areas.
2. Each advance warning sign in each direction of travel shall be equipped with at least two flags for daytime closure. Each flag shall be at least 16" x 16" in size and shall be orange or fluorescent red-orange in color. Flashing beacons shall be placed at the locations indicated for lane closure during hours of darkness.
3. A C14 (CA) "END ROAD WORK" sign, as appropriate, shall be placed at the end of the lane control unless the end of work area is obvious, or ends within a larger project's limits.
4. If the W20-1 sign would follow within 2000' of a stationary W20-1 or C11 (CA) "ROAD WORK NEXT _____MILES", use a W20-4 sign for the first advance warning sign.
5. All cones used for lane closures during the hours of darkness shall be fitted with retroreflective bands (or sleeves) as specified in the specifications.
6. Portable delineators, placed at one-half the spacing indicated for traffic cones, may be used instead of cones for daytime closures only.
7. Additional advance flaggers may be required. Flagger should stand in a conspicuous place, be visible to approaching traffic as well as approaching vehicles after the first vehicle has stopped. During the hours of darkness, the flagging-station and flagger shall be illuminated and clearly visible to approaching traffic. The illumination footprint of the lighting on the ground shall be at least 20' in diameter. Place a minimum of four cones at 50' intervals in advance of flagger station as shown.
8. Place C30 (CA) "LANE CLOSED" sign at 500' to 1000' intervals throughout extended work areas. They are optional if the work area is visible from the flagger station.
9. When a pilot car is used, place a C37 (CA) "TRAFFIC CONTROL-WAIT AND FOLLOW PILOT CAR" sign at all intersections within traffic control area. Signs shall be clean and visible at all times.
10. An optional C29 (CA) sign may be placed below the C9A (CA) sign.
11. Traffic cones or barricades may be placed on the optional taper as shown, barricades shall be Type I, II, or III.

STATE OF CALIFORNIA
DEPARTMENT OF TRANSPORTATION

TRAFFIC CONTROL SYSTEM FOR LANE CLOSURE ON TWO LANE CONVENTIONAL HIGHWAYS

NO SCALE

TCS-1

STATE OF CALIFORNIA - DEPARTMENT OF TRANSPORTATION
Caltrans

FUNCTIONAL SUPERVISOR | CALCULATED-DESIGNED BY | CHECKED BY | REVISED BY | DATE REVISED

LAST REVISION 00-00-00 | DATE PLOTTED => 04-MAR-2013 | TIME PLOTTED => 12:39

Dist	COUNTY	ROUTE	POST MILES TOTAL PROJECT	SHEET No.	TOTAL SHEETS
04	Sol	12	20.6/23.5	124	138

REGISTERED CIVIL ENGINEER 12-7-12 DATE

3-4-13
PLANS APPROVAL DATE

REGISTERED PROFESSIONAL ENGINEER Gurinderpal Bhullar No. C48815 Exp. 9-30-14 CIVIL STATE OF CALIFORNIA

THE STATE OF CALIFORNIA OR ITS OFFICERS OR AGENTS SHALL NOT BE RESPONSIBLE FOR THE ACCURACY OR COMPLETENESS OF SCANNED COPIES OF THIS PLAN SHEET.

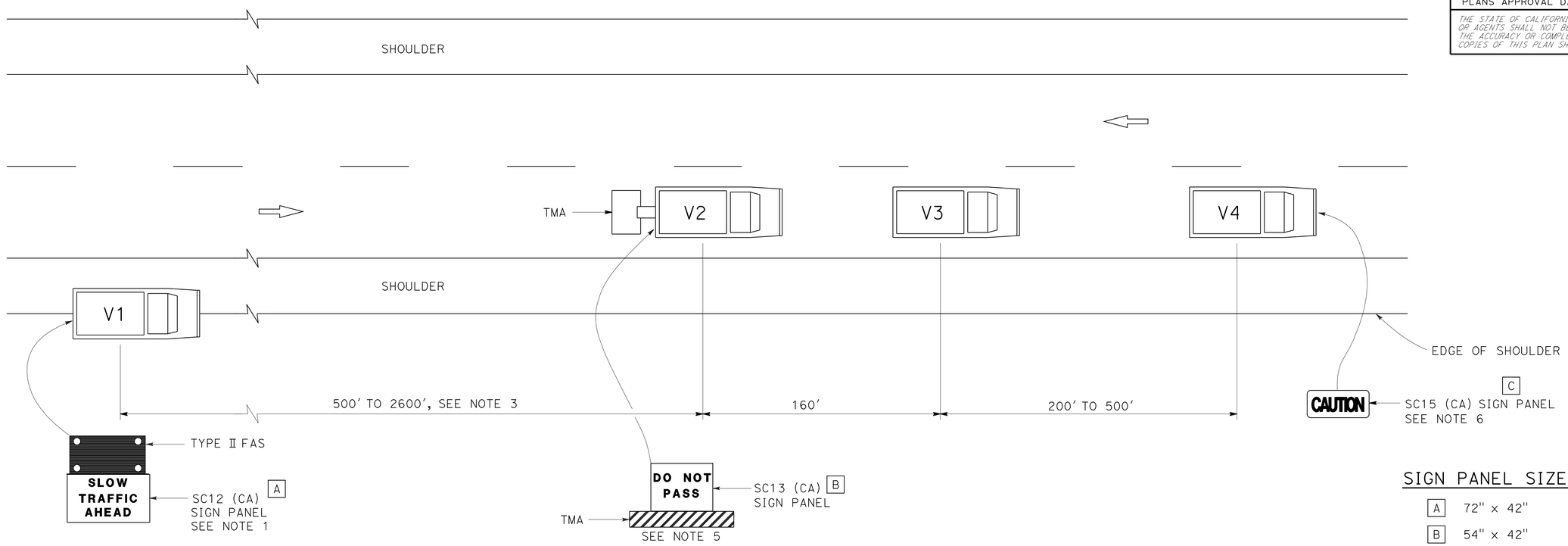

SIGN PANEL SIZE (Min)

A	72" x 42"
B	54" x 42"
C	54" x 24"

LEGEND

V1	SIGN VEHICLE
V2	SHADOW VEHICLE
V3	WORK/APPLICATION VEHICLE
V4	SIGN VEHICLE
TMA	TRUCK-MOUNTED ATTENUATOR
	FLASHING ARROW SIGN (FAS) IN FLASHING CAUTION MODE

NOTES:

1. Either a changeable message sign or a SC12 (CA) "SLOW TRAFFIC AHEAD" sign shall be mounted on the rear of sign vehicle V1. A Type II flashing arrow sign may be used with the SC12 (CA) sign panel.
2. Sign vehicle V1 should be positioned where highly visible when shoulders are not available.
3. If traffic queues develop, sign vehicle V1 should be positioned upstream from the end of queue.
4. Vehicle-mounted sign panels shall be Type III, IV VII, VIII or IX retroreflective sheeting, black on white, black on orange, or black on fluorescent orange, with 6" minimum series D letters per Caltrans sign specifications.
5. Gross Vehicle Weight of shadow vehicle shall be a minimum of 20,000 pounds and shall be equipped with a truck-mounted attenuator. The sign panel shown shall be mounted on the rear of shadow vehicle V2. The message "LANE CLOSED" may be used in place of the "DO NOT PASS" message.
6. The sign panel shown shall be mounted on the front of sign vehicle V4, facing opposing traffic.
7. All vehicles shall be equipped with flashing or rotating amber lights.
8. Sign vehicle V4 will not be required when the work and vehicles V2 and V3 are 2' or more from the centerline of the highway during the work or application operations.
9. All vehicles used for lane closures shall be equipped with two-way radios and the vehicle operators shall maintain communication during the work or application operation.
10. When multiple work vehicles are used in close proximity to each other, only one shadow vehicle is required and spacing between work vehicles shall be minimized in order to deter traffic from entering the closed lane.

STATE OF CALIFORNIA
DEPARTMENT OF TRANSPORTATION

TRAFFIC CONTROL SYSTEM FOR MOVING LANE CLOSURE ON TWO LANE HIGHWAYS

NO SCALE

TCS-2

STATE OF CALIFORNIA - DEPARTMENT OF TRANSPORTATION
Caltrans

FUNCTIONAL SUPERVISOR
CALCULATED-DESIGNED BY
CHECKED BY
REVISED BY
DATE REVISED

LAST REVISION 00-00-00
DATE PLOTTED => 04-MAR-2013
TIME PLOTTED => 12:39

Dist	COUNTY	ROUTE	POST MILES TOTAL PROJECT	SHEET No.	TOTAL SHEETS
04	Sol	12	20.6/23.5	125	138

REGISTERED CIVIL ENGINEER

April 20, 2012
PLANS APPROVAL DATE

REGISTERED PROFESSIONAL ENGINEER
Roberta L. McLaughlin
No. C40375
Exp. 3-31-13
CIVIL
STATE OF CALIFORNIA

THE STATE OF CALIFORNIA OR ITS OFFICERS OR AGENTS SHALL NOT BE RESPONSIBLE FOR THE ACCURACY OR COMPLETENESS OF SCANNED COPIES OF THIS PLAN SHEET.

TO ACCOMPANY PLANS DATED 3-4-13

2010 REVISED STANDARD PLAN RSP A24A

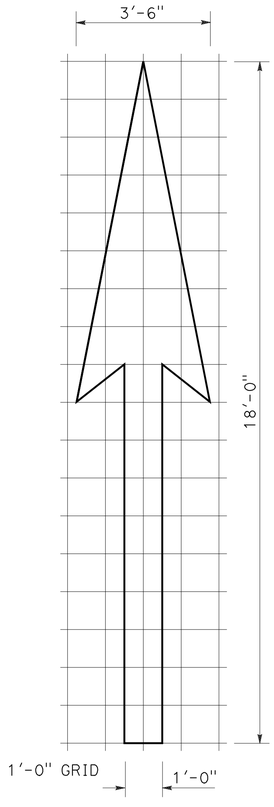

A=25 ft^2

TYPE I 18'-0" ARROW

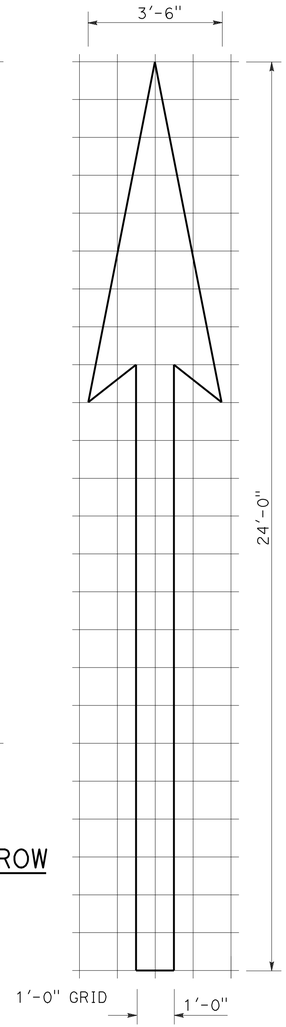

A=31 ft^2

TYPE I 24'-0" ARROW

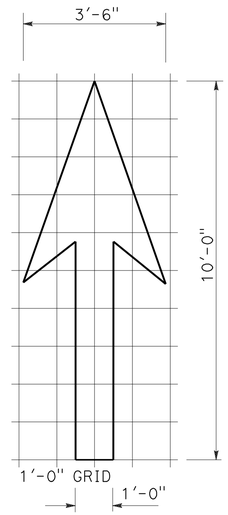

A=14 ft^2

TYPE I 10'-0" ARROW

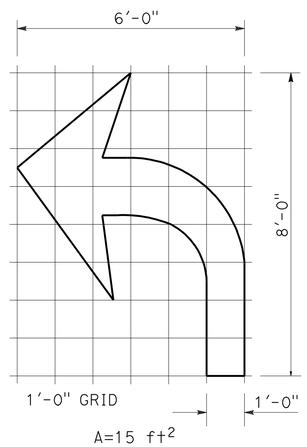

A=15 ft^2

TYPE IV (L) ARROW

(For Type IV (R) arrow, use mirror image)

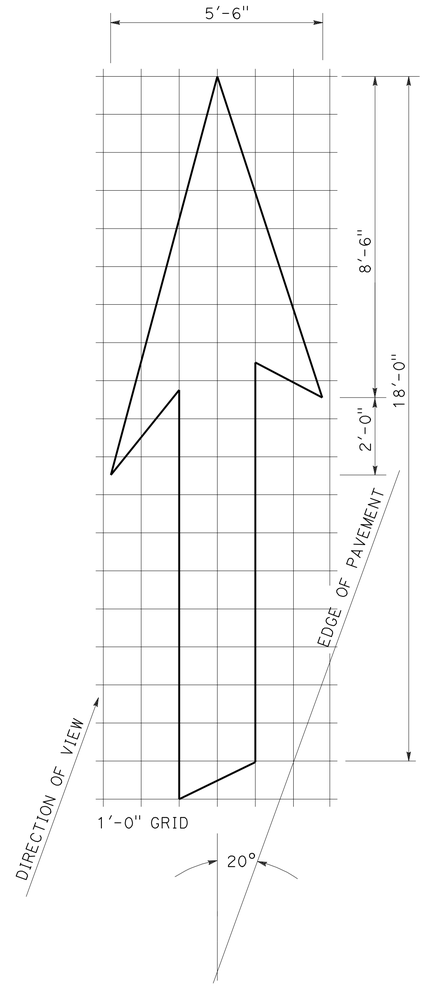

A=42 ft^2

TYPE VI ARROW

Right lane drop arrow
(For left lane, use mirror image)

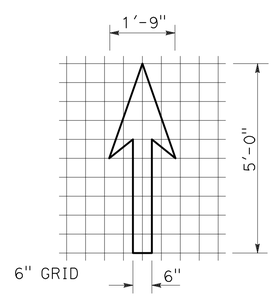

A=3.5 ft^2

BIKE LANE ARROW

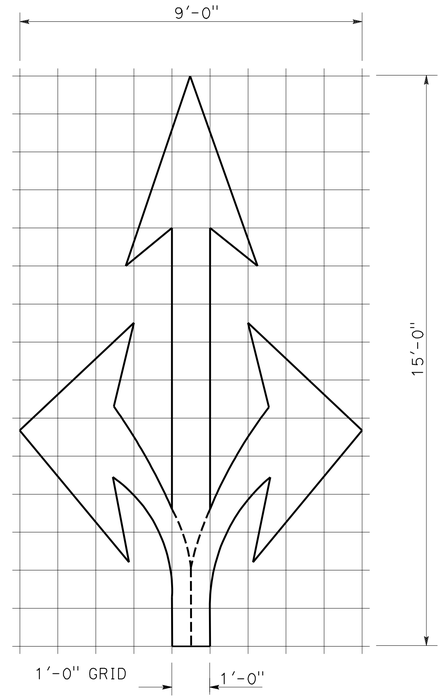

A=36 ft^2

TYPE VIII ARROW

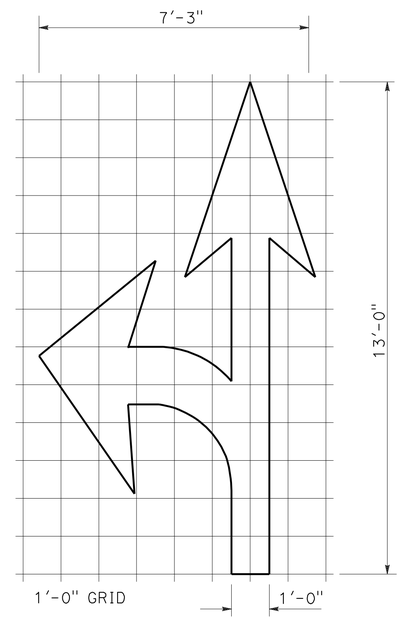

A=27 ft^2

TYPE VII (L) ARROW

(For Type VII (R) arrow, use mirror image)

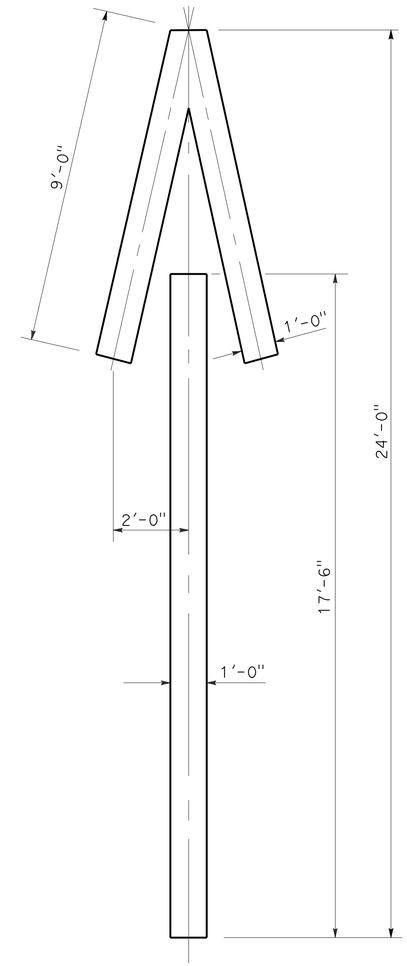

A=33 ft^2

TYPE V ARROW

NOTE:
Minor variations in dimensions may be accepted by the Engineer.

STATE OF CALIFORNIA
DEPARTMENT OF TRANSPORTATION

PAVEMENT MARKINGS ARROWS

NO SCALE

RSP A24A DATED APRIL 20, 2012 SUPERSEDES STANDARD PLAN A24A DATED MAY 20, 2011 - PAGE 13 OF THE STANDARD PLANS BOOK DATED 2010.

REVISED STANDARD PLAN RSP A24A

3-14-12

Dist	COUNTY	ROUTE	POST MILES TOTAL PROJECT	SHEET No.	TOTAL SHEETS
04	Sol	12	20.6/23.5	126	138

REGISTERED CIVIL ENGINEER

October 19, 2012
PLANS APPROVAL DATE

REGISTERED PROFESSIONAL ENGINEER
Roberta L. McLaughlin
No. C40375
Exp. 3-31-13
CIVIL
STATE OF CALIFORNIA

THE STATE OF CALIFORNIA OR ITS OFFICERS OR AGENTS SHALL NOT BE RESPONSIBLE FOR THE ACCURACY OR COMPLETENESS OF SCANNED COPIES OF THIS PLAN SHEET.

NOTE: TO ACCOMPANY PLANS DATED 3-4-13

Minor variations in dimensions may be accepted by the Engineer.

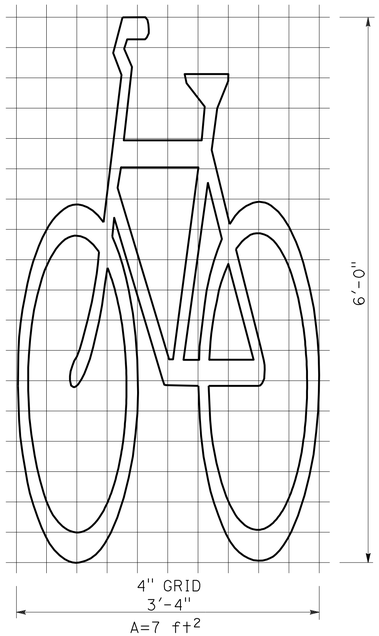

BIKE LANE SYMBOL WITHOUT PERSON

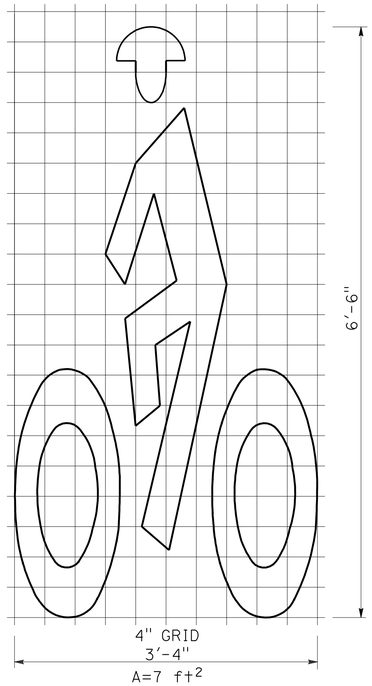

BIKE LANE SYMBOL WITH PERSON

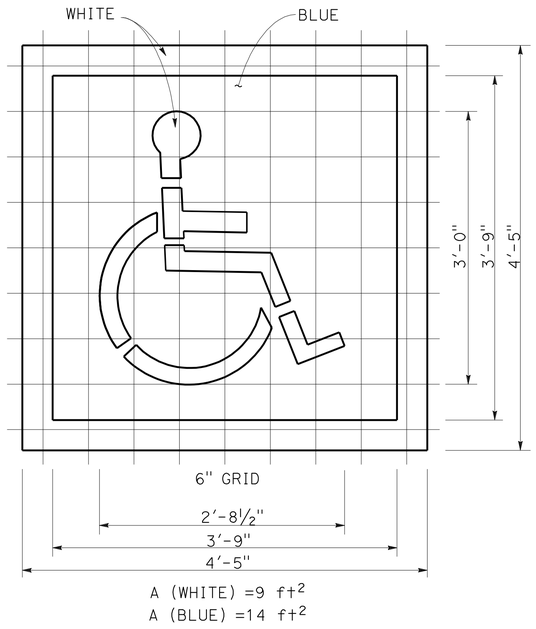

INTERNATIONAL SYMBOL OF ACCESSIBILITY (ISA) MARKING

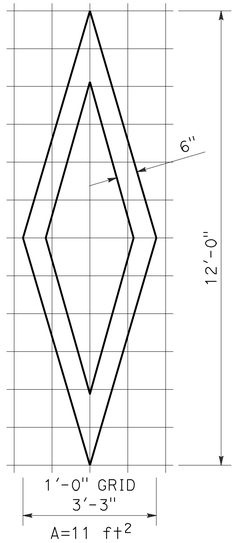

DIAMOND SYMBOL

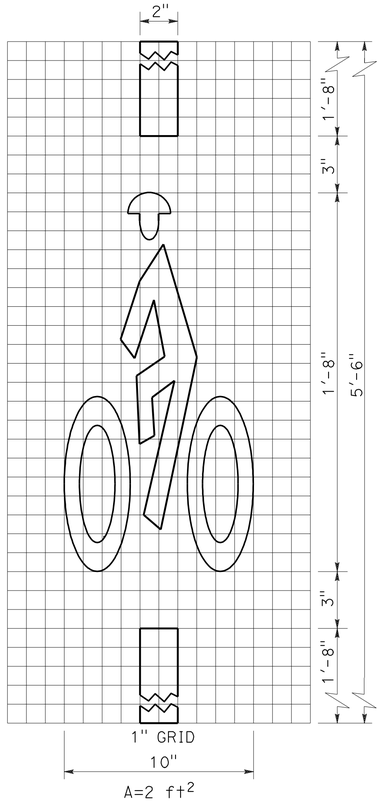

BICYCLE LOOP DETECTOR SYMBOL

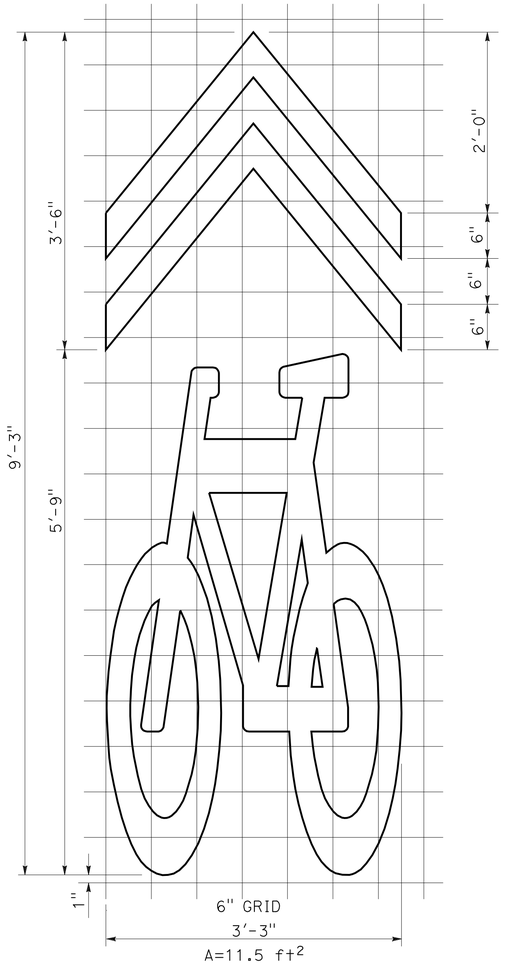

SHARED ROADWAY BICYCLE MARKING

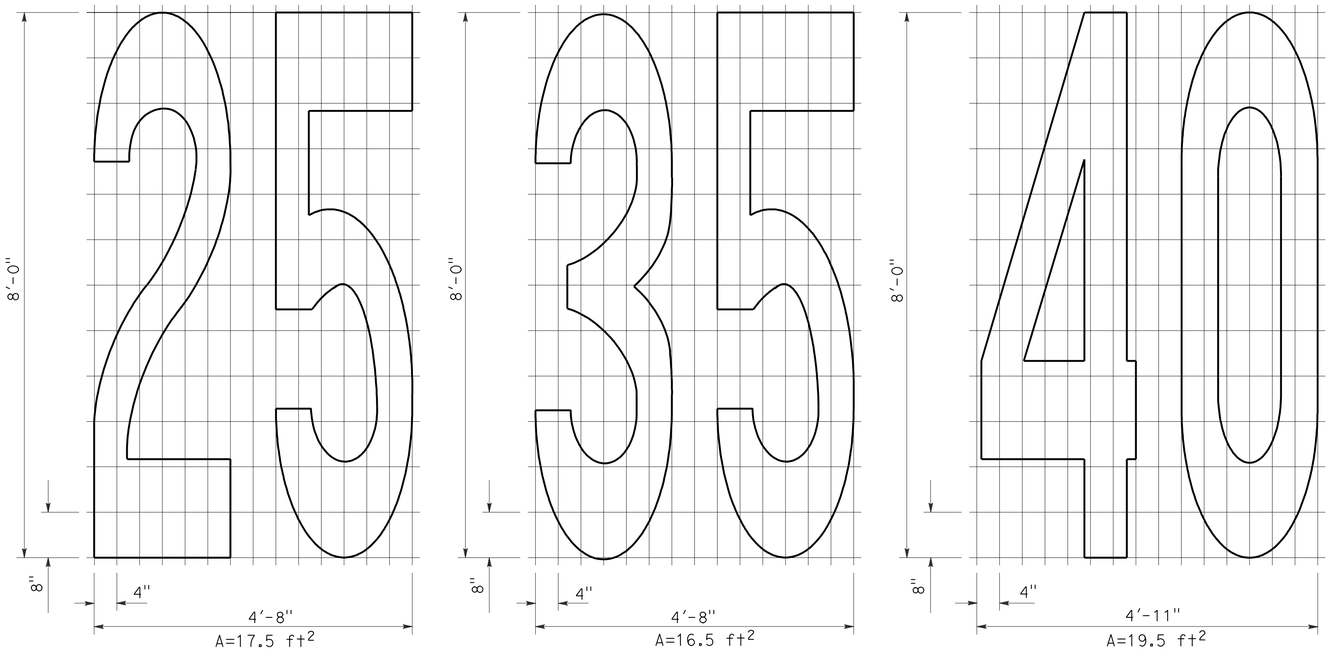

NUMERALS

STATE OF CALIFORNIA
DEPARTMENT OF TRANSPORTATION

PAVEMENT MARKINGS SYMBOLS AND NUMERALS

NO SCALE

RSP A24C DATED OCTOBER 19, 2012 SUPERSEDES STANDARD PLAN A24C DATED MAY 20, 2011 - PAGE 15 OF THE STANDARD PLANS BOOK DATED 2010.

REVISED STANDARD PLAN RSP A24C

2010 REVISED STANDARD PLAN RSP A24C

6-28-12

Dist	COUNTY	ROUTE	POST MILES TOTAL PROJECT	SHEET No.	TOTAL SHEETS
04	Sol	12	20.6/23.5	127	138

REGISTERED CIVIL ENGINEER

July 20, 2012
PLANS APPROVAL DATE

REGISTERED PROFESSIONAL ENGINEER
Roberta L. McLaughlin
No. C40375
Exp. 3-31-13
CIVIL
STATE OF CALIFORNIA

THE STATE OF CALIFORNIA OR ITS OFFICERS OR AGENTS SHALL NOT BE RESPONSIBLE FOR THE ACCURACY OR COMPLETENESS OF SCANNED COPIES OF THIS PLAN SHEET.

TO ACCOMPANY PLANS DATED 3-4-13

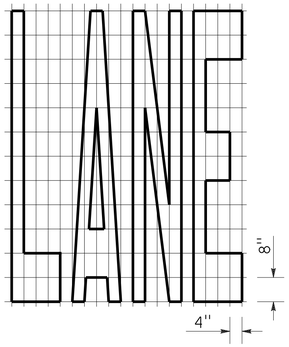

A=24 ft²

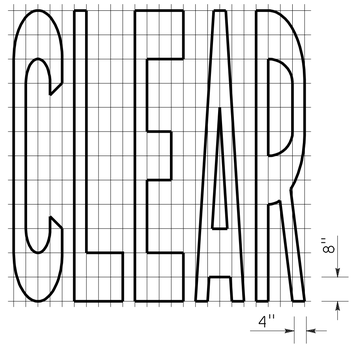

A=27 ft²

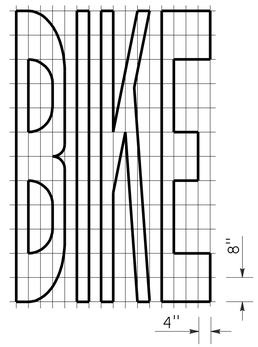

A=21 ft²

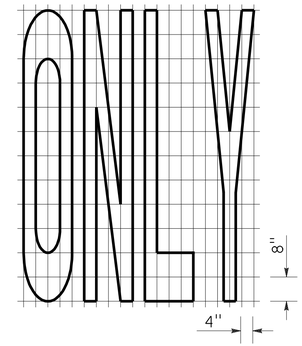

A=22 ft²

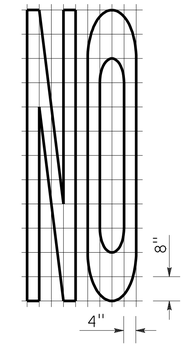

A=14 ft²

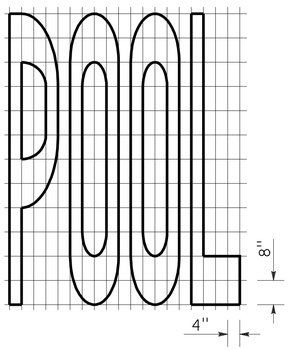

A=23 ft²

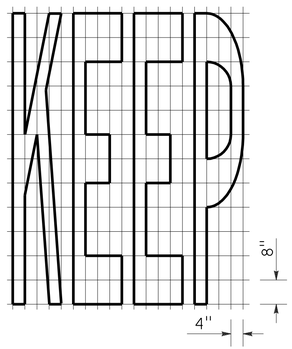

A=24 ft²

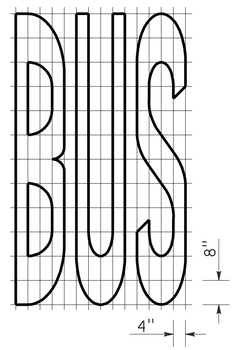

A=20 ft²

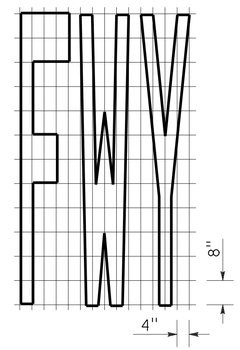

A=16 ft²

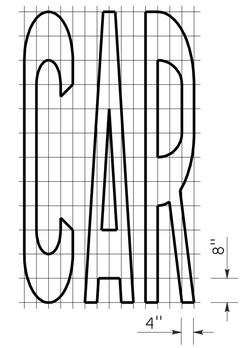

A=17 ft²

WORD MARKINGS			
ITEM	ft²	ITEM	ft²
LANE	24	NO	14
POOL	23	BIKE	21
CAR	17	BUS	20
CLEAR	27	ONLY	22
KEEP	24	FWY	16

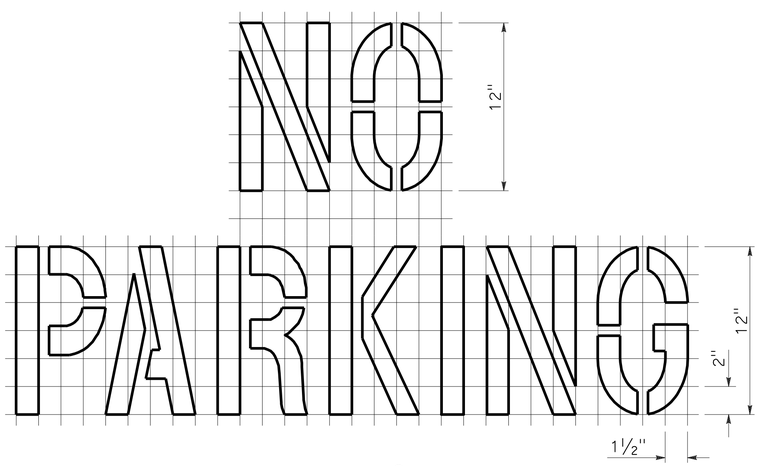

A=2 ft²
See Notes 6 and 7

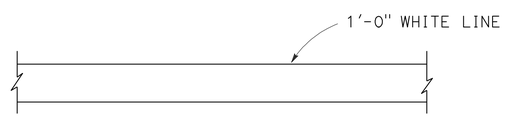

LIMIT LINE (STOP LINE)

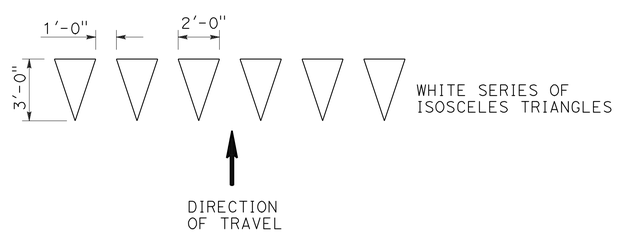

YIELD LINE

NOTES:

1. If a message consists of more than one word, it should read "UP", i.e., the first word should be nearest the driver.
2. The space between words should be at least four times the height of the characters for low speed roads, but not more than ten times the height of the characters. The space may be reduced appropriately where there is limited space because of local conditions.
3. Minor variations in dimensions may be accepted by the Engineer.
4. Portions of a letter, number or symbol may be separated by connecting segments not to exceed 2" in width.
5. The words "NO PARKING" pavement marking is to be used for parking facilities. For typical locations of markings, see Standard Plans A90A and A90B.
6. The words "NO PARKING", shall be painted in white letters no less than 1'-0" high on a contrasting background and located so that it is visible to traffic enforcement officials.

STATE OF CALIFORNIA
DEPARTMENT OF TRANSPORTATION

PAVEMENT MARKINGS WORDS, LIMIT AND YIELD LINES

NO SCALE

RSP A24E DATED JULY 20, 2012 SUPERSEDES STANDARD PLAN A24E
DATED MAY 20, 2011 - PAGE 17 OF THE STANDARD PLANS BOOK DATED 2010.

REVISED STANDARD PLAN RSP A24E

2010 REVISED STANDARD PLAN RSP A24E

6-12-12

Dist	COUNTY	ROUTE	POST MILES TOTAL PROJECT	SHEET No.	TOTAL SHEETS
04	Sol	12	20.6/23.5	128	138

REGISTERED CIVIL ENGINEER

July 20, 2012
PLANS APPROVAL DATE

REGISTERED PROFESSIONAL ENGINEER
Roberta L. McLaughlin
No. C40375
Exp. 3-31-13
CIVIL
STATE OF CALIFORNIA

THE STATE OF CALIFORNIA OR ITS OFFICERS OR AGENTS SHALL NOT BE RESPONSIBLE FOR THE ACCURACY OR COMPLETENESS OF SCANNED COPIES OF THIS PLAN SHEET.

TO ACCOMPANY PLANS DATED 3-4-13

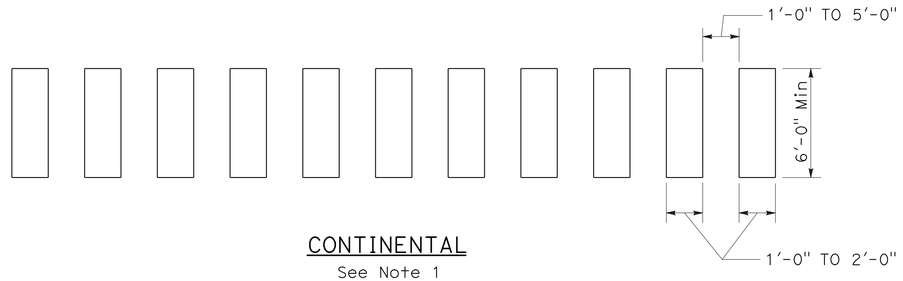

CONTINENTAL
See Note 1

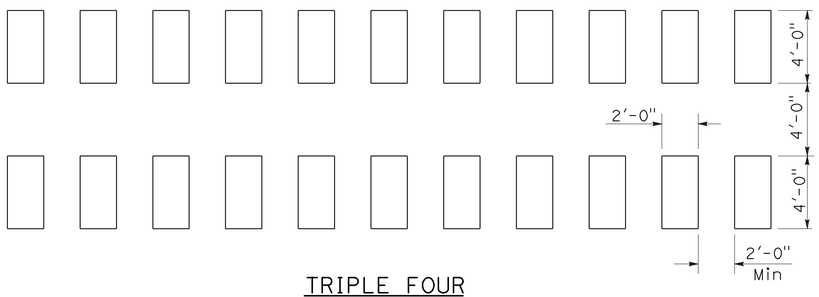

TRIPLE FOUR
See Note 1

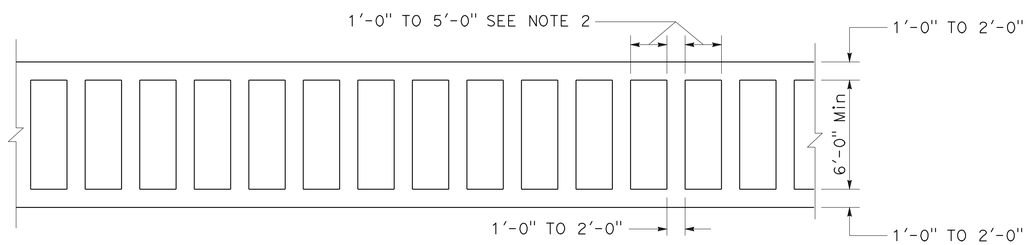

LADDER

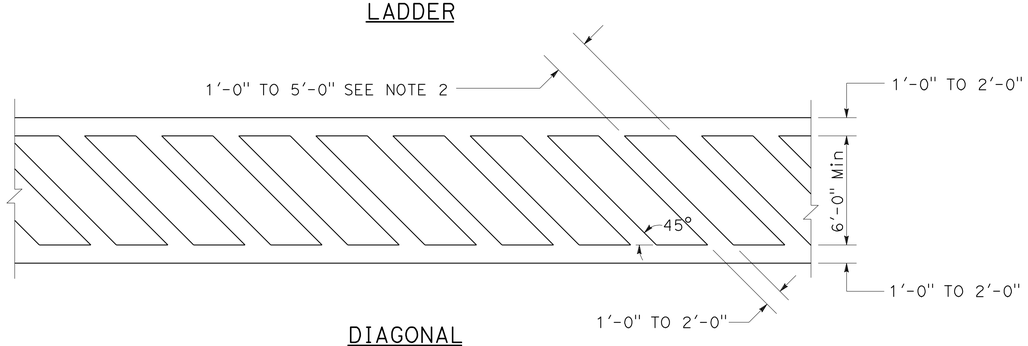

DIAGONAL

HIGHER VISIBILITY CROSSWALKS

NOTES:

1. Spaces between markings should be placed in wheel tracks of each lane.
2. Spacings not to exceed 2.5 times width of longitudinal line.
3. All crosswalk markings must be white except for those near schools must be yellow.

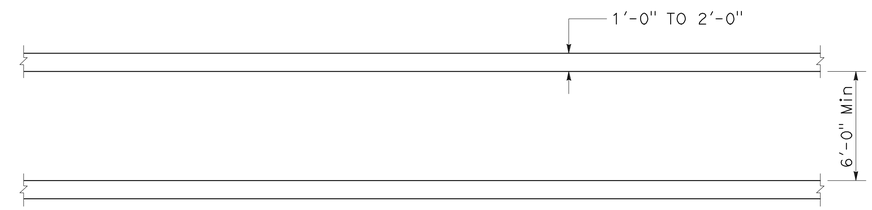

BASIC

STATE OF CALIFORNIA
DEPARTMENT OF TRANSPORTATION

PAVEMENT MARKINGS CROSSWALKS

NO SCALE

RSP A24F DATED JULY 20, 2012 SUPPLEMENTS THE STANDARD PLANS BOOK DATED 2010.

REVISED STANDARD PLAN RSP A24F

2010 REVISED STANDARD PLAN RSP A24F

6-28-12

Dist	COUNTY	ROUTE	POST MILES TOTAL PROJECT	SHEET No.	TOTAL SHEETS
04	Sol	12	20.6/23.5	129	138

Randell D. Hiatt
REGISTERED CIVIL ENGINEER

October 19, 2012
PLANS APPROVAL DATE

REGISTERED PROFESSIONAL ENGINEER
Randell D. Hiatt
No. C50200
Exp. 6-30-13
CIVIL
STATE OF CALIFORNIA

THE STATE OF CALIFORNIA OR ITS OFFICERS OR AGENTS SHALL NOT BE RESPONSIBLE FOR THE ACCURACY OR COMPLETENESS OF SCANNED COPIES OF THIS PLAN SHEET.

TO ACCOMPANY PLANS DATED 3-4-13

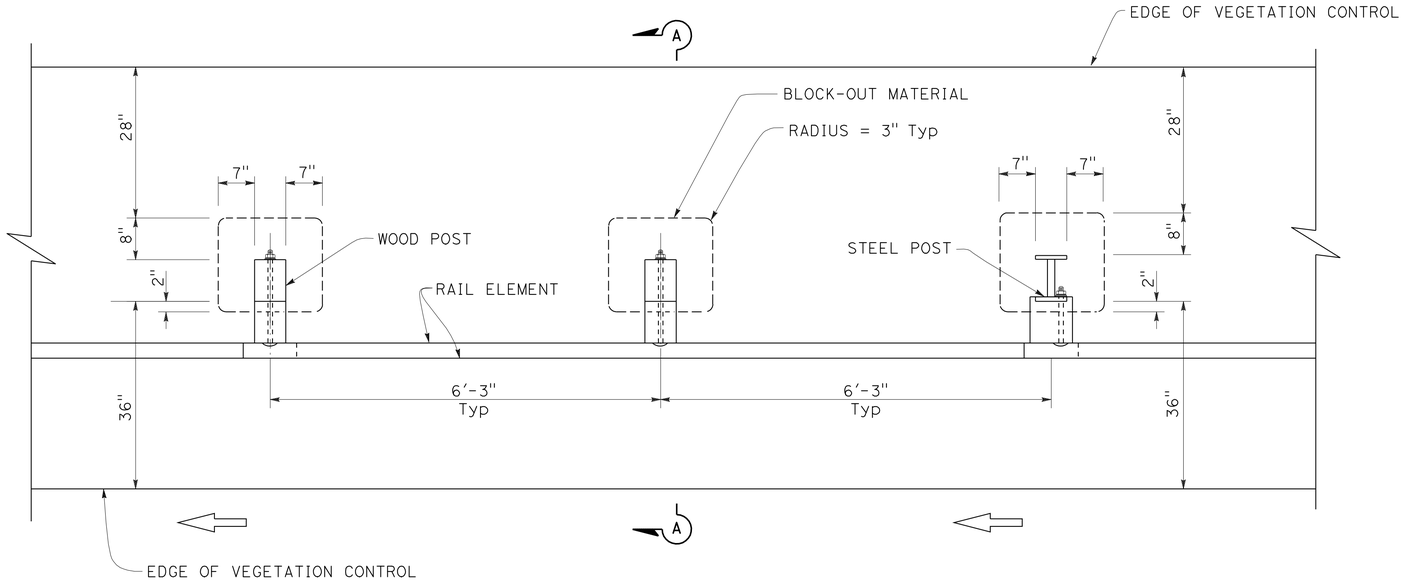

PLAN

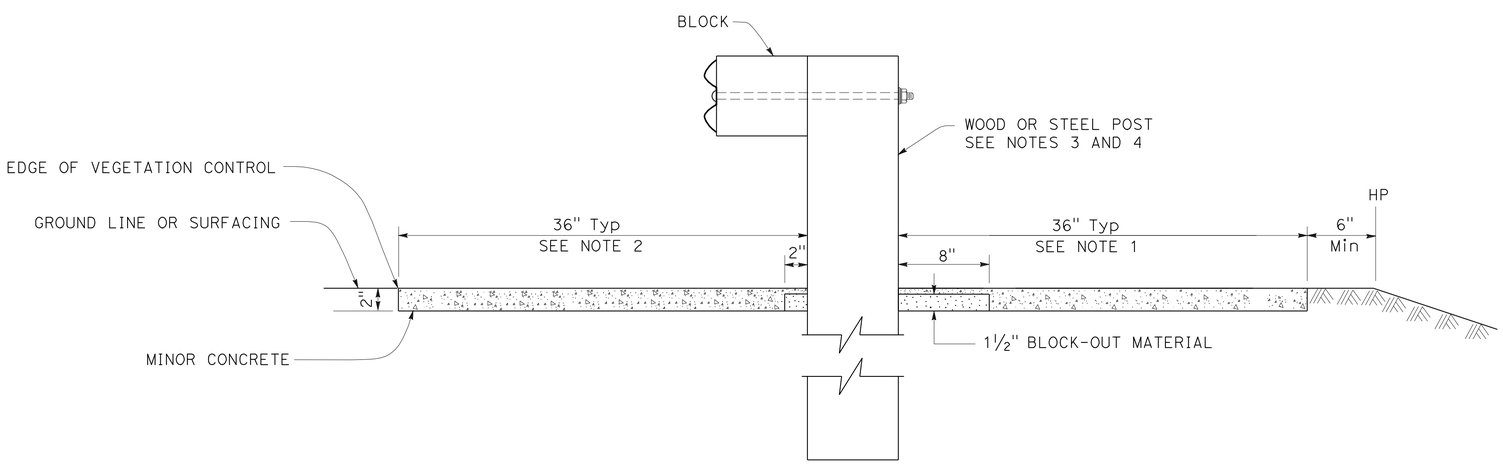

SECTION A-A

NOTES:

1. Where the distance between back of post and hinge point is less than 42", construct vegetation control to 6" from hinge point while maintaining the 8" block-out at back of post. If the 8" block-out at back of post can not be maintained, construct vegetation control flush with the back edge of post.
2. Where dike is constructed under railing, construct vegetation control to back edge of dike. Where paved shoulder is constructed within 36" in front of the post, construct vegetation control to the edge of paved shoulder.
3. For wood post sizes, see Standard Plan A77C1.
4. For steel post sizes, see Standard Plan A77C2.
5. For details not shown, see Standard Plans A77A1 and A77A2.

STATE OF CALIFORNIA
DEPARTMENT OF TRANSPORTATION

METAL BEAM GUARD RAILING TYPICAL VEGETATION CONTROL STANDARD RAILING SECTION

NO SCALE

RSP A77C5 DATED OCTOBER 19, 2012 SUPERSEDES STANDARD PLAN A77C5 DATED MAY 20, 2011 - PAGE 53 OF THE STANDARD PLANS BOOK DATED 2010.

REVISED STANDARD PLAN RSP A77C5

2010 REVISED STANDARD PLAN RSP A77C5

9-26-12

Dist	COUNTY	ROUTE	POST MILES TOTAL PROJECT	SHEET No.	TOTAL SHEETS
04	Sol	12	20.6/23.5	130	138

Randell D. Hiatt
REGISTERED CIVIL ENGINEER

October 19, 2012
PLANS APPROVAL DATE

REGISTERED PROFESSIONAL ENGINEER
Randell D. Hiatt
No. C50200
Exp. 6-30-13
CIVIL
STATE OF CALIFORNIA

THE STATE OF CALIFORNIA OR ITS OFFICERS OR AGENTS SHALL NOT BE RESPONSIBLE FOR THE ACCURACY OR COMPLETENESS OF SCANNED COPIES OF THIS PLAN SHEET.

TO ACCOMPANY PLANS DATED 3-4-13

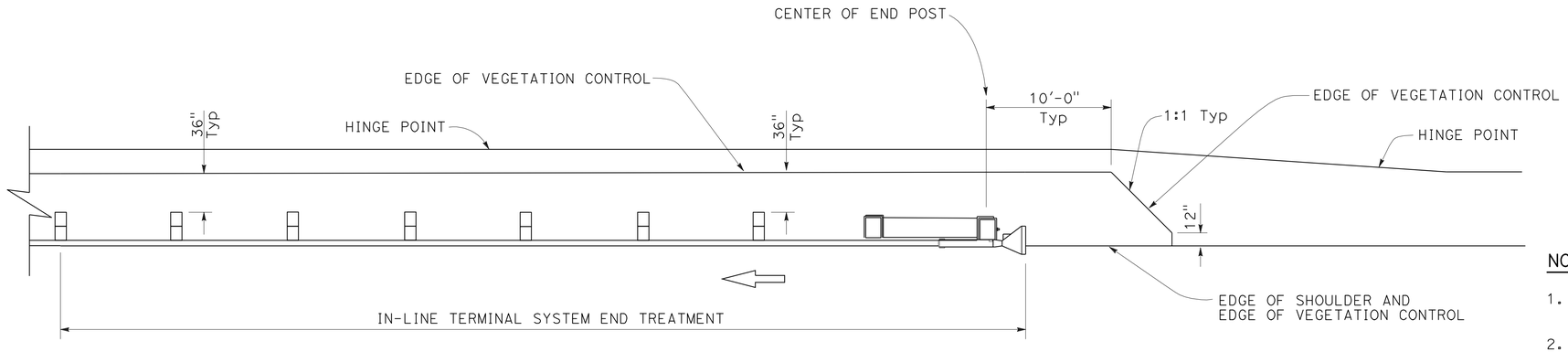

PLAN

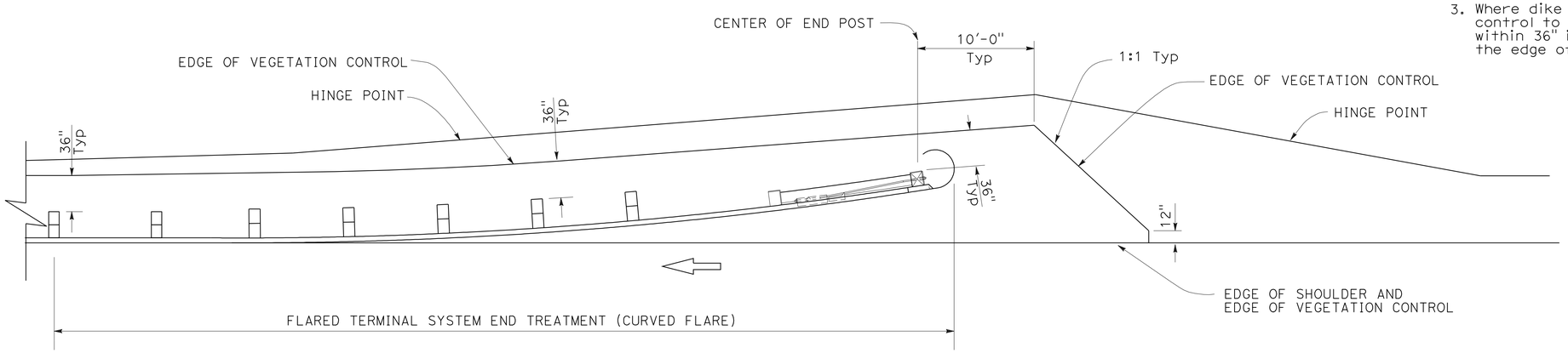

PLAN

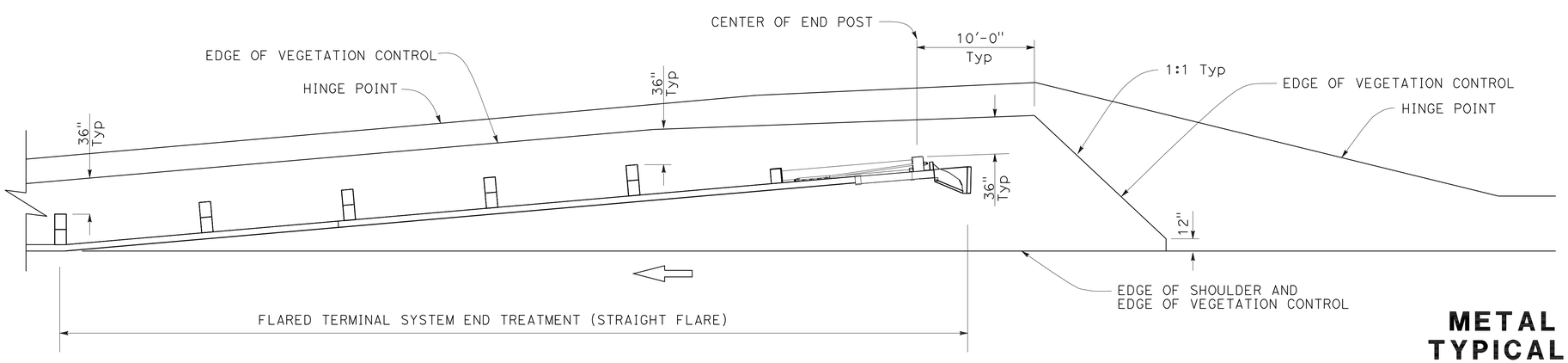

PLAN

NOTES:

1. See Revised Standard Plan RSP A77C5 for additional vegetation control details.
2. Where the distance between back of post and hinge point is less than 42", construct vegetation control to 6" from hinge point while maintaining the 8" block-out at back of post. If the 8" block-out at back of post can not be maintained, construct vegetation control flush with the back edge of post.
3. Where dike is constructed under railing, construct vegetation control to back edge of dike. Where paved shoulder is constructed within 36" in front of the post, construct vegetation control to the edge of paved shoulder.

STATE OF CALIFORNIA
DEPARTMENT OF TRANSPORTATION

METAL BEAM GUARD RAILING TYPICAL VEGETATION CONTROL FOR TERMINAL SYSTEM END TREATMENTS

NO SCALE

RSP A77C6 DATED OCTOBER 19, 2012 SUPERSEDES STANDARD PLAN A77C6 DATED MAY 20, 2011 - PAGE 54 OF THE STANDARD PLANS BOOK DATED 2010.

REVISED STANDARD PLAN RSP A77C6

2010 REVISED STANDARD PLAN RSP A77C6

9-26-12

Dist	COUNTY	ROUTE	POST MILES TOTAL PROJECT	SHEET No.	TOTAL SHEETS
04	Sol	12	20.6/23.5	131	138

Randell D. Hiatt
REGISTERED CIVIL ENGINEER

October 19, 2012
PLANS APPROVAL DATE

REGISTERED PROFESSIONAL ENGINEER
Randell D. Hiatt
No. C50200
Exp. 6-30-13
CIVIL
STATE OF CALIFORNIA

THE STATE OF CALIFORNIA OR ITS OFFICERS OR AGENTS SHALL NOT BE RESPONSIBLE FOR THE ACCURACY OR COMPLETENESS OF SCANNED COPIES OF THIS PLAN SHEET.

TO ACCOMPANY PLANS DATED 3-4-13

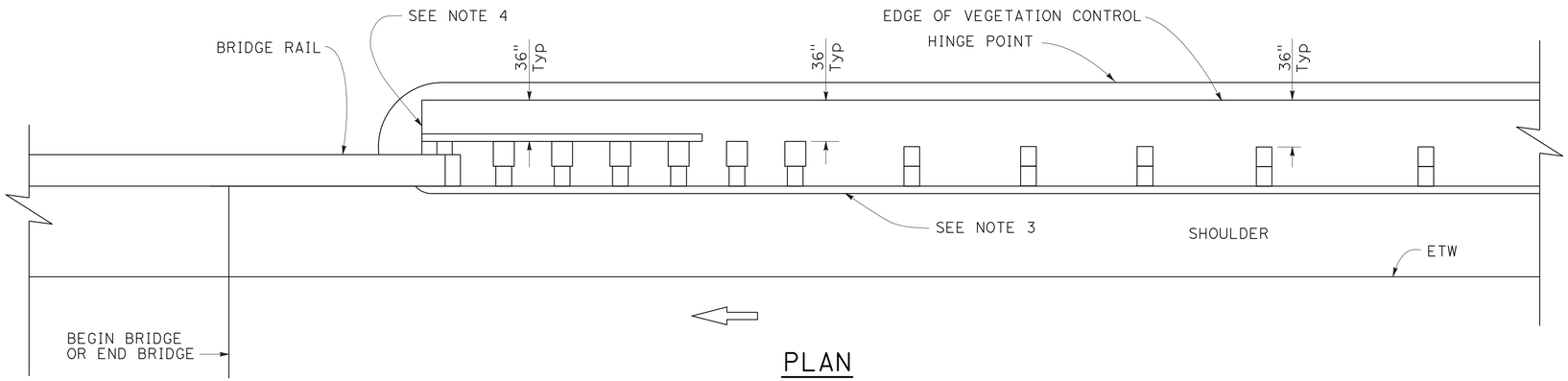

PLAN

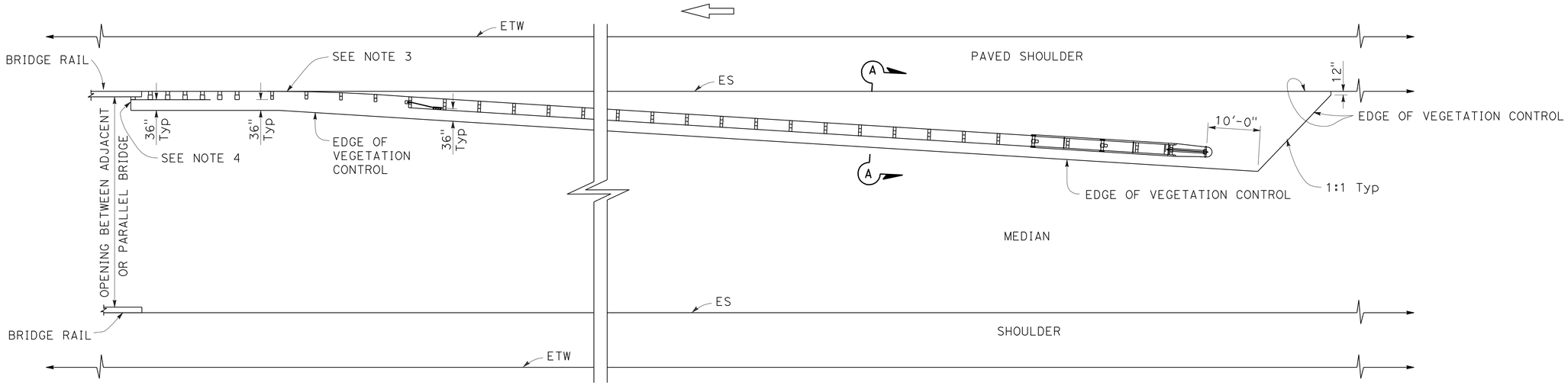

PLAN

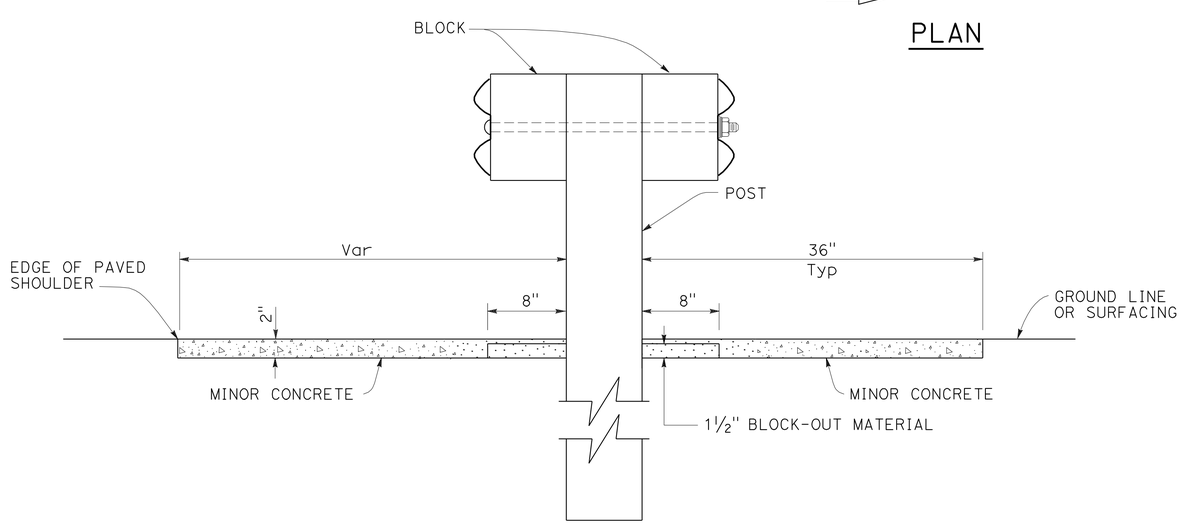

SECTION A-A

NOTES:

1. See Revised Standard Plan RSP A77C5 for additional vegetation control details.
2. Where the distance between back of post and hinge point is less than 42", construct vegetation control to 6" from hinge point while maintaining the 8" block-out at back of post. If the 8" block-out at back of post can not be maintained, construct vegetation control flush with the back edge of post.
3. Where dike is constructed under railing, construct vegetation control to back edge of dike. Where paved shoulder is constructed within 36" in front of the post, construct vegetation control to the edge of paved shoulder.
4. End vegetation control at end of backside rail element.

STATE OF CALIFORNIA
DEPARTMENT OF TRANSPORTATION

METAL BEAM GUARD RAILING TYPICAL VEGETATION CONTROL AT STRUCTURE APPROACH

NO SCALE

RSP A77C7 DATED OCTOBER 19, 2012 SUPERSEDES STANDARD PLAN A77C7 DATED MAY 20, 2011 - PAGE 55 OF THE STANDARD PLANS BOOK DATED 2010.

REVISED STANDARD PLAN RSP A77C7

2010 REVISED STANDARD PLAN RSP A77C7

9-26-12

Dist	COUNTY	ROUTE	POST MILES TOTAL PROJECT	SHEET No.	TOTAL SHEETS
04	Sol	12	20.6/23.5	132	138

Raymond Don Tsztoo
REGISTERED CIVIL ENGINEER

October 19, 2012
PLANS APPROVAL DATE

REGISTERED PROFESSIONAL ENGINEER
Raymond Don Tsztoo
No. C37332
Exp. 6-30-14
CIVIL
STATE OF CALIFORNIA

THE STATE OF CALIFORNIA OR ITS OFFICERS OR AGENTS SHALL NOT BE RESPONSIBLE FOR THE ACCURACY OR COMPLETENESS OF SCANNED COPIES OF THIS PLAN SHEET.

TO ACCOMPANY PLANS DATED 3-4-13

2010 REVISED STANDARD PLAN RSP A86D

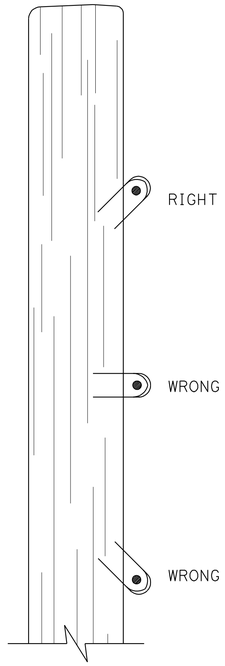

DRIVE STAPLES AT ANGLE

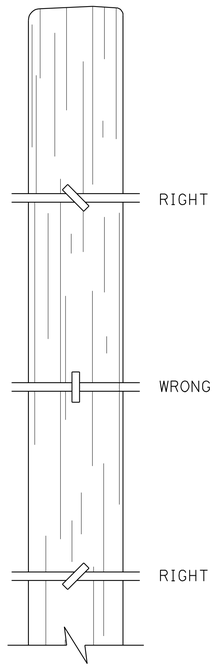

DO NOT DRIVE STAPLES PARALLEL TO SIDE OF POST

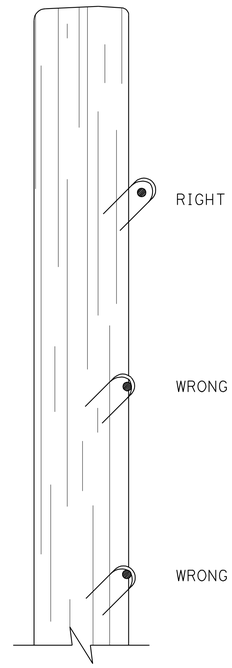

LEAVE WIRE LOOSE IN STAPLE

LINE POST STAPLING DETAILS

(Apply to rectangular/square and round posts)
Do not staple vertical wire in wire mesh.

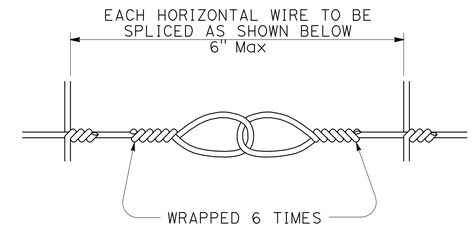

SPLICE DETAIL FOR BARBED WIRE/WIRE MESH FENCE

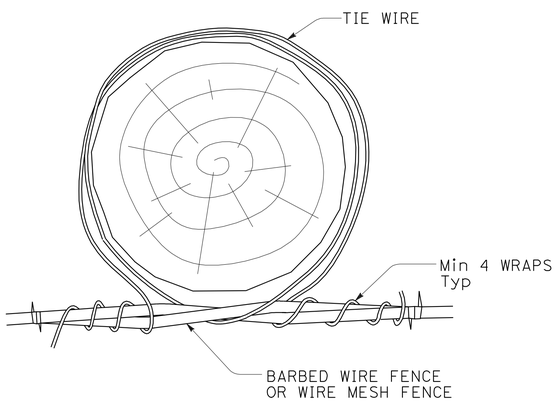

OPTION A

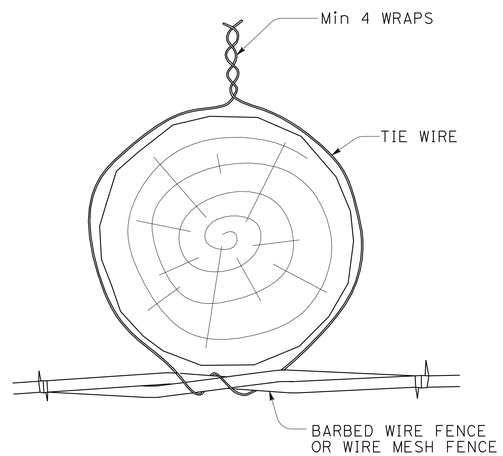

OPTION B

LINE POST WIRE TIE OPTION DETAILS

(Option details also apply to rectangular/square posts)

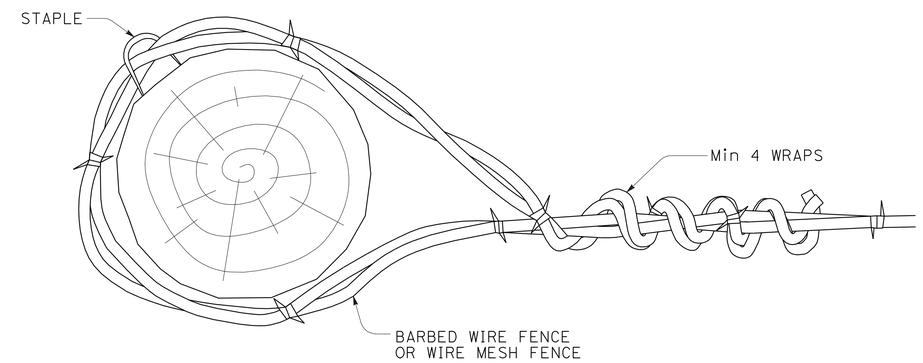

END, LATCH, PULL, AND CORNER POST DETAIL

(Also applies to rectangular/square posts)

STATE OF CALIFORNIA
DEPARTMENT OF TRANSPORTATION

BARBED WIRE AND WIRE MESH FENCE - MISCELLANEOUS DETAILS

NO SCALE

RSP A86D DATED OCTOBER 19, 2012 SUPPLEMENTS THE STANDARD PLANS BOOK DATED 2010.

REVISED STANDARD PLAN RSP A86D

10-9-12

DIST	COUNTY	ROUTE	POST MILES TOTAL PROJECT	SHEET No.	TOTAL SHEETS
04	Sol	12	20.6/23.5	133	138

REGISTERED CIVIL ENGINEER

January 20, 2012
PLANS APPROVAL DATE

REGISTERED PROFESSIONAL ENGINEER
Cornelis M. Hakim
No. C55610
Exp. 12-31-12
CIVIL
STATE OF CALIFORNIA

THE STATE OF CALIFORNIA OR ITS OFFICERS OR AGENTS SHALL NOT BE RESPONSIBLE FOR THE ACCURACY OR COMPLETENESS OF SCANNED COPIES OF THIS PLAN SHEET.

TO ACCOMPANY PLANS DATED 3-4-13

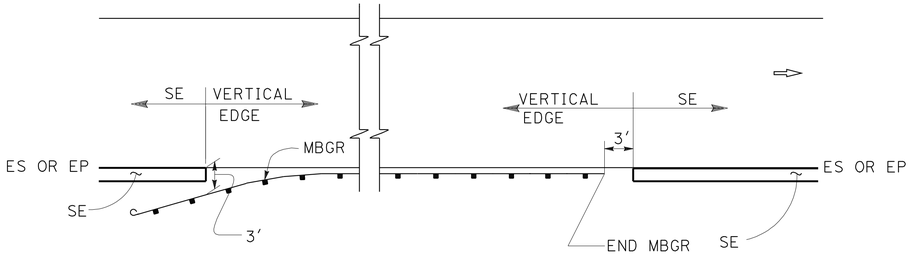

MBGR

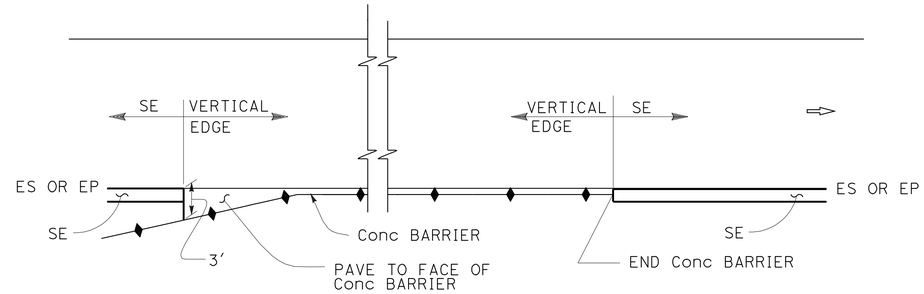

CONCRETE BARRIER

ABBREVIATIONS:

SE SAFETY EDGE

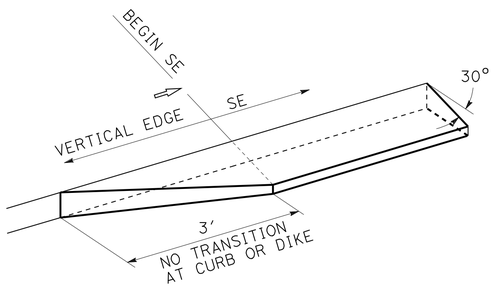

TRANSITION DETAIL
FOR CONCRETE ONLY

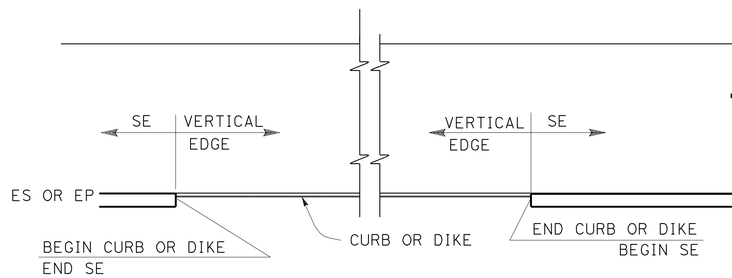

CURB OR DIKE

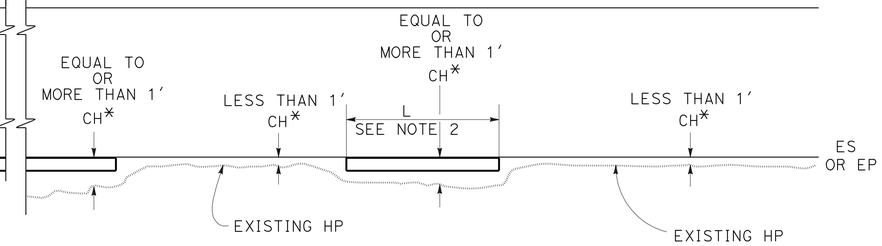

NARROW SIDE SLOPE

* CH = Distance from ES or EP to existing HP.

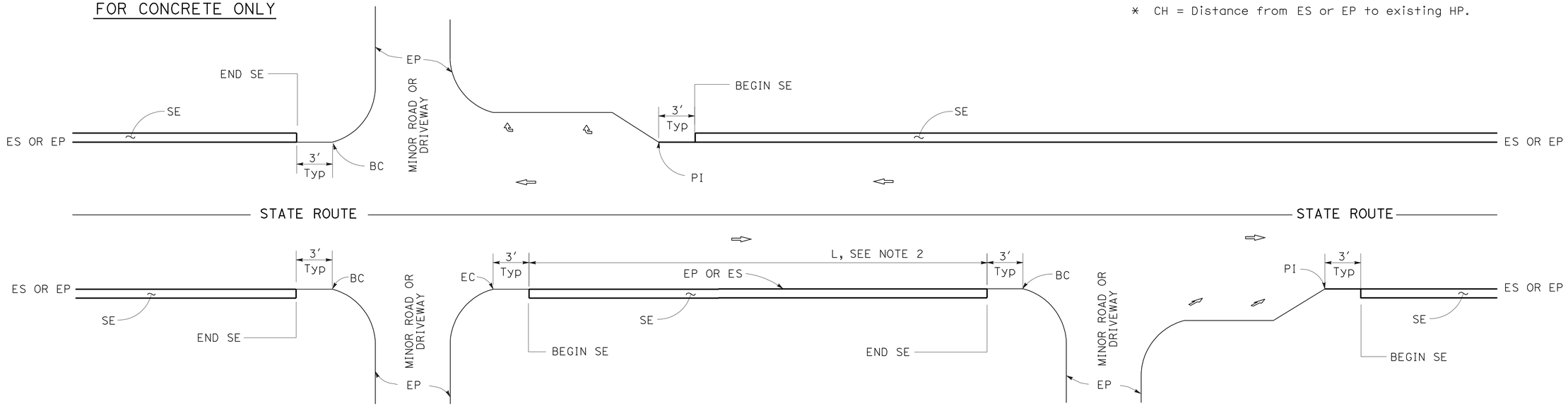

INTERSECTION

MINOR ROADWAY OR DRIVEWAY

DRIVEWAY AND INTERSECTION

NOTES:

1. For details not shown, see Revised Standard Plans RSP P75 and RSP P76.
2. Safety edge is optional when L is less than 30′.

STATE OF CALIFORNIA
DEPARTMENT OF TRANSPORTATION

PAVEMENT EDGE TREATMENTS

NO SCALE

RSP P74 DATED JANUARY 20, 2012 SUPPLEMENTS THE STANDARD PLANS BOOK DATED 2010.

REVISED STANDARD PLAN RSP P74

2010 REVISED STANDARD PLAN RSP P74

01-05-12

DIST	COUNTY	ROUTE	POST MILES TOTAL PROJECT	SHEET No.	TOTAL SHEETS
04	Sol	12	20.6/23.5	134	138

REGISTERED CIVIL ENGINEER

January 20, 2012
PLANS APPROVAL DATE

REGISTERED PROFESSIONAL ENGINEER Cornelis M. Hakim No. C55610 Exp. 12-31-12 CIVIL STATE OF CALIFORNIA

THE STATE OF CALIFORNIA OR ITS OFFICERS OR AGENTS SHALL NOT BE RESPONSIBLE FOR THE ACCURACY OR COMPLETENESS OF SCANNED COPIES OF THIS PLAN SHEET.

TO ACCOMPANY PLANS DATED 3-4-13

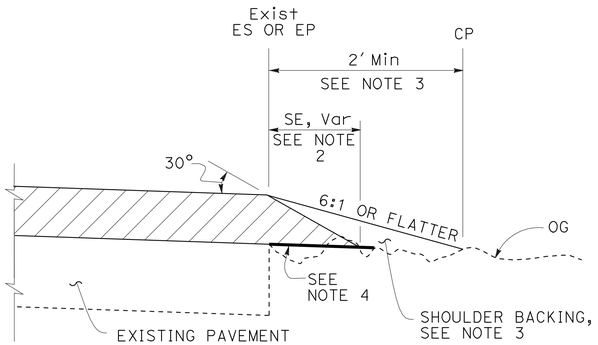

CASE A
Safety Edge

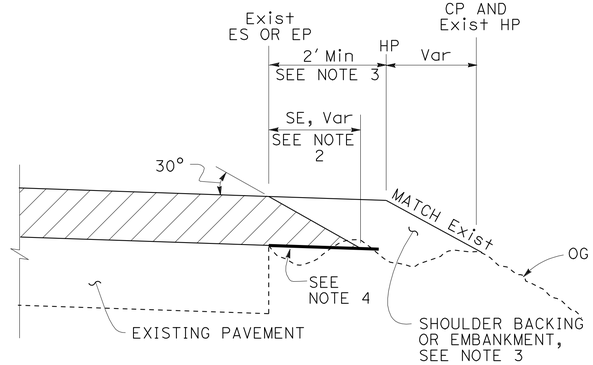

CASE B
Safety Edge

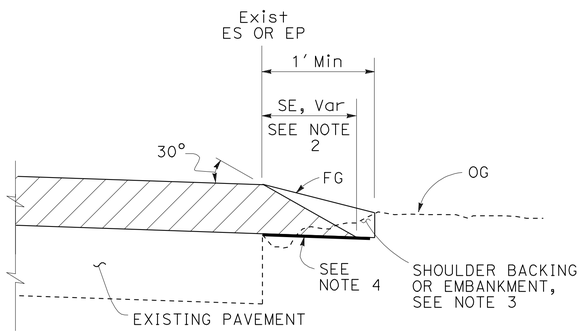

CASE C
Safety Edge

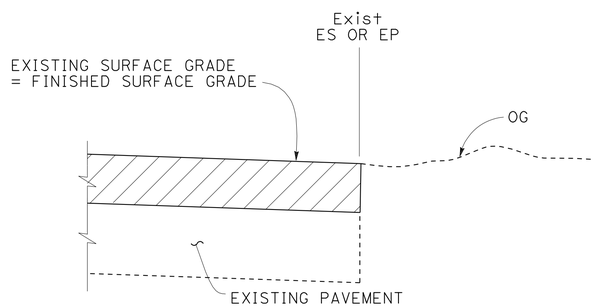

CASE D
Vertical Edge

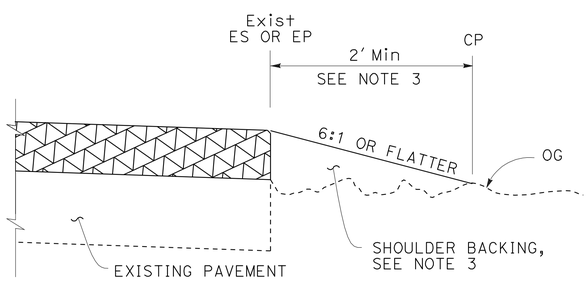

CASE E
Vertical Edge

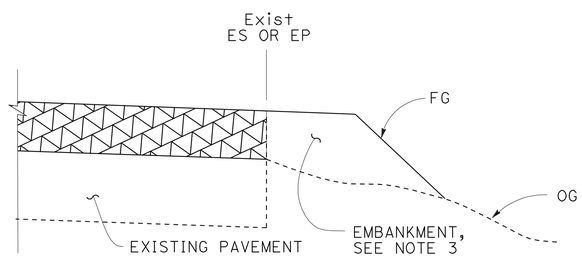

CASE F
Vertical Edge
* See Table A and Revised Std Plan RSP P74

LEGEND:

- HMA OVERLAY
- HMA OR CONCRETE OVERLAY
- CONCRETE OVERLAY

ABBREVIATIONS:

SE SAFETY EDGE
TT TOTAL THICKNESS OF SE

TABLE A
EDGE TREATMENT FOR VARIOUS OVERLAY THICKNESS AND CONDITIONS

	OVERLAY THICKNESS	
FIELD CONDITION	LESS THAN 0.15'	0.15' OR MORE
Exist SLOPE 6:1 OR FLATTER	CASE E	CASE A
Exist SLOPE 3:1 TO 6:1	CASE E	CASE B
Exist SLOPE STEEPER THAN 3:1	CASE F	CASE F
CUT SECTION (REPLACE, COLD PLANE, MILL PAVEMENT)	CASE D	CASE C

ADDITIONAL HMA OR CONCRETE QUANTITIES FOR SE/SIDE/MILE

TYPICAL CROSS SECTION	TT	TOTAL ADDITIONAL MATERIAL FOR SE/SIDE/MILE		
		HMA (TON)	CONCRETE (CY)*	CONCRETE (CY)**
TT	0.15'	NA	NA	NA
	0.20'	13.7	NA	NA
	0.30'	30.9	NA	NA
	0.40'	54.9	NA	NA
	0.45'	69.4	NA	NA
TT 0.43'	0.50'	84.2	NA	NA
	0.60'	113.9	NA	NA
	0.70'	143.6	70.9	94.2
	0.80'	173.3	85.6	112.2
	0.90'	203.0	100.3	130.2
	1.00'	232.7	114.9	148.2
	1.10'	262.4	129.6	166.2
	1.20'	292.1	144.3	184.2

* For Detail "A"
** For Optional Detail "A"

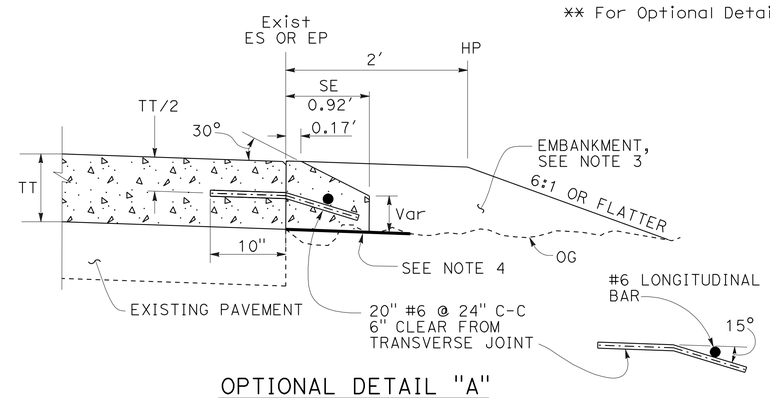

OPTIONAL DETAIL "A"
For concrete overlay
See Note 5

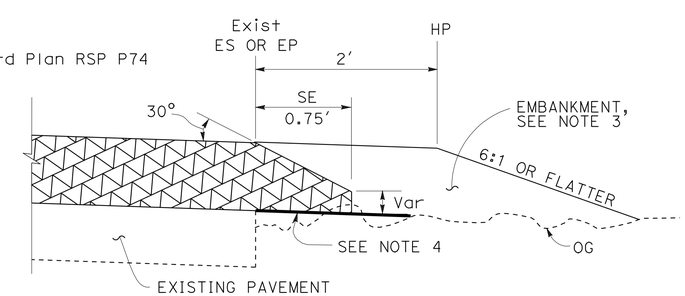

DETAIL "A"
For HMA overlay thickness more than 0.43' or concrete overlay

NOTES:

1. For limits of safety edge and vertical edge treatments, see Revised Standard Plan RSP P74.
2. Details shown for HMA overlay thickness less than 0.43'. See Detail "A" for HMA overlay thickness more than 0.43' or concrete overlay.
3. For locations and limits of shoulder backing or embankment see project plans.
4. Grade existing ground to place safety edge. 1' minimum width
5. Safety edge transverse joint must match overlay transverse joint. End of #6 longitudinal bar must be 2" ±½" clear from transverse joint.
6. Safety edge is not needed in the area of MBGR, barrier, right turn lane and acceleration lane. See Revised Standard Plan RSP P74.

STATE OF CALIFORNIA
DEPARTMENT OF TRANSPORTATION

PAVEMENT EDGE TREATMENTS-OVERLAYS

NO SCALE

RSP P75 DATED JANUARY 20, 2012 SUPPLEMENTS THE STANDARD PLANS BOOK DATED 2010.

REVISED STANDARD PLAN RSP P75

2010 REVISED STANDARD PLAN RSP P75

TO ACCOMPANY PLANS DATED 3-4-13

Dist	COUNTY	ROUTE	POST MILES TOTAL PROJECT	SHEET No.	TOTAL SHEETS
04	Sol	12	20.6/23.5	135	138

REGISTERED CIVIL ENGINEER

October 19, 2012
PLANS APPROVAL DATE

REGISTERED PROFESSIONAL ENGINEER Glenn DeCou No. C34547 Exp. 9-30-13 CIVIL STATE OF CALIFORNIA

THE STATE OF CALIFORNIA OR ITS OFFICERS OR AGENTS SHALL NOT BE RESPONSIBLE FOR THE ACCURACY OR COMPLETENESS OF SCANNED COPIES OF THIS PLAN SHEET.

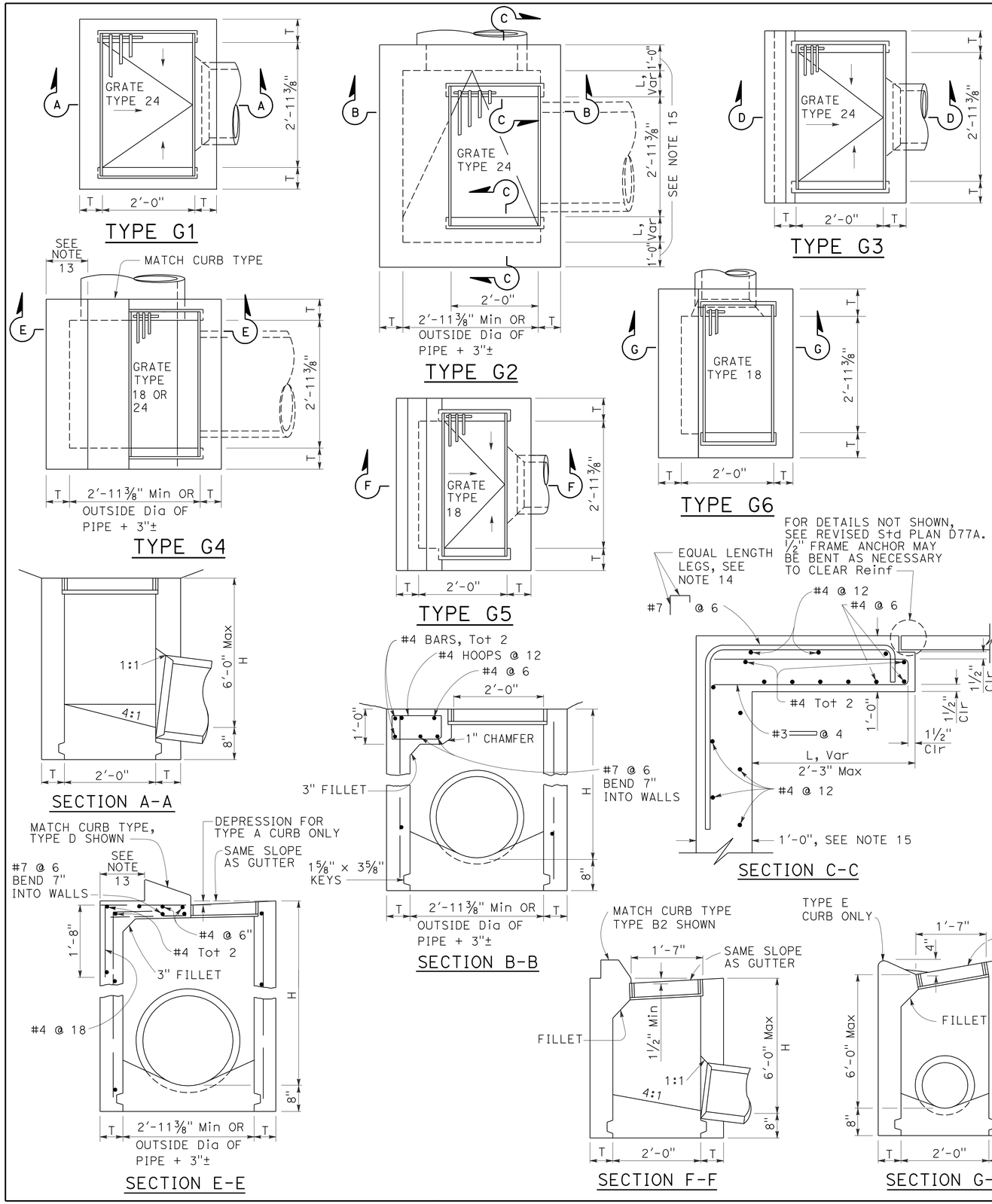

NOTES:

1. "H" is the difference in elevation between the outlet pipe flow line and the normal gutter grade line undepressed.
2. For "T" wall thickness, see Table A below.
3. Wall reinforcing not required when "H" is 8'-0" or less and the unsupported width or length is 7'-0" or less. Walls exceeding these limits shall be reinforced with #4 bars @ 1'-6" ± centers placed 1½" clear to inside of box unless otherwise shown.
4. Inlet bottom reinforcing not required. See Standard Plan D74C for alternative reinforced bottom and alternative half round bottom.
5. Steps-None required where "H" is less than 2'-6". Where "H" is 2'-6" or more, install steps with lowest rung 1'-0" above the floor and highest rung not more than 6" below top of inlet. The distance between steps shall not exceed 1'-0" and shall be uniform throughout the length of the wall. Place steps in the wall without an opening. Steps inserts may be substituted for the bar steps. Step inserts shall comply with State Industrial Safety requirements. See Standard Plan D74C for step details.
6. Details shown apply to both metal and concrete pipe.
7. Pipe(s) can be placed in any wall.
8. Curb section shall match adjacent curb.
9. Basin floors shall have wood trowel finish and a minimum slope of 12:3 from all directions toward outlet pipe.
10. Set inlet so that grate bars are parallel to direction of principal surface flow.
11. See Revised Standard Plans D77A and D77B for grate and frame details and weights of miscellaneous iron and steel.
12. See Standard Plan D78A for gutter depression details.
13. This dimenison will vary with different grates, curbs types, box width and wall thickness.
14. Bar may be rotated as necessary to clear opening. Where "L" is 6" or less, bar may be omitted.
15. Where "L" is 6" or less, wall thickness shall be as shown in Table A.
16. Cast-in-place inlets to be formed around all pipes/stubs intersecting the inlet, and concrete poured in one continuous operation. Precast inlets shall have mortared connections conforming to details for Type GCP Inlet shown on Standard Plan D75B. See Standard Specifications for mortar composition.

TABLE A

CONCRETE QUANTITIES				
TYPE	H=3'-0" TO 8'-0" (T=6")		H=8'-1" TO 20'-0" (T=8")	
	H=3'-0" (CY)	ADDITIONAL PCC PER FOOT (CY)	H=8'-1" (CY)	ADDITIONAL PCC PER FOOT (CY)
G-1	0.95	0.220	See Note A	SEE NOTE A
G-2*	1.31	0.255	3.50	0.357
G-3	1.03	0.220	See Note A	SEE NOTE A
G-4* (TYPE 24)	1.27	0.255	3.48	0.357
G-4* (TYPE 18)	1.30	0.255	3.50	0.357
G-5	1.02	0.220	SEE NOTE A	SEE NOTE A
G-6	1.04	0.220	SEE NOTE A	SEE NOTE A

TABLE BASED ON 8" FLOOR SLAB. NO DEDUCTIONS ARE TO BE MADE TO THESE QUANTITIES BECAUSE OF PIPE OPENINGS, DIFFERENT FLOOR ALTERNATIVES OR DIFFERENT CURB TYPES. * QUANTITIES FOR TYPE G-2 AND G-4 INLETS BASED ON THE MINIMUM INTERIOR DIMENSIONS.

NOTE A:

Maximum allowable height 6'-0".

STATE OF CALIFORNIA
DEPARTMENT OF TRANSPORTATION

DRAINAGE INLETS

NO SCALE

RSP D73 DATED OCTOBER 19, 2012 SUPERSEDES STANDARD PLAN D73 DATED MAY 20, 2011 - PAGE 156 OF THE STANDARD PLANS BOOK DATED 2010.

REVISED STANDARD PLAN RSP D73

2010 REVISED STANDARD PLAN RSP D73

7-19-12

Dist	COUNTY	ROUTE	POST MILES TOTAL PROJECT	SHEET No.	TOTAL SHEETS
04	Sol	12	20.6/23.5	136	138

Raymond Don Tsztoo
REGISTERED CIVIL ENGINEER

July 20, 2012
PLANS APPROVAL DATE

REGISTERED PROFESSIONAL ENGINEER
Raymond Don Tsztoo
No. C37332
Exp. 6-30-14
CIVIL
STATE OF CALIFORNIA

THE STATE OF CALIFORNIA OR ITS OFFICERS OR AGENTS SHALL NOT BE RESPONSIBLE FOR THE ACCURACY OR COMPLETENESS OF SCANNED COPIES OF THIS PLAN SHEET.

TO ACCOMPANY PLANS DATED 3-4-13

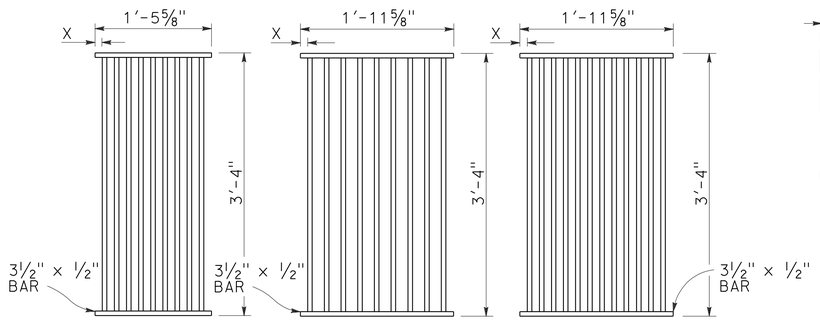

TYPE 18-9

1⅜" Clear spacing. Use within the roadbed on highways where bicycles and pedestrians are excluded.

TYPE 24-9

2" Clear spacing. Use in locations off the roadbed on all types of highways.

TYPE 24-12

1⅜" Clear spacing. Use within the roadbed on highways where bicycles and pedestrians are excluded.

RECTANGULAR GRATE DETAILS

(See table below)

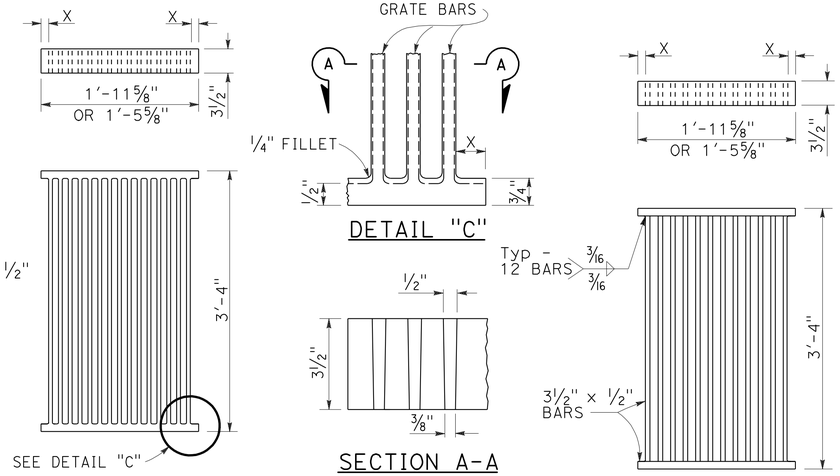

ALTERNATIVE CAST DUCTILE IRON GRATE OR CAST CARBON STEEL GRATE

ALTERNATIVE WELDED GRATE

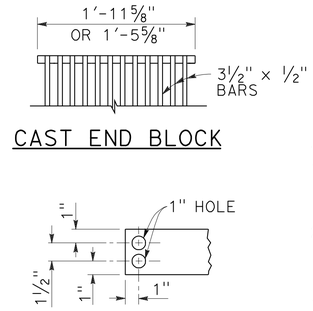

CAST END BLOCK

END OF BAR

NOTES:

1. Grate type numbers refer to approximate width of grate in inches and number of bars, respectively.
2. Contractor has the option of using cast ductile iron, cast carbon steel, welded, bolted, or cast end block grate.
3. Rounded top of bars optional on all grates.
4. Pipe inlets with a grate shall be placed so that bars parallel direction of principle surface flow.
5. Complete joint penetration butt welds may be substituted for the fillet welds on all anchors.
6. Standard square, hexagon, round or equivalent headed anchors may be substituted for the right angle hooks on the anchors shown on this plan.
7. Grate and frame weights are based on welded grates (weights of face angles, steps, protection bars, etc. are not included).
8. Connect chain to grate and frame only at locations shown on the plans. When chain is required, do not use cast ductile iron grates.

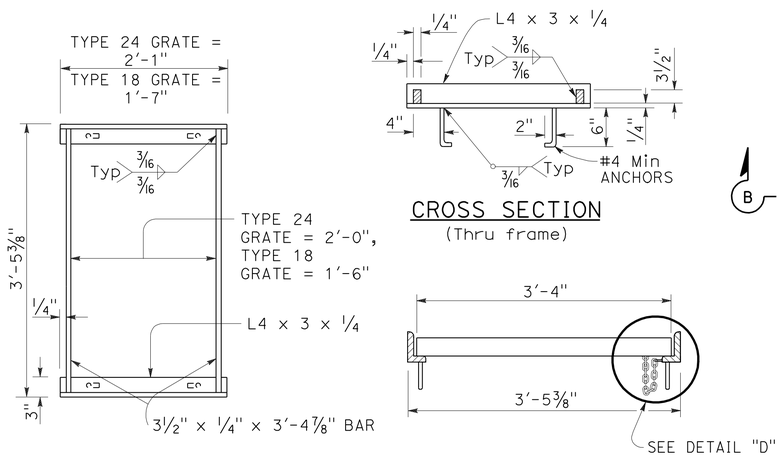

TYPICAL FRAME

CROSS SECTION
(Thru frame)

LONGITUDINAL SECTION
(Thru frame and grate)

RECTANGULAR FRAME DETAILS

(For all rectangular grates)

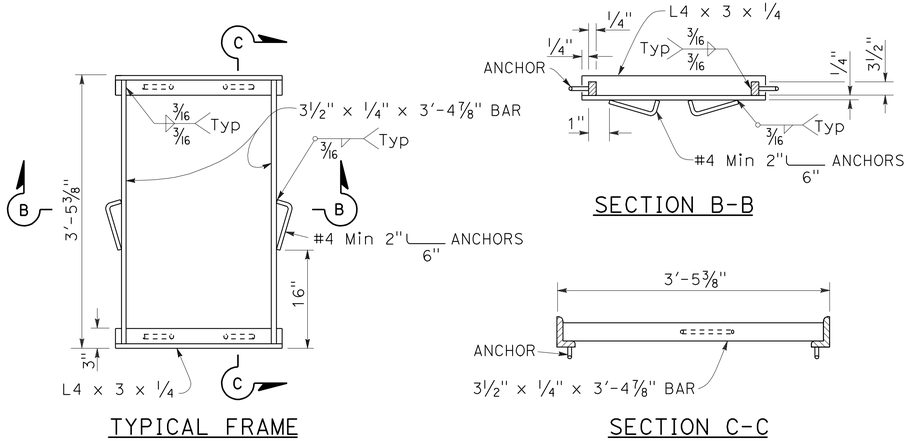

TYPICAL FRAME

SECTION B-B

SECTION C-C

ALTERNATIVE ANCHOR FOR RECTANGULAR FRAME

(For details not shown, See Rectangular Frame Details)

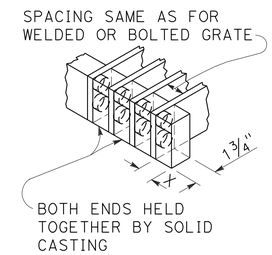

ALTERNATIVE CAST DUCTILE IRON OR CAST CARBON STEEL END BLOCK GRATE

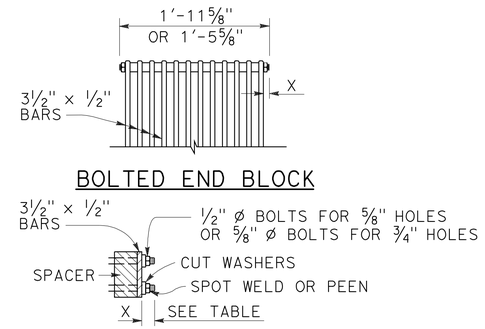

ALTERNATIVE BOLTED GRATE

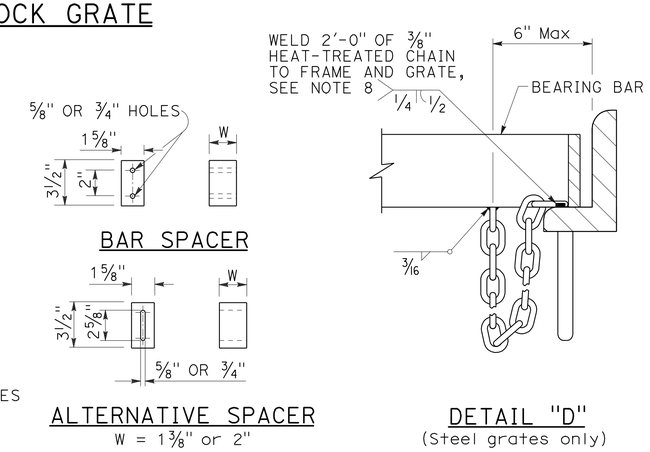

GRATE BAR SPACING TABLE

TYPE	No. OF BARS	CLEAR BAR SPACING	X
18-9	9	1⅜"	1 1/16"
24-9	9	2"	1 9/16"
24-12	12	1⅜"	1¼"

INLET TYPE	COVER TYPE	WEIGHT LB
OS	PLATE	174
OL-7	PLATE	170
OL-10	PLATE	170
OL-14	PLATE	170
OL-21	PLATE	170
OCP	PLATE	112
OCPI	PLATE	112
OCPI	REDWOOD	42
OMP	PLATE	177
OMPI	PLATE	177

INLET TYPE	GRATE TYPE	No. OF GRATES	WEIGHT LB
GDO	24-12	2	634
GOL-7	24-12	1	326
GOL-10	24-12	1	326
GO,G1,G2,G3,G4 (TYPE 24)	24-9	1	263
	24-12	1	326
G4 (TYPE 18),G5,G6	18-9	1	249
GT1	18-9	2	498
GT2	18-9	2	498
GT3	24-12	2	652
GT4	24-12	2	652
TRASH RACK			22
GRATE CHAIN			3

BASIS FOR Misc IRON & STEEL FINAL PAY WEIGHTS FOR DRAINAGE INLETS

(See Note 7)

STATE OF CALIFORNIA
DEPARTMENT OF TRANSPORTATION

GRATE DETAILS

NO SCALE

RSP D77A DATED JULY 20, 2012 SUPERSEDES STANDARD PLAN D77A DATED MAY 20, 2011 - PAGE 164 OF THE STANDARD PLANS BOOK DATED 2010.

REVISED STANDARD PLAN RSP D77A

2010 REVISED STANDARD PLAN RSP D77A

6-13-12

Dist	COUNTY	ROUTE	POST MILES TOTAL PROJECT	SHEET No.	TOTAL SHEETS
04	Sol	12	20.6/23.5	137	138

Raymond Don Tsztoo
REGISTERED CIVIL ENGINEER

July 20, 2012
PLANS APPROVAL DATE

REGISTERED PROFESSIONAL ENGINEER Raymond Don Tsztoo No. C37332 Exp. 6-30-14 CIVIL STATE OF CALIFORNIA

THE STATE OF CALIFORNIA OR ITS OFFICERS OR AGENTS SHALL NOT BE RESPONSIBLE FOR THE ACCURACY OR COMPLETENESS OF SCANNED COPIES OF THIS PLAN SHEET.

TO ACCOMPANY PLANS DATED 3-4-13

2010 REVISED STANDARD PLAN RSP D77B

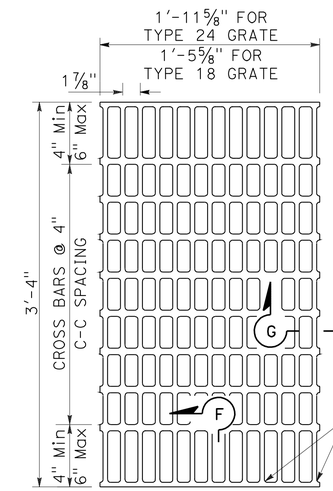

NOTES:

Bearing bars to be 3½" × ¼" bars on 1⅞" centers.

⅜"± ø Cross bars may be fillet welded, resistance welded or electroforged to bearing bars.

Weight of Type 24 grate = 141 LBS.

Weight of Type 18 grate = 107 LBS. (Type 24 grate shown).

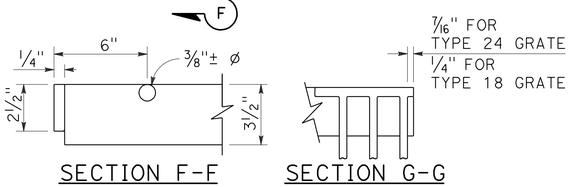

SECTION F-F SECTION G-G

TYPE 18-10 AND 24-13 GRATE

(Welded Steel)

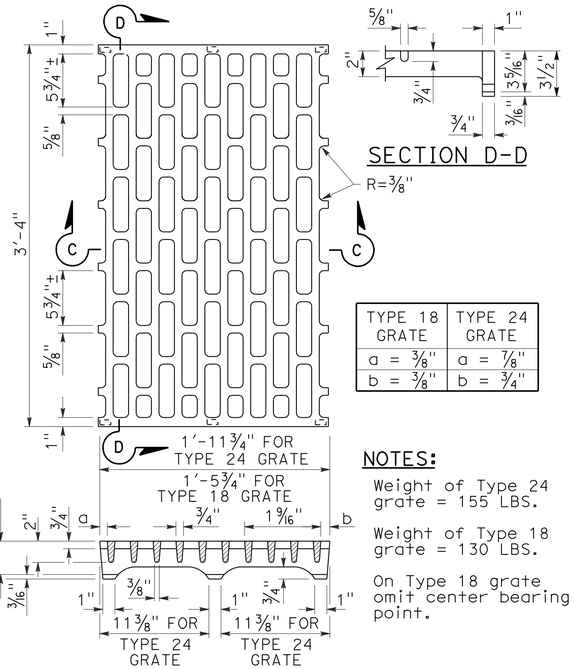

SECTION D-D

TYPE 18 GRATE	TYPE 24 GRATE
a = ⅜"	a = ⅞"
b = ⅜"	b = ¾"

NOTES:

Weight of Type 24 grate = 155 LBS.

Weight of Type 18 grate = 130 LBS.

On Type 18 grate omit center bearing point.

SECTION C-C

TYPE 18-8C AND 24-10C GRATE

(Cast ductile iron)

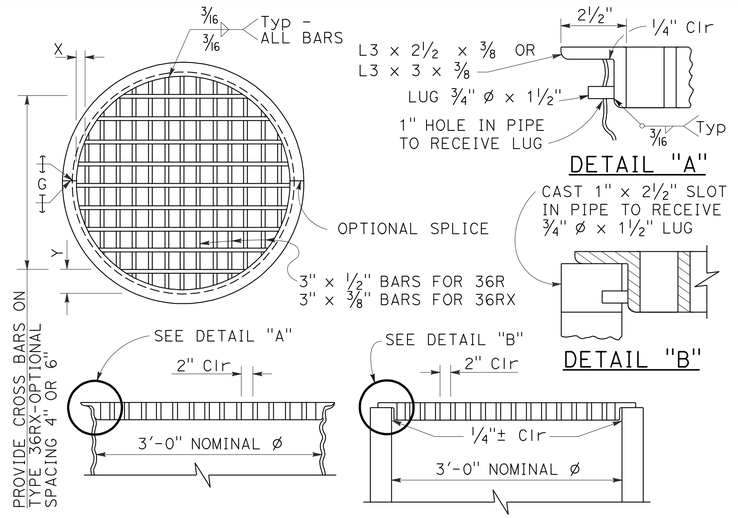

DETAIL "A" DETAIL "B"

TYPE 36R AND 36RX GRATE DETAILS

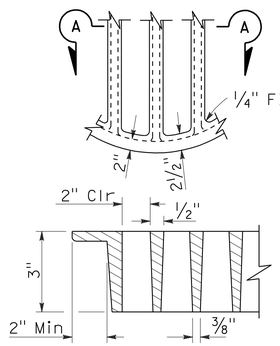

SECTION A-A

ALTERNATIVE CAST DUCTILE IRON GRATE OR CAST CARBON STEEL GRATE TYPE 36R AND 36RX

BASIS FOR Misc IRON AND STEEL FINAL PAY WEIGHTS FOR DRAINAGE INLETS

INLET TYPE	GRATE TYPE	No. OF GRATES	WEIGHT LB
GDO (SEE NOTE 4)	24-10C	2	391
	24-10S	2	456
	24-12X	2	473
	24-13	2	374
GO,GOL,G1,G2, G3,G4 (TYPE 24)	24-10C	1	202
	24-10S	1	229
	24-12X	1	239
	24-13	1	188
G4 (TYPE 18) G5,G6	18-8S	1	187
	18-9X	1	187
	18-10	1	149
GT1,GT2	18-8S	2	374
	18-9X	2	374
	18-10	2	298
GT3,GT4	24-10C	2	404
	24-10S	2	458
	24-12X	2	478
	24-13	2	376
ODI	36RX (Mod)	1	196
GMP,GCP,GCPI	36RX	1	215
ODI	36R (Mod)	1	220
GMP,GCP,GCPI	36R	1	236
TRASH RACK			22
GRATE CHAIN			3

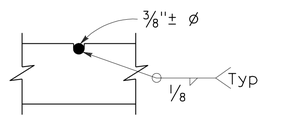

⅜"± ø Cross bars may be fillet welded, resistance welded or electroforged to bearing bars.

CROSS BAR DETAIL TYPE 36RX GRATE (WELDED STEEL)

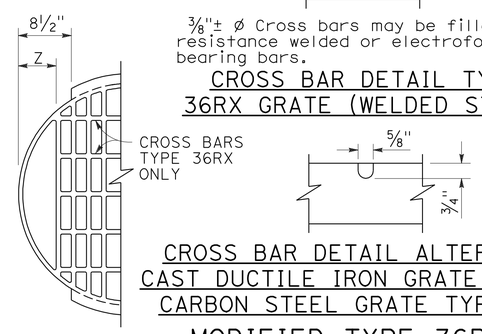

CROSS BAR DETAIL ALTERNATIVE CAST DUCTILE IRON GRATE OR CAST CARBON STEEL GRATE TYPE 36RX

MODIFIED TYPE 36R AND 36RX GRATE FOR ODI INLET

NOTES:

1. When alternative grates are allowed - Final pay based on alternative with the lesser weight.
2. Use frame shown on Standard Plan D74A, D74B or RSP D77A as appropriate.
3. When Type 24-10S, 24-12X or 24-13 grates are used with GDO Inlets, a ¼" × 3½" × 3'-4⅞" steel bar shall be welded across the center of inlet frame to separate the individual grates.
4. See Revised Standard Plan RSP D77A for connecting chain to welded grate and frame. When chain is required, do not use cast ductile iron grate.

GRATE BAR SPACING TABLE

TYPE	No. OF BARS	CLEAR BAR SPACING	X	Y 4" SPACING	Y 6" SPACING	Z
36R	13	2"	2⅛"	-	-	-
36RX (STEEL)	15	2"	9/16"	3¾"	5¾"	-
36RX (CAST)	13	2"	2⅛"	3¾"	5¾"	-
36R Mod	12	2"	2⅛"	-	-	5"
36RX Mod (STEEL)	13	2"	9/16"	3¾"	5¾"	5 11/16"
36RX Mod (CAST)	12	2"	2⅛"	3¾"	5¾"	5"

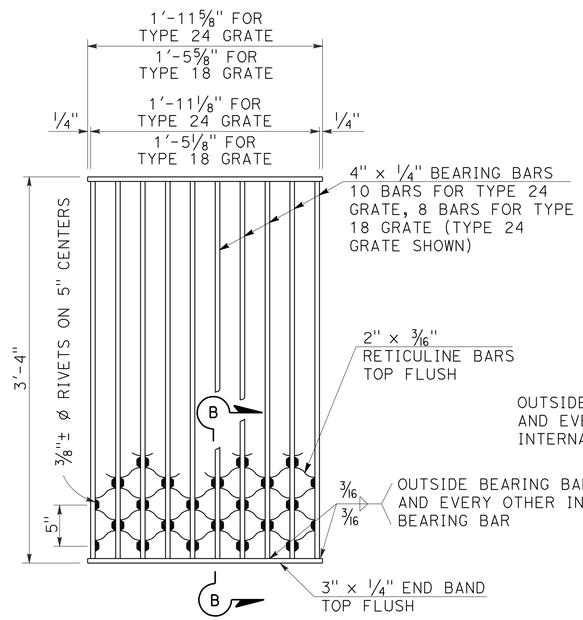

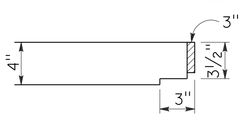

SECTION B-B

NOTES:

Weight of Type 24 grate = 182 LBS.
Weight of Type 18 grate = 145 LBS.

TYPE 18-8S AND 24-10S GRATE

(Welded Steel) Reticuline type

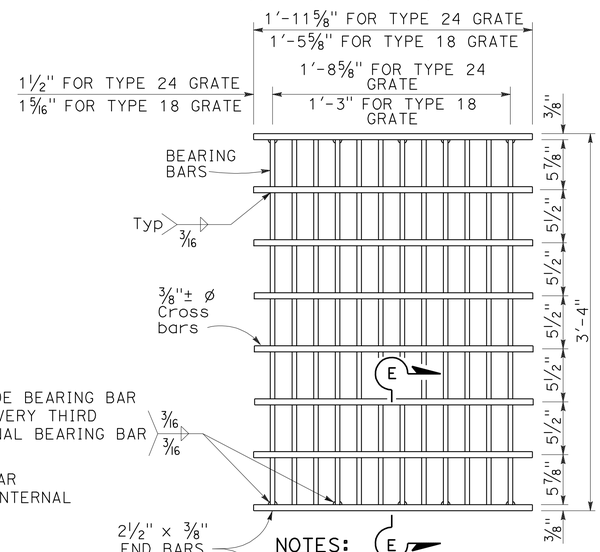

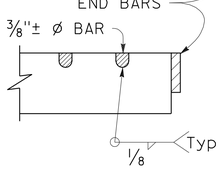

SECTION E-E

NOTES:

Bearing bars to be 3½" × ⅜" bars on 1⅞" centers.

12 Bars for Type 24 grate - 9 bars for Type 18 grates. (Type 24 grate shown).

Weight of Type 24 grate = 192 LBS.

Weight of Type 18 grate = 145 LBS.

⅜"± ø Cross bars may be fillet welded, resistance welded or electroforged to bearing bars.

TYPE 18-9X AND 24-12X GRATE

(Welded Steel)

STATE OF CALIFORNIA
DEPARTMENT OF TRANSPORTATION

BICYCLE TRAVERSABLE GRATE DETAILS

NO SCALE

RSP D77B DATED JULY 20, 2012 SUPERSEDES STANDARD PLAN D77B DATED MAY 20, 2011 - PAGE 165 OF THE STANDARD PLANS BOOK DATED 2010.

REVISED STANDARD PLAN RSP D77B

4-17-12

Dist	COUNTY	ROUTE	POST MILES TOTAL PROJECT	SHEET No.	TOTAL SHEETS
04	Sol	12	20.6/23.5	138	138

REGISTERED CIVIL ENGINEER

October 21, 2011
PLANS APPROVAL DATE

REGISTERED PROFESSIONAL ENGINEER Tillat Satter No. C42892 Exp. 3-31-12 CIVIL STATE OF CALIFORNIA

THE STATE OF CALIFORNIA OR ITS OFFICERS OR AGENTS SHALL NOT BE RESPONSIBLE FOR THE ACCURACY OR COMPLETENESS OF SCANNED COPIES OF THIS PLAN SHEET.

TO ACCOMPANY PLANS DATED 3-4-13

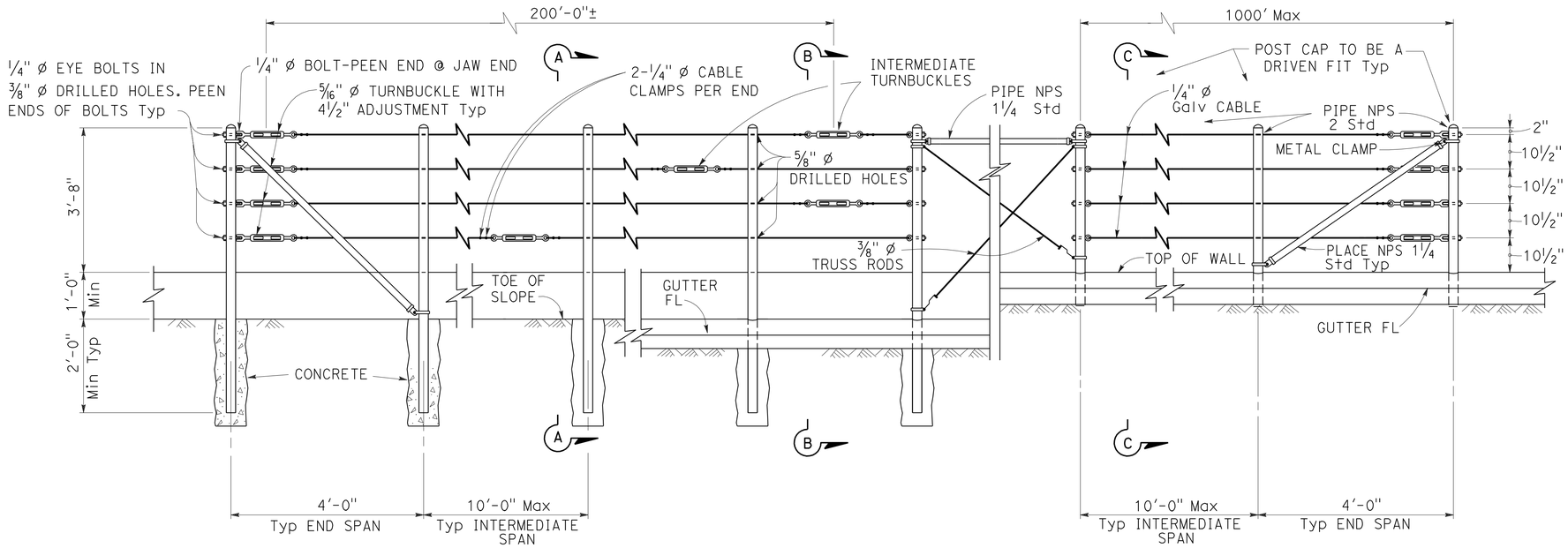

EXISTING WALL (WITHOUT GUTTER)
Existing

RETAINING WALL (WITH GUTTER)
Existing

RETAINING WALL (WITH GUTTER)
New construction

ELEVATION

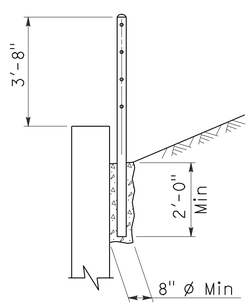

SECTION A-A
Existing

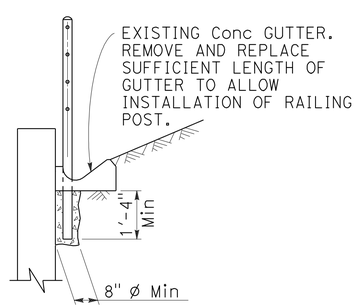

SECTION B-B
Existing

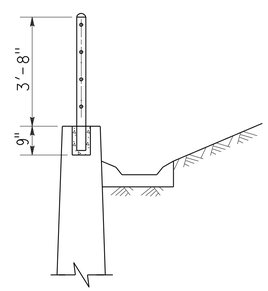

SECTION C-C
New construction

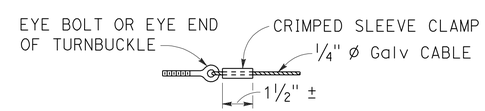

ALTERNATIVE CABLE CONNECTION

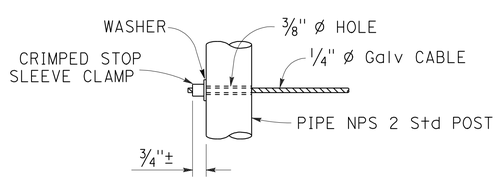

ALTERNATIVE DEAD END ANCHORAGE

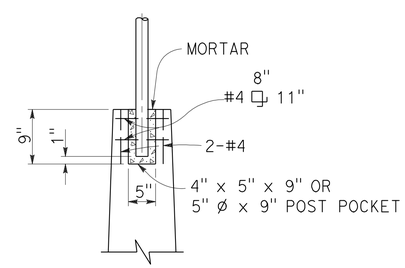

POST POCKET

NOTES:

1. Maximum distance between turnbuckles shall be 200'-0"±.
2. Intermediate turnbuckles to be placed in adjacent spans.
3. Cable shall not be spliced between intermediate turnbuckles and end posts.
4. Posts to be vertical.
5. Alignment of holes in posts may vary to conform to slope of top of retaining wall.
6. The Contractor shall verify all dependent dimensions in the field before ordering or fabricating any material.
7. Line posts shall be braced horizontally and trussed diagonally in both directions at intervals not to exceed 1000'.
8. Post pockets to be centered in top of wall.
9. Typical end spans, braced in both directions, shall be constructed at changes in line where the angle of deflection is 15° or more.
10. Provide thimbles at all cable loops.

STATE OF CALIFORNIA
DEPARTMENT OF TRANSPORTATION

CABLE RAILING

NO SCALE

RSP B11-47 DATED OCTOBER 21, 2011 SUPERSEDES STANDARD PLAN B11-47 DATED MAY 20, 2011 - PAGE 293 OF THE STANDARD PLANS BOOK DATED 2010.

REVISED STANDARD PLAN RSP B11-47

2010 REVISED STANDARD PLAN RSP B11-47

9-14-11