Dist	COUNTY	ROUTE	POST MILES TOTAL PROJECT	SHEET No.	TOTAL SHEETS
04	SCI	152	16.2/R16.5, R18.5/R19.5	1	195

ACHSNH-P152(082)E

STATE OF CALIFORNIA
DEPARTMENT OF TRANSPORTATION

PROJECT PLANS FOR CONSTRUCTION ON
STATE HIGHWAY

IN SANTA CLARA COUNTY
NEAR GILROY FROM OLD LAKE ROAD
TO 0.3 MILE EAST OF OLD LAKE ROAD AND
FROM 0.4 MILE WEST TO 0.6 MILE EAST OF LOVERS LANE

TO BE SUPPLEMENTED BY STANDARD PLANS DATED MAY 2006

INDEX OF PLANS

SHEET No.	DESCRIPTION
1	TITLE AND LOCATION MAP
2-6	TYPICAL CROSS SECTIONS
7-14	LAYOUTS
15-19	PROFILES AND SUPERELEVATION DIAGRAMS
20-21	CONSTRUCTION DETAILS
22	TEMPORARY WATER POLLUTION CONTROL QUANTITIES
23-31	EROSION CONTROL PLANS, DETAILS AND QUANTITIES
32-59	DRAINAGE PLANS, PROFILES, DETAILS AND QUANTITIES
60-64	UTILITY PLANS
65-66	CONSTRUCTION AREA SIGNS
67-93	STAGE CONSTRUCTION PLANS
94-103	PAVEMENT DELINEATION PLANS
104-105	SIGN PLAN AND QUANTITIES
106	SUMMARY OF QUANTITIES
107-109	RETAINING WALL PLANS
110	PLANT REMOVAL PLAN
111-145	REVISED AND NEW STANDARD PLANS

STRUCTURE PLANS

146-157	SOIL NAIL WALL 1 Br No. 37E0059
158-195	SOIL NAIL WALL 2 Br No. 37E0060

THE STANDARD PLANS LIST APPLICABLE TO THIS CONTRACT IS INCLUDED IN THE NOTICE TO BIDDERS AND SPECIAL PROVISIONS BOOK.

LOCATION MAP

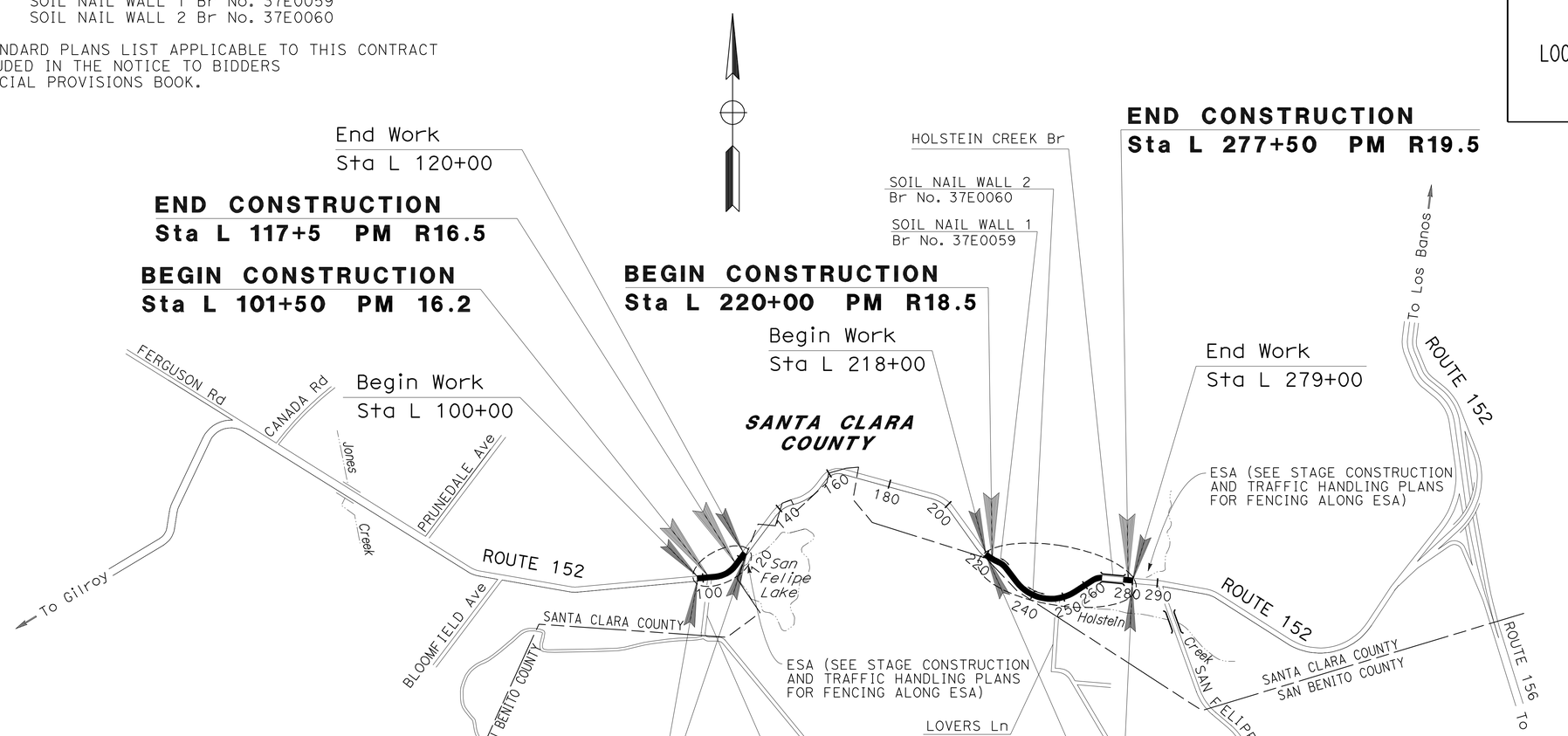

THE CONTRACTOR SHALL POSSESS THE CLASS (OR CLASSES) OF LICENSE AS SPECIFIED IN THE "NOTICE TO BIDDERS."

NO SCALE

PROJECT MANAGER: FARIBA ZOHOURY

DESIGN ENGINEER: AHMED RAHID

2/7/12
PROJECT ENGINEER REGISTERED CIVIL ENGINEER — DATE

May 21, 2012
PLANS APPROVAL DATE

REGISTERED PROFESSIONAL ENGINEER — Ahmed T. Rahid — No. 76800 — Exp. 12-31-12 — CIVIL — STATE OF CALIFORNIA

THE STATE OF CALIFORNIA OR ITS OFFICERS OR AGENTS SHALL NOT BE RESPONSIBLE FOR THE ACCURACY OR COMPLETENESS OF SCANNED COPIES OF THIS PLAN SHEET.

CONTRACT No.	04-2A4404
PROJECT ID	0400000823

LAST REVISION 02-07-12 — DATE PLOTTED => 16-OCT-2012 TIME PLOTTED => 05:29

Dist	COUNTY	ROUTE	POST MILES TOTAL PROJECT	SHEET No.	TOTAL SHEETS
04	SCI	152	16.2/R16.5, R18.5/R19.5	2	195

REGISTERED CIVIL ENGINEER 2/7/12 DATE

5-21-12
PLANS APPROVAL DATE

REGISTERED PROFESSIONAL ENGINEER Ahmed T. Rahid No. 76800 Exp. 12-31-12 CIVIL STATE OF CALIFORNIA

THE STATE OF CALIFORNIA OR ITS OFFICERS OR AGENTS SHALL NOT BE RESPONSIBLE FOR THE ACCURACY OR COMPLETENESS OF SCANNED COPIES OF THIS PLAN SHEET.

NOTES:

1. DIMENSIONS OF THE PAVEMENT STRUCTURES (STRUCTURAL SECTIONS) ARE SUBJECT TO TOLERANCES SPECIFIED IN THE STANDARD SPECIFICATIONS.
2. SUPERELEVATIONS ARE SHOWN ON THE SUPERELEVATION DIAGRAMS.
3. SEE LAYOUT PLANS FOR R/W LIMITS, SNWE, TCE AND SE.
4. FOR CONCRETE BARRIER DETAILS, SEE SOIL NAIL WALL DETAILS.
5. FOR RUMBLE STRIP DETAILS, SEE STANDARD PLAN A40B AND PAVEMENT DELINEATION DETAILS.
6. EXACT LOCATIONS OF SAW CUT LINES TO BE DETERMINED BY ENGINEER.
7. FOR EXACT LOCATIONS OF HMA DIKES, SEE LAYOUT PLANS.
8. USE FULL DEPTH HMA (TYPE A) TO CONSTRUCT AND CONFORM LOVERS LANE.

ABBREVIATIONS:

DE	DRAINAGE EASEMENT
OGFC	OPEN GRADED FRICTION COURSE
PDW	PRIVATE DRIVEWAY
SE	SLOPE EASEMENT
SNWE	SOIL NAIL WALL EASEMENT
TCE	TEMPORARY CONSTRUCTION EASEMENT

DESIGN DESIGNATION:

AADT 40,000

ASSUMED VALUES FOR T.I.

20 Yr T.I. = 13.5
R VALUE = 15

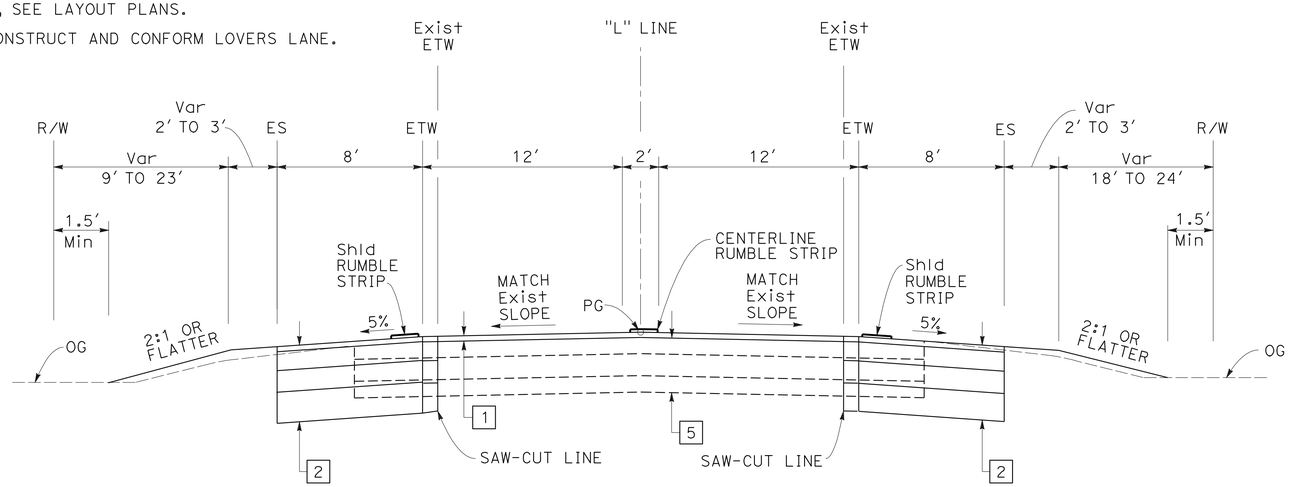

"L" 220+00 TO "L" 220+50
"L" 277+00 TO "L" 277+50

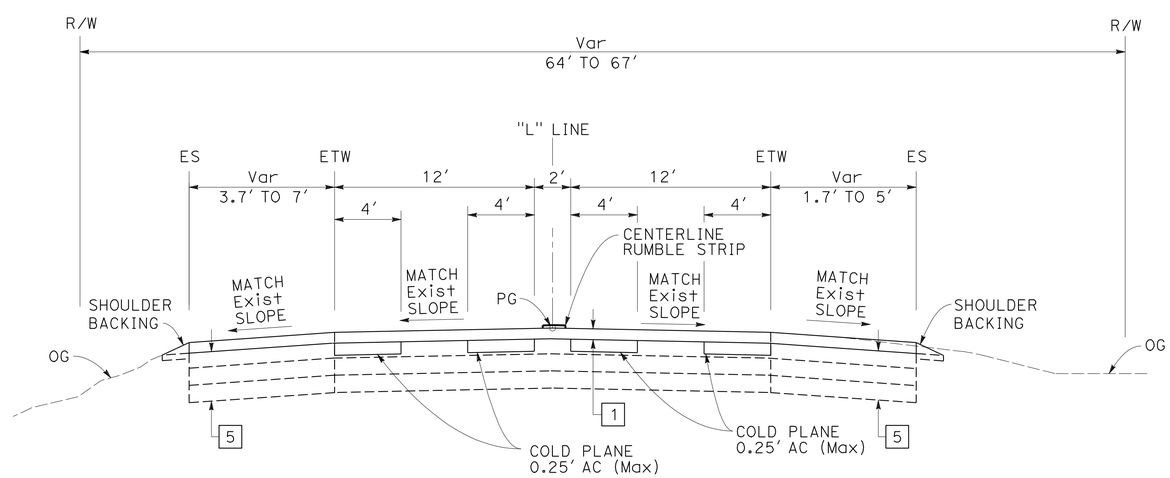

"L" 101+50 TO "L" 117+50

ROUTE 152

TYPICAL PAVEMENT STRUCTURAL SECTIONS:

1
- 0.10' HMA (OPEN GRADED)

2
- 0.10' HMA (OPEN GRADED)
- 0.65' HMA (TYPE A)
- 0.70' LCB
- 1.35' CI 4 AS

3
- 0.10' HMA (OPEN GRADED)
- 2.70' HMA (TYPE A)

4
- 0.25' HMA (TYPE A)
- 0.50' CI 2 AB

5
- Exist
- 0.50' AC (TYPE B)
- 0.67' CTB
- 0.50' CI 1 AS

TYPICAL CROSS SECTIONS

NO SCALE

X-1

REVISED BY	DATE REVISED
AR	2/7/12

AHMED RAHID — CALCULATED-DESIGNED BY
CALVIN TRAN — CHECKED BY
MORTEZA AZIMI — FUNCTIONAL SUPERVISOR

STATE OF CALIFORNIA - DEPARTMENT OF TRANSPORTATION
Caltrans®
DESIGN

LAST REVISION 02-07-12
DATE PLOTTED => 06-JUN-2012
TIME PLOTTED => 14:26

Dist	COUNTY	ROUTE	POST MILES TOTAL PROJECT	SHEET No.	TOTAL SHEETS
04	SCI	152	16.2/R16.5, R18.5/R19.5	3	195

REGISTERED CIVIL ENGINEER DATE 2/7/12

5-21-12
PLANS APPROVAL DATE

REGISTERED PROFESSIONAL ENGINEER Ahmed T. Rahid No. 76800 Exp. 12-31-12 CIVIL STATE OF CALIFORNIA

THE STATE OF CALIFORNIA OR ITS OFFICERS OR AGENTS SHALL NOT BE RESPONSIBLE FOR THE ACCURACY OR COMPLETENESS OF SCANNED COPIES OF THIS PLAN SHEET.

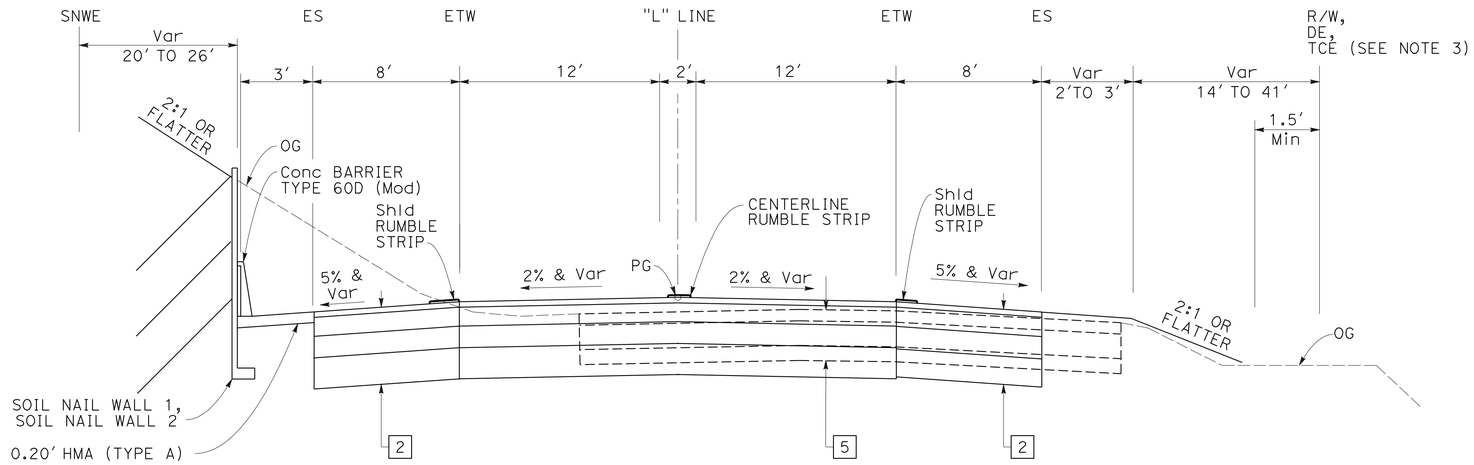

"L" 228+33 TO "L" 230+42
"L" 234+98 TO "L" 241+25

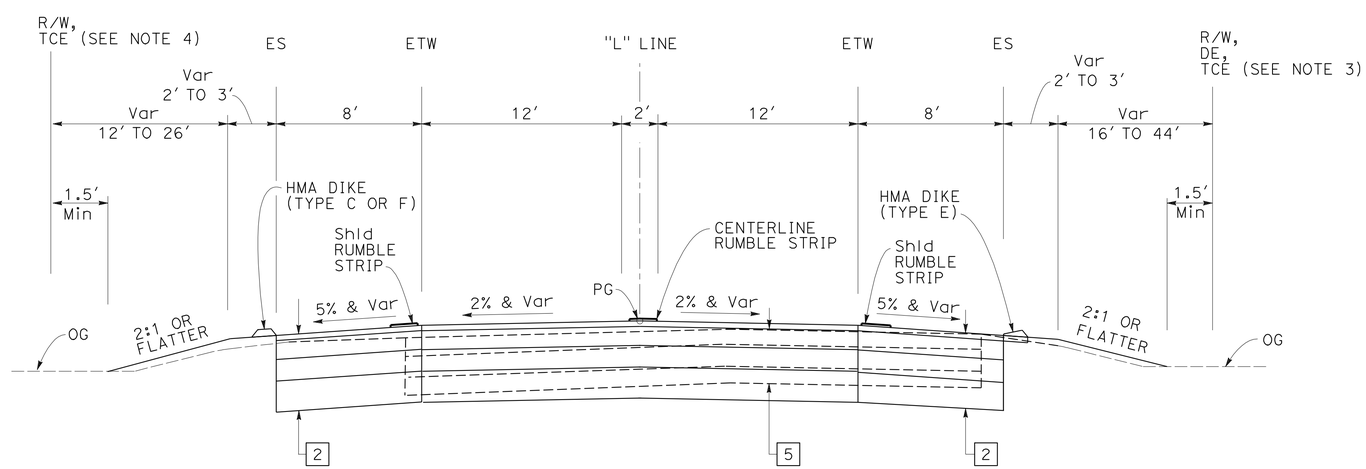

"L" 220+50 TO "L" 228+33
"L" 258+92 TO "L" 266+50
"L" 267+25 TO "L" 277+00

ROUTE 152

TYPICAL CROSS SECTIONS

NO SCALE

FOR NOTES, ABBREVIATIONS AND LEGEND, SEE SHEET X-1

X-2

REVISED BY	DATE REVISED
AR	2/7/12

AHMED RAHID — CALVIN TRAN — CALCULATED-DESIGNED BY — CHECKED BY

FUNCTIONAL SUPERVISOR: MORTEZA AZIMI

STATE OF CALIFORNIA - DEPARTMENT OF TRANSPORTATION — Caltrans — DESIGN

LAST REVISION 02-07-12 — DATE PLOTTED => 06-JUN-2012 — TIME PLOTTED => 14:26

Dist	COUNTY	ROUTE	POST MILES TOTAL PROJECT	SHEET No.	TOTAL SHEETS
04	SCI	152	16.2/R16.5, R18.5/R19.5	4	195

REGISTERED CIVIL ENGINEER 2/7/12 DATE

5-21-12
PLANS APPROVAL DATE

REGISTERED PROFESSIONAL ENGINEER Ahmed T. Rahid No. 76800 Exp. 12-31-12 CIVIL STATE OF CALIFORNIA

THE STATE OF CALIFORNIA OR ITS OFFICERS OR AGENTS SHALL NOT BE RESPONSIBLE FOR THE ACCURACY OR COMPLETENESS OF SCANNED COPIES OF THIS PLAN SHEET.

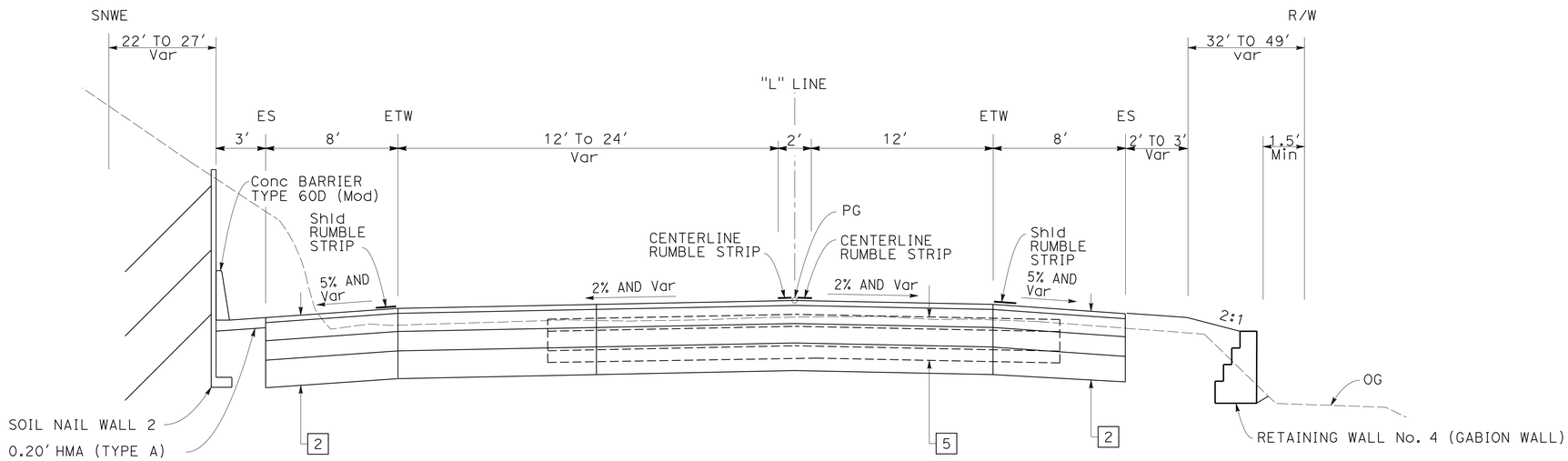

"L" 241+25 TO "L" 248+10

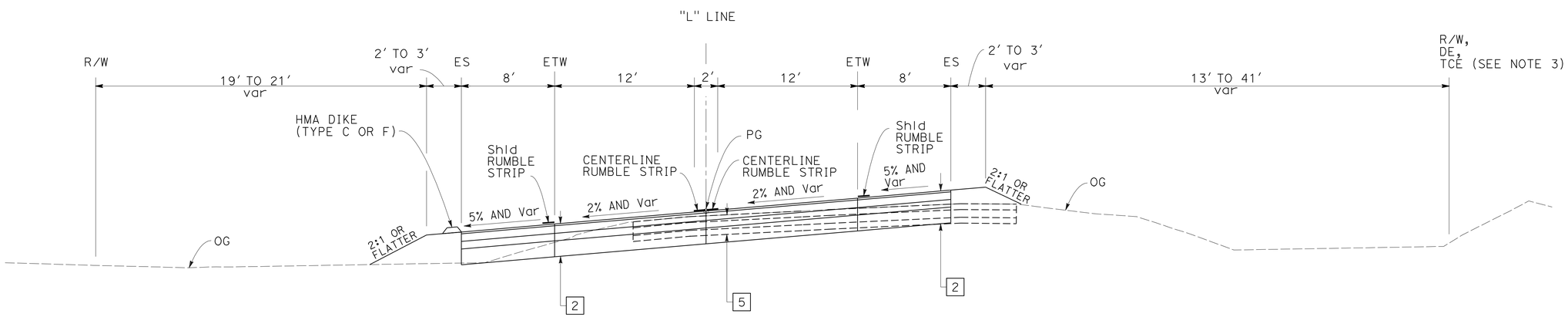

"L" 230+42 TO "L" 234+98

ROUTE 152

TYPICAL CROSS SECTIONS

NO SCALE

FOR NOTES, ABBREVIATIONS AND LEGEND, SEE SHEET X-1

X-3

REVISED BY	DATE REVISED
AR	2/7/12

AHMED RAHID — CALVIN TRAN

CALCULATED-DESIGNED BY — CHECKED BY

FUNCTIONAL SUPERVISOR: MORTEZA AZIMI

STATE OF CALIFORNIA - DEPARTMENT OF TRANSPORTATION

Caltrans® DESIGN

LAST REVISION 02-07-12 — DATE PLOTTED => 06-JUN-2012 — TIME PLOTTED => 14:26

Dist	COUNTY	ROUTE	POST MILES TOTAL PROJECT	SHEET No.	TOTAL SHEETS
04	SCI	152	16.2/R16.5, R18.5/R19.5	5	195

REGISTERED CIVIL ENGINEER DATE 2/7/12

5-21-12
PLANS APPROVAL DATE

REGISTERED PROFESSIONAL ENGINEER Ahmed T. Rahid No. 76800 Exp. 12-31-12 CIVIL STATE OF CALIFORNIA

THE STATE OF CALIFORNIA OR ITS OFFICERS OR AGENTS SHALL NOT BE RESPONSIBLE FOR THE ACCURACY OR COMPLETENESS OF SCANNED COPIES OF THIS PLAN SHEET.

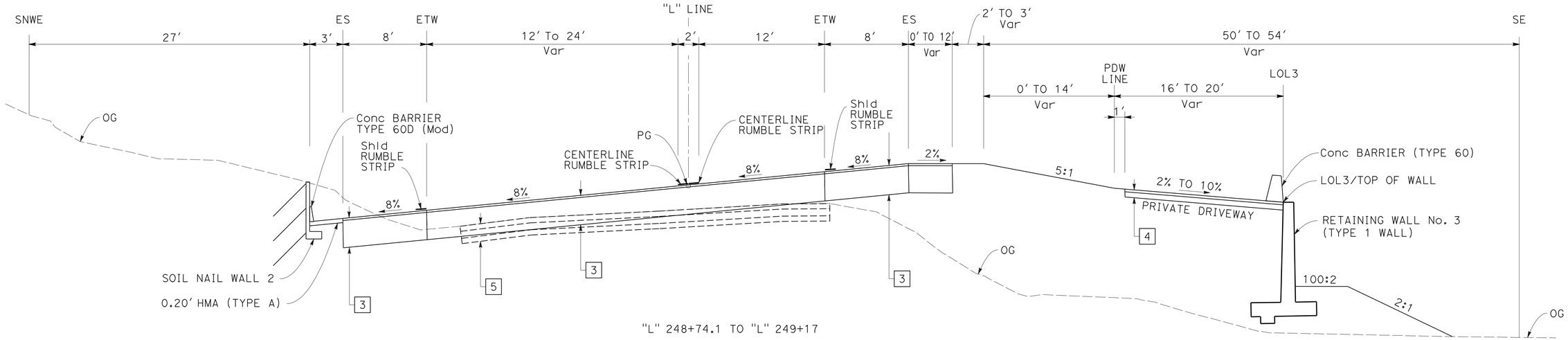

"L" 248+74.1 TO "L" 249+17

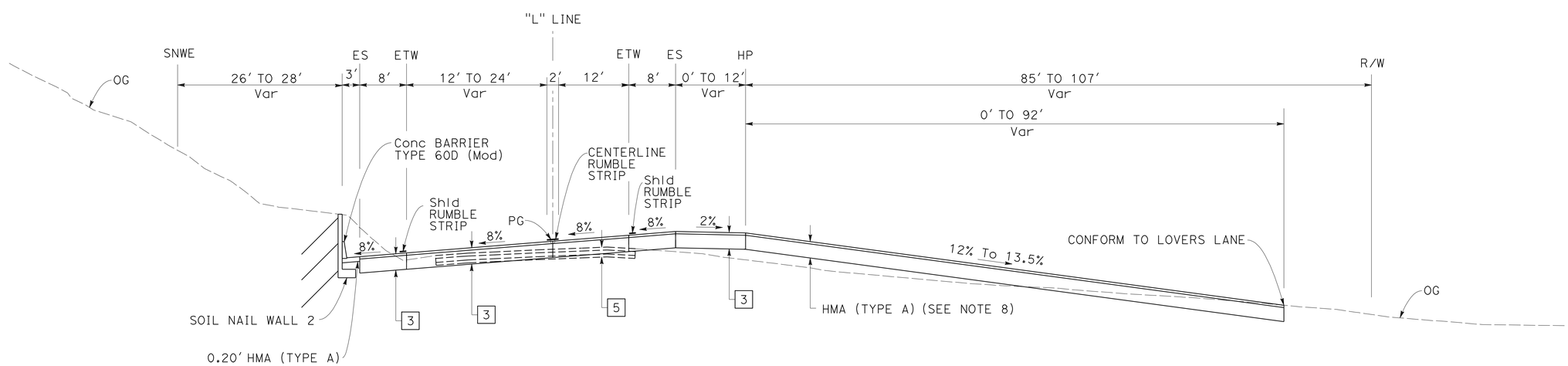

"L" 248+10 TO "L" 248+74.1

ROUTE 152

TYPICAL CROSS SECTIONS

NO SCALE

FOR NOTES, ABBREVIATIONS AND LEGEND, SEE SHEET X-1

X-4

AR	2/7/12
REVISED BY	DATE REVISED
AHMED RAHID	CALVIN TRAN
CALCULATED-DESIGNED BY	CHECKED BY
FUNCTIONAL SUPERVISOR	MORTEZA AZIMI

STATE OF CALIFORNIA - DEPARTMENT OF TRANSPORTATION

Caltrans® **DESIGN**

LAST REVISION 02-07-12 | DATE PLOTTED => 22-MAY-2012 TIME PLOTTED => 15:57

Dist	COUNTY	ROUTE	POST MILES TOTAL PROJECT	SHEET No.	TOTAL SHEETS
04	SCI	152	16.2/R16.5, R18.5/R19.5	6	195

REGISTERED CIVIL ENGINEER DATE 2/7/12

5-21-12
PLANS APPROVAL DATE

REGISTERED PROFESSIONAL ENGINEER Ahmed T. Rahid No. 76800 Exp. 12-31-12 CIVIL STATE OF CALIFORNIA

THE STATE OF CALIFORNIA OR ITS OFFICERS OR AGENTS SHALL NOT BE RESPONSIBLE FOR THE ACCURACY OR COMPLETENESS OF SCANNED COPIES OF THIS PLAN SHEET.

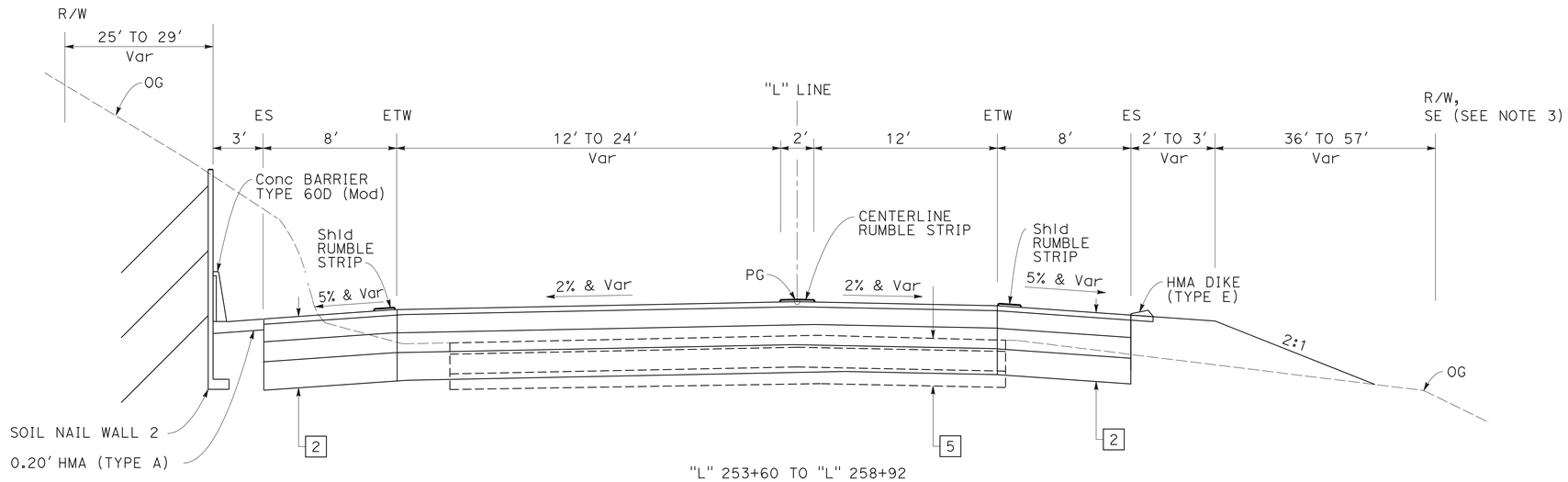

"L" 253+60 TO "L" 258+92

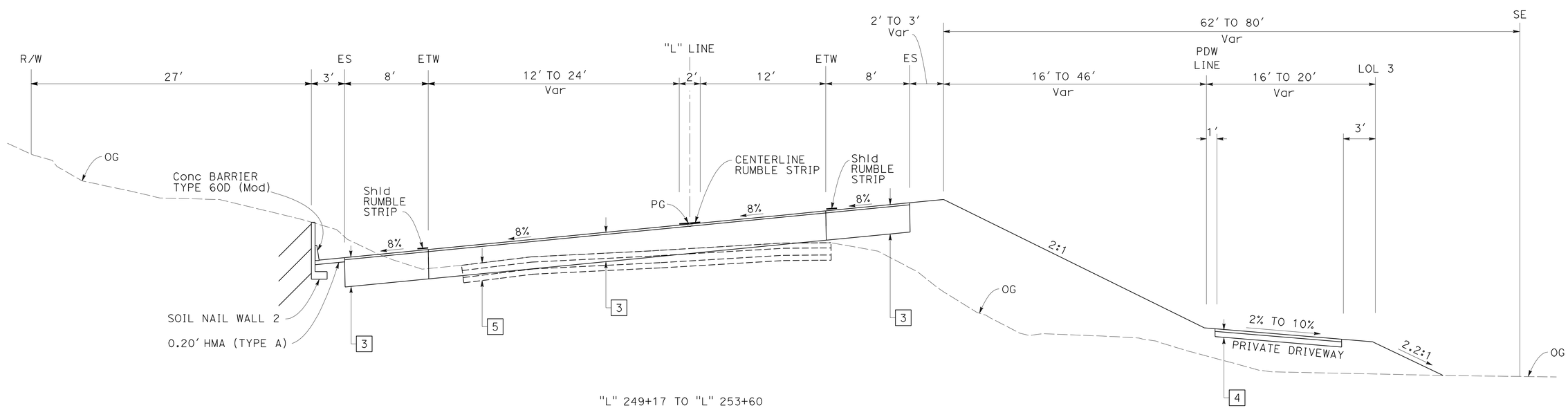

"L" 249+17 TO "L" 253+60

ROUTE 152

TYPICAL CROSS SECTIONS

NO SCALE

FOR NOTES, ABBREVIATIONS AND LEGEND, SEE SHEET X-1

X-5

REVISED BY	DATE REVISED
AR	2/7/12

AHMED RAHID — CALCULATED-DESIGNED BY
CALVIN TRAN — CHECKED BY
MORTEZA AZIMI — FUNCTIONAL SUPERVISOR

STATE OF CALIFORNIA - DEPARTMENT OF TRANSPORTATION
Caltrans
DESIGN

LAST REVISION 02-07-12 | DATE PLOTTED => 06-JUN-2012 | TIME PLOTTED => 14:26

Dist	COUNTY	ROUTE	POST MILES TOTAL PROJECT	SHEET No.	TOTAL SHEETS
04	SCI	152	16.2/R16.5, R18.5/R19.5	7	195

REGISTERED CIVIL ENGINEER DATE 2/7/12

5-21-12
PLANS APPROVAL DATE

REGISTERED PROFESSIONAL ENGINEER Ahmed T. Rahid No. 76800 Exp. 12-31-12 CIVIL STATE OF CALIFORNIA

THE STATE OF CALIFORNIA OR ITS OFFICERS OR AGENTS SHALL NOT BE RESPONSIBLE FOR THE ACCURACY OR COMPLETENESS OF SCANNED COPIES OF THIS PLAN SHEET.

LEGEND:

- No. — PAVEMENT STRUCTURAL SECTION NUMBER
- No. — CURVE DATA NUMBER
- COLD PLANE ASPHALT CONCRETE PAVEMENT(CPACP)
- REMOVE BASE AND SURFACING
- DRIVEWAY CONFORM

ABBREVIATIONS:

AMA	ARCHAEOLOGICAL MONITORING AREA
CPACP	COLD PLANE ASPHALT CONCRETE PAVEMENT
DE	DRAINAGE EASEMENT
SE	SLOPE EASEMENT
SNWE	SOIL NAIL WALL EASEMENT
TCE	TEMPORARY CONSTRUCT EASEMENT

NOTES:

1. FOR ACCURATE RIGHT OF WAY DATA, CONTACT RIGHT OF WAY ENGINEERING AT THE DISTRICT OFFICE.
2. SEE STAGE CONSTRUCTION AND TRAFFIC HANDLING PLANS FOR ENVIRONMENTALLY SENSITIVE AREAS AND ARCHAEOLOGICAL MONITORING AREA.
3. NEW MAILBOX LOCATION WILL BE DETERMINED BY ENGINEER.

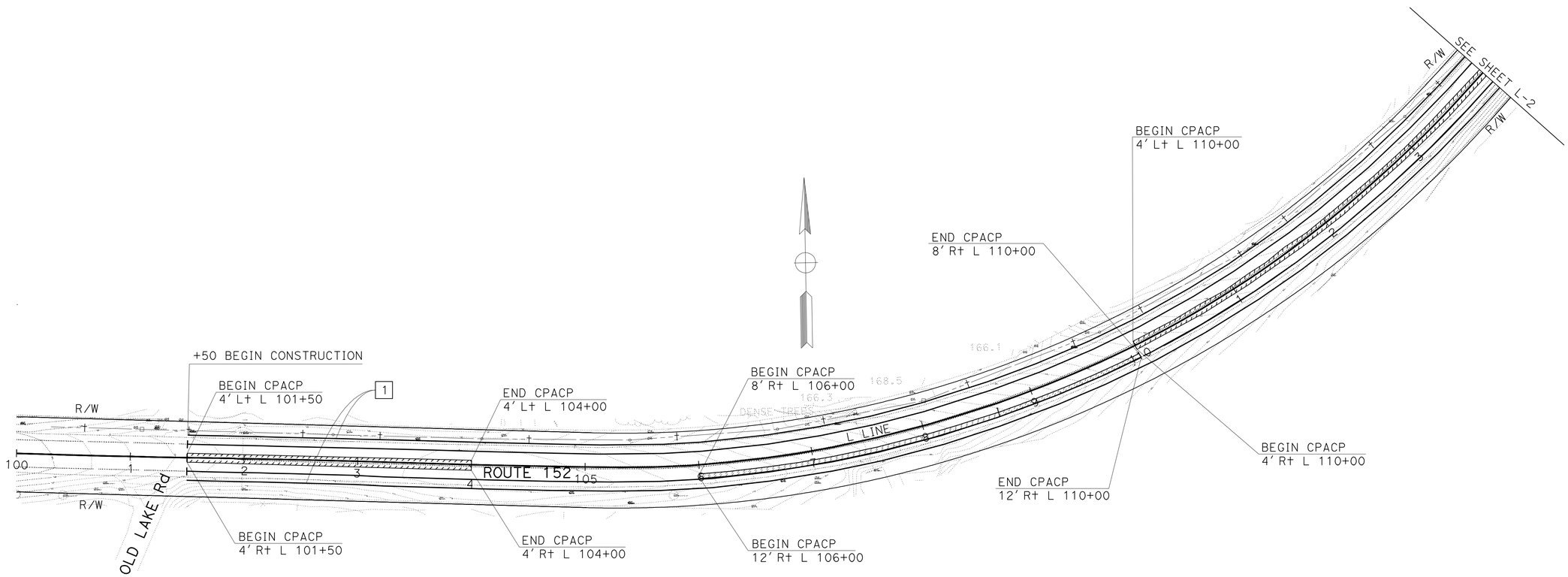

LAYOUT

SCALE 1'' = 50'

L-1

CALCULATED-DESIGNED BY	AHMED RAHID
CHECKED BY	CALVIN TRAN
REVISED BY	AR
DATE REVISED	2/7/12
FUNCTIONAL SUPERVISOR	MORTEZA AZIMI

STATE OF CALIFORNIA - DEPARTMENT OF TRANSPORTATION

Caltrans® DESIGN

LAST REVISION 02-07-12 | DATE PLOTTED => 22-MAY-2012 | TIME PLOTTED => 15:58

Dist	COUNTY	ROUTE	POST MILES TOTAL PROJECT	SHEET No.	TOTAL SHEETS
04	SCI	152	16.2/R16.5, R18.5/R19.5	8	195

REGISTERED CIVIL ENGINEER DATE 2/7/12

PLANS APPROVAL DATE 5-21-12

REGISTERED PROFESSIONAL ENGINEER Ahmed T. Rahid No. 76800 Exp. 12-31-12 CIVIL STATE OF CALIFORNIA

THE STATE OF CALIFORNIA OR ITS OFFICERS OR AGENTS SHALL NOT BE RESPONSIBLE FOR THE ACCURACY OR COMPLETENESS OF SCANNED COPIES OF THIS PLAN SHEET.

NOTE:

FOR ACCURATE RIGHT OF WAY DATA, CONTACT RIGHT OF WAY ENGINEERING AT THE DISTRICT OFFICE.

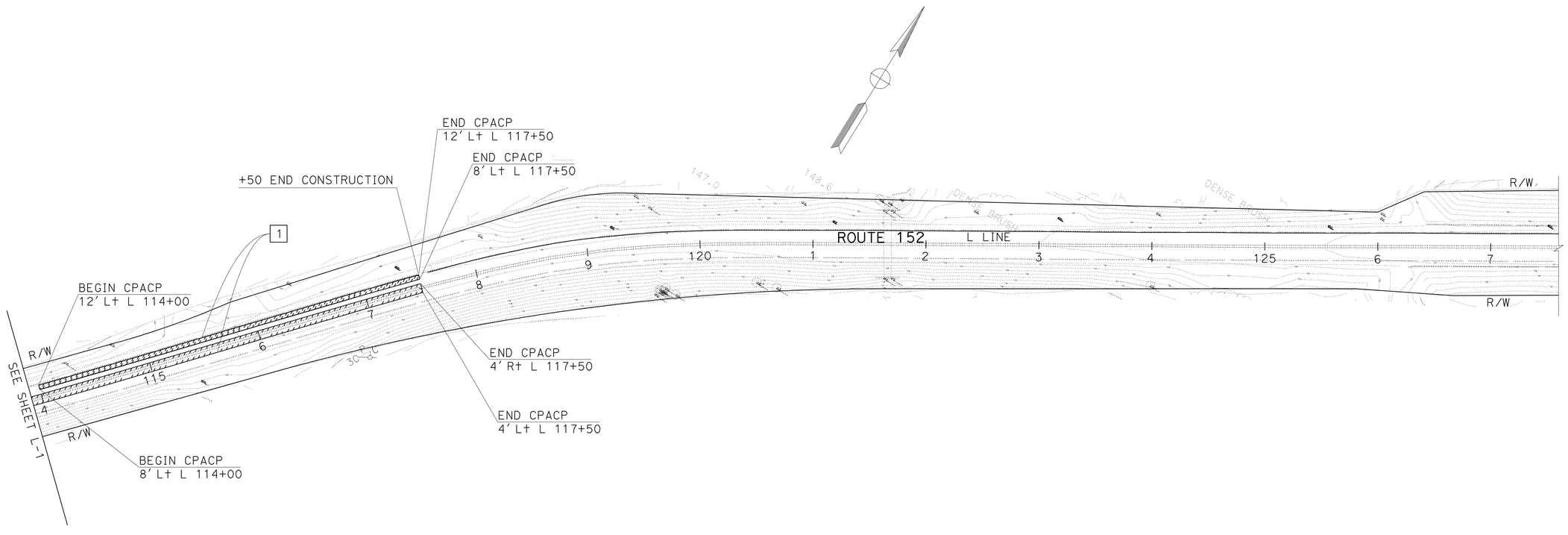

FOR NOTES, ABBREVIATIONS &/OR LEGEND, SEE SHEET L-1

LAYOUT

SCALE: 1'' = 50'

L-2

REVISED BY	DATE REVISED
AR	2/7/12

CALCULATED-DESIGNED BY: AHMED RAHID
CHECKED BY: CALVIN TRAN
FUNCTIONAL SUPERVISOR: MORTEZA AZIMI

STATE OF CALIFORNIA - DEPARTMENT OF TRANSPORTATION
Caltrans
DESIGN

LAST REVISION 02-07-12 DATE PLOTTED => 22-MAY-2012 TIME PLOTTED => 15:30

Dist	COUNTY	ROUTE	POST MILES TOTAL PROJECT	SHEET No.	TOTAL SHEETS
04	SCI	152	16.2/R16.5, R18.5/R19.5	9	195

REGISTERED CIVIL ENGINEER 2/7/12 DATE

5-21-12
PLANS APPROVAL DATE

REGISTERED PROFESSIONAL ENGINEER Ahmed T. Rahid No. 76800 Exp. 12-31-12 CIVIL STATE OF CALIFORNIA

THE STATE OF CALIFORNIA OR ITS OFFICERS OR AGENTS SHALL NOT BE RESPONSIBLE FOR THE ACCURACY OR COMPLETENESS OF SCANNED COPIES OF THIS PLAN SHEET.

NOTE:

FOR ACCURATE RIGHT OF WAY DATA, CONTACT RIGHT OF WAY ENGINEERING AT THE DISTRICT OFFICE.

CURVE DATA

No.	R	Δ	T	L	N	E
1	1000′	25°40′18"	227.85′	448.05′	1816519.69	6288619.17

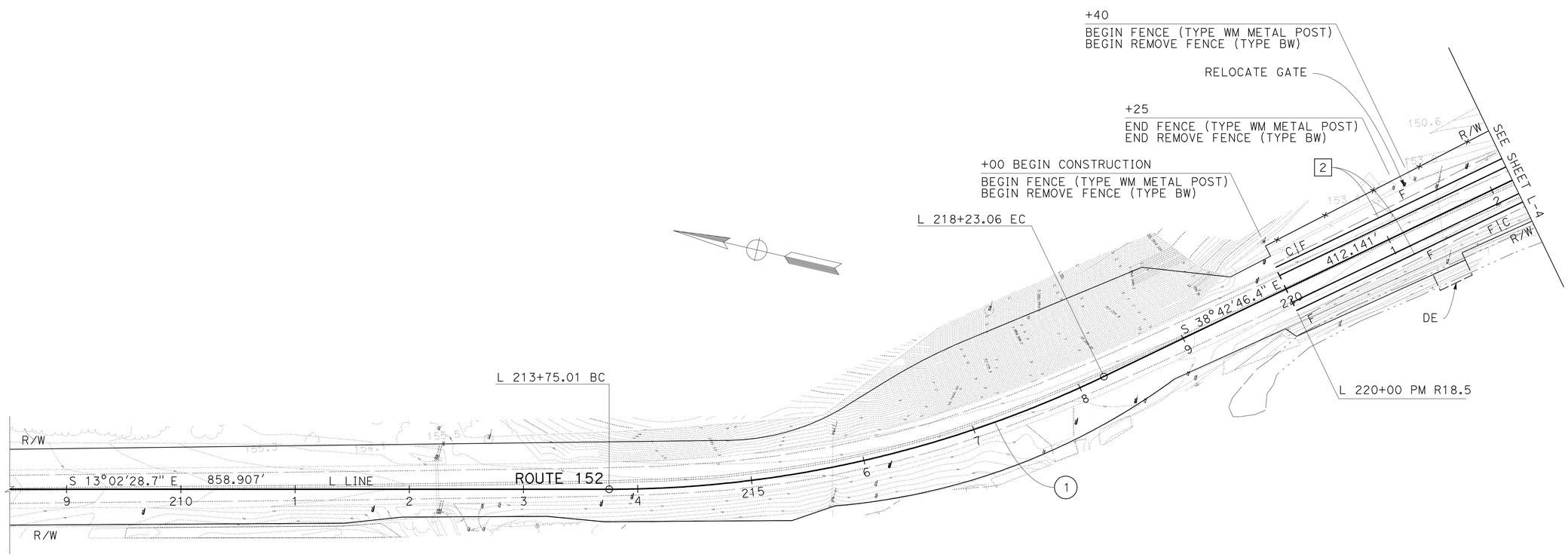

FOR NOTES, ABBREVIATIONS AND LEGEND, SEE SHEET L-1

LAYOUT
SCALE: 1″ = 50′

L-3

REVISED BY	DATE REVISED
AR	2/7/12

CALCULATED-DESIGNED BY: AHMED RAHID
CHECKED BY: CALVIN TRAN
FUNCTIONAL SUPERVISOR: MORTEZA AZIMI

STATE OF CALIFORNIA - DEPARTMENT OF TRANSPORTATION
Caltrans
DESIGN

LAST REVISION 02-07-12 | DATE PLOTTED => 22-MAY-2012 | TIME PLOTTED => 15:23

Dist	COUNTY	ROUTE	POST MILES TOTAL PROJECT	SHEET No.	TOTAL SHEETS
04	SCI	152	16.2/R16.5, R18.5/R19.5	10	195

REGISTERED CIVIL ENGINEER 2/7/12 DATE

5-21-12
PLANS APPROVAL DATE

REGISTERED PROFESSIONAL ENGINEER Ahmed T. Rahid No. 76800 Exp. 12-31-12 CIVIL STATE OF CALIFORNIA

THE STATE OF CALIFORNIA OR ITS OFFICERS OR AGENTS SHALL NOT BE RESPONSIBLE FOR THE ACCURACY OR COMPLETENESS OF SCANNED COPIES OF THIS PLAN SHEET.

NOTE:

FOR ACCURATE RIGHT OF WAY DATA, CONTACT RIGHT OF WAY ENGINEERING AT THE DISTRICT OFFICE.

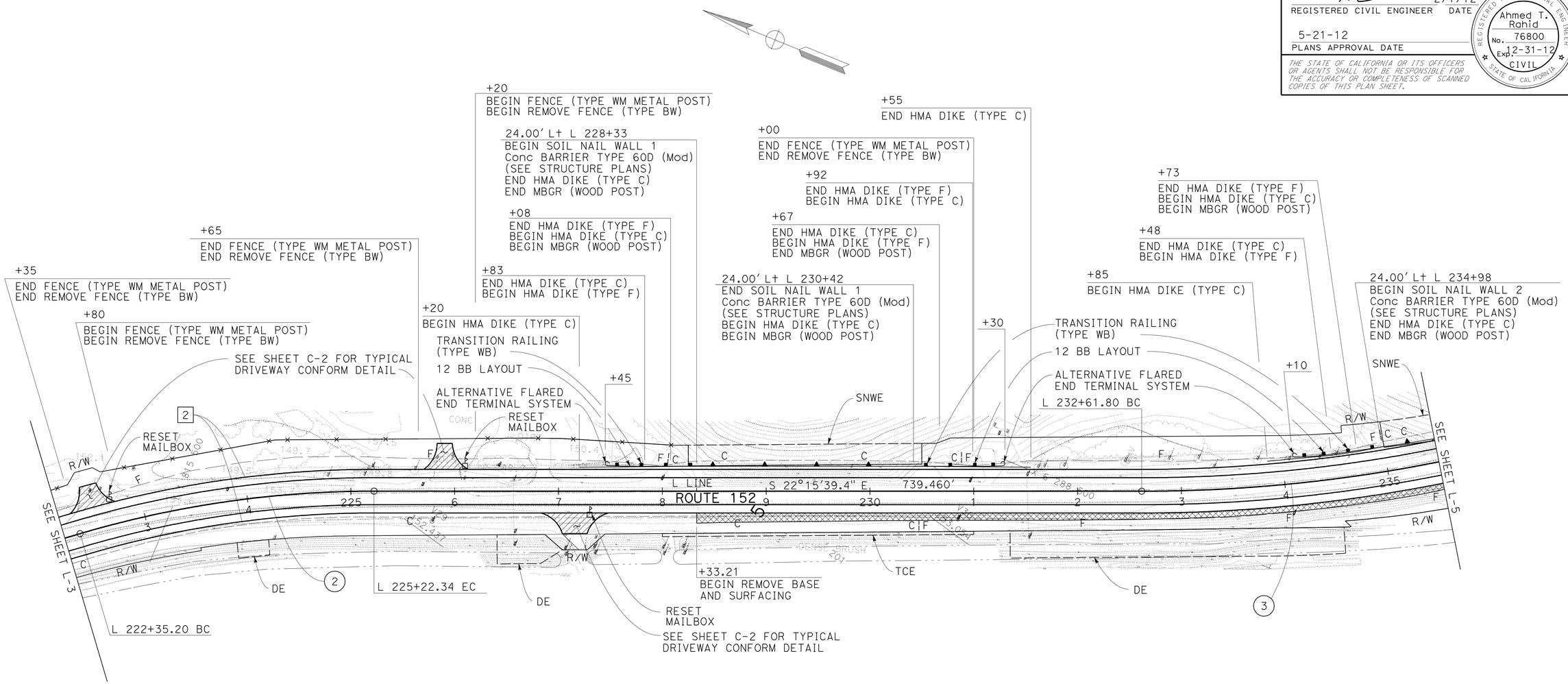

CURVE DATA

No.	R	Δ	T	L	N	E
2	1000'	16°27'07"	144.56'	287.14'	1814947.27	6287316.36
3	1460'	82°58'04"	1290.96'	2114.17'	1815194.83	6289873.13

FOR NOTES, ABBREVIATIONS AND LEGEND, SEE SHEET L-1

LAYOUT

SCALE: 1'' = 50'

L-4

REVISED BY	DATE REVISED
AR	2/7/12

AHMED RAHID — CALCULATED-DESIGNED BY
CALVIN TRAN — CHECKED BY
MORTEZA AZIMI — FUNCTIONAL SUPERVISOR

STATE OF CALIFORNIA - DEPARTMENT OF TRANSPORTATION
Caltrans
DESIGN

LAST REVISION 02-07-12 | DATE PLOTTED => 22-MAY-2012 | TIME PLOTTED => 15:23

Dist	COUNTY	ROUTE	POST MILES TOTAL PROJECT	SHEET No.	TOTAL SHEETS
04	SCI	152	16.2/R16.5, R18.5/R19.5	11	195

REGISTERED CIVIL ENGINEER 11/7/11 DATE

5-21-12
PLANS APPROVAL DATE

REGISTERED PROFESSIONAL ENGINEER Ahmed T. Rahid No. 76800 Exp. 12-31-12 CIVIL STATE OF CALIFORNIA

THE STATE OF CALIFORNIA OR ITS OFFICERS OR AGENTS SHALL NOT BE RESPONSIBLE FOR THE ACCURACY OR COMPLETENESS OF SCANNED COPIES OF THIS PLAN SHEET.

NOTE:

FOR ACCURATE RIGHT OF WAY DATA, CONTACT RIGHT OF WAY ENGINEERING AT THE DISTRICT OFFICE.

CURVE DATA

No.	R	Δ	T	L	N	E
3	1460′	82°58′04"	1290.96′	2114.17′	1815194.83	6289873.13

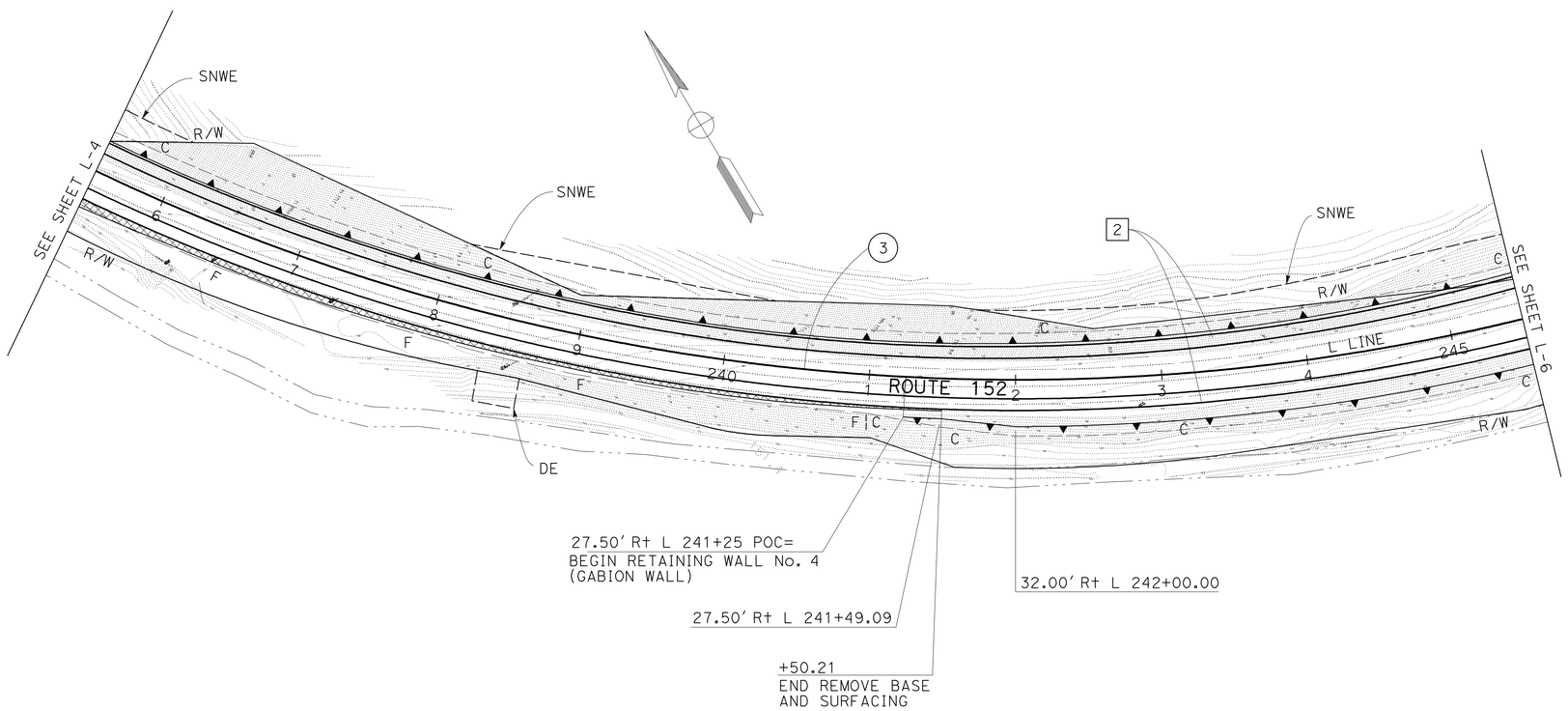

FOR NOTES, ABBREVIATIONS AND LEGEND, SEE SHEET L-1

LAYOUT

SCALE: 1" = 50′

L-5

STATE OF CALIFORNIA - DEPARTMENT OF TRANSPORTATION

Caltrans

DESIGN

FUNCTIONAL SUPERVISOR: MORTEZA AZIMI

CALCULATED-DESIGNED BY: AHMED RAHID

CHECKED BY: CALVIN TRAN

REVISED BY: AR

DATE REVISED: 10/21/11

LAST REVISION 10-21-11

DATE PLOTTED => 22-MAY-2012

TIME PLOTTED => 15:23

Dist	COUNTY	ROUTE	POST MILES TOTAL PROJECT	SHEET No.	TOTAL SHEETS
04	SCI	152	16.2/R16.5, R18.5/R19.5	12	195

REGISTERED CIVIL ENGINEER 2/7/12 DATE

5-21-12
PLANS APPROVAL DATE

REGISTERED PROFESSIONAL ENGINEER Ahmed T. Rahid No. 76800 Exp. 12-31-12 CIVIL STATE OF CALIFORNIA

THE STATE OF CALIFORNIA OR ITS OFFICERS OR AGENTS SHALL NOT BE RESPONSIBLE FOR THE ACCURACY OR COMPLETENESS OF SCANNED COPIES OF THIS PLAN SHEET.

NOTE:

FOR ACCURATE RIGHT OF WAY DATA, CONTACT RIGHT OF WAY ENGINEERING AT THE DISTRICT OFFICE.

CURVE DATA

No.	R	Δ	T	L	N	E
3	1460′	82°58′04"	1290.96′	2114.17′	1815194.83	6289873.13

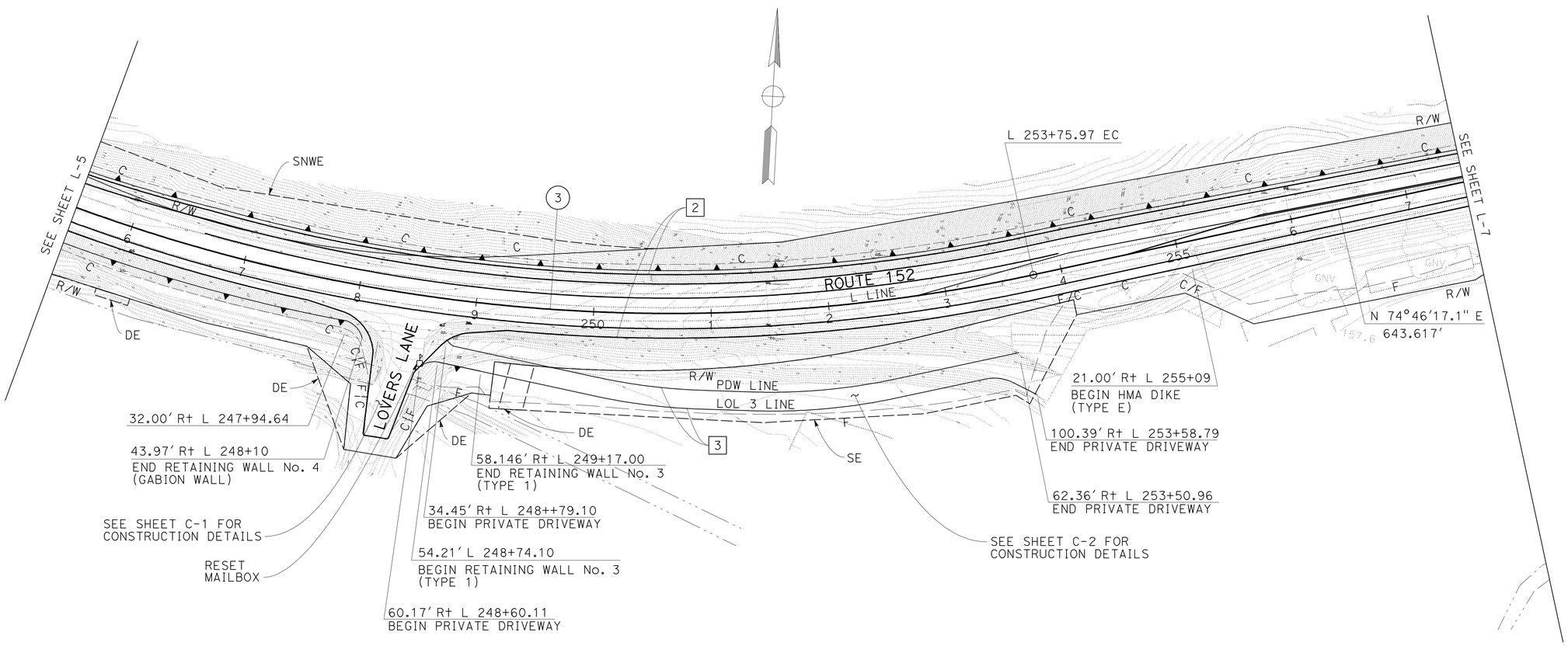

FOR NOTES, ABBREVIATIONS AND LEGEND, SEE SHEET L-1

LAYOUT

SCALE: 1″ = 50′

L-6

REVISED BY	DATE REVISED
AR	2/7/12

CALCULATED-DESIGNED BY: AHMED RAHID
CHECKED BY: CALVIN TRAN
FUNCTIONAL SUPERVISOR: MORTEZA AZIMI

STATE OF CALIFORNIA - DEPARTMENT OF TRANSPORTATION
Caltrans
DESIGN

LAST REVISION 02-07-12 | DATE PLOTTED => 22-MAY-2012 | TIME PLOTTED => 15:23

Dist	COUNTY	ROUTE	POST MILES TOTAL PROJECT	SHEET No.	TOTAL SHEETS
04	SCI	152	16.2/R16.5, R18.5/R19.5	13	195

REGISTERED CIVIL ENGINEER 2/7/12 DATE

5-21-12
PLANS APPROVAL DATE

REGISTERED PROFESSIONAL ENGINEER Ahmed T. Rahid No. 76800 Exp. 12-31-12 CIVIL STATE OF CALIFORNIA

THE STATE OF CALIFORNIA OR ITS OFFICERS OR AGENTS SHALL NOT BE RESPONSIBLE FOR THE ACCURACY OR COMPLETENESS OF SCANNED COPIES OF THIS PLAN SHEET.

NOTE:

FOR ACCURATE RIGHT OF WAY DATA, CONTACT RIGHT OF WAY ENGINEERING AT THE DISTRICT OFFICE.

CURVE DATA

No.	R	Δ	T	L	N	E
4	1000′	39°14′16"	356.46′	684.83′	1812990.27	6291140.32

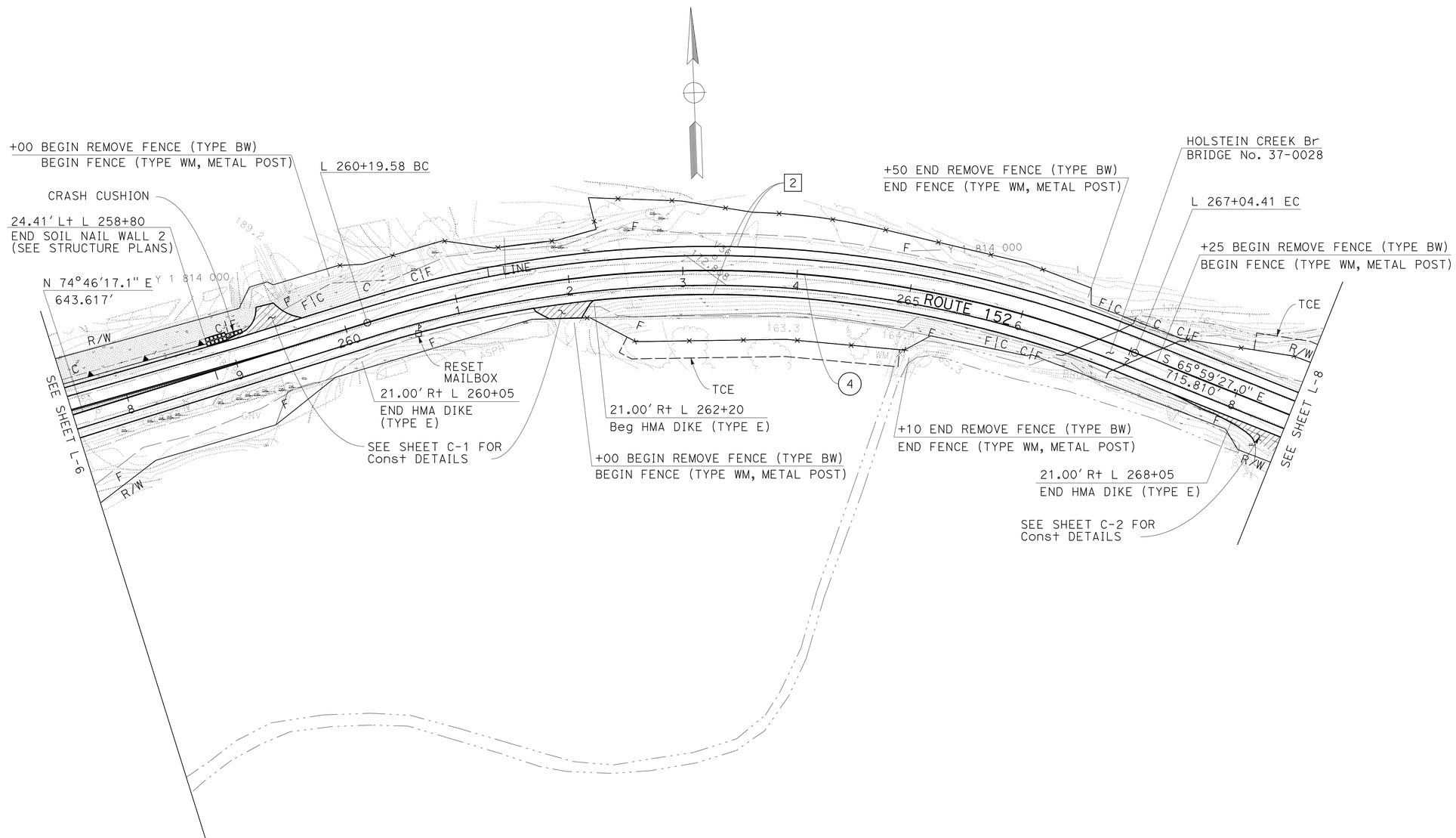

FOR NOTES, ABBREVIATIONS AND LEGEND, SEE SHEET L-1

LAYOUT
SCALE: 1′′ = 50′

L-7

REVISED BY	DATE REVISED
AR	2/7/12

CALCULATED-DESIGNED BY: AHMED RAHID
CHECKED BY: CALVIN TRAN
FUNCTIONAL SUPERVISOR: MORTEZA AZIMI

STATE OF CALIFORNIA - DEPARTMENT OF TRANSPORTATION
Caltrans
DESIGN

LAST REVISION 02-07-12 | DATE PLOTTED => 22-MAY-2012 | TIME PLOTTED => 15:23

Dist	COUNTY	ROUTE	POST MILES TOTAL PROJECT	SHEET No.	TOTAL SHEETS
04	SCI	152	16.2/R16.5, R18.5/R19.5	14	195

REGISTERED CIVIL ENGINEER DATE 2/7/12

5-21-12
PLANS APPROVAL DATE

REGISTERED PROFESSIONAL ENGINEER Ahmed T. Rahid No. 76800 Exp. 12-31-12 CIVIL STATE OF CALIFORNIA

THE STATE OF CALIFORNIA OR ITS OFFICERS OR AGENTS SHALL NOT BE RESPONSIBLE FOR THE ACCURACY OR COMPLETENESS OF SCANNED COPIES OF THIS PLAN SHEET.

NOTE:

FOR ACCURATE RIGHT OF WAY DATA, CONTACT RIGHT OF WAY ENGINEERING AT THE DISTRICT OFFICE.

CURVE DATA

No.	R	Δ	T	L	N	E
5	2000′	7°24′19"	129.42′	258.49′	1815439.44	6293014.84

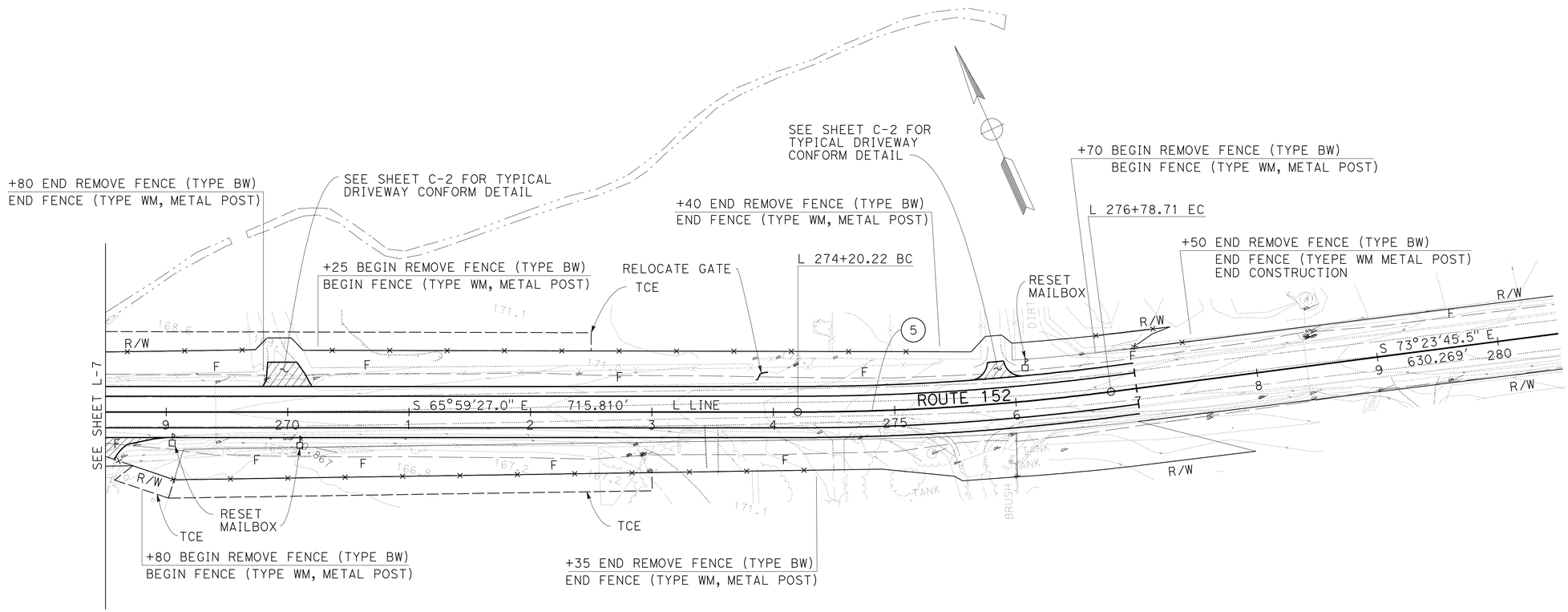

FOR NOTES, ABBREVIATIONS AND LEGEND, SEE SHEET L-1

LAYOUT
SCALE: 1″ = 50′

L-8

REVISED BY	AR
DATE REVISED	2/7/12
CALCULATED-DESIGNED BY	AHMED RAHID
CHECKED BY	CALVIN TRAN
FUNCTIONAL SUPERVISOR	MORTEZA AZIMI

STATE OF CALIFORNIA - DEPARTMENT OF TRANSPORTATION
Caltrans
DESIGN

LAST REVISION 02-07-12 | DATE PLOTTED => 22-MAY-2012 | TIME PLOTTED => 15:23

Dist	COUNTY	ROUTE	POST MILES TOTAL PROJECT	SHEET No.	TOTAL SHEETS
04	SCI	152	16.2/R16.5, R18.5/R19.5	15	195

REGISTERED CIVIL ENGINEER DATE 11/7/11

5-21-12
PLANS APPROVAL DATE

REGISTERED PROFESSIONAL ENGINEER Ahmed T. Rahid No. 76800 Exp. 12-31-12 CIVIL STATE OF CALIFORNIA

THE STATE OF CALIFORNIA OR ITS OFFICERS OR AGENTS SHALL NOT BE RESPONSIBLE FOR THE ACCURACY OR COMPLETENESS OF SCANNED COPIES OF THIS PLAN SHEET.

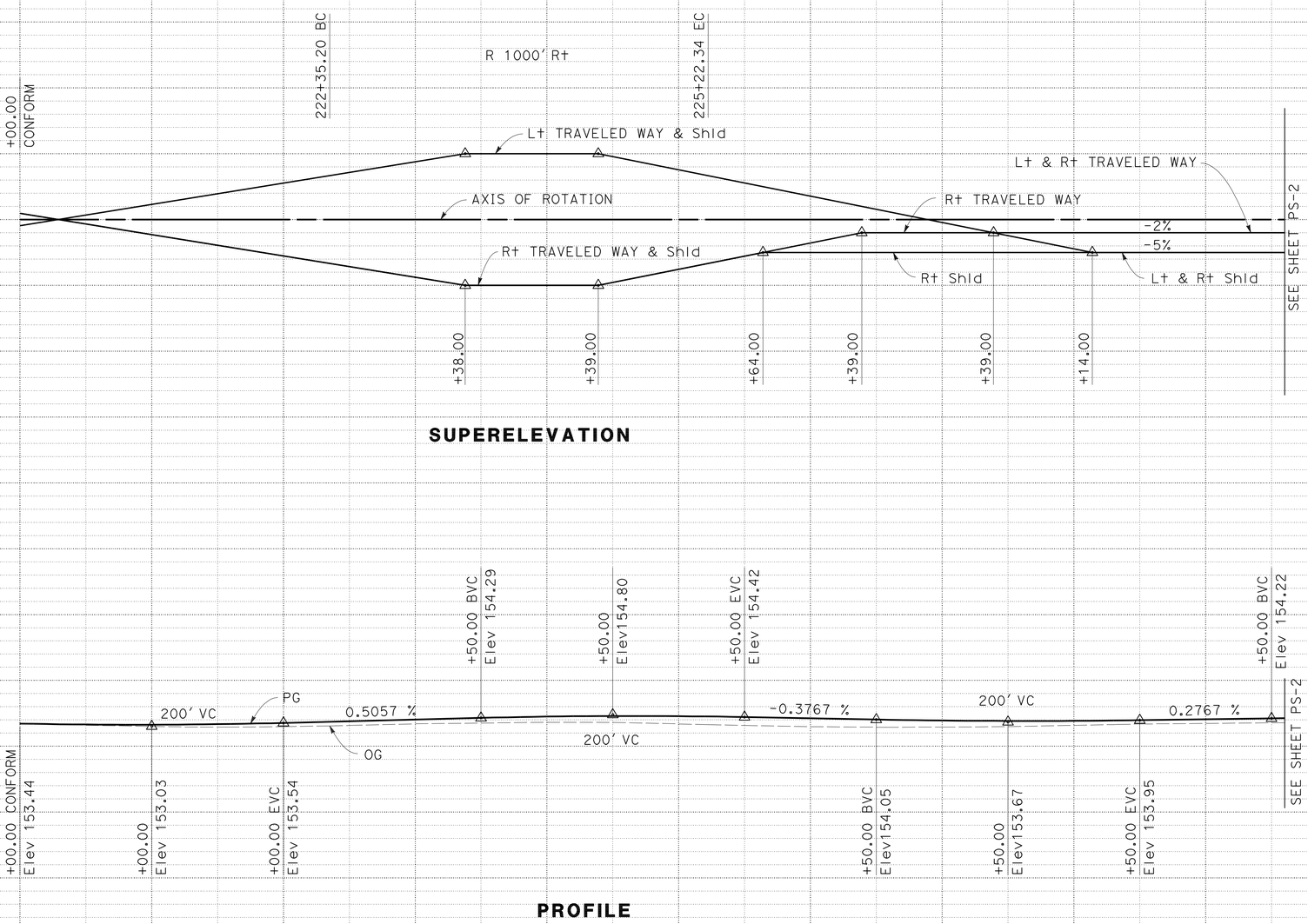

PROFILE AND SUPERELEVATION DIAGRAM

SCALE: Horiz 1" = 50'
Vert 1" = 10'

PS-1

STATION		220	1	2	3	4	225	6	7	8	9	+50	TOTAL
CY	Exc	201.049	909.1	371.57	429.04	400.67	311.70	311.70	264.47	405.75	377.561		
	Emb	7.65	20.2	28.72	76.46	215.97	224.01	128.90	92.47	19.04	0.76		

STATE OF CALIFORNIA - DEPARTMENT OF TRANSPORTATION
Caltrans DESIGN

FUNCTIONAL SUPERVISOR: MORTEZA AZIMI
CALCULATED-DESIGNED BY: AHMED RAHID
CHECKED BY: CALVIN TRAN
REVISED BY: AR
DATE REVISED: 10/12/11

LAST REVISION 10-12-11
DATE PLOTTED => 22-MAY-2012
TIME PLOTTED => 15:23

Dist	COUNTY	ROUTE	POST MILES TOTAL PROJECT	SHEET No.	TOTAL SHEETS
04	SCI	152	16.2/R16.5, R18.5/R19.5	16	195

REGISTERED CIVIL ENGINEER 11/7/11 DATE

5-21-12
PLANS APPROVAL DATE

REGISTERED PROFESSIONAL ENGINEER Ahmed T. Rahid No. 76800 Exp. 12-31-12 CIVIL STATE OF CALIFORNIA

THE STATE OF CALIFORNIA OR ITS OFFICERS OR AGENTS SHALL NOT BE RESPONSIBLE FOR THE ACCURACY OR COMPLETENESS OF SCANNED COPIES OF THIS PLAN SHEET.

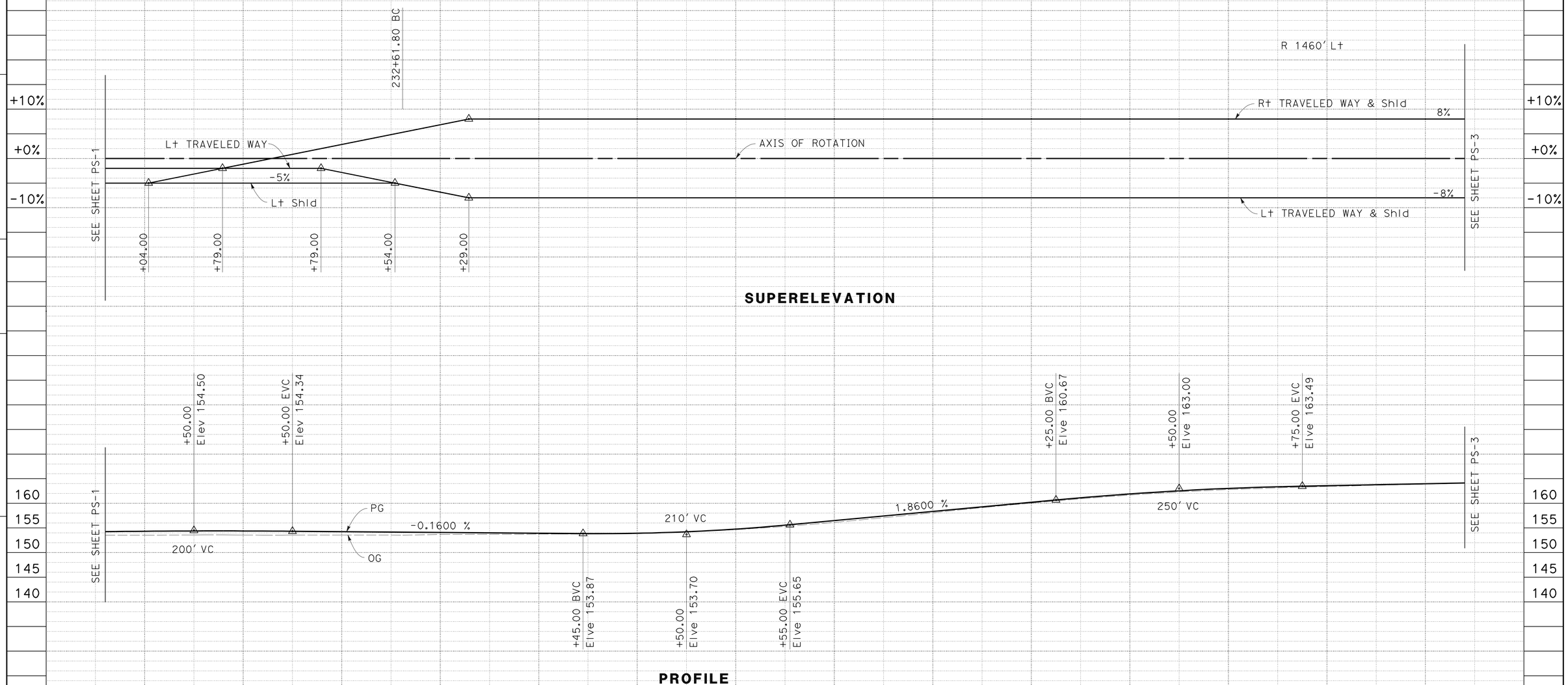

PROFILE AND SUPERELEVATION DIAGRAM

SCALE: Horiz 1" = 50'
Vert 1" = 10'

PS-2

STATION		+50	230	1	2	3	4	235	6	7	8	9	240	1	2	3	TOTAL
CY	Exc	445.248	702.71	366.67	248.30	283.86	304.45	464.54	730.13	642.55	595.05	582.71	678.56	359.74	655.23		
	Emb	0.857	1.58	25.36	72.49	64.53	43.04	32.20	35.49	35.65	33.14	24.77	25.88	47.00	126.61		

REVISED BY: AR — DATE REVISED: 10/12/11
CALCULATED-DESIGNED BY: AHMED RAHID — CHECKED BY: CALVIN TRAN
FUNCTIONAL SUPERVISOR: MORTEZA AZIMI

STATE OF CALIFORNIA - DEPARTMENT OF TRANSPORTATION
Caltrans DESIGN

LAST REVISION 10-12-11 — DATE PLOTTED => 22-MAY-2012 — TIME PLOTTED => 15:23

Dist	COUNTY	ROUTE	POST MILES TOTAL PROJECT	SHEET No.	TOTAL SHEETS
04	SCI	152	16.2/R16.5, R18.5/R19.5	17	195

REGISTERED CIVIL ENGINEER 11/7/11 DATE

5-21-12
PLANS APPROVAL DATE

REGISTERED PROFESSIONAL ENGINEER Ahmed T. Rahid No. 76800 Exp. 12-31-12 CIVIL STATE OF CALIFORNIA

THE STATE OF CALIFORNIA OR ITS OFFICERS OR AGENTS SHALL NOT BE RESPONSIBLE FOR THE ACCURACY OR COMPLETENESS OF SCANNED COPIES OF THIS PLAN SHEET.

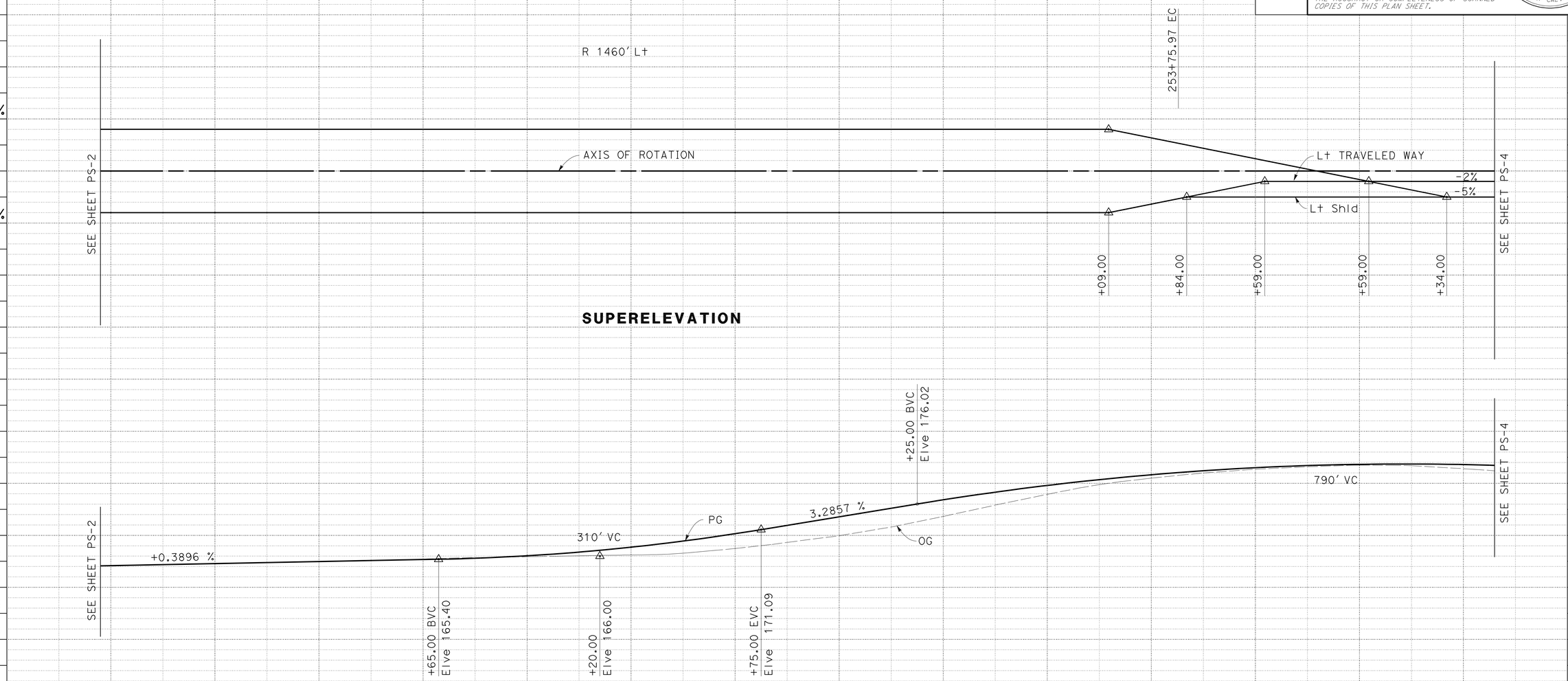

PROFILE AND SUPERELEVATION DIAGRAM

SCALE: Horiz 1" = 50'
Vert 1" = 10'

PS-3

STATION		3	4	245	6	7	8	9	250	1	2	3	4	255	6	7	TOTAL
CY	Exc	712.05	815.16	1063.42	548.17	632.34	345.55	194.11	128.47	215.45	572.11	433.68	757.01	1095.45	330.78		
	Emb	146.12	189.52	375.30	275.70	502.44	570.18	1415.51	1042.14	1880.40	1925.66	417.54	118.95	460.14	481.38		

REVISED BY: AR — DATE REVISED: 10/12/11
AHMED RAHID — CALVIN TRAN
CALCULATED-DESIGNED BY — CHECKED BY
FUNCTIONAL SUPERVISOR: MORTEZA AZIMI
STATE OF CALIFORNIA - DEPARTMENT OF TRANSPORTATION
Caltrans DESIGN

LAST REVISION 10-12-11
DATE PLOTTED => 22-MAY-2012
TIME PLOTTED => 15:23

Dist	COUNTY	ROUTE	POST MILES TOTAL PROJECT	SHEET No.	TOTAL SHEETS
04	SCI	152	16.2/R16.5, R18.5/R19.5	18	195

REGISTERED CIVIL ENGINEER DATE 11/7/11

5-21-12
PLANS APPROVAL DATE

REGISTERED PROFESSIONAL ENGINEER Ahmed T. Rahid No. 76800 Exp. 12-31-12 CIVIL STATE OF CALIFORNIA

THE STATE OF CALIFORNIA OR ITS OFFICERS OR AGENTS SHALL NOT BE RESPONSIBLE FOR THE ACCURACY OR COMPLETENESS OF SCANNED COPIES OF THIS PLAN SHEET.

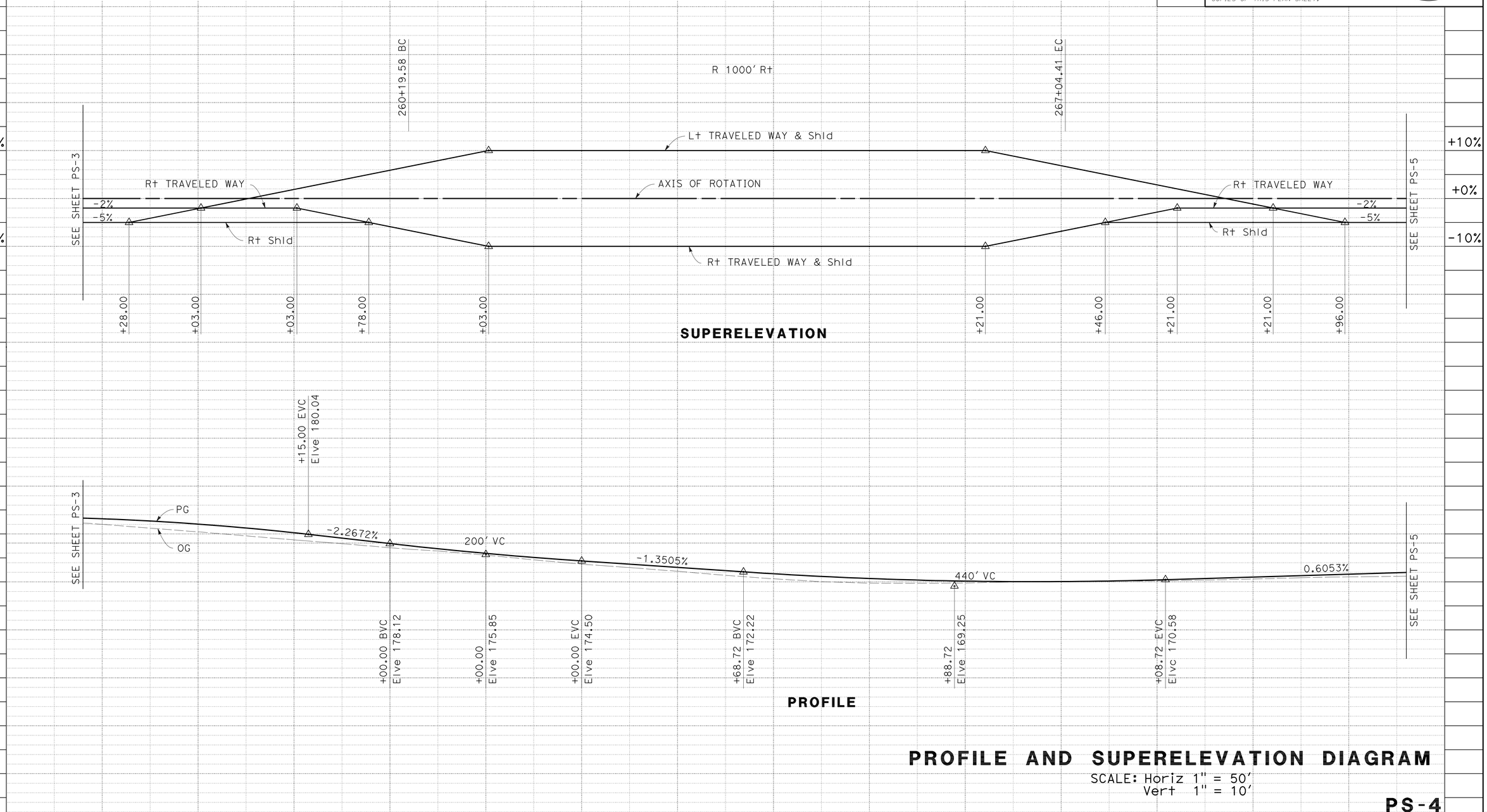

PROFILE AND SUPERELEVATION DIAGRAM

SCALE: Horiz 1" = 50'
Vert 1" = 10'

PS-4

STATION		7	8	9	260	1	2	3	4	265	6	7	8	9	270	TOTAL
CY	Exc	1563.41	1351.02	198.23	108.82	49.50	55.78	89.75	139.36	253.40	390.02	221.52	365.18	269.51		
	Emb	995.73	549.67	464.21	189.87	210.17	240.97	290.86	250.96	126.15	20.80	290.35	33.29	163.46		

REVISED BY	DATE REVISED
AR	10/12/11

AHMED RAHID — CALVIN TRAN

CALCULATED-DESIGNED BY — CHECKED BY

FUNCTIONAL SUPERVISOR: MORTEZA AZIMI

STATE OF CALIFORNIA - DEPARTMENT OF TRANSPORTATION — DESIGN — Caltrans

LAST REVISION 09-30-11 — DATE PLOTTED => 22-MAY-2012 — TIME PLOTTED => 15:23

Dist	COUNTY	ROUTE	POST MILES TOTAL PROJECT	SHEET No.	TOTAL SHEETS
04	SCI	152	16.2/R16.5, R18.5/R19.5	19	195

REGISTERED CIVIL ENGINEER DATE 11/7/11

5-21-12
PLANS APPROVAL DATE

REGISTERED PROFESSIONAL ENGINEER Ahmed T. Rahid No. 76800 Exp. 12-31-12 CIVIL STATE OF CALIFORNIA

THE STATE OF CALIFORNIA OR ITS OFFICERS OR AGENTS SHALL NOT BE RESPONSIBLE FOR THE ACCURACY OR COMPLETENESS OF SCANNED COPIES OF THIS PLAN SHEET.

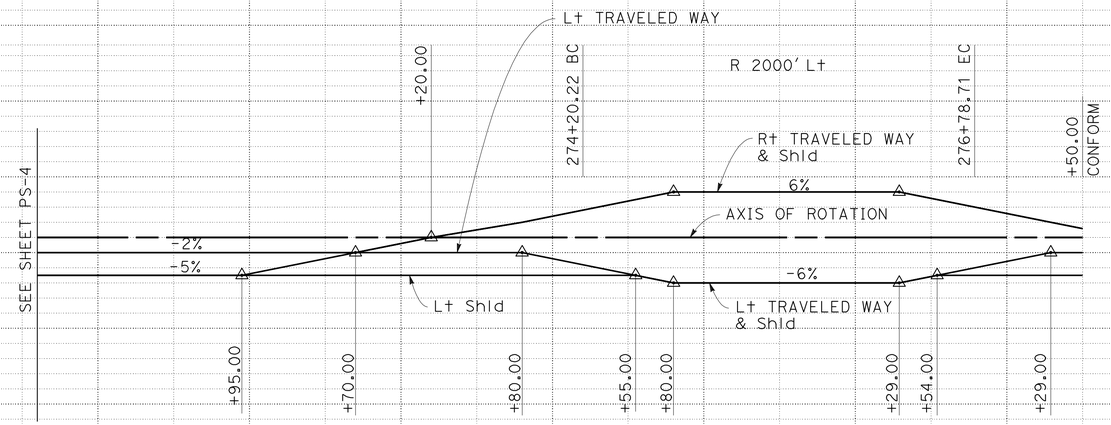

SUPERELEVATION

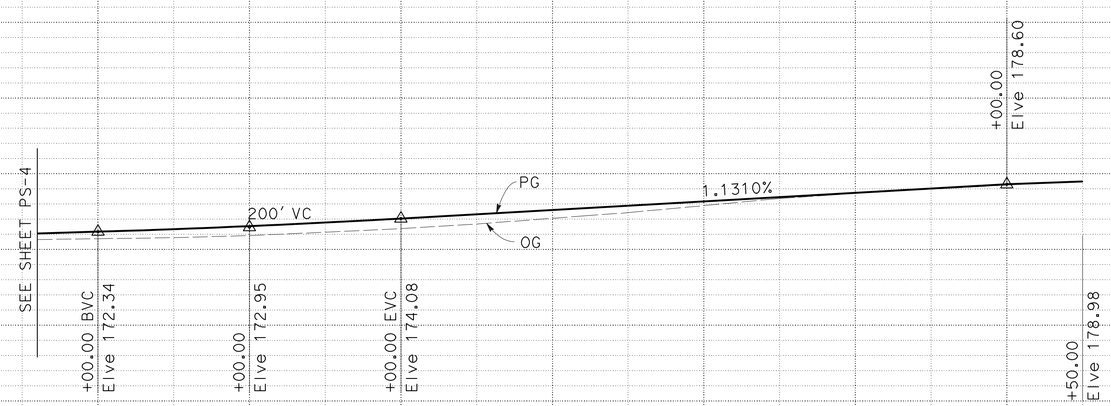

PROFILE

PROFILE AND SUPERELEVATION DIAGRAM

SCALE: Horiz 1" = 50'
Vert 1" = 10'

PS-5

STATION		270	1	2	3	4	275	6	7	8	9	280	1	2	3	TOTAL
CY	Exc	103.52	76.05	36.67	34.99	68.13	233.44	198.22	301.92	306.24	326.69					
	Emb	143.75	265.36	298.26	235.11	228.08	173.20	63.88	77.65	60.31	38.26					

STATE OF CALIFORNIA - DEPARTMENT OF TRANSPORTATION
Caltrans DESIGN

FUNCTIONAL SUPERVISOR: MORTEZA AZIMI
CALCULATED-DESIGNED BY: AHMED RAHID
CHECKED BY: CALVIN TRAN
REVISED BY: AR
DATE REVISED: 10/12/11

LAST REVISION 10-12-11
DATE PLOTTED => 22-MAY-2012
TIME PLOTTED => 15:23

Dist	COUNTY	ROUTE	POST MILES TOTAL PROJECT	SHEET No.	TOTAL SHEETS
04	SCI	152	16.2/R16.5; R18.5/R19.5	20	195

REGISTERED CIVIL ENGINEER 2/7/12 DATE

5-21-12
PLANS APPROVAL DATE

REGISTERED PROFESSIONAL ENGINEER Ahmed T. Rahid No. 76800 Exp. 12-31-12 CIVIL STATE OF CALIFORNIA

THE STATE OF CALIFORNIA OR ITS OFFICERS OR AGENTS SHALL NOT BE RESPONSIBLE FOR THE ACCURACY OR COMPLETENESS OF SCANNED COPIES OF THIS PLAN SHEET.

NOTES:

1. FOR ACCURATE RIGHT OF WAY DATA, CONTACT RIGHT OF WAY ENGINEERING AT THE DISTRICT OFFICE.
2. FOR LOVERS LANE DRIVEWAY CROSS SECTION, SEE TYPICAL CROSS SECTIONS.

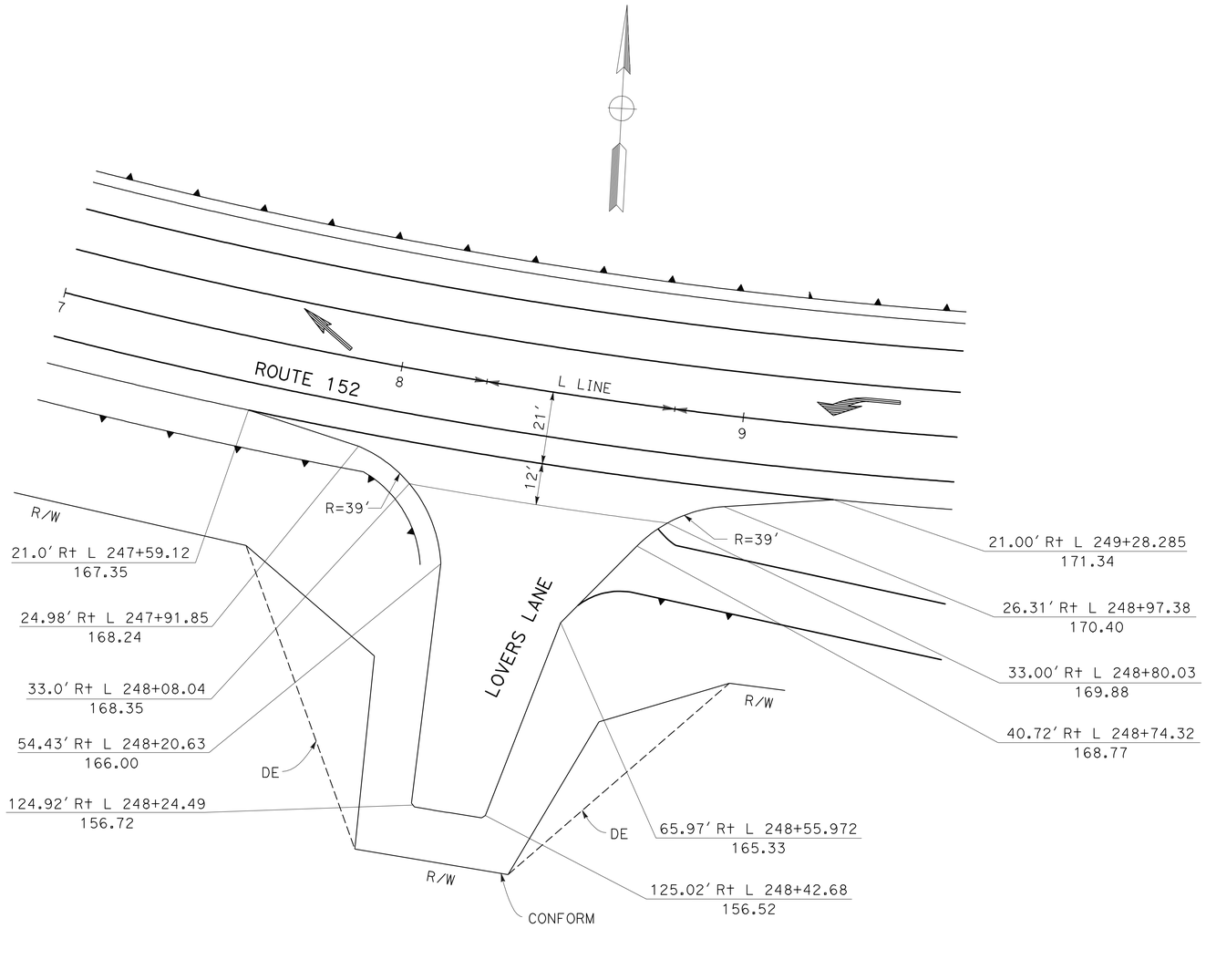

LOVERS LANE/HIGHWAY 152 INTERSECTION

"L" 248+50

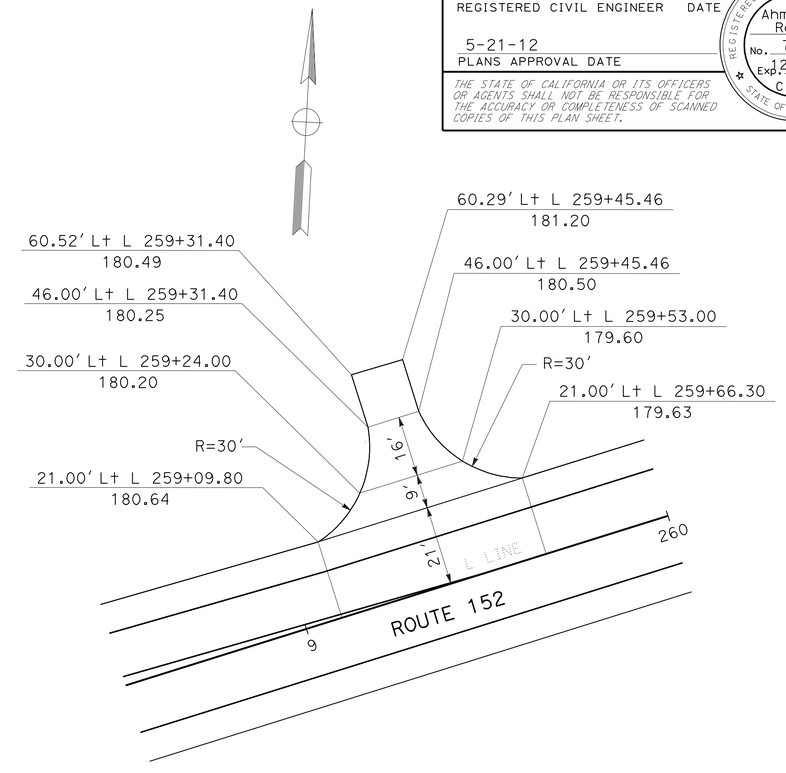

DRIVEWAY CONFORM

"L" 259+50

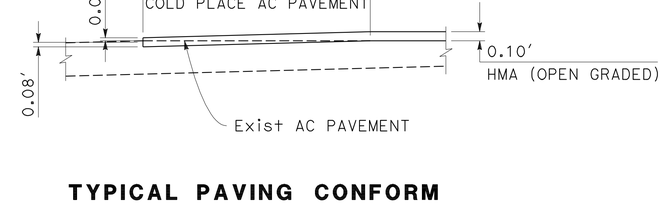

TYPICAL PAVING CONFORM

"L" 220+00 TO 220+50
"L" 277+00 TO 277+50

NO SCALE

CONSTRUCTION DETAILS
PAVEMENT ELEVATION PLAN

SCALE: 1" = 20'

APPROVED FOR PAVEMENT ELEVATION WORK ONLY

C-1

REVISED BY	DATE REVISED
AR	2/7/12

CALVIN TRAN — CALCULATED-DESIGNED BY
AHMED RAHID — CHECKED BY
FUNCTIONAL SUPERVISOR: MORTEZA AZIMI

STATE OF CALIFORNIA - DEPARTMENT OF TRANSPORTATION
Caltrans
DESIGN

LAST REVISION 02-07-12 | DATE PLOTTED => 22-MAY-2012 | TIME PLOTTED => 15:49

Dist	COUNTY	ROUTE	POST MILES TOTAL PROJECT	SHEET No.	TOTAL SHEETS
04	SCI	152	16.2/R16.5, R18.5/R19.5	21	195

REGISTERED CIVIL ENGINEER 2/7/12 DATE

5-21-12
PLANS APPROVAL DATE

REGISTERED PROFESSIONAL ENGINEER Ahmed T. Rahid No. 76800 Exp. 12-31-12 CIVIL STATE OF CALIFORNIA

THE STATE OF CALIFORNIA OR ITS OFFICERS OR AGENTS SHALL NOT BE RESPONSIBLE FOR THE ACCURACY OR COMPLETENESS OF SCANNED COPIES OF THIS PLAN SHEET.

NOTE:

FOR ACCURATE RIGHT OF WAY DATA, CONTACT RIGHT OF WAY ENGINEERING AT THE DISTRICT OFFICE.

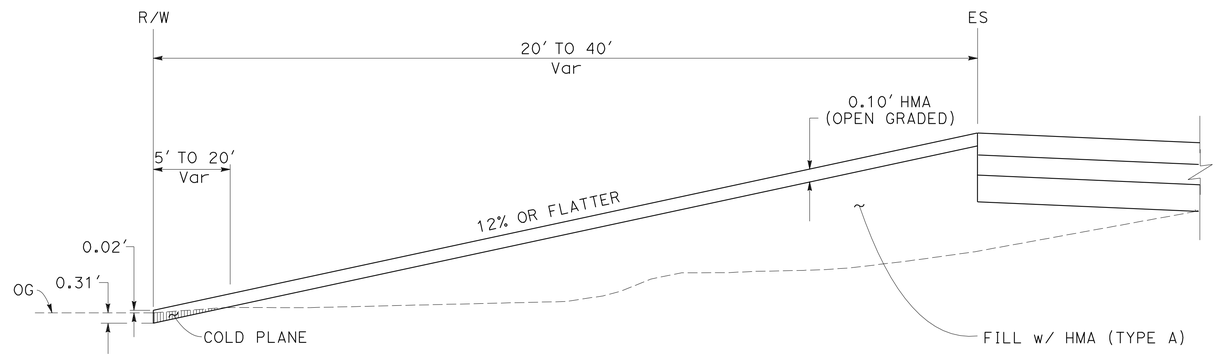

TYPICAL DRIVEWAY CONFORM

"L" 222+50	"L" 226+00	"L" 227+15
"L" 259+50	"L" 262+00	"L" 268+50
"L" 270+00	"L" 275+60	"L" 275+90

NO SCALE

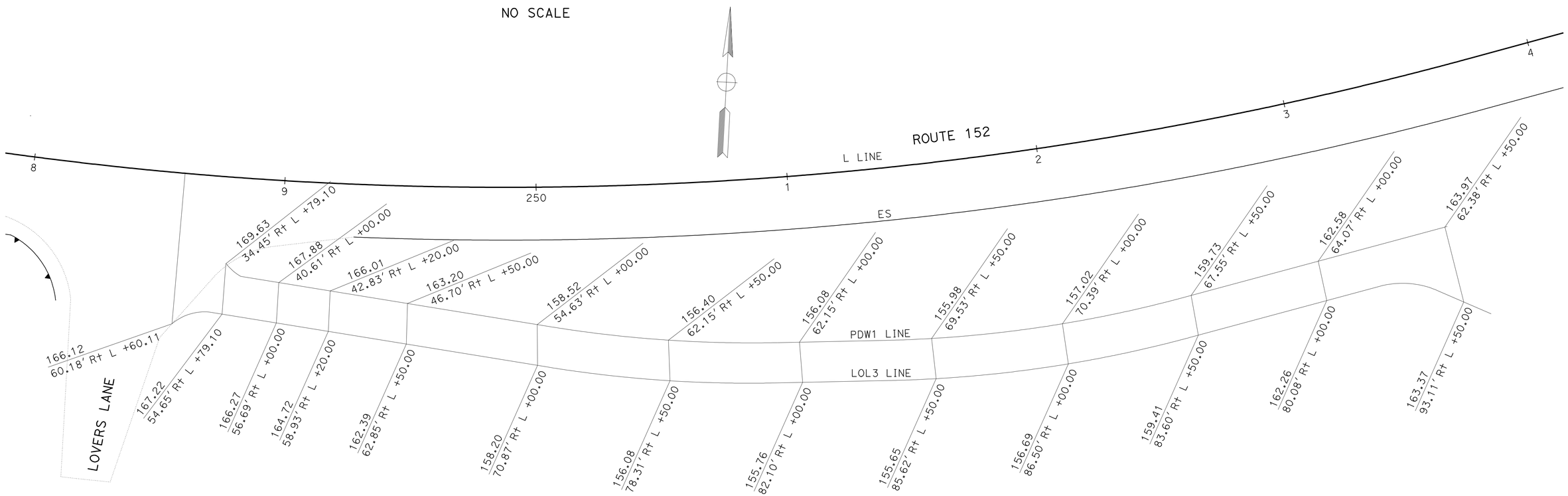

FINISH SURFACE ELEVATION

FOR PRIVATE DRIVE WAY

"L" 248+60.11

SCALE: 1" = 20'

APPROVED FOR PAVEMENT ELEVATION WORK ONLY

FOR NOTES, ABBREVIATIONS AND LEGEND, SEE SHEET C-1

CONSTRUCTION DETAILS
PAVEMENT ELEVATION PLAN

SCALE: AS SHOWN

C-2

REVISED BY	DATE REVISED
AR	2/7/12

CALCULATED-DESIGNED BY: CALVIN TRAN
CHECKED BY: AHMED RAHID
FUNCTIONAL SUPERVISOR: MORTEZA AZIMI

STATE OF CALIFORNIA - DEPARTMENT OF TRANSPORTATION
Caltrans
DESIGN

LAST REVISION 02-07-12 | DATE PLOTTED => 22-MAY-2012 | TIME PLOTTED => 15:37

Dist	COUNTY	ROUTE	POST MILES TOTAL PROJECT	SHEET No.	TOTAL SHEETS
04	SCI	152	16.2/R16.5, R18.5/R19.5	22	195

REGISTERED CIVIL ENGINEER 11/7/11 DATE

5-21-12
PLANS APPROVAL DATE

REGISTERED PROFESSIONAL ENGINEER Ahmed T. Rahid No. 76800 Exp. 12-31-12 CIVIL STATE OF CALIFORNIA

THE STATE OF CALIFORNIA OR ITS OFFICERS OR AGENTS SHALL NOT BE RESPONSIBLE FOR THE ACCURACY OR COMPLETENESS OF SCANNED COPIES OF THIS PLAN SHEET.

TEMPORARY WATER POLLUTION CONTROL SUMMARY

DESCRIPTION	UNIT	QUANTITY
TEMPORARY FIBER ROLL	LF	2900
TEMPORARY SILT FENCE	LF	400
TEMPORARY CONSTRUCTION ENTRANCE	EA	4
TEMPORARY COVER	SQYD	1000
TEMPORARY CHECK DAM	LF	180
TEMPORARY DRAINAGE INLET PROTECTION	EA	22
TEMPORARY HYDRAULIC MULCH TYPE (BONDED FIBER MATRIX)	SQYD	20000
RAIN EVENT ACTION PLAN	EA	79
STORM WATER ANNUAL REPORT	EA	2
STORM WATER SAMPLING AND ANALYSIS DAY	EA	50

WATER POLLUTION CONTROL QUANTITIES

WPCQ-1

STATE OF CALIFORNIA - DEPARTMENT OF TRANSPORTATION
Caltrans DESIGN

FUNCTIONAL SUPERVISOR: MORTEZA AZIMI
CALCULATED-DESIGNED BY: AHMED RAHID
CHECKED BY: KHALIQ TAHERI
REVISED BY: AR
DATE REVISED: 10/21/11

LAST REVISION 10-21-11 | DATE PLOTTED => 22-MAY-2012 | TIME PLOTTED => 15:38

Dist	COUNTY	ROUTE	POST MILES TOTAL PROJECT	SHEET No.	TOTAL SHEETS
04	SCI	152	16.2/R16.5, R18.5/R19.5	23	195

LICENSED LANDSCAPE ARCHITECT

5-21-12
PLANS APPROVAL DATE

LICENSED LANDSCAPE ARCHITECT
Laurie J. Smith No. 4088
Signature
8-31-12
Renewal Date
Date
STATE OF CALIFORNIA

THE STATE OF CALIFORNIA OR ITS OFFICERS OR AGENTS SHALL NOT BE RESPONSIBLE FOR THE ACCURACY OR COMPLETENESS OF SCANNED COPIES OF THIS PLAN SHEET.

NOTE:

FOR ACCURATE RIGHT OF WAY DATA, CONTACT RIGHT OF WAY ENGINEERING AT THE DISTRICT OFFICE.

ABBREVIATION:

SNWE - SOIL NAIL WALL EASEMENT

LEGEND:

EROSION CONTROL (TYPE 1)
EROSION CONTROL (COMPOST BLANKET)
EROSION CONTROL (HYDROSEED)

EROSION CONTROL (TYPE 2)
RECP (NETTING)
EROSION CONTROL (COMPOST BLANKET)
EROSION CONTROL (HYDROSEED)

EROSION CONTROL (TYPE 3)
COMPOST, INCORPORATE
EROSION CONTROL (HYDROSEED)

FIBER ROLLS

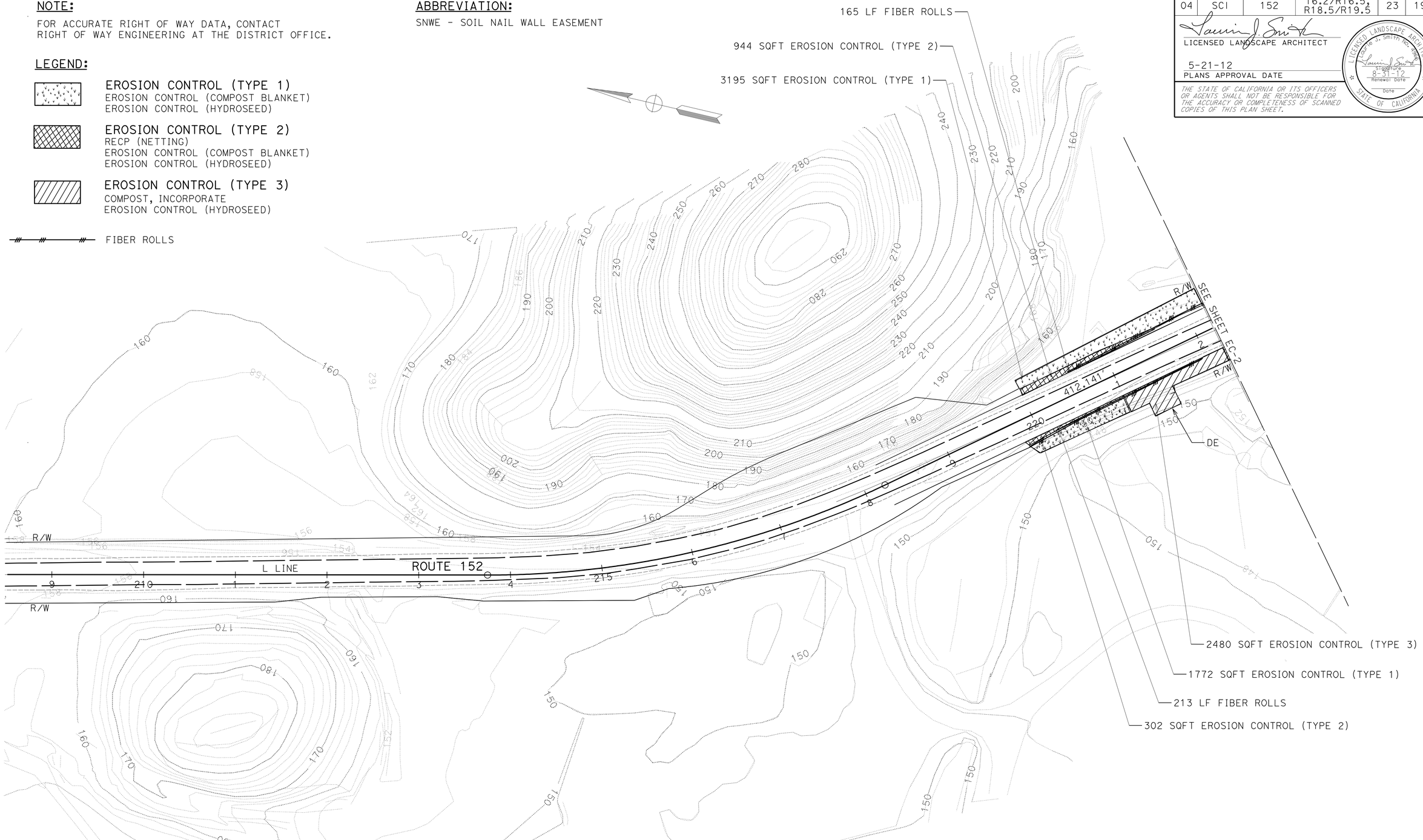

EROSION CONTROL PLAN

SCALE: 1" = 50'

APPROVED FOR EROSION CONTROL WORK ONLY

EC-1

REVISED BY	DATE REVISED
LJS	10/4/11

LAURIE J SMITH — SENIOR LANDSCAPE ARCHITECT
ALEX MC DONALD — CALCULATED-DESIGNED BY
DAVID W YAM — CHECKED BY

STATE OF CALIFORNIA - DEPARTMENT OF TRANSPORTATION
Caltrans®
WATER QUALITY

LAST REVISION 10-04-11
DATE PLOTTED => 22-MAY-2012
TIME PLOTTED => 15:38

Dist	COUNTY	ROUTE	POST MILES TOTAL PROJECT	SHEET No.	TOTAL SHEETS
04	SCI	152	16.2/R16.5, R18.5/R19.5	24	195

LICENSED LANDSCAPE ARCHITECT

5-21-12
PLANS APPROVAL DATE

LICENSED LANDSCAPE ARCHITECT
Laurie J. Smith No. 4098
Signature
8-31-12
Renewal Date
Date
STATE OF CALIFORNIA

THE STATE OF CALIFORNIA OR ITS OFFICERS OR AGENTS SHALL NOT BE RESPONSIBLE FOR THE ACCURACY OR COMPLETENESS OF SCANNED COPIES OF THIS PLAN SHEET.

NOTE:

FOR COMPLETE RIGHT OF WAY DATA, SEE RIGHT OF WAY RECORD MAPS AT DISTRICT OFFICE.

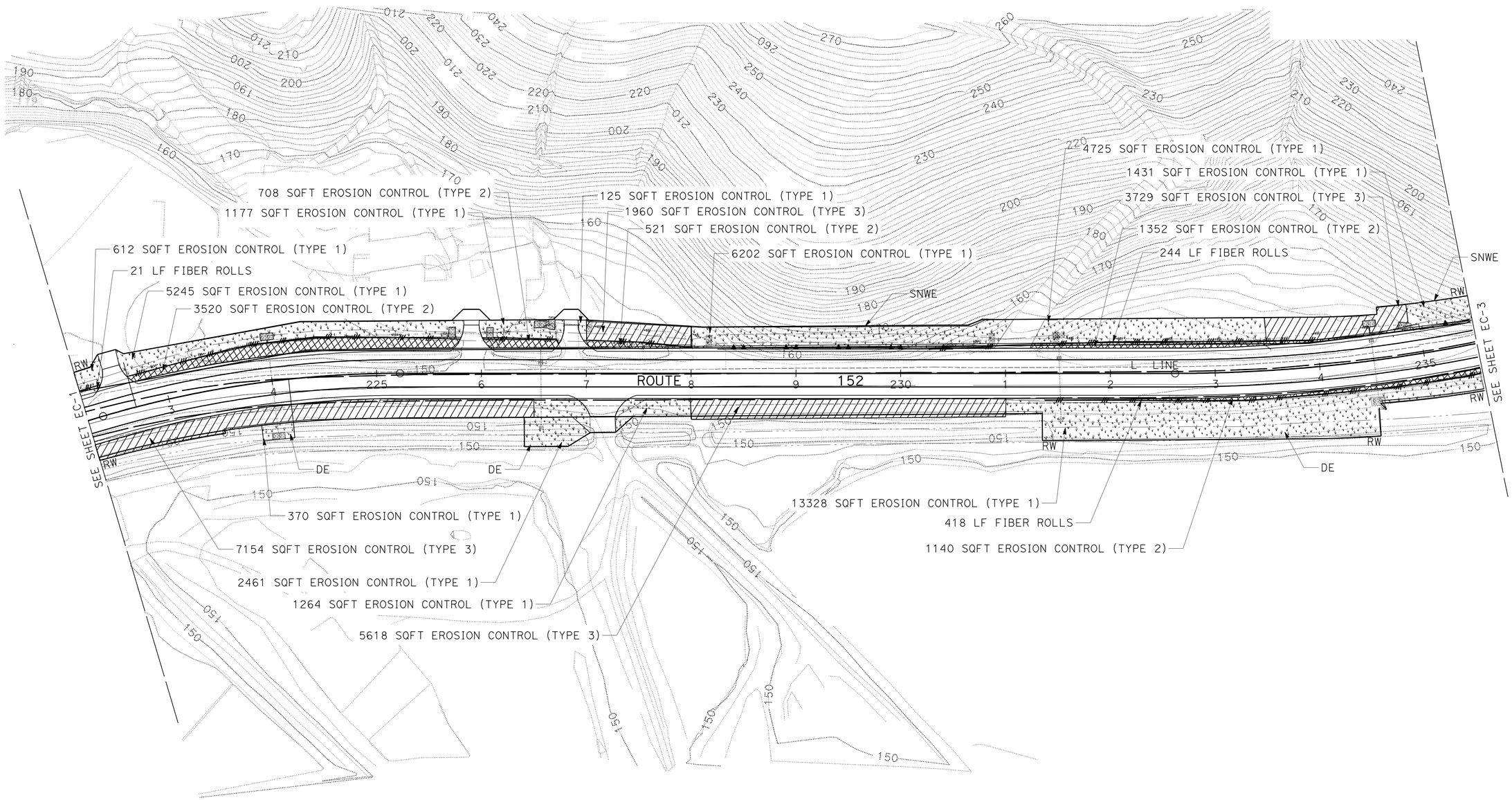

APPROVED FOR EROSION CONTROL WORK ONLY

FOR NOTES, ABBREVIATIONS AND LEGEND, SEE SHEET EC-1

EROSION CONTROL PLAN

SCALE: 1" = 50'

EC-2

STATE OF CALIFORNIA - DEPARTMENT OF TRANSPORTATION
Caltrans®
WATER QUALITY

SENIOR LANDSCAPE ARCHITECT: DAVID W YAM

CALCULATED-DESIGNED BY: LAURIE J SMITH
CHECKED BY: ALEX MC DONALD

REVISED BY: LJS
DATE REVISED: 9/26/11

LAST REVISION 09-26-11
DATE PLOTTED => 22-MAY-2012
TIME PLOTTED => 15:38

Dist	COUNTY	ROUTE	POST MILES TOTAL PROJECT	SHEET No.	TOTAL SHEETS
04	SCI	152	16.2/R16.5, R18.5/R19.5	25	195

LICENSED LANDSCAPE ARCHITECT

5-21-12
PLANS APPROVAL DATE

LICENSED LANDSCAPE ARCHITECT
Laurie J. Smith No. 4088
Signature
8-31-12
Renewal Date
Date
STATE OF CALIFORNIA

THE STATE OF CALIFORNIA OR ITS OFFICERS OR AGENTS SHALL NOT BE RESPONSIBLE FOR THE ACCURACY OR COMPLETENESS OF SCANNED COPIES OF THIS PLAN SHEET.

NOTE:

FOR COMPLETE RIGHT OF WAY DATA, SEE RIGHT OF WAY RECORD MAPS AT DISTRICT OFFICE.

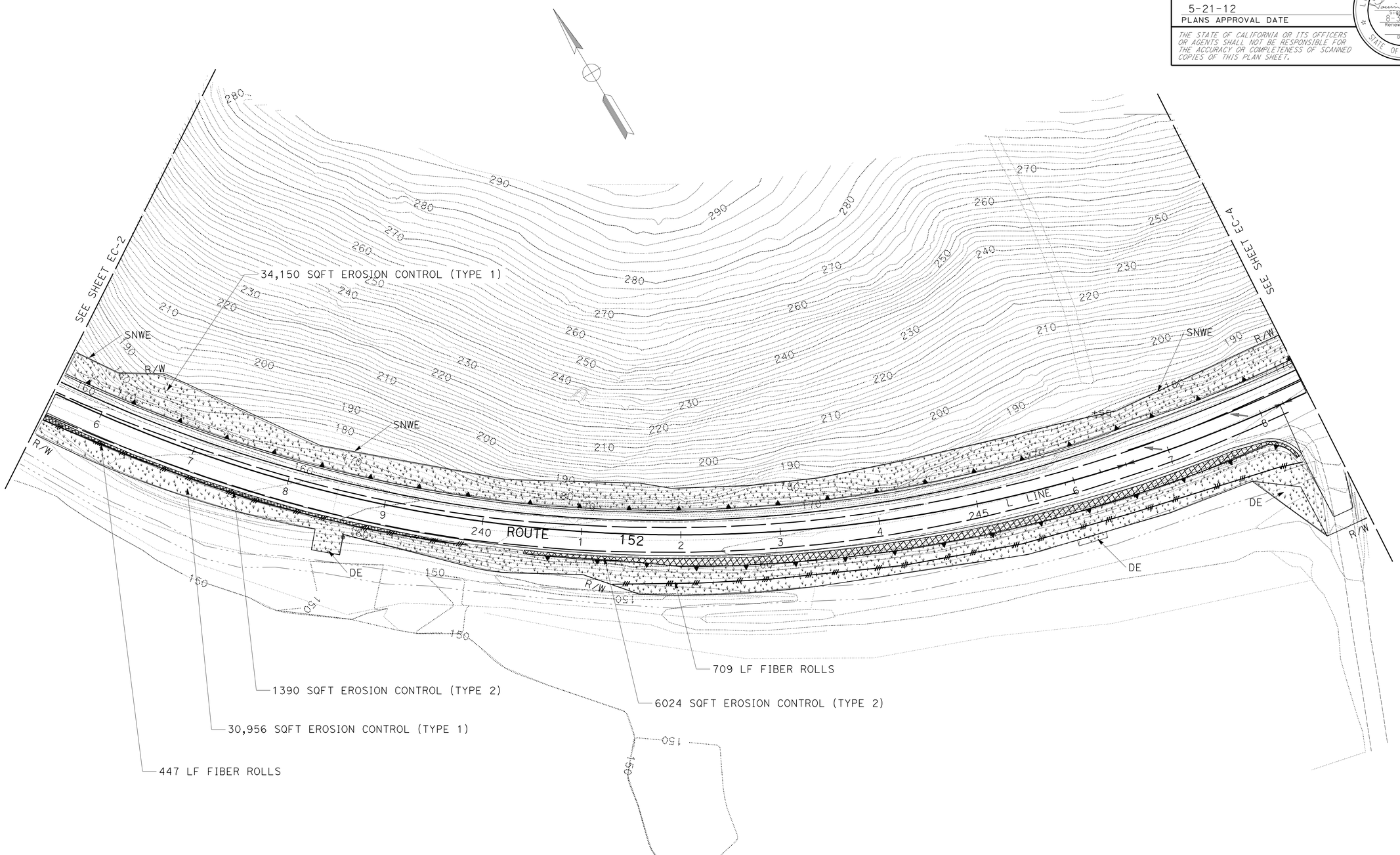

APPROVED FOR EROSION CONTROL WORK ONLY

FOR NOTES, ABBREVIATIONS AND LEGEND, SEE SHEET EC-1

EROSION CONTROL PLAN

SCALE: 1" = 50'

EC-3

STATE OF CALIFORNIA - DEPARTMENT OF TRANSPORTATION
Caltrans®
WATER QUALITY

SENIOR LANDSCAPE ARCHITECT: DAVID W YAM

CALCULATED-DESIGNED BY: LAURIE J SMITH
CHECKED BY: ALEX MC DONALD

REVISED BY: LJS
DATE REVISED: 9/26/11

LAST REVISION DATE PLOTTED => 22-MAY-2012
TIME PLOTTED => 16:05
09-26-11

Dist	COUNTY	ROUTE	POST MILES TOTAL PROJECT	SHEET No.	TOTAL SHEETS
04	SCI	152	16.2/R16.5, R18.5/R19.5	26	195

LICENSED LANDSCAPE ARCHITECT

5-21-12
PLANS APPROVAL DATE

LICENSED LANDSCAPE ARCHITECT
Laurie J. Smith No. 4088
Signature
8-31-12
Renewal Date
Date
STATE OF CALIFORNIA

THE STATE OF CALIFORNIA OR ITS OFFICERS OR AGENTS SHALL NOT BE RESPONSIBLE FOR THE ACCURACY OR COMPLETENESS OF SCANNED COPIES OF THIS PLAN SHEET.

NOTE:

FOR COMPLETE RIGHT OF WAY DATA, SEE RIGHT OF WAY RECORD MAPS AT DISTRICT OFFICE.

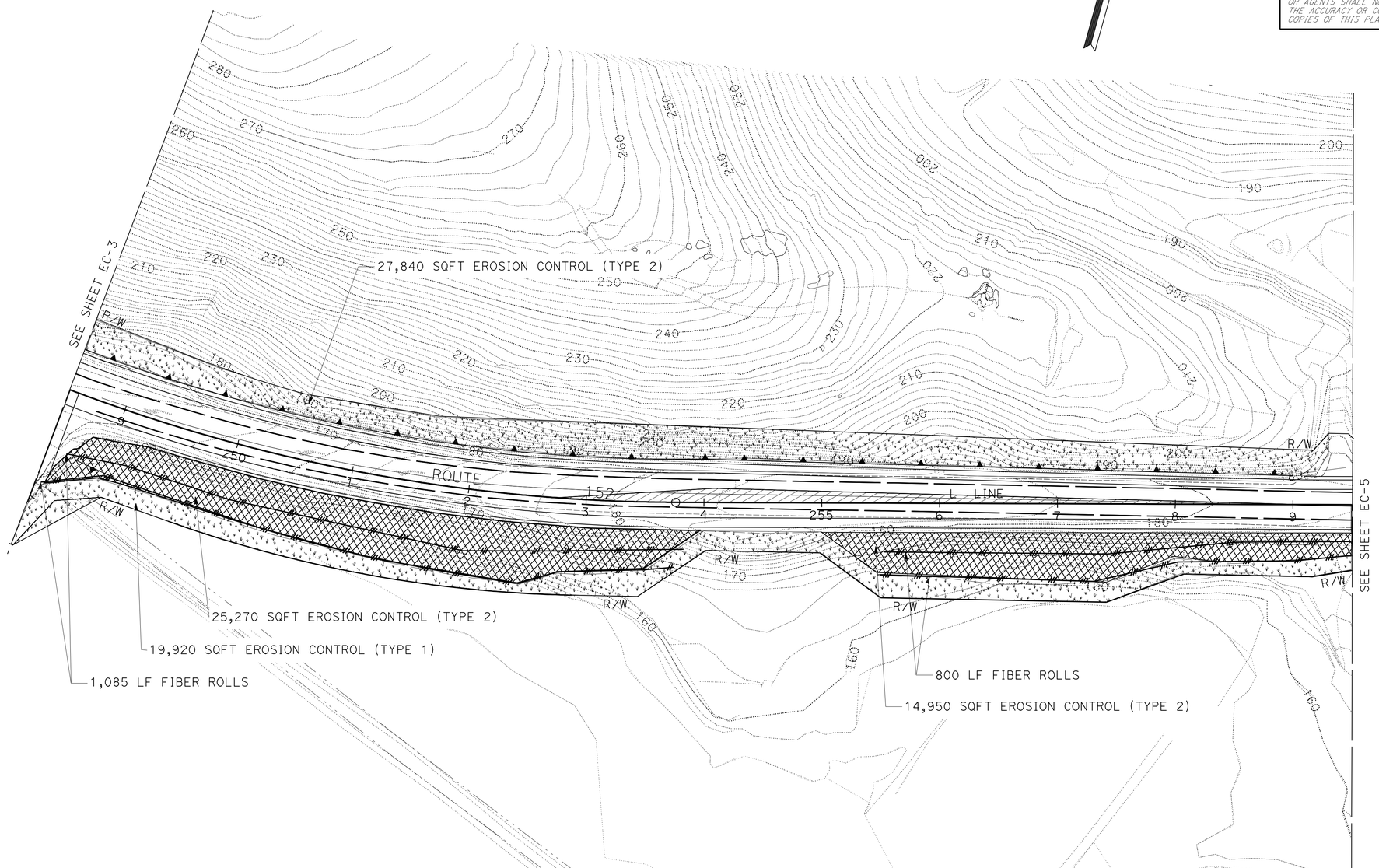

EROSION CONTROL PLAN

SCALE: 1" = 50'

APPROVED FOR EROSION CONTROL WORK ONLY

FOR NOTES, ABBREVIATIONS AND LEGEND, SEE SHEET EC-1

EC-4

STATE OF CALIFORNIA - DEPARTMENT OF TRANSPORTATION
Caltrans®
WATER QUALITY

SENIOR LANDSCAPE ARCHITECT: DAVID W YAM

CALCULATED-DESIGNED BY: LAURIE J SMITH
CHECKED BY: ALEX MC DONALD

REVISED BY: LJS
DATE REVISED: 9/26/11

LAST REVISION 09-26-11
DATE PLOTTED => 22-MAY-2012
TIME PLOTTED => 16:05

Dist	COUNTY	ROUTE	POST MILES TOTAL PROJECT	SHEET No.	TOTAL SHEETS
04	SCI	152	16.2/R16.5, R18.5/R19.5	27	195

LICENSED LANDSCAPE ARCHITECT

5-21-12
PLANS APPROVAL DATE

THE STATE OF CALIFORNIA OR ITS OFFICERS OR AGENTS SHALL NOT BE RESPONSIBLE FOR THE ACCURACY OR COMPLETENESS OF SCANNED COPIES OF THIS PLAN SHEET.

LICENSED LANDSCAPE ARCHITECT
Laurie J. Smith No. 4088
Signature
8-31-12
Renewal Date
Date
STATE OF CALIFORNIA

NOTE:
FOR COMPLETE RIGHT OF WAY DATA, SEE RIGHT OF WAY RECORD MAPS AT DISTRICT OFFICE.

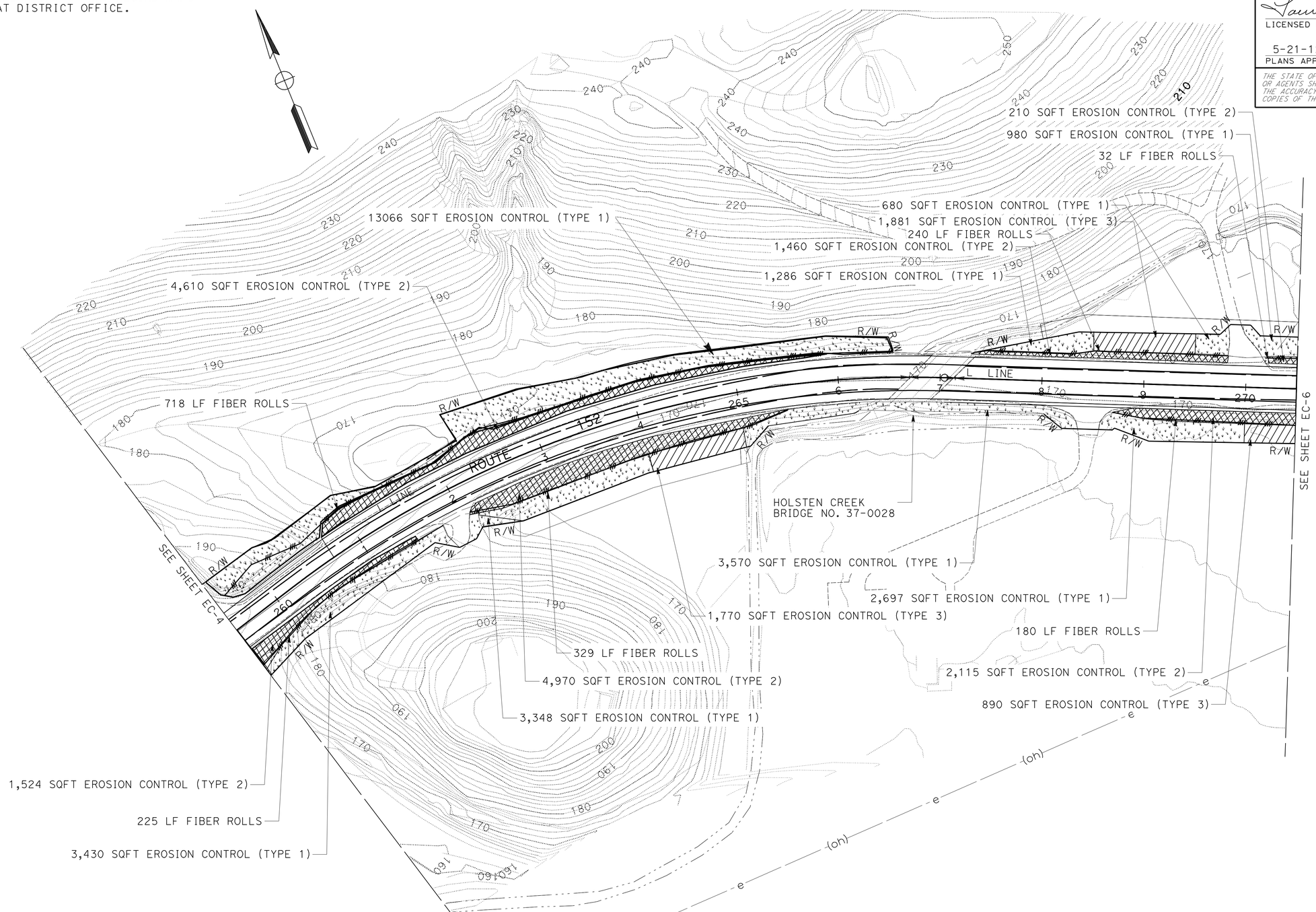

APPROVED FOR EROSION CONTROL WORK ONLY

FOR NOTES, ABBREVIATIONS AND LEGEND, SEE SHEET EC-1

EROSION CONTROL PLAN
SCALE: 1" = 50'

EC-5

STATE OF CALIFORNIA - DEPARTMENT OF TRANSPORTATION
Caltrans
WATER QUALITY
SENIOR LANDSCAPE ARCHITECT: DAVID W YAM
CALCULATED-DESIGNED BY: LAURIE J SMITH
CHECKED BY: ALEX MC DONALD
REVISED BY: LJS
DATE REVISED: 9/26/11

LAST REVISION 09-26-11
DATE PLOTTED => 22-MAY-2012
TIME PLOTTED => 16:05

Dist	COUNTY	ROUTE	POST MILES TOTAL PROJECT	SHEET No.	TOTAL SHEETS
04	SCI	152	16.2/R16.5, R18.5/R19.5	28	195

LICENSED LANDSCAPE ARCHITECT

5-21-12
PLANS APPROVAL DATE

LICENSED LANDSCAPE ARCHITECT
Laurie J. Smith No. 4088
Signature
8-31-12
Renewal Date
Date
STATE OF CALIFORNIA

THE STATE OF CALIFORNIA OR ITS OFFICERS OR AGENTS SHALL NOT BE RESPONSIBLE FOR THE ACCURACY OR COMPLETENESS OF SCANNED COPIES OF THIS PLAN SHEET.

NOTE:

FOR COMPLETE RIGHT OF WAY DATA, SEE RIGHT OF WAY RECORD MAPS AT DISTRICT OFFICE.

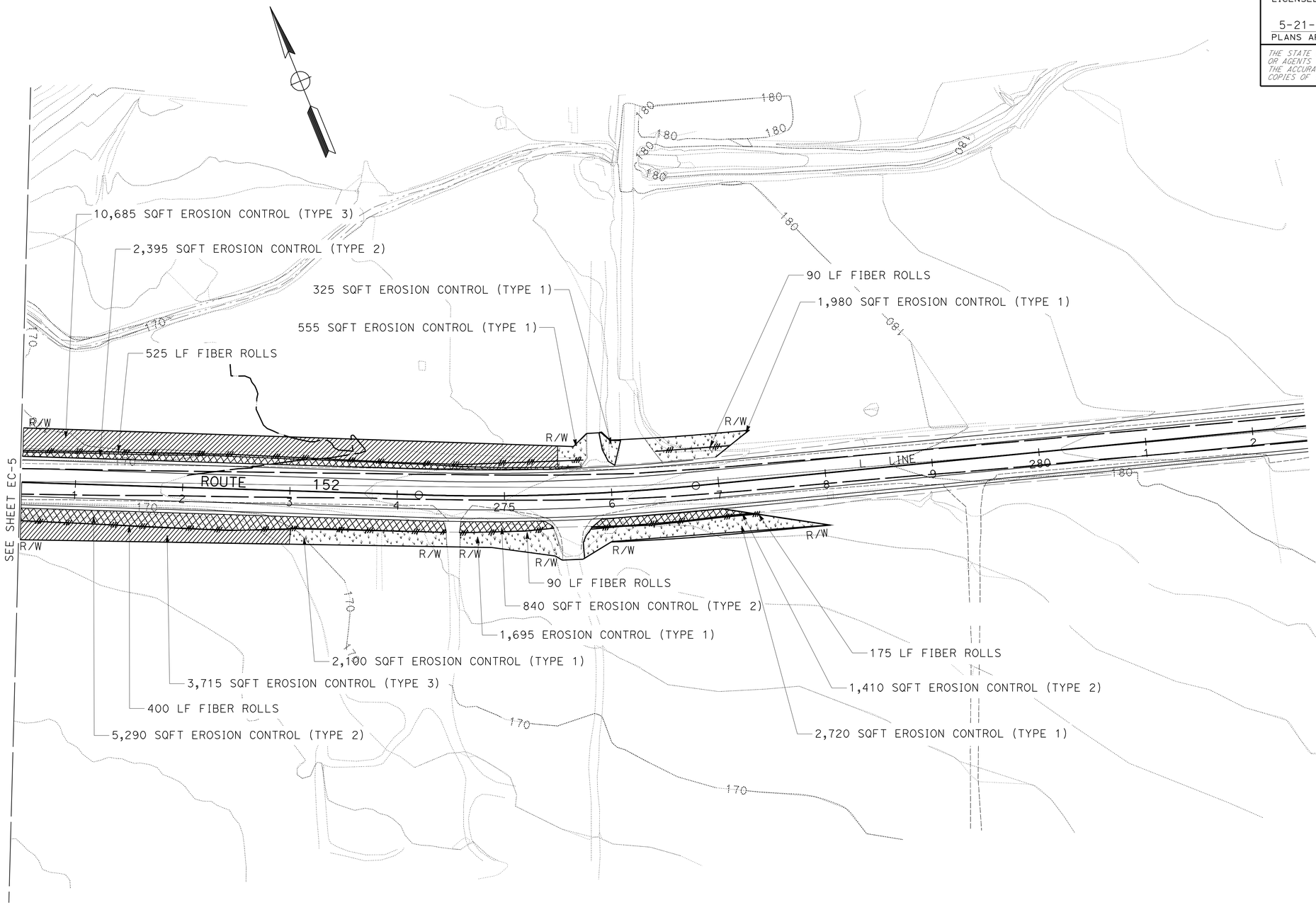

EROSION CONTROL PLAN

SCALE: 1" = 50'

APPROVED FOR EROSION CONTROL WORK ONLY

FOR NOTES, ABBREVIATIONS AND LEGEND, SEE SHEET EC-1

EC-6

STATE OF CALIFORNIA - DEPARTMENT OF TRANSPORTATION
Caltrans®
WATER QUALITY

SENIOR LANDSCAPE ARCHITECT: DAVID W YAM

CALCULATED-DESIGNED BY: LAURIE J SMITH
CHECKED BY: ALEX MC DONALD

REVISED BY: LJS
DATE REVISED: 9/26/11

LAST REVISION: 09-26-11
DATE PLOTTED => 22-MAY-2012
TIME PLOTTED => 16:05

Dist	COUNTY	ROUTE	POST MILES TOTAL PROJECT	SHEET No.	TOTAL SHEETS
04	SCI	152	16.2/R16.5, R18.5/R19.5	29	195

LICENSED LANDSCAPE ARCHITECT

5-21-12
PLANS APPROVAL DATE

LICENSED LANDSCAPE ARCHITECT
Laurie J. Smith No. 4088
Signature
8-31-12
Renewal Date
Date
STATE OF CALIFORNIA

THE STATE OF CALIFORNIA OR ITS OFFICERS OR AGENTS SHALL NOT BE RESPONSIBLE FOR THE ACCURACY OR COMPLETENESS OF SCANNED COPIES OF THIS PLAN SHEET.

EROSION CONTROL QUANTITIES

SHEET No.	LOCATION BEGIN	LOCATION END	TYPE	AREA SQFT	COMPOST (INCORPORATE) SQYD	EROSION CONTROL (COMPOST BLANKET) CY	RECP (NETTING) SQFT	EROSION CONTROL (HYDROSEED) SQFT	FIBER ROLLS LF
EC-1	L LINE 219+82 24'-0" R	L LINE 221+82 24'-0" R	2	302	-	1	302	302	213
	L LINE 219+85' 31'-0" R	L LINE 220+50' 28'-0" R	1	1,772	-	1	-	1,772	-
	L LINE 220+00' 31'-0" L	L LINE 222+20' 30'-0" L	1	3,195	-	3	-	3,195	165
	L LINE 220+50' 26'-0" L	L LINE 221+61' 25'-7" L	2	944	-	1	105	944	-
	L LINE 221+00' 24'-0" R	L LINE 222+20' 24'-0" R	3	2,480	276	-	-	2,480	-
EC-2	L LINE 222+20' 24'-1" L	L LINE 222+46' 44'-0" L	1	612	-	1	-	612	21
	L LINE 222+20' 44'-0" R	L LINE 226+50' 23'-8" R	3	7,154	795	-	-	7,154	-
	L LINE 222+63' 44'-0" L	L LINE 225+82' 38'-0" L	1	5,245	-	4	-	5,245	322
	L LINE 222+68' 26'-5" L	L LINE 225+80' 34'-6" L	2	3,520	-	3	391	3,520	-
	L LINE 223+84' 40'-04" R	L LINE 224+15' 40'-04" R	1	370	-	1	-	370	-
	L LINE 225+98' 45'-10" L	L LINE 226+79' 45'-10" L	1	1,177	-	1	-	1,177	70
	L LINE 226+00' 34'-06" L	L LINE 228+00' 24'-01" L	2	708	-	1	79	708	-
	L LINE 226+41' 42'-08" R	L LINE 227+04' 42'-05" R	1	2,461	-	2	-	2,461	-
	L LINE 226+92' 45'-08" L	L LINE 227+00' 31'-06" L	1	125	-	1	-	125	100
	L LINE 227+00' 31'-06" L	L LINE 228+00' 24'-00" L	3	1,960	218	-	218	1,960	-
	L LINE 226+97' 31'-11" L	L LINE 228+00' 24'-00" L	2	521	-	1	58	521	-
	L LINE 227+28' 40'-00" R	L LINE 228+00' 24'-02" R	1	1,264	-	1	-	1,264	-
	L LINE 228+00' 24'-02" R	L LINE 231+00' 23'-06" R	3	5,618	624	-	-	5,618	-
	L LINE 228+00' 24'-02" L	L LINE 231+06' 48'-06" L	1	6,202	-	5	-	6,202	-
	L LINE 231+00' 23'-06" R	L LINE 235+50' 29'-00" R	1	13,328	-	10	-	13,328	-
	L LINE 231+37' 25'-00" R	L LINE 235+50' 23'-03" R	2	1,140	-	1	126	1,140	418
	L LINE 231+24' 23'-10" L	L LINE 234+45' 24'-06" L	2	1,352	-	1	150	1,352	244
	L LINE 231+24' 23'-10" L	L LINE 233+50' 25'-00" L	1	4,725	-	1	-	4,725	-
			SUBTOTAL		1,913	40	1,429	66,175	1,553

EROSION CONTROL QUANTITIES
ECQ-1

STATE OF CALIFORNIA - DEPARTMENT OF TRANSPORTATION
Caltrans®
WATER QUALITY

SENIOR LANDSCAPE ARCHITECT: DAVID W YAM
CALCULATED-DESIGNED BY: LAURIE J SMITH
CHECKED BY: ALEX MC DONALD
REVISED BY: LS
DATE REVISED: 9/26/11

LAST REVISION 09-26-11
DATE PLOTTED => 22-MAY-2012
TIME PLOTTED => 16:05

Dist	COUNTY	ROUTE	POST MILES TOTAL PROJECT	SHEET No.	TOTAL SHEETS
04	SCI	152	16.2/R16.5, R18.5/R19.5	30	195

LICENSED LANDSCAPE ARCHITECT

5-21-12
PLANS APPROVAL DATE

LICENSED LANDSCAPE ARCHITECT Laurie J. Smith No. 4088 Signature 8-31-12 Renewal Date Date STATE OF CALIFORNIA

THE STATE OF CALIFORNIA OR ITS OFFICERS OR AGENTS SHALL NOT BE RESPONSIBLE FOR THE ACCURACY OR COMPLETENESS OF SCANNED COPIES OF THIS PLAN SHEET.

EROSION CONTROL QUANTITIES

SHEET No.	LOCATION BEGIN	LOCATION END	TYPE	AREA SQFT	COMPOST (INCORPORATE) SQYD	EROSION CONTROL (COMPOST BLANKET) CY	RECP (NETTING) SQFT	EROSION CONTROL (HYDROSEED) SQFT	FIBER ROLLS LF
EC-2	L LINE 233+50 28'-10" L	L LINE 234+90 23'-06" L	3	3,729	414	-	-	3,729	-
	L LINE 234+90 26'-02" L	L LINE 234+00 26'-02" L	1	1,431	-	1	-	1,431	-
EC-3	L LINE 235+50 26'-02" L	L LINE 248+25 35'-11" L	1	34,150	-	26	-	34,150	-
	L LINE 235+50 24'-01" R	L LINE 239+69 25'-00" R	2	1,390	-	1	154	1,390	447
	L LINE 235+50 29'-01" R	L LINE 248+21 54'-01" R	1	30,956	-	24	-	30,956	-
	L LINE 240+44 23'-04" R	L LINE 248+21 54'-01" R	2	6,024	-	5	670	6,024	709
EC-4	L LINE 248+25 35'-11" L	L LINE 259+20 25'-08" L	1	27,840	-	22	-	27,840	-
	L LINE 248+25 102'-01" R	L LINE 259+50 23'-07" R	1	19,920	-	15	-	19,920	-
	L LINE 248+59 76'-04" R	L LINE 259+00 47'-10" R	2	25,270	-	20	2,810	25,270	1,085
	L LINE 255+00 23'-10" R	L LINE 259+50 23'-07" R	2	14,950	-	12	1,660	14,950	800
EC-5	L LINE 259+56 23'-06" L	L LINE 266+56 23'-06" L	1	13,066	-	10	-	13,066	718
	L LINE 260+70 24'-10" L	L LINE 265+91 25'-08" L	2	4,610	-	4	512	4,610	-
	L LINE 259+56 23'-10" R	L LINE 266+53 25'-1" R	2	1,524	-	1	170	1,524	225
	L LINE 261+78 43'-07" R	L LINE 265+91 26'-7" R	1	3,430	-	3	-	3,430	-
	L LINE 261+92 56'-10" R	L LINE 264+00 42'-06" R	1	3,348	-	3	-	3,348	-
	L LINE 262+08 30'-06" R	L LINE 261+84 33'-8" R	2	4,970	-	4	552	4,970	330
	L LINE 264+00 42'-06" R	L LINE 265+00 35'-11" R	3	1,770	197	-	-	1,770	-
	L LINE 265+00 35'-11" R	L LINE 265+47 24'-11" R	1	3,570	-	3	-	3,570	-
	L LINE 267+30 24'-02" L	L LINE 269+30 23'-03" L	2	1,460	-	1	162	1,460	240
	L LINE 267+30 24'-0" L	L LINE 268+50 30'-11" L	1	1,286	-	1	-	1,286	-
	L LINE 268+50 30'-11" L	L LINE 269+50 31'-03" L	3	1,881	209	-	-	1,881	-
	L LINE 269+50 31'-03" L	L LINE 269+82 31'-04" L	1	680	-	1	-	680	-
	L LINE 268+55 53'-06" L	L LINE 269+00 33'-07" L	1	690	-	1	-	690	-
				SUBTOTAL	820	158	6,690	207,945	4,554

EROSION CONTROL QUANTITIES
ECQ-2

STATE OF CALIFORNIA - DEPARTMENT OF TRANSPORTATION
Caltrans
WATER QUALITY

SENIOR LANDSCAPE ARCHITECT: DAVID W YAM
CALCULATED-DESIGNED BY: LAURIE J SMITH
CHECKED BY: ALEX MC DONALD
REVISED BY: LJS
DATE REVISED: 09/26/11

LAST REVISION 09-26-11
DATE PLOTTED => 22-MAY-2012
TIME PLOTTED => 16:05

Dist	COUNTY	ROUTE	POST MILES TOTAL PROJECT	SHEET No.	TOTAL SHEETS
04	SCI	152	16.2/R16.5, R18.5/R19.5	31	195

LICENSED LANDSCAPE ARCHITECT

5-21-12
PLANS APPROVAL DATE

LICENSED LANDSCAPE ARCHITECT Laurie J. Smith No. 4098 Signature 8-31-12 Renewal Date Date STATE OF CALIFORNIA

THE STATE OF CALIFORNIA OR ITS OFFICERS OR AGENTS SHALL NOT BE RESPONSIBLE FOR THE ACCURACY OR COMPLETENESS OF SCANNED COPIES OF THIS PLAN SHEET.

EROSION CONTROL QUANTITIES

SHEET No.	LOCATION		TYPE	AREA	COMPOST (INCORPORATE)	EROSION CONTROL (COMPOST BLANKET)	RECP (NETTING)	EROSION CONTROL (HYDROSEED)	FIBER ROLLS	MOVE IN, MOVE OUT (EROSION CONTROL)
	BEGIN	END		SQFT	SQYD	CY	SQFT	SQFT	LF	EA
EC-5	L LINE 268+70 27'- 04" R	L LINE 270+49 23'- 10" R	2	2,115	-	2	280	2,515	180	
	L LINE 270+00 33'- 07" R	L LINE 270+49 23'- 10" R	3	890	99	-	-	890	-	
	L LINE 269+94 61'- 06" L	L LINE 270+49 31'- 10" L	2	210	-	1	23	210	32	
EC-6	L LINE 270+49 28'- 08" L	L LINE 275+50 25'- 07" L	3	10,685	1190	-	-	10,685	-	
	L LINE 270+49 24'- 08" L	L LINE 275+00 24'- 02" L	2	2,395	-	2	270	2,395	525	
	L LINE 270+49 22'- 07" R	L LINE 274+46 33'- 08" R	2	5,290	-	4	590	5,290	400	
	L LINE 274+49 33'- 08" R	L LINE 273+00 37'- 02" R	3	3,715	415	-	-	3,715	-	
	L LINE 273+00 37'- 02" R	L LINE 274+46 33'- 08" R	1	2,100	-	2	-	2,100	-	
	L LINE 275+73 24'- 01" L	L LINE 275+78 33'- 09" L	2	840	-	1	95	840	90	
	L LINE 275+73 33'- 06" L	L LINE 275+78 33'- 09" L	1	1,695	-	2	-	1,695	-	
	L LINE 275+50 24'- 02" L	L LINE 275+78 32'- 10" L	1	555	-	2	1	555	-	
	L LINE 275+72 45'- 03" R	L LINE 277+52 30'- 10" R	1	2,720	-	2	-	2,720	-	
	L LINE 275+80 30'- 10" R	L LINE 277+52 30'- 10" R	1	1,410	-	1	160	1,410	175	
	L LINE 275+92 32'- 10" L	L LINE 276+09 32'- 10" L	1	325	-	1	-	325	-	
	L LINE 276+35 48'- 10" L	L LINE 282+50 24'- 02" L	1	1,980	-	2	-	1,980	90	
				SUBTOTAL	1704	22	1419	37,325	1,492	6
				TOTAL	4,437	220	9,538	311,445	7,599	6

EROSION CONTROL QUANTITIES
ECQ-3

STATE OF CALIFORNIA - DEPARTMENT OF TRANSPORTATION
Caltrans®
WATER QUALITY

SENIOR LANDSCAPE ARCHITECT: DAVID W YAM
CALCULATED-DESIGNED BY: LAURIE J SMITH
CHECKED BY: ALEX MC DONALD
REVISED BY: LJS
DATE REVISED: 10/04/11

LAST REVISION 10-04-11
DATE PLOTTED => 23-MAY-2012
TIME PLOTTED => 06:04

Dist	COUNTY	ROUTE	POST MILES TOTAL PROJECT	SHEET No.	TOTAL SHEETS
04	SCI	152	16.2/R16.5, R18.5/R19.5	32	195

REGISTERED CIVIL ENGINEER 11/7/11 DATE

5-21-12
PLANS APPROVAL DATE

REGISTERED PROFESSIONAL ENGINEER Fang Hong Wu No. 31258 Exp. 9-30-12 CIVIL STATE OF CALIFORNIA

THE STATE OF CALIFORNIA OR ITS OFFICERS OR AGENTS SHALL NOT BE RESPONSIBLE FOR THE ACCURACY OR COMPLETENESS OF SCANNED COPIES OF THIS PLAN SHEET.

NOTES:

1. FOR ACCURATE RIGHT OF WAY DATA, CONTACT RIGHT OF WAY ENGINEERING AT THE DISTRICT OFFICE.
2. LOCATIONS OF EXISTING DRAINAGE FACILITIES ARE APPROXIMATE. WHERE A PROPOSED DRAINAGE SYSTEM CONNECTS TO AN EXISTING DRAINAGE FACILITY, THE CONTRACTOR SHALL FIELD VERIFY THE LOCATION AND INVERT ELEVATION OF THE EXISTING FACILITY. ANY DISCREPANCIES SHALL BE BROUGHT TO THE ENGINEER PRIOR TO CONSTRUCTING ANY PORTION OF THE PROPOSED DRAINAGE SYSTEM.
3. LOCATIONS OF CULVERT INLETS, OUTLETS, TOP OF GRATE ELEVATIONS AND LENGTHS OF CULVERTS AS SHOWN ARE SUBJECT TO CHANGE BY THE ENGINEER BASED ON ACTUAL FIELD CONDITIONS.
4. FLOW LINE ELEVATIONS AND OFFSETS AS SHOWN ARE SUBJECT TO CHANGE BY THE ENGINEER BASE ON ACTUAL FIELD CONDITIONS.
5. OFFSET AND FLOW LINE ELEVATION AT THE PROJECT LIMIT (L 277+35) SUBJECT TO CHANGE BY THE ENGINEER TO CONFORM WITH THE EXISTING CONDITIONS.

ABBREVATIONS:

ACOD	ASPHALT CONCRETE OVERSIDE DRAIN
CSPPD	CSP WITH DOWNDRAIN JOINT
DE	DRAINAGE EASEMENT
GDA	GUTTER DEPRESSION APRON
PSC	POLYMERIC SHEET COATING
SE	SLOPE EASEMENT
SNWE	SOIL NAIL EASEMENT
TCE	TEMPORARY CONSTRUCTION EASEMENT
w/	WITH

LEGEND:

	GUTTER CENTER LINE
	GRADE TO DRAIN
	Exist CULVERT
	NEW CULVERT
a	DRAINAGE UNIT
No.	DRAINAGE SYSTEM NUMBER
	RSP

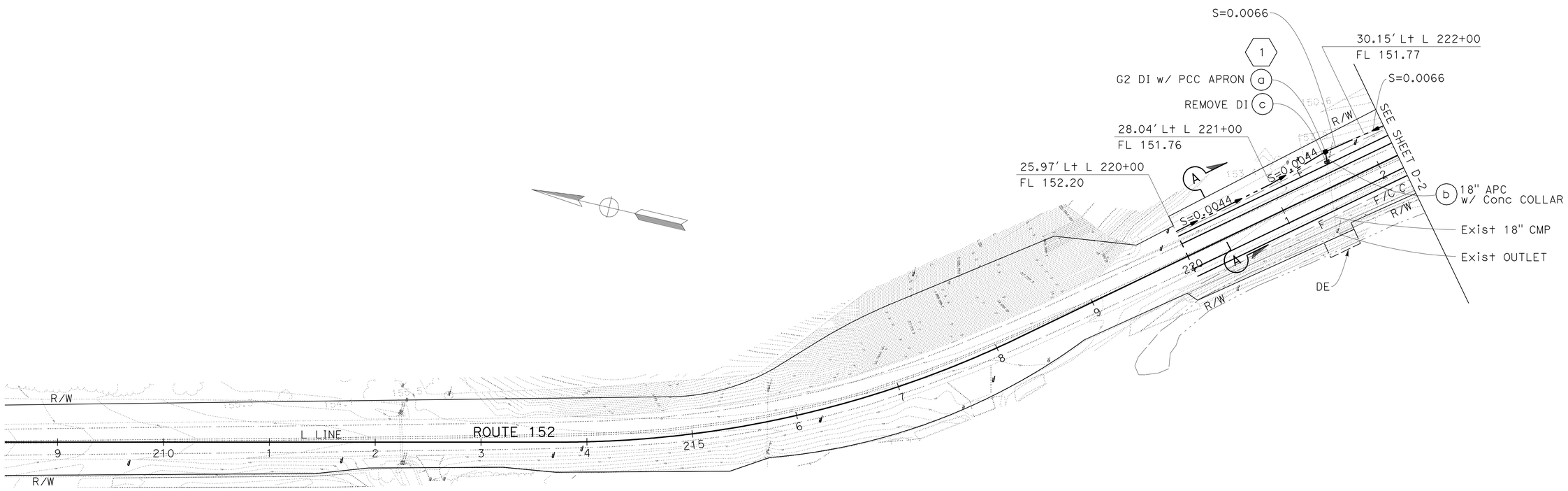

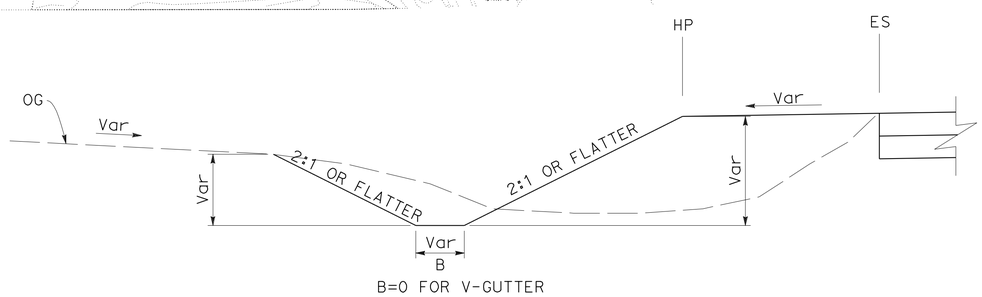

SECTION A-A

TYPICAL GUTTER SECTION

Sta L 220+00 TO 277+50

(NO SCALE)

DRAINAGE PLAN

SCALE: 1" = 50'

APPROVED FOR DRAINAGE WORK ONLY

D-1

STATE OF CALIFORNIA - DEPARTMENT OF TRANSPORTATION

Caltrans

HYDRAULICS

FUNCTIONAL SUPERVISOR: YUAN ZHENG GE

CALCULATED-DESIGNED BY: FANG HONG WU

CHECKED BY: AHMED RAHID

REVISED BY: FHW

DATE REVISED: 10/12/11

LAST REVISION: DATE PLOTTED => 22-MAY-2012 TIME PLOTTED => 16:05

10-12-11

Dist	COUNTY	ROUTE	POST MILES TOTAL PROJECT	SHEET No.	TOTAL SHEETS
04	SCI	152	16.2/R16.5, R18.5/R19.5	33	195

REGISTERED CIVIL ENGINEER 11/7/11 DATE

5-21-12
PLANS APPROVAL DATE

REGISTERED PROFESSIONAL ENGINEER Fang Hong Wu No. 31258 Exp. 9-30-12 CIVIL STATE OF CALIFORNIA

THE STATE OF CALIFORNIA OR ITS OFFICERS OR AGENTS SHALL NOT BE RESPONSIBLE FOR THE ACCURACY OR COMPLETENESS OF SCANNED COPIES OF THIS PLAN SHEET.

NOTE:

FOR ACCURATE RIGHT OF WAY DATA, CONTACT RIGHT OF WAY ENGINEERING AT THE DISTRICT OFFICE.

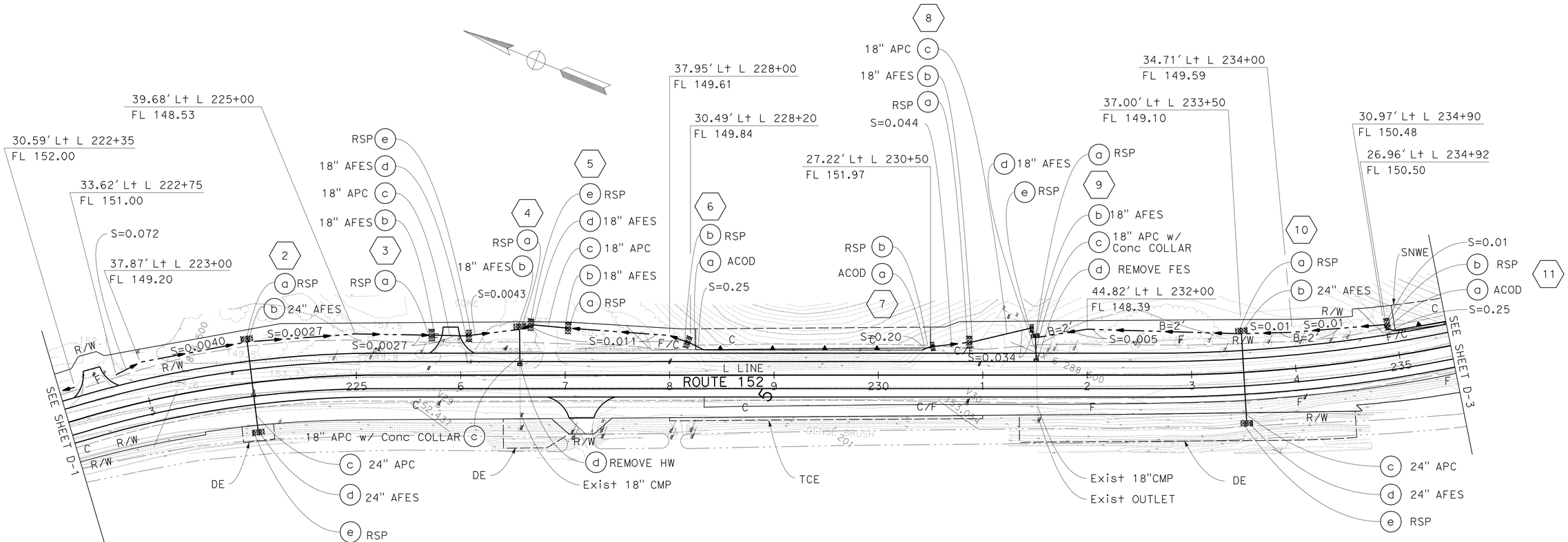

FOR NOTES, ABBREVIATIONS AND LEGEND, SEE SHEET D-1

APPROVED FOR DRAINAGE WORK ONLY

DRAINAGE PLAN

SCALE: 1" = 50'

D-2

STATE OF CALIFORNIA - DEPARTMENT OF TRANSPORTATION
Caltrans
HYDRAULICS

FUNCTIONAL SUPERVISOR: YUAN ZHENG GE
CALCULATED-DESIGNED BY: FANG HONG WU
CHECKED BY: AHMED RAHID
REVISED BY: FHW
DATE REVISED: 10/20/11

LAST REVISION: 10-21-11
DATE PLOTTED => 22-MAY-2012
TIME PLOTTED => 16:06

Dist	COUNTY	ROUTE	POST MILES TOTAL PROJECT	SHEET No.	TOTAL SHEETS
04	SCI	152	16.2/R16.5, R18.5/R19.5	34	195

REGISTERED CIVIL ENGINEER 11/7/11 DATE

5-21-12
PLANS APPROVAL DATE

REGISTERED PROFESSIONAL ENGINEER Fang Hong Wu No. 31258 Exp. 9-30-12 CIVIL STATE OF CALIFORNIA

THE STATE OF CALIFORNIA OR ITS OFFICERS OR AGENTS SHALL NOT BE RESPONSIBLE FOR THE ACCURACY OR COMPLETENESS OF SCANNED COPIES OF THIS PLAN SHEET.

NOTE:

FOR ACCURATE RIGHT OF WAY DATA, CONTACT RIGHT OF WAY ENGINEERING AT THE DISTRICT OFFICE.

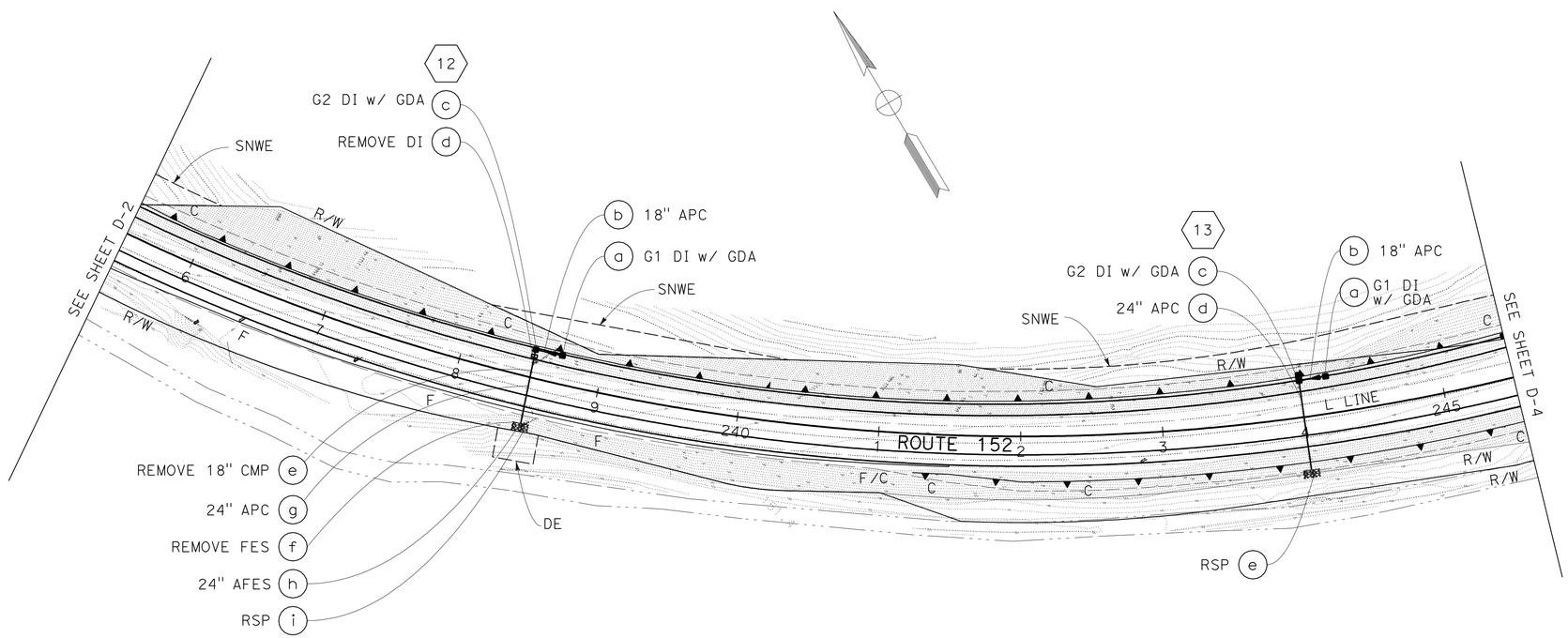

FOR NOTES, ABBREVIATIONS AND LEGEND, SEE SHEET D-1

APPROVED FOR DRAINAGE WORK ONLY

DRAINAGE PLAN

SCALE: 1" = 50'

D-3

FANG HONG WU	REVISED BY: FHW
AHMED RAHID	DATE REVISED: 10/20/11
CALCULATED-DESIGNED BY	
CHECKED BY	
FUNCTIONAL SUPERVISOR: YUAN ZHENG GE	

STATE OF CALIFORNIA - DEPARTMENT OF TRANSPORTATION

Caltrans® HYDRAULICS

LAST REVISION 10-21-11 | DATE PLOTTED => 22-MAY-2012 | TIME PLOTTED => 16:06

Dist	COUNTY	ROUTE	POST MILES TOTAL PROJECT	SHEET No.	TOTAL SHEETS
04	SCI	152	16.2/R16.5, R18.5/R19.5	35	195

REGISTERED CIVIL ENGINEER 11/7/11 DATE

5-12-12
PLANS APPROVAL DATE

REGISTERED PROFESSIONAL ENGINEER Fang Hong Wu No. 31258 Exp. 9-30-12 CIVIL STATE OF CALIFORNIA

THE STATE OF CALIFORNIA OR ITS OFFICERS OR AGENTS SHALL NOT BE RESPONSIBLE FOR THE ACCURACY OR COMPLETENESS OF SCANNED COPIES OF THIS PLAN SHEET.

NOTE:

FOR ACCURATE RIGHT OF WAY DATA, CONTACT RIGHT OF WAY ENGINEERING AT THE DISTRICT OFFICE.

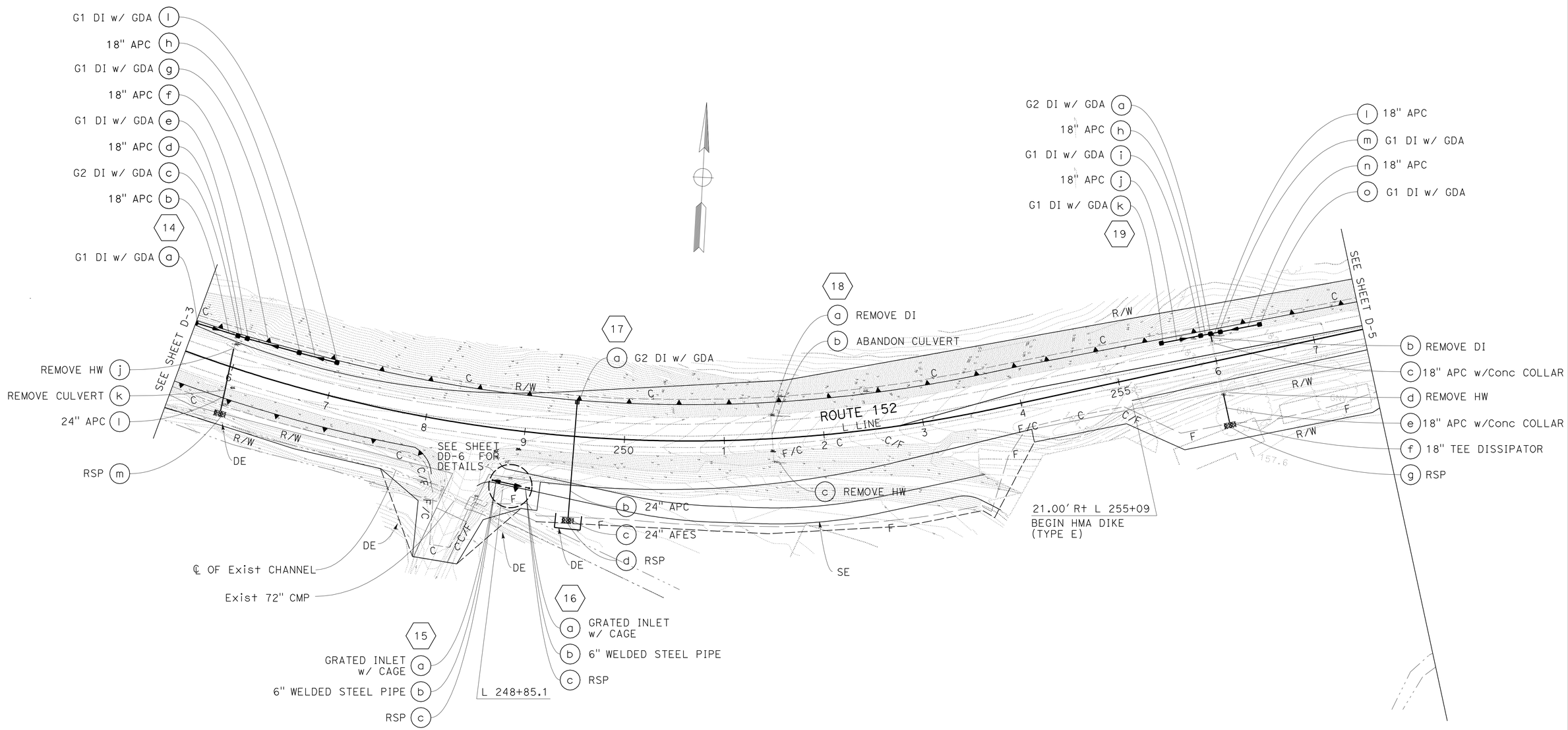

FOR NOTES, ABBREVIATIONS AND LEGEND, SEE SHEET D-1

APPROVED FOR DRAINAGE WORK ONLY

DRAINAGE PLAN

SCALE: 1" = 50'

D-4

STATE OF CALIFORNIA - DEPARTMENT OF TRANSPORTATION
Caltrans
HYDRAULICS

FUNCTIONAL SUPERVISOR: YUAN ZHENG GE

CALCULATED-DESIGNED BY: FANG HONG WU
CHECKED BY: AHMED RAHID

REVISED BY: FHW
DATE REVISED: 10/27/11

LAST REVISION DATE PLOTTED => 22-MAY-2012
TIME PLOTTED => 16:06

Dist	COUNTY	ROUTE	POST MILES TOTAL PROJECT	SHEET No.	TOTAL SHEETS
04	SCI	152	16.2/R16.5, R18.5/R19.5	36	195

REGISTERED CIVIL ENGINEER 11/7/11 DATE

5-21-12
PLANS APPROVAL DATE

REGISTERED PROFESSIONAL ENGINEER Fang Hong Wu No. 31258 Exp. 9-30-12 CIVIL STATE OF CALIFORNIA

THE STATE OF CALIFORNIA OR ITS OFFICERS OR AGENTS SHALL NOT BE RESPONSIBLE FOR THE ACCURACY OR COMPLETENESS OF SCANNED COPIES OF THIS PLAN SHEET.

NOTE:

FOR ACCURATE RIGHT OF WAY DATA, CONTACT RIGHT OF WAY ENGINEERING AT THE DISTRICT OFFICE.

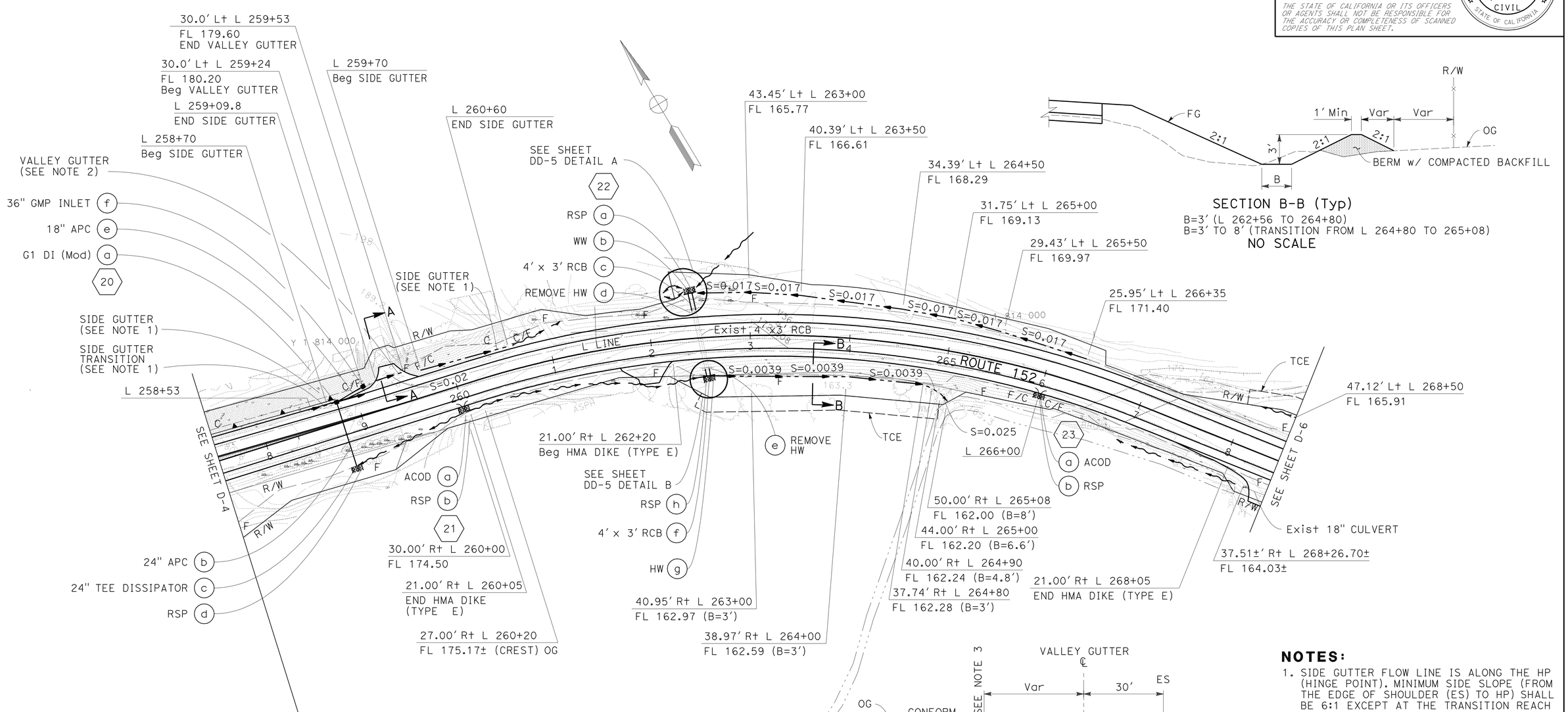

SECTION B-B (Typ)

B=3' (L 262+56 TO 264+80)
B=3' TO 8' (TRANSITION FROM L 264+80 TO 265+08)

NO SCALE

SECTION A-A

VALLEY GUTTER

L 259+24 TO 259+53

NO SCALE

NOTES:

1. SIDE GUTTER FLOW LINE IS ALONG THE HP (HINGE POINT). MINIMUM SIDE SLOPE (FROM THE EDGE OF SHOULDER (ES) TO HP) SHALL BE 6:1 EXCEPT AT THE TRANSITION REACH WHICH CHANGED FROM 0 TO 6:1.
2. VALLEY GUTTER LOCATION SUBJECT TO CHANGE BY THE ENGINEER BASED ON FINAL DRIVEWAY CONFIGUTATION AND FIELD CONDITION.
3. DRIVEWAY PAVEMENT EXTENDS TO R/W LINE FOR STATIONS BETWEEN L 259+31.4 AND L 259+45.5.

FOR NOTES, ABBREVIATIONS AND LEGEND, SEE SHEET D-1

APPROVED FOR DRAINAGE WORK ONLY

DRAINAGE PLAN

SCALE: 1" = 50'

D-5

FHW	10/27/11	FANG HONG WU	AHMED RAHID
REVISED BY	DATE REVISED	CALCULATED-DESIGNED BY	CHECKED BY

FUNCTIONAL SUPERVISOR: YUAN ZHENG GE

STATE OF CALIFORNIA - DEPARTMENT OF TRANSPORTATION

Caltrans® HYDRAULICS

LAST REVISION 10-27-11 | DATE PLOTTED => 22-MAY-2012 | TIME PLOTTED => 16:06

Dist	COUNTY	ROUTE	POST MILES TOTAL PROJECT	SHEET No.	TOTAL SHEETS
04	SCI	152	16.2/R16.5, R18.5/R19.5	37	195

REGISTERED CIVIL ENGINEER 11/7/11 DATE

5-21-12
PLANS APPROVAL DATE

REGISTERED PROFESSIONAL ENGINEER Fang Hong Wu No. 31258 Exp. 9-30-12 CIVIL STATE OF CALIFORNIA

THE STATE OF CALIFORNIA OR ITS OFFICERS OR AGENTS SHALL NOT BE RESPONSIBLE FOR THE ACCURACY OR COMPLETENESS OF SCANNED COPIES OF THIS PLAN SHEET.

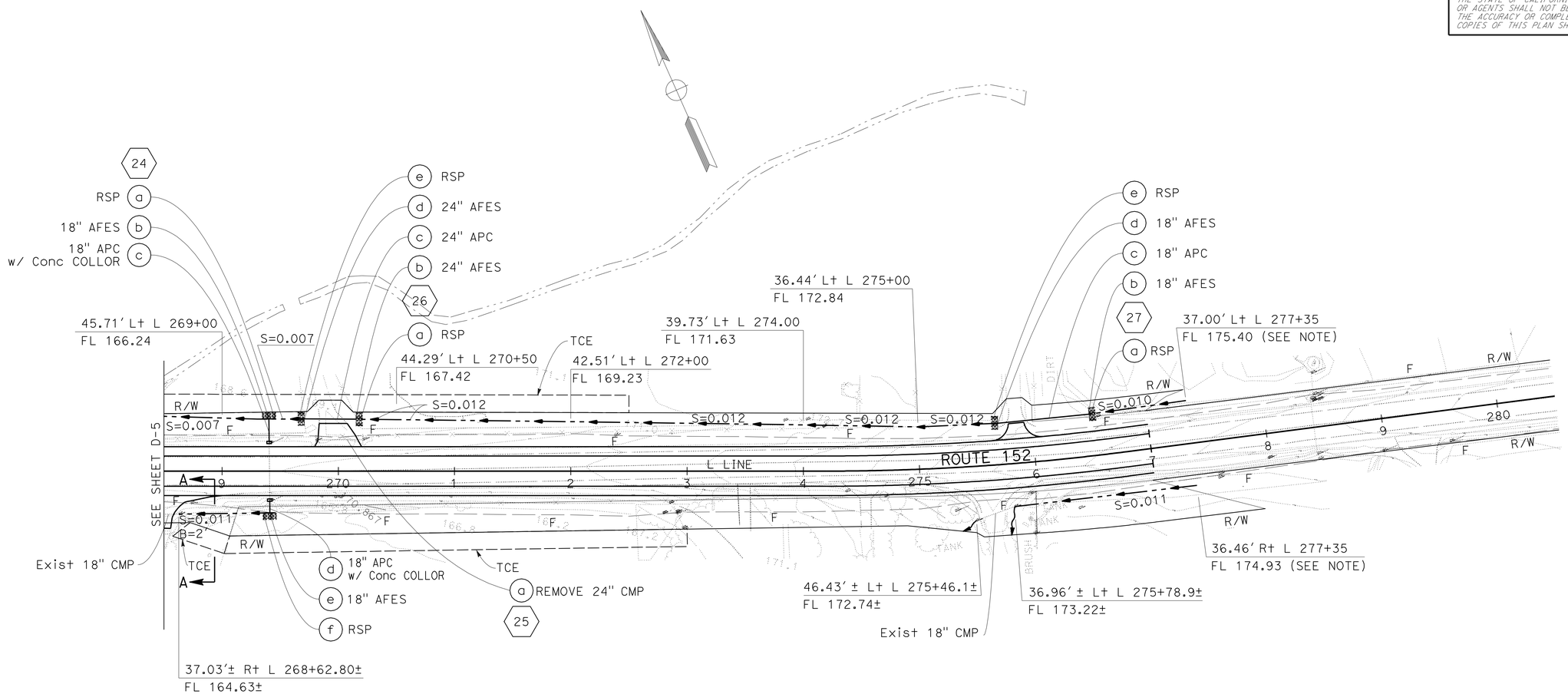

FOR NOTES, ABBREVIATIONS AND LEGEND, SEE SHEET D-1

APPROVED FOR DRAINAGE WORK ONLY

DRAINAGE PLAN

SCALE: 1" = 50'

D-6

STATE OF CALIFORNIA - DEPARTMENT OF TRANSPORTATION
Caltrans
HYDRAULICS

FUNCTIONAL SUPERVISOR: YUAN ZHENG GE

CALCULATED-DESIGNED BY: FANG HONG WU
CHECKED BY: AHMED RAHID

REVISED BY: FHW
DATE REVISED: 10/20/11

LAST REVISION: 10-21-11
DATE PLOTTED => 22-MAY-2012
TIME PLOTTED => 16:06

Dist	COUNTY	ROUTE	POST MILES TOTAL PROJECT	SHEET No.	TOTAL SHEETS
04	SCI	152	16.2/R16.5, R18.5/R19.5	38	195

REGISTERED CIVIL ENGINEER 11/7/11 DATE

5-21-12
PLANS APPROVAL DATE

REGISTERED PROFESSIONAL ENGINEER Ahmed T. Rahid No. 76800 Exp. 12-31-12 CIVIL STATE OF CALIFORNIA

THE STATE OF CALIFORNIA OR ITS OFFICERS OR AGENTS SHALL NOT BE RESPONSIBLE FOR THE ACCURACY OR COMPLETENESS OF SCANNED COPIES OF THIS PLAN SHEET.

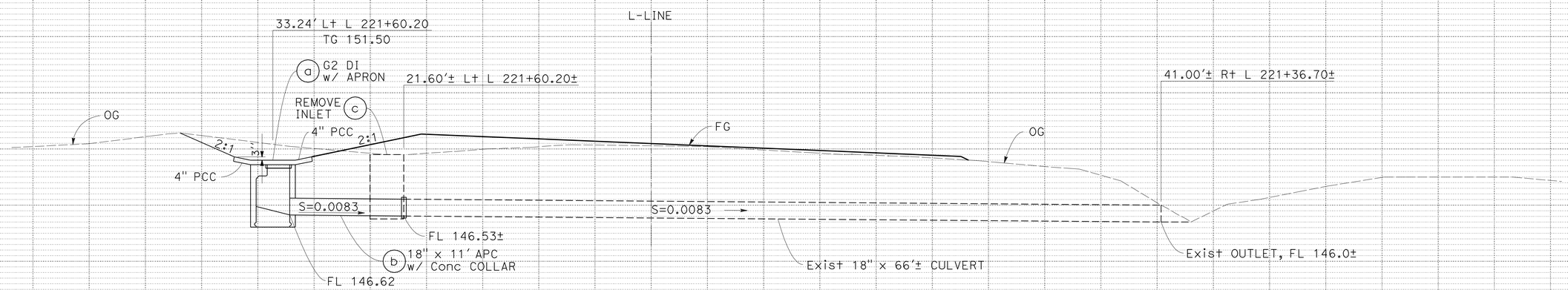

DRAINAGE SYSTEM No. 1

DRAINAGE SYSTEM No. 2

DRAINAGE PROFILES

SCALE: Horiz 1" = 5'
Vert 1" = 5'

DP-1

REVISED BY	DATE REVISED
AR	10/12/11

CALCULATED-DESIGNED BY: AHMED RAHID
CHECKED BY: FANG HONG WU
FUNCTIONAL SUPERVISOR: MORTEZA AZIMI

STATE OF CALIFORNIA - DEPARTMENT OF TRANSPORTATION
Caltrans
DESIGN

LAST REVISION 10-12-11 | DATE PLOTTED => 22-MAY-2012 | TIME PLOTTED => 16:06

Dist	COUNTY	ROUTE	POST MILES TOTAL PROJECT	SHEET No.	TOTAL SHEETS
04	SCI	152	16.2/R16.5, R18.5/R19.5	39	195

REGISTERED CIVIL ENGINEER 11/7/11 DATE

5-21-12
PLANS APPROVAL DATE

REGISTERED PROFESSIONAL ENGINEER Ahmed T. Rahid No. 76800 Exp. 12-31-12 CIVIL STATE OF CALIFORNIA

THE STATE OF CALIFORNIA OR ITS OFFICERS OR AGENTS SHALL NOT BE RESPONSIBLE FOR THE ACCURACY OR COMPLETENESS OF SCANNED COPIES OF THIS PLAN SHEET.

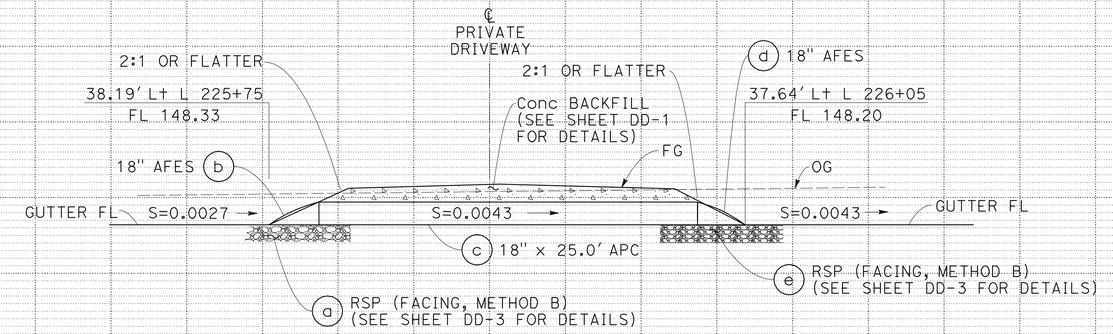

DRAINAGE SYSTEM No. 3

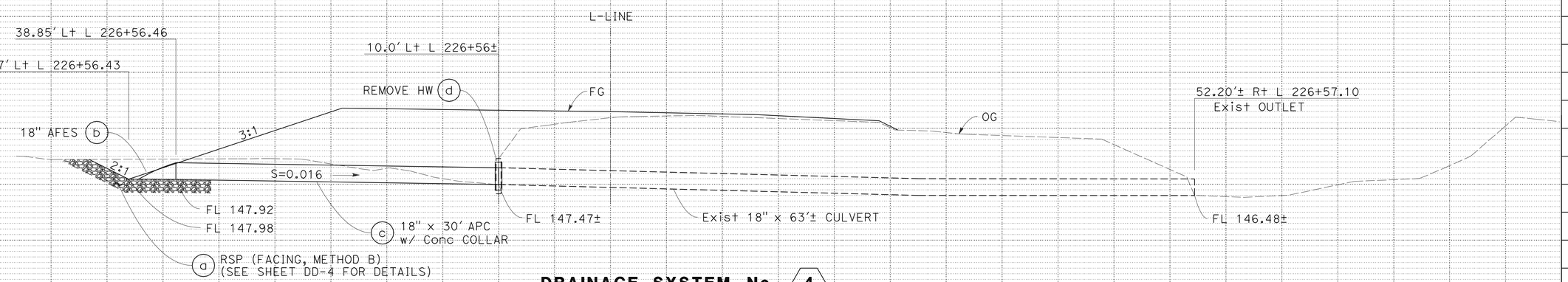

DRAINAGE SYSTEM No. 4

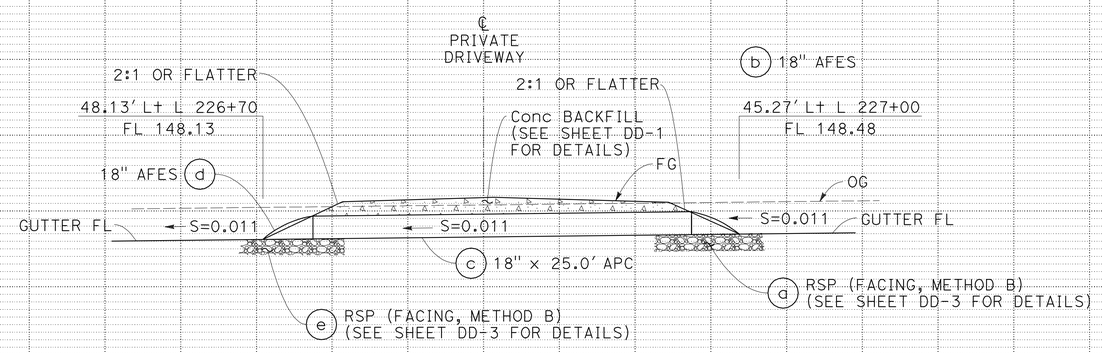

DRAINAGE SYSTEM No. 5

DRAINAGE PROFILES

SCALE: Horiz 1" = 5'
Vert 1" = 5'

DP-2

REVISED BY	DATE REVISED
AR	10/12/11

AHMED RAHID — FANG HONG WU — CALCULATED-DESIGNED BY — CHECKED BY

FUNCTIONAL SUPERVISOR: MORTEZA AZIMI

STATE OF CALIFORNIA - DEPARTMENT OF TRANSPORTATION — DESIGN — Caltrans

LAST REVISION 10-12-11 — DATE PLOTTED => 22-MAY-2012 — TIME PLOTTED => 16:06

Dist	COUNTY	ROUTE	POST MILES TOTAL PROJECT	SHEET No.	TOTAL SHEETS
04	SCI	152	16.2/R16.5, R18.5/R19.5	40	195

REGISTERED CIVIL ENGINEER DATE 11/7/11

5-21-12
PLANS APPROVAL DATE

REGISTERED PROFESSIONAL ENGINEER Ahmed T. Rahid No. 76800 Exp. 12-31-12 CIVIL STATE OF CALIFORNIA

THE STATE OF CALIFORNIA OR ITS OFFICERS OR AGENTS SHALL NOT BE RESPONSIBLE FOR THE ACCURACY OR COMPLETENESS OF SCANNED COPIES OF THIS PLAN SHEET.

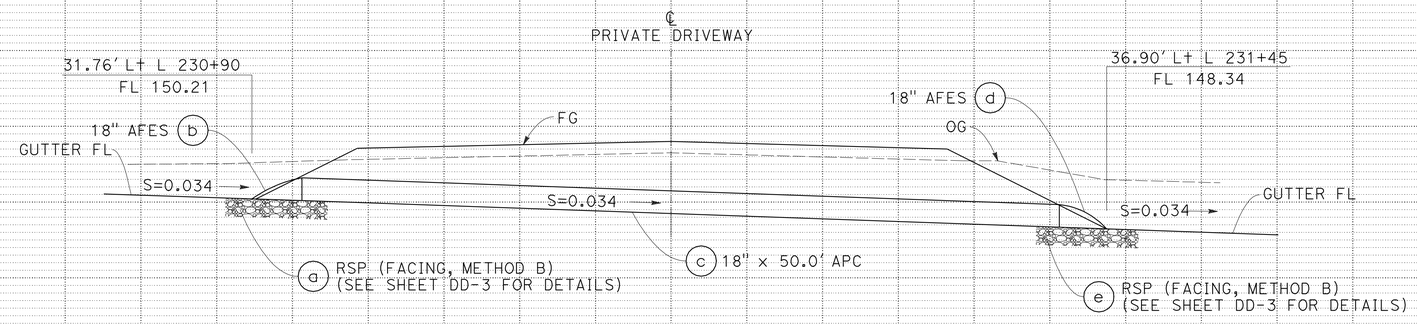

DRAINAGE SYSTEM No. 8

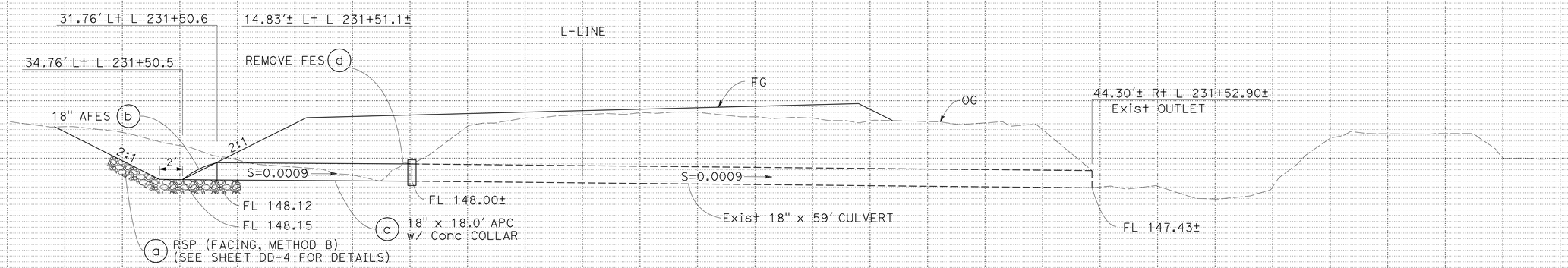

DRAINAGE SYSTEM No. 9

DRAINAGE PROFILES

SCALE: Horiz 1" = 5'
Vert 1" = 5'

DP-3

REVISED BY	DATE REVISED
AR	10/12/11

AHMED RAHID — FANH HONG WU — CALCULATED-DESIGNED BY — CHECKED BY

FUNCTIONAL SUPERVISOR: MORTEZA AZIMI

STATE OF CALIFORNIA - DEPARTMENT OF TRANSPORTATION — Caltrans — DESIGN

LAST REVISION 10-12-11 — DATE PLOTTED => 22-MAY-2012 — TIME PLOTTED => 16:06

Dist	COUNTY	ROUTE	POST MILES TOTAL PROJECT	SHEET No.	TOTAL SHEETS
04	SCI	152	16.2/R16.5, R18.5/R19.5	41	195

REGISTERED CIVIL ENGINEER DATE 11/7/11

5-21-12
PLANS APPROVAL DATE

REGISTERED PROFESSIONAL ENGINEER Ahmed T. Rahid No. 76800 Exp. 12-31-12 CIVIL STATE OF CALIFORNIA

THE STATE OF CALIFORNIA OR ITS OFFICERS OR AGENTS SHALL NOT BE RESPONSIBLE FOR THE ACCURACY OR COMPLETENESS OF SCANNED COPIES OF THIS PLAN SHEET.

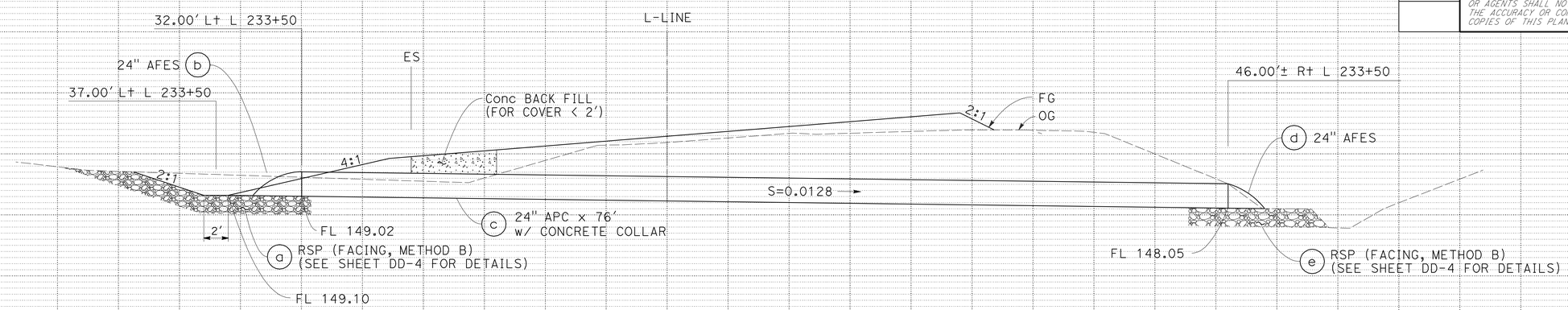

DRAINAGE SYSTEM No. 10

NOTE:

OUTLET LOCATION AND FLOW LINE ELEVATION SUBJECT TO CHANGE BY THE ENGINEER BASED ON ACTUAL FIELD CONDICTION.

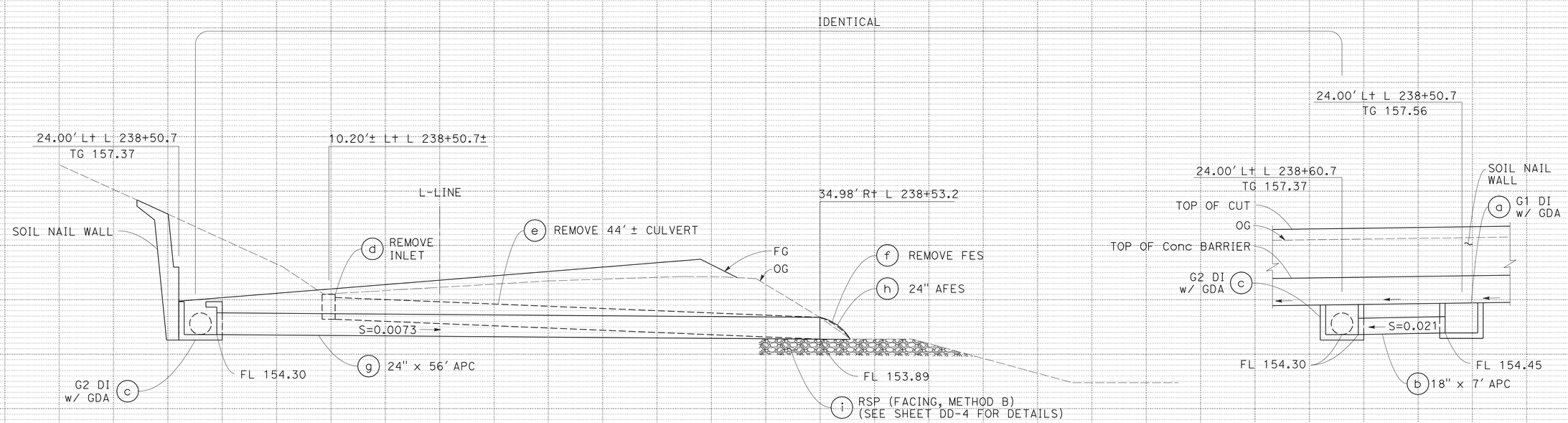

DRAINAGE SYSTEM No. 12

DRAINAGE PROFILES

SCALE: Horiz 1" = 5'
Vert 1" = 5'

DP-4

STATE OF CALIFORNIA - DEPARTMENT OF TRANSPORTATION
Caltrans® DESIGN
FUNCTIONAL SUPERVISOR: MORTEZA AZIMI
CALCULATED-DESIGNED BY: AHMED RAHID
CHECKED BY: FANG HONG WU
REVISED BY: AR
DATE REVISED: 10/12/11

LAST REVISION 10-12-11
DATE PLOTTED => 22-MAY-2012
TIME PLOTTED => 16:39

Dist	COUNTY	ROUTE	POST MILES TOTAL PROJECT	SHEET No.	TOTAL SHEETS
04	SCI	152	16.2/R16.5, R18.5/R19.5	42	195

REGISTERED CIVIL ENGINEER 11/7/11 DATE

5-21-12
PLANS APPROVAL DATE

REGISTERED PROFESSIONAL ENGINEER Ahmed T. Rahid No. 76800 Exp. 12-31-12 CIVIL STATE OF CALIFORNIA

THE STATE OF CALIFORNIA OR ITS OFFICERS OR AGENTS SHALL NOT BE RESPONSIBLE FOR THE ACCURACY OR COMPLETENESS OF SCANNED COPIES OF THIS PLAN SHEET.

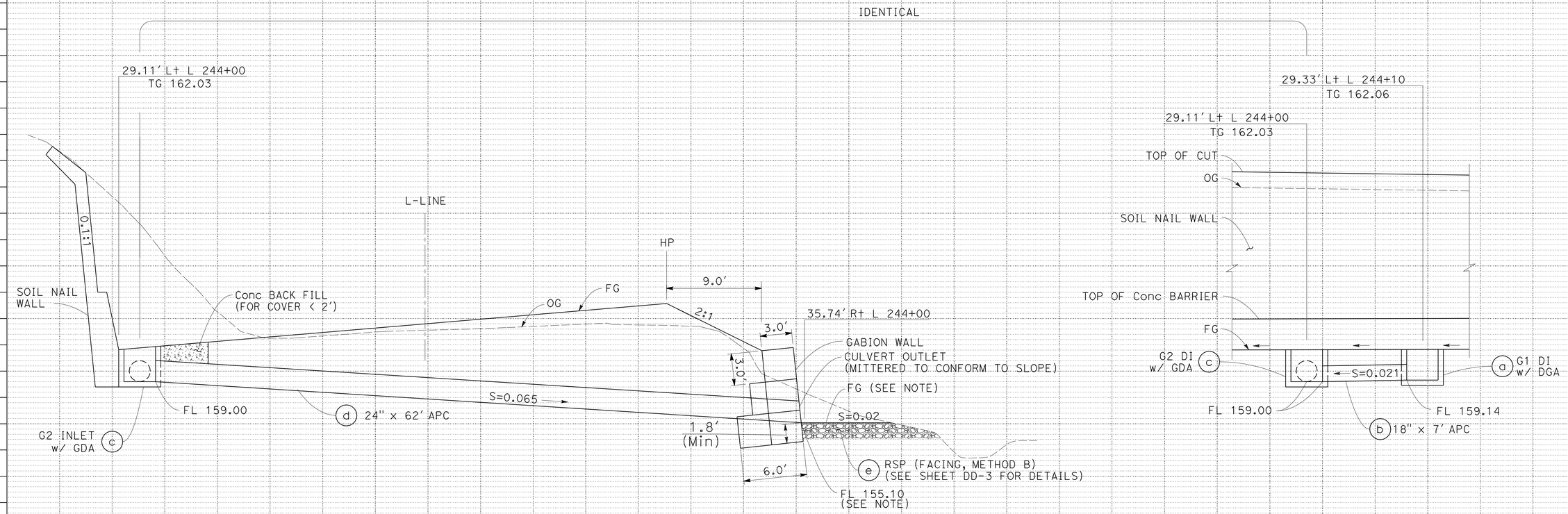

DRAINAGE SYSTEM No. 13

NOTE

LOCATION OF CULVERT OUTLET, LENGTH AND SLOPE OF CULVERT SUBJECT TO CHANGE BY ENGINEER BASED ON ACTUAL FIELD SURVEY PRIOR TO CONSTRUCTION.

DRAINAGE PROFILES

SCALE: Horiz 1" = 5'
Vert 1" = 5'

DP-5

REVISED BY	DATE REVISED
AR	10/12/11

CALCULATED-DESIGNED BY: AHMED RAHID
CHECKED BY: FANG HONG WU
FUNCTIONAL SUPERVISOR: MORTEZA AZIMI

STATE OF CALIFORNIA - DEPARTMENT OF TRANSPORTATION
Caltrans DESIGN

LAST REVISION 10-12-11
DATE PLOTTED => 22-MAY-2012
TIME PLOTTED => 16:39

Dist	COUNTY	ROUTE	POST MILES TOTAL PROJECT	SHEET No.	TOTAL SHEETS
04	SCI	152	16.2/R16.5, R18.5/R19.5	43	195

REGISTERED CIVIL ENGINEER 11/7/11 DATE

5-21-12
PLANS APPROVAL DATE

REGISTERED PROFESSIONAL ENGINEER Ahmed T. Rahid No. 76800 Exp. 12-31-12 CIVIL STATE OF CALIFORNIA

THE STATE OF CALIFORNIA OR ITS OFFICERS OR AGENTS SHALL NOT BE RESPONSIBLE FOR THE ACCURACY OR COMPLETENESS OF SCANNED COPIES OF THIS PLAN SHEET.

NOTE:

LOCATION OF PIPE OUTLET, LENGTH AND SLOPE OF PIPE SUBJECT TO CHANGE BY THE ENGINEER BASED ON ACTUAL FIELD SURVEY PRIOR TO CONSTRUCTION.

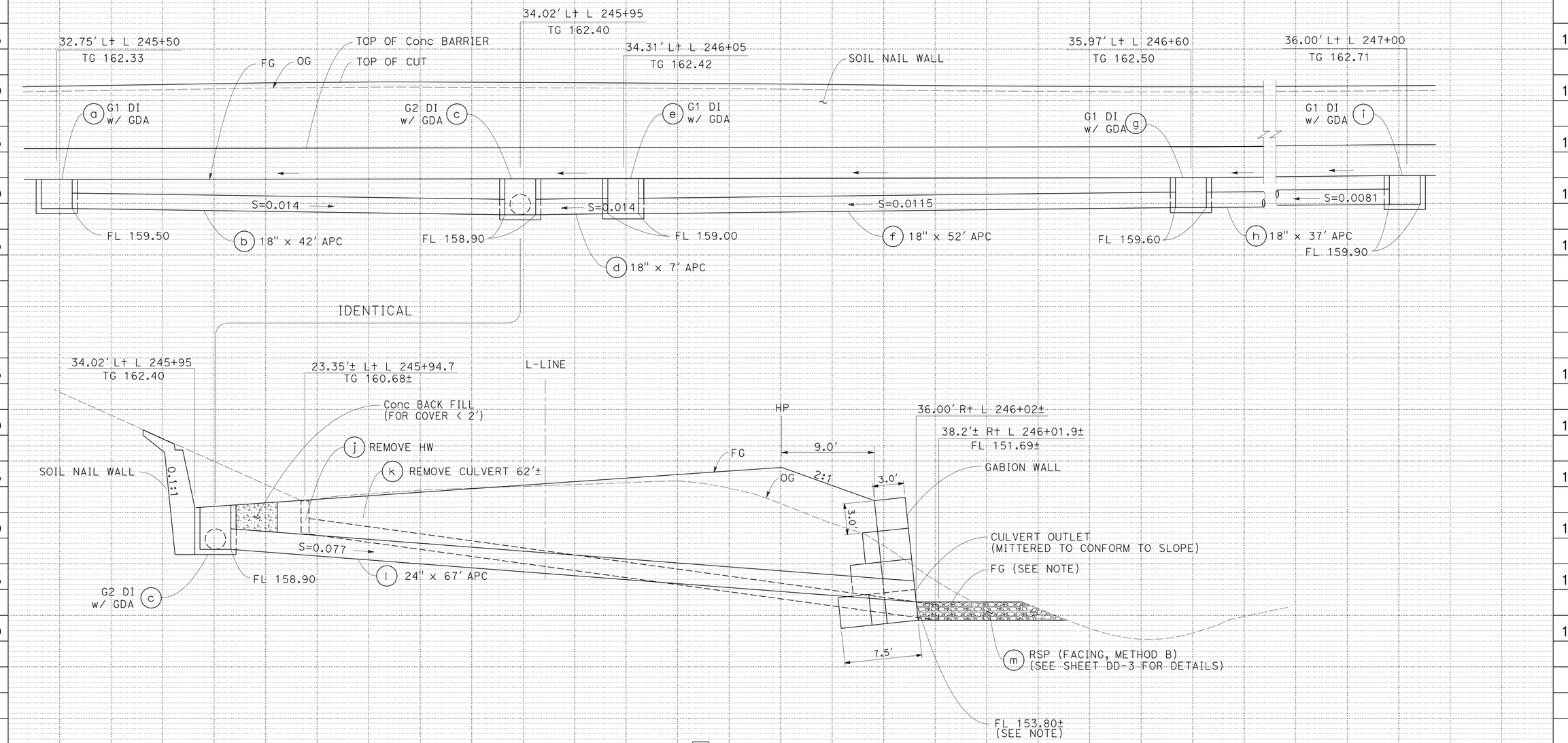

DRAINAGE SYSTEM No. 14

DRAINAGE PROFILES

SCALE: Horiz 1" = 5'
Vert 1" = 5'

DP-6

REVISED BY	DATE REVISED
AR	10/12/11

CALCULATED-DESIGNED BY: AHMED RAHID
CHECKED BY: FANG HONG WU
FUNCTIONAL SUPERVISOR: MORTEZA AZIMI

STATE OF CALIFORNIA - DEPARTMENT OF TRANSPORTATION
Caltrans
DESIGN

LAST REVISION 10-12-11
DATE PLOTTED => 22-MAY-2012
TIME PLOTTED => 16:39

Dist	COUNTY	ROUTE	POST MILES TOTAL PROJECT	SHEET No.	TOTAL SHEETS
04	SCI	152	16.2/R16.5, R18.5/R19.5	44	195

REGISTERED CIVIL ENGINEER DATE 11/7/11

5-21-12
PLANS APPROVAL DATE

REGISTERED PROFESSIONAL ENGINEER Ahmed T. Rahid No. 76800 Exp. 12-31-12 CIVIL STATE OF CALIFORNIA

THE STATE OF CALIFORNIA OR ITS OFFICERS OR AGENTS SHALL NOT BE RESPONSIBLE FOR THE ACCURACY OR COMPLETENESS OF SCANNED COPIES OF THIS PLAN SHEET.

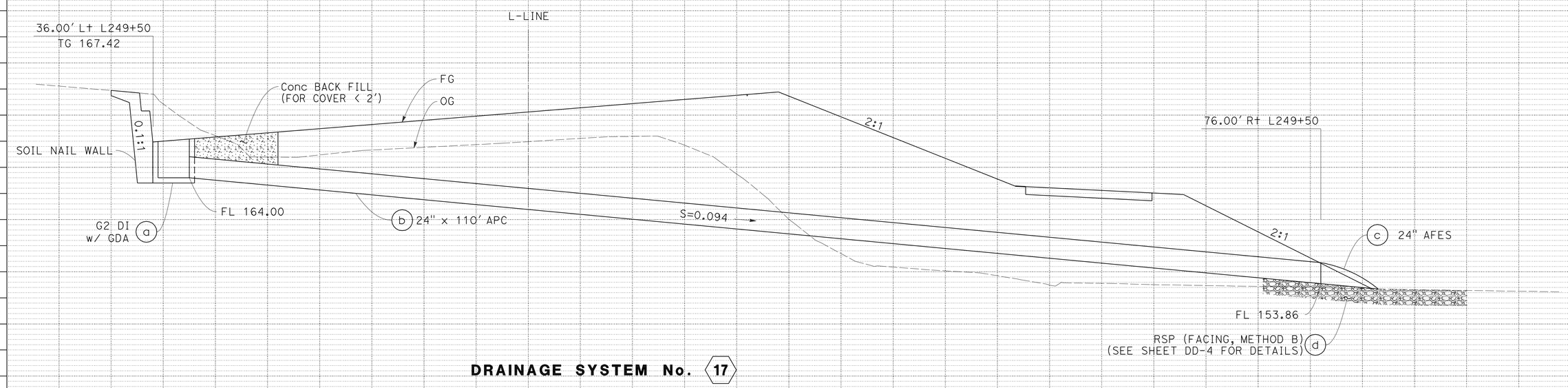

DRAINAGE SYSTEM No. 17

DRAINAGE PROFILES

SCALE: Horiz 1" = 5'
Vert 1" = 5'

DP-7

AHMED RAHID — REVISED BY: AR — DATE REVISED: 10/12/11
FANG HONG WU — CALCULATED-DESIGNED BY
CHECKED BY
FUNCTIONAL SUPERVISOR: MORTEZA AZIMI
STATE OF CALIFORNIA - DEPARTMENT OF TRANSPORTATION — Caltrans — DESIGN

LAST REVISION 10-12-11 — DATE PLOTTED => 22-MAY-2012 — TIME PLOTTED => 16:39

Dist	COUNTY	ROUTE	POST MILES TOTAL PROJECT	SHEET No.	TOTAL SHEETS
04	SCI	152	16.2/R16.5, R18.5/R19.5	45	195

REGISTERED CIVIL ENGINEER 11/7/11 DATE

5-21-12
PLANS APPROVAL DATE

REGISTERED PROFESSIONAL ENGINEER Ahmed T. Rahid No. 76800 Exp. 12-31-12 CIVIL STATE OF CALIFORNIA

THE STATE OF CALIFORNIA OR ITS OFFICERS OR AGENTS SHALL NOT BE RESPONSIBLE FOR THE ACCURACY OR COMPLETENESS OF SCANNED COPIES OF THIS PLAN SHEET.

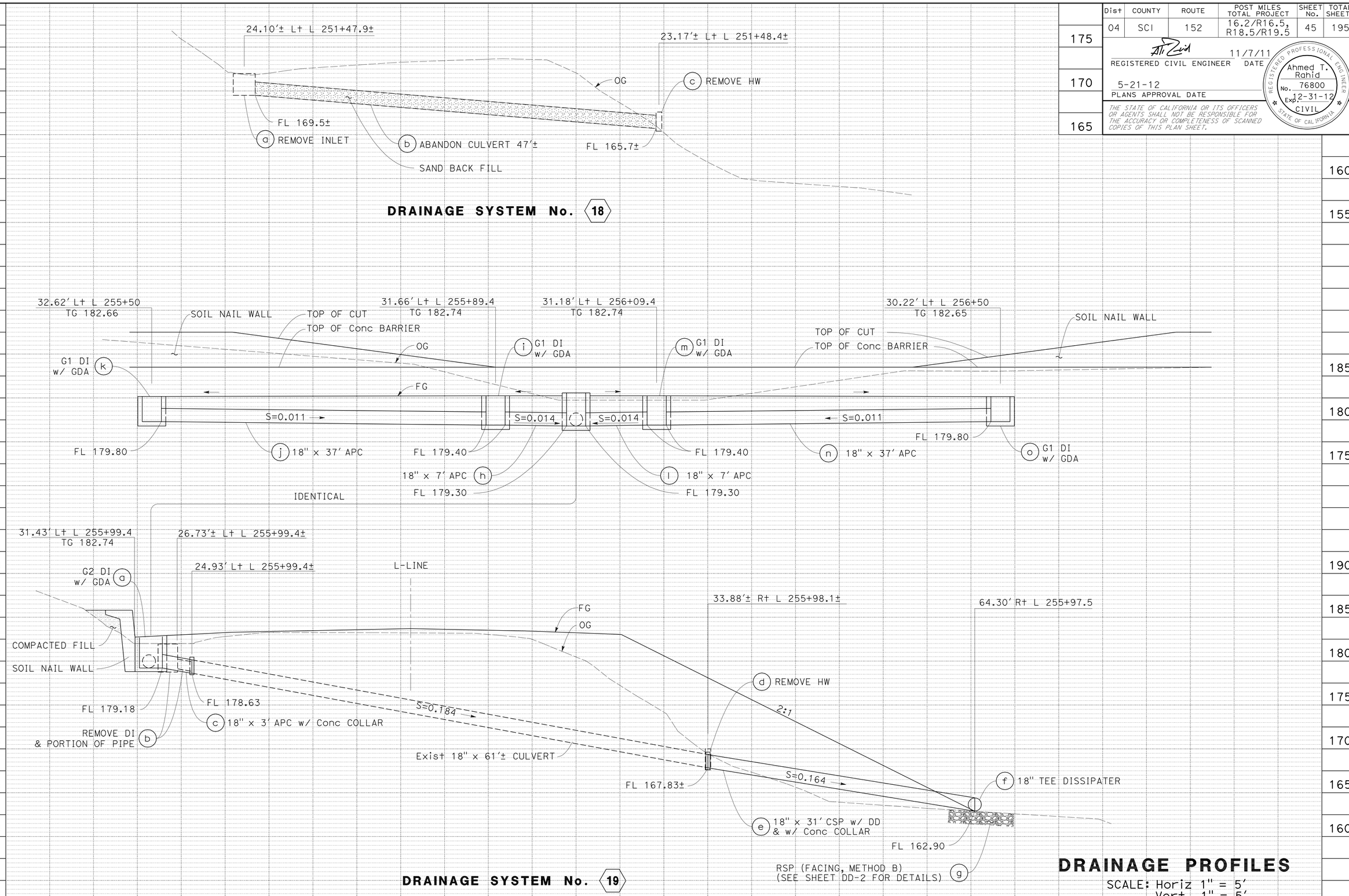

DRAINAGE PROFILES

SCALE: Horiz 1" = 5'
Vert 1" = 5'

DP-8

REVISED BY	DATE REVISED
AR	10/12/11

CALCULATED-DESIGNED BY: AHMED RAHID
CHECKED BY: FANG HONG WU
FUNCTIONAL SUPERVISOR: MORTEZA AZIMI

STATE OF CALIFORNIA - DEPARTMENT OF TRANSPORTATION
Caltrans
DESIGN

LAST REVISION 10-12-11
DATE PLOTTED => 22-MAY-2012
TIME PLOTTED => 16:39

Dist	COUNTY	ROUTE	POST MILES TOTAL PROJECT	SHEET No.	TOTAL SHEETS
04	SCI	152	16.2/R16.5, R18.5/R19.5	46	195

REGISTERED CIVIL ENGINEER 11/7/11 DATE

5-21-12
PLANS APPROVAL DATE

REGISTERED PROFESSIONAL ENGINEER Ahmed T. Rahid No. 76800 Exp. 12-31-12 CIVIL STATE OF CALIFORNIA

THE STATE OF CALIFORNIA OR ITS OFFICERS OR AGENTS SHALL NOT BE RESPONSIBLE FOR THE ACCURACY OR COMPLETENESS OF SCANNED COPIES OF THIS PLAN SHEET.

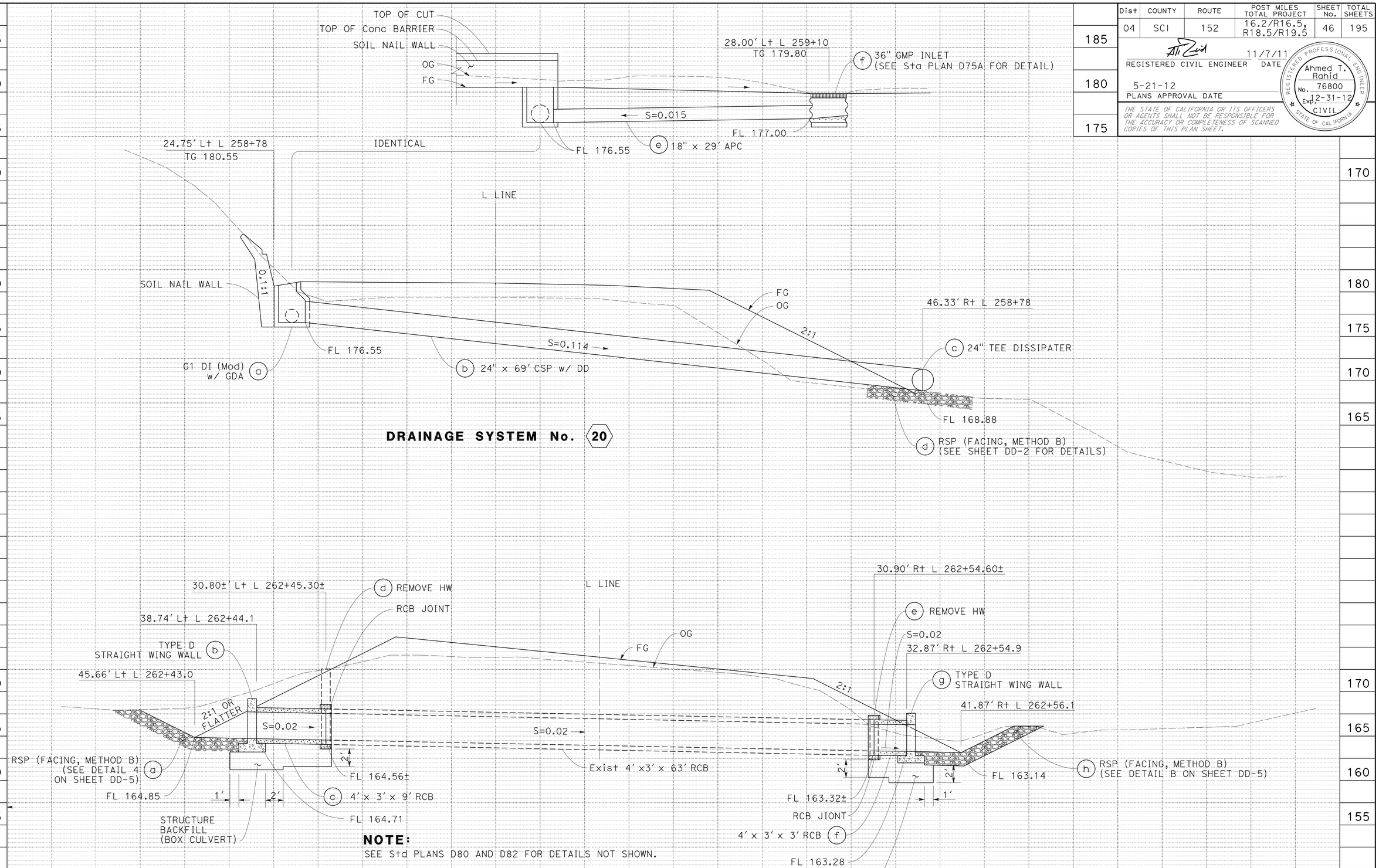

DRAINAGE SYSTEM No. 20

DRAINAGE SYSTEM No. 22

NOTE:
SEE Std PLANS D80 AND D82 FOR DETAILS NOT SHOWN.

DRAINAGE PROFILES

SCALE: Horiz 1" = 5'
Vert 1" = 5'

DP-9

STATE OF CALIFORNIA - DEPARTMENT OF TRANSPORTATION
Caltrans
DESIGN
FUNCTIONAL SUPERVISOR: MORTEZA AZIMI
CALCULATED-DESIGNED BY: AHMED RAHID
CHECKED BY: FANG HONG WU
REVISED BY: AR
DATE REVISED: 11/6/11

LAST REVISION 10-26-11
DATE PLOTTED => 22-MAY-2012
TIME PLOTTED => 16:40

Dist	COUNTY	ROUTE	POST MILES TOTAL PROJECT	SHEET No.	TOTAL SHEETS
04	SCI	152	16.2/R16.5, R18.5/R19.5	47	195

REGISTERED CIVIL ENGINEER 11/7/11 DATE

5-21-12
PLANS APPROVAL DATE

REGISTERED PROFESSIONAL ENGINEER Ahmed T. Rahid No. 76800 Exp. 12-31-12 CIVIL STATE OF CALIFORNIA

THE STATE OF CALIFORNIA OR ITS OFFICERS OR AGENTS SHALL NOT BE RESPONSIBLE FOR THE ACCURACY OR COMPLETENESS OF SCANNED COPIES OF THIS PLAN SHEET.

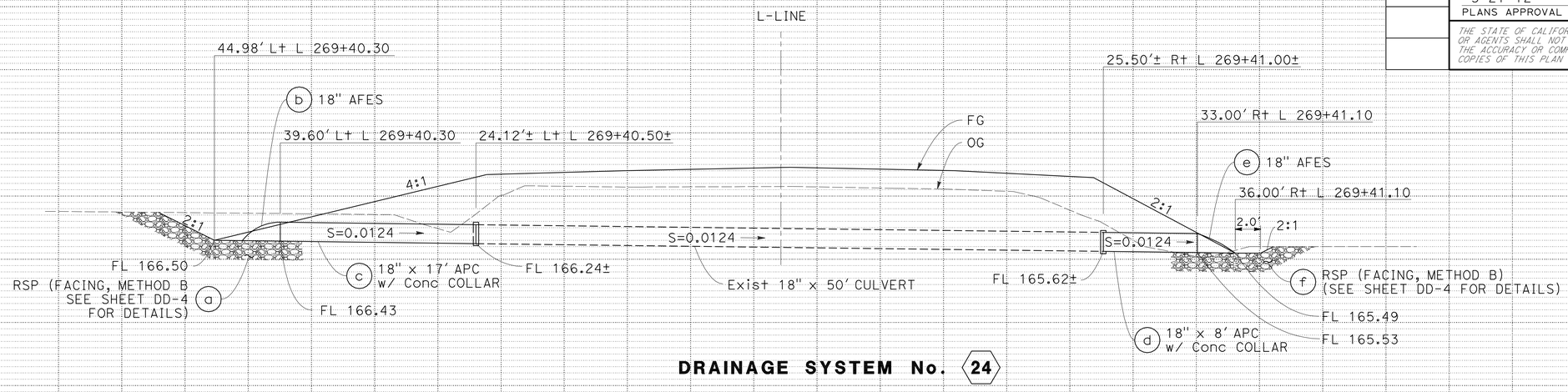

DRAINAGE SYSTEM No. 24

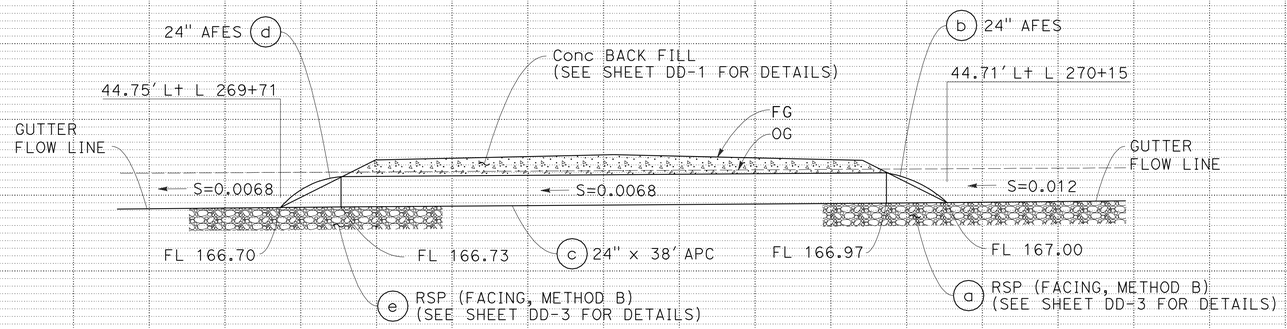

DRAINAGE SYSTEM No. 26

DRAINAGE PROFILES

SCALE: Horiz 1" = 5'
Vert 1" = 5'

DP-10

REVISED BY	DATE REVISED
AR	10/12/11

CALCULATED-DESIGNED BY: AHMED RAHID
CHECKED BY: FANG HONG WU
FUNCTIONAL SUPERVISOR: MORTEZA AZIMI

STATE OF CALIFORNIA - DEPARTMENT OF TRANSPORTATION
Caltrans DESIGN

LAST REVISION 10-12-11 | DATE PLOTTED => 22-MAY-2012 | TIME PLOTTED => 16:40

Dist	COUNTY	ROUTE	POST MILES TOTAL PROJECT	SHEET No.	TOTAL SHEETS
04	SCI	152	16.2/R16.5, R18.5/R19.5	48	195

REGISTERED CIVIL ENGINEER 11/7/11 DATE

5-21-12
PLANS APPROVAL DATE

REGISTERED PROFESSIONAL ENGINEER Ahmed T. Rahid No. 76800 Exp. 12-31-12 CIVIL STATE OF CALIFORNIA

THE STATE OF CALIFORNIA OR ITS OFFICERS OR AGENTS SHALL NOT BE RESPONSIBLE FOR THE ACCURACY OR COMPLETENESS OF SCANNED COPIES OF THIS PLAN SHEET.

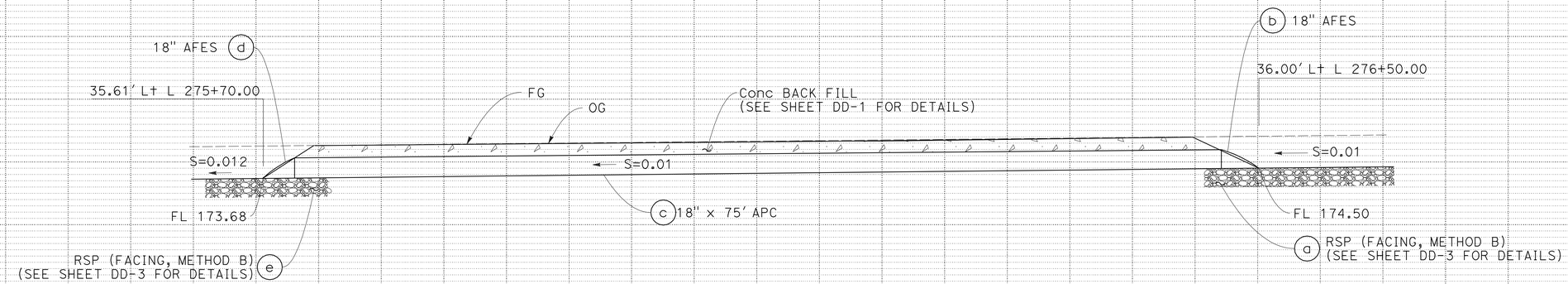

DRAINAGE SYSTEM No. 27

DRAINAGE PROFILES

SCALE: Horiz 1" = 5'
Vert 1" = 5'

DP-11

REVISED BY	DATE REVISED
AR	10/12/11

CALCULATED-DESIGNED BY: AHMAD RAHID
CHECKED BY: FANG HONG WU
FUNCTIONAL SUPERVISOR: MORTEZA AZIMI

STATE OF CALIFORNIA - DEPARTMENT OF TRANSPORTATION
Caltrans® DESIGN

LAST REVISION 10-12-11 | DATE PLOTTED => 22-MAY-2012 | TIME PLOTTED => 16:40

Dist	COUNTY	ROUTE	POST MILES TOTAL PROJECT	SHEET No.	TOTAL SHEETS
04	SCI	152	16.2/R16.5, R18.5/R19.5	49	195

REGISTERED CIVIL ENGINEER 11/7/11 DATE

5-21-12
PLANS APPROVAL DATE

REGISTERED PROFESSIONAL ENGINEER Fang Hong Wu No. 31258 Exp. 9-30-12 CIVIL STATE OF CALIFORNIA

THE STATE OF CALIFORNIA OR ITS OFFICERS OR AGENTS SHALL NOT BE RESPONSIBLE FOR THE ACCURACY OR COMPLETENESS OF SCANNED COPIES OF THIS PLAN SHEET.

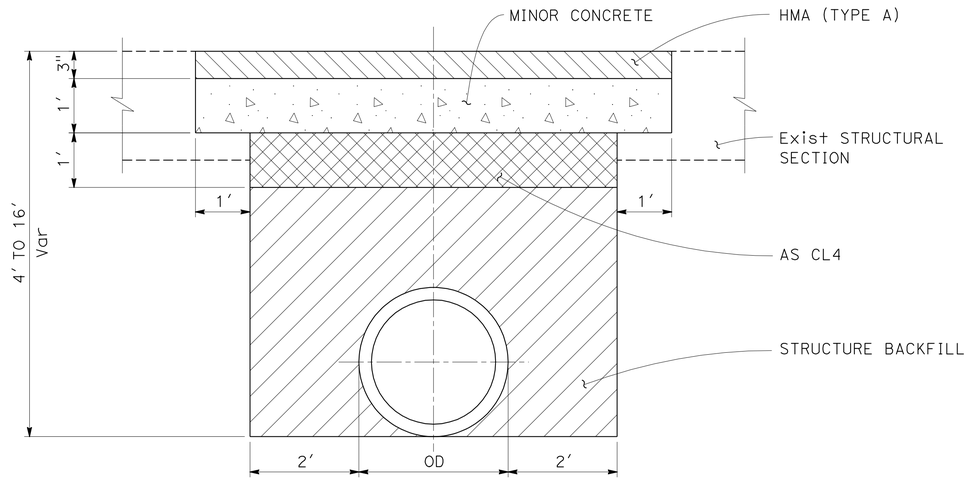

NOTES:

1. CONCRETE CAP MAY BE RAPID SET PCC.
2. COMPACTION TO BE AT 95% RELATIVE CAMPACTION, SUBJECT TO TESTING.

TRENCH PAVING DETAIL

2 c 4 c 9 c 10 c 12 g 13 d 14 l 17 b 20 b

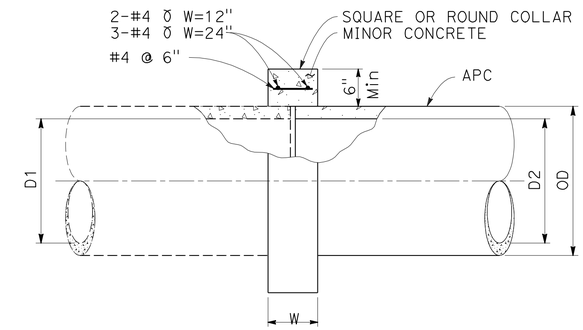

W = 12" WHERE D2 ≤ 24"
W = 24" WHERE D2 > 24"

CONCRETE COLLAR

1 b 4 c 9 c 19 c e 24 c d

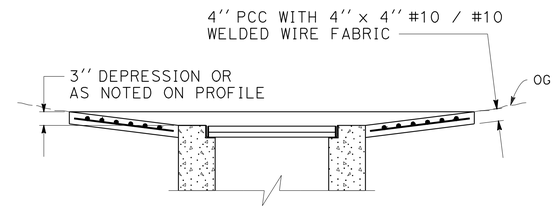

SECTION A-A

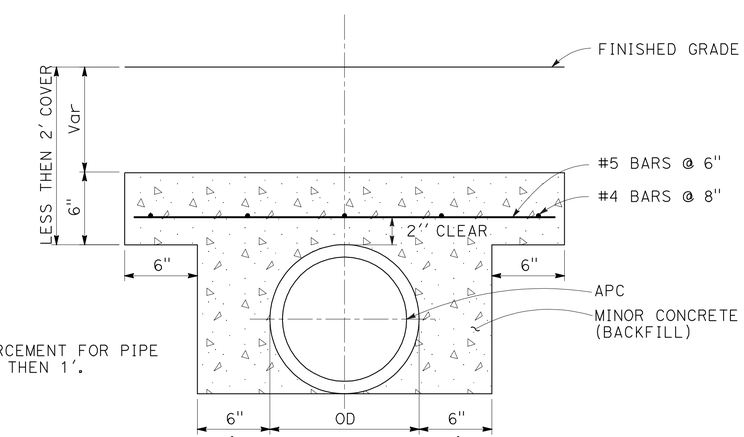

NOTE:

USE REINFORCEMENT FOR PIPE COVER LESS THEN 1'.

MINOR CONCRETE (BACKFILL)

3 c 5 c 10 c 13 d 14 l 17 b 26 c 27 c

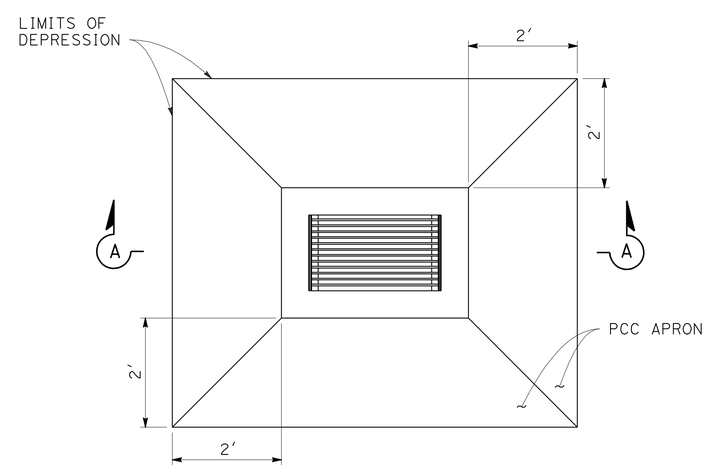

INLET WITH PCC APRON

1 a

DRAINAGE DETAILS

NO SCALE

DD-1

STATE OF CALIFORNIA - DEPARTMENT OF TRANSPORTATION
HYDRAULICS
Caltrans
FUNCTIONAL SUPERVISOR: YUAN ZHENG GE
CALCULATED-DESIGNED BY: FANG HONG WU
CHECKED BY: AHMED RAHID
REVISED BY: FHW
DATE REVISED: 9/27/11

LAST REVISION 09-27-11
DATE PLOTTED => 22-MAY-2012
TIME PLOTTED => 16:40

Dist	COUNTY	ROUTE	POST MILES TOTAL PROJECT	SHEET No.	TOTAL SHEETS
04	SCI	152	16.2/R16.5, R18.5/R19.5	50	195

REGISTERED CIVIL ENGINEER 11/7/11 DATE

5-21-12
PLANS APPROVAL DATE

REGISTERED PROFESSIONAL ENGINEER Fang Hong Wu No. 31258 Exp. 9-30-12 CIVIL STATE OF CALIFORNIA

THE STATE OF CALIFORNIA OR ITS OFFICERS OR AGENTS SHALL NOT BE RESPONSIBLE FOR THE ACCURACY OR COMPLETENESS OF SCANNED COPIES OF THIS PLAN SHEET.

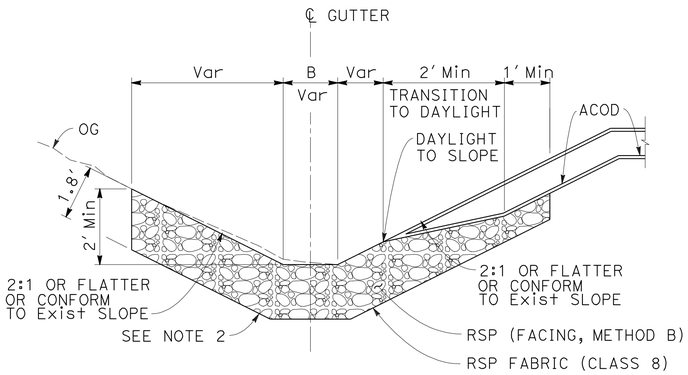

SECTION B-B
B=0 FOR V GUTTER

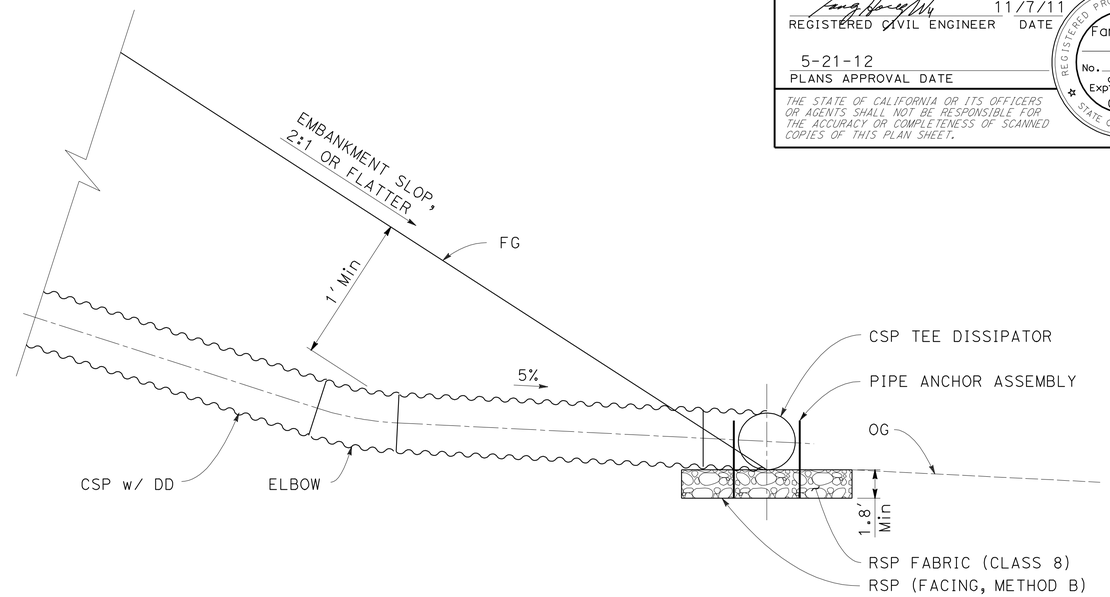

SECTION A-A

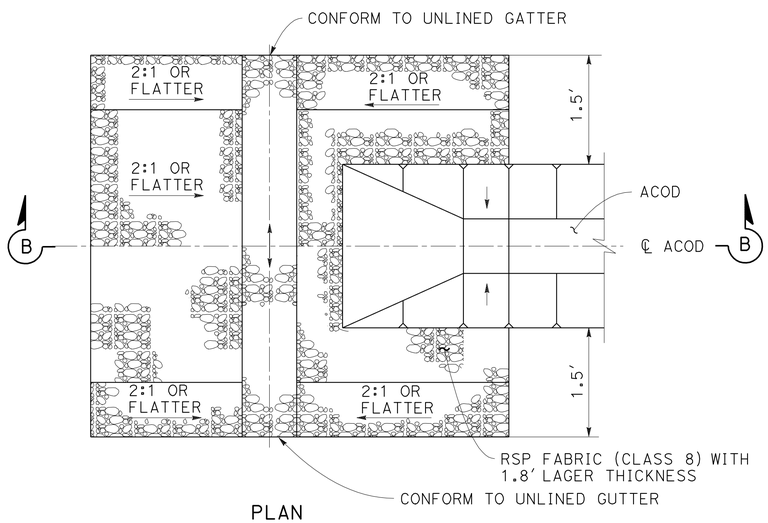

PLAN

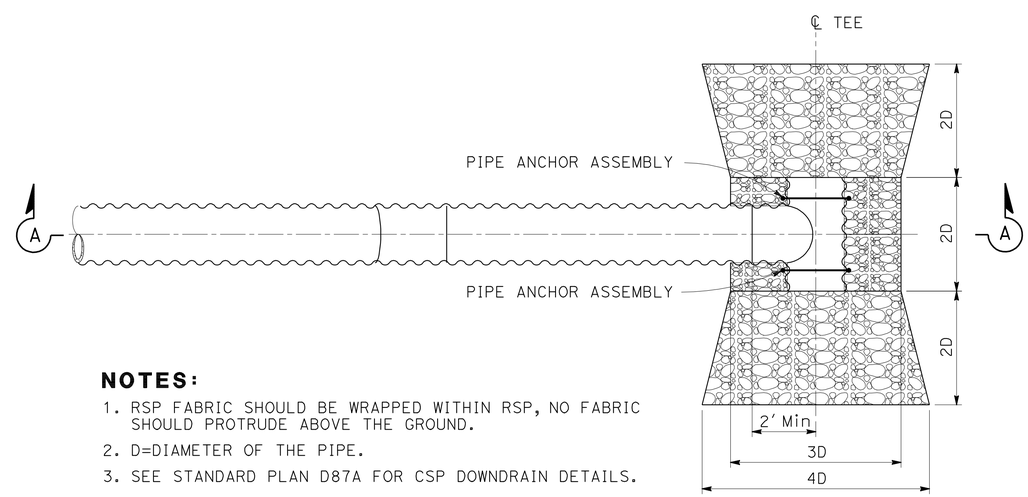

PLAN

NOTES:

1. ORIENTATION OF ACOD AND PLACEMENT OF RSP SUBJECT TO CHANGE BY THE ENGINEER BASED ON ACTUAL FIELD CONDITIONS.
2. FOR LOCATION WITHOUT GUTTER PLACE RSP FOR A MINIMUM LENGTH OF 6' BEYOND ACOD OUTLET WITH THE SAME LAYER THICKNESS, AND SUBJECT TO CHANGE BY THE ENGINEER BASED ON ACTUAL FIELD CONDITIONS.
3. FOR DETAILS NOT SHOWN, SEE STANDARD PLAN D87D, OVERSIDE DRAINS.
4. RSP FABRIC SHOULD BE WRAPPED WITHIN RSP. NO FABRIC SHOULD PROTRUDE ABOVE THE GROUND.

RSP AT ACOD OUTLET (TYPICAL)

6 b 7 b 11 b 21 b 23 b

NOTES:

1. RSP FABRIC SHOULD BE WRAPPED WITHIN RSP, NO FABRIC SHOULD PROTRUDE ABOVE THE GROUND.
2. D=DIAMETER OF THE PIPE.
3. SEE STANDARD PLAN D87A FOR CSP DOWNDRAIN DETAILS.

CSP DOWNDRAIN TEE DISSIPATOR WITH RSP

19 f g 20 c d

DRAINAGE DETAILS
NO SCALE

DD-2

STATE OF CALIFORNIA - DEPARTMENT OF TRANSPORTATION
Caltrans
HYDRAULICS

FUNCTIONAL SUPERVISOR: YUAN ZHENG GE
CALCULATED-DESIGNED BY: FANG HONG WU
CHECKED BY: AHMED RAHID
REVISED BY: FHW
DATE REVISED: 9/27/11

LAST REVISION 09-27-11 | DATE PLOTTED => 22-MAY-2012 | TIME PLOTTED => 16:40

Dist	COUNTY	ROUTE	POST MILES TOTAL PROJECT	SHEET No.	TOTAL SHEETS
04	SCI	152	16.2/R16.5, R18.5/R19.5	51	195

REGISTERED CIVIL ENGINEER 11/7/11 DATE

5-21-12
PLANS APPROVAL DATE

REGISTERED PROFESSIONAL ENGINEER Fang Hong Wu No. 31258 Exp. 9-30-12 CIVIL STATE OF CALIFORNIA

THE STATE OF CALIFORNIA OR ITS OFFICERS OR AGENTS SHALL NOT BE RESPONSIBLE FOR THE ACCURACY OR COMPLETENESS OF SCANNED COPIES OF THIS PLAN SHEET.

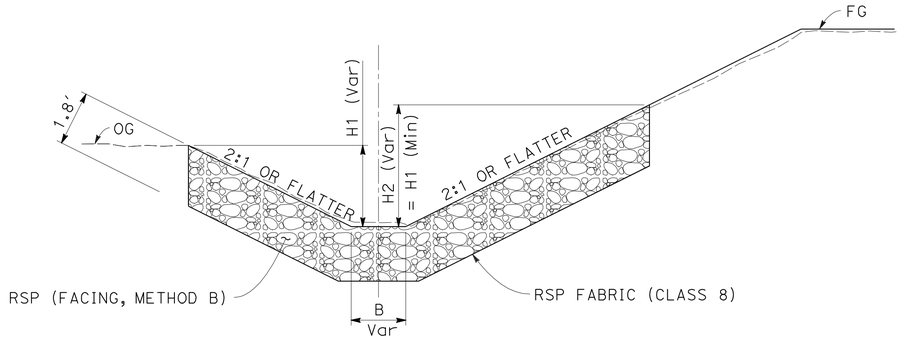

SECTION B-B

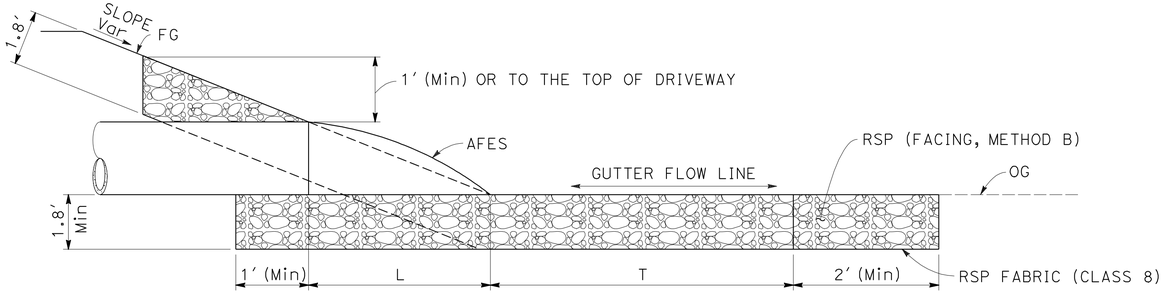

SECTION A-A

NOTES:

1. IF BENCH WIDTH IS LESS THEN 6', PLACE RSP FOR THE WIDTH OF THE BENCH, OR AS DIRECTED BY THE ENGINEER BASED ON ACTUAL FIELD CONDITION.
2. RSP FABRIC SHOULD BE WRAPPED WITHIN RSP. NO FABRIC SHOULD PROTRUDE ABOVE THE GROUND.
3. CONSTRACTOR SHOULD SUBMIT THE PIPE PLACEMENT PROCEDURE WITHIN THE GABION FOR ENGINEER'S REVIEW AND APPROVAL PRIOR TO CONSTRUCTION. PIPE PROTECTION MUST BE AS SPECIFIED BY PIPE MANUFACTURE IF NEEDED.

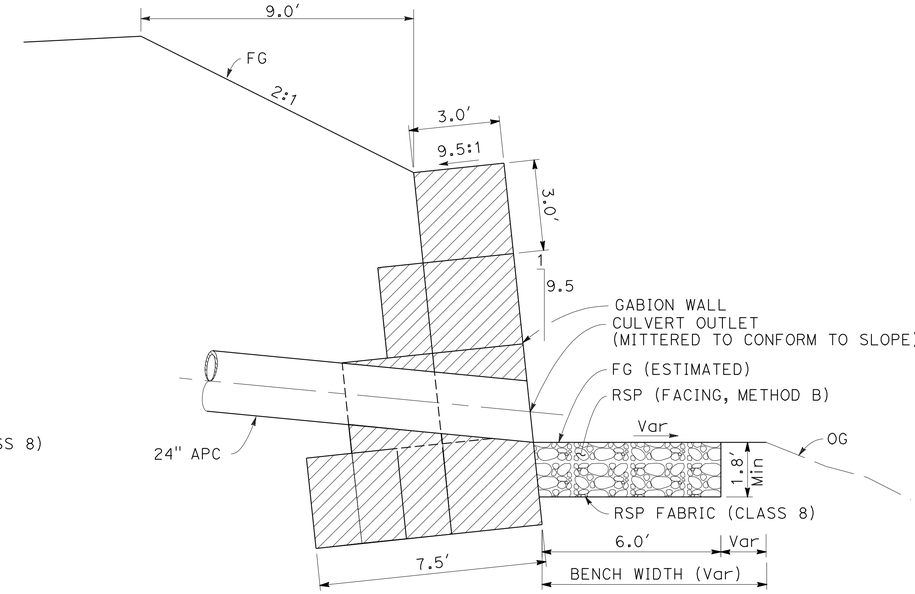

SECTION C-C

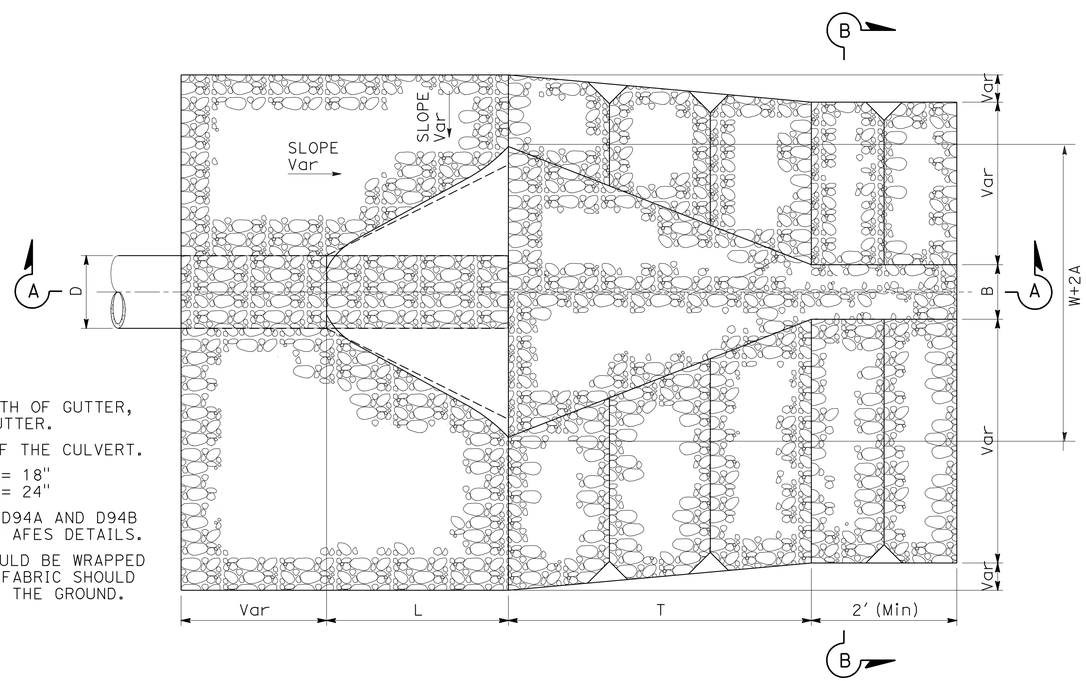

NOTES:

1. B = BOTTOM WIDTH OF GUTTER, B = 0' FOR V-GUTTER.
2. D = DIAMETER OF THE CULVERT.
3. T = 4.5' FOR D = 18"
   T = 6.0' FOR D = 24"
4. SEE Std PLANS D94A AND D94B FOR W, L, A AND AFES DETAILS.
5. RSP FABRIC SHOULD BE WRAPPED WITHIN RSP. NO FABRIC SHOULD PROTRUDE ABOVE THE GROUND.

RSP AT CULVERT INLET AND OUTLET WITH AFES ALONG GUTTER (TYPICAL)

3 a e 5 a e 8 a e 26 a e 27 a e

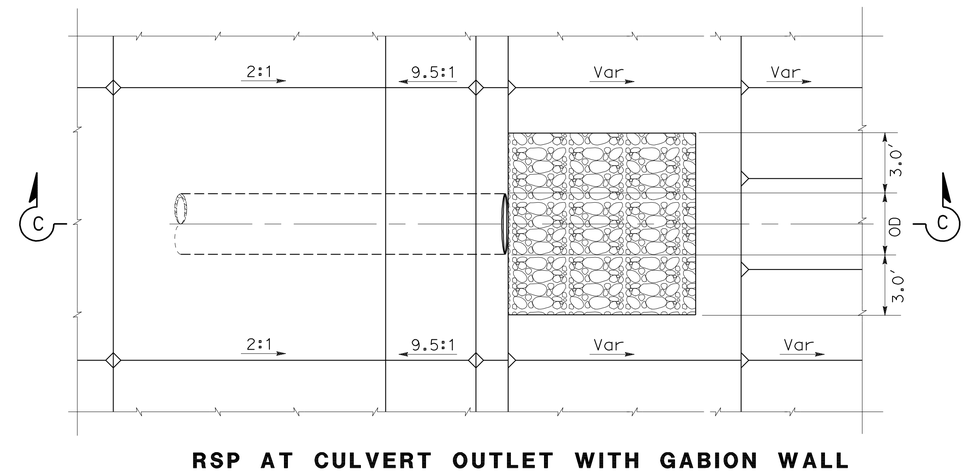

RSP AT CULVERT OUTLET WITH GABION WALL

13 e 14 m

DRAINAGE DETAILS

NO SCALE

DD-3

STATE OF CALIFORNIA - DEPARTMENT OF TRANSPORTATION
Caltrans
HYDRAULICS

FUNCTIONAL SUPERVISOR: YUAN ZHENG GE
CALCULATED-DESIGNED BY: FANG HONG WU
CHECKED BY: AHMED RAHID
REVISED BY: YZG
DATE REVISED: 10/10/11

LAST REVISION 10-10-11
DATE PLOTTED => 22-MAY-2012
TIME PLOTTED => 16:40

Dist	COUNTY	ROUTE	POST MILES TOTAL PROJECT	SHEET No.	TOTAL SHEETS
04	SCI	152	16.2/R16.5, R18.5/R19.5	52	195

REGISTERED CIVIL ENGINEER 11/7/11 DATE

5-21-12
PLANS APPROVAL DATE

REGISTERED PROFESSIONAL ENGINEER Fang Hong Wu No. 31258 Exp 9-30-12 CIVIL STATE OF CALIFORNIA

THE STATE OF CALIFORNIA OR ITS OFFICERS OR AGENTS SHALL NOT BE RESPONSIBLE FOR THE ACCURACY OR COMPLETENESS OF SCANNED COPIES OF THIS PLAN SHEET.

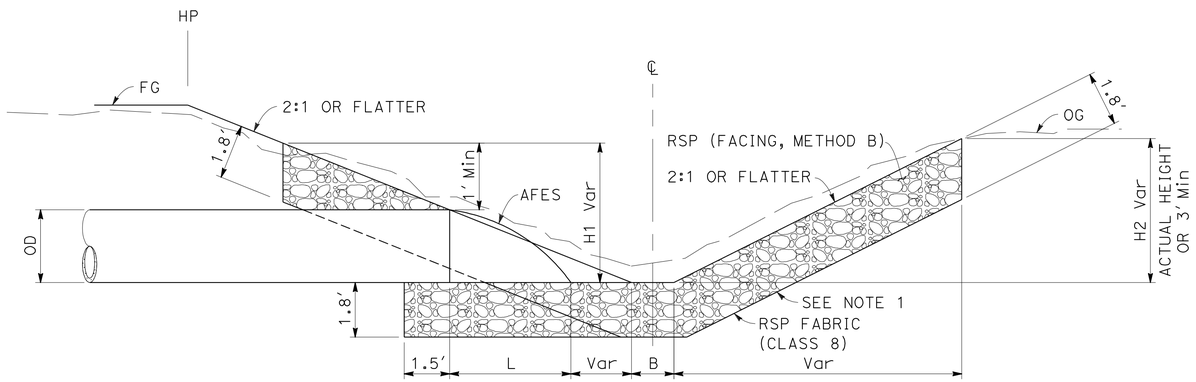

SECTION A-A
B=0' FOR V GUTTER

NOTES:

1. FOR LOCATIONS WITHOUT GUTTER, PROVIDE THE SAME LAYER OF RSP FOR A MINIMUM OF 6' BEYOND INLET OR OUTLET, AND SUBJECT TO CHANGE BY THE ENGINEER BASE ON ACTUAL FIELD CONDITIONS.
2. RSP FABRIC SHOULD BE WRAPPED WITH RSP. NO FABRIC SHOULD PROTRUDE ABOVE THE GROUND.

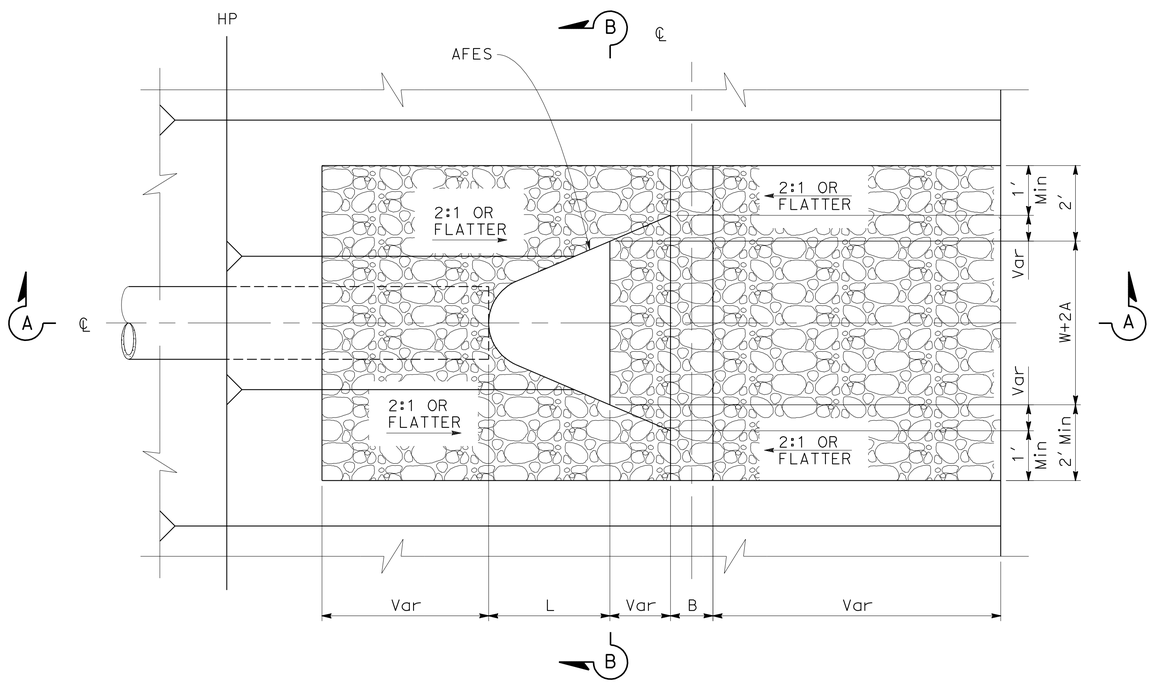

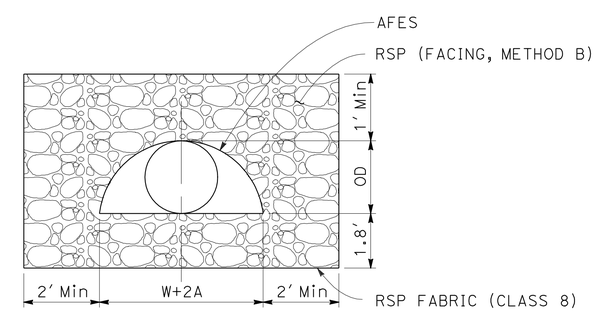

SECTION B-B

RSP AT CULVERT INLET AND OUTLET ACROSS ROAD WAY

2 a e 4 a 9 a 11 a e 12 i 17 d 24 a f

DRAINAGE DETAILS

NO SCALE

DD-4

REVISED BY	FHW
DATE REVISED	09/27/11
FANG HONG WU	
AHMED RAHID	
CALCULATED-DESIGNED BY	
CHECKED BY	
FUNCTIONAL SUPERVISOR	
YUAN ZHENG GE	

STATE OF CALIFORNIA - DEPARTMENT OF TRANSPORTATION
Caltrans
HYDRAULICS

LAST REVISION 09-27-11
DATE PLOTTED => 22-MAY-2012
TIME PLOTTED => 16:40

Dist	COUNTY	ROUTE	POST MILES TOTAL PROJECT	SHEET No.	TOTAL SHEETS
04	SCI	152	16.2/R16.5, R18.5/R19.5	53	195

REGISTERED CIVIL ENGINEER 2/7/12 DATE

5-21-12
PLANS APPROVAL DATE

REGISTERED PROFESSIONAL ENGINEER Fang Hong Wu No. 31258 Exp. 9-30-12 CIVIL STATE OF CALIFORNIA

THE STATE OF CALIFORNIA OR ITS OFFICERS OR AGENTS SHALL NOT BE RESPONSIBLE FOR THE ACCURACY OR COMPLETENESS OF SCANNED COPIES OF THIS PLAN SHEET.

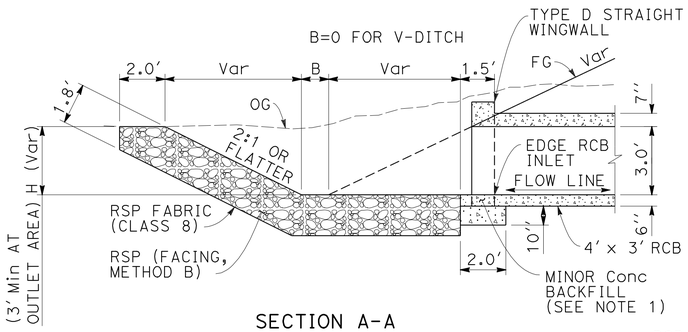

SECTION A-A

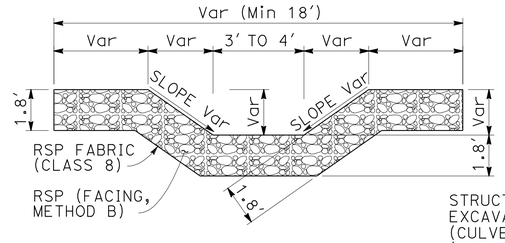

SECTION C-C

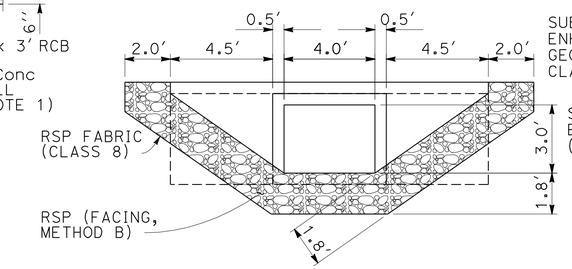

SECTION B-B

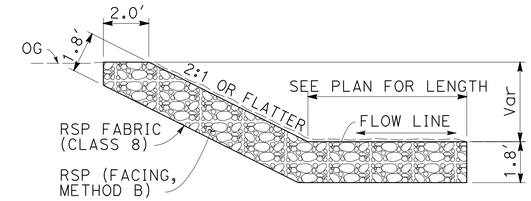

SECTION D-D

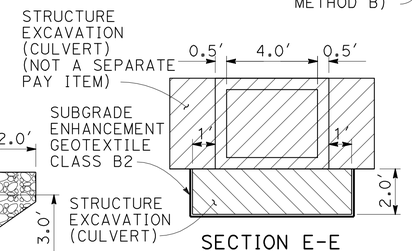

SECTION E-E

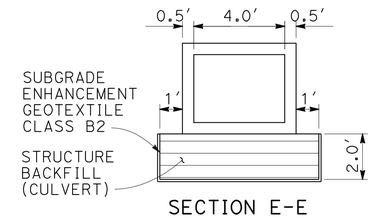

SECTION E-E

NOTES:

1. PROVIDE MINOR CONCRETE BACKFILL FROM EDGE OF RCB INLET TO EDGE OF TYPE D WING WALL (1.5' WIDE, 6" DEEP).
2. SEE Std PLAN D85 FOR TYPE D STRAIGHT WING WALL DETAILS.
3. RSP FABRIC SHOULD BE WRAPPED WITHIN RSP. NO FABRIC SHOULD PROTRUDE ABOVE THE GROUND.

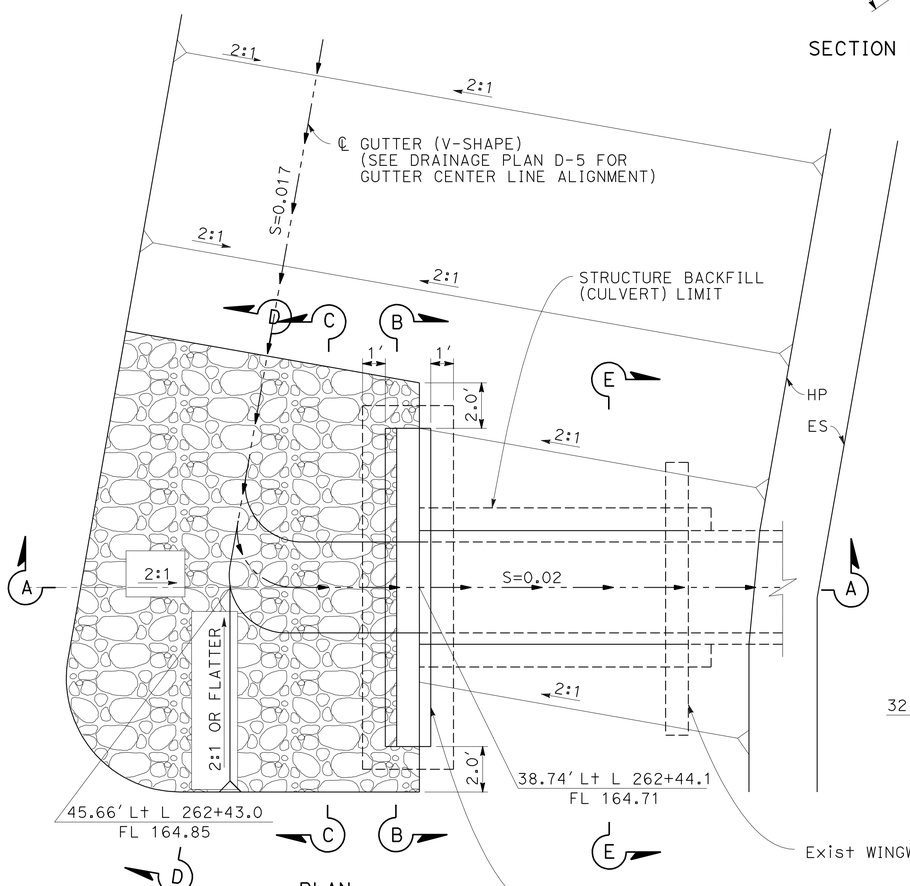

PLAN

DETAIL A

22 a b

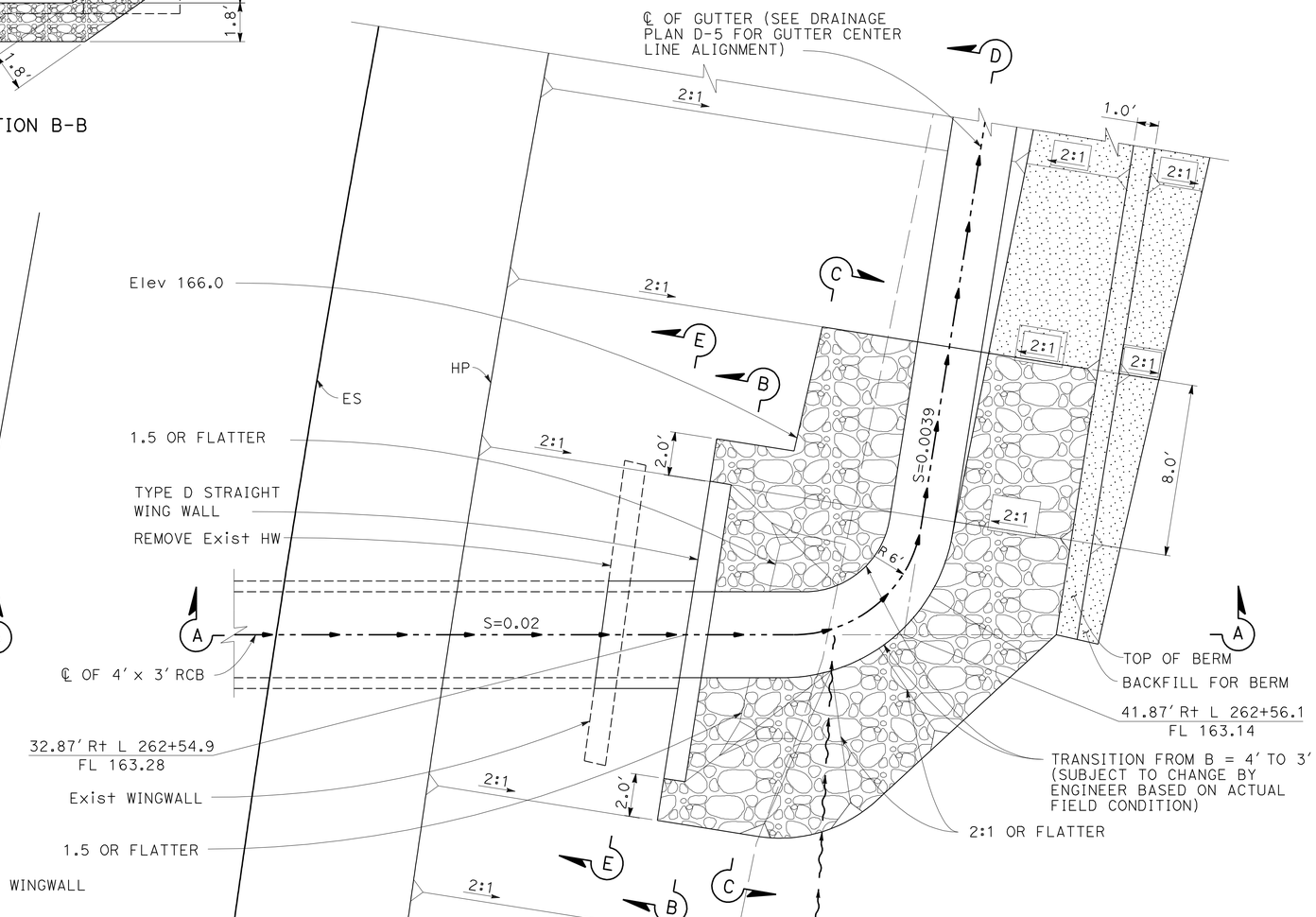

DETAIL B

22 g h

DRAINAGE DETAILS

NO SCALE

DD-5

REVISED BY	DATE REVISED
FHW	2/7/12

CALCULATED-DESIGNED BY: FANG HONG WU
CHECKED BY: AHMED RAHID
FUNCTIONAL SUPERVISOR: YUAN ZHENG GE

STATE OF CALIFORNIA - DEPARTMENT OF TRANSPORTATION
Caltrans
HYDRAULICS

LAST REVISION 02-07-12 | DATE PLOTTED => 22-MAY-2012 | TIME PLOTTED => 16:41

Dist	COUNTY	ROUTE	POST MILES TOTAL PROJECT	SHEET No.	TOTAL SHEETS
04	SCI	152	16.2/R16.5, R18.5/R19.5	54	195

REGISTERED CIVIL ENGINEER 11/7/11 DATE

5-21-12
PLANS APPROVAL DATE

REGISTERED PROFESSIONAL ENGINEER Fang Hong Wu No. 31258 Exp. 9-30-12 CIVIL STATE OF CALIFORNIA

THE STATE OF CALIFORNIA OR ITS OFFICERS OR AGENTS SHALL NOT BE RESPONSIBLE FOR THE ACCURACY OR COMPLETENESS OF SCANNED COPIES OF THIS PLAN SHEET.

NOTES:

1. OFFSET AND Elev SHOWN ARE FOR TOP EDGE OF GUTTER ALONG THE WALL.
2. FOR DETAILS NOT SHOWN, SEE Std PLAN B3-9.
3. RSP FABRIC SHOULD BE WRAPPED WITHIN RSP. NO FABRIC SHOULD PRUTRUDE ABOVE THE GROUND.

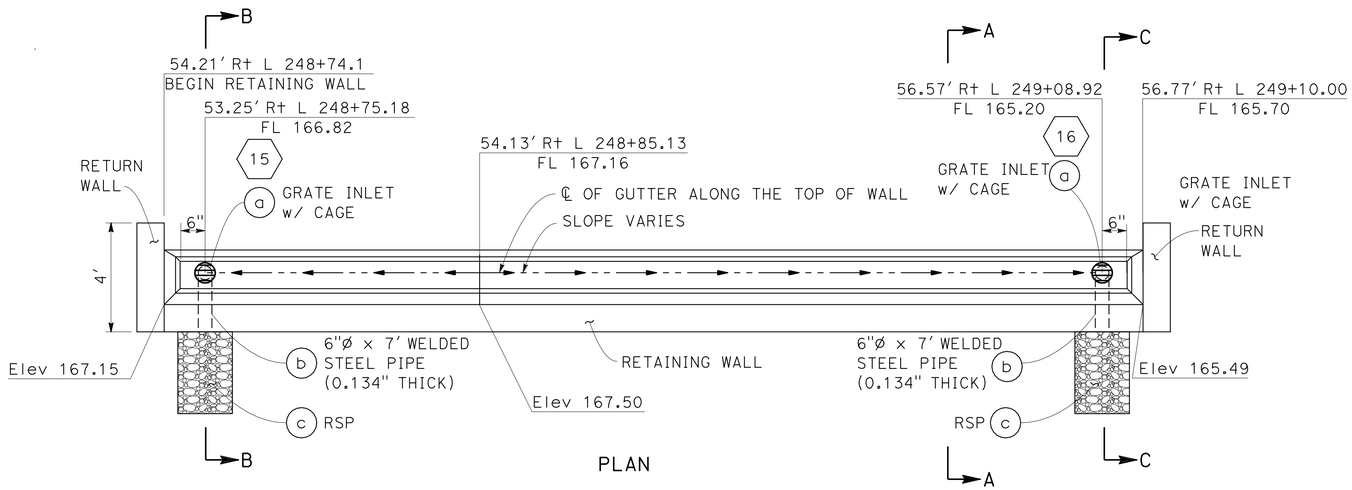

GUTTER ALONG TOP OF RETAINING WALL

L 248+74.10 TO 249+10.00

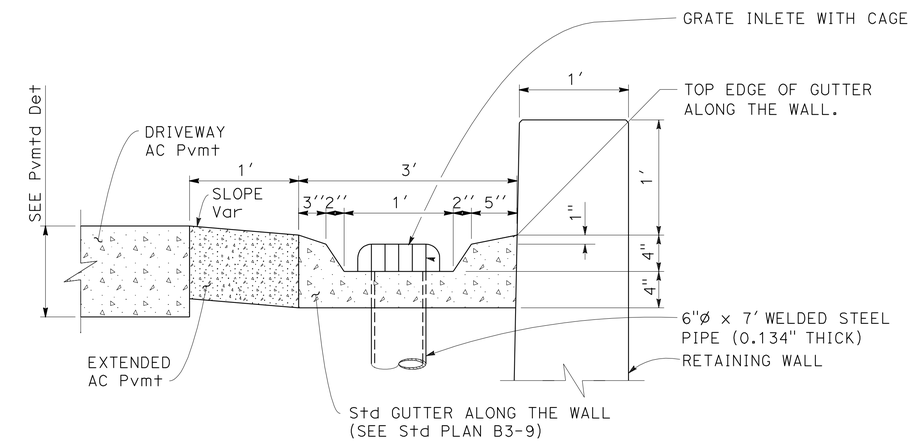

SECTION A-A

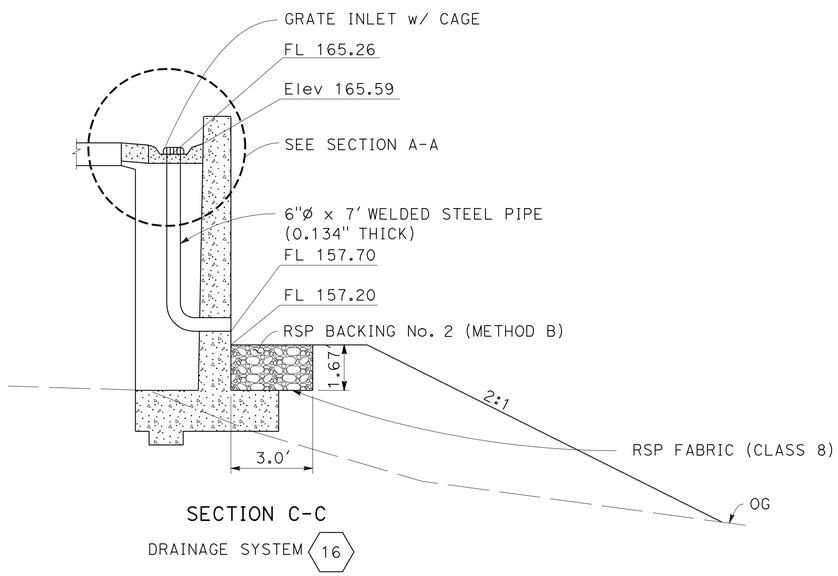

SECTION C-C

DRAINAGE SYSTEM 16

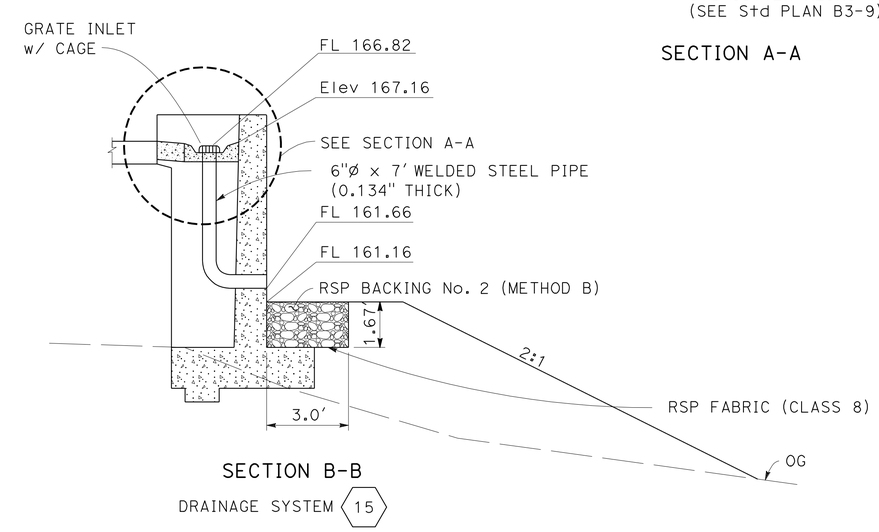

SECTION B-B

DRAINAGE SYSTEM 15

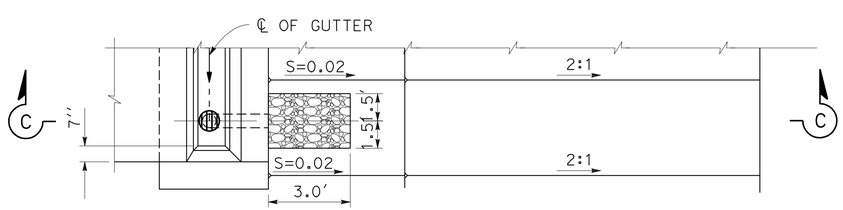

PLAN

GUTTER ON TOP OF WALL

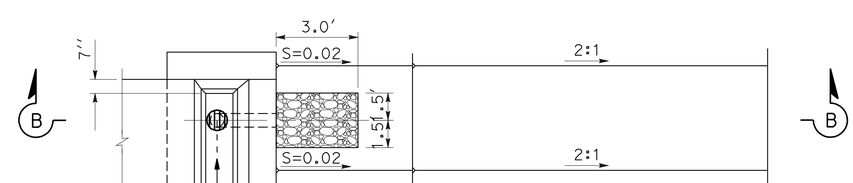

PLAN

GUTTER ON TOP OF WALL

DRAINAGE DETAILS

NO SCALE

DD-6

STATE OF CALIFORNIA - DEPARTMENT OF TRANSPORTATION
Caltrans® HYDRAULICS

FUNCTIONAL SUPERVISOR: YUAN ZHENG GE
CALCULATED-DESIGNED BY: FANG HONG WU
CHECKED BY: AHMED RAHID
REVISED BY: YZG
DATE REVISED: 10/10/11

LAST REVISION 10-10-11
DATE PLOTTED => 22-MAY-2012
TIME PLOTTED => 16:41

Dist	COUNTY	ROUTE	POST MILES TOTAL PROJECT	SHEET No.	TOTAL SHEETS
04	SCI	152	16.2/R16.5, R18.5/R19.5	55	195

REGISTERED CIVIL ENGINEER 11/7/11 DATE

5-21-12
PLANS APPROVAL DATE

REGISTERED PROFESSIONAL ENGINEER Fang Hong Wu No. 31258 Exp. 9-30-12 CIVIL STATE OF CALIFORNIA

THE STATE OF CALIFORNIA OR ITS OFFICERS OR AGENTS SHALL NOT BE RESPONSIBLE FOR THE ACCURACY OR COMPLETENESS OF SCANNED COPIES OF THIS PLAN SHEET.

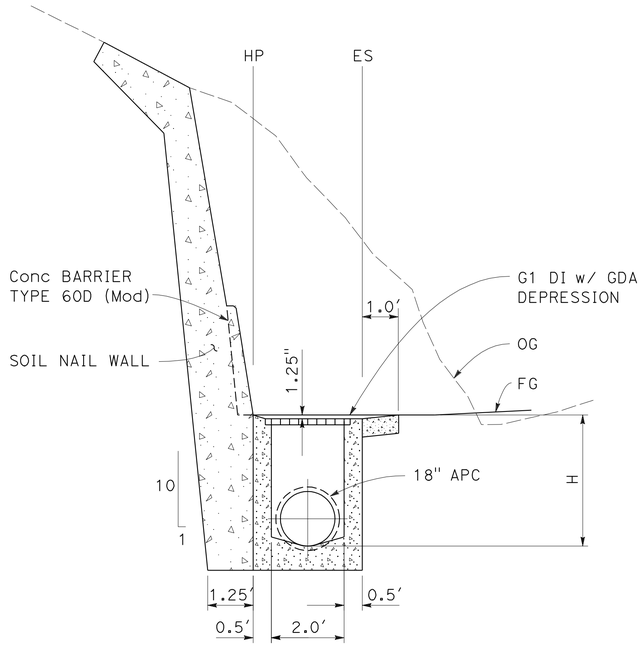

SECTION C-C

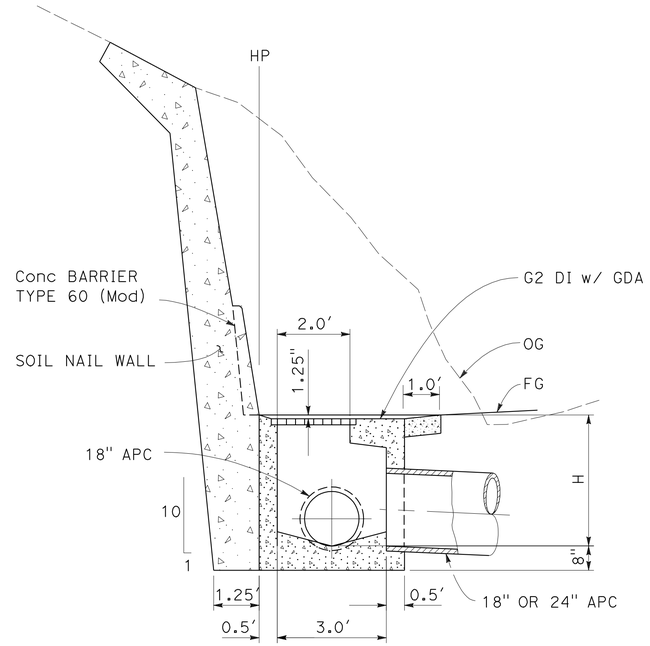

SECTION B-B

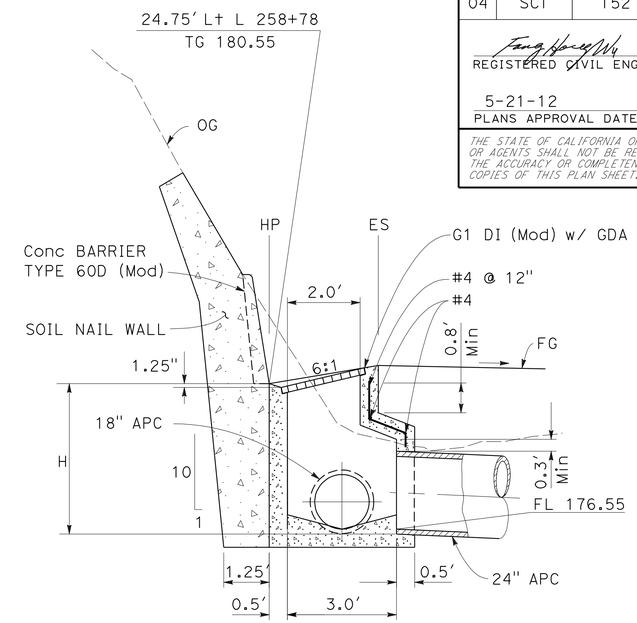

SECTION A-A

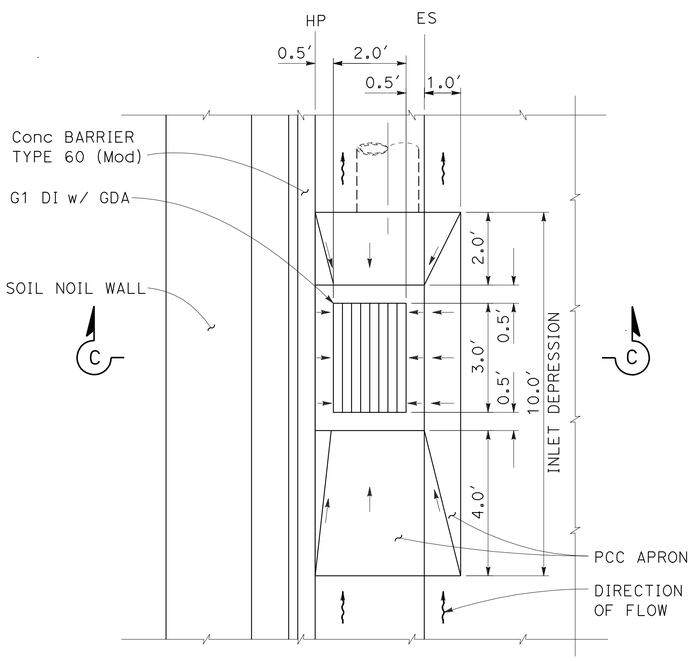

PLAN

G1 DI ADJACENT TO SOIL NAIL WALL WITH CONCRETE BARRIER (TYPICAL)

12 a 13 a 14 a e g i 19 i k m o

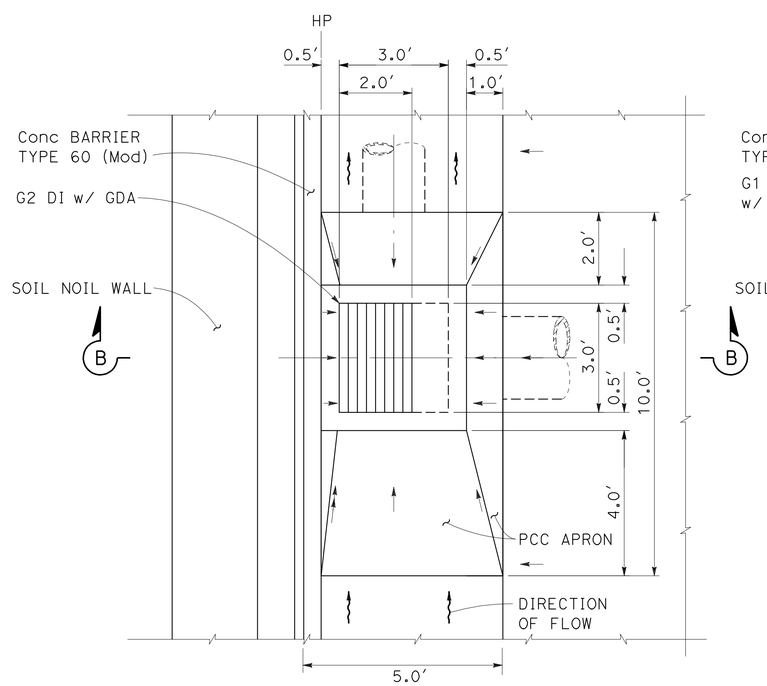

PLAN

G2 DI ADJACENT TO SOIL NAIL WALL WITH CONCRETE BARRIER (TYPICAL)

12 c 13 c 14 c 17 a 19 a

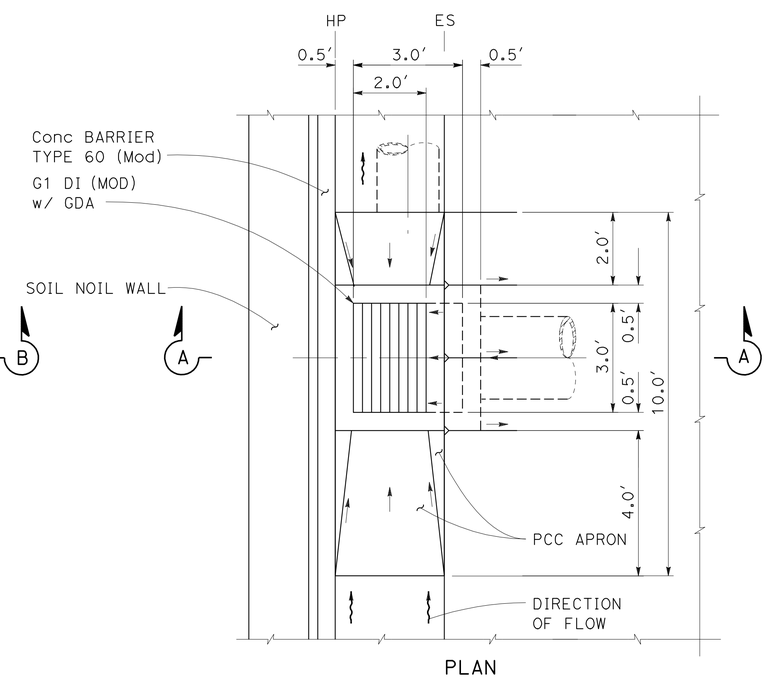

PLAN

G1 DI (Mod) ON SIDE GUTTER ADJACENT TO SOIL NAIL WALL WITH CONCRETE BARRIER

20 a

DRAINAGE DETAILS

NO SCALE

DD-7

REVISED BY	DATE REVISED
FHW	9/27/11

CALCULATED-DESIGNED BY: FANG HONG WU
CHECKED BY: AHMED RAHID
FUNCTIONAL SUPERVISOR: YUAN ZHENG GE

STATE OF CALIFORNIA - DEPARTMENT OF TRANSPORTATION
Caltrans
HYDRAULICS

LAST REVISION 9-27-11 | DATE PLOTTED => 22-MAY-2012 | TIME PLOTTED => 16:41

ALTERNATIVE PIPE CULVERT ALLOWABLE PIPE MATERIAL AND PROTECTION

DESIGNATION	RCP*	CSP** WITH PSC	SSRP WITH PSC	PLASTIC PIPE	
				SMOOTH INTERIOR WALL TYPE	CURRUGATED INTERIOR WALL TYPE
18" APC	YES	YES(0.064" THICK)		YES	YES
24" APC	YES	YES(0.064" THICK)	YES(0.064" THICK)	YES	YES

NOTES:

1. ALL PIPE JOINT TYPE ARE STANDARD UNLESS OTHERWISE NOTED.
2. * FOR MINIMUM ALLOWABLE CLASS OF RCP,SEE STD PLAN A62D. STEEL COVER FOR THE 18" PIPE SHOULD BE 0.75" AND 1.0" FOR 24" PIPE.
3. ** EITHER HELICAL OR ANNULAR CORRUGATIONS ARE ALLOWABLE WITH 2 2/3" x 1/2" CORRUGATIONS. PLACE PS COATING BOTH INSIDE AND OUTSIDE OF THE PIPE.
4. *** SEE Q-1 SHEET FOR TOTAL QUANTITIES.

ABBREVIATION

PSC = POLYMERIC SHEET COATING

Dist	COUNTY	ROUTE	POST MILES TOTAL PROJECT	SHEET No.	TOTAL SHEETS
04	SCI	152	16.2/R16.5, R18.5/R19.5	56	195

REGISTERED CIVIL ENGINEER 11/7/11 DATE

5-21-12
PLANS APPROVAL DATE

REGISTERED PROFESSIONAL ENGINEER Ahmed T. Rahid No. 76800 Exp. 12-31-12 CIVIL STATE OF CALIFORNIA

THE STATE OF CALIFORNIA OR ITS OFFICERS OR AGENTS SHALL NOT BE RESPONSIBLE FOR THE ACCURACY OR COMPLETENESS OF SCANNED COPIES OF THIS PLAN SHEET.

DRAINAGE QUANTITIES

DRAINAGE SYSTEM No.	DRAINAGE UNIT	FRAME AND GRATE (N) TYPE 24-12X	FRAME AND GRATE (N) TYPE 24-9	FRAME AND GRATE (N) TYPE 36R	HEIGHT OF INLET (N)	36" CORRUGATED STEEL PIPE INLET (0.109" THICK)	STRUCTURAL CONCRETE (BOX CULVERT)	STRUCTURAL CONCRETE (WING WALL)	BAR REINFORCING STEEL	MINOR CONCRETE (MINOR STRUCTURE)	MINOR CONCRETE (MINOR CONSTRUCTION)	MINOR CONCRETE (MISC CONSTRUCTION)	6" WELDED STEEL PIPE (0.134" THICK)	INLET GRATE 6" PIPE (N)	MISC IRON AND STEEL	CSP DD (0.109" THICK) 18"	CSP DD (0.109" THICK) 24"	APC 18"	APC 24"	4' x 3' RCB (N)	CONCRETE COLLAR (N)	AFES 18"	AFES 24"	TEE DIS-SIPATOR (N) 18"	TEE DIS-SIPATOR (N) 24"	REMOVE INLET	REMOVE CULVERT	REMOVE FES	REMOVE HEADWALL	ABANDON CULVERT	SAND BACKFILL (N)	RSP (FACING, METHOD B)	RSP (BACKING No. 2 METHOD B)	RSP FABRIC (CLASS 8)	HMA (TYPE A) ***	MINOR CONCRETE	AS CLASS 4 ***	STRUCTURE BACKFILL (N)	MAXIMUMM COVER (N)	STRUCTURE BACKFILL (CULVERT)	STRUCTURE EXCAVATION (CULVERT)	SUBGRADE ENHANCEMENT GEOTEXTILE CLASS B2	STRUCTURE EXCAVATION (WING WALL) (N)	STRUCTURE BACKFILL (WING WALL) (N)	DESCRIPTION	STATION	DRAINAGE PLAN SHEET No.	DRAINAGE SYSTEM No.	DRAINAGE UNIT
		EA			LF		CY		LB	CY			LF	EA	LB	LF					EA					LF	EA		LF	CY		SQYD	TON	CY			LF	CY	CY	SQYD	CY	CY					
1	a		1		4.9					1.79	0.60				263																												G2 DI w/ PCC APRON	33.24' L+ L 221+60.2	D-1	1	a
	b																	11			1																11.5						18" APC w/ CONCRETE COLLAR	31.74' L+ L 221+59.7 TO 21.60' L 221+56.5			b
	c																								1																		REMOVE DI	22.78' L 221+56.5			c
2	a																														6.7		22.0										RSP w/ RSP FABRIC	39.45' L+ L 224+00.0	D-2	2	a
	b																						1																				24" AFES	39.45' L+ L 224+00.0			b
	c																		86															6.7	13.2	10.1	40.6	13.0					24" APC	39.45' L+ L 224+00.0 TO 49.20' R+ L 224+00.0			c
	d																						1																				24" AFES	49.20' R+ L 224+00.0			d
	e																														7.7		22.0										RSP w/ RSP FABRIC	49.20' R+ L 224+00.0			e
3	a																														4.0		10.0										RSP w/ RSP FABRIC	38.19' L+ L 225+75.0	D-2	3	a
	b																					1																					18" AFES	38.19' L+ L 225+75.0			b
	c											4.3						25																			6.0						18" APC	38.19' L+ L 225+75.0 TO 37.64' L+ L 226+05.0			c
	d																					1																					18" AFES	37.64' L 226+05.0			d
	e																														4.0		10.0										RSP w/ RSP FABRIC	37.64' L 226+05.0			e
4	a																														6.7		18.0										RSP w/ RSP FABRIC	43.07' L+ L 226.56.4	D-2	4	a
	b																					1																					18" AFES	38.85' L+ L 226.56.4			b
	c																	30			1													2.4	4.7	3.6	14.7	11.0					18" APC w/ CONCRETE COLLAR	38.85' L+ L 226.56.4 TO 10.0' L+ L 226+56.6			c
	d																												1														REMOVE HEADWALL	10.00' L+ L 226+56.6			d
5	a																														4.0		10.0										RSP w/ RSP FABRIC	48.13' L+ L 226+70.0	D-2	5	a
	b																					1																					18" AFES	48.13' L+ L 226+70.0			b
	c											4.3						25																			8.5						18" APC	48.13' L+ L 226+70.0 TO 45.27' L+ L 227+00.0			c
	d																					1																					18" AFES	45.27' L+ L 227+00.0			d
	e																														4.0		10.0										RSP w/ RSP FABRIC	45.27' L+ L 227+00.0			e
6	a																																	0.5									ACOD	24.00' L+ L 228+33.0	D-2	6	a
6	b																														5.0		9.0										RSP w/ RSP FABRIC	24.00' L+ L 228+33.0 TO 30.49' L+ L 228+20.0	D-2	6	b
7	a																																	0.5									ACOD	24.00' L+ L 230+42.0	D-2	7	a
7	b																														5.0		9.0										RSP w/ RSP FABRIC	24.00' L+ L 230+42.0 TO 28.0' L+ L 230+50.0	D-2	7	b
8	a																														4.0		10.0										RSP w/ RSP FABRIC	30.75' L+ L 230+90.0	D-2	8	a
	b																					1																					18" AFES	30.75' L+ L 230+90.0			b
	c																	50																			7.5						18" APC	30.75' L+ L 230+90.0 TO 34.40' L+ L 231+45.0			c
	d																					1																					18" AFES	34.40' L+ L 231+45.0			d
	e																														4.0		10.0										RSP w/ RSP FABRIC	34.40' L+ L 231+45.0			e
9	a																														8.9		28.0										RSP w/ RSP FABRIC	34.76' L+ L 231+50.5	D-2	9	a
	b																					1																					18" AFES	34.76' L+ L 231+50.5			b
	c																	18			1													1.2	2.4	1.8	5.8	12.0					18" APC w/ CONCRETE COLLAR	31.76' L+ L 231+50.5 TO 14.83' L+ L 231+51.1			c
	d																											1															REMOVE FES	14.83' L+ L 231+51.1			d
SHEET TOTALS			1							1.79	0.60	8.6			263			159	86		3	8	2			1		1	1			64.0		168	11.3	20.3	15.5	61.1						SHEET TOTAL				

(N) = NOT A SEPARATE PAY ITEM, FOR INFORMATION ONLY.

DRAINAGE QUANTITIES DQ-1

STATE OF CALIFORNIA - DEPARTMENT OF TRANSPORTATION
Caltrans DESIGN

FUNCTIONAL SUPERVISOR: MORTEZA AZIMI
CALCULATED-DESIGNED BY: AHMED RAHID
CHECKED BY: FANG HONG WU
REVISED BY: AR
DATE REVISED: 10/12/11

LAST REVISION: DATE PLOTTED => 22-MAY-2012 TIME PLOTTED => 16:41
10-12-11

Dist	COUNTY	ROUTE	POST MILES TOTAL PROJECT	SHEET No.	TOTAL SHEETS
04	SCI	152	16.2/R16.5, R18.5/R19.5	57	195

REGISTERED CIVIL ENGINEER 11/7/11 DATE

5-21-12
PLANS APPROVAL DATE

REGISTERED PROFESSIONAL ENGINEER Ahmed T. Rahid No. 76800 Exp. 12-31-12 CIVIL STATE OF CALIFORNIA

THE STATE OF CALIFORNIA OR ITS OFFICERS OR AGENTS SHALL NOT BE RESPONSIBLE FOR THE ACCURACY OR COMPLETENESS OF SCANNED COPIES OF THIS PLAN SHEET.

DRAINAGE QUANTITIES

DRAINAGE SYSTEM No.	DRAINAGE UNIT	FRAME AND GRATE (N) TYPE 24-12X (EA)	FRAME AND GRATE (N) TYPE 24-9 (EA)	FRAME AND GRATE (N) TYPE 36R (EA)	HEIGHT OF INLET (N) (LF)	36" CORRUGATED STEEL PIPE INLET (0.109" THICK) (LF)	STRUCTURAL CONCRETE (BOX CULVERT) (CY)	STRUCTURAL CONCRETE (WING WALL) (CY)	BAR REINFORCING STEEL (LB)	MINOR CONCRETE (MINOR STRUCTURE) (CY)	MINOR CONCRETE (MISC CONSTRUCTION) (CY)	MINOR CONCRETE (BACKFILL) (CY)	6" WELDED STEEL PIPE (0.134" THICK) (LF)	INLET GRATE 6" PIPE (N) (EA)	MISC IRON AND STEEL (LB)	CSP DD (0.109" THICK) 18" (LF)	CSP DD (0.109" THICK) 24" (LF)	APC 18" (LF)	APC 24" (LF)	4' x 3' RCB (N) (LF)	CONCRETE COLLAR (N) (EA)	AFES 18" (EA)	AFES 24" (EA)	TEE DIS-SIPATOR (N) 18" (EA)	TEE DIS-SIPATOR (N) 24" (EA)	REMOVE INLET (EA)	REMOVE CULVERT (LF)	REMOVE FES (EA)	REMOVE HEADWALL (EA)	ABANDON CULVERT (LF)	SAND BACKFILL (N) (CY)	RSP (FACING, METHOD B) (CY)	RSP (BACKING No. 2 METHOD B) (CY)	RSP FABRIC (CLASS 8) (SQYD)	HMA (TYPE A) *** (TON)	MINOR CONCRETE (CY)	AS CLASS 4 *** (CY)	STRUCTURE BACKFILL (N) (CY)	MAXIMUM COVER (N) (LF)	STRUCTURE BACKFILL (CULVERT) (CY)	STRUCTURE EXCAVATION (CULVERT) (CY)	SUBGRADE ENHANCEMENT GEOTEXTILE CLASS B2 (SQYD)	STRUCTURE EXCAVATION (WING WALL) (N) (CY)	STRUCTURE BACKFILL (WING WALL) (N) (CY)	DESCRIPTION	STATION	DRAINAGE PLAN SHEET No.	DRAINAGE SYSTEM No.	DRAINAGE UNIT
10	a																														6.4		22.0											RSP w/ RSP FABRIC	37.00' L+ L 233+50.0	D-2	10	a
	b																						1																					24" AFES	37.00' L+ L 233+50.0			b
	c											2.0							76														6.7	13.2	10.1	26.5	12.5							24" APC w/ CONCRETE COLLAR	33.00' L+ L 233+50.0 TO 46.00' R+ L 233+50.0			c
	d																						1																					24" AFES	46.00' R+ L 233+50.0			d
	e																														7.7		22.0											RSP w/ RSP FABRIC	46.00' R+ L 233+50.0			e
11	a																																	0.5										ACOD	24.00' L+ L 234+92.0	D-2	11	a
11	b																														5.0		9.0											RSP w/ RSP FABRIC	24.00' L+ L 234+92.0 TO 30.27' L+ L 234+80.0	D-2	11	b
12	a	1			3.1					0.97	1.11				239																													G1 DI w/ GDA	24.00' L+ L 238+60.7	D-3	12	a
	b																	7																					21.0					18" APC	23.00' L+ L 238+60.7 TO 23.00' L+ L 238+50.7			b
	c	1			3.1					1.34	1.33				239																												G2 DI w/ GDA	24.00' L+ L 238+50.7			c
	d																									1																		REMOVE DI	10.20' L+ L 238+50.7			d
	e																										44																	REMOVE CULVERT, 18" CMP	10.20' L+ L 238+50.7 TO 34.98 R+ L 238+53.2			e
	f																											1																REMOVE FES	34.98' R+ L 238+53.2			f
	g																		56															6.7	13.2	10.1	24.1	10.5							24" APC	24.00' L+ L 238+50.7 TO 34.98' R+ L 238+53.2			g
	h																						1																					24" AFES	34.98' R+ L 238+53.2			h
	I																														7.7		22.0											RSP w/ RSP FABRIC	34.98' R+ L 238+53.2			I
13	a	1			3					0.95	1.11				239																													G1 DI w/ GDA	29.33' L+ L 244+10.0	D-3	13	a
	b																	7																					13.0					18" APC	29.33' L+ L 244+10.0 TO 29.11' L+ L 244+00.0			b
	c	1			3					1.31	1.33				239																													G2 DI w/ GDA	29.11' L+ L 244+00.0			c
	d											1.5							72														6.7	12.8	9.8	44.3	17.0							24" APC	29.11' L+ L 244+00.0 TO 43.70' R+ L 244+00.0			d
	e																														3.0		9.0											RSP w/ RSP FABRIC	43.70' R+ L 244+00.0			e
14	a	1			2.8					0.91	1.11				239																													G1 DI w/ GDA	32.75' L+ L 245+50.0	D-4	14	a
	b																	42																					3.0					18" APC	32.75' L+ L 245+50.0 TO 34.00' L+ L 245+95.0			b
	c	1			3.5					1.44	1.33				239																													G2 DI w/ GDA	34.00' L+ L 245+95.0			c
	d																	7																					4.0					18" APC	34.00' L+ L 245+95.0 TO 34.30' L+ L 246+05.0			d
	e	1			3.4					1.04	1.11				239																													G1 DI w/ GDA	34.30' L+ L 246+05.0			e
	f																	52																					4.5					18" APC	34.30' L+ L 246+05.0 TO 35.97' L+ L 246+60.0			f
	g	1			2.9					0.93	1.11				239																													G1 DI w/ GDA	35.97' L+ L 246+60.0			g
	h																	37																					5.0					18" APC	35.97' L+ L 246+60.0 TO 36.00' L+ L 247+00.0			h
	I	1			2.8					0.91	1.11				239																													G1 DI w/ GDA	36.00' L+ L 247+00.0			I
	j																												1															REMOVE HEADWALL	23.40' L+ L 245+94.7			j
	k																										62																	REMOVE CULVERT	23.40' L+ L 245+94.7 TO 38.20' R+ L 246+01.9			k
	l											0.8							67														7.8	15.4	11.8	60.6	20.0							24" APC	34.00' L+ L 245+95.0 TO 38.20' R+ L 246+02.0			l
	m																														3.0		9.0											RSP w/ RSP FABRIC	38.20' R+ L 246+02.0			m
SHEET TOTALS		9								9.8	10.65	4.3			2151			152	271				3			1	106	1	1			32.8		93.0	28.4	54.6	41.8	155.5							SHEET TOTAL				

(N) = NOT A SEPARATE PAY ITEM, FOR INFORMATION ONLY.

DRAINAGE QUANTITIES DQ-2

STATE OF CALIFORNIA - DEPARTMENT OF TRANSPORTATION
Caltrans® DESIGN

FUNCTIONAL SUPERVISOR: MORTEZA AZIMI
CALCULATED-DESIGNED BY: AHMED RAHID
CHECKED BY: FANG HONG WU
REVISED BY: AR
DATE REVISED: 10/12/11

LAST REVISION: DATE PLOTTED => 22-MAY-2012 TIME PLOTTED => 16:41
10-12-11

Dist	COUNTY	ROUTE	POST MILES TOTAL PROJECT	SHEET No.	TOTAL SHEETS
04	SCI	152	16.2/R16.5, R18.5/R19.5	58	195

REGISTERED CIVIL ENGINEER 11/7/11 DATE

5-21-12
PLANS APPROVAL DATE

REGISTERED PROFESSIONAL ENGINEER Ahmed T. Rahid No. 76800 Exp. 12-31-12 CIVIL STATE OF CALIFORNIA

THE STATE OF CALIFORNIA OR ITS OFFICERS OR AGENTS SHALL NOT BE RESPONSIBLE FOR THE ACCURACY OR COMPLETENESS OF SCANNED COPIES OF THIS PLAN SHEET.

DRAINAGE QUANTITIES

DRAINAGE SYSTEM No. ⬡	DRAINAGE UNIT ◯	FRAME AND GRATE (N) TYPE 24-12X (EA)	FRAME AND GRATE (N) TYPE 24-9 (EA)	FRAME AND GRATE (N) TYPE 36R (EA)	HEIGHT OF INLET (N) (LF)	36" CORRUGATED STEEL PIPE INLET (0.109" THICK) (LF)	STRUCTURAL CONCRETE (BOX CULVERT) (CY)	STRUCTURAL CONCRETE (WING WALL) (CY)	BAR REINFORCING STEEL (LB)	MINOR CONCRETE (MINOR STRUCTURE) (CY)	MINOR CONCRETE (MISC CONSTRUCTION) (CY)	MINOR CONCRETE (BACKFILL) (CY)	6" WELDED STEEL PIPE (0.134" THICK) (LF)	INLET GRATE 6" PIPE (N) (EA)	MISC IRON AND STEEL (LB)	CSP DD (0.109" THICK) 18" (LF)	CSP DD (0.109" THICK) 24" (LF)	APC 18" (LF)	APC 24" (LF)	4' x 3' RCB (N) (LF)	CONCRETE COLLAR (N) 18" (EA)	CONCRETE COLLAR (N) 24" (EA)	AFES 18" (EA)	AFES 24" (EA)	TEE DIS-SIPATOR (N) 18" (EA)	TEE DIS-SIPATOR (N) 24" (EA)	REMOVE INLET (EA)	REMOVE CULVERT (LF)	REMOVE FES (EA)	REMOVE HEADWALL (EA)	ABANDON CULVERT (LF)	SAND BACKFILL (N) (CY)	RSP (FACING, METHOD B) (CY)	RSP (BACKING No. 2 METHOD B) (CY)	RSP FABRIC (CLASS 8) (SQYD)	HMA (TYPE A) *** (TON)	MINOR CONCRETE (CY)	AS CLASS 4 *** (CY)	STRUCTURE BACKFILL (N) (CY)	MAXIMUM COVER (N) (LF)	STRUCTURE BACKFILL (CULVERT) (CY)	STRUCTURE EXCAVATION (CULVERT) (CY)	SUBGRADE ENHANCEMENT GEOTEXTILE CLASS B2 (SQYD)	STRUCTURE EXCAVATION (WING WALL) (N) (CY)	STRUCTURE BACKFILL (WING WALL) (N) (CY)	DESCRIPTION	STATION	DRAINAGE PLAN SHEET No.	DRAINAGE SYSTEM No. ⬡	DRAINAGE UNIT ◯
15	a													1																																	DRAIN INLET w/ GRATE	53.38' Rt L 248+74.93	D-4	15	a
	b												7																																	6" WELDED STEEL PIPE (0.134" THICK)	53.38' Rt L 248+74.93			b
	c																															0.6	3.0												OUTLET AT WALL w/ RSP	55.21' Rt L 248+74.93			c
16	a													1																																	DRAIN INLET w/ GRATE	56.94' Rt L 249+09.17	D-4	16	a
	b												7																																	6" WELDED STEEL PIPE (0.134" THICK)	56.94' Rt L 249+09.17			b
	c																															0.6	3.0												OUTLET AT WALL w/ RSP	58.77' Rt L 249+09.17			c
17	a	1			3.4					1.41	1.33				239																															G2 DI w/ GDA	36.00' Lt L 249+50.00	D-4	17	a
	b											0.8							110															8.1	15.9	12.2	71.7	23.0							24" APC	36.00' Lt L 249+50.00 TO 76.0' Rt L 249+50.00			b
	c																						1																							24" AFES	76.00' Rt L 249.50			c
	d																														7.7		22.0												RSP w/ RSP FABRIC	76.00' Rt L 249.50			d
18	a																									1																					REMOVE DI	24.10' Lt L 251+47.90	D-4	18	a
	b																													47	3.1															ABANDON CULVERT	24.10' Lt L 251+47.90 TO 23.17' Rt L 251+48.40			b
	c																												1																	REMOVE HEADWALL	23.17' Rt L 251+48.40			c
19	a	1			3.5					1.44	1.33				239																															G2 DI w/ GDA	31.43' Lt L 255+99.40	D-4	19	a
	b																									1	3																			REMOVE DI & PORTION OF CULVERT	26.73' Lt L 225+99.40 TO 23.80' Lt L 255+99.40			b
	c															3					1																							18" CSP DD w/ CONCRETE COLLAR	27.92' Lt L 256+00.00 TO 23.80' Lt L 225+99.40			c
	d																												1																	REMOVE HEADWALL	33.88' Rt L 255+98.10			d
	e															31					1																									18" CSP DD w/ CONCRETE COLLAR	33.88' Rt L 255+98.10 TO 64.30 RT L 255+97.50			e
	f																								1																					18" TEE DISSIPATOR	64.30' Rt L 255+97.50			f
	g																														3.0		12.0												RSP w/ RSP FABRIC	64.30' Rt L 255+97.50			g
	h																	7																									3.5			18" APC	31.66' Lt L 255+89.40 TO 31.43' Lt L 256+00.00			h
	I	1			3.4					1.04	1.11				239																															G1 DI w/ GDA	31.66' Lt L 255+89.40			I
	j																	37																									3.5			18" APC	31.66' Lt L 255+89.40 TO 32.62' Lt L 255+50.00			j
	k	1			2.9					0.93	1.11				239																															G1 DI w/ GDA	32.62' Lt L 255+50.00			k
	l																	7																									3.5			18" APC	31.43' Lt L 255+99.40 TO 31.18' Lt L 256+09.40			l
	m	1			3.4					1.04	1.11				239																															G1 DI w/ GDA	31.18' Lt L 256+09.40			m
	n																	37																									3.5			18" APC	31.18' Lt L 256+09.40 TO 30.22' Lt L 256+50.00			n
	o	1			2.9					0.93	1.11				239																															G1 DI w/ GDA	30.22' Lt L 256+50.00			o
20	a	1			4.0					1.20	1.11				239																															G1 DI (MOD) w/ GDA	24.75' Lt L 258+78.00	D-5	20	a
	b																69																	6.8	13.4	10.3	39.6								24" CSP DD	24.75' Lt L 258+78.00 TO 46.33' Rt L 258+78.00			b
	c																									1																				24" TEE DISSIPATOR	46.33' Rt L 258+78.00			c
	d																														5.3		17.0												RSP w/ RSP FABRIC	46.33' Rt L 258+78.00			d
	e																	30																					12.0						18" APC	24.75' Lt L 258+78.00 TO 28.00' Lt L 259+10.00			e
	f			1	2.8	3				0.6					236																															36" GMP INLET (0.109" THICK)	28.00' Lt L 259+10.00			f
21	a																																	0.5												ACOD	21.00' Rt L 260+00.00	D-5	21	a
21	b																														5.0		9.0												RSP w/ RSP FABRIC	30.00' Rt L 260+00.00	D-5	21	b
SHEET TOTALS		7		1		3				8.59	8.21	0.8	14	2	1909	34	69	118	110		2		1	1	1	2	3		2	47	3.1	21.0	1.2	66.0	15.4	29.3	22.5	111.3							SHEET TOTAL				

(N) = NOT A SEPARATE PAY ITEM, FOR INFORMATION ONLY.

DRAINAGE QUANTITIES DQ-3

STATE OF CALIFORNIA - DEPARTMENT OF TRANSPORTATION
Caltrans® DESIGN

FUNCTIONAL SUPERVISOR: MORTEZA AZIMI
CALCULATED-DESIGNED BY: AHMED RAHID
CHECKED BY: FANG HONG WU
REVISED BY: AR
DATE REVISED: 10/12/11

LAST REVISION DATE PLOTTED => 22-MAY-2012
TIME PLOTTED => 16:42
10-12-11

Dist	COUNTY	ROUTE	POST MILES TOTAL PROJECT	SHEET No.	TOTAL SHEETS
04	SCI	152	16.2/R16.5, R18.5/R19.5	59	195

REGISTERED CIVIL ENGINEER 2/7/12 DATE

5-21-12
PLANS APPROVAL DATE

REGISTERED PROFESSIONAL ENGINEER Ahmed T. Rahid No. 76800 Exp. 12-31-12 CIVIL STATE OF CALIFORNIA

THE STATE OF CALIFORNIA OR ITS OFFICERS OR AGENTS SHALL NOT BE RESPONSIBLE FOR THE ACCURACY OR COMPLETENESS OF SCANNED COPIES OF THIS PLAN SHEET.

DRAINAGE QUANTITIES

DRAINAGE SYSTEM No. ⬡	DRAINAGE UNIT ◯	FRAME AND GRATE (N) TYPE 24-12X (EA)	FRAME AND GRATE (N) TYPE 24-9 (EA)	FRAME AND GRATE (N) TYPE 36R (EA)	HEIGHT OF INLET (N) (LF)	36" CORRUGATED STEEL PIPE INLET (0.109" THICK) (LF)	STRUCTURAL CONCRETE (BOX CULVERT) (CY)	STRUCTURAL CONCRETE (WING WALL) (CY)	BAR REINFORCING STEEL (LB)	MINOR CONCRETE (MINOR STRUCTURE) (CY)	MINOR CONCRETE (MISC CONSTRUCTION) (CY)	MINOR CONCRETE (BACKFILL) (CY)	6" WELDED STEEL PIPE (0.134" THICK) (LF)	INLET GRATE 6" PIPE (N) (EA)	MISC IRON AND STEEL (LB)	CSP DD (0.109" THICK) 18" (LF)	CSP DD (0.109" THICK) 24" (LF)	APC 18" (LF)	APC 24" (LF)	4' x 3' RCB (N) (LF)	CONCRETE COLLAR (N) (EA)	AFES 18" (EA)	AFES 24" (EA)	TEE DIS-SIPATOR (N) 18" (EA)	TEE DIS-SIPATOR (N) 24" (EA)	REMOVE INLET (EA)	REMOVE CULVERT (LF)	REMOVE FES (EA)	REMOVE HEADWALL (EA)	ABANDON CULVERT (LF)	SAND BACKFILL (N) (CY)	RSP (FACING, METHOD B) (CY)	RSP (BACKING No. 2 METHOD B) (CY)	RSP FABRIC (CLASS 8) (SQYD)	HMA (TYPE A) *** (TON)	MINOR CONCRETE (CY)	AS CLASS 4 *** (CY)	STRUCTURE BACKFILL (N) (CY)	MAXIMUM COVER (N) (LF)	STRUCTURE BACKFILL (CULVERT) (CY)	STRUCTURE EXCAVATION (CULVERT) (CY)	SUBGRADE ENHANCEMENT GEOTEXTILE CLASS B2 (SQYD)	STRUCTURE EXCAVATION (WING WALL) (N) (CY)	STRUCTURE BACKFILL (WING WALL) (N) (CY)	DESCRIPTION	STATION	DRAINAGE PLAN SHEET No.	DRAINAGE SYSTEM No. ⬡	DRAINAGE UNIT ◯
22	a																													23.0		60.0												RSP w/ RSP FABRIC	38.64' Lt L 262+44.1 / 45.57' Lt L 262+43.0	D-5	22	a
	b							3.2	130			0.2																														5.15	16.3	TYPE D STRAIGHT WING WALL	38.64' Lt L 262+44.1			b
	c						2.5		400											8							1										16.0	5.2	11.40	10.1			4' x 3' RCB	38.64' Lt L 262+44.4 TO 30.8' Lt L 262+45.3			c
	d																																										REMOVE HEADWALL	30.80' Lt L 262+42.3			d
	e																											1																REMOVE HEADWALL	30.90' Rt L 262+54.6			e
	f						1.0		150											3																		16.0	5.2	11.40	10.1			4' x 3' RCB	30.90' Rt L 262+54.6 TO 49.0' Rt L 262+55.6			f
	g							3.2	130			0.2																														5.15	4.9	TYPE D STRAIGHT WING WALL	37.55' Rt L 262+55.6			g
	h																													21.5		50.0												RSP w/ RSP FABRIC	37.55' Rt L 262+55.6 / 50.0' Rt L 262+57.4			h
23	a																																0.5											ACOD	21.00' Rt L 266+00.0	D-5	23	a
23	b																													5.0		9.0												RSP w/ RSP FABRIC	21.00' Rt L 266+00.0	D-5	23	b
24	a																													6.7		22.0												RSP w/ RSP FABRIC	44.82' Lt L 269+40.3	D-6	24	a
	b																						1																					18" AFES	44.82' Lt L 269+40.3			b
	c															17			1																			9.5						18" APC w/ CONCRETE COLLAR	39.60' Lt L 269+40.3 TO 24.12' Lt L 269+40.5			c
	d															8			1																			9.5						18" APC w/ CONCRETE COLLAR	25.50' Rt L 269+41.0 TO 32.95' Rt L 269+41.1			d
	e																						1																					18" AFES	32.95' Rt L 269+41.1			e
	f																													5.8		21.0												RSP w/ RSP FABRIC	35.95' Rt L 269+41.1			f
25	a																										41																	REMOVE CULVERT, 24" CMP	26.60' Lt L 269+80.7 27.3' Lt L 270+21.4	D-6	25	a
26	a																													4.0		10.0												RSP w/ RSP FABRIC	44.55' Lt L 270+15.0	D-6	26	a
	b																							1																				24" AFES	44.55' Lt L 270+15.0			b
	c											8.3						38																				3.0						24" APC	44.55' Lt L 270+15.0 TO 44.59' Lt L 269+71.0			c
	d																							1																				24" AFES	44.59' Lt L 269+71.0			d
	e																													4.0		10.0												RSP w/ RSP FABRIC	44.59' Lt L 269+71.0			e
27	a																													4.0		10.0												RSP w/ RSP FABRIC	36.00' Lt L 276+50.0	D-6	27	a
	b																						1																					18" AFES	36.00' Lt L 276+50.0			b
	c											12.8				75																						2.0						18" APC	35.61' Lt L 275+80.0 TO 36.00' Lt L 276+50.0			c
	d																						1																					18" AFES	35.61' Lt L 275+80.0			d
	e																													4.0		10.0												RSP w/ RSP FABRIC	35.61' Lt L 275+80.0			e
SHEET TOTALS DQ-4							3.5	6.4	810			21.5				100	38	11	2	4	2				41		2			78.0		202	0.5														
DQ-1			1							1.79	0.60	8.6			263	159	86		3	8	2			1		1	1			64.0		168	11.3	20.3	15.5	61.1											
DQ-2		9								9.80	10.65	4.3			2151	152	271				3			1	106	1	1			32.8		93.0	28.4	54.6	41.8	155.5											
DQ-3		7		1		3				8.59	8.21	0.8	14	2	1909	34	69	118	110		2		1	1	1	2	3		2	47	3.1	21.0	1.2	66.0	15.4	29.3	22.5	111.3										
TOTAL						3	3.5	6.4	810	20.18	19.46	35.2	14		4323	34	69	529	505			12	8			4	150	2	6	47		195.8	1.2	529.0	55.6	104.2	79.8		10.4	22.80	20.2			TOTAL				

(N) = NOT A SEPARATE PAY ITEM, FOR INFORMATION ONLY.

DRAINAGE QUANTITIES DQ-4

STATE OF CALIFORNIA - DEPARTMENT OF TRANSPORTATION
Caltrans DESIGN

FUNCTIONAL SUPERVISOR: MORTEZA AZIMI
CALCULATED-DESIGNED BY: AHMED RAHID
CHECKED BY: FANG HONG WU
REVISED BY: AR
DATE REVISED: 2/7/12

LAST REVISION DATE PLOTTED => 22-MAY-2012
02-07-12 TIME PLOTTED => 16:42

Dist	COUNTY	ROUTE	POST MILES TOTAL PROJECT	SHEET No.	TOTAL SHEETS
04	SCI	152	16.2/R16.5, R18.5/R19.5	60	195

REGISTERED CIVIL ENGINEER 11/7/11 DATE

5-21-12
PLANS APPROVAL DATE

REGISTERED PROFESSIONAL ENGINEER Ahmed T. Rahid No. 76800 Exp. 12-31-12 CIVIL STATE OF CALIFORNIA

THE STATE OF CALIFORNIA OR ITS OFFICERS OR AGENTS SHALL NOT BE RESPONSIBLE FOR THE ACCURACY OR COMPLETENESS OF SCANNED COPIES OF THIS PLAN SHEET.

NOTES:

1. FOR ACCURATE RIGHT OF WAY DATA, CONTACT RIGHT OF WAY ENGINEERING AT THE DISTRICT OFFICE.
2. NEW LOCATIONS OF POLES ARE APPROXIMATE BASED ON PG&E RELOCATION PLANS.

LEGEND:

UTILITIES	EXISTINGS UTILITIES	OWNERSHIP
TELEPHONE	--t———————t—	PACIFIC BELL TELEPHONE
ELECTRIC	-e———————(oh)—	PG&E
GAS	--gs———————gs—	PG&E
◒	OVERHEAD UTILITY POLE	

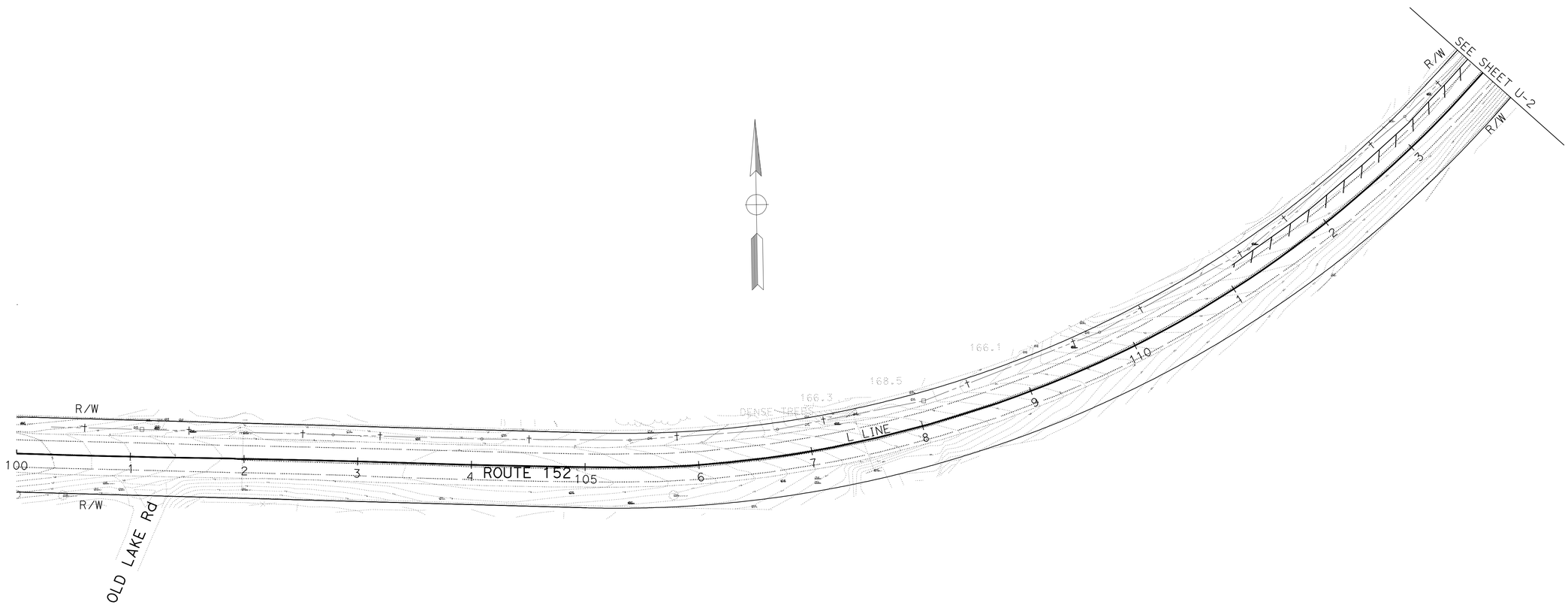

UTILITY PLAN

SCALE: 1" = 50'

U-1

APPROVED FOR UTILITY INFORMATION ONLY

STATE OF CALIFORNIA - DEPARTMENT OF TRANSPORTATION

Caltrans®

DESIGN

FUNCTIONAL SUPERVISOR: MORTEZA AZIMI

CALCULATED-DESIGNED BY: AHMED RAHID

CHECKED BY: CALVIN TRAN

REVISED BY: AR

DATE REVISED: 10/20/11

LAST REVISION 10-21-11

DATE PLOTTED => 22-MAY-2012
TIME PLOTTED => 16:38

Dist	COUNTY	ROUTE	POST MILES TOTAL PROJECT	SHEET No.	TOTAL SHEETS
04	SCI	152	16.2/R16.5, R18.5/R19.5	61	195

REGISTERED CIVIL ENGINEER DATE 11/7/11

5-21-12
PLANS APPROVAL DATE

REGISTERED PROFESSIONAL ENGINEER
Ahmed T. Rahid
No. 76800
Exp. 12-31-12
CIVIL
STATE OF CALIFORNIA

THE STATE OF CALIFORNIA OR ITS OFFICERS OR AGENTS SHALL NOT BE RESPONSIBLE FOR THE ACCURACY OR COMPLETENESS OF SCANNED COPIES OF THIS PLAN SHEET.

NOTE:

FOR ACCURATE RIGHT OF WAY DATA, CONTACT RIGHT OF WAY ENGINEERING AT THE DISTRICT OFFICE.

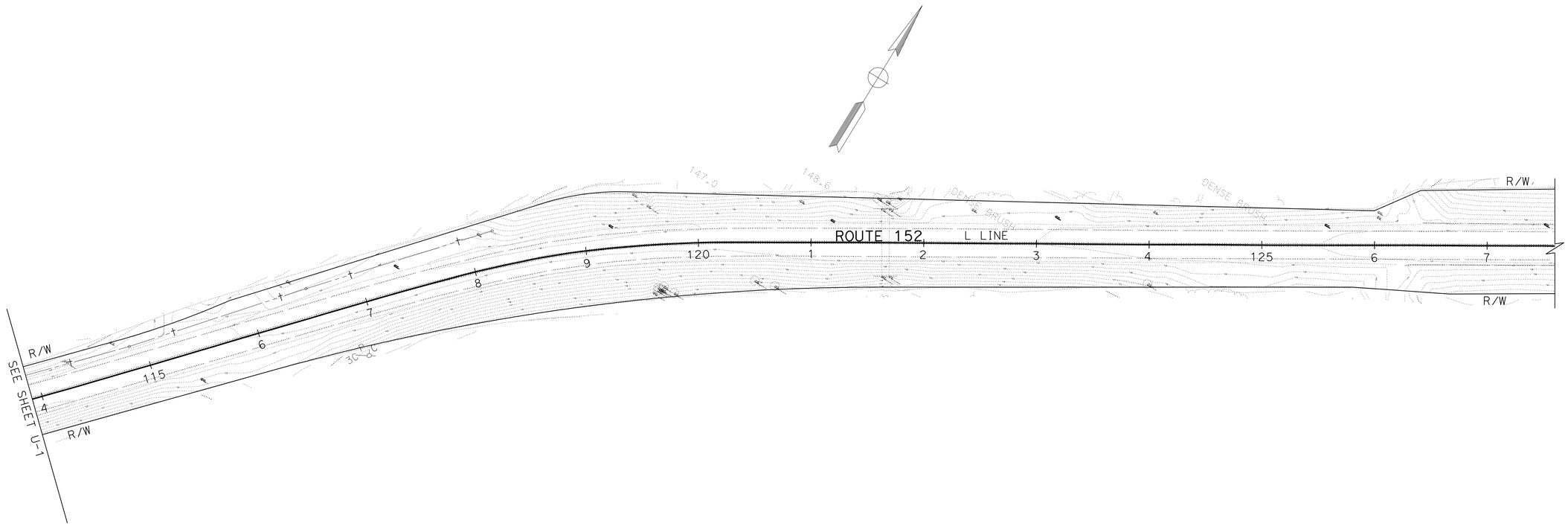

APPROVED FOR UTILITY INFORMATION ONLY

FOR NOTES, ABBREVIATIONS AND LEGEND, SEE SHEET U-1

UTILITY PLAN

SCALE: 1" = 50'

U-2

REVISED BY	AR
DATE REVISED	10/20/11
CALCULATED-DESIGNED BY	AHMED RAHID
CHECKED BY	CALVIN TRAN
FUNCTIONAL SUPERVISOR	MORTEZA AZIMI

STATE OF CALIFORNIA - DEPARTMENT OF TRANSPORTATION
Caltrans
DESIGN

LAST REVISION 10-21-11
DATE PLOTTED => 22-MAY-2012
TIME PLOTTED => 16:38

Dist	COUNTY	ROUTE	POST MILES TOTAL PROJECT	SHEET No.	TOTAL SHEETS
04	SCI	152	16.2/R16.5, R18.5/R19.5	62	195

REGISTERED CIVIL ENGINEER 11/7/11 DATE

5-21-12
PLANS APPROVAL DATE

REGISTERED PROFESSIONAL ENGINEER
Ahmed T. Rahid
No. 76800
Exp. 12-31-12
CIVIL
STATE OF CALIFORNIA

THE STATE OF CALIFORNIA OR ITS OFFICERS OR AGENTS SHALL NOT BE RESPONSIBLE FOR THE ACCURACY OR COMPLETENESS OF SCANNED COPIES OF THIS PLAN SHEET.

NOTE:

FOR ACCURATE RIGHT OF WAY DATA, CONTACT RIGHT OF WAY ENGINEERING AT THE DISTRICT OFFICE.

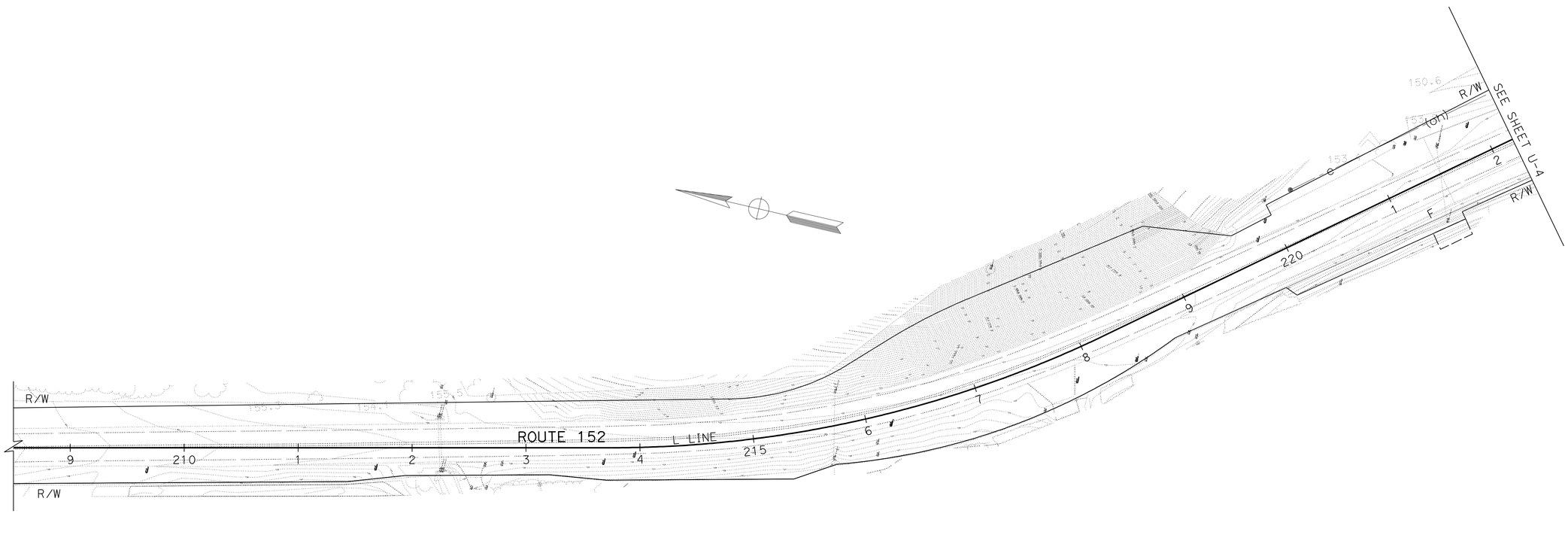

APPROVED FOR UTILITY INFORMATION ONLY

FOR NOTES, ABBREVIATIONS AND LEGEND, SEE SHEET U-1

UTILITY PLAN

SCALE: 1" = 50'

U-3

REVISED BY	AR
DATE REVISED	10/20/11
AHMED RAHID	
CALVIN TRAN	
CALCULATED-DESIGNED BY	
CHECKED BY	
FUNCTIONAL SUPERVISOR	
MORTEZA AZIMI	

STATE OF CALIFORNIA - DEPARTMENT OF TRANSPORTATION
Caltrans
DESIGN

LAST REVISION 10-21-11
DATE PLOTTED => 22-MAY-2012
TIME PLOTTED => 16:39

Dist	COUNTY	ROUTE	POST MILES TOTAL PROJECT	SHEET No.	TOTAL SHEETS
04	SCI	152	16.2/R16.5, R18.5/R19.5	63	195

REGISTERED CIVIL ENGINEER DATE 11/7/11

5-21-12
PLANS APPROVAL DATE

REGISTERED PROFESSIONAL ENGINEER Ahmed T. Rahid No. 76800 Exp. 12-31-12 CIVIL STATE OF CALIFORNIA

THE STATE OF CALIFORNIA OR ITS OFFICERS OR AGENTS SHALL NOT BE RESPONSIBLE FOR THE ACCURACY OR COMPLETENESS OF SCANNED COPIES OF THIS PLAN SHEET.

NOTE:

FOR ACCURATE RIGHT OF WAY DATA, CONTACT RIGHT OF WAY ENGINEERING AT THE DISTRICT OFFICE.

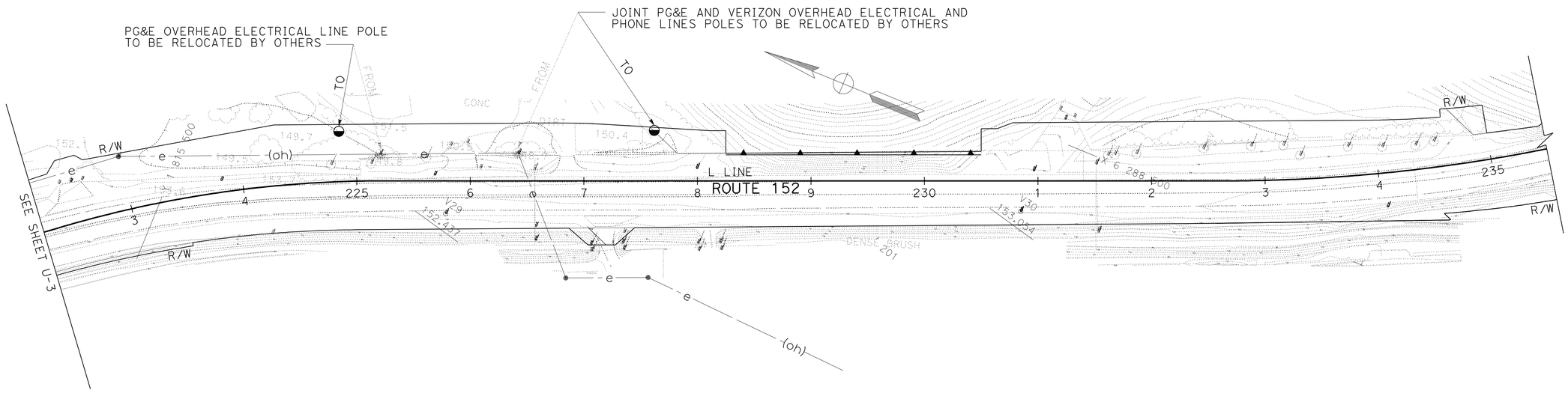

APPROVED FOR UTILITY INFORMATION ONLY

FOR NOTES, ABBREVIATIONS AND LEGEND, SEE SHEET U-1

UTILITY PLAN

SCALE: 1" = 50'

U-4

STATE OF CALIFORNIA - DEPARTMENT OF TRANSPORTATION

Caltrans

DESIGN

FUNCTIONAL SUPERVISOR: MORTEZA AZIMI

CALCULATED-DESIGNED BY: AHMED RAHID

CHECKED BY: CALVIN TRAN

REVISED BY: AR

DATE REVISED: 10/20/11

LAST REVISION: DATE PLOTTED => 22-MAY-2012 TIME PLOTTED => 16:39

10-21-11

BORDER LAST REVISED 7/2/2010

USERNAME => s128843
DGN FILE => 0400000823ka004.dgn

RELATIVE BORDER SCALE IS IN INCHES 0 1 2 3

UNIT 0706

PROJECT NUMBER & PHASE 04000008231

Dist	COUNTY	ROUTE	POST MILES TOTAL PROJECT	SHEET No.	TOTAL SHEETS
04	SCI	152	16.2/R16.5, R18.5/R19.5	64	195

REGISTERED CIVIL ENGINEER 11/7/11 DATE

5-21-12
PLANS APPROVAL DATE

REGISTERED PROFESSIONAL ENGINEER Ahmed T. Rahid No. 76800 Exp. 12-31-12 CIVIL STATE OF CALIFORNIA

THE STATE OF CALIFORNIA OR ITS OFFICERS OR AGENTS SHALL NOT BE RESPONSIBLE FOR THE ACCURACY OR COMPLETENESS OF SCANNED COPIES OF THIS PLAN SHEET.

NOTE:

FOR ACCURATE RIGHT OF WAY DATA, CONTACT RIGHT OF WAY ENGINEERING AT THE DISTRICT OFFICE.

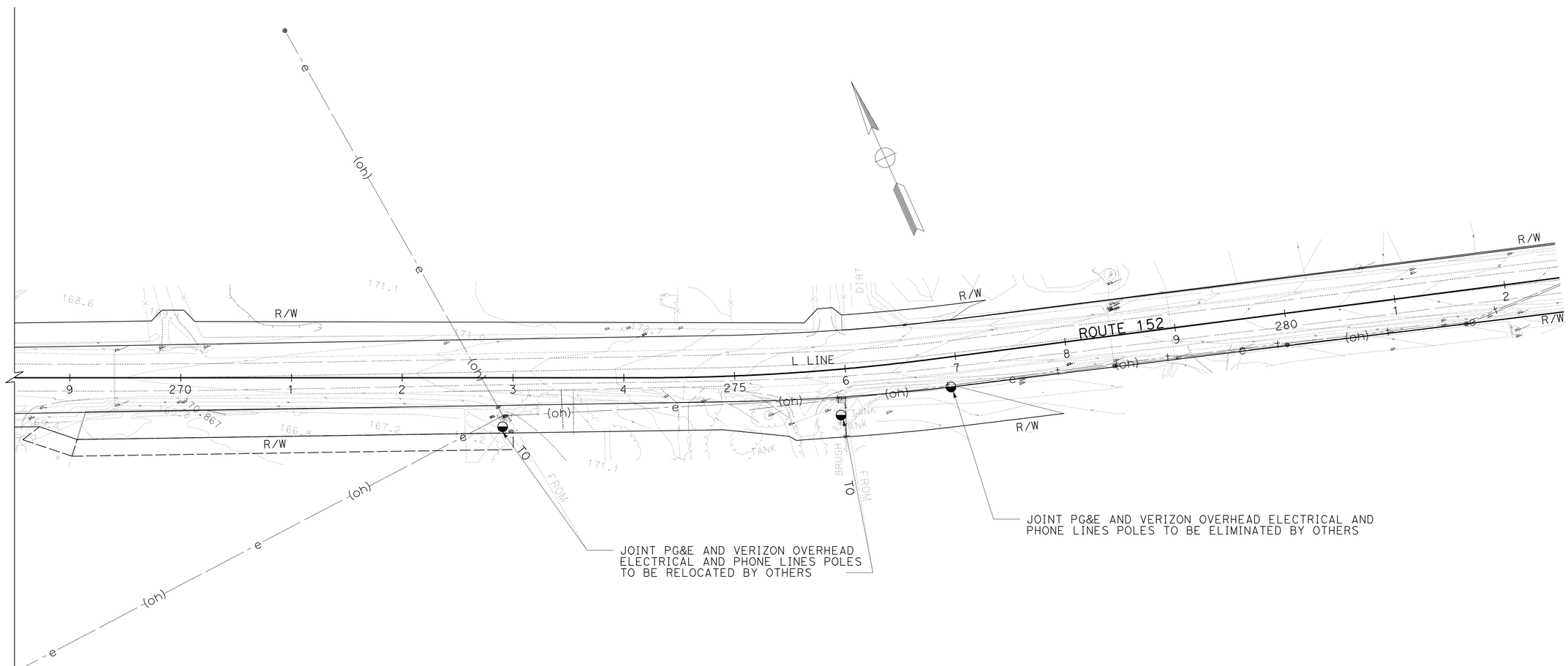

APPROVED FOR UTILITY WORK ONLY

FOR NOTES, ABBREVIATIONS AND LEGEND, SEE SHEET U-1

UTILITY PLAN

SCALE: 1" = 50'

U-5

REVISED BY	DATE REVISED
AR	10/20/11

CALCULATED-DESIGNED BY: AHMED RAHID
CHECKED BY: CALVIN TRAN
FUNCTIONAL SUPERVISOR: MORTEZA AZIMI

STATE OF CALIFORNIA - DEPARTMENT OF TRANSPORTATION
Caltrans®
DESIGN

LAST REVISION 10-21-11
DATE PLOTTED => 22-MAY-2012
TIME PLOTTED => 16:39

Dist	COUNTY	ROUTE	POST MILES TOTAL PROJECT	SHEET No.	TOTAL SHEETS
04	SCI	152	16.2/R16.5, R18.5/R19.5	65	195

REGISTERED CIVIL ENGINEER 4/23/12 DATE

5-21-12
PLANS APPROVAL DATE

REGISTERED PROFESSIONAL ENGINEER Jerilyn L. Struven No. 49964 Exp. 12-31-12 CIVIL STATE OF CALIFORNIA

THE STATE OF CALIFORNIA OR ITS OFFICERS OR AGENTS SHALL NOT BE RESPONSIBLE FOR THE ACCURACY OR COMPLETENESS OF SCANNED COPIES OF THIS PLAN SHEET.

NOTE:

1. EXACT SIGN LOCATION TO BE DETERMINED BY THE ENGINEER.

LEGEND:

A CONSTRUCTION AREA SIGN LETTER

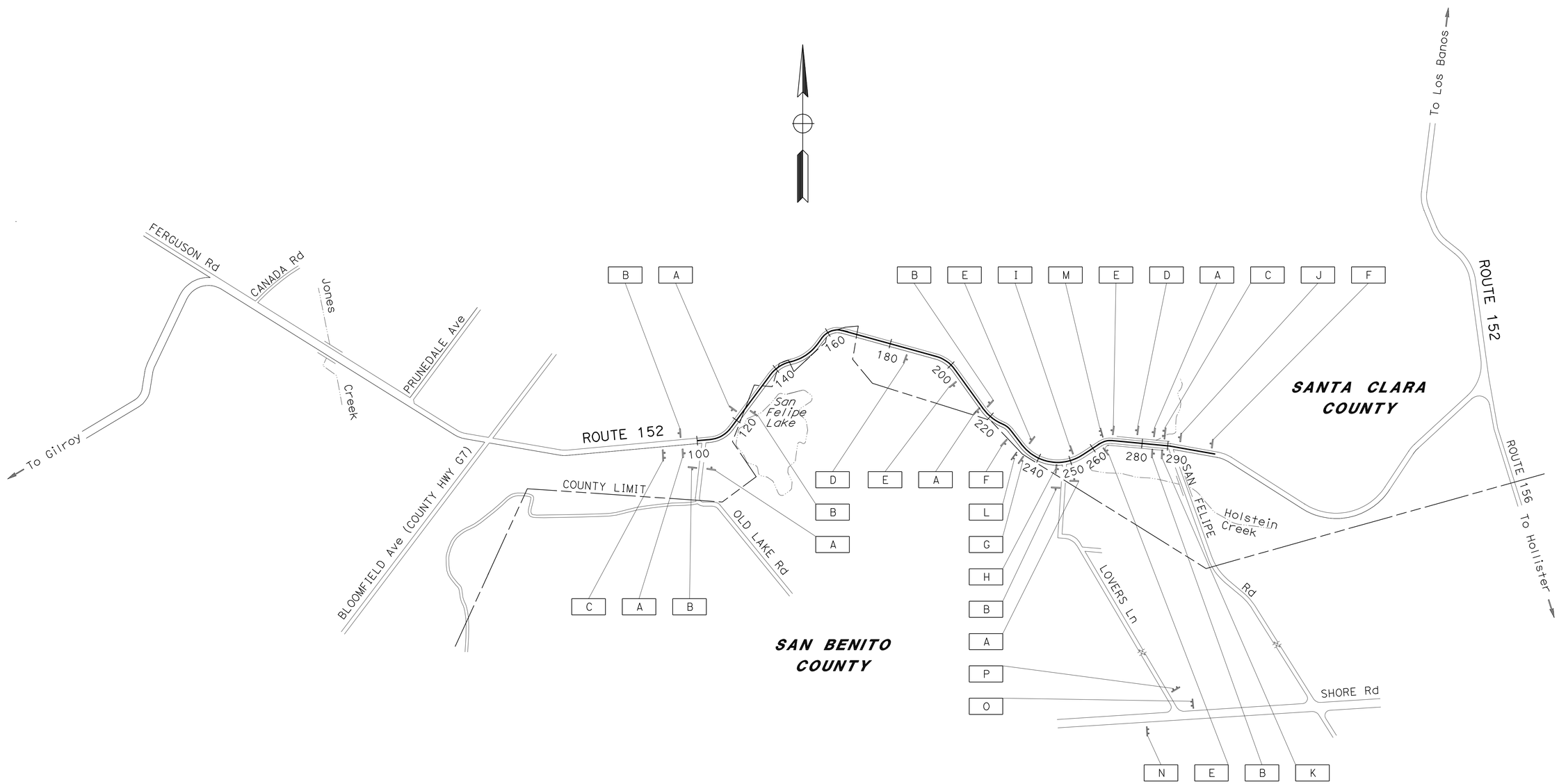

CONSTRUCTION AREA SIGNS

NO SCALE

APPROVED FOR CONSTRUCTION AREA SIGN WORK ONLY

CS-1

HENRY TAM	REVISED BY: HT
JERILYN STRUVEN	DATE REVISED: 4/23/12
CALCULATED-DESIGNED BY	
CHECKED BY	
FUNCTIONAL SUPERVISOR: ROLAND AU-YEUNG	

STATE OF CALIFORNIA - DEPARTMENT OF TRANSPORTATION
Caltrans
TRAFFIC

LAST REVISION 04-23-12 | DATE PLOTTED => 22-MAY-2012 | TIME PLOTTED => 17:31

Dist	COUNTY	ROUTE	POST MILES TOTAL PROJECT	SHEET No.	TOTAL SHEETS
04	SCI	152	16.2/R16.5, R18.5/R19.5	66	195

REGISTERED CIVIL ENGINEER 4/23/12 DATE

5-21-12
PLANS APPROVAL DATE

REGISTERED PROFESSIONAL ENGINEER Jerilyn L. Struven No. 49964 Exp. 12-31-12 CIVIL STATE OF CALIFORNIA

THE STATE OF CALIFORNIA OR ITS OFFICERS OR AGENTS SHALL NOT BE RESPONSIBLE FOR THE ACCURACY OR COMPLETENESS OF SCANNED COPIES OF THIS PLAN SHEET.

STATIONARY MOUNTED CONSTRUCTION AREA SIGNS

SIGN No.	SIGN CODE	PANEL SIZE	SIGN MESSAGE	NUMBER OF POSTS AND SIZE	No. OF SIGNS	REMARKS
A	W20-1	36" x 36"	ROAD WORK AHEAD	1 - 4" x 6"	6	
B	G20-2	36" x 18"	END ROAD WORK	1 - 4" x 4"	6	
C	C40(CA)	108" x 42"	TRAFFIC FINES DOUBLED IN CONSTRUCTION ZONES	2 - 4" x 6"	2	
D	W3-5a	48" x 48"	45 MPH SPEED ZONE AHEAD	1 - 4" x 6"	2	
E	R2-1(45)	36" x 48"	SPEED LIMIT 45	1 - 4" x 6"	4	
F	W20-2	36" x 36"	DETOUR AHEAD	1 - 4" x 6"	2	
G	M4-8	30" x 15"	DETOUR	1 - 4" x 6"	1	SEE SIGN DETAIL A
	SPECIAL A	36" x 24"	LOVERS LANE			
	M6-3(↑)	21" x 15"	UP ARROW			
H	R3-1	36" x 36"	NO RIGHT TURN	1 - 4" x 6"	1	
I	R3-2	36" x 36"	NO LEFT TURN	1 - 4" x 6"	1	
J	M4-8	30" x 15"	DETOUR	1 - 4" x 6"	1	SEE SIGN DETAIL A
	SPECIAL A	36" x 24"	LOVERS LANE			
	M6-1(←)	21" x 15"	LEFT ARROW			
K	M4-8	30" x 15"	DETOUR	1 - 4" x 6"	1	SEE SIGN DETAIL A
	SPECIAL A	36" x 24"	LOVERS LANE			
	M6-1(→)	21" x 15"	RIGHT ARROW			
L	SPECIAL B	84" x 54"	ROAD CLOSURE SIGN	2 - 4" x 6"	1	SEE SIGN DETAIL B
M	SPECIAL C	84" x 60"	ROAD CLOSURE SIGN	2 - 4" x 6"	1	SEE SIGN DETAIL C
N	SPECIAL D	84" x 54"	ROAD CLOSURE SIGN	2 - 4" x 6"	1	SEE SIGN DETAIL D
O	SPECIAL E	84" x 54"	ROAD CLOSURE SIGN	2 - 4" x 6"	1	SEE SIGN DETAIL E
P	SPECIAL F	84" x 54"	ROAD CLOSURE SIGN	2 - 4" x 6"	1	SEE SIGN DETAIL F

152 G28(24" x 18")

SPECIAL A 5" CAP

24"

LOVERS
LANE

BLACK/ORANGE
36"

SIGN DETAIL A

SPECIAL B 5" CAP

54"

LOVERS LANE
CLOSED
DATE: ____TO____
USE
SAN FELIPE ROAD

BLACK/ORANGE
84"

SIGN DETAIL B

SPECIAL C 5" CAP

60"

LOVERS LANE
CLOSED
DATE: ____TO____
USE
BLOOMFIELD AVE
(COUNTY HWY G7)

BLACK/ORANGE
84"

SIGN DETAIL C

SPECIAL D 5" CAP

54"

LOVERS LANE
CLOSED AT 152
DATE: ____TO____
USE
SAN FELIPE ROAD

BLACK/ORANGE
84"

SIGN DETAIL D

SPECIAL E 5" CAP

54"

LOVERS LANE
CLOSED AT 152
DATE: ____TO____
USE
FRAZER LAKE ROAD

BLACK/ORANGE
84"

SIGN DETAIL E

SPECIAL F 5" CAP

54"

LOVERS LANE
CLOSED AT 152
DATE: ____TO____
LOCAL TRAFFIC
ONLY

BLACK/ORANGE
84"

SIGN DETAIL F

APPROVED FOR CONSTRUCTION AREA SIGN WORK ONLY

FOR NOTES, ABBREVIATIONS AND LEGEND, SEE SHEET CS-1

CONSTRUCTION AREA SIGNS

NO SCALE

CS-2

STATE OF CALIFORNIA - DEPARTMENT OF TRANSPORTATION
Caltrans®
TRAFFIC

FUNCTIONAL SUPERVISOR: ROLAND AU-YEUNG
CALCULATED-DESIGNED BY: HENRY TAM
CHECKED BY: JERILYN STRUVEN
REVISED BY: HT
DATE REVISED: 4/23/12

LAST REVISION 04-23-12 | DATE PLOTTED => 22-MAY-2012 | TIME PLOTTED => 16:39

Dist	COUNTY	ROUTE	POST MILES TOTAL PROJECT	SHEET No.	TOTAL SHEETS
04	SCI	152	16.2/R16.5, R18.5/R19.5	67	195

REGISTERED CIVIL ENGINEER DATE 2/7/12

5-21-12
PLANS APPROVAL DATE

REGISTERED PROFESSIONAL ENGINEER Ahmed T. Rahid No. 76800 Exp. 12-31-12 CIVIL STATE OF CALIFORNIA

THE STATE OF CALIFORNIA OR ITS OFFICERS OR AGENTS SHALL NOT BE RESPONSIBLE FOR THE ACCURACY OR COMPLETENESS OF SCANNED COPIES OF THIS PLAN SHEET.

NOTES:

1. FOR ACCURATE RIGHT OF WAY DATA, CONTACT RIGHT OF WAY ENGINEERING AT THE DISTRICT OFFICE.
2. ALL DRIVEWAY TO REMAIN OPEN DURING CONSTRUCT.
3. ALL POST MILE MARKERS AND SURVEY MONUMENTS TO BE PRESERVED & REINSTALLED.
4. WESTBOUND WIDENING MUST BE COMPLETED PRIOR TO EASTBOUND WIDENING.
5. EXACT LOCATIONS OF TEMPORARY FENCING TO BE DETRMINED BY THE ENGINEER.
6. REMOVE ALL TEMPORARY FENCING AFTER STAGE 3.
7. AC RESURFACING DURING NIGHT CLOSURE ONLY. NO DAYTIME CLOSURES ALLOWED.

ABBREVIATIONS:

AMA	ARCHAEOLOGICAL MONITORING AREA
DE	DRAINAGE EASEMENT
SE	SLOPE EASEMENT
SNWE	SOIL NAIL WALL EASEMENT
TCE	TEMPORARY CONSTRUCTION EASEMENT

LEGEND:

- No. — PAVEMENT DELINEATION DETAIL NUMBER
- BR No. — BEGIN REMOVE PAVEMENT DELINEATION
- ER No. — END REMOVE PAVEMENT DELINEATION
- BT No. — BEGIN TEMPORARY TRAFFIC STRIPE (PAINT)
- ET No. — END TEMPORARY TRAFFIC STRIPE (PAINT)
- CONSTRUCTION AREA
- ARCHAEOLOGICAL MONITORING AREA (AMA)
- TEMPORARY FENCE (WILDLIFE EXCLUSION)
- TEMPORARY FENCE (TYPE CL-6)
- TEMPORARY RAILING (TYPE K)
- ALTERNATE ONE WAY TRAFFIC CONTROL
- DIRECTION OF TRAVEL

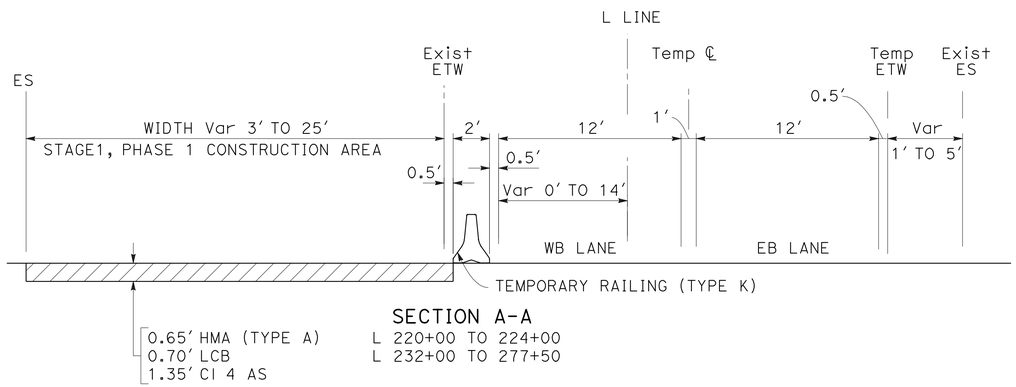

SECTION A-A
L 220+00 TO 224+00
L 232+00 TO 277+50

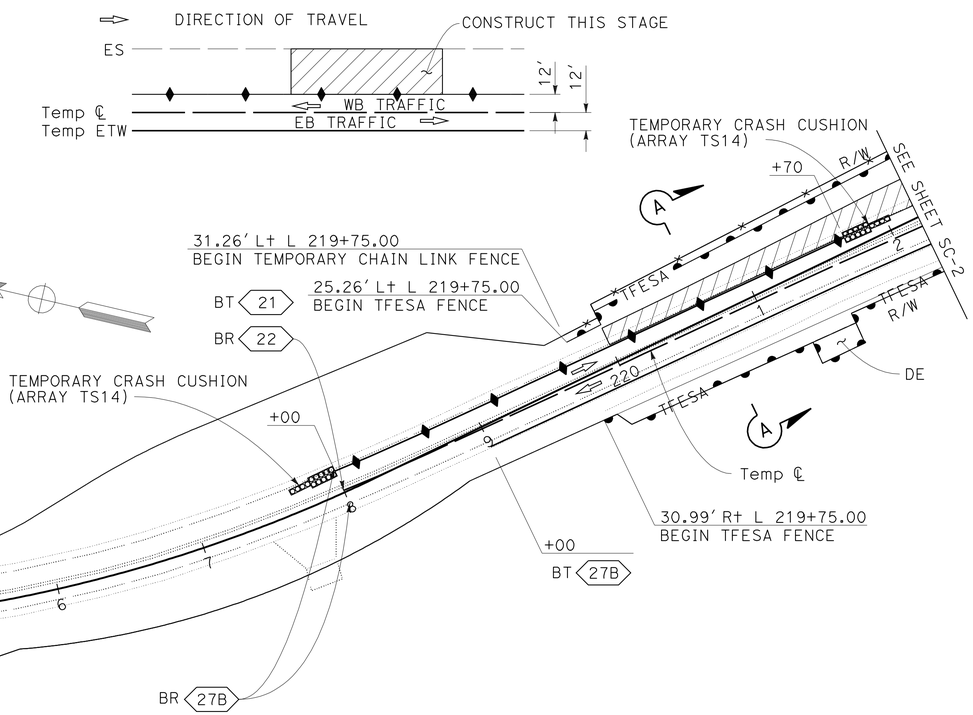

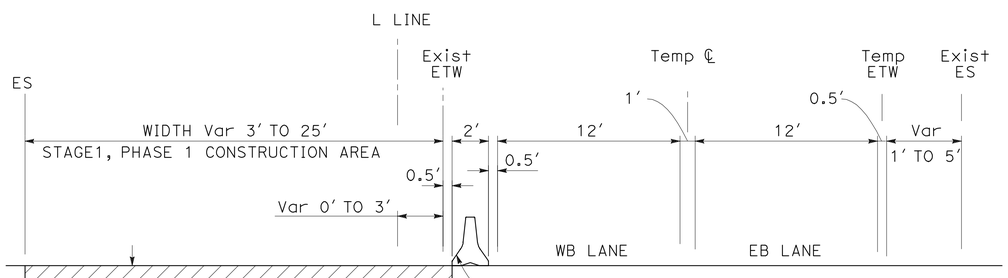

SECTION B-B
L 224+00 TO 232+00

STAGE CONSTRUCTION AND TRAFFIC HANDLING PLAN
STAGE 1

SCALE: 1" = 50'

APPROVED FOR STAGE CONSTRUCTION AND TRAFFIC HANDLING WORK ONLY

SC-1

REVISED BY	DATE REVISED
AR	2/7/12

CALCULATED-DESIGNED BY: AHMED RAHID
CHECKED BY: CALVIN TRAN
FUNCTIONAL SUPERVISOR: MORTEZA AZIMI

STATE OF CALIFORNIA - DEPARTMENT OF TRANSPORTATION
Caltrans
DESIGN

LAST REVISION 02-07-12
DATE PLOTTED => 22-MAY-2012
TIME PLOTTED => 16:39

Dist	COUNTY	ROUTE	POST MILES TOTAL PROJECT	SHEET No.	TOTAL SHEETS
04	SCI	152	16.2/R16.5, R18.5/R19.5	68	195

REGISTERED CIVIL ENGINEER DATE 2/7/12

5-21-12
PLANS APPROVAL DATE

REGISTERED PROFESSIONAL ENGINEER Ahmed T. Rahid No. 76800 Exp. 12-31-12 CIVIL STATE OF CALIFORNIA

THE STATE OF CALIFORNIA OR ITS OFFICERS OR AGENTS SHALL NOT BE RESPONSIBLE FOR THE ACCURACY OR COMPLETENESS OF SCANNED COPIES OF THIS PLAN SHEET.

NOTE:

FOR ACCURATE RIGHT OF WAY DATA, CONTACT RIGHT OF WAY ENGINEERING AT THE DISTRICT OFFICE.

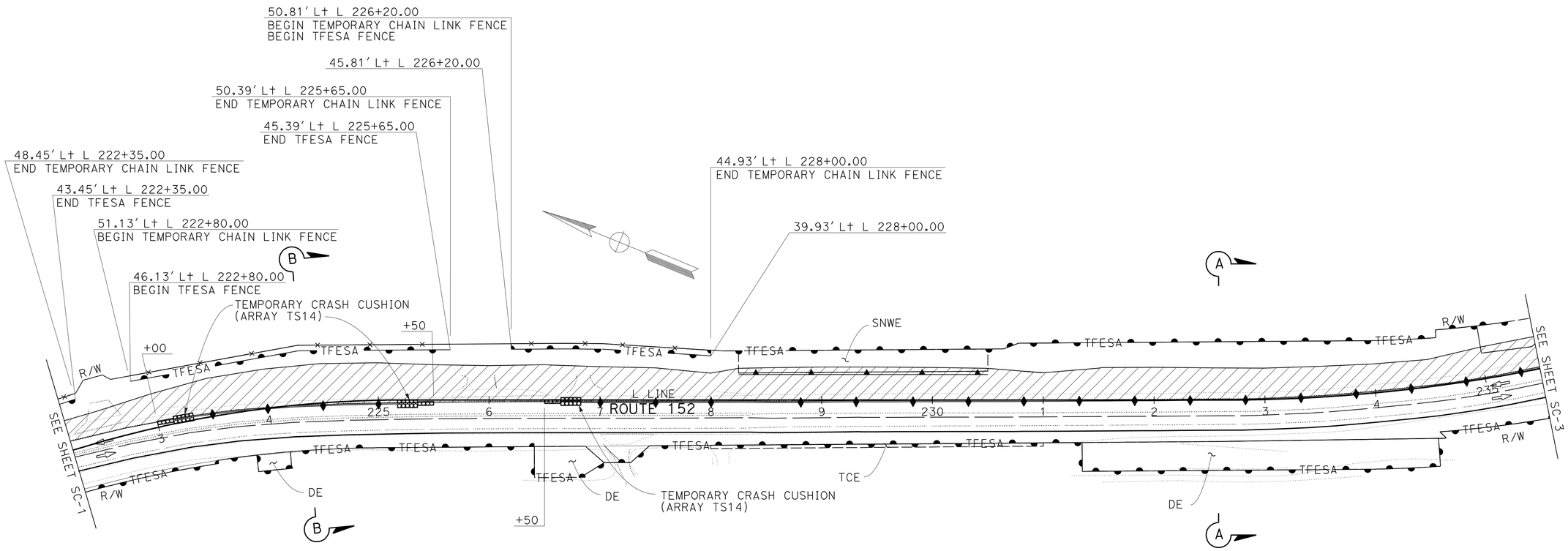

STAGE CONSTRUCTION AND TRAFFIC HANDLING PLAN

STAGE 1

SCALE: 1" = 50'

APPROVED FOR STAGE CONSTRUCTION AND TRAFFIC HANDLING WORK ONLY

FOR NOTES, ABBREVIATIONS AND LEGEND, SEE SHEET SC-1

SC-2

REVISED BY	AR
DATE REVISED	2/7/12
CALCULATED-DESIGNED BY	AHMED RAHID
CHECKED BY	CALVIN TRAN
FUNCTIONAL SUPERVISOR	MORTEZA AZIMI

STATE OF CALIFORNIA - DEPARTMENT OF TRANSPORTATION

Caltrans

DESIGN

LAST REVISION DATE PLOTTED => 22-MAY-2012
TIME PLOTTED => 16:39

02-07-12

Dist	COUNTY	ROUTE	POST MILES TOTAL PROJECT	SHEET No.	TOTAL SHEETS
04	SCI	152	16.2/R16.5, R18.5/R19.5	69	195

REGISTERED CIVIL ENGINEER DATE 2/7/12

5-21-12
PLANS APPROVAL DATE

REGISTERED PROFESSIONAL ENGINEER
Ahmed T. Rahid
No. 76800
Exp. 12-31-12
CIVIL
STATE OF CALIFORNIA

THE STATE OF CALIFORNIA OR ITS OFFICERS OR AGENTS SHALL NOT BE RESPONSIBLE FOR THE ACCURACY OR COMPLETENESS OF SCANNED COPIES OF THIS PLAN SHEET.

NOTE:

FOR ACCURATE RIGHT OF WAY DATA, CONTACT RIGHT OF WAY ENGINEERING AT THE DISTRICT OFFICE.

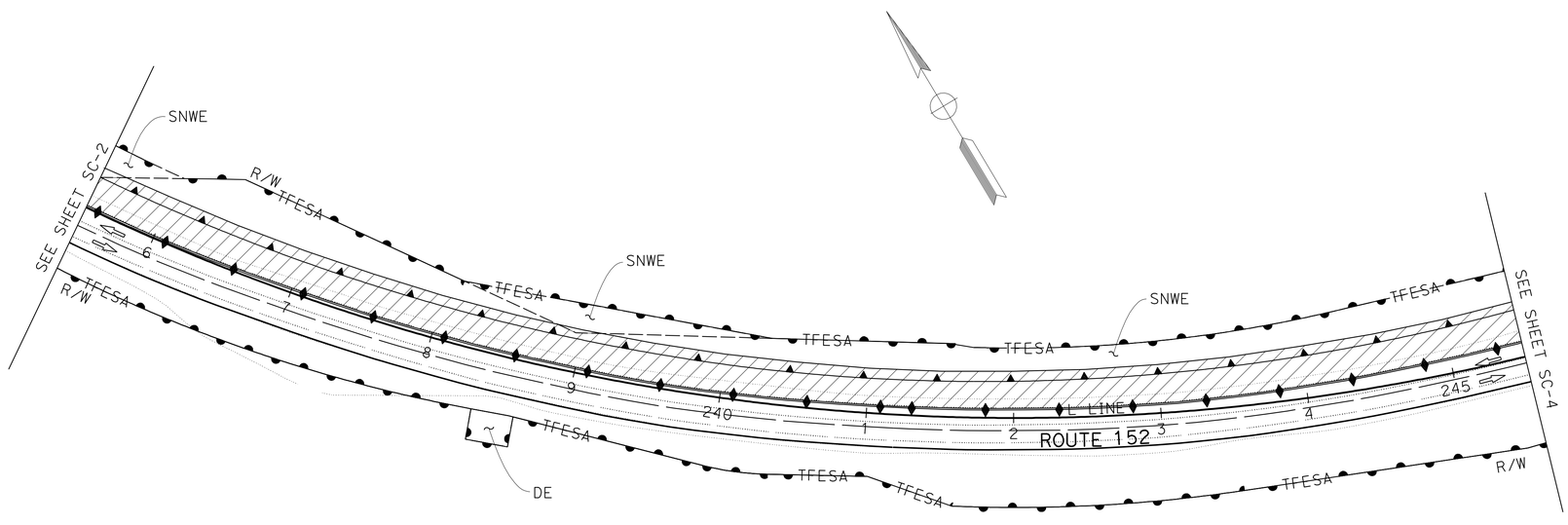

STAGE CONSTRUCTION AND TRAFFIC HANDLING PLAN

STAGE 1

SCALE: 1" = 50'

APPROVED FOR STAGE CONSTRUCTION AND TRAFFIC HANDLING WORK ONLY

FOR NOTES, ABBREVIATIONS AND LEGEND, SEE SHEET SC-1

SC-3

STATE OF CALIFORNIA - DEPARTMENT OF TRANSPORTATION
Caltrans
DESIGN

FUNCTIONAL SUPERVISOR: MORTEZA AZIMI
CALCULATED-DESIGNED BY: AHMED RAHID
CHECKED BY: CALVIN TRAN
REVISED BY: AR
DATE REVISED: 2/7/12

LAST REVISION 02-07-12 | DATE PLOTTED => 22-MAY-2012 | TIME PLOTTED => 16:39

Dist	COUNTY	ROUTE	POST MILES TOTAL PROJECT	SHEET No.	TOTAL SHEETS
04	SCI	152	16.2/R16.5, R18.5/R19.5	70	195

REGISTERED CIVIL ENGINEER 2/7/12 DATE

5-21-12
PLANS APPROVAL DATE

REGISTERED PROFESSIONAL ENGINEER Ahmed T. Rahid No. 76800 Exp. 12-31-12 CIVIL STATE OF CALIFORNIA

THE STATE OF CALIFORNIA OR ITS OFFICERS OR AGENTS SHALL NOT BE RESPONSIBLE FOR THE ACCURACY OR COMPLETENESS OF SCANNED COPIES OF THIS PLAN SHEET.

NOTE:

FOR ACCURATE RIGHT OF WAY DATA, CONTACT RIGHT OF WAY ENGINEERING AT THE DISTRICT OFFICE.

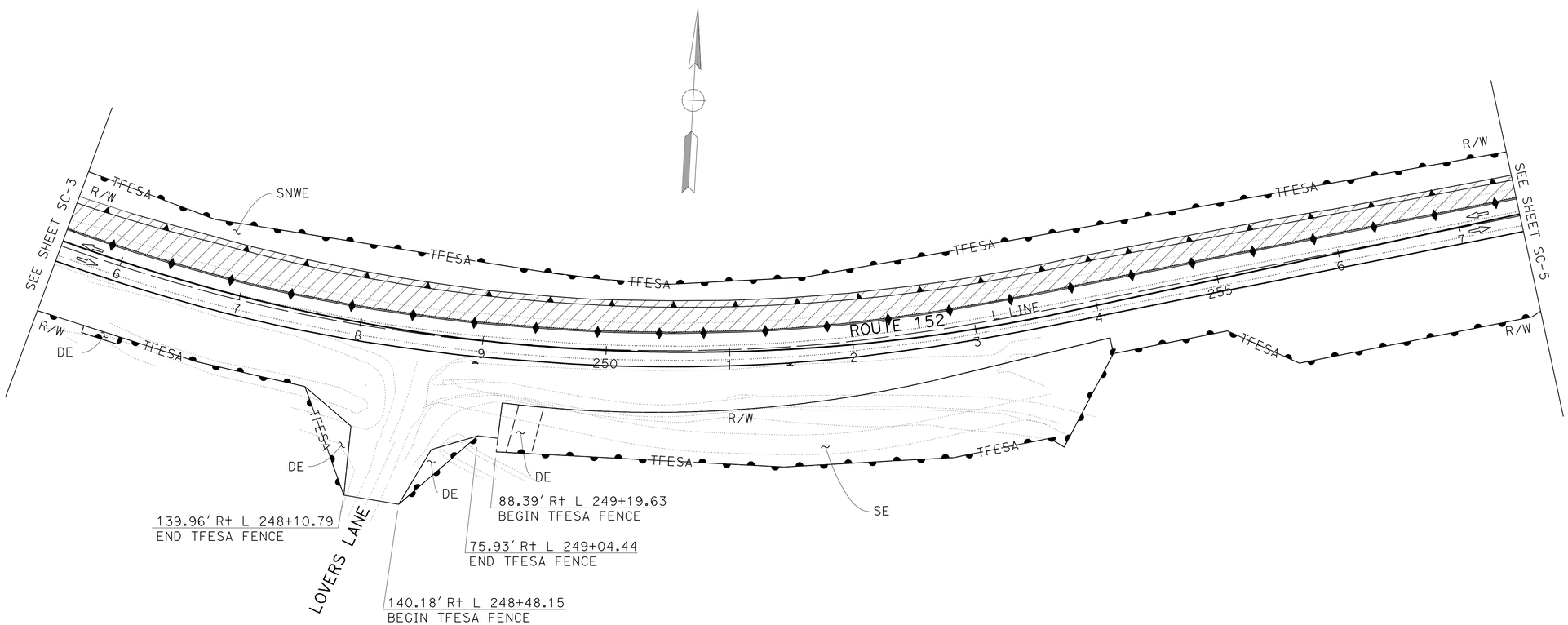

STAGE CONSTRUCTION AND TRAFFIC HANDLING PLAN

STAGE 1

SCALE: 1" = 50'

APPROVED FOR STAGE CONSTRUCTION AND TRAFFIC HANDLING WORK ONLY

FOR NOTES, ABBREVIATIONS AND LEGEND, SEE SHEET SC-1

SC-4

REVISED BY	AR
DATE REVISED	2/7/12
CALCULATED-DESIGNED BY	AHMED RAHID
CHECKED BY	CALVIN TRAN
FUNCTIONAL SUPERVISOR	MORTEZA AZIMI

STATE OF CALIFORNIA - DEPARTMENT OF TRANSPORTATION

Caltrans

DESIGN

LAST REVISION 02-07-12 | DATE PLOTTED => 22-MAY-2012 | TIME PLOTTED => 16:39

Dist	COUNTY	ROUTE	POST MILES TOTAL PROJECT	SHEET No.	TOTAL SHEETS
04	SCI	152	16.2/R16.5, R18.5/R19.5	71	195

REGISTERED CIVIL ENGINEER 2/7/12 DATE

5-21-12
PLANS APPROVAL DATE

REGISTERED PROFESSIONAL ENGINEER Ahmed T. Rahid No. 76800 Exp. 12-31-12 CIVIL STATE OF CALIFORNIA

THE STATE OF CALIFORNIA OR ITS OFFICERS OR AGENTS SHALL NOT BE RESPONSIBLE FOR THE ACCURACY OR COMPLETENESS OF SCANNED COPIES OF THIS PLAN SHEET.

NOTE:

FOR ACCURATE RIGHT OF WAY DATA, CONTACT RIGHT OF WAY ENGINEERING AT THE DISTRICT OFFICE.

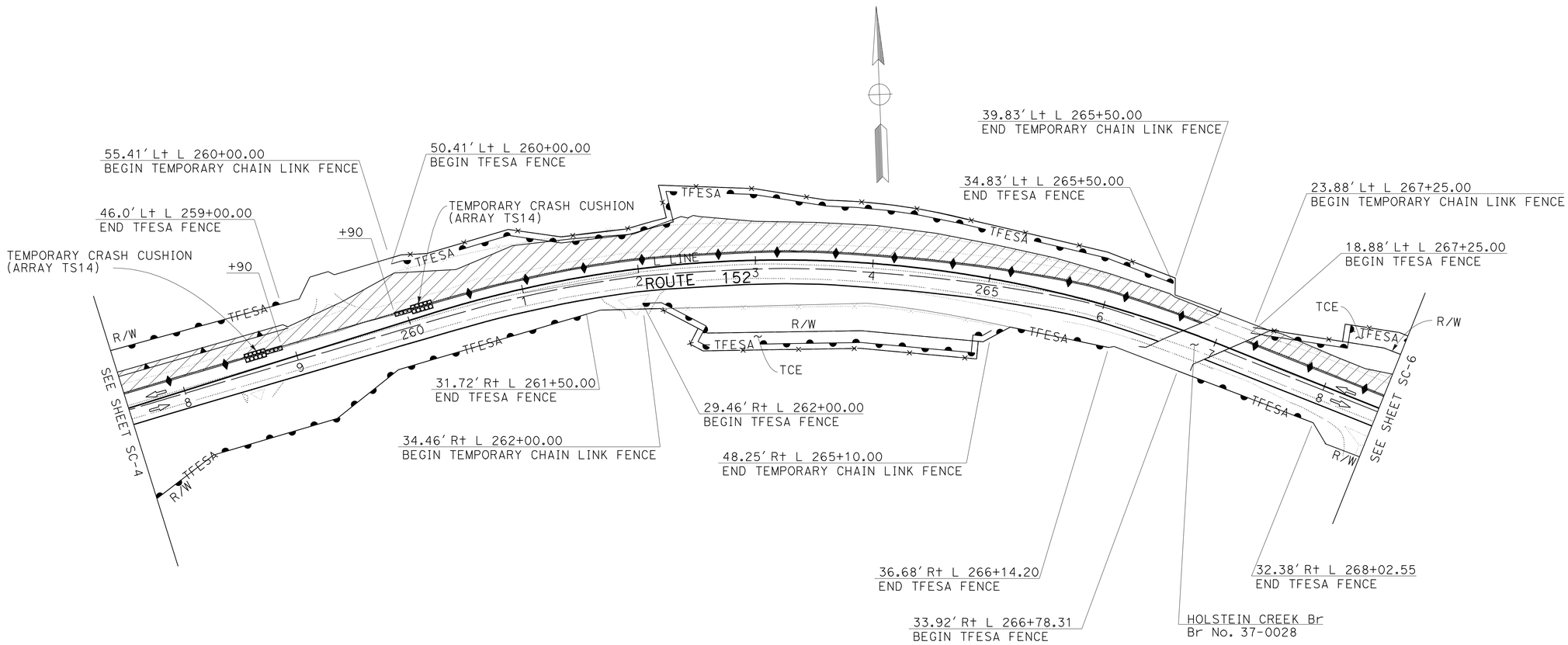

STAGE CONSTRUCTION AND TRAFFIC HANDLING PLAN

STAGE 1

SCALE: 1" = 50′

APPROVED FOR STAGE CONSTRUCTION AND TRAFFIC HANDLING WORK ONLY

FOR NOTES, ABBREVIATIONS AND LEGEND, SEE SHEET SC-1

SC-5

REVISED BY	DATE REVISED
AR	2/7/12

AHMED RAHID — CALCULATED-DESIGNED BY
CALVIN TRAN — CHECKED BY
MORTEZA AZIMI — FUNCTIONAL SUPERVISOR

STATE OF CALIFORNIA - DEPARTMENT OF TRANSPORTATION
Caltrans
DESIGN

LAST REVISION 02-07-12 | DATE PLOTTED => 22-MAY-2012 | TIME PLOTTED => 16:39

Dist	COUNTY	ROUTE	POST MILES TOTAL PROJECT	SHEET No.	TOTAL SHEETS
04	SCI	152	16.2/R16.5, R18.5/R19.5	72	195

REGISTERED CIVIL ENGINEER 2/7/12 DATE

5-21-12
PLANS APPROVAL DATE

REGISTERED PROFESSIONAL ENGINEER Ahmed T. Rahid No. 76800 Exp. 12-31-12 CIVIL STATE OF CALIFORNIA

THE STATE OF CALIFORNIA OR ITS OFFICERS OR AGENTS SHALL NOT BE RESPONSIBLE FOR THE ACCURACY OR COMPLETENESS OF SCANNED COPIES OF THIS PLAN SHEET.

NOTE:

FOR ACCURATE RIGHT OF WAY DATA, CONTACT RIGHT OF WAY ENGINEERING AT THE DISTRICT OFFICE.

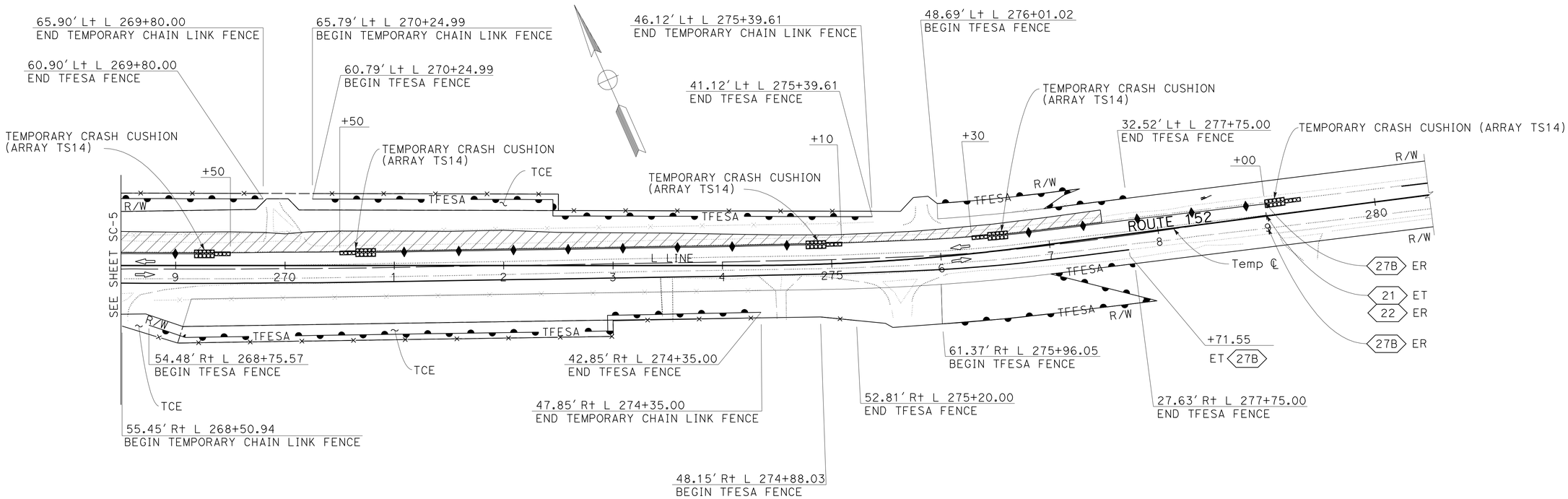

STAGE CONSTRUCTION AND TRAFFIC HANDLING PLAN

STAGE 1

SCALE: 1" = 50′

APPROVED FOR STAGE CONSTRUCTION AND TRAFFIC HANDLING WORK ONLY

FOR NOTES, ABBREVIATIONS AND LEGEND, SEE SHEET SC-1

SC-6

REVISED BY	AR
DATE REVISED	2/7/12
CALCULATED-DESIGNED BY	AHMED RAHID
CHECKED BY	CALVIN TRAN
FUNCTIONAL SUPERVISOR	MORTEZA AZIMI

STATE OF CALIFORNIA - DEPARTMENT OF TRANSPORTATION
Caltrans
DESIGN

LAST REVISION 02-07-12
DATE PLOTTED => 23-MAY-2012
TIME PLOTTED => 06:36

Dist	COUNTY	ROUTE	POST MILES TOTAL PROJECT	SHEET No.	TOTAL SHEETS
04	SCI	152	16.2/R16.5, R18.5/R19.5	73	195

REGISTERED CIVIL ENGINEER 2/7/12 DATE

5-21-12
PLANS APPROVAL DATE

REGISTERED PROFESSIONAL ENGINEER Ahmed T. Rahid No. 76800 Exp. 12-31-12 CIVIL STATE OF CALIFORNIA

THE STATE OF CALIFORNIA OR ITS OFFICERS OR AGENTS SHALL NOT BE RESPONSIBLE FOR THE ACCURACY OR COMPLETENESS OF SCANNED COPIES OF THIS PLAN SHEET.

NOTE:

FOR ACCURATE RIGHT OF WAY DATA, CONTACT RIGHT OF WAY ENGINEERING AT THE DISTRICT OFFICE.

LEGEND:

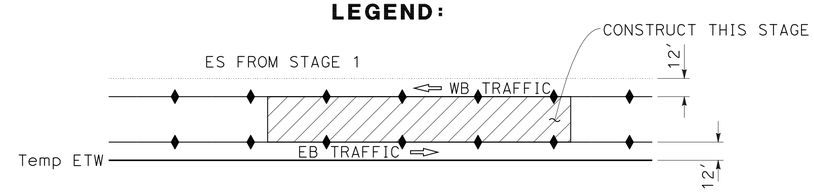

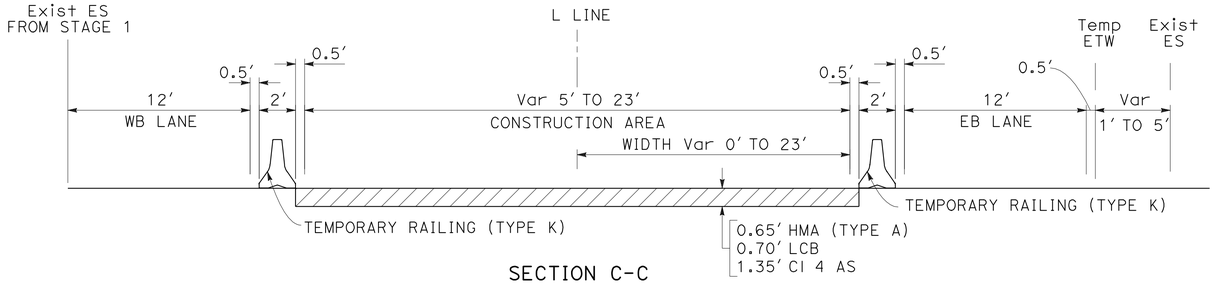

SECTION C-C
L 220+00 TO 250+00

SECTION D-D
L 250+00 TO 277+50

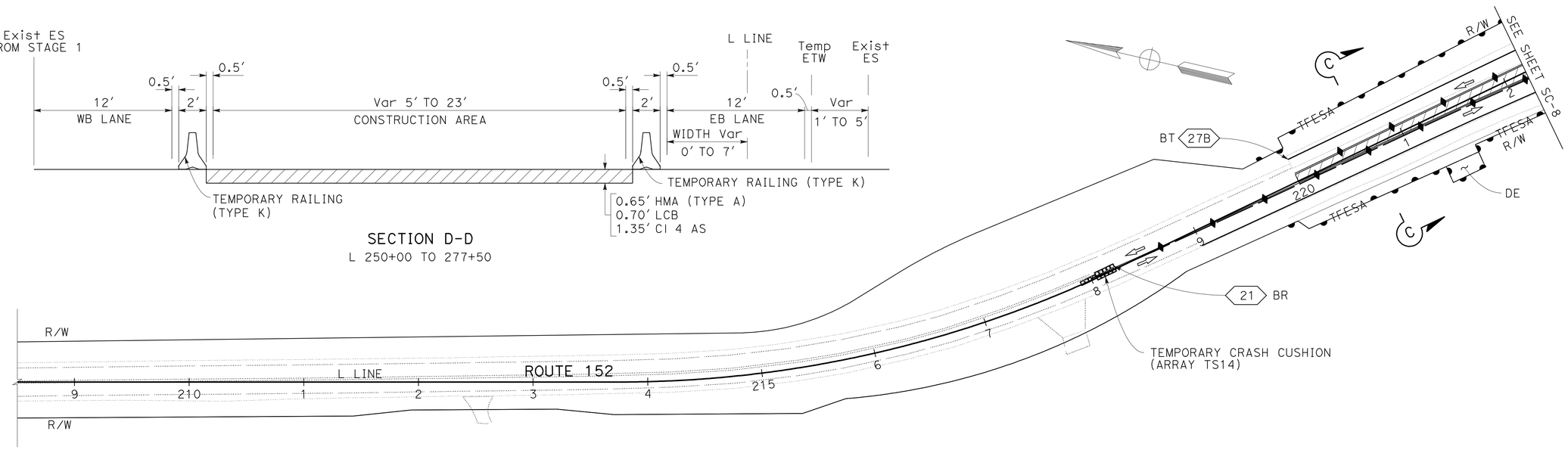

STAGE CONSTRUCTION AND TRAFFIC HANDLING PLAN

STAGE 2

SCALE: 1" = 50'

APPROVED FOR STAGE CONSTRUCTION AND TRAFFIC HANDLING WORK ONLY

FOR NOTES, ABBREVIATIONS AND LEGEND, SEE SHEET SC-1

SC-7

REVISED BY	AR
DATE REVISED	2/7/12
CALCULATED-DESIGNED BY	AHMED RAHID
CHECKED BY	CALVIN TRAN
FUNCTIONAL SUPERVISOR	MORTEZA AZIMI

STATE OF CALIFORNIA - DEPARTMENT OF TRANSPORTATION
Caltrans
DESIGN

LAST REVISION 02-07-12
DATE PLOTTED => 23-MAY-2012
TIME PLOTTED => 06:36

Dist	COUNTY	ROUTE	POST MILES TOTAL PROJECT	SHEET No.	TOTAL SHEETS
04	SCI	152	16.2/R16.5, R18.5/R19.5	74	195

REGISTERED CIVIL ENGINEER DATE 2/7/12

5-21-12
PLANS APPROVAL DATE

REGISTERED PROFESSIONAL ENGINEER Ahmed T. Rahid No. 76800 Exp. 12-31-12 CIVIL STATE OF CALIFORNIA

THE STATE OF CALIFORNIA OR ITS OFFICERS OR AGENTS SHALL NOT BE RESPONSIBLE FOR THE ACCURACY OR COMPLETENESS OF SCANNED COPIES OF THIS PLAN SHEET.

NOTE:

FOR ACCURATE RIGHT OF WAY DATA, CONTACT RIGHT OF WAY ENGINEERING AT THE DISTRICT OFFICE.

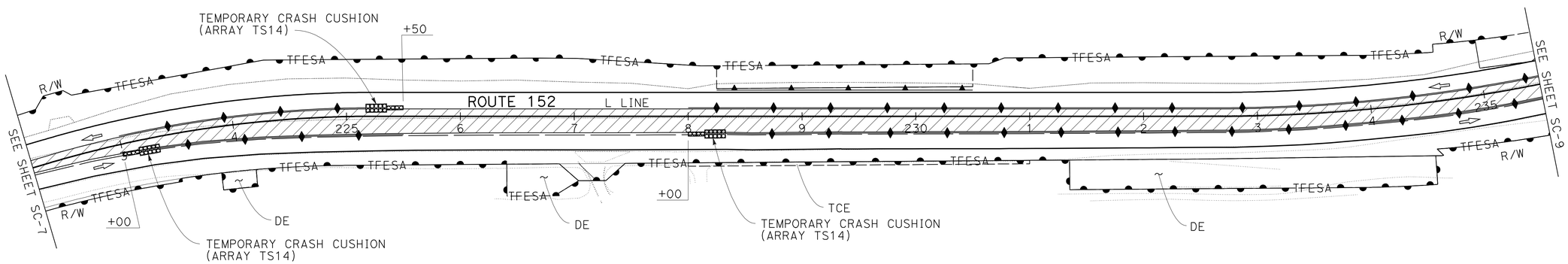

STAGE CONSTRUCTION AND TRAFFIC HANDLING PLAN

STAGE 2

SCALE: 1" = 50'

APPROVED FOR STAGE CONSTRUCTION AND TRAFFIC HANDLING WORK ONLY

FOR NOTES, ABBREVIATIONS AND LEGEND, SEE SHEET SC-1

SC-8

REVISED BY	AR
DATE REVISED	2/7/12
CALCULATED-DESIGNED BY	AHMED RAHID
CHECKED BY	CALVIN TRAN
FUNCTIONAL SUPERVISOR	MORTEZA AZIMI

STATE OF CALIFORNIA - DEPARTMENT OF TRANSPORTATION

Caltrans® DESIGN

LAST REVISION DATE PLOTTED => 22-MAY-2012
02-07-12 TIME PLOTTED => 16:40

Dist	COUNTY	ROUTE	POST MILES TOTAL PROJECT	SHEET No.	TOTAL SHEETS
04	SCI	152	16.2/R16.5, R18.5/R19.5	75	195

REGISTERED CIVIL ENGINEER DATE 2/7/12

5-21-12
PLANS APPROVAL DATE

REGISTERED PROFESSIONAL ENGINEER
Ahmed T. Rahid
No. 76800
Exp. 12-31-12
CIVIL
STATE OF CALIFORNIA

THE STATE OF CALIFORNIA OR ITS OFFICERS OR AGENTS SHALL NOT BE RESPONSIBLE FOR THE ACCURACY OR COMPLETENESS OF SCANNED COPIES OF THIS PLAN SHEET.

NOTE:

FOR ACCURATE RIGHT OF WAY DATA, CONTACT RIGHT OF WAY ENGINEERING AT THE DISTRICT OFFICE.

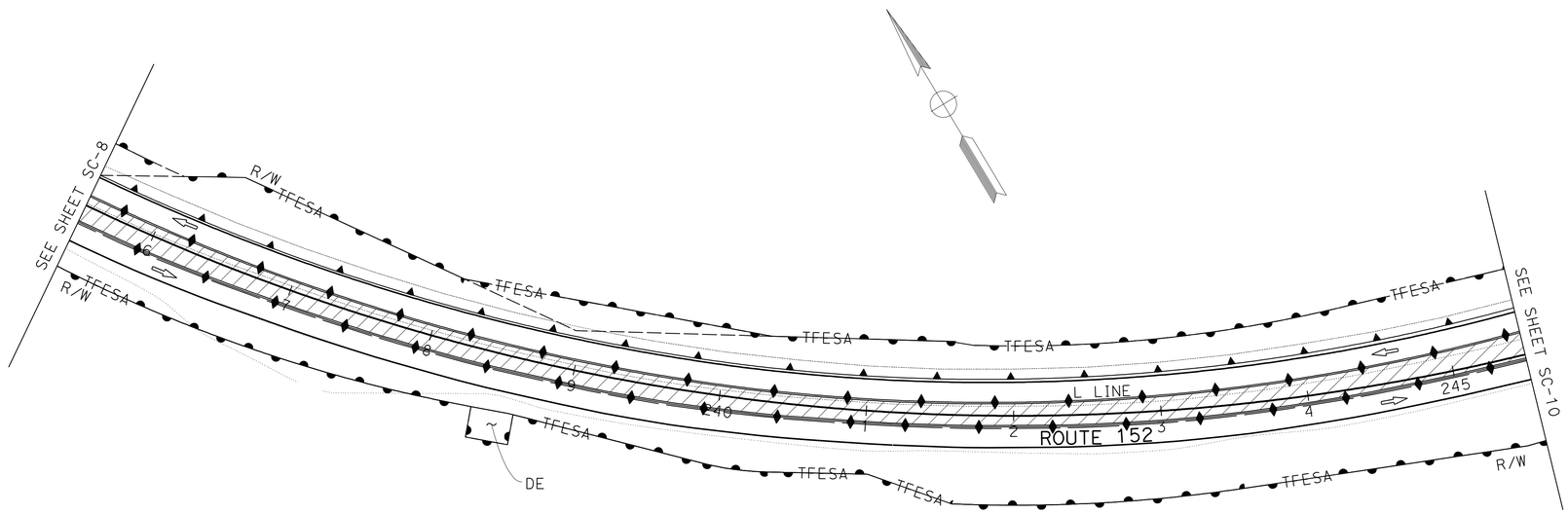

STAGE CONSTRUCTION AND TRAFFIC HANDLING PLAN

STAGE 2

SCALE: 1" = 50'

APPROVED FOR STAGE CONSTRUCTION AND TRAFFIC HANDLING WORK ONLY

FOR NOTES, ABBREVIATIONS AND LEGEND, SEE SHEET SC-1

SC-9

STATE OF CALIFORNIA - DEPARTMENT OF TRANSPORTATION
Caltrans
DESIGN

FUNCTIONAL SUPERVISOR: MORTEZA AZIMI
CALCULATED-DESIGNED BY: AHMED RAHID
CHECKED BY: CALVIN TRAN
REVISED BY: AR
DATE REVISED: 2/7/12

LAST REVISION 02-07-12
DATE PLOTTED => 22-MAY-2012
TIME PLOTTED => 16:40

Dist	COUNTY	ROUTE	POST MILES TOTAL PROJECT	SHEET No.	TOTAL SHEETS
04	SCI	152	16.2/R16.5, R18.5/R19.5	76	195

REGISTERED CIVIL ENGINEER DATE 2/7/12

5-21-12
PLANS APPROVAL DATE

REGISTERED PROFESSIONAL ENGINEER
Ahmed T. Rahid
No. 76800
Exp. 12-31-12
CIVIL
STATE OF CALIFORNIA

THE STATE OF CALIFORNIA OR ITS OFFICERS OR AGENTS SHALL NOT BE RESPONSIBLE FOR THE ACCURACY OR COMPLETENESS OF SCANNED COPIES OF THIS PLAN SHEET.

NOTE:

FOR ACCURATE RIGHT OF WAY DATA, CONTACT RIGHT OF WAY ENGINEERING AT THE DISTRICT OFFICE.

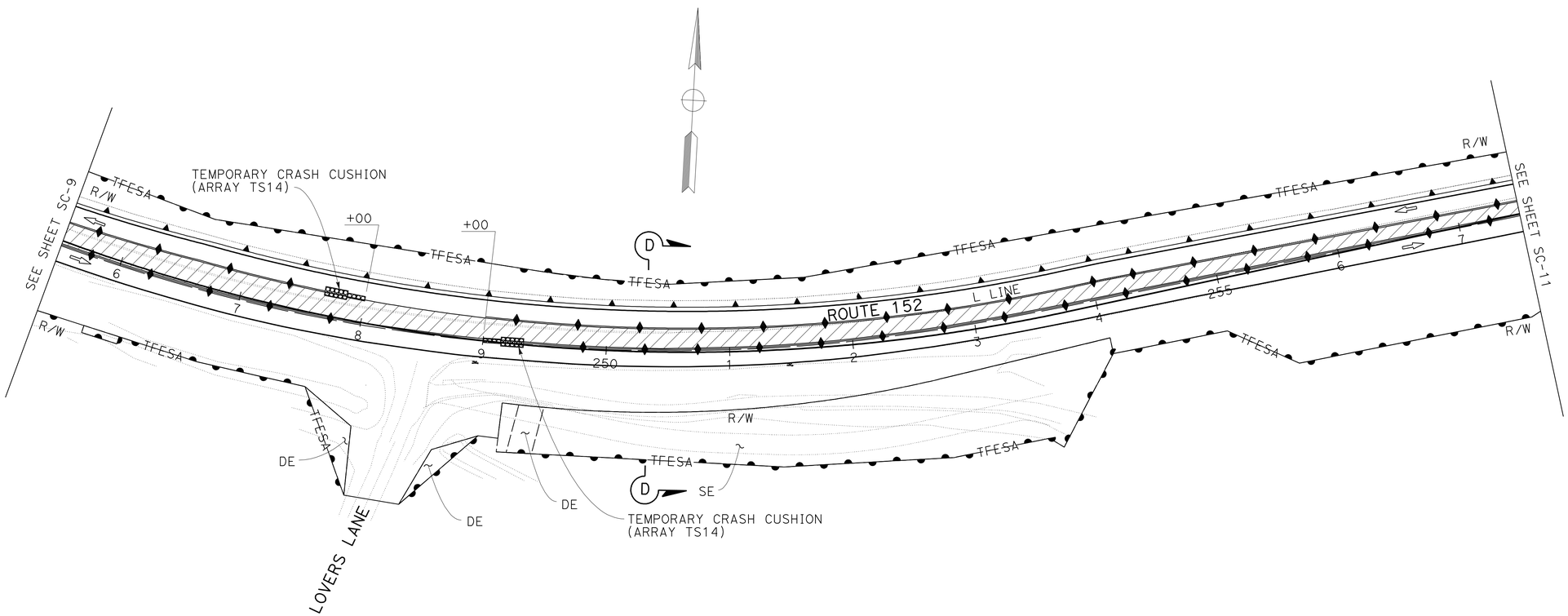

STAGE CONSTRUCTION AND TRAFFIC HANDLING PLAN

STAGE 2

SCALE: 1" = 50'

APPROVED FOR STAGE CONSTRUCTION AND TRAFFIC HANDLING WORK ONLY

FOR NOTES, ABBREVIATIONS AND LEGEND, SEE SHEET SC-1

SC-10

CALCULATED-DESIGNED BY	AHMED RAHID
CHECKED BY	CALVIN TRAN
REVISED BY	AR
DATE REVISED	2/7/12
FUNCTIONAL SUPERVISOR	MORTEZA AZIMI

STATE OF CALIFORNIA - DEPARTMENT OF TRANSPORTATION
Caltrans
DESIGN

LAST REVISION 02-07-12 | DATE PLOTTED => 22-MAY-2012 | TIME PLOTTED => 16:40

Dist	COUNTY	ROUTE	POST MILES TOTAL PROJECT	SHEET No.	TOTAL SHEETS
04	SCI	152	16.2/R16.5, R18.5/R19.5	77	195

REGISTERED CIVIL ENGINEER DATE 2/7/12

5-21-12
PLANS APPROVAL DATE

REGISTERED PROFESSIONAL ENGINEER Ahmed T. Rahid No. 76800 Exp. 12-31-12 CIVIL STATE OF CALIFORNIA

THE STATE OF CALIFORNIA OR ITS OFFICERS OR AGENTS SHALL NOT BE RESPONSIBLE FOR THE ACCURACY OR COMPLETENESS OF SCANNED COPIES OF THIS PLAN SHEET.

NOTE:

FOR ACCURATE RIGHT OF WAY DATA, CONTACT RIGHT OF WAY ENGINEERING AT THE DISTRICT OFFICE.

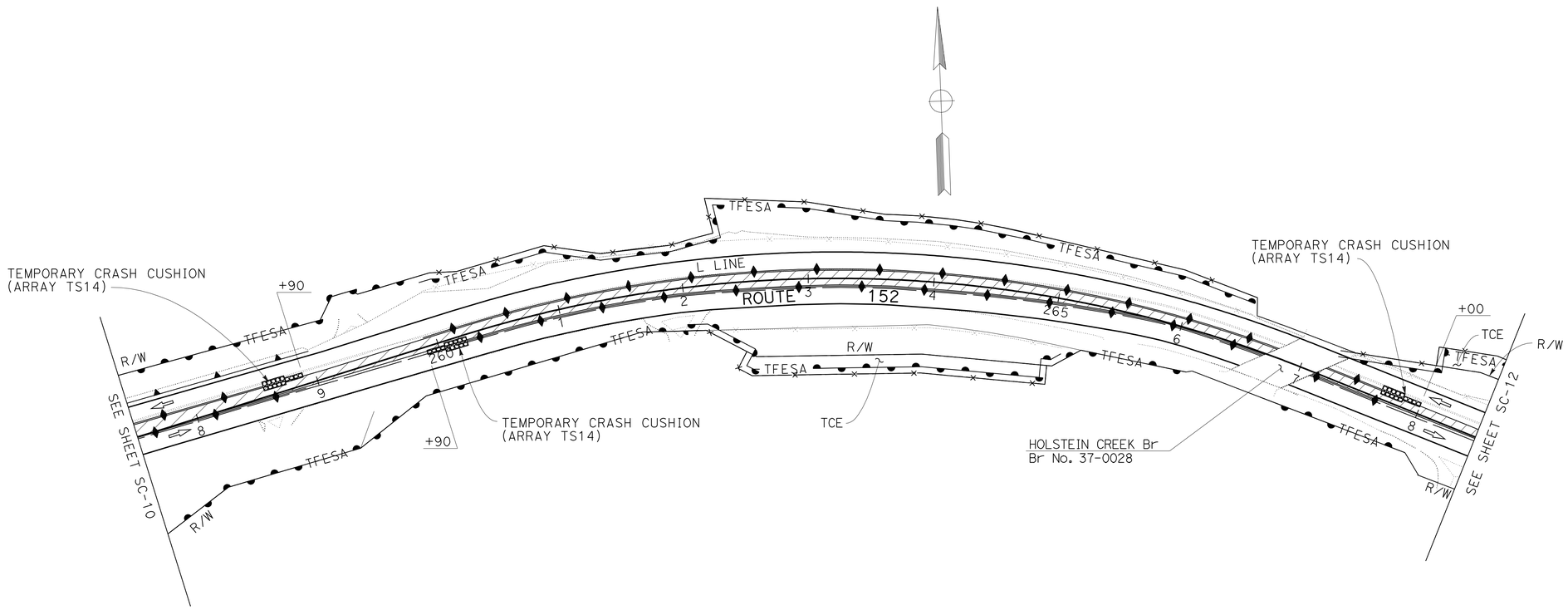

STAGE CONSTRUCTION AND TRAFFIC HANDLING PLAN

STAGE 2

SCALE: 1" = 50'

APPROVED FOR STAGE CONSTRUCTION AND TRAFFIC HANDLING WORK ONLY

FOR NOTES, ABBREVIATIONS AND LEGEND, SEE SHEET SC-1

SC-11

AHMED RAHID	REVISED BY: AR
CALVIN TRAN	DATE REVISED: 2/7/12
CALCULATED-DESIGNED BY	
CHECKED BY	
FUNCTIONAL SUPERVISOR: MORTEZA AZIMI	

STATE OF CALIFORNIA - DEPARTMENT OF TRANSPORTATION

Caltrans DESIGN

LAST REVISION DATE PLOTTED => 22-MAY-2012 TIME PLOTTED => 16:40

02-07-12

Dist	COUNTY	ROUTE	POST MILES TOTAL PROJECT	SHEET No.	TOTAL SHEETS
04	SCI	152	16.2/R16.5, R18.5/R19.5	78	195

REGISTERED CIVIL ENGINEER 2/7/12 DATE

5-21-12
PLANS APPROVAL DATE

REGISTERED PROFESSIONAL ENGINEER
Ahmed T. Rahid
No. 76800
Exp. 12-31-12
CIVIL
STATE OF CALIFORNIA

THE STATE OF CALIFORNIA OR ITS OFFICERS OR AGENTS SHALL NOT BE RESPONSIBLE FOR THE ACCURACY OR COMPLETENESS OF SCANNED COPIES OF THIS PLAN SHEET.

NOTE:

FOR ACCURATE RIGHT OF WAY DATA, CONTACT RIGHT OF WAY ENGINEERING AT THE DISTRICT OFFICE.

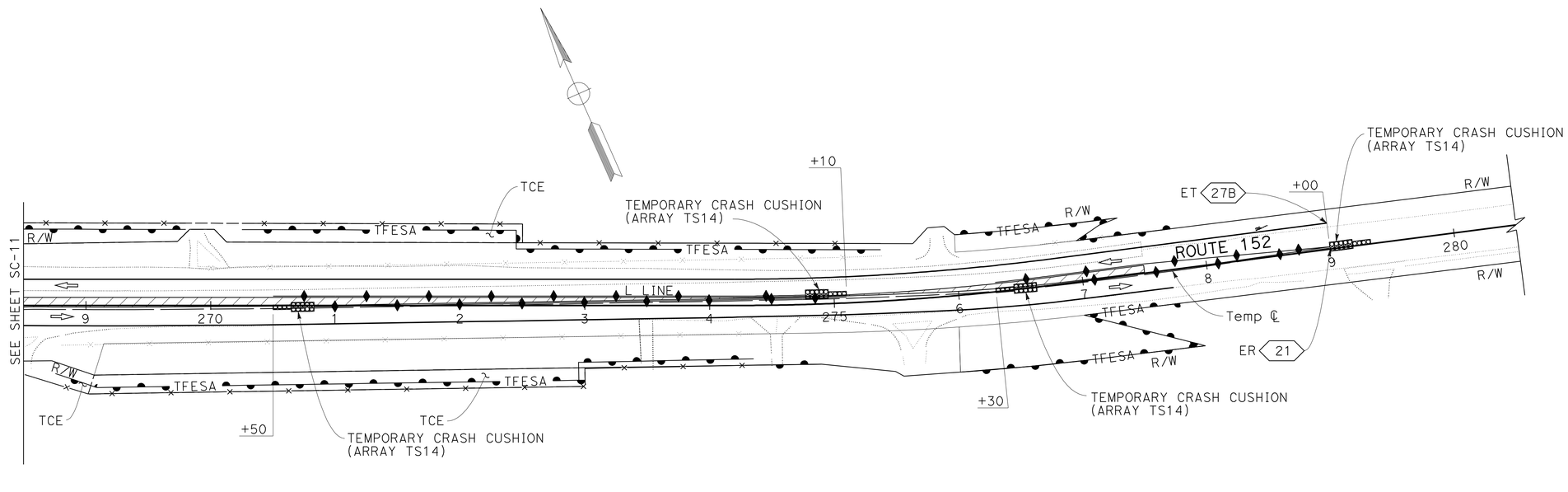

APPROVED FOR STAGE CONSTRUCTION AND TRAFFIC HANDLING WORK ONLY

FOR NOTES, ABBREVIATIONS AND LEGEND, SEE SHEET SC-1

STAGE CONSTRUCTION AND TRAFFIC HANDLING PLAN

STAGE 2

SCALE: 1" = 50'

SC-12

REVISED BY	AR
DATE REVISED	2/7/12
CALCULATED-DESIGNED BY	AHMED RAHID
CHECKED BY	CALVIN TRAN
FUNCTIONAL SUPERVISOR	MORTEZA AZIMI

STATE OF CALIFORNIA - DEPARTMENT OF TRANSPORTATION
Caltrans
DESIGN

LAST REVISION 02-07-12 | DATE PLOTTED => 22-MAY-2012 | TIME PLOTTED => 16:40

Dist	COUNTY	ROUTE	POST MILES TOTAL PROJECT	SHEET No.	TOTAL SHEETS
04	SCI	152	16.2/R16.5, R18.5/R19.5	79	195

REGISTERED CIVIL ENGINEER 2/7/12 DATE

5-21-12
PLANS APPROVAL DATE

REGISTERED PROFESSIONAL ENGINEER Ahmed T. Rahid No. 76800 Exp. 12-31-12 CIVIL STATE OF CALIFORNIA

THE STATE OF CALIFORNIA OR ITS OFFICERS OR AGENTS SHALL NOT BE RESPONSIBLE FOR THE ACCURACY OR COMPLETENESS OF SCANNED COPIES OF THIS PLAN SHEET.

NOTE:

FOR ACCURATE RIGHT OF WAY DATA, CONTACT RIGHT OF WAY ENGINEERING AT THE DISTRICT OFFICE.

LEGEND:

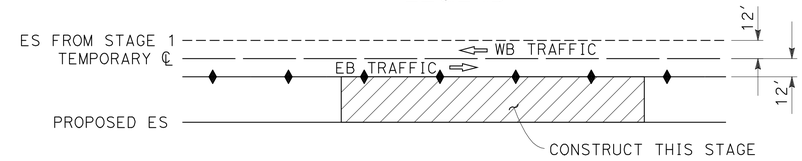

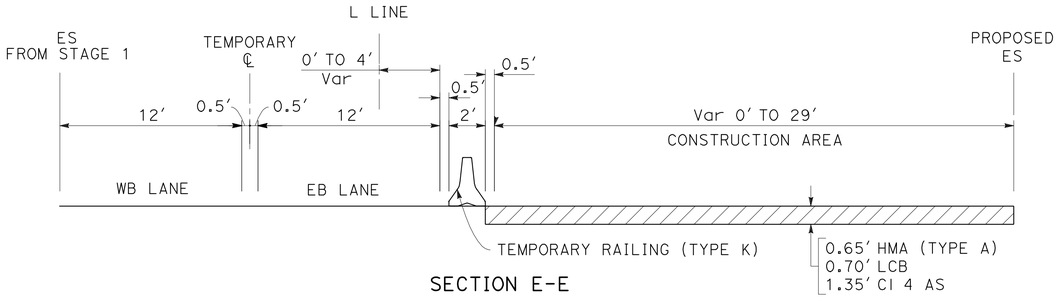

SECTION E-E
L 220+00 TO 244+00
L 259+00 TO 277+50

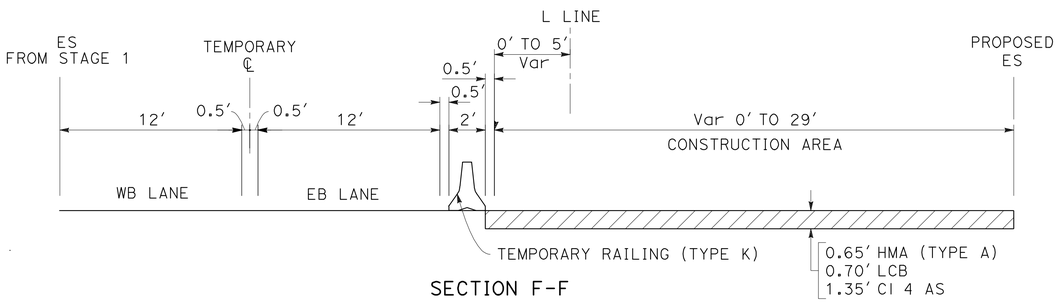

SECTION F-F
L 244+00 TO 259+00

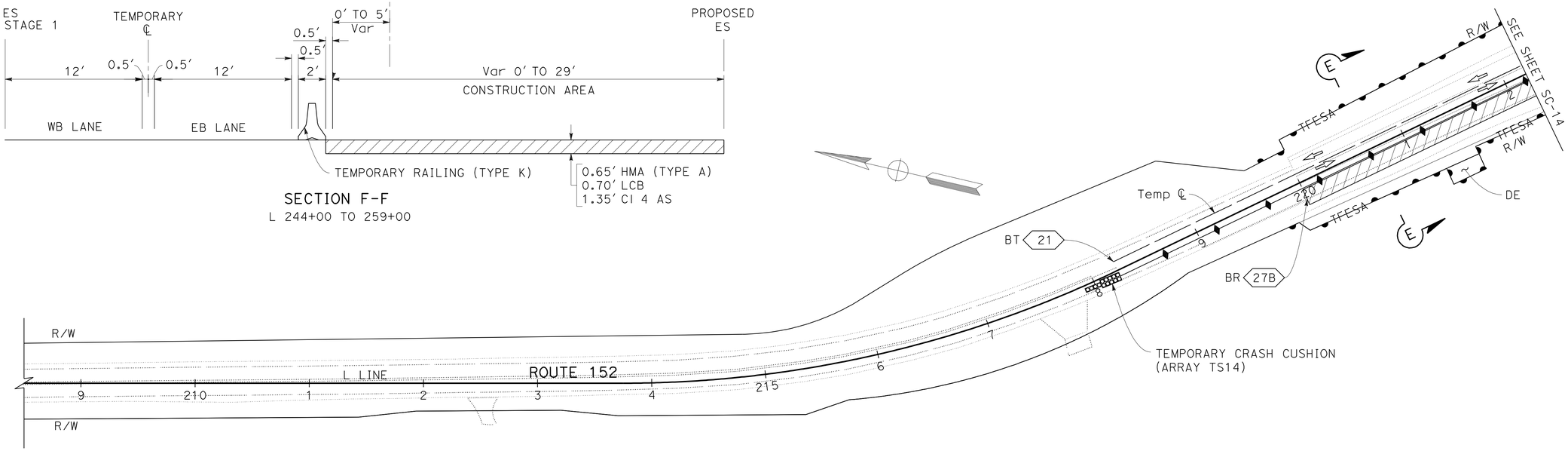

STAGE CONSTRUCTION AND TRAFFIC HANDLING PLAN

STAGE 3

SCALE: 1" = 50′

APPROVED FOR STAGE CONSTRUCTION AND TRAFFIC HANDLING WORK ONLY

FOR NOTES, ABBREVIATIONS AND LEGEND, SEE SHEET SC-1

SC-13

REVISED BY	AR
DATE REVISED	2/7/12
CALCULATED-DESIGNED BY	AHMED RAHID
CHECKED BY	CALVIN TRAN
FUNCTIONAL SUPERVISOR	MORTEZA AZIMI

STATE OF CALIFORNIA - DEPARTMENT OF TRANSPORTATION
Caltrans
DESIGN

LAST REVISION 02-07-12 | DATE PLOTTED => 22-MAY-2012 | TIME PLOTTED => 16:40

Dist	COUNTY	ROUTE	POST MILES TOTAL PROJECT	SHEET No.	TOTAL SHEETS
04	SCI	152	16.2/R16.5, R18.5/R19.5	80	195

REGISTERED CIVIL ENGINEER DATE 2/7/12

5-21-12
PLANS APPROVAL DATE

REGISTERED PROFESSIONAL ENGINEER Ahmed T. Rahid No. 76800 Exp. 12-31-12 CIVIL STATE OF CALIFORNIA

THE STATE OF CALIFORNIA OR ITS OFFICERS OR AGENTS SHALL NOT BE RESPONSIBLE FOR THE ACCURACY OR COMPLETENESS OF SCANNED COPIES OF THIS PLAN SHEET.

NOTE:

FOR ACCURATE RIGHT OF WAY DATA, CONTACT RIGHT OF WAY ENGINEERING AT THE DISTRICT OFFICE.

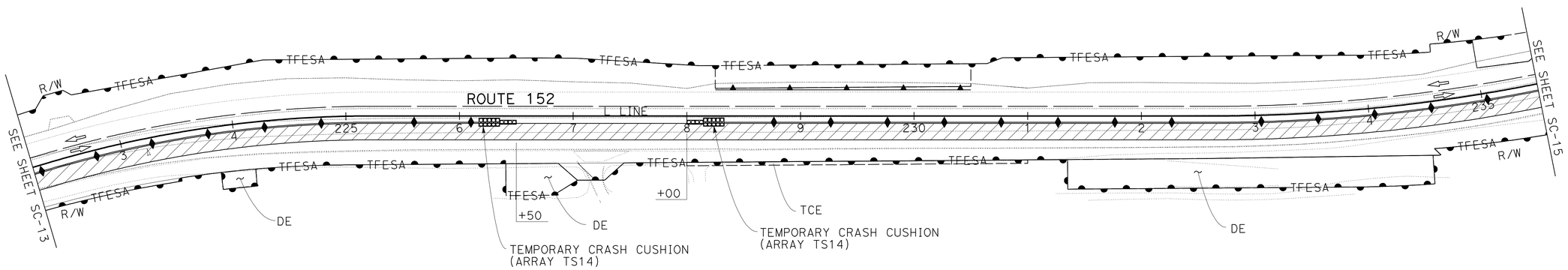

STAGE CONSTRUCTION AND TRAFFIC HANDLING PLAN

STAGE 3

SCALE: 1" = 50'

APPROVED FOR STAGE CONSTRUCTION AND TRAFFIC HANDLING WORK ONLY

FOR NOTES, ABBREVIATIONS AND LEGEND, SEE SHEET SC-1, 13

SC-14

STATE OF CALIFORNIA - DEPARTMENT OF TRANSPORTATION
Caltrans® DESIGN

FUNCTIONAL SUPERVISOR: MORTEZA AZIMI

CALCULATED-DESIGNED BY: AHMED RAHID
CHECKED BY: CALVIN TRAN

REVISED BY: AR
DATE REVISED: 2/7/12

LAST REVISION DATE PLOTTED => 22-MAY-2012
TIME PLOTTED => 16:40
02-07-12

Dist	COUNTY	ROUTE	POST MILES TOTAL PROJECT	SHEET No.	TOTAL SHEETS
04	SCI	152	16.2/R16.5, R18.5/R19.5	81	195

REGISTERED CIVIL ENGINEER DATE 2/7/12

5-21-12
PLANS APPROVAL DATE

REGISTERED PROFESSIONAL ENGINEER
Ahmed T. Rahid
No. 76800
Exp. 12-31-12
CIVIL
STATE OF CALIFORNIA

THE STATE OF CALIFORNIA OR ITS OFFICERS OR AGENTS SHALL NOT BE RESPONSIBLE FOR THE ACCURACY OR COMPLETENESS OF SCANNED COPIES OF THIS PLAN SHEET.

NOTE:

FOR ACCURATE RIGHT OF WAY DATA, CONTACT RIGHT OF WAY ENGINEERING AT THE DISTRICT OFFICE.

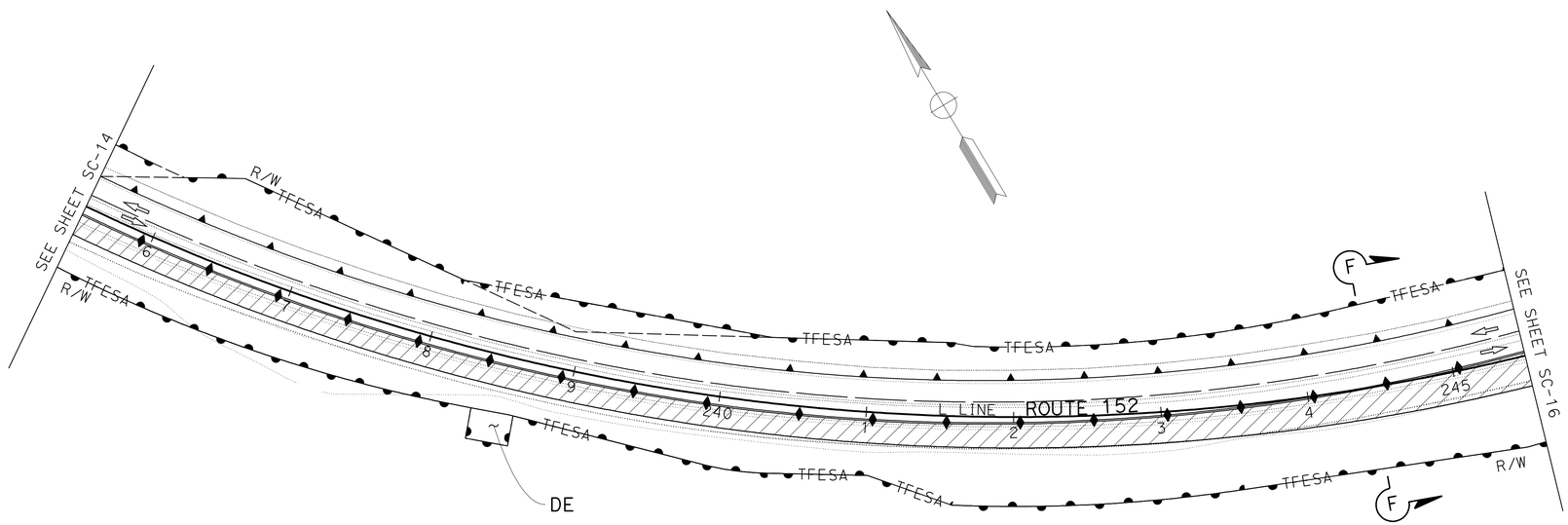

STAGE CONSTRUCTION AND TRAFFIC HANDLING PLAN

STAGE 3

SCALE: 1" = 50'

APPROVED FOR STAGE CONSTRUCTION AND TRAFFIC HANDLING WORK ONLY

FOR NOTES, ABBREVIATIONS AND LEGEND, SEE SHEET SC-1, 13

SC-15

STATE OF CALIFORNIA - DEPARTMENT OF TRANSPORTATION
Caltrans
DESIGN

FUNCTIONAL SUPERVISOR: MORTEZA AZIMI
CALCULATED-DESIGNED BY: AHMED RAHID
CHECKED BY: CALVIN TRAN
REVISED BY: AR
DATE REVISED: 2/7/12

LAST REVISION DATE PLOTTED => 22-MAY-2012
02-07-12 TIME PLOTTED => 17:19

Dist	COUNTY	ROUTE	POST MILES TOTAL PROJECT	SHEET No.	TOTAL SHEETS
04	SCI	152	16.2/R16.5, R18.5/R19.5	82	195

REGISTERED CIVIL ENGINEER DATE 2/7/12

5-21-12
PLANS APPROVAL DATE

REGISTERED PROFESSIONAL ENGINEER Ahmed T. Rahid No. 76800 Exp. 12-31-12 CIVIL STATE OF CALIFORNIA

THE STATE OF CALIFORNIA OR ITS OFFICERS OR AGENTS SHALL NOT BE RESPONSIBLE FOR THE ACCURACY OR COMPLETENESS OF SCANNED COPIES OF THIS PLAN SHEET.

NOTE:

FOR ACCURATE RIGHT OF WAY DATA, CONTACT RIGHT OF WAY ENGINEERING AT THE DISTRICT OFFICE.

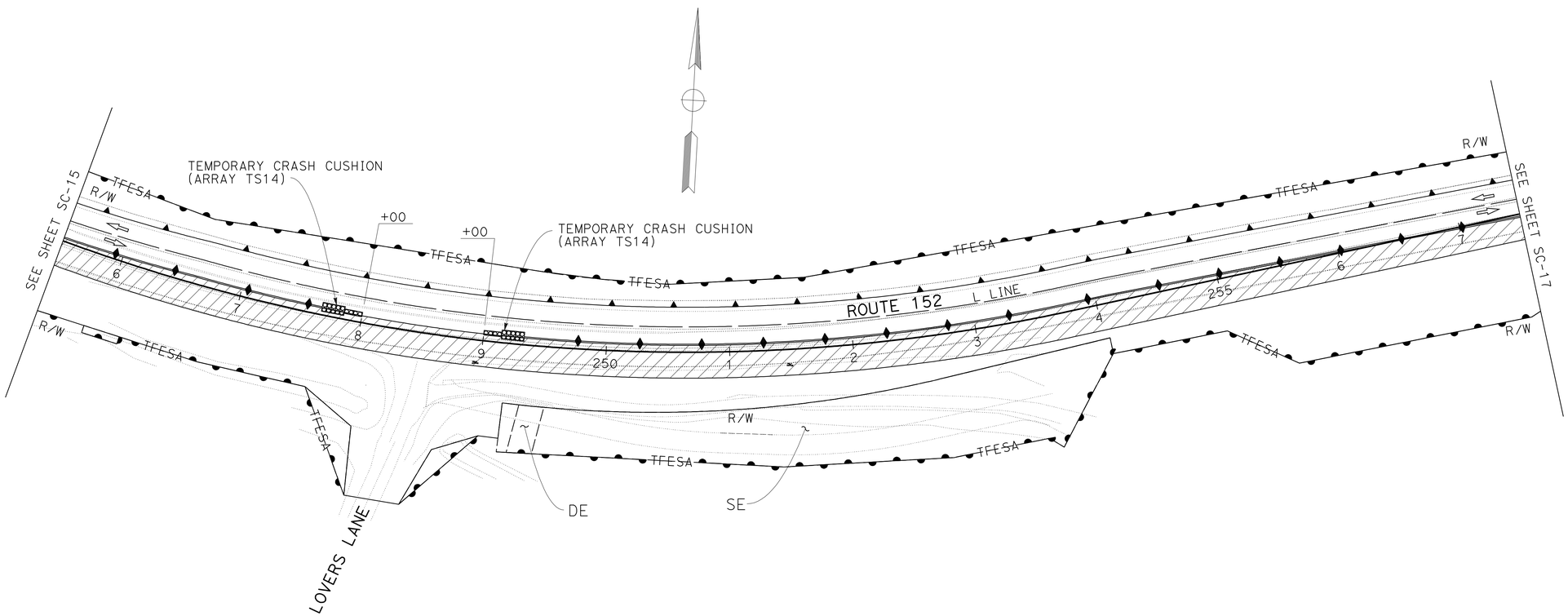

STAGE CONSTRUCTION AND TRAFFIC HANDLING PLAN

STAGE 3

SCALE: 1" = 50'

APPROVED FOR STAGE CONSTRUCTION AND TRAFFIC HANDLING WORK ONLY

FOR NOTES, ABBREVIATIONS AND LEGEND, SEE SHEET SC-1, 13

SC-16

STATE OF CALIFORNIA - DEPARTMENT OF TRANSPORTATION
Caltrans®
DESIGN

FUNCTIONAL SUPERVISOR: MORTEZA AZIMI

CALCULATED-DESIGNED BY: AHMED RAHID
CHECKED BY: CALVIN TRAN

REVISED BY: AR
DATE REVISED: 2/7/12

LAST REVISION: DATE PLOTTED => 22-MAY-2012
02-07-12 TIME PLOTTED => 17:19

Dist	COUNTY	ROUTE	POST MILES TOTAL PROJECT	SHEET No.	TOTAL SHEETS
04	SCI	152	16.2/R16.5, R18.5/R19.5	83	195

REGISTERED CIVIL ENGINEER DATE 2/7/12

5-21-12
PLANS APPROVAL DATE

REGISTERED PROFESSIONAL ENGINEER Ahmed T. Rahid No. 76800 Exp. 12-31-12 CIVIL STATE OF CALIFORNIA

THE STATE OF CALIFORNIA OR ITS OFFICERS OR AGENTS SHALL NOT BE RESPONSIBLE FOR THE ACCURACY OR COMPLETENESS OF SCANNED COPIES OF THIS PLAN SHEET.

NOTE:

FOR ACCURATE RIGHT OF WAY DATA, CONTACT RIGHT OF WAY ENGINEERING AT THE DISTRICT OFFICE.

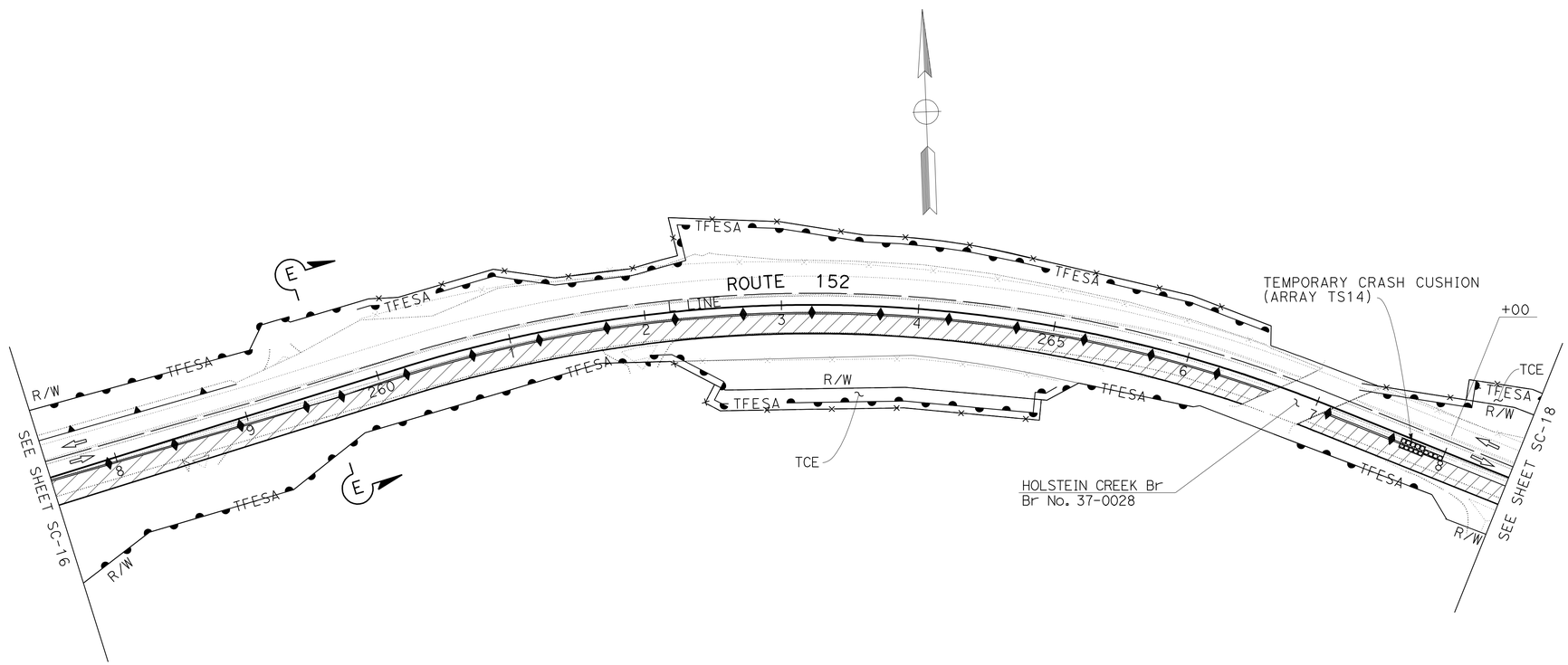

STAGE CONSTRUCTION AND TRAFFIC HANDLING PLAN

STAGE 3

SCALE: 1" = 50'

APPROVED FOR STAGE CONSTRUCTION AND TRAFFIC HANDLING WORK ONLY

FOR NOTES, ABBREVIATIONS AND LEGEND, SEE SHEET SC-1, 13

SC-17

STATE OF CALIFORNIA - DEPARTMENT OF TRANSPORTATION
Caltrans
DESIGN

FUNCTIONAL SUPERVISOR: MORTEZA AZIMI
CALCULATED-DESIGNED BY: AHMED RAHID
CHECKED BY: CALVIN TRAN
REVISED BY: AR
DATE REVISED: 2/7/12

LAST REVISION DATE PLOTTED => 22-MAY-2012
TIME PLOTTED => 17:19
02-07-12

Dist	COUNTY	ROUTE	POST MILES TOTAL PROJECT	SHEET No.	TOTAL SHEETS
04	SCI	152	16.2/R16.5, R18.5/R19.5	84	195

REGISTERED CIVIL ENGINEER DATE 2/7/12

5-21-12
PLANS APPROVAL DATE

REGISTERED PROFESSIONAL ENGINEER Ahmed T. Rahid No. 76800 Exp. 12-31-12 CIVIL STATE OF CALIFORNIA

THE STATE OF CALIFORNIA OR ITS OFFICERS OR AGENTS SHALL NOT BE RESPONSIBLE FOR THE ACCURACY OR COMPLETENESS OF SCANNED COPIES OF THIS PLAN SHEET.

NOTE:

FOR ACCURATE RIGHT OF WAY DATA, CONTACT RIGHT OF WAY ENGINEERING AT THE DISTRICT OFFICE.

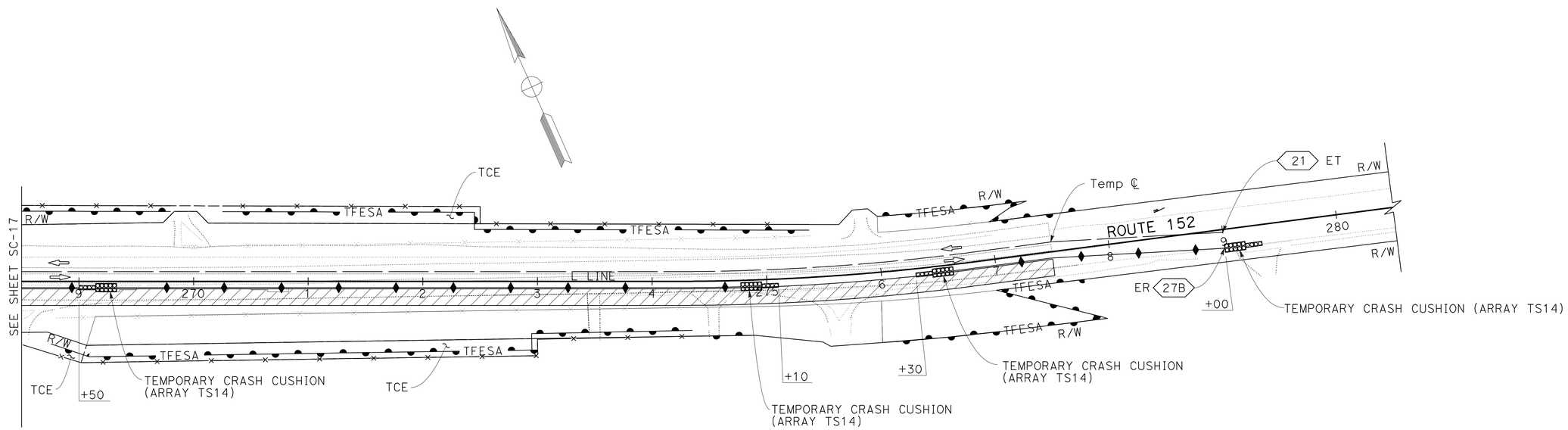

STAGE CONSTRUCTION AND TRAFFIC HANDLING PLAN

STAGE 3

SCALE: 1" = 50'

FOR NOTES, ABBREVIATIONS AND LEGEND, SEE SHEET SC-1, 13

APPROVED FOR STAGE CONSTRUCTION AND TRAFFIC HANDLING WORK ONLY

SC-18

REVISED BY	DATE REVISED
AR	2/7/12

CALCULATED-DESIGNED BY: AHMED RAHID
CHECKED BY: CALVIN TRAN
FUNCTIONAL SUPERVISOR: MORTEZA AZIMI

STATE OF CALIFORNIA - DEPARTMENT OF TRANSPORTATION
Caltrans
DESIGN

LAST REVISION 02-07-12
DATE PLOTTED => 22-MAY-2012
TIME PLOTTED => 17:22

Dist	COUNTY	ROUTE	POST MILES TOTAL PROJECT	SHEET No.	TOTAL SHEETS
04	SCI	152	16.2/R16.5, R18.5/R19.5	85	195

REGISTERED CIVIL ENGINEER DATE 2/7/12

5-21-12
PLANS APPROVAL DATE

REGISTERED PROFESSIONAL ENGINEER Ahmed T. Rahid No. 76800 Exp. 12-31-12 CIVIL STATE OF CALIFORNIA

THE STATE OF CALIFORNIA OR ITS OFFICERS OR AGENTS SHALL NOT BE RESPONSIBLE FOR THE ACCURACY OR COMPLETENESS OF SCANNED COPIES OF THIS PLAN SHEET.

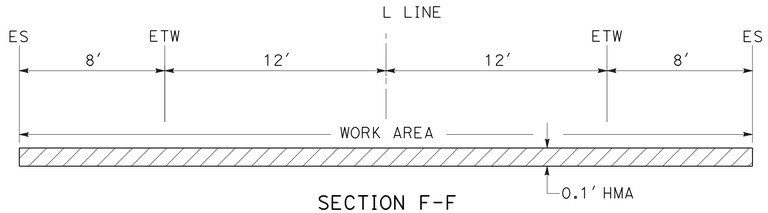

SECTION F-F
L 101+50 TO 120+00
L 220+00 TO 241+00
L 259+00 TO 277+50

SECTION G-G
L 241+00 TO 259+00

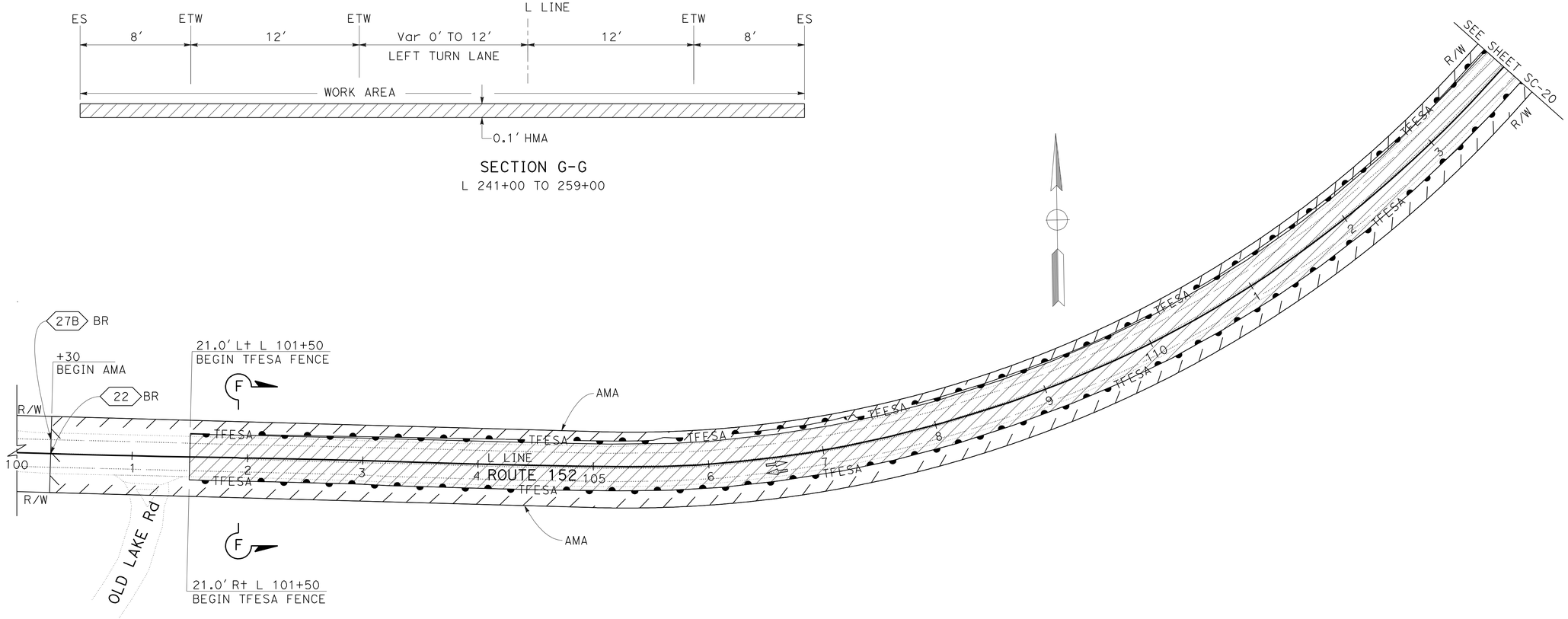

STAGE CONSTRUCTION AND TRAFFIC HANDLING PLAN

STAGE 4

SCALE: 1" = 50′

APPROVED FOR STAGE CONSTRUCTION AND TRAFFIC HANDLING WORK ONLY

SC-19

REVISED BY	DATE REVISED
AR	02/07/12

AHMED RAHID — CALCULATED-DESIGNED BY
CALVIN TRAN — CHECKED BY
FUNCTIONAL SUPERVISOR: MORTEZA AZIMI

STATE OF CALIFORNIA - DEPARTMENT OF TRANSPORTATION
Caltrans DESIGN

LAST REVISION 02-07-12 | DATE PLOTTED => 22-MAY-2012 | TIME PLOTTED => 17:19

Dist	COUNTY	ROUTE	POST MILES TOTAL PROJECT	SHEET No.	TOTAL SHEETS
04	SCI	152	16.2/R16.5, R18.5/R19.5	86	195

REGISTERED CIVIL ENGINEER 2/7/12 DATE

5-21-12
PLANS APPROVAL DATE

REGISTERED PROFESSIONAL ENGINEER Ahmed T. Rahid No. 76800 Exp. 12-31-12 CIVIL STATE OF CALIFORNIA

THE STATE OF CALIFORNIA OR ITS OFFICERS OR AGENTS SHALL NOT BE RESPONSIBLE FOR THE ACCURACY OR COMPLETENESS OF SCANNED COPIES OF THIS PLAN SHEET.

NOTE:

FOR ACCURATE RIGHT OF WAY DATA, CONTACT RIGHT OF WAY ENGINEERING AT THE DISTRICT OFFICE.

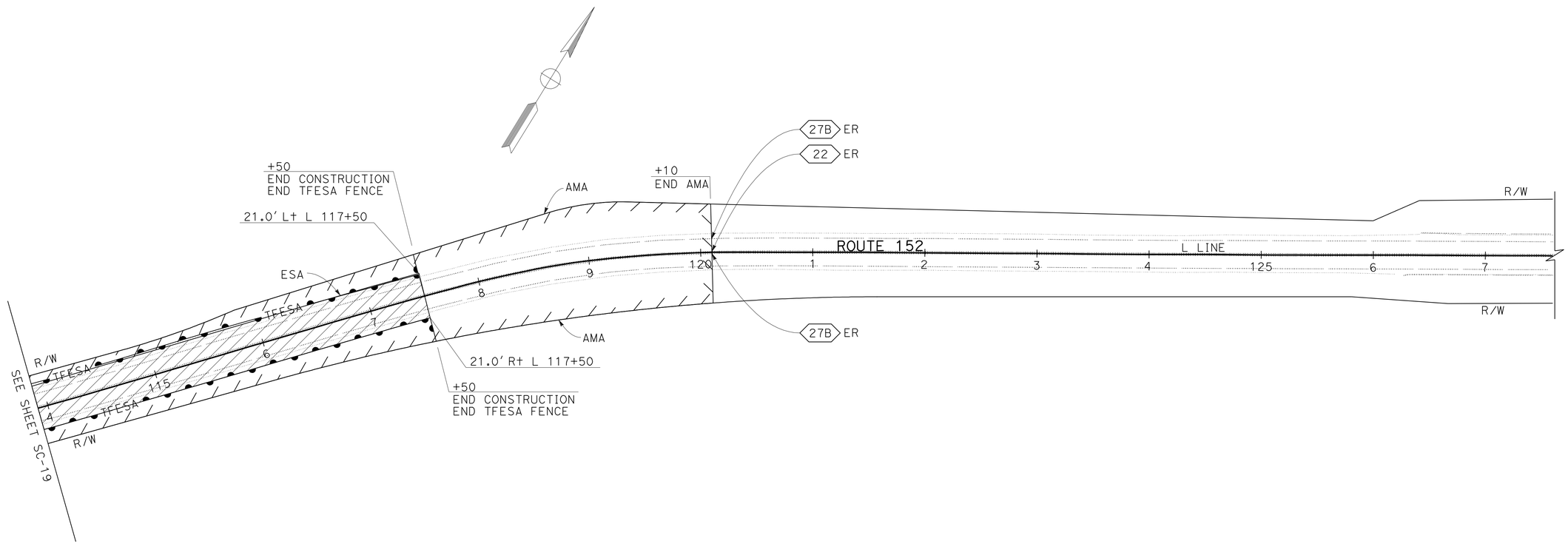

STAGE CONSTRUCTION AND TRAFFIC HANDLING PLAN

STAGE 4

SCALE: 1" = 50'

APPROVED FOR STAGE CONSTRUCTION AND TRAFFIC HANDLING WORK ONLY

FOR NOTES, ABBREVIATIONS AND LEGEND, SEE SHEET SC-1

SC-20

REVISED BY	AR
DATE REVISED	02/07/12
CALCULATED-DESIGNED BY	AHMED RAHID
CHECKED BY	CALVIN TRAN
FUNCTIONAL SUPERVISOR	MORTEZA AZIMI

STATE OF CALIFORNIA - DEPARTMENT OF TRANSPORTATION
Caltrans
DESIGN

LAST REVISION 02-07-12 | DATE PLOTTED => 22-MAY-2012 | TIME PLOTTED => 17:19

Dist	COUNTY	ROUTE	POST MILES TOTAL PROJECT	SHEET No.	TOTAL SHEETS
04	SCI	152	16.2/R16.5, R18.5/R19.5	87	195

REGISTERED CIVIL ENGINEER 2/7/12 DATE

5-21-12
PLANS APPROVAL DATE

REGISTERED PROFESSIONAL ENGINEER Ahmed T. Rahid No. 76800 Exp. 12-31-12 CIVIL STATE OF CALIFORNIA

THE STATE OF CALIFORNIA OR ITS OFFICERS OR AGENTS SHALL NOT BE RESPONSIBLE FOR THE ACCURACY OR COMPLETENESS OF SCANNED COPIES OF THIS PLAN SHEET.

NOTE:

FOR ACCURATE RIGHT OF WAY DATA, CONTACT RIGHT OF WAY ENGINEERING AT THE DISTRICT OFFICE.

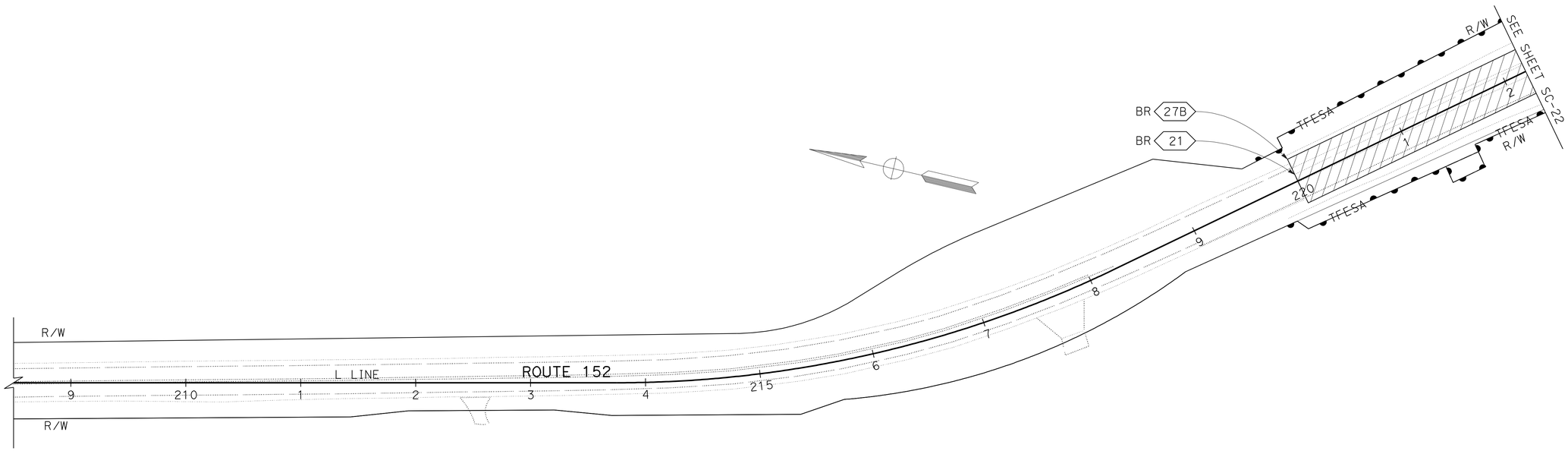

APPROVED FOR STAGE CONSTRUCTION AND TRAFFIC HANDLING WORK ONLY

FOR NOTES, ABBREVIATIONS AND LEGEND, SEE SHEET SC-1&19

STAGE CONSTRUCTION AND TRAFFIC HANDLING PLAN

STAGE 4

SCALE: 1" = 50'

SC-21

REVISED BY	DATE REVISED
AR	02/07/12

AHMED RAHID — CALCULATED-DESIGNED BY
CALVIN TRAN — CHECKED BY
MORTEZA AZIMI — FUNCTIONAL SUPERVISOR

STATE OF CALIFORNIA - DEPARTMENT OF TRANSPORTATION
Caltrans
DESIGN

LAST REVISION 02-07-12 | DATE PLOTTED => 22-MAY-2012 | TIME PLOTTED => 17:19

Dist	COUNTY	ROUTE	POST MILES TOTAL PROJECT	SHEET No.	TOTAL SHEETS
04	SCI	152	16.2/R16.5, R18.5/R19.5	88	195

REGISTERED CIVIL ENGINEER 2/7/12 DATE

5-21-12
PLANS APPROVAL DATE

REGISTERED PROFESSIONAL ENGINEER Ahmed T. Rahid No. 76800 Exp. 12-31-12 CIVIL STATE OF CALIFORNIA

THE STATE OF CALIFORNIA OR ITS OFFICERS OR AGENTS SHALL NOT BE RESPONSIBLE FOR THE ACCURACY OR COMPLETENESS OF SCANNED COPIES OF THIS PLAN SHEET.

NOTE:

FOR ACCURATE RIGHT OF WAY DATA, CONTACT RIGHT OF WAY ENGINEERING AT THE DISTRICT OFFICE.

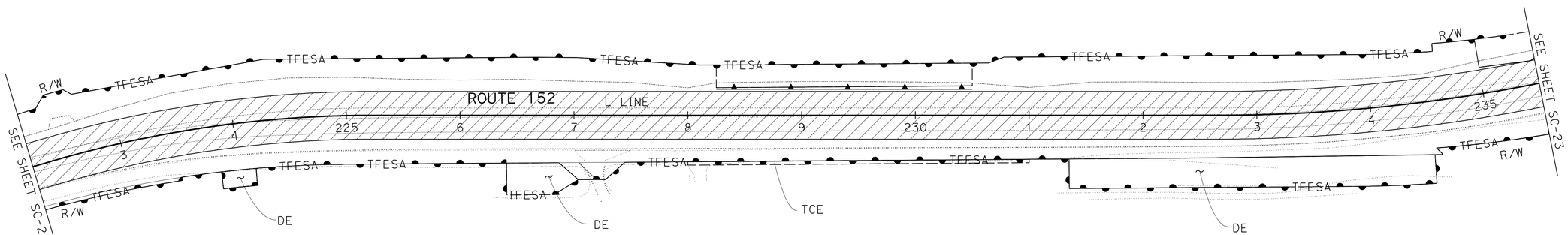

STAGE CONSTRUCTION AND TRAFFIC HANDLING PLAN

STAGE 4

SCALE: 1" = 50'

APPROVED FOR STAGE CONSTRUCTION AND TRAFFIC HANDLING WORK ONLY

FOR NOTES, ABBREVIATIONS AND LEGEND, SEE SHEET SC-1&19

SC-22

STATE OF CALIFORNIA - DEPARTMENT OF TRANSPORTATION
Caltrans® DESIGN

FUNCTIONAL SUPERVISOR: MORTEZA AZIMI
CALCULATED-DESIGNED BY: AHMED RAHID
CHECKED BY: CALVIN TRAN
REVISED BY: AR
DATE REVISED: 02-07-12

LAST REVISION DATE PLOTTED => 22-MAY-2012
TIME PLOTTED => 17:19

Dist	COUNTY	ROUTE	POST MILES TOTAL PROJECT	SHEET No.	TOTAL SHEETS
04	SCI	152	16.2/R16.5, R18.5/R19.5	89	195

REGISTERED CIVIL ENGINEER 2/7/12 DATE

5-21-12
PLANS APPROVAL DATE

REGISTERED PROFESSIONAL ENGINEER Ahmed T. Rahid No. 76800 Exp. 12-31-12 CIVIL STATE OF CALIFORNIA

THE STATE OF CALIFORNIA OR ITS OFFICERS OR AGENTS SHALL NOT BE RESPONSIBLE FOR THE ACCURACY OR COMPLETENESS OF SCANNED COPIES OF THIS PLAN SHEET.

NOTE:

FOR ACCURATE RIGHT OF WAY DATA, CONTACT RIGHT OF WAY ENGINEERING AT THE DISTRICT OFFICE.

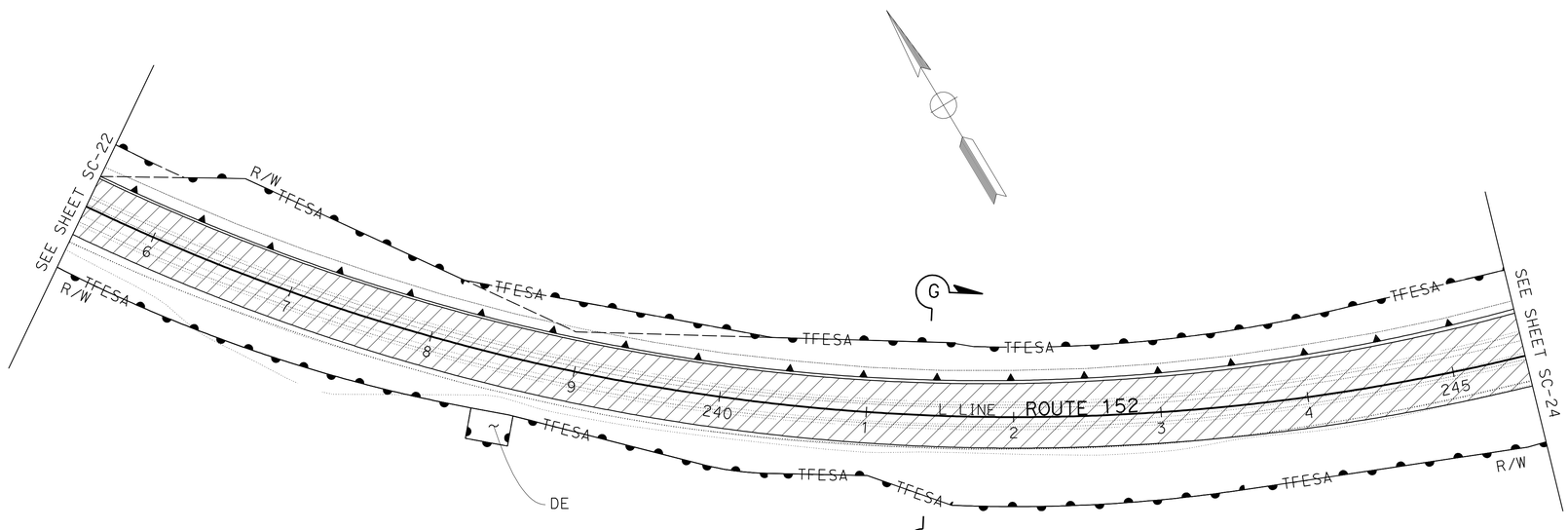

STAGE CONSTRUCTION AND TRAFFIC HANDLING PLAN

STAGE 4

SCALE: 1" = 50'

APPROVED FOR STAGE CONSTRUCTION AND TRAFFIC HANDLING WORK ONLY

FOR NOTES, ABBREVIATIONS AND LEGEND, SEE SHEET SC-1&19

SC-23

STATE OF CALIFORNIA - DEPARTMENT OF TRANSPORTATION

Caltrans®

DESIGN

FUNCTIONAL SUPERVISOR: MORTEZA AZIMI

CALCULATED-DESIGNED BY: AHMED RAHID

CHECKED BY: CALVIN TRAN

REVISED BY: AR

DATE REVISED: 02-07-12

LAST REVISION: 02-07-12

DATE PLOTTED => 22-MAY-2012

TIME PLOTTED => 17:19

Dist	COUNTY	ROUTE	POST MILES TOTAL PROJECT	SHEET No.	TOTAL SHEETS
04	SCI	152	16.2/R16.5, R18.5/R19.5	90	195

REGISTERED CIVIL ENGINEER — DATE 2/7/12

5-21-12
PLANS APPROVAL DATE

REGISTERED PROFESSIONAL ENGINEER — Ahmed T. Rahid — No. 76800 — Exp. 12-31-12 — CIVIL — STATE OF CALIFORNIA

THE STATE OF CALIFORNIA OR ITS OFFICERS OR AGENTS SHALL NOT BE RESPONSIBLE FOR THE ACCURACY OR COMPLETENESS OF SCANNED COPIES OF THIS PLAN SHEET.

NOTE:

FOR ACCURATE RIGHT OF WAY DATA, CONTACT RIGHT OF WAY ENGINEERING AT THE DISTRICT OFFICE.

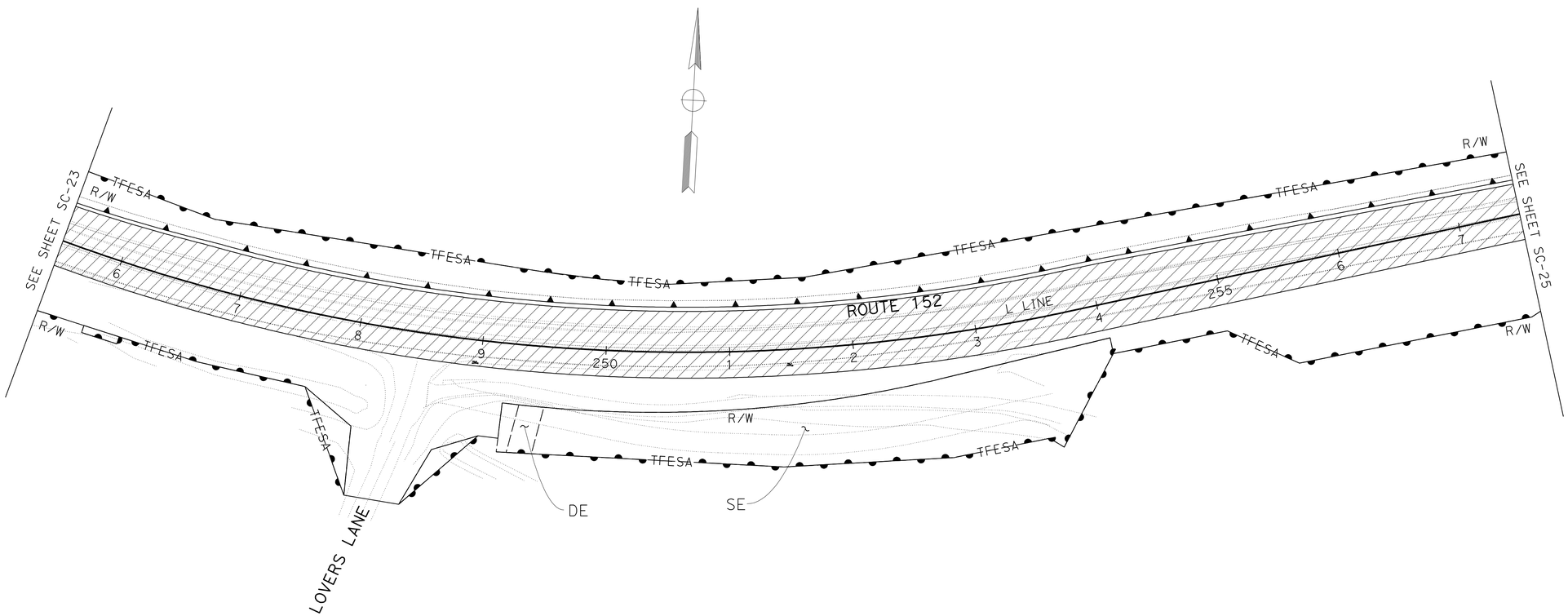

STAGE CONSTRUCTION AND TRAFFIC HANDLING PLAN

STAGE 4

SCALE: 1" = 50'

APPROVED FOR STAGE CONSTRUCTION AND TRAFFIC HANDLING WORK ONLY

FOR NOTES, ABBREVIATIONS AND LEGEND, SEE SHEET SC-1&19

SC-24

STATE OF CALIFORNIA - DEPARTMENT OF TRANSPORTATION
Caltrans®
DESIGN

FUNCTIONAL SUPERVISOR: MORTEZA AZIMI
CALCULATED-DESIGNED BY: AHMED RAHID
CHECKED BY: CALVIN TRAN
REVISED BY: AR
DATE REVISED: 02-07-12

LAST REVISION 02-07-12 | DATE PLOTTED => 22-MAY-2012 | TIME PLOTTED => 17:19

Dist	COUNTY	ROUTE	POST MILES TOTAL PROJECT	SHEET No.	TOTAL SHEETS
04	SCI	152	16.2/R16.5, R18.5/R19.5	91	195

REGISTERED CIVIL ENGINEER — DATE 2/7/12

5-21-12
PLANS APPROVAL DATE

REGISTERED PROFESSIONAL ENGINEER — Ahmed T. Rahid — No. 76800 — Exp. 12-31-12 — CIVIL — STATE OF CALIFORNIA

THE STATE OF CALIFORNIA OR ITS OFFICERS OR AGENTS SHALL NOT BE RESPONSIBLE FOR THE ACCURACY OR COMPLETENESS OF SCANNED COPIES OF THIS PLAN SHEET.

NOTE:

FOR ACCURATE RIGHT OF WAY DATA, CONTACT RIGHT OF WAY ENGINEERING AT THE DISTRICT OFFICE.

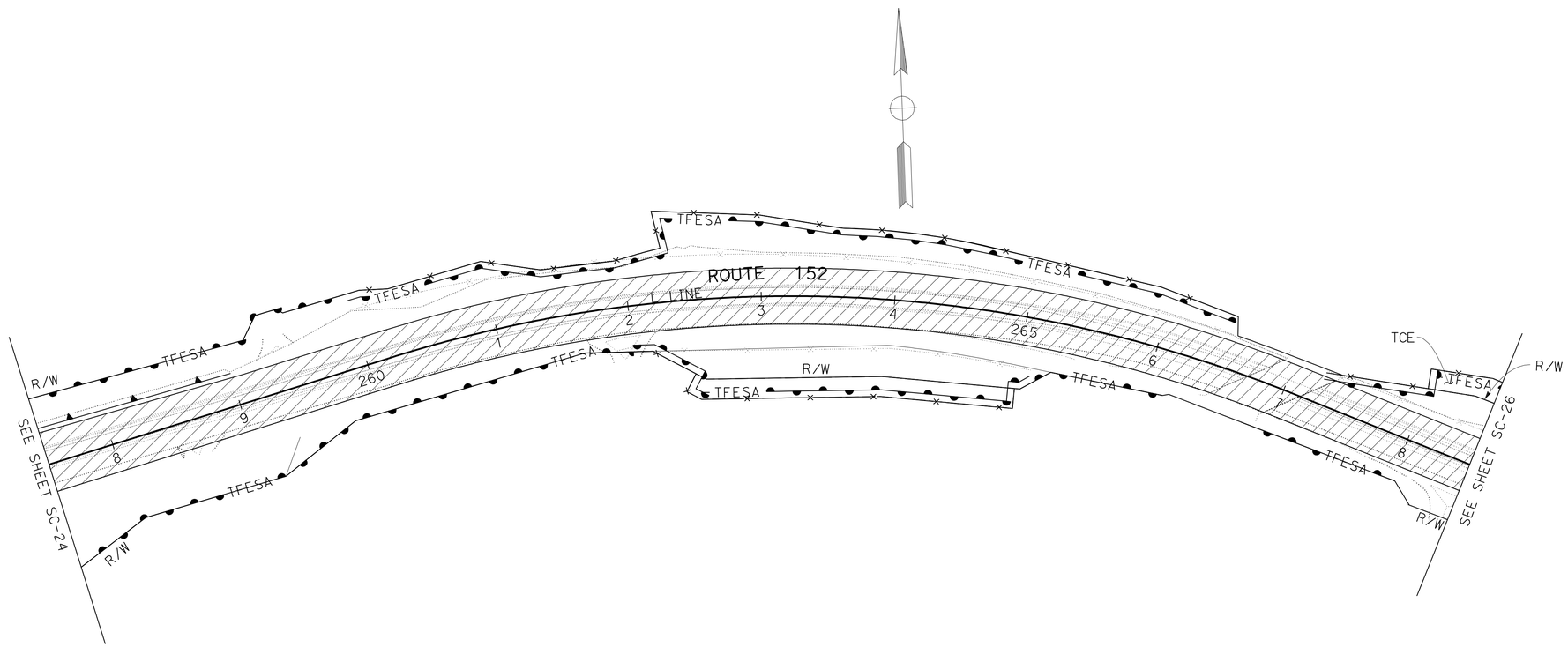

STAGE CONSTRUCTION AND TRAFFIC HANDLING PLAN

STAGE 4

SCALE: 1" = 50'

APPROVED FOR STAGE CONSTRUCTION AND TRAFFIC HANDLING WORK ONLY

FOR NOTES, ABBREVIATIONS AND LEGEND, SEE SHEET SC-1&19

SC-25

AHMED RAHID	REVISED BY: AR
CALVIN TRAN	DATE REVISED: 02-07-12
CALCULATED-DESIGNED BY	
CHECKED BY	
FUNCTIONAL SUPERVISOR: MORTEZA AZIMI	

STATE OF CALIFORNIA - DEPARTMENT OF TRANSPORTATION
Caltrans
DESIGN

LAST REVISION 02-07-12 | DATE PLOTTED => 22-MAY-2012 | TIME PLOTTED => 17:19

Dist	COUNTY	ROUTE	POST MILES TOTAL PROJECT	SHEET No.	TOTAL SHEETS
04	SCI	152	16.2/R16.5, R18.5/R19.5	92	195

REGISTERED CIVIL ENGINEER 2/7/12 DATE

5-21-12
PLANS APPROVAL DATE

REGISTERED PROFESSIONAL ENGINEER Ahmed T. Rahid No. 76800 Exp. 12-31-12 CIVIL STATE OF CALIFORNIA

THE STATE OF CALIFORNIA OR ITS OFFICERS OR AGENTS SHALL NOT BE RESPONSIBLE FOR THE ACCURACY OR COMPLETENESS OF SCANNED COPIES OF THIS PLAN SHEET.

NOTE:

FOR ACCURATE RIGHT OF WAY DATA, CONTACT RIGHT OF WAY ENGINEERING AT THE DISTRICT OFFICE.

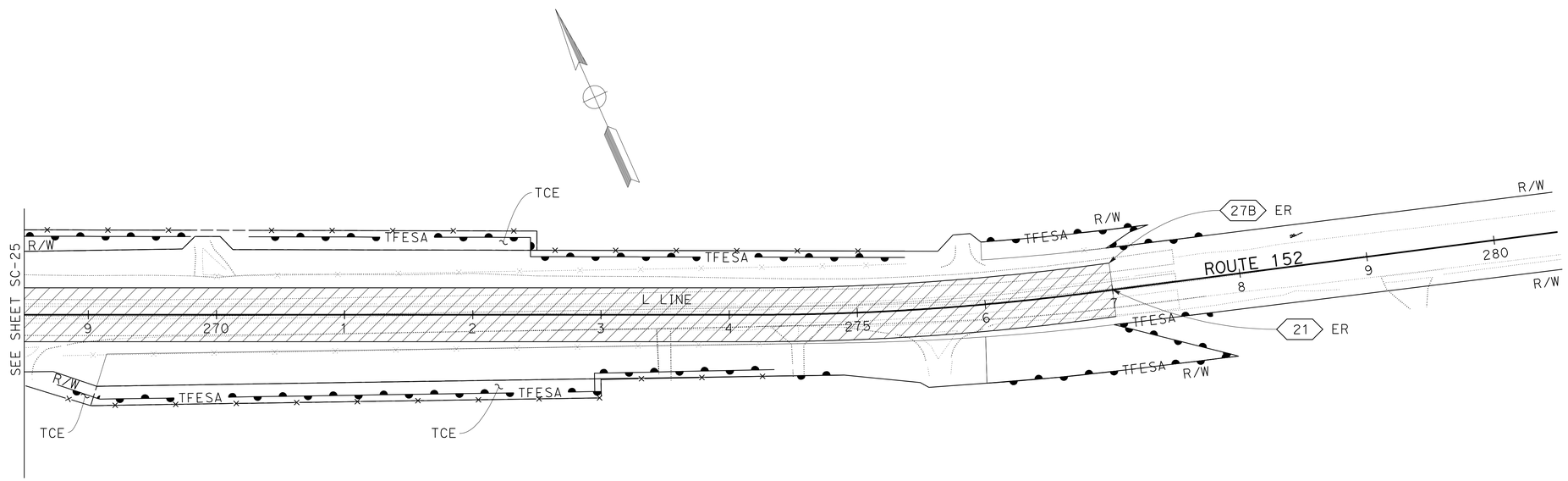

STAGE CONSTRUCTION AND TRAFFIC HANDLING PLAN

STAGE 4

SCALE: 1" = 50'

APPROVED FOR STAGE CONSTRUCTION AND TRAFFIC HANDLING WORK ONLY

FOR NOTES, ABBREVIATIONS AND LEGEND, SEE SHEET SC-1&19

SC-26

STATE OF CALIFORNIA - DEPARTMENT OF TRANSPORTATION
Caltrans DESIGN

FUNCTIONAL SUPERVISOR: MORTEZA AZIMI
CALCULATED-DESIGNED BY: AHMED RAHID
CHECKED BY: CALVIN TRAN
REVISED BY: AR
DATE REVISED: 02-07-12

LAST REVISION 02-07-12 | DATE PLOTTED => 22-MAY-2012 | TIME PLOTTED => 17:19

Dist	COUNTY	ROUTE	POST MILES TOTAL PROJECT	SHEET No.	TOTAL SHEETS
04	SCI	152	16.2/R16.5, R18.5/R19.5	93	195

REGISTERED CIVIL ENGINEER DATE 2/7/12

5-21-12
PLANS APPROVAL DATE

REGISTERED PROFESSIONAL ENGINEER Ahmed T. Rahid No. 76800 Exp. 12-31-12 CIVIL STATE OF CALIFORNIA

THE STATE OF CALIFORNIA OR ITS OFFICERS OR AGENTS SHALL NOT BE RESPONSIBLE FOR THE ACCURACY OR COMPLETENESS OF SCANNED COPIES OF THIS PLAN SHEET.

STAGE CONSTRUCTION AND TRAFFIC HANDLING QUANTITIES

SHEET No.	STATION	STAGE	TEMPORARY RAILING (TYPE K)	TEMPORARY CRASH CUSHION MODULE ARRAY "TS14"	REMOVE YELLOW THERMOPLASTIC TRAFFIC STRIPE (HAZARDOUS WASTE)	REMOVE PAINTED TRAFFIC STRIPE		REMOVE PAVEMENT MARKER	TEMPORARY TRAFFIC STRIPE (PAINT)		TEMPORARY FENCE (WILDLIFE EXCLUSION)
					DETAIL 22	DETAIL 27B	DETAIL 21		DETAIL 27B	DETAIL 21	
			LF	EA	LF	LF		EA	LF		
SC-1	L 220+00 To 222+00	1	200	28	400	400		19	200	400	750
SC-2	L 222+00 To 235+50	1	1350	42	2700	2700		115	1350	2700	2700
SC-3	L 235+50 To 245+50	1	1000		2000	2000		86	1000	2000	2000
SC-4	L 245+50 To 257+50	1	1200		2400	2400		102	1200	2400	2400
SC-5	L 257+50 To 268+50	1	1100	28	2200	2200		94	1100	2200	2200
SC-6	L 268+50 To 277+50	1	900	70	1800	1800		77	900	1800	1800
SC-7	L 220+00 To 222+00	2	400	14			400		200		
SC-8	L 222+00 To 235+50	2	2700	42			2700		1350		
SC-9	L 235+50 To 245+50	2	2000				2000		1000		
SC-10	L 245+50 To 257+50	2	2400	28			2400		1200		
SC-11	L 257+50 To 268+50	2	2200	42			2200		1100		
SC-12	L 268+50 To 277+50	2	1800	56			1800		900		
SC-13	L 220+00 To 222+00	3	200	14		200				400	
SC-14	L 222+00 To 235+50	3	1350	28		1350				2700	
SC-15	L 235+50 To 245+50	3	1000			1000				2000	
SC-16	L 245+50 To 257+50	3	1200	28		1200				2400	
SC-17	L 257+50 To 268+50	3	1100	14		1100				2200	
SC-18	L 268+50 To 277+50	3	900	56		900				1800	
SC-19	L 101+50 To 113+95	4			2490	2490		106			1790
SC-20	L 113+95 To 117+50	4			710	710		32			810
SC-21	L 220+00 To 222+00	4				200	400				
SC-22	L 222+00 To 235+50	4				1350	2700				
SC-23	L 235+50 To 245+50	4				1000	2000				
SC-24	L 245+50 To 257+50	4				1200	2400				
SC-25	L 257+50 To 268+50	4				1100	2200				
SC-26	L 268+50 To 277+50	4				900	1800				
SUBTOTAL			23000	490	14700	26200	23000	631	11500	23000	14450
TOTAL			23000	490	14700	49200		631	34500		14450

STATE OF CALIFORNIA - DEPARTMENT OF TRANSPORTATION
Caltrans® DESIGN

FUNCTIONAL SUPERVISOR: MORTEZA AZIMI
CALCULATED-DESIGNED BY: AHMED RAHID
CHECKED BY: CALVIN TRAN
REVISED BY: AR
DATE REVISED: 2/7/12

STAGE CONSTRUCTION QUANTITIES

SCQ-1

LAST REVISION 02-07-12 | DATE PLOTTED => 22-MAY-2012 | TIME PLOTTED => 17:19

Dist	COUNTY	ROUTE	POST MILES TOTAL PROJECT	SHEET No.	TOTAL SHEETS
04	SCI	152	16.2/R16.5, R18.5/R19.5	94	195

REGISTERED CIVIL ENGINEER DATE 2/7/12

5-21-12
PLANS APPROVAL DATE

REGISTERED PROFESSIONAL ENGINEER Ahmed T. Rahid No. 76800 Exp. 12-31-12 CIVIL STATE OF CALIFORNIA

THE STATE OF CALIFORNIA OR ITS OFFICERS OR AGENTS SHALL NOT BE RESPONSIBLE FOR THE ACCURACY OR COMPLETENESS OF SCANNED COPIES OF THIS PLAN SHEET.

NOTES:

1. FOR ACCURATE RIGHT OF WAY DATA, CONTACT RIGHT OF WAY ENGINEERING AT THE DISTRICT OFFICE.
2. ALL LANES ARE 12′ WIDE UNLESS NOTED.
3. EDGELINE OFFSET 2′ FROM CURB FACE UNLESS NOTED.
4. THE EXACT LIMIT OF TRAFFIC STRIPE WILL BE DETERMINED BY THE ENGINEER.

LEGEND:

(No.) PAVEMENT DELINEATION DETAIL NUMBER

CHANGE OF PAVEMENT DELINEATION DETAILS

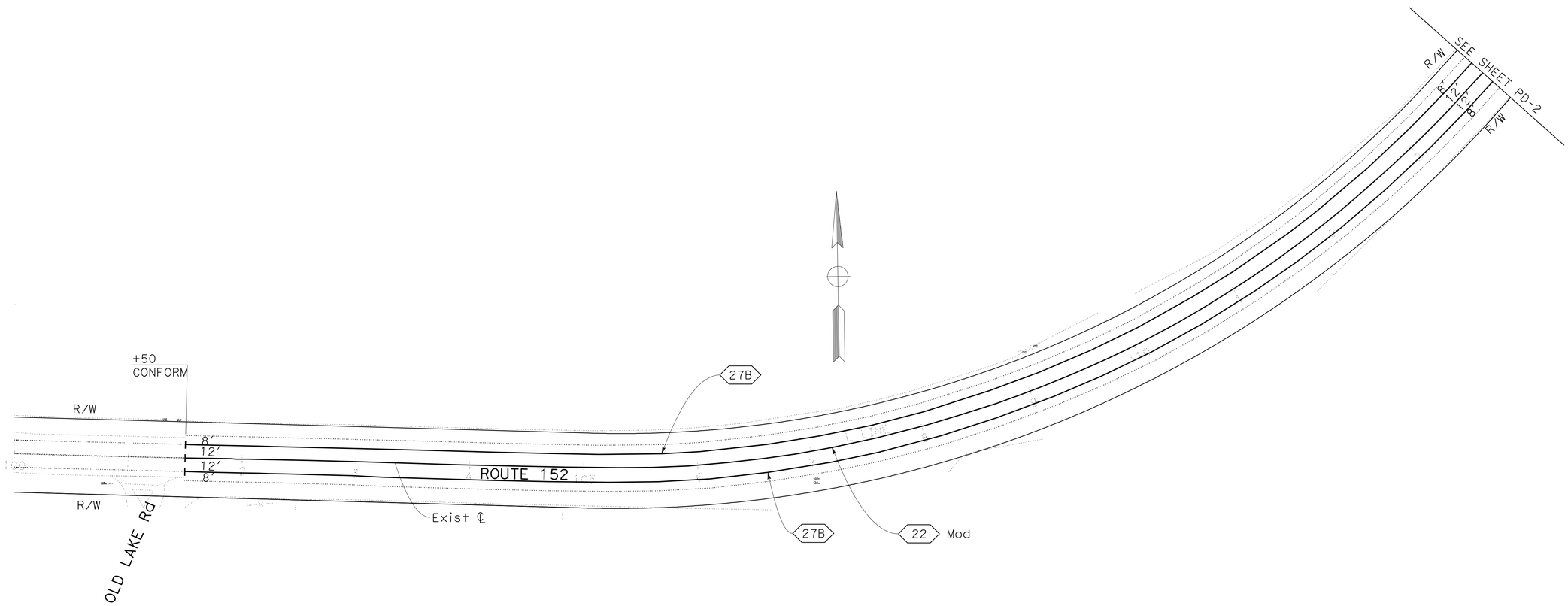

PAVEMENT DELINEATION PLAN

SCALE: 1" = 50′

APPROVED FOR PAVEMENT DELINEATION WORK ONLY

PD-1

REVISED BY	DATE REVISED
AR	2/7/12

CALCULATED-DESIGNED BY: AHMED RAHID
CHECKED BY: CALVIN TRAN
FUNCTIONAL SUPERVISOR: MORTEZA AZIMI

STATE OF CALIFORNIA - DEPARTMENT OF TRANSPORTATION
Caltrans
DESIGN

LAST REVISION 02-07-12 | DATE PLOTTED => 22-MAY-2012 | TIME PLOTTED => 17:20

Dist	COUNTY	ROUTE	POST MILES TOTAL PROJECT	SHEET No.	TOTAL SHEETS
04	SCI	152	16.2/R16.5, R18.5/R19.5	95	195

REGISTERED CIVIL ENGINEER 2/7/12 DATE

5-21-12
PLANS APPROVAL DATE

REGISTERED PROFESSIONAL ENGINEER Ahmed T. Rahid No. 76800 Exp. 12-31-12 CIVIL STATE OF CALIFORNIA

THE STATE OF CALIFORNIA OR ITS OFFICERS OR AGENTS SHALL NOT BE RESPONSIBLE FOR THE ACCURACY OR COMPLETENESS OF SCANNED COPIES OF THIS PLAN SHEET.

NOTE:

FOR ACCURATE RIGHT OF WAY DATA, CONTACT RIGHT OF WAY ENGINEERING AT THE DISTRICT OFFICE.

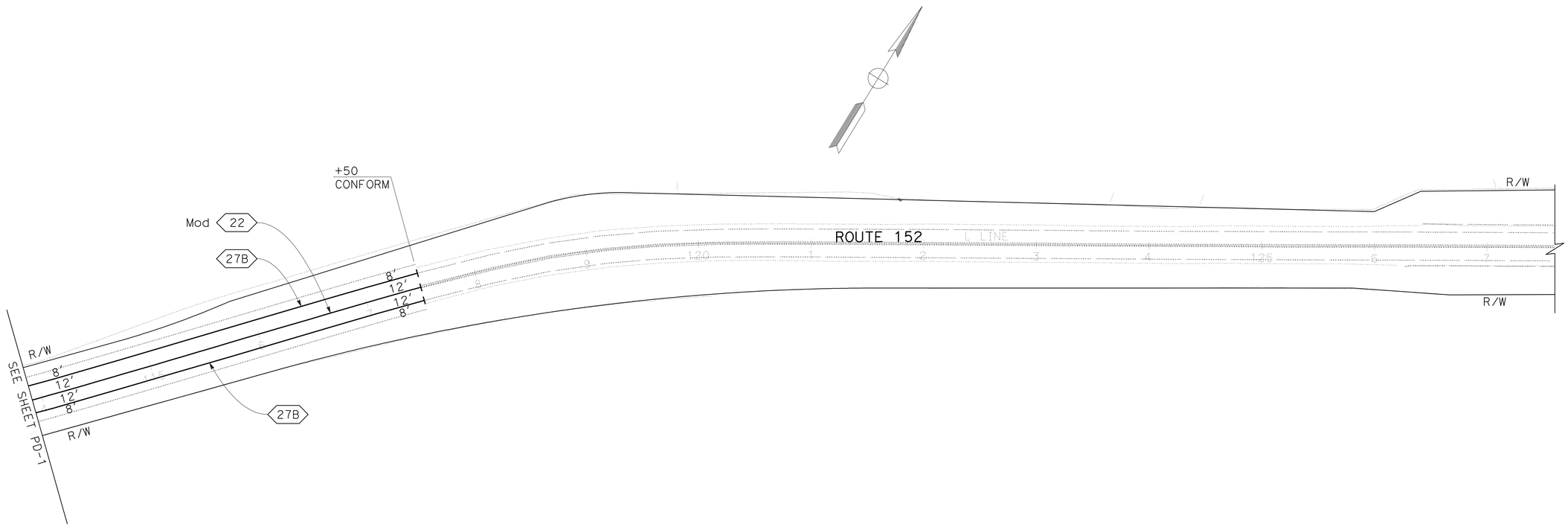

PAVEMENT DELINEATION PLAN

SCALE: 1" = 50'

APPROVED FOR PAVEMENT DELINEATION WORK ONLY

FOR NOTES, ABBREVIATIONS AND LEGEND, SEE SHEET PD-1

PD-2

REVISED BY	AR
DATE REVISED	2/7/12
CALCULATED-DESIGNED BY	AHMED RAHID
CHECKED BY	CALVIN TRAN
FUNCTIONAL SUPERVISOR	MORTEZA AZIMI

STATE OF CALIFORNIA - DEPARTMENT OF TRANSPORTATION

Caltrans® **DESIGN**

LAST REVISION DATE PLOTTED => 22-MAY-2012
02-07-12 TIME PLOTTED => 17:20

Dist	COUNTY	ROUTE	POST MILES TOTAL PROJECT	SHEET No.	TOTAL SHEETS
04	SCI	152	16.2/R16.5, R18.5/R19.5	96	195

REGISTERED CIVIL ENGINEER 2/7/12 DATE

5-21-12
PLANS APPROVAL DATE

REGISTERED PROFESSIONAL ENGINEER
Ahmed T. Rahid
No. 76800
Exp. 12-31-12
CIVIL
STATE OF CALIFORNIA

THE STATE OF CALIFORNIA OR ITS OFFICERS OR AGENTS SHALL NOT BE RESPONSIBLE FOR THE ACCURACY OR COMPLETENESS OF SCANNED COPIES OF THIS PLAN SHEET.

NOTE:

FOR ACCURATE RIGHT OF WAY DATA, CONTACT RIGHT OF WAY ENGINEERING AT THE DISTRICT OFFICE.

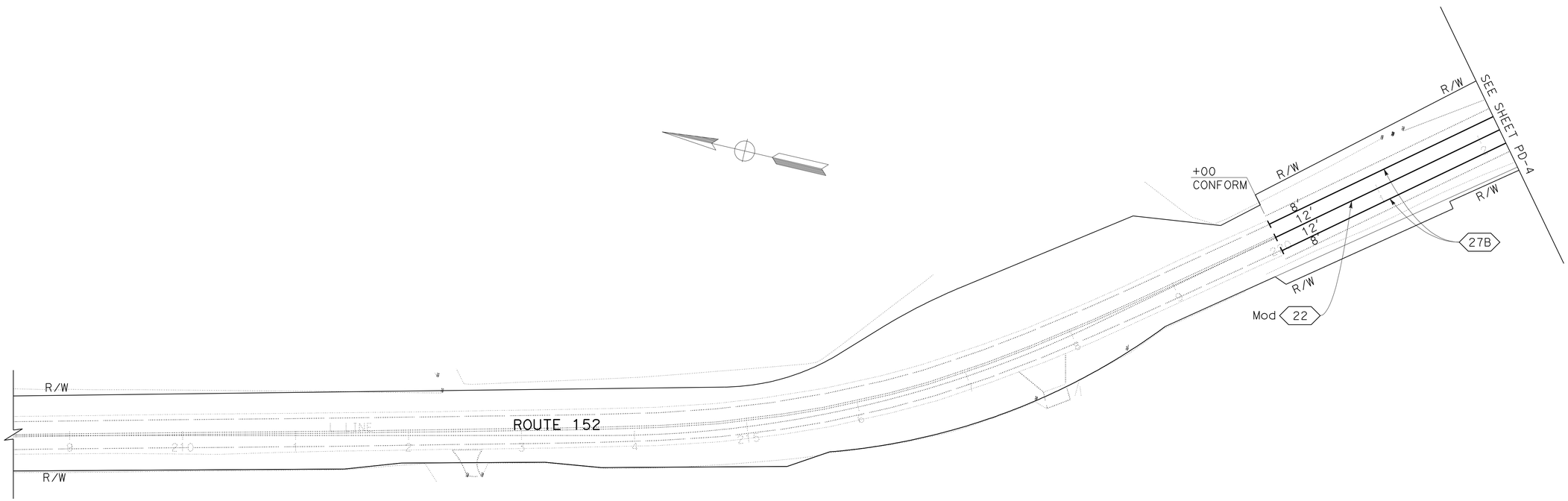

PAVEMENT DELINEATION PLAN

SCALE: 1" = 50'

APPROVED FOR PAVEMENT DELINEATION WORK ONLY

FOR NOTES, ABBREVIATIONS AND LEGEND, SEE SHEET PD-1

PD-3

REVISED BY	AR
DATE REVISED	2/7/12
CALCULATED-DESIGNED BY	AHMED RAHID
CHECKED BY	CALVIN TRAN
FUNCTIONAL SUPERVISOR	MORTEZA AZIMI

STATE OF CALIFORNIA - DEPARTMENT OF TRANSPORTATION
Caltrans
DESIGN

LAST REVISION 02-07-12 | DATE PLOTTED => 22-MAY-2012 | TIME PLOTTED => 17:20

Dist	COUNTY	ROUTE	POST MILES TOTAL PROJECT	SHEET No.	TOTAL SHEETS
04	SCI	152	16.2/R16.5, R18.5/R19.5	97	195

REGISTERED CIVIL ENGINEER DATE 2/7/12

5-21-12
PLANS APPROVAL DATE

REGISTERED PROFESSIONAL ENGINEER
Ahmed T. Rahid
No. 76800
Exp. 12-31-12
CIVIL
STATE OF CALIFORNIA

THE STATE OF CALIFORNIA OR ITS OFFICERS OR AGENTS SHALL NOT BE RESPONSIBLE FOR THE ACCURACY OR COMPLETENESS OF SCANNED COPIES OF THIS PLAN SHEET.

NOTE:

FOR ACCURATE RIGHT OF WAY DATA, CONTACT RIGHT OF WAY ENGINEERING AT THE DISTRICT OFFICE.

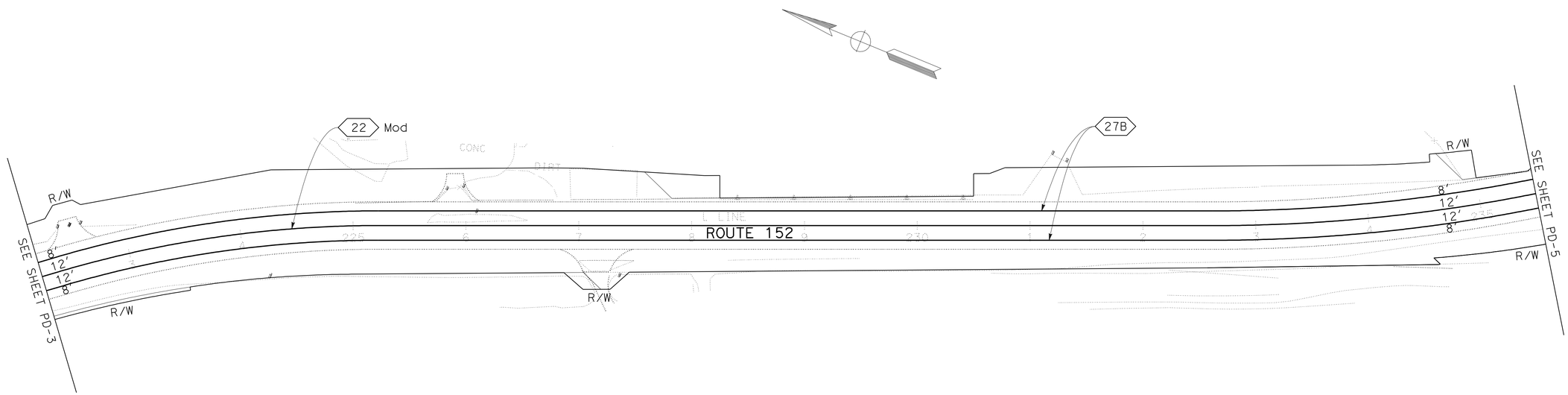

PAVEMENT DELINEATION PLAN

SCALE: 1" = 50'

APPROVED FOR PAVEMENT DELINEATION WORK ONLY

FOR NOTES, ABBREVIATIONS AND LEGEND, SEE SHEET PD-1

PD-4

REVISED BY	AR
DATE REVISED	2/7/12
CALCULATED-DESIGNED BY	AHMED RAHID
CHECKED BY	CALVIN TRAN
FUNCTIONAL SUPERVISOR	MORTEZA AZIMI

STATE OF CALIFORNIA - DEPARTMENT OF TRANSPORTATION
Caltrans
DESIGN

LAST REVISION DATE PLOTTED => 22-MAY-2012
02-07-12 TIME PLOTTED => 17:20

Dist	COUNTY	ROUTE	POST MILES TOTAL PROJECT	SHEET No.	TOTAL SHEETS
04	SCI	152	16.2/R16.5, R18.5/R19.5	98	195

REGISTERED CIVIL ENGINEER 2/7/12 DATE

5-21-12
PLANS APPROVAL DATE

REGISTERED PROFESSIONAL ENGINEER
Ahmed T. Rahid
No. 76800
Exp. 12-31-12
CIVIL
STATE OF CALIFORNIA

THE STATE OF CALIFORNIA OR ITS OFFICERS OR AGENTS SHALL NOT BE RESPONSIBLE FOR THE ACCURACY OR COMPLETENESS OF SCANNED COPIES OF THIS PLAN SHEET.

NOTE:

FOR ACCURATE RIGHT OF WAY DATA, CONTACT RIGHT OF WAY ENGINEERING AT THE DISTRICT OFFICE.

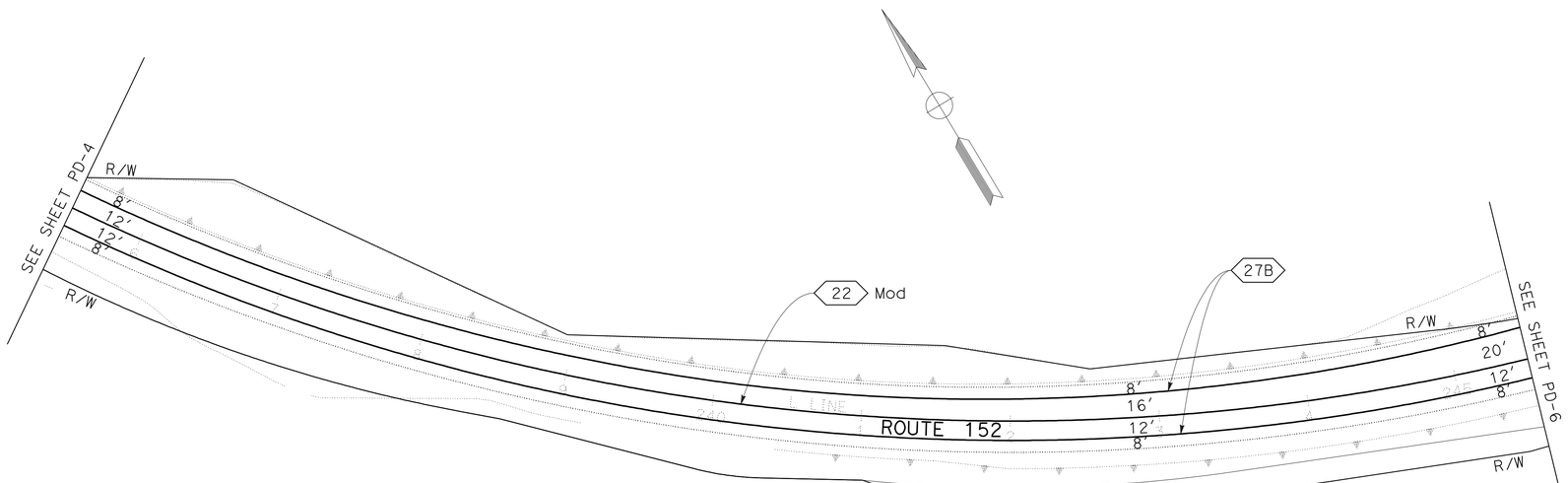

PAVEMENT DELINEATION PLAN

SCALE: 1" = 50'

APPROVED FOR PAVEMENT DELINEATION WORK ONLY

FOR NOTES, ABBREVIATIONS AND LEGEND, SEE SHEET PD-1

PD-5

STATE OF CALIFORNIA - DEPARTMENT OF TRANSPORTATION
Caltrans
DESIGN

FUNCTIONAL SUPERVISOR: MORTEZA AZIMI
CALCULATED-DESIGNED BY: AHMED RAHID
CHECKED BY: CALVIN TRAN
REVISED BY: AR
DATE REVISED: 2/7/12

LAST REVISION DATE PLOTTED => 22-MAY-2012
TIME PLOTTED => 17:20
02-07-12

BORDER LAST REVISED 7/2/2010
USERNAME => s128843
DGN FILE => 0400000823na005.dgn
RELATIVE BORDER SCALE IS IN INCHES 0 1 2 3
UNIT 0706
PROJECT NUMBER & PHASE 04000008231

Dist	COUNTY	ROUTE	POST MILES TOTAL PROJECT	SHEET No.	TOTAL SHEETS
04	SCI	152	16.2/R16.5, R18.5/R19.5	99	195

REGISTERED CIVIL ENGINEER DATE 2/7/12

5-21-12
PLANS APPROVAL DATE

REGISTERED PROFESSIONAL ENGINEER
Ahmed T. Rahid
No. 76800
Exp. 12-31-12
CIVIL
STATE OF CALIFORNIA

THE STATE OF CALIFORNIA OR ITS OFFICERS OR AGENTS SHALL NOT BE RESPONSIBLE FOR THE ACCURACY OR COMPLETENESS OF SCANNED COPIES OF THIS PLAN SHEET.

NOTE:

FOR ACCURATE RIGHT OF WAY DATA, CONTACT RIGHT OF WAY ENGINEERING AT THE DISTRICT OFFICE.

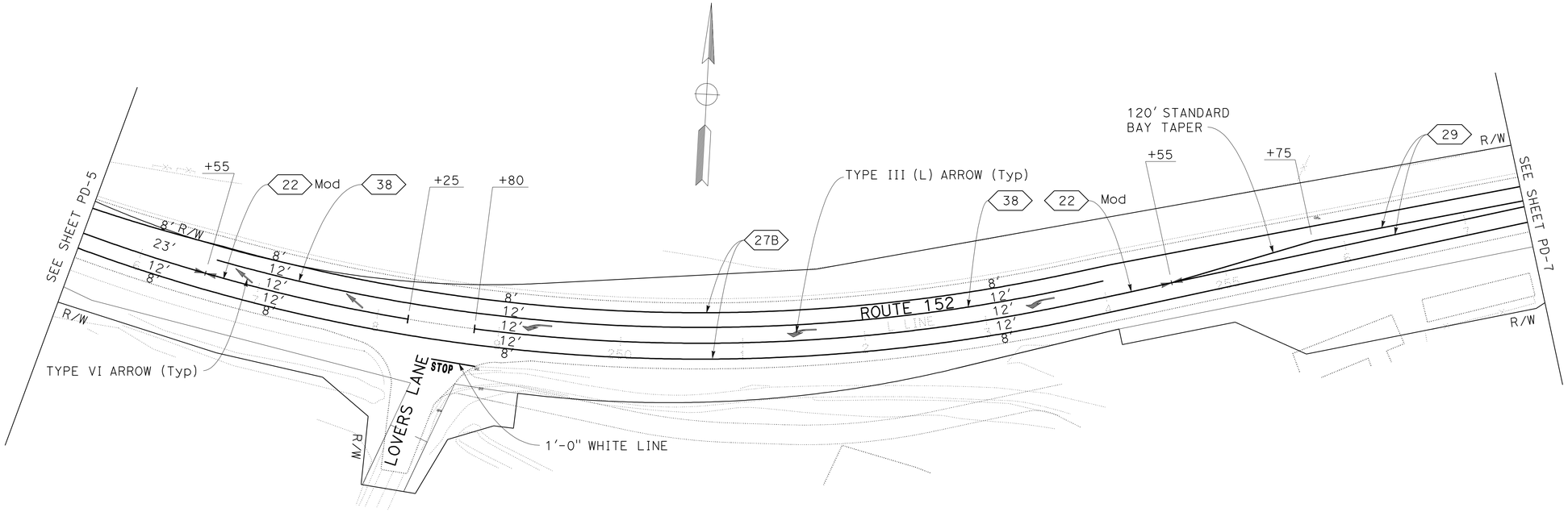

PAVEMENT DELINEATION PLAN

SCALE: 1" = 50'

APPROVED FOR PAVEMENT DELINEATION WORK ONLY

FOR NOTES, ABBREVIATIONS AND LEGEND, SEE SHEET PD-1

PD-6

REVISED BY	AR
DATE REVISED	2/7/12
CALCULATED-DESIGNED BY	AHMED RAHID
CHECKED BY	CALVIN TRAN
FUNCTIONAL SUPERVISOR	MORTEZA AZIMI

STATE OF CALIFORNIA - DEPARTMENT OF TRANSPORTATION
Caltrans
DESIGN

LAST REVISION 02-07-12 | DATE PLOTTED => 22-MAY-2012 | TIME PLOTTED => 17:20

Dist	COUNTY	ROUTE	POST MILES TOTAL PROJECT	SHEET No.	TOTAL SHEETS
04	SCI	152	16.2/R16.5, R18.5/R19.5	100	195

REGISTERED CIVIL ENGINEER 2/7/12 DATE

5-21-12
PLANS APPROVAL DATE

REGISTERED PROFESSIONAL ENGINEER
Ahmed T. Rahid
No. 76800
Exp. 12-31-12
CIVIL
STATE OF CALIFORNIA

THE STATE OF CALIFORNIA OR ITS OFFICERS OR AGENTS SHALL NOT BE RESPONSIBLE FOR THE ACCURACY OR COMPLETENESS OF SCANNED COPIES OF THIS PLAN SHEET.

NOTE:

FOR ACCURATE RIGHT OF WAY DATA, CONTACT RIGHT OF WAY ENGINEERING AT THE DISTRICT OFFICE.

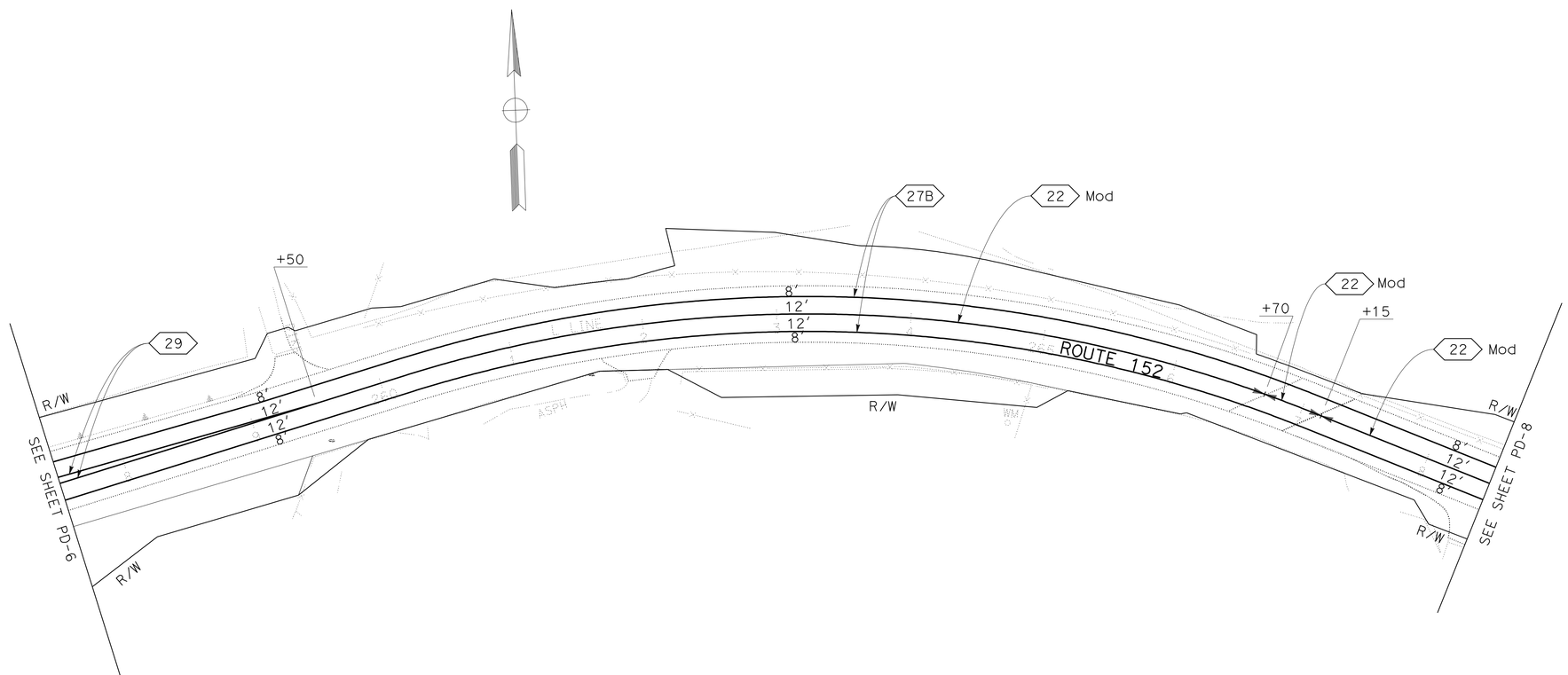

PAVEMENT DELINEATION PLAN

SCALE: 1" = 50'

APPROVED FOR PAVEMENT DELINEATION WORK ONLY

FOR NOTES, ABBREVIATIONS AND LEGEND, SEE SHEET PD-1

PD-7

REVISED BY	DATE REVISED
AR	2/7/12

AHMED RAHID — CALCULATED-DESIGNED BY
CALVIN TRAN — CHECKED BY
MORTEZA AZIMI — FUNCTIONAL SUPERVISOR

STATE OF CALIFORNIA - DEPARTMENT OF TRANSPORTATION
Caltrans®
DESIGN

LAST REVISION 02-07-12
DATE PLOTTED => 22-MAY-2012
TIME PLOTTED => 17:20