Dist	COUNTY	ROUTE	POST MILES TOTAL PROJECT	SHEET No.	TOTAL SHEETS
04	SF	80,101	L3.8/5.0, 4.1/5.0	1	136

STATE OF CALIFORNIA ACNH-ACBHNH-Q101(173)E

DEPARTMENT OF TRANSPORTATION

PROJECT PLANS FOR CONSTRUCTION ON

STATE HIGHWAY

IN THE CITY AND COUNTY OF SAN FRANCISCO ON ROUTE 80 FROM ROUTE 80/101 CONNECTORS TO 4th STREET AND ON ROUTE 101 FROM 17th TO SOUTH VAN NESS AVENUE

TO BE SUPPLEMENTED BY STANDARD PLANS DATED MAY 2006

INDEX OF PLANS

SHEET No.	DESCRIPTION
1	TITLE AND LOCATION MAP
2-10	LAYOUTS
11-30	DRAINAGE PLANS, PROFILES, DETAILS AND QUANTITIES
31-37	UTILITY PLANS, DETAILS AND QUANTITIES
38-50	CONSTRUCTION AREA SIGNS
51-61	STAGE CONSTRUCTION, DETAILS AND QUANTITIES
62-72	TRAFFIC HANDLING PLANS, DETAILS AND QUANTITIES
73-83	PAVEMENT DELINEATION PLANS, DETAILS AND QUANTITIES
84-85	SIGN PLAN, DETAILS AND QUANTITIES
86	SUMMARY OF QUANTITIES
87-89	ELECTRICAL PLANS
90-105	REVISED AND NEW STANDARD PLANS
STRUCTURE PLANS	
106-136	BAYSHORE AND CENTRAL VIADUCTS Br No. 34-0077 AND Br No.34-0088

THE STANDARD PLANS LIST APPLICABLE TO THIS CONTRACT IS INCLUDED IN THE NOTICE TO BIDDERS AND SPECIAL PROVISIONS BOOK.

LOCATION MAP

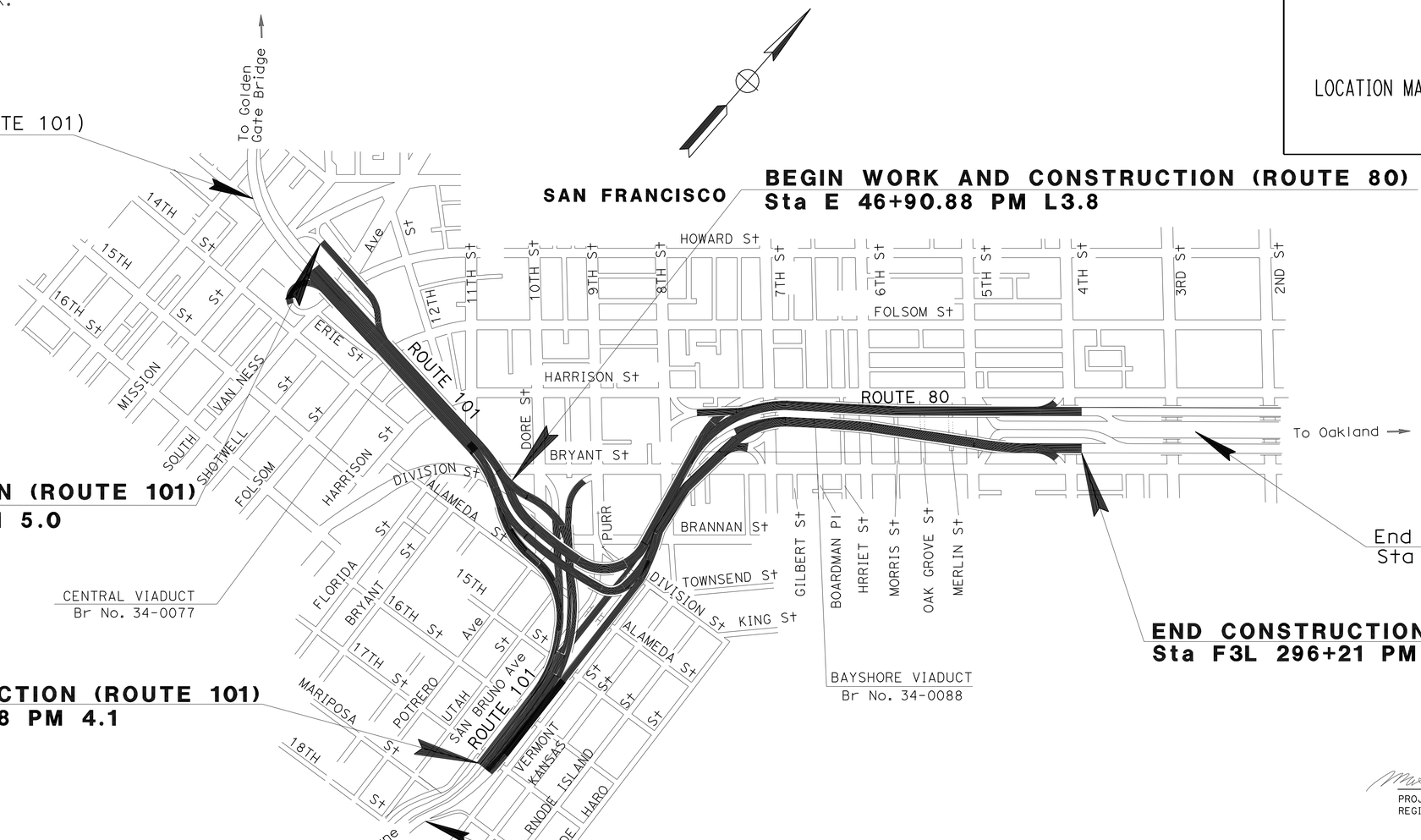

NO SCALE

THE CONTRACTOR SHALL POSSESS THE CLASS (OR CLASSES) OF LICENSE AS SPECIFIED IN THE "NOTICE TO BIDDERS."

PROJECT MANAGER: SOMCHAI CHONGCHAIKIT

DESIGN ENGINEER: MAXIM HOVHANESSIAN

8-19-09
PROJECT ENGINEER DATE
REGISTERED CIVIL ENGINEER

January 11, 2010
PLANS APPROVAL DATE

REGISTERED PROFESSIONAL ENGINEER M. Hovhanessian No. 42284 Exp. 3-31-10 CIVIL STATE OF CALIFORNIA

THE STATE OF CALIFORNIA OR ITS OFFICERS OR AGENTS SHALL NOT BE RESPONSIBLE FOR THE ACCURACY OR COMPLETENESS OF SCANNED COPIES OF THIS PLAN SHEET.

CONTRACT No. **04-2A1404**

LAST REVISION 06-30-09 DATE PLOTTED => 20-APR-2010 TIME PLOTTED => 13:26

Dist	COUNTY	ROUTE	POST MILES TOTAL PROJECT	SHEET No.	TOTAL SHEETS
04	SF	80,101	L3.8/5.0, 4.1/5.0	2	136

REGISTERED CIVIL ENGINEER 8-19-09 DATE

1-11-10
PLANS APPROVAL DATE

REGISTERED PROFESSIONAL ENGINEER M. Hovhanessian No. 42284 Exp. 3-31-10 CIVIL STATE OF CALIFORNIA

THE STATE OF CALIFORNIA OR ITS OFFICERS OR AGENTS SHALL NOT BE RESPONSIBLE FOR THE ACCURACY OR COMPLETENESS OF SCANNED COPIES OF THIS PLAN SHEET.

FOR ACCURATE RIGHT OF WAY AND ACCESS DATA, CONTACT RIGHT OF WAY ENGINEERING AT THE DISTRICT OFFICE.

NOTE:

COORDINATE VALUES SHOWN ARE CCS83 ZONE 1.

ABBREVIATION:

FLA - FREEWAY LEASE AREA

LEGEND:

(No.) CURVE DATA

-·-·-·- BENT No. LINE

S A N F R A N C I S C O

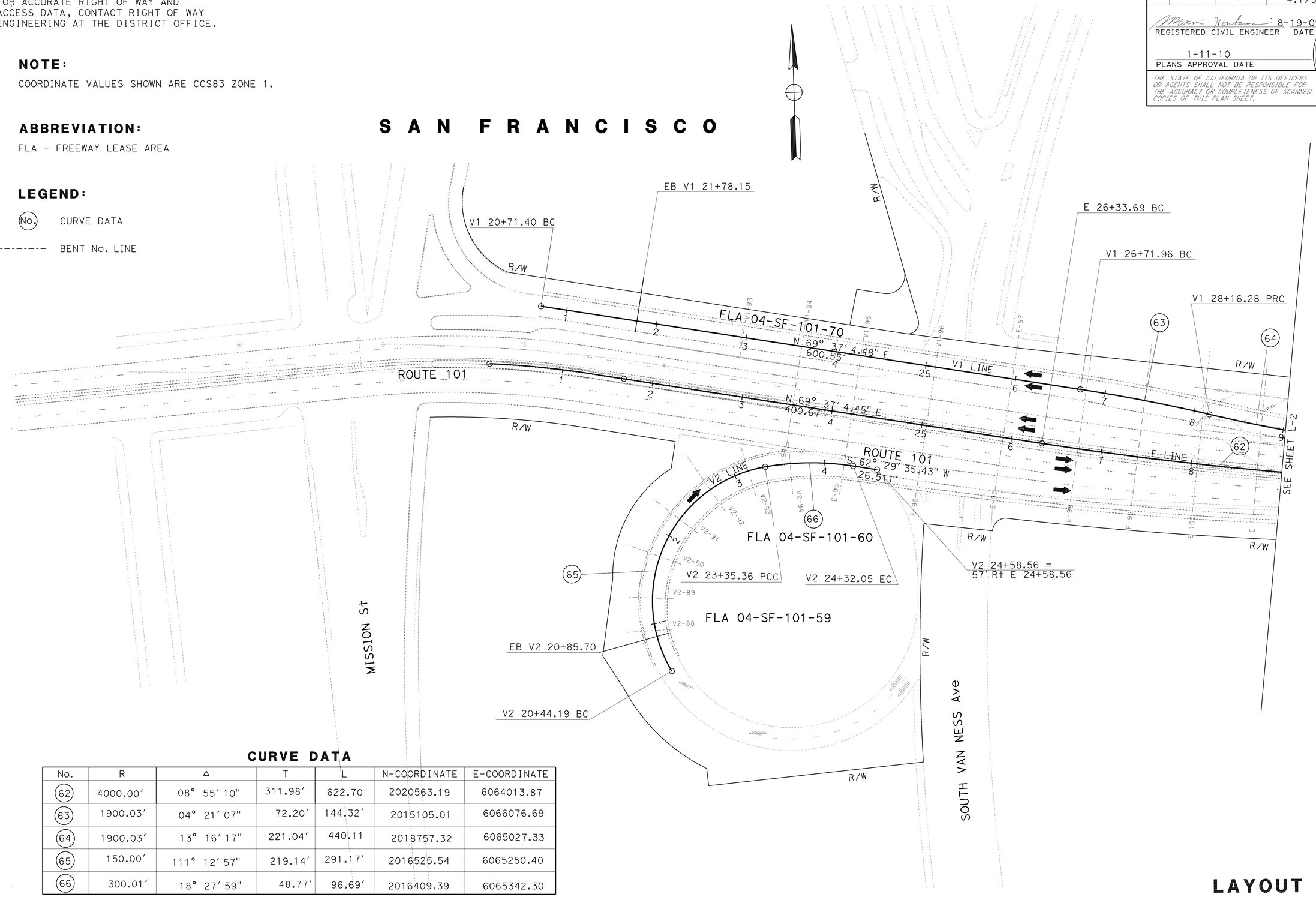

CURVE DATA

No.	R	Δ	T	L	N-COORDINATE	E-COORDINATE
62	4000.00'	08° 55' 10"	311.98'	622.70	2020563.19	6064013.87
63	1900.03'	04° 21' 07"	72.20'	144.32'	2015105.01	6066076.69
64	1900.03'	13° 16' 17"	221.04'	440.11	2018757.32	6065027.33
65	150.00'	111° 12' 57"	219.14'	291.17'	2016525.54	6065250.40
66	300.01'	18° 27' 59"	48.77'	96.69'	2016409.39	6065342.30

LAYOUT

SCALE: 1" = 50'

L-1

STATE OF CALIFORNIA - DEPARTMENT OF TRANSPORTATION
Caltrans
DESIGN

FUNCTIONAL SUPERVISOR: ABOLFAZL EMADZADEH

CALCULATED-DESIGNED BY: MAXIM HOVHANESSIAN
CHECKED BY: MAXIM HOVHANESSIAN

REVISED BY: MH
DATE REVISED: 8/19/09

LAST REVISION: 05-12-09
DATE PLOTTED => 14-JAN-2010
TIME PLOTTED => 12:59

Dist	COUNTY	ROUTE	POST MILES TOTAL PROJECT	SHEET No.	TOTAL SHEETS
04	SF	80,101	L3.8/5.0, 4.1/5.0	3	136

REGISTERED CIVIL ENGINEER 8-19-09 DATE

1-11-10
PLANS APPROVAL DATE

REGISTERED PROFESSIONAL ENGINEER M. Hovhanessian No. 42284 Exp. 3-31-10 CIVIL STATE OF CALIFORNIA

THE STATE OF CALIFORNIA OR ITS OFFICERS OR AGENTS SHALL NOT BE RESPONSIBLE FOR THE ACCURACY OR COMPLETENESS OF SCANNED COPIES OF THIS PLAN SHEET.

FOR ACCURATE RIGHT OF WAY AND ACCESS DATA, CONTACT RIGHT OF WAY ENGINEERING AT THE DISTRICT OFFICE.

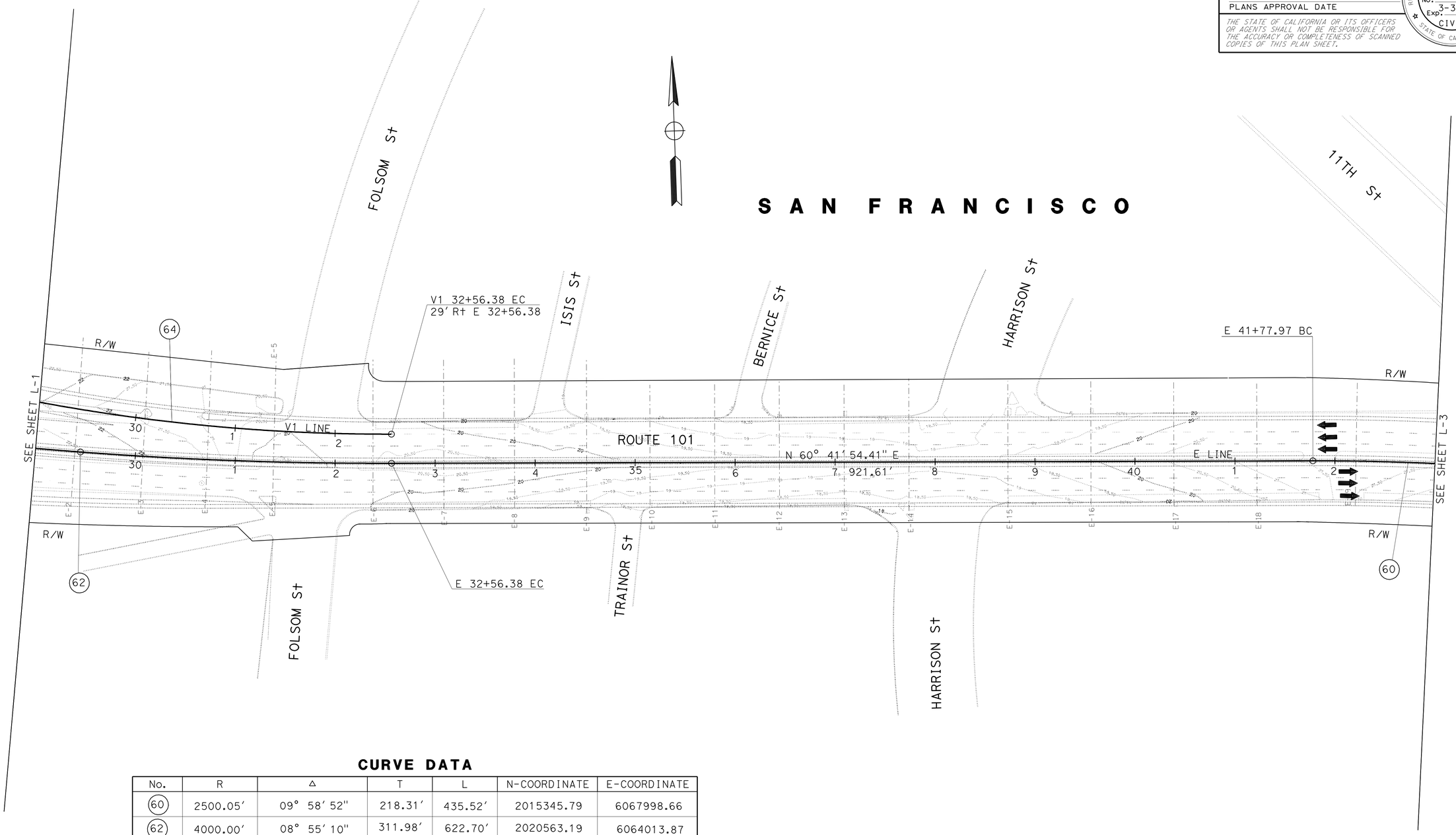

CURVE DATA

No.	R	Δ	T	L	N-COORDINATE	E-COORDINATE
60	2500.05'	09° 58' 52"	218.31'	435.52'	2015345.79	6067998.66
62	4000.00'	08° 55' 10"	311.98'	622.70'	2020563.19	6064013.87
64	1900.03'	13° 16' 17"	221.04'	440.11'	2018757.32	6065027.33

FOR NOTES, ABBREVIATIONS AND LEGEND, SEE SHEET L-1

LAYOUT
SCALE: 1" = 50'

L-2

STATE OF CALIFORNIA - DEPARTMENT OF TRANSPORTATION
Caltrans
DESIGN

FUNCTIONAL SUPERVISOR: ABOLFAZL EMADZADEH

CALCULATED-DESIGNED BY: MAXIM HOVHANESSIAN
CHECKED BY: MAXIM HOVHANESSIAN

REVISED BY: MH
DATE REVISED: 8/19/09

LAST REVISION: 08-26-09
DATE PLOTTED => 14-JAN-2010
TIME PLOTTED => 12:59

Dist	COUNTY	ROUTE	POST MILES TOTAL PROJECT	SHEET No.	TOTAL SHEETS
04	SF	80,101	L3.8/5.0, 4.1/5.0	4	136

REGISTERED CIVIL ENGINEER 8-19-09 DATE

1-11-10
PLANS APPROVAL DATE

REGISTERED PROFESSIONAL ENGINEER M. Hovhanessian No. 42284 Exp. 3-31-10 CIVIL STATE OF CALIFORNIA

THE STATE OF CALIFORNIA OR ITS OFFICERS OR AGENTS SHALL NOT BE RESPONSIBLE FOR THE ACCURACY OR COMPLETENESS OF SCANNED COPIES OF THIS PLAN SHEET.

S A N F R A N C I S C O

FOR ACCURATE RIGHT OF WAY AND ACCESS DATA, CONTACT RIGHT OF WAY ENGINEERING AT THE DISTRICT OFFICE.

CURVE DATA

No.	R	Δ	T	L	N-COORDINATE	E-COORDINATE
38	500.01′	11° 29′ 00″	50.27′	100.21′	2018780.09	6067726.99
39	250.00′	54° 34′ 15″	128.96′	238.11′	2018552.22	6067624.15
41	4000.07′	05° 18′ 23″	185.37′	370.47′	2014238.09	6067406.29
42	500.01′	11° 29′ 00″	50.27′	100.21′	2017726.04	6067727.73
43	250.00′	57° 14′ 20″	136.40′	249.73′	2017975.44	6067710.37
44	500.01′	11° 29′ 00″	50.27′	100.21′	2017855.06	6067929.48
45	500.01′	11° 14′ 05″	49.97′	99.61′	2018253.97	6067062.19
46	250.00′	30° 24′ 45″	67.95′	132.70′	2018032.09	6067193.83
47	508.00′	11° 29′ 00″	50.27′	100.21′	2018246.82	6067065.80
50	4000.07′	05° 18′ 23″	185.37′	370.47′	2014217.72	6067292.74
51	550.01′	29° 51′ 11″	146.62′	286.58	2017673.73	6067473.76
57	900.02′	39° 26′ 70″	322.57′	619.46′	2017134.39	6068363.89
58	1600.03′	11° 16′ 23″	157.91′	314.81′	2019377.13	6067254.68
59	1600.03′	06° 39′ 44″	93.13′	186.04′	2016256.01	6067961.06
60	2500.05′	09° 58′ 52″	218.31′	435.52′	2015345.79	6067998.66
61	3000.05′	12° 52 ′57″	338.70′	674.54′	2020699.69	6066645.45

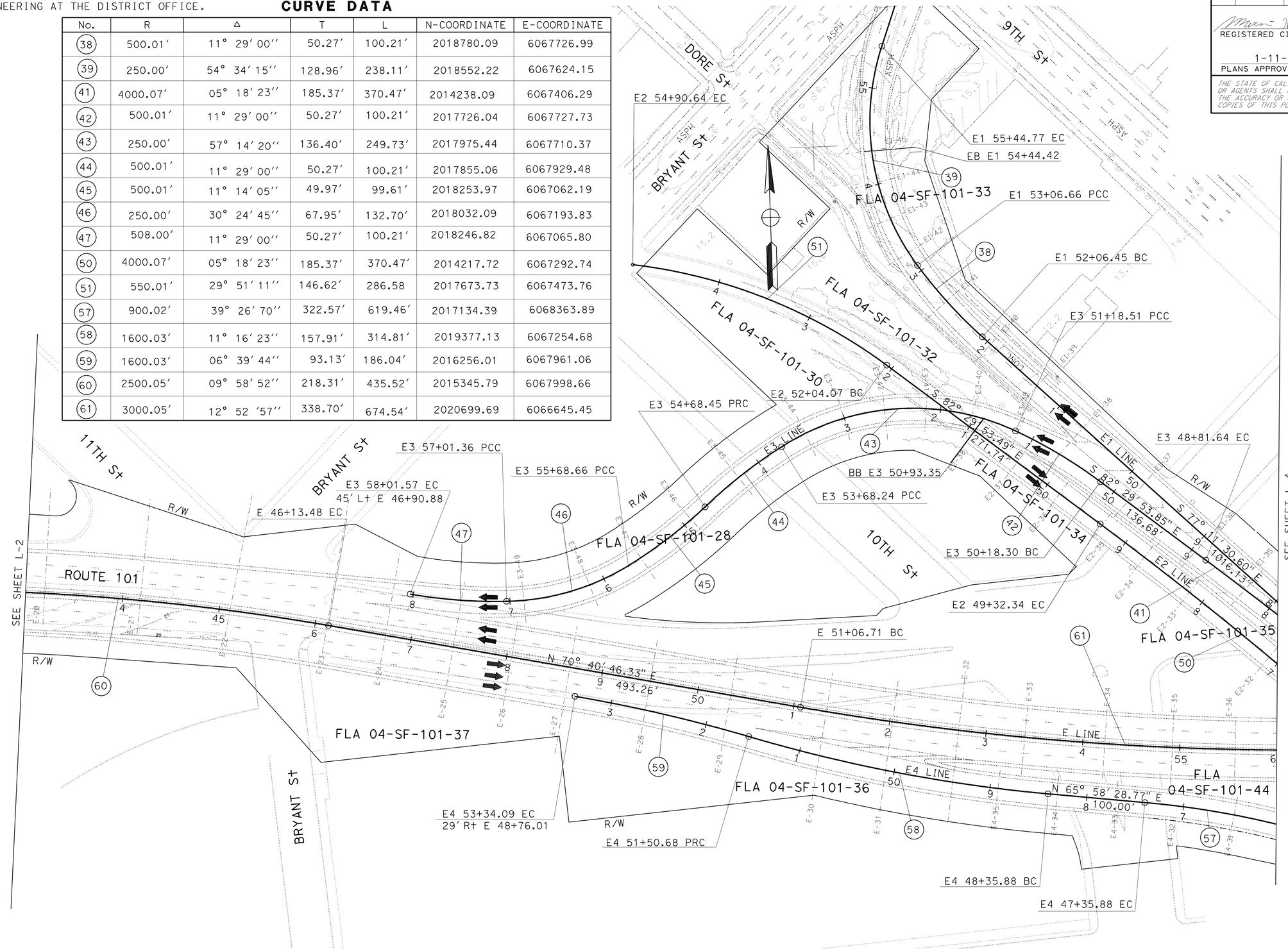

FOR NOTES, ABBREVIATIONS AND LEGEND, SEE SHEET L-1

LAYOUT
SCALE: 1″ = 50′

L-3

MAXIM HOVHANESSIAN	MH	REVISED BY	8/26/09
MAXIM HOVHANESSIAN		DATE REVISED	
CALCULATED-DESIGNED BY		FUNCTIONAL SUPERVISOR	
CHECKED BY		ABOLFAZL EMADZADEH	

STATE OF CALIFORNIA - DEPARTMENT OF TRANSPORTATION
Caltrans®
DESIGN

LAST REVISION 08-26-09 | DATE PLOTTED => 14-JAN-2010 | TIME PLOTTED => 12:59

BORDER LAST REVISED 4/11/2008 | RELATIVE BORDER SCALE IS IN INCHES 0 1 2 3 | USERNAME => trmikesl | DGN FILE => 42a140ea003.dgn | CU 04242 | EA 2A1401

FOR ACCURATE RIGHT OF WAY AND ACCESS DATA, CONTACT RIGHT OF WAY ENGINEERING AT THE DISTRICT OFFICE.

Dist	COUNTY	ROUTE	POST MILES TOTAL PROJECT	SHEET No.	TOTAL SHEETS
04	SF	80,101	L3.8/5.0, 4.1/5.0	5	136

REGISTERED CIVIL ENGINEER 8-19-09 DATE

1-11-10
PLANS APPROVAL DATE

REGISTERED PROFESSIONAL ENGINEER M. Hovhanessian No. 42284 Exp. 3-31-10 CIVIL STATE OF CALIFORNIA

THE STATE OF CALIFORNIA OR ITS OFFICERS OR AGENTS SHALL NOT BE RESPONSIBLE FOR THE ACCURACY OR COMPLETENESS OF SCANNED COPIES OF THIS PLAN SHEET.

CURVE DATA

No.	R	Δ	T	L	N-COORDINATE	E-COORDINATE
10	2200.04′	02° 45′ 00″	52.81′	105.59′	2017045.18	6066992.63
11	1100.02′	20° 22′ 09″	197.62′	391.07′	2017983.41	6067566.89
12	2200.04′	02° 45′ 00″	52.81′	105.59′	2017303.73	6066701.97
13B	1000.02′	04° 33′ 59″	39.87′	79.70′	2017239.66	6068158.67
30	600.01′	30° 55′ 03″	165.93′	323.77′	2018341.93	6067864.59
30A	2000.04′	18° 39′ 39″	328.61′	651.40′	2017274.55	6066834.62
31	300.01′	64° 53′ 22″	190.72′	339.77′	2018442.24	6068147.33
32	600.01′	12° 37′ 24″	66.37′	132.19′	2018654.87	6067935.69
33	1400.03′	15° 29′ 37″	190.46′	378.59′	2017779.50	6067135.16
34	600.01′	12° 38′ 53″	66.50′	132.45′	2018278.28	6067760.66

CURVE DATA

No.	R	Δ	T	L	N-COORDINATE	E-COORDINATE
50	4000.07′	05° 18′ 23″	185.37′	370.47′	2014217.72	6067292.74
52	1000.02′	04° 33′ 59″	39.87′	79.70′	2017067.32	6068291.26
56	450.01′	30° 46′ 41″	123.86′	241.73′	2017568.22	6068483.47
57	900.02′	39° 26′ 07″	322.57′	619.46′	2017134.39	6068363.89
61	3000.05′	12° 52 ′57″	338.70′	674.54′	2020699.69	6066645.45

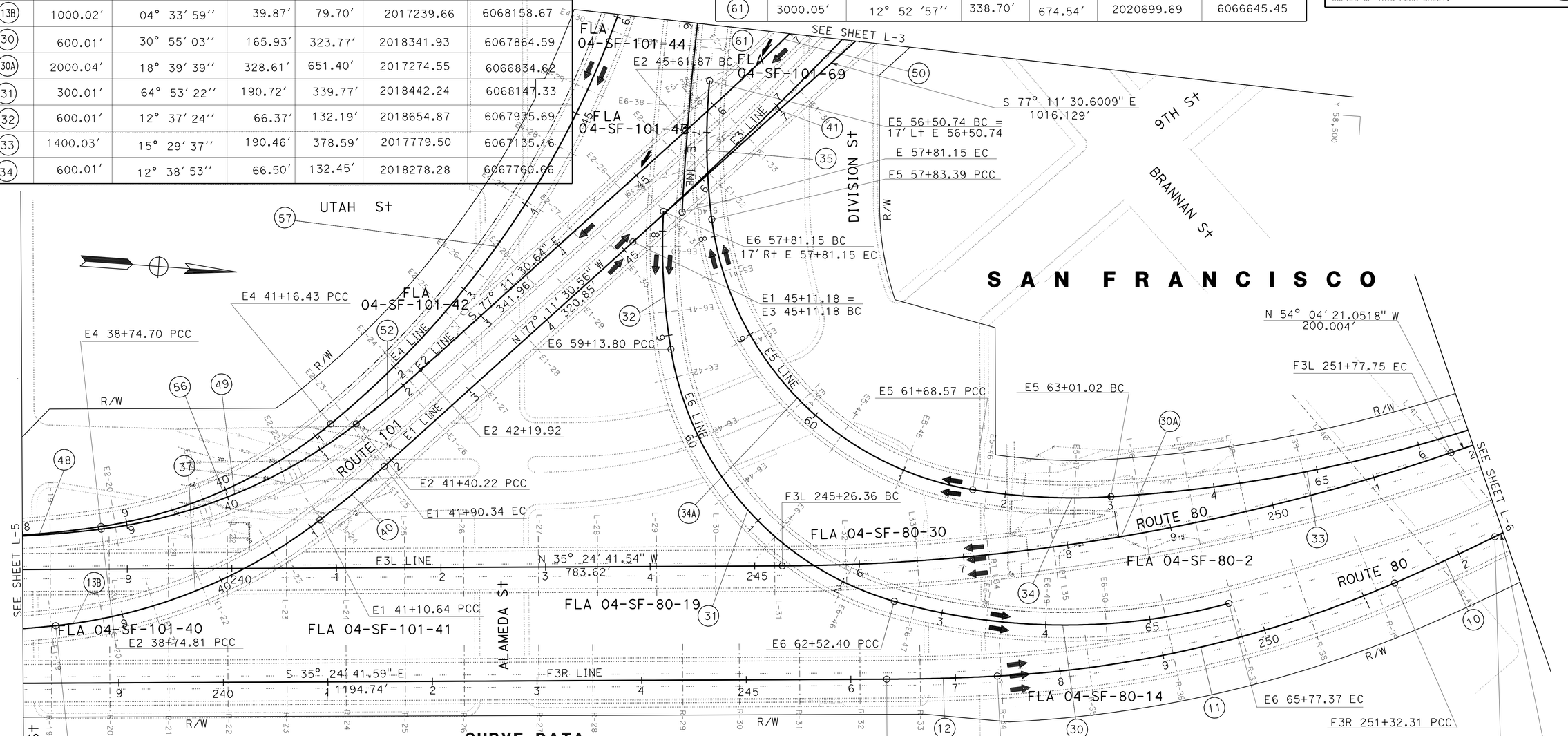

CURVE DATA

No.	R	Δ	T	L	N-COORDINATE	E-COORDINATE
34A	300.01′	68° 21′ 09″	203.70′	357.90′	2018409.42	6068030.48
35	600.01′	12° 40′ 02″	66.60′	132.65′	2018631.11	6067828.35
37	500.01′	31° 22′ 39″	140.44′	273.83′	2017569.32	6068534.61
40	1000.02′	04° 33′ 59″	39.87′	79.70′	2017092.13	6068385.30
41	4000.07′	05° 18′ 23″	185.37′	370.47′	2014238.09	6067406.29
48	900.02′	08° 29′ 00″	66.75′	133.26′	2017256.68	6068158.74
49	500.01′	30° 24′ 49″	135.91′	265.41′	2017544.52	6068440.58

FOR NOTES, ABBREVIATIONS AND LEGEND, SEE SHEET L-1

LAYOUT
SCALE: 1" = 50′

L-4

REVISED BY	DATE REVISED
MH	8/26/09

MAXIM HOVHANESSIAN
MAXIM HOVHANESSIAN

CALCULATED-
DESIGNED BY
CHECKED BY

FUNCTIONAL SUPERVISOR
ABOLFAZL EMADZADEH

STATE OF CALIFORNIA - DEPARTMENT OF TRANSPORTATION
Caltrans
DESIGN

LAST REVISION 05-12-09
DATE PLOTTED => 14-JAN-2010
TIME PLOTTED => 12:59

Dist	COUNTY	ROUTE	POST MILES TOTAL PROJECT	SHEET No.	TOTAL SHEETS
04	SF	80,101	L3.8/5.0, 4.1/5.0	6	136

REGISTERED CIVIL ENGINEER 8-19-09 DATE

1-11-10
PLANS APPROVAL DATE

REGISTERED PROFESSIONAL ENGINEER M. Hovhanessian No. 42284 Exp. 3-31-10 CIVIL STATE OF CALIFORNIA

THE STATE OF CALIFORNIA OR ITS OFFICERS OR AGENTS SHALL NOT BE RESPONSIBLE FOR THE ACCURACY OR COMPLETENESS OF SCANNED COPIES OF THIS PLAN SHEET.

FOR ACCURATE RIGHT OF WAY AND ACCESS DATA, CONTACT RIGHT OF WAY ENGINEERING AT THE DISTRICT OFFICE.

CURVE DATA

No.	R	Δ	T	L	N-COORDINATE	E-COORDINATE
13A	5000.09′	08° 44′ 34″	382.22′	762.96′	2014707.52	6065112.19
13B	1000.02′	04° 33′ 59″	39.87′	79.70′	2017239.66	6068158.67
36	3000.05′	09° 20′ 26″	245.08′	489.08′	2015617.84	6066872.81
48	900.02′	08° 29′ 00″	66.75′	133.26′	2017256.68	6068158.74
53	2975.26′	02° 33′ 45″	66.54′	133.06′	2015391.46	6066976.86
54	1475.24′	17° 38′ 37″	228.95′	454.28′	2016205.11	6068237.04
55	900.02′	08° 29′ 00″	66.75′	133.26′	2017256.68	6068158.74

FOR NOTES, ABBREVIATIONS AND LEGEND, SEE SHEET L-1

LAYOUT
SCALE: 1" = 50′

L-5

STATE OF CALIFORNIA - DEPARTMENT OF TRANSPORTATION
Caltrans DESIGN

FUNCTIONAL SUPERVISOR: ABOLFAZL EMADZADEH

CALCULATED-DESIGNED BY: MAXIM HOVHANESSIAN
CHECKED BY: MAXIM HOVHANESSIAN

REVISED BY: MH
DATE REVISED: 8/26/09

LAST REVISION: 05-12-09
DATE PLOTTED => 14-JAN-2010
TIME PLOTTED => 13:00

Dist	COUNTY	ROUTE	POST MILES TOTAL PROJECT	SHEET No.	TOTAL SHEETS
04	SF	80,101	L3.8/5.0, 4.1/5.0	7	136

REGISTERED CIVIL ENGINEER 8-19-09 DATE

1-11-10
PLANS APPROVAL DATE

REGISTERED PROFESSIONAL ENGINEER M. Hovhanessian No. 42284 Exp. 3-31-10 CIVIL STATE OF CALIFORNIA

THE STATE OF CALIFORNIA OR ITS OFFICERS OR AGENTS SHALL NOT BE RESPONSIBLE FOR THE ACCURACY OR COMPLETENESS OF SCANNED COPIES OF THIS PLAN SHEET.

FOR ACCURATE RIGHT OF WAY AND ACCESS DATA, CONTACT RIGHT OF WAY ENGINEERING AT THE DISTRICT OFFICE.

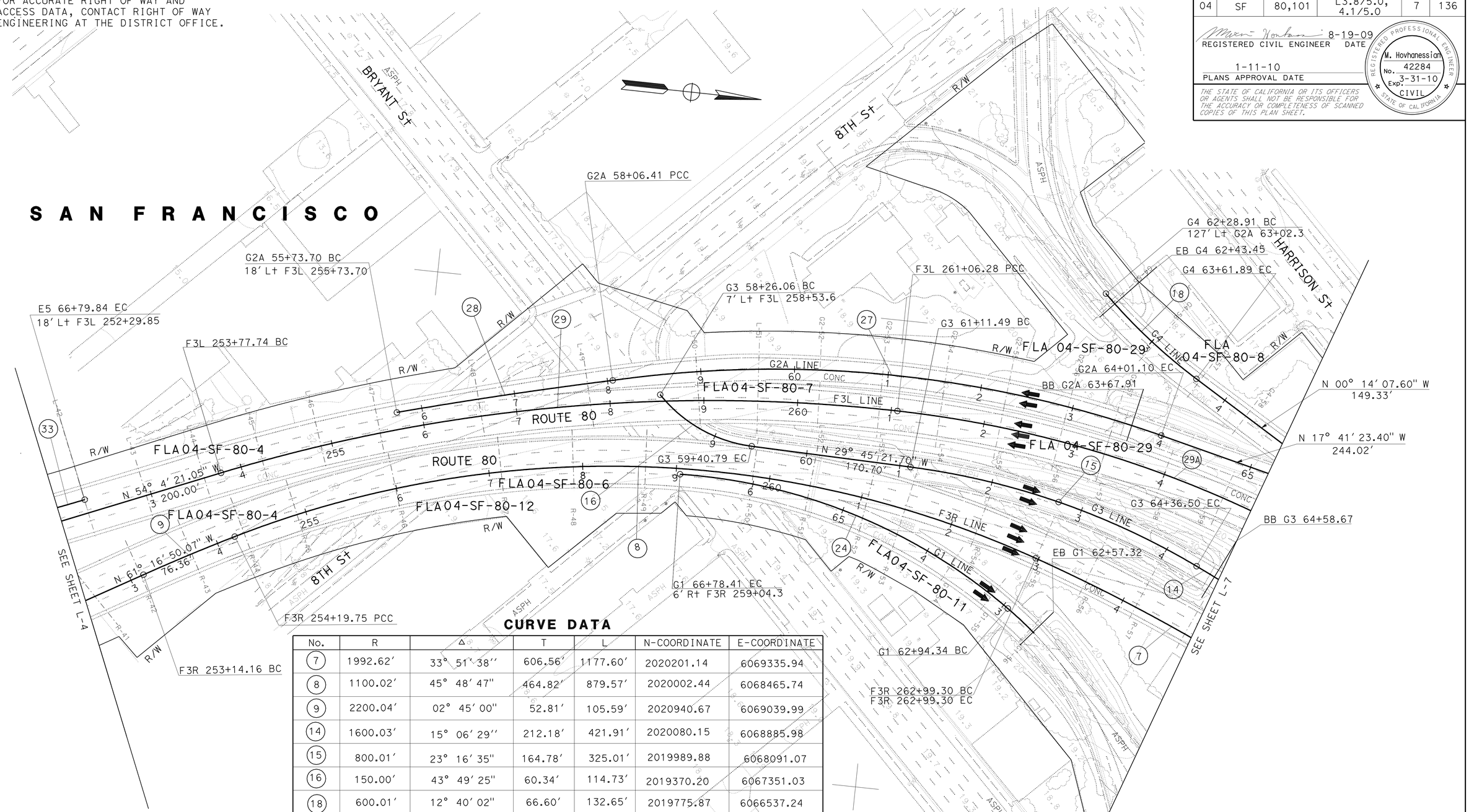

CURVE DATA

No.	R	Δ	T	L	N-COORDINATE	E-COORDINATE
7	1992.62'	33° 51' 38''	606.56'	1177.60'	2020201.14	6069335.94
8	1100.02'	45° 48' 47"	464.82'	879.57'	2020002.44	6068465.74
9	2200.04'	02° 45' 00"	52.81'	105.59'	2020940.67	6069039.99
14	1600.03'	15° 06' 29''	212.18'	421.91'	2020080.15	6068885.98
15	800.01'	23° 16' 35"	164.78'	325.01'	2019989.88	6068091.07
16	150.00'	43° 49' 25"	60.34'	114.73'	2019370.20	6067351.03
18	600.01'	12° 40' 02"	66.60'	132.65'	2019775.87	6066537.24
24	600.01'	36° 57' 35"	200.53'	387.05'	2019731.28	6068052.80
27	1240.02'	27° 28' 42"	303.18'	594.70'	2020164.16	6068388.70
28	5002.25'	02° 40' 25"	116.73'	233.42'	2022781.71	6071091.29
29	1800.03'	23° 11' 23"	369.33'	728.54'	2020469.05	6068902.40
29A	1200.02'	52° 36' 05''	593.11'	1101.70'	2020161.08	6068387.46
33	1400.03'	15° 29' 37''	190.46'	378.59'	2017779.50	6067135.16

FOR NOTES, ABBREVIATIONS AND LEGEND, SEE SHEET L-1

LAYOUT

SCALE: 1" = 50'

L-6

REVISED BY	MH
DATE REVISED	8/26/09
CALCULATED-DESIGNED BY	MAXIM HOVHANESSIAN
CHECKED BY	MAXIM HOVHANESSIAN
FUNCTIONAL SUPERVISOR	ABOLFAZL EMADZADEH

STATE OF CALIFORNIA - DEPARTMENT OF TRANSPORTATION

Caltrans

DESIGN

LAST REVISION 05-12-09 DATE PLOTTED => 14-JAN-2010 TIME PLOTTED => 13:00

Dist	COUNTY	ROUTE	POST MILES TOTAL PROJECT	SHEET No.	TOTAL SHEETS
04	SF	80,101	L3.8/5.0, 4.1/5.0	8	136

REGISTERED CIVIL ENGINEER 8-19-09 DATE

1-11-10
PLANS APPROVAL DATE

REGISTERED PROFESSIONAL ENGINEER M. Hovhanessian No. 42284 Exp. 3-31-10 CIVIL STATE OF CALIFORNIA

THE STATE OF CALIFORNIA OR ITS OFFICERS OR AGENTS SHALL NOT BE RESPONSIBLE FOR THE ACCURACY OR COMPLETENESS OF SCANNED COPIES OF THIS PLAN SHEET.

FOR ACCURATE RIGHT OF WAY AND ACCESS DATA, CONTACT RIGHT OF WAY ENGINEERING AT THE DISTRICT OFFICE.

S A N F R A N C I S C O

CURVE DATA

No.	R	Δ	T	L	N-COORDINATE	E-COORDINATE
2	5000.09'	07° 39' 10''	334.42'	667.84'	2023047.68	6062870.31
6	1999.27'	04° 28' 56''	78.24'	156.40'	2020197.83	6069341.52
7	1992.62'	33° 51' 38''	606.56'	1177.60'	2020201.14	6069335.94
13	6000.11'	02° 39' 53''	139.55'	279.06'	2019419.95	6073236.25
14	1600.03'	15° 06' 29''	212.18'	421.91'	2020080.15	6068885.98
17	2000.04'	16° 58' 09''	298.36'	592.35'	2019935.88	6069136.65
26	600.01'	31° 45' 22''	170.67'	332.56'	2020202.16	6067704.80
29A	1200.02'	52° 36' 05''	593.11'	1101.70'	2020161.08	6068387.46

FOR NOTES, ABBREVIATIONS AND LEGEND, SEE SHEET L-1

LAYOUT

SCALE: 1" = 50'

L-7

STATE OF CALIFORNIA - DEPARTMENT OF TRANSPORTATION
Caltrans DESIGN

FUNCTIONAL SUPERVISOR: ABOLFAZL EMADZADEH
CALCULATED-DESIGNED BY: MAXIM HOVHANESSIAN
CHECKED BY
REVISED BY: MH
DATE REVISED: 8/26/09

LAST REVISION DATE PLOTTED => 14-JAN-2010
05-12-09 TIME PLOTTED => 13:00

FOR ACCURATE RIGHT OF WAY AND ACCESS DATA, CONTACT RIGHT OF WAY ENGINEERING AT THE DISTRICT OFFICE.

Dist	COUNTY	ROUTE	POST MILES TOTAL PROJECT	SHEET No.	TOTAL SHEETS
04	SF	80,101	L3.8/5.0, 4.1/5.0	9	136

REGISTERED CIVIL ENGINEER 8-19-09 DATE

1-11-10
PLANS APPROVAL DATE

REGISTERED PROFESSIONAL ENGINEER M. Hovhanessian No. 42284 Exp. 3-31-10 CIVIL STATE OF CALIFORNIA

THE STATE OF CALIFORNIA OR ITS OFFICERS OR AGENTS SHALL NOT BE RESPONSIBLE FOR THE ACCURACY OR COMPLETENESS OF SCANNED COPIES OF THIS PLAN SHEET.

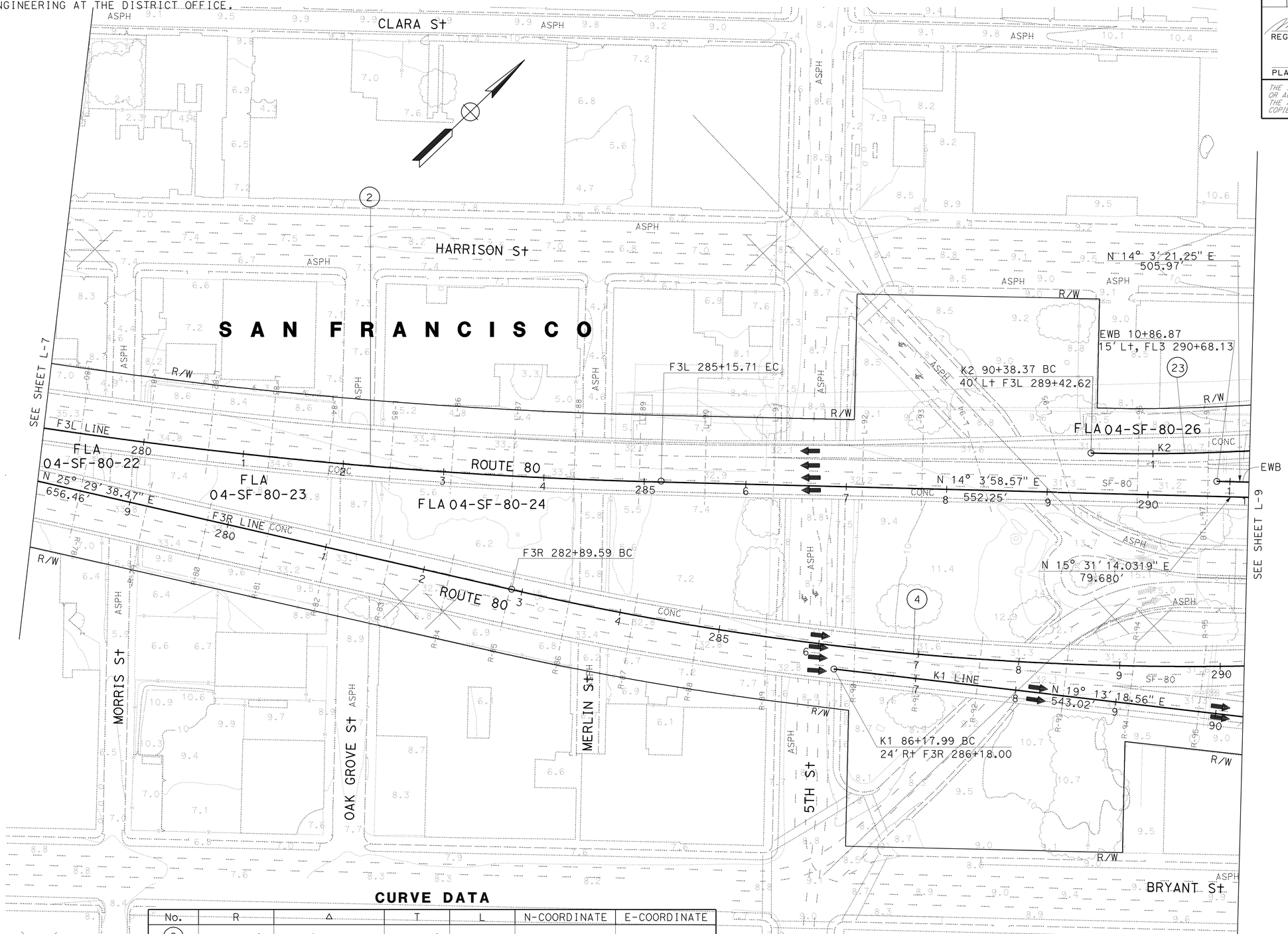

CURVE DATA

No.	R	Δ	T	L	N-COORDINATE	E-COORDINATE
2	5000.09'	07° 39' 10''	334.42'	667.84'	2023047.68	6062870.31
4	2999.96'	15° 21' 29''	404.49'	804.14'	2022958.31	6065086.09
23	2000.04'	09° 35' 15''	167.73'	334.68'	2022742.33	6065845.60

FOR NOTES, ABBREVIATIONS AND LEGEND, SEE SHEET L-1

LAYOUT

SCALE: 1" = 50'

L-8

CALCULATED-DESIGNED BY	MAXIM HOVHANESSIAN	REVISED BY	MH
CHECKED BY	MAXIM HOVHANESSIAN	DATE REVISED	8/26/09
FUNCTIONAL SUPERVISOR	ABOLFAZL EMADZADEH		

STATE OF CALIFORNIA - DEPARTMENT OF TRANSPORTATION
Caltrans
DESIGN

LAST REVISION 05-12-09 | DATE PLOTTED => 14-JAN-2010 | TIME PLOTTED => 13:01

FOR ACCURATE RIGHT OF WAY AND ACCESS DATA, CONTACT RIGHT OF WAY ENGINEERING AT THE DISTRICT OFFICE.

Dist	COUNTY	ROUTE	POST MILES TOTAL PROJECT	SHEET No.	TOTAL SHEETS
04	SF	80,101	L3.8/5.0, 4.1/5.0	10	136

REGISTERED CIVIL ENGINEER 8-19-09 DATE

1-11-10
PLANS APPROVAL DATE

REGISTERED PROFESSIONAL ENGINEER M. Hovhanessian No. 42284 Exp. 3-31-10 CIVIL STATE OF CALIFORNIA

THE STATE OF CALIFORNIA OR ITS OFFICERS OR AGENTS SHALL NOT BE RESPONSIBLE FOR THE ACCURACY OR COMPLETENESS OF SCANNED COPIES OF THIS PLAN SHEET.

CURVE DATA

No.	R	Δ	T	L	N-COORDINATE	E-COORDINATE
1	4998.15′	03° 55′ 02″	170.92′	341.71′	2021194.86	6072713.47
4	2999.96′	15° 21′ 29″	404.49′	804.14′	2022958.31	6065086.09
19	400.01′	34° 00′ 18″	122.31′	237.40′	2022386.85	6068515.63
21	3999.97′	01° 47′ 15″	62.40′	124.80′	2021903.56	6071846.54
22	400.00′	33° 13′ 54″	119.37′	232.00′	2022646.67	6067442.39
20	800.01′	07° 07′ 01″	49.75′	99.37′	2022209.38	6068874.12
23	2000.04′	09° 35′ 15″	167.73′	334.68′	2022742.33	6065845.60
25	800.00′	02° 16′ 47″	15.92′	31.83′	2022648.15	6067041.93

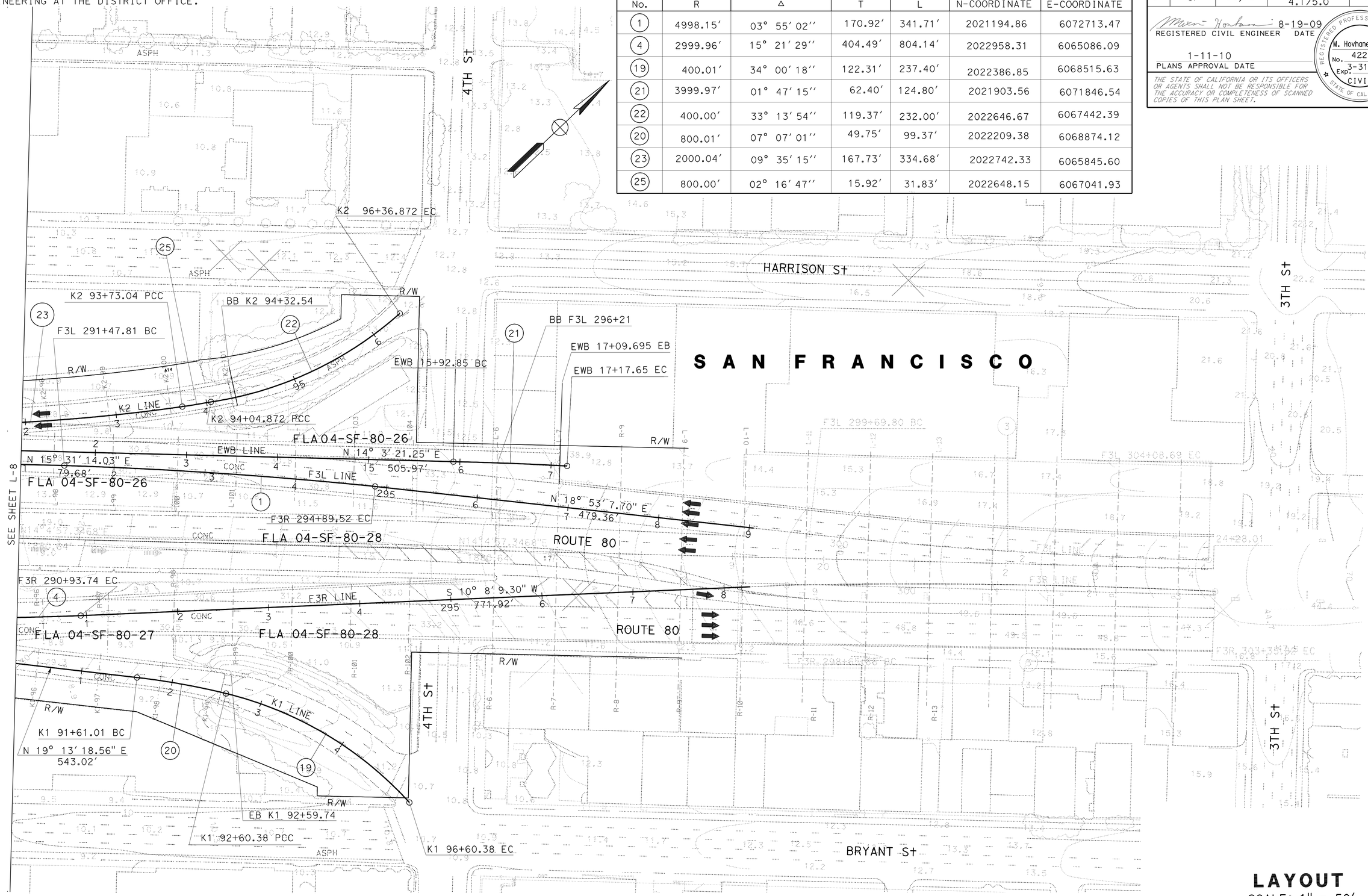

FOR NOTES, ABBREVIATIONS AND LEGEND, SEE SHEET L-1

LAYOUT

SCALE: 1" = 50′

L-9

MH	8/26/09	REVISED BY	DATE REVISED
MAXIM HOVHANESSIAN	MAXIM HOVHANESSIAN	CALCULATED-DESIGNED BY	CHECKED BY
FUNCTIONAL SUPERVISOR	ABOLFAZL EMADZADEH		

STATE OF CALIFORNIA - DEPARTMENT OF TRANSPORTATION

Caltrans® DESIGN

LAST REVISION 05-12-09 | DATE PLOTTED => 14-JAN-2010 TIME PLOTTED => 13:01

Dist	COUNTY	ROUTE	POST MILES TOTAL PROJECT	SHEET No.	TOTAL SHEETS
04	SF	80,101	L3.8/5.0, 4.1/5.0	11	136

8-25-09
REGISTERED CIVIL ENGINEER DATE

1-11-10
PLANS APPROVAL DATE

REGISTERED PROFESSIONAL ENGINEER
Dixon T. Lau
No. 46706
Exp. 6-30-11
CIVIL
STATE OF CALIFORNIA

THE STATE OF CALIFORNIA OR ITS OFFICERS OR AGENTS SHALL NOT BE RESPONSIBLE FOR THE ACCURACY OR COMPLETENESS OF SCANNED COPIES OF THIS PLAN SHEET.

FOR ACCURATE RIGHT OF WAY AND ACCESS DATA, CONTACT RIGHT OF WAY ENGINEERING AT THE DISTRICT OFFICE.

LEGEND:

- No. DRAINAGE SYSTEM NUMBER
- a DRAINAGE UNIT
- DI
- MH

ABBREVIATIONS:

APC ALTERNATE PIPE CULVERT (VCP OR DIP)
DIP DUCTILE IRON PIPE
SF SAN FRANCISCO
w/ WITH
TC TOP OF COVER

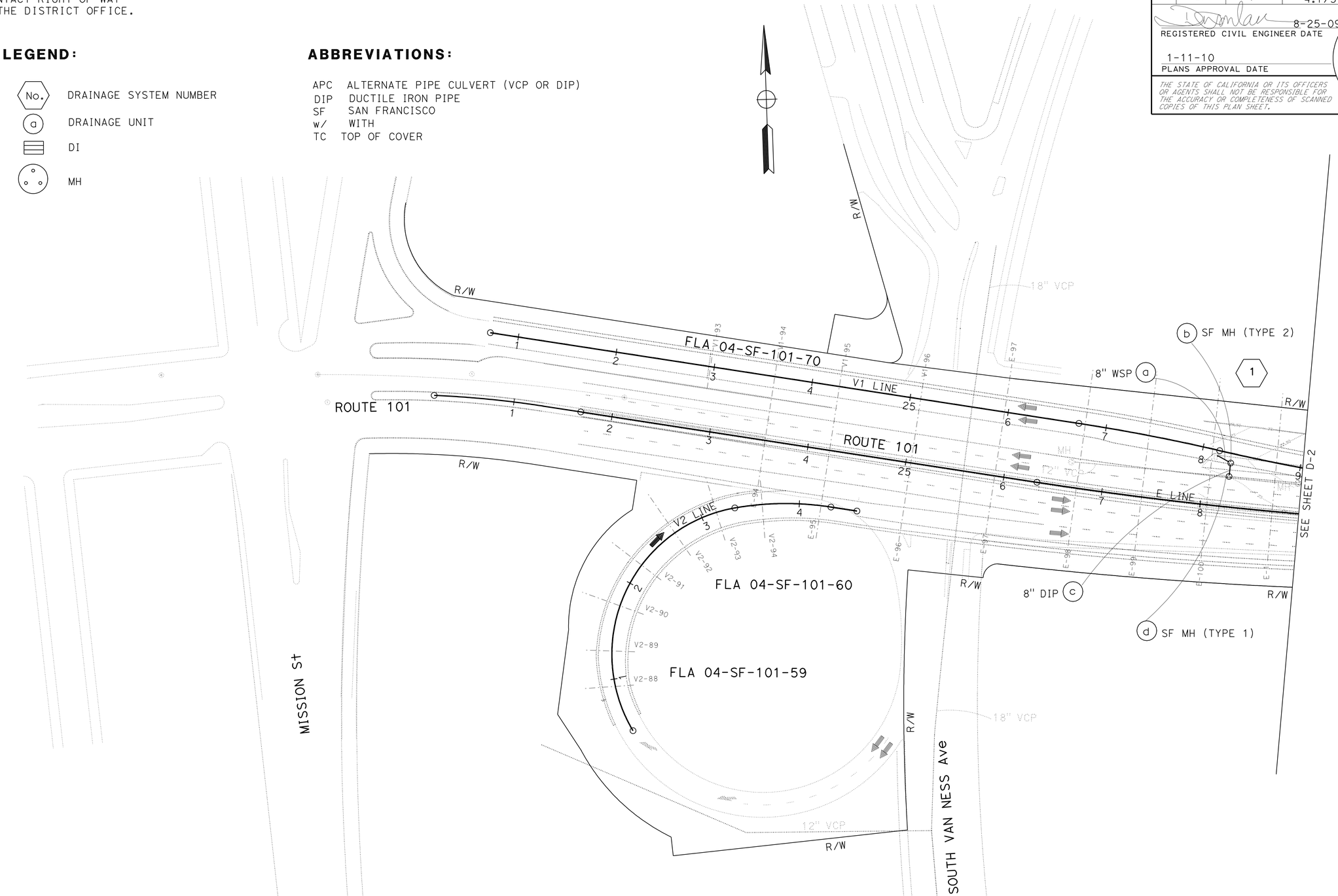

THIS PLAN ACCURATE FOR DRAINAGE WORK ONLY

DRAINAGE PLAN

SCALE: 1" = 50'

D-1

REVISED BY	DATE REVISED
MP	5/13/09

CALCULATED-DESIGNED BY: MICHAEL PUSTOV
CHECKED BY: DIXON T. LAU
FUNCTIONAL SUPERVISOR: JOSEPH PETERSON

STATE OF CALIFORNIA - DEPARTMENT OF TRANSPORTATION
Caltrans HYDRAULICS

LAST REVISION 07-22-09 | DATE PLOTTED => 14-JAN-2010 | TIME PLOTTED => 13:01

Dist	COUNTY	ROUTE	POST MILES TOTAL PROJECT	SHEET No.	TOTAL SHEETS
04	SF	80,101	L3.8/5.0, 4.1/5.0	12	136

8-25-09
REGISTERED CIVIL ENGINEER DATE

1-11-10
PLANS APPROVAL DATE

REGISTERED PROFESSIONAL ENGINEER
Dixon T. Lau
No. 46706
Exp. 6-30-11
CIVIL
STATE OF CALIFORNIA

THE STATE OF CALIFORNIA OR ITS OFFICERS OR AGENTS SHALL NOT BE RESPONSIBLE FOR THE ACCURACY OR COMPLETENESS OF SCANNED COPIES OF THIS PLAN SHEET.

FOR ACCURATE RIGHT OF WAY AND ACCESS DATA, CONTACT RIGHT OF WAY ENGINEERING AT THE DISTRICT OFFICE.

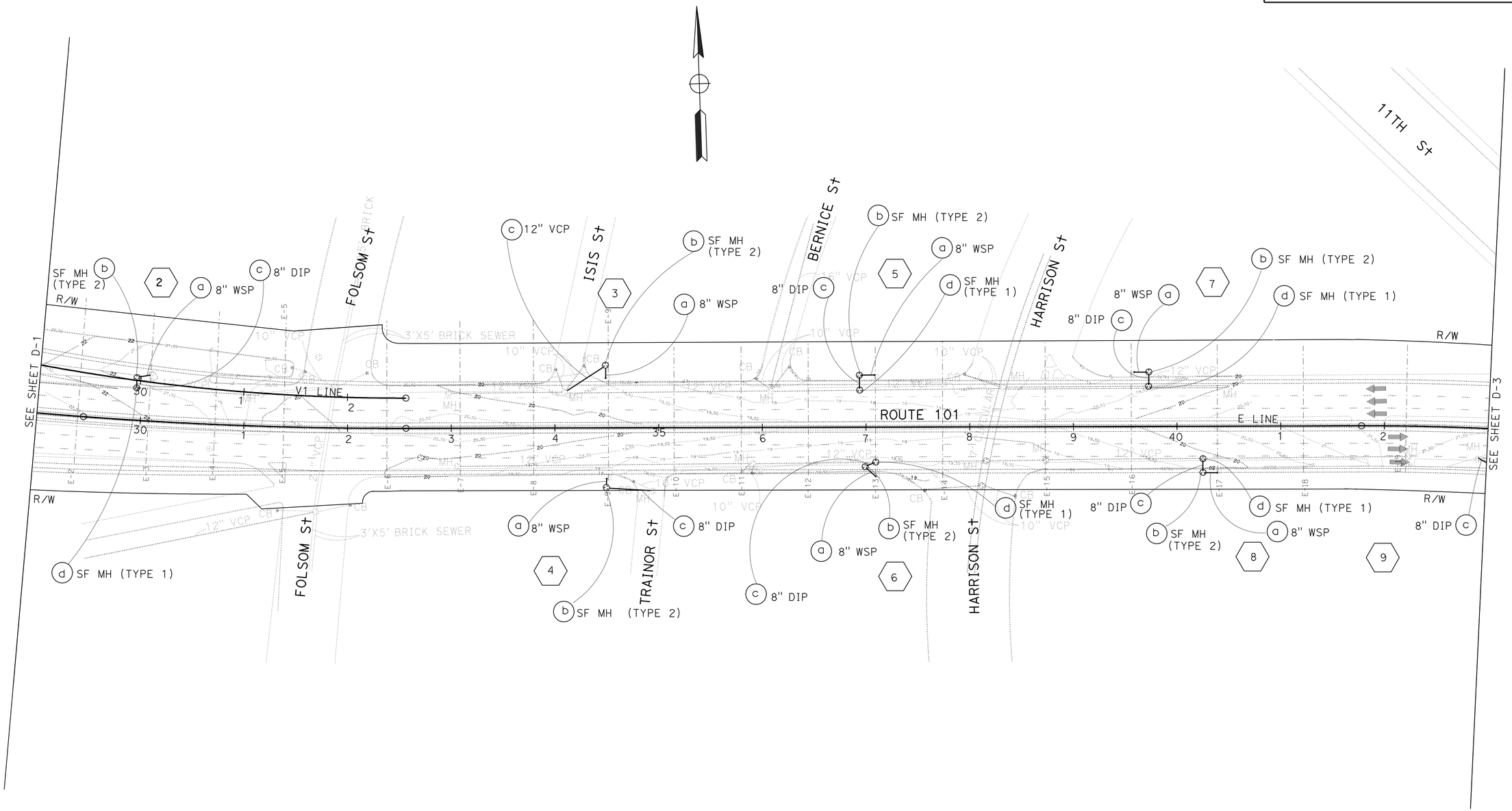

FOR NOTES, ABBREVIATIONS AND LEGEND, SEE SHEET D-1

THIS PLAN ACCURATE FOR DRAINAGE WORK ONLY

DRAINAGE PLAN

SCALE: 1" = 50'

D-2

STATE OF CALIFORNIA - DEPARTMENT OF TRANSPORTATION

Caltrans **HYDRAULICS**

FUNCTIONAL SUPERVISOR: JOSEPH PETERSON

CALCULATED-DESIGNED BY: MICHAEL PUSTOV

CHECKED BY: DIXON T. LAU

REVISED BY: MP

DATE REVISED: 5/13/09

LAST REVISION 07-22-09 | DATE PLOTTED => 14-JAN-2010 | TIME PLOTTED => 13:02

BORDER LAST REVISED 4/11/2008 | RELATIVE BORDER SCALE IS IN INCHES 0 1 2 3 | USERNAME => trmikesl | DGN FILE => 42a140ia002.dgn | CU 04242 | EA 2A1401

Dist	COUNTY	ROUTE	POST MILES TOTAL PROJECT	SHEET No.	TOTAL SHEETS
04	SF	80,101	L3.8/5.0, 4.1/5.0	13	136

8-25-09
REGISTERED CIVIL ENGINEER DATE

1-11-10
PLANS APPROVAL DATE

REGISTERED PROFESSIONAL ENGINEER
Dixon T. Lau
No. 46706
Exp. 6-30-11
CIVIL
STATE OF CALIFORNIA

THE STATE OF CALIFORNIA OR ITS OFFICERS OR AGENTS SHALL NOT BE RESPONSIBLE FOR THE ACCURACY OR COMPLETENESS OF SCANNED COPIES OF THIS PLAN SHEET.

FOR ACCURATE RIGHT OF WAY AND ACCESS DATA, CONTACT RIGHT OF WAY ENGINEERING AT THE DISTRICT OFFICE.

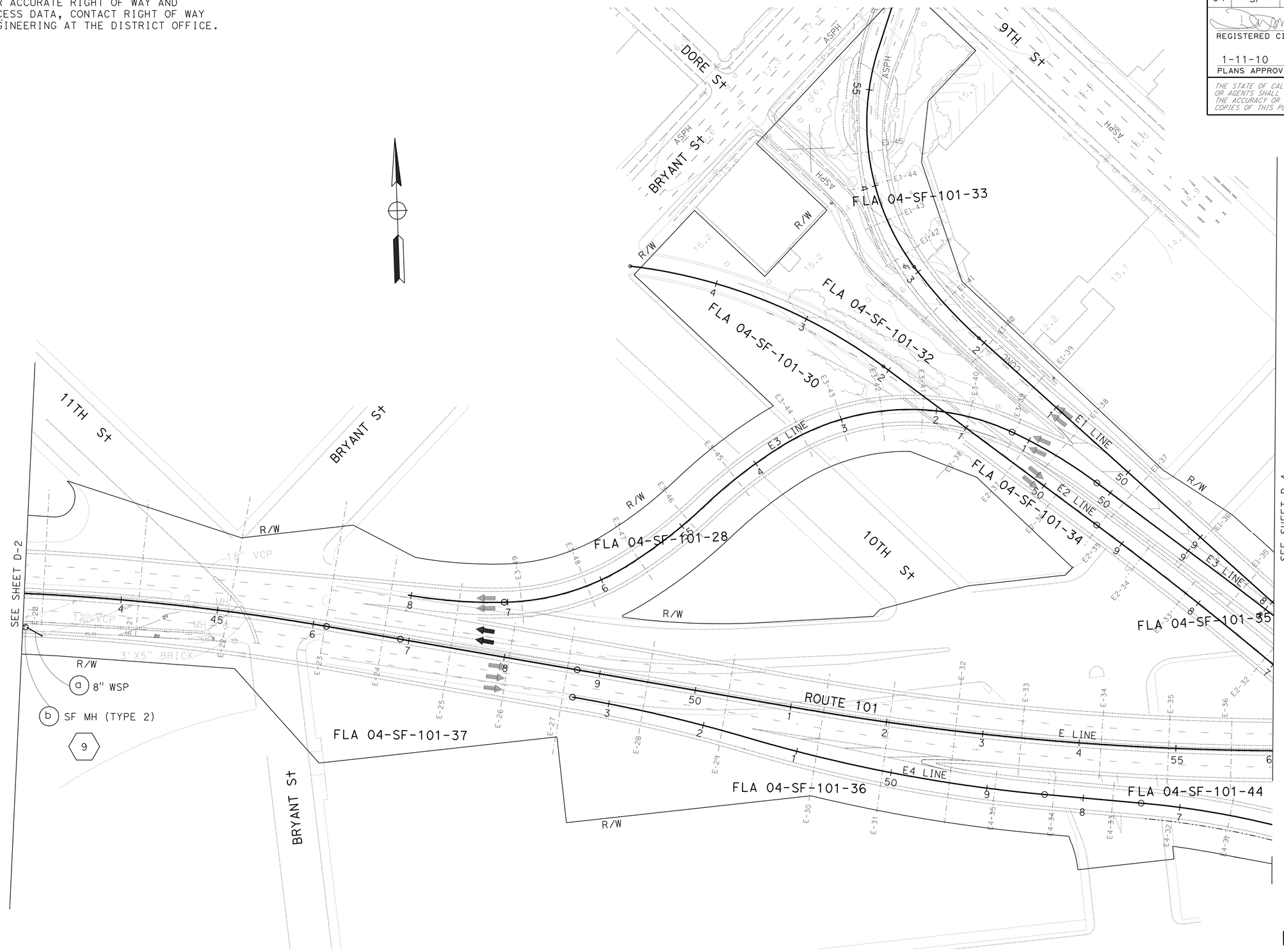

FOR NOTES, ABBREVIATIONS AND LEGEND, SEE SHEET D-1

THIS PLAN ACCURATE FOR DRAINAGE WORK ONLY

DRAINAGE PLAN

SCALE: 1" = 50'

D-3

CALCULATED-DESIGNED BY	MICHAEL PUSTOV
CHECKED BY	DIXON T. LAU
REVISED BY	MP
DATE REVISED	5/13/09

FUNCTIONAL SUPERVISOR: JOSEPH PETERSON

STATE OF CALIFORNIA - DEPARTMENT OF TRANSPORTATION
Caltrans
HYDRAULICS

LAST REVISION DATE PLOTTED => 14-JAN-2010
07-22-09 TIME PLOTTED => 13:02

Dist	COUNTY	ROUTE	POST MILES TOTAL PROJECT	SHEET No.	TOTAL SHEETS
04	SF	80,101	L3.8/5.0, 4.1/5.0	14	136

REGISTERED CIVIL ENGINEER DATE 8-25-09

PLANS APPROVAL DATE 1-11-10

REGISTERED PROFESSIONAL ENGINEER Dixon T. Lau No. 46706 Exp. 6-30-11 CIVIL STATE OF CALIFORNIA

THE STATE OF CALIFORNIA OR ITS OFFICERS OR AGENTS SHALL NOT BE RESPONSIBLE FOR THE ACCURACY OR COMPLETENESS OF SCANNED COPIES OF THIS PLAN SHEET.

FOR ACCURATE RIGHT OF WAY AND ACCESS DATA, CONTACT RIGHT OF WAY ENGINEERING AT THE DISTRICT OFFICE.

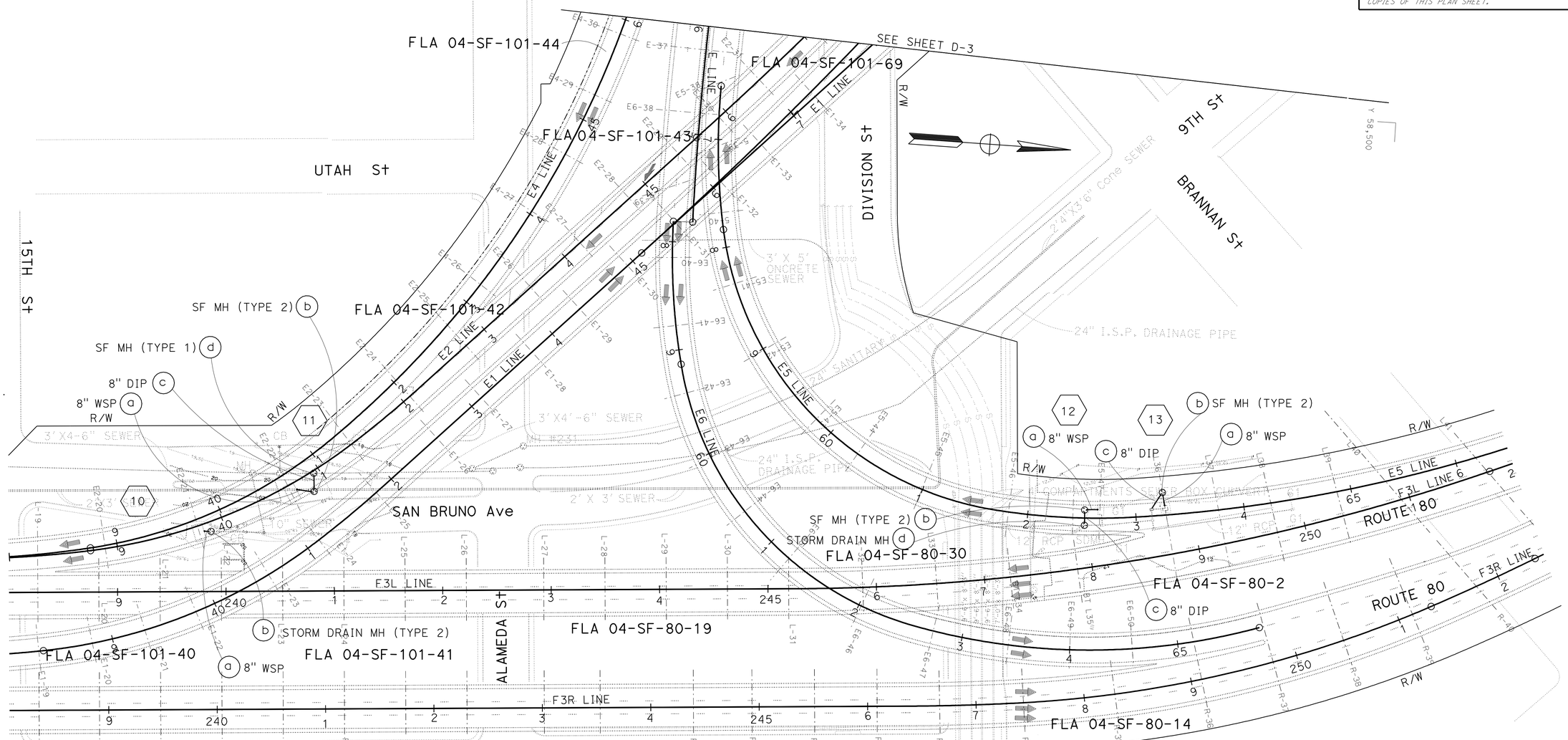

FOR NOTES, ABBREVIATIONS AND LEGEND, SEE SHEET D-1

THIS PLAN ACCURATE FOR DRAINAGE WORK ONLY

DRAINAGE PLAN

SCALE: 1" = 50'

D-4

CALCULATED-DESIGNED BY	MICHAEL PUSTOV	REVISED BY	MP
CHECKED BY	DIXON T. LAU	DATE REVISED	5/13/09
FUNCTIONAL SUPERVISOR	JOSEPH PETERSON		

STATE OF CALIFORNIA - DEPARTMENT OF TRANSPORTATION

Caltrans HYDRAULICS

LAST REVISION 07-22-09 | DATE PLOTTED => 14-JAN-2010 | TIME PLOTTED => 13:02

FOR ACCURATE RIGHT OF WAY AND
ACCESS DATA, CONTACT RIGHT OF WAY
ENGINEERING AT THE DISTRICT OFFICE.

Dist	COUNTY	ROUTE	POST MILES TOTAL PROJECT	SHEET No.	TOTAL SHEETS
04	SF	80,101	L3.8/5.0, 4.1/5.0	15	136

8-25-09
REGISTERED CIVIL ENGINEER DATE

1-11-10
PLANS APPROVAL DATE

REGISTERED PROFESSIONAL ENGINEER
Dixon T. Lau
No. 46706
Exp. 6-30-11
CIVIL
STATE OF CALIFORNIA

THE STATE OF CALIFORNIA OR ITS OFFICERS OR AGENTS SHALL NOT BE RESPONSIBLE FOR THE ACCURACY OR COMPLETENESS OF SCANNED COPIES OF THIS PLAN SHEET.

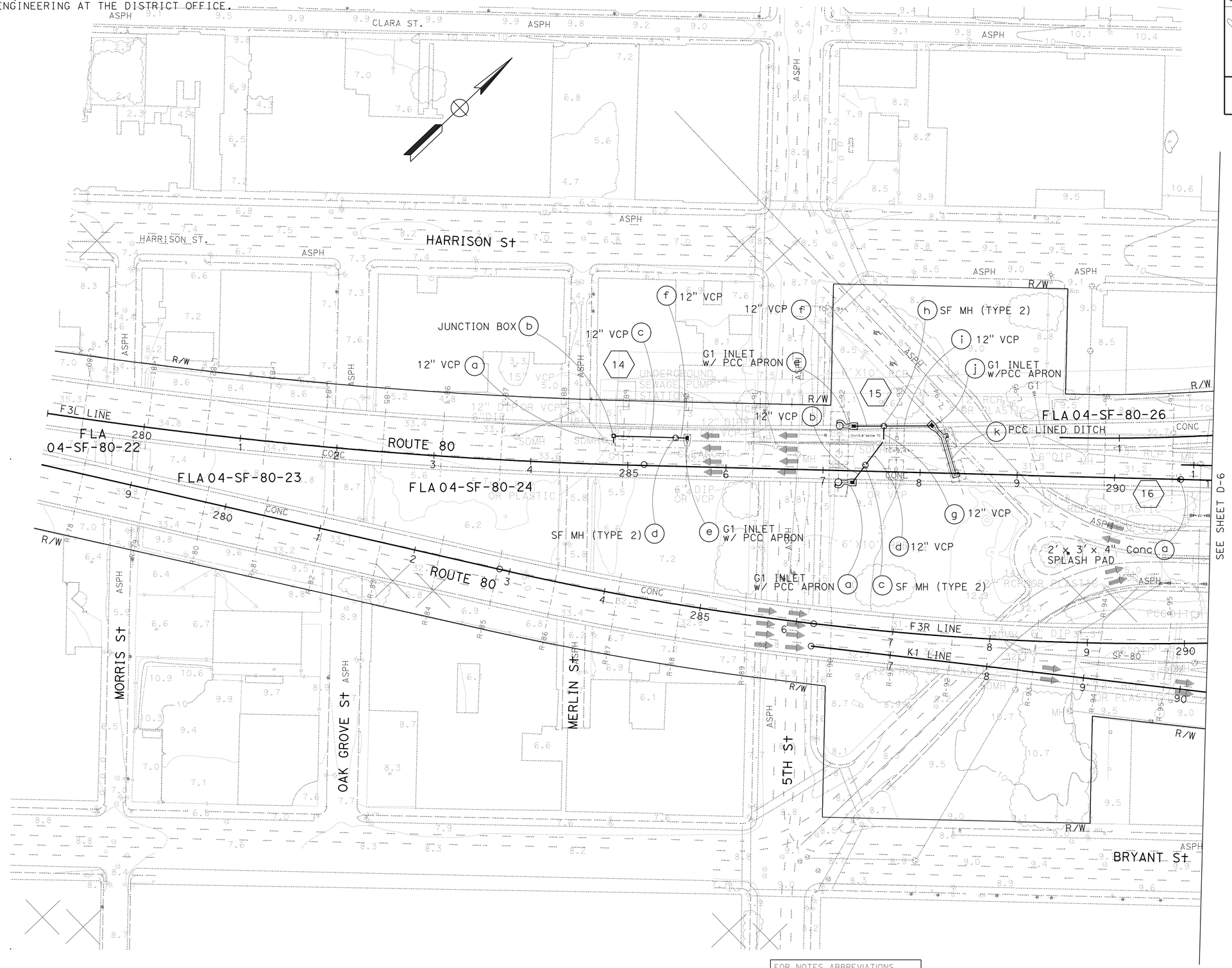

FOR NOTES, ABBREVIATIONS AND LEGEND, SEE SHEET D-1

THIS PLAN ACCURATE FOR DRAINAGE WORK ONLY

DRAINAGE PLAN

SCALE: 1" = 50'

D-5

REVISED BY	DATE REVISED
MP	5/13/09

MICHAEL PUSTOV
DIXON T. LAU
CALCULATED-DESIGNED BY
CHECKED BY
FUNCTIONAL SUPERVISOR
JOSEPH PETERSON

STATE OF CALIFORNIA - DEPARTMENT OF TRANSPORTATION
Caltrans
HYDRAULICS

LAST REVISION DATE PLOTTED => 14-JAN-2010
07-22-09 TIME PLOTTED => 13:02

FOR ACCURATE RIGHT OF WAY AND ACCESS DATA, CONTACT RIGHT OF WAY ENGINEERING AT THE DISTRICT OFFICE.

Dist	COUNTY	ROUTE	POST MILES TOTAL PROJECT	SHEET No.	TOTAL SHEETS
04	SF	80,101	L3.8/5.0, 4.1/5.0	16	136

REGISTERED CIVIL ENGINEER DATE 8-25-09

1-11-10
PLANS APPROVAL DATE

REGISTERED PROFESSIONAL ENGINEER Dixon T. Lau No. 46706 Exp. 6-30-11 CIVIL STATE OF CALIFORNIA

THE STATE OF CALIFORNIA OR ITS OFFICERS OR AGENTS SHALL NOT BE RESPONSIBLE FOR THE ACCURACY OR COMPLETENESS OF SCANNED COPIES OF THIS PLAN SHEET.

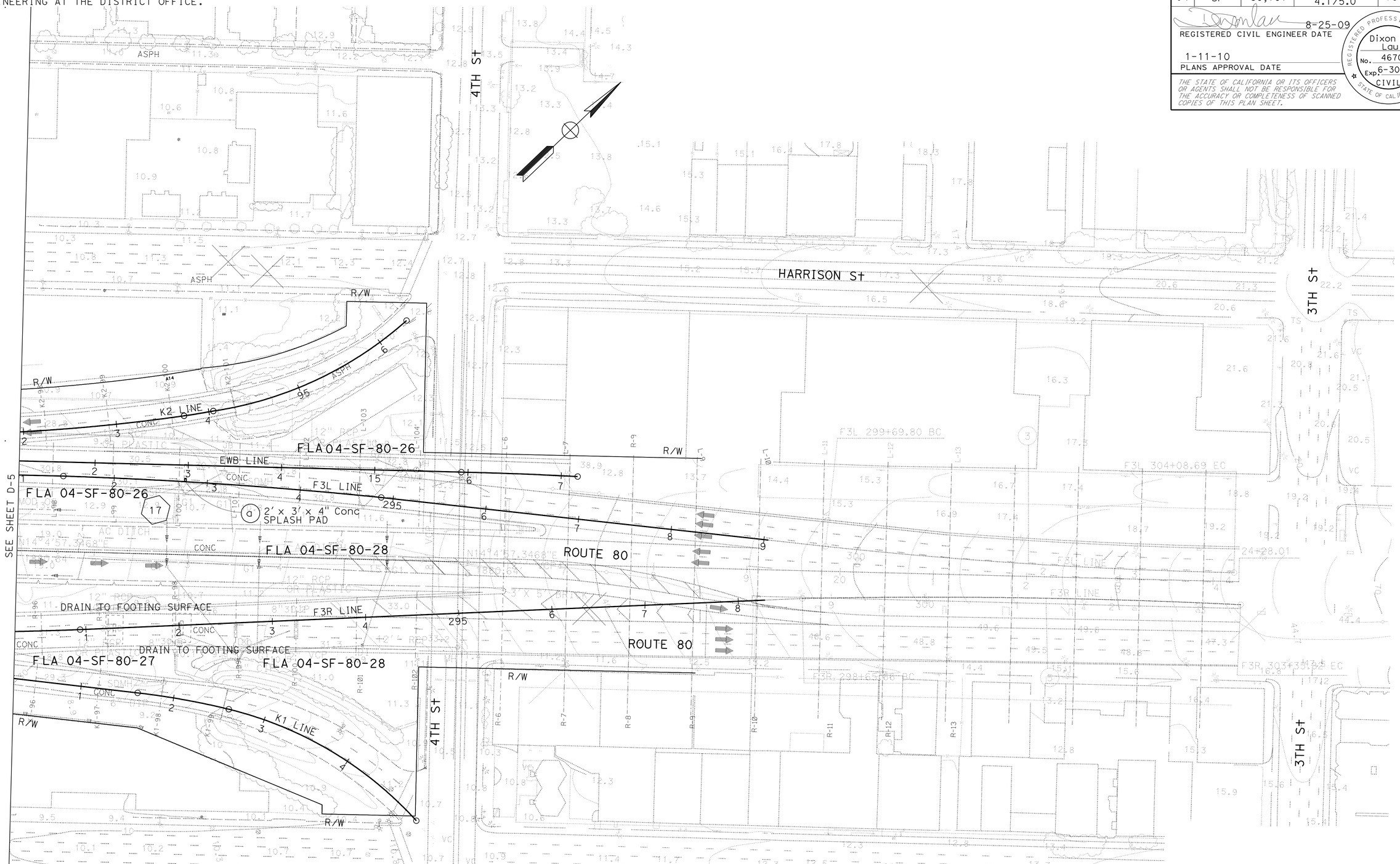

FOR NOTES, ABBREVIATIONS AND LEGEND, SEE SHEET D-1

THIS PLAN ACCURATE FOR DRAINAGE WORK ONLY

DRAINAGE PLAN

SCALE: 1" = 50'

D-6

REVISED BY	DATE REVISED
MP	5/13/09

MICHAEL PUSTOV — CALCULATED-DESIGNED BY
DIXON T. LAU — CHECKED BY
FUNCTIONAL SUPERVISOR: JOSEPH PETERSON

STATE OF CALIFORNIA - DEPARTMENT OF TRANSPORTATION
Caltrans HYDRAULICS

LAST REVISION 07-22-09 | DATE PLOTTED => 14-JAN-2010 | TIME PLOTTED => 13:03

BORDER LAST REVISED 4/11/2008 | RELATIVE BORDER SCALE IS IN INCHES 0 1 2 3 | USERNAME => trmikes1 | DGN FILE => 42a140ja006.dgn | CU 04242 | EA 2A1401

Dist	COUNTY	ROUTE	POST MILES TOTAL PROJECT	SHEET No.	TOTAL SHEETS
04	SF	80,101	L3.8/5.0, 4.1/5.0	17	136

REGISTERED CIVIL ENGINEER DATE 8-25-09

1-11-10
PLANS APPROVAL DATE

REGISTERED PROFESSIONAL ENGINEER Dixon T. Lau No. 46706 Exp. 6-30-11 CIVIL STATE OF CALIFORNIA

THE STATE OF CALIFORNIA OR ITS OFFICERS OR AGENTS SHALL NOT BE RESPONSIBLE FOR THE ACCURACY OR COMPLETENESS OF SCANNED COPIES OF THIS PLAN SHEET.

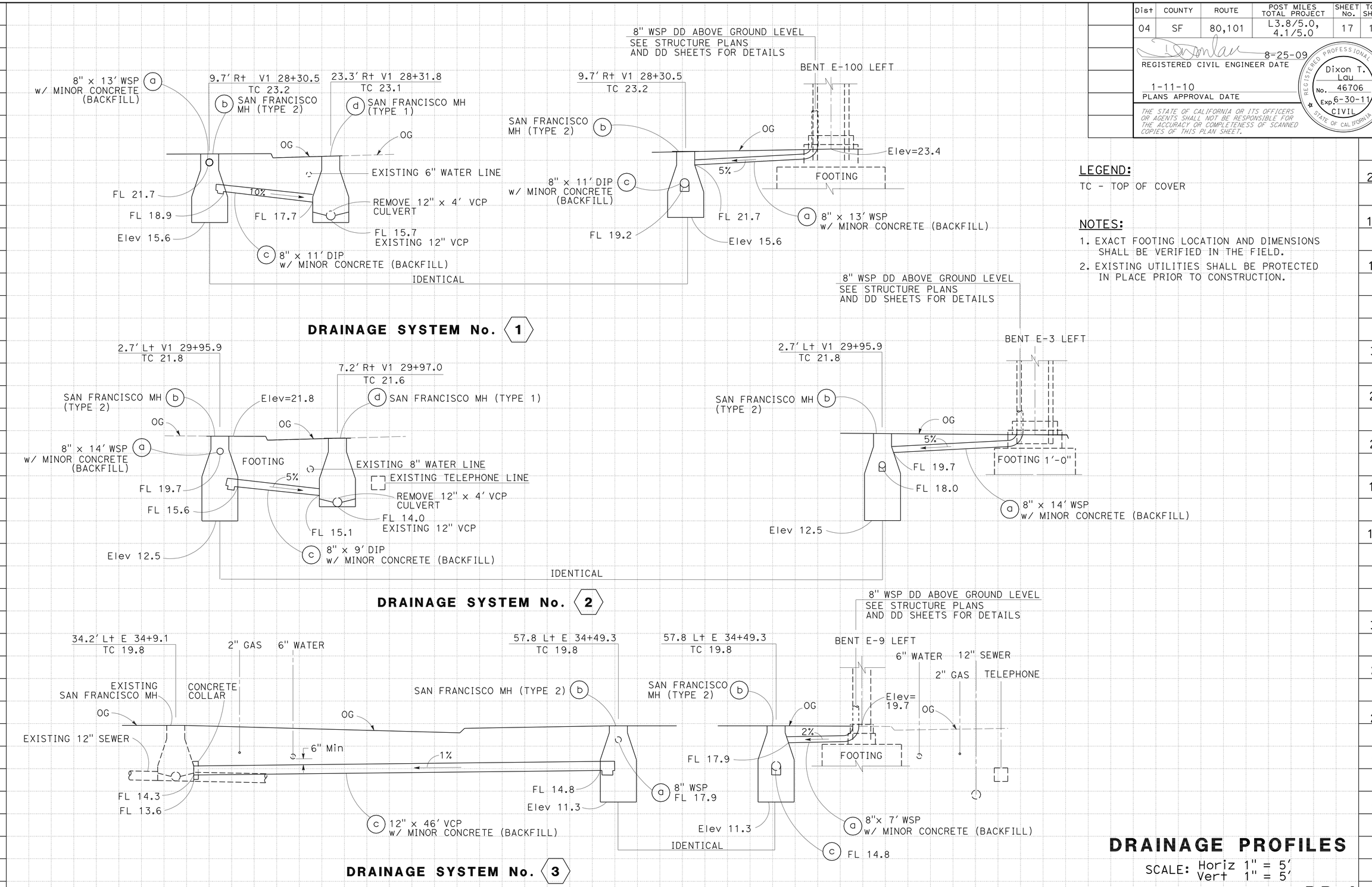

LEGEND:

TC - TOP OF COVER

NOTES:

1. EXACT FOOTING LOCATION AND DIMENSIONS SHALL BE VERIFIED IN THE FIELD.
2. EXISTING UTILITIES SHALL BE PROTECTED IN PLACE PRIOR TO CONSTRUCTION.

DRAINAGE PROFILES

SCALE: Horiz 1" = 5'
Vert 1" = 5'

DP-1

STATION		TOTAL
CY	Exc	
	Emb	

STATE OF CALIFORNIA - DEPARTMENT OF TRANSPORTATION
Caltrans HYDRAULICS

FUNCTIONAL SUPERVISOR: JOSEPH PETERSON
CALCULATED-DESIGNED BY: MICHAEL PUSTOV
CHECKED BY: DIXON T. LAU
REVISED BY: MP
DATE REVISED: 5/13/09

LAST REVISION DATE PLOTTED => 14-JAN-2010
TIME PLOTTED => 13:03
05-22-09

Dist	COUNTY	ROUTE	POST MILES TOTAL PROJECT	SHEET No.	TOTAL SHEETS
04	SF	80,101	L3.8/5.0, 4.1/5.0	18	136

REGISTERED CIVIL ENGINEER DATE 8-25-09

PLANS APPROVAL DATE 1-11-10

REGISTERED PROFESSIONAL ENGINEER Dixon T. Lau No. 46706 Exp. 6-30-11 CIVIL STATE OF CALIFORNIA

THE STATE OF CALIFORNIA OR ITS OFFICERS OR AGENTS SHALL NOT BE RESPONSIBLE FOR THE ACCURACY OR COMPLETENESS OF SCANNED COPIES OF THIS PLAN SHEET.

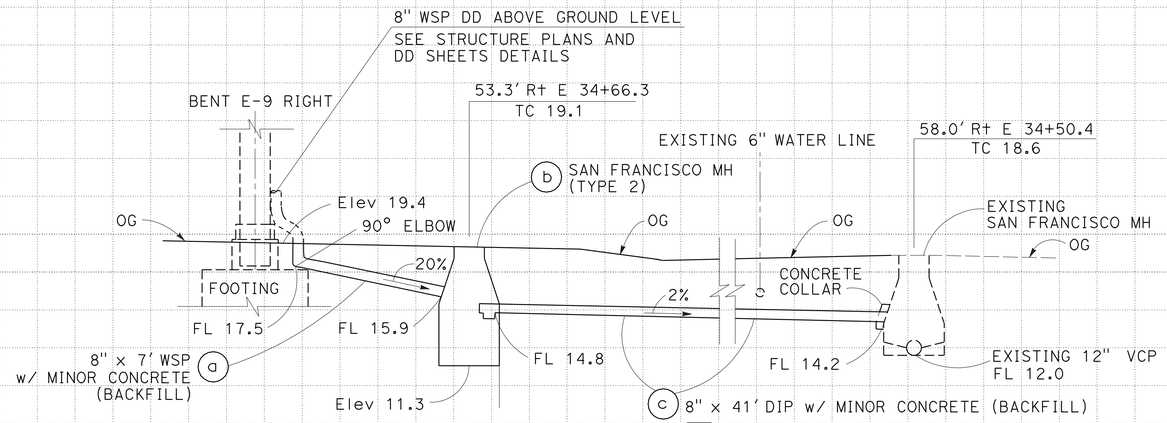

DRAINAGE SYSTEM No. 4

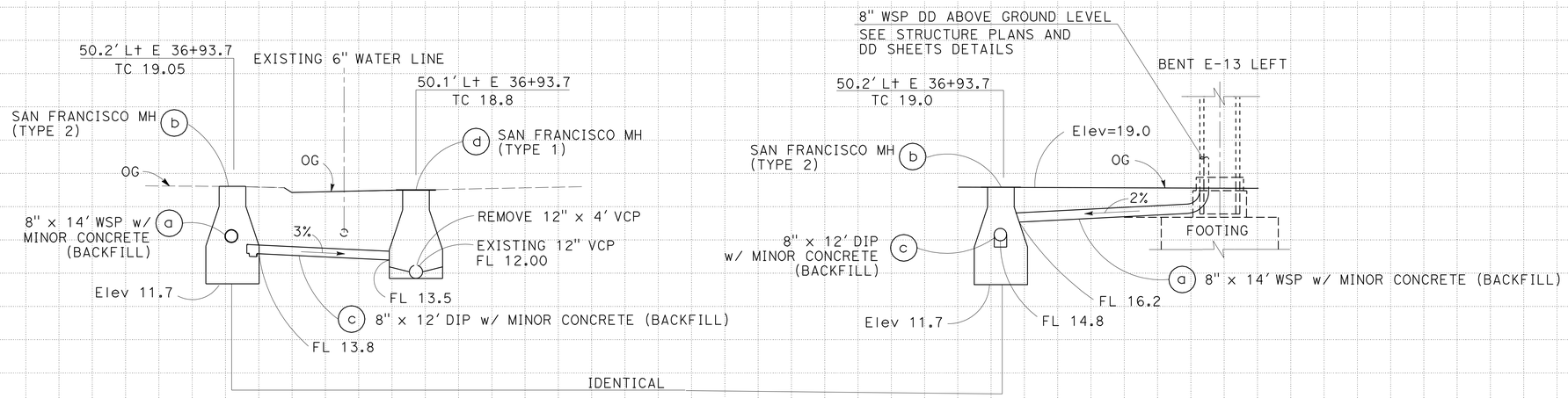

DRAINAGE SYSTEM No. 5

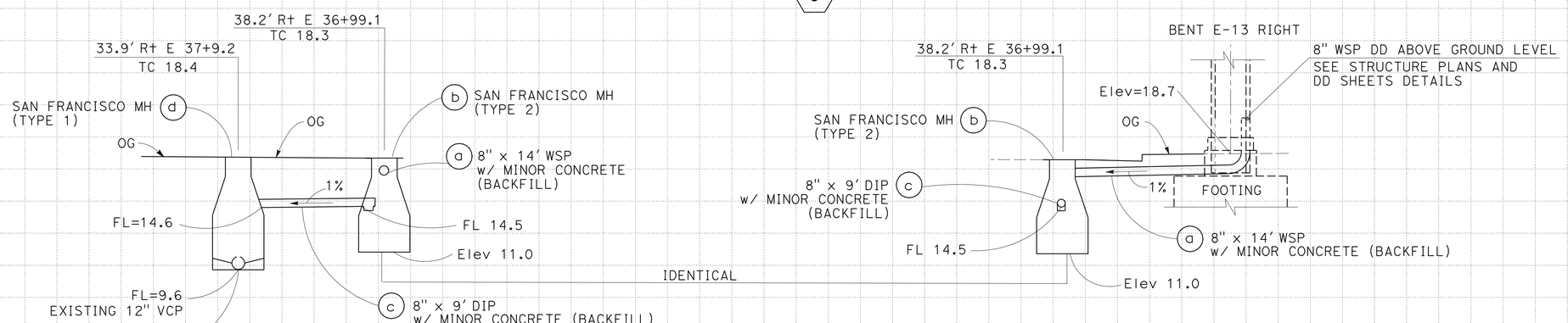

DRAINAGE SYSTEM No. 6

DRAINAGE PROFILES

SCALE: Horiz 1" = 5'
Vert 1" = 5'

DP-2

STATION		TOTAL
CY	Exc	
	Emb	

STATE OF CALIFORNIA - DEPARTMENT OF TRANSPORTATION
Caltrans HYDRAULICS

FUNCTIONAL SUPERVISOR: JOSEPH PETERSON

CALCULATED-DESIGNED BY: DIXON T. LAU
CHECKED BY: MICHAEL PUSTOV

REVISED BY: MP
DATE REVISED: 5/13/09

LAST REVISION 05-11-09
DATE PLOTTED => 14-JAN-2010
TIME PLOTTED => 13:03

Dist	COUNTY	ROUTE	POST MILES TOTAL PROJECT	SHEET No.	TOTAL SHEETS
04	SF	80,101	L3.8/5.0, 4.1/5.0	19	136

REGISTERED CIVIL ENGINEER DATE 8-25-09

PLANS APPROVAL DATE 1-11-10

THE STATE OF CALIFORNIA OR ITS OFFICERS OR AGENTS SHALL NOT BE RESPONSIBLE FOR THE ACCURACY OR COMPLETENESS OF SCANNED COPIES OF THIS PLAN SHEET.

REGISTERED PROFESSIONAL ENGINEER Dixon T. Lau No. 46706 Exp. 6-30-11 CIVIL STATE OF CALIFORNIA

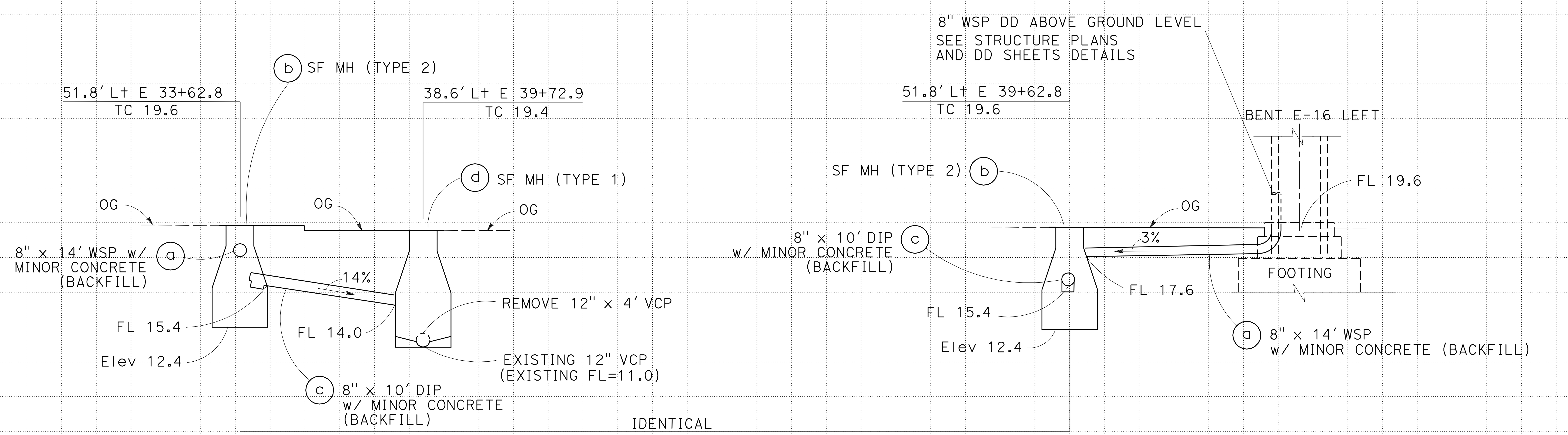

DRAINAGE SYSTEM No. 7

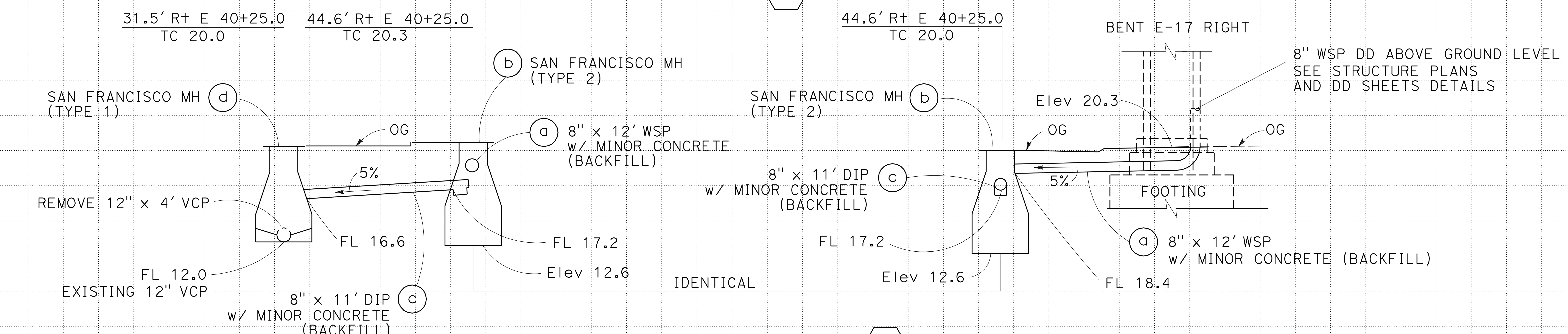

DRAINAGE SYSTEM No. 8

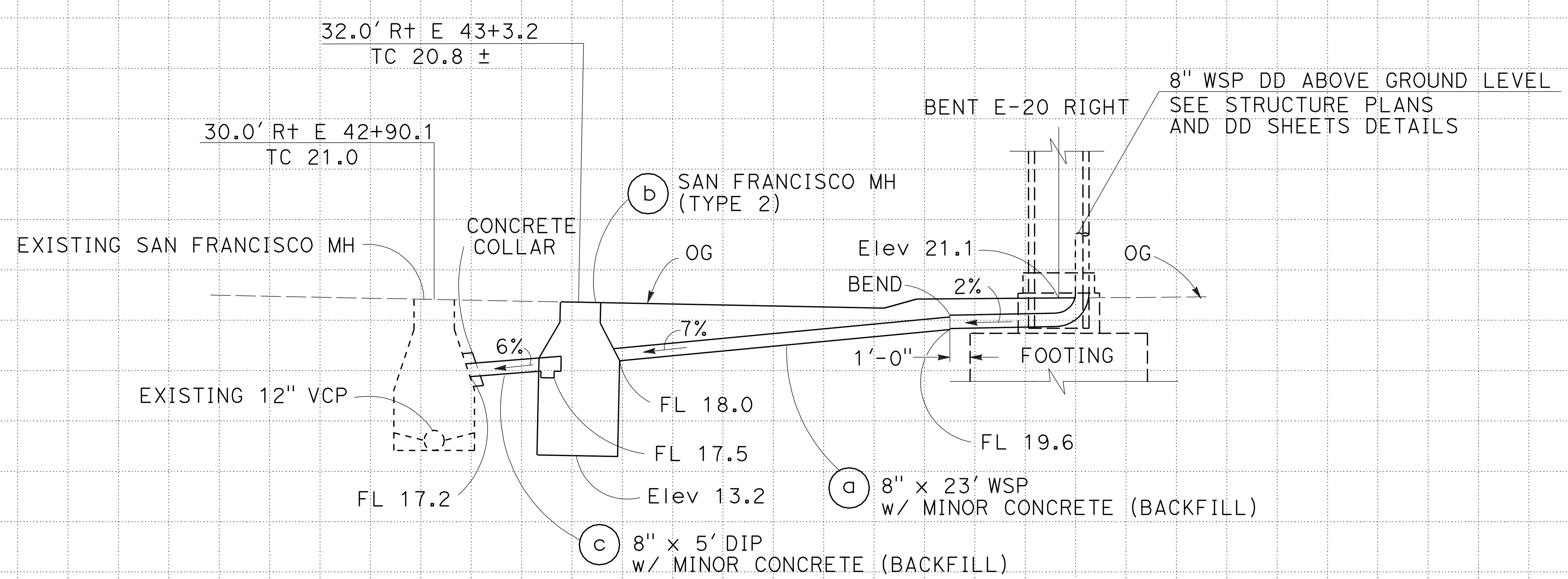

DRAINAGE SYSTEM No. 9

DRAINAGE PROFILES

SCALE: Horiz 1" = 5′
Vert 1" = 5′

DP-3

STATION | CY Exc | Emb | TOTAL

STATE OF CALIFORNIA - DEPARTMENT OF TRANSPORTATION
Caltrans
HYDRAULICS

FUNCTIONAL SUPERVISOR: JOSEPH PETERSON
CALCULATED-DESIGNED BY: MICHAEL PUSTOV
CHECKED BY: DIXON T. LAU
REVISED BY: MP
DATE REVISED: 5/13/09

LAST REVISION 05-15-09
DATE PLOTTED => 14-JAN-2010
TIME PLOTTED => 13:03

Dist	COUNTY	ROUTE	POST MILES TOTAL PROJECT	SHEET No.	TOTAL SHEETS
04	SF	80,101	L3.8/5.0, 4.1/5.0	20	136

REGISTERED CIVIL ENGINEER 8-25-09 DATE

1-11-10
PLANS APPROVAL DATE

REGISTERED PROFESSIONAL ENGINEER Dixon T. Lau No. 46706 Exp. 6-30-11 CIVIL STATE OF CALIFORNIA

THE STATE OF CALIFORNIA OR ITS OFFICERS OR AGENTS SHALL NOT BE RESPONSIBLE FOR THE ACCURACY OR COMPLETENESS OF SCANNED COPIES OF THIS PLAN SHEET.

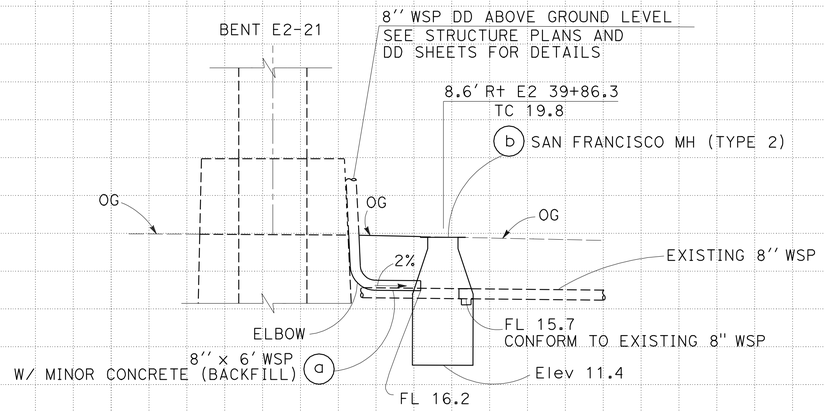

DRAINAGE SYSTEM No. 10

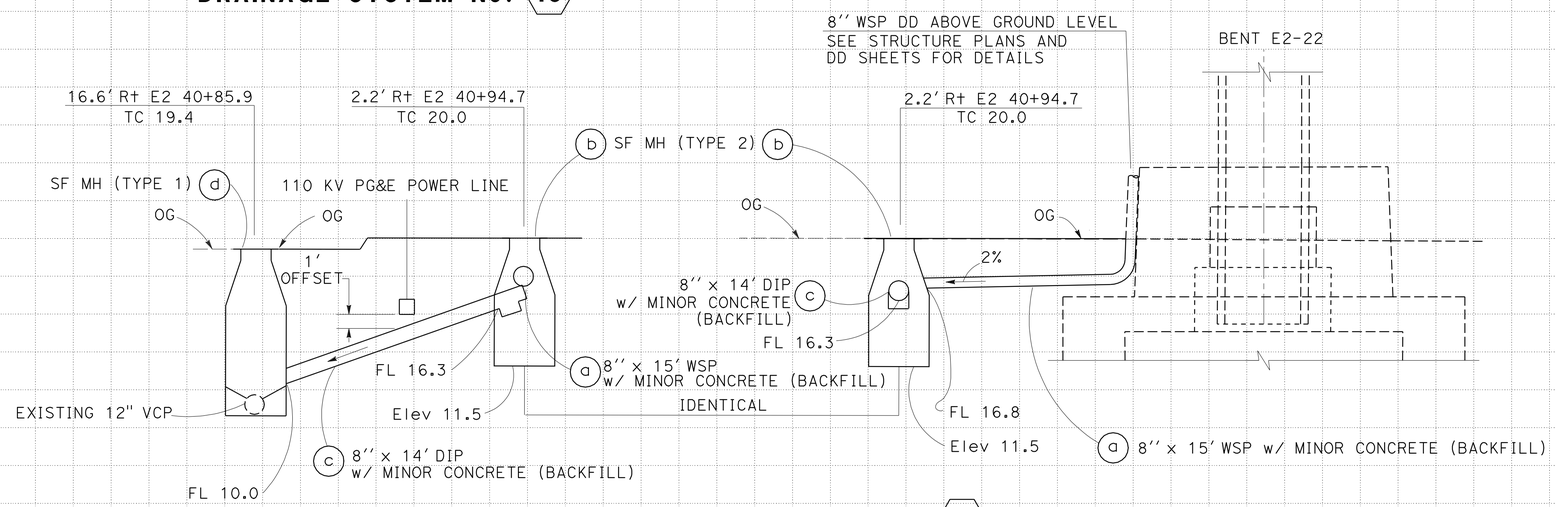

DRAINAGE SYSTEM No. 11

DRAINAGE PROFILES

SCALE: HORIZ 1'' = 5'
VERT 1'' = 5'

DP-4

STATION		TOTAL
CY	Exc	
	Emb	

REVISED BY	DATE REVISED
MP	5/13/09

MICHAEL PUSTOV — DIXON T. LAU — CALCULATED-DESIGNED BY — CHECKED BY

FUNCTIONAL SUPERVISOR: JOSEPH PETERSON

STATE OF CALIFORNIA - DEPARTMENT OF TRANSPORTATION
Caltrans
HYDRAULICS

LAST REVISION 05-15-09 | DATE PLOTTED => 14-JAN-2010 | TIME PLOTTED => 13:03

Dist	COUNTY	ROUTE	POST MILES TOTAL PROJECT	SHEET No.	TOTAL SHEETS
04	SF	80,101	L3.8/5.0, 4.1/5.0	21	136

REGISTERED CIVIL ENGINEER DATE 8-25-09

PLANS APPROVAL DATE 1-11-10

REGISTERED PROFESSIONAL ENGINEER Dixon T. Lau No. 46706 Exp. 6-30-11 CIVIL STATE OF CALIFORNIA

THE STATE OF CALIFORNIA OR ITS OFFICERS OR AGENTS SHALL NOT BE RESPONSIBLE FOR THE ACCURACY OR COMPLETENESS OF SCANNED COPIES OF THIS PLAN SHEET.

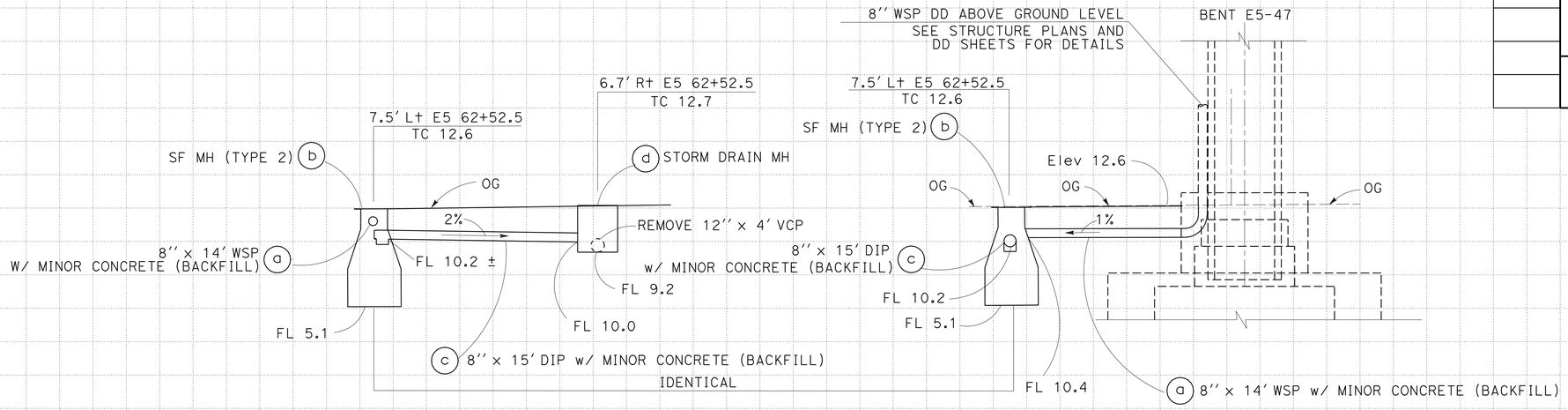

DRAINAGE SYSTEM No. 12

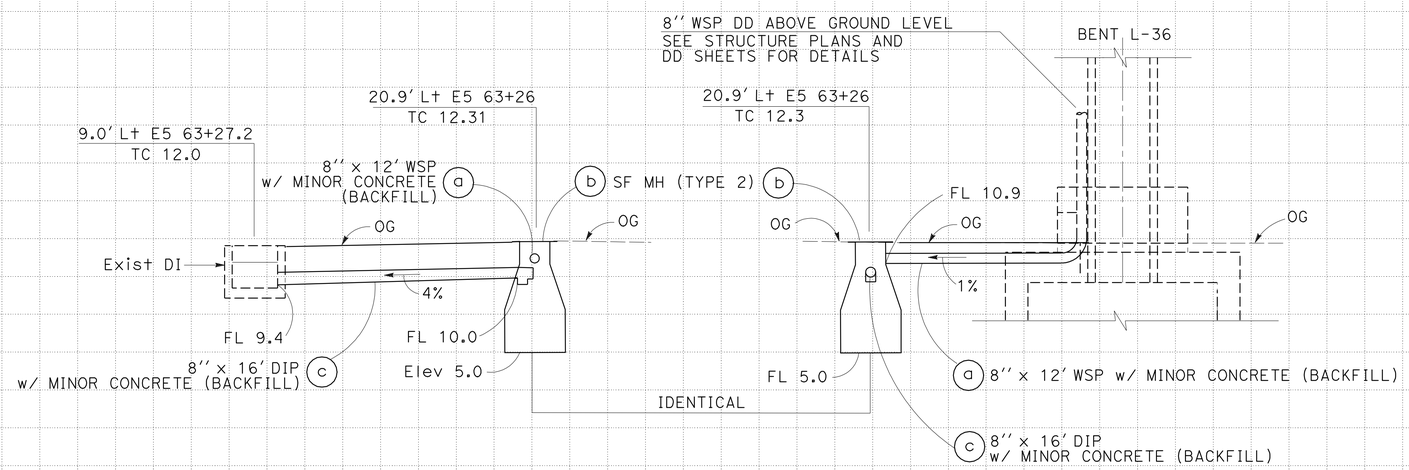

DRAINAGE SYSTEM No. 13

DRAINAGE PROFILES

SCALE: HORIZ 1'' = 5'
VERT 1'' = 5'

DP-5

STATION		TOTAL
CY	Exc	
	Emb	

STATE OF CALIFORNIA - DEPARTMENT OF TRANSPORTATION
Caltrans HYDRAULICS

FUNCTIONAL SUPERVISOR: JOSEPH PETERSON
CALCULATED-DESIGNED BY: MICHAEL PUSTOV
CHECKED BY: DIXON T. LAU
REVISED BY: MP
DATE REVISED: 5/13/09

LAST REVISION 05-15-09
DATE PLOTTED => 14-JAN-2010
TIME PLOTTED => 13:04

Dist	COUNTY	ROUTE	POST MILES TOTAL PROJECT	SHEET No.	TOTAL SHEETS
04	SF	80,101	L3.8/5.0, 4.1/5.0	22	136

REGISTERED CIVIL ENGINEER DATE 8-25-09

1-11-10
PLANS APPROVAL DATE

REGISTERED PROFESSIONAL ENGINEER Dixon T. Lau No. 46706 Exp. 6-30-11 CIVIL STATE OF CALIFORNIA

THE STATE OF CALIFORNIA OR ITS OFFICERS OR AGENTS SHALL NOT BE RESPONSIBLE FOR THE ACCURACY OR COMPLETENESS OF SCANNED COPIES OF THIS PLAN SHEET.

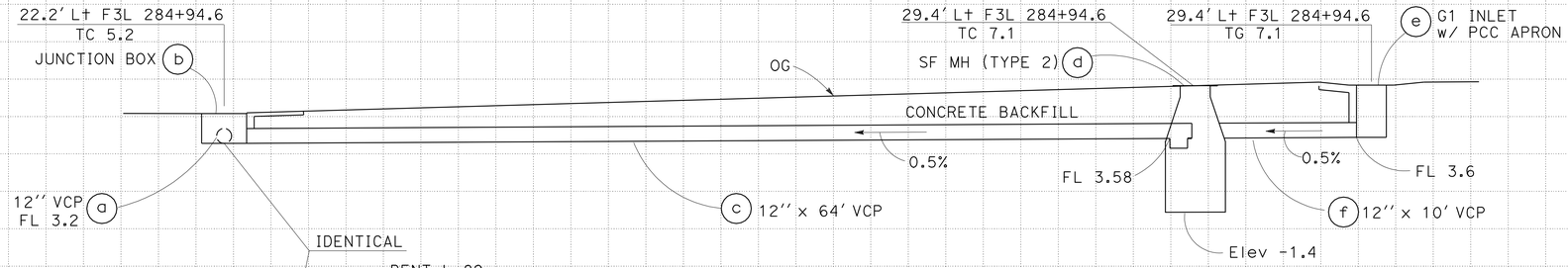

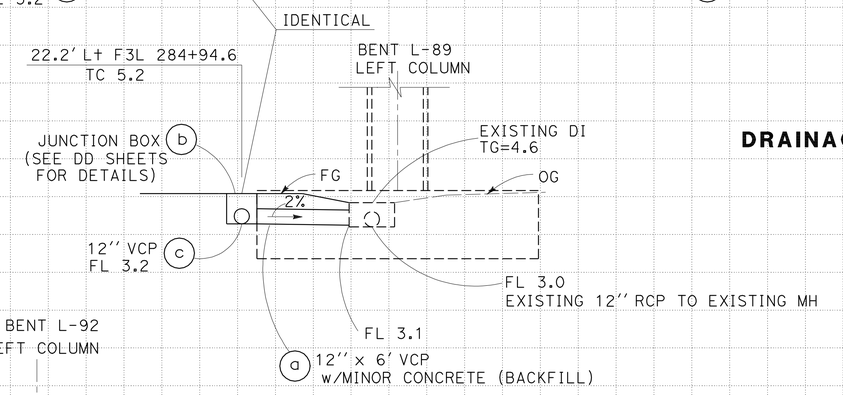

DRAINAGE SYSTEM No. 14

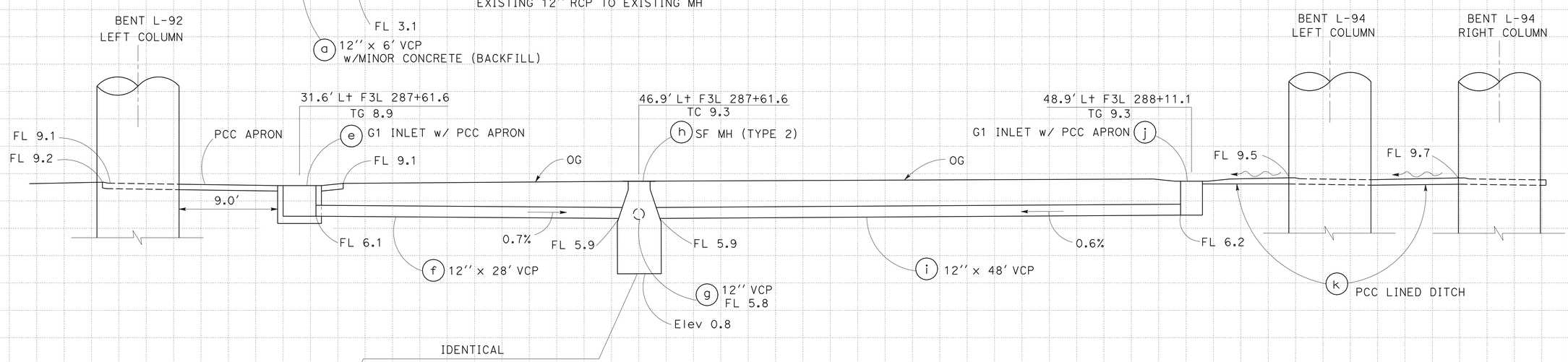

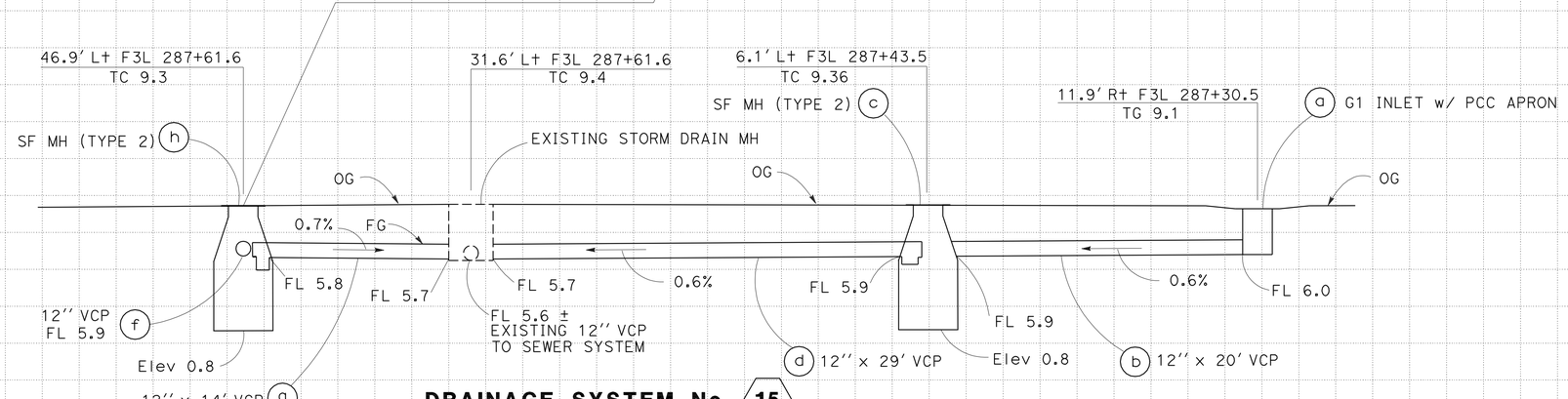

DRAINAGE SYSTEM No. 15

DRAINAGE PROFILES

SCALE: HORIZ 1'' = 5'
VERT 1'' = 5'

DP-6

REVISED BY	DATE REVISED
MP	5/13/09

CALCULATED-DESIGNED BY: MICHAEL PUSTOV
CHECKED BY: DIXON T. LAU
FUNCTIONAL SUPERVISOR: JOSEPH PETERSON

STATE OF CALIFORNIA - DEPARTMENT OF TRANSPORTATION
Caltrans HYDRAULICS

STATION		TOTAL
CY	Exc	
	Emb	

LAST REVISION 05-15-09 | DATE PLOTTED => 14-JAN-2010 | TIME PLOTTED => 13:04

Dist	COUNTY	ROUTE	POST MILES TOTAL PROJECT	SHEET No.	TOTAL SHEETS
04	SF	80,101	L3.8/5.0, 4.1/5.0	23	136

REGISTERED CIVIL ENGINEER DATE 8-25-09

1-11-10
PLANS APPROVAL DATE

REGISTERED PROFESSIONAL ENGINEER Dixon T. Lau No. 46706 Exp. 6-30-11 CIVIL STATE OF CALIFORNIA

THE STATE OF CALIFORNIA OR ITS OFFICERS OR AGENTS SHALL NOT BE RESPONSIBLE FOR THE ACCURACY OR COMPLETENESS OF SCANNED COPIES OF THIS PLAN SHEET.

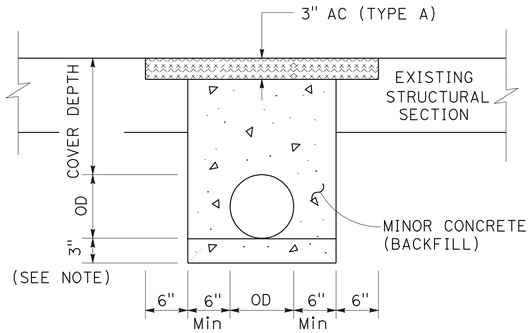

NOTE:

3" MINOR CONCRETE BACKFILL AS PIPE BEDDING IS REQUIRED FOR VITRIFIED CLAY PIPE ONLY.

ROADWAY TRENCH PAVING DETAIL

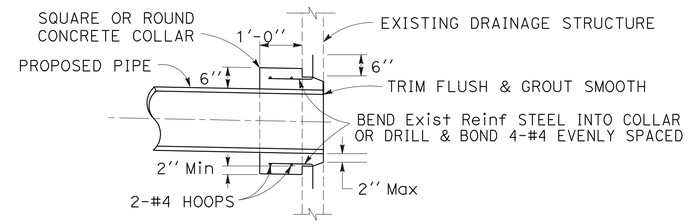

PIPE CONNECTION TO EXISTING DRAINAGE STRUCTURE

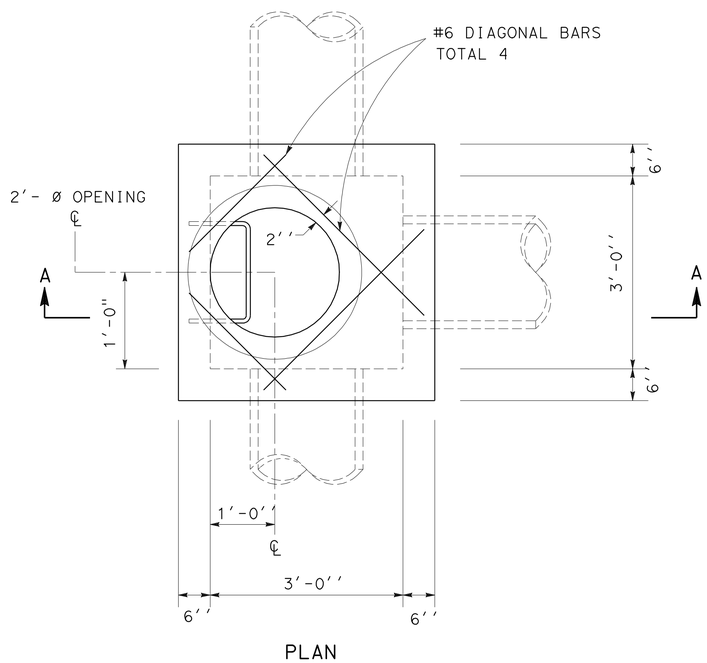

PLAN

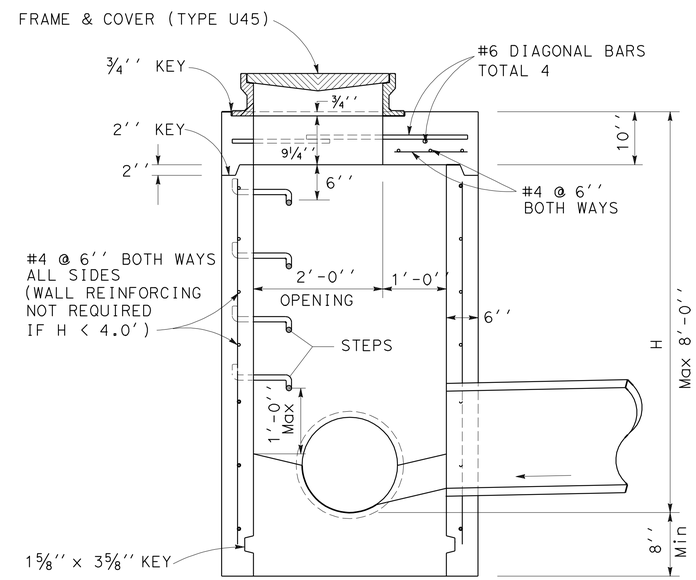

NOTE:

STEPS - NONE REQUIRED WHERE "H" IS LESS THAN 2'-6". WHERE "H" IS 2'-6" OR MORE, INSTALL STEPS WITH LOWEST RUNG 1'-0" ABOVE THE FLOOR AND HIGHEST RUNG NOT MORE THAN 6" BELOW TOP OF INLET. THE DISTANCE BETWEEN STEPS SHALL NOT EXCEED 1'-0" AND SHALL BE UNIFORM THROUGHOUT THE LENGTH OF THE WALL. PLACE STEPS IN THE WALL WITHOUT AN OPENING. STEP INSERTS MAY BE SUBSTITUTED FOR THE BAR STEPS. STEP INSERTS SHALL COMPLY WITH STATE INDUSTRIAL SAFETY REQUIREMENT. SEE STANDARD PLAN D74C FOR STEP DETAILS.

SECTION A-A

STORM DRAIN MANHOLE

12 d

DRAINAGE DETAILS

NO SCALE

DD-1

REVISED BY	DATE REVISED
MP	5/13/09

MICHAEL PUSTOV — CALCULATED-DESIGNED BY
DIXON T. LAU — CHECKED BY
JOSEPH PETERSON — FUNCTIONAL SUPERVISOR

STATE OF CALIFORNIA - DEPARTMENT OF TRANSPORTATION
Caltrans HYDRAULICS

LAST REVISION 02-25-08 | DATE PLOTTED => 14-JAN-2010 | TIME PLOTTED => 13:04

Dist	COUNTY	ROUTE	POST MILES TOTAL PROJECT	SHEET No.	TOTAL SHEETS
04	SF	80,101	L3.8/5.0, 4.1/5.0	24	136

REGISTERED CIVIL ENGINEER DATE 8-25-09

PLANS APPROVAL DATE 1-11-10

REGISTERED PROFESSIONAL ENGINEER Dixon T. Lau No. 46706 Exp. 6-30-11 CIVIL STATE OF CALIFORNIA

THE STATE OF CALIFORNIA OR ITS OFFICERS OR AGENTS SHALL NOT BE RESPONSIBLE FOR THE ACCURACY OR COMPLETENESS OF SCANNED COPIES OF THIS PLAN SHEET.

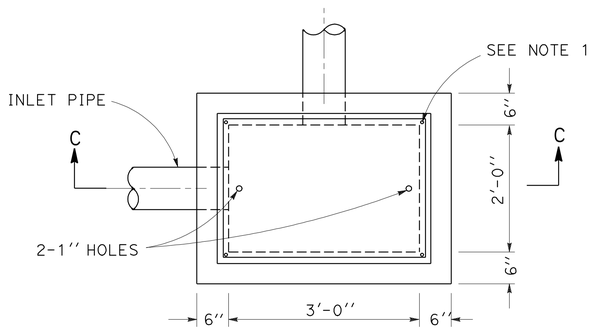

PLAN

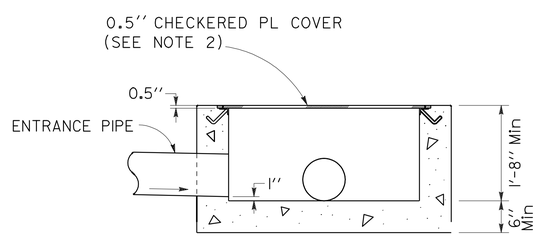

SECTION C-C

JUCTION BOX DETAIL

14 b

NOTES:

1. PROVIDE ONE 3/8'' x 3/4'' BRASS FLATHEAD SCREW IN EACH CORNER OF PLATE COVER. TOTAL: 4
2. FOR CHECKERED PLATE COVER AND FRAME INSTALLATION DETAILS NOT SHOWN, SEE Std PLAN D72.
3. FLOW LINE OF OUTLET PIPE SHALL BE AT LEAST 1'' BELOW THE FLOW LINE OF INLET PIPE.
4. BOTH INLET AND OUTLET PIPE SIZES SHALL BE 12'' OR LESS.
5. PIPES CAN BE PLACED IN ANY WALL.

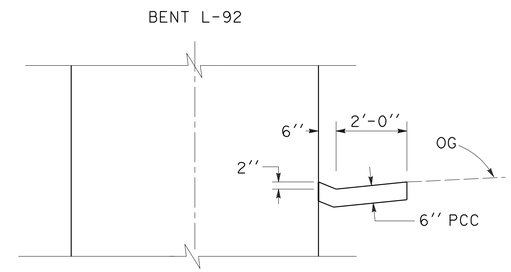

SECTION A-A

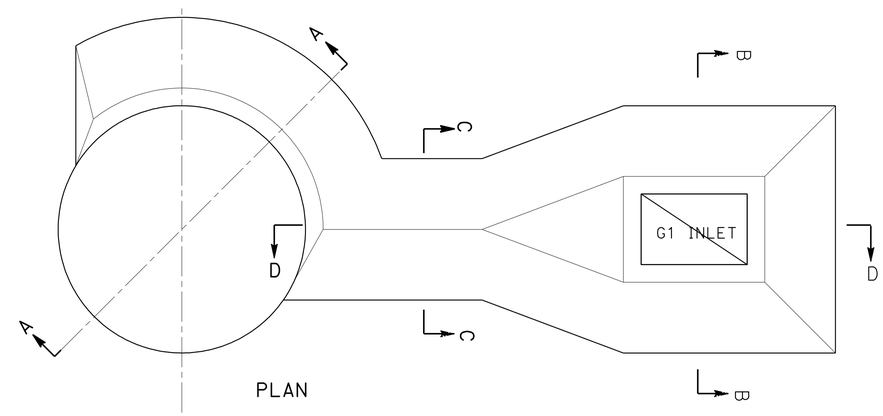

PLAN

G1 INLET WITH PCC APRON & TRANSITION

15 a , e

SEE DD-5 FOR SECTIONS B-B, C-C AND D-D.

DRAINAGE DETAILS

NO SCALE

DD-2

STATE OF CALIFORNIA - DEPARTMENT OF TRANSPORTATION

Caltrans HYDRAULICS

FUNCTIONAL SUPERVISOR: JOSEPH PETERSON

CALCULATED-DESIGNED BY: MICHAEL PUSTOV

CHECKED BY: DIXON T. LAU

REVISED BY: MP

DATE REVISED: 5/13/09

LAST REVISION 05-15-09 | DATE PLOTTED => 14-JAN-2010 | TIME PLOTTED => 13:04

Dist	COUNTY	ROUTE	POST MILES TOTAL PROJECT	SHEET No.	TOTAL SHEETS
04	SF	80,101	L3.8/5.0, 4.1/5.0	25	136

REGISTERED CIVIL ENGINEER DATE 8-25-09

PLANS APPROVAL DATE 1-11-10

REGISTERED PROFESSIONAL ENGINEER Dixon T. Lau No. 46706 Exp. 6-30-11 CIVIL STATE OF CALIFORNIA

THE STATE OF CALIFORNIA OR ITS OFFICERS OR AGENTS SHALL NOT BE RESPONSIBLE FOR THE ACCURACY OR COMPLETENESS OF SCANNED COPIES OF THIS PLAN SHEET.

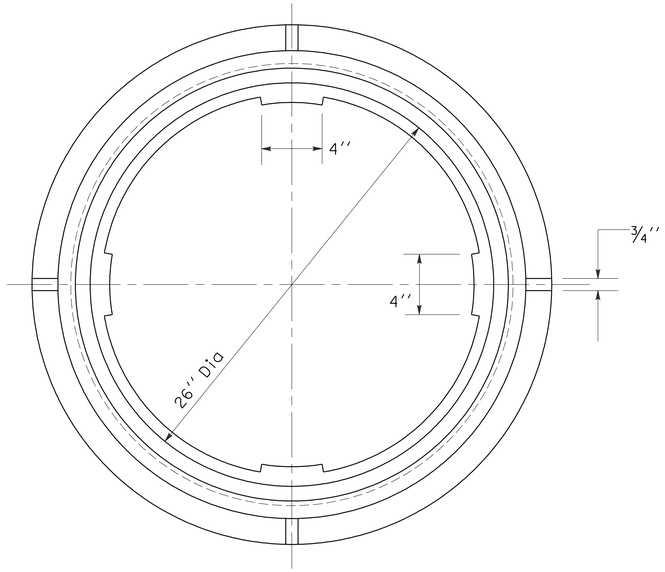

PLAN VIEW OF FRAME

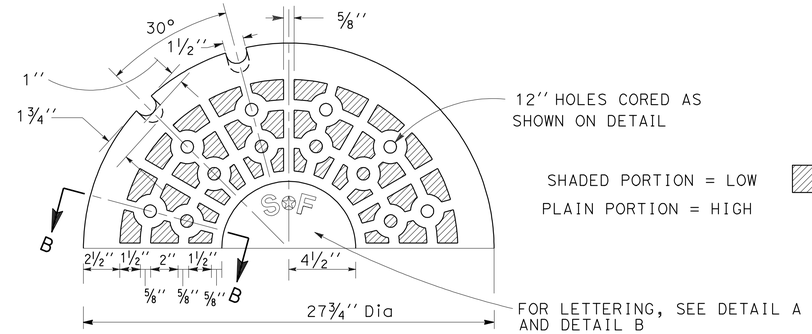

HALF PLAN OF COVER

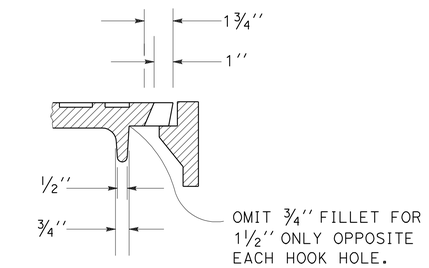

SECTION A-A

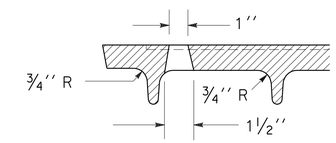

SECTION B-B

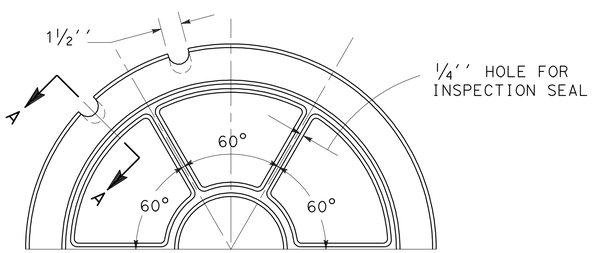

HALF PLAN-UNDERSIDE OF COVER

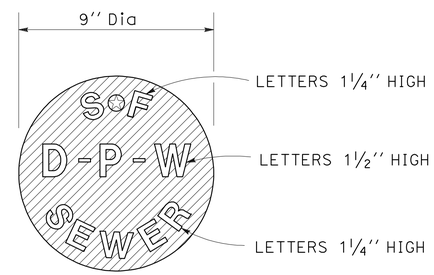

DETAIL A-SAN FRANCISCO MANHOLE (TYPE-1)

PATTERN TO BE MADE SO THAT OTHER LETTERING CAN BE INSERTED IN THIS SPACE IF ORDERED.

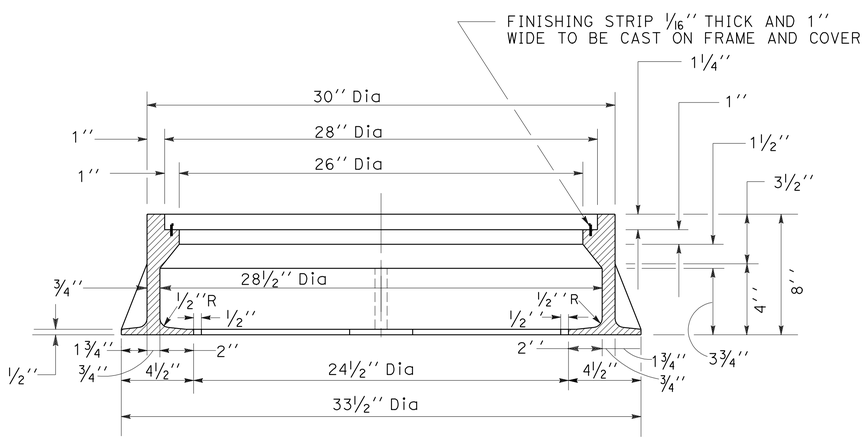

SECTION OF MANHOLE FRAME

Approx WEIGHT 258 LBS

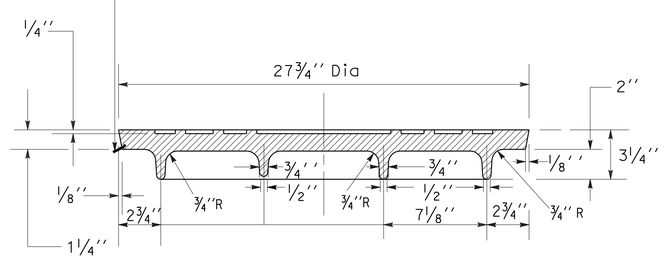

SECTION OF COVER

Approx WEIGHT 225 LBS

SAN FRANCISCO MANHOLE FRAME AND COVER

NOTE: MATERIAL FOR MANHOLE FRAME AND COVER TO BE "GRAY CAST IRON" IN ACCORDANCE WITH CURRENT A.S.T.M. - Spec A-48.

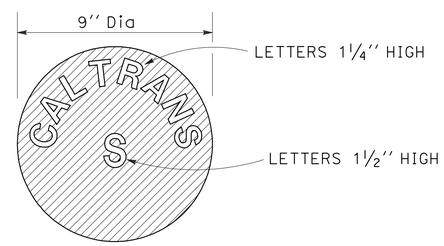

DETAIL B-SAN FRANCISCO MANHOLE (TYPE-2)

PATTERN TO BE MADE SO THAT OTHER LETTERING CAN BE INSERTED IN THIS SPACE IF ORDERED.

DRAINAGE DETAILS

NO SCALE

DD-3

REVISED BY	DATE REVISED
MP	5/13/09

CALCULATED-DESIGNED BY: MICHAEL PUSTOV
CHECKED BY: DIXON T. LAU
FUNCTIONAL SUPERVISOR: JOSEPH PETERSON

STATE OF CALIFORNIA - DEPARTMENT OF TRANSPORTATION
Caltrans HYDRAULICS

LAST REVISION 10-10-08
DATE PLOTTED => 14-JAN-2010
TIME PLOTTED => 13:04

Dist	COUNTY	ROUTE	POST MILES TOTAL PROJECT	SHEET No.	TOTAL SHEETS
04	SF	80,101	L3.8/5.0, 4.1/5.0	26	136

8-25-09
REGISTERED CIVIL ENGINEER DATE

1-11-10
PLANS APPROVAL DATE

REGISTERED PROFESSIONAL ENGINEER Dixon T. Lau No. 46706 Exp 6-30-11 CIVIL STATE OF CALIFORNIA

THE STATE OF CALIFORNIA OR ITS OFFICERS OR AGENTS SHALL NOT BE RESPONSIBLE FOR THE ACCURACY OR COMPLETENESS OF SCANNED COPIES OF THIS PLAN SHEET.

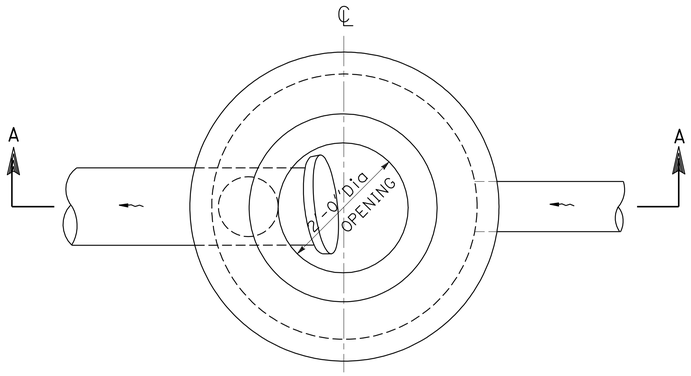

PLAN
(TYPE 2)

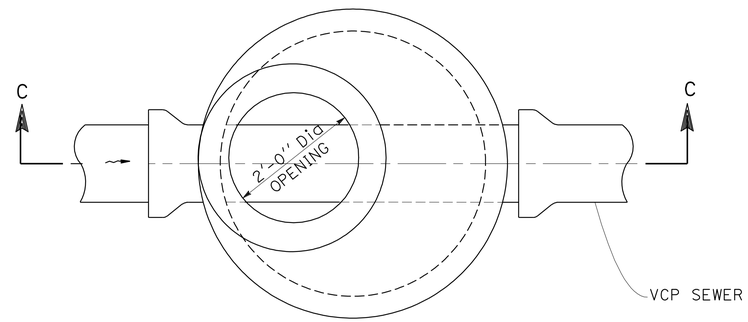

PLAN
(TYPE 1)

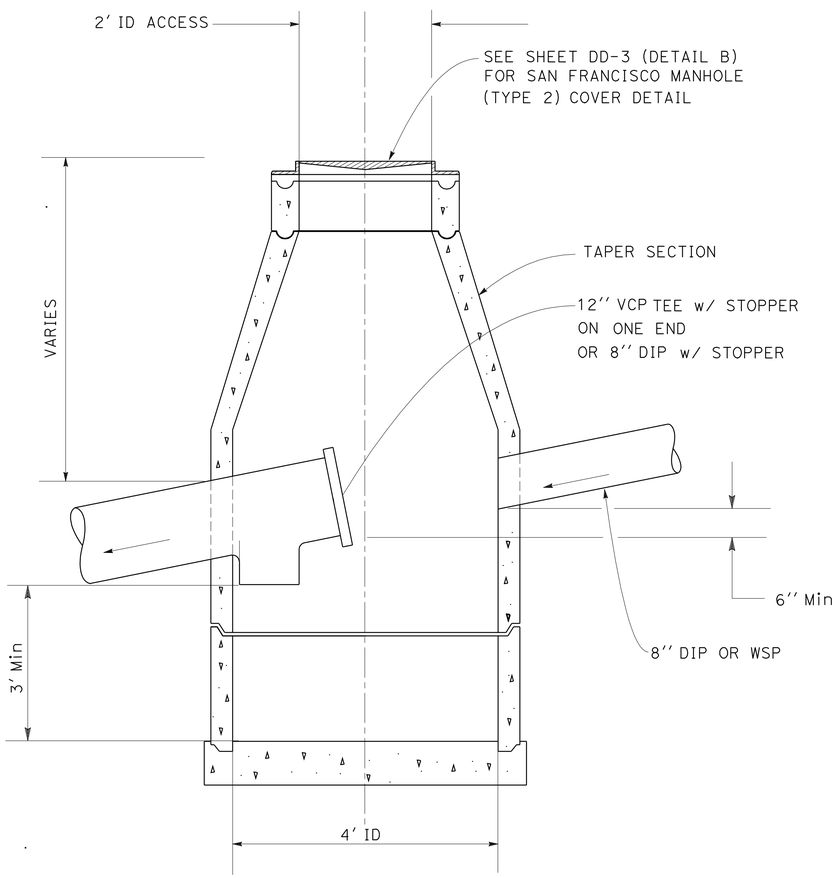

SECTION A-A (TYPE 2)

SAN FRANCISCO MANHOLE (TYPE 2)

SAND TRAP MANHOLE TYPICAL SECTION

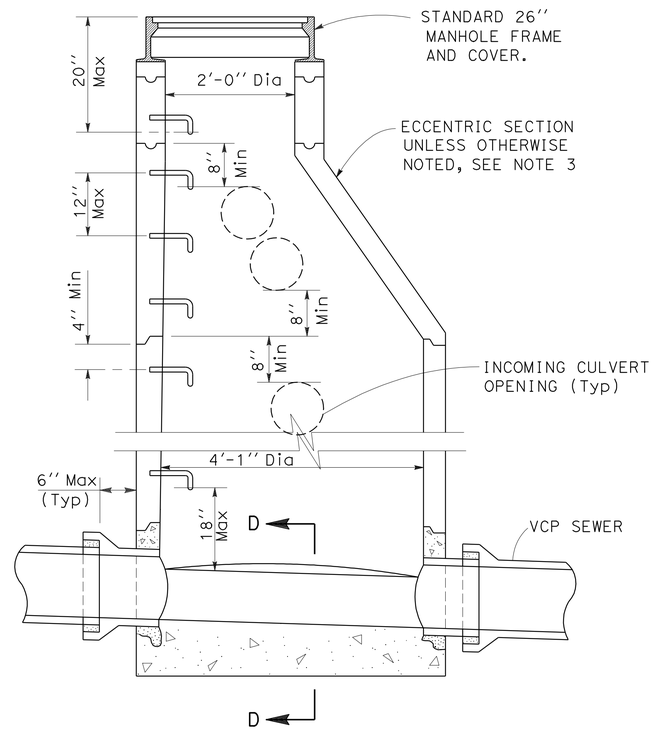

SECTION C-C (TYPE 1)

SAN FRANCISCO MANHOLE (TYPE 1)

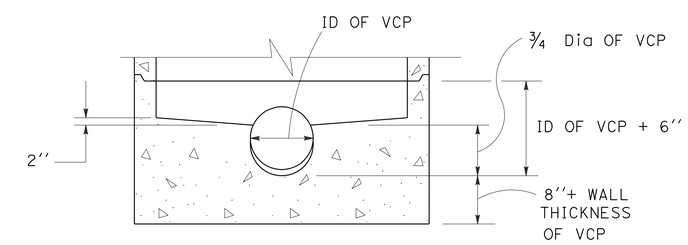

SECTION D-D (TYPE 1)

NOTES:

1. ALL PRECAST COMPONENTS SHALL BE MANUFACTURED IN ACCORDANCE WITH ASTM C-478.
2. VERTICAL WALL OF ECCENTRIC CONE SECTION SHALL BE ON UPSTREAM SIDE OF MANHOLE, UNLESS OTHERWISE DIRECTED BY THE ENGINEER.
3. CAST-IN-PLACE CONCRETE FOUNDATION SHALL BE MINOR CONCRETE.
4. CULVERT OPENINGS SHALL BE A MINIMUM OF 8'' FROM PRECAST SECTION JOINTS.
5. CONTRACTOR SHALL MINIMIZE THE NUMBER OF SECTION RINGS BY UTILIZING LARGEST SECTION AVAILABLE.
6. ALL STEPS SHALL BE CLASS 304 STAINLESS STEEL OR POLYPROPYLENE CONFORMING TO TYPE II, GRADE 16906 AS PRESCRIBED BY ASTM 2146 WITH 1/2-INCH GRADE 60 STEEL REINFORCEMENT CONFORMING TO ASTM A-615.

DRAINAGE DETAILS

NO SCALE

DD-4

STATE OF CALIFORNIA - DEPARTMENT OF TRANSPORTATION
Caltrans HYDRAULICS

FUNCTIONAL SUPERVISOR: JOSEPH PETERSON

CALCULATED-DESIGNED BY: MICHAEL PUSTOV
CHECKED BY: DIXON T. LAU

REVISED BY: MP
DATE REVISED: 5/13/09

LAST REVISION 05-15-09 | DATE PLOTTED => 14-JAN-2010 | TIME PLOTTED => 13:05

Dist	COUNTY	ROUTE	POST MILES TOTAL PROJECT	SHEET No.	TOTAL SHEETS
04	SF	80,101	L3.8/5.0, 4.1/5.0	27	136

REGISTERED CIVIL ENGINEER 8-25-09 DATE

1-11-10
PLANS APPROVAL DATE

REGISTERED PROFESSIONAL ENGINEER Dixon T. Lau No. 46706 Exp 6-30-11 CIVIL STATE OF CALIFORNIA

THE STATE OF CALIFORNIA OR ITS OFFICERS OR AGENTS SHALL NOT BE RESPONSIBLE FOR THE ACCURACY OR COMPLETENESS OF SCANNED COPIES OF THIS PLAN SHEET.

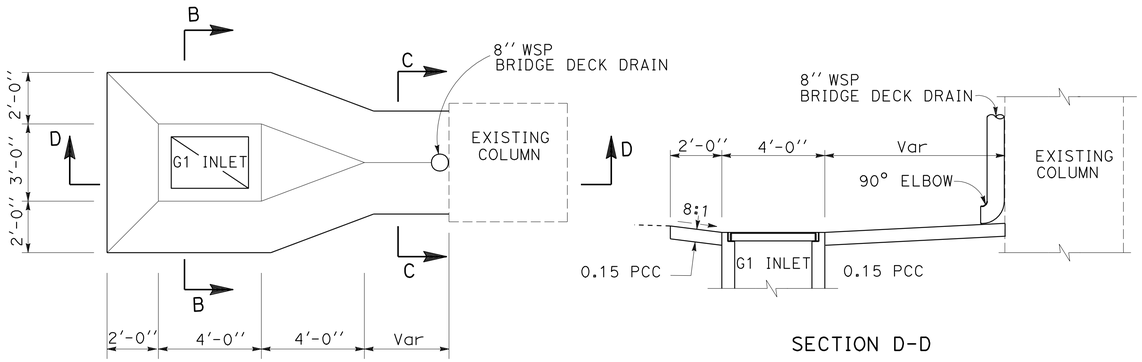

SECTION D-D

14 e

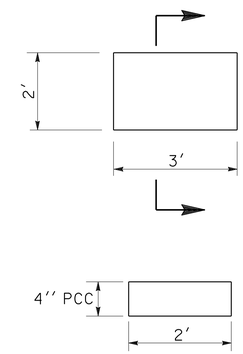

CONCRETE SPLASH PAD

FOR BOTH 16 a AND 17 a

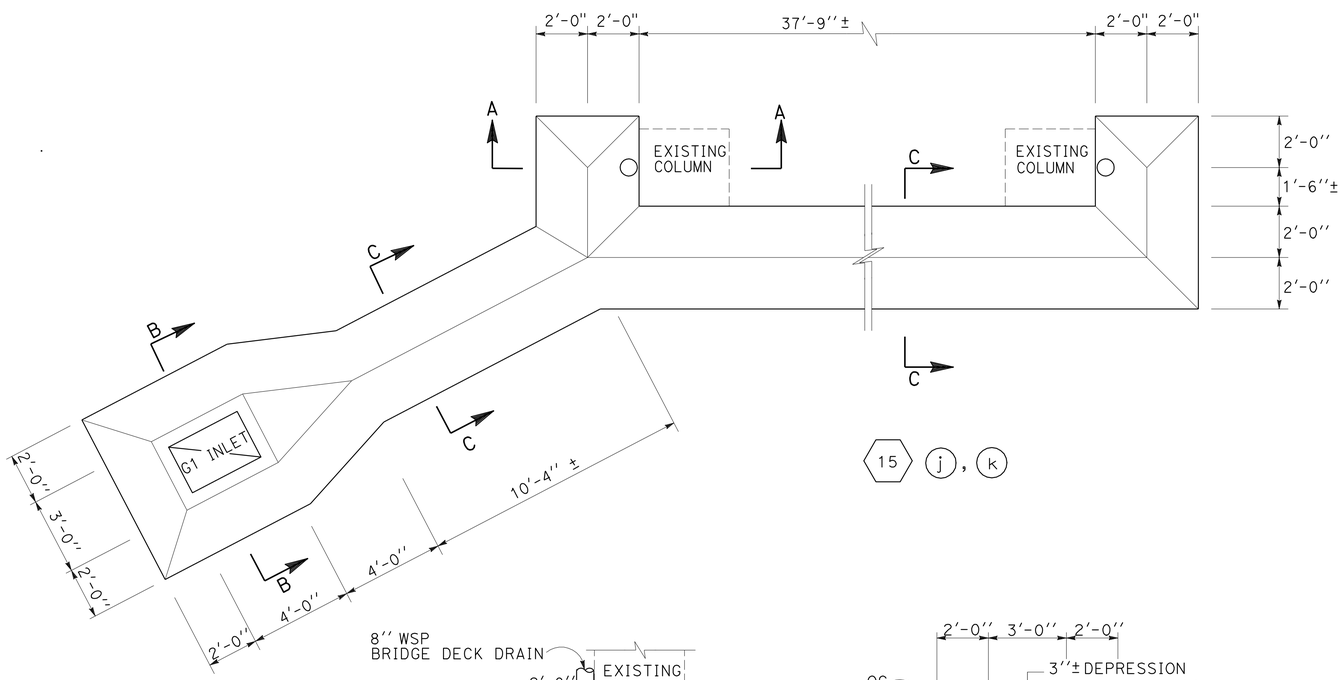

15 j, k

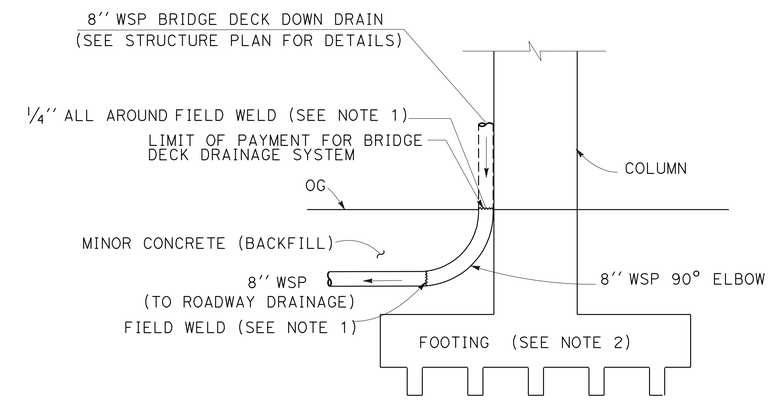

DETAIL OF DOWNDRAIN OUTLET

1 a, 2 a, 3 a, 4 a, 5 a,
6 a, 7 a, 8 a, 9 a, 10 a,
11 a, 12 a, 13 a

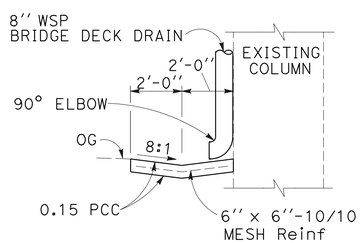

SECTION A-A

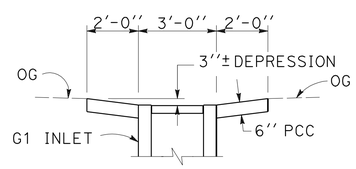

SECTION B-B

FOR BOTH 14 e AND 15 j, k

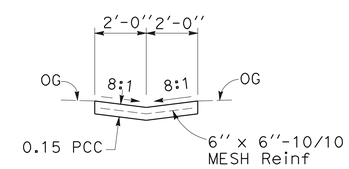

SECTION C-C

FOR BOTH 14 e AND 15 k

NOTES:

1. EXACT FOOTING LOCATION AND DIMENSIONS SHALL BE VERIFIED IN THE FIELD.

DRAINAGE DETAILS

NO SCALE

DD-5

STATE OF CALIFORNIA - DEPARTMENT OF TRANSPORTATION
Caltrans HYDRAULICS
FUNCTIONAL SUPERVISOR: JOSEPH PETERSON
CALCULATED-DESIGNED BY: MICHAEL PUSTOV
CHECKED BY: DIXON T. LAU
REVISED BY: MP
DATE REVISED: 5/13/09

LAST REVISION 05-15-09
DATE PLOTTED => 14-JAN-2010
TIME PLOTTED => 13:05

Dist	COUNTY	ROUTE	POST MILES TOTAL PROJECT	SHEET No.	TOTAL SHEETS
04	SF	80,101	L3.8/5.0, 4.1/5.0	28	136

REGISTERED CIVIL ENGINEER DATE 8-25-09

1-11-10
PLANS APPROVAL DATE

REGISTERED PROFESSIONAL ENGINEER Dixon T. Lau No. 46706 Exp. 6-30-11 CIVIL STATE OF CALIFORNIA

THE STATE OF CALIFORNIA OR ITS OFFICERS OR AGENTS SHALL NOT BE RESPONSIBLE FOR THE ACCURACY OR COMPLETENESS OF SCANNED COPIES OF THIS PLAN SHEET.

LEGEND:

S - STANDARD

(N) NOT A SEPARATE PAY ITEM, FOR INFORMATION ONLY.

DRAINAGE QUANTITIES

DRAINAGE SYSTEM No. ⬡	DRAINAGE UNIT ◯	ABANDON CULVERT (EA)	REMOVE CULVERT (LF)	ADJUST INLET (EA)	DITCH EXCAVATION (CY)	MINOR CONCRETE (DITCH LINING) (CY)	MINOR CONCRETE (MINOR STRUCTURE) (CY)	MINOR CONCRETE (Misc CONSTRUCTION) (CY)	Misc IRON & STEEL (LB)	FRAMES AND GRATES (N) TYPE 24-12X (EA)	FRAMES AND GRATES (N) TYPE U 45 (EA)	FRAMES AND GRATES (N) 0.5'' CHECKERED PLATE (EA)	12'' VITRIFIED CLAY PIPE (LF)	8'' WELDED STEEL PIPE (0.134'' THICK) (LF)	8'' DUCTILE IRON PIPE (LF)	MINOR CONCRETE (BACKFILL) (CY)	CONCRETE SPLASH PAD (EA)	SAN FRANCISCO MANHOLE (TYPE 1) (EA)	SAN FRANCISCO MANHOLE (TYPE 2) (EA)	MAXIMUM COVER (N) (FT)	HEIGHT OF INLET/MANHOLE /JUNCTION BOX "H" (N) (FT)	STORM DRAIN MANHOLE (N) (EA)	JOINT TYPE (N)	DESCRIPTION	STATION	DRAINAGE PLAN SHEET No.	DRAINAGE SYSTEM No. ⬡	DRAINAGE UNIT ◯
1	a													13		1.1				1.0			DD	8'' WELDED STEEL PIPE	5.77' R+ V1 28+16.3 TO 9.2' R+ V1 28+29.3	D-1	1	a
	b																		1		7.4			SAN FRANCISCO MANHOLE (TYPE 2)	9.7' R+ V1 28+30.5			b
	c														11	3.2				4.4			S	8'' DUCTILE IRON PIPE	11.2' R+ V1 28+30.4 TO 21.8' R+ V1 28+31.8			c
	d																	1			7.3			SAN FRANCISCO MANHOLE (TYPE 1)	23.3' R+ V1 28+31.9			d
2	a													14		1.5				1.5			DD	8'' WELDED STEEL PIPE	6.5' L+ V1 30+7.8 TO 2.7' L+ V1 29+95.9	D-2	2	a
	b																		1		8.5			SAN FRANCISCO MANHOLE (TYPE 2)	2.7' L+ V1 29+95.9			b
	c														9	3.6				5.5			S	8'' DUCTILE IRON PIPE	2.7' L+ V1 29+95.9 TO 7.2' R+ V1 29+97			c
	d																	1			7.6			SAN FRANCISCO MANHOLE (TYPE 1)	7.2' R+ V1 29+97			d
3	a													7		0.9				1.2			DD	8'' WELDED STEEL PIPE	47.3' L+ TO 57.8' L+ E 34+49.3	D-2	3	a
	b																		1		8.4			SAN FRANCISCO MANHOLE (TYPE 2)	57.8' L+ E 34+49.3			b
	c												46			17.2				4.4			S	12'' VCP	57.8' L+ E 34+49.3' TO 34.2' L+ E 34+9.1			c
4	a													7		1.5				2.7			DD	8'' WELDED STEEL PIPE	49.3' R+ E 50.4 TO 58.0' R+ E 34+50.4	D-2	4	a
	b																		1		7.9			SF MANHOLE (TYPE 2)	58.0' R+ E 34+50.4			b
	c														41	7.4				3.7			S	8'' DUCTILE IRON PIPE	58.0' R+ E 34+50.4 TO 61.3' R+ E 34+94.1			c
5	a													14		2.0				1.9			DD	8'' WELDED STEEL PIPE	50.2' L+ E 37+8.3 TO 36+93.7	D-2	5	a
	b																		1		7.4			SAN FRANCISCO MANHOLE (TYPE 2)	50.2' L+ E 36+93.7			b
	c														12	3.5				4.5			S	8'' DUCTILE IRON PIPE	50.2' L+ E TO 35.8' L+ E 36+93.7			c
	d																	1			6.7			SAN FRANCISCO MANHOLE (TYPE 1)	35.8' L+ E 36+93.7			d
6	a													14		1.3				1.0			DD	8'' WELDED STEEL PIPE	47.3' R+ E 37+9.2 TO 38.2' R+ E 36+99	D-2	6	a
	b																		1		7.4			SAN FRANCISCO MANHOLE (TYPE 2)	38.2' R+ E 36+99			b
	c														9	2.2				3.3			S	8'' DUCTILE IRON PIPE	38.2' R+ E 36+99 TO 33.9' R+ E 37+9.2			c
	d																	1			8.6			SAN FRANCISCO MANHOLE (TYPE 1)	33.9' R+ E 37+9.2			d
7	a													14		1.9				1.5			DD	8'' WELDED STEEL PIPE	52.4' L+ E 39+58.8 TO 39+72.9	D-2	7	a
	b																		1		7.4			SAN FRANCISCO MANHOLE (TYPE 2)	52.4' L+ E 39+72.9			b
	c														10	3.3				4.5			S	8'' DUCTILE IRON PIPE	52.4' L+ E TO 38.6' L+ E 39+72.9			c
	d																	1			8.5			SAN FRANCISCO MANHOLE (TYPE 1)	38.6' L+ E 39+72.9			d
SHEET TOTAL													46	83	92	50.6		5	7					SHEET TOTAL				

DRAINAGE QUANTITIES DQ-1

MICHAEL PUSTOV — REVISED BY — MP
DIXON T. LAU — DATE REVISED — 5/13/09
CALCULATED-DESIGNED BY
CHECKED BY
FUNCTIONAL SUPERVISOR — JOSEPH PETERSON

STATE OF CALIFORNIA - DEPARTMENT OF TRANSPORTATION
Caltrans
HYDRAULICS

LAST REVISION 08-20-09
DATE PLOTTED => 14-JAN-2010
TIME PLOTTED => 13:05

Dist	COUNTY	ROUTE	POST MILES TOTAL PROJECT	SHEET No.	TOTAL SHEETS
04	SF	80,101	L3.8/5.0, 4.1/5.0	29	136

REGISTERED CIVIL ENGINEER DATE 8-25-09

PLANS APPROVAL DATE 1-11-10

REGISTERED PROFESSIONAL ENGINEER Dixon T. Lau No. 46706 Exp. 6-30-11 CIVIL STATE OF CALIFORNIA

THE STATE OF CALIFORNIA OR ITS OFFICERS OR AGENTS SHALL NOT BE RESPONSIBLE FOR THE ACCURACY OR COMPLETENESS OF SCANNED COPIES OF THIS PLAN SHEET.

(N) NOT A SEPARATE PAY ITEM, FOR INFORMATION ONLY.

DRAINAGE QUANTITIES

DRAINAGE SYSTEM No.	DRAINAGE UNIT	ABANDON CULVERT (EA)	REMOVE CULVERT (LF)	ADJUST INLET (EA)	DITCH EXCAVATION (CY)	MINOR CONCRETE (DITCH LINING) (CY)	MINOR CONCRETE (MINOR STRUCTURE) (CY)	Misc IRON & STEEL (LB)	MINOR CONCRETE (Misc CONSTRUCTION) (CY)	FRAMES AND GRATES (N) TYPE 24-12X (EA)	FRAMES AND GRATES (N) TYPE U 45 (EA)	FRAMES AND GRATES (N) 0.5'' CHECKERED PLATE (EA)	12'' VITRIFIED CLAY PIPE (LF)	8'' WELDED STEEL PIPE (0.134'' THICK) (LF)	8'' DUCTILE IRON PIPE (LF)	MINOR CONCRETE (BACKFILL) (CY)	CONCRETE SPLASH PAD (EA)	SAN FRANCISCO MANHOLE (TYPE 1) (EA)	SAN FRANCISCO MANHOLE (TYPE 2) (EA)	MAXIMUM COVER (N) (FT)	HEIGHT OF INLET/MANHOLE /JUNCTION BOX "H" (N) (FT)	STORM DRAIN MANHOLE (N) (EA)	JOINT TYPE (N)	DESCRIPTION	STATION	DRAINAGE PLAN SHEET No.	DRAINAGE SYSTEM No.	DRAINAGE UNIT
8	a													12		1.6				1.0			DD	8'' WELDED STEEL PIPE	45.1' Rt E 40+39 TO 40+25.0	D-2	8	a
	b																		1		7.4			SAN FRANCISCO MANHOLE (TYPE 2)	44.7' Rt E 40+25.0			b
	c														11	2.6				3.0			S	8'' DUCTILE IRON PIPE	44.7' Rt E TO 31.5' Rt E 40+25.0			c
	d																	1			6.8			SAN FRANCISCO MANHOLE (TYPE 1)	31.5' Rt E 40+25.0			d
9	a													23		3.2				2.3			DD	8'' WELDED STEEL PIPE	42.9' Rt E 43+20.4 TO 34.8' Rt E 43+3.0	D-2, D-3	9	a
	b																		1		7.5			SAN FRANCISCO MANHOLE (TYPE 2)	34.8' Rt E 43+3.0			b
	c														5	1.1				3.2			S	8'' DUCTILE IRON PIPE	34.8' Rt E 43+3.0 TO 28.8' Rt E 42+91.7			c
10	a													6		1.1				3.0			DD	8'' WELDED STEEL PIPE	9.9' Rt E2 39+80.1 TO 8.7' Rt E2 39+16.6	D-4	10	a
	b		8																1		8.4			SAN FRANCISCO MANHOLE (TYPE 2)	8.7' Rt E2 39+16.6			b
11	a													15		3.2				2.6			DD	8'' WELDED STEEL PIPE	7.0' Rt E2 40+76 TO 16.6' Rt E2 40+85.9	D-4	11	a
	b																		1		8.3			SAN FRANCISCO MANHOLE (TYPE 2)	16.6' Rt E2 40+85.9			b
	c														14	3.5				2.9			S	8'' DUCTILE IRON PIPE	16.6' Rt E2 40+85.9 TO 2.2' Rt E2 40+94.3			c
	d																	1			11.0			SAN FRANCISCO MANHOLE (TYPE 1)	2.2' Rt E2 40+94.3			d
12	a													14		2.4				1.7			DD	8'' WELDED STEEL PIPE	7.9' Lt E5 62+64.6 TO 7.5' Lt E5 62+52.5	D-4	12	a
	b																		1		7.4			SAN FRANCISCO MANHOLE (TYPE 2)	7.5' Lt E5 62+52.5			b
	c														15	2.3				2.0			S	8'' DUCTILE IRON PIPE	7.5' Lt E5 62+52.5 TO 6.7' Rt E5 62+52.5			c
	d					1.5	435			1											3.5	1		STORM DRAIN MANHOLE	6.7' Rt E5 62+52.5			d
13	a													12		1.3				0.7			DD	8'' WELDED STEEL PIPE	9.0' Lt E5 63+27.2 TO 20.9' Lt E5 63+26.0	D-4	13	a
	b																		1		7.4			SAN FRANCISCO MANHOLE (TYPE 2)	20.9' Lt E5 63+26.0			b
	c														16	2.6				1.7			S	8'' DUCTILE IRON PIPE	20.9' Lt E5 63+26.0 TO 9' Lt E5 63+27.2			c
14	a												6			0.8							S	12'' VCP w/ CONCRETE BACKFILL	22.2' TO 29.6' Lt F3L 284+94.6	D-5	14	a
	b					1.0	123					1									2.0			JUNCTION BOX	29.6' Lt F3L 284+94.6			b
	c												64			13.0				2.5			S	12'' VCP w/ CONCRETE BACKFILL	29.6' Lt F3L 284+94.6 TO 29.2' Lt F3L 285+48.8			c
	d																		1		8.5			SAN FRANCISCO MANHOLE (TYPE 2)	29.2' Lt F3L 285+48.8			d
	e					1.1	239	1.5	1												3.5			G1 INLET w/ PCC APRON h=3.5	29.4' Lt F3L 285+60.5			e
	f												10			2.6				2.7			S	12'' VCP w/ CONCRETE BACKFILL	29.2' Lt F3L 285+48.8 TO 29.4' Lt F3L 285+60.5			f
SHEET TOTAL			8			3.6	797	1.5					80	82	61	41.3		2	7					SHEET TOTAL				

MICHAEL PUSTOV — REVISED BY — MP
DIXON AT. LAU — DATE REVISED — 5/13/09
CALCULATED-DESIGNED BY
CHECKED BY
FUNCTIONAL SUPERVISOR — JOSEPH PETERSON

STATE OF CALIFORNIA - DEPARTMENT OF TRANSPORTATION
Caltrans HYDRAULICS

LAST REVISION 08-20-09 — DATE PLOTTED => 14-JAN-2010 TIME PLOTTED => 13:05

Dist	COUNTY	ROUTE	POST MILES TOTAL PROJECT	SHEET No.	TOTAL SHEETS
04	SF	80,101	L3.8/5.0, 4.1/5.0	30	136

REGISTERED CIVIL ENGINEER DATE 8-25-09

PLANS APPROVAL DATE 1-11-10

REGISTERED PROFESSIONAL ENGINEER Dixon T. Lau No. 46706 Exp. 6-30-11 CIVIL STATE OF CALIFORNIA

THE STATE OF CALIFORNIA OR ITS OFFICERS OR AGENTS SHALL NOT BE RESPONSIBLE FOR THE ACCURACY OR COMPLETENESS OF SCANNED COPIES OF THIS PLAN SHEET.

(N) NOT A SEPARATE PAY ITEM, FOR INFORMATION ONLY.

DRAINAGE QUANTITIES

DRAINAGE SYSTEM No. ⬡	DRAINAGE UNIT ◯	ABANDON CULVERT (EA)	REMOVE CULVERT (LF)	ADJUST INLET (EA)	DITCH EXCAVATION (CY)	MINOR CONCRETE (DITCH LINING) (CY)	MINOR CONCRETE (MINOR STRUCTURE) (CY)	Misc IRON & STEEL (LB)	MINOR CONCRETE (Misc CONSTRUCTION) (CY)	FRAMES AND GRATES (N) TYPE 24-12X (EA)	FRAMES AND GRATES (N) TYPE U 45 (EA)	FRAMES AND GRATES (N) 0.5'' CHECKERED PLATE (EA)	12'' VITRIFIED CLAY PIPE (LF)	8'' WELDED STEEL PIPE (0.134'' THICK) (LF)	8'' DUCTILE IRON PIPE (LF)	MINOR CONCRETE (BACKFILL) (CY)	CONCRETE SPLASH PAD (EA)	SAN FRANCISCO MANHOLE (TYPE 1) (EA)	SAN FRANCISCO MANHOLE (TYPE 2) (EA)	MAXIMUM COVER (N) (FT)	HEIGHT OF INLET/MANHOLE /JUNCTION BOX "H" (N) (FT)	STORM DRAIN MANHOLE (N)	JOINT TYPE (N)	DESCRIPTION	STATION	DRAINAGE PLAN SHEET No.	DRAINAGE SYSTEM No. ⬡	DRAINAGE UNIT ◯
15	a						1	239	2	1											3.1			G1 INLET w/ PCC APRON h=3.1	11.9' R+ F3L 287+30.5	D-5	15	a
	b												20			5.1				2.4			S	12'' VCP	11.9' R+ F3L 287+30.5 TO 6.1' L+ F3L 287+43.5			b
	c																		1		8.4			SAN FRANCISCO MANHOLE (TYPE 2)	6.1' L+ F3L 287+43.5			c
	d												29			7.8				2.7			S	12'' VCP	6.1' L+ F3L 287+43.5 TO 31.6' L+ F3L 287+61.6			d
	e						1	239	2	1											3.0			G1 INLET w/ PCC APRON h=3.0	46.1' L+ F3L 287+30.5			e
	f												28			7.2				2.3			S	12'' VCP	46.1' L+ F3L 287+30.5 TO 46.9' L+ F3L 287+61.6			f
	g												14			3.4				2.7			S	12'' VCP	31.6' L+ TO 46.9' L+ F3L 287+61.6			g
	h																		1		8.5			SAN FRANCISCO MANHOLE (TYPE 2)	46.9' L+ F3L 287+61.6			h
	i												48			11.9				2.3			S	12'' VCP	46.9' L+ F3L 287+61.6 TO 48.9' L+ F3L 288+11.1			i
	j						1	239	1	1											3.1			G1 INLET w/ PCC APRON H=3.1	48.9' L+ F3L 288+11.1			j
	k				4	4																		PCC LINED DITCH	0.3' L+ F3L 288+38.2 TO 37 'L+ F3L 288+26.5 TO 48.9' L+ F3L 288+11.1			k
16	a																1							CONCRETE SPLASH PAD	0.8' R+ F3L 290+66.2	D-5	16	a
17	a																1							CONCRETE SPLASH PAD	2.0' L+ F3L 292+76.6	D-6	17	a
SHEET TOTAL					4	4	3.0	717	5				139			35.4	2		2					SHEET TOTAL				
TOTAL SHEET DQ-1													46	83	92	50.6		5	7					TOTAL FROM SHEET DQ-1				
TOTAL SHEET DQ-2			8				3.6	797	1.5				80	82	61	41.3		2	7					TOTAL FROM SHEET DQ-2				
GRAND TOTAL			8		4	4	6.6	1514	6.5				265	165	153	127.3	2	7	16					GRAND TOTAL				

DRAINAGE QUANTITIES DQ-3

STATE OF CALIFORNIA - DEPARTMENT OF TRANSPORTATION

Caltrans HYDRAULICS

FUNCTIONAL SUPERVISOR: JOSEPH PETERSON

CALCULATED-DESIGNED BY: MICHAEL PUSTOV

CHECKED BY: DIXON T. LAU

REVISED BY: MP

DATE REVISED: 5/13/09

LAST REVISION 08-20-09

DATE PLOTTED => 14-JAN-2010
TIME PLOTTED => 13:05

Dist	COUNTY	ROUTE	POST MILES TOTAL PROJECT	SHEET No.	TOTAL SHEETS
04	SF	80,101	L3.8/5.0, 4.1/5.0	31	136

REGISTERED CIVIL ENGINEER 8-19-09 DATE

1-11-10
PLANS APPROVAL DATE

REGISTERED PROFESSIONAL ENGINEER M. Hovhanessian No. 42284 Exp. 3-31-10 CIVIL STATE OF CALIFORNIA

THE STATE OF CALIFORNIA OR ITS OFFICERS OR AGENTS SHALL NOT BE RESPONSIBLE FOR THE ACCURACY OR COMPLETENESS OF SCANNED COPIES OF THIS PLAN SHEET.

FOR ACCURATE RIGHT OF WAY AND ACCESS DATA, CONTACT RIGHT OF WAY ENGINEERING AT THE DISTRICT OFFICE.

LEGEND:

UTILITY	SYMBOL	OWNERSHIP
ELECTRIC	—e—	PG&E & STREET LIGHTING
GAS	---gs---	PG&E
OVERHEAD MUNI	—(oh)— me —	SAN FRANCISCO
POTHOLE	◕	
DETAIL NUMBER	No.	

ABBREVIATIONS:

AT&T	AMERICAN TELEPHONE & TELEGRAPH
AWSS	AUXILIARY WATER SYSTEMS
CB	CATCH BASIN
DIP	DUCTILE IRON PIPE
FBC	FIBER OPTIC CABLE
OH-ME	OVERHEAD MUNI
PAC BELL	PACIFIC BELL TELEPHONE
PG&E	PACIFIC GAS & ELECTRIC
PUC	PUBLIC UTILITIES COMMISSION
SDMH	STORM DRAIN MANHOLE
SFPUC	SAN FRANCISCO PUBLIC UTILITIES COMMISSION
TC	TELEPHONE CABLE
VER	VERIZON TELEPHONE CABLE

NOTE:

1. LOCATIONS OF UTILITY FACILITIES SHOWN ON THESE PLANS ARE APPROXIMATE AND SHALL BE VERIFIED BY THE CONTRACTOR PRIOR TO CONSTRUCTION.

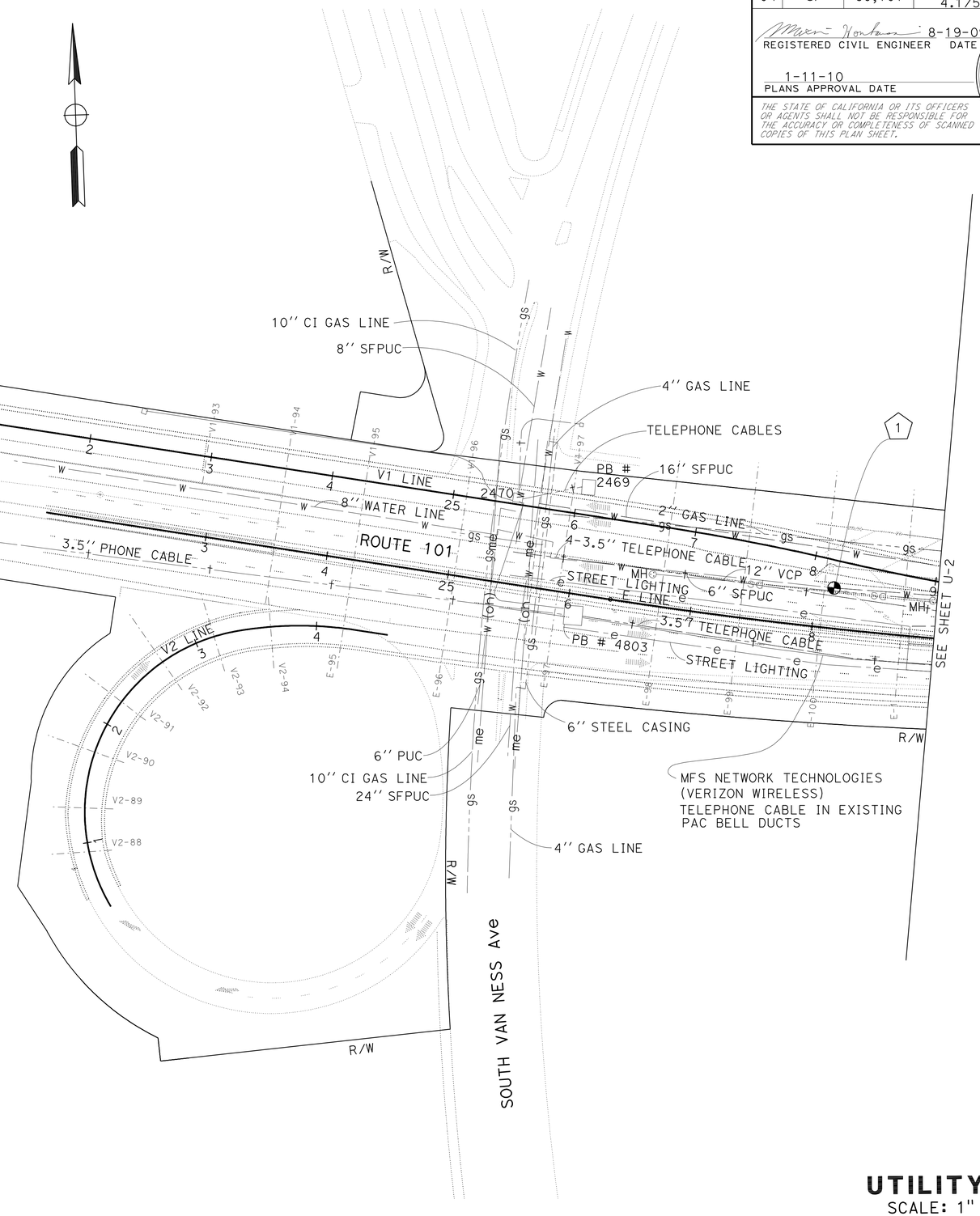

UTILITY POTHOLE DETAILS

DETAIL No.	DESCRIPTION	DISTANCE FROM ALIGNMENT (FT)	DEPTH BELOW ORIGINAL GROUND (INCH)	UTILITY RISK LOW	UTILITY RISK HIGH
1	6'' WATER LINE-SFPUC	33.2' Lt E 28+13.4	23	X	
2	8'' WATER LINE-SFPUC	35' Lt E 30+11	36	X	
3	TELEPHONE-SBC	26' Lt E 30+11	52	X	
4	2'' GAS LINE-PG&E	36' Lt E 34+47	34	X	
5	8'' WATER LINE-SFPUC	40' Lt E 34+52	34	X	
6	TELEPHONE-SBC	31.4' Lt E 34+47	55	X	
7	6'' WATER LINE-SFPUC	48.5' Rt E 34+86	24	X	
8	6'' WATER LINE-SFPUC	40.8' Lt E 37+11.7	34	X	
9	115 KV ELECTRIC LINE-PG&E	3' Rt E4 40+62.6	40		X
10	8'' SEWER LINE-SAN FRANCISCO	10' Rt E2 39+89.1	42	X	
11	8'' WATER LINE-SFPUC	35' Lt E 29+95.3	36	X	
12	8'' WATER LINE-SFPUC	41' Lt E 36+94.5	37	X	
13	115 KV ELECTRIC LINE-SAN FRANCISCO	7' Rt E2 40+90.2	42		X

THIS PLAN ACCURATE FOR UTILITY WORK ONLY

UTILITY PLAN
SCALE: 1" = 50'

U-1

REVISED BY	DATE REVISED
MH	8/19/09

CALCULATED-DESIGNED BY: MAXIM HOVHANESSIAN
CHECKED BY: MAXIM HOVHANESSIAN

FUNCTIONAL SUPERVISOR: ABOLFAZL EMADZADEH

STATE OF CALIFORNIA - DEPARTMENT OF TRANSPORTATION
Caltrans
DESIGN

LAST REVISION 11-04-09 | DATE PLOTTED => 14-JAN-2010 | TIME PLOTTED => 13:06

Dist	COUNTY	ROUTE	POST MILES TOTAL PROJECT	SHEET No.	TOTAL SHEETS
04	SF	80,101	L3.8/5.0, 4.1/5.0	32	136

REGISTERED CIVIL ENGINEER 8-19-09 DATE

1-11-10
PLANS APPROVAL DATE

REGISTERED PROFESSIONAL ENGINEER M. Hovhanessian No. 42284 Exp. 3-31-10 CIVIL STATE OF CALIFORNIA

THE STATE OF CALIFORNIA OR ITS OFFICERS OR AGENTS SHALL NOT BE RESPONSIBLE FOR THE ACCURACY OR COMPLETENESS OF SCANNED COPIES OF THIS PLAN SHEET.

FOR ACCURATE RIGHT OF WAY AND ACCESS DATA, CONTACT RIGHT OF WAY ENGINEERING AT THE DISTRICT OFFICE.

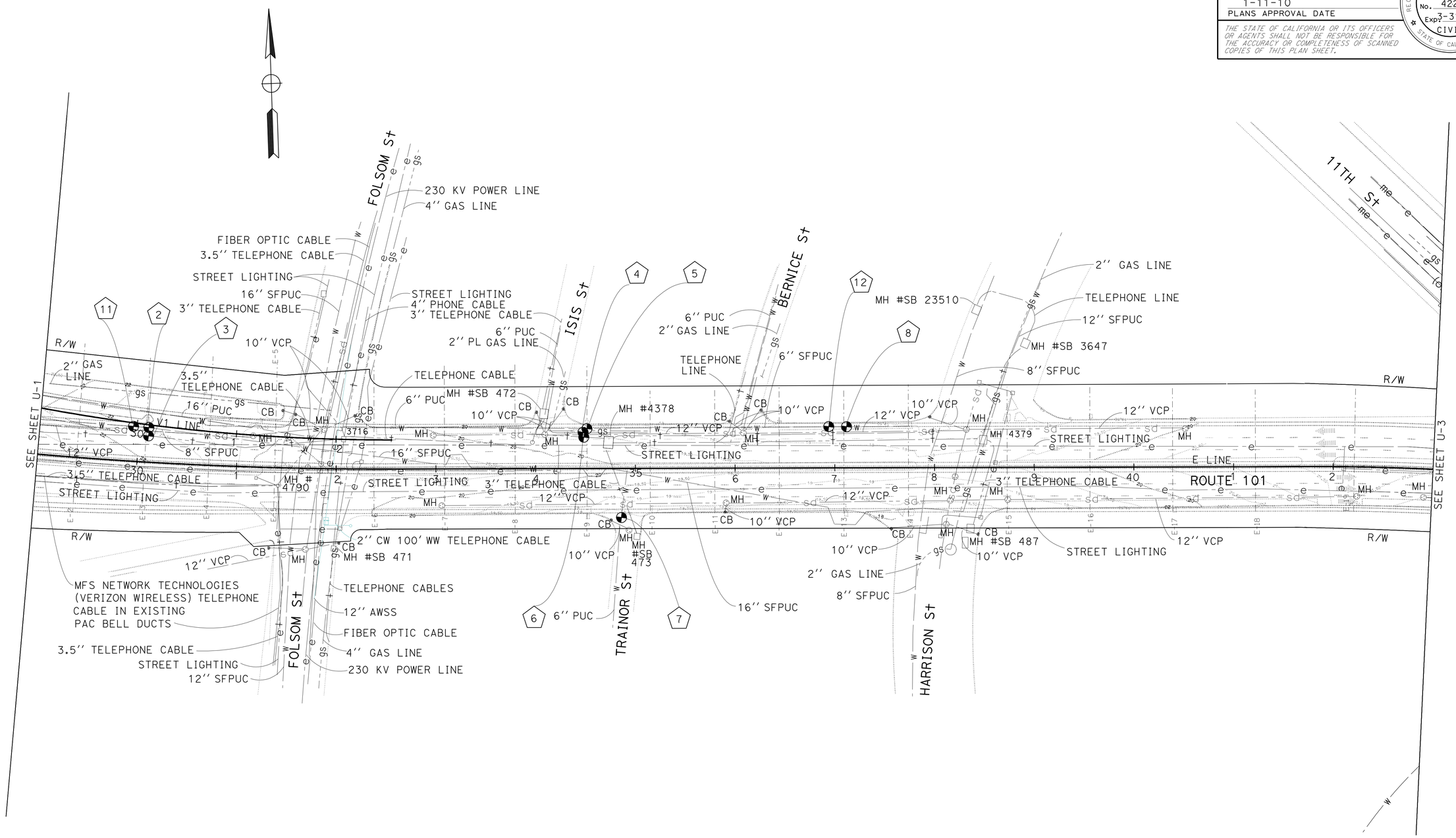

FOR NOTES, ABBREVIATIONS AND LEGEND, SEE SHEET U-1

THIS PLAN ACCURATE FOR UTILITY WORK ONLY

UTILITY PLAN

SCALE: 1" = 50'

U-2

REVISED BY	MH	MAXIM HOVHANESSIAN	CALCULATED-
DATE REVISED	8/19/09	MAXIM HOVHANESSIAN	DESIGNED BY
			CHECKED BY

FUNCTIONAL SUPERVISOR: ABOLFAZL EMADZADEH

STATE OF CALIFORNIA - DEPARTMENT OF TRANSPORTATION

Caltrans® DESIGN

LAST REVISION 11-04-09 | DATE PLOTTED => 14-JAN-2010 | TIME PLOTTED => 13:06

Dist	COUNTY	ROUTE	POST MILES TOTAL PROJECT	SHEET No.	TOTAL SHEETS
04	SF	80,101	L3.8/5.0, 4.1/5.0	33	136

REGISTERED CIVIL ENGINEER 8-19-09 DATE

1-11-10
PLANS APPROVAL DATE

REGISTERED PROFESSIONAL ENGINEER M. Hovhanessian No. 42284 Exp. 3-31-10 CIVIL STATE OF CALIFORNIA

THE STATE OF CALIFORNIA OR ITS OFFICERS OR AGENTS SHALL NOT BE RESPONSIBLE FOR THE ACCURACY OR COMPLETENESS OF SCANNED COPIES OF THIS PLAN SHEET.

FOR ACCURATE RIGHT OF WAY AND ACCESS DATA, CONTACT RIGHT OF WAY ENGINEERING AT THE DISTRICT OFFICE.

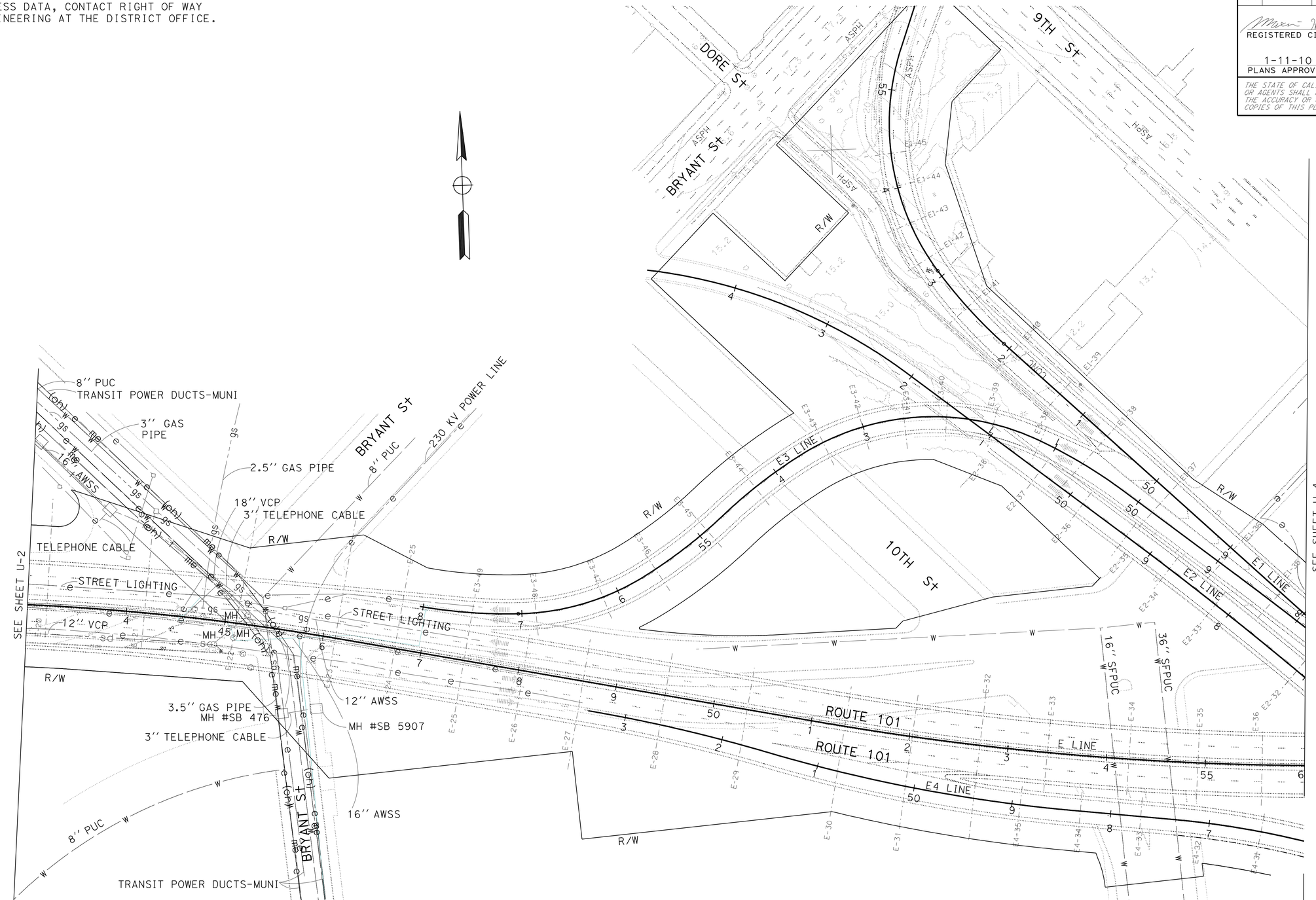

FOR NOTES, ABBREVIATIONS AND LEGEND, SEE SHEET U-1

THIS PLAN ACCURATE FOR UTILITY INFORMATION ONLY

UTILITY PLAN

SCALE: 1" = 50'

U-3

MAXIM HOVHANESSIAN	MH	CALCULATED-DESIGNED BY	FUNCTIONAL SUPERVISOR
MAXIM HOVHANESSIAN	8/19/09	CHECKED BY	ABOLFAZL EMADZADEH
REVISED BY			
DATE REVISED			

STATE OF CALIFORNIA - DEPARTMENT OF TRANSPORTATION

Caltrans® DESIGN

LAST REVISION 11-04-09 | DATE PLOTTED => 14-JAN-2010 | TIME PLOTTED => 13:06

Dist	COUNTY	ROUTE	POST MILES TOTAL PROJECT	SHEET No.	TOTAL SHEETS
04	SF	80,101	L3.8/5.0, 4.1/5.0	34	136

REGISTERED CIVIL ENGINEER 8-19-09 DATE

1-11-10
PLANS APPROVAL DATE

REGISTERED PROFESSIONAL ENGINEER M. Hovhanessian No. 42284 Exp. 3-31-10 CIVIL STATE OF CALIFORNIA

THE STATE OF CALIFORNIA OR ITS OFFICERS OR AGENTS SHALL NOT BE RESPONSIBLE FOR THE ACCURACY OR COMPLETENESS OF SCANNED COPIES OF THIS PLAN SHEET.

FOR ACCURATE RIGHT OF WAY AND ACCESS DATA, CONTACT RIGHT OF WAY ENGINEERING AT THE DISTRICT OFFICE.

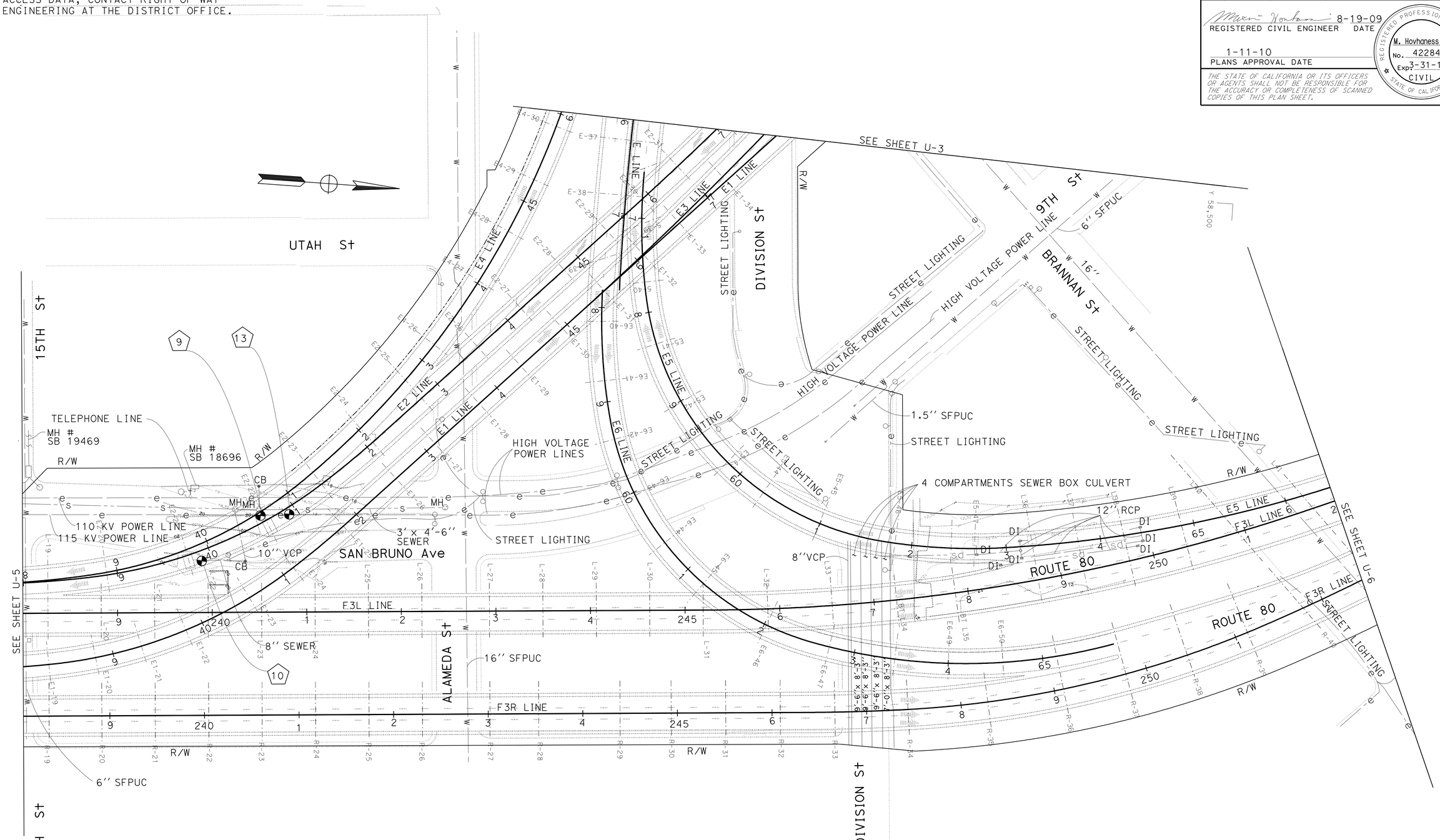

FOR NOTES, ABBREVIATIONS AND LEGEND, SEE SHEET U-1

THIS PLAN ACCURATE FOR UTILITY WORK ONLY

UTILITY PLAN
SCALE: 1" = 50'

U-4

STATE OF CALIFORNIA - DEPARTMENT OF TRANSPORTATION
Caltrans DESIGN

FUNCTIONAL SUPERVISOR: ABOLFAZL EMADZADEH
CALCULATED-DESIGNED BY: MAXIM HOVHANESSIAN
CHECKED BY: MAXIM HOVHANESSIAN
REVISED BY: MH
DATE REVISED: 8/19/09

LAST REVISION 11-04-09
DATE PLOTTED => 14-JAN-2010
TIME PLOTTED => 13:06

BORDER LAST REVISED 4/11/2008
RELATIVE BORDER SCALE IS IN INCHES 0 1 2 3
USERNAME => trmikesl
DGN FILE => 42a140ka004.dgn
CU 04242
EA 2A1401

Dist	COUNTY	ROUTE	POST MILES TOTAL PROJECT	SHEET No.	TOTAL SHEETS
04	SF	80,101	L3.8/5.0, 4.1/5.0	35	136

REGISTERED CIVIL ENGINEER 8-19-09 DATE

1-11-10
PLANS APPROVAL DATE

REGISTERED PROFESSIONAL ENGINEER
M. Hovhanessian
No. 42284
Exp. 3-31-10
CIVIL
STATE OF CALIFORNIA

THE STATE OF CALIFORNIA OR ITS OFFICERS OR AGENTS SHALL NOT BE RESPONSIBLE FOR THE ACCURACY OR COMPLETENESS OF SCANNED COPIES OF THIS PLAN SHEET.

FOR ACCURATE RIGHT OF WAY AND ACCESS DATA, CONTACT RIGHT OF WAY ENGINEERING AT THE DISTRICT OFFICE.

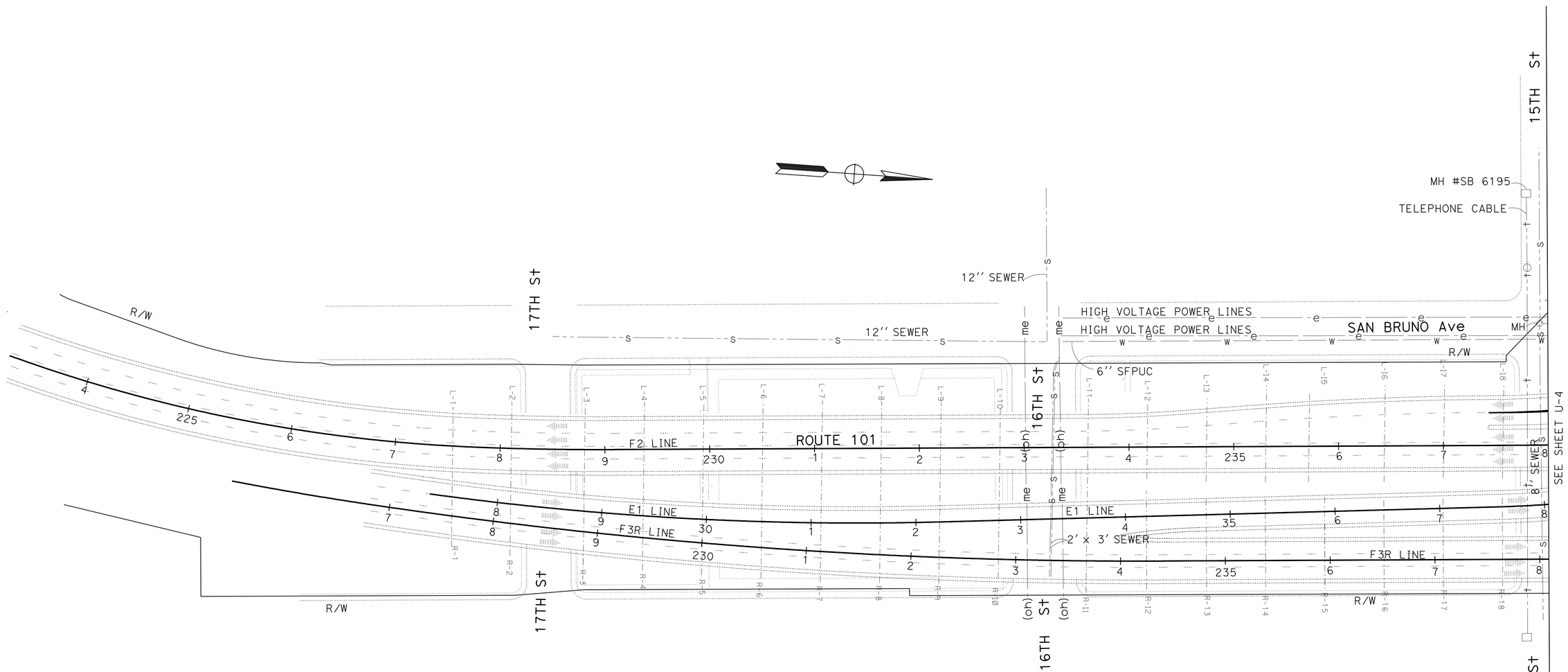

FOR NOTES, ABBREVIATIONS AND LEGEND, SEE SHEET U-1

THIS PLAN ACCURATE FOR UTILITY INFORMATION ONLY

UTILITY PLAN

SCALE: 1" = 50'

U-5

STATE OF CALIFORNIA - DEPARTMENT OF TRANSPORTATION

DESIGN

FUNCTIONAL SUPERVISOR: ABOLFAZL EMADZADEH

CALCULATED-DESIGNED BY: MAXIM HOVHANESSIAN

CHECKED BY: MAXIM HOVHANESSIAN

REVISED BY: MH

DATE REVISED: 8/19/09

LAST REVISION 11-04-09

DATE PLOTTED => 14-JAN-2010
TIME PLOTTED => 13:06

BORDER LAST REVISED 4/11/2008

RELATIVE BORDER SCALE IS IN INCHES 0 1 2 3

USERNAME => trmikesl
DGN FILE => 42a140ka005.dgn

CU 04242

EA 2A1401

FOR ACCURATE RIGHT OF WAY AND
ACCESS DATA, CONTACT RIGHT OF WAY
ENGINEERING AT THE DISTRICT OFFICE.

Dist	COUNTY	ROUTE	POST MILES TOTAL PROJECT	SHEET No.	TOTAL SHEETS
04	SF	80,101	L3.8/5.0, 4.1/5.0	36	136

REGISTERED CIVIL ENGINEER 8-19-09 DATE

1-11-10
PLANS APPROVAL DATE

REGISTERED PROFESSIONAL ENGINEER M. Hovhanessian No. 42284 Exp. 3-31-10 CIVIL STATE OF CALIFORNIA

THE STATE OF CALIFORNIA OR ITS OFFICERS OR AGENTS SHALL NOT BE RESPONSIBLE FOR THE ACCURACY OR COMPLETENESS OF SCANNED COPIES OF THIS PLAN SHEET.

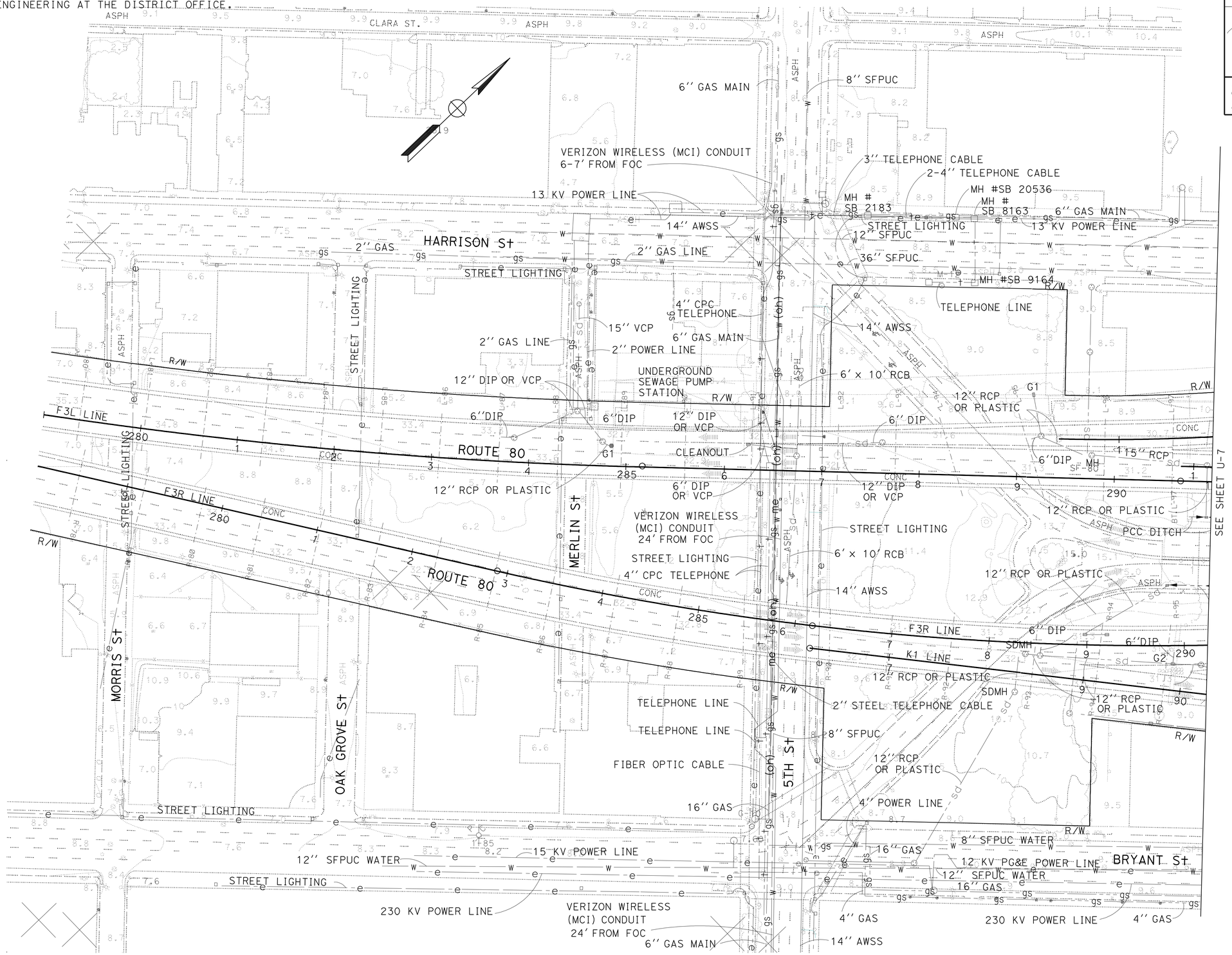

FOR NOTES, ABBREVIATIONS AND LEGEND, SEE SHEET U-1

THIS PLAN ACCURATE FOR UTILITY INFORMATION ONLY

UTILITY PLAN

SCALE: 1" = 50'

U-6

REVISED BY	MH
DATE REVISED	8/19/09
CALCULATED-DESIGNED BY	MAXIM HOVHANESSIAN
CHECKED BY	MAXIM HOVHANESSIAN
FUNCTIONAL SUPERVISOR	ABOLFAZL EMADZADEH

STATE OF CALIFORNIA - DEPARTMENT OF TRANSPORTATION
Caltrans
DESIGN

LAST REVISION 11-04-09 | DATE PLOTTED => 14-JAN-2010 | TIME PLOTTED => 13:07

FOR ACCURATE RIGHT OF WAY AND ACCESS DATA, CONTACT RIGHT OF WAY ENGINEERING AT THE DISTRICT OFFICE.

Dist	COUNTY	ROUTE	POST MILES TOTAL PROJECT	SHEET No.	TOTAL SHEETS
04	SF	80,101	L3.8/5.0, 4.1/5.0	37	136

REGISTERED CIVIL ENGINEER 8-19-09 DATE

1-11-10
PLANS APPROVAL DATE

REGISTERED PROFESSIONAL ENGINEER M. Hovhanessian No. 42284 Exp. 3-31-10 CIVIL STATE OF CALIFORNIA

THE STATE OF CALIFORNIA OR ITS OFFICERS OR AGENTS SHALL NOT BE RESPONSIBLE FOR THE ACCURACY OR COMPLETENESS OF SCANNED COPIES OF THIS PLAN SHEET.

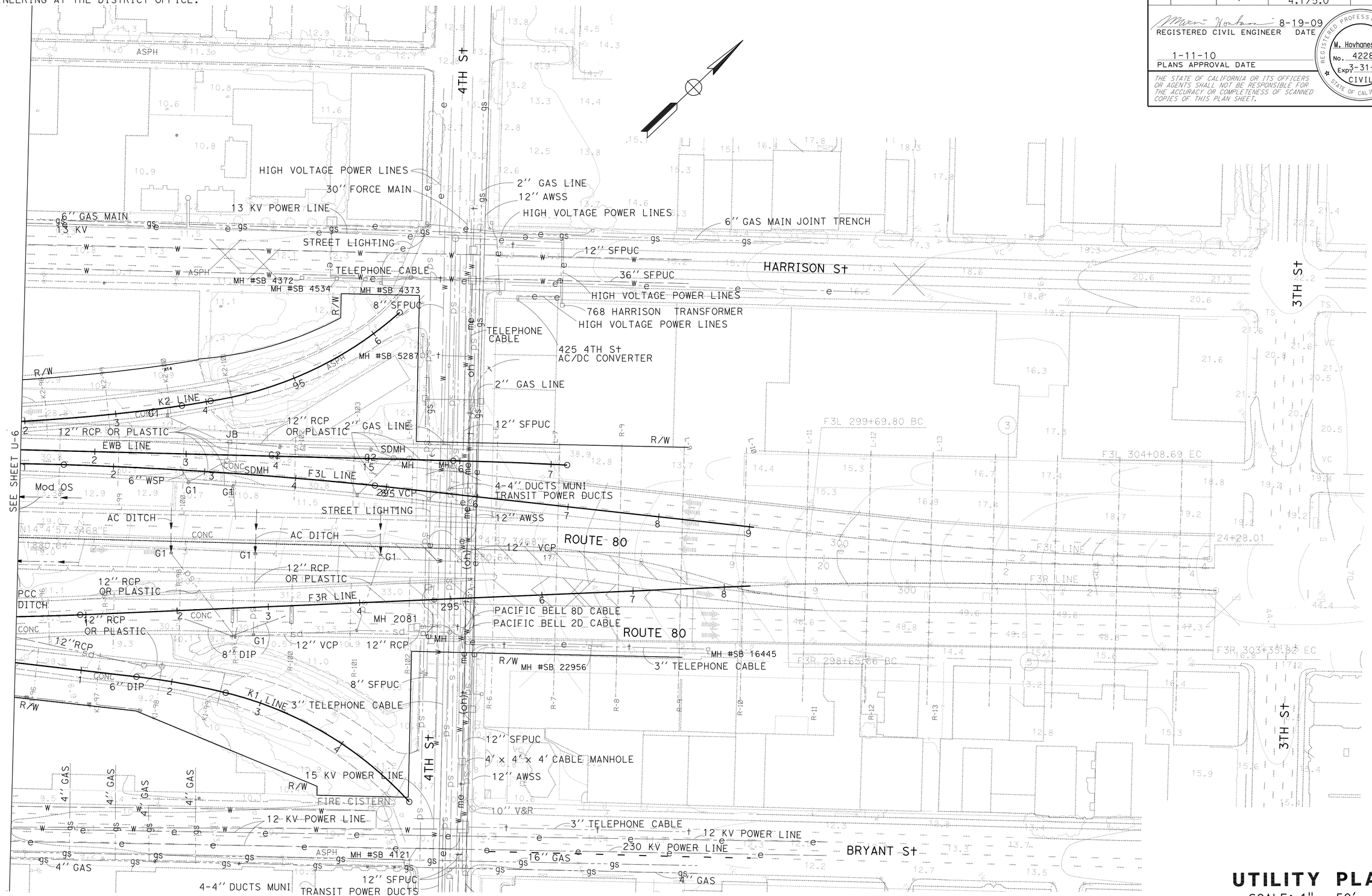

FOR NOTES, ABBREVIATIONS AND LEGEND, SEE SHEET U-1

THIS PLAN ACCURATE FOR UTILITY INFORMATION ONLY

UTILITY PLAN

SCALE: 1" = 50'

U-7

REVISED BY	MH
DATE REVISED	8/26/09
CALCULATED-	MAXIM HOVHANESSIAN
DESIGNED BY	MAXIM HOVHANESSIAN
CHECKED BY	
FUNCTIONAL SUPERVISOR	ABOLFAZL EMADZADEH

STATE OF CALIFORNIA - DEPARTMENT OF TRANSPORTATION

Caltrans® DESIGN

LAST REVISION DATE PLOTTED => 14-JAN-2010
11-04-09 TIME PLOTTED => 13:07

BORDER LAST REVISED 4/11/2008

RELATIVE BORDER SCALE IS IN INCHES 0 1 2 3

USERNAME => trmikesl
DGN FILE => 42a140ka007.dgn

CU 04242

EA 2A1401

Dist	COUNTY	ROUTE	POST MILES TOTAL PROJECT	SHEET No.	TOTAL SHEETS
04	SF	80,101	L3.8/5.0, 4.1/5.0	38	136

Lily Ting 8-26-09
REGISTERED CIVIL ENGINEER DATE

1-11-10
PLANS APPROVAL DATE

REGISTERED PROFESSIONAL ENGINEER
Lily Y. Ting
No. 37330
Exp. 6-30-10
CIVIL
STATE OF CALIFORNIA

THE STATE OF CALIFORNIA OR ITS OFFICERS OR AGENTS SHALL NOT BE RESPONSIBLE FOR THE ACCURACY OR COMPLETENESS OF SCANNED COPIES OF THIS PLAN SHEET.

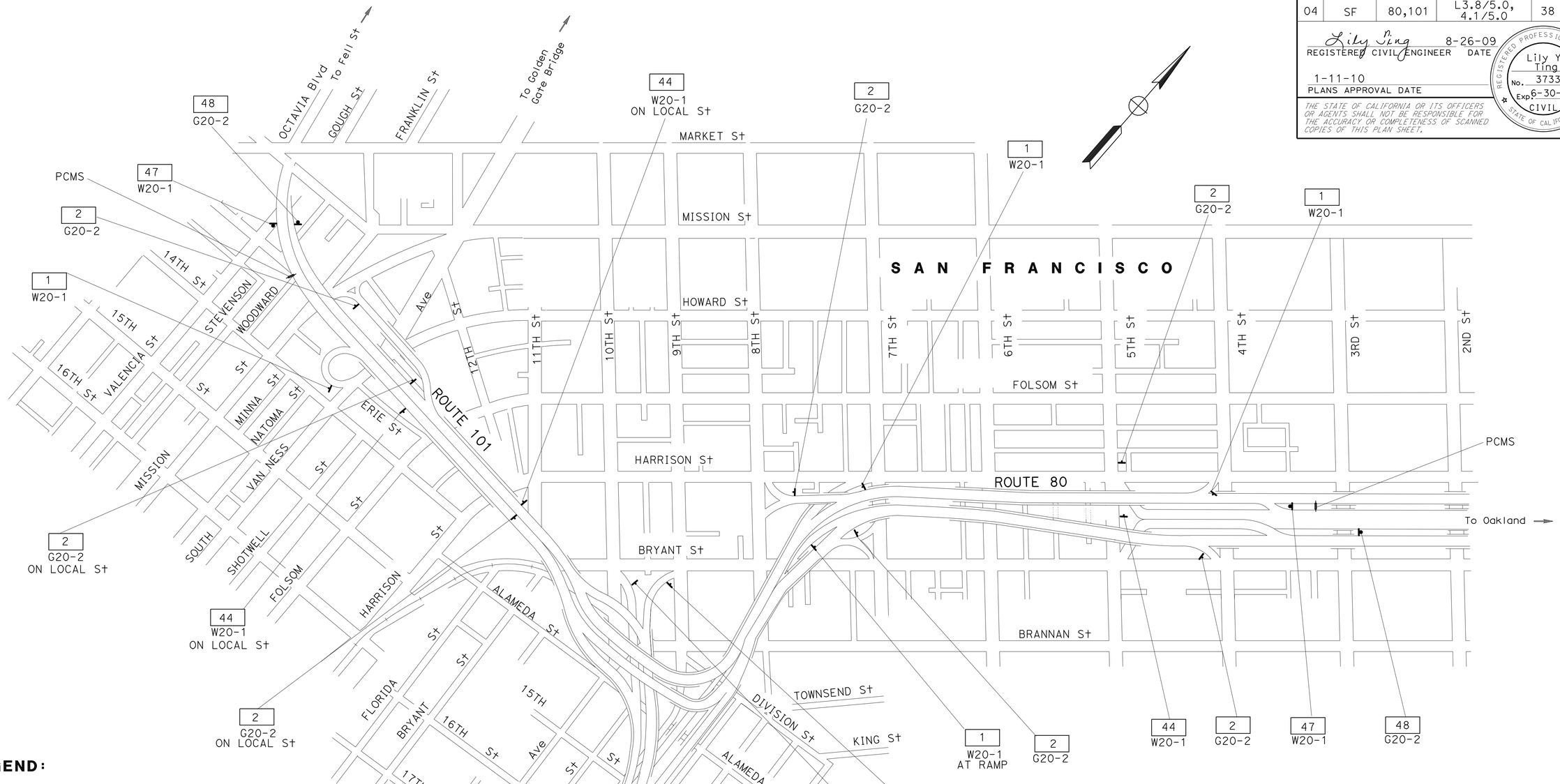

LEGEND:

No.	CONSTRUCTION AREA SIGN NUMBER
→	DIRECTION OF TRAFFIC
×	RAMP OR CONNECTOR TO BE CLOSED
⊸	PCMS (PORTABLE CHANGEABLE MESSAGE SIGN)

NOTES:

1. EXACT LOCATIONS OF CONSTRUCTION AREA SIGNS TO BE DETERMINED BY THE ENGINEER.
2. CONSTRUCTION AREA SIGNS TO BE STATIONARY MOUNTED UNLESS OTHERWISE NOTED.
3. PCMS SHOWN ON PLAN IS FOR APPROXIMATE LOCATION REFERENCE PURPOSE ONLY. USE OF PCMS IS PER ENGINEER'S DISCRETION.

CONSTRUCTION AREA SIGNS

NO SCALE

THIS PLAN ACCURATE FOR CONSTRUCTION AREA SIGN WORK ONLY

CS-1

LT	8/26/09	REVISED BY	DATE REVISED
LILY TING	ULICES VEGA	CALCULATED-DESIGNED BY	CHECKED BY
FUNCTIONAL SUPERVISOR	JERILYN STRUVEN		

STATE OF CALIFORNIA - DEPARTMENT OF TRANSPORTATION
Caltrans
TRAFFIC

LAST REVISION 08-25-09
DATE PLOTTED => 14-JAN-2010
TIME PLOTTED => 13:07

Dist	COUNTY	ROUTE	POST MILES TOTAL PROJECT	SHEET No.	TOTAL SHEETS
04	SF	80,101	L3.8/5.0, 4.1/5.0	39	136

Lily Ting 8-26-09
REGISTERED CIVIL ENGINEER DATE

1-11-10
PLANS APPROVAL DATE

REGISTERED PROFESSIONAL ENGINEER Lily Y. Ting No. 37330 Exp. 6-30-10 CIVIL STATE OF CALIFORNIA

THE STATE OF CALIFORNIA OR ITS OFFICERS OR AGENTS SHALL NOT BE RESPONSIBLE FOR THE ACCURACY OR COMPLETENESS OF SCANNED COPIES OF THIS PLAN SHEET.

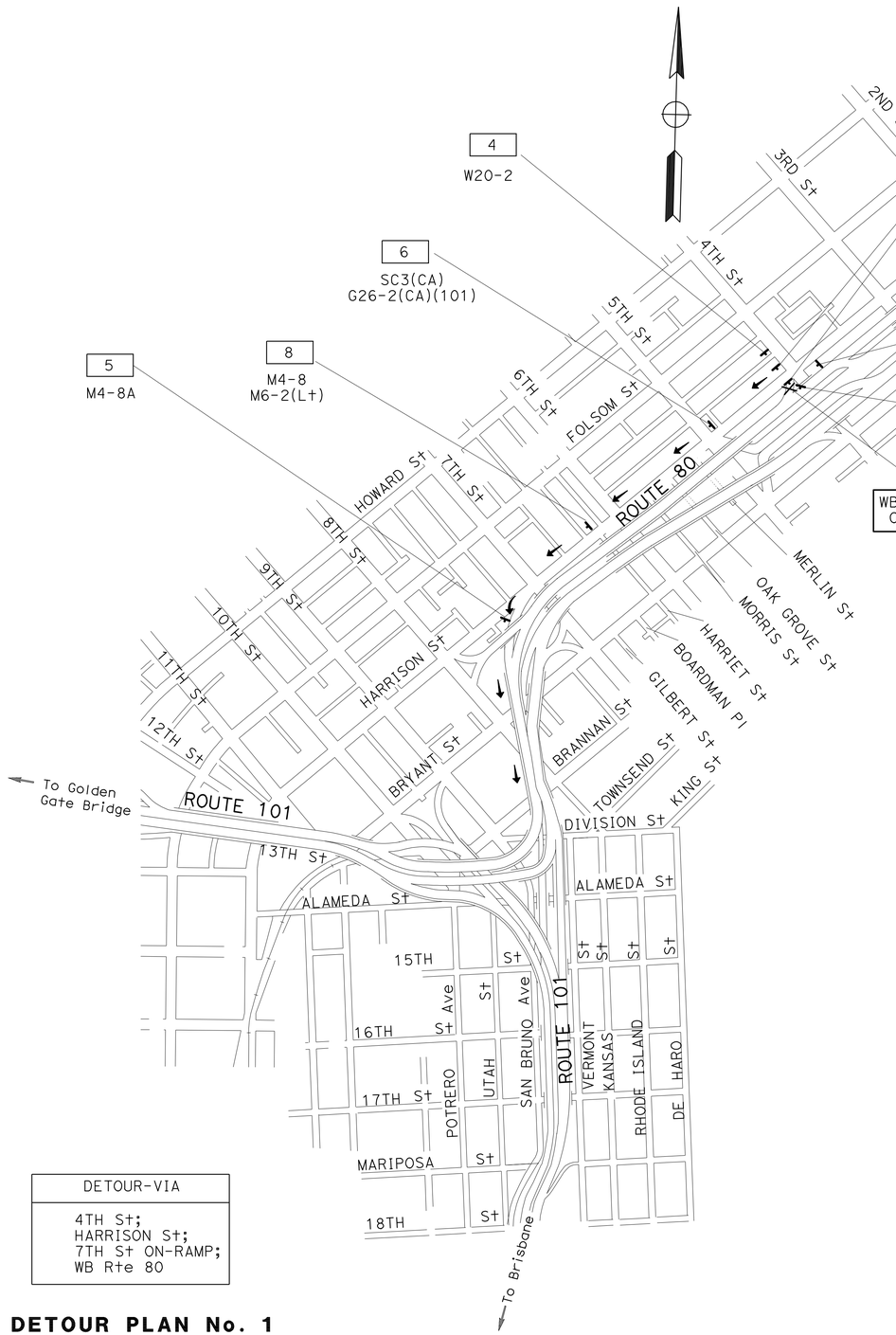

DETOUR-VIA
4TH St; HARRISON St; 7TH St ON-RAMP; WB Rte 80

DETOUR PLAN No. 1
WB Rte 80 4TH St ON-RAMP
CLOSURE

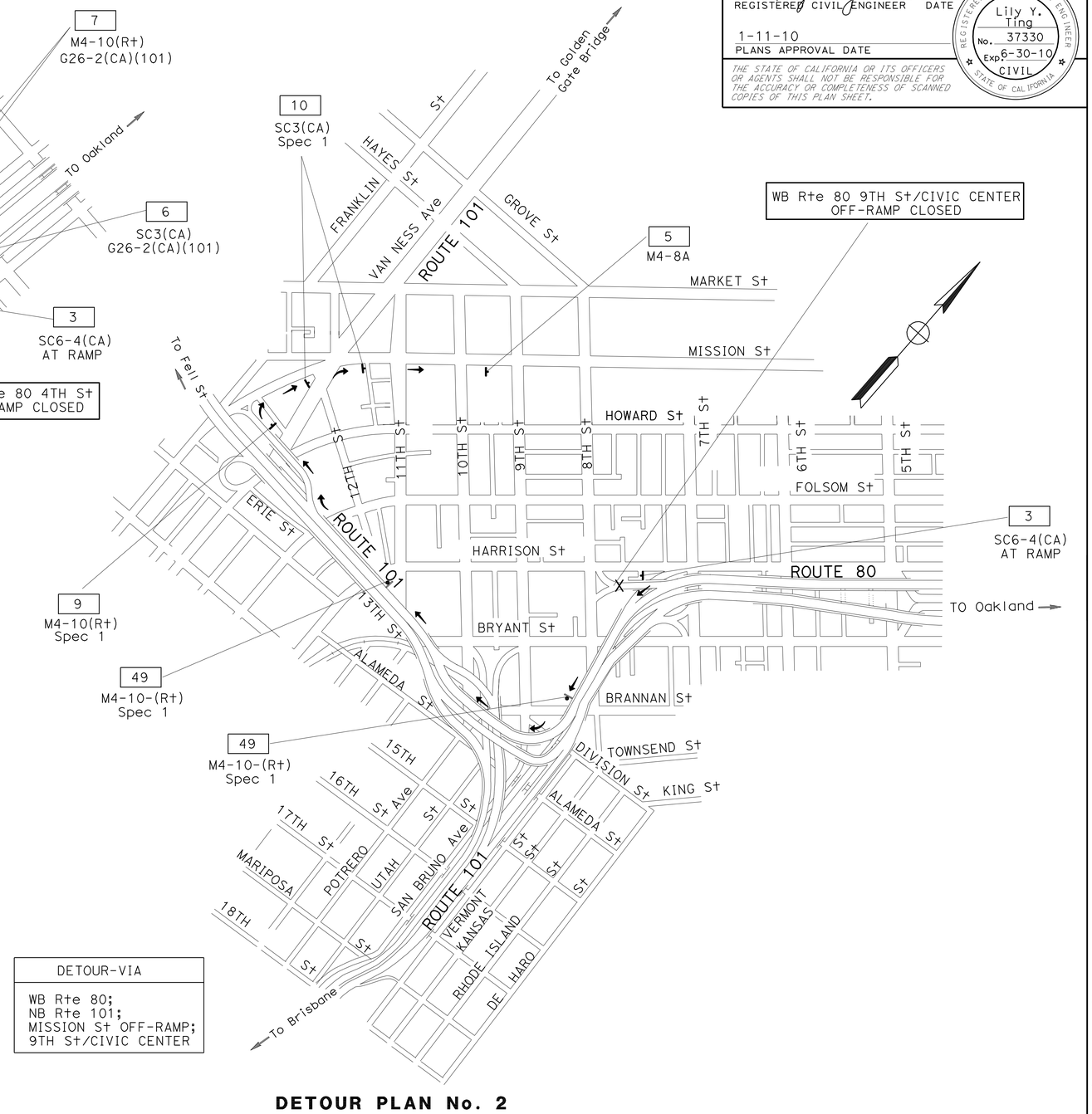

DETOUR-VIA
WB Rte 80; NB Rte 101; MISSION St OFF-RAMP; 9TH St/CIVIC CENTER

DETOUR PLAN No. 2
WB Rte 80 9TH St/CIVIC CENTER ON-RAMP
CLOSURE

CONSTRUCTION AREA SIGNS

NO SCALE

CS-2

FOR NOTES, ABBREVIATIONS AND LEGEND, SEE SHEET CS-1

THIS PLAN ACCURATE FOR CONSTRUCTION AREA SIGN WORK ONLY

STATE OF CALIFORNIA - DEPARTMENT OF TRANSPORTATION
Caltrans
TRAFFIC

FUNCTIONAL SUPERVISOR: JERILYN STRUVEN
CALCULATED-DESIGNED BY: LILY TING
CHECKED BY: ULICES VEGA
REVISED BY: LT
DATE REVISED: 8/26/09

LAST REVISION: 08-25-09
DATE PLOTTED => 14-JAN-2010
TIME PLOTTED => 13:08

Dist	COUNTY	ROUTE	POST MILES TOTAL PROJECT	SHEET No.	TOTAL SHEETS
04	SF	80,101	L3.8/5.0, 4.1/5.0	40	136

Lily Ting 8-26-09
REGISTERED CIVIL ENGINEER DATE

1-11-10
PLANS APPROVAL DATE

REGISTERED PROFESSIONAL ENGINEER Lily Y. Ting No. 37330 Exp. 6-30-10 CIVIL STATE OF CALIFORNIA

THE STATE OF CALIFORNIA OR ITS OFFICERS OR AGENTS SHALL NOT BE RESPONSIBLE FOR THE ACCURACY OR COMPLETENESS OF SCANNED COPIES OF THIS PLAN SHEET.

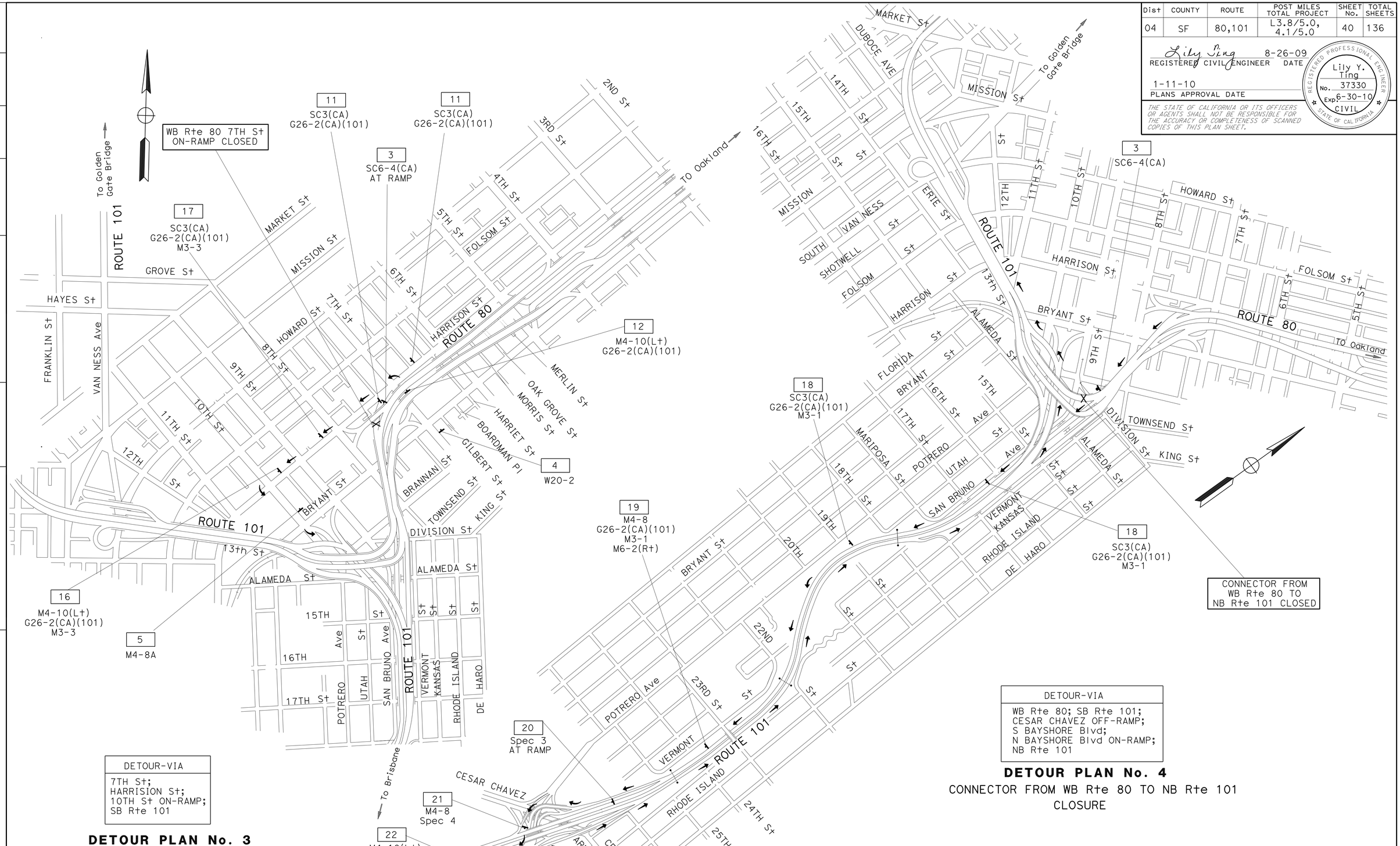

DETOUR-VIA
7TH St; HARRISION St; 10TH St ON-RAMP; SB Rte 101

DETOUR PLAN No. 3
WB Rte 80 7TH St ON-RAMP CLOSURE

DETOUR-VIA
WB Rte 80; SB Rte 101; CESAR CHAVEZ OFF-RAMP; S BAYSHORE Blvd; N BAYSHORE Blvd ON-RAMP; NB Rte 101

DETOUR PLAN No. 4
CONNECTOR FROM WB Rte 80 TO NB Rte 101 CLOSURE

FOR NOTES, ABBREVIATIONS AND LEGEND, SEE SHEET CS-1

THIS PLAN ACCURATE FOR CONSTRUCTION AREA SIGN WORK ONLY

CONSTRUCTION AREA SIGNS

NO SCALE

CS-3

REVISED BY	DATE REVISED
LT	8/26/09

CALCULATED-DESIGNED BY	CHECKED BY
LILY TING	ULICES VEGA

FUNCTIONAL SUPERVISOR: JERILYN STRUVEN

STATE OF CALIFORNIA - DEPARTMENT OF TRANSPORTATION
Caltrans® TRAFFIC

LAST REVISION: DATE PLOTTED => 14-JAN-2010 TIME PLOTTED => 13:08
08-25-09

Dist	COUNTY	ROUTE	POST MILES TOTAL PROJECT	SHEET No.	TOTAL SHEETS
04	SF	80,101	L3.8/5.0, 4.1/5.0	41	136

Lily Ting 8-26-09
REGISTERED CIVIL ENGINEER DATE

1-11-10
PLANS APPROVAL DATE

REGISTERED PROFESSIONAL ENGINEER
Lily Y. Ting
No. 37330
Exp. 6-30-10
CIVIL
STATE OF CALIFORNIA

THE STATE OF CALIFORNIA OR ITS OFFICERS OR AGENTS SHALL NOT BE RESPONSIBLE FOR THE ACCURACY OR COMPLETENESS OF SCANNED COPIES OF THIS PLAN SHEET.

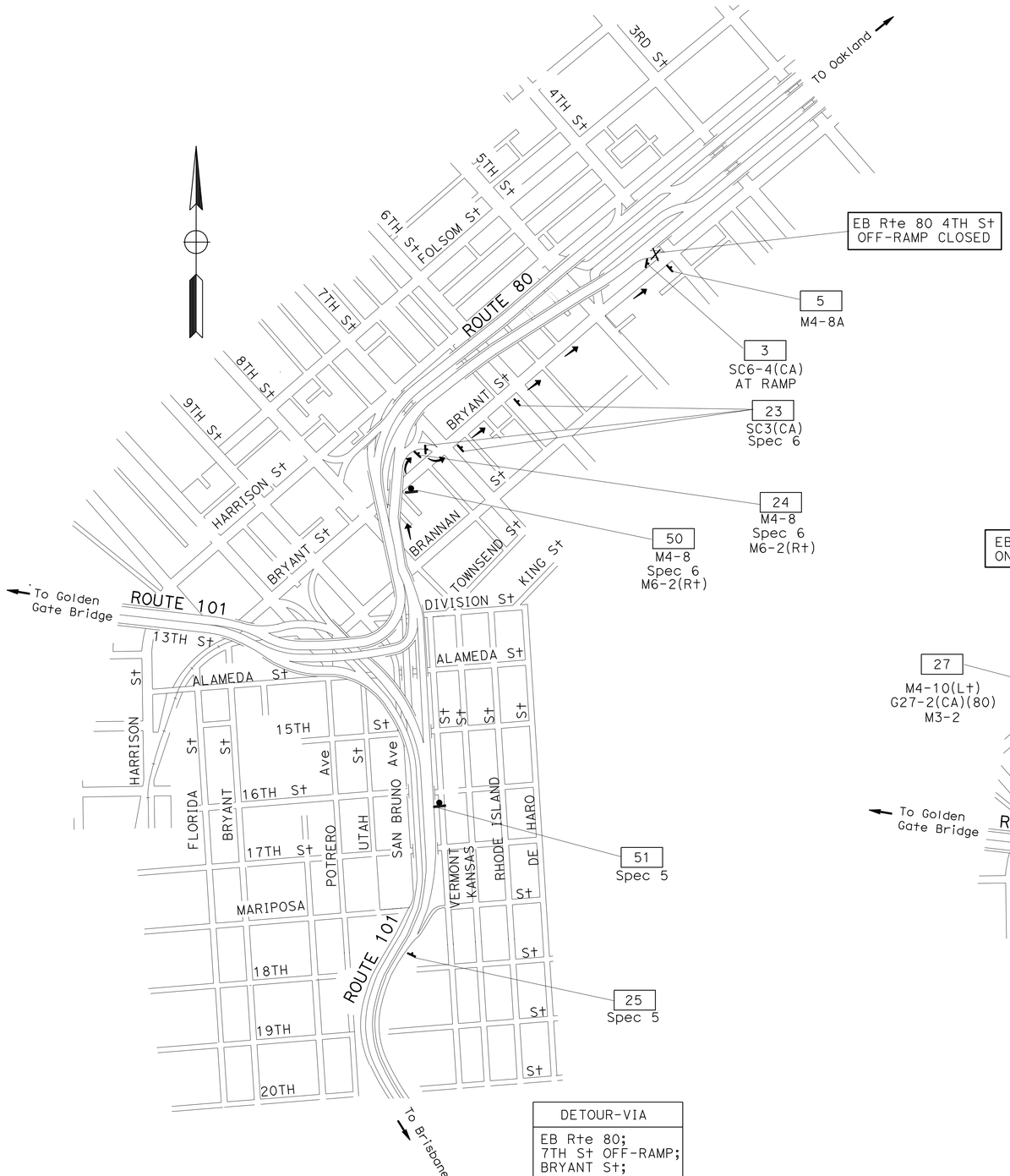

DETOUR-VIA
EB Rte 80; 7TH St OFF-RAMP; BRYANT St; 4TH St

DETOUR PLAN No. 5
EB Rte 80 4TH St OFF-RAMP CLOSURE

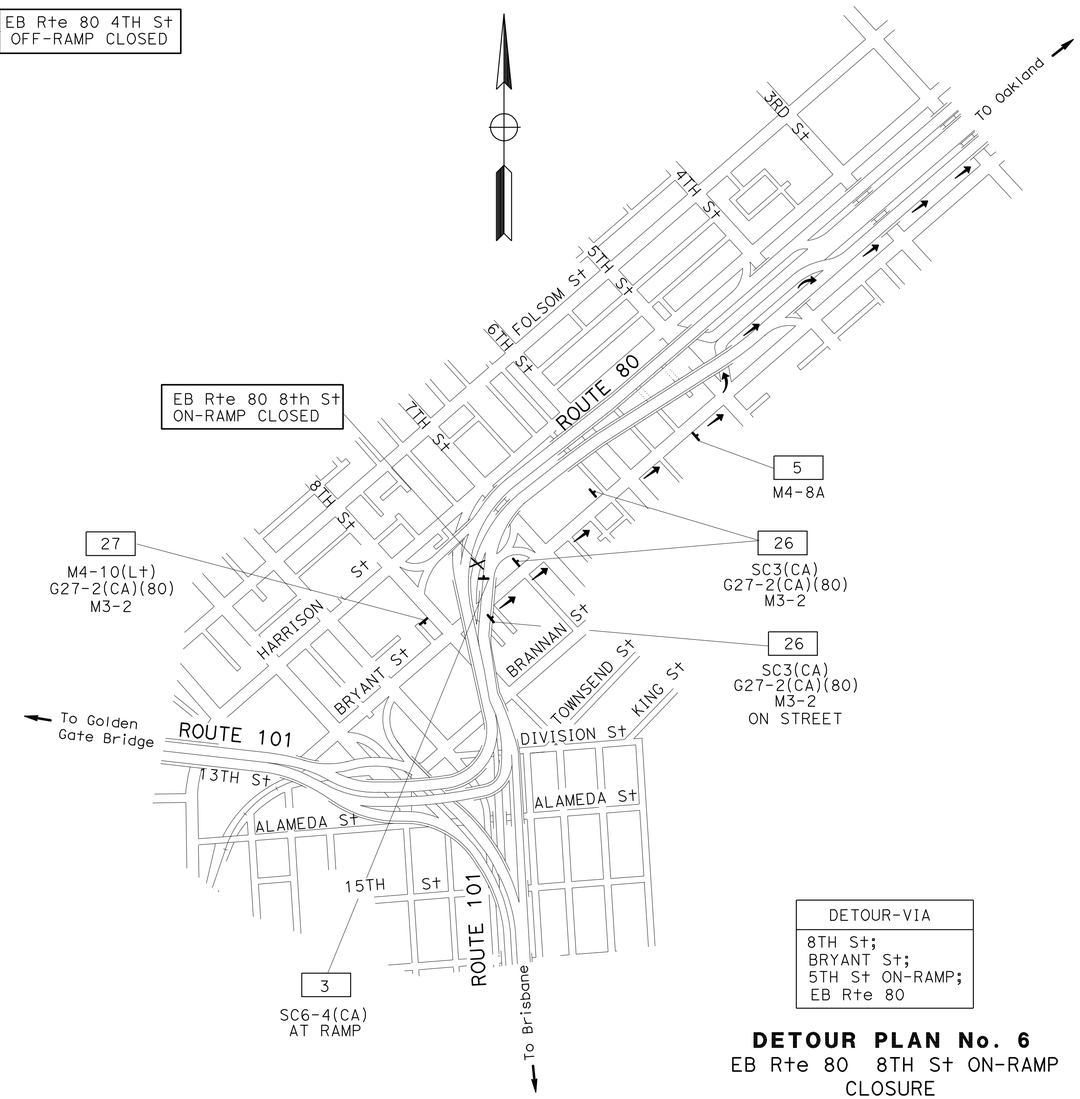

DETOUR-VIA
8TH St; BRYANT St; 5TH St ON-RAMP; EB Rte 80

DETOUR PLAN No. 6
EB Rte 80 8TH St ON-RAMP CLOSURE

CONSTRUCTION AREA SIGNS

NO SCALE

CS-4

FOR NOTES, ABBREVIATIONS AND LEGEND, SEE SHEET CS-1

THIS PLAN ACCURATE FOR CONSTRUCTION AREA SIGN WORK ONLY

STATE OF CALIFORNIA - DEPARTMENT OF TRANSPORTATION
Caltrans
TRAFFIC

FUNCTIONAL SUPERVISOR: JERILYN STRUVEN
CALCULATED-DESIGNED BY: LILY TING
CHECKED BY: ULICES VEGA
REVISED BY: LT
DATE REVISED: 8/26/09

LAST REVISION 08-25-09
DATE PLOTTED => 14-JAN-2010
TIME PLOTTED => 13:08

Dist	COUNTY	ROUTE	POST MILES TOTAL PROJECT	SHEET No.	TOTAL SHEETS
04	SF	80,101	L3.8/5.0, 4.1/5.0	42	136

Lily Ting 8-26-09
REGISTERED CIVIL ENGINEER DATE

1-11-10
PLANS APPROVAL DATE

REGISTERED PROFESSIONAL ENGINEER Lily Y. Ting No. 37330 Exp. 6-30-10 CIVIL STATE OF CALIFORNIA

THE STATE OF CALIFORNIA OR ITS OFFICERS OR AGENTS SHALL NOT BE RESPONSIBLE FOR THE ACCURACY OR COMPLETENESS OF SCANNED COPIES OF THIS PLAN SHEET.

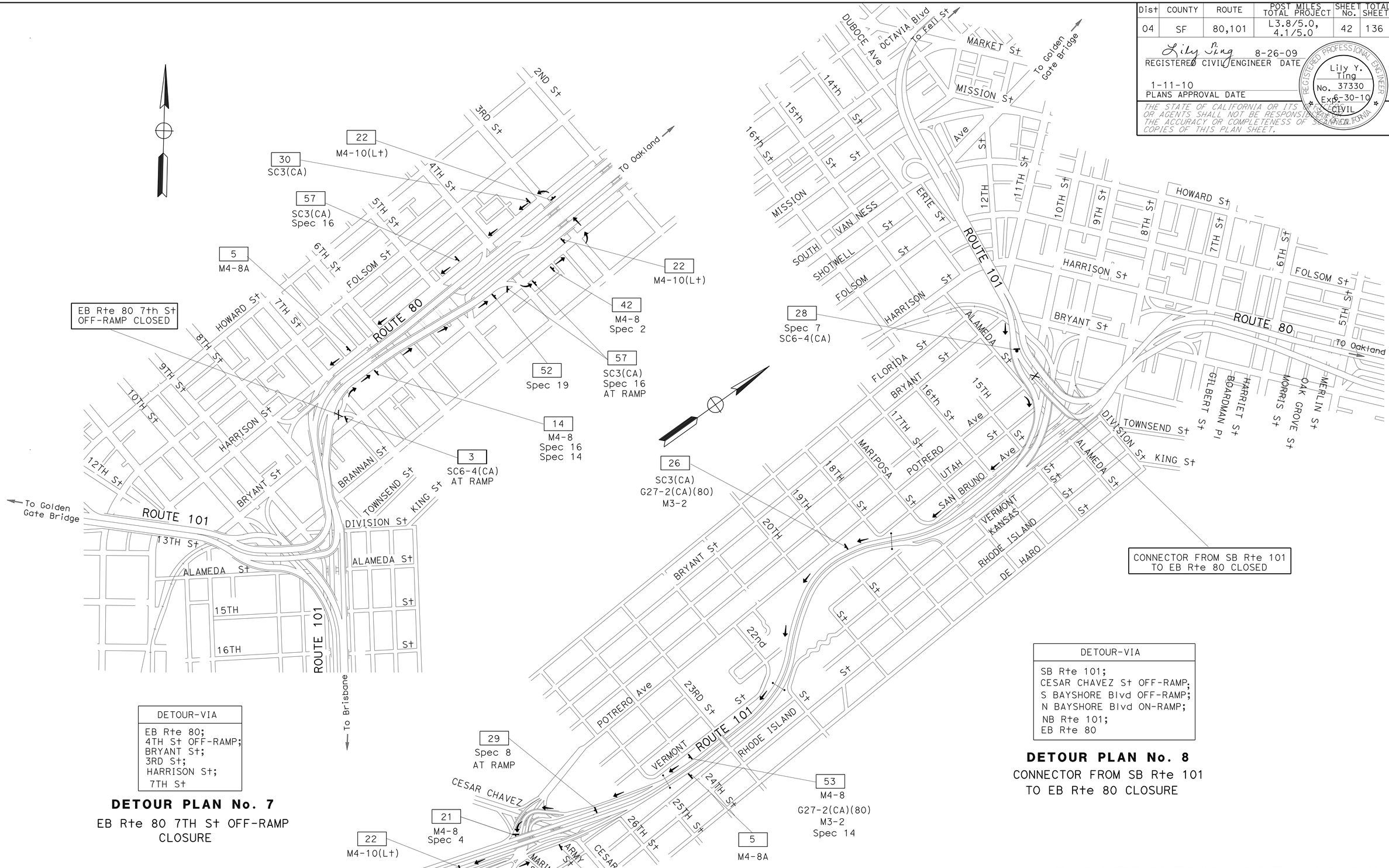

DETOUR-VIA
EB Rte 80; 4TH St OFF-RAMP; BRYANT St; 3RD St; HARRISON St; 7TH St

DETOUR PLAN No. 7

EB Rte 80 7TH St OFF-RAMP CLOSURE

DETOUR-VIA
SB Rte 101; CESAR CHAVEZ St OFF-RAMP; S BAYSHORE Blvd OFF-RAMP; N BAYSHORE Blvd ON-RAMP; NB Rte 101; EB Rte 80

DETOUR PLAN No. 8

CONNECTOR FROM SB Rte 101 TO EB Rte 80 CLOSURE

CONSTRUCTION AREA SIGNS

NO SCALE

CS-5

FOR NOTES, ABBREVIATIONS AND LEGEND, SEE SHEET CS-1

THIS PLAN ACCURATE FOR CONSTRUCTION AREA SIGN WORK ONLY

STATE OF CALIFORNIA - DEPARTMENT OF TRANSPORTATION
Caltrans
TRAFFIC

FUNCTIONAL SUPERVISOR: JERILYN STRUVEN
CALCULATED-DESIGNED BY: LILY TING
CHECKED BY: ULICES VEGA
REVISED BY: MH
DATE REVISED: 8/26/09

LAST REVISED DATE PLOTTED => 08-27-09 TIME PLOTTED => 15:08 JAN-2010

BORDER LAST REVISED 4/11/2008
RELATIVE BORDER SCALE IS IN INCHES 0 1 2 3
USERNAME => mikesl
DGN FILE => 2a1401a005.dgn
CU 04242
EA 2A1401

Dist	COUNTY	ROUTE	POST MILES TOTAL PROJECT	SHEET No.	TOTAL SHEETS
04	SF	80,101	L3.8/5.0, 4.1/5.0	43	136

Lily Ting 8-26-09
REGISTERED CIVIL ENGINEER DATE

1-11-10
PLANS APPROVAL DATE

REGISTERED PROFESSIONAL ENGINEER Lily Y. Ting No. 37330 Exp. 6-30-10 CIVIL STATE OF CALIFORNIA

THE STATE OF CALIFORNIA OR ITS OFFICERS OR AGENTS SHALL NOT BE RESPONSIBLE FOR THE ACCURACY OR COMPLETENESS OF SCANNED COPIES OF THIS PLAN SHEET.

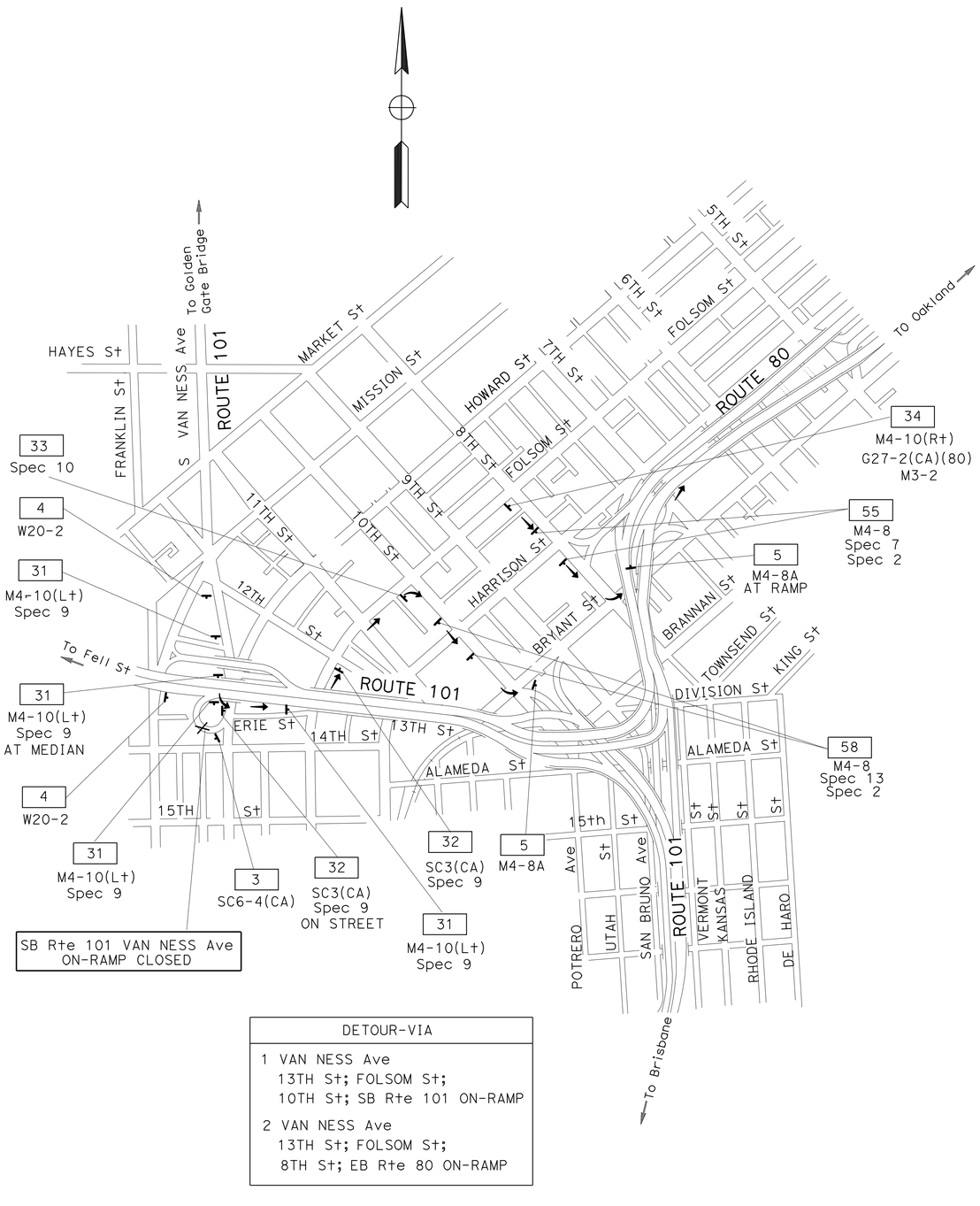

DETOUR-VIA
1 VAN NESS Ave 13TH St; FOLSOM St; 10TH St; SB Rte 101 ON-RAMP
2 VAN NESS Ave 13TH St; FOLSOM St; 8TH St; EB Rte 80 ON-RAMP

DETOUR PLAN No. 9

SB Rte 101 ON-RAMP FROM VAN NESS Ave

CLOSURE

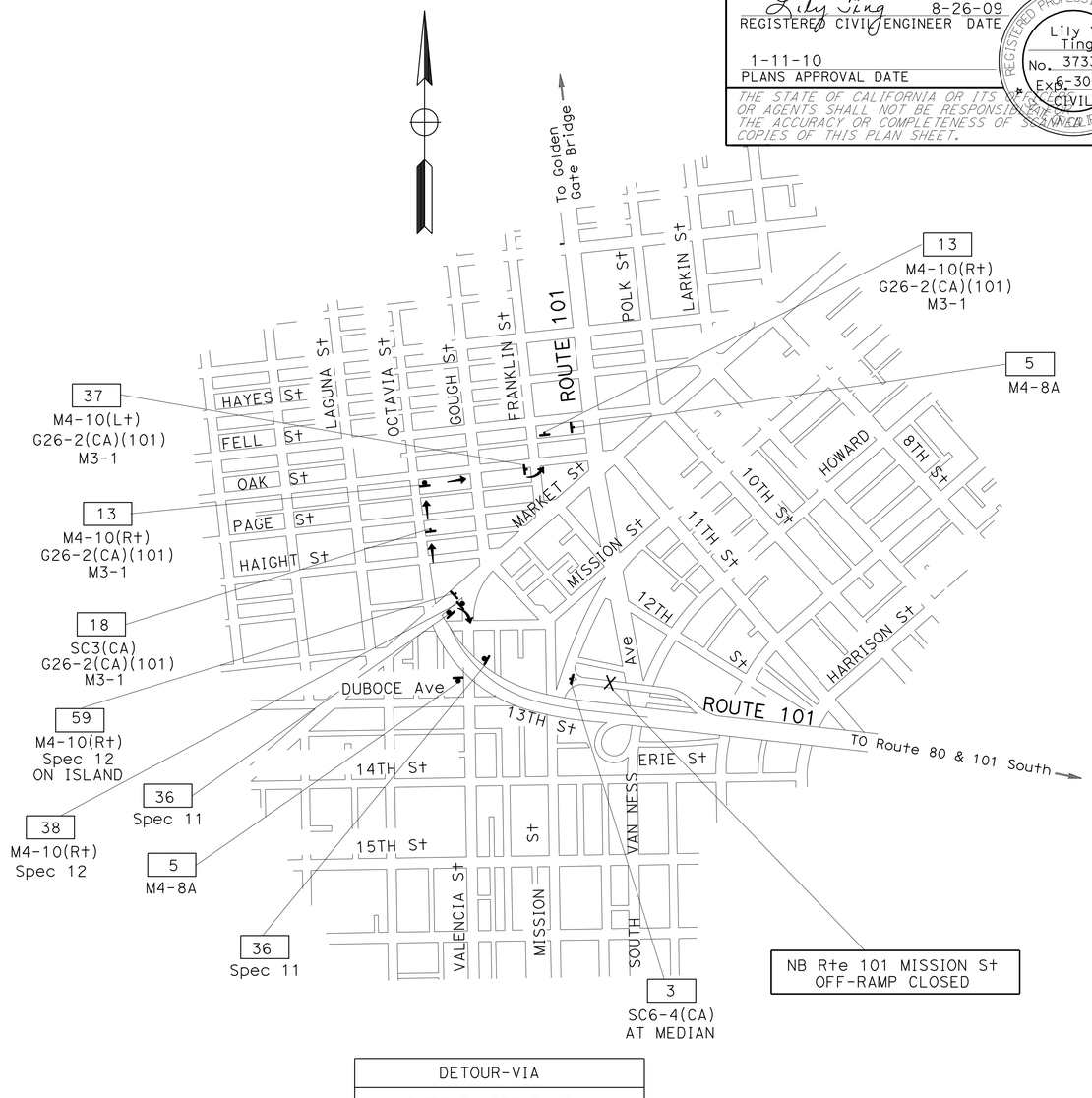

DETOUR-VIA
1 MARKET St OFF-RAMP OCTAVIA St; OAK St; FRANKLIN St; FELL St; VAN NESS Ave
2 MARKET St OFF-RAMP VALENCIA St; DUBOCE St;

DETOUR PLAN No. 10

NB Rte 101 MISSION St OFF-RAMP

CLOSURE

CONSTRUCTION AREA SIGNS

NO SCALE

CS-6

FOR NOTES, ABBREVIATIONS AND LEGEND, SEE SHEET CS-1

THIS PLAN ACCURATE FOR CONSTRUCTION AREA SIGN WORK ONLY

REVISED BY	DATE REVISED
MH	8/26/09

LILY TING — ULICES VEGA — CALCULATED-DESIGNED BY — CHECKED BY — FUNCTIONAL SUPERVISOR: JERILYN STRUVEN

STATE OF CALIFORNIA - DEPARTMENT OF TRANSPORTATION — Caltrans — TRAFFIC

LAST REVISED — DATE PLOTTED => 08-25-09 — TIME PLOTTED => 08:08 JAN-2010

Dist	COUNTY	ROUTE	POST MILES TOTAL PROJECT	SHEET No.	TOTAL SHEETS
04	SF	80,101	L3.8/5.0, 4.1/5.0	44	136

Lily Ting 8-26-09
REGISTERED CIVIL ENGINEER DATE

1-11-10
PLANS APPROVAL DATE

REGISTERED PROFESSIONAL ENGINEER Lily Y. Ting No. 37330 Exp. 6-30-10 CIVIL STATE OF CALIFORNIA

THE STATE OF CALIFORNIA OR ITS OFFICERS OR AGENTS SHALL NOT BE RESPONSIBLE FOR THE ACCURACY OR COMPLETENESS OF SCANNED COPIES OF THIS PLAN SHEET.

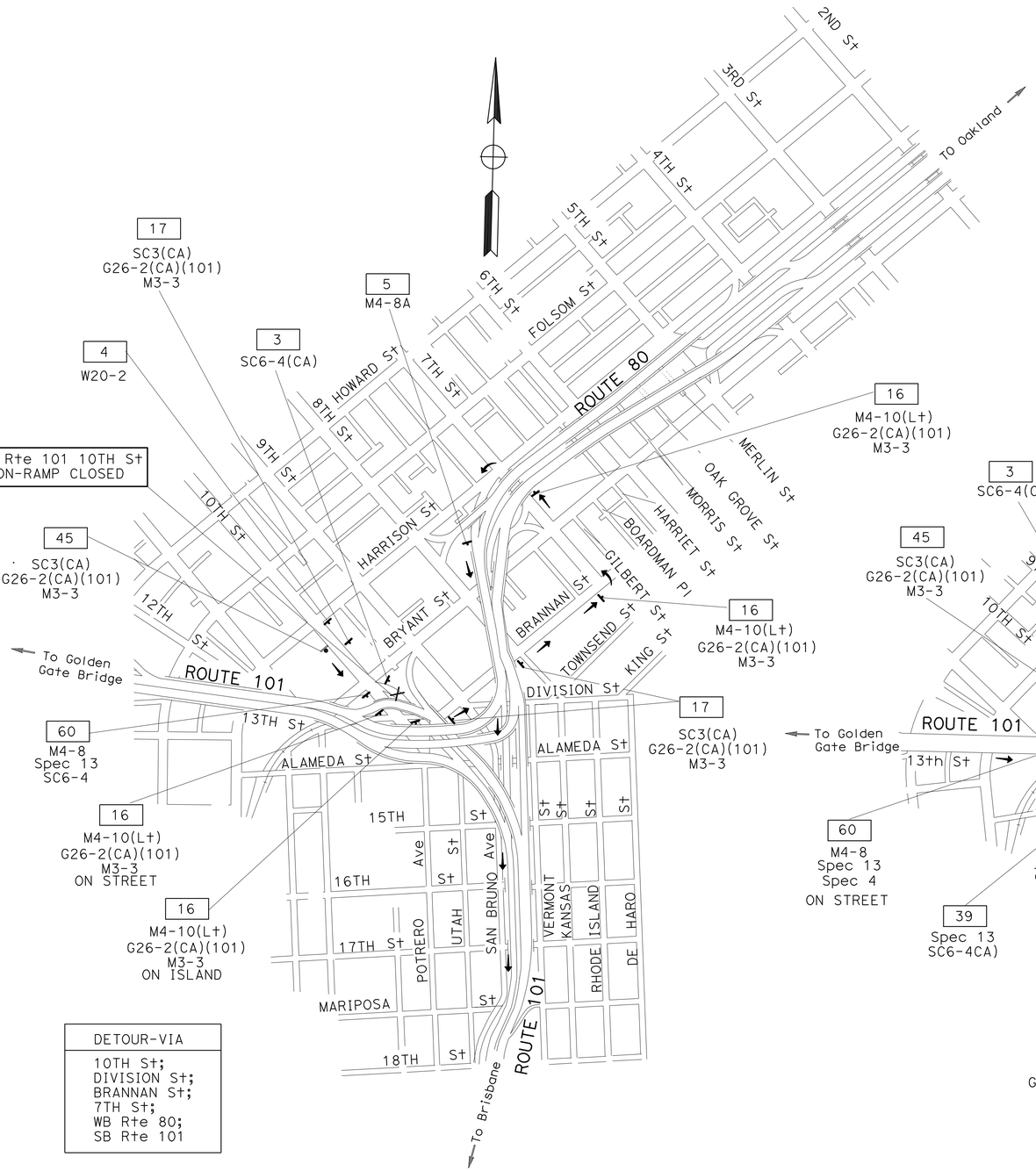

DETOUR-VIA
10TH St;
DIVISION St;
BRANNAN St;
7TH St;
WB Rte 80;
SB Rte 101

DETOUR PLAN No. 11

SB Rte 101 10TH St ON-RAMP CLOSURE

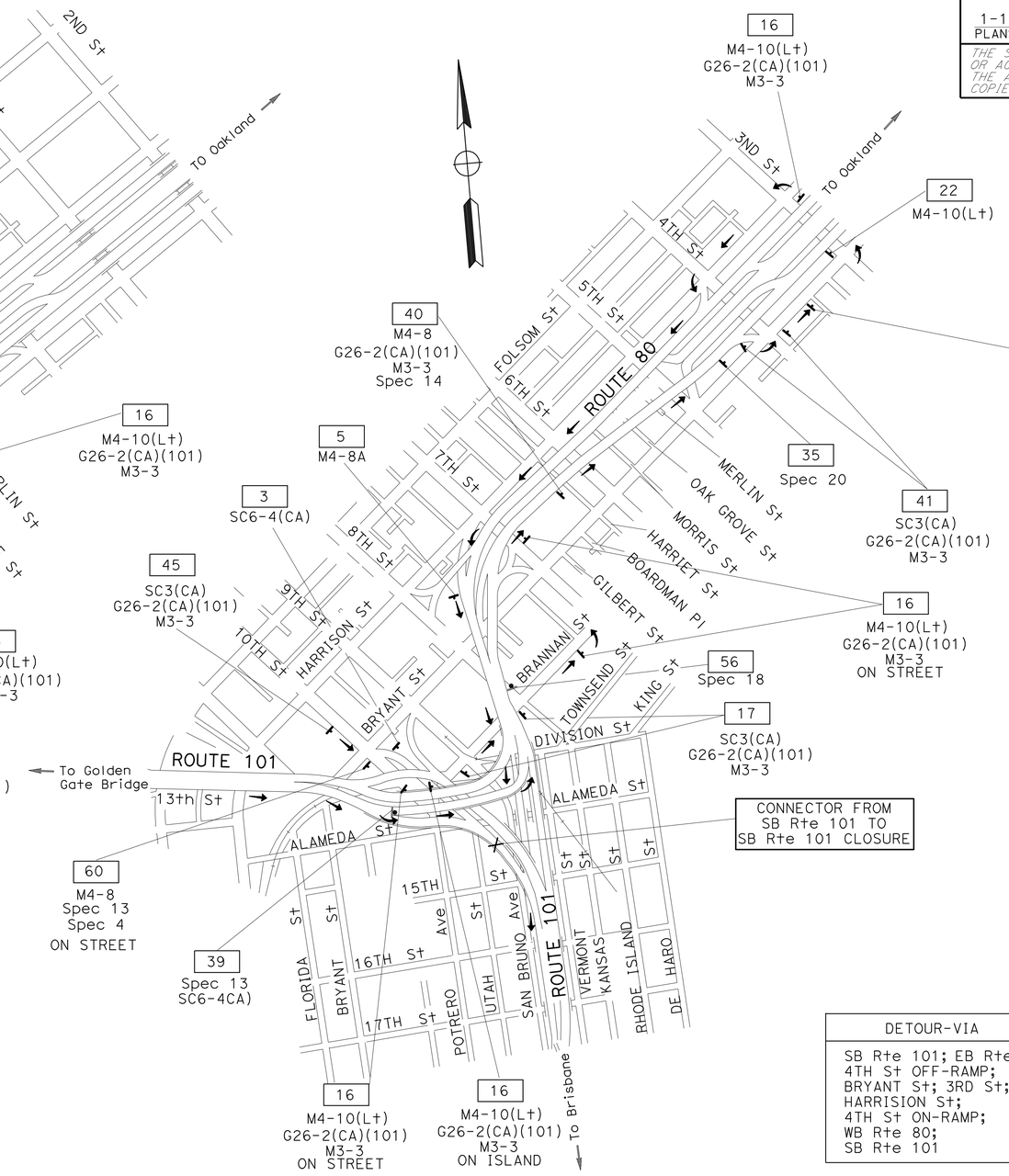

DETOUR-VIA
SB Rte 101; EB Rte 80;
4TH St OFF-RAMP;
BRYANT St; 3RD St;
HARRISION St;
4TH St ON-RAMP;
WB Rte 80;
SB Rte 101

DETOUR PLAN No. 12

CONNECTOR FROM SB Rte 101 TO SB Rte 101 CLOSURE

FOR NOTES, ABBREVIATIONS AND LEGEND, SEE SHEET CS-1

THIS PLAN ACCURATE FOR CONSTRUCTION AREA SIGN WORK ONLY

CONSTRUCTION AREA SIGNS

NO SCALE

CS-7

REVISED BY	MH	CALCULATED-DESIGNED BY	LILY TING
DATE REVISED	8/26/09	CHECKED BY	ULICES VEGA

FUNCTIONAL SUPERVISOR: JERILYN STRUVEN

STATE OF CALIFORNIA - DEPARTMENT OF TRANSPORTATION

Caltrans® TRAFFIC

LAST REVISED DATE PLOTTED => JAN-2010
TIME PLOTTED => 8:09
08-25-09

Dist	COUNTY	ROUTE	POST MILES TOTAL PROJECT	SHEET No.	TOTAL SHEETS
04	SF	80,101	L3.8/5.0, 4.1/5.0	45	136

Lily Ting 8-26-09
REGISTERED CIVIL ENGINEER DATE

1-11-10
PLANS APPROVAL DATE

REGISTERED PROFESSIONAL ENGINEER
Lily Y. Ting
No. 37330
Exp. 6-30-10
CIVIL
STATE OF CALIFORNIA

THE STATE OF CALIFORNIA OR ITS OFFICERS OR AGENTS SHALL NOT BE RESPONSIBLE FOR THE ACCURACY OR COMPLETENESS OF SCANNED COPIES OF THIS PLAN SHEET.

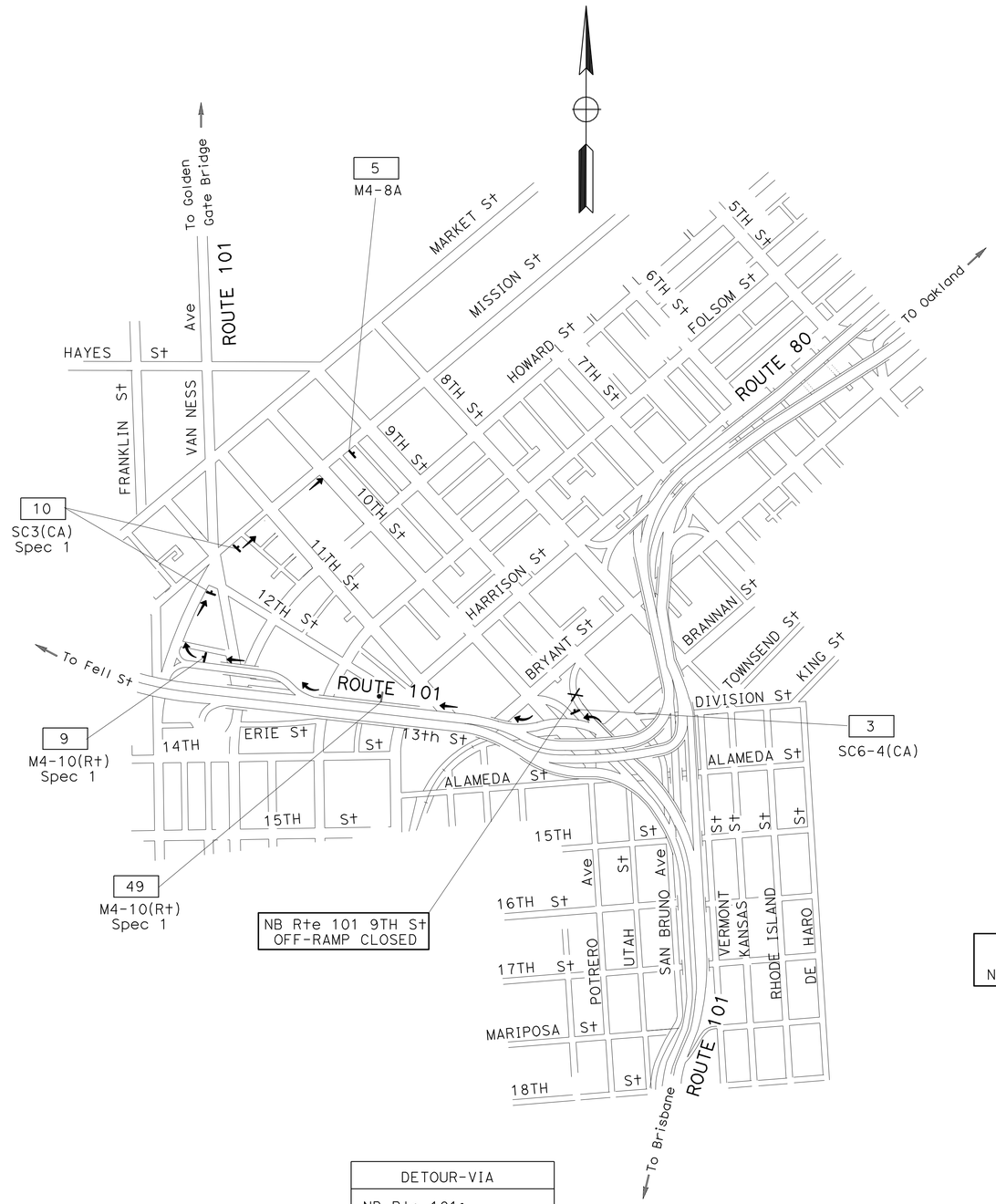

DETOUR-VIA
NB Rte 101; MISSION St OFF-RAMP; 10TH St

DETOUR PLAN No. 13

NB Rte 101 9TH St OFF-RAMP CLOSURE

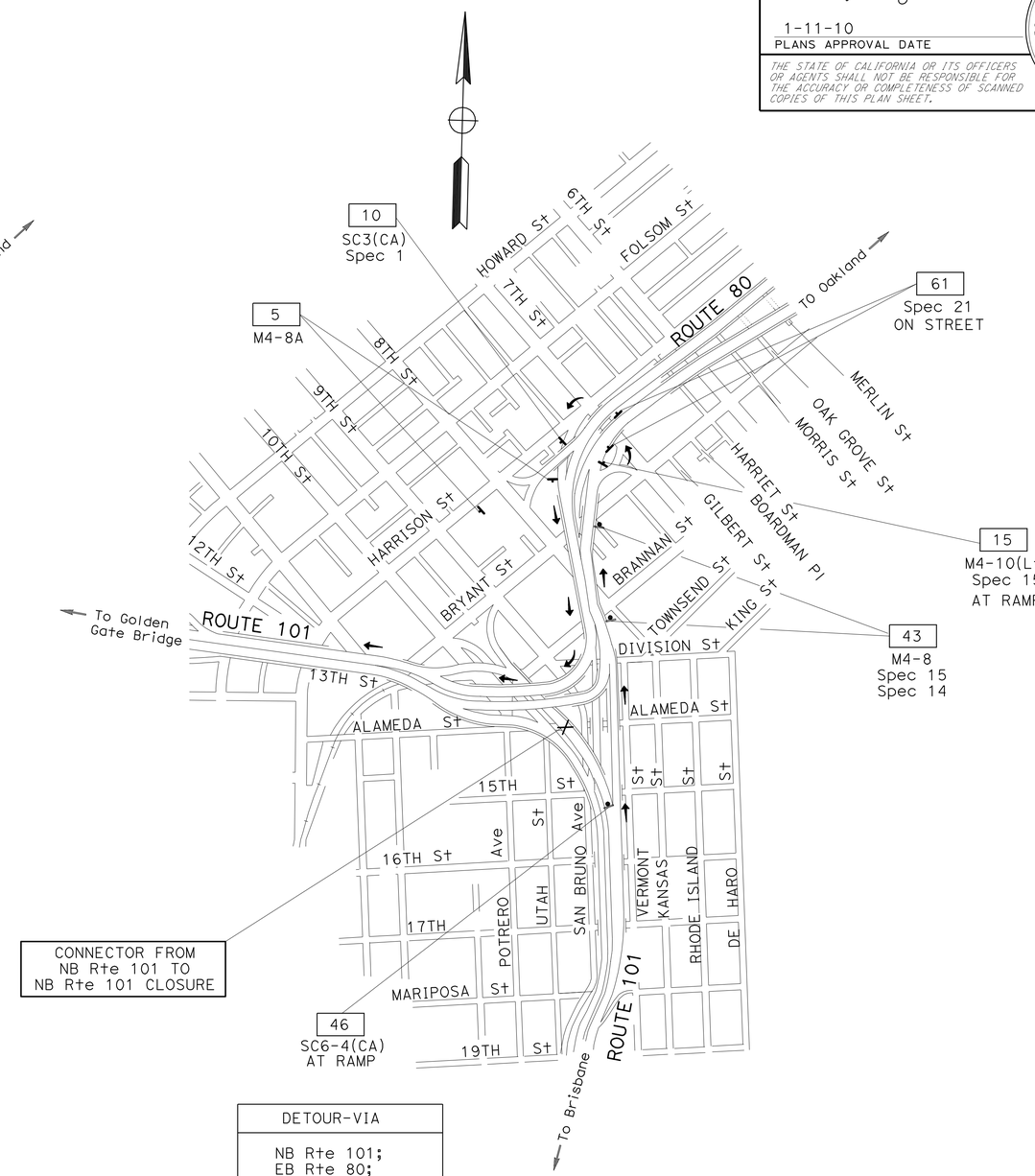

DETOUR-VIA
NB Rte 101; EB Rte 80; 7TH St OFF-RAMP; 7TH St ON-RAMP; WB Rte 80; NB Rte 101

DETOUR PLAN No. 14

CONNECTOR FROM NB Rte 101 TO NB Rte 101 CLOSURE

FOR NOTES, ABBREVIATIONS AND LEGEND, SEE SHEET CS-1

CONSTRUCTION AREA SIGNS

NO SCALE

THIS PLAN ACCURATE FOR CONSTRUCTION AREA SIGN WORK ONLY

CS-8

CALCULATED-DESIGNED BY	LILY TING	FUNCTIONAL SUPERVISOR	REVISED BY	MH
CHECKED BY	ULICES VEGA	JERILYN STRUVEN	DATE REVISED	8/26/09

STATE OF CALIFORNIA - DEPARTMENT OF TRANSPORTATION
Caltrans® TRAFFIC

LAST REVISION 08-25-09 DATE PLOTTED => 14-JAN-2010 TIME PLOTTED => 13:09

Dist	COUNTY	ROUTE	POST MILES TOTAL PROJECT	SHEET No.	TOTAL SHEETS
04	SF	80,101	L3.8/5.0, 4.1/5.0	46	136

Lily Ting 8-26-09
REGISTERED CIVIL ENGINEER DATE

1-11-10
PLANS APPROVAL DATE

REGISTERED PROFESSIONAL ENGINEER Lily Y. Ting No. 37330 Exp. 6-30-10 CIVIL STATE OF CALIFORNIA

THE STATE OF CALIFORNIA OR ITS OFFICERS OR AGENTS SHALL NOT BE RESPONSIBLE FOR THE ACCURACY OR COMPLETENESS OF SCANNED COPIES OF THIS PLAN SHEET.

CONSTRUCTION AREA SIGNS

SIGN No.	SIGN CODE	SIGN MESSAGE	PANEL SIZE (INCHES)	No. OF POSTS & SIZES (EA - INCHES)	No. OF SIGNS	REMARKS
1	W20-1	ROAD WORK AHEAD	48 x 48	1-6 x 6	6	
2	G20-2	END ROAD WORK	48 x 24	1-6 x 6	9	
3	SC6-4(CA)	RAMP CLOSED	48 x 60			##
4	W20-2	DETOUR AHEAD	36 x 36	1-6 x 6	5	
5	M4-8A	END DETOUR	24 x 18	1-6 x 6	17	
6	SC3(CA)	DETOUR (STRAIGHT)	48 x 18	1-6 x 6	2	
	G26-2(CA)(101)	ROUTE 101	35 x 30			
7	M4-10(R†)	DETOUR (RIGHT)	48 x 18	1-6 x 6	2	
	G26-2(CA)(101)	ROUTE 101	35 x 30			
8	M4-8	DETOUR	30 x 15	1-6 x 6	1	
	M6-2(L†)	DIAGONAL UP LEFT ARROW	21 x 15			BLACK/ORANGE
9	M4-10(R†)	DETOUR (RIGHT)	48 x 18	1-6 x 6	2	
	Spec 1	9TH S†	48 x 18			BLACK/ORANGE
10	SC3(CA)	DETOUR (STRAIGHT)	48 x 18	1-6 x 6	5	
	Spec 1	9TH S†	54 x 18			BLACK/ORANGE
11	SC3(CA)	DETOUR (STRAIGHT)	48 x 18	1-6 x 6	2	
	G26-2(CA)(101)	ROUTE 101	35 x 30			
12	M4-10(L†)	DETOUR (LEFT)	48 x 18	1-6 x 6	1	
	G26-2(CA)(101)	ROUTE 101	35 x 30			
13	M4-10(R†)	DETOUR (RIGHT)	48 x 18		2	
	G26-2(CA)(101)	ROUTE 101	35 x 30			SSBM
	M3-1	NORTH	30 x 15			BLACK/ORANGE
14	M4-8	DETOUR	30 x 15	1-6 x 6	1	
	Spec 16	7TH S†	48 x 18			
	Spec 14	NEXT EXIT	48 x 36			BLACK/ORANGE
15	M4-10(L†)	DETOUR (LEFT)	48 x 18	1-6 x 6	1	
	Spec 15	101 NORTH, 9TH S†	54 x 30			BLACK/ORANGE
16	M4-10(L†)	DETOUR (LEFT)	48 x 18	1-6 x 6	10	
	G26-2(CA)(101)	ROUTE 101	35 x 30			
	M3-3	SOUTH	30 x 15			BLACK/ORANGE
17	SC3(CA)	DETOUR (STRAIGHT)	48 x 18	1-6 x 6	6	
	G26-2(CA)(101)	ROUTE 101	35 x 30			
	M3-3	SOUTH	30 x 15			BLACK/ORANGE
18	SC3(CA)	DETOUR (STRAIGHT)	48 x 18	1-6 x 6	3	
	G26-2(CA)(101)	ROUTE 101	35 x 30			
	M3-1	NORTH	30 x 15			BLACK/ORANGE
19	M4-8	DETOUR	30 x 15	1-6 x 6	1	
	G26-2(CA)(101)	ROUTE 101	35 x 30			
	M3-1	NORTH	30 x 15			BLACK/ORANGE
	M6-2(R†)	DIAGONAL UP RIGHT ARROW	21 x 15			BLACK/ORANGE
20	Spec 3	DETOUR 101 NORTH USE BAYSHORE Blvd	60 x 54	2-6 x 6	1	BLACK/ORANGE
21	M4-8	DETOUR	30 x 15	1-6 x 6	2	
	Spec 4	LEFT LANE	48 x 30			BLACK/ORANGE

NOT A PAY ITEM, SHOW FOR SIGN LOCATION

THIS PLAN ACCURATE FOR CONSTRUCTION AREA SIGN WORK ONLY

CONSTRUCTION AREA SIGNS

NO SCALE

CS-9

REVISED BY	DATE REVISED
MH	8/26/09

LILY TING — ULICES VEGA
CALCULATED-DESIGNED BY — CHECKED BY
FUNCTIONAL SUPERVISOR: JERILYN STRUVEN

STATE OF CALIFORNIA - DEPARTMENT OF TRANSPORTATION
Caltrans TRAFFIC

LAST REVISION 08-25-09 | DATE PLOTTED => 14-JAN-2010 | TIME PLOTTED => 13:09

Dist	COUNTY	ROUTE	POST MILES TOTAL PROJECT	SHEET No.	TOTAL SHEETS
04	SF	80,101	L3.8/5.0, 4.1/5.0	47	136

Lily Ting 8-26-09
REGISTERED CIVIL ENGINEER DATE

1-11-10
PLANS APPROVAL DATE

REGISTERED PROFESSIONAL ENGINEER Lily Y. Ting No. 37330 Exp. 6-30-10 CIVIL STATE OF CALIFORNIA

THE STATE OF CALIFORNIA OR ITS OFFICERS OR AGENTS SHALL NOT BE RESPONSIBLE FOR THE ACCURACY OR COMPLETENESS OF SCANNED COPIES OF THIS PLAN SHEET.

CONSTRUCTION AREA SIGNS

SIGN No.	SIGN CODE	SIGN MESSAGE	PANEL SIZE (INCHES)	No. OF POSTS & SIZES (EA - INCHES)	No. OF SIGNS	REMARKS
22	M4-10(Lt)	DETOUR (LEFT)	48 x 18	1-6 x 6	5	
23	SC3(CA)	DETOUR (STRAIGHT)	48 x 18	1-6 x 6	3	
	Spec 6	4TH St	48 x 18			BLACK/ORANGE
24	M4-8	DETOUR	30 x 15	1-6 x 6	1	
	Spec 6	4TH St	48 x 18			BLACK/ORANGE
	M6-2(Rt)	DIAGONAL UP RIGHT ARROW	21 x 15			BLACK/ORANGE
25	Spec 5	DETOUR 4TH St USE 7TH St	54 x 54	1-6 x 6	1	BLACK/ORANGE
26	SC3(CA)	DETOUR (STRAIGHT)	48 x 18	1-6 x 6	4	
	G27-2(CA)(80)	ROUTE 80	36 x 36			
	M3-2	EAST	30 x 15			BLACK/ORANGE
27	M4-10(Lt)	DETOUR (LEFT)	48 x 18	1-6 x 6	1	
	G27-2(CA)(80)	ROUTE 80	36 x 36			
	M3-2	EAST	30 x 15			BLACK/ORANGE
28	Spec 7	80 EAST	54 x 18		1	BLACK/ORANGE
	SC6-4(CA)	RAMP CLOSED	48 x 60			##, SSBM
29	Spec 8	DETOUR 80 EAST USE BAYSHORE Blvd	60 x 54	2-6 x 6	1	BLACK/ORANGE
30	SC3(CA)	DETOUR (STRAIGHT)	48 x 18	1-6 x 6	1	
31	M4-10(Lt)	DETOUR (LEFT)	48 x 18	1-6 x 6	4	
	Spec 9	80 EAST 101 SOUTH	48 x 30			BLACK/ORANGE
32	SC3(CA)	DETOUR (STRAIGHT)	48 x 18	1-6 x 6	2	
	Spec 9	80 EAST 101 SOUTH	48 x 30			BLACK/ORANGE
33	Spec 10	DETOUR (↑) 80 EAST 101 SOUTH	54 x 42	1-6 x 6	1	BLACK/ORANGE
34	M4-10(Rt)	DETOUR (RIGHT)	48 x 18	1-6 x 6	1	
	G27-2(CA)(80)	ROUTE 80	36 x 36			
	M3-2	EAST	30 x 15			BLACK/ORANGE
35	Spec 20	DETOUR 101 SOUTH (↗)	54 x 48	1-6 x 6	1	
36	Spec 11	DETOUR (↑) 101 NORTH DUBOCE Ave	54 x 42		2	BLACK/ORANGE, SSBM
37	M4-10(Lt)	DETOUR (LEFT)	48 x 18	1-6 x 6	1	
	G26-2(CA)(101)	ROUTE 101	35 x 30			
	M3-1	NORTH	30 x 15			BLACK/ORANGE
38	M4-10(Rt)	DETOUR (RIGHT)	48 x 18		1	SSBM
	Spec 12	DUBOCE AVE	48 x 18			BLACK/ORANGE
39	Spec 13	101 SOUTH	48 x 18		1	BLACK/ORANGE
	SC6-4(CA)	RAMP CLOSED	48 x 60			##, SSBM
40	M4-8	DETOUR	30 x 15	1-6 x 6	1	
	G26-2(CA)(101)	ROUTE 101	35 x 30			
	M3-3	SOUTH	30 x 15			BLACK/ORANGE
	Spec 14	NEXT EXIT	48 x 36			BLACK/ORANGE
41	SC3(CA)	DETOUR (STRAIGHT)	48 x 18	1-6 x 6	2	SSBM
	G26-2(CA)(101)	ROUTE 101	35 x 30			
	M3-3	SOUTH	30 x 15			BLACK/ORANGE
42	M4-8	DETOUR	30 x 15	1-6 x 6	2	
	Spec 2	LEFT LANES	48 x 30			BLACK/ORANGE
43	M4-8	DETOUR	30 x 15		2	SSBM
	Spec 15	101 NORTH , 9TH St	54 x 30			BLACK/ORANGE
	Spec 14	NEXT EXIT	48 x 36			BLACK/ORANGE
44	W20-1	ROAD WORK AHEAD	36 x 36	1-6 x 6	3	

NOT A PAY ITEM, SHOW FOR SIGN LOCATION

THIS PLAN ACCURATE FOR CONSTRUCTION AREA SIGN WORK ONLY

CONSTRUCTION AREA SIGNS

NO SCALE

CS-10

STATE OF CALIFORNIA - DEPARTMENT OF TRANSPORTATION
Caltrans TRAFFIC

FUNCTIONAL SUPERVISOR: JERILYN STRUVEN
CALCULATED-DESIGNED BY: LILY TING
CHECKED BY: ULICES VEGA
REVISED BY: MH
DATE REVISED: 8/26/09

LAST REVISION 08-25-09 | DATE PLOTTED => 14-JAN-2010 | TIME PLOTTED => 13:09

Dist	COUNTY	ROUTE	POST MILES TOTAL PROJECT	SHEET No.	TOTAL SHEETS
04	SF	80,101	L3.8/5.0, 4.1/5.0	48	136

Lily Ting 8-26-09
REGISTERED CIVIL ENGINEER DATE

1-11-10
PLANS APPROVAL DATE

REGISTERED PROFESSIONAL ENGINEER Lily Y. Ting No. 37330 Exp. 6-30-10 CIVIL STATE OF CALIFORNIA

THE STATE OF CALIFORNIA OR ITS OFFICERS OR AGENTS SHALL NOT BE RESPONSIBLE FOR THE ACCURACY OR COMPLETENESS OF SCANNED COPIES OF THIS PLAN SHEET.

CONSTRUCTION AREA SIGN

SIGN No.	CODE	SIGN MESSAGE	PANEL SIZE (INCHES)	No. OF POSTS AND SIZES (EA - INCHES)	No. OF SIGNS	REMARKS
45	SC3(CA)	DETOUR (STRAIGHT)	48 x 18		1	
	G26-2(CA((101)	ROUTE 101	35 x 30			SSBM
	M3-3	SOUTH	30 x 15			BLACK/ORANGE
46	SC6-4(CA)	RAMP CLOSED	48 x 60			##, SSBM
47	W20-1	ROAD WORK AHEAD	48 x 48		2	SSBM
48	G20-2	END ROAD WORK	48 x 24		2	SSBM
49	M4-10(Rt)	DETOUR (RIGHT)	48 x 18		3	SSBM
	Spec 1	9TH St	48 x 18			BLACK/ORANGE
50	M4-8	DETOUR	30 x 15		1	SSBM
	Spec 6	4TH St	48 x 18			BLACK/ORANGE
	M6-2(Rt)	DIAGONAL UP RIGHT ARROW	21 x 15			BLACK/ORANGE
51	Spec 5	DETOUR 4TH St USE 7TH St	54 x 54		1	SSBM
52	Spec 19	DETOUR 7TH St (↗)	54 x 48	1-6 x 6	1	
53	M4-8	DETOUR	30 x 15	1-6 x 6	1	
	G27-2(CA)(80)	ROUTE 80	36 x 36			BLACK/ORANGE
	M3-2	EAST	30 x 15			BLACK/ORANGE
	Spec 14	NEXT EXIT	48 x 36			BLACK/ORANGE
54	Spec 17	DETOUR 80 USE 101 NORTH	54 x 48	1-6 x 6	3	
55	M4-8	DETOUR	30 x 15	1-6 x 6	2	
	Spec 7	80 EAST	54 x 18			BLACK/ORANGE
	Spec 2	LEFT LANES	48 x 30			
56	Spec 18	DETOUR 101 SOUTH USE 4TH St	54 x 48		1	SSBM
57	SC3(CA)	DETOUR (STRAIGHT)	36 x 12	1-6 x 6	3	
	Spec 16	7TH St	48 x 18			
58	M4-8	DETOUR	30 x 15	1-6 x 6	2	
	Spec 13	101 SOUTH	48 x 18			BLACK/ORANGE
	Spec 2	LEFT LANES	48 x 30			
59	M4-10(Rt)	DETOUR (RIGHT)	48 x 18	1-6 x 6	1	
	Spec 12	DUBOCE Ave	48 x 18			
60	M4-8	DETOUR	30 x 15	1-6 x 6	2	
	Spec 13	101 SOUTH	48 x 18			BLACK/ORANGE
	Spec 4	LEFT LANE	48 x 30			
61	Spec 21	DETOUR 101 NORTH 9TH St (↰)	48 x 48	1-6 x 6	2	BLACK/ORANGE

NOT A PAY ITEM, SHOW FOR SIGN LOCATION

THIS PLAN ACCURATE FOR CONSTRUCTION AREA SIGN WORK ONLY

CONSTRUCTION AREA SIGNS

NO SCALE

CS-11

REVISED BY	DATE REVISED
MH	8/26/09

LILY TING — ULICES VEGA

CALCULATED-DESIGNED BY — CHECKED BY

FUNCTIONAL SUPERVISOR: JERILYN STRUVEN

STATE OF CALIFORNIA - DEPARTMENT OF TRANSPORTATION

Caltrans **TRAFFIC**

LAST REVISION 08-25-09 | DATE PLOTTED => 14-JAN-2010 | TIME PLOTTED => 13:09

Dist	COUNTY	ROUTE	POST MILES TOTAL PROJECT	SHEET No.	TOTAL SHEETS
04	SF	80,101	L3.8/5.0, 4.1/5.0	49	136

REGISTERED CIVIL ENGINEER DATE 8-26-09

1-11-10
PLANS APPROVAL DATE

REGISTERED PROFESSIONAL ENGINEER Lily Y. Ting No. 37330 Exp. 6-30-10 CIVIL STATE OF CALIFORNIA

THE STATE OF CALIFORNIA OR ITS OFFICERS OR AGENTS SHALL NOT BE RESPONSIBLE FOR THE ACCURACY OR COMPLETENESS OF SCANNED COPIES OF THIS PLAN SHEET.

48'' x 18''
9TH ST
8'' CAPS
BLACK/ORANGE
Spec 1

48'' x 30''
LEFT LANES
8'' CAPS
BLACK/ORANGE
Spec 2

60'' x 54''
DETOUR
101 NORTH
USE
BAYSHORE BLVD
-6'' CAPS
-5'' CAPS
-6'' CAPS
-5'' CAPS
ROUTE SHIELD (101)-15'' x 10''
BLACK/ORANGE
Spec 3

48'' x 30''
LEFT LANE
10'' CAPS
BLACK/ORANGE
Spec 4

54'' x 54''
DETOUR
4TH ST
USE
7TH ST
-8'' CAPS
-6'' CAPS
-8'' CAPS
-6'' CAPS
BLACK/ORANGE
Spec 5

48'' x 18''
4TH ST
8'' CAPS
BLACK/ORANGE
Spec 6

48'' x 18''
DUBOCE AVE
4'' CAPS
BLACK/ORANGE
Spec 12

48'' x 18''
101 SOUTH
ROUTE SHIELD (101)-15'' x 10''
5'' CAPS
BLACK/ORANGE
Spec 13

54'' x 18''
80 EAST
ROUTE SHIELD 21'' x 18''
8'' CAPS
BLACK/ORANGE
Spec 7

60'' x 54''
DETOUR
80 EAST
USE
BAYSHORE BLVD
-6'' CAPS
-5'' CAPS
-6'' CAPS
-5'' CAPS
ROUTE SHIELD 21'' x 18''
BLACK/ORANGE
Spec 8

48'' x 30''
80 EAST
101 SOUTH
ROUTE SHIELD (80)-14'' x 12''
ROUTE SHIELD (101)-15'' x 10''
4'' CAPS
BLACK/ORANGE
Spec 9

54'' x 42''
DETOUR
↑ 80 EAST
101 SOUTH →
-6'' CAPS
-4'' CAPS
ROUTE SHIELD (80)-14'' x 12''
ROUTE SHIELD (101)-15'' x 10''
BLACK/ORANGE
Spec 10

54'' x 42''
DETOUR
↑ 101 NORTH
DUBOCE AVE →
-6'' CAPS
-4'' CAPS
ROUTE SHIELD (101)-15'' x 10''
BLACK/ORANGE
Spec 11

48'' x 36''
NEXT EXIT
10'' CAPS
BLACK/ORANGE
Spec 14

54'' x 30''
101 NORTH
9TH ST
-5'' CAPS
-6'' CAPS
ROUTE SHIELD (101)-15'' x 10''
BLACK/ORANGE
Spec 15

48'' x 18''
7TH ST
8'' CAPS
BLACK/ORANGE
Spec 16

54'' x 48''
DETOUR
80 USE
101 NORTH
-6'' CAPS
8'' CAPS
ROUTE SHIELD (80)-14'' x 12''
ROUTE SHIELD (101)-15'' x 10''
BLACK/ORANGE
Spec 17

54'' x 48''
DETOUR
101 SOUTH
USE 4TH ST
-5'' CAPS
6'' CAPS
ROUTE SHIELD (101)-15'' x 10''
BLACK/ORANGE
Spec 18

54'' x 48''
DETOUR
7TH
ST ↗
8'' CAPS
STANDARD ARROW 45°
BLACK/ORANGE
Spec 19

54'' x 48''
DETOUR
101 ↗
SOUTH
-6'' CAPS
8'' CAPS
ROUTE SHIELD (101)-15'' x 10''
STANDARD ARROW 45°
BLACK/ORANGE
Spec 20

48'' x 48''
DETOUR
101 NORTH ↰
9TH ST ↰
-6'' CAPS
-4'' CAPS
ROUTE SHIELD (101)-15'' x 10''
BLACK/ORANGE
Spec 21

CONSTRUCTION AREA SIGNS

NO SCALE

THIS PLAN ACCURATE FOR
CONSTRUCTION AREA SIGN WORK ONLY

CS-12

REVISED BY	MH
DATE REVISED	8/26/09
LILY L. TING	ULICES VEGA
CALCULATED-DESIGNED BY	CHECKED BY
FUNCTIONAL SUPERVISOR	JERILYN STRUVEN

STATE OF CALIFORNIA - DEPARTMENT OF TRANSPORTATION
Caltrans
TRAFFIC

LAST REVISION 08-25-09 | DATE PLOTTED => 14-JAN-2010 | TIME PLOTTED => 13:10

Dist	COUNTY	ROUTE	POST MILES TOTAL PROJECT	SHEET No.	TOTAL SHEETS
04	SF	80,101	L3.8/5.0, 4.1/5.0	50	136

Lily Ting 8-26-09
REGISTERED CIVIL ENGINEER DATE

1-11-10
PLANS APPROVAL DATE

REGISTERED PROFESSIONAL ENGINEER
Lily Y. Ting
No. 37330
Exp 6-30-10
CIVIL
STATE OF CALIFORNIA

THE STATE OF CALIFORNIA OR ITS OFFICERS OR AGENTS SHALL NOT BE RESPONSIBLE FOR THE ACCURACY OR COMPLETENESS OF SCANNED COPIES OF THIS PLAN SHEET.

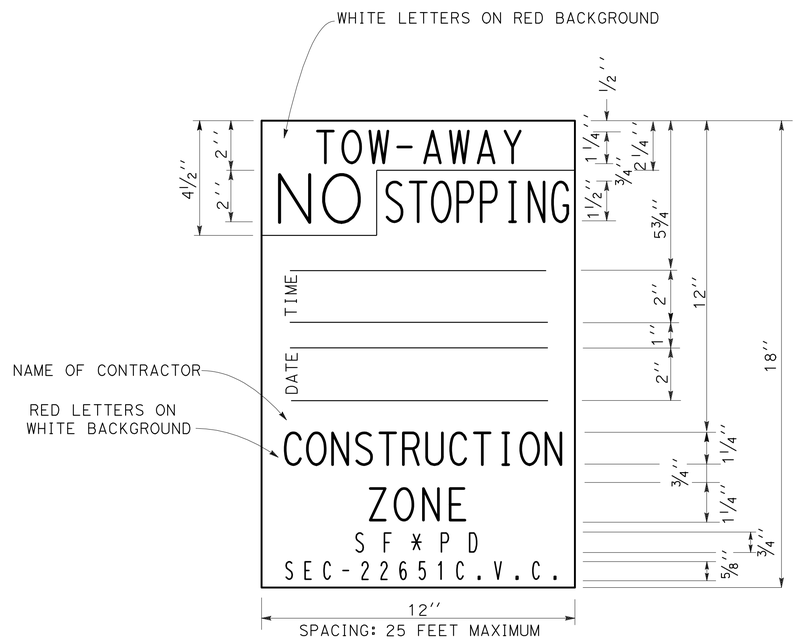

TEMPORARY TOW-AWAY NO STOPPING SIGN FOR CONSTRUCTION ZONE

CONSTRUCTION AREA SIGNS
CITY OF SAN FRANCISCO DETAIL

NO SCALE

THIS PLAN ACCURATE FOR CONSTRUCTION AREA SIGN WORK ONLY

CS-13

LILY TING	LT
ULICES VEGA	8/26/09
CALCULATED-DESIGNED BY	REVISED BY
CHECKED BY	DATE REVISED
FUNCTIONAL SUPERVISOR	
JERILYN STRUVEN	

STATE OF CALIFORNIA - DEPARTMENT OF TRANSPORTATION
Caltrans TRAFFIC

LAST REVISION 08-25-09 | DATE PLOTTED => 14-JAN-2010 | TIME PLOTTED => 13:10

Dist	COUNTY	ROUTE	POST MILES TOTAL PROJECT	SHEET No.	TOTAL SHEETS
04	SF	80,101	L3.8/5.0, 4.1/5.0	51	136

8-19-09
REGISTERED CIVIL ENGINEER DATE

1-11-10
PLANS APPROVAL DATE

REGISTERED PROFESSIONAL ENGINEER
M. Hovhanessian
No. 42284
Exp. 3-31-10
CIVIL
STATE OF CALIFORNIA

THE STATE OF CALIFORNIA OR ITS OFFICERS OR AGENTS SHALL NOT BE RESPONSIBLE FOR THE ACCURACY OR COMPLETENESS OF SCANNED COPIES OF THIS PLAN SHEET.

LEGEND:

S - STAGE
P - PHASE

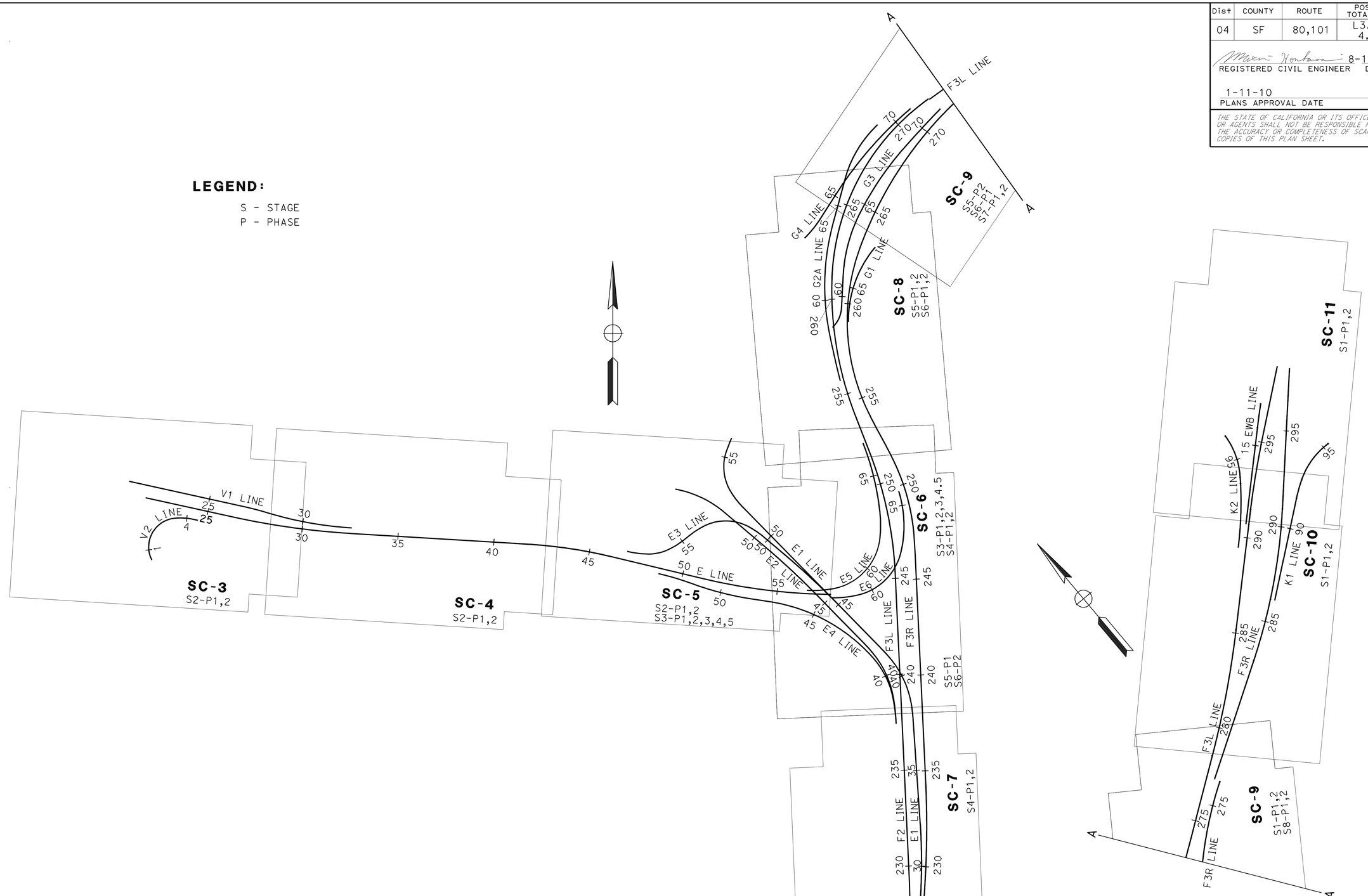

THIS PLAN ACCURATE FOR
STAGE CONSTRUCTION WORK ONLY

KEY MAP AND INDEX TO STAGE CONSTRUCTION

NO SCALE

SC-1

STATE OF CALIFORNIA - DEPARTMENT OF TRANSPORTATION
Caltrans
DESIGN

FUNCTIONAL SUPERVISOR: ABOLFAZL EMADZADEH
CALCULATED-DESIGNED BY: MAXIM HOVHANESSIAN
CHECKED BY: MAXIM HOVHANESSIAN
REVISED BY: MH
DATE REVISED: 8/26/09

LAST REVISION 08-25-09
DATE PLOTTED => 14-JAN-2010
TIME PLOTTED => 13:10

Dist	COUNTY	ROUTE	POST MILES TOTAL PROJECT	SHEET No.	TOTAL SHEETS
04	SF	80,101	L3.8/5.0, 4.1/5.0	52	136

REGISTERED CIVIL ENGINEER 8-19-09 DATE

1-11-10
PLANS APPROVAL DATE

REGISTERED PROFESSIONAL ENGINEER M. Hovhanessian No. 42284 Exp. 3-31-10 CIVIL STATE OF CALIFORNIA

THE STATE OF CALIFORNIA OR ITS OFFICERS OR AGENTS SHALL NOT BE RESPONSIBLE FOR THE ACCURACY OR COMPLETENESS OF SCANNED COPIES OF THIS PLAN SHEET.

NOTE:

FOR MORE DETAILS OF STAGES, SEE SHEETS SC-3 THROUGH SC-11

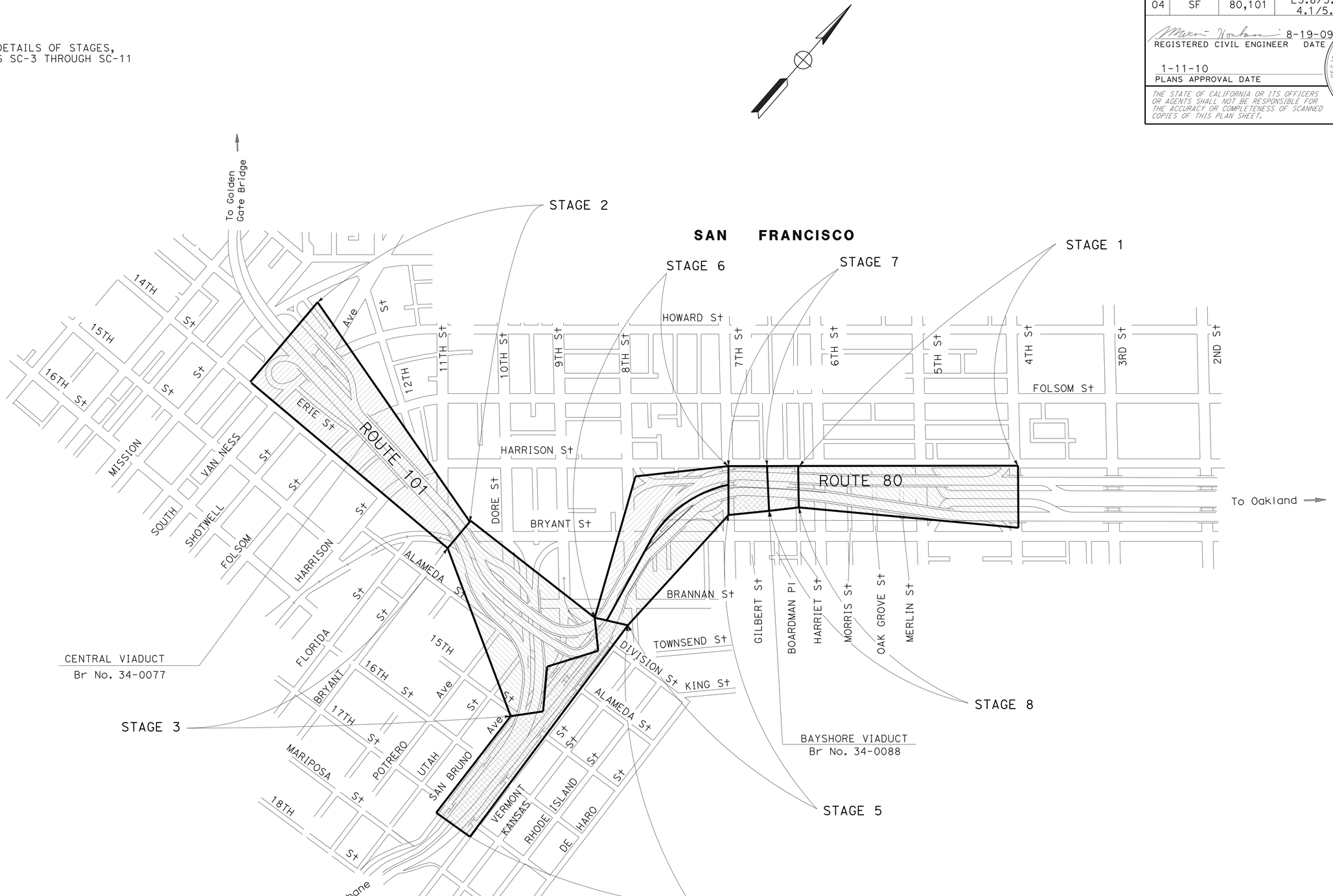

INDEX TO STAGE CONSTRUCTION

NO SCALE

THIS PLAN ACCURATE FOR STAGE CONSTRUCTION WORK ONLY

SC-2

REVISED BY	MH
DATE REVISED	8/26/09
CALCULATED-DESIGNED BY	MAXIM HOVHANESSIAN
CHECKED BY	MAXIM HOVHANESSIAN
FUNCTIONAL SUPERVISOR	ABOLFAZL EMADZADEH

STATE OF CALIFORNIA - DEPARTMENT OF TRANSPORTATION

Caltrans

DESIGN

LAST REVISION 08-25-09 | DATE PLOTTED => 14-JAN-2010 | TIME PLOTTED => 13:10

Dist	COUNTY	ROUTE	POST MILES TOTAL PROJECT	SHEET No.	TOTAL SHEETS
04	SF	80,101	L3.8/5.0, 4.1/5.0	53	136

REGISTERED CIVIL ENGINEER 8-19-09 DATE

1-11-10
PLANS APPROVAL DATE

REGISTERED PROFESSIONAL ENGINEER M. Hovhanessian No. 42284 Exp. 3-31-10 CIVIL STATE OF CALIFORNIA

THE STATE OF CALIFORNIA OR ITS OFFICERS OR AGENTS SHALL NOT BE RESPONSIBLE FOR THE ACCURACY OR COMPLETENESS OF SCANNED COPIES OF THIS PLAN SHEET.

FOR ACCURATE RIGHT OF WAY AND ACCESS DATA, CONTACT RIGHT OF WAY ENGINEERING AT THE DISTRICT OFFICE.

LEGEND:

- (No.) WORK AREA
- DIRECTION OF TRAFFIC
- Temp FENCE

ABBREVIATION:

- R&R REMOVE AND REPLACE
- FLA FREEWAY LEASE AREA

NOTE:

FOR WORK AREA LIMITS, SEE FLA MAP PROVIDED IN THE INFORMATION HAND OUT

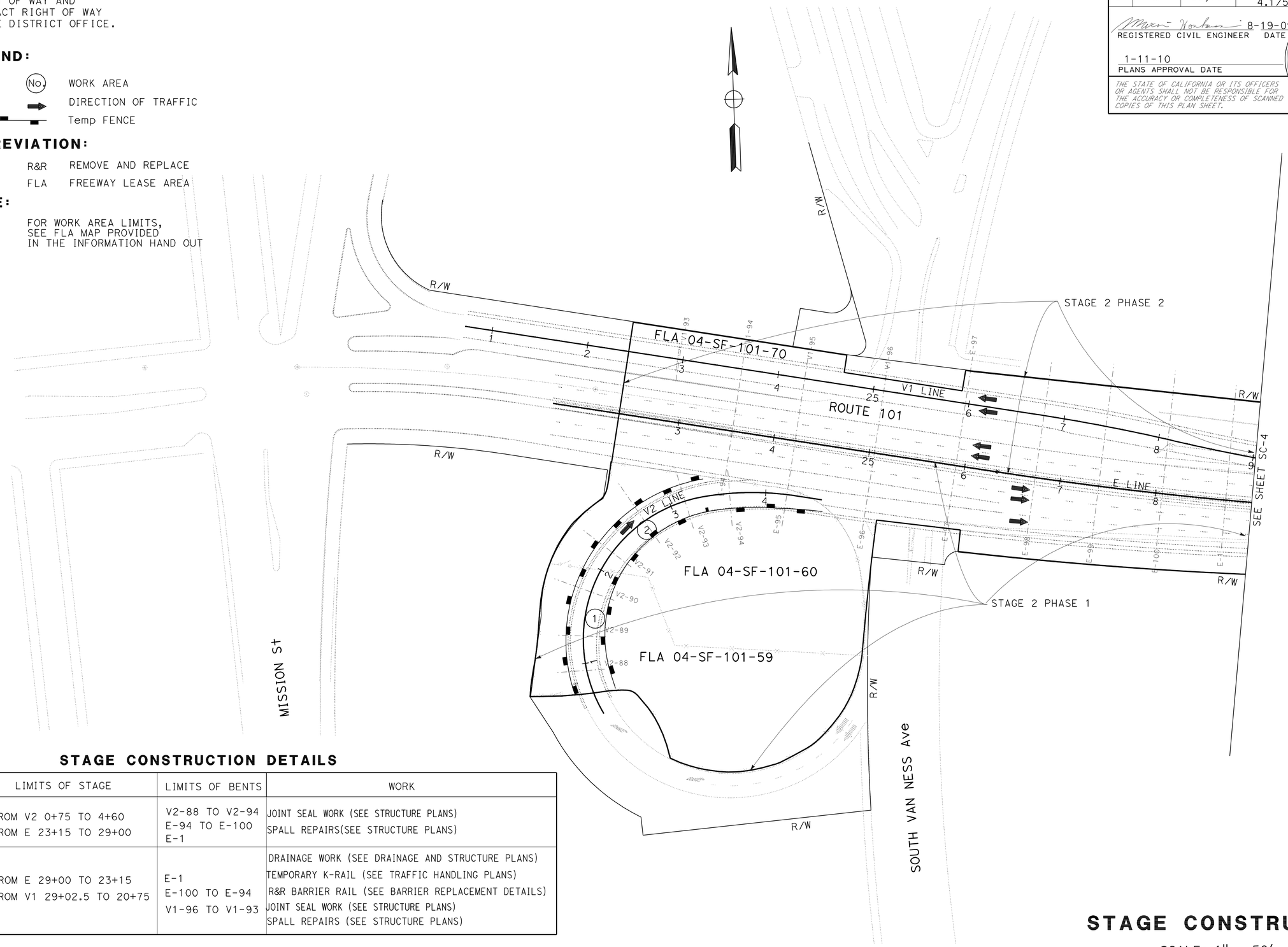

STAGE CONSTRUCTION DETAILS

STAGE/PHASE	LIMITS OF STAGE	LIMITS OF BENTS	WORK
STAGE 2 PHASE 1	FROM V2 0+75 TO 4+60 FROM E 23+15 TO 29+00	V2-88 TO V2-94 E-94 TO E-100 E-1	JOINT SEAL WORK (SEE STRUCTURE PLANS) SPALL REPAIRS(SEE STRUCTURE PLANS)
STAGE 2 PHASE 2	FROM E 29+00 TO 23+15 FROM V1 29+02.5 TO 20+75	E-1 E-100 TO E-94 V1-96 TO V1-93	DRAINAGE WORK (SEE DRAINAGE AND STRUCTURE PLANS) TEMPORARY K-RAIL (SEE TRAFFIC HANDLING PLANS) R&R BARRIER RAIL (SEE BARRIER REPLACEMENT DETAILS) JOINT SEAL WORK (SEE STRUCTURE PLANS) SPALL REPAIRS (SEE STRUCTURE PLANS)

THIS PLAN ACCURATE FOR STAGE CONSTRUCTION WORK ONLY

STAGE CONSTRUCTION

SCALE: 1" = 50'

SC-3

REVISED BY	DATE REVISED
MH	8/26/09

CALCULATED-DESIGNED BY: MAXIM HOVHANESSIAN
CHECKED BY: MAXIM HOVHANESSIAN

FUNCTIONAL SUPERVISOR: ABOLFAZL EMADZADEH

STATE OF CALIFORNIA - DEPARTMENT OF TRANSPORTATION
Caltrans
DESIGN

LAST REVISION 08-25-09 DATE PLOTTED => 14-JAN-2010 TIME PLOTTED => 13:10

Dist	COUNTY	ROUTE	POST MILES TOTAL PROJECT	SHEET No.	TOTAL SHEETS
04	SF	80,101	L3.8/5.0, 4.1/5.0	54	136

REGISTERED CIVIL ENGINEER 8-19-09 DATE

1-11-10
PLANS APPROVAL DATE

REGISTERED PROFESSIONAL ENGINEER M. Hovhanessian No. 42284 Exp. 3-31-10 CIVIL STATE OF CALIFORNIA

THE STATE OF CALIFORNIA OR ITS OFFICERS OR AGENTS SHALL NOT BE RESPONSIBLE FOR THE ACCURACY OR COMPLETENESS OF SCANNED COPIES OF THIS PLAN SHEET.

FOR ACCURATE RIGHT OF WAY AND ACCESS DATA, CONTACT RIGHT OF WAY ENGINEERING AT THE DISTRICT OFFICE.

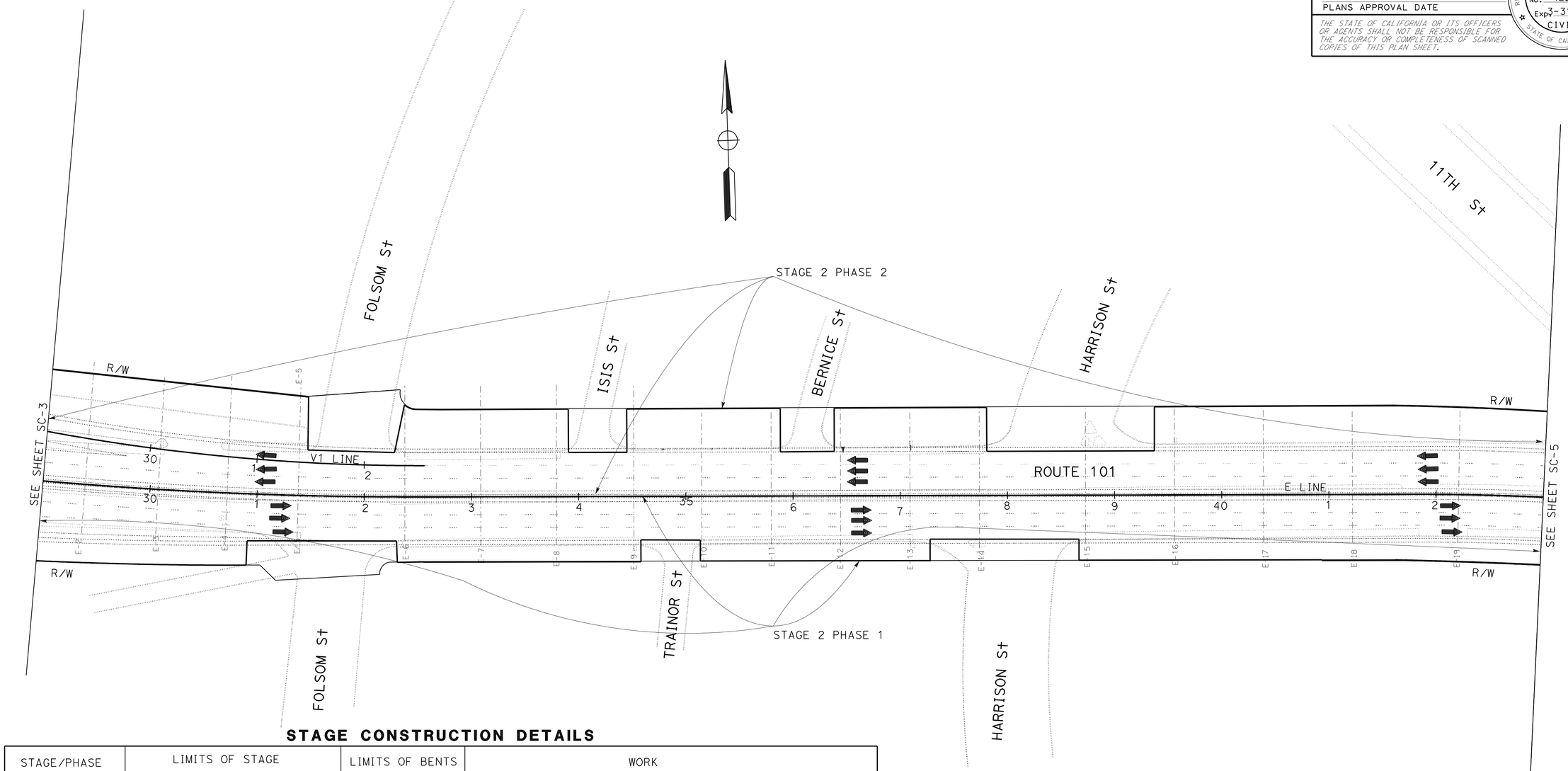

STAGE CONSTRUCTION DETAILS

STAGE/PHASE	LIMITS OF STAGE	LIMITS OF BENTS	WORK
STAGE 2 PHASE 1	FROM E 29+00 TO 43+00	E-2 TO E-19	DRAINAGE WORK (SEE DRAINAGE AND STRUCTURE PLANS) TEMPORARY K-RAIL (SEE TRAFFIC HANDLING PLANS) R&R BARRIER RAIL (SEE BARRIER REPLACEMENT DETAILS) JOINT SEAL WORK (SEE STRUCTURE PLANS) SPALL REPAIRS (SEE STRUCTURE PLANS)
STAGE 2 PHASE 2	FROM E 43+00 TO 29+00 FROM V1 32+55 TO 29+02.5	E-19 TO E-2	DRAINAGE WORK (SEE DRAINAGE AND STRUCTURE PLANS) TEMPORARY K-RAIL (SEE TRAFFIC HANDLING PLANS) R&R BARRIER RAIL (SEE BARRIER REPLACEMENT DETAILS) JOINT SEAL WORK (SEE STRUCTURE PLANS) SPALL REPAIRS (SEE STRUCTURE PLANS)

FOR NOTES, ABBREVIATIONS AND LEGEND, SEE SHEET SC-3

THIS PLAN ACCURATE FOR STAGE CONSTRUCTION WORK ONLY

STAGE CONSTRUCTION

SCALE: 1" = 50'

SC-4

REVISED BY	DATE REVISED
MH	8/26/09

CALCULATED-DESIGNED BY: MAXIM HOVHANESSIAN
CHECKED BY: MAXIM HOVHANESSIAN

FUNCTIONAL SUPERVISOR: ABOLFAZL EMADZADEH

STATE OF CALIFORNIA - DEPARTMENT OF TRANSPORTATION
Caltrans
DESIGN

LAST REVISION 08-25-09 | DATE PLOTTED => 14-JAN-2010 | TIME PLOTTED => 13:11

FOR ACCURATE RIGHT OF WAY AND
ACCESS DATA, CONTACT RIGHT OF WAY
ENGINEERING AT THE DISTRICT OFFICE.

Dist	COUNTY	ROUTE	POST MILES TOTAL PROJECT	SHEET No.	TOTAL SHEETS
04	SF	80,101	L3.8/5.0, 4.1/5.0	55	136

REGISTERED CIVIL ENGINEER 8-19-09 DATE

1-11-10
PLANS APPROVAL DATE

REGISTERED PROFESSIONAL ENGINEER M. Hovhanessian No. 42284 Exp. 3-31-10 CIVIL STATE OF CALIFORNIA

THE STATE OF CALIFORNIA OR ITS OFFICERS OR AGENTS SHALL NOT BE RESPONSIBLE FOR THE ACCURACY OR COMPLETENESS OF SCANNED COPIES OF THIS PLAN SHEET.

STAGE CONSTRUCTION DETAILS

STAGE/PHASE	LIMITS OF STAGE	LIMITS OF BENTS	WORK
STAGE 2 PHASE 1	FROM E 43+00 TO 45+60	E-20 TO E-22	DRAINAGE WORK (SEE DRAINAGE PLAN AND STRUCTURE PLANS) JOINT SEAL WORK (SEE STRUCTURE PLAN) SPALL REPAIRS (SEE STRUCTURE PLANS)
STAGE 2 PHASE 2	FROM E 45+60 TO 43+00	E-22 TO E-20	JOINT SEAL WORK (SEE STRUCTURE PLANS) SPALL REPAIRS (SEE STRUCTURE PLANS)
STAGE 3 PHASE 1	FROM E 45+60 TO 56+00 FROM E4 53+35 TO 48+15	E-23 TO E-36 E-4-34, E4-35	JOINT SEAL WORK (SEE STRUCTURE PLANS) SPALL REPAIRS (SEE STRUCTURE PLANS)
STAGE 3 PHASE 2	FROM E 56+00 TO 45+60	E-36 TO E-23	JOINT SEAL WORK (SEE STRUCTURE PLANS) SPALL REPAIRS (SEE STRUCTURE PLANS)
STAGE 3 PHASE 3	FROM E4 48+20 TO 46+05	E4-33 TO E4-31	JOINT SEAL WORK (SEE STRUCTURE PLANS) SPALL REPAIRS (SEE STRUCTURE PLANS)
STAGE 3 PHASE 4	FROM E1 48+00 TO 54+35 FROM E3 47+90 TO 57+85	E1-35 TO E1-45 E3-39 TO E3-49 E-25	JOINT SEAL WORK (SEE STRUCTURE PLANS) SPALL REPAIRS (SEE STRUCTURE PLANS)
STAGE 3 PHASE 5	FROM E2 51+15 TO 47+00	E2-38 TO E2-32	JOINT SEAL WORK (SEE STRUCTURE PLANS) SPALL REPAIRS (SEE STRUCTURE PLANS)

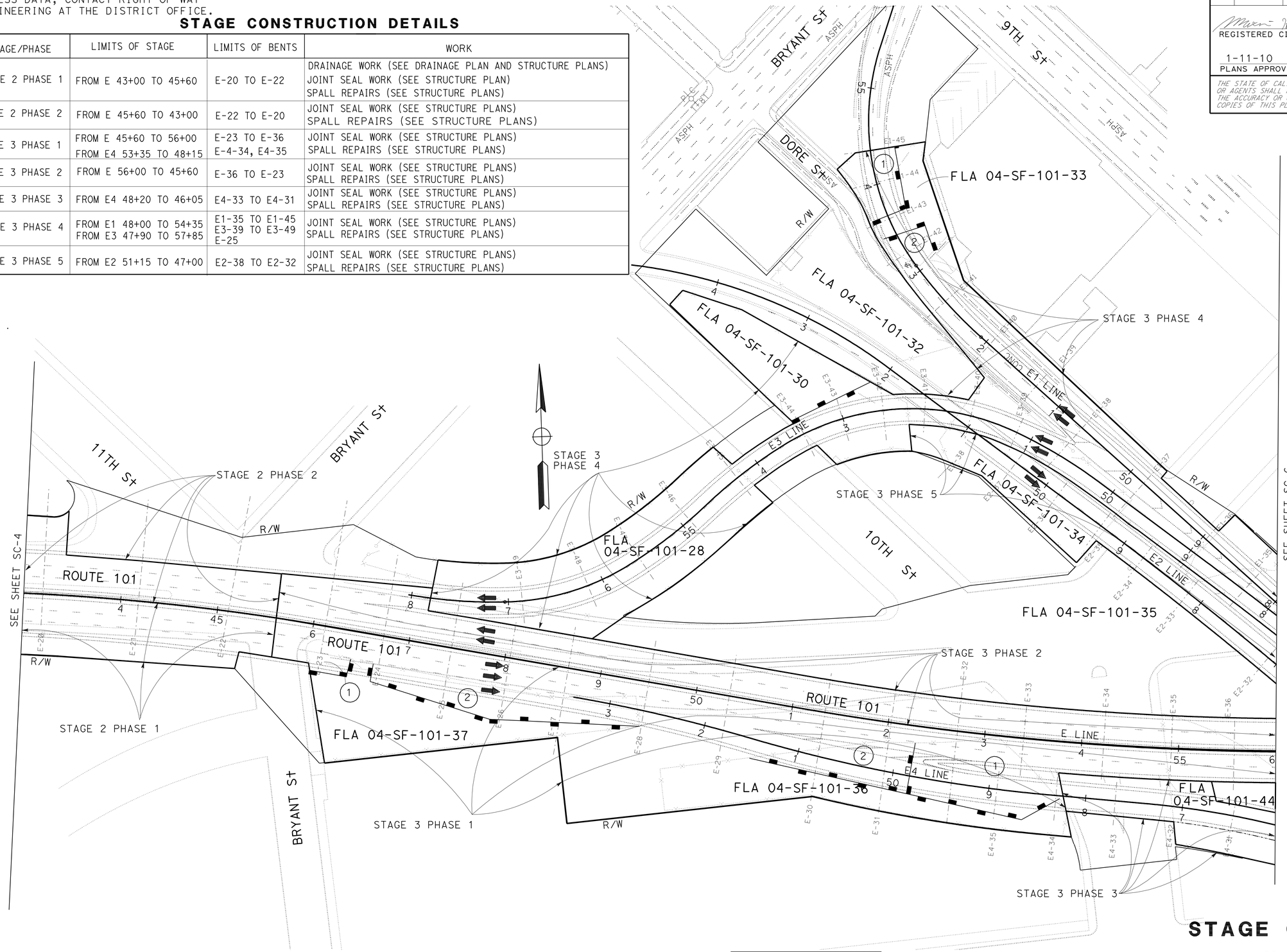

THIS PLAN ACCURATE FOR
STAGE CONSTRUCTION WORK ONLY

FOR NOTES, ABBREVIATIONS
AND LEGEND, SEE SHEET SC-3

THIS PLAN ACCURATE FOR
STAGE CONSTRUCTION WORK ONLY

STAGE CONSTRUCTION

SCALE: 1" = 50'

SC-5

MH	8/26/09
MAXIM HOVHANESSIAN	MAXIM HOVHANESSIAN
CALCULATED-DESIGNED BY	CHECKED BY
FUNCTIONAL SUPERVISOR	ABOLFAZL EMADZADEH

REVISED BY / DATE REVISED

STATE OF CALIFORNIA - DEPARTMENT OF TRANSPORTATION
Caltrans
DESIGN

LAST REVISION 08-25-09
DATE PLOTTED => 14-JAN-2010
TIME PLOTTED => 13:11

FOR ACCURATE RIGHT OF WAY AND ACCESS DATA, CONTACT RIGHT OF WAY ENGINEERING AT THE DISTRICT OFFICE.

STAGE CONSTRUCTION DETAILS

STAGE/PHASE	LIMITS OF STAGE	LIMITS OF BENTS	WORK
STAGE 3 PHASE 1	FROM E 56+00 TO 57+80 FROM E6 57+80 TO 63+50	E-37 E6-38 TO E6-50 R-36	JOINT SEAL WORK (SEE STRUCTURE PLANS) SPALL REPAIRS (SEE STRUCTURE PLANS)
STAGE 3 PHASE 2	FROM E5 61+90 TO 56+50 FROM E 56+50 TO 56+00	E5-46 TO E5-38 E-37	JOINT SEAL WORK (SEE STRUCTURE PLANS) SPALL REPAIRS (SEE STRUCTURE PLANS)
STAGE 3 PHASE 3	FROM E4 46+05 TO 38+60 FROM E2 43+20 TO 38+60	E4-30 TO E4-26 E2-25 TO E2-20	DRAINAGE WORK (SEE DRAINAGE PLANS) JOINT SEAL WORK (SEE STRUCTURE PLANS) TEMPORARY K-RAIL (SEE TRAFFIC HANDLING PLANS) R&R BARRIER RAIL (SEE BARRIER REPLACEMENT DETAILS) SPALL REPAIRS (SEE STRUCTURE PLANS)

Dist	COUNTY	ROUTE	POST MILES TOTAL PROJECT	SHEET No.	TOTAL SHEETS
04	SF	80,101	L3.8/5.0, 4.1/5.0	56	136

8-19-09
REGISTERED CIVIL ENGINEER DATE

1-11-10
PLANS APPROVAL DATE

REGISTERED PROFESSIONAL ENGINEER M. Hovhanessian No. 42284 Exp. 3-31-10 CIVIL STATE OF CALIFORNIA

THE STATE OF CALIFORNIA OR ITS OFFICERS OR AGENTS SHALL NOT BE RESPONSIBLE FOR THE ACCURACY OR COMPLETENESS OF SCANNED COPIES OF THIS PLAN SHEET.

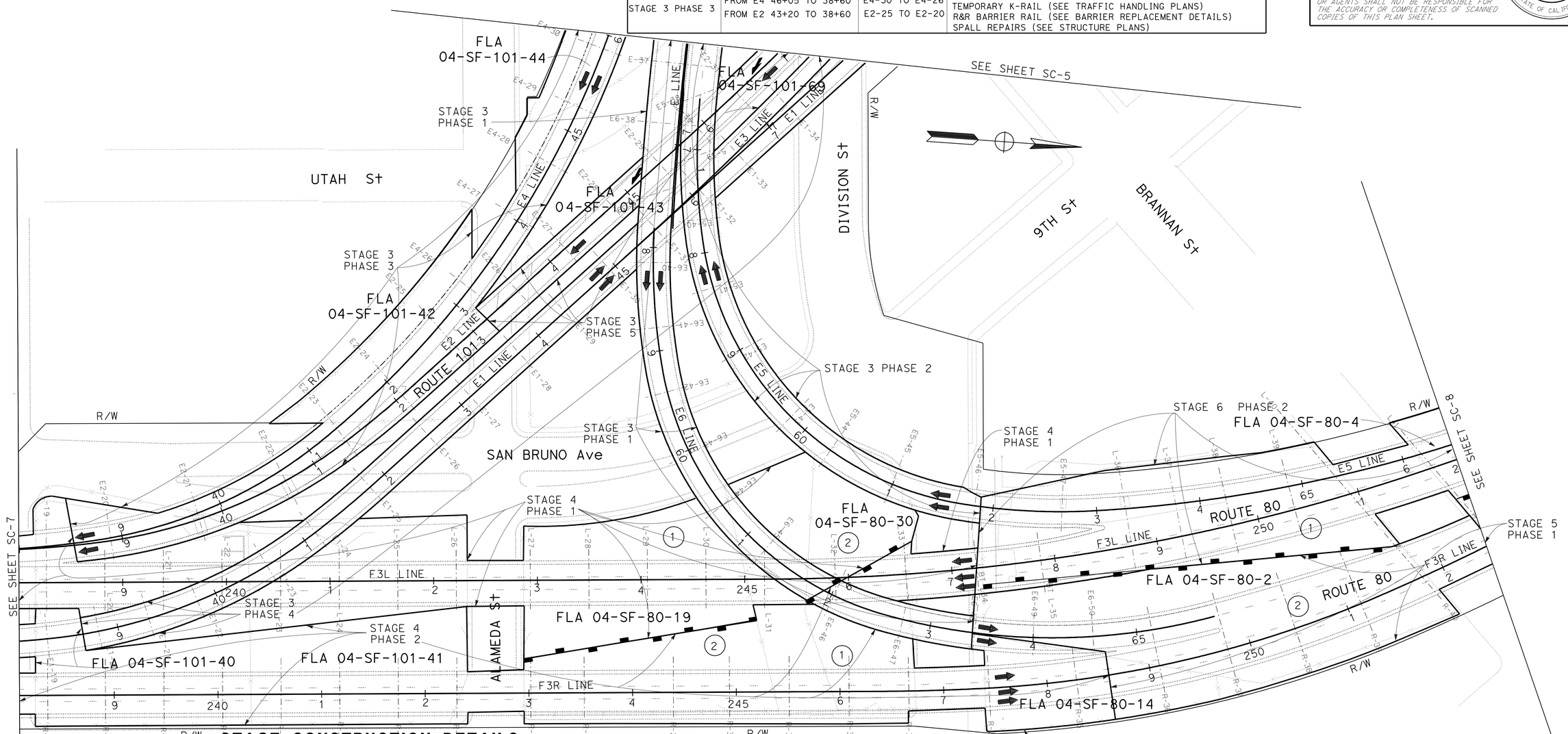

STAGE CONSTRUCTION DETAILS

STAGE/PHASE	LIMITS OF STAGE	LIMITS OF BENTS	WORK
STAGE 3 PHASE 4	FROM E1 38+55 TO 48+00 FROM E3 46+00 TO 47+90	E1-20 TO E1-34	JOINT SEAL WORK (SEE STRUCTURE PLANS) SPALL REPAIRS (SEE STRUCTURE PLANS)
STAGE 3 PHASE 5	FROM E2 47+00 TO 43+20	E2-31 TO E2-26	JOINT SEAL WORK (SEE STRUCTURE PLANS) SPALL REPAIRS (SEE STRUCTURE PLANS)
STAGE 4 PHASE 1	FROM F3L 247+15 TO 238+00 FROM E2 38+60 TO 38+00	L-34 TO L-19	JOINT SEAL WORK (SEE STRUCTURE PLANS) SPALL REPAIRS (SEE STRUCTURE PLANS)
STAGE 4 PHASE 2	FROM E1 38+05 TO 38+55 FROM F3R 238+00 TO 248+60	E1-19 R-19 TO R-35	JOINT SEAL WORK (SEE STRUCTURE PLANS) SPALL REPAIRS (SEE STRUCTURE PLANS)
STAGE 5 PHASE 1	FROM F3R 248+60 TO 252+45	R-36 TO R-40	JOINT SEAL WORK (SEE STRUCTURE PLANS) SPALL REPAIRS (SEE STRUCTURE PLANS)
STAGE 6 PHASE 2	FROM F3L 252+00 TO 247+15 FROM E5 66+50 TO 61+90	L-41 TO L-34 E5-47	DRAINAGE WORK (SEE DRAINAGE PLAN AND STRUCTURE PLANS) JOINT SEAL WORK (SEE STRUCTURE PLANS) TEMPORARY K-RAIL (SEE TRAFFIC HANDLING PLANS) R&R BARRIER RAIL (SEE BARRIER REPLACEMENT DETAILS) SPALL REPAIRS (SEE STRUCTURE PLANS)

FOR NOTES, ABBREVIATIONS AND LEGEND, SEE SHEET SC-3

THIS PLAN ACCURATE FOR STAGE CONSTRUCTION WORK ONLY

STAGE CONSTRUCTION

SCALE: 1" = 50'

SC-6

STATE OF CALIFORNIA - DEPARTMENT OF TRANSPORTATION
Caltrans DESIGN

FUNCTIONAL SUPERVISOR: ABOLFAZL EMADZADEH
CALCULATED-DESIGNED BY: MAXIM HOVHANESSIAN
CHECKED BY: MAXIM HOVHANESSIAN
REVISED BY: MH
DATE REVISED: 8/26/09

LAST REVISION DATE PLOTTED => 14-JAN-2010
08-25-09 TIME PLOTTED => 13:11

Dist	COUNTY	ROUTE	POST MILES TOTAL PROJECT	SHEET No.	TOTAL SHEETS
04	SF	80,101	L3.8/5.0, 4.1/5.0	57	136

REGISTERED CIVIL ENGINEER 8-19-09 DATE

1-11-10
PLANS APPROVAL DATE

REGISTERED PROFESSIONAL ENGINEER M. Hovhanessian No. 42284 Exp. 3-31-10 CIVIL STATE OF CALIFORNIA

THE STATE OF CALIFORNIA OR ITS OFFICERS OR AGENTS SHALL NOT BE RESPONSIBLE FOR THE ACCURACY OR COMPLETENESS OF SCANNED COPIES OF THIS PLAN SHEET.

FOR ACCURATE RIGHT OF WAY AND ACCESS DATA, CONTACT RIGHT OF WAY ENGINEERING AT THE DISTRICT OFFICE.

STAGE CONSTRUCTION DETAILS

STAGE/PHASE	LIMITS OF STAGE	LIMITS OF BENTS	WORK
STAGE 4 PHASE 1	FROM E2 38+00 TO 37+50 FROM F3L 238+00 TO 237+42.75 FROM F2 237+42.75 TO 227+25	L-18 TO L-1	JOINT SEAL WORK (SEE STRUCTURE PLANS) SPALL REPAIRS (SEE STRUCTURE PLANS)
STAGE 4 PHASE 2	FROM F3R 227+25 TO 238+10 FROM E1 27+35 TO 38+05	R-1 TO R-18	JOINT SEAL WORK (SEE STRUCTURE PLANS) SPALL REPAIRS (SEE STRUCTURE PLANS)

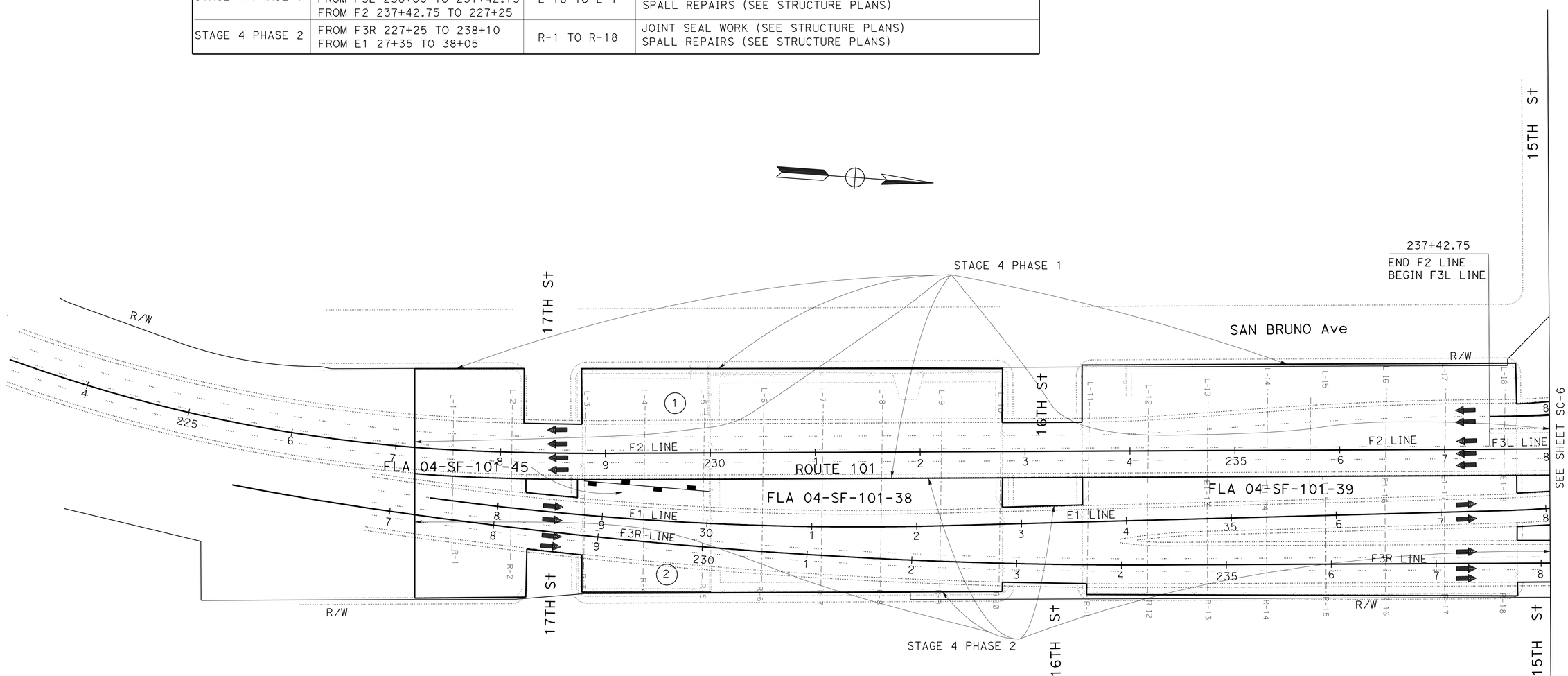

STAGE CONSTRUCTION

SCALE: 1" = 50'

SC-7

FOR NOTES, ABBREVIATIONS AND LEGEND, SEE SHEET SC-3

THIS PLAN ACCURATE FOR STAGE CONSTRUCTION WORK ONLY

STATE OF CALIFORNIA - DEPARTMENT OF TRANSPORTATION
Caltrans® DESIGN

FUNCTIONAL SUPERVISOR: ABOLFAZL EMADZADEH
CALCULATED-DESIGNED BY: MAXIM HOVHANESSIAN
CHECKED BY: MAXIM HOVHANESSIAN
REVISED BY: MH
DATE REVISED: 8/26/09

LAST REVISION 08-25-09
DATE PLOTTED => 14-JAN-2010
TIME PLOTTED => 13:11

Dist	COUNTY	ROUTE	POST MILES TOTAL PROJECT	SHEET No.	TOTAL SHEETS
04	SF	80,101	L3.8/5.0, 4.1/5.0	58	136

REGISTERED CIVIL ENGINEER 8-19-09 DATE

1-11-10
PLANS APPROVAL DATE

REGISTERED PROFESSIONAL ENGINEER M. Hovhanessian No. 42284 Exp. 3-31-10 CIVIL STATE OF CALIFORNIA

THE STATE OF CALIFORNIA OR ITS OFFICERS OR AGENTS SHALL NOT BE RESPONSIBLE FOR THE ACCURACY OR COMPLETENESS OF SCANNED COPIES OF THIS PLAN SHEET.

FOR ACCURATE RIGHT OF WAY AND ACCESS DATA, CONTACT RIGHT OF WAY ENGINEERING AT THE DISTRICT OFFICE.

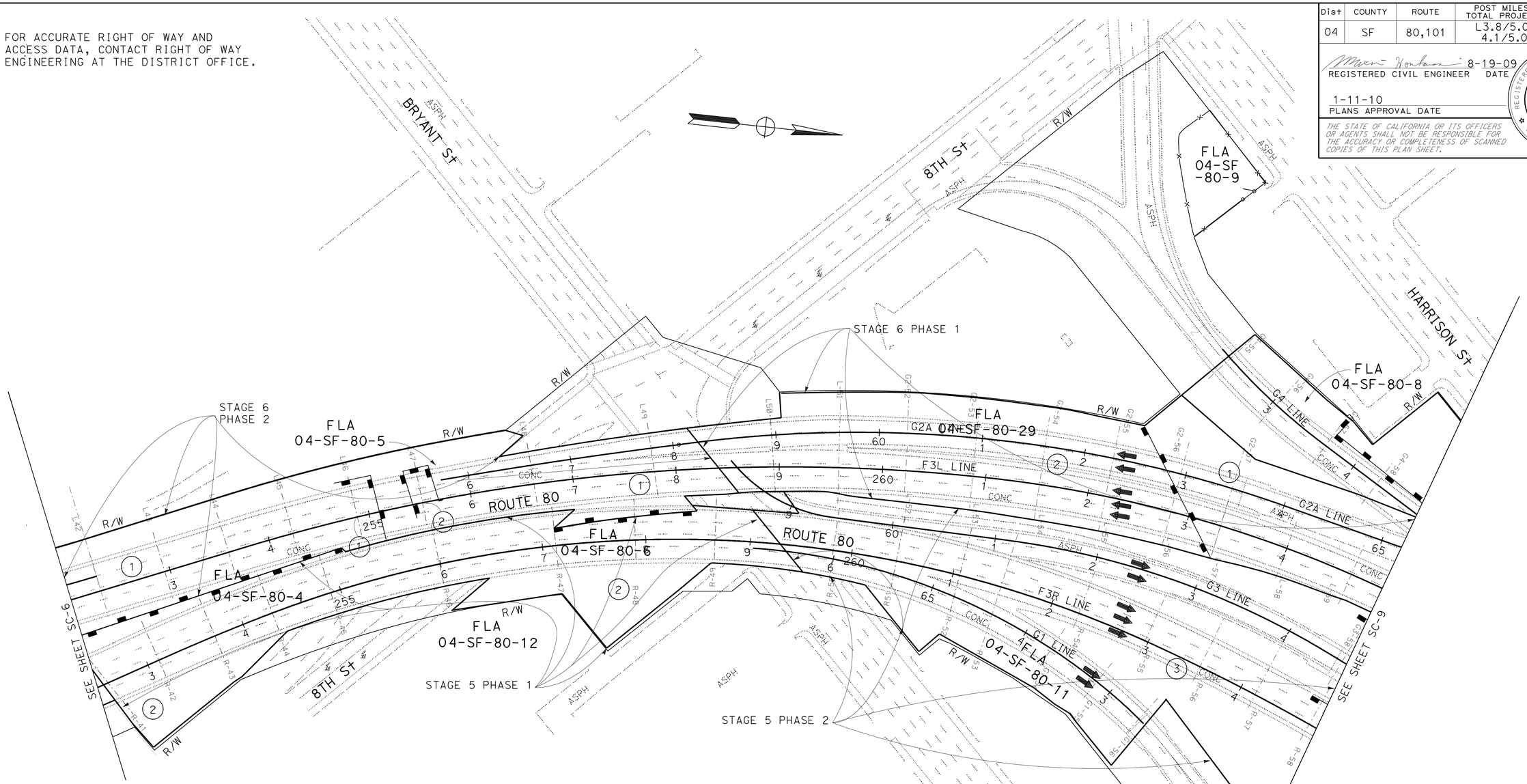

STAGE CONSTRUCTION DETAILS

STAGE/PHASE	LIMITS OF STAGE	LIMITS OF BENTS	WORK
STAGE 5 PHASE 1	FROM F3R 252+45 TO 259+30	R-41 TO R-49	JOINT SEAL WORK (SEE STRUCTURE PLANS) SPALL REPAIRS (SEE STRUCTURE PLANS)
STAGE 5 PHASE 2	FROM G1 66+45 TO 62+60 FROM G3 59+00 TO 64+65 FROM F3R 259+30 TO 264+85	G1-54 TO G1-56 G3-58 R-50 TO R-58	JOINT SEAL WORK (SEE STRUCTURE PLANS) SPALL REPAIRS (SEE STURCTURE PLANS)
STAGE 6 PHASE 1	FROM G4 64+75 TO 62+35 FROM G2A 65+20 TO 58+25 FROM F3L 265+00 TO 258+40	G4-58 TO G4-55 G2-57 TO G2-52 L-59 TO L-50	JOINT SEAL WORK (SEE STRUCTURE PLANS) SPALL REPAIRS (SEE STRUCTURE PLANS)
STAGE 6 PHASE 2	FROM G2A 58+25 TO 55+75 FROM F3L 258+40 TO 252+00	L-49 TO L-42	JOINT SEAL WORK (SEE STRUCTURE PLANS) SPALL REPAIRS (SEE STRUCTURE PLANS)

FOR NOTES, ABBREVIATIONS AND LEGEND, SEE SHEET SC-3

THIS PLAN ACCURATE FOR STAGE CONSTRUCTION WORK ONLY

STAGE CONSTRUCTION

SCALE: 1" = 50'

SC-8

REVISED BY	DATE REVISED
MH	8/26/09

CALCULATED-DESIGNED BY: MAXIM HOVHANESSIAN
CHECKED BY: MAXIM HOVHANESSIAN

FUNCTIONAL SUPERVISOR: ABOLFAZL EMADZADEH

STATE OF CALIFORNIA - DEPARTMENT OF TRANSPORTATION
Caltrans®
DESIGN

LAST REVISION: DATE PLOTTED => 14-JAN-2010
08-25-09 TIME PLOTTED => 13:12

Dist	COUNTY	ROUTE	POST MILES TOTAL PROJECT	SHEET No.	TOTAL SHEETS
04	SF	80,101	L3.8/5.0, 4.1/5.0	59	136

REGISTERED CIVIL ENGINEER 8-19-09 DATE

1-11-10
PLANS APPROVAL DATE

REGISTERED PROFESSIONAL ENGINEER M. Hovhanessian No. 42284 Exp. 3-31-10 CIVIL STATE OF CALIFORNIA

THE STATE OF CALIFORNIA OR ITS OFFICERS OR AGENTS SHALL NOT BE RESPONSIBLE FOR THE ACCURACY OR COMPLETENESS OF SCANNED COPIES OF THIS PLAN SHEET.

FOR ACCURATE RIGHT OF WAY AND ACCESS DATA, CONTACT RIGHT OF WAY ENGINEERING AT THE DISTRICT OFFICE.

STAGE CONSTRUCTION DETAILS

STAGE/PHASE	LIMITS OF STAGE	LIMITS OF BENTS	WORK
STAGE 8 PHASE 2	FROM F3L 275+10 TO 272+30	L-74 TO L-70	JOINT SEAL WORK (SEE STRUCTURE PLANS) SPALL REPAIRS (SEE STRUCTURE PLANS)
STAGE 1 PHASE 1	FROM F3R 274+25 TO 278+05	R-72 TO R-77	R-76 BEARING R&R (SEE BEARING REPLACEMENT DETAILS) JOINT SEAL WORK (SEE STRUCTURE PLANS) SPALL REPAIRS (SEE STRUCTURE PLANS)
STAGE 1 PHASE 2	FROM F3L 279+00 TO 275+10	L-79 TO L-74	JOINT SEAL WORK (SEE STRUCTURE PLANS) SPALL REPAIRS (SEE STRUCTURE PLANS)

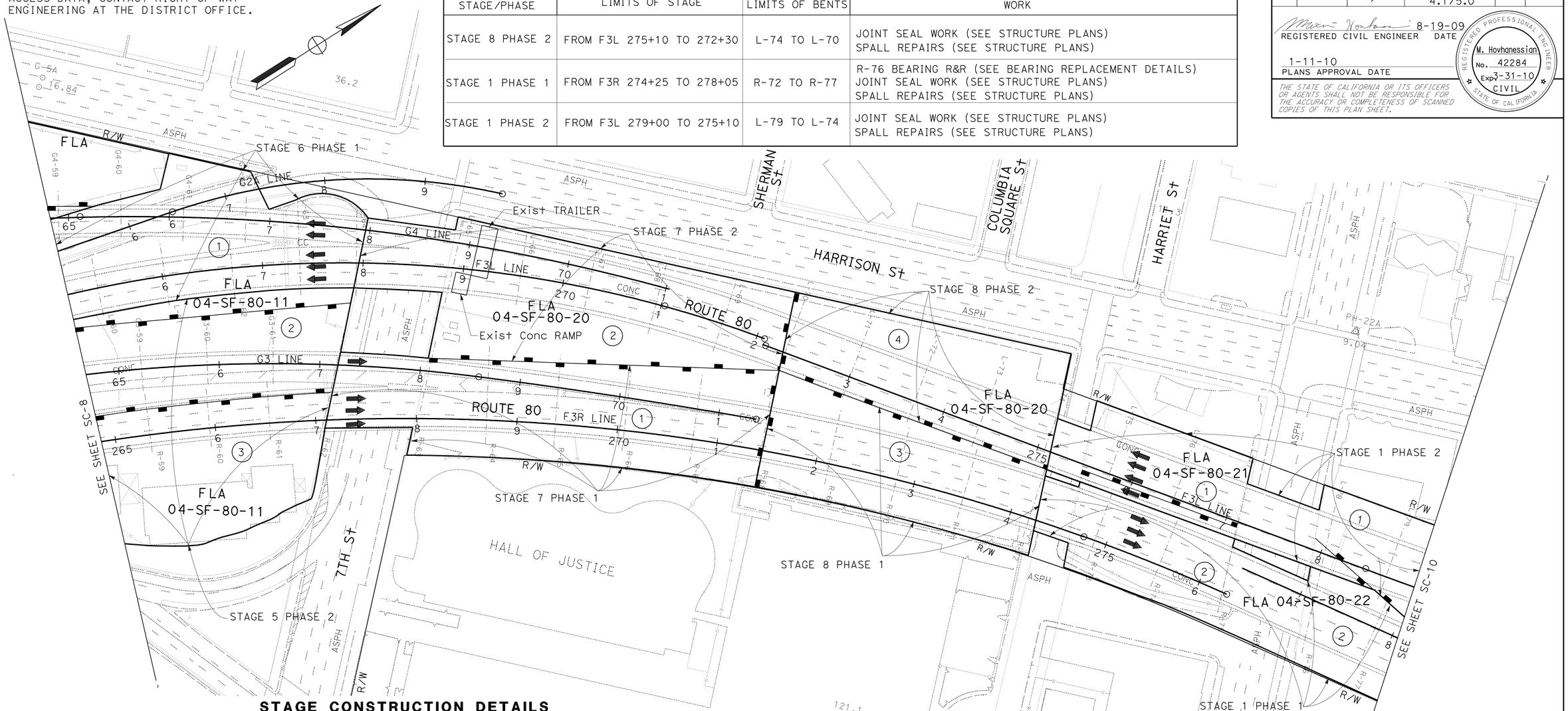

STAGE CONSTRUCTION DETAILS

STAGE/PHASE	LIMITS OF STAGE	LIMITS OF BENTS	WORK
STAGE 5 PHASE 2	FROM G3 64+65 TO 67+15 FROM F3R 264+85 TO 267+10	G3-59 TO G3-61 R-59 TO R-62	JOINT SEAL WORK (SEE STRUCTURE PLANS) SPALL REPAIRS (SEE STRUCTURE PLANS)
STAGE 6 PHASE 1	FROM F3L 267+05 TO 265+00 FROM G4 67+95 TO 64+75 FROM G2A 67+20 TO 65+20	L-69 TO L-60 G4-62 TO G4-59	JOINT SEAL WORK (SEE STRUCTURE PLANS) SPALL REPAIRS (SEE STRUCTURE PLANS)
STAGE 7 PHASE 1	FROM F3R 267+10 TO 271+40	R-63 TO R-68	R-63 BEARING R&R (SEE BEARING REPLACEMENT DETAILS) JOINT SEAL WORK (SEE STRUCTURE PLANS) SPALL REPAIRS (SEE STRUCTURE PLANS)
STAGE 7 PHASE 2	FROM F3L 272+30 TO 267+95	L-69 TO L-64	L-65 BEARING R&R (SEE BEARING REPLACEMENT DETAILS) JOINT SEAL WORK (SEE STRUCTURE PLANS) SPALL REPAIRS (SEE STRUCTURE PLANS)
STAGE 8 PHASE 1	FROM F3R 271+40 TO 274+25	R-69 TO R-72	JOINT SEAL WORK (SEE STRUCTURE PLANS) SPALL REPAIRS (SEE STRUCTURE PLANS)

FOR NOTES, ABBREVIATIONS AND LEGEND, SEE SHEET SC-3

THIS PLAN ACCURATE FOR STAGE CONSTRUCTION WORK ONLY

STAGE CONSTRUCTION

SCALE: 1" = 50"

SC-9

STATE OF CALIFORNIA - DEPARTMENT OF TRANSPORTATION
Caltrans® DESIGN

FUNCTIONAL SUPERVISOR: ABOLFAZL EMADZADEH
CALCULATED-DESIGNED BY: MAXIM HOVHANESSIAN
CHECKED BY: MAXIM HOVHANESSIAN
REVISED BY: MH
DATE REVISED: 8/26/09

LAST REVISION: 08-25-09
DATE PLOTTED => 14-JAN-2010
TIME PLOTTED => 13:12

FOR ACCURATE RIGHT OF WAY AND
ACCESS DATA, CONTACT RIGHT OF WAY
ENGINEERING AT THE DISTRICT OFFICE.

Dist	COUNTY	ROUTE	POST MILES TOTAL PROJECT	SHEET No.	TOTAL SHEETS
04	SF	80,101	L3.8/5.0, 4.1/5.0	60	136

REGISTERED CIVIL ENGINEER 8-19-09 DATE

1-11-10
PLANS APPROVAL DATE

REGISTERED PROFESSIONAL ENGINEER
M. Hovhanessian
No. 42284
Exp. 3-31-10
CIVIL
STATE OF CALIFORNIA

THE STATE OF CALIFORNIA OR ITS OFFICERS OR AGENTS SHALL NOT BE RESPONSIBLE FOR THE ACCURACY OR COMPLETENESS OF SCANNED COPIES OF THIS PLAN SHEET.

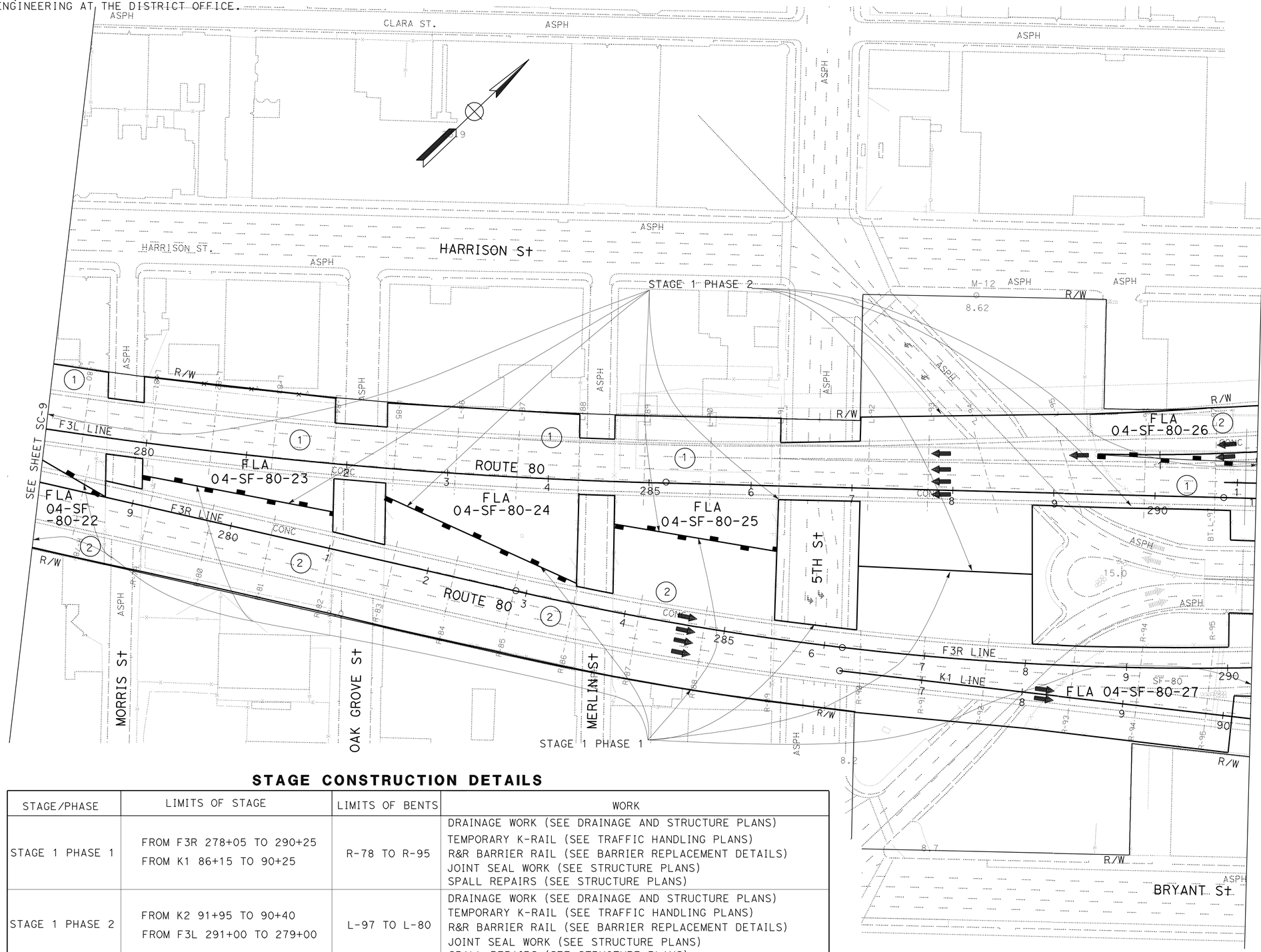

STAGE CONSTRUCTION DETAILS

STAGE/PHASE	LIMITS OF STAGE	LIMITS OF BENTS	WORK
STAGE 1 PHASE 1	FROM F3R 278+05 TO 290+25 FROM K1 86+15 TO 90+25	R-78 TO R-95	DRAINAGE WORK (SEE DRAINAGE AND STRUCTURE PLANS) TEMPORARY K-RAIL (SEE TRAFFIC HANDLING PLANS) R&R BARRIER RAIL (SEE BARRIER REPLACEMENT DETAILS) JOINT SEAL WORK (SEE STRUCTURE PLANS) SPALL REPAIRS (SEE STRUCTURE PLANS)
STAGE 1 PHASE 2	FROM K2 91+95 TO 90+40 FROM F3L 291+00 TO 279+00	L-97 TO L-80	DRAINAGE WORK (SEE DRAINAGE AND STRUCTURE PLANS) TEMPORARY K-RAIL (SEE TRAFFIC HANDLING PLANS) R&R BARRIER RAIL (SEE BARRIER REPLACEMENT DETAILS) JOINT SEAL WORK (SEE STRUCTURE PLANS) SPALL REPAIRS (SEE STRUCTURE PLANS)

FOR NOTES, ABBREVIATIONS AND LEGEND, SEE SHEET SC-3

THIS PLAN ACCURATE FOR STAGE CONSTRUCTION WORK ONLY

STAGE CONSTRUCTION

SCALE: 1" = 50'

SC-10

REVISED BY	DATE REVISED
MH	8/26/09

CALCULATED-DESIGNED BY: MAXIM HOVHANESSIAN
CHECKED BY: MAXIM HOVHANESSIAN

FUNCTIONAL SUPERVISOR: ABOLFAZL EMADZADEH

STATE OF CALIFORNIA - DEPARTMENT OF TRANSPORTATION
Caltrans
DESIGN

LAST REVISION 08-25-09
DATE PLOTTED => 14-JAN-2010
TIME PLOTTED => 13:12

Dist	COUNTY	ROUTE	POST MILES TOTAL PROJECT	SHEET No.	TOTAL SHEETS
04	SF	80,101	L3.8/5.0, 4.1/5.0	61	136

REGISTERED CIVIL ENGINEER 8-19-09 DATE

1-11-10
PLANS APPROVAL DATE

REGISTERED PROFESSIONAL ENGINEER M. Hovhanessian No. 42284 Exp. 3-31-10 CIVIL STATE OF CALIFORNIA

THE STATE OF CALIFORNIA OR ITS OFFICERS OR AGENTS SHALL NOT BE RESPONSIBLE FOR THE ACCURACY OR COMPLETENESS OF SCANNED COPIES OF THIS PLAN SHEET.

FOR ACCURATE RIGHT OF WAY AND ACCESS DATA, CONTACT RIGHT OF WAY ENGINEERING AT THE DISTRICT OFFICE.

STAGE CONSTRUCTION DETAILS

STAGE/PHASE	LIMITS OF STAGE	LIMITS OF BENTS	WORK
STAGE 1 PHASE 1	FROM K1 90+25 TO 95+00 FROM F3R 290+25 TO 295+85	K1-96 TO K1-99 R-96 TO R-102 R-6	DRAINAGE WORK (SEE DRAINAGE AND STRUCTURE PLANS) TEMPORARY K-RAIL (SEE TRAFFIC HANDLING PLANS) JOINT SEAL WORK (SEE STRUCTURE PLANS) R&R BARRIER RAIL (SEE BARRIER REPLACEMENT DETAILS) SPALL REPAIRS (SEE STRUCTURE PLANS)
STAGE 1 PHASE 2	FROM F3L 296+55 TO 291+00 FROM K2 96+35 TO 91+95	L-6 K2-98 TO K2-101 L-104 TO L-98	DRAINAGE WORK (SEE DRAINAGE PLANS) TEMPORARY K-RAIL (SEE TRAFFIC HANDLING PLANS) JOINT SEAL WORK (SEE STRUCTURE PLANS) R&R BARRIER RAIL (SEE BARRIER REPLACEMENT DETAILS) SPALL REPAIRS (SEE STRUCTURE PLANS)

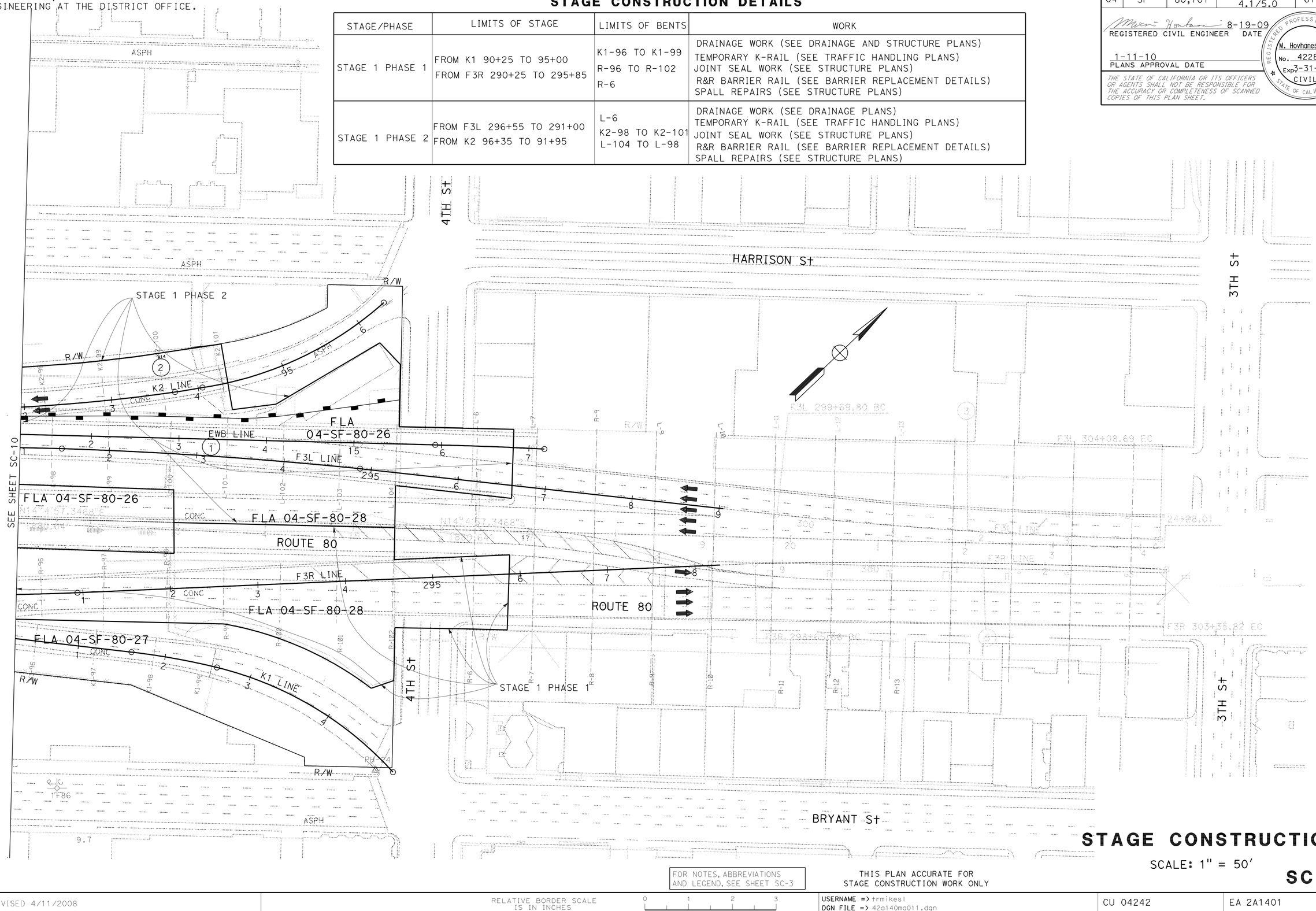

FOR NOTES, ABBREVIATIONS AND LEGEND, SEE SHEET SC-3

THIS PLAN ACCURATE FOR STAGE CONSTRUCTION WORK ONLY

STAGE CONSTRUCTION

SCALE: 1" = 50'

SC-11

MH	8/26/09		
REVISED BY	DATE REVISED		
MAXIM HOVHANESSIAN	MAXIM HOVHANESSIAN		
CALCULATED-DESIGNED BY	CHECKED BY		
FUNCTIONAL SUPERVISOR	ABOLFAZL EMADZADEH		

STATE OF CALIFORNIA - DEPARTMENT OF TRANSPORTATION

Caltrans DESIGN

LAST REVISION 08-25-09 | DATE PLOTTED => 14-JAN-2010 | TIME PLOTTED => 13:12

Dist	COUNTY	ROUTE	POST MILES TOTAL PROJECT	SHEET No.	TOTAL SHEETS
04	SF	80,101	L3.8/5.0, 4.1/5.0	62	136

REGISTERED CIVIL ENGINEER 8-19-09 DATE

1-11-10
PLANS APPROVAL DATE

REGISTERED PROFESSIONAL ENGINEER M. Hovhanessian No. 42284 Exp. 3-31-10 CIVIL STATE OF CALIFORNIA

THE STATE OF CALIFORNIA OR ITS OFFICERS OR AGENTS SHALL NOT BE RESPONSIBLE FOR THE ACCURACY OR COMPLETENESS OF SCANNED COPIES OF THIS PLAN SHEET.

FOR ACCURATE RIGHT OF WAY AND ACCESS DATA, CONTACT RIGHT OF WAY ENGINEERING AT THE DISTRICT OFFICE.

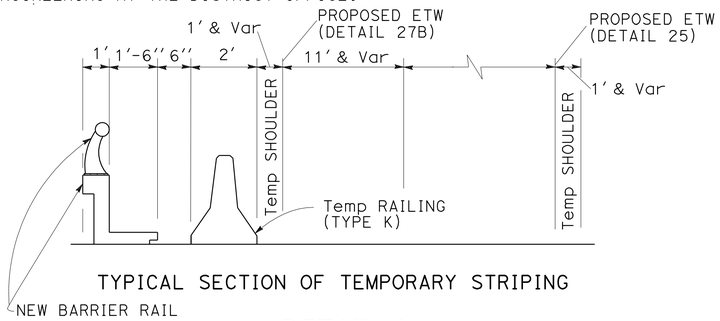

TYPICAL SECTION OF TEMPORARY STRIPING

DETAIL A
NO SCALE

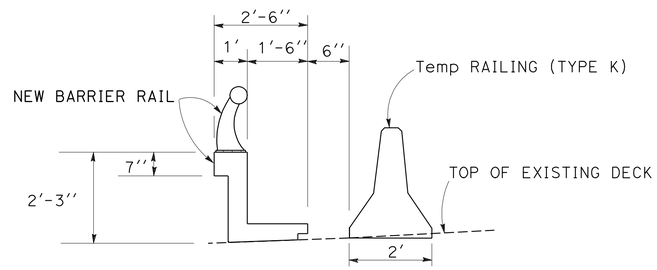

TYPICAL SECTION FOR BARRIER RAIL REPLACEMENT
(FOR SAFETY PIN CONNECTION, SEE DETAIL C)

DETAIL B
NO SCALE

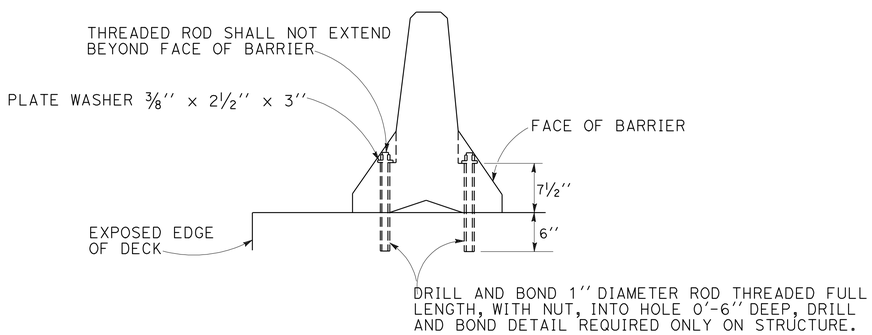

TYPE K RAILING SAFETY PIN

DETAIL C
NO SCALE

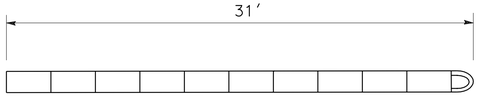

TEMPORARY CRASH CUSHION

DETAIL D
NO SCALE

LEGEND:

- Temp RAILING (TYPE K)
- DIRECTION OF TRAFFIC
- No. DETAIL NUMBER
- Temp ABSORB 350 CRASH CUSHION/ADIEM

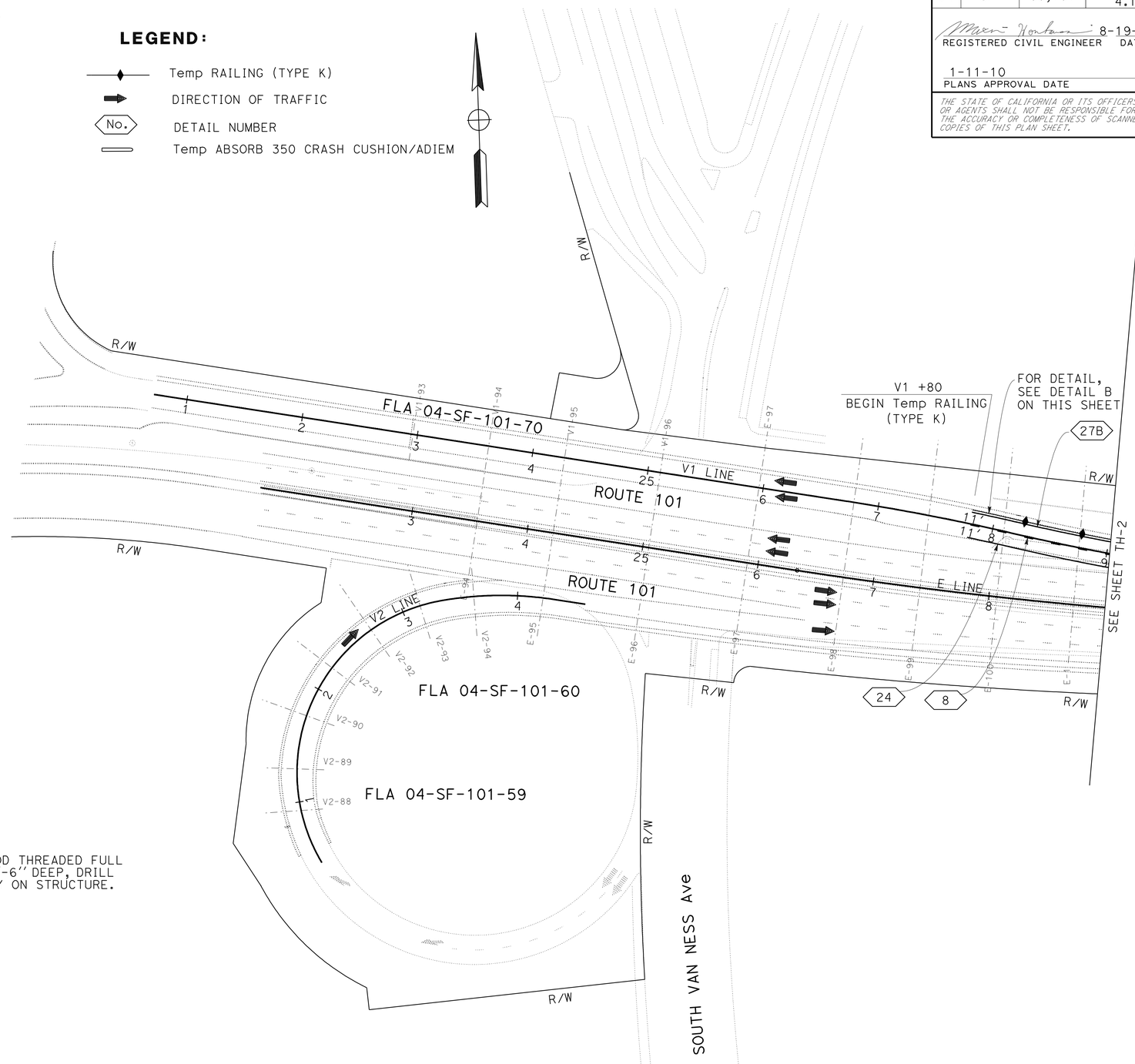

THIS PLAN ACCURATE FOR TRAFFIC HANDLING WORK ONLY

TRAFFIC HANDLING PLAN

SCALE: 1" = 50'

TH-1

STATE OF CALIFORNIA - DEPARTMENT OF TRANSPORTATION
Caltrans® **DESIGN**

FUNCTIONAL SUPERVISOR: ABOLFAZL EMADZADEH
CALCULATED-DESIGNED BY: MAXIM HOVHANESSIAN
CHECKED BY
REVISED BY: MH
DATE REVISED: 8/26/09

LAST REVISION 08-25-09 | DATE PLOTTED => 14-JAN-2010 | TIME PLOTTED => 13:13

Dist	COUNTY	ROUTE	POST MILES TOTAL PROJECT	SHEET No.	TOTAL SHEETS
04	SF	80,101	L3.8/5.0, 4.1/5.0	63	136

REGISTERED CIVIL ENGINEER 8-19-09 DATE

1-11-10
PLANS APPROVAL DATE

REGISTERED PROFESSIONAL ENGINEER M. Hovhanessian No. 42284 Exp 3-31-10 CIVIL STATE OF CALIFORNIA

THE STATE OF CALIFORNIA OR ITS OFFICERS OR AGENTS SHALL NOT BE RESPONSIBLE FOR THE ACCURACY OR COMPLETENESS OF SCANNED COPIES OF THIS PLAN SHEET.

FOR ACCURATE RIGHT OF WAY AND ACCESS DATA, CONTACT RIGHT OF WAY ENGINEERING AT THE DISTRICT OFFICE.

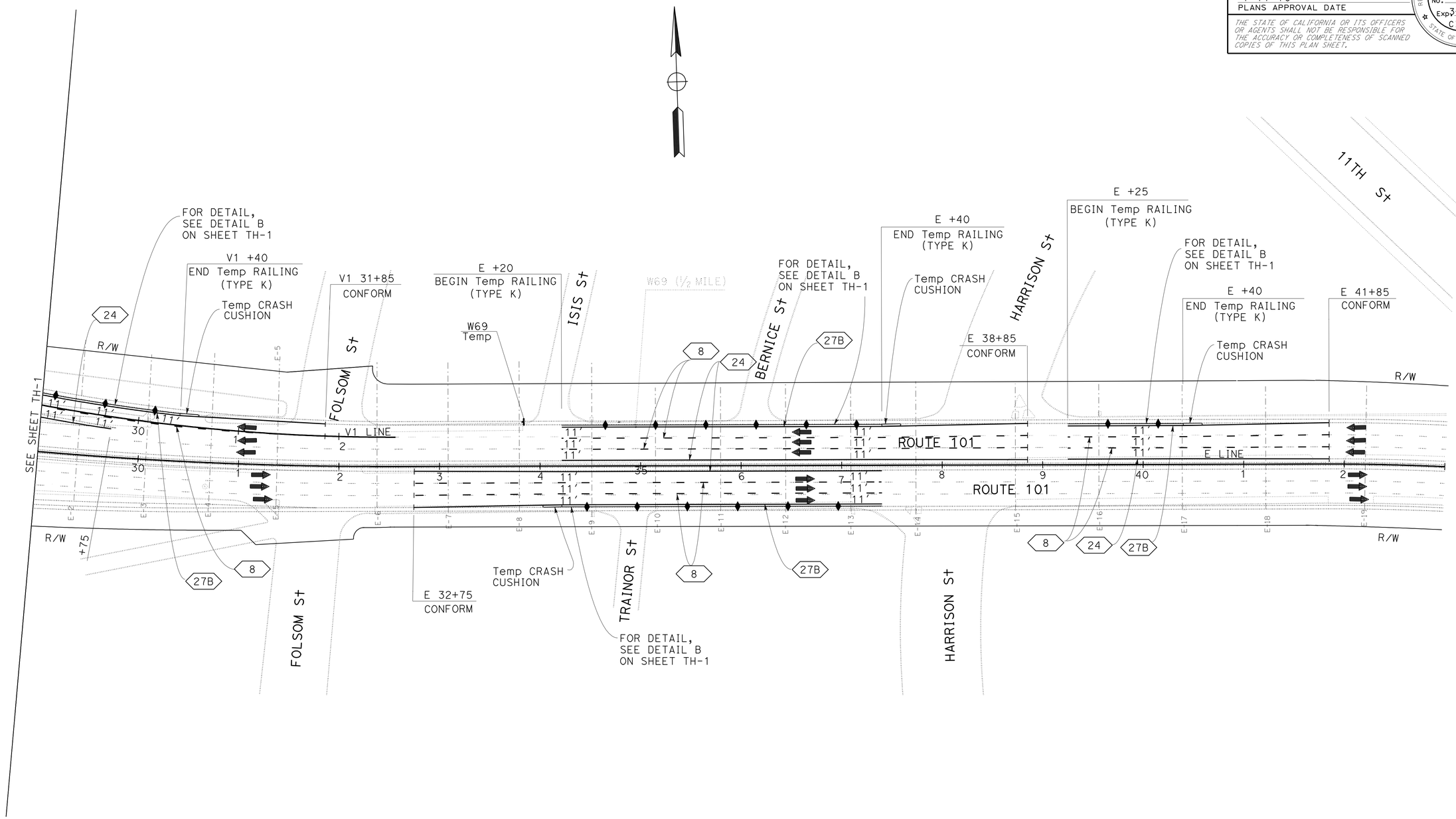

TRAFFIC HANDLING PLAN

SCALE: 1" = 50'

FOR NOTES, ABBREVIATIONS AND LEGEND, SEE SHEET TH-1

THIS PLAN ACCURATE FOR TRAFFIC HANDLING WORK ONLY

TH-2

STATE OF CALIFORNIA - DEPARTMENT OF TRANSPORTATION
Caltrans® DESIGN

FUNCTIONAL SUPERVISOR: ABOLFAZL EMADZADEH

CALCULATED-DESIGNED BY: MAXIM HOVHANESSIAN
CHECKED BY: MAXIM HOVHANESSIAN

REVISED BY: MH
DATE REVISED: 8/19/09

LAST REVISION: 08-25-09
DATE PLOTTED => 14-JAN-2010
TIME PLOTTED => 13:13

Dist	COUNTY	ROUTE	POST MILES TOTAL PROJECT	SHEET No.	TOTAL SHEETS
04	SF	80,101	L3.8/5.0, 4.1/5.0	64	136

REGISTERED CIVIL ENGINEER 8-19-09 DATE

1-11-10
PLANS APPROVAL DATE

REGISTERED PROFESSIONAL ENGINEER M. Hovhanessian No. 42284 Exp. 3-31-10 CIVIL STATE OF CALIFORNIA

THE STATE OF CALIFORNIA OR ITS OFFICERS OR AGENTS SHALL NOT BE RESPONSIBLE FOR THE ACCURACY OR COMPLETENESS OF SCANNED COPIES OF THIS PLAN SHEET.

FOR ACCURATE RIGHT OF WAY AND ACCESS DATA, CONTACT RIGHT OF WAY ENGINEERING AT THE DISTRICT OFFICE.

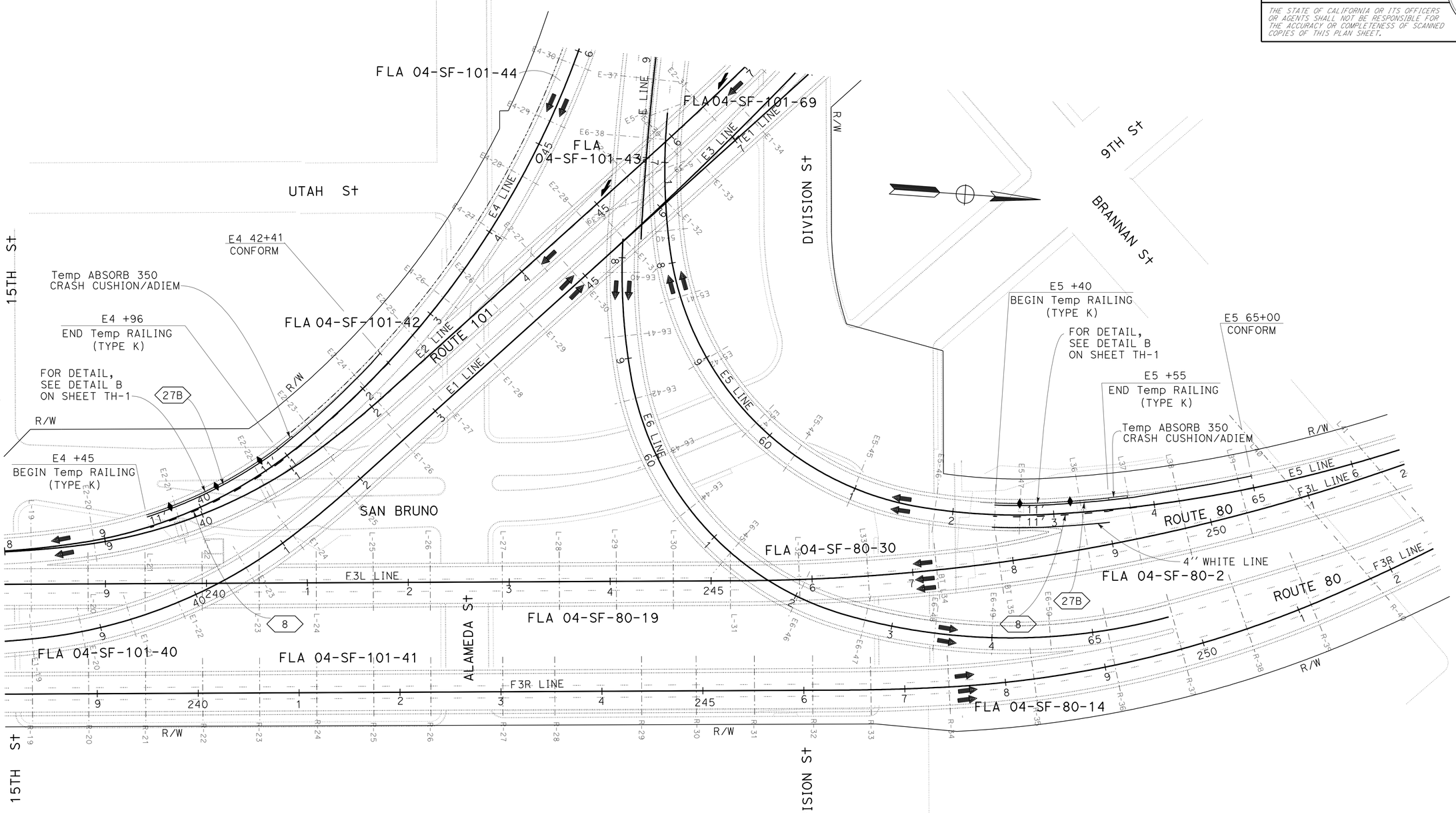

FOR NOTES, ABBREVIATIONS AND LEGEND, SEE SHEET TH-1

THIS PLAN ACCURATE FOR TRAFFIC HANDLING WORK ONLY

TRAFFIC HANDLING PLAN

SCALE: 1" = 50'

TH-3

REVISED BY	DATE REVISED
MH	8/19/09

CALCULATED-DESIGNED BY: MAXIM HOVHANESSIAN
CHECKED BY: MAXIM HOVHANESSIAN

FUNCTIONAL SUPERVISOR: ABOLFAZL EMADZADEH

STATE OF CALIFORNIA - DEPARTMENT OF TRANSPORTATION
Caltrans®
DESIGN

LAST REVISION 08-25-09
DATE PLOTTED => 14-JAN-2010
TIME PLOTTED => 13:13

FOR ACCURATE RIGHT OF WAY AND
ACCESS DATA, CONTACT RIGHT OF WAY
ENGINEERING AT THE DISTRICT OFFICE.

Dist	COUNTY	ROUTE	POST MILES TOTAL PROJECT	SHEET No.	TOTAL SHEETS
04	SF	80,101	L3.8/5.0, 4.1/5.0	65	136

REGISTERED CIVIL ENGINEER 8-19-09 DATE

1-11-10
PLANS APPROVAL DATE

REGISTERED PROFESSIONAL ENGINEER
M. Hovhanessian
No. 42284
Exp. 3-31-10
CIVIL
STATE OF CALIFORNIA

THE STATE OF CALIFORNIA OR ITS OFFICERS OR AGENTS SHALL NOT BE RESPONSIBLE FOR THE ACCURACY OR COMPLETENESS OF SCANNED COPIES OF THIS PLAN SHEET.

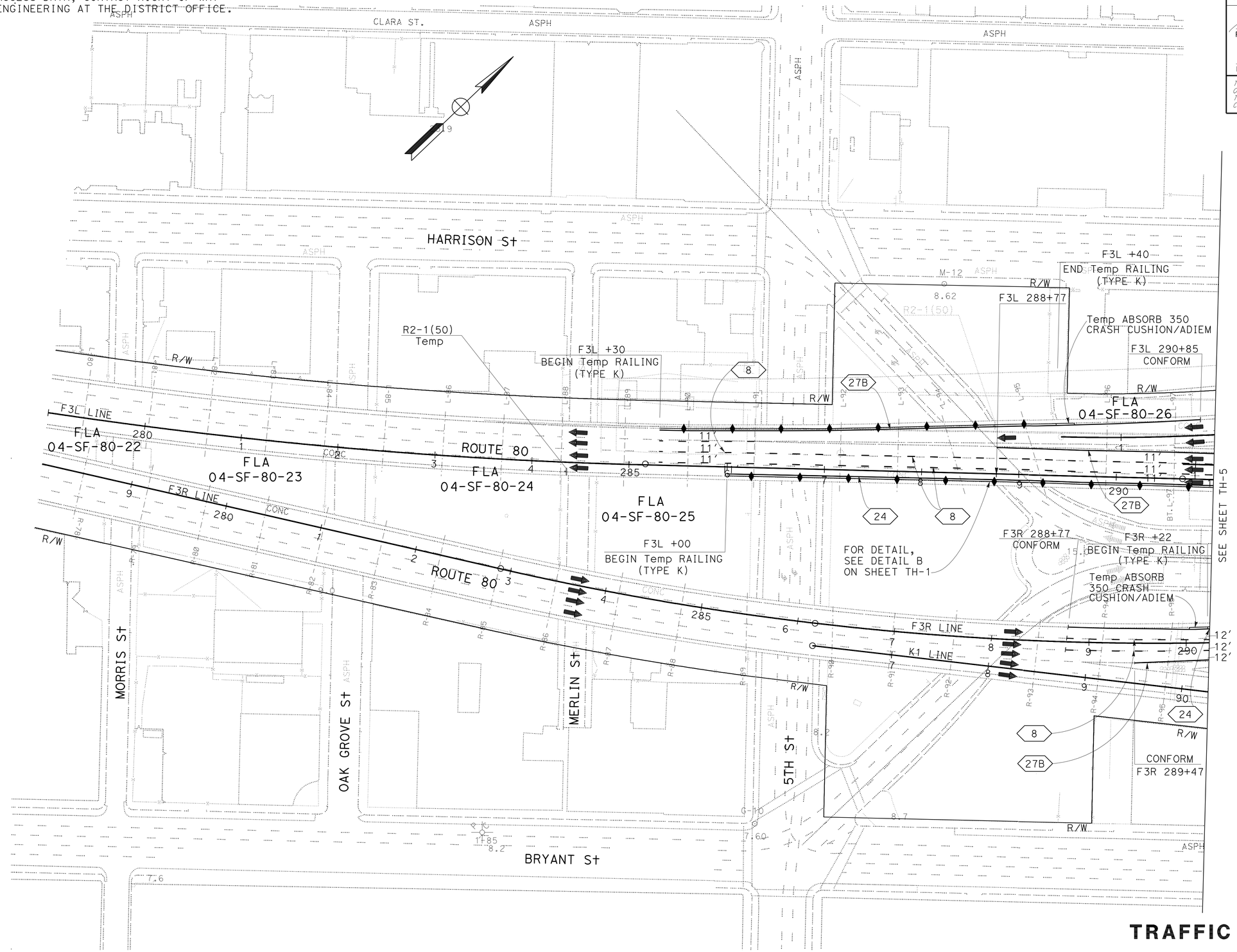

TRAFFIC HANDLING PLAN

SCALE: 1" = 50'

FOR NOTES, ABBREVIATIONS AND LEGEND, SEE SHEET TH-1

THIS PLAN ACCURATE FOR TRAFFIC HANDLING WORK ONLY

TH-4

REVISED BY	DATE REVISED
MH	8/19/09

CALCULATED-DESIGNED BY: MAXIM HOVHANESSIAN
CHECKED BY: MAXIM HOVHANESSIAN

FUNCTIONAL SUPERVISOR: ABOLFAZL EMADZADEH

STATE OF CALIFORNIA - DEPARTMENT OF TRANSPORTATION
Caltrans
DESIGN

LAST REVISION 08-25-09
DATE PLOTTED => 14-JAN-2010
TIME PLOTTED => 13:13

BORDER LAST REVISED 4/11/2008
RELATIVE BORDER SCALE IS IN INCHES 0 1 2 3
USERNAME => trmikesl
DGN FILE => 42a140md004.dgn
CU 04242
EA 2A1401

FOR ACCURATE RIGHT OF WAY AND ACCESS DATA, CONTACT RIGHT OF WAY ENGINEERING AT THE DISTRICT OFFICE.

Dist	COUNTY	ROUTE	POST MILES TOTAL PROJECT	SHEET No.	TOTAL SHEETS
04	SF	80,101	L3.8/5.0, 4.1/5.0	66	136

REGISTERED CIVIL ENGINEER 8-19-09 DATE

1-11-10
PLANS APPROVAL DATE

REGISTERED PROFESSIONAL ENGINEER
M. Hovhanessian
No. 42284
Exp. 3-31-10
CIVIL
STATE OF CALIFORNIA

THE STATE OF CALIFORNIA OR ITS OFFICERS OR AGENTS SHALL NOT BE RESPONSIBLE FOR THE ACCURACY OR COMPLETENESS OF SCANNED COPIES OF THIS PLAN SHEET.

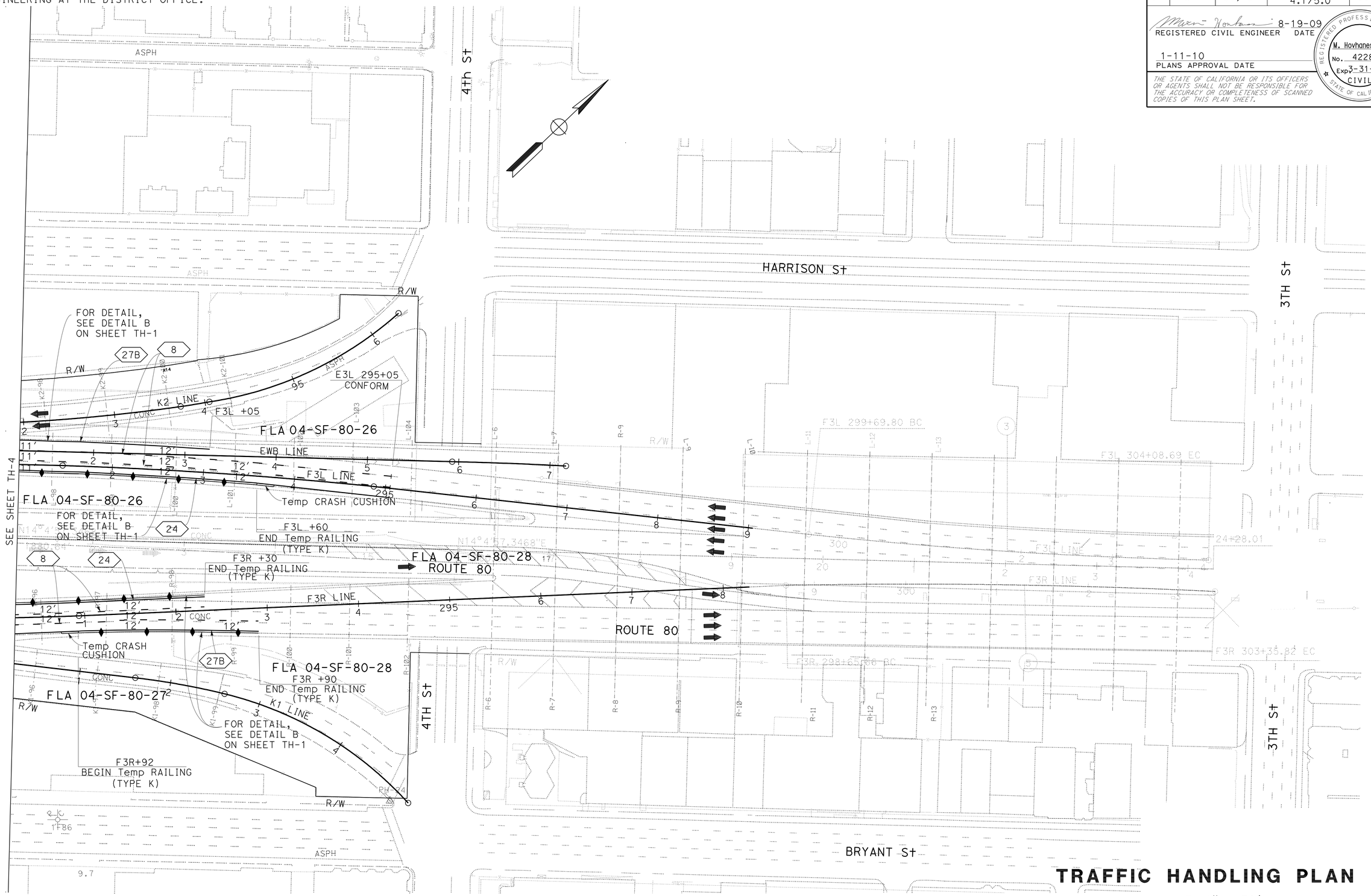

TRAFFIC HANDLING PLAN

SCALE: 1" = 50'

FOR NOTES, ABBREVIATIONS AND LEGEND, SEE SHEET TH-1

THIS PLAN ACCURATE FOR TRAFFIC HANDLING WORK ONLY

TH-5

CALCULATED-DESIGNED BY	MAXIM HOVHANESSIAN	REVISED BY	MH
CHECKED BY	MAXIM HOVHANESSIAN	DATE REVISED	8/19/09

FUNCTIONAL SUPERVISOR: ABOLFAZL EMADZADEH

STATE OF CALIFORNIA - DEPARTMENT OF TRANSPORTATION

Caltrans® DESIGN

LAST REVISION 08-25-09 | DATE PLOTTED => 14-JAN-2010 | TIME PLOTTED => 13:14

Dist	COUNTY	ROUTE	POST MILES TOTAL PROJECT	SHEET No.	TOTAL SHEETS
04	SF	80,101	L3.8/5.0, 4.1/5.0	67	136

REGISTERED CIVIL ENGINEER 8-19-09 DATE

1-11-10
PLANS APPROVAL DATE

REGISTERED PROFESSIONAL ENGINEER
M. Hovhanessian
No. 42284
Exp. 3-31-10
CIVIL
STATE OF CALIFORNIA

THE STATE OF CALIFORNIA OR ITS OFFICERS OR AGENTS SHALL NOT BE RESPONSIBLE FOR THE ACCURACY OR COMPLETENESS OF SCANNED COPIES OF THIS PLAN SHEET.

LEGEND: (ONLY FOR SHEET TH-6, TH-7,TH-8, TH-9 AND TH-10)

- WORK AREA
- CLOSE AREA
- TRAFFIC CONES AT 25′ C-C
- TYPE III BARRICADE
- (X) FLAGMAN TO DIVERT PARTIAL TRAFFIC TO PARALLEL ROADS
- PORTABLE CHANGEABLE MESSAGE SIGN
- DIRECTION OF TRAFFIC
- (1) CLOSE BECAUSE OVERHEAD WORK ON WB SF Rte 80 (BARRIER AND DRAINAGE WORK)
- (5) PEDESTRIAN DETOUR : (HARRISON-5TH-HARRISON-OFF-RAMP-ALONG 5TH-5TH)
- (6) MUNI OVERHEAD LINE DE-ENERGIZED

NOTE: FOR ADDITIONAL TRAFFIC DETAIL, SEE T-11, T-12, AND T-13 OF STANDARD PLAN

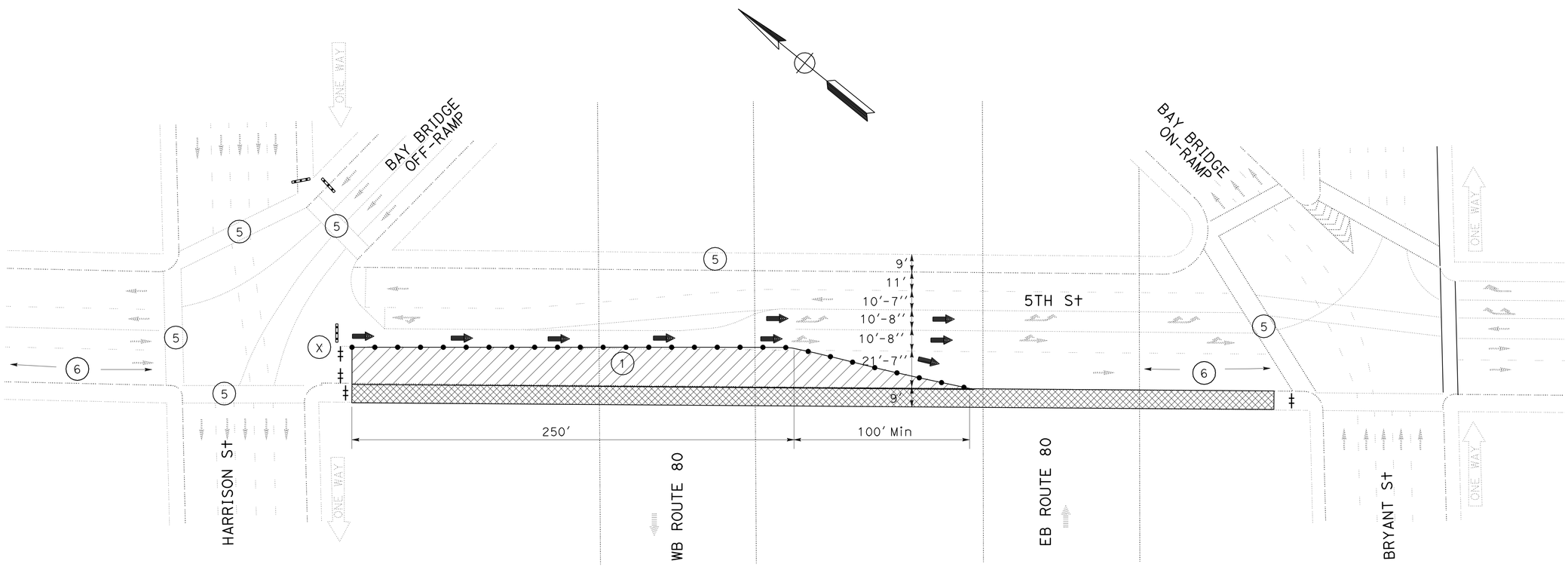

THIS PLAN ACCURATE FOR TRAFFIC HANDLING WORK ONLY

TRAFFIC HANDLING PLAN

NO SCALE

TH-6

STATE OF CALIFORNIA - DEPARTMENT OF TRANSPORTATION
Caltrans
DESIGN

FUNCTIONAL SUPERVISOR: ABOLFAZL EMADZADEH
CALCULATED-DESIGNED BY: MAXIM HOVHANESSIAN
CHECKED BY:
REVISED BY: MH
DATE REVISED: 8/19/09

LAST REVISION 08-25-09
DATE PLOTTED => 14-JAN-2010
TIME PLOTTED => 13:14

Dist	COUNTY	ROUTE	POST MILES TOTAL PROJECT	SHEET No.	TOTAL SHEETS
04	SF	80,101	L3.8/5.0, 4.1/5.0	68	136

REGISTERED CIVIL ENGINEER 8-19-09 DATE

1-11-10
PLANS APPROVAL DATE

REGISTERED PROFESSIONAL ENGINEER
M. Hovhanessian
No. 42284
Exp. 3-31-10
CIVIL
STATE OF CALIFORNIA

THE STATE OF CALIFORNIA OR ITS OFFICERS OR AGENTS SHALL NOT BE RESPONSIBLE FOR THE ACCURACY OR COMPLETENESS OF SCANNED COPIES OF THIS PLAN SHEET.

LEGEND:

(1) CLOSE BECAUSE OVERHEAD WORK ON WB SF Rte 80 (BARRIER AND DRAINAGE WORK)

(3) MUNI OVERHEAD LINE DE-ENERGIZED

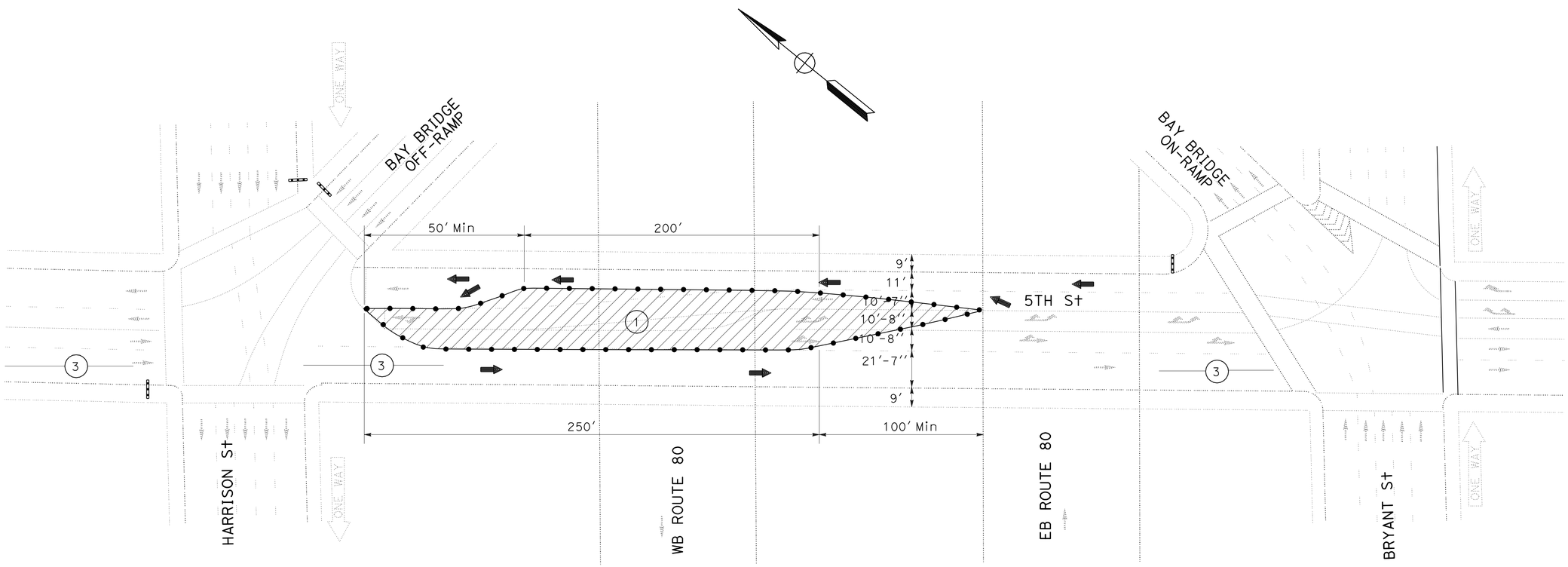

FOR LEGEND, SEE SHEET TH-6

THIS PLAN ACCURATE FOR TRAFFIC HANDLING WORK ONLY

TRAFFIC HANDLING PLAN

NO SCALE

TH-7

STATE OF CALIFORNIA - DEPARTMENT OF TRANSPORTATION
Caltrans®
DESIGN

FUNCTIONAL SUPERVISOR: ABOLFAZL EMADZADEH

CALCULATED-DESIGNED BY: MAXIM HOVHANESSIAN
CHECKED BY: MAXIM HOVHANESSIAN

REVISED BY: MH
DATE REVISED: 8/19/09

LAST REVISION 08-25-09
DATE PLOTTED => 14-JAN-2010
TIME PLOTTED => 13:14

Dist	COUNTY	ROUTE	POST MILES TOTAL PROJECT	SHEET No.	TOTAL SHEETS
04	SF	80,101	L3.8/5.0, 4.1/5.0	69	136

REGISTERED CIVIL ENGINEER 8-19-09 DATE

1-11-10
PLANS APPROVAL DATE

REGISTERED PROFESSIONAL ENGINEER
M. Hovhanessian
No. 42284
Exp. 3-31-10
CIVIL
STATE OF CALIFORNIA

THE STATE OF CALIFORNIA OR ITS OFFICERS OR AGENTS SHALL NOT BE RESPONSIBLE FOR THE ACCURACY OR COMPLETENESS OF SCANNED COPIES OF THIS PLAN SHEET.

LEGEND:

(1) CLOSE BECAUSE OVERHEAD WORK ON WB SF Rte 80 (BARRIER AND DRAINAGE WORK)

(6) PEDESTRIAN DETOUR: (HARRISON-5TH-HARRISON-ALONG 5TH-5TH)

(7) MUNI OVERHEAD LINE OK, ADEQUATE SEPARATION, NOT DE-ENERGIZED

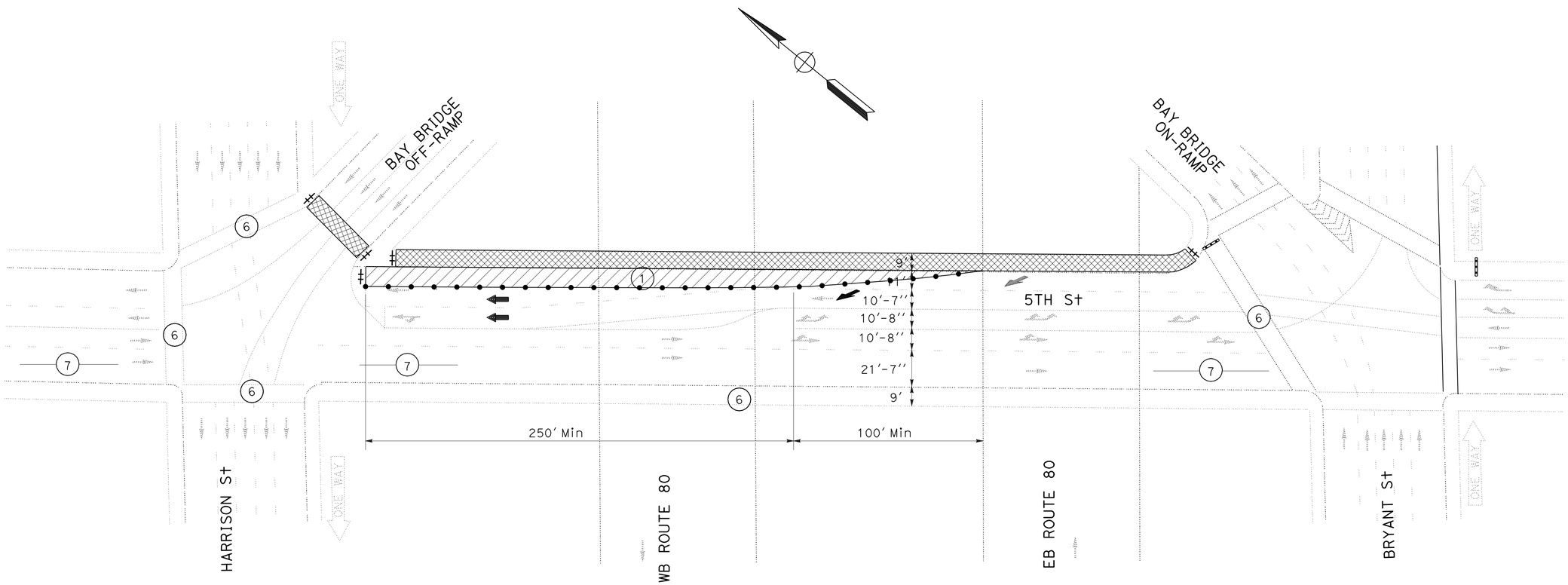

FOR LEGEND, SEE SHEET TH-6

THIS PLAN ACCURATE FOR TRAFFIC HANDLING WORK ONLY

TRAFFIC HANDLING PLAN

NO SCALE

TH-8

STATE OF CALIFORNIA - DEPARTMENT OF TRANSPORTATION
Caltrans
DESIGN

FUNCTIONAL SUPERVISOR: ABOLFAZL EMADZADEH

CALCULATED-DESIGNED BY: MAXIM HOVHANESSIAN
CHECKED BY: MAXIM HOVHANESSIAN

REVISED BY: MH
DATE REVISED: 8/19/09

LAST REVISION 08-25-09 | DATE PLOTTED => 14-JAN-2010 | TIME PLOTTED => 13:14

BORDER LAST REVISED 4/11/2008

RELATIVE BORDER SCALE IS IN INCHES 0 1 2 3

USERNAME => trmikesl
DGN FILE => 42a140md008.dgn

CU 04242

EA 2A1401

Dist	COUNTY	ROUTE	POST MILES TOTAL PROJECT	SHEET No.	TOTAL SHEETS
04	SF	80,101	L3.8/5.0, 4.1/5.0	70	136

REGISTERED CIVIL ENGINEER 8-19-09 DATE

1-11-10
PLANS APPROVAL DATE

REGISTERED PROFESSIONAL ENGINEER M. Hovhanessian No. 42284 Exp. 3-31-10 CIVIL STATE OF CALIFORNIA

THE STATE OF CALIFORNIA OR ITS OFFICERS OR AGENTS SHALL NOT BE RESPONSIBLE FOR THE ACCURACY OR COMPLETENESS OF SCANNED COPIES OF THIS PLAN SHEET.

NOTE:

1. CLOSE 2 EB LANES AND EB PARALLEL PARKING LANE USING TOW-AWAY SIGN IN SHEET CS-13.

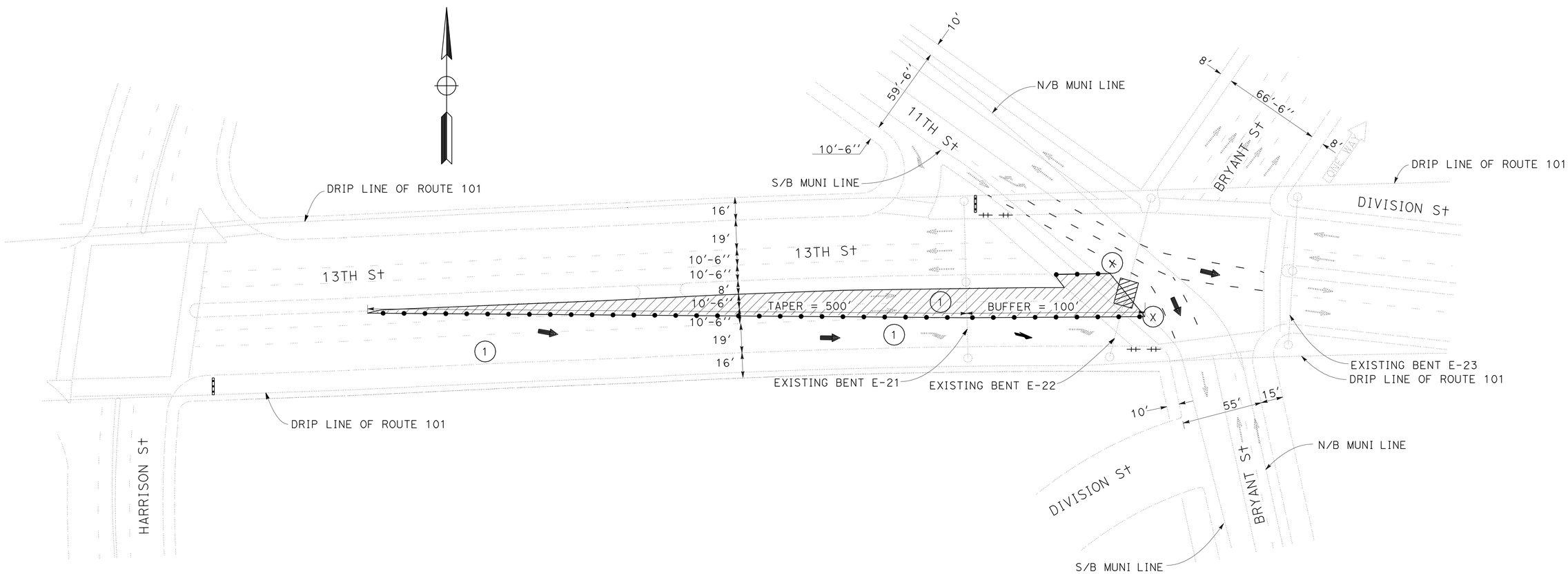

FOR LEGEND, SEE SHEET TH-6

THIS PLAN ACCURATE FOR TRAFFIC HANDLING WORK ONLY

TRAFFIC HANDLING PLAN

NO SCALE

TH-9

STATE OF CALIFORNIA - DEPARTMENT OF TRANSPORTATION	Caltrans® DESIGN
FUNCTIONAL SUPERVISOR	ABOLFAZL EMADZADEH
CALCULATED-DESIGNED BY	MAXIM HOVHANESSIAN
CHECKED BY	MAXIM HOVHANESSIAN
REVISED BY	MH
DATE REVISED	8/19/09

LAST REVISION 08-25-09 | DATE PLOTTED => 14-JAN-2010 | TIME PLOTTED => 13:14

Dist	COUNTY	ROUTE	POST MILES TOTAL PROJECT	SHEET No.	TOTAL SHEETS
04	SF	80,101	L3.8/5.0, 4.1/5.0	71	136

REGISTERED CIVIL ENGINEER 8-19-09 DATE

1-11-10
PLANS APPROVAL DATE

REGISTERED PROFESSIONAL ENGINEER
M. Hovhanessian
No. 42284
Exp. 3-31-10
CIVIL
STATE OF CALIFORNIA

THE STATE OF CALIFORNIA OR ITS OFFICERS OR AGENTS SHALL NOT BE RESPONSIBLE FOR THE ACCURACY OR COMPLETENESS OF SCANNED COPIES OF THIS PLAN SHEET.

NOTE:

1. CLOSE MIDDLE WB LANE AT INTERSECTION AND WB PARALLEL PARKING LANE ALONG 13th St USING TOW-AWAY SIGN IN SHEET CS-13.

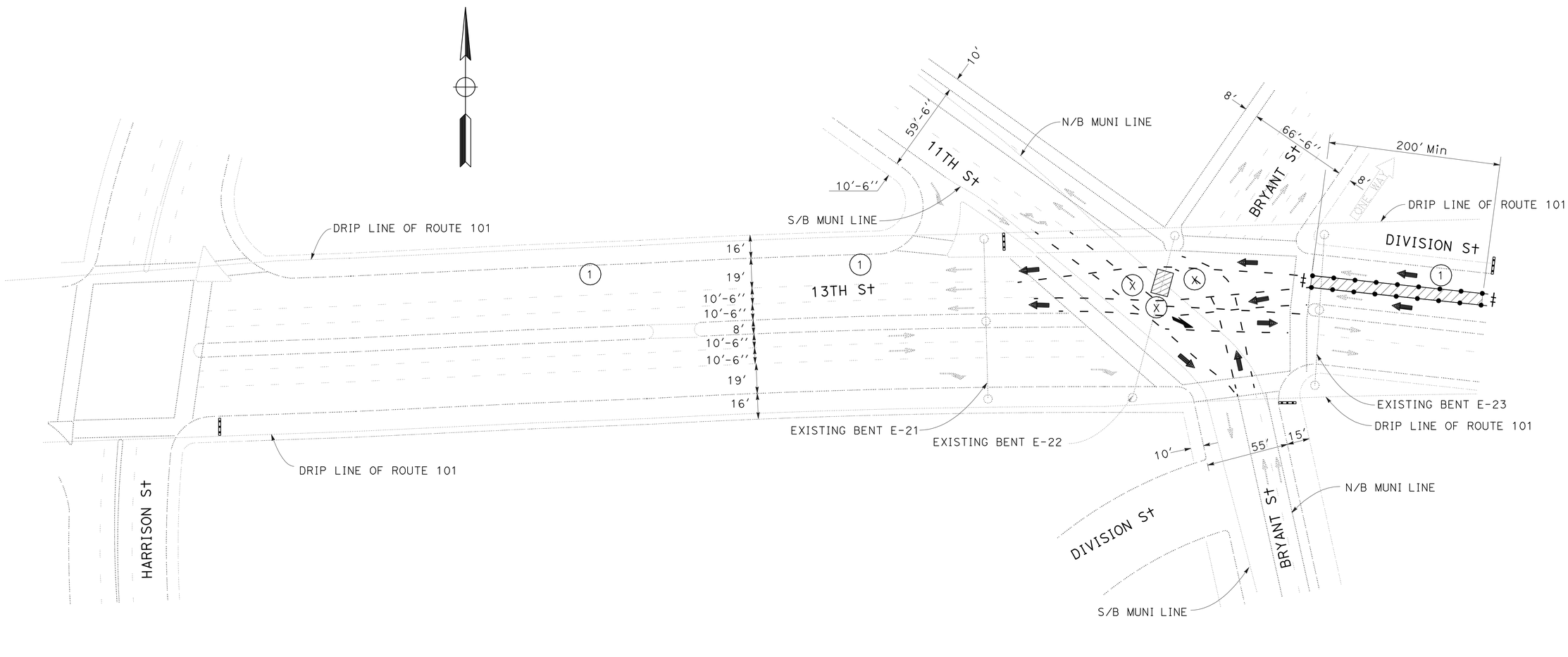

TRAFFIC HANDLING PLAN

NO SCALE

TH-10

FOR NOTES, ABBREVIATIONS AND LEGEND, SEE SHEET TH-6

THIS PLAN ACCURATE FOR TRAFFIC HANDLING WORK ONLY

CALCULATED-DESIGNED BY	MAXIM HOVHANESSIAN
CHECKED BY	MAXIM HOVHANESSIAN
REVISED BY	MH
DATE REVISED	8/19/09
FUNCTIONAL SUPERVISOR	ABOLFAZL EMADZADEH

STATE OF CALIFORNIA - DEPARTMENT OF TRANSPORTATION

Caltrans®

DESIGN

LAST REVISION 08-25-09 | DATE PLOTTED => 14-JAN-2010 | TIME PLOTTED => 13:14

Dist	COUNTY	ROUTE	POST MILES TOTAL PROJECT	SHEET No.	TOTAL SHEETS
04	SF	80,101	L3.8/5.0, 4.1/5.0	72	136

REGISTERED CIVIL ENGINEER 8-19-09 DATE

1-11-10
PLANS APPROVAL DATE

REGISTERED PROFESSIONAL ENGINEER M. Hovhanessian No. 42284 Exp. 3-31-10 CIVIL STATE OF CALIFORNIA

THE STATE OF CALIFORNIA OR ITS OFFICERS OR AGENTS SHALL NOT BE RESPONSIBLE FOR THE ACCURACY OR COMPLETENESS OF SCANNED COPIES OF THIS PLAN SHEET.

TEMPORARY PAVEMENT DELINEATION

SHEET No.	LOCATION DESCRIPTION	DETAIL No. →	TEMPORARY TRAFFIC STRIPE (PAINT)			REMOVE PAINTED TRAFFIC STRIPE	REMOVE YELLOW PAINTED TRAFFIC STRIPE
			8	24	27B		
		FT	4'' (BROKEN 17-7)	4'' SOLID YELLOW	4'' SOLID WHITE		
			LF				
TH-2	E 32+75 TO 37+40 R†	465	930	465	465	420	465
TH-2	E 41+85 TO 39+25 L†	260	520	260	260	234	260
TH-2	E 38+85 TO 34+20 L†	465	930	465	465	420	465
TH-1, TH-2	V1 31+85 TO 27+80	405	405	405	405	183	405
TH-3	E4 42+41 TO 39+45	296	296		296	134	296
TH-3	E5 65+00 TO 62+40	260	260		260	117	260
TH-4, TH-5	F3R 288+77 TO 292+90	413	826	353	343	508	413
TH-4, TH-5	F3L 295+05 TO 285+30	975	2250	975	983	880	975
SUBTOTAL			6417	2923	3477	2896	3539
TOTAL			12,817			2896	3539

TRAFFIC HANDLING QUANTITIES
THQ-1

STATE OF CALIFORNIA - DEPARTMENT OF TRANSPORTATION
Caltrans® DESIGN

FUNCTIONAL SUPERVISOR: ABOLFAZL EMADZADEH
CALCULATED-DESIGNED BY: MAXIM HOVHANESSIAN
CHECKED BY: MAXIM HOVHANESSIAN
REVISED BY: MH
DATE REVISED: 8/19/09

LAST REVISION DATE PLOTTED => 14-JAN-2010
08-25-09 TIME PLOTTED => 13:15

Dist	COUNTY	ROUTE	POST MILES TOTAL PROJECT	SHEET No.	TOTAL SHEETS
04	SF	80,101	L3.8/5.0, 4.1/5.0	73	136

REGISTERED CIVIL ENGINEER 8-19-09 DATE

1-11-10
PLANS APPROVAL DATE

REGISTERED PROFESSIONAL ENGINEER M. Hovhanessian No. 42284 Exp. 3-31-10 CIVIL STATE OF CALIFORNIA

THE STATE OF CALIFORNIA OR ITS OFFICERS OR AGENTS SHALL NOT BE RESPONSIBLE FOR THE ACCURACY OR COMPLETENESS OF SCANNED COPIES OF THIS PLAN SHEET.

FOR ACCURATE RIGHT OF WAY AND ACCESS DATA, CONTACT RIGHT OF WAY ENGINEERING AT THE DISTRICT OFFICE.

LEGEND:

No. PAVEMENT DELINEATION DETAIL NUMBER

CHANGE OF PAVEMENT DELINEATION DETAIL

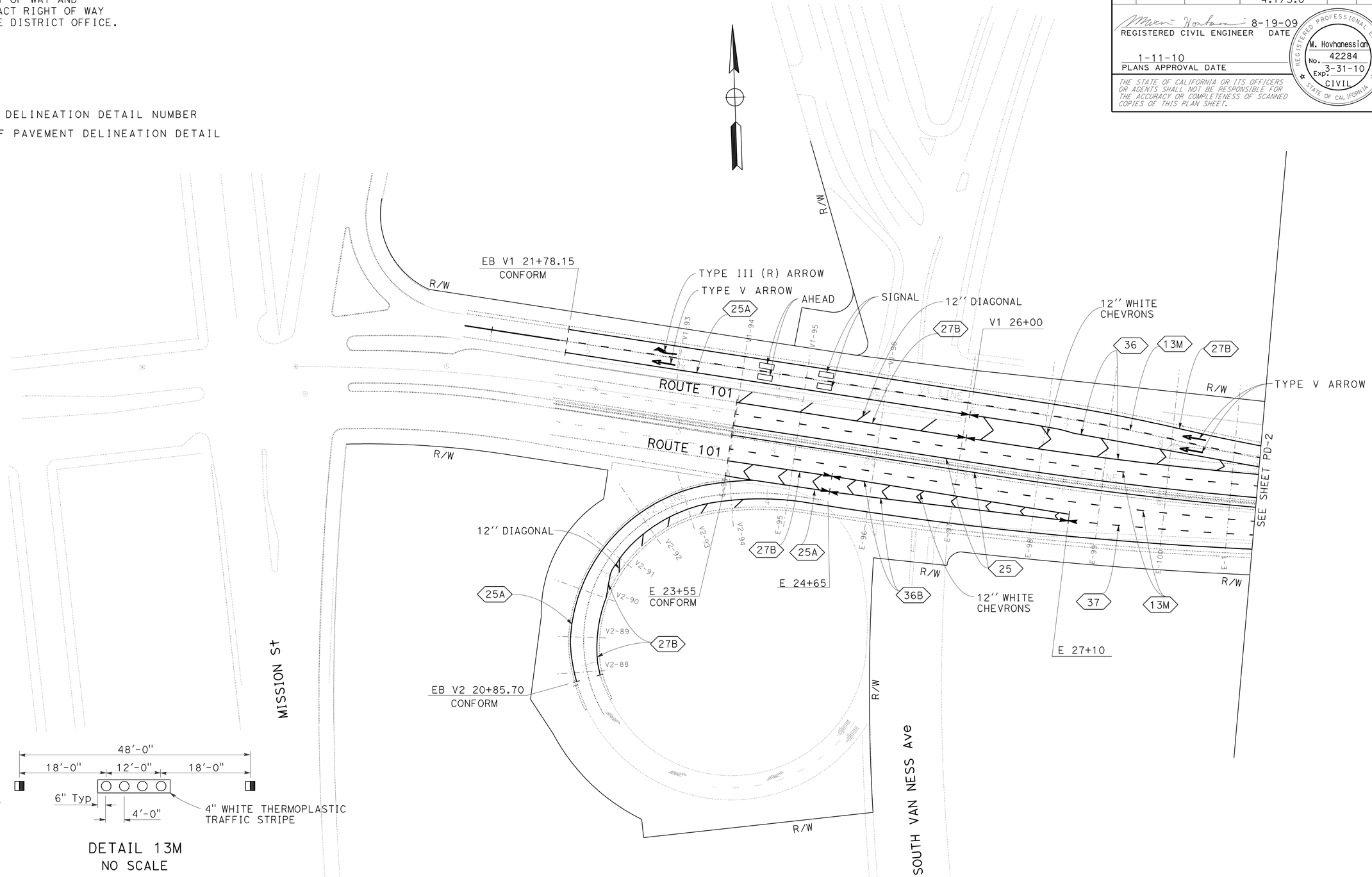

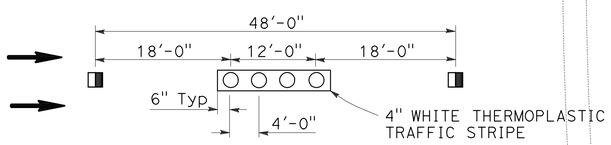

DETAIL 13M
NO SCALE

NOTES:

1. DETAIL 13M IS MODIFIED DETAIL 13 LANE LINE.
2. FOR DETAILS NOT SHOWN, SEE STANDARD PLAN A20A.
3. INSTALL 4" WHITE THERMOPLASTIC TRAFFIC STRIPE AFTER INSTALLING PAVEMENT MARKERS.

THIS PLAN ACCURATE FOR PAVEMENT DELINEATION WORK ONLY

PAVEMENT DELINEATION PLAN

SCALE: 1" = 50'

PD-1

REVISED BY	DATE REVISED
MH	8/19/09

CALCULATED-DESIGNED BY: MAXIM HOVHANESSIAN
CHECKED BY: MAXIM HOVHANESSIAN

FUNCTIONAL SUPERVISOR: ABOLFAZL EMADZADEH

STATE OF CALIFORNIA - DEPARTMENT OF TRANSPORTATION
Caltrans
DESIGN

LAST REVISION: 08-26-09
DATE PLOTTED => 14-JAN-2010
TIME PLOTTED => 13:15

Dist	COUNTY	ROUTE	POST MILES TOTAL PROJECT	SHEET No.	TOTAL SHEETS
04	SF	80,101	L3.8/5.0, 4.1/5.0	74	136

REGISTERED CIVIL ENGINEER 8-19-09 DATE

1-11-10
PLANS APPROVAL DATE

REGISTERED PROFESSIONAL ENGINEER
M. Hovhanessian
No. 42284
Exp. 3-31-10
CIVIL
STATE OF CALIFORNIA

THE STATE OF CALIFORNIA OR ITS OFFICERS OR AGENTS SHALL NOT BE RESPONSIBLE FOR THE ACCURACY OR COMPLETENESS OF SCANNED COPIES OF THIS PLAN SHEET.

FOR ACCURATE RIGHT OF WAY AND ACCESS DATA, CONTACT RIGHT OF WAY ENGINEERING AT THE DISTRICT OFFICE.

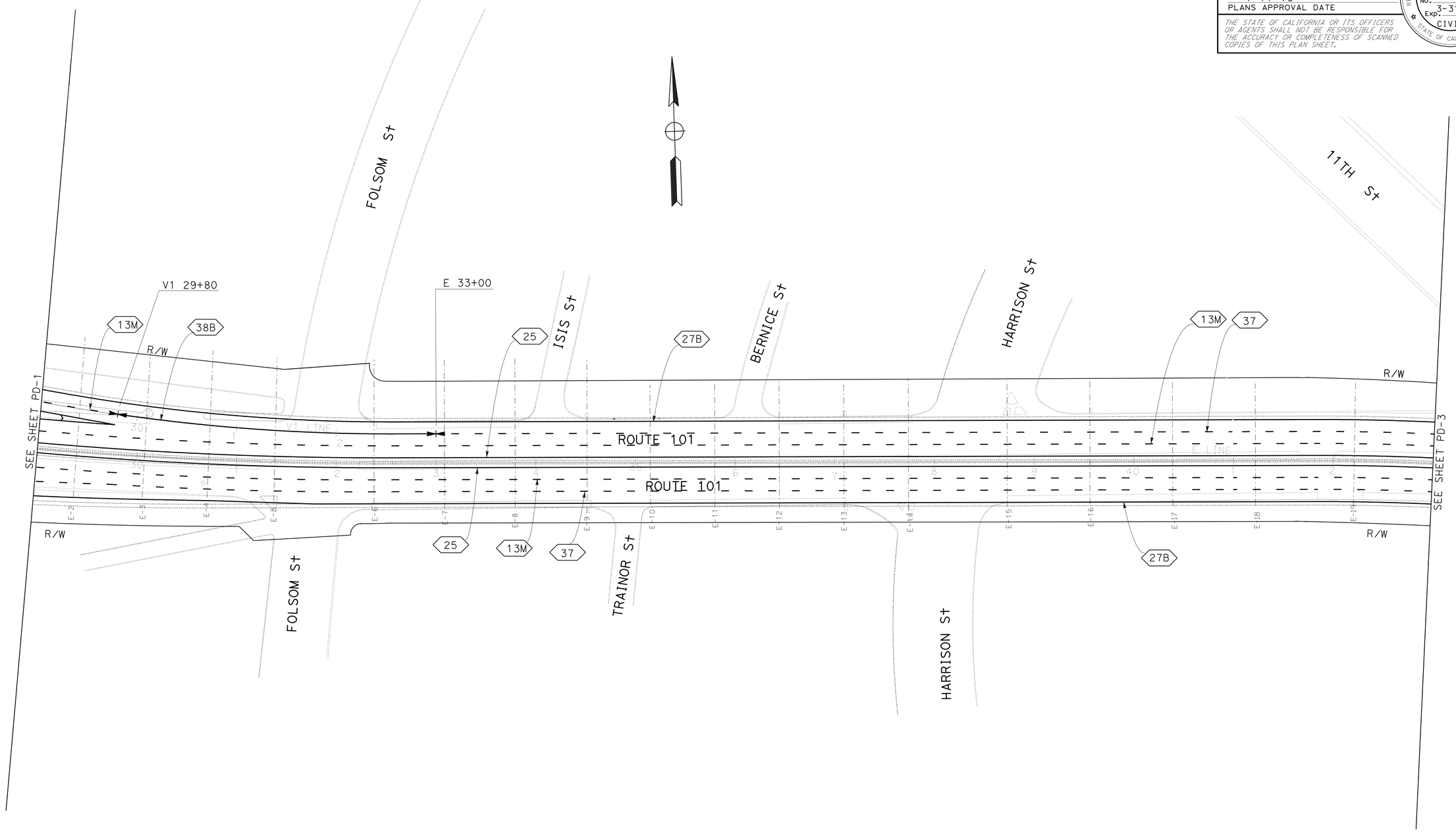

PAVEMENT DELINEATION PLAN

SCALE: 1" = 50'

THIS PLAN ACCURATE FOR PAVEMENT DELINEATION WORK ONLY

FOR NOTES, ABBREVIATIONS AND LEGEND, SEE SHEET PD-1

PD-2

REVISED BY	DATE REVISED
MH	8/19/09

CALCULATED-DESIGNED BY: MAXIM HOVHANESSIAN
CHECKED BY: MAXIM HOVHANESSIAN

FUNCTIONAL SUPERVISOR: ABOLFAZL EMADZADEH

STATE OF CALIFORNIA - DEPARTMENT OF TRANSPORTATION
Caltrans
DESIGN

LAST REVISION 08-26-09
DATE PLOTTED => 14-JAN-2010
TIME PLOTTED => 13:15

Dist	COUNTY	ROUTE	POST MILES TOTAL PROJECT	SHEET No.	TOTAL SHEETS
04	SF	80,101	L3.8/5.0, 4.1/5.0	75	136

REGISTERED CIVIL ENGINEER 8-19-09 DATE

1-11-10
PLANS APPROVAL DATE

REGISTERED PROFESSIONAL ENGINEER M. Hovhanessian No. 42284 Exp. 3-31-10 CIVIL STATE OF CALIFORNIA

THE STATE OF CALIFORNIA OR ITS OFFICERS OR AGENTS SHALL NOT BE RESPONSIBLE FOR THE ACCURACY OR COMPLETENESS OF SCANNED COPIES OF THIS PLAN SHEET.

FOR ACCURATE RIGHT OF WAY AND ACCESS DATA, CONTACT RIGHT OF WAY ENGINEERING AT THE DISTRICT OFFICE.

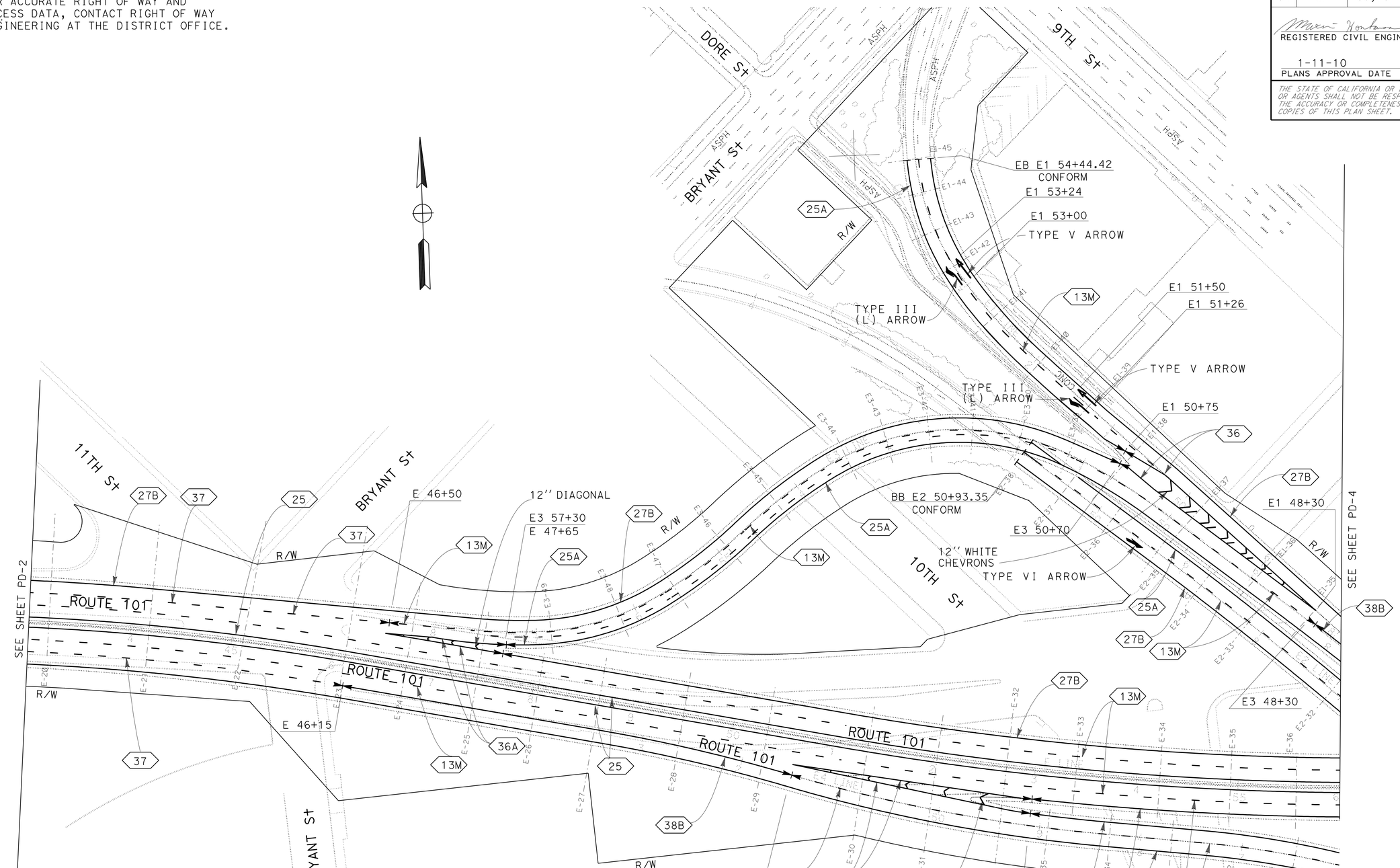

PAVEMENT DELINEATION PLAN

SCALE: 1" = 50'

FOR NOTES, ABBREVIATIONS AND LEGEND, SEE SHEET PD-1

THIS PLAN ACCURATE FOR PAVEMENT DELINEATION WORK ONLY

PD-3

REVISED BY	MH
DATE REVISED	8/19/09
MAXIM HOVHANESSIAN	MAXIM HOVHANESSIAN
CALCULATED-DESIGNED BY	
CHECKED BY	
FUNCTIONAL SUPERVISOR	ABOLFAZL EMADZADEH

STATE OF CALIFORNIA - DEPARTMENT OF TRANSPORTATION

Caltrans® DESIGN

LAST REVISION 08-26-09 | DATE PLOTTED => 14-JAN-2010 TIME PLOTTED => 13:15

Dist	COUNTY	ROUTE	POST MILES TOTAL PROJECT	SHEET No.	TOTAL SHEETS
04	SF	80,101	L3.8/5.0, 4.1/5.0	76	136

REGISTERED CIVIL ENGINEER 8-19-09 DATE

1-11-10
PLANS APPROVAL DATE

REGISTERED PROFESSIONAL ENGINEER M. Hovhanessian No. 42284 Exp. 3-31-10 CIVIL STATE OF CALIFORNIA

THE STATE OF CALIFORNIA OR ITS OFFICERS OR AGENTS SHALL NOT BE RESPONSIBLE FOR THE ACCURACY OR COMPLETENESS OF SCANNED COPIES OF THIS PLAN SHEET.

FOR ACCURATE RIGHT OF WAY AND ACCESS DATA, CONTACT RIGHT OF WAY ENGINEERING AT THE DISTRICT OFFICE.

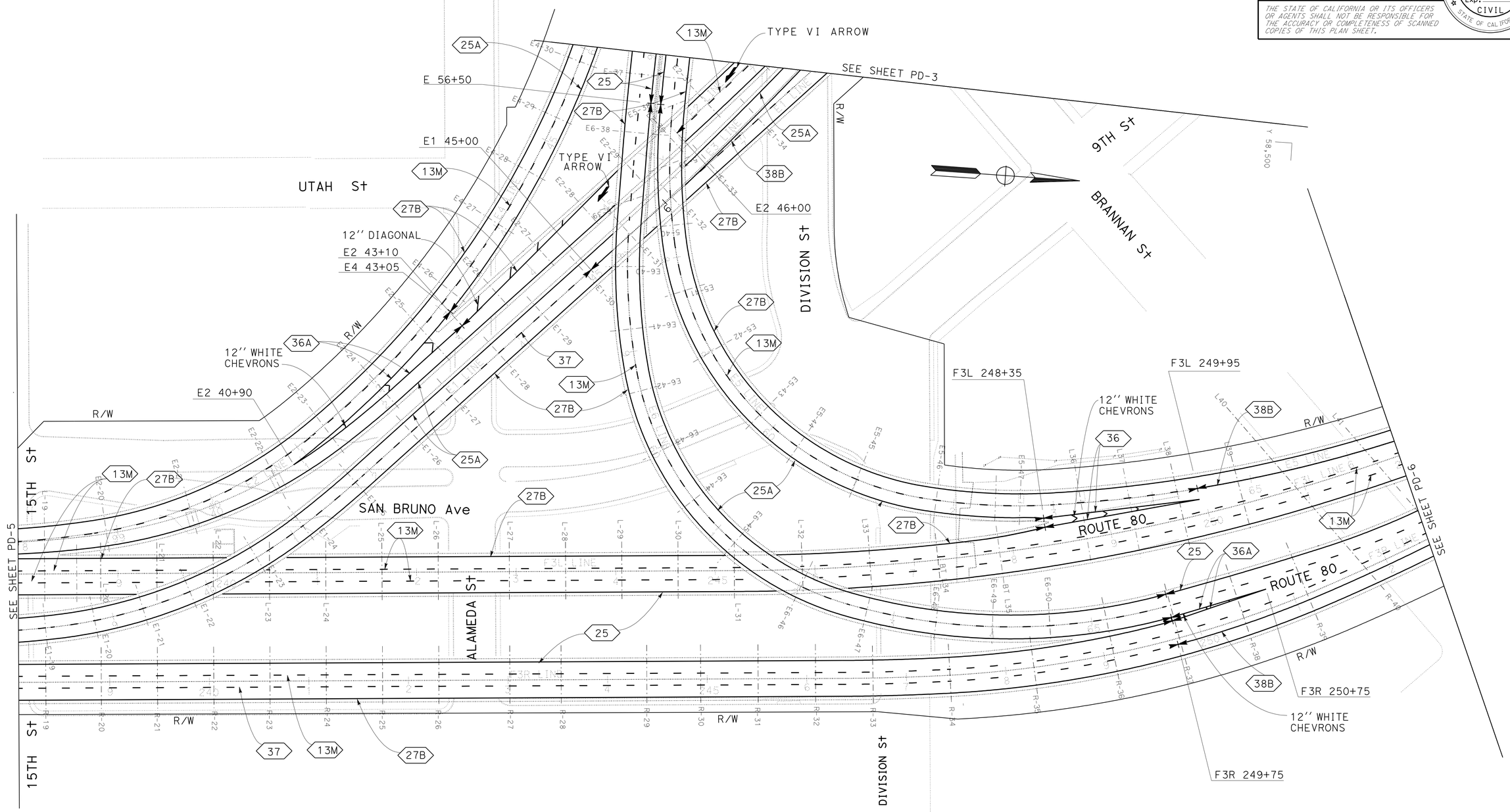

PAVEMENT DELINEATION PLAN

SCALE: 1" = 50'

FOR NOTES, ABBREVIATIONS AND LEGEND, SEE SHEET PD-1

THIS PLAN ACCURATE FOR PAVEMENT DELINEATION WORK ONLY

PD-4

STATE OF CALIFORNIA - DEPARTMENT OF TRANSPORTATION
Caltrans®
DESIGN

FUNCTIONAL SUPERVISOR: ABOLFAZL EMADZADEH

CALCULATED-DESIGNED BY: MAXIM HOVHANESSIAN
CHECKED BY: MAXIM HOVHANESSIAN

REVISED BY: MH
DATE REVISED: 8/19/09

LAST REVISION: 08-26-09
DATE PLOTTED => 14-JAN-2010
TIME PLOTTED => 13:15

Dist	COUNTY	ROUTE	POST MILES TOTAL PROJECT	SHEET No.	TOTAL SHEETS
04	SF	80,101	L3.8/5.0, 4.1/5.0	77	136

REGISTERED CIVIL ENGINEER 8-19-09 DATE

1-11-10
PLANS APPROVAL DATE

REGISTERED PROFESSIONAL ENGINEER
M. Hovhanessian
No. 42284
Exp. 3-31-10
CIVIL
STATE OF CALIFORNIA

THE STATE OF CALIFORNIA OR ITS OFFICERS OR AGENTS SHALL NOT BE RESPONSIBLE FOR THE ACCURACY OR COMPLETENESS OF SCANNED COPIES OF THIS PLAN SHEET.

FOR ACCURATE RIGHT OF WAY AND ACCESS DATA, CONTACT RIGHT OF WAY ENGINEERING AT THE DISTRICT OFFICE.

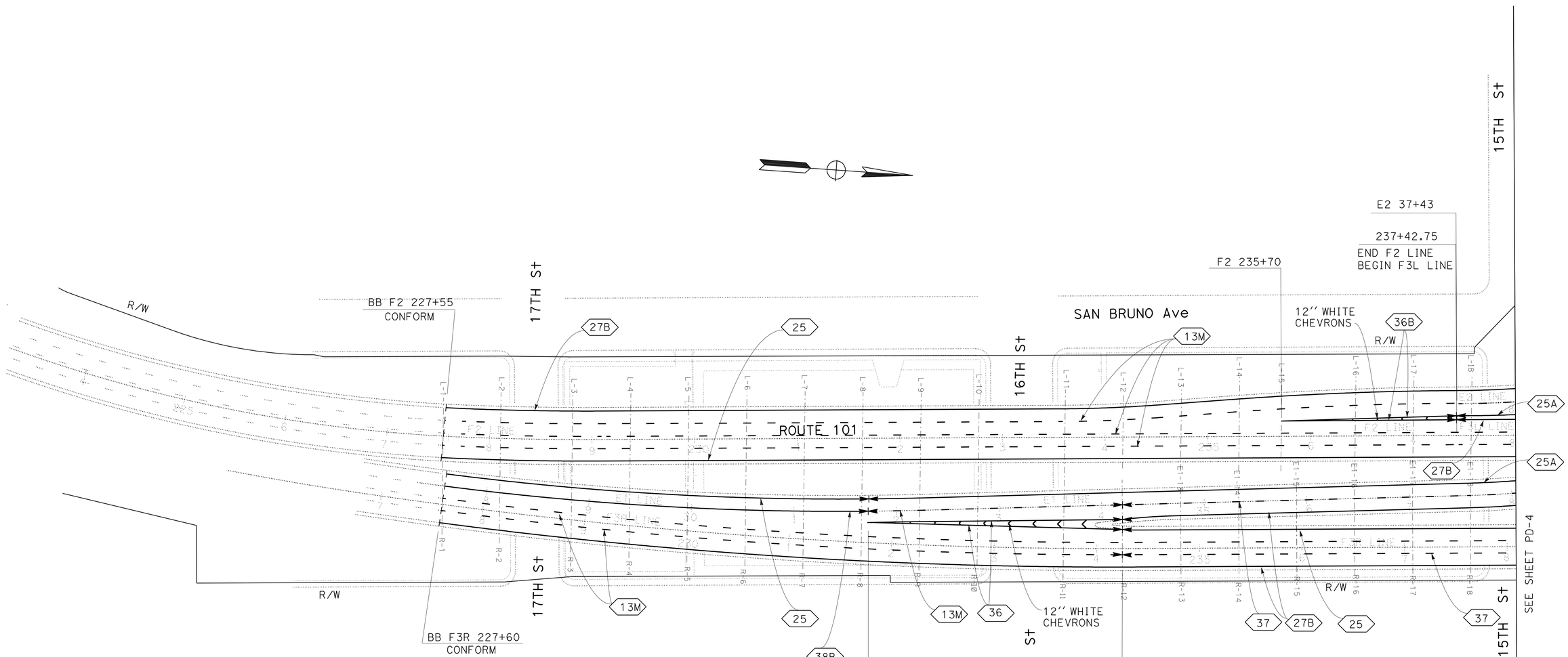

PAVEMENT DELINEATION PLAN

SCALE: 1" = 50'

THIS PLAN ACCURATE FOR PAVEMENT DELINEATION WORK ONLY

FOR NOTES, ABBREVIATIONS AND LEGEND, SEE SHEET PD-1

PD-5

REVISED BY	DATE REVISED
MH	8/19/09

CALCULATED-DESIGNED BY: MAXIM HOVHANESSIAN
CHECKED BY: MAXIM HOVHANESSIAN

FUNCTIONAL SUPERVISOR: ABOLFAZL EMADZADEH

STATE OF CALIFORNIA - DEPARTMENT OF TRANSPORTATION
Caltrans
DESIGN

LAST REVISION 08-26-09
DATE PLOTTED => 14-JAN-2010
TIME PLOTTED => 13:16

Dist	COUNTY	ROUTE	POST MILES TOTAL PROJECT	SHEET No.	TOTAL SHEETS
04	SF	80,101	L3.8/5.0, 4.1/5.0	78	136

REGISTERED CIVIL ENGINEER 8-19-09 DATE

1-11-10
PLANS APPROVAL DATE

REGISTERED PROFESSIONAL ENGINEER M. Hovhanessian No. 42284 Exp. 3-31-10 CIVIL STATE OF CALIFORNIA

THE STATE OF CALIFORNIA OR ITS OFFICERS OR AGENTS SHALL NOT BE RESPONSIBLE FOR THE ACCURACY OR COMPLETENESS OF SCANNED COPIES OF THIS PLAN SHEET.

FOR ACCURATE RIGHT OF WAY AND ACCESS DATA, CONTACT RIGHT OF WAY ENGINEERING AT THE DISTRICT OFFICE.

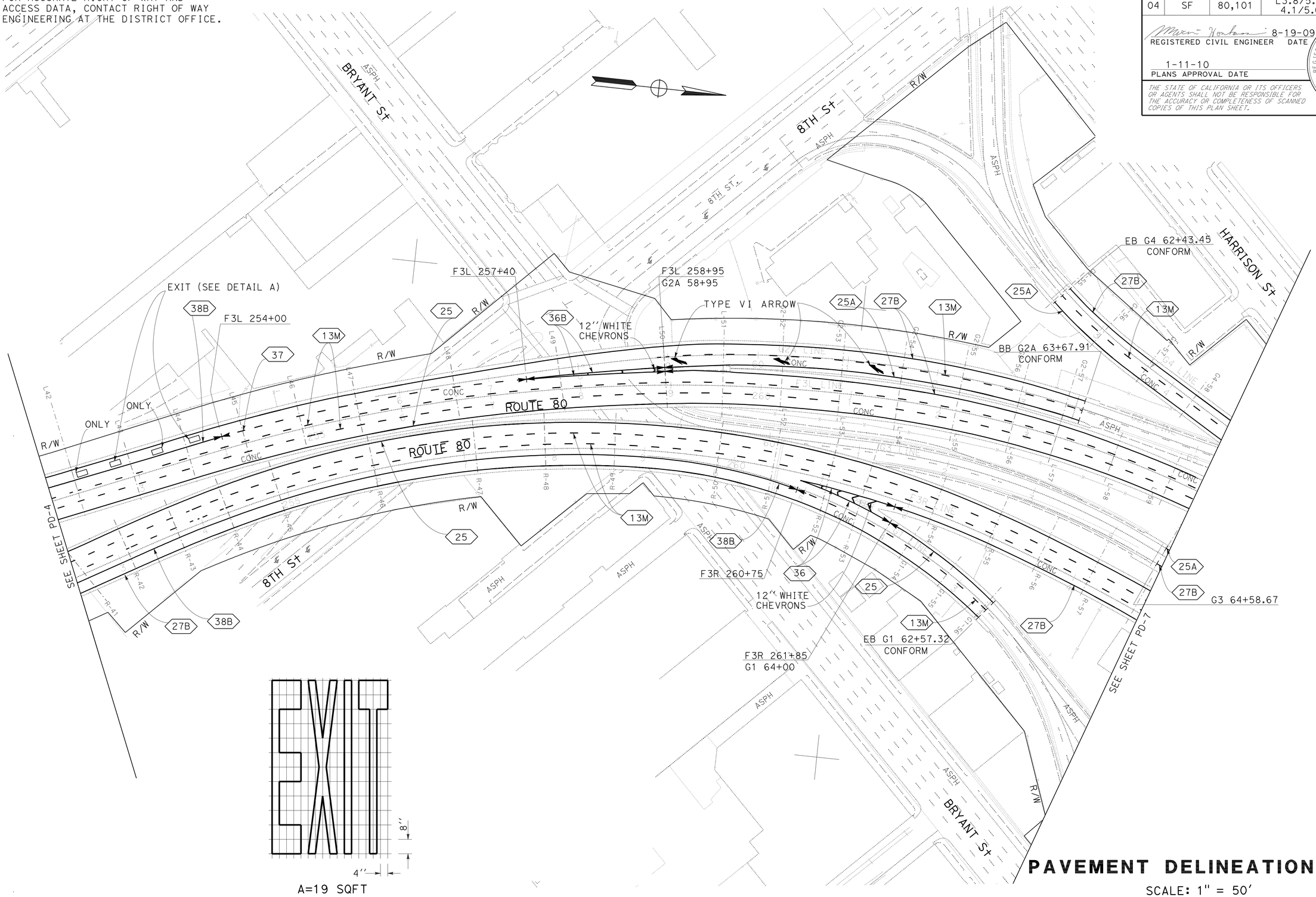

A=19 SQFT
DETAIL A

FOR NOTES, ABBREVIATIONS AND LEGEND, SEE SHEET PD-1

THIS PLAN ACCURATE FOR PAVEMENT DELINEATION WORK ONLY

PAVEMENT DELINEATION PLAN

SCALE: 1" = 50'

PD-6

STATE OF CALIFORNIA - DEPARTMENT OF TRANSPORTATION
Caltrans
DESIGN

FUNCTIONAL SUPERVISOR: ABOLFAZL EMADZADEH
CALCULATED-DESIGNED BY: MAXIM HOVHANESSIAN
CHECKED BY: MAXIM HOVHANESSIAN
REVISED BY: MH
DATE REVISED: 8/19/09

LAST REVISION DATE PLOTTED => 14-JAN-2010
08-26-09 TIME PLOTTED => 13:16

BORDER LAST REVISED 4/11/2008
RELATIVE BORDER SCALE IS IN INCHES 0 1 2 3
USERNAME => trmikesl
DGN FILE => 42a140na006.dgn
CU 04242
EA 2A1401

FOR ACCURATE RIGHT OF WAY AND
ACCESS DATA, CONTACT RIGHT OF WAY
ENGINEERING AT THE DISTRICT OFFICE.

Dist	COUNTY	ROUTE	POST MILES TOTAL PROJECT	SHEET No.	TOTAL SHEETS
04	SF	80,101	L3.8/5.0, 4.1/5.0	79	136

REGISTERED CIVIL ENGINEER 8-19-09 DATE

1-11-10
PLANS APPROVAL DATE

REGISTERED PROFESSIONAL ENGINEER
M. Hovhanessian
No. 42284
Exp. 3-31-10
CIVIL
STATE OF CALIFORNIA

THE STATE OF CALIFORNIA OR ITS OFFICERS OR AGENTS SHALL NOT BE RESPONSIBLE FOR THE ACCURACY OR COMPLETENESS OF SCANNED COPIES OF THIS PLAN SHEET.

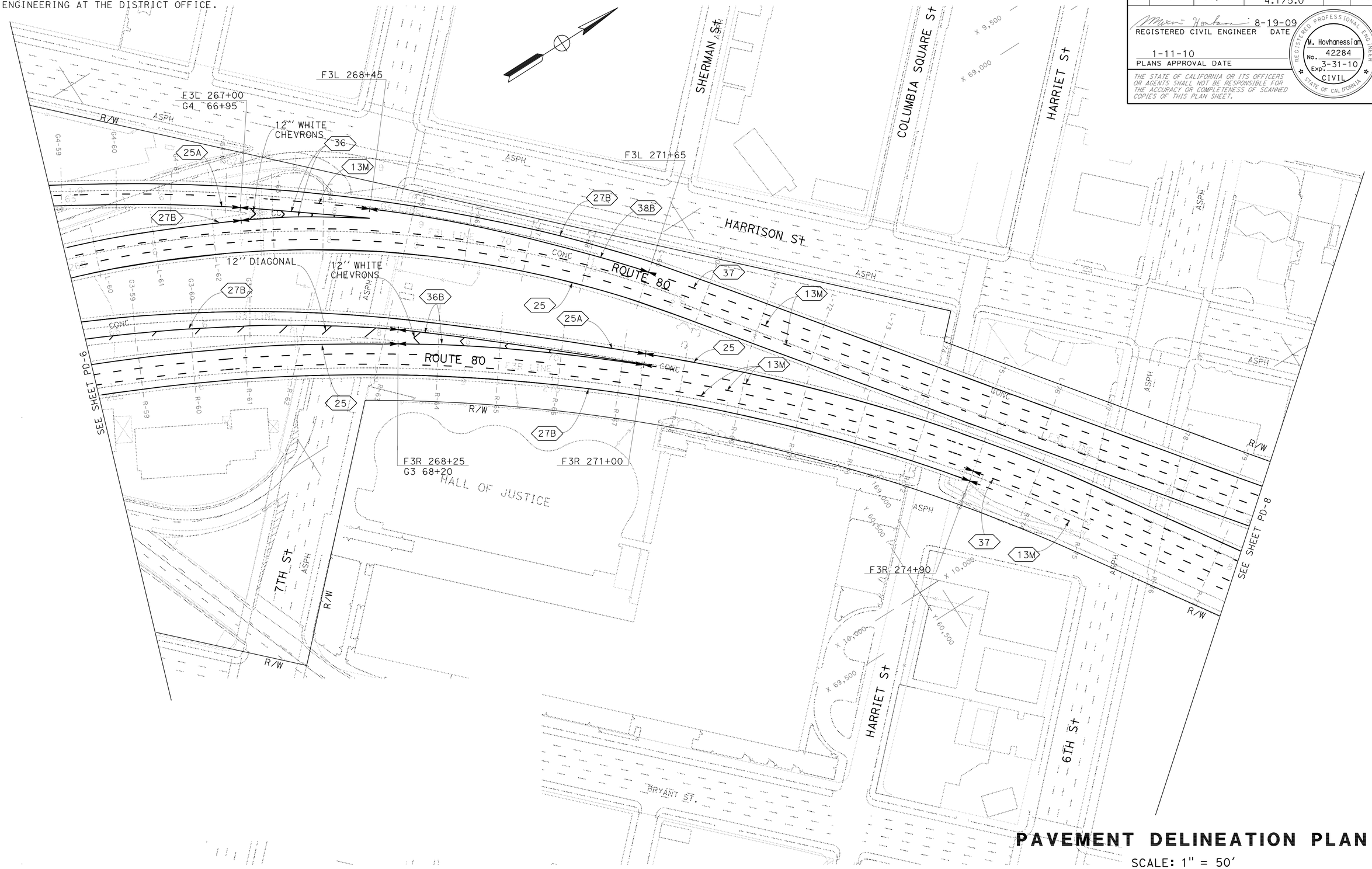

PAVEMENT DELINEATION PLAN

SCALE: 1" = 50'

THIS PLAN ACCURATE FOR
PAVEMENT DELINEATION WORK ONLY

FOR NOTES, ABBREVIATIONS
AND LEGEND, SEE SHEET PD-1

PD-7

REVISED BY	MH
DATE REVISED	8/19/09
CALCULATED-DESIGNED BY	MAXIM HOVHANESSIAN
CHECKED BY	MAXIM HOVHANESSIAN
FUNCTIONAL SUPERVISOR	ABOLFAZL EMADZADEH

STATE OF CALIFORNIA - DEPARTMENT OF TRANSPORTATION
Caltrans
DESIGN

LAST REVISION 08-26-09
DATE PLOTTED => 14-JAN-2010
TIME PLOTTED => 13:16

FOR ACCURATE RIGHT OF WAY AND
ACCESS DATA, CONTACT RIGHT OF WAY
ENGINEERING AT THE DISTRICT OFFICE.

Dist	COUNTY	ROUTE	POST MILES TOTAL PROJECT	SHEET No.	TOTAL SHEETS
04	SF	80,101	L3.8/5.0, 4.1/5.0	80	136

REGISTERED CIVIL ENGINEER 8-19-09 DATE

1-11-10
PLANS APPROVAL DATE

REGISTERED PROFESSIONAL ENGINEER
M. Hovhanessian
No. 42284
Exp. 3-31-10
CIVIL
STATE OF CALIFORNIA

THE STATE OF CALIFORNIA OR ITS OFFICERS OR AGENTS SHALL NOT BE RESPONSIBLE FOR THE ACCURACY OR COMPLETENESS OF SCANNED COPIES OF THIS PLAN SHEET.

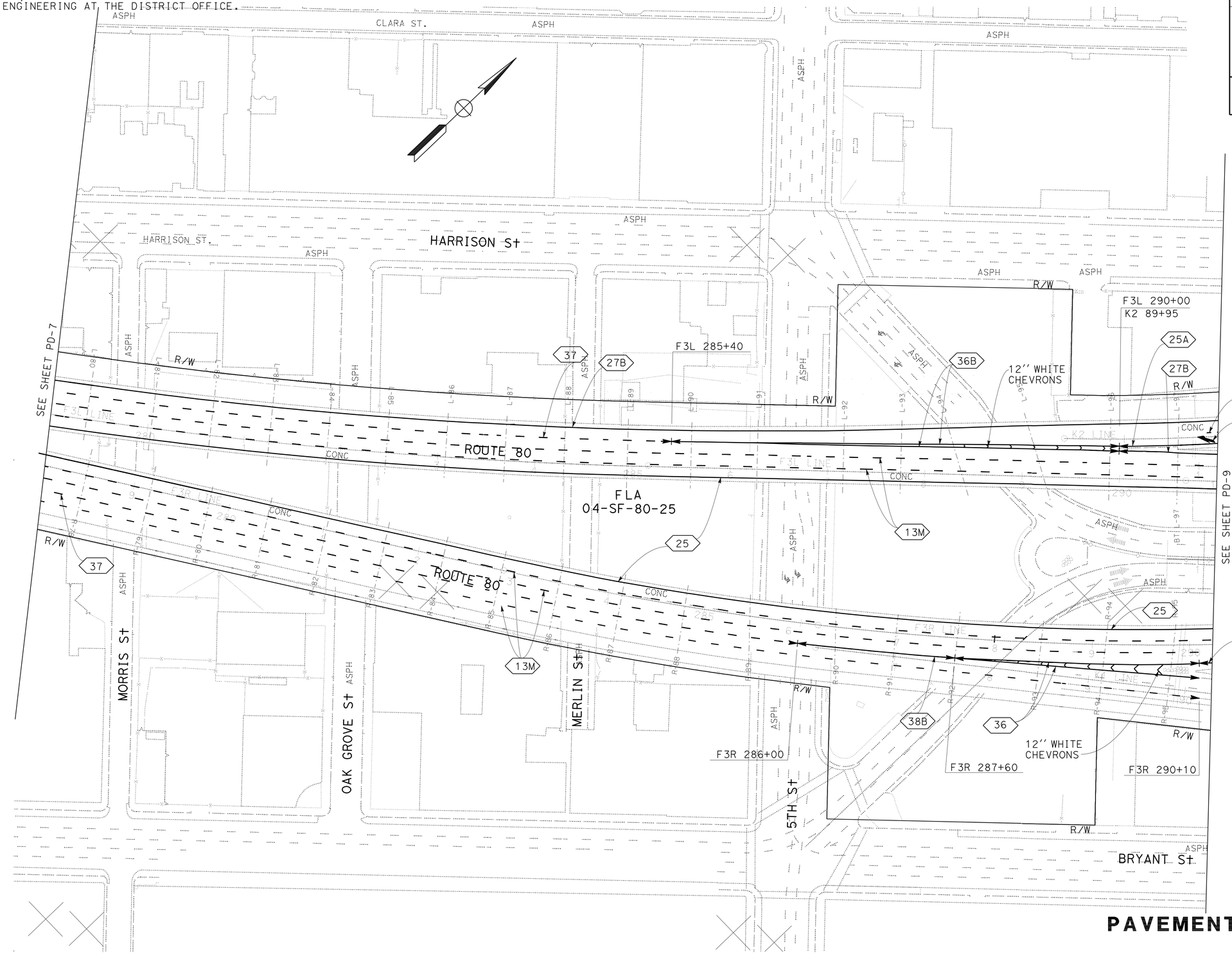

PAVEMENT DELINEATION PLAN

SCALE: 1" = 50'

THIS PLAN ACCURATE FOR
PAVEMENT DELINEATION WORK ONLY

FOR NOTES, ABBREVIATIONS
AND LEGEND, SEE SHEET PD-1

PD-8

REVISED BY	MH
DATE REVISED	8/19/09
CALCULATED-DESIGNED BY	MAXIM HOVHANESSIAN
CHECKED BY	MAXIM HOVHANESSIAN
FUNCTIONAL SUPERVISOR	ABOLFAZL EMADZADEH

STATE OF CALIFORNIA - DEPARTMENT OF TRANSPORTATION
Caltrans
DESIGN

LAST REVISION 08-26-09
DATE PLOTTED => 14-JAN-2010
TIME PLOTTED => 13:16

FOR ACCURATE RIGHT OF WAY AND ACCESS DATA, CONTACT RIGHT OF WAY ENGINEERING AT THE DISTRICT OFFICE.

Dist	COUNTY	ROUTE	POST MILES TOTAL PROJECT	SHEET No.	TOTAL SHEETS
04	SF	80,101	L3.8/5.0, 4.1/5.0	81	136

REGISTERED CIVIL ENGINEER 8-19-09 DATE

1-11-10
PLANS APPROVAL DATE

REGISTERED PROFESSIONAL ENGINEER M. Hovhanessian No. 42284 Exp. 3-31-10 CIVIL STATE OF CALIFORNIA

THE STATE OF CALIFORNIA OR ITS OFFICERS OR AGENTS SHALL NOT BE RESPONSIBLE FOR THE ACCURACY OR COMPLETENESS OF SCANNED COPIES OF THIS PLAN SHEET.

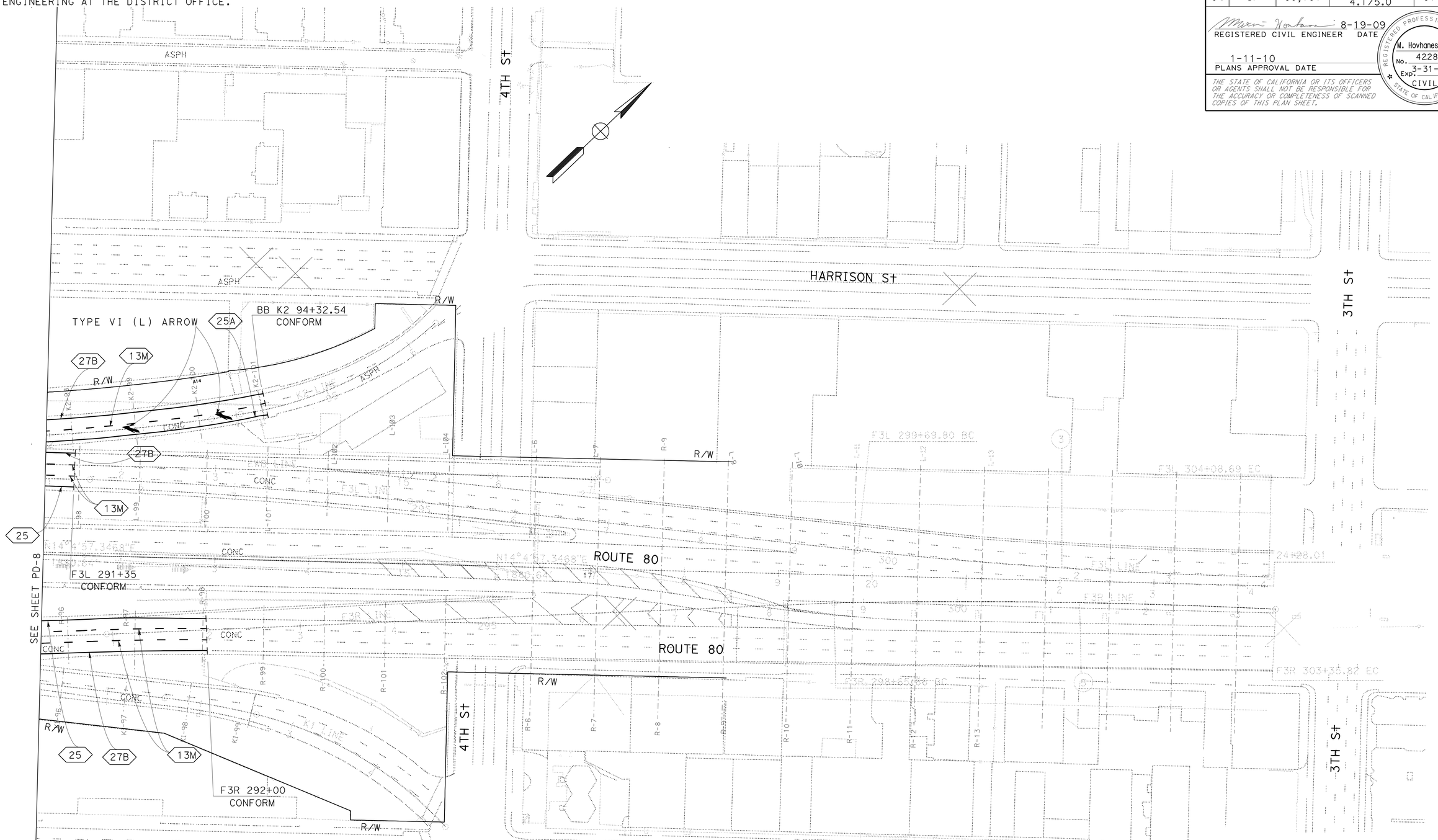

PAVEMENT DELINEATION PLAN

SCALE: 1" = 50'

FOR NOTES, ABBREVIATIONS AND LEGEND, SEE SHEET PD-1

THIS PLAN ACCURATE FOR PAVEMENT DELINEATION WORK ONLY

PD-9

MH	8/19/09	REVISED BY	DATE REVISED
MAXIM HOVHANESSIAN	MAXIM HOVHANESSIAN	CALCULATED-DESIGNED BY	CHECKED BY
FUNCTIONAL SUPERVISOR	ABOLFAZL EMADZADEH		

STATE OF CALIFORNIA - DEPARTMENT OF TRANSPORTATION

Caltrans® **DESIGN**

LAST REVISION DATE PLOTTED => 14-JAN-2010 TIME PLOTTED => 13:16 08-26-09

Dist	COUNTY	ROUTE	POST MILES TOTAL PROJECT	SHEET No.	TOTAL SHEETS
04	SF	80,101	L3.8/5.0, 4.1/5.0	82	136

REGISTERED CIVIL ENGINEER 8-19-09 DATE

1-11-10
PLANS APPROVAL DATE

REGISTERED PROFESSIONAL ENGINEER M. Hovhanessian No. 42284 Exp. 3-31-10 CIVIL STATE OF CALIFORNIA

THE STATE OF CALIFORNIA OR ITS OFFICERS OR AGENTS SHALL NOT BE RESPONSIBLE FOR THE ACCURACY OR COMPLETENESS OF SCANNED COPIES OF THIS PLAN SHEET.

TRAFFIC STRIPES, PAVEMENT MARKING AND PAVEMENT MARKERS

SHEET No.	STATION	DETAIL No. / STATION LENGTH	REMOVE THERMO PLASTIC TRAFFIC STRIPE	REMOVE YELLOW THERMO PLASTIC TRAFFIC STRIPE	THERMOPLASTIC TRAFFIC STRIPE: 13M 4'' (BROKEN 36-12)	25, 25A 4" SOLID YELLOW	27B, 36A, 36B 4'' SOLID WHITE	36, 36A, 38A, 38B 8'' SOLID WHITE	37 8'' (BROKEN 12-3)	REMOVE PAVEMENT MARKERS	PAVEMENT MARKER: NON-REFLECTIVE TYPE A	RETROREFLECTIVE TYPE C	RETROREFLECTIVE TYPE G	RETROREFLECTIVE TYPE H	REMOVE THERMO PLASTIC PAVEMENT MARKING	THERMOPLASTIC PAVEMENT MARKING: ARROWS	WORDS	12'' SOLID WHITE
		FT	LF							EA					SQFT			
PD-1	V2 20+85.70 TO E 24+65 RT	380	360	400		400	360			17				17	50			50
PD-1	E 23+55 TO 24+65 RT	110	220	110	110	110	110			18	12		3	3				
PD-1	E 24+65 TO 27+10 RT	245	983	245	245	245	490	248		47	24		17	6	105			105
PD-1, PD-2, PD-3	E 27+10 TO 46+15 RT	1905	5715	1905	1905	1905	1905		1905	370	160	128	42	40				
PD-2, PD-3	E 46+50 TO 33+00 L†	1350	4058	1350	1350	1350	1358		1350	268	116	92	31	29				
PD-2	E 33+00 TO 29+80 L†	320	960	320	320	320	320	320		70	28		35	7				
PD-1, PD-2,	E 29+80 TO 26+00 L†	380	1900	380	760	380	380	760		120	64		48	8	120			120
PD-1	E 26+00 TO 23+55 L†	245	490	245	245	245	245			36	24		6	6	60			60
PD-1	V1 28+44 TO 28+20	24													66	66		
PD-1	V1 24+55 TO 24+47	8													64		64	
PD-1	V1 23+93 TO 23+85	8													62		62	
PD-1	V1 23+00 TO 22+76	24													75	75		
PD-1	E 26+00 L† TO V1 21+78.15	422	844	422	422	422	422			68	40		10	18				
PD-3	E 46+15 TO 50+65 R†	450	1350	450	450	450	450	450		98	40		48	10				
PD-3	E 50+65 TO 53+00 RT	235	1175	235	470	235	235	470		75	40		30	5	48			48
PD-3, PD-4	E 53+00 R† TO E6 65+75	1275	2575	1255	1275	1255	1300			187	112		28	47				
PD-3, PD-4	E5 62+90 TO E 47+65 L†	1525	3029	1546	1525	1546	1504			211	132		33	46				
PD-3	E 47+65 TO 46+50 L†	115	575	115	230	115	230	115		38	24		11	3				
PD-3, PD-4	E4 49+10 TO 43+00	610	1210	612	610	612	600			91	52		13	26				
PD-4, PD-5	E1 34+20 TO 45+00	1080	2170	1070		1070	1090		1080	122		74	2	46				
PD-3, PD-4	E1 45+00 TO 48+30	330	660	330		330	330	330		42			28	14				
PD-3	E1 48+30 TO 50+75	245	980	245	245	245	245	490		63	24		28	11	120			120
PD-3	E1 50+75 TO 54+44.42	370	740	370	370	370	370			56	32		8	16				
PD-3	E1 51+26 TO 51+50	24													75	75		
PD-3	E1 53+00 TO 53+24	24													75	75		
PD-3	E3 50+70 TO 57+30	660	1320	660	660	660	660			98	56		14	28				
PD-3, PD-4	E2 50+93.35 TO 46+00	500	1000	500	500	500	500			77	44		11	22				
PD-3	E2 49+65 TO 49+47	18													42	42		
PD-4	E2 46+68 TO 46+50	18													42	42		
PD-4	E2 45+00 TO 44+82	18													42	42		
PD-4	E2 46+00 TO 43+10	290	290	290		290	290			13				13	40			40
PD-4	E2 43+10 TO 40+90	220	880	220	220	220	440	220		35	20		5	10	36			36
PD-4, PD-5	E2 40+90 TO 37+43	347	694	347	347	347	347			56	32		8	16				
PD-5	F3R 227+60 TO 231+75	415	1660	415	830	415	415	415		135	72		54	9				
PD-5	F3R 231+75 TO 234+25	250	1500	250	750	250	250	500		112	64		37	11	60			60
PD-4, PD-5	F3R 234+25 TO 249+75	1550	4650	1550	1550	1550	1550		1550	304	132	104	35	33				
PD-4	F3R 249+75 TO 250+75	100	500	100	200	100	200	100		38	24		11	3	12			12
SUBTOTAL			42488	15937	15589	15937	16596	4418	5885	2865	1368	398	596	503	1194	417	126	651
TOTAL			42488	15937	15589	32533		4418	5885	2865	1368	1497			1194	1194		

PAVEMENT DELINEATION QUANTITIES

PDQ-1

REVISED BY	DATE REVISED
MH	8/19/09

CALCULATED-DESIGNED BY: MAXIM HOVANESSIAN
CHECKED BY: MAXIM HOVANESSIAN

FUNCTIONAL SUPERVISOR: ABOLFAZL EMADZADEH

STATE OF CALIFORNIA - DEPARTMENT OF TRANSPORTATION
Caltrans® DESIGN

LAST REVISION 08-25-09 | DATE PLOTTED => 14-JAN-2010 | TIME PLOTTED => 13:17

Dist	COUNTY	ROUTE	POST MILES TOTAL PROJECT	SHEET No.	TOTAL SHEETS
04	SF	80,101	L3.8/5.0, 4.1/5.0	83	136

REGISTERED CIVIL ENGINEER 8-19-09 DATE

1-11-10
PLANS APPROVAL DATE

REGISTERED PROFESSIONAL ENGINEER M. Hovhanessian No. 42284 Exp. 3-31-10 CIVIL STATE OF CALIFORNIA

THE STATE OF CALIFORNIA OR ITS OFFICERS OR AGENTS SHALL NOT BE RESPONSIBLE FOR THE ACCURACY OR COMPLETENESS OF SCANNED COPIES OF THIS PLAN SHEET.

TRAFFIC STRIPES, PAVEMENT MARKING AND PAVEMENT MARKERS

SHEET No.	STATION	DETAIL No. STATION LENGTH	REMOVE THERMO PLASTIC TRAFFIC STRIPE	REMOVE YELLOW THERMO PLASTIC TRAFFIC STRIPE	THERMOPLASTIC TRAFFIC STRIPE					REMOVE PAVEMENT MARKERS	PAVEMENT MARKER				REMOVE THERMO PLASTIC PAVEMENT MARKING	THERMOPLASTIC PAVEMENT MARKING		
					13M	25, 25A	27B, 36A, 36B	36, 36A, 36B, 38B	37		NON-REFLECTIVE	RETROREFLECTIVE						
					4'' (BROKEN 36-12)	4'' SOLID YELLOW	4'' SOLID WHITE	8'' SOLID WHITE	8'' (BROKEN 12-3)		TYPE A	TYPE C	TYPE G	TYPE H		ARROWS	WORDS	12'' SOLID WHITE
		FT	LF							EA					SQFT			
PD-4, PD-6	F3R 250+75 TO 260+75	1000	4000	1000	2000	1000	1000	1000		315	168		126	21				
PD-6	F3R 260+75 TO 261+85	110	660	110	330	110	110	220		58	36		19	3	48			48
PD-6	G1 64+00 TO 62+57.32	145	290	145	145	145	145			28	16		4	8				
PD-7	G3 64+58.67 TO 68+20	365	365	365		365	365			16				16	105			105
PD-6, PD-7	F3R 261+85 TO 268+25	640	1920	640	1280	640	640			154	112		28	14				
PD-7	F3R 268+25 TO 271+00	275	1375	275	550	275	550	275		84	48		24	12	60			60
PD-7	F3R 271+00 TO 274+90	390	1560	390	1170	390	390			144	108		27	9				
PD-7, PD-8	F3R 274+90 TO 286+00	1110	4440	1110	3330	1110			1110	462	288	76	74	24				
PD-7, PD-8	F3R 286+00 TO 287+60	160	640	160	480	160		160		78	48		26	4				
PD-7, PD-8	F3R 287+60 TO 290+10	250	1250	250	750	250		500		118	72		40	6	96			96
PD-8, PD-9	F3R 290+10 TO 292+00	190	570	190	380	190	190			44	32		8	4				
PD-8, PD-9	F3L 291+35 TO 290+00	135	405	135	270	135	135			33	24		6	3				
PD-8, PD-9	K2 94+32.54 TO 89+95	440	880	440	440	440	440			69	40		10	19				
PD-9	K2 93+84 TO 93+66	18													42	42		
PD-9	K2 92+84 TO 92+66	18													42	42		
PD-8	K2 91+84 TO 91+66	18													42	42		
PD-8	F3L 290+00 TO 285+40	460	2300	460	920	460	920	460		130	80		40	10				
PD-7, PD-8	F3L 285+40 TO 271+65	1375	5500	1375	2750	1375	1375		1375	413	232	92	60	29				
PD-7	F3L 271+65 TO 268+45	320	1280	320	640	320	320	320		105	56		42	7				
PD-7	F3L 268+45 TO 267+00	145	870	145	435	145	145	290		78	48		26	4	32			32
PD-6, PD-7	G4 66+95 TO 62+43.45	455	910	455	455	455	455			70	40		10	20				
PD-6, PD-7	G2A 63+67.91 TO 58+95	470	940	470	470	470	470			70	40		10	20				
PD-6	G2A 61+20 TO 61+02	18													42	42		
PD-6	G2A 60+20 TO 60+02	18													42	42		
PD-6	G2A 59+20 TO 59+02	18													42	42		
PD-6, PD-7	F3L 267+00 TO 258+95	805	2415	805	1610	805	805			187	136		34	17				
PD-6	F3L 258+95 TO 257+40	155	775	155	310	155	310	155		54	32		15	7	16			16
PD-6	F3L 257+40 TO 254+00	340	1360	340	680	340	340		340	114	64	24	18	8				
PD-4, PD-6	F3L 254+00 TO 249+95	405	1620	405	810	405	405	405		133	72		52	9				
PD-6	F3L 253+70 TO 253+62	8													19		19	
PD-6	F3L 253+30 TO 253+22	8													22		22	
PD-6	F3L 252+92 TO 252+74	8													19		19	
PD-6	F3L 252+52 TO 252+44	8													22		22	
PD-4	F3L 249+95 TO 248+35	160	960	160	480	160	160	320		78	48		26	4	48			48
PD-4, PD-5	F3L 248+35 TO 237+42.75	1091	3278	1093	2185	1093	1093			253	184		46	23				
PD-4, PD-5	F2 237+42.75 TO 235+70	173	1038	173	519	173	346	173		72	48		20	4	12			12
PD-5	F2 235+70 TO 227+55	815	3260	815	2445	815	815			272	204		51	17				
SUBTOTAL			44861	12381	25834	12381	11924	4278	2825	3632	2276	192	842	322	751	252	82	417
SHEET TOTAL			44861	12381	25834	24305		4278	2825	3632	2276	1356			751	751		
TOTAL FROM PDQ-1			42488	15937	15589	32533		4418	5885	2865	1368	1497			1194	1194		
GRAND TOTAL			87349	28318	41423	56838		8696	8710	6497	3644	2853			1945	1945		

PAVEMENT DELINEATION QUANTITIES

PDQ-2

STATE OF CALIFORNIA - DEPARTMENT OF TRANSPORTATION
DESIGN
Caltrans

REVISED BY	DATE REVISED
MH	8/19/09

CALCULATED-DESIGNED BY: MAXIM HOVANESSIAN
CHECKED BY: MAXIM HOVANESSIAN
FUNCTIONAL SUPERVISOR: ABOLFAZL EMADZADEH

LAST REVISION 08-25-09
DATE PLOTTED => 14-JAN-2010
TIME PLOTTED => 13:17

Dist	COUNTY	ROUTE	POST MILES TOTAL PROJECT	SHEET No.	TOTAL SHEETS
04	SF	80,101	L3.8/5.0, 4.1/5.0	84	136

Lily Ting 8-26-09
REGISTERED CIVIL ENGINEER DATE

1-11-10
PLANS APPROVAL DATE

REGISTERED PROFESSIONAL ENGINEER Lily Y. Ting No. 37330 Exp. 6-30-10 CIVIL STATE OF CALIFORNIA

THE STATE OF CALIFORNIA OR ITS OFFICERS OR AGENTS SHALL NOT BE RESPONSIBLE FOR THE ACCURACY OR COMPLETENESS OF SCANNED COPIES OF THIS PLAN SHEET.

FOR ACCURATE RIGHT OF WAY AND ACCESS DATA, CONTACT RIGHT OF WAY ENGINEERING AT THE DISTRICT OFFICE.

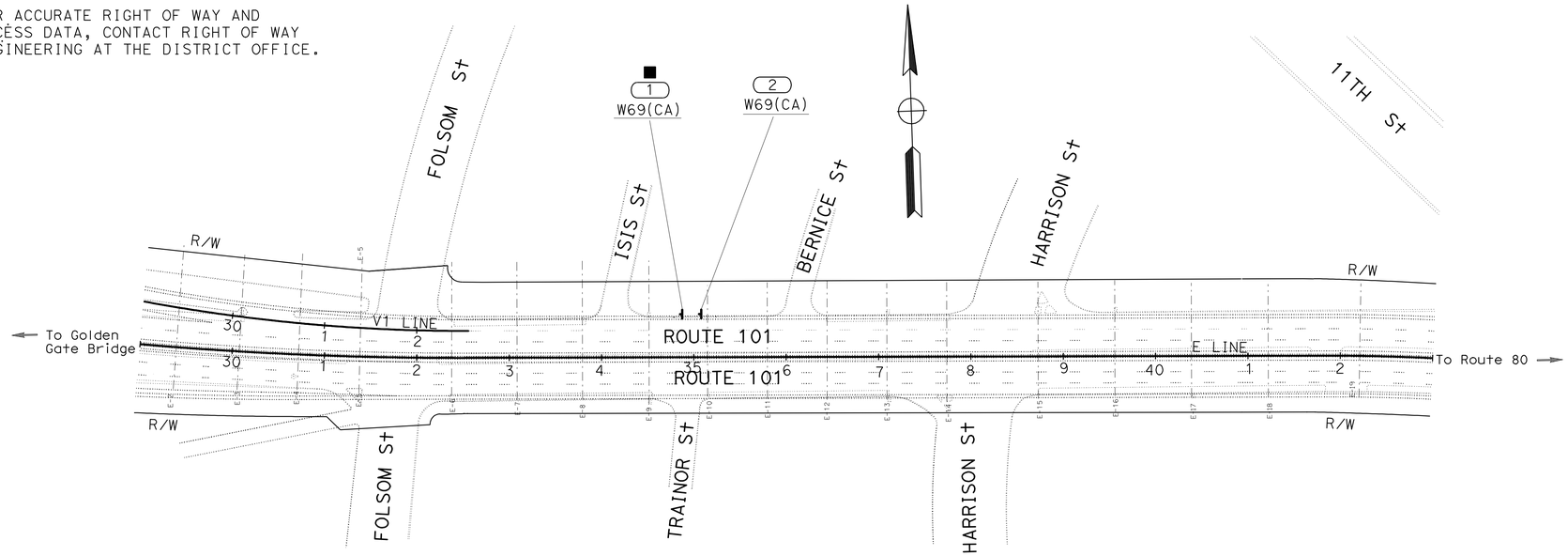

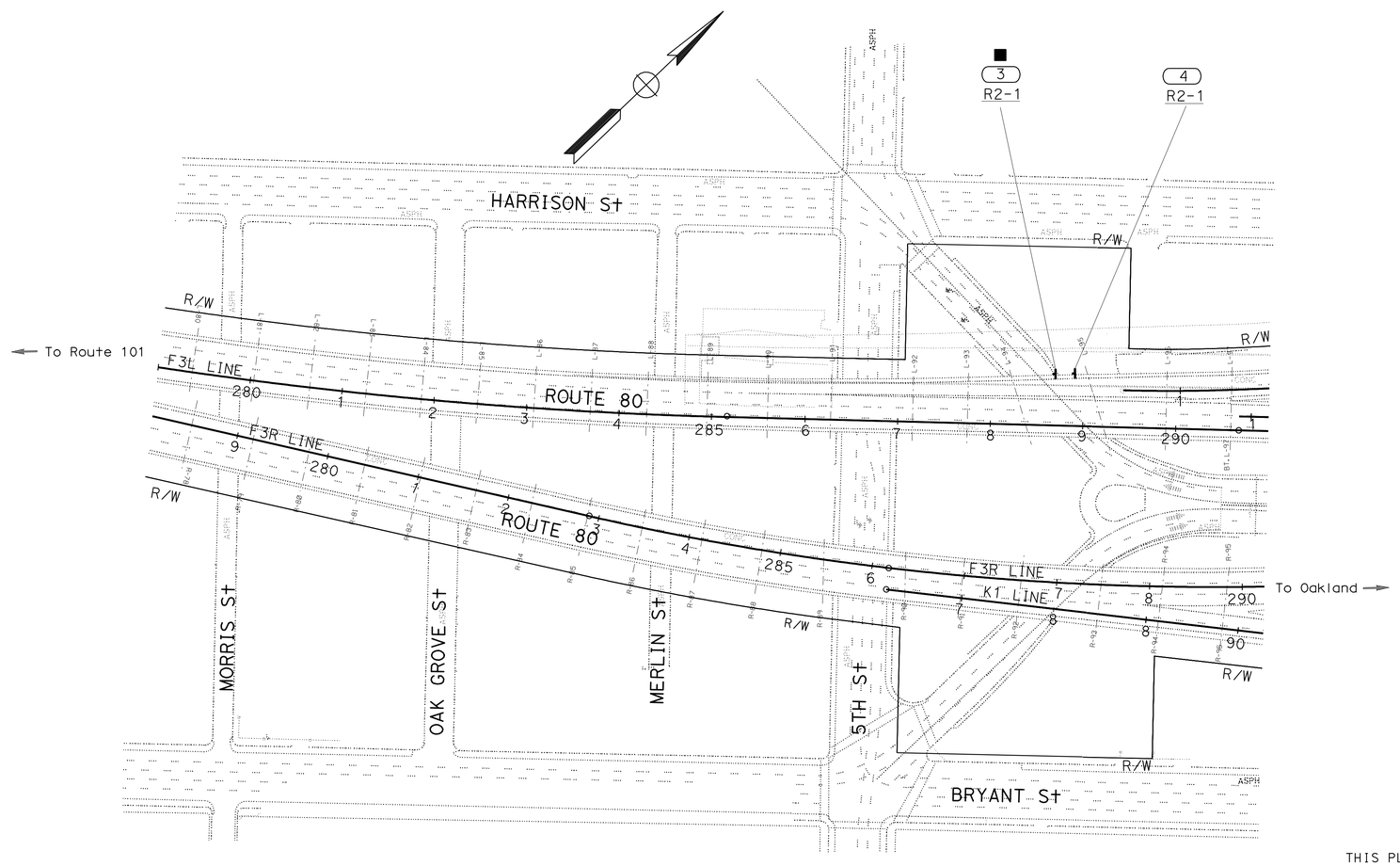

LEGEND:

(No.) ROADSIDE SIGN NUMBER
■ REMOVE ROADSIDE SIGN

NOTE:

1. EXACT SIGN LOCATIONS TO BE DETERMINED BY THE ENGINEER.

THIS PLAN ACCURATE FOR SIGN WORK ONLY

SIGN PLAN

NO SCALE

S-1

REVISED BY	DATE REVISED
LT	8/26/09

CALCULATED-DESIGNED BY: LILY L. TING
CHECKED BY: ULICES VEGA
FUNCTIONAL SUPERVISOR: JERILYN STRUVEN

STATE OF CALIFORNIA - DEPARTMENT OF TRANSPORTATION
Caltrans TRAFFIC

LAST REVISION 08-26-09 | DATE PLOTTED => 14-JAN-2010 | TIME PLOTTED => 13:17

Dist	COUNTY	ROUTE	POST MILES TOTAL PROJECT	SHEET No.	TOTAL SHEETS
04	SF	80,101	L3.8/5.0, 4.1/5.0	85	136

Lily Ting 8-26-09
REGISTERED CIVIL ENGINEER DATE

1-11-10
PLANS APPROVAL DATE

REGISTERED PROFESSIONAL ENGINEER Lily Y. Ting No. 37330 Exp 6-30-10 CIVIL STATE OF CALIFORNIA

THE STATE OF CALIFORNIA OR ITS OFFICERS OR AGENTS SHALL NOT BE RESPONSIBLE FOR THE ACCURACY OR COMPLETENESS OF SCANNED COPIES OF THIS PLAN SHEET.

ABBREVIATIONS:

L LENGTH OF SIGN
D DEPTH OF SIGN

ROADSIDE SIGN

SIGN No.	CODE	PANEL SIZE (L x D)	METAL (RAIL MOUNTED SIGN)	REMOVE ROADSIDE SIGN (METAL POST)	REMARKS
		(INCH x INCH)	LB	EA	
1	W69(CA)	60 x 60		1	END FREEWAY 1/2 MILE, RAIL MOUNTED
2	W69(CA)	60 x 60	324		END FREEWAY 1/2 MILE
3	R2-1	48 x 60		1	SPEED LIMIT 50, RAIL MOUNTED
4	R2-1	48 x 60	263		SPEED LIMIT 50
TOTAL			587	2	

SIGN PANEL SUMMARY

SIGN NUMBER	SIGN CODE	SIGN SIZE (L x D)	SIGN AREA	NUMBER OF SIGNS	SINGLE FACED	DOUBLE FACED	BACKGROUND		LEGEND		PROTECTIVE OVERLAY		ROADSIDE SIGNS SINGLE SHEET ALUMINUM SIGN					DESCRIPTION
													FRAMED ALUMINUM		UNFRAMED ALUMINUM			
							SHEETING COLOR	RETROREFLECTIVE ASTM TYPE	SHEETING COLOR	RETROREFLECTIVE ASTM TYPE	STANDARD	PREMIUM	0.063''	0.080''	0.063''	0.080''	0.134''	
		INCH x INCH	SQFT										SQFT					
2	W69(CA)	60 x 60	25	1	X		YELLOW	III	BLACK	0		X		25				END FREEWAY 1/2 MILE
4	R2-1	48 x 60	20	1	X		WHITE	III	BLACK	0		X				20		SPEED LIMIT 50
TOTAL														25		20		

CALIFORNIA SIGN CODES ARE DESIGNATED BY (CA), OTHERWISE, FEDERAL CODES ARE SHOWN

SIGN QUANTITIES

SQ-1

REVISED BY	LT
DATE REVISED	8/26/09
LILY L. TING	
ULICES VEGA	
CALCULATED-DESIGNED BY	
CHECKED BY	
FUNCTIONAL SUPERVISOR	
JERILYN STRUVEN	

STATE OF CALIFORNIA - DEPARTMENT OF TRANSPORTATION
Caltrans TRAFFIC

LAST REVISION 08-26-09
DATE PLOTTED => 14-JAN-2010
TIME PLOTTED => 13:17

Dist	COUNTY	ROUTE	POST MILES TOTAL PROJECT	SHEET No.	TOTAL SHEETS
04	SF	80,101	L3.8/5.0, 4.1/5.0	86	136

M. Hovhanessian 8-19-09
REGISTERED CIVIL ENGINEER DATE

1-11-10
PLANS APPROVAL DATE

REGISTERED PROFESSIONAL ENGINEER M. Hovhanessian No. 42284 Exp. 3-31-10 CIVIL STATE OF CALIFORNIA

THE STATE OF CALIFORNIA OR ITS OFFICERS OR AGENTS SHALL NOT BE RESPONSIBLE FOR THE ACCURACY OR COMPLETENESS OF SCANNED COPIES OF THIS PLAN SHEET.

TEMPORARY CHAIN LINK FENCE (CL-6)

SHEET No.	STAGE / PHASE	STATION	LENGTH LF
SC-3	STAGE 2 PHASE 1	20' Lt V2 20+75 TO 23+40	265
SC-3	STAGE 2 PHASE 1	25' Rt V2 20+65 TO 24+60	395
SC-5	STAGE 3 PHASE 1	45' Rt EB E 46+05 TO 46+40	35
SC-5	STAGE 3 PHASE 1	45' Rt EB E 46+40 TO 30' Rt 46+42.5	20
SC-5	STAGE 3 PHASE 1	30' Rt EB E 46+70 TO 50' Rt 46+70	20
SC-5	STAGE 3 PHASE 1	50' Rt EB E 46+70 TO 65' Rt 47+95	130
SC-5	STAGE 3 PHASE 1	65' Rt EB E 47+95 TO 45' Rt 49+40	155
SC-5	STAGE 3 PHASE 1	60' Rt EB E 50+65 TO 70' Rt 52+30	165
SC-5	STAGE 3 PHASE 1	70' Rt EB E 52+30 TO 15' Rt 52+30	55
SC-5	STAGE 3 PHASE 1	70' Rt EB E 52+30 TO 85' Rt 53+50	120
SC-5	STAGE 3 PHASE 1	85' Rt EB E 53+50 TO 60' Rt 53+85	45
SC-7	STAGE 4 PHASE 1,2	50' Lt F3R 228+80 TO 50' Lt 230+05	120
SC-6	STAGE 4 PHASE 1,2	35' Lt F3R 242+95 TO 70' Lt 245+20	230
SC-6	STAGE 4 PHASE 1,2	90' Lt F3R 245+65 TO 145' Lt 246+70	120
SC-6	STAGE 5, 6	100' Lt F3R 247+45 TO 35' Lt 251+70	405
SC-8	STAGE 5, 6	55' Lt F3R 252+40 TO 40' Lt 255+10	280
SC-8	STAGE 6 PHASE 2	100' Lt F3R 255+20 TO 255+55	35
SC-8	STAGE 6 PHASE 2	100' Lt F3R 255+55 TO 35' Lt 255+55	65
SC-8	STAGE 6 PHASE 2	95' Lt F3R 255+84 TO 45' Lt 255+86	50
SC-8	STAGE 6 PHASE 2	95' Lt F3R 255+84 TO 95' Lt 256+09	25
SC-8	STAGE 6 PHASE 2	95' Lt F3R 256+09 TO 60' Lt 256+11	35
SC-8	STAGE 5 PHASE 1	17.5' Lt F3R 257+12.5 TO 27.5' Lt 258+47.5	140
SC-8	STAGE 6 PHASE 1	192.5' Lt F3R 262+20 TO 100' Lt 263+20	145
SC-8, SC-9	STAGE 6 PHASE 1	10' Lt G4 63+65 TO 35' Lt 63+65	25
SC-8	STAGE 6 PHASE 1	10' Lt G4 63+65 TO 10' Lt 65+25	160
SC-8, SC-9	STAGE 5 PHASE 2	25' Lt F3R 264+65 TO 267+15	255
SC-8, SC-9	STAGE 6 PHASE 1	120' Lt F3R 264+65 TO 267+40	280
SC-9	STAGE 7, 8	160' Lt F3R 271+45 TO 40' Rt 271+45	200
SC-9	STAGE 1 PHASE 1,2	60' Lt F3R 274+55 TO 65' Lt 276+15	165
SC-9, SC-10	STAGE 1 PHASE 1,2	60' Lt F3R 276+90 TO 0' Lt 278+75	190
SC-10	STAGE 1 PHASE 1,2	30' Lt F3R 279+05 TO 35' Lt 280+95	195
SC-10	STAGE 1 PHASE 1,2	65' Lt F3R 281+45 TO 20' Lt 283+45	210
SC-10	STAGE 1 PHASE 1,2	85' Lt F3R 283+70 TO 285+40	170
SC-10, SC-11	STAGE 1 PHASE 2	210' Lt F3R 288+60 TO 190' Lt 293+10	435
SC-11	STAGE 1 PHASE 2	190' Lt F3R 293+10 TO 205' Lt 294+70	155
SC-9	STAGE 8 PHASE 1,2	81' Lt F3R 271+45 TO 51' Lt 274+27	285
SC-9	STAGE 7 PHASE 1,2	61' Lt F3R 268+05 TO 82' Lt 271+45	350
TOTAL			6130

TEMPORARY CRASH CUSHION

SHEET No.	STATION	(EA)
TH-2	EB E 34+01 TO 34+20	1
TH-2	WB E 40+59 TO 40+40	1
TH-2	WB E 37+59 TO 37+40	1
TH-1, TH-2	V1 30+59 TO 30+40	1
TH-3	E4 41+15 TO 40+96	1
TH-3	E5 63+74 TO 63+55	1
TH-4	F3R-L 290+03 TO 290+22	1
TH-5	F3R-R 290+73 TO 290+92	1
TH-5	F3L-R 293+79 TO 293+60	1
TH-4	F3L-L 289+59 TO 289+40	1
TOTAL		10

ROADWAY QUANTITIES

SHEET No.	STATION	HOT MIX ASPHALT (TYPE A) TON
D-1	5.77' Rt V1 28+16.3 TO 9.2' Rt V1 28+29.3	0.60
D-1	11.2' Rt V1 28+30.4 TO 21.8' Rt V1 28+31.8	0.51
D-2	6.5' Lt V1 30+7.8 TO 2.7' Lt V1 29+95.9	0.66
D-2	2.7' Lt V1 29+95.9 TO 7.2' Rt V1 29+97	0.42
D-2	48.50' Lt TO 54.62' Lt E 34+53	0.32
D-2	35.57' Lt E 34+11 TO 55.43' Lt E 34+51	4.03
D-2	49.9' Rt E 34+54.2 TO 53.3' Rt E 34+66.3	0.91
D-2	53.3' Rt E 34+66.3 TO 61.3' Rt E 34+94.1	2.12
D-2	50.2' Lt E 37+8.3 TO 36+93.7	0.66
D-2	50.2' Lt E TO 35.8' Lt E 36+93.7	0.57
D-2	47.3' Rt E 37+9.2 TO 38.2' Rt E 36+99	0.66
D-2	38.2' Rt E 36+99 TO 33.9' Rt E 37+9.2	0.42
D-2	52.4' Lt E 39+58.8 TO 39+72.9'	0.66
D-2	52.4' Lt E TO 38.6' Lt E 39+72.9	0.47
D-2	44.7' Rt E 40+42.9 TO 40+56.7	0.57
D-2	44.7' Rt E TO 31.5' Rt E 40+56.7	0.51
D-2, D-3	42.9' Rt E 43+20.4 TO 34.8' Rt E 43+3.0	1.08
D-2, D-3	34.8' Rt E 43+3.0 TO 28.8' Rt E 42+91.7	0.23
D-4	9.9' Rt E2 39+80.1 TO 8.7' Rt E2 39+16.6	0.28
D-4	7.0' Rt E2 40+76 TO 16.6' Rt E2 40+85.9	0.70
D-4	16.6' Rt E2 40+85.9 TO 2.2' Rt E2 40+94.3	0.66
D-4	7.9' Lt E5 62+64.6 TO 7.5' Lt E5 62+52.5	0.66
D-4	7.5' Lt E5 62+52.5 TO 6.7' Rt E5 62+52.5	0.70
D-4	9.0' Lt E5 63+27.2 TO 20.9' Lt E5 63+26.0	0.57
D-4	20.9' Lt E5 63+26.0 TO 9' Lt E5 63+27.2	0.76
D-5	22.2' TO 29.6' Lt F3L 284+94.6	0.32
D-5	29.6' Lt F3L 284+94.6 TO 29.2' Lt F3L 285+48.8	3.36
D-5	29.2' Lt F3L 285+48.8 TO 29.4' Lt F3L 285+60.5	0.53
D-5	11.9' Rt F3L 287+30.5 TO 6.1' Lt F3L 287+43.5	1.06
D-5	6.1' Lt F3L 287+43.5 TO 31.6' Lt F3L 287+61.6	1.53
D-5	46.1' Lt F3L 287+30.5 TO 46.9' Lt F3L 287+61.6	1.47
D-5	31.6' Lt TO 46.9' Lt F3L 287+61.6	0.74
D-5	46.9' Lt F3L 287+61.6 TO 48.9' Lt F3L 288+11.1	2.51
TOTAL		31.25

TEMPORARY RAILING (TYPE K)

SHEET No.	LOCATION	LENGTH (LF)
TH-2	EB E 34+20 TO 37+40	320
TH-2	WB E 40+40 TO 39+25	115
TH-2	WB E 37+40 TO 34+20	320
TH-1, TH-2	WB V1 30+40 TO 27+80	260
TH-3	SB E4 40+96 TO 39+45	151
TH-3	SB E5 63+55 TO 62+40	115
TH-5	EB F3R-L 290+22 TO 292+30	208
TH-5	EB F3R-R 290+92 TO 292+90	198
TH-4, TH-5	WB F3L-L 293+60 TO 286+00	760
TH-4	WB F3L-R 289+40 TO 285+30	410
TOTAL		2857

ROADWAY EXCAVATION (TYPE Z-2) (AERIALLY DEPOSITED LEAD)

SHEET No.	STATION	ITEM	CY
D-1, D-2, D-3	E 28+00 TO 44+00	ROADWAY EXCAVATION	240
D-4	E2 40+50 TO 41+00		
D-4	ES 62+00 TO 63+50		
D-5, D-6	F3L 284+00 TO 293+00		
TOTAL			240

SUMMARY OF QUANTITIES

Q-1

REVISED BY	DATE REVISED
MH	8/19/09

CALCULATED-DESIGNED BY: MAXIM HOVHANESSIAN
CHECKED BY: MAXIM HOVHANESSIAN

FUNCTIONAL SUPERVISOR: ABOLFAZL EMADZADEH

STATE OF CALIFORNIA - DEPARTMENT OF TRANSPORTATION
Caltrans DESIGN

LAST REVISION 08-26-09
DATE PLOTTED => 14-JAN-2010
TIME PLOTTED => 13:17

Dist	COUNTY	ROUTE	POST MILES TOTAL PROJECT	SHEET No.	TOTAL SHEETS
04	SF	80,101	L3.8/5.0, 4.1/5.0	87	136

REGISTERED ELECTRICAL ENGINEER 8/19/09 DATE

1-11-10
PLANS APPROVAL DATE

REGISTERED PROFESSIONAL ENGINEER Lindy F. Cabugao No. 17232 Exp 6-30-10 ELECT STATE OF CALIFORNIA

THE STATE OF CALIFORNIA OR ITS OFFICERS OR AGENTS SHALL NOT BE RESPONSIBLE FOR THE ACCURACY OR COMPLETENESS OF SCANNED COPIES OF THIS PLAN SHEET.

PROJECT NOTES:

1. EXISTING MVDS TO REMAIN IN PLACE
2. EXISTING MVDS TO BE RELOCATED
   SEE ES-6A FOR TYPE 21 FOUNDATION DETAILS
3. EXISTING 1½"C, 2#12
4. EXISTING 1½"C, 2#12, 2dlc
5. EXISTING 1½"C, 2dlc
6. REMOVE EXISTING ABANDONED JUNCTION BOX
7. EXISTING 1½"C, 4#6, 4#12
8. EXISTING 2"C, 2#4, 4#6 2#12
9. EXISTING 1½"C, 2#6, 2dlc
10. EXISTING MODEL 334 CONTROL CABINET
11. EXISTING 1½"C, 5#14
12. EXISTING 3"C, 5#8 (120 V CALL BOX POWER) AND 9-6#16 CONDUCTOR CABLES
13. EXISTING 1½"C, TELEPHONE CABLES
14. EXISTING 1½"C, 2#6, 2 dlc, TELEPHONE CABLES
15. EXISTING 1½"C, 2#12
16. EXISTING TYPE 111-AF SERVICE EQUIPMENT
17. INSTALL 1½" C, 3#6 (HM), 2#14 (TS)
18. INSTALL 1½" C, TYPE 4, 3#6 (HM), 2#14 (TS)
19. INSTALL 1½"C, 2#12
20. INSTALL 1½"C, 2#10 (SIGN), 2#14 (TS), 5#14 (PEC)
21. INSTALL 1½" C, TYPE 4, 2#10 (SIGN), 2#14 (TS), 5#14 (PEC)
22. EXISTING 3#6 (HM), 2#14 (TS)
23. EXISTING 2 PEU
24. EXISTING 1½"C, 3#2
25. EXISTING 3#6 (HM), 2#14 (TS), 2#10 (SIGN), 5#14 (PEC)

GENERAL NOTES

1. DIMENSIONS SHOWN FOR EXISTING STRUCTURES ARE APPROXIMATE.
2. SOME EXISTING CONDUITS AND EQUIPMENT ARE NOT SHOWN IN PLANS.
3. FOR THE SYSTEMS REQUIRING CONTINUITY OF OPERATION OR LIMITED/MAXIMUM DOWN TIME, THE REMOVAL OR MODIFICATION OF EXISTING CONDUITS, CONDUCTORS OR EQUIPMENT WILL BE PERFORMED ONLY WHEN NEW CONDUITS, CONDUCTORS OR EQUIPMENT ARE INSTALLED AND READY TO REPLACE OR SPLICE TO EXISTING SYSTEMS.
4. MINIMUM 48 HOURS ADVANCE NOTICE SHALL BE GIVEN TO THE ENGINEER PRIOR TO WORKING ON ANY TOS SYSTEM.
5. EQUIPMENT TO BE REMOVED AND REINSTALLED SHALL BE SECURED AT THE CONTRACTOR'S RESPONSIBILITY BEFORE THE REINSTALLATION.

INDEX

E-1 ELECTRICAL INDEX, NOTES, SYMBOLS AND ABBREVIATIONS
E-2 TRAFFIC OPERATIONS SYSTEM
E-3 LIGHTING AND SIGN ILLUMINATION SYSTEM

ABBREVIATIONS AND EQUIPMENT DESIGNATION

PROPOSED	EXISTING	
HM		HIGH MAST LIGHTING
ID		IDENTIFICATION
JB	jb	JUNCTION BOX
MVDS		MICROWAVE VEHICLE DETECTOR SENSOR
TB		TERMINAL BLOCK
TC	tc	TELEPHONE CABLE
TOS		TRAFFIC OPERATIONS SYSTEM
TS		TEST SWITCH

SYMBOLS

ER	ier	EXPOSED CONDUIT RISER
		MVDS DETECTION ZONE
		EXISTING HIGH MAST LIGHTING
(JB)	(jb)	JUNCTION BOX TYPE 1: 6"x6"x6"

ELECTRICAL INDEX, NOTES, SYMBOLS AND ABBREVIATIONS

E-1

STATE OF CALIFORNIA - DEPARTMENT OF TRANSPORTATION
Caltrans ELECTRICAL

FUNCTIONAL SUPERVISOR: KENNETH XU
CALCULATED-DESIGNED BY: LINDY CABUGAO
CHECKED BY: KENNETH XU
REVISED BY: LC
DATE REVISED: 8/19/09

LAST REVISION 11-16-09 | DATE PLOTTED => 14-JAN-2010 | TIME PLOTTED => 13:18

FOR ACCURATE RIGHT OF WAY AND
ACCESS DATA, CONTACT RIGHT OF WAY
ENGINEERING AT THE DISTRICT OFFICE.

Dist	COUNTY	ROUTE	POST MILES TOTAL PROJECT	SHEET No.	TOTAL SHEETS
04	SF	80,101	L3.8/5.0, 4.1/5.0	88	136

REGISTERED ELECTRICAL ENGINEER 8/19/09 DATE

1-11-10
PLANS APPROVAL DATE

REGISTERED PROFESSIONAL ENGINEER
Lindy F. Cabugao
No. 17232
Exp 6-30-10
ELECT
STATE OF CALIFORNIA

THE STATE OF CALIFORNIA OR ITS OFFICERS OR AGENTS SHALL NOT BE RESPONSIBLE FOR THE ACCURACY OR COMPLETENESS OF SCANNED COPIES OF THIS PLAN SHEET.

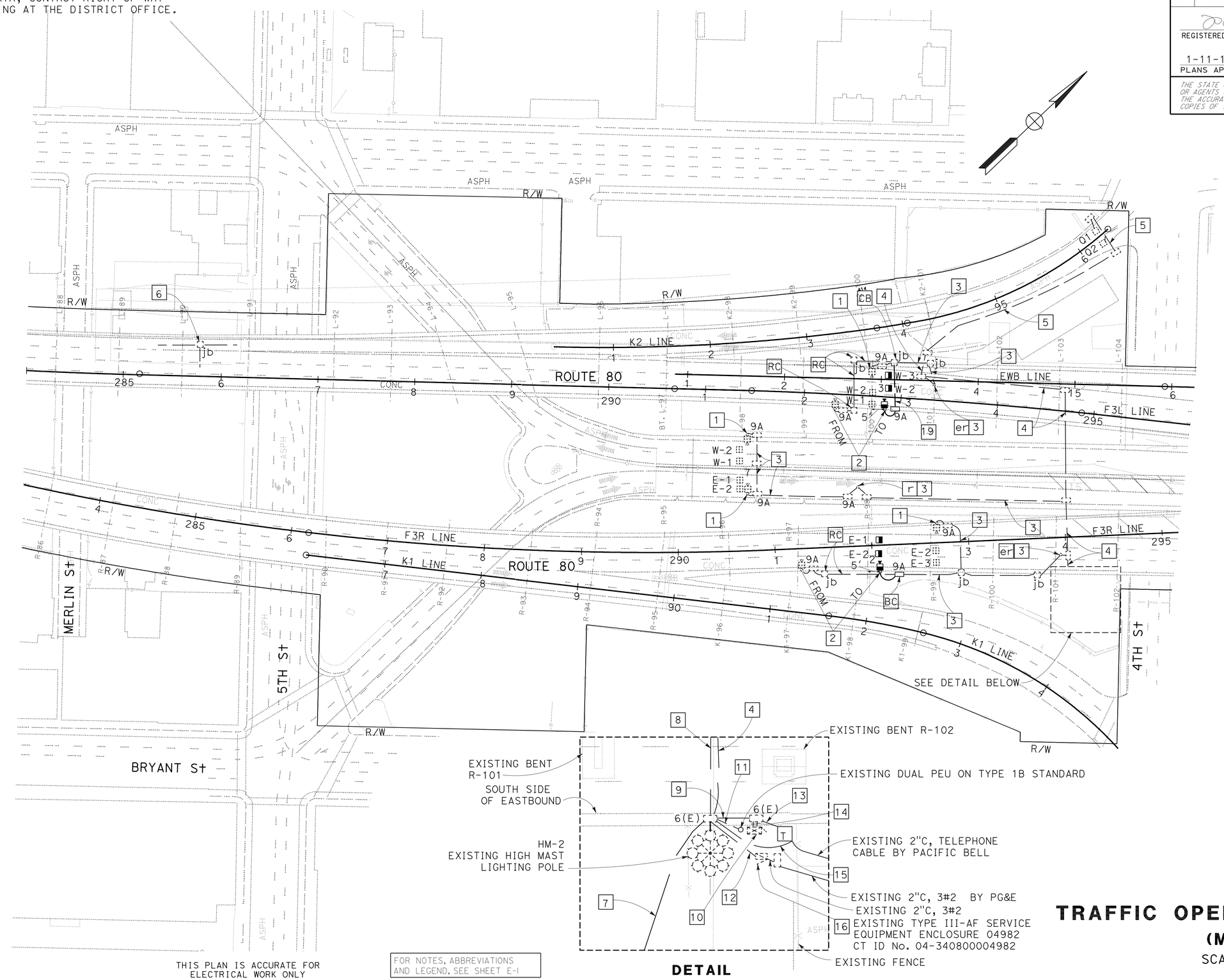

THIS PLAN IS ACCURATE FOR ELECTRICAL WORK ONLY

FOR NOTES, ABBREVIATIONS AND LEGEND, SEE SHEET E-1

DETAIL

TRAFFIC OPERATIONS SYSTEM
(MODIFY)
SCALE: 1''= 50'

E-2

CALCULATED-DESIGNED BY	LC
CHECKED BY	KENNETH XU
REVISED BY	LC
DATE REVISED	8/19/09
FUNCTIONAL SUPERVISOR	KENNETH XU

STATE OF CALIFORNIA - DEPARTMENT OF TRANSPORTATION
Caltrans
ELECTRICAL

LINDY CABUGAO
KENNETH XU

LAST REVISION 11-16-09 | DATE PLOTTED => 14-JAN-2010 | TIME PLOTTED => 13:18

BORDER LAST REVISED 4/11/2008 | RELATIVE BORDER SCALE IS IN INCHES 0 1 2 3 | USERNAME => trmikesl | DGN FILE => 42a140ua002.dgn | CU 04242 | EA 2A1401

Dist	COUNTY	ROUTE	POST MILES TOTAL PROJECT	SHEET No.	TOTAL SHEETS
04	SF	80,101	L3.8/5.0, 4.1/5.0	89	136

REGISTERED ELECTRICAL ENGINEER 8/19/09 DATE

1-11-10
PLANS APPROVAL DATE

REGISTERED PROFESSIONAL ENGINEER Lindy F. Cabugao No. 17232 Exp 6-30-10 ELECT STATE OF CALIFORNIA

THE STATE OF CALIFORNIA OR ITS OFFICERS OR AGENTS SHALL NOT BE RESPONSIBLE FOR THE ACCURACY OR COMPLETENESS OF SCANNED COPIES OF THIS PLAN SHEET.

FOR ACCURATE RIGHT OF WAY AND ACCESS DATA, CONTACT RIGHT OF WAY ENGINEERING AT THE DISTRICT OFFICE.

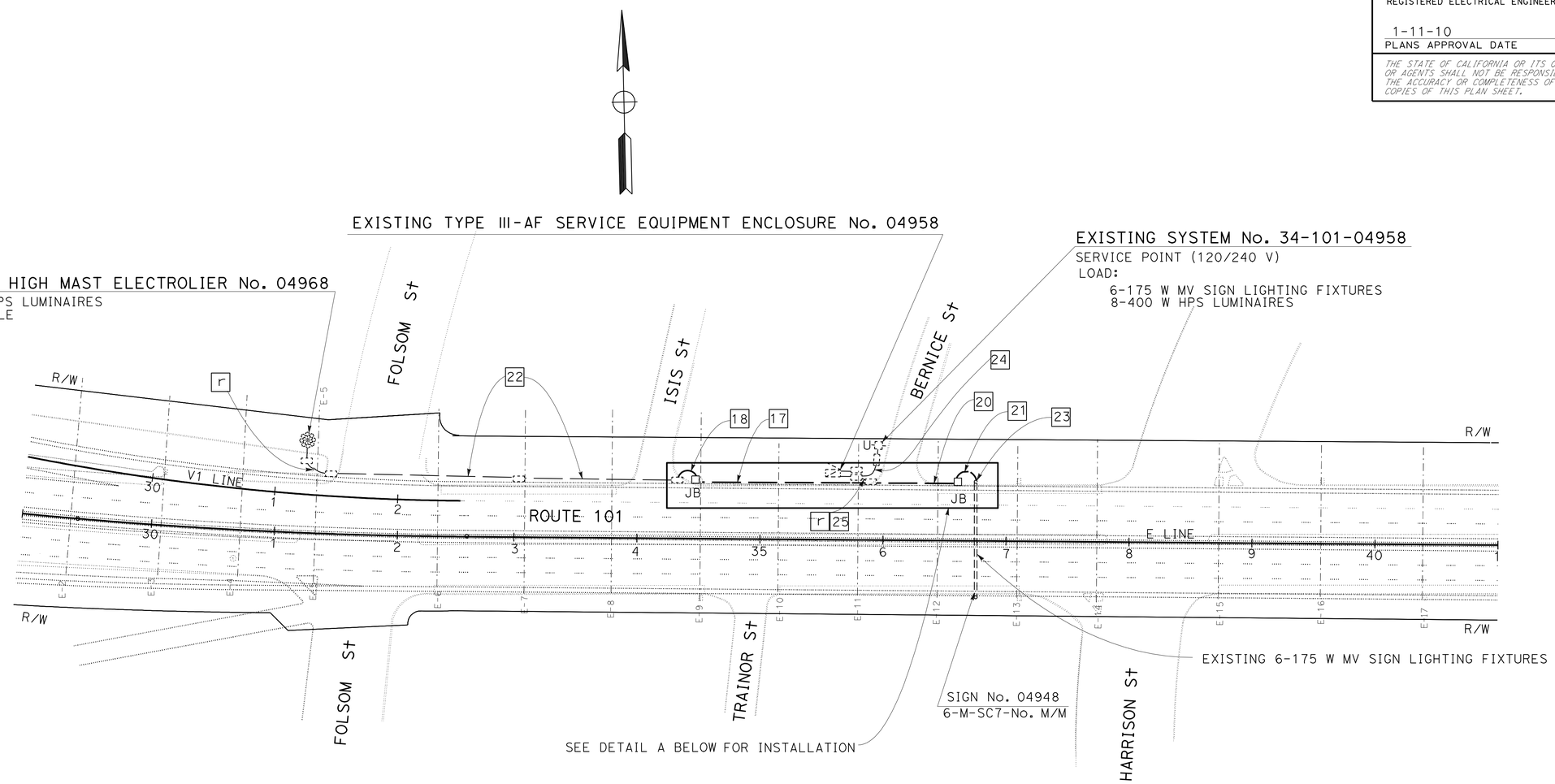

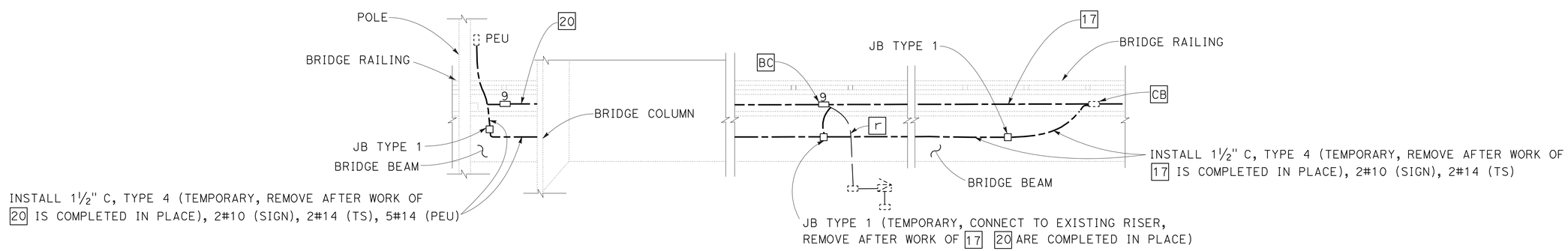

DETAIL A (SIDE PLAN)

THIS PLAN IS ACCURATE FOR ELECTRICAL WORK ONLY

FOR NOTES, ABBREVIATIONS AND LEGEND, SEE SHEET E-1

LIGHTING AND SIGN ILLUMINATION SYSTEM
(MODIFY)

SCALE: 1'' = 50'

E-3

REVISED BY	LC
DATE REVISED	8/19/09
CALCULATED-DESIGNED BY	LINDY CABUGAO
CHECKED BY	KENNETH XU
FUNCTIONAL SUPERVISOR	KENNETH XU

STATE OF CALIFORNIA - DEPARTMENT OF TRANSPORTATION
Caltrans
ELECTRICAL

LAST REVISION 11-16-09 | DATE PLOTTED => 14-JAN-2010 | TIME PLOTTED => 13:18

DIST	COUNTY	ROUTE	POST MILES TOTAL PROJECT	SHEET NO.	TOTAL SHEETS
04	SF	80,101	L3.8/5.0, 4.1/5.0	90	136

Randell D. Hiatt
REGISTERED CIVIL ENGINEER

June 6, 2008
PLANS APPROVAL DATE

REGISTERED PROFESSIONAL ENGINEER
Randell D. Hiatt
No. C50200
Exp. 6-30-09
CIVIL
STATE OF CALIFORNIA

The State of California or its officers or agents shall not be responsible for the accuracy or completeness of electronic copies of this plan sheet.

To accompany plans dated 1-11-10

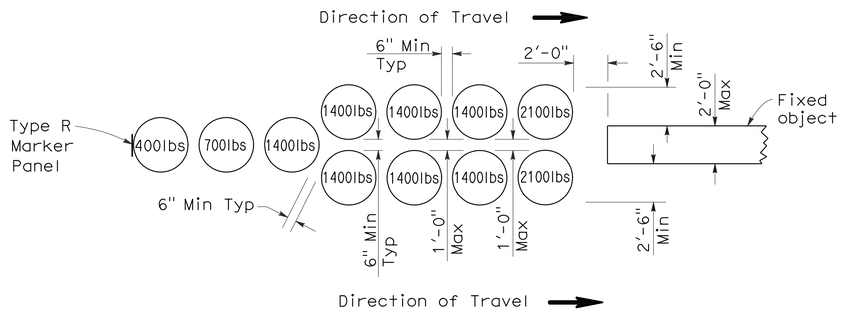

ARRAY 'U11'

Approach speed less than 45 mph

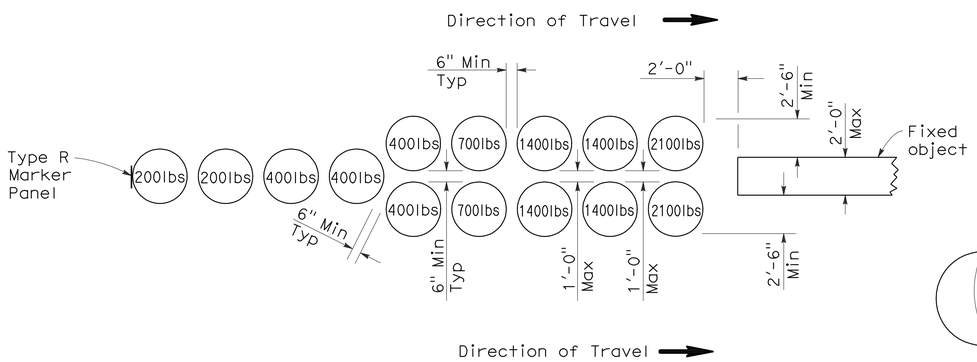

ARRAY 'U14'

Approach speed 45 mph or more

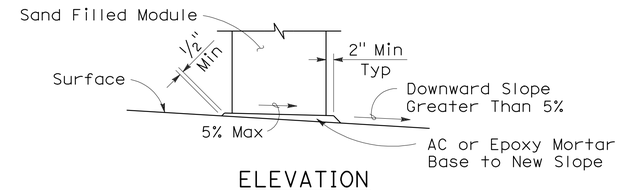

ELEVATION

SLOPED SEAT DETAIL

(See Note 4)

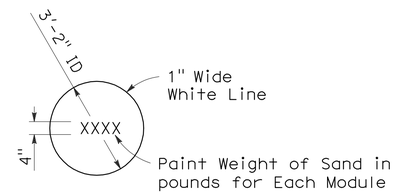

PAINTING DETAIL

(See Note 5)

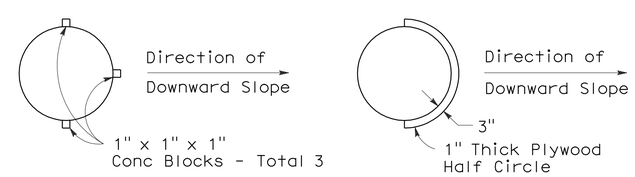

ALTERNATIVE 1 ALTERNATIVE 2

PLAN

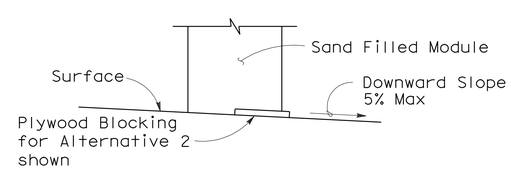

ELEVATION

BRIDGE DECK MODULE BLOCKING DETAILS

(See Note 6)

NOTES:

1. (XXX) Indicates module location and mass of sand in pounds for each module. Module spacing is based on the greater diameter of the modules.
2. All sand weights are nominal.
3. Each module is to contain amount of sand indicated, supported according to the manufacturer's instructions.
4. Modules shall be placed on asphalt concrete, epoxy mortar or concrete surface. Modules to be placed on surfacing with greater than 5% downward slope shall be seated as shown.
5. Mass of sand and outline of each module shall be painted on the surface at each module location.
6. Module blocking, epoxied to the deck surface, is required for all modules placed on bridge decks. Two acceptable alternatives are shown. Other alternatives recommended by the manufacturer and approved by the Engineer will be accepted.
7. Place the top of the Type R marker panel 1" below the module lid.
8. Approach speeds indicated conform to NCHRP Report criteria.

STATE OF CALIFORNIA
DEPARTMENT OF TRANSPORTATION

CRASH CUSHION, SAND FILLED (UNIDIRECTIONAL)

NO SCALE

RSP A81A DATED JUNE 6, 2008 SUPERSEDES STANDARD PLAN A81A
DATED MAY 1, 2006 - PAGE 99 OF THE STANDARD PLANS BOOK DATED MAY 2006.

REVISED STANDARD PLAN RSP A81A

2006 REVISED STANDARD PLAN RSP A81A

DIST	COUNTY	ROUTE	POST MILES TOTAL PROJECT	SHEET NO.	TOTAL SHEETS
04	SF	80,101	L3.8/5.0, 4.1/5.0	91	136

Randell D. Hiatt
REGISTERED CIVIL ENGINEER

June 6, 2008
PLANS APPROVAL DATE

REGISTERED PROFESSIONAL ENGINEER
Randell D. Hiatt
No. C50200
Exp. 6-30-09
CIVIL
STATE OF CALIFORNIA

The State of California or its officers or agents shall not be responsible for the accuracy or completeness of electronic copies of this plan sheet.

To accompany plans dated 1-11-10

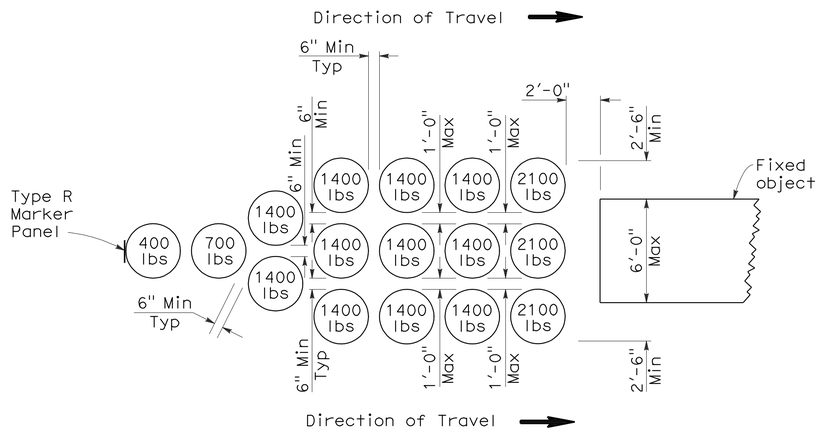

ARRAY 'U16'

Approach speed less than 45 mph

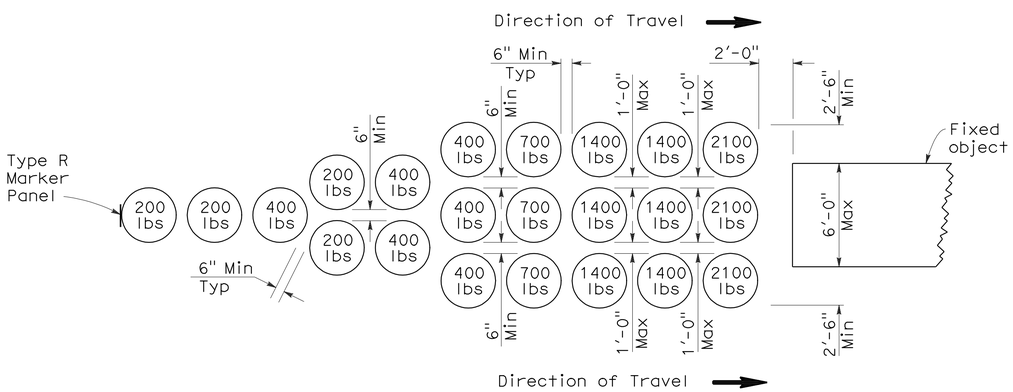

ARRAY 'U21'

Approach speed 45 mph or more

NOTES:

1. (XXX) Indicates module location and weight of sand in pounds for each module. Module spacing is based on the greater diameter of the modules.
2. All sand weights are nominal.
3. Each module is to contain amount of sand indicated, supported according to the manufacturer's instructions.
4. Modules shall be placed on asphalt concrete, epoxy mortar or concrete surface. Modules to be placed on surfacing with greater than 5% downward slope shall be seated as shown.
5. Mass of sand and outline of each module shall be painted on the surface at each module location.
6. Module blocking, epoxied to the deck surface, is required for all modules placed on bridge decks. Two acceptable alternatives are shown. Other alternatives recommended by the manufacturer and approved by the Engineer will be accepted.
7. Place the top of the Type R marker panel 1" below the module lid.
8. Approach speeds indicated conform to NCHRP Report criteria.

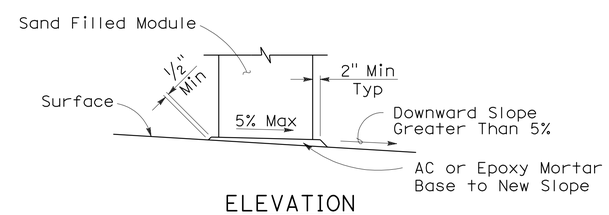

ELEVATION

SLOPED SEAT DETAIL

(See Note 4)

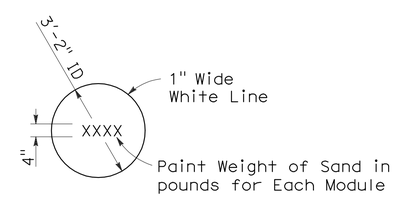

PAINTING DETAIL

(See Note 5)

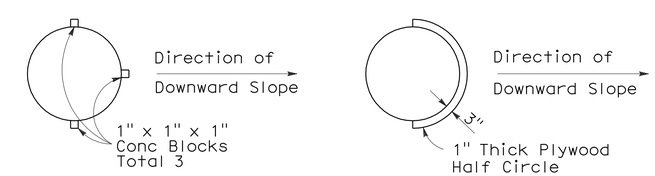

ALTERNATIVE 1

ALTERNATIVE 2

PLAN

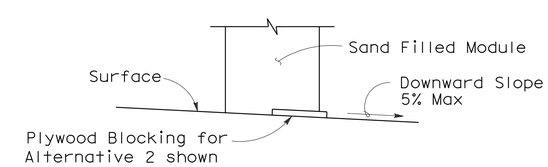

ELEVATION

BRIDGE DECK MODULE BLOCKING DETAILS

(See Note 6)

STATE OF CALIFORNIA
DEPARTMENT OF TRANSPORTATION

CRASH CUSHION, SAND FILLED (UNIDIRECTIONAL)

NO SCALE

RSP A81B DATED JUNE 6, 2008 SUPERSEDES STANDARD PLAN A81B DATED MAY 1, 2006 - PAGE 100 OF THE STANDARD PLANS BOOK DATED MAY 2006.

REVISED STANDARD PLAN RSP A81B

2006 REVISED STANDARD PLAN RSP A81B

5-15-08

DIST	COUNTY	ROUTE	POST MILES TOTAL PROJECT	SHEET NO.	TOTAL SHEETS
04	SF	80,101	L3.8/5.0, 4.1/5.0	92	136

Randell D. Hiatt
REGISTERED CIVIL ENGINEER

June 6, 2008
PLANS APPROVAL DATE

REGISTERED PROFESSIONAL ENGINEER
Randell D. Hiatt
No. C50200
Exp. 6-30-09
CIVIL
STATE OF CALIFORNIA

The State of California or its officers or agents shall not be responsible for the accuracy or completeness of electronic copies of this plan sheet.

To accompany plans dated 1-11-10

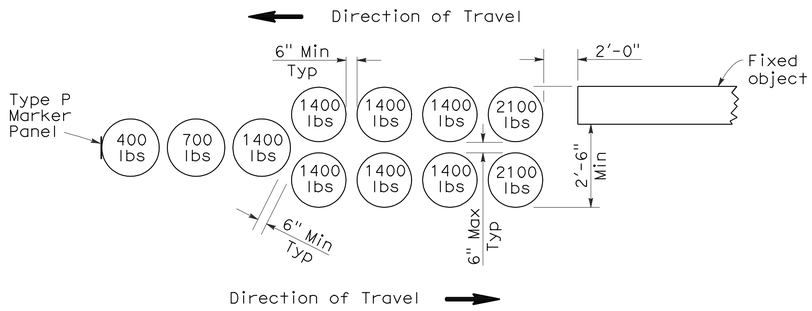

ARRAY 'B11'

Approach speed less than 45 mph

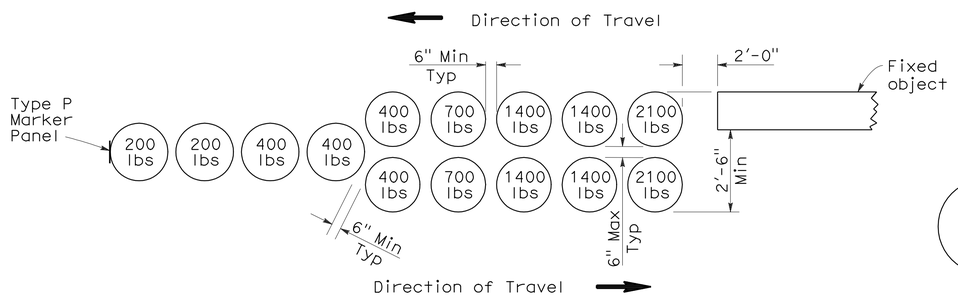

ARRAY 'B14'

Approach speed 45 mph or more

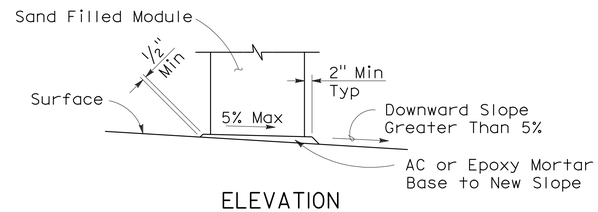

ELEVATION

SLOPED SEAT DETAIL

(See Note 5)

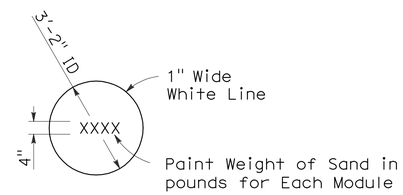

PAINTING DETAIL

(See Note 6)

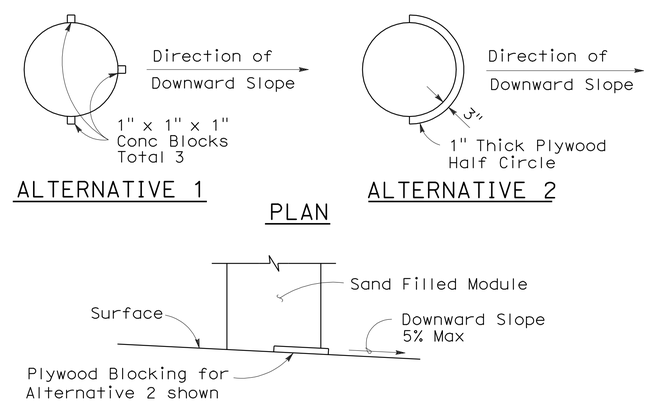

ALTERNATIVE 1

ALTERNATIVE 2

PLAN

ELEVATION

BRIDGE DECK MODULE BLOCKING DETAILS

(See Note 7)

NOTES:

1. (XXX) Indicates module location and weight of sand in pounds for each module. Module spacing is based on the greater diameter of the module.
2. All sand weights are nominal.
3. Each module is to contain amount of sand indicated, supported according to the manufacturer's instructions.
4. Bidirectional crash cushion arrays may be angled toward approaching traffic. Amount of angle not to exceed 10 degrees.
5. Modules shall be placed on asphalt concrete, epoxy mortar or concrete surface. Modules to be placed on surfacing with greater than 5% downward slope shall be seated as shown.
6. Mass of sand and outline of each module shall be painted on the surface at each module location.
7. Module blocking, epoxied to the deck surface, is required for all modules placed on bridge decks. Two acceptable alternatives are shown. Other alternatives recommended by the manufacturer and approved by the Engineer will be accepted.
8. Place the Type P marker panel so that the bottom of the panel is at the bottom of the module.
9. Approach speeds indicated conform to NCHRP Report criteria.

STATE OF CALIFORNIA
DEPARTMENT OF TRANSPORTATION

CRASH CUSHION, SAND FILLED (BIDIRECTIONAL)

NO SCALE

RSP A81C DATED JUNE 6, 2008 SUPERSEDES STANDARD PLAN A81C
DATED MAY 1, 2006 - PAGE 101 OF THE STANDARD PLANS BOOK DATED MAY 2006.

REVISED STANDARD PLAN RSP A81C

2006 REVISED STANDARD PLAN RSP A81C

5-15-08

DIST	COUNTY	ROUTE	POST MILES TOTAL PROJECT	SHEET NO.	TOTAL SHEETS
04	SF	80,101	L3.8/5.0, 4.1/5.0	93	136

Randell D. Hiatt
REGISTERED CIVIL ENGINEER

June 6, 2008
PLANS APPROVAL DATE

REGISTERED PROFESSIONAL ENGINEER
Randell D. Hiatt
No. C50200
Exp. 6-30-09
CIVIL
STATE OF CALIFORNIA

The State of California or its officers or agents shall not be responsible for the accuracy or completeness of electronic copies of this plan sheet.

To accompany plans dated 1-11-10

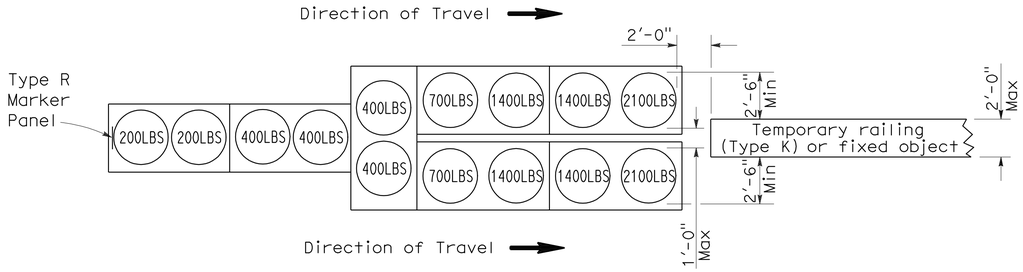

ARRAY 'TU14'

Approach speed 45 mph or more

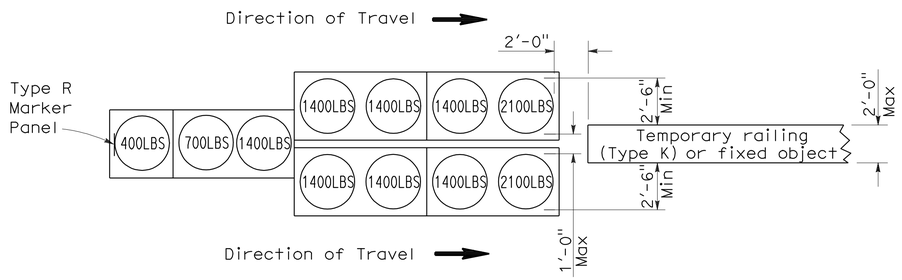

ARRAY 'TU11'

Approach speed less than 45 mph

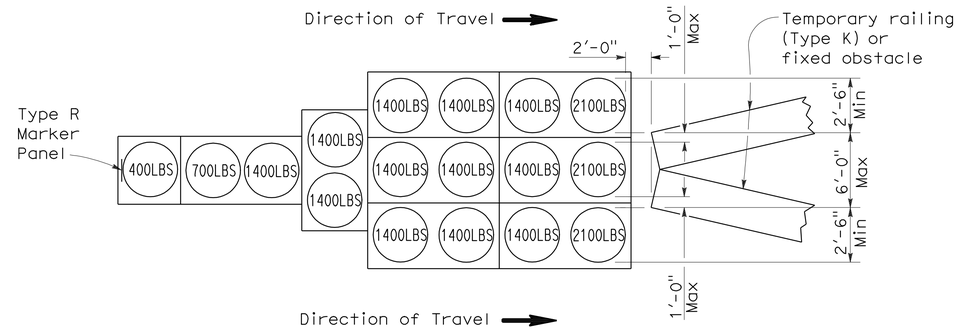

ARRAY 'TU17'

Approach speed less than 45 mph

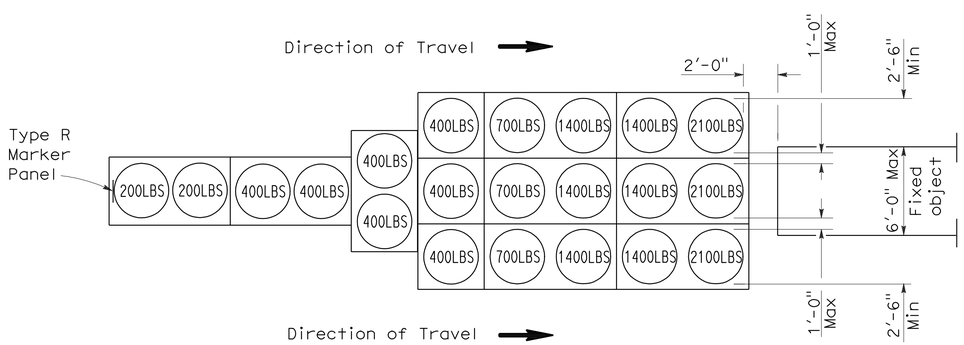

ARRAY 'TU21'

Approach speed 45 mph or more

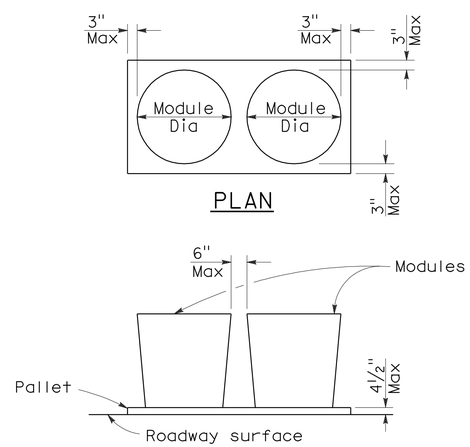

ELEVATION

CRASH CUSHION PALLET DETAIL

See Note 7

NOTES:

1. (XXX) Indicates sand filled module location and weight of sand in pounds for each module. Module spacing is based on the greater diameter of the module.
2. All sand weights are nominal.
3. Temporary crash cushion arrays shall not encroach on the traveled way.
4. Place the top of Type R marker panel 1" below the module lid.
5. Refer to Standard Plan A73B for marker details.
6. Approach speeds indicated conform to NCHRP 350 Report criteria.
7. Use of pallets is optional.

STATE OF CALIFORNIA
DEPARTMENT OF TRANSPORTATION

TEMPORARY CRASH CUSHION, SAND FILLED (UNIDIRECTIONAL)

NO SCALE

RSP T1A DATED JUNE 6, 2008 SUPERSEDES STANDARD PLAN T1A
DATED MAY 1, 2006 - PAGE 211 OF THE STANDARD PLANS BOOK DATED MAY 2006.

REVISED STANDARD PLAN RSP T1A

2006 REVISED STANDARD PLAN RSP T1A

DIST	COUNTY	ROUTE	POST MILES TOTAL PROJECT	SHEET NO.	TOTAL SHEETS
04	SF	80,101	L3.8/5.0, 4.1/5.0	94	136

Randell D. Hiatt
REGISTERED CIVIL ENGINEER

June 6, 2008
PLANS APPROVAL DATE

REGISTERED PROFESSIONAL ENGINEER
Randell D. Hiatt
No. C50200
Exp. 6-30-09
CIVIL
STATE OF CALIFORNIA

The State of California or its officers or agents shall not be responsible for the accuracy or completeness of electronic copies of this plan sheet.

To accompany plans dated 1-11-10

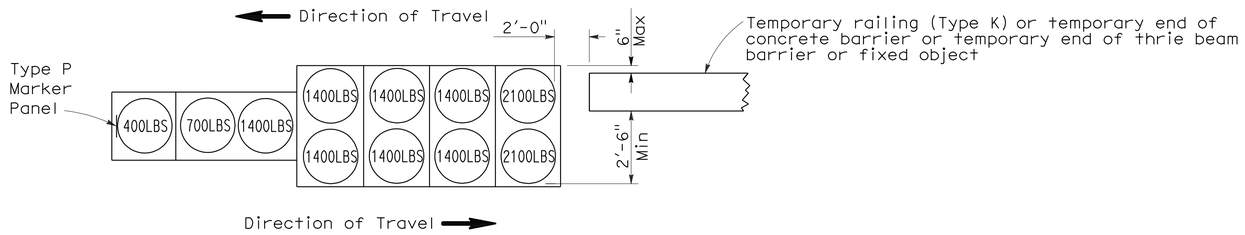

ARRAY 'TB11'

Approach speed less than 45 mph

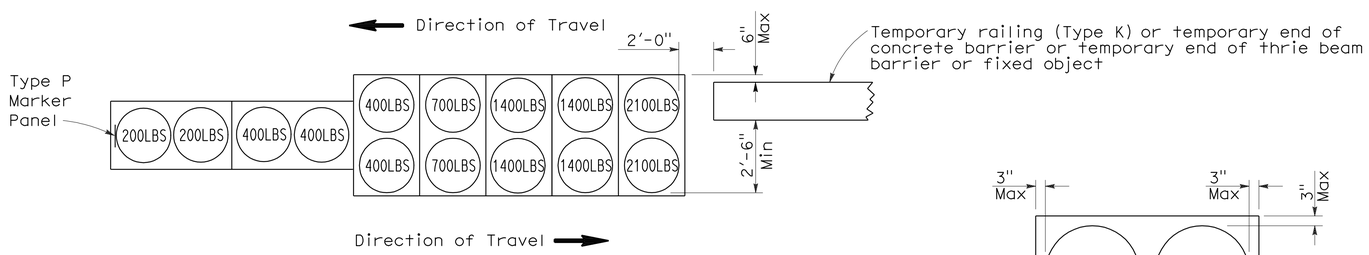

ARRAY 'TB14'

Approach speed 45 mph or more

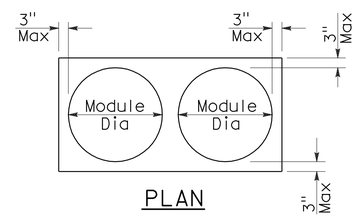

PLAN

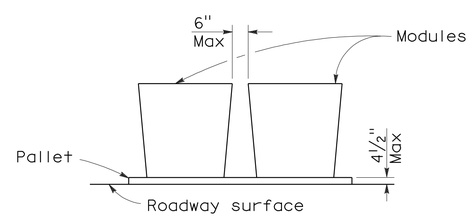

ELEVATION

CRASH CUSHION PALLET DETAIL

See Note 7

NOTES:

1. (XXX) Indicates sand filled module location and weight of sand in pounds for each module. Module spacing is based on the greater diameter of the module.
2. All sand weights are nominal.
3. Temporary crash cushion arrays shall not encroach on the traveled way.
4. Place the Type P marker panel so that the bottom of the panel rests upon the pallet.
5. Refer to Standard Plan A73B for marker details.
6. Approach speeds indicated conform to NCHRP 350 Report criteria.
7. Use of pallets is optional.

STATE OF CALIFORNIA
DEPARTMENT OF TRANSPORTATION

TEMPORARY CRASH CUSHION, SAND FILLED (BIDIRECTIONAL)

NO SCALE

RSP T1B DATED JUNE 6, 2008 SUPERSEDES STANDARD PLAN T1B
DATED MAY 1, 2006 - PAGE 212 OF THE STANDARD PLANS BOOK DATED MAY 2006.

REVISED STANDARD PLAN RSP T1B

2006 REVISED STANDARD PLAN RSP T1B

5-15-08

DIST	COUNTY	ROUTE	POST MILES TOTAL PROJECT	SHEET NO.	TOTAL SHEETS
04	SF	80,101	L3.8/5.0, 4.1/5.0	95	136

Randell D. Hiatt
REGISTERED CIVIL ENGINEER

June 6, 2008
PLANS APPROVAL DATE

REGISTERED PROFESSIONAL ENGINEER
Randell D. Hiatt
No. C50200
Exp. 6-30-09
CIVIL
STATE OF CALIFORNIA

The State of California or its officers or agents shall not be responsible for the accuracy or completeness of electronic copies of this plan sheet.

To accompany plans dated 1-11-10

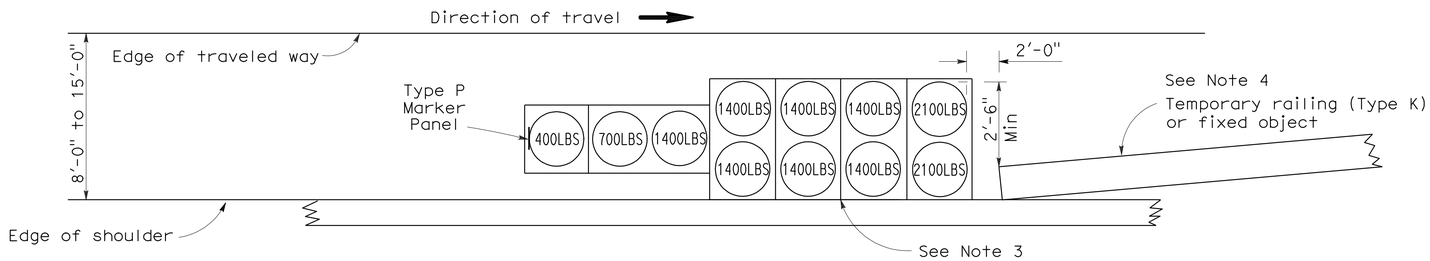

ARRAY 'TS11'

Approach speed less than 45 mph
See Note 9

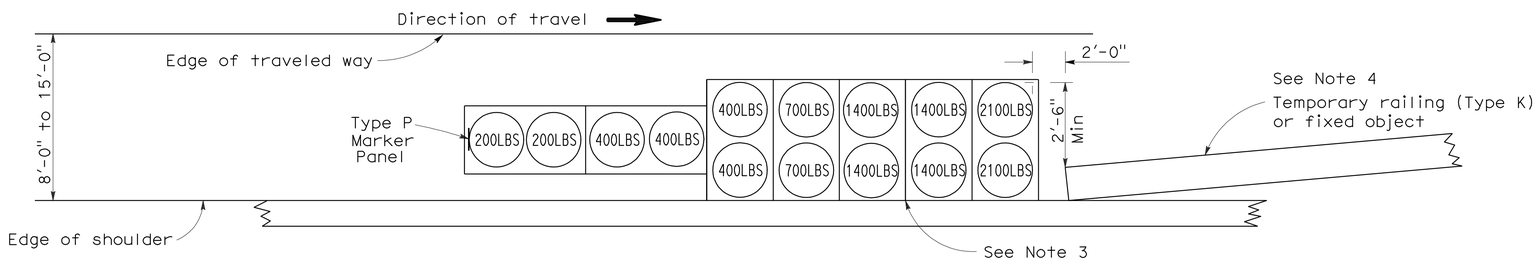

ARRAY 'TS14'

Approach speed 45 mph or more
See Note 9

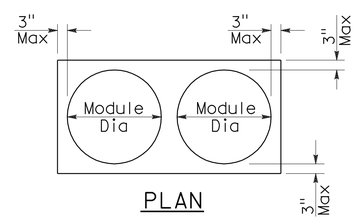

PLAN

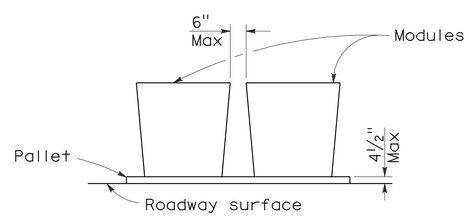

ELEVATION

CRASH CUSHION PALLET DETAIL

See Note 11

NOTES:

1. (XXX) Indicates sand filled module location and weight of sand in pounds for each module. Module spacing is based on the greater diameter of the module.
2. All sand weights are nominal.
3. The temporary crash cushion arrays shown on this plan shall be used only in locations where there will be traffic on one side of the temporary crash cushion array.
4. If the fixed object or approach end of the temporary railing is less than 15'-0" from the edge of traveled way, a temporary crash cushion is required in a construction or work zone.
5. Temporary crash cushion arrays shall not encroach on the traveled way.
6. Arrays for median shoulders shall conform to details shown on this plan for outside shoulders.
7. Place the Type P marker panel so that the bottom of the panel rests upon the pallet and faces traffic.
8. Refer to Standard Plan A73B for marker details.
9. For shoulder widths less than 8'-0", appropriate approved crash cushion protection, other than sand filled modules, shall be provided at fixed objects and at approach ends of temporary railing. The specific type of crash cushion shall be as shown on the project plans or as specified in the Special Provisions, or if not shown on the project plans or specified in the Special Provisions, shall be as approved by the Engineer.
10. Approach speeds indicated conform to NCHRP 350 Report criteria.
11. Use of pallets is optional.

STATE OF CALIFORNIA
DEPARTMENT OF TRANSPORTATION

TEMPORARY CRASH CUSHION, SAND FILLED (SHOULDER INSTALLATIONS)

NO SCALE

RSP T2 DATED JUNE 6, 2008 SUPERSEDES STANDARD PLAN T2
DATED MAY 1, 2006 - PAGE 213 OF THE STANDARD PLANS BOOK DATED MAY 2006.

REVISED STANDARD PLAN RSP T2

2006 REVISED STANDARD PLAN RSP T2

5-15-08

DIST	COUNTY	ROUTE	POST MILES TOTAL PROJECT	SHEET NO.	TOTAL SHEETS
04	SF	80,101	L3.8/5.0, 4.1/5.0	96	136

LICENSED LANDSCAPE ARCHITECT

August 15, 2008
PLANS Approval DATE

The State of California or its officers or agents shall not be responsible for the accuracy or completeness of electronic copies of this plan sheet.

LICENSED LANDSCAPE ARCHITECT
Robert B. Schott 3625
Signature
11-04-08
Renewal Date
08-11-08
Date
STATE OF CALIFORNIA

To accompany plans dated 1-11-10

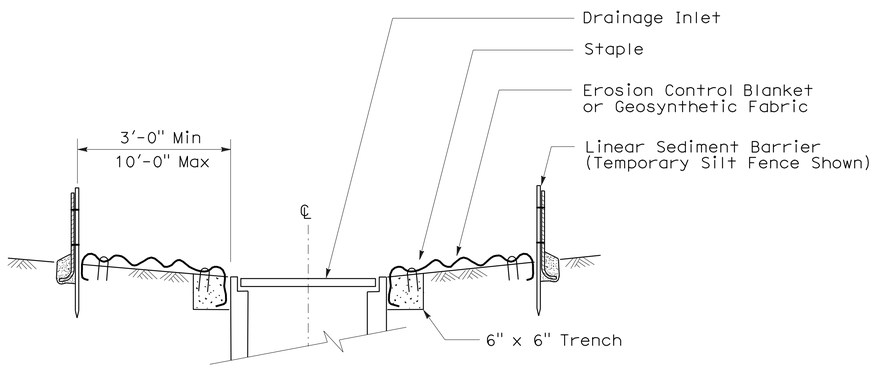

SECTION A-A

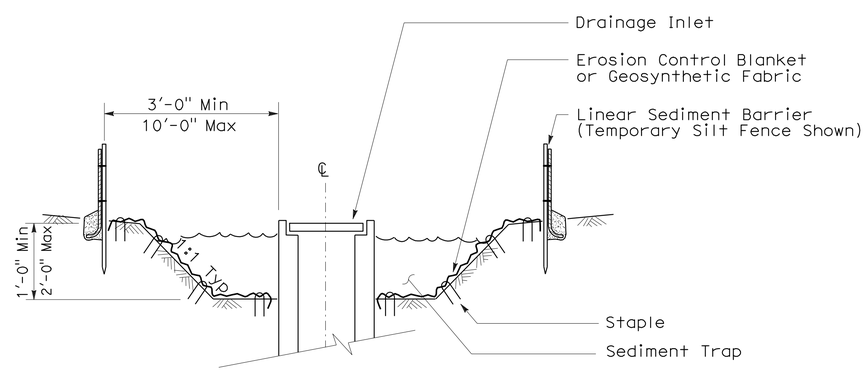

SECTION B-B

NOTES:

1. See Standard Plan T51 for Temporary Silt Fence.
2. Dimensions may vary to fit field conditions.

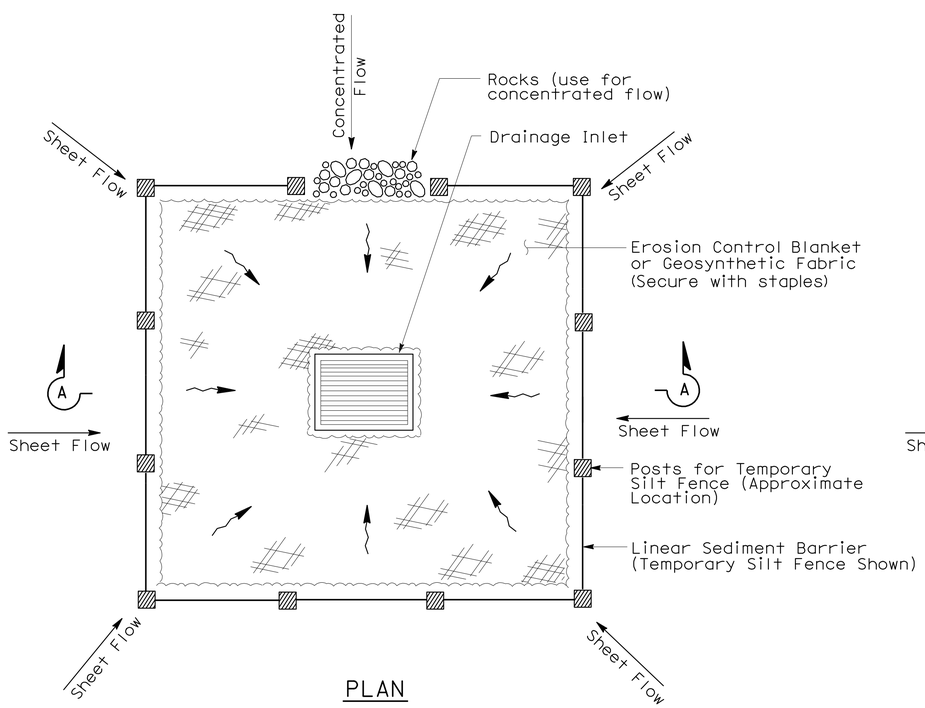

PLAN

TEMPORARY DRAINAGE INLET PROTECTION (TYPE 1)

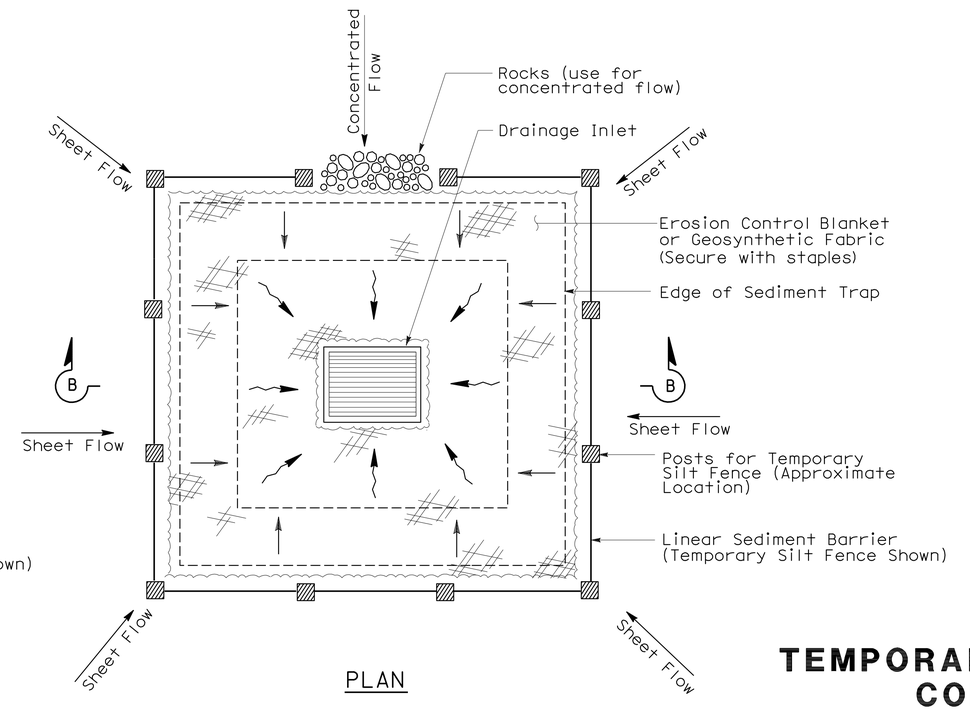

PLAN

TEMPORARY DRAINAGE INLET PROTECTION (TYPE 2) (EXCAVATED SEDIMENT TRAP)

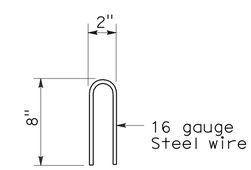

STAPLE DETAIL

STATE OF CALIFORNIA
DEPARTMENT OF TRANSPORTATION

TEMPORARY WATER POLLUTION CONTROL DETAILS (TEMPORARY DRAINAGE INLET PROTECTION)

NO SCALE

NSP T61 DATED AUGUST 15, 2008 SUPPLEMENTS THE STANDARD PLANS BOOK DATED MAY 2006.

NEW STANDARD PLAN NSP T61

2006 NEW STANDARD PLAN NSP T61

DIST	COUNTY	ROUTE	POST MILES TOTAL PROJECT	SHEET NO.	TOTAL SHEETS
04	SF	80,101	L3.8/5.0, 4.1/5.0	97	136

LICENSED LANDSCAPE ARCHITECT

August 15, 2008
PLANS APPROVAL DATE

The State of California or its officers or agents shall not be responsible for the accuracy or completeness of electronic copies of this plan sheet.

LICENSED LANDSCAPE ARCHITECT — Robert B. Schott — Signature — 11-04-08 Renewal Date — 08-11-08 Date — STATE OF CALIFORNIA

To accompany plans dated 1-11-10

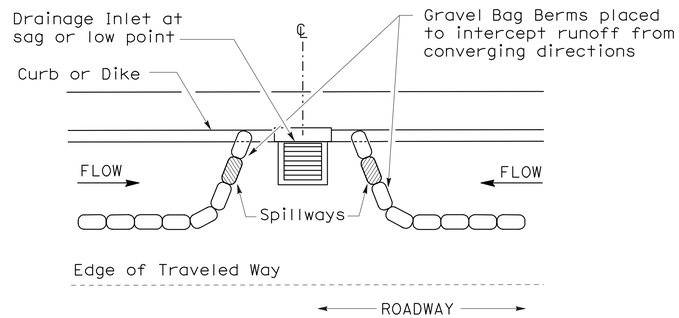

PLAN

CONFIGURATION FOR SAG POINT INLET (GRAVEL BAG BERM)

GRAVEL BAG BERM (TYPE 3A) SPACING TABLE

SLOPE OF ROADWAY (PERCENT)	1 to 3.9	4 to 5.9	6 to 7.9	8 to 10	10+
INTERVAL BETWEEN BERM	100′	75′	50′	25′	12′

For slope of less than 1%, install barriers only if erosion/sediment is prevalent

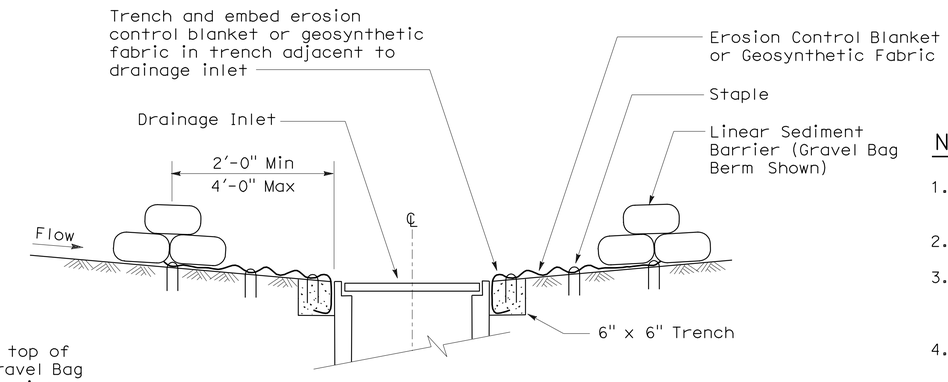

SECTION A-A

NOTES:

1. Place safety cones adjacent to drainage inlet protection.
2. Dimensions may vary to fit field conditions.
3. Install a minimum of 3 gravel bag berms upstream of each drainage inlet to be protected.
4. Position erosion control blanket or geosynthetic fabric at edge of concrete apron and secure in trench.
5. Erosion control blanket or geosynthetic fabric is not required if the area adjacent to the drainage inlet is vegetated or paved.

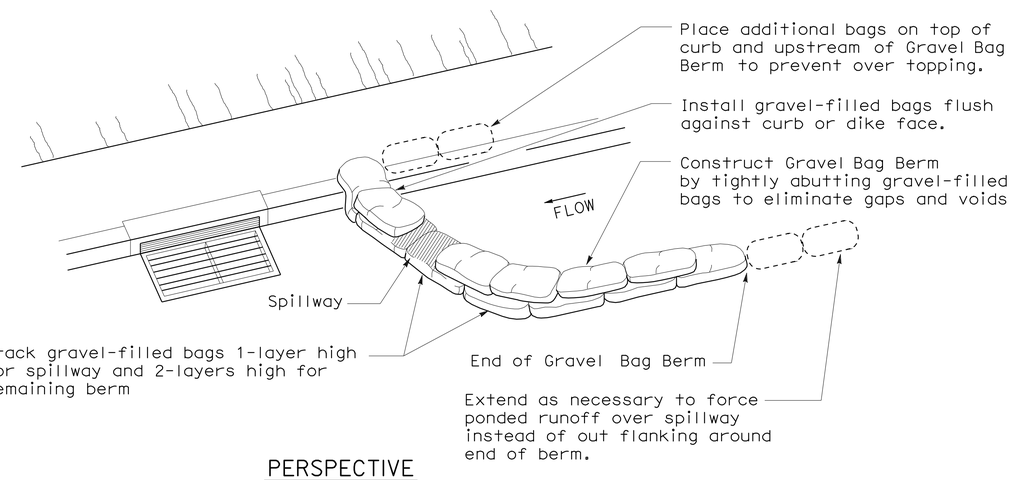

PERSPECTIVE

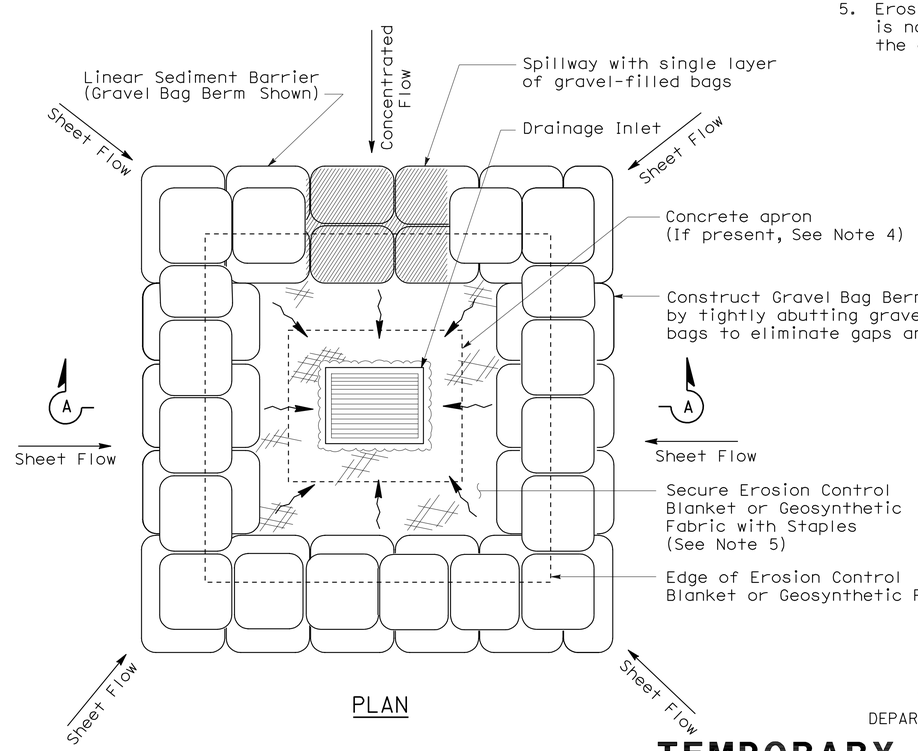

PLAN

TEMPORARY DRAINAGE INLET PROTECTION (TYPE 3B)

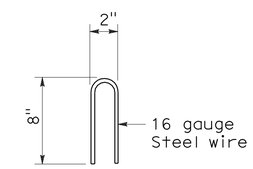

STAPLE DETAIL

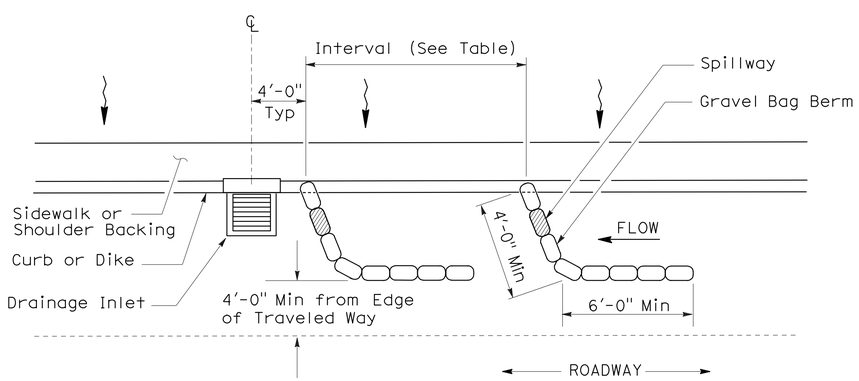

PLAN

TEMPORARY DRAINAGE INLET PROTECTION (TYPE 3A) (GRAVEL BAG BERM)

STATE OF CALIFORNIA
DEPARTMENT OF TRANSPORTATION

TEMPORARY WATER POLLUTION CONTROL DETAILS (TEMPORARY DRAINAGE INLET PROTECTION)

NO SCALE

NSP T62 DATED AUGUST 15, 2008 SUPPLEMENTS THE STANDARD PLANS BOOK DATED MAY 2006.

NEW STANDARD PLAN NSP T62

2006 NEW STANDARD PLAN NSP T62

7-11-08

DIST	COUNTY	ROUTE	POST MILES TOTAL PROJECT	SHEET NO.	TOTAL SHEETS
04	SF	80,101	L3.8/5.0, 4.1/5.0	98	136

LICENSED LANDSCAPE ARCHITECT

August 15, 2008
PLANS APPROVAL DATE

The State of California or its officers or agents shall not be responsible for the accuracy or completeness of electronic copies of this plan sheet.

LICENSED LANDSCAPE ARCHITECT — Robert B. Schott — Signature — 11-04-08 Renewal Date — 08-11-08 Date — STATE OF CALIFORNIA

To accompany plans dated 1-11-10

FLEXIBLE SEDIMENT BARRIER SPACING TABLE

SLOPE OF ROADWAY (PERCENT)	0 to 0.9	1 to 1.9	2 to 2.9	3 to 4	5+
INTERVAL BETWEEN BARRIERS	50′	35′	30′	25′	20′
ANGLE FROM FACE OF CURB	70°	70°	70°	45°	45°
SUGGESTED BARRIER LENGTH	6′	6′	6′	6′	6′

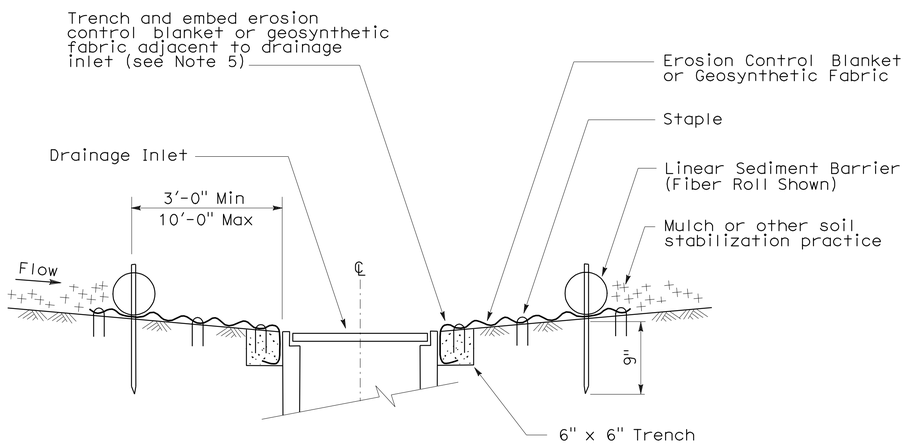

SECTION A-A

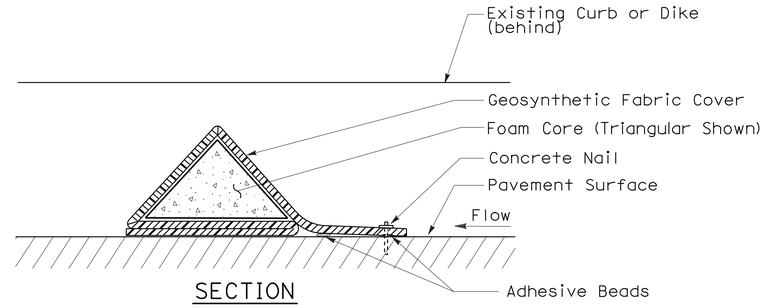

SECTION

FLEXIBLE SEDIMENT BARRIER DETAIL (FOAM BARRIER SHOWN)

NOTES:

1. See Standard Plan T51 for Temporary Silt Fence.
2. Dimensions may vary to fit field conditions.
3. Install a minimum of 3 flexible sediment barriers upstream of each drainage inlet to be protected.
4. Position erosion control blanket or geosynthetic fabric at edge of concrete apron and secure in trench.
5. Erosion control blanket or geosynthetic fabric is not required if the area adjacent to the drainage inlet is vegetated.

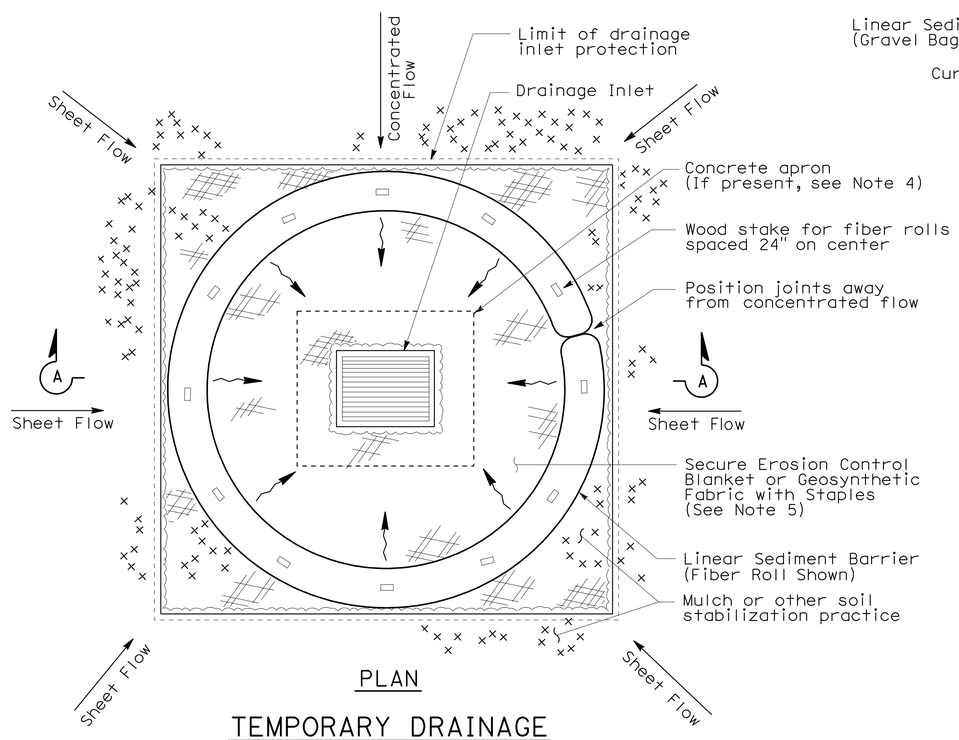

PLAN

TEMPORARY DRAINAGE INLET PROTECTION (TYPE 4A)

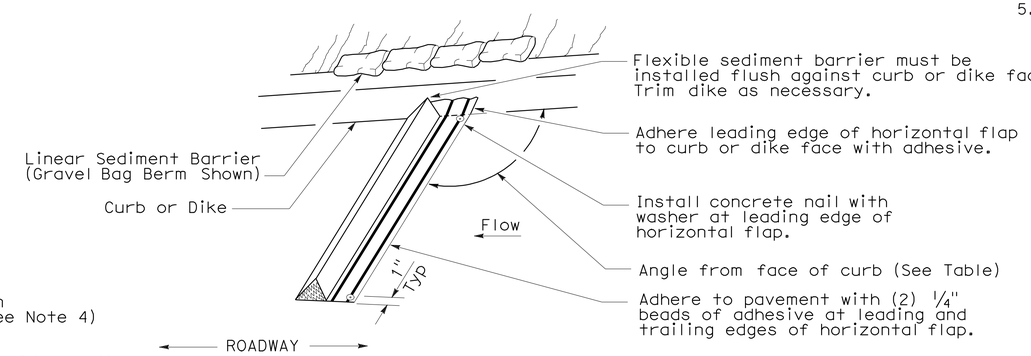

PERSPECTIVE

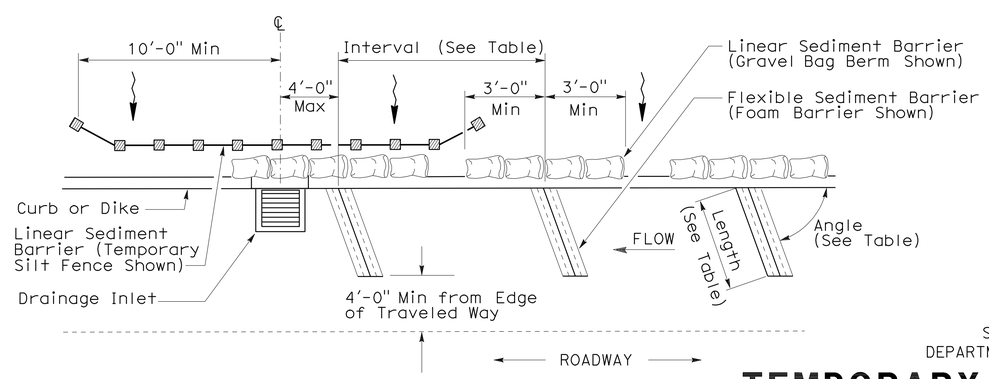

PLAN

TEMPORARY DRAINAGE INLET PROTECTION (TYPE 4B) FLEXIBLE SEDIMENT BARRIER

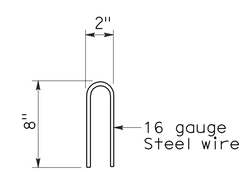

STAPLE DETAIL

STATE OF CALIFORNIA
DEPARTMENT OF TRANSPORTATION

TEMPORARY WATER POLLUTION CONTROL DETAILS (TEMPORARY DRAINAGE INLET PROTECTION)

NO SCALE

NSP T63 DATED AUGUST 15, 2008 SUPPLEMENTS THE STANDARD PLANS BOOK DATED MAY 2006.

NEW STANDARD PLAN NSP T63

2006 NEW STANDARD PLAN NSP T63

DIST	COUNTY	ROUTE	POST MILES TOTAL PROJECT	SHEET NO.	TOTAL SHEETS
04	SF	80,101	L3.8/5.0, 4.1/5.0	99	136

LICENSED LANDSCAPE ARCHITECT

August 15, 2008
PLANS APPROVAL DATE

LICENSED LANDSCAPE ARCHITECT — Robert B. Schott — Signature — 11-04-08 Renewal Date — 08-11-08 Date — STATE OF CALIFORNIA

The State of California or its officers or agents shall not be responsible for the accuracy or completeness of electronic copies of this plan sheet.

To accompany plans dated 1-11-10

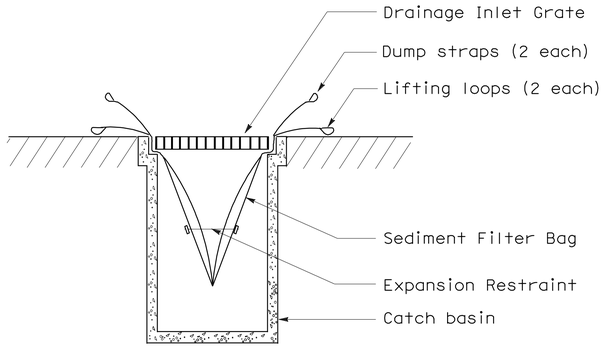

SECTION B-B

SEDIMENT FILTER BAG DETAIL

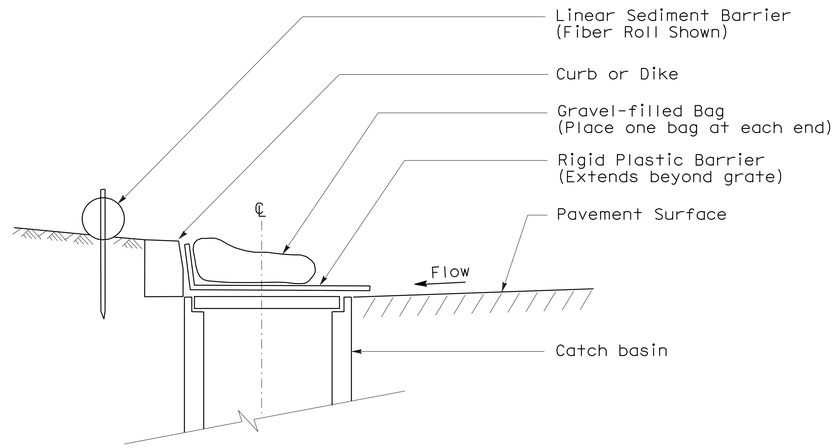

SECTION

TEMPORARY DRAINAGE INLET PROTECTION (TYPE 6A) (CATCH BASIN WITH GRATE)

NOTES:

1. See Standard Plan T51 for Temporary Silt Fence.
2. Dimensions may vary to fit field conditions.

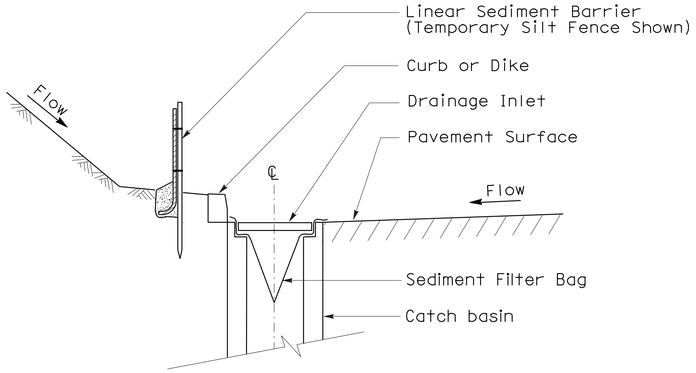

SECTION A-A

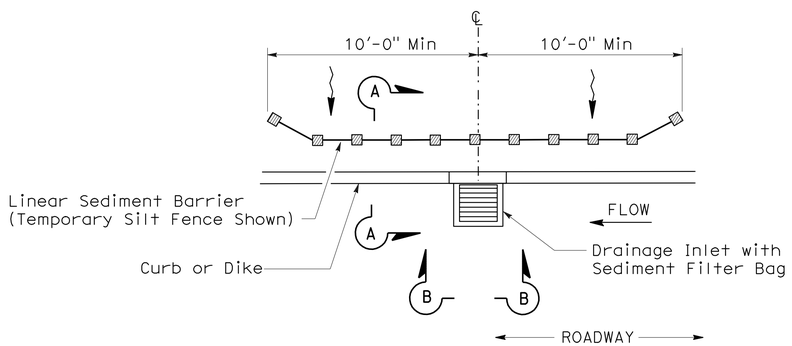

PLAN

TEMPORARY DRAINAGE INLET PROTECTION (TYPE 5) (SEDIMENT FILTER BAG)

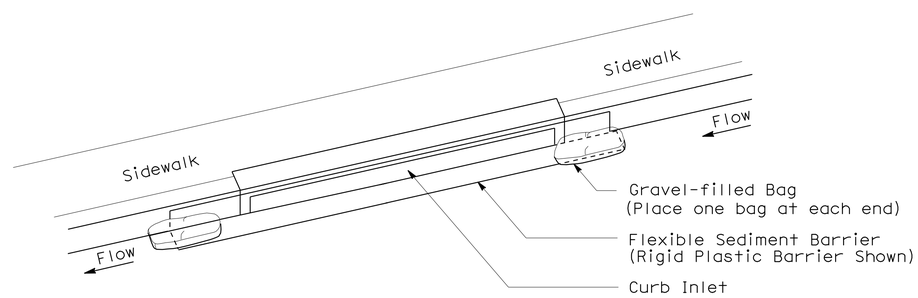

PERSPECTIVE

TEMPORARY DRAINAGE INLET PROTECTION (TYPE 6B) (CURB INLET WITHOUT GRATE)

STATE OF CALIFORNIA
DEPARTMENT OF TRANSPORTATION

TEMPORARY WATER POLLUTION CONTROL DETAILS (TEMPORARY DRAINAGE INLET PROTECTION)

NO SCALE

NSP T64 DATED AUGUST 15, 2008 SUPPLEMENTS
THE STANDARD PLANS BOOK DATED MAY 2006.

NEW STANDARD PLAN NSP T64

2006 NEW STANDARD PLAN NSP T64

7-11-08

DIST	COUNTY	ROUTE	POST MILES TOTAL PROJECT	SHEET NO.	TOTAL SHEETS
04	SF	80,101	L3.8/5.0, 4.1/5.0	100	136

REGISTERED CIVIL ENGINEER

October 5, 2007
PLANS APPROVAL DATE

REGISTERED PROFESSIONAL ENGINEER Efthymios Delis No. C51434 Exp. 6-30-08 CIVIL STATE OF CALIFORNIA

The State of California or its officers or agents shall not be responsible for the accuracy or completeness of electronic copies of this plan sheet.

To accompany plans dated 1-11-10

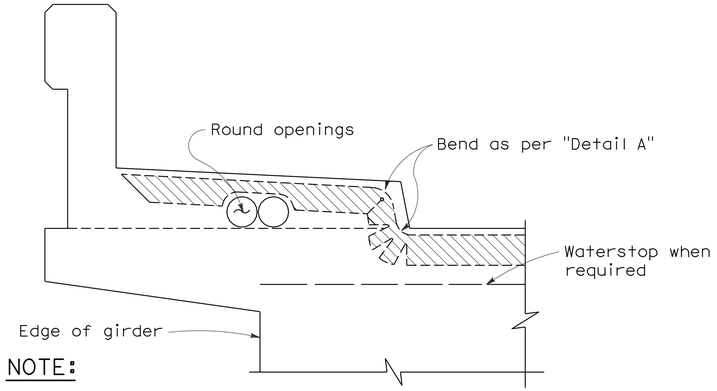

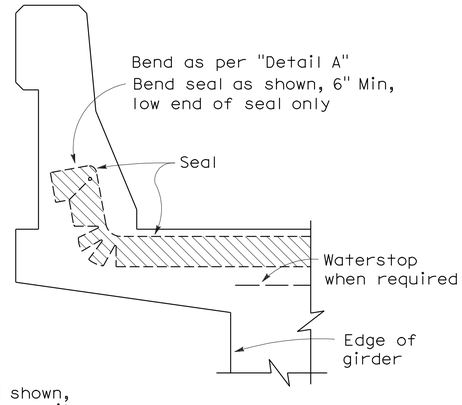

NOTE:

Type "B" seal shown. Type "A" seals to comform to the general path of seal shown, cuts for bending not required. Bend Type "A" seals 3" up into curb or barrier rail on only the low end of the seal.

CONCRETE BARRIER AND SIDEWALK

CONCRETE BARRIER

JOINT SEALS DETAILS

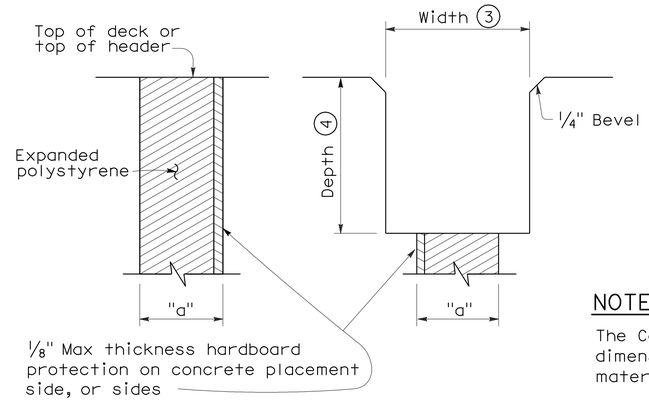

FORMING DETAIL SAWCUT DETAIL

NOTE:

The Contractor shall verify all controlling field dimensions before ordering or fabricatiing any material.

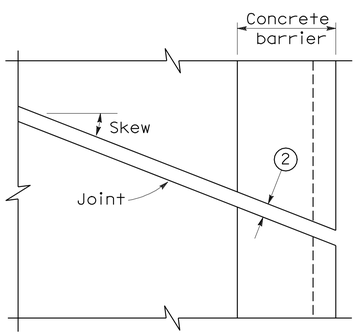

PLAN OF JOINT (SKEW ≤ 20°)

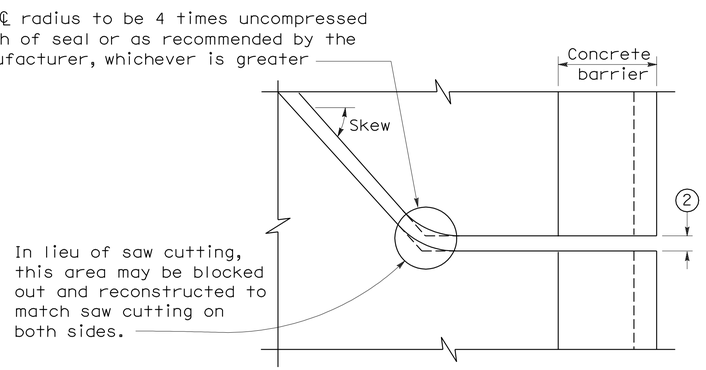

PLAN OF JOINT (SKEW > 20°)

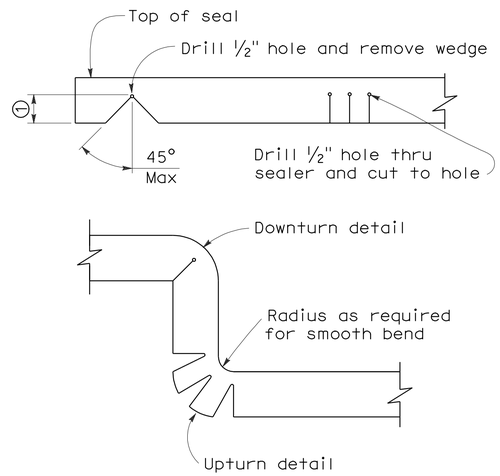

DETAIL A

NOTES:

1. Make smooth cuts from the bottom of seal to 1½" clear of top leaving at least one complete cell between the top of the cut and top of the seal. When necessary cut back of seal to clear conduit and round openings.
2. Opening in barrier to match width of sawn deck joint.
3. Sawcut groove widths shall be as ordered by the Engineer.
4. Depth of sawcut: Type A - Depth to be 2" minimum.
   Type B - Depth to be equal to or greater than the depth of seal measured along the contact surface, when compressed to minimum width position (W_2) plus dimensions shown.
5. MR (movement rating) as shown on other plan sheets.
6. Other depths must be approved by the Engineer.

DIMENSIONS "a" OF JOINT REQUIRED

Movement Rating (MR) (5)	Bridge Type	"a" Dimension Deck Concrete Placed		
		Winter	Fall-Spring	Summer
2"	All except CIP/PS	1½"	1¼"	¾"
	CIP/PS	1¼"	1"	½"
1½"	All except CIP/PS	1¼"	1"	½"
	CIP/PS	1"	¾"	½"
1"	All except CIP/PS	1"	¾"	½"
	CIP/PS	¾"	½"	½"
½"	All except CIP/PS	¾"	¾"	½"
	CIP/PS	½"	½"	½"

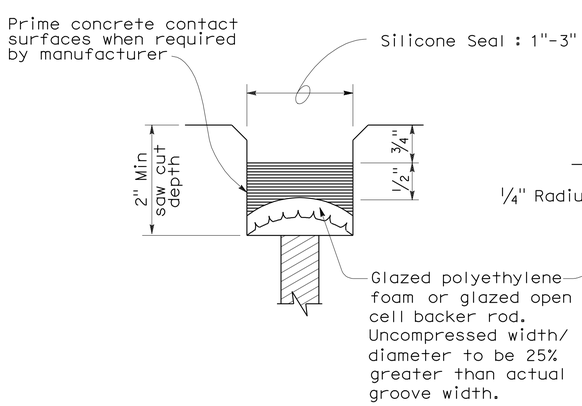

TYPE A SEAL

Movement rating : Silicone = 1" Max

TYPE AL SEAL

Longitudinal joints only

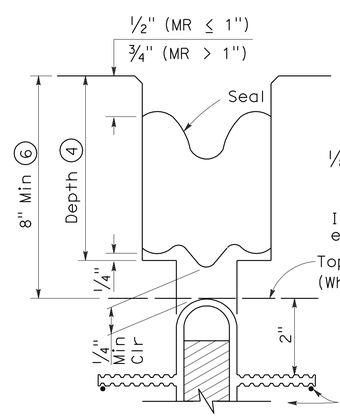

TYPE B JOINT SEAL IN MINIMUM WIDTH POSITION (W_2)

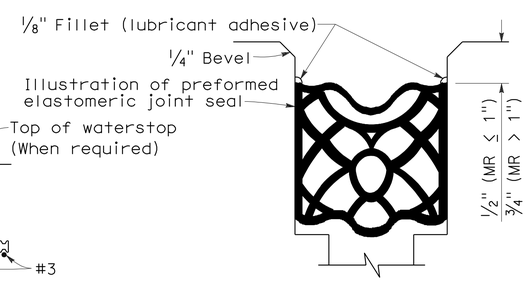

TYPE B SEAL

Movement Rating ≤ 2"

STATE OF CALIFORNIA
DEPARTMENT OF TRANSPORTATION

JOINT SEALS (MAXIMUM MOVEMENT RATING = 2")

NO SCALE

RSP B6-21 DATED OCTOBER 5, 2007 SUPERSEDES STANDARD PLAN B6-21 DATED MAY 1, 2006 - PAGE 258 OF THE STANDARD PLANS BOOK DATED MAY 2006.

REVISED STANDARD PLAN RSP B6-21

2006 REVISED STANDARD PLAN RSP B6-21

5-8-07

DIST	COUNTY	ROUTE	POST MILES TOTAL PROJECT	SHEET NO.	TOTAL SHEETS
04	SF	80,101	L3.8/5.0, 4.1/5.0	101	136

REGISTERED ELECTRICAL ENGINEER

October 5, 2007
PLANS APPROVAL DATE

REGISTERED PROFESSIONAL ENGINEER Jeffery G. McRae No. E14512 Exp. 6-30-08 ELECTRICAL STATE OF CALIFORNIA

The State of California or its officers or agents shall not be responsible for the accuracy or completeness of electronic copies of this plan sheet.

To accompany plans dated 1-11-10

2006 REVISED STANDARD PLAN RSP ES-1A

ELECTROLIERS

STANDARD TYPES
15, 15D
15 STRUCTURE
21, 21D STRUCTURE
30
31
32
35
36-20A

High mast light pole

Double Arm lighting standard

Existing electrolier

Electrolier foundation (Future installation)

NOTES:

1. Luminaires shall be 310 W HPS when installed on Type 21, 21D, 30, 31, 32, 35 and 36-20A Standards, unless otherwise specified. Luminaires shall be 200 W HPS when installed on other type standards or poles, unless otherwise specified.
2. Luminaires shall be the cutoff type, ANSI Type III medium cutoff lighting distribution, unless otherwise specified.
3. Variations noted adjacent to symbol on project plans.

Electrolier (see project notes or project plans)

Luminaire on wood pole

STANDARD NOTES:

- AB — Abandon. If applied to conduit, remove conductors.
- BC — Install pull box in existing conduit run.
- BP — Pedestrian barricade, type as indicated on plan.
- CB — Install conduit into existing pull box.
- CC — Connect new and existing conduit. Remove existing conductors and install conductors as indicated.
- CF — Conduit to remain for future use. Remove conductors. Install pull wire or rope.
- DH — Detector handhole.
- FA — Foundation to be abandoned.
- IS — Install sign on signal mast arm.
- NS — No slip base on standard.
- PEC — Photoelectric control.
- PEU — Photoelectric unit.
- RC — Equipment or material to be removed and become the property of the Contractor.
- RE — Remove electrolier, fuses and ballast. Tape ends of conductors.
- RL — Relocate equipment.
- RR — Remove and reuse equipment.
- RS — Remove and salvage equipment.
- SC — Splice new to existing conductors.
- SD — Service disconnect.
- SF — Standard to remain for future use. Remove luminaire, pole conductors, fuses and ballast.
- TSP — Telephone service point.

ABBREVIATIONS AND EQUIPMENT DESIGNATIONS

PROPOSED	EXISTING	
BBS	bbs	Battery backup system
BC	bc	Bolt circle
C	C	Conduit
CCTV	cctv	Closed circuit television
CKT	ckt	Circuit
CMS	cms	Changeable message sign
DLC	dlc	Loop detector lead-in cable
EMS	ems	Extinguishable message sign
EVC	evc	Emergency vehicle cable
EVD	evd	Emergency vehicle detector
FB	fb	Flashing beacon
FBCA	fbca	Flashing beacon control assembly
FBS	fbs	Flashing beacon with slip base
FO	fo	Fiber optic
G	G	Ground (Equipment Grounding Conductor)
GFCI	GFCI	Ground fault circuit interrupt
HAR	har	Highway advisory radio
HEX	hex	Hexagonal
HPS	hps	High pressure sodium
IISNS	iisns	Internally illuminated street name sign
ISL	isl	Induction sign lighting
LED	led	Light emitting diode
LMA	lma	Luminaire mast arm
LPS	lps	Low pressure sodium
LTG	ltg	Lighting
LUM	lum	Luminaire
MAT	mat	Mast arm mounting vehicle signal faces, top attachment
MAS	mas	Mast arm mounting vehicle signal faces, side attachment
MAS-4A	mas-4A	Mast arm mounting vehicle signal faces, side attachment - 4 signal section
MAS-4B	mas-4B	
MAS-4C	mas-4C	
MAS-5A	mas-5A	Mast arm mounting vehicle signal faces, side attachment - 5 signal section
MAS-5B	mas-5B	
MC	mc	Mercury contactor
M/M	m/m	Multiple to multiple transformer
MT	mt	Conduit with pull wire or rope only
MTG	mtg	Mounting
	mv	Mercury vapor lighting fixture
N	N	Neutral (Grounded Conductor)
NC	NC	Normally closed
NO	NO	Normally open
PB	pb	Pull box
PEC	pec	Photoelectric control (Type I, II, III, IV or V as shown)
PED	ped	Pedestrian
PEU	peu	Photoelectric unit
PPB	ppb	Pedestrian push button
RL		Relocated equipment
RM	rm	Ramp metering
SB	sb	Slip base
SIC	sic	Signal interconnect cable
SIG	sig	Signal
SMA	sma	Signal mast arm
SNS	sns	Street name sign
SP	sp	Service point
TDC	tdc	Telephone demarcation cabinet
TMS	tms	Traffic monitoring station
TOS	tos	Traffic Operations System
VEH	veh	Vehicle
XFMR	xfmr	Transformer
COMM	comm	Communication
RWIS	rwis	Roadway weather information system

SOFFIT AND WALL MOUNTED LUMINAIRES

Pendant, 70 W HPS unless otherwise specified.

Flush, 70 W HPS unless otherwise specified.

Wall surface, 70 W HPS unless otherwise specified.

Existing soffit or wall luminaire to remain unmodified.

Existing soffit or wall luminaire to be modified as specified.

NOTE:

Arrow indicates "street side" of luminaire.

STATE OF CALIFORNIA
DEPARTMENT OF TRANSPORTATION

ELECTRICAL SYSTEMS (SYMBOLS AND ABBREVIATIONS)

NO SCALE

RSP ES-1A DATED OCTOBER 5, 2007 SUPERSEDES STANDARD PLAN ES-1A DATED MAY 1, 2006 - PAGE 400 OF THE STANDARD PLANS BOOK DATED MAY 2006.

REVISED STANDARD PLAN RSP ES-1A

DIST	COUNTY	ROUTE	POST MILES TOTAL PROJECT	SHEET NO.	TOTAL SHEETS
04	SF	80,101	L3.8/5.0, 4.1/5.0	102	136

REGISTERED ELECTRICAL ENGINEER

October 5, 2007
PLANS APPROVAL DATE

REGISTERED PROFESSIONAL ENGINEER Jeffery G. McRae No. E14512 Exp. 6-30-08 ELECTRICAL STATE OF CALIFORNIA

The State of California or its officers or agents shall not be responsible for the accuracy or completeness of electronic copies of this plan sheet.

To accompany plans dated 1-11-10

CONDUIT

PROPOSED	EXISTING	
		Lighting Conduit, unless otherwise indicated or noted
		Traffic signal conduit
C	c	Communication conduit
T	t	Telephone conduit
F	f	Fire alarm conduit
FO	fo	Fiber optic conduit
		Conduit termination (RSP ES-9A C)
R	r	Conduit riser in/on structure or service pole

SERVICE EQUIPMENT

PROPOSED	EXISTING	
OH	oh	Overhead lines
U	U	Wood pole "U" indicates utility owned
		Pole guy with anchor
		Utility transformer - ground mounted
III		Service equipment enclosure type
		Service equipment enclosure door indicates front of enclosure
T	t	Telephone demarcation cabinet

POLE-MOUNTED SERVICE DESIGNATION

Type of installation

TYPE H SERVICE - 28'-10" ← Pole height above grade

ILLUMINATED OVERHEAD SIGN

PROPOSED	EXISTING	
		Overhead sign - Single post
		Overhead sign - Two post
		Overhead sign - Mounted on structure
		Overhead sign with electrolier

SIGNAL EQUIPMENT

PROPOSED	EXISTING	
		Pedestrian signal face
		Pedestrian push button post
		Pedestrian barricade
		Vehicle signal face (with backplate, 3-Section: red, yellow and green)
		Vehicle signal face with angle visors
PV	PV	Modifications of basic symbols: "L" indicates all non-arrow sections louvered "LG" indicates louvered green section only "PV" indicates 12" programmed visibility sections "8" indicates all 8" sections (only when specified)
		Type 15TS and Vehicle signal face
		Vehicle signal face with red, yellow and green left arrow sections
		Vehicle signal face with red and yellow sections and up green arrow
		Vehicle signal face (5 Section) with red, yellow and green sections and yellow and green right arrows
		Type 1 Standard and attached vehicle signal faces
		Standard with signal mast arm only and attached vehicle signal faces and internally illuminated street name sign
		Type 33 Standard, Left-turn vehicle signal face and sign
		Standard with luminaire and signal mast arms and attached vehicle signal faces
		Cantilever flashing beacon Type 9 Frame, with a sign unless otherwise specified or indicated
		Type 15-FBS Standard with two vehicle signal face sections with lens, backplate and visor with a sign
R	Y	Flashing beacon. One vehicle signal face section with lens, backplate and visor. "R" indicates red indication, "Y" indicates yellow indication
		Controller assembly. Door indicates front of cabinet

SIGNAL EQUIPMENT Cont

PROPOSED	EXISTING	
		Guard post
		Type 1 Standard with "Meter On" sign
		Emergency Vehicle detector

NOTES:

1. All signal sections shall be 12" unless shown otherwise.
2. Signal heads shall be provided with backplates unless shown otherwise.
3. Signal indication shall be LED.

STATE OF CALIFORNIA
DEPARTMENT OF TRANSPORTATION

ELECTRICAL SYSTEMS (SYMBOLS AND ABBREVIATIONS)

NO SCALE

RSP ES-1B DATED OCTOBER 5, 2007 SUPERCEDES STANDARD PLAN ES-1B DATED MAY 1, 2006 - PAGE 401 OF THE STANDARD PLANS BOOK DATED MAY 2006.

REVISED STANDARD PLAN RSP ES-1B

2006 REVISED STANDARD PLAN RSP ES-1B

7-10-07

DIST	COUNTY	ROUTE	POST MILES TOTAL PROJECT	SHEET NO.	TOTAL SHEETS
04	SF	80,101	L3.8/5.0, 4.1/5.0	103	136

REGISTERED ELECTRICAL ENGINEER

October 5, 2007
PLANS APPROVAL DATE

REGISTERED PROFESSIONAL ENGINEER Jeffery G. McRae No. E14512 Exp. 6-30-08 ELECTRICAL STATE OF CALIFORNIA

The State of California or its officers or agents shall not be responsible for the accuracy or completeness of electronic copies of this plan sheet.

To accompany plans dated 1-11-10

EQUIPMENT IDENTIFICATION

ILLUMINATED SIGN IDENTIFICATION NUMBER:

Sign No. 12345
10 ISL SCI 1.0

- Sign number - Place on post or structure
- Transformer rating (kVA)
- Lighting control type
- Number and type of fixtures

Do NOT place on standard or structure

ELECTROLIER OR EQUIPMENT IDENTIFICATION NUMBER:

12345 - 15'-0"

- Mast arm length, if shown. Do not place on standard or structure.
- Equipment number - Place on standard or structure. Existing equipment numbers are shown in parenthesis

CONDUIT AND CONDUCTOR IDENTIFICATION:

1½"C, 2#10, 15#14, 2 DLC

- Number and size of conductors and cables
- Size of conduit in inches

Ø1, Ø2, Ø2P, etc.	Traffic phase identification for signal faces, detectors and phase diagrams
1 2 3	Project note numbers
A B C	Equipment description, installation or item numbers
1 2 3	Conduit run numbers

SIGNAL AND LIGHTING STANDARD (TYPICAL DESIGNATION):

19A - 3 - 100

- Wind velocity = 100 mph
- Case 3 arm loading
- Standard type
- Standard Plan sheet number
- Detail number or letter

MISCELLANEOUS EQUIPMENT

PROPOSED	EXISTING	
CMS	cms	Changeable message sign
		Closed circuit television camera
		Highway advisory radio pole and antenna
EMS	ems	Extinguishable message sign
M V	m v	Detection device M = Microwave sensor V = Video image sensor

WIRING DIAGRAM LEGEND

P	Pole
CB	Circuit breaker
A	Ampere
V	Volt
M	Metered
UM	Unmetered
NB	Neutral bus
GB	Ground bus
G	Equipment grounding conductor
N	Grounded conductor (Neutral)

- External conductor
- Conductor or bus
- Tie point
- Contactor coil
- Contactor, Contact NO
- Terminal blocks
- Contactor, Contact NC
- Enclosure bond
- Grounding electrode
- Circuit breaker
- Receptacle

PULL BOXES

PROPOSED	EXISTING	
		Pull box-No. 5 unless otherwise indicated or noted.
3	9A(21)	Pull box-Additional designations or descriptions

3 = No. 3½ pull box
5 = No. 5 pull box
6 = No. 6 pull box
7 = No. 7 (Ceiling pull box)
8 = No. 8 (Pendant soffit pull box)
9 = No. 9 pull box
9A = No. 9A pull box

(C) = Communications pull box
(E) = Pull box with extension
(S) = Sprinkler control pull box
(21) = Anchor bolts and conduit for future installation of Type 21 Standard
(T) = Traffic pull box

VEHICLE DETECTORS

5 J 9 U

- Vehicle detector designation
- U = Upper
  L = Lower
- Slot number in input file
- Input file (I or J)
- Phase

PROPOSED	EXISTING	
		Type A detector loop. Outline of sawcut shown.
		Type B detector loop. Outline of sawcut shown.
		Type C detector loop. Outline of sawcut shown.
		Type D detector loop. Outline of sawcut shown.
		Type E detector loop. Outline of sawcut shown.
		Type Q detector loop. Outline of sawcut shown.
		Magnetic detector
DH	dh	Detector handhole
		Microwave or video detection zone

STATE OF CALIFORNIA
DEPARTMENT OF TRANSPORTATION

ELECTRICAL SYSTEMS (SYMBOLS AND ABBREVIATIONS)

NO SCALE

RSP ES-1C DATED OCTOBER 5, 2007 SUPERCEDES STANDARD PLAN ES-1C DATED MAY 1, 2006 - PAGE 402 OF THE STANDARD PLANS BOOK DATED MAY 2006.

REVISED STANDARD PLAN RSP ES-1C

2006 REVISED STANDARD PLAN RSP ES-1C

DIST	COUNTY	ROUTE	POST MILES TOTAL PROJECT	SHEET NO.	TOTAL SHEETS
04	SF	80,101	L3.8/5.0, 4.1/5.0	104	136

REGISTERED CIVIL ENGINEER

October 5, 2007
PLANS APPROVAL DATE

REGISTERED PROFESSIONAL ENGINEER
Stanley P. Johnson
No. C57793
Exp. 3-31-08
CIVIL
STATE OF CALIFORNIA

The State of California or its officers or agents shall not be responsible for the accuracy or completeness of electronic copies of this plan sheet.

To accompany plans dated 1-11-10

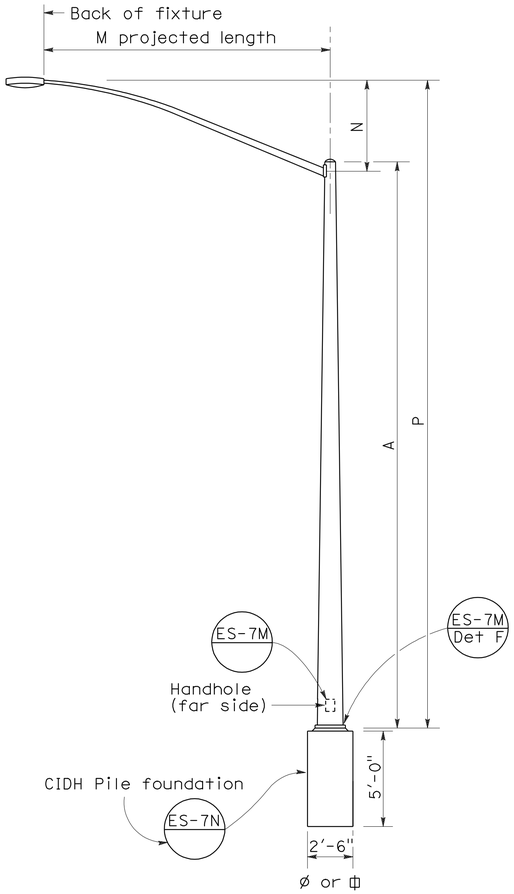

ELEVATION
TYPE 15 AND TYPE 21

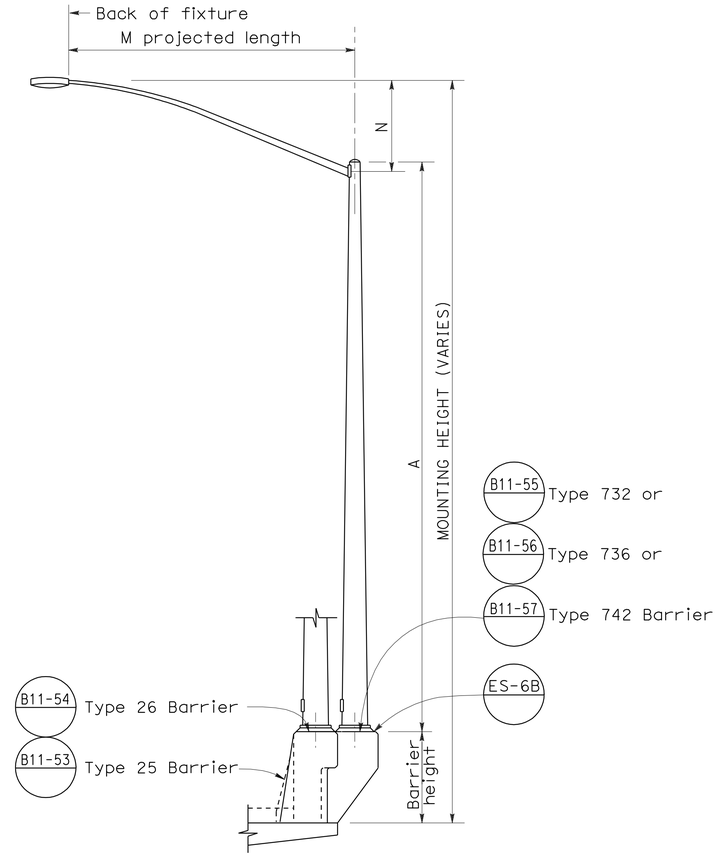

ELEVATION
TYPE 15 AND TYPE 21 BARRIER RAIL MOUNTED

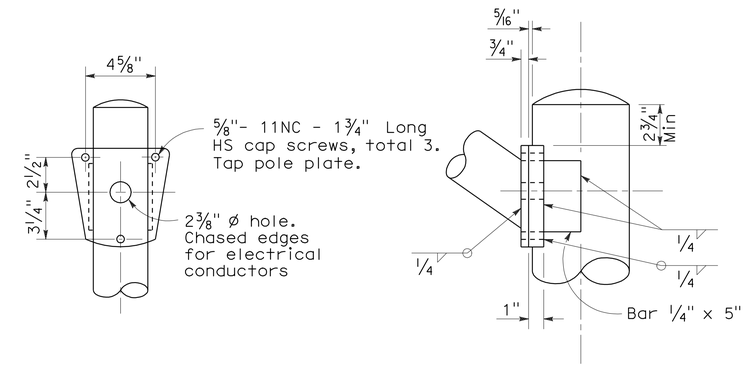

DETAIL R
LUMINAIRE ARM CONNECTION

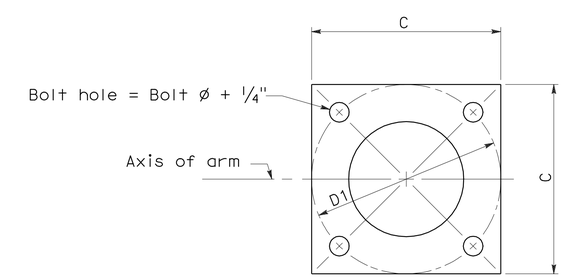

BASE PLATE

POLE TYPE	POLE DATA: A Height	POLE DATA: Min OD Base	POLE DATA: Min OD Top	POLE DATA: Wall Thickness	BASE PLATE DATA: C	BASE PLATE DATA: D1 Bolt Circle	BASE PLATE DATA: Thickness	BASE PLATE DATA: Anchor Bolts Size	LUMINAIRE ARM
15	30′	8"	3 7/8"	0.1196"	1′-0"	1′-0"	1"	1" ø x 3′-0" x 4"*	6′ - 15′ [12′]
21	35′	8 5/8"	3 7/8"	0.1196"	1′-0"	1′-0"	1"	1 1/4"ø x 3′-0" x 4"*	6′ - 15′ [12′]

* For barrier rail bolts, see Standard Plan ES-6B.

LUMINAIRE ARM DATA					
M Projected Length	N Rise	Min OD At Pole	Nominal Thickness	P Type 15	P Type 21
6′-0"	2′-0"±	3 1/4"	0.1196"	31′-6"±	36′-6"±
8′-0"	2′-6"±	3 1/2"	0.1196"	32′-0"±	37′-0"±
10′-0"	3′-3"±	3 7/8"	0.1196"	32′-9"±	37′-9"±
12′-0"	4′-3"±	3 7/8"	0.1196"	33′-9"±	38′-9"±
15′-0"	4′-9"±	4 1/4"	0.1196"	34′-3"±	39′-3"±

NOTES:

1. ☐ Indicates arm length to be used unless otherwise noted on the plans.
2. For Type 15-SB, use Type 15 standard with Type 30 slip base plate details, see Standard Plan ES-6F.
3. For additional notes, see Standard Plan ES-7M and ES-7N.

STATE OF CALIFORNIA
DEPARTMENT OF TRANSPORTATION

ELECTRICAL SYSTEMS (LIGHTING STANDARD TYPES 15 AND 21)

NO SCALE

RSP ES-6A DATED OCTOBER 5, 2007 SUPERCEDES STANDARD PLAN ES-6A DATED MAY 1, 2006 - PAGE 427 OF THE STANDARD PLANS BOOK DATED MAY 2006.

REVISED STANDARD PLAN RSP ES-6A

2006 REVISED STANDARD PLAN RSP ES-6A

7-10-07

DIST	COUNTY	ROUTE	POST MILES TOTAL PROJECT	SHEET NO.	TOTAL SHEETS
04	SF	80,101	L3.8/5.0, 4.1/5.0	105	136

REGISTERED ELECTRICAL ENGINEER

October 5, 2007
PLANS APPROVAL DATE

REGISTERED PROFESSIONAL ENGINEER
Jeffery G. McRae
No. E14512
Exp. 6-30-08
ELECTRICAL
STATE OF CALIFORNIA

The State of California or its officers or agents shall not be responsible for the accuracy or completeness of electronic copies of this plan sheet.

To accompany plans dated 1-11-10

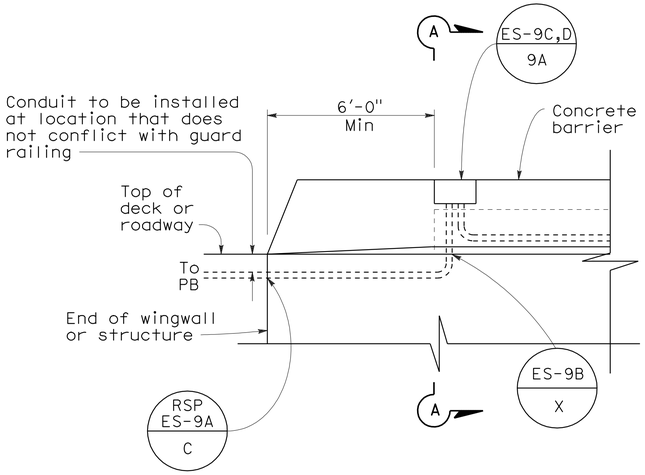

SIDEVIEW

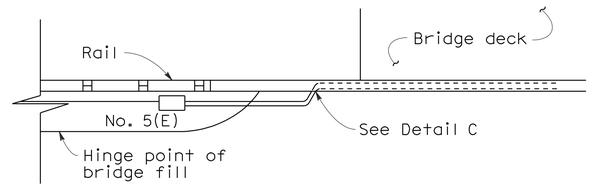

TOP VIEW

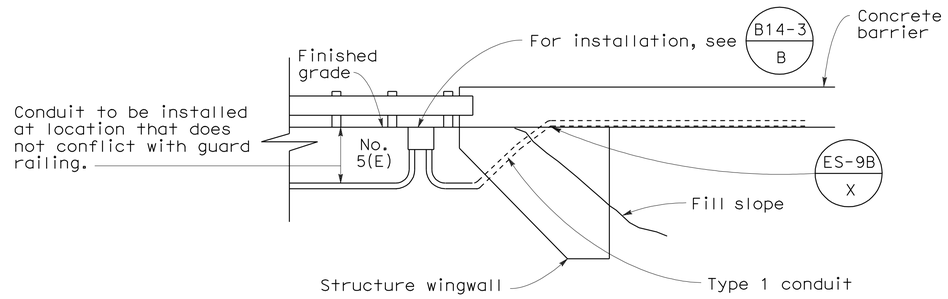

SIDE VIEW
DETAIL I
CONDUIT TERMINATION

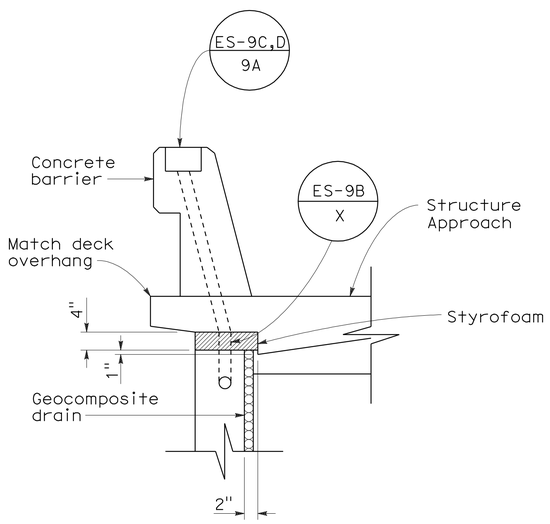

SECTION A-A

DETAIL A
CONDUIT TERMINATION

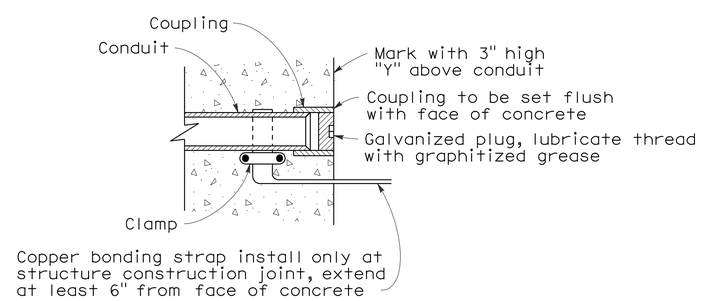

DETAIL C
CONDUIT TERMINATION

STATE OF CALIFORNIA
DEPARTMENT OF TRANSPORTATION

ELECTRICAL SYSTEMS (ELECTRICAL DETAILS STRUCTURE INSTALLATIONS)

NO SCALE

RSP ES-9A DATED OCTOBER 5, 2007 SUPERCEDES STANDARD PLAN ES-9A
DATED MAY 1, 2006 - PAGE 454 OF THE STANDARD PLANS BOOK DATED MAY 2006.

REVISED STANDARD PLAN RSP ES-9A

2006 REVISED STANDARD PLAN RSP ES-9A

7-11-07

DIST	COUNTY	ROUTE	POST MILES TOTAL PROJECT	SHEET No	TOTAL SHEETS
04	SF	80,101	L3.8/5.0, 4.1/5.0	106	136

REGISTERED CIVIL ENGINEER 8-12-09 DATE

1-11-10
PLANS APPROVAL DATE

REGISTERED PROFESSIONAL ENGINEER NOEL J. SUAN No. C 43024 Exp. 3-31-10 CIVIL STATE OF CALIFORNIA

The State of California or its officers or agents shall not be responsible for the accuracy or completeness of electronic copies of this plan sheet.

DAVID EVANS & ASSOCIATES, INC.
1544 Eureka Road, Suite 200
Roseville, CA 95661

BRG ENGINEERING
3841 North Freeway Blvd, Suite 175
Sacramento, CA 95834

INDEX TO PLANS

SHEET NO.	SHEET TITLE	SHEET NO.	SHEET TITLE
1	GENERAL PLAN	16	BRIDGE DRAINAGE DETAILS NO. 2
2	STRUCTURE PLAN NO. 1	17	BRIDGE DRAINAGE DETAILS NO. 3
3	STRUCTURE PLAN NO. 2	18	BRIDGE DRAINAGE DETAILS NO. 4
4	STRUCTURE PLAN NO. 3	19	BRIDGE DRAINAGE DETAILS NO. 5
5	STRUCTURE PLAN NO. 4	20	BRIDGE DRAINAGE DETAILS NO. 6
6	STRUCTURE PLAN NO. 5	21	BRIDGE DRAINAGE DETAILS NO. 7
7	BEARING REPLACEMENT DETAILS NO. 1	22	BRIDGE DRAINAGE DETAILS NO. 8
8	BEARING REPLACEMENT DETAILS NO. 2	23	BRIDGE DRAINAGE DETAILS NO. 9
9	JOINT SEAL DETAILS NO. 1	24	BRIDGE DRAINAGE DETAILS NO. 10
10	JOINT SEAL DETAILS NO. 2	25	BRIDGE DRAINAGE DETAILS NO. 11
11	JOINT SEAL DETAILS NO. 3	26	BARRIER REPLACEMENT DETAILS NO. 1
12	JOINT SEAL DETAILS NO. 4	27	BARRIER REPLACEMENT DETAILS NO. 2
13	DECK & JOINT SPALL REPAIR DATA	28	BARRIER REPLACEMENT DETAILS NO. 3
14	SOFFIT SPALL REPAIR DATA	29	BARRIER REPLACEMENT DETAILS NO. 4
15	BRIDGE DRAINAGE DETAILS NO. 1	30	BARRIER REPLACEMENT DETAILS NO. 5
		31	BARRIER REPLACEMENT DETAILS NO. 6

QUANTITIES

REMOVE AND REINSTALL ANGLE RESTRAINERS	17	EA
REMOVED UNSOUND CONCRETE	3,100	CF
CLEAN BRIDGE DECK	1,183,000	SQFT
BRIDGE REMOVAL (PORTION)	LUMP	SUM
RECONSTRUCT METAL RAILING (BRIDGE)	1,650	LF
STRUCTURAL CONCRETE, BRIDGE	39	CF
CLEAN EXPANSION JOINT	16,600	LF
RAPID SETTING CONCRETE (PATCH)	3,100	CF
FURNISH PRECAST CONCRETE BARRIER UNIT (12')	114	EA
ERECT PRECAST CONCRETE BARRIER UNIT	114	EA
REPAIR SPALLED SURFACE AREA	1,000	SQFT
CORE CONCRETE (1⅛")	370	LF
CORE CONCRETE (1½")	113	LF
REPLACE BEARING	24	EA
JOINT SEAL (MR ½")	14,335	LF
JOINT SEAL (MR 1")	2,316	LF
TREAT BRIDGE DECK	1,183,000	SQFT
FURNISH BRIDGE DECK TREATMENT MATERIAL	13,140	GAL
PUBLIC SAFETY PLAN	LUMP	SUM
SPOT BLAST CLEAN AND PAINT UNDERCOAT	290	SQFT
MISCELLANEOUS METAL (BRIDGE)	64,600	LB
BRIDGE DECK DRAINAGE SYSTEM	4,400	LB
BRIDGE DECK DRAINAGE SYSTEM (FIBERGLASS)	690	LF
CONCRETE BARRIER (TYPE E)	281	LF

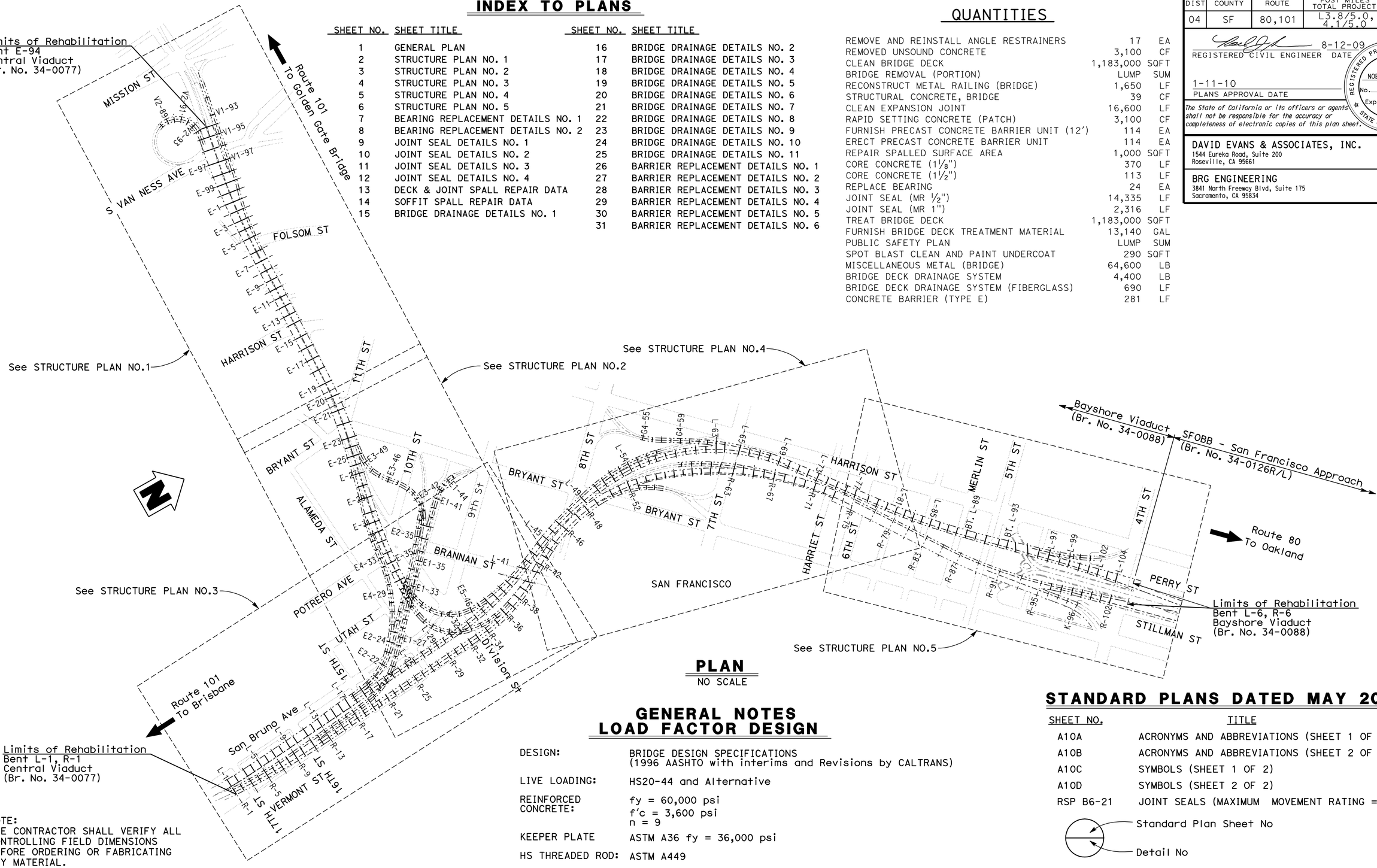

PLAN
NO SCALE

GENERAL NOTES
LOAD FACTOR DESIGN

DESIGN:	BRIDGE DESIGN SPECIFICATIONS (1996 AASHTO with interims and Revisions by CALTRANS)
LIVE LOADING:	HS20-44 and Alternative
REINFORCED CONCRETE:	fy = 60,000 psi f'c = 3,600 psi n = 9
KEEPER PLATE	ASTM A36 fy = 36,000 psi
HS THREADED ROD:	ASTM A449

NOTE:
THE CONTRACTOR SHALL VERIFY ALL CONTROLLING FIELD DIMENSIONS BEFORE ORDERING OR FABRICATING ANY MATERIAL.

STANDARD PLANS DATED MAY 2006

SHEET NO.	TITLE
A10A	ACRONYMS AND ABBREVIATIONS (SHEET 1 OF 2)
A10B	ACRONYMS AND ABBREVIATIONS (SHEET 2 OF 2)
A10C	SYMBOLS (SHEET 1 OF 2)
A10D	SYMBOLS (SHEET 2 OF 2)
RSP B6-21	JOINT SEALS (MAXIMUM MOVEMENT RATING = 2")

Standard Plan Sheet No

Detail No

Fred Dlba — DESIGN OVERSIGHT 08-27-09 SIGN OFF DATE	DESIGN	BY N. Suan	CHECKED B. Hansen	LOAD FACTOR DESIGN	LIVE LOADING: HS20-44 AND ALTERNATIVE AND PERMIT DESIGN LOAD		PREPARED FOR THE STATE OF CALIFORNIA DEPARTMENT OF TRANSPORTATION
	DETAILS	BY E. Simene	CHECKED B. Hansen	LAYOUT	BY N. Suan	CHECKED B. Hansen	
	QUANTITIES	BY E. Simene	CHECKED N. Suan	SPECIFICATIONS	BY N. Suan/D. Pecchia	PLANS AND SPECS COMPARED N. Suan/D. Pecchia	

Noel J. Suan
PROJECT ENGINEER

BRIDGE NO. Various
POST MILES Varies

BAYSHORE & CENTRAL VIADUCTS STRUCTURE REHABILITATION
GENERAL PLAN

DESIGN GENERAL PLAN SHEET (ENGLISH) (REV. 2/25/05)

ORIGINAL SCALE IN INCHES FOR REDUCED PLANS 0 1 2 3

CU 04
EA 2A1401

DISREGARD PRINTS BEARING EARLIER REVISION DATES

REVISION DATES (PRELIMINARY STAGE ONLY) 5-21-07 12-3-07 9-26-08 3-11-08 5-01-08 5-21-09 6-22-09 7-27-09 08-27-09

SHEET 1 OF 31

FILE => 34-0077 & 34-0088-a-gp01.dgn

USERNAME => BRG DATE PLOTTED => 14-JAN-2010

DIST	COUNTY	ROUTE	POST MILES TOTAL PROJECT	SHEET No	TOTAL SHEETS
04	SF	80,101	L3.8/5.0, 4.1/5.0	107	136

REGISTERED CIVIL ENGINEER 8/26/09 DATE

1-11-10
PLANS APPROVAL DATE

REGISTERED PROFESSIONAL ENGINEER NOEL J. SUAN No. C 43024 Exp. 3-31-10 CIVIL STATE OF CALIFORNIA

The State of California or its officers or agents shall not be responsible for the accuracy or completeness of electronic copies of this plan sheet.

DAVID EVANS & ASSOCIATES, INC.
1544 Eureka Road, Suite 200
Roseville, CA 95661

BRG ENGINEERING
3841 North Freeway Blvd, Suite 175
Sacramento, CA 95834

CLEAN & TREAT BRIDGE DECK TABLE

BRIDGE	ROADWAY CENTERLINE	Bent No. (Beg. to End)	LIMITS OF SEGMENT Width (Beg. to End, ft) ± @ Beg. Bent	@ End Bent	Length (ft) ±
CENTRAL VIADUCT	E LINE	E-94 TO E-95	76.5	76.5	66.0
		E-95 TO E-96	102.6	104.2	83.0
		E-96 TO E-97	104.2	103.0	95.0
		E-97 TO E-98	136.6	134.1	83.0
		E-98 TO E-99	134.1	128.2	66.0
		E-99 TO E-100	128.2	119.0	66.0
		E-100 TO E-1	119.0	108.7	66.0
		E-1 TO E-2	108.7	99.5	66.0
		E-2 TO E-3	99.5	91.6	66.0
		E-3 TO E-4	91.6	85.0	66.0
		E-4 TO E-5	85.0	79.8	66.0
		E-5 TO E-6	79.8	76.5	99.0
		E-6 TO E-21	76.5	76.5	1182.5
	V1 LINE	V1-93 TO E-97	26.5	26.5	310.0
	V2 LINE	V2-88 TO E-95	30.5	30.5	338.0

LEGEND:

① Remove and replace portion of Exist Type 2 barrier railing & Type K temporary railing, see "BARRIER REPLACEMENT DETAILS NO. 1, 2, 3, 4, 5, & 6" sheets.

② Remove and replace existing sign, see "ROAD PLANS". For site location see "STRUCTURE PLANS NO. 1 & 5" sheets.

③ Remove and replace existing conduit along rail, see "ELECTRICAL PLANS"

④ Remove existing MVDS and reconstruct on top of new railing, see "BARRIER REPLACEMENT DETAILS NO. 6" sheet. For site location see "STRUCTURE PLANS NO. 5" sheet.

Indicates existing

E-X, E1-X, E2-X, E3-X, E4-X, E5-X, E6-X, G1-X, G2-X, G3-X, G4-X, K2-X, L-X, R-X, V1-X, V2-X — Indicates bent or abutment designation and replace joint seal location. See "JOINT SEAL DETAILS NO. 1, 2, 3 & 4" sheets.

Indicates location of new Formed Gutter Drain System. See "BRIDGE DRAINAGE DETAILS NO. 1, 2, 3 & 4" sheets.

Indicates new Downdrain location. See "BRIDGE DRAINAGE DETAILS NO. 1, 2, 3 & 4" sheets.

Indicates location of existing horizontal drain pipe to be intercepted. See "BRIDGE DRAINAGE DETAILS NO. 1 & 2" sheets.

Indicates limits of clean and treat existing bridge deck with high molecular weight methacrylate.

Indicates remove existing rocker bearing assemblies and replace with new elastomeric bearing pads on concrete pedestals at bents R-63, L-65 and R-76. Total 24 bearings. See BEARING REPLACEMENT DETAILS NO. 1 & 2" sheet.

NOTES:
1. For deck and joint spall repair details, see "DECK SPALL REPAIR DETAIL" and "JOINT SPALL REPAIR DETAIL" on "DECK & JOINT SPALL REPAIR DATA" sheet.
2. For soffit spall repair detail, see "SOFFIT SPALL (@ JOINT) REPAIR DETAIL" on "SOFFIT SPALL REPAIR DATA" sheet.

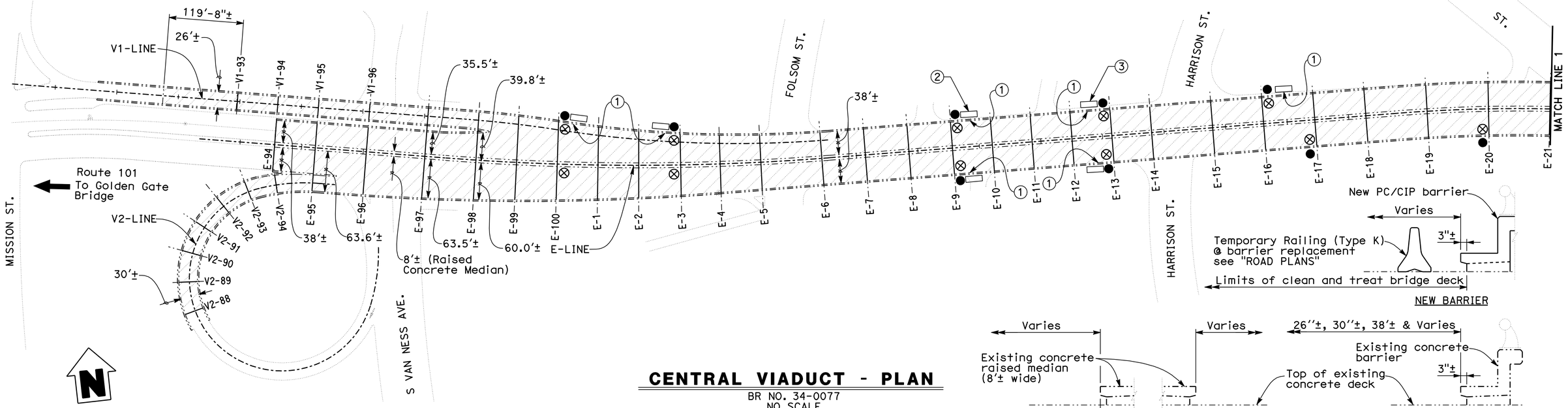

CENTRAL VIADUCT - PLAN

BR NO. 34-0077
NO SCALE

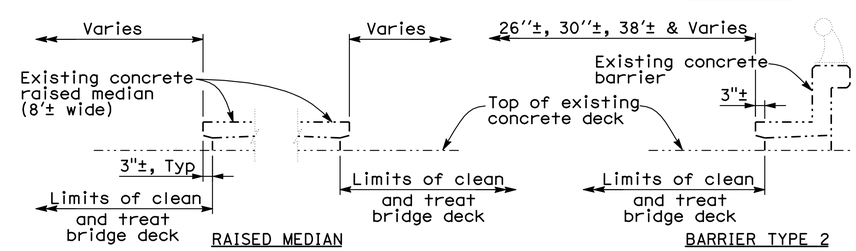

TYPICAL LIMITS OF DECK WORK

NO SCALE

NOTE:
THE CONTRACTOR SHALL VERIFY ALL CONTROLLING FIELD DIMENSIONS BEFORE ORDERING OR FABRICATING ANY MATERIAL.

Fred Diba
DESIGN OVERSIGHT
08-27-09
SIGN OFF DATE

	BY	CHECKED
DESIGN	N. Suan	B. Hansen
DETAILS	E. Simene	B. Hansen
QUANTITIES	E. Simene	N. Suan

PREPARED FOR THE STATE OF CALIFORNIA DEPARTMENT OF TRANSPORTATION

Noel J. Suan
PROJECT ENGINEER

BRIDGE NO. Various
POST MILE Varies

BAYSHORE & CENTRAL VIADUCTS STRUCTURE REHABILITATION
STRUCTURE PLAN NO. 1

DESIGN DETAIL SHEET (ENGLISH) (REV. 2/25/05)

ORIGINAL SCALE IN INCHES FOR REDUCED PLANS 0 1 2 3

CU 04
EA 2A1401

DISREGARD PRINTS BEARING EARLIER REVISION DATES

REVISION DATES (PRELIMINARY STAGE ONLY) 5-31-07 7-2-07 9-26-07 3-14-08 5-01-09 5-21-09 6-26-09 7-27-09 8-26-09

SHEET 2 OF 31

FILE => 34-0077 & 34-0088-c-sp01.dgn

USERNAME => BRG DATE PLOTTED => 14-JAN-2010

DIST	COUNTY	ROUTE	POST MILES TOTAL PROJECT	SHEET No	TOTAL SHEETS
04	SF	80,101	L3.8/5.0, 4.1/5.0	108	136

REGISTERED CIVIL ENGINEER 8-12-09 DATE

1-11-10
PLANS APPROVAL DATE

REGISTERED PROFESSIONAL ENGINEER NOEL J. SUAN No. C 43024 Exp. 3-31-10 CIVIL STATE OF CALIFORNIA

The State of California or its officers or agents shall not be responsible for the accuracy or completeness of electronic copies of this plan sheet.

DAVID EVANS & ASSOCIATES, INC.
1544 Eureka Road, Suite 200
Roseville, CA 95661

BRG ENGINEERING
3841 North Freeway Blvd, Suite 175
Sacramento, CA 95834

CLEAN & TREAT BRIDGE DECK TABLE

BRIDGE	ROADWAY CENTERLINE	Bent No. (Beg. to End)	LIMITS OF SEGMENT Width (Beg. to End, ft) ± @ Beg. Bent	@ End Bent	Length (ft) ±
CENTRAL VIADUCT	E LINE	E-21 TO E-22	76.5	79.2	93.8
		E-22 TO E-23	79.2	85.4	101.7
		E-23 TO E-24	85.4	90.3	61.0
		E-24 TO E-25	90.3	95.4	61.0
		E-25 TO E-27	64.5	64.5	122.0
		E-27 TO E-28	64.5	66.5	84.0
		E-28 TO E-29	66.5	72.7	84.0
		E-29 TO E-30	72.7	82.3	100.0
		E-30 TO E-31	82.3	86.9	68.8
		E-31 TO E-32	86.9	90.0	68.8
		E-32 TO E-37	52.5	52.5	350.4

CLEAN & TREAT BRIDGE DECK TABLE

BRIDGE	ROADWAY CENTERLINE	Bent No. (Beg. to End)	LIMITS OF SEGMENT Width (Beg. to End, ft) ± @ Beg. Bent	@ End Bent	Length (ft) ±
CENTRAL VIADUCT	E1 LINE	E1-25 TO E1-31	26.5	26.5	371.6
		E1-31 TO E1-32	26.5	27.7	56.3
		E1-32 TO E1-33	27.7	29.2	50.6
		E1-33 TO E1-34	29.2	32.3	66.5
		E1-34 TO E1-35	32.3	39.3	105.4
		E1-35 TO E1-36	39.3	44.9	64.1
		E1-36 TO E1-37	44.9	52.9	86.2
		E1-37 TO E1-38	52.9	63.6	85.0
		E1-38 TO E1-39	28.6	26.5	64.1
		E1-39 TO E1-45	26.5	26.5	312.5
	E2 LINE	E2-23 TO E2-24	42.8	46.8	69.6
		E2-24 TO E2-25	46.8	52.9	69.7
		E2-25 TO E2-38	26.5	26.5	815.4
	E3 LINE	E-25 TO E1-38	26.5	26.5	680.0
	E4 LINE	E-32 TO E4-26	26.5	26.5	617.0
	E5 LINE	E-37 TO E5-45	26.5	26.5	479.7
	E6 LINE	E-37 TO E6-44	26.5	26.5	442.1

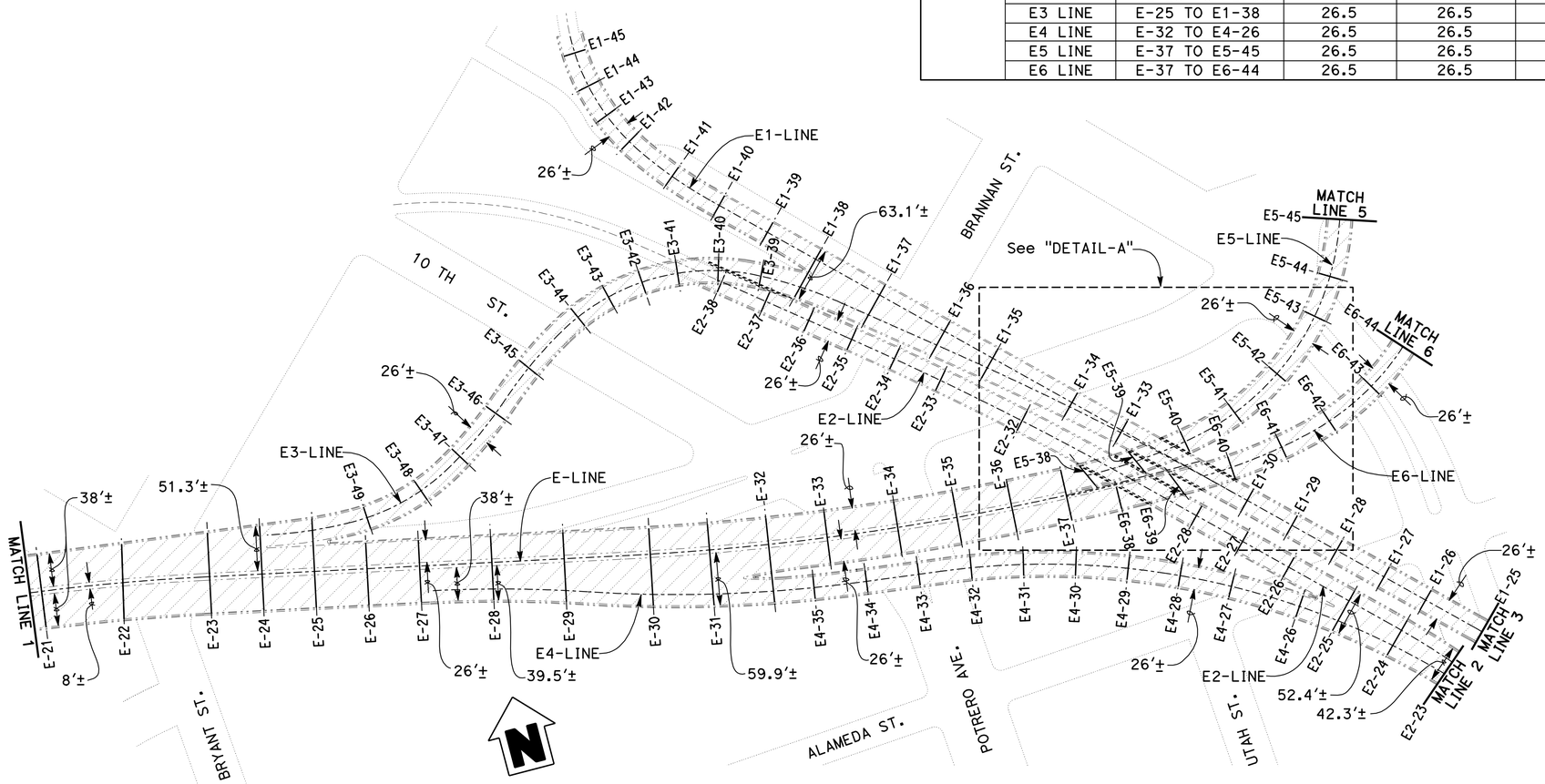

CENTRAL VIADUCT - PLAN

BR NO. 34-0077
NO SCALE

Note: E2-29 to E2-31 and E1-31 to E1-32 bent designations not shown for clarity. See "DETAIL-A" for bent designations not shown.

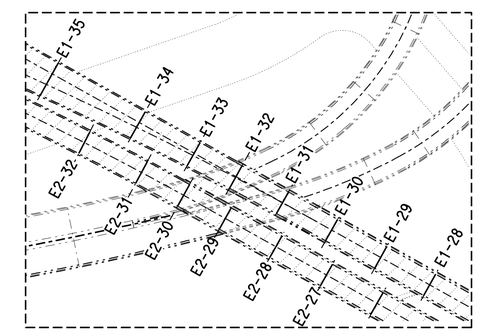

DETAIL-A

NO SCALE

Note: E1-LINE and E2-LINE work and bent designations shown only. Non E1-LINE and E2-LINE work shown on plan view this sheet.

NOTE:
THE CONTRACTOR SHALL VERIFY ALL CONTROLLING FIELD DIMENSIONS BEFORE ORDERING OR FABRICATING ANY MATERIAL.

NOTES:

1. For [hatched] see legend on "STRUCTURAL PLAN NO.1" sheet.

Fred Diba
DESIGN OVERSIGHT
08-13-09
SIGN OFF DATE

	BY	CHECKED
DESIGN	N. Suan	B. Hansen
DETAILS	E. Simene	B. Hansen
QUANTITIES	E. Simene	N. Suan

PREPARED FOR THE STATE OF CALIFORNIA DEPARTMENT OF TRANSPORTATION

Noel J. Suan
PROJECT ENGINEER

BRIDGE NO. Various
POST MILE Varies

BAYSHORE & CENTRAL VIADUCTS STRUCTURE REHABILITATION
STRUCTURE PLAN NO.2

DESIGN DETAIL SHEET (ENGLISH) (REV. 2/25/05)

ORIGINAL SCALE IN INCHES FOR REDUCED PLANS 0 1 2 3

CU 04
EA 2A1401

DISREGARD PRINTS BEARING EARLIER REVISION DATES

REVISION DATES (PRELIMINARY STAGE ONLY) 5-31-07 7-2-08 9-26-08 3-1-08 5-01-09 5-21-09 6-30-09 7-27-09

SHEET 3 OF 31

FILE => 34-0077 & 34-0088-c-sp02.dgn

USERNAME => BRG DATE PLOTTED => 14-JAN-2010

DIST	COUNTY	ROUTE	POST MILES TOTAL PROJECT	SHEET No	TOTAL SHEETS
04	SF	80,101	L3.8/5.0, 4.1/5.0	109	136

REGISTERED CIVIL ENGINEER 8-12-09 DATE

1-11-10
PLANS APPROVAL DATE

REGISTERED PROFESSIONAL ENGINEER NOEL J. SUAN No. C 43024 Exp. 3-31-10 CIVIL STATE OF CALIFORNIA

The State of California or its officers or agents shall not be responsible for the accuracy or completeness of electronic copies of this plan sheet.

DAVID EVANS & ASSOCIATES, INC.
1544 Eureka Road, Suite 200
Roseville, CA 95661

BRG ENGINEERING
3841 North Freeway Blvd, Suite 175
Sacramento, CA 95834

CLEAN & TREAT BRIDGE DECK TABLE

BRIDGE	ROADWAY CENTERLINE	Bent No. (Beg. to End)	LIMITS OF SEGMENT Width (Beg. to End, ft) ± @ Beg. Bent	@ End Bent	Length (ft) ±
CENTRAL VIADUCT	E1 LINE	R-1 TO R-2	50.5	50.9	56.4
		R-2 TO R-3	50.9	52.0	70.5
		R-3 TO R-4	52.0	53.4	56.7
		R-4 TO R-5	53.4	55.1	56.8
		R-5 TO R-6	55.1	57.3	56.8
		R-6 TO R-7	57.3	59.9	56.8
		R-7 TO R-8	59.9	62.9	56.8
		R-8 TO R-9	62.9	66.3	56.8
		R-9 TO R-10	66.3	69.7	56.8
		R-10 TO R-11	69.7	73.4	84.0
		R-11 TO R-12	73.4	65.0	56.6
		R-12 TO E1-25	26.5	26.5	757.9
	E2 LINE	L-19 TO E2-20	27.9	29.5	62.4
		E2-20 TO E2-21	29.5	31.9	62.5
		E2-21 TO E2-22	31.9	36.7	93.9
		E2-22 TO E2-23	36.7	42.8	91.1
	E5 LINE	E5-45 TO L-36	26.5	26.5	200.4
	E6 LINE	E6-44 TO R-36	26.5	26.5	448.8
	F2 LINE	L-1 TO L-11	50.5	50.5	606.0
		L-11 TO L-12	50.5	52.0	56.6
		L-12 TO L-13	52.0	55.6	56.2

CLEAN & TREAT BRIDGE DECK TABLE

BRIDGE	ROADWAY CENTERLINE	Bent No. (Beg. to End)	LIMITS OF SEGMENT Width (Beg. to End, ft) ± @ Beg. Bent	@ End Bent	Length (ft) ±
CENTRAL VIADUCT	E2 LINE	L-13 TO L-14	55.6	59.5	56.7
		L-14 TO L-15	59.5	62.7	56.7
		L-15 TO L-16	62.7	65.0	56.7
		L-16 TO L-17	65.0	66.2	56.7
		L-17 TO L-18	66.2	66.2	56.7
		L-18 TO L-19	64.0	64.5	70.1
	F3L LINE	L-19 TO L-34	38.5	38.5	897.5
		L-34 TO L-35	38.5	38.8	62.5
		L-35 TO L-36	38.8	43.4	62.5
		L-36 TO L-37	74.7	68.6	62.5
		L-37 TO L-38	68.6	63.3	62.5
		L-38 TO L-39	63.3	58.8	62.5
		L-39 TO L-40	58.8	55.5	55.6
		L-40 TO L-41	55.5	51.6	83.8
		L-41 TO L-42	51.6	50.5	54.3
	F3R LINE	R-12 TO R-36	38.5	38.5	1483.4
		R-36 TO R-37	64.5	64.5	67.8
		R-37 TO R-38	66.5	64.9	67.8
		R-38 TO R-39	64.9	60.4	67.8
		R-39 TO R-40	60.4	54.1	63.3

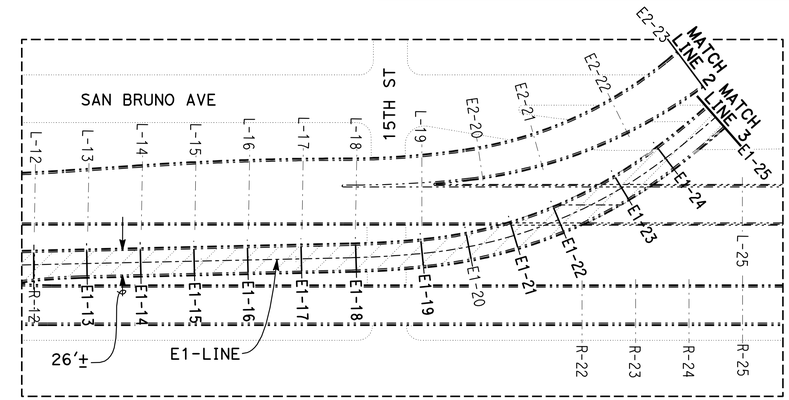

DETAIL-B
NO SCALE

Note: E1-LINE work and bent designation shown only. Non E1-LINE work shown on plan view this sheet.

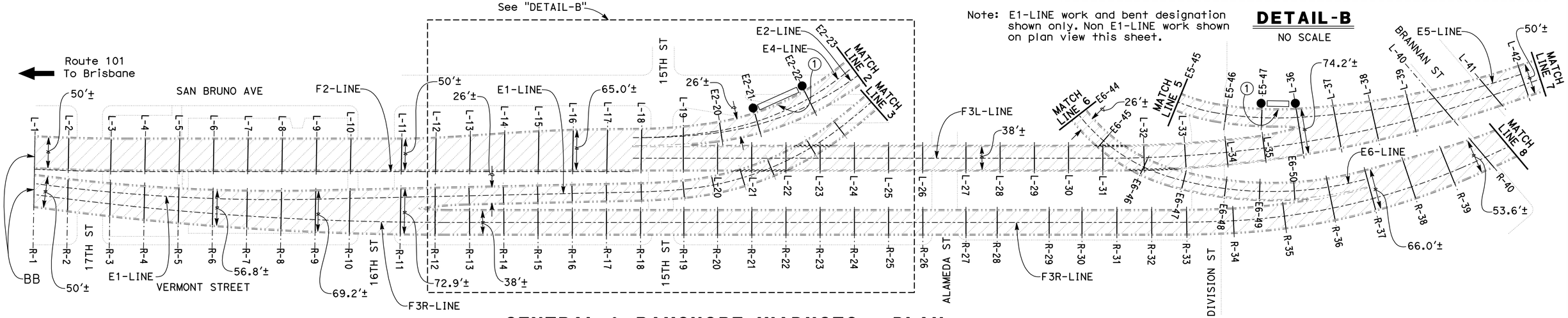

CENTRAL & BAYSHORE VIADUCTS - PLAN
BR NOS. 34-0077 & 34-0088
NO SCALE

Note: E1-LINE bent designation not shown for clarity.
See "DETAIL-B" for E1-LINE bent designation.

NOTE:
THE CONTRACTOR SHALL VERIFY ALL CONTROLLING FIELD DIMENSIONS BEFORE ORDERING OR FABRICATING ANY MATERIAL.

NOTES:

1. For ①, ●, ▭, ▨ see legend on "STRUCTURAL PLAN NO.1" sheet.

Fred Diba
DESIGN OVERSIGHT
08-13-09
SIGN OFF DATE

	BY	CHECKED
DESIGN	N. Suan	B. Hansen
DETAILS	E. Simene	B. Hansen
QUANTITIES	E. Simene	N. Suan

PREPARED FOR THE STATE OF CALIFORNIA DEPARTMENT OF TRANSPORTATION

Noel J. Suan
PROJECT ENGINEER

BRIDGE NO. Various
POST MILE Varies

BAYSHORE & CENTRAL VIADUCTS STRUCTURE REHABILITATION
STRUCTURE PLAN NO.3

DESIGN DETAIL SHEET (ENGLISH) (REV. 2/25/05)

ORIGINAL SCALE IN INCHES FOR REDUCED PLANS 0 1 2 3

CU 04
EA 2A1401

DISREGARD PRINTS BEARING EARLIER REVISION DATES

REVISION DATES (PRELIMINARY STAGE ONLY) 5-25-07 7-2-07 9-26-07 3-11-08 5-01-09 5-11-09 6-26-09 7-27-09

SHEET 4 OF 31

FILE => 34-0077 & 34-0088-c-sp03.dgn

DATE PLOTTED => 14-JAN-2010
USERNAME => BRG

DIST	COUNTY	ROUTE	POST MILES TOTAL PROJECT	SHEET No	TOTAL SHEETS
04	SF	80,101	L3.8/5.0, 4.1/5.0	110	136

REGISTERED CIVIL ENGINEER — DATE 8-12-09

1-11-10
PLANS APPROVAL DATE

REGISTERED PROFESSIONAL ENGINEER — NOEL J. SUAN — No. C 43024 — Exp. 3-31-10 — CIVIL — STATE OF CALIFORNIA

The State of California or its officers or agents shall not be responsible for the accuracy or completeness of electronic copies of this plan sheet.

DAVID EVANS & ASSOCIATES, INC.
1544 Eureka Road, Suite 200
Roseville, CA 95661

BRG ENGINEERING
3841 North Freeway Blvd, Suite 175
Sacramento, CA 95834

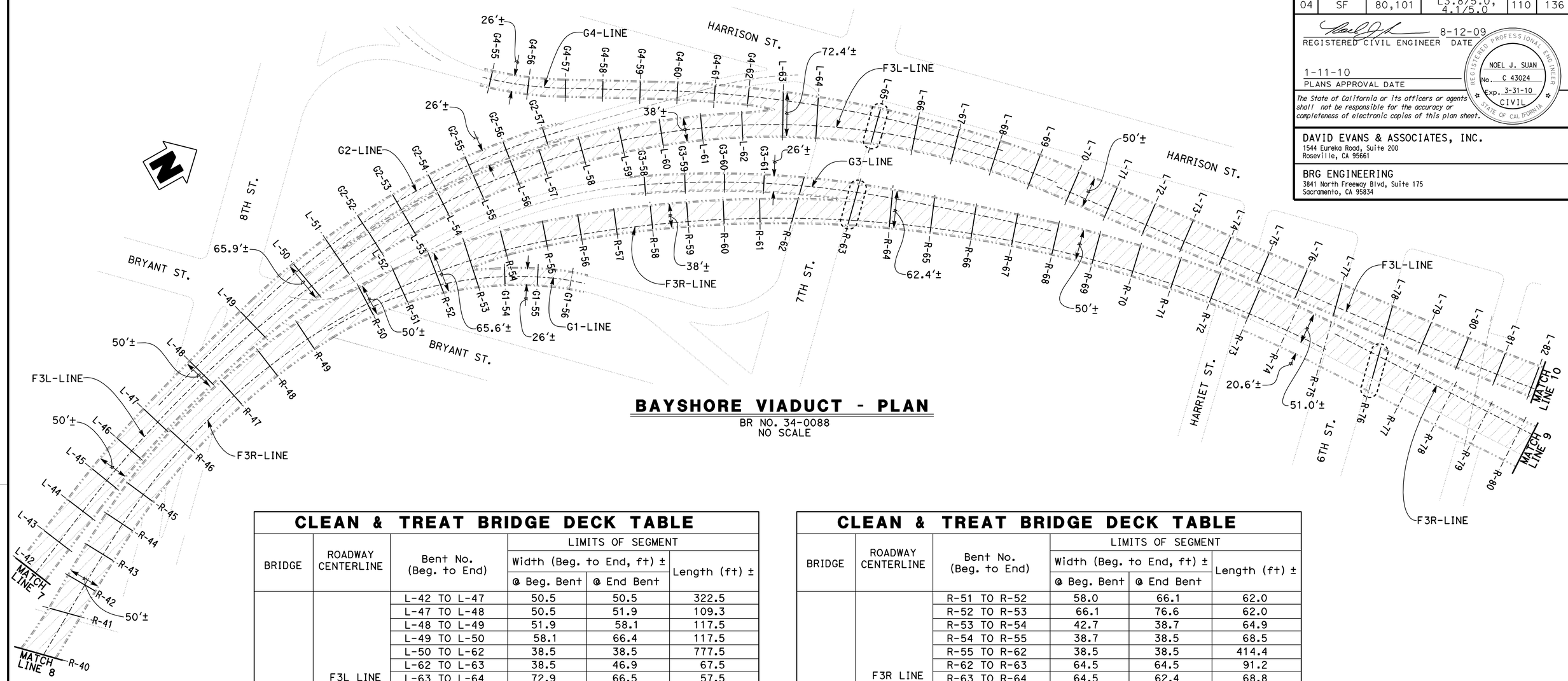

BAYSHORE VIADUCT - PLAN

BR NO. 34-0088
NO SCALE

CLEAN & TREAT BRIDGE DECK TABLE

BRIDGE	ROADWAY CENTERLINE	Bent No. (Beg. to End)	LIMITS OF SEGMENT Width (Beg. to End, ft) ± @ Beg. Bent	@ End Bent	Length (ft) ±
BAYSHORE VIADUCT	F3L LINE	L-42 TO L-47	50.5	50.5	322.5
		L-47 TO L-48	50.5	51.9	109.3
		L-48 TO L-49	51.9	58.1	117.5
		L-49 TO L-50	58.1	66.4	117.5
		L-50 TO L-62	38.5	38.5	777.5
		L-62 TO L-63	38.5	46.9	67.5
		L-63 TO L-64	72.9	66.5	57.5
		L-64 TO L-65	66.5	58.1	93.6
		L-65 TO L-66	58.1	54.1	68.9
		L-66 TO L-67	54.1	51.5	68.8
		L-67 TO L-68	51.5	50.5	68.8
		L-68 TO L-82	50.5	50.5	988.5
	F3R LINE	R-40 TO R-41	54.1	50.2	73.8
		R-41 TO R-42	50.2	50.5	53.7
		R-42 TO R-49	50.5	50.5	558.0
		R-49 TO R-50	50.5	51.3	115.2
		R-50 TO R-51	51.3	58.0	62.0

CLEAN & TREAT BRIDGE DECK TABLE

BRIDGE	ROADWAY CENTERLINE	Bent No. (Beg. to End)	LIMITS OF SEGMENT Width (Beg. to End, ft) ± @ Beg. Bent	@ End Bent	Length (ft) ±
BAYSHORE VIADUCT	F3R LINE	R-51 TO R-52	58.0	66.1	62.0
		R-52 TO R-53	66.1	76.6	62.0
		R-53 TO R-54	42.7	38.7	64.9
		R-54 TO R-55	38.7	38.5	68.5
		R-55 TO R-62	38.5	38.5	414.4
		R-62 TO R-63	64.5	64.5	91.2
		R-63 TO R-64	64.5	62.4	68.8
		R-64 TO R-65	62.9	57.0	68.8
		R-65 TO R-66	57.0	53.2	68.8
		R-66 TO R-67	53.2	51.1	68.8
		R-67 TO R-68	51.1	50.5	68.8
		R-68 TO R-73	50.5	50.5	343.8
		R-73 TO R-80	51.3	51.3	488.9
	G1 LINE	R-53 TO G1-56	26.5	26.5	160.0
	G2 LINE	L-50 TO G2-57	26.5	26.5	467.0
	G3 LINE	G3-58 TO R-63	26.5	26.5	352.0
	G4 LINE	G4-55 TO L-63	26.5	26.5	486.0

NOTE:
THE CONTRACTOR SHALL VERIFY ALL CONTROLLING FIELD DIMENSIONS BEFORE ORDERING OR FABRICATING ANY MATERIAL.

NOTE:
1. For ▨, ⬚ see legend on "STRUCTURAL PLAN NO.1" sheet.

Fred Dlba
DESIGN OVERSIGHT
08-13-09
SIGN OFF DATE

	BY	CHECKED
DESIGN	N. Suan	B. Hansen
DETAILS	E. Simene	B. Hansen
QUANTITIES	E. Simene	N. Suan

PREPARED FOR THE STATE OF CALIFORNIA DEPARTMENT OF TRANSPORTATION

Noel J. Suan
PROJECT ENGINEER

BRIDGE NO. Various
POST MILE Varies

BAYSHORE & CENTRAL VIADUCTS STRUCTURE REHABILITATION
STRUCTURE PLAN NO.4

DESIGN DETAIL SHEET (ENGLISH) (REV. 2/25/05)

ORIGINAL SCALE IN INCHES FOR REDUCED PLANS 0 1 2 3

CU 04
EA 2A1401

DISREGARD PRINTS BEARING EARLIER REVISION DATES
REVISION DATES (PRELIMINARY STAGE ONLY) 5-21-07 11-2-07 9-26-08 3-11-09 5-01-09 5-21-09 6-26-09 7-27-09

SHEET 5 OF 31

FILE => 34-0077 & 34-0088-c-sp04.dgn

DATE PLOTTED => 14-JAN-2010
USERNAME => BRG

DIST	COUNTY	ROUTE	POST MILES TOTAL PROJECT	SHEET No	TOTAL SHEETS
04	SF	80,101	L3.8/5.0, 4.1/5.0	111	136

REGISTERED CIVIL ENGINEER 8-12-09 DATE

1-11-10
PLANS APPROVAL DATE

The State of California or its officers or agents shall not be responsible for the accuracy or completeness of electronic copies of this plan sheet.

REGISTERED PROFESSIONAL ENGINEER NOEL J. SUAN No. C 43024 Exp. 3-31-10 CIVIL STATE OF CALIFORNIA

DAVID EVANS & ASSOCIATES, INC.
1544 Eureka Road, Suite 200
Roseville, CA 95661

BRG ENGINEERING
3841 North Freeway Blvd, Suite 175
Sacramento, CA 95834

CLEAN & TREAT BRIDGE DECK TABLE

BRIDGE	ROADWAY CENTERLINE	Bent No. (Beg. to End)	APPROXIMATE DIMENSIONS OF SEGMENT		
			Width (Beg. to End, ft) ±		Length (ft) ±
			@ Beg. Bent	@ End Bent	
BAYSHORE VIADUCT	F3L LINE	L-82 TO L-89	50.5	50.5	431.0
		L-89 TO L-90	50.5	50.7	65.0
		L-90 TO L-91	50.7	51.8	64.6
		L-91 TO L-92	51.8	54.6	88.5
		L-92 TO L-93	54.6	57.2	62.7
		L-93 TO L-94	57.2	60.0	62.7
		L-94 TO L-95	60.0	63.8	83.3
		L-95 TO L-96	63.8	66.9	68.1
		L-96 TO L-97	66.9	70.2	70.0
		L-97 TO L-98	38.5	38.9	70.1
		L-98 TO L-99	38.9	40.3	71.2
		L-99 TO L-100	40.3	42.7	71.2
		L-100 TO L-101	42.7	45.8	64.6
		L-101 TO L-102	45.8	50.3	64.6
		L-102 TO L-103	50.3	50.8	64.7
		L-103 TO L-104	50.8	51.3	64.7
		L-104 TO L-6	51.3	51.9	93.7

CLEAN & TREAT BRIDGE DECK TABLE

BRIDGE	ROADWAY CENTERLINE	Bent No. (Beg. to End)	APPROXIMATE DIMENSIONS OF SEGMENT		
			Width (Beg. to End, ft) ±		Length (ft) ±
			@ Beg. Bent	@ End Bent	
BAYSHORE VIADUCT	F3R LINE	R-80 TO R-90	51.3	51.3	657.0
		R-90 TO R-91	51.3	51.1	63.8
		R-91 TO R-92	51.6	54.0	61.7
		R-92 TO R-93	54.0	59.5	86.0
		R-93 TO R-94	59.5	65.3	66.3
		R-94 TO R-95	65.3	72.5	70.0
		R-95 TO R-96	46.5	38.6	70.0
		R-96 TO R-97	38.6	39.3	70.0
		R-97 TO R-98	39.3	42.1	72.3
		R-98 TO R-99	42.1	45.8	64.8
		R-99 TO R-100	45.8	49.8	64.8
		R-100 TO R-101	49.8	53.8	64.8
		R-101 TO R-102	53.8	57.7	64.2
		R-102 TO R-6	57.7	63.6	93.6
	K2 LINE	L-97 TO K2-101	26.5	26.5	272.0

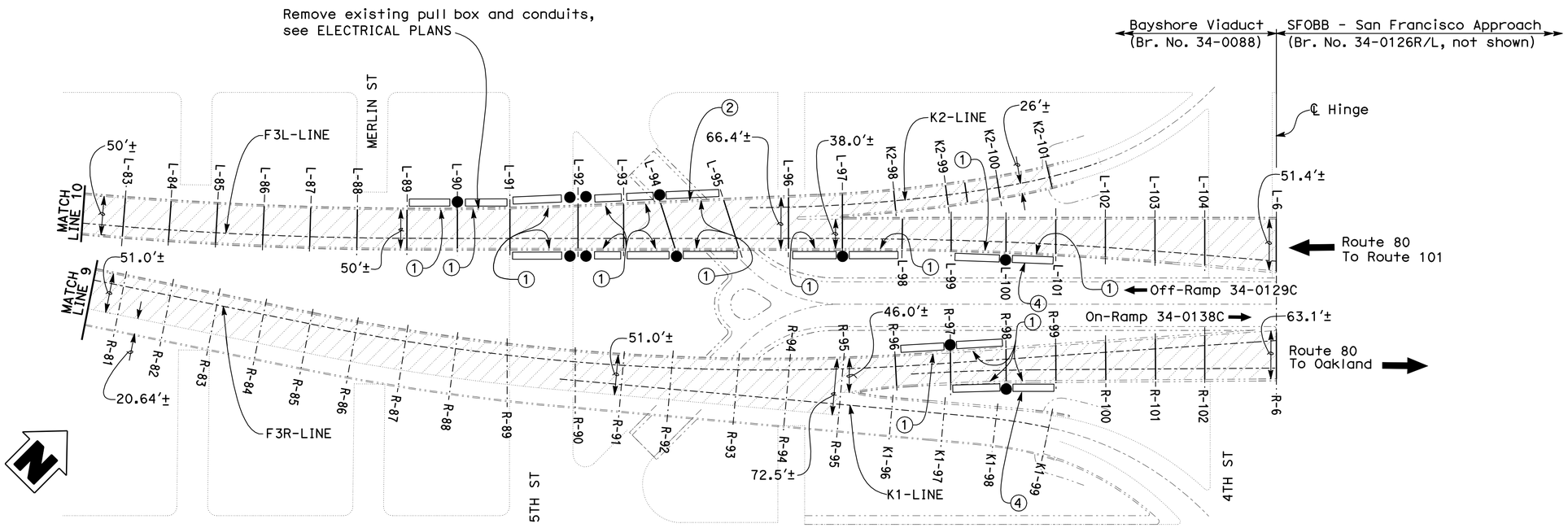

BAYSHORE VIADUCT - PLAN

BR NO. 34-0088
NO SCALE

NOTES:

1. For ①, ●, ▭, ▨, ②, ④ see legend on "STRUCTURAL PLAN NO.1" sheet.

NOTE:
THE CONTRACTOR SHALL VERIFY ALL CONTROLLING FIELD DIMENSIONS BEFORE ORDERING OR FABRICATING ANY MATERIAL.

Fred Dlba
DESIGN OVERSIGHT
08-13-09
SIGN OFF DATE

	BY	CHECKED
DESIGN	N. Suan	B. Hansen
DETAILS	E. Simene	B. Hansen
QUANTITIES	E. Simene	N. Suan

PREPARED FOR THE STATE OF CALIFORNIA DEPARTMENT OF TRANSPORTATION

Noel J. Suan
PROJECT ENGINEER

BRIDGE NO. Various
POST MILE Varies

BAYSHORE & CENTRAL VIADUCTS STRUCTURE REHABILITATION
STRUCTURE PLAN NO.5

DESIGN DETAIL SHEET (ENGLISH) (REV. 2/25/05)

ORIGINAL SCALE IN INCHES FOR REDUCED PLANS 0 1 2 3

CU 04
EA 2A1401

DISREGARD PRINTS BEARING EARLIER REVISION DATES

REVISION DATES (PRELIMINARY STAGE ONLY) 3-21-07 3-23-07 3-26-07 3-3-08 3-20-09 5-1-09 6-2-09 7-21-09

SHEET 6 OF 31

FILE => 34-0077 & 34-0088-c-sp05.dgn

DATE PLOTTED => 14-JAN-2010
USERNAME => BRG

DIST	COUNTY	ROUTE	POST MILES TOTAL PROJECT	SHEET No	TOTAL SHEETS
04	SF	80,101	L3.8/5.0, 4.1/5.0	112	136

REGISTERED CIVIL ENGINEER 8-26-09 DATE

1-11-10
PLANS APPROVAL DATE

The State of California or its officers or agents shall not be responsible for the accuracy or completeness of electronic copies of this plan sheet.

REGISTERED PROFESSIONAL ENGINEER NOEL J. SUAN No. C 43024 Exp. 3-31-10 CIVIL STATE OF CALIFORNIA

DAVID EVANS & ASSOCIATES, INC.
1544 Eureka Road, Suite 200
Roseville, CA 95661

BRG ENGINEERING
3841 North Freeway Blvd, Suite 175
Sacramento, CA 95834

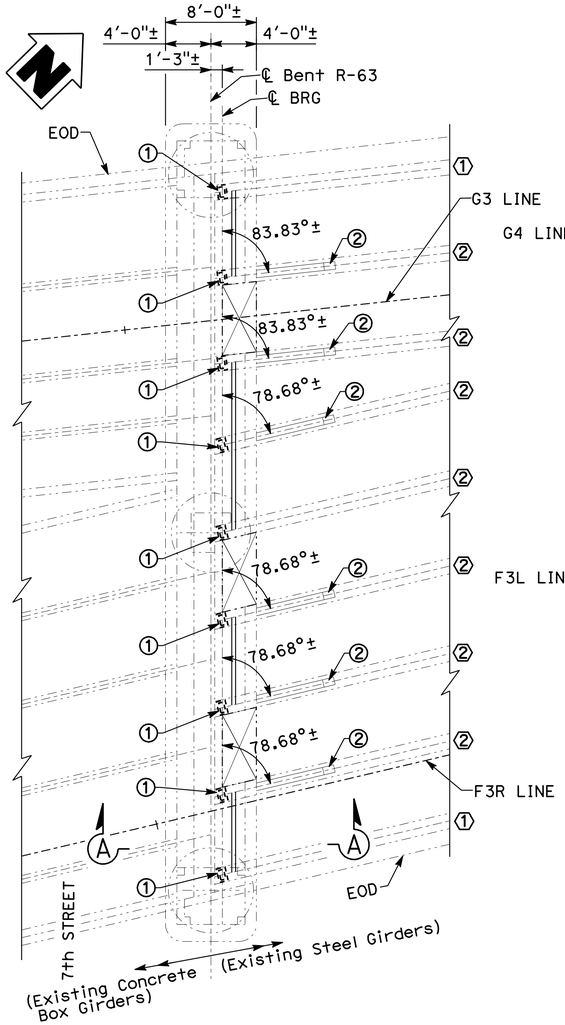

PART PLAN BENT R-63

3/16"=1'-0"

(No. of bearings to be replaced = 9 total)

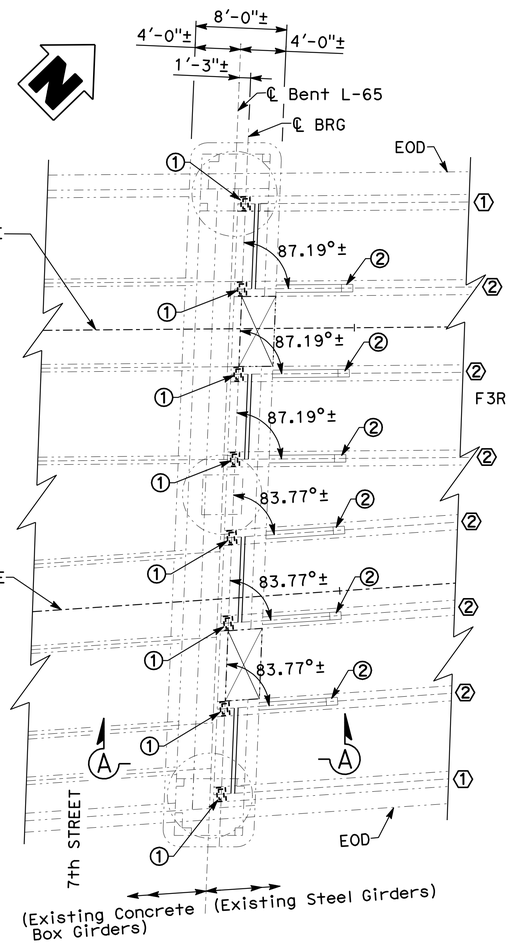

PART PLAN BENT L-65

3/16"=1'-0"

(No. of bearings to be replaced = 8 total)

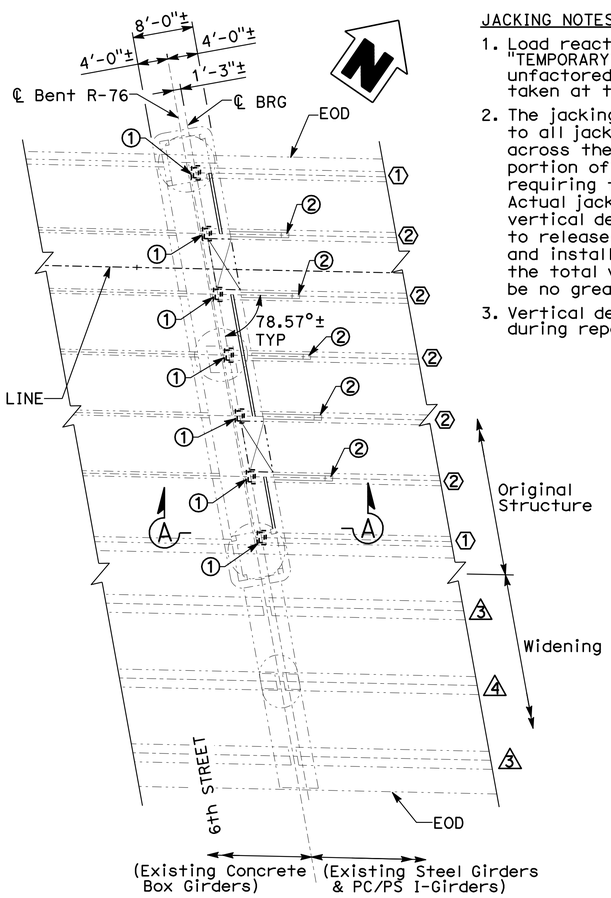

PART PLAN R-76

1/8"=1'-0"

(No. of bearings to be replaced = 7 total)

Note: For "VIEW A-A", see "BEARING REPLACEMENT DETAILS NO. 2" sheet.

JACKING NOTES:

1. Load reactions shown on the "TEMPORARY SUPPORT TABLE" are unfactored minimum design loads taken at the centerline bearings.
2. The jacking force shall be applied to all jacks simultaneously across the entire width of the portion of the superstructure requiring temporary supports. Actual jacking force and total vertical deflection shall be enough to release existing rocker bearings and install new bearing pads, but the total vertical deflection shall be no greater than 1/16".
3. Vertical deflection shall be maintained during repair operations.

LEGEND:

① Indicates remove and replace rocker bearing assemblies with elastomeric bearings on concrete pedestals

② Label and remove existing steel angle restrainers (one angle each side of anchor plate) prior to raising the superstructure. Reinstall after the existing bearings has been replaced and the superstructure has been lowered.

LEGEND (EXISTING):

Indicates existing concrete shear keys

Indicates existing girder bracing

① Exterior Steel Girder

② Interior Steel Girder

③ Exterior PC/PS I-Girder

④ Interior PC/PS I-Girder

** Remove Exist 1"ø HS bolts and replace w/ new galvanized 1"ø A325 HS bolts w/ double nuts, snug tight, Tot 8. Exclude threads from shear plane. All bolted connections between the brackets and angle restrainer are bearing type connections.

*** Clean and paint interior and exterior face of steel angles and anchor plates w/ in 4" radius of the bolted connection to be removed and replaced. Power tool clean and paint undercoat on existing contact surface areas and areas of bolted connections. Prepare and paint exposed galvanized surfaces of bolts and nuts.

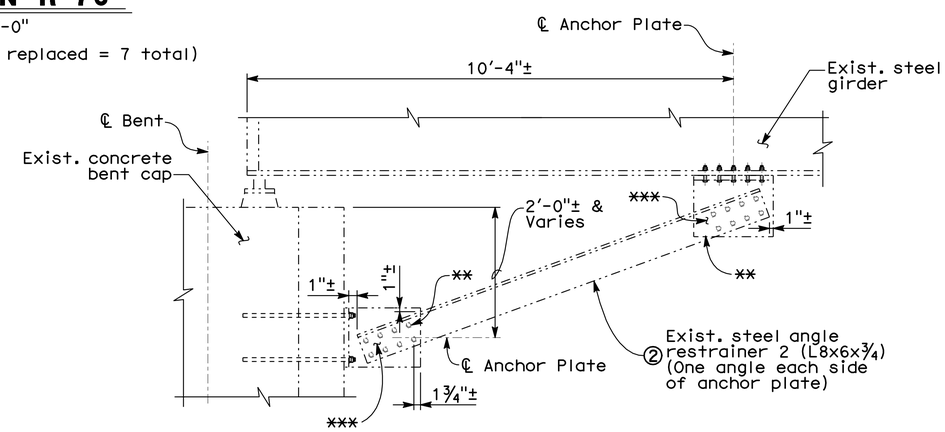

EXISTING STEEL ANGLE RESTRAINER ELEVATION

No Scale

TEMPORARY SUPPORT TABLE

Bent No.	Steel Girder	Girder Location	*Dead Load Reaction per Girder (kips)	*Live Load Reaction per Girder (kips)	*Impact Reaction per Girder (kips)	Lateral Support Minimum Design Load per Girder (kips)
R-63	Steel Girder	Interior (7) Exterior (2)	36.5 31.3	63.3 63.3	17.7 17.7	3.7 3.1
L-65	Steel Girder	Interior (6) Exterior (2)	37.3 31.6	63.3 63.3	17.7 17.7	3.7 3.2
R-76	Steel Girder	Interior (5) Exterior (2)	36.9 32.2	63.3 63.3	17.7 17.7	3.7 3.2
	PC/PS	Interior (1) Exterior (2)	43.8 47.3	51.6 51.6	14.4 14.4	4.4 4.7

* See Note 1 in "JACKING NOTES"
(x) Indicates Total No. of girders

NOTE:
THE CONTRACTOR SHALL VERIFY ALL CONTROLLING FIELD DIMENSIONS BEFORE ORDERING OR FABRICATING ANY MATERIAL.

Fred Diba
DESIGN OVERSIGHT
08-27-09
SIGN OFF DATE

DESIGN DETAIL SHEET (ENGLISH) (REV. 2/25/05)

	BY	CHECKED
DESIGN	N. Suan	B. Hansen
DETAILS	E. Simene	B. Hansen
QUANTITIES	E. Simene	N. Suan

ORIGINAL SCALE IN INCHES FOR REDUCED PLANS 0 1 2 3

PREPARED FOR THE STATE OF CALIFORNIA DEPARTMENT OF TRANSPORTATION

Noel J. Suan
PROJECT ENGINEER

CU 04
EA 2A1401

BRIDGE NO. Various
POST MILE Varies

BAYSHORE & CENTRAL VIADUCTS STRUCTURE REHABILITATION

BEARING REPLACEMENT DETAILS NO.1

DISREGARD PRINTS BEARING EARLIER REVISION DATES

REVISION DATES (PRELIMINARY STAGE ONLY) 5-25-07 7-27-07 9-26-07 3-17-08 5-01-09 5-21-09 6-26-09 7-27-09 8-26-09

SHEET 7 OF 31

FILE => 34-0077 & 34-0088-q-brgdt01 (BEARING).dgn

USERNAME => BRG DATE PLOTTED => 14-JAN-2010

DIST	COUNTY	ROUTE	POST MILES TOTAL PROJECT	SHEET No	TOTAL SHEETS
04	SF	80,101	L3.8/5.0, 4.1/5.0	113	136

REGISTERED CIVIL ENGINEER 8-26-09 DATE

1-11-10
PLANS APPROVAL DATE

REGISTERED PROFESSIONAL ENGINEER NOEL J. SUAN No. C 43024 Exp. 3-31-10 CIVIL STATE OF CALIFORNIA

The State of California or its officers or agents shall not be responsible for the accuracy or completeness of electronic copies of this plan sheet.

DAVID EVANS & ASSOCIATES, INC.
1544 Eureka Road, Suite 200
Roseville, CA 95661

BRG ENGINEERING
3841 North Freeway Blvd, Suite 175
Sacramento, CA 95834

STEEL REINFORCED ELASTOMERIC BEARING PAD TABLE

Bent No.	Number of Ext. Girder	Number of Int. Girder	Bearing Pads Size Ext. Girder (in)	Bearing Pads Size Int. Girder (in)	Keeper Plate Size Ext. Girder (in)	Keeper Plate Size Int. Girder (in)	New Concrete Pedestal Size Ext. Girder (in)	New Concrete Pedestal Size Int. Girder (in)
R-63	2	7	8 x 16 x 1.5	8 x 16 x 1.5	13 x 17.5 x 0.75	13 x 17.5 x 0.75	14 x 22 x varies	14 x 22 x varies
L-65	2	6	8 x 16 x 1.5	8 x 16 x 1.5	13 x 17.5 x 0.75	13 x 17.5 x 0.75	14 x 22 x varies	14 x 22 x varies
R-76	2	5	8 x 16 x 1.5	8 x 16 x 1.5	13 x 17.5 x 0.75	13 x 17.5 x 0.75	14 x 22 x varies	14 x 22 x varies

BEARING REPLACEMENT SEQUENCE

1. Immediately prior to lifting structure, label and remove steel angle restrainers.
2. Field verify gap distance between hold-downs and girder flange at all girders. If existing gap is less than ⅛", cut hold-downs to achieve clearance. Care shall be taken to prevent damage to girders and hold-downs.
3. Field verify distance X from top of bent cap to bottom of girder flange at ℄ plate to determine height of concrete pedestal.
4. Place temporary support and raise superstructure, see "DETAIL B TEMPORARY END-BEARING STIFFENER" this sheet and "JACKING NOTES" on "BEARING REPLACEMENT DETAILS NO.1" sheet.
5. Remove existing bearing assembly as shown on the details. Care shall be taken not to damage girder.
6. Prepare concrete and structural steel surfaces for reconstructed new bearing assembly by roughening interface between existing and new concrete and spot blast cleaning and painting of contact surface areas of existing girder flanges.
7. Bolt new keeper plate to bottom of girder flange.
8. Construct new reinforced concrete pedestal.
9. Place elastomeric bearing pad under keeper plate with adhesive to temporarily hold pad securely.
10. Lower superstructure when concrete pedestal has achieved 3600 psi compressive strength and reinstall steel angle restrainers.
11. Remove temporary support.

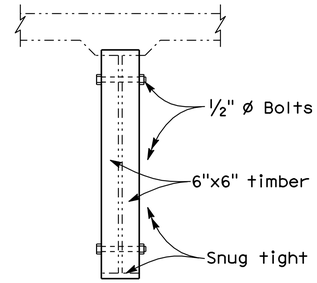

DETAIL B
TEMPORARY END-BEARING STIFFENER

No Scale

Note:
Install a 6"x6" timber snug tight on each side of the web on each girder at the locations where the jacks transfer the dead load reaction to the girders. These timbers shall be bolted through the web with ½" ø bolt at the top and bottom to secure them in place. They shall be removed after work is completed. Install shorter bolts through the web's hole and paint them.

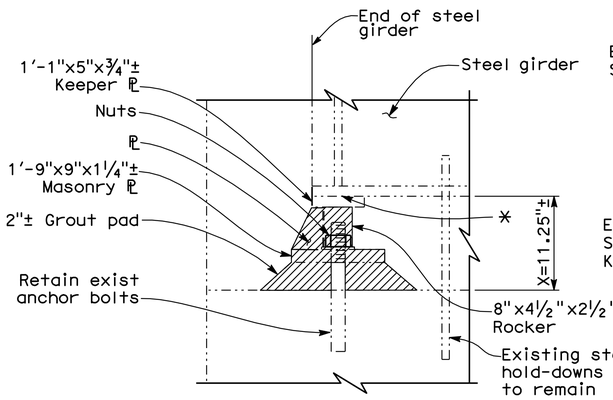

VIEW A-A

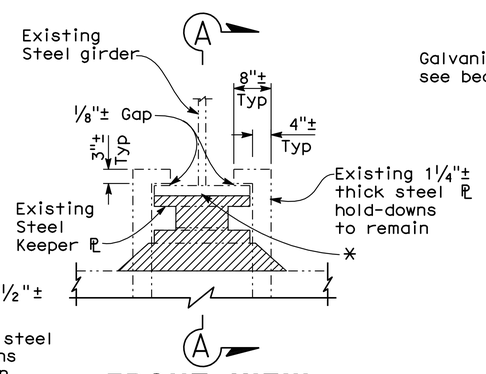

FRONT VIEW

Note: Existing anchor bolts not shown.

EXISTING

No Scale

Indicates limits of bearing assembly removal

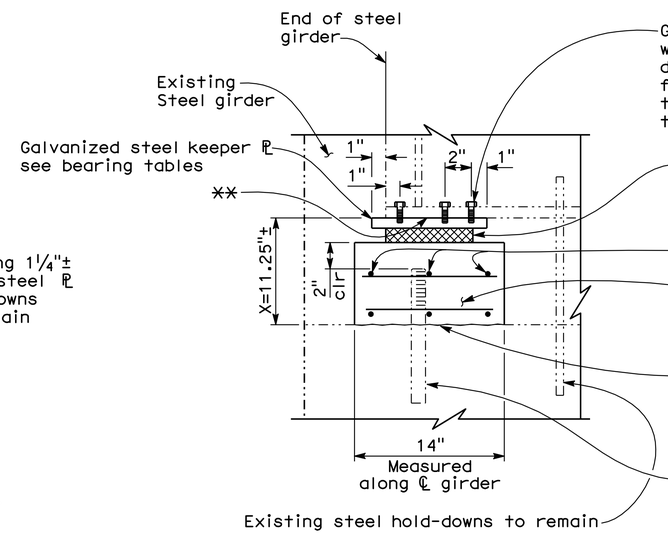

VIEW A-A

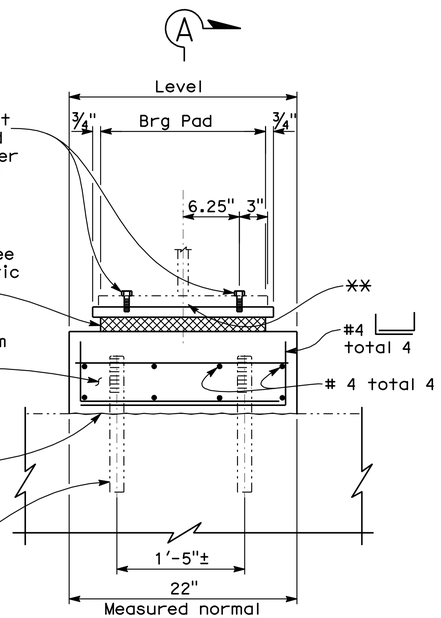

FRONT VIEW

Notes: Exist hold-downs not shown.

RECONSTRUCTION

No Scale

* Power tool clean, remove existing ⅜" welds between keeper plate and girder flange and grind welds flush, and power tool clean and paint undercoat.

** Spot blast clean and paint undercoat of contact suface areas of girder flanges to receive new keeper plates.

NOTE:
THE CONTRACTOR SHALL VERIFY ALL CONTROLLING FIELD DIMENSIONS BEFORE ORDERING OR FABRICATING ANY MATERIAL.

NOTE:
For Details not shown see "BEARING REPLACEMENT DETAILS NO. 1" sheet.

Fred Diba — DESIGN OVERSIGHT	DESIGN	BY N. Suan	CHECKED B. Hansen
08-27-09 — SIGN OFF DATE	DETAILS	BY E. Simene	CHECKED B. Hansen
	QUANTITIES	BY E. Simene	CHECKED N. Suan

PREPARED FOR THE STATE OF CALIFORNIA DEPARTMENT OF TRANSPORTATION

Noel J. Suan — PROJECT ENGINEER

BRIDGE NO. Various
POST MILE Varies

BAYSHORE & CENTRAL VIADUCTS STRUCTURE REHABILITATION

BEARING REPLACEMENT DETAILS NO. 2

DESIGN DETAIL SHEET (ENGLISH) (REV. 2/25/05)

ORIGINAL SCALE IN INCHES FOR REDUCED PLANS 0 1 2 3

CU 04
EA 2A1401

DISREGARD PRINTS BEARING EARLIER REVISION DATES — REVISION DATES (PRELIMINARY STAGE ONLY) 5-21-07 7-2-07 8-28-07 5-14-08 5-01-09 5-21-09 6-26-09 7-27-09 8-26-09

SHEET 8 OF 31

FILE => 34-0077 & 34-0088-q-brgdt02 (BEARING).dgn

USERNAME => BRG DATE PLOTTED => 14-JAN-2010

DIST	COUNTY	ROUTE	POST MILES TOTAL PROJECT	SHEET No	TOTAL SHEETS
04	SF	80,101	L3.8/5.0, 4.1/5.0	114	136

REGISTERED CIVIL ENGINEER 8-12-09 DATE

1-11-10
PLANS APPROVAL DATE

REGISTERED PROFESSIONAL ENGINEER NOEL J. SUAN No. C 43024 Exp. 3-31-10 CIVIL STATE OF CALIFORNIA

The State of California or its officers or agents shall not be responsible for the accuracy or completeness of electronic copies of this plan sheet.

DAVID EVANS & ASSOCIATES, INC.
1544 Eureka Road, Suite 200
Roseville, CA 95661

BRG ENGINEERING
3841 North Freeway Blvd, Suite 175
Sacramento, CA 95834

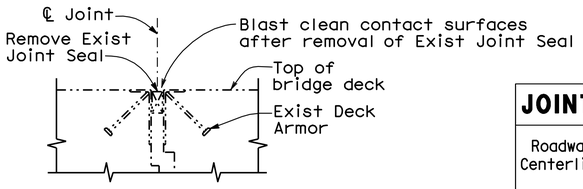

SECTION - EXISTING

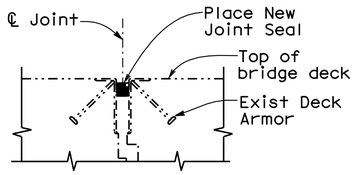

SECTION - RECONSTRUCTION RSP B6-21
Type "A" Seal

DETAIL - TYPE III

No Scale

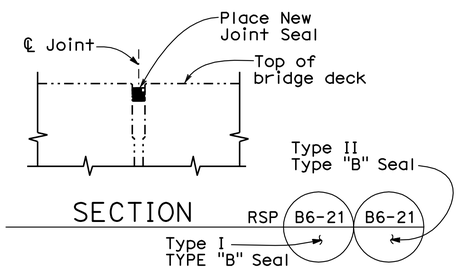

SECTION RSP B6-21 B6-21
Type I
TYPE "B" Seal

DETAIL - TYPE I & II

No Scale

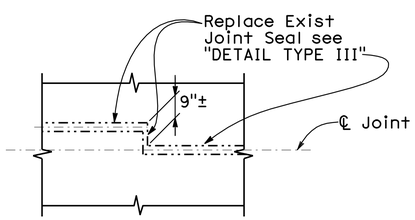

PLAN - 90° OFFSET JOINT

No Scale

Note: Offset joints occurs @ the following locations: R-35, R-36, R-46, R-47, R-50, L-47, L-49 & L-51

NOTE:
THE CONTRACTOR SHALL VERIFY ALL CONTROLLING FIELD DIMENSIONS BEFORE ORDERING OR FABRICATING ANY MATERIAL.

JOINT SEAL TABLE - CENTRAL VIADUCT

Roadway Centerline	Bent No.	Type	Minimum "MR" (in)	Approximate Length (ft)
V1	V1-93	I	0.5	27
	V1-94	I	0.5	27
	V1-95	III	1.0	27
	V1-96	III	1.0	27
	E-97	III	1.0	27
V2	V2-88	I	0.5	31
	V2-89	I	0.5	31
	V2-90	I	0.5	31
	V2-91	I	0.5	31
	V2-92	I	0.5	31
	V2-93	I	0.5	31
	V2-94	I	0.5	31
	E-95	I	0.5	31
E	E-94	I	0.5	77
	E-95	III	1.0	77
	E-96	III	1.0	105
	E-97	III	1.0	104
	E-98	I	0.5	135
	E-99	I	0.5	129
	E-100	I	0.5	120
	E-1	I	0.5	109
	E-2	I	0.5	100
	E-3	I	0.5	92
	E-4	I	0.5	86
	E-5	III	1.0	80
	E-6	I	0.5	77
	E-7	I	0.5	77
	E-8	I	0.5	77
	E-9	I	0.5	77
	E-10	I	0.5	77
	E-11	I	0.5	77
	E-12	I	0.5	77
	E-13	I	0.5	77
	E-14	III	1.0	77
	E-15	III	1.0	77
	E-16	III	1.0	77
	E-17	III	1.0	77
	E-18	III	1.0	77
	E-19	III	1.0	77
	E-20	III	1.0	77
	E-21	III	1.0	77
	E-22	III	1.0	80
	E-23	I	0.5	86
	E-24	I	0.5	91
	E-25	I	0.5	65
	E-26	I	0.5	65
	E-27	III	1.0	65
	E-28	III	1.0	67

JOINT SEAL TABLE - CENTRAL VIADUCT

Roadway Centerline	Bent No.	Type	Minimum "MR" (in)	Approximate Length (ft)
E	E-29	III	1.0	73
	E-30	I	0.5	83
	E-31	I	0.5	87
	E-32	I	0.5	54
	E-33	III	1.0	53
	E-34	I	0.5	53
	E-35	I	0.5	53
	E-36	I	0.5	53
	E-37	I	0.5	53
E4	E-32	I	0.5	27
	E4-35	I	0.5	27
	E4-34	I	0.5	27
	E4-33	I	0.5	27
	E4-32	I	0.5	27
	E4-31	I	0.5	27
	E4-30	I	0.5	27
	E4-29	I	0.5	27
	E4-28	I	0.5	27
	E4-27	I	0.5	27
	E4-26	II	1.0	27
E5	E-37	see E-LINE		
	E5-38	I	0.5	30
	E5-39	I	0.5	29
	E5-40	I	0.5	27
	E5-41	I	0.5	27
	E5-42	I	0.5	27
	E5-43	I	0.5	27
	E5-44	I	0.5	27
	E5-45	III	1.0	27
	E5-46	I	0.5	27
	E5-47	I	0.5	27
	L-36	I	0.5	27
E6	E-37	see E-LINE		
	E6-38	I	0.5	27
	E6-39	III	0.5	29
	E6-40	I	0.5	27
	E6-41	I	0.5	27
	E6-42	I	0.5	27
	E6-43	I	0.5	27
	E6-44	I	0.5	27
	E6-45	I	0.5	27
	E6-46	I	0.5	27
	E6-47	I	0.5	27
	E6-48	I	0.5	27
	E6-49	I	0.5	27
	E6-50	I	0.5	27
	R-36	III	0.5	27

NOTES:

1. Approx depth to clean expansion joints = 6.5"±.
2. No existing waterstop @ joints.

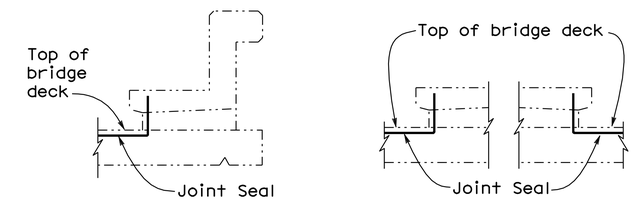

BARRIER RAIL MEDIAN

JOINT SEAL AT LOW SIDE OF DECK

No Scale

Notes: Details shown for illustration purposes only.

For use only where deck joint matches the median, curb or barrier rail joint.

The following notes apply to JOINT SEAL TYPE B:

1. Seal must satisfy both minimum Movement Rating (MR) and minimum W1 requirements.
2. Minimum W1 is the calculated maximum width of the joint based on field measurements. After the joints have been cleaned, minimum W1 is to be recalculated by the Engineer.
3. W1 shall be the smaller of the values determined as follows:
   A) 0.85 times the manufacturer's designed minimum uncompressed width of the seal.
   B) The width of the seal on the third successive test cycle of the pressure deflection test, when compressed to an average pressure of 3 psi.
4. Bend Type B joint seal 6" up into curb or rail on the low side of the deck where deck joints matches curb or rail joint.

The following notes apply to JOINT SEAL TYPE A:

Install Type A joint seal 6" up to curb or rail on the low side of the deck where joint matches curb or rail joint.

Fred Dlba
DESIGN OVERSIGHT
08-13-09
SIGN OFF DATE

	BY	CHECKED
DESIGN	N. Suan	B. Hansen
DETAILS	E. Simene	B. Hansen
QUANTITIES	E. Simene	N. Suan

PREPARED FOR THE STATE OF CALIFORNIA DEPARTMENT OF TRANSPORTATION

Noel J. Suan
PROJECT ENGINEER

BRIDGE NO. Various
POST MILE Varies

BAYSHORE & CENTRAL VIADUCTS STRUCTURE REHABILITATION

JOINT SEAL DETAILS NO. 1

DESIGN DETAIL SHEET (ENGLISH) (REV. 2/25/05)

ORIGINAL SCALE IN INCHES FOR REDUCED PLANS 0 1 2 3

CU 04
EA 2A1401

DISREGARD PRINTS BEARING EARLIER REVISION DATES

REVISION DATES (PRELIMINARY STAGE ONLY) 3-29-07 7-27-07 9-28-07 3-1-08 5-27-08 5-29-09 6-29-09 7-21-09

SHEET 9 OF 31

FILE => 34-0077 & 34-0088-q-jntdt01 (JOINT).dgn

USERNAME => BRG DATE PLOTTED => 14-JAN-2010

DIST	COUNTY	ROUTE	POST MILES TOTAL PROJECT	SHEET No	TOTAL SHEETS
04	SF	80,101	L3.8/5.0, 4.1/5.0	115	136

REGISTERED CIVIL ENGINEER 8-12-09 DATE

1-11-10
PLANS APPROVAL DATE

REGISTERED PROFESSIONAL ENGINEER NOEL J. SUAN No. C 43024 Exp. 3-31-10 CIVIL STATE OF CALIFORNIA

The State of California or its officers or agents shall not be responsible for the accuracy or completeness of electronic copies of this plan sheet.

DAVID EVANS & ASSOCIATES, INC.
1544 Eureka Road, Suite 200
Roseville, CA 95661

BRG ENGINEERING
3841 North Freeway Blvd, Suite 175
Sacramento, CA 95834

JOINT SEAL TABLE - CENTRAL VIADUCT

Roadway Centerline	Bent No.	Type	Minimum "MR" (in)	Approximate Length (ft)
E3	E-25	I	0.5	27
	E3-49	I	0.5	27
	E3-48	I	0.5	27
	E3-47	I	0.5	27
	E3-46	I	0.5	27
	E3-45	I	0.5	27
	E3-44	III	1.0	27
	E3-43	I	0.5	27
	E3-42	I	0.5	27
	E3-41	I	0.5	27
	E3-40	I	0.5	27
	E3-39	I	0.5	27
	E1-38	III	0.5	33
F2	L-1	I	0.5	51
	L-2	I	0.5	51
	L-3	I	0.5	51
	L-4	I	0.5	51
	L-5	I	0.5	51
	L-6	I	0.5	51
	L-7	I	0.5	51
	L-8	I	0.5	51
	L-9	I	0.5	51
	L-10	II	1.0	51
	L-11	I	0.5	51
	L-12	I	0.5	53
	L-13	I	0.5	56
	L-14	I	0.5	60
	L-15	I	0.5	63
	L-16	I	0.5	66
	L-17	I	0.5	67
	L-18	I	0.5	65
	L-19	I	0.5	65
E1	R-1	I	0.5	51
	R-2	I	0.5	51
	R-3	I	0.5	53
	R-4	I	0.5	54
	R-5	I	0.5	56
	R-6	I	0.5	58
	R-7	I	0.5	60
	R-8	I	0.5	63
	R-9	I	0.5	67
	R-10	III	1.0	70
	R-11	I	0.5	74
	R-12	I	0.5	27
	E1-13	I	0.5	27
	E1-14	I	0.5	27
	E1-15	I	0.5	27
	E1-16	I	0.5	27

JOINT SEAL TABLE - CENTRAL VIADUCT

Roadway Centerline	Bent No.	Type	Minimum "MR" (in)	Approximate Length (ft)
E1	E1-17	I	0.5	27
	E1-18	I	0.5	27
	E1-19	I	0.5	27
	E1-20	I	0.5	27
	E1-21	I	0.5	27
	E1-22	I	0.5	27
	E1-23	I	0.5	27
	E1-24	I	0.5	27
	E1-25	I	0.5	27
	E1-26	I	0.5	27
	E1-27	I	0.5	27
	E1-28	I	0.5	27
	E1-29	I	0.5	27
	E1-30	I	0.5	27
	E1-31	I	0.5	27
	E1-32	I	0.5	28
	E1-33	I	0.5	30
	E1-34	III	1.0	33
	E1-35	III	0.5	40
	E1-36	III	1.0	45
	E1-37	III	1.0	53
	E1-38	III	0.5	30
	E1-39	I	0.5	27
	E1-40	I	0.5	27
	E1-41	I	0.5	27
	E1-42	I	0.5	27
	E1-43	I	0.5	27
	E1-44	I	0.5	27
	E1-45	I	0.5	27
E2	L-19	see F2-LINE		
	E2-20	I	0.5	30
	E2-21	I	0.5	32
	E2-22	II	1.0	37
	E2-23	I	0.5	43
	E2-24	I	0.5	47
	E2-25	I	0.5	53
	E2-26	I	0.5	27
	E2-27	I	0.5	27
	E2-28	I	0.5	27
	E2-29	I	0.5	27
	E2-30	I	0.5	27
	E2-31	I	0.5	27
	E2-32	III	1.0	27
	E2-33	III	0.5	27
	E2-34	I	0.5	27
	E2-35	I	0.5	27
	E2-36	I	0.5	27
	E2-37	I	0.5	27
	E2-38	I	0.5	27

NOTE:
THE CONTRACTOR SHALL VERIFY ALL CONTROLLING FIELD DIMENSIONS BEFORE ORDERING OR FABRICATING ANY MATERIAL.

NOTE:
For details and notes, see "JOINT SEAL DETAILS NO. 1" sheet

Fred Diba
DESIGN OVERSIGHT
08-13-09
SIGN OFF DATE

	BY	CHECKED
DESIGN	N. Suan	B. Hansen
DETAILS	E. Simene	B. Hansen
QUANTITIES	E. Simene	N. Suan

PREPARED FOR THE STATE OF CALIFORNIA DEPARTMENT OF TRANSPORTATION

Noel J. Suan
PROJECT ENGINEER

BRIDGE NO. Various
POST MILE Varies

BAYSHORE & CENTRAL VIADUCTS STRUCTURE REHABILITATION

JOINT SEAL DETAILS NO. 2

DESIGN DETAIL SHEET (ENGLISH) (REV. 2/25/05)

ORIGINAL SCALE IN INCHES FOR REDUCED PLANS 0 1 2 3

CU 04
EA 2A1401

DISREGARD PRINTS BEARING EARLIER REVISION DATES

REVISION DATES (PRELIMINARY STAGE ONLY) 5-27-07 7-27-07 9-28-07 3-11-08 5-01-08 5-21-09 6-26-09 7-27-09

SHEET 10 OF 31

FILE => 34-0077 & 34-0088-q-jntdt02 (JOINT).dgn

USERNAME => BRG DATE PLOTTED => 14-JAN-2010

DIST	COUNTY	ROUTE	POST MILES TOTAL PROJECT	SHEET No	TOTAL SHEETS
04	SF	80,101	L3.8/5.0, 4.1/5.0	116	136

REGISTERED CIVIL ENGINEER 8-12-09 DATE

1-11-10
PLANS APPROVAL DATE

REGISTERED PROFESSIONAL ENGINEER NOEL J. SUAN No. C 43024 Exp. 3-31-10 CIVIL STATE OF CALIFORNIA

The State of California or its officers or agents shall not be responsible for the accuracy or completeness of electronic copies of this plan sheet.

DAVID EVANS & ASSOCIATES, INC.
1544 Eureka Road, Suite 200
Roseville, CA 95661

BRG ENGINEERING
3841 North Freeway Blvd, Suite 175
Sacramento, CA 95834

JOINT SEAL TABLE - BAYSHORE VIADUCT

Roadway Centerline	Bent No.	Type	Minimum "MR" (in)	Approximate Length (ft)
F3R	R-12	I	0.5	39
	R-13	I	0.5	39
	R-14	I	0.5	39
	R-15	I	0.5	39
	R-16	I	0.5	39
	R-17	I	0.5	39
	R-18	I	0.5	39
	R-19	I	0.5	39
	R-20	I	0.5	39
	R-21	I	0.5	39
	R-22	I	0.5	39
	R-23	I	0.5	39
	R-24	I	0.5	39
	R-25	I	0.5	39
	R-26	I	0.5	39
	R-27	I	0.5	39
	R-28	II	1.0	39
	R-29	III	0.5	39
	R-30	I	0.5	39
	R-31	I	0.5	39
	R-32	I	0.5	39
	R-33	I	0.5	39
	R-34	II	1.0	39
	R-35	III	0.5	39
	R-36	III	0.5	39
	R-37	I	0.5	67
	R-38	I	0.5	65
	R-39	I	0.5	61
	R-40	I	0.5	58
	R-41	I	0.5	53
	R-42	I	0.5	51
	R-43	I	0.5	51
	R-44	I	0.5	51
	R-45	II	1.0	51
	R-46	III	1.0	51
	R-47	III	0.5	51
	R-48	I	0.5	51
	R-49	II	1.0	51
	R-50	III	0.5	52
	R-51	I	0.5	59
	R-52	I	0.5	67
	R-53	I	0.5	43
	R-54	I	0.5	39
	R-55	I	0.5	39
	R-56	I	0.5	39
	R-57	I	0.5	39
	R-58	I	0.5	39
	R-59	I	0.5	39
	R-60	I	0.5	39
	R-61	I	0.5	39
	R-62	I	0.5	40
	R-63	I	0.5	65

JOINT SEAL TABLE - BAYSHORE VIADUCT

Roadway Centerline	Bent No.	Type	Minimum "MR" (in)	Approximate Length (ft)
F3R	R-64	I	0.5	63
	R-65	I	0.5	58
	R-66	I	0.5	54
	R-67	I	0.5	52
	R-68	I	0.5	51
	R-69	I	0.5	51
	R-70	I	0.5	51
	R-71	I	0.5	51
	R-72	I	0.5	51
	R-73 TO R-75	NOT REQUIRED		
	R-76	I	0.5	52
	R-77 TO R-95	NOT REQUIRED		
	R-96	I	0.5	39
	R-97	I	0.5	40
	R-98	I	0.5	43
	R-99	I	0.5	46
	R-100	I	0.5	50
	R-101	I	0.5	54
	R-102	I	0.5	58
	R-6	NOT REQUIRED		
F3L	L-19	see F2-LINE		
	L-20	I	0.5	39
	L-21	I	0.5	39
	L-22	I	0.5	39
	L-23	I	0.5	39
	L-24	I	0.5	39
	L-25	I	0.5	39
	L-26	I	0.5	39
	L-27	I	0.5	39
	L-28	I	0.5	39
	L-29	I	0.5	39
	L-30	I	0.5	39
	L-31	I	0.5	39
	L-32	I	0.5	39
	L-33	I	0.5	39
	L-34	I	0.5	39
	L-35	I	0.5	39
	L-36	I	0.5	44
	L-37	I	0.5	69
	L-38	I	0.5	64
	L-39	I	0.5	59
	L-40	I	1.0	62
	L-41	I	0.5	57
	L-42	I	0.5	51
	L-43	I	0.5	51
	L-44	I	0.5	51
	L-45	I	0.5	51
	L-46	I	0.5	51
	L-47	III	1.0	51
	L-48	II	1.0	52
	L-49	III	1.0	59
	L-50	III	0.5	67
	L-51	III	0.5	39
	L-52	I	0.5	39

NOTE:
THE CONTRACTOR SHALL VERIFY ALL CONTROLLING FIELD DIMENSIONS BEFORE ORDERING OR FABRICATING ANY MATERIAL.

NOTE:
For details and notes, see "JOINT SEAL DETAILS NO. 1" sheet

Fred Diba
DESIGN OVERSIGHT
08-13-09
SIGN OFF DATE

	BY	CHECKED
DESIGN	N. Suan	B. Hansen
DETAILS	E. Simene	B. Hansen
QUANTITIES	E. Simene	N. Suan

PREPARED FOR THE STATE OF CALIFORNIA DEPARTMENT OF TRANSPORTATION

Noel J. Suan
PROJECT ENGINEER

BRIDGE NO. Various
POST MILE Varies

BAYSHORE & CENTRAL VIADUCTS STRUCTURE REHABILITATION

JOINT SEAL DETAILS NO. 3

DESIGN DETAIL SHEET (ENGLISH) (REV. 2/25/05)

ORIGINAL SCALE IN INCHES FOR REDUCED PLANS 0 1 2 3

CU 04
EA 2A1401

DISREGARD PRINTS BEARING EARLIER REVISION DATES

REVISION DATES (PRELIMINARY STAGE ONLY) 5-22-07 7-27-07 9-28-07 3-14-08 5-01-08 5-21-09 6-26-09 7-27-09

SHEET 11 OF 31

FILE => 34-0077 & 34-0088-q-jntdt03 (JOINT).dgn

USERNAME => BRG DATE PLOTTED => 14-JAN-2010

DIST	COUNTY	ROUTE	POST MILES TOTAL PROJECT	SHEET No	TOTAL SHEETS
04	SF	80,101	L3.8/5.0, 4.1/5.0	117	136

REGISTERED CIVIL ENGINEER 8-12-09 DATE

1-11-10
PLANS APPROVAL DATE

REGISTERED PROFESSIONAL ENGINEER NOEL J. SUAN No. C 43024 Exp. 3-31-10 CIVIL STATE OF CALIFORNIA

The State of California or its officers or agents shall not be responsible for the accuracy or completeness of electronic copies of this plan sheet.

DAVID EVANS & ASSOCIATES, INC.
1544 Eureka Road, Suite 200
Roseville, CA 95661

BRG ENGINEERING
3841 North Freeway Blvd, Suite 175
Sacramento, CA 95834

JOINT SEAL TABLE - BAYSHORE VIADUCT

Roadway Centerline	Bent No.	Type	Minimum "MR" (in)	Approximate Length (ft)
F3L	L-53	I	0.5	39
	L-54	I	0.5	39
	L-55	I	0.5	39
	L-56	I	0.5	39
	L-57	I	0.5	39
	L-58	I	0.5	39
	L-59	I	0.5	39
	L-60	I	0.5	39
	L-61	I	0.5	39
	L-62	I	0.5	39
	L-63	I	0.5	47
	L-64	I	0.5	67
	L-65	I	0.5	59
	L-66	I	0.5	55
	L-67	I	0.5	52
	L-68	I	0.5	51
	L-69	I	0.5	51
	L-70	I	0.5	51
	L-71	I	0.5	51
	L-72	I	0.5	51
	L-73	I	0.5	51
	L-74	I	0.5	51
	L-75	I	0.5	51
	L-76	I	0.5	51
	L-77	I	0.5	51
	L-78	I	0.5	51
	L-79	I	0.5	51
	L-80	I	0.5	51
	L-81	I	0.5	51
	L-82	I	0.5	51
	L-83	I	0.5	51
	L-84	I	0.5	51
	L-85	I	0.5	51
	L-86	I	0.5	51
	L-87	I	0.5	51
	L-88	I	0.5	51
	L-89	I	0.5	51
	L-90	I	0.5	51
	L-91	I	0.5	52
	L-92	I	0.5	55
	L-93	I	0.5	58
	L-94	I	1.0	63
	L-95	I	0.5	67
	L-96	I	0.5	67
	L-97	I	0.5	39
	L-98	I	0.5	39
	L-99	I	0.5	41
	L-100	I	0.5	43
	L-101	I	0.5	46
	L-102	I	0.5	51
	L-103	I	0.5	55
	L-104	I	0.5	52
	L-6	NOT REQUIRED		

JOINT SEAL TABLE - BAYSHORE VIADUCT

Roadway Centerline	Bent No.	Type	Minimum "MR" (in)	Approximate Length (ft)
G1	R-53	I	0.5	27
	G1-54	I	0.5	27
	G1-55	I	0.5	27
	G1-56	I	0.5	27
G2	L-50	see F3-LINE		
	L-51	III	0.5	27
	G2-52	I	0.5	27
	G2-53	I	0.5	27
	G2-54	I	0.5	27
	G2-55	I	0.5	27
	G2-56	I	0.5	27
	G2-57	I	0.5	27
G3	G3-58	I	0.5	27
	G3-59	I	0.5	27
	G3-60	I	0.5	27
	G3-61	I	0.5	27
	R-62	I	0.5	27
G4	G4-55	I	0.5	27
	G4-56	I	0.5	27
	G4-57	I	0.5	27
	G4-58	I	0.5	27
	G4-59	I	0.5	27
	G4-60	I	0.5	27
	G4-61	I	0.5	27
	G4-62	I	0.5	27
	L-63	I	0.5	27
K2	L-97	I	0.5	27
	K2-98	I	0.5	27
	K2-99	I	0.5	27
	K2-100	I	0.5	27
	K2-101	I	0.5	27

NOTE:
THE CONTRACTOR SHALL VERIFY ALL CONTROLLING FIELD DIMENSIONS BEFORE ORDERING OR FABRICATING ANY MATERIAL.

NOTE:
For details and notes, see "JOINT SEAL DETAILS NO. 1" sheet

Fred Diba
DESIGN OVERSIGHT
08-13-09
SIGN OFF DATE

	BY	CHECKED
DESIGN	N. Suan	B. Hansen
DETAILS	E. Simene	B. Hansen
QUANTITIES	E. Simene	N. Suan

PREPARED FOR THE STATE OF CALIFORNIA DEPARTMENT OF TRANSPORTATION

Noel J. Suan
PROJECT ENGINEER

BRIDGE NO. Various
POST MILE Varies

BAYSHORE & CENTRAL VIADUCTS STRUCTURE REHABILITATION

JOINT SEAL DETAILS NO. 4

DESIGN DETAIL SHEET (ENGLISH) (REV. 2/25/05)

ORIGINAL SCALE IN INCHES FOR REDUCED PLANS 0 1 2 3

CU 04
EA 2A1401

DISREGARD PRINTS BEARING EARLIER REVISION DATES

REVISION DATES (PRELIMINARY STAGE ONLY) 3-29-07 7-13-07 3-14-08 5-21-09 5-11-09 6-5-09 7-21-09

SHEET 12 OF 31

FILE => 34-0077 & 34-0088-q-jntdt04 (JOINT).dgn

DATE PLOTTED => 14-JAN-2010
USERNAME => BRG

DIST	COUNTY	ROUTE	POST MILES TOTAL PROJECT	SHEET No	TOTAL SHEETS
04	SF	80,101	L3.8/5.0, 4.1/5.0	118	136

REGISTERED CIVIL ENGINEER 8-12-09 DATE

1-11-10
PLANS APPROVAL DATE

REGISTERED PROFESSIONAL ENGINEER NOEL J. SUAN No. C 43024 Exp. 3-31-10 CIVIL STATE OF CALIFORNIA

The State of California or its officers or agents shall not be responsible for the accuracy or completeness of electronic copies of this plan sheet.

DAVID EVANS & ASSOCIATES, INC.
1544 Eureka Road, Suite 200
Roseville, CA 95661

BRG ENGINEERING
3841 North Freeway Blvd, Suite 175
Sacramento, CA 95834

JOINT SPALL REPAIR TABLE - CENTRAL VIADUCT

Roadway Centerline	Bent No.	No. of Joints	No. of Locations	Spall Width (ft)	Spall Length (ft)	Spall Depth (ft)	"A", "B" see NOTES (CF)
E	E-2R	1	1	1.31	3.28	0.33	1.42
	E-4L	1	1	1.31	3.28	0.33	1.42
	E-6L	1	1	1.31	3.28	0.33	1.42
	E-7R	1	1	1.31	3.28	0.33	1.42
	E-11L	1	1	1.31	3.28	0.33	1.42
	E-11R	1	1	1.31	3.28	0.33	1.42
	E-13L	1	1	1.31	3.28	0.33	1.42
E1	E1-13	1	2	1.31	3.28	0.33	2.84
	E1-16	1	2	1.31	3.28	0.33	2.84
	E1-21	1	1	1.31	3.28	0.33	1.42
	E1-33	1	1	1.31	3.28	0.33	1.42
E2	E2-25	1	1	1.31	3.28	0.33	1.42
E3	E3-43	1	1	1.31	3.28	0.33	1.42
V2	V2-90	1	1	1.31	3.28	0.33	1.42

JOINT SPALL REPAIR TABLE - BAYSHORE VIADUCT

Roadway Centerline	Bent No.	No. of Joints	No. of Locations	Spall Width (ft)	Spall Length (ft)	Spall Depth (ft)	"A", "B" see NOTES (CF)
F3L	L-14	1	1	1.64	6.56	0.33	3.55
	L-15 & L-17	2	1	1.64	6.56	0.33	7.10
	L-22 & L-23	2	1	1.64	6.56	0.33	7.10
	L-25	1	1	1.64	6.56	0.33	3.55
	L-27 & L-28	2	1	1.64	6.56	0.33	7.10
	L-31	1	1	1.64	6.56	0.33	3.55
	L-33	1	1	1.64	6.56	0.33	3.55
	L-37	1	1	1.64	6.56	0.33	3.55
	L-39	1	1	1.64	6.56	0.33	3.55
	L-40	1	1	1.64	6.56	0.33	3.55
	L-45 TO L-47	3	1	1.64	6.56	0.33	10.65
	L-53	1	1	1.64	6.56	0.33	3.55
	L-63	1	1	1.64	6.56	0.33	3.55
	L-68	1	1	1.64	6.56	0.33	3.55
	L-70	1	1	1.64	6.56	0.33	3.55
	L-76	1	1	1.64	6.56	0.33	3.55
	L-79	1	1	1.64	6.56	0.33	3.55
	L-81	1	1	1.64	6.56	0.33	3.55
	L-89	1	1	1.64	6.56	0.33	3.55
	L-92 & L-93	2	1	1.64	6.56	0.33	7.10
	L-94	1	1	1.64	6.56	0.33	3.55
	L-95	1	1	1.64	6.56	0.33	3.55
	L-101	1	1	1.64	6.56	0.33	3.55
G3	G3-58	1	1	1.64	6.56	0.33	3.55
G4	G4-55	1	1	1.64	6.56	0.33	3.55
	G4-57	1	1	1.64	6.56	0.33	3.55

NOTE:
THE CONTRACTOR SHALL VERIFY ALL CONTROLLING FIELD DIMENSIONS BEFORE ORDERING OR FABRICATING ANY MATERIAL.

NOTES:

"A" Indicates Approx Vol for Remove Unsound Concrete.

"B" Indicates Approx Vol for Rapid Setting Concrete Patch.

DECK SPALL REPAIR TABLE

Bridge	Approximate deck Area (SqFt)	Approximate Area Damage (Percent)	Approximate Spall Depth (in)	"A", "B" see NOTES (CF)
Central Viaduct	558,909	1	3.0	1,397
Bayshore Viaduct	621,253	1	3.0	1,553

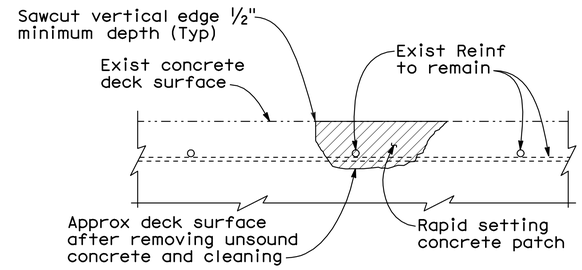

DECK SPALL REPAIR DETAIL

NO SCALE

Note: Locations to be determined by the Engineer. Reinforcement may be encountered during deck concrete removal and is to remain undamaged.

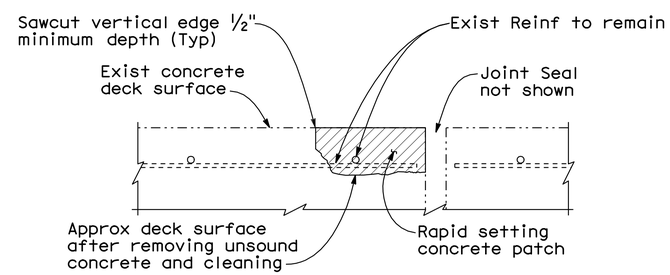

JOINT SPALL REPAIR DETAIL

NO SCALE

Note: Locations to be determined by the Engineer. Reinforcement may be encountered during deck concrete removal and is to remain undamaged.

LEGEND:

Indicates Limits of Remove Unsound Concrete and rebuild with Rapid Setting Concrete Patch

Fred Diba
DESIGN OVERSIGHT
08-13-09
SIGN OFF DATE

	BY	CHECKED
DESIGN	N. Suan	B. Hansen
DETAILS	E. Simene	B. Hansen
QUANTITIES	E. Simene	N. Suan

PREPARED FOR THE STATE OF CALIFORNIA DEPARTMENT OF TRANSPORTATION

Noel J. Suan
PROJECT ENGINEER

BRIDGE NO. Various
POST MILE Varies

BAYSHORE & CENTRAL VIADUCTS STRUCTURE REHABILITATION

DECK & JOINT SPALL REPAIR DATA

DESIGN DETAIL SHEET (ENGLISH) (REV. 2/25/05)

ORIGINAL SCALE IN INCHES FOR REDUCED PLANS 0 1 2 3

CU 04
EA 2A1401

DISREGARD PRINTS BEARING EARLIER REVISION DATES

REVISION DATES (PRELIMINARY STAGE ONLY) 5-21-07 7-27-07 9-28-07 3-11-08 5-21-08 5-21-09 6-25-09 7-21-09

SHEET 13 OF 31

FILE => 34-0077 & 34-0088-q-jntdt05 (DECKSPL).dgn

USERNAME => BRG DATE PLOTTED => 14-JAN-2010

DIST	COUNTY	ROUTE	POST MILES TOTAL PROJECT	SHEET No	TOTAL SHEETS
04	SF	80,101	L3.8/5.0, 4.1/5.0	119	136

REGISTERED CIVIL ENGINEER 8-27-09 DATE

1-11-10
PLANS APPROVAL DATE

REGISTERED PROFESSIONAL ENGINEER NOEL J. SUAN No. C 43024 Exp. 3-31-10 CIVIL STATE OF CALIFORNIA

The State of California or its officers or agents shall not be responsible for the accuracy or completeness of electronic copies of this plan sheet.

DAVID EVANS & ASSOCIATES, INC.
1544 Eureka Road, Suite 200
Roseville, CA 95661

BRG ENGINEERING
3841 North Freeway Blvd, Suite 175
Sacramento, CA 95834

SOFFIT SPALL (AT JOINT) REPAIR TABLE - CENTRAL VIADUCT

Roadway Centerline	Bent No.	No. of Joints	No. of Locations	Spall Width (ft)	Spall Length (ft)	Spall Depth (ft)	"A" see NOTE (SQFT)
E	E-5	1	2	1.31	3.28	0.33	4.30
	E-16	1	2	1.31	3.28	0.33	4.30
	E-18	1	2	1.31	3.28	0.33	4.30
	E-19	1	2	1.31	3.28	0.33	4.30
	E-20	1	2	1.31	3.28	0.33	4.30
	E-21	1	2	1.31	3.28	0.33	4.30
	E-94	1	2	1.31	3.28	0.33	4.30
	E-98	1	2	1.31	3.28	0.33	4.30

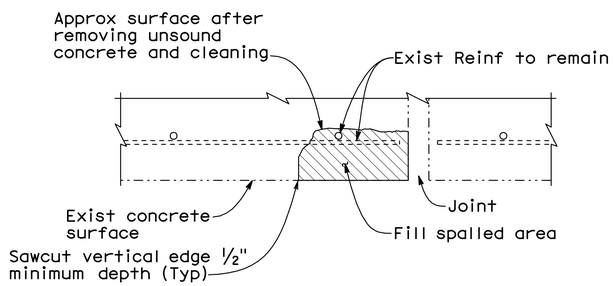

SOFFIT SPALL (AT JOINT) REPAIR DETAIL

NO SCALE

Note: Locations to be determined by the Engineer. Reinforcement may be encountered during concrete removal and is to remain undamaged.

LEGEND:

Indicates Limits of repair spalled surface areas

SOFFIT SPALL (AT JOINT) REPAIR TABLE - BAYSHORE VIADUCT

Roadway Centerline	Bent No.	No. of Joints	No. of Locations	Spall Width (ft)	Spall Length (ft)	Spall Depth (ft)	"A" see NOTE (SQFT)
F3L	L-21	1	1	0.66	1.64	0.33	1.08
	L-32	1	2	1.64	3.28	0.33	5.38
	L-38 & L-39	2	2	1.64	3.28	0.33	5.38
	L-46 TO 48	3	2	1.64	3.28	0.33	5.38
	L-51 TO L-55	5	2	1.64	3.28	0.33	5.38
	L-52	1	2	0.66	19.69	0.33	13.00
	L-57 & L-58	2	2	1.64	3.28	0.33	5.38
	L-57	1	2	0.66	19.69	0.33	13.00
	L-60 TO L-62	3	2	1.64	3.28	0.33	5.38
	L-63	1	2	0.66	19.69	0.33	13.00
	L-66 TO L-70	5	2	1.64	3.28	0.33	5.38
	L-75 & L-76	2	2	1.64	3.28	0.33	5.38
	L-79	1	2	1.64	3.28	0.33	5.38
	L-84	1	2	1.64	3.28	0.33	5.38
	L-90	1	2	1.64	3.28	0.33	5.38
	L-95	1	2	1.64	3.28	0.33	5.38
	L-98 TO L-100	3	2	1.64	3.28	0.33	5.38
	L-100	1	2	0.66	19.69	0.33	13.00
F3R	R-17	1	2	1.64	3.28	0.33	5.38
	R-58 TO R-61	4	2	1.64	3.28	0.33	5.38
	R-65 TO R-67	3	2	1.64	3.28	0.33	5.38
	R-69 TO R-74	6	2	1.64	3.28	0.33	5.38
	R-77 & R-78	2	2	1.64	3.28	0.33	5.38
	R-80 TO R-88	9	2	1.64	3.28	0.33	5.38
	R-91 TO R-94	4	2	1.64	3.28	0.33	5.38
	R-95	1	2	0.66	19.69	0.33	13.00
	R-96 & R-97	2	2	1.64	3.28	0.33	5.38
	R-99 & R-100	2	2	1.64	3.28	0.33	5.38
G3	G3A-59	1	2	1.64	3.28	0.33	5.38
	G3A-61	1	2	1.64	3.28	0.33	5.38
G4	G4A-56 TO G4A-59	4	2	1.64	3.28	0.33	5.38
	G4A-57	1	2	0.66	19.69	0.33	13.00
	G4A-61 & G4A-62	2	2	1.64	3.28	0.33	5.38
K1	K1-98	1	2	1.64	3.28	0.33	5.38

NOTE:
"A" Indicates Approx areas for REPAIR SPALLED SURFACE AREA

NOTE:
THE CONTRACTOR SHALL VERIFY ALL CONTROLLING FIELD DIMENSIONS BEFORE ORDERING OR FABRICATING ANY MATERIAL.

Fred Diba
DESIGN OVERSIGHT
08-27-09
SIGN OFF DATE

	BY	CHECKED
DESIGN	N. Suan	B. Hansen
DETAILS	E. Simene	B. Hansen
QUANTITIES	E. Simene	N. Suan

PREPARED FOR THE STATE OF CALIFORNIA DEPARTMENT OF TRANSPORTATION

Noel J. Suan
PROJECT ENGINEER

BRIDGE NO. Various
POST MILE Varies

BAYSHORE & CENTRAL VIADUCTS STRUCTURE REHABILITATION

SOFFIT SPALL REPAIR DATA

DESIGN DETAIL SHEET (ENGLISH) (REV. 2/25/05)

ORIGINAL SCALE IN INCHES FOR REDUCED PLANS 0 1 2 3

CU 04
EA 2A1401

DISREGARD PRINTS BEARING EARLIER REVISION DATES

REVISION DATES (PRELIMINARY STAGE ONLY) 5-21-07 7-2-07 9-28-07 4-1-08 5-11-09 5-15-09 6-12-09 7-13-09 8-27-09

SHEET 14 OF 31

FILE => 34-0077 & 34-0088-q-jntdt06 (SOFFITSPL).dgn

USERNAME => BRG

DATE PLOTTED => 14-JAN-2010

DIST	COUNTY	ROUTE	POST MILES TOTAL PROJECT	SHEET No	TOTAL SHEETS
04	SF	80,101	L3.8/5.0, 4.1/5.0	120	136

REGISTERED CIVIL ENGINEER 8-12-09 DATE

1-11-10
PLANS APPROVAL DATE

REGISTERED PROFESSIONAL ENGINEER NOEL J. SUAN No. C 43024 Exp. 3-31-10 CIVIL STATE OF CALIFORNIA

The State of California or its officers or agents shall not be responsible for the accuracy or completeness of electronic copies of this plan sheet.

DAVID EVANS & ASSOCIATES, INC.
1544 Eureka Road, Suite 200
Roseville, CA 95661

BRG ENGINEERING
3841 North Freeway Blvd, Suite 175
Sacramento, CA 95834

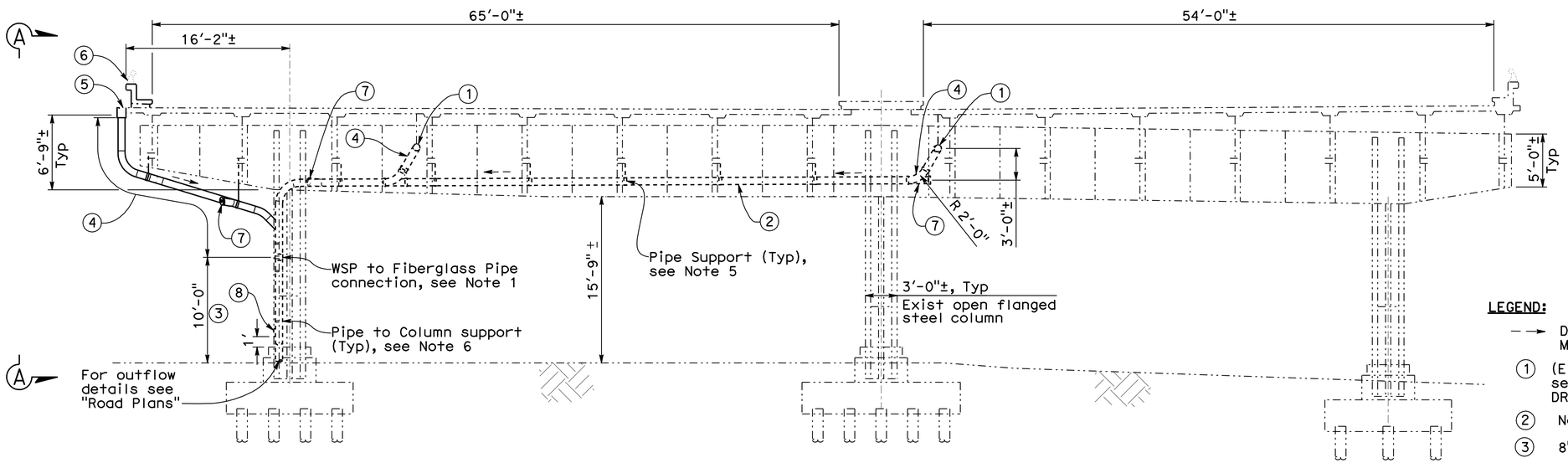

ELEVATION BENT E-100

(Looking East)
No Scale

Note:
Place cross drain at east side of bent.

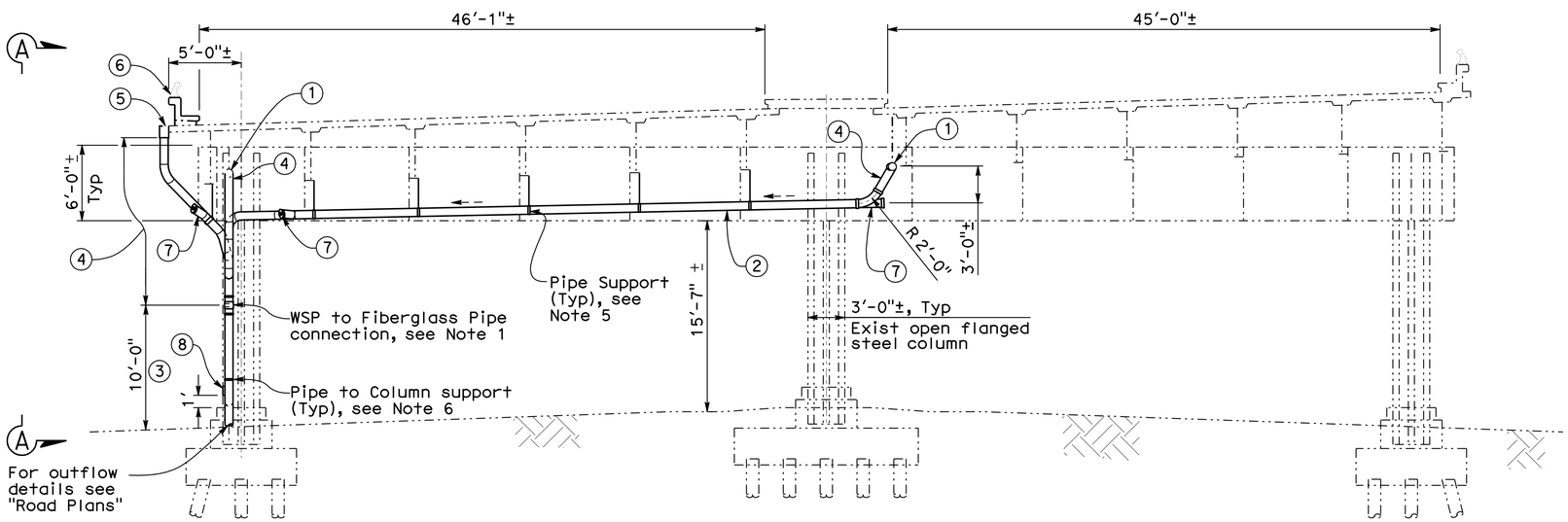

ELEVATION BENT E-3

(Looking East)
No Scale

NOTE:
THE CONTRACTOR SHALL VERIFY ALL CONTROLLING FIELD DIMENSIONS BEFORE ORDERING OR FABRICATING ANY MATERIAL.

LEGEND:

- → Direction of flow. Slope Pipe to drain. Min slope is 2%
- (1) (E) 8" OD WSP cross drain. For connection detail see "EXISTING PIPE CONNECTION DETAIL" on "BRIDGE DRAINAGE DETAILS NO. 11" sheet.
- (2) New 8"ø Fiberglass Pipe cross drain
- (3) 8"ø WSP DD
- (4) 8"ø Fiberglass Pipe DD
- (5) Formed Steel Gutter see "GUTTER SUPPORT DETAIL" on "BRIDGE DRAINAGE DETAILS NO. 10" sheet.
- (6) Remove & Replace Concrete Barrier see "BARRIER REPLACEMENT DETAILS NO. 1, 2, 3, 4, 5, & 6" sheets.
- (7) 8"ø Fiberglass Pipe Cleanout with threaded removal cap. Apply silicone grease to threads.
- (8) Bottom cleanout see "CLEANOUT HANDHOLE & COVER DETAILS" on "BRIDGE DRAINAGE DETAILS NO. 11" sheet

NOTES:

1. Minimum wall thickness of 8" ø WSP pipe and 8" ø fiberglass pipe is 0.172" and 0.125", respectively. All WSP to fiberglass pipe joints or connections to be connected by a rubber sleeve, see "RUBBER SLEEVE CONNECTION DETAIL" on "BRIDGE DRAINAGE DETAILS NO. 11" sheet. Fiberglass pipe to fiberglass joints or connections to be connected as recommended by the manufacturer. All bends to be on 2'-0" min radius measured along ℄ pipe except as noted. Paint WSP pipe to match the Exist structure. Fiberglass pipe resin to match the Exist structure.
2. Existing structure dimension shown on Elevation Views are approximate existing conditions only.
3. All steel pipe, gutter, and gutter supports shall be hot dip galvanized after fabrication.
4. For Views A-A thru View F-F, see "DRAINAGE DETAILS NO. 5" thru "BRIDGE DRAINAGE DETAILS NO. 9" sheets.
5. Pipes to be supported at 10'-0" maximum spacing throughout. See "SUPPORT DETAIL" on "DRAINAGE DETAILS NO. 10" sheet.
6. Attach pipes to column with ⅛" x 1½" galvanized metal straps with 2-½" concrete anchorage devices for concrete columns @ 10'-0" maximum centers. For steel columns, see Detail-D on "DRAINAGE DETAILS NO. 11" sheet. Use a minimum of 2 straps per column.

Fred Dlba
DESIGN OVERSIGHT
08-13-09
SIGN OFF DATE

	BY	CHECKED
DESIGN	N. Suan	B. Hansen
DETAILS	E. Simene	B. Hansen
QUANTITIES	E. Simene	N. Suan

PREPARED FOR THE STATE OF CALIFORNIA DEPARTMENT OF TRANSPORTATION

Noel J. Suan
PROJECT ENGINEER

BRIDGE NO. Various
POST MILE Varies

BAYSHORE & CENTRAL VIADUCTS STRUCTURE REHABILITATION

BRIDGE DRAINAGE DETAILS NO. 1

DESIGN DETAIL SHEET (ENGLISH) (REV. 2/25/05)

ORIGINAL SCALE IN INCHES FOR REDUCED PLANS 0 1 2 3

CU 04
EA 2A1401

DISREGARD PRINTS BEARING EARLIER REVISION DATES

REVISION DATES (PRELIMINARY STAGE ONLY) 5-21-07 12-21-07 9-26-08 3-11-08 5-01-08 5-21-09 6-26-09 7-27-09

SHEET 15 OF 31

FILE => 34-0077 & 34-0088-r-dd01 (E100&E3).dgn

USERNAME => BRG DATE PLOTTED => 14-JAN-2010

DIST	COUNTY	ROUTE	POST MILES TOTAL PROJECT	SHEET No	TOTAL SHEETS
04	SF	80,101	L3.8/5.0, 4.1/5.0	121	136

REGISTERED CIVIL ENGINEER 8-12-09 DATE

1-11-10
PLANS APPROVAL DATE

REGISTERED PROFESSIONAL ENGINEER NOEL J. SUAN No. C 43024 Exp. 3-31-10 CIVIL STATE OF CALIFORNIA

The State of California or its officers or agents shall not be responsible for the accuracy or completeness of electronic copies of this plan sheet.

DAVID EVANS & ASSOCIATES, INC.
1544 Eureka Road, Suite 200
Roseville, CA 95661

BRG ENGINEERING
3841 North Freeway Blvd, Suite 175
Sacramento, CA 95834

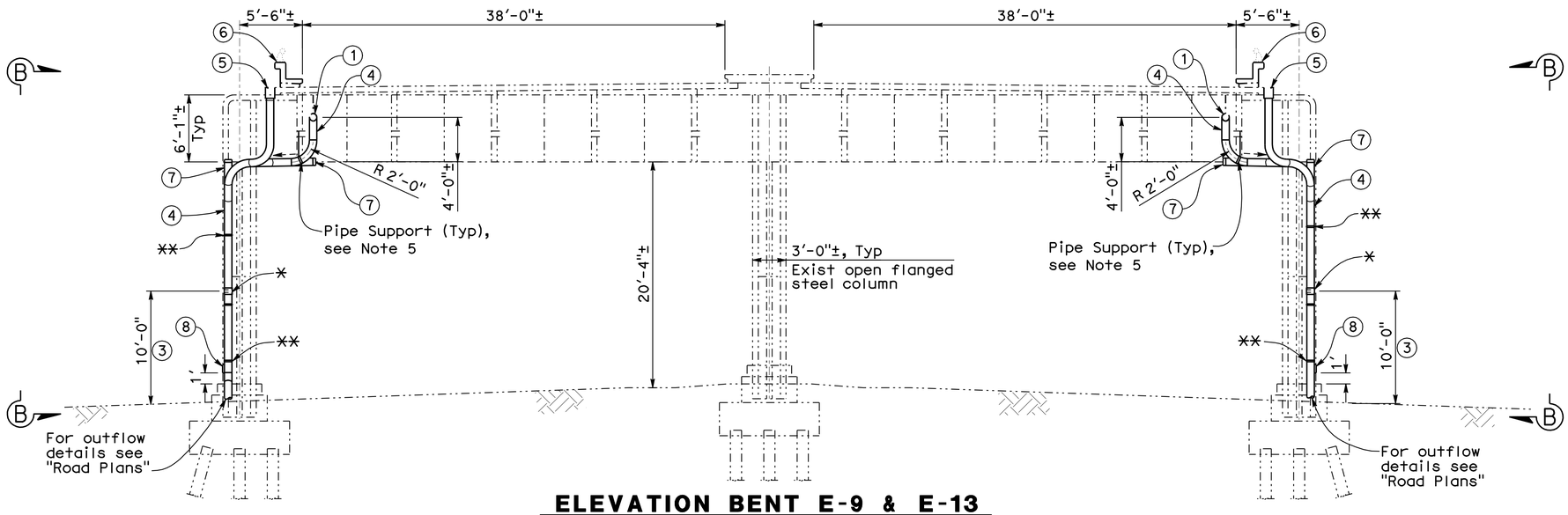

ELEVATION BENT E-9 & E-13

(Looking East)
No Scale

Notes: 1. Bent E-13 shown, Bent E-9 similar.
2. For Bent E-9, place cross drain pipe @ east side of bent.

NOTES:

For legend and notes not shown, see "BRIDGE DRAINAGE DETAILS NO. 1" sheet.

✳ WSP to Fiberglass Pipe connection, see Note 1

✳✳ Pipe to Column support (Typ), see Note 6

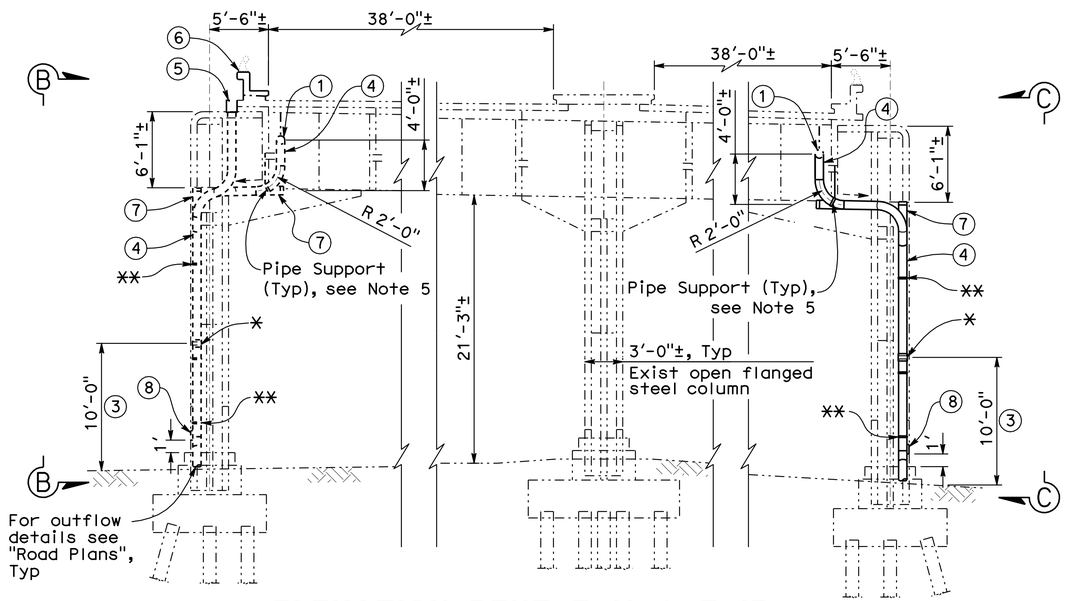

ELEVATION BENT E-16 & E-17

(Looking East)
No Scale

E-16 (Drainage System @ left side only)
E-17 (Drainage System @ right side only)

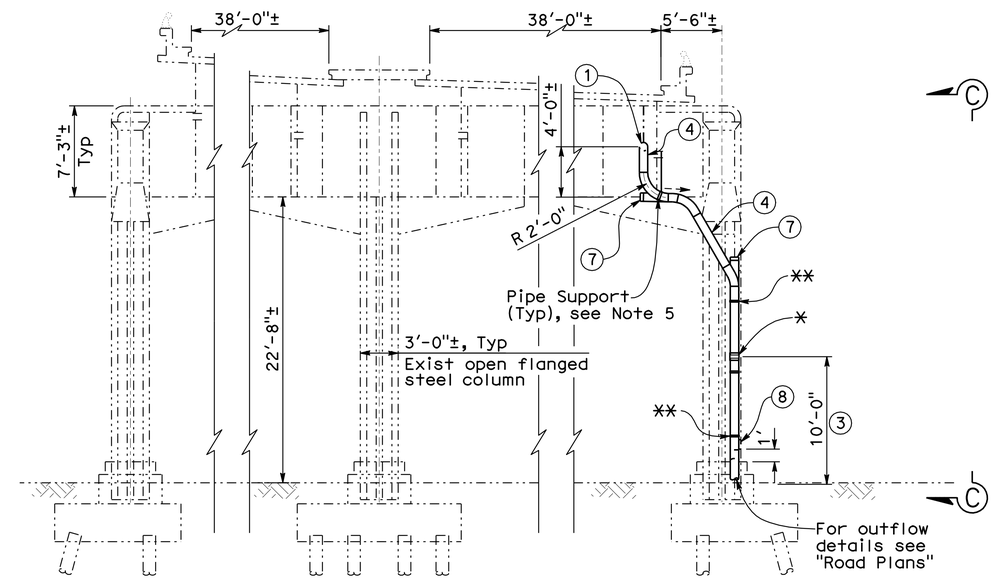

ELEVATION BENT E-20

(Looking East)
No Scale

NOTE:
THE CONTRACTOR SHALL VERIFY ALL CONTROLLING FIELD DIMENSIONS BEFORE ORDERING OR FABRICATING ANY MATERIAL.

Note:
Place cross drain pipe @ east side of bent for Bents E-16 & E-20.

Fred Diba
DESIGN OVERSIGHT
08-13-09
SIGN OFF DATE

	BY	CHECKED
DESIGN	N. Suan	B. Hansen
DETAILS	E. Simene	B. Hansen
QUANTITIES	E. Simene	N. Suan

PREPARED FOR THE STATE OF CALIFORNIA DEPARTMENT OF TRANSPORTATION

Noel J. Suan
PROJECT ENGINEER

BRIDGE NO. Various
POST MILE Varies

BAYSHORE & CENTRAL VIADUCTS STRUCTURE REHABILITATION

BRIDGE DRAINAGE DETAILS NO. 2

DESIGN DETAIL SHEET (ENGLISH) (REV. 2/25/05)

ORIGINAL SCALE IN INCHES FOR REDUCED PLANS 0 1 2 3

CU 04
EA 2A1401

DISREGARD PRINTS BEARING EARLIER REVISION DATES

REVISION DATES (PRELIMINARY STAGE ONLY) 5-21-07 7-23-07 9-28-07 3-11-08 5-21-09 5-21-09 6-15-09 7-21-09

SHEET 16 OF 31

FILE => 34-0077 & 34-0088-r-dd02 (E9-13&E16-20).dgn

DATE PLOTTED => 14-JAN-2010

USERNAME => BRG

DIST	COUNTY	ROUTE	POST MILES TOTAL PROJECT	SHEET No	TOTAL SHEETS
04	SF	80,101	L3.8/5.0, 4.1/5.0	122	136

REGISTERED CIVIL ENGINEER 8-26-09 DATE

1-11-10
PLANS APPROVAL DATE

REGISTERED PROFESSIONAL ENGINEER NOEL J. SUAN No. C 43024 Exp. 3-31-10 CIVIL STATE OF CALIFORNIA

The State of California or its officers or agents shall not be responsible for the accuracy or completeness of electronic copies of this plan sheet.

DAVID EVANS & ASSOCIATES, INC.
1544 Eureka Road, Suite 200
Roseville, CA 95661

BRG ENGINEERING
3841 North Freeway Blvd, Suite 175
Sacramento, CA 95834

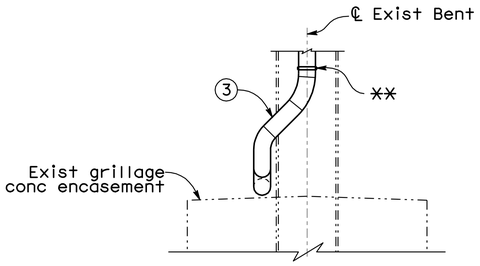

VIEW P-P
No Scale
(Partial Elevation - Bent E2-21)

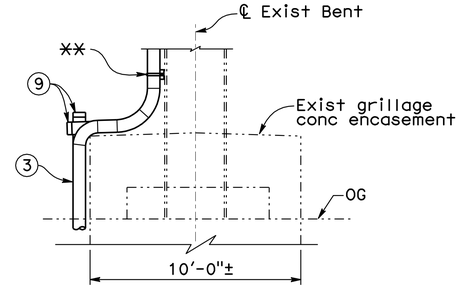

VIEW Q-Q
No Scale
(Partial Elevation - Bent E2-22)

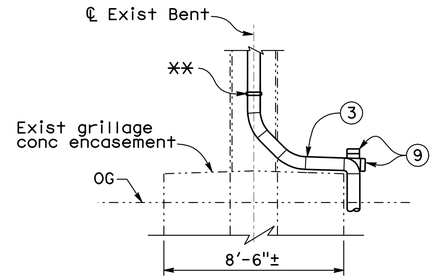

VIEW S-S
No Scale
(Partial Elevation - Bent E5-47)

NOTES:

For legend and notes not shown, see "BRIDGE DRAINAGE DETAILS NO. 1" sheet.

(9) 8"Ø WSP Cleanout with threaded removal cap. Apply silicone grease to threads.

* WSP to Fiberglass Pipe connection, see Note 1

** Pipe to Column support (Typ), see Note 6

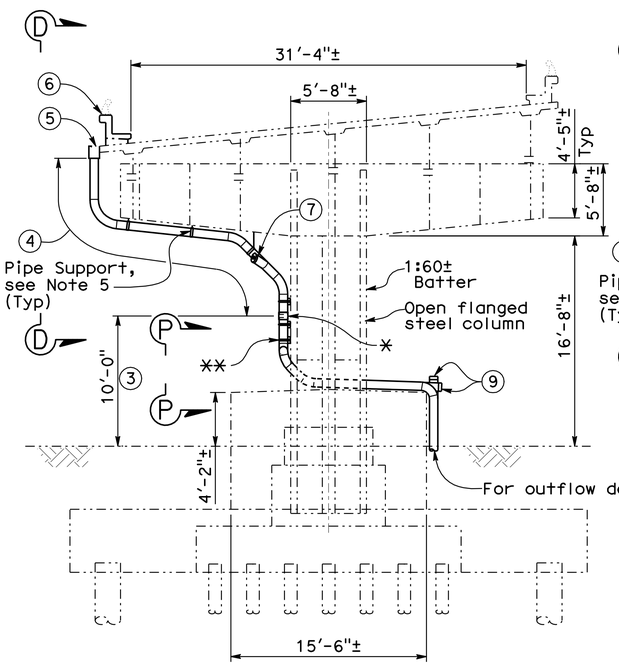

ELEVATION BENT E2-21
(Looking North)
No Scale
Note: Bent field labeled as 10-21

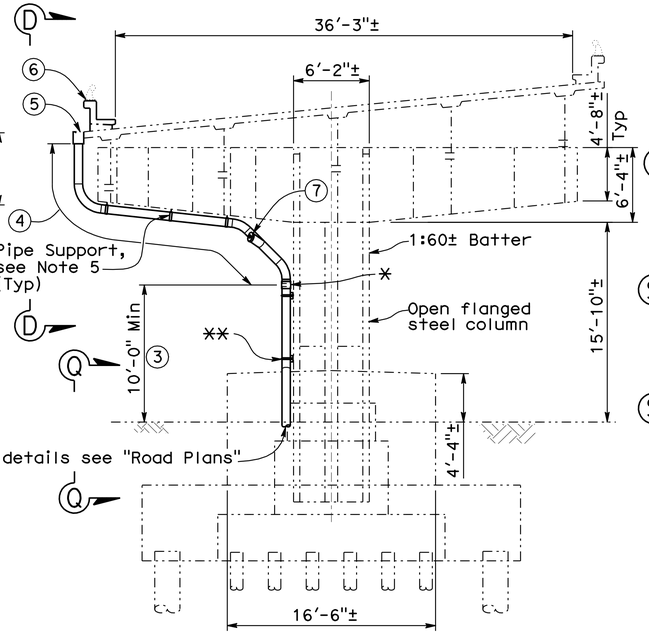

ELEVATION BENT E2-22
(Looking North)
No Scale
Note: Bent field labeled as 10-22

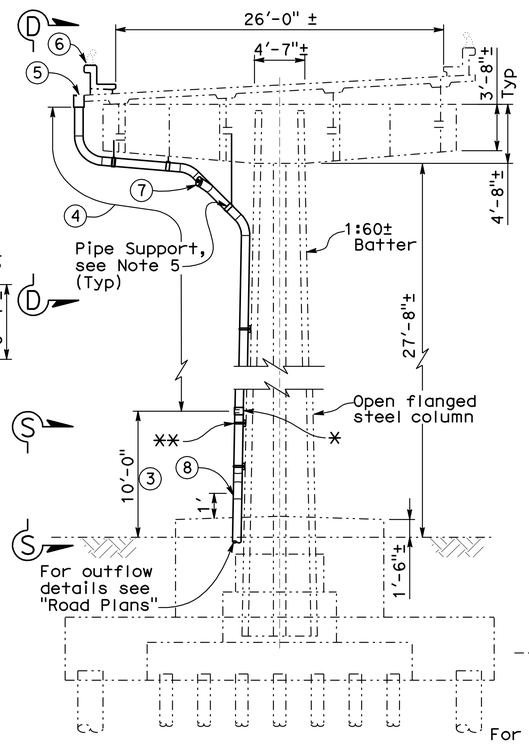

ELEVATION BENT E5-47
(Looking North)
No Scale

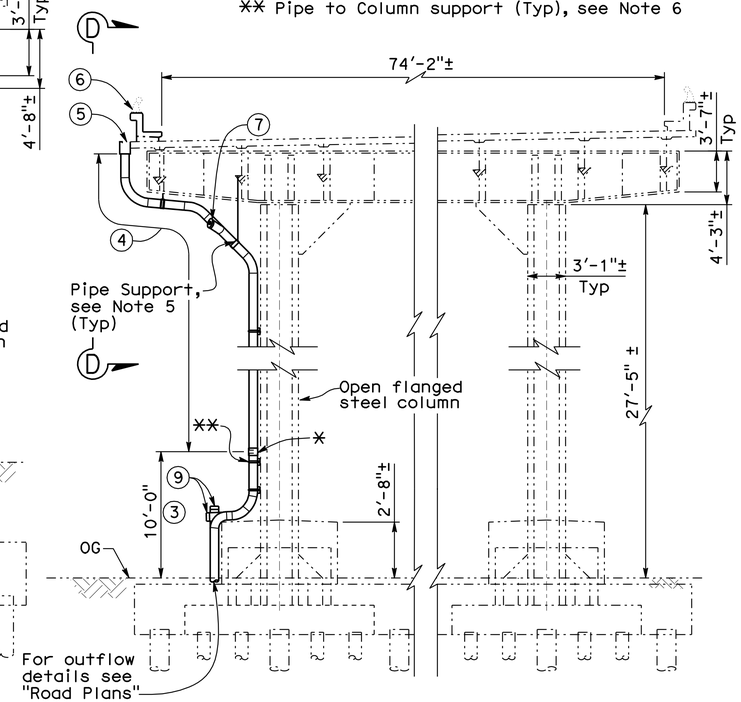

ELEVATION BENT L-36
(Looking North)
No Scale

NOTE:
THE CONTRACTOR SHALL VERIFY ALL CONTROLLING FIELD DIMENSIONS BEFORE ORDERING OR FABRICATING ANY MATERIAL.

Fred Diba
DESIGN OVERSIGHT
08-27-09
SIGN OFF DATE

	BY	CHECKED
DESIGN	N. Suan	B. Hansen
DETAILS	E. Simene	B. Hansen
QUANTITIES	E. Simene	N. Suan

PREPARED FOR THE STATE OF CALIFORNIA DEPARTMENT OF TRANSPORTATION

Noel J. Suan
PROJECT ENGINEER

BRIDGE NO. Various
POST MILE Varies

BAYSHORE & CENTRAL VIADUCTS STRUCTURE REHABILITATION

BRIDGE DRAINAGE DETAILS NO. 3

DESIGN DETAIL SHEET (ENGLISH) (REV. 2/25/05)

ORIGINAL SCALE IN INCHES FOR REDUCED PLANS 0 1 2 3

CU 04
EA 2A1401

DISREGARD PRINTS BEARING EARLIER REVISION DATES

REVISION DATES (PRELIMINARY STAGE ONLY) 5-31-07 7-31-07 9-28-07 3-14-08 5-01-09 5-31-09 6-30-09 7-31-09 8-26-09

SHEET 17 OF 31

FILE => 34-0077 & 34-0088-r-dd03 (L36,E5-47,E2-21&22).dgn

USERNAME => BRG DATE PLOTTED => 14-JAN-2010

DIST	COUNTY	ROUTE	POST MILES TOTAL PROJECT	SHEET No	TOTAL SHEETS
04	SF	80,101	L3.8/5.0, 4.1/5.0	123	136

REGISTERED CIVIL ENGINEER 8-12-09 DATE

1-11-10
PLANS APPROVAL DATE

REGISTERED PROFESSIONAL ENGINEER NOEL J. SUAN No. C 43024 Exp. 3-31-10 CIVIL STATE OF CALIFORNIA

The State of California or its officers or agents shall not be responsible for the accuracy or completeness of electronic copies of this plan sheet.

DAVID EVANS & ASSOCIATES, INC.
1544 Eureka Road, Suite 200
Roseville, CA 95661

BRG ENGINEERING
3841 North Freeway Blvd, Suite 175
Sacramento, CA 95834

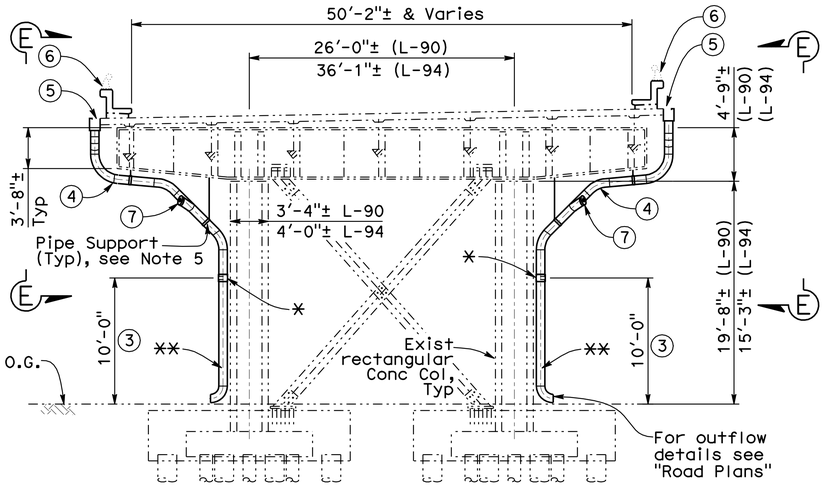

ELEVATION BENT L-90 & L-94

(Looking East)
No Scale
L-90 (Drainage System @ left side only)
L-94 (Drainage System @ both sides)

Note: Bent L-90 shown, Bent L-94 similar

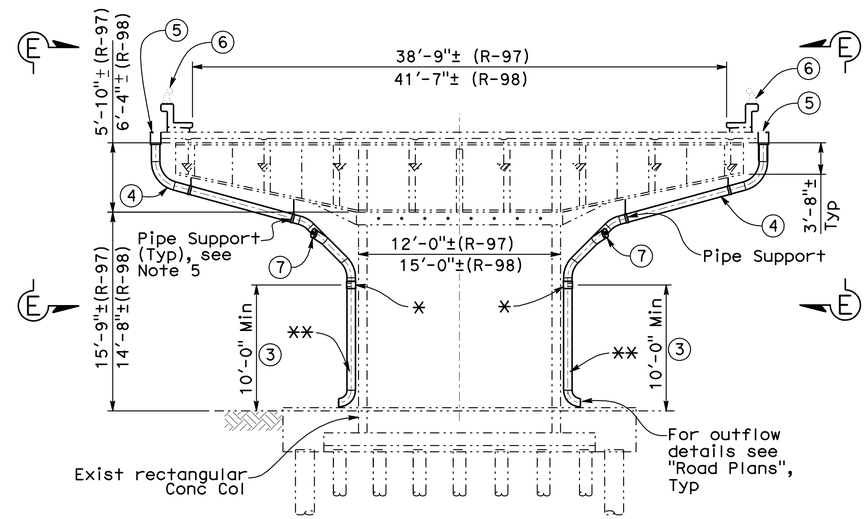

ELEVATION BENT R-97 & R-98

(Looking East)
No Scale
R-97 (Drainage System @ left side only)
R-98 (Drainage System @ right side only)

NOTES:

For legend and notes not shown, see "BRIDGE DRAINAGE DETAILS NO. 1" sheet.

* WSP to Fiberglass Pipe connection, see Note 1

** Pipe to Column support (Typ), see Note 6

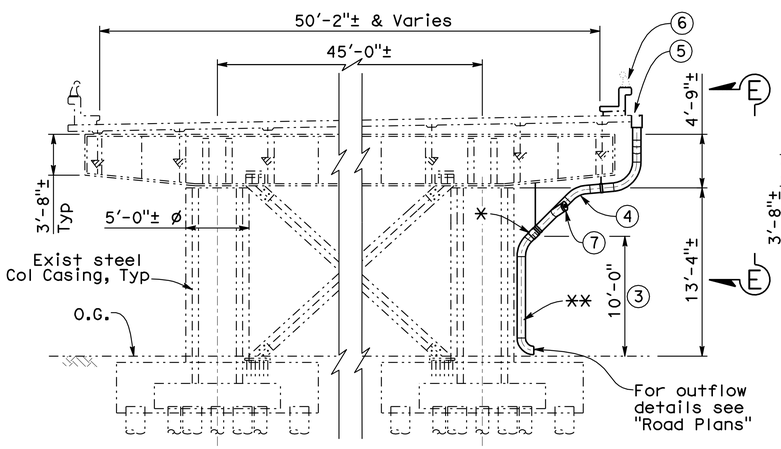

ELEVATION BENT L-97

(Looking East)
No Scale

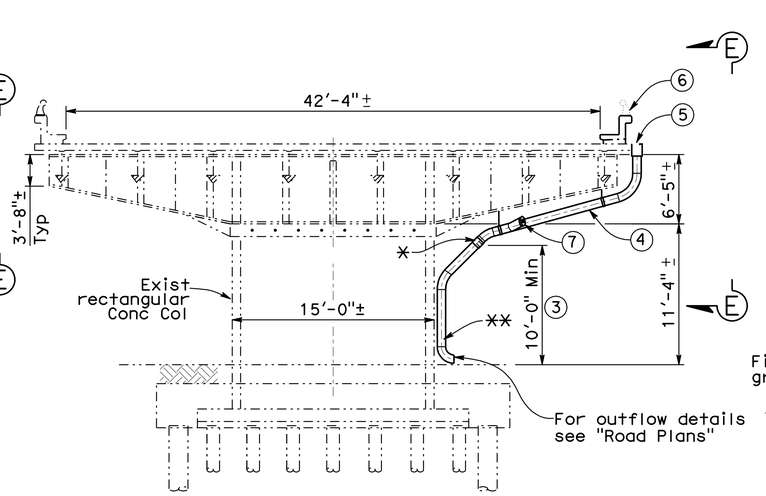

ELEVATION BENT L-100

(Looking East)
No Scale

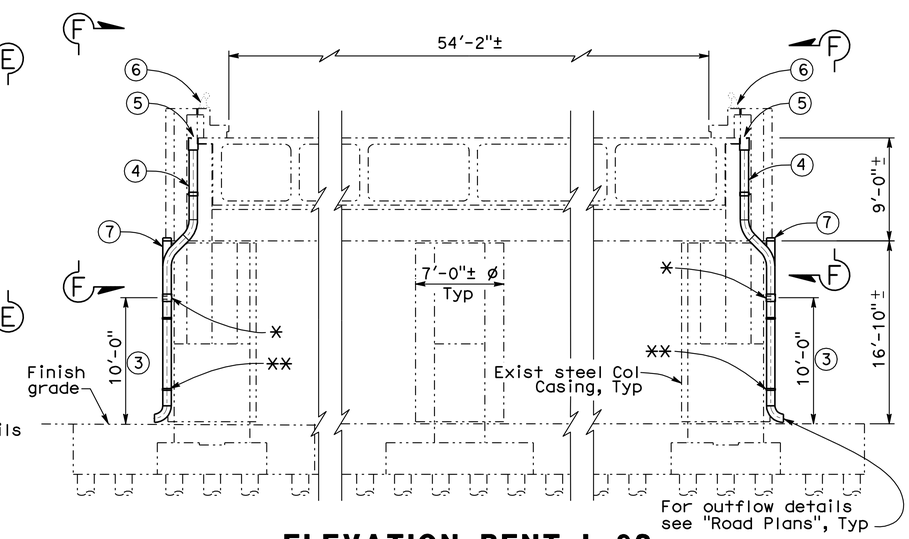

ELEVATION BENT L-92

(Looking East)
No Scale

NOTE:
THE CONTRACTOR SHALL VERIFY ALL CONTROLLING FIELD DIMENSIONS BEFORE ORDERING OR FABRICATING ANY MATERIAL.

Fred Dlba
DESIGN OVERSIGHT
08-13-09
SIGN OFF DATE

	BY	CHECKED
DESIGN	N. Suan	B. Hansen
DETAILS	E. Simene	B. Hansen
QUANTITIES	E. Simene	N. Suan

PREPARED FOR THE STATE OF CALIFORNIA DEPARTMENT OF TRANSPORTATION

Noel J. Suan
PROJECT ENGINEER

BRIDGE NO. Various
POST MILE Varies

BAYSHORE & CENTRAL VIADUCTS STRUCTURE REHABILITATION

BRIDGE DRAINAGE DETAILS NO. 4

DESIGN DETAIL SHEET (ENGLISH) (REV. 2/25/05)

ORIGINAL SCALE IN INCHES FOR REDUCED PLANS 0 1 2 3

CU 04
EA 2A1401

DISREGARD PRINTS BEARING EARLIER REVISION DATES

REVISION DATES (PRELIMINARY STAGE ONLY) 5-27-07 7-23-07 9-28-07 3-11-08 5-27-09 5-27-09 6-15-09 7-21-09

SHEET 18 OF 31

FILE => 34-0077 & 34-0088-r-dd04 (L90&94).dgn

DATE PLOTTED => 14-JAN-2010
USERNAME => BRG

DIST	COUNTY	ROUTE	POST MILES TOTAL PROJECT	SHEET No	TOTAL SHEETS
04	SF	80,101	L3.8/5.0, 4.1/5.0	124	136

REGISTERED CIVIL ENGINEER 8-12-09 DATE

1-11-10
PLANS APPROVAL DATE

REGISTERED PROFESSIONAL ENGINEER NOEL J. SUAN No. C 43024 Exp. 3-31-10 CIVIL STATE OF CALIFORNIA

The State of California or its officers or agents shall not be responsible for the accuracy or completeness of electronic copies of this plan sheet.

DAVID EVANS & ASSOCIATES, INC.
1544 Eureka Road, Suite 200
Roseville, CA 95661

BRG ENGINEERING
3841 North Freeway Blvd, Suite 175
Sacramento, CA 95834

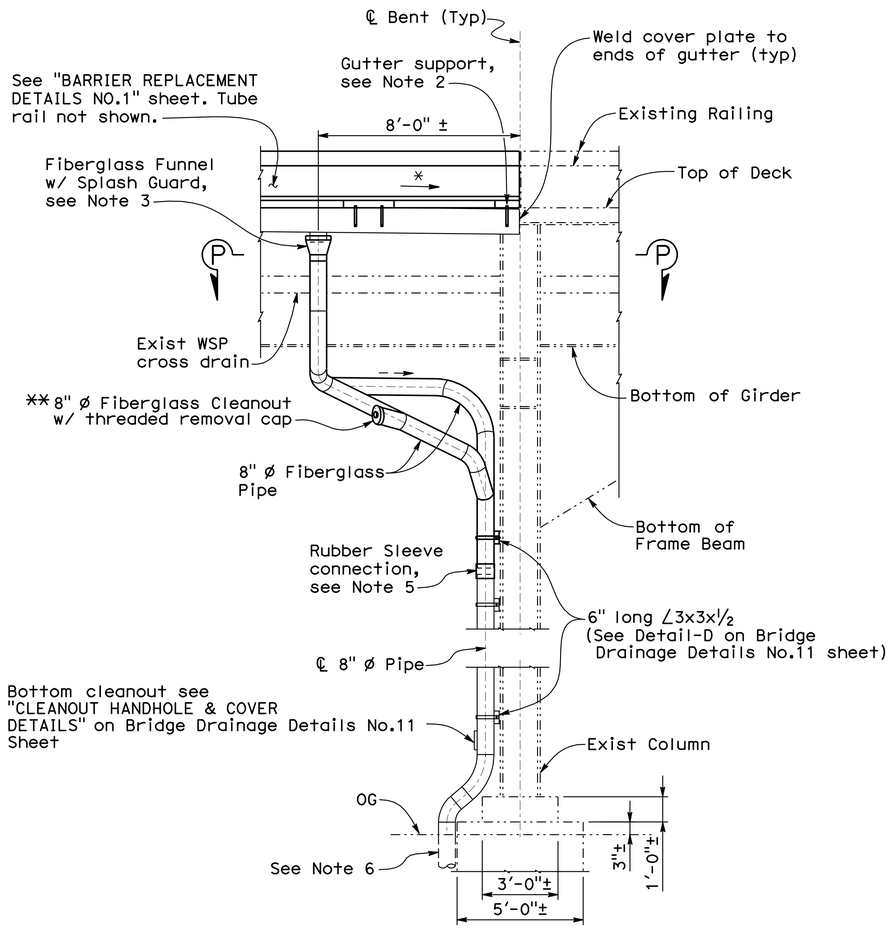

VIEW A-A

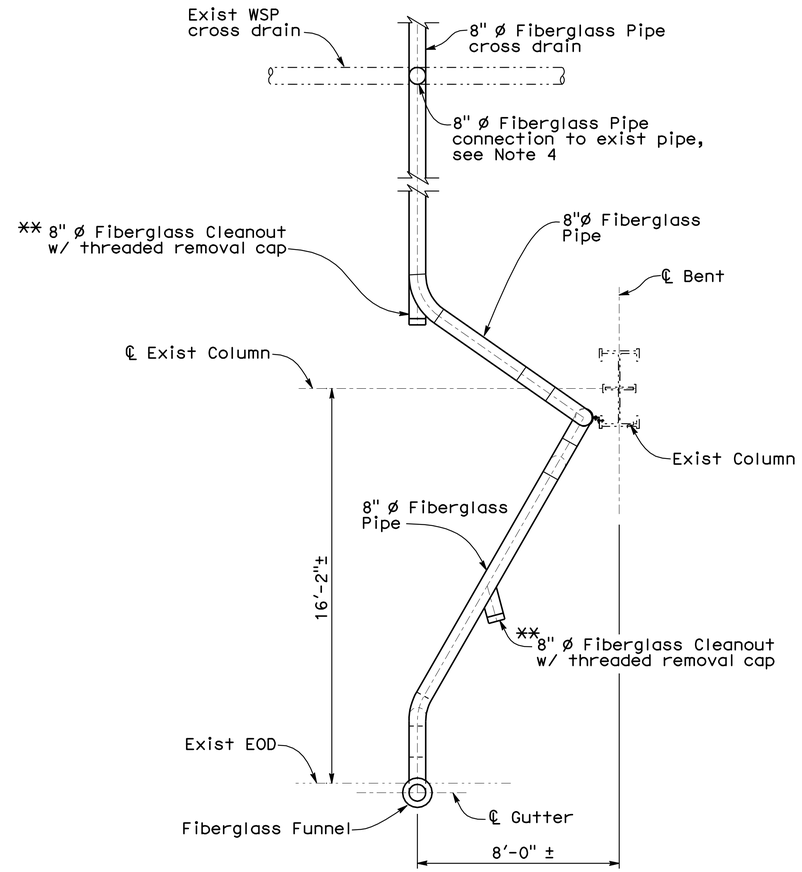

VIEW P-P PARTIAL PLAN

NOTES:

1. For location of "VIEW A-A", see "BRIDGE DRAINAGE DETAILS NO. 1" sheet.
2. For "GUTTER SUPPORT DETAIL", see "BRIDGE DRAINAGE DETAILS NO. 10" sheet.
3. For "FUNNEL & SPLASH GUARD DETAILS", see "BRIDGE DRAINAGE DETAILS NO. 10" sheet.
4. For "EXISTING PIPE CONNECTION DETAIL", see "BRIDGE DRAINAGE DETAILS NO. 11" sheet.
5. WSP to fiberglass pipe connections to be connected by rubber sleeves, see "RUBBER SLEEVE CONNECTION DETAIL" on "BRIDGE DRAINAGE DETAILS NO. 11" sheet.
6. For details of underground drainage system, see "Road Plans".

* Slope to drain

** Apply silicone grease to removal cap threads

BENT E-100 DETAILS

No Scale

NOTE:
THE CONTRACTOR SHALL VERIFY ALL CONTROLLING FIELD DIMENSIONS BEFORE ORDERING OR FABRICATING ANY MATERIAL.

Fred Dlba
DESIGN OVERSIGHT
08-13-09
SIGN OFF DATE

	BY	CHECKED
DESIGN	N. Suan	B. Hansen
DETAILS	E. Simene	B. Hansen
QUANTITIES	E. Simene	N. Suan

PREPARED FOR THE STATE OF CALIFORNIA DEPARTMENT OF TRANSPORTATION

Noel J. Suan
PROJECT ENGINEER

BRIDGE NO. Various
POST MILE Varies

BAYSHORE & CENTRAL VIADUCTS STRUCTURE REHABILITATION

BRIDGE DRAINAGE DETAILS NO. 5

DESIGN DETAIL SHEET (ENGLISH) (REV. 2/25/05)

ORIGINAL SCALE IN INCHES FOR REDUCED PLANS 0 1 2 3

CU 04
EA 2A1401

DISREGARD PRINTS BEARING EARLIER REVISION DATES

REVISION DATES (PRELIMINARY STAGE ONLY) 5-31-07 7-27-07 9-28-07 3-14-08 5-21-09 5-27-09 6-26-09 7-27-09

SHEET 19 OF 31

FILE => 34-0077 & 34-0088-r-dd05 (E100 A-A).dgn

USERNAME => BRG DATE PLOTTED => 14-JAN-2010

DIST	COUNTY	ROUTE	POST MILES TOTAL PROJECT	SHEET No	TOTAL SHEETS
04	SF	80,101	L3.8/5.0, 4.1/5.0	125	136

REGISTERED CIVIL ENGINEER 8-12-09 DATE

1-11-10
PLANS APPROVAL DATE

REGISTERED PROFESSIONAL ENGINEER NOEL J. SUAN No. C 43024 Exp. 3-31-10 CIVIL STATE OF CALIFORNIA

The State of California or its officers or agents shall not be responsible for the accuracy or completeness of electronic copies of this plan sheet.

DAVID EVANS & ASSOCIATES, INC.
1544 Eureka Road, Suite 200
Roseville, CA 95661

BRG ENGINEERING
3841 North Freeway Blvd, Suite 175
Sacramento, CA 95834

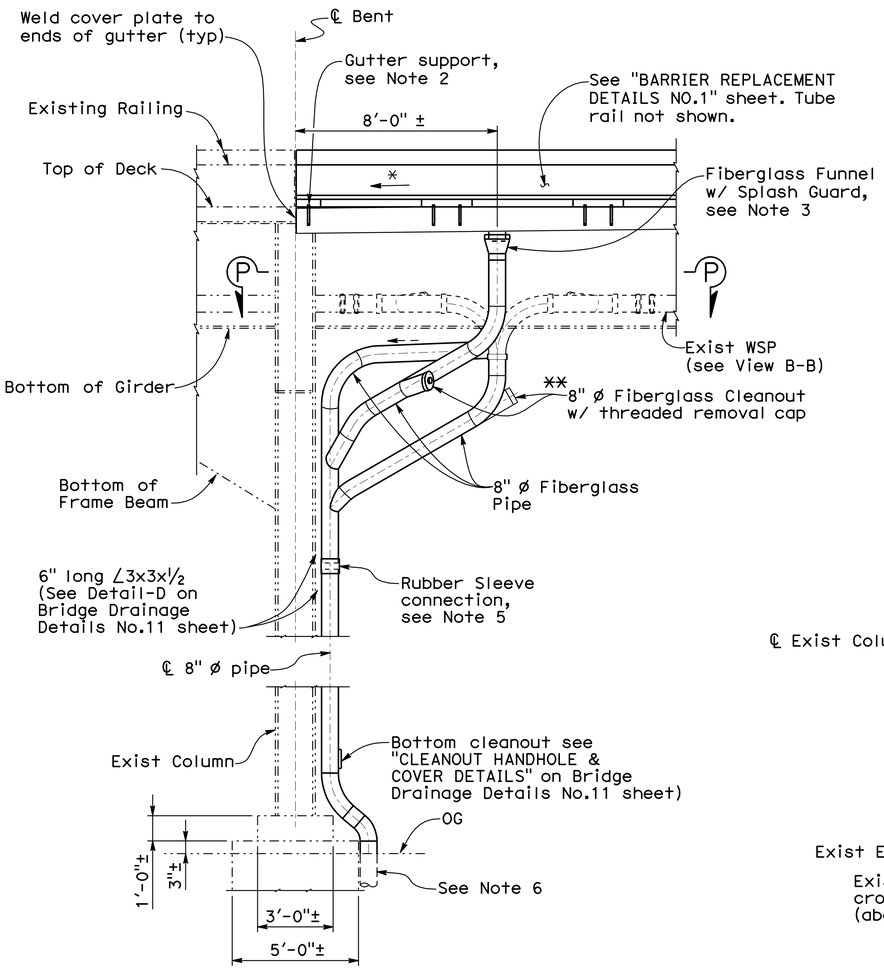

VIEW A-A

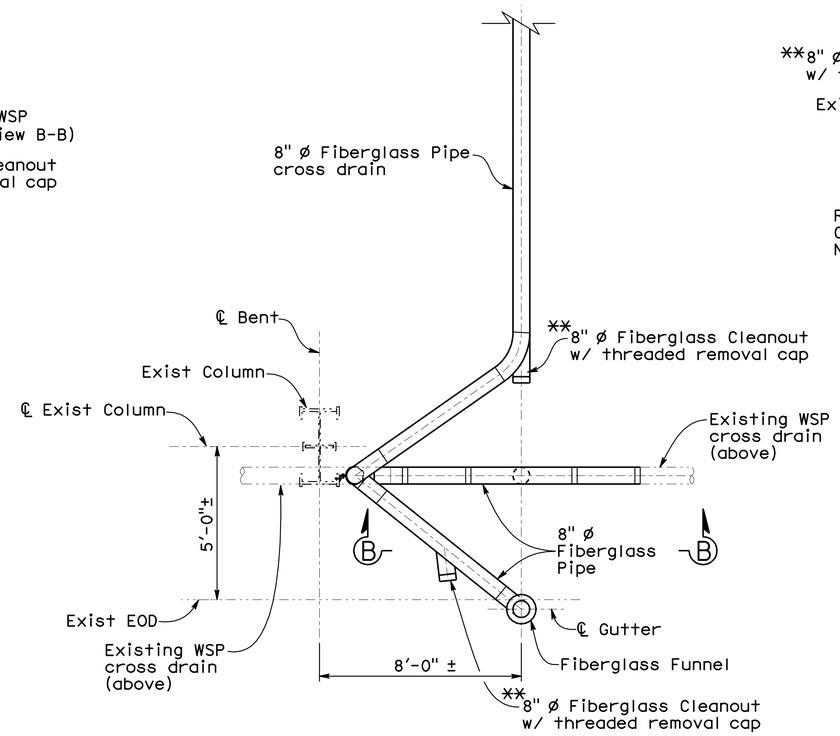

VIEW P-P PARTIAL PLAN

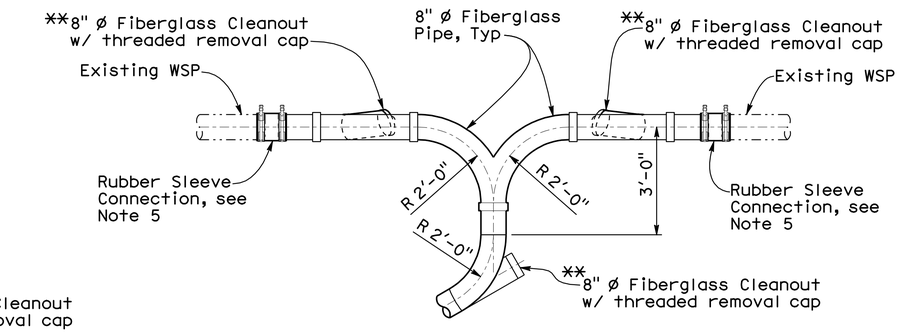

VIEW B-B

Remove as much length of exist WSP as required to allow for new DD connection.

NOTES:

1. For location of "VIEW A-A", see "BRIDGE DRAINAGE DETAILS NO. 1" sheet.
2. For "GUTTER SUPPORT DETAIL", see "BRIDGE DRAINAGE DETAILS NO. 10" sheet.
3. For "FUNNEL & SPLASH GUARD DETAILS", see "BRIDGE DRAINAGE DETAILS NO. 10" sheet.
4. For "EXISTING PIPE CONNECTION DETAIL", see "BRIDGE DRAINAGE DETAILS NO. 11" sheet.
5. WSP to fiberglass pipe connections to be connected by rubber sleeves, see "RUBBER SLEEVE CONNECTION DETAIL" on "BRIDGE DRAINAGE DETAILS NO. 11" sheet.
6. For details of underground drainage system, see "Road Plans".

* Slope to drain

** Apply silicone grease to removal cap threads

BENT E-3 DETAILS

No Scale

NOTE:
THE CONTRACTOR SHALL VERIFY ALL CONTROLLING FIELD DIMENSIONS BEFORE ORDERING OR FABRICATING ANY MATERIAL.

Fred Diba
DESIGN OVERSIGHT
08-13-09
SIGN OFF DATE

	BY	CHECKED
DESIGN	N. Suan	B. Hansen
DETAILS	E. Simene	B. Hansen
QUANTITIES	E. Simene	N. Suan

PREPARED FOR THE STATE OF CALIFORNIA DEPARTMENT OF TRANSPORTATION

Noel J. Suan
PROJECT ENGINEER

BRIDGE NO. Various
POST MILE Varies

BAYSHORE & CENTRAL VIADUCTS STRUCTURE REHABILITATION

BRIDGE DRAINAGE DETAILS NO. 6

DESIGN DETAIL SHEET (ENGLISH) (REV. 2/25/05)

ORIGINAL SCALE IN INCHES FOR REDUCED PLANS 0 1 2 3

CU 04
EA 2A1401

DISREGARD PRINTS BEARING EARLIER REVISION DATES

REVISION DATES (PRELIMINARY STAGE ONLY) 5-25-07 7-2-07 9-26-07 5-11-08 5-01-09 5-21-09 6-26-09 7-27-09

SHEET 20 OF 31

FILE => 34-0077 & 34-0088-r-dd06 (E3 A-A).dgn.dgn

USERNAME => BRG DATE PLOTTED => 14-JAN-2010

DIST	COUNTY	ROUTE	POST MILES TOTAL PROJECT	SHEET No	TOTAL SHEETS
04	SF	80,101	L3.8/5.0, 4.1/5.0	126	136

REGISTERED CIVIL ENGINEER 8-12-09 DATE

1-11-10
PLANS APPROVAL DATE

REGISTERED PROFESSIONAL ENGINEER NOEL J. SUAN No. C 43024 Exp. 3-31-10 CIVIL STATE OF CALIFORNIA

The State of California or its officers or agents shall not be responsible for the accuracy or completeness of electronic copies of this plan sheet.

DAVID EVANS & ASSOCIATES, INC.
1544 Eureka Road, Suite 200
Roseville, CA 95661

BRG ENGINEERING
3841 North Freeway Blvd, Suite 175
Sacramento, CA 95834

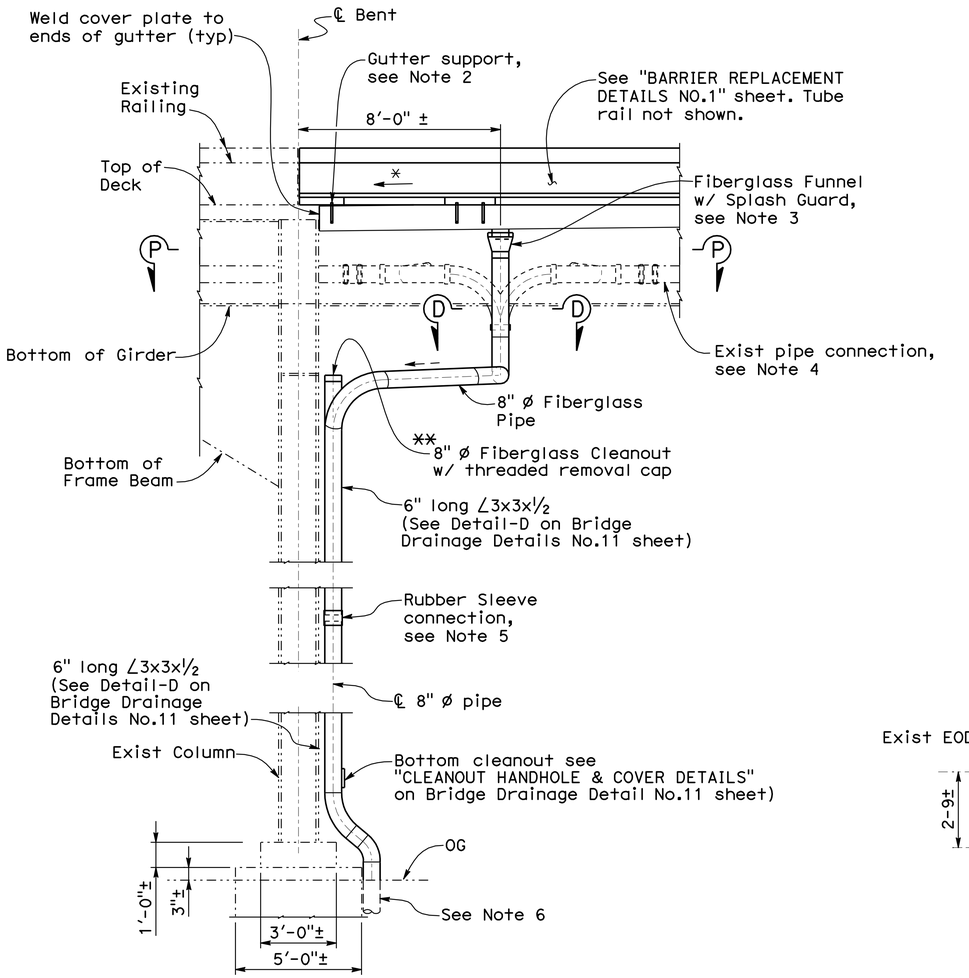

VIEW B-B

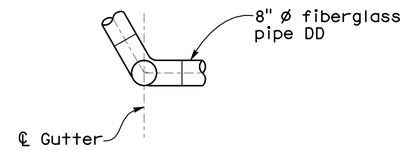

VIEW D-D

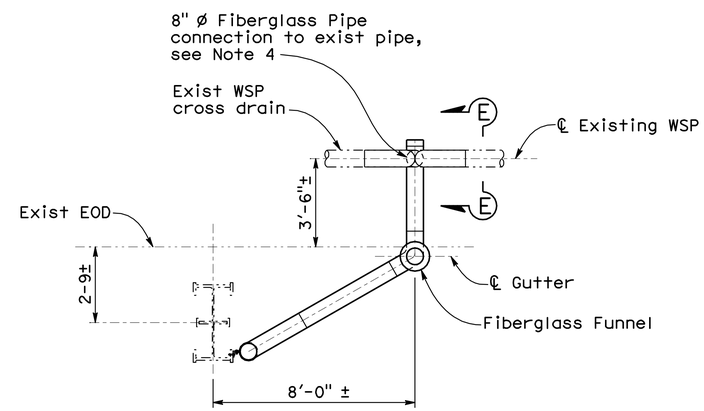

VIEW P-P PARTIAL PLAN

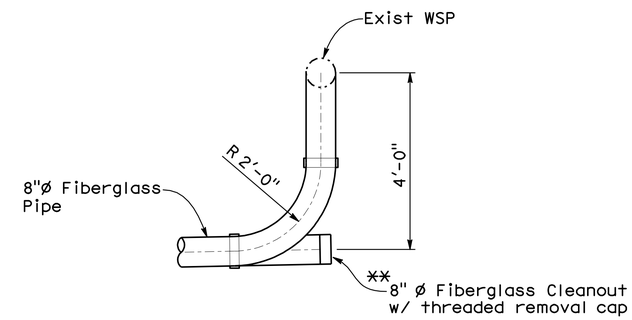

VIEW E-E

BENT E-9 DETAILS

No Scale

Note: North side of Bent E-9 shown, Bent E-16 & Bent E-13 similar except Bent E-13 drainage system and new barrier on opposite side of bent shown.

NOTES:

1. For location of "VIEW B-B", see "BRIDGE DRAINAGE DETAILS NO. 2" sheet.
2. For "GUTTER SUPPORT DETAIL", see "BRIDGE DRAINAGE DETAILS NO. 10" sheet.
3. For "FUNNEL & SPLASH GUARD DETAILS", see "BRIDGE DRAINAGE DETAILS NO. 10" sheet.
4. For "EXISTING PIPE CONNECTION DETAIL", see "BRIDGE DRAINAGE DETAILS NO. 11" sheet.
5. WSP to fiberglass pipe connections to be connected by rubber sleeves, see "RUBBER SLEEVE CONNECTION DETAIL" on "BRIDGE DRAINAGE DETAILS NO. 11" sheet.
6. For details of underground drainage system, see "Road Plans".

* Slope to drain

** Apply silicone grease to removal cap threads

NOTE:
THE CONTRACTOR SHALL VERIFY ALL CONTROLLING FIELD DIMENSIONS BEFORE ORDERING OR FABRICATING ANY MATERIAL.

Fred Dlba
DESIGN OVERSIGHT
08-13-09
SIGN OFF DATE

	BY	CHECKED
DESIGN	N. Suan	B. Hansen
DETAILS	E. Simene	B. Hansen
QUANTITIES	E. Simene	N. Suan

PREPARED FOR THE STATE OF CALIFORNIA DEPARTMENT OF TRANSPORTATION

Noel J. Suan
PROJECT ENGINEER

BRIDGE NO. Various
POST MILE Varies

BAYSHORE & CENTRAL VIADUCTS STRUCTURE REHABILITATION

BRIDGE DRAINAGE DETAILS NO. 7

DESIGN DETAIL SHEET (ENGLISH) (REV. 2/25/05)

ORIGINAL SCALE IN INCHES FOR REDUCED PLANS 0 1 2 3

CU 04
EA 2A1401

DISREGARD PRINTS BEARING EARLIER REVISION DATES

REVISION DATES (PRELIMINARY STAGE ONLY) 5-25-07 7-27-07 9-26-07 3-17-08 5-01-09 5-21-09 6-26-09 7-27-09

SHEET 21 OF 31

FILE => 34-0077 & 34-0088-r-dd07 (E9-13&E16 B-B).dgn

USERNAME => BRG DATE PLOTTED => 14-JAN-2010

DIST	COUNTY	ROUTE	POST MILES TOTAL PROJECT	SHEET No	TOTAL SHEETS
04	SF	80,101	L3.8/5.0, 4.1/5.0	127	136

REGISTERED CIVIL ENGINEER 8-12-09 DATE

1-11-10
PLANS APPROVAL DATE

REGISTERED PROFESSIONAL ENGINEER NOEL J. SUAN No. C 43024 Exp. 3-31-10 CIVIL STATE OF CALIFORNIA

The State of California or its officers or agents shall not be responsible for the accuracy or completeness of electronic copies of this plan sheet.

DAVID EVANS & ASSOCIATES, INC.
1544 Eureka Road, Suite 200
Roseville, CA 95661

BRG ENGINEERING
3841 North Freeway Blvd, Suite 175
Sacramento, CA 95834

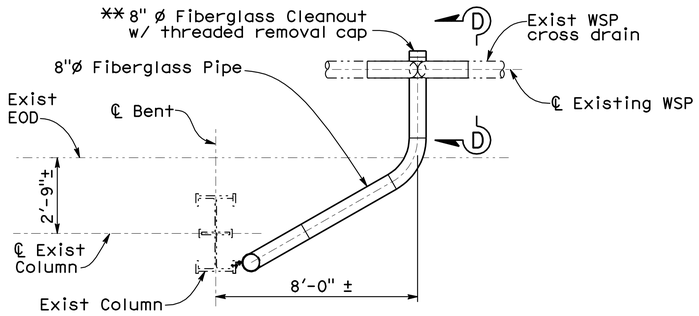

VIEW P-P - BENT E17 PARTIAL PLAN

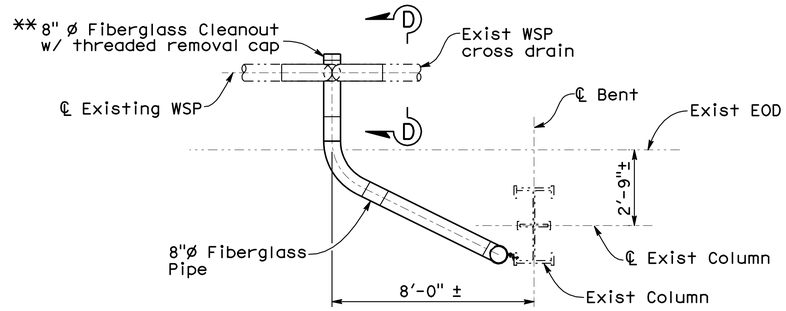

VIEW P-P - BENT E20 PARTIAL PLAN

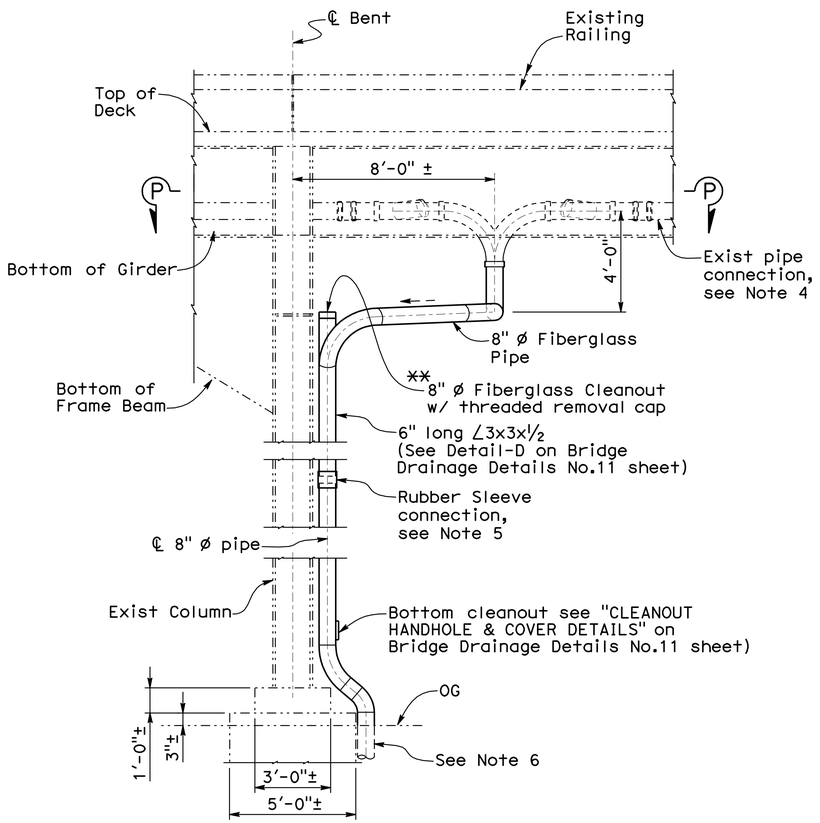

VIEW C-C

BENT E-17 DETAILS

No Scale
Note: South side of Bent E-17 shown

NOTE:
THE CONTRACTOR SHALL VERIFY ALL CONTROLLING FIELD DIMENSIONS BEFORE ORDERING OR FABRICATING ANY MATERIAL.

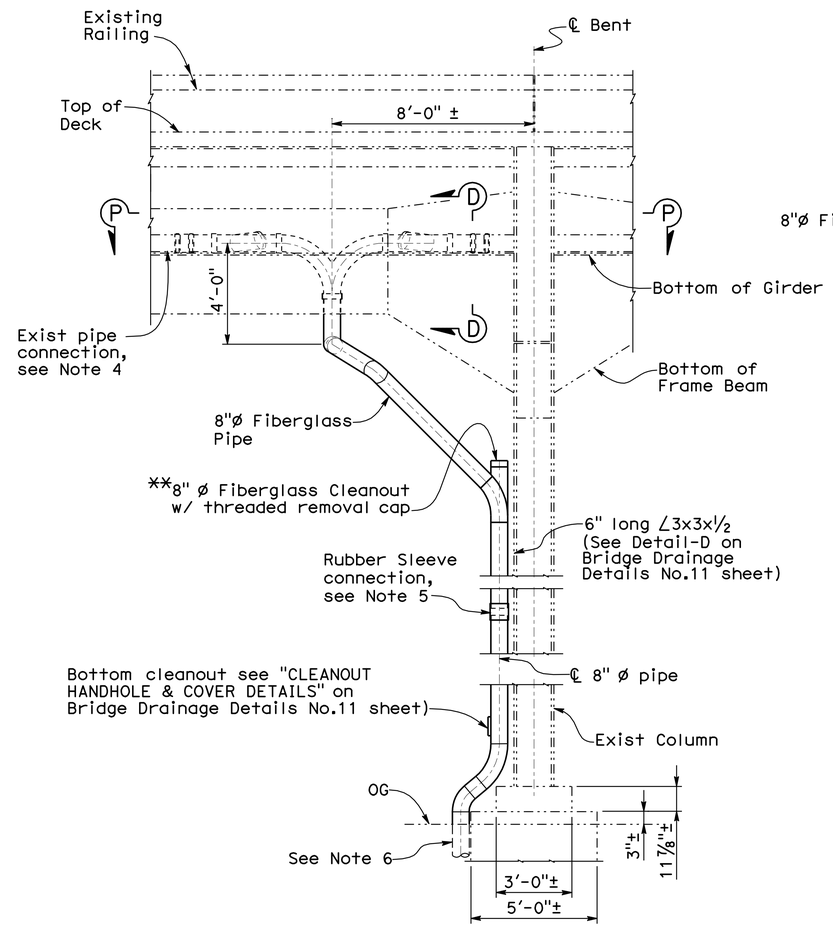

VIEW C-C

BENT E-20 DETAILS

No Scale
Note: South side of Bent E-20 shown

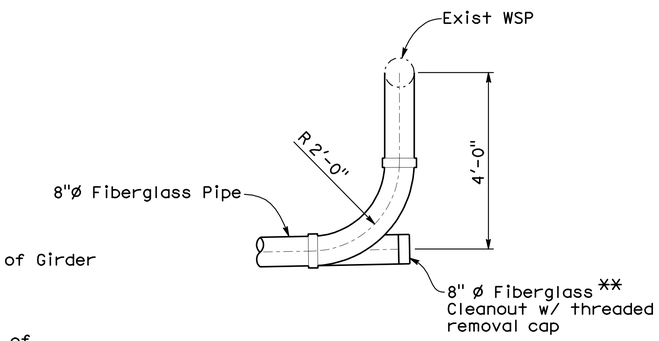

VIEW D-D

NOTES:

1. For location of "VIEW C-C", see "BRIDGE DRAINAGE DETAILS NO. 2" sheet.
2. For "GUTTER SUPPORT DETAIL", see "BRIDGE DRAINAGE DETAILS NO. 10" sheet.
3. For "FUNNEL & SPLASH GUARD DETAILS", see "BRIDGE DRAINAGE DETAILS NO. 10" sheet.
4. For "EXISTING PIPE CONNECTION DETAIL", see "BRIDGE DRAINAGE DETAILS NO. 11" sheet.
5. WSP to fiberglass pipe connections to be connected by rubber sleeves, see "RUBBER SLEEVE CONNECTION DETAIL" on "BRIDGE DRAINAGE DETAILS NO. 11" sheet.
6. For details of underground drainage system, see "Road Plans".

* Slope to drain
** Apply silicone grease to removal cap threads

Fred Dlba
DESIGN OVERSIGHT
08-13-09
SIGN OFF DATE

	BY	CHECKED
DESIGN	N. Suan	B. Hansen
DETAILS	E. Simene	B. Hansen
QUANTITIES	E. Simene	N. Suan

PREPARED FOR THE STATE OF CALIFORNIA DEPARTMENT OF TRANSPORTATION

Noel J. Suan
PROJECT ENGINEER

BRIDGE NO. Various
POST MILE Varies

BAYSHORE & CENTRAL VIADUCTS STRUCTURE REHABILITATION

BRIDGE DRAINAGE DETAILS NO. 8

DESIGN DETAIL SHEET (ENGLISH) (REV. 2/25/05)

ORIGINAL SCALE IN INCHES FOR REDUCED PLANS 0 1 2 3

CU 04
EA 2A1401

DISREGARD PRINTS BEARING EARLIER REVISION DATES

REVISION DATES (PRELIMINARY STAGE ONLY) 4-21-07 7-27-07 9-28-07 4-11-08 5-01-09 5-27-09 6-26-09 7-21-09

SHEET 22 OF 31

FILE => 34-0077 & 34-0088-r-dd08 (E17&E20 C-C).dgn

DATE PLOTTED => 14-JAN-2010
USERNAME => BRG

DIST	COUNTY	ROUTE	POST MILES TOTAL PROJECT	SHEET No	TOTAL SHEETS
04	SF	80,101	L3.8/5.0, 4.1/5.0	128	136

REGISTERED CIVIL ENGINEER 8-12-09 DATE

1-11-10
PLANS APPROVAL DATE

REGISTERED PROFESSIONAL ENGINEER NOEL J. SUAN No. C 43024 Exp. 3-31-10 CIVIL STATE OF CALIFORNIA

The State of California or its officers or agents shall not be responsible for the accuracy or completeness of electronic copies of this plan sheet.

DAVID EVANS & ASSOCIATES, INC.
1544 Eureka Road, Suite 200
Roseville, CA 95661

BRG ENGINEERING
3841 North Freeway Blvd, Suite 175
Sacramento, CA 95834

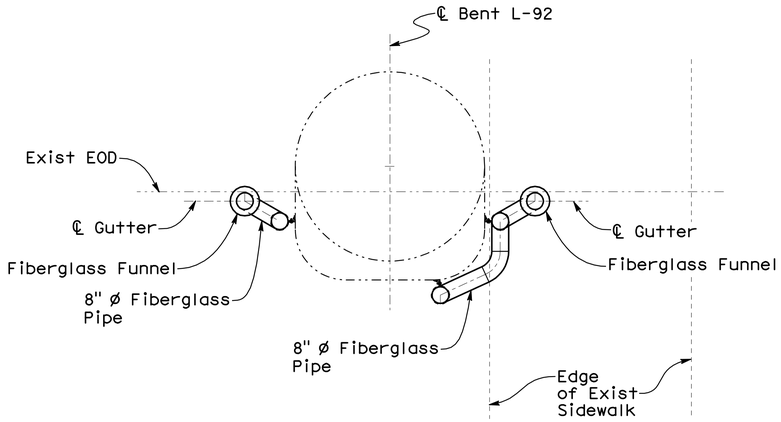

PARTIAL VIEW P-P

No Scale

NOTES:

1. For location of "VIEW D-D", "VIEW E-E", & "VIEW F-F", see "BRIDGE DRAINAGE DETAILS NO. 3", & "DRAINAGE DETAILS NO. 4" sheet, respectively.
2. For "GUTTER SUPPORT DETAILS", see "BRIDGE DRAINAGE DETAILS NO. 10" sheet.
3. For "FUNNEL & SPLASH GUARD DETAILS", see "BRIDGE DRAINAGE DETAILS NO. 10" sheet.

*Slope to drain

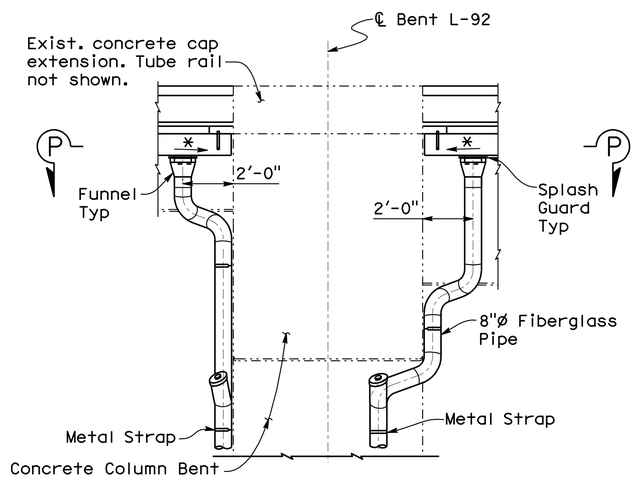

PARTIAL VIEW F-F

No Scale

Note: For details not shown, see "VIEW E-E" this sheet.

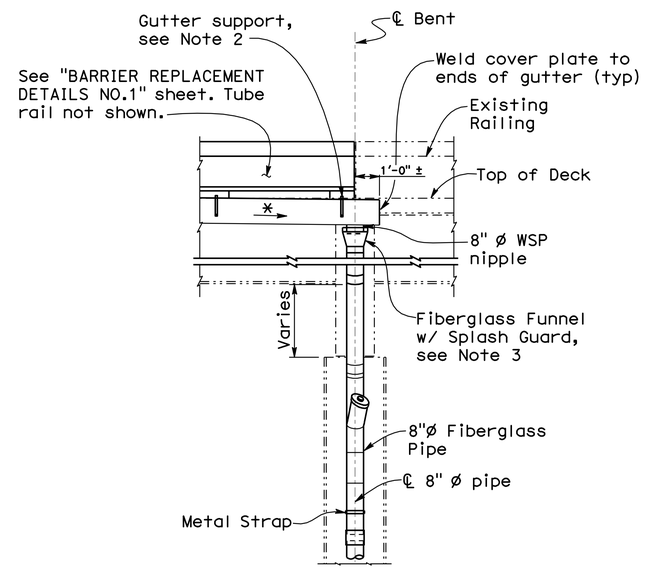

VIEW D-D

No Scale

PARTIAL VIEW

Note: Bent E2-21 shown, Bents E2-22, Bent E5-47, & Bent L-36 similar. For Bent E2-22 & L-36 drainage system and barrier at opposite side of bent shown.

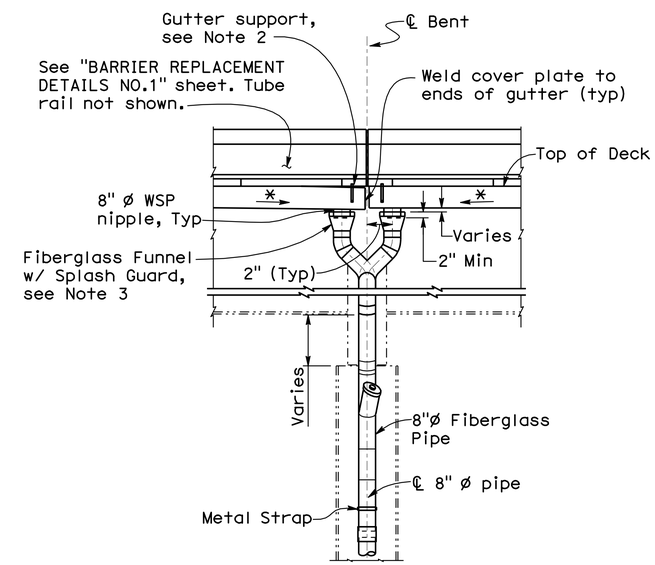

VIEW E-E

No Scale

PARTIAL VIEW

Note: Bent L-90 shown, Bents L-94, Bent L-97, Bent L-100, Bent R-97 & Bent R-98 similar.

NOTE:
THE CONTRACTOR SHALL VERIFY ALL CONTROLLING FIELD DIMENSIONS BEFORE ORDERING OR FABRICATING ANY MATERIAL.

Fred Dlba
DESIGN OVERSIGHT
08-13-09
SIGN OFF DATE

	BY	CHECKED
DESIGN	N. Suan	B. Hansen
DETAILS	E. Simene	B. Hansen
QUANTITIES	E. Simene	N. Suan

PREPARED FOR THE STATE OF CALIFORNIA DEPARTMENT OF TRANSPORTATION

Noel J. Suan
PROJECT ENGINEER

BRIDGE NO. Various
POST MILE Varies

BAYSHORE & CENTRAL VIADUCTS STRUCTURE REHABILITATION

BRIDGE DRAINAGE DETAILS NO. 9

DESIGN DETAIL SHEET (ENGLISH) (REV. 2/25/05)

ORIGINAL SCALE IN INCHES FOR REDUCED PLANS 0 1 2 3

CU 04
EA 2A1401

DISREGARD PRINTS BEARING EARLIER REVISION DATES

REVISION DATES (PRELIMINARY STAGE ONLY) 2-23-07 3-2-07 9-24-07 3-14-08 5-01-09 5-29-09 6-30-09 7-27-09

SHEET 23 OF 31

FILE => 34-0077 & 34-0088-r-dd09 (DRAIN_D-F).dgn

USERNAME => BRG DATE PLOTTED => 14-JAN-2010

DIST	COUNTY	ROUTE	POST MILES TOTAL PROJECT	SHEET No	TOTAL SHEETS
04	SF	80,101	L3.8/5.0, 4.1/5.0	129	136

REGISTERED CIVIL ENGINEER 8-12-09 DATE

1-11-10
PLANS APPROVAL DATE

REGISTERED PROFESSIONAL ENGINEER NOEL J. SUAN No. C 43024 Exp. 3-31-10 CIVIL STATE OF CALIFORNIA

The State of California or its officers or agents shall not be responsible for the accuracy or completeness of electronic copies of this plan sheet.

DAVID EVANS & ASSOCIATES, INC.
1544 Eureka Road, Suite 200
Roseville, CA 95661

BRG ENGINEERING
3841 North Freeway Blvd, Suite 175
Sacramento, CA 95834

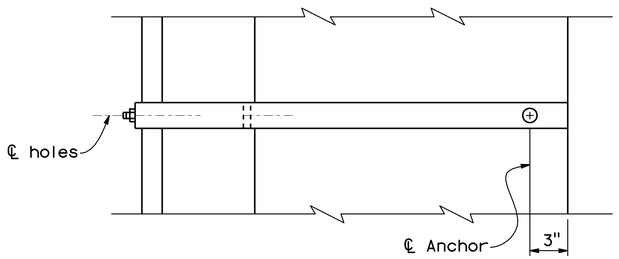

VIEW G-G

No Scale

Note: Gutter supports to be spaced @ 6'-0" O.C. (max.)

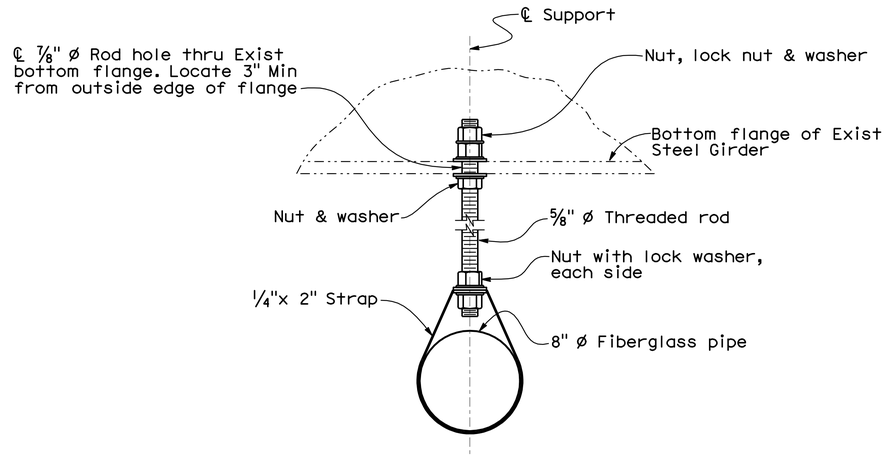

SUPPORT DETAIL

No Scale

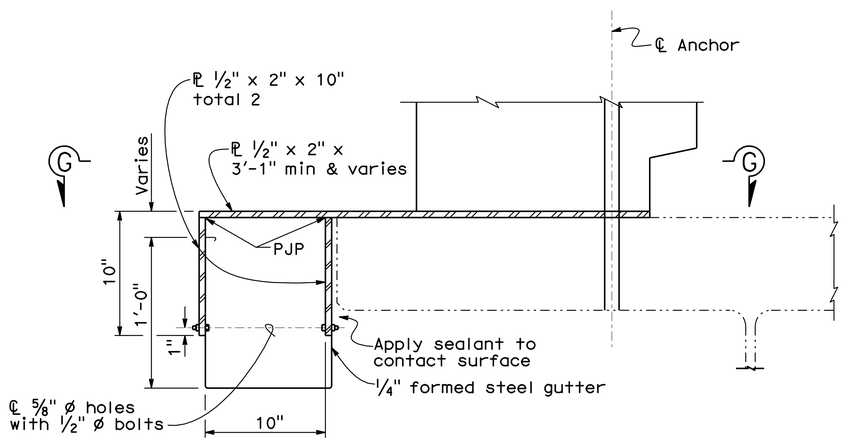

GUTTER SUPPORT DETAIL

No Scale

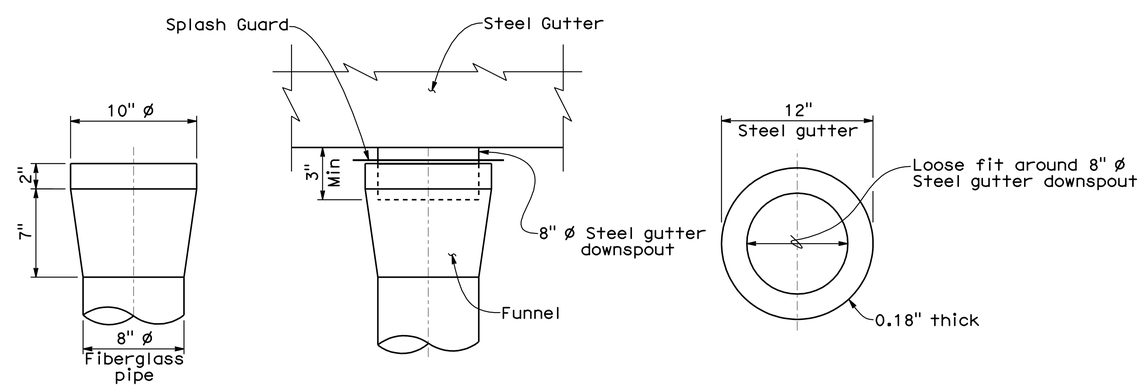

FUNNEL

SPLASH GUARD

FUNNEL & SPLASH GUARD DETAILS

No Scale

NOTE:
THE CONTRACTOR SHALL VERIFY ALL CONTROLLING FIELD DIMENSIONS BEFORE ORDERING OR FABRICATING ANY MATERIAL.

Fred Diba
DESIGN OVERSIGHT
08-13-09
SIGN OFF DATE

	BY	CHECKED
DESIGN	N. Suan	B. Hansen
DETAILS	E. Simene	B. Hansen
QUANTITIES	E. Simene	N. Suan

PREPARED FOR THE STATE OF CALIFORNIA DEPARTMENT OF TRANSPORTATION

Noel J. Suan
PROJECT ENGINEER

BRIDGE NO. Various
POST MILE Varies

BAYSHORE & CENTRAL VIADUCTS STRUCTURE REHABILITATION

BRIDGE DRAINAGE DETAILS NO. 10

DESIGN DETAIL SHEET (ENGLISH) (REV. 2/25/05)

ORIGINAL SCALE IN INCHES FOR REDUCED PLANS 0 1 2 3

CU 04
EA 2A1401

DISREGARD PRINTS BEARING EARLIER REVISION DATES

REVISION DATES (PRELIMINARY STAGE ONLY) 5-25-07 1-2-07 9-28-07 3-14-08 5-05-08 5-21-09 6-26-09 7-27-09

SHEET 24 OF 31

FILE => 34-0077 & 34-0088-r-dd10 (DRAIN_dt101).dgn

USERNAME => BRG DATE PLOTTED => 14-JAN-2010

DIST	COUNTY	ROUTE	POST MILES TOTAL PROJECT	SHEET No	TOTAL SHEETS
04	SF	80,101	L3.8/5.0, 4.1/5.0	130	136

REGISTERED CIVIL ENGINEER 8-12-09 DATE

1-11-10
PLANS APPROVAL DATE

REGISTERED PROFESSIONAL ENGINEER NOEL J. SUAN No. C 43024 Exp. 3-31-10 CIVIL STATE OF CALIFORNIA

The State of California or its officers or agents shall not be responsible for the accuracy or completeness of electronic copies of this plan sheet.

DAVID EVANS & ASSOCIATES, INC.
1544 Eureka Road, Suite 200
Roseville, CA 95661

BRG ENGINEERING
3841 North Freeway Blvd, Suite 175
Sacramento, CA 95834

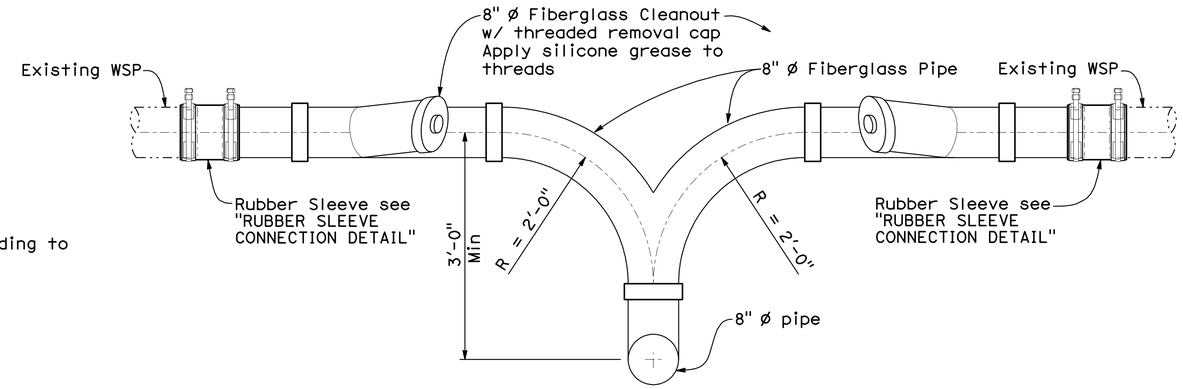

EXISTING PIPE CONNECTION DETAIL

No Scale

Note: Remove as much length of exist WSP as required to allow for new DD connection.

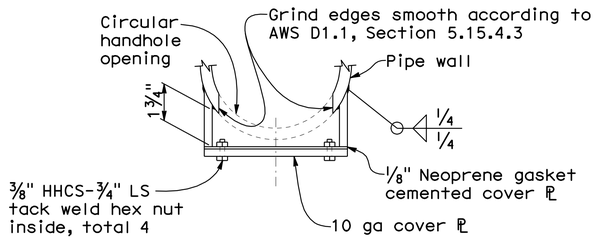

PLAN

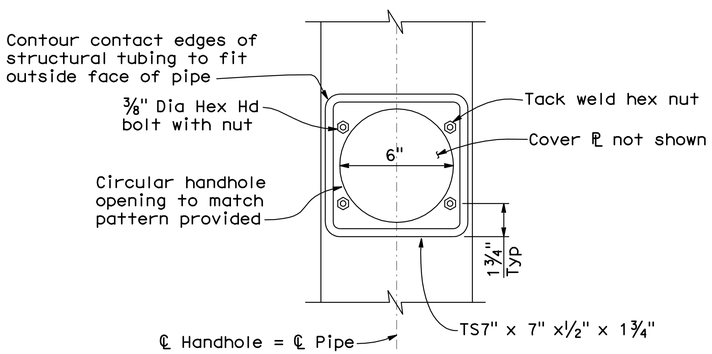

ELEVATION

CLEANOUT HANDHOLE & COVER DETAILS

No Scale

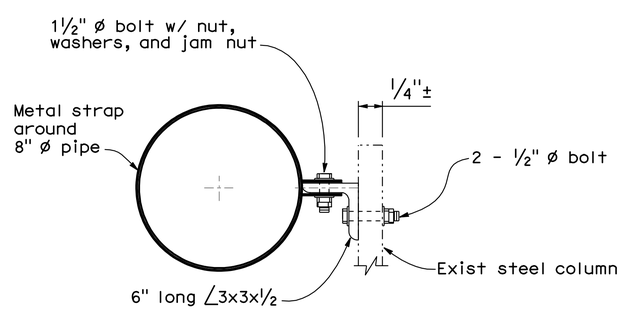

DETAIL-D

No Scale

Note: For concrete column and steel column casings, see Note 6 on "BRIDGE DRAINAGE DETAILS NO. 1" sheet. For steel column casings, drill through ½" thick column casing prior to installing pipe support anchors.

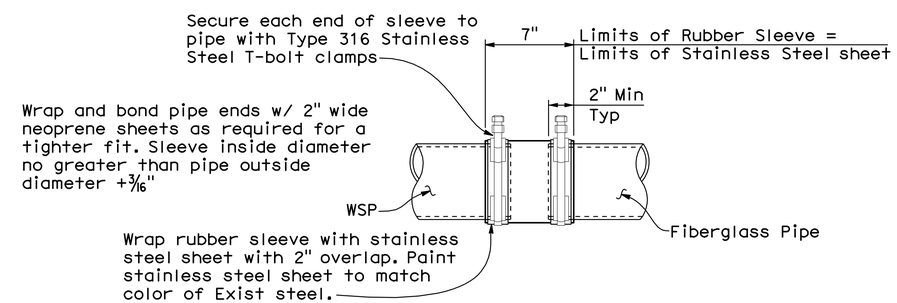

RUBBER SLEEVE CONNECTION DETAIL

No Scale

NOTE:
THE CONTRACTOR SHALL VERIFY ALL CONTROLLING FIELD DIMENSIONS BEFORE ORDERING OR FABRICATING ANY MATERIAL.

Fred Dlba
DESIGN OVERSIGHT
08-13-09
SIGN OFF DATE

	BY	CHECKED
DESIGN	N. Suan	B. Hansen
DETAILS	E. Simene	B. Hansen
QUANTITIES	E. Simene	N. Suan

PREPARED FOR THE STATE OF CALIFORNIA DEPARTMENT OF TRANSPORTATION

Noel J. Suan
PROJECT ENGINEER

BRIDGE NO. Various
POST MILE Varies

BAYSHORE & CENTRAL VIADUCTS STRUCTURE REHABILITATION

BRIDGE DRAINAGE DETAILS NO. 11

DESIGN DETAIL SHEET (ENGLISH) (REV. 2/25/05)

ORIGINAL SCALE IN INCHES FOR REDUCED PLANS 0 1 2 3

CU 04
EA 2A1401

DISREGARD PRINTS BEARING EARLIER REVISION DATES

REVISION DATES (PRELIMINARY STAGE ONLY): 5-22-07 1-2-07 9-26-07 3-17-08 5-01-08 5-21-09 6-26-09 7-27-09

SHEET 25 OF 31

FILE => 34-0077 & 34-0088-r-dd11 (DRAIN_dt102).dgn

USERNAME => BRG DATE PLOTTED => 14-JAN-2010

DIST	COUNTY	ROUTE	POST MILES TOTAL PROJECT	SHEET No	TOTAL SHEETS
04	SF	80,101	L3.8/5.0, 4.1/5.0	131	136

REGISTERED CIVIL ENGINEER 8-12-09 DATE

1-11-10
PLANS APPROVAL DATE

REGISTERED PROFESSIONAL ENGINEER NOEL J. SUAN No. C 43024 Exp. 3-31-10 CIVIL STATE OF CALIFORNIA

The State of California or its officers or agents shall not be responsible for the accuracy or completeness of electronic copies of this plan sheet.

DAVID EVANS & ASSOCIATES, INC.
1544 Eureka Road, Suite 200
Roseville, CA 95661

BRG ENGINEERING
3841 North Freeway Blvd, Suite 175
Sacramento, CA 95834

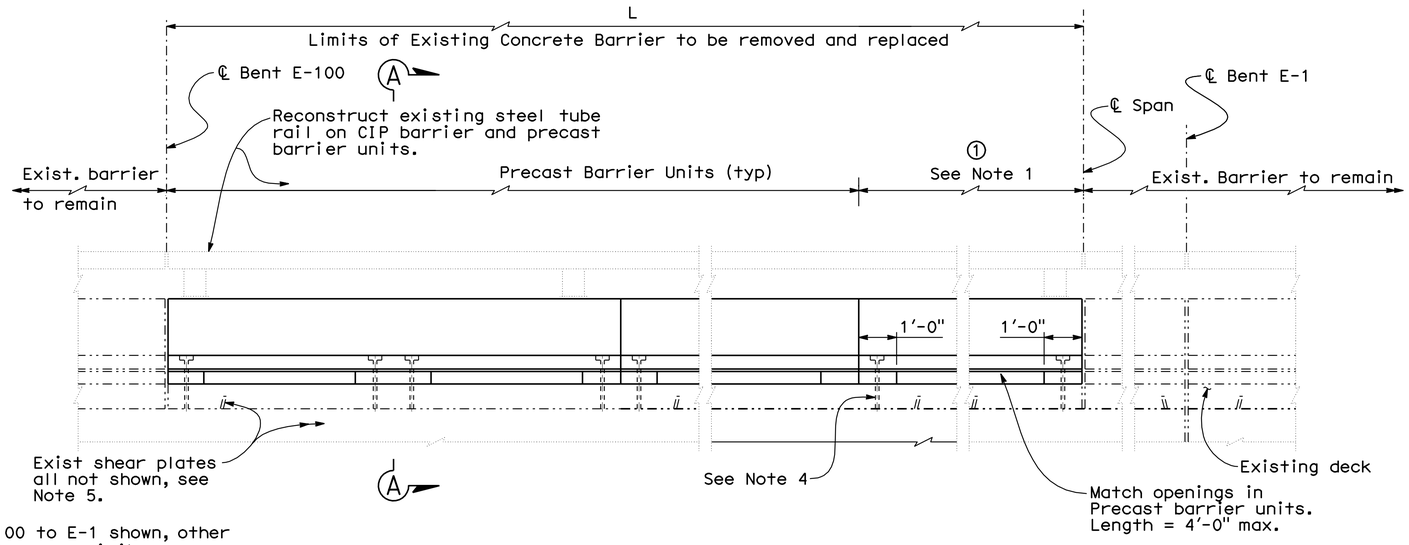

Note: Span E-100 to E-1 shown, other applicable spans similar.

INSIDE FACE ELEVATION - BARRIER REPLACEMENT

℄ BENTS E-100 TO E-1, E-9 to E-10, E-16 to E-17 - LEFT EOD, E-13 to E-12 - RIGHT EOD

½"=1'-0"

BARRIER LENGTHS TABLE

Bent No.	"L" (ft)		1 (ft)	
	Left EOD	Right EOD	Left EOD	Right EOD
E-100 to E-1	33' ±	-	9' ±	-
E-2 to E-3	33' ±	-	9' ±	-
E-9 to E-10	32.4' ±	32.4' ±	8.4' ±	8.4' ±
E12 to E-13	32.4' ±	32.4' ±	8.4' ±	8.4' ±
E-16 to E-17	41.5' ±	-	5.5' ±	-

NOTES:

1. CIP Barrier (Type "E"), one end of each span. Length varies, see "BARRIER LENGTHS TABLE". For reinforcement and dimensions, see "SECTION B-B and SECTION C-C" on "BARRIER REPLACEMENT DETAILS NO. 3" sheet.
2. For SECTION A-A, see "BARRIER REPLACEMENT DETAILS NO. 3" sheet.
3. For Precast Barrier details, see "BARRIER REPLACEMENT DETAILS NO. 3" sheet.
4. For "ANCHOR DETAIL - CIP BARRIER", see "BARRIER REPLACEMENT DETAILS NO. 3" sheet.
5. For Exist Shear Plates spacing, see "BARRIER REPLACEMENT DETAILS NO. 4" sheet.

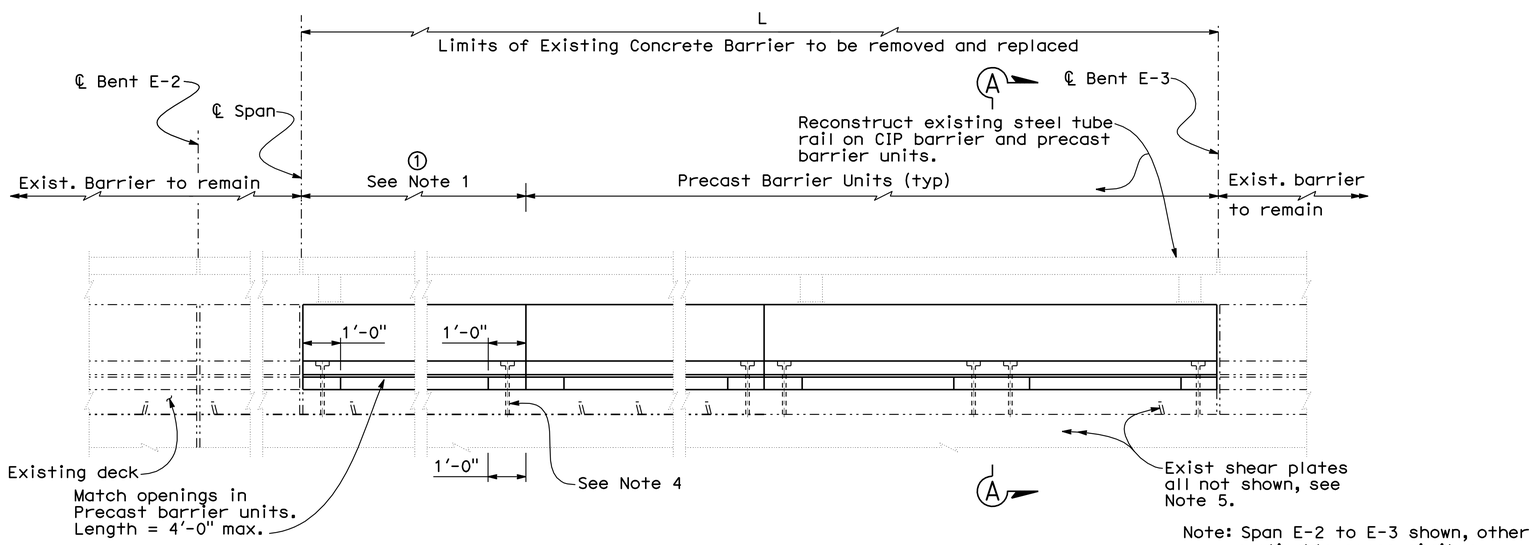

Note: Span E-2 to E-3 shown, other applicable spans similar.

INSIDE FACE ELEVATION - BARRIER REPLACEMENT

℄ BENTS E-2 TO E-3 - LEFT EOD, E-10 TO E-9 - RIGHT EOD, E-12 TO E-13 - LEFT EOD

½"=1'-0"

NOTE:
THE CONTRACTOR SHALL VERIFY ALL CONTROLLING FIELD DIMENSIONS BEFORE ORDERING OR FABRICATING ANY MATERIAL.

Fred Diba
DESIGN OVERSIGHT
08-13-09
SIGN OFF DATE

DESIGN DETAIL SHEET (ENGLISH) (REV. 2/25/05)

	BY	CHECKED
DESIGN	N. Suan	B. Hansen
DETAILS	E. Simene	B. Hansen
QUANTITIES	E. Simene	N. Suan

ORIGINAL SCALE IN INCHES FOR REDUCED PLANS 0 1 2 3

PREPARED FOR THE STATE OF CALIFORNIA DEPARTMENT OF TRANSPORTATION

Noel J. Suan
PROJECT ENGINEER

CU 04
EA 2A1401

BRIDGE NO. Various
POST MILE Varies

BAYSHORE & CENTRAL VIADUCTS STRUCTURE REHABILITATION

BARRIER REPLACEMENT DETAILS NO. 1

DISREGARD PRINTS BEARING EARLIER REVISION DATES

REVISION DATES (PRELIMINARY STAGE ONLY) 5-25-07 7-2-07 9-26-07 5-14-08 5-01-09 5-21-09 6-26-09 7-27-09

SHEET 26 OF 31

FILE => 34-0077 & 34-0088-t-brdt01 (BARRIER).dgn

USERNAME => BRG DATE PLOTTED => 14-JAN-2010

DIST	COUNTY	ROUTE	POST MILES TOTAL PROJECT	SHEET No	TOTAL SHEETS
04	SF	80,101	L3.8/5.0, 4.1/5.0	132	136

REGISTERED CIVIL ENGINEER 8-12-09 DATE

1-11-10
PLANS APPROVAL DATE

REGISTERED PROFESSIONAL ENGINEER NOEL J. SUAN No. C 43024 Exp. 3-31-10 CIVIL STATE OF CALIFORNIA

The State of California or its officers or agents shall not be responsible for the accuracy or completeness of electronic copies of this plan sheet.

DAVID EVANS & ASSOCIATES, INC.
1544 Eureka Road, Suite 200
Roseville, CA 95661

BRG ENGINEERING
3841 North Freeway Blvd, Suite 175
Sacramento, CA 95834

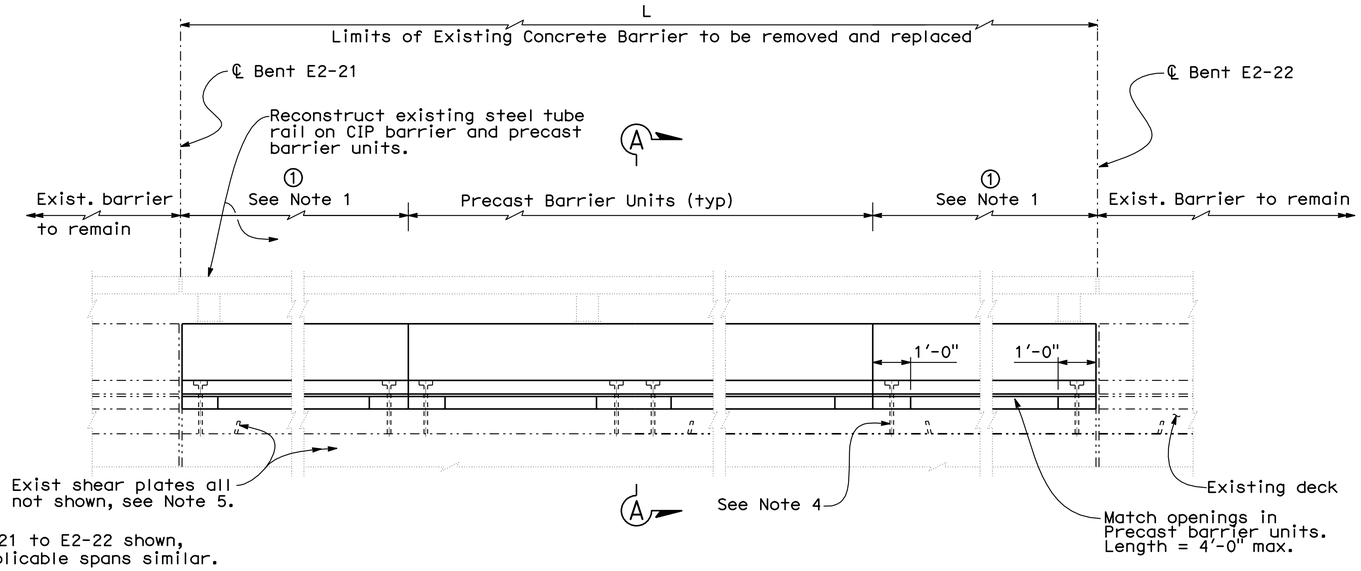

Note: Bent E2-21 to E2-22 shown, other applicable spans similar.

INSIDE FACE ELEVATION - BARRIER REPLACEMENT

℄ BENTS E2-21 to E2-22, E5-47 to L-36 - LEFT EOD,
L-100 to L-101, R-98 to R-99 - RIGHT EOD

½"=1'-0"

Note: Bent E2-21 & E2-22 field labeled as 10-21 & 10-22, respectively

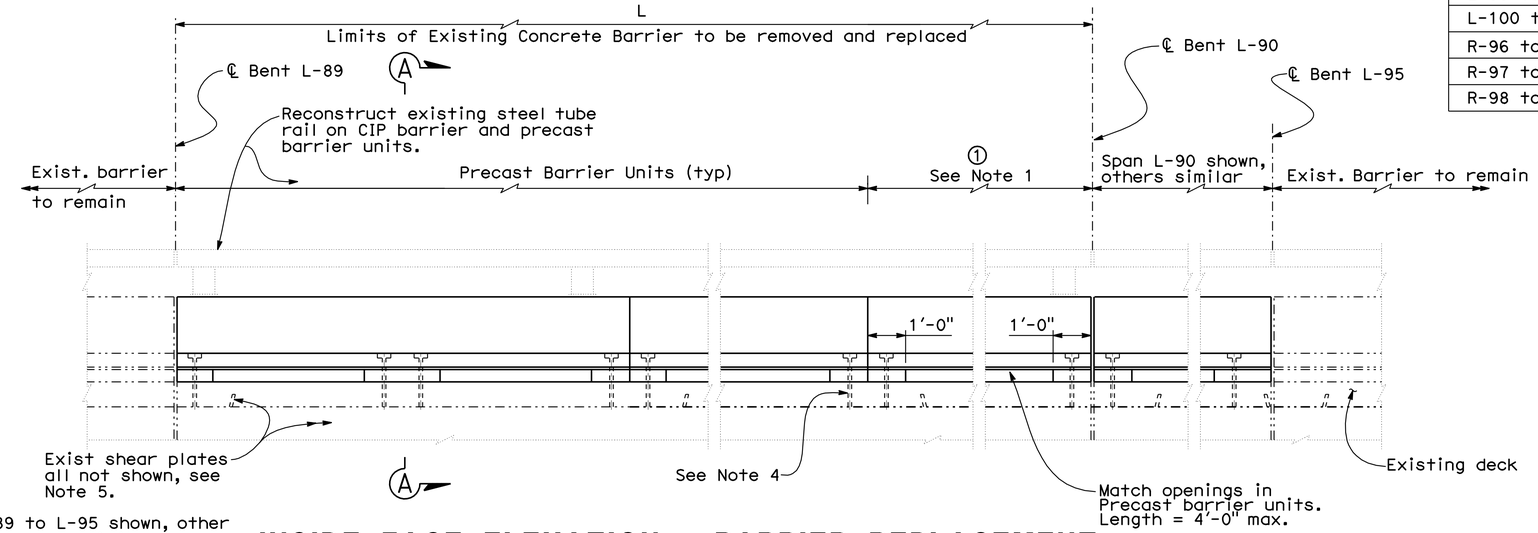

Note: Bent L-89 to L-95 shown, other applicable spans similar.

INSIDE FACE ELEVATION - BARRIER REPLACEMENT

℄ BENTS L-89 to L-95 - LEFT EOD, R-96 to R-98 - LEFT EOD,
L-91 to L-95 - RIGHT EOD, L-96 to L-98 - RIGHT EOD,
L-99 to L-100 - RIGHT EOD, R-97 to R-98 - RIGHT EOD

½"=1'-0"

BARRIER LENGTHS TABLE

Bent No.	"L" (ft)		① (ft)	
	Left EOD	Right EOD	Left EOD	Right EOD
E2-21 to E2-22	90.2' ±	-	8.9' ±, 8.8' ±	-
E5-47 to L-36	56.5' ±	-	12.0' ±, 8.0' ±	-
L-89 to L-90	65.3' ±	-	5.3' ±	-
L-90 to L-91	68.2' ±	-	8.2' ±	-
L-91 to L-92	88.5' ±	88.5' ±	4.5' ±	4.5' ±
L-92 to L-93	59.3' ±	59.2' ±	11.3' ±	11.2' ±
L-93 to L-94	47.6' ±	67.4' ±	11.6' ±	7.4' ±
L-94 to L-95	82.2' ±	83.3' ±	10.2' ±	11.3' ±
L-96 to L-97	-	70.0' ±	-	10.0' ±
L-97 to L-98	-	70.0' ±	-	10.0' ±
L-99 to L-100	-	71.2' ±	-	11.2' ±
L-100 to L-101	-	64.6' ±	-	10.0' ±, 6.6' ±
R-96 to R-97	72.0' ±	-	12.0' ±	-
R-97 to R-98	72.3' ±	72.2' ±	12.3' ±	12.2' ±
R-98 to R-99	-	64.7' ±	-	10.0' ±, 6.7' ±

NOTES:

1. CIP Barrier (Type "E"), one end of each span typical except two end @ spans E2-21, E5-47, L-100 and R-98. Length varies see "BARRIER LENGTHS TABLE". For reinforcement and dimensions, see "SECTION B-B and SECTION C-C" on "BARRIER REPLACEMENT DETAILS NO. 3" sheet.
2. For SECTION A-A, see "BARRIER REPLACEMENT DETAILS NO. 3" sheet.
3. For Precast Barrier details, see "BARRIER REPLACEMENT DETAILS NO. 3" sheet.
4. For "ANCHOR DETAIL - CIP BARRIER", see "BARRIER REPLACEMENT DETAILS NO. 3" sheet.
5. For Exist Shear Plates spacing, see "BARRIER REPLACEMENT DETAILS NO. 4" sheet.

NOTE:
THE CONTRACTOR SHALL VERIFY ALL CONTROLLING FIELD DIMENSIONS BEFORE ORDERING OR FABRICATING ANY MATERIAL.

Fred Diba
DESIGN OVERSIGHT
08-13-09
SIGN OFF DATE

	BY	CHECKED
DESIGN	N. Suan	B. Hansen
DETAILS	E. Simene	B. Hansen
QUANTITIES	E. Simene	N. Suan

PREPARED FOR THE STATE OF CALIFORNIA DEPARTMENT OF TRANSPORTATION

Noel J. Suan
PROJECT ENGINEER

BRIDGE NO. Various
POST MILE Varies

BAYSHORE & CENTRAL VIADUCTS STRUCTURE REHABILITATION

BARRIER REPLACEMENT DETAILS NO. 2

DESIGN DETAIL SHEET (ENGLISH) (REV. 2/25/05)

ORIGINAL SCALE IN INCHES FOR REDUCED PLANS 0 1 2 3

CU 04
EA 2A1401

DISREGARD PRINTS BEARING EARLIER REVISION DATES

REVISION DATES (PRELIMINARY STAGE ONLY) 5-21-07 7-2-07 9-28-07 3-11-08 5-21-08 5-21-09 6-26-09 7-21-09

SHEET 27 OF 31

FILE => 34-0077 & 34-0088-t-brdt02 (BARRIER).dgn

USERNAME => BRG DATE PLOTTED => 14-JAN-2010

DIST	COUNTY	ROUTE	POST MILES TOTAL PROJECT	SHEET No	TOTAL SHEETS
04	SF	80,101	L3.8/5.0, 4.1/5.0	133	136

REGISTERED CIVIL ENGINEER 8-26-09 DATE

1-11-10
PLANS APPROVAL DATE

REGISTERED PROFESSIONAL ENGINEER NOEL J. SUAN No. C 43024 Exp. 3-31-10 CIVIL STATE OF CALIFORNIA

The State of California or its officers or agents shall not be responsible for the accuracy or completeness of electronic copies of this plan sheet.

DAVID EVANS & ASSOCIATES, INC.
1544 Eureka Road, Suite 200
Roseville, CA 95661

BRG ENGINEERING
3841 North Freeway Blvd, Suite 175
Sacramento, CA 95834

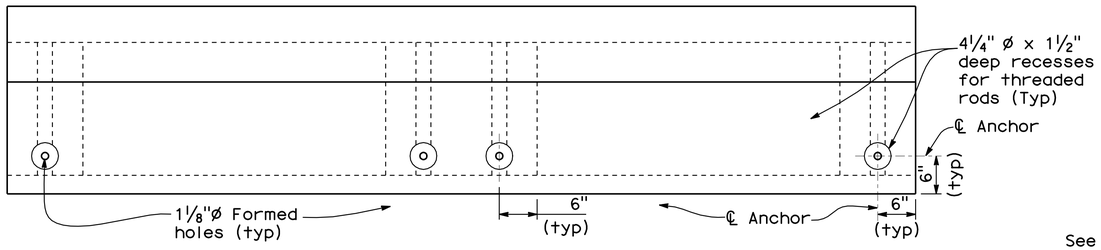

PLAN - PRECAST BARRIER UNIT

1"= 1'-0"

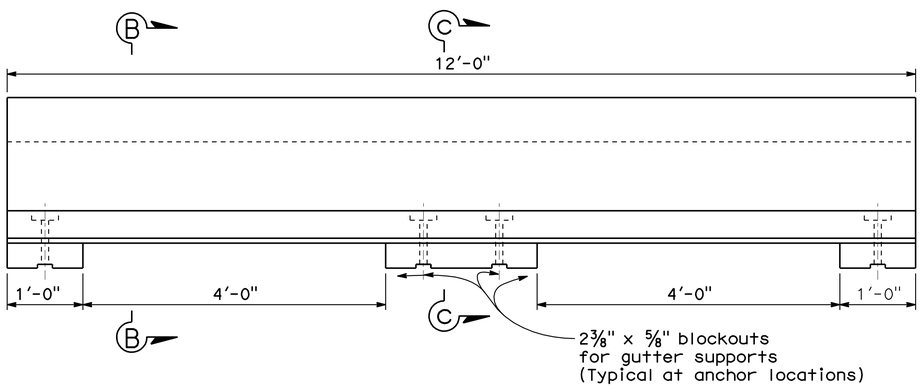

ELEVATION - PRECAST BARRIER UNIT

1"= 1'-0"

Notes: Resin capsule mounts for steel tube rail not shown.

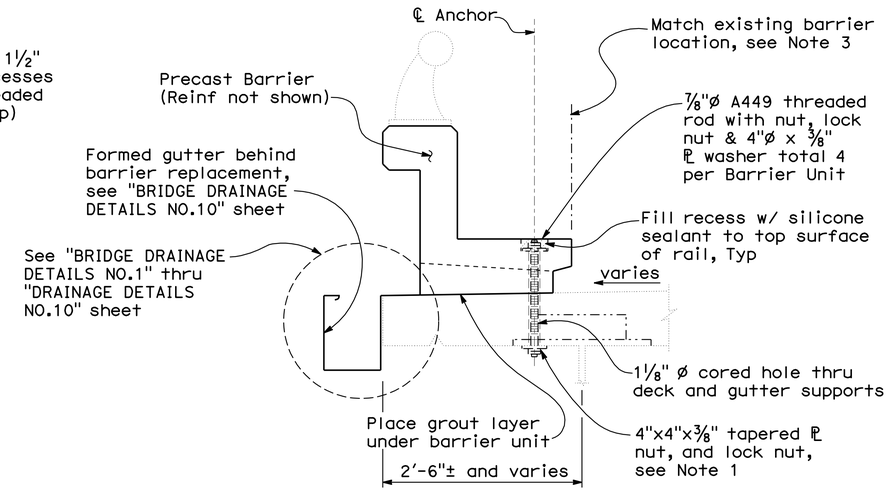

SECTION A-A

1"= 1'-0"

Note: Temporary railing (Type K) not shown, see "ROAD PLANS"

NOTES:

1. Place 4" x 4" x ½" plate at areas where bolt does not rest entirely on Exist girder flange.
2. For span L-91, see "BARRIER REPLACEMENT @ SPAN L-91" on "BARRIER REPLACEMENT DETAILS NO. 4" sheet.
3. At curved alignments, ends of chords to match existing barrier location.
4. Threaded rods, bolts, plates, nuts, washers, and gutter to be galvanized.
5. Snug tighten nuts @ both ends of threaded rods.

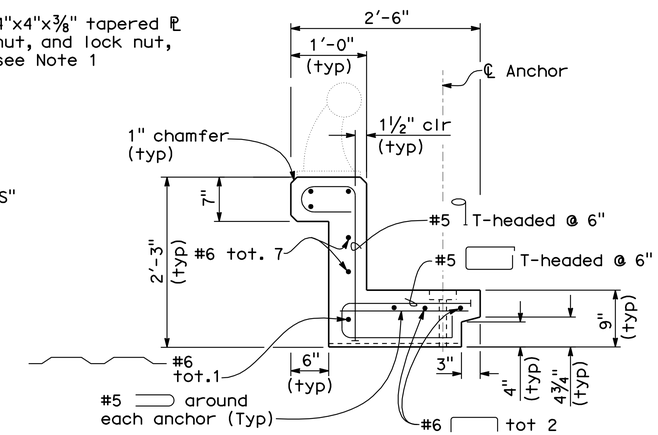

SECTION C-C

1"= 1'-0"

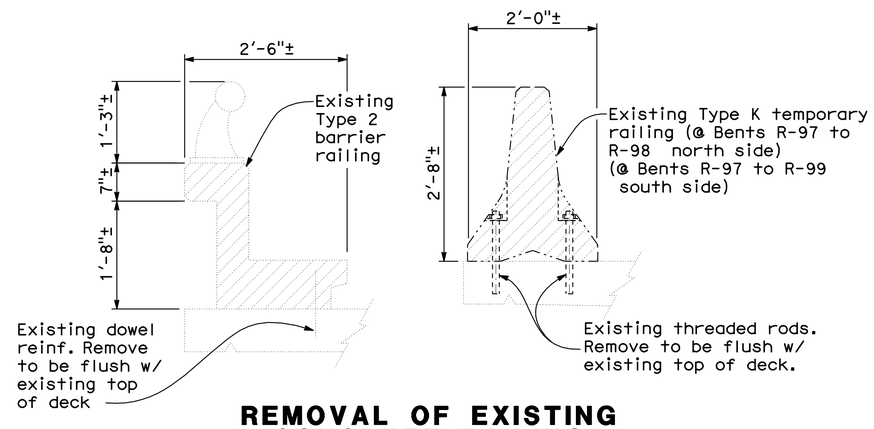

REMOVAL OF EXISTING CONCRETE RAILING

No Scale

NOTE:
THE CONTRACTOR SHALL VERIFY ALL CONTROLLING FIELD DIMENSIONS BEFORE ORDERING OR FABRICATING ANY MATERIAL.

LEGEND:

Limits of Concrete Removal

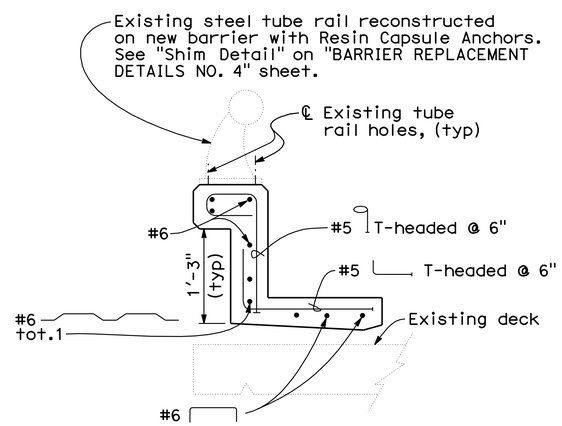

SECTION B-B

1"= 1'-0"

Note: Temporary railing (Type K) not shown, see "ROAD PLANS"

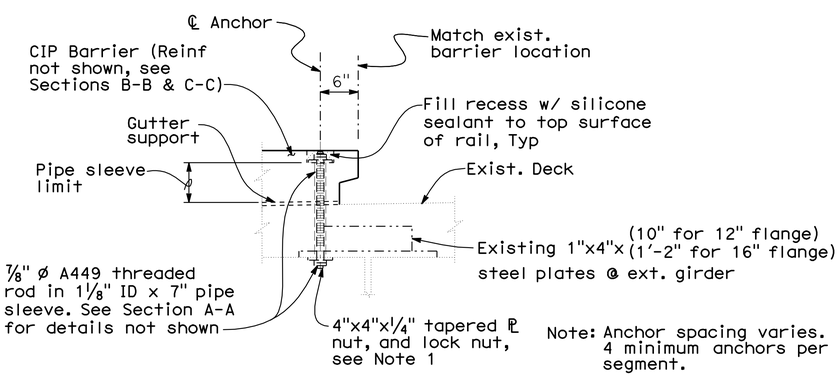

Note: Anchor spacing varies. 4 minimum anchors per segment.

ANCHOR DETAIL - CIP BARRIER (TYPE E)

1"= 1'-0"

Note: Temporary railing (Type K) not shown, see "ROAD PLANS"

Fred Dlba
DESIGN OVERSIGHT
08-27-09
SIGN OFF DATE

	BY	CHECKED
DESIGN	N. Suan	B. Hansen
DETAILS	E. Simene	B. Hansen
QUANTITIES	E. Simene	N. Suan

PREPARED FOR THE STATE OF CALIFORNIA DEPARTMENT OF TRANSPORTATION

Noel J. Suan
PROJECT ENGINEER

BRIDGE NO. Various
POST MILE Varies

BAYSHORE & CENTRAL VIADUCTS STRUCTURE REHABILITATION

BARRIER REPLACEMENT DETAILS NO. 3

DESIGN DETAIL SHEET (ENGLISH) (REV. 2/25/05)

ORIGINAL SCALE IN INCHES FOR REDUCED PLANS 0 1 2 3

CU 04
EA 2A1401

DISREGARD PRINTS BEARING EARLIER REVISION DATES

REVISION DATES (PRELIMINARY STAGE ONLY) 5-25-07 7-5-07 9-26-07 3-11-08 5-01-08 5-21-09 6-26-09 7-27-09 8-26-09

SHEET 28 OF 31

FILE => 34-0077 & 34-0088-t-brdt03 (BARRIER).dgn

USERNAME => BRG DATE PLOTTED => 14-JAN-2010

DIST	COUNTY	ROUTE	POST MILES TOTAL PROJECT	SHEET No	TOTAL SHEETS
04	SF	80,101	L3.8/5.0, 4.1/5.0	134	136

REGISTERED CIVIL ENGINEER 8-26-09 DATE

1-11-10
PLANS APPROVAL DATE

REGISTERED PROFESSIONAL ENGINEER NOEL J. SUAN No. C 43024 Exp. 3-31-10 CIVIL STATE OF CALIFORNIA

The State of California or its officers or agents shall not be responsible for the accuracy or completeness of electronic copies of this plan sheet.

DAVID EVANS & ASSOCIATES, INC.
1544 Eureka Road, Suite 200
Roseville, CA 95661

BRG ENGINEERING
3841 North Freeway Blvd, Suite 175
Sacramento, CA 95834

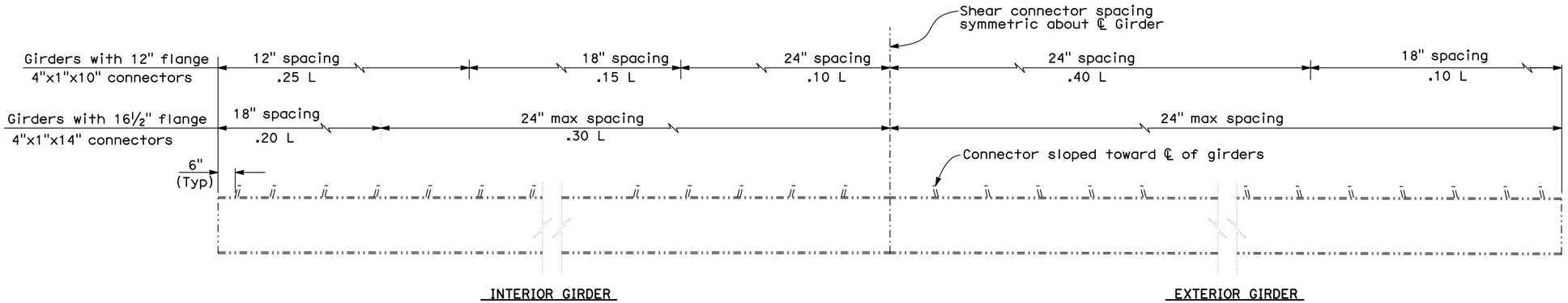

SHEAR CONNECTOR SPACING

No Scale

Note: Exist shear plates shown for information purposes only. Drilling through Exist shear plates to allow for coring of concrete deck for concrete barrier placement maybe required as directed by the Engineer.

FLANGE DETAILS

No Scale

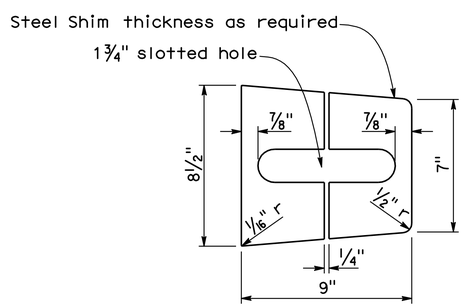

SHIM DETAIL

No Scale

Note: Provide steel shim as required for the reconstruction of the Exist tube rail to maintain a smooth profile.

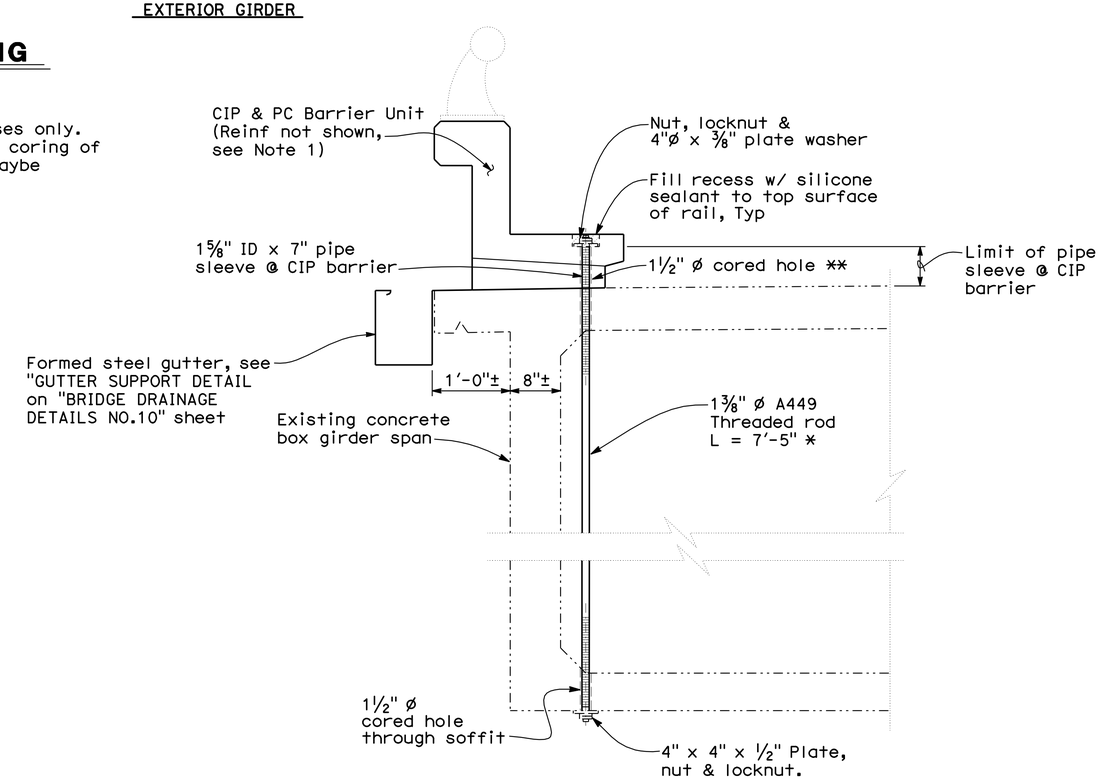

BARRIER REPLACEMENT AT SPAN L-91

No Scale

Notes:

* Depth of Structure to be field verified - excess bolt length to be cut
** Over-sized hole cored through PC barrier unit
1. For details not shown, see "BARRIER REPLACEMENT DETAILS NO. 2 TO NO. 3" sheets.
2. Threaded rods, plates, nuts, washers, and gutter to be galvanized.
3. Snug tighten nuts @ both ends of threaded rods.
4. Barrier replacement @ left EOD shown, barrier replacement @ right EOD similar.

NOTE:
THE CONTRACTOR SHALL VERIFY ALL CONTROLLING FIELD DIMENSIONS BEFORE ORDERING OR FABRICATING ANY MATERIAL.

Fred Diba
DESIGN OVERSIGHT
08-27-09
SIGN OFF DATE

	BY	CHECKED
DESIGN	N. Suan	B. Hansen
DETAILS	E. Simene	B. Hansen
QUANTITIES	E. Simene	N. Suan

PREPARED FOR THE STATE OF CALIFORNIA DEPARTMENT OF TRANSPORTATION

Noel J. Suan
PROJECT ENGINEER

BRIDGE NO. Various
POST MILE Varies

BAYSHORE & CENTRAL VIADUCTS STRUCTURE REHABILITATION

BARRIER REPLACEMENT DETAILS NO. 4

DESIGN DETAIL SHEET (ENGLISH) (REV. 2/25/05)

ORIGINAL SCALE IN INCHES FOR REDUCED PLANS 0 1 2 3

CU 04
EA 2A1401

DISREGARD PRINTS BEARING EARLIER REVISION DATES

REVISION DATES (PRELIMINARY STAGE ONLY) 5-25-07 1-2-08 9-26-08 3-17-08 5-01-08 5-21-09 6-26-09 7-27-09 8-26-09

SHEET 29 OF 31

FILE => 34-0077 & 34-0088-t-brdt04 (BARRIER).dgn

USERNAME => BRG DATE PLOTTED => 14-JAN-2010

DIST	COUNTY	ROUTE	POST MILES TOTAL PROJECT	SHEET No	TOTAL SHEETS
04	SF	80,101	L3.8/5.0, 4.1/5.0	135	136

REGISTERED CIVIL ENGINEER 8-12-09 DATE

1-11-10
PLANS APPROVAL DATE

REGISTERED PROFESSIONAL ENGINEER NOEL J. SUAN No. C 43024 Exp. 3-31-10 CIVIL STATE OF CALIFORNIA

The State of California or its officers or agents shall not be responsible for the accuracy or completeness of electronic copies of this plan sheet.

DAVID EVANS & ASSOCIATES, INC.
1544 Eureka Road, Suite 200
Roseville, CA 95661

BRG ENGINEERING
3841 North Freeway Blvd, Suite 175
Sacramento, CA 95834

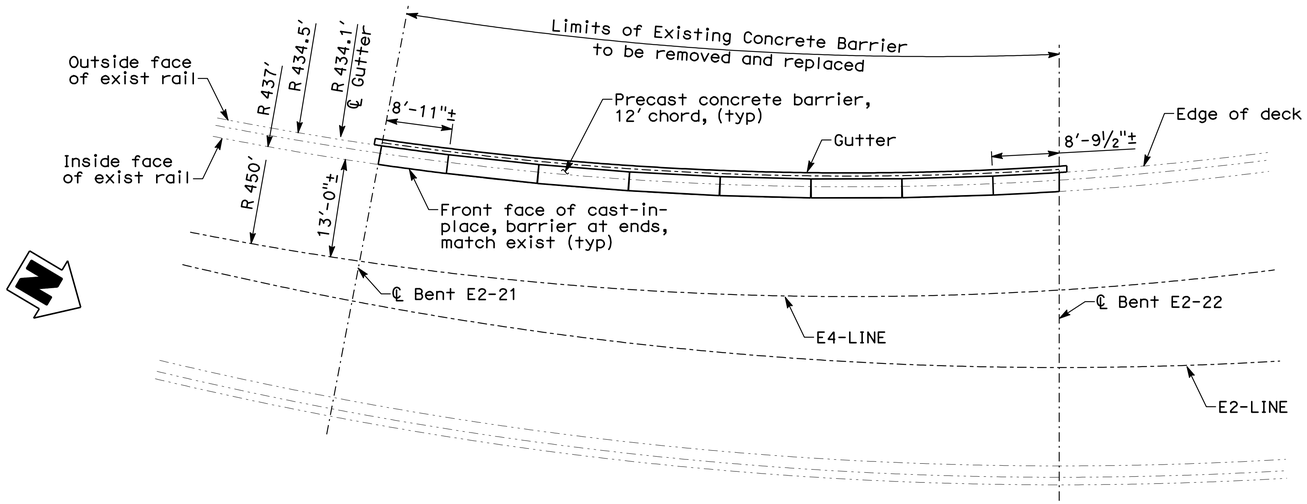

BARRIER RAIL LAYOUT PLAN - BENT E2-21 TO BENT E2-22

No Scale

NOTES:

1. For drainage details not shown see "DRAINAGE DETAILS NO. 9" sheet.
2. For barrier details not shown see "BARRIER REPLACEMENT DETAILS NO. 1 to NO. 4" sheets

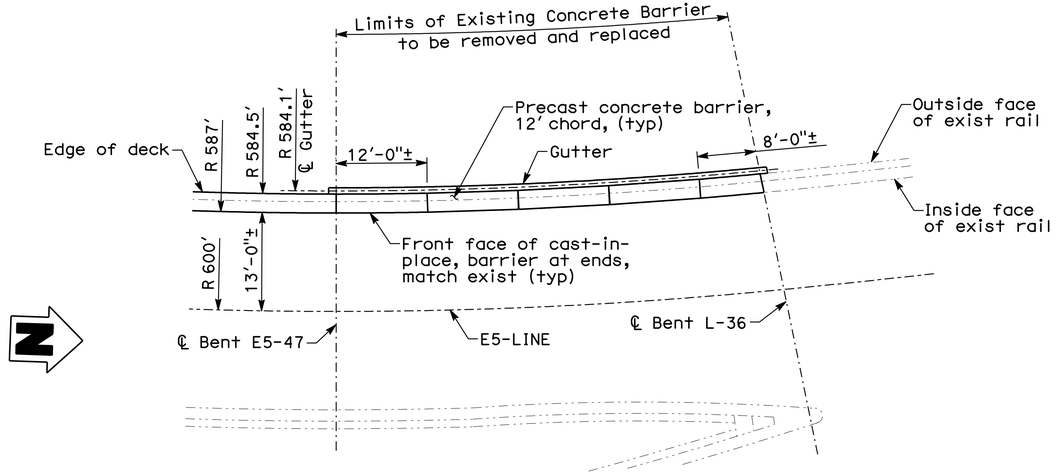

BARRIER RAIL LAYOUT PLAN - BENT E5-47 TO BENT L-36

No Scale

NOTE:
THE CONTRACTOR SHALL VERIFY ALL CONTROLLING FIELD DIMENSIONS BEFORE ORDERING OR FABRICATING ANY MATERIAL.

Fred Dlba
DESIGN OVERSIGHT
08-13-09
SIGN OFF DATE

	BY	CHECKED
DESIGN	N. Suan	B. Hansen
DETAILS	E. Simene	B. Hansen
QUANTITIES	E. Simene	N. Suan

PREPARED FOR THE STATE OF CALIFORNIA DEPARTMENT OF TRANSPORTATION

Noel J. Suan
PROJECT ENGINEER

BRIDGE NO. Various
POST MILE Varies

BAYSHORE & CENTRAL VIADUCTS STRUCTURE REHABILITATION

BARRIER REPLACEMENT DETAILS NO. 5

DESIGN DETAIL SHEET (ENGLISH) (REV. 2/25/05)

ORIGINAL SCALE IN INCHES FOR REDUCED PLANS 0 1 2 3

CU 04
EA 2A1401

DISREGARD PRINTS BEARING EARLIER REVISION DATES

REVISION DATES (PRELIMINARY STAGE ONLY) 4-27-07 12-7-07 9-19-07 4-11-08 5-01-09 5-11-09 6-22-09 7-27-09

SHEET 30 OF 31

FILE => 34-0077 & 34-0088-t-brdt05 (BARRIER).dgn

USERNAME => BRG DATE PLOTTED => 14-JAN-2010

DIST	COUNTY	ROUTE	POST MILES TOTAL PROJECT	SHEET No	TOTAL SHEETS
04	SF	80,101	L3.8/5.0, 4.1/5.0	136	136

REGISTERED CIVIL ENGINEER 8-26-09 DATE

1-11-10
PLANS APPROVAL DATE

REGISTERED PROFESSIONAL ENGINEER NOEL J. SUAN No. C 43024 Exp. 3-31-10 CIVIL STATE OF CALIFORNIA

The State of California or its officers or agents shall not be responsible for the accuracy or completeness of electronic copies of this plan sheet.

DAVID EVANS & ASSOCIATES, INC.
1544 Eureka Road, Suite 200
Roseville, CA 95661

BRG ENGINEERING
3841 North Freeway Blvd, Suite 175
Sacramento, CA 95834

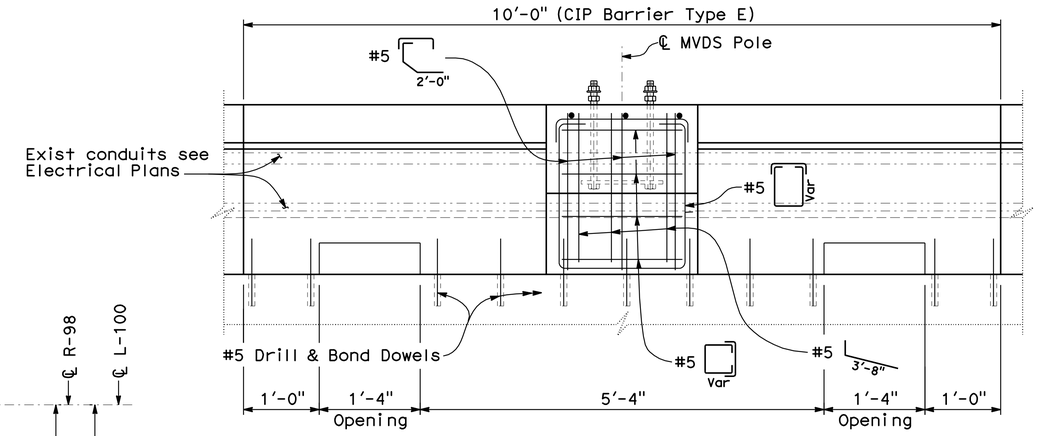

VIEW B-B

Note: Formed steel gutter, gutter support, anchors & Exist steel tube rail not shown for clarity.

NOTES:

1. See ES-6A ES-6B for rail mounting details not shown.
2. Details to be used to support Exist MVDS pole. Remove and Relocate Exist pole, max height 20', see Electrical Plans.
3. Reinforcing shown is in addition to CIP Barrier (Type E) reinforcing only. For details not shown see SECTION B-B" & SECTION C-C on "BARRIER REPLACEMENT DETAILS NO. 3" sheet.
4. For site location, see "STRUCTURE PLAN NO. 5" sheet.

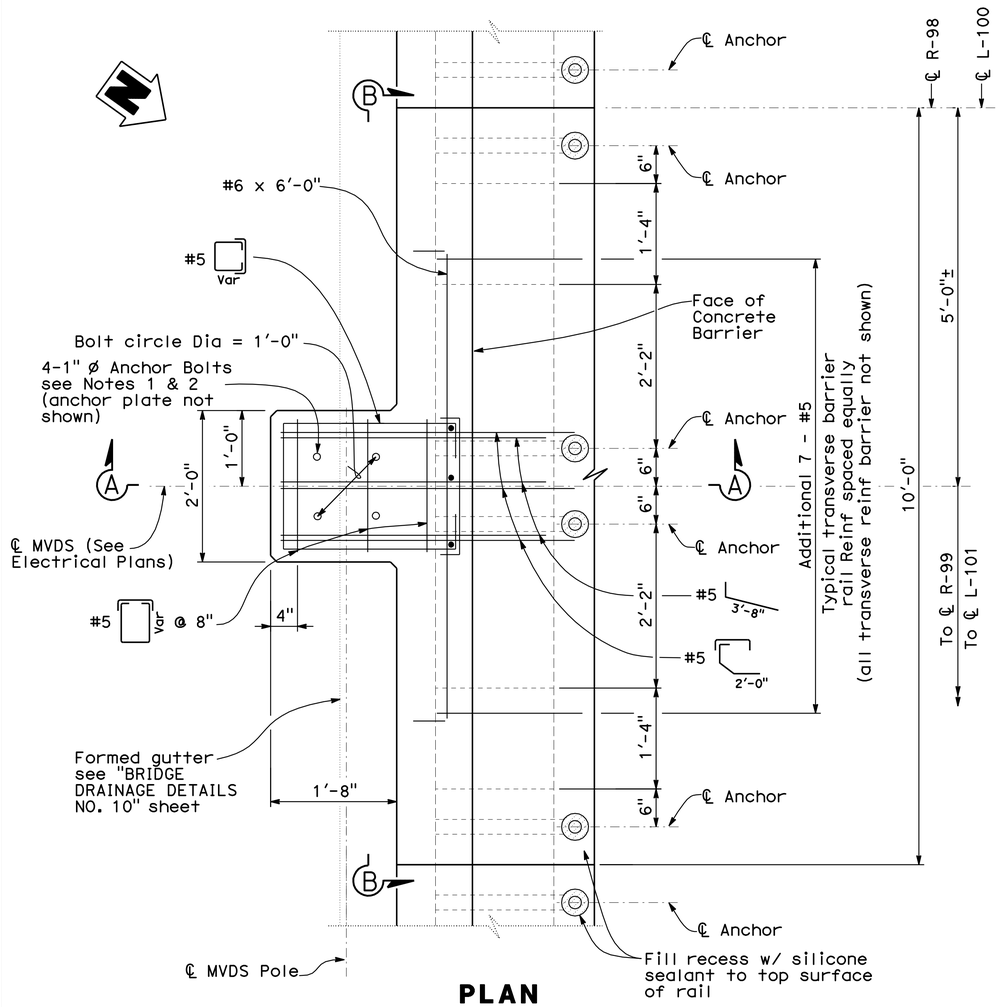

PLAN

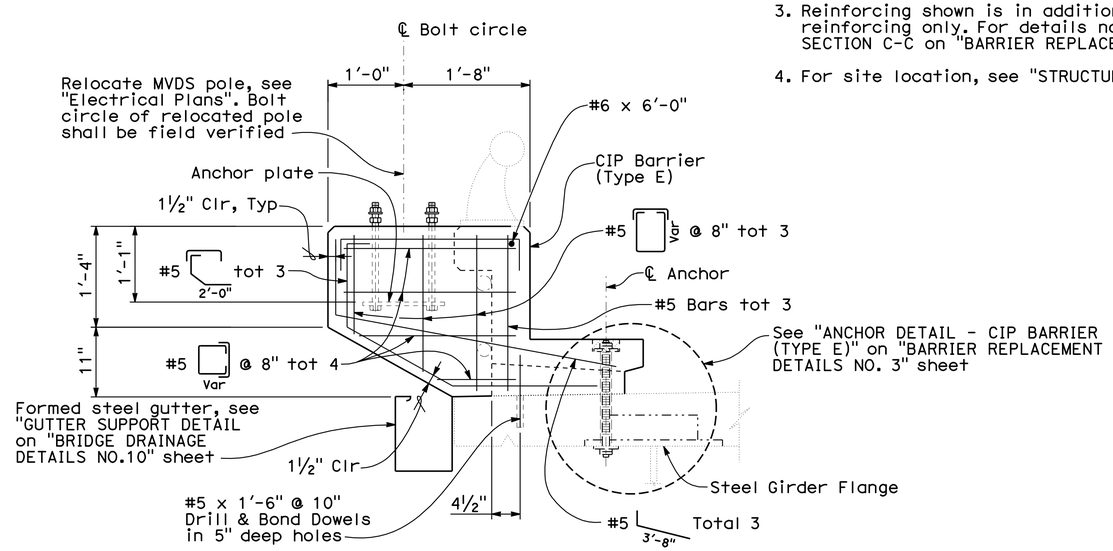

VIEW A-A

NOTE:
THE CONTRACTOR SHALL VERIFY ALL CONTROLLING FIELD DIMENSIONS BEFORE ORDERING OR FABRICATING ANY MATERIAL.

MVDS PEDESTAL

No Scale

Fred Diba
DESIGN OVERSIGHT
08-27-09
SIGN OFF DATE

	BY	CHECKED
DESIGN	N. Suan	B. Hansen
DETAILS	E. Simene	B. Hansen
QUANTITIES	E. Simene	N. Suan

PREPARED FOR THE STATE OF CALIFORNIA DEPARTMENT OF TRANSPORTATION

Noel J. Suan
PROJECT ENGINEER

BRIDGE NO. Various
POST MILE Varies

BAYSHORE & CENTRAL VIADUCTS STRUCTURE REHABILITATION

BARRIER REPLACEMENT DETAILS NO. 6

DESIGN DETAIL SHEET (ENGLISH) (REV. 2/25/05)

ORIGINAL SCALE IN INCHES FOR REDUCED PLANS 0 1 2 3

CU 04
EA 2A1401

DISREGARD PRINTS BEARING EARLIER REVISION DATES

REVISION DATES (PRELIMINARY STAGE ONLY) 5-31-07 7-31-07 9-28-07 3-14-08 5-21-09 5-29-09 6-26-09 7-31-09 8-26-09

SHEET 31 OF 31

FILE => 34-0077 & 34-0088-t-brdt06 (MVDS_Ped).dgn

USERNAME => BRG DATE PLOTTED => 14-JAN-2010