Dist	COUNTY	ROUTE	POST MILES TOTAL PROJECT	SHEET No.	TOTAL SHEETS
04	SCI	880	4.1/8.7	1	710

STATE OF CALIFORNIA
DEPARTMENT OF TRANSPORTATION

PROJECT PLANS FOR CONSTRUCTION ON
STATE HIGHWAY

IN SANTA CLARA COUNTY
IN SAN JOSE AND MILPITAS
FROM 0.1 MILE NORTH OF ROUTE 101
TO 0.3 MILE NORTH OF ROUTE 237

TO BE SUPPLEMENTED BY STANDARD PLANS DATED MAY 2006

INDEX OF PLANS

SHEET No.	DESCRIPTION
1	TITLE AND LOCATION MAP
2-25	TYPICAL CROSS SECTIONS
26	KEY MAP AND LINE INDEX
27	PROJECT CONTROL PLAN
28-49	LAYOUTS
50-52	PROFILES AND SUPERELEVATION DIAGRAMS
53-113	CONSTRUCTION DETAILS
114-136	EROSION CONTROL PLANS, DETAILS AND QUANTITIES
137-141	CONTOUR GRADING
142-256	DRAINAGE PLANS, DETAILS AND QUANTITIES
257-264	SUBSURFACE DRAINAGE PLANS, DETAILS AND QUANTITIES
265-296	UTILITY PLANS, DETAILS AND QUANTITIES
297-298	CONSTRUCTION AREA SIGNS
299-395	STAGE CONSTRUCTION AND TRAFFIC HANDLING PLANS, DETAILS AND QUANTITIES
396-419	DETOUR PLANS AND QUANTITIES
420-451	PAVEMENT DELINEATION PLANS, DETAILS AND QUANTITIES
452-494	SIGN PLANS, DETAILS AND QUANTITIES
495-500	SUMMARY OF QUANTITIES
501-530	RETAINING WALL PLANS
531-567	HIGHWAY PLANTING, DETAILS AND IRRIGATION PLANS
568-627	ELECTRICAL PLANS
628-681	REVISED AND NEW STANDARD PLANS

STRUCTURE PLANS

682-693	HETCH HETCHY AQUEDUCT PROTECTION STRUCTURE PLANS Br No. 37-0669
694-710	RW4 - SOIL NAIL WALL Br No. 37E0103

THE STANDARD PLANS LIST APPLICABLE TO THIS CONTRACT IS INCLUDED IN THE NOTICE TO BIDDERS AND SPECIAL PROVISIONS BOOK.

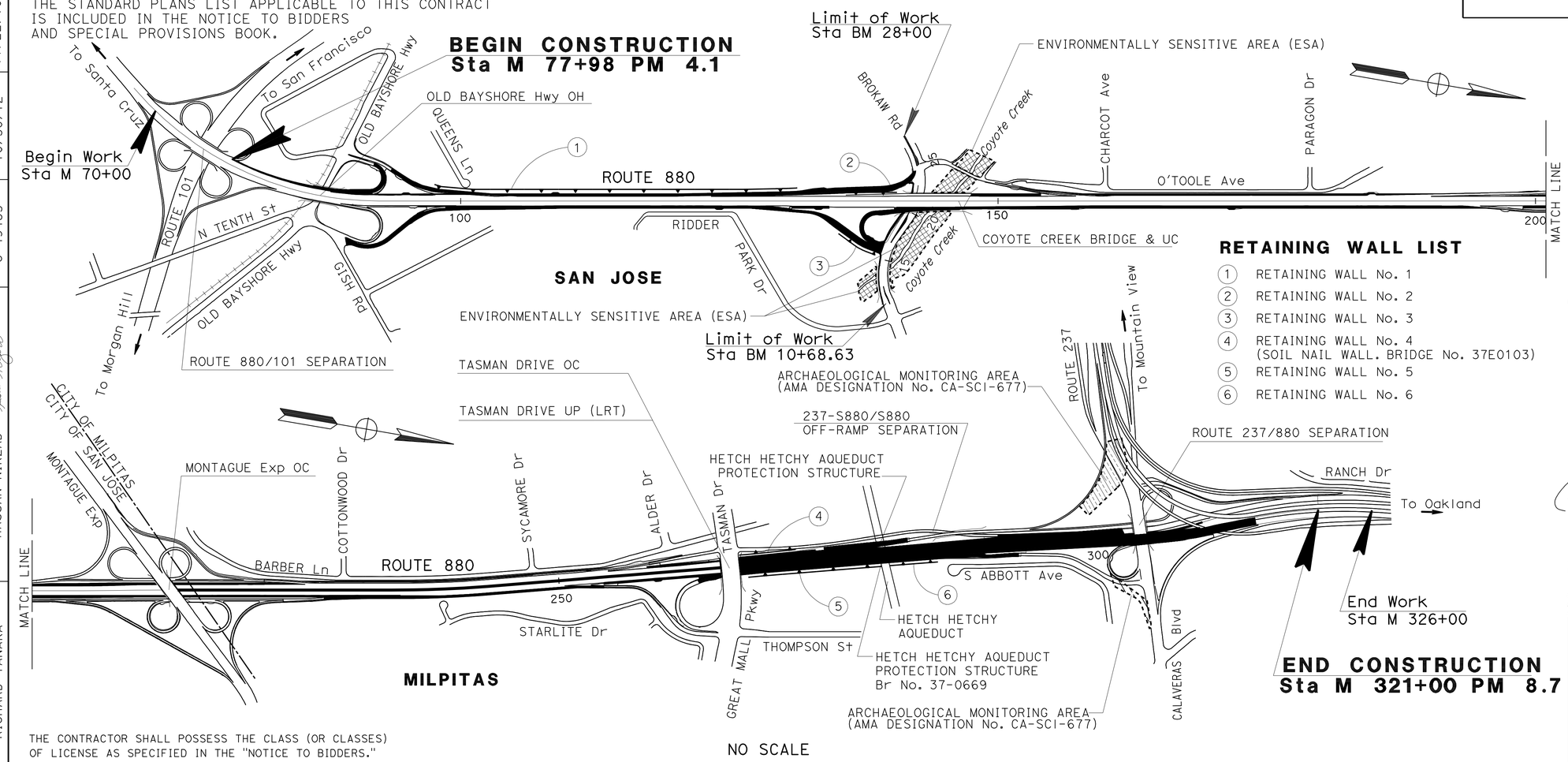

LOCATION MAP

RETAINING WALL LIST

1. RETAINING WALL No. 1
2. RETAINING WALL No. 2
3. RETAINING WALL No. 3
4. RETAINING WALL No. 4 (SOIL NAIL WALL. BRIDGE No. 37E0103)
5. RETAINING WALL No. 5
6. RETAINING WALL No. 6

Hans F. Larsen — 11/10/10 DATE
Director of Transportation
Approved As To Features Affecting
City Of San Jose Facilities

Greg Armendariz — 10/18/10 DATE
City Of Milpitas Facilities
City Engineer/Public Works Director
Approved As To Features Affecting
City Of Milpitas Facilities

PROJECT ENGINEER REGISTERED CIVIL ENGINEER — 10/15/10 DATE

REGISTERED PROFESSIONAL ENGINEER
RICHARD K. TANAKA
No. 23233
Exp. 12/31/11
CIVIL
STATE OF CALIFORNIA

July 11, 2011
PLANS APPROVAL DATE

THE STATE OF CALIFORNIA OR ITS OFFICERS OR AGENTS SHALL NOT BE RESPONSIBLE FOR THE ACCURACY OR COMPLETENESS OF SCANNED COPIES OF THIS PLAN SHEET.

MARK THOMAS & COMPANY, INC.
1960 ZANKER ROAD
SAN JOSE, CA 95112

SANTA CLARA VALLEY
TRANSPORTATION AUTHORITY
3331 NORTH FIRST STREET, BLDG B
SAN JOSE, CA 95134

CONTRACT No.	04-298304
PROJECT ID	0400000799

APPROVED AS TO IMPACT ON STATE FACILITIES AND CONFORMANCE WITH APPLICABLE STATE STANDARDS AND PRACTICES AND THAT TECHNICAL OVERSIGHT WAS PERFORMED.

CONSULTANT DESIGN ENGINEER	REGISTRATION No.	LICENSE Exp DATE	DATE SIGNED
RICHARD TANAKA	C 49485	10/30/12	11/22/10

CALTRANS DESIGN OVERSIGHT APPROVAL
HASSAN NIKZAD

THE CONTRACTOR SHALL POSSESS THE CLASS (OR CLASSES) OF LICENSE AS SPECIFIED IN THE "NOTICE TO BIDDERS."

NO SCALE

LAST REVISION 10-25-10 | DATE PLOTTED => 08-JUL-2011 | TIME PLOTTED => 12:32

Dist	COUNTY	ROUTE	POST MILES TOTAL PROJECT	SHEET No.	TOTAL SHEETS
04	SCI	880	4.1/8.7	2	710

REGISTERED CIVIL ENGINEER 03/31/11 DATE

7-11-11
PLANS APPROVAL DATE

REGISTERED PROFESSIONAL ENGINEER RICHARD K. TANAKA No. 23233 Exp. 12/31/11 CIVIL STATE OF CALIFORNIA

THE STATE OF CALIFORNIA OR ITS OFFICERS OR AGENTS SHALL NOT BE RESPONSIBLE FOR THE ACCURACY OR COMPLETENESS OF SCANNED COPIES OF THIS PLAN SHEET.

MARK THOMAS & COMPANY, INC.
1960 ZANKER ROAD
SAN JOSE, CA 95112

SANTA CLARA VALLEY TRANSPORTATION AUTHORITY
3331 NORTH FIRST STREET, BLDG B
SAN JOSE, CA 95134

LEGEND & ABBREVIATIONS:

X	PAVEMENT STRUCTURAL SECTION
COM	CITY OF MILPITAS
CSJ	CITY OF SAN JOSE
C&G	CURB & GUTTER
Lip	LIP OF GUTTER
LTB	LIME TREATED BASE
OGFC	OPEN GRADED FRICTION COARSE
PCCP	PORTLAND CEMENT CONCRETE PAVEMENT
RAC	RUBBERIZED ASPHALT CONCRETE
RHMA-G	RUBBERIZED HOT MIX ASPHALT (GAP GRADED)

NOTES:

1. DIMENSIONS OF THE PAVEMENT STRUCTURES (STRUCTURAL SECTIONS) ARE SUBJECT TO TOLERANCES SPECIFIED IN THE STANDARD SPECIFICATIONS.
2. SUPERELEVATIONS ARE SHOWN ON THE SUPERELEVATION DIAGRAMS.
3. EXACT LOCATIONS AND TYPES OF HMA DIKE, CONCRETE CURB, AND CONCRETE BARRIER ARE SHOWN ON THE LAYOUTS AND SUMMARY OF QUANTITIES SHEET.
4. FOR STRUCTURAL SECTION AND PAVEMENT DETAILS UNDER HMA DIKE, AND CONCRETE BARRIERS, SEE CONSTRUCTION DETAILS, FOR MBGR SEE NEW STANDARD PLAN A77C5.
5. FOR PAVING CONFORMS SEE CONSTRUCTION DETAILS.
6. CONTRACTOR SHALL MATCH BOTTOM OF PROPOSED ATPB LAYER TO BOTTOM OF EXISTING ATPB LAYER, SEE CONSTRUCTION DETAILS.

TYPICAL STRUCTURAL SECTIONS

A	0.15′ COLD PLANE AC 0.10′ HMA (OGFC) 0.10′ RHMA-G
B	0.15′ COLD PLANE AC 0.10′ HMA (OGFC) 0.10 RHMA-G Var HMA (A)
C	0.10′ HMA (OGFC) 0.10′ RHMA-G 0.50′ HMA (A) 0.80′ LCB 1.35′ CI 4 AS
D	0.10′ HMA (OGFC) 0.10′ RHMA-G 0.30′ HMA (A) 1.00′ CI 3 AB 0.90′ CI 4 AS
E	0.10′ HMA (OGFC) 0.10′ RHMA-G 0.50′ Min HMA (A) 0.25′ ATPB 0.85′ LCB 0.90′ CI 4 AS
F	0.10′ HMA (OGFC) 0.10′ RHMA-G 1.10′ HMA (A)
G	0.29′ PCC 0.25′ CI 3 AB
H	1.20′ HMA (A)
I	0.25′ HMA (A)
J	0.10′ HMA (OGFC)
K	0.10′ HMA (OGFC) 0.10′ RHMA-G 0.40′ Min HMA (A) 1.00′ CI 3 AB 0.90′ CI 4 AS
L	0.10′ COLD PLANE AC 0.10′ HMA (OGFC)
M	0.10′ COLD PLANE AC 0.10′ HMA (OGFC) 0.10′ RHMA-G
N	0.10′ COLD PLANE AC Var HMA (A)
O	0.10′ HMA (OGFC) 0.10′ RHMA-G 0.60′ Min HMA (A) 0.80′ LCB 1.35′ CI 4 AS
P	0.10′ HMA (OGFC) 0.10′ RHMA-G 0.35′ HMA (A) 0.25′ ATPB 1.00′ LCB 0.90′ CI 4 AS

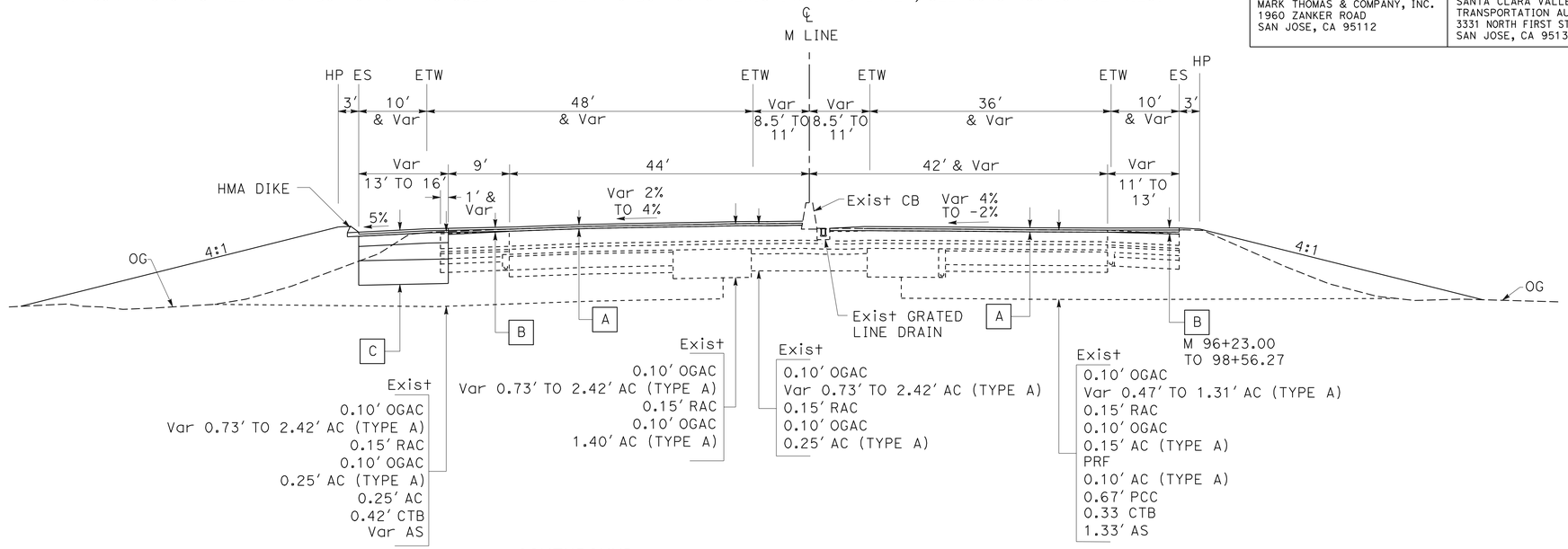

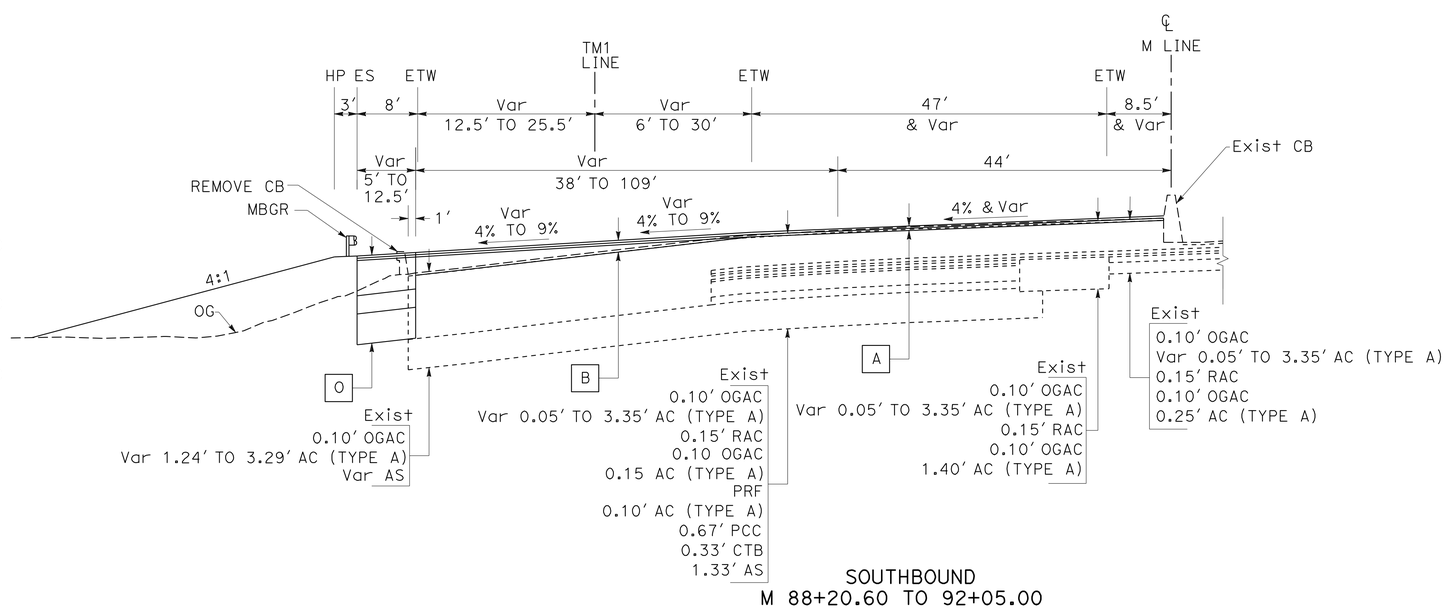

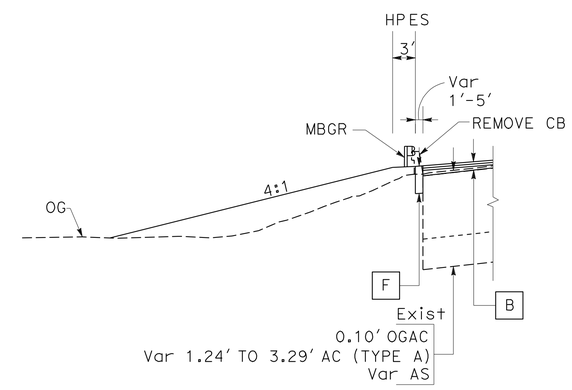

TYPICAL CROSS SECTIONS

NO SCALE

X-1

STATE OF CALIFORNIA - DEPARTMENT OF TRANSPORTATION

Caltrans

CONSULTANT FUNCTIONAL SUPERVISOR: RICHARD TANAKA

CALCULATED-DESIGNED BY: MARILOU AYUPAN

CHECKED BY: RAFAEL LOPEZ

REVISED BY / DATE REVISED

LAST REVISION: DATE PLOTTED => 08-JUL-2011 TIME PLOTTED => 13:07

03-31-11

Dist	COUNTY	ROUTE	POST MILES TOTAL PROJECT	SHEET No.	TOTAL SHEETS
04	SCI	880	4.1/8.7	3	710

REGISTERED CIVIL ENGINEER 03/31/11 DATE

7-11-11
PLANS APPROVAL DATE

REGISTERED PROFESSIONAL ENGINEER RICHARD K. TANAKA No. 23233 Exp. 12/31/11 CIVIL STATE OF CALIFORNIA

THE STATE OF CALIFORNIA OR ITS OFFICERS OR AGENTS SHALL NOT BE RESPONSIBLE FOR THE ACCURACY OR COMPLETENESS OF SCANNED COPIES OF THIS PLAN SHEET.

MARK THOMAS & COMPANY, INC.
1960 ZANKER ROAD
SAN JOSE, CA 95112

SANTA CLARA VALLEY TRANSPORTATION AUTHORITY
3331 NORTH FIRST STREET, BLDG B
SAN JOSE, CA 95134

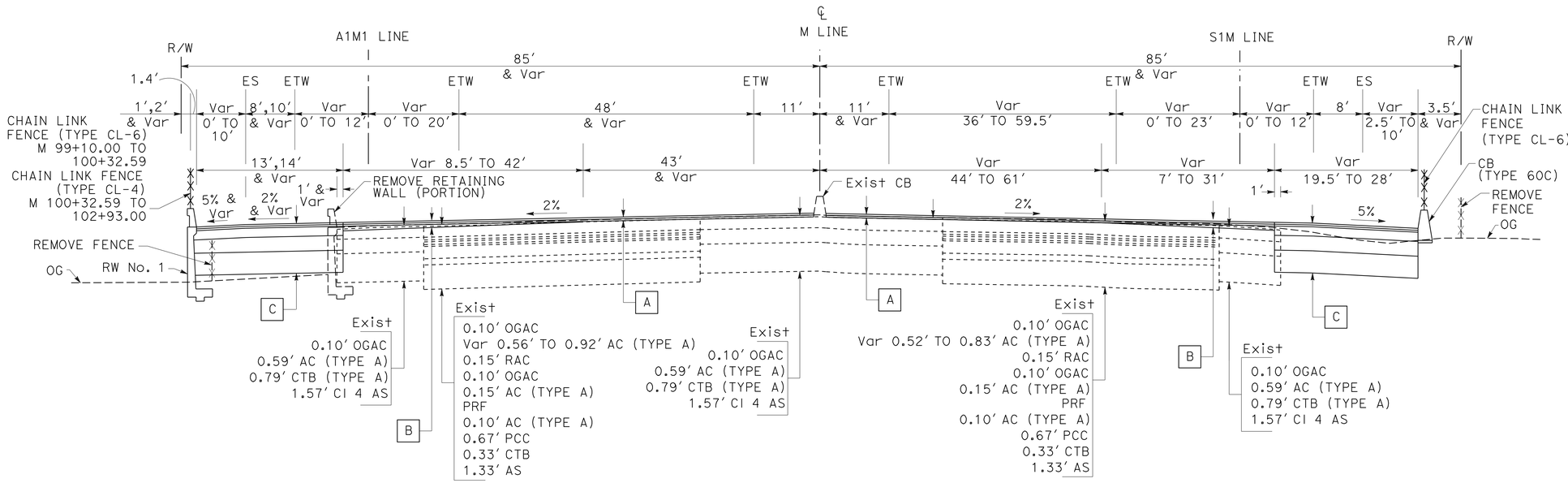

SOUTHBOUND
M 99+10.00 TO 102+93.00

NORTHBOUND
M 98+56.27 TO 108+74.00

ROUTE 880

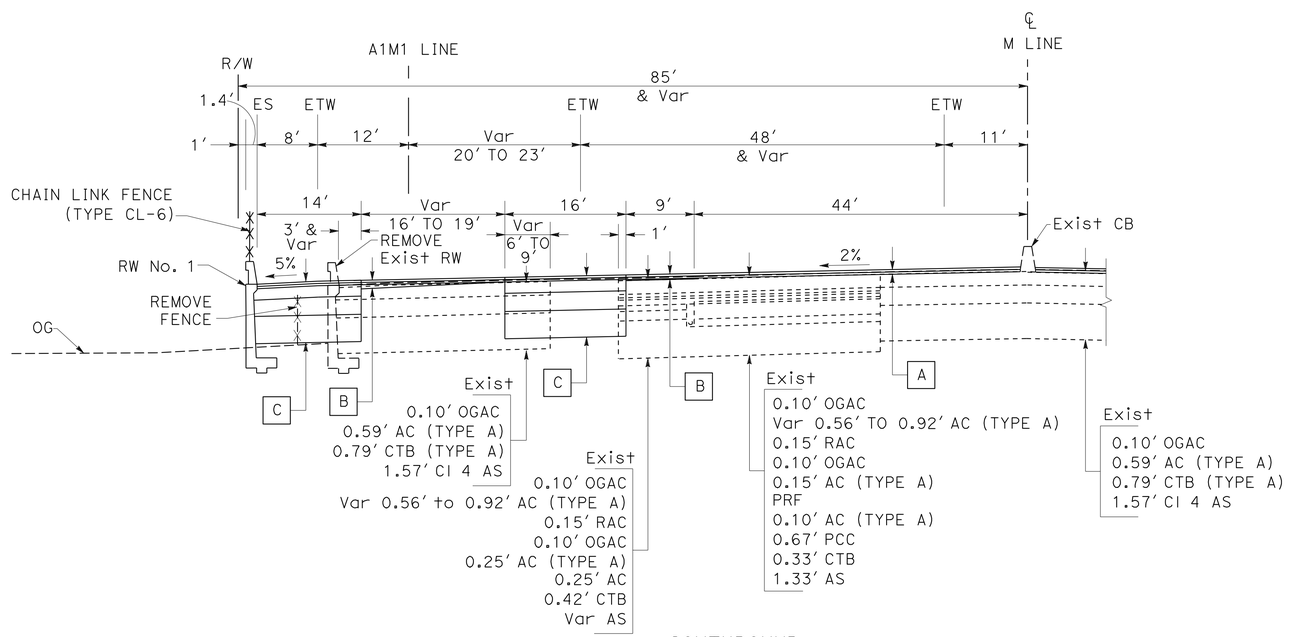

SOUTHBOUND
M 98+71.77 TO 99+10.00
ROUTE 880

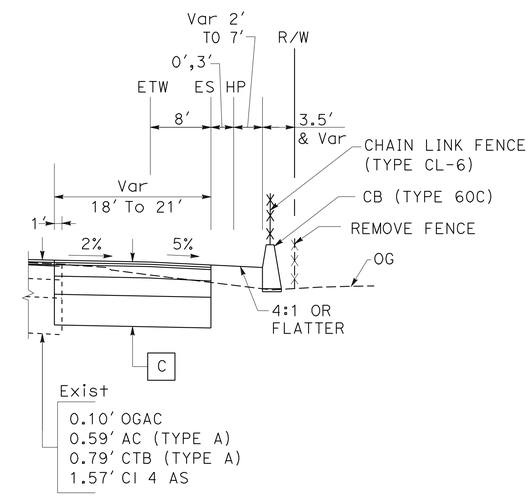

NORTHBOUND
M 104+05.00 TO 108+74.00
ROUTE 880

FOR NOTES, ABBREVIATIONS AND LEGEND, SEE SHEET X-1

TYPICAL CROSS SECTIONS

NO SCALE

X-2

STATE OF CALIFORNIA - DEPARTMENT OF TRANSPORTATION
Caltrans

CONSULTANT FUNCTIONAL SUPERVISOR: RICHARD TANAKA
CALCULATED-DESIGNED BY: RAFAEL LOPEZ
CHECKED BY: MARILOU AYUPAN
REVISED BY / DATE REVISED

LAST REVISION 03-31-11
DATE PLOTTED => 08-JUL-2011
TIME PLOTTED => 13:08

Dist	COUNTY	ROUTE	POST MILES TOTAL PROJECT	SHEET No.	TOTAL SHEETS
04	SCI	880	4.1/8.7	4	710

REGISTERED CIVIL ENGINEER 03/31/11 DATE

7-11-11
PLANS APPROVAL DATE

REGISTERED PROFESSIONAL ENGINEER RICHARD K. TANAKA No. 23233 Exp. 12/31/11 CIVIL STATE OF CALIFORNIA

THE STATE OF CALIFORNIA OR ITS OFFICERS OR AGENTS SHALL NOT BE RESPONSIBLE FOR THE ACCURACY OR COMPLETENESS OF SCANNED COPIES OF THIS PLAN SHEET.

MARK THOMAS & COMPANY, INC.
1960 ZANKER ROAD
SAN JOSE, CA 95112

SANTA CLARA VALLEY
TRANSPORTATION AUTHORITY
3331 NORTH FIRST STREET, BLDG B
SAN JOSE, CA 95134

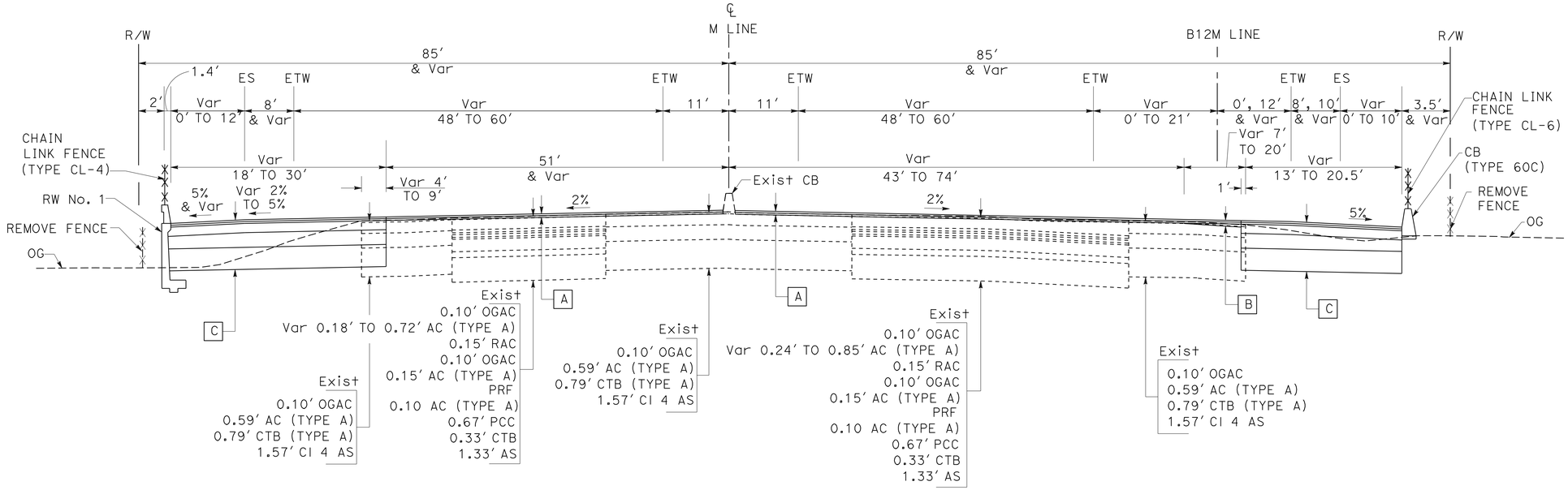

SOUTHBOUND
M 119+55.00 to 125+44.17

NORTHBOUND
M 126+41.00 TO 130+57.70

ROUTE 880

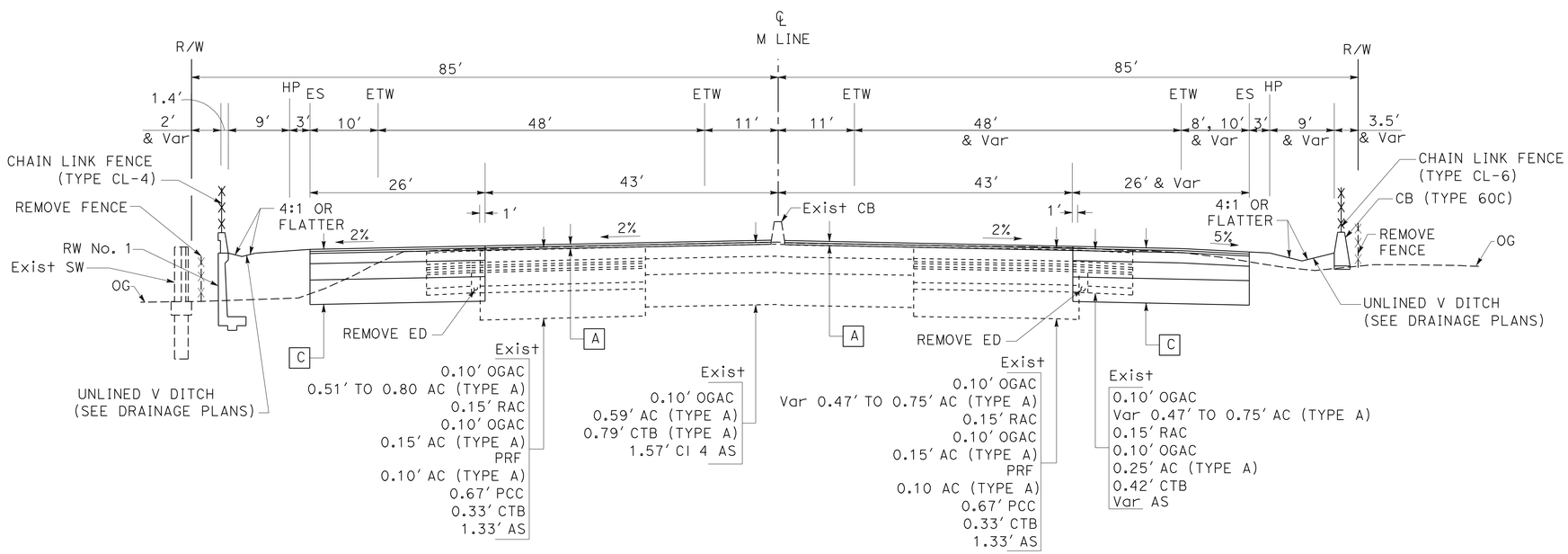

SOUTHBOUND
M 102+93.00 TO 119+55.00

NORTHBOUND
M 108+74.00 to 126+41.00

ROUTE 880

FOR NOTES, ABBREVIATIONS AND LEGEND, SEE SHEET X-1

TYPICAL CROSS SECTIONS

NO SCALE

X-3

STATE OF CALIFORNIA - DEPARTMENT OF TRANSPORTATION
Caltrans

CONSULTANT FUNCTIONAL SUPERVISOR: RICHARD TANAKA
CALCULATED-DESIGNED BY
CHECKED BY
REVISED BY: RAFAEL LOPEZ
DATE REVISED: MARILOU AYUPAN

LAST REVISION 03-31-11
DATE PLOTTED => 08-JUL-2011
TIME PLOTTED => 13:08

Dist	COUNTY	ROUTE	POST MILES TOTAL PROJECT	SHEET No.	TOTAL SHEETS
04	SCI	880	4.1/8.7	5	710

REGISTERED CIVIL ENGINEER 03/31/11 DATE

7-11-11
PLANS APPROVAL DATE

REGISTERED PROFESSIONAL ENGINEER RICHARD K. TANAKA No. 23233 Exp. 12/31/11 CIVIL STATE OF CALIFORNIA

THE STATE OF CALIFORNIA OR ITS OFFICERS OR AGENTS SHALL NOT BE RESPONSIBLE FOR THE ACCURACY OR COMPLETENESS OF SCANNED COPIES OF THIS PLAN SHEET.

MARK THOMAS & COMPANY, INC.
1960 ZANKER ROAD
SAN JOSE, CA 95112

SANTA CLARA VALLEY TRANSPORTATION AUTHORITY
3331 NORTH FIRST STREET, BLDG B
SAN JOSE, CA 95134

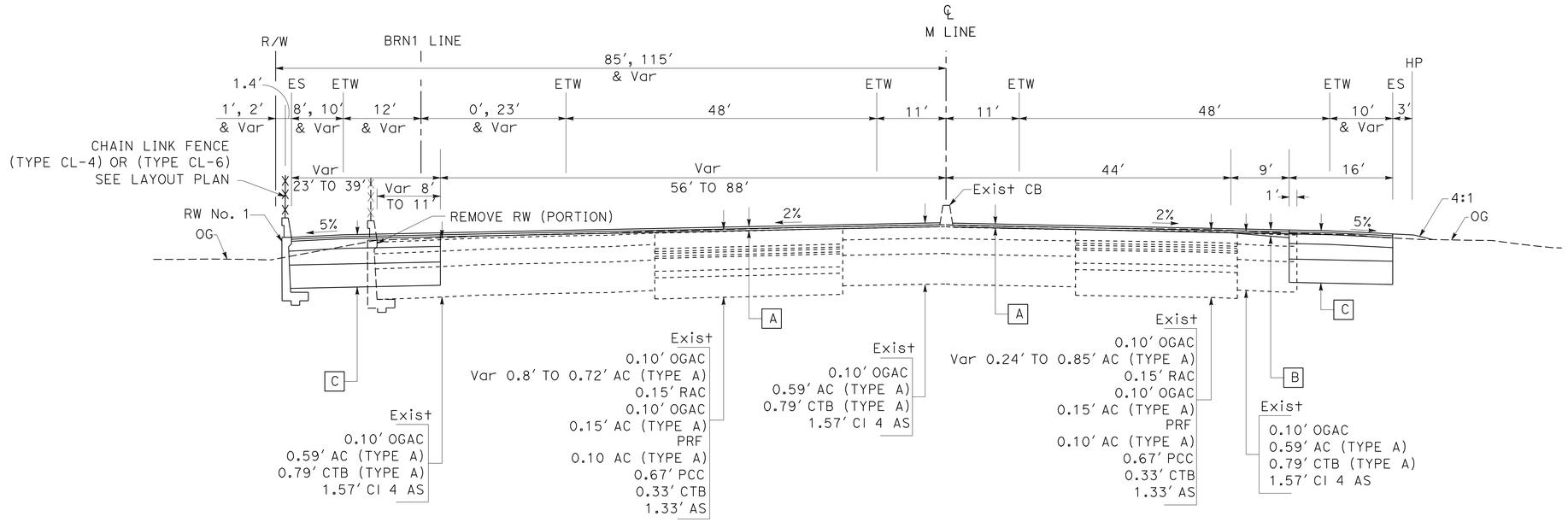

SOUTHBOUND
M 125+44.16 TO 133+96.90

NORTHBOUND
M 130+82.91 TO 133+20.00

ROUTE 880

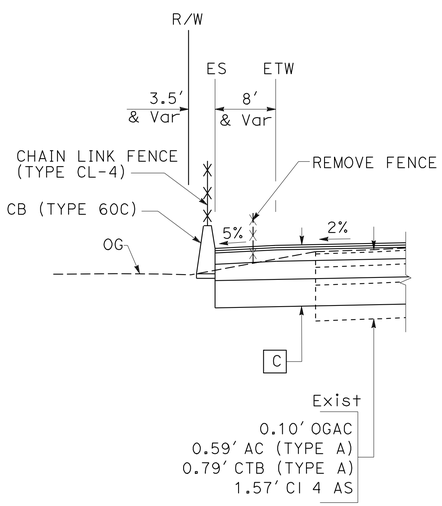

SOUTHBOUND
M 131+35.01 TO 133+96.90
ROUTE 880

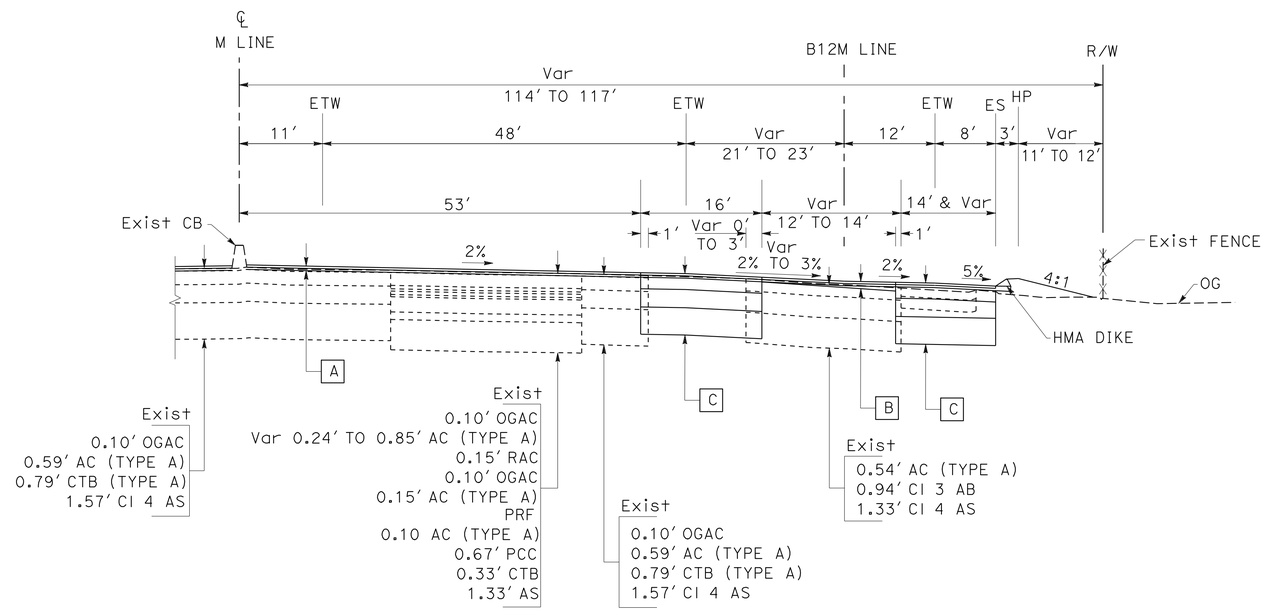

NORTHBOUND
M 130+57.70 TO 130+82.91
ROUTE 880

FOR NOTES, ABBREVIATIONS AND LEGEND, SEE SHEET X-1

TYPICAL CROSS SECTIONS
NO SCALE

X-4

STATE OF CALIFORNIA - DEPARTMENT OF TRANSPORTATION
Caltrans

CONSULTANT FUNCTIONAL SUPERVISOR: RICHARD TANAKA
CALCULATED-DESIGNED BY: RAFAEL LOPEZ
CHECKED BY: MARILOU AYUPAN
REVISED BY
DATE REVISED

LAST REVISION 03-31-11
DATE PLOTTED => 08-JUL-2011
TIME PLOTTED => 13:08

Dist	COUNTY	ROUTE	POST MILES TOTAL PROJECT	SHEET No.	TOTAL SHEETS
04	SCI	880	4.1/8.7	6	710

REGISTERED CIVIL ENGINEER 03/31/11 DATE

7-11-11
PLANS APPROVAL DATE

REGISTERED PROFESSIONAL ENGINEER RICHARD K. TANAKA No. 23233 Exp. 12/31/11 CIVIL STATE OF CALIFORNIA

THE STATE OF CALIFORNIA OR ITS OFFICERS OR AGENTS SHALL NOT BE RESPONSIBLE FOR THE ACCURACY OR COMPLETENESS OF SCANNED COPIES OF THIS PLAN SHEET.

MARK THOMAS & COMPANY, INC.
1960 ZANKER ROAD
SAN JOSE, CA 95112

SANTA CLARA VALLEY TRANSPORTATION AUTHORITY
3331 NORTH FIRST STREET, BLDG B
SAN JOSE, CA 95134

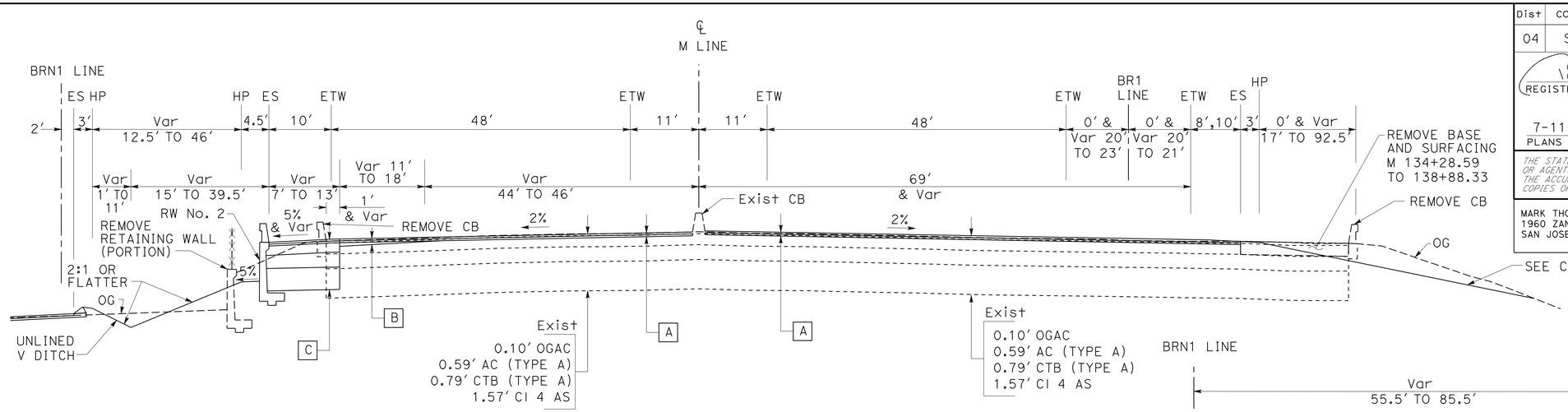

SOUTHBOUND
M 136+27.31 TO 141+39.30

NORTHBOUND
M 134+60 TO 141+39.30

ROUTE 880

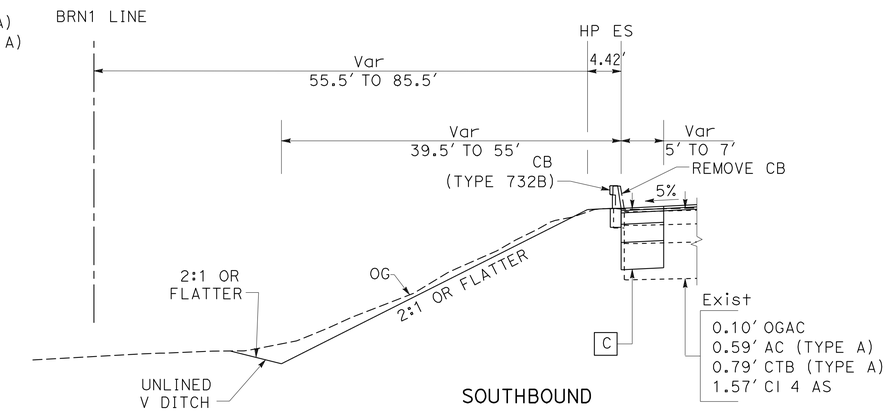

SOUTHBOUND
M 140+59.31 TO 141+39.30
ROUTE 880

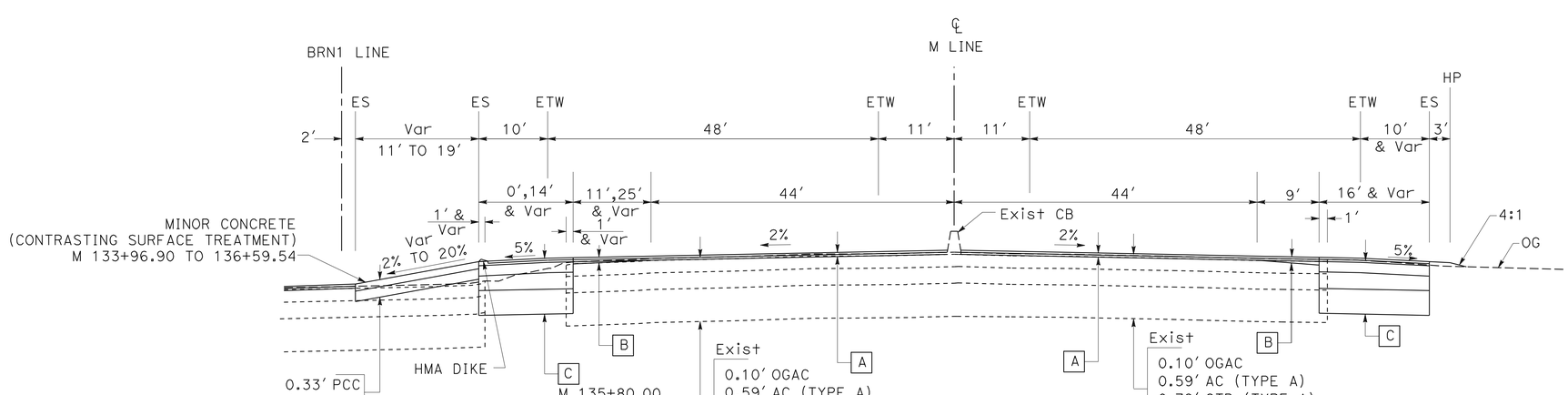

SOUTHBOUND
M 133+96.90 TO 136+27.31
ROUTE 880

NORTHBOUND
M 133+20.00 TO 134+60.00
ROUTE 880

FOR NOTES, ABBREVIATIONS AND LEGEND, SEE SHEET X-1

TYPICAL CROSS SECTIONS

NO SCALE

X-5

STATE OF CALIFORNIA - DEPARTMENT OF TRANSPORTATION
Caltrans

CONSULTANT FUNCTIONAL SUPERVISOR: RICHARD TANAKA
CALCULATED-DESIGNED BY: RAFAEL LOPEZ
CHECKED BY: MARILOU AYUPAN
REVISED BY
DATE REVISED

LAST REVISION 03-31-11
DATE PLOTTED => 08-JUL-2011
TIME PLOTTED => 13:08

Dist	COUNTY	ROUTE	POST MILES TOTAL PROJECT	SHEET No.	TOTAL SHEETS
04	SCI	880	4.1/8.7	7	710

REGISTERED CIVIL ENGINEER 03/31/11 DATE

7-11-11
PLANS APPROVAL DATE

REGISTERED PROFESSIONAL ENGINEER RICHARD K. TANAKA No. 23233 Exp. 12/31/11 CIVIL STATE OF CALIFORNIA

THE STATE OF CALIFORNIA OR ITS OFFICERS OR AGENTS SHALL NOT BE RESPONSIBLE FOR THE ACCURACY OR COMPLETENESS OF SCANNED COPIES OF THIS PLAN SHEET.

MARK THOMAS & COMPANY, INC.
1960 ZANKER ROAD
SAN JOSE, CA 95112

SANTA CLARA VALLEY
TRANSPORTATION AUTHORITY
3331 NORTH FIRST STREET, BLDG B
SAN JOSE, CA 95134

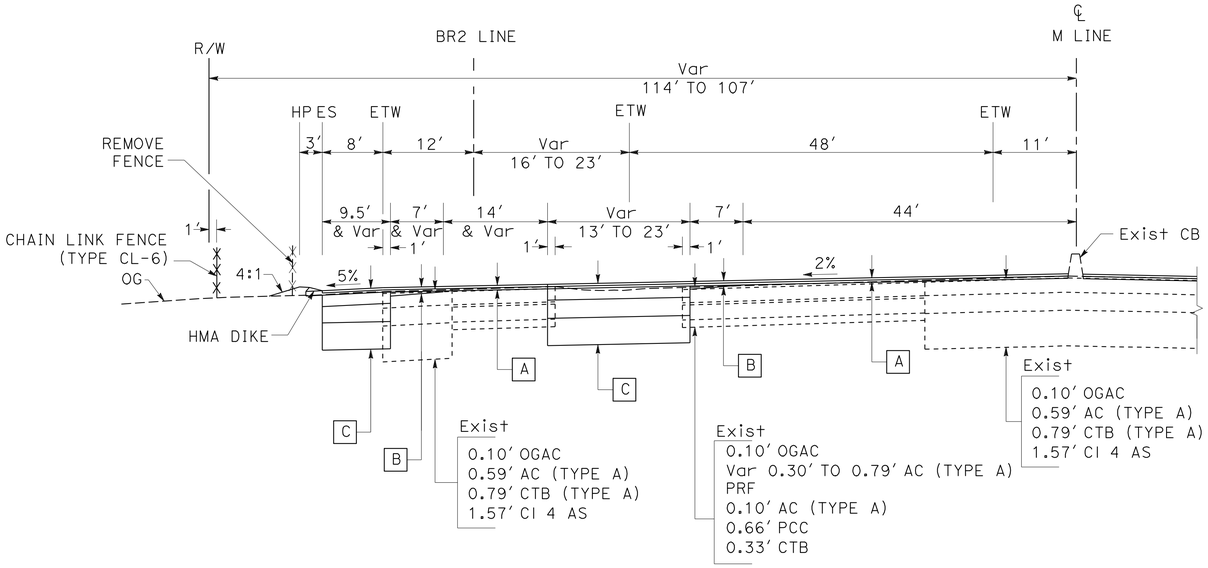

SOUTHBOUND
M 153+99.26 TO 154+85.00
ROUTE 880

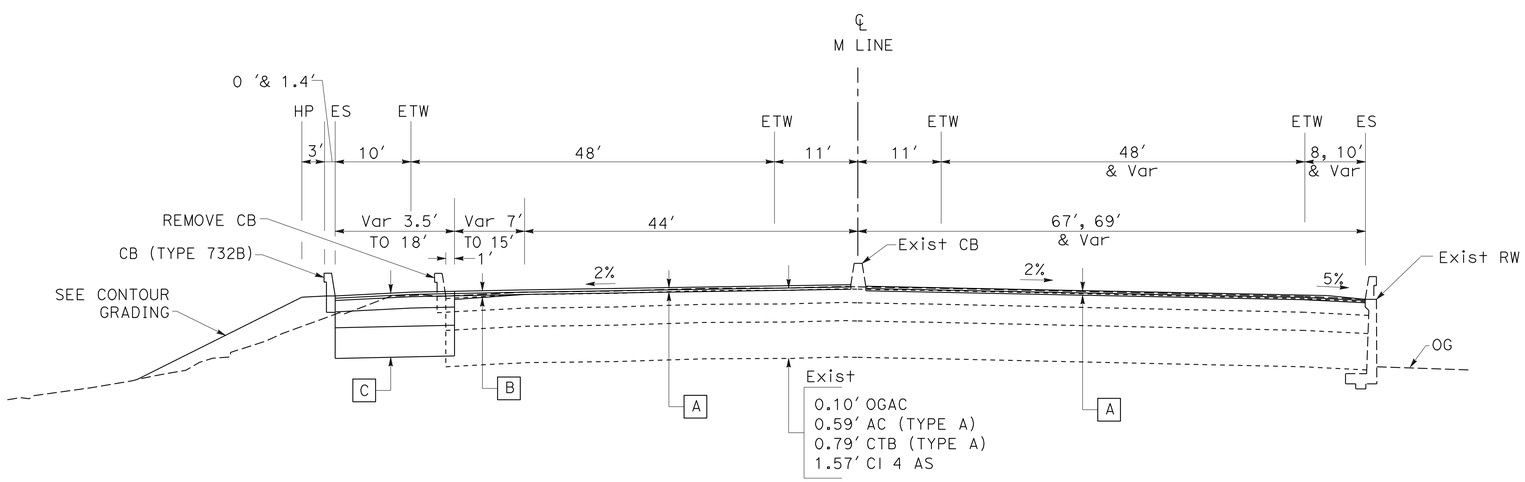

SOUTHBOUND
M 147+55.04 TO 153+99.26

NORTHBOUND
M 146+73.10 TO 156+00.00

ROUTE 880

FOR NOTES, ABBREVIATIONS AND LEGEND, SEE SHEET X-1

TYPICAL CROSS SECTIONS
NO SCALE

X-6

STATE OF CALIFORNIA - DEPARTMENT OF TRANSPORTATION
Caltrans

CONSULTANT FUNCTIONAL SUPERVISOR: RICHARD TANAKA
CALCULATED-DESIGNED BY: RAFAEL LOPEZ
CHECKED BY: MARILOU AYUPAN
REVISED BY
DATE REVISED

LAST REVISION 03-31-11
DATE PLOTTED => 08-JUL-2011
TIME PLOTTED => 13:08

Dist	COUNTY	ROUTE	POST MILES TOTAL PROJECT	SHEET No.	TOTAL SHEETS
04	SCI	880	4.1/8.7	8	710

REGISTERED CIVIL ENGINEER 03/31/11 DATE

7-11-11
PLANS APPROVAL DATE

REGISTERED PROFESSIONAL ENGINEER RICHARD K. TANAKA No. 23233 Exp. 12/31/11 CIVIL STATE OF CALIFORNIA

THE STATE OF CALIFORNIA OR ITS OFFICERS OR AGENTS SHALL NOT BE RESPONSIBLE FOR THE ACCURACY OR COMPLETENESS OF SCANNED COPIES OF THIS PLAN SHEET.

MARK THOMAS & COMPANY, INC.
1960 ZANKER ROAD
SAN JOSE, CA 95112

SANTA CLARA VALLEY TRANSPORTATION AUTHORITY
3331 NORTH FIRST STREET, BLDG B
SAN JOSE, CA 95134

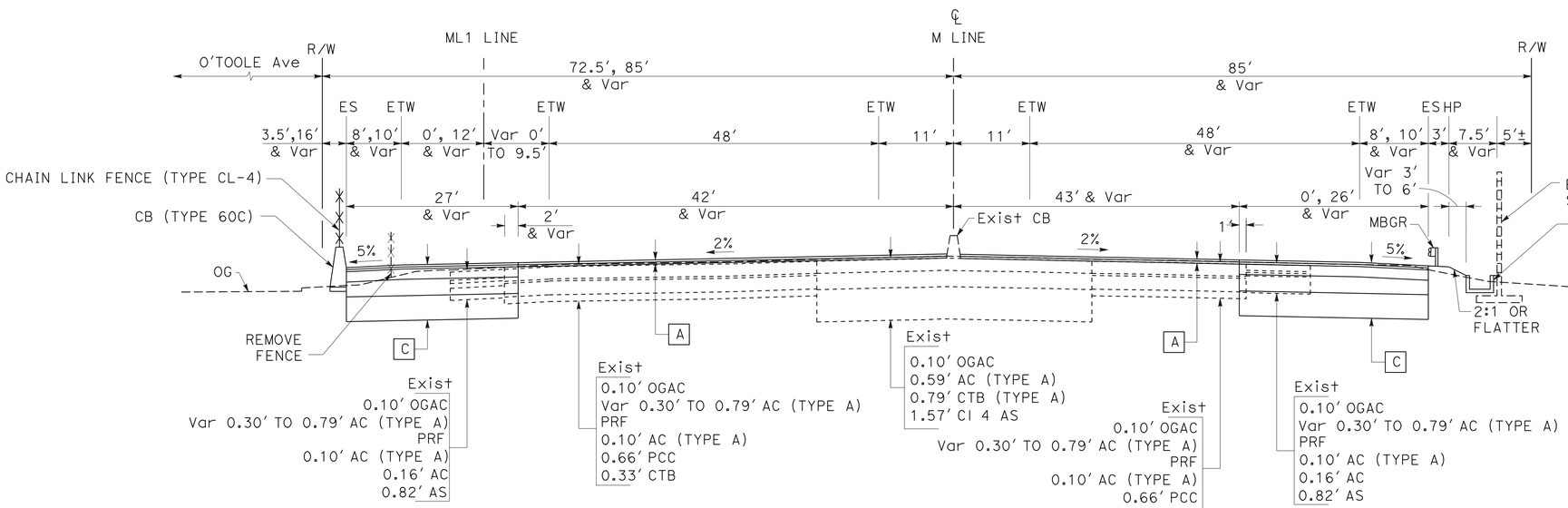

SOUTHBOUND
M 158+75.00 TO 200+30.00

NORTHBOUND
M 159+83.00 TO 196+56.17

ROUTE 880

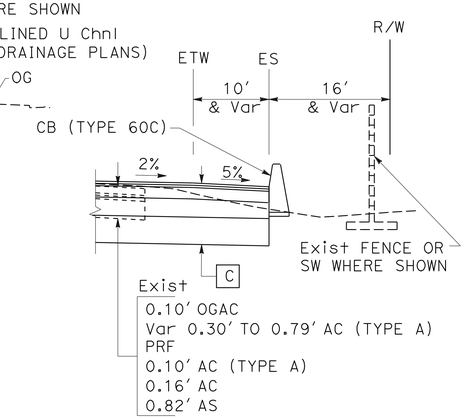

NORTHBOUND
M 171+19.22 TO 173+82.00
M 194+00.75 TO 194+95.00
ROUTE 880

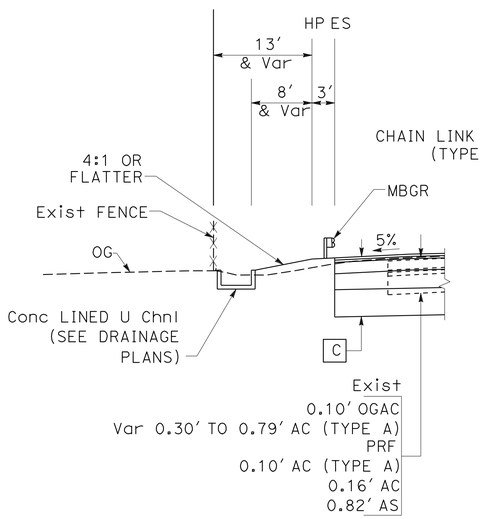

SOUTHBOUND
M 185+52.50 TO 195+14.93
ROUTE 880

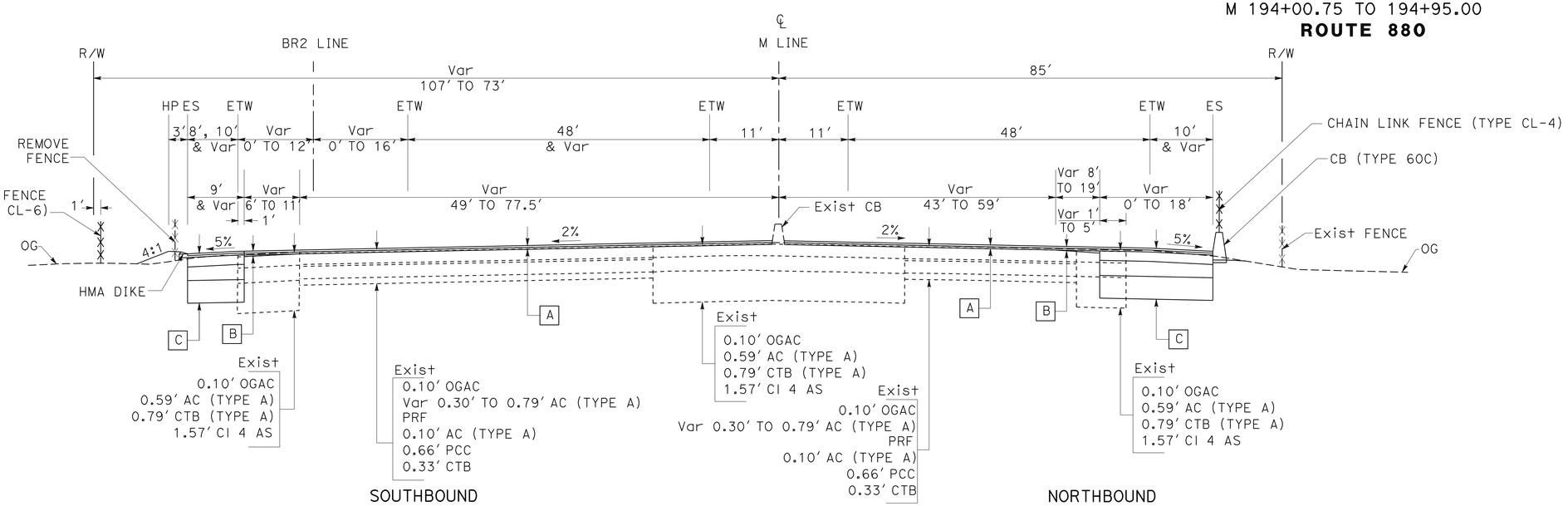

SOUTHBOUND
M 154+85.00 TO 158+75.00

NORTHBOUND
M 156+00.00 TO 159+83.00

ROUTE 880

FOR NOTES, ABBREVIATIONS AND LEGEND, SEE SHEET X-1

TYPICAL CROSS SECTIONS

NO SCALE

X-7

STATE OF CALIFORNIA - DEPARTMENT OF TRANSPORTATION
Caltrans

CONSULTANT FUNCTIONAL SUPERVISOR: RICHARD TANAKA
CALCULATED-DESIGNED BY: RAFAEL LOPEZ
CHECKED BY: MARILOU AYUPAN
REVISED BY
DATE REVISED

LAST REVISION 03-31-11
DATE PLOTTED => 08-JUL-2011
TIME PLOTTED => 13:08

Dist	COUNTY	ROUTE	POST MILES TOTAL PROJECT	SHEET No.	TOTAL SHEETS
04	SCI	880	4.1/8.7	9	710

REGISTERED CIVIL ENGINEER 10/15/10 DATE

7-11-11
PLANS APPROVAL DATE

REGISTERED PROFESSIONAL ENGINEER RICHARD K. TANAKA No. 23233 Exp. 12/31/11 CIVIL STATE OF CALIFORNIA

THE STATE OF CALIFORNIA OR ITS OFFICERS OR AGENTS SHALL NOT BE RESPONSIBLE FOR THE ACCURACY OR COMPLETENESS OF SCANNED COPIES OF THIS PLAN SHEET.

MARK THOMAS & COMPANY, INC.
1960 ZANKER ROAD
SAN JOSE, CA 95112

SANTA CLARA VALLEY
TRANSPORTATION AUTHORITY
3331 NORTH FIRST STREET, BLDG B
SAN JOSE, CA 95134

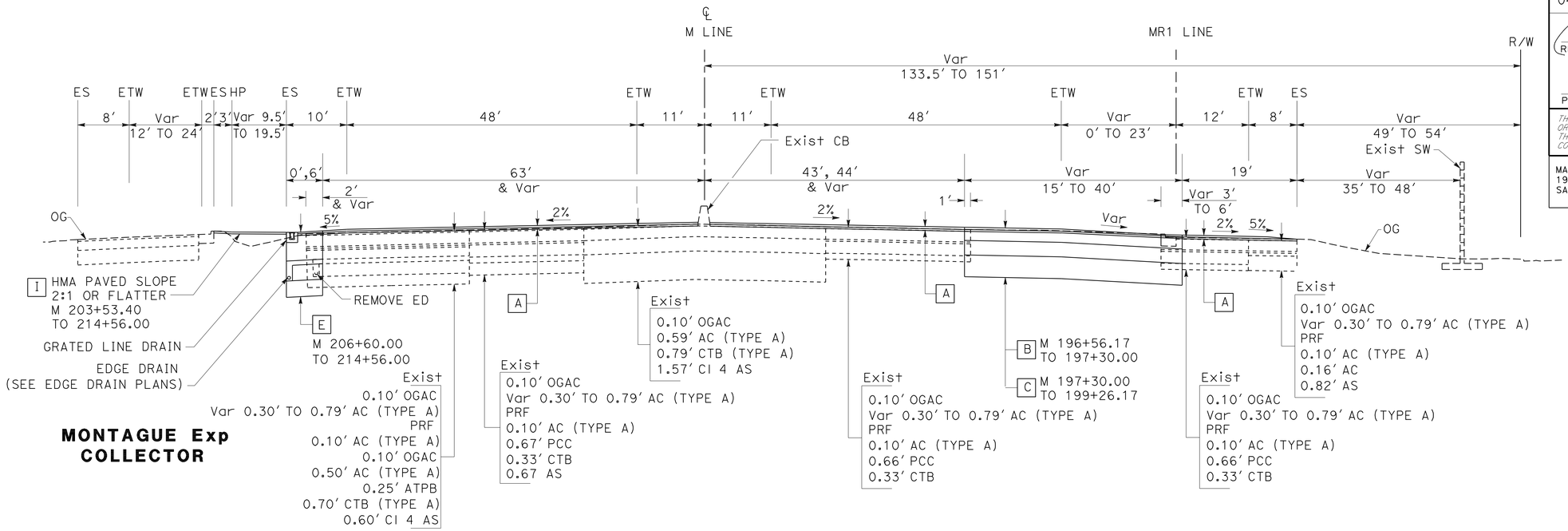

MONTAGUE Exp COLLECTOR

SOUTHBOUND
M 202+65.00 TO 214+56.00

NORTHBOUND
M 196+56.17 TO 199+26.17

ROUTE 880

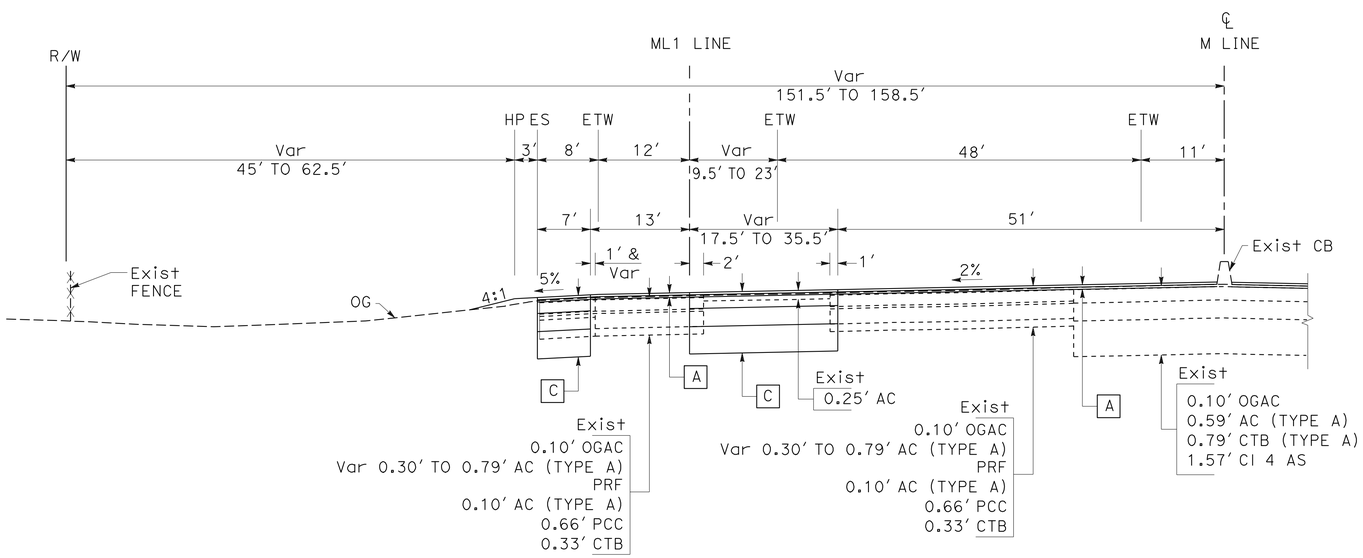

SOUTHBOUND
M 200+30.00 TO 202+65.00
ROUTE 880

FOR NOTES, ABBREVIATIONS AND LEGEND, SEE SHEET X-1

TYPICAL CROSS SECTIONS
NO SCALE

X-8

STATE OF CALIFORNIA - DEPARTMENT OF TRANSPORTATION
Caltrans

CONSULTANT FUNCTIONAL SUPERVISOR: RICHARD TANAKA
CALCULATED-DESIGNED BY: RAFAEL LOPEZ
CHECKED BY: MARILOU AYUPAN
REVISED BY / DATE REVISED

LAST REVISION 11-17-10
DATE PLOTTED => 08-JUL-2011
TIME PLOTTED => 13:08

Dist	COUNTY	ROUTE	POST MILES TOTAL PROJECT	SHEET No.	TOTAL SHEETS
04	SCI	880	4.1/8.7	10	710

REGISTERED CIVIL ENGINEER 10/15/10 DATE

7-11-11
PLANS APPROVAL DATE

REGISTERED PROFESSIONAL ENGINEER RICHARD K. TANAKA No. 23233 Exp. 12/31/11 CIVIL STATE OF CALIFORNIA

THE STATE OF CALIFORNIA OR ITS OFFICERS OR AGENTS SHALL NOT BE RESPONSIBLE FOR THE ACCURACY OR COMPLETENESS OF SCANNED COPIES OF THIS PLAN SHEET.

MARK THOMAS & COMPANY, INC.
1960 ZANKER ROAD
SAN JOSE, CA 95112

SANTA CLARA VALLEY
TRANSPORTATION AUTHORITY
3331 NORTH FIRST STREET, BLDG B
SAN JOSE, CA 95134

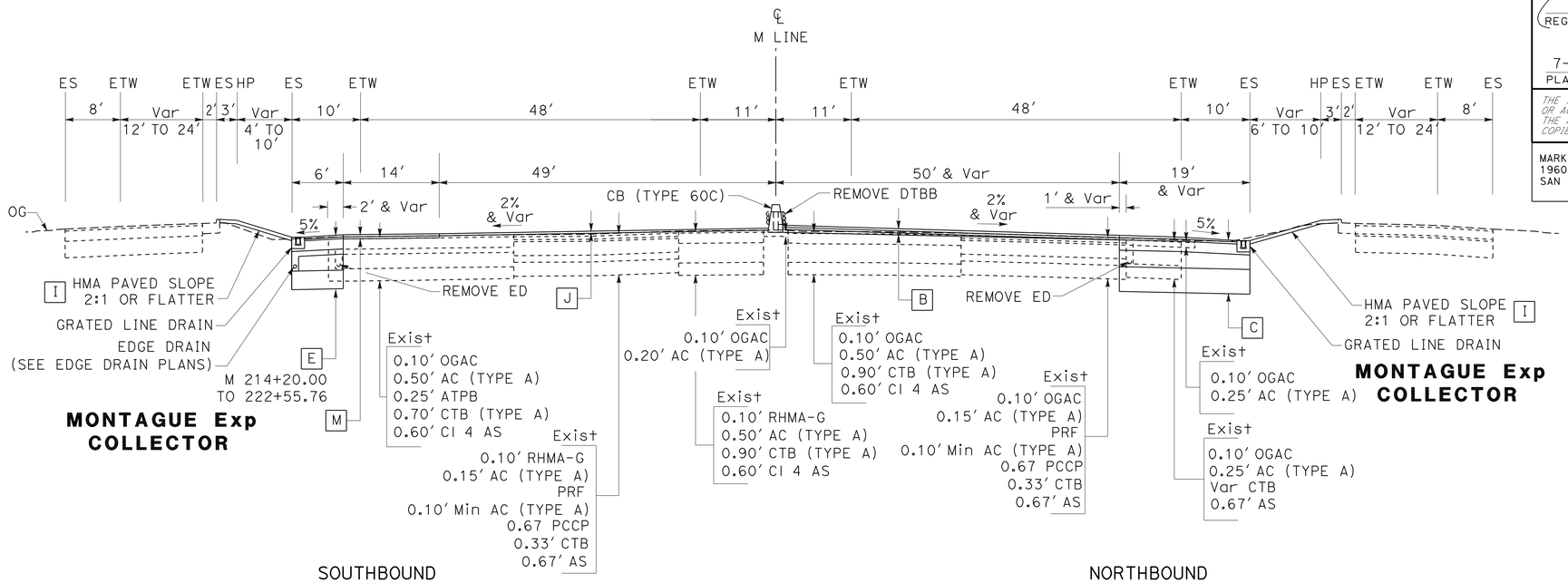

SOUTHBOUND
M 214+56.00 TO 222+55.76

NORTHBOUND
M 212+12.00 TO 227+54.86

ROUTE 880

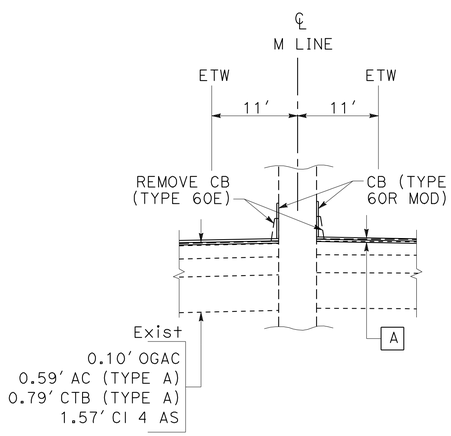

M 212+11.74 TO 215+37.99
ROUTE 880

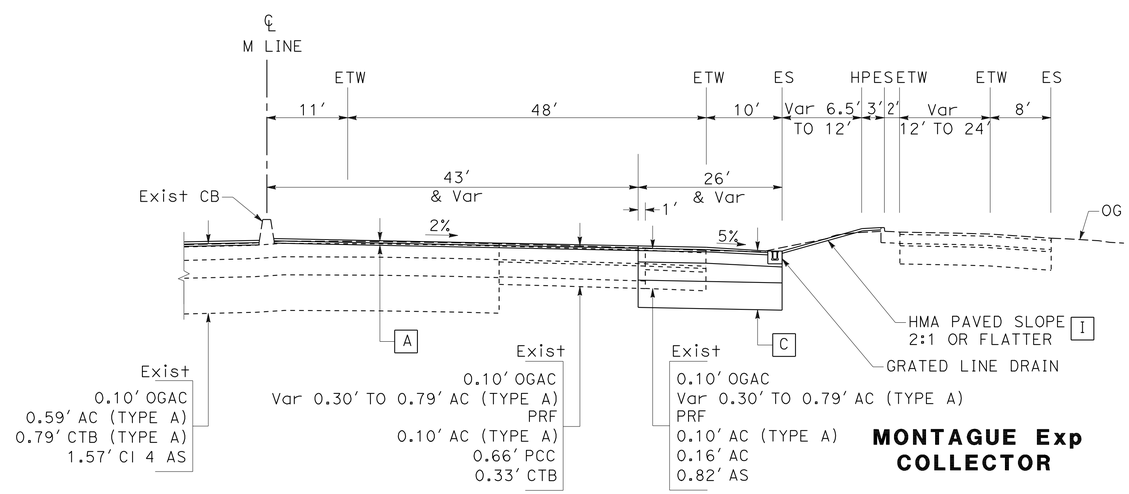

NORTHBOUND
M 199+26.17 TO 212+12.00
ROUTE 880

TYPICAL CROSS SECTIONS
NO SCALE

X-9

FOR NOTES, ABBREVIATIONS AND LEGEND, SEE SHEET X-1

REVISED BY | DATE REVISED
RAFAEL LOPEZ | MARILOU AYUPAN
CALCULATED-DESIGNED BY | CHECKED BY
CONSULTANT FUNCTIONAL SUPERVISOR
RICHARD TANAKA

STATE OF CALIFORNIA - DEPARTMENT OF TRANSPORTATION
Caltrans

LAST REVISION 11-17-10 | DATE PLOTTED => 08-JUL-2011 | TIME PLOTTED => 14:38

Dist	COUNTY	ROUTE	POST MILES TOTAL PROJECT	SHEET No.	TOTAL SHEETS
04	SCI	880	4.1/8.7	11	710

REGISTERED CIVIL ENGINEER 10/15/10 DATE

7-11-11
PLANS APPROVAL DATE

REGISTERED PROFESSIONAL ENGINEER RICHARD K. TANAKA No. 23233 Exp. 12/31/11 CIVIL STATE OF CALIFORNIA

THE STATE OF CALIFORNIA OR ITS OFFICERS OR AGENTS SHALL NOT BE RESPONSIBLE FOR THE ACCURACY OR COMPLETENESS OF SCANNED COPIES OF THIS PLAN SHEET.

MARK THOMAS & COMPANY, INC.
1960 ZANKER ROAD
SAN JOSE, CA 95112

SANTA CLARA VALLEY
TRANSPORTATION AUTHORITY
3331 NORTH FIRST STREET, BLDG B
SAN JOSE, CA 95134

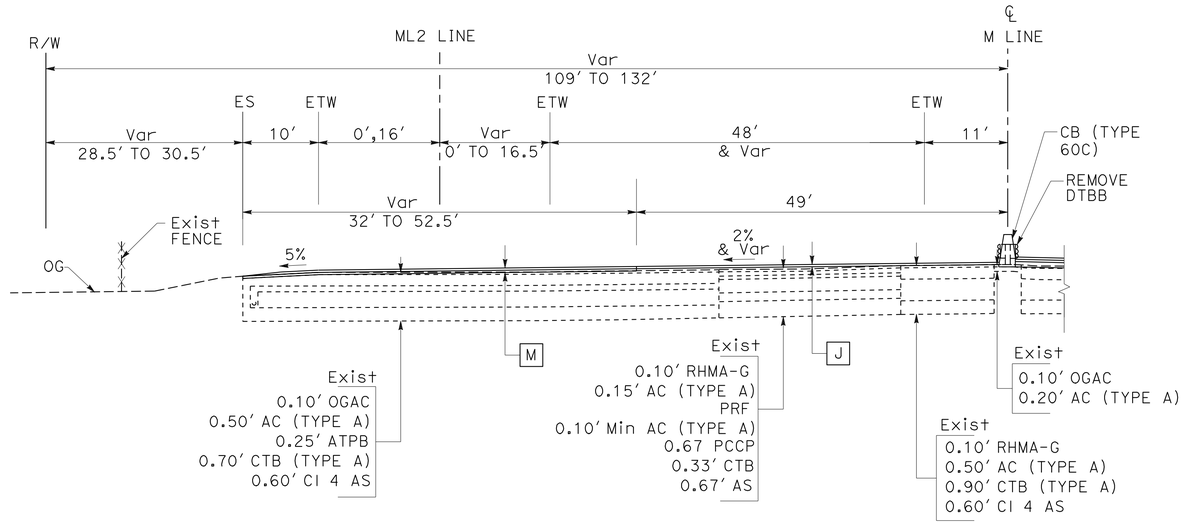

SOUTHBOUND
M 222+71.00 TO 226+02.93
ROUTE 880

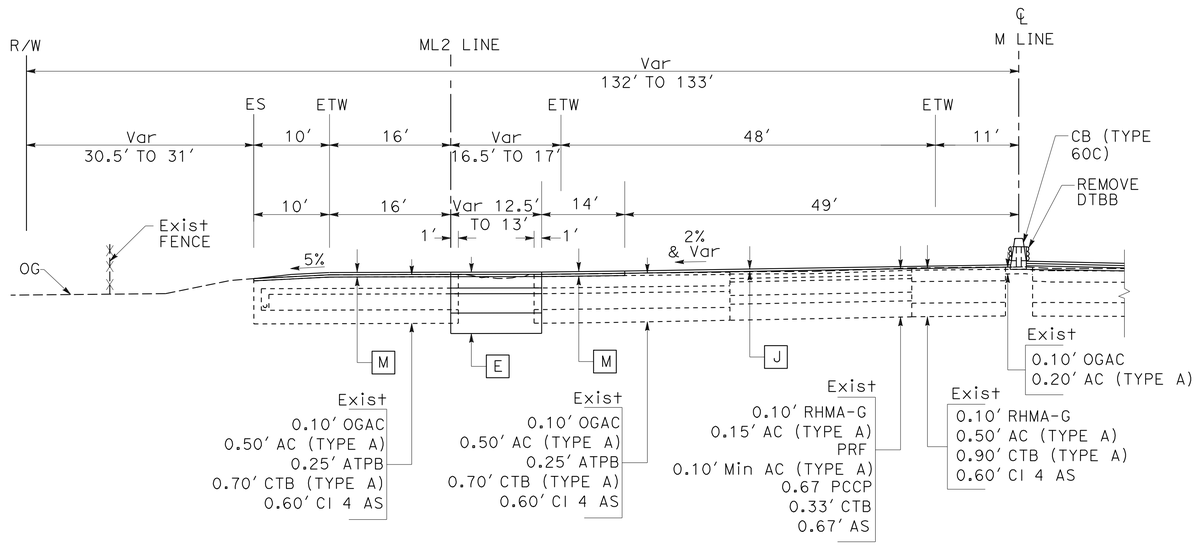

SOUTHBOUND
M 222+55.76 TO 222+71.00
ROUTE 880

FOR NOTES, ABBREVIATIONS AND LEGEND, SEE SHEET X-1

TYPICAL CROSS SECTIONS
NO SCALE

X-10

STATE OF CALIFORNIA - DEPARTMENT OF TRANSPORTATION
Caltrans

CONSULTANT FUNCTIONAL SUPERVISOR: RICHARD TANAKA
CALCULATED-DESIGNED BY: RAFAEL LOPEZ
CHECKED BY: MARILOU AYUPAN
REVISED BY
DATE REVISED

LAST REVISION 11-17-10
DATE PLOTTED => 08-JUL-2011
TIME PLOTTED => 14:36

Dist	COUNTY	ROUTE	POST MILES TOTAL PROJECT	SHEET No.	TOTAL SHEETS
04	SCI	880	4.1/8.7	12	710

REGISTERED CIVIL ENGINEER 10/15/10 DATE

7-11-11
PLANS APPROVAL DATE

REGISTERED PROFESSIONAL ENGINEER RICHARD K. TANAKA No. 23233 Exp. 12/31/11 CIVIL STATE OF CALIFORNIA

THE STATE OF CALIFORNIA OR ITS OFFICERS OR AGENTS SHALL NOT BE RESPONSIBLE FOR THE ACCURACY OR COMPLETENESS OF SCANNED COPIES OF THIS PLAN SHEET.

MARK THOMAS & COMPANY, INC.
1960 ZANKER ROAD
SAN JOSE, CA 95112

SANTA CLARA VALLEY TRANSPORTATION AUTHORITY
3331 NORTH FIRST STREET, BLDG B
SAN JOSE, CA 95134

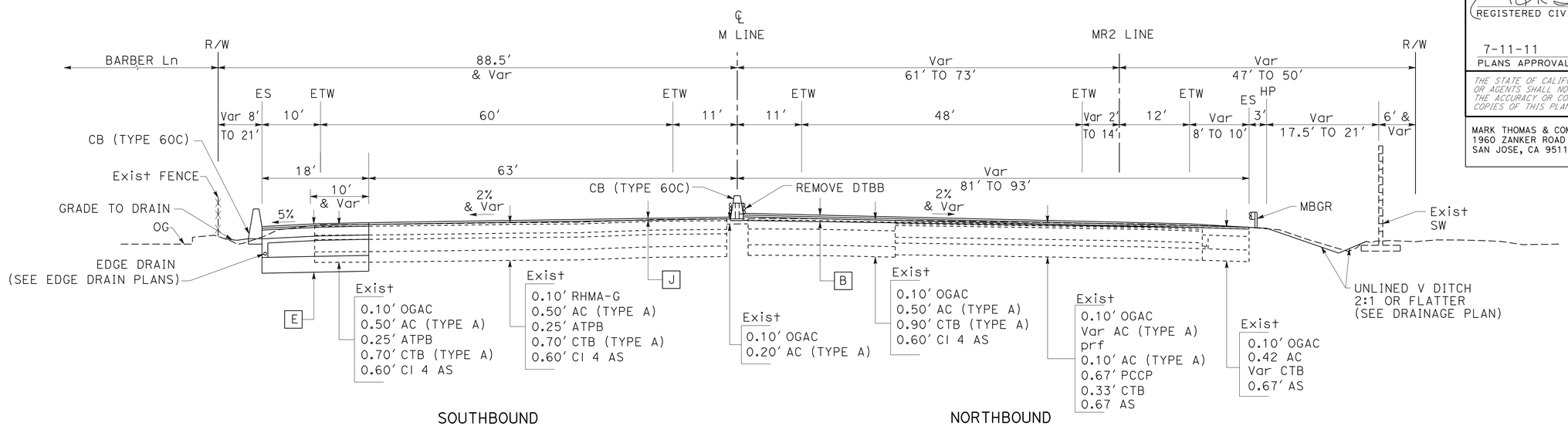

SOUTHBOUND
M 227+10.00 TO 247+54.00

NORTHBOUND
M 228+13.00 TO 231+60.00

ROUTE 880

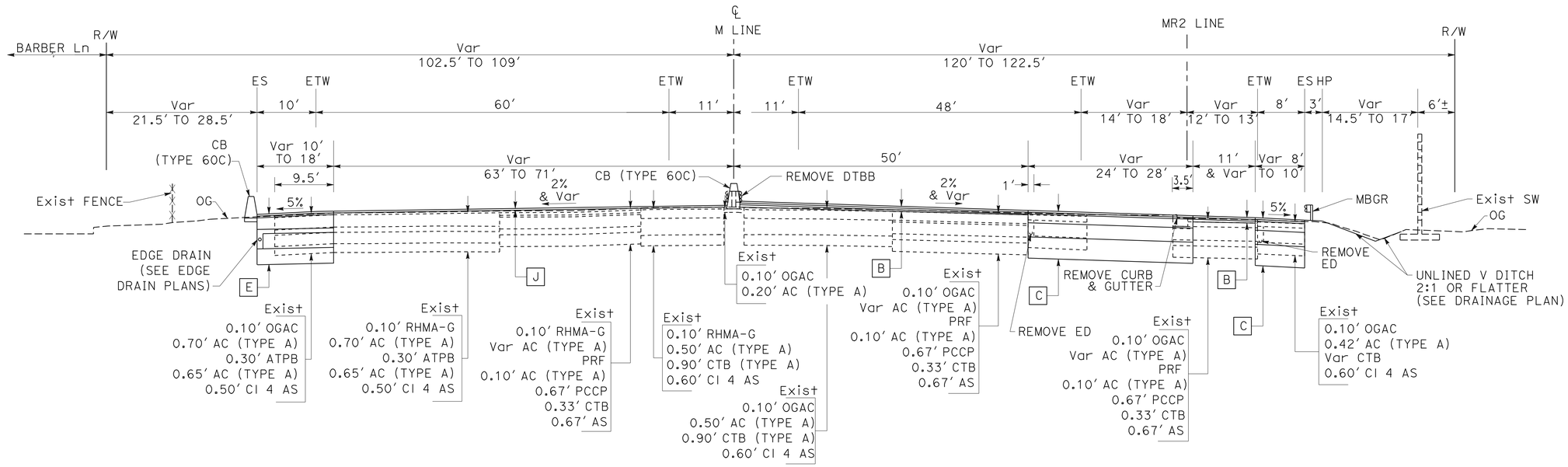

SOUTHBOUND
M 226+02.93 TO 227+10.00

NORTHBOUND
M 227+54.86 TO 228+13.00

ROUTE 880

FOR NOTES, ABBREVIATIONS AND LEGEND, SEE SHEET X-1

TYPICAL CROSS SECTIONS
NO SCALE

X-11

STATE OF CALIFORNIA - DEPARTMENT OF TRANSPORTATION
Caltrans

CONSULTANT FUNCTIONAL SUPERVISOR: RICHARD TANAKA
CALCULATED-DESIGNED BY: RAFAEL LOPEZ
CHECKED BY: MARILOU AYUPAN
REVISED BY
DATE REVISED

LAST REVISION 11-17-10
DATE PLOTTED => 08-JUL-2011
TIME PLOTTED => 14:36

Dist	COUNTY	ROUTE	POST MILES TOTAL PROJECT	SHEET No.	TOTAL SHEETS
04	SCI	880	4.1/8.7	13	710

REGISTERED CIVIL ENGINEER 10/15/10 DATE

7-11-11
PLANS APPROVAL DATE

REGISTERED PROFESSIONAL ENGINEER RICHARD K. TANAKA No. 23233 Exp. 12/31/11 CIVIL STATE OF CALIFORNIA

THE STATE OF CALIFORNIA OR ITS OFFICERS OR AGENTS SHALL NOT BE RESPONSIBLE FOR THE ACCURACY OR COMPLETENESS OF SCANNED COPIES OF THIS PLAN SHEET.

MARK THOMAS & COMPANY, INC.
1960 ZANKER ROAD
SAN JOSE, CA 95112

SANTA CLARA VALLEY TRANSPORTATION AUTHORITY
3331 NORTH FIRST STREET, BLDG B
SAN JOSE, CA 95134

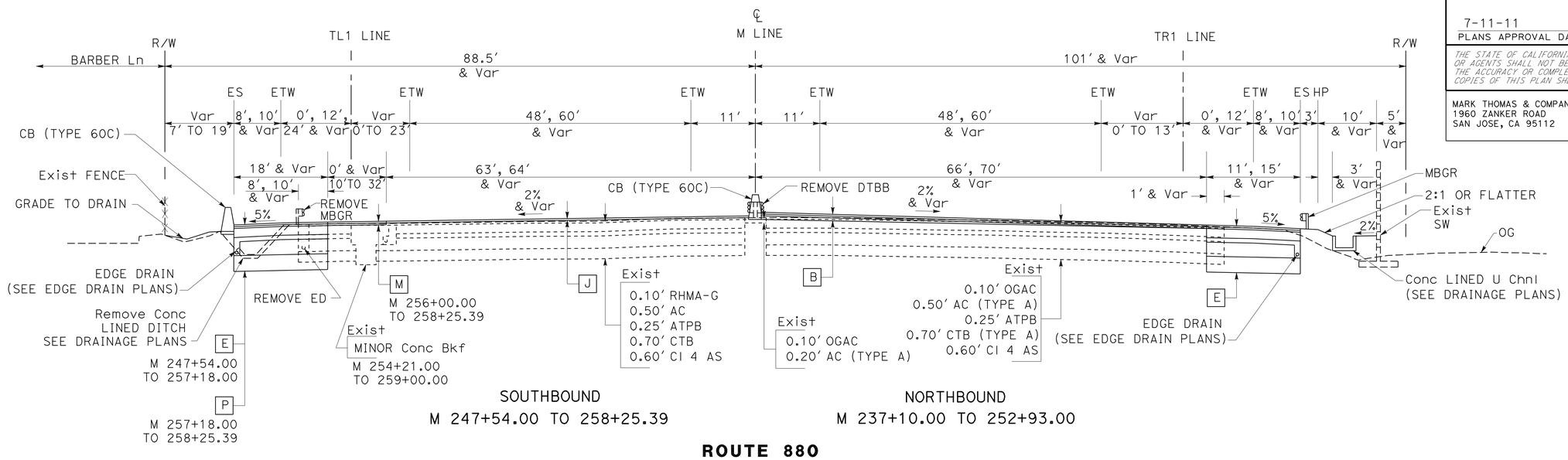

SOUTHBOUND
M 247+54.00 TO 258+25.39

NORTHBOUND
M 237+10.00 TO 252+93.00

ROUTE 880

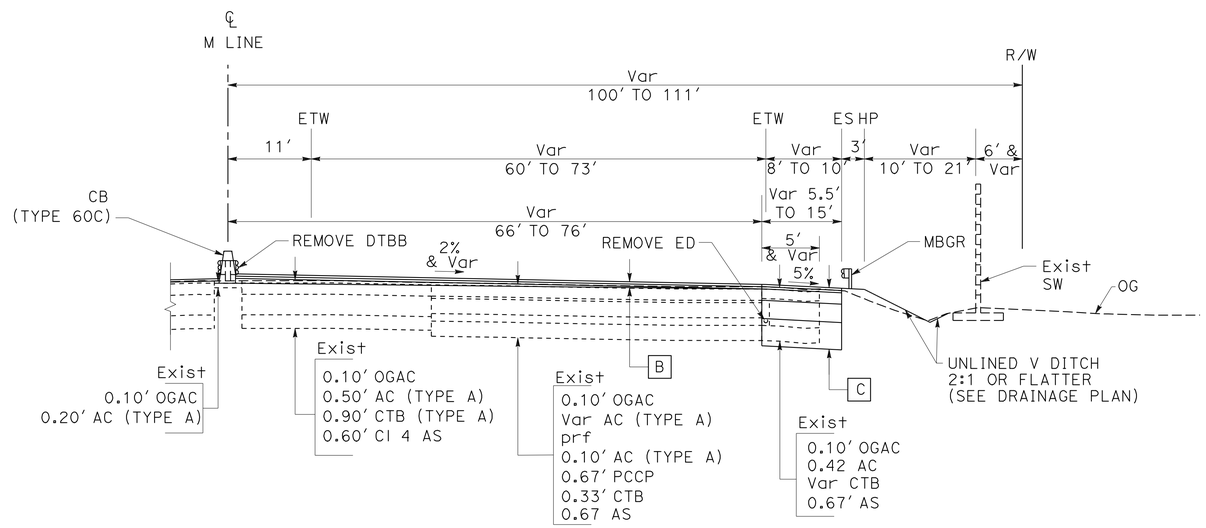

NORTHBOUND
M 231+60.00 TO 237+10.00
ROUTE 880

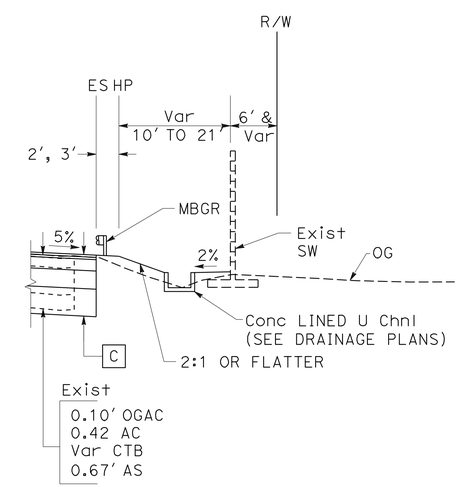

NORTHBOUND
M 234+00.00 TO 237+10.00
ROUTE 880

FOR NOTES, ABBREVIATIONS AND LEGEND, SEE SHEET X-1

TYPICAL CROSS SECTIONS
NO SCALE

X-12

STATE OF CALIFORNIA - DEPARTMENT OF TRANSPORTATION
Caltrans

CONSULTANT FUNCTIONAL SUPERVISOR: RICHARD TANAKA
CALCULATED-DESIGNED BY: RAFAEL LOPEZ
CHECKED BY: MARILOU AYUPAN
REVISED BY
DATE REVISED

LAST REVISION 11-17-10
DATE PLOTTED => 08-JUL-2011
TIME PLOTTED => 14:36

Dist	COUNTY	ROUTE	POST MILES TOTAL PROJECT	SHEET No.	TOTAL SHEETS
04	SCI	880	4.1/8.7	14	710

REGISTERED CIVIL ENGINEER 03/31/11 DATE

7-11-11
PLANS APPROVAL DATE

REGISTERED PROFESSIONAL ENGINEER
RICHARD K. TANAKA
No. 23233
Exp. 12/31/11
CIVIL
STATE OF CALIFORNIA

THE STATE OF CALIFORNIA OR ITS OFFICERS OR AGENTS SHALL NOT BE RESPONSIBLE FOR THE ACCURACY OR COMPLETENESS OF SCANNED COPIES OF THIS PLAN SHEET.

MARK THOMAS & COMPANY, INC.
1960 ZANKER ROAD
SAN JOSE, CA 95112

SANTA CLARA VALLEY TRANSPORTATION AUTHORITY
3331 NORTH FIRST STREET, BLDG B
SAN JOSE, CA 95134

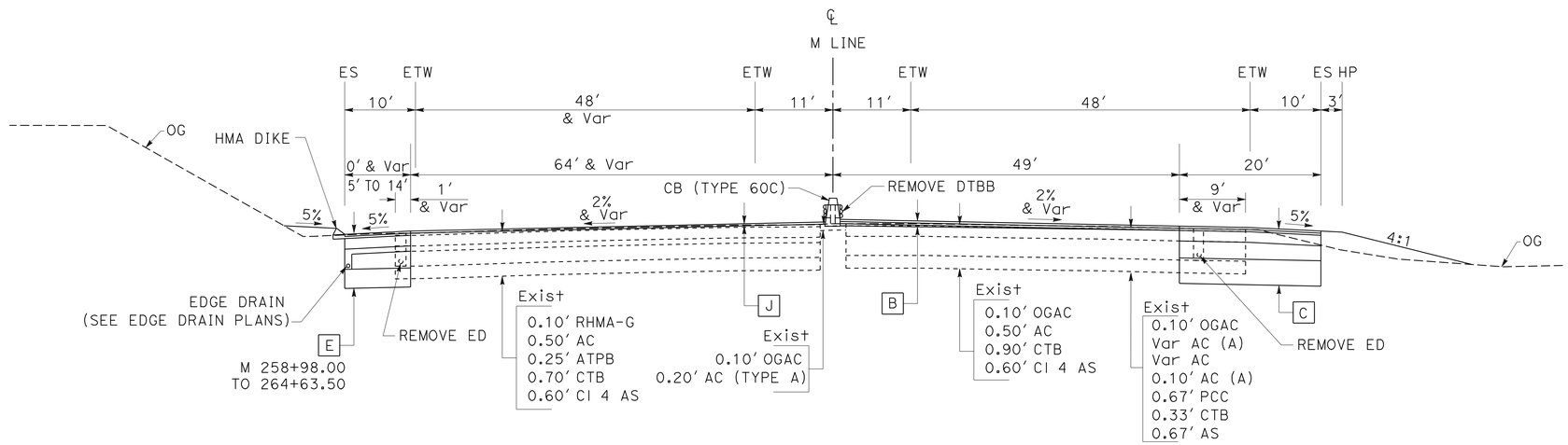

SOUTHBOUND
M 258+25.39 TO 264+63.50

NORTHBOUND
M 254+14.38 TO 263+89.58

ROUTE 880

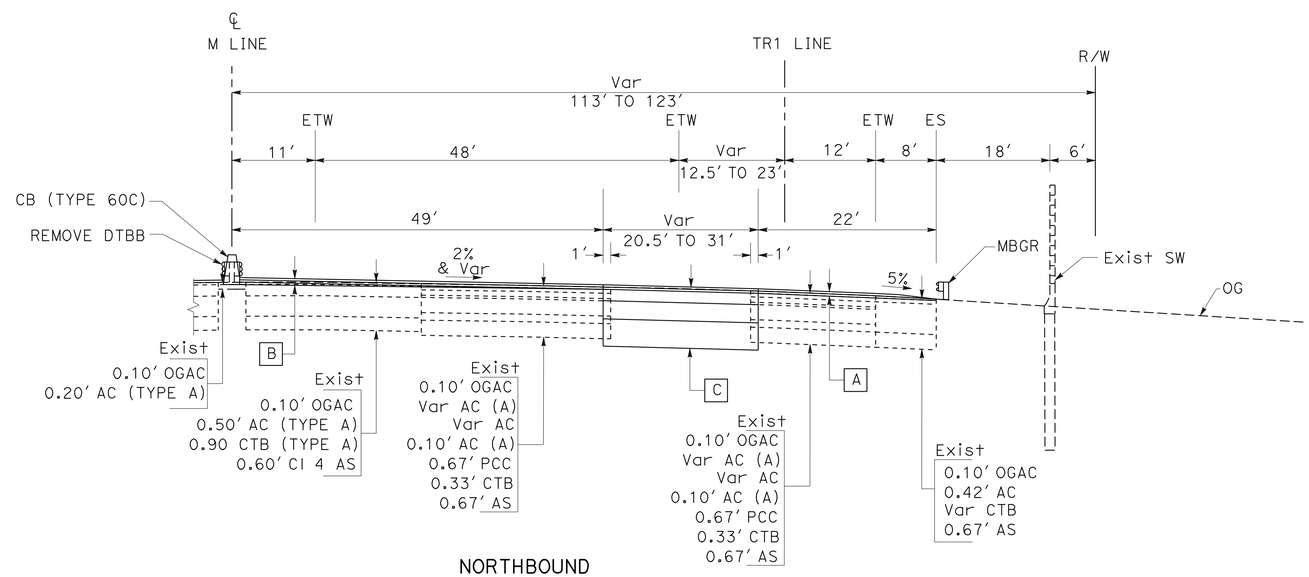

NORTHBOUND
M 252+93.00 TO 254+14.38
ROUTE 880

FOR NOTES, ABBREVIATIONS AND LEGEND, SEE SHEET X-1

TYPICAL CROSS SECTIONS
NO SCALE

X-13

STATE OF CALIFORNIA - DEPARTMENT OF TRANSPORTATION
Caltrans

CONSULTANT FUNCTIONAL SUPERVISOR: RICHARD TANAKA
CALCULATED-DESIGNED BY: RAFAEL LOPEZ
CHECKED BY: MARILOU AYUPAN
REVISED BY
DATE REVISED

LAST REVISION 03-31-11
DATE PLOTTED => 08-JUL-2011
TIME PLOTTED => 14:36

Dist	COUNTY	ROUTE	POST MILES TOTAL PROJECT	SHEET No.	TOTAL SHEETS
04	SCI	880	4.1/8.7	15	710

REGISTERED CIVIL ENGINEER 03/31/11 DATE

7-11-11
PLANS APPROVAL DATE

REGISTERED PROFESSIONAL ENGINEER RICHARD K. TANAKA No. 23233 Exp. 12/31/11 CIVIL STATE OF CALIFORNIA

THE STATE OF CALIFORNIA OR ITS OFFICERS OR AGENTS SHALL NOT BE RESPONSIBLE FOR THE ACCURACY OR COMPLETENESS OF SCANNED COPIES OF THIS PLAN SHEET.

MARK THOMAS & COMPANY, INC.
1960 ZANKER ROAD
SAN JOSE, CA 95112

SANTA CLARA VALLEY TRANSPORTATION AUTHORITY
3331 NORTH FIRST STREET, BLDG B
SAN JOSE, CA 95134

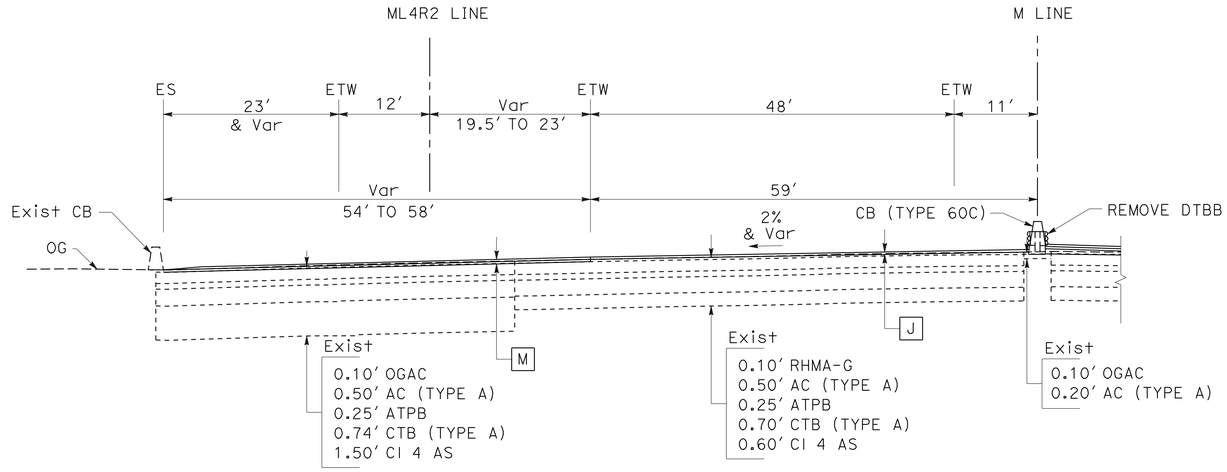

SOUTHBOUND
M 274+84.00 TO 276+62.00
ROUTE 880

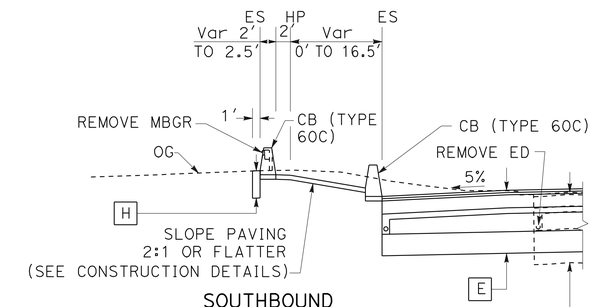

SOUTHBOUND
M 272+19.64 TO 274+59.19
ROUTE 880

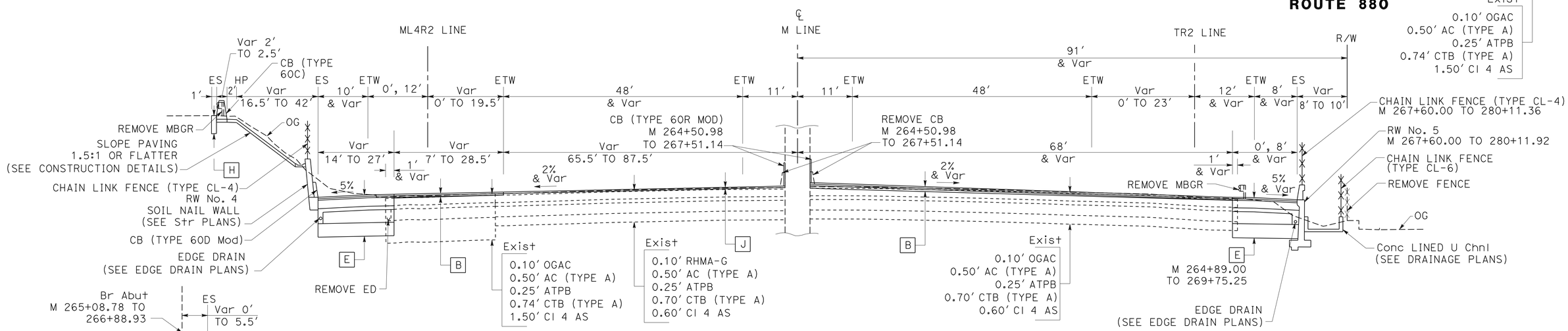

SOUTHBOUND
M 264+63.50 TO 274+84.00

NORTHBOUND
M 263+89.58 TO 269+75.25

ROUTE 880

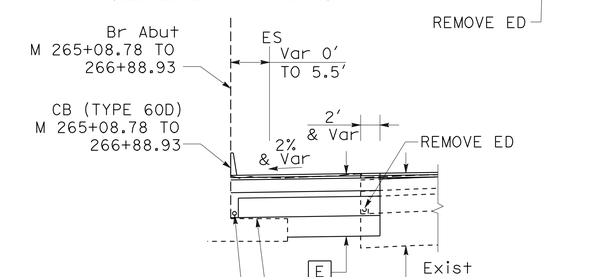

SOUTHBOUND
M 264+33.00 TO 266+88.93
ROUTE 880

FOR NOTES, ABBREVIATIONS AND LEGEND, SEE SHEET X-1

TYPICAL CROSS SECTIONS
NO SCALE

X-14

STATE OF CALIFORNIA - DEPARTMENT OF TRANSPORTATION
Caltrans

CONSULTANT FUNCTIONAL SUPERVISOR: RICHARD TANAKA
CALCULATED-DESIGNED BY: RAFAEL LOPEZ
CHECKED BY: MARILOU AYUPAN
REVISED BY
DATE REVISED

LAST REVISION 03-31-11
DATE PLOTTED => 08-JUL-2011
TIME PLOTTED => 14:36

Dist	COUNTY	ROUTE	POST MILES TOTAL PROJECT	SHEET No.	TOTAL SHEETS
04	SCI	880	4.1/8.7	16	710

REGISTERED CIVIL ENGINEER 03/31/11 DATE

7-11-11
PLANS APPROVAL DATE

REGISTERED PROFESSIONAL ENGINEER
RICHARD K. TANAKA
No. 23233
Exp. 12/31/11
CIVIL
STATE OF CALIFORNIA

THE STATE OF CALIFORNIA OR ITS OFFICERS OR AGENTS SHALL NOT BE RESPONSIBLE FOR THE ACCURACY OR COMPLETENESS OF SCANNED COPIES OF THIS PLAN SHEET.

MARK THOMAS & COMPANY, INC.
1960 ZANKER ROAD
SAN JOSE, CA 95112

SANTA CLARA VALLEY
TRANSPORTATION AUTHORITY
3331 NORTH FIRST STREET, BLDG B
SAN JOSE, CA 95134

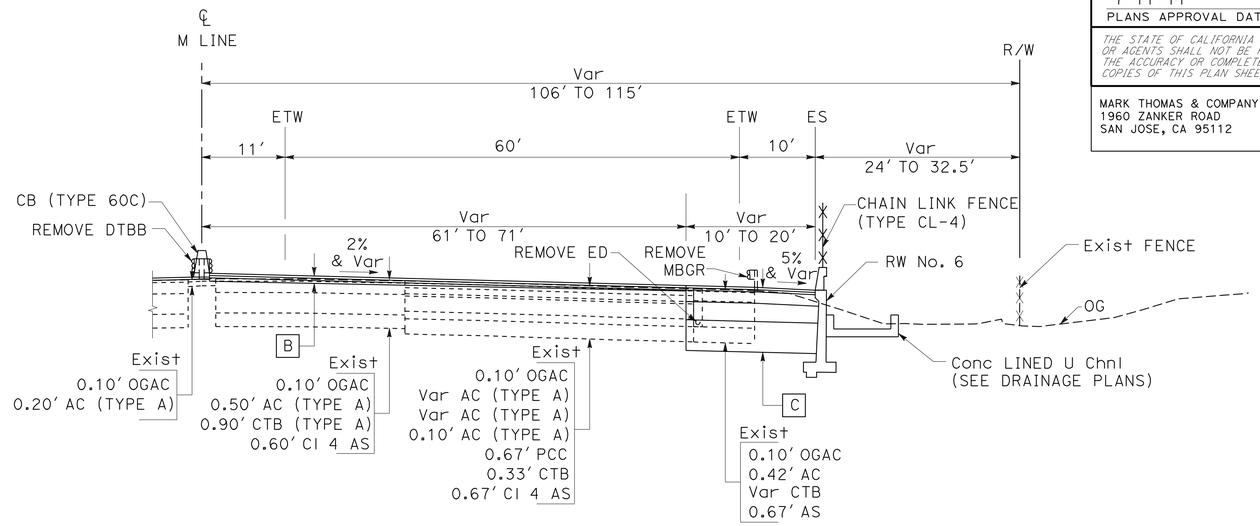

NORTHBOUND
M 284+36.00 TO 285+54.00
ROUTE 880

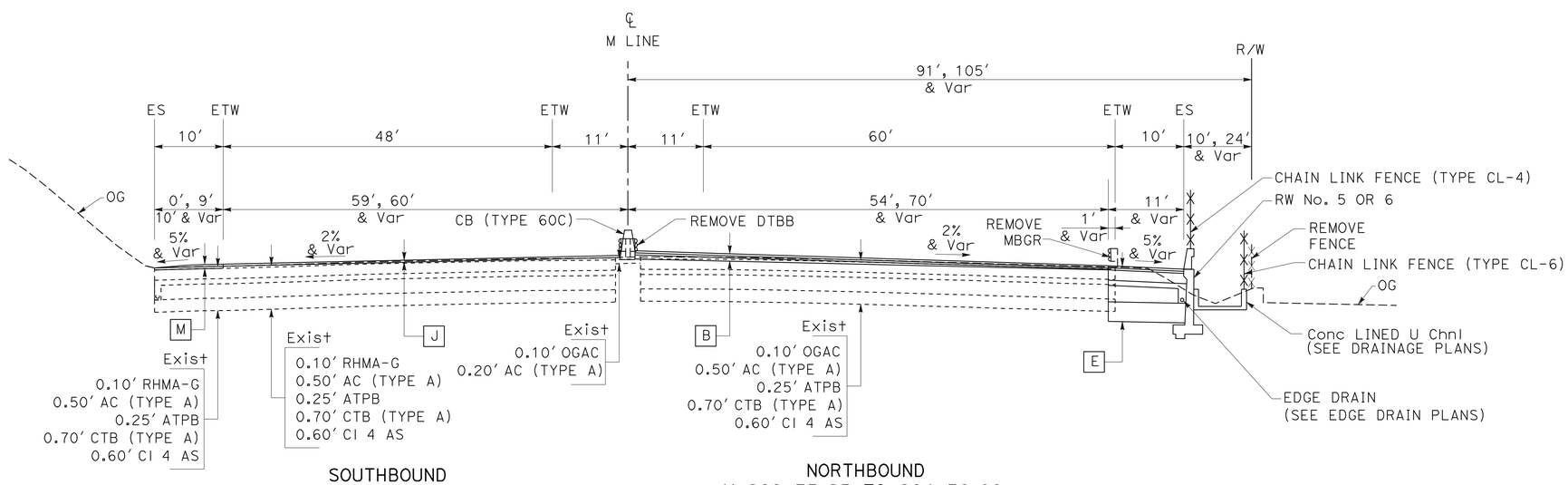

SOUTHBOUND
M 276+62.00 TO 291+04.13

NORTHBOUND
M 269+75.25 TO 284+36.00

ROUTE 880

FOR NOTES, ABBREVIATIONS
AND LEGEND, SEE SHEET X-1

TYPICAL CROSS SECTIONS
NO SCALE

X-15

STATE OF CALIFORNIA - DEPARTMENT OF TRANSPORTATION
Caltrans

CONSULTANT FUNCTIONAL SUPERVISOR: RICHARD TANAKA
CALCULATED-DESIGNED BY: RAFAEL LOPEZ
CHECKED BY: MARILOU AYUPAN
REVISED BY
DATE REVISED

LAST REVISION 03-31-11
DATE PLOTTED => 08-JUL-2011
TIME PLOTTED => 14:36

Dist	COUNTY	ROUTE	POST MILES TOTAL PROJECT	SHEET No.	TOTAL SHEETS
04	SCI	880	4.1/8.7	17	710

REGISTERED CIVIL ENGINEER 03/31/11 DATE

7-11-11
PLANS APPROVAL DATE

REGISTERED PROFESSIONAL ENGINEER RICHARD K. TANAKA No. 23233 Exp. 12/31/11 CIVIL STATE OF CALIFORNIA

THE STATE OF CALIFORNIA OR ITS OFFICERS OR AGENTS SHALL NOT BE RESPONSIBLE FOR THE ACCURACY OR COMPLETENESS OF SCANNED COPIES OF THIS PLAN SHEET.

MARK THOMAS & COMPANY, INC.
1960 ZANKER ROAD
SAN JOSE, CA 95112

SANTA CLARA VALLEY TRANSPORTATION AUTHORITY
3331 NORTH FIRST STREET, BLDG B
SAN JOSE, CA 95134

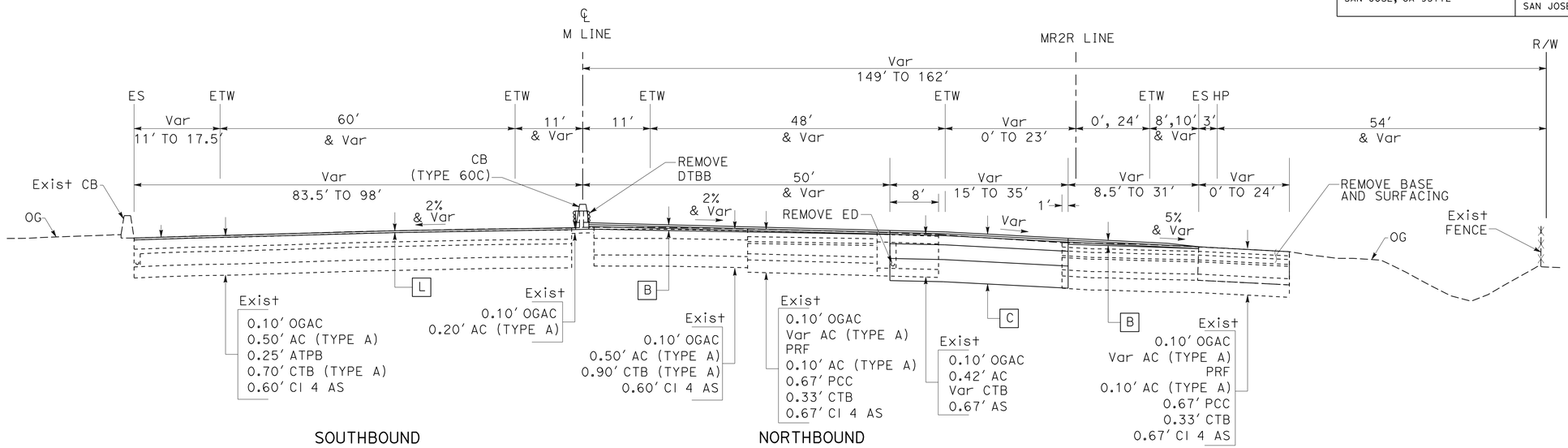

SOUTHBOUND
M 299+06.00 TO 306+05.04

NORTHBOUND
M 287+50 TO 292+30.13

ROUTE 880

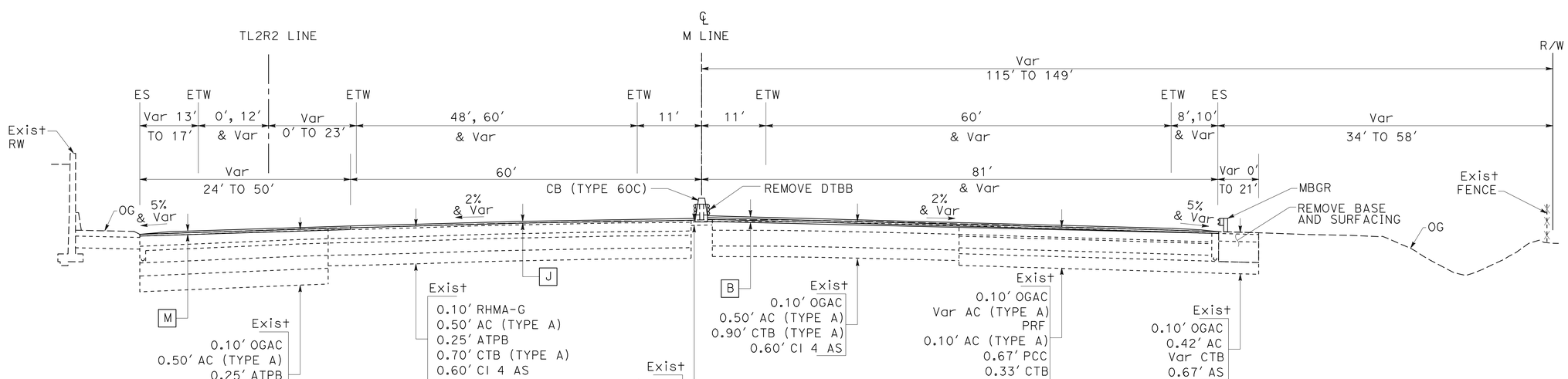

SOUTHBOUND
M 291+04.13 TO 299+06.00

NORTHBOUND
M 285+54.00 TO 287+50

ROUTE 880

FOR NOTES, ABBREVIATIONS AND LEGEND, SEE SHEET X-1

TYPICAL CROSS SECTIONS

NO SCALE

X-16

STATE OF CALIFORNIA - DEPARTMENT OF TRANSPORTATION
Caltrans

CONSULTANT FUNCTIONAL SUPERVISOR: RICHARD TANAKA
CALCULATED-DESIGNED BY: RAFAEL LOPEZ
CHECKED BY: MARILOU AYUPAN
REVISED BY
DATE REVISED

LAST REVISION 03-31-11
DATE PLOTTED => 08-JUL-2011
TIME PLOTTED => 14:36

Dist	COUNTY	ROUTE	POST MILES TOTAL PROJECT	SHEET No.	TOTAL SHEETS
04	SCI	880	4.1/8.7	18	710

REGISTERED CIVIL ENGINEER 10/15/10 DATE

7-11-11
PLANS APPROVAL DATE

REGISTERED PROFESSIONAL ENGINEER
RICHARD K. TANAKA
No. 23233
Exp. 12/31/11
CIVIL
STATE OF CALIFORNIA

THE STATE OF CALIFORNIA OR ITS OFFICERS OR AGENTS SHALL NOT BE RESPONSIBLE FOR THE ACCURACY OR COMPLETENESS OF SCANNED COPIES OF THIS PLAN SHEET.

MARK THOMAS & COMPANY, INC.
1960 ZANKER ROAD
SAN JOSE, CA 95112

SANTA CLARA VALLEY
TRANSPORTATION AUTHORITY
3331 NORTH FIRST STREET, BLDG B
SAN JOSE, CA 95134

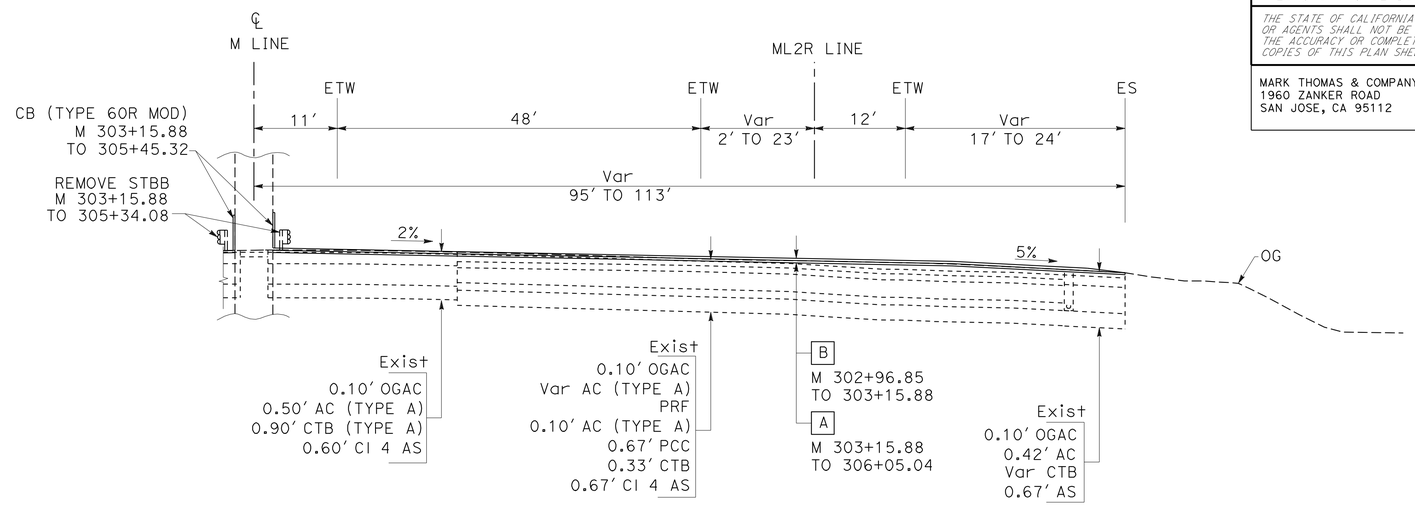

NORTHBOUND
M 302+96.85 TO 306+05.04
ROUTE 880

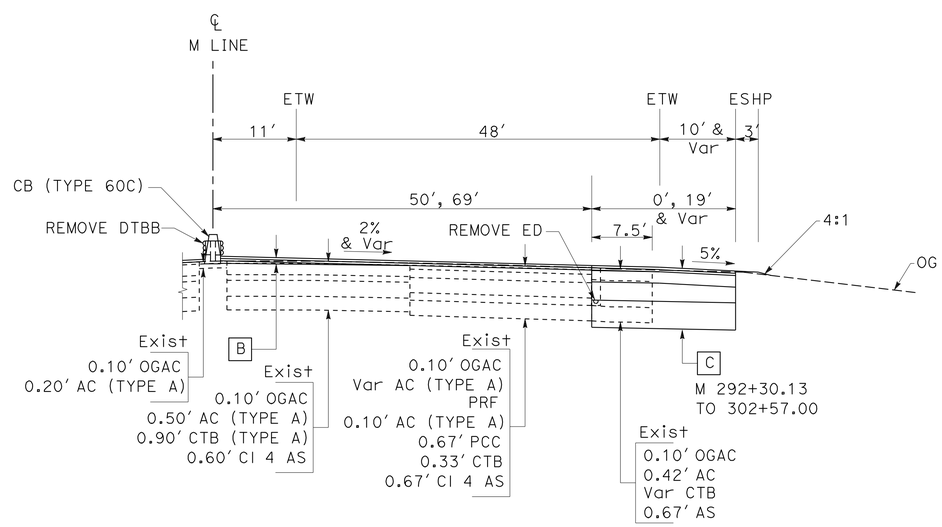

NORTHBOUND
M 292+30.13 TO 302+96.85
ROUTE 880

FOR NOTES, ABBREVIATIONS AND LEGEND, SEE SHEET X-1

TYPICAL CROSS SECTIONS
NO SCALE

X-17

STATE OF CALIFORNIA - DEPARTMENT OF TRANSPORTATION
Caltrans

CONSULTANT FUNCTIONAL SUPERVISOR: RICHARD TANAKA
CALCULATED-DESIGNED BY: RAFAEL LOPEZ
CHECKED BY: MARILOU AYUPAN
REVISED BY
DATE REVISED

LAST REVISION 11-17-10
DATE PLOTTED => 08-JUL-2011
TIME PLOTTED => 14:36

Dist	COUNTY	ROUTE	POST MILES TOTAL PROJECT	SHEET No.	TOTAL SHEETS
04	SCI	880	4.1/8.7	19	710

REGISTERED CIVIL ENGINEER 03/31/11 DATE

7-11-11
PLANS APPROVAL DATE

REGISTERED PROFESSIONAL ENGINEER RICHARD K. TANAKA No. 23233 Exp. 12/31/11 CIVIL STATE OF CALIFORNIA

THE STATE OF CALIFORNIA OR ITS OFFICERS OR AGENTS SHALL NOT BE RESPONSIBLE FOR THE ACCURACY OR COMPLETENESS OF SCANNED COPIES OF THIS PLAN SHEET.

MARK THOMAS & COMPANY, INC.
1960 ZANKER ROAD
SAN JOSE, CA 95112

SANTA CLARA VALLEY TRANSPORTATION AUTHORITY
3331 NORTH FIRST STREET, BLDG B
SAN JOSE, CA 95134

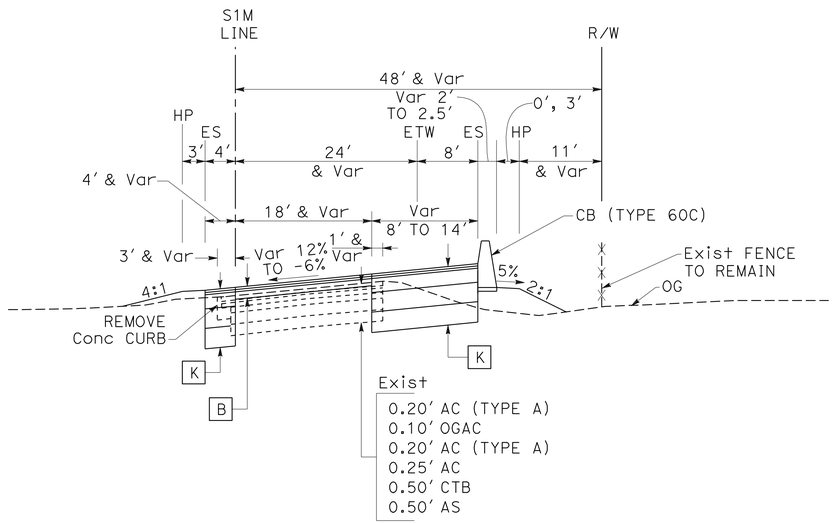

OLD BAYSHORE Hwy NB ON RAMP
S1M 388+17.70 TO 394+70.21

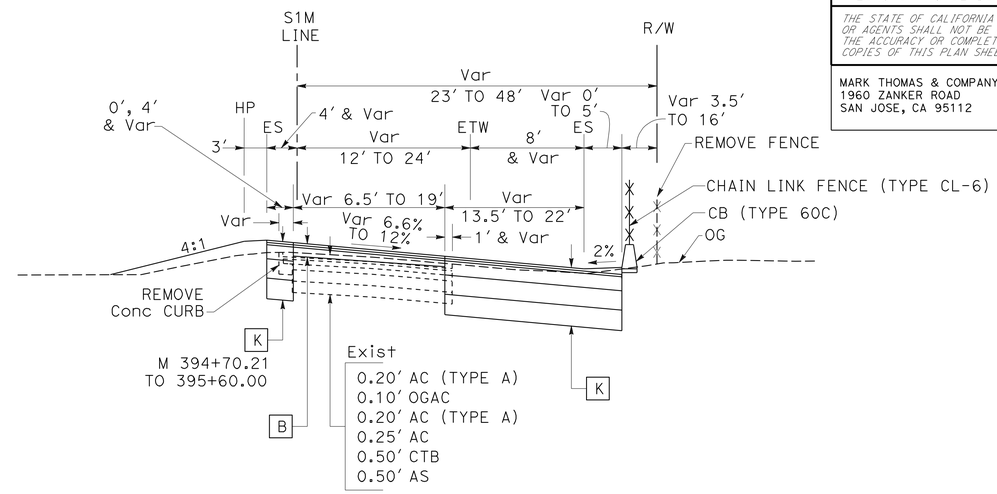

OLD BAYSHORE Hwy NB ON-RAMP
S1M 394+70.21 TO 398+56.10

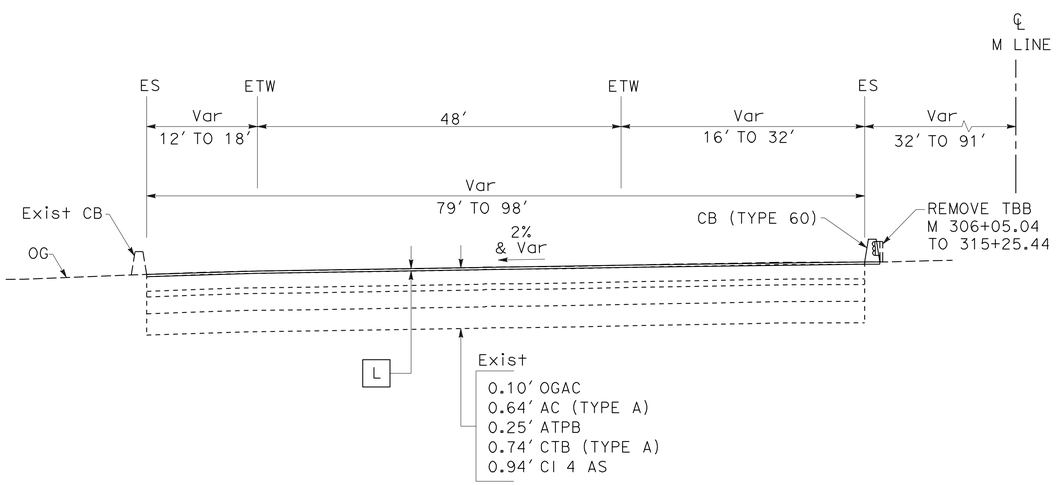

SOUTHBOUND
M 306+05.04 TO 315+25.00
ROUTE 880

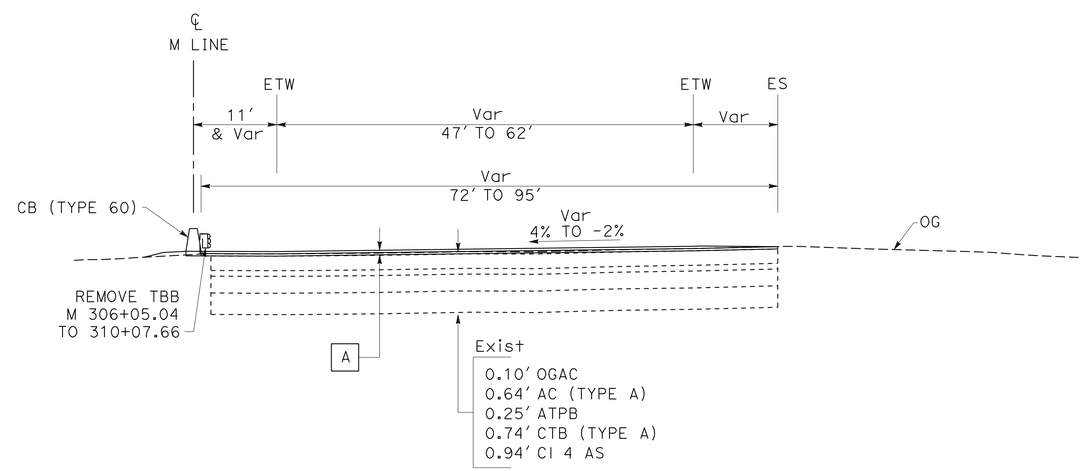

NORTHBOUND
M 306+05.04 TO 321+00.00
ROUTE 880

TYPICAL CROSS SECTIONS
NO SCALE

X-18

FOR NOTES, ABBREVIATIONS AND LEGEND, SEE SHEET X-1

STATE OF CALIFORNIA - DEPARTMENT OF TRANSPORTATION
Caltrans

CONSULTANT FUNCTIONAL SUPERVISOR: RICHARD TANAKA
CALCULATED-DESIGNED BY: RAFAEL LOPEZ
CHECKED BY: MARILOU AYUPAN
REVISED BY
DATE REVISED

LAST REVISION 03-31-11
DATE PLOTTED => 08-JUL-2011
TIME PLOTTED => 14:37

Dist	COUNTY	ROUTE	POST MILES TOTAL PROJECT	SHEET No.	TOTAL SHEETS
04	SCI	880	4.1/8.7	20	710

REGISTERED CIVIL ENGINEER 03/31/11 DATE

7-11-11
PLANS APPROVAL DATE

REGISTERED PROFESSIONAL ENGINEER
RICHARD K. TANAKA
No. 23233
Exp. 12/31/11
CIVIL
STATE OF CALIFORNIA

THE STATE OF CALIFORNIA OR ITS OFFICERS OR AGENTS SHALL NOT BE RESPONSIBLE FOR THE ACCURACY OR COMPLETENESS OF SCANNED COPIES OF THIS PLAN SHEET.

MARK THOMAS & COMPANY, INC.
1960 ZANKER ROAD
SAN JOSE, CA 95112

SANTA CLARA VALLEY TRANSPORTATION AUTHORITY
3331 NORTH FIRST STREET, BLDG B
SAN JOSE, CA 95134

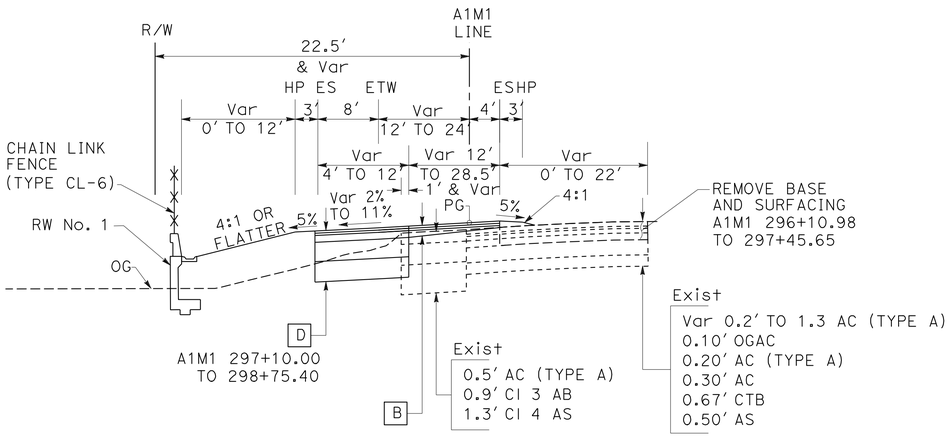

OLD BAYSHORE Hwy SB OFF-RAMP
A1M1 296+49.00 TO 298+75.40

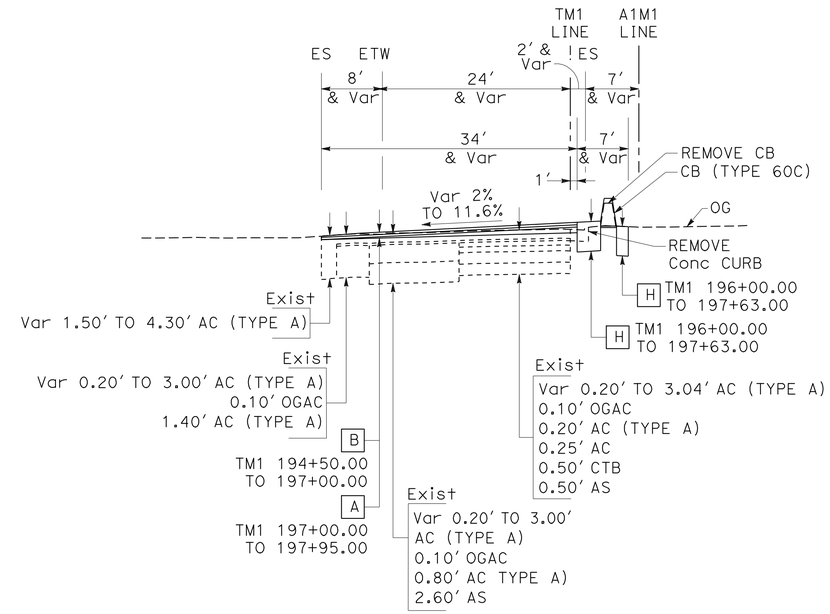

OLD BAYSHORE Hwy SB ON-RAMP
TM1 194+50.00 TO 197+95.00

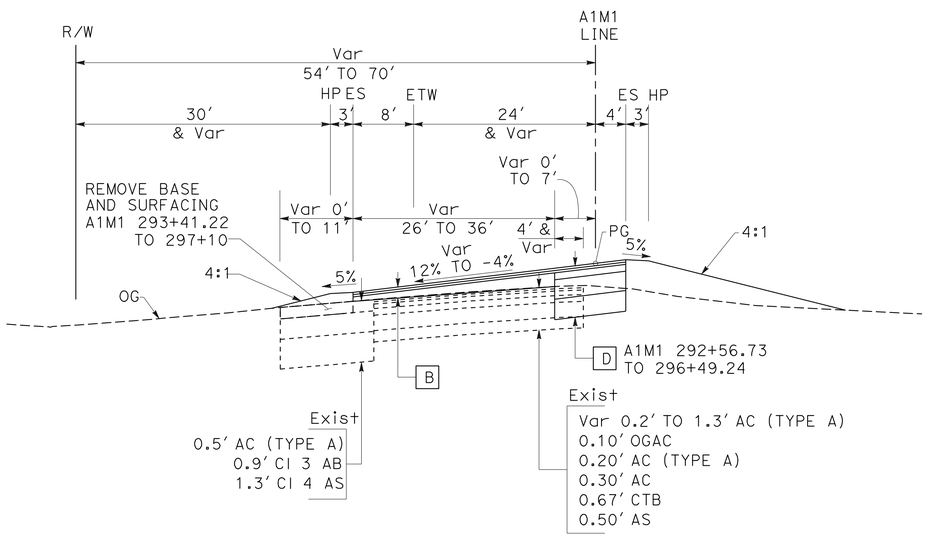

OLD BAYSHORE Hwy SB OFF-RAMP
A1M1 291+30.50 TO 296+49.00

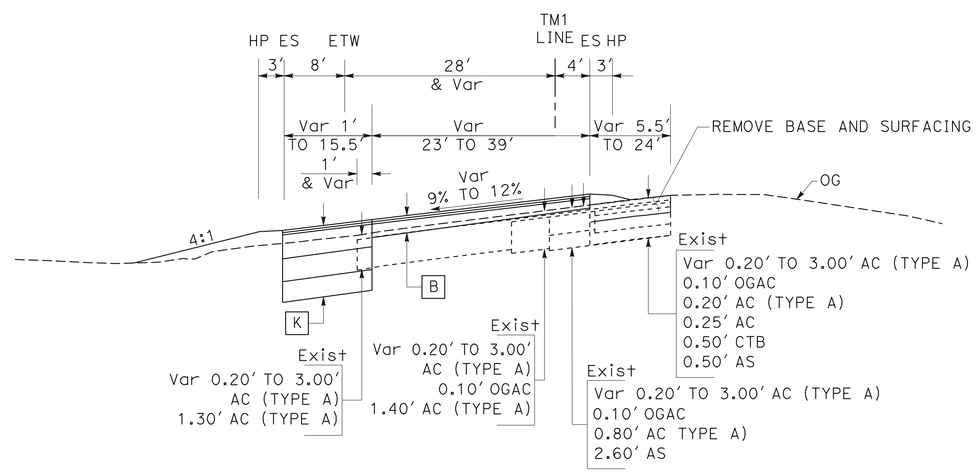

OLD BAYSHORE Hwy SB ON-RAMP
TM1 191+63.70 TO 194+50.00

FOR NOTES, ABBREVIATIONS AND LEGEND, SEE SHEET X-1

TYPICAL CROSS SECTIONS
NO SCALE

X-19

STATE OF CALIFORNIA - DEPARTMENT OF TRANSPORTATION
Caltrans

CONSULTANT FUNCTIONAL SUPERVISOR: RICHARD TANAKA
CALCULATED-DESIGNED BY: RAFAEL LOPEZ
CHECKED BY: MARILOU AYUPAN
REVISED BY
DATE REVISED

LAST REVISION 03-31-11
DATE PLOTTED => 08-JUL-2011
TIME PLOTTED => 14:37

Dist	COUNTY	ROUTE	POST MILES TOTAL PROJECT	SHEET No.	TOTAL SHEETS
04	SCI	880	4.1/8.7	21	710

REGISTERED CIVIL ENGINEER 03/31/11 DATE

7-11-11
PLANS APPROVAL DATE

REGISTERED PROFESSIONAL ENGINEER RICHARD K. TANAKA No. 23233 Exp. 12/31/11 CIVIL STATE OF CALIFORNIA

THE STATE OF CALIFORNIA OR ITS OFFICERS OR AGENTS SHALL NOT BE RESPONSIBLE FOR THE ACCURACY OR COMPLETENESS OF SCANNED COPIES OF THIS PLAN SHEET.

MARK THOMAS & COMPANY, INC.
1960 ZANKER ROAD
SAN JOSE, CA 95112

SANTA CLARA VALLEY TRANSPORTATION AUTHORITY
3331 NORTH FIRST STREET, BLDG B
SAN JOSE, CA 95134

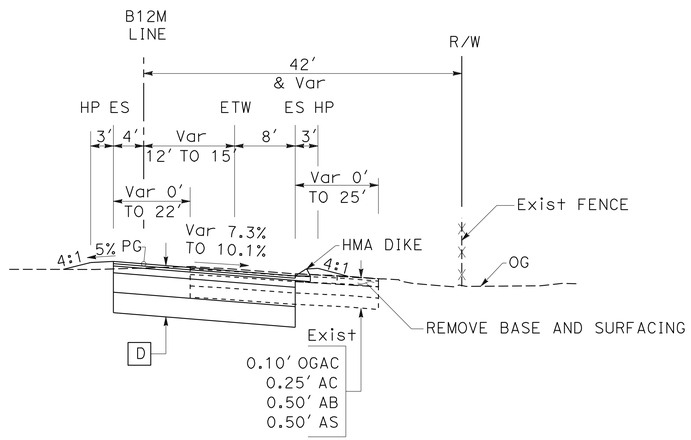

BROKAW ROAD NB OFF-RAMP
B12M 432+13.00 TO 432+87.10

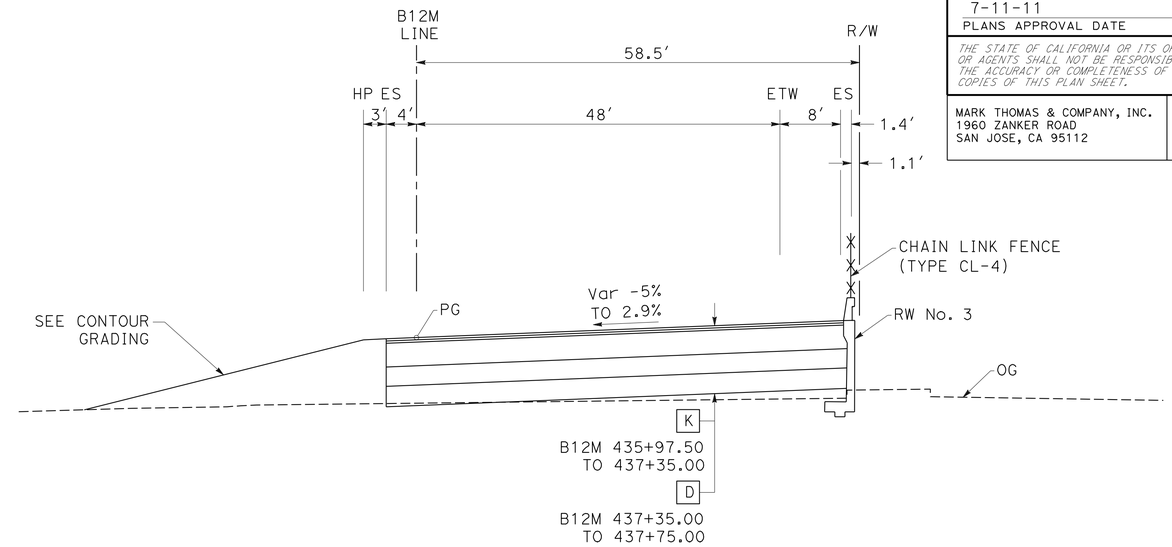

BROKAW ROAD NB OFF-RAMP
B12M 435+97.50 TO 437+75.00

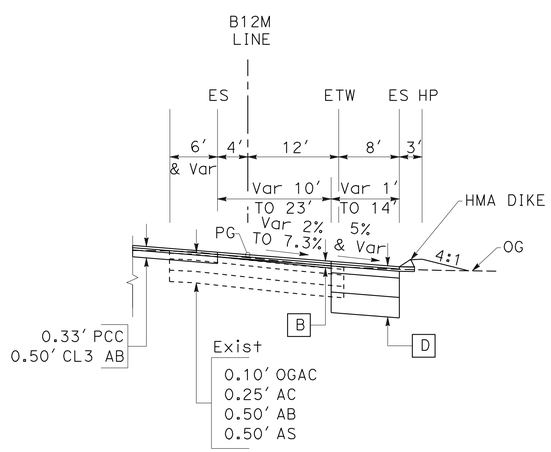

BROKAW ROAD NB OFF-RAMP
B12M 430+83.50 TO 432+13.00

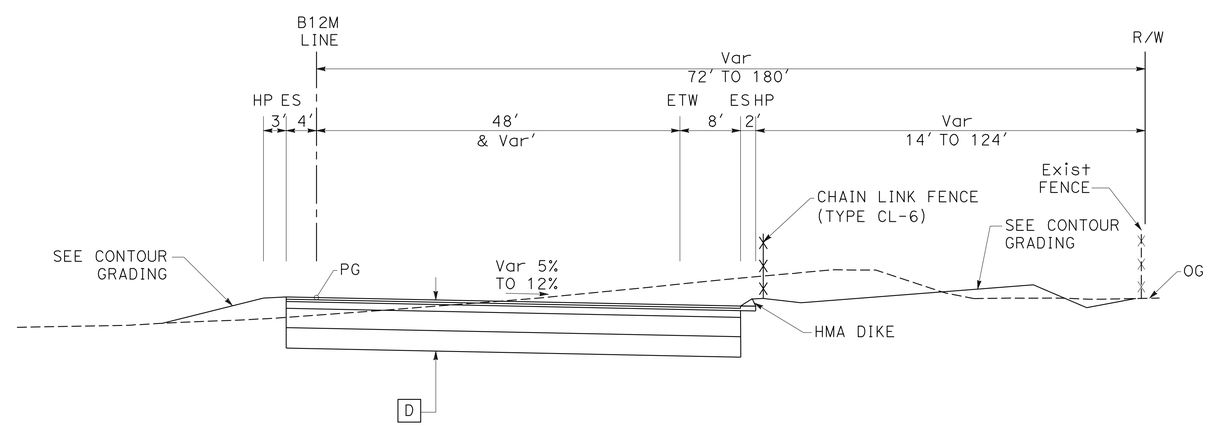

BROKAW ROAD NB OFF-RAMP
B12M 432+87.10 TO 435+97.50

TYPICAL CROSS SECTIONS
NO SCALE

X-20

FOR NOTES, ABBREVIATIONS AND LEGEND, SEE SHEET X-1

STATE OF CALIFORNIA - DEPARTMENT OF TRANSPORTATION
Caltrans

CONSULTANT FUNCTIONAL SUPERVISOR: RICHARD TANAKA
CALCULATED-DESIGNED BY: RAFAEL LOPEZ
CHECKED BY: MARILOU AYUPAN
REVISED BY
DATE REVISED

LAST REVISION 03-31-11
DATE PLOTTED => 08-JUL-2011
TIME PLOTTED => 12:49

Dist	COUNTY	ROUTE	POST MILES TOTAL PROJECT	SHEET No.	TOTAL SHEETS
04	SCI	880	4.1/8.7	22	710

REGISTERED CIVIL ENGINEER 03/31/11 DATE

7-11-11
PLANS APPROVAL DATE

REGISTERED PROFESSIONAL ENGINEER RICHARD K. TANAKA No. 23233 Exp. 12/31/11 CIVIL STATE OF CALIFORNIA

THE STATE OF CALIFORNIA OR ITS OFFICERS OR AGENTS SHALL NOT BE RESPONSIBLE FOR THE ACCURACY OR COMPLETENESS OF SCANNED COPIES OF THIS PLAN SHEET.

MARK THOMAS & COMPANY, INC.
1960 ZANKER ROAD
SAN JOSE, CA 95112

SANTA CLARA VALLEY TRANSPORTATION AUTHORITY
3331 NORTH FIRST STREET, BLDG B
SAN JOSE, CA 95134

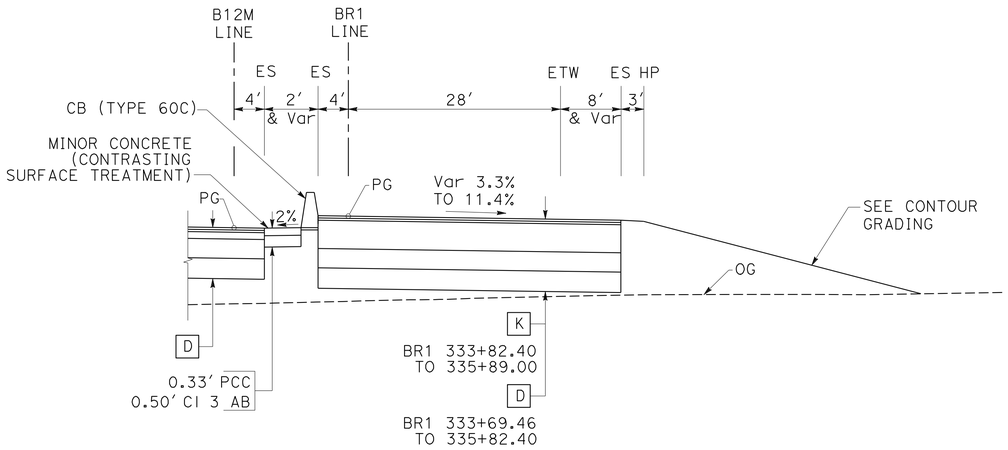

BROKAW RD NB ON-RAMP
BR1 333+69.46 TO 335+61.00

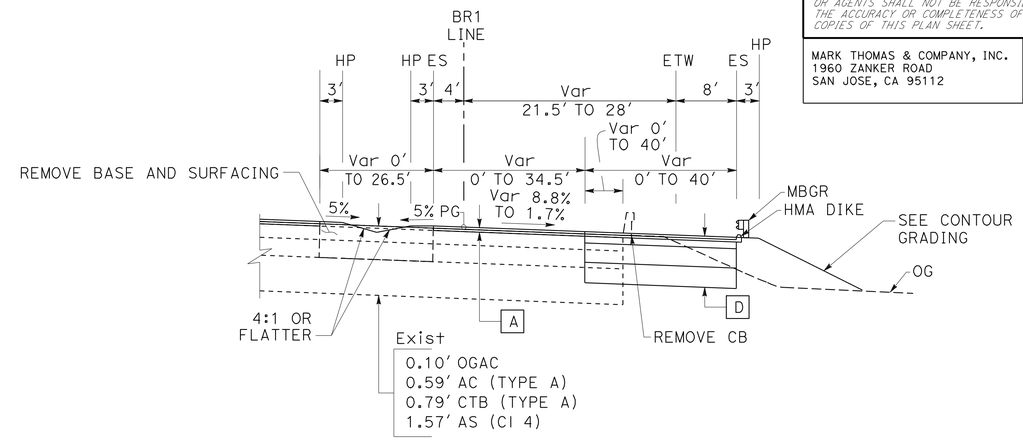

BROKAW ROAD NB ON-RAMP
BR1 338+27.92 TO 340+33.21

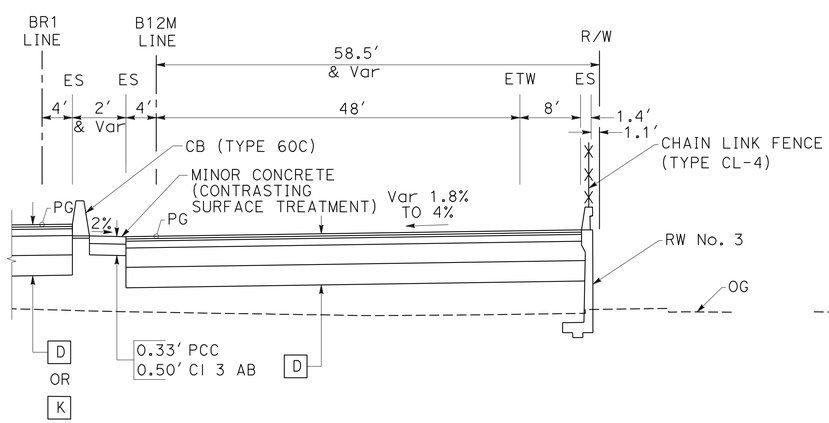

BROKAW RD NB OFF-RAMP
B12M 437+75.00 TO 439+84.26

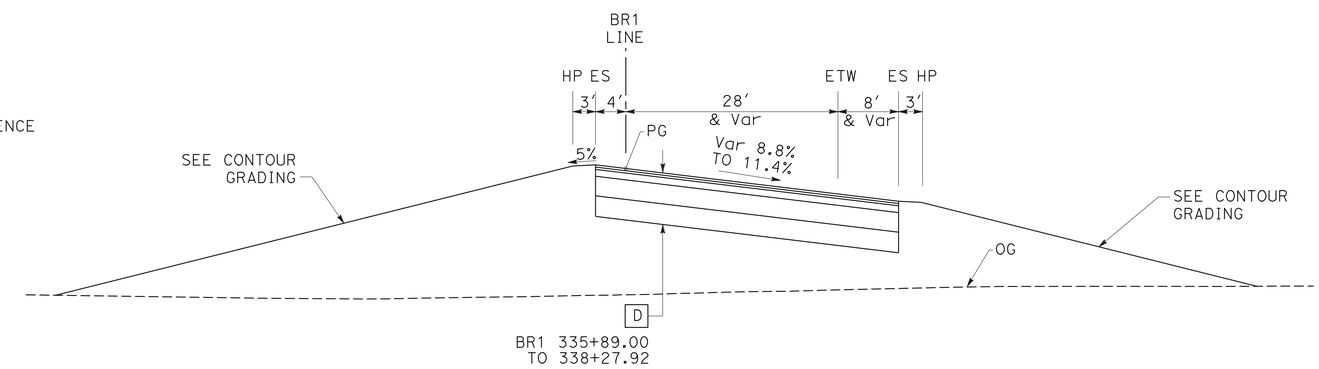

BROKAW ROAD NB ON-RAMP
BR1 335+61.00 TO 338+27.92

FOR NOTES, ABBREVIATIONS AND LEGEND, SEE SHEET X-1

TYPICAL CROSS SECTIONS
NO SCALE

X-21

STATE OF CALIFORNIA - DEPARTMENT OF TRANSPORTATION
Caltrans

CONSULTANT FUNCTIONAL SUPERVISOR: RICHARD TANAKA
CALCULATED-DESIGNED BY: MARILOU AYUPAN
CHECKED BY: RAFAEL LOPEZ
REVISED BY
DATE REVISED

LAST REVISION 03-31-11
DATE PLOTTED => 08-JUL-2011
TIME PLOTTED => 12:49

Dist	COUNTY	ROUTE	POST MILES TOTAL PROJECT	SHEET No.	TOTAL SHEETS
04	SCI	880	4.1/8.7	23	710

REGISTERED CIVIL ENGINEER 03/31/11 DATE

7-11-11
PLANS APPROVAL DATE

REGISTERED PROFESSIONAL ENGINEER RICHARD K. TANAKA No. 23233 Exp. 12/31/11 CIVIL STATE OF CALIFORNIA

THE STATE OF CALIFORNIA OR ITS OFFICERS OR AGENTS SHALL NOT BE RESPONSIBLE FOR THE ACCURACY OR COMPLETENESS OF SCANNED COPIES OF THIS PLAN SHEET.

MARK THOMAS & COMPANY, INC.
1960 ZANKER ROAD
SAN JOSE, CA 95112

SANTA CLARA VALLEY TRANSPORTATION AUTHORITY
3331 NORTH FIRST STREET, BLDG B
SAN JOSE, CA 95134

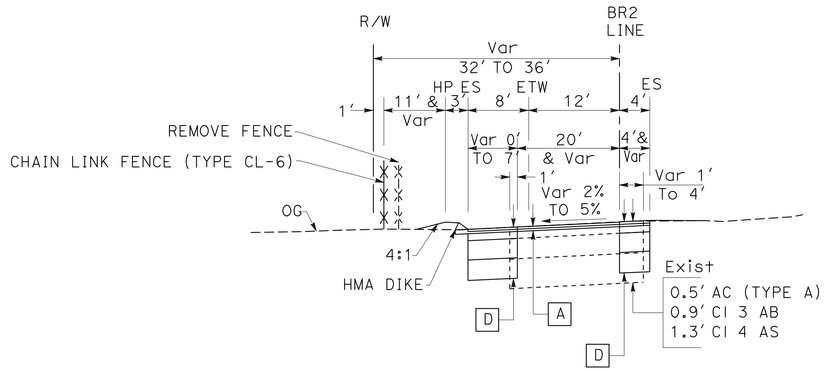

BROKAW ROAD SB OFF-RAMP
BR2 251+95.12 TO 253+98.63

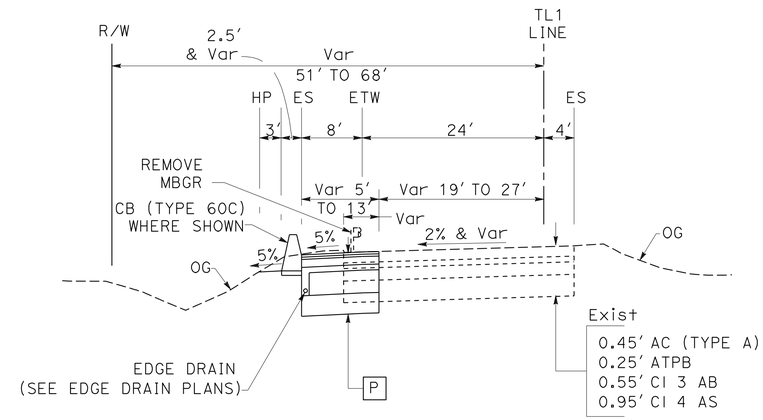

TASMAN DRIVE SB ON-RAMP
TL1 158+25.70 TO 161+66.00

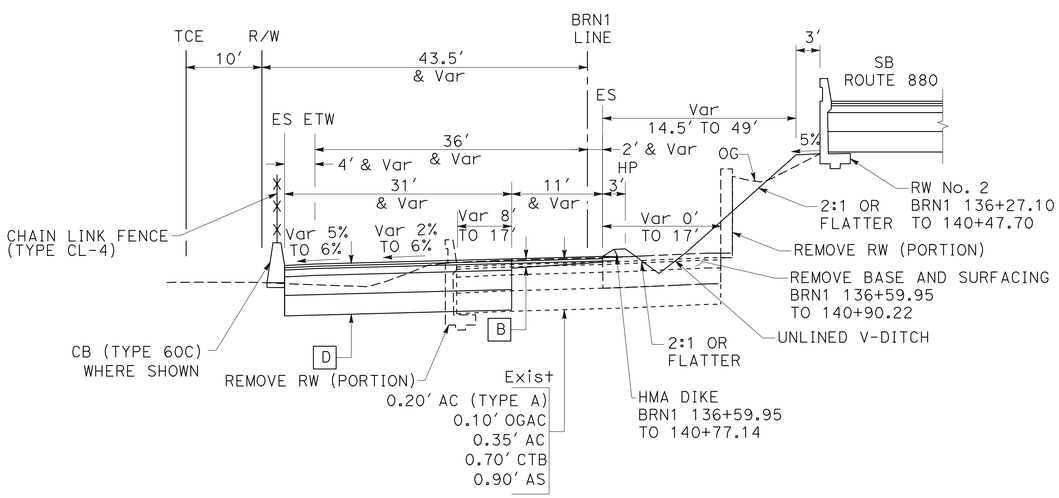

BROKAW ROAD SB ON-RAMP
BRN1 133+97.20 TO 142+28.89

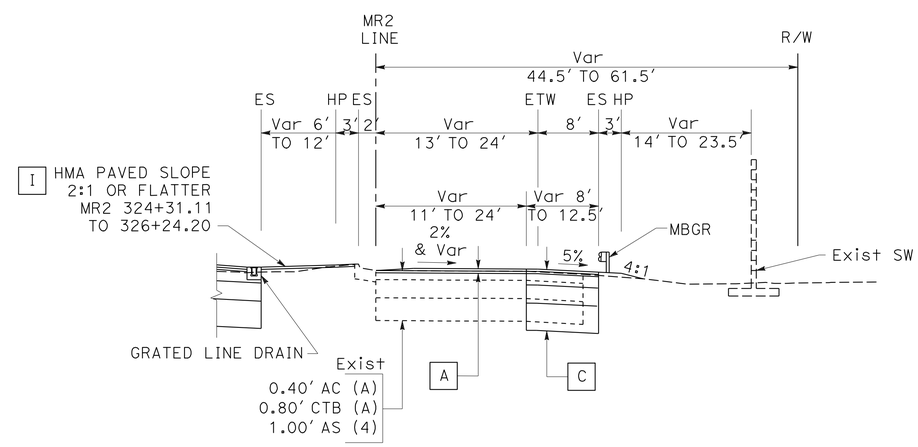

MONTAGUE Exp NB ON-RAMP
MR2 324+31.11 TO 327+54.57

TYPICAL CROSS SECTIONS
NO SCALE

X-22

FOR NOTES, ABBREVIATIONS AND LEGEND, SEE SHEET X-1

STATE OF CALIFORNIA - DEPARTMENT OF TRANSPORTATION
Caltrans

CONSULTANT FUNCTIONAL SUPERVISOR: RICHARD TANAKA
CALCULATED-DESIGNED BY: RAFAEL LOPEZ
CHECKED BY: MARILOU AYUPAN
REVISED BY
DATE REVISED

LAST REVISION 03-31-11
DATE PLOTTED => 08-JUL-2011
TIME PLOTTED => 12:49

Dist	COUNTY	ROUTE	POST MILES TOTAL PROJECT	SHEET No.	TOTAL SHEETS
04	SCI	880	4.1/8.7	24	710

REGISTERED CIVIL ENGINEER 10/15/10 DATE

7-11-11
PLANS APPROVAL DATE

REGISTERED PROFESSIONAL ENGINEER
RICHARD K. TANAKA
No. 23233
Exp. 12/31/11
CIVIL
STATE OF CALIFORNIA

THE STATE OF CALIFORNIA OR ITS OFFICERS OR AGENTS SHALL NOT BE RESPONSIBLE FOR THE ACCURACY OR COMPLETENESS OF SCANNED COPIES OF THIS PLAN SHEET.

MARK THOMAS & COMPANY, INC.
1960 ZANKER ROAD
SAN JOSE, CA 95112

SANTA CLARA VALLEY
TRANSPORTATION AUTHORITY
3331 NORTH FIRST STREET, BLDG B
SAN JOSE, CA 95134

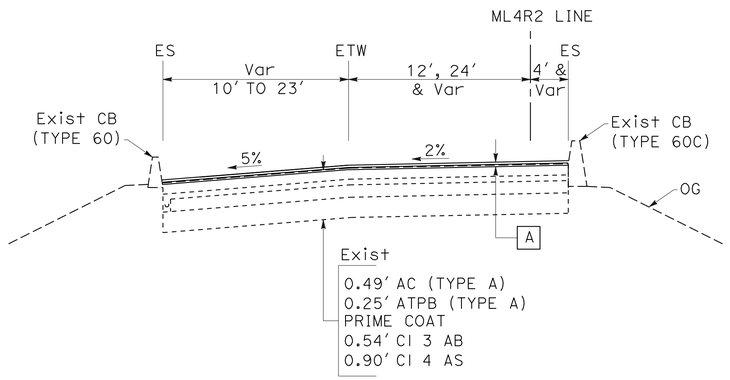

EB 237 / SB 880 CONNECTOR
ML4R2 276+62.00 TO 282+74.60

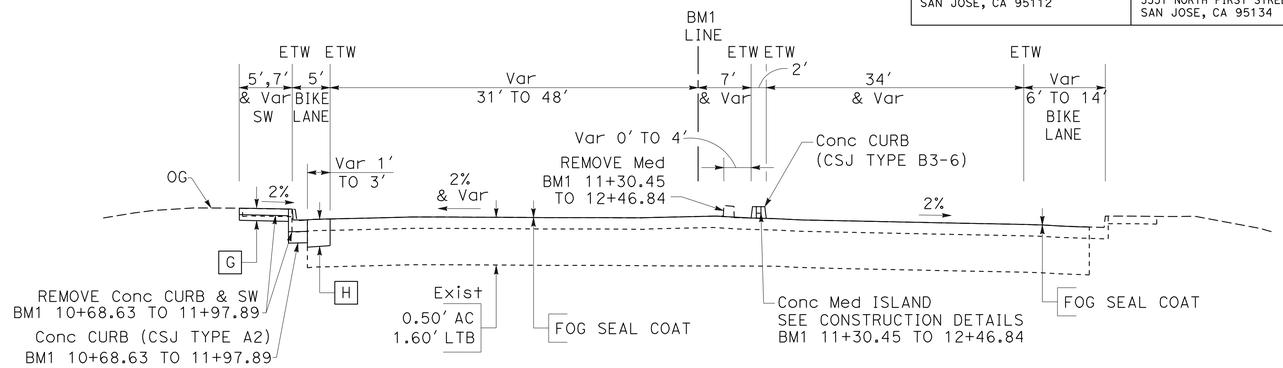

BROKAW ROAD
BM1 10+68.63 TO 12+46.84

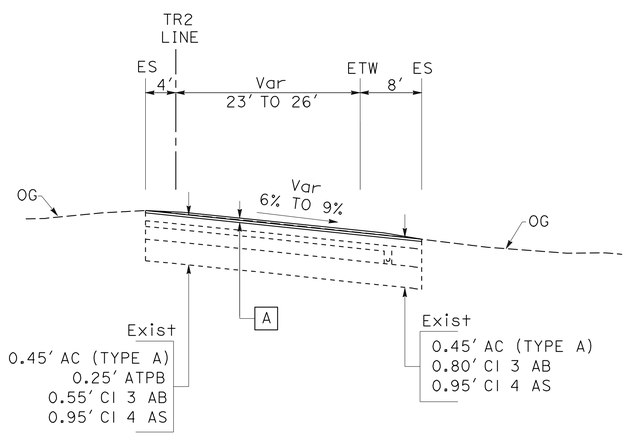

GREAT MALL Pkwy NB ON-RAMP
TR2 362+98.08 TO 363+89.27

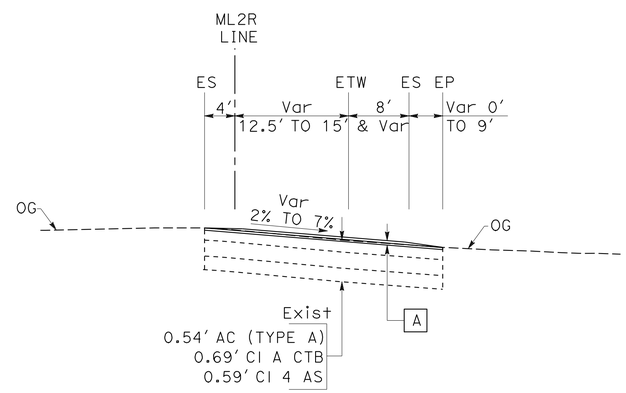

CALAVERAS Blvd NB ON-RAMP
ML2R 401+71.40 TO 402+87.99

TYPICAL CROSS SECTIONS
NO SCALE

X-23

FOR NOTES, ABBREVIATIONS
AND LEGEND, SEE SHEET X-1

STATE OF CALIFORNIA - DEPARTMENT OF TRANSPORTATION
Caltrans

CONSULTANT FUNCTIONAL SUPERVISOR: RICHARD TANAKA
CALCULATED-DESIGNED BY: RAFAEL LOPEZ
CHECKED BY: MARILOU AYUPAN
REVISED BY
DATE REVISED

LAST REVISION 11-17-10
DATE PLOTTED => 08-JUL-2011
TIME PLOTTED => 12:49

Dist	COUNTY	ROUTE	POST MILES TOTAL PROJECT	SHEET No.	TOTAL SHEETS
04	SCI	880	4.1/8.7	25	710

REGISTERED CIVIL ENGINEER 03/31/11 DATE

7-11-11
PLANS APPROVAL DATE

REGISTERED PROFESSIONAL ENGINEER RICHARD K. TANAKA No. 23233 Exp. 12/31/11 CIVIL STATE OF CALIFORNIA

THE STATE OF CALIFORNIA OR ITS OFFICERS OR AGENTS SHALL NOT BE RESPONSIBLE FOR THE ACCURACY OR COMPLETENESS OF SCANNED COPIES OF THIS PLAN SHEET.

MARK THOMAS & COMPANY, INC.
1960 ZANKER ROAD
SAN JOSE, CA 95112

SANTA CLARA VALLEY TRANSPORTATION AUTHORITY
3331 NORTH FIRST STREET, BLDG B
SAN JOSE, CA 95134

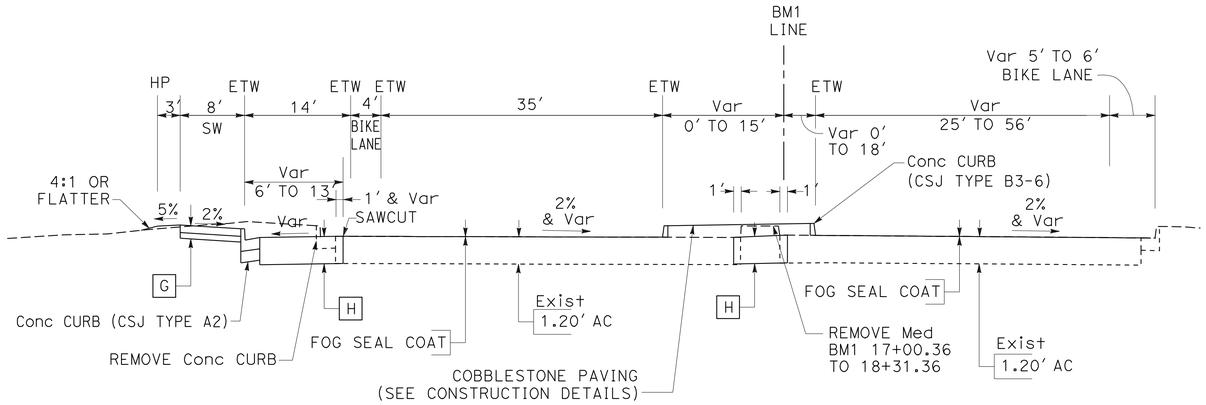

BROKAW ROAD
BM1 17+00.36 TO 17+75.00

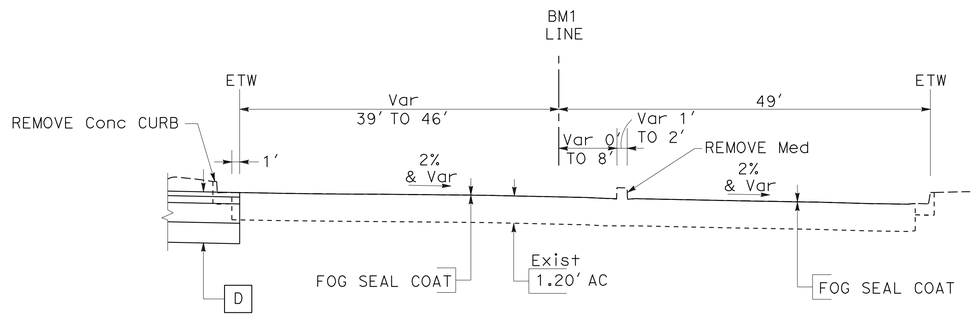

BROKAW ROAD
BM1 15+65.00 TO 17+00.36

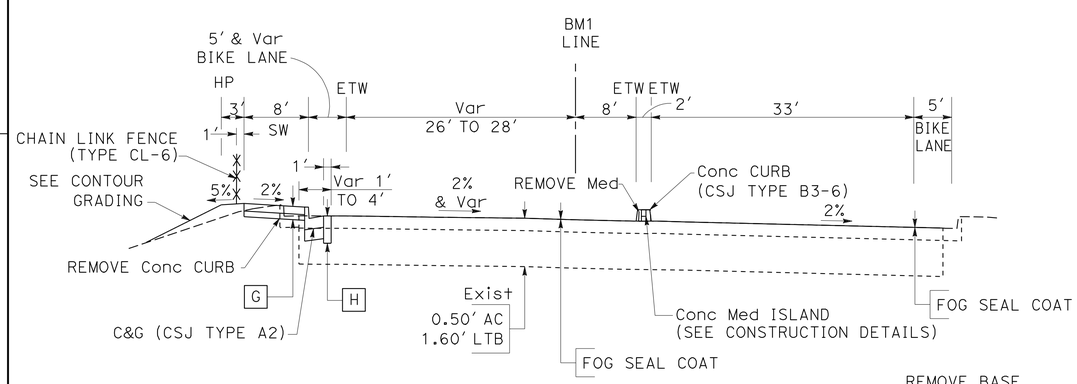

BROKAW ROAD
BM1 14+83.68 TO 15+65.00

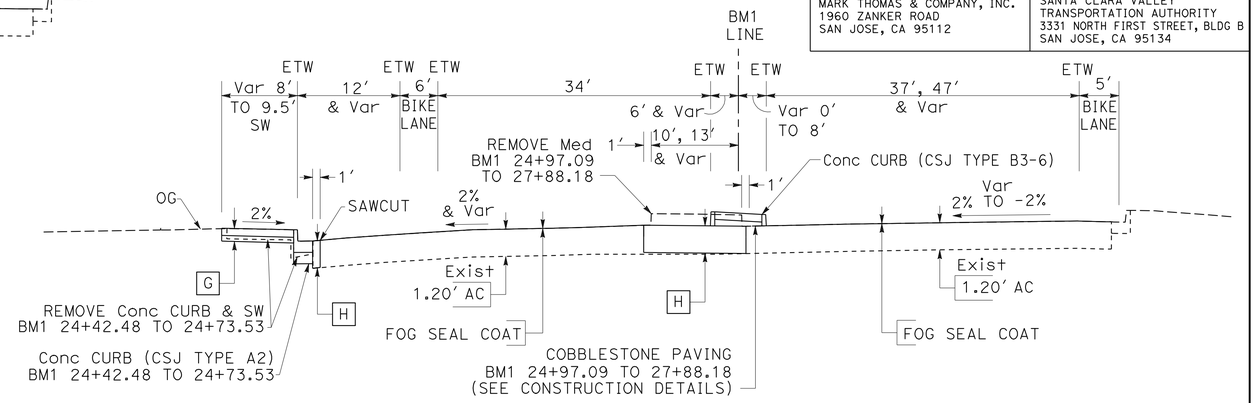

BROKAW ROAD
BM1 24+42.48 TO 27+88.18

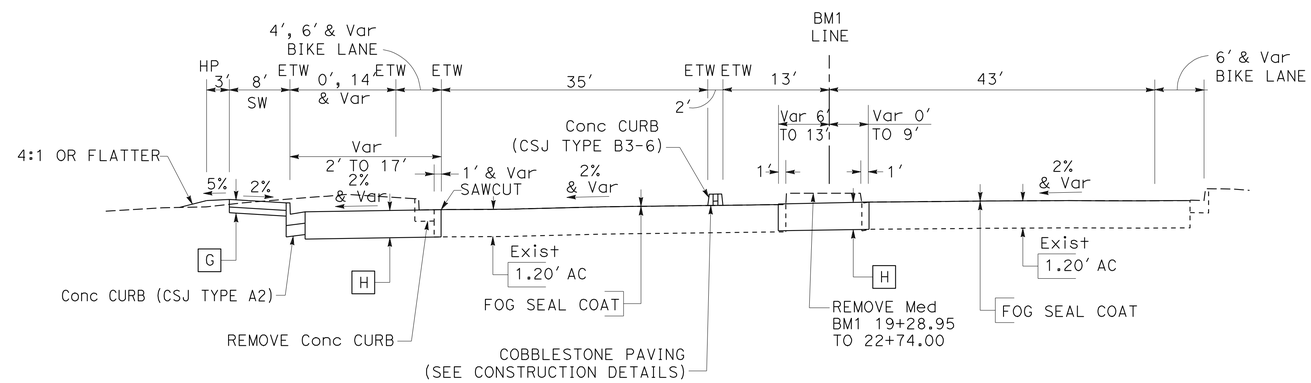

BROKAW ROAD
BM1 19+32.00 TO 22+99.76

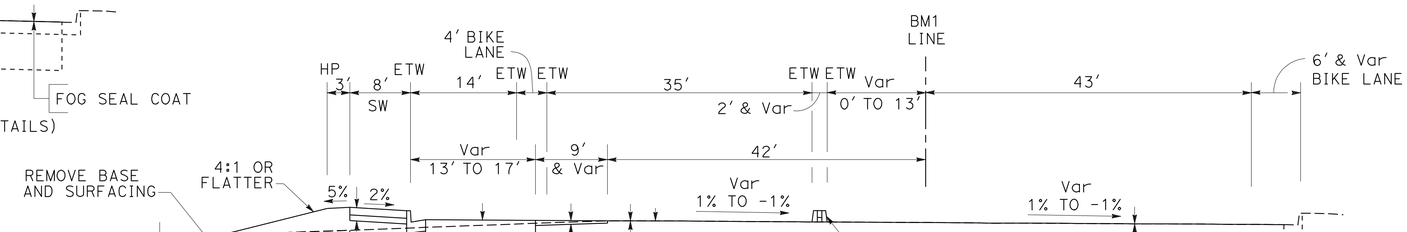

BROKAW ROAD
BM1 17+75.00 TO 19+32.00

FOR NOTES, ABBREVIATIONS AND LEGEND, SEE SHEET X-1

TYPICAL CROSS SECTIONS
NO SCALE

X-24

STATE OF CALIFORNIA - DEPARTMENT OF TRANSPORTATION
Caltrans®

CONSULTANT FUNCTIONAL SUPERVISOR: RICHARD TANAKA
CALCULATED-DESIGNED BY: RAFAEL LOPEZ
CHECKED BY: MARILOU AYUPAN
REVISED BY
DATE REVISED

LAST REVISION 03-31-11
DATE PLOTTED => 08-JUL-2011
TIME PLOTTED => 12:49

Dist	COUNTY	ROUTE	POST MILES TOTAL PROJECT	SHEET No.	TOTAL SHEETS
04	SCI	880	4.1/8.7	26	710

REGISTERED CIVIL ENGINEER 03/31/11 DATE

7-11-11
PLANS APPROVAL DATE

REGISTERED PROFESSIONAL ENGINEER RICHARD K. TANAKA No. 23233 Exp. 12/31/11 CIVIL STATE OF CALIFORNIA

THE STATE OF CALIFORNIA OR ITS OFFICERS OR AGENTS SHALL NOT BE RESPONSIBLE FOR THE ACCURACY OR COMPLETENESS OF SCANNED COPIES OF THIS PLAN SHEET.

MARK THOMAS & COMPANY, INC.
1960 ZANKER ROAD
SAN JOSE, CA 95112

SANTA CLARA VALLEY
TRANSPORTATION AUTHORITY
3331 NORTH FIRST STREET, BLDG B
SAN JOSE, CA 95134

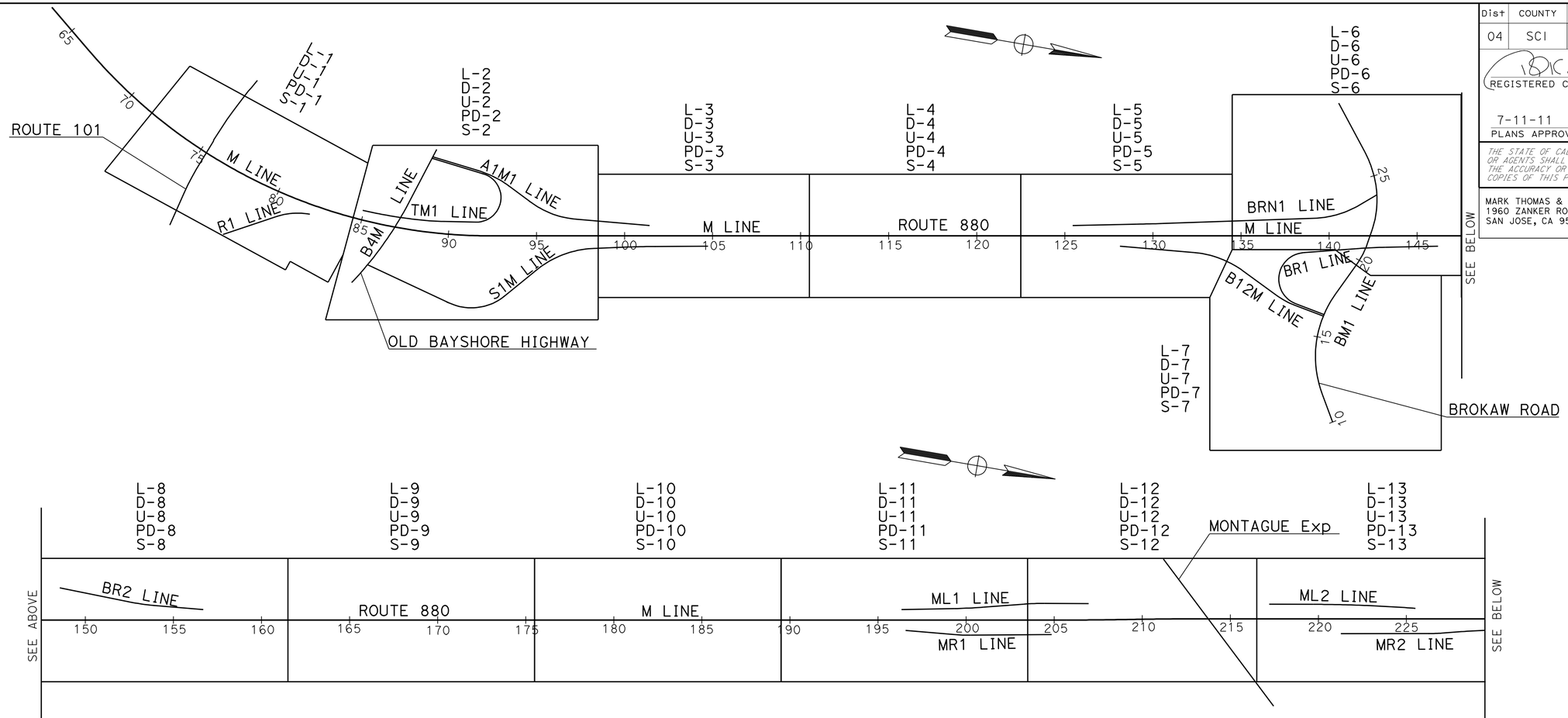

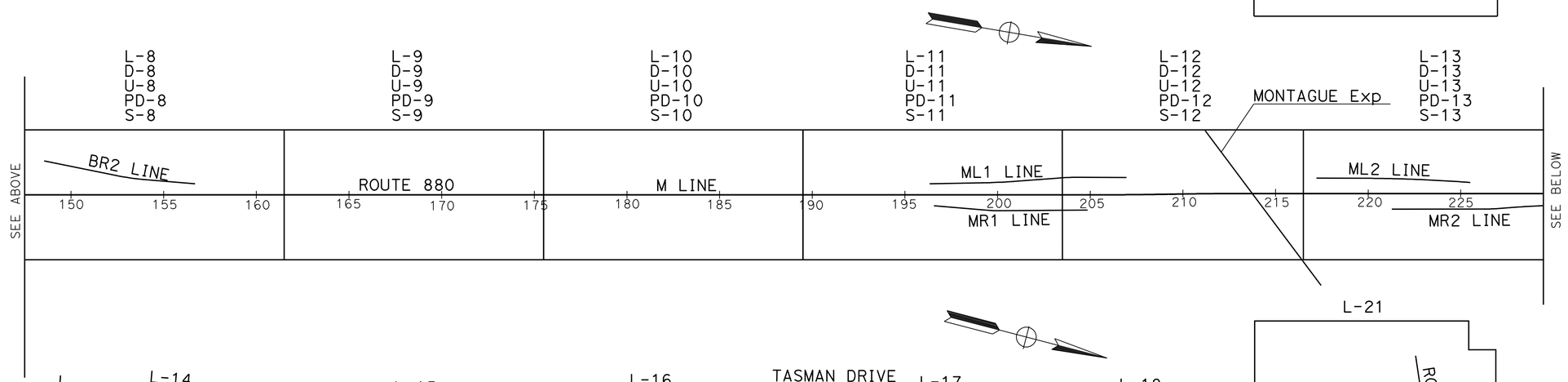

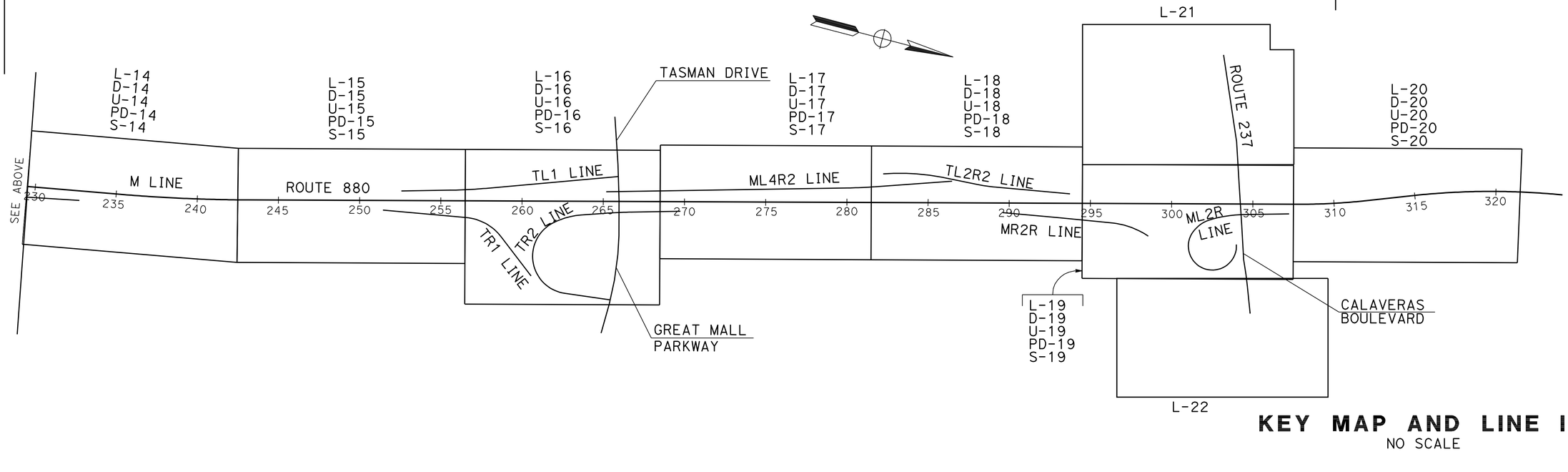

KEY MAP AND LINE INDEX

NO SCALE

K-1

REVISED BY | DATE REVISED
RAFAEL LOPEZ | MARILOU AYUPAN
CALCULATED-DESIGNED BY | CHECKED BY
CONSULTANT FUNCTIONAL SUPERVISOR
RICHARD TANAKA

STATE OF CALIFORNIA - DEPARTMENT OF TRANSPORTATION
Caltrans

LAST REVISION 03-31-11 | DATE PLOTTED => 08-JUL-2011 | TIME PLOTTED => 12:49

Dist	COUNTY	ROUTE	POST MILES TOTAL PROJECT	SHEET No.	TOTAL SHEETS
04	SCI	880	4.1/8.7	27	710

REGISTERED CIVIL ENGINEER 10/15/10 DATE

7-11-11
PLANS APPROVAL DATE

REGISTERED PROFESSIONAL ENGINEER
RICHARD K. TANAKA
No. 23233
Exp. 12/31/11
CIVIL
STATE OF CALIFORNIA

THE STATE OF CALIFORNIA OR ITS OFFICERS OR AGENTS SHALL NOT BE RESPONSIBLE FOR THE ACCURACY OR COMPLETENESS OF SCANNED COPIES OF THIS PLAN SHEET.

MARK THOMAS & COMPANY, INC.
1960 ZANKER ROAD
SAN JOSE, CA 95112

SANTA CLARA VALLEY
TRANSPORTATION AUTHORITY
3331 NORTH FIRST STREET, BLDG B
SAN JOSE, CA 95134

HPGN D CA MISSION

CONTROL FOR DESIGN AND CONSTRUCTION

STATION DESIGNATION	ORDER	NORTHING	EASTING	ELEVATION	DESCRIPTION
SCL47	1ST	1967908.654	6163455.910	-	CALTRANS BRASS DISK
HPGN D CA MISSION	1ST	1967516.310	6129782.500	-	ALUMINUM DISK NGS PID AA1873
HPGN D CA SAN PEDRO	1ST	1954402.381	6152725.496	-	ALUMINUM DISK NGS PID AA1872
J 886 RESET	1ST	1991339.190	6155027.920	-	NGS BRASS DISK, PID HS2874
MT-2	3RD	1956510.595	6153176.869	72.19	CDH DISK - Elev = MON RIM
MT-7	3RD	1958269.042	6153768.578	57.24	MAG NAIL AND SHINNER
MT-12	3RD	1960356.061	6154426.438	53.80	MAG NAIL AND SHINNER
MT-15	3RD	1963093.563	6153956.578	56.15	PK NAIL AND SHINNER
MT-18	3RD	1964463.585	6152998.120	51.22	PK NAIL AND SHINNER
MT-19	3RD	1964771.080	6155132.302	59.23	PK NAIL AND SHINNER
MT-25	3RD	1965694.744	6153521.499	56.53	PK NAIL AND SHINNER
MT-28	3RD	1968048.423	6152306.296	41.84	PK NAIL AND SHINNER
MT-29	3RD	1968411.666	6153043.535	47.23	PK NAIL AND SHINNER
MT-30	3RD	1968457.992	6153770.346	46.39	PK NAIL AND SHINNER
MT-37	3RD	1970594.910	6151230.357	39.99	PK NAIL AND SHINNER
MT-40	3RD	1971062.461	6152587.730	41.59	MAG NAIL
MT-43	3RD	1972558.405	6152332.362	38.29	MAG NAIL
MT-46	3RD	1972816.906	6153515.078	42.05	MAG NAIL
MT-49	3RD	1975079.599	6151842.598	30.92	MAG NAIL
MT-52	3RD	1976349.716	6149568.012	28.63	MAG NAIL
MT-57	3RD	1977006.619	6152767.687	27.02	CUT X ON TOP OF CURB
MT-65	3RD	1977709.603	6151168.673	27.76	MAG NAIL
MT-68	3RD	1979709.442	6147635.513	43.61	PK NAIL
MT-74	3RD	1980342.232	6150978.335	21.01	2 INCH DISK - Elev = MON RIM
MT-77	3RD	1981234.367	6152215.442	18.63	PK NAIL
MT-81	3RD	1983701.731	6149783.224	17.49	MAG NAIL

J 886 RESET

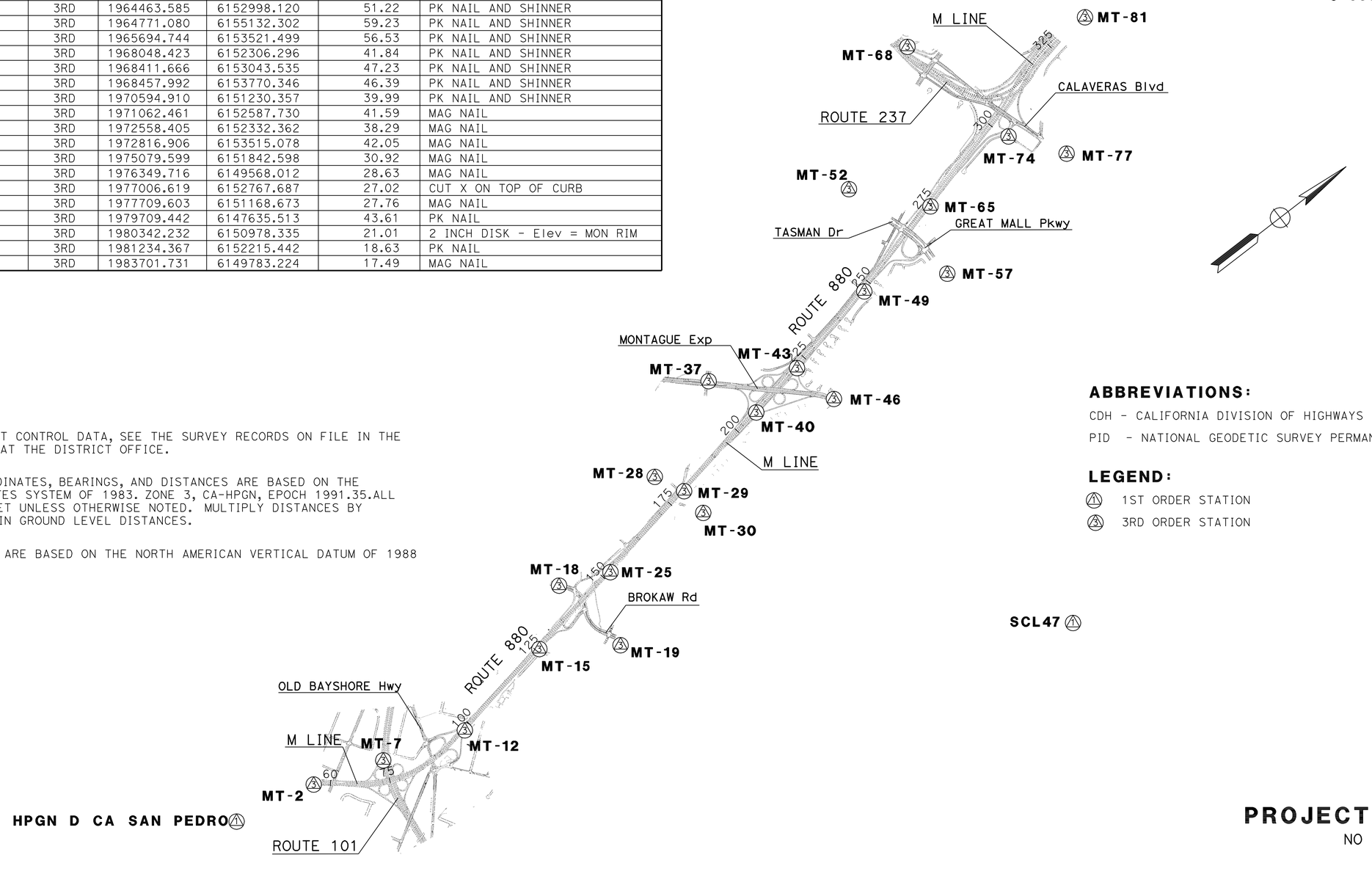

NOTES:

1. FOR COMPLETE PROJECT CONTROL DATA, SEE THE SURVEY RECORDS ON FILE IN THE SURVEYS DEPARTMENT AT THE DISTRICT OFFICE.
2. THIS PROJECT'S COORDINATES, BEARINGS, AND DISTANCES ARE BASED ON THE CALIFORNIA COORDINATES SYSTEM OF 1983. ZONE 3, CA-HPGN, EPOCH 1991.35.ALL DISTANCES ARE IN FEET UNLESS OTHERWISE NOTED. MULTIPLY DISTANCES BY 1.000049235 TO OBTAIN GROUND LEVEL DISTANCES.
3. ELEVATIONS FOR THIS ARE BASED ON THE NORTH AMERICAN VERTICAL DATUM OF 1988 (NAVD 88).

ABBREVIATIONS:

CDH - CALIFORNIA DIVISION OF HIGHWAYS

PID - NATIONAL GEODETIC SURVEY PERMANENT IDENTIFIER

LEGEND:

1ST ORDER STATION

3RD ORDER STATION

THIS PLAN ACCURATE FOR PROJECT CONTROL INFORMATION ONLY

PROJECT CONTROL

NO SCALE

PC-1

STATE OF CALIFORNIA - DEPARTMENT OF TRANSPORTATION
Caltrans OFFICE OF LAND SURVEYS

CONSULTANT FUNCTIONAL SUPERVISOR: RICHARD TANAKA

CALCULATED-DESIGNED BY: SEAN PREVOST
CHECKED BY: MARILOU AYUPAN

REVISED BY | DATE REVISED

LAST REVISION 10-15-10 | DATE PLOTTED => 08-JUL-2011 | TIME PLOTTED => 12:49

FOR ACCURATE RIGHT OF WAY DATA, CONTACT RIGHT OF WAY ENGINEERING AT THE DISTRICT OFFICE.

NOTES:

1. FOR DIKE TRANSITIONS AND TYPES AT MBGR, SEE STANDARD PLAN A77C4 AND A77F.
2. FOR VEGETATION CONTROL AROUND MBGR, SEE NEW STANDARD PLAN A77C5, A77C6, A77C7, A77C8, & A77C10.
3. FOR THE LIMIT AND QUANTITY OF REMOVAL FOR MBGR, RETAINING WALL, & FENCE, SEE SUMMARY OF QUANTITY SHEETS.
4. CONTRACTOR SHALL RESTORE THE LANDSCAPING AND IRRIGATION DAMAGED BY THE INSTALLATION OF DTBB BACK TO ORIGINAL.
5. FOR AREA OF REPLACE ASPHALT CONCRETE SURFACING, SEE SUMMARY OF QUANTITIES.

LEGEND:

- CONFORM COLD PLANE AC PAVEMENT
- COLD PLANE AC PAVEMENT AND RESURFACE
- MINOR CONCRETE (CONTRASTING SURFACE TREATMENT)
- REMOVE BASE AND SURFACING
- ENVIRONMENTALLY SENSITIVE AREA (ESA)
- ARCHAEOLOGICAL MONITORING AREA (AMA DESIGNATION No. CA-SCI-677)
- ROCK BLANKET
- COBBLESTONE PAVING
- VEGETATION CONTROL (MINOR CONCRETE)
- IRRIGATION SLEEVE
- IRRIGATION CROSSOVER
- Exist IRRIGATION CROSSOVER
- TCE
- SLOPE EASEMENT
- PTE
- EIC — EXTEND IRRIGATION CROSSOVER
- No. — PAVEMENT STRUCTURAL SECTION (SEE X-1)
- No. — CURVE DATA
- CURB RAMP (CASE A - UNLESS OTHERWISE NOTED)
- S — WILDLIFE PASSAGEWAY (Typ S) AT CB (TYPE 60C) (SEE CONSTRUCTION DETAILS)
- TFESA — TEMPORARY FENCE (TYPE ESA) ENVIRONMENTAL SENSITIVE AREA

CURVE DATA

No.	R	Δ	T	L	N-COORDINATE	E-COORDINATE
1	3000.00	49°27'26"	1381.66	2589.57	1959285.4547	6151516.0591
34	400.00	28°13'10"	100.54	197.01	1958761.1467	6154925.0368

ABBREVIATIONS:

AFTS	ALTERNATIVE FLARED TERMINAL SYSTEM
AITS	ALTERNATIVE IN-LINE TERMINAL SYSTEM
C&G	CURB & GUTTER
CHP	CALIFORNIA HIGHWAY PATROL ENFORCEMENT AREA
COM	CITY OF MILPITAS
CSJ	CITY OF SAN JOSE
ESA	ENVIRONMENTALLY SENSITIVE AREA
IC	IRRIGATION CROSSOVER
LSS	LIMIT OF STRUCTURAL SECTION
MVP	MAINTENANCE VEHICLE PULLOUT
Pkwy	PARKWAY
PTE	PERMIT TO ENTER AND CONSTRUCT
PUE	PUBLIC UTILITY EASEMENT
TCE	TEMPORARY CONSTRUCTION EASEMENT
WMVDS	WIRELESS MAGNETOMETER VEHICLE DETECTION STATION

Dist	COUNTY	ROUTE	POST MILES TOTAL PROJECT	SHEET No.	TOTAL SHEETS
04	SCI	880	4.1/8.7	28	710

REGISTERED CIVIL ENGINEER 03/31/11 DATE

7-11-11
PLANS APPROVAL DATE

REGISTERED PROFESSIONAL ENGINEER RICHARD K. TANAKA No. 23233 Exp. 12/31/11 CIVIL STATE OF CALIFORNIA

THE STATE OF CALIFORNIA OR ITS OFFICERS OR AGENTS SHALL NOT BE RESPONSIBLE FOR THE ACCURACY OR COMPLETENESS OF SCANNED COPIES OF THIS PLAN SHEET.

MARK THOMAS & COMPANY, INC.
1960 ZANKER ROAD
SAN JOSE, CA 95112

SANTA CLARA VALLEY TRANSPORTATION AUTHORITY
3331 NORTH FIRST STREET, BLDG B
SAN JOSE, CA 95134

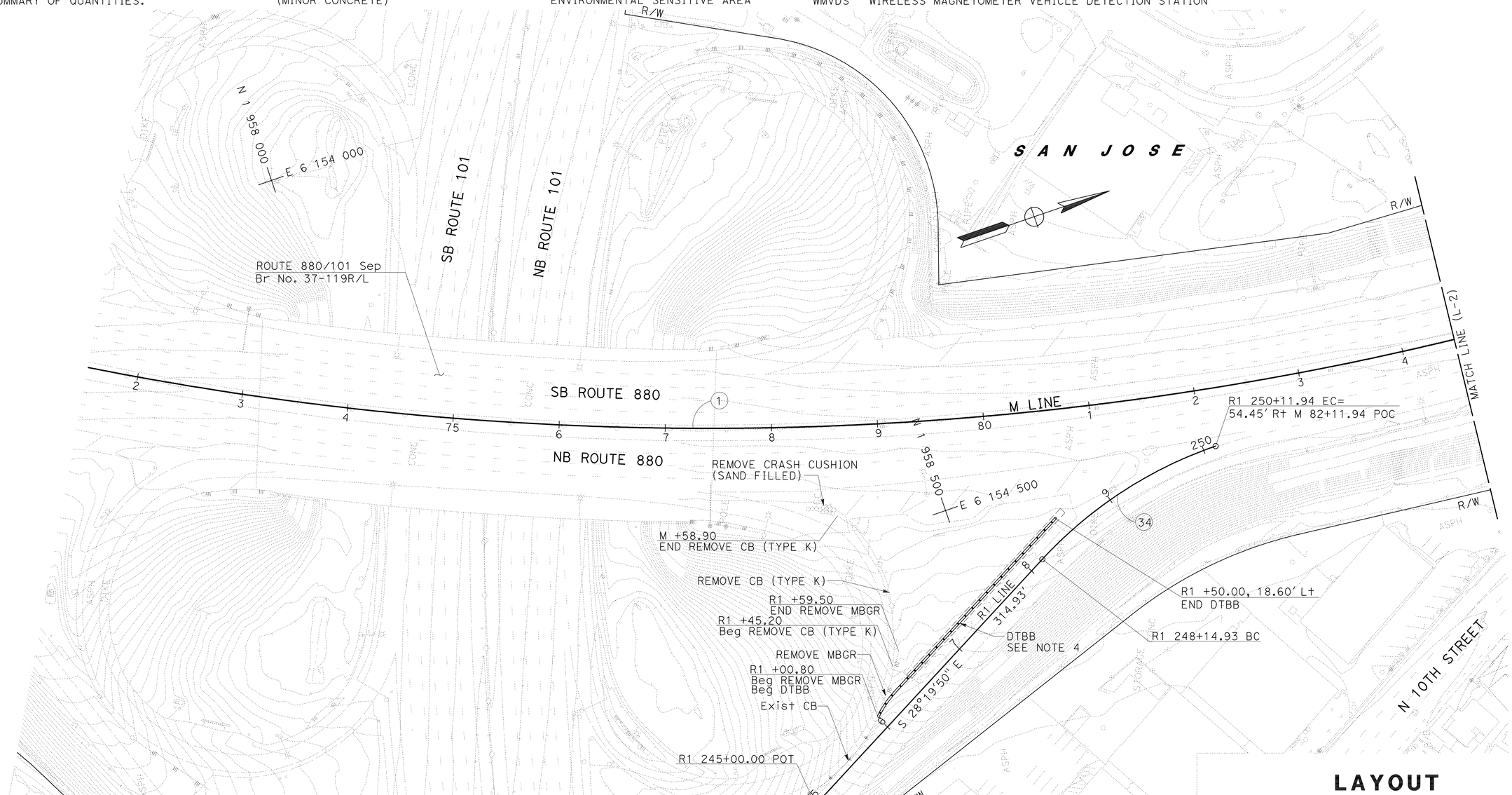

LAYOUT

SCALE: 1" = 50'

L-1

STATE OF CALIFORNIA - DEPARTMENT OF TRANSPORTATION
Caltrans

CONSULTANT FUNCTIONAL SUPERVISOR: RICHARD TANAKA
CALCULATED-DESIGNED BY: MARILOU AYUPAN
CHECKED BY: TOMMY CHO
REVISED BY
DATE REVISED

LAST REVISION 03-31-11
DATE PLOTTED => 08-JUL-2011
TIME PLOTTED => 12:50

Dist	COUNTY	ROUTE	POST MILES TOTAL PROJECT	SHEET No.	TOTAL SHEETS
04	SCI	880	4.1/8.7	29	710

REGISTERED CIVIL ENGINEER 03/31/11 DATE

7-11-11
PLANS APPROVAL DATE

REGISTERED PROFESSIONAL ENGINEER RICHARD K. TANAKA No. 23233 Exp. 12/31/11 CIVIL STATE OF CALIFORNIA

THE STATE OF CALIFORNIA OR ITS OFFICERS OR AGENTS SHALL NOT BE RESPONSIBLE FOR THE ACCURACY OR COMPLETENESS OF SCANNED COPIES OF THIS PLAN SHEET.

MARK THOMAS & COMPANY, INC.
1960 ZANKER ROAD
SAN JOSE, CA 95112

SANTA CLARA VALLEY TRANSPORTATION AUTHORITY
3331 NORTH FIRST STREET, BLDG B
SAN JOSE, CA 95134

CURVE DATA

No.	R	Δ	T	L	N-COORDINATE	E-COORDINATE
14	2946.54	5°49'49"	150.04	299.83	1959203.4455	6151510.7031
15	1715.13	5°33'50"	83.34	166.55	1959265.5929	6152740.5501
16	140.00	164°23'36"	1021.58	401.69	1959675.6720	6154272.0225
17	570.00	19°40'18"	98.82	195.70	1959591.8825	6154685.7577
18	500.00	31°41'49"	141.94	276.61	1960210.5766	6153799.5831
35	300.00	64°19'53"	188.67	336.84	1959703.3412	6154598.3211
36	550.00	37°00'04"	184.03	355.19	1960496.2478	6154981.8322
59	1999.90	16°00'38"	281.26	558.85	1957399.0344	6153753.8440
69	1679.13	4°59'25"	73.17	146.24	1959207.1528	6152760.5822
70	104.00	54°36'54"	53.70	99.13	1959673.8458	6154275.7622
71	514.57	4°20'01"	19.47	38.92	1960058.7189	6154770.3431
72	468.54	4°41'31"	19.20	38.37	1960283.4320	6153813.2673
73	159.38	13°23'20"	18.71	37.24	1960237.8330	6154119.0394
74	452.50	37°33'58"	153.89	296.68	1960491.2799	6154908.9767
75	81.89	46°01'30"	34.78	65.78		

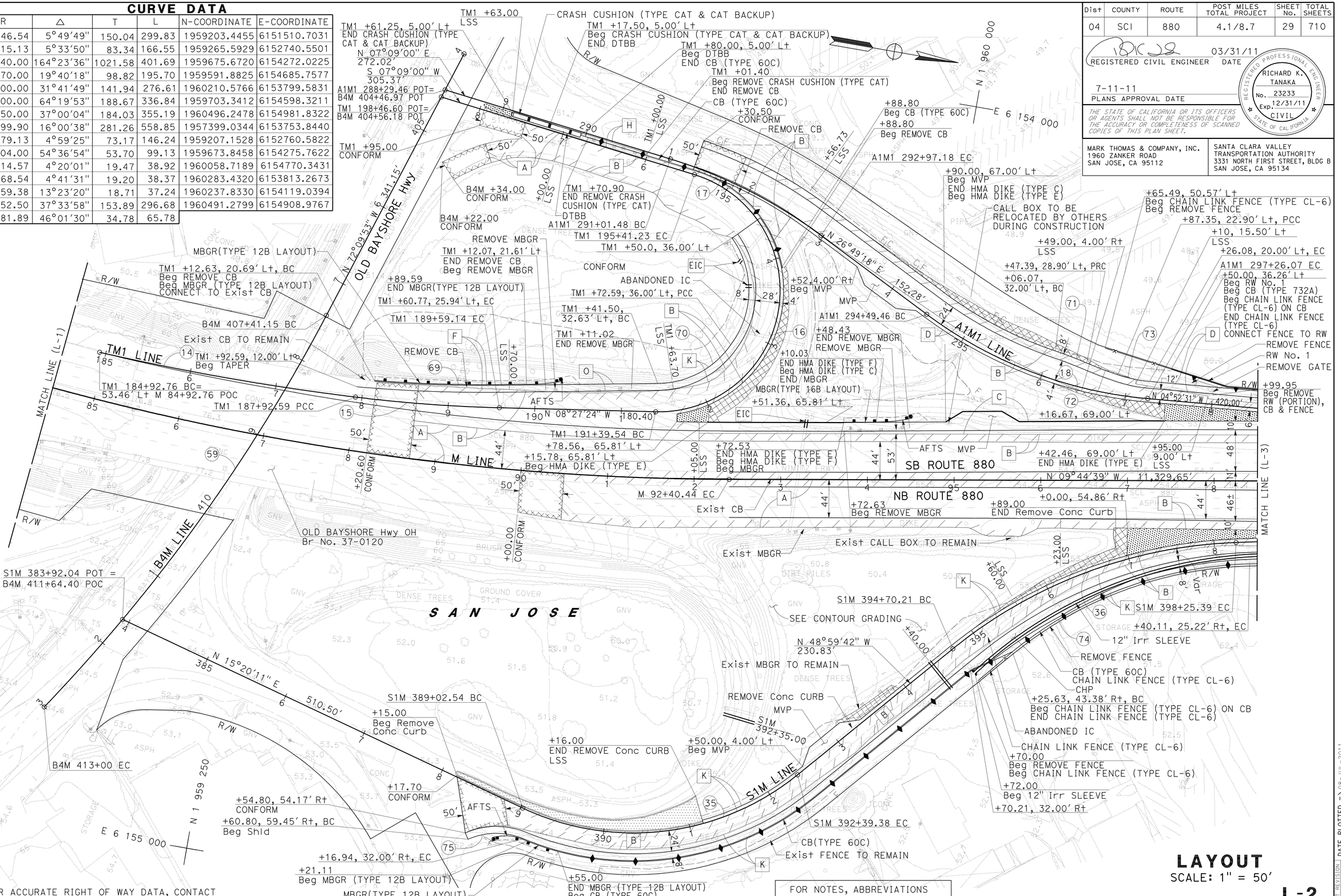

FOR ACCURATE RIGHT OF WAY DATA, CONTACT RIGHT OF WAY ENGINEERING AT THE DISTRICT OFFICE.

FOR NOTES, ABBREVIATIONS AND LEGEND, SEE SHEET L-1

LAYOUT
SCALE: 1" = 50'

L-2

STATE OF CALIFORNIA - DEPARTMENT OF TRANSPORTATION
Caltrans

CONSULTANT FUNCTIONAL SUPERVISOR: RICHARD TANAKA
CALCULATED-DESIGNED BY: TOMMY CHO
CHECKED BY: MARILOU AYUPAN
REVISED BY
DATE REVISED

LAST REVISION 03-31-11
DATE PLOTTED => 08-JUL-2011
TIME PLOTTED => 12:50

FOR ACCURATE RIGHT OF WAY DATA, CONTACT
RIGHT OF WAY ENGINEERING AT THE DISTRICT OFFICE.

Dist	COUNTY	ROUTE	POST MILES TOTAL PROJECT	SHEET No.	TOTAL SHEETS
04	SCI	880	4.1/8.7	30	710

REGISTERED CIVIL ENGINEER 03/31/11 DATE

7-11-11
PLANS APPROVAL DATE

REGISTERED PROFESSIONAL ENGINEER
RICHARD K. TANAKA
No. 23233
Exp. 12/31/11
CIVIL
STATE OF CALIFORNIA

THE STATE OF CALIFORNIA OR ITS OFFICERS OR AGENTS SHALL NOT BE RESPONSIBLE FOR THE ACCURACY OR COMPLETENESS OF SCANNED COPIES OF THIS PLAN SHEET.

MARK THOMAS & COMPANY, INC.
1960 ZANKER ROAD
SAN JOSE, CA 95112

SANTA CLARA VALLEY
TRANSPORTATION AUTHORITY
3331 NORTH FIRST STREET, BLDG B
SAN JOSE, CA 95134

CURVE DATA

No.	R	Δ	T	L	N-COORDINATE	E-COORDINATE
37	4982.54	1°55'18"	83.56	167.11	1961594.5335	6159279.9657

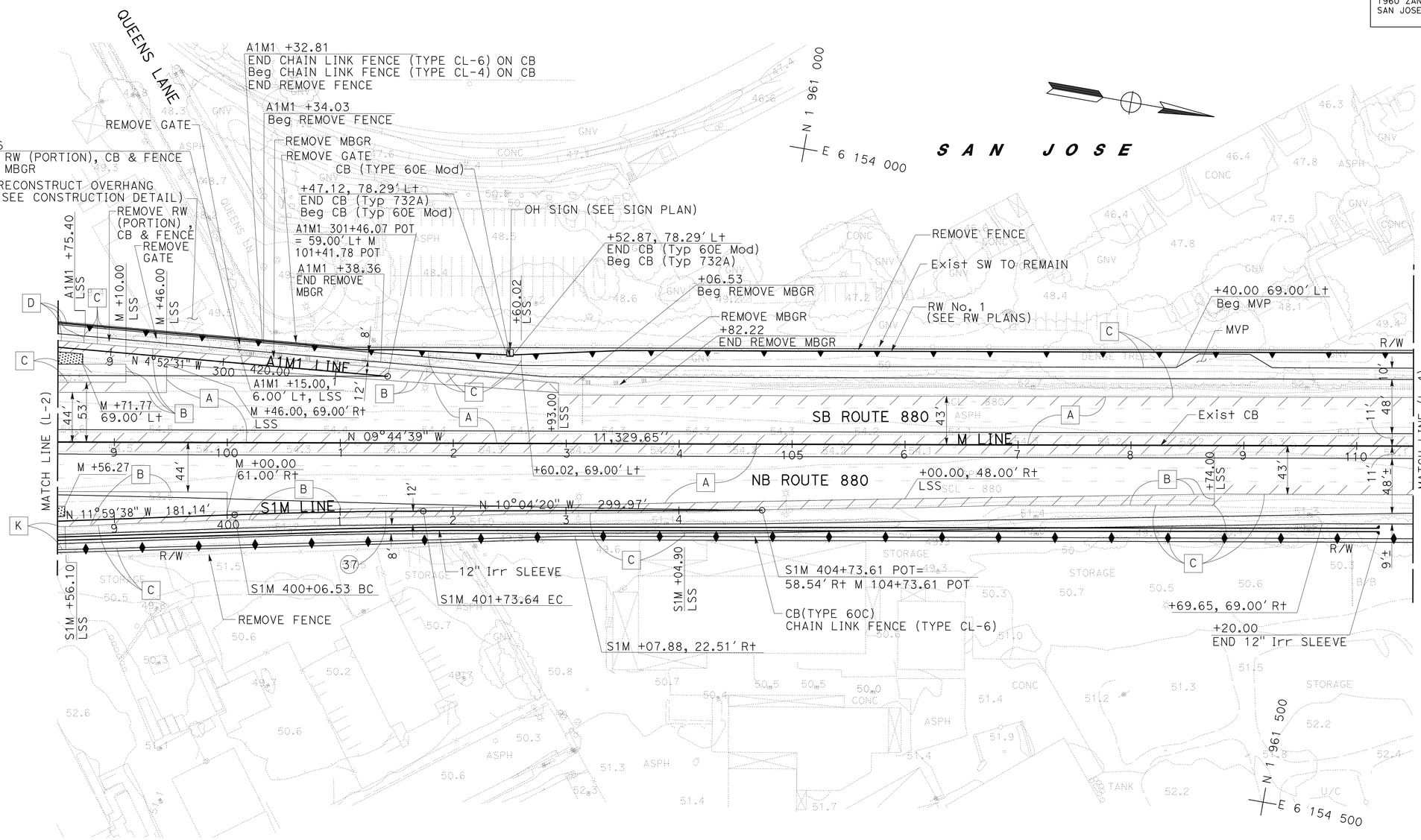

FOR NOTES, ABBREVIATIONS
AND LEGEND, SEE SHEET L-1

LAYOUT
SCALE: 1" = 50'

L-3

STATE OF CALIFORNIA - DEPARTMENT OF TRANSPORTATION
Caltrans

CONSULTANT FUNCTIONAL SUPERVISOR: RICHARD TANAKA
CALCULATED-DESIGNED BY: MARILOU AYUPAN
CHECKED BY: TOMMY CHO
REVISED BY
DATE REVISED

LAST REVISION 03-31-11
DATE PLOTTED => 08-JUL-2011
TIME PLOTTED => 12:50

FOR ACCURATE RIGHT OF WAY DATA, CONTACT
RIGHT OF WAY ENGINEERING AT THE DISTRICT OFFICE.

Dist	COUNTY	ROUTE	POST MILES TOTAL PROJECT	SHEET No.	TOTAL SHEETS
04	SCI	880	4.1/8.7	31	710

REGISTERED CIVIL ENGINEER 03/31/11 DATE

7-11-11
PLANS APPROVAL DATE

REGISTERED PROFESSIONAL ENGINEER
RICHARD K. TANAKA
No. 23233
Exp. 12/31/11
CIVIL
STATE OF CALIFORNIA

THE STATE OF CALIFORNIA OR ITS OFFICERS OR AGENTS SHALL NOT BE RESPONSIBLE FOR THE ACCURACY OR COMPLETENESS OF SCANNED COPIES OF THIS PLAN SHEET.

MARK THOMAS & COMPANY, INC.
1960 ZANKER ROAD
SAN JOSE, CA 95112

SANTA CLARA VALLEY
TRANSPORTATION AUTHORITY
3331 NORTH FIRST STREET, BLDG B
SAN JOSE, CA 95134

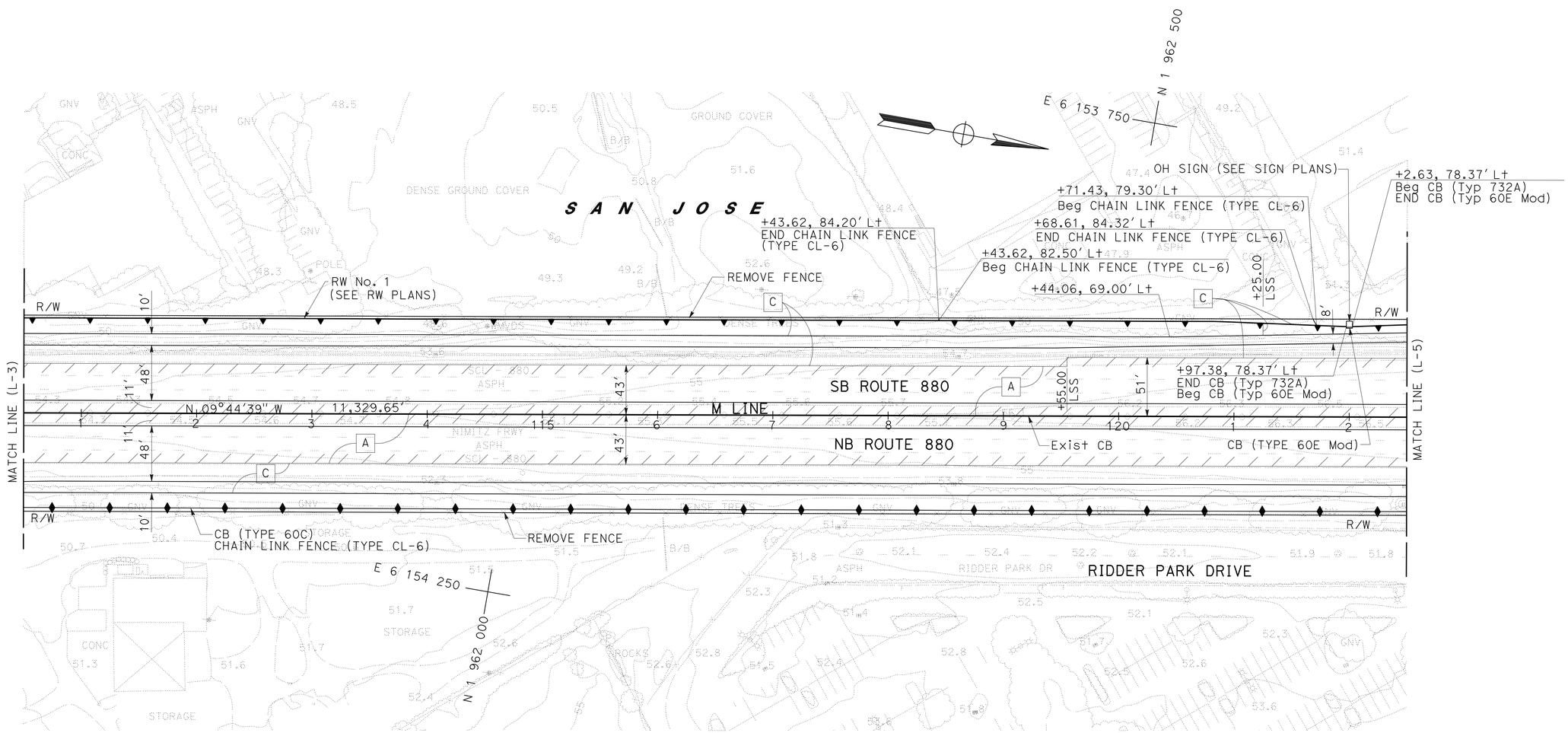

FOR NOTES, ABBREVIATIONS
AND LEGEND, SEE SHEET L-1

LAYOUT
SCALE: 1" = 50'

L-4

STATE OF CALIFORNIA - DEPARTMENT OF TRANSPORTATION
Caltrans

CONSULTANT FUNCTIONAL SUPERVISOR: RICHARD TANAKA
CALCULATED-DESIGNED BY: TOMMY CHO
CHECKED BY: MARILOU AYUPAN
REVISED BY
DATE REVISED

LAST REVISION 03-31-11
DATE PLOTTED => 08-JUL-2011
TIME PLOTTED => 12:50

FOR ACCURATE RIGHT OF WAY DATA, CONTACT
RIGHT OF WAY ENGINEERING AT THE DISTRICT OFFICE.

Dist	COUNTY	ROUTE	POST MILES TOTAL PROJECT	SHEET No.	TOTAL SHEETS
04	SCI	880	4.1/8.7	32	710

REGISTERED CIVIL ENGINEER 03/31/11 DATE

7-11-11
PLANS APPROVAL DATE

REGISTERED PROFESSIONAL ENGINEER RICHARD K. TANAKA No. 23233 Exp. 12/31/11 CIVIL STATE OF CALIFORNIA

THE STATE OF CALIFORNIA OR ITS OFFICERS OR AGENTS SHALL NOT BE RESPONSIBLE FOR THE ACCURACY OR COMPLETENESS OF SCANNED COPIES OF THIS PLAN SHEET.

MARK THOMAS & COMPANY, INC.
1960 ZANKER ROAD
SAN JOSE, CA 95112

SANTA CLARA VALLEY
TRANSPORTATION AUTHORITY
3331 NORTH FIRST STREET, BLDG B
SAN JOSE, CA 95134

CURVE DATA

No.	R	Δ	T	L	N-COORDINATE	E-COORDINATE
19	10000.00	00°49′02″	71.31	142.61	1961508.4297	6143966.6108
38	550.00	31°11′18″	153.50	299.39	1963791.2305	6154438.4446
76	300.00	31°11′18″	83.73	163.30		

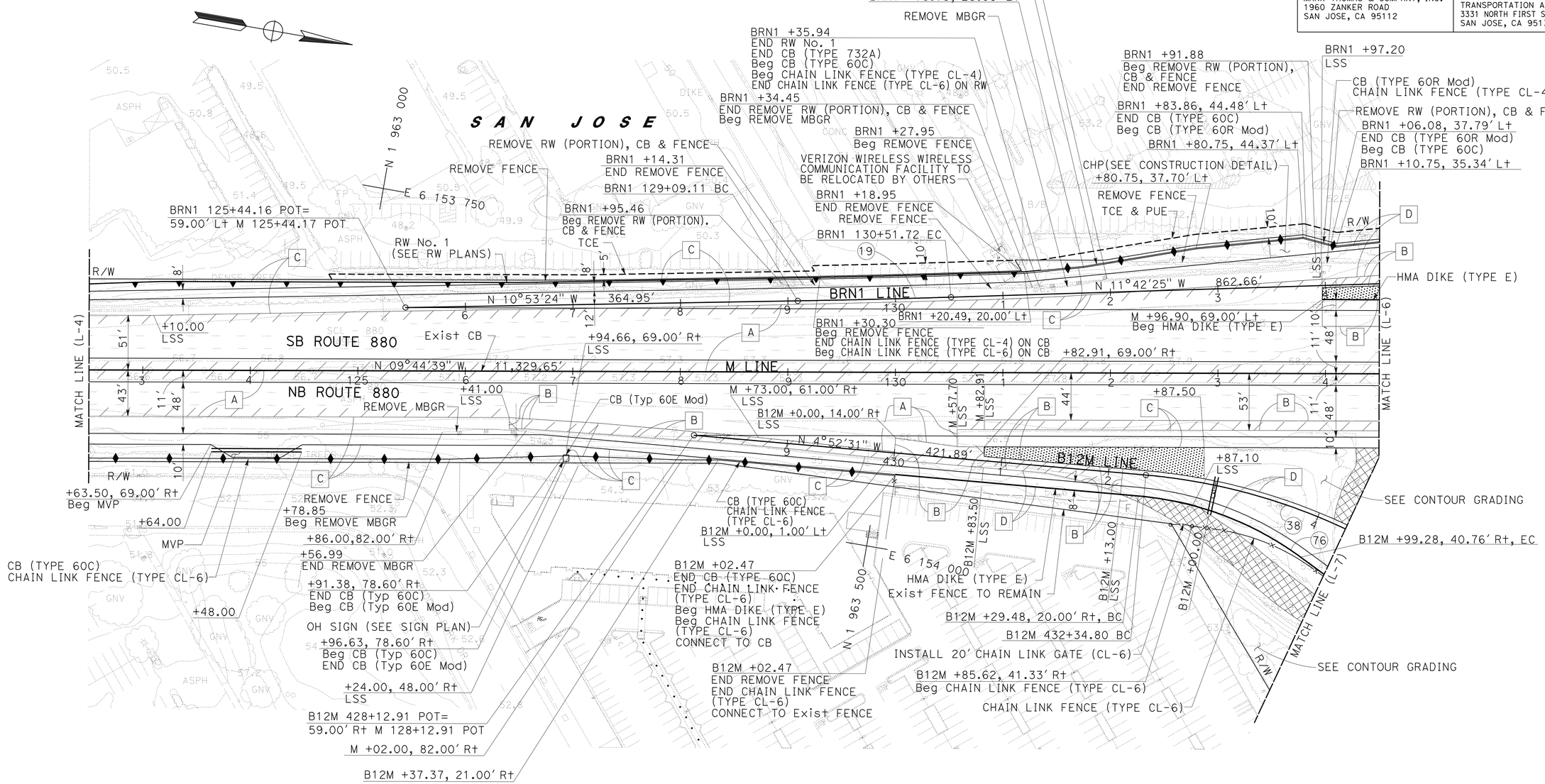

FOR NOTES, ABBREVIATIONS
AND LEGEND, SEE SHEET L-1

LAYOUT
SCALE: 1" = 50′

L-5

STATE OF CALIFORNIA - DEPARTMENT OF TRANSPORTATION
Caltrans

CONSULTANT FUNCTIONAL SUPERVISOR: RICHARD TANAKA
CALCULATED-DESIGNED BY: MARILOU AYUPAN
CHECKED BY: TOMMY CHO
REVISED BY
DATE REVISED

LAST REVISION 03-31-11
DATE PLOTTED => 08-JUL-2011
TIME PLOTTED => 12:50

FOR ACCURATE RIGHT OF WAY DATA, CONTACT
RIGHT OF WAY ENGINEERING AT THE DISTRICT OFFICE.

CURVE DATA

No.	R	Δ	T	L	N-COORDINATE	E-COORDINATE
20	550.00	28°30′36″	139.73	273.68	1964270.6185	6153044.9911
41	3000.00	03°11′44″	83.68	167.32	1965376.4555	6156623.2422
61	451.00	16°33′29″	65.63	130.34	1964260.6327	6153602.6994
62	531.00	27°49′29″	131.53	257.87	1964194.6961	6153509.2604
63	601.00	19°10′55″	101.55	201.21	1964128.3695	6153531.6384
77	107.00	32°25′49″	31.12	60.56		

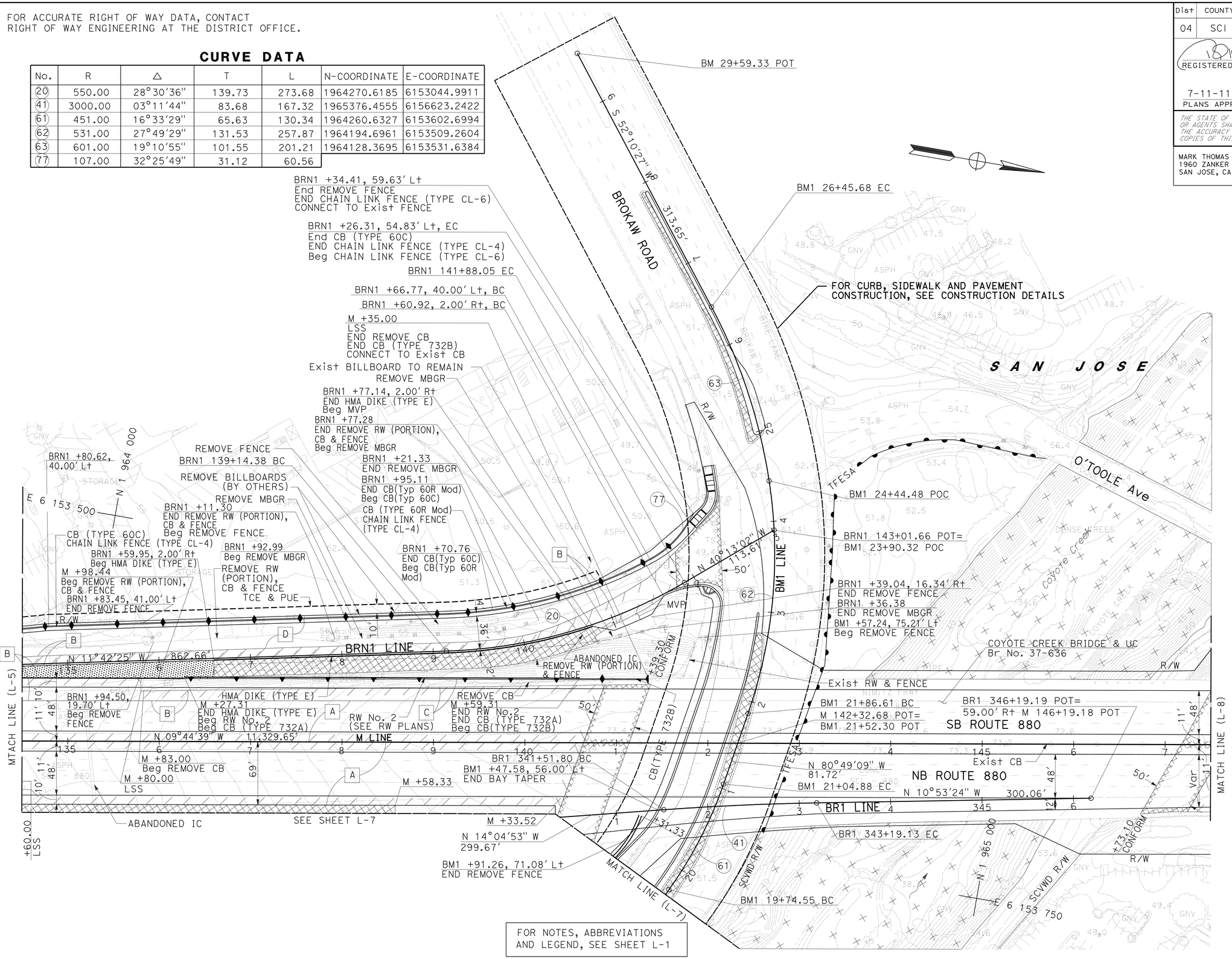

FOR NOTES, ABBREVIATIONS
AND LEGEND, SEE SHEET L-1

Dist	COUNTY	ROUTE	POST MILES TOTAL PROJECT	SHEET No.	TOTAL SHEETS
04	SCI	880	4.1/8.7	33	710

REGISTERED CIVIL ENGINEER 03/31/11 DATE

7-11-11
PLANS APPROVAL DATE

REGISTERED PROFESSIONAL ENGINEER
RICHARD K. TANAKA
No. 23233
Exp. 12/31/11
CIVIL
STATE OF CALIFORNIA

THE STATE OF CALIFORNIA OR ITS OFFICERS OR AGENTS SHALL NOT BE RESPONSIBLE FOR THE ACCURACY OR COMPLETENESS OF SCANNED COPIES OF THIS PLAN SHEET.

MARK THOMAS & COMPANY, INC.
1960 ZANKER ROAD
SAN JOSE, CA 95112

SANTA CLARA VALLEY
TRANSPORTATION AUTHORITY
3331 NORTH FIRST STREET, BLDG B
SAN JOSE, CA 95134

CALCULATED-DESIGNED BY: TOMMY CHO
CHECKED BY: MARILOU AYUPAN
REVISED BY
DATE REVISED
CONSULTANT FUNCTIONAL SUPERVISOR: RICHARD TANAKA

STATE OF CALIFORNIA - DEPARTMENT OF TRANSPORTATION
Caltrans

LAYOUT
SCALE: 1" = 50′

L-6

LAST REVISION 03-31-11
DATE PLOTTED => 08-JUL-2011
TIME PLOTTED => 12:50

FOR ACCURATE RIGHT OF WAY DATA, CONTACT
RIGHT OF WAY ENGINEERING AT THE DISTRICT OFFICE.

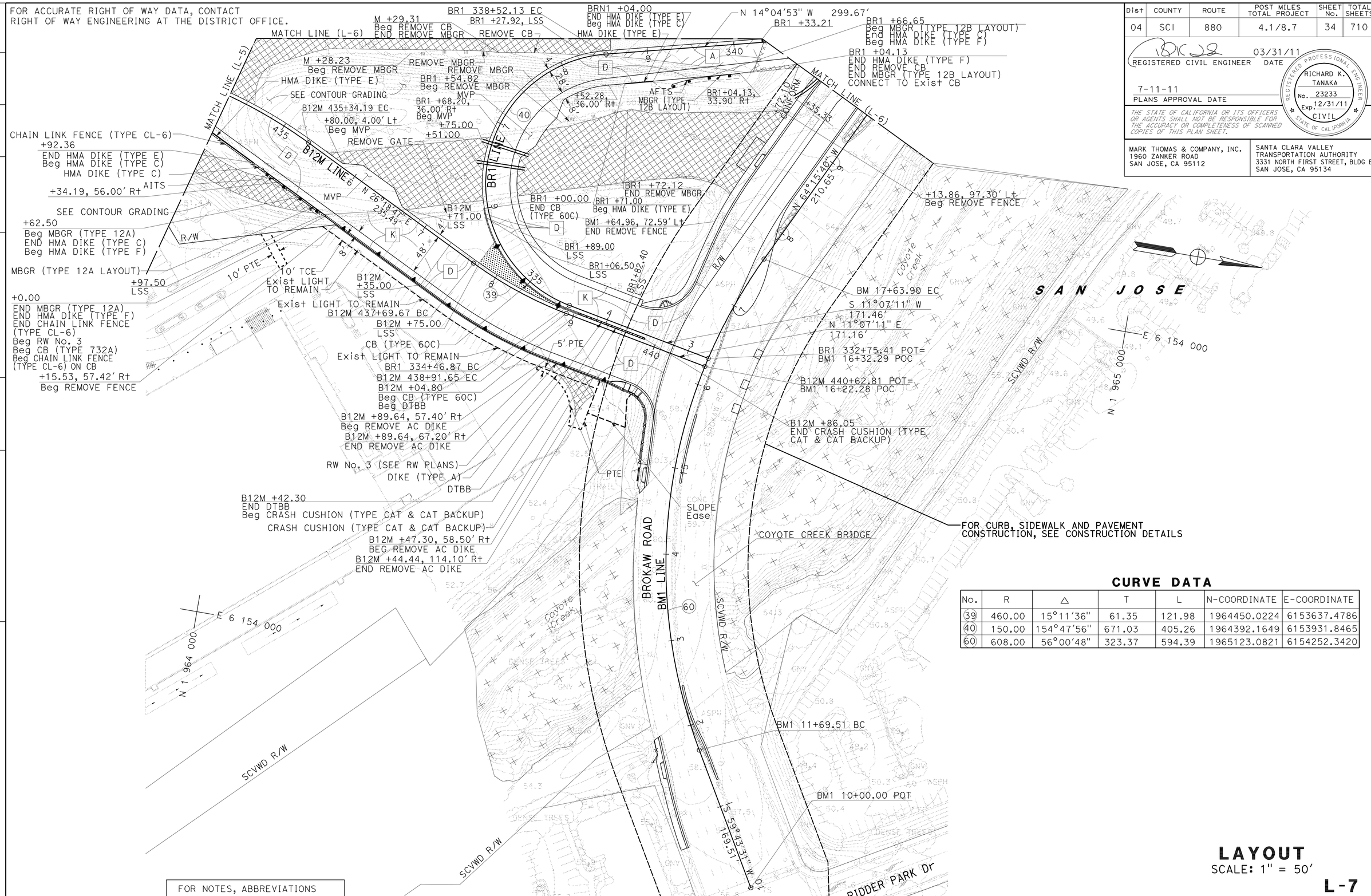

Dist	COUNTY	ROUTE	POST MILES TOTAL PROJECT	SHEET No.	TOTAL SHEETS
04	SCI	880	4.1/8.7	34	710

REGISTERED CIVIL ENGINEER 03/31/11 DATE

7-11-11
PLANS APPROVAL DATE

REGISTERED PROFESSIONAL ENGINEER
RICHARD K. TANAKA
No. 23233
Exp. 12/31/11
CIVIL
STATE OF CALIFORNIA

THE STATE OF CALIFORNIA OR ITS OFFICERS OR AGENTS SHALL NOT BE RESPONSIBLE FOR THE ACCURACY OR COMPLETENESS OF SCANNED COPIES OF THIS PLAN SHEET.

MARK THOMAS & COMPANY, INC.
1960 ZANKER ROAD
SAN JOSE, CA 95112

SANTA CLARA VALLEY
TRANSPORTATION AUTHORITY
3331 NORTH FIRST STREET, BLDG B
SAN JOSE, CA 95134

CURVE DATA

No.	R	Δ	T	L	N-COORDINATE	E-COORDINATE
39	460.00	15°11'36"	61.35	121.98	1964450.0224	6153637.4786
40	150.00	154°47'56"	671.03	405.26	1964392.1649	6153931.8465
60	608.00	56°00'48"	323.37	594.39	1965123.0821	6154252.3420

FOR NOTES, ABBREVIATIONS
AND LEGEND, SEE SHEET L-1

LAYOUT
SCALE: 1" = 50'

L-7

STATE OF CALIFORNIA - DEPARTMENT OF TRANSPORTATION
Caltrans

CONSULTANT FUNCTIONAL SUPERVISOR: RICHARD TANAKA
CALCULATED-DESIGNED BY: MARILOU AYUPAN
CHECKED BY: TOMMY CHO
REVISED BY
DATE REVISED

LAST REVISION 03-31-11
DATE PLOTTED => 08-JUL-2011
TIME PLOTTED => 12:50

FOR ACCURATE RIGHT OF WAY DATA, CONTACT
RIGHT OF WAY ENGINEERING AT THE DISTRICT OFFICE.

Dist	COUNTY	ROUTE	POST MILES TOTAL PROJECT	SHEET No.	TOTAL SHEETS
04	SCI	880	4.1/8.7	35	710

REGISTERED CIVIL ENGINEER 03/31/11 DATE

7-11-11
PLANS APPROVAL DATE

REGISTERED PROFESSIONAL ENGINEER RICHARD K. TANAKA No. 23233 Exp. 12/31/11 CIVIL STATE OF CALIFORNIA

THE STATE OF CALIFORNIA OR ITS OFFICERS OR AGENTS SHALL NOT BE RESPONSIBLE FOR THE ACCURACY OR COMPLETENESS OF SCANNED COPIES OF THIS PLAN SHEET.

MARK THOMAS & COMPANY, INC.
1960 ZANKER ROAD
SAN JOSE, CA 95112

SANTA CLARA VALLEY
TRANSPORTATION AUTHORITY
3331 NORTH FIRST STREET, BLDG B
SAN JOSE, CA 95134

CURVE DATA

No.	R	Δ	T	L	N-COORDINATE	E-COORDINATE
21	1250.00	6°36'09	72.10	144.05	1965732.7064	6152104.9916

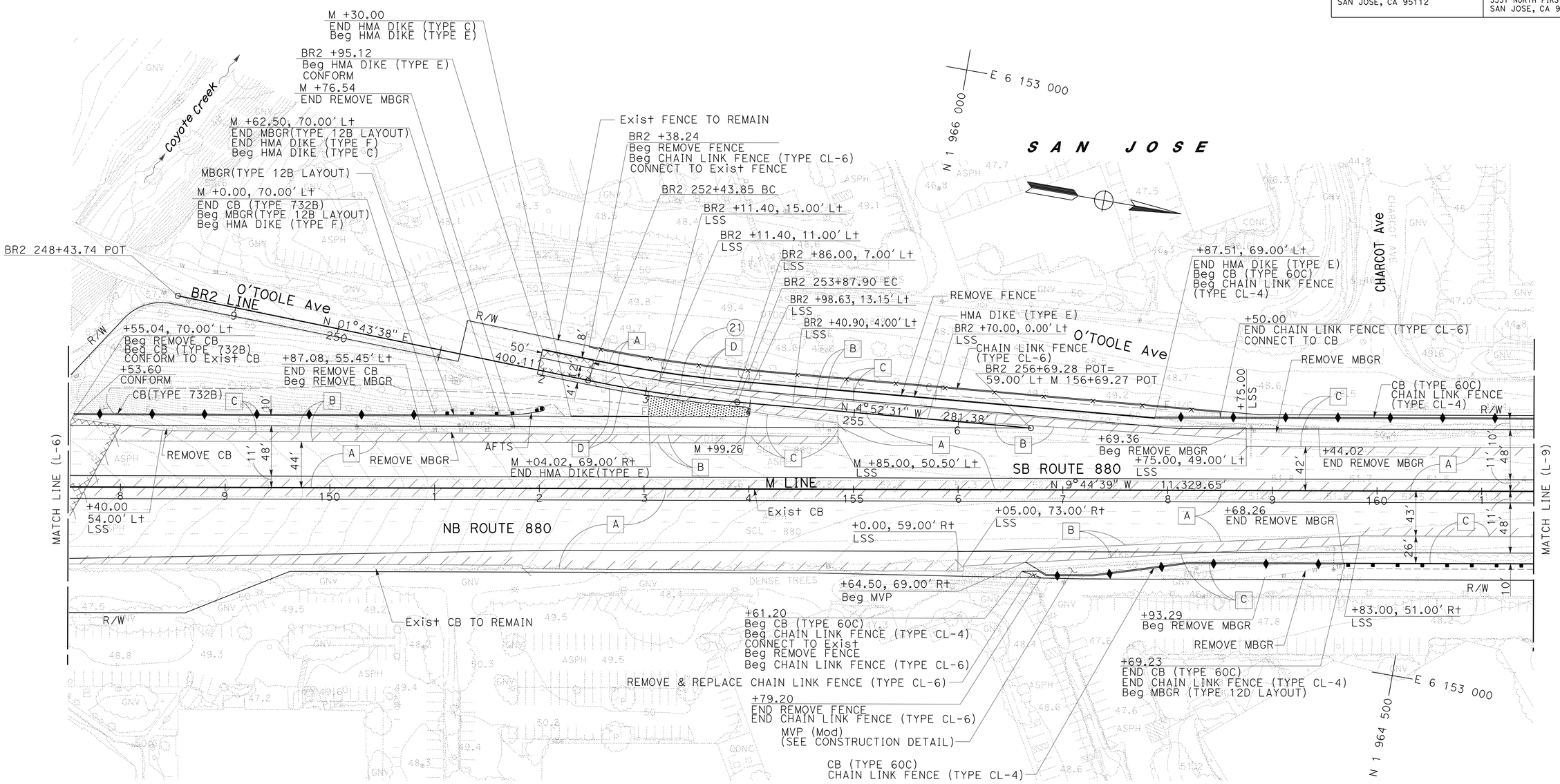

FOR NOTES, ABBREVIATIONS
AND LEGEND, SEE SHEET L-1

LAYOUT
SCALE: 1" = 50'

L-8

REVISED BY	DATE REVISED
TOMMY CHO	MARILOU AYUPAN

CALCULATED-DESIGNED BY
CHECKED BY

CONSULTANT FUNCTIONAL SUPERVISOR
RICHARD TANAKA

STATE OF CALIFORNIA - DEPARTMENT OF TRANSPORTATION
Caltrans

LAST REVISION 03-31-11
DATE PLOTTED => 08-JUL-2011
TIME PLOTTED => 12:51

FOR ACCURATE RIGHT OF WAY DATA, CONTACT
RIGHT OF WAY ENGINEERING AT THE DISTRICT OFFICE.

Dist	COUNTY	ROUTE	POST MILES TOTAL PROJECT	SHEET No.	TOTAL SHEETS
04	SCI	880	4.1/8.7	36	710

REGISTERED CIVIL ENGINEER 03/31/11 DATE

7-11-11
PLANS APPROVAL DATE

REGISTERED PROFESSIONAL ENGINEER
RICHARD K. TANAKA
No. 23233
Exp. 12/31/11
CIVIL
STATE OF CALIFORNIA

THE STATE OF CALIFORNIA OR ITS OFFICERS OR AGENTS SHALL NOT BE RESPONSIBLE FOR THE ACCURACY OR COMPLETENESS OF SCANNED COPIES OF THIS PLAN SHEET.

MARK THOMAS & COMPANY, INC.
1960 ZANKER ROAD
SAN JOSE, CA 95112

SANTA CLARA VALLEY
TRANSPORTATION AUTHORITY
3331 NORTH FIRST STREET, BLDG B
SAN JOSE, CA 95134

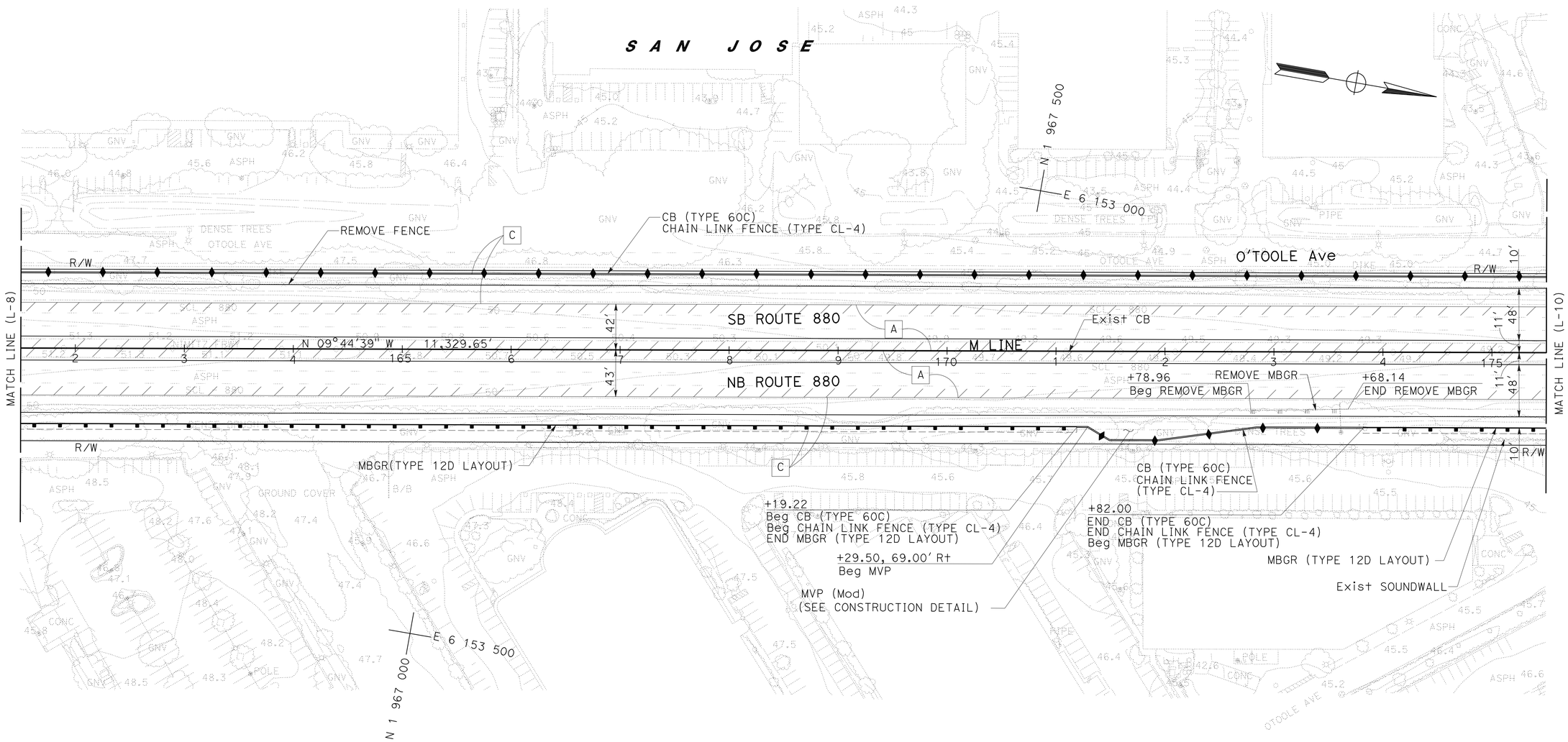

FOR NOTES, ABBREVIATIONS
AND LEGEND, SEE SHEET L-1

LAYOUT
SCALE: 1" = 50'

L-9

STATE OF CALIFORNIA - DEPARTMENT OF TRANSPORTATION
Caltrans

CONSULTANT FUNCTIONAL SUPERVISOR: RICHARD TANAKA
CALCULATED-DESIGNED BY: TOMMY CHO
CHECKED BY: MARILOU AYUPAN
REVISED BY
DATE REVISED

LAST REVISION 03-31-11
DATE PLOTTED => 08-JUL-2011
TIME PLOTTED => 12:51

FOR ACCURATE RIGHT OF WAY DATA, CONTACT
RIGHT OF WAY ENGINEERING AT THE DISTRICT OFFICE.

Dist	COUNTY	ROUTE	POST MILES TOTAL PROJECT	SHEET No.	TOTAL SHEETS
04	SCI	880	4.1/8.7	37	710

REGISTERED CIVIL ENGINEER 03/31/11 DATE

7-11-11
PLANS APPROVAL DATE

REGISTERED PROFESSIONAL ENGINEER
RICHARD K. TANAKA
No. 23233
Exp. 12/31/11
CIVIL
STATE OF CALIFORNIA

THE STATE OF CALIFORNIA OR ITS OFFICERS OR AGENTS SHALL NOT BE RESPONSIBLE FOR THE ACCURACY OR COMPLETENESS OF SCANNED COPIES OF THIS PLAN SHEET.

MARK THOMAS & COMPANY, INC.
1960 ZANKER ROAD
SAN JOSE, CA 95112

SANTA CLARA VALLEY
TRANSPORTATION AUTHORITY
3331 NORTH FIRST STREET, BLDG B
SAN JOSE, CA 95134

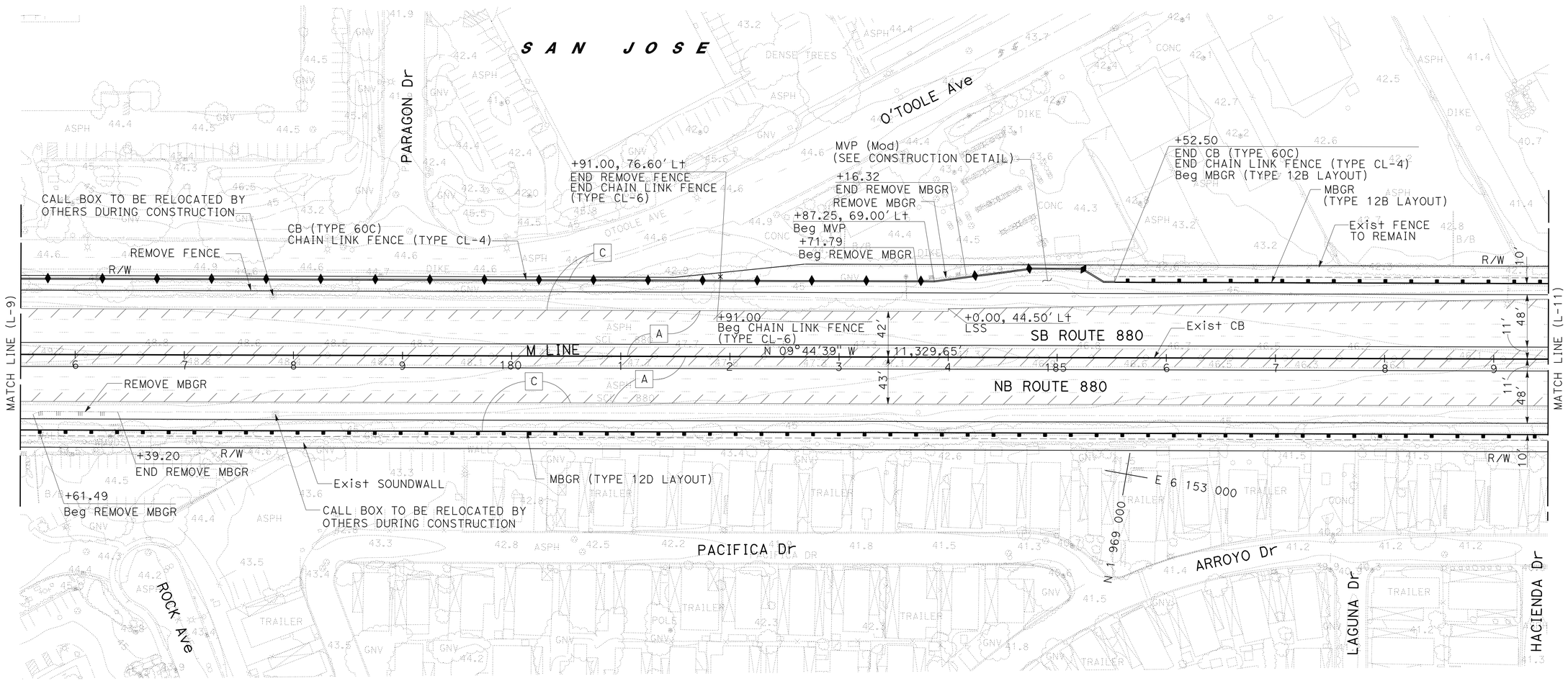

FOR NOTES, ABBREVIATIONS
AND LEGEND, SEE SHEET L-1

LAYOUT
SCALE: 1" = 50'

L-10

REVISED BY	DATE REVISED

CALCULATED-DESIGNED BY: TOMMY CHO
CHECKED BY: MARILOU AYUPAN

CONSULTANT FUNCTIONAL SUPERVISOR: RICHARD TANAKA

STATE OF CALIFORNIA - DEPARTMENT OF TRANSPORTATION
Caltrans

LAST REVISION 03-31-11
DATE PLOTTED => 08-JUL-2011
TIME PLOTTED => 12:51

FOR ACCURATE RIGHT OF WAY DATA, CONTACT
RIGHT OF WAY ENGINEERING AT THE DISTRICT OFFICE.

Dist	COUNTY	ROUTE	POST MILES TOTAL PROJECT	SHEET No.	TOTAL SHEETS
04	SCI	880	4.1/8.7	38	710

REGISTERED CIVIL ENGINEER 03/31/11 DATE

7-11-11
PLANS APPROVAL DATE

REGISTERED PROFESSIONAL ENGINEER RICHARD K. TANAKA No. 23233 Exp. 12/31/11 CIVIL STATE OF CALIFORNIA

THE STATE OF CALIFORNIA OR ITS OFFICERS OR AGENTS SHALL NOT BE RESPONSIBLE FOR THE ACCURACY OR COMPLETENESS OF SCANNED COPIES OF THIS PLAN SHEET.

MARK THOMAS & COMPANY, INC.
1960 ZANKER ROAD
SAN JOSE, CA 95112

SANTA CLARA VALLEY
TRANSPORTATION AUTHORITY
3331 NORTH FIRST STREET, BLDG B
SAN JOSE, CA 95134

CURVE DATA

No.	R	Δ	T	L	N-COORDINATE	E-COORDINATE
22	3000.00	3°11'29"	83.57	167.10	1969753.5658	6149653.0630
42	1000.00	5°21'29"	46.79	93.52	1970261.0309	6151748.0340

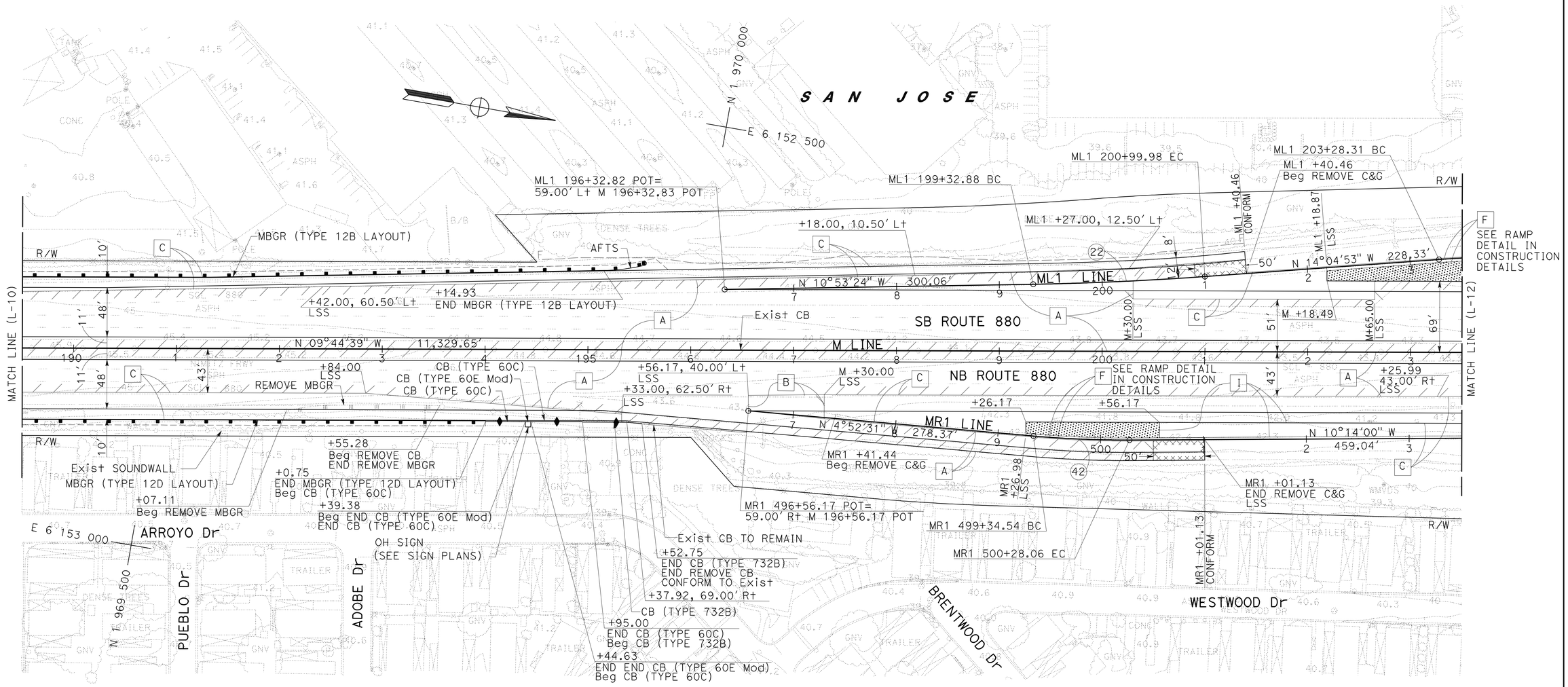

FOR NOTES, ABBREVIATIONS
AND LEGEND, SEE SHEET L-1

LAYOUT
SCALE: 1" = 50'

L-11

STATE OF CALIFORNIA - DEPARTMENT OF TRANSPORTATION
Caltrans

CONSULTANT FUNCTIONAL SUPERVISOR: RICHARD TANAKA
CALCULATED-DESIGNED BY: MARILOU AYUPAN
CHECKED BY: TOMMY CHO
REVISED BY
DATE REVISED

LAST REVISION 03-31-11
DATE PLOTTED => 08-JUL-2011
TIME PLOTTED => 12:51

FOR ACCURATE RIGHT OF WAY DATA, CONTACT
RIGHT OF WAY ENGINEERING AT THE DISTRICT OFFICE.

Dist	COUNTY	ROUTE	POST MILES TOTAL PROJECT	SHEET No.	TOTAL SHEETS
04	SCI	880	4.1/8.7	39	710

REGISTERED CIVIL ENGINEER 03/31/11 DATE

7-11-11
PLANS APPROVAL DATE

REGISTERED PROFESSIONAL ENGINEER RICHARD K. TANAKA No. 23233 Exp. 12/31/11 CIVIL STATE OF CALIFORNIA

THE STATE OF CALIFORNIA OR ITS OFFICERS OR AGENTS SHALL NOT BE RESPONSIBLE FOR THE ACCURACY OR COMPLETENESS OF SCANNED COPIES OF THIS PLAN SHEET.

MARK THOMAS & COMPANY, INC.
1960 ZANKER ROAD
SAN JOSE, CA 95112

SANTA CLARA VALLEY
TRANSPORTATION AUTHORITY
3331 NORTH FIRST STREET, BLDG B
SAN JOSE, CA 95134

CURVE DATA

No.	R	Δ	T	L	N-COORDINATE	E-COORDINATE
2	20,000.00	1°00'38"	176.39	352.77	1967574.4198	6132843.7792
3	25,000.00	1°00'38"	220.49	440.96	1975971.6916	6177053.3464
23	1500.00	4°32'22"	59.45	118.84	1971069.8749	6153962.2930

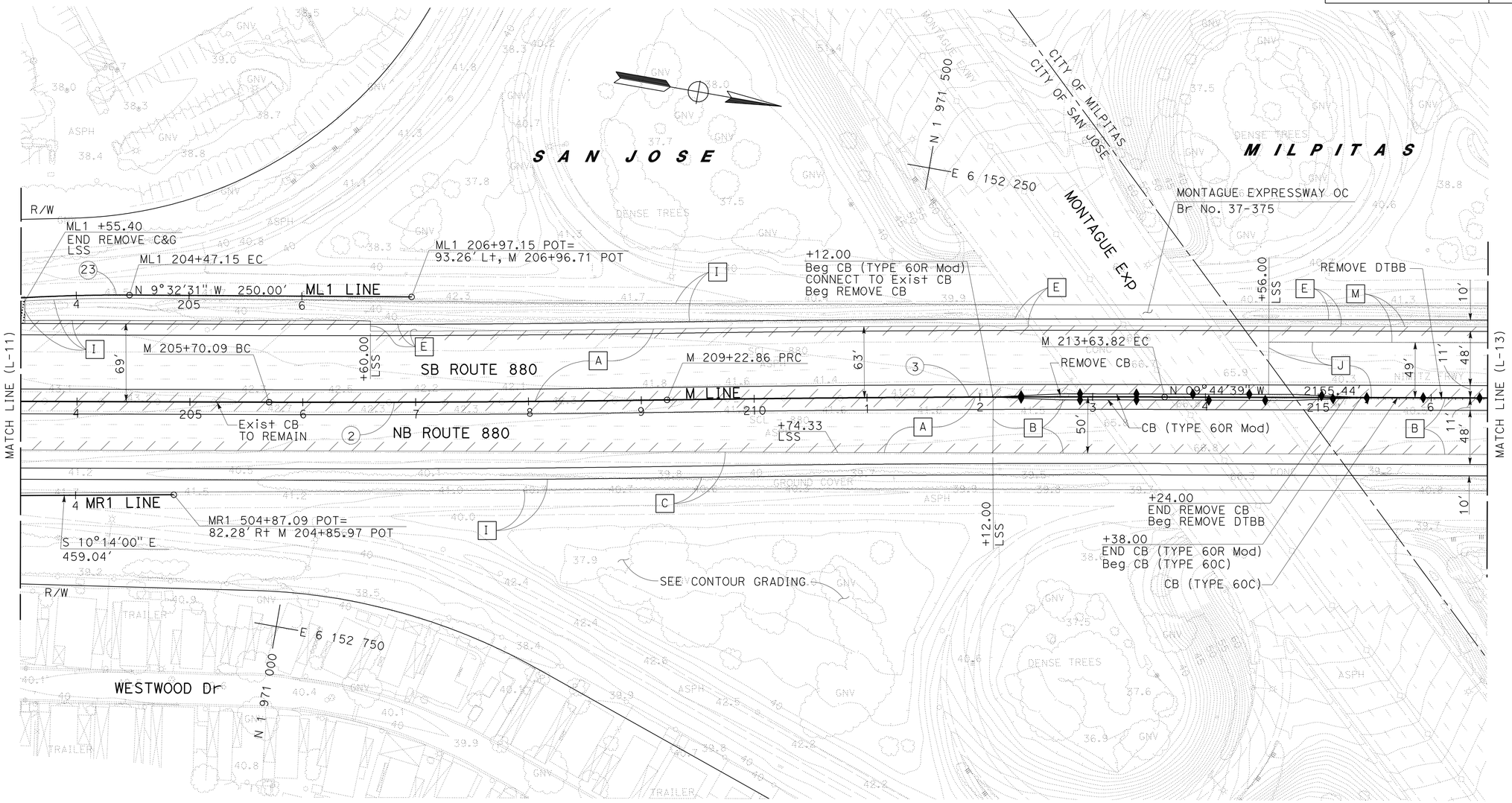

FOR NOTES, ABBREVIATIONS
AND LEGEND, SEE SHEET L-1

LAYOUT
SCALE: 1" = 50'

L-12

STATE OF CALIFORNIA - DEPARTMENT OF TRANSPORTATION
Caltrans

CONSULTANT FUNCTIONAL SUPERVISOR: RICHARD TANAKA
CALCULATED-DESIGNED BY: MARILOU AYUPAN
CHECKED BY: TOMMY CHO
REVISED BY
DATE REVISED

LAST REVISION 03-31-11
DATE PLOTTED => 08-JUL-2011
TIME PLOTTED => 12:51

FOR ACCURATE RIGHT OF WAY DATA, CONTACT
RIGHT OF WAY ENGINEERING AT THE DISTRICT OFFICE.

Dist	COUNTY	ROUTE	POST MILES TOTAL PROJECT	SHEET No.	TOTAL SHEETS
04	SCI	880	4.1/8.7	40	710

REGISTERED CIVIL ENGINEER 03/31/11 DATE

7-11-11
PLANS APPROVAL DATE

REGISTERED PROFESSIONAL ENGINEER RICHARD K. TANAKA No. 23233 Exp. 12/31/11 CIVIL STATE OF CALIFORNIA

THE STATE OF CALIFORNIA OR ITS OFFICERS OR AGENTS SHALL NOT BE RESPONSIBLE FOR THE ACCURACY OR COMPLETENESS OF SCANNED COPIES OF THIS PLAN SHEET.

MARK THOMAS & COMPANY, INC.
1960 ZANKER ROAD
SAN JOSE, CA 95112

SANTA CLARA VALLEY
TRANSPORTATION AUTHORITY
3331 NORTH FIRST STREET, BLDG B
SAN JOSE, CA 95134

CURVE DATA

No.	R	Δ	T	L	N-COORDINATE	E-COORDINATE
24	8000.00	4°09'48"	290.78	581.31	1973650.9478	6160119.6211
43	1000.00	4°17'23"	37.45	74.87	1972830.3284	6151297.4977
44	3000.00	3°11'29"	83.57	167.10	1973908.6671	6155150.9295
96	1023.67	4°18'00"	38.43	76.82	1972797.9648	6151305.4549

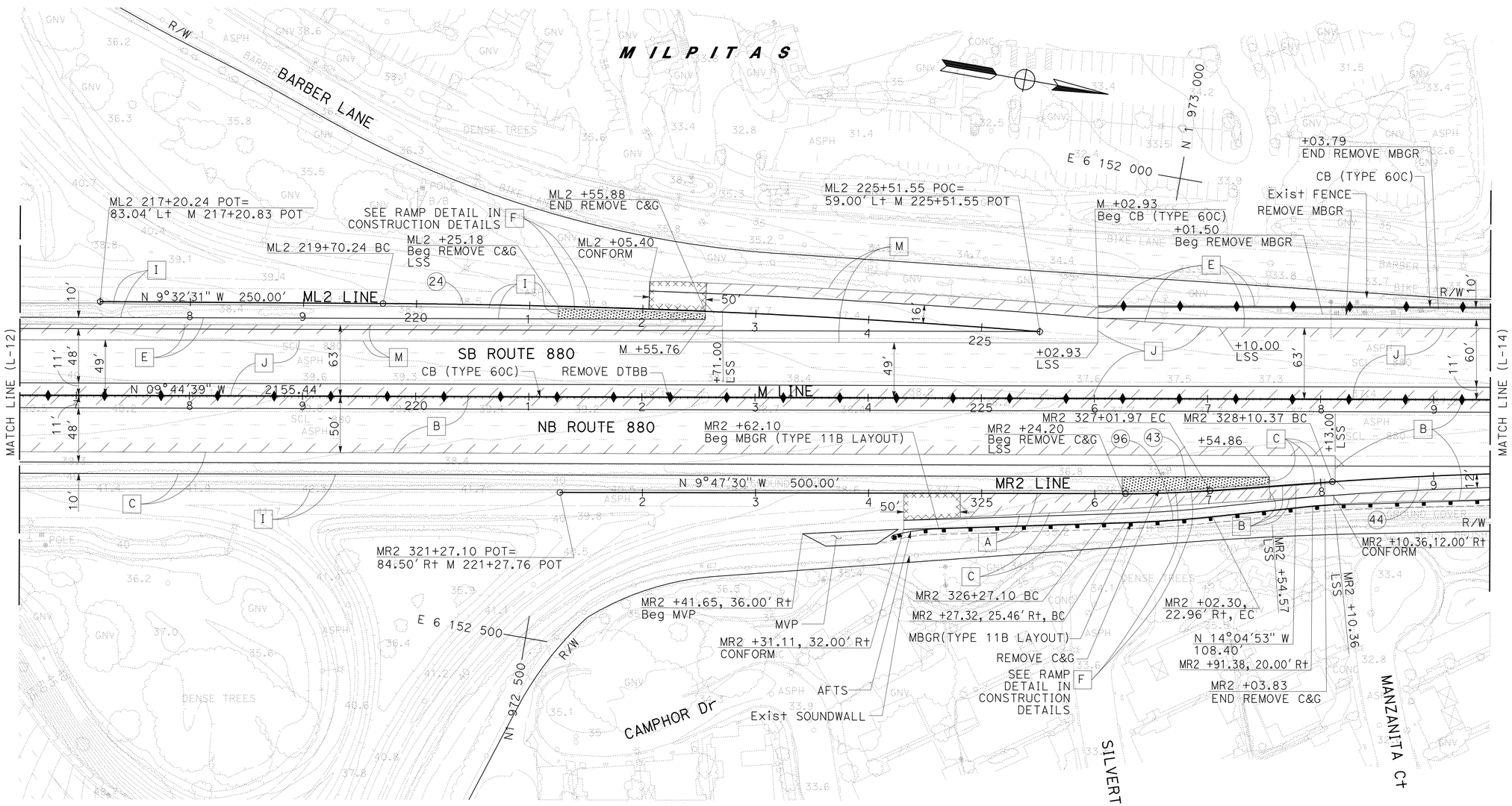

FOR NOTES, ABBREVIATIONS
AND LEGEND, SEE SHEET L-1

LAYOUT
SCALE: 1" = 50'

L-13

REVISED BY	DATE REVISED
TOMMY CHO	MARILOU AYUPAN

CALCULATED-DESIGNED BY
CHECKED BY
CONSULTANT FUNCTIONAL SUPERVISOR
RICHARD TANAKA

STATE OF CALIFORNIA - DEPARTMENT OF TRANSPORTATION
Caltrans

LAST REVISION 03-31-11
DATE PLOTTED => 08-JUL-2011
TIME PLOTTED => 12:51

FOR ACCURATE RIGHT OF WAY DATA, CONTACT
RIGHT OF WAY ENGINEERING AT THE DISTRICT OFFICE.

Dist	COUNTY	ROUTE	POST MILES TOTAL PROJECT	SHEET No.	TOTAL SHEETS
04	SCI	880	4.1/8.7	41	710

REGISTERED CIVIL ENGINEER 03/31/11 DATE

7-11-11
PLANS APPROVAL DATE

REGISTERED PROFESSIONAL ENGINEER
RICHARD K. TANAKA
No. 23233
Exp. 12/31/11
CIVIL
STATE OF CALIFORNIA

THE STATE OF CALIFORNIA OR ITS OFFICERS OR AGENTS SHALL NOT BE RESPONSIBLE FOR THE ACCURACY OR COMPLETENESS OF SCANNED COPIES OF THIS PLAN SHEET.

MARK THOMAS & COMPANY, INC.
1960 ZANKER ROAD
SAN JOSE, CA 95112

SANTA CLARA VALLEY
TRANSPORTATION AUTHORITY
3331 NORTH FIRST STREET, BLDG B
SAN JOSE, CA 95134

CURVE DATA

No.	R	Δ	T	L	N-COORDINATE	E-COORDINATE
4	9993.00	4°34'43"	399.49	798.56	1972173.4967	6142200.3741

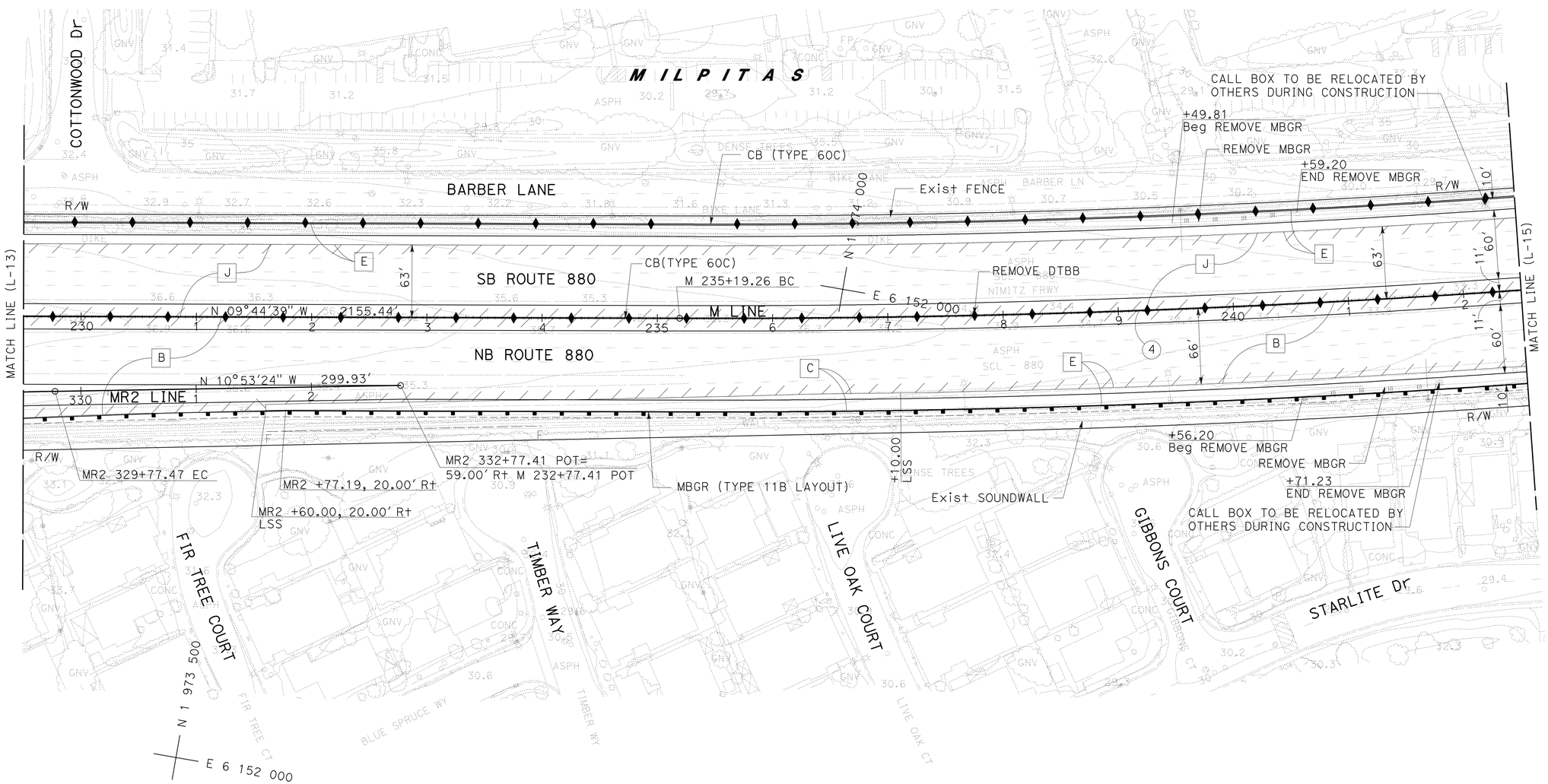

FOR NOTES, ABBREVIATIONS
AND LEGEND, SEE SHEET L-1

LAYOUT
SCALE: 1" = 50'

L-14

STATE OF CALIFORNIA - DEPARTMENT OF TRANSPORTATION
Caltrans

CONSULTANT FUNCTIONAL SUPERVISOR: RICHARD TANAKA
CALCULATED-DESIGNED BY: MARILOU AYUPAN
CHECKED BY: TOMMY CHO
REVISED BY
DATE REVISED

LAST REVISION 03-31-11
DATE PLOTTED => 08-JUL-2011
TIME PLOTTED => 15:49

FOR ACCURATE RIGHT OF WAY DATA, CONTACT
RIGHT OF WAY ENGINEERING AT THE DISTRICT OFFICE.

Dist	COUNTY	ROUTE	POST MILES TOTAL PROJECT	SHEET No.	TOTAL SHEETS
04	SCI	880	4.1/8.7	42	710

REGISTERED CIVIL ENGINEER 03/31/11 DATE

7-11-11
PLANS APPROVAL DATE

REGISTERED PROFESSIONAL ENGINEER RICHARD K. TANAKA No. 23233 Exp. 12/31/11 CIVIL STATE OF CALIFORNIA

THE STATE OF CALIFORNIA OR ITS OFFICERS OR AGENTS SHALL NOT BE RESPONSIBLE FOR THE ACCURACY OR COMPLETENESS OF SCANNED COPIES OF THIS PLAN SHEET.

MARK THOMAS & COMPANY, INC.
1960 ZANKER ROAD
SAN JOSE, CA 95112

SANTA CLARA VALLEY
TRANSPORTATION AUTHORITY
3331 NORTH FIRST STREET, BLDG B
SAN JOSE, CA 95134

CURVE DATA

No.	R	Δ	T	L	N-COORDINATE	E-COORDINATE
25	3000.00	4°12'10"	110.08	220.06	1975030.3196	6148621.8364

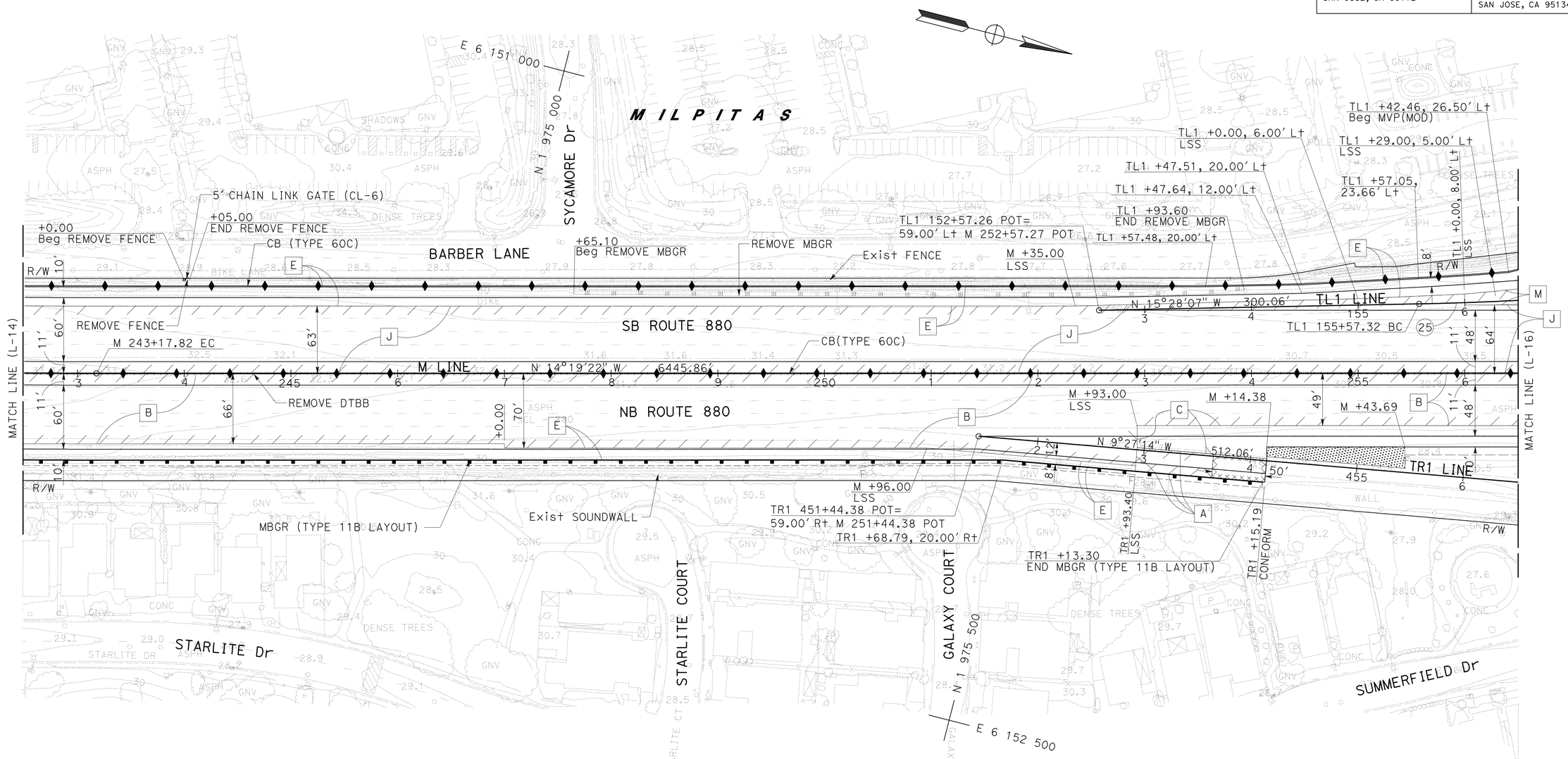

FOR NOTES, ABBREVIATIONS
AND LEGEND, SEE SHEET L-1

LAYOUT
SCALE: 1" = 50'

L-15

STATE OF CALIFORNIA - DEPARTMENT OF TRANSPORTATION
Caltrans

CONSULTANT FUNCTIONAL SUPERVISOR: RICHARD TANAKA
CALCULATED-DESIGNED BY: MARILOU AYUPAN
CHECKED BY: TOMMY CHO
REVISED BY
DATE REVISED

LAST REVISION 03-31-11
DATE PLOTTED => 08-JUL-2011
TIME PLOTTED => 15:49

FOR ACCURATE RIGHT OF WAY DATA, CONTACT
RIGHT OF WAY ENGINEERING AT THE DISTRICT OFFICE.

Dist	COUNTY	ROUTE	POST MILES TOTAL PROJECT	SHEET No.	TOTAL SHEETS
04	SCI	880	4.1/8.7	43	710

REGISTERED CIVIL ENGINEER 03/31/11 DATE

7-11-11
PLANS APPROVAL DATE

REGISTERED PROFESSIONAL ENGINEER RICHARD K. TANAKA No. 23233 Exp. 12/31/11 CIVIL STATE OF CALIFORNIA

THE STATE OF CALIFORNIA OR ITS OFFICERS OR AGENTS SHALL NOT BE RESPONSIBLE FOR THE ACCURACY OR COMPLETENESS OF SCANNED COPIES OF THIS PLAN SHEET.

MARK THOMAS & COMPANY, INC.
1960 ZANKER ROAD
SAN JOSE, CA 95112

SANTA CLARA VALLEY
TRANSPORTATION AUTHORITY
3331 NORTH FIRST STREET, BLDG B
SAN JOSE, CA 95134

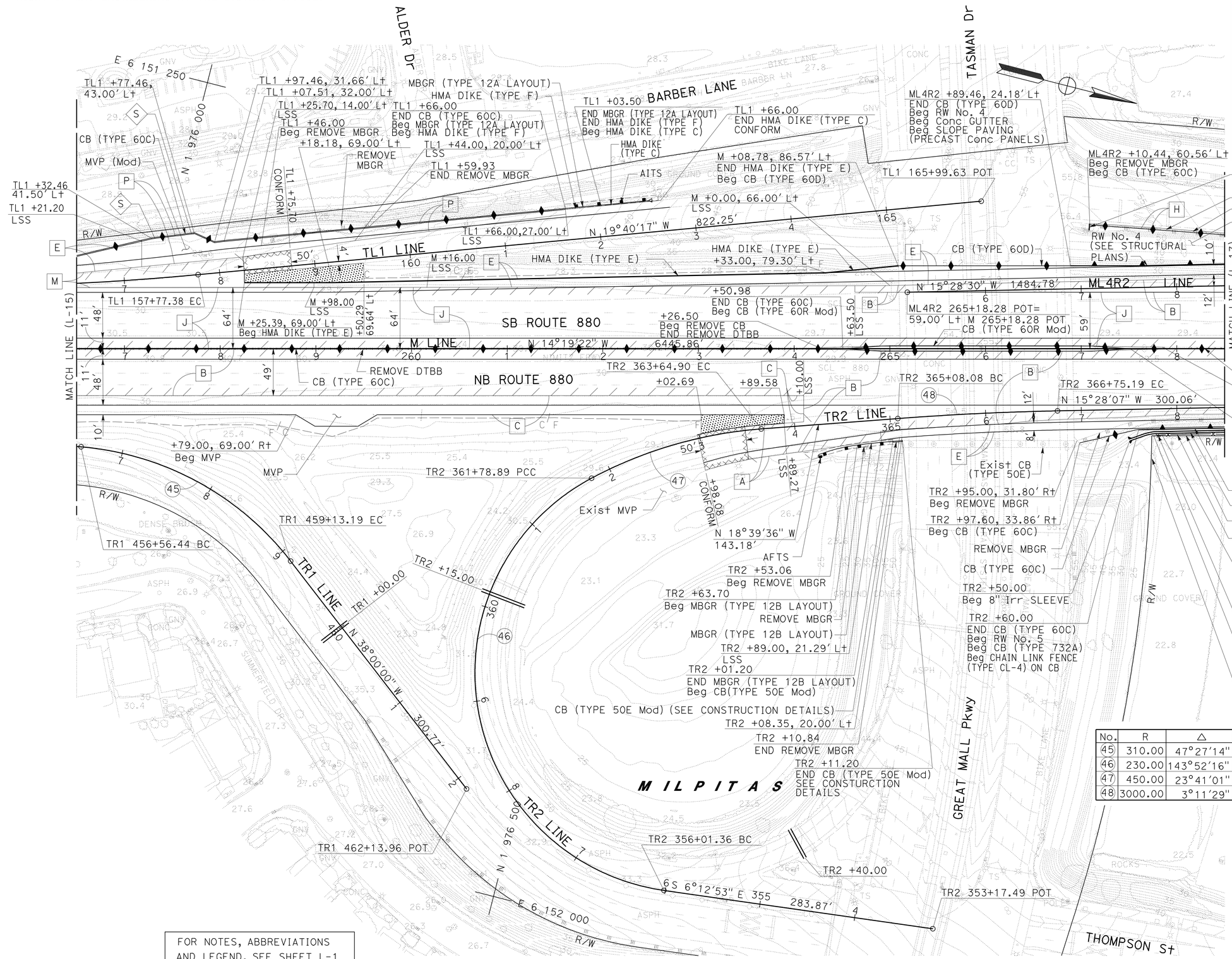

CURVE DATA

No.	R	Δ	T	L	N-COORDINATE	E-COORDINATE
45	310.00	47°27'14"	136.25	256.75	1976017.0956	6151957.1364
46	230.00	143°52'16"	705.17	577.54	1976646.2538	6151721.1342
47	450.00	23°41'01"	94.35	186.01	1976794.4406	6151883.7400
48	3000.00	3°11'29"	83.57	167.10	1977745.9703	6154253.8860

FOR NOTES, ABBREVIATIONS
AND LEGEND, SEE SHEET L-1

LAYOUT

SCALE: 1" = 50'

L-16

STATE OF CALIFORNIA - DEPARTMENT OF TRANSPORTATION
Caltrans

CONSULTANT FUNCTIONAL SUPERVISOR: RICHARD TANAKA
CALCULATED-DESIGNED BY: TOMMY CHO
CHECKED BY: MARILOU AYUPAN
REVISED BY
DATE REVISED

LAST REVISION 03-31-11
DATE PLOTTED => 08-JUL-2011
TIME PLOTTED => 15:50

FOR ACCURATE RIGHT OF WAY DATA, CONTACT
RIGHT OF WAY ENGINEERING AT THE DISTRICT OFFICE.

Dist	COUNTY	ROUTE	POST MILES TOTAL PROJECT	SHEET No.	TOTAL SHEETS
04	SCI	880	4.1/8.7	44	710

REGISTERED CIVIL ENGINEER 03/31/11 DATE

7-11-11
PLANS APPROVAL DATE

REGISTERED PROFESSIONAL ENGINEER RICHARD K. TANAKA No. 23233 Exp. 12/31/11 CIVIL STATE OF CALIFORNIA

THE STATE OF CALIFORNIA OR ITS OFFICERS OR AGENTS SHALL NOT BE RESPONSIBLE FOR THE ACCURACY OR COMPLETENESS OF SCANNED COPIES OF THIS PLAN SHEET.

MARK THOMAS & COMPANY, INC.
1960 ZANKER ROAD
SAN JOSE, CA 95112

SANTA CLARA VALLEY
TRANSPORTATION AUTHORITY
3331 NORTH FIRST STREET, BLDG B
SAN JOSE, CA 95134

CURVE DATA

No.	R	Δ	T	L	N-COORDINATE	E-COORDINATE
26	3000.00	3°13'58"	84.65	169.26	1977393.5750	6147993.8346
97	351.00	10°33'36"	32.44	64.69		
98	349.00	8°06'35"	24.74	49.40		

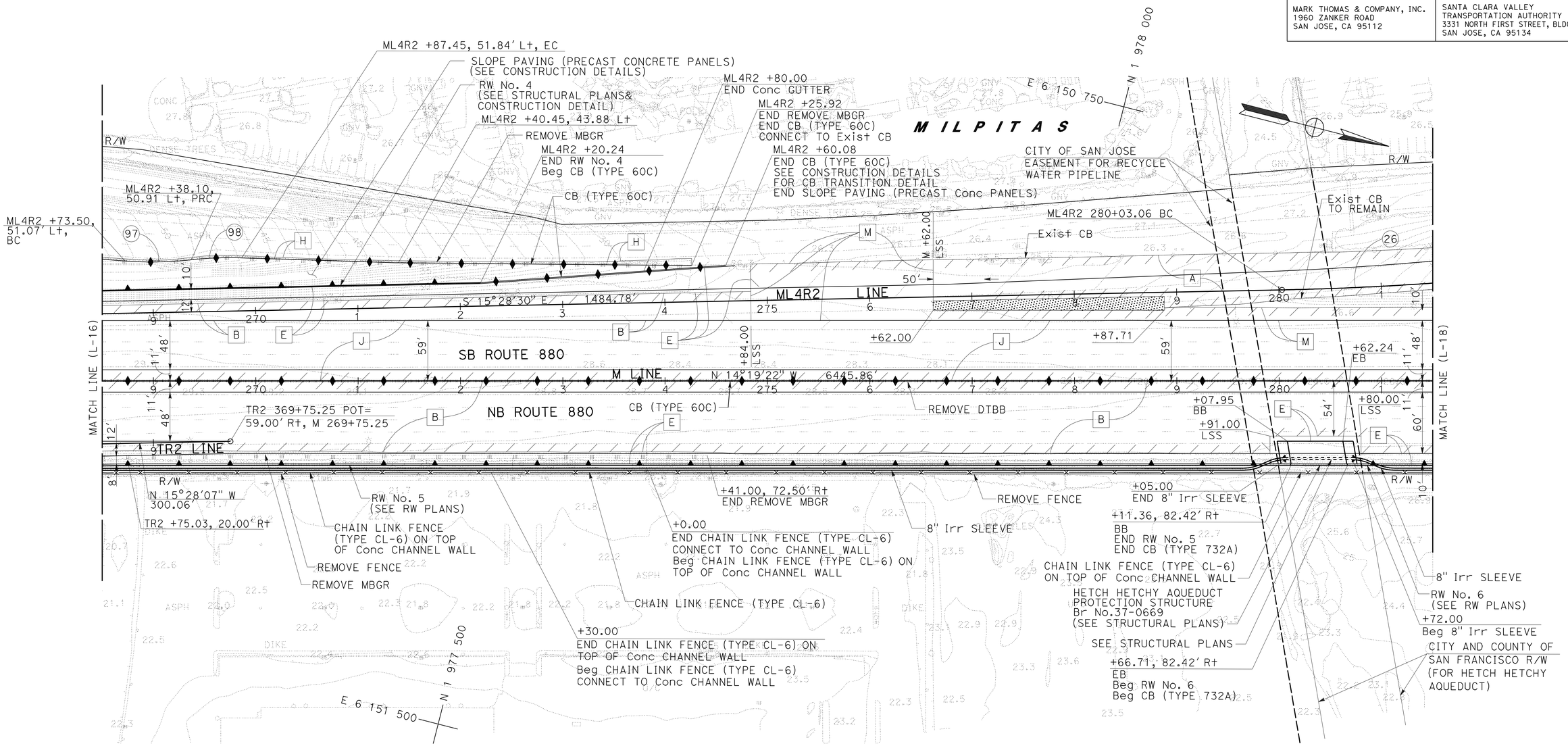

FOR NOTES, ABBREVIATIONS AND LEGEND, SEE SHEET L-1

LAYOUT
SCALE: 1" = 50'

L-17

REVISED BY | DATE REVISED
TOMMY CHO | MARILOU AYUPAN
CALCULATED-DESIGNED BY | CHECKED BY
CONSULTANT FUNCTIONAL SUPERVISOR
RICHARD TANAKA
STATE OF CALIFORNIA - DEPARTMENT OF TRANSPORTATION
Caltrans

LAST REVISION 03-31-11 | DATE PLOTTED => 08-JUL-2011 | TIME PLOTTED => 15:50

FOR ACCURATE RIGHT OF WAY DATA, CONTACT
RIGHT OF WAY ENGINEERING AT THE DISTRICT OFFICE.

Dist	COUNTY	ROUTE	POST MILES TOTAL PROJECT	SHEET No.	TOTAL SHEETS
04	SCI	880	4.1/8.7	45	710

REGISTERED CIVIL ENGINEER 03/31/11 DATE

7-11-11
PLANS APPROVAL DATE

REGISTERED PROFESSIONAL ENGINEER RICHARD K. TANAKA No. 23233 Exp. 12/31/11 CIVIL STATE OF CALIFORNIA

THE STATE OF CALIFORNIA OR ITS OFFICERS OR AGENTS SHALL NOT BE RESPONSIBLE FOR THE ACCURACY OR COMPLETENESS OF SCANNED COPIES OF THIS PLAN SHEET.

MARK THOMAS & COMPANY, INC.
1960 ZANKER ROAD
SAN JOSE, CA 95112

SANTA CLARA VALLEY
TRANSPORTATION AUTHORITY
3331 NORTH FIRST STREET, BLDG B
SAN JOSE, CA 95134

CURVE DATA

No.	R	Δ	T	L	N-COORDINATE	E-COORDINATE
27	1386.48	15°48′09″	192.42	382.40	1978833.7523	6152058.1836
28	1000.00	6°24′52″	56.04	111.95	1978909.5823	6149664.3152

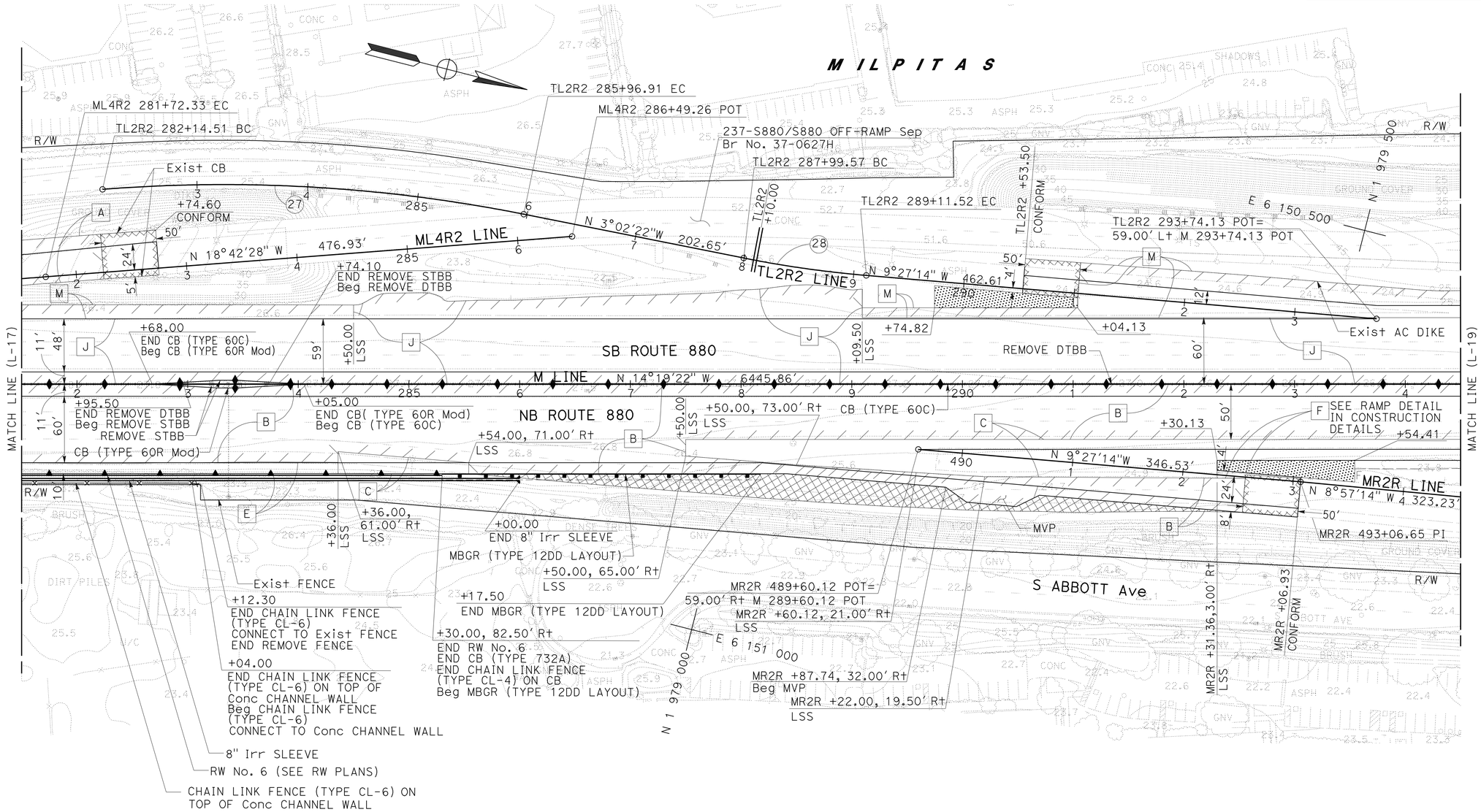

FOR NOTES, ABBREVIATIONS
AND LEGEND, SEE SHEET L-1

LAYOUT
SCALE: 1" = 50′

L-18

STATE OF CALIFORNIA - DEPARTMENT OF TRANSPORTATION
Caltrans

CONSULTANT FUNCTIONAL SUPERVISOR: RICHARD TANAKA
CALCULATED-DESIGNED BY: MARILOU AYUPAN
CHECKED BY: TOMMY CHO
REVISED BY
DATE REVISED

LAST REVISION 03-31-11
DATE PLOTTED => 08-JUL-2011
TIME PLOTTED => 15:50

FOR ACCURATE RIGHT OF WAY DATA, CONTACT
RIGHT OF WAY ENGINEERING AT THE DISTRICT OFFICE.

Dist	COUNTY	ROUTE	POST MILES TOTAL PROJECT	SHEET No.	TOTAL SHEETS
04	SCI	880	4.1/8.7	46	710

REGISTERED CIVIL ENGINEER 03/31/11 DATE

7-11-11
PLANS APPROVAL DATE

REGISTERED PROFESSIONAL ENGINEER RICHARD K. TANAKA No. 23233 Exp. 12/31/11 CIVIL STATE OF CALIFORNIA

THE STATE OF CALIFORNIA OR ITS OFFICERS OR AGENTS SHALL NOT BE RESPONSIBLE FOR THE ACCURACY OR COMPLETENESS OF SCANNED COPIES OF THIS PLAN SHEET.

MARK THOMAS & COMPANY, INC.
1960 ZANKER ROAD
SAN JOSE, CA 95112

SANTA CLARA VALLEY
TRANSPORTATION AUTHORITY
3331 NORTH FIRST STREET, BLDG B
SAN JOSE, CA 95134

CURVE DATA

No.	R	Δ	T	L	N-COORDINATE	E-COORDINATE
49	500.00	28°09′23"	125.39	245.71	1979897.1505	6151178.1797
50	148.00	219°49′26"	-	567.82	1980459.3477	6150665.7136
51	200.00	36°44′26"	66.42	128.25	1980507.7025	6150684.8399
52	750.00	16°12′37"	106.81	212.19	1980796.5377	6151152.8935

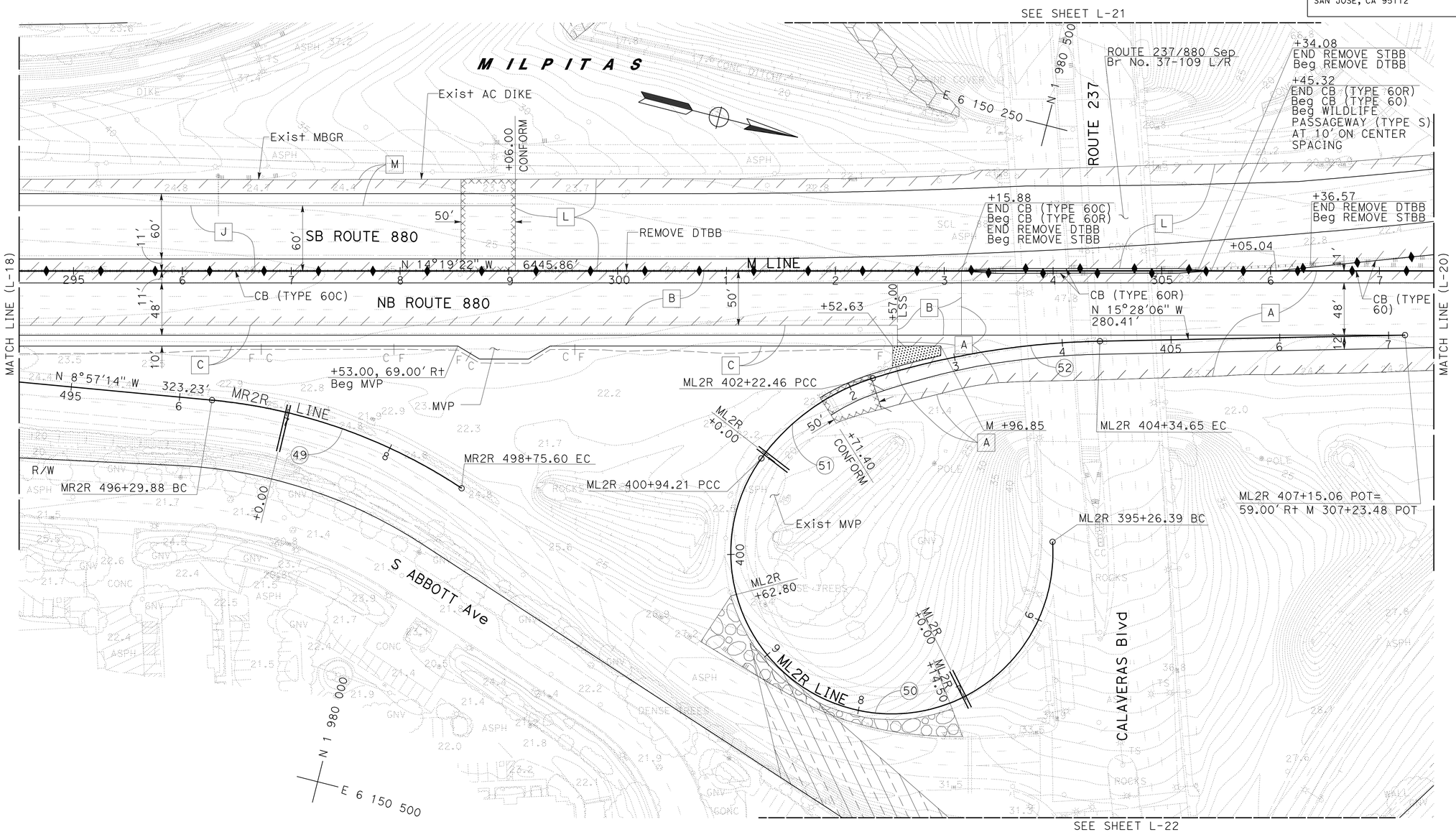

FOR NOTES, ABBREVIATIONS
AND LEGEND, SEE SHEET L-1

LAYOUT
SCALE: 1" = 50′

L-19

STATE OF CALIFORNIA - DEPARTMENT OF TRANSPORTATION
Caltrans

CONSULTANT FUNCTIONAL SUPERVISOR: RICHARD TANAKA
CALCULATED-DESIGNED BY: MARILOU AYUPAN
CHECKED BY: TOMMY CHO
REVISED BY
DATE REVISED

LAST REVISION 03-31-11
DATE PLOTTED => 08-JUL-2011
TIME PLOTTED => 15:50

FOR ACCURATE RIGHT OF WAY DATA, CONTACT
RIGHT OF WAY ENGINEERING AT THE DISTRICT OFFICE.

Dist	COUNTY	ROUTE	POST MILES TOTAL PROJECT	SHEET No.	TOTAL SHEETS
04	SCI	880	4.1/8.7	47	710

REGISTERED CIVIL ENGINEER 03/31/11 DATE

7-11-11
PLANS APPROVAL DATE

REGISTERED PROFESSIONAL ENGINEER RICHARD K. TANAKA No. 23233 Exp. 12/31/11 CIVIL STATE OF CALIFORNIA

THE STATE OF CALIFORNIA OR ITS OFFICERS OR AGENTS SHALL NOT BE RESPONSIBLE FOR THE ACCURACY OR COMPLETENESS OF SCANNED COPIES OF THIS PLAN SHEET.

MARK THOMAS & COMPANY, INC.
1960 ZANKER ROAD
SAN JOSE, CA 95112

SANTA CLARA VALLEY
TRANSPORTATION AUTHORITY
3331 NORTH FIRST STREET, BLDG B
SAN JOSE, CA 95134

CURVE DATA

No.	R	Δ	T	L	N-COORDINATE	E-COORDINATE
5	3986.00	6°31′44″	227.35	454.21	1979905.0447	6146426.0561
6	4500.00	15°04′56″	595.72	1184.56	1983166.1617	6154264.6502

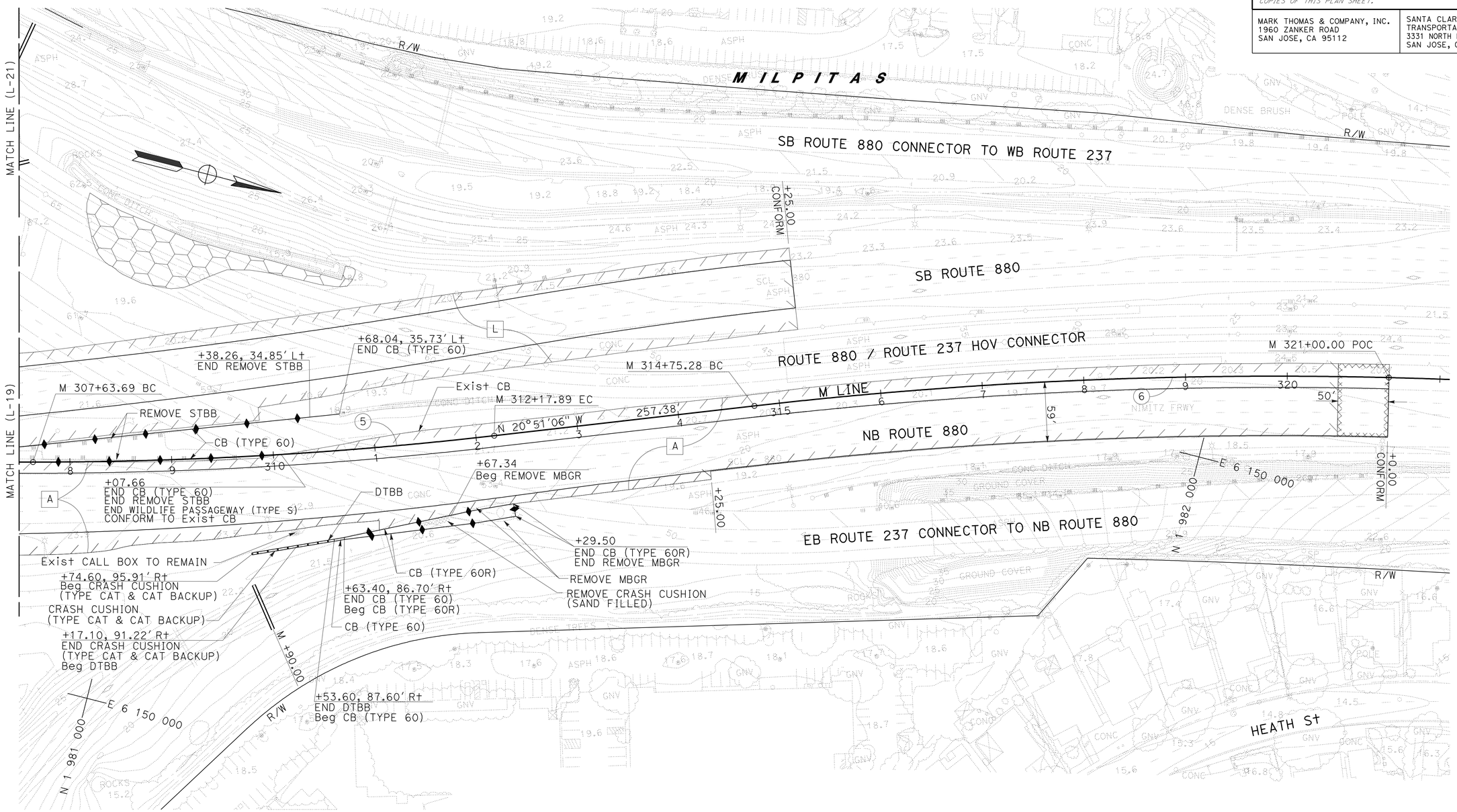

FOR NOTES, ABBREVIATIONS
AND LEGEND, SEE SHEET L-1

LAYOUT
SCALE: 1" = 50′

L-20

STATE OF CALIFORNIA - DEPARTMENT OF TRANSPORTATION
Caltrans

CONSULTANT FUNCTIONAL SUPERVISOR: RICHARD TANAKA
CALCULATED-DESIGNED BY: TOMMY CHO
CHECKED BY: MARILOU AYUPAN
REVISED BY
DATE REVISED

LAST REVISION 03-31-11
DATE PLOTTED => 08-JUL-2011
TIME PLOTTED => 15:50

FOR ACCURATE RIGHT OF WAY DATA, CONTACT
RIGHT OF WAY ENGINEERING AT THE DISTRICT OFFICE.

Dist	COUNTY	ROUTE	POST MILES TOTAL PROJECT	SHEET No.	TOTAL SHEETS
04	SCI	880	4.1/8.7	48	710

REGISTERED CIVIL ENGINEER 03/31/11 DATE

7-11-11
PLANS APPROVAL DATE

REGISTERED PROFESSIONAL ENGINEER
RICHARD K. TANAKA
No. 23233
Exp. 12/31/11
CIVIL
STATE OF CALIFORNIA

THE STATE OF CALIFORNIA OR ITS OFFICERS OR AGENTS SHALL NOT BE RESPONSIBLE FOR THE ACCURACY OR COMPLETENESS OF SCANNED COPIES OF THIS PLAN SHEET.

MARK THOMAS & COMPANY, INC.
1960 ZANKER ROAD
SAN JOSE, CA 95112

SANTA CLARA VALLEY
TRANSPORTATION AUTHORITY
3331 NORTH FIRST STREET, BLDG B
SAN JOSE, CA 95134

FOR NOTES, ABBREVIATIONS
AND LEGEND, SEE SHEET L-1

LAYOUT
SCALE: 1" = 50'

L-21

STATE OF CALIFORNIA - DEPARTMENT OF TRANSPORTATION
Caltrans

CONSULTANT FUNCTIONAL SUPERVISOR: RICHARD TANAKA

CALCULATED-DESIGNED BY: TOMMY CHO
CHECKED BY: MARILOU AYUPAN

REVISED BY
DATE REVISED

LAST REVISION 03-31-11
DATE PLOTTED => 08-JUL-2011
TIME PLOTTED => 15:51

FOR ACCURATE RIGHT OF WAY DATA, CONTACT
RIGHT OF WAY ENGINEERING AT THE DISTRICT OFFICE.

Dist	COUNTY	ROUTE	POST MILES TOTAL PROJECT	SHEET No.	TOTAL SHEETS
04	SCI	880	4.1/8.7	49	710

REGISTERED CIVIL ENGINEER 03/31/11 DATE

7-11-11
PLANS APPROVAL DATE

REGISTERED PROFESSIONAL ENGINEER
RICHARD K. TANAKA
No. 23233
Exp. 12/31/11
CIVIL
STATE OF CALIFORNIA

THE STATE OF CALIFORNIA OR ITS OFFICERS OR AGENTS SHALL NOT BE RESPONSIBLE FOR THE ACCURACY OR COMPLETENESS OF SCANNED COPIES OF THIS PLAN SHEET.

MARK THOMAS & COMPANY, INC.
1960 ZANKER ROAD
SAN JOSE, CA 95112

SANTA CLARA VALLEY
TRANSPORTATION AUTHORITY
3331 NORTH FIRST STREET, BLDG B
SAN JOSE, CA 95134

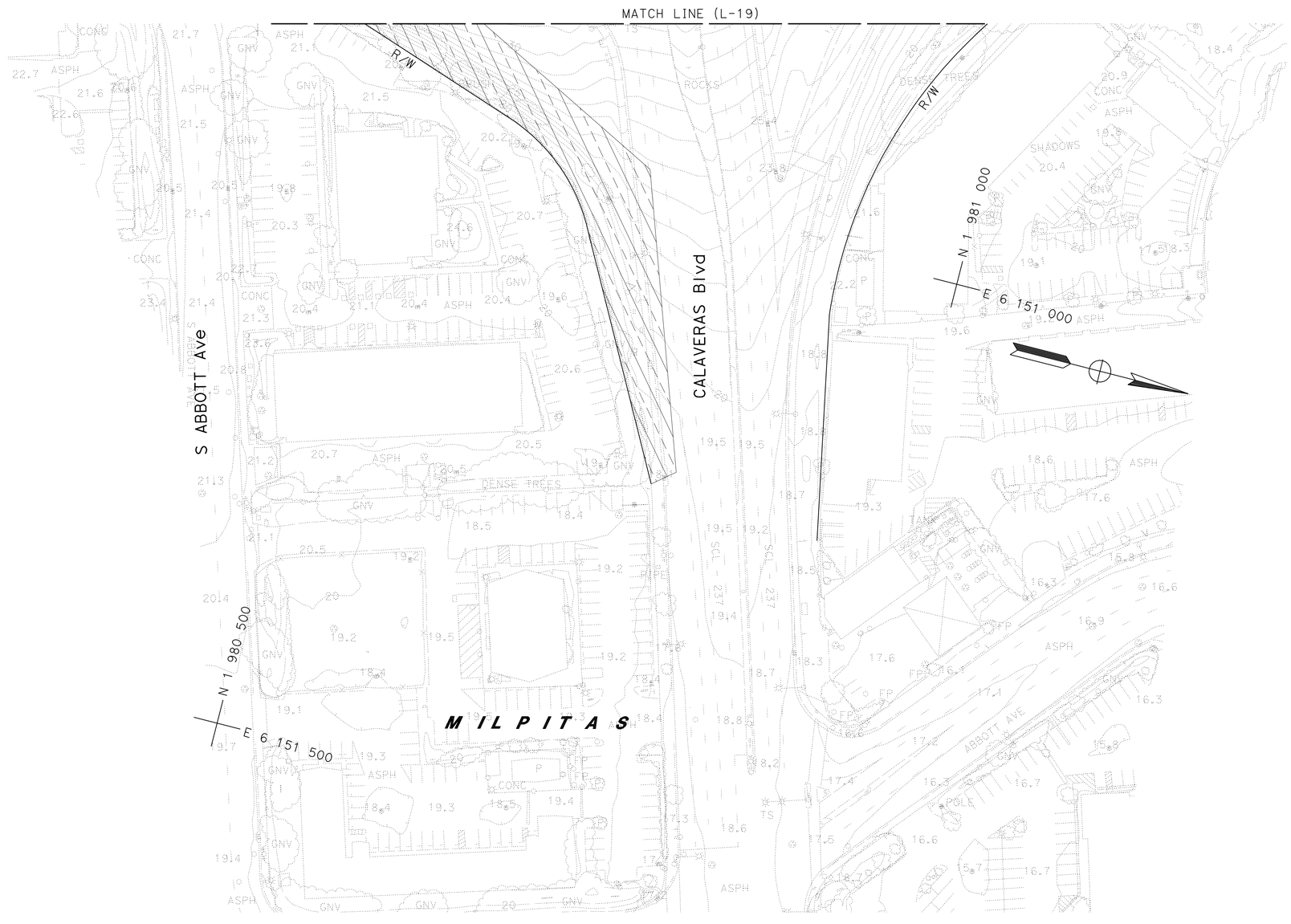

FOR NOTES, ABBREVIATIONS
AND LEGEND, SEE SHEET L-1

LAYOUT
SCALE: 1" = 50'

L-22

STATE OF CALIFORNIA - DEPARTMENT OF TRANSPORTATION
Caltrans

CONSULTANT FUNCTIONAL SUPERVISOR: RICHARD TANAKA
CALCULATED-DESIGNED BY: TOMMY CHO
CHECKED BY: MARILOU AYUPAN
REVISED BY
DATE REVISED

LAST REVISION 03-31-11
DATE PLOTTED => 08-JUL-2011
TIME PLOTTED => 15:51

Dist	COUNTY	ROUTE	POST MILES TOTAL PROJECT	SHEET No.	TOTAL SHEETS
04	SCI	880	4.1/8.7	50	710

REGISTERED CIVIL ENGINEER 10/15/10 DATE

7-11-11
PLANS APPROVAL DATE

REGISTERED PROFESSIONAL ENGINEER
RICHARD K. TANAKA
No. 23233
Exp. 12/31/11
CIVIL
STATE OF CALIFORNIA

THE STATE OF CALIFORNIA OR ITS OFFICERS OR AGENTS SHALL NOT BE RESPONSIBLE FOR THE ACCURACY OR COMPLETENESS OF SCANNED COPIES OF THIS PLAN SHEET.

MARK THOMAS & COMPANY, INC.
1960 ZANKER ROAD
SAN JOSE, CA 95112

SANTA CLARA VALLEY
TRANSPORTATION AUTHORITY
3331 NORTH FIRST STREET, BLDG B
SAN JOSE, CA 95134

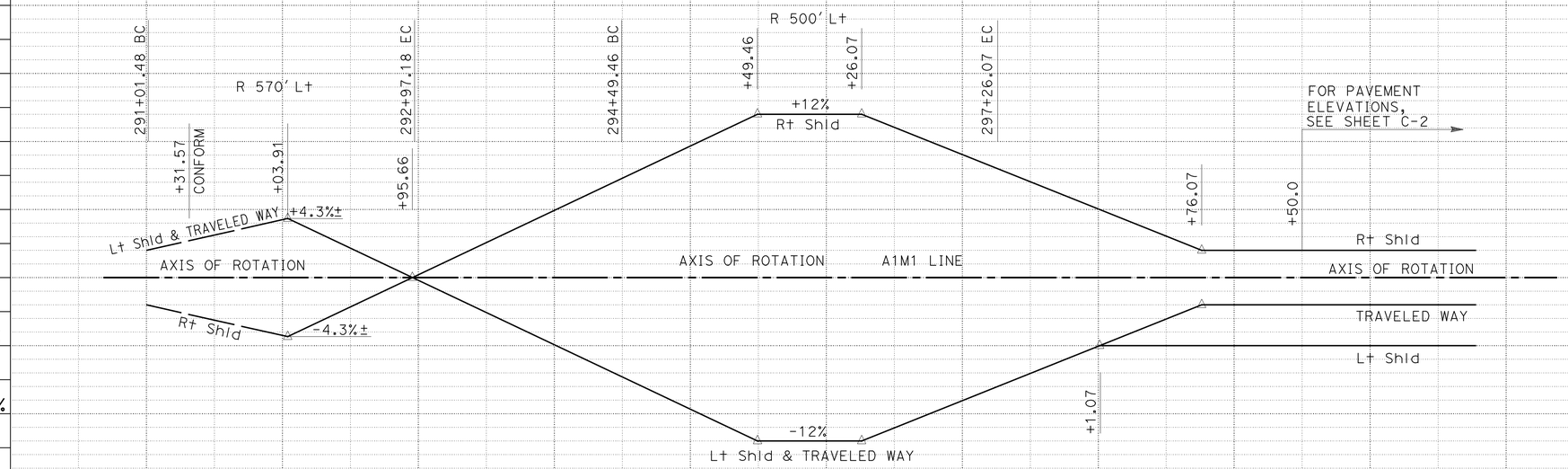

SUPERELEVATION

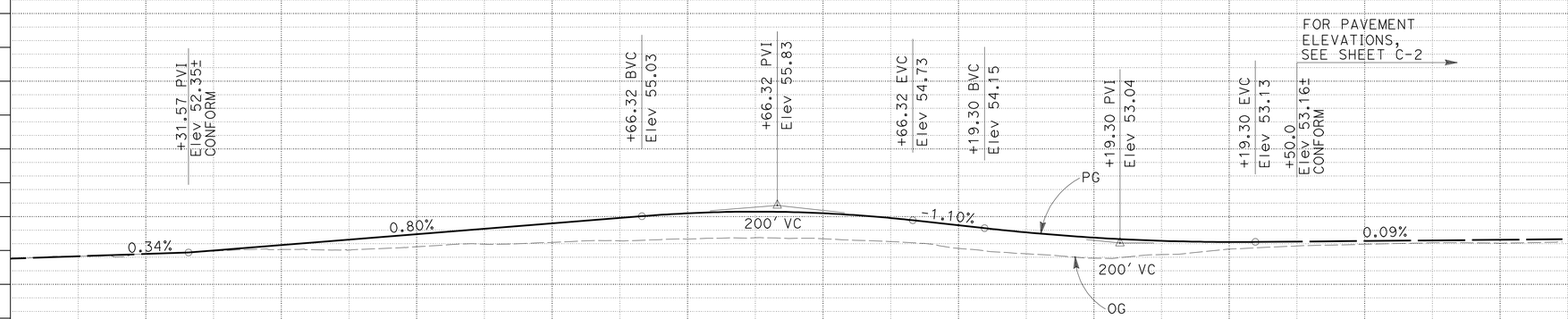

PROFILE

A1M1 LINE PROFILE AND SUPERELEVATION DIAGRAM

SCALE: Horiz 1" = 50'
Vert 1" = 5'

PS-1

STATION		1		2		3		4		295+00		6		7		8		9		300+00	TOTAL
CY	Exc	0	0.2	3.3	2.9	11.8	12.8	22.5	20.7	18.8	17.9	11.8	5.5	2.1	9.1	8.3	7.4	4.5	0	0	159
	Emb	0	0	6.5	14.0	11.8	15.9	29.8	42.8	68.8	85.9	64.2	36.4	21.3	37.3	24.8	11.4	7.1	0	0	478

STATE OF CALIFORNIA - DEPARTMENT OF TRANSPORTATION
Caltrans

CONSULTANT FUNCTIONAL SUPERVISOR: RICHARD TANAKA
CALCULATED-DESIGNED BY: MARILOU AYUPAN
CHECKED BY: TOMMY CHO
REVISED BY / DATE REVISED

LAST REVISION 10-15-10
DATE PLOTTED => 08-JUL-2011
TIME PLOTTED => 15:51

Dist	COUNTY	ROUTE	POST MILES TOTAL PROJECT	SHEET No.	TOTAL SHEETS
04	SCI	880	4.1/8.7	51	710

REGISTERED CIVIL ENGINEER 10/15/10 DATE

7-11-11
PLANS APPROVAL DATE

REGISTERED PROFESSIONAL ENGINEER
RICHARD K. TANAKA
No. 23233
Exp. 12/31/11
CIVIL
STATE OF CALIFORNIA

THE STATE OF CALIFORNIA OR ITS OFFICERS OR AGENTS SHALL NOT BE RESPONSIBLE FOR THE ACCURACY OR COMPLETENESS OF SCANNED COPIES OF THIS PLAN SHEET.

MARK THOMAS & COMPANY, INC.
1960 ZANKER ROAD
SAN JOSE, CA 95112

SANTA CLARA VALLEY
TRANSPORTATION AUTHORITY
3331 NORTH FIRST STREET, BLDG B
SAN JOSE, CA 95134

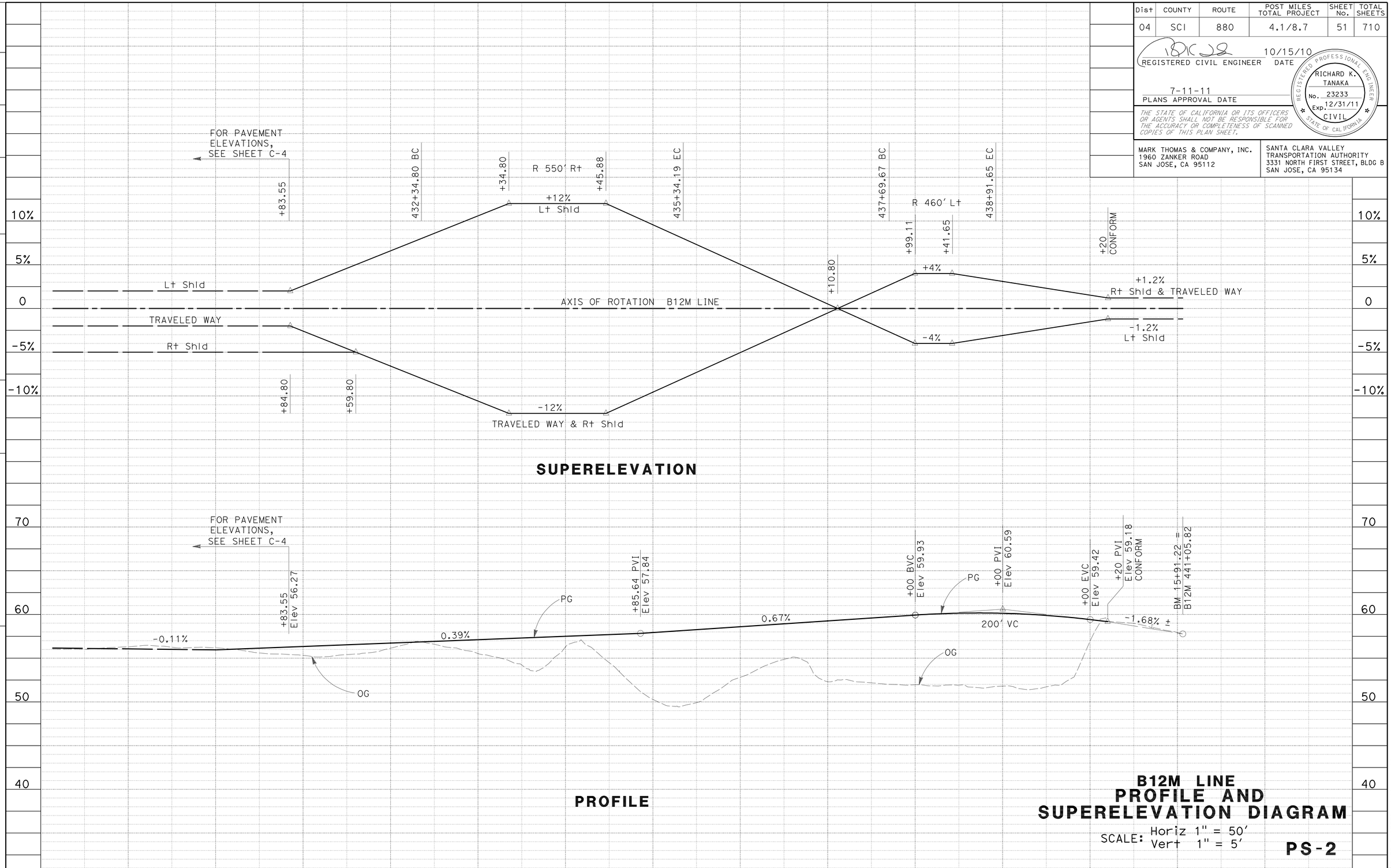

B12M LINE PROFILE AND SUPERELEVATION DIAGRAM

SCALE: Horiz 1" = 50'
Vert 1" = 5'

PS-2

STATION		9		430+00		1		2		3		4		435+00		6		7		8		9		440+00		1	TOTAL
CY	Exc	0	0	0	0	8.2	21.2	15.2	56.5	168.5	285.2	395.3	588.3	419.5	284.7	197.3	62.5	1.2	0	0	0	0	0	0.1	120.6	0	2624
	Emb	0	0	0	0	6.6	17.0	14.4	6.4	20.3	68.5	102.9	83.5	311.4	645.9	540.7	385.7	413.2	577.3	615.8	629.5	544.9	567.2	481.0	35.3	0	6067

STATE OF CALIFORNIA - DEPARTMENT OF TRANSPORTATION
Caltrans

CONSULTANT FUNCTIONAL SUPERVISOR: RICHARD TANAKA

CALCULATED-DESIGNED BY: TOMMY CHO
CHECKED BY: MARILOU AYUPAN

REVISED BY | DATE REVISED

LAST REVISION 10-15-10 | DATE PLOTTED => 08-JUL-2011 | TIME PLOTTED => 15:51

Dist	COUNTY	ROUTE	POST MILES TOTAL PROJECT	SHEET No.	TOTAL SHEETS
04	SCI	880	4.1/8.7	52	710

REGISTERED CIVIL ENGINEER 03/31/11 DATE

7-11-11
PLANS APPROVAL DATE

REGISTERED PROFESSIONAL ENGINEER RICHARD K. TANAKA No. 23233 Exp. 12/31/11 CIVIL STATE OF CALIFORNIA

THE STATE OF CALIFORNIA OR ITS OFFICERS OR AGENTS SHALL NOT BE RESPONSIBLE FOR THE ACCURACY OR COMPLETENESS OF SCANNED COPIES OF THIS PLAN SHEET.

MARK THOMAS & COMPANY, INC.
1960 ZANKER ROAD
SAN JOSE, CA 95112

SANTA CLARA VALLEY
TRANSPORTATION AUTHORITY
3331 NORTH FIRST STREET, BLDG B
SAN JOSE, CA 95134

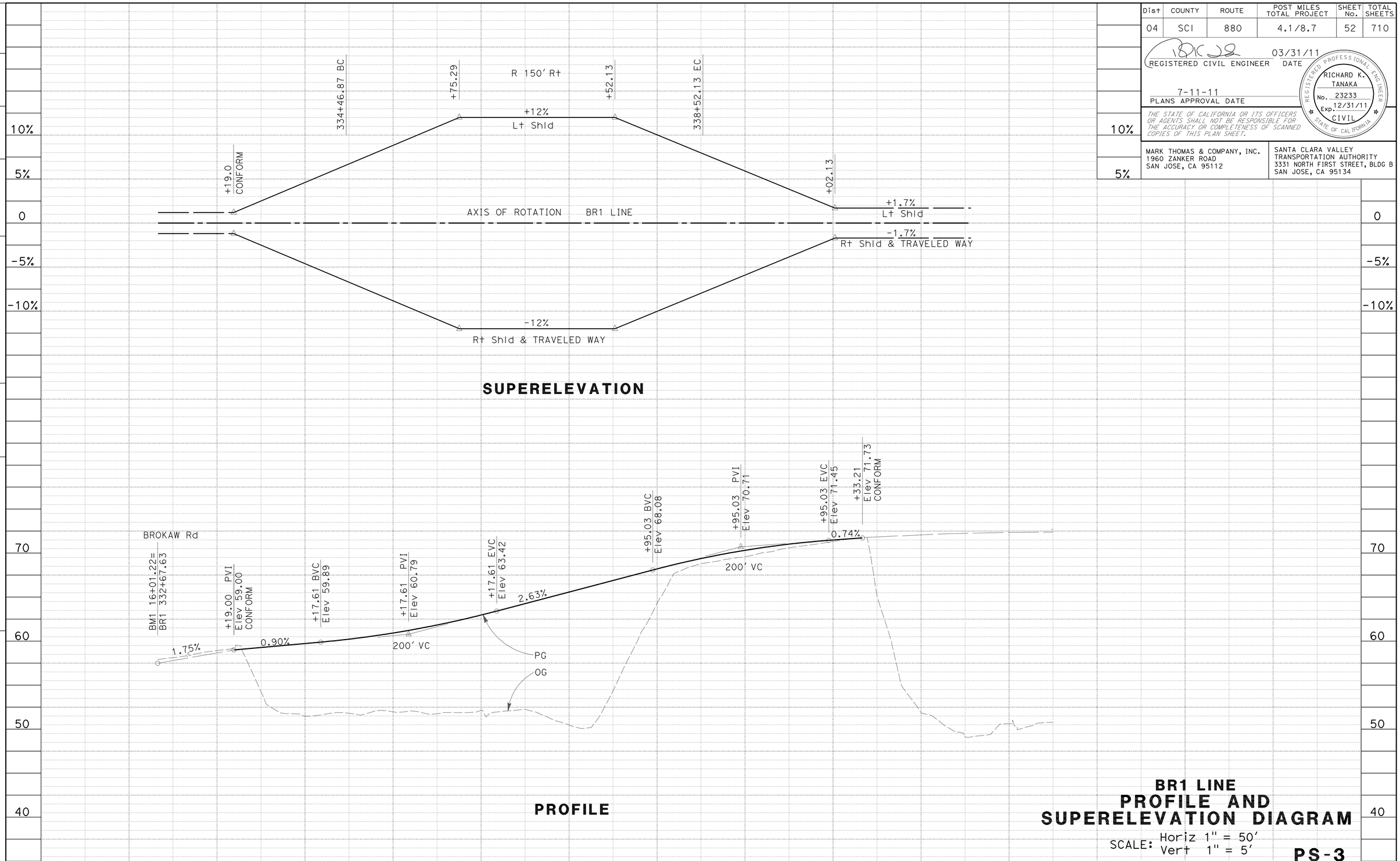

BR1 LINE
PROFILE AND SUPERELEVATION DIAGRAM

SCALE: Horiz 1" = 50'
Vert 1" = 5'

PS-3

STATION		3		4		335+00		6		7		8		9		340+00		1	TOTAL
CY	Exc	0	74.3	0	0	0	0	0	0	0	0	0	26.8	55.4	50.9	27.4	0	0	235
	Emb	0	75.0	455.1	478.2	367.3	422.3	713.4	1309.9	1796.6	1970.2	1019.6	697.3	889.2	949.4	626.8	0	0	11770

STATE OF CALIFORNIA - DEPARTMENT OF TRANSPORTATION
Caltrans

CONSULTANT FUNCTIONAL SUPERVISOR: RICHARD TANAKA
CALCULATED-DESIGNED BY: TOMMY CHO
CHECKED BY: MARILOU AYUPAN
REVISED BY / DATE REVISED

LAST REVISION 03-31-11
DATE PLOTTED => 08-JUL-2011
TIME PLOTTED => 15:51

Dist	COUNTY	ROUTE	POST MILES TOTAL PROJECT	SHEET No.	TOTAL SHEETS
04	SCI	880	4.1/8.7	53	710

REGISTERED CIVIL ENGINEER 03/31/11 DATE

7-11-11
PLANS APPROVAL DATE

REGISTERED PROFESSIONAL ENGINEER RICHARD K. TANAKA No. 23233 Exp. 12/31/11 CIVIL STATE OF CALIFORNIA

THE STATE OF CALIFORNIA OR ITS OFFICERS OR AGENTS SHALL NOT BE RESPONSIBLE FOR THE ACCURACY OR COMPLETENESS OF SCANNED COPIES OF THIS PLAN SHEET.

MARK THOMAS & COMPANY, INC.
1960 ZANKER ROAD
SAN JOSE, CA 95112

SANTA CLARA VALLEY TRANSPORTATION AUTHORITY
3331 NORTH FIRST STREET, BLDG B
SAN JOSE, CA 95134

FOR ACCURATE RIGHT OF WAY DATA, CONTACT RIGHT OF WAY ENGINEERING AT THE DISTRICT OFFICE.

LEGEND:

XX.XX* ELEVATION AT CATCH POINT OF CB (TYPE 60C) SEE CONSTRUCTION DETAILS

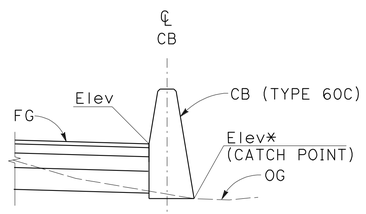

CASE 1

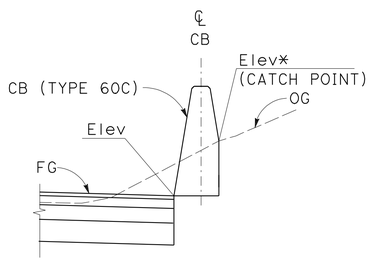

CASE 2

ELEVATION CALLOUT AT CONCRETE BARRIER (TYPE 60C)

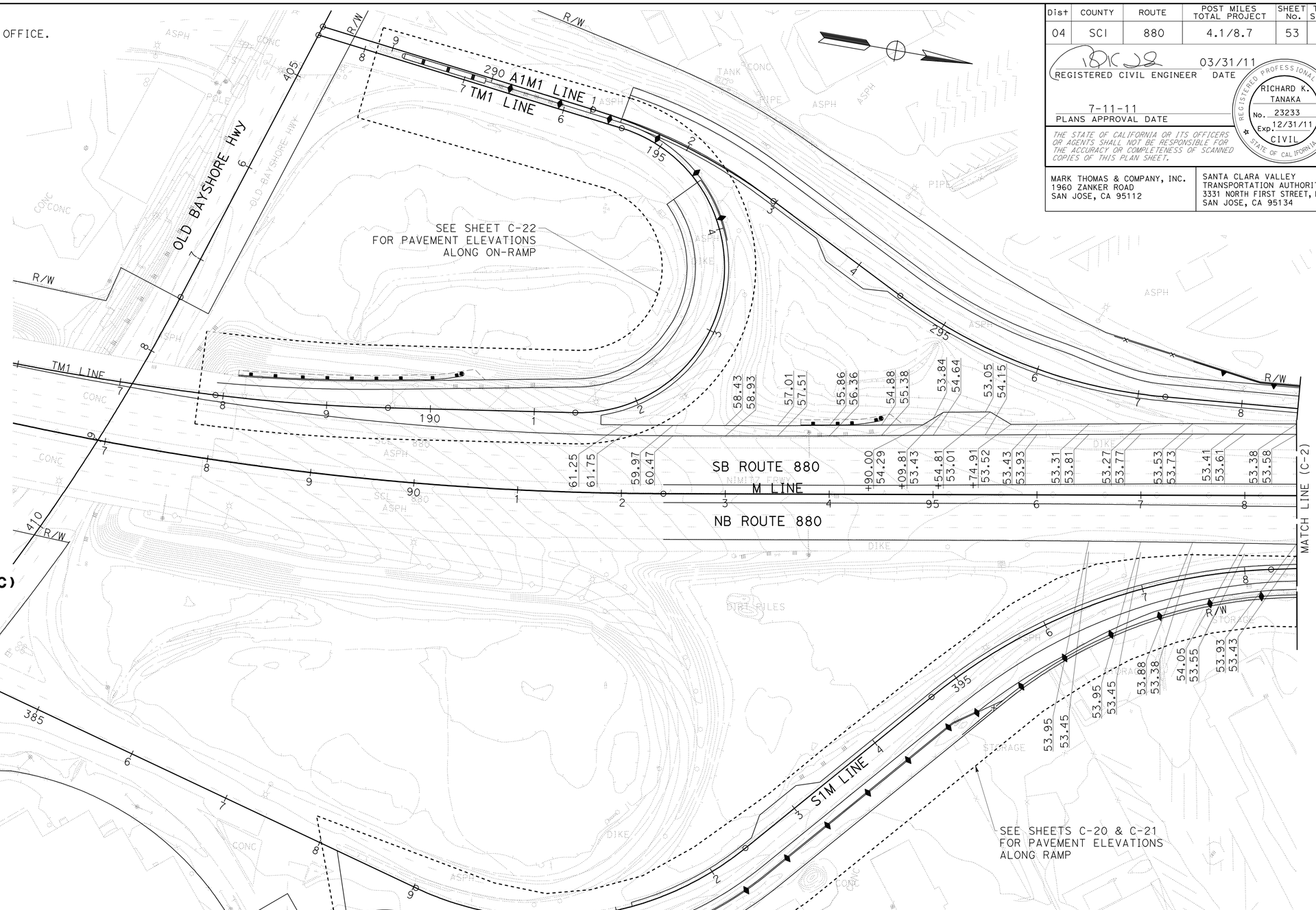

NOTES:

1. ALL ELEVATIONS ON SHEETS C-1 TO C-19 ARE 50' APART UNLESS OTHERWISE NOTED.
2. ALL ELEVATIONS ON SHEETS C-20 TO C-24 ARE 20' APART UNLESS OTHERWISE NOTED.
3. ALL ELEVATIONS ARE TIED TO EDGE OF TRAVELED WAY AND EDGE OF SHOULDER.

THIS PLAN ACCURATE FOR PAVEMENT ELEVATION WORK ONLY.

CONSTRUCTION DETAILS
PAVEMENT ELEVATIONS
SCALE: 1" = 50'

C-1

REVISED BY | DATE REVISED
RAFAEL LOPEZ | MARILOU AYUPAN
CALCULATED-DESIGNED BY | CHECKED BY
CONSULTANT FUNCTIONAL SUPERVISOR
RICHARD TANAKA
STATE OF CALIFORNIA - DEPARTMENT OF TRANSPORTATION
Caltrans

LAST REVISION 03-31-11 | DATE PLOTTED => 08-JUL-2011 | TIME PLOTTED => 15:51

FOR ACCURATE RIGHT OF WAY DATA, CONTACT
RIGHT OF WAY ENGINEERING AT THE DISTRICT OFFICE.

Dist	COUNTY	ROUTE	POST MILES TOTAL PROJECT	SHEET No.	TOTAL SHEETS
04	SCI	880	4.1/8.7	54	710

REGISTERED CIVIL ENGINEER 03/31/11 DATE

7-11-11
PLANS APPROVAL DATE

REGISTERED PROFESSIONAL ENGINEER
RICHARD K. TANAKA
No. 23233
Exp. 12/31/11
CIVIL
STATE OF CALIFORNIA

THE STATE OF CALIFORNIA OR ITS OFFICERS OR AGENTS SHALL NOT BE RESPONSIBLE FOR THE ACCURACY OR COMPLETENESS OF SCANNED COPIES OF THIS PLAN SHEET.

MARK THOMAS & COMPANY, INC.
1960 ZANKER ROAD
SAN JOSE, CA 95112

SANTA CLARA VALLEY
TRANSPORTATION AUTHORITY
3331 NORTH FIRST STREET, BLDG B
SAN JOSE, CA 95134

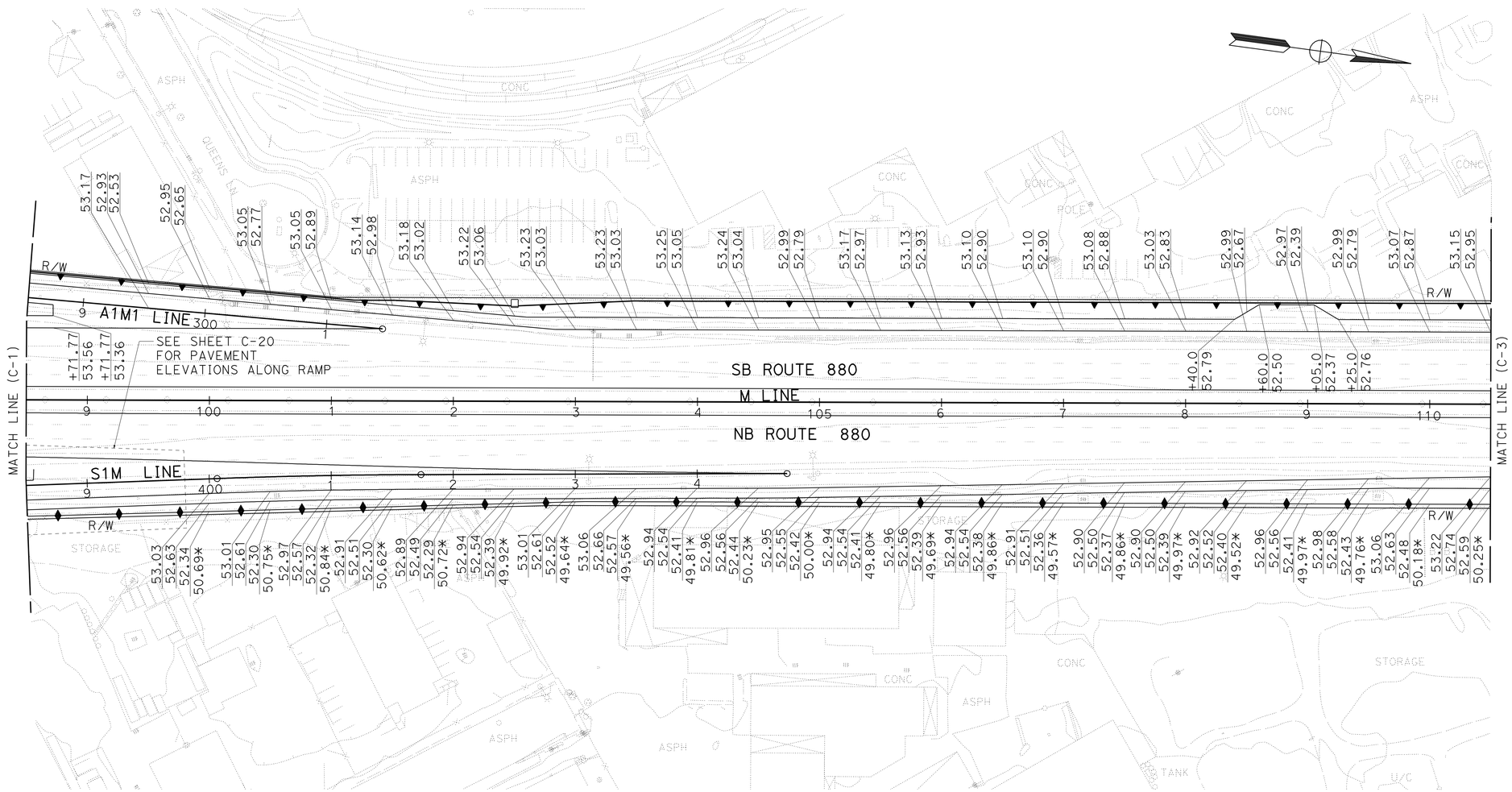

FOR NOTES AND LEGEND,
SEE SHEET C-1

THIS PLAN ACCURATE FOR PAVEMENT ELEVATION WORK ONLY.

CONSTRUCTION DETAILS
PAVEMENT ELEVATIONS
SCALE: 1" = 50'

C-2

STATE OF CALIFORNIA - DEPARTMENT OF TRANSPORTATION
Caltrans

CONSULTANT FUNCTIONAL SUPERVISOR: RICHARD TANAKA
CALCULATED-DESIGNED BY: RAFAEL LOPEZ
CHECKED BY: MARILOU AYUPAN
REVISED BY
DATE REVISED

LAST REVISION 03-31-11
DATE PLOTTED => 08-JUL-2011
TIME PLOTTED => 15:51

FOR ACCURATE RIGHT OF WAY DATA, CONTACT
RIGHT OF WAY ENGINEERING AT THE DISTRICT OFFICE.

Dist	COUNTY	ROUTE	POST MILES TOTAL PROJECT	SHEET No.	TOTAL SHEETS
04	SCI	880	4.1/8.7	55	710

REGISTERED CIVIL ENGINEER 03/31/11 DATE

7-11-11
PLANS APPROVAL DATE

REGISTERED PROFESSIONAL ENGINEER
RICHARD K. TANAKA
No. 23233
Exp. 12/31/11
CIVIL
STATE OF CALIFORNIA

THE STATE OF CALIFORNIA OR ITS OFFICERS OR AGENTS SHALL NOT BE RESPONSIBLE FOR THE ACCURACY OR COMPLETENESS OF SCANNED COPIES OF THIS PLAN SHEET.

MARK THOMAS & COMPANY, INC.
1960 ZANKER ROAD
SAN JOSE, CA 95112

SANTA CLARA VALLEY
TRANSPORTATION AUTHORITY
3331 NORTH FIRST STREET, BLDG B
SAN JOSE, CA 95134

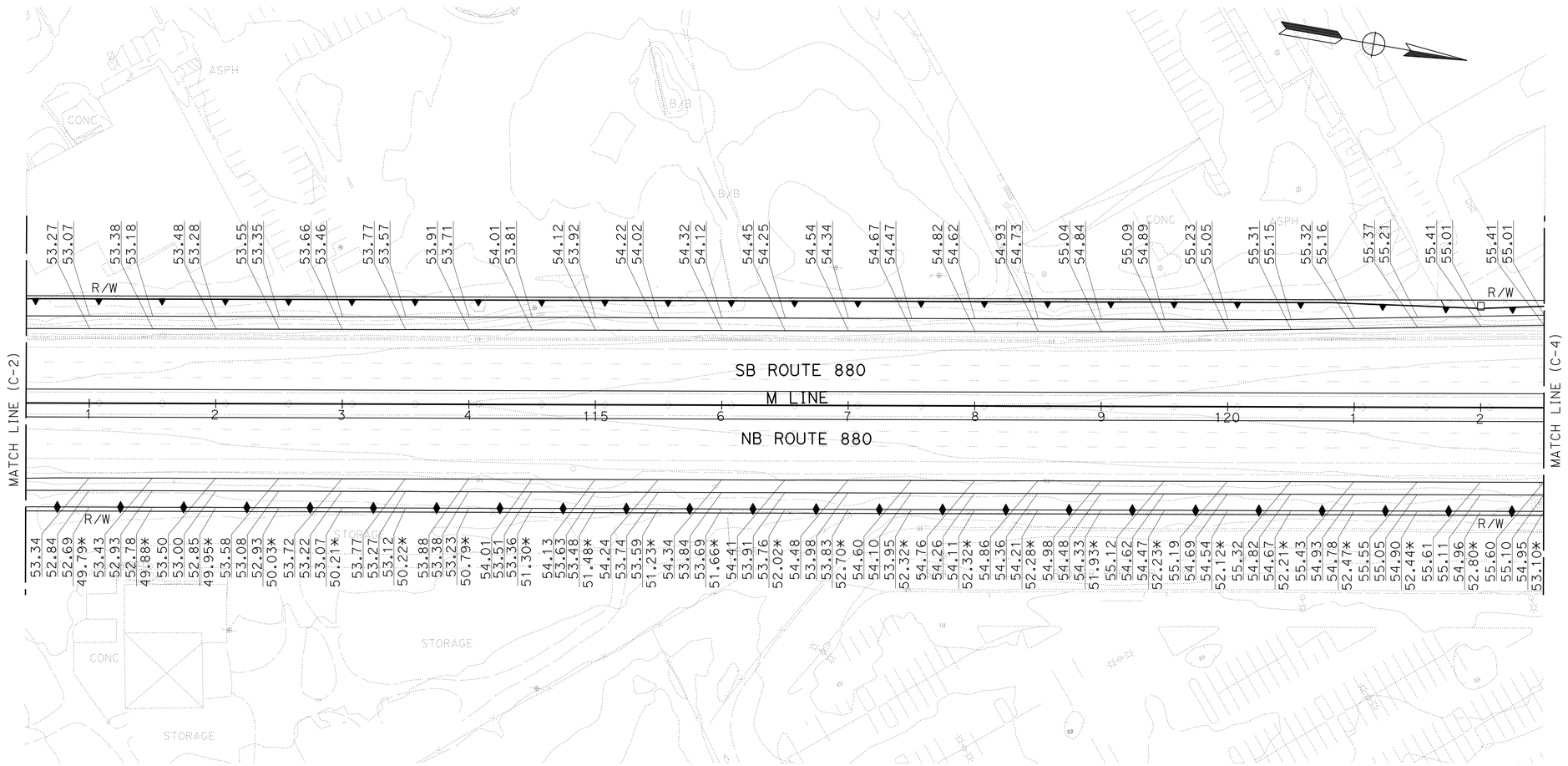

FOR NOTES AND LEGEND,
SEE SHEET C-1

THIS PLAN ACCURATE FOR PAVEMENT ELEVATION WORK ONLY.

CONSTRUCTION DETAILS
PAVEMENT ELEVATIONS
SCALE: 1" = 50'

C-3

STATE OF CALIFORNIA - DEPARTMENT OF TRANSPORTATION
Caltrans

CONSULTANT FUNCTIONAL SUPERVISOR: RICHARD TANAKA
CALCULATED-DESIGNED BY: RAFAEL LOPEZ
CHECKED BY: MARILOU AYUPAN
REVISED BY
DATE REVISED

LAST REVISION 03-31-11
DATE PLOTTED => 08-JUL-2011
TIME PLOTTED => 15:55

FOR ACCURATE RIGHT OF WAY DATA, CONTACT
RIGHT OF WAY ENGINEERING AT THE DISTRICT OFFICE.

Dist	COUNTY	ROUTE	POST MILES TOTAL PROJECT	SHEET No.	TOTAL SHEETS
04	SCI	880	4.1/8.7	56	710

REGISTERED CIVIL ENGINEER 03/31/11 DATE

7-11-11
PLANS APPROVAL DATE

REGISTERED PROFESSIONAL ENGINEER
RICHARD K. TANAKA
No. 23233
Exp. 12/31/11
CIVIL
STATE OF CALIFORNIA

THE STATE OF CALIFORNIA OR ITS OFFICERS OR AGENTS SHALL NOT BE RESPONSIBLE FOR THE ACCURACY OR COMPLETENESS OF SCANNED COPIES OF THIS PLAN SHEET.

MARK THOMAS & COMPANY, INC.
1960 ZANKER ROAD
SAN JOSE, CA 95112

SANTA CLARA VALLEY
TRANSPORTATION AUTHORITY
3331 NORTH FIRST STREET, BLDG B
SAN JOSE, CA 95134

FOR NOTES AND LEGEND,
SEE SHEET C-1

THIS PLAN ACCURATE FOR PAVEMENT ELEVATION WORK ONLY.

CONSTRUCTION DETAILS
PAVEMENT ELEVATIONS
SCALE: 1" = 50'

C-4

STATE OF CALIFORNIA - DEPARTMENT OF TRANSPORTATION
Caltrans

CONSULTANT FUNCTIONAL SUPERVISOR: RICHARD TANAKA
CALCULATED-DESIGNED BY: RAFAEL LOPEZ
CHECKED BY: MARILOU AYUPAN
REVISED BY
DATE REVISED

LAST REVISION 03-31-11
DATE PLOTTED => 08-JUL-2011
TIME PLOTTED => 15:55

FOR ACCURATE RIGHT OF WAY DATA, CONTACT
RIGHT OF WAY ENGINEERING AT THE DISTRICT OFFICE.

CURVE DATA

No.	R	Δ	T	L
80	616.00	07°21′43″	39.63	79.15
81	200.00	06°51′32″	11.99	23.94
82	200.00	17°20′14″	30.49	60.52

Dist	COUNTY	ROUTE	POST MILES TOTAL PROJECT	SHEET No.	TOTAL SHEETS
04	SCI	880	4.1/8.7	57	710

REGISTERED CIVIL ENGINEER 03/31/11 DATE

7-11-11
PLANS APPROVAL DATE

REGISTERED PROFESSIONAL ENGINEER RICHARD K. TANAKA No. 23233 Exp. 12/31/11 CIVIL STATE OF CALIFORNIA

THE STATE OF CALIFORNIA OR ITS OFFICERS OR AGENTS SHALL NOT BE RESPONSIBLE FOR THE ACCURACY OR COMPLETENESS OF SCANNED COPIES OF THIS PLAN SHEET.

MARK THOMAS & COMPANY, INC.
1960 ZANKER ROAD
SAN JOSE, CA 95112

SANTA CLARA VALLEY
TRANSPORTATION AUTHORITY
3331 NORTH FIRST STREET, BLDG B
SAN JOSE, CA 95134

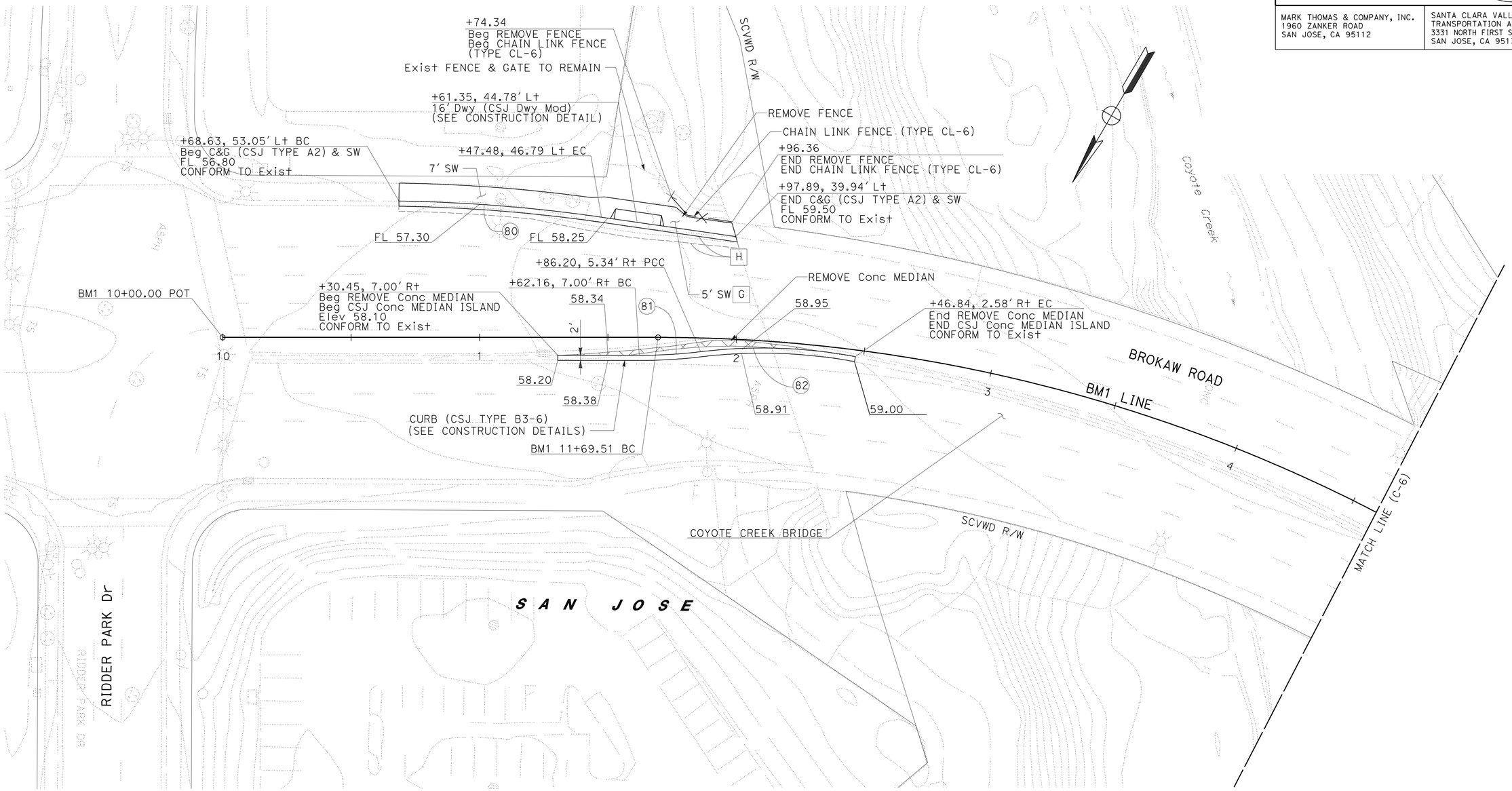

CONSTRUCTION DETAILS
PAVEMENT ELEVATIONS AND CURB, SIDEWALK & PAVEMENT CONSTRUCTION
SCALE: 1" = 20′

FOR NOTES, ABBREVIATIONS AND LEGEND, SEE SHEET C-1 & L-1

THIS PLAN ACCURATE FOR PAVEMENT ELEVATION WORK ONLY.

C-5

STATE OF CALIFORNIA - DEPARTMENT OF TRANSPORTATION
Caltrans

CONSULTANT FUNCTIONAL SUPERVISOR: RICHARD TANAKA
CALCULATED-DESIGNED BY: TOMMY CHO
CHECKED BY: MARILOU AYUPAN
REVISED BY
DATE REVISED

LAST REVISION 03-31-11
DATE PLOTTED => 08-JUL-2011
TIME PLOTTED => 15:52

FOR ACCURATE RIGHT OF WAY DATA, CONTACT
RIGHT OF WAY ENGINEERING AT THE DISTRICT OFFICE.

CURVE DATA

No.	R	Δ	T	L
83	50.00	20°33'13"	9.07	17.94
84	136.23	17°18'26"	20.73	41.15
85	109.59	21°25'34"	20.73	40.98
86	400.00	11°27'33"	40.13	80.00
87	40.00	76°34'42"	31.58	53.46
88	30.00	36°53'28"	10.01	19.32
89	48.00	86°50'24"	45.42	72.75
90	453.00	11°27'33"	45.45	90.60

Dist	COUNTY	ROUTE	POST MILES TOTAL PROJECT	SHEET No.	TOTAL SHEETS
04	SCI	880	4.1/8.7	58	710

REGISTERED CIVIL ENGINEER 03/31/11 DATE

7-11-11
PLANS APPROVAL DATE

REGISTERED PROFESSIONAL ENGINEER RICHARD K. TANAKA No. 23233 Exp. 12/31/11 CIVIL STATE OF CALIFORNIA

THE STATE OF CALIFORNIA OR ITS OFFICERS OR AGENTS SHALL NOT BE RESPONSIBLE FOR THE ACCURACY OR COMPLETENESS OF SCANNED COPIES OF THIS PLAN SHEET.

MARK THOMAS & COMPANY, INC.
1960 ZANKER ROAD
SAN JOSE, CA 95112

SANTA CLARA VALLEY
TRANSPORTATION AUTHORITY
3331 NORTH FIRST STREET, BLDG B
SAN JOSE, CA 95134

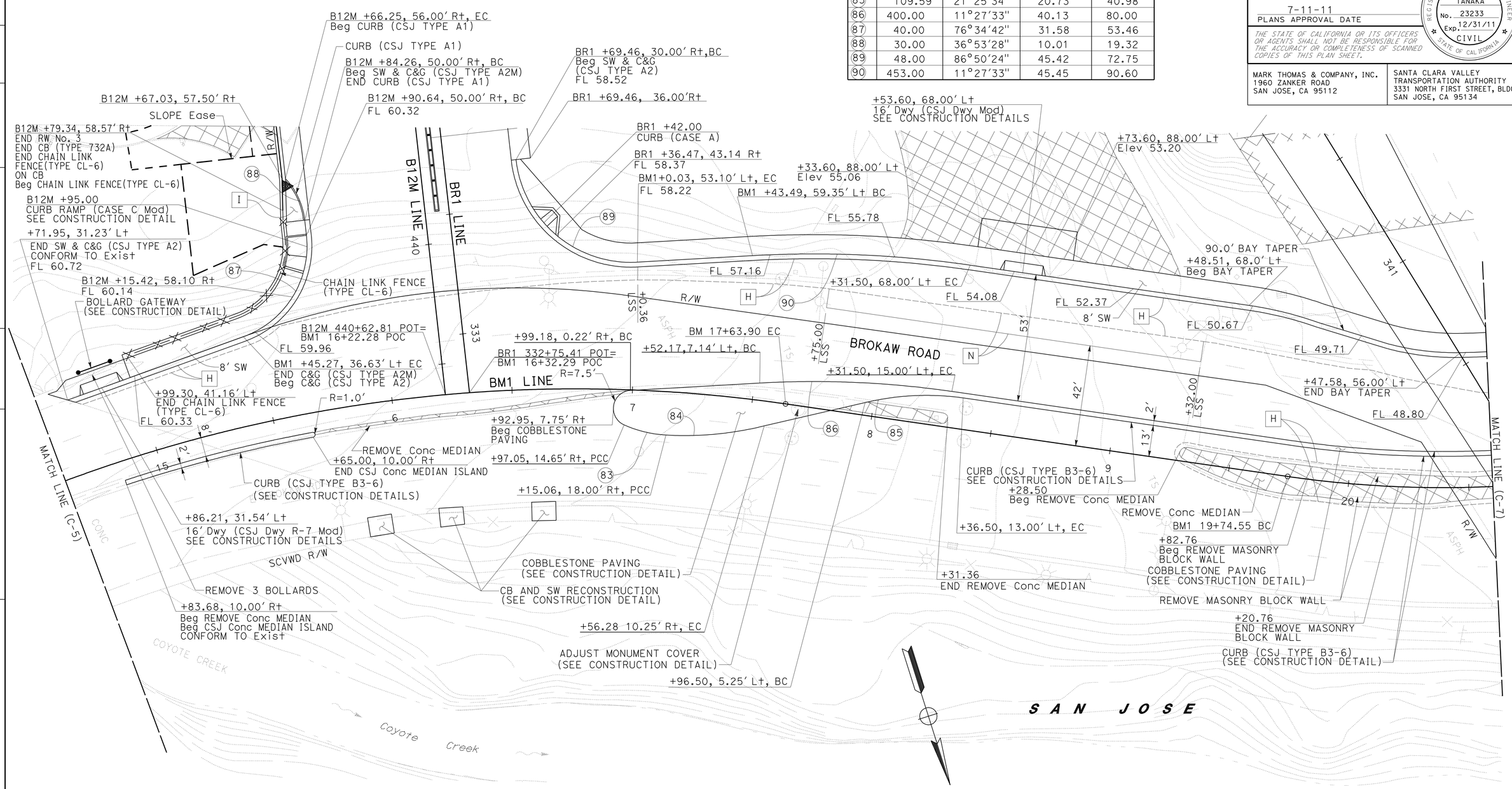

CONSTRUCTION DETAILS
PAVEMENT ELEVATIONS AND CURB, SIDEWALK & PAVEMENT CONSTRUCTION
SCALE: 1" = 20'

FOR NOTES, ABBREVIATIONS AND
LEGEND, SEE SHEET C-1 & L-1

THIS PLAN ACCURATE FOR PAVEMENT ELEVATION WORK ONLY.

C-6

STATE OF CALIFORNIA - DEPARTMENT OF TRANSPORTATION
Caltrans

CONSULTANT FUNCTIONAL SUPERVISOR: RICHARD TANAKA
CALCULATED-DESIGNED BY: MARILOU AYUPAN
CHECKED BY: TOMMY CHO
REVISED BY / DATE REVISED

LAST REVISION 03-31-11
DATE PLOTTED => 08-JUL-2011
TIME PLOTTED => 15:52

FOR ACCURATE RIGHT OF WAY DATA, CONTACT
RIGHT OF WAY ENGINEERING AT THE DISTRICT OFFICE.

Dist	COUNTY	ROUTE	POST MILES TOTAL PROJECT	SHEET No.	TOTAL SHEETS
04	SCI	880	4.1/8.7	59	710

REGISTERED CIVIL ENGINEER 03/31/11 DATE

7-11-11
PLANS APPROVAL DATE

REGISTERED PROFESSIONAL ENGINEER
RICHARD K. TANAKA
No. 23233
Exp. 12/31/11
CIVIL
STATE OF CALIFORNIA

THE STATE OF CALIFORNIA OR ITS OFFICERS OR AGENTS SHALL NOT BE RESPONSIBLE FOR THE ACCURACY OR COMPLETENESS OF SCANNED COPIES OF THIS PLAN SHEET.

MARK THOMAS & COMPANY, INC.
1960 ZANKER ROAD
SAN JOSE, CA 95112

SANTA CLARA VALLEY
TRANSPORTATION AUTHORITY
3331 NORTH FIRST STREET, BLDG B
SAN JOSE, CA 95134

CURVE DATA

No.	R	Δ	T	L
91	20.00	98°54'17"	23.38	34.52
92	98.05	25°20'30"	22.04	43.37
93	30.00	48°46'20"	13.60	25.54
94	473.00	03°23'14"	13.99	27.96
95	525.00	14°53'13"	68.59	136.41
96	70.00	17°23'10"	10.70	21.24
97	100.00	11°44'28"	10.28	20.49

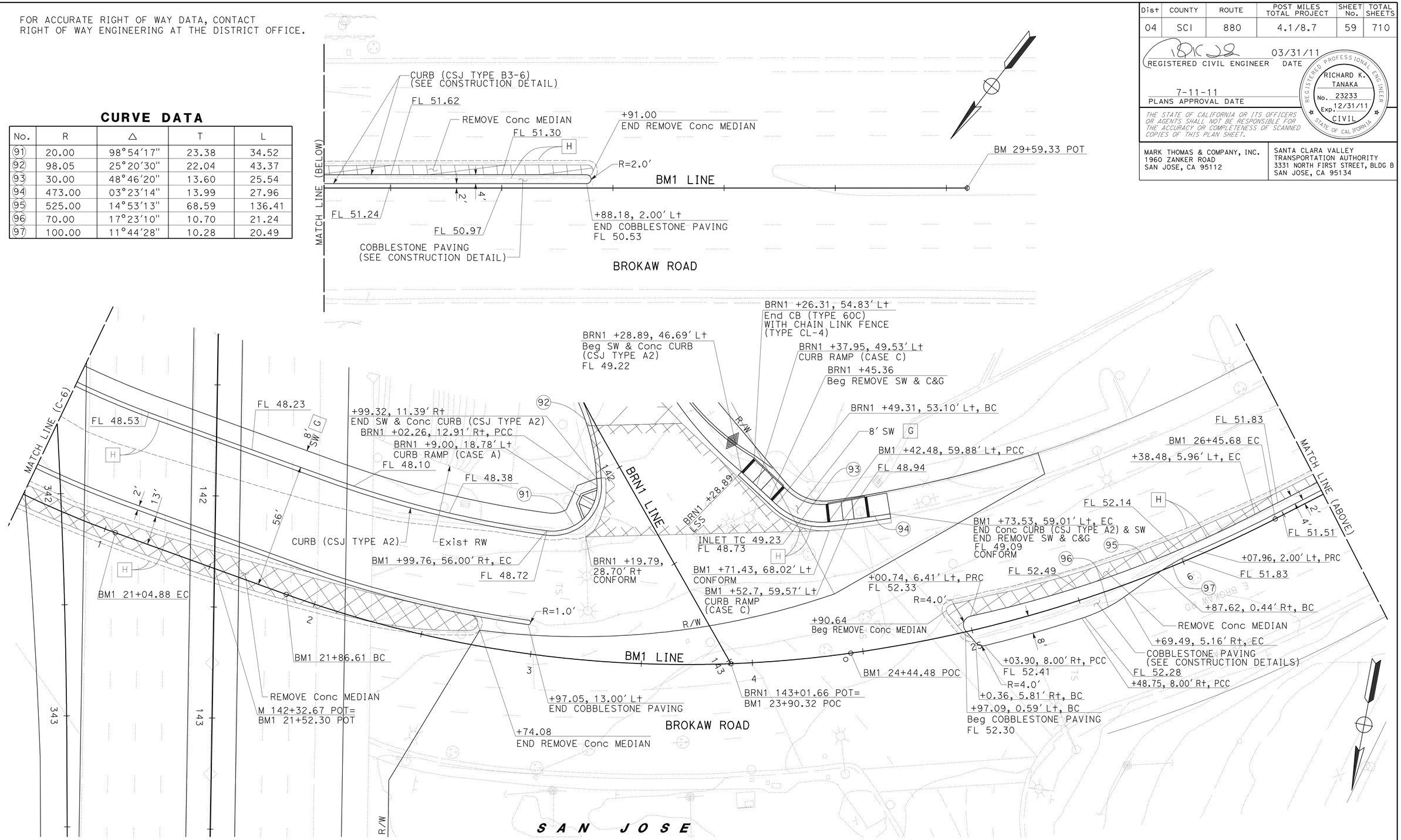

CONSTRUCTION DETAILS
PAVEMENT ELEVATIONS AND CURB, SIDEWALK & PAVEMENT CONSTRUCTION
SCALE: 1" = 20'

C-7

FOR NOTES, ABBREVIATIONS AND LEGEND, SEE SHEET C-1 & L-1

THIS PLAN ACCURATE FOR PAVEMENT ELEVATION WORK ONLY.

REVISED BY | DATE REVISED
TOMMY CHO | MARILOU AYUPAN
CALCULATED-DESIGNED BY | CHECKED BY
CONSULTANT FUNCTIONAL SUPERVISOR: RICHARD TANAKA
STATE OF CALIFORNIA - DEPARTMENT OF TRANSPORTATION
Caltrans

LAST REVISION 03-31-11 | DATE PLOTTED => 08-JUL-2011 | TIME PLOTTED => 15:52

FOR ACCURATE RIGHT OF WAY DATA, CONTACT
RIGHT OF WAY ENGINEERING AT THE DISTRICT OFFICE.

Dist	COUNTY	ROUTE	POST MILES TOTAL PROJECT	SHEET No.	TOTAL SHEETS
04	SCI	880	4.1/8.7	60	710

REGISTERED CIVIL ENGINEER 03/31/11 DATE

7-11-11
PLANS APPROVAL DATE

REGISTERED PROFESSIONAL ENGINEER
RICHARD K. TANAKA
No. 23233
Exp. 12/31/11
CIVIL
STATE OF CALIFORNIA

THE STATE OF CALIFORNIA OR ITS OFFICERS OR AGENTS SHALL NOT BE RESPONSIBLE FOR THE ACCURACY OR COMPLETENESS OF SCANNED COPIES OF THIS PLAN SHEET.

MARK THOMAS & COMPANY, INC.
1960 ZANKER ROAD
SAN JOSE, CA 95112

SANTA CLARA VALLEY
TRANSPORTATION AUTHORITY
3331 NORTH FIRST STREET, BLDG B
SAN JOSE, CA 95134

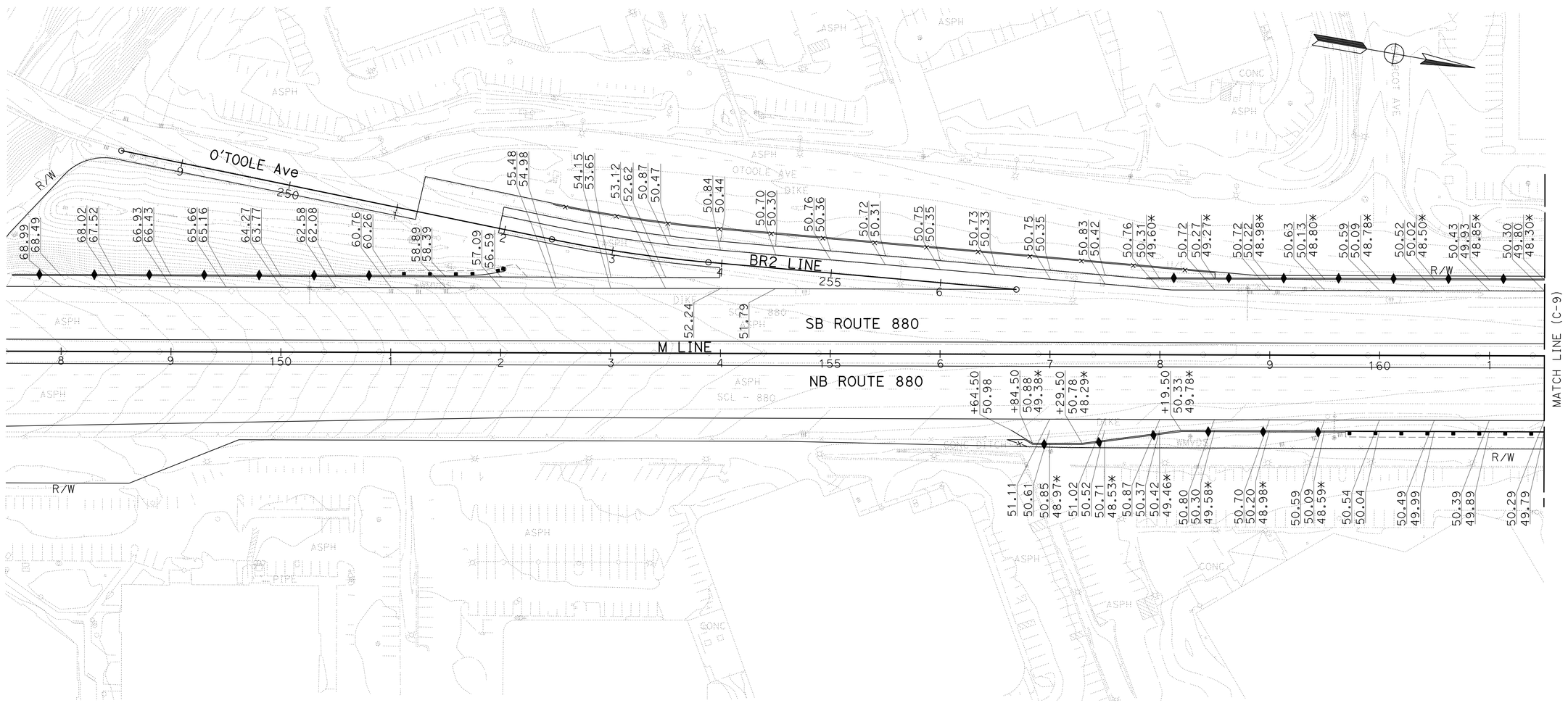

FOR NOTES AND LEGEND,
SEE SHEET C-1

THIS PLAN ACCURATE FOR PAVEMENT ELEVATION WORK ONLY.

CONSTRUCTION DETAILS
PAVEMENT ELEVATIONS
SCALE: 1" = 50'

C-8

STATE OF CALIFORNIA - DEPARTMENT OF TRANSPORTATION
Caltrans

CONSULTANT FUNCTIONAL SUPERVISOR: RICHARD TANAKA
CALCULATED-DESIGNED BY: RAFAEL LOPEZ
CHECKED BY: MARILOU AYUPAN
REVISED BY
DATE REVISED

LAST REVISION 03-31-11
DATE PLOTTED => 08-JUL-2011
TIME PLOTTED => 15:52

Dist	COUNTY	ROUTE	POST MILES TOTAL PROJECT	SHEET No.	TOTAL SHEETS
04	SCI	880	4.1/8.7	61	710

REGISTERED CIVIL ENGINEER 03/31/11 DATE

7-11-11
PLANS APPROVAL DATE

REGISTERED PROFESSIONAL ENGINEER
RICHARD K. TANAKA
No. 23233
Exp. 12/31/11
CIVIL
STATE OF CALIFORNIA

THE STATE OF CALIFORNIA OR ITS OFFICERS OR AGENTS SHALL NOT BE RESPONSIBLE FOR THE ACCURACY OR COMPLETENESS OF SCANNED COPIES OF THIS PLAN SHEET.

MARK THOMAS & COMPANY, INC.
1960 ZANKER ROAD
SAN JOSE, CA 95112

SANTA CLARA VALLEY
TRANSPORTATION AUTHORITY
3331 NORTH FIRST STREET, BLDG B
SAN JOSE, CA 95134

FOR ACCURATE RIGHT OF WAY DATA, CONTACT
RIGHT OF WAY ENGINEERING AT THE DISTRICT OFFICE.

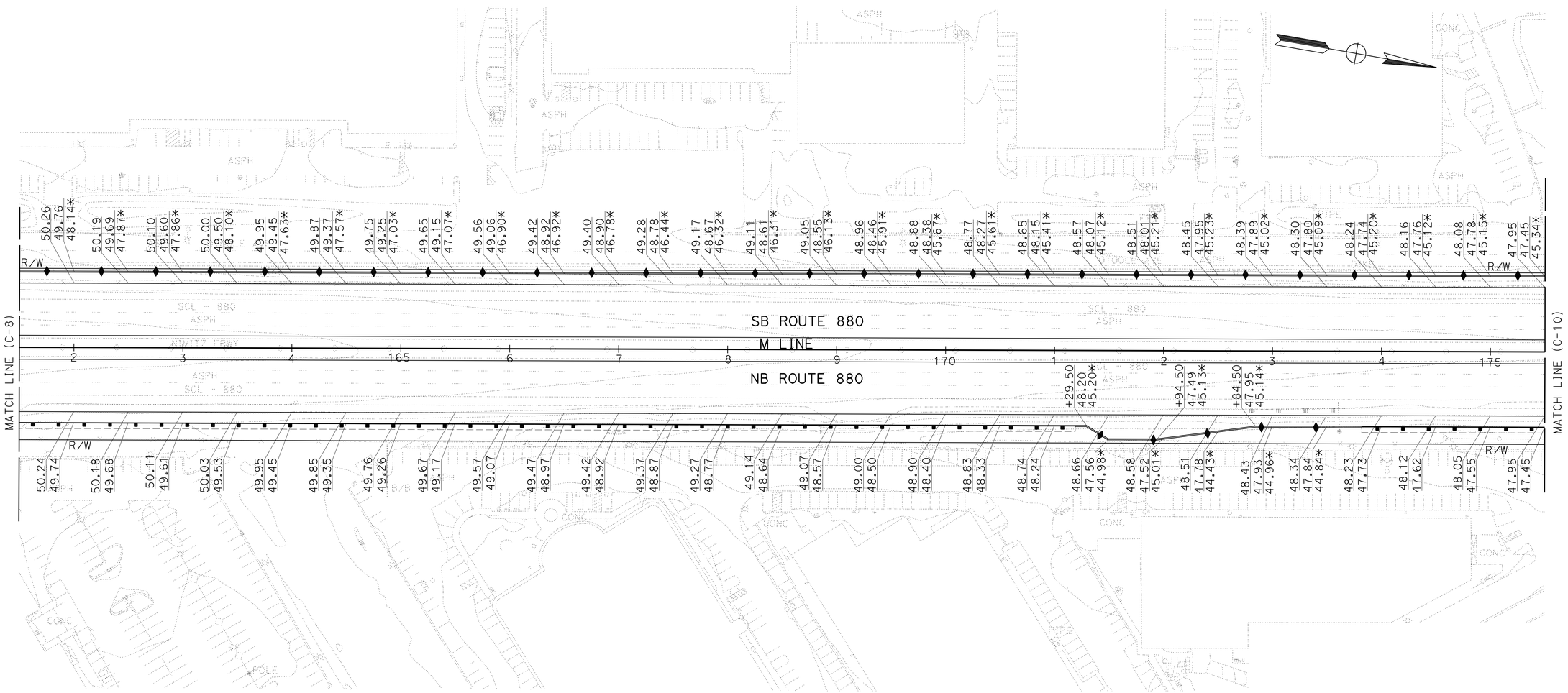

FOR NOTES AND LEGEND,
SEE SHEET C-1

THIS PLAN ACCURATE FOR PAVEMENT ELEVATION WORK ONLY.

CONSTRUCTION DETAILS
PAVEMENT ELEVATIONS
SCALE: 1" = 50'

C-9

STATE OF CALIFORNIA - DEPARTMENT OF TRANSPORTATION
Caltrans

CONSULTANT FUNCTIONAL SUPERVISOR: RICHARD TANAKA
CALCULATED-DESIGNED BY: RAFAEL LOPEZ
CHECKED BY: MARILOU AYUPAN
REVISED BY
DATE REVISED

LAST REVISION 03-31-11
DATE PLOTTED => 08-JUL-2011
TIME PLOTTED => 15:52

FOR ACCURATE RIGHT OF WAY DATA, CONTACT
RIGHT OF WAY ENGINEERING AT THE DISTRICT OFFICE.

Dist	COUNTY	ROUTE	POST MILES TOTAL PROJECT	SHEET No.	TOTAL SHEETS
04	SCI	880	4.1/8.7	62	710

REGISTERED CIVIL ENGINEER 03/31/11 DATE

7-11-11
PLANS APPROVAL DATE

REGISTERED PROFESSIONAL ENGINEER RICHARD K. TANAKA No. 23233 Exp. 12/31/11 CIVIL STATE OF CALIFORNIA

THE STATE OF CALIFORNIA OR ITS OFFICERS OR AGENTS SHALL NOT BE RESPONSIBLE FOR THE ACCURACY OR COMPLETENESS OF SCANNED COPIES OF THIS PLAN SHEET.

MARK THOMAS & COMPANY, INC.
1960 ZANKER ROAD
SAN JOSE, CA 95112

SANTA CLARA VALLEY
TRANSPORTATION AUTHORITY
3331 NORTH FIRST STREET, BLDG B
SAN JOSE, CA 95134

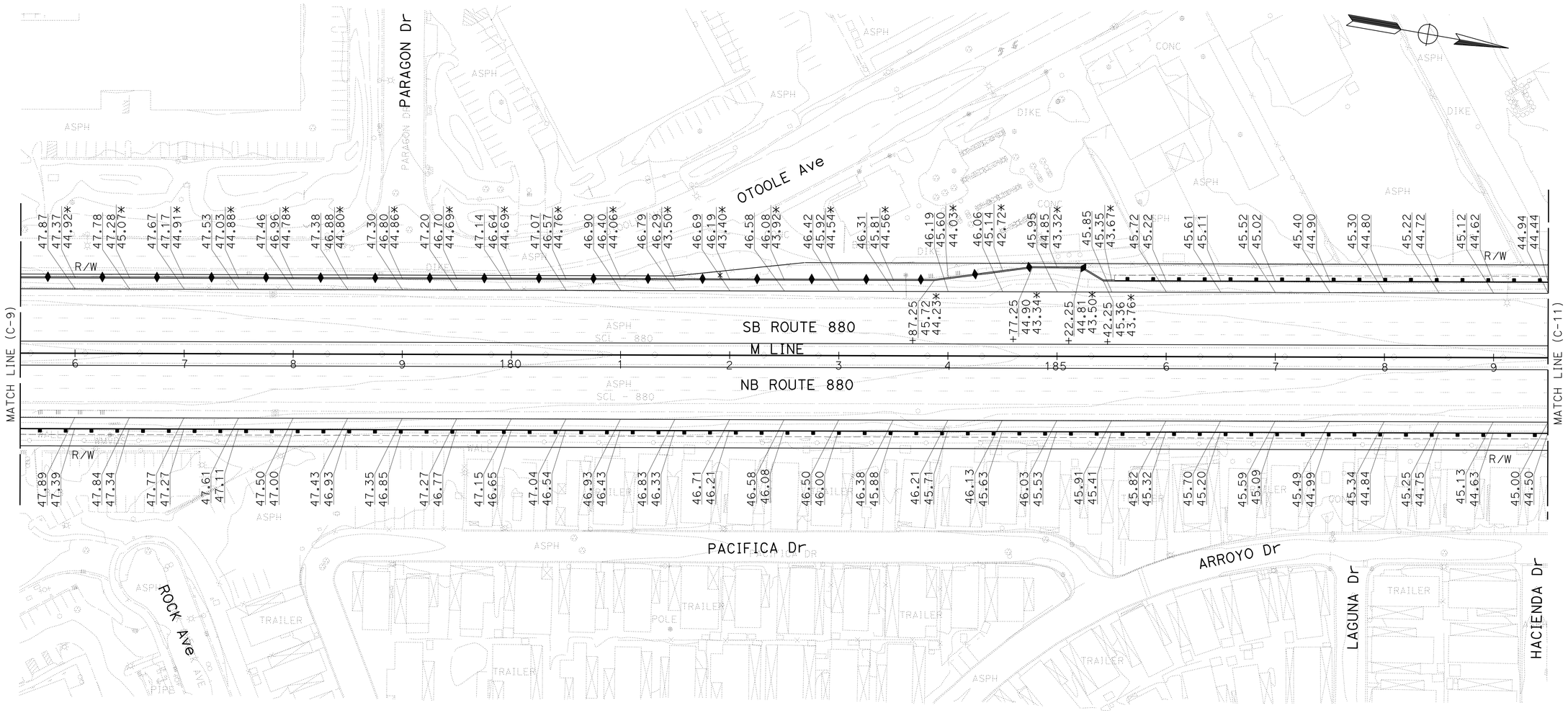

FOR NOTES AND LEGEND,
SEE SHEET C-1

THIS PLAN ACCURATE FOR PAVEMENT ELEVATION WORK ONLY.

CONSTRUCTION DETAILS
PAVEMENT ELEVATIONS
SCALE: 1" = 50'

C-10

STATE OF CALIFORNIA - DEPARTMENT OF TRANSPORTATION
Caltrans

CONSULTANT FUNCTIONAL SUPERVISOR: RICHARD TANAKA
CALCULATED-DESIGNED BY: RAFAEL LOPEZ
CHECKED BY: MARILOU AYUPAN
REVISED BY
DATE REVISED

LAST REVISION 03-31-11
DATE PLOTTED => 08-JUL-2011
TIME PLOTTED => 15:52

FOR ACCURATE RIGHT OF WAY DATA, CONTACT
RIGHT OF WAY ENGINEERING AT THE DISTRICT OFFICE.

Dist	COUNTY	ROUTE	POST MILES TOTAL PROJECT	SHEET No.	TOTAL SHEETS
04	SCI	880	4.1/8.7	63	710

REGISTERED CIVIL ENGINEER 03/31/11 DATE

7-11-11
PLANS APPROVAL DATE

REGISTERED PROFESSIONAL ENGINEER
RICHARD K. TANAKA
No. 23233
Exp. 12/31/11
CIVIL
STATE OF CALIFORNIA

THE STATE OF CALIFORNIA OR ITS OFFICERS OR AGENTS SHALL NOT BE RESPONSIBLE FOR THE ACCURACY OR COMPLETENESS OF SCANNED COPIES OF THIS PLAN SHEET.

MARK THOMAS & COMPANY, INC.
1960 ZANKER ROAD
SAN JOSE, CA 95112

SANTA CLARA VALLEY
TRANSPORTATION AUTHORITY
3331 NORTH FIRST STREET, BLDG B
SAN JOSE, CA 95134

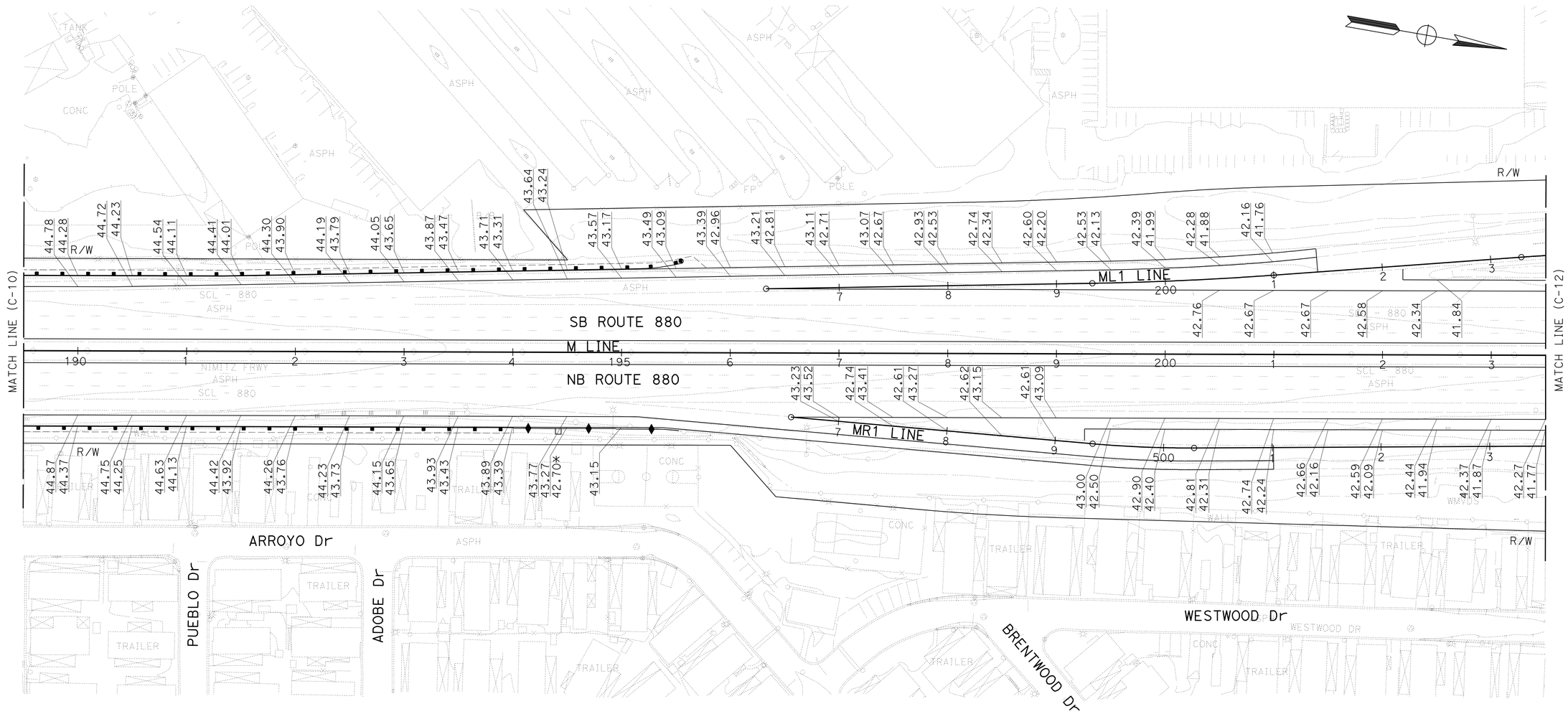

FOR NOTES AND LEGEND,
SEE SHEET C-1

THIS PLAN ACCURATE FOR PAVEMENT ELEVATION WORK ONLY.

CONSTRUCTION DETAILS
PAVEMENT ELEVATIONS
SCALE: 1" = 50'

C-11

STATE OF CALIFORNIA - DEPARTMENT OF TRANSPORTATION
Caltrans

CONSULTANT FUNCTIONAL SUPERVISOR: RICHARD TANAKA
CALCULATED-DESIGNED BY: RAFAEL LOPEZ
CHECKED BY: MARILOU AYUPAN
REVISED BY
DATE REVISED

LAST REVISION 03-31-11
DATE PLOTTED => 08-JUL-2011
TIME PLOTTED => 15:52

FOR ACCURATE RIGHT OF WAY DATA, CONTACT
RIGHT OF WAY ENGINEERING AT THE DISTRICT OFFICE.

Dist	COUNTY	ROUTE	POST MILES TOTAL PROJECT	SHEET No.	TOTAL SHEETS
04	SCI	880	4.1/8.7	64	710

REGISTERED CIVIL ENGINEER 03/31/11 DATE

7-11-11
PLANS APPROVAL DATE

REGISTERED PROFESSIONAL ENGINEER
RICHARD K. TANAKA
No. 23233
Exp. 12/31/11
CIVIL
STATE OF CALIFORNIA

THE STATE OF CALIFORNIA OR ITS OFFICERS OR AGENTS SHALL NOT BE RESPONSIBLE FOR THE ACCURACY OR COMPLETENESS OF SCANNED COPIES OF THIS PLAN SHEET.

MARK THOMAS & COMPANY, INC.
1960 ZANKER ROAD
SAN JOSE, CA 95112

SANTA CLARA VALLEY
TRANSPORTATION AUTHORITY
3331 NORTH FIRST STREET, BLDG B
SAN JOSE, CA 95134

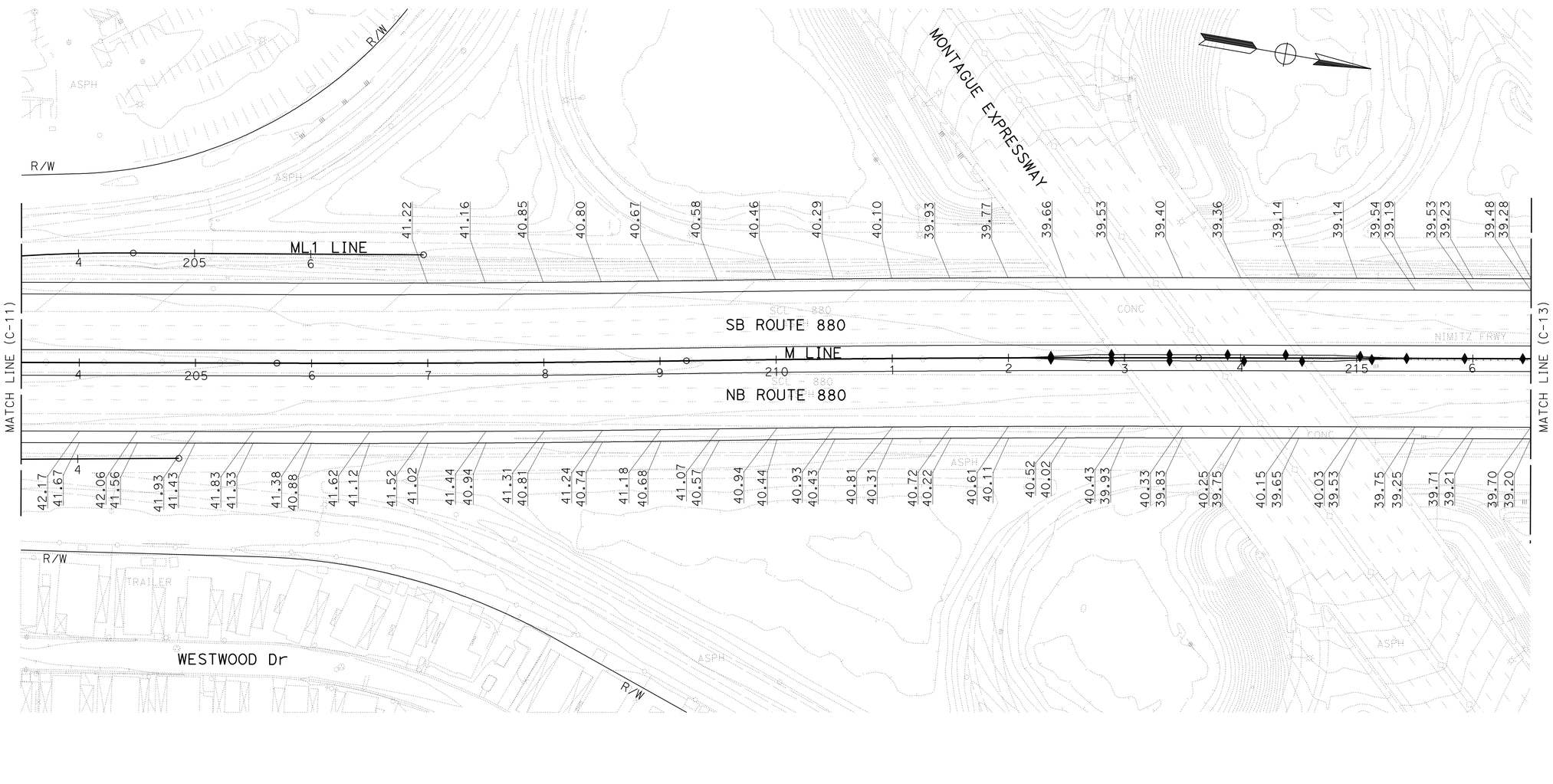

FOR NOTES AND LEGEND,
SEE SHEET C-1

THIS PLAN ACCURATE FOR PAVEMENT ELEVATION WORK ONLY.

CONSTRUCTION DETAILS
PAVEMENT ELEVATIONS
SCALE: 1" = 50'

C-12

STATE OF CALIFORNIA - DEPARTMENT OF TRANSPORTATION
Caltrans

CONSULTANT FUNCTIONAL SUPERVISOR: RICHARD TANAKA
CALCULATED-DESIGNED BY: RAFAEL LOPEZ
CHECKED BY: MARILOU AYUPAN
REVISED BY
DATE REVISED

LAST REVISION 03-31-11
DATE PLOTTED => 08-JUL-2011
TIME PLOTTED => 15:53

FOR ACCURATE RIGHT OF WAY DATA, CONTACT
RIGHT OF WAY ENGINEERING AT THE DISTRICT OFFICE.

Dist	COUNTY	ROUTE	POST MILES TOTAL PROJECT	SHEET No.	TOTAL SHEETS
04	SCI	880	4.1/8.7	65	710

REGISTERED CIVIL ENGINEER 03/31/11 DATE

7-11-11
PLANS APPROVAL DATE

REGISTERED PROFESSIONAL ENGINEER
RICHARD K. TANAKA
No. 23233
Exp. 12/31/11
CIVIL
STATE OF CALIFORNIA

THE STATE OF CALIFORNIA OR ITS OFFICERS OR AGENTS SHALL NOT BE RESPONSIBLE FOR THE ACCURACY OR COMPLETENESS OF SCANNED COPIES OF THIS PLAN SHEET.

MARK THOMAS & COMPANY, INC.
1960 ZANKER ROAD
SAN JOSE, CA 95112

SANTA CLARA VALLEY
TRANSPORTATION AUTHORITY
3331 NORTH FIRST STREET, BLDG B
SAN JOSE, CA 95134

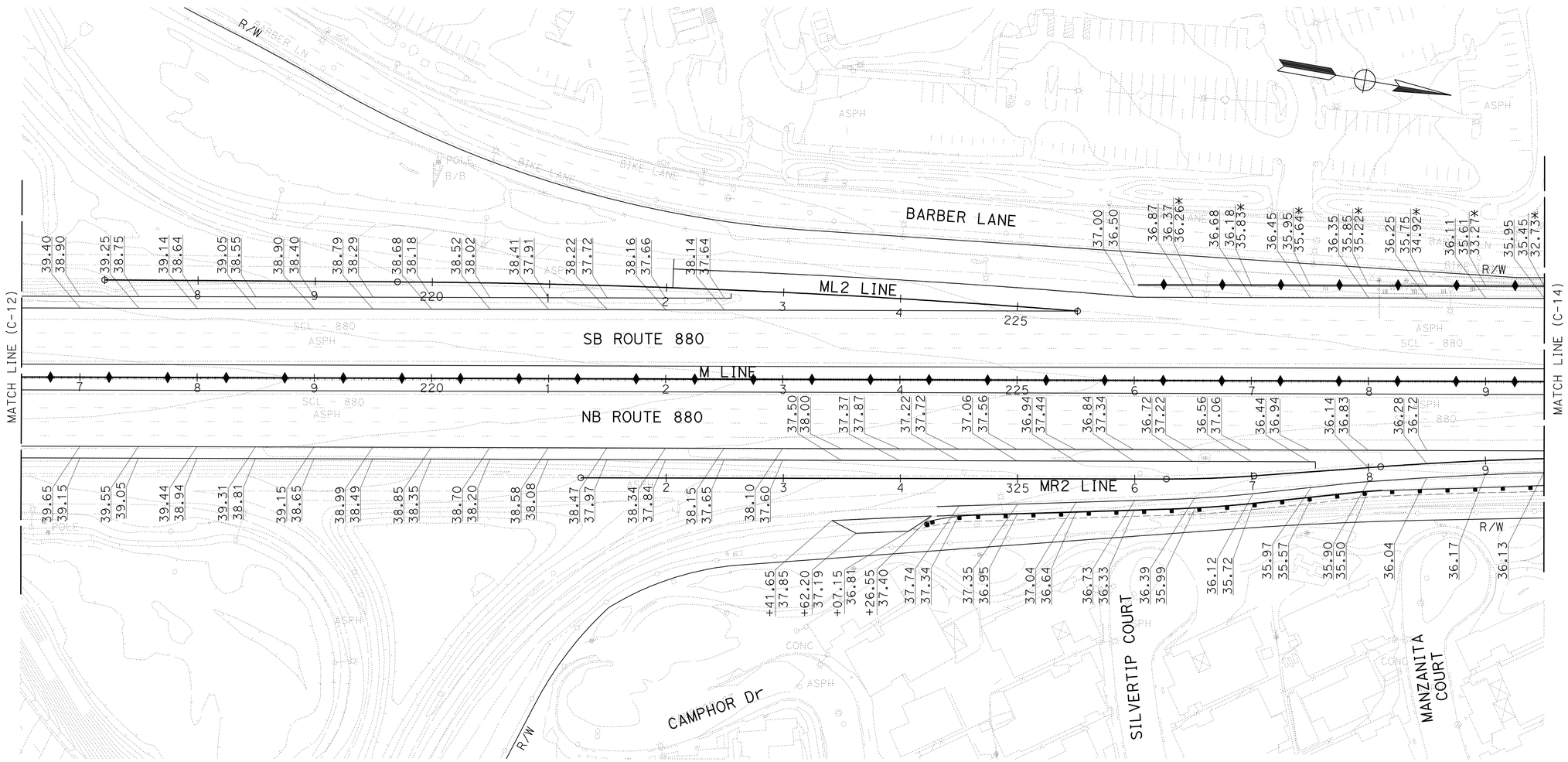

FOR NOTES AND LEGEND,
SEE SHEET C-1

THIS PLAN ACCURATE FOR PAVEMENT ELEVATION WORK ONLY.

CONSTRUCTION DETAILS
PAVEMENT ELEVATIONS
SCALE: 1" = 50'

C-13

STATE OF CALIFORNIA - DEPARTMENT OF TRANSPORTATION
Caltrans

CONSULTANT FUNCTIONAL SUPERVISOR: RICHARD TANAKA
CALCULATED-DESIGNED BY: RAFAEL LOPEZ
CHECKED BY: MARILOU AYUPAN
REVISED BY
DATE REVISED

LAST REVISION 03-31-11
DATE PLOTTED => 08-JUL-2011
TIME PLOTTED => 15:53

FOR ACCURATE RIGHT OF WAY DATA, CONTACT
RIGHT OF WAY ENGINEERING AT THE DISTRICT OFFICE.

Dist	COUNTY	ROUTE	POST MILES TOTAL PROJECT	SHEET No.	TOTAL SHEETS
04	SCI	880	4.1/8.7	66	710

REGISTERED CIVIL ENGINEER 03/31/11 DATE

7-11-11
PLANS APPROVAL DATE

REGISTERED PROFESSIONAL ENGINEER
RICHARD K. TANAKA
No. 23233
Exp. 12/31/11
CIVIL
STATE OF CALIFORNIA

THE STATE OF CALIFORNIA OR ITS OFFICERS OR AGENTS SHALL NOT BE RESPONSIBLE FOR THE ACCURACY OR COMPLETENESS OF SCANNED COPIES OF THIS PLAN SHEET.

MARK THOMAS & COMPANY, INC.
1960 ZANKER ROAD
SAN JOSE, CA 95112

SANTA CLARA VALLEY
TRANSPORTATION AUTHORITY
3331 NORTH FIRST STREET, BLDG B
SAN JOSE, CA 95134

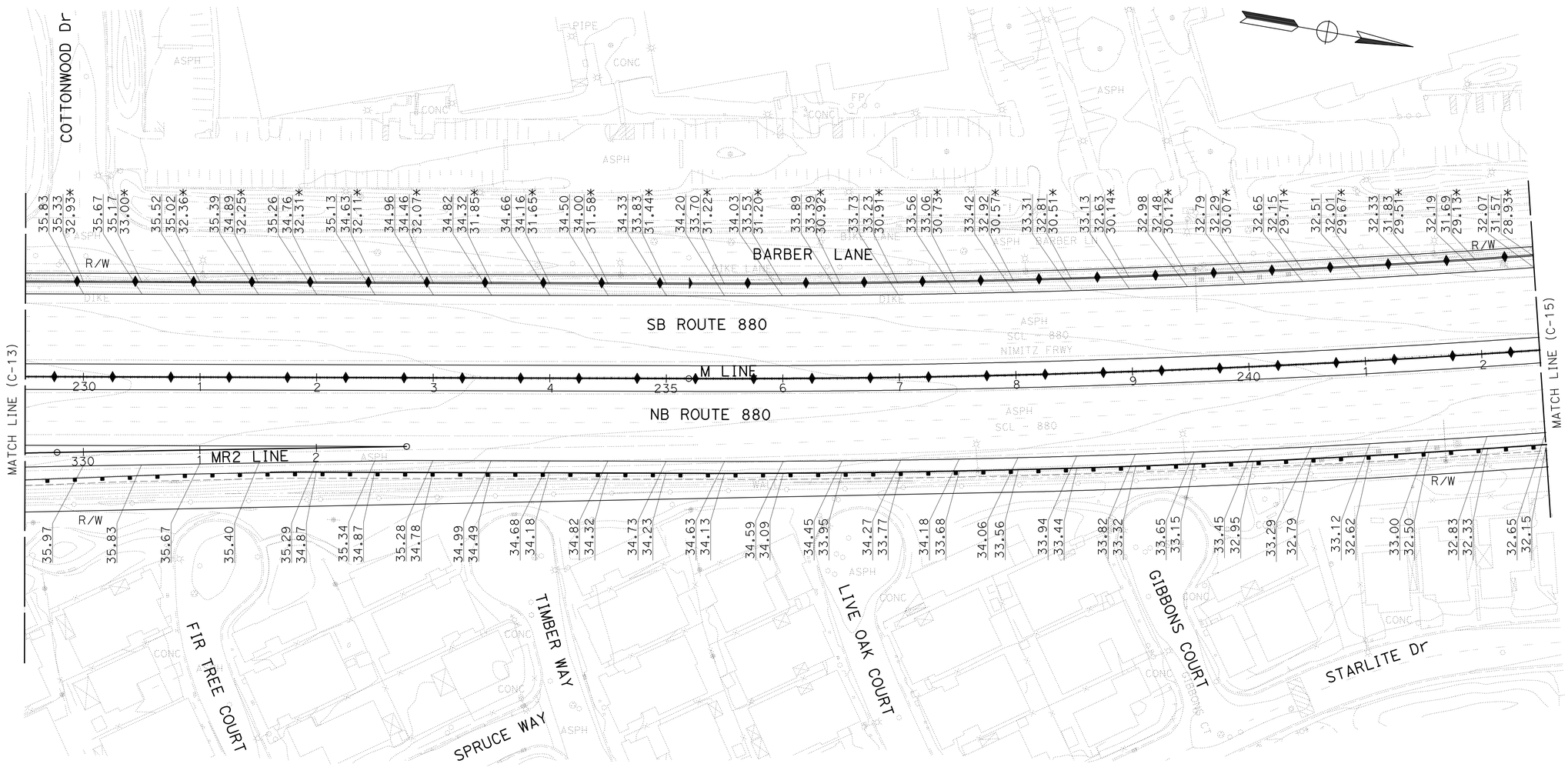

FOR NOTES AND LEGEND,
SEE SHEET C-1

THIS PLAN ACCURATE FOR PAVEMENT ELEVATION WORK ONLY.

CONSTRUCTION DETAILS
PAVEMENT ELEVATIONS
SCALE: 1" = 50'

C-14

STATE OF CALIFORNIA - DEPARTMENT OF TRANSPORTATION
Caltrans

CONSULTANT FUNCTIONAL SUPERVISOR: RICHARD TANAKA
CALCULATED-DESIGNED BY: RAFAEL LOPEZ
CHECKED BY: MARILOU AYUPAN
REVISED BY
DATE REVISED

LAST REVISION 03-31-11
DATE PLOTTED => 08-JUL-2011
TIME PLOTTED => 15:53

FOR ACCURATE RIGHT OF WAY DATA, CONTACT
RIGHT OF WAY ENGINEERING AT THE DISTRICT OFFICE.

Dist	COUNTY	ROUTE	POST MILES TOTAL PROJECT	SHEET No.	TOTAL SHEETS
04	SCI	880	4.1/8.7	67	710

REGISTERED CIVIL ENGINEER 03/31/11 DATE

7-11-11
PLANS APPROVAL DATE

REGISTERED PROFESSIONAL ENGINEER
RICHARD K. TANAKA
No. 23233
Exp. 12/31/11
CIVIL
STATE OF CALIFORNIA

THE STATE OF CALIFORNIA OR ITS OFFICERS OR AGENTS SHALL NOT BE RESPONSIBLE FOR THE ACCURACY OR COMPLETENESS OF SCANNED COPIES OF THIS PLAN SHEET.

MARK THOMAS & COMPANY, INC.
1960 ZANKER ROAD
SAN JOSE, CA 95112

SANTA CLARA VALLEY
TRANSPORTATION AUTHORITY
3331 NORTH FIRST STREET, BLDG B
SAN JOSE, CA 95134

FOR NOTES AND LEGEND,
SEE SHEET C-1

THIS PLAN ACCURATE FOR PAVEMENT ELEVATION WORK ONLY.

CONSTRUCTION DETAILS
PAVEMENT ELEVATIONS
SCALE: 1" = 50'

C-15

STATE OF CALIFORNIA - DEPARTMENT OF TRANSPORTATION
Caltrans

CONSULTANT FUNCTIONAL SUPERVISOR: RICHARD TANAKA
CALCULATED-DESIGNED BY: RAFAEL LOPEZ
CHECKED BY: MARILOU AYUPAN
REVISED BY
DATE REVISED

LAST REVISION 03-31-11
DATE PLOTTED => 08-JUL-2011
TIME PLOTTED => 15:53

FOR ACCURATE RIGHT OF WAY DATA, CONTACT
RIGHT OF WAY ENGINEERING AT THE DISTRICT OFFICE.

Dist	COUNTY	ROUTE	POST MILES TOTAL PROJECT	SHEET No.	TOTAL SHEETS
04	SCI	880	4.1/8.7	68	710

REGISTERED CIVIL ENGINEER 03/31/11 DATE

7-11-11
PLANS APPROVAL DATE

REGISTERED PROFESSIONAL ENGINEER
RICHARD K. TANAKA
No. 23233
Exp. 12/31/11
CIVIL
STATE OF CALIFORNIA

THE STATE OF CALIFORNIA OR ITS OFFICERS OR AGENTS SHALL NOT BE RESPONSIBLE FOR THE ACCURACY OR COMPLETENESS OF SCANNED COPIES OF THIS PLAN SHEET.

MARK THOMAS & COMPANY, INC.
1960 ZANKER ROAD
SAN JOSE, CA 95112

SANTA CLARA VALLEY
TRANSPORTATION AUTHORITY
3331 NORTH FIRST STREET, BLDG B
SAN JOSE, CA 95134

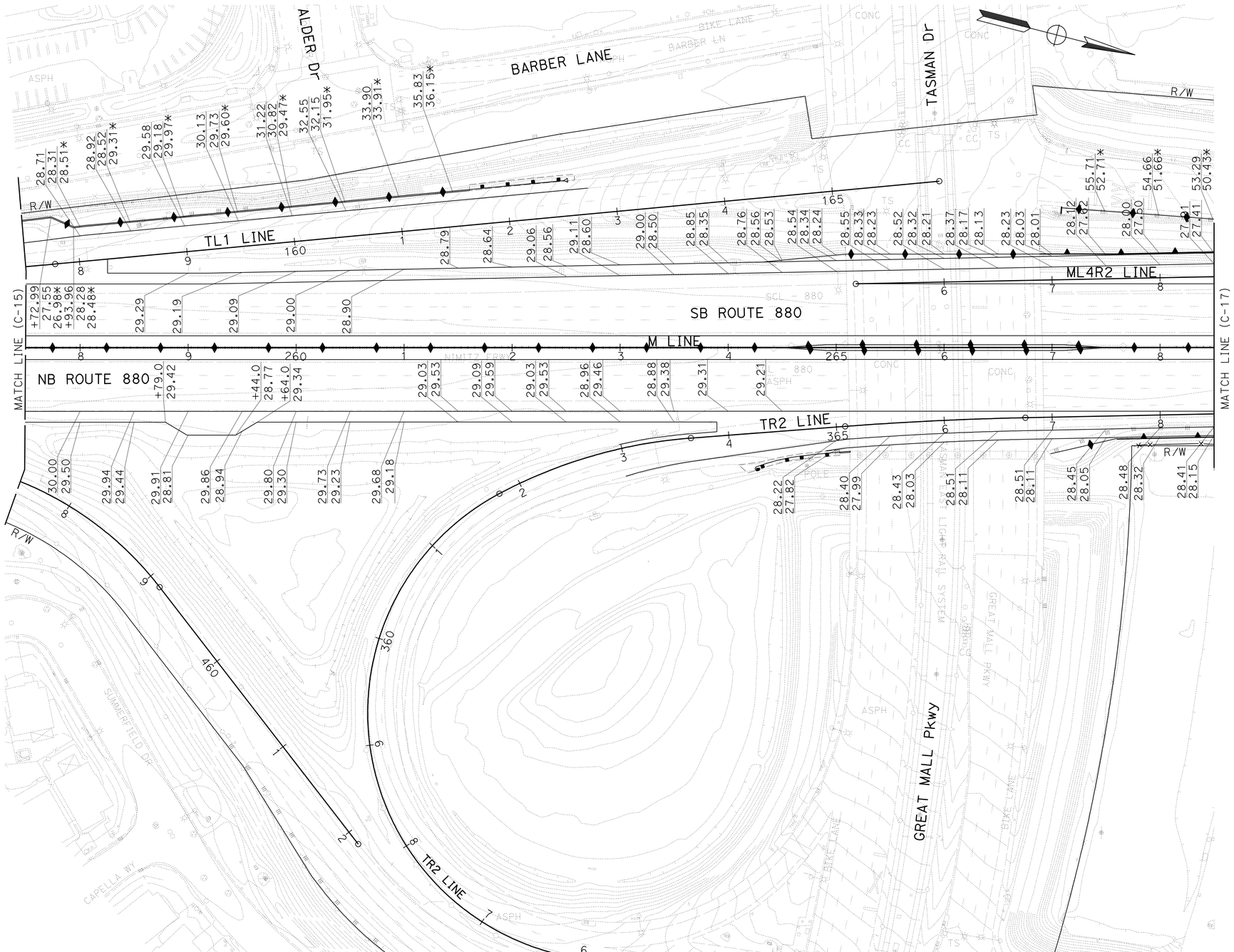

FOR NOTES AND LEGEND,
SEE SHEET C-1

THIS PLAN ACCURATE FOR PAVEMENT ELEVATION WORK ONLY.

CONSTRUCTION DETAILS
PAVEMENT ELEVATIONS
SCALE: 1" = 50'

C-16

STATE OF CALIFORNIA - DEPARTMENT OF TRANSPORTATION
Caltrans

CONSULTANT FUNCTIONAL SUPERVISOR: RICHARD TANAKA
CALCULATED-DESIGNED BY: RAFAEL LOPEZ
CHECKED BY: MARILOU AYUPAN
REVISED BY
DATE REVISED

LAST REVISION 03-31-11
DATE PLOTTED => 08-JUL-2011
TIME PLOTTED => 15:53

FOR ACCURATE RIGHT OF WAY DATA, CONTACT
RIGHT OF WAY ENGINEERING AT THE DISTRICT OFFICE.

Dist	COUNTY	ROUTE	POST MILES TOTAL PROJECT	SHEET No.	TOTAL SHEETS
04	SCI	880	4.1/8.7	69	710

REGISTERED CIVIL ENGINEER 03/31/11 DATE

7-11-11
PLANS APPROVAL DATE

REGISTERED PROFESSIONAL ENGINEER
RICHARD K. TANAKA
No. 23233
Exp. 12/31/11
CIVIL
STATE OF CALIFORNIA

THE STATE OF CALIFORNIA OR ITS OFFICERS OR AGENTS SHALL NOT BE RESPONSIBLE FOR THE ACCURACY OR COMPLETENESS OF SCANNED COPIES OF THIS PLAN SHEET.

MARK THOMAS & COMPANY, INC.
1960 ZANKER ROAD
SAN JOSE, CA 95112

SANTA CLARA VALLEY
TRANSPORTATION AUTHORITY
3331 NORTH FIRST STREET, BLDG B
SAN JOSE, CA 95134

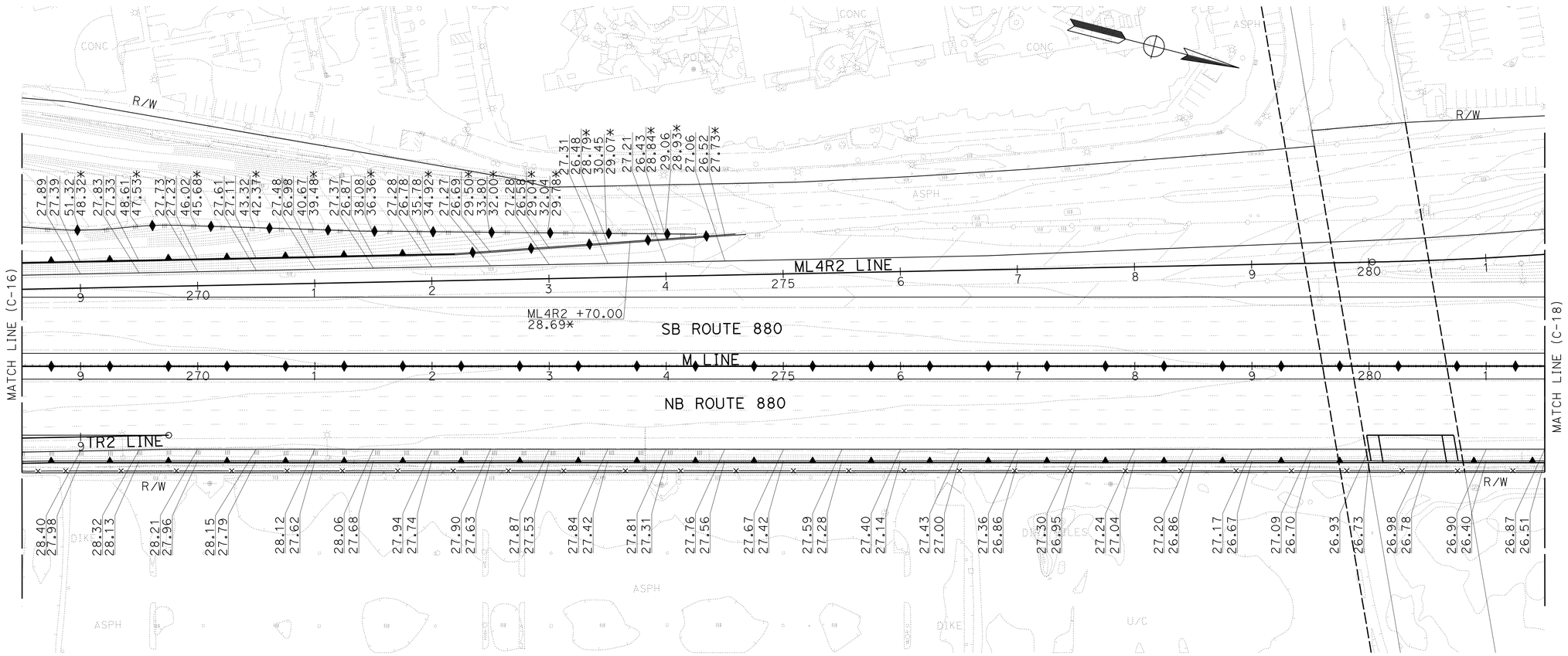

FOR NOTES AND LEGEND,
SEE SHEET C-1

THIS PLAN ACCURATE FOR PAVEMENT ELEVATION WORK ONLY.

CONSTRUCTION DETAILS
PAVEMENT ELEVATIONS
SCALE: 1" = 50'

C-17

REVISED BY | DATE REVISED
RAFAEL LOPEZ | MARILOU AYUPAN
CALCULATED-DESIGNED BY | CHECKED BY
CONSULTANT FUNCTIONAL SUPERVISOR
RICHARD TANAKA
STATE OF CALIFORNIA - DEPARTMENT OF TRANSPORTATION
Caltrans

LAST REVISION 03-31-11 | DATE PLOTTED => 08-JUL-2011 | TIME PLOTTED => 15:53

FOR ACCURATE RIGHT OF WAY, CONTACT
RIGHT OF WAY ENGINEERING AT THE DISTRICT OFFICE.

Dist	COUNTY	ROUTE	POST MILES TOTAL PROJECT	SHEET No.	TOTAL SHEETS
04	SCI	880	4.1/8.7	70	710

REGISTERED CIVIL ENGINEER 03/31/11 DATE

7-11-11
PLANS APPROVAL DATE

REGISTERED PROFESSIONAL ENGINEER
RICHARD K. TANAKA
No. 23233
Exp. 12/31/11
CIVIL
STATE OF CALIFORNIA

THE STATE OF CALIFORNIA OR ITS OFFICERS OR AGENTS SHALL NOT BE RESPONSIBLE FOR THE ACCURACY OR COMPLETENESS OF SCANNED COPIES OF THIS PLAN SHEET.

MARK THOMAS & COMPANY, INC.
1960 ZANKER ROAD
SAN JOSE, CA 95112

SANTA CLARA VALLEY
TRANSPORTATION AUTHORITY
3331 NORTH FIRST STREET, BLDG B
SAN JOSE, CA 95134

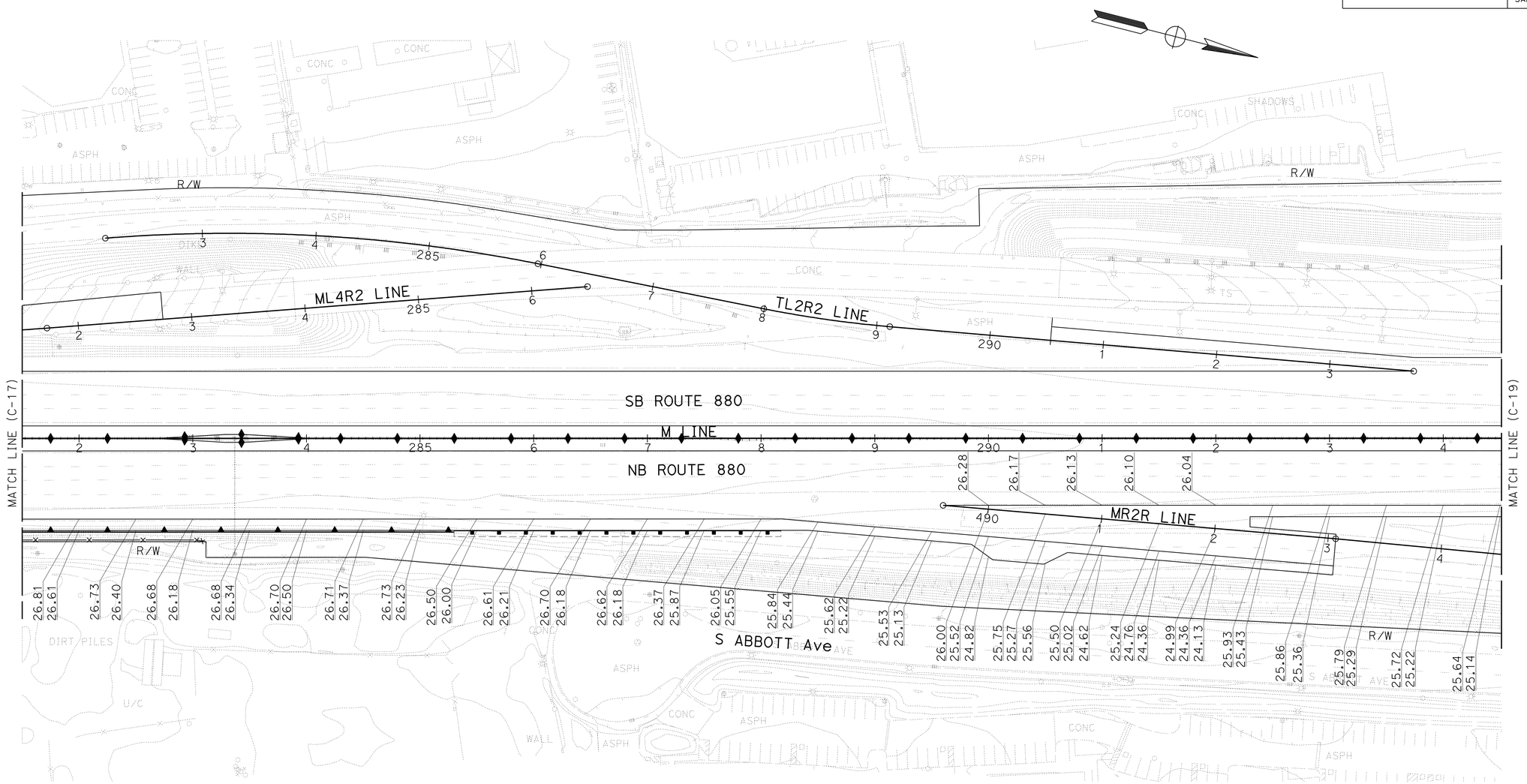

FOR NOTES AND LEGEND,
SEE SHEET C-1

THIS PLAN ACCURATE FOR PAVEMENT ELEVATION WORK ONLY.

CONSTRUCTION DETAILS
PAVEMENT ELEVATIONS
SCALE: 1" = 50'

C-18

STATE OF CALIFORNIA - DEPARTMENT OF TRANSPORTATION
Caltrans

CONSULTANT FUNCTIONAL SUPERVISOR: RICHARD TANAKA
CALCULATED-DESIGNED BY: RAFAEL LOPEZ
CHECKED BY: MARILOU AYUPAN
REVISED BY
DATE REVISED

LAST REVISION 03-31-11
DATE PLOTTED => 08-JUL-2011
TIME PLOTTED => 15:53

FOR ACCURATE RIGHT OF WAY DATA, CONTACT
RIGHT OF WAY ENGINEERING AT THE DISTRICT OFFICE.

Dist	COUNTY	ROUTE	POST MILES TOTAL PROJECT	SHEET No.	TOTAL SHEETS
04	SCl	880	4.1/8.7	71	710

REGISTERED CIVIL ENGINEER 03/31/11 DATE

7-11-11
PLANS APPROVAL DATE

REGISTERED PROFESSIONAL ENGINEER
RICHARD K. TANAKA
No. 23233
Exp. 12/31/11
CIVIL
STATE OF CALIFORNIA

THE STATE OF CALIFORNIA OR ITS OFFICERS OR AGENTS SHALL NOT BE RESPONSIBLE FOR THE ACCURACY OR COMPLETENESS OF SCANNED COPIES OF THIS PLAN SHEET.

MARK THOMAS & COMPANY, INC.
1960 ZANKER ROAD
SAN JOSE, CA 95112

SANTA CLARA VALLEY
TRANSPORTATION AUTHORITY
3331 NORTH FIRST STREET, BLDG B
SAN JOSE, CA 95134

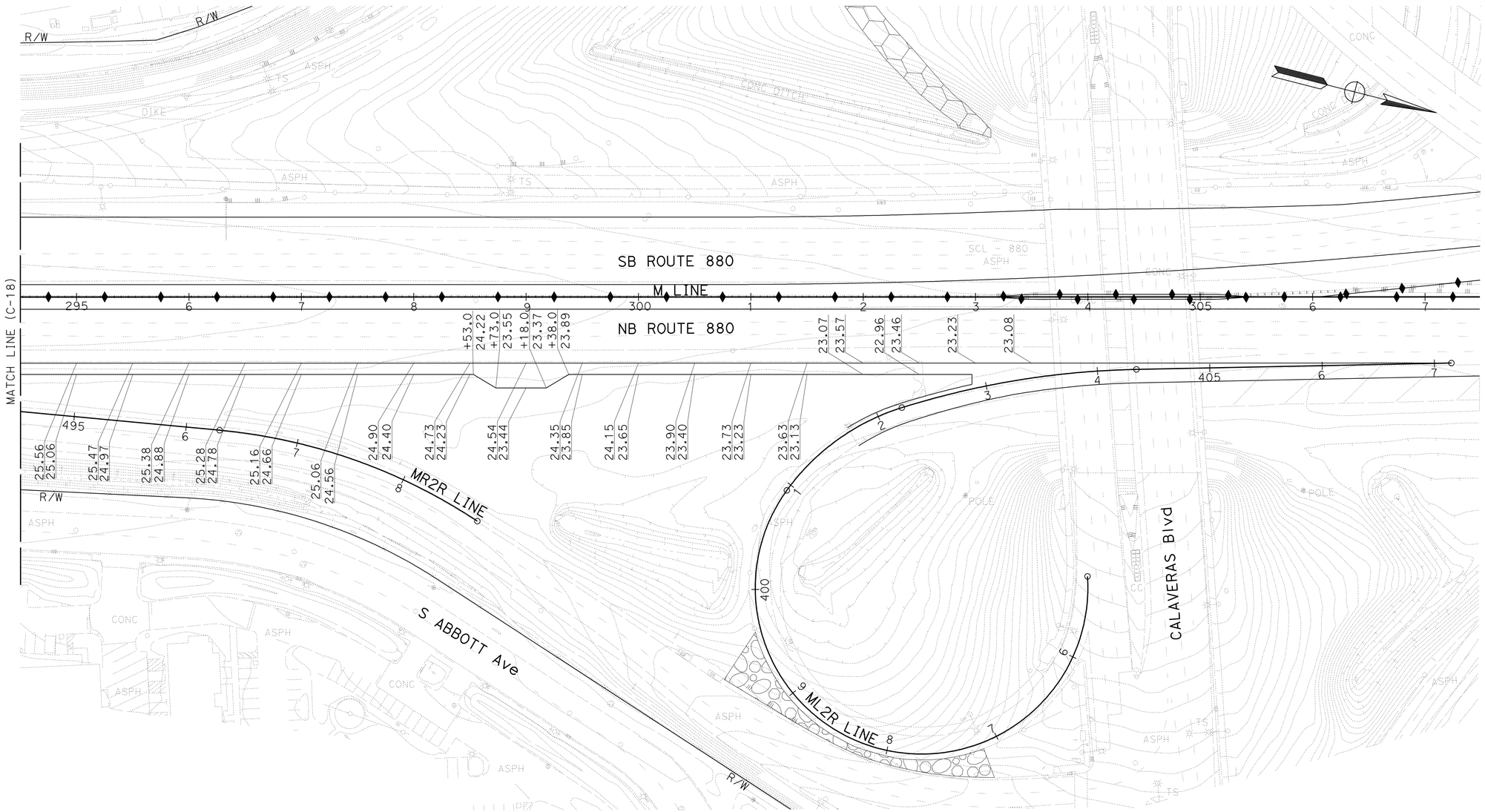

FOR NOTES AND LEGEND,
SEE SHEET C-1

THIS PLAN ACCURATE FOR PAVEMENT ELEVATION WORK ONLY.

CONSTRUCTION DETAILS
PAVEMENT ELEVATIONS
SCALE: 1" = 50'

C-19

STATE OF CALIFORNIA - DEPARTMENT OF TRANSPORTATION
Caltrans

CONSULTANT FUNCTIONAL SUPERVISOR: RICHARD TANAKA
CALCULATED-DESIGNED BY: RAFAEL LOPEZ
CHECKED BY: MARILOU AYUPAN
REVISED BY
DATE REVISED

LAST REVISION 03-31-11
DATE PLOTTED => 08-JUL-2011
TIME PLOTTED => 12:45

FOR ACCURATE RIGHT OF WAY DATA, CONTACT
RIGHT OF WAY ENGINEERING AT THE DISTRICT OFFICE.

Dist	COUNTY	ROUTE	POST MILES TOTAL PROJECT	SHEET No.	TOTAL SHEETS
04	SCI	880	4.1/8.7	72	710

REGISTERED CIVIL ENGINEER 03/31/11 DATE

7-11-11
PLANS APPROVAL DATE

REGISTERED PROFESSIONAL ENGINEER
RICHARD K. TANAKA
No. 23233
Exp. 12/31/11
CIVIL
STATE OF CALIFORNIA

THE STATE OF CALIFORNIA OR ITS OFFICERS OR AGENTS SHALL NOT BE RESPONSIBLE FOR THE ACCURACY OR COMPLETENESS OF SCANNED COPIES OF THIS PLAN SHEET.

MARK THOMAS & COMPANY, INC.
1960 ZANKER ROAD
SAN JOSE, CA 95112

SANTA CLARA VALLEY
TRANSPORTATION AUTHORITY
3331 NORTH FIRST STREET, BLDG B
SAN JOSE, CA 95134

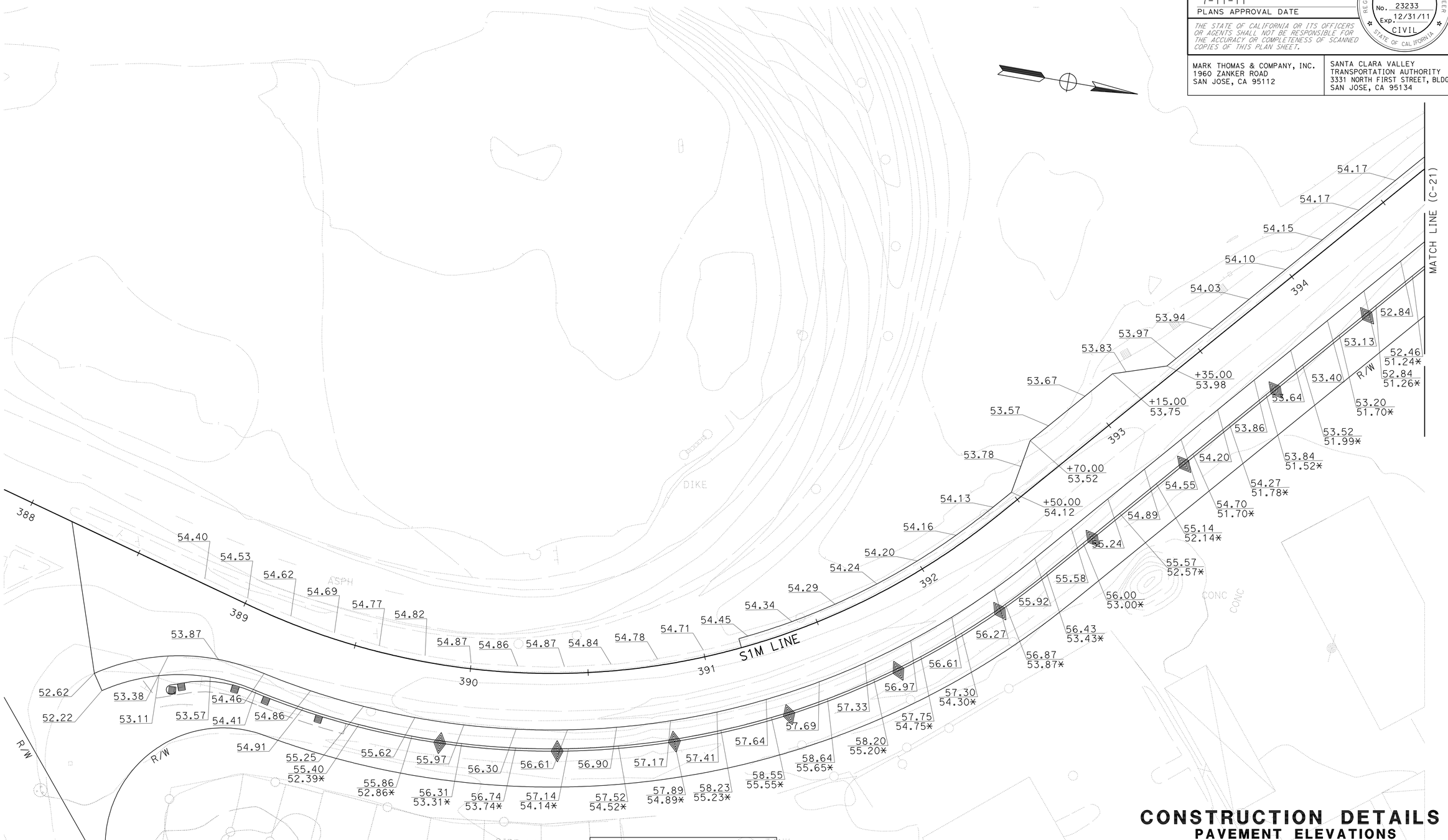

FOR NOTES AND LEGEND,
SEE SHEET C-1

THIS PLAN ACCURATE FOR PAVEMENT ELEVATION WORK ONLY.

CONSTRUCTION DETAILS
PAVEMENT ELEVATIONS
SCALE: 1" = 20'

C-20

STATE OF CALIFORNIA - DEPARTMENT OF TRANSPORTATION
Caltrans

CONSULTANT FUNCTIONAL SUPERVISOR: RICHARD TANAKA
CALCULATED-DESIGNED BY: RAFAEL LOPEZ
CHECKED BY: MARILOU AYUPAN
REVISED BY
DATE REVISED

LAST REVISION 03-31-11
DATE PLOTTED => 08-JUL-2011
TIME PLOTTED => 12:46

FOR ACCURATE RIGHT OF WAY DATA, CONTACT
RIGHT OF WAY ENGINEERING AT THE DISTRICT OFFICE.

Dist	COUNTY	ROUTE	POST MILES TOTAL PROJECT	SHEET No.	TOTAL SHEETS
04	SCI	880	4.1/8.7	73	710

REGISTERED CIVIL ENGINEER 03/31/11 DATE

7-11-11
PLANS APPROVAL DATE

REGISTERED PROFESSIONAL ENGINEER
RICHARD K. TANAKA
No. 23233
Exp. 12/31/11
CIVIL
STATE OF CALIFORNIA

THE STATE OF CALIFORNIA OR ITS OFFICERS OR AGENTS SHALL NOT BE RESPONSIBLE FOR THE ACCURACY OR COMPLETENESS OF SCANNED COPIES OF THIS PLAN SHEET.

MARK THOMAS & COMPANY, INC.
1960 ZANKER ROAD
SAN JOSE, CA 95112

SANTA CLARA VALLEY
TRANSPORTATION AUTHORITY
3331 NORTH FIRST STREET, BLDG B
SAN JOSE, CA 95134

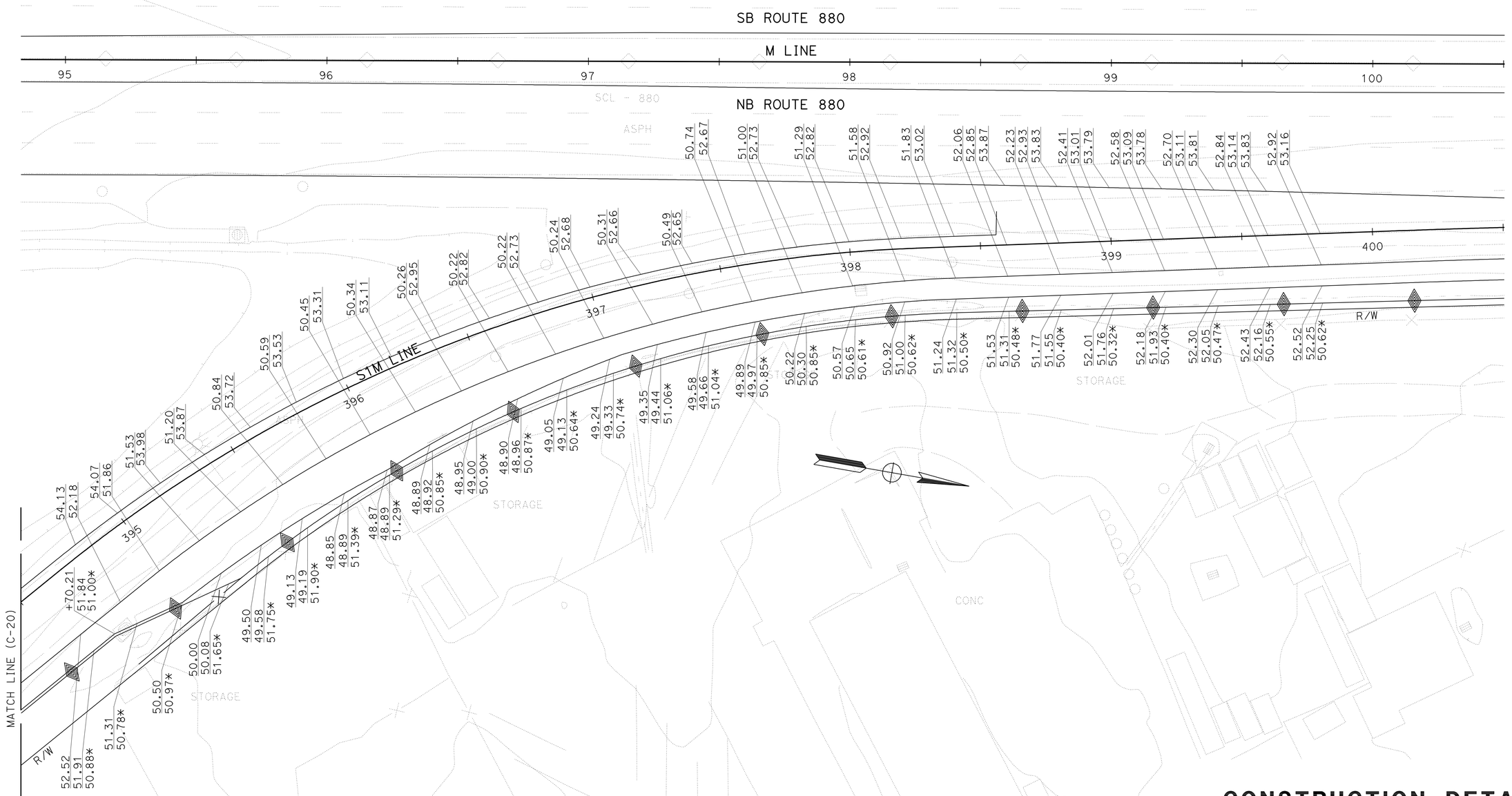

FOR NOTES AND LEGEND,
SEE SHEET C-1

THIS PLAN ACCURATE FOR PAVEMENT ELEVATION WORK ONLY.

CONSTRUCTION DETAILS
PAVEMENT ELEVATIONS
SCALE: 1" = 20'

C-21

STATE OF CALIFORNIA - DEPARTMENT OF TRANSPORTATION
Caltrans

CONSULTANT FUNCTIONAL SUPERVISOR: RICHARD TANAKA
CALCULATED-DESIGNED BY: RAFAEL LOPEZ
CHECKED BY: MARILOU AYUPAN
REVISED BY
DATE REVISED

LAST REVISION 03-31-11
DATE PLOTTED => 08-JUL-2011
TIME PLOTTED => 12:46

Dist	COUNTY	ROUTE	POST MILES TOTAL PROJECT	SHEET No.	TOTAL SHEETS
04	SCI	880	4.1/8.7	74	710

REGISTERED CIVIL ENGINEER 03/31/11 DATE

7-11-11
PLANS APPROVAL DATE

REGISTERED PROFESSIONAL ENGINEER RICHARD K. TANAKA No. 23233 Exp. 12/31/11 CIVIL STATE OF CALIFORNIA

THE STATE OF CALIFORNIA OR ITS OFFICERS OR AGENTS SHALL NOT BE RESPONSIBLE FOR THE ACCURACY OR COMPLETENESS OF SCANNED COPIES OF THIS PLAN SHEET.

MARK THOMAS & COMPANY, INC.
1960 ZANKER ROAD
SAN JOSE, CA 95112

SANTA CLARA VALLEY TRANSPORTATION AUTHORITY
3331 NORTH FIRST STREET, BLDG B
SAN JOSE, CA 95134

FOR ACCURATE RIGHT OF WAY DATA, CONTACT RIGHT OF WAY ENGINEERING AT THE DISTRICT OFFICE.

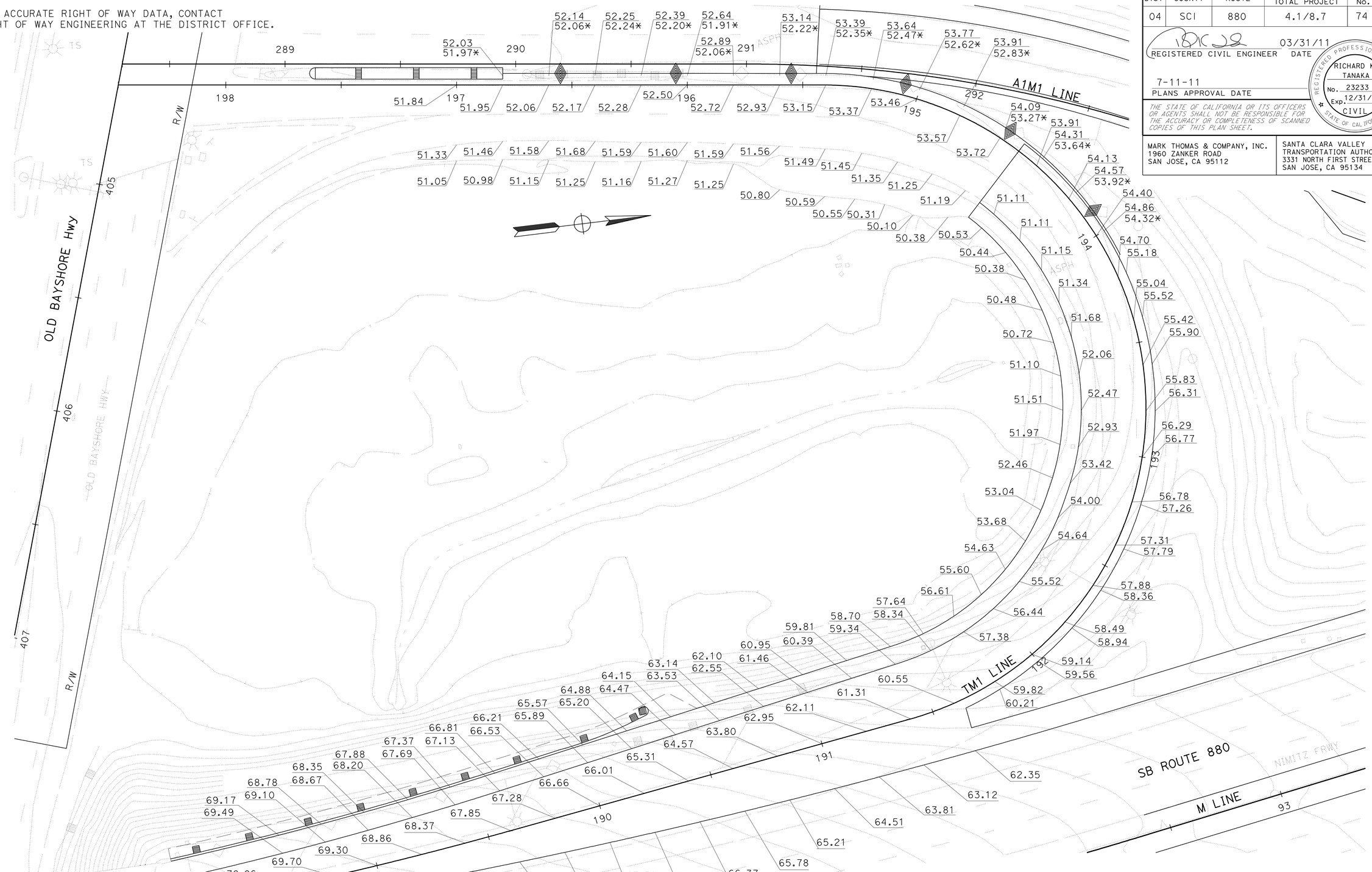

FOR NOTES AND LEGEND, SEE SHEET C-1

THIS PLAN ACCURATE FOR PAVEMENT ELEVATION WORK ONLY.

CONSTRUCTION DETAILS
PAVEMENT ELEVATIONS
SCALE: 1" = 20'

C-22

STATE OF CALIFORNIA - DEPARTMENT OF TRANSPORTATION
Caltrans

CONSULTANT FUNCTIONAL SUPERVISOR: RICHARD TANAKA
CALCULATED-DESIGNED BY: RAFAEL LOPEZ
CHECKED BY: MARILOU AYUPAN
REVISED BY
DATE REVISED

LAST REVISION 03-31-11
DATE PLOTTED => 08-JUL-2011
TIME PLOTTED => 12:46

FOR ACCURATE RIGHT OF WAY DATA, CONTACT
RIGHT OF WAY ENGINEERING AT THE DISTRICT OFFICE.

Dist	COUNTY	ROUTE	POST MILES TOTAL PROJECT	SHEET No.	TOTAL SHEETS
04	SCI	880	4.1/8.7	75	710

REGISTERED CIVIL ENGINEER 03/31/11 DATE

7-11-11
PLANS APPROVAL DATE

REGISTERED PROFESSIONAL ENGINEER
RICHARD K. TANAKA
No. 23233
Exp. 12/31/11
CIVIL
STATE OF CALIFORNIA

THE STATE OF CALIFORNIA OR ITS OFFICERS OR AGENTS SHALL NOT BE RESPONSIBLE FOR THE ACCURACY OR COMPLETENESS OF SCANNED COPIES OF THIS PLAN SHEET.

MARK THOMAS & COMPANY, INC.
1960 ZANKER ROAD
SAN JOSE, CA 95112

SANTA CLARA VALLEY
TRANSPORTATION AUTHORITY
3331 NORTH FIRST STREET, BLDG B
SAN JOSE, CA 95134

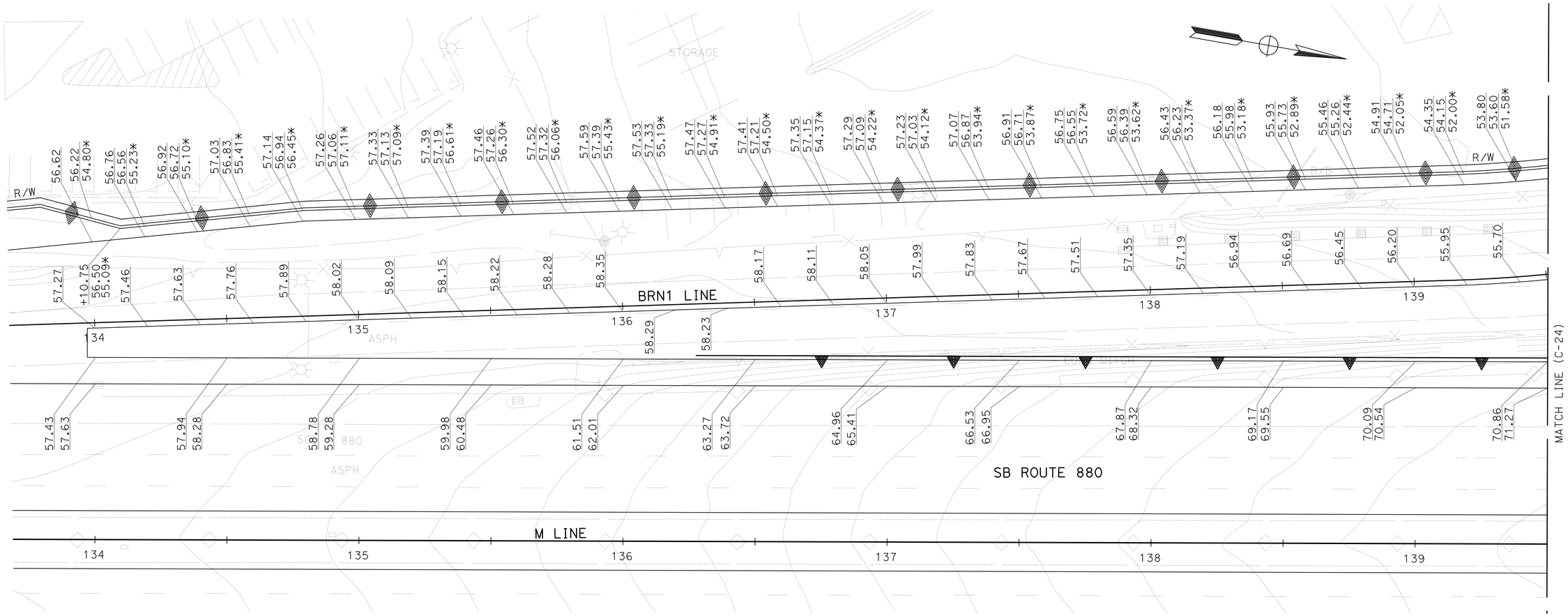

FOR NOTES AND LEGEND,
SEE SHEET C-1

THIS PLAN ACCURATE FOR PAVEMENT ELEVATION WORK ONLY.

CONSTRUCTION DETAILS
PAVEMENT ELEVATIONS
SCALE: 1" = 20'

C-23

STATE OF CALIFORNIA - DEPARTMENT OF TRANSPORTATION
Caltrans

CONSULTANT FUNCTIONAL SUPERVISOR: RICHARD TANAKA
CALCULATED-DESIGNED BY: RAFAEL LOPEZ
CHECKED BY: MARILOU AYUPAN
REVISED BY
DATE REVISED

LAST REVISION 03-31-11
DATE PLOTTED => 08-JUL-2011
TIME PLOTTED => 12:46

Dist	COUNTY	ROUTE	POST MILES TOTAL PROJECT	SHEET No.	TOTAL SHEETS
04	SCI	880	4.1/8.7	76	710

REGISTERED CIVIL ENGINEER 03/31/11 DATE

7-11-11
PLANS APPROVAL DATE

REGISTERED PROFESSIONAL ENGINEER RICHARD K. TANAKA No. 23233 Exp. 12/31/11 CIVIL STATE OF CALIFORNIA

THE STATE OF CALIFORNIA OR ITS OFFICERS OR AGENTS SHALL NOT BE RESPONSIBLE FOR THE ACCURACY OR COMPLETENESS OF SCANNED COPIES OF THIS PLAN SHEET.

MARK THOMAS & COMPANY, INC.
1960 ZANKER ROAD
SAN JOSE, CA 95112

SANTA CLARA VALLEY
TRANSPORTATION AUTHORITY
3331 NORTH FIRST STREET, BLDG B
SAN JOSE, CA 95134

FOR ACCURATE RIGHT OF WAY DATA, CONTACT
RIGHT OF WAY ENGINEERING AT THE DISTRICT OFFICE.

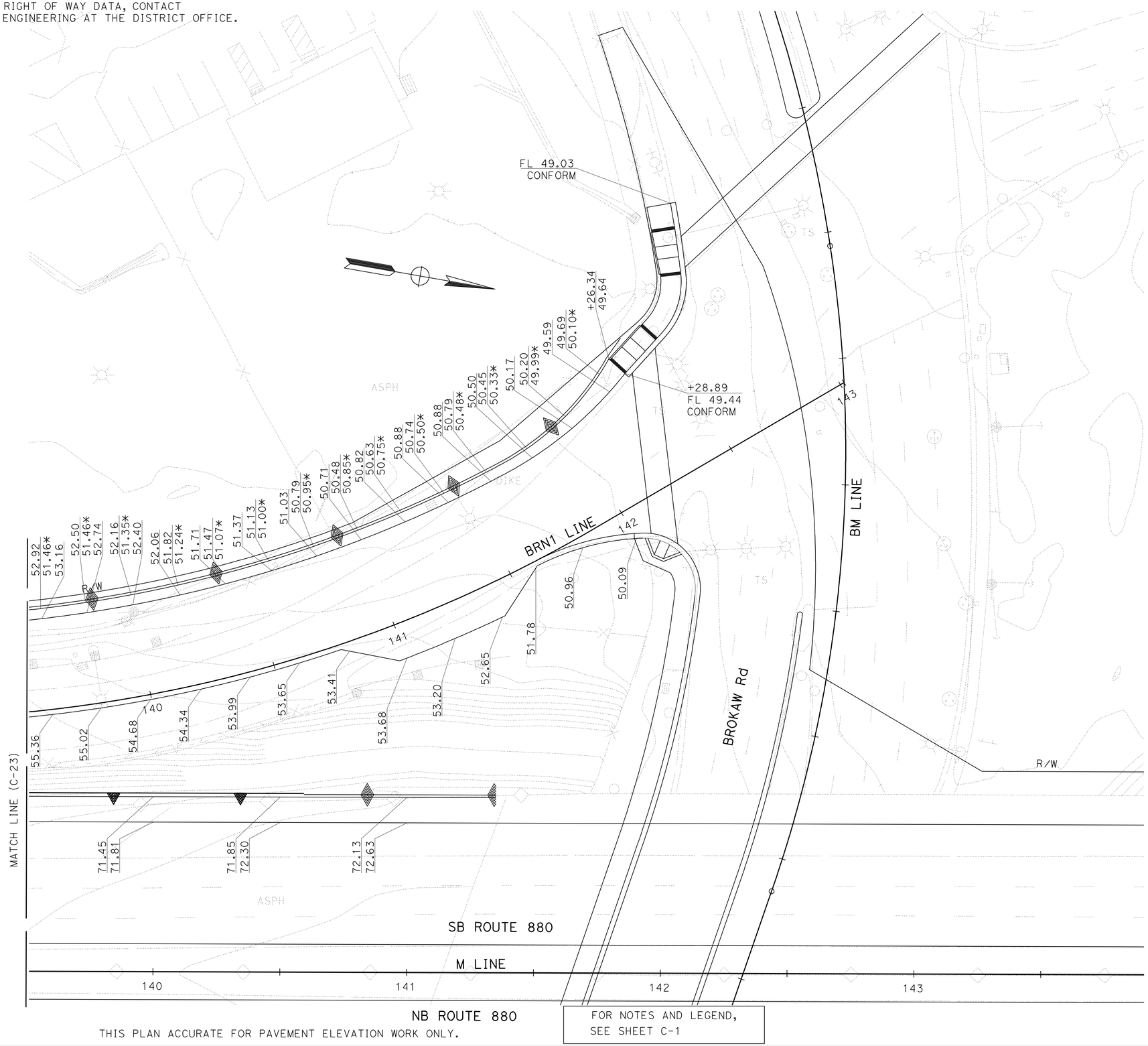

THIS PLAN ACCURATE FOR PAVEMENT ELEVATION WORK ONLY.

FOR NOTES AND LEGEND,
SEE SHEET C-1

CONSTRUCTION DETAILS
PAVEMENT ELEVATIONS
SCALE: 1" = 20'

C-24

STATE OF CALIFORNIA - DEPARTMENT OF TRANSPORTATION
Caltrans

CONSULTANT FUNCTIONAL SUPERVISOR: RICHARD TANAKA
CALCULATED-DESIGNED BY: RAFAEL LOPEZ
CHECKED BY: MARILOU AYUPAN
REVISED BY
DATE REVISED

LAST REVISION 03-31-11
DATE PLOTTED => 08-JUL-2011
TIME PLOTTED => 12:46

Dist	COUNTY	ROUTE	POST MILES TOTAL PROJECT	SHEET No.	TOTAL SHEETS
04	SCl	880	4.1/8.7	77	710

REGISTERED CIVIL ENGINEER 03/31/11 DATE

7-11-11
PLANS APPROVAL DATE

REGISTERED PROFESSIONAL ENGINEER RICHARD K. TANAKA No. 23233 Exp. 12/31/11 CIVIL STATE OF CALIFORNIA

THE STATE OF CALIFORNIA OR ITS OFFICERS OR AGENTS SHALL NOT BE RESPONSIBLE FOR THE ACCURACY OR COMPLETENESS OF SCANNED COPIES OF THIS PLAN SHEET.

MARK THOMAS & COMPANY, INC.
1960 ZANKER ROAD
SAN JOSE, CA 95112

SANTA CLARA VALLEY TRANSPORTATION AUTHORITY
3331 NORTH FIRST STREET, BLDG B
SAN JOSE, CA 95134

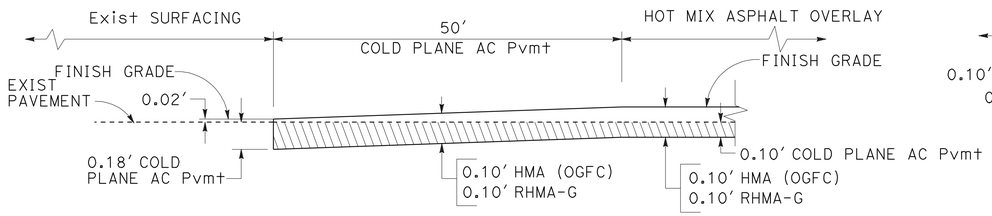

TRANSVERSE PAVING CONFORM (CASE 4)

ML2 222+05.40 Lt
TL1 158+75.70 Lt & Rt
TL2R2 290+53.50 Lt & Rt

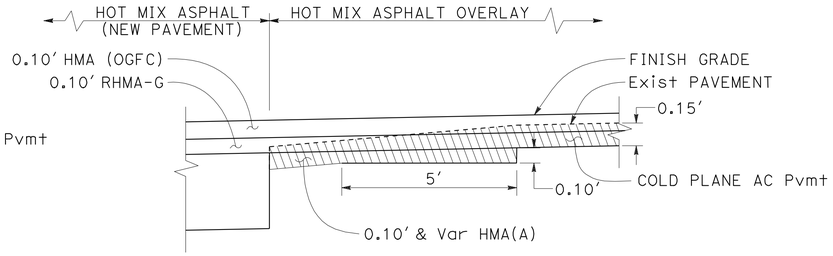

LONGITUDINAL PAVING CONFORM (CASE 3)

M	88+20.60	Lt	TO M	99+46.00	Lt
M	96+23.00	Rt	TO M	108+74.00	Rt
M	126+41.00	Rt	TO B12M	432+13.00	Lt
M	130+82.91	Rt	TO M	134+60.00	Rt
M	134+96.90	Lt	TO M	141+39.30	Lt
BRN1	133+97.20	Rt	TO BRN1	142+35.00	Rt
M	147+53.60	Lt	TO M	154+85.00	Lt
M	156+00.00	Rt	TO M	159+83.00	Rt
BR2	253+11.40	Lt	TO M	158+75.00	Lt
M	196+56.17	Rt	TO M	197+30.00	Rt
M	264+63.50	Lt	TO M	274+84.00	Lt

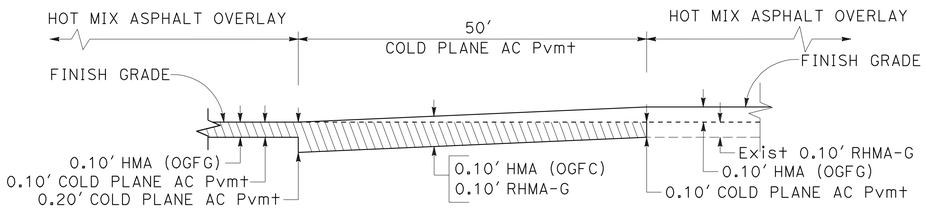

TRANSVERSE PAVING CONFORM (CASE 3)

M 299+06.00 Lt

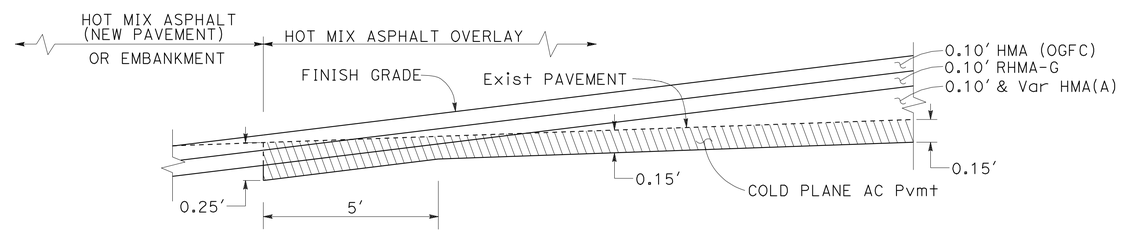

LONGITUDINAL PAVING CONFORM (CASE 2)

TM1	194+00.00	Lt	TO TM1	197+00.00	Lt
A1M1	291+30.50	Rt	TO A1M1	296+95.66	Rt
A1M1	293+95.66	Lt	TO M	102+93.00	Lt
BRN1	133+97.20	Lt	TO BRN1	142+35.00	Lt
M	212+12.00	Rt	TO M	228+13.00	Rt
MR2	327+54.57	Rt	TO TR1	452+93.40	Rt
M	252+93.00	Rt	TO M	264+10.00	Rt
TR2	363+89.27	Rt	TO MR2R	493+06.93	Rt
M	287+50.00	Rt	TO M	303+15.88	Rt

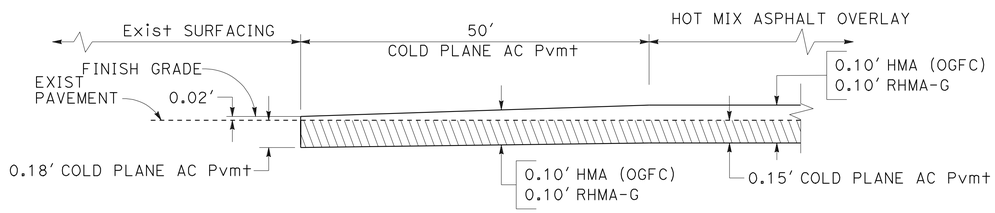

TRANSVERSE PAVING CONFORM (CASE 2)

M	88+20.60 Lt	BR1	340+72.10 Lt & Rt
M	90+00.00 Rt	ML1	201+40.46 Lt
M	141+39.30 Lt	MR1	501+01.13 Rt
M	146+73.10 Rt	MR2	324+31.11 Rt
M	147+53.60 Lt	TR1	454+15.19 Lt & Rt
M	321+00.00 Rt	TR2	362+98.08 Lt & Rt
B4M	405+34.00 Lt	ML4R2	282+74.60 Lt & Rt
TM1	197+95.00 Lt & Rt	ML2R	401+71.40 Lt & Rt
S1M	388+17.70 Lt & Rt		
BR2	251+95.12 Lt		

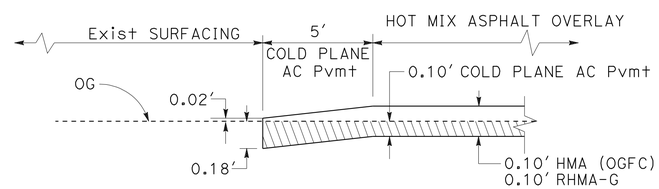

LONGITUDINAL PAVING CONFORM (CASE 1)

M	274+84.00	Lt	TO M	276+62.00	Lt
M	278+87.71	Lt	TO M	289+74.42	Lt
TL2R2	291+03.50	Lt	TO M	298+56.00	Lt

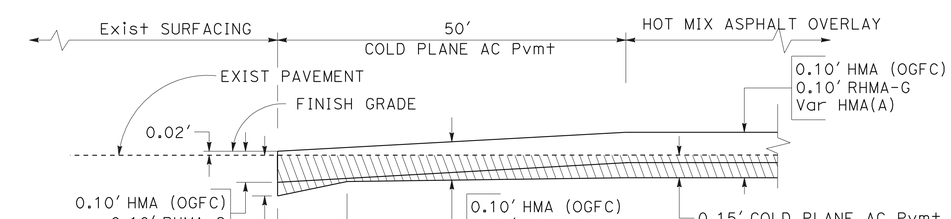

TRANSVERSE PAVING CONFORM (CASE 1)

M	88+20.60 Lt	BRN1	142+71.43 Lt & Rt
M	141+39.30 Lt	MR2R	493+06.93 Lt & Rt
A1M1	291+30.50 Lt & Rt		

CONSTRUCTION DETAILS

NO SCALE

C-25

STATE OF CALIFORNIA - DEPARTMENT OF TRANSPORTATION
Caltrans

CONSULTANT FUNCTIONAL SUPERVISOR: RICHARD TANAKA
CALCULATED-DESIGNED BY: TOMMY CHO
CHECKED BY: MARILOU AYUPAN
REVISED BY
DATE REVISED

LAST REVISION 03-31-11
DATE PLOTTED => 08-JUL-2011
TIME PLOTTED => 12:46

Dist	COUNTY	ROUTE	POST MILES TOTAL PROJECT	SHEET No.	TOTAL SHEETS
04	SCI	880	4.1/8.7	78	710

REGISTERED CIVIL ENGINEER 03/31/11 DATE

7-11-11
PLANS APPROVAL DATE

REGISTERED PROFESSIONAL ENGINEER RICHARD K. TANAKA No. 23233 Exp. 12/31/11 CIVIL STATE OF CALIFORNIA

THE STATE OF CALIFORNIA OR ITS OFFICERS OR AGENTS SHALL NOT BE RESPONSIBLE FOR THE ACCURACY OR COMPLETENESS OF SCANNED COPIES OF THIS PLAN SHEET.

MARK THOMAS & COMPANY, INC.
1960 ZANKER ROAD
SAN JOSE, CA 95112

SANTA CLARA VALLEY TRANSPORTATION AUTHORITY
3331 NORTH FIRST STREET, BLDG B
SAN JOSE, CA 95134

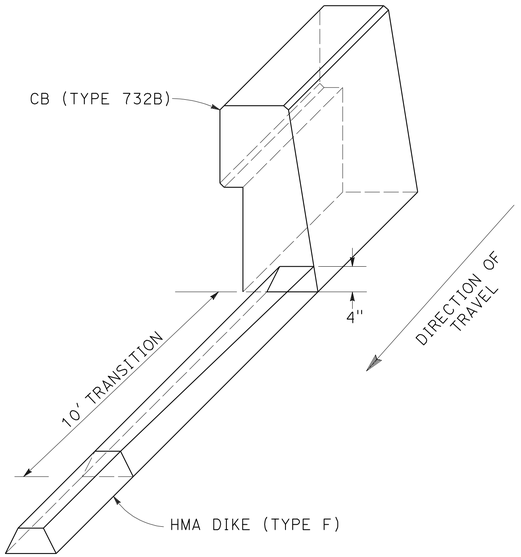

TRANSITION FROM HMA DIKE (TYPE F) TO CONCRETE BARRIER (TYPE 732B)

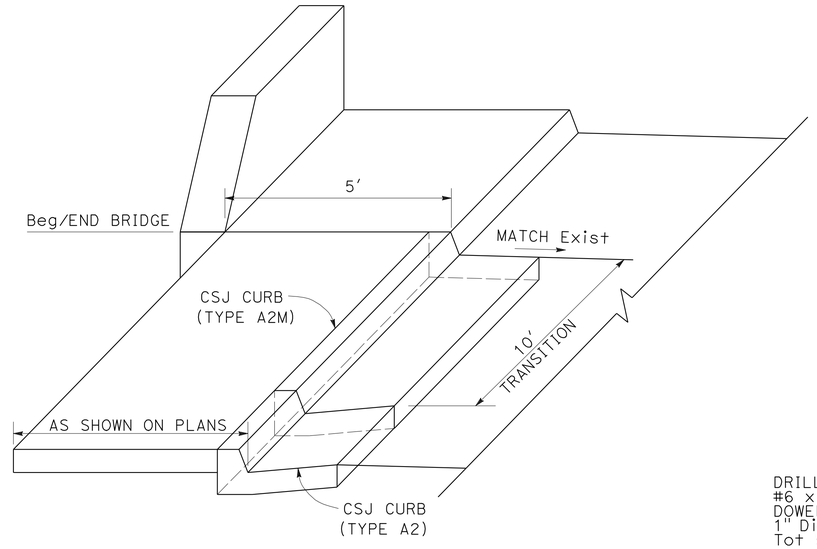

TRANSITION DETAIL AT BRIDGE

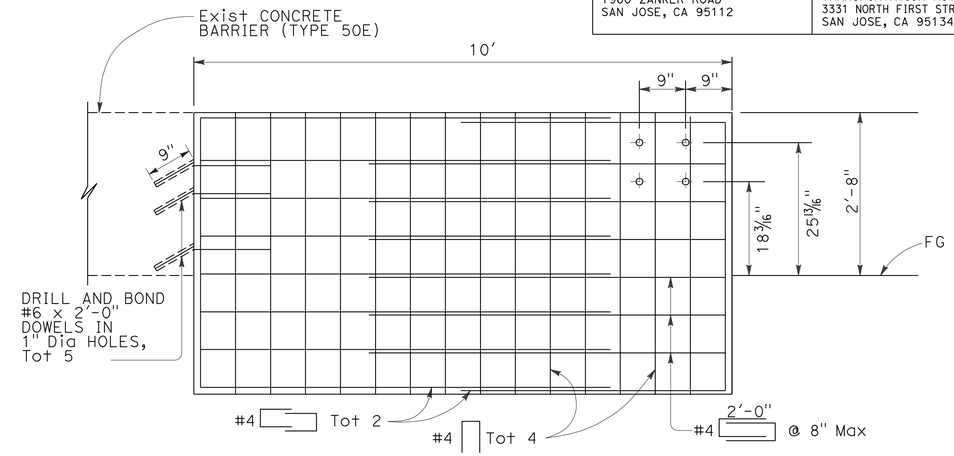

ELEVATION
CONCRETE BARRIER (TYPE 50E Mod)
(FOR GUARD RAILING CONNECTION, SEE STANDARD PLAN A77J3)

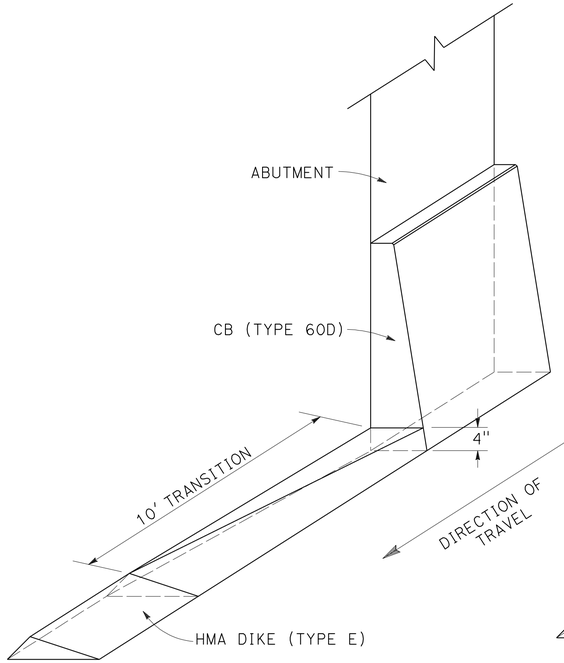

TRANSITION FROM HMA DIKE (TYPE E) TO CONCRETE BARRIER (TYPE 60D)

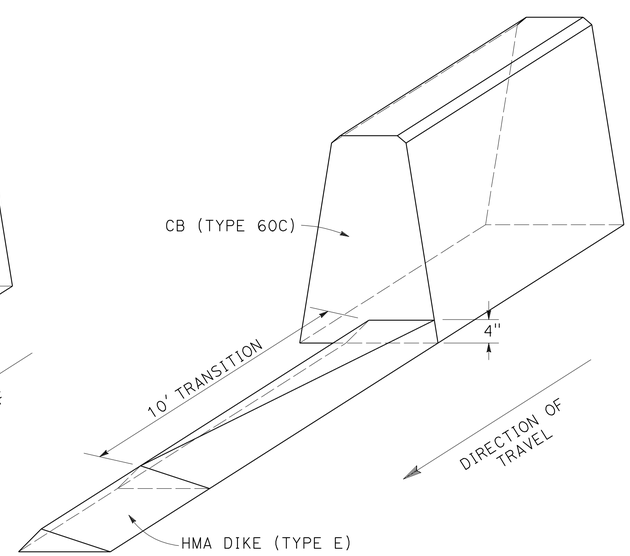

TRANSITION FROM HMA DIKE (TYPE E) TO CONCRETE BARRIER (TYPE 60C)

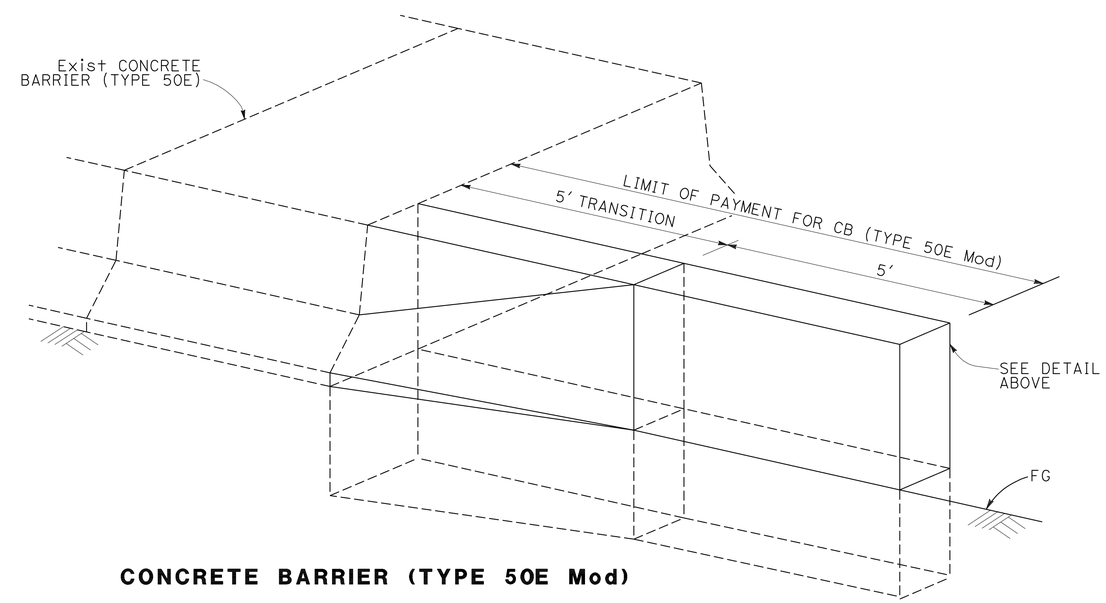

CONCRETE BARRIER (TYPE 50E Mod)

CONSTRUCTION DETAILS
NO SCALE

C-26

STATE OF CALIFORNIA - DEPARTMENT OF TRANSPORTATION
Caltrans

CONSULTANT FUNCTIONAL SUPERVISOR: RICHARD TANAKA
CALCULATED-DESIGNED BY: MARILOU AYUPAN
CHECKED BY: TOMMY CHO
REVISED BY
DATE REVISED

LAST REVISION 03-31-11
DATE PLOTTED => 08-JUL-2011
TIME PLOTTED => 12:46

Dist	COUNTY	ROUTE	POST MILES TOTAL PROJECT	SHEET No.	TOTAL SHEETS
04	SCl	880	4.1/8.7	79	710

REGISTERED CIVIL ENGINEER 03/31/11 DATE

7-11-11
PLANS APPROVAL DATE

REGISTERED PROFESSIONAL ENGINEER
RICHARD K. TANAKA
No. 23233
Exp. 12/31/11
CIVIL
STATE OF CALIFORNIA

THE STATE OF CALIFORNIA OR ITS OFFICERS OR AGENTS SHALL NOT BE RESPONSIBLE FOR THE ACCURACY OR COMPLETENESS OF SCANNED COPIES OF THIS PLAN SHEET.

MARK THOMAS & COMPANY, INC.
1960 ZANKER ROAD
SAN JOSE, CA 95112

SANTA CLARA VALLEY
TRANSPORTATION AUTHORITY
3331 NORTH FIRST STREET, BLDG B
SAN JOSE, CA 95134

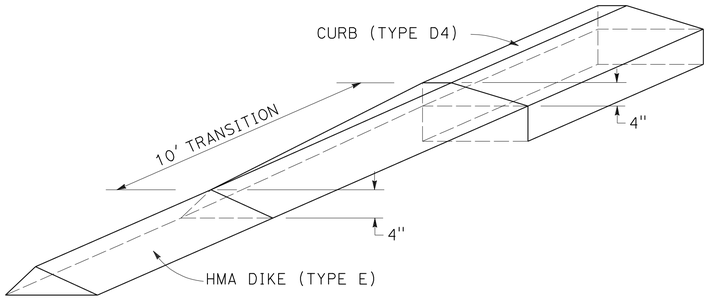

TRANSITION FROM HMA DIKE (TYPE E) TO CURB (TYPE D4)

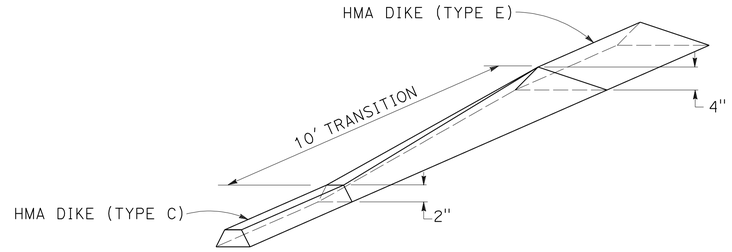

TRANSITION FROM HMA DIKE (TYPE C) TO HMA DIKE (TYPE E)

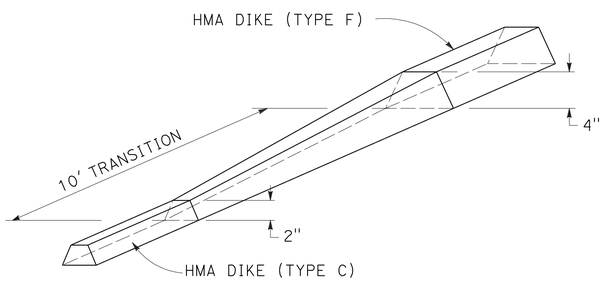

TRANSITION FROM HMA DIKE (TYPE C) TO HMA DIKE (TYPE F)

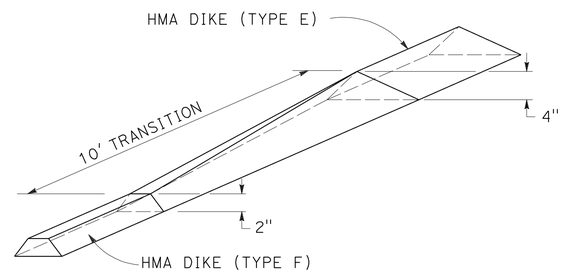

TRANSITION FROM HMA DIKE (TYPE F) TO HMA DIKE (TYPE E)

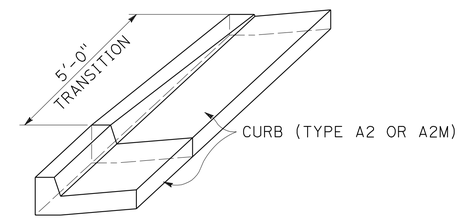

TRANSITION FROM CURB (TYPE CSJ A2 OR CSJ A2M) TO ZERO HEIGHT

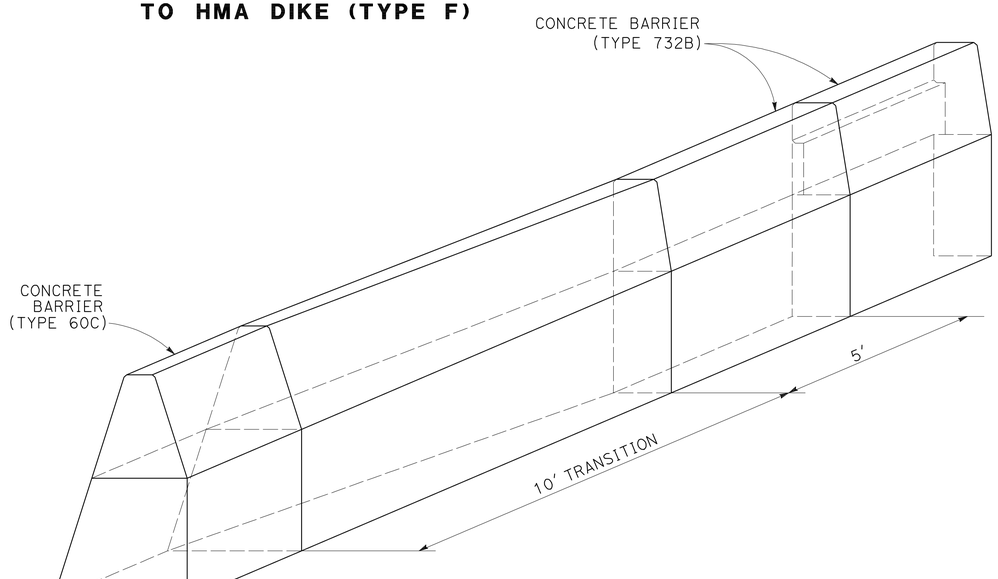

TRANSITION FROM CONCRETE BARRIER (TYPE 60C) TO CONCRETE BARRIER (TYPE 732B)

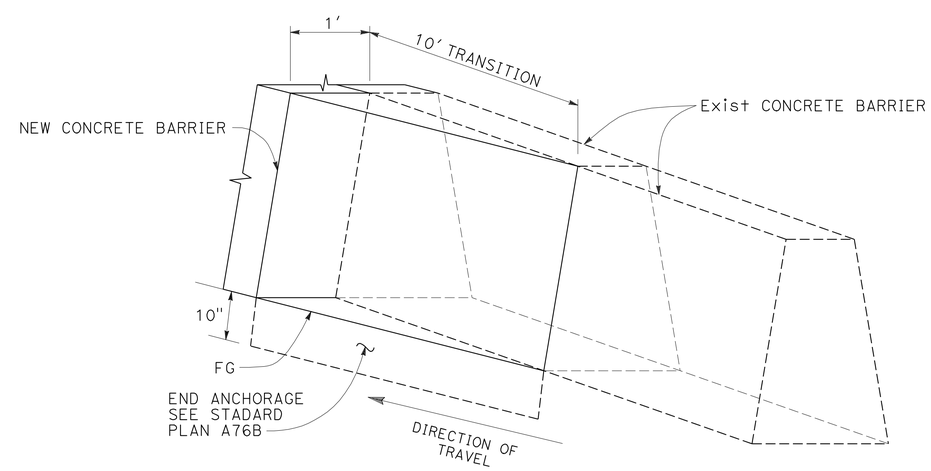

CONCRETE BARRIER (TYPE 60C) TRANSITION FROM 1' TO 0"

CONSTRUCTION DETAILS

NO SCALE

C-27

STATE OF CALIFORNIA - DEPARTMENT OF TRANSPORTATION
Caltrans

CONSULTANT FUNCTIONAL SUPERVISOR: RICHARD TANAKA
CALCULATED-DESIGNED BY: MARILOU AYUPAN
CHECKED BY: TOMMY CHO
REVISED BY
DATE REVISED

LAST REVISION 03-31-11
DATE PLOTTED => 08-JUL-2011
TIME PLOTTED => 12:47

Dist	COUNTY	ROUTE	POST MILES TOTAL PROJECT	SHEET No.	TOTAL SHEETS
04	SCI	880	4.1/8.7	80	710

REGISTERED CIVIL ENGINEER 03/31/11 DATE

7-11-11
PLANS APPROVAL DATE

REGISTERED PROFESSIONAL ENGINEER RICHARD K. TANAKA No. 23233 Exp. 12/31/11 CIVIL STATE OF CALIFORNIA

THE STATE OF CALIFORNIA OR ITS OFFICERS OR AGENTS SHALL NOT BE RESPONSIBLE FOR THE ACCURACY OR COMPLETENESS OF SCANNED COPIES OF THIS PLAN SHEET.

MARK THOMAS & COMPANY, INC.
1960 ZANKER ROAD
SAN JOSE, CA 95112

SANTA CLARA VALLEY TRANSPORTATION AUTHORITY
3331 NORTH FIRST STREET, BLDG B
SAN JOSE, CA 95134

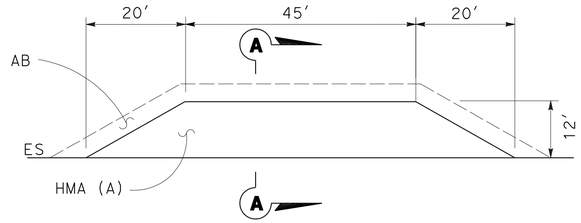

PLAN
MAINTENANCE VEHICLE PULLOUT (MVP)

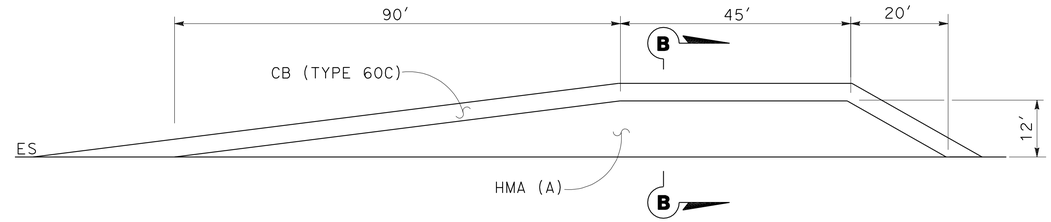

PLAN
MAINTENANCE VEHICLE PULLOUT (MVP Mod)

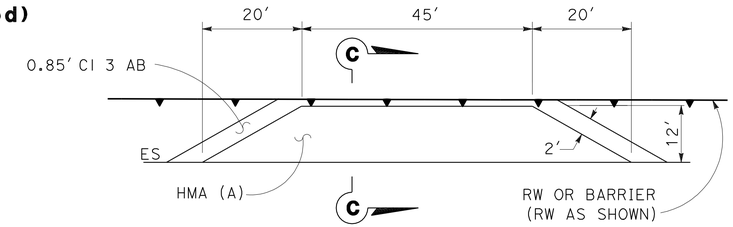

PLAN
MAINTENANCE VEHICLE PULLOUT (MVP)
AT RETAINING WALL/CONCRETE BARRIER (TYPE 60C)

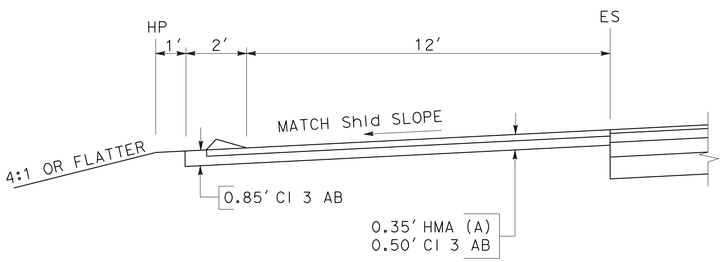

SECTION A-A
MVP WITH DIKE
M 94+90.00, 67.00′ Lt

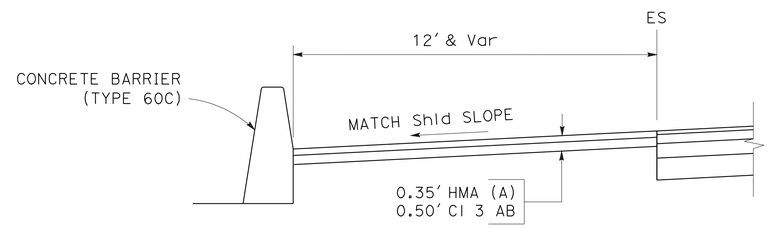

SECTION B-B & C-C
MVP/MVP (Mod) WITH CONCRETE BARRIER (TYPE 60C)

M 171+29.50, 69.00′ Rt
M 123+63.50, 69.00′ Rt
M 183+87.25, 69.00′ Lt
TL1 156+42.46, 26.50′ Lt

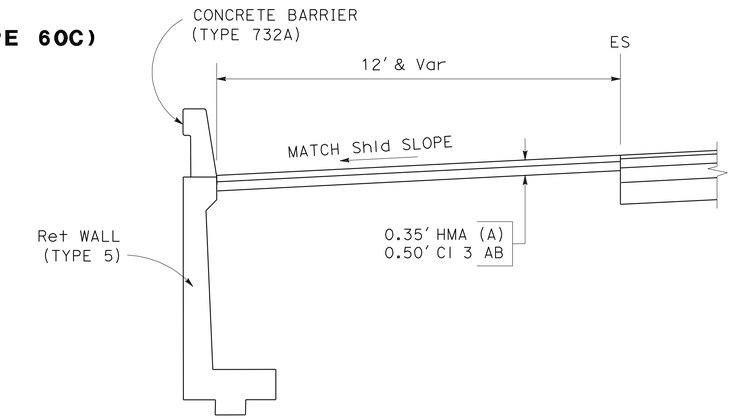

SECTION C-C
MVP AT RETAINING WALL
M 108+40.00, 69.00′ Lt

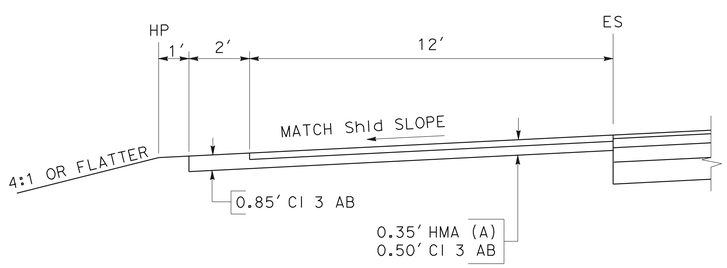

SECTION A-A
MVP WITHOUT DIKE

M 258+79.00, 69.00′ Rt
M 298+53.00, 69.00′ Rt
MR2 323+41.65, 36.00′ Rt
BRN1 140+77.14, 2.00′ Rt
S1M 392+50.00, 4.00′ Lt
A1M1 293+52.40, 4.00′ Rt
BR1 336+68.20, 36.00′ Rt
B12M 435+80.00, 4.00′ Lt

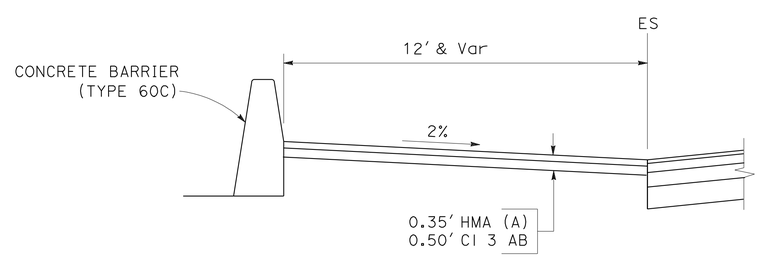

SECTION B-B
MVP (Mod) WITH CONCRETE BARRIER (TYPE 60C)

M 156+64.50, 69.00′ Rt

CONSTRUCTION DETAILS
NO SCALE

C-28

STATE OF CALIFORNIA - DEPARTMENT OF TRANSPORTATION
Caltrans

CONSULTANT FUNCTIONAL SUPERVISOR: RICHARD TANAKA
CALCULATED-DESIGNED BY: TOMMY CHO
CHECKED BY: MARILOU AYUPAN
REVISED BY
DATE REVISED

LAST REVISION 03-31-11
DATE PLOTTED => 08-JUL-2011
TIME PLOTTED => 12:47

Dist	COUNTY	ROUTE	POST MILES TOTAL PROJECT	SHEET No.	TOTAL SHEETS
04	SCl	880	4.1/8.7	81	710

REGISTERED CIVIL ENGINEER 03/31/11 DATE

7-11-11
PLANS APPROVAL DATE

REGISTERED PROFESSIONAL ENGINEER RICHARD K. TANAKA No. 23233 Exp. 12/31/11 CIVIL STATE OF CALIFORNIA

THE STATE OF CALIFORNIA OR ITS OFFICERS OR AGENTS SHALL NOT BE RESPONSIBLE FOR THE ACCURACY OR COMPLETENESS OF SCANNED COPIES OF THIS PLAN SHEET.

MARK THOMAS & COMPANY, INC.
1960 ZANKER ROAD
SAN JOSE, CA 95112

SANTA CLARA VALLEY TRANSPORTATION AUTHORITY
3331 NORTH FIRST STREET, BLDG B
SAN JOSE, CA 95134

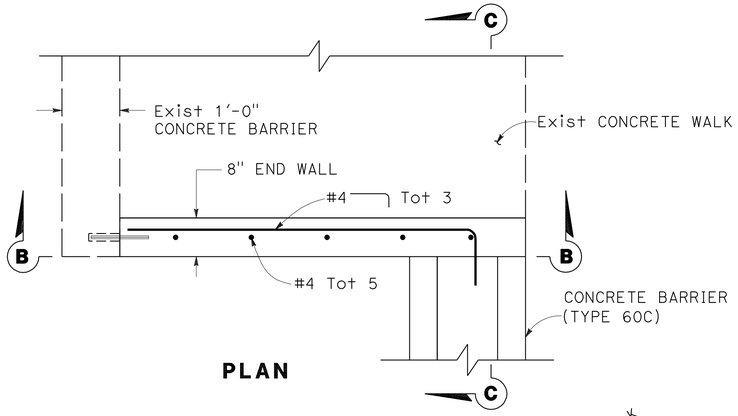

PLAN

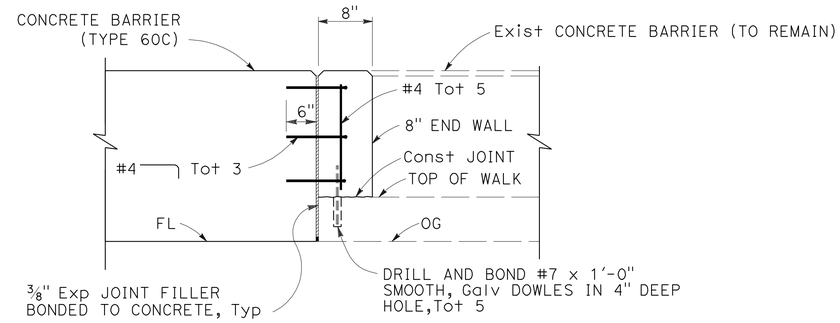

SECTION C-C

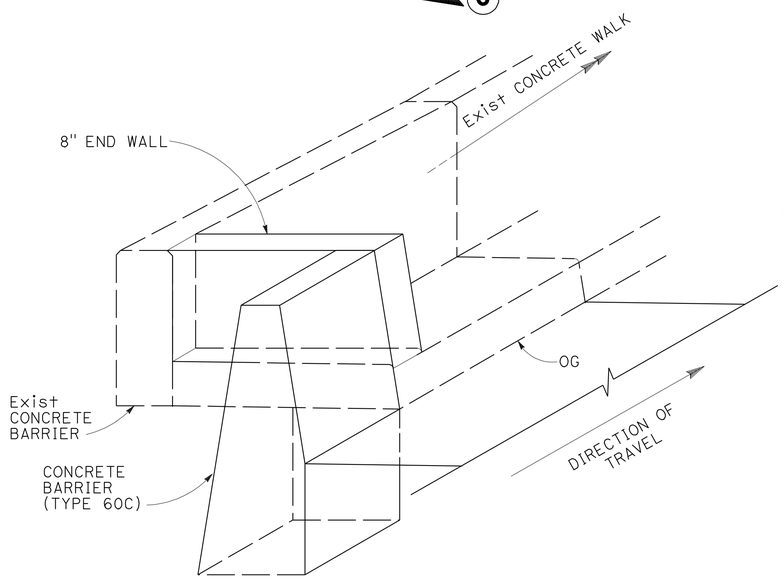

SIDEWALK END WALL AT SB TASMAN OFF-RAMP

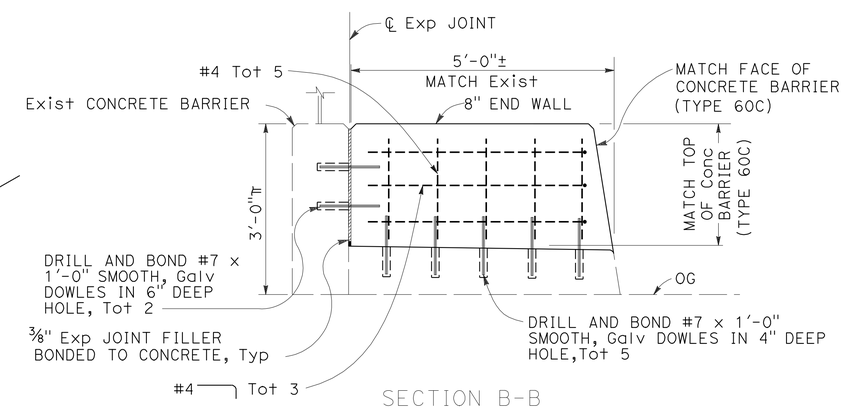

SECTION B-B

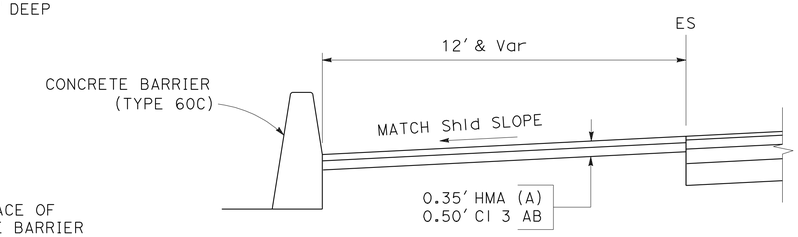

BRN1 131+75.75, 23.68' Lt

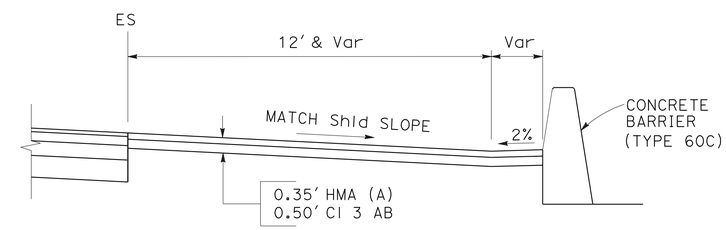

S1M 394+70.21, 32.00' Rt

CHP WITH CONCRETE BARRIER (TYPE 60C)

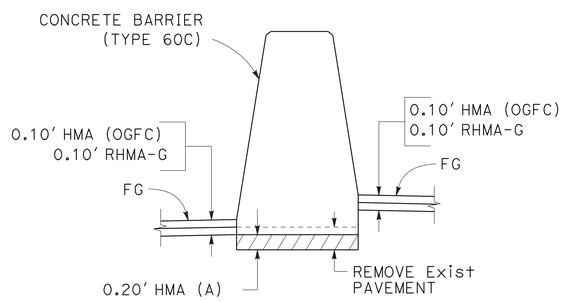

MEDIAN BARRIER (CASE 1)
M 215+24.00 TO 264+26.50
M 267+85.64 TO 307+72.00

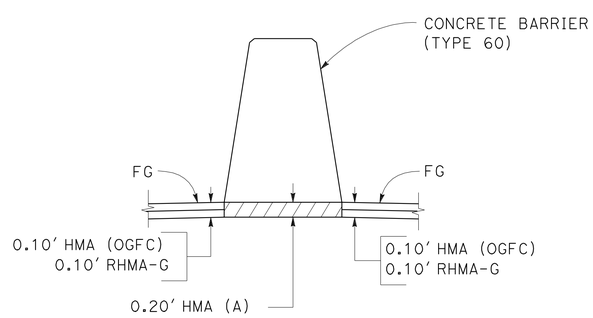

MEDIAN BARRIER (CASE 2)
M 307+72.00 TO 310+68.04

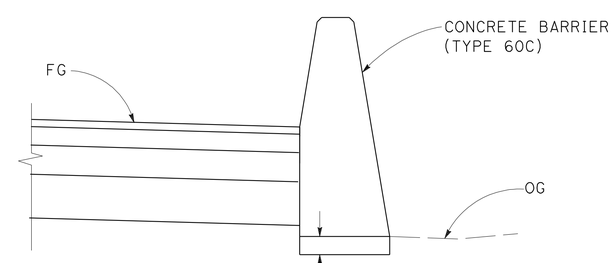

PAVEMENT SECTION UNDER CONCRETE BARRIER

CONSTRUCTION DETAILS
NO SCALE

C-29

STATE OF CALIFORNIA - DEPARTMENT OF TRANSPORTATION
Caltrans
CONSULTANT FUNCTIONAL SUPERVISOR: RICHARD TANAKA
CALCULATED-DESIGNED BY: TOMMY CHO
CHECKED BY: MARILOU AYUPAN
REVISED BY
DATE REVISED

LAST REVISION 03-31-11
DATE PLOTTED => 08-JUL-2011
TIME PLOTTED => 12:47

Dist	COUNTY	ROUTE	POST MILES TOTAL PROJECT	SHEET No.	TOTAL SHEETS
04	SCI	880	4.1/8.7	82	710

REGISTERED CIVIL ENGINEER 03/31/11 DATE

7-11-11
PLANS APPROVAL DATE

REGISTERED PROFESSIONAL ENGINEER RICHARD K. TANAKA No. 23233 Exp. 12/31/11 CIVIL STATE OF CALIFORNIA

THE STATE OF CALIFORNIA OR ITS OFFICERS OR AGENTS SHALL NOT BE RESPONSIBLE FOR THE ACCURACY OR COMPLETENESS OF SCANNED COPIES OF THIS PLAN SHEET.

MARK THOMAS & COMPANY, INC.
1960 ZANKER ROAD
SAN JOSE, CA 95112

SANTA CLARA VALLEY
TRANSPORTATION AUTHORITY
3331 NORTH FIRST STREET, BLDG B
SAN JOSE, CA 95134

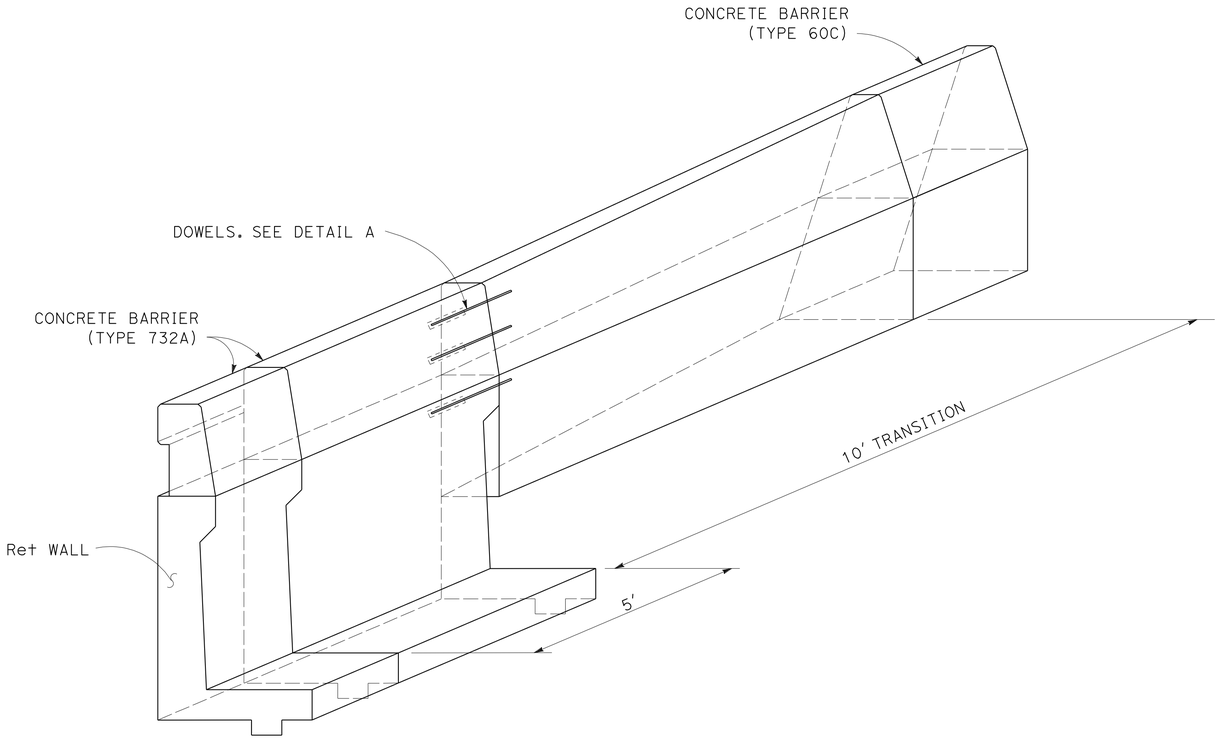

TRANSITION FROM CONCRETE BARRIER (TYPE 732A)
TO CONCRETE BARRIER (TYPE 60C)

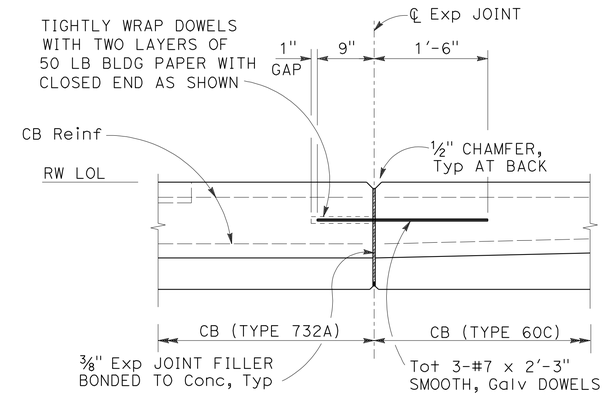

PLAN
DETAIL A

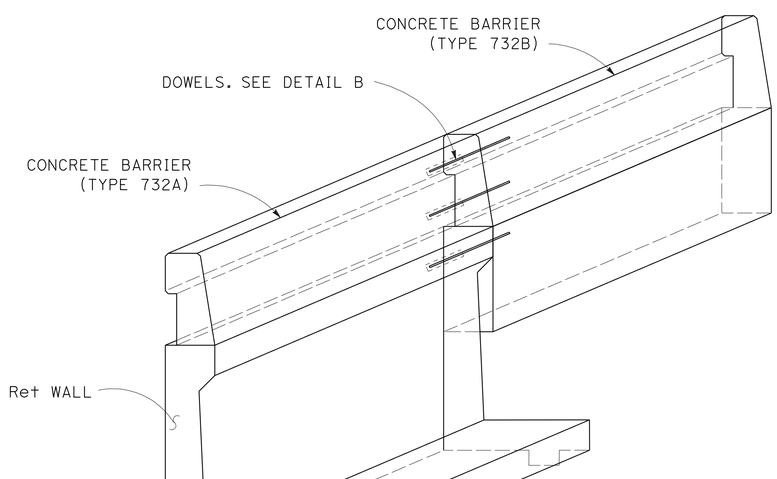

TRANSITION FROM CONCRETE BARRIER (TYPE 732A)
TO CONCRETE BARRIER (TYPE 732B)

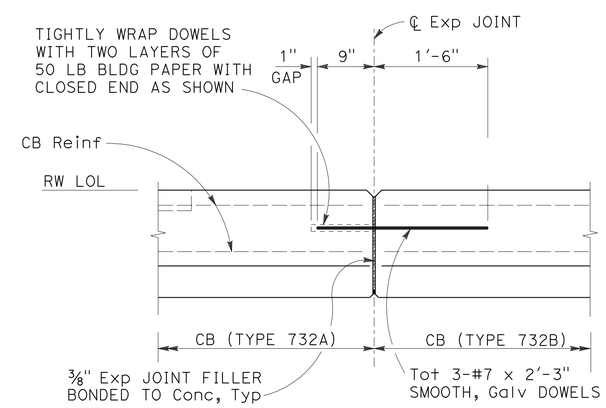

PLAN
DETAIL B

CONSTRUCTION DETAILS
NO SCALE

C-30

STATE OF CALIFORNIA - DEPARTMENT OF TRANSPORTATION
Caltrans

CONSULTANT FUNCTIONAL SUPERVISOR: RICHARD TANAKA
CALCULATED-DESIGNED BY: MARILOU AYUPAN
CHECKED BY: TOMMY CHO
REVISED BY
DATE REVISED

LAST REVISION 03-31-11
DATE PLOTTED => 08-JUL-2011
TIME PLOTTED => 12:47

Dist	COUNTY	ROUTE	POST MILES TOTAL PROJECT	SHEET No.	TOTAL SHEETS
04	SCl	880	4.1/8.7	83	710

REGISTERED CIVIL ENGINEER 03/31/11 DATE

7-11-11
PLANS APPROVAL DATE

REGISTERED PROFESSIONAL ENGINEER RICHARD K. TANAKA No. 23233 Exp. 12/31/11 CIVIL STATE OF CALIFORNIA

THE STATE OF CALIFORNIA OR ITS OFFICERS OR AGENTS SHALL NOT BE RESPONSIBLE FOR THE ACCURACY OR COMPLETENESS OF SCANNED COPIES OF THIS PLAN SHEET.

MARK THOMAS & COMPANY, INC.
1960 ZANKER ROAD
SAN JOSE, CA 95112

SANTA CLARA VALLEY
TRANSPORTATION AUTHORITY
3331 NORTH FIRST STREET, BLDG B
SAN JOSE, CA 95134

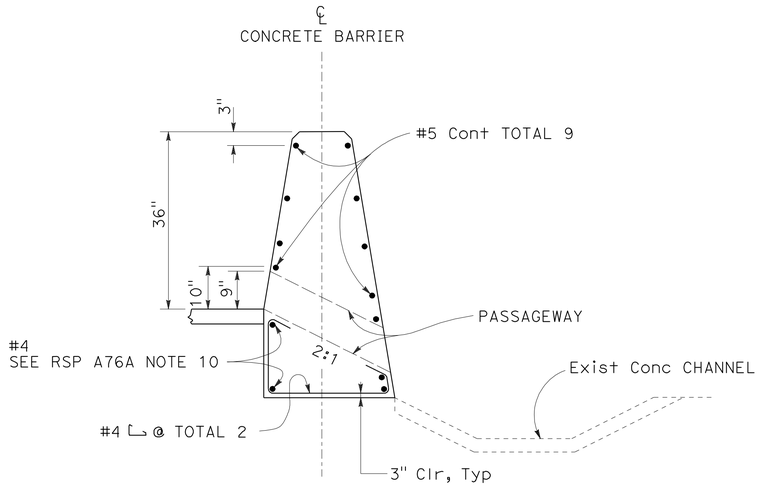

SECTION A-A
(CONCRETE BARRIER TYPE 60C SHOWN)

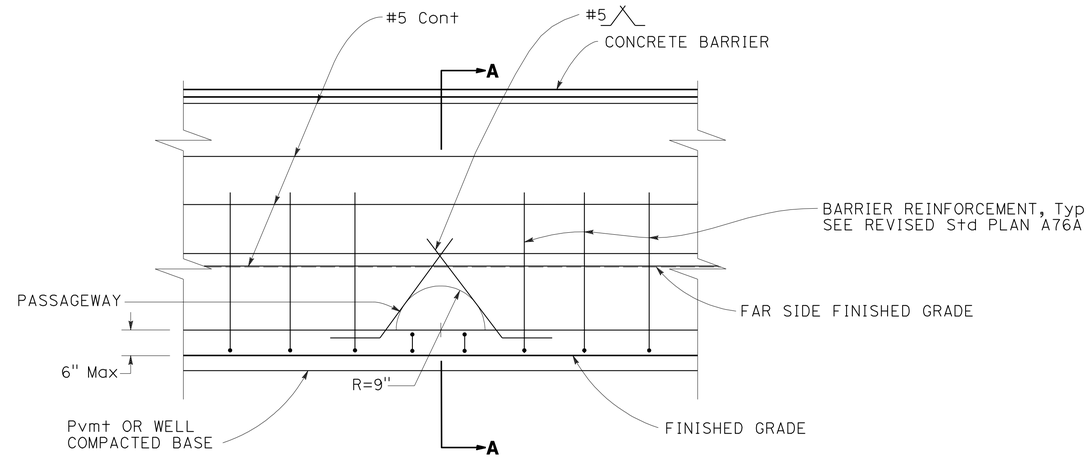

ELEVATION

WILDLIFE PASSAGEWAY (TYPE S) AT CONCRETE BARRIER (TYPE 60C)

(FOR ADDITIONAL DETAILS AND NOTES NOT SHOWN, SEE REVISED STANDARD PLAN A76J)

TL1 157+35.50, 41.60′ Lt
TL1 157+74.42, 42.90′ Lt

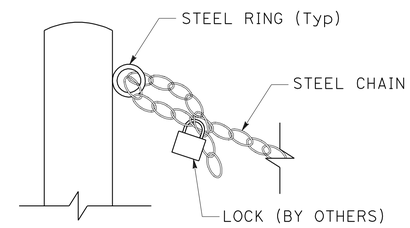

LOCK DETAIL

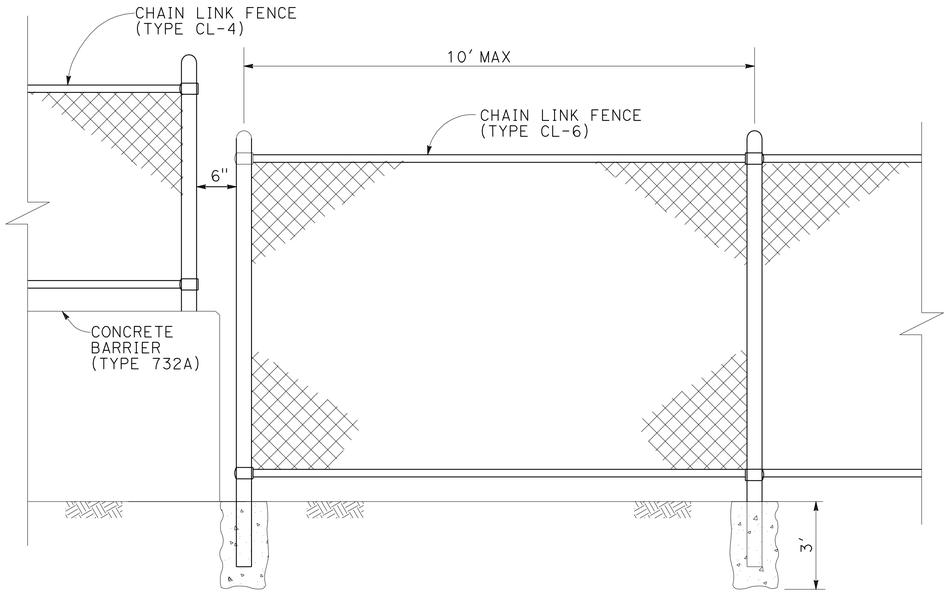

NOTE: FOR DETAILS NOT SHOWN, SEE REVISED STANDARD PLAN A85

CHAIN LINK FENCE CONNECTION TO BARRIER

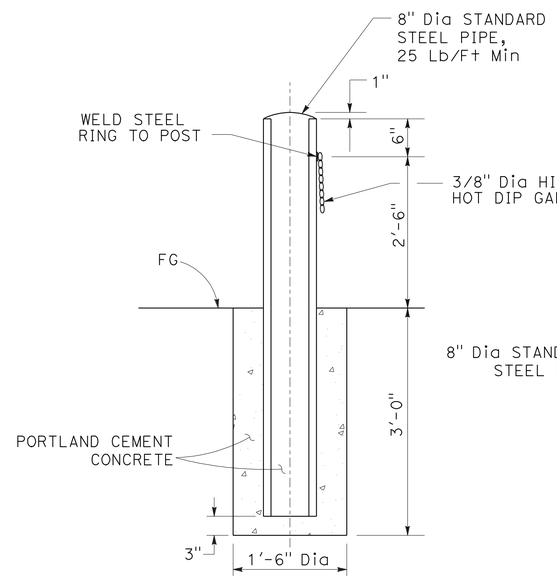

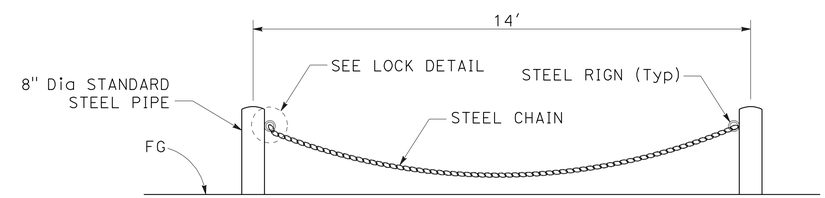

BOLLARD GATEWAY

CONSTRUCTION DETAILS
NO SCALE

C-31

STATE OF CALIFORNIA - DEPARTMENT OF TRANSPORTATION
Caltrans
CONSULTANT FUNCTIONAL SUPERVISOR: RICHARD TANAKA
CALCULATED-DESIGNED BY: TOMMY CHO
CHECKED BY: MARILOU AYUPAN
REVISED BY
DATE REVISED

LAST REVISION 03-31-11
DATE PLOTTED => 08-JUL-2011
TIME PLOTTED => 12:47

Dist	COUNTY	ROUTE	POST MILES TOTAL PROJECT	SHEET No.	TOTAL SHEETS
04	SCI	880	4.1/8.7	84	710

REGISTERED CIVIL ENGINEER 03/31/11 DATE

7-11-11
PLANS APPROVAL DATE

REGISTERED PROFESSIONAL ENGINEER RICHARD K. TANAKA No. 23233 Exp. 12/31/11 CIVIL STATE OF CALIFORNIA

THE STATE OF CALIFORNIA OR ITS OFFICERS OR AGENTS SHALL NOT BE RESPONSIBLE FOR THE ACCURACY OR COMPLETENESS OF SCANNED COPIES OF THIS PLAN SHEET.

MARK THOMAS & COMPANY, INC.
1960 ZANKER ROAD
SAN JOSE, CA 95112

SANTA CLARA VALLEY TRANSPORTATION AUTHORITY
3331 NORTH FIRST STREET, BLDG B
SAN JOSE, CA 95134

NOTE:

SCORE MARKS NOT TO EXCEED 4'-0" ON CENTER, USE MECHANICAL SEPARATOR AT EVERY OTHER SCORE MARK.

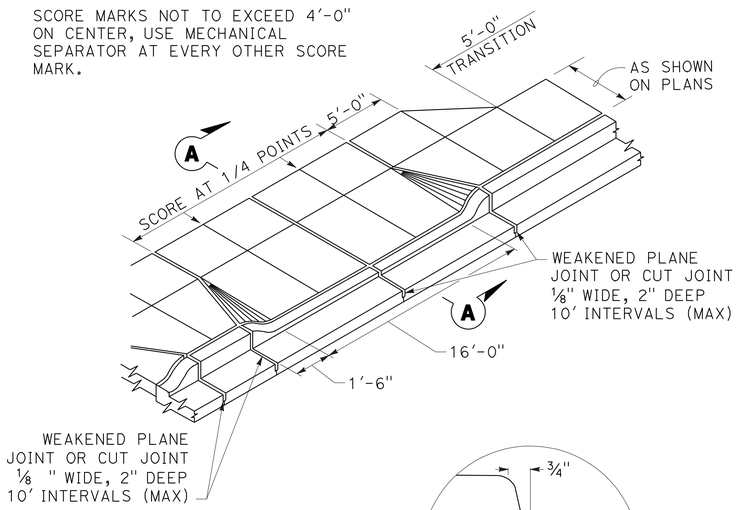

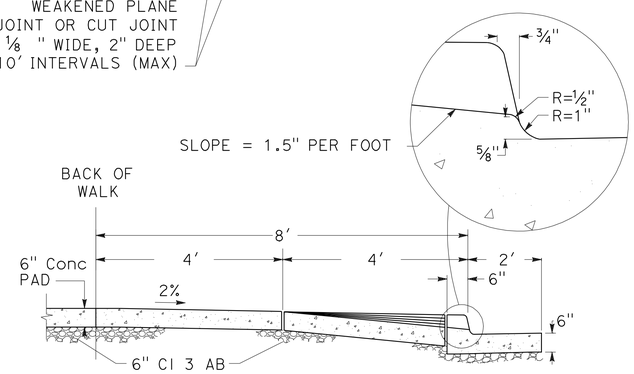

SECTION A-A

CITY OF SAN JOSE DRIVEWAY (Mod)

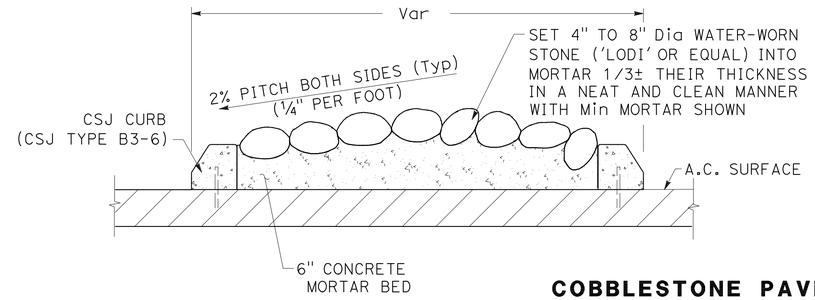

COBBLESTONE PAVING (IN MEDIAN ISLAND)

NOTES:

1. AFTER THE COBBLESTONE HAS BEEN SET INTO THE MORTAR, THE EXCESSIVE MORTAR IN BETWEEN THE JOINTS OF THE COBBLESTONES SHALL BE CAREFULLY REMOVED AND RAKED RAKED IN A SMOOTH JOINT (NO PROTRUSION OF MORTAR WILL BE ALLOWED).
2. SEAL FINAL SURFACE WATER SEALER.

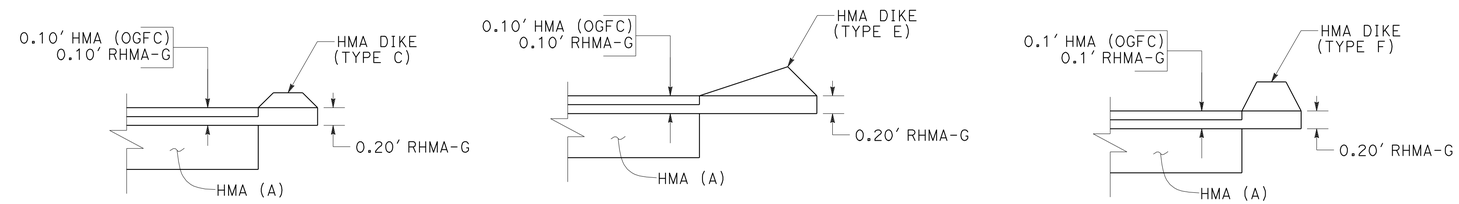

PAVEMENT SECTION UNDER ASPHALT CONCRETE DIKE

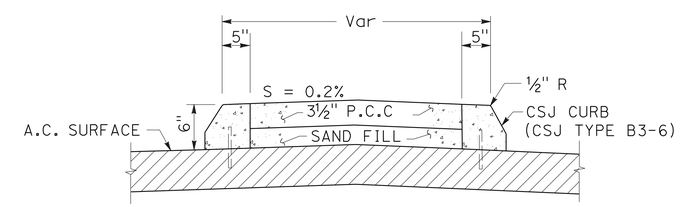

CITY OF SAN JOSE CONCRETE MEDIAN ISLAND

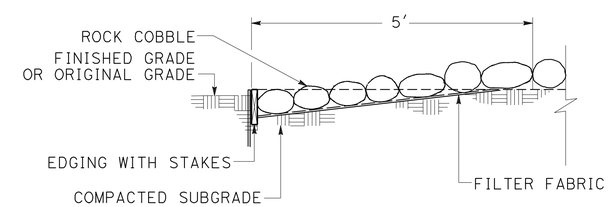

SECTION ROCK BLANKET

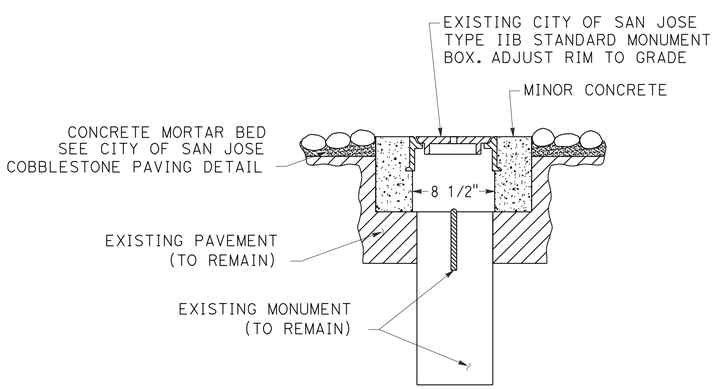

ADJUST MONUMENT COVER TO GRADE

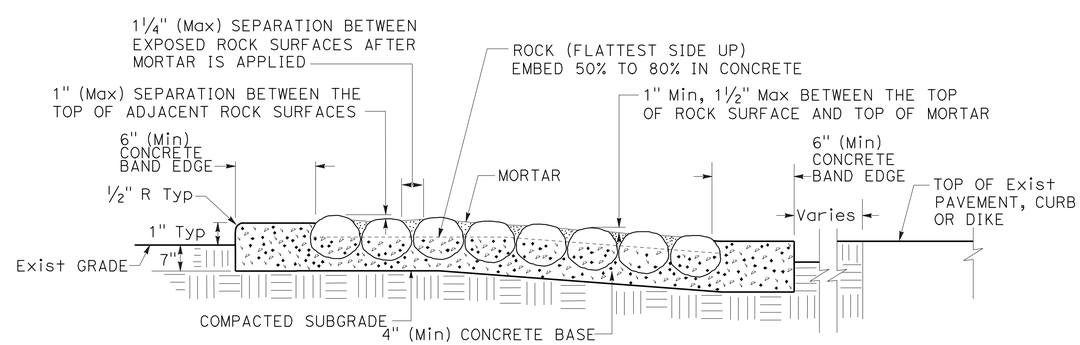

SECTION COBBLESTONE PAVING

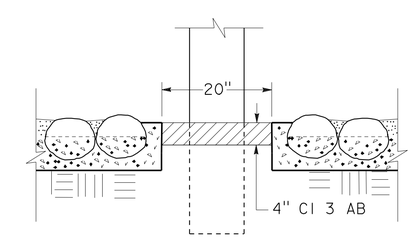

COBBLESTONE PAVING AT POST LOCATIONS

CONSTRUCTION DETAILS

NO SCALE

C-32

STATE OF CALIFORNIA - DEPARTMENT OF TRANSPORTATION
Caltrans

CONSULTANT FUNCTIONAL SUPERVISOR: RICHARD TANAKA
CALCULATED-DESIGNED BY: TOMMY CHO
CHECKED BY: MARILOU AYUPAN
REVISED BY
DATE REVISED

LAST REVISION 03-31-11
DATE PLOTTED => 08-JUL-2011
TIME PLOTTED => 12:47

Dist	COUNTY	ROUTE	POST MILES TOTAL PROJECT	SHEET No.	TOTAL SHEETS
04	SCI	880	4.1/8.7	85	710

REGISTERED CIVIL ENGINEER 03/31/11 DATE

7-11-11
PLANS APPROVAL DATE

REGISTERED PROFESSIONAL ENGINEER RICHARD K. TANAKA No. 23233 Exp. 12/31/11 CIVIL STATE OF CALIFORNIA

THE STATE OF CALIFORNIA OR ITS OFFICERS OR AGENTS SHALL NOT BE RESPONSIBLE FOR THE ACCURACY OR COMPLETENESS OF SCANNED COPIES OF THIS PLAN SHEET.

MARK THOMAS & COMPANY, INC.
1960 ZANKER ROAD
SAN JOSE, CA 95112

SANTA CLARA VALLEY TRANSPORTATION AUTHORITY
3331 NORTH FIRST STREET, BLDG B
SAN JOSE, CA 95134

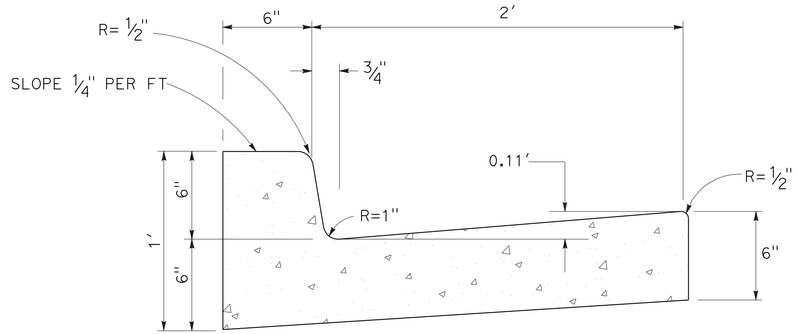

CITY OF SAN JOSE
CONCRETE CURB & GUTTER
(CSJ TYPE A2)

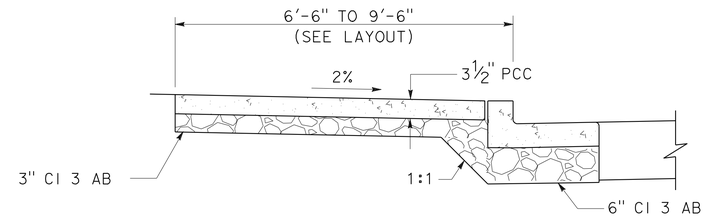

SECTION A-A

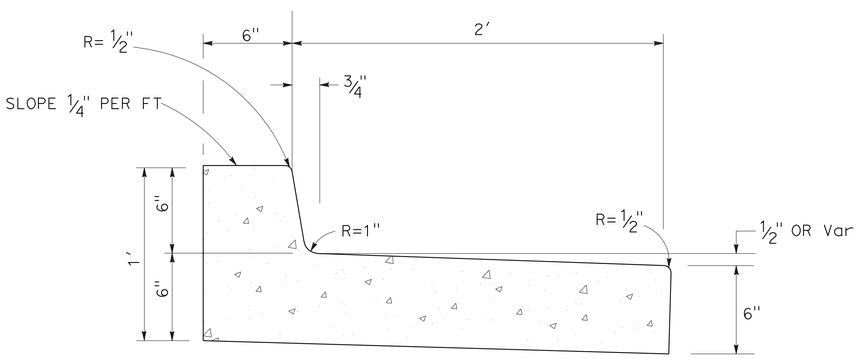

CITY OF SAN JOSE
CONCRETE CURB & GUTTER (Mod)
(CSJ TYPE A2M)

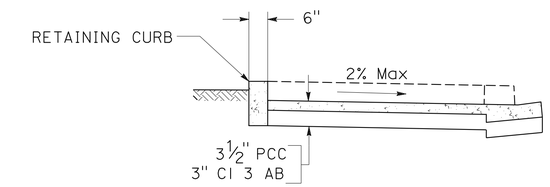

SECTION B-B

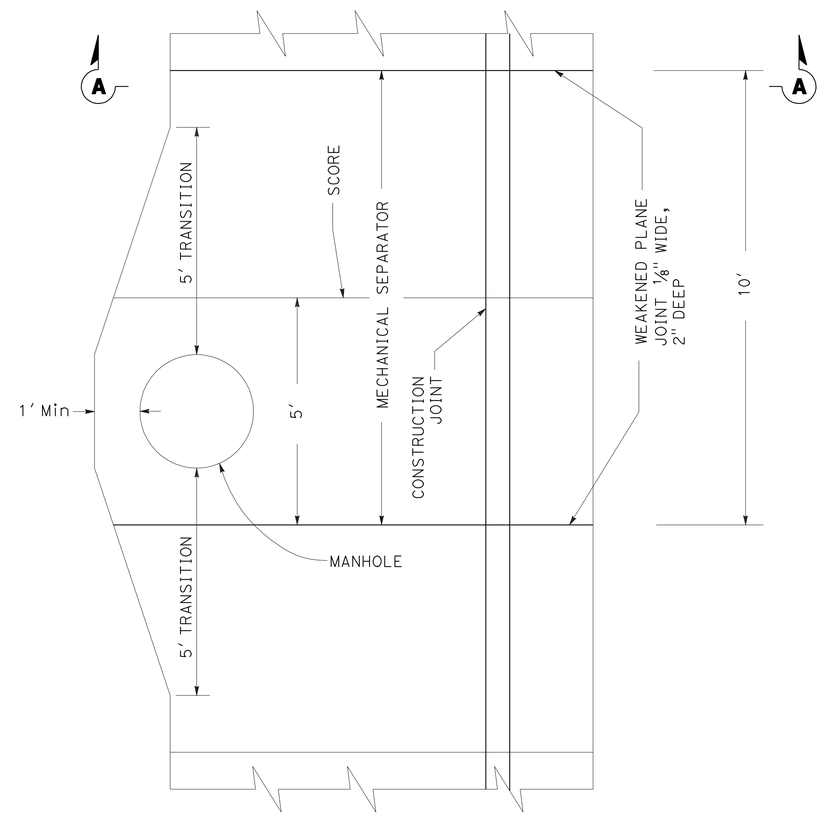

SIDEWALK DETAIL

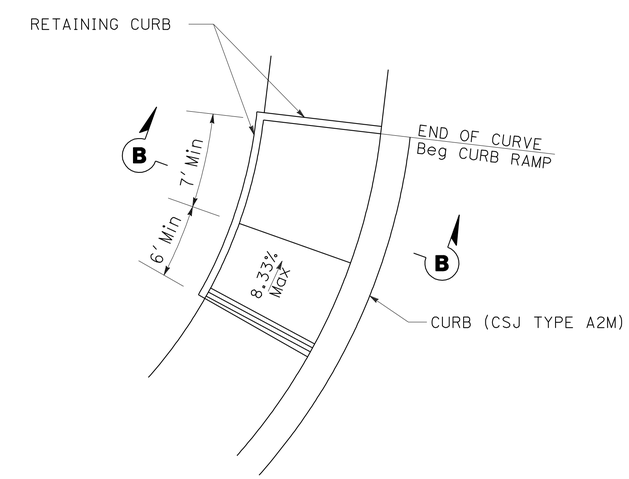

DETAIL C
CURB RAMP (CASE C Mod)
(FOR ADDITIONAL DETAILS NOT SHOWN, SEE REVISED STANDARD PLAN A88A)

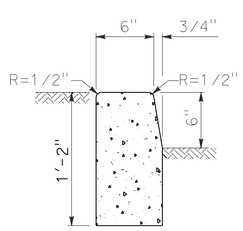

CITY OF SAN JOSE CURB
(CSJ TYPE A1)

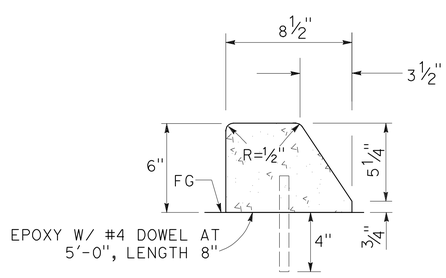

CITY OF SAN JOSE CURB
(CSJ TYPE B3-6)

CONSTRUCTION DETAILS
NO SCALE

C-33

STATE OF CALIFORNIA - DEPARTMENT OF TRANSPORTATION
Caltrans

CONSULTANT FUNCTIONAL SUPERVISOR: RICHARD TANAKA
CALCULATED-DESIGNED BY: TOMMY CHO
CHECKED BY: MARILOU AYUPAN
REVISED BY
DATE REVISED

LAST REVISION 03-31-11
DATE PLOTTED => 08-JUL-2011
TIME PLOTTED => 12:48

Dist	COUNTY	ROUTE	POST MILES TOTAL PROJECT	SHEET No.	TOTAL SHEETS
04	SCl	880	4.1/8.7	86	710

REGISTERED CIVIL ENGINEER 03/31/11 DATE

7-11-11
PLANS APPROVAL DATE

REGISTERED PROFESSIONAL ENGINEER RICHARD K. TANAKA No. 23233 Exp. 12/31/11 CIVIL STATE OF CALIFORNIA

THE STATE OF CALIFORNIA OR ITS OFFICERS OR AGENTS SHALL NOT BE RESPONSIBLE FOR THE ACCURACY OR COMPLETENESS OF SCANNED COPIES OF THIS PLAN SHEET.

MARK THOMAS & COMPANY, INC.
1960 ZANKER ROAD
SAN JOSE, CA 95112

SANTA CLARA VALLEY
TRANSPORTATION AUTHORITY
3331 NORTH FIRST STREET, BLDG B
SAN JOSE, CA 95134

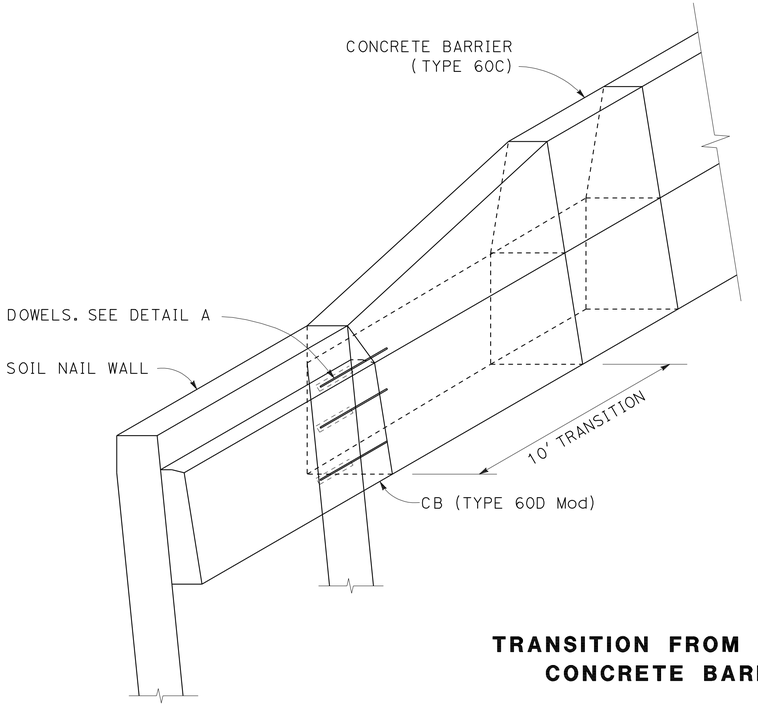

TRANSITION FROM SOIL NAIL WALL WITH MODIFIED TYPE 60D CONCRETE BARRIER TO CONCRETE BARRIER TYPE 60C

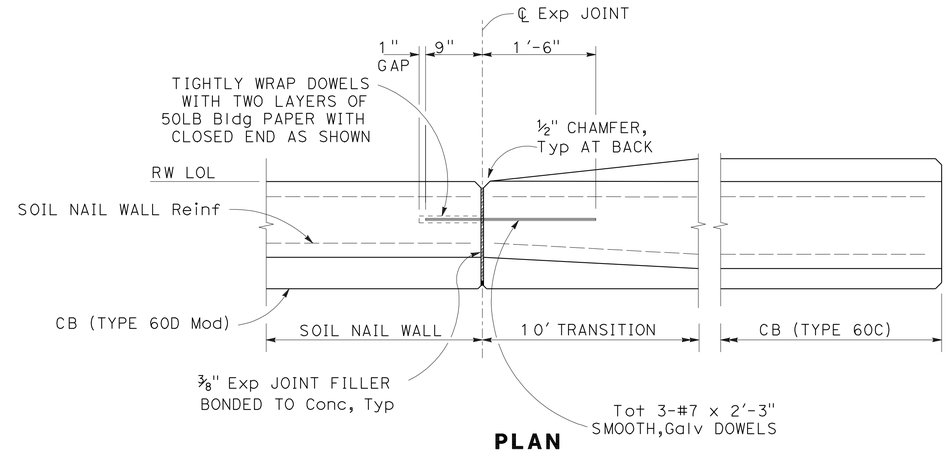

PLAN
DETAIL A

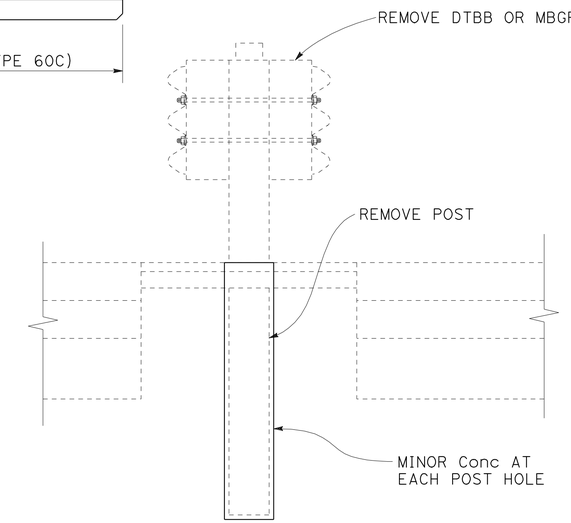

PAVEMENT RESTORATION AT DTBB AND MBGR

M 215+24.00 TO 310+07.66
R1 246+00.80 TO 246+45.20

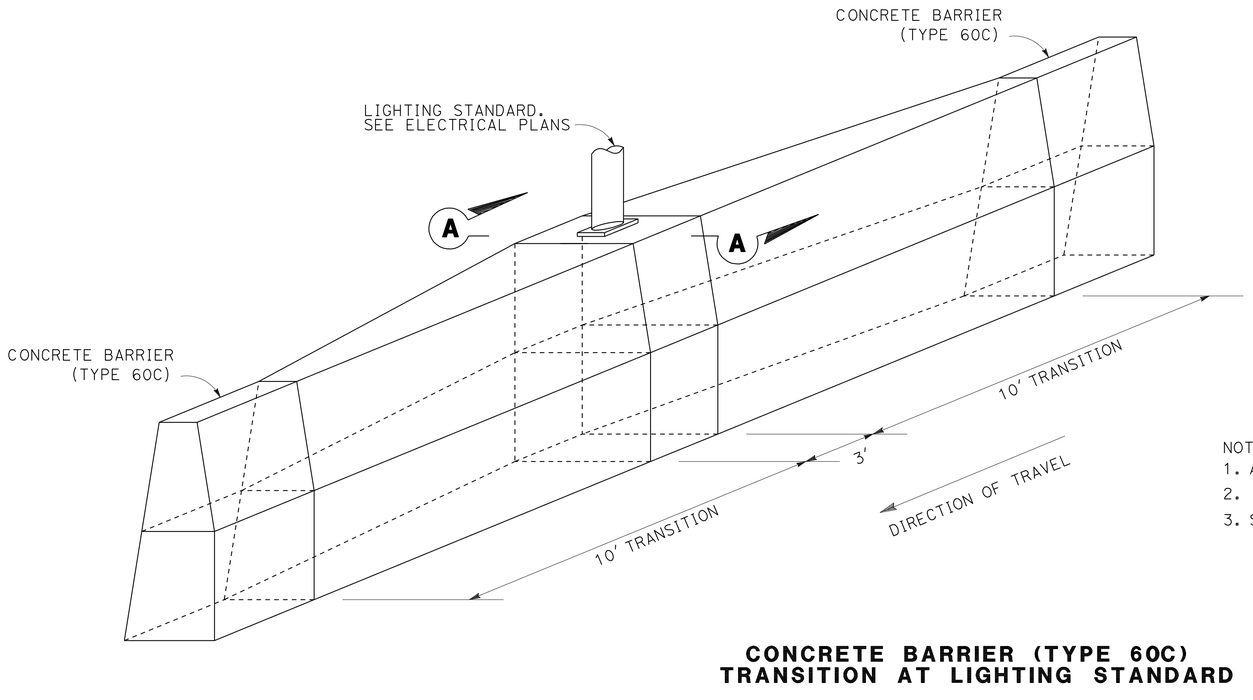

CONCRETE BARRIER (TYPE 60C)
TRANSITION AT LIGHTING STANDARD

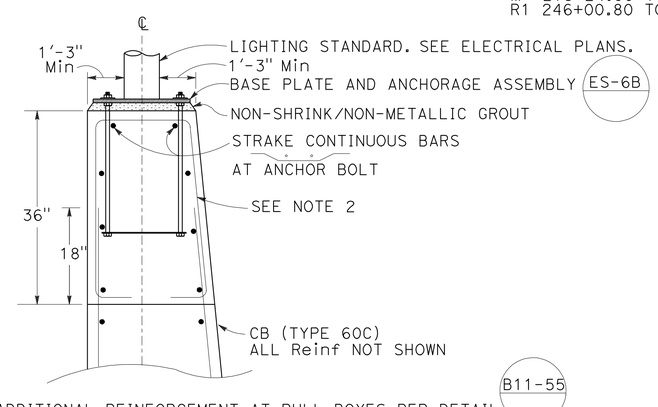

NOTES:
1. ADD ADDITIONAL REINFORCEMENT AT PULL BOXES PER DETAIL B11-55.
2. USE ADDITIONAL #5@ ▯ 8", TOTAL 5, CENTERED ON ℄ OF POLE.
3. SEE STANDARD PLANS A76A, RSP ES-6A AND ES-6B FOR DETAILS NOT SHOWN.

SECTION A-A

CONSTRUCTION DETAILS

NO SCALE

C-34

STATE OF CALIFORNIA - DEPARTMENT OF TRANSPORTATION
Caltrans®

CONSULTANT FUNCTIONAL SUPERVISOR: RICHARD TANAKA
CALCULATED-DESIGNED BY: TOMMY CHO
CHECKED BY: MARILOU AYUPAN
REVISED BY
DATE REVISED

LAST REVISION 03-31-11
DATE PLOTTED => 08-JUL-2011
TIME PLOTTED => 12:48

Dist	COUNTY	ROUTE	POST MILES TOTAL PROJECT	SHEET No.	TOTAL SHEETS
04	SCl	880	4.1/8.7	87	710

REGISTERED CIVIL ENGINEER 10/15/10 DATE

7-11-11
PLANS APPROVAL DATE

REGISTERED PROFESSIONAL ENGINEER RICHARD K. TANAKA No. 23233 Exp. 12/31/11 CIVIL STATE OF CALIFORNIA

THE STATE OF CALIFORNIA OR ITS OFFICERS OR AGENTS SHALL NOT BE RESPONSIBLE FOR THE ACCURACY OR COMPLETENESS OF SCANNED COPIES OF THIS PLAN SHEET.

MARK THOMAS & COMPANY, INC.
1960 ZANKER ROAD
SAN JOSE, CA 95112

SANTA CLARA VALLEY
TRANSPORTATION AUTHORITY
3331 NORTH FIRST STREET, BLDG B
SAN JOSE, CA 95134

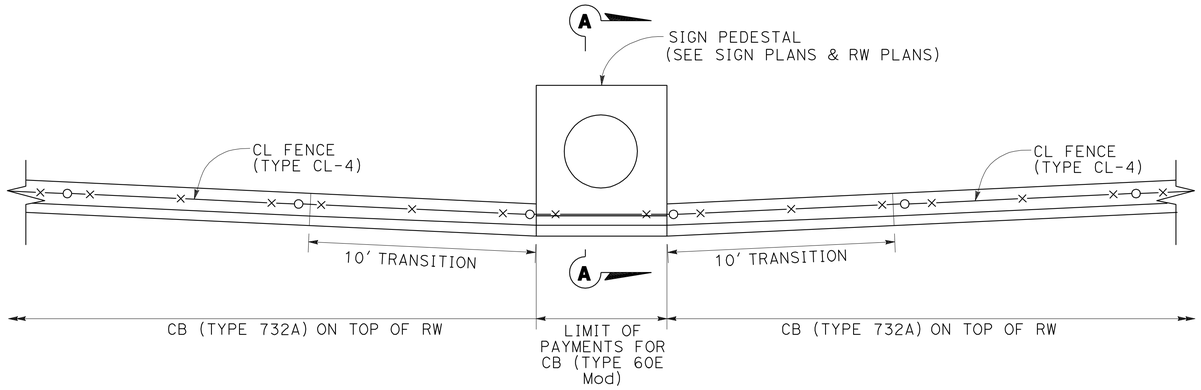

PLAN

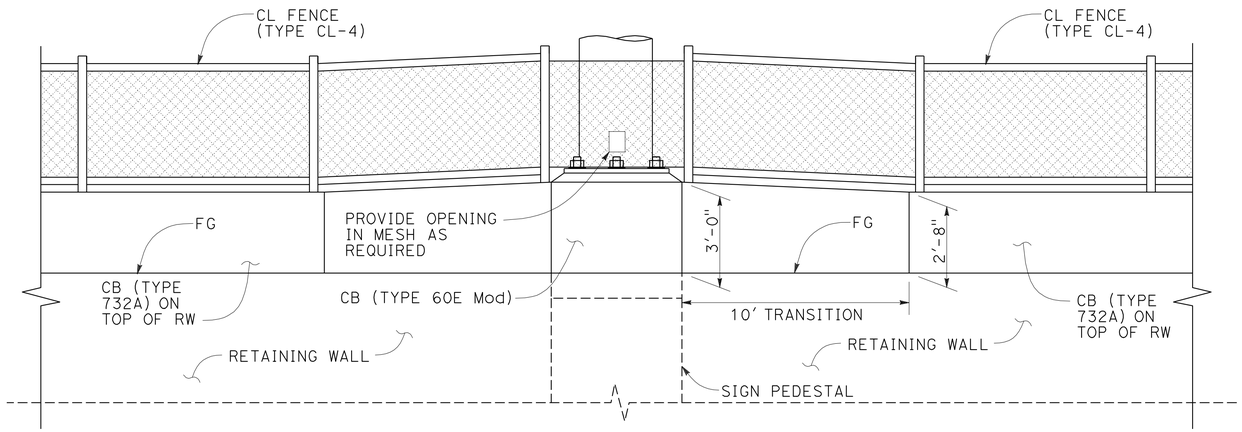

ELEVATION

CONCRETE BARRIER TRANSITION AT SIGN POST

M 102+50.00, L+
M 122+00.00, L+

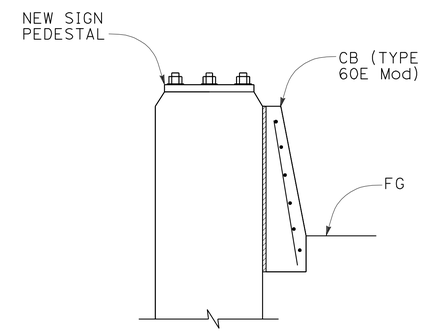

SECTION A-A

CONCRETE BARRIER (TYPE 60E Mod)

FOR DETAILS NOT SHOWN, SEE STANDARD PLANS A76C

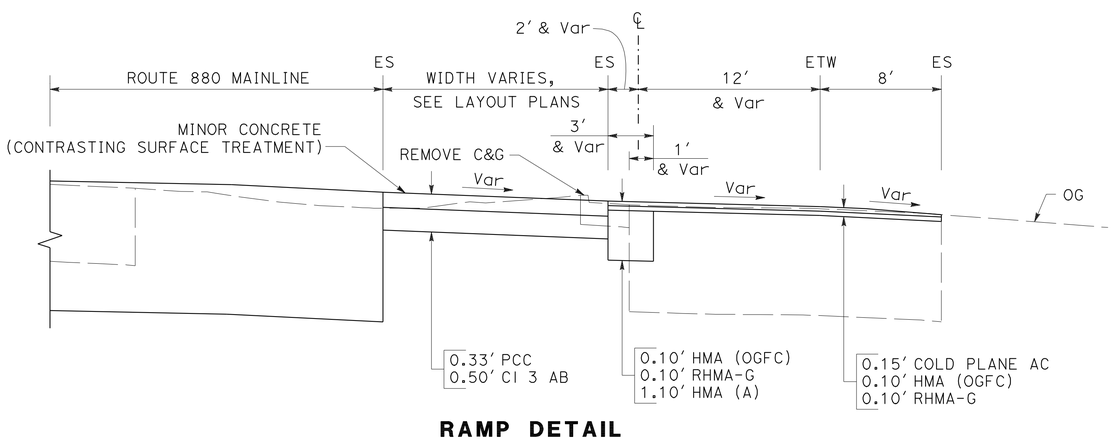

RAMP DETAIL

MR1 499+26.98 TO 501+01.13
MR2 326+24.20 TO 327+54.57
ML1 202+18.87 TO 203+55.40
ML2 221+25.18 TO 222+55.88

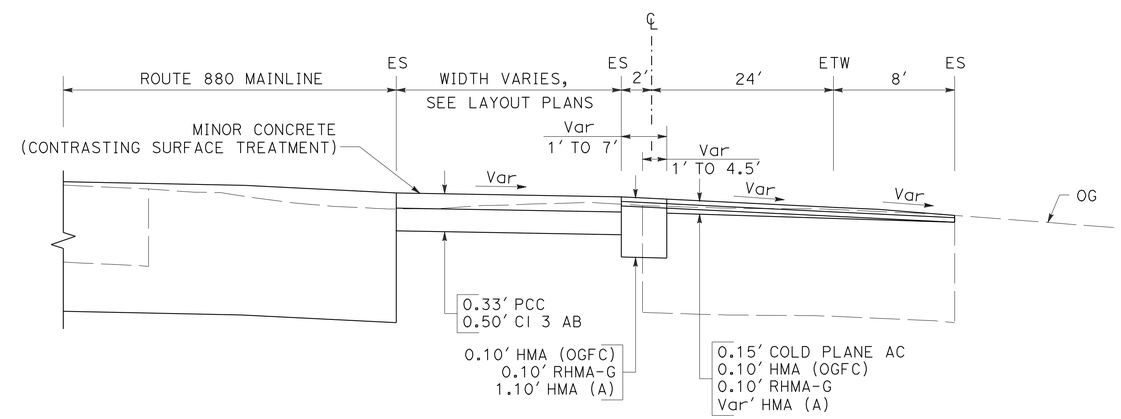

RAMP DETAIL

MR2R 492+31.36 TO 493+06.93

CONSTRUCTION DETAILS

NO SCALE

C-35

REVISED BY	DATE REVISED
TOMMY CHO	MARILOU AYUPAN

CALCULATED-DESIGNED BY | CHECKED BY

CONSULTANT FUNCTIONAL SUPERVISOR: RICHARD TANAKA

STATE OF CALIFORNIA - DEPARTMENT OF TRANSPORTATION

Caltrans

LAST REVISION 10-15-10 | DATE PLOTTED => 08-JUL-2011 | TIME PLOTTED => 12:48

Dist	COUNTY	ROUTE	POST MILES TOTAL PROJECT	SHEET No.	TOTAL SHEETS
04	SCI	880	4.1/8.7	88	710

REGISTERED CIVIL ENGINEER 10/15/10 DATE

7-11-11
PLANS APPROVAL DATE

REGISTERED PROFESSIONAL ENGINEER RICHARD K. TANAKA No. 23233 Exp. 12/31/11 CIVIL STATE OF CALIFORNIA

THE STATE OF CALIFORNIA OR ITS OFFICERS OR AGENTS SHALL NOT BE RESPONSIBLE FOR THE ACCURACY OR COMPLETENESS OF SCANNED COPIES OF THIS PLAN SHEET.

MARK THOMAS & COMPANY, INC.
1960 ZANKER ROAD
SAN JOSE, CA 95112

SANTA CLARA VALLEY
TRANSPORTATION AUTHORITY
3331 NORTH FIRST STREET, BLDG B
SAN JOSE, CA 95134

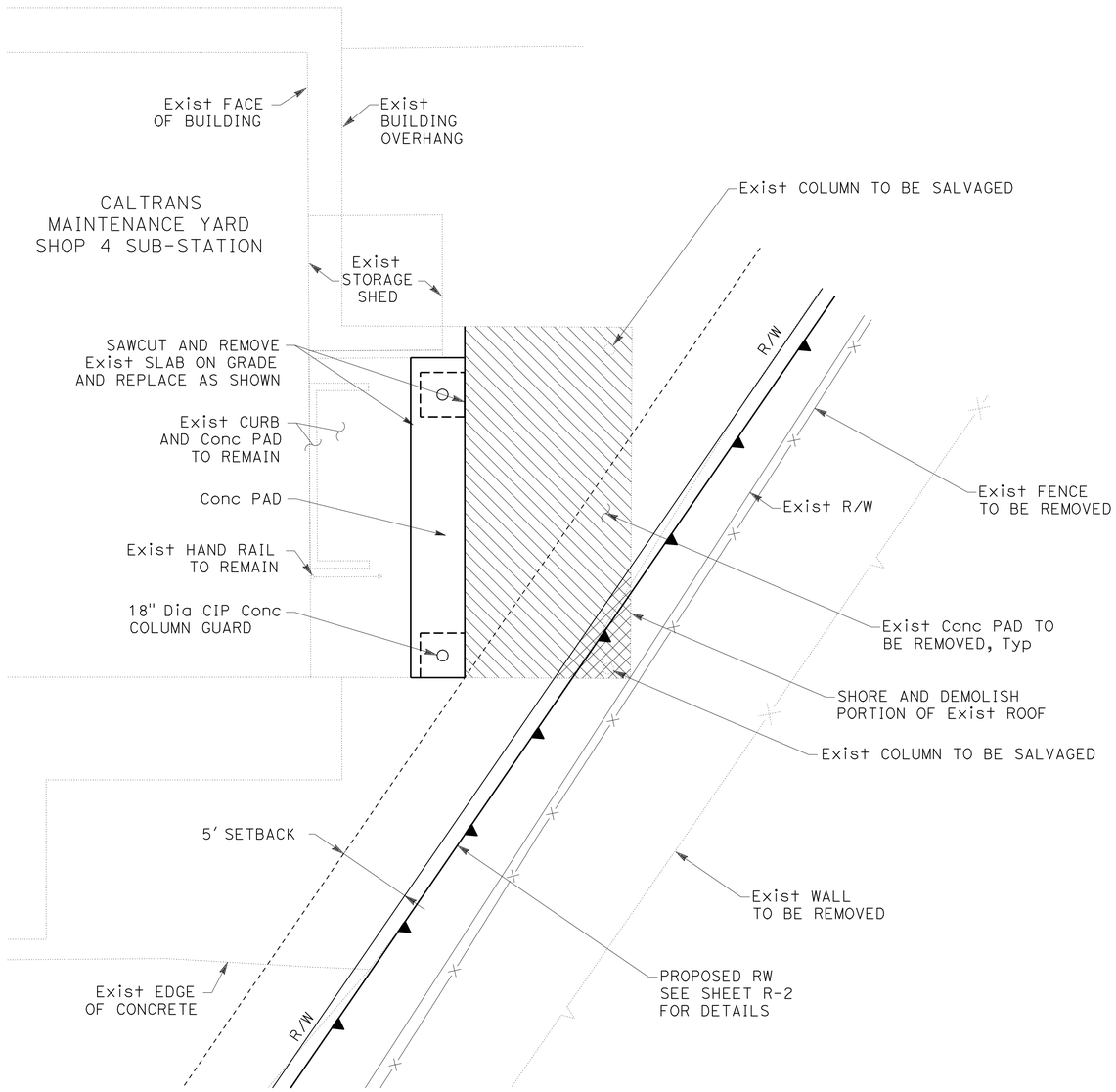

SITE PLAN
1" = 5'

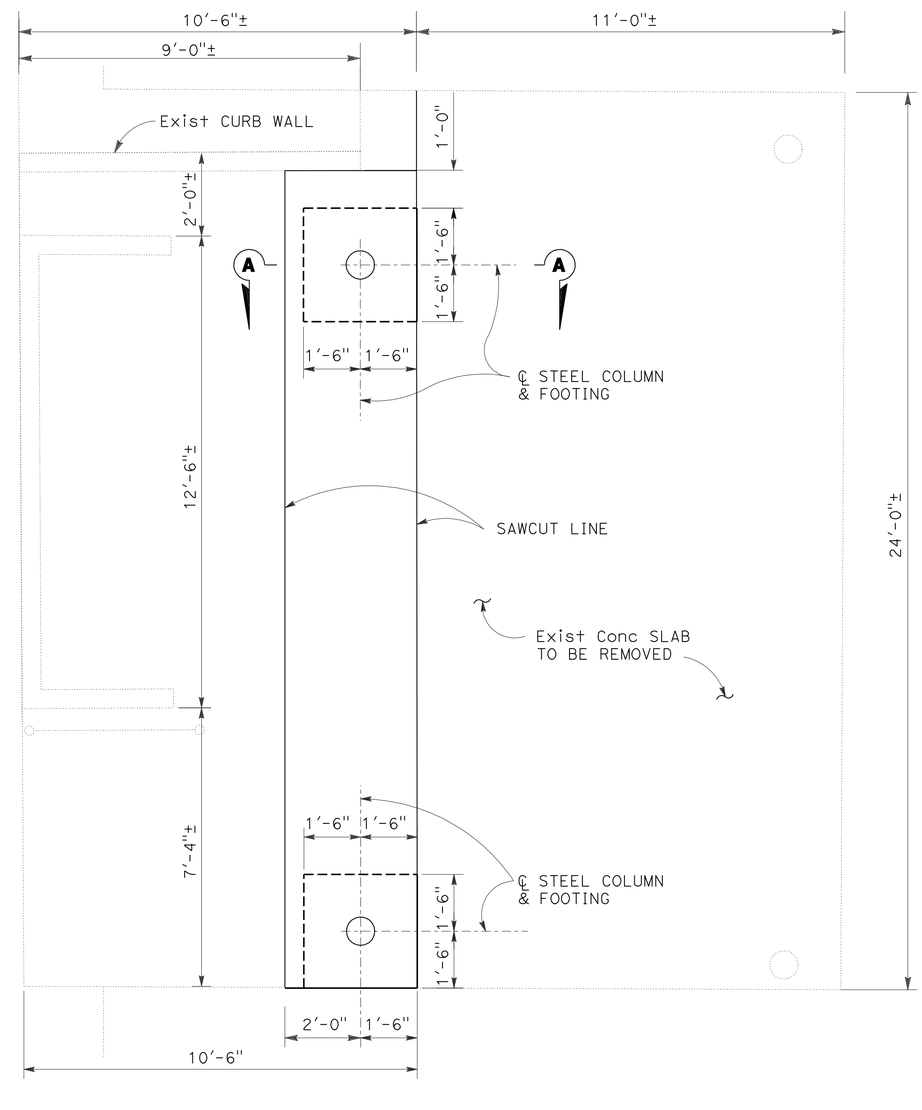

NOTE: FOR SECTION A-A, SEE SHEET C-37.

PLAN
1/2" = 1'-0"

CONSTRUCTION DETAILS
SHOP 4 SUB-STATION
SCALE AS SHOWN

C-36

STATE OF CALIFORNIA - DEPARTMENT OF TRANSPORTATION
Caltrans

CONSULTANT FUNCTIONAL SUPERVISOR: RICHARD TANAKA
CALCULATED-DESIGNED BY / CHECKED BY
PETER PARK / MARILOU AYUPAN
REVISED BY / DATE REVISED

LAST REVISION 10-15-10 | DATE PLOTTED => 08-JUL-2011 | TIME PLOTTED => 12:48

Dist	COUNTY	ROUTE	POST MILES TOTAL PROJECT	SHEET No.	TOTAL SHEETS
04	SCI	880	4.1/8.7	89	710

REGISTERED CIVIL ENGINEER 03/31/11 DATE

7-11-11
PLANS APPROVAL DATE

REGISTERED PROFESSIONAL ENGINEER RICHARD K. TANAKA No. 23233 Exp. 12/31/11 CIVIL STATE OF CALIFORNIA

THE STATE OF CALIFORNIA OR ITS OFFICERS OR AGENTS SHALL NOT BE RESPONSIBLE FOR THE ACCURACY OR COMPLETENESS OF SCANNED COPIES OF THIS PLAN SHEET.

MARK THOMAS & COMPANY, INC.
1960 ZANKER ROAD
SAN JOSE, CA 95112

SANTA CLARA VALLEY
TRANSPORTATION AUTHORITY
3331 NORTH FIRST STREET, BLDG B
SAN JOSE, CA 95134

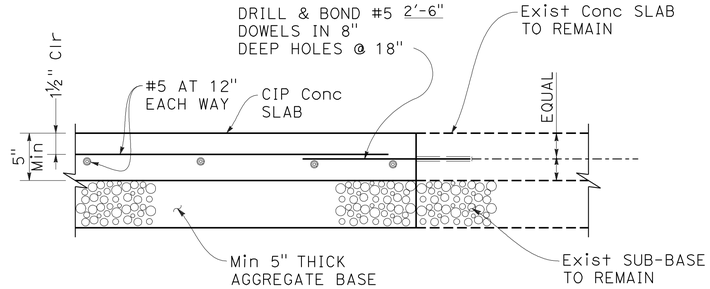

B CIP CONCRETE SLAB
1½" = 1'

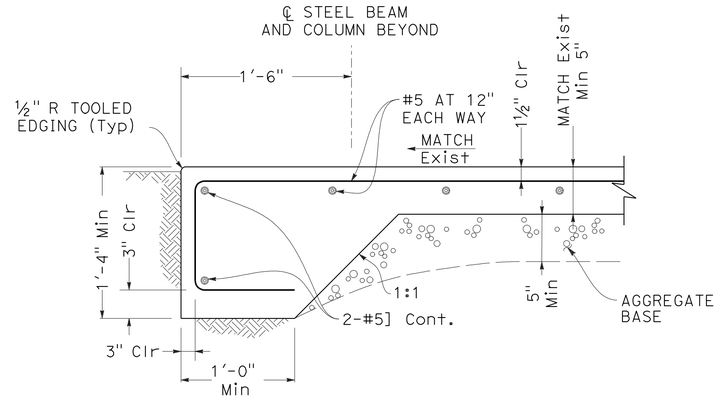

C CONCRETE SLAB REINFORCEMENT
1½" = 1'

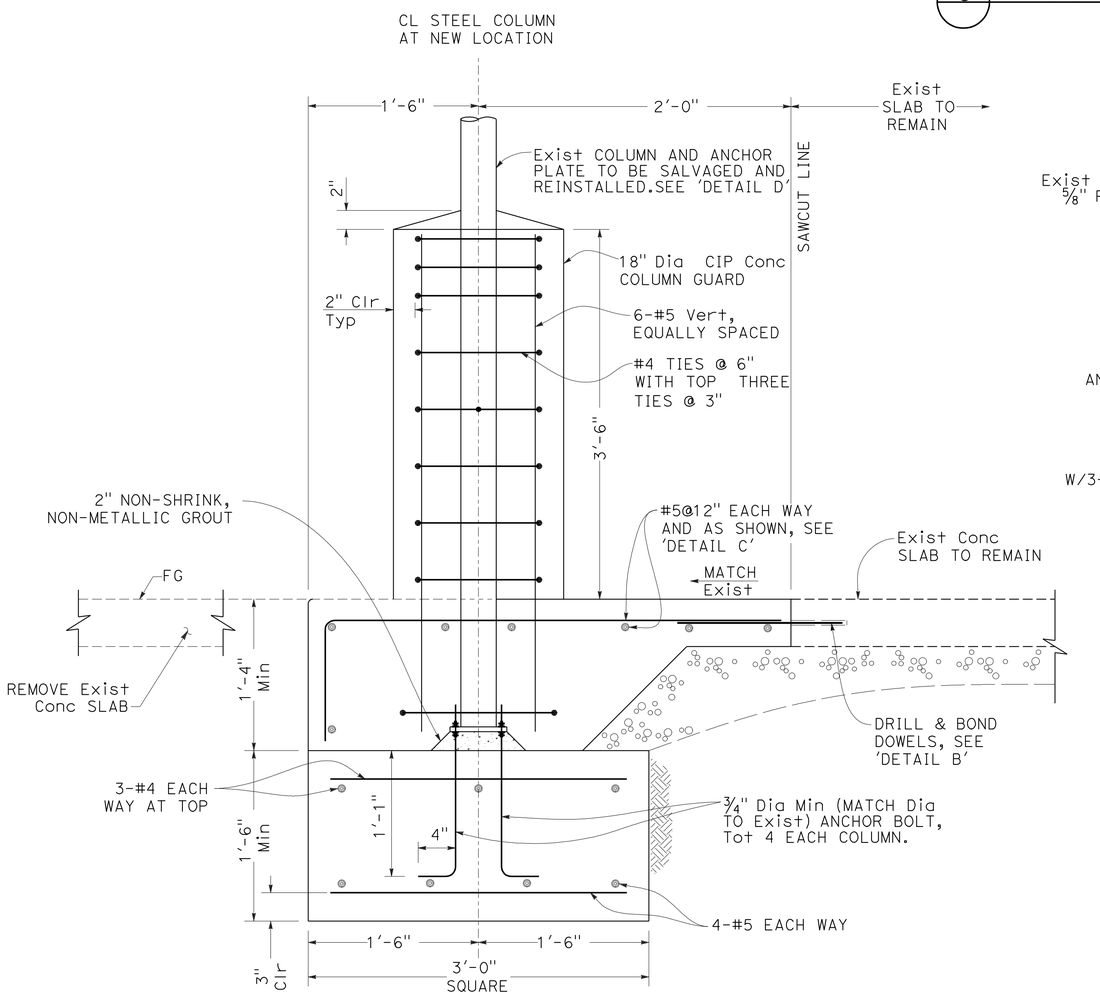

SECTION A-A
1½" = 1'

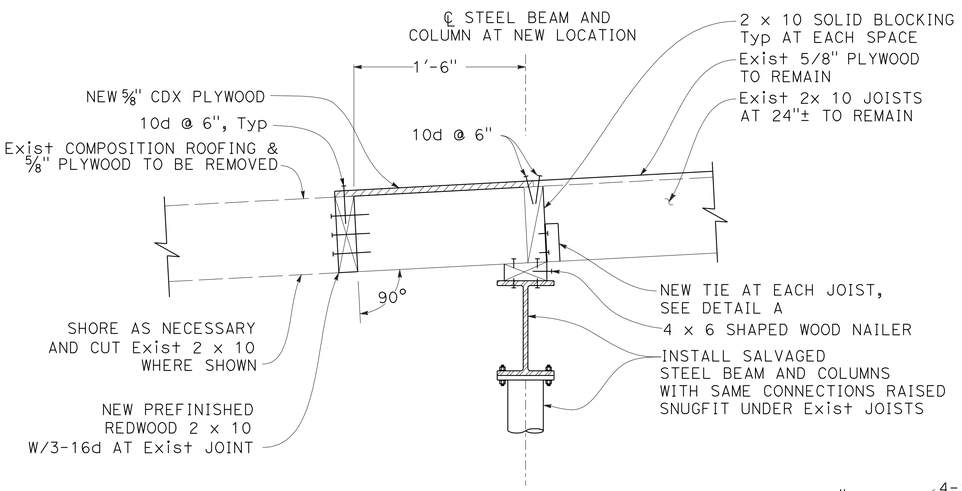

D ROOF DETAIL
1½" = 1'

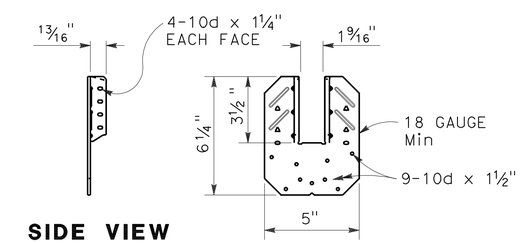

SIDE VIEW

DETAIL A
¼" = 1'

NOTES:

1. CONTRACTOR SHALL VERIFY ALL CONTROLLING FIELD DIMENSIONS AND EXISTING CONSTRUCTION BEFORE ORDERING OR FABRICATING ANY MATERIAL.
2. CONFORM ALL EDGES OF THE NEW SLAB WITH EXISTING CONCRETE SLABS, UNLESS NOTED OTHERWISE. WARP NEW CONCRETE SLAB AS REQUIRED TO DRAIN AWAY FROM THE EXISTING BUILDING OR ADJOINING STRUCTURES.
3. REMOVE EXISTING ROOF FINISHES TO THE MINIMUM EXTENT REQUIRED TO PROVIDE SHOWN MODIFICATION. REPLACE MINIMUM 22 GUAGE GALVANIZED SHEET METAL FLASHING, DOWNSPOUT AND GUTTERS AS NECESSARY TO MATCH EXISTING, CLEAN AND PRIMED FOR FINAL COATS OF PAINT.
4. ALL NAILS SHALL BE COMMON GALVANIZED NAILS.
5. USE TOUCH-UP PAINTS TO STEEL FRAMING WHERE REQUIRED TO MATCH EXISTING. CLEAN EXISTING WOOD, EXPOSED FRAMING FLASHING, GUTTERS, DOWN SPOUTS AND PAINT WITH ONE COAT OF PRIMER AND TWO COATS OF LATEX SEMIGLOSS PAINT TO MATCH EXISTING.

CONSTRUCTION DETAILS
SHOP 4 SUB-STATION SECTIONS
SCALE AS SHOWN

C-37

STATE OF CALIFORNIA - DEPARTMENT OF TRANSPORTATION
Caltrans®
CONSULTANT FUNCTIONAL SUPERVISOR: RICHARD TANAKA
CALCULATED-DESIGNED BY: MARILOU AYUPAN
CHECKED BY: PETER PARK
REVISED BY
DATE REVISED

LAST REVISION 03-31-11
DATE PLOTTED => 08-JUL-2011
TIME PLOTTED => 12:48

Dist	COUNTY	ROUTE	POST MILES TOTAL PROJECT	SHEET No.	TOTAL SHEETS
04	SCI	880	4.1/8.7	90	710

REGISTERED CIVIL ENGINEER 10/15/10 DATE

7-11-11
PLANS APPROVAL DATE

REGISTERED PROFESSIONAL ENGINEER RICHARD K. TANAKA No. 23233 Exp. 12/31/11 CIVIL STATE OF CALIFORNIA

THE STATE OF CALIFORNIA OR ITS OFFICERS OR AGENTS SHALL NOT BE RESPONSIBLE FOR THE ACCURACY OR COMPLETENESS OF SCANNED COPIES OF THIS PLAN SHEET.

MARK THOMAS & COMPANY, INC.
1960 ZANKER ROAD
SAN JOSE, CA 95112

SANTA CLARA VALLEY TRANSPORTATION AUTHORITY
3331 NORTH FIRST STREET, BLDG B
SAN JOSE, CA 95134

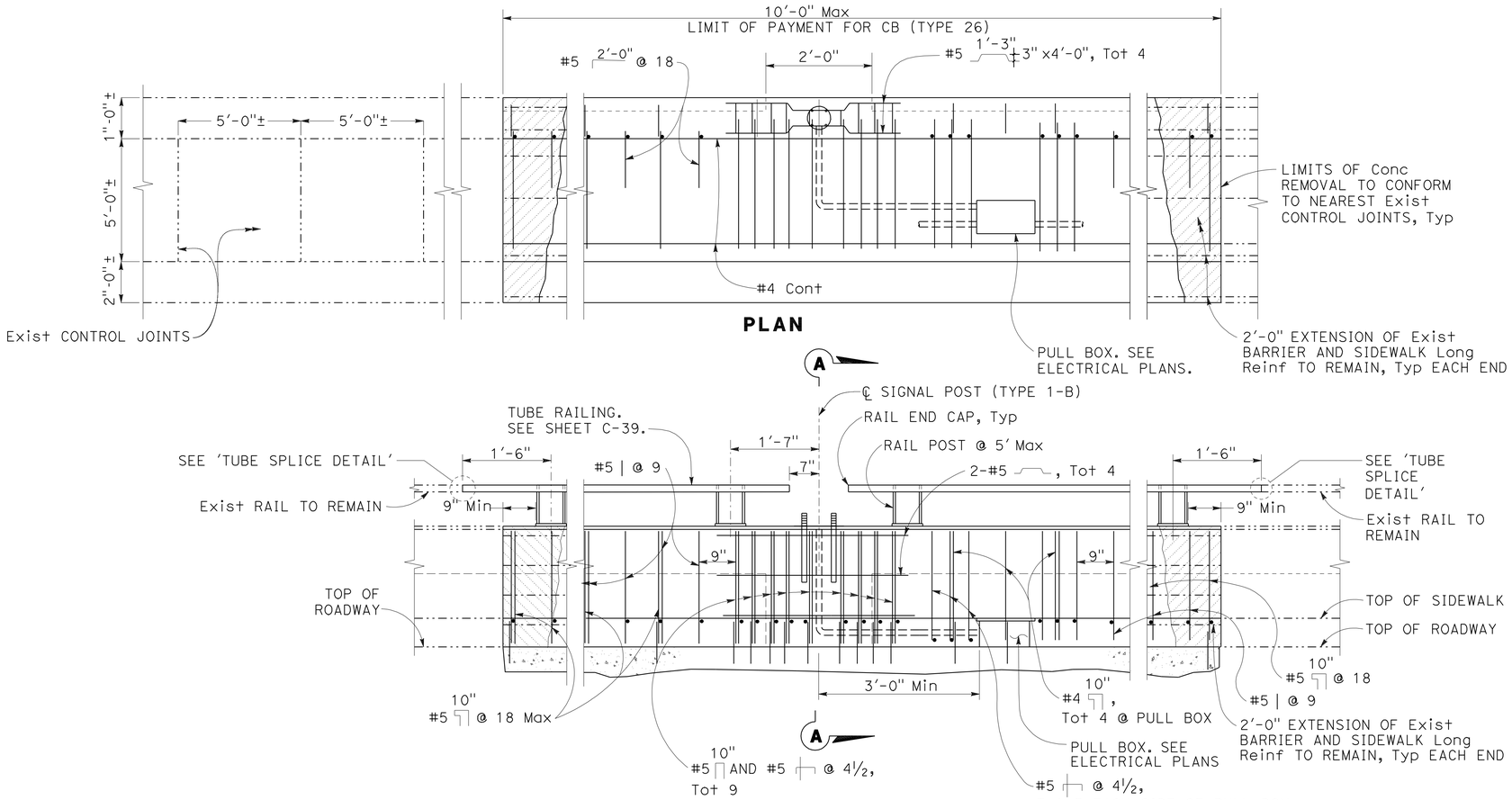

PLAN

ELEVATION

LEGEND

INDICATES NEW CONSTRUCTION

INDICATES EXISTING STRUCTURE

INDICATES LIMITS OF CONCRETE BARRIER REMOVAL

NOTES:

1. DIMENSIONS SHOWN ARE APPROXIMATE AND ARE TO BE ADJUSTED TO CONFORM TO ADJACENT CONCRETE BARRIER AND SIDEWALK
2. FOR TUBE RAILING DETAILS, SEE SHEET C-39.
3. FOR SHOWN SIGNAL POLE AND ANCHORAGE LOCATION AND DETAILS, SEE ELECTRICAL PLANS.
4. FOR BARRIER AND SIDEWALK DETAILS AND INFORMATION NOT SHOWN SEE Std PLAN B11-54

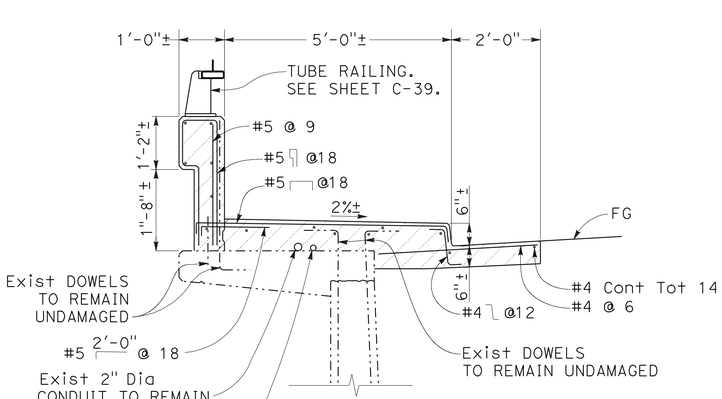

TYPICAL SECTION AT EXISTING RETAINING WALL
NO SCALE

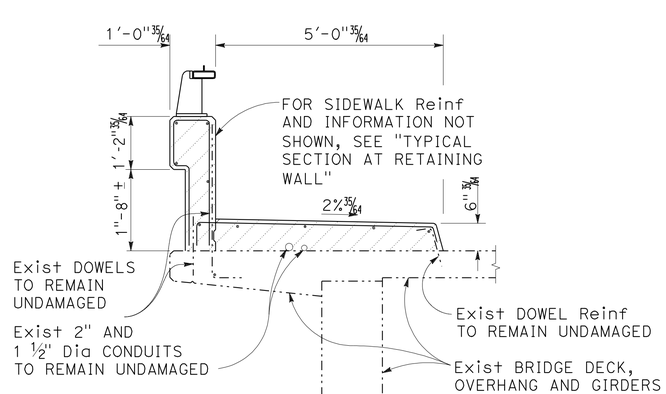

TYPICAL SECTION AT EXISTING BRIDGE
NO SCALE
FOR INFORMATION NOT SHOWN, SEE "TYPICAL SECTION AT EXISTING RETAINING WALL"

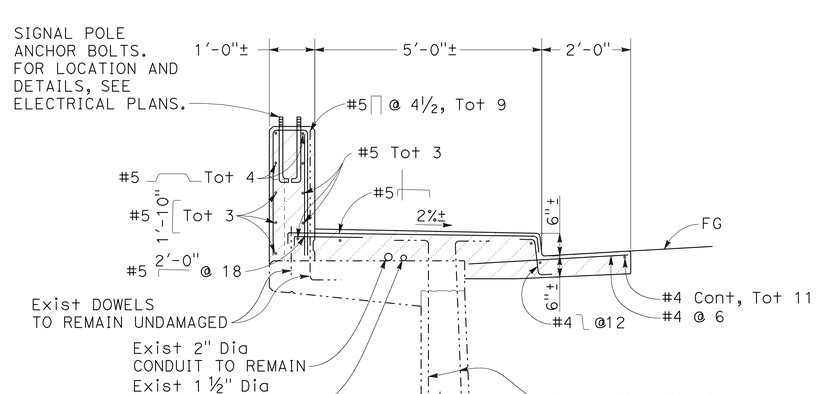

SECTION A-A
NO SCALE

CONSTRUCTION DETAILS
NO SCALE

CONCRETE BARRIER AND SIDEWALK RECONSTRUCTION AT BROKAW ROAD

C-38

STATE OF CALIFORNIA - DEPARTMENT OF TRANSPORTATION
Caltrans

CONSULTANT FUNCTIONAL SUPERVISOR: RICHARD TANAKA
CALCULATED-DESIGNED BY: TOMMY CHO
CHECKED BY: MARILOU AYUPAN
REVISED BY
DATE REVISED

LAST REVISION 10-15-10
DATE PLOTTED => 08-JUL-2011
TIME PLOTTED => 12:48

Dist	COUNTY	ROUTE	POST MILES TOTAL PROJECT	SHEET No.	TOTAL SHEETS
04	SCl	880	4.1/8.7	91	710

REGISTERED CIVIL ENGINEER 10/15/10 DATE

7-11-11
PLANS APPROVAL DATE

REGISTERED PROFESSIONAL ENGINEER RICHARD K. TANAKA No. 23233 Exp. 12/31/11 CIVIL STATE OF CALIFORNIA

THE STATE OF CALIFORNIA OR ITS OFFICERS OR AGENTS SHALL NOT BE RESPONSIBLE FOR THE ACCURACY OR COMPLETENESS OF SCANNED COPIES OF THIS PLAN SHEET.

MARK THOMAS & COMPANY, INC.
1960 ZANKER ROAD
SAN JOSE, CA 95112

SANTA CLARA VALLEY TRANSPORTATION AUTHORITY
3331 NORTH FIRST STREET, BLDG B
SAN JOSE, CA 95134

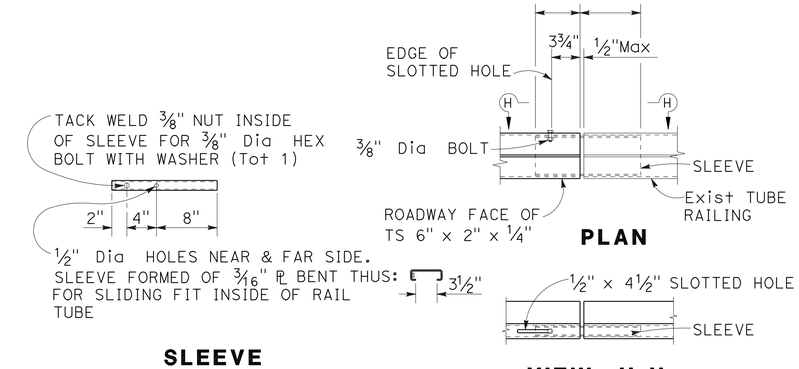

TUBE SPLICE

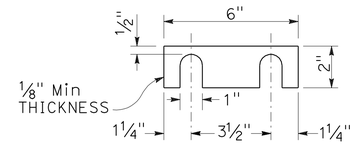

RAILING SHIM DETAILS

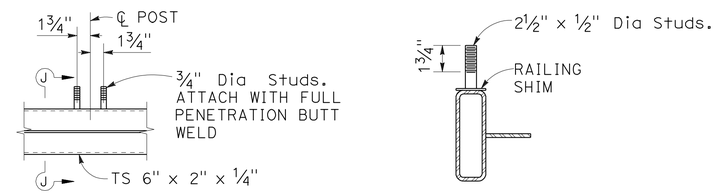

STUD BOLT DETAILS

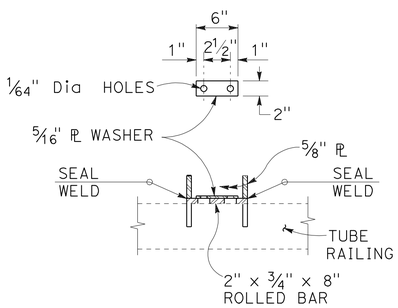

SECTION E-E

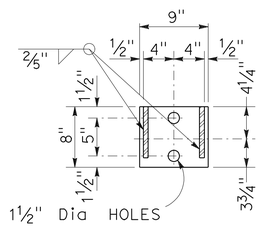

SECTION D-D

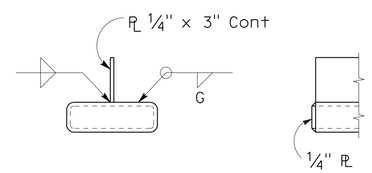

RAIL END CAP

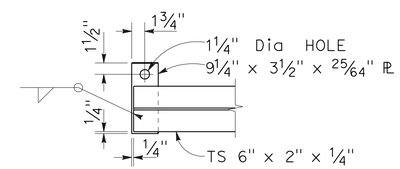

DETAIL B

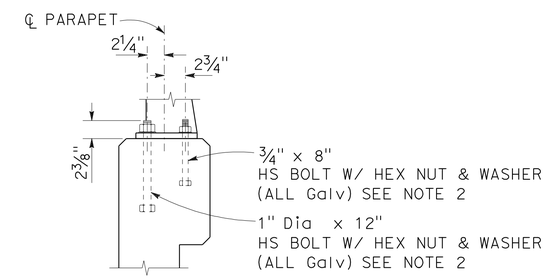

RAIL POST ANCHOR BOLT DETAIL

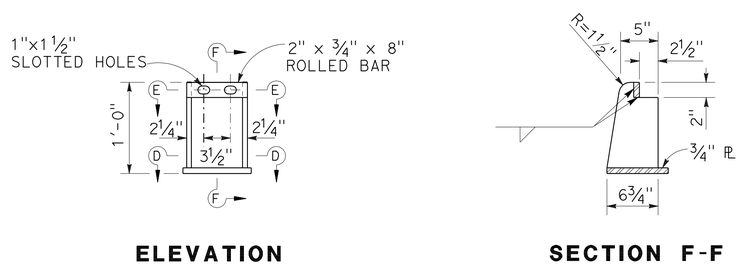

RAIL POST DETAILS

NOTES:

1. TUBING SHALL BE SHOP BENT OR FABRICATED TO FIT HORIZONTAL CURVE.
2. POSTS SHALL BE NORMAL TO RAILING.
3. WALLS ARE TO BE BACKFILLED BEFORE RAILING IS PLACED.
4. CLEARANCE TO REINFORCING STEEL IN CURB AND RAILING TO BE 1". LONGITUDINAL REINFORCEMENT TO STOP AT ALL JOINTS.
5. TORQUE RAIL TO POST NUTS TO 54 FOOT POUNDS.
6. ALL EXPOSED CORNERS SHALL BE GROUND SMOOTH.
7. GALVANIZE RAIL ASSEMBLY AFTER FABRICATION

CONCRETE BARRIER AND SIDEWALK RECONSTRUCTION AT BROKAW ROAD (Cont.)

CONSTRUCTION DETAILS
NO SCALE

C-39

STATE OF CALIFORNIA - DEPARTMENT OF TRANSPORTATION
Caltrans

CONSULTANT FUNCTIONAL SUPERVISOR: RICHARD TANAKA
CALCULATED-DESIGNED BY: MARILOU AYUPAN
CHECKED BY: TOMMY CHO
REVISED BY
DATE REVISED

LAST REVISION 10-15-10
DATE PLOTTED => 08-JUL-2011
TIME PLOTTED => 12:49

Dist	COUNTY	ROUTE	POST MILES TOTAL PROJECT	SHEET No.	TOTAL SHEETS
04	SCl	880	4.1/8.7	92	710

REGISTERED CIVIL ENGINEER 03/31/11 DATE

7-11-11
PLANS APPROVAL DATE

REGISTERED PROFESSIONAL ENGINEER RICHARD K. TANAKA No. 23233 Exp. 12/31/11 CIVIL STATE OF CALIFORNIA

THE STATE OF CALIFORNIA OR ITS OFFICERS OR AGENTS SHALL NOT BE RESPONSIBLE FOR THE ACCURACY OR COMPLETENESS OF SCANNED COPIES OF THIS PLAN SHEET.

MARK THOMAS & COMPANY, INC.
1960 ZANKER ROAD
SAN JOSE, CA 95112

SANTA CLARA VALLEY TRANSPORTATION AUTHORITY
3331 NORTH FIRST STREET, BLDG B
SAN JOSE, CA 95134

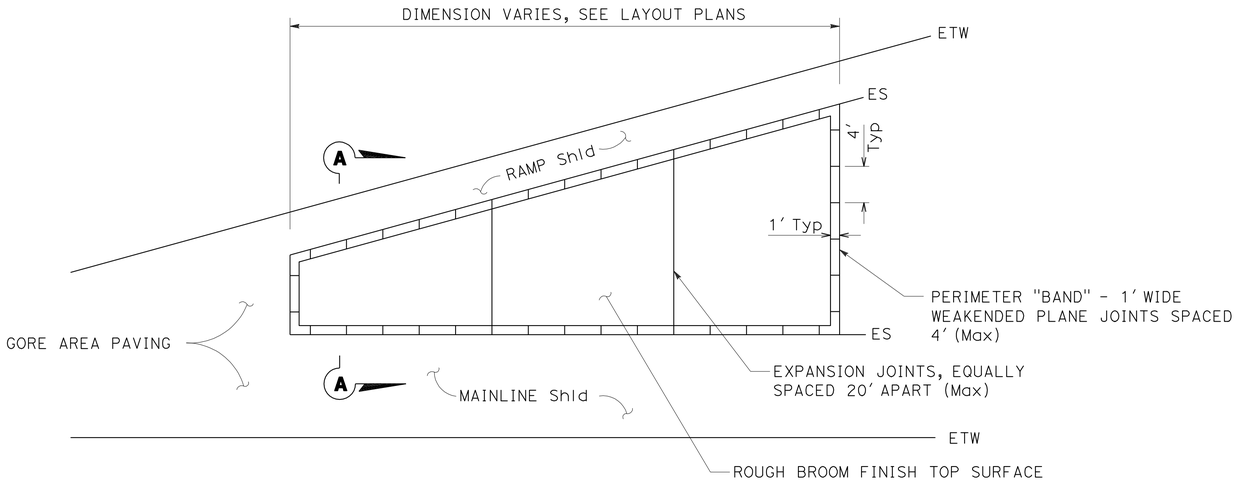

PLAN

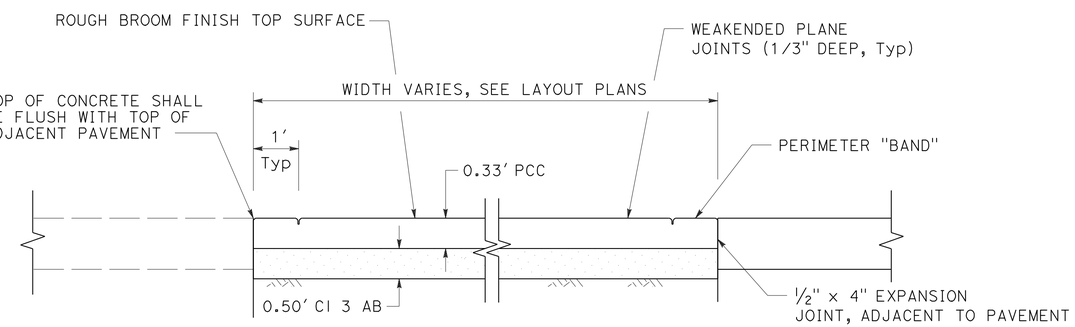

SECTION A-A

MINOR CONCRETE (CONTRASTING SURFACE TREATMENT)

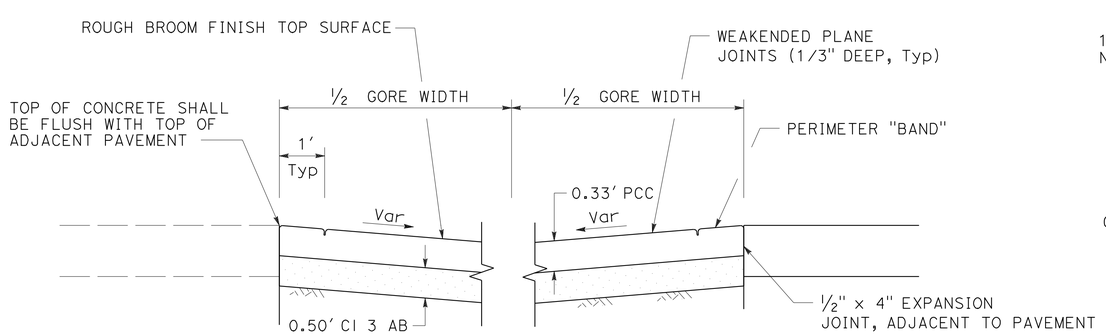

SECTION A-A

MINOR CONCRETE (CONTRASTING SURFACE TREATMENT)

M 130+82.91 TO 132+12.22

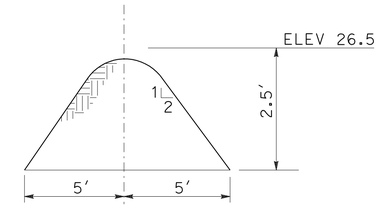

SECTION

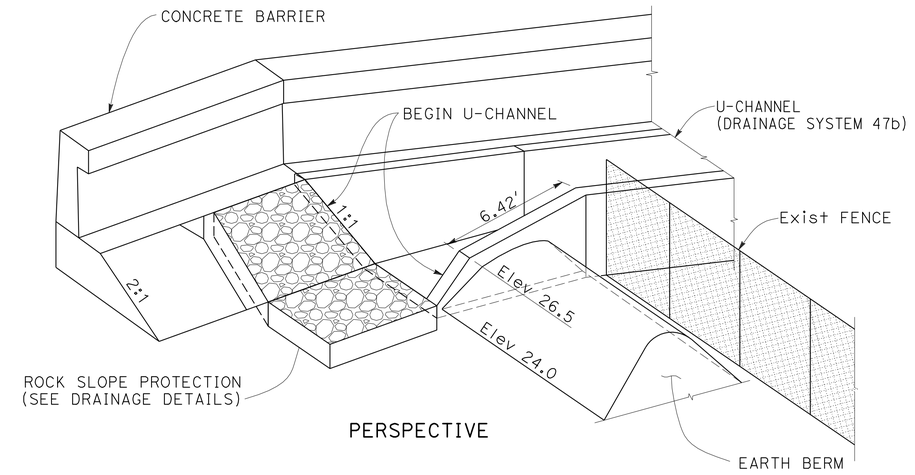

PERSPECTIVE

EARTH BERM

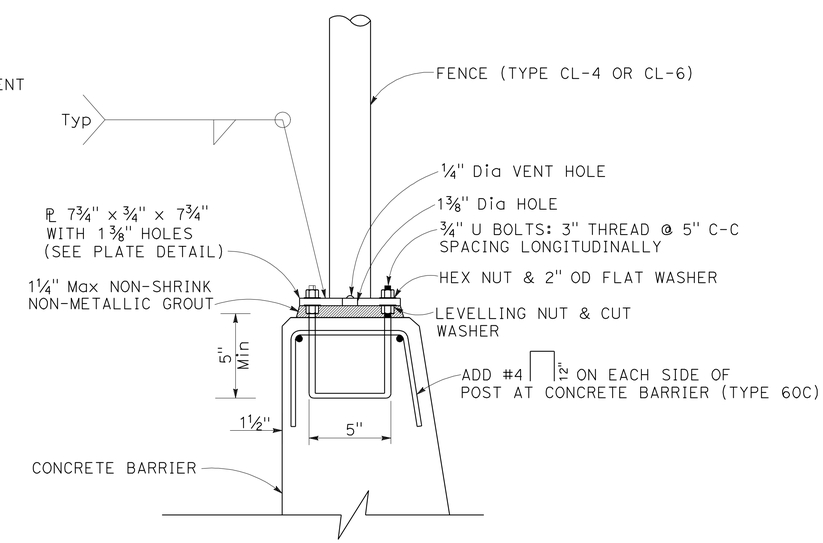

CHAIN LINK FENCE POST MOUNTING DETAIL

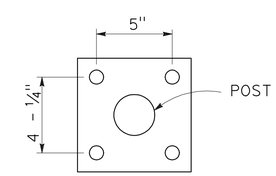

PLATE DETAIL

CONSTRUCTION DETAILS

NO SCALE

C-40

REVISED BY | DATE REVISED
TOMMY CHO | MARILOU AYUPAN
CALCULATED-DESIGNED BY | CHECKED BY
CONSULTANT FUNCTIONAL SUPERVISOR
RICHARD TANAKA

STATE OF CALIFORNIA - DEPARTMENT OF TRANSPORTATION
Caltrans

LAST REVISION 03-31-11 | DATE PLOTTED => 08-JUL-2011 | TIME PLOTTED => 12:49

Dist	COUNTY	ROUTE	POST MILES TOTAL PROJECT	SHEET No.	TOTAL SHEETS
04	SCI	880	4.1/8.7	93	710

REGISTERED CIVIL ENGINEER 06/10/11 DATE

7-11-11
PLANS APPROVAL DATE

REGISTERED PROFESSIONAL ENGINEER RICHARD K. TANAKA No. 23233 Exp. 12/31/11 CIVIL STATE OF CALIFORNIA

THE STATE OF CALIFORNIA OR ITS OFFICERS OR AGENTS SHALL NOT BE RESPONSIBLE FOR THE ACCURACY OR COMPLETENESS OF SCANNED COPIES OF THIS PLAN SHEET.

MARK THOMAS & COMPANY, INC.
1960 ZANKER ROAD
SAN JOSE, CA 95112

SANTA CLARA VALLEY TRANSPORTATION AUTHORITY
3331 NORTH FIRST STREET, BLDG B
SAN JOSE, CA 95134

NOTES:
1. CONTRACTOR TO FILL BETWEEN BARRIER WALLS BY PLACING 2' PCC AT BASE BETWEEN BARRIER WALLS.
2. FORMING MATERIAL FOR 4" CAP MAY REMAIN IN PLACE.
3. ENCLOSE COLUMN WITH 4" EXPANDED POLYSTYRENE AT LOCATIONS WHERE CONCRETE OR CEMENT TREATED BASE ENCASES THE COLUMN.

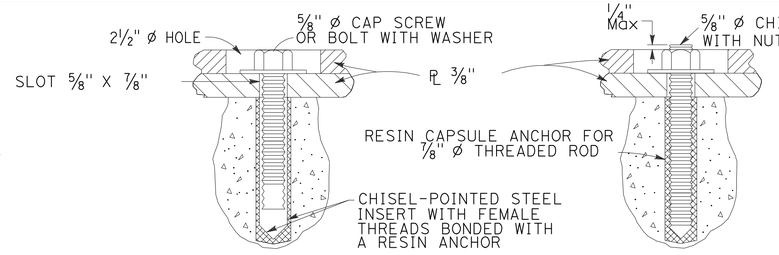

DETAIL A DETAIL B
ALTERNATIVE ANCHORAGE

NOTES:
1) RESIN CAPSULE ANCHORAGE IS SUBJECT TO APPROVAL OF THE ENGINEER. INSTALLATION PROCEDURES SHALL COMPLY WITH MANUFACTURER'S INSTRUCTIONS.
2) DETAIL B SIMILAR TO DETAIL A EXCEPT FOR ANCHORAGE DEVICES.

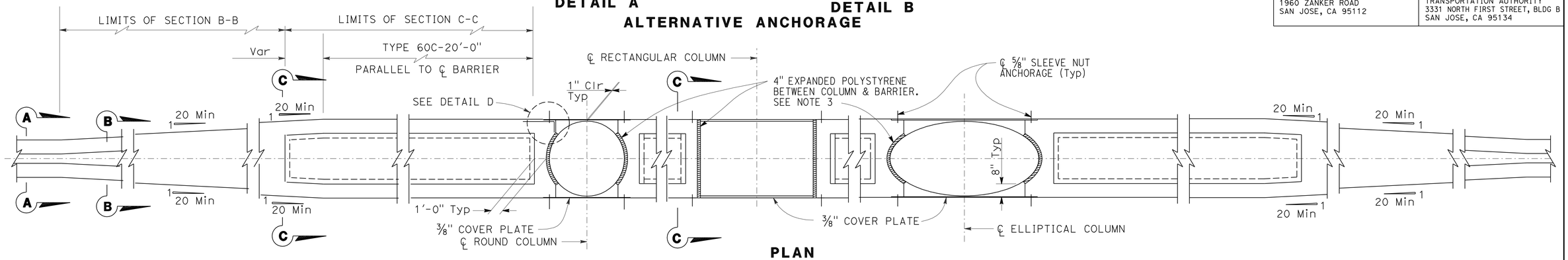

PLAN

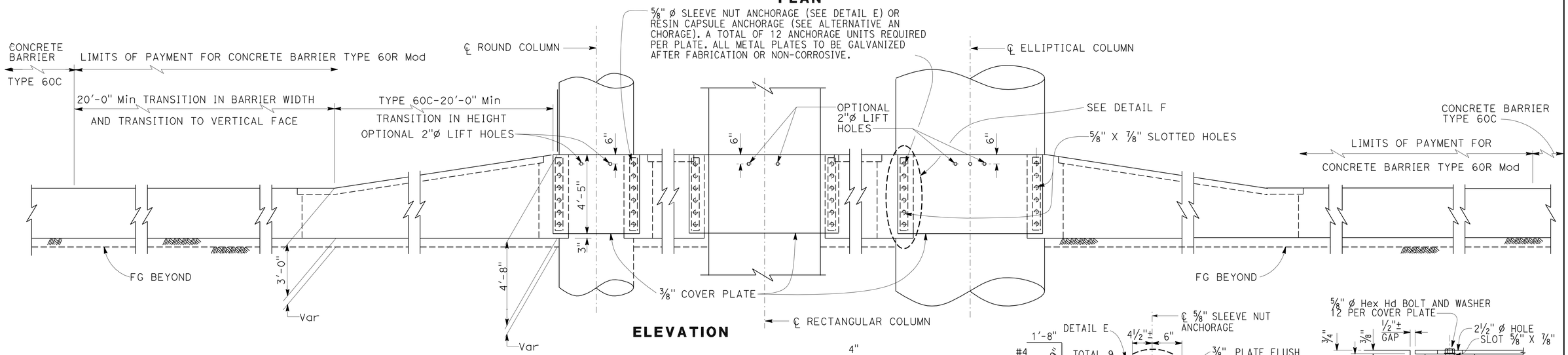

ELEVATION

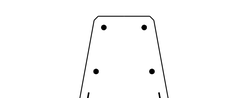

SECTION A-A

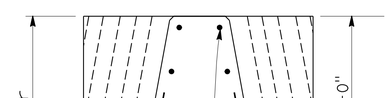

#4 Tot 12 Cont

SECTION B-B

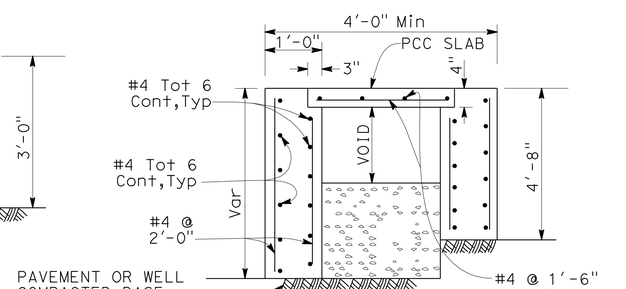

SECTION C-C

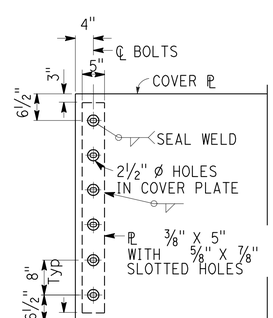

DETAIL F

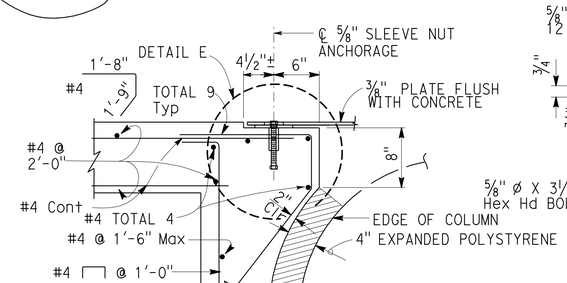

DETAIL D

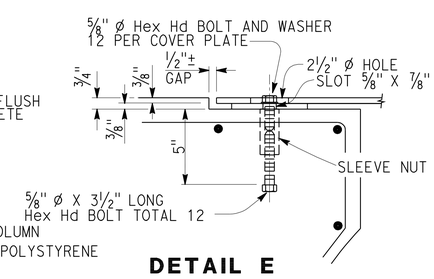

DETAIL E

CONSTRUCTION DETAILS
NO SCALE

C-41

CONCRETE BARRIER TYPE 60R Mod TRANSITION AT BRIDGE COLUMN

STATE OF CALIFORNIA - DEPARTMENT OF TRANSPORTATION
Caltrans

CONSULTANT FUNCTIONAL SUPERVISOR: RICHARD TANAKA
CALCULATED-DESIGNED BY: TOMMY CHO
CHECKED BY: MARILOU AYUPAN
REVISED BY
DATE REVISED

LAST REVISION 06-10-11
DATE PLOTTED => 08-JUL-2011
TIME PLOTTED => 12:49

Dist	COUNTY	ROUTE	POST MILES TOTAL PROJECT	SHEET No.	TOTAL SHEETS
04	SCl	880	4.1/8.7	94	710

REGISTERED CIVIL ENGINEER 06/10/11 DATE

7-11-11
PLANS APPROVAL DATE

REGISTERED PROFESSIONAL ENGINEER RICHARD K. TANAKA No. 23233 Exp. 12/31/11 CIVIL STATE OF CALIFORNIA

THE STATE OF CALIFORNIA OR ITS OFFICERS OR AGENTS SHALL NOT BE RESPONSIBLE FOR THE ACCURACY OR COMPLETENESS OF SCANNED COPIES OF THIS PLAN SHEET.

MARK THOMAS & COMPANY, INC.
1960 ZANKER ROAD
SAN JOSE, CA 95112

SANTA CLARA VALLEY TRANSPORTATION AUTHORITY
3331 NORTH FIRST STREET, BLDG B
SAN JOSE, CA 95134

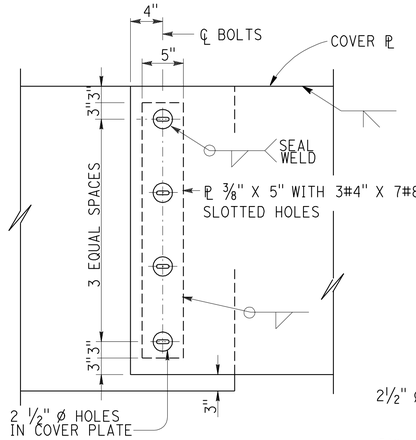

DETAIL F

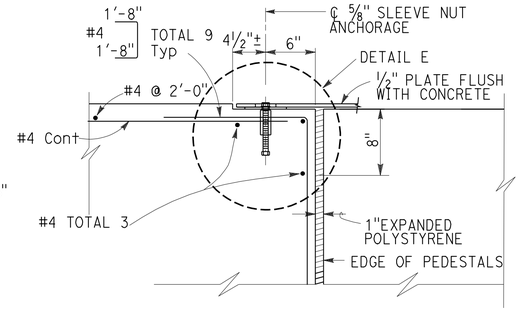

DETAIL D

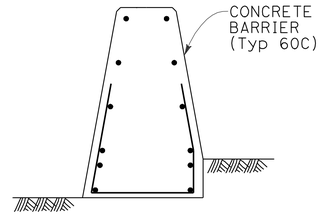

SECTION A-A

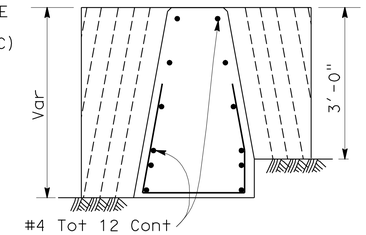

SECTION B-B

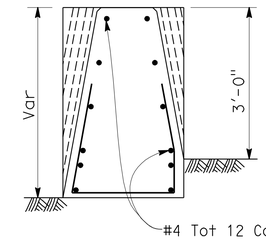

SECTION F-F

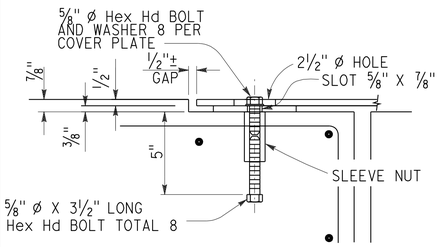

DETAIL E

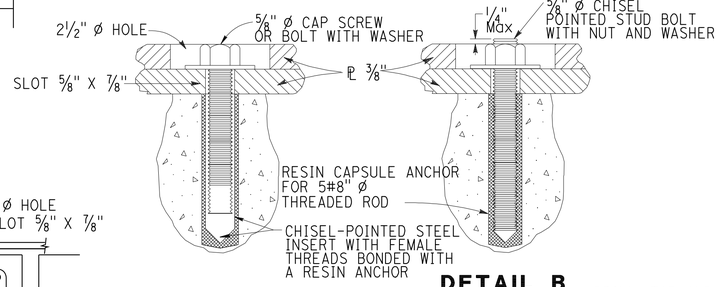

DETAIL A
DETAIL B
ALTERNATIVE ANCHORAGE

NOTES: 1) RESIN CAPSULE ANCHORAGE IS SUBJECT TO APPROVAL OF THE ENGINEER. INSTALLATION PROCEDURES SHALL COMPLY WITH MANUFACTURER'S INSTRUCTIONS.

2) DETAIL B SIMILAR TO DETAIL A EXCEPT FOR ANCHORAGE DEVICES.

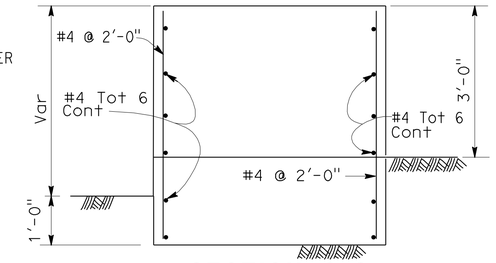

SECTION C-C

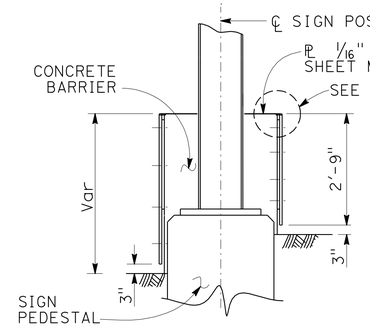

SECTION D-D

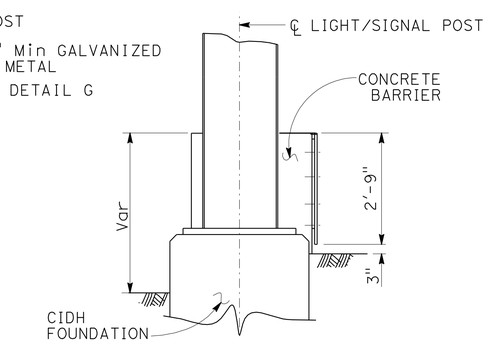

SECTION E-E

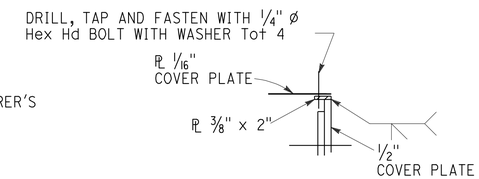

DETAIL G

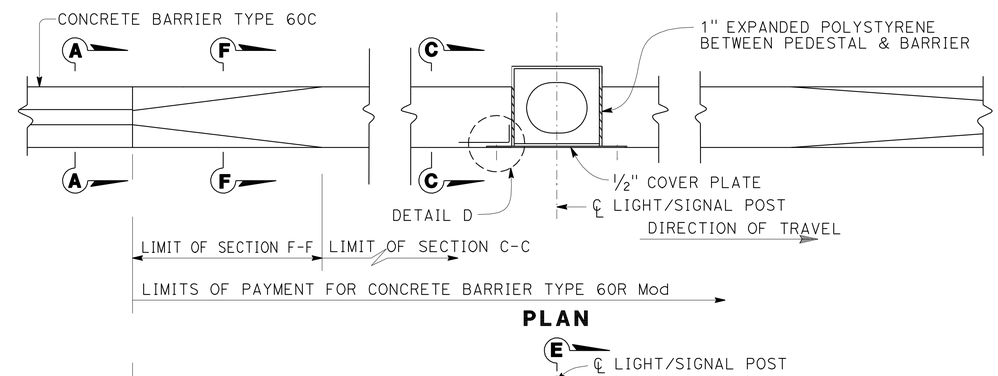

PLAN

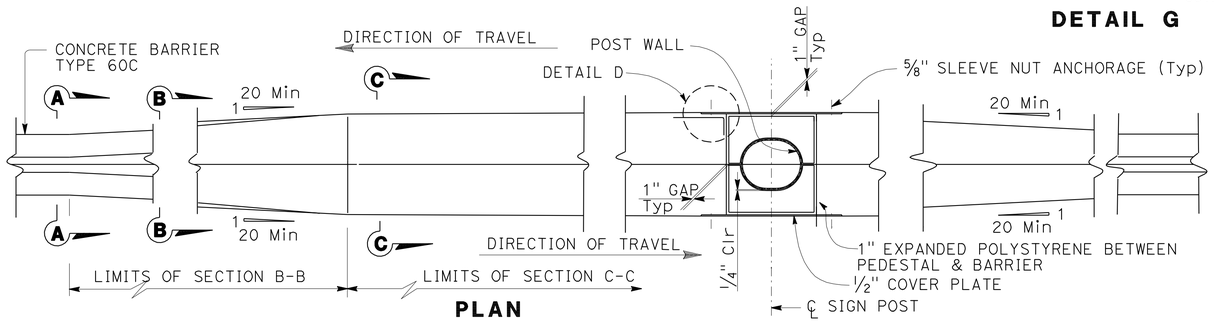

PLAN

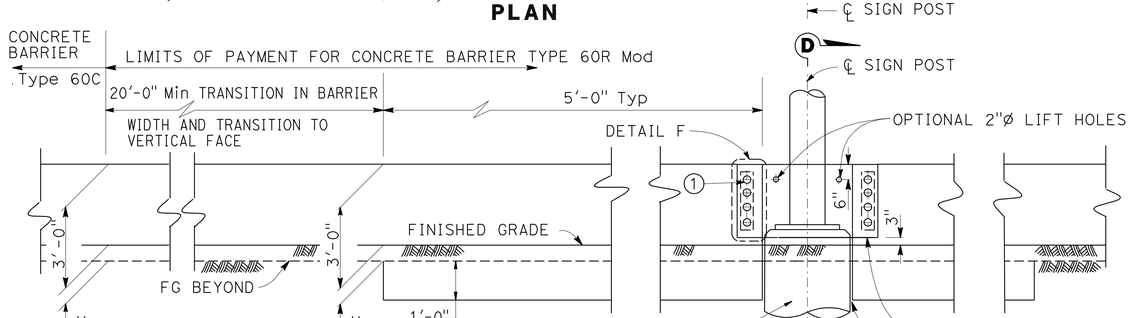

ELEVATION

TRANSITION AT SIGN POST
M 283+36.00, 0.00' Lt

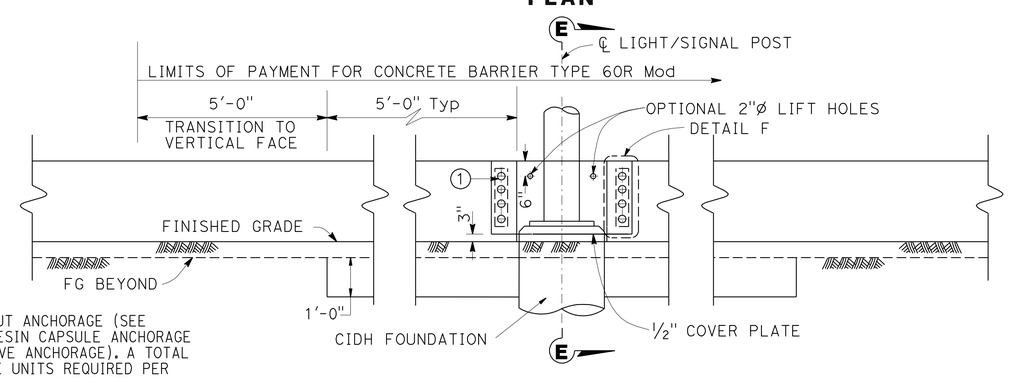

ELEVATION

TRANSITION AT LIGHT POST AND SIGNAL POST
BRN1 133+83.83 TO 134+06.08, Lt
BRN1 139+70.76 TO 139+95.11, Lt

① 5/8" Ø SLEEVE NUT ANCHORAGE (SEE DETAIL E) OR RESIN CAPSULE ANCHORAGE (SEE ALTERNATIVE ANCHORAGE). A TOTAL OF 8 ANCHORAGE UNITS REQUIRED PER PLATE. ALL METAL PLATES TO BE GALVANIZED AFTER FABRICATION. HARDWARE TO BE GALVANIZED NON-CORROSIVE.

CONSTRUCTION DETAILS
NO SCALE

CONCRETE BARRIER TYPE 60R Mod TRANSITION AT SIGN POST, LIGHT POST AND SIGNAL POST

C-42

STATE OF CALIFORNIA - DEPARTMENT OF TRANSPORTATION
Caltrans
CONSULTANT FUNCTIONAL SUPERVISOR: RICHARD TANAKA
CALCULATED-DESIGNED BY: TOMMY CHO
CHECKED BY: MARILOU AYUPAN
REVISED BY
DATE REVISED

LAST REVISION 06-10-11
DATE PLOTTED => 08-JUL-2011
TIME PLOTTED => 12:49

Dist	COUNTY	ROUTE	POST MILES TOTAL PROJECT	SHEET No.	TOTAL SHEETS
04	SCI	880	4.1/8.7	95	710

REGISTERED CIVIL ENGINEER 10/15/10 DATE

7-11-11
PLANS APPROVAL DATE

REGISTERED PROFESSIONAL ENGINEER RICHARD K. TANAKA No. 23233 Exp. 12/31/11 CIVIL STATE OF CALIFORNIA

THE STATE OF CALIFORNIA OR ITS OFFICERS OR AGENTS SHALL NOT BE RESPONSIBLE FOR THE ACCURACY OR COMPLETENESS OF SCANNED COPIES OF THIS PLAN SHEET.

MARK THOMAS & COMPANY, INC.
1960 ZANKER ROAD
SAN JOSE, CA 95112

SANTA CLARA VALLEY TRANSPORTATION AUTHORITY
3331 NORTH FIRST STREET, BLDG B
SAN JOSE, CA 95134

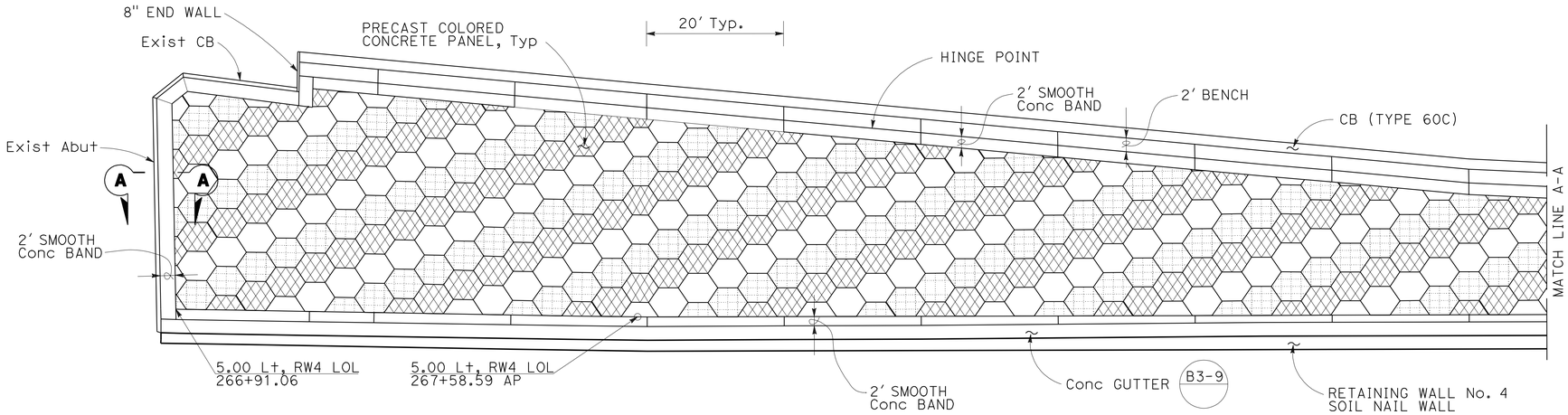

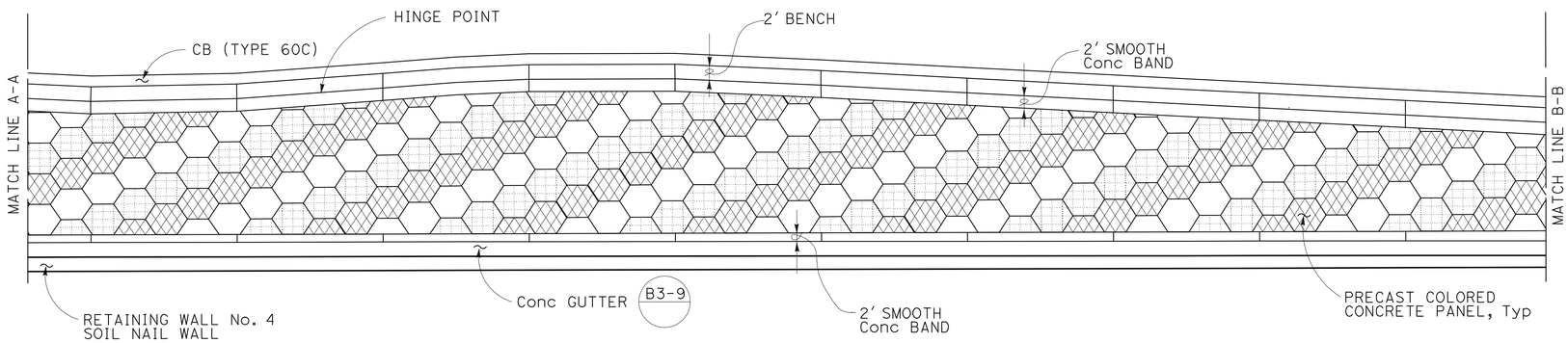

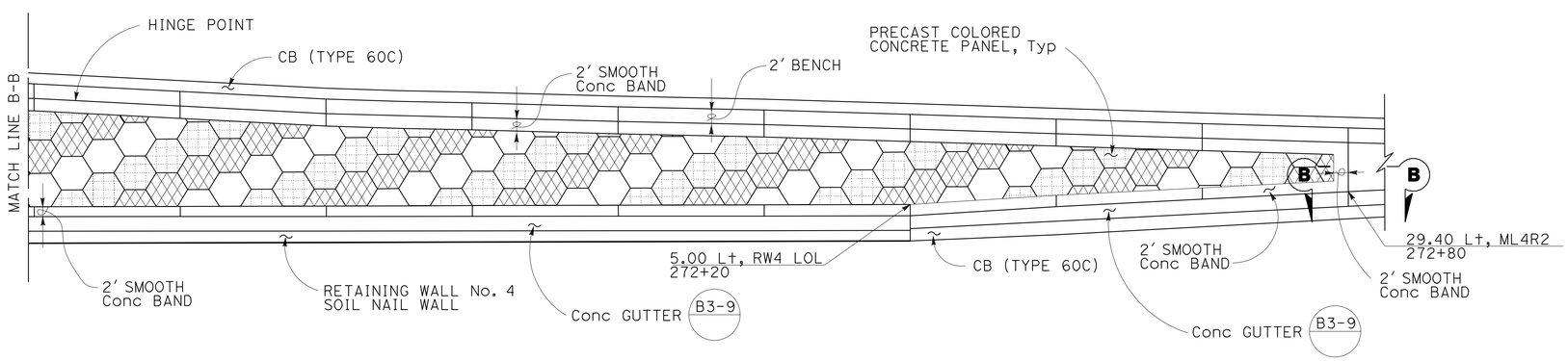

PLAN VIEW OF INSTALLATION

SLOPE PAVING (PRECAST CONCRETE PANELS)

LEGEND

- RED/TERRA COTA
- GRAPHITE/BLACK
- YELLOW/TAN

NOTES

1. FOR 'TYPICAL SLOPE PAVING SECTION & GUTTER DETAIL' SEE SHEET C-44 & C-45.
2. CHAIN LINK RAILING ON RW No. 4 NOT SHOWN FOR CLARITY.

CONSTRUCTION DETAILS

NO SCALE

C-43

STATE OF CALIFORNIA - DEPARTMENT OF TRANSPORTATION
Caltrans

CONSULTANT FUNCTIONAL SUPERVISOR: RICHARD TANAKA
CALCULATED-DESIGNED BY: MARK SATURNIO
CHECKED BY: MARILOU AYUPAN
REVISED BY
DATE REVISED

LAST REVISION 10-15-10
DATE PLOTTED => 08-JUL-2011
TIME PLOTTED => 12:49

Dist	COUNTY	ROUTE	POST MILES TOTAL PROJECT	SHEET No.	TOTAL SHEETS
04	SCI	880	4.1/8.7	96	710

REGISTERED CIVIL ENGINEER 03/31/11 DATE

7-11-11
PLANS APPROVAL DATE

REGISTERED PROFESSIONAL ENGINEER RICHARD K. TANAKA No. 23233 Exp. 12/31/11 CIVIL STATE OF CALIFORNIA

THE STATE OF CALIFORNIA OR ITS OFFICERS OR AGENTS SHALL NOT BE RESPONSIBLE FOR THE ACCURACY OR COMPLETENESS OF SCANNED COPIES OF THIS PLAN SHEET.

MARK THOMAS & COMPANY, INC.
1960 ZANKER ROAD
SAN JOSE, CA 95112

SANTA CLARA VALLEY TRANSPORTATION AUTHORITY
3331 NORTH FIRST STREET, BLDG B
SAN JOSE, CA 95134

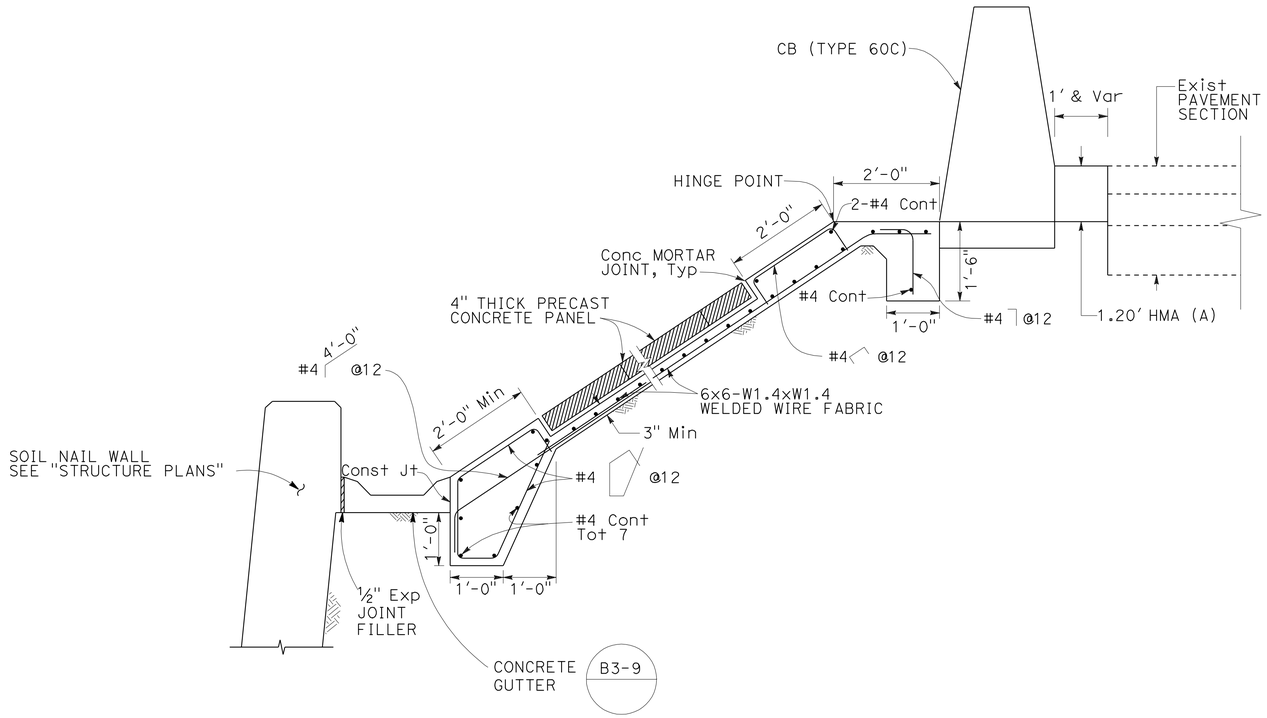

TYPICAL SLOPE PAVING (PRECAST CONCRETE PANEL) SECTION WITH GUTTER AND CONCRETE PAVER AT THE BACK OF SOIL NAIL WALL

ML4R2 266+89.46 TO 272+20.24

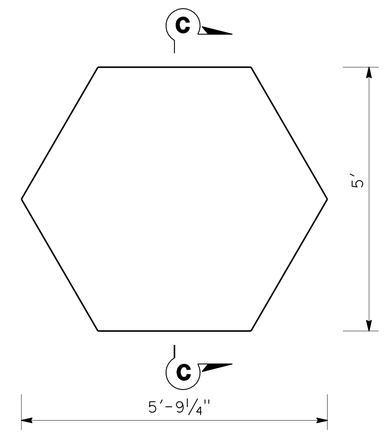

PRECAST CONCRETE PANEL

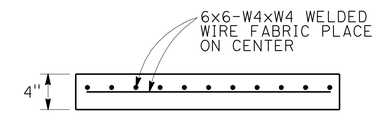

SECTION C-C

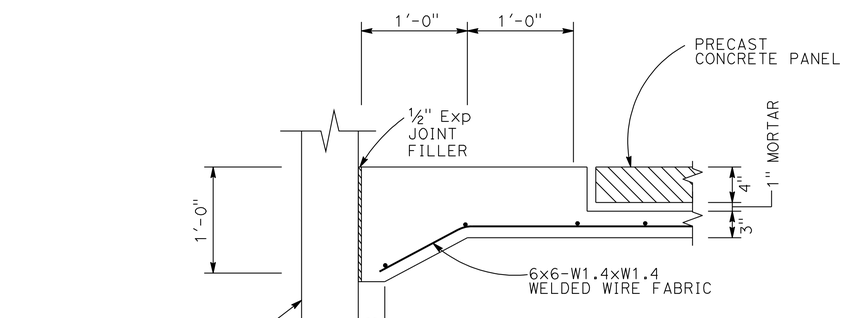

SECTION A-A

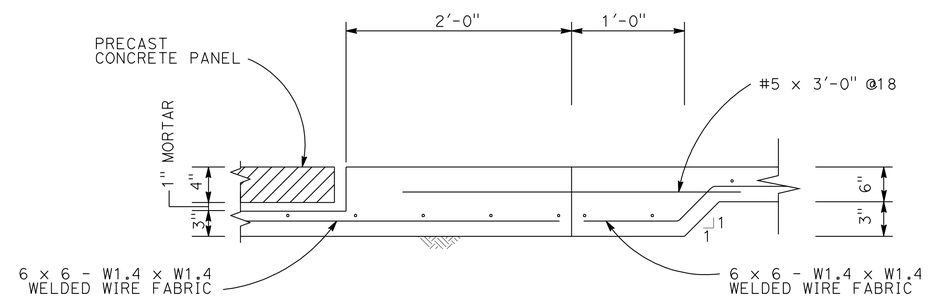

SECTION B-B

CONSTRUCTION DETAILS
NO SCALE

C-44

STATE OF CALIFORNIA - DEPARTMENT OF TRANSPORTATION
Caltrans

CONSULTANT FUNCTIONAL SUPERVISOR: RICHARD TANAKA
CALCULATED-DESIGNED BY: MARK SATURNIO
CHECKED BY: MARILOU AYUPAN
REVISED BY
DATE REVISED

LAST REVISION 03-31-11
DATE PLOTTED => 08-JUL-2011
TIME PLOTTED => 12:50

Dist	COUNTY	ROUTE	POST MILES TOTAL PROJECT	SHEET No.	TOTAL SHEETS
04	SCI	880	4.1/8.7	97	710

REGISTERED CIVIL ENGINEER 03/31/11 DATE

7-11-11
PLANS APPROVAL DATE

REGISTERED PROFESSIONAL ENGINEER
RICHARD K. TANAKA
No. 23233
Exp. 12/31/11
CIVIL
STATE OF CALIFORNIA

THE STATE OF CALIFORNIA OR ITS OFFICERS OR AGENTS SHALL NOT BE RESPONSIBLE FOR THE ACCURACY OR COMPLETENESS OF SCANNED COPIES OF THIS PLAN SHEET.

MARK THOMAS & COMPANY, INC.
1960 ZANKER ROAD
SAN JOSE, CA 95112

SANTA CLARA VALLEY
TRANSPORTATION AUTHORITY
3331 NORTH FIRST STREET, BLDG B
SAN JOSE, CA 95134

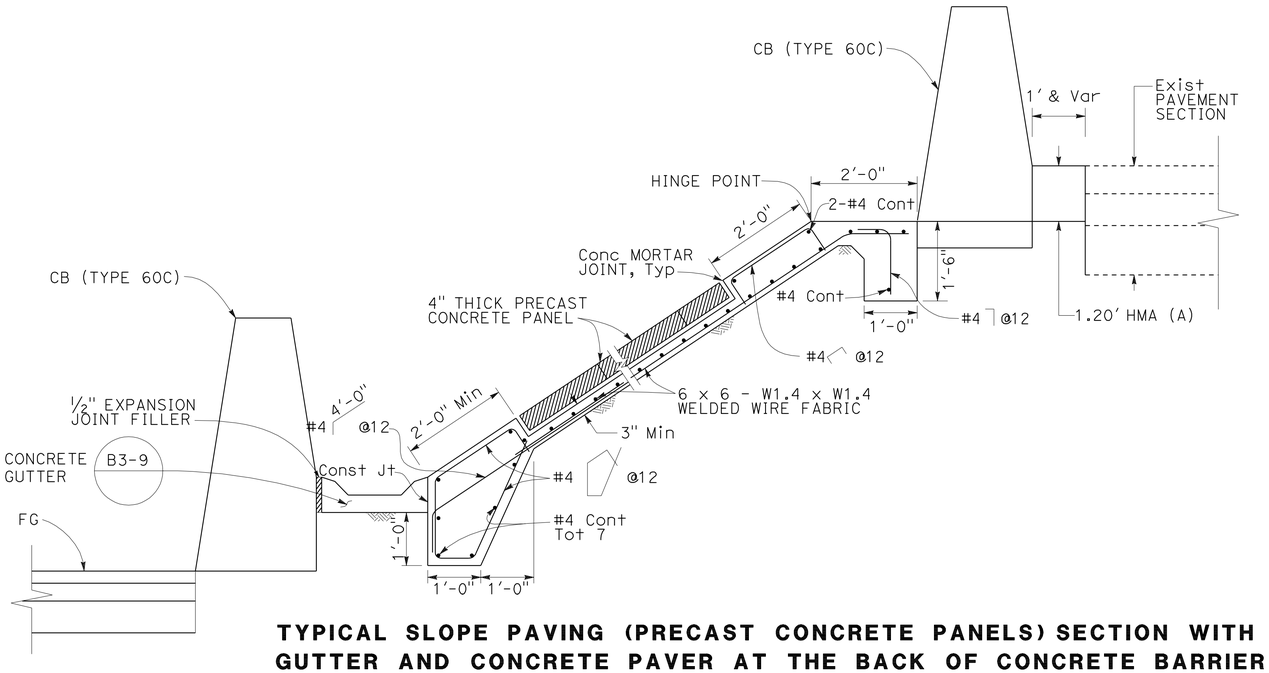

TYPICAL SLOPE PAVING (PRECAST CONCRETE PANELS) SECTION WITH GUTTER AND CONCRETE PAVER AT THE BACK OF CONCRETE BARRIER

ML4R2 272+20.24 TO 272+80.00

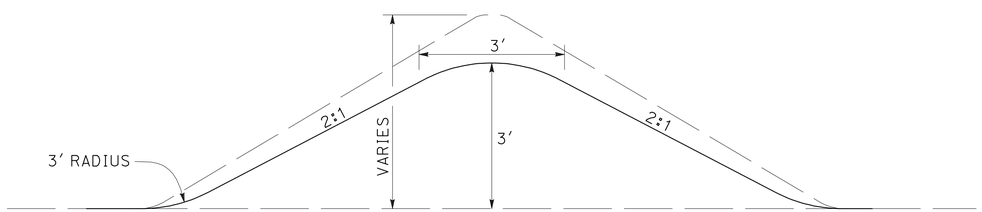

EARTH BERM AT NB LOOP OFF-RAMP TO OLD BAYSHORE Hwy (Typ SECTION)

CONSTRUCTION DETAILS

NO SCALE

C-45

STATE OF CALIFORNIA - DEPARTMENT OF TRANSPORTATION
Caltrans

CONSULTANT FUNCTIONAL SUPERVISOR: RICHARD TANAKA
CALCULATED-DESIGNED BY: TOMMY CHO
CHECKED BY: MARILOU AYUPAN
REVISED BY
DATE REVISED

LAST REVISION 03-31-11
DATE PLOTTED => 08-JUL-2011
TIME PLOTTED => 12:50

Dist	COUNTY	ROUTE	POST MILES TOTAL PROJECT	SHEET No.	TOTAL SHEETS
04	SCI	880	4.1/8.7	98	710

REGISTERED CIVIL ENGINEER 10/15/10 DATE

7-11-11
PLANS APPROVAL DATE

REGISTERED PROFESSIONAL ENGINEER RICHARD K. TANAKA No. 23233 Exp. 12/31/11 CIVIL STATE OF CALIFORNIA

THE STATE OF CALIFORNIA OR ITS OFFICERS OR AGENTS SHALL NOT BE RESPONSIBLE FOR THE ACCURACY OR COMPLETENESS OF SCANNED COPIES OF THIS PLAN SHEET.

MARK THOMAS & COMPANY, INC.
1960 ZANKER ROAD
SAN JOSE, CA 95112

SANTA CLARA VALLEY
TRANSPORTATION AUTHORITY
3331 NORTH FIRST STREET, BLDG B
SAN JOSE, CA 95134

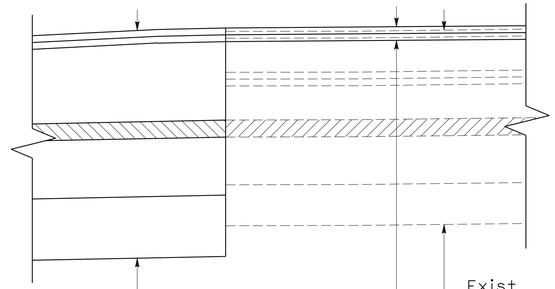

0.10′ HMA (OGFC)
0.10′ RHMA-G
0.50′ Min HMA (A)
0.25′ ATPB
0.85′ LCB
0.90′ CI 4 AS

0.15′ COLD PLANE AC
0.10′ HMA (OGFC)
0.10′ RHMA-G

Exist
0.10′ OGAC
Var 0.30′ TO 0.79′ AC (TYPE A)
PRF
0.10′ AC (TYPE A)
0.10′ OGAC
0.50′ AC (TYPE A)
0.25′ ATPB
0.70′ CTB (TYPE A)
0.60′ CI 4 AS

CASE 3

M 207+85.00 TO 214+56.00, Lt

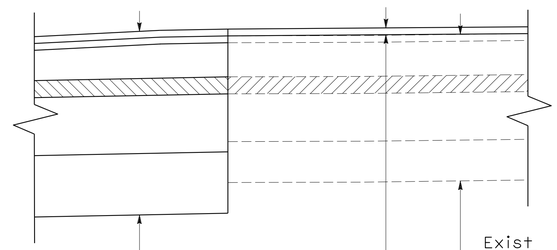

0.10′ HMA (OGFC)
0.10′ RHMA-G
0.50′ Min HMA (A)
0.25′ ATPB
0.85′ LCB
0.90′ CI 4 AS

0.10′ HMA (OGFC)

Exist
0.10′ RHMA-G
0.50′ AC (TYPE A)
0.25′ ATPB
0.70′ CTB (TYPE A)
0.60′ CI 4 AS

CASE 2

M 227+10.00 TO 247+54.00, Lt
M 258+98.00 TO 264+63.50, Lt

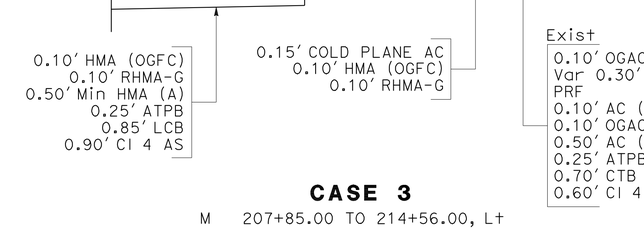

Exist
0.10′ OGAC
0.50′ AC (TYPE A)
0.25′ ATPB
0.70′ CTB (TYPE A)
0.60′ CI 4 AS

0.15′ COLD PLANE AC
0.10′ HMA (OGFC)
0.10′ RHMA-G
Var HMA (A)

0.10′ HMA (OGFC)
0.10′ RHMA-G
0.50′ Min HMA (A)
0.25′ ATPB
0.85′ LCB
0.90′ CI 4 AS

CASE 1

M 237+10.00 TO 252+93.00, Rt
M 264+63.50 TO 274+84.00, Lt
M 264+89.00 TO 284+36.00, Rt

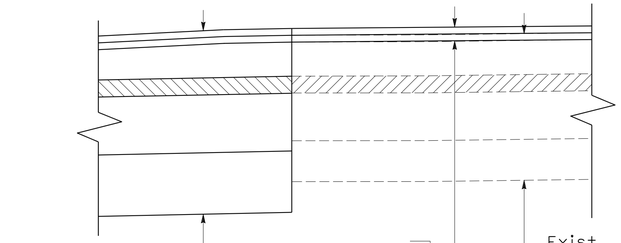

0.10′ HMA (OGFC)
0.10′ RHMA-G
0.50′ Min HMA (A)
0.25′ ATPB
0.85′ LCB
0.90′ CI 4 AS

0.10′ COLD PLANE AC
0.10′ HMA (OGFC)
0.10′ RHMA-G

Exist
0.10′ OGAC
0.50′ AC (TYPE A)
0.25′ ATPB
0.70′ AC (TYPE A)
0.60′ CI 4 AS

CASE 6

M 214+56.00 TO 222+55.76, Lt
M 256+00.00 TO 258+25.39, Lt

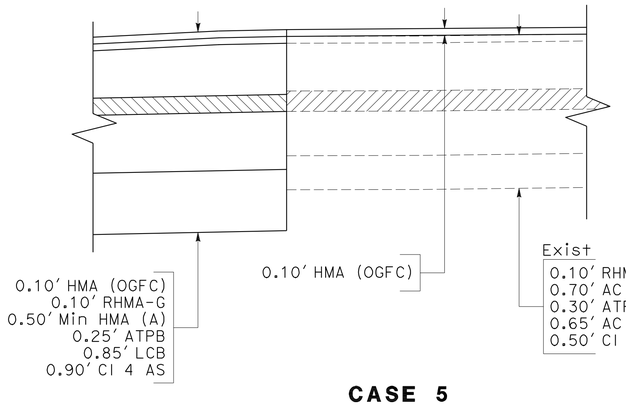

0.10′ HMA (OGFC)
0.10′ RHMA-G
0.50′ Min HMA (A)
0.25′ ATPB
0.85′ LCB
0.90′ CI 4 AS

0.10′ HMA (OGFC)

Exist
0.10′ RHMA-G
0.70′ AC (TYPE A)
0.30′ ATPB
0.65′ AC (TYPE A)
0.50′ CI 4 AS

CASE 5

M 226+02.93 TO 227+10.00, Lt

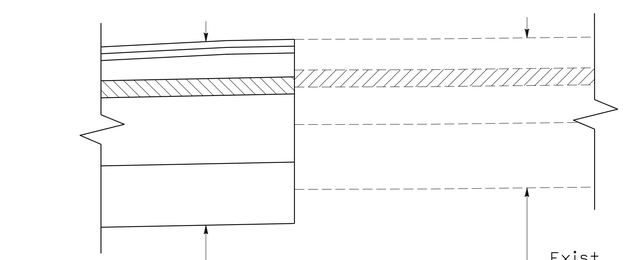

0.10′ HMA (OGFC)
0.10′ RHMA-G
0.35′ HMA (A)
0.25′ ATPB
1.00′ LCB
0.90′ CI 4 AS

Exist
0.45′ AC (TYPE A)
0.25′ ATPB
0.55′ CI 3 AB
0.95′ CI 4 AS

CASE 4

TL1 158+25.70 TO 161+66.00, Lt

NEW ATPB LAYER TO MATCH EXISTING ATPB LAYER DETAIL

CONSTRUCTION DETAILS

NO SCALE

C-46

STATE OF CALIFORNIA - DEPARTMENT OF TRANSPORTATION
Caltrans

CONSULTANT FUNCTIONAL SUPERVISOR: RICHARD TANAKA
CALCULATED-DESIGNED BY: TOMMY CHO
CHECKED BY: MARILOU AYUPAN
REVISED BY
DATE REVISED

LAST REVISION 10-15-10
DATE PLOTTED => 08-JUL-2011
TIME PLOTTED => 12:50

FOR ACCURATE RIGHT OF WAY DATA, CONTACT
RIGHT OF WAY RECORD MAPS AT DISTRICT OFFICE.

ABBREVIATION:

DBH DIAMETER BREAST HEIGHT

LEGEND:

REMOVE TREE

EXISTING TREE TO REMAIN

Dist	COUNTY	ROUTE	POST MILES TOTAL PROJECT	SHEET No.	TOTAL SHEETS
04	SCI	880	4.1/8.7	99	710

REGISTERED CIVIL ENGINEER 03/31/11 DATE

7-11-11
PLANS APPROVAL DATE

REGISTERED PROFESSIONAL ENGINEER
RICHARD K. TANAKA
No. 23233
Exp. 12/31/11
CIVIL
STATE OF CALIFORNIA

THE STATE OF CALIFORNIA OR ITS OFFICERS OR AGENTS SHALL NOT BE RESPONSIBLE FOR THE ACCURACY OR COMPLETENESS OF SCANNED COPIES OF THIS PLAN SHEET.

MARK THOMAS & COMPANY, INC.
1960 ZANKER ROAD
SAN JOSE, CA 95112

SANTA CLARA VALLEY
TRANSPORTATION AUTHORITY
3331 NORTH FIRST STREET, BLDG B
SAN JOSE, CA 95134

NOTE: THERE IS NO TREE REMOVAL WORK PERFORMED ON THIS SHEET (FOR INFORMATION ONLY)

CONSTRUCTION DETAILS
TREE REMOVAL PLAN
SCALE: 1" = 50'

C-47

THIS PLAN ACCURATE FOR TREE REMOVAL WORK ONLY.

STATE OF CALIFORNIA - DEPARTMENT OF TRANSPORTATION
Caltrans

CONSULTANT FUNCTIONAL SUPERVISOR: RICHARD TANAKA
CALCULATED-DESIGNED BY: AMABELLE PAQUIA
CHECKED BY: MARILOU AYUPAN
REVISED BY
DATE REVISED

LAST REVISION 03-31-11
DATE PLOTTED => 08-JUL-2011
TIME PLOTTED => 12:50

Dist	COUNTY	ROUTE	POST MILES TOTAL PROJECT	SHEET No.	TOTAL SHEETS
04	SCI	880	4.1/8.7	100	710

REGISTERED CIVIL ENGINEER 03/31/11 DATE

7-11-11
PLANS APPROVAL DATE

REGISTERED PROFESSIONAL ENGINEER RICHARD K. TANAKA No. 23233 Exp. 12/31/11 CIVIL STATE OF CALIFORNIA

THE STATE OF CALIFORNIA OR ITS OFFICERS OR AGENTS SHALL NOT BE RESPONSIBLE FOR THE ACCURACY OR COMPLETENESS OF SCANNED COPIES OF THIS PLAN SHEET.

MARK THOMAS & COMPANY, INC.
1960 ZANKER ROAD
SAN JOSE, CA 95112

SANTA CLARA VALLEY
TRANSPORTATION AUTHORITY
3331 NORTH FIRST STREET, BLDG B
SAN JOSE, CA 95134

FOR ACCURATE RIGHT OF WAY DATA, CONTACT
RIGHT OF WAY RECORD MAPS AT DISTRICT OFFICE.

NOTE:
FOR ADDITIONAL TREE REMOVAL, SEE ROADSIDE CLEARING PLANS.

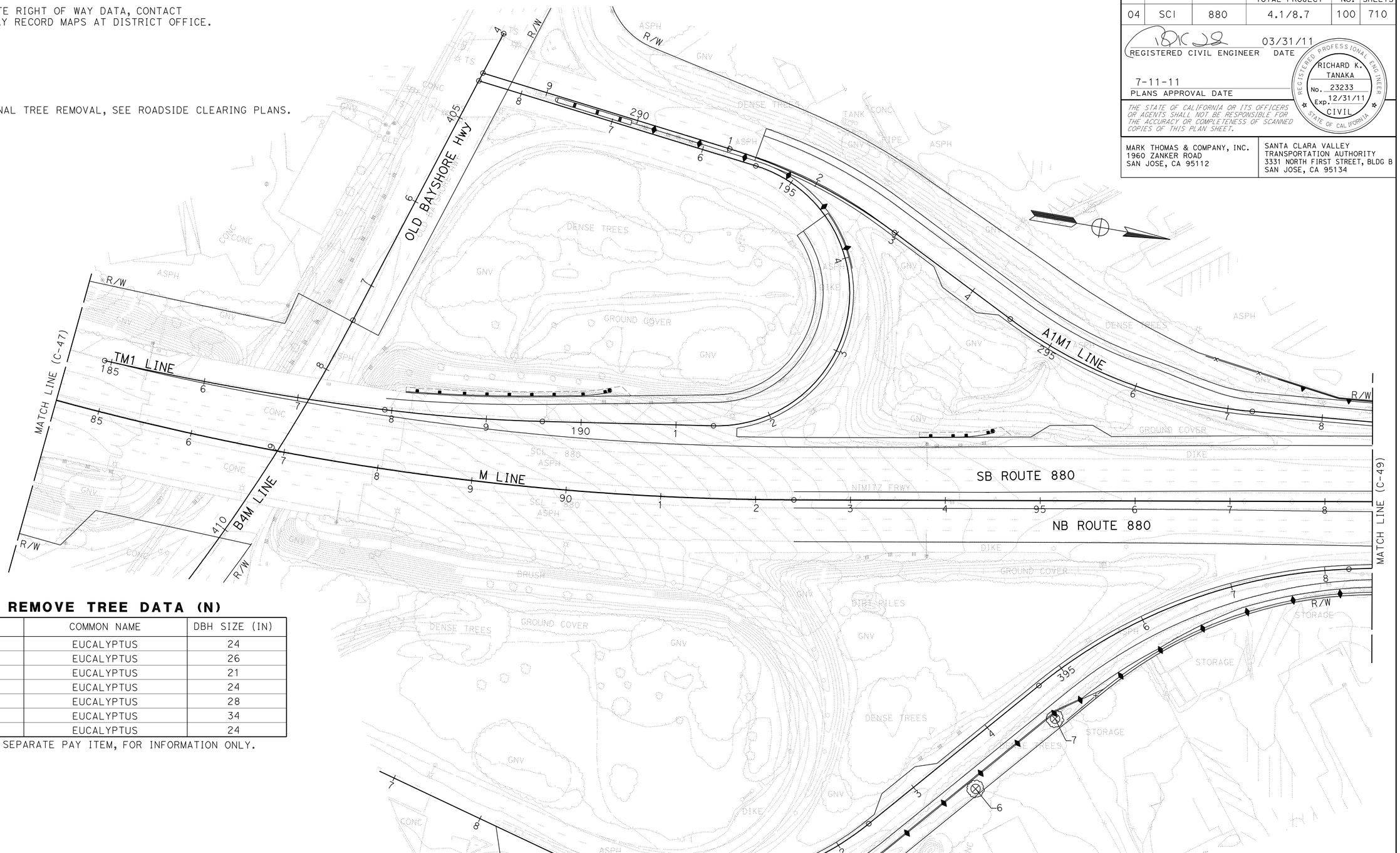

REMOVE TREE DATA (N)

No.	COMMON NAME	DBH SIZE (IN)
1	EUCALYPTUS	24
2	EUCALYPTUS	26
3	EUCALYPTUS	21
4	EUCALYPTUS	24
5	EUCALYPTUS	28
6	EUCALYPTUS	34
7	EUCALYPTUS	24

(N) - NOT A SEPARATE PAY ITEM, FOR INFORMATION ONLY.

FOR ABBREVIATIONS AND
LEGEND, SEE SHEET C-47

THIS PLAN ACCURATE FOR TREE REMOVAL WORK ONLY.

CONSTRUCTION DETAILS
TREE REMOVAL PLAN
SCALE: 1" = 50'

C-48

STATE OF CALIFORNIA - DEPARTMENT OF TRANSPORTATION
Caltrans

CONSULTANT FUNCTIONAL SUPERVISOR: RICHARD TANAKA
CALCULATED-DESIGNED BY: AMABELLE PAQUIA
CHECKED BY: MARILOU AYUPAN
REVISED BY
DATE REVISED

LAST REVISION 03-31-11
DATE PLOTTED => 08-JUL-2011
TIME PLOTTED => 12:50