DIST	COUNTY	ROUTE	POST MILES TOTAL PROJECT	SHEET No	TOTAL SHEETS
04	Ala	84	22.9/22.7	801	814

REGISTERED CIVIL ENGINEER — DATE 01/16/15

2-23-15
PLANS APPROVAL DATE

The State of California or its officers or agents shall not be responsible for the accuracy or completeness of scanned copies of this plan sheet.

REGISTERED PROFESSIONAL ENGINEER — WESLEY SENNETT — No. C 82031 — Exp. 03/31/16 — CIVIL — STATE OF CALIFORNIA

ALAMEDA COUNTY TRANSPORTATION COMMISSION
1111 BROADWAY, SUITE 800
OAKLAND, CA 94607

MGE ENGINEERING, INC.
7415 GREENHAVEN DRIVE, SUITE 100
SACRAMENTO, CALIFORNIA 95831

SOIL NAIL WALL PROFILE

Station	Top of Wall Elevation	Bottom of Wall Elevation	FG Elevation	Dimension "A" (ft)
249+80	555.86	525.60	527.60	2.83
250+00	555.66	524.92	526.92	2.87
250+20	555.16	524.20	526.20	2.90
250+40	554.61	523.50	525.50	2.91
250+60	554.00	522.83	524.83	2.92
250+80	553.45	522.19	524.19	2.93

LEGEND

- ○ Indicates soil nail location with typical angle of inclination of 15 degrees
- Indicates soil nail location with angle of inclination of 18 degrees
- Indicates soil nail location with angle of inclination of 20 degrees
- ▭ Indicates proof test soil nail location; Location may be adjusted by the Engineer
- LE# Indicates soil nail profile line

Notes:

1. Vertical spacing between soil nail assemblies is 5'-6" Max.
2. Horizontal spacing between soil nail assemblies is 5'-0" Max.
3. Place soil nail assembly normal to RW LOL and at 15 degrees inclination, except noted otherwise on the plans.
4. Roadway FG and Concrete Barrier Type 60D not shown for clarity.

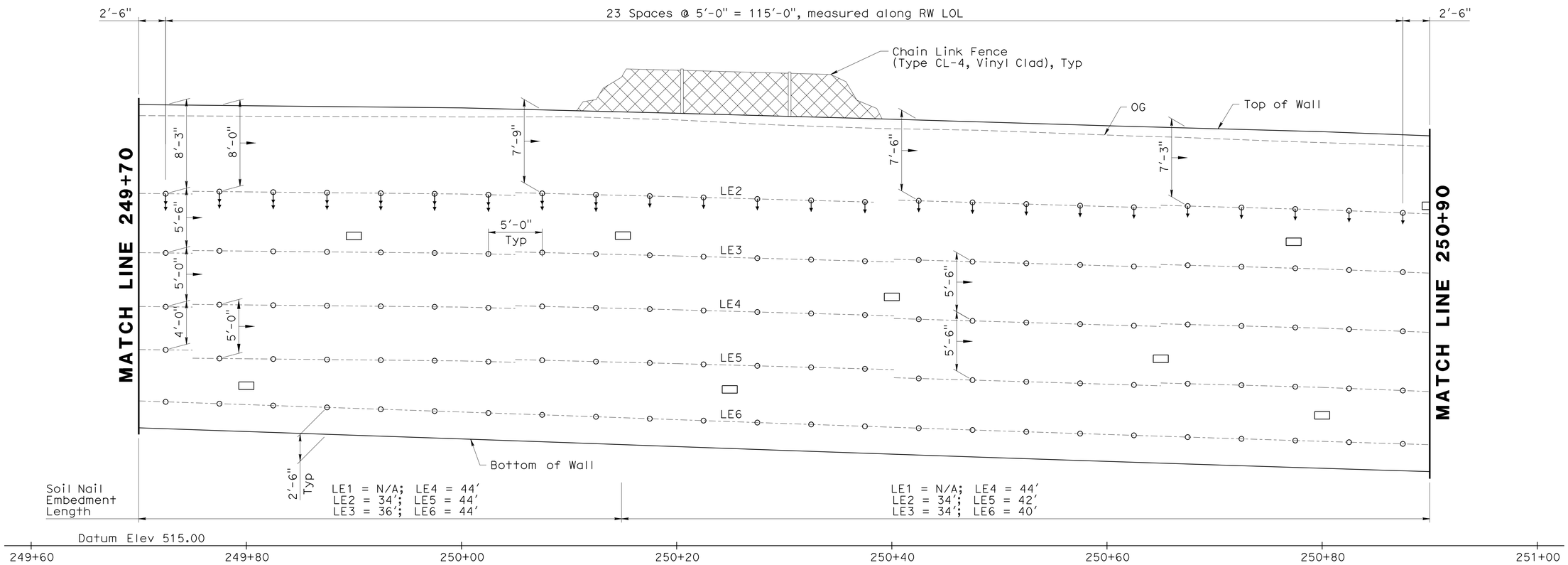

SOIL NAIL WALL DEVELOPED ELEVATION

1" = 5'-0"

DESIGN OVERSIGHT David Soon	DESIGN	BY W. Sennett	CHECKED R. Huang
2-23-15 SIGN OFF DATE	DETAILS	BY X. Sun	CHECKED R. Huang
	QUANTITIES	BY W. Sennett	CHECKED R. Huang

PREPARED FOR THE STATE OF CALIFORNIA DEPARTMENT OF TRANSPORTATION

R. Sennett
PROJECT ENGINEER

BRIDGE NO. 33E0075
POST MILES 22.9

RETAINING WALL 246
SOIL NAIL WALL DETAILS No. 4

DESIGN DETAIL SHEET (ENGLISH) (REV. 03/14/12)

ORIGINAL SCALE IN INCHES FOR REDUCED PLANS 0 1 2 3

UNIT: 0733
PROJECT NUMBER & PHASE: 04000205811 CONTRACT NO.: 04-297624

DISREGARD PRINTS BEARING EARLIER REVISION DATES → REVISION DATES 02/08/09 10/21/10 05/30/14 01/16/15

SHEET 7 OF 20

FILE => 33e0075-g-rwdt04.dgn

USERNAME => s141070 DATE PLOTTED => 25-MAR-2015 TIME PLOTTED => 08:52

DIST	COUNTY	ROUTE	POST MILES TOTAL PROJECT	SHEET No	TOTAL SHEETS
04	Ala	84	22.9/22.7	802	814

W Sennett 01/16/15
REGISTERED CIVIL ENGINEER DATE

2-23-15
PLANS APPROVAL DATE

The State of California or its officers or agents shall not be responsible for the accuracy or completeness of scanned copies of this plan sheet.

REGISTERED PROFESSIONAL ENGINEER
WESLEY SENNETT
No. C 82031
Exp. 03/31/16
CIVIL
STATE OF CALIFORNIA

ALAMEDA COUNTY TRANSPORTATION COMMISSION
1111 BROADWAY, SUITE 800
OAKLAND, CA 94607

MGE ENGINEERING, INC.
7415 GREENHAVEN DRIVE, SUITE 100
SACRAMENTO, CALIFORNIA 95831

SOIL NAIL WALL PROFILE

Station	Top of Wall Elevation	Bottom of Wall Elevation	FG Elevation	Dimension "A" (ft)
251+00	552.68	521.58	523.58	2.91
251+20	552.32	521.14	523.14	2.92
251+40	552.17	520.88	522.88	2.93
251+60	552.28	520.65	522.65	2.96
251+80	552.42	520.46	522.46	3.00
252+00	552.59	520.29	522.29	3.03

LEGEND

- ○ Indicates soil nail location with typical angle of inclination of 15 degrees
- Indicates soil nail location with angle of inclination of 18 degrees
- Indicates soil nail location with angle of inclination of 20 degrees
- ▭ Indicates proof test soil nail location; Location may be adjusted by the Engineer
- LE# Indicates soil nail profile line

Notes:

1. Vertical spacing between soil nail assemblies is 5'-6" Max.
2. Horizontal spacing between soil nail assemblies is 5'-0" Max.
3. Place soil nail assembly normal to RW LOL and at 15 degrees inclination, except noted otherwise on the plans.
4. Roadway FG and Concrete Barrier Type 60D not shown for clarity.

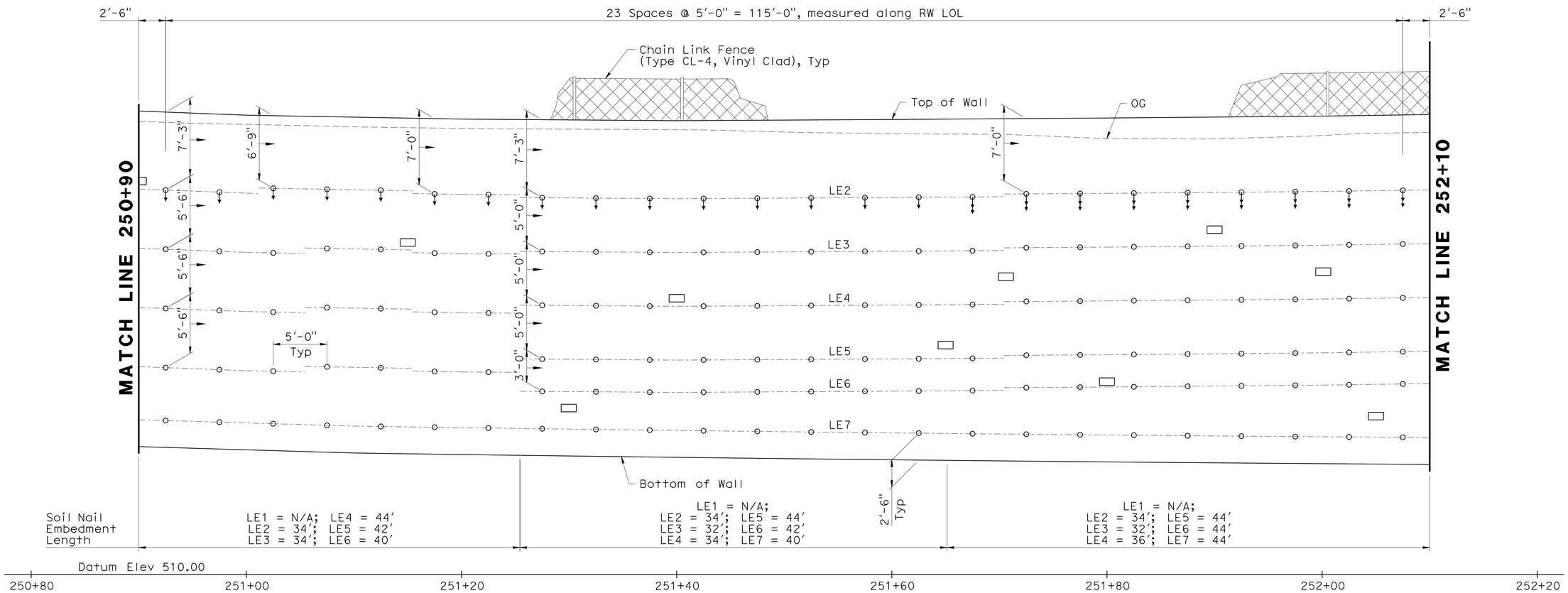

SOIL NAIL WALL DEVELOPED ELEVATION

1" = 5'-0"

David Soon
DESIGN OVERSIGHT David Soon
2-23-15
SIGN OFF DATE

	BY	CHECKED
DESIGN	W. Sennett	R. Huang
DETAILS	X. Sun	R. Huang
QUANTITIES	W. Sennett	R. Huang

PREPARED FOR THE STATE OF CALIFORNIA DEPARTMENT OF TRANSPORTATION

R. Sennett
PROJECT ENGINEER

BRIDGE NO. 33E0075
POST MILES 22.9

RETAINING WALL 246
SOIL NAIL WALL DETAILS No. 5

DESIGN DETAIL SHEET (ENGLISH) (REV. 03/14/12)

ORIGINAL SCALE IN INCHES FOR REDUCED PLANS 0 1 2 3

UNIT: 0733
PROJECT NUMBER & PHASE: 04000205811 CONTRACT NO.: 04-297624

DISREGARD PRINTS BEARING EARLIER REVISION DATES

REVISION DATES 02/08/09 10/27/10 05/30/14 01/16/15

SHEET 8 OF 20

FILE => 33e0075-g-rwdt05.dgn

USERNAME => s141070 DATE PLOTTED => 25-MAR-2015 TIME PLOTTED => 08:52

DIST	COUNTY	ROUTE	POST MILES TOTAL PROJECT	SHEET No	TOTAL SHEETS
04	Ala	84	22.9/22.7	803	814

W Sennett 01/16/15
REGISTERED CIVIL ENGINEER DATE

2-23-15
PLANS APPROVAL DATE

REGISTERED PROFESSIONAL ENGINEER
WESLEY SENNETT
No. C 82031
Exp. 03/31/16
CIVIL
STATE OF CALIFORNIA

The State of California or its officers or agents shall not be responsible for the accuracy or completeness of scanned copies of this plan sheet.

ALAMEDA COUNTY TRANSPORTATION COMMISSION
1111 BROADWAY, SUITE 800
OAKLAND, CA 94607

MGE ENGINEERING, INC.
7415 GREENHAVEN DRIVE, SUITE 100
SACRAMENTO, CALIFORNIA 95831

SOIL NAIL WALL PROFILE

Station	Top of Wall Elevation	Bottom of Wall Elevation	FG Elevation	Dimension "A" (ft)
252+20	552.89	520.15	522.15	3.07
252+40	553.09	520.00	521.99	3.11
252+60	553.13	519.83	521.83	3.13
252+80	553.18	519.67	521.67	3.15
253+00	553.15	519.51	521.51	3.16
253+20	553.13	519.35	521.35	3.18

LEGEND

- ○ Indicates soil nail location with typical angle of inclination of 15 degrees
- Indicates soil nail location with angle of inclination of 18 degrees
- ▭ Indicates proof test soil nail location; Location may be adjusted by the Engineer
- LE# Indicates soil nail profile line

Notes:

1. Vertical spacing between soil nail assemblies is 5'-6" Max.
2. Horizontal spacing between soil nail assemblies is 5'-0" Max.
3. Place soil nail assembly normal to RW LOL and at 15 degrees inclination, except noted otherwise on the plans.
4. Roadway FG and Concrete Barrier Type 60D not shown for clarity.

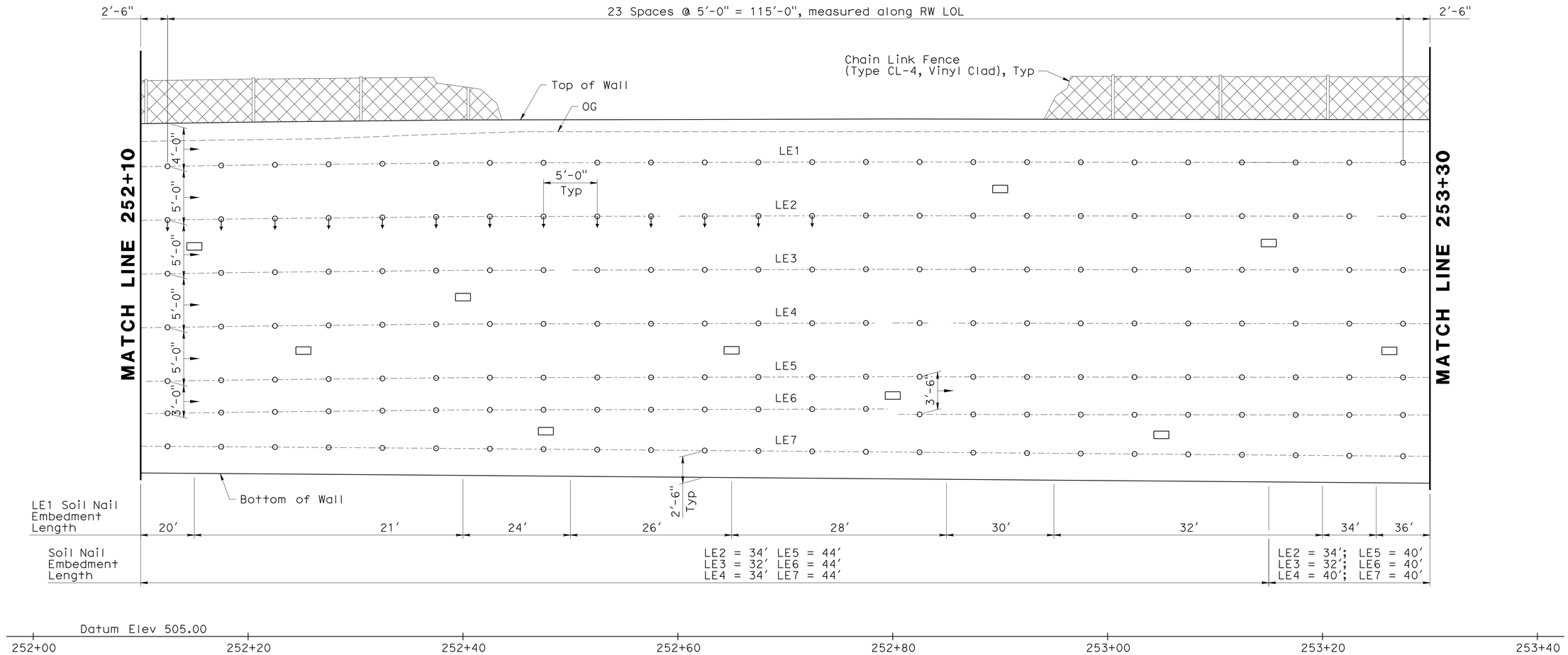

SOIL NAIL WALL DEVELOPED ELEVATION

1" = 5'-0"

David Soon
DESIGN OVERSIGHT David Soon
2-23-15
SIGN OFF DATE

	BY	CHECKED
DESIGN	W. Sennett	R. Huang
DETAILS	X. Sun	R. Huang
QUANTITIES	W. Sennett	R. Huang

PREPARED FOR THE STATE OF CALIFORNIA DEPARTMENT OF TRANSPORTATION

R. Sennett
PROJECT ENGINEER

BRIDGE NO. 33E0075
POST MILES 22.9

RETAINING WALL 246
SOIL NAIL WALL DETAILS No. 6

DESIGN DETAIL SHEET (ENGLISH) (REV. 03/14/12)

ORIGINAL SCALE IN INCHES FOR REDUCED PLANS 0 1 2 3

UNIT: 0733
PROJECT NUMBER & PHASE: 04000205811 CONTRACT NO.: 04-297624

DISREGARD PRINTS BEARING EARLIER REVISION DATES

REVISION DATES 02/05/09 10/21/10 05/30/14 01/16/15

SHEET 9 OF 20

FILE => 33e0075-g-rwdt06.dgn

USERNAME => s141070 DATE PLOTTED => 25-MAR-2015 TIME PLOTTED => 08:52

DIST	COUNTY	ROUTE	POST MILES TOTAL PROJECT	SHEET No	TOTAL SHEETS
04	Ala	84	22.9/22.7	804	814

REGISTERED CIVIL ENGINEER 01/16/15 DATE

2-23-15
PLANS APPROVAL DATE

REGISTERED PROFESSIONAL ENGINEER WESLEY SENNETT No. C 82031 Exp. 03/31/16 CIVIL STATE OF CALIFORNIA

The State of California or its officers or agents shall not be responsible for the accuracy or completeness of scanned copies of this plan sheet.

ALAMEDA COUNTY TRANSPORTATION COMMISSION
1111 BROADWAY, SUITE 800
OAKLAND, CA 94607

MGE ENGINEERING, INC.
7415 GREENHAVEN DRIVE, SUITE 100
SACRAMENTO, CALIFORNIA 95831

SOIL NAIL WALL PROFILE

Station	Top of Wall Elevation	Bottom of Wall Elevation	FG Elevation	Dimension "A" (ft)
253+40	553.11	519.19	521.19	3.19
253+60	552.33	519.07	521.07	3.13
253+80	551.69	518.85	520.85	3.08
254+00	551.07	518.79	520.79	3.03
254+20	550.53	518.77	520.77	2.98
254+40	549.93	518.79	520.83	2.91

LEGEND

o Indicates soil nail location with typical angle of inclination of 15 degrees

▭ Indicates proof test soil nail location; Location may be adjusted by the Engineer

LE# Indicates soil nail profile line

Notes:

1. Vertical spacing between soil nail assemblies is 5'-6" Max.
2. Horizontal spacing between soil nail assemblies is 5'-0" Max.
3. Place soil nail assembly normal to RW LOL and at 15 degrees inclination, except noted otherwise on the plans.
4. Roadway FG and Concrete Barrier Type 60D not shown for clarity.

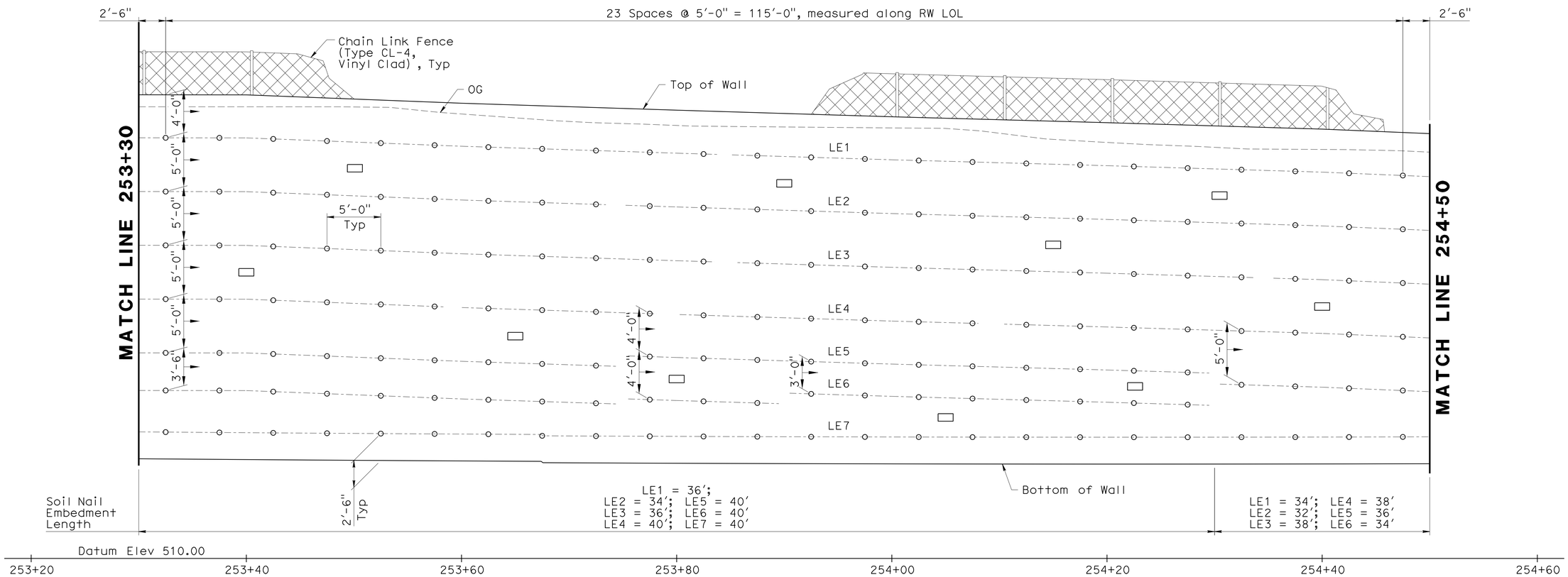

SOIL NAIL WALL DEVELOPED ELEVATION

1" = 5'-0"

David Soon
DESIGN OVERSIGHT David Soon
2-23-15
SIGN OFF DATE

	BY	CHECKED
DESIGN	W. Sennett	R. Huang
DETAILS	X. Sun	R. Huang
QUANTITIES	W. Sennett	R. Huang

PREPARED FOR THE STATE OF CALIFORNIA DEPARTMENT OF TRANSPORTATION

R. Sennett
PROJECT ENGINEER

BRIDGE NO. 33E0075
POST MILES 22.9

RETAINING WALL 246
SOIL NAIL WALL DETAILS No. 7

DESIGN DETAIL SHEET (ENGLISH) (REV. 03/14/12)

ORIGINAL SCALE IN INCHES FOR REDUCED PLANS 0 1 2 3

UNIT: 0733
PROJECT NUMBER & PHASE: 04000205811 CONTRACT NO.: 04-297624

DISREGARD PRINTS BEARING EARLIER REVISION DATES

REVISION DATES 02/08/09 10/29/10 05/30/14 01/16/15

SHEET 10 OF 20

FILE => 33e0075-g-rwdt07.dgn

USERNAME => s141070 DATE PLOTTED => 25-MAR-2015 TIME PLOTTED => 08:52

DIST	COUNTY	ROUTE	POST MILES TOTAL PROJECT	SHEET No	TOTAL SHEETS
04	Ala	84	22.9/22.7	805	814

REGISTERED CIVIL ENGINEER 01/16/15 DATE

2-23-15
PLANS APPROVAL DATE

The State of California or its officers or agents shall not be responsible for the accuracy or completeness of scanned copies of this plan sheet.

REGISTERED PROFESSIONAL ENGINEER
WESLEY SENNETT
No. C 82031
Exp. 03/31/16
CIVIL
STATE OF CALIFORNIA

ALAMEDA COUNTY TRANSPORTATION COMMISSION
1111 BROADWAY, SUITE 800
OAKLAND, CA 94607

MGE ENGINEERING, INC.
7415 GREENHAVEN DRIVE, SUITE 100
SACRAMENTO, CALIFORNIA 95831

SOIL NAIL WALL PROFILE

Station	Top of Wall Elevation	Bottom of Wall Elevation	FG Elevation	Dimension "A" (ft)
254+60	549.09	518.84	520.83	2.83
254+80	548.44	518.92	520.92	2.75
255+00	547.93	519.04	521.04	2.69
255+20	547.35	519.19	521.19	2.62
255+40	546.57	519.34	521.34	2.52
255+60	545.63	519.47	521.47	2.42

LEGEND

- o Indicates soil nail location with typical angle of inclination of 15 degrees
- ▭ Indicates proof test soil nail location; Location may be adjusted by the Engineer
- LE# Indicates soil nail profile line

Notes:

1. Vertical spacing between soil nail assemblies is 5'-6" Max.
2. Horizontal spacing between soil nail assemblies is 5'-0" Max.
3. Place soil nail assembly normal to RW LOL and at 15 degrees inclination, except noted otherwise on the plans.
4. Roadway FG and Concrete Barrier Type 60D not shown for clarity.

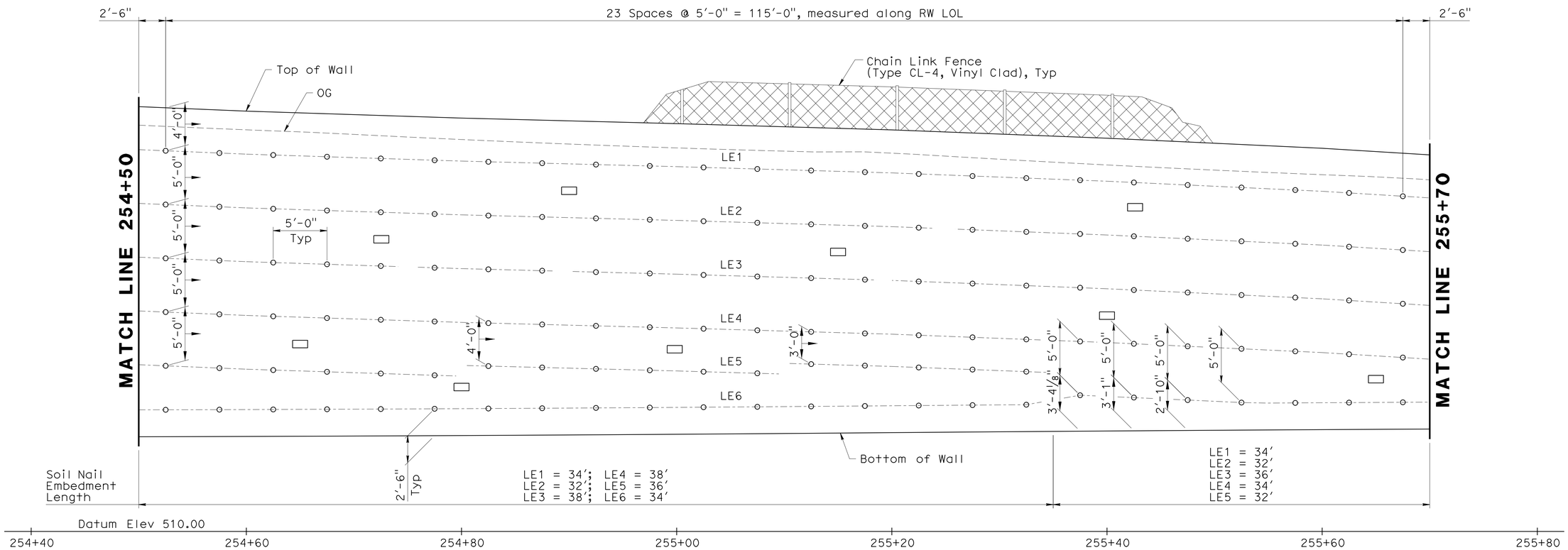

SOIL NAIL WALL DEVELOPED ELEVATION

1" = 5'-0"

DESIGN OVERSIGHT David Soon 2-23-15 SIGN OFF DATE	DESIGN	BY W. Sennett	CHECKED R. Huang	PREPARED FOR THE STATE OF CALIFORNIA DEPARTMENT OF TRANSPORTATION	R. Sennett PROJECT ENGINEER
	DETAILS	BY X. Sun	CHECKED R. Huang		
	QUANTITIES	BY W. Sennett	CHECKED R. Huang		

BRIDGE NO. 33E0075
POST MILES 22.9

RETAINING WALL 246
SOIL NAIL WALL DETAILS No. 8

DESIGN DETAIL SHEET (ENGLISH) (REV. 03/14/12)

ORIGINAL SCALE IN INCHES FOR REDUCED PLANS 0 1 2 3

UNIT: 0733
PROJECT NUMBER & PHASE: 04000205811 CONTRACT NO.: 04-297624

DISREGARD PRINTS BEARING EARLIER REVISION DATES

REVISION DATES 02/08/09 10/27/10 05/30/14 01/16/15

SHEET 11 OF 20

FILE => 33e0075-g-rwdt08.dgn

USERNAME => s141070 DATE PLOTTED => 25-MAR-2015 TIME PLOTTED => 08:52

DIST	COUNTY	ROUTE	POST MILES TOTAL PROJECT	SHEET No	TOTAL SHEETS
04	Ala	84	22.9/22.7	806	814

REGISTERED CIVIL ENGINEER 01/16/15 DATE

2-23-15
PLANS APPROVAL DATE

The State of California or its officers or agents shall not be responsible for the accuracy or completeness of scanned copies of this plan sheet.

REGISTERED PROFESSIONAL ENGINEER
WESLEY SENNETT
No. C 82031
Exp. 03/31/16
CIVIL
STATE OF CALIFORNIA

ALAMEDA COUNTY TRANSPORTATION COMMISSION
1111 BROADWAY, SUITE 800
OAKLAND, CA 94607

MGE ENGINEERING, INC.
7415 GREENHAVEN DRIVE, SUITE 100
SACRAMENTO, CALIFORNIA 95831

SOIL NAIL WALL PROFILE

Station	Top of Wall Elevation	Bottom of Wall Elevation	FG Elevation	Dimension "A" (ft)
255+80	544.41	519.57	521.57	2.28
256+00	542.92	519.65	521.65	2.13
256+20	541.15	519.71	521.71	1.94
256+40	539.15	519.74	521.74	1.74
256+60	536.93	519.75	521.75	1.52
256+80	535.25	519.74	521.74	1.35

LEGEND

o Indicates soil nail location with typical angle of inclination of 15 degrees

▭ Indicates proof test soil nail location; Location may be adjusted by the Engineer

LE# Indicates soil nail profile line

Notes:

1. Vertical spacing between soil nail assemblies is 5'-6" Max.
2. Horizontal spacing between soil nail assemblies is 5'-0" Max.
3. Place soil nail assembly normal to RW LOL and at 15 degrees inclination, except noted otherwise on the plans.
4. Roadway FG and Concrete Barrier Type 60D not shown for clarity.

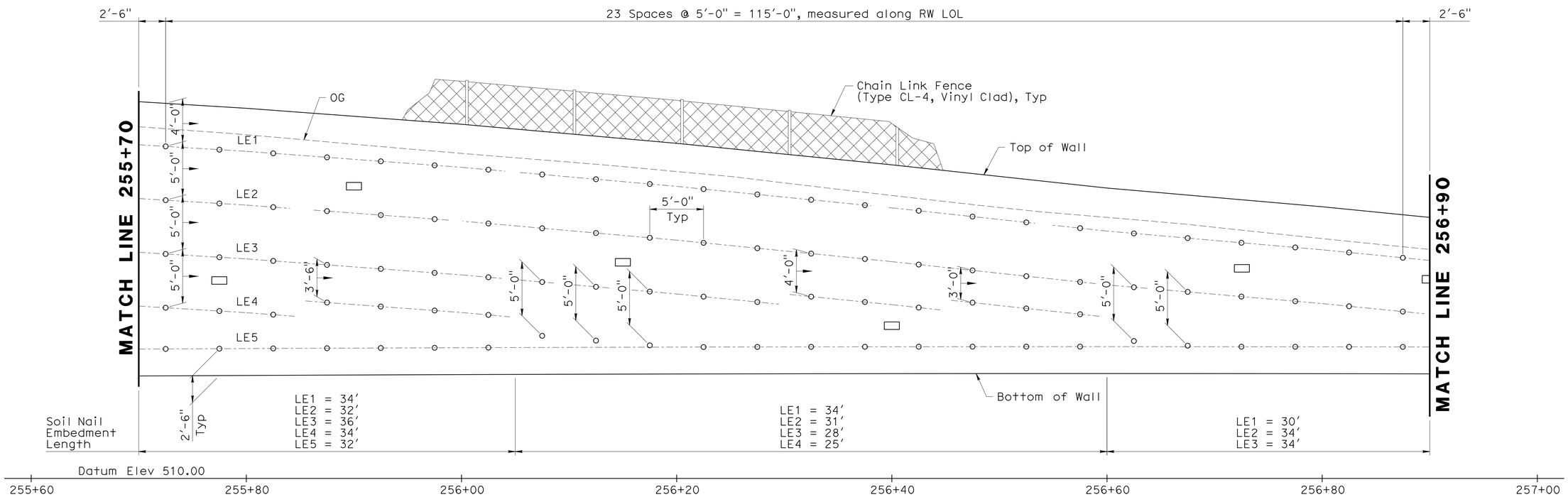

SOIL NAIL WALL DEVELOPED ELEVATION

1" = 5'-0"

DESIGN OVERSIGHT David Soon	DESIGN	BY W. Sennett	CHECKED R. Huang
2-23-15 SIGN OFF DATE	DETAILS	BY X. Sun	CHECKED R. Huang
	QUANTITIES	BY W. Sennett	CHECKED R. Huang

PREPARED FOR THE STATE OF CALIFORNIA DEPARTMENT OF TRANSPORTATION

R. Sennett
PROJECT ENGINEER

BRIDGE NO. 33E0075
POST MILES 22.9

RETAINING WALL 246
SOIL NAIL WALL DETAILS No. 9

DESIGN DETAIL SHEET (ENGLISH) (REV. 03/14/12)

ORIGINAL SCALE IN INCHES FOR REDUCED PLANS 0 1 2 3

UNIT: 0733
PROJECT NUMBER & PHASE: 04000205811 CONTRACT NO.: 04-297624

DISREGARD PRINTS BEARING EARLIER REVISION DATES → 02/05/09 10/27/10 05/30/14 01/16/15

SHEET 12 OF 20

FILE => 33e0075-g-rwdt09.dgn

USERNAME => s141070 DATE PLOTTED => 25-MAR-2015 TIME PLOTTED => 08:52

DIST	COUNTY	ROUTE	POST MILES TOTAL PROJECT	SHEET No	TOTAL SHEETS
04	Ala	84	22.9/22.7	807	814

W Sennett 01/16/15
REGISTERED CIVIL ENGINEER DATE

2-23-15
PLANS APPROVAL DATE

The State of California or its officers or agents shall not be responsible for the accuracy or completeness of scanned copies of this plan sheet.

REGISTERED PROFESSIONAL ENGINEER
WESLEY SENNETT
No. C 82031
Exp. 03/31/16
CIVIL
STATE OF CALIFORNIA

ALAMEDA COUNTY TRANSPORTATION COMMISSION
1111 BROADWAY, SUITE 800
OAKLAND, CA 94607

MGE ENGINEERING, INC.
7415 GREENHAVEN DRIVE, SUITE 100
SACRAMENTO, CALIFORNIA 95831

SOIL NAIL WALL PROFILE

Station	Top of Wall Elevation	Bottom of Wall Elevation	FG Elevation	Dimension "A" (ft)
257+00	533.27	519.72	521.72	1.16
257+20	531.76	520.03	522.03	0.97
257+40	530.66	520.33	522.33	0.83
257+60	529.60	520.60	522.60	0.70
257+80	528.75	520.85	522.85	0.59

LEGEND

- o Indicates soil nail location with typical angle of inclination of 15 degrees
- ▭ Indicates proof test soil nail location; Location may be adjusted by the Engineer
- LE# Indicates soil nail profile line

Notes:

1. Vertical spacing between soil nail assemblies is 5'-6" Max.
2. Horizontal spacing between soil nail assemblies is 5'-0" Max.
3. Place soil nail assembly normal to RW LOL and at 15 degrees inclination, except noted otherwise on the plans.
4. Roadway FG and Concrete Barrier Type 60D not shown for clarity.

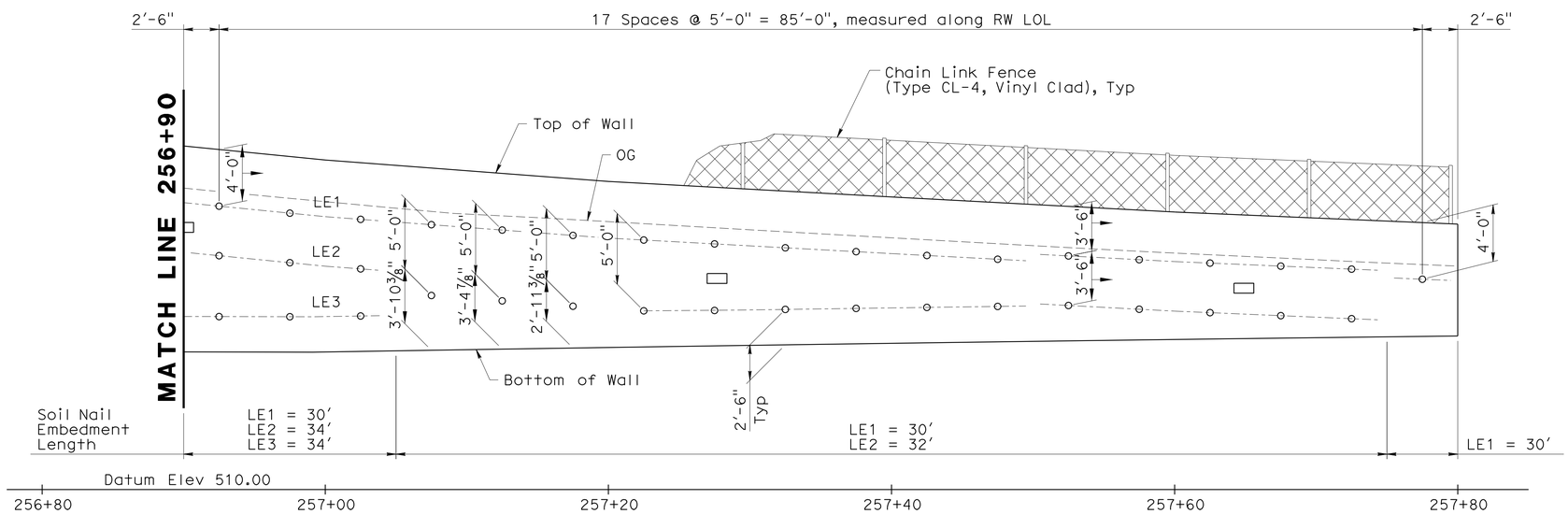

SOIL NAIL WALL DEVELOPED ELEVATION

1" = 5'-0"

DESIGN	BY W. Sennett	CHECKED R. Huang	
DETAILS	BY X. Sun	CHECKED R. Huang	
QUANTITIES	BY W. Sennett	CHECKED R. Huang	

David Soon
DESIGN OVERSIGHT David Soon
2-23-15
SIGN OFF DATE

PREPARED FOR THE STATE OF CALIFORNIA DEPARTMENT OF TRANSPORTATION

R. Sennett
PROJECT ENGINEER

BRIDGE NO. 33E0075
POST MILES 22.9

RETAINING WALL 246
SOIL NAIL WALL DETAILS No. 10

DESIGN DETAIL SHEET (ENGLISH) (REV. 03/14/12)

ORIGINAL SCALE IN INCHES FOR REDUCED PLANS 0 1 2 3

UNIT: 0733
PROJECT NUMBER & PHASE: 04000205811 CONTRACT NO.: 04-297624

DISREGARD PRINTS BEARING EARLIER REVISION DATES

REVISION DATES 02/08/09 10/27/10 05/30/14 01/16/15

SHEET 13 OF 20

FILE => 33e0075-g-rwdt10.dgn

USERNAME => s141070 DATE PLOTTED => 25-MAR-2015 TIME PLOTTED => 08:52

DIST	COUNTY	ROUTE	POST MILES TOTAL PROJECT	SHEET No	TOTAL SHEETS
04	Ala	84	22.9/22.7	808	814

REGISTERED CIVIL ENGINEER 01/16/15 DATE

2-23-15
PLANS APPROVAL DATE

REGISTERED PROFESSIONAL ENGINEER WESLEY SENNETT No. C 82031 Exp. 03/31/16 CIVIL STATE OF CALIFORNIA

The State of California or its officers or agents shall not be responsible for the accuracy or completeness of scanned copies of this plan sheet.

ALAMEDA COUNTY TRANSPORTATION COMMISSION
1111 BROADWAY, SUITE 800
OAKLAND, CA 94607

MGE ENGINEERING, INC.
7415 GREENHAVEN DRIVE, SUITE 100
SACRAMENTO, CALIFORNIA 95831

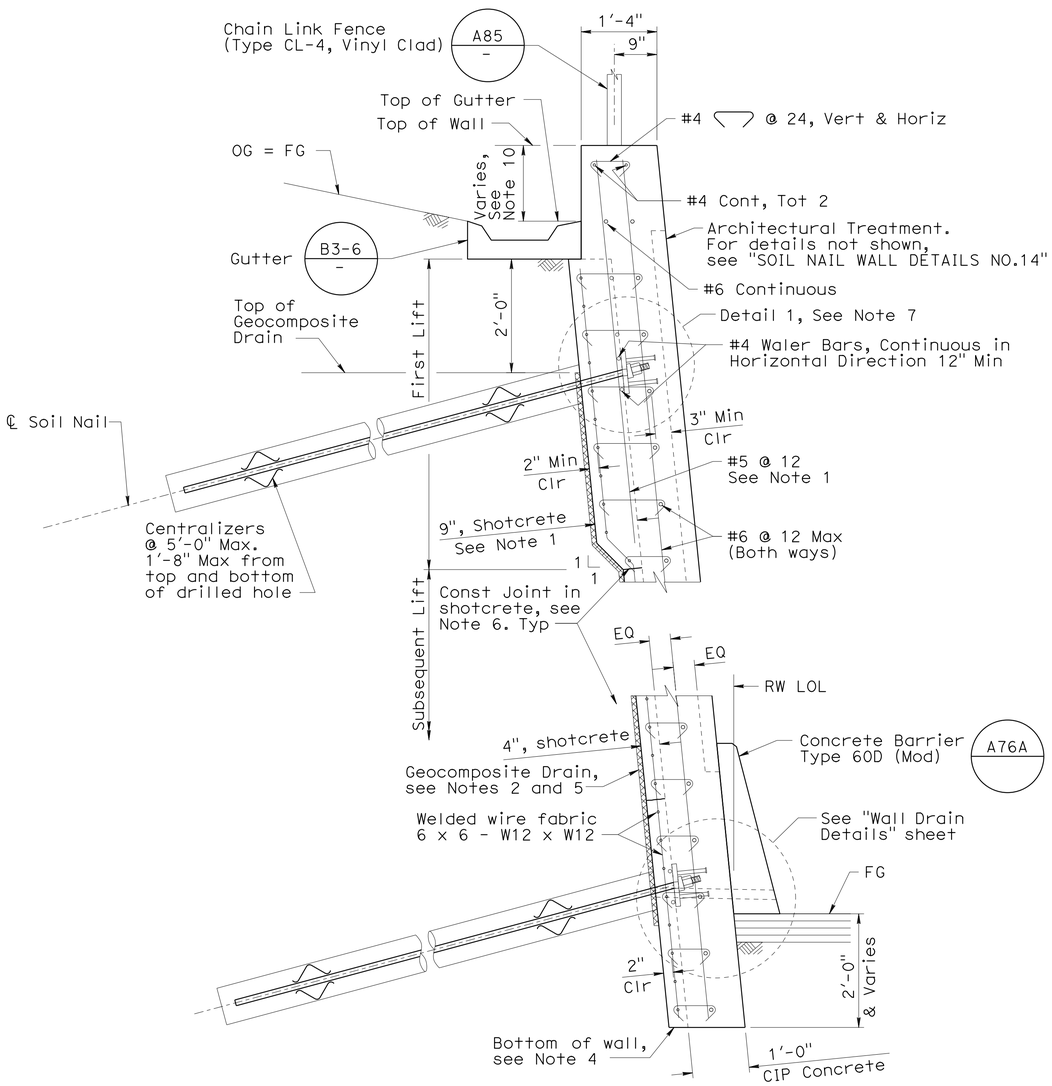

Section for Sta from 246+00 to 247+60 and from 252+10 to 257+80

TYPICAL SECTION 1

3/4" = 1'-0"

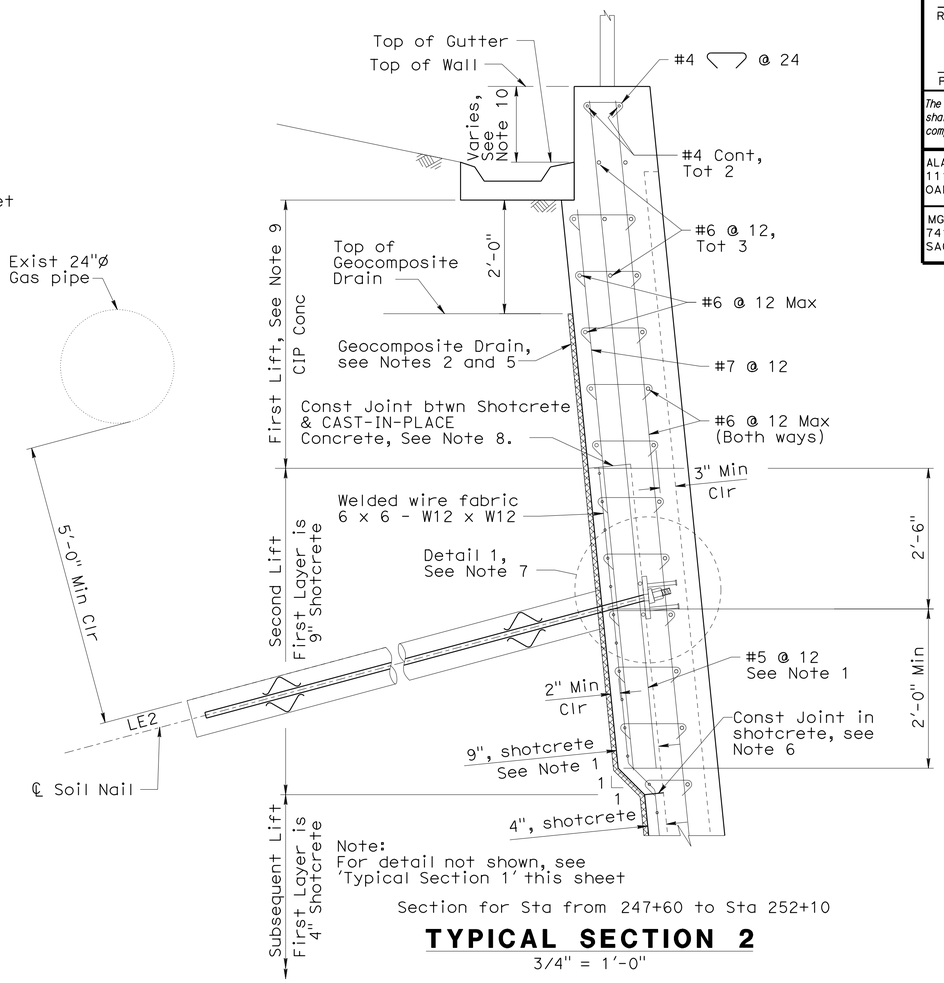

Note:
For detail not shown, see 'Typical Section 1' this sheet

Section for Sta from 247+60 to Sta 252+10

TYPICAL SECTION 2

3/4" = 1'-0"

Gutter Profile	
Station	Top of Gutter Elevation
248+00.00	558.667
248+20.00	558.419
248+40.00	557.583
248+80.00	556.667
249+00.07	556.107
249+40.25	555.316
249+60.35	554.736
250+00.62	554.323
250+34.11	553.449
250+81.37	552.077
251+00.22	551.35
251+19.03	551.006
251+40.43	550.8492
253+84.28	550.223
254+40.06	548.587
254+61.15	547.718
254+79.90	547.113
255+08.02	546.36
255+24.43	545.8405
255+47.86	544.869
255+59.58	544.321
255+83.02	542.85
256+01.76	541.433
256+14.04	540.344
256+25.20	539.296
256+46.29	537.1395
256+58.007	535.875
256+69.72	534.8145
256+79.10	533.9905
256+83.78	533.546
257+00.25	531.922
257+19.82	530.44
257+34.50	529.631
257+61.42	528.212
257+79.98	527.414

Notes:

1. #5 reinforcement bar and 9" shotcrete thickness to extend 2'-0" below top row of soil nails.
2. The 1'-0" geocomposite drains must be placed vertically at mid bay between soil nails, and must be continuous with minimum 1'-0" lapping at splices.
3. For the CIP concrete the rebar cover must be a minimum of 3".
4. Bottom of wall to be placed against undisturbed material.
5. Adjust geocomposite drain to clear test soil nails.
6. The Vertical and horizontal construction joint in the Shotcrete Layer must be located a minimum of 1'-6" from adjacent Soil Nail rows and columns.
7. For 'Detail 1', see "Soil Nail Wall Details No. 12" sheet.
8. First lift must be constructed with CAST-IN-PLACE concrete only.
9. See "Soil Nail Wall Details No. 12" sheet for construction sequence of Typical Section 2.
10. Top of Wall to Top of Gutter is 1'-4" from Sta 246+00 to Sta 248+00. Refer to "Gutter Profile" Table for Top of Gutter Profile from Sta 248+00 to Sta 257+80.

David Soon
DESIGN OVERSIGHT David Soon
2-23-15
SIGN OFF DATE

	BY	CHECKED
DESIGN	W. Sennett	R. Huang
DETAILS	X. Sun	R. Huang
QUANTITIES	W. Sennett	R. Huang

PREPARED FOR THE STATE OF CALIFORNIA DEPARTMENT OF TRANSPORTATION

R. Sennett
PROJECT ENGINEER

BRIDGE NO. 33E0075
POST MILES 22.9

RETAINING WALL 246

SOIL NAIL WALL DETAILS No. 11

DESIGN DETAIL SHEET (ENGLISH) (REV. 03/14/12)

ORIGINAL SCALE IN INCHES FOR REDUCED PLANS 0 1 2 3

UNIT: 0733
PROJECT NUMBER & PHASE: 04000205811 CONTRACT NO.: 04-297624

DISREGARD PRINTS BEARING EARLIER REVISION DATES

REVISION DATES 02/25/09 10/27/10 05/30/14 01/16/15

SHEET 14 OF 20

FILE => 33e0075-g-rwdt11.dgn

USERNAME => s141070 DATE PLOTTED => 25-MAR-2015 TIME PLOTTED => 08:52

DIST	COUNTY	ROUTE	POST MILES TOTAL PROJECT	SHEET No	TOTAL SHEETS
04	Ala	84	22.9/22.7	809	814

REGISTERED CIVIL ENGINEER 01/16/15 DATE

2-23-15
PLANS APPROVAL DATE

REGISTERED PROFESSIONAL ENGINEER WESLEY SENNETT No. C 82031 Exp. 03/31/16 CIVIL STATE OF CALIFORNIA

The State of California or its officers or agents shall not be responsible for the accuracy or completeness of scanned copies of this plan sheet.

ALAMEDA COUNTY TRANSPORTATION COMMISSION
1111 BROADWAY, SUITE 800
OAKLAND, CA 94607

MGE ENGINEERING, INC.
7415 GREENHAVEN DRIVE, SUITE 100
SACRAMENTO, CALIFORNIA 95831

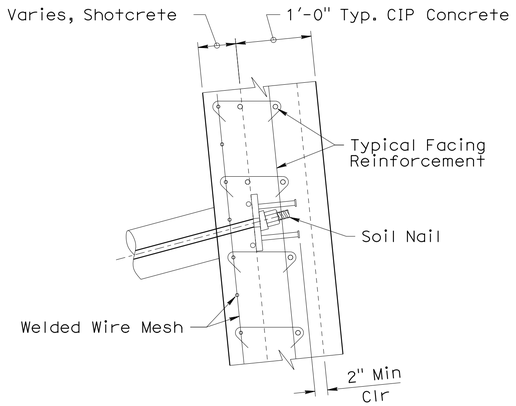

DETAIL 1
1" = 1'-0"

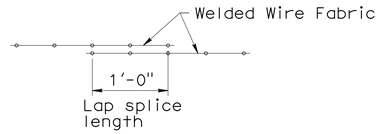

LAP SPLICE
1" = 1'-0"

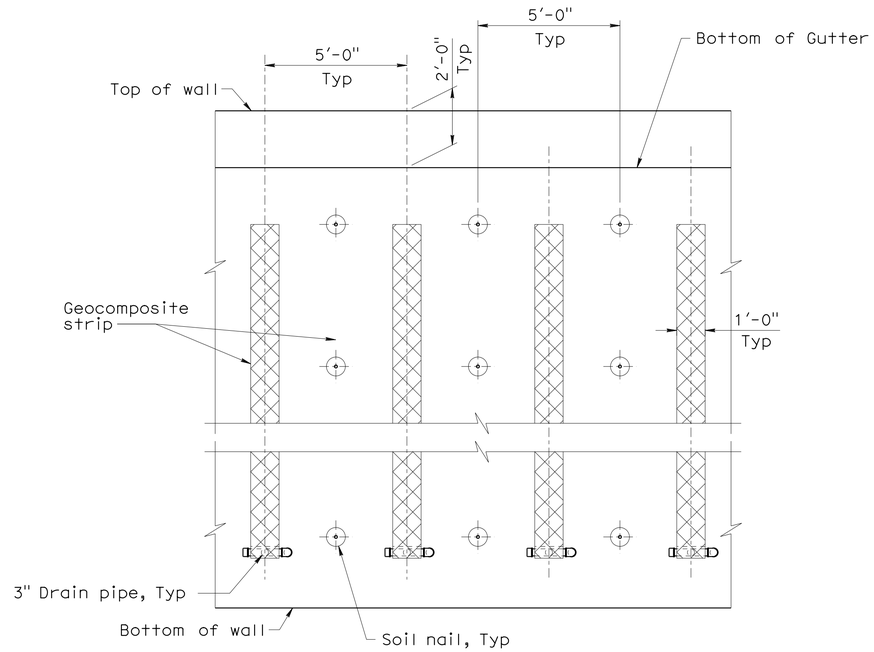

TYPICAL SOIL NAIL AND DRAINAGE ELEVATION
3/8" = 1'-0"

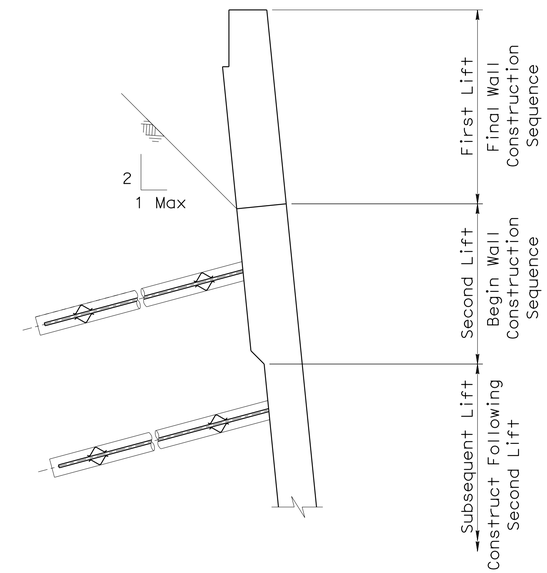

TYPICAL SECTION 2 CONSTRUCTION SEQUENCE
No Scale

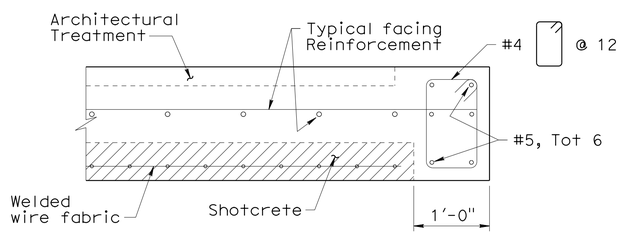

END WALL DETAIL
1" = 1'-0"

DESIGN OVERSIGHT David Soon	DESIGN	BY W. Sennett	CHECKED R. Huang
2-23-15 SIGN OFF DATE	DETAILS	BY X. Sun	CHECKED R. Huang
	QUANTITIES	BY W. Sennett	CHECKED R. Huang

PREPARED FOR THE STATE OF CALIFORNIA DEPARTMENT OF TRANSPORTATION

R. Sennett
PROJECT ENGINEER

BRIDGE NO. 33E0075
POST MILES 22.9

RETAINING WALL 246
SOIL NAIL WALL DETAILS No. 12

DESIGN DETAIL SHEET (ENGLISH) (REV. 03/14/12)

ORIGINAL SCALE IN INCHES FOR REDUCED PLANS 0 1 2 3

UNIT: 0733
PROJECT NUMBER & PHASE: 04000205811 CONTRACT NO.: 04-297624

DISREGARD PRINTS BEARING EARLIER REVISION DATES

REVISION DATES 02/05/09 10/21/10 05/30/14 01/16/15

SHEET 15 OF 20

FILE => 33e0075-g-rwdt12.dgn

USERNAME => s141070 DATE PLOTTED => 25-MAR-2015 TIME PLOTTED => 08:52

DIST	COUNTY	ROUTE	POST MILES TOTAL PROJECT	SHEET No	TOTAL SHEETS
04	Ala	84	22.9/22.7	810	814

REGISTERED CIVIL ENGINEER 01/16/15 DATE

2-23-15
PLANS APPROVAL DATE

REGISTERED PROFESSIONAL ENGINEER WESLEY SENNETT No. C 82031 Exp. 03/31/16 CIVIL STATE OF CALIFORNIA

The State of California or its officers or agents shall not be responsible for the accuracy or completeness of scanned copies of this plan sheet.

ALAMEDA COUNTY TRANSPORTATION COMMISSION
1111 BROADWAY, SUITE 800
OAKLAND, CA 94607

MGE ENGINEERING, INC.
7415 GREENHAVEN DRIVE, SUITE 100
SACRAMENTO, CALIFORNIA 95831

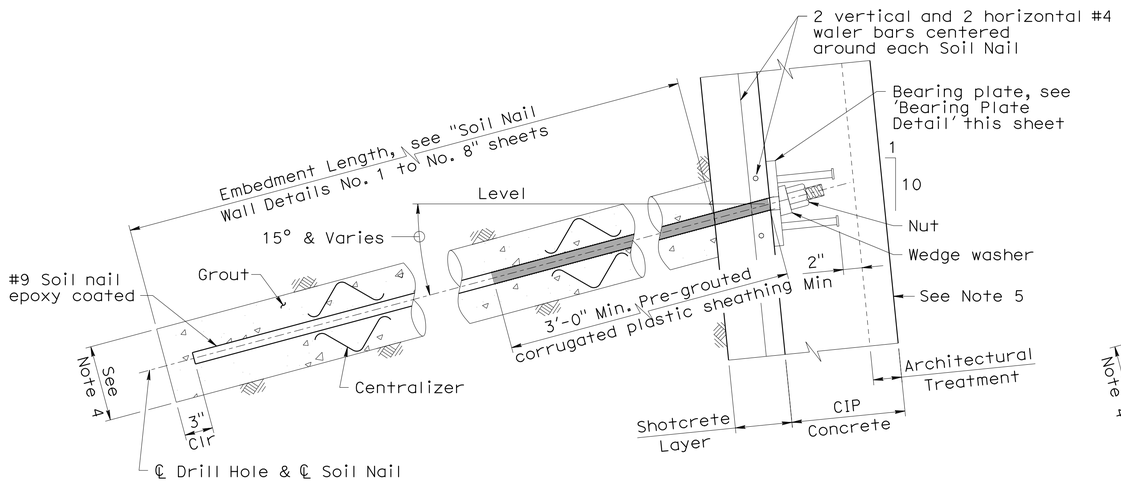

SOIL NAIL ASSEMBLY DETAIL

1 1/2" = 1'-0"

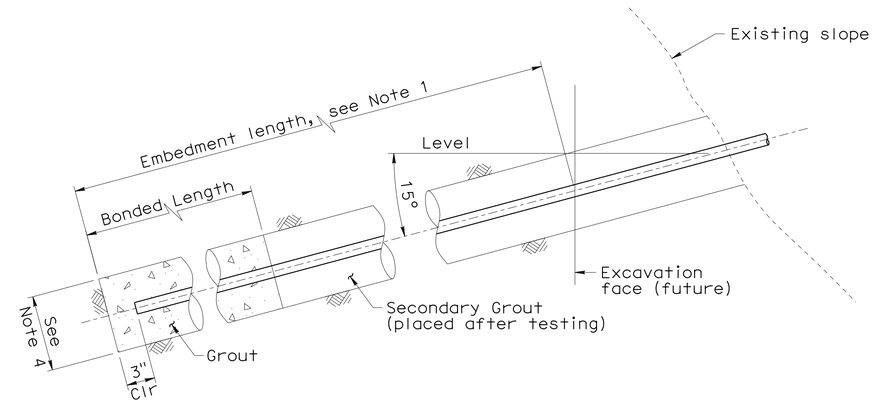

VERIFICATION TEST SOIL NAIL ASSEMBLY DETAIL

1 1/2" = 1'-0"

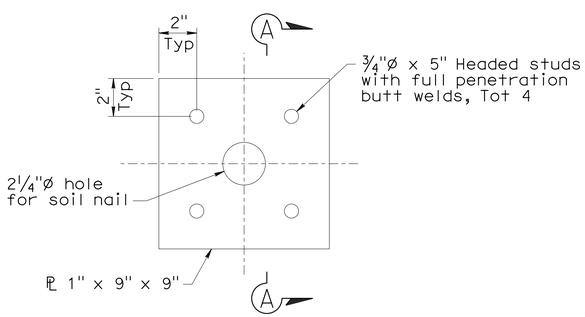

BEARING PLATE DETAIL

3" = 1'-0"

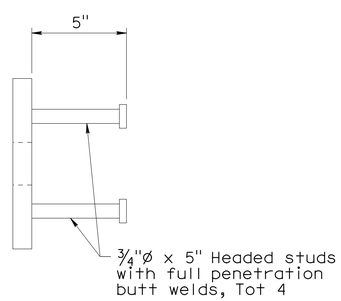

SECTION A-A

3" = 1'-0"

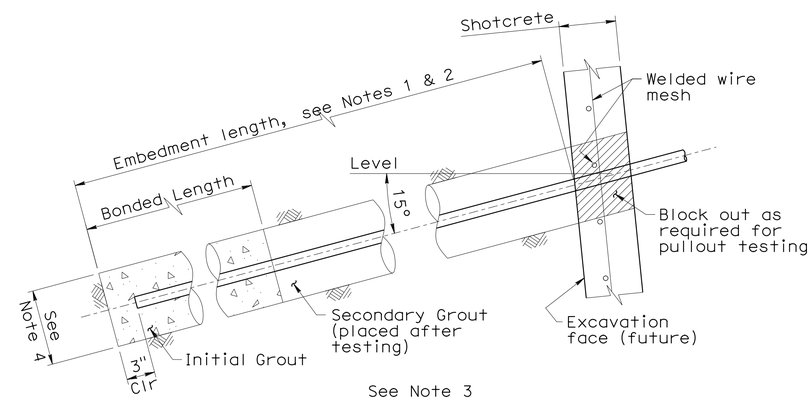

PROOF TEST SOIL NAIL ASSEMBLY DETAIL

1 1/2" = 1'-0"

Notes:

1. Embedment length, of Proof Test Nails and Verification Test Nails must be equal to 2/3 of the embedment length of adjacent soil nail assembly, but not less than 12 ft.
2. Total length of the Proof Test Soil Nail Assembly equals to the embedment length plus the length required for jacking equipment.
3. For location of Proof Test Soil Nail Assemblies, see "Soil Nail Wall Details No. 1" to "Soil Nail Wall Details No. 10" sheet. Additional Proof Test Soil Nails must be installed and tested per Special Provisions.
4. The diameter of drilled hole will be determined by contractor.
5. Not all Reinforcement shown, see "SOIL NAIL WALL DETAILS NO. 11 & 12" sheets.

DESIGN OVERSIGHT David Soon
2-23-15
SIGN OFF DATE

	BY	CHECKED
DESIGN	W. Sennett	R. Huang
DETAILS	X. Sun	R. Huang
QUANTITIES	W. Sennett	R. Huang

PREPARED FOR THE STATE OF CALIFORNIA DEPARTMENT OF TRANSPORTATION

R. Sennett
PROJECT ENGINEER

BRIDGE NO. 33E0075
POST MILES 22.9

RETAINING WALL 246
SOIL NAIL WALL DETAILS No. 13

DESIGN DETAIL SHEET (ENGLISH) (REV. 03/14/12)

ORIGINAL SCALE IN INCHES FOR REDUCED PLANS 0 1 2 3

UNIT: 0733
PROJECT NUMBER & PHASE: 04000205811 CONTRACT NO.: 04-297624

DISREGARD PRINTS BEARING EARLIER REVISION DATES → 02/05/09 10/27/10 05/30/14 01/16/15

SHEET 16 OF 20

FILE => 33e0075-g-rwdt13.dgn

USERNAME => s141070 DATE PLOTTED => 25-MAR-2015 TIME PLOTTED => 08:52

DIST	COUNTY	ROUTE	POST MILES TOTAL PROJECT	SHEET No	TOTAL SHEETS
04	Ala	84	22.9/22.7	811	814

W Sennett 01/16/15
REGISTERED CIVIL ENGINEER DATE

2-23-15
PLANS APPROVAL DATE

REGISTERED PROFESSIONAL ENGINEER
WESLEY SENNETT
No. C 82031
Exp. 03/31/16
CIVIL
STATE OF CALIFORNIA

The State of California or its officers or agents shall not be responsible for the accuracy or completeness of scanned copies of this plan sheet.

ALAMEDA COUNTY TRANSPORTATION COMMISSION
1111 BROADWAY, SUITE 800
OAKLAND, CA 94607

MGE ENGINEERING, INC.
7415 GREENHAVEN DRIVE, SUITE 100
SACRAMENTO, CALIFORNIA 95831

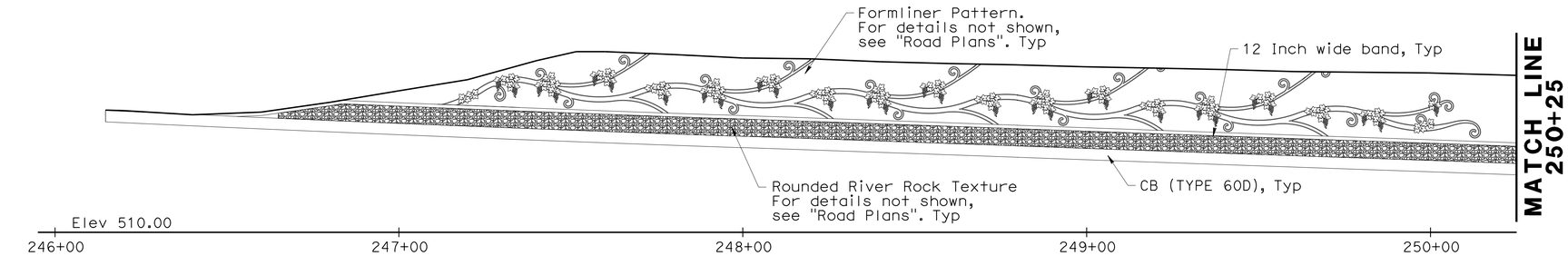

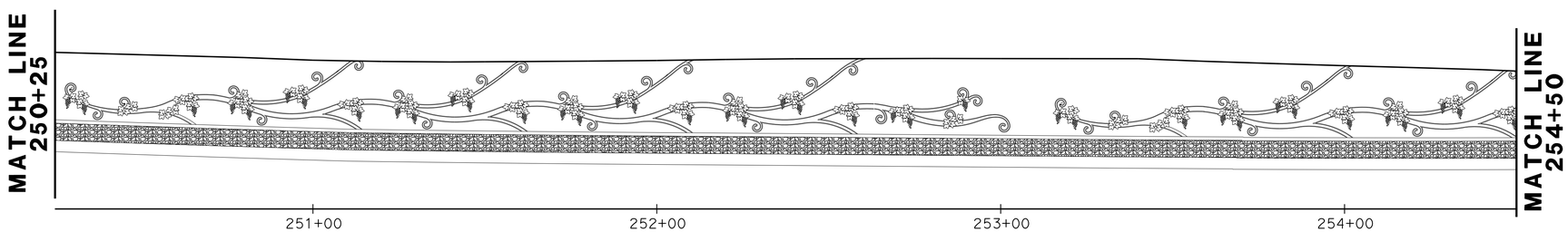

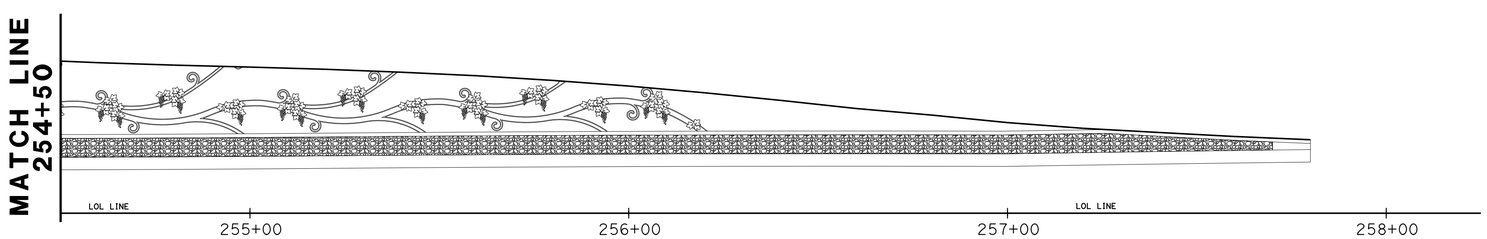

ARCHITECTURAL TREATMENT DEVELOPED ELEVATION

1" = 20'-0"

Note:
For texture details, see "Road Plans".

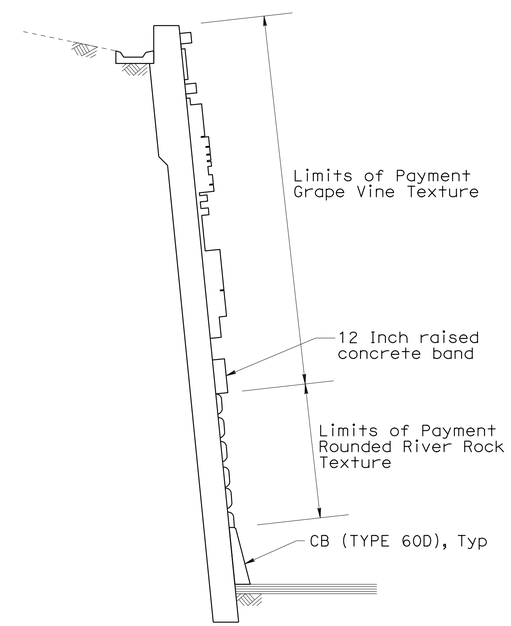

LIMITS OF PAYMENT FOR ARCHITECTURAL TREATMENT

NO SCALE

David Soon
DESIGN OVERSIGHT David Soon
3-16-15
SIGN OFF DATE

DESIGN DETAIL SHEET (ENGLISH) (REV. 03/14/12)

	BY	CHECKED
DESIGN	W. Sennett	R. Huang
DETAILS	X. Sun	R. Huang
QUANTITIES	W. Sennett	R. Huang

ORIGINAL SCALE IN INCHES FOR REDUCED PLANS 0 1 2 3

PREPARED FOR THE
STATE OF CALIFORNIA
DEPARTMENT OF TRANSPORTATION

R. Sennett
PROJECT ENGINEER

BRIDGE NO. 33E0075
POST MILES 22.9

RETAINING WALL 246
SOIL NAIL WALL DETAILS NO. 14

UNIT: 0733
PROJECT NUMBER & PHASE: 04000205811 CONTRACT NO.: 04-297624

DISREGARD PRINTS BEARING EARLIER REVISION DATES

REVISION DATES 02/05/09 10/27/10 05/30/14 12/22/14

SHEET 17 OF 20

FILE => 33e0075-g-rwdt14.dgn

USERNAME => s141070 DATE PLOTTED => 25-MAR-2015 TIME PLOTTED => 08:52

DIST	COUNTY	ROUTE	POST MILES TOTAL PROJECT	SHEET No	TOTAL SHEETS
04	Ala	84	22.9/22.7	812	814

REGISTERED CIVIL ENGINEER 01/16/15 DATE

2-23-15
PLANS APPROVAL DATE

REGISTERED PROFESSIONAL ENGINEER WESLEY SENNETT No. C 82031 Exp. 03/31/16 CIVIL STATE OF CALIFORNIA

The State of California or its officers or agents shall not be responsible for the accuracy or completeness of scanned copies of this plan sheet.

ALAMEDA COUNTY TRANSPORTATION COMMISSION
1111 BROADWAY, SUITE 800
OAKLAND, CA 94607

MGE ENGINEERING, INC.
7415 GREENHAVEN DRIVE, SUITE 100
SACRAMENTO, CALIFORNIA 95831

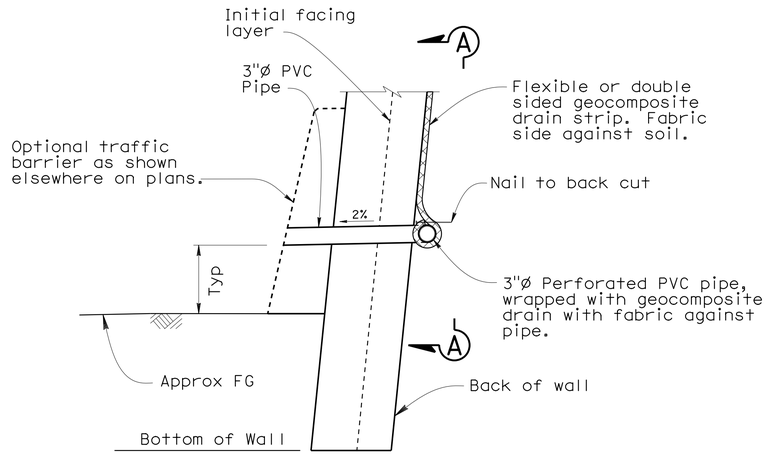

WALL DRAIN DETAIL AT WEEPHOLE
OPTION A
No scale

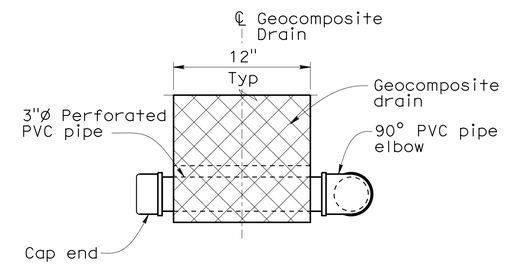

VIEW A-A
No scale

NOTES:

1. Geocomposite drain strip per Section 88 Geosynthetics of the Standard Specifications.
2. Elevation of drains and weepholes as shown elsewhere on plans.

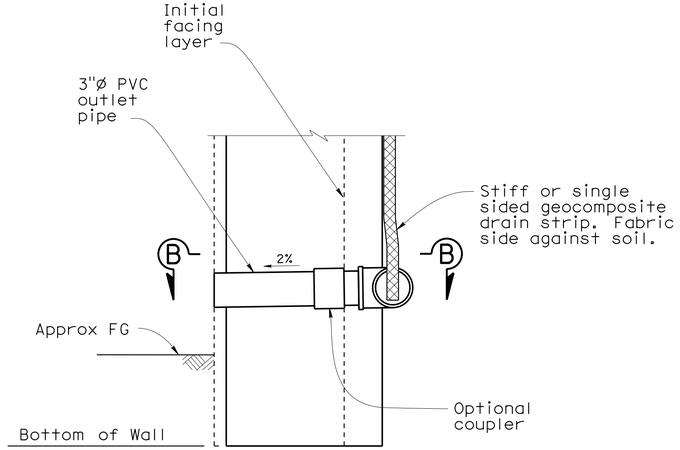

WALL DRAIN DETAIL AT WEEPHOLE
OPTION B
No scale

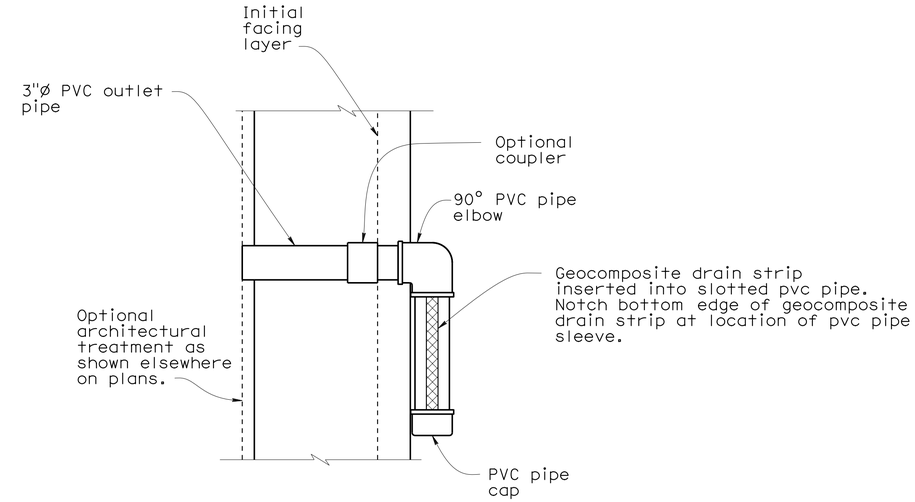

VIEW B-B
No Scale

David Soon
DESIGN OVERSIGHT David Soon
2-23-15
SIGN OFF DATE

	BY	CHECKED
DESIGN	W. Sennett	R. Huang
DETAILS	X. Sun	R. Huang
QUANTITIES	W. Sennett	R. Huang

PREPARED FOR THE STATE OF CALIFORNIA DEPARTMENT OF TRANSPORTATION

R. Sennett
PROJECT ENGINEER

BRIDGE NO. 33E0075
POST MILES 22.9

RETAINING WALL 246
WALL DRAIN DETAILS

DESIGN DETAIL SHEET (ENGLISH) (REV. 03/14/12)

ORIGINAL SCALE IN INCHES FOR REDUCED PLANS 0 1 2 3

UNIT: 0733
PROJECT NUMBER & PHASE: 04000205811 CONTRACT NO.: 04-297624

DISREGARD PRINTS BEARING EARLIER REVISION DATES

REVISION DATES 02/05/09 10/29/10 05/30/14 01/16/15

SHEET 18 OF 20

FILE => 33e0075-g-rwdt15.dgn

USERNAME => s141070 DATE PLOTTED => 25-MAR-2015 TIME PLOTTED => 08:52

DIST	COUNTY	ROUTE	POST MILES TOTAL PROJECT	SHEET No	TOTAL SHEETS
04	Ala	84	22.9/22.7	813	814

GEOTECHNICAL PROFESSIONAL — DATE 01/16/15

REGISTERED PROFESSIONAL ENGINEER — Stephen Huang No. C 42289 Exp. 3-31-16 GEOTECHNICAL — STATE OF CALIFORNIA

2-23-15
PLANS APPROVAL DATE

The State of California or its officers or agents shall not be responsible for the accuracy or completeness of electronic copies of this plan sheet.

URS CORPORATION
1333 BROADWAY, SUITE 800
OAKLAND, CA 94612

ALAMEDA COUNTY TRANSPORTATION COMMISSION
1111 BROADWAY, SUITE 800
OAKLAND, CA 94607

NOTES

1. This LOTB sheet was prepared in accordance with the Caltrans Soil & Rock Logging, Classification, and Presentation Manual (June 2007).
2. Hammer efficiency ratio of 8-inch auger boring (A-07-004) is based on published values for a similar hammer type.

BENCH MARK

B.M Elev. 415.27
Northing: 2063428.6750
Easting: 6181960.7750
21/2" Brass disk set in concrete in well monument stamped "+", at the intersection of Vineyard Avenue and Ruby Hill Drive

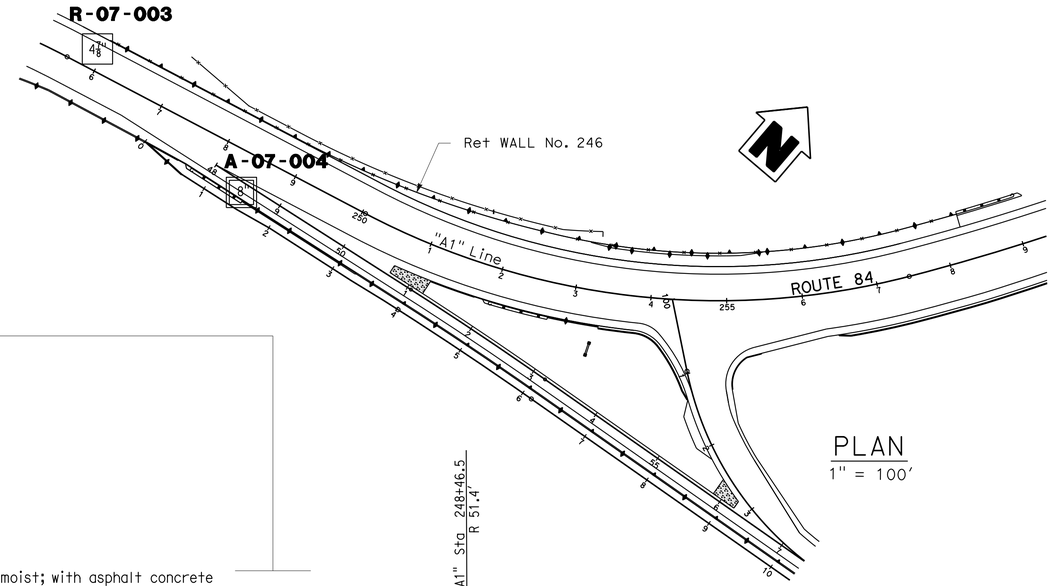

PLAN
1" = 100'

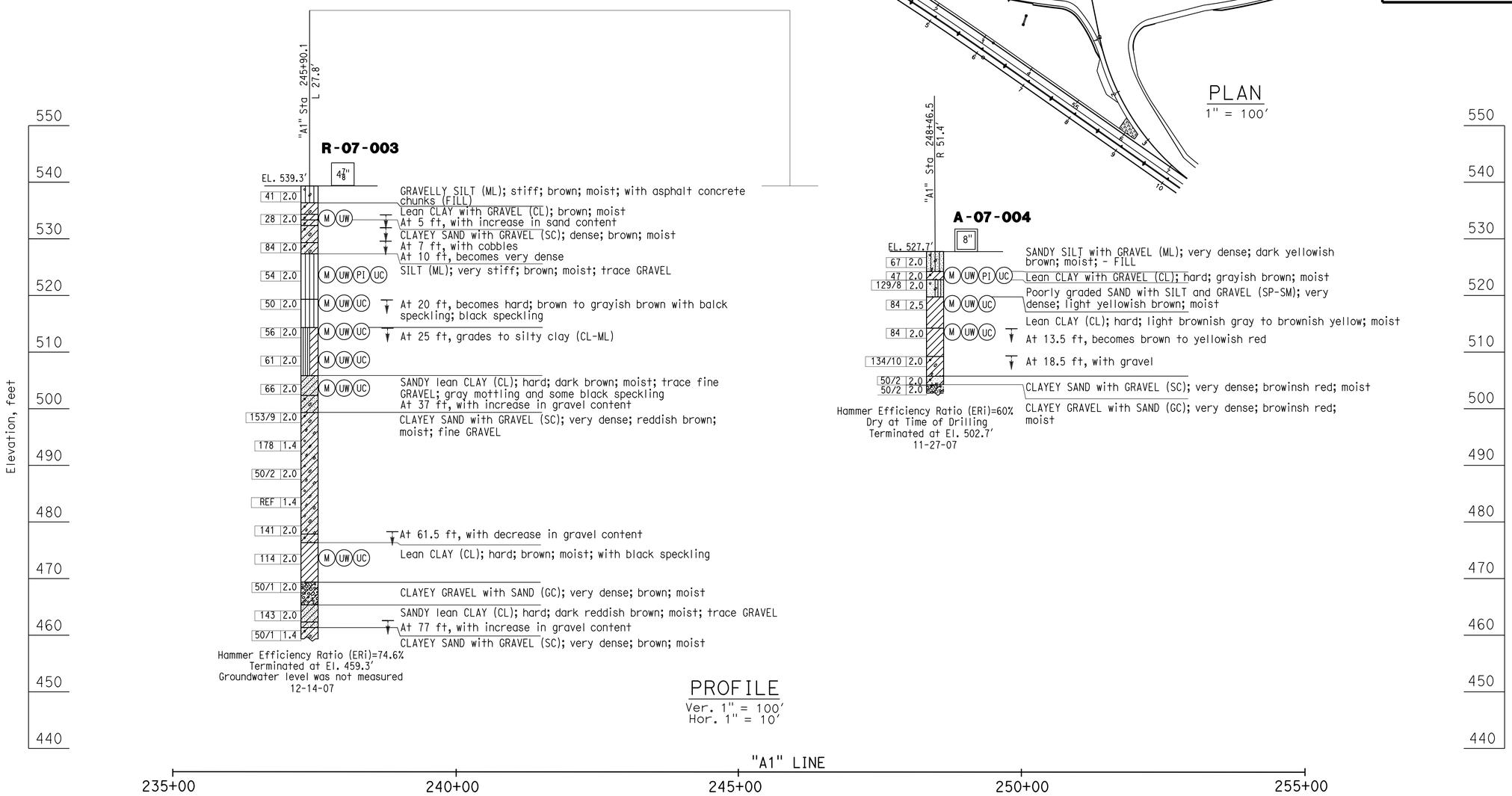

PROFILE
Ver. 1" = 100'
Hor. 1" = 10'

David Soon — DESIGN OVERSIGHT	DRAWN BY	B. Vuong	C. Rambo — FIELD INVESTIGATION BY:
2-23-15 — SIGN OFF DATE	CHECKED BY	M. Larson	DATE: Nov-Dec 2007

PREPARED FOR THE STATE OF CALIFORNIA DEPARTMENT OF TRANSPORTATION

Stephen Huang — PROJECT ENGINEER

BRIDGE NO. 33E0075
POST MILES 22.9

RETAINING WALL 246
LOG OF TEST BORINGS (1 OF 2)

GS GEOTECHNICAL LOG OF TEST BORINGS SHEET (ENGLISH) (REV. 7/16/10)

ORIGINAL SCALE IN INCHES FOR REDUCED PLANS 0 1 2 3

UNIT: 0733
PROJECT NUMBER & PHASE: 04000205811 CONTRACT NO.: 04-297624

DISREGARD PRINTS BEARING EARLIER REVISION DATES → 01/16/15

SHEET 19 OF 20

FILE => 33e0075-z-1tb01.dgn

USERNAME => s141070 DATE PLOTTED => 25-MAR-2015 TIME PLOTTED => 08:52

DIST	COUNTY	ROUTE	POST MILES TOTAL PROJECT	SHEET No	TOTAL SHEETS
04	Ala	84	22.9/22.7	814	814

GEOTECHNICAL PROFESSIONAL — DATE 01/16/15

2-23-15
PLANS APPROVAL DATE

REGISTERED PROFESSIONAL ENGINEER — Stephen Huang — No. C 42289 — Exp. 3-31-16 — GEOTECHNICAL — STATE OF CALIFORNIA

The State of California or its officers or agents shall not be responsible for the accuracy or completeness of electronic copies of this plan sheet.

URS CORPORATION
1333 BROADWAY, SUITE 800
OAKLAND, CA 94612

ALAMEDA COUNTY TRANSPORTATION COMMISSION
1111 BROADWAY, SUITE 800
OAKLAND, CA 94607

NOTES

1. This LOTB sheet was prepared in accordance with the Caltrans Soil & Rock Logging, Classification, and Presentation Manual (June 2007)
2. Hammer efficiency of 8-inch auger boring (A-08-005) is based on published values for a similar hammer type.

BENCH MARK

B.M Elev. 415.27
Northing: 2063428.6750
Easting: 6181960.7750
2 1/2" Brass disk set in concrete in well monument stamped "+", at the intersection of Vineyard Avenue and Ruby Hill Drive

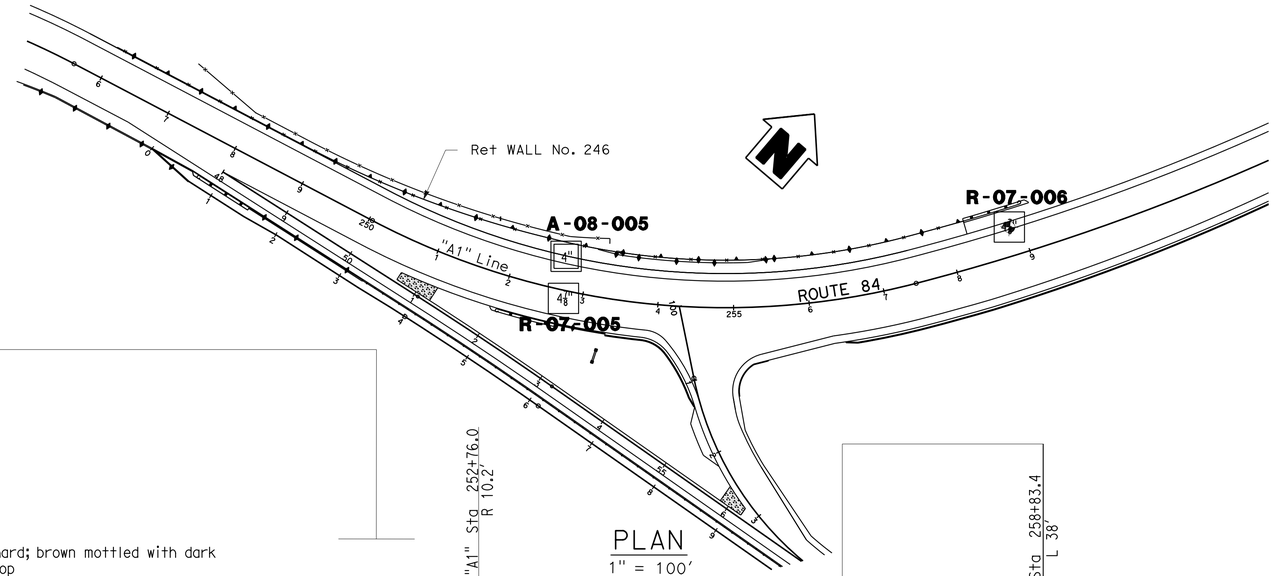

PLAN
1" = 100'

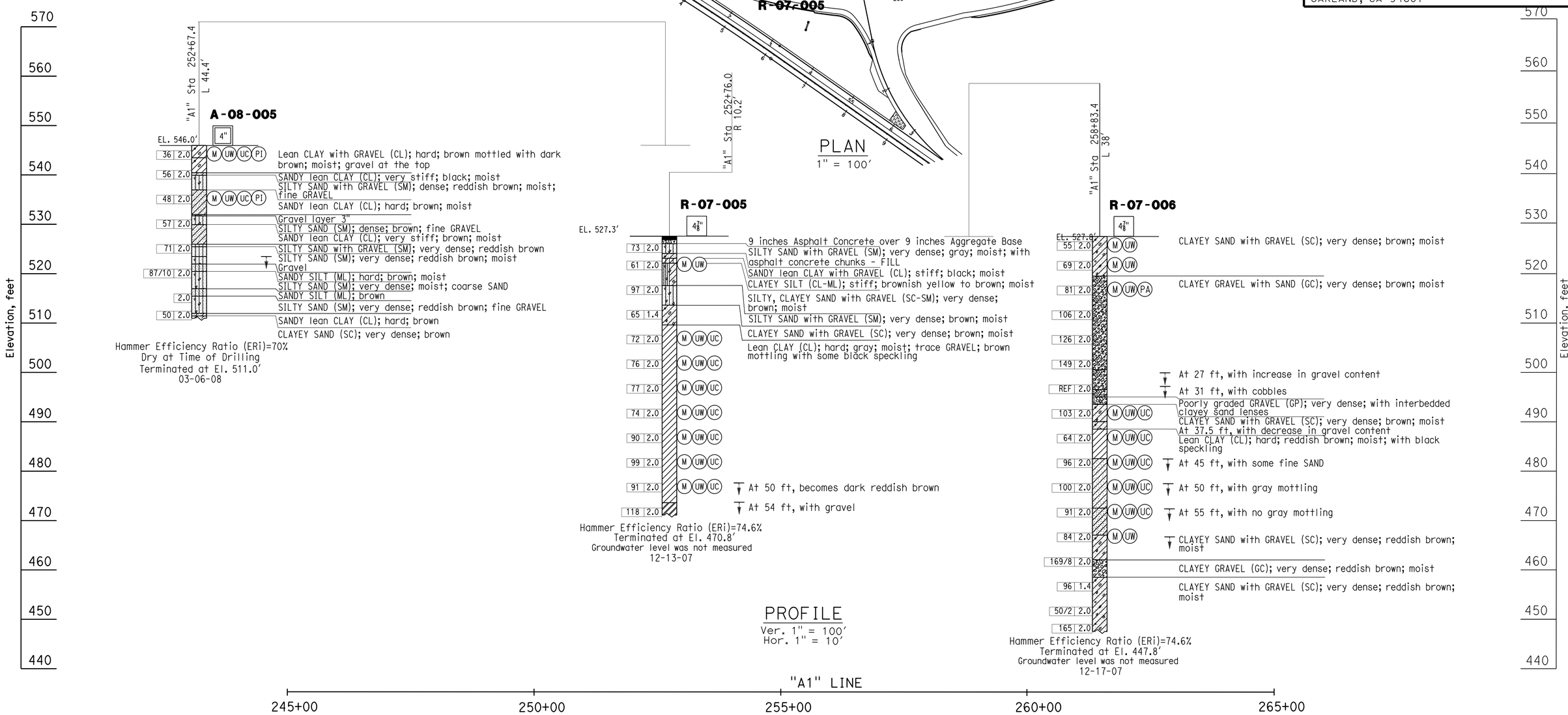

PROFILE
Ver. 1" = 100'
Hor. 1" = 10'

David Soon — DESIGN OVERSIGHT — David Soon — 2-23-15 SIGN OFF DATE	DRAWN BY	B. Vuong	C. Rambo — FIELD INVESTIGATION BY: — DATE: Dec 2007-Mar 2008	PREPARED FOR THE STATE OF CALIFORNIA DEPARTMENT OF TRANSPORTATION	Stephen Huang — PROJECT ENGINEER
	CHECKED BY	M. Larson			

BRIDGE NO. 33E0075
POST MILES 22.9

RETAINING WALL 246
LOG OF TEST BORINGS (2 OF 2)

GS GEOTECHNICAL LOG OF TEST BORINGS SHEET (ENGLISH) (REV. 7/16/10)

ORIGINAL SCALE IN INCHES FOR REDUCED PLANS 0 1 2 3

UNIT: 0733
PROJECT NUMBER & PHASE: 04000205811 CONTRACT NO.: 04-297624

DISREGARD PRINTS BEARING EARLIER REVISION DATES → 01/16/15

SHEET 20 OF 20

FILE => 33e0075-z-ltb02.dgn

USERNAME => s140170 DATE PLOTTED => 25-MAR-2015 TIME PLOTTED => 08:52