DIST	COUNTY	ROUTE	POST MILES TOTAL PROJECT	SHEET NO.	TOTAL SHEETS
04	Ala	84	25.5/27.1	401	495

REGISTERED ELECTRICAL ENGINEER

October 5, 2007
PLANS APPROVAL DATE

REGISTERED PROFESSIONAL ENGINEER Jeffery G. McRae No. E14512 Exp. 6-30-08 ELECTRICAL STATE OF CALIFORNIA

The State of California or its officers or agents shall not be responsible for the accuracy or completeness of electronic copies of this plan sheet.

To accompany plans dated 6-27-11

2006 REVISED STANDARD PLAN RSP ES-2D

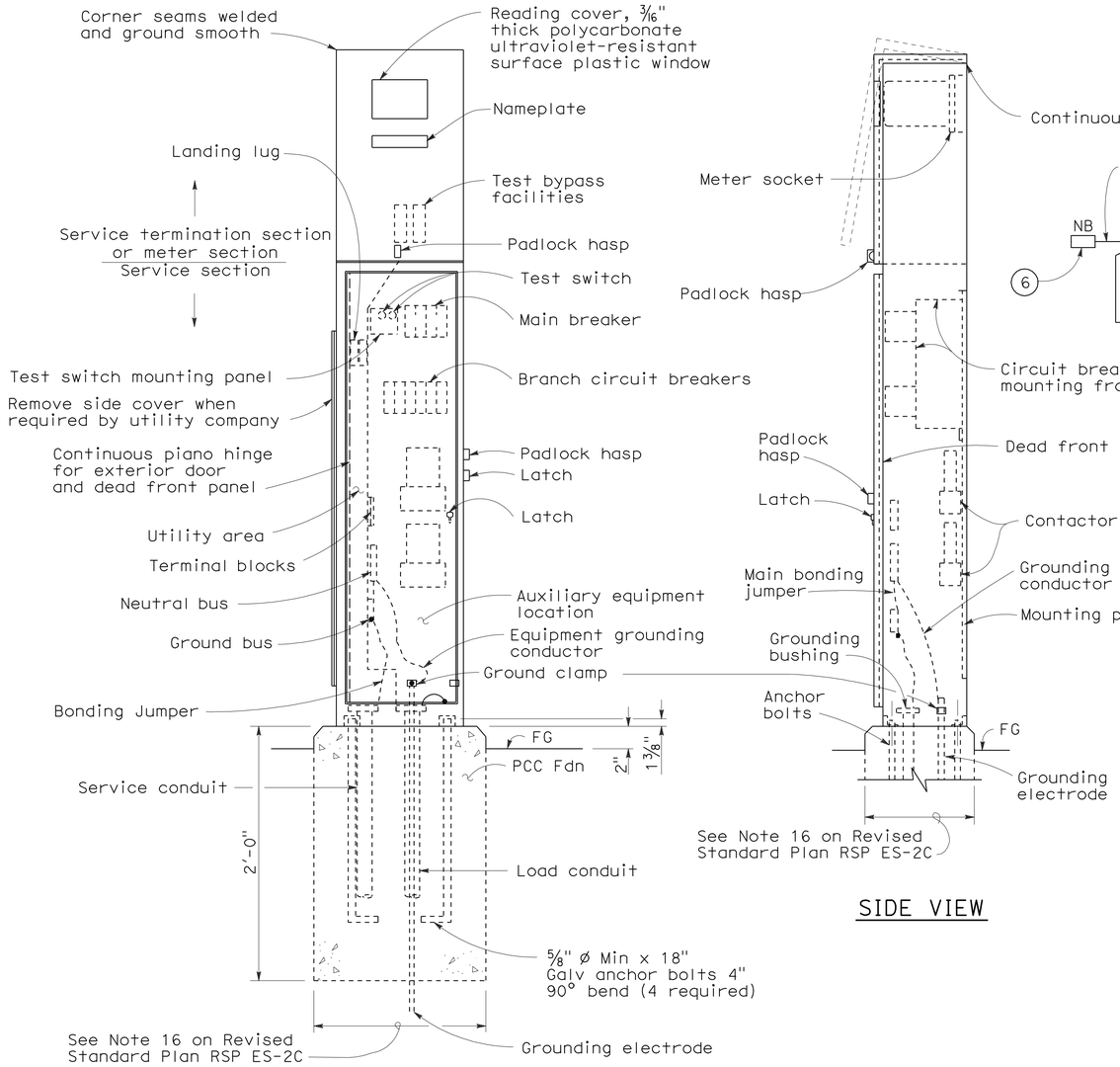

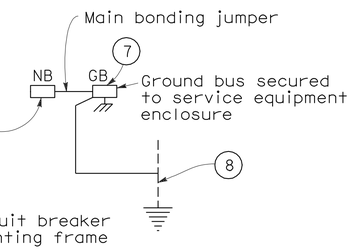

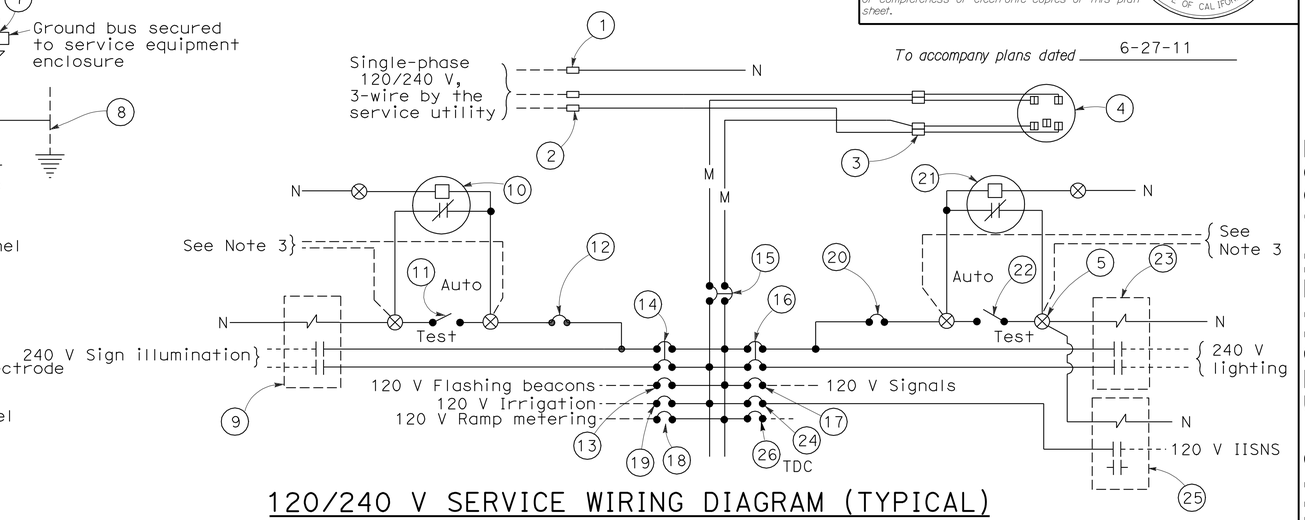

120/240 V SERVICE WIRING DIAGRAM (TYPICAL)

TYPE III-A SERVICE (120/240 V) EQUIPMENT LEGEND					
ITEM No.	COMPONENT	NAME PLATE DESCRIPTION	ITEM No.	COMPONENT	NAME PLATE DESCRIPTION
1	Neutral lug		14	30 A, 240 V, 2P, CB	Sign Illumination
2	Landing lug (Note 6)		15	100 A, 240 V, 2P, CB	Main Breaker
3	Test bypass facility		16	30 A, 240 V, 2P, CB	Lighting
4	Meter socket and support		17	50 A, 120 V, 1P, CB	Signals
5	Terminal blocks		18	30 A, 120 V, 1P, CB	Ramp Metering
6	Neutral bus		19	20 A, 120 V, 1P, CB	Irrigation
7	Ground bus		20	15 A, 120 V, 1P, CB	Lighting Control
8	Grounding electrode		21	Photoelectric unit (Note 7)	
9	30 A, 2PNO Contactor	Sign Illumination	22	15 A, 1P, Test switch	Lighting Test Switch
10	Photoelectric unit (Note 7)		23	60 A, 2PNO Contactor	Lighting
11	15 A, 1P, Test switch	Sign Illumination Test Switch	24	15 A, 120 V, 1P, CB	IISNS
12	15 A, 120 V, 1P, CB	Sign Illumination Control	25	30 A, 2PNO Contactor	IISNS
13	15 A, 120 V, 1P, CB	Flashing Beacon	26	20 A, 120 V, 1P, CB	Telephone Demarcation Cabinet

TYPE III-AF SERVICE EQUIPMENT ENCLOSURE (TYPICAL)

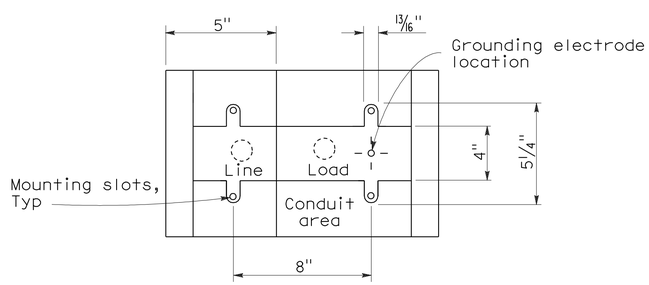

BASE FOR TYPE III-A SERVICE EQUIPMENT ENCLOSURE

NOTES: (FOR SERVICE EQUIPMENT ENCLOSURE)

1. Voltage ratings of service equipment shall conform to the service voltages indicated on the plans.
2. Unless otherwise indicated on the plans, service equipment items shall be provided for each service equipment enclosure as shown.
3. Connect to remote test switch mounted on lighting standards, sign post or structure when required.
4. Items No. 1 and 6 shall be isolated from the service equipment enclosure.
5. Meter sockets shall be 5 clip type.
6. The landing lug shall be suitable for multiple conductors.
7. Type V photoelectric control shall be used unless otherwise indicated on the plans.

STATE OF CALIFORNIA
DEPARTMENT OF TRANSPORTATION

ELECTRICAL SYSTEMS (SERVICE EQUIPMENT AND TYPICAL WIRING DIAGRAM, TYPE III-A SERIES)

NO SCALE

RSP ES-2D DATED OCTOBER 5, 2007 SUPERCEDES STANDARD PLAN ES-2D DATED MAY 1, 2006 - PAGE 406 OF THE STANDARD PLANS BOOK DATED MAY 2006.

REVISED STANDARD PLAN RSP ES-2D

7-10-07

DIST	COUNTY	ROUTE	POST MILES TOTAL PROJECT	SHEET NO.	TOTAL SHEETS
04	Ala	84	25.5/27.1	402	495

REGISTERED ELECTRICAL ENGINEER

June 6, 2008
PLANS APPROVAL DATE

REGISTERED PROFESSIONAL ENGINEER
Jeffery G. McRae
No. E14512
Exp. 6-30-10
ELECTRICAL
STATE OF CALIFORNIA

The State of California or its officers or agents shall not be responsible for the accuracy or completeness of electronic copies of this plan sheet.

To accompany plans dated 6-27-11

VISORS

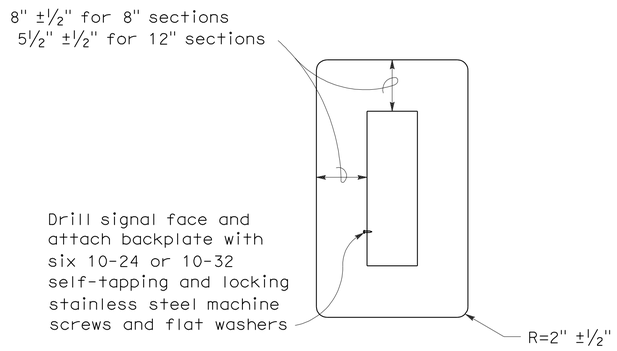

8" AND 12" SECTIONS

BACKPLATE

1/16" minimum thickness
3001-14 aluminum, or plastic when specified

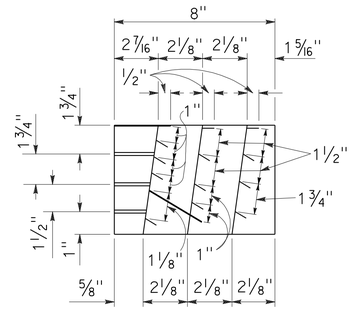

SECTION A-A

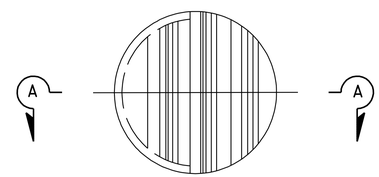

FRONT VIEW

DIRECTIONAL LOUVER

Directional louvers shall be oriented as directed by the Engineer and secured in place with one plated brass machine screw and nut.

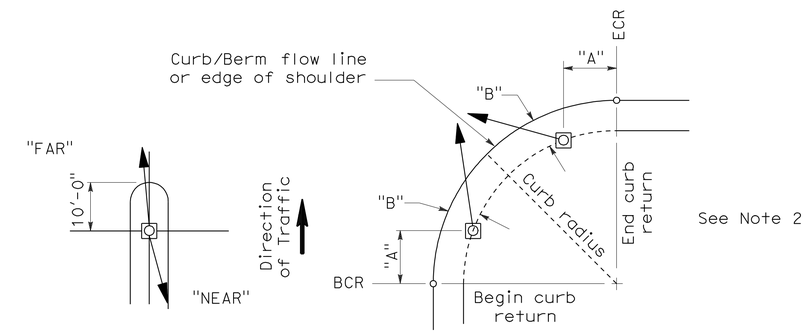

NOTES:

1. Typical signal pole placement unless dimensioned on plans.
2. For "A" and "B" dimensions, see Pole Schedule, or as directed by the Engineer.

SIGNAL STANDARD PLACEMENT DIMENSIONS AND EQUIPMENT LOCATIONS

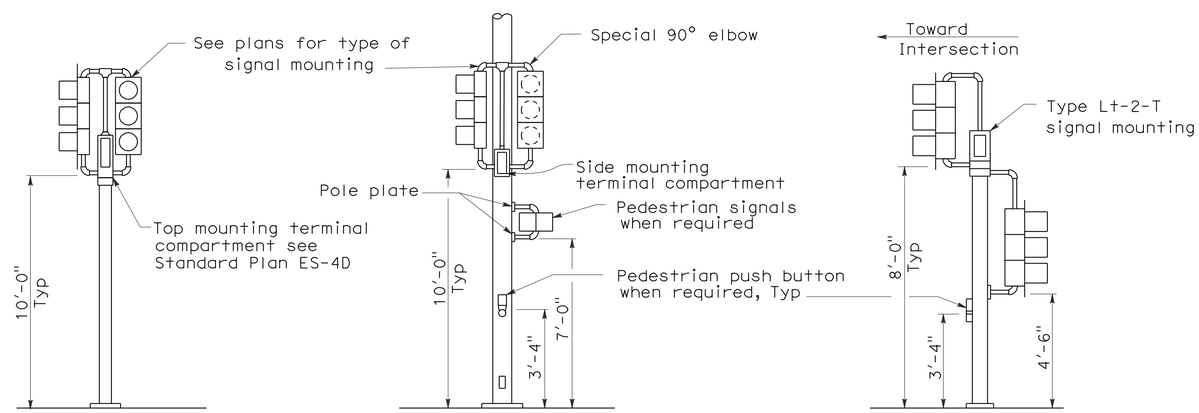

TOP MOUNTED SIGNALS (TV)

Type 1-A, 1-B, 1-C and 1-D standard as indicated on the plans

SIDE MOUNTED SIGNALS (SV AND SP)

Normally used on standards with luminaire or signal mast arm

LEFT TURN LANE SIGNAL

Type 1-A, 1-B, 1-C and 1-D standard as indicated on plans

TYPICAL SIGNAL INSTALLATIONS

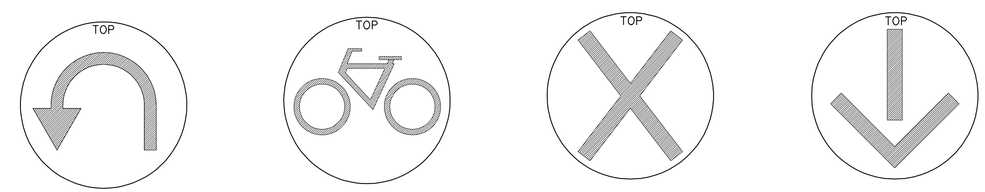

U-TURN SIGNAL FACE | BICYCLE SIGNAL FACE | LANE CONTROL SIGNAL FACE | LANE CONTROL SIGNAL FACE

STATE OF CALIFORNIA
DEPARTMENT OF TRANSPORTATION

ELECTRICAL SYSTEMS (SIGNAL HEADS AND MOUNTINGS)

NO SCALE

RSP ES-4C DATED JUNE 6, 2008 SUPERSEDES STANDARD PLAN ES-4C DATED MAY 1, 2006 - PAGE 420 OF THE STANDARD PLANS BOOK DATED MAY 2006.

REVISED STANDARD PLAN RSP ES-4C

2006 REVISED STANDARD PLAN RSP ES-4C

5-19-08

DIST	COUNTY	ROUTE	POST MILES TOTAL PROJECT	SHEET NO.	TOTAL SHEETS
04	Ala	84	25.5/27.1	403	495

REGISTERED ELECTRICAL ENGINEER

June 6, 2008
PLANS APPROVAL DATE

REGISTERED PROFESSIONAL ENGINEER Jeffery G. McRae No. E14512 Exp. 6-30-10 ELECTRICAL STATE OF CALIFORNIA

The State of California or its officers or agents shall not be responsible for the accuracy or completeness of electronic copies of this plan sheet.

To accompany plans dated 6-27-11

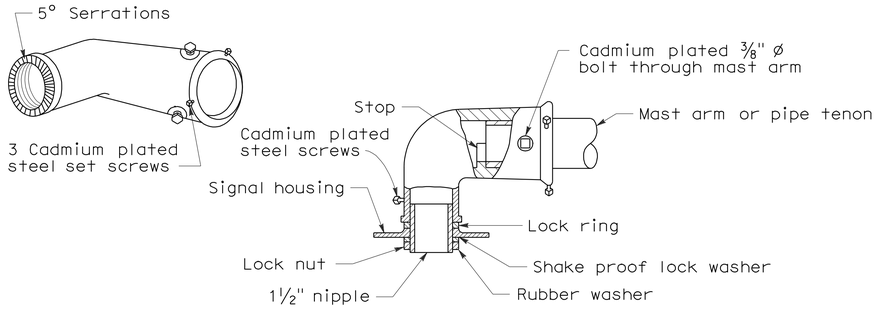

MAST ARM MOUNTING - TYPE "MAT"

For 2 NPS pipe, see Note 1.

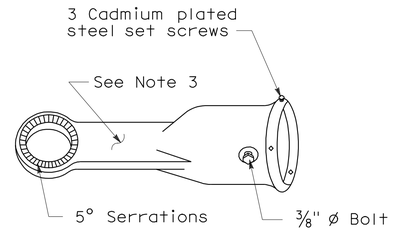

MAST ARM MOUNTING - TYPE "MAS"

For 2 NPS pipe. See Note 1.

SIGNAL SLIP FITTERS

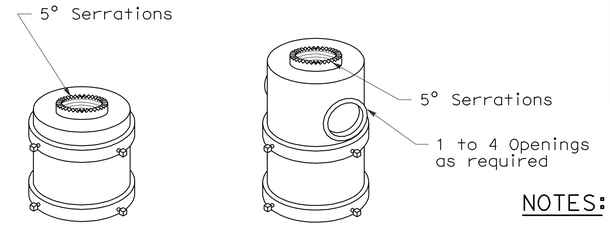

For one mounting For mulitiple mountings

TOP MOUNTINGS

For 4 NPS pipe, see Note 2.

NOTES:

1. After mast arm signal has been plumbed and secured, drill 7/16" hole through mast arm tenon in line with slip fitter hole. Place a cadmium plated 3/8" ø galvanized bolt with washer under bolt head through hole and secure with washer, nut, and locknut. Seal openings between mast arm mountings and mast arm with mastic.
2. (a) Threaded top mounted slip fitter openings shall be 1½ NPS.
   (b) Serrations in fittings shall match those on bottom of signal heads or in lock ring.
   (c) Top opening shall be offset when backplate is used.
3. Wireway shall have a cross section area of 0.95 square inch minimum. Minimum width of ½".

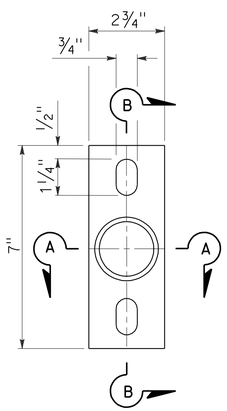

POLE PLATE

For side mountings

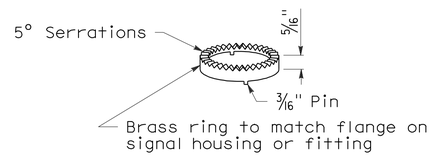

LOCK RING

Use where locking ring is not integral with signal housing or fitting.

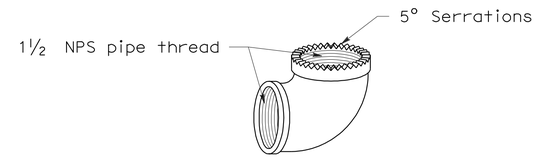

SPECIAL 90° ELBOW

One for each signal head, except those with special slip fitter mounting

MISCELLANEOUS MOUNTING HARDWARE

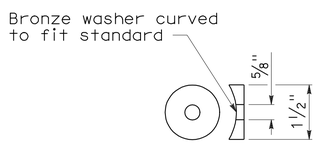

DETAIL "C"

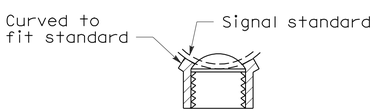

SECTION A-A

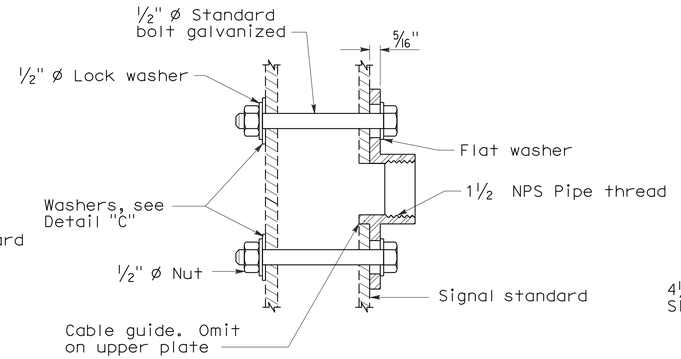

SECTION B-B

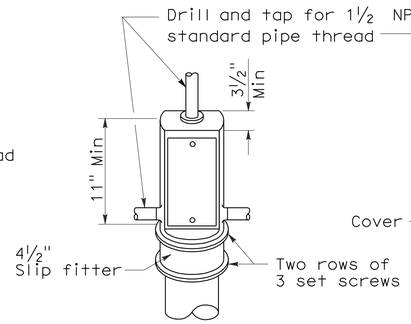

TOP MOUNTING

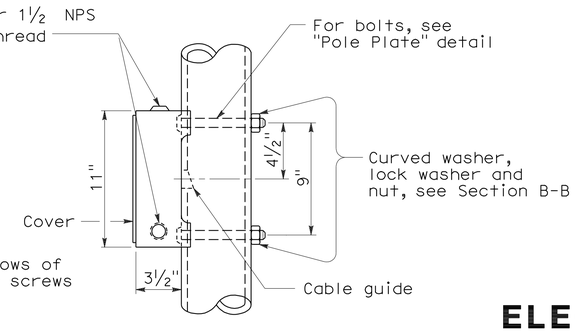

SIDE MOUNTING

TERMINAL COMPARTMENTS

STATE OF CALIFORNIA
DEPARTMENT OF TRANSPORTATION

ELECTRICAL SYSTEMS (SIGNAL HEADS AND MOUNTINGS)

NO SCALE

RSP ES-4D DATED June 6, 2008 SUPERSEDES STANDARD PLAN ES-4D
DATED MAY 1, 2006 - PAGE 421 OF THE STANDARD PLANS BOOK DATED MAY 2006.

REVISED STANDARD PLAN RSP ES-4D

2006 REVISED STANDARD PLAN RSP ES-4D

5-19-08

DIST	COUNTY	ROUTE	POST MILES TOTAL PROJECT	SHEET NO.	TOTAL SHEETS
04	Ala	84	25.5/27.1	404	495

REGISTERED ELECTRICAL ENGINEER

October 5, 2007
PLANS APPROVAL DATE

REGISTERED PROFESSIONAL ENGINEER Jeffery G. McRae No. E14512 Exp. 6-30-08 ELECTRICAL STATE OF CALIFORNIA

The State of California or its officers or agents shall not be responsible for the accuracy or completeness of electronic copies of this plan sheet.

To accompany plans dated 6-27-11

2006 REVISED STANDARD PLAN RSP ES-5A

LOOP INSTALLATION PROCEDURE

1. Loops shall be centered in lanes.
2. Saw slots in pavement for loop conductors as shown in details.
3. Distance between side of loop and a lead-in saw cut from adjacent detectors shall be 2'-0" minimum. Distance between lead-in saw cuts shall be 6" minimum.
4. Bottom of saw slot shall be smooth with no sharp edges.
5. Slots shall be washed until clean, blown out and thoroughly dried before installing loop conductors.
6. Adjacent loops on the same sensor unit channel shall be wound in opposite directions.
7. Identify and tag loop circuit pairs in the pull box with loop number, start (S) and finish (F) of conductor. Identify and tag lead-in-cable with sensor number and phase.
8. Install loop conductor in slot using a 3/16" to 1/4" thick wood paddle. Hold loop conductors with wood paddles (at the bottom of the sawed slot) during sealant placement.
9. No more than 2 twisted pairs shall be installed in one sawed slot.
10. Allow additional 5'-0" of slack length of conductor for the lead-in run to pull box.
11. The additional length of each conductor for each loop shall be twisted together into a pair (6 turns per 3'-4" minimum) before being placed in the slot and conduit leading to pull box.
12. Test each loop circuit for continuity, circuit resistance and insulation resistance at the pull box before filling slots.
13. Fill slots as shown in details.
14. Splice loop conductors to lead-in-cable. Splices shall be soldered.
15. End of lead-in-cable and Type 2 loop conductor shall be waterproofed prior to installing in conduit to prevent moisture from entering the cable.
16. Lead-in-cable shall not be spliced between the pull box and the controller cabinet terminals.
17. Test each loop circuit for continuity, circuit resistance and insulation resistance at the controller cabinet location.
18. Where loop conductors are not to be spliced to a lead-in-cable, the ends of the conductors shall be taped and waterproofed with electrical insulating coating.

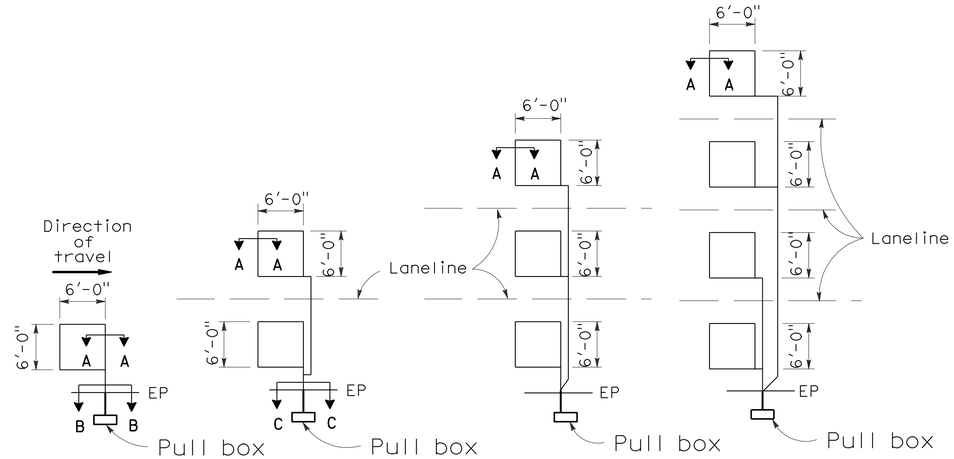

TYPE 1A INSTALLATION | TYPE 2A INSTALLATION | TYPE 3A INSTALLATION | TYPE 4A INSTALLATION

SAWCUT DETAILS

(Type A loop detector configurations illustrated)

1. 1A thru 4A = 1 Type A loop configuration in each lane.
2. 1B thru 4B = 1 Type B loop configuration in each lane.
3. 1C = 1 Type C loop configuration entering lanes as required.
4. 1D thru 4D = 1 Type D loop configuration in each lane.
5. 1E thru 4E = 1 Type E loop configuration in each lane.
6. 1Q thru 4Q = 1 Type Q loop configuration in each lane. (Use Type A, B, C, D, E or Q loop detector configurations only when specified or shown on plans)

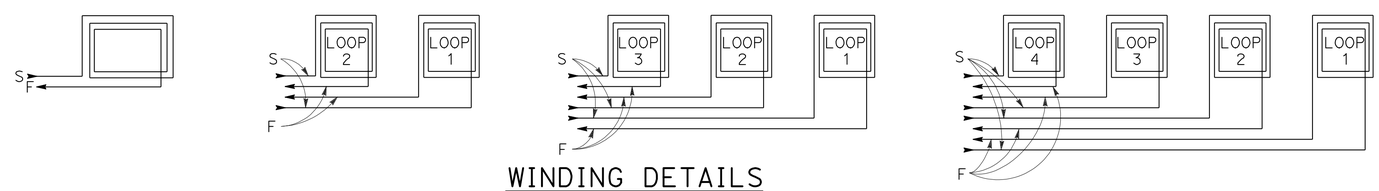

WINDING DETAILS

See Notes 6 and 7

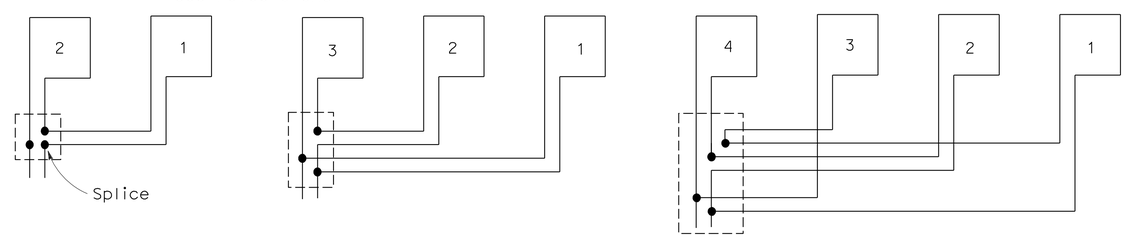

TYPICAL LOOP CONNECTIONS

(Dashed lines represent the pull box)

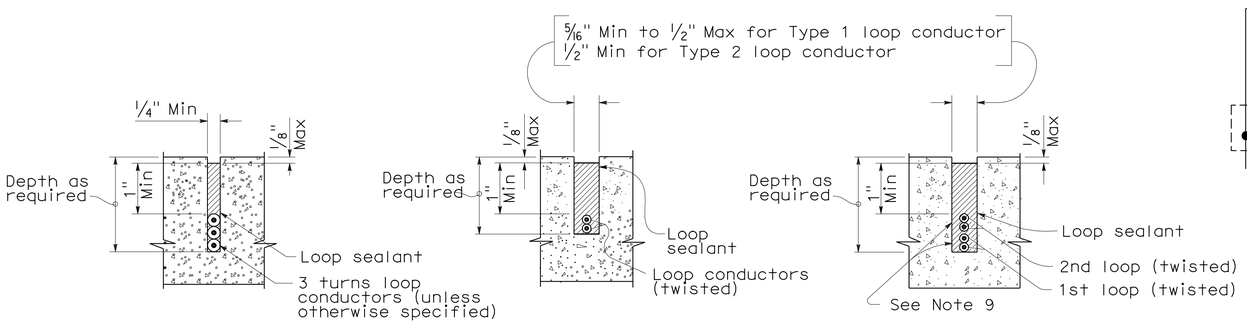

SECTION A-A | SECTION B-B | SECTION C-C

SLOT DETAILS - TYPE 1 AND TYPE 2 LOOP CONDUCTOR

STATE OF CALIFORNIA
DEPARTMENT OF TRANSPORTATION

ELECTRICAL SYSTEMS (DETECTORS)

NO SCALE

RSP ES-5A DATED OCTOBER 5, 2007 SUPERCEDES STANDARD PLAN ES-5A DATED MAY 1, 2006 - PAGE 423 OF THE STANDARD PLANS BOOK DATED MAY 2006.

REVISED STANDARD PLAN RSP ES-5A

DIST	COUNTY	ROUTE	POST MILES TOTAL PROJECT	SHEET NO.	TOTAL SHEETS
04	Ala	84	25.5/27.1	405	495

REGISTERED CIVIL ENGINEER

October 5, 2007
PLANS APPROVAL DATE

REGISTERED PROFESSIONAL ENGINEER
Stanley P. Johnson
No. C57793
Exp. 3-31-08
CIVIL
STATE OF CALIFORNIA

The State of California or its officers or agents shall not be responsible for the accuracy or completeness of electronic copies of this plan sheet.

To accompany plans dated 6-27-11

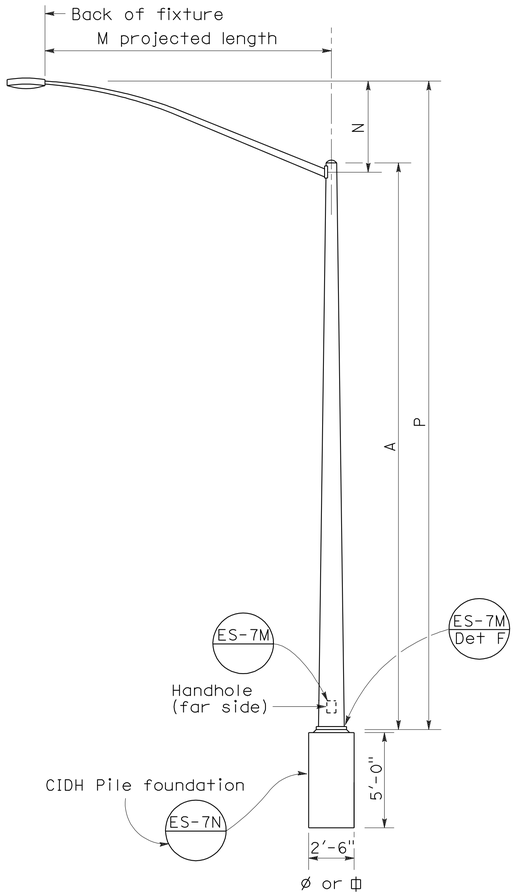

ELEVATION
TYPE 15 AND TYPE 21

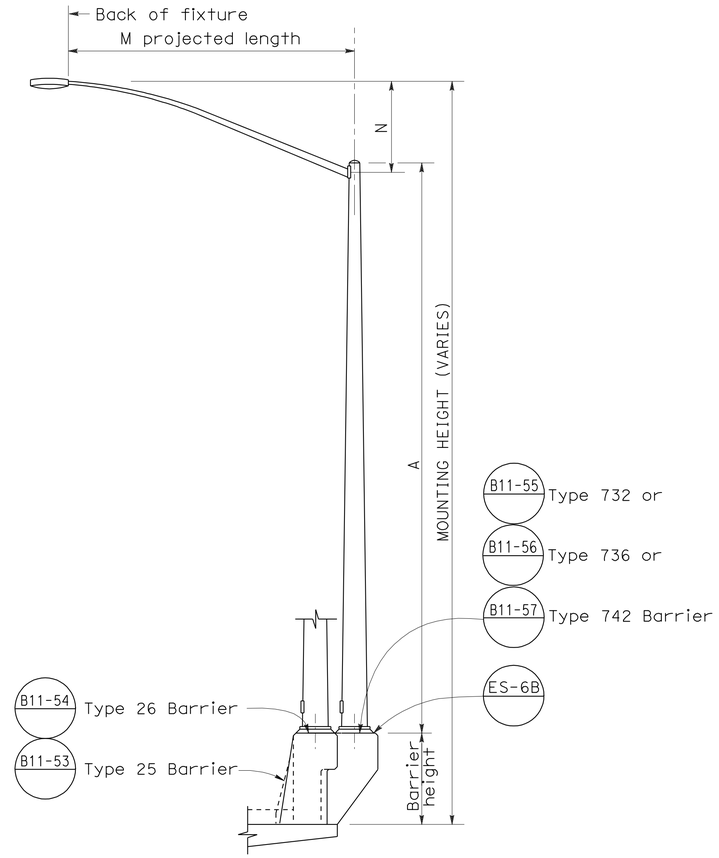

ELEVATION
TYPE 15 AND TYPE 21 BARRIER RAIL MOUNTED

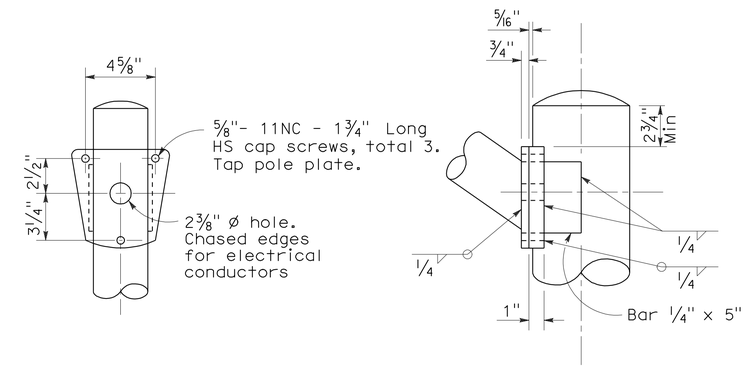

DETAIL R
LUMINAIRE ARM CONNECTION

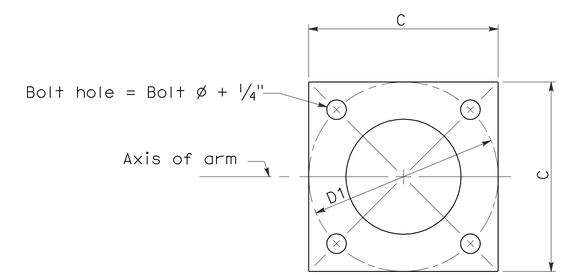

BASE PLATE

POLE TYPE	POLE DATA				BASE PLATE DATA				LUMINAIRE ARM
	A Height	Min OD Base	Min OD Top	Wall Thickness	C	D1 Bolt Circle	Thick-ness	Anchor Bolts Size	
15	30'	8"	3 7/8"	0.1196"	1'-0"	1'-0"	1"	1" ø x 3'-0" x 4"*	6' - 15' [12']
21	35'	8 5/8"	3 7/8"	0.1196"	1'-0"	1'-0"	1"	1 1/4"ø x 3'-0" x 4"*	6' - 15' [12']

* For barrier rail bolts, see Standard Plan ES-6B.

LUMINAIRE ARM DATA					
M Projected Length	N Rise	Min OD At Pole	Nominal Thickness	P Type 15	P Type 21
6'-0"	2'-0"±	3 1/4"	0.1196"	31'-6"±	36'-6"±
8'-0"	2'-6"±	3 1/2"	0.1196"	32'-0"±	37'-0"±
10'-0"	3'-3"±	3 7/8"	0.1196"	32'-9"±	37'-9"±
12'-0"	4'-3"±	3 7/8"	0.1196"	33'-9"±	38'-9"±
15'-0"	4'-9"±	4 1/4"	0.1196"	34'-3"±	39'-3"±

NOTES:

1. ☐ Indicates arm length to be used unless otherwise noted on the plans.
2. For Type 15-SB, use Type 15 standard with Type 30 slip base plate details, see Standard Plan ES-6F.
3. For additional notes, see Standard Plan ES-7M and ES-7N.

STATE OF CALIFORNIA
DEPARTMENT OF TRANSPORTATION

ELECTRICAL SYSTEMS (LIGHTING STANDARD TYPES 15 AND 21)

NO SCALE

RSP ES-6A DATED OCTOBER 5, 2007 SUPERCEDES STANDARD PLAN ES-6A DATED MAY 1, 2006 - PAGE 427 OF THE STANDARD PLANS BOOK DATED MAY 2006.

REVISED STANDARD PLAN RSP ES-6A

2006 REVISED STANDARD PLAN RSP ES-6A

DIST	COUNTY	ROUTE	POST MILES TOTAL PROJECT	SHEET NO.	TOTAL SHEETS
04	Ala	84	25.5/27.1	406	495

REGISTERED CIVIL ENGINEER

October 5, 2007
PLANS APPROVAL DATE

REGISTERED PROFESSIONAL ENGINEER
Stanley P. Johnson
No. C57793
Exp. 3-31-08
CIVIL
STATE OF CALIFORNIA

The State of California or its officers or agents shall not be responsible for the accuracy or completeness of electronic copies of this plan sheet.

To accompany plans dated 6-27-11

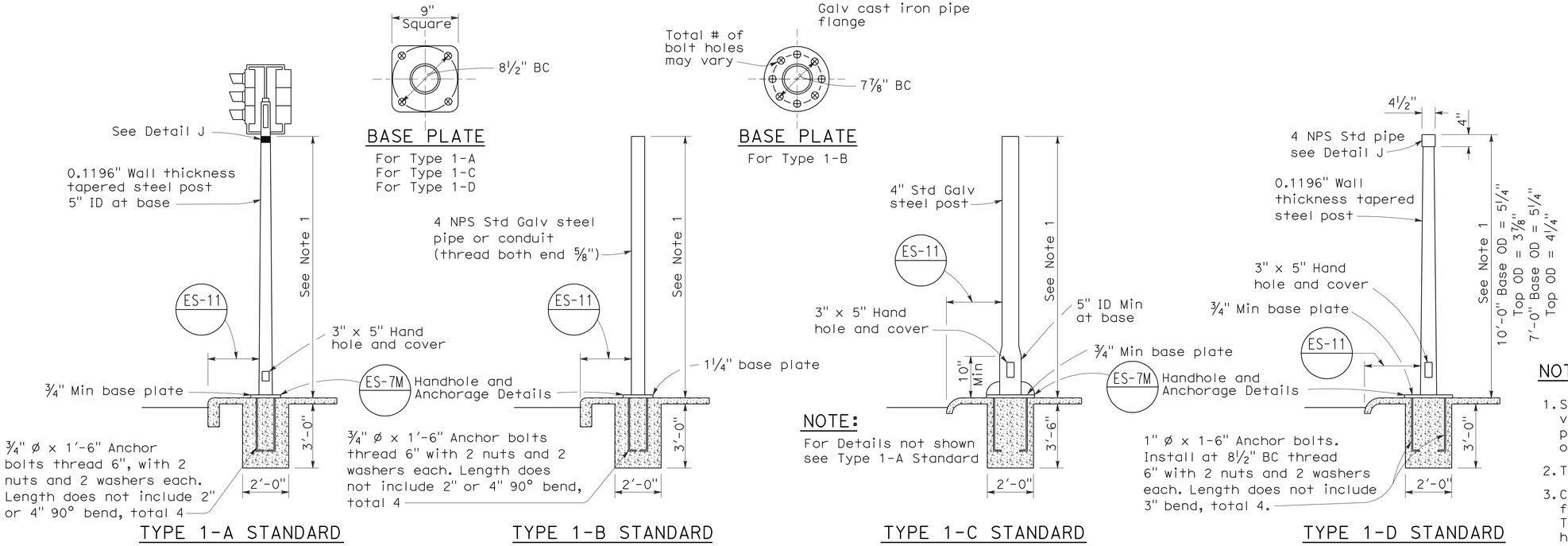

TYPE 1 SIGNAL STANDARDS

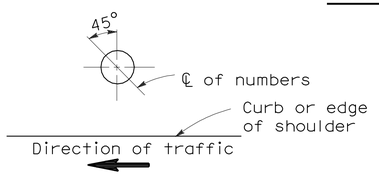

PLAN

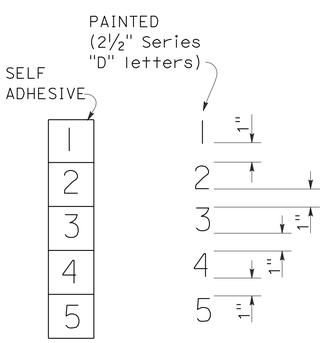

NUMBER DETAIL

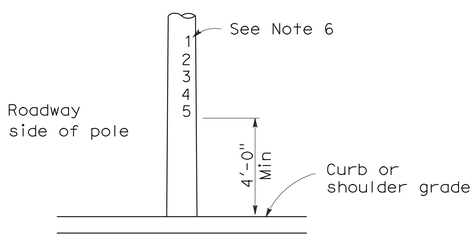

TYPICAL NUMBER FORMAT

LOCATION OF EQUIPMENT NUMBERS ON STANDARDS AND POSTS

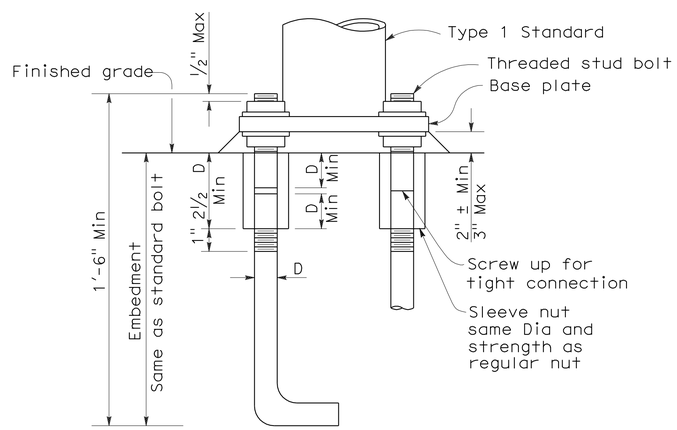

ANCHOR BOLTS WITH SLEEVE NUTS

Sleeve nuts to be used only when shown or specified on Project Plans

D = Diameter of anchor bolt

NOTES:

1. Standards shall be 10'-0" ± 2" for vehicle signals and 7'-0" ± 2" for pedestrian signals unless otherwise noted on plans.
2. Top of standards shall be 4½" OD.
3. Conduits shall extend 2" maximum above finished surface of foundation and for Types 1-A, 1-C and 1-D shall be sloped toward handhole.
4. Anchor bolts shall be bonded to conduit or grounding conductor.
5. Conduit between standard and adjacent pull box shall be 2" minimum.
6. Paint numbers on roadway side facing traffic when electrolier or post is left of direction of traffic.

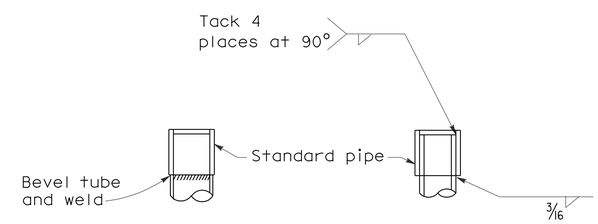

DETAIL J

Tube may be inserted into pipe or butted as required

STATE OF CALIFORNIA
DEPARTMENT OF TRANSPORTATION

ELECTRICAL SYSTEMS (SIGNAL AND LIGHTING STANDARD TYPE 1 STANDARD AND EQUIPMENT NUMBERING)

NO SCALE

RSP ES-7B DATED OCTOBER 5, 2007 SUPERCEDES STANDARD PLAN ES-7B DATED MAY 1, 2006 - PAGE 438 OF THE STANDARD PLANS BOOK DATED MAY 2006.

REVISED STANDARD PLAN RSP ES-7B

2006 REVISED STANDARD PLAN RSP ES-7B

7-10-07

DIST	COUNTY	ROUTE	POST MILES TOTAL PROJECT	SHEET NO.	TOTAL SHEETS
04	Ala	84	25.5/27.1	407	495

REGISTERED CIVIL ENGINEER

October 5, 2007
PLANS APPROVAL DATE

REGISTERED PROFESSIONAL ENGINEER Stanley P. Johnson No. C57793 Exp. 3-31-08 CIVIL STATE OF CALIFORNIA

The State of California or its officers or agents shall not be responsible for the accuracy or completeness of electronic copies of this plan sheet.

To accompany plans dated 6-27-11

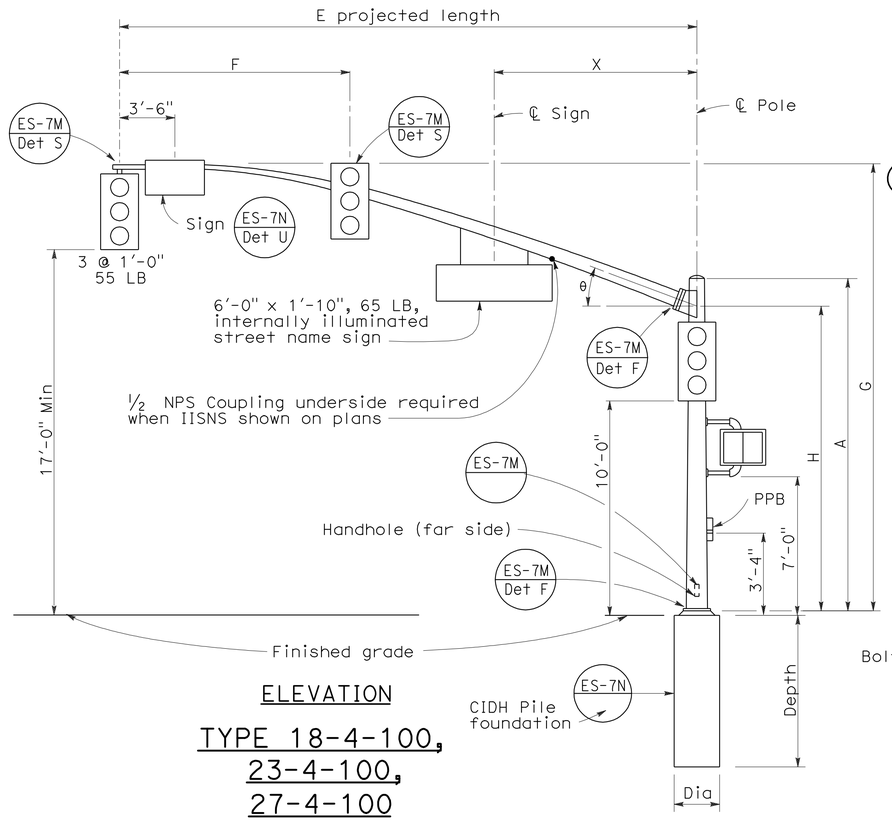

ELEVATION

TYPE 18-4-100, 23-4-100, 27-4-100

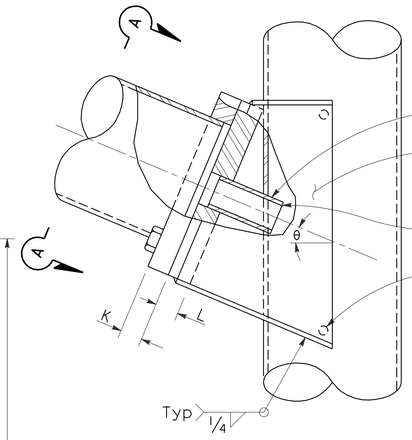

ELEVATION

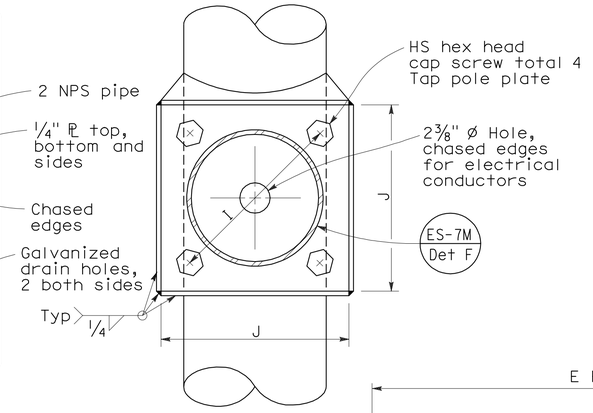

VIEW A-A

SIGNAL ARM CONNECTION DETAILS

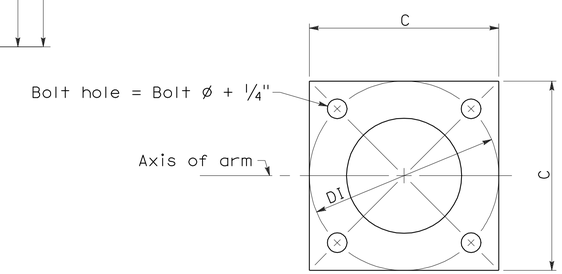

BASE PLATE

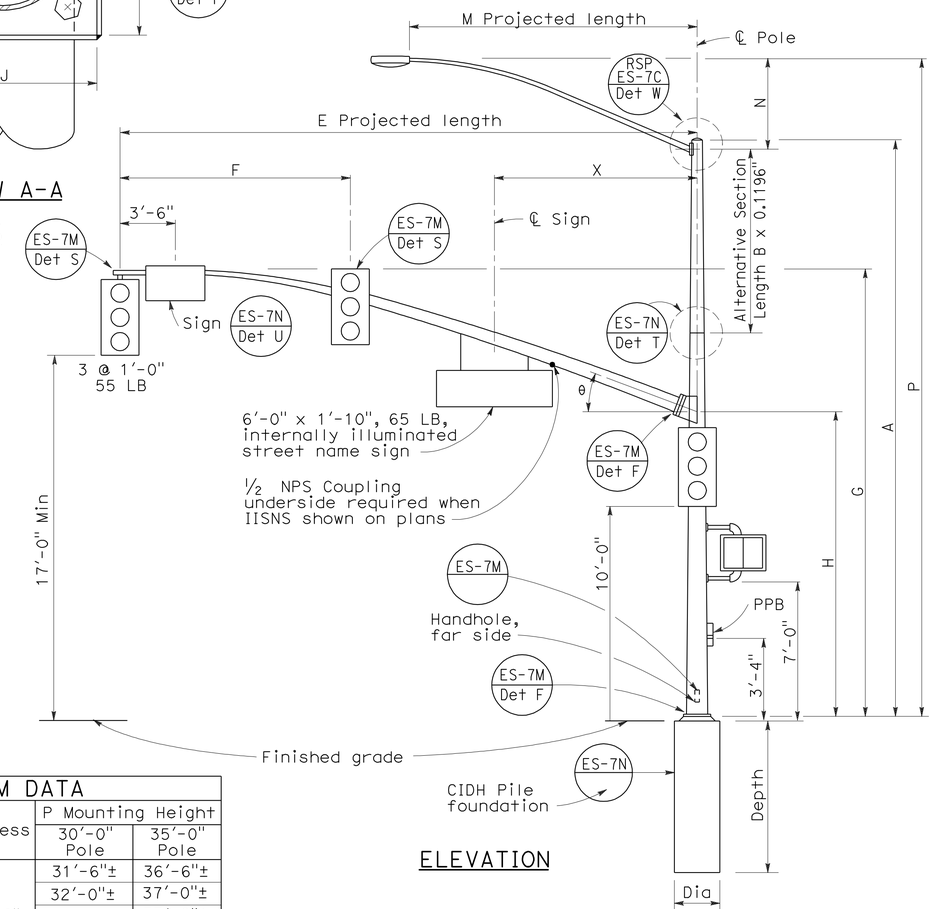

ELEVATION

TYPE 19-4-100, 19A-4-100, 24-4-100, 24A-4-100, 26-4-100, 26A-4-100

SIGNAL ARM DATA												
E Projected Length	F Min Spacing	G Mounting Height	H	Min OD at Pole	Thickness	I Bolt Circle	HS Cap Screws	J Plate Size	K Arm ℙ Thickness	L Pole ℙ Thickness	θ	X Max
25'-0"	10'-0"	22'-8"±	16'-0"	7 5/16"	0.2391"	12"	1¼"-7NC-3"	1'-0"	1¼"	1½"	23°	10'-6"
30'-0"	12'-0"	23'-0"±		8"								
35'-0"	14'-0"			8 11/16"		13½"		1'-1½"	1½"	1¾"	21°	13'-0"
40'-0"	15'-0"			9⅜"							15°	
45'-0"		23'-8"±		10¼"								

LUMINAIRE ARM DATA					
M Projected Length	N Rise	Min OD at Pole	Thickness	P Mounting Height 30'-0" Pole	P Mounting Height 35'-0" Pole
6'-0"	2'-0"±	3¼"	0.1196"	31'-6"±	36'-6"±
8'-0"	2'-6"±	3½"		32'-0"±	37'-0"±
10'-0"	3'-3"±	3⅞"		32'-9"±	37'-9"±
12'-0"	4'-3"±			33'-9"±	38'-9"±
15'-0"	4'-9"±	4¼"		34'-3"±	39'-3"±

POLE DATA									BASE PLATE DATA				Luminaire Arm	Signal Arm	CIDH PILE FOUNDATION		
Pole Type	Load Case	Wind Velocity mph	A Height	Min OD Base	Min OD Top	Thickness	Alternative Section B Length	Alternative Section Bottom	Alternative Section Top	C	DI Bolt Circle	Thickness	Anchor Bolts Size			Dia	Depth	Reinforced
18-4-100	4	100	17'-0"	12"	9"	0.2391"	None			1'-6"	1'-6"	1½"	2" Ø x 42" x 6"	None	25'-0", [30'-0"]	3'-0"	9'-0"	Yes
19-4-100			30'-0"		8"		10'-0"	9⅜"	8"					6'-15' [12'-0"]				
19A-4-100			35'-0"		7 5/16"		15'-0'		7 5/16"					6'-15' [15'-0"]				
23-4-100			17'-0"		9"		None							None	35'-0"			
24-4-100			30'-0"		8"		10'-0"	9⅜"	8"					6'-15' [12'-0"]				
24A-4-100			35'-0"		7 5/16"		15'-0"		7 5/16"					6'-15' [15'-0"]				
26-4-100			30'-0"	12½"	8"	0.3125"	10'-0"	9¾"	8⅜"					6'-15' [12'-0"]	40'-0", [45'-0"]			
26A-4-100			35'-0"		7 5/16"		15'-0"		7 11/16"					6'-15' [15'-0"]				
27-4-100			17'-0"		9¾"		None							None				

☐ Indicates arm length to be used unless otherwise noted on plans.

STATE OF CALIFORNIA
DEPARTMENT OF TRANSPORTATION

ELECTRICAL SYSTEMS (SIGNAL AND LIGHTING STANDARD CASE 4 ARM LOADING WIND VELOCITY=100 MPH ARM LENGTHS 25' TO 45')

NO SCALE

RSP ES-7F DATED OCTOBER 5, 2007 SUPERCEDES RSP ES-7F DATED NOVEMBER 17, 2006 AND STANDARD PLAN ES-7F DATED MAY 1, 2006 - PAGE 442 OF THE STANDARD PLANS BOOK DATED MAY 2006.

REVISED STANDARD PLAN RSP ES-7F

2006 REVISED STANDARD PLAN RSP ES-7F

7-10-07

DIST	COUNTY	ROUTE	POST MILES TOTAL PROJECT	SHEET NO.	TOTAL SHEETS
04	Ala	84	25.5/27.1	408	495

REGISTERED CIVIL ENGINEER

November 17, 2006
PLANS APPROVAL DATE

REGISTERED PROFESSIONAL ENGINEER Stanley P. Johnson No. C57793 Exp. 03-31-08 CIVIL STATE OF CALIFORNIA

The State of California or its officers or agents shall not be responsible for the accuracy or completeness of electronic copies of this plan sheet.

To accompany plans dated 6-27-11

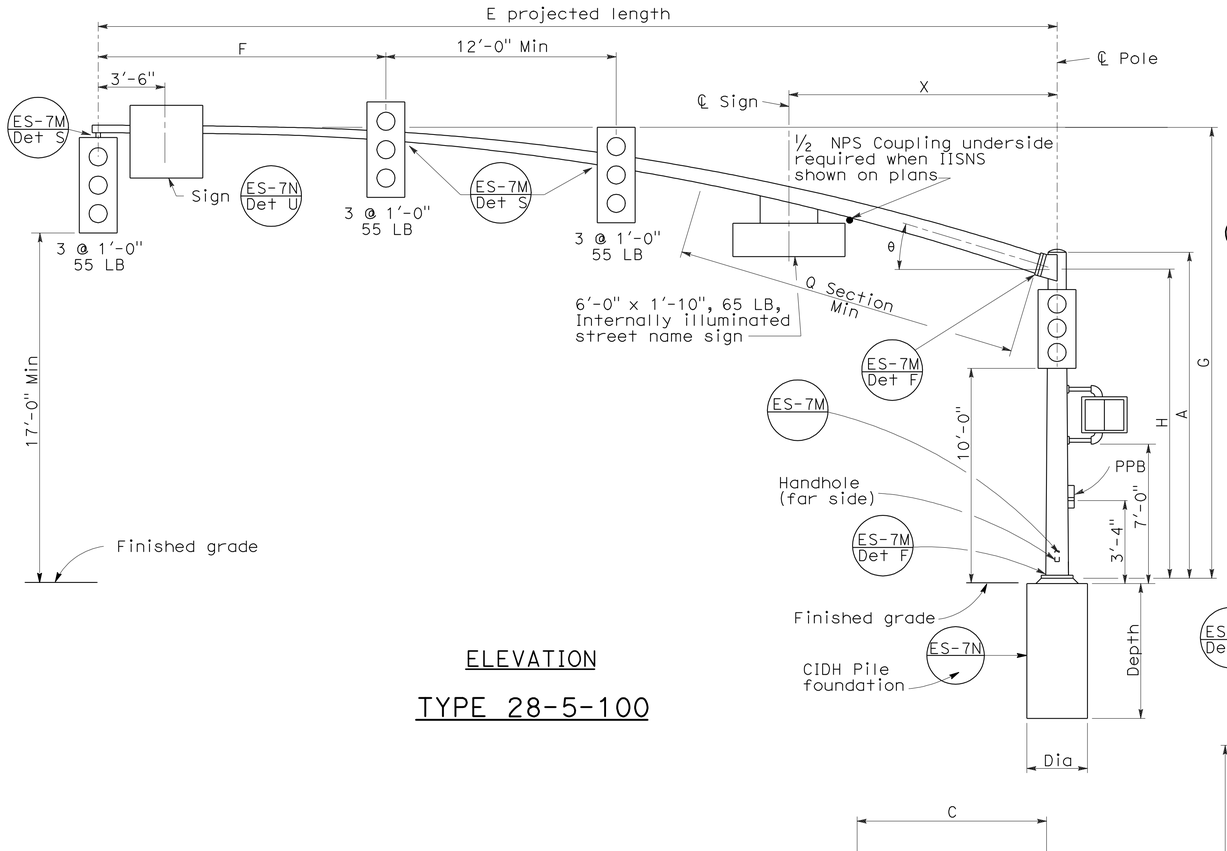

ELEVATION

TYPE 28-5-100

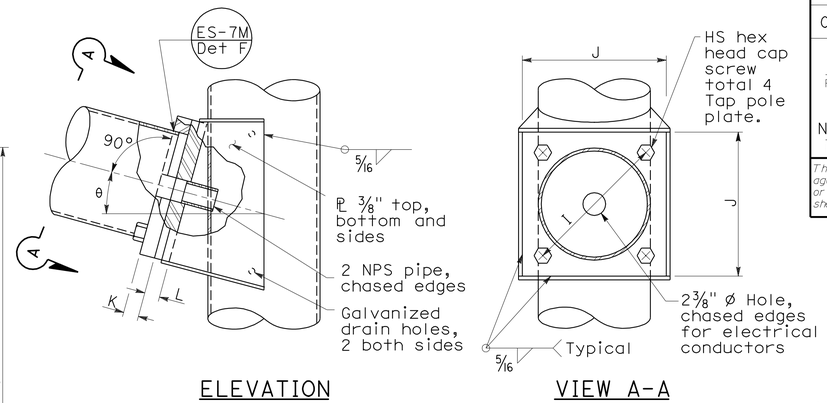

ELEVATION

VIEW A-A

SIGNAL ARM CONNECTION DETAILS

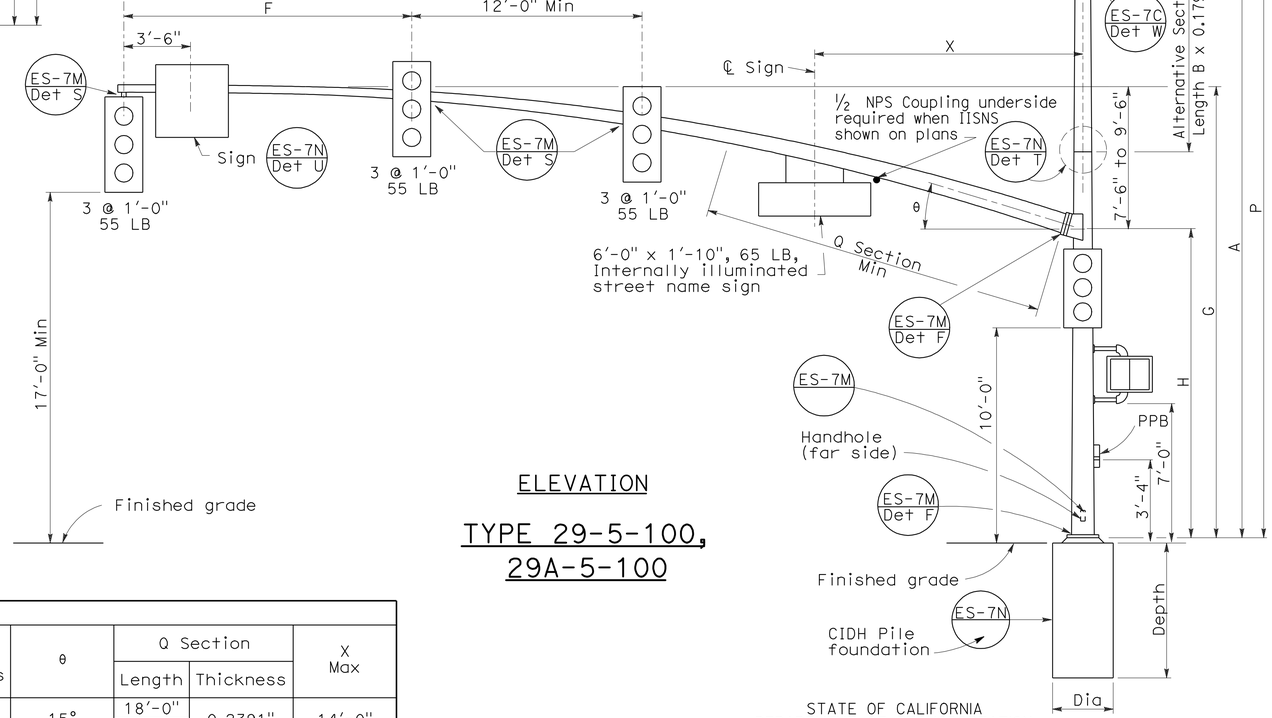

ELEVATION

TYPE 29-5-100, 29A-5-100

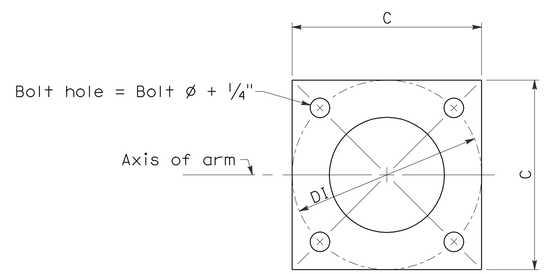

BASE PLATE

LUMINAIRE ARM DATA					
M Projected Length	N Rise	Min OD at Pole	Thickness	P Mounting Height 30'-0" Pole	P Mounting Height 35'-0" Pole
6'-0"	2'-0"±	3¼"	0.1196"	31'-6"±	36'-6"±
8'-0"	2'-6"±	3½"		32'-0"±	37'-0"±
10'-0"	3'-3"±	3⅞"		32'-9"±	37'-9"±
12'-0"	4'-3"±			33'-9"±	38'-9"±
15'-0"	4'-9"±	4¼"		34'-3"±	39'-3"±

SIGNAL ARM DATA														
E Projected Length	F Min Spacing	G Mounting Height	H	Min OD at Pole	Thickness	I Bolt Circle	HS Cap Screws	J Plate Size	K Arm ℄ Thickness	L Pole ℄ Thickness	θ	Q Section Length	Q Section Thickness	X Max
50'-0"	15'-0"	23'-7"± to 25'-7"±	16'-0"	11 7/16"	0.1793"	16"	1½"-6NC-3¼"	1'-4"	1¾"	1¾"	15°	18'-0"	0.2391"	14'-0"
55'-0"				1'-¼"								23'-0"		

POLE DATA									BASE PLATE DATA						CIDH PILE FOUNDATION		
Pole Type	Load Case	Wind Velocity mph	A Height	Min OD Base	Min OD Top	Thickness	Alternative Section B Length	Alternative Section Bottom	Alternative Section Top	C	DI Bolt Circle	Thickness	Anchor Bolts Size	Luminaire Arm	Signal Arm	Dia	Depth	Reinforced
28-5-100	5	100	17'-0"	14"	11 11/16"	0.3125"	None			21"	21"	1¾"	2" ø x 42" x 6"	None	50'-0", 55'-0"	3'-0"	9'-2"	Yes
29-5-100			30'-0"		9⅞"		10'-0"	11¼"	9⅞"					6'-15' [15'-0"]				
29A-5-100			35'-0"		9 3/16"		15'-0"		9 3/16"	23"	23"							

[ ] Indicates arm length to be used unless otherwise noted on plans.

STATE OF CALIFORNIA
DEPARTMENT OF TRANSPORTATION

ELECTRICAL SYSTEMS (SIGNAL AND LIGHTING STANDARD CASE 5 ARM LOADING WIND VELOCITY=100 MPH ARM LENGTHS 50' TO 55')

NO SCALE

RSP ES-7G DATED NOVEMBER 17, 2006 SUPERSEDES STANDARD PLAN ES-7G DATED MAY 1, 2006 - PAGE 443 OF THE STANDARD PLANS BOOK DATED MAY 2006.

REVISED STANDARD PLAN RSP ES-7G

2006 REVISED STANDARD PLAN RSP ES-7G

5-15-06

DIST	COUNTY	ROUTE	POST MILES TOTAL PROJECT	SHEET NO.	TOTAL SHEETS
04	Ala	84	25.5/27.1	409	495

REGISTERED ELECTRICAL ENGINEER

October 5, 2007
PLANS APPROVAL DATE

REGISTERED PROFESSIONAL ENGINEER
Jeffery G. McRae
No. E14512
Exp. 6-30-08
ELECTRICAL
STATE OF CALIFORNIA

The State of California or its officers or agents shall not be responsible for the accuracy or completeness of electronic copies of this plan sheet.

To accompany plans dated 6-27-11

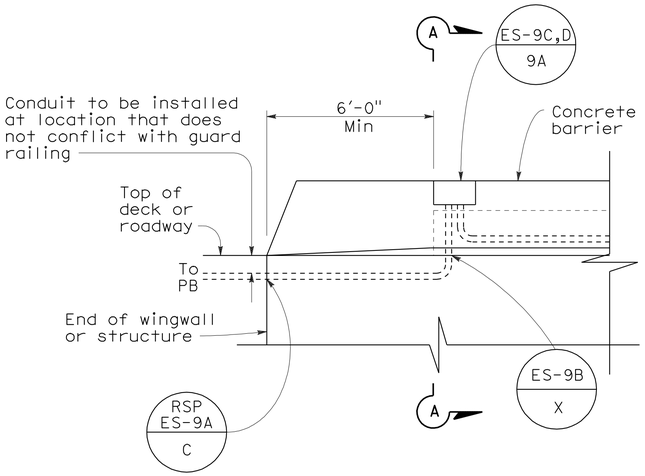

SIDEVIEW

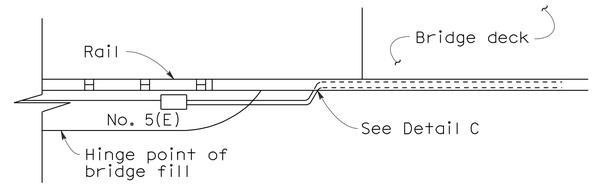

TOP VIEW

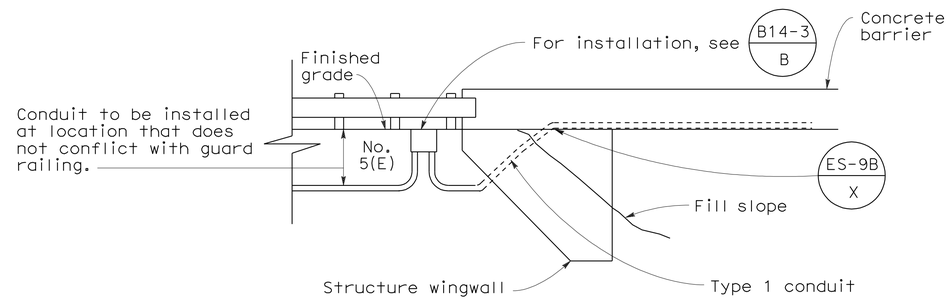

SIDE VIEW
DETAIL I
CONDUIT TERMINATION

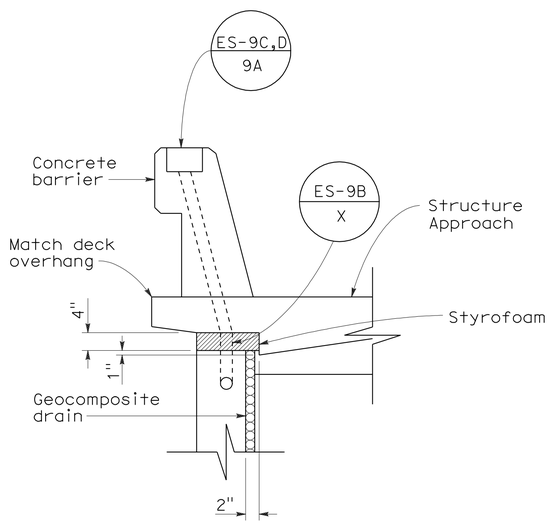

SECTION A-A

DETAIL A
CONDUIT TERMINATION

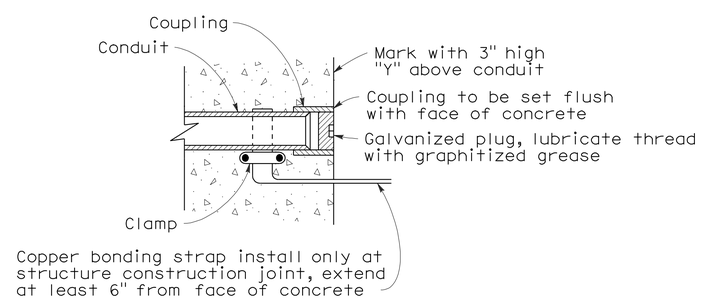

DETAIL C
CONDUIT TERMINATION

STATE OF CALIFORNIA
DEPARTMENT OF TRANSPORTATION

ELECTRICAL SYSTEMS (ELECTRICAL DETAILS STRUCTURE INSTALLATIONS)

NO SCALE

RSP ES-9A DATED OCTOBER 5, 2007 SUPERCEDES STANDARD PLAN ES-9A DATED MAY 1, 2006 - PAGE 454 OF THE STANDARD PLANS BOOK DATED MAY 2006.

REVISED STANDARD PLAN RSP ES-9A

2006 REVISED STANDARD PLAN RSP ES-9A

DIST	COUNTY	ROUTE	POST MILES TOTAL PROJECT	SHEET NO.	TOTAL SHEETS
04	Ala	84	25.5/27.1	410	495

REGISTERED ELECTRICAL ENGINEER

October 5, 2007
PLANS APPROVAL DATE

The State of California or its officers or agents shall not be responsible for the accuracy or completeness of electronic copies of this plan sheet.

REGISTERED PROFESSIONAL ENGINEER Jeffery G. McRae No. E14512 Exp. 6-30-08 ELECTRICAL STATE OF CALIFORNIA

To accompany plans dated 6-27-11

2006 REVISED STANDARD PLAN RSP ES-9C

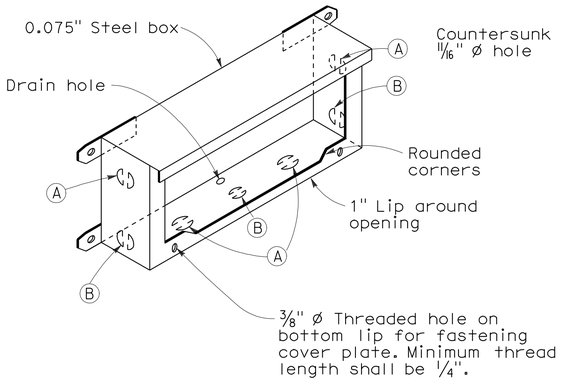

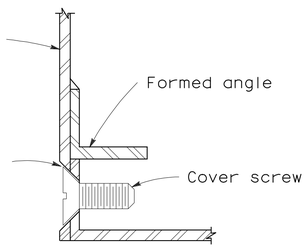

DETAIL J

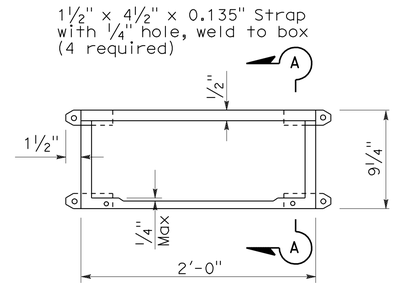

PLAN

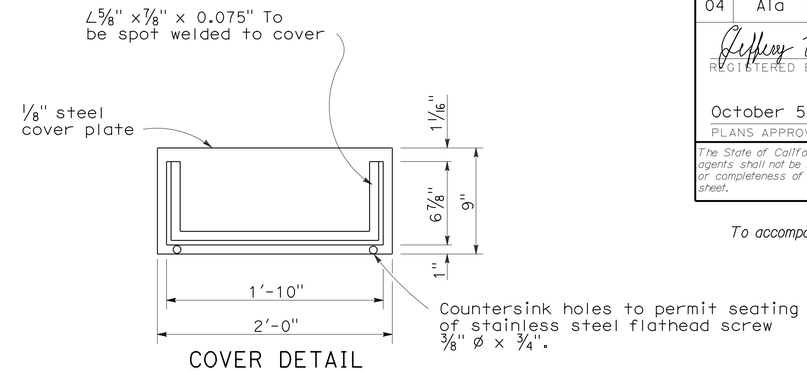

COVER DETAIL

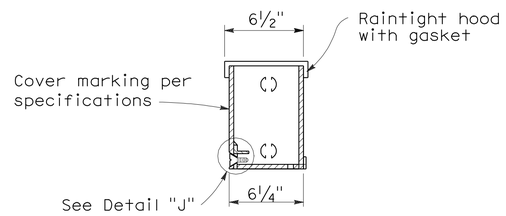

SECTION A-A

INSTALLATION NOTE:

Box shall be parallel to top of railing. Close cover box during pouring with 1/4" plywood of sufficient size to provide 1:1 chamfer on 3 sides of cover. Upper edge of plywood shall fit against lower edge of raintight hood.

No. 9 STRUCTURE PULL BOX

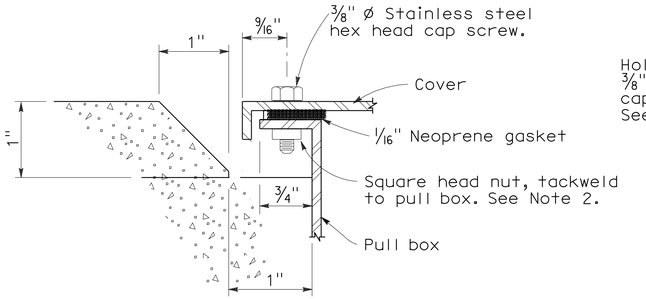

SECTION C-C

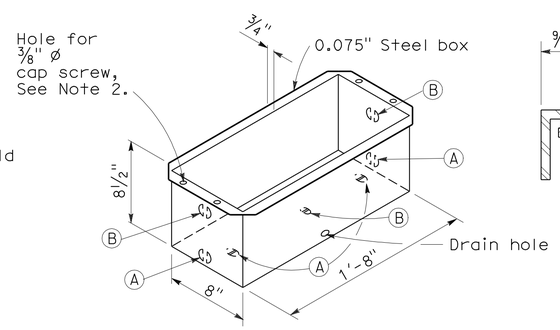

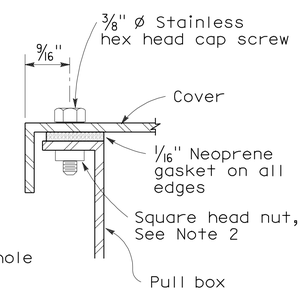

DETAIL A

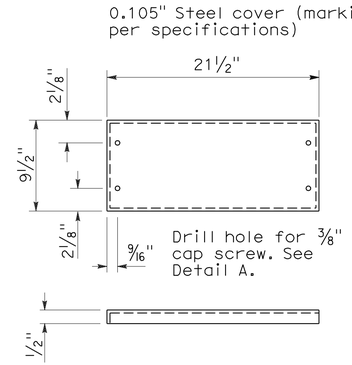

COVER DETAIL

NOTES: No. 9 and 9A Pull Box

1. Corner joints shall be lapped and secured by spot welding or riveting.
2. Where cap screws are used to attach cover to box, either of the following methods of providing adequate threading may be used:
   a. Tack weld square nut to bottom of flange (Total 4), or
   b. Tack weld a 1/4" x 5/8" x 8" bar beneath flange (Total 2).
3. Pound knockouts flat after punching.
4. Multiple size knockouts shall not be permitted.
5. Pull box covers shall be marked as shown on Standard Plan ES-8.

No. 9A STRUCTURE PULL BOX

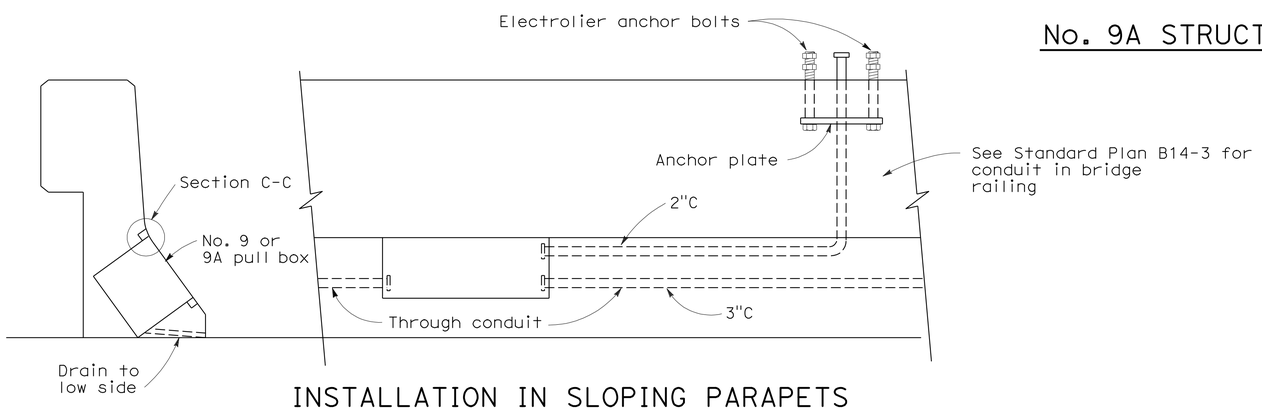

INSTALLATION IN SLOPING PARAPETS

For reinforcement in area of electrolier, see railing sheets. For electrolier anchor bolts, see Standard Plan ES-6B.

KNOCKOUT SCHEDULE
No. 9 AND 9A PULL BOX

(A) 2"C, 1 each end, 2 on bottom.

(B) 3"C, 1 each end, 1 on bottom.

STATE OF CALIFORNIA
DEPARTMENT OF TRANSPORTATION

ELECTRICAL SYSTEMS (ELECTRICAL DETAILS STRUCTURE INSTALLATIONS)

NO SCALE

RSP ES-9C DATED OCTOBER 5, 2007 SUPERCEDES STANDARD PLAN ES-9C DATED MAY 1, 2006 - PAGE 456 OF THE STANDARD PLANS BOOK DATED MAY 2006.

REVISED STANDARD PLAN RSP ES-9C

7-26-07

DIST	COUNTY	ROUTE	POST MILES TOTAL PROJECT	SHEET No	TOTAL SHEETS
04	Ala	84	25.5/27.1	411	495

REGISTERED CIVIL ENGINEER 12/10/10 DATE

6-27-11
PLANS APPROVAL DATE

REGISTERED PROFESSIONAL ENGINEER Guoping Xu No. C 63977 Exp. 09/30/12 CIVIL STATE OF CALIFORNIA

The State of California or its officers or agents shall not be responsible for the accuracy or completeness of scanned copies of this plan sheet.

ALAMEDA COUNTY TRANSPORTATION IMPROVEMENT AUTHORITY (ACTIA)
1333 BROADWAY, SUITE 300
OAKLAND, CA 94612

MGE ENGINEERING, INC.
7415 GREENHAVEN DRIVE, SUITE 100
SACRAMENTO, CALIFORNIA 95831

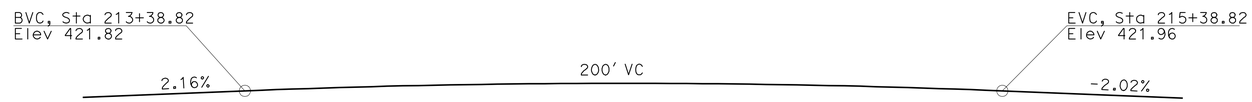

PROFILE GRADE
No Scale

INDEX TO PLANS

Sheet No.	Title
1	GENERAL PLAN
2	DECK CONTOURS
3	FOUNDATION PLAN
4	ABUTMENT 1 LAYOUT
5	ABUTMENT 2 LAYOUT
6	ABUTMENT DETAILS NO. 1
7	ABUTMENT DETAILS NO. 2
8	ABUTMENT DETAILS NO. 3
9	TYPICAL SECTION
10	GIRDER LAYOUT
11	ROCK SLOPE PROTECTION
12	LOG OF TEST BORINGS 1 of 4
13	LOG OF TEST BORINGS 2 of 4
14	LOG OF TEST BORINGS 3 of 4
15	LOG OF TEST BORINGS 4 of 4

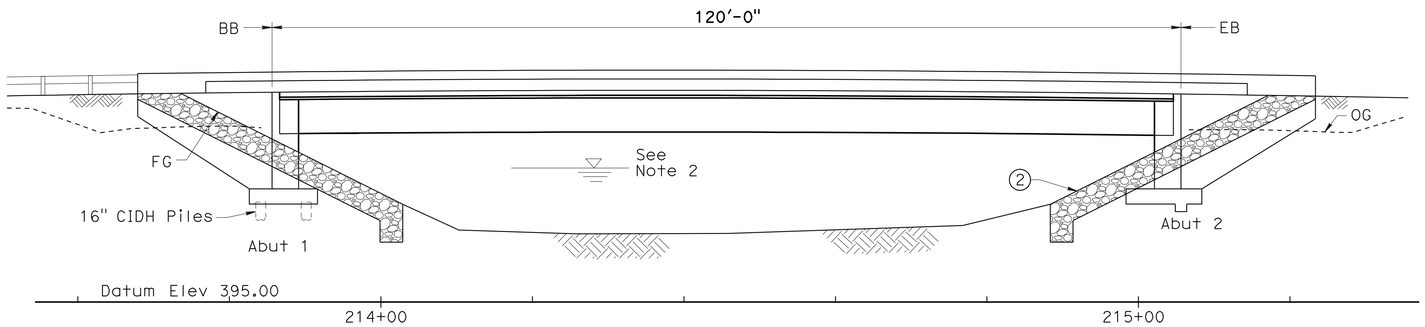

ELEVATION
1" = 10'-0"

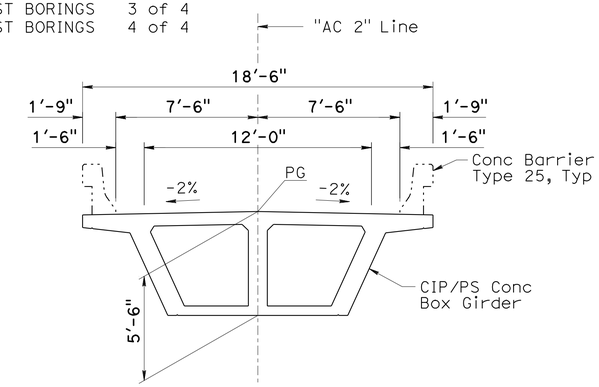

TYPICAL SECTION
1/4" = 1'-0"

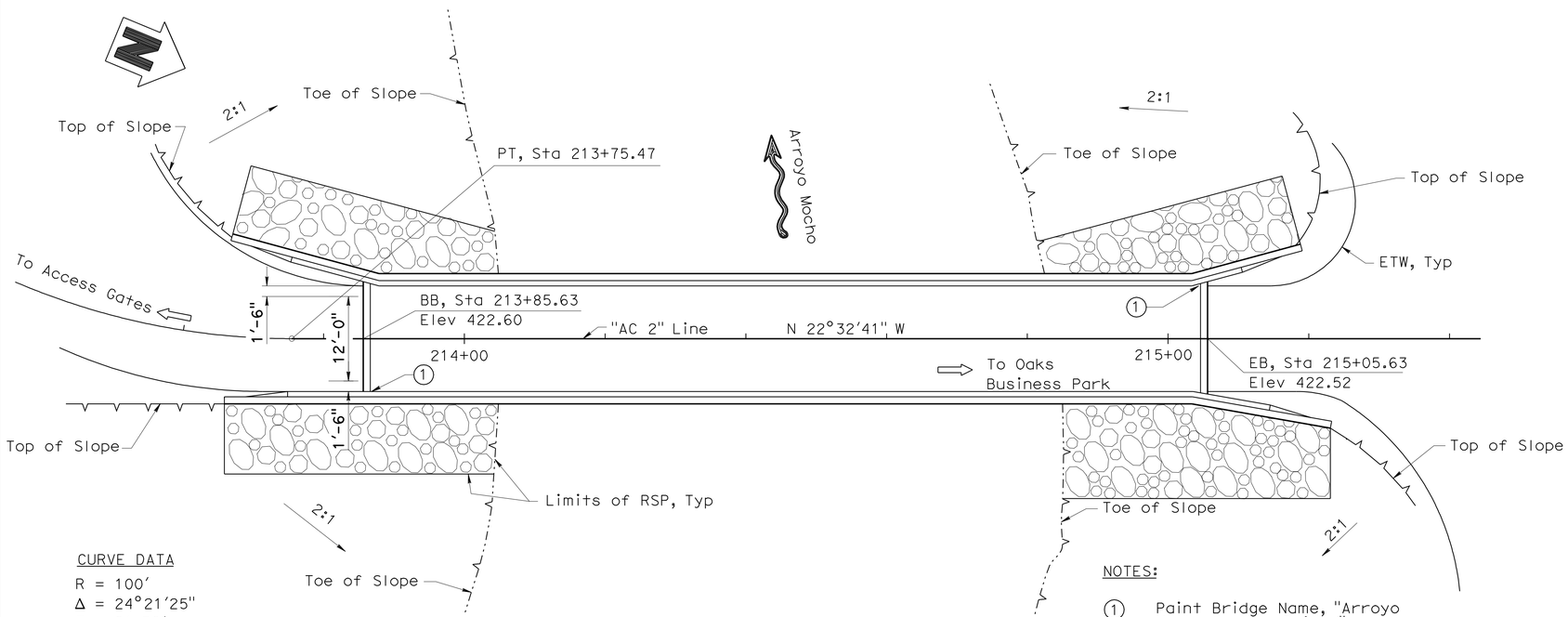

PLAN
1" = 10'-0"

CURVE DATA
R = 100'
Δ = 24°21'25"
T = 21.58'
L = 42.51'

LEGEND
Indicates Direction of Flow
Indicates Direction of Travel

NOTES:
1. Paint Bridge Name, "Arroyo Mocho Access Bridge"
2. Rock Slope Protection (1/4Ton, Method B)

ARROYO MOCHO ACCESS BRIDGE BRIDGE NO. N/A

QUANTITIES

STRUCTURE EXCAVATION (BRIDGE)	119	CY
STRUCTURE BACKFILL (BRIDGE)	119	CY
16" CAST-IN-DRILLED-HOLE CONCRETE PILING	303	LF
PRESTRESSING CAST-IN-PLACE CONCRETE	LUMP	SUM
STRUCTURAL CONCRETE, BRIDGE FOOTING	31	CY
STRUCTURAL CONCRETE, BRIDGE	207	CY
JOINT SEAL (MR 1")	37	LF
BAR REINFORCING STEEL (BRIDGE)	44,384	LB
ROCK SLOPE PROTECTION (1/4 TON, METHOD B)	267	CY
ROCK SLOPE PROTECTION (BACKING NO. 2, METHOD B)	64	CY
ROCK SLOPE PROTECTION FABRIC	326	SQYD
CONCRETE BARRIER (TYPE 25)	311	LF

NOTES:
1. For General Notes, see "FOUNDATION PLAN" sheet.
2. For Hydrologic Summary, see "FOUNDATION PLAN" sheet.

DESIGN OVERSIGHT Yiwei Hu
1/26/11
SIGN OFF DATE

	BY	CHECKED			
DESIGN	P. Zhao	R. Sennett	LOAD & RESISTANCE FACTOR DESIGN	LIVE LOADING: HL93 W/"LOW-BOY"; PERMIT DESIGN VEHICLE	
DETAILS	P. Zhao	R. Sennett	LAYOUT	P. Zhao	R. Sennett
QUANTITIES	R. Huang	W. Sennett	SPECIFICATIONS	K. Chen	PLANS AND SPECS COMPARED G. Xu

PREPARED FOR THE STATE OF CALIFORNIA DEPARTMENT OF TRANSPORTATION

Guoping Xu
PROJECT ENGINEER

BRIDGE NO. N/A
POST MILES N/A

ARROYO MOCHO ACCESS BRIDGE
GENERAL PLAN

DESIGN GENERAL PLAN SHEET (ENGLISH) (REV. 06-01-09)

ORIGINAL SCALE IN INCHES FOR REDUCED PLANS 0 1 2 3

CU 0733
EA 297611

DISREGARD PRINTS BEARING EARLIER REVISION DATES

REVISION DATES (PRELIMINARY STAGE ONLY) 02/04/08 04/07/08 09/15/08 12/19/08 04/08/09 01/22/10 08/16/10 10/28/10 12/10/10

SHEET 1 OF 15

FILE => 01-a-gp01.dgn

USERNAME => s124496 DATE PLOTTED => 21-NOV-2011 TIME PLOTTED => 15:24

DIST	COUNTY	ROUTE	POST MILES TOTAL PROJECT	SHEET No	TOTAL SHEETS
04	Ala	84	25.5/27.1	412	495

REGISTERED CIVIL ENGINEER 12/10/10 DATE

6-27-11
PLANS APPROVAL DATE

REGISTERED PROFESSIONAL ENGINEER Guoping Xu No. C 63977 Exp. 09/30/12 CIVIL STATE OF CALIFORNIA

The State of California or its officers or agents shall not be responsible for the accuracy or completeness of scanned copies of this plan sheet.

ALAMEDA COUNTY TRANSPORTATION IMPROVEMENT AUTHORITY (ACTIA)
1333 BROADWAY, SUITE 300
OAKLAND, CA 94612

MGE ENGINEERING, INC.
7415 GREENHAVEN DRIVE, SUITE 100
SACRAMENTO, CALIFORNIA 95831

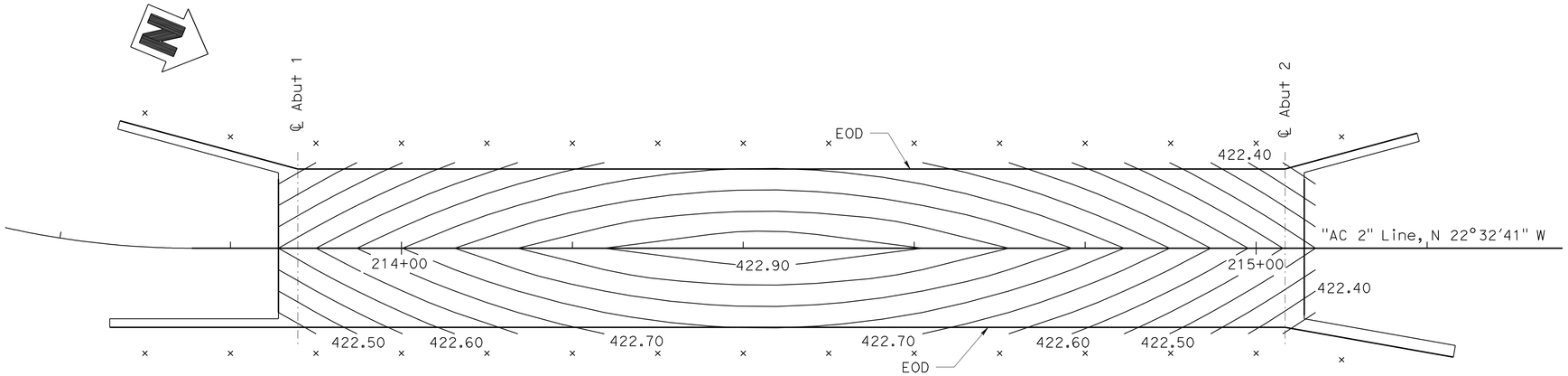

NOTES:

1. X Indicates 10'-0" Intervals along Station Line
1. Contour interval is 0.05 feet.
2. Contours do not include camber.

DECK CONTOURS

1/8" = 1'-0"

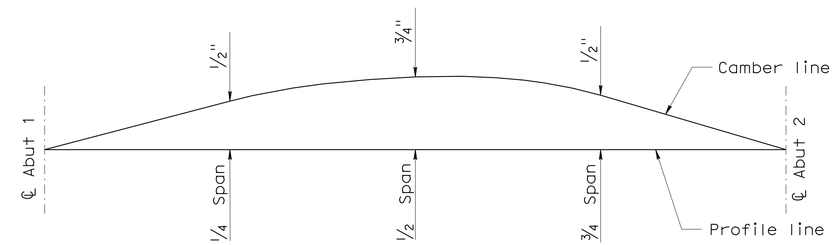

Note: Camber shown does not include allowance for falsework settlement.
Camber values are shown in inches.

CAMBER DIAGRAM

No Scale

STANDARD PLANS

Dated May 2006

	A10A	ACRONYMS AND ABBREVIATIONS (SHEET 1 OF 2)
	A10B	ACRONYMS AND ABBREVIATIONS (SHEET 2 OF 2)
	A10C	SYMBOLS (SHEET 1 OF 2)
	A10D	SYMBOLS (SHEET 2 OF 2)
	A62C	LIMITS OF PAYMENT FOR EXCAVATION AND BACKFILL - BRIDGE
	B0-1	BRIDGE DETAILS
	B0-5	BRIDGE DETAILS
	B0-13	BRIDGE DETAILS
	B2-3	16" AND 24" CAST-IN-DRILLED-HOLE CONCRETE PILE
RSP	B6-21	JOINT SEALS (MAXIMUM MOVEMENT RATING = 2")
	B7-1	BOX GIRDER DETAILS
	B8-5	CAST-IN-PLACE PRESTRESSED GIRDER DETAILS
	B11-53	CONCRETE BARRIER TYPE 25

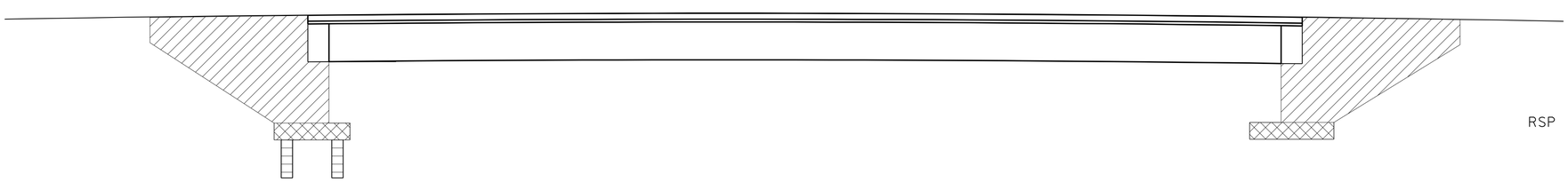

Structural Concrete, Bridge (5000 psi @ 28 days)

Structural Concrete, Bridge

Structural Concrete, Bridge Footing

16" CIDH Pile

CONCRETE STRENGTH AND TYPE LIMITS

No Scale

Standard Plan sheet No.

Detail No.

DESIGN OVERSIGHT Yiwei Hu
1/26/11
SIGN OFF DATE

	BY	CHECKED
DESIGN	P. Zhao	R. Sennett
DETAILS	P. Zhao	R. Sennett
QUANTITIES	R. Huang	W. Sennett

PREPARED FOR THE STATE OF CALIFORNIA DEPARTMENT OF TRANSPORTATION

Guoping Xu
PROJECT ENGINEER

BRIDGE NO. N/A
POST MILE N/A

ARROYO MOCHO ACCESS BRIDGE
DECK CONTOURS

DESIGN DETAIL SHEET (ENGLISH) (REV. 06-01-09)

ORIGINAL SCALE IN INCHES FOR REDUCED PLANS 0 1 2 3

CU 0733
EA 297611

DISREGARD PRINTS BEARING EARLIER REVISION DATES

REVISION DATES (PRELIMINARY STAGE ONLY) 04/30/09 01/22/10 08/18/10 10/21/10 12/10/10

SHEET 2 OF 15

FILE => 01-d-dc01.dgn

USERNAME => s124496 DATE PLOTTED => 21-NOV-2011 TIME PLOTTED => 15:24

DIST	COUNTY	ROUTE	POST MILES TOTAL PROJECT	SHEET No	TOTAL SHEETS
04	Ala	84	25.5/27.1	413	495

REGISTERED CIVIL ENGINEER 12/10/10 DATE

6-27-11
PLANS APPROVAL DATE

REGISTERED PROFESSIONAL ENGINEER Guoping Xu No. C 63977 Exp. 09/30/12 CIVIL STATE OF CALIFORNIA

The State of California or its officers or agents shall not be responsible for the accuracy or completeness of scanned copies of this plan sheet.

ALAMEDA COUNTY TRANSPORTATION IMPROVEMENT AUTHORITY (ACTIA)
1333 BROADWAY, SUITE 300
OAKLAND, CA 94612

MGE ENGINEERING, INC.
7415 GREENHAVEN DRIVE, SUITE 100
SACRAMENTO, CALIFORNIA 95831

LEGEND

Indicates Direction of Flow

XXX.xx Indicates Bottom of Footing Elevation

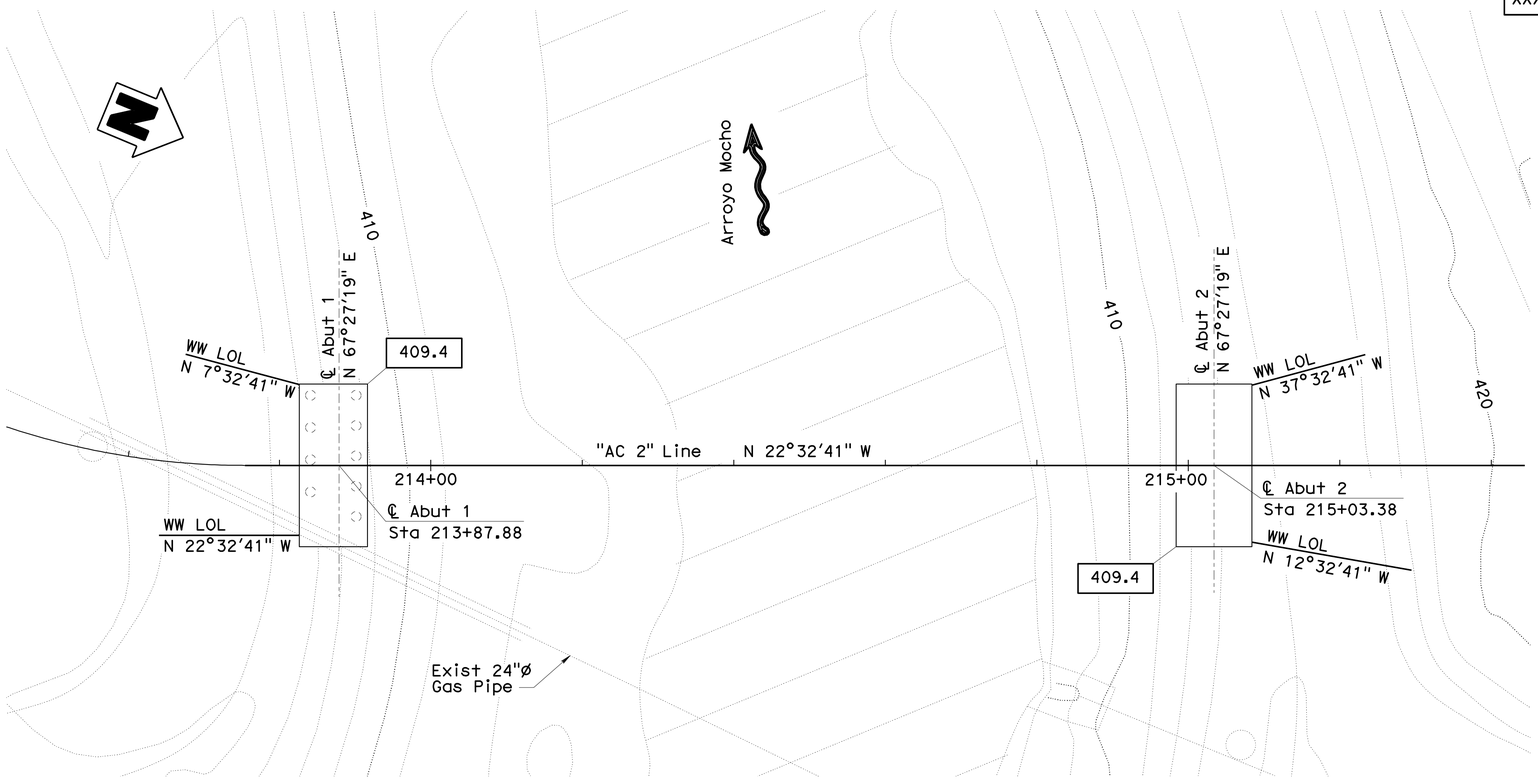

FOUNDATION PLAN

1" = 10'-0"

GENERAL NOTES
LOAD AND RESISTANCE FACTOR DESIGN

DESIGN: AASHTO LRFD Bridge Design Specifications, 4th Edition and the Caltrans Amendments, Preface dated December 2008; except that Abutments and Concrete Barrier Type 25 are designed using Bridge Design Specifications ('96 AASHTO w/ Revisions by Caltrans).

SEISMIC DESIGN: Caltrans Seismic Design Criteria (SDC) Version 1.4 dated June 2006

DEAD LOAD: Includes 35 psf for future wearing surface

LIVE LOADING: HL93 and Permit Design Vehicle

SEISMIC LOADING: Modified Caltrans SDC ARS Curve
Soil Profile Type D
Magnitude Group (7.25?.25)
Peak Rock Acceleration = 0.5g

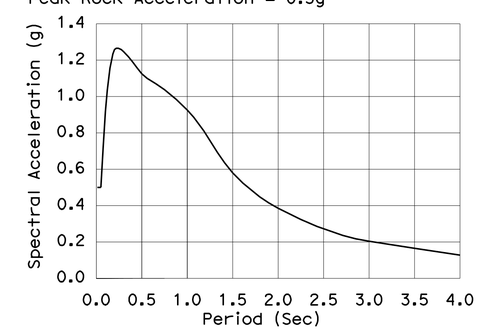

ARS CURVE

CONCRETE: fy = 60 ksi
f'c = 3.6 ksi
n = 8
See "Prestressing Notes" on 'GIRDER LAYOUT' sheet

BENCHMARK DATA

B-31 - MONUMENT GTS205 MONUMENT IS A SET 5/8" REBAR WITH PLASTIC CAP LABELED "GTS CTRL PT." MONUMENT IS LOCATED ON THE WEST SIDE OF ISABEL JUST SOUTH OF THE CREEK THAT IS +/- 1000 FT SOUTH OF DISCOVERY DR. IT IS 21 FT SOUTH OF 6FT CHAIN LINK FENCE AND 25.5 FT WEST OF ABUTMENT WALL.
ELEVATION: 419.84' NORTHING: 2072557.560
EASTING: 6183906.224

B-33 - MONUMENT GTS303 MONUMENT IS A SET 5/8" REBAR WITH PLASTIC CAP LABELED "GTS CTRL PT." MONUMENT IS LOCATED ON THE SOUTH SIDE OF THE CHANNEL THAT IS SOUTH OF DISCOVERY DR, +/- 200 FT WEST OF ISABEL, 8FT SOUTH OF ANGLE POINT OF CONCRETE WALL.
ELEVATION: 414.26' NORTHING: 2072505.810
EASTING: 6183714.251

HYDROLOGIC SUMMARY

Drainage Area: 50 square miles

	Design Flood	Base Flood
Frequency (Years)	50	100
Discharge (Cubic feet per second)	3,900	4,800
Water Surface (Elevation at bridge)	413.62	414.66

Flood plain data are based upon information available when the plans were prepared and are shown to meet federal requirements. The accuracy of said information is not warranted by the State and interested or affected parties should make their own investigation.

PILE FOOTING DATA TABLE

Support Location	Pile Type	Nominal Resistance (kips)		Design Tip Elevation (ft)	Specified Tip Elevation (ft)
		Compression	Tension		
Abut 1	16" CIDH	260	0	376.0(a) 394.0(b)	376.0

Design tip elevations controlled by the following demends:
(a) Compression; (b) Lateral

SPREAD FOOTING DATA TABLE

Support Location	Working Stress Design (WSD)		Load and Resistance Factor Design (LRFD)		
	Permissible Gross Contact Stress (Settlement) (ksf)	Allowable Gross Bearing Capacity (ksf)	Service Permissible Net Contact Stress (Settlement) (ksf)	Strength Factored Gross Nominal Bearing Resistance ϕ_b= 0.50 (ksf)	Extreme Event Factored Gross Nominal Bearing Resistance ϕ_b= 1.00 (ksf)
Abut 2	7.00	6.00	N/A	N/A	N/A

Stephen Huang 08/18/2010
GEOTECHNICAL PROFESSIONAL APPROVAL DATE

DESIGN OVERSIGHT Yiwei Hu
1/26/11
SIGN OFF DATE

SCALE: 1"=10'-0" VERT.DATUM NAVD88 HORZ.DATUM NAD83
PHOTOGRAMMETRY AS OF: 11/10/2005 ALIGNMENT TIES
SURVEYED BY Dan Scott DRAFTED BY Abhijeet Bhoi
FIELD CHECKED BY Dan Scott CHECKED BY

	BY	CHECKED
DESIGN	P. Zhao	R. Sennett
DETAILS	P. Zhao	R. Sennett
QUANTITIES	R. Huang	W. Sennett

PREPARED FOR THE STATE OF CALIFORNIA DEPARTMENT OF TRANSPORTATION

Guoping Xu
PROJECT ENGINEER

BRIDGE NO. N/A
POST MILE N/A

ARROYO MOCHO ACCESS BRIDGE
FOUNDATION PLAN

FOUNDATION PLAN SHEET (ENGLISH) (REV. 06-01-09)

ORIGINAL SCALE IN INCHES FOR REDUCED PLANS 0 1 2 3

CU 0733
EA 297611

DISREGARD PRINTS BEARING EARLIER REVISION DATES

REVISION DATES (PRELIMINARY STAGE ONLY) 02/04/08 04/07/08 09/12/08 12/14/08 04/30/09 01/22/10 08/16/10 10/24/10 12/10/10

SHEET 3 OF 15

FILE => 01-e-fdp101.dgn

USERNAME => s124496 DATE PLOTTED => 21-NOV-2011 TIME PLOTTED => 15:24

DIST	COUNTY	ROUTE	POST MILES TOTAL PROJECT	SHEET No	TOTAL SHEETS
04	Ala	84	25.5/27.1	414	495

REGISTERED CIVIL ENGINEER 12/10/10 DATE

6-27-11
PLANS APPROVAL DATE

REGISTERED PROFESSIONAL ENGINEER Guoping Xu No. C 63977 Exp. 09/30/12 CIVIL STATE OF CALIFORNIA

The State of California or its officers or agents shall not be responsible for the accuracy or completeness of scanned copies of this plan sheet.

ALAMEDA COUNTY TRANSPORTATION IMPROVEMENT AUTHORITY (ACTIA)
1333 BROADWAY, SUITE 300
OAKLAND, CA 94612

MGE ENGINEERING, INC.
7415 GREENHAVEN DRIVE, SUITE 100
SACRAMENTO, CALIFORNIA 95831

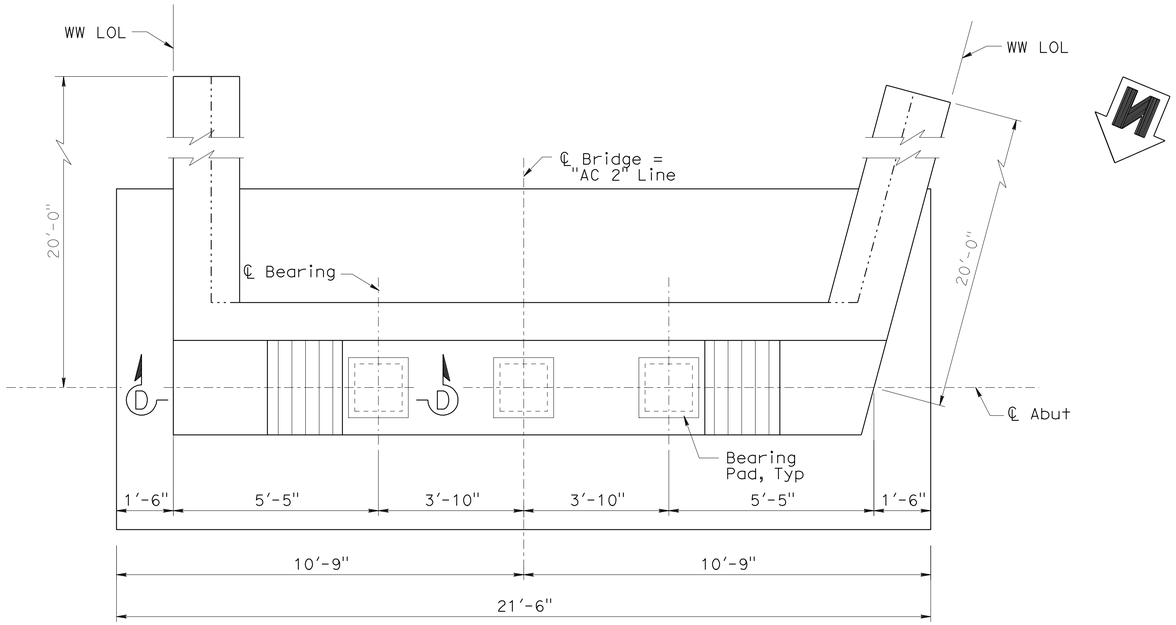

PLAN
½" = 1'-0"

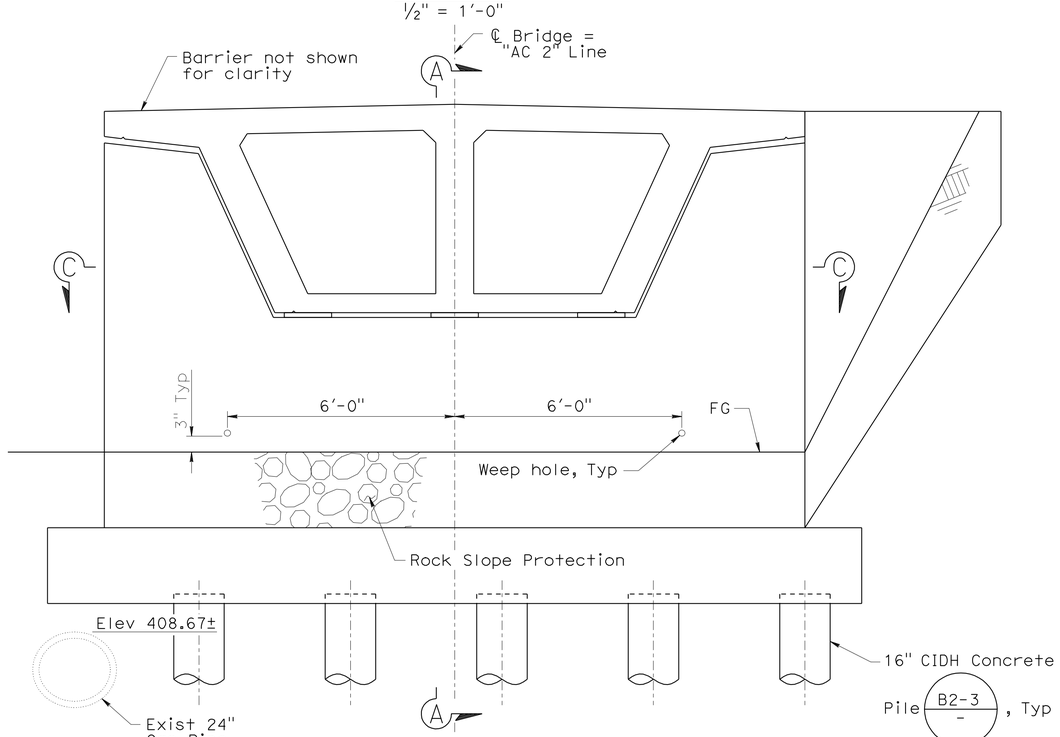

ELEVATION
½" = 1'-0"

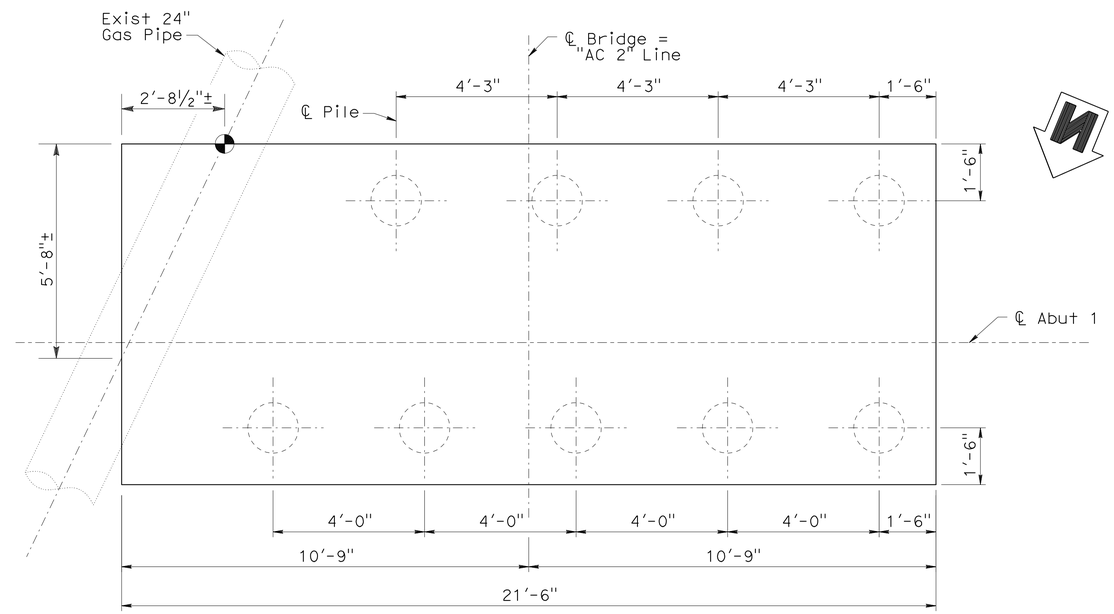

PILE LAYOUT
½" = 1'-0"

LEGEND

◕ Indicates Gas Pipe elevation 408.67±

NOTES:

1. For Sections A-A, See "ABUTMENT DETAILS NO. 1" sheet.
2. For Sections C-C and D-D, See "ABUTMENT DETAILS NO. 2" sheet.
3. For Wingwall Details, see"ABUTMENT DETAILS NO. 3" sheet.

DESIGN OVERSIGHT Yiwei Hu
1/26/11
SIGN OFF DATE

	BY	CHECKED
DESIGN	P. Zhao	R. Sennett
DETAILS	P. Zhao	R. Sennett
QUANTITIES	R. Huang	W. Sennett

PREPARED FOR THE STATE OF CALIFORNIA DEPARTMENT OF TRANSPORTATION

Guoping Xu
PROJECT ENGINEER

BRIDGE NO. N/A
POST MILE N/A

ARROYO MOCHO ACCESS BRIDGE
ABUTMENT 1 LAYOUT

DESIGN DETAIL SHEET (ENGLISH) (REV. 06-01-09)

ORIGINAL SCALE IN INCHES FOR REDUCED PLANS 0 1 2 3

CU 0733
EA 297611

DISREGARD PRINTS BEARING EARLIER REVISION DATES

REVISION DATES (PRELIMINARY STAGE ONLY) 04/30/09 01/22/10 08/18/10 10/21/10 12/10/10

SHEET 4 OF 15

FILE => 01-f-a01_1o1.dgn

USERNAME => s124436 DATE PLOTTED => 21-NOV-2011 TIME PLOTTED => 15:24

DIST	COUNTY	ROUTE	POST MILES TOTAL PROJECT	SHEET No	TOTAL SHEETS
04	Ala	84	25.5/27.1	415	495

REGISTERED CIVIL ENGINEER 12/10/10 DATE

6-27-11
PLANS APPROVAL DATE

REGISTERED PROFESSIONAL ENGINEER
Guoping Xu
No. C 63977
Exp. 09/30/12
CIVIL
STATE OF CALIFORNIA

The State of California or its officers or agents shall not be responsible for the accuracy or completeness of scanned copies of this plan sheet.

ALAMEDA COUNTY TRANSPORTATION IMPROVEMENT AUTHORITY (ACTIA)
1333 BROADWAY, SUITE 300
OAKLAND, CA 94612

MGE ENGINEERING, INC.
7415 GREENHAVEN DRIVE, SUITE 100
SACRAMENTO, CALIFORNIA 95831

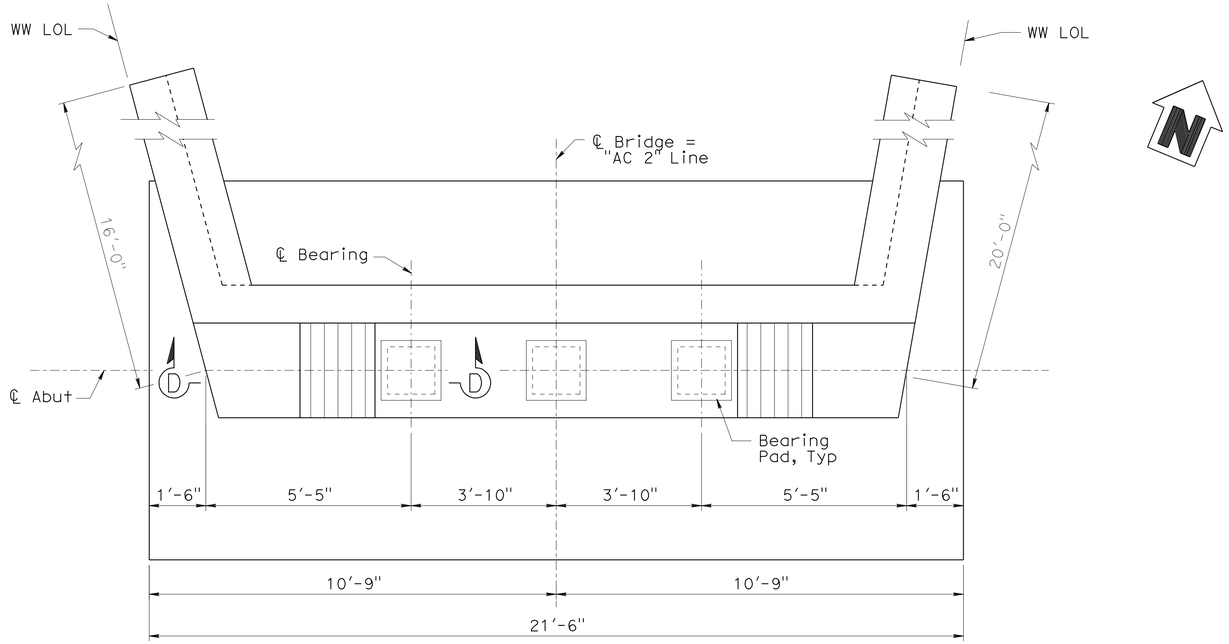

PLAN
½" = 1'-0"

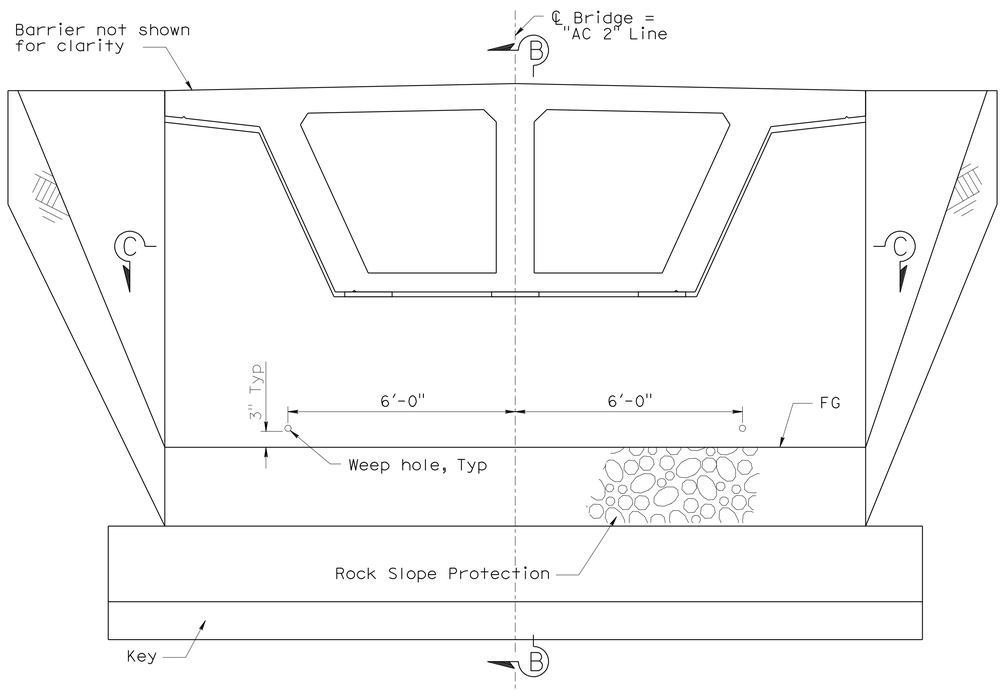

ELEVATION
½" = 1'-0"

NOTES:

1. For Section B-B, See "ABUTMENT DETAILS NO. 1" sheet.
2. For Sections C-C and D-D, See "ABUTMENT DETAILS NO. 2" sheet.
3. For Wingwall Details, see"ABUTMENT DETAILS NO. 3" sheet.

DESIGN OVERSIGHT Yiwei Hu	DESIGN	BY P. Zhao	CHECKED R. Sennett
1/26/11 SIGN OFF DATE	DETAILS	BY P. Zhao	CHECKED R. Sennett
	QUANTITIES	BY R. Huang	CHECKED W. Sennett

PREPARED FOR THE STATE OF CALIFORNIA DEPARTMENT OF TRANSPORTATION

Guoping Xu
PROJECT ENGINEER

BRIDGE NO. N/A
POST MILE N/A

ARROYO MOCHO ACCESS BRIDGE
ABUTMENT 2 LAYOUT

DESIGN DETAIL SHEET (ENGLISH) (REV. 06-01-09)

ORIGINAL SCALE IN INCHES FOR REDUCED PLANS 0 1 2 3

CU 0733
EA 297611

DISREGARD PRINTS BEARING EARLIER REVISION DATES

REVISION DATES (PRELIMINARY STAGE ONLY): ~~04/30/09~~ ~~01/22/10~~ ~~08/16/10~~ ~~10/21/10~~ 12/10/10

SHEET 5 OF 15

FILE => 01-f-a01_lo2.dgn

USERNAME => s124496 DATE PLOTTED => 21-NOV-2011 TIME PLOTTED => 15:24

DIST	COUNTY	ROUTE	POST MILES TOTAL PROJECT	SHEET No	TOTAL SHEETS
04	Ala	84	25.5/27.1	416	495

REGISTERED CIVIL ENGINEER 12/10/10 DATE

6-27-11
PLANS APPROVAL DATE

REGISTERED PROFESSIONAL ENGINEER Guoping Xu No. C 63977 Exp. 09/30/12 CIVIL STATE OF CALIFORNIA

The State of California or its officers or agents shall not be responsible for the accuracy or completeness of scanned copies of this plan sheet.

ALAMEDA COUNTY TRANSPORTATION IMPROVEMENT AUTHORITY (ACTIA)
1333 BROADWAY, SUITE 300
OAKLAND, CA 94612

MGE ENGINEERING, INC.
7415 GREENHAVEN DRIVE, SUITE 100
SACRAMENTO, CALIFORNIA 95831

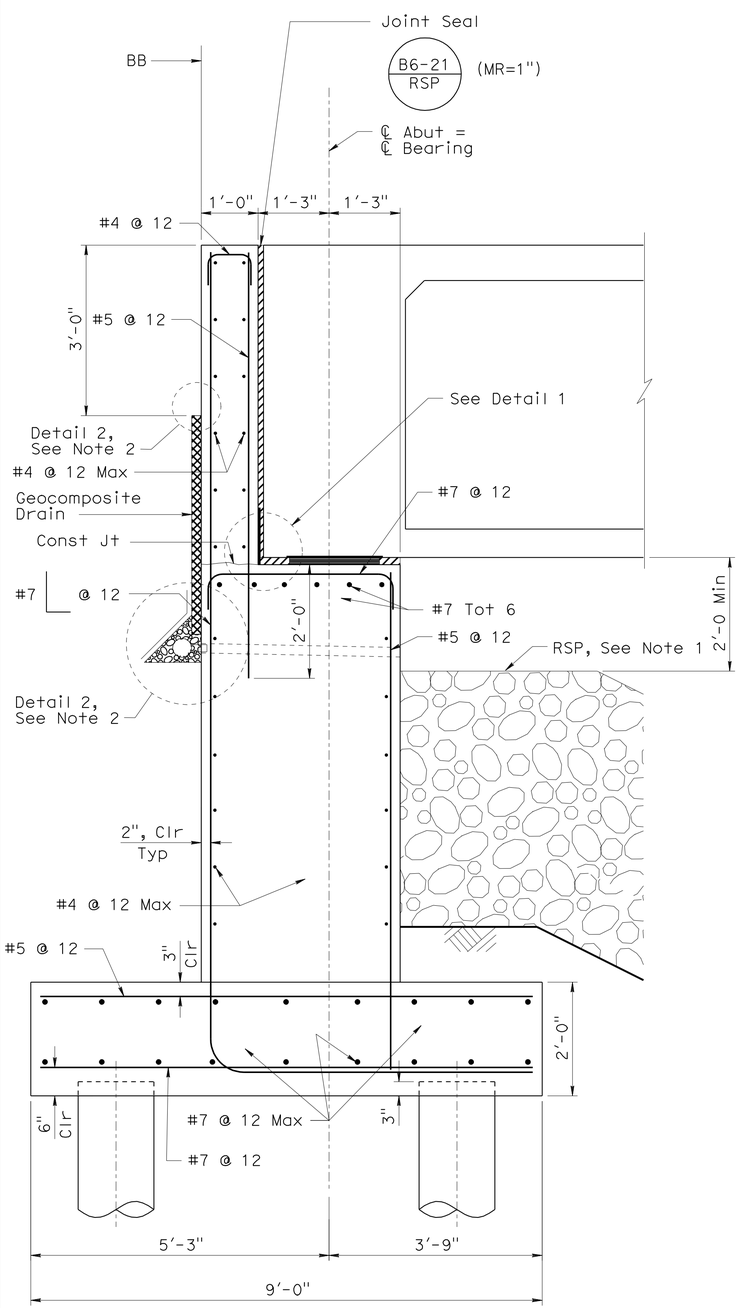

SECTION A-A
3/4" = 1'-0"

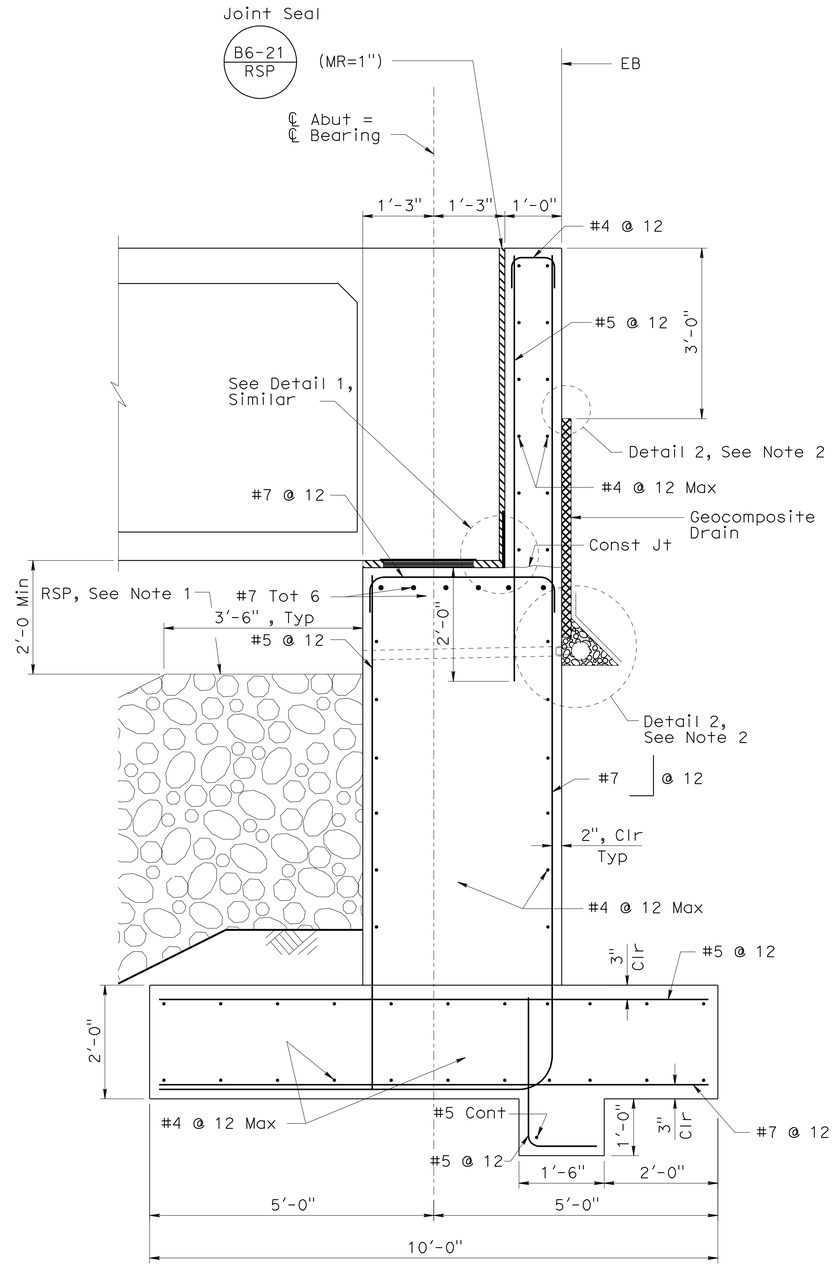

SECTION B-B
3/4" = 1'-0"

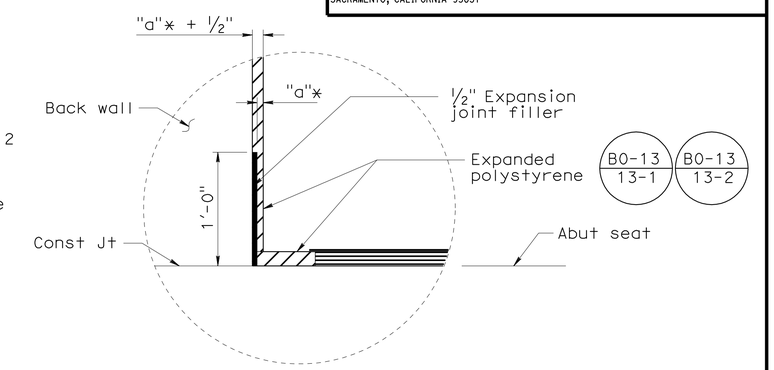

* For definition dimension "a", see Std Plan RSP B6-21

DETAIL 1
1 1/2" = 1'-0"

NOTES:

1. For RSP, See "ROCK SLOPE PROTECTION" sheet.
2. For Detail 2, See "ABUTMENT DETAILS NO. 3" sheet.

DESIGN OVERSIGHT Yiwei Hu
1/26/11
SIGN OFF DATE

	BY	CHECKED
DESIGN	P. Zhao	R. Sennett
DETAILS	P. Zhao	R. Sennett
QUANTITIES	R. Huang	W. Sennett

PREPARED FOR THE STATE OF CALIFORNIA DEPARTMENT OF TRANSPORTATION

Guoping Xu
PROJECT ENGINEER

BRIDGE NO. N/A
POST MILE N/A

ARROYO MOCHO ACCESS BRIDGE
ABUTMENT DETAILS NO. 1

DESIGN DETAIL SHEET (ENGLISH) (REV. 06-01-09)

ORIGINAL SCALE IN INCHES FOR REDUCED PLANS 0 1 2 3

CU 0733
EA 297611

DISREGARD PRINTS BEARING EARLIER REVISION DATES

REVISION DATES (PRELIMINARY STAGE ONLY) 04/30/09 01/22/10 08/13/10 10/21/10 12/10/10

SHEET 6 OF 15

FILE => 01-f-a01dt01.dgn

USERNAME => s124436 DATE PLOTTED => 21-NOV-2011 TIME PLOTTED => 15:24

DIST	COUNTY	ROUTE	POST MILES TOTAL PROJECT	SHEET No	TOTAL SHEETS
04	Ala	84	25.5/27.1	417	495

REGISTERED CIVIL ENGINEER 12/10/10 DATE

6-27-11
PLANS APPROVAL DATE

REGISTERED PROFESSIONAL ENGINEER Guoping Xu No. C 63977 Exp. 09/30/12 CIVIL STATE OF CALIFORNIA

The State of California or its officers or agents shall not be responsible for the accuracy or completeness of scanned copies of this plan sheet.

ALAMEDA COUNTY TRANSPORTATION IMPROVEMENT AUTHORITY (ACTIA)
1333 BROADWAY, SUITE 300
OAKLAND, CA 94612

MGE ENGINEERING, INC.
7415 GREENHAVEN DRIVE, SUITE 100
SACRAMENTO, CALIFORNIA 95831

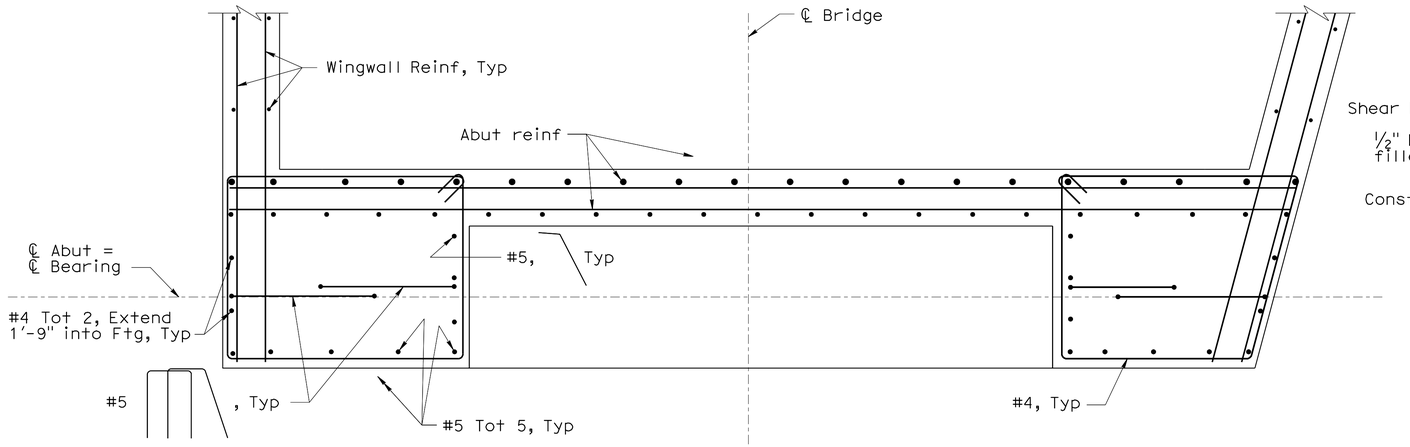

SECTION C-C
3/4" = 1'-0"

Abutment 1 shown
Abutment 2 similiar

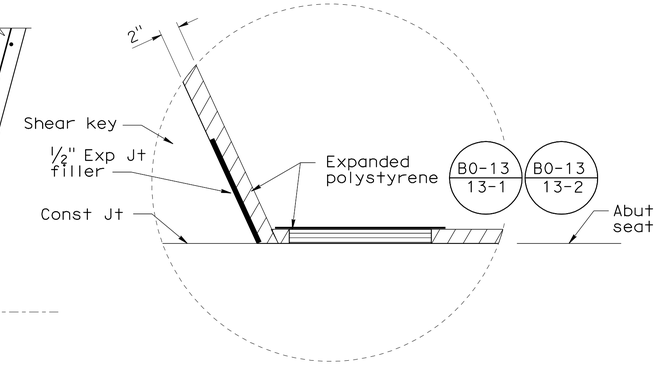

DETAIL 3
1 1/2" = 1'-0"

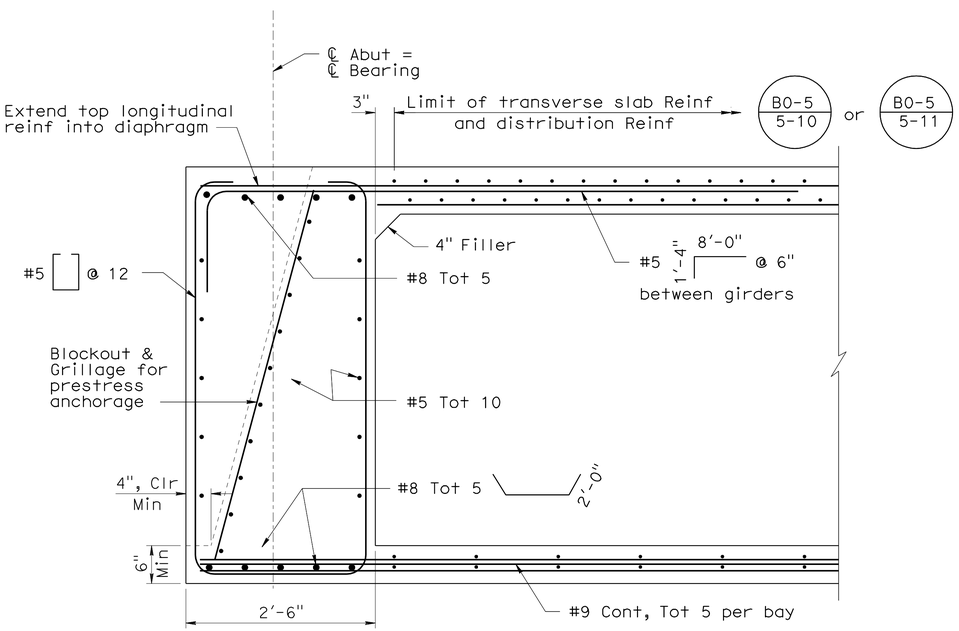

END DIAPHRAGM DETAILS
B8-5
1" = 1'-0"

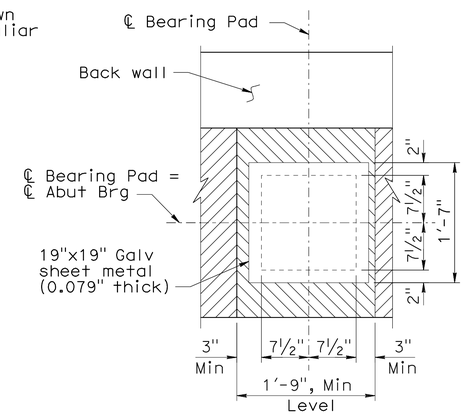

PLAN

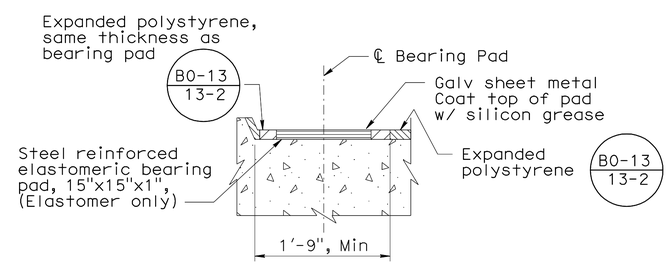

ELEVATION

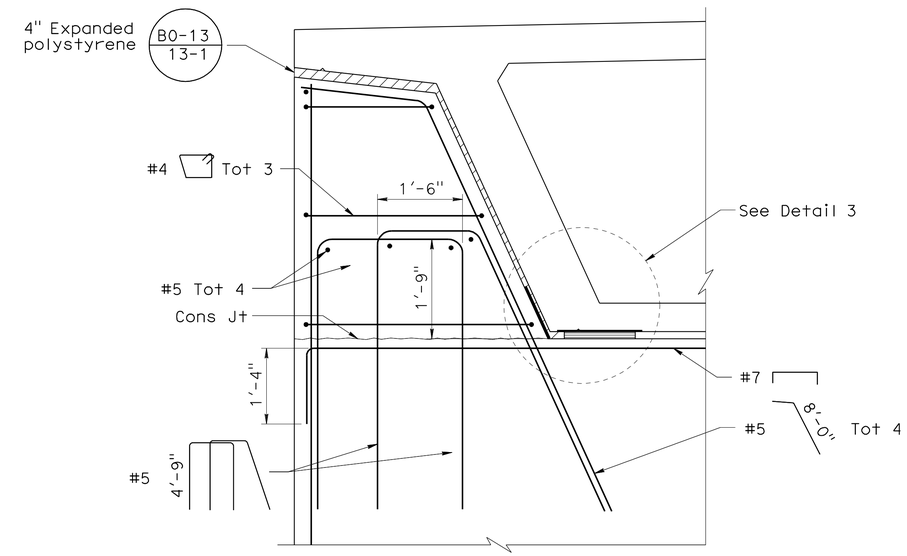

SECTION D-D
3/4" = 1'-0"

BEARING PAD DETAILS
1" = 1'-0"

DESIGN OVERSIGHT Yiwei Hu; 1/26/11 SIGN OFF DATE	DESIGN	BY P. Zhao	CHECKED R. Sennett	PREPARED FOR THE STATE OF CALIFORNIA DEPARTMENT OF TRANSPORTATION	Guoping Xu PROJECT ENGINEER
	DETAILS	BY P. Zhao	CHECKED R. Sennett		
	QUANTITIES	BY R. Huang	CHECKED W. Sennett		

BRIDGE NO. N/A
POST MILE N/A

ARROYO MOCHO ACCESS BRIDGE
ABUTMENT DETAILS NO. 2

DESIGN DETAIL SHEET (ENGLISH) (REV. 06-01-09)

ORIGINAL SCALE IN INCHES FOR REDUCED PLANS 0 1 2 3

CU 0733
EA 297611

DISREGARD PRINTS BEARING EARLIER REVISION DATES

REVISION DATES (PRELIMINARY STAGE ONLY) 04/30/09 01/22/10 08/16/10 10/21/10 12/10/10

SHEET 7 OF 15

FILE => 01-f-a01dt02.dgn

USERNAME => s124196 DATE PLOTTED => 21-NOV-2011 TIME PLOTTED => 15:24

DIST	COUNTY	ROUTE	POST MILES TOTAL PROJECT	SHEET No	TOTAL SHEETS
04	Ala	84	25.5/27.1	418	495

REGISTERED CIVIL ENGINEER 12/10/10 DATE

6-27-11
PLANS APPROVAL DATE

REGISTERED PROFESSIONAL ENGINEER Guoping Xu No. C 63977 Exp. 09/30/12 CIVIL STATE OF CALIFORNIA

The State of California or its officers or agents shall not be responsible for the accuracy or completeness of scanned copies of this plan sheet.

ALAMEDA COUNTY TRANSPORTATION IMPROVEMENT AUTHORITY (ACTIA)
1333 BROADWAY, SUITE 300
OAKLAND, CA 94612

MGE ENGINEERING, INC.
7415 GREENHAVEN DRIVE, SUITE 100
SACRAMENTO, CALIFORNIA 95831

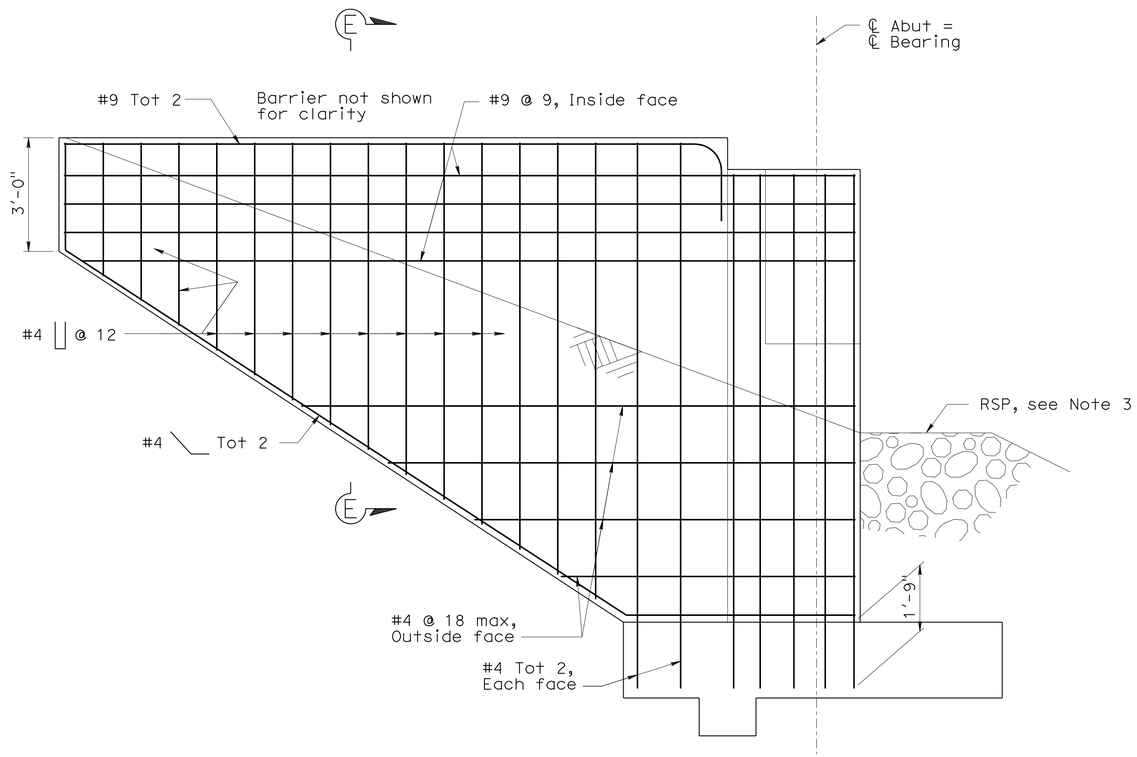

WINGWALL ELEVATION
½" = 1'-0"

Abut 2 shown
Abut 1 similar

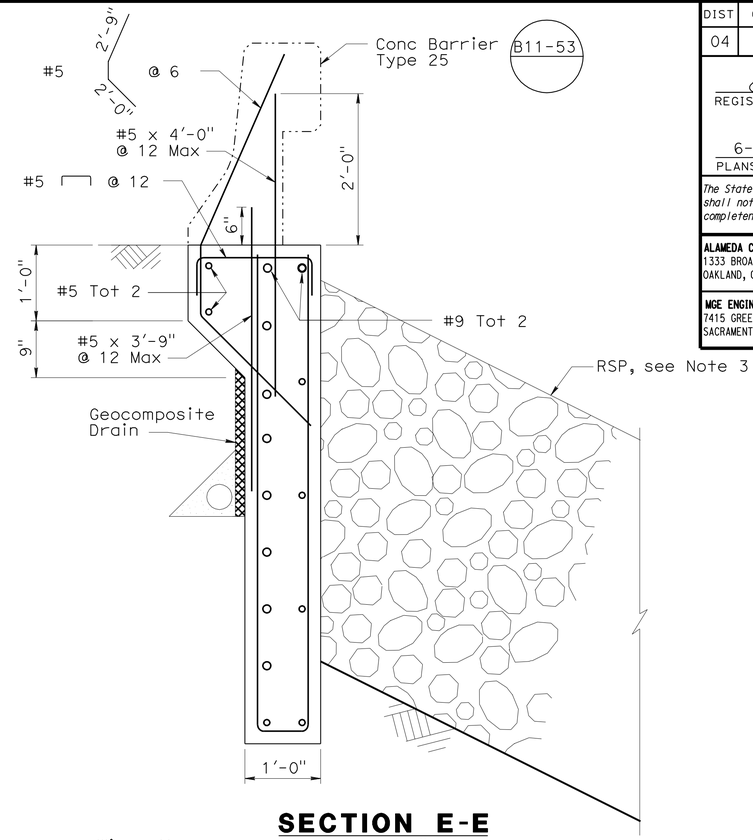

SECTION E-E
1" = 1'-0"

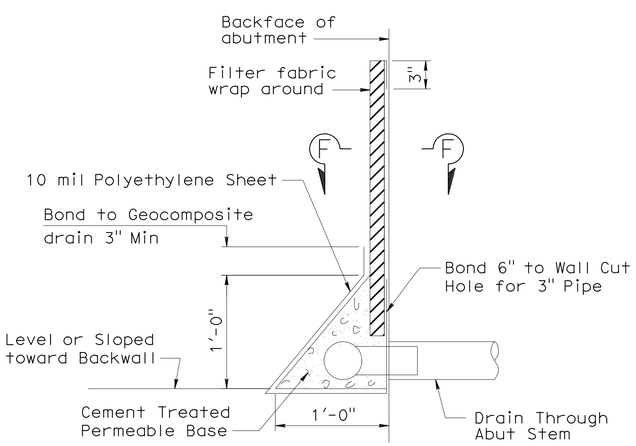

DETAIL 2
No Scale

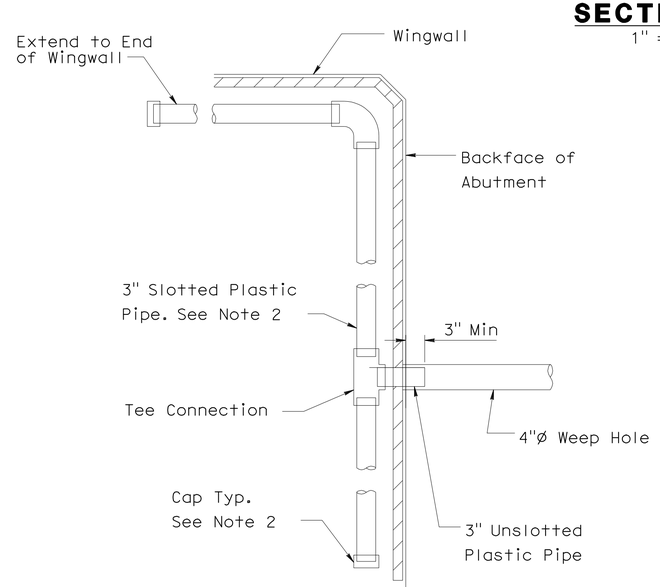

SECTION F-F
No Scale

NOTES:

1. 4" drains at 20' max center to center. Weep holes shall be located 3" above finished grade.
2. Geocomposite drain, cement treated permeable base, and 3"Ø slotted plastic pipe continuous behind abutments, return walls, & wingwalls. Cap ends of pipe. Provide "Tee" connection at each 4"Ø drain.
3. For limits and details of Rock Slope Protection, refer to "Rock Slope Protection" sheet.

DESIGN OVERSIGHT Yiwei Hu
1/26/11
SIGN OFF DATE

	BY	CHECKED
DESIGN	P. Zhao	R. Sennett
DETAILS	P. Zhao	R. Sennett
QUANTITIES	R. Huang	W. Sennett

PREPARED FOR THE STATE OF CALIFORNIA DEPARTMENT OF TRANSPORTATION

Guoping Xu
PROJECT ENGINEER

BRIDGE NO. N/A
POST MILE N/A

ARROYO MOCHO ACCESS BRIDGE
ABUTMENT DETAILS NO. 3

DESIGN DETAIL SHEET (ENGLISH) (REV. 06-01-09)

ORIGINAL SCALE IN INCHES FOR REDUCED PLANS 0 1 2 3

CU 0733
EA 297611

DISREGARD PRINTS BEARING EARLIER REVISION DATES

REVISION DATES (PRELIMINARY STAGE ONLY): 04/30/09 01/22/10 08/18/10 10/27/10 12/10/10

SHEET 8 OF 15

FILE => 01-f-a01dt03.dgn

USERNAME => s124496 DATE PLOTTED => 21-NOV-2011 TIME PLOTTED => 15:24

DIST	COUNTY	ROUTE	POST MILES TOTAL PROJECT	SHEET No	TOTAL SHEETS
04	Ala	84	25.5/27.1	419	495

REGISTERED CIVIL ENGINEER 12/10/10 DATE

6-27-11
PLANS APPROVAL DATE

REGISTERED PROFESSIONAL ENGINEER Guoping Xu No. C 63977 Exp. 09/30/12 CIVIL STATE OF CALIFORNIA

The State of California or its officers or agents shall not be responsible for the accuracy or completeness of scanned copies of this plan sheet.

ALAMEDA COUNTY TRANSPORTATION IMPROVEMENT AUTHORITY (ACTIA)
1333 BROADWAY, SUITE 300
OAKLAND, CA 94612

MGE ENGINEERING, INC.
7415 GREENHAVEN DRIVE, SUITE 100
SACRAMENTO, CALIFORNIA 95831

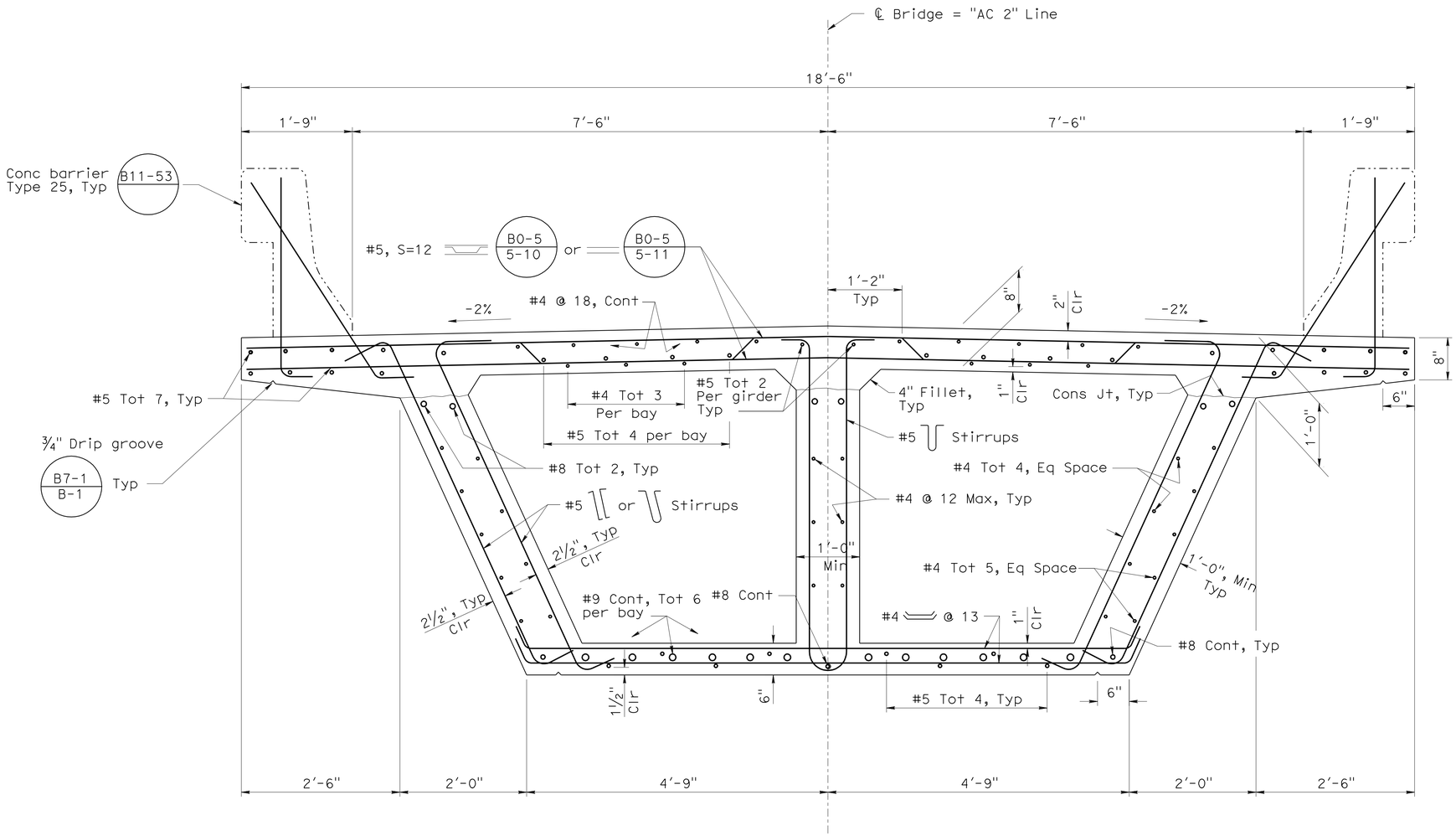

TYPICAL SECTION

1" = 1'-0"

B0-5 B7-1 B8-5 B11-53

DESIGN OVERSIGHT Yiwei Hu 1/26/11 SIGN OFF DATE	DESIGN	BY P. Zhao	CHECKED R. Sennett	PREPARED FOR THE STATE OF CALIFORNIA DEPARTMENT OF TRANSPORTATION	Guoping Xu PROJECT ENGINEER
	DETAILS	BY P. Zhao	CHECKED R. Sennett		
	QUANTITIES	BY R. Huang	CHECKED W. Sennett		

BRIDGE NO. N/A
POST MILE N/A

ARROYO MOCHO ACCESS BRIDGE
TYPICAL SECTION

DESIGN DETAIL SHEET (ENGLISH) (REV. 06-01-09)

ORIGINAL SCALE IN INCHES FOR REDUCED PLANS 0 1 2 3

CU 0733
EA 297611

DISREGARD PRINTS BEARING EARLIER REVISION DATES

REVISION DATES (PRELIMINARY STAGE ONLY) ~~04/30/09~~ ~~01/22/10~~ ~~08/18/10~~ ~~10/21/10~~ 12/10/10

SHEET 9 OF 15

FILE => 01-k-ts01.dgn

USERNAME => s124936 DATE PLOTTED => 21-NOV-2011 TIME PLOTTED => 15:24

DIST	COUNTY	ROUTE	POST MILES TOTAL PROJECT	SHEET No	TOTAL SHEETS
04	Ala	84	25.5/27.1	420	495

REGISTERED CIVIL ENGINEER 12/10/10 DATE

6-27-11
PLANS APPROVAL DATE

REGISTERED PROFESSIONAL ENGINEER Guoping Xu No. C 63977 Exp. 09/30/12 CIVIL STATE OF CALIFORNIA

The State of California or its officers or agents shall not be responsible for the accuracy or completeness of scanned copies of this plan sheet.

ALAMEDA COUNTY TRANSPORTATION IMPROVEMENT AUTHORITY (ACTIA)
1333 BROADWAY, SUITE 300
OAKLAND, CA 94612

MGE ENGINEERING, INC.
7415 GREENHAVEN DRIVE, SUITE 100
SACRAMENTO, CALIFORNIA 95831

LEGEND

12" Indicates Girder Width

PRESTRESSING NOTES

270 ksi Low Relaxation strand:
Pjack = 5100 kips

Anchor Set = ⅜"
Number of Girders = 3

Distribution of prestress force (Pjack) between girders shall not exceed to ratio of 3:2. Maximum final force variation between girders shall not exceed 725 kips.

Contractor shall provide a minimum of two prestress tendons per each girder.

Concrete: f'c = 5.0 ksi @ 28 Days
f'ci = 3.5 ksi @ time of stressing

Contractor shall submit elongation calculations based on initial stress at ☒ = 0.959 time jacking stress.
One end stressing shall be performed from Abutment 1 end.
The prestress force design is based on μ = 0.15, k = 0.0002/ft

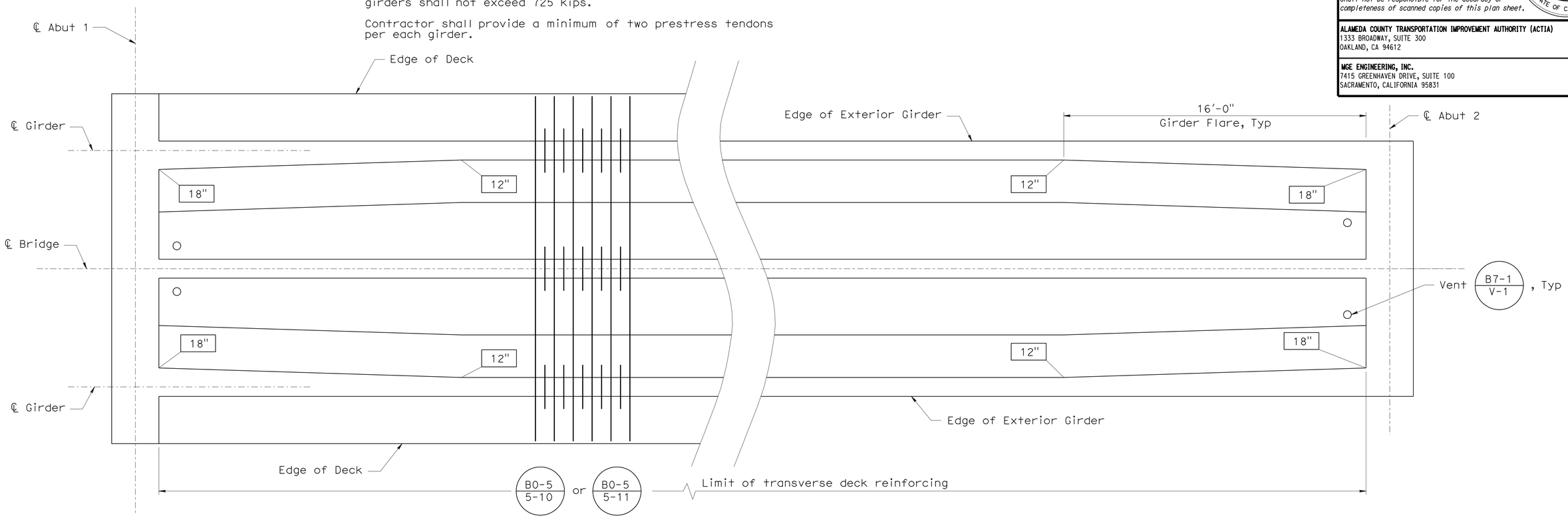

GIRDER LAYOUT

⅜" = 1'-0"

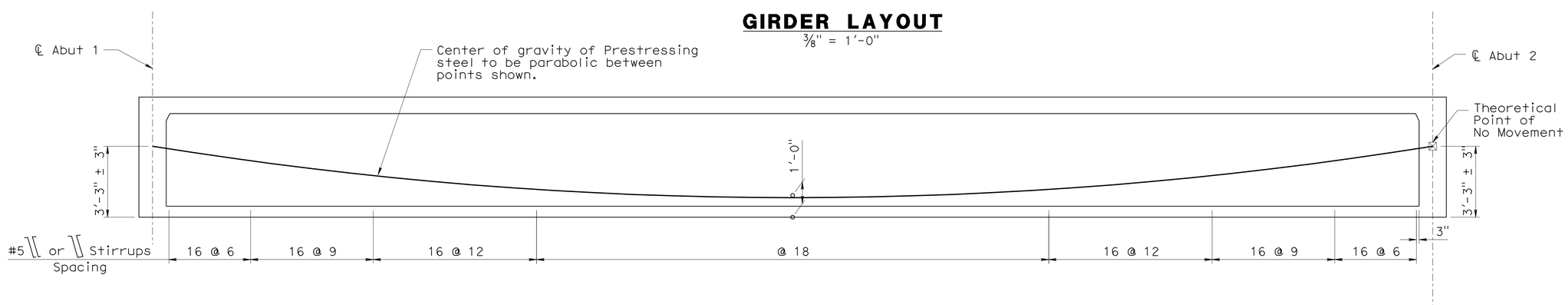

LONGITUDINAL SECTION

No Scale

DESIGN OVERSIGHT Yiwei Hu	DESIGN	BY P. Zhao	CHECKED R. Sennett
1/26/11 SIGN OFF DATE	DETAILS	BY P. Zhao	CHECKED R. Sennett
	QUANTITIES	BY R. Huang	CHECKED W. Sennett

PREPARED FOR THE STATE OF CALIFORNIA DEPARTMENT OF TRANSPORTATION

Guoping Xu
PROJECT ENGINEER

BRIDGE NO. N/A
POST MILE N/A

ARROYO MOCHO ACCESS BRIDGE
GIRDER LAYOUT

DESIGN DETAIL SHEET (ENGLISH) (REV. 06-01-09)

ORIGINAL SCALE IN INCHES FOR REDUCED PLANS 0 1 2 3

CU 0733
EA 297611

DISREGARD PRINTS BEARING EARLIER REVISION DATES

REVISION DATES (PRELIMINARY STAGE ONLY) 04/30/09 01/22/10 08/13/10 10/21/10 12/10/10

SHEET 10 OF 15

FILE => 01-I-g_lo01.dgn

USERNAME => s124496 DATE PLOTTED => 21-NOV-2011 TIME PLOTTED => 15:24

DIST	COUNTY	ROUTE	POST MILES TOTAL PROJECT	SHEET No	TOTAL SHEETS
04	Ala	84	25.5/27.1	421	495

REGISTERED CIVIL ENGINEER 12/10/10 DATE

6-27-11
PLANS APPROVAL DATE

REGISTERED PROFESSIONAL ENGINEER Guoping Xu No. C 63977 Exp. 09/30/12 CIVIL STATE OF CALIFORNIA

The State of California or its officers or agents shall not be responsible for the accuracy or completeness of scanned copies of this plan sheet.

ALAMEDA COUNTY TRANSPORTATION IMPROVEMENT AUTHORITY (ACTIA)
1333 BROADWAY, SUITE 300
OAKLAND, CA 94612

MGE ENGINEERING, INC.
7415 GREENHAVEN DRIVE, SUITE 100
SACRAMENTO, CALIFORNIA 95831

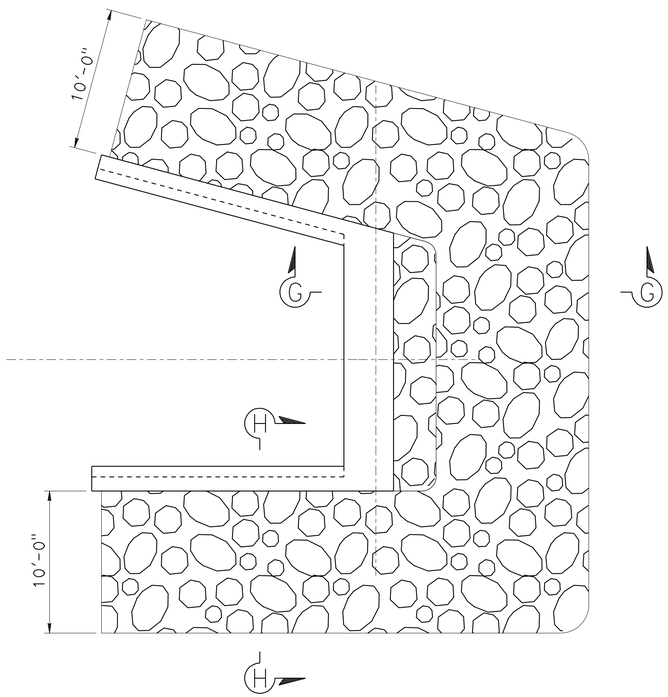

PLAN
3/16"=1'-0"

Abut 1 Shown,
Abut 2 Similar

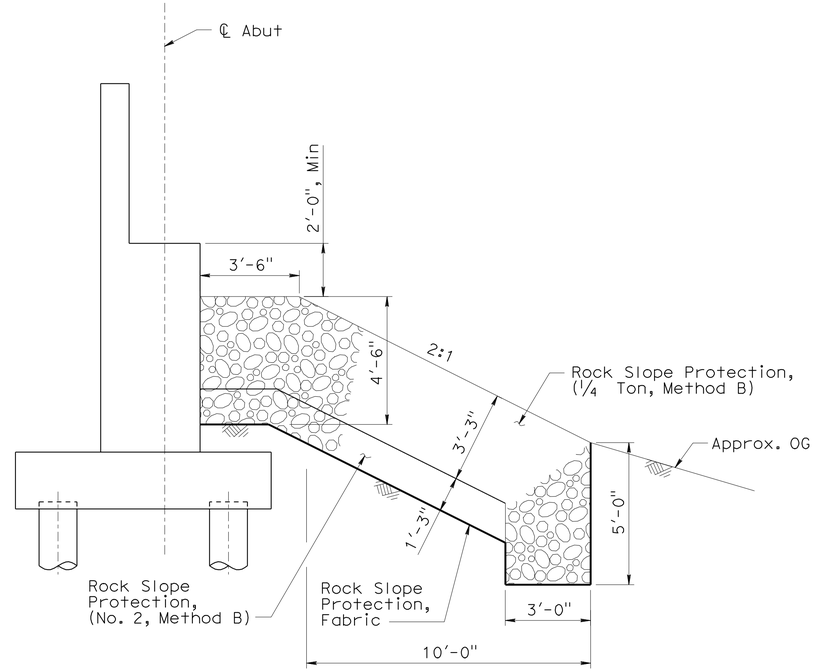

SECTION G-G
3/8" = 1'-0"

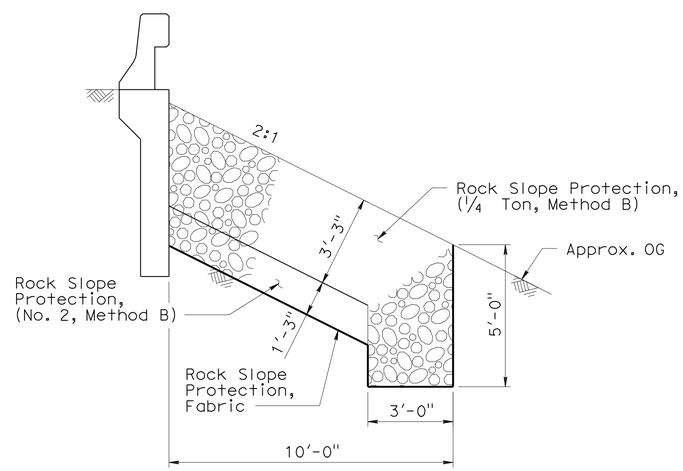

SECTION H-H
3/8" = 1'-0"

DESIGN OVERSIGHT Yiwei Hu
1/26/11
SIGN OFF DATE

	BY	CHECKED
DESIGN	P. Zhao	R. Sennett
DETAILS	P. Zhao	R. Sennett
QUANTITIES	R. Huang	W. Sennett

PREPARED FOR THE STATE OF CALIFORNIA DEPARTMENT OF TRANSPORTATION

Guoping Xu
PROJECT ENGINEER

BRIDGE NO. N/A
POST MILE N/A

ARROYO MOCHO ACCESS BRIDGE
ROCK SLOPE PROTECTION

DESIGN DETAIL SHEET (ENGLISH) (REV. 06-01-09)

ORIGINAL SCALE IN INCHES FOR REDUCED PLANS 0 1 2 3

CU 0733
EA 297611

DISREGARD PRINTS BEARING EARLIER REVISION DATES

REVISION DATES (PRELIMINARY STAGE ONLY): 04/30/09 01/22/10 08/16/10 10/27/10 12/10/10

SHEET 11 OF 15

FILE => 01-u-miscdt01.dgn

USERNAME => s124196 DATE PLOTTED => 21-NOV-2011 TIME PLOTTED => 15:24

DIST	COUNTY	ROUTE	POST MILES TOTAL PROJECT	SHEET No	TOTAL SHEETS
04	Ala	84	25.5/27.1	422	495

REGISTERED CIVIL ENGINEER 1/4/11 DATE

6-27-11
PLANS APPROVAL DATE

The State of California or its officers or agents shall not be responsible for the accuracy or completeness of electronic copies of this plan sheet.

REGISTERED PROFESSIONAL ENGINEER Stephen Huang No. C 42289 Exp. 03/31/12 CIVIL STATE OF CALIFORNIA

ALAMEDA COUNTY TRANSPORTATION IMPROVEMENT AUTHORITY (ACTIA)
1333 Broadway, Suite 300
Oakland, CA 94612

URS CORPORATION
1333 Broadway,
Suite 800
Oakland, CA 94612

REFERENCE: CALTRANS SOIL & ROCK LOGGING, CLASSIFICATION, AND PRESENTATION MANUAL (JUNE 2007)

CEMENTATION

Description	Criteria
Weak	Crumbles or breaks with handling or little finger pressure.
Moderate	Crumbles or breaks with considerable finger pressure.
Strong	Will not crumble or break with finger pressure.

CONSISTENCY OF COHESIVE SOILS

Description	Unconfined Compressive Strength (tsf)	Pocket Penetrometer Measurement (tsf)	Torvane Measurement (tsf)	Field Approximation
Very Soft	< 0.25	< 0.25	< 0.12	Easily penetrated several inches by fist
Soft	0.25 to 0.50	0.25 to 0.50	0.12 to 0.25	Easily penetrated several inches by thumb
Medium Stiff	0.50 to 1.0	0.50 to 1.0	0.25 to 0.50	Penetrated several inches by thumb with moderate effort
Stiff	1 to 2	1 to 2	0.50 to 1.0	Readily indented by thumb but penetrated only with great effort
Very Stiff	2 to 4	2 to 4	1.0 to 2.0	Readily indented by thumbnail
Hard	> 4.0	> 4.0	> 2.0	Indented by thumbnail with difficulty

BOREHOLE IDENTIFICATION

Symbol	Hole Type	Description
Size	A	Auger Boring
Size	R P	Rotary drilled boring Rotary percussion boring (air)
Size	R	Rotary drilled diamond core
Size	HD HA	Hand driven (1-inch soil tube) Hand Auger
●	D	Dynamic Cone Penetration Boring
▲	CPT	Cone Penetration Test (ASTM D 5778-95)
⬚	O	Other

Note: Size in inches.

PLASTICITY OF FINE-GRAINED SOILS

Description	Criteria
Nonplastic	A 1/8-inch thread cannot be rolled at any water content.
Low	The thread can barely be rolled and the lump cannot be formed when drier than the plastic limit.
Medium	The thread is easy to roll and not much time is required to reach the plastic limit. The thread cannot be rerolled after reaching the plastic limit. The lump crumbles when drier than the plastic limit.
High	It takes considerable time rolling and kneading to reach the plastic limit. The thread can be rerolled several times after reaching the plastic limit. The lump can be formed without crumbling when drier than the plastic limit.

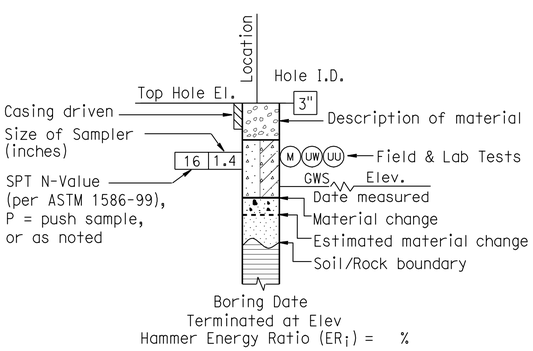

ROTARY BORING

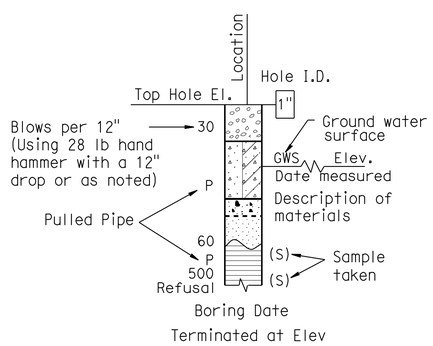

HAND BORING

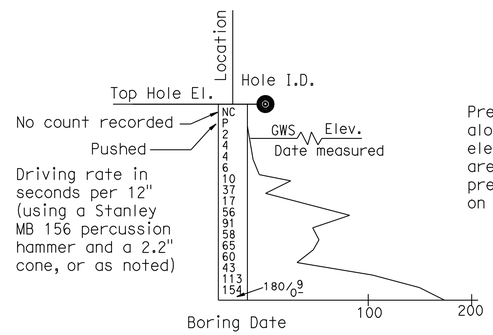

DYNAMIC CONE PENETRATION BORING

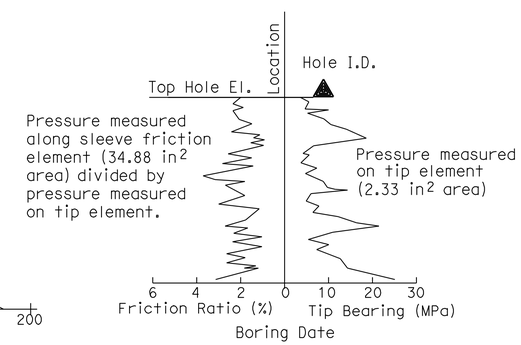

CONE PENETRATION TEST (CPT) SOUNDING

DESIGN OVERSIGHT Yiwei Hu 1/26/11 SIGN OFF DATE	DRAWN BY A. CHEUNG CHECKED BY M. THUMMALURU	C. RAMBO FIELD INVESTIGATION BY: DATE:	PREPARED FOR THE STATE OF CALIFORNIA DEPARTMENT OF TRANSPORTATION

Stephen Huang
PROJECT ENGINEER

BRIDGE NO. N/A
POST MILES N/A

ARROYO MOCHO ACCESS BRIDGE
LOG OF TEST BORINGS 1 of 4

GS CIVIL LOG OF TEST BORINGS SHEET (ENGLISH) (REV. 7/16/10)

ORIGINAL SCALE IN INCHES FOR REDUCED PLANS 0 1 2 3

UNIT: 0733
PROJECT NUMBER & PHASE: 04000205801 CONTRACT NO.: 04-297614

DISREGARD PRINTS BEARING EARLIER REVISION DATES

REVISION DATES

SHEET 12 OF 15

FILE => 01-z-z-ltb01.dgn

USERNAME => s124496 DATE PLOTTED => 21-NOV-2011 TIME PLOTTED => 15:24

REFERENCE: CALTRANS SOIL & ROCK LOGGING, CLASSIFICATION, AND PRESENTATION MANUAL (JUNE 2007)

DIST	COUNTY	ROUTE	POST MILES TOTAL PROJECT	SHEET No	TOTAL SHEETS
04	Ala	84	25.5/27.1	423	495

REGISTERED CIVIL ENGINEER — DATE 1/4/11

6-27-11
PLANS APPROVAL DATE

REGISTERED PROFESSIONAL ENGINEER — Stephen Huang — No. C 42289 — Exp. 03/31/12 — CIVIL — STATE OF CALIFORNIA

The State of California or its officers or agents shall not be responsible for the accuracy or completeness of electronic copies of this plan sheet.

ALAMEDA COUNTY TRANSPORTATION IMPROVEMENT AUTHORITY (ACTIA)
1333 Broadway, Suite 300
Oakland, CA 94612

URS CORPORATION
1333 Broadway,
Suite 800
Oakland, CA 94612

GROUP SYMBOLS AND NAMES

Graphic/Symbol	Group Names	Graphic/Symbol	Group Names
GW	Well-graded GRAVEL Well-graded GRAVEL with SAND	CL	Lean CLAY Lean CLAY with SAND Lean CLAY with GRAVEL SANDY lean CLAY SANDY lean CLAY with GRAVEL GRAVELLY lean CLAY GRAVELLY lean CLAY with SAND
GP	Poorly graded GRAVEL Poorly graded GRAVEL with SAND		
GW-GM	Well-graded GRAVEL with SILT Well-graded GRAVEL with SILT and SAND	CL-ML	SILTY CLAY SILTY CLAY with SAND SILTY CLAY with GRAVEL SANDY SILTY CLAY SANDY SILTY CLAY with GRAVEL GRAVELLY SILTY CLAY GRAVELLY SILTY CLAY with SAND
GW-GC	Well-graded GRAVEL with CLAY (or SILTY CLAY) Well-graded GRAVEL with CLAY and SAND (or SILTY CLAY and SAND)		
GP-GM	Poorly graded GRAVEL with SILT Poorly graded GRAVEL with SILT and SAND	ML	SILT SILT with SAND SILT with GRAVEL SANDY SILT SANDY SILT with GRAVEL GRAVELLY SILT GRAVELLY SILT with SAND
GP-GC	Poorly graded GRAVEL with CLAY (or SILTY CLAY) Poorly graded GRAVEL with CLAY and SAND (or SILTY CLAY and SAND)		
GM	SILTY GRAVEL SILTY GRAVEL with SAND	OL	ORGANIC lean CLAY ORGANIC lean CLAY with SAND ORGANIC lean CLAY with GRAVEL SANDY ORGANIC lean CLAY SANDY ORGANIC lean CLAY with GRAVEL GRAVELLY ORGANIC lean CLAY GRAVELLY ORGANIC lean CLAY with SAND
GC	CLAYEY GRAVEL CLAYEY GRAVEL with SAND		
GC-GM	SILTY, CLAYEY GRAVEL SILTY, CLAYEY GRAVEL with SAND	OL	ORGANIC SILT ORGANIC SILT with SAND ORGANIC SILT with GRAVEL SANDY ORGANIC SILT SANDY ORGANIC SILT with GRAVEL GRAVELLY ORGANIC SILT GRAVELLY ORGANIC SILT with SAND
SW	Well-graded SAND Well-graded SAND with GRAVEL		
SP	Poorly graded SAND Poorly graded SAND with GRAVEL	CH	Fat CLAY Fat CLAY with SAND Fat CLAY with GRAVEL SANDY fat CLAY SANDY fat CLAY with GRAVEL GRAVELLY fat CLAY GRAVELLY fat CLAY with SAND
SW-SM	Well-graded SAND with SILT Well-graded SAND with SILT and GRAVEL		
SW-SC	Well-graded SAND with CLAY (or SILTY CLAY) Well-graded SAND with CLAY and GRAVEL (or SILTY CLAY and GRAVEL)	MH	Elastic SILT Elastic SILT with SAND Elastic SILT with GRAVEL SANDY elastic SILT SANDY elastic SILT with GRAVEL GRAVELLY elastic SILT GRAVELLY elastic SILT with SAND
SP-SM	Poorly graded SAND with SILT Poorly graded SAND with SILT and GRAVEL		
SP-SC	Poorly graded SAND with CLAY (or SILTY CLAY) Poorly graded SAND with CLAY and GRAVEL (or SILTY CLAY and GRAVEL)	OH	ORGANIC fat CLAY ORGANIC fat CLAY with SAND ORGANIC fat CLAY with GRAVEL SANDY ORGANIC fat CLAY SANDY ORGANIC fat CLAY with GRAVEL GRAVELLY ORGANIC fat CLAY GRAVELLY ORGANIC fat CLAY with SAND
SM	SILTY SAND SILTY SAND with GRAVEL		
SC	CLAYEY SAND CLAYEY SAND with GRAVEL	OH	ORGANIC elastic SILT ORGANIC elastic SILT with SAND ORGANIC elastic SILT with GRAVEL SANDY ORGANIC elastic SILT SANDY ORGANIC elastic SILT with GRAVEL GRAVELLY ORGANIC elastic SILT GRAVELLY ORGANIC elastic SILT with SAND
SC-SM	SILTY, CLAYEY SAND SILTY, CLAYEY SAND with GRAVEL		
PT	PEAT	OL/OH	ORGANIC SOIL ORGANIC SOIL with SAND ORGANIC SOIL with GRAVEL SANDY ORGANIC SOIL SANDY ORGANIC SOIL with GRAVEL GRAVELLY ORGANIC SOIL GRAVELLY ORGANIC SOIL with SAND
	COBBLES COBBLES and BOULDERS BOULDERS		

FIELD AND LABORATORY TESTING

- (C) Consolidation (ASTM D 2435)
- (CL) Collapse Potential (ASTM D 5333)
- (CP) Compaction Curve (CTM 216)
- (CR) Corrosivity Testing (CTM 643, CTM 422, CTM 417)
- (CU) Consolidated Undrained Triaxial (ASTM D 4767)
- (DS) Direct Shear (ASTM D 3080)
- (EI) Expansion Index (ASTM D 4829)
- (M) Moisture Content (ASTM D 2216)
- (OC) Organic Content-% (ASTM D 2974)
- (P) Permeability (CTM 220)
- (PA) Particle Size Analysis (ASTM D 422)
- (PI) Plasticity Index (AASHTO T 90) Liquid Limit (AASHTO T 89)
- (PL) Point Load Index (ASTM D 5731)
- (PM) Pressure Meter
- (PP) Pocket Penetrometer
- (R) R-Value (CTM 301)
- (SE) Sand Equivalent (CTM 217)
- (SG) Specific Gravity (AASHTO T 100)
- (SL) Shrinkage Limit (ASTM D 427)
- (SW) Swell Potential (ASTM D 4546)
- (TV) Pocket Torvane
- (UC) Unconfined Compression-Soil (ASTM D 2166) Unconfined Compression-Rock (ASTM D 2938)
- (UU) Unconsolidated Undrained Triaxial (ASTM D 2850)
- (UW) Unit Weight (ASTM D 4767)
- (VS) Vane Shear (AASHTO T 223)

APPARENT DENSITY OF COHESIONLESS SOILS

Description	SPT N_{60} (Blows / 12 inches)
Very loose	0 - 4
Loose	5 - 10
Medium Dense	11 - 30
Dense	31 - 50
Very Dense	> 50

MOISTURE

Description	Criteria
Dry	Absence of moisture, dusty, dry to the touch
Moist	Damp but no visible water
Wet	Visible free water, usually soil is below water table

PERCENT OR PROPORTION OF SOILS

Description	Criteria
Trace	Particles are present but estimated to be less than 5%
Few	5 to 10%
Little	15 to 25%
Some	30 to 45%
Mostly	50 to 100%

PARTICLE SIZE

Description		Size
Boulder		> 12"
Cobble		3" to 12"
Gravel	Coarse	3/4" to 3"
	Fine	No. 4 to 3/4"
Sand	Coarse	No. 10 to No. 4
	Medium	No. 40 to No. 10
	Fine	No. 200 to No. 40

DESIGN OVERSIGHT — Yiwei Hu
1/26/11
SIGN OFF DATE

DRAWN BY: A. CHEUNG
CHECKED BY: M. THUMMALURU

C. RAMBO
FIELD INVESTIGATION BY:
DATE:

PREPARED FOR THE STATE OF CALIFORNIA DEPARTMENT OF TRANSPORTATION

Stephen Huang
PROJECT ENGINEER

BRIDGE NO. N/A
POST MILES N/A

ARROYO MOCHO ACCESS BRIDGE
LOG OF TEST BORINGS 2 of 4

GS CIVIL LOG OF TEST BORINGS SHEET (ENGLISH) (REV. 7/16/10)

ORIGINAL SCALE IN INCHES FOR REDUCED PLANS 0 1 2 3

UNIT: 0733
PROJECT NUMBER & PHASE: 04000205801 CONTRACT NO.: 04-297614

DISREGARD PRINTS BEARING EARLIER REVISION DATES

REVISION DATES

SHEET 13 OF 15

FILE => 01-z-z-ltb02.dgn

USERNAME => s124496 DATE PLOTTED => 21-NOV-2011 TIME PLOTTED => 15:25

DIST	COUNTY	ROUTE	POST MILES TOTAL PROJECT	SHEET No	TOTAL SHEETS
04	Ala	84	25.5/27.1	424	495

REGISTERED CIVIL ENGINEER — DATE 1/4/11

6-27-11
PLANS APPROVAL DATE

REGISTERED PROFESSIONAL ENGINEER — Stephen Huang — No. C 42289 — Exp. 03/31/12 — CIVIL — STATE OF CALIFORNIA

The State of California or its officers or agents shall not be responsible for the accuracy or completeness of electronic copies of this plan sheet.

ALAMEDA COUNTY TRANSPORTATION IMPROVEMENT AUTHORITY (ACTIA)
1333 Broadway, Suite 300
Oakland, CA 94612

URS CORPORATION
1333 Broadway,
Suite 800
Oakland, CA 94612

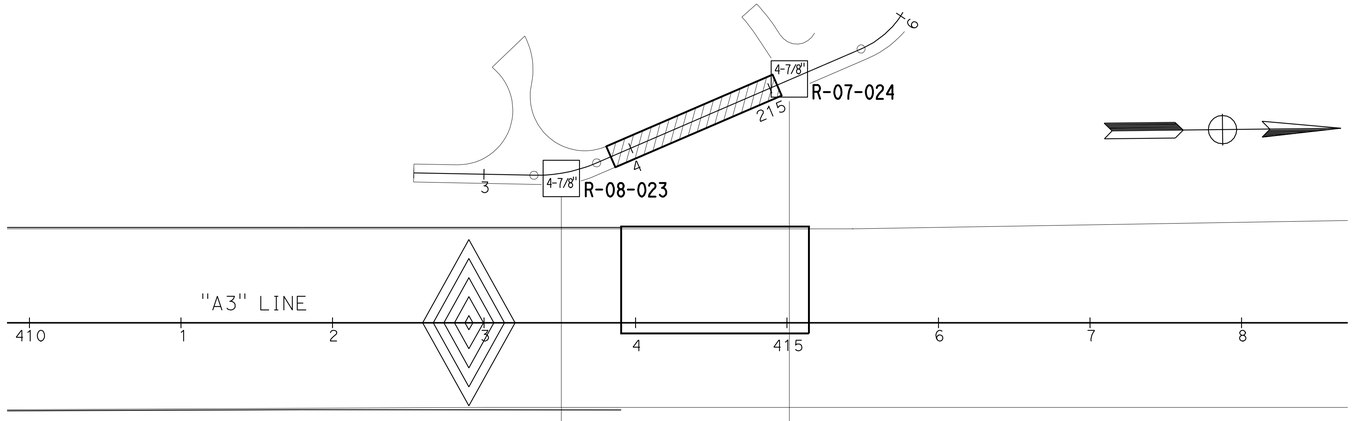

PLAN
Scale: 1"=50'

NOTE:
1. This LOTB sheet was prepared in accordance with the Caltrans Soil and Rock Logging, Classification, and Presentation Manual (JUNE 2007)
2. Drilling fluid was measured at EL. 374.5 feet in NB23, 5 days after temporyily stopped drilling.
3. Design groundwater level at El. 376 feet.

Sta "A3" 413+63.2 94.8' Lt

R-08-023

4-7/8"

EL. 417.0'

Depth	Sample	Description
		6 inches Aggregate.
50	M UW	CLAYEY SAND with GRAVEL (SC); dense to very dense; brown; moist.
13		Cobbles.
		CLAYEY SAND with GRAVEL (SC); medium dense; dark grayish brown; moist to wet.
13	M UW UC	Lean CLAY (CL); stiff; dark brown; moist; trace fine GRAVEL.
		At 11 ft, with coarse sand.
54		CLAYEY SAND with GRAVEL (SC); very dense; dark brown; moist.
68		CLAYEY GRAVEL with SAND (GC); dense; dark brown; moist.
63		CLAYEY SAND with GRAVEL (SC); dense; brown.
10	M UW PI UC	Lean CLAY (CL); stiff; light brown; moist.
12	M UW PI UC	
		SILTY, CLAYEY SAND with GRAVEL (SC-SM); very dense; grayish brown.
120		GWS EL 374.5' 01-02-08
119		
46	M UW PA	At 50 ft, becomes dense. At 52 ft, with less gravel.
28	M UW PI UC	SILTY CLAY (CL-ML); stiff; light brown.
27	M UW UC	Lean CLAY (CL); stiff; brown; moist; trace GRAVEL.
55	M UW UC	At 65 ft, with sand lenses.
203		SILTY GRAVEL with SAND (GM); very dense; brown.
59		Lean CLAY (CL); very stiff; brown; moist.
57	M UW UC	
		At 82 ft, with some sand.
59	M UW UC	SANDY lean CLAY with GRAVEL (CL); very stiff; reddish brown; moist.
166		CLAYEY SAND with GRAVEL (SC); very dense; brown.
115		
122		

Terminated at EL. 315.5' 01-02-08

Sta "A3" 415+18.7 155.2' Lt

R-07-024

4-7/8"

EL. 417.5'

Depth	Sample	Description
		6 inches Aggregate.
6	M UW UC	GRAVELLY SILT (ML); brown.
24		SANDY SILT (ML); medium stiff; dark brown; moist; trace fine GRAVEL.
16		SILTY GRAVEL (GM); medium dense; grayish brown; dry; with some cobbles up to 6 inches.
		CLAYEY SAND with GRAVEL (SC); medium dense; dark brown; moist.
27	M UW PA	CLAYEY GRAVEL with SAND (GC); medium dense; grayish brown; moist.
52		At 20 ft, becomes dense.
126		At 25 ft, becomes very dense. At 27 ft, with some gravel layers upto 6 inches thick.
66		
39	M UW UC	Lean CLAY (CL); hard; dark brown; moist; trace coarse SAND.
		CLAYEY SAND with GRAVEL (SC); very dense; brown with gray mottling; moist.
161		
76		
		At 48 ft, with decrease in gravel content.
48	M UW UC	Lean CLAY (CL); hard; dark brown; moist; trace GRAVEL.
30	M UW UC	At 55 ft, becomes very stiff.
		CLAYEY GRAVEL (GC); brown.
19	M UW PI UC	Lean CLAY (CL); stiff; dark brown; moist.
46	M UW UC	At 65 ft, becomes hard.
41	M UW UC	At 70 ft, becomes stiff.
		SILTY SAND (SM); dense; dark brown; moist.
		At 72 ft, with gravel.
66		Lean CLAY with SAND (CL); dark brown.
		Poorly graded SAND with SILT (SP-SM); very dense; dark brown; moist; trace fine GRAVEL.
37	M UW PI UC	Lean CLAY (CL); stiff; dark brown; moist.
50	M UW UC	At 85 ft, becomes very stiff.
85		At 90 ft, becomes hard.
63	M UW UC	
45	M UW UC	At 100 ft, becomes light brown, very stiff.

Dry to 8 feet at time of drilling
Groundwater level was not measured
Terminated at EL. 313.5' 12-27-07

BENCH MARK:
B.M Elev. 415.27
Northing: 2063428.6750
Easting: 6181960.7750
2½" brass disk set in concrete in well monument stamped "+", at the intersection of Vineyard Avenue and Ruby Hill Drive

DESIGN OVERSIGHT Yiwei Hu 1/26/11 SIGN OFF DATE	DRAWN BY A. CHEUNG	C. RAMBO FIELD INVESTIGATION BY:	PREPARED FOR THE STATE OF CALIFORNIA DEPARTMENT OF TRANSPORTATION	Stephen Huang PROJECT ENGINEER	BRIDGE NO. N/A POST MILES N/A	ARROYO MOCHO ACCESS BRIDGE LOG OF TEST BORINGS 3 of 4
	CHECKED BY M. THUMMALURU	DATE:				

GS CIVIL LOG OF TEST BORINGS SHEET (ENGLISH) (REV. 7/16/10)

ORIGINAL SCALE IN INCHES FOR REDUCED PLANS 0 1 2 3

UNIT: 0733
PROJECT NUMBER & PHASE: 04000205801 CONTRACT NO.: 04-297614

DISREGARD PRINTS BEARING EARLIER REVISION DATES

REVISION DATES | SHEET 14 OF 15

FILE => 01-z-z-ltb03.dgn

USERNAME => s124496 DATE PLOTTED => 21-NOV-2011 TIME PLOTTED => 15:25

DIST.	COUNTY	ROUTE	KILOMETER POST TOTAL PROJECT	SHEET NO.	TOTAL SHEETS
04	Ala	84		407	407

REGISTERED GEOTECHNICAL ENGINEER

PLANS APPROVAL DATE

CITY OF LIVERMORE
DEPARTMENT OF PUBLIC WORKS
3589 Pacific Avenue

GEOTECHNICAL CONSULTANTS, INC.
631 Howard Street, Sta. 320
San Francisco, CA 94105

REGISTERED PROFESSIONAL ENGINEER G. NEELAKANTAN No. 2391 Exp. 9/30/01 GEOTECHNICAL STATE OF CALIFORNIA

REGISTERED PROFESSIONAL ENGINEER Stephen Huang No. C 42289 Exp. 03/31/10 GEOTECHNICAL STATE OF CALIFORNIA

The State of California or its officers or agents shall not be responsible for the accuracy or completeness of electronic copies of this plan sheet.

NOTES:

1. The 64 mm sampler shown on the logs is a split barrel sampler with 76.2 mm O.D. and 64 mm I.D., with 152.4 mm long brass liners. The sampler is driven using a 63.5 kg hammer with a 0.76 m drop.

2. Soil classification and description conform to ASTM D2487.

BENCHMARK:
All elevations shown hereon are based upon Caltrans Aerial Control Panel No. AB-947 having an elevation of 399.13 feet (121.655 meters) as described in Caltrans Survey Book ALA84-A-5 (pg 2 of 4 - 87-240).
TBM No. 2: Mon. No. 220
A brass pin in Standard City Well Monument Box at the intersection of Stanley Blvd. and Isabel Avenue 19.067 meters right of Center Line Station "15" 122+19.529. The elevation is 126.311 meters (414.41 feet).

Contract Number: 04-233054
City Project Numbers: 89-50
Date Accepted: 10/1/02

AS-BUILT DRAWING

Resident Engineer: Hank Doll
Vail Cooper & Associates

[X] No Changes
[ ] Changes As Noted

Revisions by: MPW (Initials)

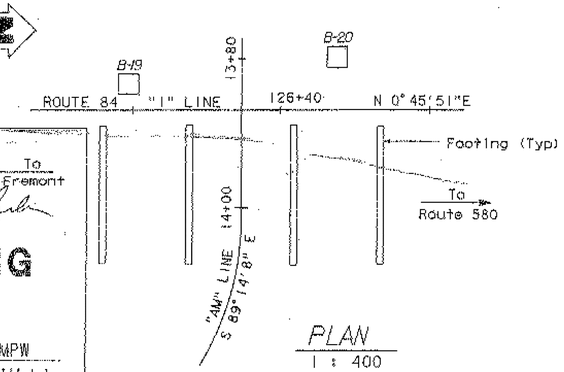

PLAN
1 : 400

Notes:

1. See the plans dated May 11, 1999 for stationing.
For example I Line Sta 136+62 (Metric) = A3 Line Sta 448+23 (English).

2. Structure Design produced the data presented in the table below.
The data are the metric locations for the As-Built Test Borings referenced to the proposed new structure location. This table is presented on the As-Built Log of Test Boring sheet for the convenience of any bidder, contractor or other interested party.

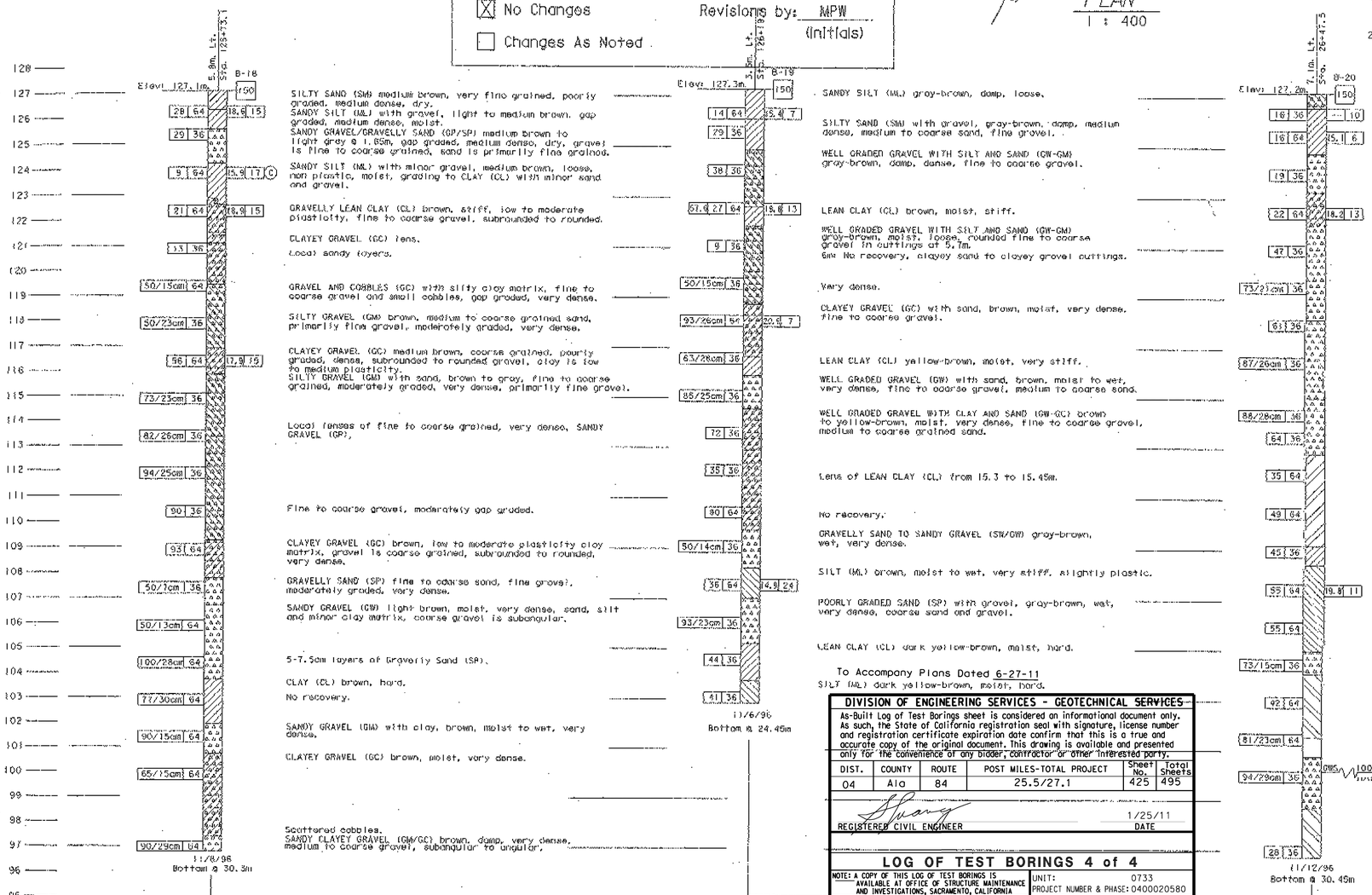

SILTY SAND (SM) medium brown, very fine grained, poorly graded, medium dense, dry.
SANDY SILT (ML) with gravel, light to medium brown, gap graded, medium dense, moist.
SANDY GRAVEL/GRAVELLY SAND (GP/SP) medium brown to light gray @ 1.65m, gap graded, medium dense, dry, gravel is fine to coarse grained, sand is primarily fine grained.
SANDY SILT (ML) with minor gravel, medium brown, loose, non plastic, moist, grading to CLAY (CL) with minor sand and gravel.
GRAVELLY LEAN CLAY (CL) brown, stiff, low to moderate plasticity, fine to coarse gravel, subrounded to rounded.
CLAYEY GRAVEL (GC) lens.
Local sandy layers.
GRAVEL AND COBBLES (GC) with silty clay matrix, fine to coarse gravel and small cobbles, gap graded, very dense.
SILTY GRAVEL (GM) brown, medium to coarse grained sand, primarily fine gravel, moderately graded, very dense.
CLAYEY GRAVEL (GC) medium brown, coarse grained, poorly graded, dense, subrounded to rounded gravel, clay is low to medium plasticity.
SILTY GRAVEL (GM) with sand, brown to gray, fine to coarse grained, moderately graded, very dense, primarily fine gravel.
Local lenses of fine to coarse grained, very dense, SANDY GRAVEL (GP).
Fine to coarse gravel, moderately gap graded.
CLAYEY GRAVEL (GC) brown, low to moderate plasticity clay matrix, gravel is coarse grained, subrounded to rounded, very dense.
GRAVELLY SAND (SP) fine to coarse sand, fine gravel, moderately graded, very dense.
SANDY GRAVEL (GW) light brown, moist, very dense, sand, silt and minor clay matrix, coarse gravel is subangular.
5-7.5m layers of Gravelly Sand (SP).
CLAY (CL) brown, hard.
No recovery.
SANDY GRAVEL (GW) with clay, brown, moist to wet, very dense.
CLAYEY GRAVEL (GC) brown, moist, very dense.
Scattered cobbles.
SANDY CLAYEY GRAVEL (GM/GC) brown, damp, very dense, medium to coarse gravel, subangular to angular.

SANDY SILT (ML) gray-brown, damp, loose.
SILTY SAND (SM) with gravel, gray-brown, damp, medium dense, medium to coarse sand, fine gravel.
WELL GRADED GRAVEL WITH SILT AND SAND (GW-GM) gray-brown, damp, dense, fine to coarse gravel.
LEAN CLAY (CL) brown, moist, stiff.
WELL GRADED GRAVEL WITH SILT AND SAND (GW-GM) gray-brown, moist, loose, rounded fine to coarse gravel in cuttings at 5.7m.
6m No recovery, clayey sand to clayey gravel cuttings.
Very dense.
CLAYEY GRAVEL (GC) with sand, brown, moist, very dense, fine to coarse gravel.
LEAN CLAY (CL) yellow-brown, moist, very stiff.
WELL GRADED GRAVEL (GW) with sand, brown, moist to wet, very dense, fine to coarse gravel, medium to coarse sand.
WELL GRADED GRAVEL WITH CLAY AND SAND (GW-GC) brown to yellow-brown, moist, very dense, fine to coarse gravel, medium to coarse grained sand.
Lens of LEAN CLAY (CL) from 15.3 to 15.45m.
No recovery.
GRAVELLY SAND TO SANDY GRAVEL (SW/GW) gray-brown, wet, very dense.
SILT (ML) brown, moist to wet, very stiff, slightly plastic.
POORLY GRADED SAND (SP) with gravel, gray-brown, wet, very dense, coarse sand and gravel.
LEAN CLAY (CL) dark yellow-brown, moist, hard.

To Accompany Plans Dated 6-27-11

SILT (ML) dark yellow-brown, moist, hard.

SILT (ML) with gravel, dark brown, damp, stiff, minor string, plastic.
SILT (ML) with sand, dark brown, damp, stiff, open-pore structure, gravel at 1m.
SANDY GRAVEL (GW/GP) brown, damp, medium dense, fine to coarse gravel, moderate amount of sand and silt matrix.
LEAN CLAY (CL) with gravel, brown, damp to moist, stiff.
SANDY GRAVEL (GP) gray-brown, moist, dense, minor silt, fine to coarse gravel.
Coarse gravel and cobbles.
Cobble layer, minor caving.
Cobble in sampler.
Coarse gravel and cobbles.
GRAVELLY SAND (SP-SM) moderate sand and silt matrix, dense, scattered cobbles.
Very dense, coarse gravel and cobbles, local clay lens.
SANDY SILTY GRAVEL (GM) brown, damp, very dense.
Very dense.
CLAYEY SILT (ML) brown, damp, very stiff.
CLAYEY SILT (ML) with sand, brown, moist, very stiff, fractured, sand is very fine to fine grained.
SILTY SAND (SM) brown, moist, dense, sand is very fine to medium grained.
SANDY CLAY (CL) with gravel, brown, moist, hard, minor fine to coarse gravel throughout. Layers of Clayey Silt (ML) with fine grained sand.
Increasing sand and gravel.
SANDY GRAVEL (GP/GM) green-brown, moist, very dense.
SILTY CLAY (CL) brown, moist, very stiff.
POORLY GRADED SAND (SP) gray-brown, moist, very dense, sand is coarse to very coarse grained, minor silt.
SANDY GRAVEL (GW/GP) brown, moist to wet, very dense, coarse gravel.
SILTY CLAY (CL) brown, moist, very stiff, slightly plastic.

Revisions made to this Log of Test Borings from the original ___ Log of Test Borings are the addition of the following table and notes:

Boring	Station	Offset from A3 Line (84)
B-18	412+45	19.0 ft. Lt
B-19	414+00	11.5 ft. Lt
B-20	415+00	23.0 ft. Lt

DIVISION OF ENGINEERING SERVICES - GEOTECHNICAL SERVICES

As-Built Log of Test Borings sheet is considered an informational document only. As such, the State of California registration seal with signature, license number and registration certificate expiration date confirm that this is a true and accurate copy of the original document. This drawing is available and presented only for the convenience of any bidder, contractor or other interested party.

DIST.	COUNTY	ROUTE	POST MILES-TOTAL PROJECT	Sheet No.	Total Sheets
04	Ala	84	25.5/27.1	425	495

REGISTERED CIVIL ENGINEER — DATE 1/25/11

LOG OF TEST BORINGS 4 of 4

NOTE: A COPY OF THIS LOG OF TEST BORINGS IS AVAILABLE AT OFFICE OF STRUCTURE MAINTENANCE AND INVESTIGATIONS, SACRAMENTO, CALIFORNIA

UNIT: 0733
PROJECT NUMBER & PHASE: 0400020580

BRIDGE No.	Sheet	of
33-0713	15	15

LEGEND OF BORING OPERATIONS

LEGEND OF EARTH MATERIAL

CONSISTENCY FOR SOIL

DESIGN OVERSIGHT
SIGN OFF DATE

DRAWN BY J. HULSE
CHECKED BY T. HUBER

N. MACE, V. THILAKARATNE, J. THURDER
FIELD INVESTIGATION BY
DATE:

PREPARED FOR THE STATE OF CALIFORNIA DEPARTMENT OF TRANSPORTATION

O. RODRIGUEZ
PROJECT ENGINEER

BRIDGE NO. 33C-0407
KILOMETER POST

ARROYO MOCHO BRIDGE

LOG OF TEST BORINGS

REVISION DATES (PRELIMINARY STAGE ONLY)

SHEET 12 OF 12

ORIGINAL SCALE IN MILLIMETERS FOR REDUCED PLANS

REV. DATE: 6-2-97

TIME PLOTTED => $$$$$$SYTIME$$$$$$

01-z-z-ltb04.tif

DIST	COUNTY	ROUTE	POST MILES TOTAL PROJECT	SHEET No	TOTAL SHEETS
04	Ala	84	25.5/27.1	426	495

REGISTERED CIVIL ENGINEER 12/10/10 DATE

6-27-11
PLANS APPROVAL DATE

REGISTERED PROFESSIONAL ENGINEER Guoping Xu No. C 63977 Exp. 09/30/12 CIVIL STATE OF CALIFORNIA

The State of California or its officers or agents shall not be responsible for the accuracy or completeness of scanned copies of this plan sheet.

ALAMEDA COUNTY TRANSPORTATION IMPROVEMENT AUTHORITY (ACTIA)
1333 BROADWAY, SUITE 300
OAKLAND, CA 94612

MGE ENGINEERING, INC.
7415 GREENHAVEN DRIVE, SUITE 100
SACRAMENTO, CALIFORNIA 95831

PROFILE GRADE
NO SCALE

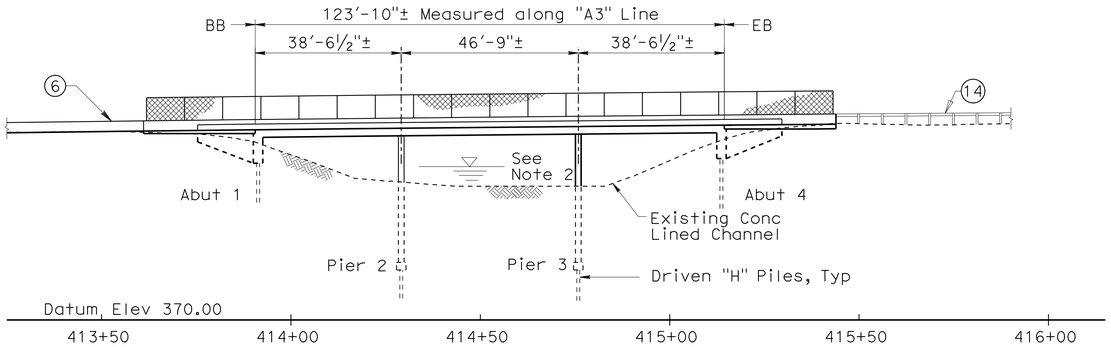

MIRROR ELEVATION
1" = 20'-0"

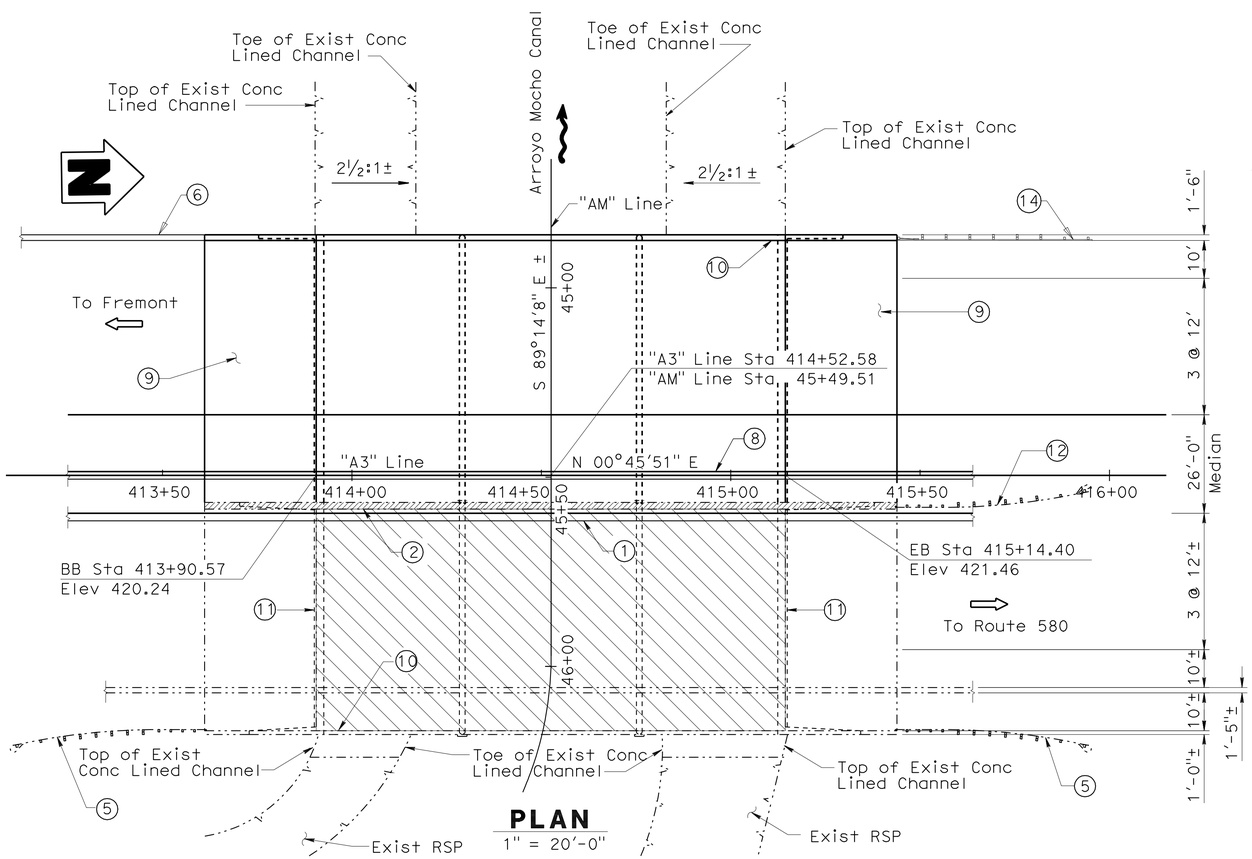

PLAN
1" = 20'-0"

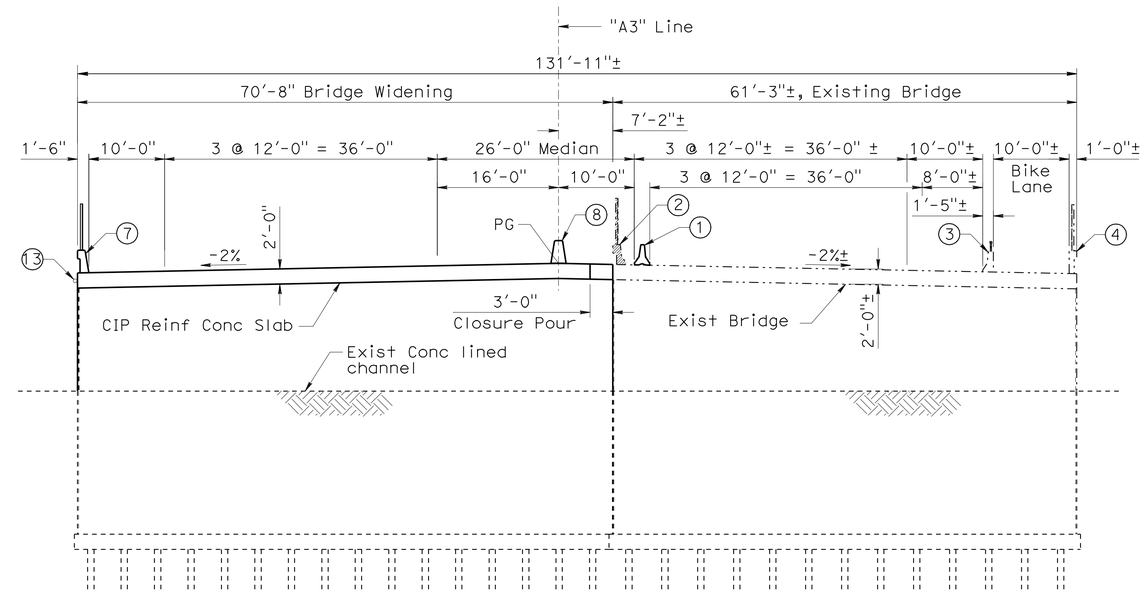

TYPICAL SECTION
1" = 10'-0"

NOTES:

1. Temporary Railing (Type K), see "Road Plans"
2. Remove Existing Concrete Barrier Type 25 and Chain Link Railing
3. Exist Conc Barrier Type 27 w/ Tubular Handrail to remain
4. Exist Conc Barrier Type 26 (Mod) w/ Chain Link Railing (Type 7) to remain
5. Existing Metal Beam Guard Rail to remain
6. Concrete Barrier (Type 60C), see "Road Plans"
7. Concrete Barrier Type 736 w/ Type 7 Chain Link Railing, Vinyl Clad
8. Concrete Barrier Type 60A
9. Structure Approach Type N(30D)
10. Paint "Bridge No. 33-0713 PM R27.10 2003"
11. Remove and Replace Exist Joint Seal
12. Existing Metal Beam Guard Rail to be removed, see "Road Plans"
13. Supply line per Std Plan sheet H9
14. MBGR, See "Road Plans"

LEGEND

- Indicates Exist Structure
- Indicates New Construction
- Indicates Direction of Travel
- Indicates Direction of Flow
- Indicates Concrete Removal
- Indicates limits of remove unsound concrete and replace with rapid setting concrete, clean and treat bridge deck with Methacrylate

NOTES:

1. For General Notes and Index to Plans, see "INDEX TO PLANS" sheet.
2. For Pile Data Table and Hydrologic Summary, see "FOUNDATION PLAN" sheet.
3. The Contractor shall verify all controlling field dimensions before ordering or fabricating any material.

DESIGN OVERSIGHT Yiwei Hu
1/26/11
SIGN OFF DATE

	BY	CHECKED
DESIGN	G. Xu	R. Sennett
DETAILS	P. Zhao	R. Sennett
QUANTITIES	W. Sennett	R. Huang

LOAD & RESISTANCE FACTOR DESIGN — LIVE LOADING: HL93 W/ "LOW-BOY" AND PERMIT DESIGN VEHICLE

	BY	CHECKED
LAYOUT	G. Xu	R. Sennett
SPECIFICATIONS	K. Chen	PLANS AND SPECS COMPARED G. Xu

PREPARED FOR THE STATE OF CALIFORNIA DEPARTMENT OF TRANSPORTATION

Guoping Xu
PROJECT ENGINEER

CU 0733
EA 297611

BRIDGE NO. 33-0713
POST MILES 26.6

ARROYO MOCHO BRIDGE (WIDEN)
GENERAL PLAN

DISREGARD PRINTS BEARING EARLIER REVISION DATES — REVISION DATES (PRELIMINARY STAGE ONLY): ~~02/04/08~~ ~~04/07/08~~ ~~09/15/08~~ ~~05/01/09~~ ~~01/22/10~~ ~~08/16/10~~ ~~10/27/10~~ 12/10/10

SHEET 1 OF 16

DESIGN GENERAL PLAN SHEET (ENGLISH) (REV. 06-01-09)

ORIGINAL SCALE IN INCHES FOR REDUCED PLANS 0 1 2 3

FILE => 33-0713-a-gp.dgn

USERNAME => s124496 DATE PLOTTED => 21-NOV-2011 TIME PLOTTED => 15:25

DIST	COUNTY	ROUTE	POST MILES TOTAL PROJECT	SHEET No	TOTAL SHEETS
04	Ala	84	25.5/27.1	427	495

REGISTERED CIVIL ENGINEER 12/10/10 DATE

6-27-11
PLANS APPROVAL DATE

REGISTERED PROFESSIONAL ENGINEER Guoping Xu No. C 63977 Exp. 09/30/12 CIVIL STATE OF CALIFORNIA

The State of California or its officers or agents shall not be responsible for the accuracy or completeness of scanned copies of this plan sheet.

ALAMEDA COUNTY TRANSPORTATION IMPROVEMENT AUTHORITY (ACTIA)
1333 BROADWAY, SUITE 300
OAKLAND, CA 94612

MGE ENGINEERING, INC.
7415 GREENHAVEN DRIVE, SUITE 100
SACRAMENTO, CALIFORNIA 95831

INDEX TO PLANS

Sheet No.	Title
1	GENERAL PLAN
2	INDEX TO PLANS
3	FOUNDATION PLAN
4	ABUTMENT LAYOUT
5	ABUTMENT DETAILS NO. 1
6	ABUTMENT DETAILS NO. 2
7	PIER DETAILS NO. 1
8	PIER DETAILS NO. 2
9	TYPICAL SECTION
10	SLAB REINFORCEMENT
11	STRUCTURE APPROACH TYPE N(30D)
12	STRUCTURE APPROACH DRAINAGE DETAILS
13	LOG OF TEST BORINGS 1 OF 4
14	LOG OF TEST BORINGS 2 OF 4
15	LOG OF TEST BORINGS 3 OF 4
16	LOG OF TEST BORINGS 4 OF 4

STANDARD PLANS

DATED MAY 2006

	A10A	ACRONYMS AND ABBREVIATIONS (SHEET 1 OF 2)
	A10B	ACRONYMS AND ABBREVIATIONS (SHEET 2 OF 2)
	A10C	SYMBOLS (SHEET 1 OF 2)
	A10D	SYMBOLS (SHEET 2 OF 2)
	A62C	LIMITS OF PAYMENT FOR EXCAVATION AND BACKFILL - BRIDGE
RSP	A76A	CONCRETE BARRIER TYPE 60
	B0-1	BRIDGE DETAILS
	B0-5	BRIDGE DETAILS
RSP	B6-21	JOINT SEALS
	B11-52	CHAIN LINK RAILING TYPE 7
	B11-56	CONCRETE BARRIER TYPE 736
	H9	PLANTING AND IRRIGATION DETAILS
	T3	TEMPORARY RAILING (TYPE K)

STANDARD PLAN SHEET No.

DETAIL No.

GENERAL NOTES
LOAD AND RESISTANCE FACTOR DESIGN

DESIGN: AASHTO LRFD Bridge Design Specifications, 4th Edition and the Caltrans Amendments, Preface dated December 2008, except that abutments, concrete barrier Type 736 (Mod) and structural approach Type N(30D) are disigned using Bridge Design Specifications ('96 AASHTO w/ Revisions by Caltrans)

SEISMIC DESIGN: Caltrans Seismic Design Criteria (SDC) Version 1.4 dated June 2006

DEAD LOAD: Includes 35 psf for future wearing surface

LIVE LOADING: HL93 and Permit Design Vehicle

SEISMIC LOADING: Modified Caltrans SDC ARS Curve
Soil Profile Type D
Magnitude Group (7.25±25)
Peak Rock Acceleration = 0.5g

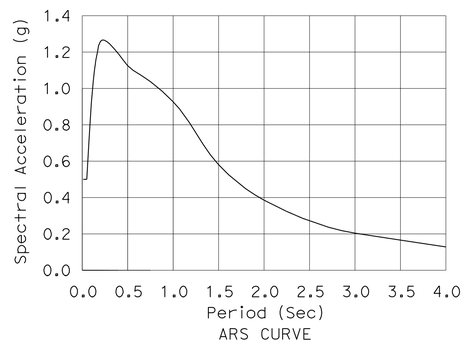

ARS CURVE

CONCRETE: fy = 60 ksi
f'c = 3.6 ksi
n = 8

ARROYO MOCHO BRIDGE (WIDEN) BRIDGE NO. 33-0713

QUANTITIES

REMOVE UNSOUND CONCRETE	22	CF
CLEAN BRIDGE DECK	7,585	SQFT
BRIDGE REMOVAL (PORTION)	LUMP	SUM
STRUCTURE EXCAVATION (BRIDGE)	147	CY
STRUCTURE EXCAVATION (TYPE D)	477	CY
STRUCTURE BACKFILL (BRIDGE)	69	CY
FURNISH STEEL PILING (HP 10 X 57)	2,568	LF
DRIVE STEEL PILE (HP 10 X 57)	58	EA
STRUCTURAL CONCRETE, BRIDGE FOOTING	26	CY
STRUCTURAL CONCRETE, BRIDGE	1,055	CY
STRUCTURAL CONCRETE, APPROACH SLAB (TYPE N)	157	CY
DRILL AND BOND DOWEL	255	LF
DRILL AND BOND DOWEL (CHEMICAL ADHESIVE)	124	EA
RAPID SETTING CONCRETE (PATCH)	22	CF
REFINISH BRIDGE DECK	279	SQFT
JOINT SEAL (MR1/2")	263	LF
BAR REINFORCING STEEL (BRIDGE)	177,089	LB
TREAT BRIDGE DECK	7,585	SQFT
FURNISH BRIDGE DECK TREATMENT MATERIAL	84	GAL
PUBLIC SAFETY PLAN	LUMP	SUM
CHAIN LINK RAILING (TYPE 7)	184	LF
CONCRETE BARRIER (TYPE 60A)	184	LF
CONCRETE BARRIER (TYPE 736)	184	LF

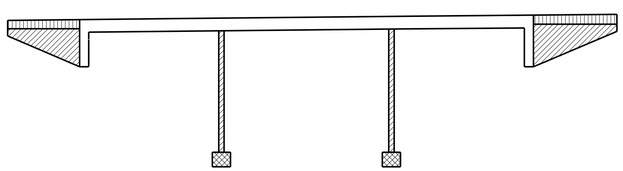

Structural Concrete, Bridge (4.0 ksi @ 28 days)
Structural Concrete, Bridge Footing
Structural Concrete, Bridge
Structural Concrete, Approach Slab

CONCRETE STRENGTH AND TYPE LIMITS
No Scale

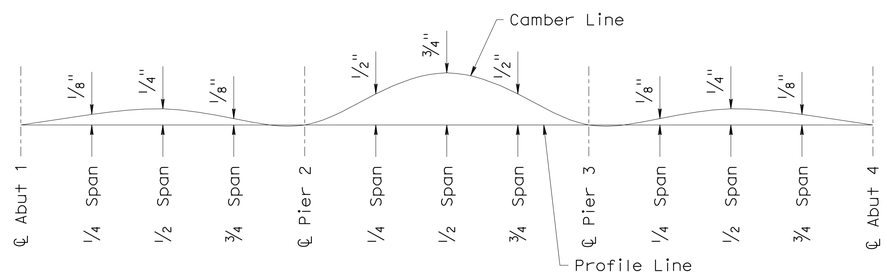

Note: Camber shown does not include allowance for falsework settlement. Camber values are shown in inches.

CAMBER DIAGRAM
No Scale

Note:
The Contractor shall verify all controlling field dimensions before ordering or fabricating any material.

DESIGN OVERSIGHT Yiwei Hu
1/26/11
SIGN OFF DATE

	BY	CHECKED
DESIGN	G. Xu	R. Sennett
DETAILS	P. Zhao	R. Sennett
QUANTITIES	W. Sennett	R. Huang

PREPARED FOR THE STATE OF CALIFORNIA DEPARTMENT OF TRANSPORTATION

Guoping Xu
PROJECT ENGINEER

BRIDGE NO. 33-0713
POST MILE 26.6

ARROYO MOCHO BRIDGE (WIDEN)
INDEX TO PLANS

DESIGN DETAIL SHEET (ENGLISH) (REV. 06-01-09)

ORIGINAL SCALE IN INCHES FOR REDUCED PLANS 0 1 2 3

CU 0733
EA 297611

DISREGARD PRINTS BEARING EARLIER REVISION DATES

REVISION DATES (PRELIMINARY STAGE ONLY) 05/01/09 01/22/10 08/16/10 10/21/10 12/10/10

SHEET 2 OF 16

FILE => 33-0713-a-itp.dgn

USERNAME => s124496 DATE PLOTTED => 21-NOV-2011 TIME PLOTTED => 15:25

DIST	COUNTY	ROUTE	POST MILES TOTAL PROJECT	SHEET No	TOTAL SHEETS
04	Ala	84	25.5/27.1	428	495

REGISTERED CIVIL ENGINEER 12/10/10 DATE

6-27-11
PLANS APPROVAL DATE

REGISTERED PROFESSIONAL ENGINEER Guoping Xu No. C 63977 Exp. 09/30/12 CIVIL STATE OF CALIFORNIA

The State of California or its officers or agents shall not be responsible for the accuracy or completeness of scanned copies of this plan sheet.

ALAMEDA COUNTY TRANSPORTATION IMPROVEMENT AUTHORITY (ACTIA)
1333 BROADWAY, SUITE 300
OAKLAND, CA 94612

MGE ENGINEERING, INC.
7415 GREENHAVEN DRIVE, SUITE 100
SACRAMENTO, CALIFORNIA 95831

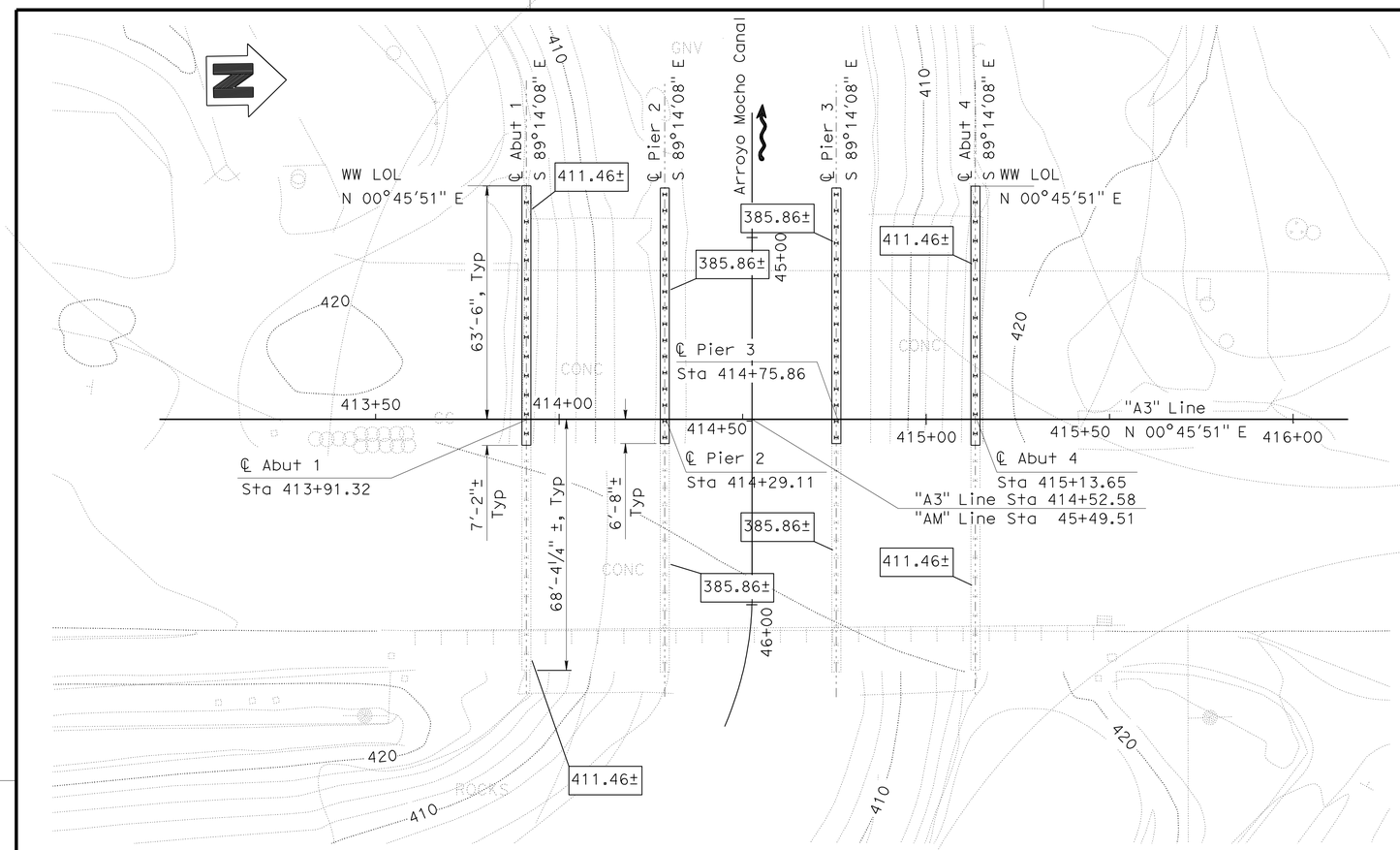

FOUNDATION PLAN
1" = 20'-0"

LEGEND

- Indicates Existing Structure
- Indicates New Construction
- Indicates Direction of Flow
- XXX.XX Indicates Bottom of Footing Elevation
- Indicates New Pile
- Indicates Exist Pile

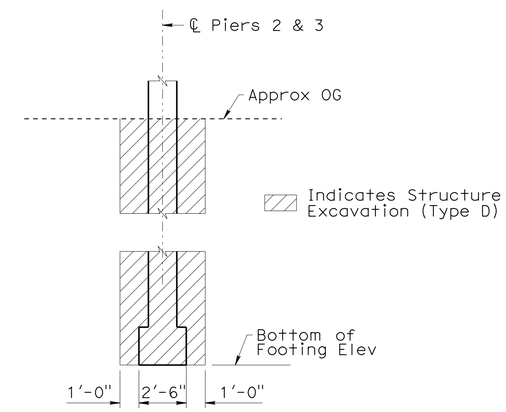

PIER EXCAVATION PAY LIMITS
No Scale

HYDROLOGIC SUMMARY

Drainage Area: 50 square miles

	Design Flood	Base Flood
Frequency (Years)	50	100
Discharge (Cubic feet per second)	3,900	4,800
Water Surface (Elevation at bridge)	413.76	414.80

Flood plain data are based upon information available when the plans were prepared and are shown to meet federal requirements. The accuracy of said information is not warranted by the State and interested or affected parties should make their own investigation.

Stephen Huang 08/18/2010
GEOTECHNICAL PROFESSIONAL APPROVAL DATE

Note:
The Contractor shall verify all controlling field dimensions before ordering or fabricating any material.

PILE DATA TABLE

Location	Pile Type	Nominal Resistance (kips)		Design Tip Elevations (ft)	Specified Tip Elevations (ft)	Nominal Driving Resistance (kips)
		Compression	Tension			
Abut 1	HP 10x57	150	0	377.0 (1) 390.0 (2)	377.0	150
Pier 2	HP 10x57	290	0	331.0 (1) 360.0 (2)	331.0	290
Pier 3	HP 10x57	290	0	331.0 (1) 360.0 (2)	331.0	290
Abut 4	HP 10x57	150	0	377.0 (1) 390.0 (2)	377.0	150

Design tip elevation is controlled by the following demands:
(1) Compression, (2) Tension.

BENCHMARK DATA

B-32 - MONUMENT GTS204 MONUMENT IS A SET MAG NAIL WITH WASHER IN AC STAMPED "GTS CONTROL POINT." MONUMENT IS LOCATED ON THE WEST SIDE OF ISABEL +/-100 FT. NORTH OF CREEK THAT IS SOUTH OF DISCOVERY DR. IT IS 4 FT FROM THE EDGE OF PAVEMENT NEAR THE END OF THE AC BERM.
ELEVATION: 422.07' NORTHING: 2072840.013
EASTING: 6183917.613

B-34 - MONUMENT GTS306 MONUMENT IS A SET 5/8" REBAR WITH PLASTIC CAP LABELED "GTS CTRL PT." MONUMENT IS LOCATED NEAR THE SE CORNER OF BRIDGE SOUTH OF DISCOVERY DRIVE, 4 FT SE OF FENCE ANGLE POING, 6 FT NE OF JOINT POLE, 4 FT WEST OF TOP OF BANK..
ELEVATION: 422.29' NORTHING: 2072540.345
EASTING: 6184.845

DESIGN OVERSIGHT Yiwei Hu
1/26/11
SIGN OFF DATE

SCALE: 1"=20'-0" | VERT.DATUM NAVD88 | HORZ.DATUM NAD83
PHOTOGRAMMETRY AS OF: 11/10/2005 | ALIGNMENT TIES
SURVEYED BY Dan Scott | DRAFTED BY Abhijeet Bhoi
FIELD CHECKED BY Dan Scott | CHECKED BY

	BY	CHECKED
DESIGN	G. Xu	R. Sennett
DETAILS	P. Zhao	R. Sennett
QUANTITIES	W. Sennett	R. Huang

PREPARED FOR THE STATE OF CALIFORNIA DEPARTMENT OF TRANSPORTATION

Guoping Xu
PROJECT ENGINEER

BRIDGE NO. 33-0713
POST MILE 26.6

ARROYO MOCHO BRIDGE (WIDEN)
FOUNDATION PLAN

FOUNDATION PLAN SHEET (ENGLISH) (REV. 06-01-09)

ORIGINAL SCALE IN INCHES FOR REDUCED PLANS 0 1 2 3

CU 0733
EA 297611

DISREGARD PRINTS BEARING EARLIER REVISION DATES
REVISION DATES (PRELIMINARY STAGE ONLY) 02/04/08 04/07/08 09/25/08 12/19/08 05/07/09 01/27/10 09/16/10 10/27/10 12/10/10

SHEET 3 OF 16

FILE => 33-0713-e-fpl.dgn

USERNAME => s124496 DATE PLOTTED => 21-NOV-2011 TIME PLOTTED => 15:25

DIST	COUNTY	ROUTE	POST MILES TOTAL PROJECT	SHEET No	TOTAL SHEETS
04	Ala	84	25.5/27.1	429	495

REGISTERED CIVIL ENGINEER 12/10/10 DATE

6-27-11
PLANS APPROVAL DATE

REGISTERED PROFESSIONAL ENGINEER Guoping Xu No. C 63977 Exp. 09/30/12 CIVIL STATE OF CALIFORNIA

The State of California or its officers or agents shall not be responsible for the accuracy or completeness of scanned copies of this plan sheet.

ALAMEDA COUNTY TRANSPORTATION IMPROVEMENT AUTHORITY (ACTIA)
1333 BROADWAY, SUITE 300
OAKLAND, CA 94612

MGE ENGINEERING, INC.
7415 GREENHAVEN DRIVE, SUITE 100
SACRAMENTO, CALIFORNIA 95831

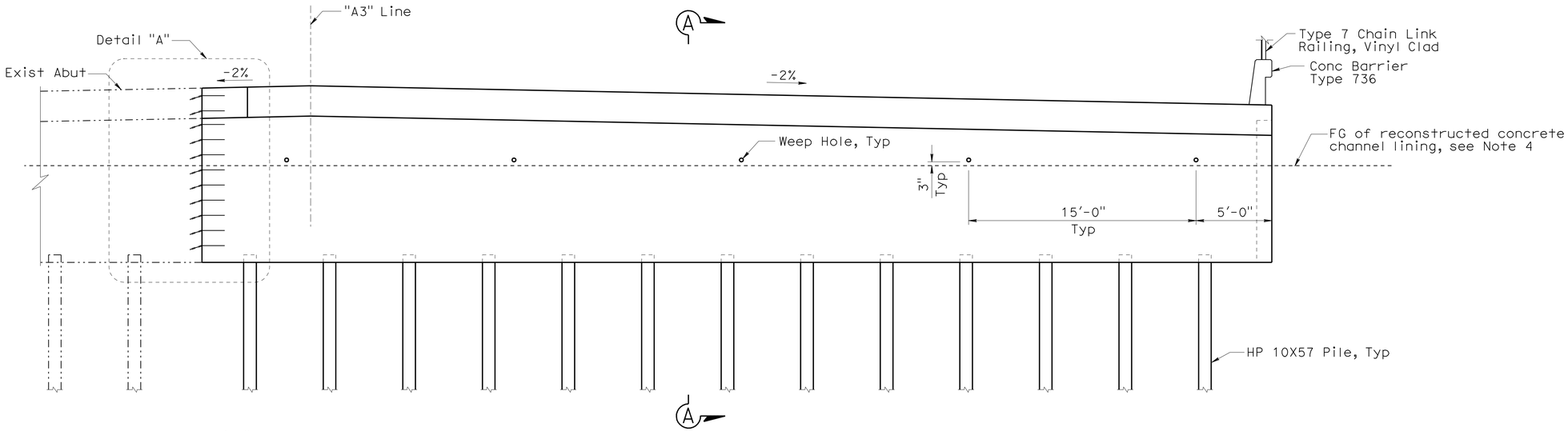

ELEVATION
1/4" = 1'-0"

(Abut 1 Shown, Abut 4 Similar)

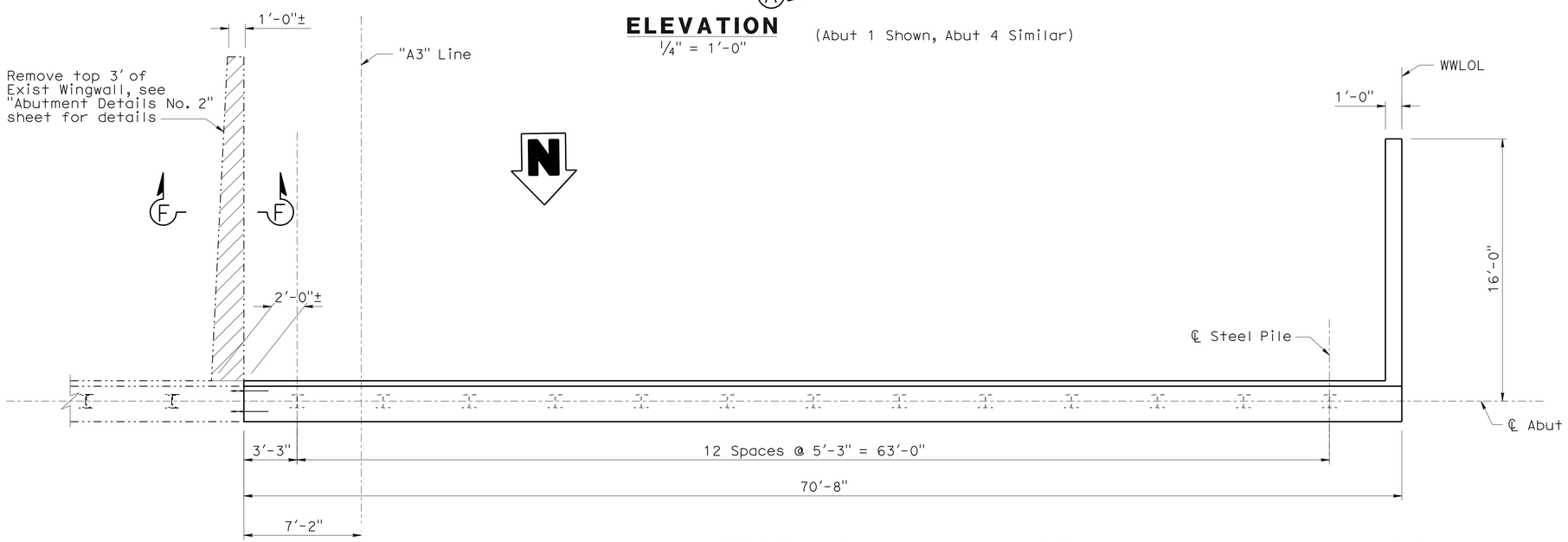

PLAN
1/4" = 1'-0"

(Abut 1 Shown, Abut 4 Similar. Approach Slab not Shown for clarity)

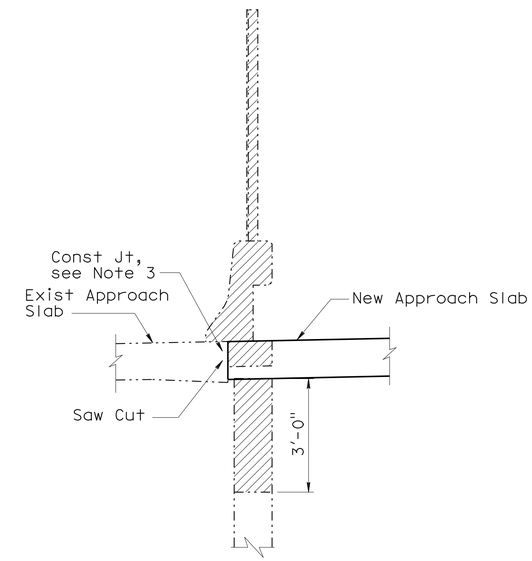

SECTION F-F
1/2" = 1'-0"

LEGEND

- Indicates Exist Structure
- Indicates New Construction
- Indicates Removal of Exist Concrete Barrier, railing and Portion of Exist Wingwall

NOTES:

1. For Section A-A, see "ABUTMENT DETAILS No. 1" sheet.
2. For Detail A, see "ABUTMENT DETAILS No. 2" sheet.
3. For Const Jt details, see "STRUCTURE APPROACH TYPE N(30D)" sheet.
4. For concrete channel reconstruction details not shown, see "ABUTMENT DETAILS No. 1" sheet.

Note:
The Contractor shall verify all controlling field dimensions before ordering or fabricating any material.

DESIGN OVERSIGHT Yiwei Hu
1/26/11
SIGN OFF DATE

	BY	CHECKED
DESIGN	G. Xu	R. Sennett
DETAILS	P. Zhao	R. Sennett
QUANTITIES	W. Sennett	R. Huang

PREPARED FOR THE STATE OF CALIFORNIA DEPARTMENT OF TRANSPORTATION

Guoping Xu
PROJECT ENGINEER

BRIDGE NO. 33-0713
POST MILE 26.6

ARROYO MOCHO BRIDGE (WIDEN)
ABUTMENT LAYOUT

DESIGN DETAIL SHEET (ENGLISH) (REV. 06-01-09)

ORIGINAL SCALE IN INCHES FOR REDUCED PLANS 0 1 2 3

CU 0733
EA 297611

DISREGARD PRINTS BEARING EARLIER REVISION DATES

REVISION DATES (PRELIMINARY STAGE ONLY) 05/01/09 01/22/10 08/18/10 10/21/10 12/10/10

SHEET 4 OF 16

FILE => 33-0713-f-a01_lo1.dgn

USERNAME => s124496 DATE PLOTTED => 21-NOV-2011 TIME PLOTTED => 15:25

DIST	COUNTY	ROUTE	POST MILES TOTAL PROJECT	SHEET No	TOTAL SHEETS
04	Ala	84	25.5/27.1	430	495

REGISTERED CIVIL ENGINEER 12/10/10 DATE

6-27-11
PLANS APPROVAL DATE

REGISTERED PROFESSIONAL ENGINEER Guoping Xu No. C 63977 Exp. 09/30/12 CIVIL STATE OF CALIFORNIA

The State of California or its officers or agents shall not be responsible for the accuracy or completeness of scanned copies of this plan sheet.

ALAMEDA COUNTY TRANSPORTATION IMPROVEMENT AUTHORITY (ACTIA)
1333 BROADWAY, SUITE 300
OAKLAND, CA 94612

MGE ENGINEERING, INC.
7415 GREENHAVEN DRIVE, SUITE 100
SACRAMENTO, CALIFORNIA 95831

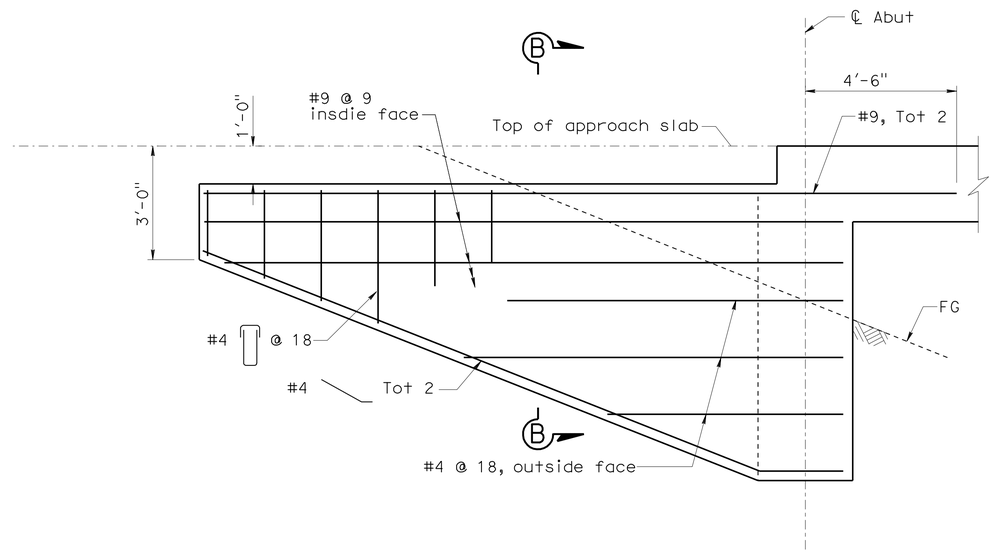

(Concrete Barrier and Chain Link Railing not shown for clarity)

WINGWALL ELEVATION

Scale: ½" = 1'-0"

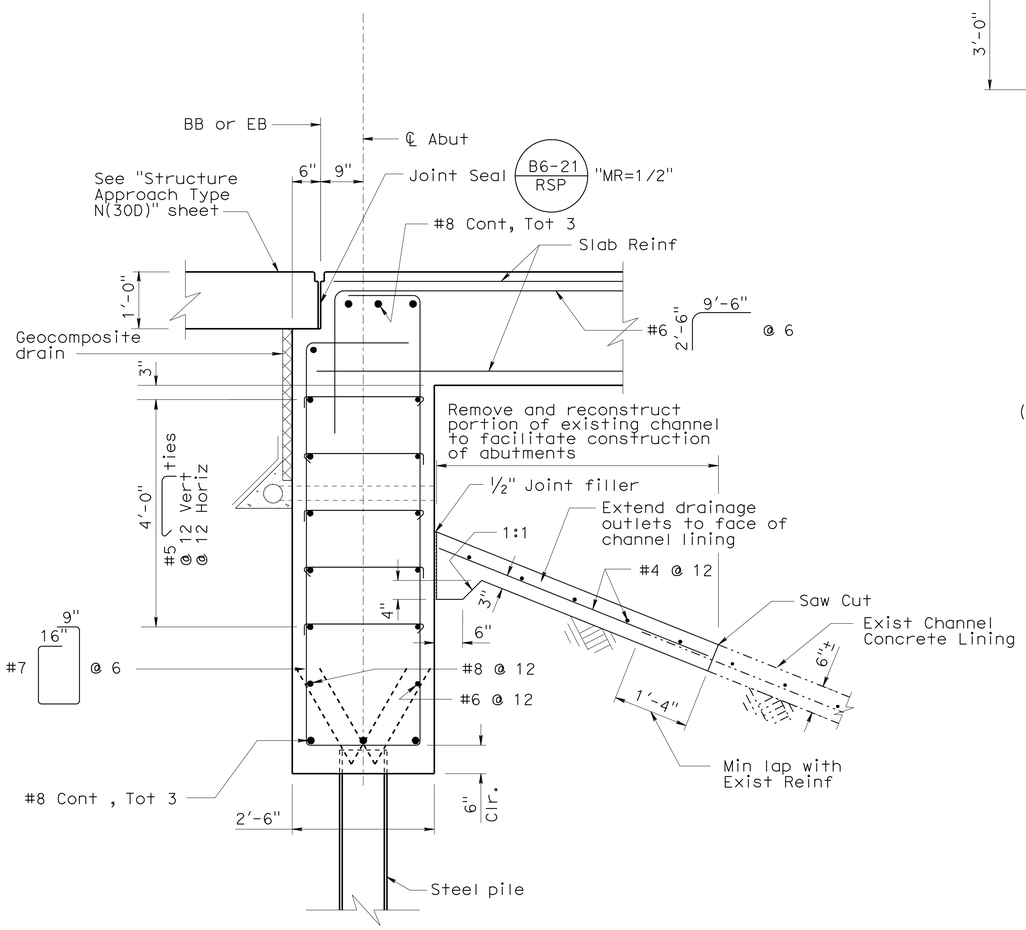

SECTION A-A

Scale: ¾" = 1'-0"

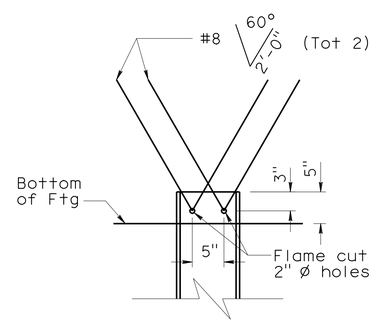

STEEL PILE ANCHOR

Scale: 1" = 1'-0"

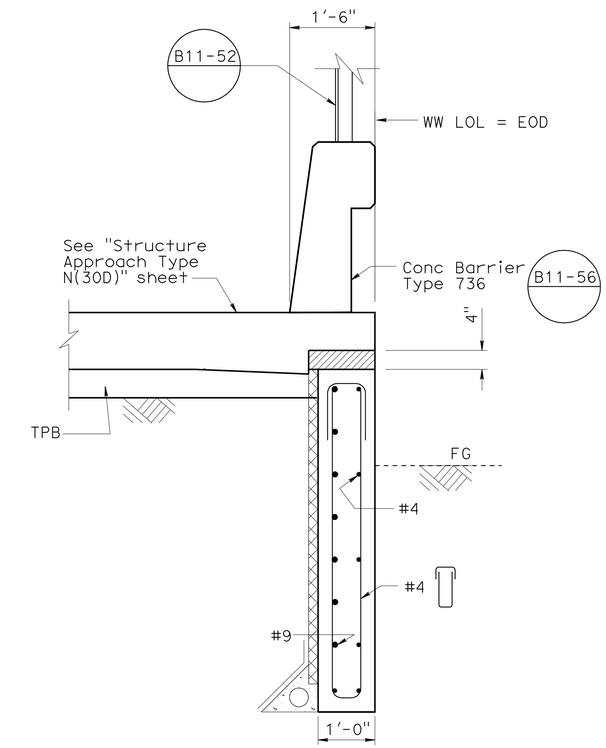

SECTION B-B

Scale: ¾" = 1'-0"

NOTE:

For location of Section A-A, see "ABUTMENT LAYOUT" sheet.

Note:
The Contractor shall verify all controlling field dimensions before ordering or fabricating any material.

DESIGN OVERSIGHT Yiwei Hu
1/26/11
SIGN OFF DATE

	BY	CHECKED
DESIGN	G. Xu	R. Sennett
DETAILS	P. Zhao	R. Sennett
QUANTITIES	W. Sennett	R. Huang

PREPARED FOR THE STATE OF CALIFORNIA DEPARTMENT OF TRANSPORTATION

Guoping Xu
PROJECT ENGINEER

BRIDGE NO. 33-0713
POST MILE 26.6

ARROYO MOCHO BRIDGE (WIDEN)
ABUTMENT DETAILS NO. 1

DESIGN DETAIL SHEET (ENGLISH) (REV. 06-01-09)

ORIGINAL SCALE IN INCHES FOR REDUCED PLANS 0 1 2 3

CU 0733
EA 297611

DISREGARD PRINTS BEARING EARLIER REVISION DATES

REVISION DATES (PRELIMINARY STAGE ONLY) 05/04/09 01/22/10 08/16/10 10/22/10 12/10/10

SHEET 5 OF 16

FILE => 33-0713-f-a01dt01.dgn

USERNAME => s124496 DATE PLOTTED => 21-NOV-2011 TIME PLOTTED => 15:25

DIST	COUNTY	ROUTE	POST MILES TOTAL PROJECT	SHEET No	TOTAL SHEETS
04	Ala	84	25.5/27.1	431	495

REGISTERED CIVIL ENGINEER 12/10/10 DATE

6-27-11
PLANS APPROVAL DATE

REGISTERED PROFESSIONAL ENGINEER Guoping Xu No. C 63977 Exp. 09/30/12 CIVIL STATE OF CALIFORNIA

The State of California or its officers or agents shall not be responsible for the accuracy or completeness of scanned copies of this plan sheet.

ALAMEDA COUNTY TRANSPORTATION IMPROVEMENT AUTHORITY (ACTIA)
1333 BROADWAY, SUITE 300
OAKLAND, CA 94612

MGE ENGINEERING, INC.
7415 GREENHAVEN DRIVE, SUITE 100
SACRAMENTO, CALIFORNIA 95831

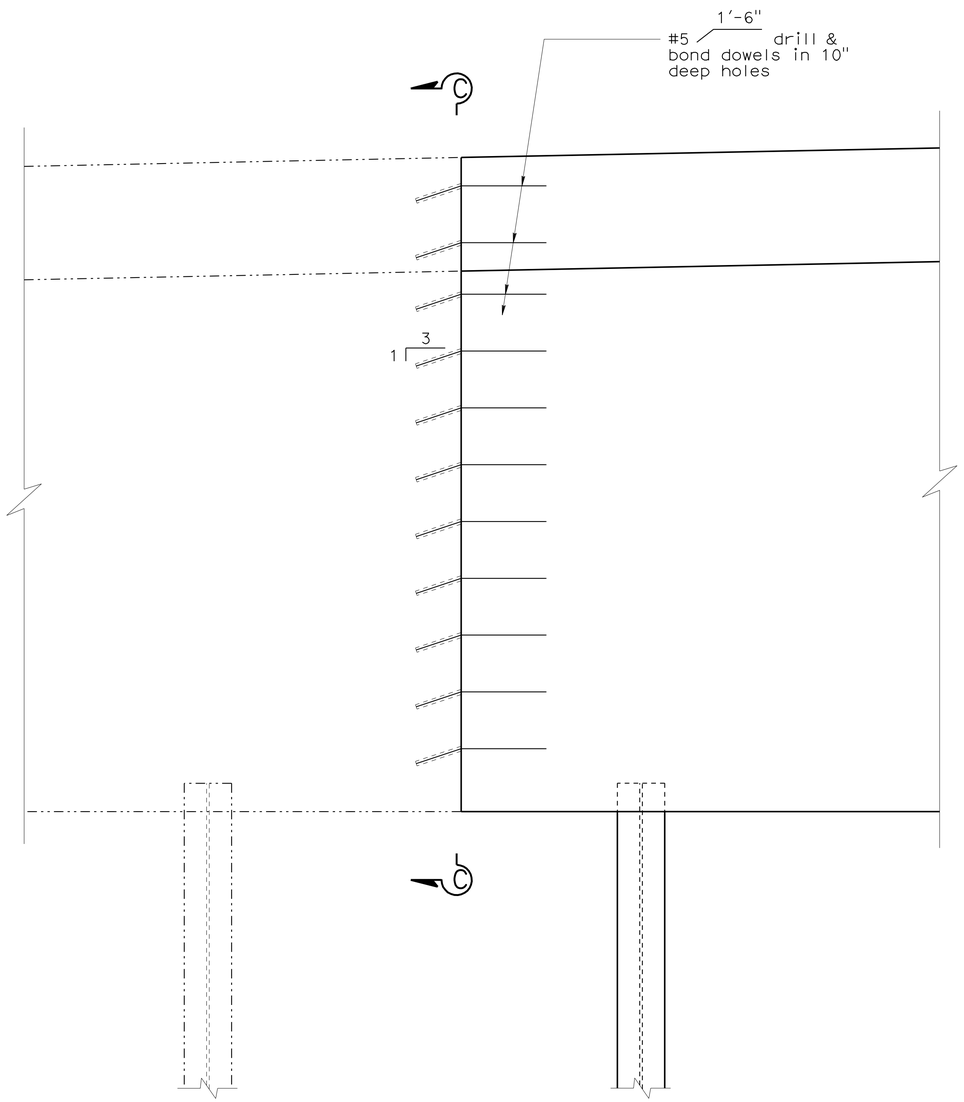

DETAIL 'A'
Scale: 3/4" = 1'-0"

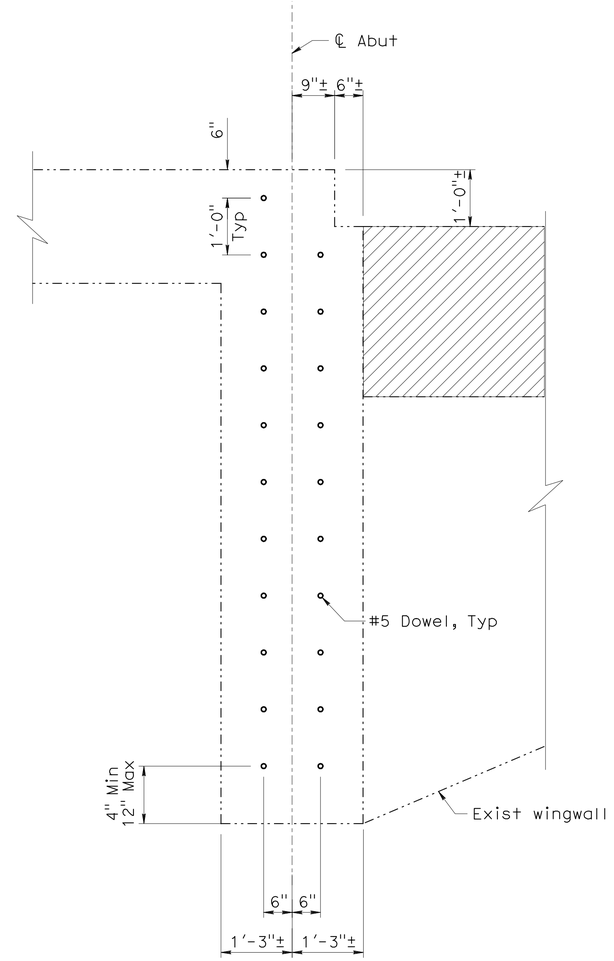

SECTION C-C
Scale: 3/4" = 1'-0"

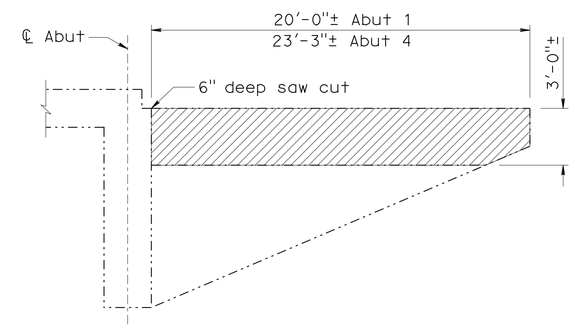

LIMITS OF EXIST WINGWALL REMOVAL
Scale: 1/4" = 1'-0"

LEGEND

Indicates Exist Structure

Indicates New Construction

Indicates Removal of Portion of Exist Wingwall

NOTE:
For Location of Detail A, see "ABUTMENT LAYOUT" Sheet.

Note:
The Contractor shall verify all controlling field dimensions before ordering or fabricating any material.

DESIGN OVERSIGHT Yiwei Hu
1/26/11
SIGN OFF DATE

	BY	CHECKED
DESIGN	G. Xu	R. Sennett
DETAILS	P. Zhao	R. Sennett
QUANTITIES	W. Sennett	R. Huang

PREPARED FOR THE STATE OF CALIFORNIA DEPARTMENT OF TRANSPORTATION

Guoping Xu
PROJECT ENGINEER

BRIDGE NO. 33-0713
POST MILE 26.6

ARROYO MOCHO BRIDGE (WIDEN)
ABUTMENT DETAILS NO. 2

DESIGN DETAIL SHEET (ENGLISH) (REV. 06-01-09)

ORIGINAL SCALE IN INCHES FOR REDUCED PLANS 0 1 2 3

CU 0733
EA 297611

DISREGARD PRINTS BEARING EARLIER REVISION DATES

REVISION DATES (PRELIMINARY STAGE ONLY) 05/04/09 01/22/10 08/16/10 10/21/10 12/10/10

SHEET 6 OF 16

FILE => 33-0713-f-a01dt02.dgn

USERNAME => s124196 DATE PLOTTED => 21-NOV-2011 TIME PLOTTED => 15:25

DIST	COUNTY	ROUTE	POST MILES TOTAL PROJECT	SHEET No	TOTAL SHEETS
04	Ala	84	25.5/27.1	432	495

REGISTERED CIVIL ENGINEER 12/10/10 DATE

6-27-11
PLANS APPROVAL DATE

REGISTERED PROFESSIONAL ENGINEER Guoping Xu No. C 63977 Exp. 09/30/12 CIVIL STATE OF CALIFORNIA

The State of California or its officers or agents shall not be responsible for the accuracy or completeness of scanned copies of this plan sheet.

ALAMEDA COUNTY TRANSPORTATION IMPROVEMENT AUTHORITY (ACTIA)
1333 BROADWAY, SUITE 300
OAKLAND, CA 94612

MGE ENGINEERING, INC.
7415 GREENHAVEN DRIVE, SUITE 100
SACRAMENTO, CALIFORNIA 95831

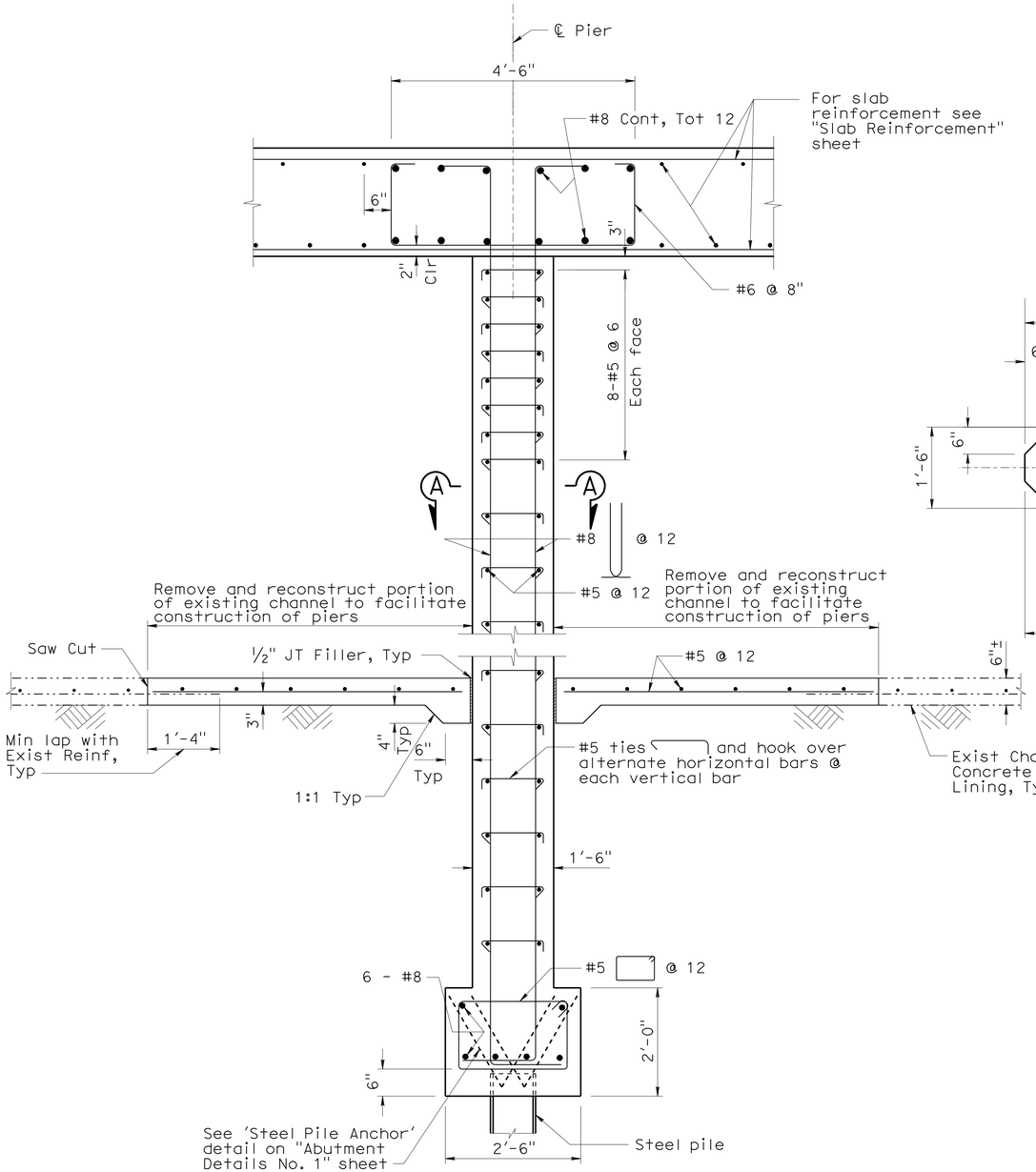

PIER SECTION

Scale: 3/4" = 1'-0"

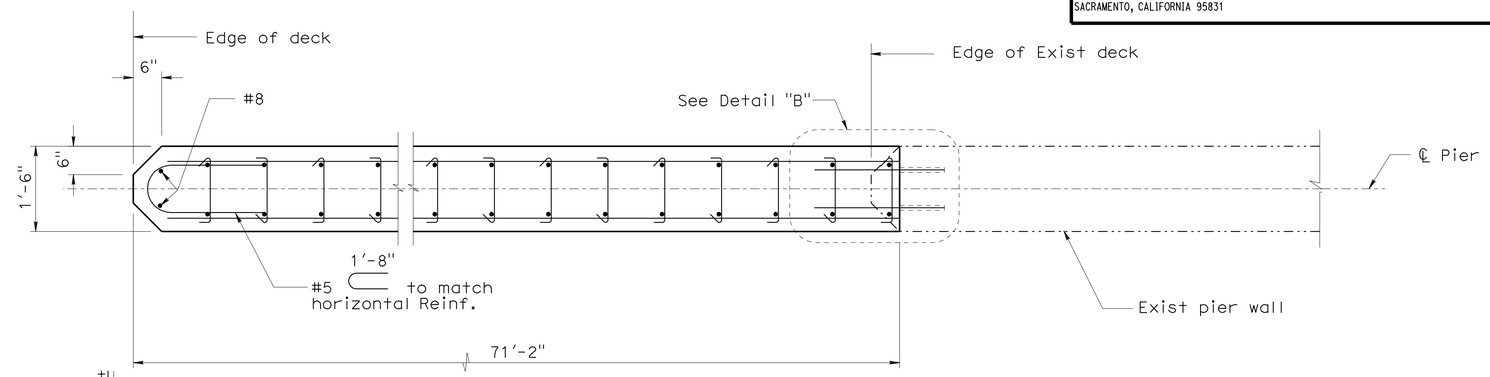

SECTION A-A

Scale: 3/4" = 1'-0"

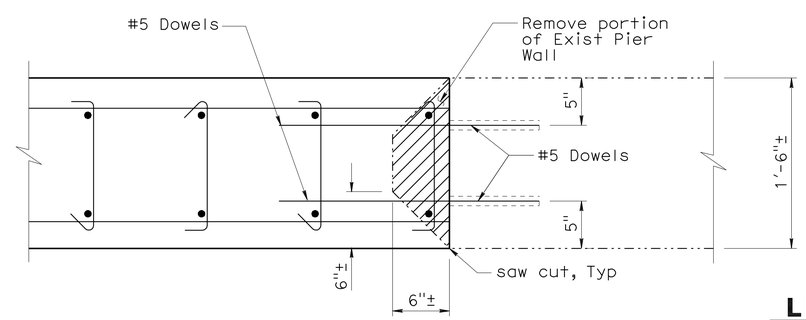

DETAIL 'B'

Scale: 1 1/2" = 1'-0"

LEGEND

Indicates Exist Structure

Indicates New Construction

Indicates Removal of Portion of Exist Pier Wall

Note:
The Contractor shall verify all controlling field dimensions before ordering or fabricating any material.

DESIGN OVERSIGHT Yiwei Hu 1/26/11 SIGN OFF DATE	DESIGN	BY G. Xu	CHECKED R. Sennett	PREPARED FOR THE STATE OF CALIFORNIA DEPARTMENT OF TRANSPORTATION	Guoping Xu PROJECT ENGINEER
	DETAILS	BY P. Zhao	CHECKED R. Sennett		
	QUANTITIES	BY W. Sennett	CHECKED R. Huang		

BRIDGE NO. 33-0713
POST MILE 26.6

ARROYO MOCHO BRIDGE (WIDEN)
PIER DETAILS NO. 1

DESIGN DETAIL SHEET (ENGLISH) (REV. 06-01-09)

ORIGINAL SCALE IN INCHES FOR REDUCED PLANS 0 1 2 3

CU 0733
EA 297611

DISREGARD PRINTS BEARING EARLIER REVISION DATES

REVISION DATES (PRELIMINARY STAGE ONLY) 05/01/09 01/22/10 08/18/10 10/21/10 12/10/10

SHEET 7 OF 16

FILE => 33-0713-i-p01dt01.dgn

USERNAME => s124496 DATE PLOTTED => 21-NOV-2011 TIME PLOTTED => 15:25

DIST	COUNTY	ROUTE	POST MILES TOTAL PROJECT	SHEET No	TOTAL SHEETS
04	Ala	84	25.5/27.1	433	495

REGISTERED CIVIL ENGINEER 12/10/10 DATE

6-27-11
PLANS APPROVAL DATE

REGISTERED PROFESSIONAL ENGINEER Guoping Xu No. C 63977 Exp. 09/30/12 CIVIL STATE OF CALIFORNIA

The State of California or its officers or agents shall not be responsible for the accuracy or completeness of scanned copies of this plan sheet.

ALAMEDA COUNTY TRANSPORTATION IMPROVEMENT AUTHORITY (ACTIA)
1333 BROADWAY, SUITE 300
OAKLAND, CA 94612

MGE ENGINEERING, INC.
7415 GREENHAVEN DRIVE, SUITE 100
SACRAMENTO, CALIFORNIA 95831

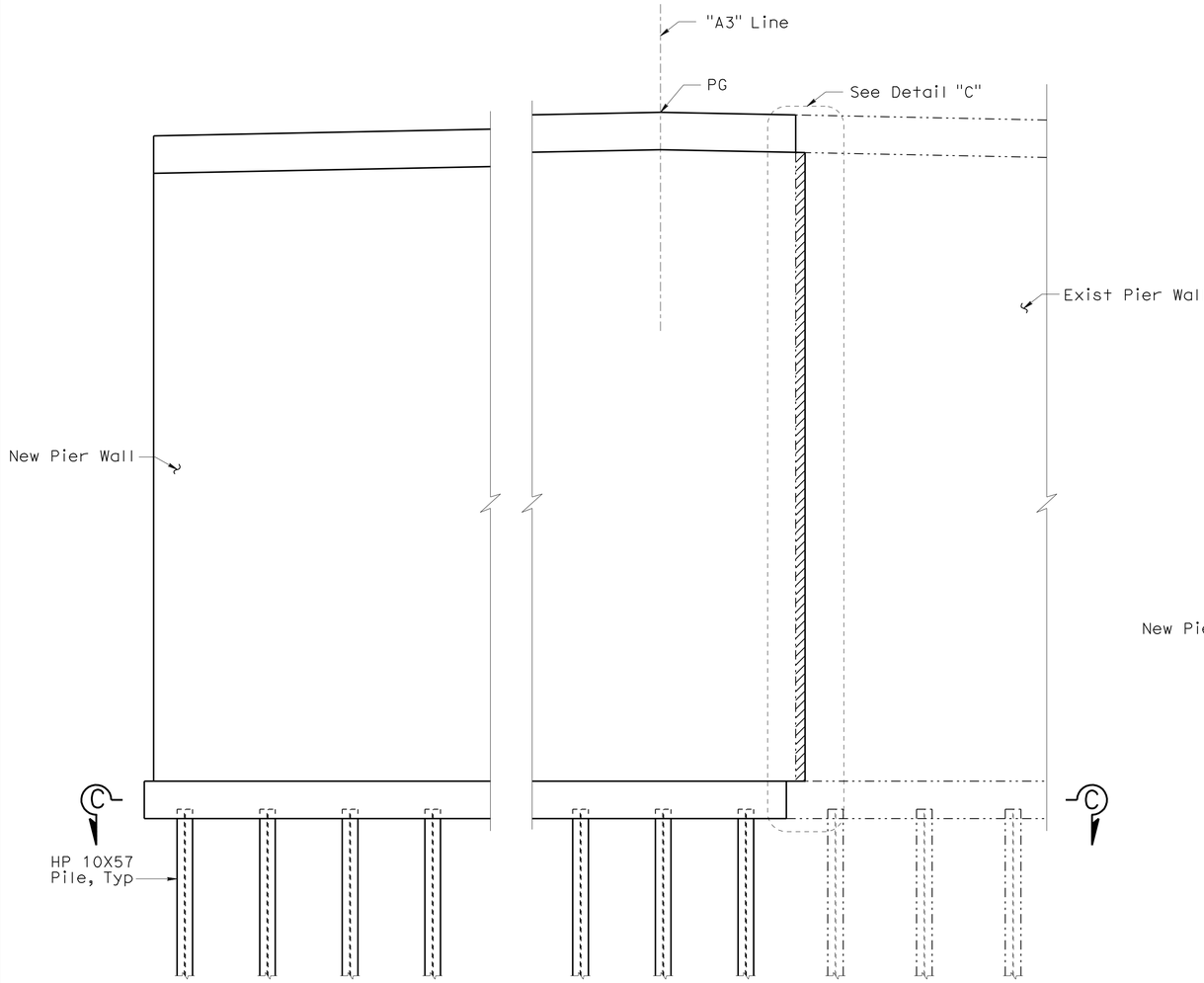

PIER ELEVATION
Scale: 1/4" = 1'-0"

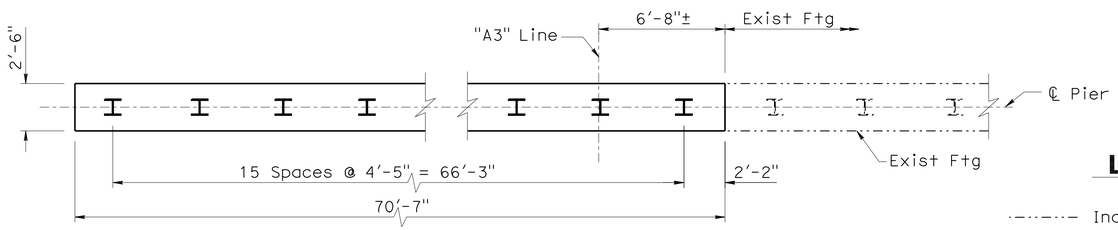

SECTION C-C
Scale: 1/4" = 1'-0"

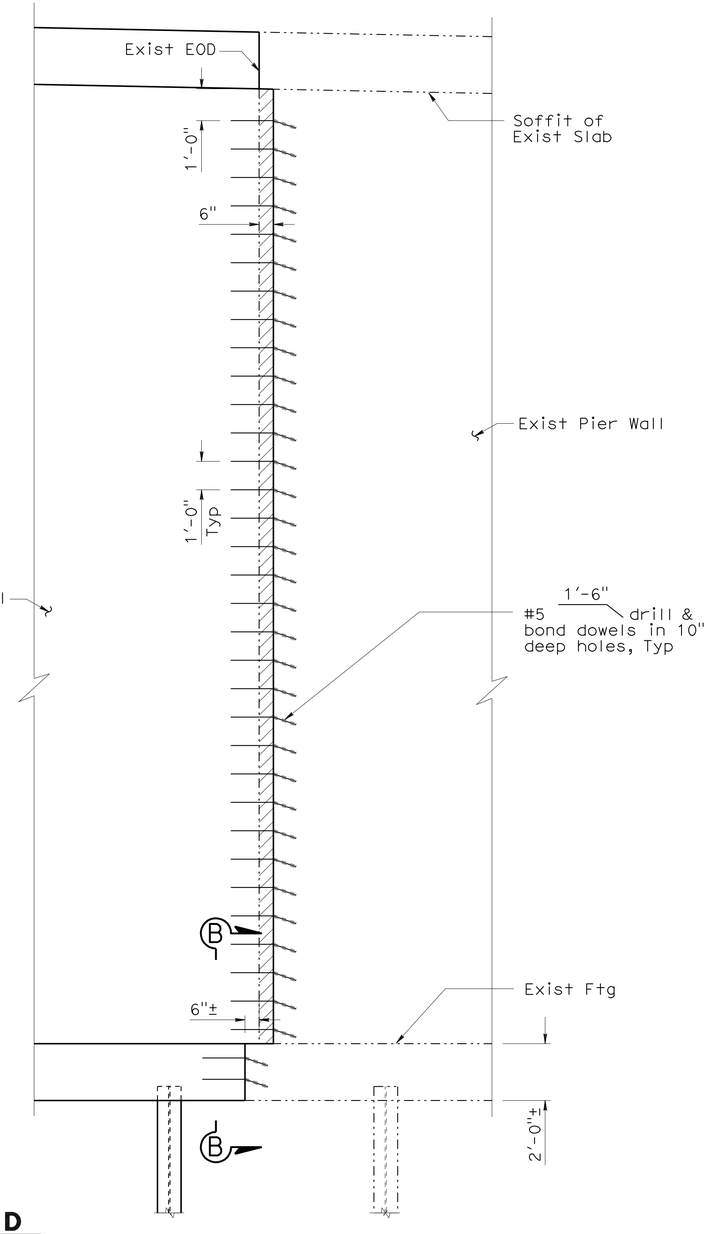

DETAIL 'C'
Scale: 3/8" = 1'-0"

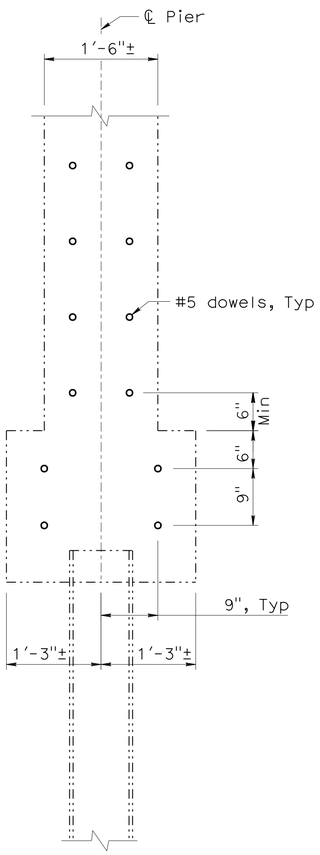

SECTION B-B
Scale: 1" = 1'-0"

LEGEND

Indicates Exist Structure

Indicates New Construction

Indicates Removal of Portion of Exist Pier Wall

Note:
The Contractor shall verify all controlling field dimensions before ordering or fabricating any material.

DESIGN OVERSIGHT Yiwei Hu
1/26/11
SIGN OFF DATE

	BY	CHECKED
DESIGN	G. Xu	R. Sennett
DETAILS	P. Zhao	R. Sennett
QUANTITIES	W. Sennett	R. Huang

PREPARED FOR THE STATE OF CALIFORNIA DEPARTMENT OF TRANSPORTATION

Guoping Xu
PROJECT ENGINEER

BRIDGE NO. 33-0713
POST MILE 26.6

ARROYO MOCHO BRIDGE (WIDEN)
PIER DETAILS NO. 2

DESIGN DETAIL SHEET (ENGLISH) (REV. 06-01-09)

ORIGINAL SCALE IN INCHES FOR REDUCED PLANS 0 1 2 3

CU 0733
EA 297611

DISREGARD PRINTS BEARING EARLIER REVISION DATES

REVISION DATES (PRELIMINARY STAGE ONLY) 05/01/09 01/22/10 08/18/10 10/21/10 12/10/10

SHEET 8 OF 16

FILE => 33-0713-i-p01dt02.dgn

USERNAME => s124496 DATE PLOTTED => 21-NOV-2011 TIME PLOTTED => 15:25

DIST	COUNTY	ROUTE	POST MILES TOTAL PROJECT	SHEET No	TOTAL SHEETS
04	Ala	84	25.5/27.1	434	495

REGISTERED CIVIL ENGINEER 12/10/10 DATE

6-27-11
PLANS APPROVAL DATE

REGISTERED PROFESSIONAL ENGINEER Guoping Xu No. C 63977 Exp. 09/30/12 CIVIL STATE OF CALIFORNIA

The State of California or its officers or agents shall not be responsible for the accuracy or completeness of scanned copies of this plan sheet.

ALAMEDA COUNTY TRANSPORTATION IMPROVEMENT AUTHORITY (ACTIA)
1333 BROADWAY, SUITE 300
OAKLAND, CA 94612

MGE ENGINEERING, INC.
7415 GREENHAVEN DRIVE, SUITE 100
SACRAMENTO, CALIFORNIA 95831

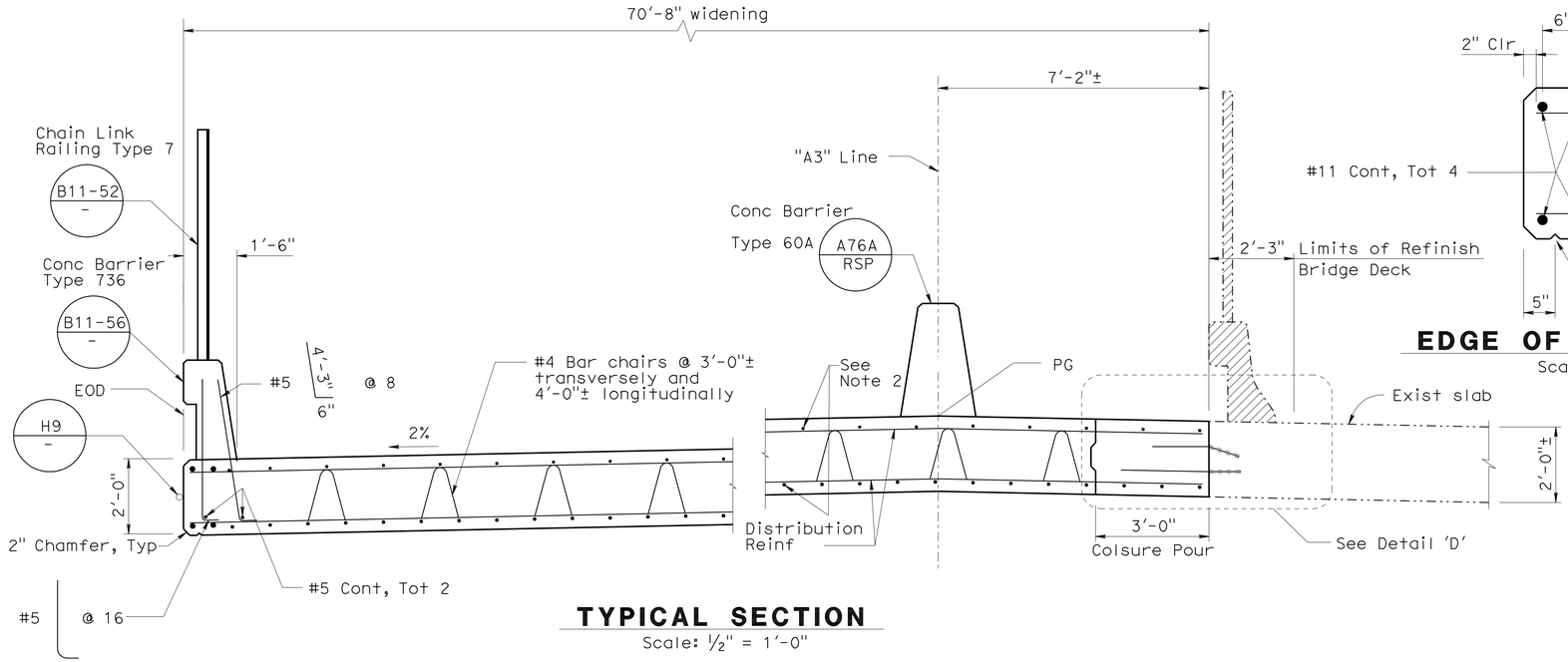

TYPICAL SECTION
Scale: 1/2" = 1'-0"

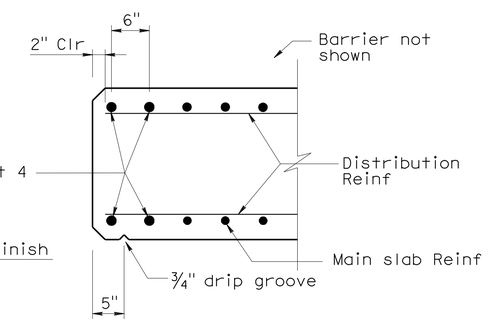

EDGE OF SLAB DETAILS
Scale: 1" = 1'-0"

FALSEWORK RELEASE

Falsework shall be released as soon as permitted by the specifications. Closure pour shall not be placed sooner than 60 days after the falsework has been released.

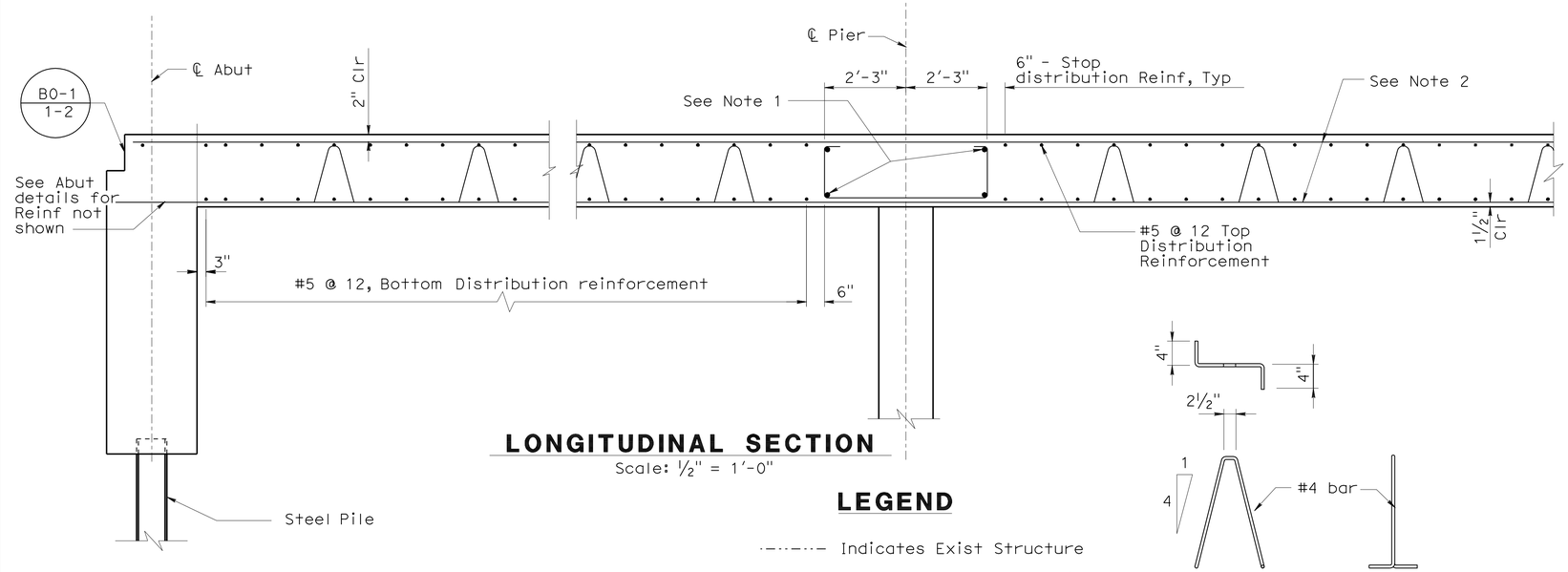

LONGITUDINAL SECTION
Scale: 1/2" = 1'-0"

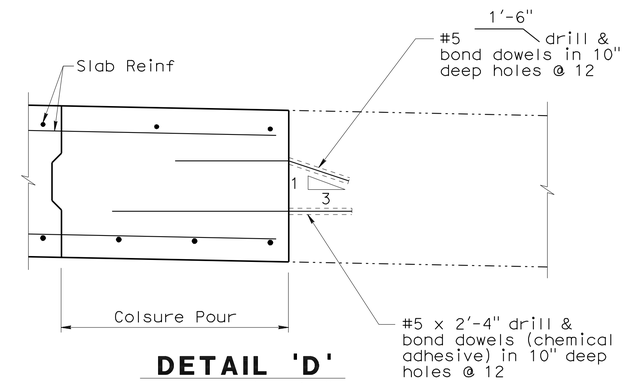

DETAIL 'D'
Scale: 1" = 1'-0"

LEGEND

Indicates Exist Structure

Indicates New Construction

Indicates Removal of Exist Conc Barrier & Railing

BAR CHAIR DETAIL
Scale: 1" = 1'-0"

NOTES:

1. For slab reinforcement at top of pier, see " PIER DETAILS NO. 1" sheet.
2. For main slab reinforcement, see "SLAB REINFORCEMENT" sheet.

Note:
The Contractor shall verify all controlling field dimensions before ordering or fabricating any material.

DESIGN OVERSIGHT Yiwei Hu
1/26/11
SIGN OFF DATE

	BY	CHECKED
DESIGN	G. Xu	R. Sennett
DETAILS	P. Zhao	R. Sennett
QUANTITIES	W. Sennett	R. Huang

PREPARED FOR THE STATE OF CALIFORNIA DEPARTMENT OF TRANSPORTATION

Guoping Xu
PROJECT ENGINEER

BRIDGE NO. 33-0713
POST MILE 26.6

ARROYO MOCHO BRIDGE (WIDEN)
TYPICAL SECTION

DESIGN DETAIL SHEET (ENGLISH) (REV. 06-01-09)

ORIGINAL SCALE IN INCHES FOR REDUCED PLANS 0 1 2 3

CU 0733
EA 297611

DISREGARD PRINTS BEARING EARLIER REVISION DATES

REVISION DATES (PRELIMINARY STAGE ONLY) 05/04/09 01/22/10 08/18/10 10/21/10 12/10/10

SHEET 9 OF 16

FILE => 33-0713-k-ts01.dgn

USERNAME => s124496 DATE PLOTTED => 21-NOV-2011 TIME PLOTTED => 15:25

DIST	COUNTY	ROUTE	POST MILES TOTAL PROJECT	SHEET No	TOTAL SHEETS
04	Ala	84	25.5/27.1	435	495

REGISTERED CIVIL ENGINEER 12/10/10 DATE

6-27-11
PLANS APPROVAL DATE

REGISTERED PROFESSIONAL ENGINEER Guoping Xu No. C 63977 Exp. 09/30/12 CIVIL STATE OF CALIFORNIA

The State of California or its officers or agents shall not be responsible for the accuracy or completeness of scanned copies of this plan sheet.

ALAMEDA COUNTY TRANSPORTATION IMPROVEMENT AUTHORITY (ACTIA)
1333 BROADWAY, SUITE 300
OAKLAND, CA 94612

MGE ENGINEERING, INC.
7415 GREENHAVEN DRIVE, SUITE 100
SACRAMENTO, CALIFORNIA 95831

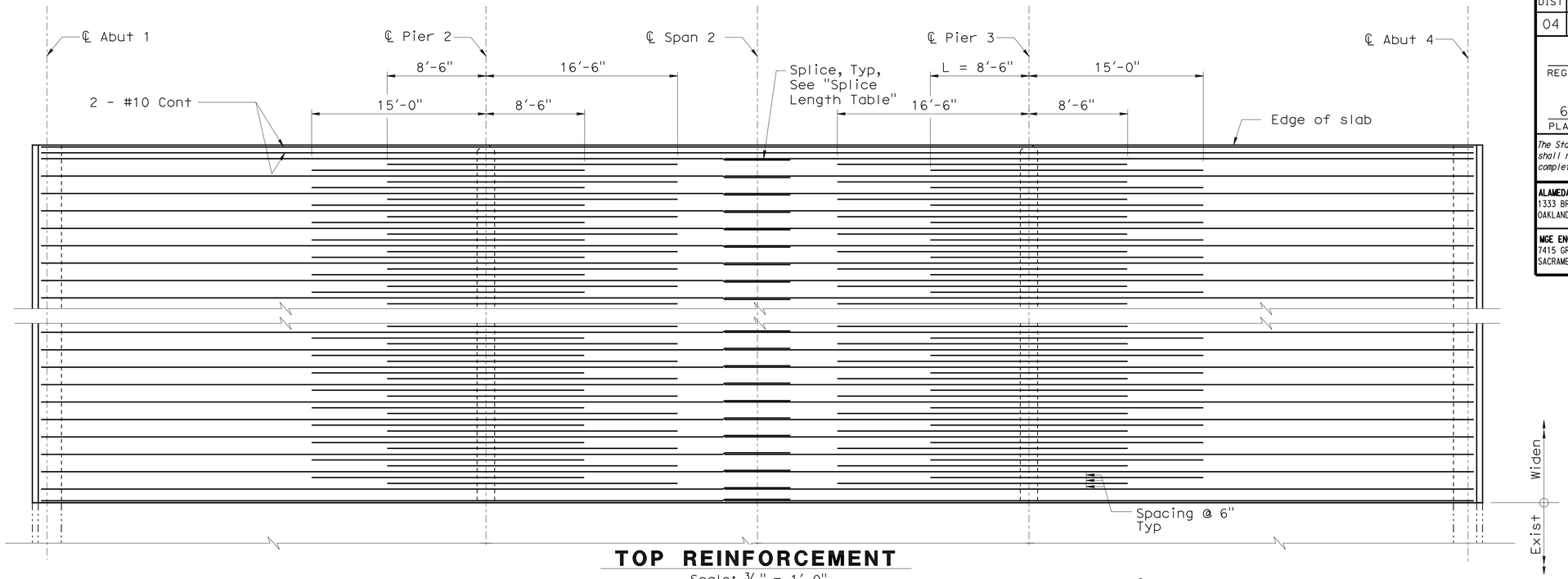

TOP REINFORCEMENT

Scale: 3/16" = 1'-0"

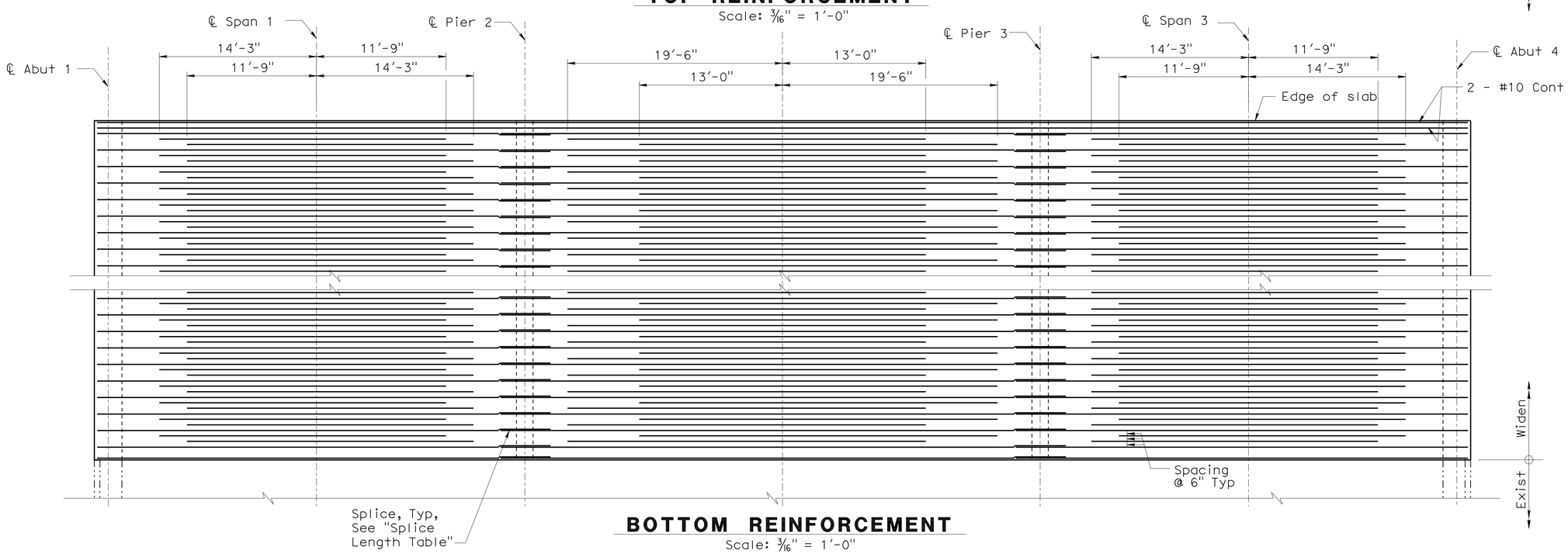

BOTTOM REINFORCEMENT

Scale: 3/16" = 1'-0"

SPLICE LENGTH TABLE

#8	4'-6"
#9	5'-8"
#10	6'-10"

NOTES:

1. All Top Reinf #9 except edge 2-#10.
2. All Bottom Reinf #8 except edge 2-#10

Note:
The Contractor shall verify all controlling field dimensions before ordering or fabricating any material.

DESIGN OVERSIGHT Yiwei Hu
1/26/11
SIGN OFF DATE

	BY	CHECKED
DESIGN	G. Xu	R. Sennett
DETAILS	P. Zhao	R. Sennett
QUANTITIES	W. Sennett	R. Huang

PREPARED FOR THE STATE OF CALIFORNIA DEPARTMENT OF TRANSPORTATION

Guoping Xu
PROJECT ENGINEER

BRIDGE NO. 33-0713
POST MILE 26.6

ARROYO MOCHO BRIDGE (WIDEN)
SLAB REINFORCEMENT

DESIGN DETAIL SHEET (ENGLISH) (REV. 06-01-09)

ORIGINAL SCALE IN INCHES FOR REDUCED PLANS 0 1 2 3

CU 0733
EA 297611

DISREGARD PRINTS BEARING EARLIER REVISION DATES

REVISION DATES (PRELIMINARY STAGE ONLY) 05/07/09 01/22/10 08/18/10 10/22/10 12/10/10

SHEET 10 OF 16

FILE => 33-0713-1-sr01.dgn

USERNAME => s124496 DATE PLOTTED => 21-NOV-2011 TIME PLOTTED => 15:26

DIST.	COUNTY	ROUTE	POST MILES TOTAL PROJECT	SHEET NO.	TOTAL SHEETS
04	Ala	84	25.5/27.1	436	495

REGISTERED CIVIL ENGINEER 12/10/10 DATE

6-27-11
PLANS APPROVAL DATE

REGISTERED PROFESSIONAL ENGINEER Guoping Xu No. C 63977 Exp. 09/30/12 CIVIL STATE OF CALIFORNIA

The State of California or its officers or agents shall not be responsible for the accuracy or completeness of electronic copies of this plan sheet.

ALAMEDA COUNTY TRANSPORTATION IMPROVEMENT AUTHORITY (ACTIA)
1333 BROADWAY, SUITE 300
OAKLAND, CA 94612

MGE ENGINEERING, INC.
7415 GREENHAVEN DRIVE, SUITE 100
SACRAMENTO, CALIFORNIA 95831

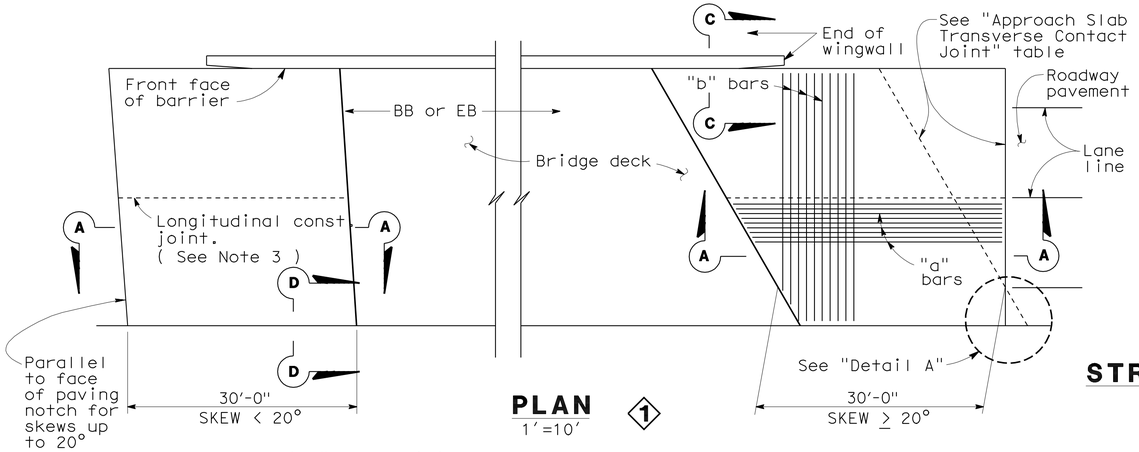

PLAN ①
1'=10'

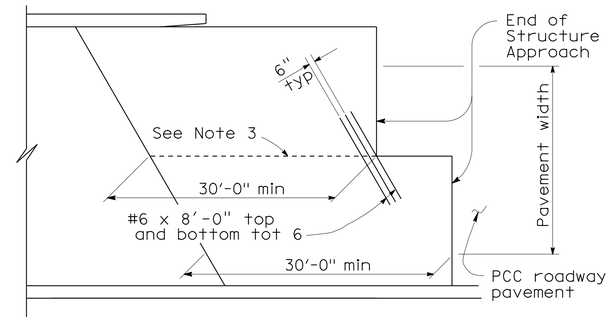

STRUCTURE APPROACH - END STAGGER DETAIL
No Scale

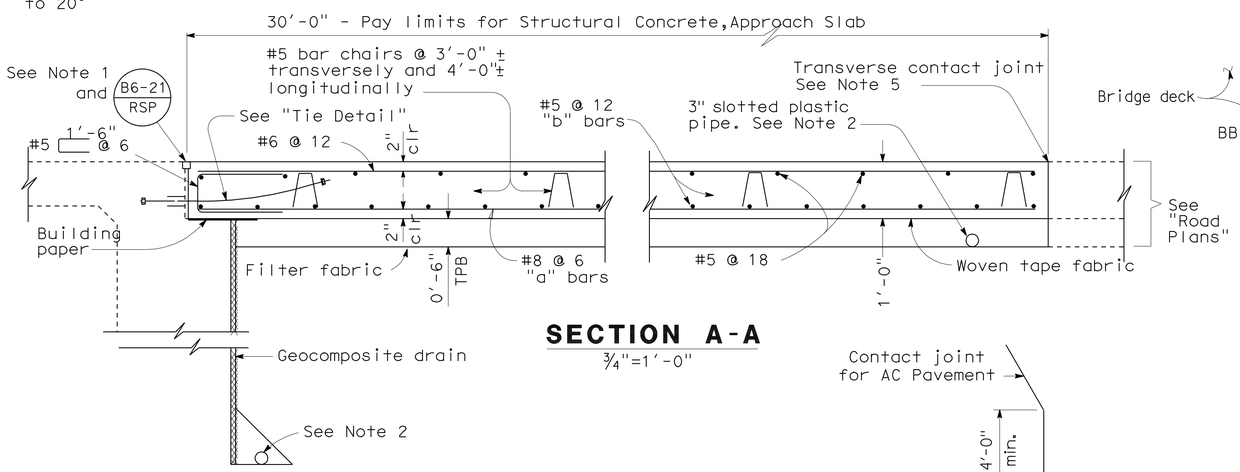

SECTION A-A
¾"=1'-0"

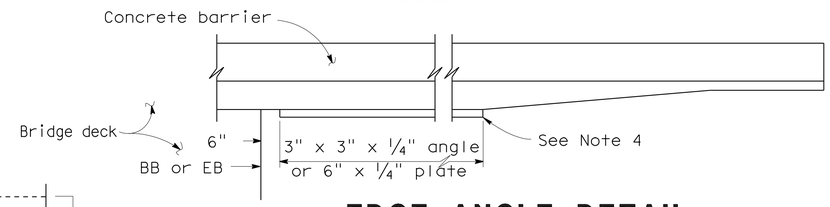

EDGE ANGLE DETAIL
½"=1'-0"

APPROACH SLAB TRANSVERSE CONTACT JOINT		
APPROACH SKEW	WITH AC ROADWAY PAVEMENT	WITH PCC ROADWAY PAVEMENT
< 20°	Parallel to face of paving notch	Parallel to face of paving notch
20°- 45°	Parallel to face of P N use (Detail A)	Stagger lines 24' to 36' apart
> 45°	Parallel to face of P N use (Detail A)	Stagger at each lane line

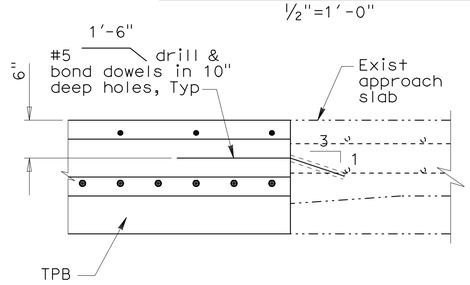

SECTION D-D ② ③
1½"=1'-0"

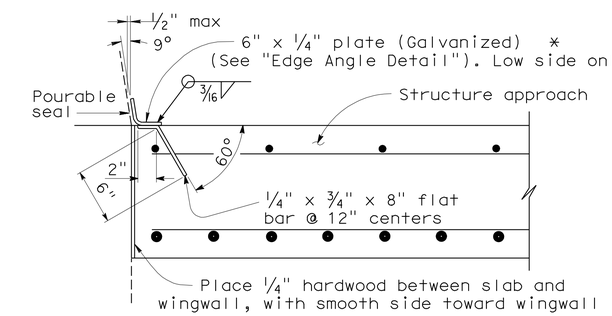

*(TO BE USED WITH TYPE 732 OR TYPE 736 CONCRETE BARRIER)

DETAIL B
1½"=1'-0"

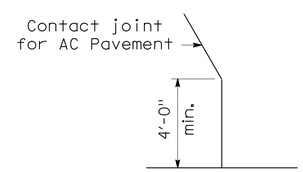

DETAIL A
No Scale

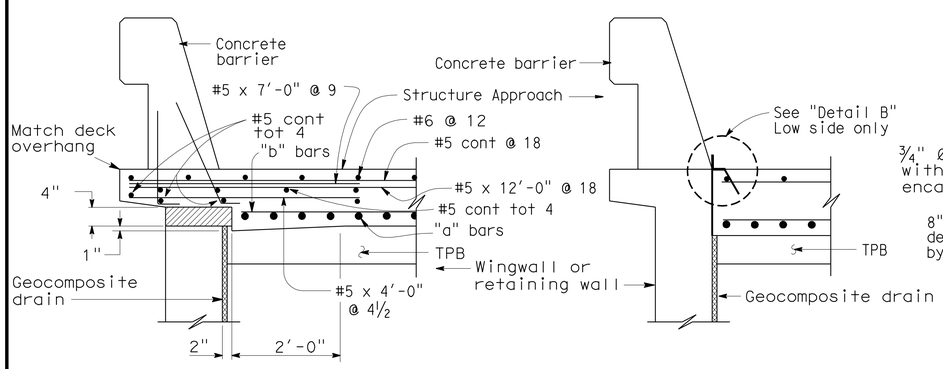

TYPE E-1 TYPE E-2

SECTION C-C ①
¾"=1'-0"

(Type E-1 to be used, unless otherwise shown on plans)

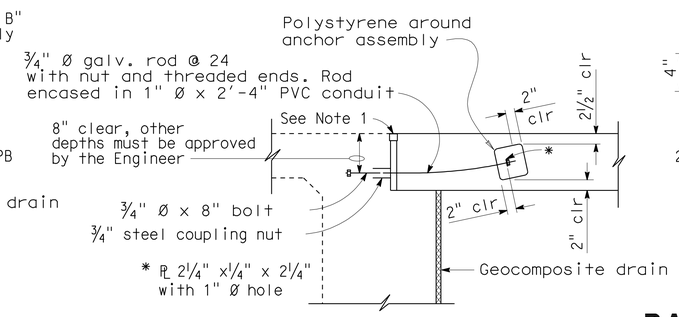

TIE DETAIL
¾"=1'-0"

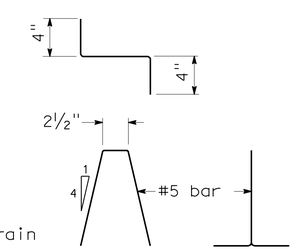

BAR CHAIR DETAIL
1½"=1'-0"

NOTES:

1. For details not noted or shown, see Structure Plans.
2. For drainage details, see "STRUCTURE APPROACH DRAINAGE DETAILS" sheet.
3. Longitudinal construction joints, when permitted by the Engineer, shall be located on lane lines.
4. End angle or plate at beginning of barrier transition, end of wingwall or end of structure approach, as applicable.
5. For transverse contact joint with new PCC paving, refer to Standard Plan P10.
6. At the contractor's option, approach slab transverse reinforcement may be placed parallel to paving notch. Spacing of transverse reinforcement is measured along ℄ roadway.

Polystyrene to be removed.

STANDARD DRAWING

FILE NO. xs3-180e

APPROVED BY M. Ha RESPONSIBLE TECHNICAL SPECIALIST
APPROVAL DATE 8-12-08

RELEASED BY O. Alcantara RESPONSIBLE OFFICE CHIEF
RELEASE DATE 8-12-08

① Modify Detail ③ Add Detail
② Remove Detail

STATE OF CALIFORNIA DEPARTMENT OF TRANSPORTATION

DIVISION OF ENGINEERING SERVICES

BRIDGE NO. 33-0713
POST MILE 26.6

ARROYO MOCHO BRIDGE (WIDEN)
STRUCTURE APPROACH TYPE N(30D)

DS OSD 2147A (ENGLISH STANDARD DRAWING "XS" BORDER REV. 01/11/08)

ORIGINAL SCALE IN INCHES FOR REDUCED PLANS 0 1 2 3

CU 0733
EA 297611

DISREGARD PRINTS BEARING EARLIER REVISION DATES

REVISION DATES (PRELIMINARY STAGE ONLY) 01/28/10 08/16/10 12/10/10

SHEET 11 OF 16

USERNAME => s124496

33-0713-s-sa01.dgn

DATE PLOTTED => 21-NOV-2011 TIME PLOTTED => 15:26

DIST.	COUNTY	ROUTE	MILE POST TOTAL PROJECT	SHEET NO.	TOTAL SHEETS
04	Ala	84	25.5/27.1	437	495

REGISTERED CIVIL ENGINEER 12/10/10 DATE

PROFESSIONAL ENGINEER REGISTERED Guoping Xu No. C 63977 Exp. 09/30/12 CIVIL STATE OF CALIFORNIA

6-27-11
PLANS APPROVAL DATE

The State of California or its officers or agents shall not be responsible for the accuracy or completeness of electronic copies of this plan sheet.

ALAMEDA COUNTY TRANSPORTATION IMPROVEMENT AUTHORITY (ACTIA)
1333 BROADWAY, SUITE 300
OAKLAND, CA 94612

MGE ENGINEERING, INC.
7415 GREENHAVEN DRIVE, SUITE 100
SACRAMENTO, CALIFORNIA 95831

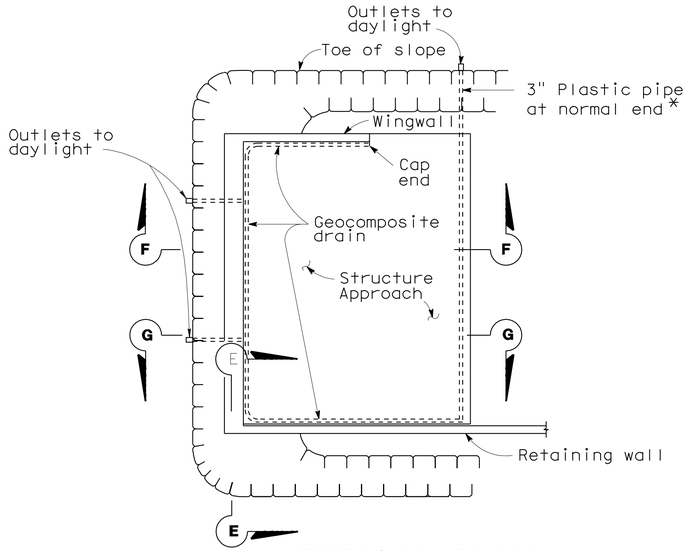

TYPICAL PLAN

1"=10'

*For pipe layout at staggered end,see "Detail B".

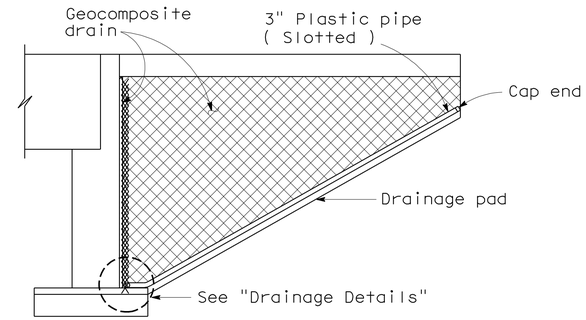

CANTILEVER WINGWALL SECTION F-F

1/4"=1'-0"

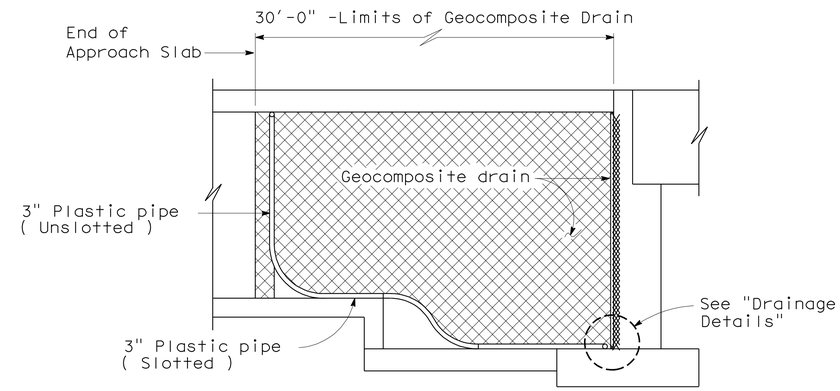

RETAINING WALL WINGWALL SECTION G-G

1/4"=1'-0"

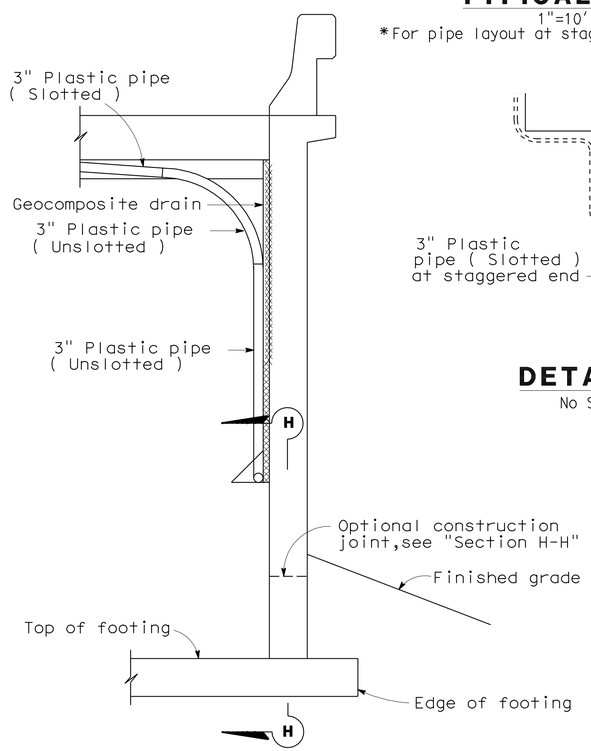

SECTION E-E

1/2"=1'-0"

NOTE: Bends and junctions in 3" plastic pipe are 30" radius Min

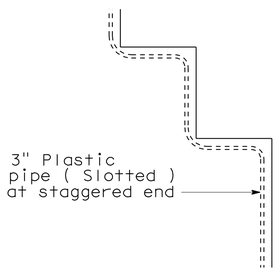

DETAIL B

No Scale

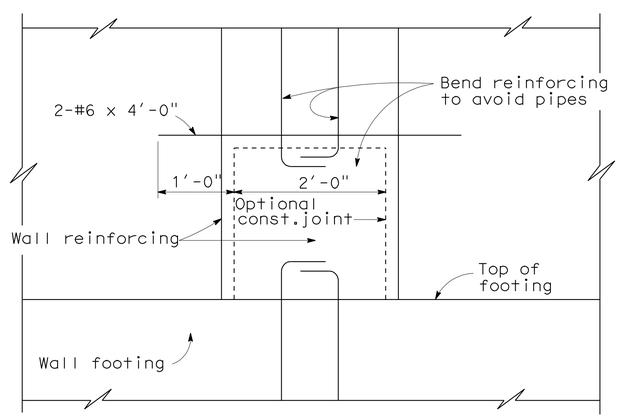

SECTION H-H

1"=1'-0"

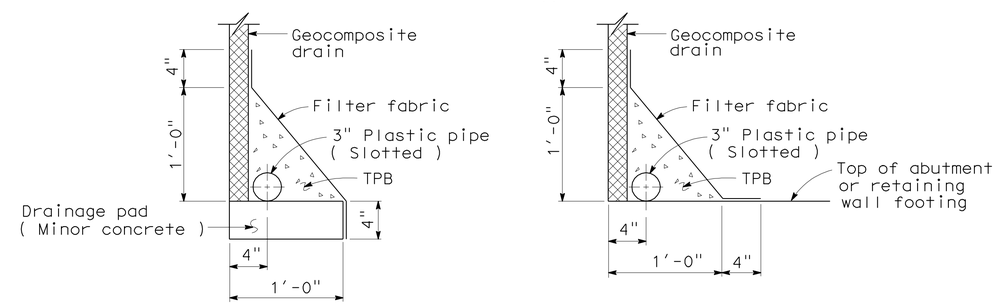

WITHOUT FOOTING

WITH FOOTING

DRAINAGE DETAILS

1 1/2"=1'-0"

STANDARD DRAWING

RELEASE DATE 4/23/98	DESIGN	BY M.TRAFFALIS	CHECKED E.THORKILDSEN	RELEASED BY
	DETAILS	BY R.YEE	CHECKED E.THORKILDSEN	
FILE NO. xs3-110e	SUBMITTED	BY M.HA	DRAWING DATE 4/98	OFFICE CHIEF

STATE OF CALIFORNIA DEPARTMENT OF TRANSPORTATION

DIVISION OF ENGINEERING SERVICES

BRIDGE NO. 33-0713
MILE POST 26.6

ARROYO MOCHO BRIDGE (WIDEN)

STRUCTURE APPROACH DRAINAGE DETAILS

DS OSD 2147A (ENGLISH) (REV. X/XX/XX)

ORIGINAL SCALE IN INCHES FOR REDUCED PLANS 0 1 2 3

CU 0733
EA 297611

DISREGARD PRINTS BEARING EARLIER REVISION DATES

REVISION DATES (PRELIMINARY STAGE ONLY) 05/07/09 01/22/10 08/16/10 12/10/10

SHEET 12 OF 16

USERNAME => s124496

33-0713-s-sadst01.dgn

DATE PLOTTED => 21-NOV-2011 TIME PLOTTED => 15:26

DIST	COUNTY	ROUTE	POST MILES TOTAL PROJECT	SHEET No	TOTAL SHEETS
04	Ala	84	25.5/27.1	438	495

REGISTERED CIVIL ENGINEER — DATE 1/4/11

6-27-11
PLANS APPROVAL DATE

REGISTERED PROFESSIONAL ENGINEER — Stephen Huang — No. C 42289 — Exp. 03/31/12 — CIVIL — STATE OF CALIFORNIA

The State of California or its officers or agents shall not be responsible for the accuracy or completeness of electronic copies of this plan sheet.

ALAMEDA COUNTY TRANSPORTATION IMPROVEMENT AUTHORITY (ACTIA)
1333 Broadway, Suite 300
Oakland, CA 94612

URS CORPORATION
1333 Broadway,
Suite 800
Oakland, CA 94612

REFERENCE: CALTRANS SOIL & ROCK LOGGING, CLASSIFICATION, AND PRESENTATION MANUAL (JUNE 2007)

CEMENTATION

Description	Criteria
Weak	Crumbles or breaks with handling or little finger pressure.
Moderate	Crumbles or breaks with considerable finger pressure.
Strong	Will not crumble or break with finger pressure.

CONSISTENCY OF COHESIVE SOILS

Description	Unconfined Compressive Strength (tsf)	Pocket Penetrometer Measurement (tsf)	Torvane Measurement (tsf)	Field Approximation
Very Soft	< 0.25	< 0.25	< 0.12	Easily penetrated several inches by fist
Soft	0.25 to 0.50	0.25 to 0.50	0.12 to 0.25	Easily penetrated several inches by thumb
Medium Stiff	0.50 to 1.0	0.50 to 1.0	0.25 to 0.50	Penetrated several inches by thumb with moderate effort
Stiff	1 to 2	1 to 2	0.50 to 1.0	Readily indented by thumb but penetrated only with great effort
Very Stiff	2 to 4	2 to 4	1.0 to 2.0	Readily indented by thumbnail
Hard	> 4.0	> 4.0	> 2.0	Indented by thumbnail with difficulty

BOREHOLE IDENTIFICATION

Symbol	Hole Type	Description
Size	A	Auger Boring
Size	R P	Rotary drilled boring Rotary percussion boring (air)
Size	R	Rotary drilled diamond core
Size	HD HA	Hand driven (1-inch soil tube) Hand Auger
●	D	Dynamic Cone Penetration Boring
▲	CPT	Cone Penetration Test (ASTM D 5778-95)
⬚	O	Other

Note: Size in inches.

PLASTICITY OF FINE-GRAINED SOILS

Description	Criteria
Nonplastic	A 1/8-inch thread cannot be rolled at any water content.
Low	The thread can barely be rolled and the lump cannot be formed when drier than the plastic limit.
Medium	The thread is easy to roll and not much time is required to reach the plastic limit. The thread cannot be rerolled after reaching the plastic limit. The lump crumbles when drier than the plastic limit.
High	It takes considerable time rolling and kneading to reach the plastic limit. The thread can be rerolled several times after reaching the plastic limit. The lump can be formed without crumbling when drier than the plastic limit.

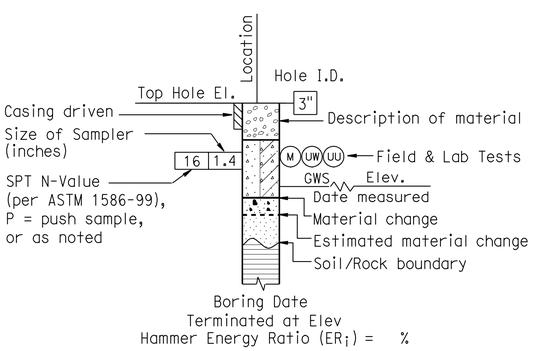

ROTARY BORING

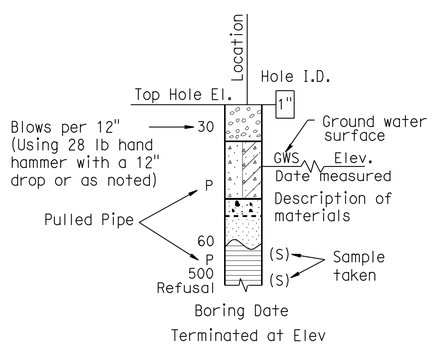

HAND BORING

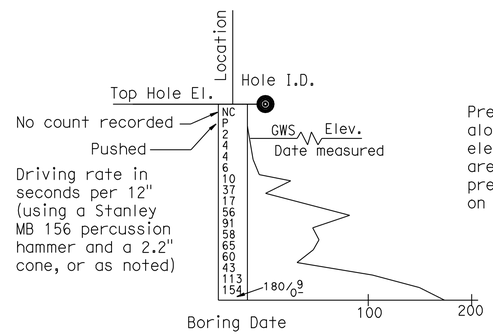

DYNAMIC CONE PENETRATION BORING

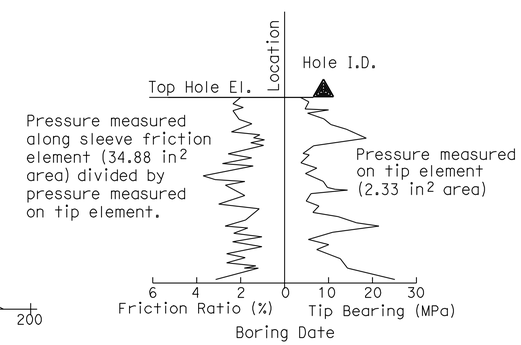

CONE PENETRATION TEST (CPT) SOUNDING

DESIGN OVERSIGHT Yiwei Hu	DRAWN BY	A. CHEUNG	C. RAMBO FIELD INVESTIGATION BY:
1/26/11 SIGN OFF DATE	CHECKED BY	M. THUMMALURU	DATE:

PREPARED FOR THE STATE OF CALIFORNIA DEPARTMENT OF TRANSPORTATION

Stephen Huang
PROJECT ENGINEER

BRIDGE NO. 33-0713
POST MILES 26.6

ARROYO MOCHO BRIDGE (WIDEN)
LOG OF TEST BORINGS 1 OF 4

GS CIVIL LOG OF TEST BORINGS SHEET (ENGLISH) (REV. 7/16/10)

ORIGINAL SCALE IN INCHES FOR REDUCED PLANS 0 1 2 3

UNIT: 0733
PROJECT NUMBER & PHASE: 04000205801 CONTRACT NO.: 04-297614

DISREGARD PRINTS BEARING EARLIER REVISION DATES

REVISION DATES

SHEET 13 OF 16

FILE => 33-0713-z-1tb01.dgn

USERNAME => s124496 DATE PLOTTED => 21-NOV-2011 TIME PLOTTED => 15:26

REFERENCE: CALTRANS SOIL & ROCK LOGGING, CLASSIFICATION, AND PRESENTATION MANUAL (JUNE 2007)

GROUP SYMBOLS AND NAMES

Graphic/Symbol	Group Names
GW	Well-graded GRAVEL Well-graded GRAVEL with SAND
GP	Poorly graded GRAVEL Poorly graded GRAVEL with SAND
GW-GM	Well-graded GRAVEL with SILT Well-graded GRAVEL with SILT and SAND
GW-GC	Well-graded GRAVEL with CLAY (or SILTY CLAY) Well-graded GRAVEL with CLAY and SAND (or SILTY CLAY and SAND)
GP-GM	Poorly graded GRAVEL with SILT Poorly graded GRAVEL with SILT and SAND
GP-GC	Poorly graded GRAVEL with CLAY (or SILTY CLAY) Poorly graded GRAVEL with CLAY and SAND (or SILTY CLAY and SAND)
GM	SILTY GRAVEL SILTY GRAVEL with SAND
GC	CLAYEY GRAVEL CLAYEY GRAVEL with SAND
GC-GM	SILTY, CLAYEY GRAVEL SILTY, CLAYEY GRAVEL with SAND
SW	Well-graded SAND Well-graded SAND with GRAVEL
SP	Poorly graded SAND Poorly graded SAND with GRAVEL
SW-SM	Well-graded SAND with SILT Well-graded SAND with SILT and GRAVEL
SW-SC	Well-graded SAND with CLAY (or SILTY CLAY) Well-graded SAND with CLAY and GRAVEL (or SILTY CLAY and GRAVEL)
SP-SM	Poorly graded SAND with SILT Poorly graded SAND with SILT and GRAVEL
SP-SC	Poorly graded SAND with CLAY (or SILTY CLAY) Poorly graded SAND with CLAY and GRAVEL (or SILTY CLAY and GRAVEL)
SM	SILTY SAND SILTY SAND with GRAVEL
SC	CLAYEY SAND CLAYEY SAND with GRAVEL
SC-SM	SILTY, CLAYEY SAND SILTY, CLAYEY SAND with GRAVEL
PT	PEAT
	COBBLES COBBLES and BOULDERS BOULDERS

Graphic/Symbol	Group Names
CL	Lean CLAY Lean CLAY with SAND Lean CLAY with GRAVEL SANDY lean CLAY SANDY lean CLAY with GRAVEL GRAVELLY lean CLAY GRAVELLY lean CLAY with SAND
CL-ML	SILTY CLAY SILTY CLAY with SAND SILTY CLAY with GRAVEL SANDY SILTY CLAY SANDY SILTY CLAY with GRAVEL GRAVELLY SILTY CLAY GRAVELLY SILTY CLAY with SAND
ML	SILT SILT with SAND SILT with GRAVEL SANDY SILT SANDY SILT with GRAVEL GRAVELLY SILT GRAVELLY SILT with SAND
OL	ORGANIC lean CLAY ORGANIC lean CLAY with SAND ORGANIC lean CLAY with GRAVEL SANDY ORGANIC lean CLAY SANDY ORGANIC lean CLAY with GRAVEL GRAVELLY ORGANIC lean CLAY GRAVELLY ORGANIC lean CLAY with SAND
OL	ORGANIC SILT ORGANIC SILT with SAND ORGANIC SILT with GRAVEL SANDY ORGANIC SILT SANDY ORGANIC SILT with GRAVEL GRAVELLY ORGANIC SILT GRAVELLY ORGANIC SILT with SAND
CH	Fat CLAY Fat CLAY with SAND Fat CLAY with GRAVEL SANDY fat CLAY SANDY fat CLAY with GRAVEL GRAVELLY fat CLAY GRAVELLY fat CLAY with SAND
MH	Elastic SILT Elastic SILT with SAND Elastic SILT with GRAVEL SANDY elastic SILT SANDY elastic SILT with GRAVEL GRAVELLY elastic SILT GRAVELLY elastic SILT with SAND
OH	ORGANIC fat CLAY ORGANIC fat CLAY with SAND ORGANIC fat CLAY with GRAVEL SANDY ORGANIC fat CLAY SANDY ORGANIC fat CLAY with GRAVEL GRAVELLY ORGANIC fat CLAY GRAVELLY ORGANIC fat CLAY with SAND
OH	ORGANIC elastic SILT ORGANIC elastic SILT with SAND ORGANIC elastic SILT with GRAVEL SANDY ORGANIC elastic SILT SANDY ORGANIC elastic SILT with GRAVEL GRAVELLY ORGANIC elastic SILT GRAVELLY ORGANIC elastic SILT with SAND
OL/OH	ORGANIC SOIL ORGANIC SOIL with SAND ORGANIC SOIL with GRAVEL SANDY ORGANIC SOIL SANDY ORGANIC SOIL with GRAVEL GRAVELLY ORGANIC SOIL GRAVELLY ORGANIC SOIL with SAND

FIELD AND LABORATORY TESTING

- (C) Consolidation (ASTM D 2435)
- (CL) Collapse Potential (ASTM D 5333)
- (CP) Compaction Curve (CTM 216)
- (CR) Corrosivity Testing (CTM 643, CTM 422, CTM 417)
- (CU) Consolidated Undrained Triaxial (ASTM D 4767)
- (DS) Direct Shear (ASTM D 3080)
- (EI) Expansion Index (ASTM D 4829)
- (M) Moisture Content (ASTM D 2216)
- (OC) Organic Content-% (ASTM D 2974)
- (P) Permeability (CTM 220)
- (PA) Particle Size Analysis (ASTM D 422)
- (PI) Plasticity Index (AASHTO T 90) Liquid Limit (AASHTO T 89)
- (PL) Point Load Index (ASTM D 5731)
- (PM) Pressure Meter
- (PP) Pocket Penetrometer
- (R) R-Value (CTM 301)
- (SE) Sand Equivalent (CTM 217)
- (SG) Specific Gravity (AASHTO T 100)
- (SL) Shrinkage Limit (ASTM D 427)
- (SW) Swell Potential (ASTM D 4546)
- (TV) Pocket Torvane
- (UC) Unconfined Compression-Soil (ASTM D 2166) Unconfined Compression-Rock (ASTM D 2938)
- (UU) Unconsolidated Undrained Triaxial (ASTM D 2850)
- (UW) Unit Weight (ASTM D 4767)
- (VS) Vane Shear (AASHTO T 223)

DIST	COUNTY	ROUTE	POST MILES TOTAL PROJECT	SHEET No	TOTAL SHEETS
04	Ala	84	25.5/27.1	439	495

REGISTERED CIVIL ENGINEER — DATE 1/4/11

6-27-11
PLANS APPROVAL DATE

REGISTERED PROFESSIONAL ENGINEER — Stephen Huang — No. C 42289 — Exp. 03/31/12 — CIVIL — STATE OF CALIFORNIA

The State of California or its officers or agents shall not be responsible for the accuracy or completeness of electronic copies of this plan sheet.

ALAMEDA COUNTY TRANSPORTATION IMPROVEMENT AUTHORITY (ACTIA)
1333 Broadway, Suite 300
Oakland, CA 94612

URS CORPORATION
1333 Broadway,
Suite 800
Oakland, CA 94612

APPARENT DENSITY OF COHESIONLESS SOILS

Description	SPT N_{60} (Blows / 12 inches)
Very loose	0 - 4
Loose	5 - 10
Medium Dense	11 - 30
Dense	31 - 50
Very Dense	> 50

MOISTURE

Description	Criteria
Dry	Absence of moisture, dusty, dry to the touch
Moist	Damp but no visible water
Wet	Visible free water, usually soil is below water table

PERCENT OR PROPORTION OF SOILS

Description	Criteria
Trace	Particles are present but estimated to be less than 5%
Few	5 to 10%
Little	15 to 25%
Some	30 to 45%
Mostly	50 to 100%

PARTICLE SIZE

Description		Size
Boulder		> 12"
Cobble		3" to 12"
Gravel	Coarse	3/4" to 3"
	Fine	No. 4 to 3/4"
Sand	Coarse	No. 10 to No. 4
	Medium	No. 40 to No. 10
	Fine	No. 200 to No. 40

DESIGN OVERSIGHT Yiwei Hu
1/26/11
SIGN OFF DATE

DRAWN BY A. CHEUNG
CHECKED BY M. THUMMALURU

C. RAMBO
FIELD INVESTIGATION BY:
DATE:

PREPARED FOR THE STATE OF CALIFORNIA DEPARTMENT OF TRANSPORTATION

Stephen Huang
PROJECT ENGINEER

BRIDGE NO. 33-0713
POST MILES 26.6

ARROYO MOCHO BRIDGE (WIDEN)
LOG OF TEST BORINGS 2 OF 4

ORIGINAL SCALE IN INCHES FOR REDUCED PLANS 0 1 2 3

UNIT: 0733
PROJECT NUMBER & PHASE: 04000205801 CONTRACT NO.: 04-297614

DISREGARD PRINTS BEARING EARLIER REVISION DATES

REVISION DATES

SHEET 14 OF 16

FILE => 33-0713-z-1tb02.dgn

USERNAME => s124496 DATE PLOTTED => 21-NOV-2011 TIME PLOTTED => 15:26

DIST	COUNTY	ROUTE	POST MILES TOTAL PROJECT	SHEET No	TOTAL SHEETS
04	Ala	84	25.5/27.1	440	495

REGISTERED CIVIL ENGINEER — DATE 1/4/11

6-27-11
PLANS APPROVAL DATE

REGISTERED PROFESSIONAL ENGINEER — Stephen Huang — No. C 42289 — Exp. 03/31/12 — CIVIL — STATE OF CALIFORNIA

The State of California or its officers or agents shall not be responsible for the accuracy or completeness of electronic copies of this plan sheet.

ALAMEDA COUNTY TRANSPORTATION IMPROVEMENT AUTHORITY (ACTIA)
1333 Broadway, Suite 300
Oakland, CA 94612

URS CORPORATION
1333 Broadway,
Suite 800
Oakland, CA 94612

BENCH MARK:
B.M Elev. 415.27
Northing: 2063428.6750
Easting: 6181960.7750
2½" brass disk set in concrete in well monument stamped "+", at the intersection of Vineyard Avenue and Ruby Hill Drive

NOTE:
1. This LOTB sheet was prepared in accordance with the Caltrans Soil and Rock Logging, Classification, and Presentation Manual (JUNE 2007)
2. Drilling fluid was measured at EL. 374.5 feet in NB23, 5 days after temporyily stopped drilling.
3. Design groundwater level at El. 376 feet.

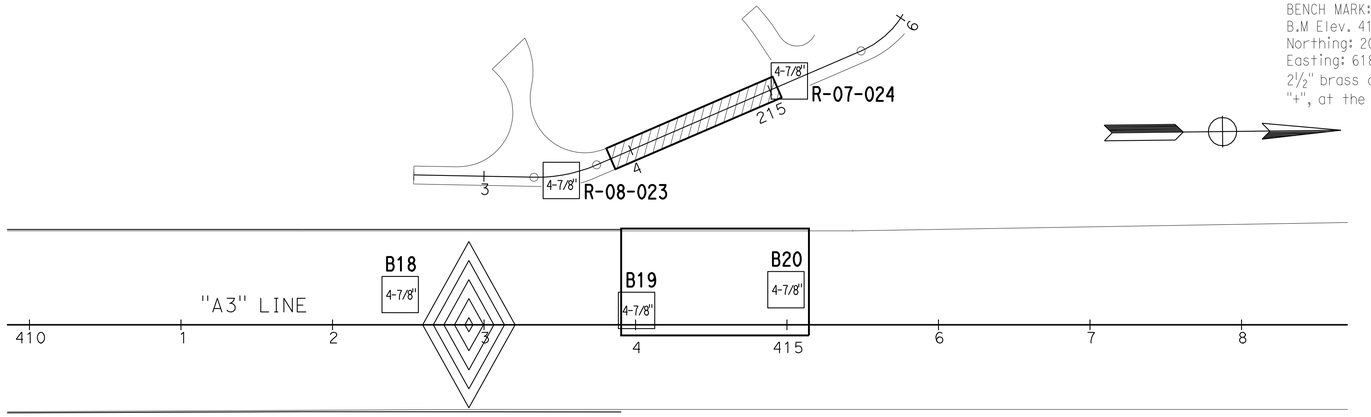

PLAN
Scale: 1"=50'

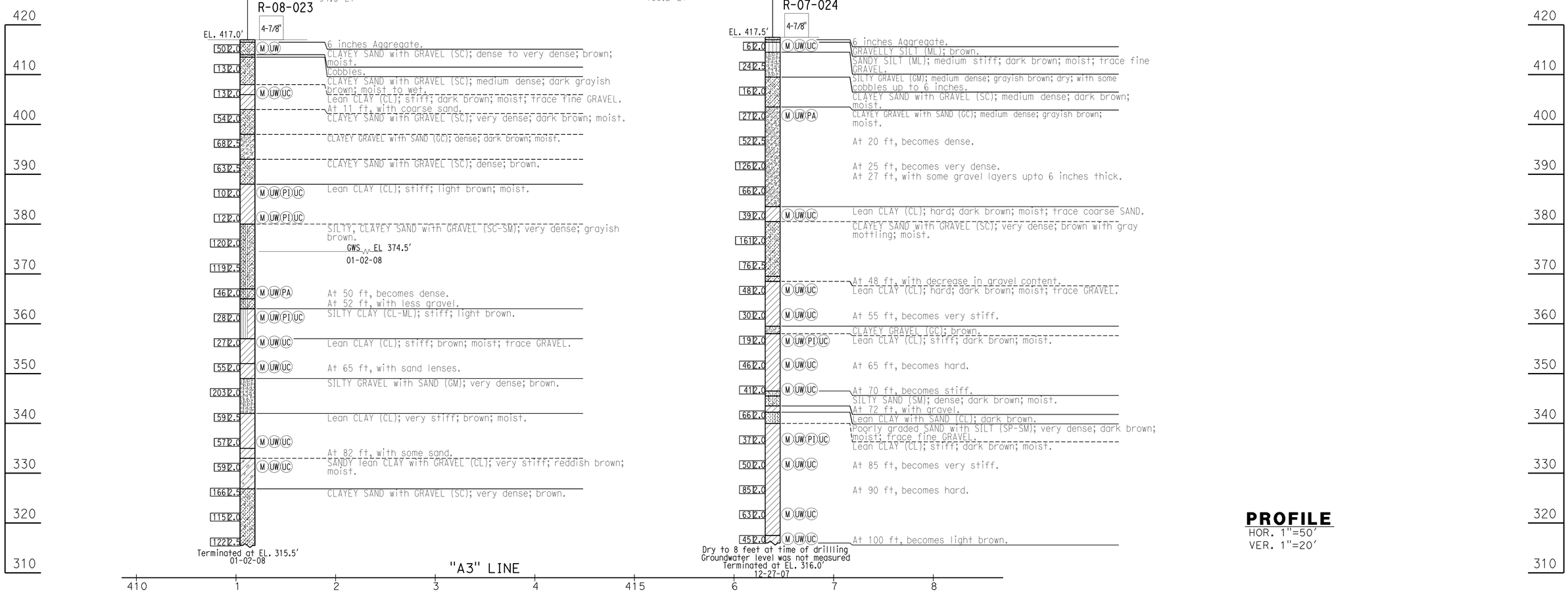

PROFILE
HOR. 1"=50'
VER. 1"=20'

DESIGN OVERSIGHT Yiwei Hu — 1/26/11 SIGN OFF DATE	DRAWN BY A. CHEUNG	C. RAMBO FIELD INVESTIGATION BY:	PREPARED FOR THE STATE OF CALIFORNIA DEPARTMENT OF TRANSPORTATION
	CHECKED BY M. THUMMALURU	DATE:	Stephen Huang PROJECT ENGINEER

BRIDGE NO. 33-0713
POST MILES 26.6

ARROYO MOCHO BRIDGE (WIDEN)
LOG OF TEST BORINGS 3 OF 4

GS CIVIL LOG OF TEST BORINGS SHEET (ENGLISH) (REV. 7/16/10)

ORIGINAL SCALE IN INCHES FOR REDUCED PLANS 0 1 2 3

UNIT: 0733
PROJECT NUMBER & PHASE: 04000205801 CONTRACT NO.: 04-297614

DISREGARD PRINTS BEARING EARLIER REVISION DATES

REVISION DATES | SHEET 15 | OF 16

FILE => 33-0713-z-ltb03.dgn

USERNAME => s124496 DATE PLOTTED => 21-NOV-2011 TIME PLOTTED => 15:26

DIST.	COUNTY	ROUTE	KILOMETER POST TOTAL PROJECT	SHEET NO.	TOTAL SHEETS
04	Ala	84		407	407

REGISTERED GEOTECHNICAL ENGINEER

PLANS APPROVAL DATE

CITY OF LIVERMORE
DEPARTMENT OF PUBLIC WORKS
3589 Pacific Avenue

GEOTECHNICAL CONSULTANTS, INC.
631 Howard Street, Ste. 320
San Francisco, CA 94105

REGISTERED PROFESSIONAL ENGINEER G. NEELAKANTAN No. 2391 Exp. 9/30/01 GEOTECHNICAL STATE OF CALIFORNIA

REGISTERED PROFESSIONAL ENGINEER Stephen Huang No. C 42289 Exp. 03/31/12 GEOTECHNICAL STATE OF CALIFORNIA

The State of California or its officers or agents shall not be responsible for the accuracy or completeness of electronic copies of this plan sheet.

Notes:

1. See the plans dated May 11, 1999 for stationing. For example 1 Line Sta 136+62 (Metric) = A3 Line Sta 448+23 (English).
2. Structure Design produced the data presented in the table below. The data are the metric locations for the As-Built Test Borings referenced to the proposed new structure location. This table is presented on the As-Built Log of Test Boring sheet for the convenience of any bidder, contractor or other interested party.

NOTES:

1. The 64 mm sampler shown on the logs is a split barrel sampler with 76.2 mm O.D. and 64 mm I.D., with 152.4 mm long brass linears. The sampler is driven using a 63.5 kg hammer with a 0.76 m drop.
2. Soil classification and description conform to ASTM D2487.

BENCHMARK:
All elevations shown hereon are based upon Caltrans Aerial Control Panel No. AB-947 having an elevation of 399.13 feet (121.655 meters) as described in Caltrans Survey Book ALA84-A-5 (pg 2 of 4 - 87-240).
TBM No. 2: Mon. No. 220
A brass pin in Standard City Well Monument Box at the intersection of Stanley Blvd. and Isabel Avenue 19.064 meters right of Center Line Station "15" 122+19.529. The elevation is 126.311 meters (414.41 feet).

Contract Number: 04-233054
City Project Numbers: 89-50 To Fremont
Date Accepted: 10/1/02

AS-BUILT DRAWING
Resident Engineer: Hank Doll
Vail Cooper & Associates
[X] No Changes
[ ] Changes As Noted
Revisions by: MPW (Initials)

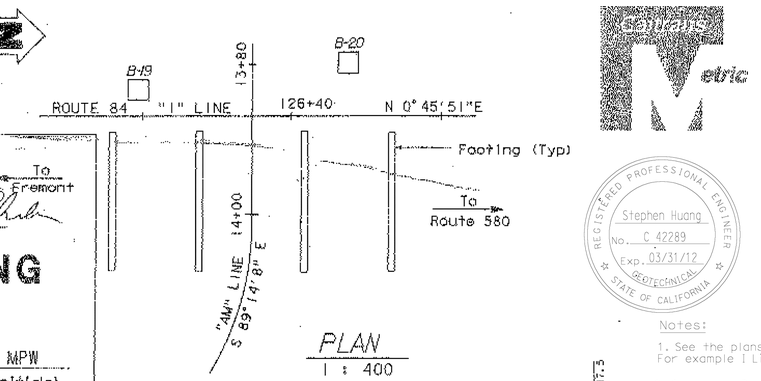

PLAN
1 : 400

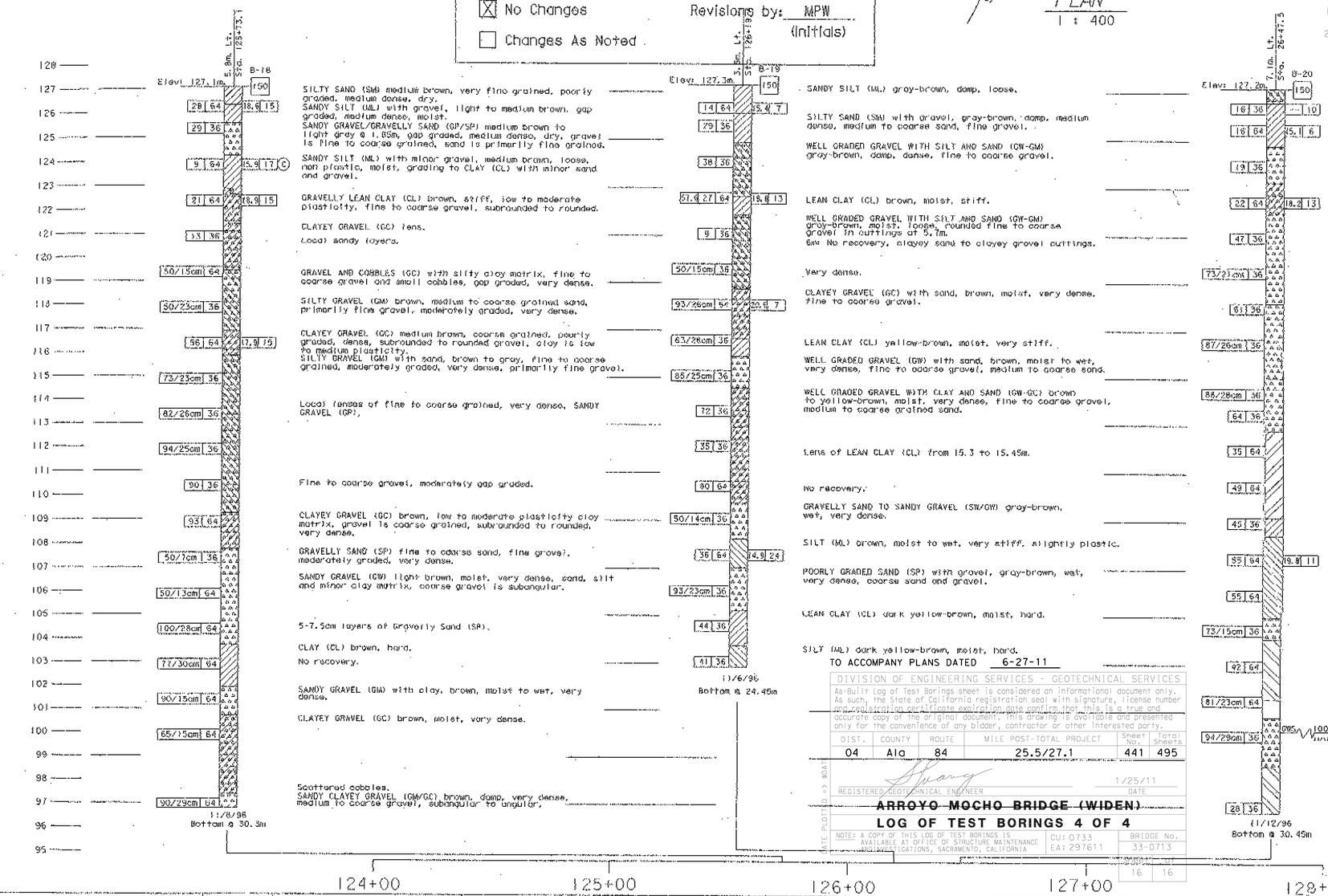

DIVISION OF ENGINEERING SERVICES - GEOTECHNICAL SERVICES

As-Built Log of Test Borings sheet is considered an informational document only. As such, the State of California registration seal with signature, license number and registration certificate expiration date confirm that this is a true and accurate copy of the original document. This drawing is available and presented only for the convenience of any bidder, contractor or other interested party.

DIST.	COUNTY	ROUTE	MILE POST-TOTAL PROJECT	Sheet No.	Total Sheets
04	Ala	84	25.5/27.1	441	495

REGISTERED GEOTECHNICAL ENGINEER — DATE 1/25/11

ARROYO MOCHO BRIDGE (WIDEN)
LOG OF TEST BORINGS 4 OF 4

NOTE: A COPY OF THIS LOG OF TEST BORINGS IS AVAILABLE AT OFFICE OF STRUCTURE MAINTENANCE INVESTIGATIONS, SACRAMENTO, CALIFORNIA

CU: 0733
EA: 297611
BRIDGE No. 33-0713
SHEET 16 OF 16

Revisions made to this Log of Test Borings from the original ____ Log of Test Borings are the addition of the following table and notes:

Boring	Station	Offset from A3 Line (84)
B-18	412+45	19.0 ft. Lt
B-19	414+00	11.5 ft. Lt
B-20	415+00	23.0 ft. Lt

LEGEND OF BORING OPERATIONS

LEGEND OF EARTH MATERIAL

CONSISTENCY FOR SOIL

NOTE: Visual classification of materials being a field inspection is confirmed by results of laboratory test results.

DESIGN OVERSIGHT

SIGN OFF DATE

DRAWN BY J. HULSE

CHECKED BY T. HUBER

N. MACE, V. THILAKARATNE, J. THURDER
FIELD INVESTIGATION BY

DATE:

PREPARED FOR THE STATE OF CALIFORNIA DEPARTMENT OF TRANSPORTATION

O. RODRIGUEZ
PROJECT ENGINEER

BRIDGE NO. 33C-0407
KILOMETER POST

ARROYO MOCHO BRIDGE
LOG OF TEST BORINGS

REVISION DATES (PRELIMINARY STAGE ONLY)

SHEET 12 OF 12

REV. DATE: 6-2-97

ORIGINAL SCALE IN MILLIMETERS FOR REDUCED PLANS

33-0713-z-ltb04.tif

DIST	COUNTY	ROUTE	POST MILES TOTAL PROJECT	SHEET No	TOTAL SHEETS
04	Ala	84	25.5/27.1	442	495

REGISTERED CIVIL ENGINEER — DATE 12/10/10

6-27-11
PLANS APPROVAL DATE

REGISTERED PROFESSIONAL ENGINEER — DUAN WANG — No. C 61943 — Exp. 06/30/11 — CIVIL — STATE OF CALIFORNIA

The State of California or its officers or agents shall not be responsible for the accuracy or completeness of scanned copies of this plan sheet.

ALAMEDA COUNTY TRANSPORTATION IMPROVEMENT AUTHORITY (ACTIA)
1333 BROADWAY, SUITE 300
OAKLAND, CA 94612

MGE ENGINEERING, INC.
7415 GREENHAVEN DRIVE, SUITE 100
SACRAMENTO, CALIFORNIA 95831

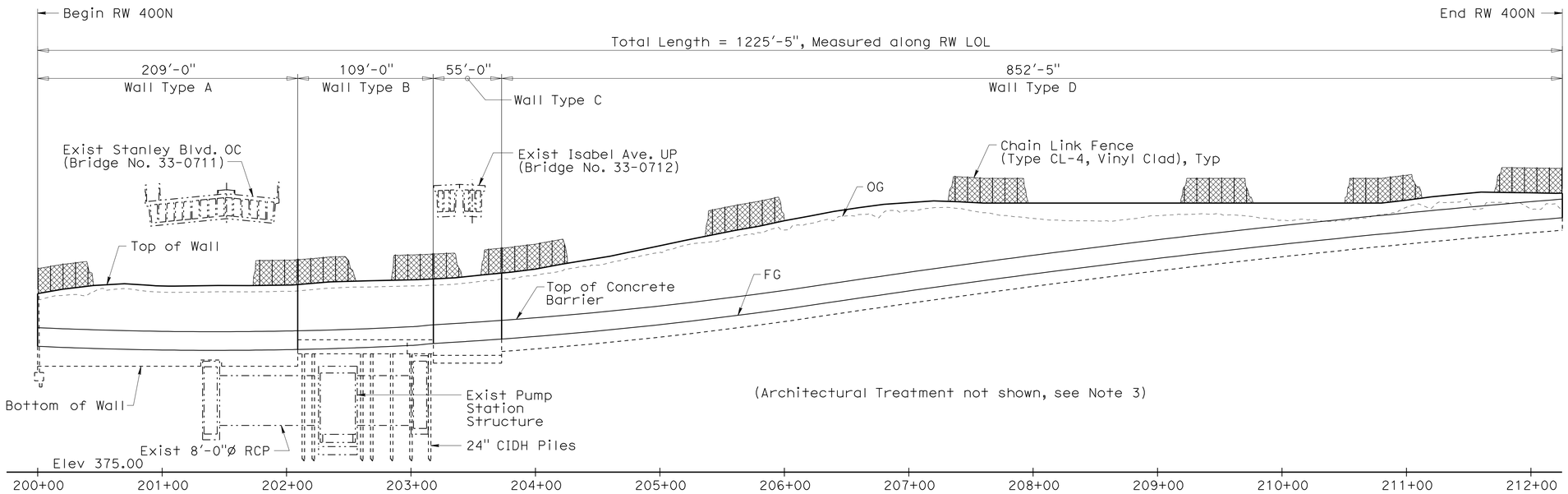

MIRROR DEVELOPED ELEVATION

1" = 50'-0" (H); 1" = 10'-0" (V)

RETAINING WALL 400N — BRIDGE NO. 33E0079

QUANTITIES		
STRUCTURE EXCAVATION (RETAINING WALL)	790	CY
STRUCTURE EXCAVATION (TIEBACK WALL)	163	CY
STRUCTURE EXCAVATION (SOIL NAIL WALL)	374	CY
STRUCTURE BACKFILL (RETAINING WALL)	581	CY
STRUCTURE BACKFILL (TIEBACK WALL)	20	CY
STRUCTURE BACKFILL (SOIL NAIL WALL)	63	CY
SOIL NAIL ASSEMBLY	6,106	LF
24" CAST-IN-DRILLED-HOLE CONCRETE PILING	662	LF
TIEBACK ANCHOR	30	EA
STRUCTURAL CONCRETE, RETAINING WALL	560	CY
ARCHITECTURAL TREATMENT	8,525	SQFT
DRILL AND BOND DOWEL	71	LF
BAR REINFORCING STEEL (RETAINING WALL)	156,084	LB
SHOTCRETE	192	CY
MINOR CONCRETE (GUTTER)	852	LF
MINOR CONCRETE (DEBRIS SUMP AND DRAINAGE PAD)	4	CY
CHAIN LINK FENCE (TYPE CL-4, VINYL-CLAD)	1,225	LF
CONCRETE BARRIER (TYPE 60D)	1,225	LF

STANDARD PLANS

Dated May 2006

	A10A	Acronyms and Abbreviations (Sheet 1 of 2)
	A10B	Acronyms and Abbreviations (Sheet 2 of 2)
	A10C	Symbols (Sheet 1 of 2)
	A10D	Symbols (Sheet 2 of 2)
	A62B	Limits of Payment for Excavation and Backfill Bridge Surcharge and Wall
RSP	A76A	Concrete Barrier Type 60
	A85	Chain Link Fence
	B0-1	Bridge Details
	B0-3	Bridge Details
	B3-1	Retaining Wall Type 1
	B3-8	Retaining Wall Details No. 1
	B3-9	Retaining Wall Details No. 2

Standard Plan sheet No.

Detail No.

INDEX TO PLANS

Sheet No.	Title
1	General Plan No. 1
2	General Plan No. 2
3	Foundation Plan
4	Wall Type A Details No. 1
5	Wall Type A Details No. 2
6	Wall Type A Details No. 3
7	Wall Type A Details No. 4
8	Wall Type B Details No. 1
9	Wall Type B Details No. 2
10	Wall Type B Details No. 3
11	Wall Type C Details No. 1
12	Wall Type C Details No. 2
13	Wall Type D Details No. 1
14	Wall Type D Details No. 2
15	Wall Type D Details No. 3
16	Wall Type D Details No. 4
17	Wall Type D Details No. 5
18	Wall Type D Details No. 6
19	Wall Drain Details
20	Miscellaneous Details No. 1
21	Miscellaneous Details No. 2
22	Architectural Treatment Layout
23	Log of Test Borings (1 of 7)
24	Log of Test Borings (2 of 7)
25	Log of Test Borings (3 of 7)
26	Log of Test Borings (4 of 7)
27	Log of Test Borings (5 of 7)
28	Log of Test Borings (6 of 7)
29	Log of Test Borings (7 of 7)

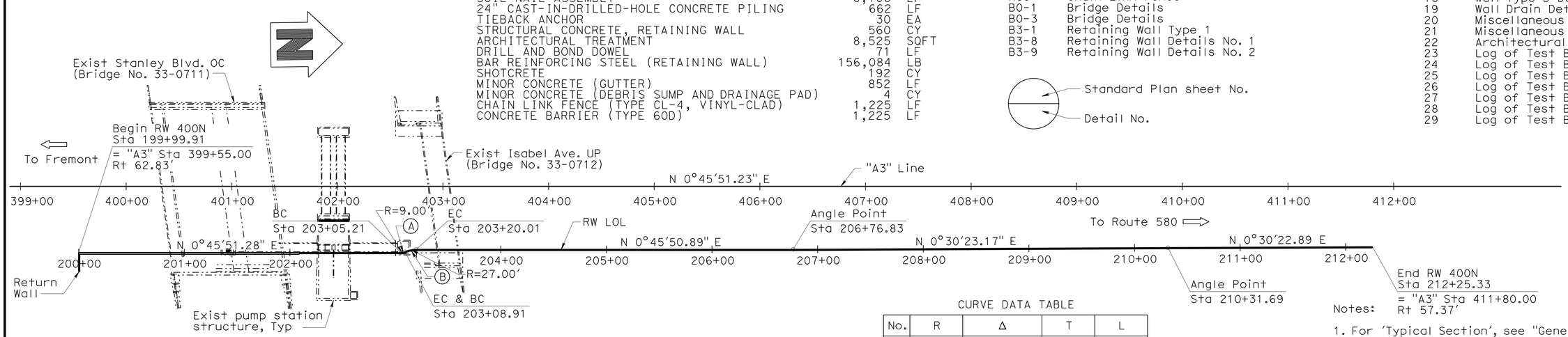

PLAN

1" = 50'-0"

CURVE DATA TABLE

No.	R	Δ	T	L
A	9.00'	23°33'04.6"	1.88'	3.70'
B	27.00'	23°33'04.2"	5.63'	11.10'

Notes:

1. For 'Typical Section', see "General Plan No. 2" sheet.
2. For 'General Notes', see "Foundation Plan" sheet.
3. For Architectural Treatment, see "Architectural Treatment Layout" sheet.
4. For 'Pile Data Table', see "Wall Type B Details No. 1" sheet.

Note:
The Contractor shall verify all controlling field dimensions before ordering or fabricating any material.

DESIGN OVERSIGHT — Yiwei Hu
1/26/11
SIGN OFF DATE

	BY	CHECKED
DESIGN	D. Wang / E. Tang	G. Xu / R. Huang
DETAILS	X. Sun	G. Xu
QUANTITIES	D. Wang / D. Vang	W. Sennett

LOAD & RESISTANCE FACTOR DESIGN — LIVE LOADING: SURCHANGE 240 PSF
LAYOUT — D. Wang — CHECKED G. Xu
SPECIFICATIONS — K. Chen — PLANS AND SPECS COMPARED G. Xu

PREPARED FOR THE STATE OF CALIFORNIA DEPARTMENT OF TRANSPORTATION

Guoping Xu
PROJECT ENGINEER

BRIDGE NO. 33E0079
POST MILES 27.00

RETAINING WALL 400N
GENERAL PLAN No. 1

DESIGN GENERAL PLAN SHEET (ENGLISH) (REV. 06-01-09)

ORIGINAL SCALE IN INCHES FOR REDUCED PLANS 0 1 2 3

CU 0733
EA 297611

DISREGARD PRINTS BEARING EARLIER REVISION DATES

REVISION DATES (PRELIMINARY STAGE ONLY): 05/04/09 01/22/10 08/18/10 10/21/10 12/10/10

SHEET 1 OF 29

FILE => 33e0079-a-gp01.dgn

USERNAME => s124496 DATE PLOTTED => 21-NOV-2011 TIME PLOTTED => 15:26

DIST	COUNTY	ROUTE	POST MILES TOTAL PROJECT	SHEET No	TOTAL SHEETS
04	Ala	84	25.5/27.1	443	495

REGISTERED CIVIL ENGINEER 12/10/10 DATE

6-27-11
PLANS APPROVAL DATE

REGISTERED PROFESSIONAL ENGINEER DUAN WANG No. C 61943 Exp. 06/30/11 CIVIL STATE OF CALIFORNIA

The State of California or its officers or agents shall not be responsible for the accuracy or completeness of scanned copies of this plan sheet.

ALAMEDA COUNTY TRANSPORTATION IMPROVEMENT AUTHORITY (ACTIA)
1333 BROADWAY, SUITE 300
OAKLAND, CA 94612

MGE ENGINEERING, INC.
7415 GREENHAVEN DRIVE, SUITE 100
SACRAMENTO, CALIFORNIA 95831

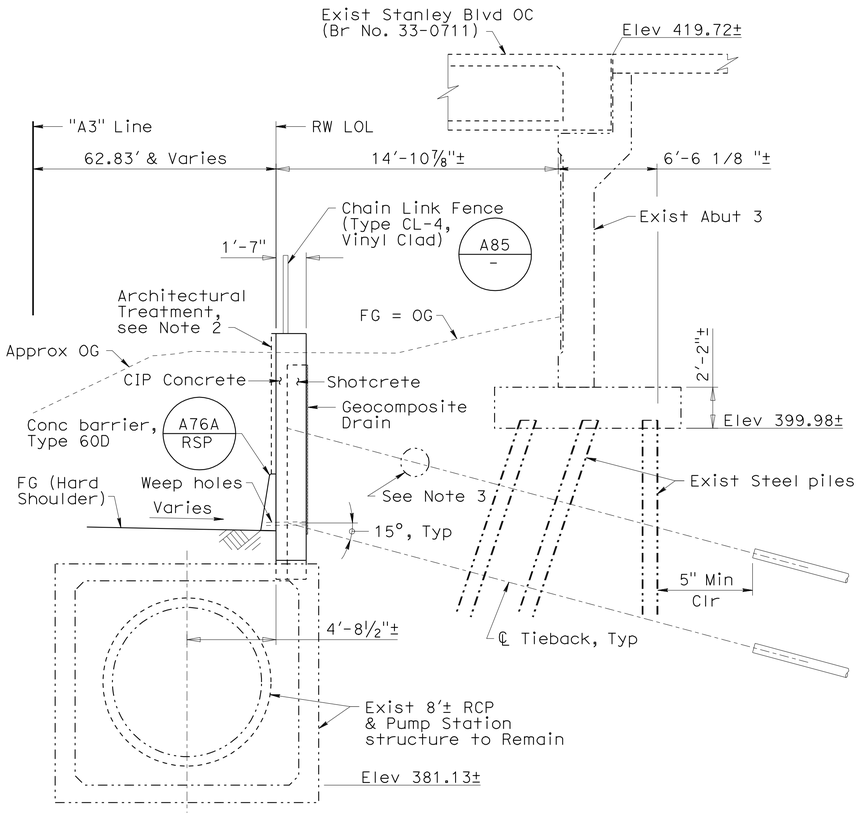

WALL TYPE A TYPICAL SECTION

¼" = 1'-0"

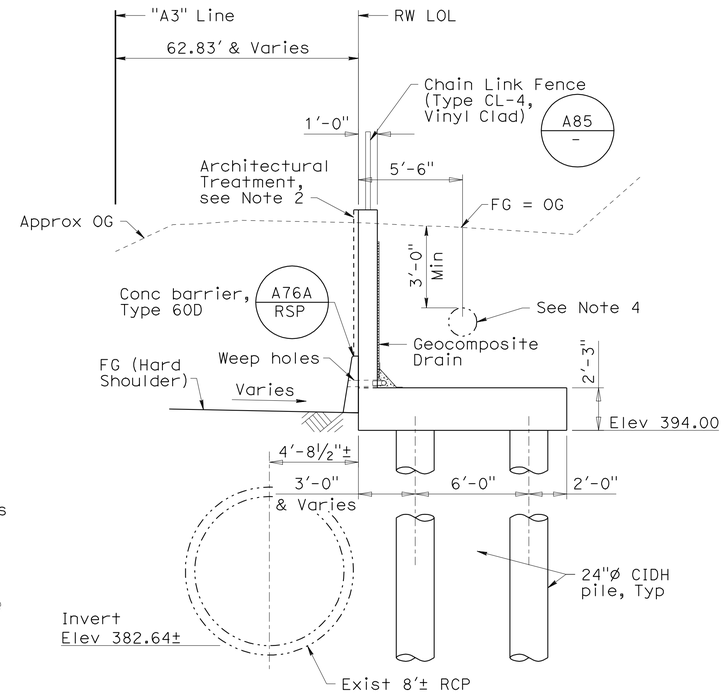

WALL TYPE B TYPICAL SECTION

¼" = 1'-0"

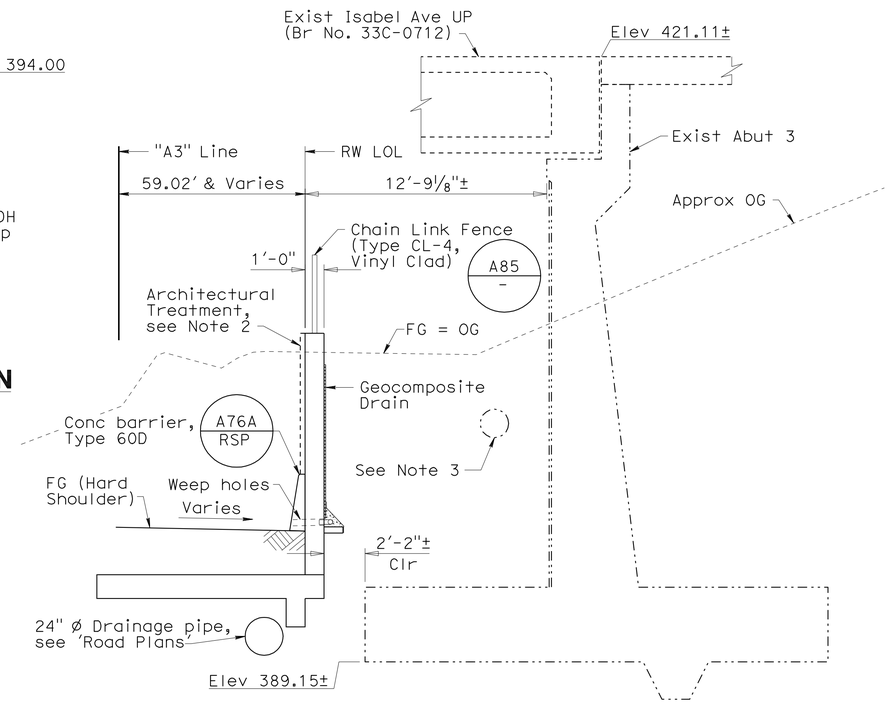

WALL TYPE C TYPICAL SECTION

¼" = 1'-0"

Notes:

1. Gutter is present only at Type D Wall, see "Road Plans".
2. For architectural treatment, see "Architectural Treatment Layout" sheet.
3. Exist 18"ø Reclaimed Water Line to remain. See "Utility Plans" for exact locations. Adjust soil nail / tieback angle or height locally as necessary to clear existing water line with minimum clearance of 1'-0".
4. Exist 18"ø Reclaimed Water Line to be temporarily removed prior to constuction of Wall Type B and replaced afterwards. See Road Plan sheet "W-5" for details.

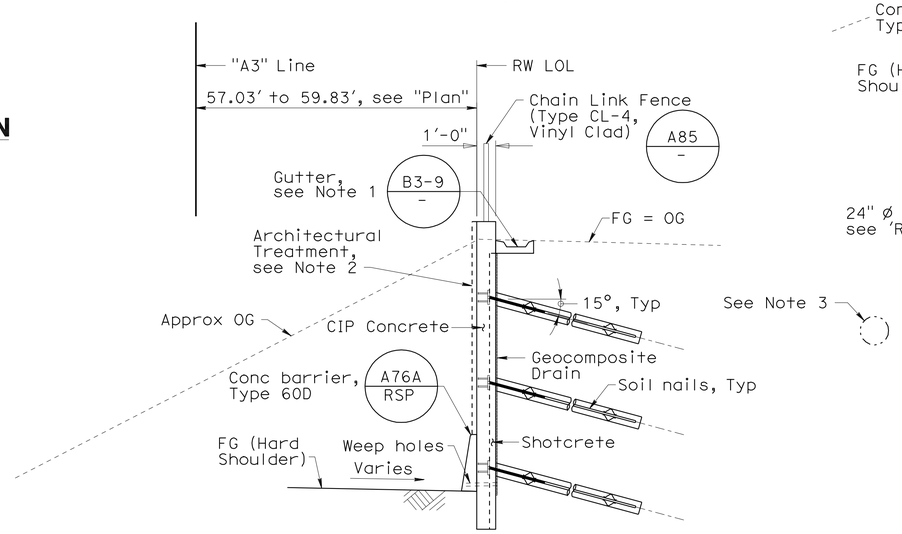

WALL TYPE D TYPICAL SECTION

¼" = 1'-0"

Note:
The Contractor shall verify all controlling field dimensions before ordering or fabricating any material.

DESIGN OVERSIGHT Yiwei Hu
1/26/11
SIGN OFF DATE

	BY	CHECKED
DESIGN	D. Wang / E. Tang	G. Xu / R. Huang
DETAILS	X. Sun	G. Xu
QUANTITIES	D. Wang / D. Vang	W. Sennett

PREPARED FOR THE STATE OF CALIFORNIA DEPARTMENT OF TRANSPORTATION

Guoping Xu
PROJECT ENGINEER

BRIDGE NO. 33E0079
POST MILE 27.00

RETAINING WALL 400N
GENERAL PLAN No. 2

DESIGN DETAIL SHEET (ENGLISH) (REV. 06-01-09)

ORIGINAL SCALE IN INCHES FOR REDUCED PLANS 0 1 2 3

CU 0733
EA 297611

DISREGARD PRINTS BEARING EARLIER REVISION DATES

REVISION DATES (PRELIMINARY STAGE ONLY) 05/21/09 01/22/10 08/13/10 10/21/10 12/10/10

SHEET 2 OF 29

FILE => 33e0079-a-gp02.dgn

USERNAME => s124496 DATE PLOTTED => 21-NOV-2011 TIME PLOTTED => 15:26

DIST	COUNTY	ROUTE	POST MILES TOTAL PROJECT	SHEET No	TOTAL SHEETS
04	Ala	84	25.5/27.1	444	495

REGISTERED CIVIL ENGINEER — DATE 12/10/10

6-27-11
PLANS APPROVAL DATE

REGISTERED PROFESSIONAL ENGINEER — DUAN WANG — No. C 61943 — Exp. 06/30/11 — CIVIL — STATE OF CALIFORNIA

The State of California or its officers or agents shall not be responsible for the accuracy or completeness of scanned copies of this plan sheet.

ALAMEDA COUNTY TRANSPORTATION IMPROVEMENT AUTHORITY (ACTIA)
1333 BROADWAY, SUITE 300
OAKLAND, CA 94612

MGE ENGINEERING, INC.
7415 GREENHAVEN DRIVE, SUITE 100
SACRAMENTO, CALIFORNIA 95831

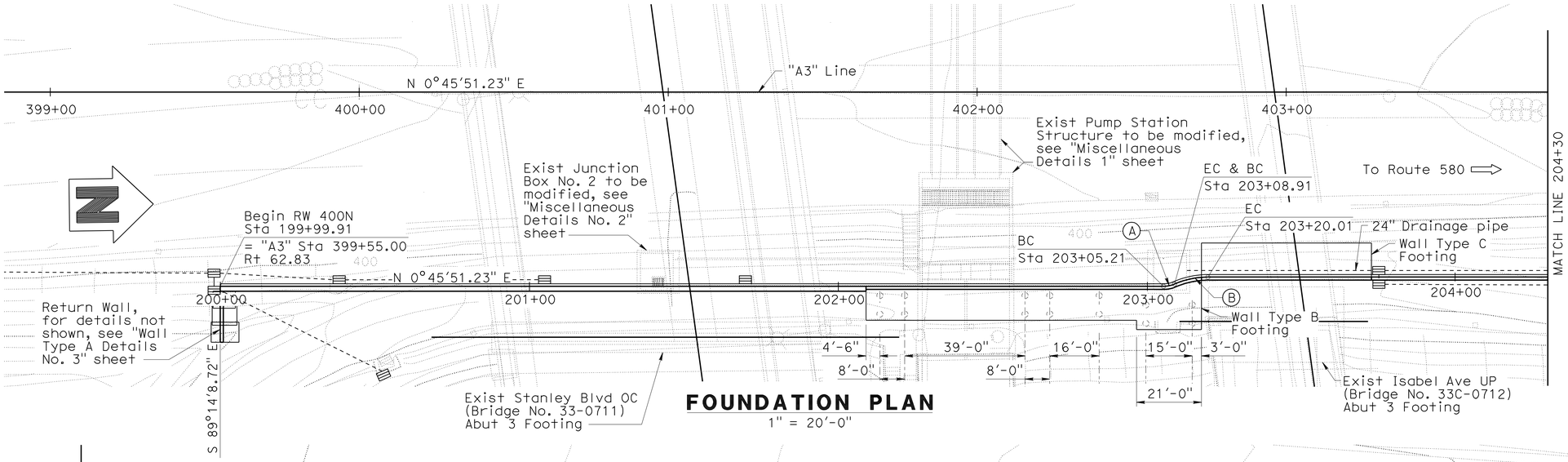

FOUNDATION PLAN
1" = 20'-0"

CURVE DATA TABLE

No.	R	Δ	T	L
A	9.00'	23°33'04.6"	1.88'	3.70'
B	27.00'	23°33'04.2"	5.63'	11.10'

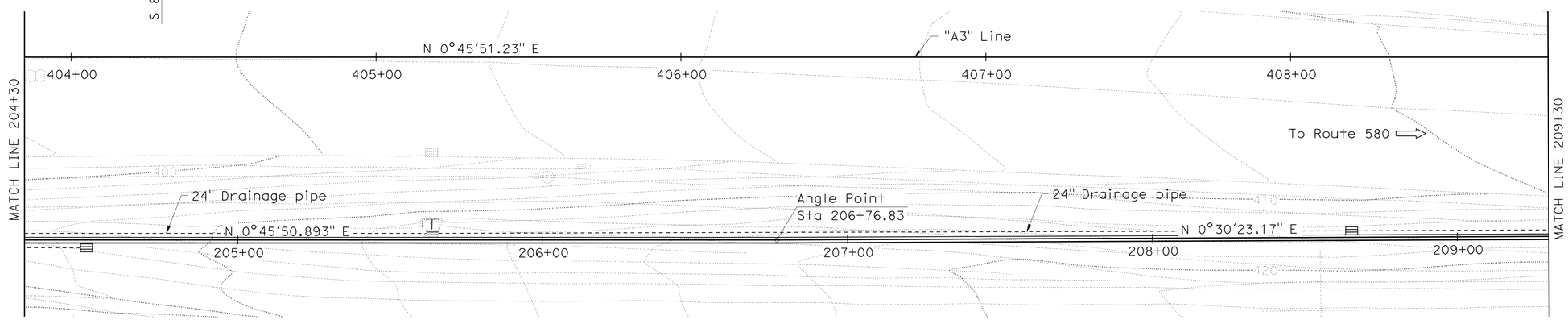

FOUNDATION PLAN
1" = 20'-0"

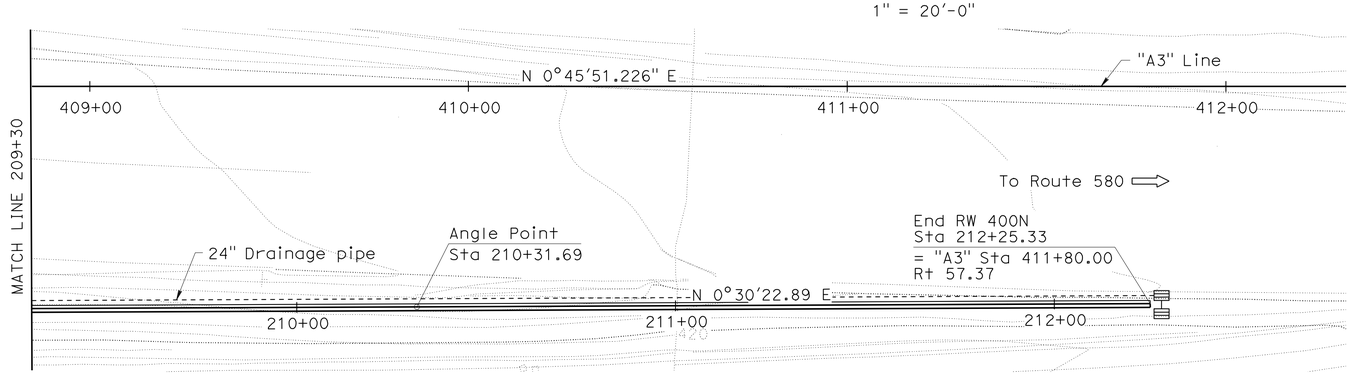

FOUNDATION PLAN
1" = 20'-0"

GENERAL NOTES
LOAD FACTOR DESIGN

DESIGN: Bridge Design Specifications April 2000 (LFD) (1996 AASHTO) with interims and revisions by Caltrans

Service Load Design Method per FHWA Manual for Design & Construction-Monitoring of Soil Nail Walls (FHWA-SA-96-069R and FHWAO-IF-03-017)

DESIGN SOIL PARAMETERS:
$\phi = 34°$
$\gamma = 130$ pcf
C = 1,000 psf
Qd = 2.09 k/ft

LIVE LOAD SURCHARGE: 240 psf (Vertical)

SEISMIC LOAD: $\Delta Pae = 32H^2$(Lbs/ft)
Where H = Design Height of Wall (ft)

REINFORCED CONCRETE: f'c = 3,600 psi
fy = 60,000 psi

SHOTCRETE: f'c = 3,600 psi
fy = 60,000 psi

STRUCTURAL STEEL: ASTM Designation: A709
fy = 36,000 psi

Note:
The Contractor shall verify all controlling field dimensions before ordering or fabricating any material.

Stephen Huang — GEOTECHNICAL PROFESSIONAL — 08/18/2010 APPROVAL DATE

DESIGN OVERSIGHT — Yiwei Hu — 1/26/11 SIGN OFF DATE

SCALE: 1"=10'-0"	VERT.DATUM	HORZ.DATUM	
PHOTOGRAMMETRY AS OF: 11/10/2005	ALIGNMENT TIES		
SURVEYED BY Dan Scott	DRAFTED BY Abhijeet Bhoi		
FIELD CHECKED BY Dan Scott	CHECKED BY		

	BY	CHECKED
DESIGN	D. Wang / E. Tang	G. Xu / R. Huang
DETAILS	X. Sun	G. Xu
QUANTITIES	D. Wang / D. Vang	W. Sennett

PREPARED FOR THE STATE OF CALIFORNIA DEPARTMENT OF TRANSPORTATION

Guoping Xu — PROJECT ENGINEER

BRIDGE NO. 33E0079
POST MILE 27.00

RETAINING WALL 400N
FOUNDATION PLAN

FOUNDATION PLAN SHEET (ENGLISH) (REV. 06-01-09)

ORIGINAL SCALE IN INCHES FOR REDUCED PLANS 0 1 2 3

CU 0733
EA 297611

DISREGARD PRINTS BEARING EARLIER REVISION DATES — REVISION DATES (PRELIMINARY STAGE ONLY) 05/04/09 01/22/10 08/18/10 10/21/10 12/10/10

SHEET 3 OF 29

FILE => 33e0079-e-fdp101.dgn

USERNAME => s124496 DATE PLOTTED => 21-NOV-2011 TIME PLOTTED => 15:27

DIST	COUNTY	ROUTE	POST MILES TOTAL PROJECT	SHEET No	TOTAL SHEETS
04	Ala	84	25.5/27.1	445	495

REGISTERED CIVIL ENGINEER 12/10/10 DATE

6-27-11
PLANS APPROVAL DATE

REGISTERED PROFESSIONAL ENGINEER DUAN WANG No. C 61943 Exp. 06/30/11 CIVIL STATE OF CALIFORNIA

The State of California or its officers or agents shall not be responsible for the accuracy or completeness of scanned copies of this plan sheet.

ALAMEDA COUNTY TRANSPORTATION IMPROVEMENT AUTHORITY (ACTIA)
1333 BROADWAY, SUITE 300
OAKLAND, CA 94612

MGE ENGINEERING, INC.
7415 GREENHAVEN DRIVE, SUITE 100
SACRAMENTO, CALIFORNIA 95831

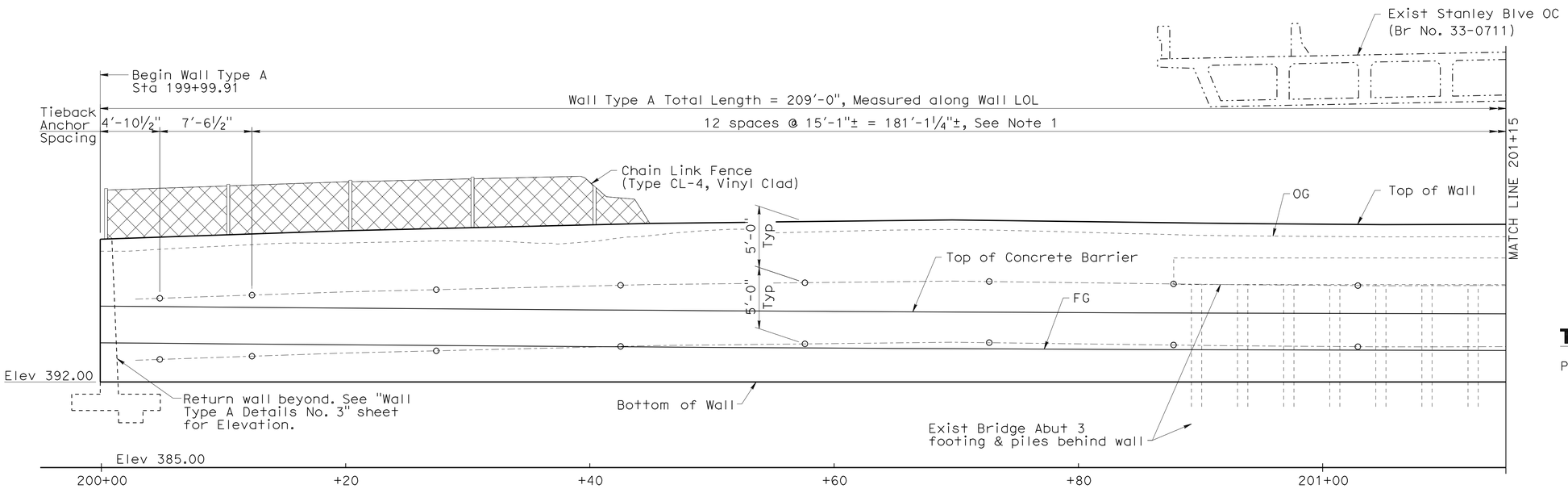

WALL TYPE A MIRROR ELEVATION

1" = 5'-0"

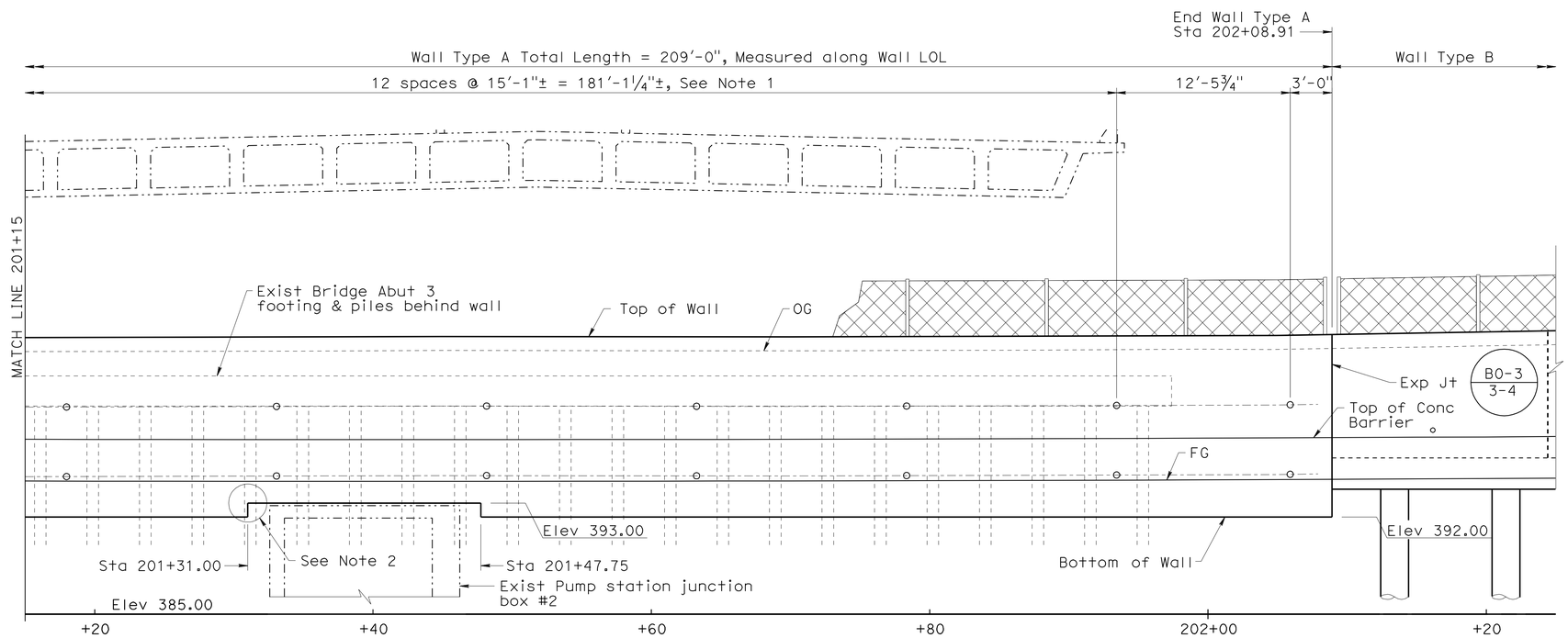

WALL TYPE A MIRROR ELEVATION

1" = 5'-0"

Note:
The Contractor shall verify all controlling field dimensions before ordering or fabricating any material.

TIEBACK NOTES:

Prestressing Steel:
- Strands - ASTM designation: A416
- T = Design force per tieback
  (First lift) = 52 kips,
  (Second lift) = 69 kips
- fpu = Minimum tensile strength of prestressing steel (ksi)
- As (Min) = Minimum cross sectional area of prestressing steel in tieback (in
- As (Min) = 1.5 x T / (0.75 x fpu)

WALL TYPE A PROFILE

Station	Top of Wall Elevation	Bottom of Wall Elevation
199+99.91	403.68	392.00
200+19.91	404.37	392.00
200+44.91	404.97	392.00
200+69.67	405.26	392.00
200+89.91	405.00	392.00
200+94.91	404.94	392.00
201+04.91	404.88	392.00
201+09.91	404.88	392.00
201+44.91	404.98	393.00
201+69.91	404.95	392.00
202+04.91	405.05	392.00
202+08.91	405.12	392.00

LEGEND
- o Indicates Tieback Anchor Locations
- ---- Indicates Tieback Profile Line

Note:
1. Tieback anchors shall be positioned between Exist footing piles with a minimum of 1'-0" clearance to Exist piles.
2. For Wall Step details, see "Wall Type A Details No. 3" sheet.

DESIGN OVERSIGHT Yiwei Hu
1/26/11
SIGN OFF DATE

DESIGN	BY D. Wang / E. Tang	CHECKED G. Xu / R. Huang
DETAILS	BY X. Sun	CHECKED G. Xu
QUANTITIES	BY D. Wang / D. Vang	CHECKED W. Sennett

PREPARED FOR THE STATE OF CALIFORNIA DEPARTMENT OF TRANSPORTATION

Guoping Xu
PROJECT ENGINEER

BRIDGE NO. 33E0079
POST MILE 27.00

RETAINING WALL 400N
WALL TYPE A DETAILS No. 1

DESIGN DETAIL SHEET (ENGLISH) (REV. 06-01-09)

ORIGINAL SCALE IN INCHES FOR REDUCED PLANS 0 1 2 3

CU 0733
EA 297611

DISREGARD PRINTS BEARING EARLIER REVISION DATES

REVISION DATES (PRELIMINARY STAGE ONLY) 05/04/09 01/22/10 08/18/10 10/27/10 12/10/10

SHEET 4 OF 29

FILE => 33e0079-g-redt01.dgn

USERNAME => s124496 DATE PLOTTED => 21-NOV-2011 TIME PLOTTED => 15:27

DIST	COUNTY	ROUTE	POST MILES TOTAL PROJECT	SHEET No	TOTAL SHEETS
04	Ala	84	25.5/27.1	446	495

REGISTERED CIVIL ENGINEER 12/10/10 DATE

6-27-11
PLANS APPROVAL DATE

REGISTERED PROFESSIONAL ENGINEER DUAN WANG No. C 61943 Exp. 06/30/11 CIVIL STATE OF CALIFORNIA

The State of California or its officers or agents shall not be responsible for the accuracy or completeness of scanned copies of this plan sheet.

ALAMEDA COUNTY TRANSPORTATION IMPROVEMENT AUTHORITY (ACTIA)
1333 BROADWAY, SUITE 300
OAKLAND, CA 94612

MGE ENGINEERING, INC.
7415 GREENHAVEN DRIVE, SUITE 100
SACRAMENTO, CALIFORNIA 95831

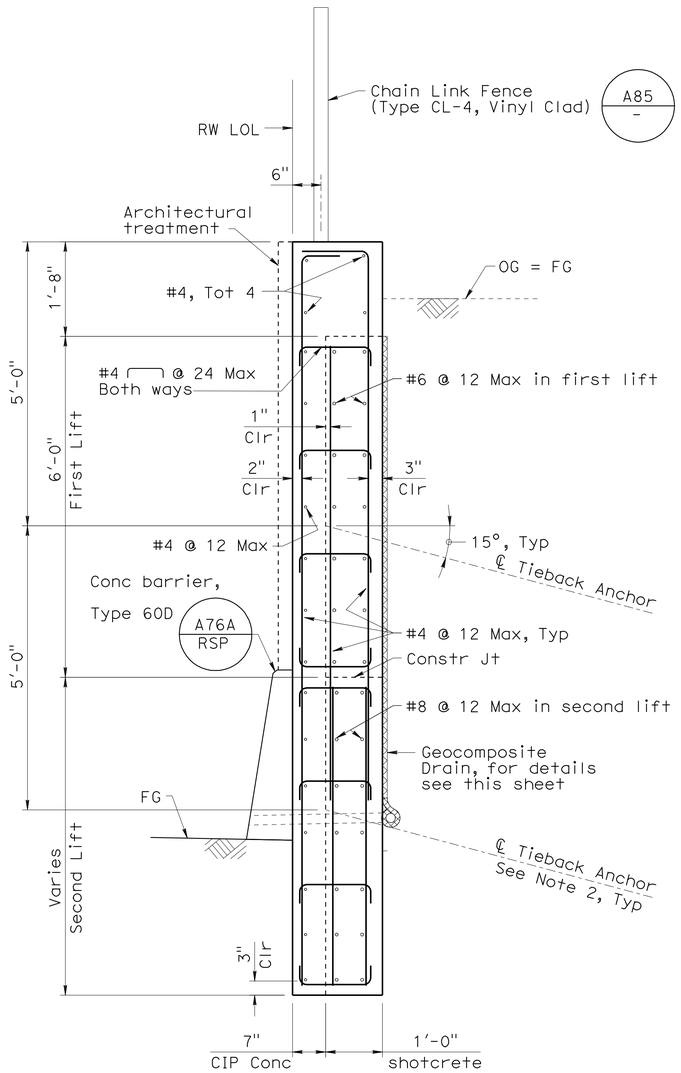

WALL TYPE A TYPICAL SECTION

3/4" = 1'-0"

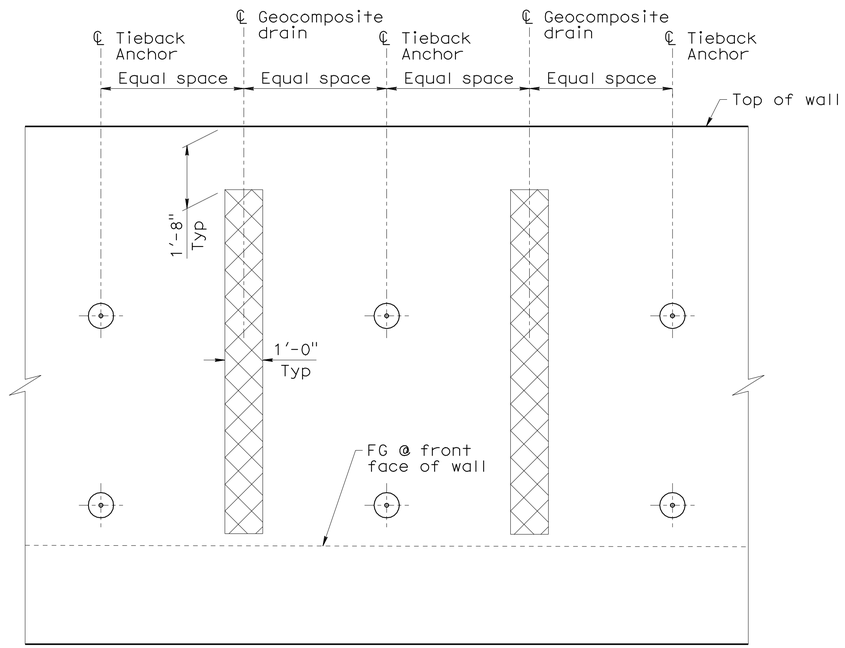

TYPICAL TIEBACK AND DRAINAGE ELEVATION

1/2" = 1'-0"

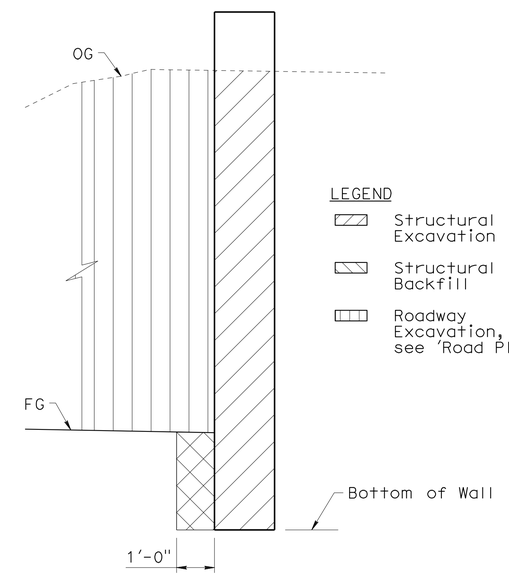

WALL TYPE A EXCAVATION AND BACKFILL

No Scale

Note:
The Contractor shall verify all controlling field dimensions before ordering or fabricating any material.

Note:
1. For additional drainage information, see "Road Plans"
2. The free unbonded length should be the greatest of the following values:
   - 15 ft (typical minumum free length)
   - 5 ft beyond active wedge project upward behind toe of wall
   - 5 ft beyond existing bridge piles

DESIGN OVERSIGHT Yiwei Hu
1/26/11
SIGN OFF DATE

	BY	CHECKED
DESIGN	D. Wang / E. Tang	G. Xu / R. Huang
DETAILS	X. Sun	G. Xu
QUANTITIES	D. Wang / D. Vang	W. Sennett

PREPARED FOR THE STATE OF CALIFORNIA DEPARTMENT OF TRANSPORTATION

Guoping Xu
PROJECT ENGINEER

BRIDGE NO. 33E0079
POST MILE 27.00

RETAINING WALL 400N
WALL TYPE A DETAILS No. 2

DESIGN DETAIL SHEET (ENGLISH) (REV. 06-01-09)

ORIGINAL SCALE IN INCHES FOR REDUCED PLANS 0 1 2 3

CU 0733
EA 297611

DISREGARD PRINTS BEARING EARLIER REVISION DATES

REVISION DATES (PRELIMINARY STAGE ONLY) 05/04/09 01/22/10 08/18/10 10/21/10 12/10/10

SHEET 5 OF 29

FILE => 33e0079-g-redt02.dgn

USERNAME => s124496 DATE PLOTTED => 21-NOV-2011 TIME PLOTTED => 15:27

DIST	COUNTY	ROUTE	POST MILES TOTAL PROJECT	SHEET No	TOTAL SHEETS
04	Ala	84	25.5/27.1	447	495

REGISTERED CIVIL ENGINEER 12/10/10 DATE

6-27-11
PLANS APPROVAL DATE

REGISTERED PROFESSIONAL ENGINEER DUAN WANG No. C 61943 Exp. 06/30/11 CIVIL STATE OF CALIFORNIA

The State of California or its officers or agents shall not be responsible for the accuracy or completeness of scanned copies of this plan sheet.

ALAMEDA COUNTY TRANSPORTATION IMPROVEMENT AUTHORITY (ACTIA)
1333 BROADWAY, SUITE 300
OAKLAND, CA 94612

MGE ENGINEERING, INC.
7415 GREENHAVEN DRIVE, SUITE 100
SACRAMENTO, CALIFORNIA 95831

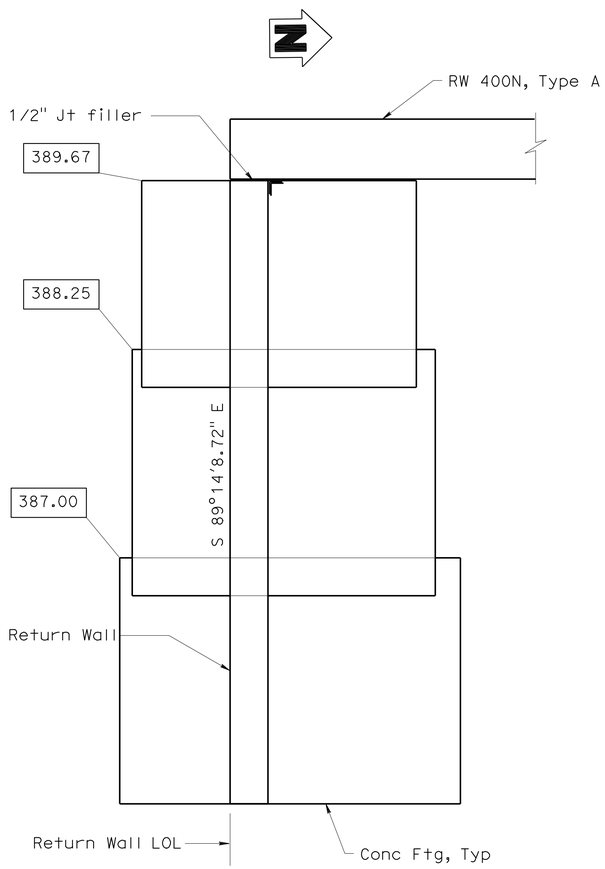

Note: Return wall shall be constructed prior to soil nail wall construction.

RETURN WALL FOUNDATION PLAN
1/2" = 1'-0"

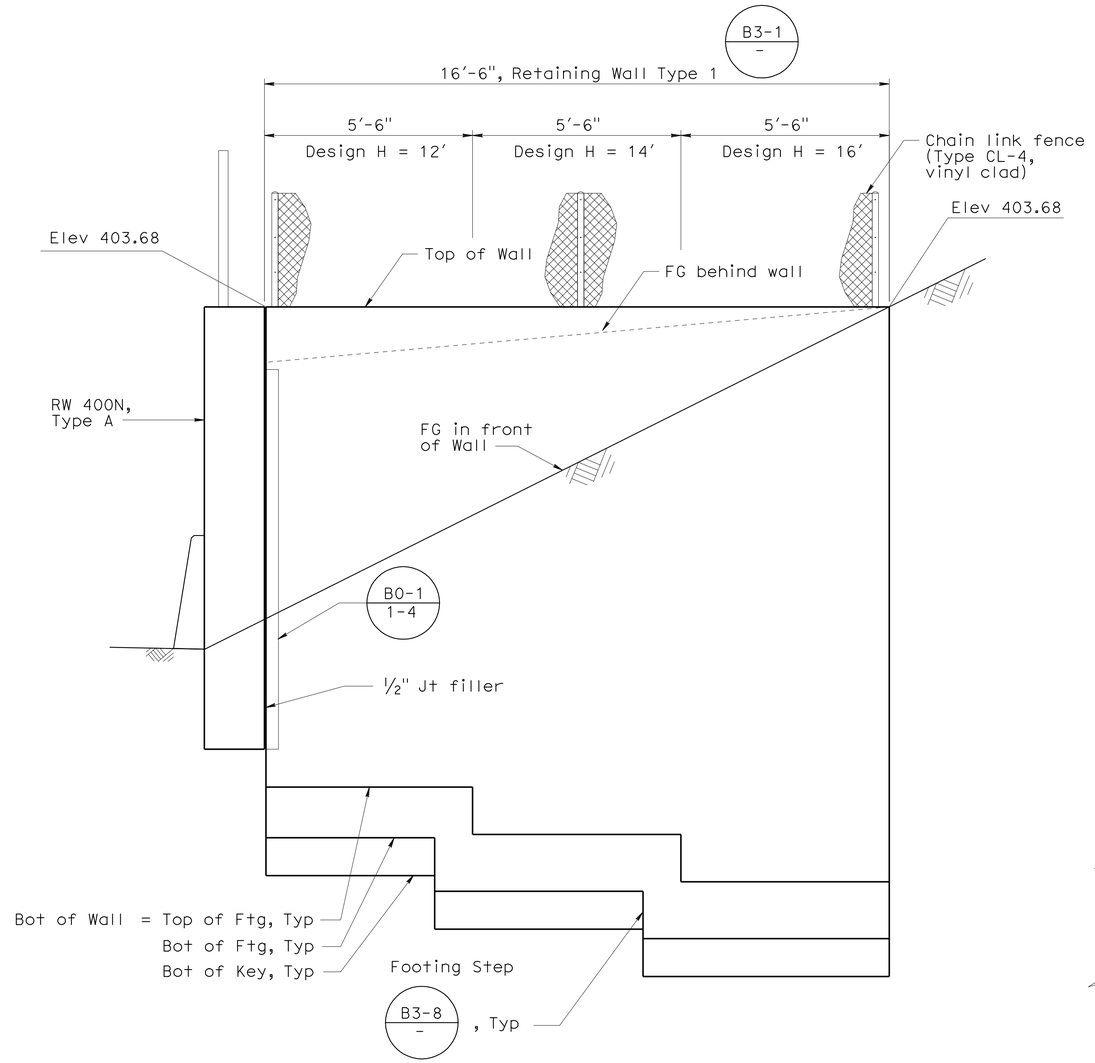

RETURN WALL ELEVATION
1/2" = 1'-0"

LEGEND

XXX.XX Indicates Bottom of Footing Elevation

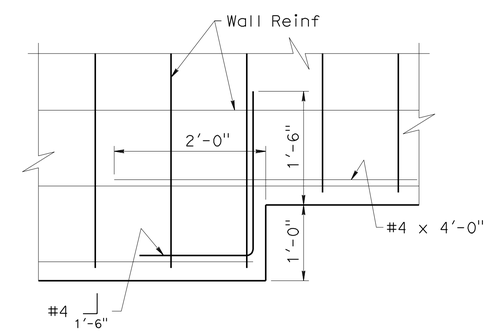

WALL STEP DETAIL
1" = 1'-0"

Note:
The Contractor shall verify all controlling field dimensions before ordering or fabricating any material.

DESIGN OVERSIGHT Yiwei Hu
1/26/11
SIGN OFF DATE

	BY	CHECKED
DESIGN	D. Wang / E. Tang	G. Xu / R. Huang
DETAILS	X. Sun	G. Xu
QUANTITIES	D. Wang / D. Vang	W. Sennett

PREPARED FOR THE STATE OF CALIFORNIA DEPARTMENT OF TRANSPORTATION

Guoping Xu
PROJECT ENGINEER

BRIDGE NO. 33E0079
POST MILE 27.00

RETAINING WALL 400N
WALL TYPE A DETAILS No. 3

DESIGN DETAIL SHEET (ENGLISH) (REV. 06-01-09)

ORIGINAL SCALE IN INCHES FOR REDUCED PLANS 0 1 2 3

CU 0733
EA 297611

DISREGARD PRINTS BEARING EARLIER REVISION DATES

REVISION DATES (PRELIMINARY STAGE ONLY) 05/01/09 01/22/10 08/18/10 10/21/10 12/10/10

SHEET 6 OF 29

FILE => 33e0079-g-redt03.dgn

USERNAME => s124496 DATE PLOTTED => 21-NOV-2011 TIME PLOTTED => 15:27

DIST.	COUNTY	ROUTE	POST MILES TOTAL PROJECT	SHEET NO.	TOTAL SHEETS
04	Ala	84	25.5/27.1	448	495

REGISTERED CIVIL ENGINEER — DATE 12/10/10

6-27-11
PLANS APPROVAL DATE

REGISTERED PROFESSIONAL ENGINEER — DUAN WANG — No. C 61943 — Exp. 06/30/11 — CIVIL — STATE OF CALIFORNIA

The State of California or its officers or agents shall not be responsible for the accuracy or completeness of electronic copies of this plan sheet.

ALAMEDA COUNTY TRANSPORTATION IMPROVEMENT AUTHORITY (ACTIA)
1333 BROADWAY, SUITE 300
OAKLAND, CA 94612

MGE ENGINEERING, INC.
7415 GREENHAVEN DRIVE, SUITE 100
SACRAMENTO, CALIFORNIA 95831

NOTES:

1. Anchorage enclosure shall only be used when anchor head assembly is not enclosed in concrete.
2. Anchorage enclosure shall have provisions to allow injecting grout at low end and venting at high end. Galvanize after fabrication.
3. Silicone sealant to cover full width of flange.
4. Steel tube welded to bearing plate (Min thickness = 1/4"). Galvanize assembly after fabrication
5. Steel tube welded to bearing plate inside diameter of steel tube to be 1" greater than outside diameter of smooth sheathing (Min thickness = 1/4") Galvanize assembly after fabrication.
6. For other wall details, see Structural Plans.

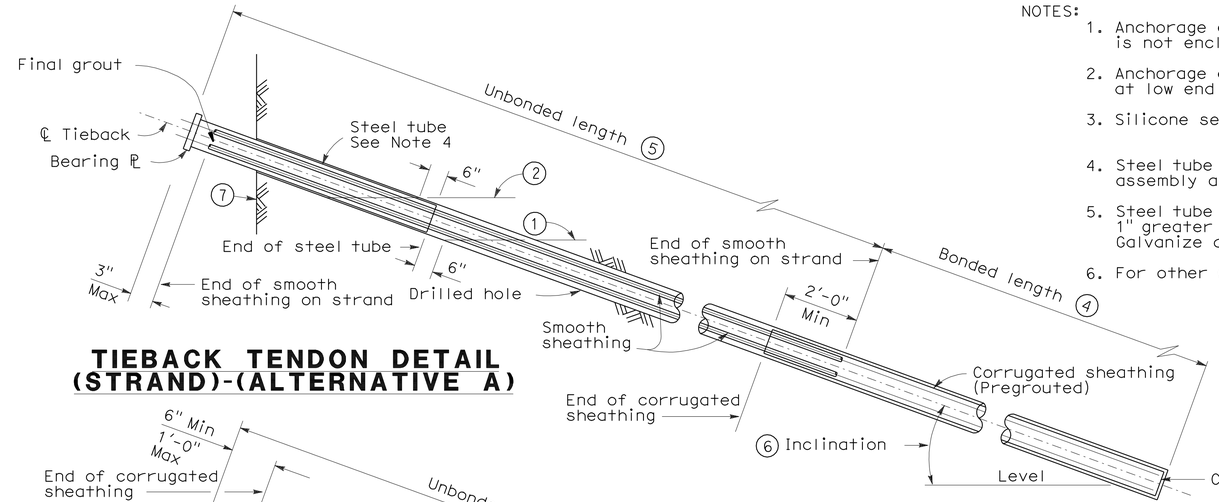

TIEBACK TENDON DETAIL (STRAND)-(ALTERNATIVE A)

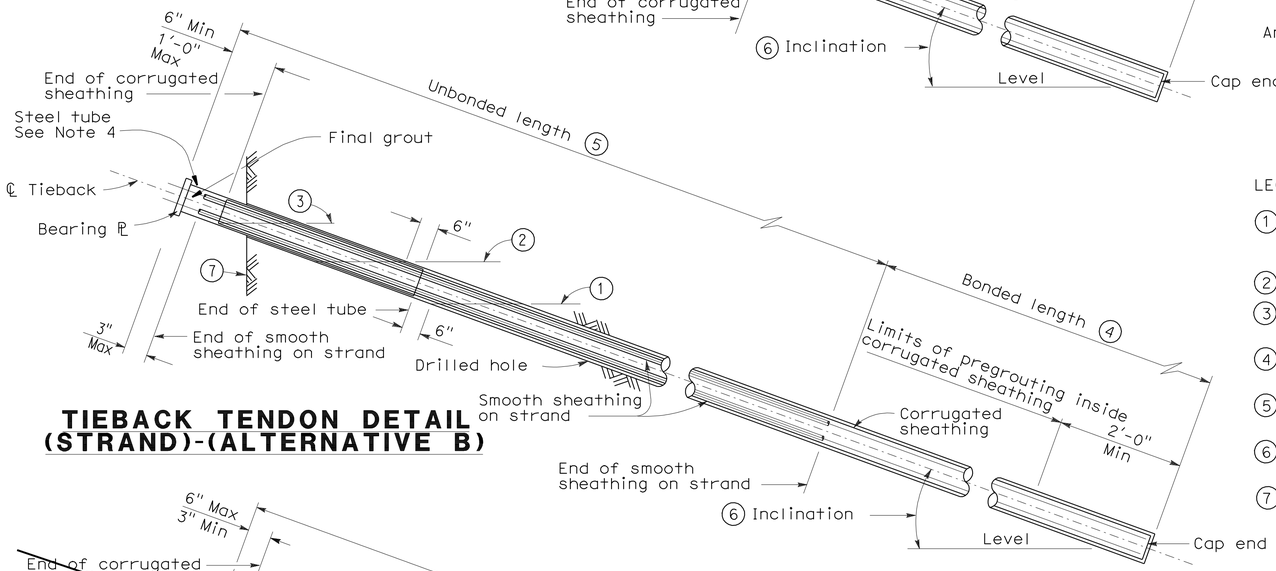

TIEBACK TENDON DETAIL (STRAND)-(ALTERNATIVE B)

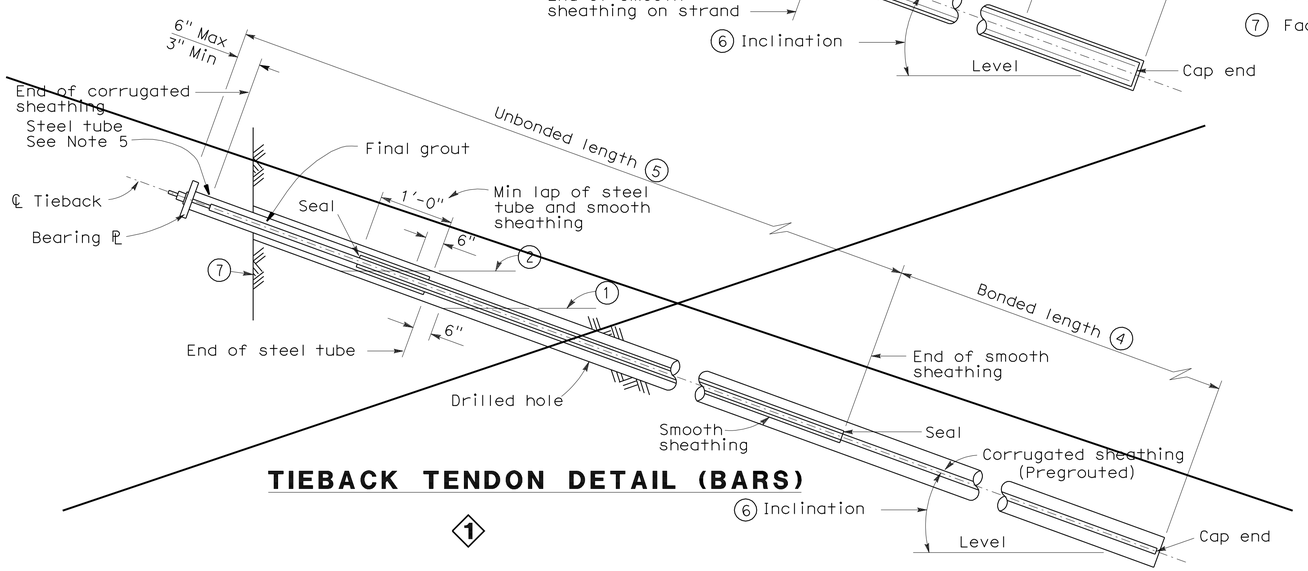

TIEBACK TENDON DETAIL (BARS)

1

LEGEND:

1. Level of initial grouting for drill hole 6" in diameter or smaller
2. Level of secondary grouting
3. Level of initial grouting inside corrugated sheathing
4. Bonded length shall be determined by the contractor
5. For unbonded length, see Project Plans
6. For inclination, see Project Plans
7. Face of Wall Excavation

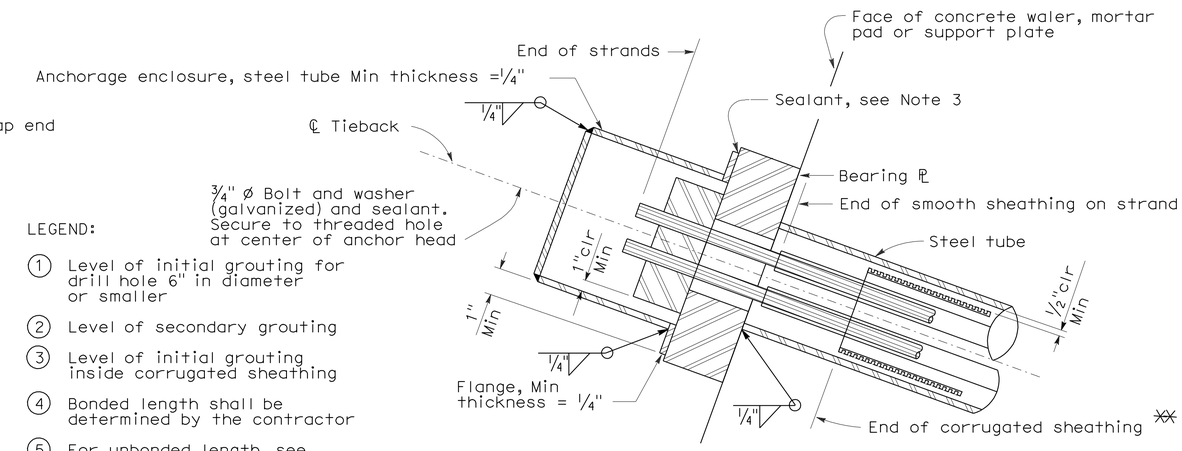

ALTERNATIVE X

✳✳ Alternative B tendon only

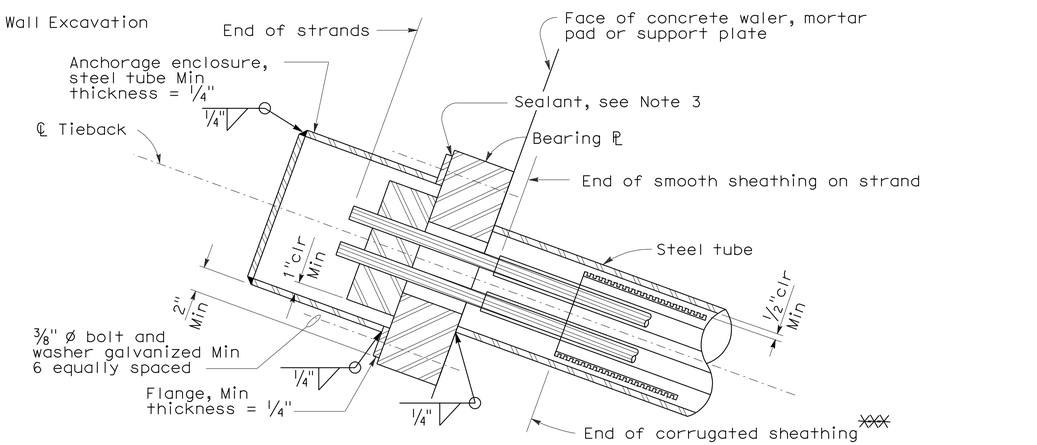

✳✳✳ Alternative B tendon only

ALTERNATIVE Y

ANCHORAGE ENCLOSURE DETAILS

STANDARD DRAWING			
FILE NO. xs12-040e	APPROVED BY G. WANG (RESPONSIBLE TECHNICAL SPECIALIST)	RELEASED BY ROBERTO LACALLE (RESPONSIBLE OFFICE CHIEF)	
	APPROVAL DATE 2-27-09	RELEASE DATE 2-27-09	

1 Detail Deleted

STATE OF CALIFORNIA
DEPARTMENT OF TRANSPORTATION

DIVISION OF ENGINEERING SERVICES

BRIDGE NO. 33E0078
POST MILE 27.00

RETAINING WALL 400N
WALL TYPE A DETAILS No. 4

DS OSD 2147A (ENGLISH STANDARD DRAWING "XS" BORDER REV. 01/11/08)

ORIGINAL SCALE IN INCHES FOR REDUCED PLANS 0 1 2 3

CU 0733
EA 297611

DISREGARD PRINTS BEARING EARLIER REVISION DATES → 08/14/10 12/10/10

REVISION DATES (PRELIMINARY STAGE ONLY)

SHEET 7 OF 29

FILE => 33e0079-g-redt04.dgn

USERNAME => s124496 DATE PLOTTED => 21-NOV-2011 TIME PLOTTED => 15:27

DIST	COUNTY	ROUTE	POST MILES TOTAL PROJECT	SHEET No	TOTAL SHEETS
04	Ala	84	25.5/27.1	449	495

REGISTERED CIVIL ENGINEER 12/10/10 DATE

6-27-11
PLANS APPROVAL DATE

REGISTERED PROFESSIONAL ENGINEER DUAN WANG No. C 61943 Exp. 06/30/11 CIVIL STATE OF CALIFORNIA

The State of California or its officers or agents shall not be responsible for the accuracy or completeness of scanned copies of this plan sheet.

ALAMEDA COUNTY TRANSPORTATION IMPROVEMENT AUTHORITY (ACTIA)
1333 BROADWAY, SUITE 300
OAKLAND, CA 94612

MGE ENGINEERING, INC.
7415 GREENHAVEN DRIVE, SUITE 100
SACRAMENTO, CALIFORNIA 95831

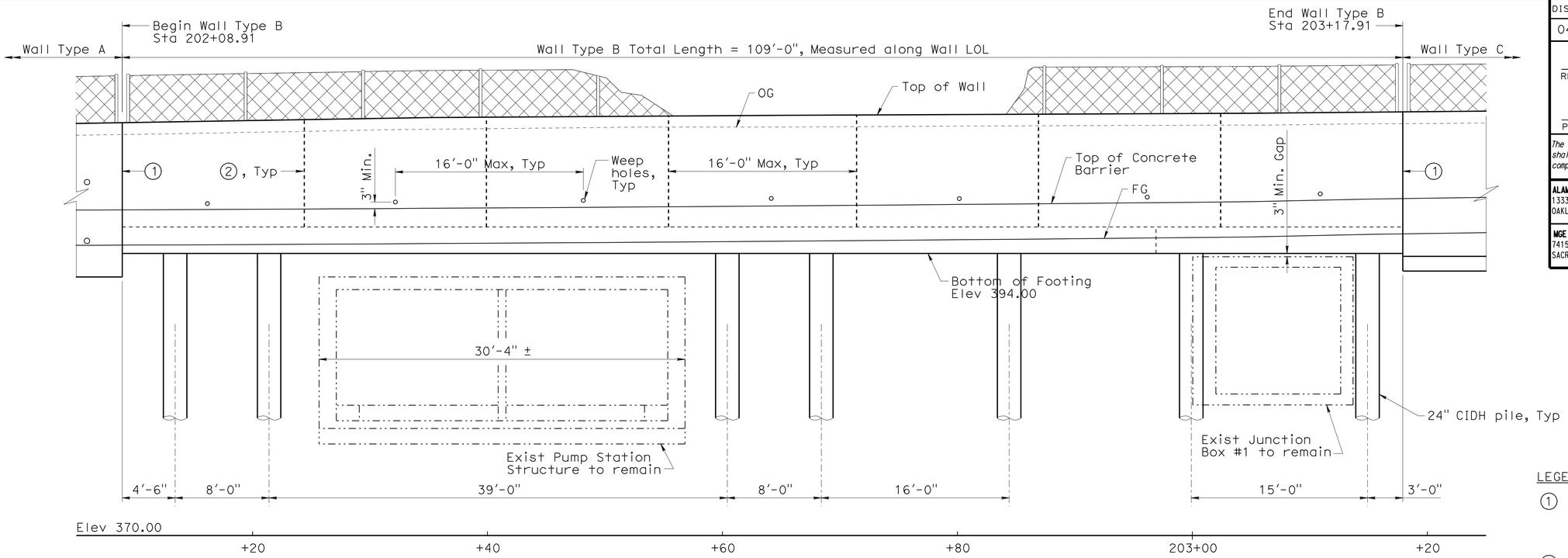

WALL TYPE B MIRROR DEVELOPED ELEVATION

1" = 5'-0"

WALL TYPE B PROFILE

Station	Bottom of Footing Elev	Top of Wall Elev
202+08.91	394.00	405.12
202+34.91	394.00	405.55
202+64.91	394.00	405.74
203+04.91	394.00	405.91
203+17.91	394.00	406.03

LEGEND

① Expansion Joint through wall and footing — B0-3 / 3-4

② Expansion Joint in Wall only — B0-3 / 3-4

PILE DATA TABLE

Location	Pile Type	Pile Cut-off Elevation (ft)	Design Loading (Service)	Nominal Resistance		Design Tip Elevation (ft)	Specified Tip Elevation (ft)
				Compression	Tension		
Wall Type B	24" CIDH	394.25	290 Kips	580 Kips	0 Kips	347.0 (1), 373.0 (2)	347.0

Design tip elevation is controlled by the following demands: (1) Compression; (2) Lateral

CURVE DATA TABLE

NO	R	Δ	T	L
Ⓐ	9.00'	23°33'04.6"	1.88'	3.70'
Ⓑ	27.00'	23°33'04.2"	5.63'	11.10'

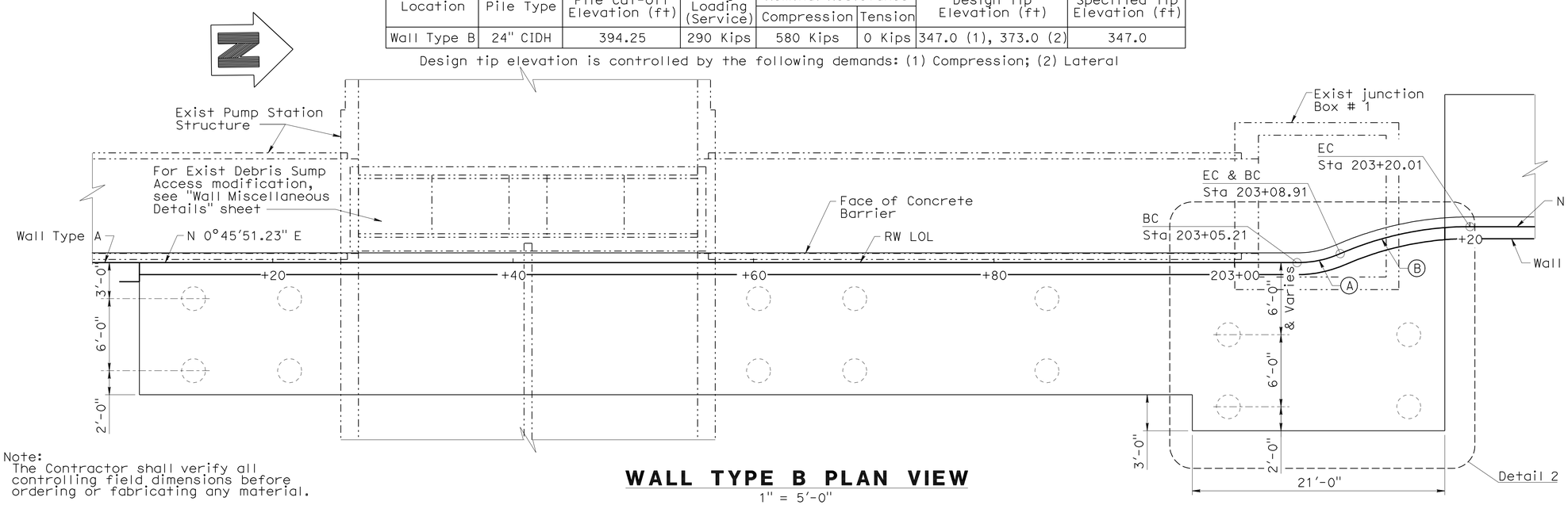

Note:
The Contractor shall verify all controlling field dimensions before ordering or fabricating any material.

WALL TYPE B PLAN VIEW

1" = 5'-0"

Note:
1. For 'Detail 2', see "Wall Type B Details No. 3" sheet

DESIGN OVERSIGHT Yiwei Hu
1/26/11
SIGN OFF DATE

	BY	CHECKED
DESIGN	D. Wang / E. Tang	G. Xu / R. Huang
DETAILS	X. Sun	G. Xu
QUANTITIES	D. Wang / D. Vang	W. Sennett

PREPARED FOR THE STATE OF CALIFORNIA DEPARTMENT OF TRANSPORTATION

Guoping Xu
PROJECT ENGINEER

BRIDGE NO. 33E0079
POST MILE 27.00

RETAINING WALL 400N
WALL TYPE B DETAILS No. 1

DESIGN DETAIL SHEET (ENGLISH) (REV. 06-01-09)

ORIGINAL SCALE IN INCHES FOR REDUCED PLANS 0 1 2 3

CU 0733
EA 297611

DISREGARD PRINTS BEARING EARLIER REVISION DATES

REVISION DATES (PRELIMINARY STAGE ONLY) 05/04/09 01/22/10 08/18/10 10/21/10 12/10/10

SHEET 8 OF 29

FILE => 33e0079-g-redt05.dgn

USERNAME => s124496 DATE PLOTTED => 21-NOV-2011 TIME PLOTTED => 15:27

DIST	COUNTY	ROUTE	POST MILES TOTAL PROJECT	SHEET No	TOTAL SHEETS
04	Ala	84	25.5/27.1	450	495

REGISTERED CIVIL ENGINEER 12/10/10 DATE

6-27-11
PLANS APPROVAL DATE

REGISTERED PROFESSIONAL ENGINEER DUAN WANG No. C 61943 Exp. 06/30/11 CIVIL STATE OF CALIFORNIA

The State of California or its officers or agents shall not be responsible for the accuracy or completeness of scanned copies of this plan sheet.

ALAMEDA COUNTY TRANSPORTATION IMPROVEMENT AUTHORITY (ACTIA)
1333 BROADWAY, SUITE 300
OAKLAND, CA 94612

MGE ENGINEERING, INC.
7415 GREENHAVEN DRIVE, SUITE 100
SACRAMENTO, CALIFORNIA 95831

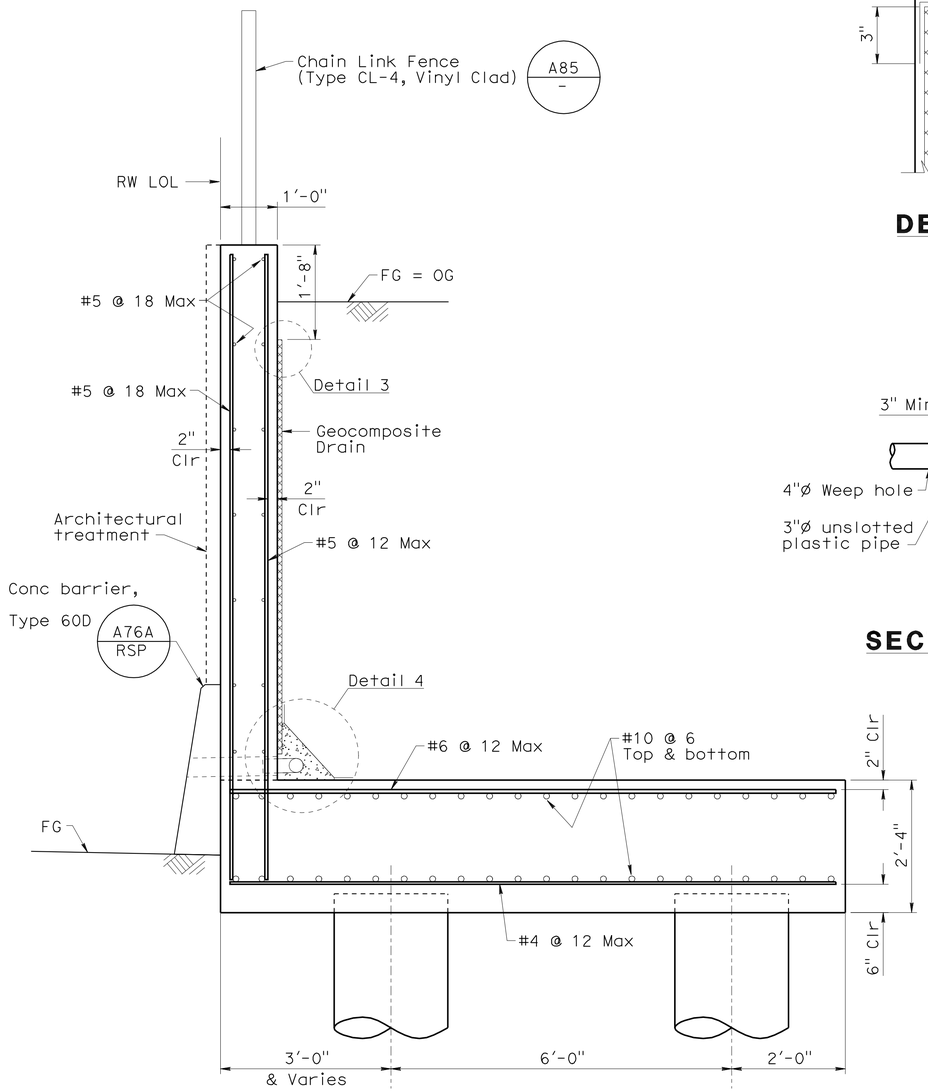

WALL TYPE B TYPICAL SECTION

3/4" = 1'-0"

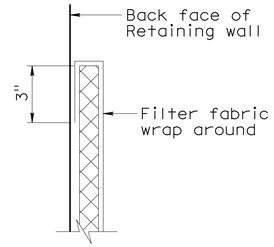

DETAIL 3

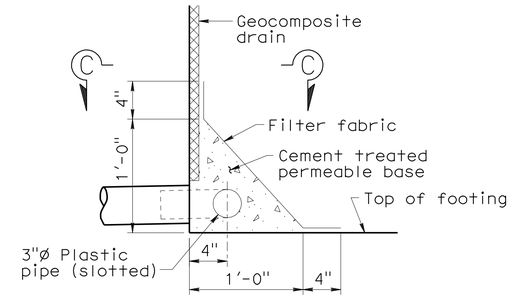

DETAIL 4

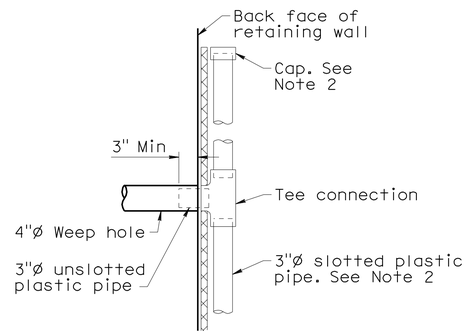

SECTION C-C

Notes:
1. 4"ø weep holes at 20' Max center to center. Weep holes shall be located 3" Min above finished grade.
2. Geocomposite drain, cement treated permeable base, and 3"ø slotted plastic pipe continuous behind retaining walls. Cap ends of pipe. Provide "Tee" connection at each 3"ø drain.

WALL TYPE B AND C WEEP HOLE AND GEOCOMPOSITE DRAIN

No Scale

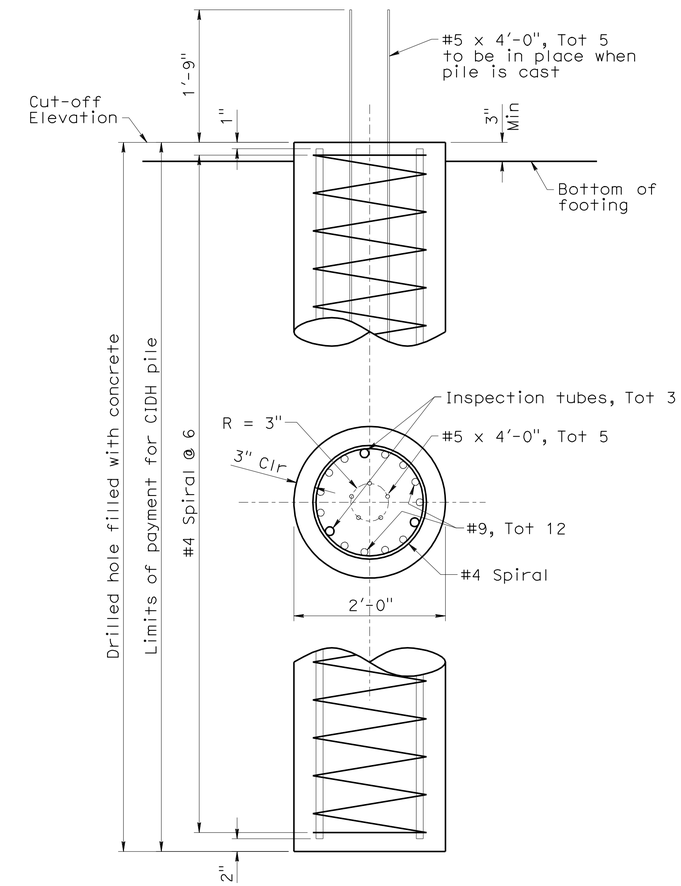

CIDH PILE DETAIL

1" = 1'-0"

Note:
The Contractor shall verify all controlling field dimensions before ordering or fabricating any material.

DESIGN OVERSIGHT Yiwei Hu
1/26/11
SIGN OFF DATE

	BY	CHECKED
DESIGN	D. Wang / E. Tang	G. Xu / R. Huang
DETAILS	X. Sun	G. Xu
QUANTITIES	D. Wang / D. Vang	W. Sennett

PREPARED FOR THE STATE OF CALIFORNIA DEPARTMENT OF TRANSPORTATION

Guoping Xu
PROJECT ENGINEER

BRIDGE NO. 33E0079
POST MILE 27.00

RETAINING WALL 400N
WALL TYPE B DETAILS No. 2

DESIGN DETAIL SHEET (ENGLISH) (REV. 06-01-09)

ORIGINAL SCALE IN INCHES FOR REDUCED PLANS 0 1 2 3

CU 0733
EA 297611

DISREGARD PRINTS BEARING EARLIER REVISION DATES

REVISION DATES (PRELIMINARY STAGE ONLY) 05/04/09 01/22/10 08/18/10 10/21/10 12/10/10

SHEET 9 OF 29

FILE => 33e0079-g-redt06.dgn

USERNAME => s124496 DATE PLOTTED => 21-NOV-2011 TIME PLOTTED => 15:27

DIST	COUNTY	ROUTE	POST MILES TOTAL PROJECT	SHEET No	TOTAL SHEETS
04	Ala	84	25.5/27.1	451	495

REGISTERED CIVIL ENGINEER 12/10/10 DATE

6-27-11
PLANS APPROVAL DATE

REGISTERED PROFESSIONAL ENGINEER DUAN WANG No. C 61943 Exp. 06/30/11 CIVIL STATE OF CALIFORNIA

The State of California or its officers or agents shall not be responsible for the accuracy or completeness of scanned copies of this plan sheet.

ALAMEDA COUNTY TRANSPORTATION IMPROVEMENT AUTHORITY (ACTIA)
1333 BROADWAY, SUITE 300
OAKLAND, CA 94612

MGE ENGINEERING, INC.
7415 GREENHAVEN DRIVE, SUITE 100
SACRAMENTO, CALIFORNIA 95831

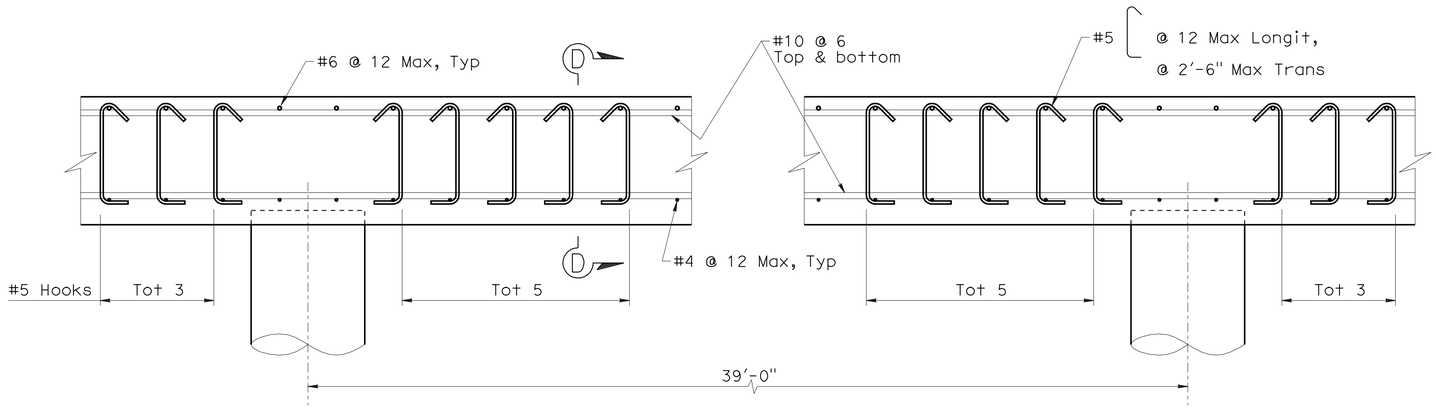

PARTIAL FOOTING ELEVATION
3/4" = 1'-0"

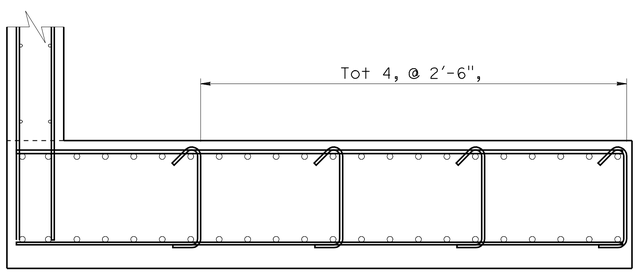

SECTION D-D
3/4" = 1'-0"

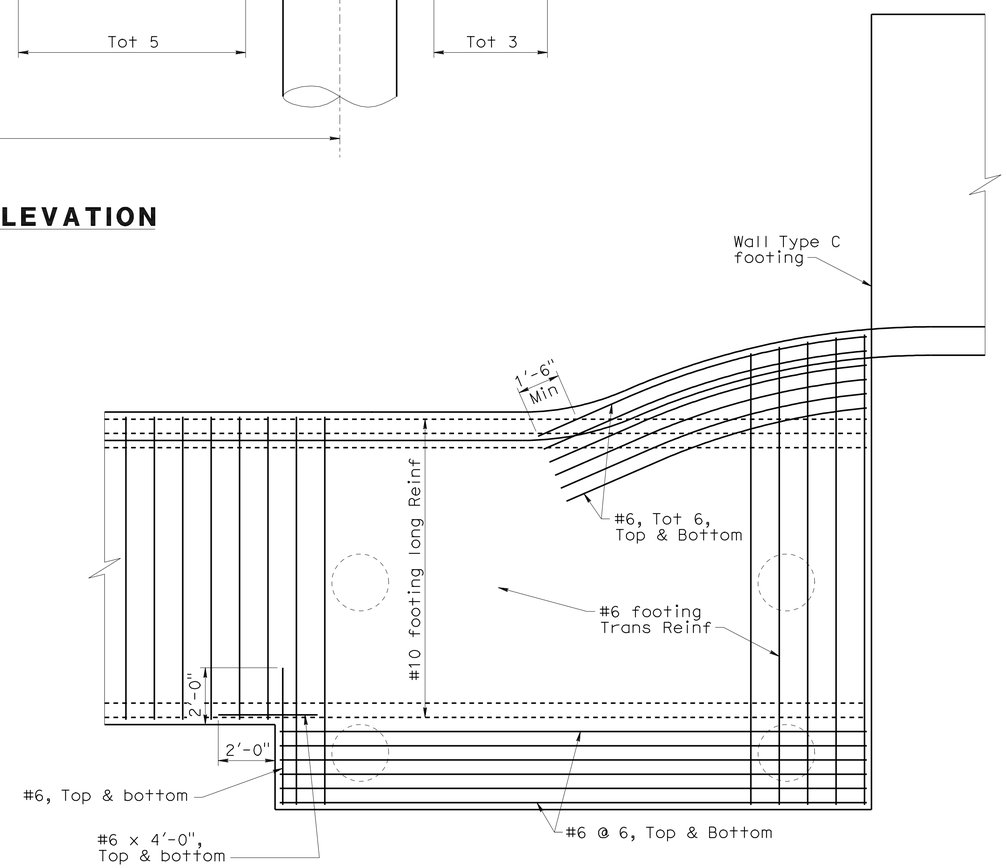

DETAIL 2
3/8 " = 1'-0"

Note:
The Contractor shall verify all controlling field dimensions before ordering or fabricating any material.

DESIGN OVERSIGHT Yiwei Hu
1/26/11
SIGN OFF DATE

	BY	CHECKED
DESIGN	D. Wang / E. Tang	G. Xu / R. Huang
DETAILS	X. Sun	G. Xu
QUANTITIES	D. Wang / D. Vang	W. Sennett

PREPARED FOR THE STATE OF CALIFORNIA DEPARTMENT OF TRANSPORTATION

Guoping Xu
PROJECT ENGINEER

BRIDGE NO. 33E0079
POST MILE 27.00

RETAINING WALL 400N
WALL TYPE B DETAILS No. 3

DESIGN DETAIL SHEET (ENGLISH) (REV. 06-01-09)

ORIGINAL SCALE IN INCHES FOR REDUCED PLANS 0 1 2 3

CU 0733
EA 297611

DISREGARD PRINTS BEARING EARLIER REVISION DATES → REVISION DATES (PRELIMINARY STAGE ONLY) 05/07/09 01/22/10 08/13/10 10/21/10 12/10/10

SHEET 10 OF 29

FILE => 33e0079-g-redt07.dgn

USERNAME => s124496 DATE PLOTTED => 21-NOV-2011 TIME PLOTTED => 15:27

DIST	COUNTY	ROUTE	POST MILES TOTAL PROJECT	SHEET No	TOTAL SHEETS
04	Ala	84	25.5/27.1	452	495

REGISTERED CIVIL ENGINEER 12/10/10 DATE

6-27-11
PLANS APPROVAL DATE

REGISTERED PROFESSIONAL ENGINEER DUAN WANG No. C 61943 Exp. 06/30/11 CIVIL STATE OF CALIFORNIA

The State of California or its officers or agents shall not be responsible for the accuracy or completeness of scanned copies of this plan sheet.

ALAMEDA COUNTY TRANSPORTATION IMPROVEMENT AUTHORITY (ACTIA)
1333 BROADWAY, SUITE 300
OAKLAND, CA 94612

MGE ENGINEERING, INC.
7415 GREENHAVEN DRIVE, SUITE 100
SACRAMENTO, CALIFORNIA 95831

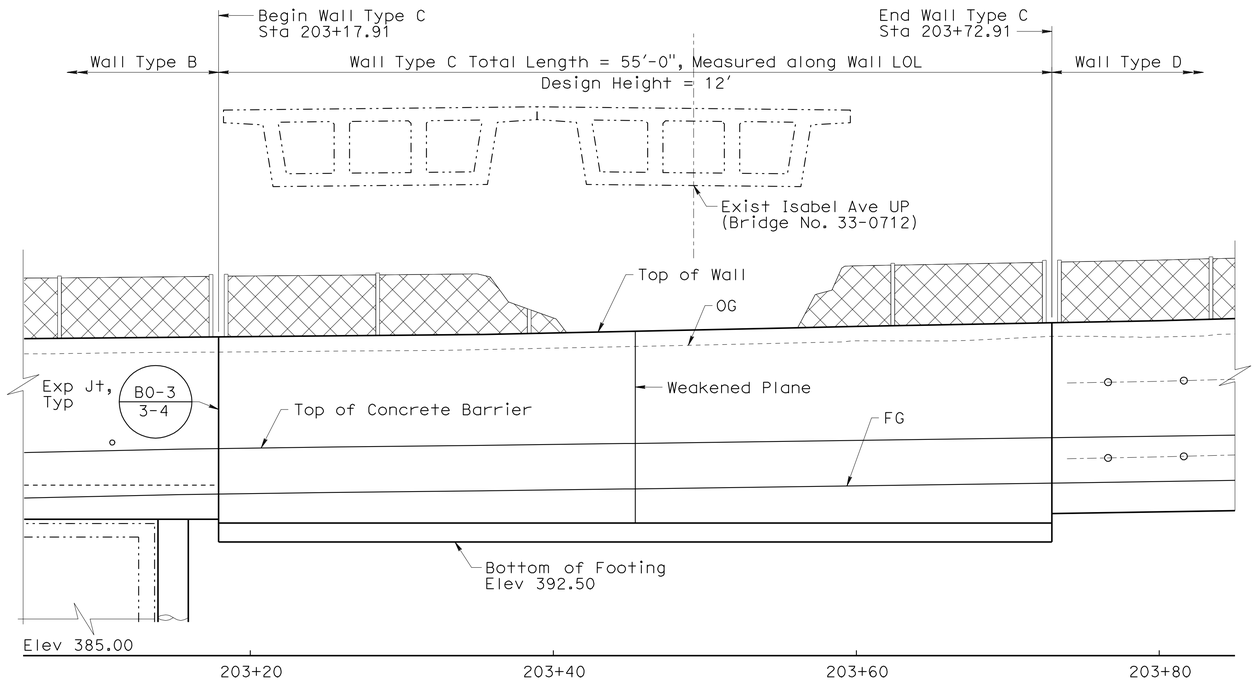

WALL TYPE C MIRROR DEVELOPED ELEVATION

1" = 5'-0"

WALL TYPE C PROFILE

Station	Bottom of Footing Elev	Top of Wall Elev
203+17.91	392.50	406.03
203+35.32	392.50	406.20
203+55.32	392.50	406.66
203+60.00	392.50	406.73
203+72.91	392.50	406.97

WALL TYPE C DESIGN NOTES:

Minimum Allowable Bearing Pressure = 6 psf

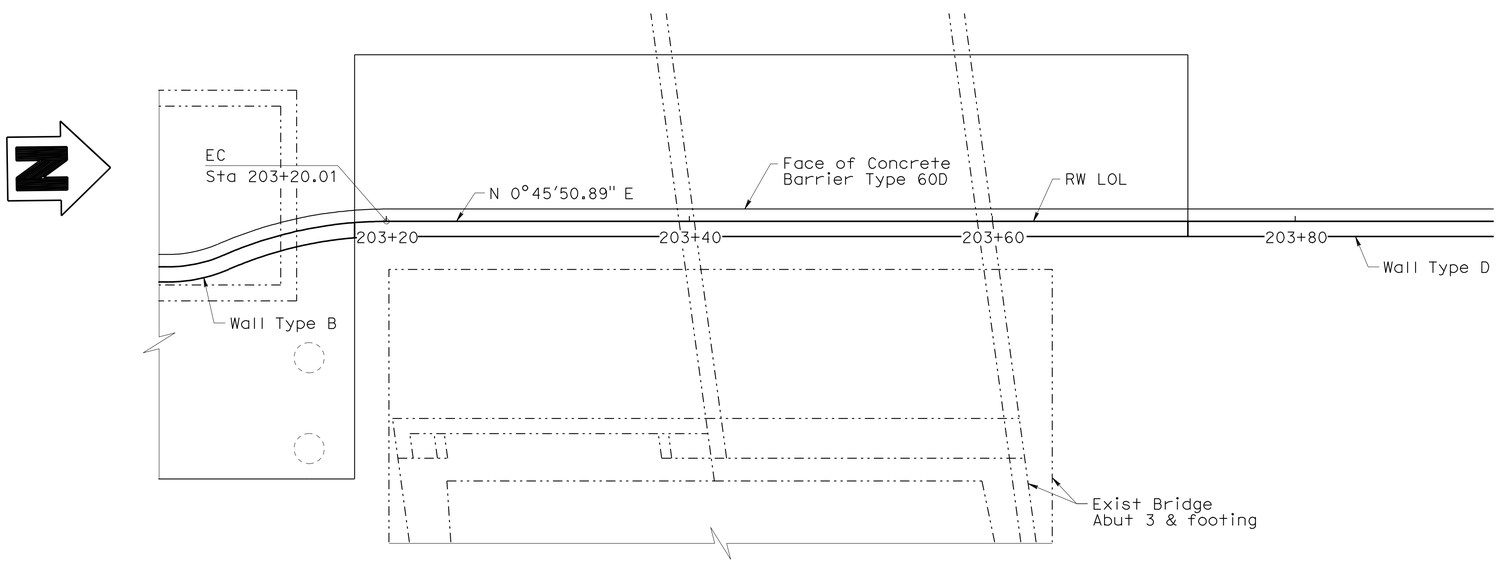

WALL TYPE C PLAN VIEW

1" = 5'-0"

Note:
The Contractor shall verify all controlling field dimensions before ordering or fabricating any material.

DESIGN OVERSIGHT Yiwei Hu
1/26/11
SIGN OFF DATE

	BY	CHECKED
DESIGN	D. Wang / E. Tang	G. Xu / R. Huang
DETAILS	X. Sun	G. Xu
QUANTITIES	D. Wang / D. Vang	W. Sennett

PREPARED FOR THE STATE OF CALIFORNIA DEPARTMENT OF TRANSPORTATION

Guoping Xu
PROJECT ENGINEER

BRIDGE NO. 33E0079
POST MILE 27.00

RETAINING WALL 400N
WALL TYPE C DETAILS No. 1

DESIGN DETAIL SHEET (ENGLISH) (REV. 06-01-09)

ORIGINAL SCALE IN INCHES FOR REDUCED PLANS 0 1 2 3

CU 0733
EA 297611

DISREGARD PRINTS BEARING EARLIER REVISION DATES

REVISION DATES (PRELIMINARY STAGE ONLY) 05/04/09 01/22/10 08/18/10 10/27/10 12/10/10

SHEET 11 OF 29

FILE => 33e0079-g-redt08.dgn

USERNAME => s124496 DATE PLOTTED => 21-NOV-2011 TIME PLOTTED => 15:27

DIST	COUNTY	ROUTE	POST MILES TOTAL PROJECT	SHEET No	TOTAL SHEETS
04	Ala	84	25.5/27.1	453	495

REGISTERED CIVIL ENGINEER 12/10/10 DATE

6-27-11
PLANS APPROVAL DATE

REGISTERED PROFESSIONAL ENGINEER DUAN WANG No. C 61943 Exp. 06/30/11 CIVIL STATE OF CALIFORNIA

The State of California or its officers or agents shall not be responsible for the accuracy or completeness of scanned copies of this plan sheet.

ALAMEDA COUNTY TRANSPORTATION IMPROVEMENT AUTHORITY (ACTIA)
1333 BROADWAY, SUITE 300
OAKLAND, CA 94612

MGE ENGINEERING, INC.
7415 GREENHAVEN DRIVE, SUITE 100
SACRAMENTO, CALIFORNIA 95831

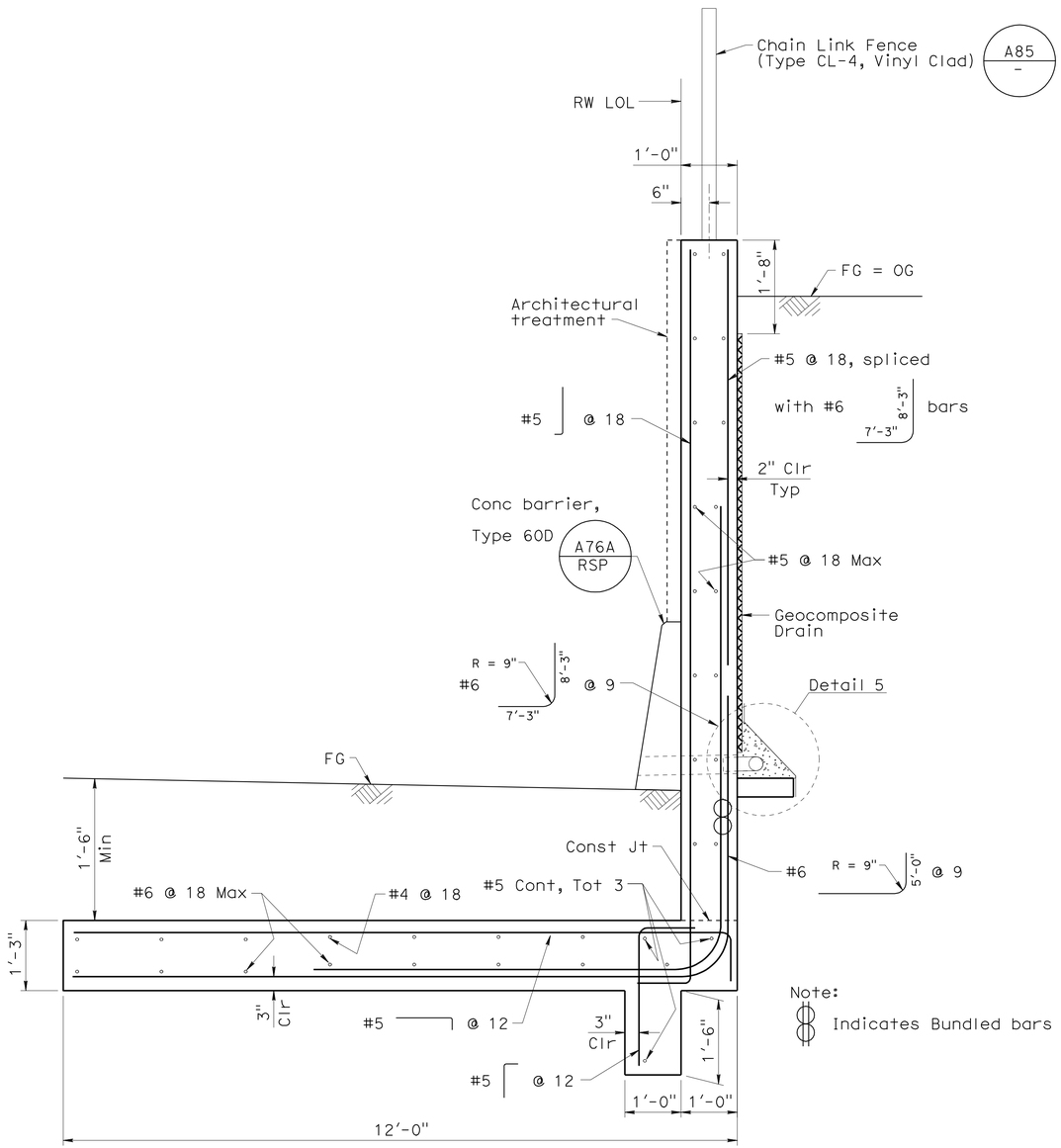

WALL TYPE C TYPICAL SECTION

3/4" = 1'-0"

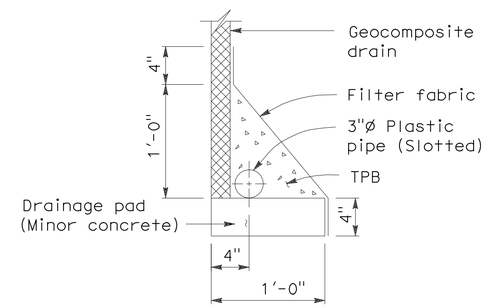

WITHOUT FOOTING

DETAIL 5

Note:
The Contractor shall verify all controlling field dimensions before ordering or fabricating any material.

DESIGN OVERSIGHT Yiwei Hu
1/26/11
SIGN OFF DATE

	BY	CHECKED
DESIGN	D. Wang / E. Tang	G. Xu / R. Huang
DETAILS	X. Sun	G. Xu
QUANTITIES	D. Wang / D. Vang	W. Sennett

PREPARED FOR THE STATE OF CALIFORNIA DEPARTMENT OF TRANSPORTATION

Guoping Xu
PROJECT ENGINEER

BRIDGE NO. 33E0079
POST MILE 27.00

RETAINING WALL 400N
WALL TYPE C DETAILS No. 2

DESIGN DETAIL SHEET (ENGLISH) (REV. 06-01-09)

ORIGINAL SCALE IN INCHES FOR REDUCED PLANS 0 1 2 3

CU 0733
EA 297611

DISREGARD PRINTS BEARING EARLIER REVISION DATES

REVISION DATES (PRELIMINARY STAGE ONLY) 05/04/09 01/22/10 08/12/10 10/22/10 12/10/10

SHEET 12 OF 29

FILE => 33e0079-g-redt09.dgn

USERNAME => s124436 DATE PLOTTED => 21-NOV-2011 TIME PLOTTED => 15:27

DIST	COUNTY	ROUTE	POST MILES TOTAL PROJECT	SHEET No	TOTAL SHEETS
04	Ala	84	25.5/27.1	454	495

REGISTERED CIVIL ENGINEER 12/10/10 DATE

6-27-11
PLANS APPROVAL DATE

REGISTERED PROFESSIONAL ENGINEER DUAN WANG No. C 61943 Exp. 06/30/11 CIVIL STATE OF CALIFORNIA

The State of California or its officers or agents shall not be responsible for the accuracy or completeness of scanned copies of this plan sheet.

ALAMEDA COUNTY TRANSPORTATION IMPROVEMENT AUTHORITY (ACTIA)
1333 BROADWAY, SUITE 300
OAKLAND, CA 94612

MGE ENGINEERING, INC.
7415 GREENHAVEN DRIVE, SUITE 100
SACRAMENTO, CALIFORNIA 95831

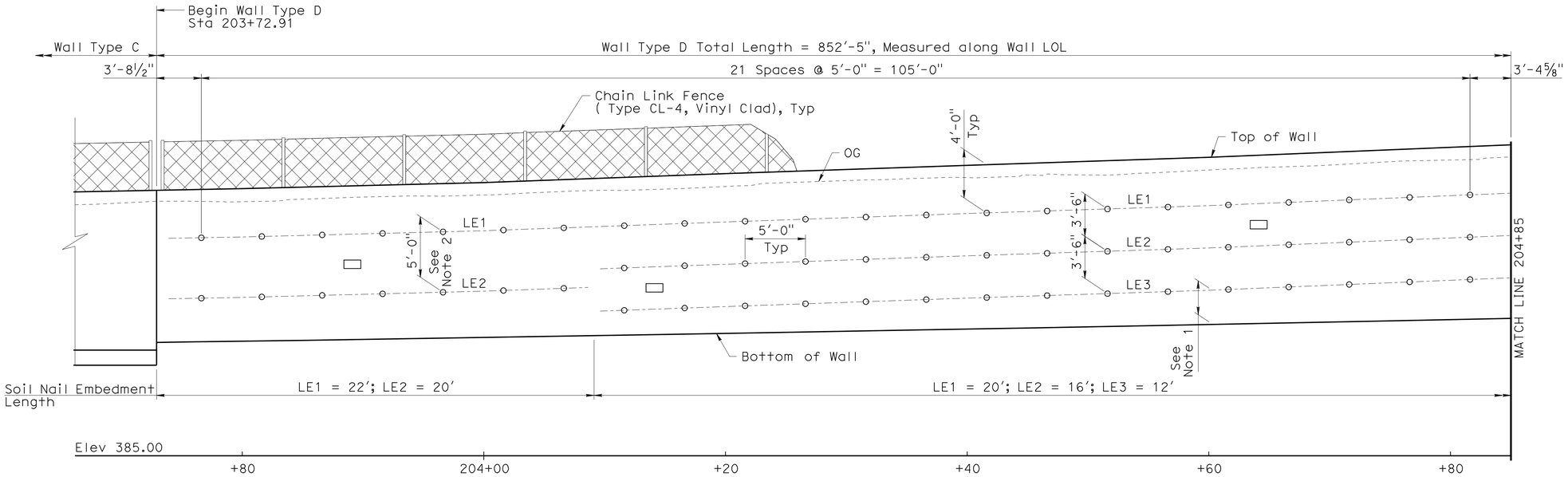

WALL TYPE D MIRROR ELEVATION

1" = 5'-0"

WALL TYPE D PROFILE

Station	Top of Wall Elevation	Bottom of Wall Elevation
203+72.91	406.97	394.38
203+80	407.11	394.48
204+00	407.62	394.79
204+20	408.35	395.13
204+40	409.04	395.49
204+60	409.70	395.87
204+80	410.54	396.27
205+00	411.36	396.69
205+20	412.22	397.14
205+40	413.01	397.62
205+60	413.82	398.12
205+80	414.52	398.64

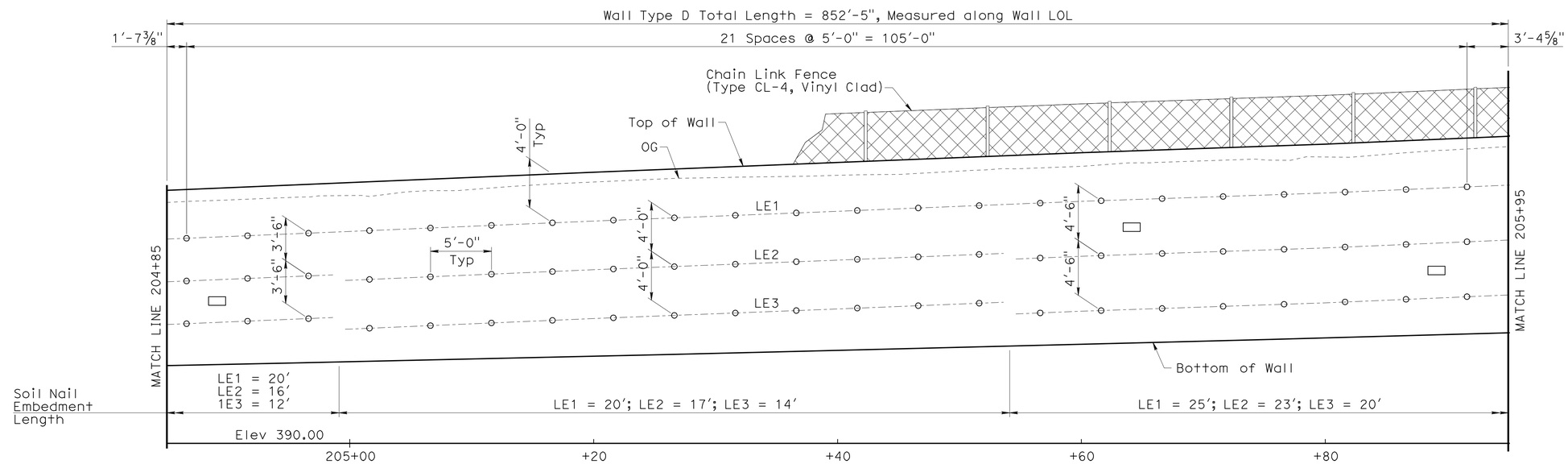

WALL TYPE D MIRROR ELEVATION

1" = 5'-0"

LEGEND

- ○ Indicates soil nail location with typical angle of inclination of 15 degrees
- ▭ Indicates proof test soil nail location; Location may be adjusted by the Engineer
- LE# Indicates soil nail profile line

Notes:

1. Vertical distance from Bottom of Wall to bottom level of soil nail assembly is 2'-0" (Min) to 4'-0" (Max).
2. Vertical spacing of soil nail assembly is 2'-6" (Min) to 5'-0" (Max).
3. Place soil nail assembly normal to RW LOL and at 15 degrees inclination.
4. Roadway FG and Concrete Barrier Type 60D not shown for clarity.
5. For 'Soil Nail Wall Notes', see "Wall Type D Details No. 2" sheet.

Note:
The Contractor shall verify all controlling field dimensions before ordering or fabricating any material.

DESIGN OVERSIGHT Yiwei Hu
1/26/11
SIGN OFF DATE

	BY	CHECKED
DESIGN	D. Wang / E. Tang	G. Xu / R. Huang
DETAILS	X. Sun	G. Xu
QUANTITIES	D. Wang / D. Vang	W. Sennett

PREPARED FOR THE STATE OF CALIFORNIA DEPARTMENT OF TRANSPORTATION

Guoping Xu
PROJECT ENGINEER

BRIDGE NO. 33E0079
POST MILE 27.00

RETAINING WALL 400N
WALL TYPE D DETAILS No. 1

DESIGN DETAIL SHEET (ENGLISH) (REV. 06-01-09)

ORIGINAL SCALE IN INCHES FOR REDUCED PLANS 0 1 2 3

CU 0733
EA 297611

DISREGARD PRINTS BEARING EARLIER REVISION DATES

REVISION DATES (PRELIMINARY STAGE ONLY) 05/04/09 01/22/10 08/18/10 10/21/10 12/10/10

SHEET 13 OF 29

FILE => 33e0079-g-redt10.dgn

USERNAME => s124496 DATE PLOTTED => 21-NOV-2011 TIME PLOTTED => 15:27

DIST	COUNTY	ROUTE	POST MILES TOTAL PROJECT	SHEET No	TOTAL SHEETS
04	Ala	84	25.5/27.1	455	495

REGISTERED CIVIL ENGINEER — DATE 12/10/10

PLANS APPROVAL DATE 6-27-11

REGISTERED PROFESSIONAL ENGINEER — DUAN WANG — No. C 61943 — Exp. 06/30/11 — CIVIL — STATE OF CALIFORNIA

The State of California or its officers or agents shall not be responsible for the accuracy or completeness of scanned copies of this plan sheet.

ALAMEDA COUNTY TRANSPORTATION IMPROVEMENT AUTHORITY (ACTIA)
1333 BROADWAY, SUITE 300
OAKLAND, CA 94612

MGE ENGINEERING, INC.
7415 GREENHAVEN DRIVE, SUITE 100
SACRAMENTO, CALIFORNIA 95831

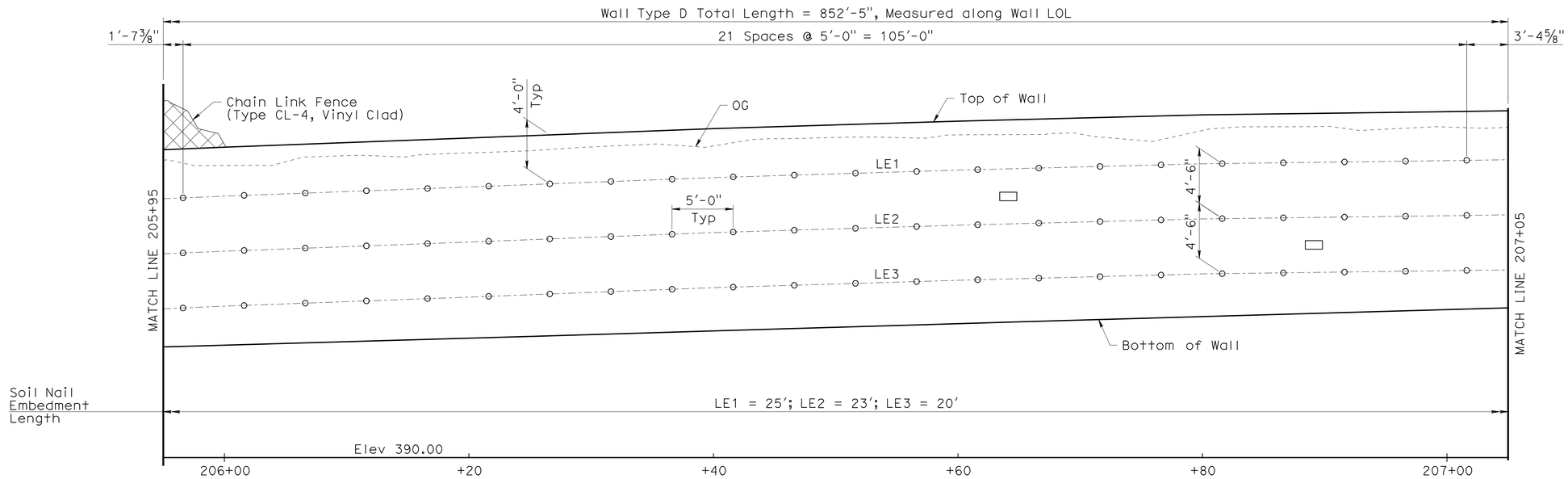

WALL TYPE D MIRROR ELEVATION

1" = 5'-0"

WALL TYPE D PROFILE

Station	Top of Wall Elevation	Bottom of Wall Elevation
206+00	415.38	399.19
206+20	416.12	399.77
206+40	416.89	400.36
206+60	417.49	400.95
206+80	418.01	401.53
207+00	418.28	402.10
207+20	418.56	402.66
207+40	418.45	403.22
207+60	418.20	403.77
207+80	418.20	404.30
208+00	418.20	404.83

LEGEND

- ○ Indicates soil nail location with typical angle of inclination of 15 degrees
- ▭ Indicates proof test soil nail location; Location may be adjusted by the Engineer
- LE# Indicates soil nail profile line

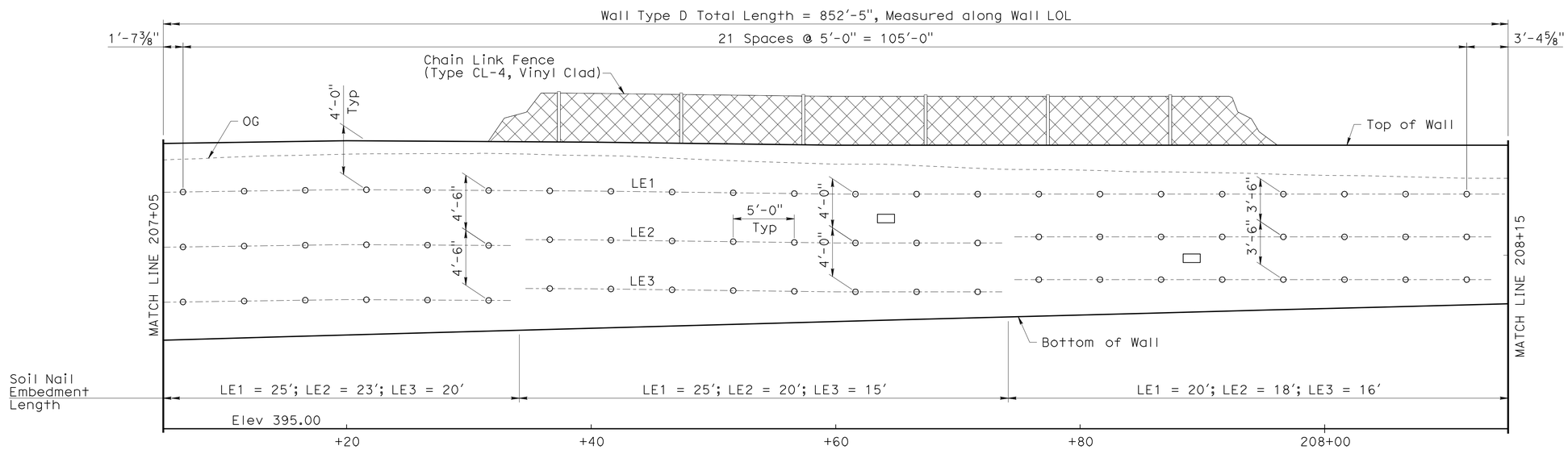

WALL TYPE D MIRROR ELEVATION

1" = 5'-0"

SOIL NAIL WALL NOTES:

SOIL NAILS ASSEMBLY: ASTM Designation: A615
fy = 60 ksi
Nail grout f'c = 3000 psi

STRUCTURAL STEEL: ASTM Designation: A709
fy = 36 ksi

DESIGN PARAMETERS: (Soil)
ø = 34°
C = 1000 psf
γ = 130 pcf
Qd = 2.09 k/ft

PSEUDE-STATIC SEISMIC ACCELERATION: Coefficient = 0.17 g

Note:
The Contractor shall verify all controlling field dimensions before ordering or fabricating any material.

DESIGN OVERSIGHT — Yiwei Hu
1/26/11
SIGN OFF DATE

	BY	CHECKED
DESIGN	D. Wang / E. Tang	G. Xu / R. Huang
DETAILS	X. Sun	G. Xu
QUANTITIES	D. Wang / D. Vang	W. Sennett

PREPARED FOR THE STATE OF CALIFORNIA DEPARTMENT OF TRANSPORTATION

Guoping Xu — PROJECT ENGINEER

BRIDGE NO. 33E0079
POST MILE 27.00

RETAINING WALL 400N
WALL TYPE D DETAILS No. 2

DESIGN DETAIL SHEET (ENGLISH) (REV. 06-01-09)

ORIGINAL SCALE IN INCHES FOR REDUCED PLANS 0 1 2 3

CU 0733
EA 297611

DISREGARD PRINTS BEARING EARLIER REVISION DATES

REVISION DATES (PRELIMINARY STAGE ONLY): 05/04/09 01/22/10 08/13/10 10/29/10 12/10/10

SHEET 14 OF 29

FILE => 33e0079-g-redt11.dgn

USERNAME => s124496 DATE PLOTTED => 21-NOV-2011 TIME PLOTTED => 15:27

DIST	COUNTY	ROUTE	POST MILES TOTAL PROJECT	SHEET No	TOTAL SHEETS
04	Ala	84	25.5/27.1	456	495

REGISTERED CIVIL ENGINEER 12/10/10 DATE

6-27-11
PLANS APPROVAL DATE

REGISTERED PROFESSIONAL ENGINEER DUAN WANG No. C 61943 Exp. 06/30/11 CIVIL STATE OF CALIFORNIA

The State of California or its officers or agents shall not be responsible for the accuracy or completeness of scanned copies of this plan sheet.

ALAMEDA COUNTY TRANSPORTATION IMPROVEMENT AUTHORITY (ACTIA)
1333 BROADWAY, SUITE 300
OAKLAND, CA 94612

MGE ENGINEERING, INC.
7415 GREENHAVEN DRIVE, SUITE 100
SACRAMENTO, CALIFORNIA 95831

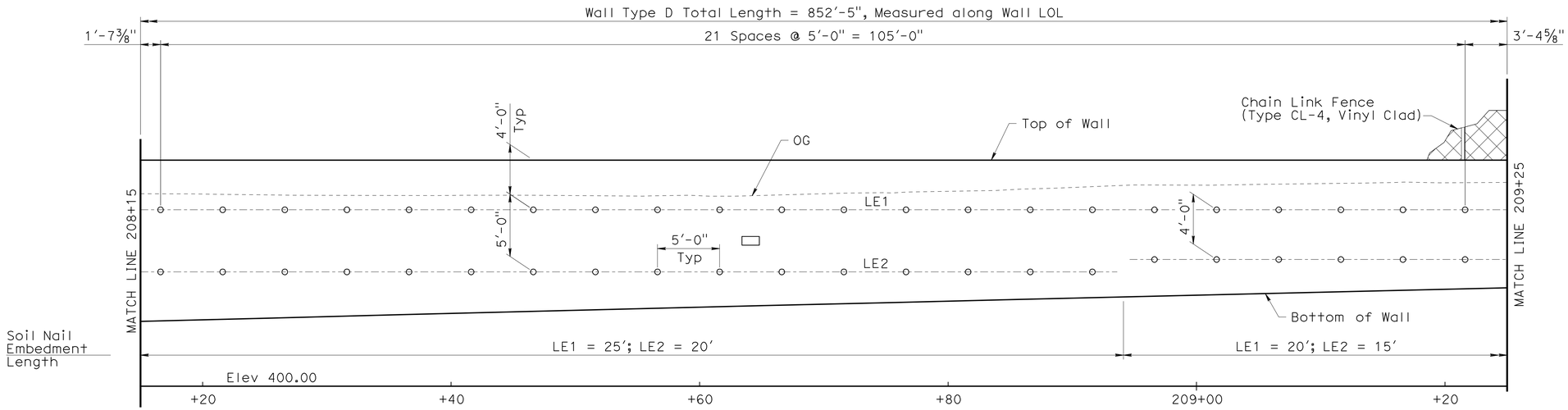

WALL TYPE D MIRROR ELEVATION

1" = 5'-0"

WALL TYPE D PROFILE

Station	Top of Wall Elevation	Bottom of Wall Elevation
208+20	418.20	405.35
208+40	418.20	405.86
208+60	418.20	406.36
208+80	418.20	406.85
209+00	418.20	407.33
209+20	418.20	407.80
209+40	418.20	408.26
209+60	418.20	408.72
209+80	418.20	409.16
210+00	418.20	409.59
210+20	418.20	410.02

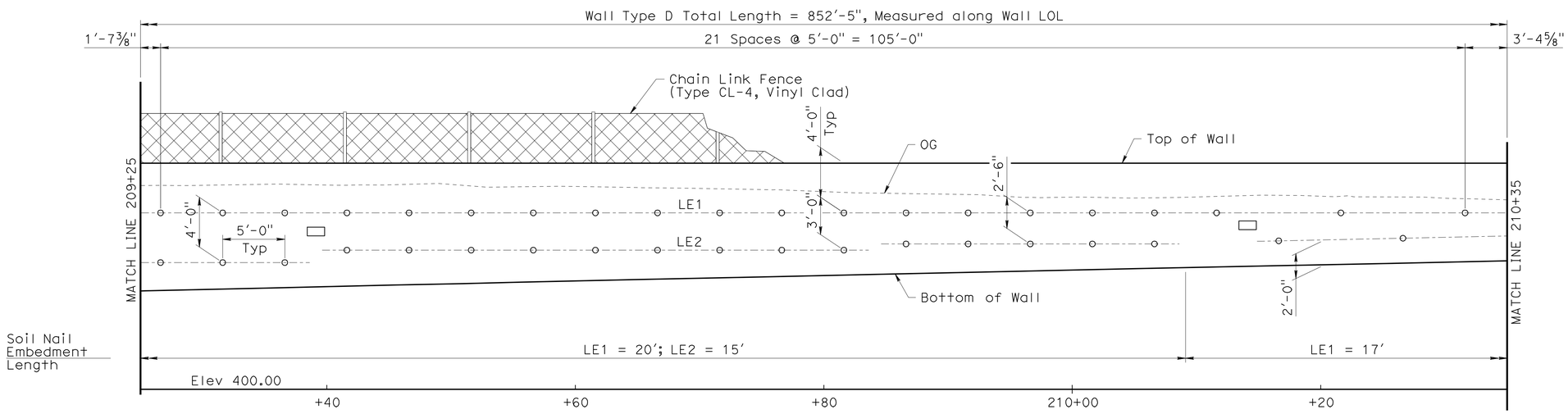

WALL TYPE D MIRROR ELEVATION

1" = 5'-0"

LEGEND

- ○ Indicates soil nail location with typical angle of inclination of 15 degrees
- ▭ Indicates proof test soil nail location; Location may be adjusted by the Engineer
- LE# Indicates soil nail profile line

Note:
The Contractor shall verify all controlling field dimensions before ordering or fabricating any material.

DESIGN OVERSIGHT Yiwei Hu
1/26/11
SIGN OFF DATE

	BY	CHECKED
DESIGN	D. Wang / E. Tang	G. Xu / R. Huang
DETAILS	X. Sun	G. Xu
QUANTITIES	D. Wang / D. Vang	W. Sennett

PREPARED FOR THE STATE OF CALIFORNIA DEPARTMENT OF TRANSPORTATION

Guoping Xu
PROJECT ENGINEER

BRIDGE NO. 33E0079
POST MILE 27.00

RETAINING WALL 400N
WALL TYPE D DETAILS No. 3

DESIGN DETAIL SHEET (ENGLISH) (REV. 06-01-09)

ORIGINAL SCALE IN INCHES FOR REDUCED PLANS 0 1 2 3

CU 0733
EA 297611

DISREGARD PRINTS BEARING EARLIER REVISION DATES

REVISION DATES (PRELIMINARY STAGE ONLY) 05/04/09 01/22/10 08/18/10 10/21/10 12/10/10

SHEET 15 OF 29

FILE => 33e0079-g-redt12.dgn

USERNAME => s124196 DATE PLOTTED => 21-NOV-2011 TIME PLOTTED => 15:28

DIST	COUNTY	ROUTE	POST MILES TOTAL PROJECT	SHEET No	TOTAL SHEETS
04	Ala	84	25.5/27.1	457	495

REGISTERED CIVIL ENGINEER 12/10/10 DATE

6-27-11
PLANS APPROVAL DATE

REGISTERED PROFESSIONAL ENGINEER DUAN WANG No. C 61943 Exp. 06/30/11 CIVIL STATE OF CALIFORNIA

The State of California or its officers or agents shall not be responsible for the accuracy or completeness of scanned copies of this plan sheet.

ALAMEDA COUNTY TRANSPORTATION IMPROVEMENT AUTHORITY (ACTIA)
1333 BROADWAY, SUITE 300
OAKLAND, CA 94612

MGE ENGINEERING, INC.
7415 GREENHAVEN DRIVE, SUITE 100
SACRAMENTO, CALIFORNIA 95831

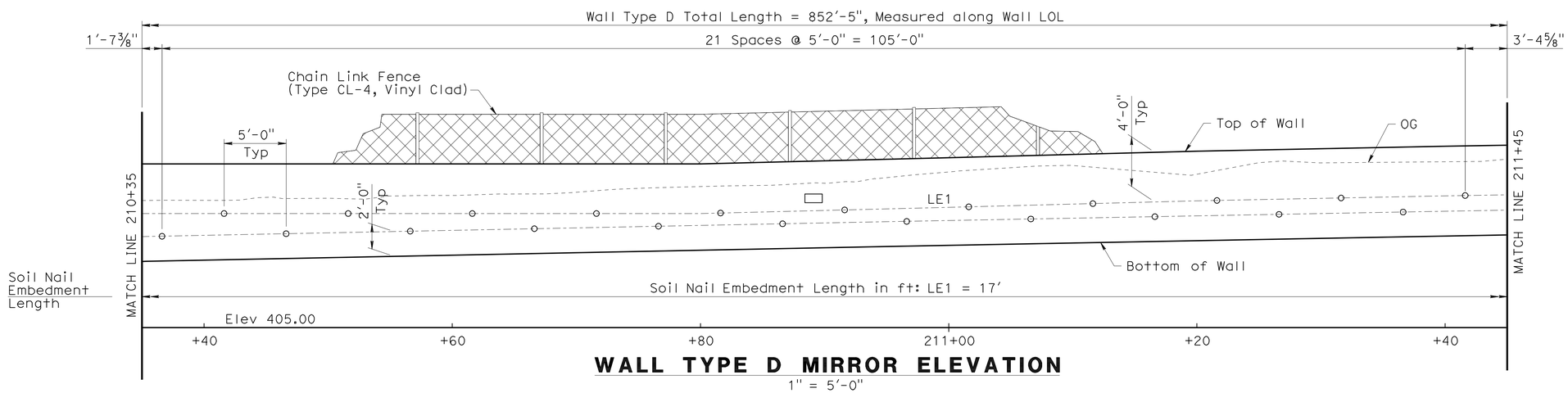

WALL TYPE D MIRROR ELEVATION

1" = 5'-0"

WALL TYPE D PROFILE

Station	Top of Wall Elevation	Bottom of Wall Elevation
210+40	418.20	410.44
210+60	418.20	410.84
210+80	418.20	411.24
211+00	418.70	411.63
211+20	419.22	412.01
211+40	419.62	412.38
211+60	419.99	412.74
211+80	419.91	413.09
212+00	419.86	413.44
212+20	419.79	413.77
212+25.325	419.81	413.86

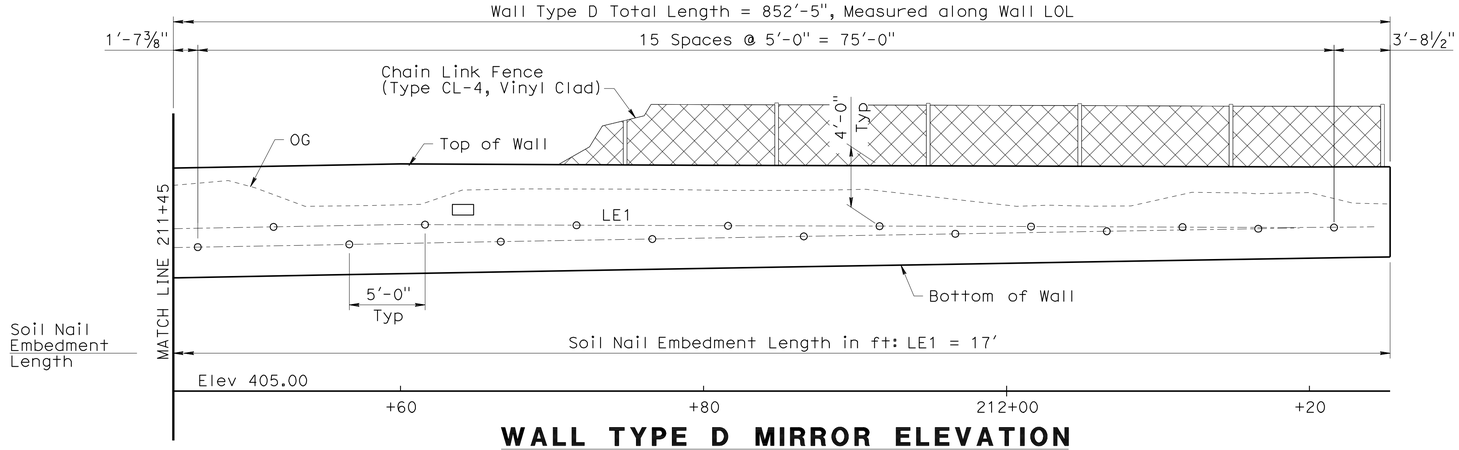

WALL TYPE D MIRROR ELEVATION

1" = 5'-0"

LEGEND

- ○ Indicates soil nail location with typical angle of inclination of 15 degrees
- ▭ Indicates proof test soil nail location; Location may be adjusted by the Engineer
- LE# Indicates soil nail profile line

Note:
The Contractor shall verify all controlling field dimensions before ordering or fabricating any material.

DESIGN OVERSIGHT Yiwei Hu
1/26/11
SIGN OFF DATE

	BY	CHECKED
DESIGN	D. Wang / E. Tang	G. Xu / R. Huang
DETAILS	X. Sun	G. Xu
QUANTITIES	D. Wang / D. Vang	W. Sennett

PREPARED FOR THE STATE OF CALIFORNIA DEPARTMENT OF TRANSPORTATION

Guoping Xu
PROJECT ENGINEER

BRIDGE NO. 33E0079
POST MILE 27.00

RETAINING WALL 400N
WALL TYPE D DETAILS No. 4

DESIGN DETAIL SHEET (ENGLISH) (REV. 06-01-09)

ORIGINAL SCALE IN INCHES FOR REDUCED PLANS 0 1 2 3

CU 0733
EA 297611

DISREGARD PRINTS BEARING EARLIER REVISION DATES

REVISION DATES (PRELIMINARY STAGE ONLY) 05/04/09 01/22/10 08/18/10 10/22/10 12/10/10

SHEET 16 OF 29

FILE => 33e0079-g-redt13.dgn

USERNAME => s124196 DATE PLOTTED => 21-NOV-2011 TIME PLOTTED => 15:28

DIST	COUNTY	ROUTE	POST MILES TOTAL PROJECT	SHEET No	TOTAL SHEETS
04	Ala	84	25.5/27.1	458	495

REGISTERED CIVIL ENGINEER 12/10/10 DATE

6-27-11
PLANS APPROVAL DATE

REGISTERED PROFESSIONAL ENGINEER DUAN WANG No. C 61943 Exp. 06/30/11 CIVIL STATE OF CALIFORNIA

The State of California or its officers or agents shall not be responsible for the accuracy or completeness of scanned copies of this plan sheet.

ALAMEDA COUNTY TRANSPORTATION IMPROVEMENT AUTHORITY (ACTIA)
1333 BROADWAY, SUITE 300
OAKLAND, CA 94612

MGE ENGINEERING, INC.
7415 GREENHAVEN DRIVE, SUITE 100
SACRAMENTO, CALIFORNIA 95831

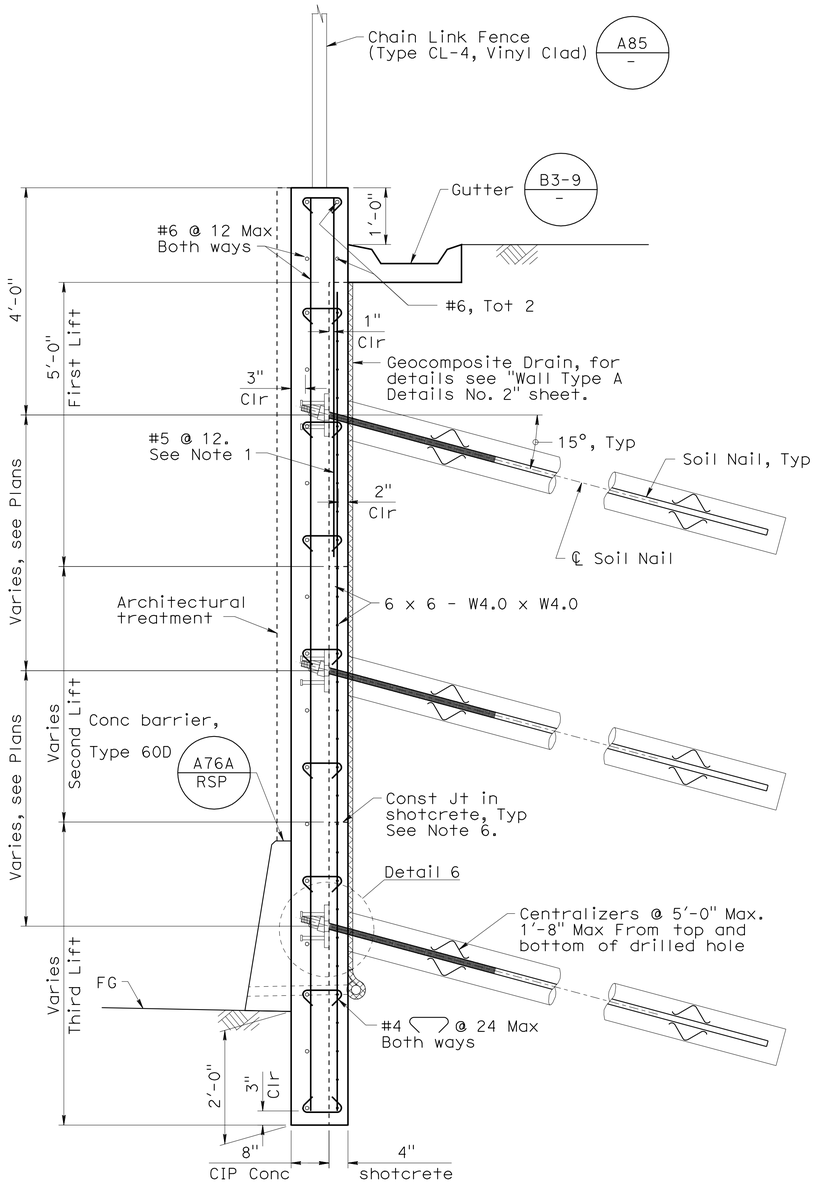

WALL TYPE D TYPICAL SECTION

3/4" = 1'-0"

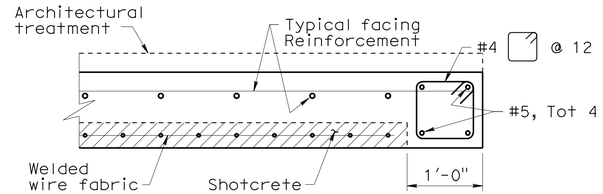

END WALL DETAIL

1" = 1'-0"

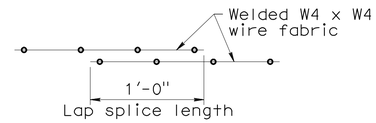

LAP SPLICE

1 1/2" = 1'-0"

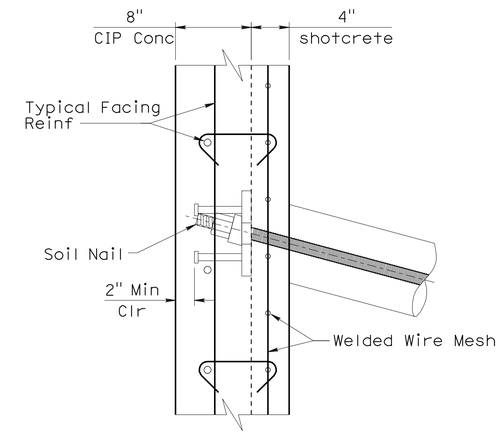

DETAIL 6

1 1/2" = 1'-0"

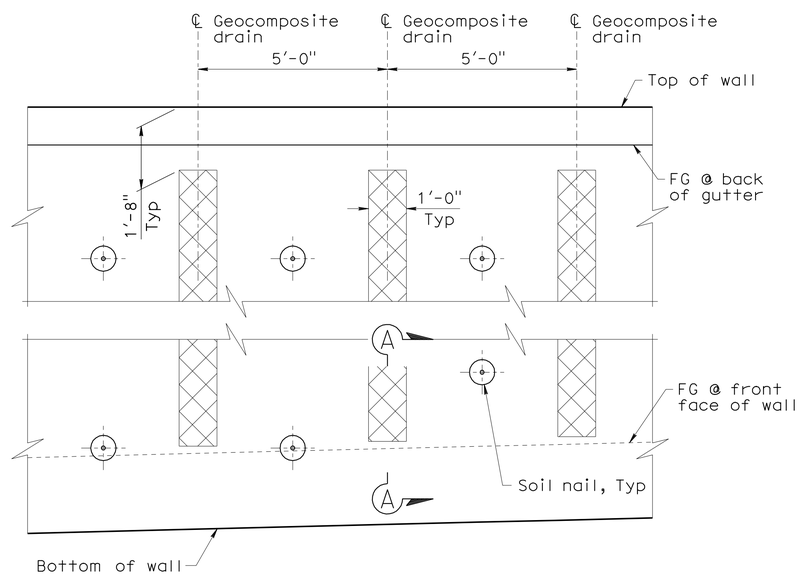

TYPICAL SOIL NAIL AND DRAINAGE ELEVATION

1/2" = 1'-0"

LEGEND

- Structural Excavation
- Structural Backfill
- Roadway Excavation

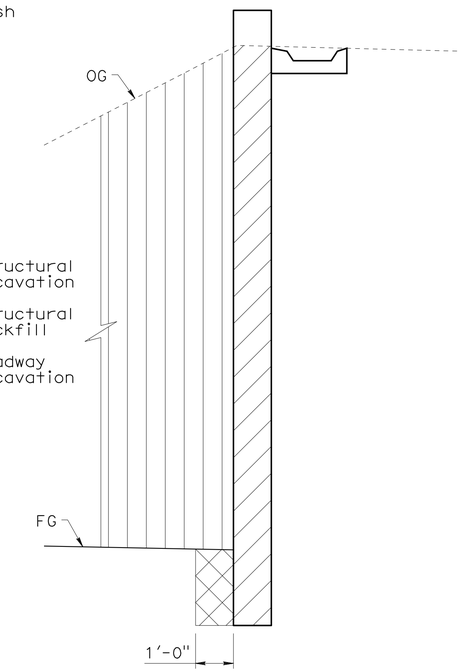

WALL TYPE D EXCAVATION AND BACKFILL

No Scale

Notes:

1. #5 reinforcement bar to extend 2'-6" below Soil Nail Profile line LE1.
2. The 1'-0" geocomposite drains shall be placed vertically at mid bay between soil nails. Must be continuous with minimum 1'-0" lapping at splices.
3. For the CIP concrete the rebar cover shall be minimum of 3".
4. Bottom of wall to be placed against undisturbed material.
5. Adjust geocomposite drain to clear test soil nails.
6. The vertical and horizontal construction joint in the shotcrete Layer shall be located a minimum of 1'-6" from adjacent soil nail row and columns.
7. For "Detail 1" & "Section A-A", see "Wall Type A Details No. 2" sheet similar.

Note:
The Contractor shall verify all controlling field dimensions before ordering or fabricating any material.

DESIGN OVERSIGHT Yiwei Hu
1/26/11
SIGN OFF DATE

	BY	CHECKED
DESIGN	D. Wang / E. Tang	G. Xu / R. Huang
DETAILS	X. Sun	G. Xu
QUANTITIES	D. Wang / D. Vang	W. Sennett

PREPARED FOR THE STATE OF CALIFORNIA DEPARTMENT OF TRANSPORTATION

Guoping Xu
PROJECT ENGINEER

BRIDGE NO. 33E0079
POST MILE 27.00

RETAINING WALL 400N
WALL TYPE D DETAILS No. 5

DESIGN DETAIL SHEET (ENGLISH) (REV. 06-01-09)

ORIGINAL SCALE IN INCHES FOR REDUCED PLANS 0 1 2 3

CU 0733
EA 297611

DISREGARD PRINTS BEARING EARLIER REVISION DATES

REVISION DATES (PRELIMINARY STAGE ONLY) 05/07/09 01/22/10 08/13/10 10/21/10 12/10/10

SHEET 17 OF 29

FILE => 33e0079-g-redt14.dgn

USERNAME => s124496 DATE PLOTTED => 21-NOV-2011 TIME PLOTTED => 15:28

DIST	COUNTY	ROUTE	POST MILES TOTAL PROJECT	SHEET No	TOTAL SHEETS
04	Ala	84	25.5/27.1	459	495

REGISTERED CIVIL ENGINEER 12/10/10 DATE

6-27-11
PLANS APPROVAL DATE

REGISTERED PROFESSIONAL ENGINEER DUAN WANG No. C 61943 Exp. 06/30/11 CIVIL STATE OF CALIFORNIA

The State of California or its officers or agents shall not be responsible for the accuracy or completeness of scanned copies of this plan sheet.

ALAMEDA COUNTY TRANSPORTATION IMPROVEMENT AUTHORITY (ACTIA)
1333 BROADWAY, SUITE 300
OAKLAND, CA 94612

MGE ENGINEERING, INC.
7415 GREENHAVEN DRIVE, SUITE 100
SACRAMENTO, CALIFORNIA 95831

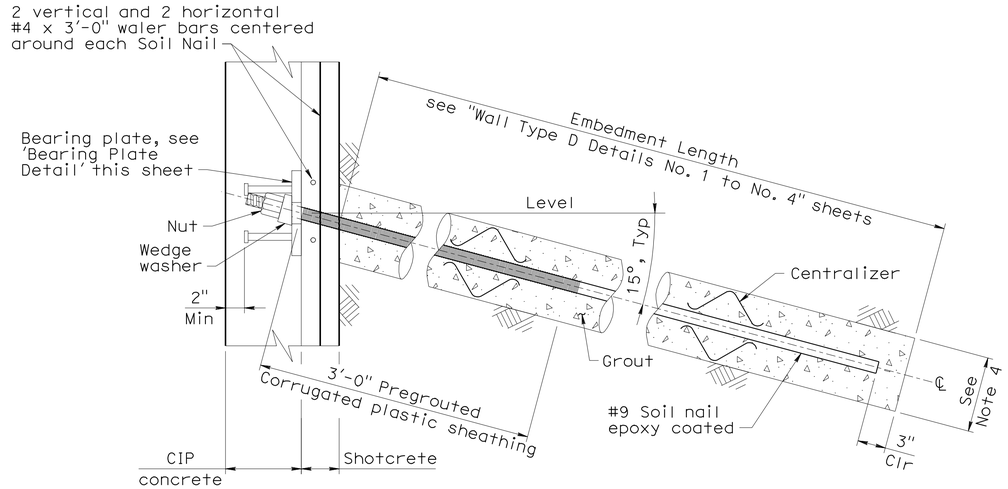

SOIL NAIL ASSEMBLY DETAIL

1 1/2" = 1'-0"

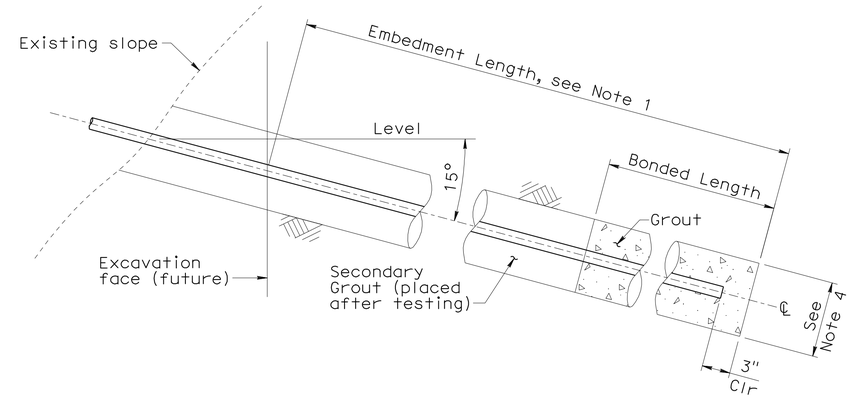

VERIFICATION TEST SOIL NAIL ASSEMBLY DETAIL

1 1/2" = 1'-0"

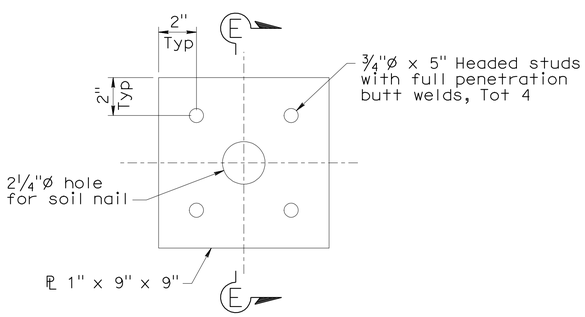

BEARING PLATE DETAIL

3" = 1'-0"

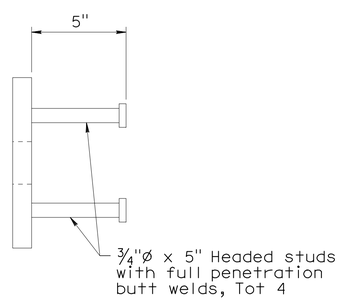

SECTION E-E

3" = 1'-0"

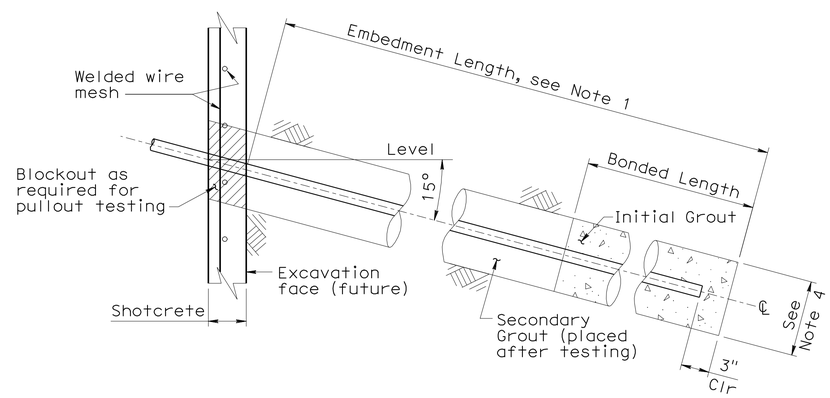

PROOF TEST SOIL NAIL ASSEMBLY DETAIL

1 1/2" = 1'-0"

Notes:

1. Embedment length, of Proof Test Nails and Verification Test Nails shall be equal to 2/3 of the embedment length of adjacent soil nail assembly, but not less than 12 ft.
2. Total length of the Proof Test Soil Nail Assembly equals to the embedment length plus the length required for jacking equipment.
3. For location of Proof Test Soil Nail Assemblies, see "Wall Type D Details No. 1" to "Wall Type D Details No. 4" sheet. Additional Proof Test Soil Nails will be installed and tested per Special Provisions.
4. Diameter of drilled hole will be determined by contractor.
5. For bonded length, see Special Provisions.
6. Not all Reinforcement shown, see "Wall Type D Details No. 5" sheet.

Note:
The Contractor shall verify all controlling field dimensions before ordering or fabricating any material.

DESIGN OVERSIGHT Yiwei Hu
1/26/11
SIGN OFF DATE

	BY	CHECKED
DESIGN	D. Wang / E. Tang	G. Xu / R. Huang
DETAILS	X. Sun	G. Xu
QUANTITIES	D. Wang / D. Vang	W. Sennett

PREPARED FOR THE STATE OF CALIFORNIA DEPARTMENT OF TRANSPORTATION

Guoping Xu
PROJECT ENGINEER

BRIDGE NO. 33E0079
POST MILE 27.00

RETAINING WALL 400N
WALL TYPE D DETAILS No. 6

DESIGN DETAIL SHEET (ENGLISH) (REV. 06-01-09)

ORIGINAL SCALE IN INCHES FOR REDUCED PLANS 0 1 2 3

CU 0733
EA 297611

DISREGARD PRINTS BEARING EARLIER REVISION DATES

REVISION DATES (PRELIMINARY STAGE ONLY) 05/04/09 01/22/10 08/18/10 10/21/10 12/10/10

SHEET 18 OF 29

FILE => 33e0079-g-redt15.dgn

USERNAME => s124496 DATE PLOTTED => 21-NOV-2011 TIME PLOTTED => 15:28

DIST.	COUNTY	ROUTE	POST MILES TOTAL PROJECT	SHEET NO.	TOTAL SHEETS
04	Ala	84	25.5/27.1	460	495

REGISTERED CIVIL ENGINEER 12/10/10 DATE

6-27-11
PLANS APPROVAL DATE

REGISTERED PROFESSIONAL ENGINEER DUAN WANG No. C 61943 Exp. 06/30/11 CIVIL STATE OF CALIFORNIA

The State of California or its officers or agents shall not be responsible for the accuracy or completeness of electronic copies of this plan sheet.

ALAMEDA COUNTY TRANSPORTATION IMPROVEMENT AUTHORITY (ACTIA)
1333 BROADWAY, SUITE 300
OAKLAND, CA 94612

MGE ENGINEERING, INC.
7415 GREENHAVEN DRIVE, SUITE 100
SACRAMENTO, CALIFORNIA 95831

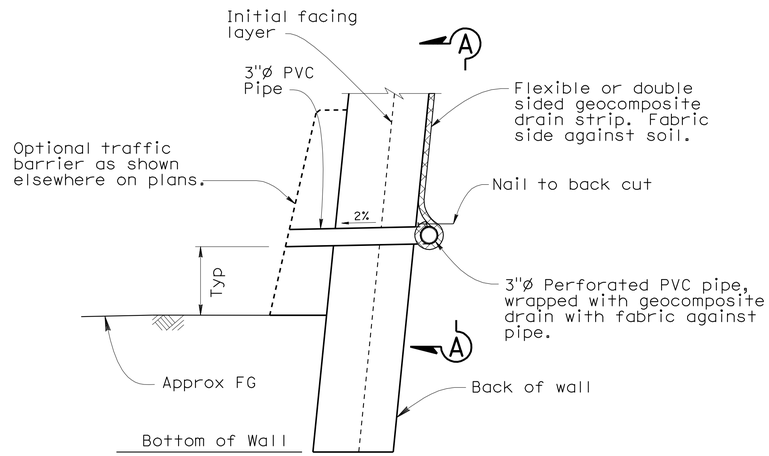

WALL DRAIN DETAIL AT WEEPHOLE OPTION A

No scale

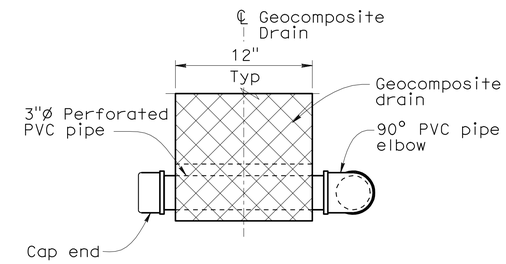

VIEW A-A

No scale

NOTES:

1. Elevation of drains and weepholes as shown elsewhere on plans.

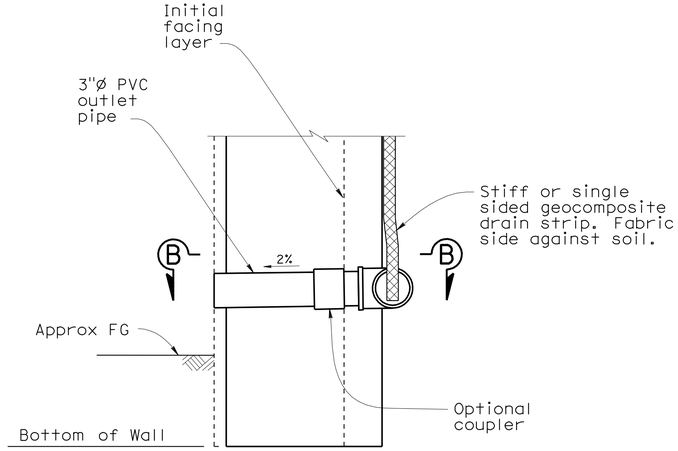

WALL DRAIN DETAIL AT WEEPHOLE OPTION B

No scale

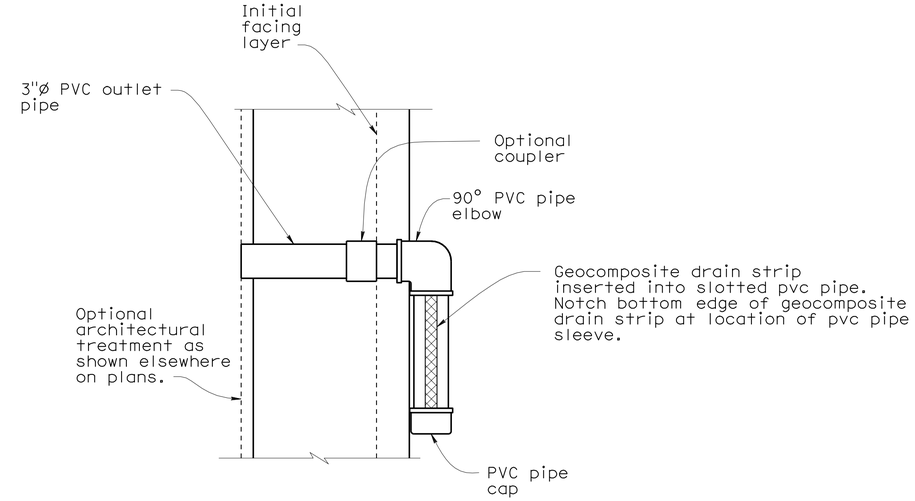

VIEW B-B

No Scale

STANDARD DRAWING

FILE NO. xs12-021e

APPROVED BY K. GRISWELL
RESPONSIBLE TECHNICAL SPECIALIST
APPROVAL DATE

RELEASED BY ROBERTO LACALLE
RESPONSIBLE OFFICE CHIEF
RELEASE DATE

STATE OF CALIFORNIA DEPARTMENT OF TRANSPORTATION

DIVISION OF ENGINEERING SERVICES

BRIDGE NO.

POST MILE

RETAINING WALL 400N
WALL DRAIN DETAILS

DS OSD 2147A (ENGLISH STANDARD DRAWING "XS" BORDER REV. 01/11/08)

ORIGINAL SCALE IN INCHES FOR REDUCED PLANS 0 1 2 3

CU
EA

DISREGARD PRINTS BEARING EARLIER REVISION DATES

REVISION DATES (PRELIMINARY STAGE ONLY) 12/10/10

SHEET 19 OF 29

FILE => 33e0079-g-redt16.dgn

USERNAME => s124496 DATE PLOTTED => 21-NOV-2011 TIME PLOTTED => 15:28

DIST	COUNTY	ROUTE	POST MILES TOTAL PROJECT	SHEET No	TOTAL SHEETS
04	Ala	84	25.5/27.1	461	495

REGISTERED CIVIL ENGINEER 12/10/10 DATE

6-27-11
PLANS APPROVAL DATE

REGISTERED PROFESSIONAL ENGINEER DUAN WANG No. C 61943 Exp. 06/30/11 CIVIL STATE OF CALIFORNIA

The State of California or its officers or agents shall not be responsible for the accuracy or completeness of scanned copies of this plan sheet.

ALAMEDA COUNTY TRANSPORTATION IMPROVEMENT AUTHORITY (ACTIA)
1333 BROADWAY, SUITE 300
OAKLAND, CA 94612

MGE ENGINEERING, INC.
7415 GREENHAVEN DRIVE, SUITE 100
SACRAMENTO, CALIFORNIA 95831

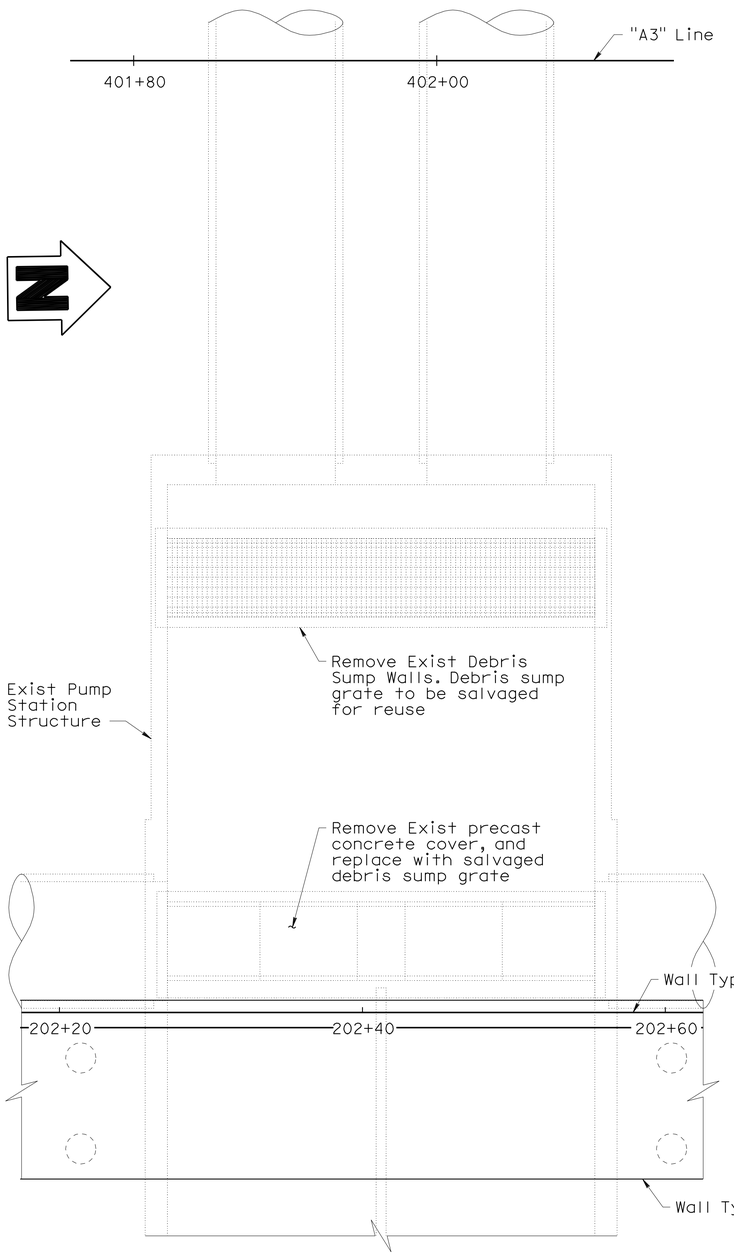

PART PLAN EXIST PUMP STATION
1" = 5'-0"

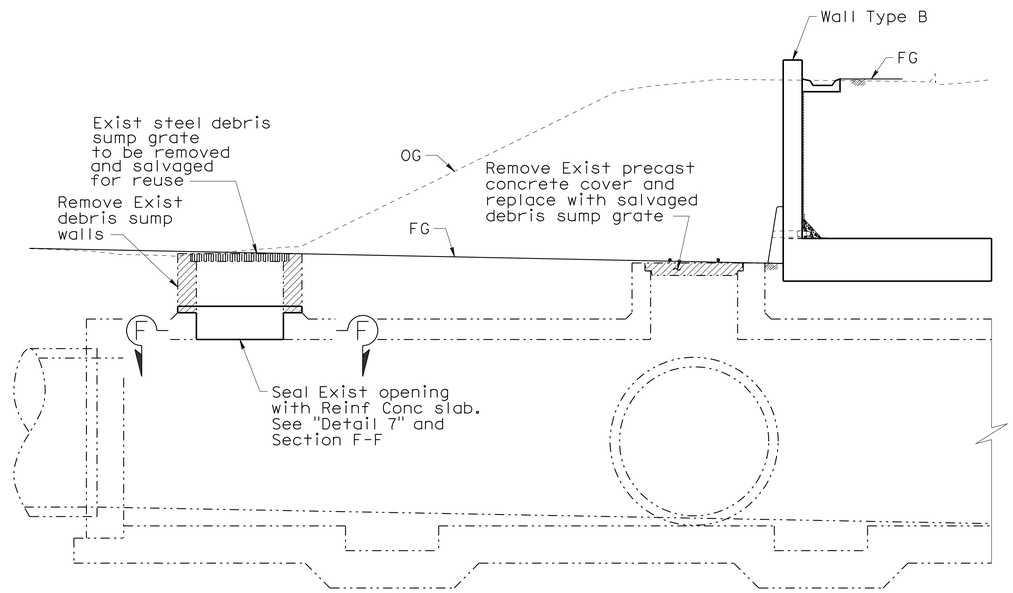

SECTION VIEW AT "A3" LINE STA 401+96.33
1/4" = 1'-0"

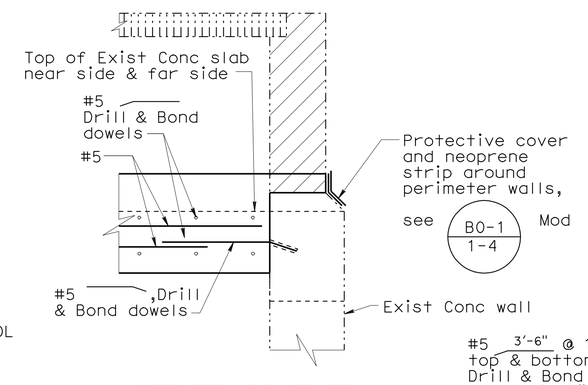

SECTION K-K
3/4" = 1'-0"

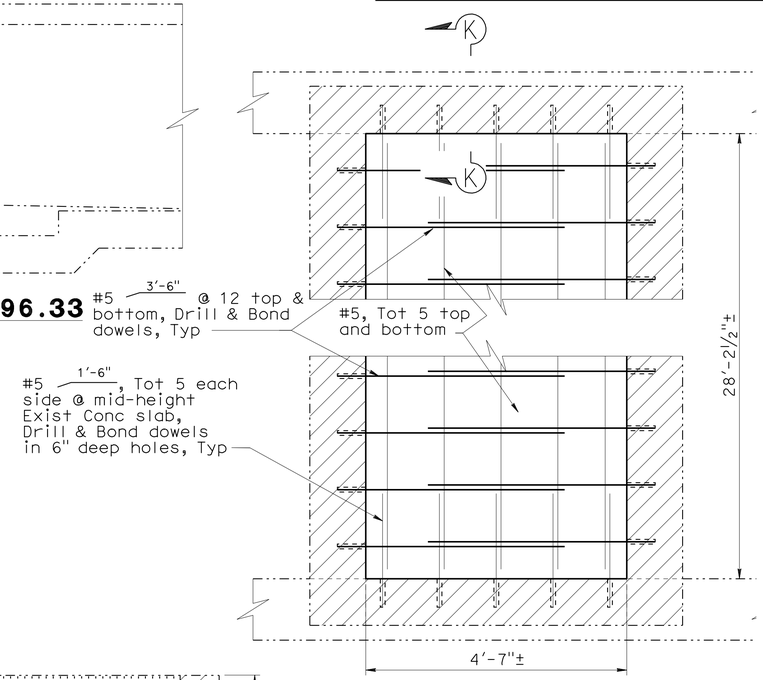

SECTION F-F
3/4" = 1'-0"

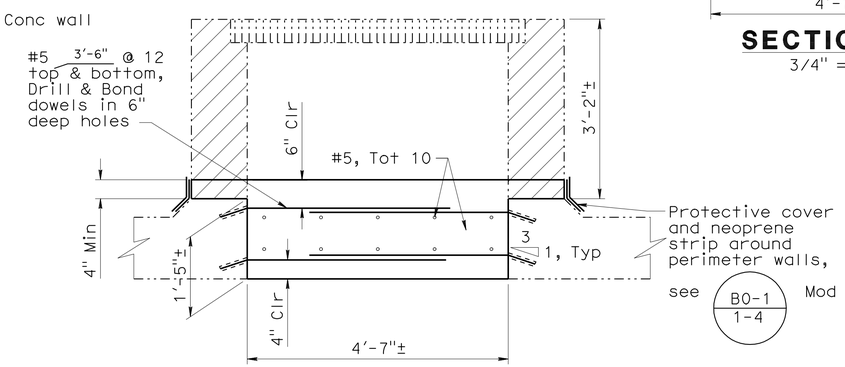

DETAIL 7
3/4" = 1'-0"

Note:
The Contractor shall verify all controlling field dimensions before ordering or fabricating any material.

DESIGN OVERSIGHT Yiwei Hu
1/26/11
SIGN OFF DATE

	BY	CHECKED
DESIGN	D. Wang / E. Tang	G. Xu / R. Huang
DETAILS	X. Sun	G. Xu
QUANTITIES	D. Wang / D. Vang	W. Sennett

PREPARED FOR THE STATE OF CALIFORNIA DEPARTMENT OF TRANSPORTATION

Guoping Xu
PROJECT ENGINEER

BRIDGE NO. 33E0079
POST MILE 27.00

RETAINING WALL 400N
MISCELLANEOUS DETAILS No. 1

DESIGN DETAIL SHEET (ENGLISH) (REV. 06-01-09)

ORIGINAL SCALE IN INCHES FOR REDUCED PLANS 0 1 2 3

CU 0733
EA 297611

DISREGARD PRINTS BEARING EARLIER REVISION DATES

REVISION DATES (PRELIMINARY STAGE ONLY) 05/07/09 01/22/10 08/18/10 10/22/10 12/10/10

SHEET 20 OF 29

FILE => 33e0079-u-miscdt01.dgn

USERNAME => s124496 DATE PLOTTED => 21-NOV-2011 TIME PLOTTED => 15:28

DIST	COUNTY	ROUTE	POST MILES TOTAL PROJECT	SHEET No	TOTAL SHEETS
04	Ala	84	25.5/27.1	462	495

REGISTERED CIVIL ENGINEER 12/10/10 DATE

6-27-11
PLANS APPROVAL DATE

REGISTERED PROFESSIONAL ENGINEER DUAN WANG No. C 61943 Exp. 06/30/11 CIVIL STATE OF CALIFORNIA

The State of California or its officers or agents shall not be responsible for the accuracy or completeness of scanned copies of this plan sheet.

ALAMEDA COUNTY TRANSPORTATION IMPROVEMENT AUTHORITY (ACTIA)
1333 BROADWAY, SUITE 300
OAKLAND, CA 94612

MGE ENGINEERING, INC.
7415 GREENHAVEN DRIVE, SUITE 100
SACRAMENTO, CALIFORNIA 95831

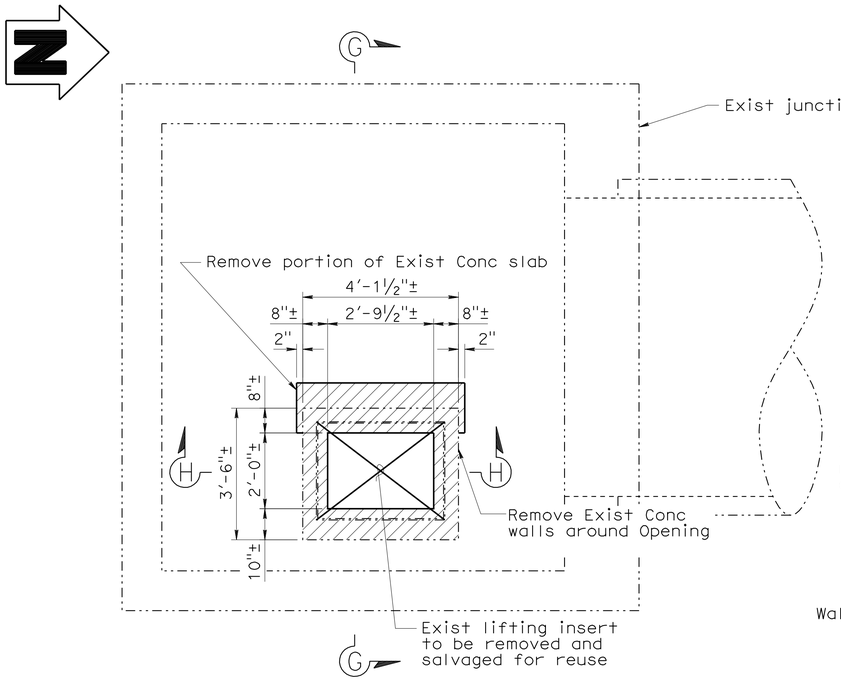

CONCRETE REMOVAL DETAIL - JUNCTION BOX #2
1/2 " = 1'-0"

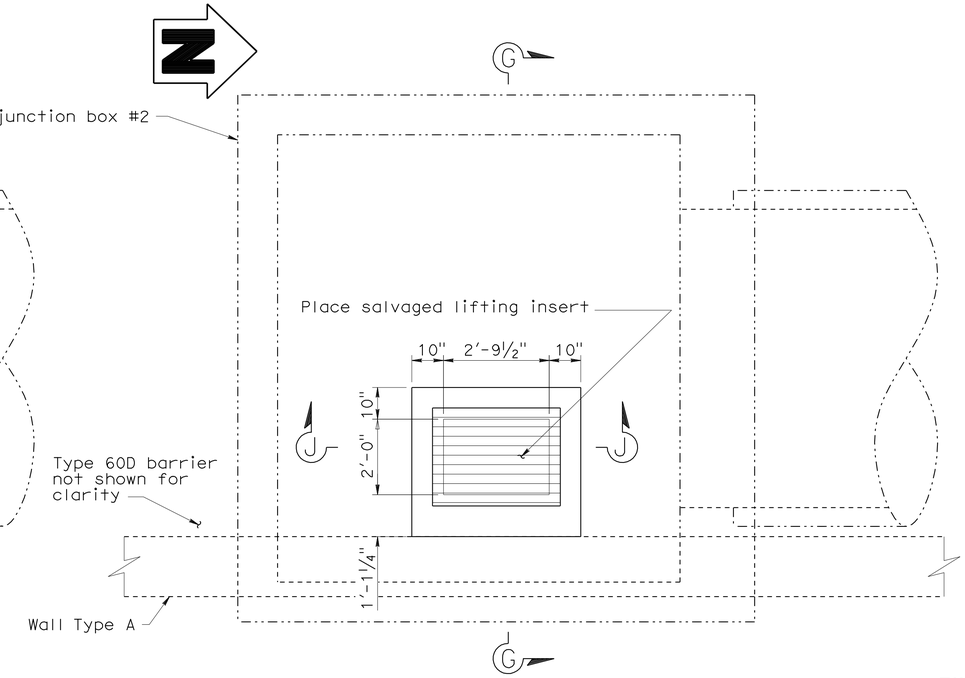

PLAN VIEW - JUNCTION BOX #2 AT "A3" LINE STA 400+96.70
1/2 " = 1'-0"

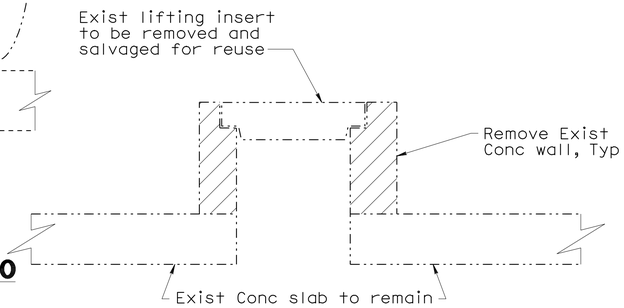

SECTION H-H (REMOVAL)
3/4" = 1'-0"

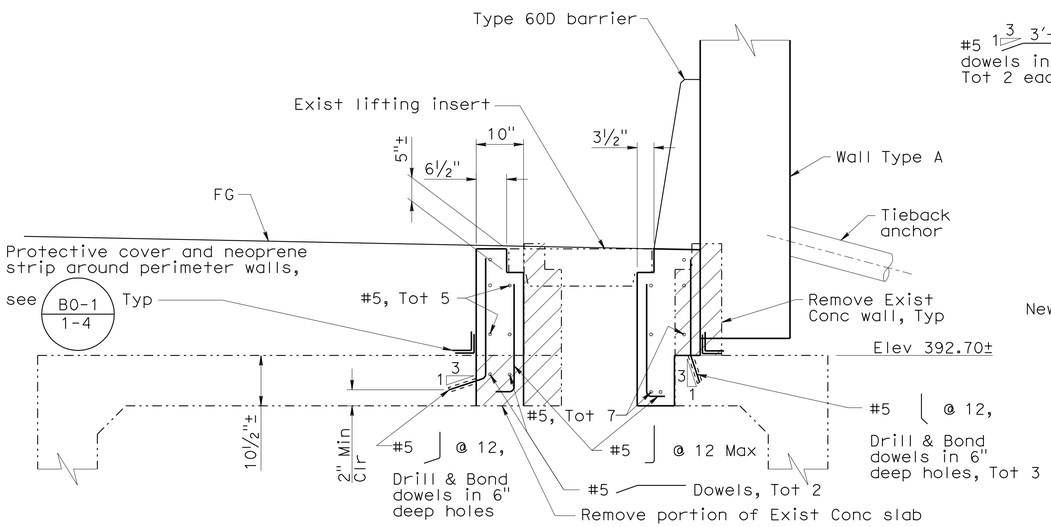

SECTION G-G
3/4" = 1'-0"

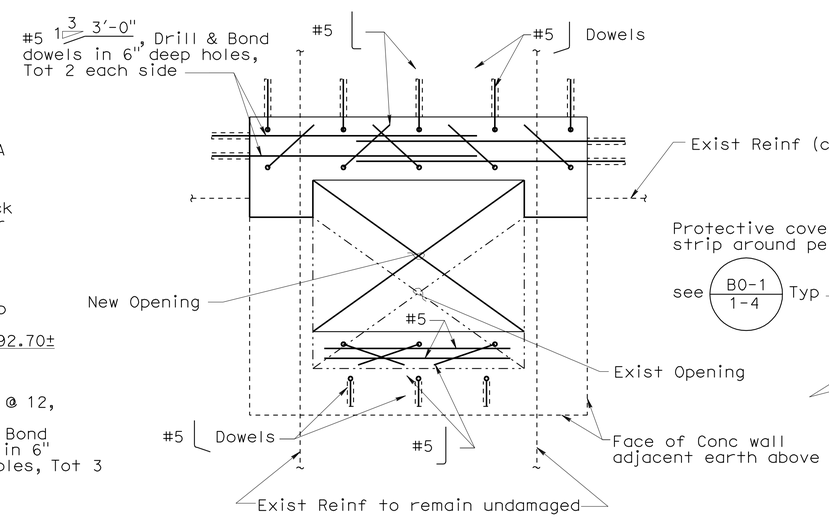

PLAN - ROOF SLAB
1" = 1'-0"

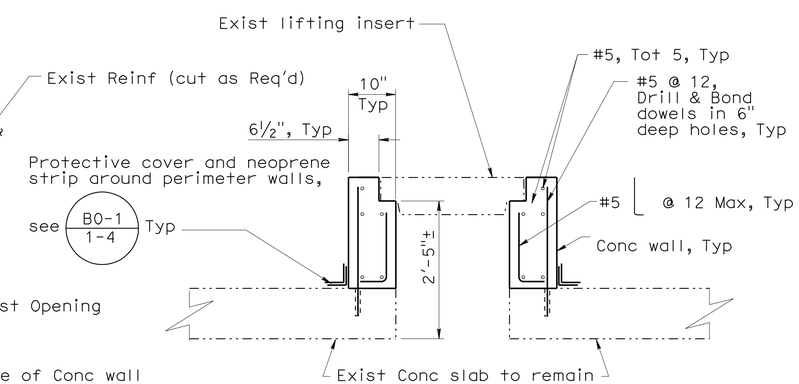

SECTION J-J (NEW WALLS)
3/4" = 1'-0"

Note:
The Contractor shall verify all controlling field dimensions before ordering or fabricating any material.

DESIGN OVERSIGHT Yiwei Hu
1/26/11
SIGN OFF DATE

	BY	CHECKED
DESIGN	D. Wang / E. Tang	G. Xu / R. Huang
DETAILS	X. Sun	G. Xu
QUANTITIES	D. Wang / D. Vang	W. Sennett

PREPARED FOR THE STATE OF CALIFORNIA DEPARTMENT OF TRANSPORTATION

Guoping Xu
PROJECT ENGINEER

BRIDGE NO. 33E0079
POST MILE 27.00

RETAINING WALL 400N
MISCELLANEOUS DETAILS No. 2

DESIGN DETAIL SHEET (ENGLISH) (REV. 06-01-09)

ORIGINAL SCALE IN INCHES FOR REDUCED PLANS 0 1 2 3

CU 0733
EA 297611

DISREGARD PRINTS BEARING EARLIER REVISION DATES

REVISION DATES (PRELIMINARY STAGE ONLY) 05/04/09 01/22/10 08/18/10 10/21/10 12/10/10

SHEET 21 OF 29

FILE => 33e0079-u-miscdt02.dgn

USERNAME => s124496 DATE PLOTTED => 21-NOV-2011 TIME PLOTTED => 15:28

DIST	COUNTY	ROUTE	POST MILES TOTAL PROJECT	SHEET No	TOTAL SHEETS
04	Ala	84	25.5/27.1	463	495

REGISTERED CIVIL ENGINEER 12/10/10 DATE

6-27-11
PLANS APPROVAL DATE

REGISTERED PROFESSIONAL ENGINEER
DUAN WANG
No. C 61943
Exp. 06/30/11
CIVIL
STATE OF CALIFORNIA

The State of California or its officers or agents shall not be responsible for the accuracy or completeness of scanned copies of this plan sheet.

ALAMEDA COUNTY TRANSPORTATION IMPROVEMENT AUTHORITY (ACTIA)
1333 BROADWAY, SUITE 300
OAKLAND, CA 94612

MGE ENGINEERING, INC.
7415 GREENHAVEN DRIVE, SUITE 100
SACRAMENTO, CALIFORNIA 95831

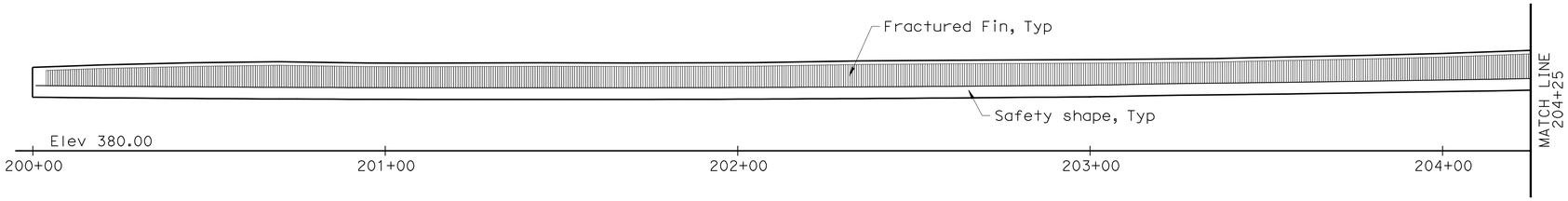

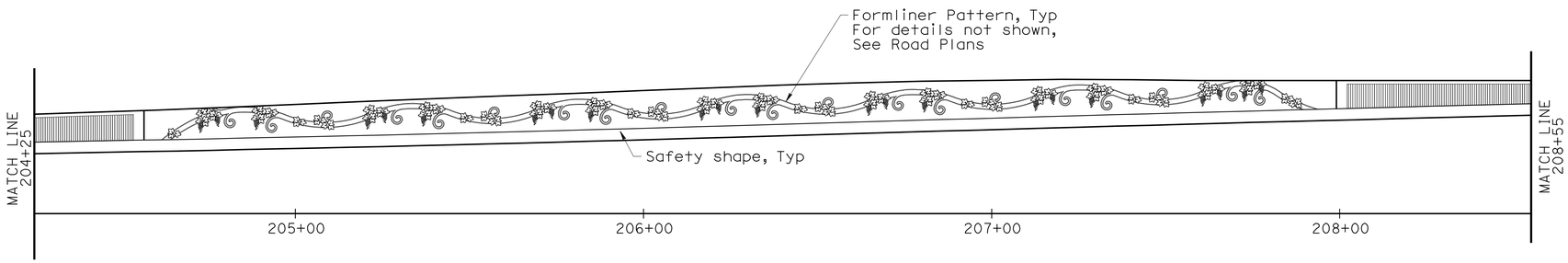

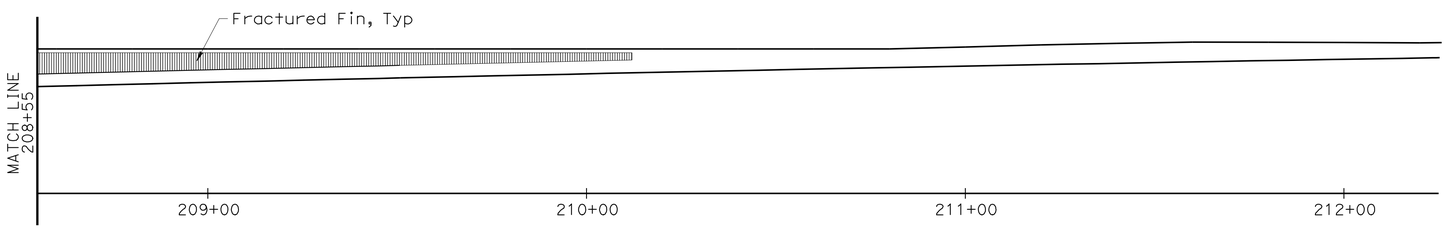

ARCHITECTURAL TREATMENT MIRROR DEVELOPED ELEVATION

1" = 20'-0"

Note:
The Contractor shall verify all controlling field dimensions before ordering or fabricating any material.

DESIGN OVERSIGHT Yiwei Hu
1/26/11
SIGN OFF DATE

	BY	CHECKED
DESIGN	D. Wang / E. Tang	G. Xu / R. Huang
DETAILS	X. Sun	G. Xu
QUANTITIES	D. Wang / D. Vang	W. Sennett

PREPARED FOR THE STATE OF CALIFORNIA DEPARTMENT OF TRANSPORTATION

Guoping Xu
PROJECT ENGINEER

BRIDGE NO. 33E0079
POST MILE 27.00

RETAINING WALL 400N
ARCHITECTURAL TREATMENT LAYOUT

DESIGN DETAIL SHEET (ENGLISH) (REV. 06-01-09)

ORIGINAL SCALE IN INCHES FOR REDUCED PLANS 0 1 2 3

CU 0733
EA 297611

DISREGARD PRINTS BEARING EARLIER REVISION DATES

REVISION DATES (PRELIMINARY STAGE ONLY) 05/01/09 01/22/10 08/18/10 10/21/10 12/10/10

SHEET 22 OF 29

FILE => 33e0079-u-miscdt03.dgn

USERNAME => s124436 DATE PLOTTED => 21-NOV-2011 TIME PLOTTED => 15:28

DIST	COUNTY	ROUTE	POST MILES TOTAL PROJECT	SHEET No	TOTAL SHEETS
04	Ala	84	25.5/27.1	464	495

REGISTERED CIVIL ENGINEER — DATE 3/18/10

6-27-11
PLANS APPROVAL DATE

REGISTERED PROFESSIONAL ENGINEER — Stephen Huang — No. C 42289 — Exp. 03/31/12 — CIVIL — STATE OF CALIFORNIA

The State of California or its officers or agents shall not be responsible for the accuracy or completeness of electronic copies of this plan sheet.

ALAMEDA COUNTY TRANSPORTATION IMPROVEMENT AUTHORITY (ACTIA)
1333 Broadway, Suite 300
Oakland, CA 94612

URS CORPORATION
1333 Broadway,
Suite 800
Oakland, CA 94612

REFERENCE: CALTRANS SOIL & ROCK LOGGING, CLASSIFICATION, AND PRESENTATION MANUAL (JUNE 2007)

CEMENTATION

Description	Criteria
Weak	Crumbles or breaks with handling or little finger pressure.
Moderate	Crumbles or breaks with considerable finger pressure.
Strong	Will not crumble or break with finger pressure.

CONSISTENCY OF COHESIVE SOILS

Description	Unconfined Compressive Strength (tsf)	Pocket Penetrometer Measurement (tsf)	Torvane Measurement (tsf)	Field Approximation
Very Soft	< 0.25	< 0.25	< 0.12	Easily penetrated several inches by fist
Soft	0.25 to 0.50	0.25 to 0.50	0.12 to 0.25	Easily penetrated several inches by thumb
Medium Stiff	0.50 to 1.0	0.50 to 1.0	0.25 to 0.50	Penetrated several inches by thumb with moderate effort
Stiff	1 to 2	1 to 2	0.50 to 1.0	Readily indented by thumb but penetrated only with great effort
Very Stiff	2 to 4	2 to 4	1.0 to 2.0	Readily indented by thumbnail
Hard	> 4.0	> 4.0	> 2.0	Indented by thumbnail with difficulty

BOREHOLE IDENTIFICATION

Symbol	Hole Type	Description
Size	A	Auger Boring
Size	R P	Rotary drilled boring Rotary percussion boring (air)
Size	R	Rotary drilled diamond core
Size	HD HA	Hand driven (1-inch soil tube) Hand Auger
●	D	Dynamic Cone Penetration Boring
▲	CPT	Cone Penetration Test (ASTM D 5778-95)
⬚	O	Other

Note: Size in inches.

PLASTICITY OF FINE-GRAINED SOILS

Description	Criteria
Nonplastic	A 1/8-inch thread cannot be rolled at any water content.
Low	The thread can barely be rolled and the lump cannot be formed when drier than the plastic limit.
Medium	The thread is easy to roll and not much time is required to reach the plastic limit. The thread cannot be rerolled after reaching the plastic limit. The lump crumbles when drier than the plastic limit.
High	It takes considerable time rolling and kneading to reach the plastic limit. The thread can be rerolled several times after reaching the plastic limit. The lump can be formed without crumbling when drier than the plastic limit.

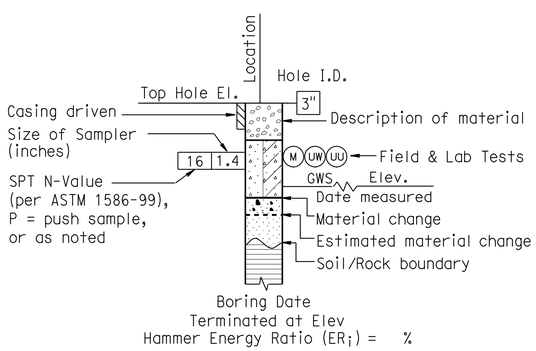

ROTARY BORING

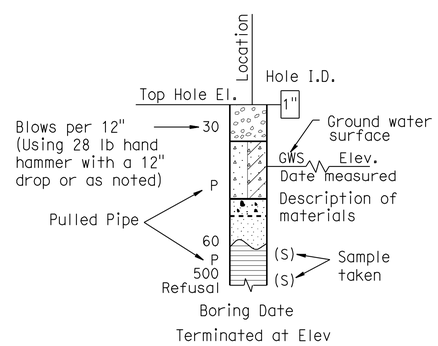

HAND BORING

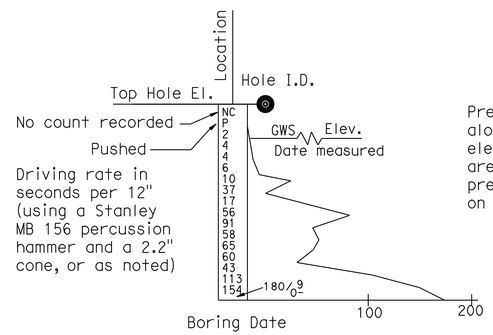

DYNAMIC CONE PENETRATION BORING

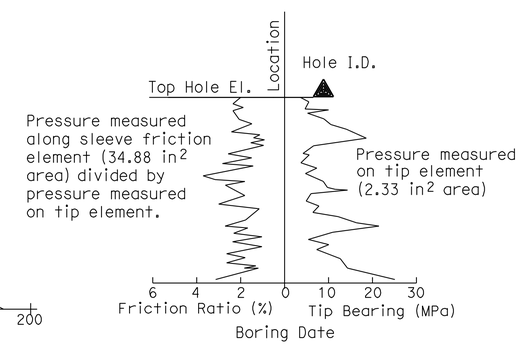

CONE PENETRATION TEST (CPT) SOUNDING

DESIGN OVERSIGHT Yiwei Hu	DRAWN BY	ANDREW CHEUNG	CHARLES RAMBO FIELD INVESTIGATION BY:
1/26/11 SIGN OFF DATE	CHECKED BY	MADHU THUMMALURU	DATE:

PREPARED FOR THE STATE OF CALIFORNIA DEPARTMENT OF TRANSPORTATION

Stephen Huang
PROJECT ENGINEER

BRIDGE NO. 33E0079
POST MILES 27.0

RETAINING WALL 400N
LOG OF TEST BORINGS (1 of 7)

GS CIVIL LOG OF TEST BORINGS SHEET (ENGLISH) (REV. 7/16/10)

ORIGINAL SCALE IN INCHES FOR REDUCED PLANS 0 1 2 3

UNIT: 0733
PROJECT NUMBER & PHASE: 04000205801 CONTRACT NO.: 04-297614

DISREGARD PRINTS BEARING EARLIER REVISION DATES

REVISION DATES

SHEET 23 OF 29

FILE => 33e0079-z-1tb01.dgn

USERNAME => s124436 DATE PLOTTED => 21-NOV-2011 TIME PLOTTED => 15:28

REFERENCE: CALTRANS SOIL & ROCK LOGGING, CLASSIFICATION, AND PRESENTATION MANUAL (JUNE 2007)

GROUP SYMBOLS AND NAMES

Graphic/Symbol	Group Names
GW	Well-graded GRAVEL Well-graded GRAVEL with SAND
GP	Poorly graded GRAVEL Poorly graded GRAVEL with SAND
GW-GM	Well-graded GRAVEL with SILT Well-graded GRAVEL with SILT and SAND
GW-GC	Well-graded GRAVEL with CLAY (or SILTY CLAY) Well-graded GRAVEL with CLAY and SAND (or SILTY CLAY and SAND)
GP-GM	Poorly graded GRAVEL with SILT Poorly graded GRAVEL with SILT and SAND
GP-GC	Poorly graded GRAVEL with CLAY (or SILTY CLAY) Poorly graded GRAVEL with CLAY and SAND (or SILTY CLAY and SAND)
GM	SILTY GRAVEL SILTY GRAVEL with SAND
GC	CLAYEY GRAVEL CLAYEY GRAVEL with SAND
GC-GM	SILTY, CLAYEY GRAVEL SILTY, CLAYEY GRAVEL with SAND
SW	Well-graded SAND Well-graded SAND with GRAVEL
SP	Poorly graded SAND Poorly graded SAND with GRAVEL
SW-SM	Well-graded SAND with SILT Well-graded SAND with SILT and GRAVEL
SW-SC	Well-graded SAND with CLAY (or SILTY CLAY) Well-graded SAND with CLAY and GRAVEL (or SILTY CLAY and GRAVEL)
SP-SM	Poorly graded SAND with SILT Poorly graded SAND with SILT and GRAVEL
SP-SC	Poorly graded SAND with CLAY (or SILTY CLAY) Poorly graded SAND with CLAY and GRAVEL (or SILTY CLAY and GRAVEL)
SM	SILTY SAND SILTY SAND with GRAVEL
SC	CLAYEY SAND CLAYEY SAND with GRAVEL
SC-SM	SILTY, CLAYEY SAND SILTY, CLAYEY SAND with GRAVEL
PT	PEAT
	COBBLES COBBLES and BOULDERS BOULDERS

Graphic/Symbol	Group Names
CL	Lean CLAY Lean CLAY with SAND Lean CLAY with GRAVEL SANDY lean CLAY SANDY lean CLAY with GRAVEL GRAVELLY lean CLAY GRAVELLY lean CLAY with SAND
CL-ML	SILTY CLAY SILTY CLAY with SAND SILTY CLAY with GRAVEL SANDY SILTY CLAY SANDY SILTY CLAY with GRAVEL GRAVELLY SILTY CLAY GRAVELLY SILTY CLAY with SAND
ML	SILT SILT with SAND SILT with GRAVEL SANDY SILT SANDY SILT with GRAVEL GRAVELLY SILT GRAVELLY SILT with SAND
OL	ORGANIC lean CLAY ORGANIC lean CLAY with SAND ORGANIC lean CLAY with GRAVEL SANDY ORGANIC lean CLAY SANDY ORGANIC lean CLAY with GRAVEL GRAVELLY ORGANIC lean CLAY GRAVELLY ORGANIC lean CLAY with SAND
OL	ORGANIC SILT ORGANIC SILT with SAND ORGANIC SILT with GRAVEL SANDY ORGANIC SILT SANDY ORGANIC SILT with GRAVEL GRAVELLY ORGANIC SILT GRAVELLY ORGANIC SILT with SAND
CH	Fat CLAY Fat CLAY with SAND Fat CLAY with GRAVEL SANDY fat CLAY SANDY fat CLAY with GRAVEL GRAVELLY fat CLAY GRAVELLY fat CLAY with SAND
MH	Elastic SILT Elastic SILT with SAND Elastic SILT with GRAVEL SANDY elastic SILT SANDY elastic SILT with GRAVEL GRAVELLY elastic SILT GRAVELLY elastic SILT with SAND
OH	ORGANIC fat CLAY ORGANIC fat CLAY with SAND ORGANIC fat CLAY with GRAVEL SANDY ORGANIC fat CLAY SANDY ORGANIC fat CLAY with GRAVEL GRAVELLY ORGANIC fat CLAY GRAVELLY ORGANIC fat CLAY with SAND
OH	ORGANIC elastic SILT ORGANIC elastic SILT with SAND ORGANIC elastic SILT with GRAVEL SANDY ORGANIC elastic SILT SANDY ORGANIC elastic SILT with GRAVEL GRAVELLY ORGANIC elastic SILT GRAVELLY ORGANIC elastic SILT with SAND
OL/OH	ORGANIC SOIL ORGANIC SOIL with SAND ORGANIC SOIL with GRAVEL SANDY ORGANIC SOIL SANDY ORGANIC SOIL with GRAVEL GRAVELLY ORGANIC SOIL GRAVELLY ORGANIC SOIL with SAND

FIELD AND LABORATORY TESTING

- (C) Consolidation (ASTM D 2435)
- (CL) Collapse Potential (ASTM D 5333)
- (CP) Compaction Curve (CTM 216)
- (CR) Corrosivity Testing (CTM 643, CTM 422, CTM 417)
- (CU) Consolidated Undrained Triaxial (ASTM D 4767)
- (DS) Direct Shear (ASTM D 3080)
- (EI) Expansion Index (ASTM D 4829)
- (M) Moisture Content (ASTM D 2216)
- (OC) Organic Content-% (ASTM D 2974)
- (P) Permeability (CTM 220)
- (PA) Particle Size Analysis (ASTM D 422)
- (PI) Plasticity Index (AASHTO T 90) Liquid Limit (AASHTO T 89)
- (PL) Point Load Index (ASTM D 5731)
- (PM) Pressure Meter
- (PP) Pocket Penetrometer
- (R) R-Value (CTM 301)
- (SE) Sand Equivalent (CTM 217)
- (SG) Specific Gravity (AASHTO T 100)
- (SL) Shrinkage Limit (ASTM D 427)
- (SW) Swell Potential (ASTM D 4546)
- (TV) Pocket Torvane
- (UC) Unconfined Compression-Soil (ASTM D 2166) Unconfined Compression-Rock (ASTM D 2938)
- (UU) Unconsolidated Undrained Triaxial (ASTM D 2850)
- (UW) Unit Weight (ASTM D 4767)
- (VS) Vane Shear (AASHTO T 223)

DIST	COUNTY	ROUTE	POST MILES TOTAL PROJECT	SHEET No	TOTAL SHEETS
04	Ala	84	25.5/27.1	465	495

REGISTERED CIVIL ENGINEER — DATE 1/4/11

6-27-11
PLANS APPROVAL DATE

REGISTERED PROFESSIONAL ENGINEER — Stephen Huang — No. C 42289 — Exp. 03/31/12 — CIVIL — STATE OF CALIFORNIA

The State of California or its officers or agents shall not be responsible for the accuracy or completeness of electronic copies of this plan sheet.

ALAMEDA COUNTY TRANSPORTATION IMPROVEMENT AUTHORITY (ACTIA)
1333 Broadway, Suite 300
Oakland, CA 94612

URS CORPORATION
1333 Broadway,
Suite 800
Oakland, CA 94612

APPARENT DENSITY OF COHESIONLESS SOILS

Description	SPT N_{60} (Blows / 12 inches)
Very loose	0 - 4
Loose	5 - 10
Medium Dense	11 - 30
Dense	31 - 50
Very Dense	> 50

MOISTURE

Description	Criteria
Dry	Absence of moisture, dusty, dry to the touch
Moist	Damp but no visible water
Wet	Visible free water, usually soil is below water table

PERCENT OR PROPORTION OF SOILS

Description	Criteria
Trace	Particles are present but estimated to be less than 5%
Few	5 to 10%
Little	15 to 25%
Some	30 to 45%
Mostly	50 to 100%

PARTICLE SIZE

Description		Size
Boulder		> 12"
Cobble		3" to 12"
Gravel	Coarse	3/4" to 3"
	Fine	No. 4 to 3/4"
Sand	Coarse	No. 10 to No. 4
	Medium	No. 40 to No. 10
	Fine	No. 200 to No. 40

DESIGN OVERSIGHT Yiwei Hu
1/26/11
SIGN OFF DATE

DRAWN BY ANDREW CHEUNG
CHECKED BY MADHU THUMMALURU

CHARLES RAMBO
FIELD INVESTIGATION BY:
DATE:

PREPARED FOR THE STATE OF CALIFORNIA DEPARTMENT OF TRANSPORTATION

Stephen Huang
PROJECT ENGINEER

BRIDGE NO. 33E0079
POST MILES 27.0

RETAINING WALL 400N
LOG OF TEST BORINGS (2 of 7)

GS CIVIL LOG OF TEST BORINGS SHEET (ENGLISH) (REV. 7/16/10)

ORIGINAL SCALE IN INCHES FOR REDUCED PLANS 0 1 2 3

UNIT: 0733
PROJECT NUMBER & PHASE: 04000205801 CONTRACT NO.: 04-297614

DISREGARD PRINTS BEARING EARLIER REVISION DATES

REVISION DATES

SHEET 24 OF 29

FILE => 33e0079-z-ltb02.dgn

USERNAME => s124496 DATE PLOTTED => 21-NOV-2011 TIME PLOTTED => 15:28

DIST	COUNTY	ROUTE	POST MILES TOTAL PROJECT	SHEET No	TOTAL SHEETS
04	Ala	84	25.5/27.1	466	495

REGISTERED CIVIL ENGINEER — DATE 1/4/11

6-27-11
PLANS APPROVAL DATE

REGISTERED PROFESSIONAL ENGINEER — Stephen Huang — No. C 42289 — Exp. 03/31/12 — CIVIL — STATE OF CALIFORNIA

The State of California or its officers or agents shall not be responsible for the accuracy or completeness of electronic copies of this plan sheet.

ALAMEDA COUNTY TRANSPORTATION IMPROVEMENT AUTHORITY (ACTIA)
1333 Broadway, Suite 300
Oakland, CA 94612

URS CORPORATION
1333 Broadway,
Suite 800
Oakland, CA 94612

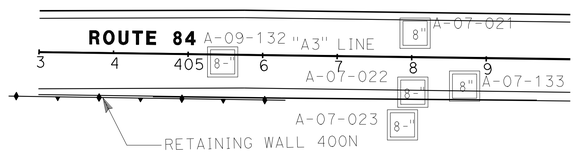

PLAN
Scale: 1"=100'

BENCH MARK:
B.M Elev. 415.27
Northing: 2063428.6750
Easting: 6181960.7750
$2\frac{1}{2}$" Brass disk set in concrete in well monument stamped "+",
at the intersection of Vineyard Avenue and Ruby Hill Drive

NOTE: This LOTB sheet was prepared in accordance with the Caltrans Soil & Rock Logging, Classification, and Presentation Manual (June 2007)

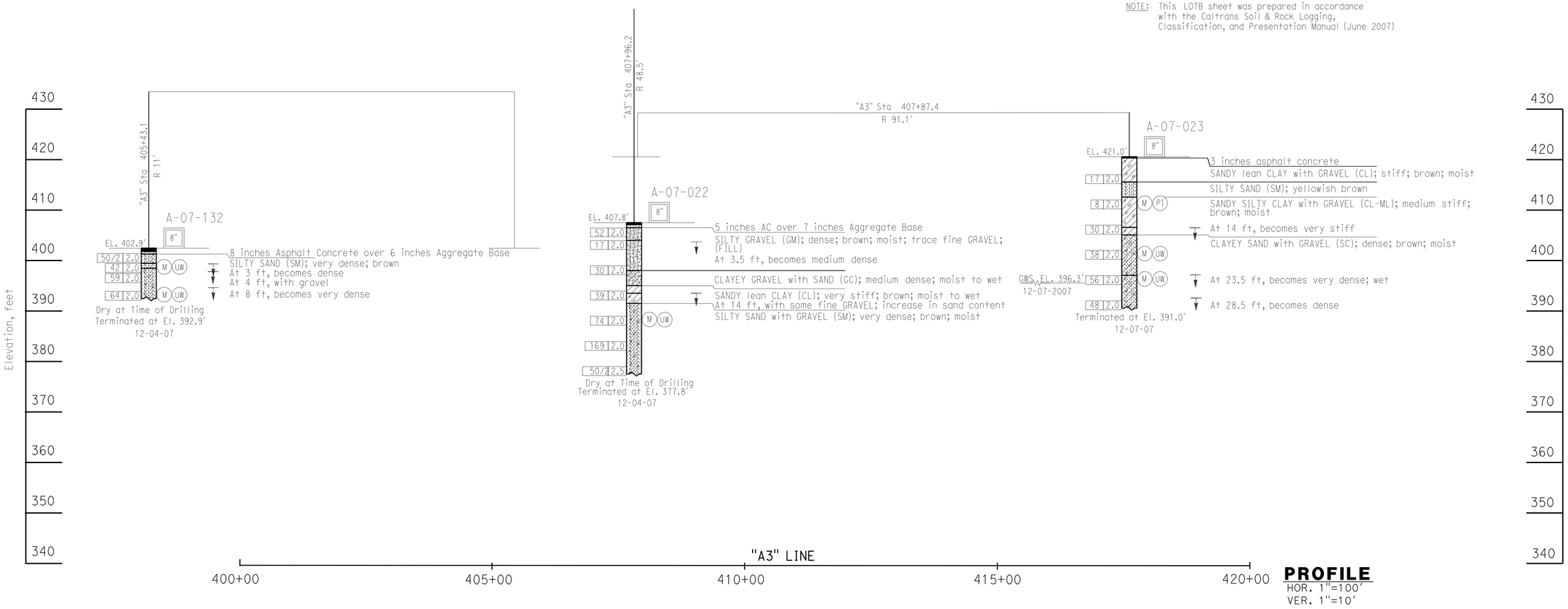

PROFILE
HOR. 1"=100'
VER. 1"=10'

DESIGN OVERSIGHT Yiwei Hu 1/26/11 SIGN OFF DATE	DRAWN BY	ANDREW CHEUNG	CHARLES RAMBO FIELD INVESTIGATION BY: DATE:	PREPARED FOR THE STATE OF CALIFORNIA DEPARTMENT OF TRANSPORTATION	Stephen Huang PROJECT ENGINEER
	CHECKED BY	MADHU THUMMALURU			

BRIDGE NO. 33E0079 — POST MILES 27.0

RETAINING WALL 400N
LOG OF TEST BORINGS (3 of 7)

GS CIVIL LOG OF TEST BORINGS SHEET (ENGLISH) (REV. 7/16/10)

ORIGINAL SCALE IN INCHES FOR REDUCED PLANS 0 1 2 3

UNIT: 0733
PROJECT NUMBER & PHASE: 04000205801 CONTRACT NO.: 04-297614

DISREGARD PRINTS BEARING EARLIER REVISION DATES

REVISION DATES — SHEET 25 OF 29

FILE => 33e0079-z-ltb03.dgn

USERNAME => s124496 DATE PLOTTED => 21-NOV-2011 TIME PLOTTED => 15:23

DIST	COUNTY	ROUTE	POST MILES TOTAL PROJECT	SHEET No	TOTAL SHEETS
04	Ala	84	25.5/27.1	467	495

REGISTERED CIVIL ENGINEER — DATE 1/4/11

6-27-11
PLANS APPROVAL DATE

REGISTERED PROFESSIONAL ENGINEER — Stephen Huang — No. C 42289 — Exp. 03/31/12 — CIVIL — STATE OF CALIFORNIA

The State of California or its officers or agents shall not be responsible for the accuracy or completeness of electronic copies of this plan sheet.

ALAMEDA COUNTY TRANSPORTATION IMPROVEMENT AUTHORITY (ACTIA)
1333 Broadway, Suite 300
Oakland, CA 94612

URS CORPORATION
1333 Broadway,
Suite 800
Oakland, CA 94612

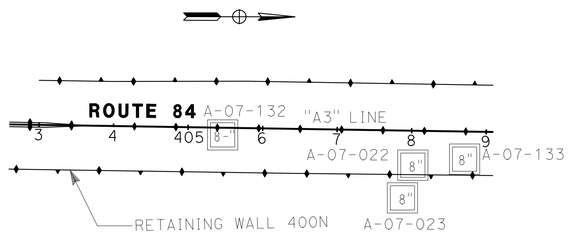

PLAN
Scale: 1"=100'

BENCH MARK:
B.M Elev. 415.27
Northing: 2063428.6750
Easting: 6181960.7750
$2\frac{1}{2}$" Brass disk set in concrete in well monument stamped "+",
at the intersection of Vineyard Avenue and Ruby Hill Drive

NOTE: This LOTB sheet was prepared in accordance with the Caltrans Soil & Rock Logging, Classification, and Presentation Manual (June 2007)

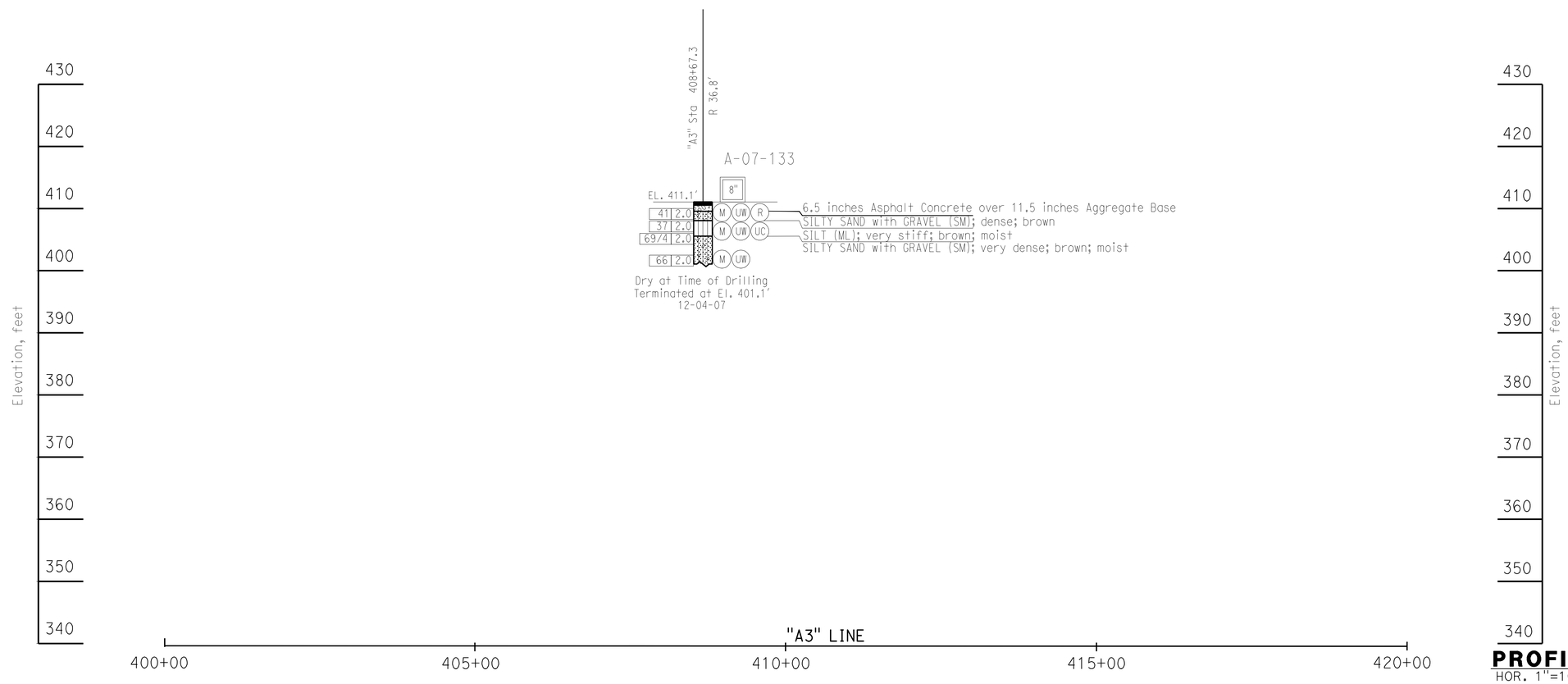

PROFILE
HOR. 1"=100'
VER. 1"=10'

DESIGN OVERSIGHT Yiwei Hu — 1/26/11 SIGN OFF DATE	DRAWN BY	ANDREW CHEUNG	CHARLES RAMBO FIELD INVESTIGATION BY:	PREPARED FOR THE STATE OF CALIFORNIA DEPARTMENT OF TRANSPORTATION	Stephen Huang PROJECT ENGINEER
	CHECKED BY	MADHU THUMMALURU	DATE:		

BRIDGE NO. 33E0079 — POST MILES 27.0

RETAINING WALL 400N
LOG OF TEST BORINGS (4 of 7)

GS CIVIL LOG OF TEST BORINGS SHEET (ENGLISH) (REV. 7/16/10)

ORIGINAL SCALE IN INCHES FOR REDUCED PLANS 0 1 2 3

UNIT: 0733
PROJECT NUMBER & PHASE: 0400020580 CONTRACT NO.: 04-297614

DISREGARD PRINTS BEARING EARLIER REVISION DATES

REVISION DATES — SHEET 26 OF 29

FILE => 33e0079-z-ltb04.dgn

USERNAME => s124436 DATE PLOTTED => 21-NOV-2011 TIME PLOTTED => 15:23

DIST	COUNTY	ROUTE	KILOMETER POST TOTAL PROJECT	SHEET NO.	TOTAL SHEETS
04	Ala	84		382	467

REGISTERED GEOTECHNICAL ENGINEER

PLANS APPROVAL DATE

CITY OF LIVERMORE
DEPARTMENT OF PUBLIC WORKS
3569 Pacific Avenue

GEOTECHNICAL CONSULTANTS, INC.
631 Howard Street, Ste. 320
San Francisco, CA 94105

The State of California or its officers or agents shall not be responsible for the accuracy or completeness of electronic copies of this plan sheet.

REGISTERED PROFESSIONAL ENGINEER — No. 2391 — Exp. 9/30/01 — GEOTECHNICAL — STATE OF CALIFORNIA

Contract Number: 04-233054
City Project Numbers: 89-50

Date Accepted: 10/1/02

AS-BUILT DRAWING

Resident Engineer: Hank Doll
Vail Cooper & Associates

☒ No Changes. ☐ Changes As Noted

Revisions by: MPW (Initials)

NOTES:

1. The 64 mm sampler shown on the logs is a split barrel sampler with 76.2 mm O.D. and 64 mm I.D., with 152.4 mm long brass liners. The sampler is driven using a 63.5 kg hammer with a 0.76 m drop.
2. Soil classification and description conform to ASTM D2487.

BENCHMARK:
All elevations shown hereon are based upon Caltrans Aerial Control Panel No. AB-947 having an elevation of 399.13 feet (121.655 meters) as described in Caltrans Survey Book ALA84-A-5 (pg 2 of 4 - 87-240).
TBM No. 2: Mon. No. 220
A brass pin in Standard City Well Monument Box at the Intersection of Stanley Blvd. and Isabel Avenue 19.004 meters right of Center Line Station "15" 122+19.529. The elevation is 126.311 meters (414.41 feet).

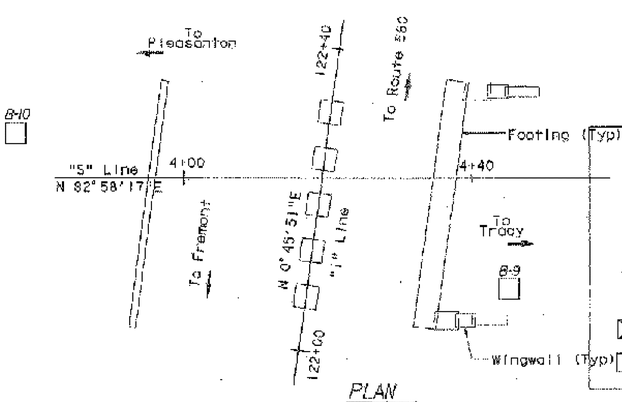

PLAN
1 : 400

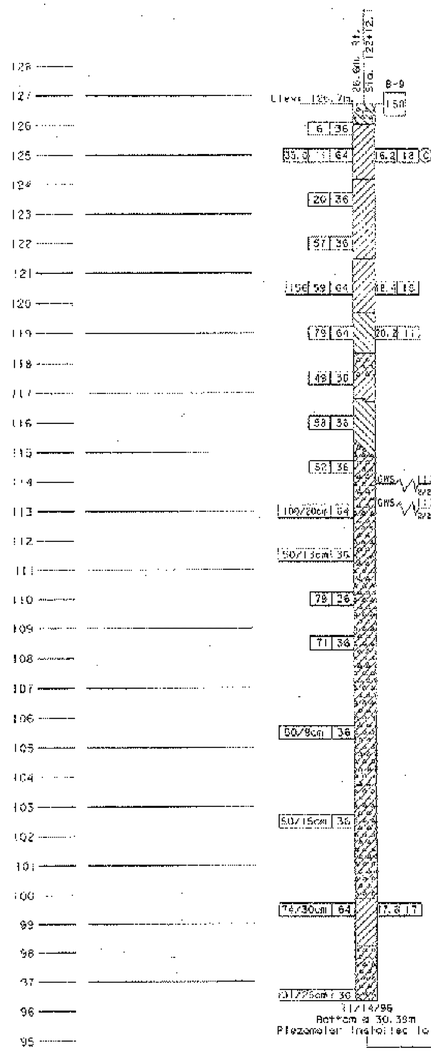

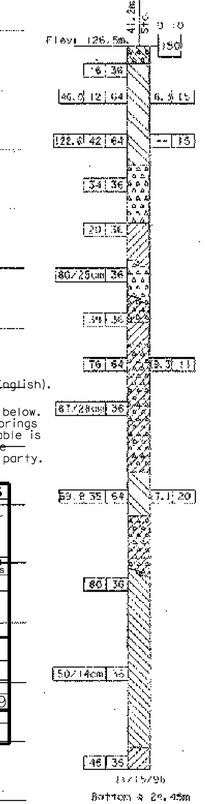

REGISTERED PROFESSIONAL ENGINEER — Stephen Huang — No. C 42289 — Exp. 03/31/02 — GEOTECHNICAL — STATE OF CALIFORNIA

Notes:

1. See the plans dated May 11, 1999 for stationing. For example I-Line Sta. 136+62 (Metric) = A3 Line Sta. 448+23 (English).
2. Structure Design produced the data presented in the table below. The data are the metric locations for the As-Built Test Borings referenced to the proposed new structure location. This table is presented on the As-Built ~~Log of Test Boring sheet for the~~ convenience of any bidder, contractor or other interested party.

To Accompany Plans Dated 6-27-11

DIVISION OF ENGINEERING SERVICES - GEOTECHNICAL SERVICES

As-Built ~~Log of Test Borings sheet is considered an informational document only.~~ As such, the State of California registration seal with signature, license number and registration certificate expiration date confirm that this is a true and accurate copy of the original document. This drawing is available and presented only for the convenience of any bidder, contractor or other interested party.

DIST.	COUNTY	ROUTE	KILOMETER POST-TOTAL PROJECT	Sheet No.	Total Sheets
04	Ala	84	25.5/27.1	468	495

REGISTERED GEOTECHNICAL ENGINEER — DATE 1/25/11

DATE PLOTTED => $DATE

RETAINING WALL 400N

LOG OF TEST BORINGS (5 of 7)

NOTE: A COPY OF THIS LOG OF TEST BORINGS IS AVAILABLE AT OFFICE OF STRUCTURE MAINTENANCE AND INVESTIGATIONS, SACRAMENTO, CALIFORNIA

CU: 0733
EA: 297611

BRIDGE No. 33E0079

Sheet 27 of 29

Revisions made to this Log of Test Borings from the original Log of Test Borings are the addition of the following table and notes:

Boring	Station	Offset from A3 Line (84)
B-9	400+66	87.3 ft. Rt
B-10	401+02	135.2 ft. Lt

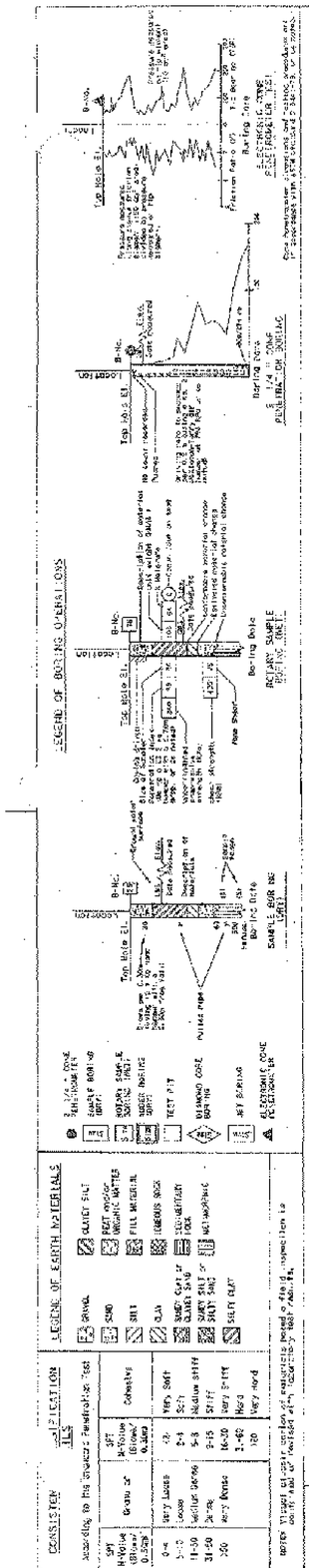

DESIGN OVERSIGHT	DRAWN BY J. HULSE	N. Moore FIELD INVESTIGATION BY	PREPARED FOR THE STATE OF CALIFORNIA DEPARTMENT OF TRANSPORTATION	G. RODRIGUEZ PROJECT ENGINEER	BRIDGE NO. 33C-0406 KILOMETER POST	ISABEL AVENUE UNDERCROSSING
SIGN OFF DATE	CHECKED BY T. HUBER	DATE		CU EA		LOG OF TEST BORINGS

REV. DATE: 6-2-97

ORIGINAL SCALE IN MILLIMETERS FOR REDUCED PLANS 0 10 20 30 40 50 60 70 80 90 100

*DISREGARD PRINTS BEARING EARLIER REVISION DATES

REVISION DATES (PRELIMINARY STAGE ONLY)

SHEET 16 OF 16

TIME PLOTTED => $$$$$$$$TIME$$$$$$$$

FILE => $REQUEST

33e0079-z-ltb05.tif

DIST.	COUNTY	ROUTE	KILOMETER POST TOTAL PROJECT	SHEET NO.	TOTAL SHEETS
04	ALA	84		345	401

REGISTERED GEOTECHNICAL ENGINEER

PLANS APPROVAL DATE

CITY OF LIVERMORE
DEPARTMENT OF PUBLIC WORKS
3589 Pacific Avenue
GEOTECHNICAL CONSULTANTS, INC.
631 Howard Street, Ste. 320
San Francisco, CA 94105

REGISTERED PROFESSIONAL ENGINEER — Stephen Huang — No. C 42289 — Exp. 03/31/12 — GEOTECHNICAL — STATE OF CALIFORNIA

REGISTERED PROFESSIONAL ENGINEER — G. MEELAKANTAN — No. 2591 — Exp. 9/30/01 — GEOTECHNICAL — STATE OF CALIFORNIA

The State of California or its officers or agents shall not be responsible for the accuracy or completeness of electronic copies of this plan sheet.

NOTES:

1. The 64 mm sampler shown on the logs is a split barrel sampler with 76.2 mm O.D. and 64 mm I.D., with 152.4 mm long brass liners. The sampler is driven using a 63.5 kg hammer with a 0.76 m drop.
2. Soil classification and description conform to ASTM D2487.

BENCHMARK:
All elevations shown hereon are based upon Caltrans Aerial Control Panel No. AB-947 having an elevation of 399.13 feet (121.655 meters) as described in Caltrans Survey Book ALA84-A-5 (pg 2 of 4 - 87-240).
TBM No. 2: Mon. No. 220
A brass pin in Standard City Well Monument Box at the intersection of Stanley Blvd. and Isabel Avenue 19.004 meters right of Center Line Station "15" 122+19.529. The elevation is 126.311 meters (414.41 feet).

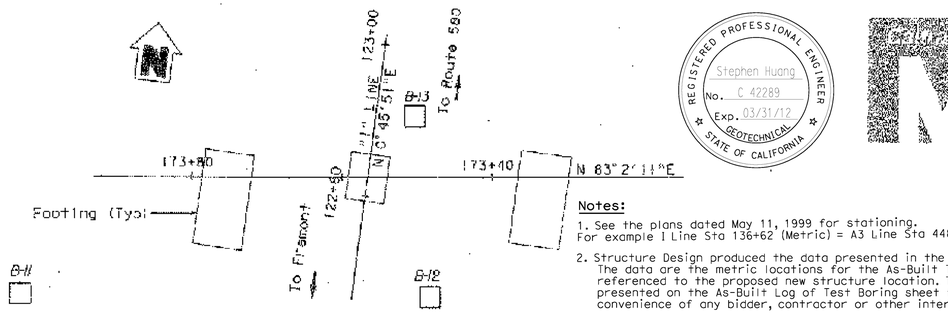

PLAN
1 : 400

Notes:

1. See the plans dated May 11, 1999 for stationing. For example I Line Sta 136+62 (Metric) = A3 Line Sta 448+23 (English).
2. Structure Design produced the data presented in the table below. The data are the metric locations for the As-Built Test Borings referenced to the proposed new structure location. This table is presented on the As-Built Log of Test Boring sheet for the convenience of any bidder, contractor or other interested party.

Revisions made to this Log of Test Borings from the original ____ Log of Test Borings are the addition of the following table and notes:

Boring	Station	Offset from A3 Line (B4)
B-11	402+27	143.4 ft. Lt
B-12	402+49	33.5 ft. Rt
B-13	403+25	16.7 ft. Rt

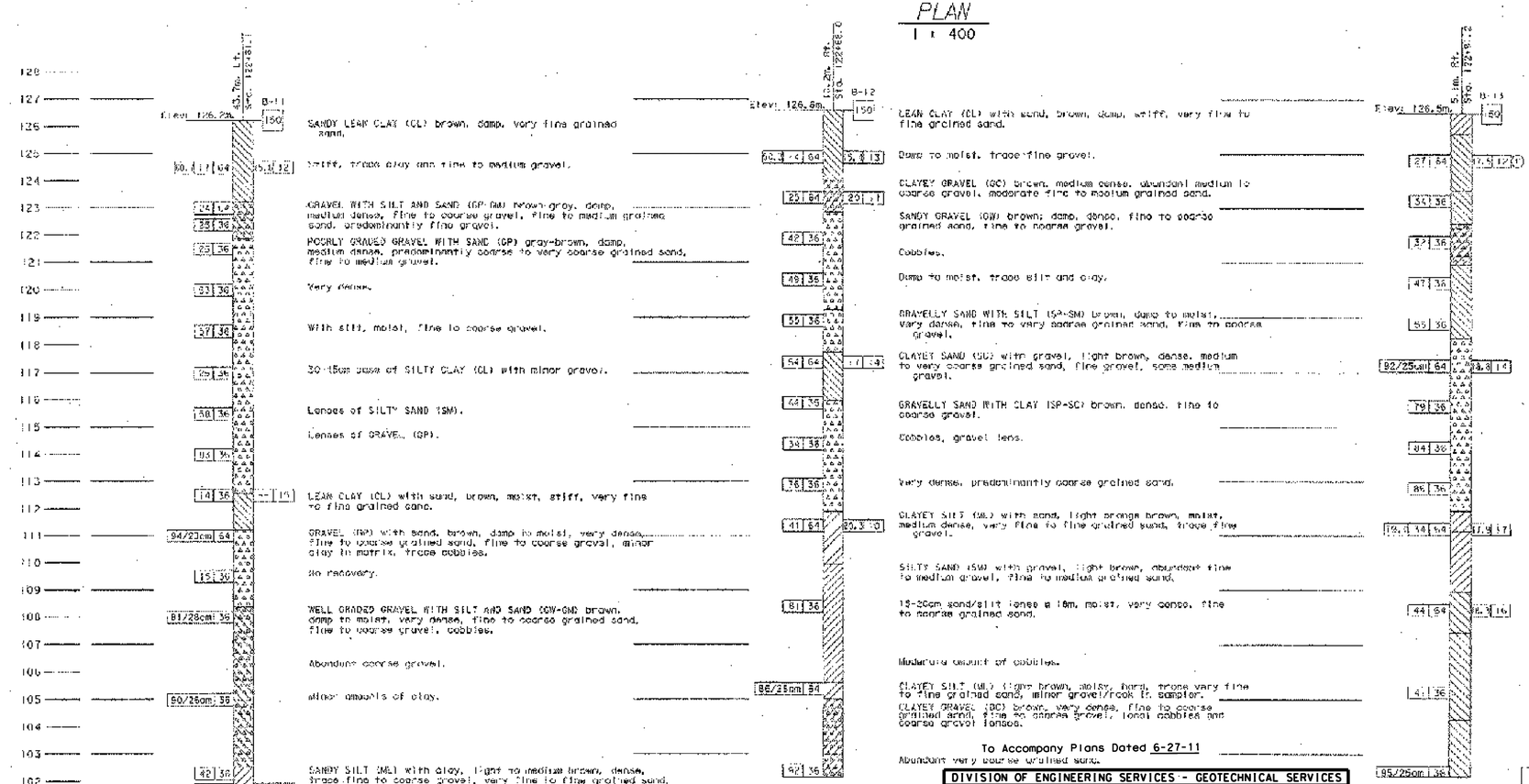

To Accompany Plans Dated 6-27-11

DIVISION OF ENGINEERING SERVICES - GEOTECHNICAL SERVICES

As-Built Log of Test Borings sheet is considered an informational document only. As such, the State of California registration seal with signature, license number and registration permit expiration date confirmed thereto is not an accurate copy of the original document. This drawing is available and presented only for the convenience of any bidder, contractor or other interested party.

DIST.	COUNTY	ROUTE	POSTMILES-TOTAL PROJECT	Sheet No.	Total Sheets
04	Ala	84	25.5/27.1	469	495

REGISTERED GEOTECHNICAL ENGINEER — DATE 1/25/11

RETAINING WALL 400N

LOG OF TEST BORINGS (6 of 7)

NOTE: A COPY OF THIS LOG OF TEST BORINGS IS AVAILABLE AT OFFICE OF STRUCTURE MAINTENANCE AND INVESTIGATIONS, SACRAMENTO, CALIFORNIA

CU: 0733
EA: 297611

BRIDGE No. 33E-0079

Sheet 28 of 29

Contract Number: 04-233054
City Project Numbers: 89-50
Date Accepted: 10/1/02

AS-BUILT DRAWING

Resident Engineer: Hank Doll
Vail Cooper & Associates

☒ No Changes
☐ Changes As Noted

Revisions by: MFW (Initials)

LEGEND OF BORING OPERATIONS

LEGEND OF EARTH MATERIALS

CONSISTENCY — According to the Standard Penetration Test

SPT (Number of Blows/30.5cm)	Granular	SPT (Number of Blows/30.5cm)	Cohesive
0-4	Very Loose	<2	Very Soft
5-10	Loose	2-4	Soft
11-30	Medium Dense	5-8	Medium stiff
31-50	Dense	9-15	Stiff
>50	Very Dense	16-30	Very stiff
		31-60	Hard
		>60	Very Hard

NOTE: Field classification of materials based on visual inspection in conformance with Caltrans Soil & Rock Manual.

DESIGN OVERSIGHT

SIGN OFF DATE

DRAWN BY: J. HULSE
CHECKED BY: T. BUSCH

A. PATTERSON
V. TULAKARATNE
FIELD INVESTIGATION BY:
DATE:

PREPARED FOR THE STATE OF CALIFORNIA DEPARTMENT OF TRANSPORTATION

D. RODRIGUEZ
PROJECT ENGINEER

BRIDGE NO. 33C-0405
KILOMETER POST

ISABEL AVENUE UNDERPASS
LOG OF TEST BORINGS

REV. DATE: 6-2-97

ORIGINAL SCALE IN MILLIMETERS FOR REDUCED PLANS

CU
EA

DISCARD PRINTS BEARING EARLIER REVISION DATES

REVISION DATES (PRELIMINARY STAMP ONLY)

SHEET 13 OF 13

33e0079-z-ltb06.tif

DIST.	COUNTY	ROUTE	KILOMETER POST TOTAL PROJECT	SHEET NO.	TOTAL SHEETS
04	Ala	84		470	495

NOTES:

1. The 64 mm sampler shown on the logs is a split barrel sampler with 76.2 mm O.D. and 64 mm I.D., with 152.4 mm long brass liners. The sampler is driven using a 63.5 kg hammer with a 0.76 m drop.

2. Soil classification and description conform to ASTM D2487.

BENCHMARK:
All elevations shown hereon are based upon Caltrans Aerial Control Panel No. AB-947 having an elevation of 399.13 feet (121.655 meters) as described in Caltrans Survey Book ALA84-A-5 (pg 2 of 4 - 87-240).
TBM No. 2: Mon. No. 220
A brass pin in Standard City Well Monument Box at the intersection of Stanley Blvd. and Isabel Avenue 19.084 meters right of Center Line Station "15" 122+19.529. The elevation is 126.311 meters (414.4 feet).

Contract Number: 04-233054
City Project Numbers: 89-50
Date Accepted: 10/1/02

AS-BUILT DRAWING

Resident Engineer: Hank Doll
Vail Cooper & Associates

☒ No Changes
☐ Changes As Noted

Revisions by: MPW
(Initials)

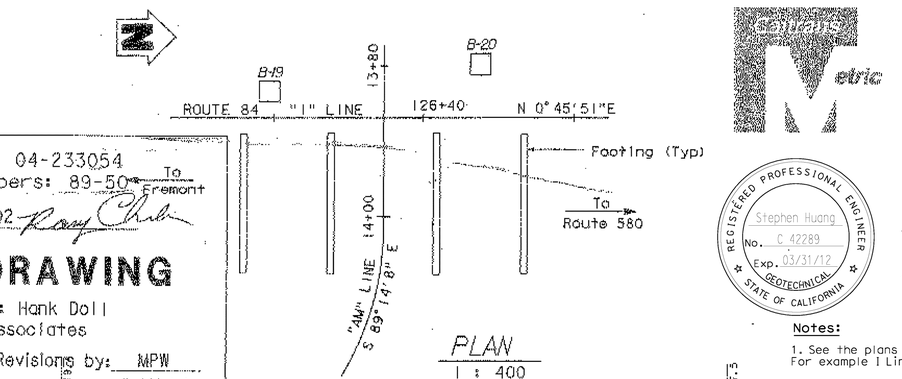

PLAN
1 : 400

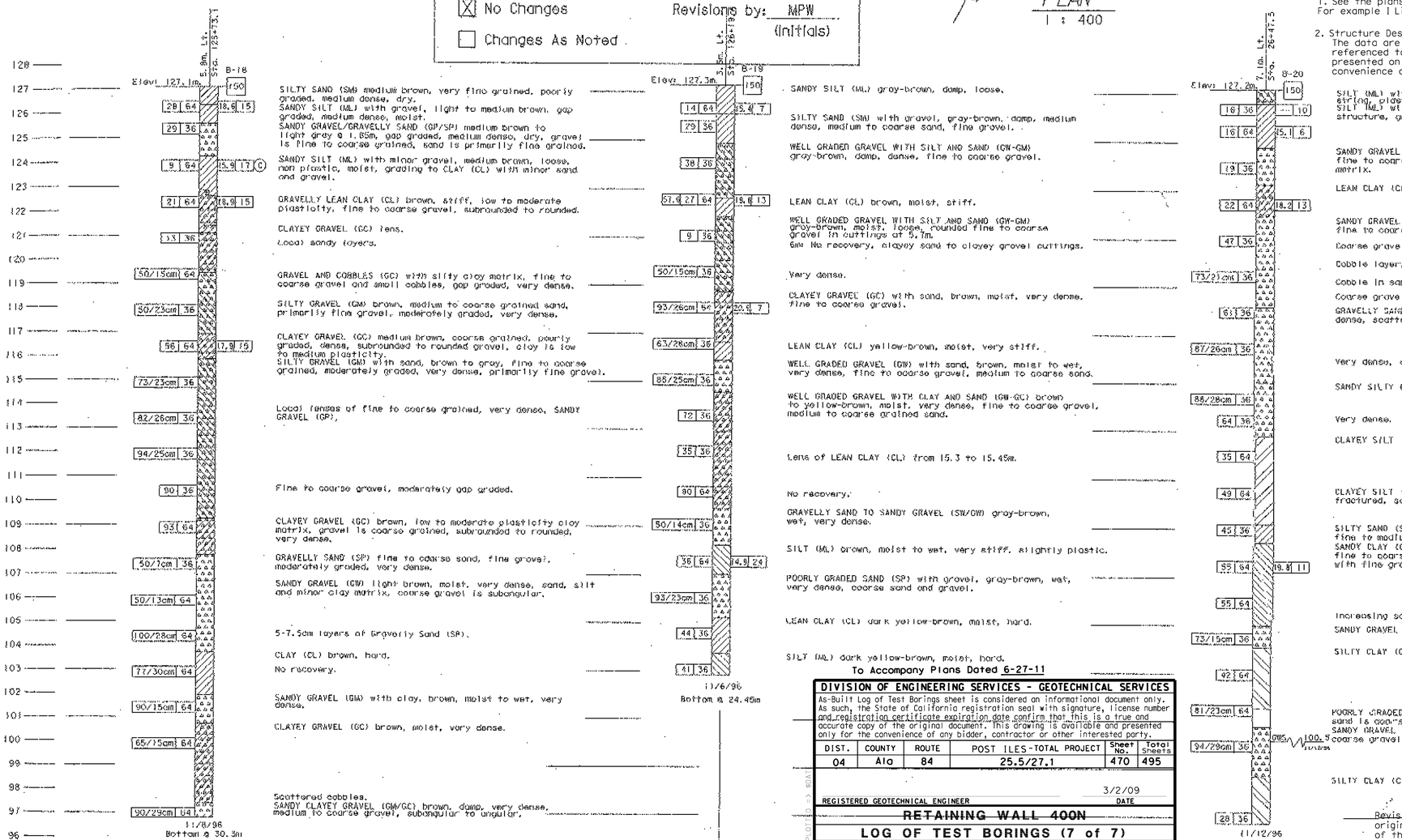

To Accompany Plans Dated 6-27-11

DIVISION OF ENGINEERING SERVICES - GEOTECHNICAL SERVICES

As-Built Log of Test Borings sheet is considered an informational document only. As such, the State of California registration seal with signature, license number and registration certificate expiration date confirm that this is a true and accurate copy of the original document. This drawing is available and presented only for the convenience of any bidder, contractor or other interested party.

DIST.	COUNTY	ROUTE	POST ILES-TOTAL PROJECT	Sheet No.	Total Sheets
04	Ala	84	25.5/27.1	470	495

REGISTERED GEOTECHNICAL ENGINEER — DATE 3/2/09

RETAINING WALL 40ON

LOG OF TEST BORINGS (7 of 7)

NOTE: A COPY OF THIS LOG OF TEST BORINGS IS AVAILABLE AT OFFICE OF STRUCTURE MAINTENANCE AND INVESTIGATIONS, SACRAMENTO, CALIFORNIA

CU: 0733
EA: 297611

BRIDGE No. 33E0079

Sheet 29 of 29

REGISTERED PROFESSIONAL ENGINEER
G. NEELAKANTAN
No. 2391
Exp. 9/30/11
GEOTECHNICAL
STATE OF CALIFORNIA

REGISTERED GEOTECHNICAL ENGINEER

PLANS APPROVAL DATE

CITY OF LIVERMORE
DEPARTMENT OF PUBLIC WORKS
3589 Pacific Avenue

GEOTECHNICAL CONSULTANTS, INC.
631 Howard Street, Ste. 320
San Francisco, CA 94105

REGISTERED PROFESSIONAL ENGINEER
Stephen Huang
No. C 42289
Exp. 03/31/12
GEOTECHNICAL
STATE OF CALIFORNIA

The State of California or its officers or agents shall not be responsible for the accuracy or completeness of electronic copies of this plan sheet.

Notes:

1. See the plans dated May 11, 1999 for stationing. For example 1 Line Sta 136+62 (Metric) = A3 Line Sta 448+23 (English).

2. Structure Design produced the data presented in the table below. The data are the metric locations for the As-Built Test Borings referenced to the proposed new structure location. This table is presented on the As-Built Log of Test Boring sheet for the convenience of any bidder, contractor or other interested party.

Revisions made to this Log of Test Borings from the original ____ Log of Test Borings are the addition of the following table and notes:

Boring	Station	Offset from A3 Line (84)
B-18	412+45	19.0 ft. Lt
B-19	414+00	11.5 ft. Lt
B-20	415+00	23.0 ft. Lt

LEGEND OF BORING OPERATIONS

LEGEND OF EARTH MATERIAL

CONSISTENCY FOR SOILS

DESIGN OVERSIGHT	DRAWN BY J. HULSE	N. MACE, V. THILAKARATNE, J. THURDER — FIELD INVESTIGATION BY
SIGN OFF DATE	CHECKED BY T. HUBER	DATE:

PREPARED FOR THE STATE OF CALIFORNIA DEPARTMENT OF TRANSPORTATION

O. RODRIGUEZ
PROJECT ENGINEER

BRIDGE NO. 33C-0407
KILOMETER POST

ARROYO MOCHO BRIDGE

LOG OF TEST BORINGS

REV. DATE: 6-2-97

ORIGINAL SCALE IN MILLIMETERS FOR REDUCED PLANS

REVISION DATES (PRELIMINARY STAGE ONLY)

SHEET 12 OF 12

33e0079-z-ltb07.tif

DIST	COUNTY	ROUTE	POST MILES TOTAL PROJECT	SHEET No	TOTAL SHEETS
04	Ala	84	25.5/27.1	471	495

REGISTERED CIVIL ENGINEER 12/10/10 DATE

6-27-11
PLANS APPROVAL DATE

REGISTERED PROFESSIONAL ENGINEER Guoping Xu No. C 63977 Exp. 09/30/12 CIVIL STATE OF CALIFORNIA

The State of California or its officers or agents shall not be responsible for the accuracy or completeness of scanned copies of this plan sheet.

ALAMEDA COUNTY TRANSPORTATION IMPROVEMENT AUTHORITY (ACTIA)
1333 BROADWAY, SUITE 300
OAKLAND, CA 94612

MGE ENGINEERING, INC.
7415 GREENHAVEN DRIVE, SUITE 100
SACRAMENTO, CALIFORNIA 95831

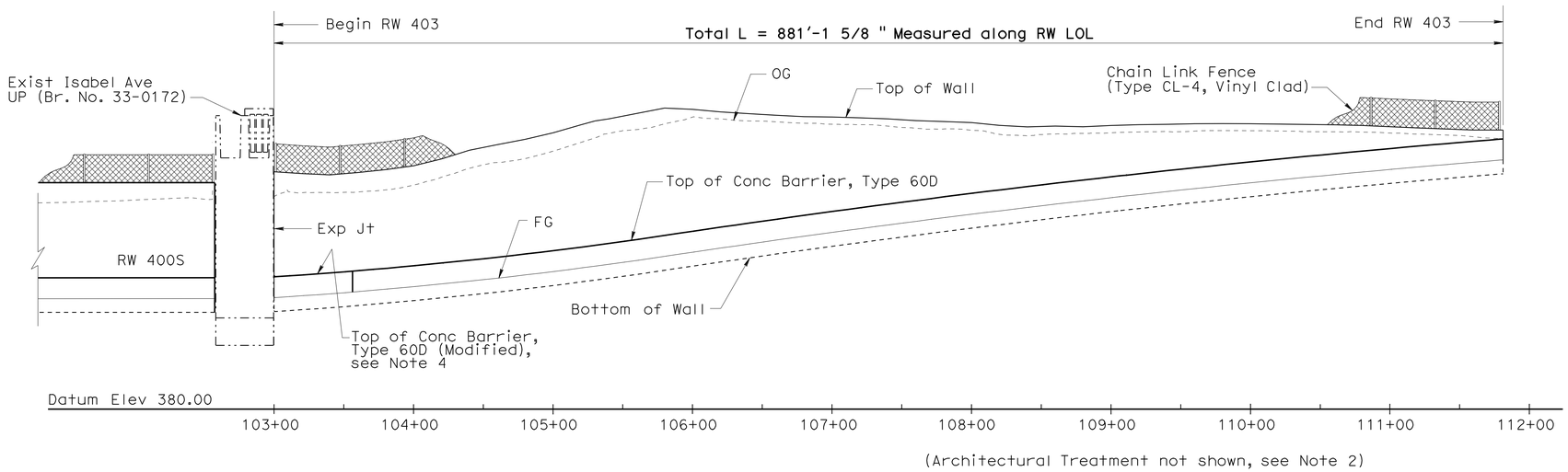

DEVELOPED ELEVATION

SCALE: 1" = 50'-0" (H)
1" = 10'-0" (V)

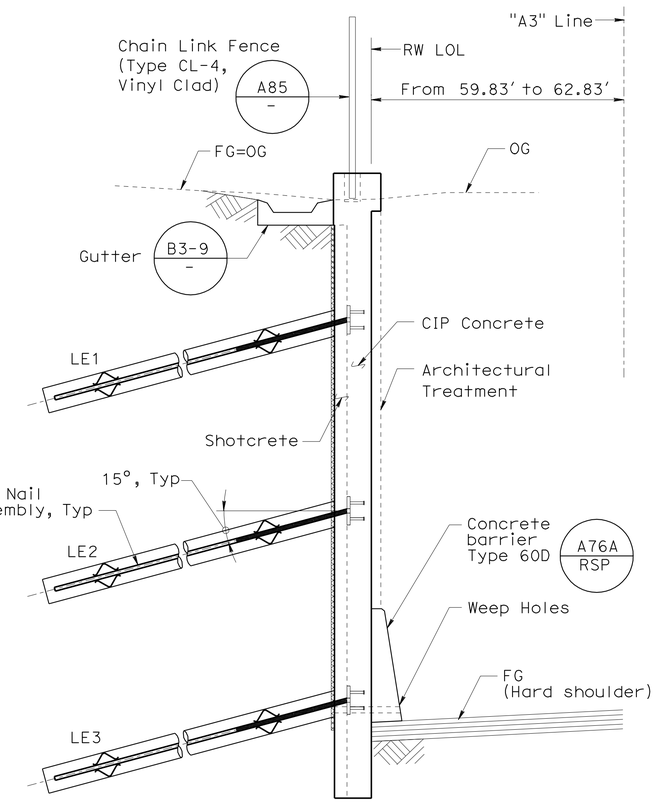

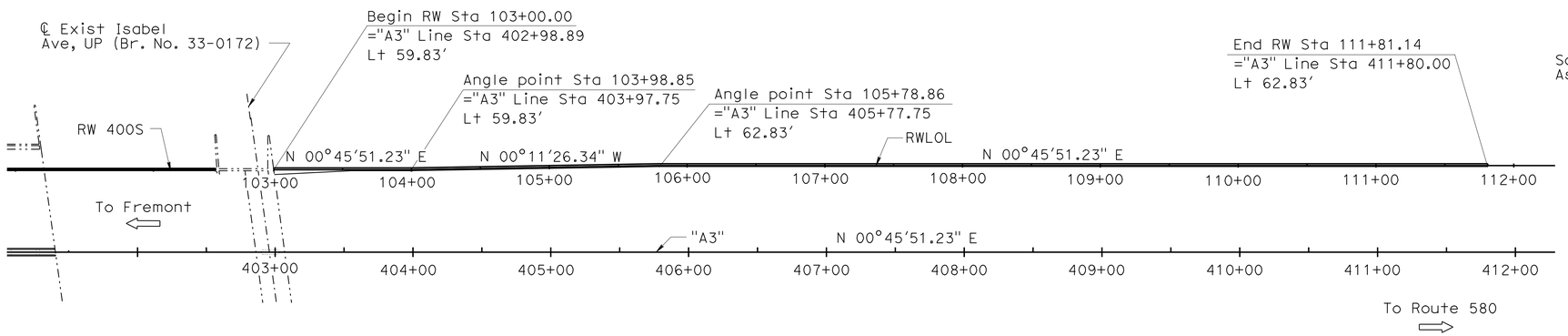

PLAN

SCALE: 1" = 50'-0"

RETAINING WALL 403 BRIDGE NO. 33E0077

QUANTITIES

STRUCTURE EXCAVATION (SOIL NAIL WALL)	644	CY
STRUCTURE BACKFILL (SOIL NAIL WALL)	67	CY
SOIL NAIL ASSEMBLY	12,065	LF
STRUCTURAL CONCRETE, RETAINING WALL	376	CY
ARCHITECTURAL TREATMENT	8,708	SQFT
BAR REINFORCING STEEL (RETAINING WALL)	84,067	LB
SHOTCRETE	156	CY
MINOR CONCRETE (GUTTER)	881	LF
CHAIN LINK FENCE (TYPE CL-4, VINYL-CLAD)	881	LF
CONCRETE BARRIER (TYPE 60D)	825	LF
CONCRETE BARRIER (TYPE 60D MODIFIED)	56	LF

TYPICAL SECTION

SCALE: 1/2" = 1'-0"

Notes:

1. For "General Notes", see "Foundation Plan" sheet.
2. For Architectural Treatment, see "Architectural Treatment Layout" sheet.
3. For expansion joint details, see "Soil Nail Wall Details No. 7" sheet.
4. For limits and details of concrete barrier Type 60D (Modified), see "Soil Nail Wall Details No. 7" sheet.

Note:
The Contractor shall verify all controlling field dimensions before ordering or fabricating any material.

DESIGN OVERSIGHT Yiwei Hu 1/26/11 SIGN OFF DATE	DESIGN	BY G. Xu	CHECKED E. Tang	LOAD & RESISTANCE FACTOR DESIGN — LIVE LOAD: SURCHARGE 240 PSF
	DETAILS	BY P. Zhao	CHECKED E. Tang	LAYOUT — BY G. Xu — CHECKED E. Tang
	QUANTITIES	BY D. Vang	CHECKED W. Sennett	SPECIFICATIONS — BY K. Chen — PLANS AND SPECS COMPARED G. Xu

PREPARED FOR THE STATE OF CALIFORNIA DEPARTMENT OF TRANSPORTATION

Guoping Xu
PROJECT ENGINEER

BRIDGE NO. 33E0077
POST MILES 27.00

RETAINING WALL 403
GENERAL PLAN

DESIGN GENERAL PLAN SHEET (ENGLISH) (REV. 06-01-09)

ORIGINAL SCALE IN INCHES FOR REDUCED PLANS 0 1 2 3

CU 0733
EA 297611

DISREGARD PRINTS BEARING EARLIER REVISION DATES

REVISION DATES (PRELIMINARY STAGE ONLY) 05/01/09 01/22/10 08/18/10 10/21/10 12/10/10

SHEET 1 OF 17

FILE => 33e0077-a-gp01.dgn

USERNAME => s124496 DATE PLOTTED => 21-NOV-2011 TIME PLOTTED => 15:23

DIST	COUNTY	ROUTE	POST MILES TOTAL PROJECT	SHEET No	TOTAL SHEETS
04	Ala	84	25.5/27.1	472	495

REGISTERED CIVIL ENGINEER 12/10/10 DATE

6-27-11
PLANS APPROVAL DATE

REGISTERED PROFESSIONAL ENGINEER Guoping Xu No. C 63977 Exp. 09/30/12 CIVIL STATE OF CALIFORNIA

The State of California or its officers or agents shall not be responsible for the accuracy or completeness of scanned copies of this plan sheet.

ALAMEDA COUNTY TRANSPORTATION IMPROVEMENT AUTHORITY (ACTIA)
1333 BROADWAY, SUITE 300
OAKLAND, CA 94612

MGE ENGINEERING, INC.
7415 GREENHAVEN DRIVE, SUITE 100
SACRAMENTO, CALIFORNIA 95831

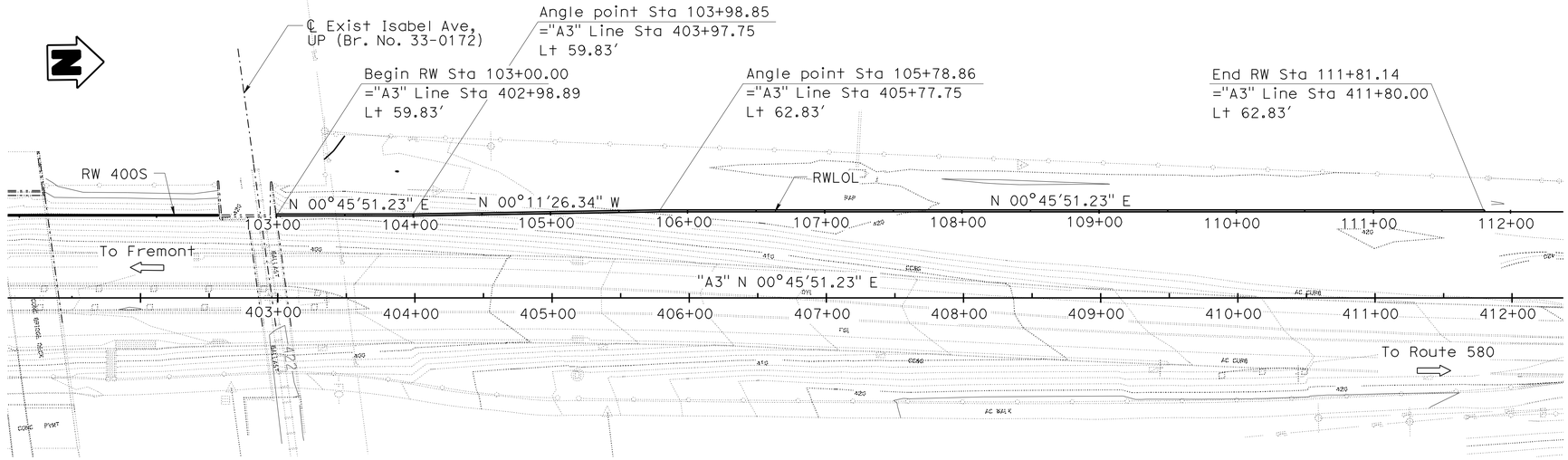

FOUNDATION PLAN
SCALE: 1" = 50'-0"

GENERAL NOTES
LOAD FACTOR DESIGN

DESIGN: Bridge Design Specifications April 2000 (LFD) (1996 AASHTO) with interims and revisions by Caltrans

Service Load Design Method per FHWA Manual for Design & Construction Monitoring of Soil Nail Walls (FHWA-SA-96-069R and FHWA O-IF-03-017)

REINFORCED CONCRETE: fy = 60,000 psi
f'c = 3,600 psi

SHOTCRETE: fy = 60,000 psi
f'c = 3,600 psi

SOIL NAILS ASSEMBLY: ASTM Designation: A615
fy = 60,000 psi

STRUCTURAL STEEL: ASTM Designation: A709
fy = 36,000 psi

DESIGN PARAMETERS: (Soil)
ϕ = 34°
C = 1,000 pfs
γ = 130 pcf
Qd = 2.09 k/ft

LIVE LOAD SURCHARGE: 240 psf (Vertical)

SEISMIC LOAD: Pseudo-static seismic Coefficient = 0.17g

Note:
The Contractor shall verify all controlling field dimensions before ordering or fabricating any material.

STANDARD PLANS
Dated May 2006

	A10A	Acronyms and Abbreviations (Sheet 1 of 2)
	A10B	Acronyms and Abbreviations (Sheet 2 of 2)
	A10C	Symbols (Sheet 1 of 2)
	A10D	Symbols (Sheet 2 of 2)
	A62B	Limits of Payment for Excavation and Backfill Bridge Surcharge and Wall
RSP	A76A	Concrete Barrier Type 60D
	A85	Chain Link Fence
	B3-9	Retaining Wall Details No. 2

Standard Plan sheet No.
Detail No.

INDEX TO PLANS

Sheet No.	Title
1	General Plan
2	Foundation Plan
3	Soil Nail Wall Details No. 1
4	Soil Nail Wall Details No. 2
5	Soil Nail Wall Details No. 3
6	Soil Nail Wall Details No. 4
7	Soil Nail Wall Details No. 5
8	Soil Nail Wall Details No. 6
9	Soil Nail Wall Details No. 7
10	Soil Nail Wall Details No. 8
11	Soil Nail Wall Details No. 9
12	Wall Drain Details
13	Architectural Treatment Layout
14	Log of Test Borings (1 of 4)
15	Log of Test Borings (2 of 4)
16	Log of Test Borings (3 of 4)
17	Log of Test Borings (4 of 4)

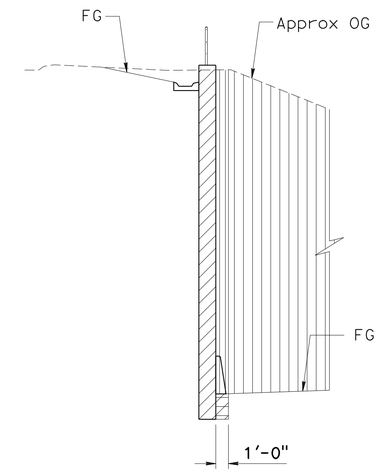

SOIL NAIL WALL
EXCAVATION AND BACKFILL PAY LIMITS
NO SCALE

LEGEND

Structure Excavation (Soil Nail Wall)

Structure Backfill (Soil Nail Wall)

Roadway Excavation (see 'Road Plan')

Stephen Huang 08/18/2010
GEOTECHNICAL PROFESSIONAL APPROVAL DATE

DESIGN OVERSIGHT Yiwei Hu
1/26/11
SIGN OFF DATE

SCALE:	VERT.DATUM NAVD88	HORZ.DATUM NAD83	DESIGN	BY G. Xu	CHECKED E. Tang
PHOTOGRAMMETRY AS OF: 11/10/2005	ALIGNMENT TIES Dist. Traverse Sheet		DETAILS	BY K. Wang	CHECKED E. Tang
SURVEYED BY Dan Scott	DRAFTED BY Abhijeet Bhoi		QUANTITIES	BY D. Vang	CHECKED W. Sennett
FIELD CHECKED BY Dan Scott	CHECKED BY				

PREPARED FOR THE STATE OF CALIFORNIA DEPARTMENT OF TRANSPORTATION

Guoping Xu
PROJECT ENGINEER

BRIDGE NO. 33E0077
POST MILE 27.00

RETAINING WALL 403
FOUNDATION PLAN

FOUNDATION PLAN SHEET (ENGLISH) (REV. 06-01-09)

ORIGINAL SCALE IN INCHES FOR REDUCED PLANS 0 1 2 3

CU 0733
EA 297611

DISREGARD PRINTS BEARING EARLIER REVISION DATES

REVISION DATES (PRELIMINARY STAGE ONLY) 05/04/09 01/22/10 08/18/10 10/21/10 12/10/10

SHEET 2 OF 17

FILE => 33e0077-e-fdp101.dgn

USERNAME => s124496 DATE PLOTTED => 21-NOV-2011 TIME PLOTTED => 15:29

DIST	COUNTY	ROUTE	POST MILES TOTAL PROJECT	SHEET No	TOTAL SHEETS
04	Ala	84	25.5/27.1	473	495

REGISTERED CIVIL ENGINEER 12/10/10 DATE

6-27-11
PLANS APPROVAL DATE

REGISTERED PROFESSIONAL ENGINEER Guoping Xu No. C 63977 Exp. 09/30/12 CIVIL STATE OF CALIFORNIA

The State of California or its officers or agents shall not be responsible for the accuracy or completeness of scanned copies of this plan sheet.

ALAMEDA COUNTY TRANSPORTATION IMPROVEMENT AUTHORITY (ACTIA)
1333 BROADWAY, SUITE 300
OAKLAND, CA 94612

MGE ENGINEERING, INC.
7415 GREENHAVEN DRIVE, SUITE 100
SACRAMENTO, CALIFORNIA 95831

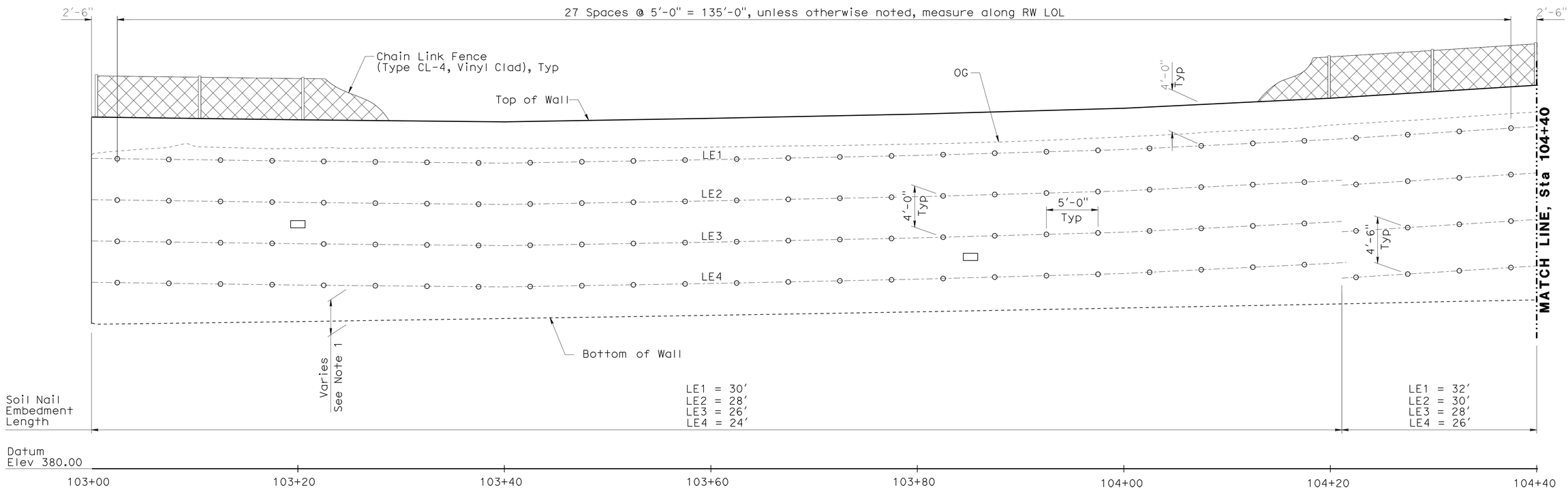

DEVELOPED SOIL NAIL WALL ELEVATION

SCALE: 1" = 5'-0"

SOIL NAIL WALL PROFILE

Station	Bottom of Wall Elevation	Top of Wall Elevation
103+00	394.13	414.06
103+20	394.26	413.79
103+40	394.55	413.60
103+60	394.86	413.94
103+80	395.20	414.35
104+00	395.57	414.91
104+20	395.95	415.88
104+40	396.36	417.15

LEGEND

- o — Indicates soil nail bearing plate location
- ▭ — Indicates proof test soil nail location; Location may be adjusted by the Engineer
- LE# — Indicates soil nail profile line

Notes:

1. Vertical distance from bottom of wall to bottom level of soil nail assembly shall be 2'-0" (Min) to 4'-0" (Max) unless otherwise noted on plans.
2. Vertical spacing of soil nail assembly shall be 3'-6" (Min) to 5'-0" (Max).
3. Horizontal spacing of soil nail assembly shall be 3'-6" (Min) to 5'-0" (Max).
4. Place soil nail assembly normal to RW LOL and at 15 degrees inclination.
5. Roadway FG and Concrete Barrier Type 60D not shown for clarity.

Note:
The Contractor shall verify all controlling field dimensions before ordering or fabricating any material.

DESIGN OVERSIGHT Yiwei Hu
1/26/11
SIGN OFF DATE

	BY	CHECKED
DESIGN	G. Xu	E. Tang
DETAILS	K. Wang	E. Tang
QUANTITIES	D. Vang	W. Sennett

PREPARED FOR THE STATE OF CALIFORNIA DEPARTMENT OF TRANSPORTATION

Guoping Xu
PROJECT ENGINEER

BRIDGE NO. 33E0077
POST MILE 27.00

RETAINING WALL 403
SOIL NAIL WALL DETAILS NO. 1

DESIGN DETAIL SHEET (ENGLISH) (REV. 06-01-09)

ORIGINAL SCALE IN INCHES FOR REDUCED PLANS 0 1 2 3

CU 0733
EA 297611

DISREGARD PRINTS BEARING EARLIER REVISION DATES

REVISION DATES (PRELIMINARY STAGE ONLY) 05/01/09 01/22/10 08/13/10 12/10/10

SHEET 3 OF 17

FILE => 33e0077-g-redt01.dgn

USERNAME => s124936 DATE PLOTTED => 21-NOV-2011 TIME PLOTTED => 15:29

DIST	COUNTY	ROUTE	POST MILES TOTAL PROJECT	SHEET No	TOTAL SHEETS
04	Ala	84	25.5/27.1	474	495

REGISTERED CIVIL ENGINEER 12/10/10 DATE

6-27-11
PLANS APPROVAL DATE

REGISTERED PROFESSIONAL ENGINEER Guoping Xu No. C 63977 Exp. 09/30/12 CIVIL STATE OF CALIFORNIA

The State of California or its officers or agents shall not be responsible for the accuracy or completeness of scanned copies of this plan sheet.

ALAMEDA COUNTY TRANSPORTATION IMPROVEMENT AUTHORITY (ACTIA)
1333 BROADWAY, SUITE 300
OAKLAND, CA 94612

MGE ENGINEERING, INC.
7415 GREENHAVEN DRIVE, SUITE 100
SACRAMENTO, CALIFORNIA 95831

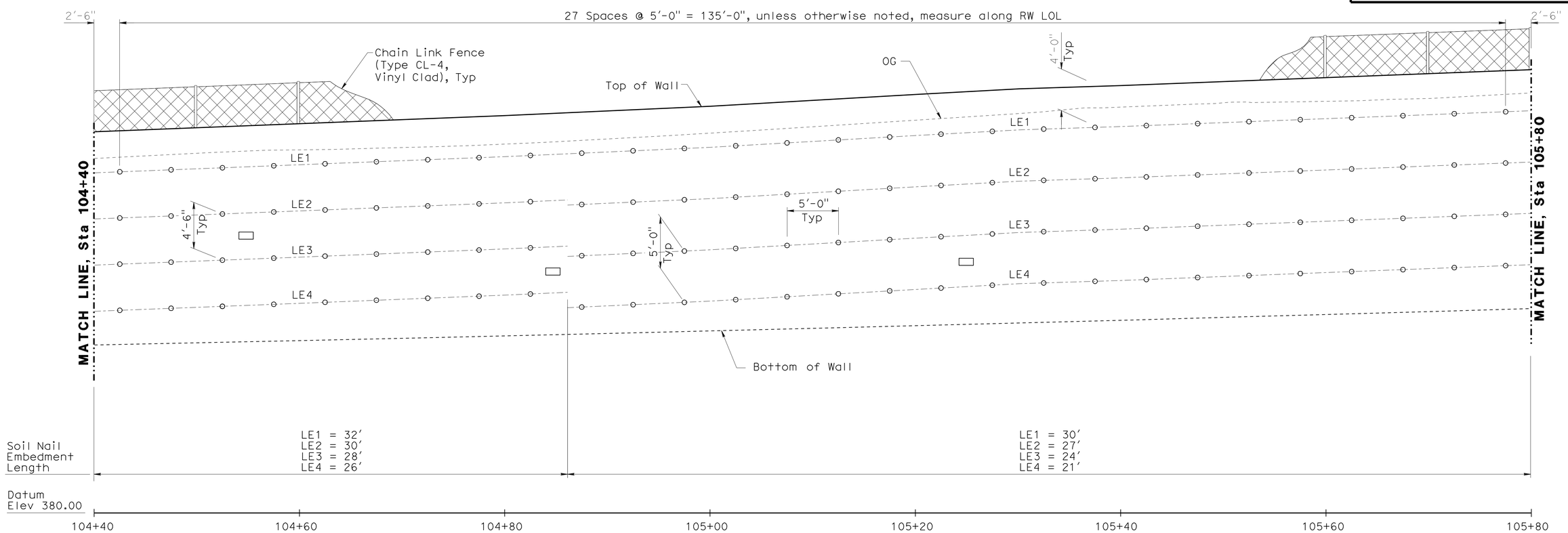

SOIL NAIL WALL ELEVATION

SCALE: 1" = 5'-0"

SOIL NAIL WALL PROFILE

Station	Bottom of Wall Elevation	Top of Wall Elevation
104+40	396.36	417.15
104+60	396.79	417.93
104+80	397.25	418.72
105+00	397.74	419.64
105+20	398.24	420.78
105+40	398.78	421.65
105+60	399.34	422.43
105+80	399.92	423.20

Note:
The Contractor shall verify all controlling field dimensions before ordering or fabricating any material.

Note:

1. See "Soil Nail Wall Details No. 1" for notes and Legend.

DESIGN OVERSIGHT Yiwei Hu
1/26/11
SIGN OFF DATE

	BY	CHECKED
DESIGN	G. Xu	E. Tang
DETAILS	K. Wang	E. Tang
QUANTITIES	D. Vang	W. Sennett

PREPARED FOR THE STATE OF CALIFORNIA DEPARTMENT OF TRANSPORTATION

Guoping Xu
PROJECT ENGINEER

BRIDGE NO. 33E0077
POST MILE 27.00

RETAINING WALL 403
SOIL NAIL WALL DETAILS NO. 2

DESIGN DETAIL SHEET (ENGLISH) (REV. 06-01-09)

ORIGINAL SCALE IN INCHES FOR REDUCED PLANS 0 1 2 3

CU 0733
EA 297611

DISREGARD PRINTS BEARING EARLIER REVISION DATES
REVISION DATES (PRELIMINARY STAGE ONLY) 05/01/09 01/22/10 08/18/10 12/10/10

SHEET 4 OF 17

FILE => 33e0077-g-redt02.dgn

USERNAME => s124436 DATE PLOTTED => 21-NOV-2011 TIME PLOTTED => 15:29

DIST	COUNTY	ROUTE	POST MILES TOTAL PROJECT	SHEET No	TOTAL SHEETS
04	Ala	84	25.5/27.1	475	495

REGISTERED CIVIL ENGINEER 12/10/10 DATE

6-27-11
PLANS APPROVAL DATE

REGISTERED PROFESSIONAL ENGINEER Guoping Xu No. C 63977 Exp. 09/30/12 CIVIL STATE OF CALIFORNIA

The State of California or its officers or agents shall not be responsible for the accuracy or completeness of scanned copies of this plan sheet.

ALAMEDA COUNTY TRANSPORTATION IMPROVEMENT AUTHORITY (ACTIA)
1333 BROADWAY, SUITE 300
OAKLAND, CA 94612

MGE ENGINEERING, INC.
7415 GREENHAVEN DRIVE, SUITE 100
SACRAMENTO, CALIFORNIA 95831

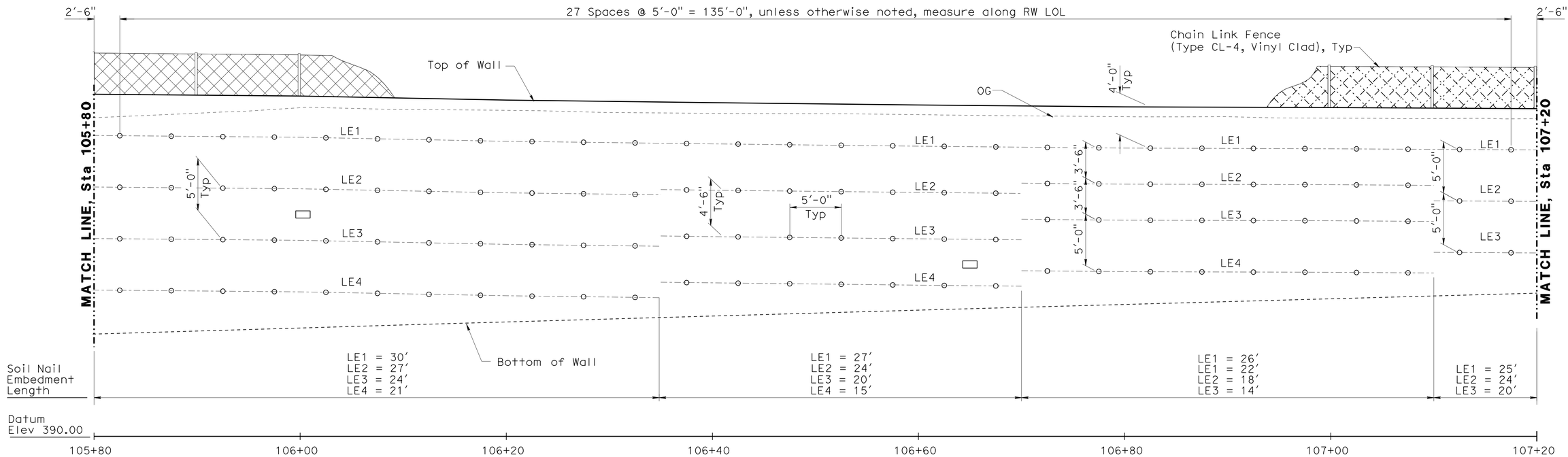

SOIL NAIL WALL ELEVATION

SCALE: 1" = 5'-0"

SOIL NAIL WALL PROFILE

Station	Bottom of Wall Elevation	Top of Wall Elevation
105+80	399.92	423.20
106+00	400.51	423.02
106+20	401.10	422.64
106+40	401.68	422.39
106+60	402.24	422.17
106+80	402.80	421.98
107+00	403.35	421.92
107+20	403.89	421.80

Note:
The Contractor shall verify all controlling field dimensions before ordering or fabricating any material.

Note:

1. See "Soil Nail Wall Details No. 1" for notes and Legend.

DESIGN OVERSIGHT Yiwei Hu
1/26/11
SIGN OFF DATE

	BY	CHECKED
DESIGN	G. Xu	E. Tang
DETAILS	K. Wang	E. Tang
QUANTITIES	D. Vang	W. Sennett

PREPARED FOR THE STATE OF CALIFORNIA DEPARTMENT OF TRANSPORTATION

Guoping Xu
PROJECT ENGINEER

BRIDGE NO. 33E0077
POST MILE 27.00

RETAINING WALL 403
SOIL NAIL WALL DETAILS NO. 3

DESIGN DETAIL SHEET (ENGLISH) (REV. 06-01-09)

ORIGINAL SCALE IN INCHES FOR REDUCED PLANS 0 1 2 3

CU 0733
EA 297611

DISREGARD PRINTS BEARING EARLIER REVISION DATES

REVISION DATES (PRELIMINARY STAGE ONLY) 05/04/09 01/22/10 08/18/10 12/10/10

SHEET 5 OF 17

FILE => 33e0077-g-redt03.dgn

USERNAME => s124496 DATE PLOTTED => 21-NOV-2011 TIME PLOTTED => 15:29

DIST	COUNTY	ROUTE	POST MILES TOTAL PROJECT	SHEET No	TOTAL SHEETS
04	Ala	84	25.5/27.1	476	495

REGISTERED CIVIL ENGINEER 12/10/10 DATE

6-27-11
PLANS APPROVAL DATE

REGISTERED PROFESSIONAL ENGINEER Guoping Xu No. C 63977 Exp. 09/30/12 CIVIL STATE OF CALIFORNIA

The State of California or its officers or agents shall not be responsible for the accuracy or completeness of scanned copies of this plan sheet.

ALAMEDA COUNTY TRANSPORTATION IMPROVEMENT AUTHORITY (ACTIA)
1333 BROADWAY, SUITE 300
OAKLAND, CA 94612

MGE ENGINEERING, INC.
7415 GREENHAVEN DRIVE, SUITE 100
SACRAMENTO, CALIFORNIA 95831

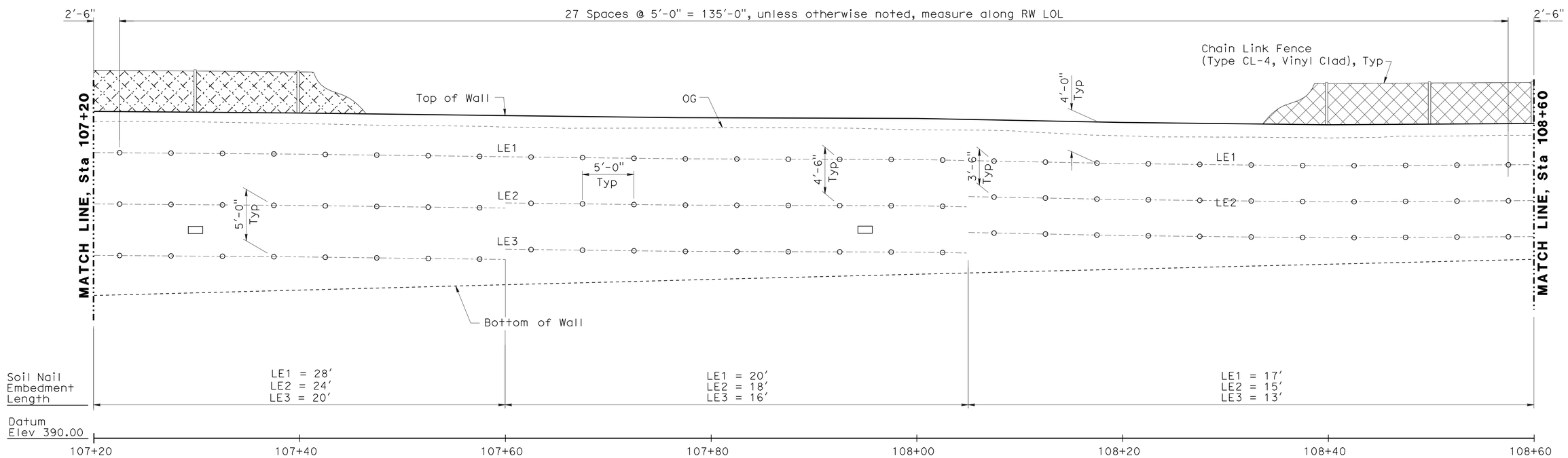

SOIL NAIL WALL ELEVATION

SCALE: 1" = 5'-0"

SOIL NAIL WALL PROFILE

Station	Bottom of Wall Elevation	Top of Wall Elevation
107+20	403.89	421.80
107+40	404.42	421.64
107+60	404.94	421.39
107+80	405.45	421.26
108+00	405.95	421.11
108+20	406.45	420.72
108+40	406.93	420.50
108+60	407.41	420.62

Note:
The Contractor shall verify all controlling field dimensions before ordering or fabricating any material.

Note:

1. See "Soil Nail Wall Details No. 1" for notes and Legend.

DESIGN OVERSIGHT Yiwei Hu
1/26/11
SIGN OFF DATE

	BY	CHECKED
DESIGN	G. Xu	E. Tang
DETAILS	K. Wang	E. Tang
QUANTITIES	D. Vang	W. Sennett

PREPARED FOR THE STATE OF CALIFORNIA DEPARTMENT OF TRANSPORTATION

Guoping Xu
PROJECT ENGINEER

BRIDGE NO. 33E0077
POST MILE 27.00

RETAINING WALL 403
SOIL NAIL WALL DETAILS NO. 4

DESIGN DETAIL SHEET (ENGLISH) (REV. 06-01-09)

ORIGINAL SCALE IN INCHES FOR REDUCED PLANS 0 1 2 3

CU 0733
EA 297611

DISREGARD PRINTS BEARING EARLIER REVISION DATES

REVISION DATES (PRELIMINARY STAGE ONLY) 05/04/09 01/22/10 08/18/10 12/10/10

SHEET 6 OF 17

FILE => 33e0077-g-redt04.dgn

USERNAME => s124496 DATE PLOTTED => 21-NOV-2011 TIME PLOTTED => 15:23

DIST	COUNTY	ROUTE	POST MILES TOTAL PROJECT	SHEET No	TOTAL SHEETS
04	Ala	84	25.5/27.1	477	495

REGISTERED CIVIL ENGINEER 12/10/10 DATE

6-27-11
PLANS APPROVAL DATE

REGISTERED PROFESSIONAL ENGINEER Guoping Xu No. C 63977 Exp. 09/30/12 CIVIL STATE OF CALIFORNIA

The State of California or its officers or agents shall not be responsible for the accuracy or completeness of scanned copies of this plan sheet.

ALAMEDA COUNTY TRANSPORTATION IMPROVEMENT AUTHORITY (ACTIA)
1333 BROADWAY, SUITE 300
OAKLAND, CA 94612

MGE ENGINEERING, INC.
7415 GREENHAVEN DRIVE, SUITE 100
SACRAMENTO, CALIFORNIA 95831

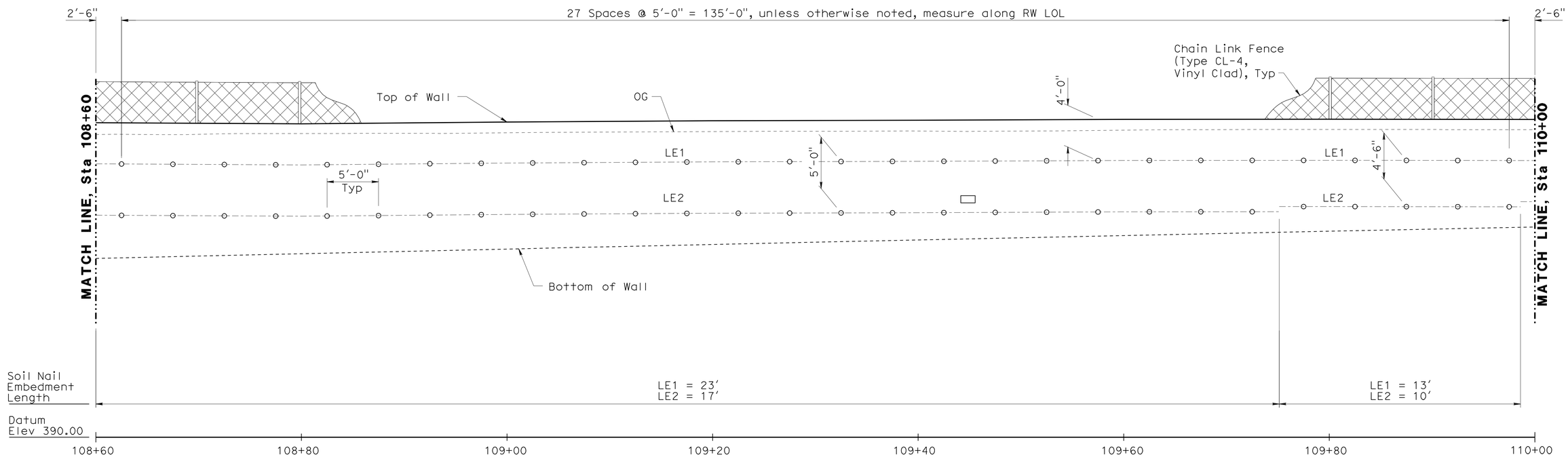

SOIL NAIL WALL ELEVATION

SCALE: 1" = 5'-0"

SOIL NAIL WALL PROFILE

Station	Bottom of Wall Elevation	Top of Wall Elevation
108+60	407.41	420.62
108+80	407.87	420.52
109+00	408.33	420.69
109+20	408.77	420.81
109+40	409.21	420.86
109+60	409.64	420.95
109+80	410.06	420.96
110+00	410.47	420.94

Note:
The Contractor shall verify all controlling field dimensions before ordering or fabricating any material.

Note:

1. See "Soil Nail Wall Details No. 1" for notes and Legend.

DESIGN OVERSIGHT Yiwei Hu
1/26/11
SIGN OFF DATE

	BY	CHECKED
DESIGN	G. Xu	E. Tang
DETAILS	K. Wang	E. Tang
QUANTITIES	D. Vang	W. Sennett

PREPARED FOR THE STATE OF CALIFORNIA DEPARTMENT OF TRANSPORTATION

Guoping Xu
PROJECT ENGINEER

BRIDGE NO. 33E0077
POST MILE 27.00

RETAINING WALL 403
SOIL NAIL WALL DETAILS NO. 5

DESIGN DETAIL SHEET (ENGLISH) (REV. 06-01-09)

ORIGINAL SCALE IN INCHES FOR REDUCED PLANS 0 1 2 3

CU 0733
EA 297611

DISREGARD PRINTS BEARING EARLIER REVISION DATES
REVISION DATES (PRELIMINARY STAGE ONLY) 05/04/09 01/22/10 08/18/10 12/10/10

SHEET 7 OF 17

FILE => 33e0077-g-redt05.dgn

USERNAME => s124496 DATE PLOTTED => 21-NOV-2011 TIME PLOTTED => 15:29

DIST	COUNTY	ROUTE	POST MILES TOTAL PROJECT	SHEET No	TOTAL SHEETS
04	Ala	84	25.5/27.1	478	495

REGISTERED CIVIL ENGINEER 12/10/10 DATE

6-27-11
PLANS APPROVAL DATE

REGISTERED PROFESSIONAL ENGINEER Guoping Xu No. C 63977 Exp. 09/30/12 CIVIL STATE OF CALIFORNIA

The State of California or its officers or agents shall not be responsible for the accuracy or completeness of scanned copies of this plan sheet.

ALAMEDA COUNTY TRANSPORTATION IMPROVEMENT AUTHORITY (ACTIA)
1333 BROADWAY, SUITE 300
OAKLAND, CA 94612

MGE ENGINEERING, INC.
7415 GREENHAVEN DRIVE, SUITE 100
SACRAMENTO, CALIFORNIA 95831

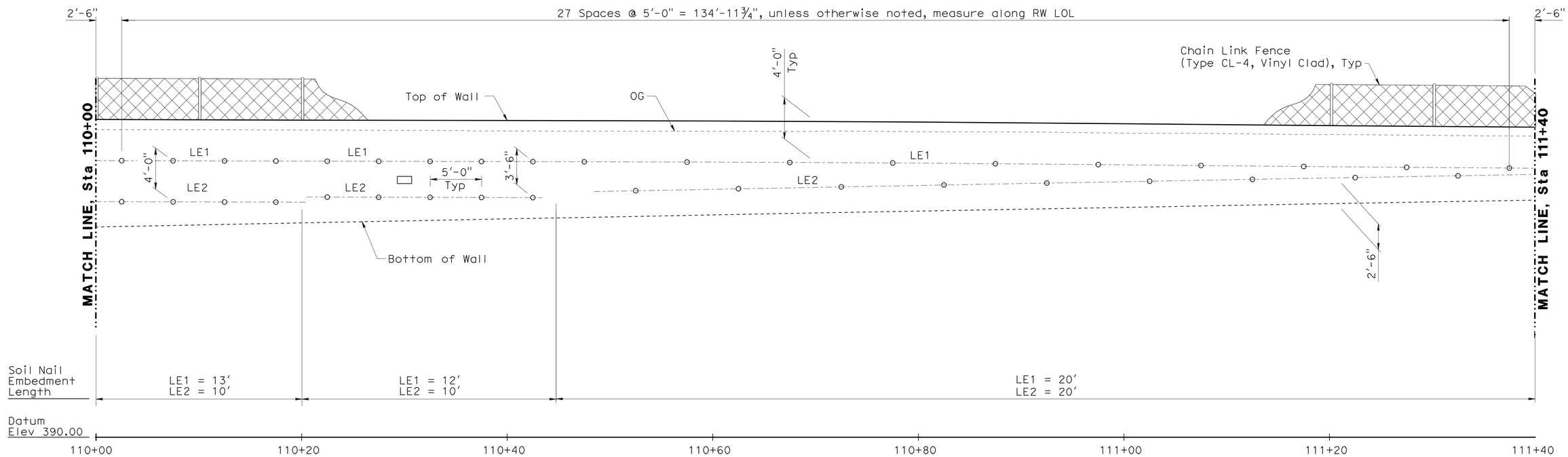

SOIL NAIL WALL ELEVATION

SCALE: 1" = 5'-0"

SOIL NAIL WALL PROFILE

Station	Bottom of Wall Elevation	Top of Wall Elevation
110+00	410.47	420.94
110+20	410.87	420.88
110+40	411.26	420.84
110+60	411.65	420.78
110+80	412.02	420.69
111+00	412.38	420.54
111+20	412.74	420.34
111+40	413.08	420.19

Note:
The Contractor shall verify all controlling field dimensions before ordering or fabricating any material.

Note:

1. See "Soil Nail Wall Details No. 1" for notes and Legend.

DESIGN OVERSIGHT Yiwei Hu
1/26/11
SIGN OFF DATE

	BY	CHECKED
DESIGN	G. Xu	E. Tang
DETAILS	K. Wang	E. Tang
QUANTITIES	D. Vang	W. Sennett

PREPARED FOR THE STATE OF CALIFORNIA DEPARTMENT OF TRANSPORTATION

Guoping Xu
PROJECT ENGINEER

BRIDGE NO. 33E0077
POST MILE 27.00

RETAINING WALL 403
SOIL NAIL WALL DETAILS NO. 6

DESIGN DETAIL SHEET (ENGLISH) (REV. 06-01-09)

ORIGINAL SCALE IN INCHES FOR REDUCED PLANS 0 1 2 3

CU 0733
EA 297611

DISREGARD PRINTS BEARING EARLIER REVISION DATES

REVISION DATES (PRELIMINARY STAGE ONLY) 05/01/09 01/22/10 08/18/10 12/10/10

SHEET 8 OF 17

FILE => 33e0077-g-redt06.dgn

USERNAME => s124496 DATE PLOTTED => 21-NOV-2011 TIME PLOTTED => 15:29

DIST	COUNTY	ROUTE	POST MILES TOTAL PROJECT	SHEET No	TOTAL SHEETS
04	Ala	84	25.5/27.1	479	495

REGISTERED CIVIL ENGINEER 12/10/10 DATE

6-27-11
PLANS APPROVAL DATE

REGISTERED PROFESSIONAL ENGINEER Guoping Xu No. C 63977 Exp. 09/30/12 CIVIL STATE OF CALIFORNIA

The State of California or its officers or agents shall not be responsible for the accuracy or completeness of scanned copies of this plan sheet.

ALAMEDA COUNTY TRANSPORTATION IMPROVEMENT AUTHORITY (ACTIA)
1333 BROADWAY, SUITE 300
OAKLAND, CA 94612

MGE ENGINEERING, INC.
7415 GREENHAVEN DRIVE, SUITE 100
SACRAMENTO, CALIFORNIA 95831

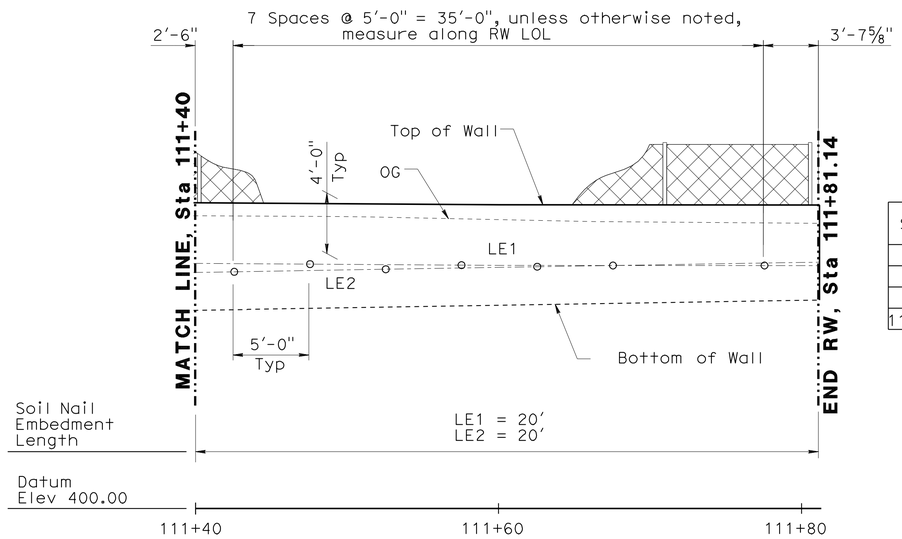

SOIL NAIL WALL ELEVATION
SCALE: 1" = 5'-0"

SOIL NAIL WALL PROFILE

Station	Bottom of Wall Elevation	Top of Wall Elevation
111+40	413.08	420.19
111+60	413.42	420.05
111+80	413.75	420.04
111+81.14	413.76	420.04

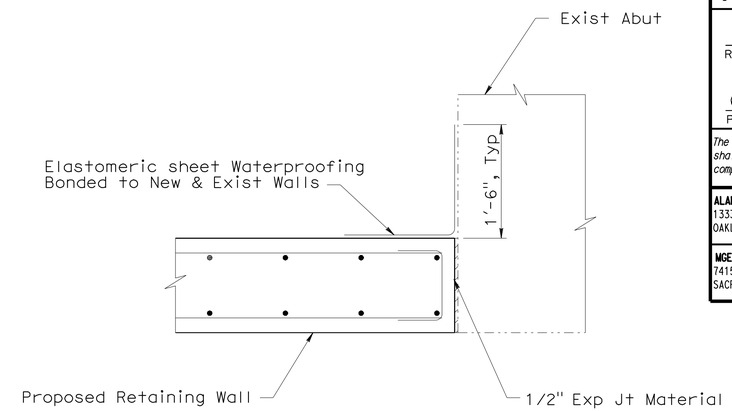

EXPANSION JOINT DETAIL
SCALE: 1" = 1'-0"

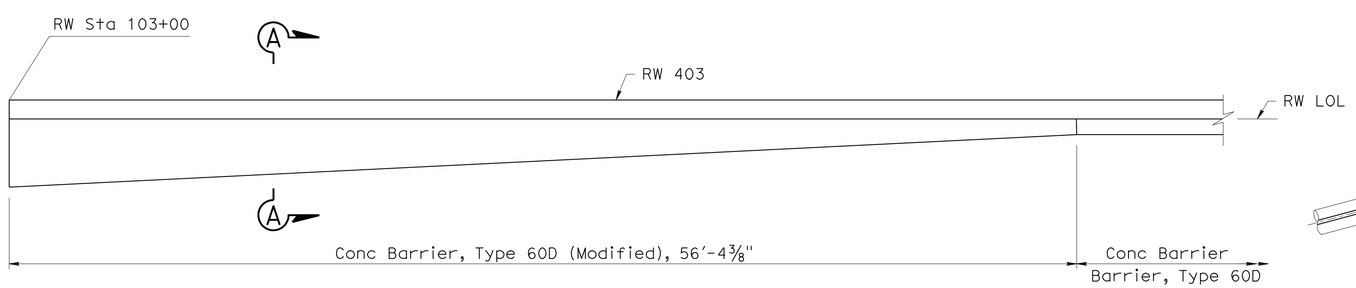

PLAN - LIMITS OF CONCRETE BARRIER, TYPE 60D (MODIFIED)
SCALE: ¼" = 1'-0"

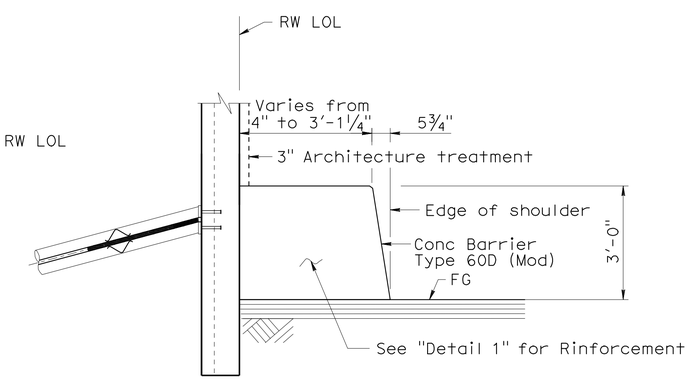

SECTION A-A
SCALE: ½" = 1'-0"

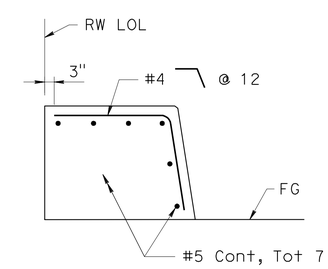

DETAIL 1
SCALE: ½" = 1'-0"

Note:
The Contractor shall verify all controlling field dimensions before ordering or fabricating any material.

Note:
1. See "Soil Nail Wall Details No. 1" for notes and Legend.

DESIGN OVERSIGHT Yiwei Hu
1/26/11
SIGN OFF DATE

	BY	CHECKED
DESIGN	G. Xu	E. Tang
DETAILS	K. Wang	E. Tang
QUANTITIES	D. Vang	W. Sennett

PREPARED FOR THE STATE OF CALIFORNIA DEPARTMENT OF TRANSPORTATION

Guoping Xu
PROJECT ENGINEER

BRIDGE NO. 33E0077
POST MILE 27.00

RETAINING WALL 403
SOIL NAIL WALL DETAILS NO. 7

DESIGN DETAIL SHEET (ENGLISH) (REV. 06-01-09)

ORIGINAL SCALE IN INCHES FOR REDUCED PLANS 0 1 2 3

CU 0733
EA 297611

DISREGARD PRINTS BEARING EARLIER REVISION DATES

REVISION DATES (PRELIMINARY STAGE ONLY) 05/04/09 01/22/10 08/18/10 12/10/10

SHEET 9 OF 17

FILE => 33e0077-g-redt07.dgn

USERNAME => s124496 DATE PLOTTED => 21-NOV-2011 TIME PLOTTED => 15:29

DIST	COUNTY	ROUTE	POST MILES TOTAL PROJECT	SHEET No	TOTAL SHEETS
04	Ala	84	25.5/27.1	480	495

REGISTERED CIVIL ENGINEER 12/10/10 DATE

6-27-11
PLANS APPROVAL DATE

REGISTERED PROFESSIONAL ENGINEER Guoping Xu No. C 63977 Exp. 09/30/12 CIVIL STATE OF CALIFORNIA

The State of California or its officers or agents shall not be responsible for the accuracy or completeness of scanned copies of this plan sheet.

ALAMEDA COUNTY TRANSPORTATION IMPROVEMENT AUTHORITY (ACTIA)
1333 BROADWAY, SUITE 300
OAKLAND, CA 94612

MGE ENGINEERING, INC.
7415 GREENHAVEN DRIVE, SUITE 100
SACRAMENTO, CALIFORNIA 95831

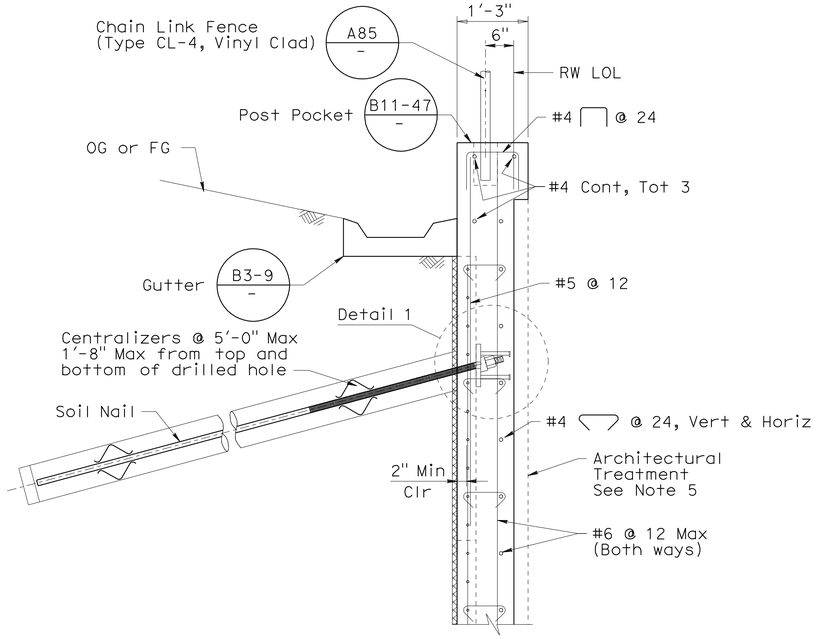

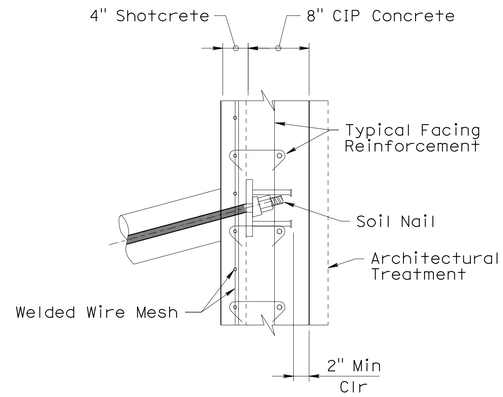

DETAIL 1
1" = 1'-0"

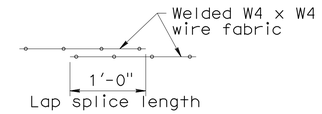

LAP SPLICE
1" = 1'-0"

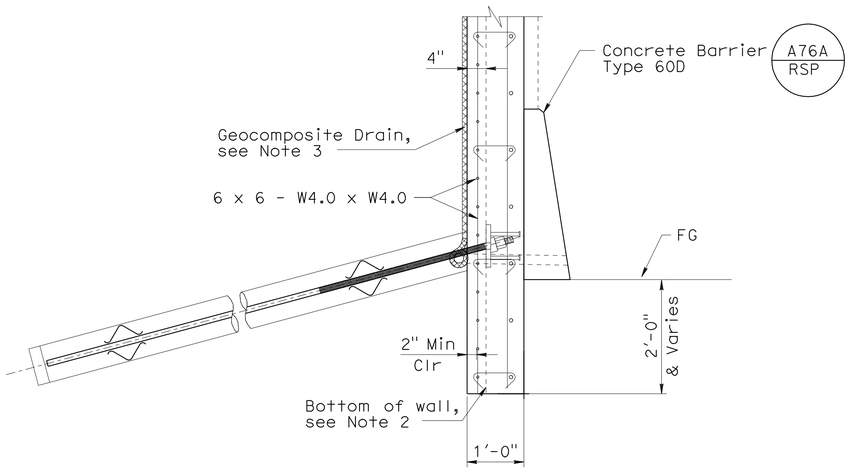

TYPICAL SECTION
3/4" = 1'-0"

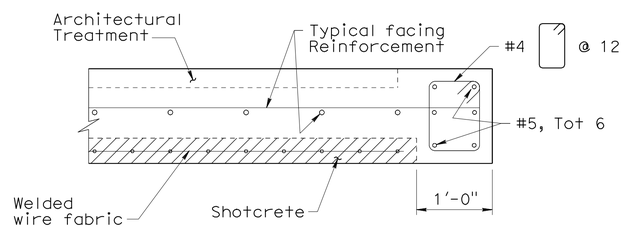

END WALL DETAIL
1" = 1'-0"

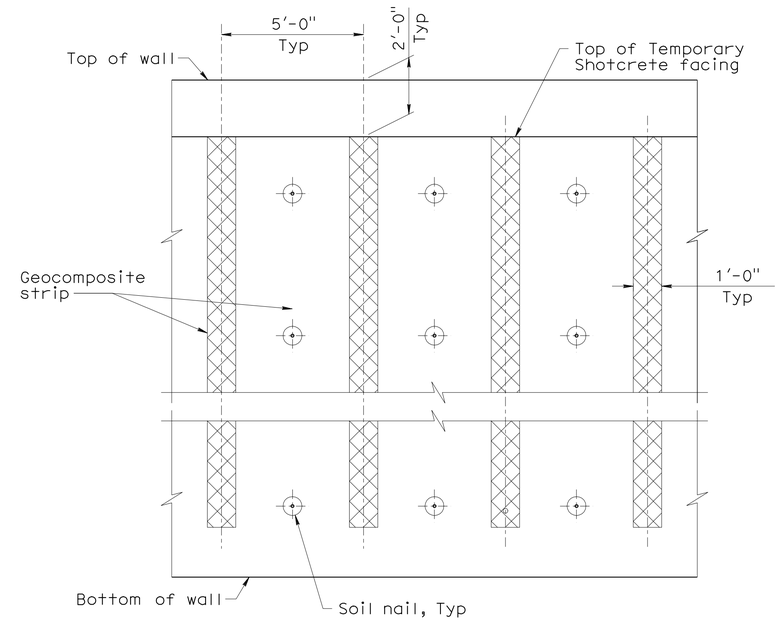

TYPICAL SOIL NAIL AND DRAINAGE ELEVATION
3/8" = 1'-0"

Notes:

1. The 1'-0" geocomposite drains shall be placed vertically at mid bay between soil nails. Must be continuous with minimum 1'-0" lapping at splices.
2. Bottom of wall to be placed against undisturbed material.
3. Adjust geocomposite drain to clear test soil nails.
4. The Vertical and horizontal construction joint in the Shotcrete Layer shall be located a minimum of 1'-6" from adjacent Soil Nail row and columns.
5. See "Architectural Treatment Details" sheet for details.

Note:
The Contractor shall verify all controlling field dimensions before ordering or fabricating any material.

DESIGN OVERSIGHT Yiwei Hu
1/26/11
SIGN OFF DATE

	BY	CHECKED
DESIGN	G. Xu	E. Tang
DETAILS	K. Wang	E. Tang
QUANTITIES	D. Vang	W. Sennett

PREPARED FOR THE STATE OF CALIFORNIA DEPARTMENT OF TRANSPORTATION

Guoping Xu
PROJECT ENGINEER

BRIDGE NO. 33E0077
POST MILE 27.00

RETAINING WALL 403
SOIL NAIL WALL DETAILS NO. 8

DESIGN DETAIL SHEET (ENGLISH) (REV. 06-01-09)

ORIGINAL SCALE IN INCHES FOR REDUCED PLANS 0 1 2 3

CU 0733
EA 297611

DISREGARD PRINTS BEARING EARLIER REVISION DATES
REVISION DATES (PRELIMINARY STAGE ONLY) 05/04/09 01/22/10 08/18/10 12/10/10

SHEET 10 OF 17

FILE => 33e0077-g-redt08.dgn

USERNAME => s124196 DATE PLOTTED => 21-NOV-2011 TIME PLOTTED => 15:29

DIST	COUNTY	ROUTE	POST MILES TOTAL PROJECT	SHEET No	TOTAL SHEETS
04	Ala	84	25.5/27.1	481	495

REGISTERED CIVIL ENGINEER 12/10/10 DATE

6-27-11
PLANS APPROVAL DATE

REGISTERED PROFESSIONAL ENGINEER Guoping Xu No. C 63977 Exp. 09/30/12 CIVIL STATE OF CALIFORNIA

The State of California or its officers or agents shall not be responsible for the accuracy or completeness of scanned copies of this plan sheet.

ALAMEDA COUNTY TRANSPORTATION IMPROVEMENT AUTHORITY (ACTIA)
1333 BROADWAY, SUITE 300
OAKLAND, CA 94612

MGE ENGINEERING, INC.
7415 GREENHAVEN DRIVE, SUITE 100
SACRAMENTO, CALIFORNIA 95831

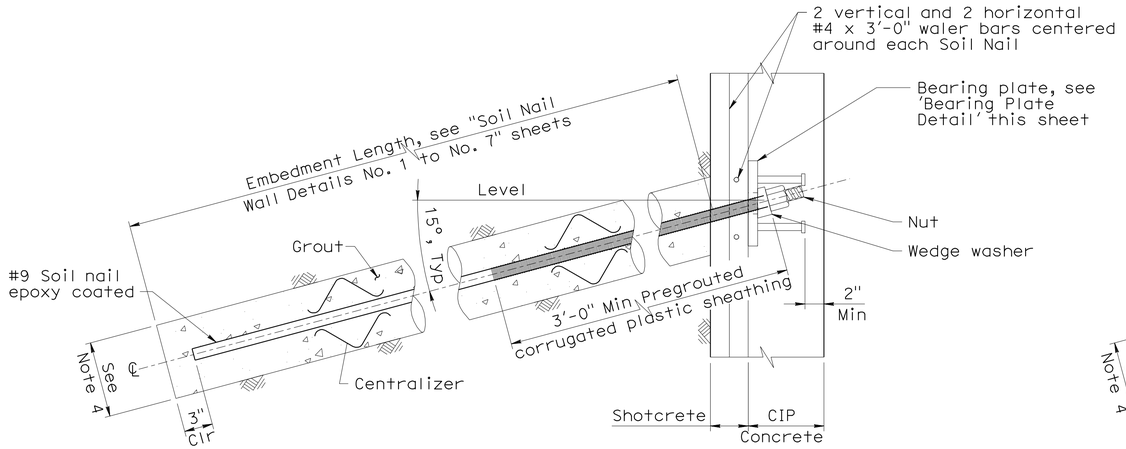

SOIL NAIL ASSEMBLY DETAIL
1 1/2" = 1'-0"

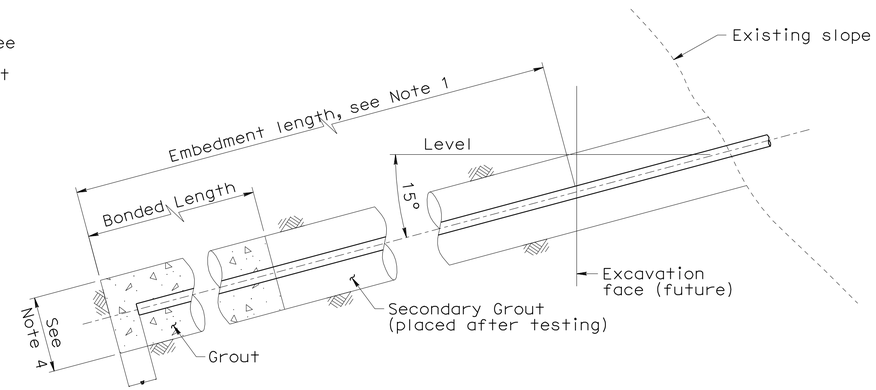

VERIFICATION TEST SOIL NAIL ASSEMBLY DETAIL
1 1/2" = 1'-0"

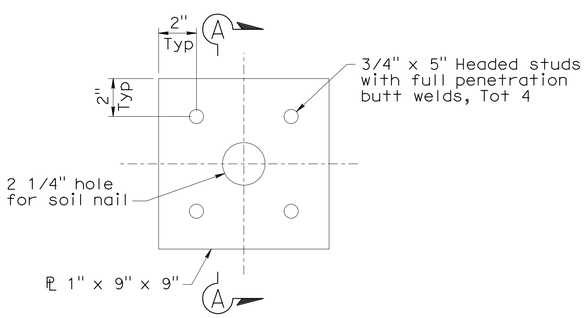

BEARING PLATE DETAIL
3" = 1'-0"

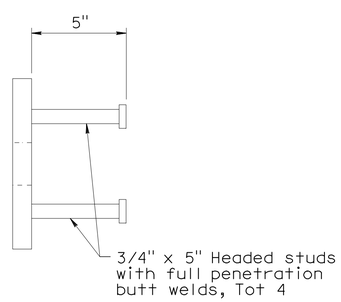

SECTION A-A
3" = 1'-0"

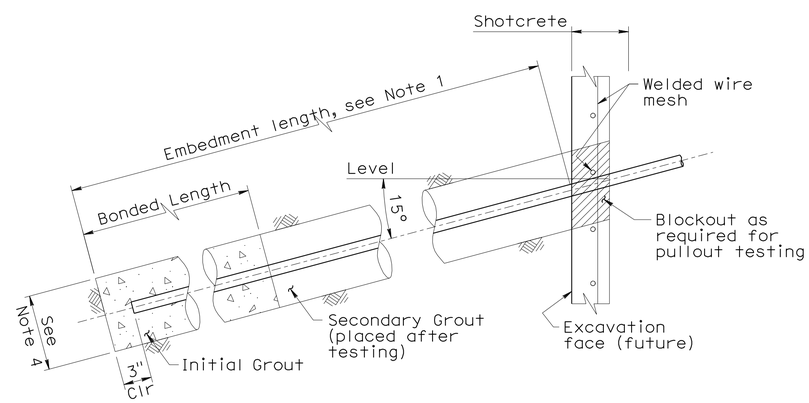

PROOF TEST SOIL NAIL ASSEMBLY DETAIL
1 1/2" = 1'-0"

Notes:
1. Embedment length of Proof Test Nails and Verification Test Nails shall be equal to 2/3 of the embedment length of adjacent soil nail assembly, but not less than 12 ft.
2. Total length of the Proof Test Soil Nail Assembly equals to the embedment length plus the length required for jacking equipment.
3. For location of Proof Test Soil Nail Assemblies, see "Soil Nail Wall Details No. 1" to "Soil Nail Wall Details No. 7" sheet. Additional Proof Test Soil Nails will be installed and tested per Special Provisions.
4. Diameter of drilled hole will be determined by contractor.
5. Not all Reinforcement shown, see "Soil Nail Wall Details No. 8" sheet.

Note:
The Contractor shall verify all controlling field dimensions before ordering or fabricating any material.

DESIGN OVERSIGHT Yiwei Hu
1/26/11
SIGN OFF DATE

	BY	CHECKED
DESIGN	G. Xu	E. Tang
DETAILS	K. Wang	E. Tang
QUANTITIES	D. Vang	W. Sennett

PREPARED FOR THE STATE OF CALIFORNIA DEPARTMENT OF TRANSPORTATION

Guoping Xu
PROJECT ENGINEER

BRIDGE NO. 33E0077
POST MILE 27.00

RETAINING WALL 403
SOIL NAIL WALL DETAILS NO. 9

DESIGN DETAIL SHEET (ENGLISH) (REV. 06-01-09)

ORIGINAL SCALE IN INCHES FOR REDUCED PLANS 0 1 2 3

CU 0733
EA 297611

DISREGARD PRINTS BEARING EARLIER REVISION DATES

REVISION DATES (PRELIMINARY STAGE ONLY) 05/01/09 01/22/10 08/13/10 12/10/10

SHEET 11 OF 17

FILE => 33e0077-g-redt09.dgn

USERNAME => s124496 DATE PLOTTED => 21-NOV-2011 TIME PLOTTED => 15:29

DIST.	COUNTY	ROUTE	POST MILES TOTAL PROJECT	SHEET NO.	TOTAL SHEETS
04	Ala	84	25.5/27.1	482	495

REGISTERED CIVIL ENGINEER 12/10/10 DATE

PROFESSIONAL ENGINEER REGISTERED Guoping Xu No. C 63977 Exp. 09/30/12 CIVIL STATE OF CALIFORNIA

6-27-11
PLANS APPROVAL DATE

The State of California or its officers or agents shall not be responsible for the accuracy or completeness of electronic copies of this plan sheet.

ALAMEDA COUNTY TRANSPORTATION IMPROVEMENT AUTHORITY (ACTIA)
1333 BROADWAY, SUITE 300
OAKLAND, CA 94612

MGE ENGINEERING, INC.
7415 GREENHAVEN DRIVE, SUITE 100
SACRAMENTO, CALIFORNIA 95831

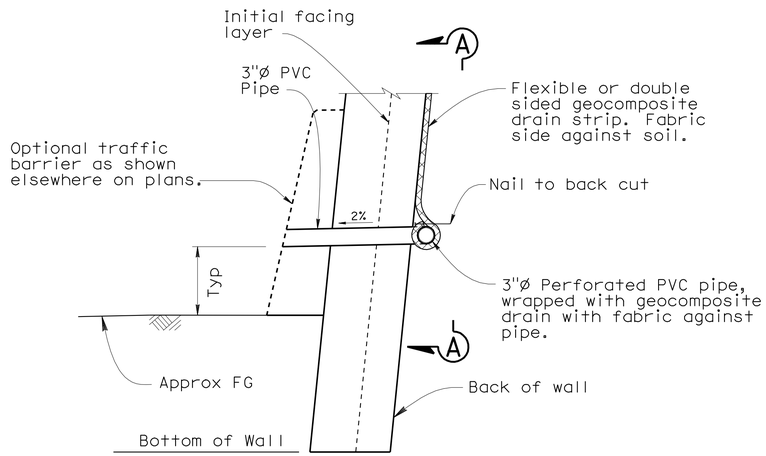

WALL DRAIN DETAIL AT WEEPHOLE
OPTION A
No scale

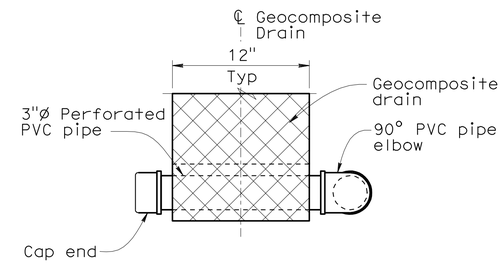

VIEW A-A
No scale

NOTES:

1. Geocomposite drain strip per Section 88 Geosynthetics of the Standard Specifications.
2. Elevation of drains and weepholes as shown elsewhere on plans.

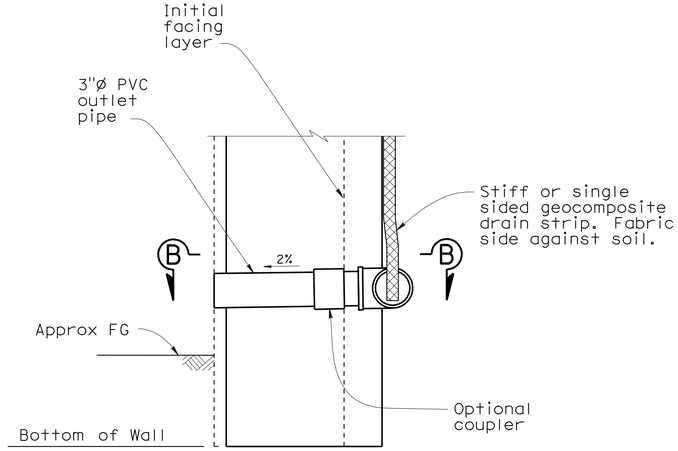

WALL DRAIN DETAIL AT WEEPHOLE
OPTION B
No scale

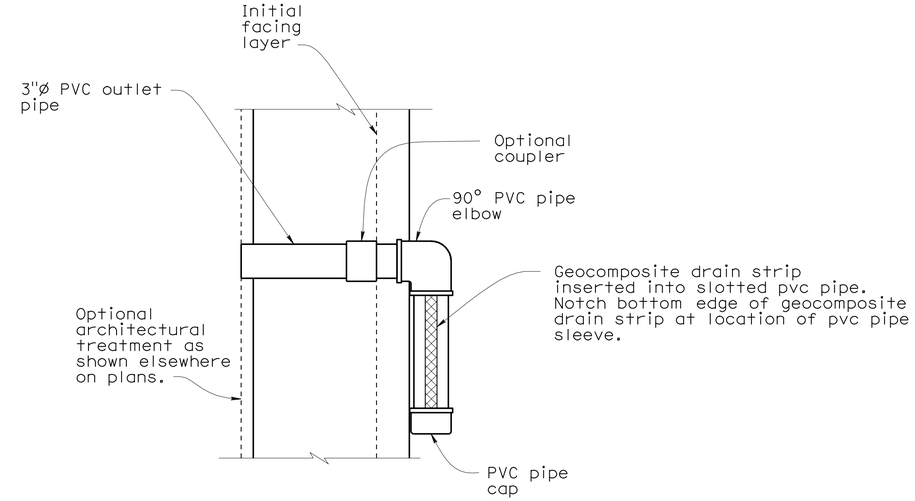

VIEW B-B
No Scale

STANDARD DRAWING

FILE NO. xs12-021e

APPROVED BY K. GRISWELL
RESPONSIBLE TECHNICAL SPECIALIST
APPROVAL DATE

RELEASED BY ROBERTO LACALLE
RESPONSIBLE OFFICE CHIEF
RELEASE DATE

STATE OF CALIFORNIA
DEPARTMENT OF TRANSPORTATION

DIVISION OF ENGINEERING SERVICES

BRIDGE NO. 33E0077
POST MILE 27.00

RETAINING WALL 403
WALL DRAIN DETAILS

DS OSD 2147A (ENGLISH STANDARD DRAWING "XS" BORDER REV. 01/11/08)

ORIGINAL SCALE IN INCHES FOR REDUCED PLANS 0 1 2 3

CU 0733
EA 297611

DISREGARD PRINTS BEARING EARLIER REVISION DATES

REVISION DATES (PRELIMINARY STAGE ONLY) 08/16/10 12/10/10

SHEET 12 OF 17

USERNAME => s124496

33e0077-g-redt10.dgn

DATE PLOTTED => 21-NOV-2011 TIME PLOTTED => 15:30

DIST	COUNTY	ROUTE	POST MILES TOTAL PROJECT	SHEET No	TOTAL SHEETS
04	Ala	84	25.5/27.1	483	495

REGISTERED CIVIL ENGINEER 12/10/10 DATE

6-27-11
PLANS APPROVAL DATE

REGISTERED PROFESSIONAL ENGINEER
Guoping Xu
No. C 63977
Exp. 09/30/12
CIVIL
STATE OF CALIFORNIA

The State of California or its officers or agents shall not be responsible for the accuracy or completeness of scanned copies of this plan sheet.

ALAMEDA COUNTY TRANSPORTATION IMPROVEMENT AUTHORITY (ACTIA)
1333 BROADWAY, SUITE 300
OAKLAND, CA 94612

MGE ENGINEERING, INC.
7415 GREENHAVEN DRIVE, SUITE 100
SACRAMENTO, CALIFORNIA 95831

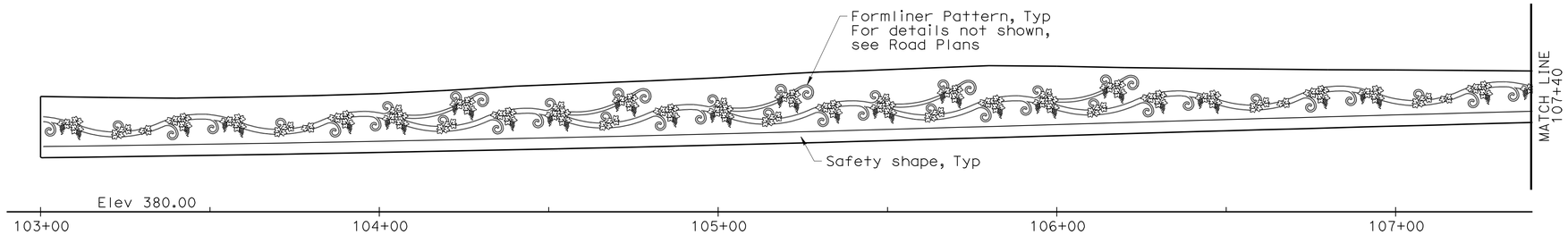

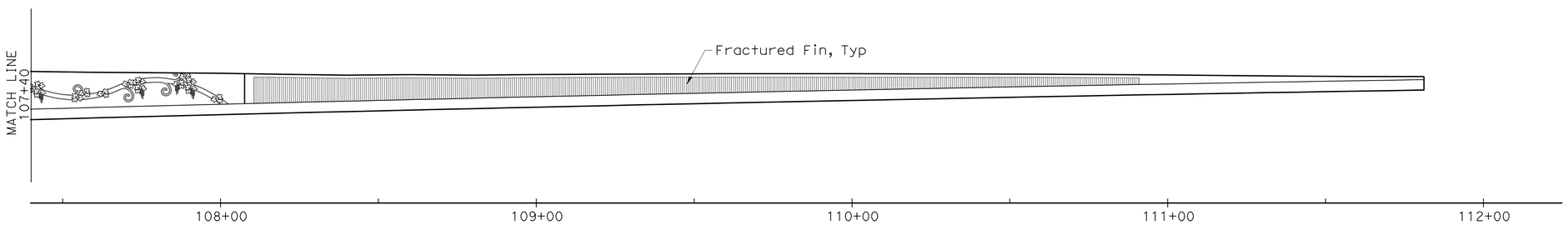

ARCHITECTURAL TREATMENT DEVELOPED ELEVATION

1" = 20'-0"

Note:
The Contractor shall verify all controlling field dimensions before ordering or fabricating any material.

DESIGN OVERSIGHT Yiwei Hu
1/26/11
SIGN OFF DATE

	BY	CHECKED
DESIGN	G. Xu	E. Tang
DETAILS	K. Wang	E. Tang
QUANTITIES	D. Vang	W. Sennett

PREPARED FOR THE STATE OF CALIFORNIA DEPARTMENT OF TRANSPORTATION

Guoping Xu
PROJECT ENGINEER

BRIDGE NO. 33E0077
POST MILE 27.00

RETAINING WALL 403
ARCHITECTURAL TREATMENT LAYOUT

DESIGN DETAIL SHEET (ENGLISH) (REV. 06-01-09)

ORIGINAL SCALE IN INCHES FOR REDUCED PLANS 0 1 2 3

CU 0733
EA 297611

DISREGARD PRINTS BEARING EARLIER REVISION DATES

REVISION DATES (PRELIMINARY STAGE ONLY) 05/04/09 01/22/10 08/18/10 12/10/10

SHEET 13 OF 17

FILE => 33e0077-u-miscdt01.dgn

USERNAME => s124496 DATE PLOTTED => 21-NOV-2011 TIME PLOTTED => 15:30

DIST	COUNTY	ROUTE	POST MILES TOTAL PROJECT	SHEET No	TOTAL SHEETS
04	Ala	84	25.5/27.1	484	495

REGISTERED CIVIL ENGINEER — DATE 1/4/11

6-27-11
PLANS APPROVAL DATE

REGISTERED PROFESSIONAL ENGINEER — Stephen Huang — No. C 42289 — Exp. 03/31/12 — CIVIL — STATE OF CALIFORNIA

The State of California or its officers or agents shall not be responsible for the accuracy or completeness of electronic copies of this plan sheet.

ALAMEDA COUNTY TRANSPORTATION IMPROVEMENT AUTHORITY (ACTIA)
1333 Broadway, Suite 300
Oakland, CA 94612

URS CORPORATION
1333 Broadway,
Suite 800
Oakland, CA 94612

REFERENCE: CALTRANS SOIL & ROCK LOGGING, CLASSIFICATION, AND PRESENTATION MANUAL (JUNE 2007)

CEMENTATION

Description	Criteria
Weak	Crumbles or breaks with handling or little finger pressure.
Moderate	Crumbles or breaks with considerable finger pressure.
Strong	Will not crumble or break with finger pressure.

CONSISTENCY OF COHESIVE SOILS

Description	Unconfined Compressive Strength (tsf)	Pocket Penetrometer Measurement (tsf)	Torvane Measurement (tsf)	Field Approximation
Very Soft	< 0.25	< 0.25	< 0.12	Easily penetrated several inches by fist
Soft	0.25 to 0.50	0.25 to 0.50	0.12 to 0.25	Easily penetrated several inches by thumb
Medium Stiff	0.50 to 1.0	0.50 to 1.0	0.25 to 0.50	Penetrated several inches by thumb with moderate effort
Stiff	1 to 2	1 to 2	0.50 to 1.0	Readily indented by thumb but penetrated only with great effort
Very Stiff	2 to 4	2 to 4	1.0 to 2.0	Readily indented by thumbnail
Hard	> 4.0	> 4.0	> 2.0	Indented by thumbnail with difficulty

BOREHOLE IDENTIFICATION

Symbol	Hole Type	Description
Size	A	Auger Boring
Size	R P	Rotary drilled boring Rotary percussion boring (air)
Size	R	Rotary drilled diamond core
Size	HD HA	Hand driven (1-inch soil tube) Hand Auger
●	D	Dynamic Cone Penetration Boring
▲	CPT	Cone Penetration Test (ASTM D 5778-95)
⬚	O	Other

Note: Size in inches.

PLASTICITY OF FINE-GRAINED SOILS

Description	Criteria
Nonplastic	A 1/8-inch thread cannot be rolled at any water content.
Low	The thread can barely be rolled and the lump cannot be formed when drier than the plastic limit.
Medium	The thread is easy to roll and not much time is required to reach the plastic limit. The thread cannot be rerolled after reaching the plastic limit. The lump crumbles when drier than the plastic limit.
High	It takes considerable time rolling and kneading to reach the plastic limit. The thread can be rerolled several times after reaching the plastic limit. The lump can be formed without crumbling when drier than the plastic limit.

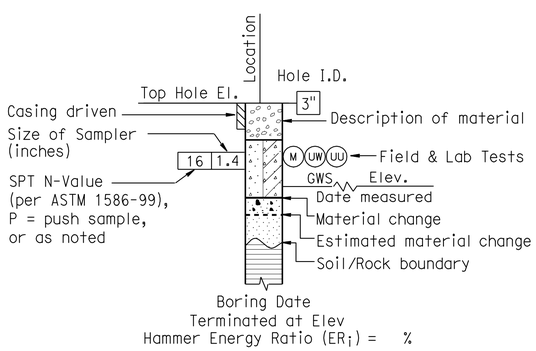

ROTARY BORING

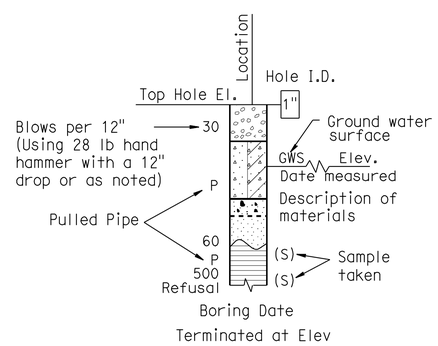

HAND BORING

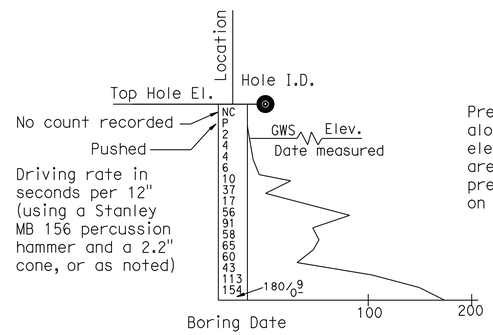

DYNAMIC CONE PENETRATION BORING

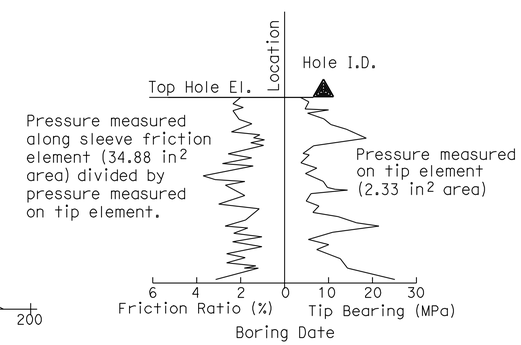

CONE PENETRATION TEST (CPT) SOUNDING

DESIGN OVERSIGHT Yiwei Hu	DRAWN BY	ANDREW CHEUNG	CHARLES RAMBO FIELD INVESTIGATION BY:
1/26/11 SIGN OFF DATE	CHECKED BY	MADHU THUMMALURU	DATE:

PREPARED FOR THE STATE OF CALIFORNIA DEPARTMENT OF TRANSPORTATION

Stephen Huang
PROJECT ENGINEER

BRIDGE NO. 33E0077
POST MILES 27.0

RETAINING WALL 403
LOG OF TEST BORINGS (1 of 4)

GS CIVIL LOG OF TEST BORINGS SHEET (ENGLISH) (REV. 7/16/10)

ORIGINAL SCALE IN INCHES FOR REDUCED PLANS 0 1 2 3

UNIT: 0733
PROJECT NUMBER & PHASE: 04000205801 CONTRACT NO.: 04-297614

DISREGARD PRINTS BEARING EARLIER REVISION DATES

REVISION DATES

SHEET 14 OF 17

FILE => 33e0077-z-1tb01.dgn

USERNAME => s124496 DATE PLOTTED => 21-NOV-2011 TIME PLOTTED => 15:30

REFERENCE: CALTRANS SOIL & ROCK LOGGING, CLASSIFICATION, AND PRESENTATION MANUAL (JUNE 2007)

DIST	COUNTY	ROUTE	POST MILES TOTAL PROJECT	SHEET No	TOTAL SHEETS
04	Ala	84	25.5/27.1	485	495

REGISTERED CIVIL ENGINEER — DATE 1/4/11

6-27-11
PLANS APPROVAL DATE

REGISTERED PROFESSIONAL ENGINEER — Stephen Huang — No. C 42289 — Exp. 03/31/12 — CIVIL — STATE OF CALIFORNIA

The State of California or its officers or agents shall not be responsible for the accuracy or completeness of electronic copies of this plan sheet.

ALAMEDA COUNTY TRANSPORTATION IMPROVEMENT AUTHORITY (ACTIA)
1333 Broadway, Suite 300
Oakland, CA 94612

URS CORPORATION
1333 Broadway,
Suite 800
Oakland, CA 94612

GROUP SYMBOLS AND NAMES

Graphic/Symbol	Group Names
GW	Well-graded GRAVEL Well-graded GRAVEL with SAND
GP	Poorly graded GRAVEL Poorly graded GRAVEL with SAND
GW-GM	Well-graded GRAVEL with SILT Well-graded GRAVEL with SILT and SAND
GW-GC	Well-graded GRAVEL with CLAY (or SILTY CLAY) Well-graded GRAVEL with CLAY and SAND (or SILTY CLAY and SAND)
GP-GM	Poorly graded GRAVEL with SILT Poorly graded GRAVEL with SILT and SAND
GP-GC	Poorly graded GRAVEL with CLAY (or SILTY CLAY) Poorly graded GRAVEL with CLAY and SAND (or SILTY CLAY and SAND)
GM	SILTY GRAVEL SILTY GRAVEL with SAND
GC	CLAYEY GRAVEL CLAYEY GRAVEL with SAND
GC-GM	SILTY, CLAYEY GRAVEL SILTY, CLAYEY GRAVEL with SAND
SW	Well-graded SAND Well-graded SAND with GRAVEL
SP	Poorly graded SAND Poorly graded SAND with GRAVEL
SW-SM	Well-graded SAND with SILT Well-graded SAND with SILT and GRAVEL
SW-SC	Well-graded SAND with CLAY (or SILTY CLAY) Well-graded SAND with CLAY and GRAVEL (or SILTY CLAY and GRAVEL)
SP-SM	Poorly graded SAND with SILT Poorly graded SAND with SILT and GRAVEL
SP-SC	Poorly graded SAND with CLAY (or SILTY CLAY) Poorly graded SAND with CLAY and GRAVEL (or SILTY CLAY and GRAVEL)
SM	SILTY SAND SILTY SAND with GRAVEL
SC	CLAYEY SAND CLAYEY SAND with GRAVEL
SC-SM	SILTY, CLAYEY SAND SILTY, CLAYEY SAND with GRAVEL
PT	PEAT
	COBBLES COBBLES and BOULDERS BOULDERS

Graphic/Symbol	Group Names
CL	Lean CLAY Lean CLAY with SAND Lean CLAY with GRAVEL SANDY lean CLAY SANDY lean CLAY with GRAVEL GRAVELLY lean CLAY GRAVELLY lean CLAY with SAND
CL-ML	SILTY CLAY SILTY CLAY with SAND SILTY CLAY with GRAVEL SANDY SILTY CLAY SANDY SILTY CLAY with GRAVEL GRAVELLY SILTY CLAY GRAVELLY SILTY CLAY with SAND
ML	SILT SILT with SAND SILT with GRAVEL SANDY SILT SANDY SILT with GRAVEL GRAVELLY SILT GRAVELLY SILT with SAND
OL	ORGANIC lean CLAY ORGANIC lean CLAY with SAND ORGANIC lean CLAY with GRAVEL SANDY ORGANIC lean CLAY SANDY ORGANIC lean CLAY with GRAVEL GRAVELLY ORGANIC lean CLAY GRAVELLY ORGANIC lean CLAY with SAND
OL	ORGANIC SILT ORGANIC SILT with SAND ORGANIC SILT with GRAVEL SANDY ORGANIC SILT SANDY ORGANIC SILT with GRAVEL GRAVELLY ORGANIC SILT GRAVELLY ORGANIC SILT with SAND
CH	Fat CLAY Fat CLAY with SAND Fat CLAY with GRAVEL SANDY fat CLAY SANDY fat CLAY with GRAVEL GRAVELLY fat CLAY GRAVELLY fat CLAY with SAND
MH	Elastic SILT Elastic SILT with SAND Elastic SILT with GRAVEL SANDY elastic SILT SANDY elastic SILT with GRAVEL GRAVELLY elastic SILT GRAVELLY elastic SILT with SAND
OH	ORGANIC fat CLAY ORGANIC fat CLAY with SAND ORGANIC fat CLAY with GRAVEL SANDY ORGANIC fat CLAY SANDY ORGANIC fat CLAY with GRAVEL GRAVELLY ORGANIC fat CLAY GRAVELLY ORGANIC fat CLAY with SAND
OH	ORGANIC elastic SILT ORGANIC elastic SILT with SAND ORGANIC elastic SILT with GRAVEL SANDY ORGANIC elastic SILT SANDY ORGANIC elastic SILT with GRAVEL GRAVELLY ORGANIC elastic SILT GRAVELLY ORGANIC elastic SILT with SAND
OL/OH	ORGANIC SOIL ORGANIC SOIL with SAND ORGANIC SOIL with GRAVEL SANDY ORGANIC SOIL SANDY ORGANIC SOIL with GRAVEL GRAVELLY ORGANIC SOIL GRAVELLY ORGANIC SOIL with SAND

FIELD AND LABORATORY TESTING

- (C) Consolidation (ASTM D 2435)
- (CL) Collapse Potential (ASTM D 5333)
- (CP) Compaction Curve (CTM 216)
- (CR) Corrosivity Testing (CTM 643, CTM 422, CTM 417)
- (CU) Consolidated Undrained Triaxial (ASTM D 4767)
- (DS) Direct Shear (ASTM D 3080)
- (EI) Expansion Index (ASTM D 4829)
- (M) Moisture Content (ASTM D 2216)
- (OC) Organic Content-% (ASTM D 2974)
- (P) Permeability (CTM 220)
- (PA) Particle Size Analysis (ASTM D 422)
- (PI) Plasticity Index (AASHTO T 90) Liquid Limit (AASHTO T 89)
- (PL) Point Load Index (ASTM D 5731)
- (PM) Pressure Meter
- (PP) Pocket Penetrometer
- (R) R-Value (CTM 301)
- (SE) Sand Equivalent (CTM 217)
- (SG) Specific Gravity (AASHTO T 100)
- (SL) Shrinkage Limit (ASTM D 427)
- (SW) Swell Potential (ASTM D 4546)
- (TV) Pocket Torvane
- (UC) Unconfined Compression-Soil (ASTM D 2166) Unconfined Compression-Rock (ASTM D 2938)
- (UU) Unconsolidated Undrained Triaxial (ASTM D 2850)
- (UW) Unit Weight (ASTM D 4767)
- (VS) Vane Shear (AASHTO T 223)

APPARENT DENSITY OF COHESIONLESS SOILS

Description	SPT N_{60} (Blows / 12 inches)
Very loose	0 - 4
Loose	5 - 10
Medium Dense	11 - 30
Dense	31 - 50
Very Dense	> 50

MOISTURE

Description	Criteria
Dry	Absence of moisture, dusty, dry to the touch
Moist	Damp but no visible water
Wet	Visible free water, usually soil is below water table

PERCENT OR PROPORTION OF SOILS

Description	Criteria
Trace	Particles are present but estimated to be less than 5%
Few	5 to 10%
Little	15 to 25%
Some	30 to 45%
Mostly	50 to 100%

PARTICLE SIZE

Description		Size
Boulder		> 12"
Cobble		3" to 12"
Gravel	Coarse	3/4" to 3"
	Fine	No. 4 to 3/4"
Sand	Coarse	No. 10 to No. 4
	Medium	No. 40 to No. 10
	Fine	No. 200 to No. 40

DESIGN OVERSIGHT — Yiwei Hu — 1/26/11 — SIGN OFF DATE

DRAWN BY: ANDREW CHEUNG
CHECKED BY: MADHU THUMMALURU
CHARLES RAMBO — FIELD INVESTIGATION BY:
DATE:

PREPARED FOR THE STATE OF CALIFORNIA DEPARTMENT OF TRANSPORTATION

Stephen Huang — PROJECT ENGINEER

BRIDGE NO. 33E0077
POST MILES 27.0

RETAINING WALL 403
LOG OF TEST BORINGS (2 of 4)

GS CIVIL LOG OF TEST BORINGS SHEET (ENGLISH) (REV. 7/16/10)

ORIGINAL SCALE IN INCHES FOR REDUCED PLANS 0 1 2 3

UNIT: 0733
PROJECT NUMBER & PHASE: 0400020580 CONTRACT NO.: 04-297614

DISREGARD PRINTS BEARING EARLIER REVISION DATES

REVISION DATES

SHEET 15 OF 17

FILE => 33e0077-z-1tb02.dgn

USERNAME => s124496 DATE PLOTTED => 21-NOV-2011 TIME PLOTTED => 16:30

DIST	COUNTY	ROUTE	POST MILES TOTAL PROJECT	SHEET No	TOTAL SHEETS
04	Ala	84	25.5/27.1	486	495

REGISTERED CIVIL ENGINEER — DATE 1/4/11

6-27-11
PLANS APPROVAL DATE

The State of California or its officers or agents shall not be responsible for the accuracy or completeness of electronic copies of this plan sheet.

REGISTERED PROFESSIONAL ENGINEER — Stephen Huang — No. C 42289 — Exp. 03/31/12 — CIVIL — STATE OF CALIFORNIA

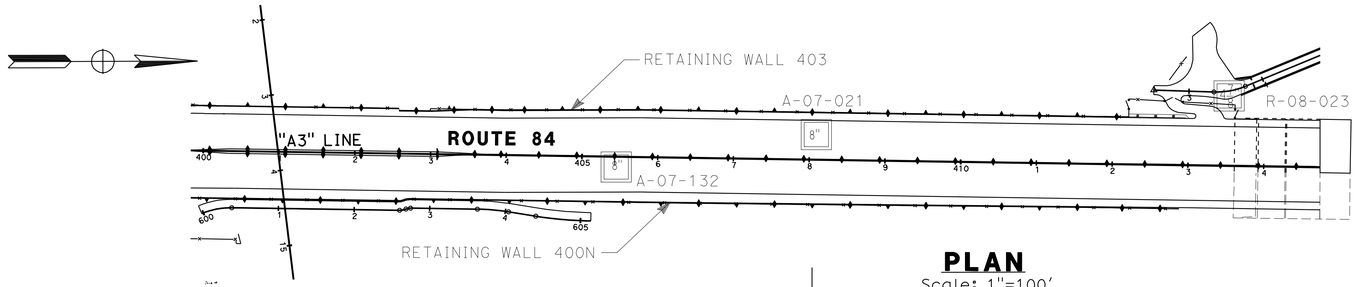

PLAN
Scale: 1"=100'

NOTE: This LOTB sheet was prepared in accordance with the Caltrans Soil & Rock Logging, Classification, and Presentation Manual (June 2007)

BENCH MARK:
B.M Elev. 415.27
Northing: 2063428.6750
Easting: 6181960.7750
$2\frac{1}{2}$" Brass disk set in concrete in well monument stamped "+", at the intersection of Vineyard Avenue and Ruby Hill Drive

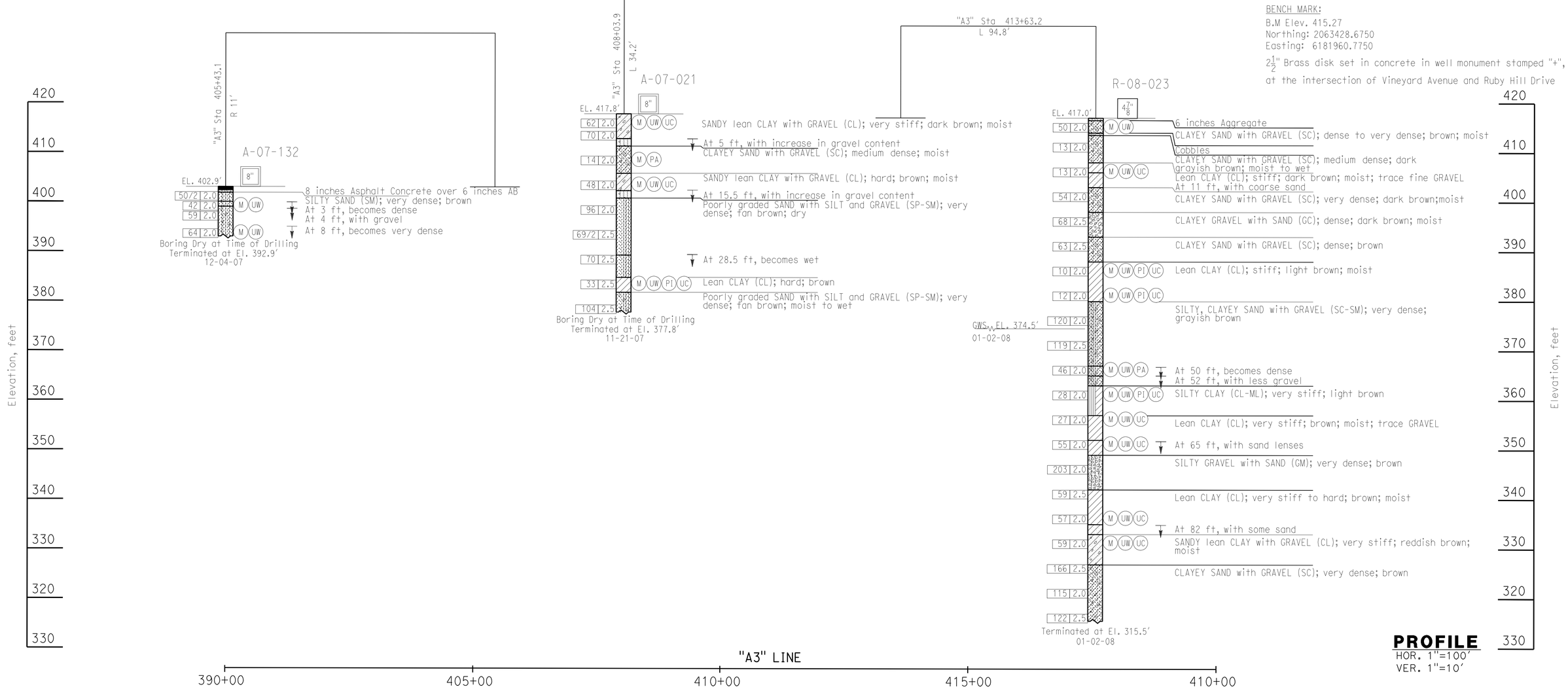

PROFILE
HOR. 1"=100'
VER. 1"=10'

DESIGN OVERSIGHT Yiwei Hu 1/26/11 SIGN OFF DATE	DRAWN BY	ANDREW CHEUNG	CHARLES RAMBO FIELD INVESTIGATION BY:	PREPARED FOR THE STATE OF CALIFORNIA DEPARTMENT OF TRANSPORTATION	Stephen Huang PROJECT ENGINEER
	CHECKED BY	MADHU THUMMALURU	DATE:		

BRIDGE NO. 33E0077 — POST MILES 27.0

RETAINING WALL 403
LOG OF TEST BORINGS (3 of 4)

GS CIVIL LOG OF TEST BORINGS SHEET (ENGLISH) (REV. 7/16/10)

ORIGINAL SCALE IN INCHES FOR REDUCED PLANS 0 1 2 3

UNIT: 0733
PROJECT NUMBER & PHASE: 04000205801 CONTRACT NO.: 04-297614

DISREGARD PRINTS BEARING EARLIER REVISION DATES → REVISION DATES

SHEET 16 OF 17

FILE => 33e0077-z-ltb03.dgn

USERNAME => s124436 DATE PLOTTED => 21-NOV-2011 TIME PLOTTED => 15:30

NOTES:

1. The 64 mm sampler shown on the logs is a split barrel sampler with 76.2 mm O.D. and 64 mm I.D., with 152.4 mm long brass liners. The sampler is driven using a 63.5 kg hammer with a 0.76 m drop.

2. Soil classification and description conform to ASTM D2487.

BENCHMARK:
All elevations shown hereon are based upon Caltrans Aerial Control Panel No. AB-947 having an elevation of 399.13 feet (121.653 meters) as described in Caltrans Survey Book ALA84-A-5 (pg 2 of 4 - 87-240).
TBM No. 2: Mon. No. 220
A brass pin in Standard City Well Monument Box at the intersection of Stanley Blvd. and Isabel Avenue 19.004 meters right of Center Line Station "15" 122+19.529. The elevation is 126.311 meters (414.41 feet).

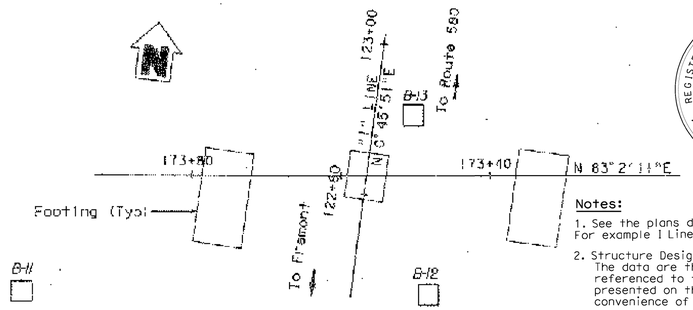

PLAN
1 : 400

Notes:

1. See the plans dated May 11, 1999 for stationing. For example I Line Sta 136+62 (Metric) = A3 Line Sta 448+23 (English).
2. Structure Design produced the data presented in the table below. The data are the metric locations for the As-Built Test Borings referenced to the proposed new structure location. This table is presented on the As-Built Log of Test Boring sheet for the convenience of any bidder, contractor or other interested party.

REGISTERED PROFESSIONAL ENGINEER — Stephen Huang — No. C 42289 — Exp. 03/31/12 — GEOTECHNICAL — STATE OF CALIFORNIA

DIST.	COUNTY	ROUTE	KILOMETER POST TOTAL PROJECT	SHEET NO.	TOTAL SHEETS
04	ALA	84		305	401

REGISTERED GEOTECHNICAL ENGINEER

PLANS APPROVAL DATE

REGISTERED PROFESSIONAL ENGINEER — C. MEELAKANTAN — No. 2361 — Exp. 9/30/01 — GEOTECHNICAL — STATE OF CALIFORNIA

CITY OF LIVERMORE
DEPARTMENT OF PUBLIC WORKS
3580 Pointing Avenue

GEOTECHNICAL CONSULTANTS, INC.
631 Howard Street, Ste.320
San Francisco, CA 94105

The State of California or its officers or agents shall not be responsible for the accuracy or completeness of electronic copies of this plan sheet.

Revisions made to this Log of Test Borings from the original ____ Log of Test Borings are the addition of the following table and notes:

Boring	Station	Offset from A3 Line (84)
B-11	402+27	143.4 ft. Lt
B-12	402+49	33.5 ft. Rt
B-13	403+25	16.7 ft. Rt

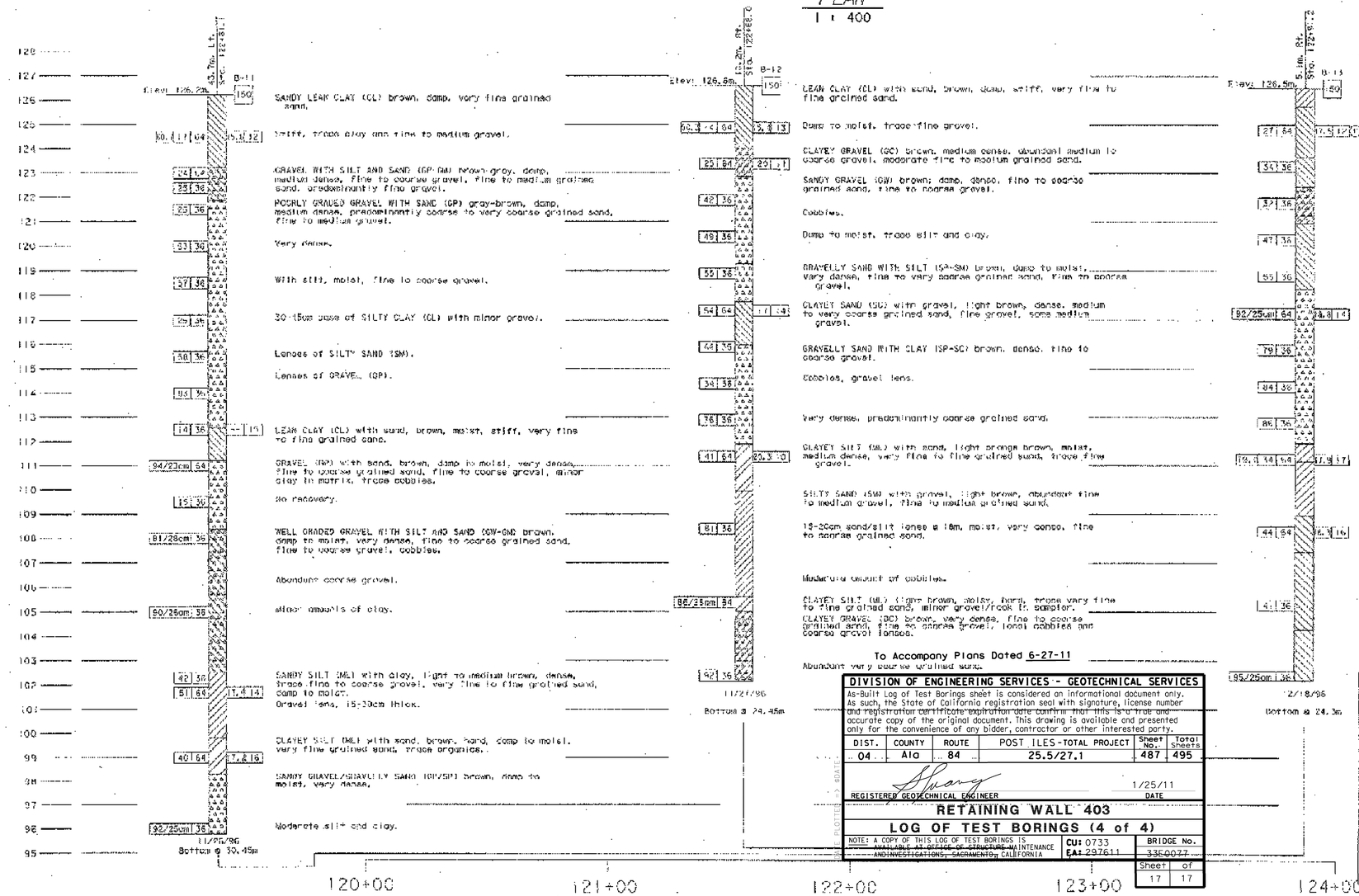

To Accompany Plans Dated 6-27-11

DIVISION OF ENGINEERING SERVICES - GEOTECHNICAL SERVICES

As-Built Log of Test Borings sheet is considered an informational document only. As such, the State of California registration seal with signature, license number and registration certificate expiration date confirm that this document is an accurate copy of the original document. This drawing is available and presented only for the convenience of any bidder, contractor or other interested party.

DIST.	COUNTY	ROUTE	POST MILES - TOTAL PROJECT	Sheet No.	Total Sheets
04	ALA	84	25.5/27.1	487	495

REGISTERED GEOTECHNICAL ENGINEER — DATE 1/25/11

RETAINING WALL 403

LOG OF TEST BORINGS (4 of 4)

NOTE: A COPY OF THIS LOG OF TEST BORINGS IS AVAILABLE AT OFFICE OF STRUCTURE MAINTENANCE AND INVESTIGATIONS, SACRAMENTO, CALIFORNIA

CU: 0733
EA: 297611

BRIDGE No. 33-0077
Sheet 17 of 17

Contract Number: 04-233054
City Project Numbers: 89-50
Date Accepted: 10/1/02

AS-BUILT DRAWING

Resident Engineer: Hank Doll
Vail Cooper & Associates

☒ No Changes
☐ Changes As Noted

Revisions by: MFW (Initials)

LEGEND OF EARTH MATERIALS

LEGEND OF BORING GENERALIZING

CONSISTENCY — COHESIVE SOIL

NOTE: Field classification of materials based on visual inspection in accordance with Caltrans Field Manual Test Procedures.

DESIGN OVERSIGHT	
SIGN OFF DATE	
DRAWN BY	J. HULSE
CHECKED BY	T. HUSTON
A. PATTERSON, V. THILAKARATNE	
FIELD INVESTIGATION BY:	
DATE:	

PREPARED FOR THE STATE OF CALIFORNIA DEPARTMENT OF TRANSPORTATION

O. RODRIGUEZ
PROJECT ENGINEER

CU
EA

BRIDGE NO. 33-0405
KILOMETER POST

ISABEL AVENUE UNDERPASS

LOG OF TEST BORINGS

REV. DATE: 6-2-97

ORIGINAL SCALE IN MILLIMETERS FOR REDUCED PLANS

DISCARD PRINTS BEARING EARLIER REVISION DATES

REVISION DATES (PRELIMINARY STAMP ONLY)

SHEET 13 OF 13

33e0077-z-ltb04.tif

DIST	COUNTY	ROUTE	POST MILES TOTAL PROJECT	SHEET No	TOTAL SHEETS
04	Ala	84	25.5/27.1	488	495

REGISTERED CIVIL ENGINEER 12/10/10 DATE

6-27-11
PLANS APPROVAL DATE

REGISTERED PROFESSIONAL ENGINEER Guoping Xu No. C 63977 Exp. 09/30/12 CIVIL STATE OF CALIFORNIA

The State of California or its officers or agents shall not be responsible for the accuracy or completeness of scanned copies of this plan sheet.

ALAMEDA COUNTY TRANSPORTATION IMPROVEMENT AUTHORITY (ACTIA)
1333 BROADWAY, SUITE 300
OAKLAND, CA 94612

MGE ENGINEERING, INC.
7415 GREENHAVEN DRIVE, SUITE 100
SACRAMENTO, CALIFORNIA 95831

RETAINING WALL 400S — BRIDGE NO. 33E0078

QUANTITIES

STRUCTURE EXCAVATION (TIEBACK WALL)	274	CY
STRUCTURE BACKFILL (TIEBACK WALL)	18	CY
TIEBACK ANCHOR	72	EA
STRUCTURAL CONCRETE, RETAINING WALL	114	CY
ARCHITECTURAL TREATMENT	3,356	SQFT
BAR REINFORCING STEEL (RETAINING WALL)	31,710	LB
SHOTCRETE	154	CY
MINOR CONCRETE (GUTTER)	243	LF
CHAIN LINK FENCE (TYPE CL-4, VINYL-CLAD)	133	LF
CONCRETE BARRIER (TYPE 60D)	243	LF

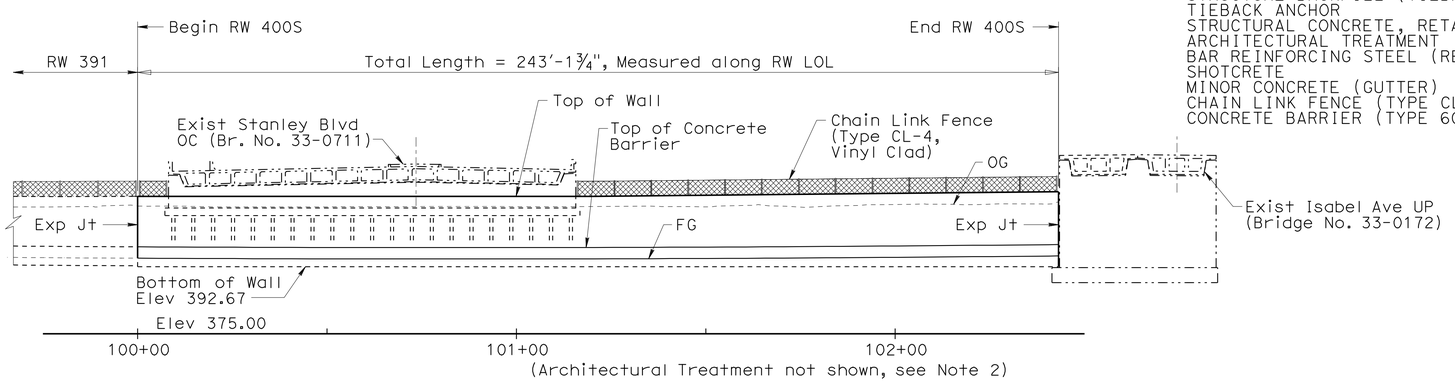

(Architectural Treatment not shown, see Note 2)

DEVELOPED ELEVATION

1" = 20'-0"

STANDARD PLANS

Dated May 2006

	A10A	Acronyms and Abbreviations (Sheet 1 of 2)
	A10B	Acronyms and Abbreviations (Sheet 2 of 2)
	A10C	Symbols (Sheet 1 of 2)
	A10D	Symbols (Sheet 2 of 2)
RSP	A76A	Concrete Barrier Type 60
	A85	Chain Link Fence
	B3-9	Retaining Wall Details No. 2

INDEX TO PLANS

Sheet No.	Title
1	General Plan
2	Foundation Plan
3	Tieback Wall Details No. 1
4	Tieback Wall Details No. 2
5	Tieback Wall Details No. 3
6	Wall Drain Details
7	Exist Log of Test Borings (1 of 2)
8	Exist Log of Test Borings (2 of 2)

Standard Plan sheet No.
Detail No.

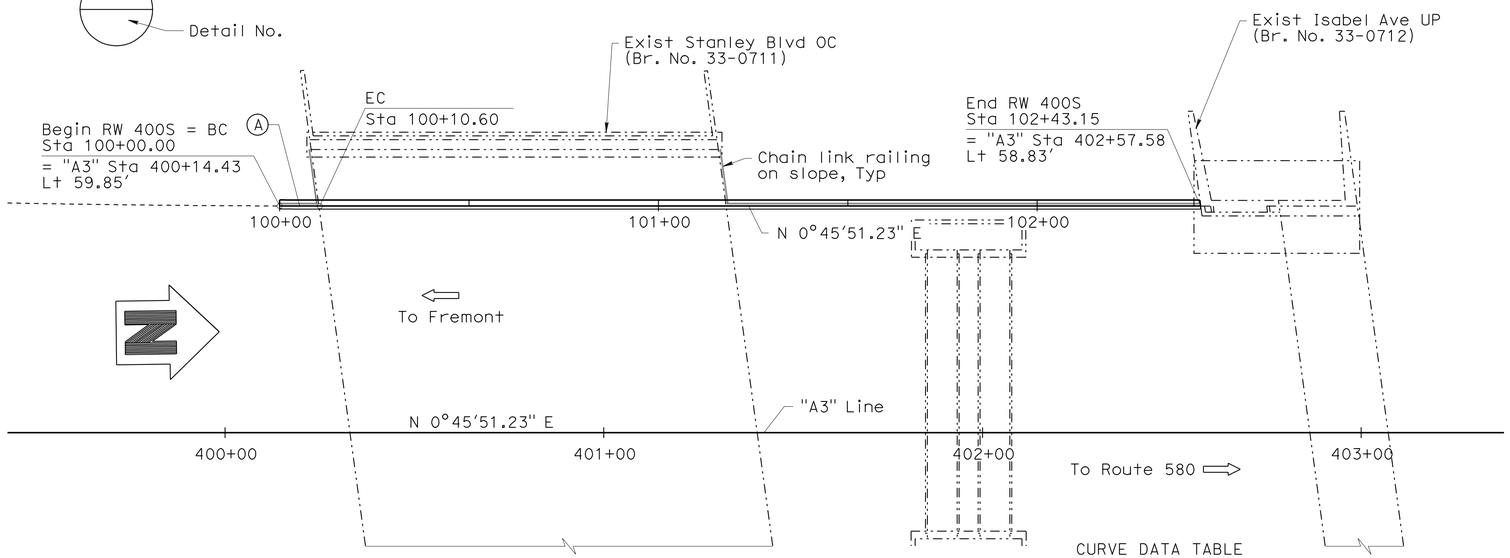

PLAN

1" = 20'-0"

CURVE DATA TABLE

No.	R	Δ	T	L
A	4484.32'	0°08'07.5"	5.30'	10.60'

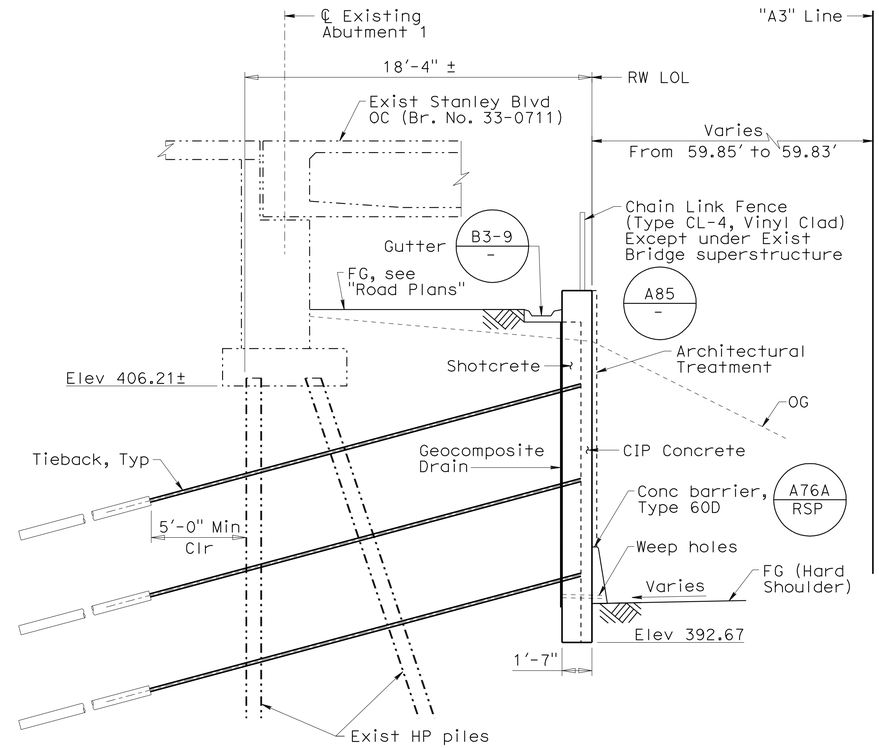

TYPICAL SECTION

1/4" = 1'-0"

Notes:

1. For 'General Notes', see "Foundation Plan" sheet.
2. For Architectural Treatment, see "Tieback Wall Details No. 2" sheet.

Note:
The Contractor shall verify all controlling field dimensions before ordering or fabricating any material.

DESIGN OVERSIGHT Yiwei Hu 1/26/11 SIGN OFF DATE	DESIGN	BY G. Xu	CHECKED D. Wang	LOAD & RESISTANCE FACTOR DESIGN — LIVE LOADING: SURCHANGE 240 PSF
	DETAILS	BY X. Sun	CHECKED D. Wang	LAYOUT BY G. Xu — CHECKED D. Wang
	QUANTITIES	BY E. Tang	CHECKED W. Sennett	SPECIFICATIONS BY K. Chen — PLANS AND SPECS COMPARED G. Xu

PREPARED FOR THE STATE OF CALIFORNIA DEPARTMENT OF TRANSPORTATION

Guoping Xu
PROJECT ENGINEER

BRIDGE NO. 33E0078
POST MILES 27.00

RETAINING WALL 400S
GENERAL PLAN

DESIGN GENERAL PLAN SHEET (ENGLISH) (REV. 06-01-09)

ORIGINAL SCALE IN INCHES FOR REDUCED PLANS 0 1 2 3

CU 0733
EA 297611

DISREGARD PRINTS BEARING EARLIER REVISION DATES

REVISION DATES (PRELIMINARY STAGE ONLY): 05/07/09 01/22/10 08/13/10 10/21/10 12/10/10

SHEET 1 OF 8

FILE => 33e0078-a-gp01.dgn

USERNAME => s124436 DATE PLOTTED => 21-NOV-2011 TIME PLOTTED => 15:30

DIST	COUNTY	ROUTE	POST MILES TOTAL PROJECT	SHEET No	TOTAL SHEETS
04	Ala	84	25.5/27.1	489	495

REGISTERED CIVIL ENGINEER 12/10/10 DATE

6-27-11
PLANS APPROVAL DATE

REGISTERED PROFESSIONAL ENGINEER Guoping Xu No. C 63977 Exp. 09/30/12 CIVIL STATE OF CALIFORNIA

The State of California or its officers or agents shall not be responsible for the accuracy or completeness of scanned copies of this plan sheet.

ALAMEDA COUNTY TRANSPORTATION IMPROVEMENT AUTHORITY (ACTIA)
1333 BROADWAY, SUITE 300
OAKLAND, CA 94612

MGE ENGINEERING, INC.
7415 GREENHAVEN DRIVE, SUITE 100
SACRAMENTO, CALIFORNIA 95831

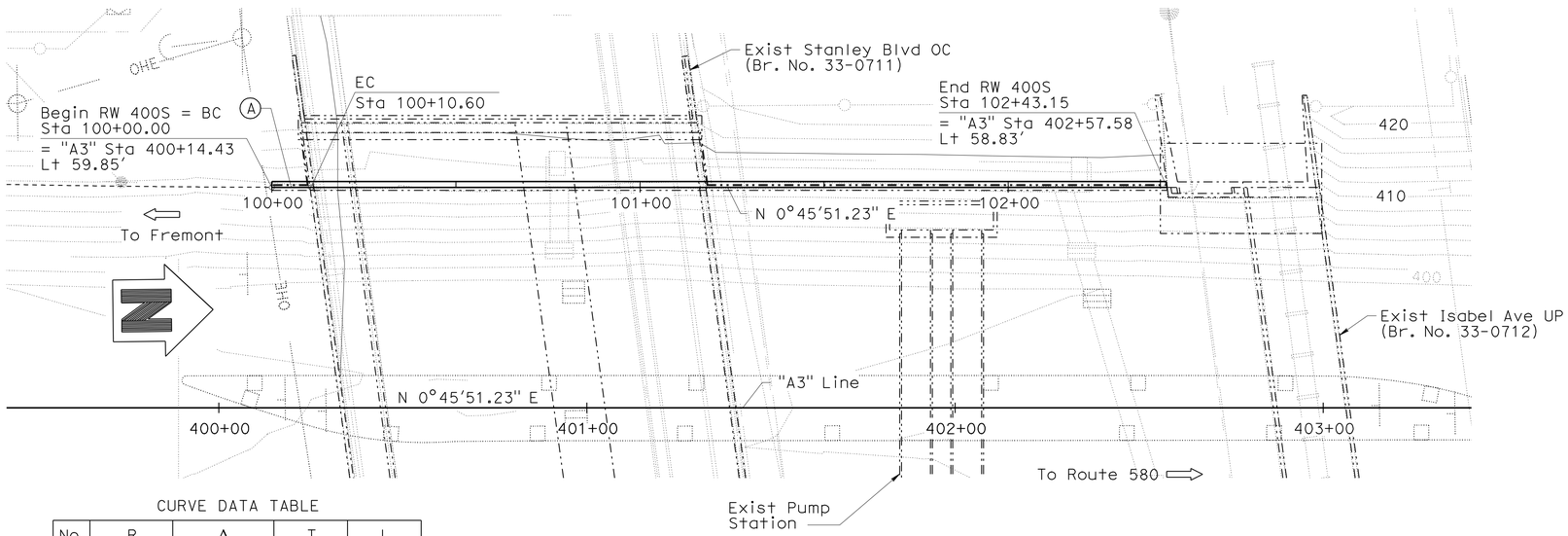

CURVE DATA TABLE

No.	R	Δ	T	L
A	4484.32'	0°08'07.5"	5.30'	10.60'

FOUNDATION PLAN
1" = 20'-0"

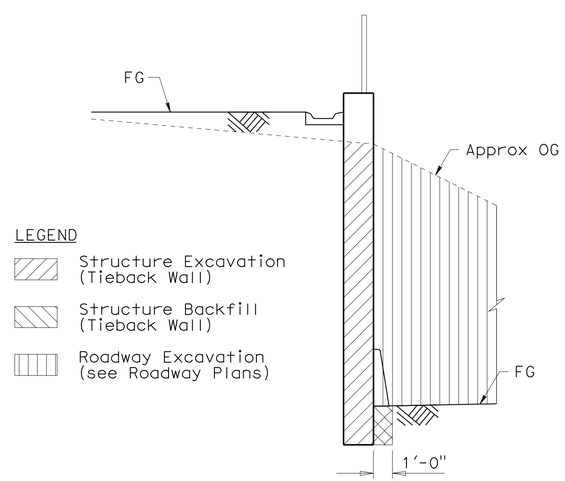

LEGEND

- Structure Excavation (Tieback Wall)
- Structure Backfill (Tieback Wall)
- Roadway Excavation (see Roadway Plans)

TIEBACK WALL
EXCAVATION AND BACKFILL PAY LIMITS
NO SCALE

GENERAL NOTES
LOAD FACTOR DESIGN

DESIGN: Bridge Design Specifications, April 2000 (1996 AASHTO with interims and provisions by Caltrans)

DESIGN SOIL PARAMETERS:
ϕ = 34°
C = 1000 psf
γ = 130pcf
Qd = 2.09 k/ft

LIVE LOAD SURCHARGE: 240 psf (Vertical)

SEISMIC LOAD: $\Delta Pae = 32H^2$ (Lbs/ft)
Where H = Wall Design Height (ft)

REINFORCED CONCRETE:
f'c = 3,600 psi
fy = 60,000 psi

SHOTCRETE:
f'c = 3,600 psi
fy = 60,000 psi

STRUCTURAL STEEL:
ASTM Designation: A709
fy = 36,000 psi

TIEBACK NOTES:

Prestressing Steel:
Bars - ASTM designation: A722 Type II
Strands - ASTM sesignation: A416
T = Design force per tieback:
(Firsh lift) = 60 k
(Second lift) = 41 k
(Third lift) = 41 k
fpu = Minimum tensile strength of prestressing steel (kips per in
As (Min) = Minimum cross sectional area of prestressing steel in tieback (in
As (Min) = 1.5 x T / (0.75 x fpu)

Stephen Huang 08/18/2010
GEOTECHNICAL PROFESSIONAL APPROVAL DATE

Note:
The Contractor shall verify all controlling field dimensions before ordering or fabricating any material.

DESIGN OVERSIGHT Yiwei Hu
1/26/11
SIGN OFF DATE

SCALE:	VERT.DATUM	HORZ.DATUM
PHOTOGRAMMETRY AS OF: 11/10/2005	ALIGNMENT TIES	
SURVEYED BY Dan Scott	DRAFTED BY Abhijeet Bhoi	
FIELD CHECKED BY Dan Scott	CHECKED BY	

	BY	CHECKED
DESIGN	G. Xu	D. Wang
DETAILS	X. Sun	D. Wang
QUANTITIES	E. Tang	W. Sennett

PREPARED FOR THE STATE OF CALIFORNIA DEPARTMENT OF TRANSPORTATION

Guoping Xu
PROJECT ENGINEER

BRIDGE NO. 33E0078
POST MILE 27.00

RETAINING WALL 400S
FOUNDATION PLAN

FOUNDATION PLAN SHEET (ENGLISH) (REV. 06-01-09)

ORIGINAL SCALE IN INCHES FOR REDUCED PLANS 0 1 2 3

CU 0733
EA 297611

DISREGARD PRINTS BEARING EARLIER REVISION DATES

REVISION DATES (PRELIMINARY STAGE ONLY) 05/01/09 01/22/10 08/18/10 10/21/10 12/10/10

SHEET 2 OF 8

FILE => 33e0078-e-fdp101.dgn

USERNAME => s124496 DATE PLOTTED => 21-NOV-2011 TIME PLOTTED => 15:30

DIST	COUNTY	ROUTE	POST MILES TOTAL PROJECT	SHEET No	TOTAL SHEETS
04	Ala	84	25.5/27.1	490	495

REGISTERED CIVIL ENGINEER 12/10/10 DATE

6-27-11
PLANS APPROVAL DATE

REGISTERED PROFESSIONAL ENGINEER Guoping Xu No. C 63977 Exp. 09/30/12 CIVIL STATE OF CALIFORNIA

The State of California or its officers or agents shall not be responsible for the accuracy or completeness of scanned copies of this plan sheet.

ALAMEDA COUNTY TRANSPORTATION IMPROVEMENT AUTHORITY (ACTIA)
1333 BROADWAY, SUITE 300
OAKLAND, CA 94612

MGE ENGINEERING, INC.
7415 GREENHAVEN DRIVE, SUITE 100
SACRAMENTO, CALIFORNIA 95831

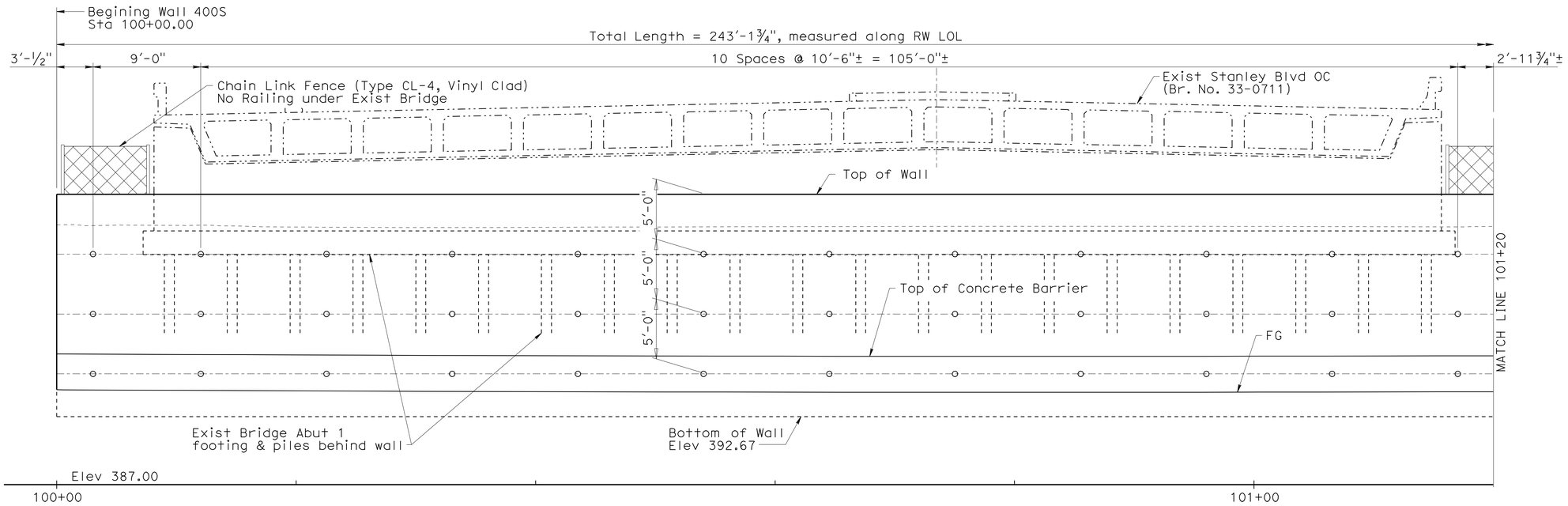

TIEBACK WALL ELEVATION

1" = 5'-0"

TIEBACK WALL PROFILE

Station	BOW Elev	TOW Elev
100+00.00	392.67	411.25
101+20.00	392.67	411.25
102+43.15	392.67	412.50

LEGEND

○ Indicates Tieback Locations

—— Indicates Tieback Profile Line

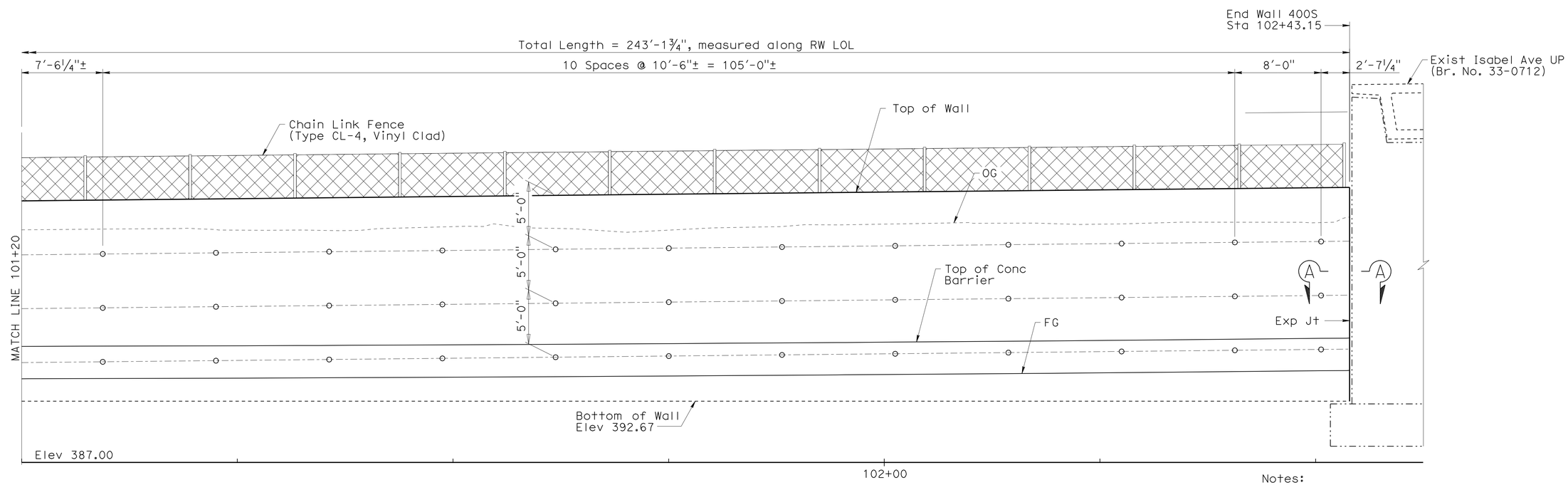

Note:
The Contractor shall verify all controlling field dimensions before ordering or fabricating any material.

TIEBACK WALL ELEVATION

1" = 5'-0"

Notes:

1. Tieback shall be positioned between Exist piles with minimum of 1'-0" clearance to Exist piles.
2. For Section A-A, see "Tieback Wall Details No. 2" sheet.

DESIGN OVERSIGHT Yiwei Hu
1/26/11
SIGN OFF DATE

	BY	CHECKED
DESIGN	G. Xu	D. Wang
DETAILS	X. Sun	D. Wang
QUANTITIES	E. Tang	W. Sennett

PREPARED FOR THE STATE OF CALIFORNIA DEPARTMENT OF TRANSPORTATION

Guoping Xu
PROJECT ENGINEER

BRIDGE NO. 33E0078
POST MILE 27.00

RETAINING WALL 400S
TIEBACK WALL DETAILS No. 1

DESIGN DETAIL SHEET (ENGLISH) (REV. 06-01-09)

ORIGINAL SCALE IN INCHES FOR REDUCED PLANS 0 1 2 3

CU 0733
EA 297611

DISREGARD PRINTS BEARING EARLIER REVISION DATES

REVISION DATES (PRELIMINARY STAGE ONLY) 05/04/09 01/22/10 08/18/10 10/21/10 12/10/10

SHEET 3 OF 8

FILE => 33e0078-g-redt01.dgn

USERNAME => s124496 DATE PLOTTED => 21-NOV-2011 TIME PLOTTED => 15:30

DIST	COUNTY	ROUTE	POST MILES TOTAL PROJECT	SHEET No	TOTAL SHEETS
04	Ala	84	25.5/27.1	491	495

REGISTERED CIVIL ENGINEER 12/10/10 DATE

6-27-11
PLANS APPROVAL DATE

REGISTERED PROFESSIONAL ENGINEER Guoping Xu No. C 63977 Exp. 09/30/12 CIVIL STATE OF CALIFORNIA

The State of California or its officers or agents shall not be responsible for the accuracy or completeness of scanned copies of this plan sheet.

ALAMEDA COUNTY TRANSPORTATION IMPROVEMENT AUTHORITY (ACTIA)
1333 BROADWAY, SUITE 300
OAKLAND, CA 94612

MGE ENGINEERING, INC.
7415 GREENHAVEN DRIVE, SUITE 100
SACRAMENTO, CALIFORNIA 95831

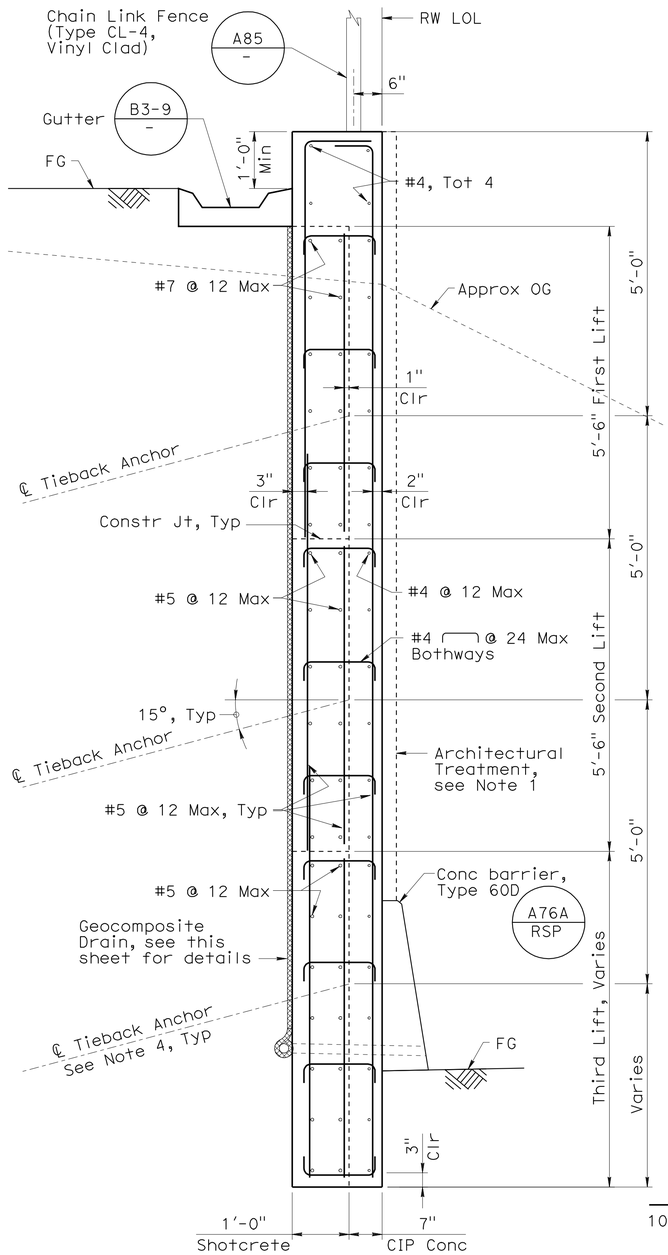

TYPICAL SECTION
3/4" = 1'-0"

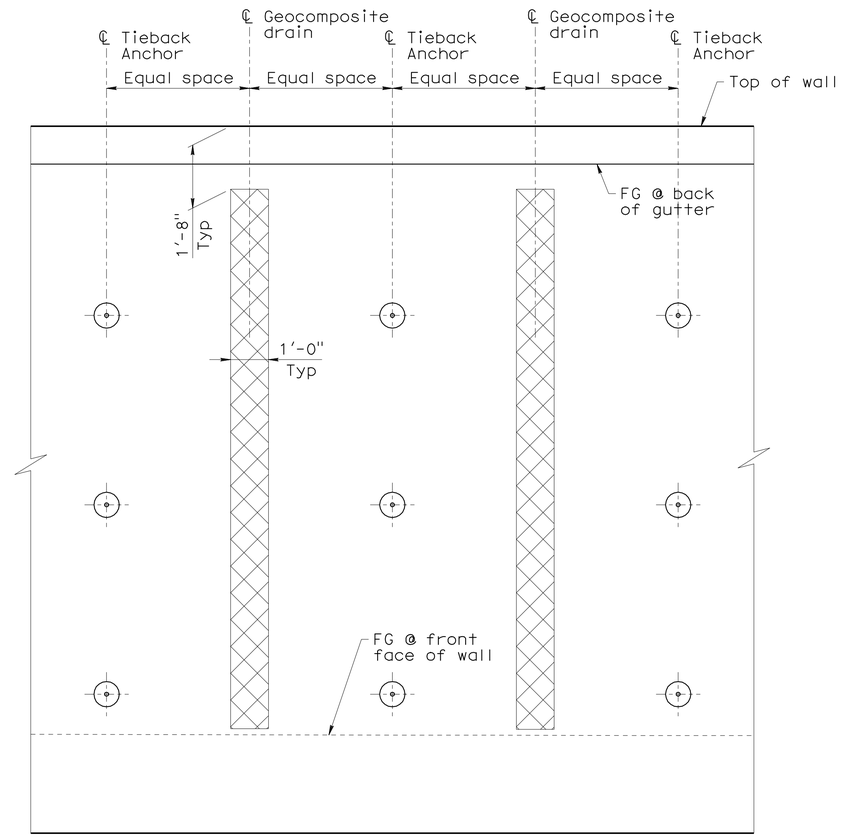

TYPICAL TIEBACK AND DRAINAGE ELEVATION
1/2" = 1'-0"

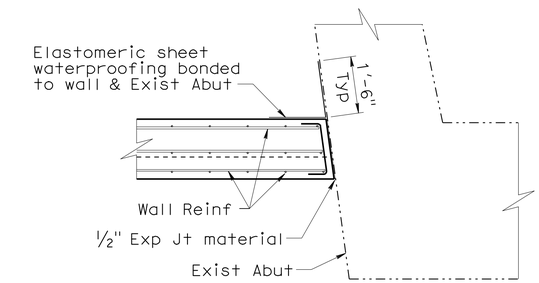

SECTION A-A
1/2 " = 1'-0"

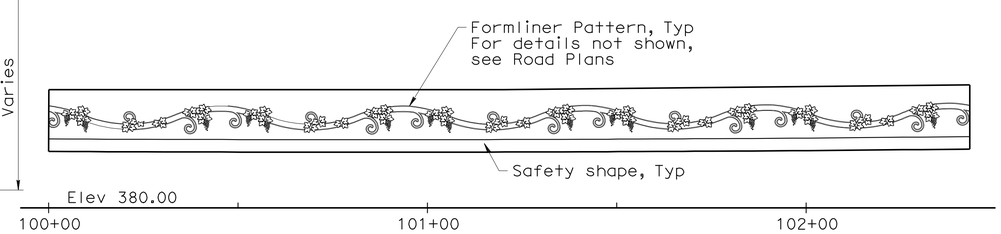

ARCHITECTURAL TREATMENT DEVELOPED ELEVATION
1" = 20'-0"

Notes:

1. For Architectural Treatment details, see "Tieback Wall Details No. 2" sheet.
2. For location of Section A-A, See "Tieback Wall Details No. 1" sheet.
3. For additional drainage information, see "Road Plans"
4. The free unbonded length should be the greatest of the following values:
   - 15 ft (Typical minumum free length)
   - 5 ft beyond active wedge project upward behind toe of wall
   - 5 ft beyond existing bridge piles

Note:
The Contractor shall verify all controlling field dimensions before ordering or fabricating any material.

DESIGN OVERSIGHT Yiwei Hu
1/26/11
SIGN OFF DATE

	BY	CHECKED
DESIGN	G. Xu	D. Wang
DETAILS	X. Sun	D. Wang
QUANTITIES	E. Tang	W. Sennett

PREPARED FOR THE STATE OF CALIFORNIA DEPARTMENT OF TRANSPORTATION

Guoping Xu
PROJECT ENGINEER

BRIDGE NO. 33E0078
POST MILE 27.00

RETAINING WALL 400S
TIEBACK WALL DETAILS No. 2

DESIGN DETAIL SHEET (ENGLISH) (REV. 06-01-09)

ORIGINAL SCALE IN INCHES FOR REDUCED PLANS 0 1 2 3

CU 0733
EA 297611

DISREGARD PRINTS BEARING EARLIER REVISION DATES

REVISION DATES (PRELIMINARY STAGE ONLY) 05/04/09 01/22/10 08/18/10 10/21/10 12/10/10

SHEET 4 OF 8

FILE => 33e0078-g-redt02.dgn

USERNAME => s6124436 DATE PLOTTED => 21-NOV-2011 TIME PLOTTED => 15:30

DIST.	COUNTY	ROUTE	POST MILES TOTAL PROJECT	SHEET NO.	TOTAL SHEETS
04	Ala	84	25.5/27.1	492	495

REGISTERED CIVIL ENGINEER 12/10/10 DATE

PROFESSIONAL ENGINEER REGISTERED Guoping Xu No. C 63977 Exp. 09/30/12 CIVIL STATE OF CALIFORNIA

6-27-11
PLANS APPROVAL DATE

The State of California or its officers or agents shall not be responsible for the accuracy or completeness of electronic copies of this plan sheet.

ALAMEDA COUNTY TRANSPORTATION IMPROVEMENT AUTHORITY (ACTIA)
1333 BROADWAY, SUITE 300
OAKLAND, CA 94612

MGE ENGINEERING, INC.
7415 GREENHAVEN DRIVE, SUITE 100
SACRAMENTO, CALIFORNIA 95831

NOTES:

1. Anchorage enclosure shall only be used when anchor head assembly is not enclosed in concrete.
2. Anchorage enclosure shall have provisions to allow injecting grout at low end and venting at high end. Galvanize after fabrication.
3. Silicone sealant to cover full width of flange.
4. Steel tube welded to bearing plate (Min thickness = 1/4"). Galvanize assembly after fabrication
5. Steel tube welded to bearing plate inside diameter of steel tube to be 1" greater than outside diameter of smooth sheathing (Min thickness = 1/4") Galvanize assembly after fabrication.
6. For other wall details, see Structural Plans.

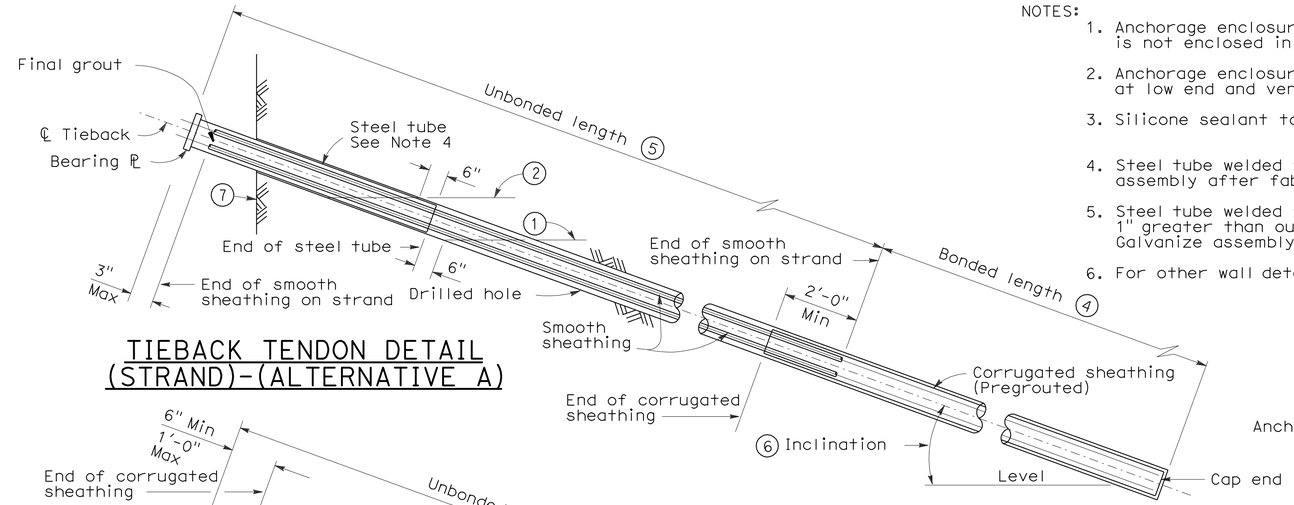

TIEBACK TENDON DETAIL (STRAND)-(ALTERNATIVE A)

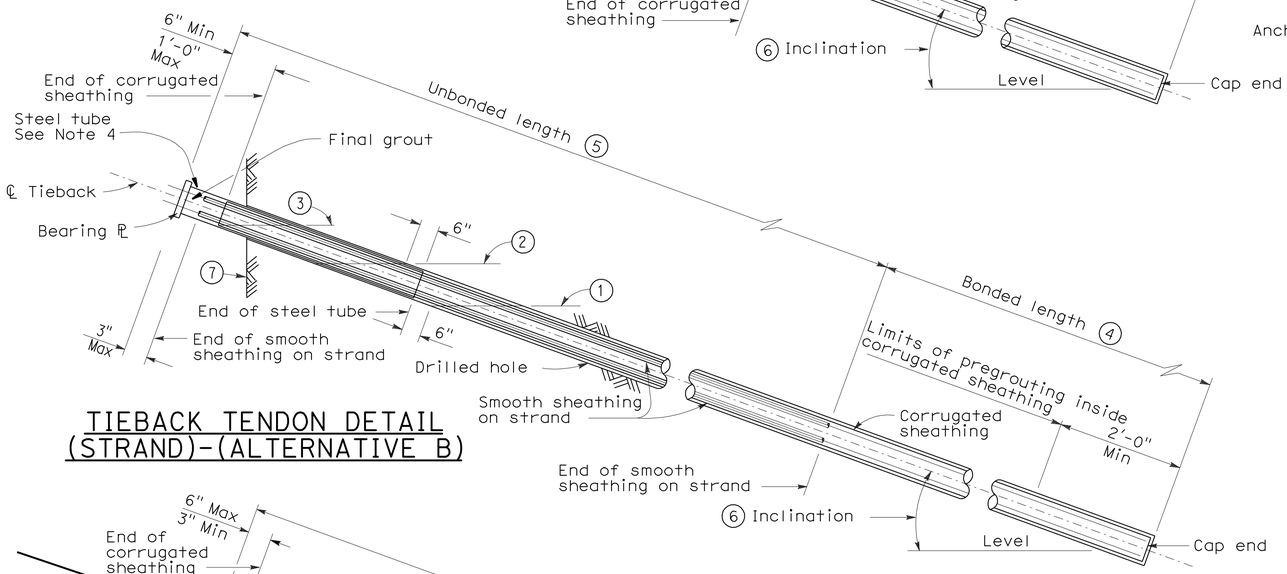

TIEBACK TENDON DETAIL (STRAND)-(ALTERNATIVE B)

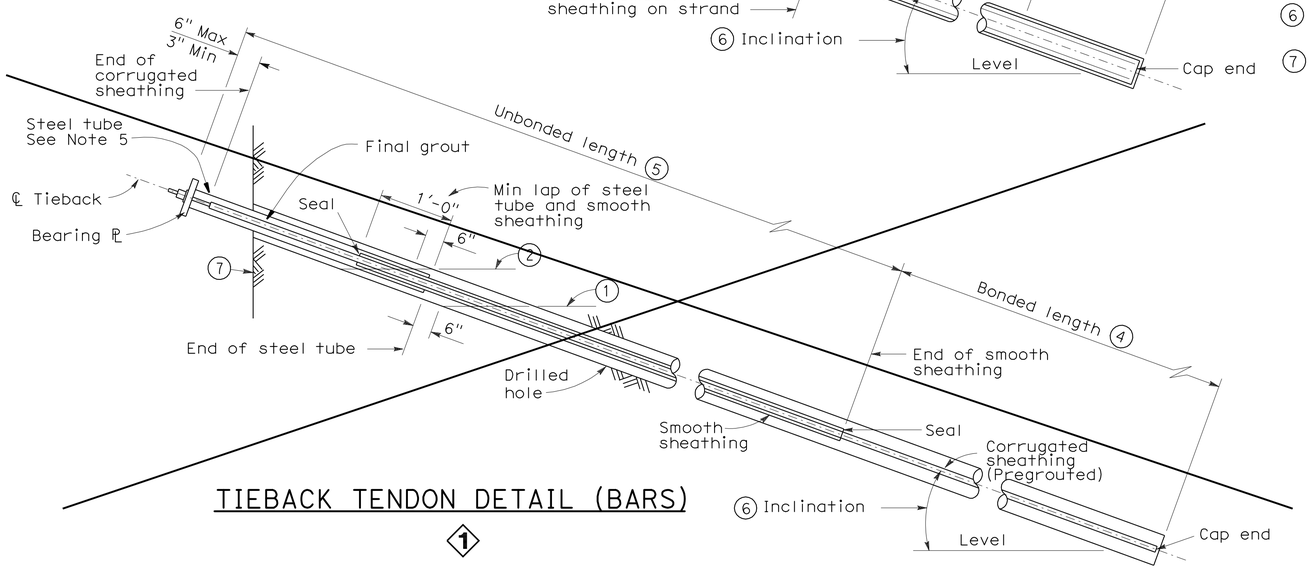

TIEBACK TENDON DETAIL (BARS)

1

LEGEND:

1. Level of initial grouting for drill hole 6" in diameter or smaller
2. Level of secondary grouting
3. Level of initial grouting inside corrugated sheathing
4. Bonded length shall be determined by the contractor
5. For unbonded length, see Project Plans
6. For inclination, see Project Plans
7. Face of Wall Excavation

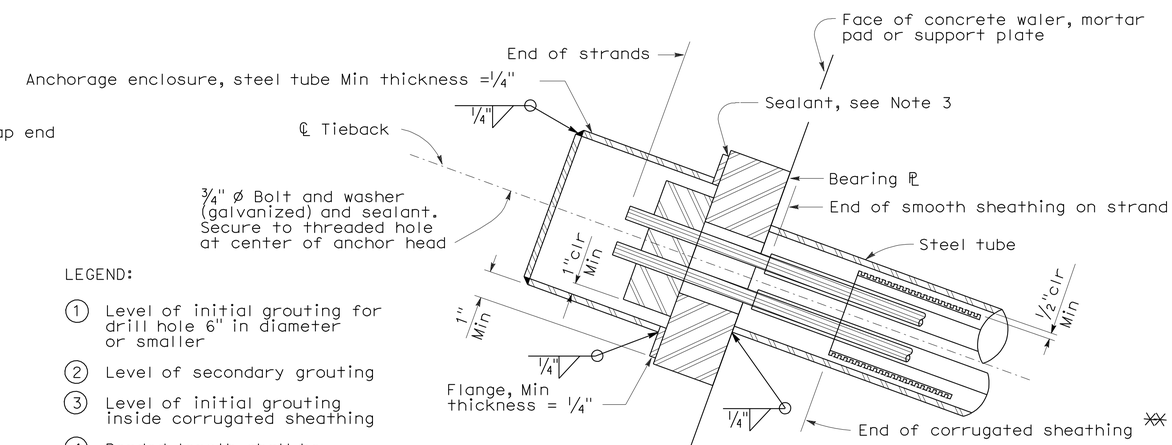

ALTERNATIVE X

※Alternative B tendon only

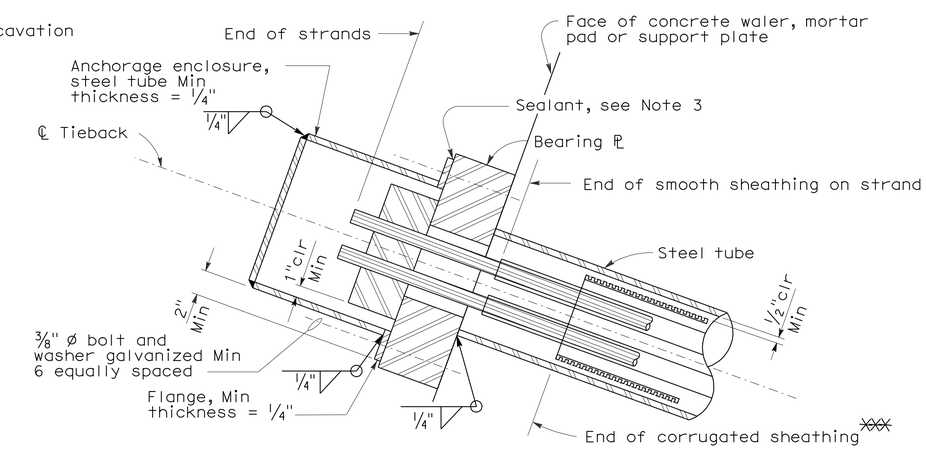

ALTERNATIVE Y

※※Alternative B tendon only

ANCHORAGE ENCLOSURE DETAILS

STANDARD DRAWING

FILE NO. xs12-040e

APPROVED BY G. WANG
RESPONSIBLE TECHNICAL SPECIALIST
APPROVAL DATE 2-27-09

RELEASED BY ROBERTO LACALLE
RESPONSIBLE OFFICE CHIEF
RELEASE DATE 2-27-09

1 Detail Deleted

STATE OF CALIFORNIA
DEPARTMENT OF TRANSPORTATION

DIVISION OF ENGINEERING SERVICES

BRIDGE NO. 33E0078
POST MILE 27.00

RETAINING WALL 400S
TIEBACK WALL DETAILS No. 3

DS OSD 2147A (ENGLISH STANDARD DRAWING "XS" BORDER REV. 01/11/08)

ORIGINAL SCALE IN INCHES FOR REDUCED PLANS 0 1 2 3

CU 0733
EA 297611

DISREGARD PRINTS BEARING EARLIER REVISION DATES

REVISION DATES (PRELIMINARY STAGE ONLY) 08/16/10 12/10/10

SHEET 5 OF 8

FILE => 33e0078-g-redt03.dgn

USERNAME => s124496 DATE PLOTTED => 21-NOV-2011 TIME PLOTTED => 15:30

DIST.	COUNTY	ROUTE	POST MILES TOTAL PROJECT	SHEET NO.	TOTAL SHEETS
04	Ala	84	25.5/27.1	493	495

REGISTERED CIVIL ENGINEER 12/10/10 DATE

PROFESSIONAL ENGINEER REGISTERED Guoping Xu No. C 63977 Exp. 09/30/12 CIVIL STATE OF CALIFORNIA

6-27-11
PLANS APPROVAL DATE

The State of California or its officers or agents shall not be responsible for the accuracy or completeness of electronic copies of this plan sheet.

ALAMEDA COUNTY TRANSPORTATION IMPROVEMENT AUTHORITY (ACTIA)
1333 BROADWAY, SUITE 300
OAKLAND, CA 94612

MGE ENGINEERING, INC.
7415 GREENHAVEN DRIVE, SUITE 100
SACRAMENTO, CALIFORNIA 95831

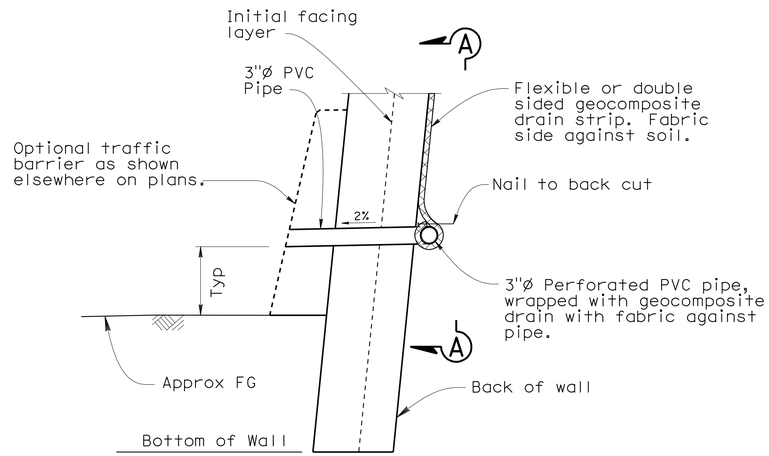

WALL DRAIN DETAIL AT WEEPHOLE
OPTION A
No scale

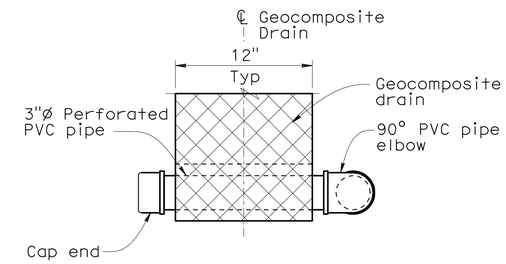

VIEW A-A
No scale

NOTES:

1. Geocomposite drain strip per Section 88 Geosynthetics of the Standard Specifications.
2. Elevation of drains and weepholes as shown elsewhere on plans.

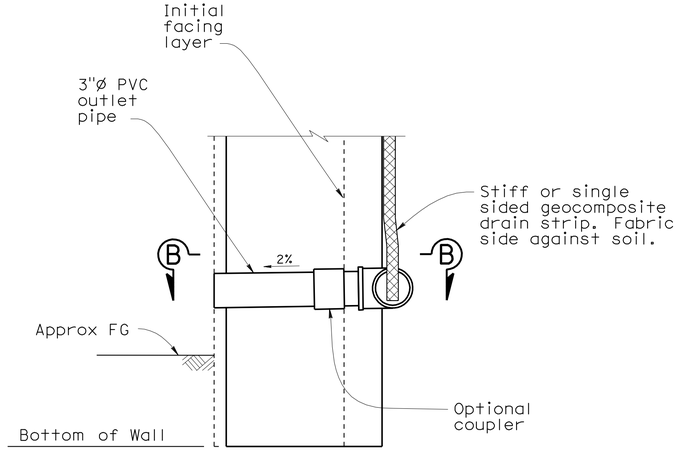

WALL DRAIN DETAIL AT WEEPHOLE
OPTION B
No scale

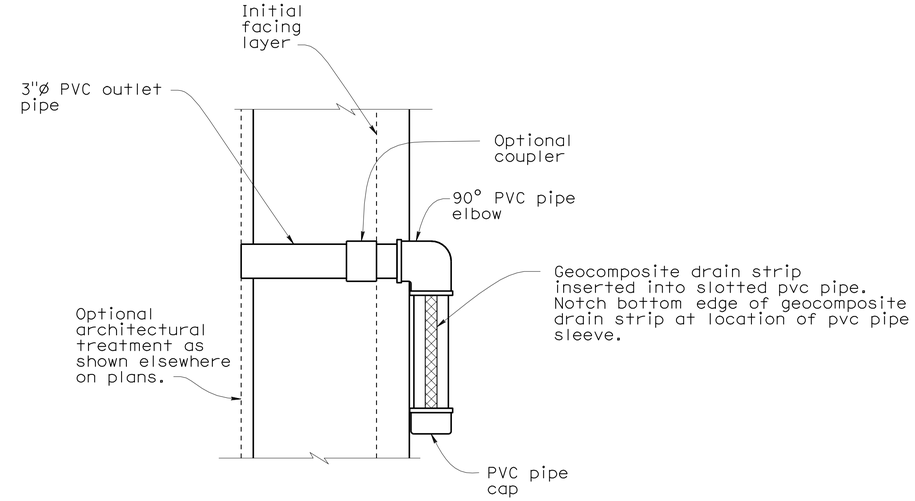

VIEW B-B
No Scale

STANDARD DRAWING

FILE NO. xs12-021e

APPROVED BY K. GRISWELL
RESPONSIBLE TECHNICAL SPECIALIST
APPROVAL DATE

RELEASED BY ROBERTO LACALLE
RESPONSIBLE OFFICE CHIEF
RELEASE DATE

STATE OF CALIFORNIA
DEPARTMENT OF TRANSPORTATION

DIVISION OF ENGINEERING SERVICES

BRIDGE NO. 33E0078
POST MILE 27.00

RETAINING WALL 400S
WALL DRAIN DETAILS

DS OSD 2147A (ENGLISH STANDARD DRAWING "XS" BORDER REV. 01/11/08)

ORIGINAL SCALE IN INCHES FOR REDUCED PLANS 0 1 2 3

CU 0733
EA 297611

DISREGARD PRINTS BEARING EARLIER REVISION DATES

REVISION DATES (PRELIMINARY STAGE ONLY) 08/16/10 12/10/10

SHEET 6 OF 8

FILE => 33e0078-g-redt04.dgn

USERNAME => s124496 DATE PLOTTED => 21-NOV-2011 TIME PLOTTED => 15:31

DIST	COUNTY	ROUTE	KILOMETER POST TOTAL PROJECT	SHEET NO.	TOTAL SHEETS
04	Ala	84		382	495

REGISTERED GEOTECHNICAL ENGINEER

PLANS APPROVAL DATE

CITY OF LIVERMORE
DEPARTMENT OF PUBLIC WORKS
3589 Pacific Avenue

GEOTECHNICAL CONSULTANTS, INC.
631 Howard Street, Ste. 320
San Francisco, CA 94105

REGISTERED PROFESSIONAL ENGINEER — NEIL AKANTAN — No. 2391 — Exp. 9/30/01 — GEOTECHNICAL — STATE OF CALIFORNIA

The State of California or its officers or agents shall not be responsible for the accuracy or completeness of electronic copies of this plan sheet.

Contract Number: 04-233054
City Project Numbers: 89-50
Date Accepted: 10/1/02

AS-BUILT DRAWING

Resident Engineer: Hank Doll
Vail Cooper & Associates

☒ No Changes. ☐ Changes As Noted

Revisions by: MPW (Initials)

NOTES:

1. The 64 mm sampler shown on the logs is a split barrel sampler with 76.2 mm O.D. and 64 mm I.D., with 152.4 mm long brass liners. The sampler is driven using a 63.5 kg hammer with a 0.76 m drop.
2. Soil classification and description conform to ASTM D2487.

BENCHMARK:
All elevations shown hereon are based upon Caltrans Aerial Control Panel No. AB-947 having an elevation of 399.13 feet (121.655 meters) as described in Caltrans Survey Book ALA84-A-5 (pg 2 of 4 - 87-240).
TBM No. 2: Mon. No. 220
A brass pin in Standard City Well Monument Box at the Intersection of Stanley Blvd. and Isabel Avenue 19.004 meters right of Center Line Station "I5" 122+19.529. The elevation is 126.311 meters (414.41 feet).

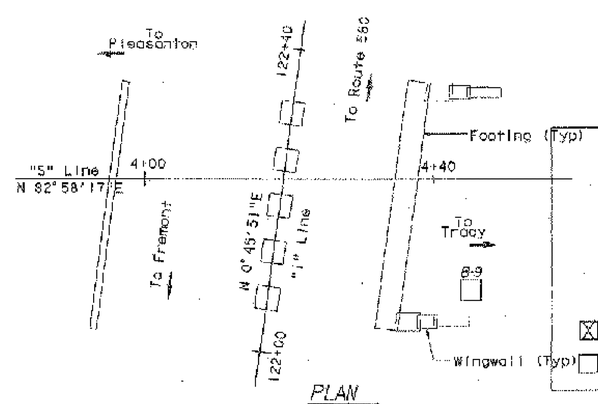

PLAN
1" = 400'

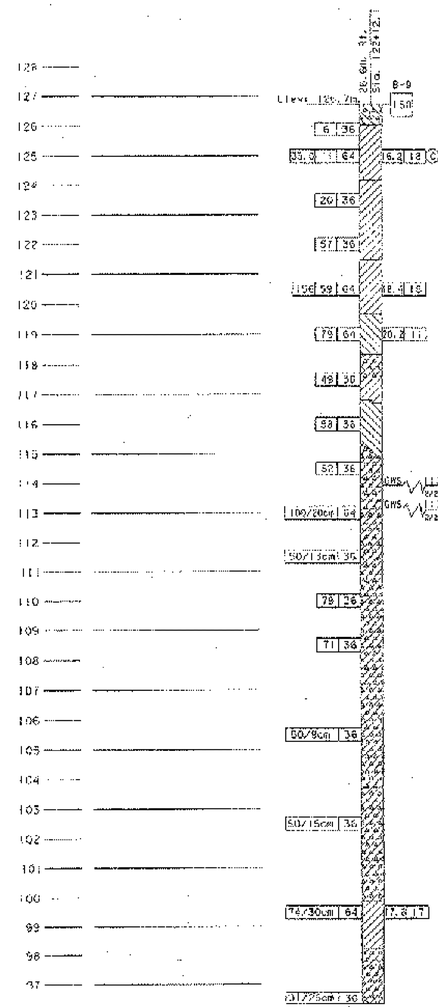

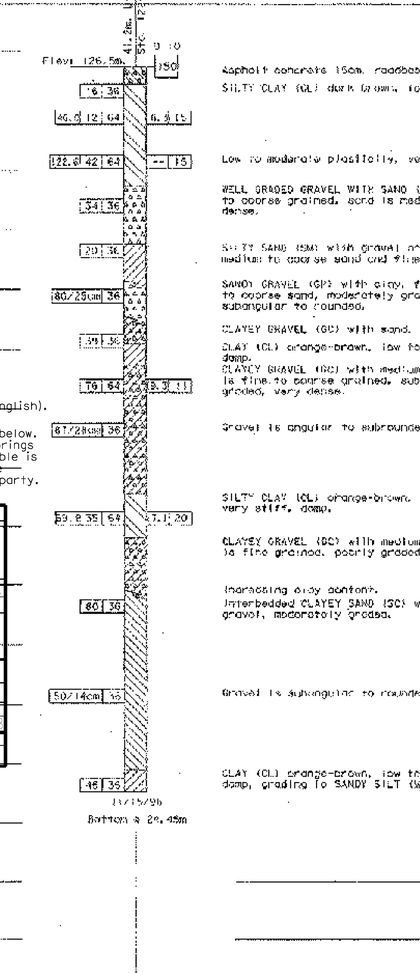

Notes:

1. See the plans dated May 11, 1999 for stationing.
For example I-Line Sta 136+62 (Metric) = A3 Line Sta 448+23 (English).
2. Structure Design produced the data presented in the table below. The data are the metric locations for the As-Built Test Borings referenced to the proposed new structure location. This table is presented on the As-Built ~~Log of Test Boring sheet for the~~ convenience of any bidder, contractor or other interested party.
To Accompany Plans Dated 6-27-11

REGISTERED PROFESSIONAL ENGINEER — Stephen Huang — No. C 42289 — Exp. 03/31/12 — GEOTECHNICAL — STATE OF CALIFORNIA

DIVISION OF ENGINEERING SERVICES - GEOTECHNICAL SERVICES

As-Built ~~Log of Test Borings sheet is considered an informational document only.~~ As such, the State of California registration seal with signature, license number and registration certificate expiration date confirm that this is a true and accurate copy of the original document. This drawing is available and presented only for the convenience of any bidder, contractor or other interested party.

DIST.	COUNTY	ROUTE	POST MILES	TOTAL PROJECT Sheet No.	TOTAL PROJECT Sheets
04	Ala	84	25.5/27.1	494	495

REGISTERED GEOTECHNICAL ENGINEER — DATE 1/25/11

DATE PLOTTED => 8DATE

RETAINING WALL 400S

LOG OF TEST BORINGS (1 of 2)

NOTE: A COPY OF THIS LOG OF TEST BORINGS IS AVAILABLE AT OFFICE OF STRUCTURE MAINTENANCE AND INVESTIGATIONS, SACRAMENTO, CALIFORNIA

CU: 0733
EA: 297611

BRIDGE No. 33E0078
Sheet 7 of 8

Revisions made to this Log of Test Borings from the original Log of Test Borings are the addition of the following table and notes:

Boring	Station	Offset from A3 Line (84)
B-9	400+66	87.3 ft. Rt
B-10	401+02	135.2 ft. Lt

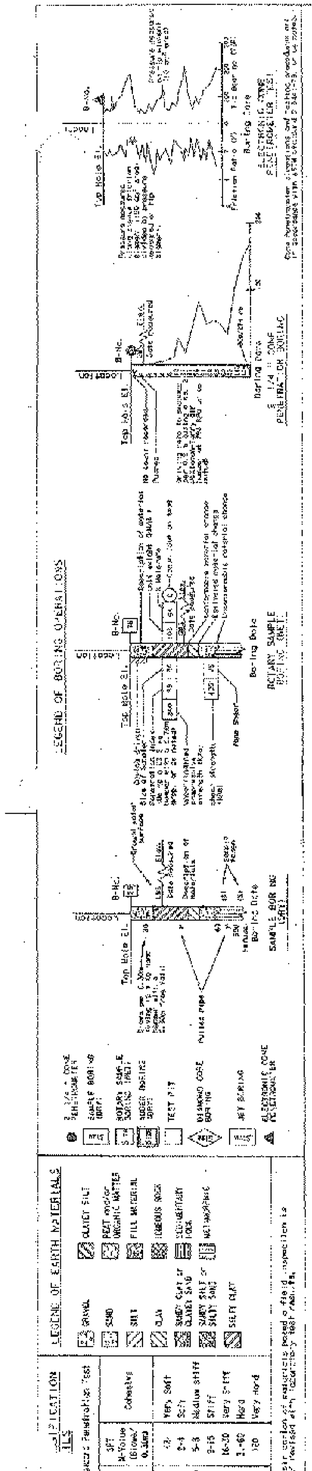

DESIGN OVERSIGHT	DRAWN BY J. HULSE	N. Moore FIELD INVESTIGATION BY:	PREPARED FOR THE STATE OF CALIFORNIA DEPARTMENT OF TRANSPORTATION	G. RODRIGUEZ PROJECT ENGINEER	BRIDGE NO. 33C-0406 KILOMETER POST	ISABEL AVENUE UNDERCROSSING
SIGN OFF DATE	CHECKED BY T. HUBER	DATE:				LOG OF TEST BORINGS

REV. DATE: 6-2-97

ORIGINAL SCALE IN MILLIMETERS FOR REDUCED PLANS 0 10 20 30 40 50 60 70 80 90 100

CU
EA

*DISREGARD PRINTS BEARING EARLIER REVISION DATES

REVISION DATES (PRE RAILWAY STATE ONLY)

SHEET 16 OF 16

TIME PLOTTED => $$$$$$SYTIME$$$$$

FILE => BREQUEST

33e0078-z-ltb01.tif

NOTES:

1. The 64 mm sampler shown on the logs is a split barrel sampler with 76.2 mm O.D. and 64 mm I.D., with 152.4 mm long brass liners. The sampler is driven using a 63.5 kg hammer with a 0.76 m drop.

2. Soil classification and description conform to ASTM D2487.

BENCHMARK:
All elevations shown hereon are based upon Caltrans Aerial Control Panel No. AB-947 having an elevation of 399.13 feet (121.655 meters) as described in Caltrans Survey Book ALA84-A-5 (pg 2 of 4 - 87-240).
TBM No. 2: Mon. No. 220
A brass pin in Standard City Well Monument Box at the intersection of Stanley Blvd. and Isabel Avenue 19.004 meters right of Center Line Station "I5" 122+19.529. The elevation is 126.311 meters (414.41 feet).

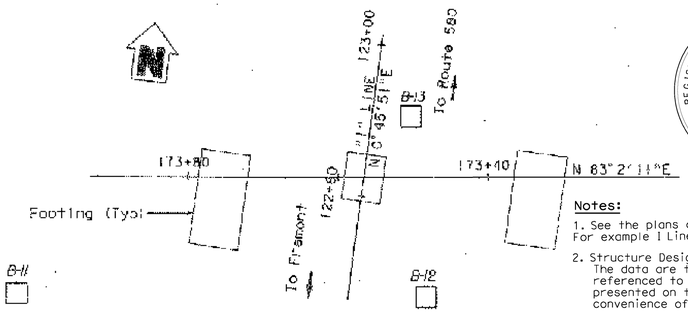

Notes:

1. See the plans dated May 11, 1999 for stationing. For example I Line Sta 136+62 (Metric) = A3 Line Sta 448+23 (English).
2. Structure Design produced the data presented in the table below. The data are the metric locations for the As-Built Test Borings referenced to the proposed new structure location. This table is presented on the As-Built Log of Test Boring sheet for the convenience of any bidder, contractor or other interested party.

REGISTERED PROFESSIONAL ENGINEER Stephen Huang No. C 42289 Exp. 03/31/12 GEOTECHNICAL STATE OF CALIFORNIA

DIST.	COUNTY	ROUTE	KILOMETER POST TOTAL PROJECT	SHEET NO.	TOTAL SHEETS
04	Ala	84		495	497

REGISTERED GEOTECHNICAL ENGINEER

PLANS APPROVAL DATE

REGISTERED PROFESSIONAL ENGINEER C. MEELAKANTAN No. 2381 Exp. 9/30/01 GEOTECHNICAL STATE OF CALIFORNIA

CITY OF LIVERMORE
DEPARTMENT OF PUBLIC WORKS
3589 Pacific Avenue
GEOTECHNICAL CONSULTANTS, INC.
631 Howard Street, Ste. 320
San Francisco, CA 94105

The State of California or its officers or agents shall not be responsible for the accuracy or completeness of electronic copies of this plan sheet.
Revisions made to this Log of Test Borings from the original ____ Log of Test Borings are the addition of the following table and notes:

Boring	Station	Offset from A3 Line (84)
B-11	402+27	143.4 ft. Lt
B-12	402+49	33.5 ft. Rt
B-13	403+25	16.7 ft. Rt

PLAN
1 : 400

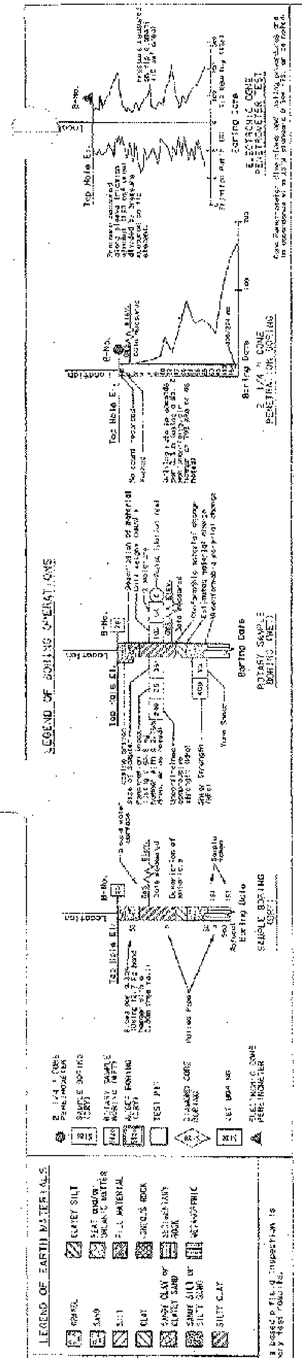

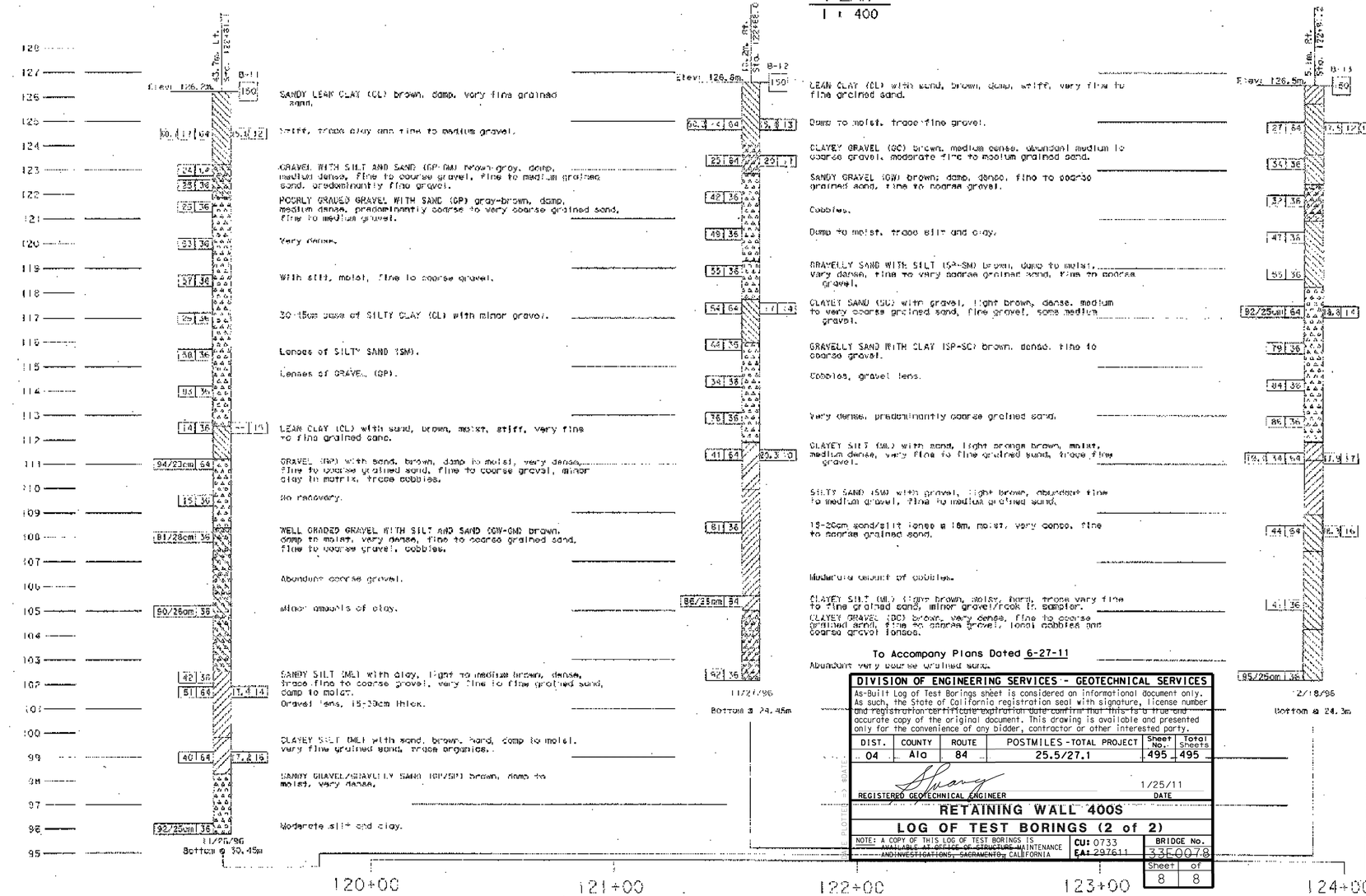

To Accompany Plans Dated 6-27-11

DIVISION OF ENGINEERING SERVICES - GEOTECHNICAL SERVICES

As-Built Log of Test Borings sheet is considered an informational document only. As such, the State of California registration seal with signature, license number and registration certificate expiration date confirm that this is a true and accurate copy of the original document. This drawing is available and presented only for the convenience of any bidder, contractor or other interested party.

DIST.	COUNTY	ROUTE	POSTMILES - TOTAL PROJECT	Sheet No.	Total Sheets
04	Ala	84	25.5/27.1	495	495

REGISTERED GEOTECHNICAL ENGINEER — DATE 1/25/11

RETAINING WALL 400S

LOG OF TEST BORINGS (2 of 2)

NOTE: A COPY OF THIS LOG OF TEST BORINGS IS AVAILABLE AT OFFICE OF STRUCTURE MAINTENANCE AND INVESTIGATIONS, SACRAMENTO, CALIFORNIA

CU: 0733
EA: 297611

BRIDGE No. 33E0078
Sheet 8 of 8

Contract Number: 04-233054
City Project Numbers: 89-50
Date Accepted: 10/1/02

AS-BUILT DRAWING
Resident Engineer: Hank Doll
Vail Cooper & Associates
☒ No Changes
☐ Changes As Noted
Revisions by: MFW (Initials)

DESIGN OVERSIGHT	DRAWN BY: J. HULSE	A. PATTERSON, V. TULAKARA INC. FIELD INVESTIGATION BY:	PREPARED FOR THE STATE OF CALIFORNIA DEPARTMENT OF TRANSPORTATION
SIGN OFF DATE	CHECKED BY: T. HUSTON	DATE:	O. RODRIGUEZ PROJECT ENGINEER

BRIDGE NO. 33C0405
KILOMETER POST

ISABEL AVENUE UNDERPASS
LOG OF TEST BORINGS

REV. DATE 8-2-97
ORIGINAL SCALE IN MILLIMETERS FOR REDUCED PLANS
CU
EA
DISCARD PRINTS BEARING EARLIER REVISION DATES
REVISION DATES (PRELIMINARY STAGE ONLY)
SHEET 13 OF 13

33e0078-z-ltb02.tif