Dist	COUNTY	ROUTE	POST MILES TOTAL PROJECT	SHEET No.	TOTAL SHEETS
04	Ala	580	R7.8/19.1	2	681

REGISTERED CIVIL ENGINEER 2/22/12 DATE

5-21-12
PLANS APPROVAL DATE

REGISTERED PROFESSIONAL ENGINEER Brian Krcelic No. C33203 Exp. 06/30/12 CIVIL STATE OF CALIFORNIA

THE STATE OF CALIFORNIA OR ITS OFFICERS OR AGENTS SHALL NOT BE RESPONSIBLE FOR THE ACCURACY OR COMPLETENESS OF SCANNED COPIES OF THIS PLAN SHEET.

T Y LIN INTERNATIONAL
1111 BROADWAY, SUITE 2150
OAKLAND, CA 94607

ALAMEDA CTC
1333 BROADWAY, SUITE 220
OAKLAND, CA 94612

NOTES:

1. DIMENSIONS OF THE PAVEMENT STRUCTURES (STRUCTURAL SECTIONS) ARE SUBJECT TO TOLERANCES SPECIFIED IN THE Std SPECIFICATIONS.
2. SUPERELEVATION AS SHOWN OR AS DIRECTED BY THE ENGINEER.
3. SEE LAYOUT PLANS FOR LOCATION OF HMA DIKE, Conc BARRIER AND MBGR.
4. FOR SAW CUT DETAIL SEE DETAIL A ON SHEET X-3.
5. SEE CONSTRUCTION DETAILS FOR PLACEMENT OF AREA CONTAINING AERIALLY DEPOSITED LEAD.
6. SEE RETAINING WALL PLANS FOR CONCRETE BARRIER TYPES AT RETAINING WALLS.
7. SEE EDGE DRAIN SHEETS FOR LOCATION OF EDGE DRAIN.
8. FOR COLD PLANE AND OVERLAY CONFORM DETAILS SEE CONSTRUCTION DETAILS.
9. FOR LOCATION, LIMITS AND DETAILS OF MVP, SEE LAYOUTS AND CONSTRUCTION DETAILS.
10. FOR LOCATIONS AND LIMITS OF COLD PANE AC Pvmt, SEE LAYOUTS AND SUMMARY OF QUANTITIES SHEETS.
11. FOR LOCATION , LIMITS AND DETAILS OF THE TEMPORARY CREEK DIVERSION SYSTEM SEE SHEETS C-4 THROUGH C-7.
12. PRIME COAT MUST BE APPLIED ON ALL UNTREATED BASE MATERIALS BEFORE PLACING HMA-A.
13. FOR UNDERDRAIN LOCATION, LIMITS AND DETAILS SEE SUBSURFACE DRAINAGE PLANS AND DRAINAGE DETAILS.
14. EXTEND 0.20' OF THE TOP LAYER OF HMA-A OR THE 0.15' LAYER OF THE RHMA-G PLACED ON THE SHOULDER UNDER THE DIKES WITH NO JOINT AT THE ES. SEE Std PLANS A87B FOR DETAIL.
15. HMA SURFACING AND BASE LAYERS MAY NEED ADJUSTMENT TO ALLOW ELEVATION OF NEW ATPB LAYER TO MATCH THE ELEVATION OF THE Exist ATPB LAYER.

PAVEMENT STRUCTURAL SECTIONS:

[1] 0.15' RHMA-G
0.60' HMA-A
0.80' LCB
2.00' Cl 4 AS
SEG

[2] 0.15' RHMA-G
Var 0.10' TO 0.15' HMA-A
(CROSS SLOPE CORRECTION)
COLD PLANE AC Pvmt
(SEE DETAIL B ON X-12)

[3] 0.10' HMA-O

[4] 0.15' RHMA-G
0.35' HMA-A
2.10' LCB

[5] 0.25' VEGETATION CONTROL
(MINOR CONCRETE)

[6] 0.35' Conc Pvmt
0.50' ~~Cl 3 AB~~ Cl 2 AB (2)

[7] 0.15' RHMA-G
2.35' HMA-A

[8] 0.3' HMA-A

[9] 0.15' RHMA-G
0.60' HMA-A
0.25' ATPB
0.90' LCB
1.50' Cl 4 AS
SEG

DESIGN DESIGNATION (ROUTE 580):

MAINLINE TI=15.5, R-VALUE=5
RAMPS TI=10.0, R-VALUE=5
V DESIGN = 70 mph

ABBREVIATIONS:

BART	BAY AREA RAPID TRANSIT
CTS	CEMENT TREATED SUBBASE
GB	GRADE BREAK
HMA-A	HOT MIX ASPHALT - TYPE A
HMA-O	HOT MIX ASPHALT - OPEN GRADED
HOV	HIGH OCCUPANCY VEHICLE
RAC	RUBBERIZED ASPHALT CONCRETE
RHMA-G	RUBBERIZED HOT MIX ASPHALT - GAP GRADED
MVP	MAINTENANCE VEHICLE PULLOUT
SEG	SUBGRADE ENHANCEMENT GEOTEXTILE
TCE	TEMPORARY CONSTRUCTION EASEMENT
PFE	PERMANENT FOOTING EASEMENT
SN/TBW	SOILNAIL/TIEBACK WALL EASEMENT

LEGEND:

COLD PLANE AC PAVEMENT

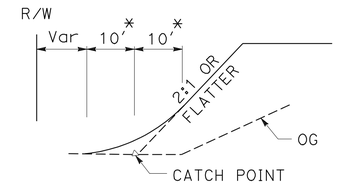

TYPICAL FILL SLOPE ROUNDING

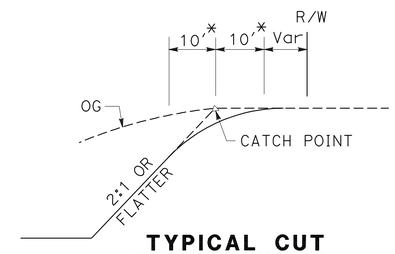

TYPICAL CUT SLOPE ROUNDING

*SPACE PERMITTING OR AS INSTRUCTED BY THE ENGINEER

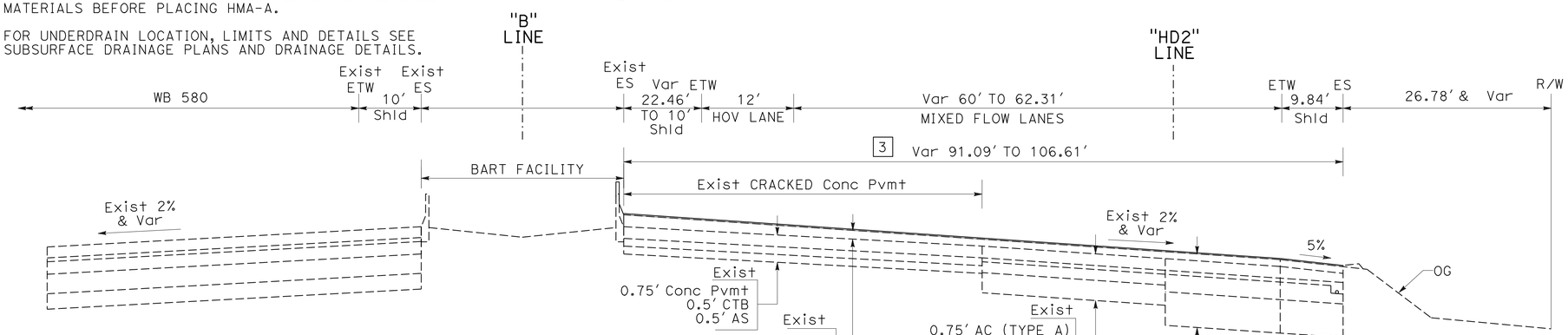

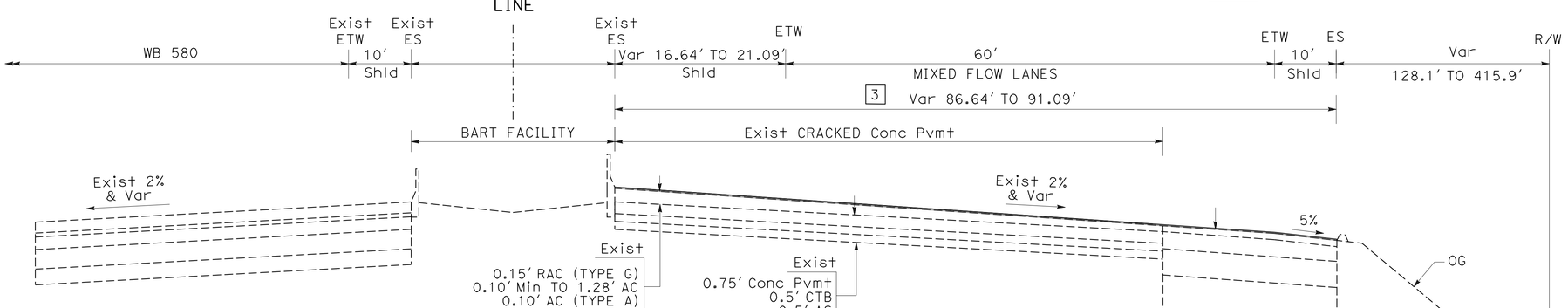

ROUTE 580

TYPICAL CROSS SECTION

NO SCALE

(2) **REVISED PER ADDENDUM No. 2 DATED SEPTEMBER 19, 2012**

X-1

STATE OF CALIFORNIA - DEPARTMENT OF TRANSPORTATION
Caltrans

CONSULTANT FUNCTIONAL SUPERVISOR: BRIAN KRCELIC
CALCULATED-DESIGNED BY: SNEHA PAVULURI
CHECKED BY: NABAZ SAIEED
REVISED BY
DATE REVISED

LAST REVISION 2-22-12
DATE PLOTTED => 18-SEP-2012
TIME PLOTTED => 11:02

Dist	COUNTY	ROUTE	POST MILES TOTAL PROJECT	SHEET No.	TOTAL SHEETS
04	Ala	580	R7.8/19.1	7	681

REGISTERED CIVIL ENGINEER 2/22/12 DATE

5-21-12
PLANS APPROVAL DATE

REGISTERED PROFESSIONAL ENGINEER Brian Krcelic No. C33203 Exp. 06/30/12 CIVIL STATE OF CALIFORNIA

THE STATE OF CALIFORNIA OR ITS OFFICERS OR AGENTS SHALL NOT BE RESPONSIBLE FOR THE ACCURACY OR COMPLETENESS OF SCANNED COPIES OF THIS PLAN SHEET.

T Y LIN INTERNATIONAL
1111 BROADWAY, SUITE 2150
OAKLAND, CA 94607

ALAMEDA CTC
1333 BROADWAY, SUITE 220
OAKLAND, CA 94612

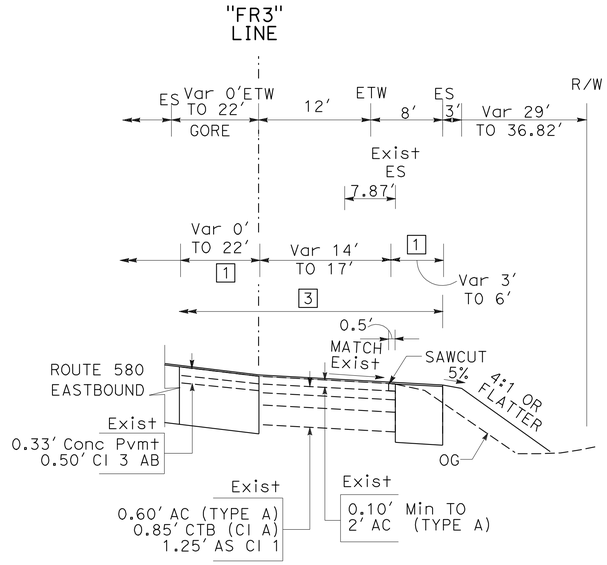

EASTBOUND

FALLON ROAD OFF-RAMP

"FR3" 320+56.97 TO "FR3" 324+70.23

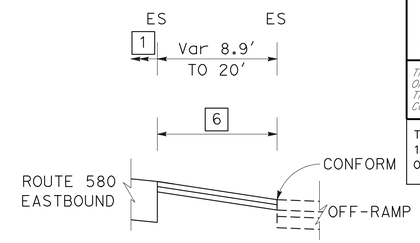

TEXTURED PAVING

EASTBOUND

~~"B" 323+26.66 TO "B" 324+05.48~~ 2
"B" 423+27.29 TO "B" 424+04.18

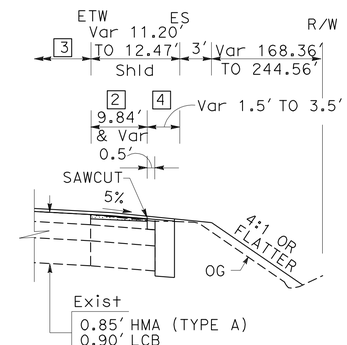

EASTBOUND

"B" 426+31.59 TO "B" 427+54.23

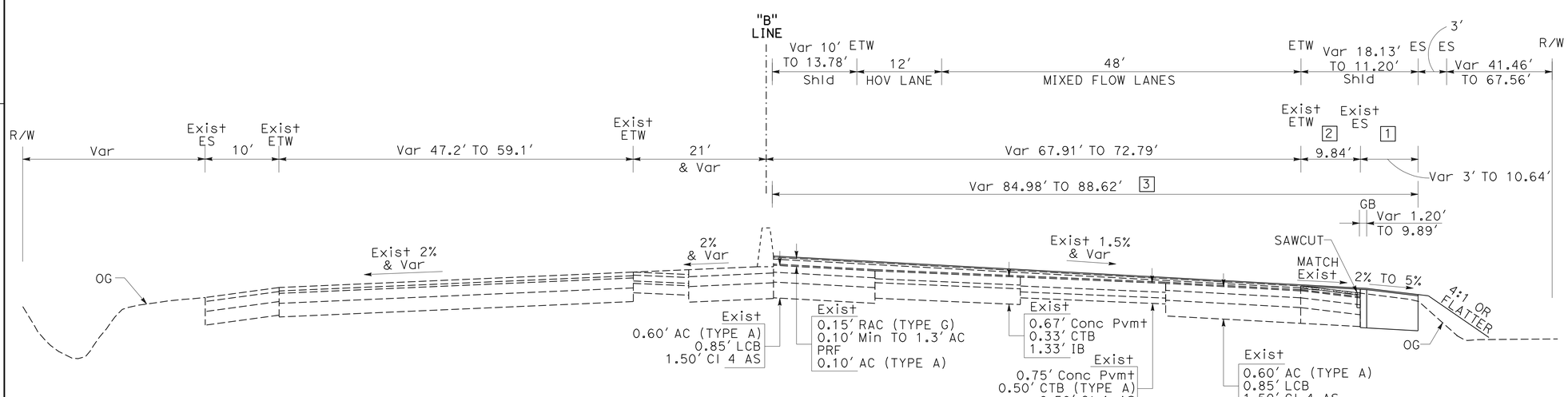

WESTBOUND

"B" 421+85.31 TO "B" 427+54.23

EASTBOUND

TYPICAL CROSS SECTION

NO SCALE

X-6

FOR NOTES, ABBREVIATIONS AND LEGEND, SEE SHEET X-1

2 **ROUTE 580 REVISED PER ADDENDUM No. 2 DATED SEPTEMBER 19, 2012**

STATE OF CALIFORNIA - DEPARTMENT OF TRANSPORTATION
Caltrans

CONSULTANT FUNCTIONAL SUPERVISOR: BRIAN KRCELIC
CALCULATED-DESIGNED BY: NABAZ SAIEED
CHECKED BY: SNEHA PAVULURI
REVISED BY
DATE REVISED

LAST REVISION 2-22-12
DATE PLOTTED => 18-SEP-2012
TIME PLOTTED => 11:03

Dist	COUNTY	ROUTE	POST MILES TOTAL PROJECT	SHEET No.	TOTAL SHEETS
04	Ala	580	R7.8/19.1	58	681

REGISTERED CIVIL ENGINEER 2/22/12 DATE

5-21-12
PLANS APPROVAL DATE

REGISTERED PROFESSIONAL ENGINEER
SNEHALATHA PAVULURI
No. C78187
Exp. 09/30/13
CIVIL
STATE OF CALIFORNIA

THE STATE OF CALIFORNIA OR ITS OFFICERS OR AGENTS SHALL NOT BE RESPONSIBLE FOR THE ACCURACY OR COMPLETENESS OF SCANNED COPIES OF THIS PLAN SHEET.

T Y LIN INTERNATIONAL
1111 BROADWAY, SUITE 2150
OAKLAND, CA 94607

ALAMEDA CTC
1333 BROADWAY, SUITE 220
OAKLAND, CA 94612

NOTE:

FOR ACCURATE RIGHT OF WAY DATA, CONTACT RIGHT OF WAY ENGINEERING AT THE DISTRICT OFFICE.

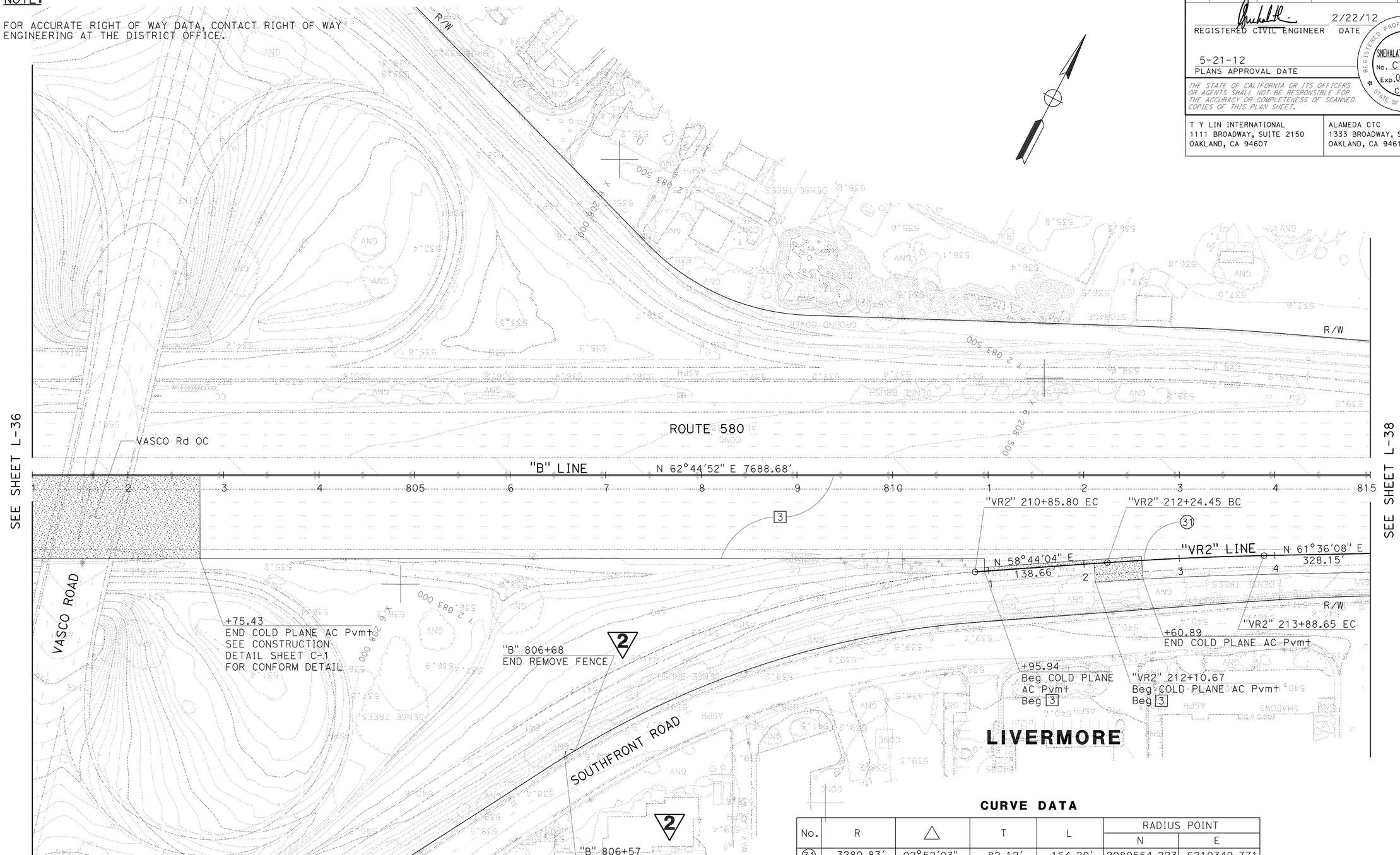

CURVE DATA

No.	R	△	T	L	RADIUS POINT N	RADIUS POINT E
31	3280.83'	02°52'03"	82.12'	164.20'	2080554.223	6210349.771

2 REVISED PER ADDENDUM No. 2 DATED SEPTEMBER 19, 2012

FOR NOTES, ABBREVIATIONS AND LEGEND, SEE SHEET L-1

LAYOUT

SCALE: 1" = 50'

L-37

STATE OF CALIFORNIA - DEPARTMENT OF TRANSPORTATION
Caltrans

CONSULTANT FUNCTIONAL SUPERVISOR: BRIAN KRCELIC

CALCULATED-DESIGNED BY: SNEHA PAVULURI
CHECKED BY: NABAZ SAIEED

REVISED BY
DATE REVISED

LAST REVISION 2-22-12
DATE PLOTTED => 18-SEP-2012
TIME PLOTTED => 08:20

Dist	COUNTY	ROUTE	POST MILES TOTAL PROJECT	SHEET No.	TOTAL SHEETS
04	Ala	580	R7.8/19.1	296	681

REGISTERED CIVIL ENGINEER 2/22/12 DATE

5-21-12
PLANS APPROVAL DATE

REGISTERED PROFESSIONAL ENGINEER Brian Krcelic No. C33203 Exp. 06/30/12 CIVIL STATE OF CALIFORNIA

THE STATE OF CALIFORNIA OR ITS OFFICERS OR AGENTS SHALL NOT BE RESPONSIBLE FOR THE ACCURACY OR COMPLETENESS OF SCANNED COPIES OF THIS PLAN SHEET.

T Y LIN INTERNATIONAL
1111 BROADWAY, SUITE 2150
OAKLAND, CA 94607

ALAMEDA CTC
1333 BROADWAY, SUITE 220
OAKLAND, CA 94612

STAGE 2B - CONSTRUCTION:

(7) CONSTRUCT EB ROUTE 580 OUTSIDE SHOULDER AREA BETWEEN "B" 584+34 AND 640+15.

(8) CONSTRUCT RETAINING WALLS No. 11 AND 10.

(9) CONSTRUCT RETAINING WALL No. 9

(10) WIDEN ARROYO LAS POSITAS BRIDGE, Br. No. 33-0203.

(11) CONSTRUCT SOUND WALL No. 1 AND RETAINING WALL No. 8 AND 18.

STAGE 3 - CONSTRUCTION:

2 (12) ~~RHMA-O~~ SURFACING ENTIRE EB PROJECT LIMITS (NOT SHOWN).
HMA-O

NOTE:

FOR ACCURATE RIGHT OF WAY DATA, CONTACT RIGHT OF WAY ENGINEERING AT THE DISTRICT OFFICE.

STAGE 2B - TRAFFIC:

D FOR EB ROUTE 580 FROM "B" 580+00 TO 644+00:

a. MAINTAIN MAINLINE TRAFFIC ON EXISTING WEST OF "B" 600+90

b. SHIFT TRAFFIC TOWARD INSIDE SHOULDER AND REDUCE LANES TO 11′ FROM "B" 600+90 TO 644+00.

c. REDUCE INSIDE SHOULDER WIDTH TO 1′ FROM "B" 586+24 TO 596+77.

d. REDUCE OUTSIDE SHOULDER WIDTH TO 5′ FROM "B" 616+91 TO 617+74, AND 8.9′ & Var FROM "B" 617+74 TO 635+49.

E FOR N. LIVERMORE Ave EB OFF-RAMP FROM "B" 636+86 TO "LA3" 341+82:

a. SHIFT OFF-RAMP TRAFFIC TOWARD INSIDE SHOULDER AT THE GORE AND REDUCE LANE TO 11′.

b. CLOSE OUTSIDE SHOULDER.

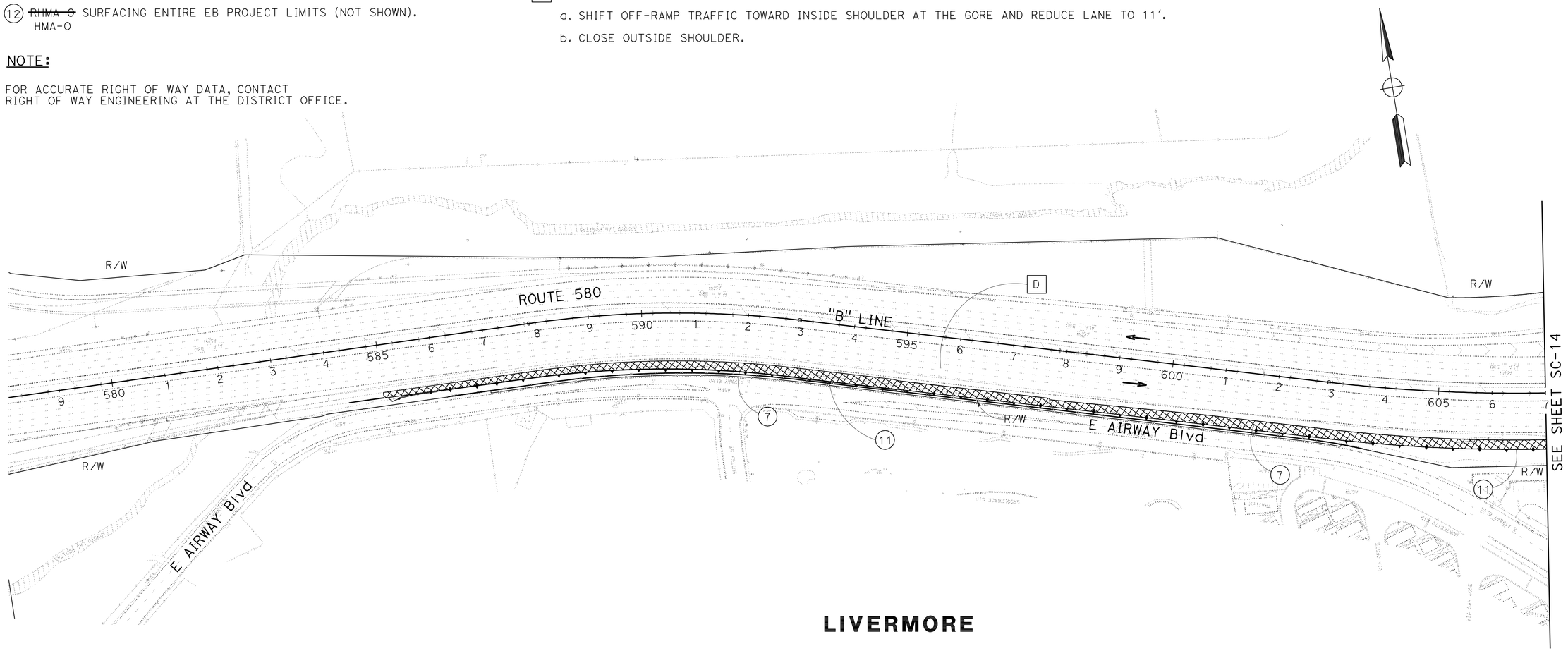

LIVERMORE

STAGE CONSTRUCTION

STAGE 2B

SCALE: 1" = 100′

FOR NOTES, ABBREVIATIONS AND LEGEND, SEE SHEET SC-1

2 **REVISED PER ADDENDUM No. 2 DATED SEPTEMBER 19, 2012**

APPROVED FOR STAGE CONSTRUCTION WORK ONLY

SC-13

STATE OF CALIFORNIA - DEPARTMENT OF TRANSPORTATION
Caltrans

CONSULTANT FUNCTIONAL SUPERVISOR: BRIAN KRCELIC
CALCULATED-DESIGNED BY: SNEHA PAVULURI
CHECKED BY: NABAZ SAIEED
REVISED BY / DATE REVISED

LAST REVISION 2-22-12
DATE PLOTTED => 18-SEP-2012
TIME PLOTTED => 08:20

FOR ACCURATE RIGHT OF WAY DATA, CONTACT
RIGHT OF WAY ENGINEERING AT THE DISTRICT OFFICE

DIST	COUNTY	ROUTE	POST MILES TOTAL PROJECT	SHEET No	TOTAL SHEETS
04	Ala	580	R7.8/19.1	601	681

REGISTERED CIVIL ENGINEER — 1/31/12 DATE

5-21-12
PLANS APPROVAL DATE

REGISTERED PROFESSIONAL ENGINEER — INES S. LI — No. C51561 — Exp. 6/30/12 — CIVIL — STATE OF CALIFORNIA

The State of California or its officers or agents shall not be responsible for the accuracy or completeness of scanned copies of this plan sheet.

BIGGS CARDOSA ASSOCIATES INC.
865 THE ALAMEDA
SAN JOSE, CALIFORNIA 95126

ALAMEDA CTC
1333 BROADWAY, SUITE 220
OAKLAND, CALIFORNIA 94612

LEGEND:
- Indicates exist structure
- Indicates new construction
- Indicates bridge removal (Portion)
- Indicates direction of traffic

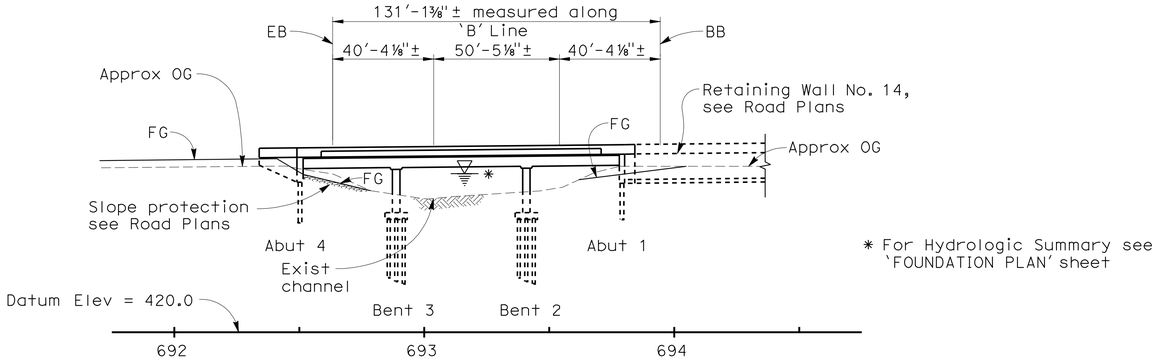

* For Hydrologic Summary see 'FOUNDATION PLAN' sheet

ELEVATION
1" = 30'

2 REVISED PER ADDENDUM No. 2
DATED SEPTEMBER 19, 2012

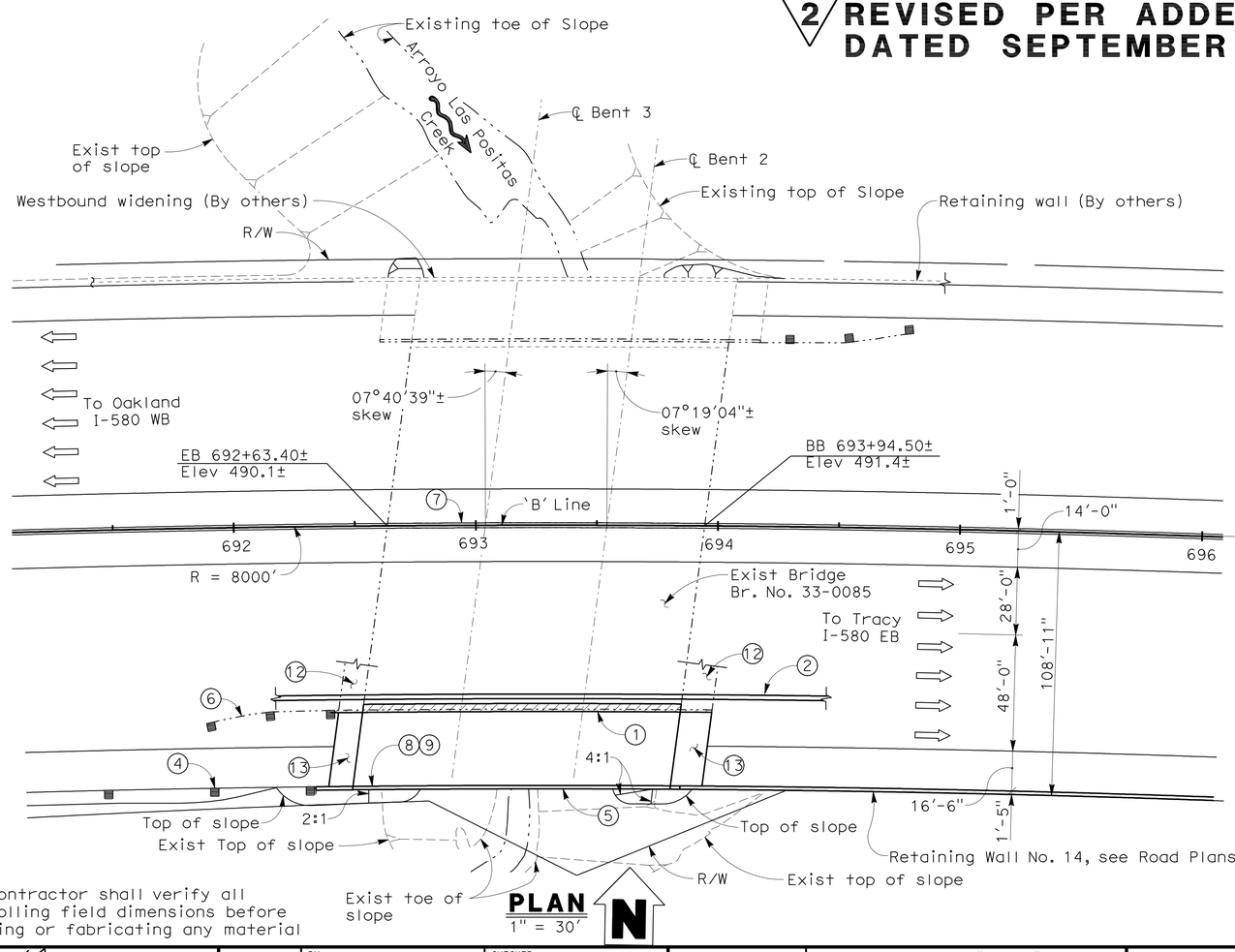

NOTE:
The Contractor shall verify all controlling field dimensions before ordering or fabricating any material

PLAN
1" = 30'

N

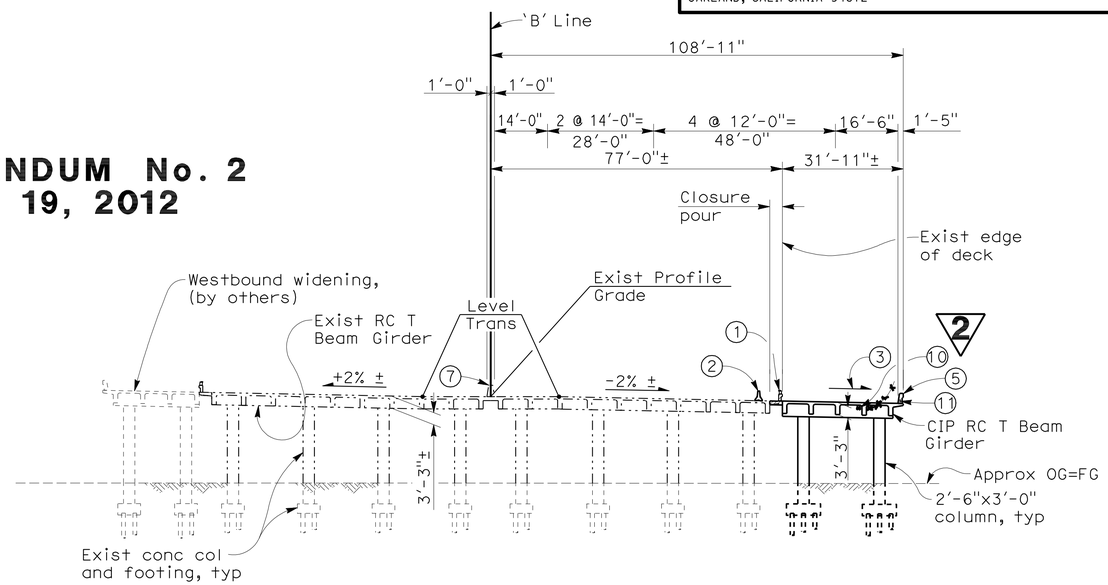

TYPICAL SECTION
1" = 20'

NOTES:
1. Remove existing overhang, concrete barrier, metal bridge railing and portion of wingwalls.
2. Temporary Railing (Type K), see Road Plans.
3. Match existing cross slope
4. Metal Beam Guard Rail, see Road Plans
5. Concrete Barrier Type 732
6. Existing metal beam guard railing to be removed, see Road Plans
7. Existing Concrete Barrier (Type 60A Mod)
8. Paint 'Bridge No. 33-0085'
9. Paint 'Arroyo Las Positas'
10. 1-4" dia and 1-3" dia Electrical Conduits, see Electrical Plans. (2)
11. 2-2" dia Electrical Conduits
12. Existing Structure Approach Slab
13. Structure Approach Slab (Type N Modified)
14. For Index to Bridge Plans & General Notes, see 'INDEX TO PLANS' sheet
15. For Pile Data Table, see 'FOUNDATION PLAN' sheet
16. For Quantities, see 'INDEX TO PLANS' sheet

DESIGN OVERSIGHT Yiwei Hu 2/8/12 SIGN OFF DATE	DESIGN	BY R. RIVAS	CHECKED Y. LIN	LOAD & RESISTANCE FACTOR DESIGN	LIVE LOADING: HL93 W/"LOW-BOY"; PERMIT DESIGN VEHICLE
	DETAILS	BY R. RIVAS	CHECKED S. MOYLES	LAYOUT BY I. LI	CHECKED S. MOYLES
	QUANTITIES	BY S. KOTAMALA	CHECKED M. FRECHETTE	SPECIFICATIONS BY I. LI	PLANS AND SPECS COMPARED S. MOYLES

PREPARED FOR THE STATE OF CALIFORNIA DEPARTMENT OF TRANSPORTATION

INES LI
PROJECT ENGINEER

BRIDGE NO. 33-0085
POST MILES 11.72

ARROYO LAS POSITAS BRIDGE (WIDEN)
GENERAL PLAN

DESIGN GENERAL PLAN SHEET (ENGLISH) (REV. 7/16/10)

ORIGINAL SCALE IN INCHES FOR REDUCED PLANS 0 1 2 3

UNIT: 0735
PROJECT NUMBER & PHASE: 04000007831 CONTRACT NO.: 04-2908V1

DISREGARD PRINTS BEARING EARLIER REVISION DATES → 1/4/10 3/26/10 1/30/11 1/31/12

SHEET 1 OF 15

FILE => 33-0085-a-gp01.add

USERNAME => s114937 DATE PLOTTED => 18-SEP-2012 TIME PLOTTED => 08:29

2007236.2 (2007236ES1-EB)

DIST	COUNTY	ROUTE	POST MILES TOTAL PROJECT	SHEET No	TOTAL SHEETS
04	Ala	580	R7.8/19.1	608	681

REGISTERED CIVIL ENGINEER — DATE 1/31/12

5-21-12
PLANS APPROVAL DATE

REGISTERED PROFESSIONAL ENGINEER — INES S. LI — No. C51561 — Exp. 6/30/12 — CIVIL — STATE OF CALIFORNIA

The State of California or its officers or agents shall not be responsible for the accuracy or completeness of scanned copies of this plan sheet.

BIGGS CARDOSA ASSOCIATES INC.
865 THE ALAMEDA
SAN JOSE, CALIFORNIA 95126

ALAMEDA CTC
1333 BROADWAY, SUITE 220
OAKLAND, CALIFORNIA 94612

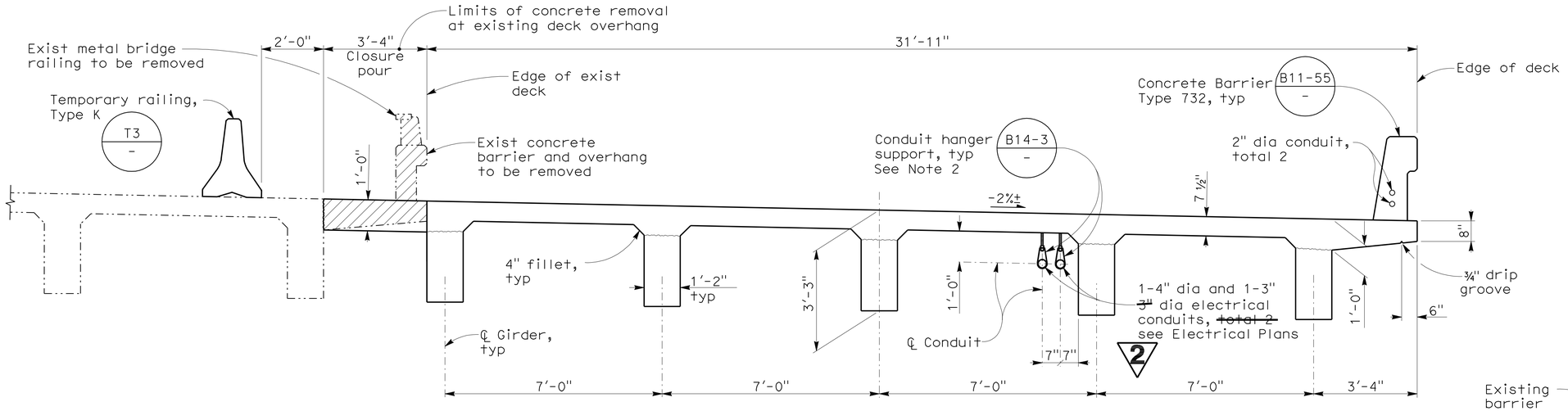

TYPICAL SECTION

1/2" = 1'-0"

FALSEWORK RELEASE NOTES

Alternative 1:

Falsework shall be released as soon as permitted by the specifications. Closure pour and intermediate diaphragms shall not be placed sooner than 60 days after the falsework has been released.

Alternative 2:

Falsework shall not be released less than 28 days after the last concrete has been placed. Closure pour and intermediate diaphragms shall not be placed sooner than 14 days after the falsework has been released.

When falsework release Alternative 2 is used, camber values are 0.75 times those shown.

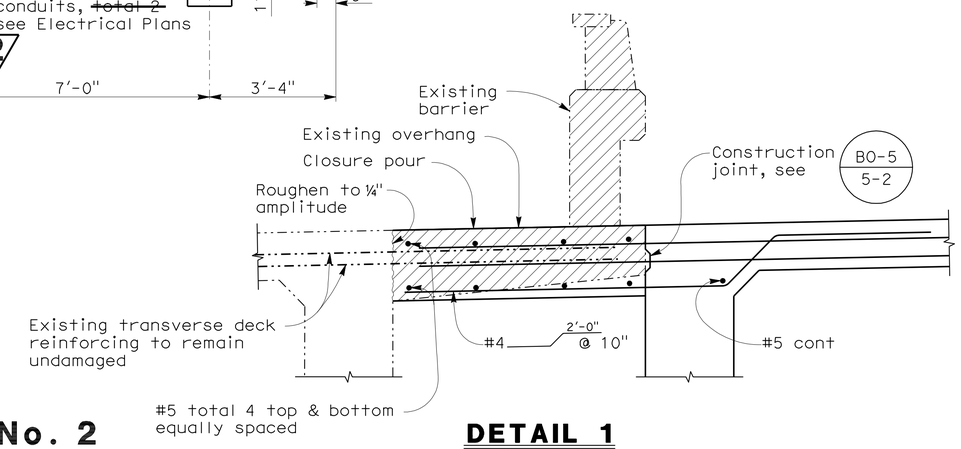

DETAIL 1

1" = 1'-0"

2 REVISED PER ADDENDUM No. 2 DATED SEPTEMBER 19, 2012

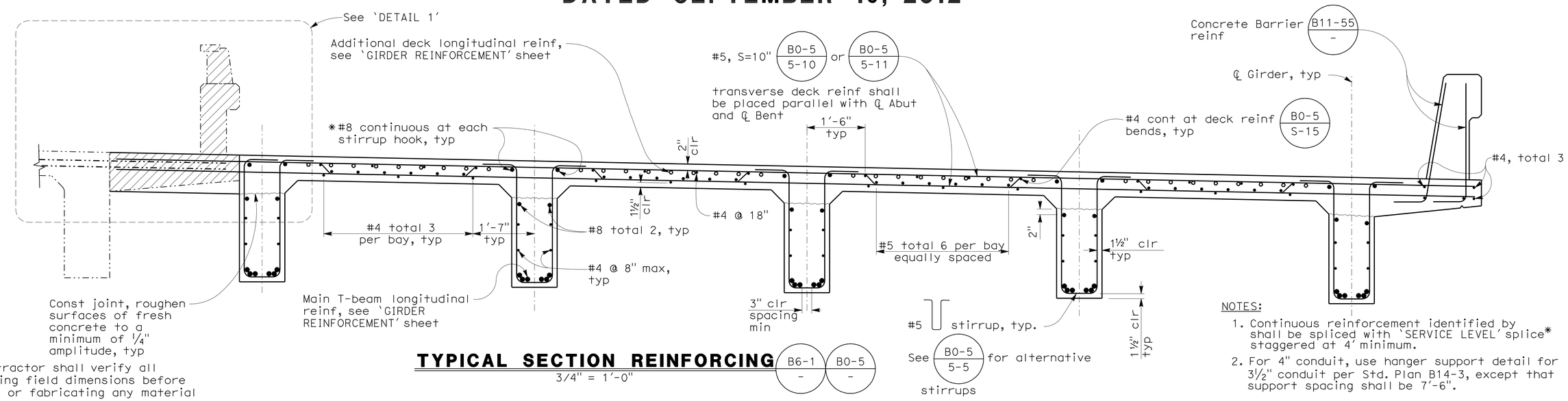

NOTES:

1. Continuous reinforcement identified by shall be spliced with 'SERVICE LEVEL' splice* staggered at 4' minimum.
2. For 4" conduit, use hanger support detail for 3½" conduit per Std. Plan B14-3, except that support spacing shall be 7'-6".

NOTE:
The Contractor shall verify all controlling field dimensions before ordering or fabricating any material

TYPICAL SECTION REINFORCING

3/4" = 1'-0"

B6-1 - B0-5 -

DESIGN OVERSIGHT — Yiwei Hu
2/8/12
SIGN OFF DATE

	BY	CHECKED
DESIGN	R. RIVAS	Y. LIN
DETAILS	R. RIVAS	S. MOYLES
QUANTITIES	S. KOTAMALA	M. FRECHETTE

PREPARED FOR THE STATE OF CALIFORNIA DEPARTMENT OF TRANSPORTATION

INES LI
PROJECT ENGINEER

BRIDGE NO. 33-0085
POST MILES 11.72

ARROYO LAS POSITAS BRIDGE (WIDEN)

TYPICAL SECTION

DESIGN GENERAL PLAN SHEET (ENGLISH) (REV. 7/16/10)

ORIGINAL SCALE IN INCHES FOR REDUCED PLANS 0 1 2 3

UNIT: 0735
PROJECT NUMBER & PHASE: 04000007831
CONTRACT NO.: 04-2908V1

DISREGARD PRINTS BEARING EARLIER REVISION DATES — REVISION DATES 1/4/10 03/26/10 11/30/11 1/31/12

SHEET 8 OF 15

FILE => 33-0085-m-ts1.dwg

USERNAME => s114937 DATE PLOTTED => 18-SEP-2012 TIME PLOTTED => 08:29

2007236 (2007236ES8-EB)

FOR ACCURATE RIGHT OF WAY DATA, CONTACT
RIGHT OF WAY ENGINEERING AT THE DISTRICT OFFICE

DIST	COUNTY	ROUTE	POST MILES TOTAL PROJECT	SHEET No	TOTAL SHEETS
04	Ala	580	R7.8/19.1	616	681

REGISTERED CIVIL ENGINEER — 1/31/12 DATE

5-21-12
PLANS APPROVAL DATE

REGISTERED PROFESSIONAL ENGINEER — INES S. LI — No. C51561 — Exp.6/30/12 — CIVIL — STATE OF CALIFORNIA

The State of California or its officers or agents shall not be responsible for the accuracy or completeness of scanned copies of this plan sheet.

BIGGS CARDOSA ASSOCIATES INC.
865 THE ALAMEDA
SAN JOSE, CALIFORNIA 95126

ALAMEDA CTC
1333 BROADWAY, SUITE 220
OAKLAND, CALIFORNIA 94612

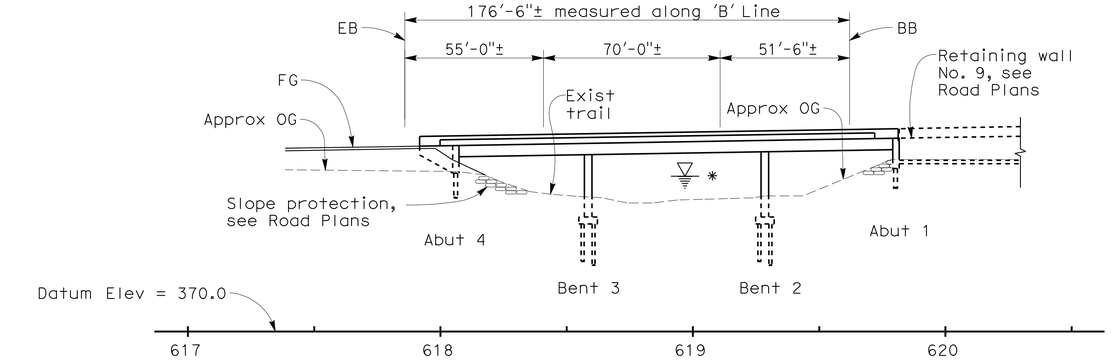

ELEVATION
1" = 30'

* For Hydrologic Summary see 'FOUNDATION PLAN' sheet

LEGEND:
- Indicates exist structure
- Indicates new construction
- Indicates bridge removal (Portion)
- Indicates direction of traffic
- Indicates deck drain inlet

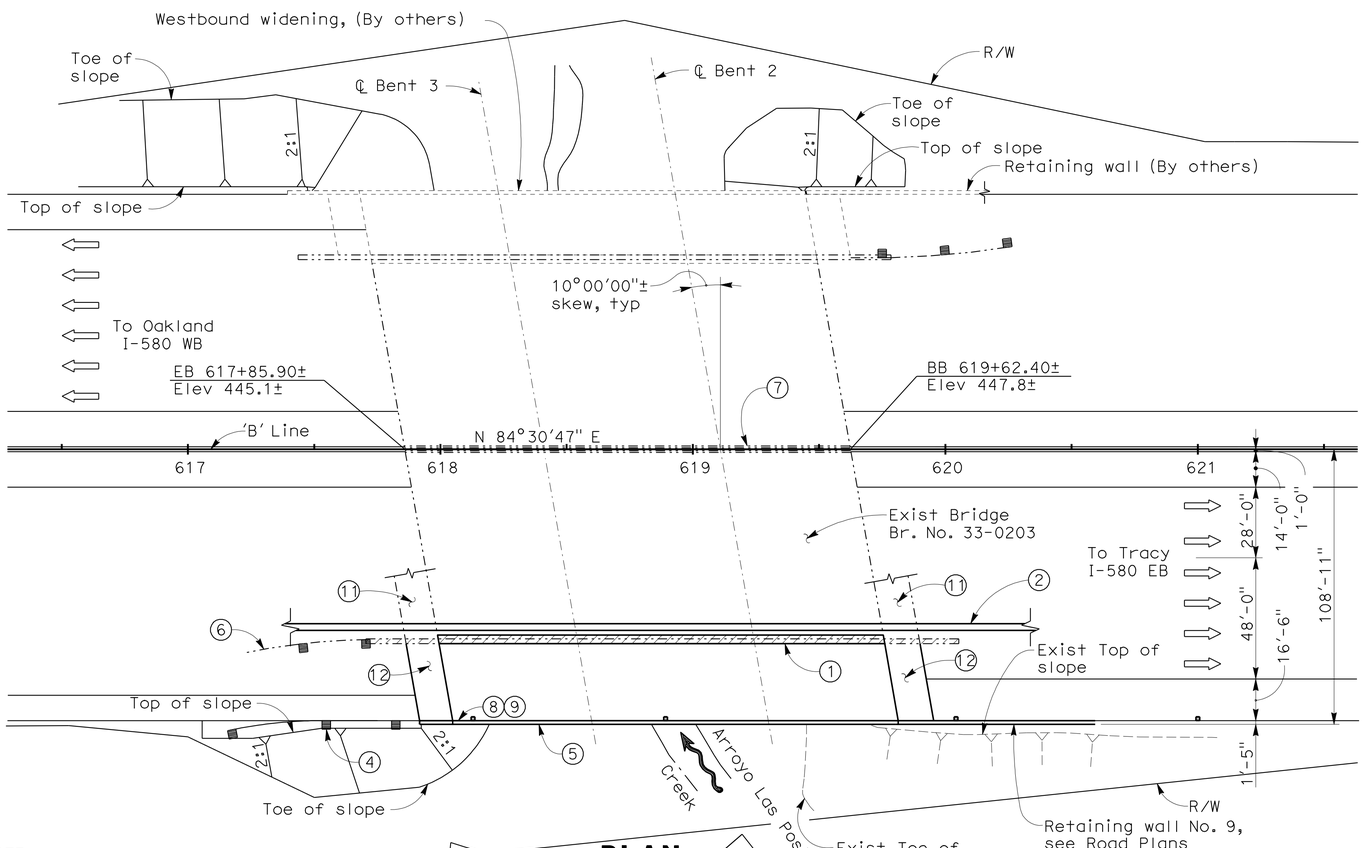

PLAN
1" = 30'

NOTE:
The Contractor shall verify all controlling field dimensions before ordering or fabricating any material

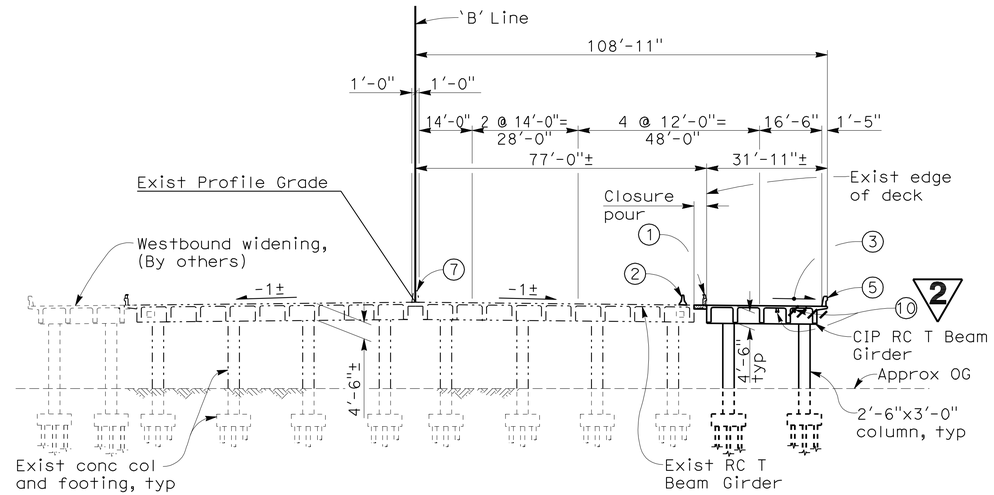

TYPICAL SECTION
1" = 20'

NOTES:
1. Remove existing overhang, concrete barrier, metal bridge railing and portion of wingwalls
2. Temporary Railing (Type K)
3. Match existing cross slope
4. Metal beam guard rail, see Road Plans
5. Concrete Barrier Type 732
6. Existing metal beam guard railing to be removed, see Road Plans
7. Existing Concrete Barrier (Type 60A Mod)
8. Paint 'Bridge No. 33-0203'
9. Paint 'Arroyo Las Positas'
10. 1-4" dia and 1-3" dia electrical conduits, see Electrical Plans 2
11. Existing Structure Approach Slab
12. Structure Approach Slab (Type N Modified)
13. For Index to Bridge Plans & General Notes, see 'INDEX TO PLANS' sheet
14. For Pile Data Table, see 'FOUNDATION PLAN' sheet
15. For Quantities, see 'INDEX TO PLANS' sheet

2 REVISED PER ADDENDUM No. 2 DATED SEPTEMBER 19, 2012

DESIGN OVERSIGHT Yiwei Hu 2/8/12 SIGN OFF DATE	DESIGN	BY D. CHAN	CHECKED Y. LIN	LOAD & RESISTANCE FACTOR DESIGN	LIVE LOADING: HL93 W/"LOW-BOY"; PERMIT DESIGN VEHICLE
	DETAILS	BY D. CHAN	CHECKED S. MOYLES	LAYOUT BY I. LI	CHECKED S. MOYLES
	QUANTITIES	BY P. GONGIDI	CHECKED M. FRECHETTE	SPECIFICATIONS BY I. LI	PLANS AND SPECS COMPARED S. MOYLES

PREPARED FOR THE STATE OF CALIFORNIA DEPARTMENT OF TRANSPORTATION

INES LI
PROJECT ENGINEER

BRIDGE NO. 33-0203
POST MILES 13.13

ARROYO LAS POSITAS BRIDGE (WIDEN)
GENERAL PLAN

DESIGN GENERAL PLAN SHEET (ENGLISH) (REV. 7/16/10)

ORIGINAL SCALE IN INCHES FOR REDUCED PLANS 0 1 2 3

UNIT: 0735
PROJECT NUMBER & PHASE: 04000007831 CONTRACT NO.: 04-2908V1

DISREGARD PRINTS BEARING EARLIER REVISION DATES → REVISION DATES 1/4/10 3/26/10 11/30/11 1/31/12 — SHEET 1 OF 15

FILE => 33-0203-a-gp01.add

USERNAME => s117606 DATE PLOTTED => 18-SEP-2012 TIME PLOTTED => 08:43 2007236.2 (2007236CS1-EB)

DIST	COUNTY	ROUTE	POST MILES TOTAL PROJECT	SHEET No	TOTAL SHEETS
04	Ala	580	R7.8/19.1	623	681

REGISTERED CIVIL ENGINEER 1/31/12 DATE

5-21-12
PLANS APPROVAL DATE

REGISTERED PROFESSIONAL ENGINEER INES S. LI No. C51561 Exp.6/30/12 CIVIL STATE OF CALIFORNIA

The State of California or its officers or agents shall not be responsible for the accuracy or completeness of scanned copies of this plan sheet.

BIGGS CARDOSA ASSOCIATES INC.
865 THE ALAMEDA
SAN JOSE, CALIFORNIA 95126

ALAMEDA CTC
1333 BROADWAY, SUITE 220
OAKLAND, CALIFORNIA 94612

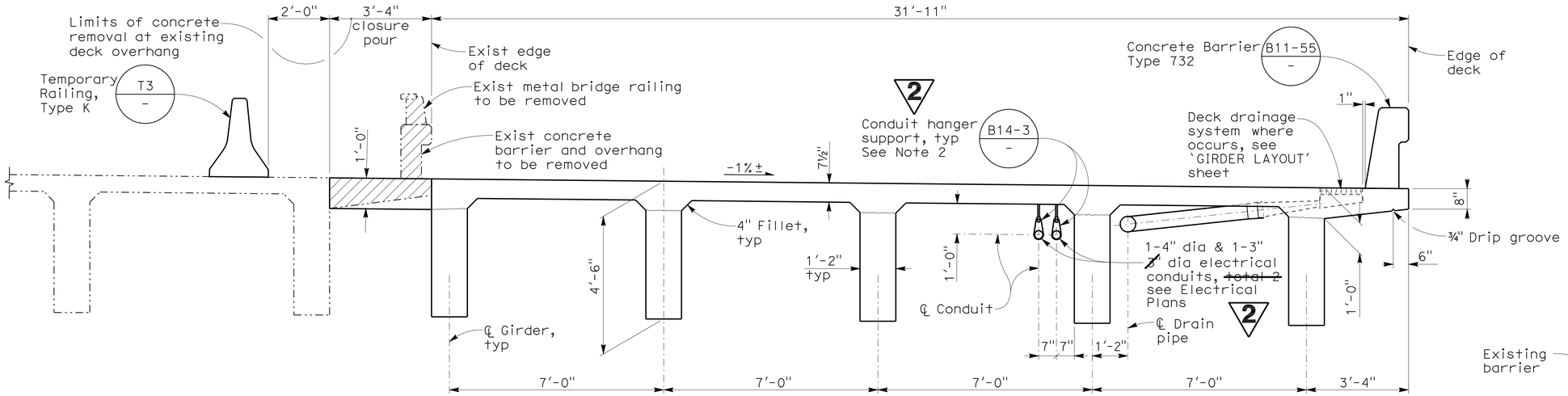

TYPICAL SECTION

1/2" = 1'-0"

FALSEWORK RELEASE NOTES

1. Alternative 1:
   Falsework shall be released as soon as permitted by the specifications. Closure pour and intermediate diaphragms shall not be placed sooner than 60 days after the falsework has been released.

   Alternative 2:
   Falsework shall not be released less than 28 days after the last concrete has been placed. Closure pour and intermediate diaphragms shall not be placed sooner than 14 days after the falsework has been released.

   When falsework release Alternative 2 is used, camber values are 0.75 times those shown.

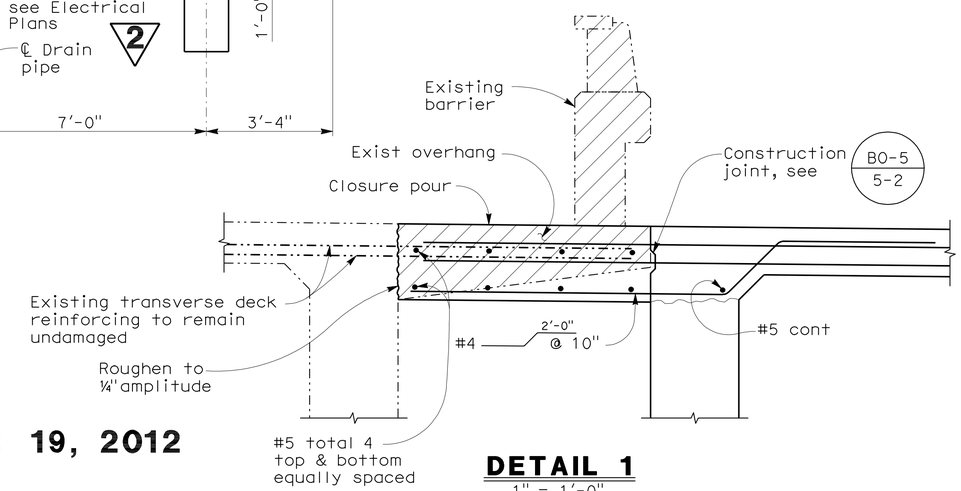

DETAIL 1

1" = 1'-0"

2 **REVISED PER ADDENDUM No. 2 DATED SEPTEMBER 19, 2012**

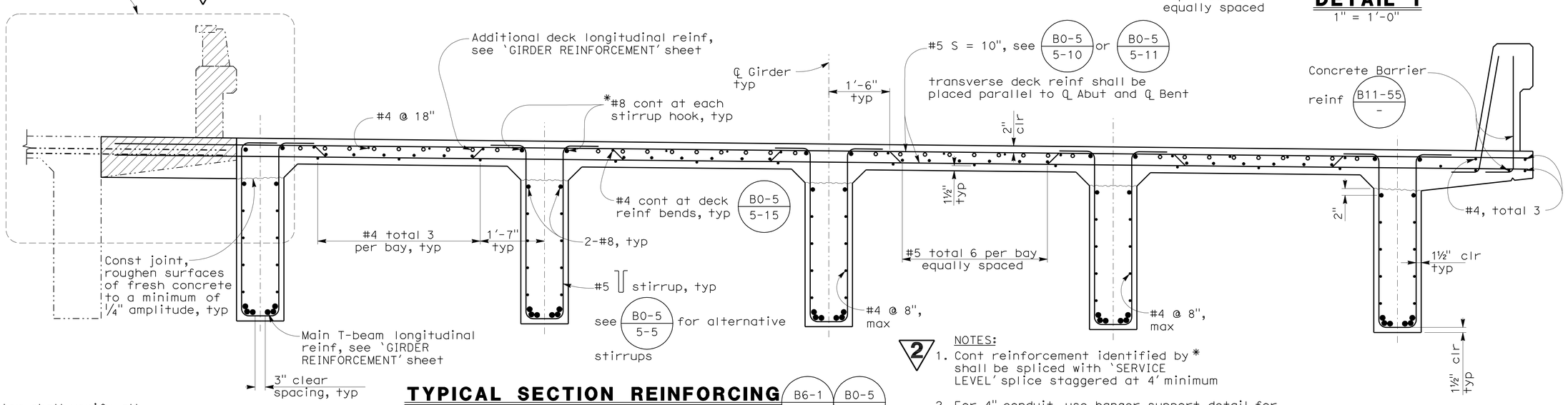

TYPICAL SECTION REINFORCING

3/4" = 1'-0"

B6-1 - B0-5 -

2 NOTES:

1. Cont reinforcement identified by * shall be spliced with 'SERVICE LEVEL' splice staggered at 4' minimum
2. For 4" conduit, use hanger support detail for 3½" conduit per Std Plan B14-3 except that support spacing shall be 7'-6"

NOTE:
The Contractor shall verify all controlling field dimensions before ordering or fabricating any material

DESIGN	BY D. CHAN	CHECKED Y. LIN	
DETAILS	BY D. CHAN	CHECKED S. MOYLES	
QUANTITIES	BY P. GONGIDI	CHECKED M. FRECHETTE	

DESIGN OVERSIGHT Yiwei Hu
2/8/12
SIGN OFF DATE

PREPARED FOR THE STATE OF CALIFORNIA DEPARTMENT OF TRANSPORTATION

INES LI
PROJECT ENGINEER

BRIDGE NO. 33-0203
POST MILES 13.13

ARROYO LAS POSITAS BRIDGE (WIDEN)
TYPICAL SECTION

DESIGN GENERAL PLAN SHEET (ENGLISH) (REV. 7/16/10)

ORIGINAL SCALE IN INCHES FOR REDUCED PLANS 0 1 2 3

UNIT: 0735
PROJECT NUMBER & PHASE: 04000007831 CONTRACT NO.: 04-2908V1

DISREGARD PRINTS BEARING EARLIER REVISION DATES → REVISION DATES 1/4/10 03/26/10 11/30/11 1/31/12

SHEET 8 OF 15

FILE => 33-0203-m-ts1.add

USERNAME => s117606 DATE PLOTTED => 18-SEP-2012 TIME PLOTTED => 08:43

2007236 (2007236CS8-EB)

DIST	COUNTY	ROUTE	POST MILES TOTAL PROJECT	SHEET No	TOTAL SHEETS
04	Ala	580	R7.8/19.1	625	681

REGISTERED CIVIL ENGINEER 1/31/12 DATE

5-21-12
PLANS APPROVAL DATE

REGISTERED PROFESSIONAL ENGINEER INES S. LI No. C51561 Exp.6/30/12 CIVIL STATE OF CALIFORNIA

The State of California or its officers or agents shall not be responsible for the accuracy or completeness of scanned copies of this plan sheet.

BIGGS CARDOSA ASSOCIATES INC.
865 THE ALAMEDA
SAN JOSE, CALIFORNIA 95126

ALAMEDA CTC
1333 BROADWAY, SUITE 220
OAKLAND, CALIFORNIA 94612

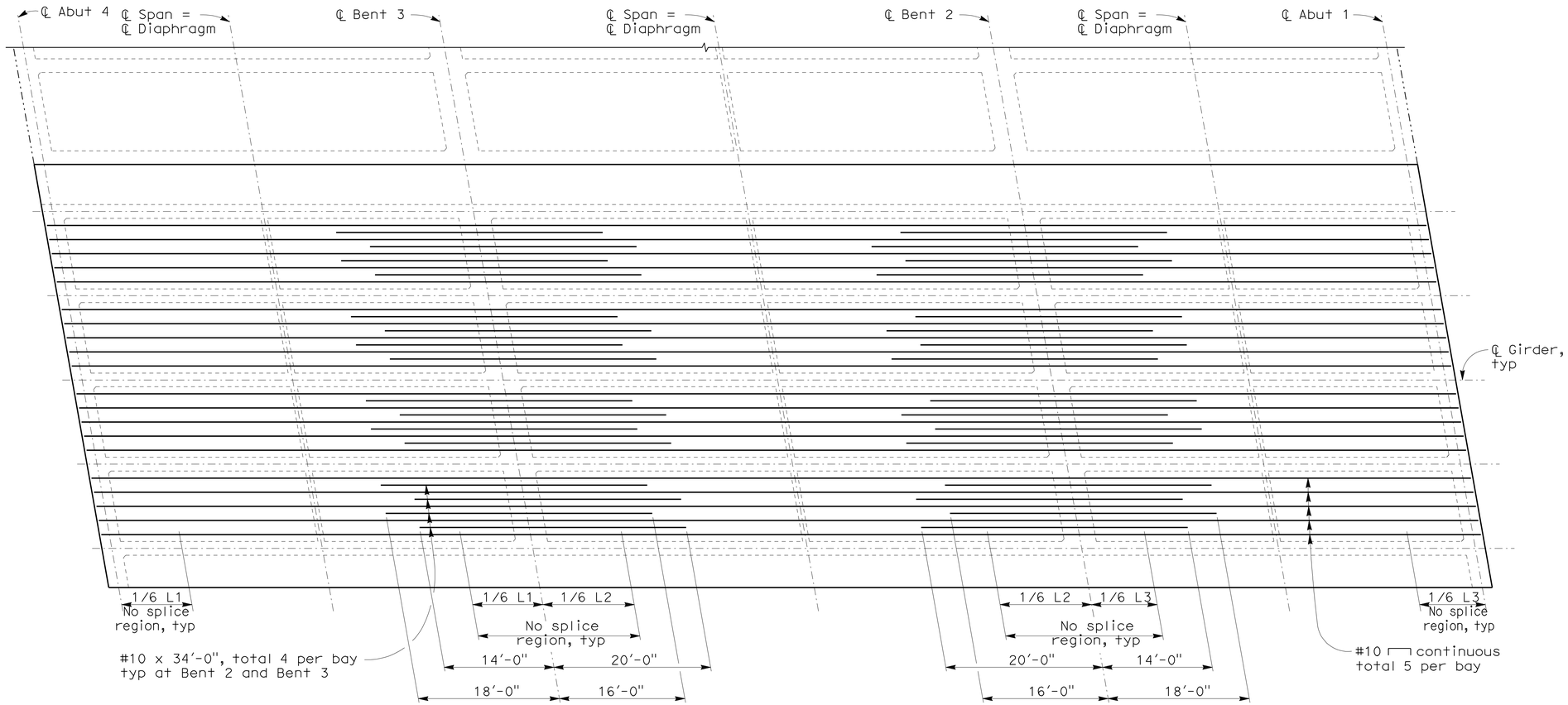

ADDITIONAL DECK REINFORCEMENT

NO SCALE

N

2

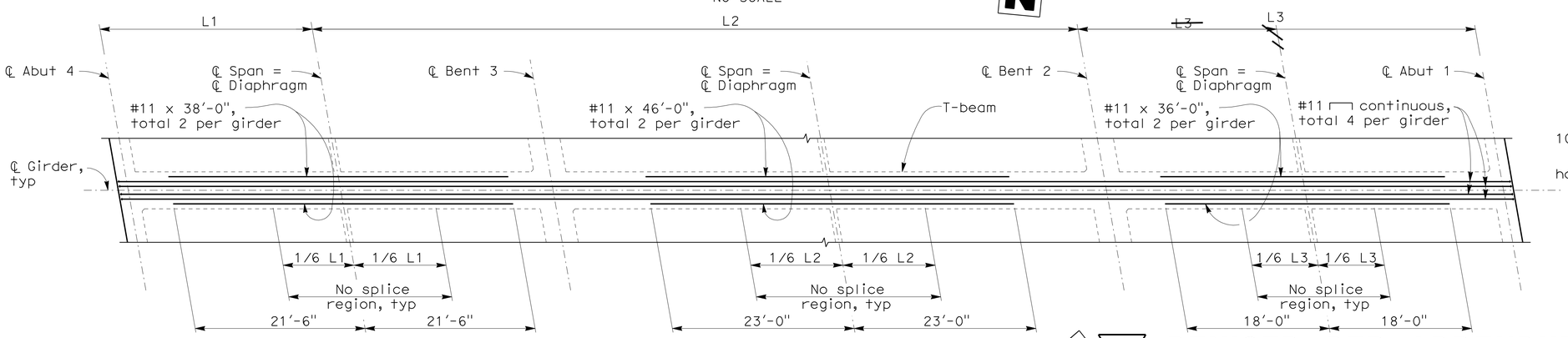

BOTTOM T-BEAM REINFORCEMENT

NO SCALE

N

2

NOTES:

1. Additional top deck reinforcement shown. See 'TYPICAL SECTION' sheet for typical deck reinforcement not shown
2. No lap splices permitted
3. Additional deck & beam reinforcing shall be spliced with service level splices as needed
4. Space additional reinforcement approximately equally within each bay
5. For 'DETAIL 2', see 'GIRDER LAYOUT' sheet

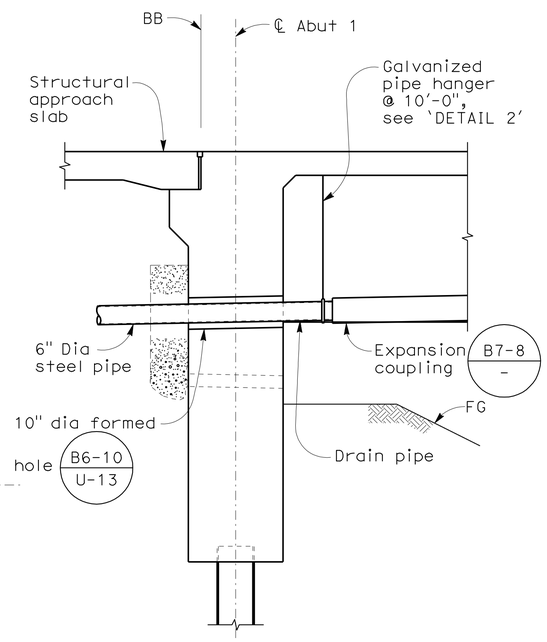

SECTION A-A

NO SCALE

2

REVISED PER ADDENDUM No. 2 DATED SEPTEMBER 19, 2012

NOTE:
The Contractor shall verify all controlling field dimensions before ordering or fabricating any material

DESIGN OVERSIGHT Yiwei Hu
2/8/12
SIGN OFF DATE

	BY	CHECKED
DESIGN	D. CHAN	Y. LIN
DETAILS	D. CHAN	S. MOYLES
QUANTITIES	P. GONGIDI	M. FRECHETTE

PREPARED FOR THE STATE OF CALIFORNIA DEPARTMENT OF TRANSPORTATION

INES LI
PROJECT ENGINEER

BRIDGE NO. 33-0203
POST MILES 13.13

ARROYO LAS POSITAS BRIDGE (WIDEN)
GIRDER REINFORCEMENT

DESIGN GENERAL PLAN SHEET (ENGLISH) (REV. 7/16/10)

ORIGINAL SCALE IN INCHES FOR REDUCED PLANS 0 1 2 3

UNIT: 0735
PROJECT NUMBER & PHASE: 04000007831 CONTRACT NO.: 04-2908V1

DISREGARD PRINTS BEARING EARLIER REVISION DATES → 1/4/10 3/26/10 11/30/11 1/31/12

SHEET 10 OF 15

FILE => 33-0203-q-g-rf01.dwg

USERNAME => s119571 DATE PLOTTED => 18-SEP-2012 TIME PLOTTED => 08:15 (8/3/11) (2007236CS10-EB)

DIST	COUNTY	ROUTE	POST MILES TOTAL PROJECT	SHEET No	TOTAL SHEETS
04	Ala	580	R7.8/19.1	669	681

REGISTERED CIVIL ENGINEER 02-01-12 DATE

5-21-12
PLANS APPROVAL DATE

REGISTERED PROFESSIONAL ENGINEER Raymond Kwok No. C75351 Exp. 12/31/13 CIVIL STATE OF CALIFORNIA

The State of California or its officers or agents shall not be responsible for the accuracy or completeness of electronic copies of this plan sheet.

ALAMEDA CTC
1333 BROADWAY, SUITE 220
OAKLAND, CA 94612

T.Y. LIN INTERNATIONAL
2010 CROW CANYON PLACE, SUITE 350
SAN RAMON, CA 94583

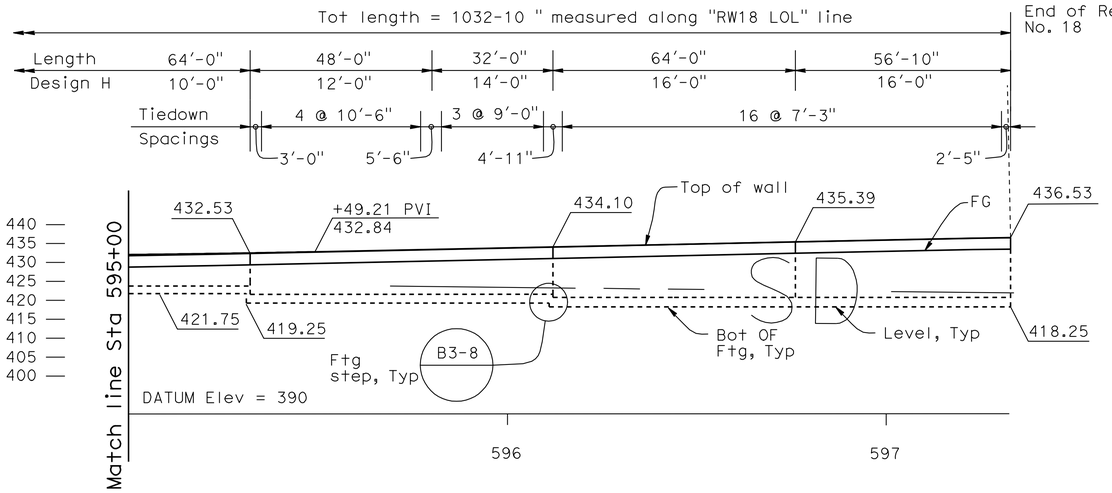

DEVELOPED MIRROR ELEVATION

Scale: 1" = 20'-0"

INDEX TO PLANS

Sheet No.	Title
1	GENERAL PLAN NO. 1
2	GENERAL PLAN NO. 2
3	GENERAL PLAN NO. 3
4	RETAINING WALL TYPE 7SW - DETAILS NO. 1
5	RETAINING WALL TYPE 7SW - DETAILS NO. 2
6	RETAINING WALL TYPE 7SW MODIFIED - DETAILS NO. 1
7	RETAINING WALL TYPE 7SW MODIFIED - DETAILS NO. 2
8	VERTICAL GROUND ANCHOR DETAILS NO. 1
9	VERTICAL GROUND ANCHOR DETAILS NO. 2
10	MASONRY BLOCK SOUND WALL ON RETAINING WALL - DETAILS NO. 1
11	MASONRY BLOCK SOUND WALL ON RETAINING WALL - DETAILS NO. 2
12	ARCHITECTURAL TEXTURE
13	SOIL LEGEND
14	SOIL LEGEND
15	LOG OF TEST BORINGS

RETAINING WALL NO. 18 BRIDGE NO. 33E0122

NOTES:

1. For weep holes and weakened planes locations and details see B0-3
2. Stop waterstop 6" above Conc Gtr FL and 1'-0" below FG
3. From "RW18 LOL" 595+64 to "RW18 LOL" 597+32.83, overexcavate 2' and backfill with compacted AB.

QUANTITIES

STRUCTURE EXCAVATION (GROUND ANCHOR WALL)	3,765	CY
STRUCTURE BACKFILL (GROUND ANCHOR WALL)	2,152	CY
PERVIOUS BACKFILL MATERIAL (RETAINING WALL)	60	CY
VERTICAL GROUND ANCHOR	47	EA
STRUCTURAL CONCRETE, RETAINING WALL	1,166	CY
FRACTURED RIB TEXTURE	3,340	SQFT
SOUND WALL (MASONRY BLOCK)	3,319	SQFT
BAR REINFORCING STEEL (RETAINING WALL)	116,447	LB
MINOR CONCRETE (GUTTER)	526	LF
CONCRETE BARRIER (TYPE 60D)	1,033	LF
SLOPE PAVING (CONCRETE)	67	CY

2

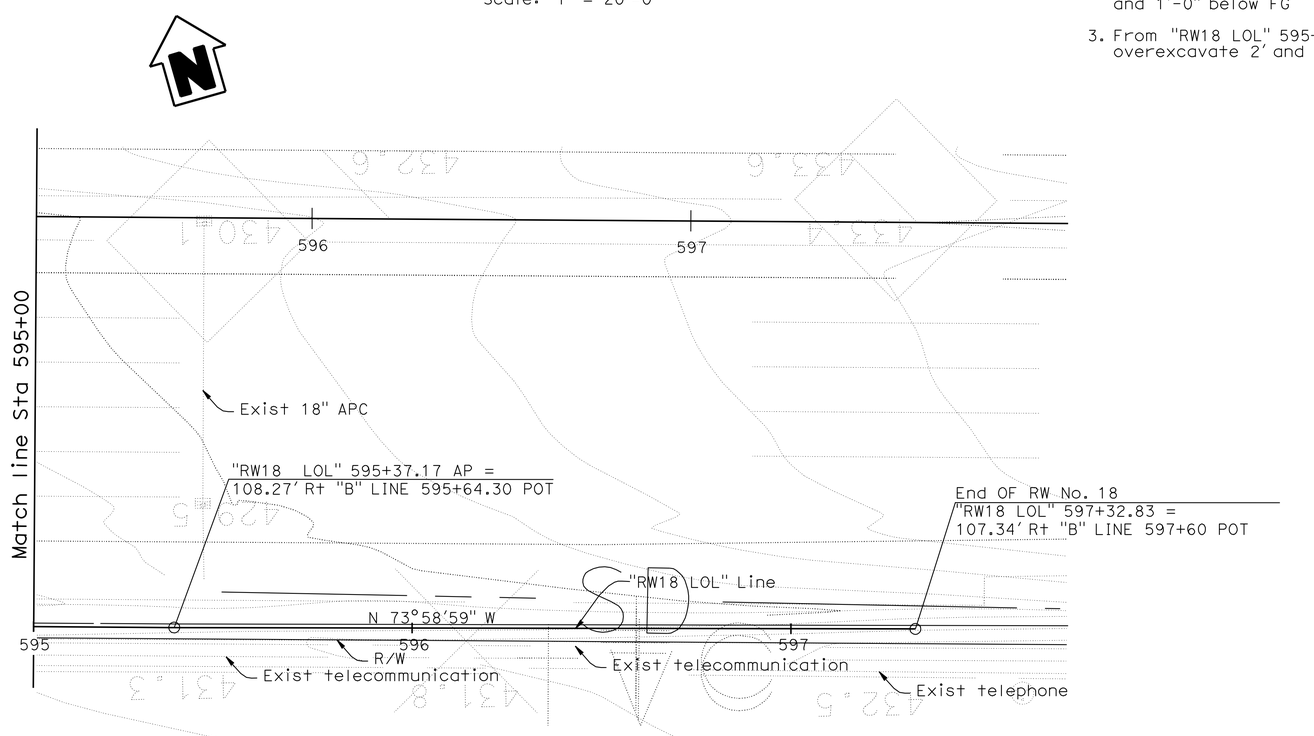

PLAN

Scale: 1" = 20'-0"

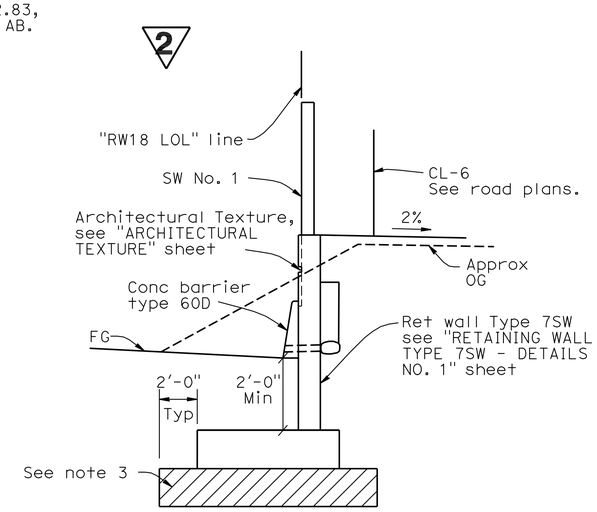

"RW18 LOL" 594+90.76 to "RW18 LOL" 597+32.83

TYPICAL SECTION

Scale: 1/4"=1'-0"

2 **REVISED PER ADDENDUM No. 2 DATED SEPTEMBER 19, 2012**

DESIGN OVERSIGHT Yiwei Hu 2/8/12 SIGN OFF DATE	DESIGN	BY Raymond Kwok	CHECKED Mark Philipps	LOAD & RESISTANCE FACTOR DESIGN	LIVE LOADING: HL93 W/"LOW-BOY"; PERMIT DESIGN VEHICLE
	DETAILS	BY Raymond Kwok	CHECKED Mark Philipps	LAYOUT BY Raymond Kwok	CHECKED Mark Philipps
	QUANTITIES	BY Raymond Kwok	CHECKED Mark Philipps	SPECIFICATIONS BY Chris Hodge	PLANS AND SPECS COMPARED Chris Hodge

PREPARED FOR THE STATE OF CALIFORNIA DEPARTMENT OF TRANSPORTATION

Raymond Kwok
PROJECT ENGINEER

BRIDGE NO. 33E0122
POST MILES 13.71

RETAINING WALL NO. 18

GENERAL PLAN NO. 3

DESIGN GENERAL PLAN SHEET (ENGLISH) (REV.7/16/10)

ORIGINAL SCALE IN INCHES FOR REDUCED PLANS 0 1 2 3

UNIT: 0735
PROJECT NUMBER & PHASE: 04000007831 CONTRACT NO.: 04-2908V1

DISREGARD PRINTS BEARING EARLIER REVISION DATES

REVISION DATES 11/09 1/10

SHEET 03 OF 15

FILE => 33e0122-a-gp03.add

USERNAME => s124496 DATE PLOTTED => 18-SEP-2012 TIME PLOTTED => 10:54