Dist	COUNTY	ROUTE	POST MILES TOTAL PROJECT	SHEET No.	TOTAL SHEETS
04	Ala	580	R14.6/R21.6	101	804

REGISTERED CIVIL ENGINEER 9/23/11 DATE

4-9-12
PLANS APPROVAL DATE

REGISTERED PROFESSIONAL ENGINEER N.V. BERNARDI No. 45407 Exp. 9/30/12 CIVIL STATE OF CALIFORNIA

THE STATE OF CALIFORNIA OR ITS OFFICERS OR AGENTS SHALL NOT BE RESPONSIBLE FOR THE ACCURACY OR COMPLETENESS OF SCANNED COPIES OF THIS PLAN SHEET.

BKF ENGINEERS
4670 WILLOW ROAD, SUITE 250
PLEASANTON, CA. 94588

ALAMEDA CTC
1333 BROADWAY SUITE 220
OAKLAND, CA. 94612

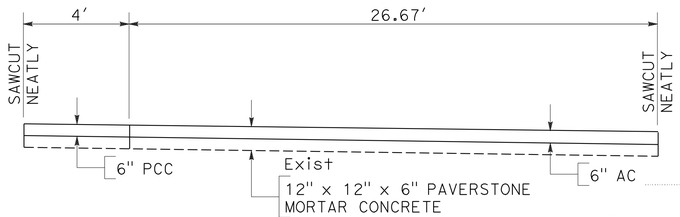

SECTION B-B
NO SCALE

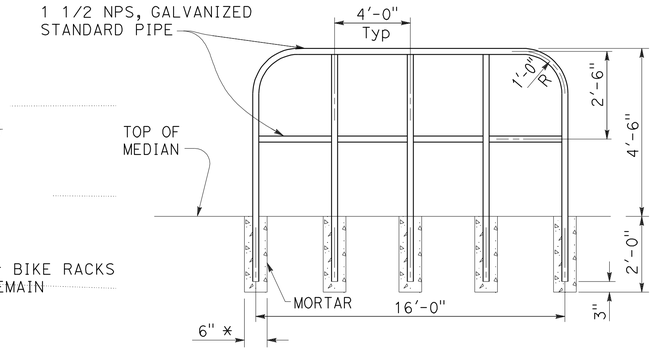

PIPE HANDRAILING
NO SCALE

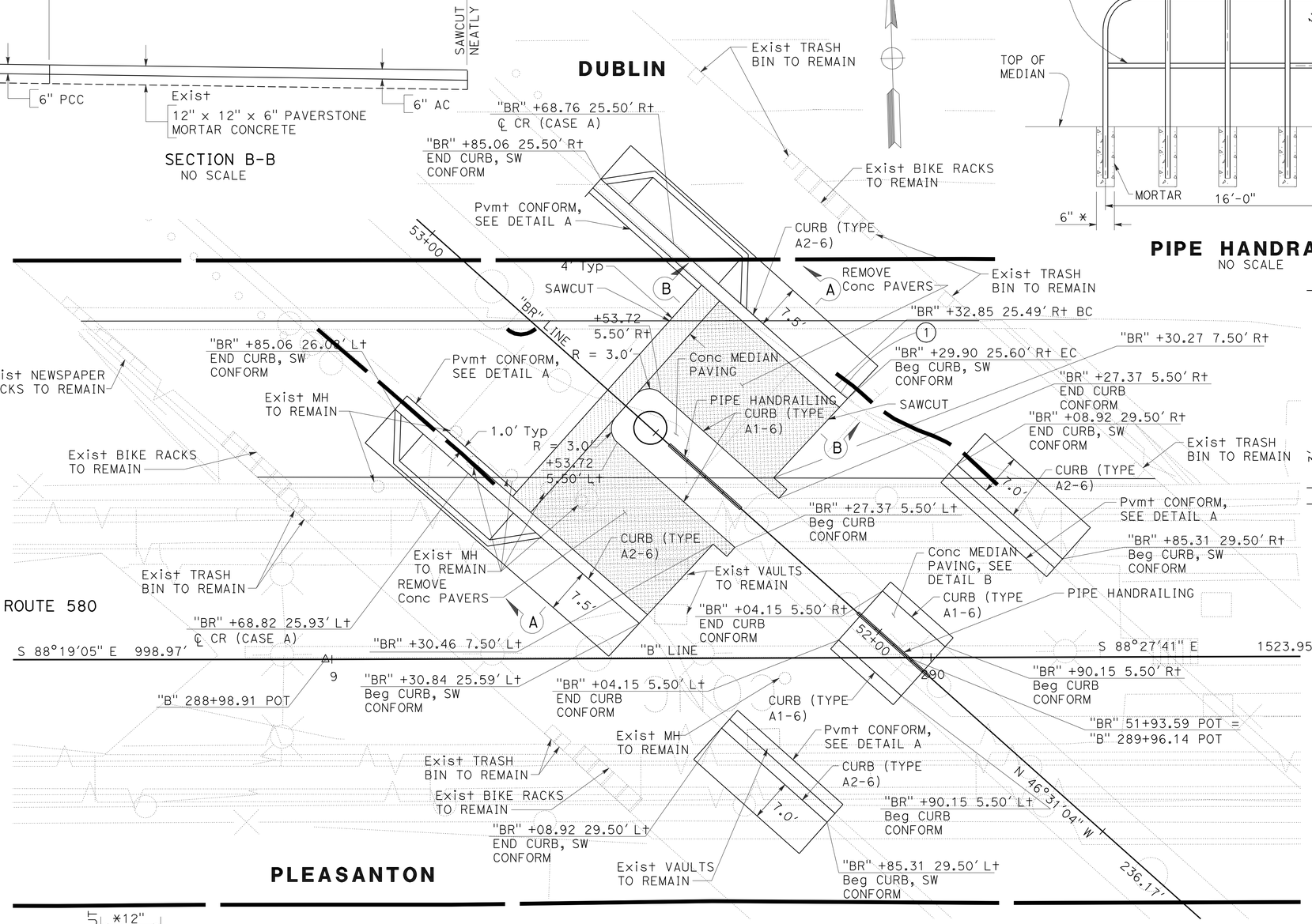

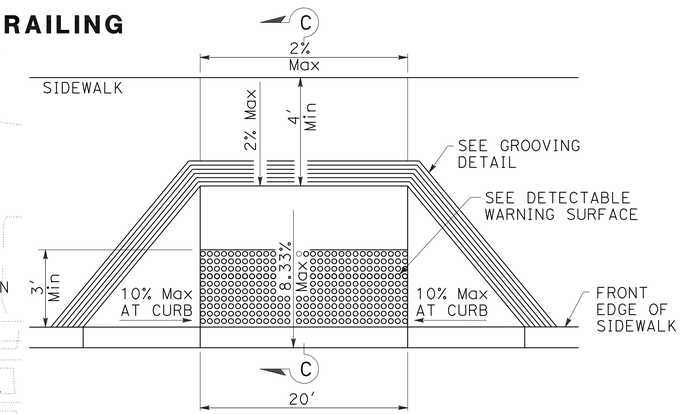

CURB RAMP DETAILS
NO SCALE

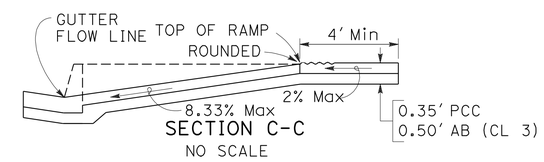

SECTION C-C
NO SCALE

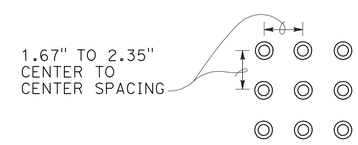

RAISED TRUNCATED DOME PATTERN (IN-LINE)
DETECTABLE WARNING SURFACE
NO SCALE

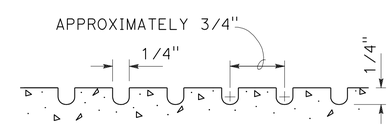

GROOVING DETAIL
NO SCALE

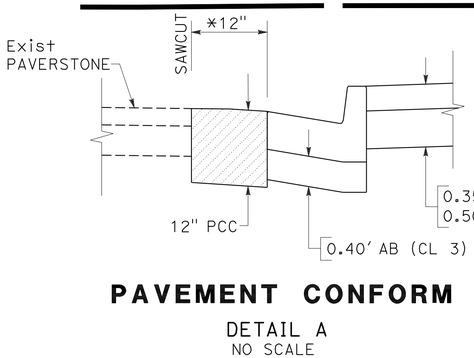

PAVEMENT CONFORM
DETAIL A
NO SCALE

*NOTE:
REMOVE THE FIRST ROW OF PAVERSTONE AND RECONSTRUCT WITH 12" PCC, WHERE THE FIRST ROW OF PAVERSTONE IS LESS THAN 12", REMOVE UP TO 12".

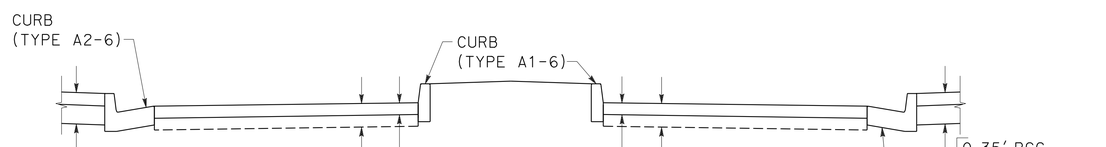

SECTION A-A
NO SCALE

CURVE DATA

No.	R	Δ	T	L
1	30.00'	5°38'15"	1.48'	2.95'

CONSTRUCTION DETAILS

SCALE: 1" = 10'

C-25

STATE OF CALIFORNIA - DEPARTMENT OF TRANSPORTATION

Caltrans

CONSULTANT FUNCTIONAL SUPERVISOR: NATALINA V. BERNARDI

CALCULATED-DESIGNED BY: DAT Q. NGUYEN

CHECKED BY: LUIS GARCIA

REVISED BY: DQN

DATE REVISED: 9/23/11

LAST REVISION: 09-23-11

DATE PLOTTED => 13-APR-2012
TIME PLOTTED => 08:00

Dist	COUNTY	ROUTE	POST MILES TOTAL PROJECT	SHEET No.	TOTAL SHEETS
04	Ala	580	R14.6/R21.6	102	804

9/23/11
REGISTERED CIVIL ENGINEER DATE

4-9-12
PLANS APPROVAL DATE

REGISTERED PROFESSIONAL ENGINEER
N.V. BERNARDI
No. 45407
Exp. 9/30/12
CIVIL
STATE OF CALIFORNIA

THE STATE OF CALIFORNIA OR ITS OFFICERS OR AGENTS SHALL NOT BE RESPONSIBLE FOR THE ACCURACY OR COMPLETENESS OF SCANNED COPIES OF THIS PLAN SHEET.

BKF ENGINEERS
4670 WILLOW ROAD, SUITE 250
PLEASANTON, CA. 94588

ALAMEDA CTC
1333 BROADWAY SUITE 220
OAKLAND, CA. 94612

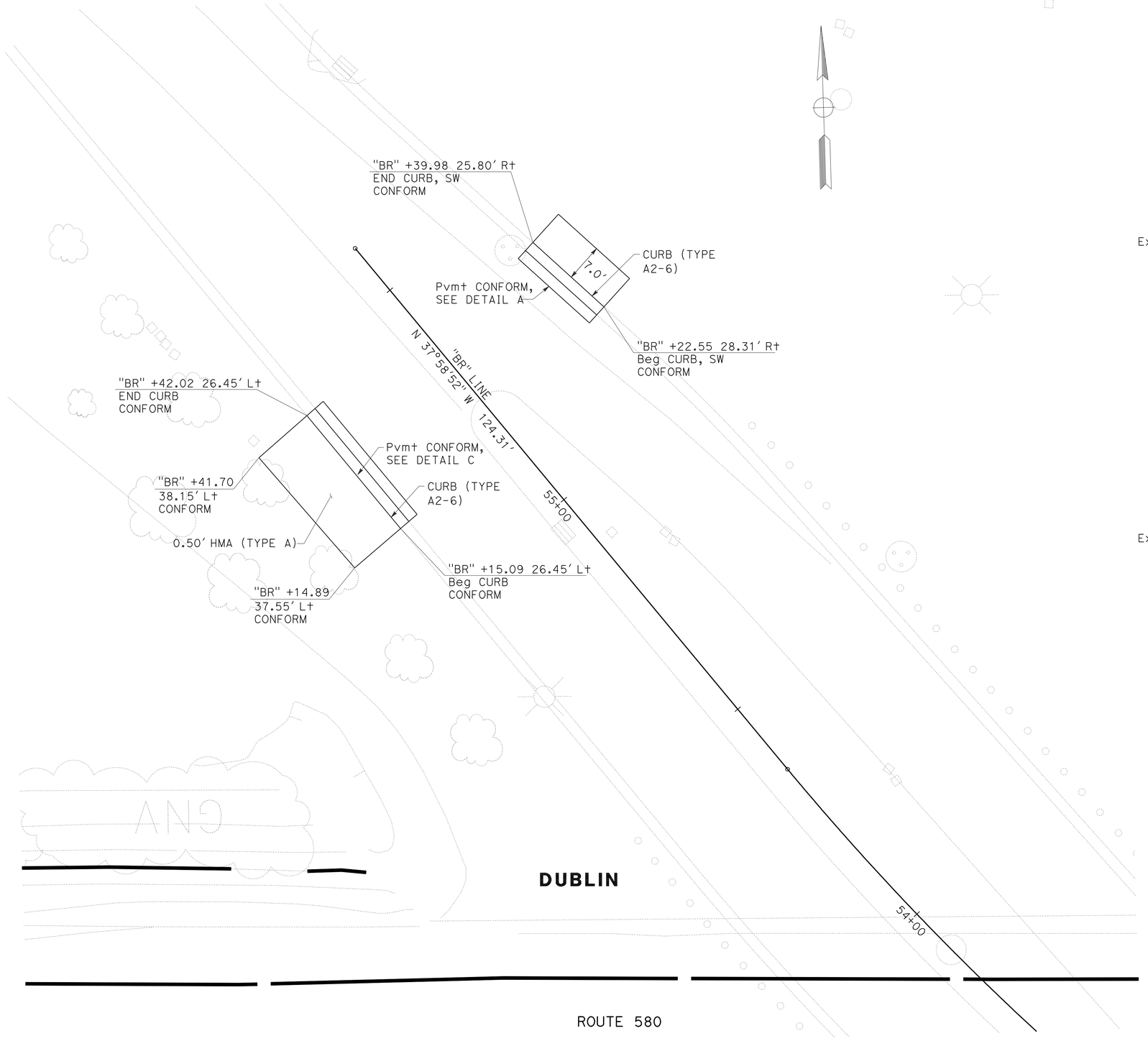

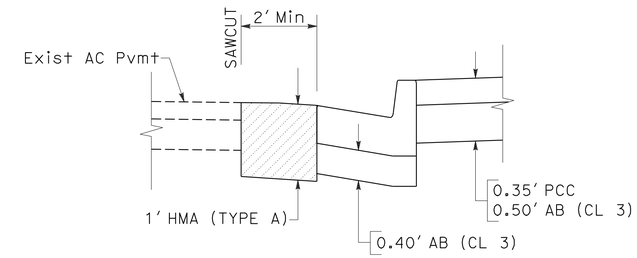

PAVEMENT CONFORM

DETAIL A
NO SCALE

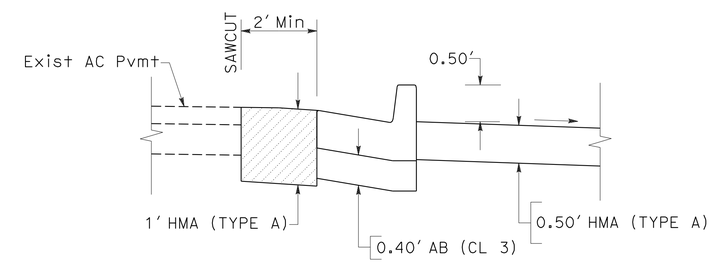

PAVEMENT CONFORM

DETAIL C
NO SCALE

CONSTRUCTION DETAILS

SCALE: 1" = 10'

C-26

STATE OF CALIFORNIA - DEPARTMENT OF TRANSPORTATION

CONSULTANT FUNCTIONAL SUPERVISOR: NATALINA V. BERNARDI

CALCULATED-DESIGNED BY: DAT Q. NGUYEN

CHECKED BY: LUIS GARCIA

REVISED BY: DQN

DATE REVISED: 9/23/11

LAST REVISION 09-23-11 | DATE PLOTTED => 13-APR-2012 | TIME PLOTTED => 08:00

Dist	COUNTY	ROUTE	POST MILES TOTAL PROJECT	SHEET No.	TOTAL SHEETS
04	Ala	580	R14.6/R21.6	103	804

9/23/11
REGISTERED CIVIL ENGINEER DATE

4-9-12
PLANS APPROVAL DATE

REGISTERED PROFESSIONAL ENGINEER N.V. BERNARDI No. 45407 Exp. 9/30/12 CIVIL STATE OF CALIFORNIA

THE STATE OF CALIFORNIA OR ITS OFFICERS OR AGENTS SHALL NOT BE RESPONSIBLE FOR THE ACCURACY OR COMPLETENESS OF SCANNED COPIES OF THIS PLAN SHEET.

BKF ENGINEERS
4670 WILLOW ROAD, SUITE 250
PLEASANTON, CA. 94588

ALAMEDA CTC
1333 BROADWAY SUITE 220
OAKLAND, CA. 94612

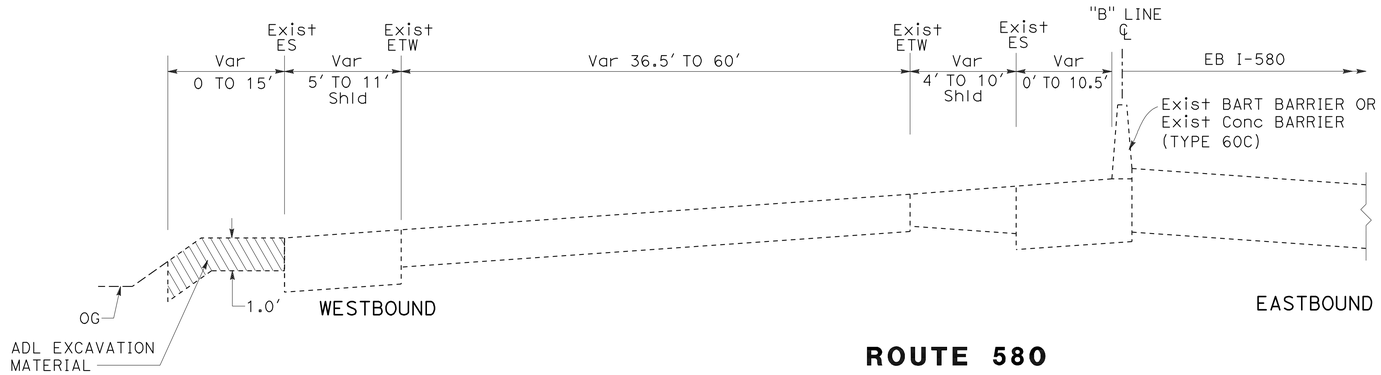

ROUTE 580
AREA CONTAINING AERIALLY DEPOSITED LEAD (TYPE Y-1)

"B" 189+16.64 TO 190+72.15
"B" 522+50.00 TO 530+73.39
"B" 537+01.31 TO 540+00.00

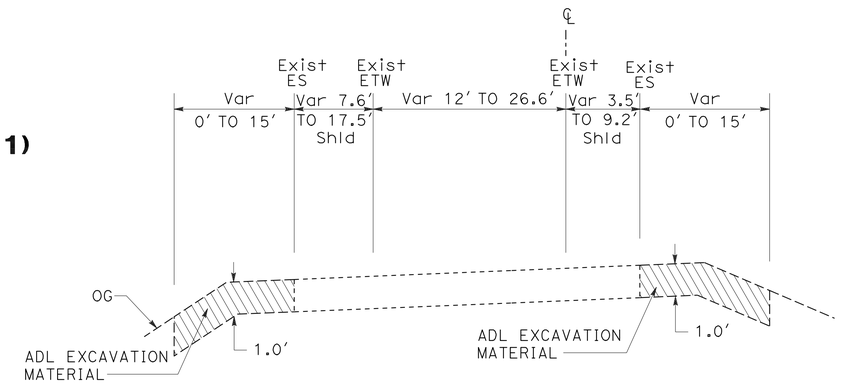

RAMPS WITH AREAS CONTAINING AERIALLY DEPOSITED LEAD (TYPE Y-1)

"MHN4" 184+22.51 TO 191+92.34
"MAB3" 259+73.90 TO 261+63.54

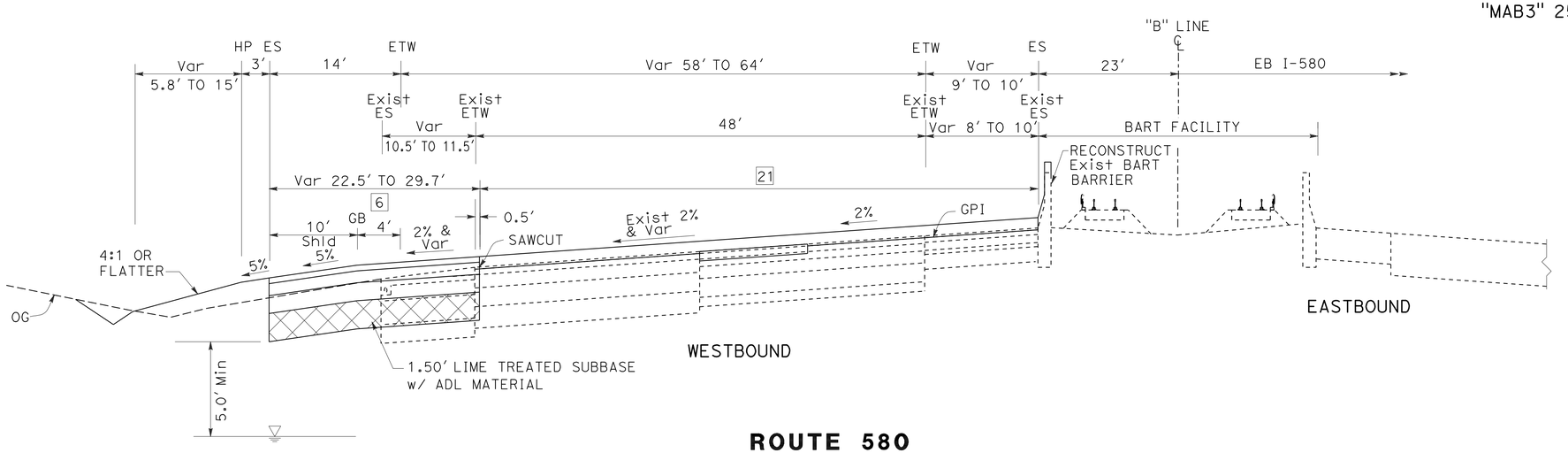

ROUTE 580
PLACEMENT OF AERIALLY DEPOSITED LEAD (TYPE Y-1)

"B" 321+54.45 TO 328+04.82

NOTE:
FOR PAVEMENT STRUCTURAL SECTION, SEE SHEET X-1.

CONSTRUCTION DETAILS
NO SCALE

C-27

STATE OF CALIFORNIA - DEPARTMENT OF TRANSPORTATION
CONSULTANT FUNCTIONAL SUPERVISOR: NATALINA V. BERNARDI
CALCULATED-DESIGNED BY: DAT Q. NGUYEN
CHECKED BY: LUIS GARCIA
REVISED BY: DQN
DATE REVISED: 9/23/11

LAST REVISION 09-23-11
DATE PLOTTED => 13-APR-2012
TIME PLOTTED => 08:00

Dist	COUNTY	ROUTE	POST MILES TOTAL PROJECT	SHEET No.	TOTAL SHEETS
04	Ala	580	R14.6/R21.6	104	804

9/23/11
REGISTERED CIVIL ENGINEER DATE

4-9-12
PLANS APPROVAL DATE

REGISTERED PROFESSIONAL ENGINEER N.V. BERNARDI No. 45407 Exp. 9/30/12 CIVIL STATE OF CALIFORNIA

THE STATE OF CALIFORNIA OR ITS OFFICERS OR AGENTS SHALL NOT BE RESPONSIBLE FOR THE ACCURACY OR COMPLETENESS OF SCANNED COPIES OF THIS PLAN SHEET.

BKF ENGINEERS
4670 WILLOW ROAD, SUITE 250
PLEASANTON, CA. 94588

ALAMEDA CTC
1333 BROADWAY SUITE 220
OAKLAND, CA. 94612

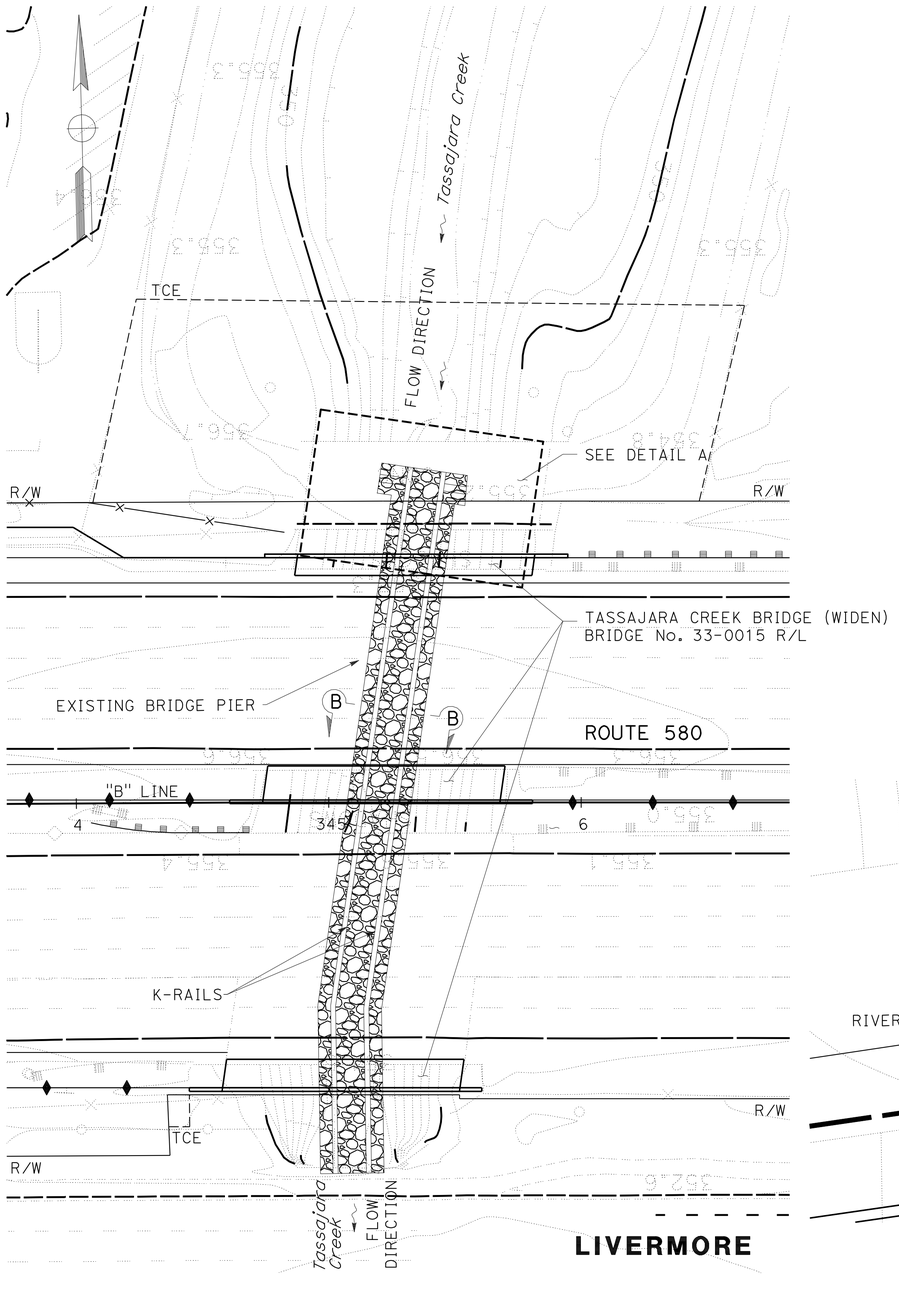

TEMPORARY CREEK DIVERSION SYSTEM
FOR TASSAJARA CREEK
SCALE: 1" = 30'

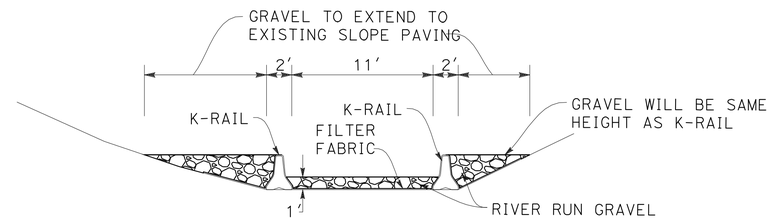

CROSS SECTION A-A
NO SCALE

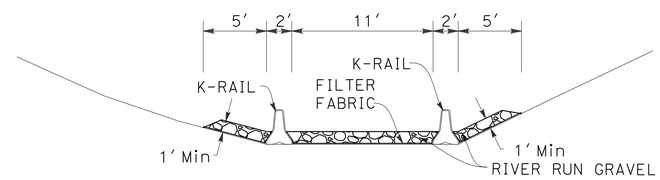

CROSS SECTION B-B
NO SCALE

NOTES:

1. CONTRACTOR SHALL RESTORE CREEK TO EXISTING CONDITIONS AFTER EACH CONSTRUCTION SEASON AND AT COMPLETION OF WORK.
2. FROM OCTOBER 15 TO APRIL 15, CONTRACTOR SHALL NOT PERFORM ANY WORK IN THE CREEK, FROM THE TOP OF BANK TO THE TOP OF BANK.
3. FOLLOWING PROJECT COMPLETION, TEMPORARY CREEK DIVERSION REMOVED. GRADES SHALL BE RESTORED PER NOTE 1.
4. SEE DQ-1 FOR APC ALLOWABLE PIPE MATERIAL.

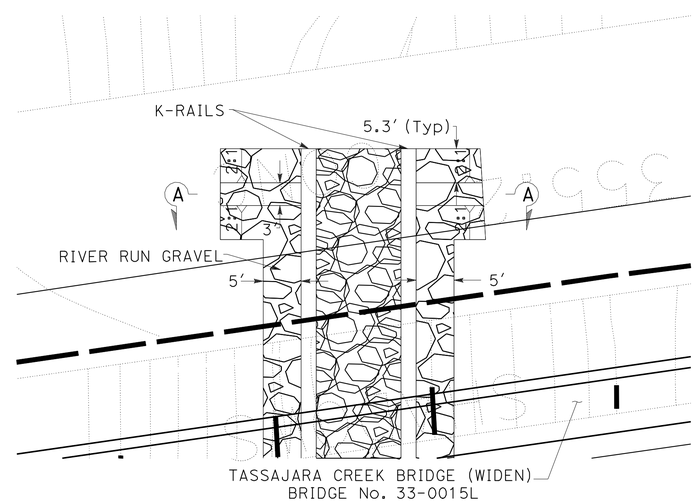

DETAIL A
SCALE: 1" = 10'

CONSTRUCTION DETAILS
TEMPORARY CREEK DIVERSION
SCALE: AS SHOWN

C-28

DAT Q. NGUYEN	DQN
LUIS GARCIA	9/23/11
REVISED BY	DATE REVISED
CALCULATED-DESIGNED BY	
CHECKED BY	
CONSULTANT FUNCTIONAL SUPERVISOR	
NATALINA V. BERNARDI	

STATE OF CALIFORNIA - DEPARTMENT OF TRANSPORTATION
Caltrans

LAST REVISION 09-23-11
DATE PLOTTED => 13-APR-2012
TIME PLOTTED => 08:00

Dist	COUNTY	ROUTE	POST MILES TOTAL PROJECT	SHEET No.	TOTAL SHEETS
04	Ala	580	R14.6/R21.6	105	804

9/23/11
REGISTERED CIVIL ENGINEER DATE

4-9-12
PLANS APPROVAL DATE

REGISTERED PROFESSIONAL ENGINEER N.V. BERNARDI No. 45407 Exp. 9/30/12 CIVIL STATE OF CALIFORNIA

THE STATE OF CALIFORNIA OR ITS OFFICERS OR AGENTS SHALL NOT BE RESPONSIBLE FOR THE ACCURACY OR COMPLETENESS OF SCANNED COPIES OF THIS PLAN SHEET.

BKF ENGINEERS
4670 WILLOW ROAD, SUITE 250
PLEASANTON, CA. 94588

ALAMEDA CTC
1333 BROADWAY SUITE 220
OAKLAND, CA. 94612

LEGEND

PROPOSED CONCRETE (CHANNEL LINING)

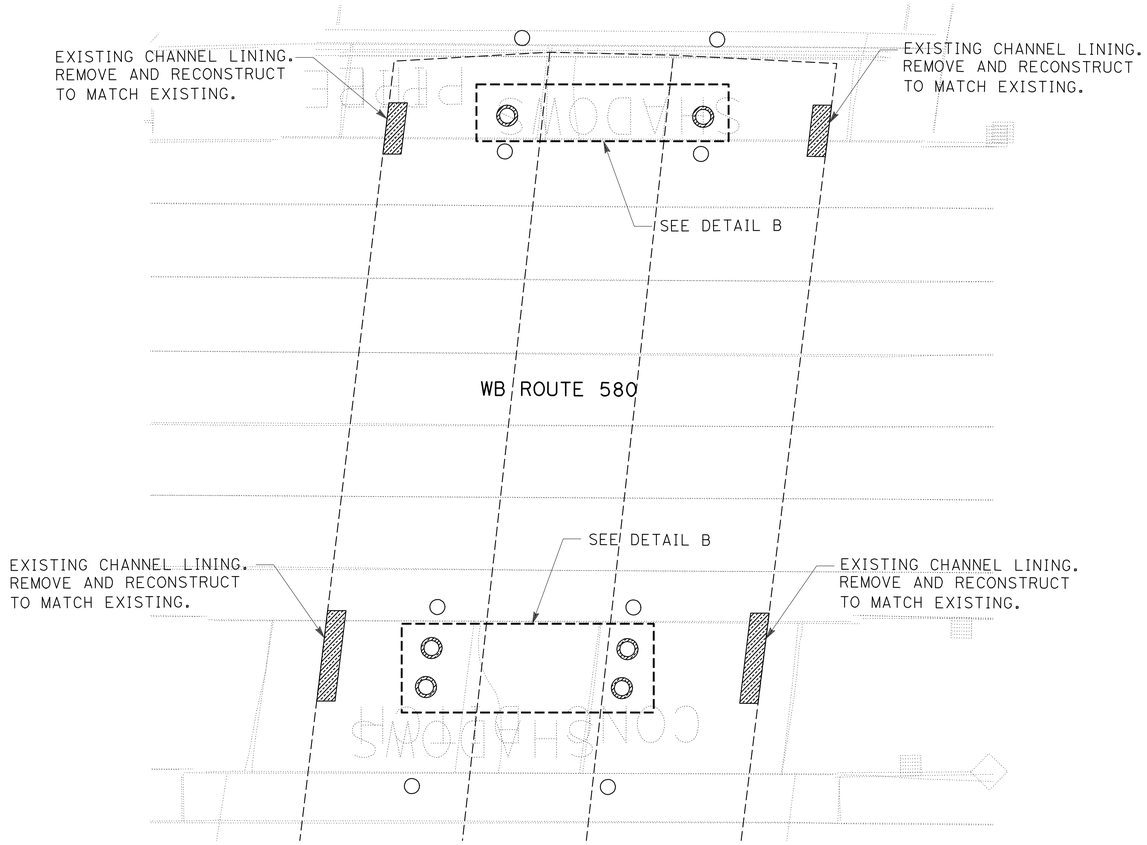

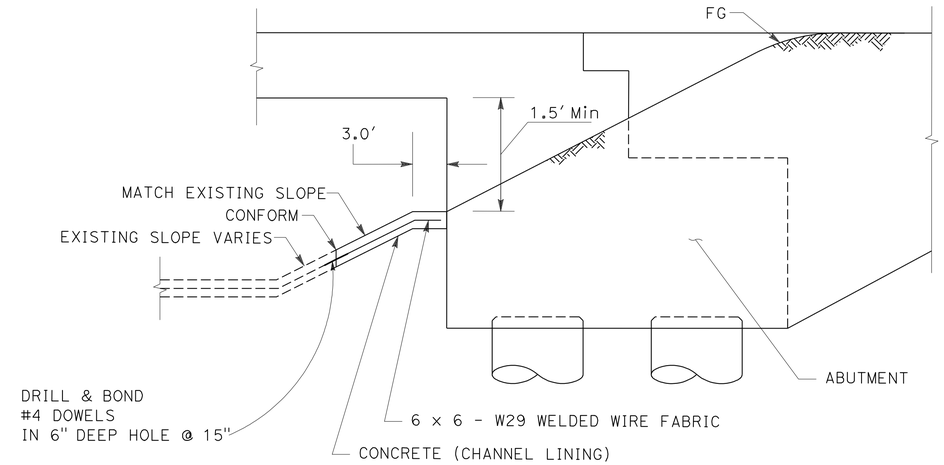

DETAIL A

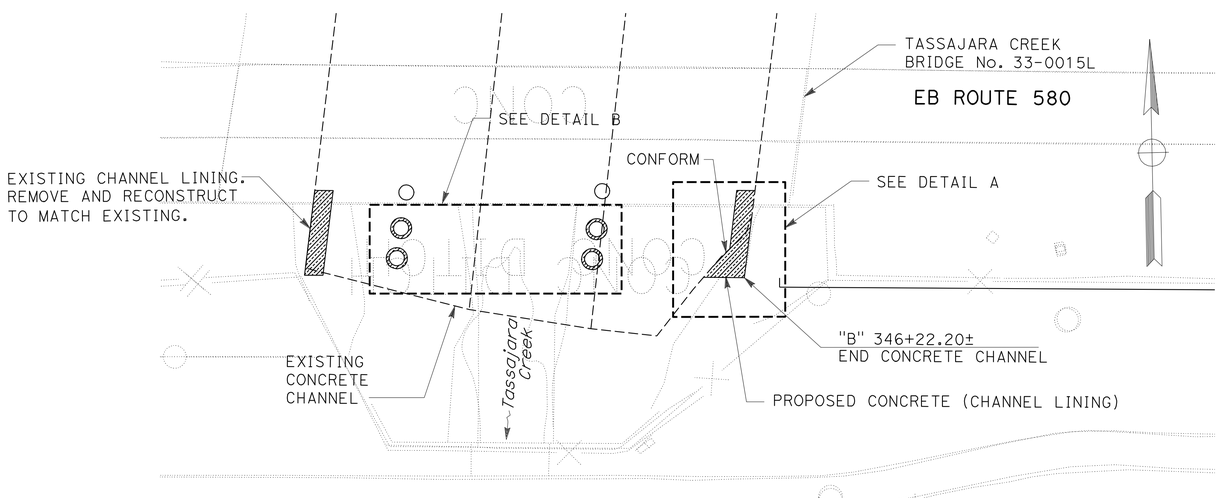

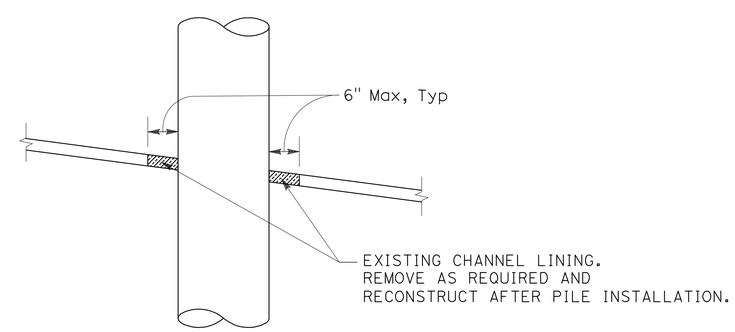

DETAIL B

CONSTRUCTION DETAIL
CHANNEL LINING
NO SCALE

C-29

FOR NOTES, LEGEND AND ABBREVIATION, SEE SHEET C-1

REVISED BY	DATE REVISED
DQN	9/23/11

DAT Q. NGUYEN — LUIS GARCIA — CALCULATED-DESIGNED BY — CHECKED BY

CONSULTANT FUNCTIONAL SUPERVISOR — NATALINA V. BERNARDI

STATE OF CALIFORNIA - DEPARTMENT OF TRANSPORTATION — Caltrans

LAST REVISION 09-23-11 — DATE PLOTTED => 13-APR-2012 — TIME PLOTTED => 08:00

Dist	COUNTY	ROUTE	POST MILES TOTAL PROJECT	SHEET No.	TOTAL SHEETS
04	Ala	580	R14.6/R21.6	106	804

REGISTERED CIVIL ENGINEER 9/23/11 DATE

4-9-12
PLANS APPROVAL DATE

REGISTERED PROFESSIONAL ENGINEER N.V. BERNARDI No. 45407 Exp. 9/30/12 CIVIL STATE OF CALIFORNIA

THE STATE OF CALIFORNIA OR ITS OFFICERS OR AGENTS SHALL NOT BE RESPONSIBLE FOR THE ACCURACY OR COMPLETENESS OF SCANNED COPIES OF THIS PLAN SHEET.

BKF ENGINEERS
4670 WILLOW ROAD, SUITE 250
PLEASANTON, CA. 94588

ALAMEDA CTC
1333 BROADWAY SUITE 220
OAKLAND, CA. 94612

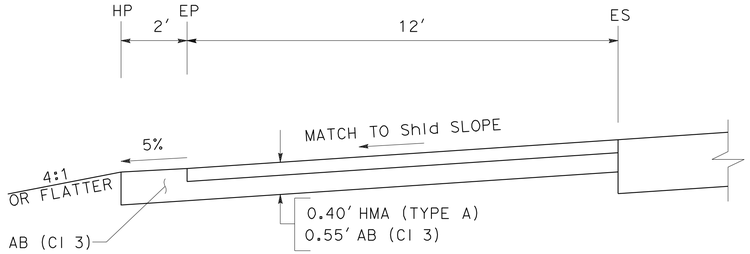

SECTION A-A

MAINTENANCE VEHICLE PULLOUT (MVP)

"B" 266+00.00 TO 267+85.00
"MAB2" 260+28.75 TO 261+13.81
"B" 343+34.29 TO 344+19.29
"B" 367+93.86 TO 368+78.86
"B" 525+18.77 TO 526+13.77
"MAL1" 517+09.87 TO 517+98.47

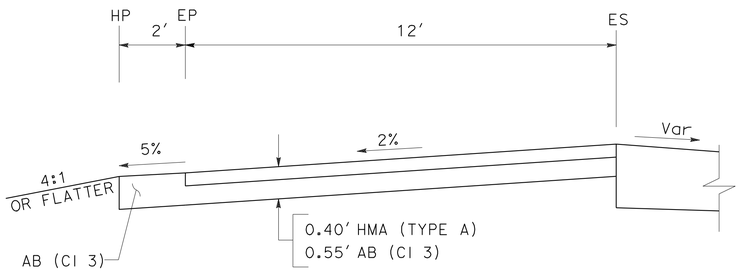

SECTION A-A

MAINTENANCE VEHICLE PULLOUT (MVP)

"MHR3" 315+84.41 TO 316+68.44

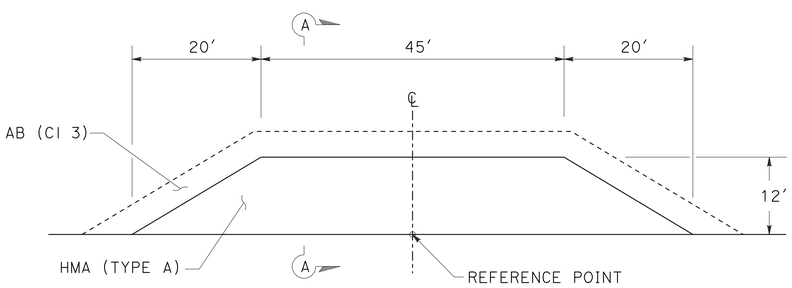

PLAN

MAINTENANCE VEHICLE PULLOUT (MVP)

(FOR ADDITIONAL MVP DETAILS NOT SHOWN, SEE STANDARD PLAN H9)

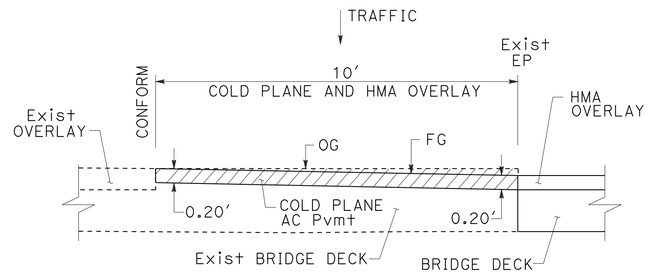

HMA OVERLAY CONFORM AT TASSAJARA CREEK

BRIDGE No. 33-0015 R/L
"B" 344+73.82 TO 345+67.82

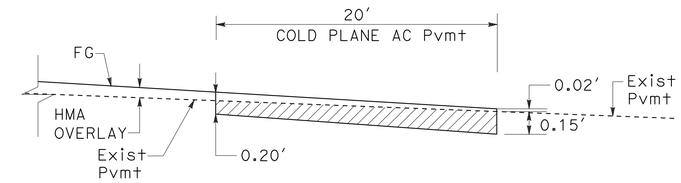

TRANSVERSE CONFORM AT RAMP (CASE A)

"MTR2" LINE

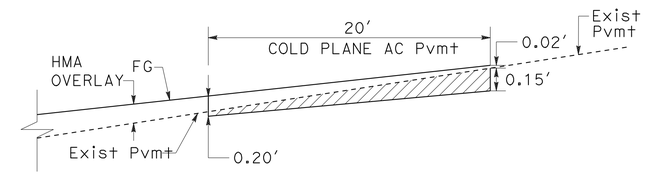

TRANSVERSE CONFORM AT RAMP (CASE B)

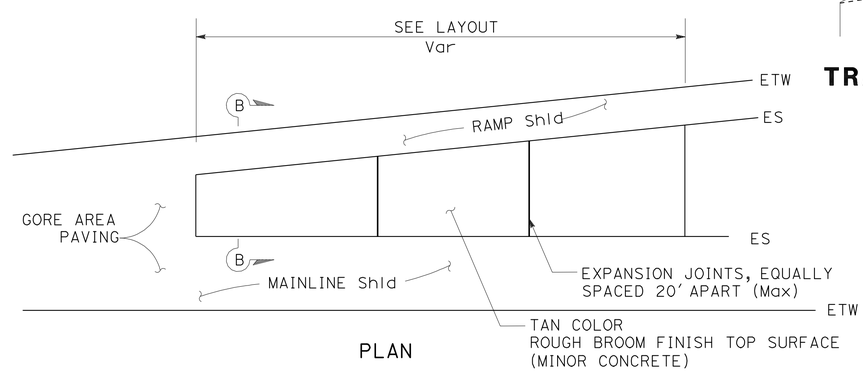

PLAN

"BB2" LINE
"MAB2" LINE
"MAB3" LINE
"MAB1" LINE
"MHR2" LINE
"MHR3" LINE
"MHR1" LINE
"MTR4" LINE
"MTR1" LINE
"MER2" LINE
"MER3" LINE
"MER1" LINE
"MAL2" LINE
"MAL1" LINE
"MAL3" LINE

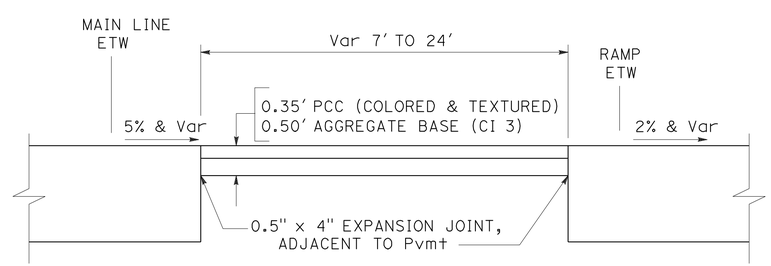

SECTION B-B

MINOR CONCRETE (TEXTURED PAVING)

CONSTRUCTION DETAILS

NO SCALE

C-30

REVISED BY	DATE REVISED
DQN	9/23/11

DAT Q. NGUYEN — LUIS GARCIA — CALCULATED-DESIGNED BY — CHECKED BY

CONSULTANT FUNCTIONAL SUPERVISOR — NATALINA V. BERNARDI

STATE OF CALIFORNIA - DEPARTMENT OF TRANSPORTATION — Caltrans

LAST REVISION 09-23-11 — DATE PLOTTED => 13-APR-2012 — TIME PLOTTED => 08:00

Dist	COUNTY	ROUTE	POST MILES TOTAL PROJECT	SHEET No.	TOTAL SHEETS
04	Ala	580	R14.6/R21.6	107	804

9/23/11
REGISTERED CIVIL ENGINEER DATE

4-9-12
PLANS APPROVAL DATE

REGISTERED PROFESSIONAL ENGINEER
N.V. BERNARDI
No. 45407
Exp. 9/30/12
CIVIL
STATE OF CALIFORNIA

THE STATE OF CALIFORNIA OR ITS OFFICERS OR AGENTS SHALL NOT BE RESPONSIBLE FOR THE ACCURACY OR COMPLETENESS OF SCANNED COPIES OF THIS PLAN SHEET.

BKF ENGINEERS
4670 WILLOW ROAD, SUITE 250
PLEASANTON, CA. 94588

ALAMEDA CTC
1333 BROADWAY SUITE 220
OAKLAND, CA. 94612

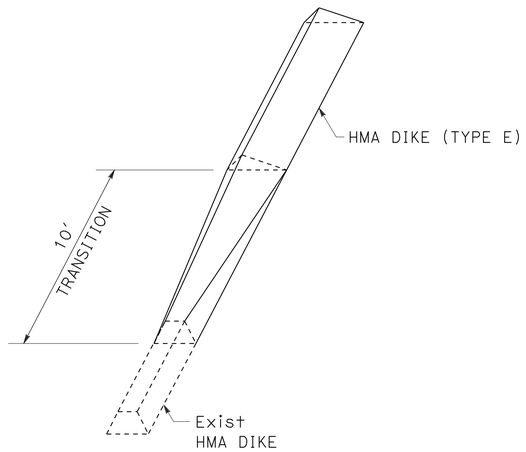

TRANSITION FROM Exist HMA DIKE TO HMA DIKE (TYPE E)

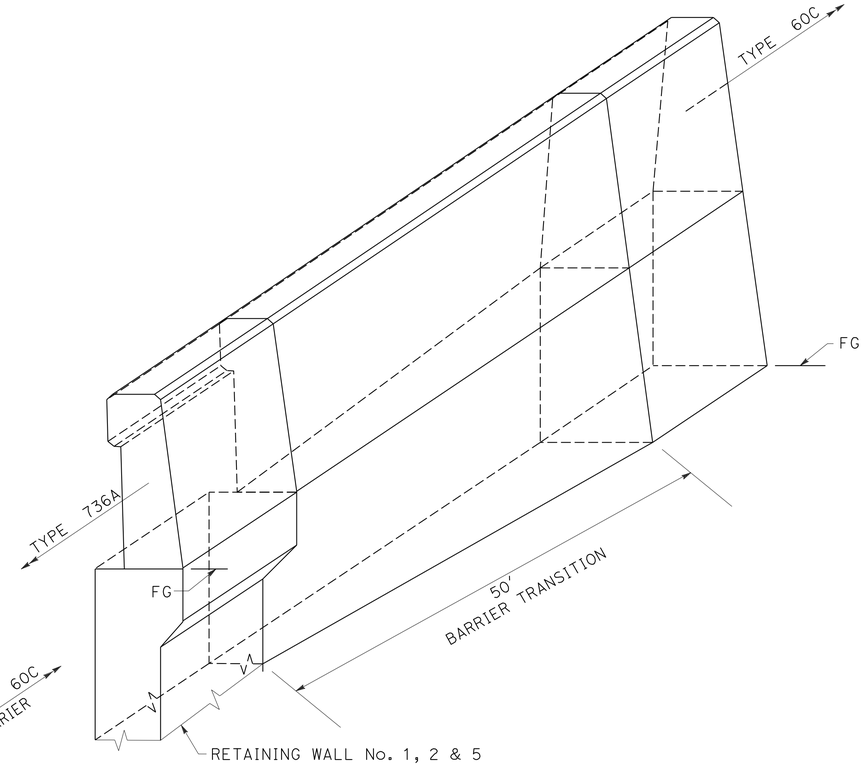

TRANSITION FROM CONCRETE BARRIER (TYPE 736A) TO CONCRETE BARRIER (TYPE 60C)

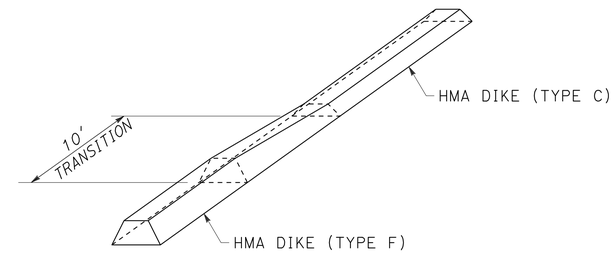

TRANSITION FROM HMA DIKE (TYPE F) TO HMA DIKE (TYPE C)

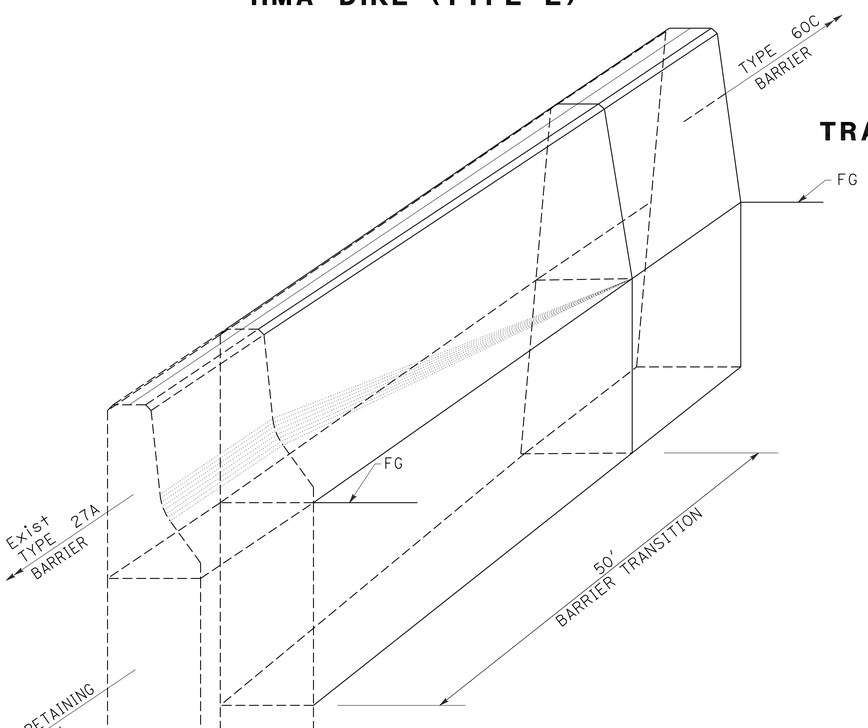

TRANSITION FROM Exist CONCRETE BARRIER (TYPE 27A) WITH RETAINING WALL TO CONCRETE BARRIER (TYPE 60C)

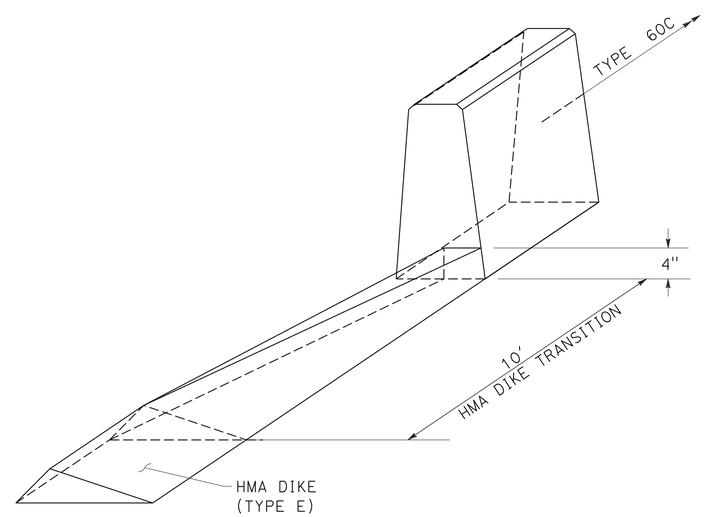

TRANSITION FROM HMA DIKE (TYPE E) TO CONCRETE BARRIER (TYPE 60C)

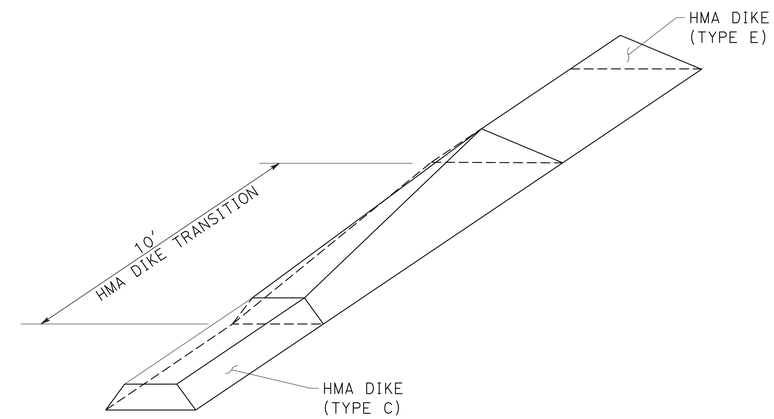

TRANSITION FROM HMA DIKE (TYPE C) TO HMA DIKE (TYPE E)

CONSTRUCTION DETAILS

NO SCALE

C-31

STATE OF CALIFORNIA - DEPARTMENT OF TRANSPORTATION
Caltrans

CONSULTANT FUNCTIONAL SUPERVISOR: NATALINA V. BERNARDI
CALCULATED-DESIGNED BY: DAT Q. NGUYEN
CHECKED BY: LUIS GARCIA
REVISED BY: DQN
DATE REVISED: 9/23/11

LAST REVISION: 09-23-11
DATE PLOTTED => 13-APR-2012
TIME PLOTTED => 08:00

Dist	COUNTY	ROUTE	POST MILES TOTAL PROJECT	SHEET No.	TOTAL SHEETS
04	Ala	580	R14.6/R21.6	108	804

9/23/11
REGISTERED CIVIL ENGINEER DATE

4-9-12
PLANS APPROVAL DATE

REGISTERED PROFESSIONAL ENGINEER N.V. BERNARDI No. 45407 Exp. 9/30/12 CIVIL STATE OF CALIFORNIA

THE STATE OF CALIFORNIA OR ITS OFFICERS OR AGENTS SHALL NOT BE RESPONSIBLE FOR THE ACCURACY OR COMPLETENESS OF SCANNED COPIES OF THIS PLAN SHEET.

BKF ENGINEERS
4670 WILLOW ROAD, SUITE 250
PLEASANTON, CA. 94588

ALAMEDA CTC
1333 BROADWAY SUITE 220
OAKLAND, CA. 94612

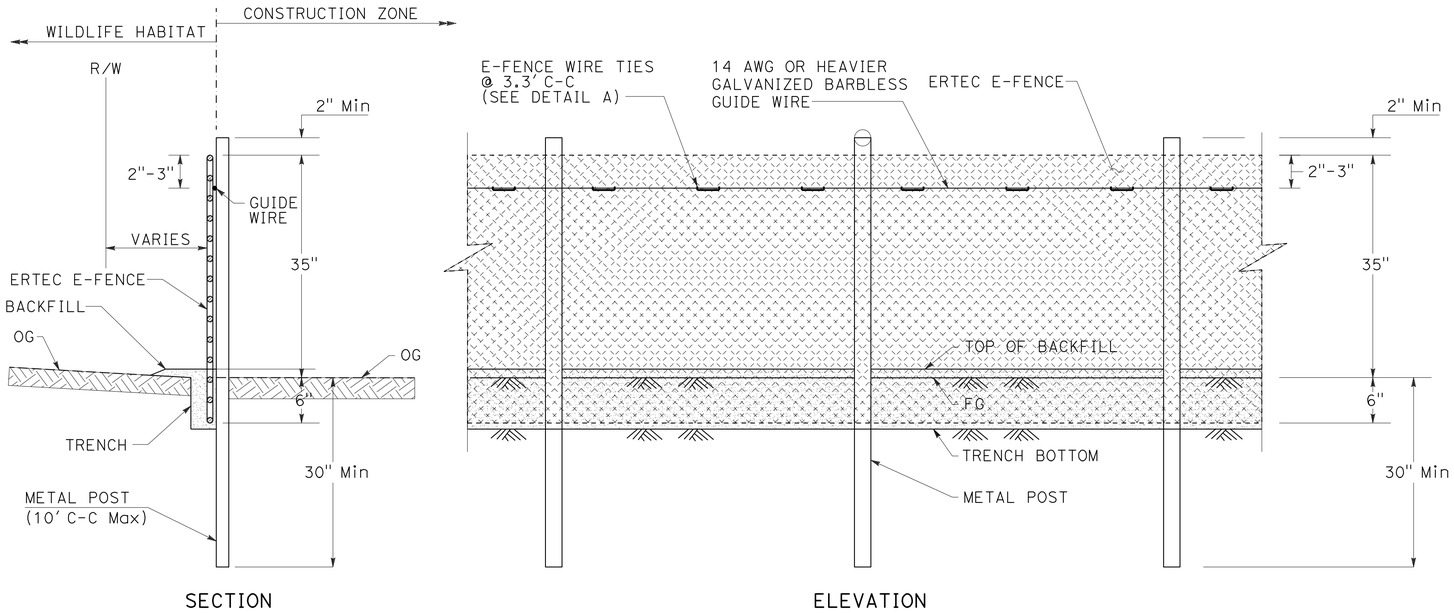

TEMPORARY FENCE (WILDLIFE EXCLUSION)

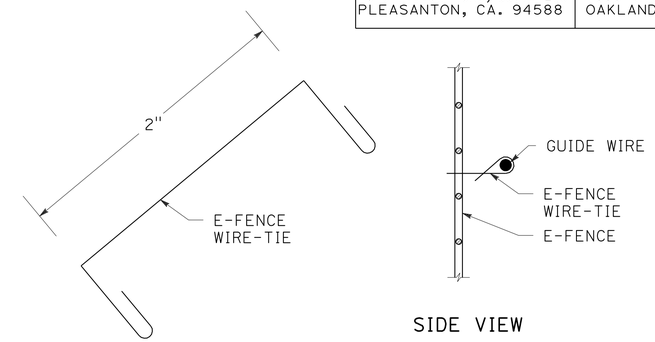

NOTE:
INSERT E-FENCE WIRE-TIE THROUGH E-FENCE AT 3.3 FOOT INTERVALS. CRIMP LOOPS OF E-FENCE WIRE-TIE TIGHTLY AROUND 14 AWG OR HEAVIER GALVANIZED BARBLESS GUIDE WIRE FOR SECURE CONNECTION.

DETAIL A: TEMPORARY FENCE WIRE-TIE INSTALLATION

NOTES:

1. SEE STANDARD PLAN A86 FOR GENERAL FENCE CONSTRUCTION.
2. EXISTING MATERIAL MAY CONSIST OF SOME LARGE ROCK OUTCROPPINGS. CONTRACTOR SHOULD EXPECT TRENCHING OR SECURING POSTS IN ROCKY MATERIAL.
3. THREE BRAIDED WIRE SUPPORT AND STRUT REQUIRED AT EACH POST LOCATION.

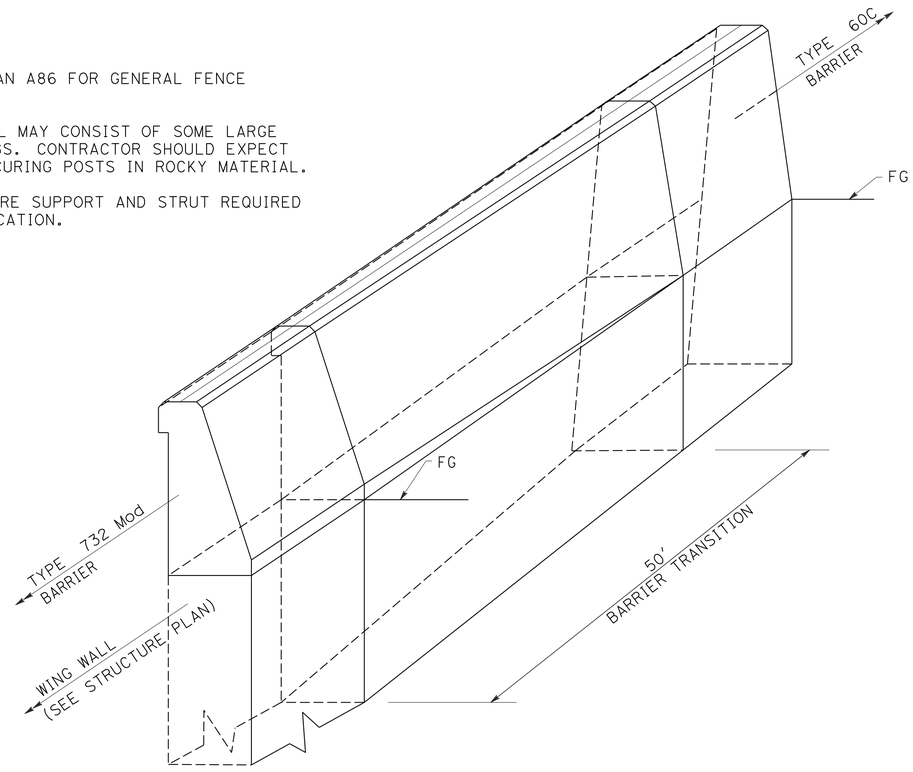

TRANSITION FROM CONCRETE BARRIER (TYPE 732 Mod / TYPE 732) TO CONCRETE BARRIER (TYPE 60C)

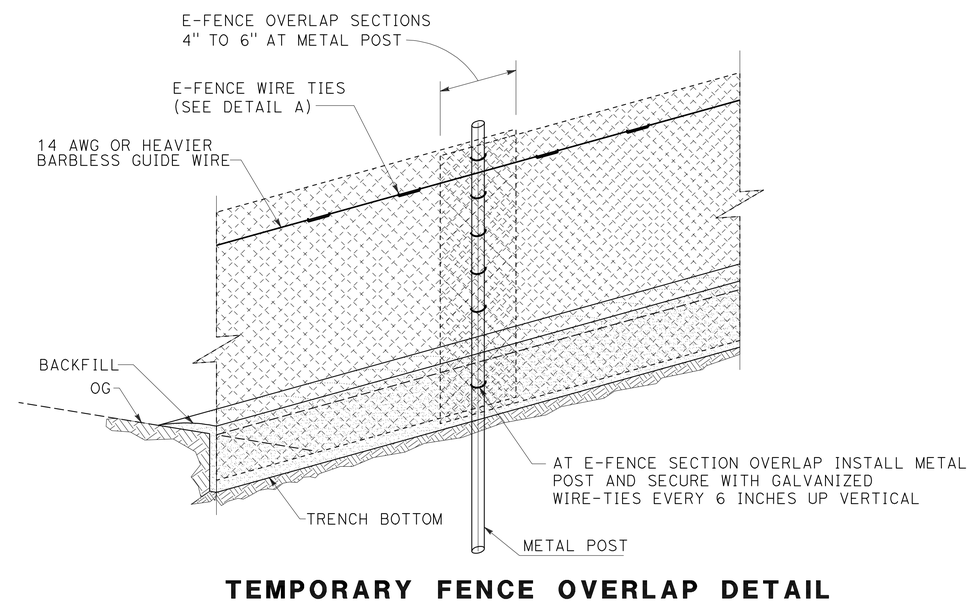

TEMPORARY FENCE OVERLAP DETAIL

CONSTRUCTION DETAILS

NO SCALE

C-32

DQN	9/23/11
REVISED BY	DATE REVISED
DAT Q. NGUYEN	LUIS GARCIA
CALCULATED-DESIGNED BY	CHECKED BY
CONSULTANT FUNCTIONAL SUPERVISOR	NATALINA V. BERNARDI

STATE OF CALIFORNIA - DEPARTMENT OF TRANSPORTATION

Caltrans

LAST REVISION 09-23-11 | DATE PLOTTED => 13-APR-2012 | TIME PLOTTED => 08:01

Dist	COUNTY	ROUTE	POST MILES TOTAL PROJECT	SHEET No.	TOTAL SHEETS
04	Ala	580	R14.6/R21.6	109	804

9/23/11
REGISTERED CIVIL ENGINEER DATE

4-9-12
PLANS APPROVAL DATE

REGISTERED PROFESSIONAL ENGINEER
N.V. BERNARDI
No. 45407
Exp. 9/30/12
CIVIL
STATE OF CALIFORNIA

THE STATE OF CALIFORNIA OR ITS OFFICERS OR AGENTS SHALL NOT BE RESPONSIBLE FOR THE ACCURACY OR COMPLETENESS OF SCANNED COPIES OF THIS PLAN SHEET.

BKF ENGINEERS
4670 WILLOW ROAD, SUITE 250
PLEASANTON, CA. 94588

ALAMEDA CTC
1333 BROADWAY SUITE 220
OAKLAND, CA. 94612

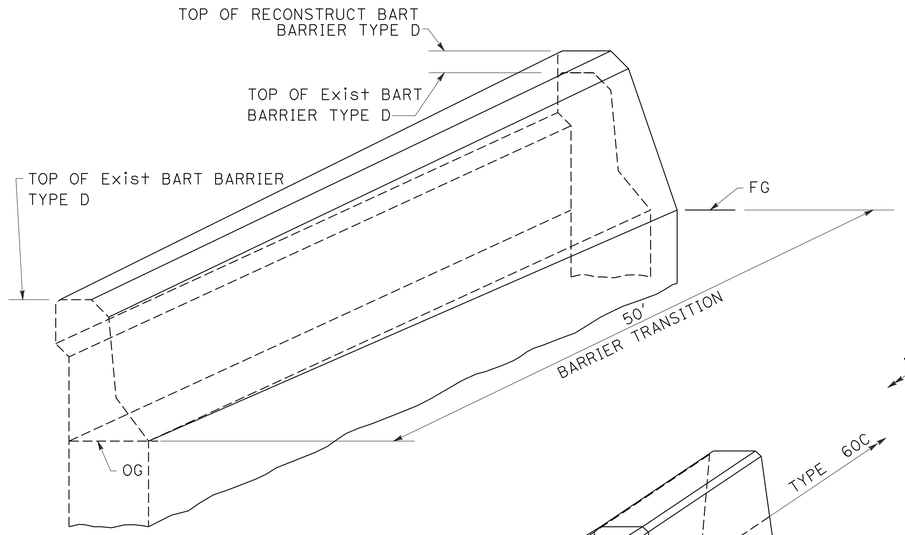

BART BARRIER TRANSITION

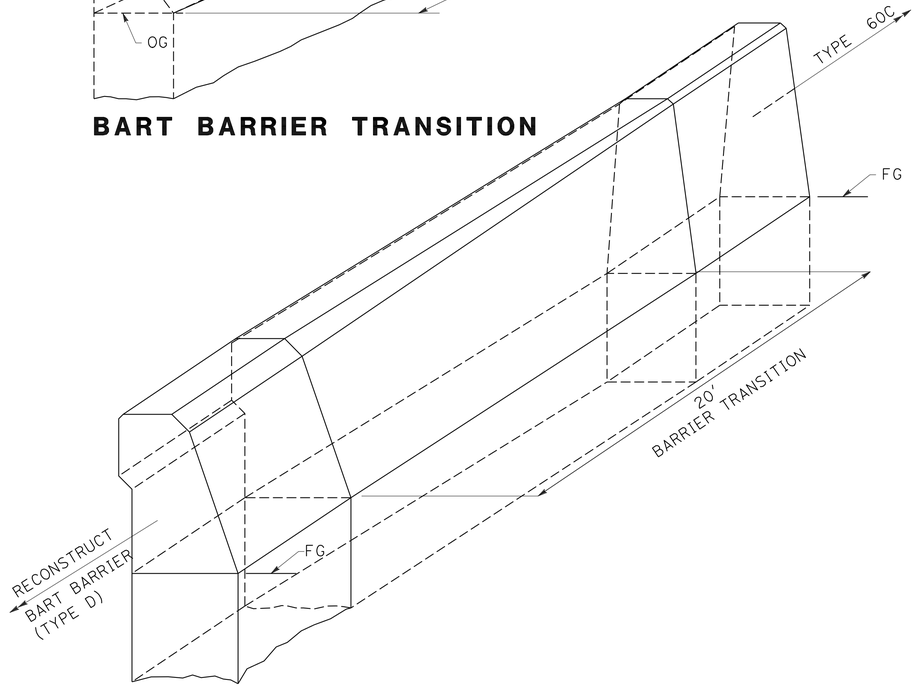

TRANSITION FROM RECONSTRUCT BART BARRIER (TYPE D) TO CONCRETE BARRIER (TYPE 60C)

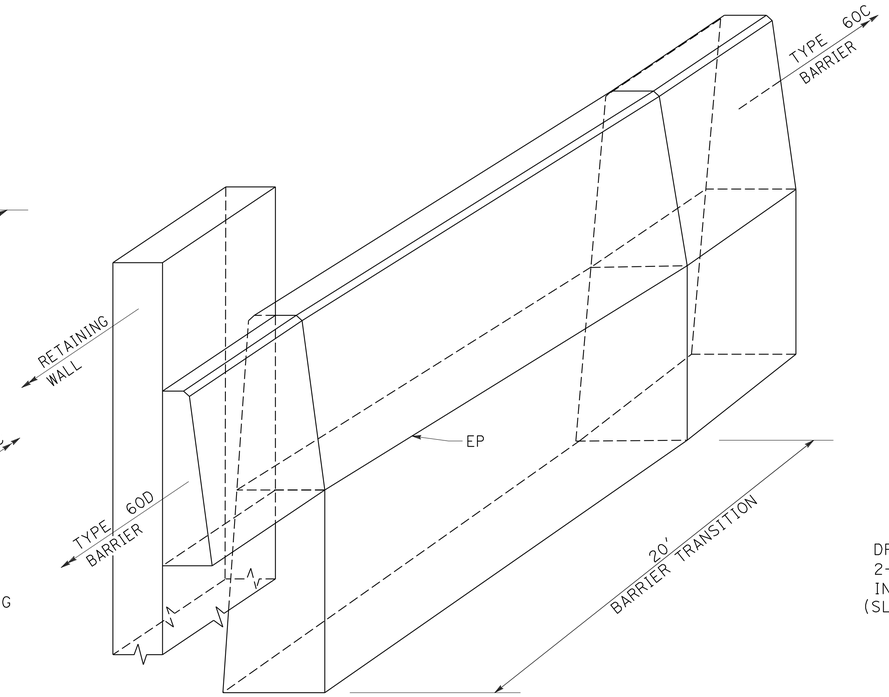

TRANSITION FROM CONCRETE BARRIER (TYPE 60D) TO CONCRETE BARRIER (TYPE 60C)

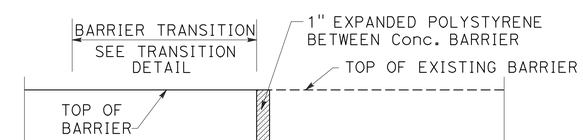

CONNECTION DETAIL FROM CONCRETE BARRIER TO EXISTING BARRIER

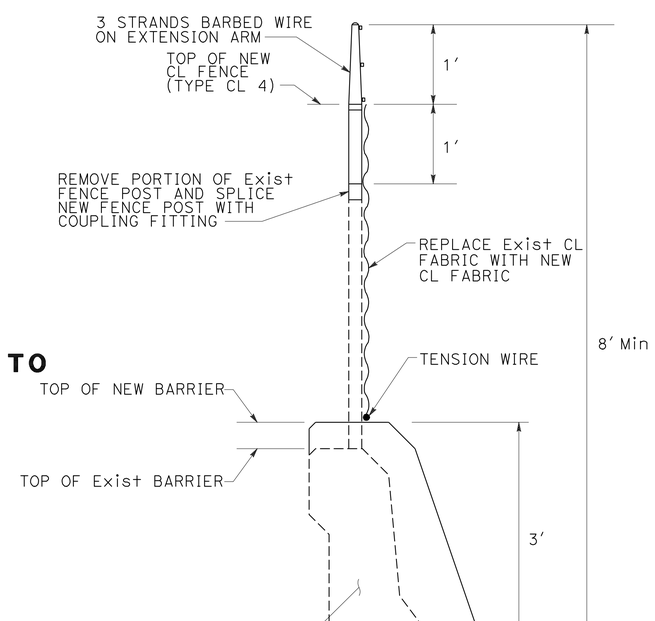

TYPICAL SECTION RECONSTRUCT BART BARRIER

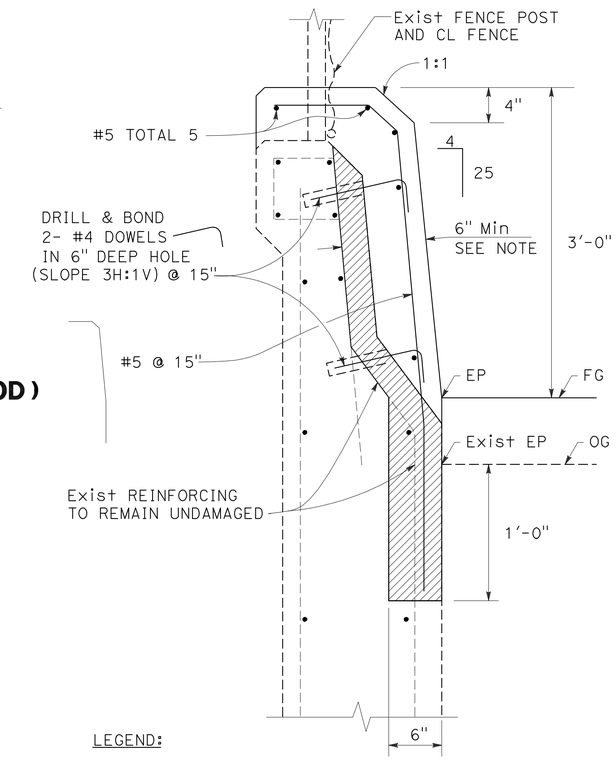

LEGEND:

Conc REMOVAL
Exist REINFORCING TO REMAIN

NOTE:
REMOVE CONCRETE COVER TO EXPOSE EXISTING REINFORCEMENT. REMOVE MORE EXISTING CONCRETE AS NEEDED TO PROVIDE 6" NEW CONCRETE THICKNESS.

RECONSTRUCT BART BARRIER (TYPE D)

"B" 306+22.00 TO "B" 331+86.25

CONSTRUCTION DETAILS

NO SCALE

C-33

DQN	9/23/11
REVISED BY	DATE REVISED
DAT Q. NGUYEN	LUIS GARCIA
CALCULATED-DESIGNED BY	CHECKED BY
CONSULTANT FUNCTIONAL SUPERVISOR	NATALINA V. BERNARDI

STATE OF CALIFORNIA - DEPARTMENT OF TRANSPORTATION

Caltrans

LAST REVISION 09-23-11 | DATE PLOTTED => 13-APR-2012 | TIME PLOTTED => 08:01

Dist	COUNTY	ROUTE	POST MILES TOTAL PROJECT	SHEET No.	TOTAL SHEETS
04	Ala	580	R14.6/R21.6	110	804

REGISTERED CIVIL ENGINEER 9/23/11 DATE

4-9-12
PLANS APPROVAL DATE

REGISTERED PROFESSIONAL ENGINEER N.V. BERNARDI No. 45407 Exp. 9/30/12 CIVIL STATE OF CALIFORNIA

THE STATE OF CALIFORNIA OR ITS OFFICERS OR AGENTS SHALL NOT BE RESPONSIBLE FOR THE ACCURACY OR COMPLETENESS OF SCANNED COPIES OF THIS PLAN SHEET.

BKF ENGINEERS
4670 WILLOW ROAD, SUITE 250
PLEASANTON, CA. 94588

ALAMEDA CTC
1333 BROADWAY SUITE 220
OAKLAND, CA. 94612

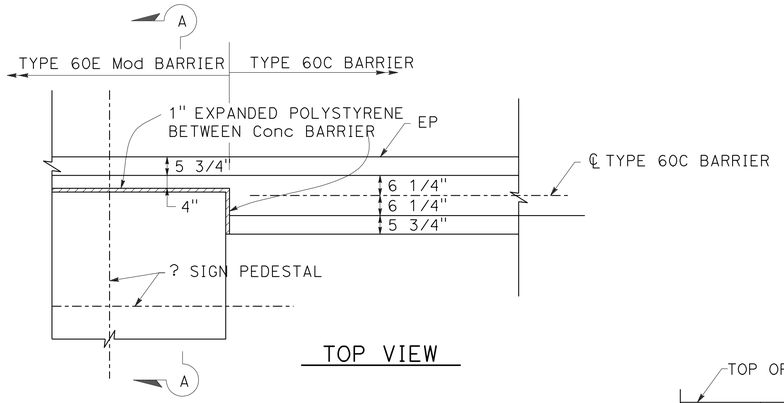

TOP VIEW

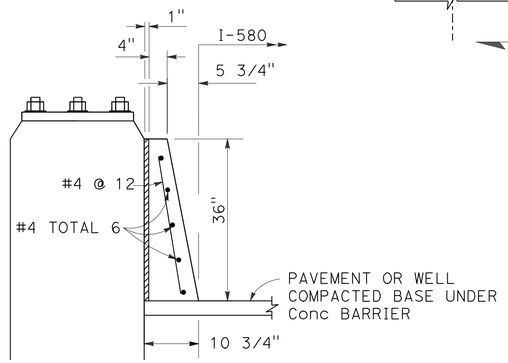

SECTION A-A

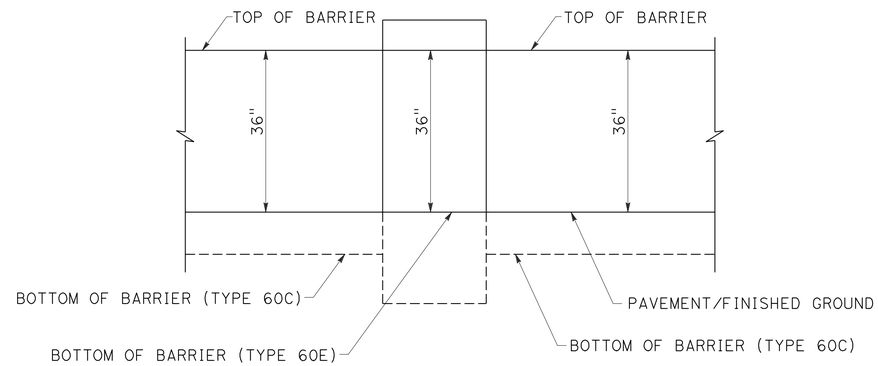

SIDE VIEW

CONCRETE BARRIER TYPE 60C / 60E Mod BARRIER AT PEDESTAL

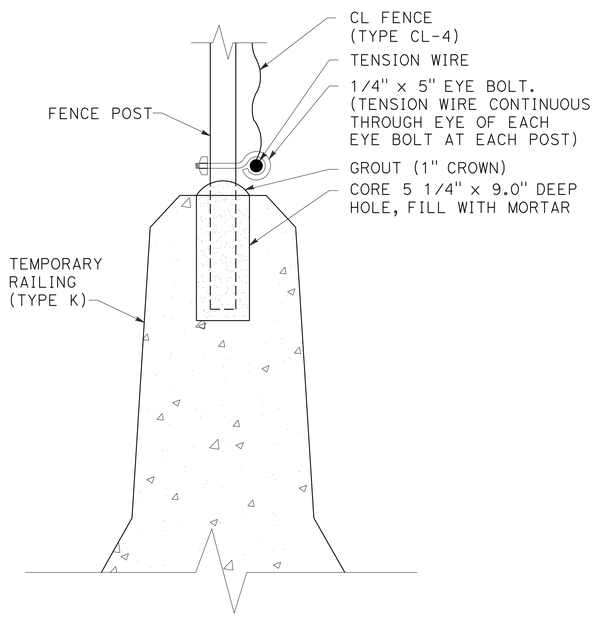

POST ANCHOR DETAIL

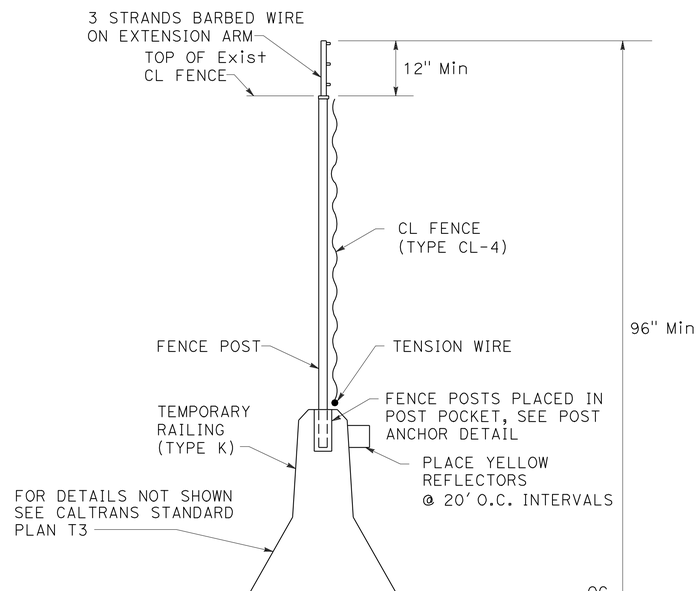

TEMPORARY RAILING (BART)

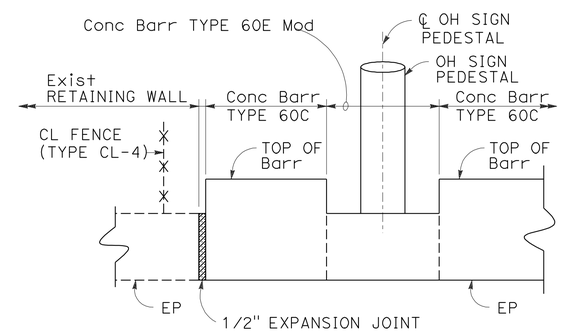

SIDE VIEW

CONCRETE BARRIER TYPE 60C / EXIST RW, EXPANSION JOINT CONNECTION

CONSTRUCTION DETAILS

NO SCALE

C-34

STATE OF CALIFORNIA - DEPARTMENT OF TRANSPORTATION

Caltrans

CONSULTANT FUNCTIONAL SUPERVISOR: NATALINA V. BERNARDI

CALCULATED-DESIGNED BY: DAT Q. NGUYEN

CHECKED BY: LUIS GARCIA

REVISED BY: DQN

DATE REVISED: 9/23/11

LAST REVISION 09-23-11

DATE PLOTTED => 13-APR-2012

TIME PLOTTED => 07:39

Dist	COUNTY	ROUTE	POST MILES TOTAL PROJECT	SHEET No.	TOTAL SHEETS
04	Ala	580	R14.6/R21.6	111	804

9/23/11
REGISTERED CIVIL ENGINEER DATE

4-9-12
PLANS APPROVAL DATE

REGISTERED PROFESSIONAL ENGINEER N.V. BERNARDI No. 45407 Exp. 9/30/12 CIVIL STATE OF CALIFORNIA

THE STATE OF CALIFORNIA OR ITS OFFICERS OR AGENTS SHALL NOT BE RESPONSIBLE FOR THE ACCURACY OR COMPLETENESS OF SCANNED COPIES OF THIS PLAN SHEET.

BKF ENGINEERS
4670 WILLOW ROAD, SUITE 250
PLEASANTON, CA. 94588

ALAMEDA CTC
1333 BROADWAY SUITE 220
OAKLAND, CA. 94612

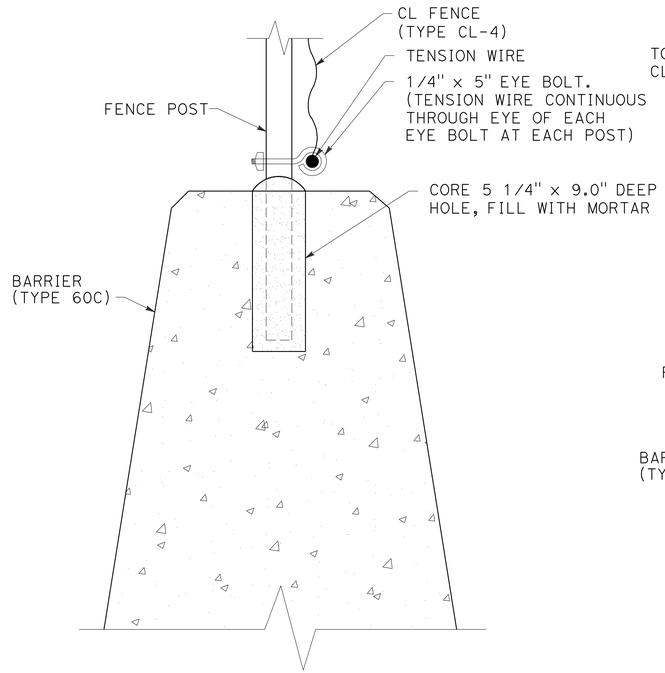

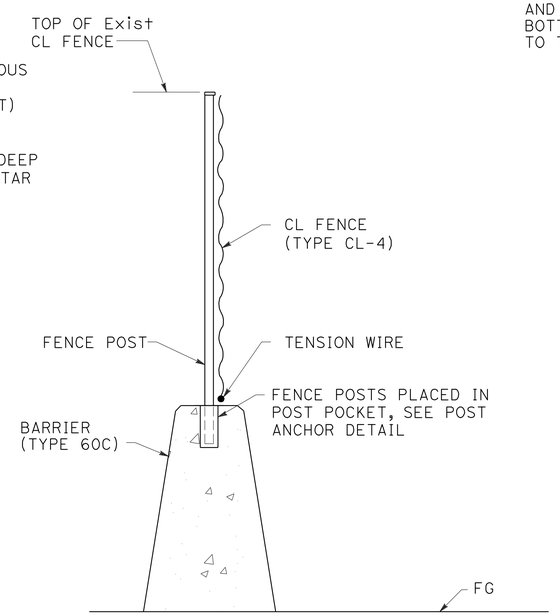

CONCRETE BARRIER (TYPE 60C) POST ANCHOR AND FENCE DETAIL

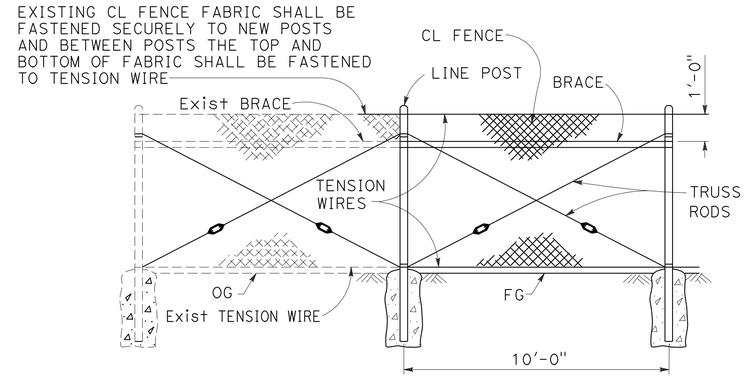

EXISTING CHAIN LINK FENCE CONNECTION TO NEW CHAIN LINK FENCE

NOTES:
1. FOR ADDITIONAL DETAIL, SEE STANDARD PLAN A85.
2. NEW FENCE POST SHALL BE SPACED NO MORE THAN 10' AWAY FROM EXISTING POST.
3. TRUSS RODS SHALL BE INSTALL BETWEEN EXISTING AND NEW POST

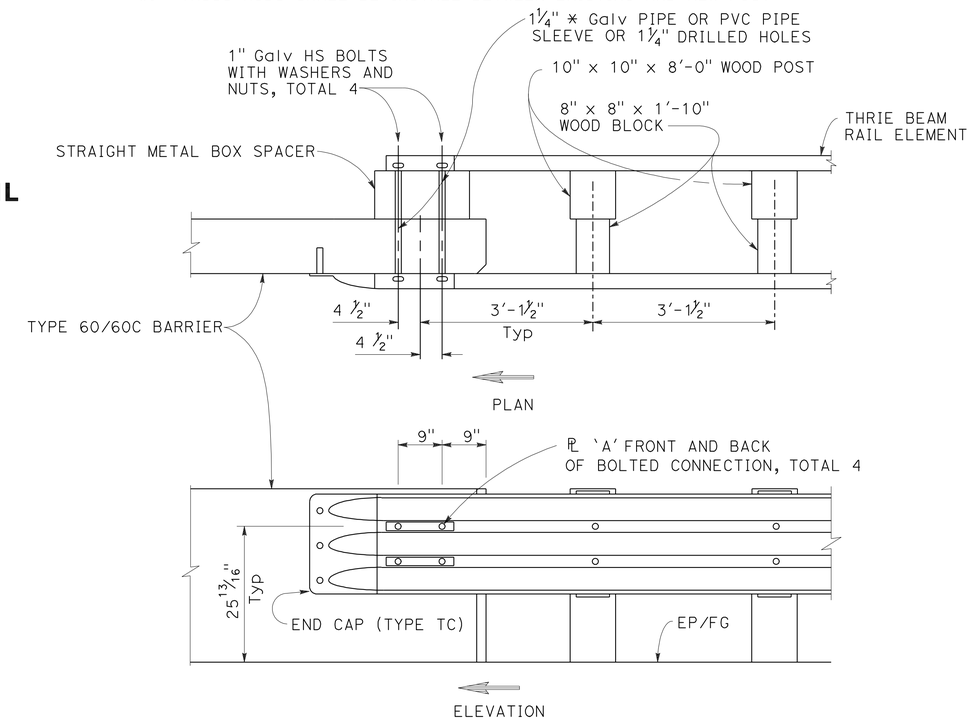

CONNECTION DETAIL AA

MBGR CONNECTION TO CONCRETE BARRIER TYPE 60C/60.

(FOR ADDITIONAL DETAIL, SEE STANDARD PLAN A77J2)

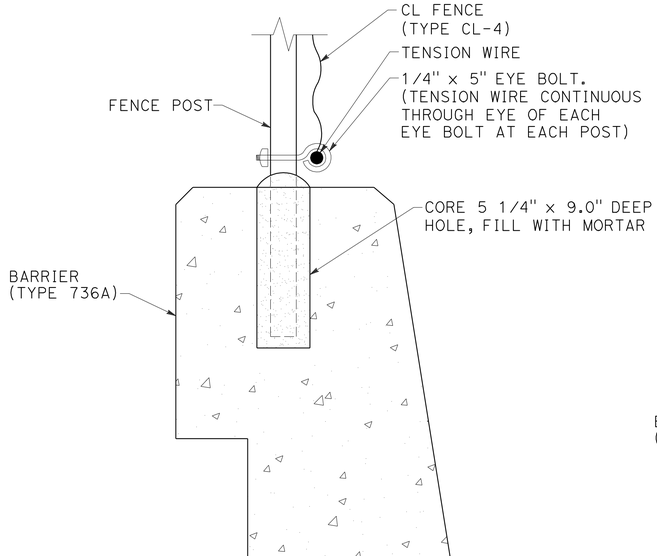

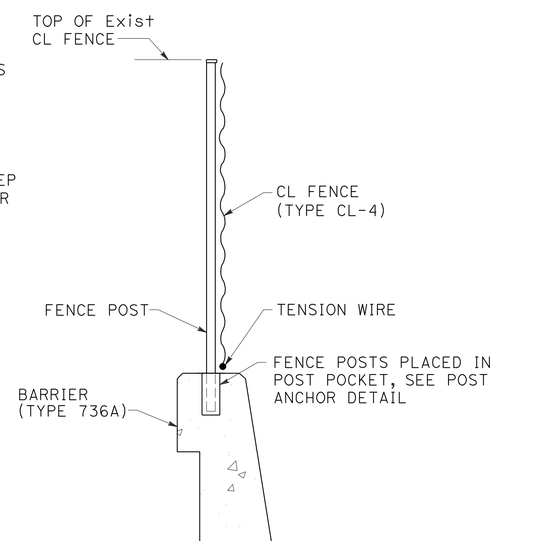

CONCRETE BARRIER (TYPE 736A) POST ANCHOR AND FENCE DETAIL

CONSTRUCTION DETAILS
NO SCALE

C-35

STATE OF CALIFORNIA - DEPARTMENT OF TRANSPORTATION
Caltrans

CONSULTANT FUNCTIONAL SUPERVISOR: NATALINA V. BERNARDI
CALCULATED-DESIGNED BY: DAT Q. NGUYEN
CHECKED BY: LUIS GARCIA
REVISED BY: DQN
DATE REVISED: 9/23/11

LAST REVISION 09-23-11
DATE PLOTTED => 13-APR-2012
TIME PLOTTED => 07:39

Dist	COUNTY	ROUTE	POST MILES TOTAL PROJECT	SHEET No.	TOTAL SHEETS
04	Ala	580	R14.6/R21.6	112	804

REGISTERED CIVIL ENGINEER 9/23/11 DATE

4-9-12
PLANS APPROVAL DATE

REGISTERED PROFESSIONAL ENGINEER N.V. BERNARDI No. 45407 Exp. 9/30/12 CIVIL STATE OF CALIFORNIA

THE STATE OF CALIFORNIA OR ITS OFFICERS OR AGENTS SHALL NOT BE RESPONSIBLE FOR THE ACCURACY OR COMPLETENESS OF SCANNED COPIES OF THIS PLAN SHEET.

BKF ENGINEERS
4670 WILLOW ROAD, SUITE 250
PLEASANTON, CA. 94588

ALAMEDA CTC
1333 BROADWAY SUITE 220
OAKLAND, CA. 94612

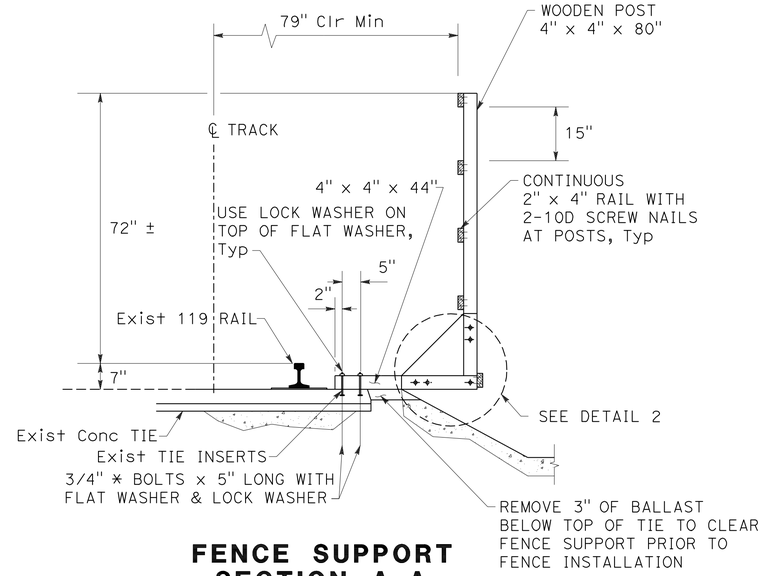

FENCE SUPPORT SECTION A-A

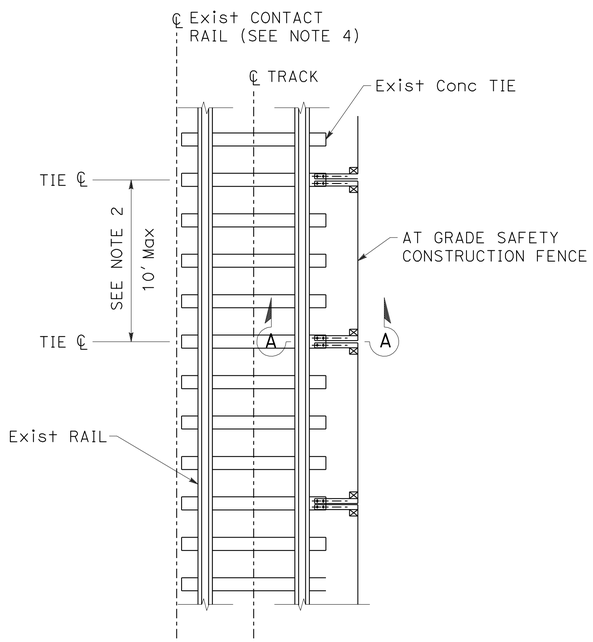

PARTIAL PLAN

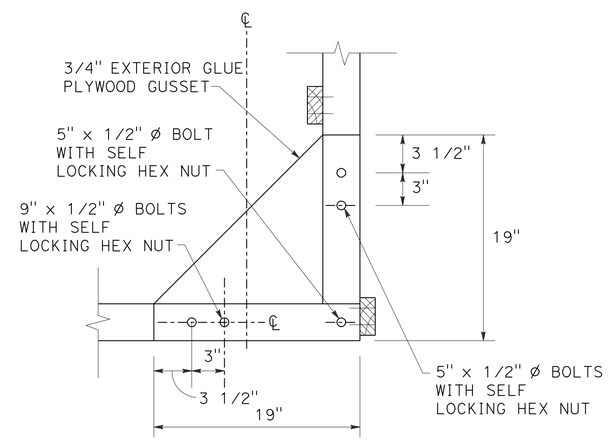

DETAIL 2

NOTES:

1. FOR LOCATION OF SAFETY CONSTRUCTION FENCE, SEE SHEETS TH-3 TO TH-5.
2. ACTUAL TIE SPACING TO BE FIELD VERIFIED BY CONTRACTOR PRIOR TO FENCE FABRICATION.
3. WHERE FENCE SUPPORT TYPE A IS USED, REMOVE Exist TIE INSERT PLUGS AND CLEAN ALL TIE INSERTS TO REMOVE ANY DIRT, ROCK, PAD RESIDUE OR OTHER MATTER, MANUALLY OR BY FORCED AIR. IF THE 3/4" ø BOLT FOR CONSTRUCTING THE SAFETY CONSTRUCTION FENCE CANNOT BE INSERTED TO ITS FULL DEPTH AFTER CLEANING AS DESCRIBED ABOVE, THE THREADS IN THE TIE INSERT SHALL BE CLEANED TO REMOVE CORROSION AND OTHER DEBRIS WITH A 3/4 - 10 UNC TAP, LIGHTLY OILED; THE HOLE SHALL BE CLEANED TO REMOVE ANY REMNANTS OF THE TAP OPERATION.
4. SAFETY CONSTRUCTION FENCE SHALL BE ANCHORED TO EXISTING TIES WHICH ARE NOT BEING USED TO ANCHOR EXISTING CONTACT RAIL.
5. AFTER FENCE REMOVAL, RESTORE BALLAST TO EXISTING CONDITIONS AS DIRECTED BY THE ENGINEER.

FOR NOTES, LEGEND AND ABBREVIATION, SEE SHEET C-1

CONSTRUCTION DETAILS
SAFETY CONSTRUCTION FENCE
NO SCALE

C-36

CALCULATED-DESIGNED BY	DAT Q. NGUYEN
CHECKED BY	LUIS GARCIA
REVISED BY	DQN
DATE REVISED	9/23/11
CONSULTANT FUNCTIONAL SUPERVISOR	NATALINA V. BERNARDI

STATE OF CALIFORNIA - DEPARTMENT OF TRANSPORTATION

Caltrans

LAST REVISION 09-23-11 | DATE PLOTTED => 13-APR-2012 | TIME PLOTTED => 07:39

Dist	COUNTY	ROUTE	POST MILES TOTAL PROJECT	SHEET No.	TOTAL SHEETS
04	Ala	580	R14.6/R21.6	113	804

REGISTERED CIVIL ENGINEER 9/23/11 DATE

4-9-12
PLANS APPROVAL DATE

REGISTERED PROFESSIONAL ENGINEER N.V. BERNARDI No. 45407 Exp. 9/30/12 CIVIL STATE OF CALIFORNIA

THE STATE OF CALIFORNIA OR ITS OFFICERS OR AGENTS SHALL NOT BE RESPONSIBLE FOR THE ACCURACY OR COMPLETENESS OF SCANNED COPIES OF THIS PLAN SHEET.

BKF ENGINEERS
4670 WILLOW ROAD, SUITE 250
PLEASANTON, CA. 94588

ALAMEDA CTC
1333 BROADWAY SUITE 220
OAKLAND, CA. 94612

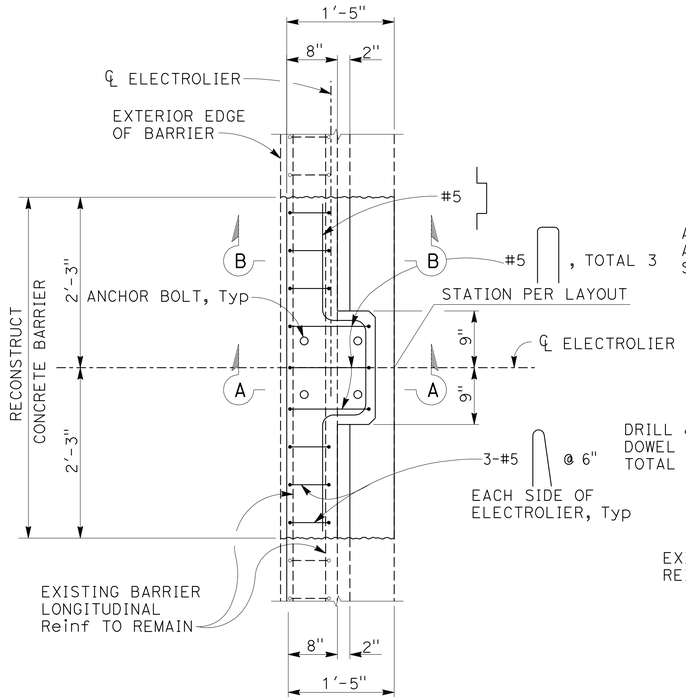

PLAN

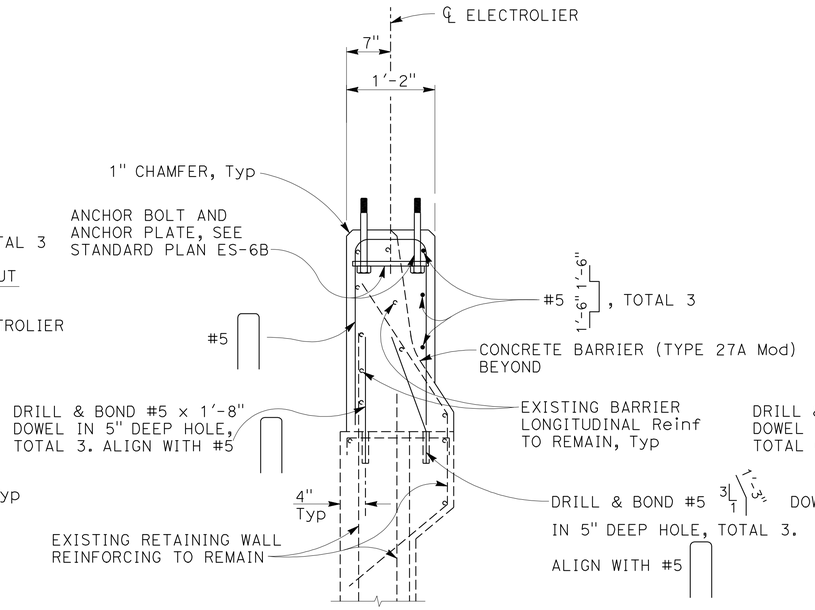

SECTION A-A

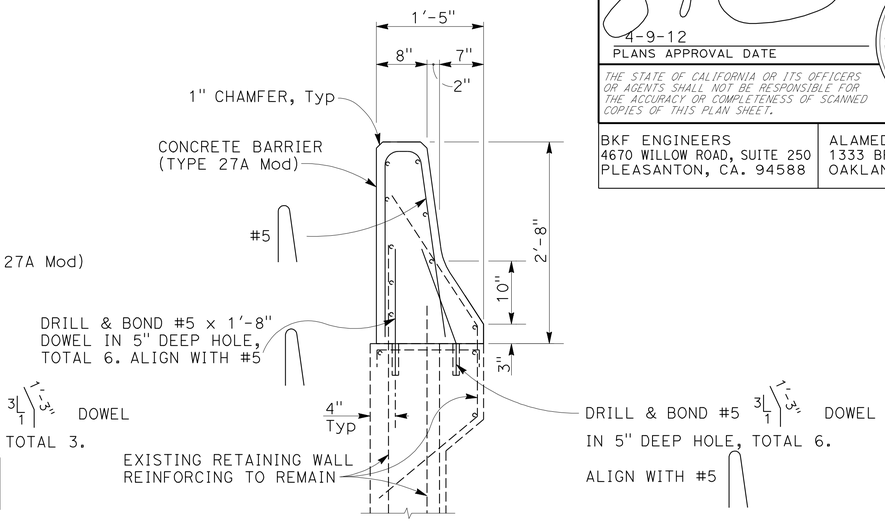

SECTION B-B

RECONSTRUCT CONCRETE BARRIER (TYPE 27A Mod)

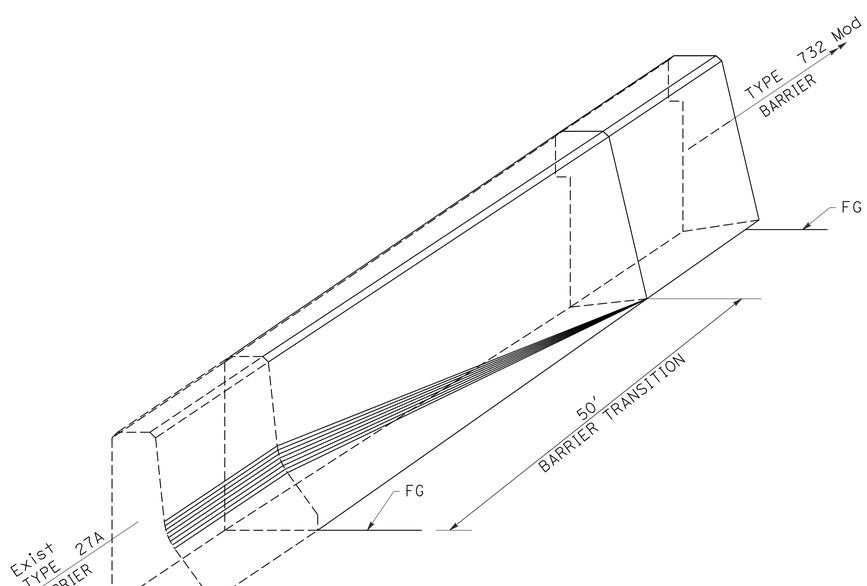

TRANSITION FROM Exist CONCRETE BARRIER (TYPE 27A) TO CONCRETE BARRIER (TYPE 732 Mod)

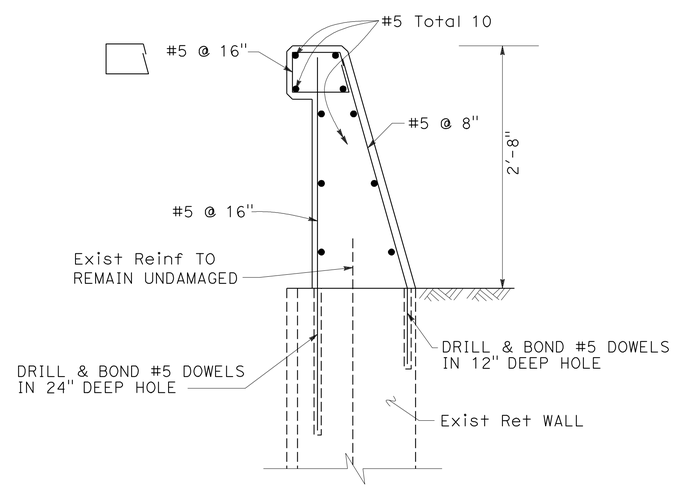

CONCRETE BARRIER TYPE 732 Mod

NOTE:

1. FOR ADDITIONAL DETAILS SEE Std PLAN B11-55.

CONSTRUCTION DETAILS

NO SCALE

C-37

FOR NOTES, LEGEND AND ABBREVIATION, SEE SHEET C-1

STATE OF CALIFORNIA - DEPARTMENT OF TRANSPORTATION

CONSULTANT FUNCTIONAL SUPERVISOR: NATALINA V. BERNARDI

CALCULATED-DESIGNED BY: DAT Q. NGUYEN

CHECKED BY: LUIS GARCIA

REVISED BY: DQN

DATE REVISED: 9/23/11

LAST REVISION 09-23-11 | DATE PLOTTED => 13-APR-2012 | TIME PLOTTED => 07:39

Dist	COUNTY	ROUTE	POST MILES TOTAL PROJECT	SHEET No.	TOTAL SHEETS
04	Ala	580	R14.6/R21.6	114	804

REGISTERED CIVIL ENGINEER 9/23/11 DATE

4-9-12
PLANS APPROVAL DATE

REGISTERED PROFESSIONAL ENGINEER ROY M SCHNABEL No. C46828 Exp.6/30/13 CIVIL STATE OF CALIFORNIA

THE STATE OF CALIFORNIA OR ITS OFFICERS OR AGENTS SHALL NOT BE RESPONSIBLE FOR THE ACCURACY OR COMPLETENESS OF SCANNED COPIES OF THIS PLAN SHEET.

BIGGS CARDOSA ASSOCIATES INC.
865 THE ALAMEDA
SAN JOSE, CALIFORNIA 95126

ALAMEDA CTC
1333 BROADWAY, SUITE 200
OAKLAND, CA 94612

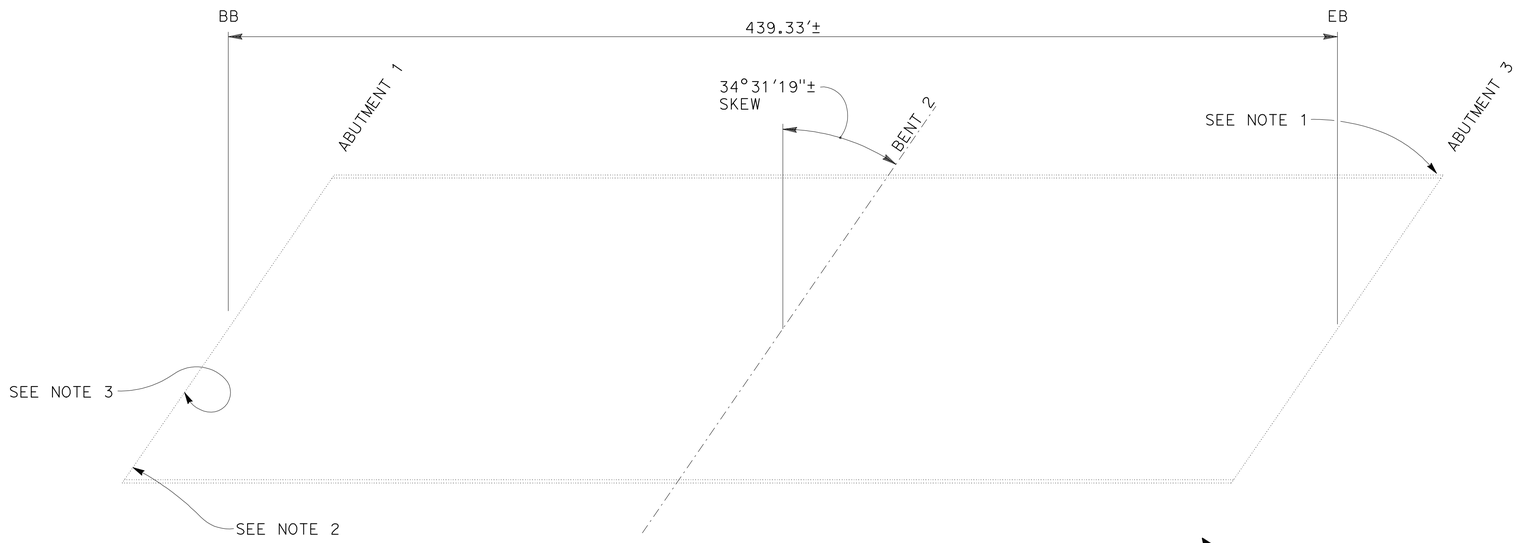

HOPYARD - DOUGHERTY RD OC
BRIDGE No. 33-0551, ROUTE 580, PM 19.8/20.0

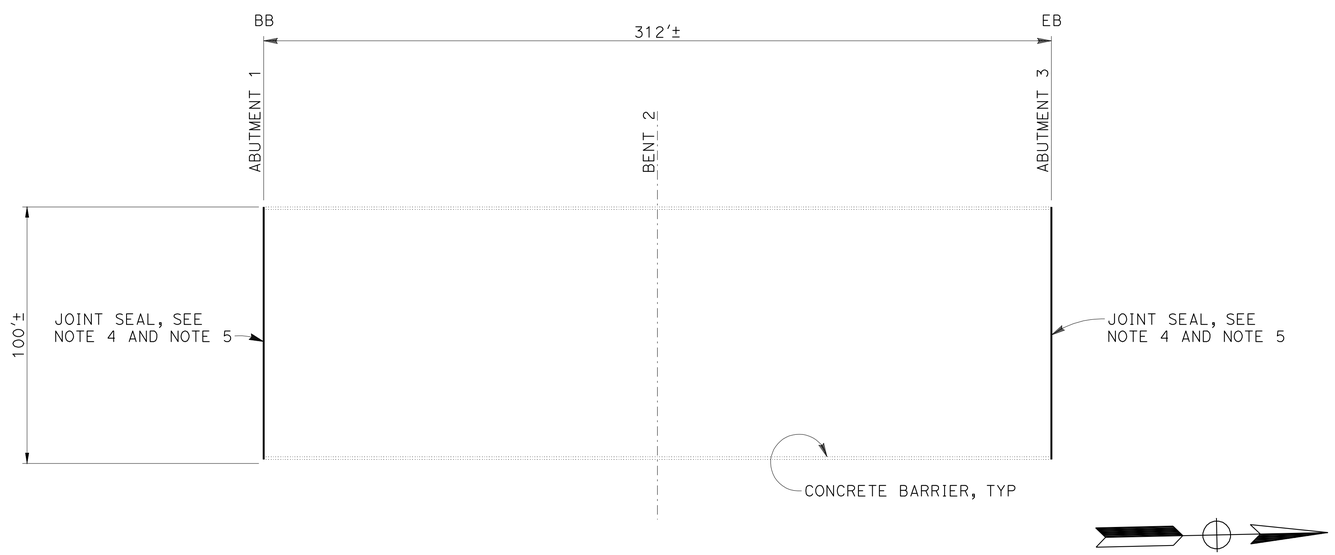

HACIENDA DRIVE OVERCROSSING
BRIDGE No. 33-0584, ROUTE 580, PM 18.2/19.7

NOTES:

1. REMOVE UNSOUND CONCRETE AND PATCH SPALL ON SIDE FACE OF ABUTMENT 3 WITH RAPID SETTING CONCRETE. SPALL DIMENSIONS ARE APPROXIMATELY 36"x10"x3" DEEP.
2. REMOVE UNSOUND CONCRETE AND PATCH SPALL ON EXTERIOR SHEAR KEY WITH RAPID SETTING CONCRETE. SPALL DIMENSIONS ARE APPROXIMATELY 10"x12"x7" DEEP.
3. REMOVE UNSOUND CONCRETE AND PATCH SPALL AT ABUTMENT 1 BELOW SECOND ELASTOMERIC BEARING PAD WITH RAPID SETTING CONCRETE. SPALL DIMENSIONS ARE APPROXIMATELY 18"x6"x3" DEEP.
4. FOR JOINT SEAL (MR = 2"), SEE B6-21 / - .
5. TOP OF EXISTING WATERSTOP IS 8"± BELOW TOP OF DECK.
6. THE CONTRACTOR SHALL VERIFY ALL CONTROLLING FIELD DIMENSIONS BEFORE ORDERING OR FABRICATING MATERIALS.

STANDARD PLANS DATED MAY 2006

	SHEET No.	TITLE
	A10A	ACRONYMS AND ABBREVIATIONS (SHEET 1 OF 2)
	A10B	ACRONYMS AND ABBREVIATIONS (SHEET 2 OF 2)
RSP	B6-21	JOINT SEALS (MAXIMUM MOVEMENT RATING = 2")
	B11-51	TUBULAR HAND RAILING
RSP	B11-64	CONCRETE BARRIER TYPE 80 SW (SHEET 3 OF 3)

HOPYARD - DOUGHERTY RD OC 33-0551

QUANTITIES

REMOVE UNSOUND CONCRETE	2	CF
RAPID SETTING CONCRETE (PATCH)	2	CF

HACIENDA DRIVE OVERCROSSING 33-0584

QUANTITIES

CLEAN EXPANSION JOINT	200	LF
JOINT SEAL (MR = 2")	200	LF

CONSTRUCTION DETAILS
BRIDGE REHABILITATION
NO SCALE

C-38

REVISED BY	DATE REVISED
RSR	9/23/11
RSR	5/25/11

RICARDO RIVAS — INES LI
CALCULATED-DESIGNED BY — CHECKED BY
CONSULTANT FUNCTIONAL SUPERVISOR — ROY M. SCHNABEL

STATE OF CALIFORNIA - DEPARTMENT OF TRANSPORTATION
Caltrans

LAST REVISION 09/23/11
DATE PLOTTED => 13-APR-2012
TIME PLOTTED => 07:45

2007236 (2007236YC38)

Dist	COUNTY	ROUTE	POST MILES TOTAL PROJECT	SHEET No.	TOTAL SHEETS
04	Ala	580	R14.6/R21.6	115	804

REGISTERED CIVIL ENGINEER 9/23/11 DATE

4-9-12
PLANS APPROVAL DATE

REGISTERED PROFESSIONAL ENGINEER ROY M SCHNABEL No. C46828 Exp.6/30/13 CIVIL STATE OF CALIFORNIA

THE STATE OF CALIFORNIA OR ITS OFFICERS OR AGENTS SHALL NOT BE RESPONSIBLE FOR THE ACCURACY OR COMPLETENESS OF SCANNED COPIES OF THIS PLAN SHEET.

BIGGS CARDOSA ASSOCIATES INC.
865 THE ALAMEDA
SAN JOSE, CALIFORNIA 95126

ALAMEDA CTC
1333 BROADWAY, SUITE 200
OAKLAND, CA 94612

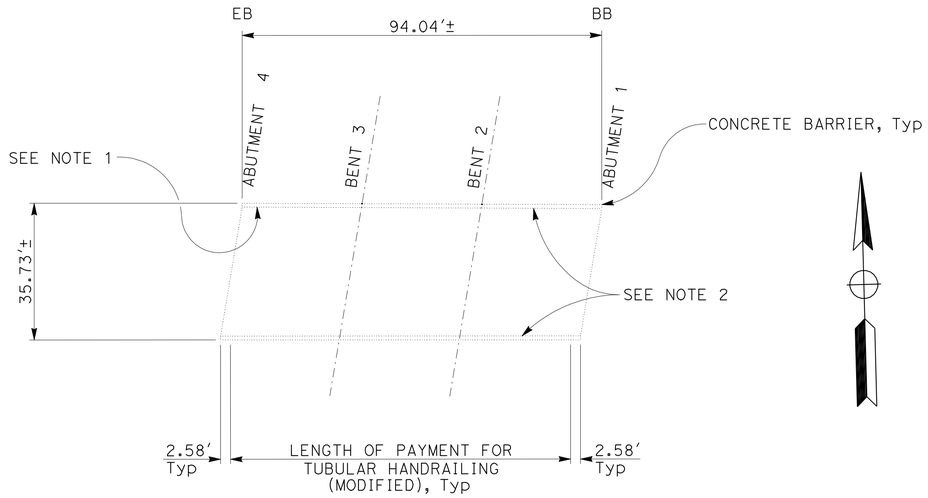

TASSAJARA CREEK BRIDGE
BRIDGE No. 33-0015Y, ROUTE 580, PM 18.32

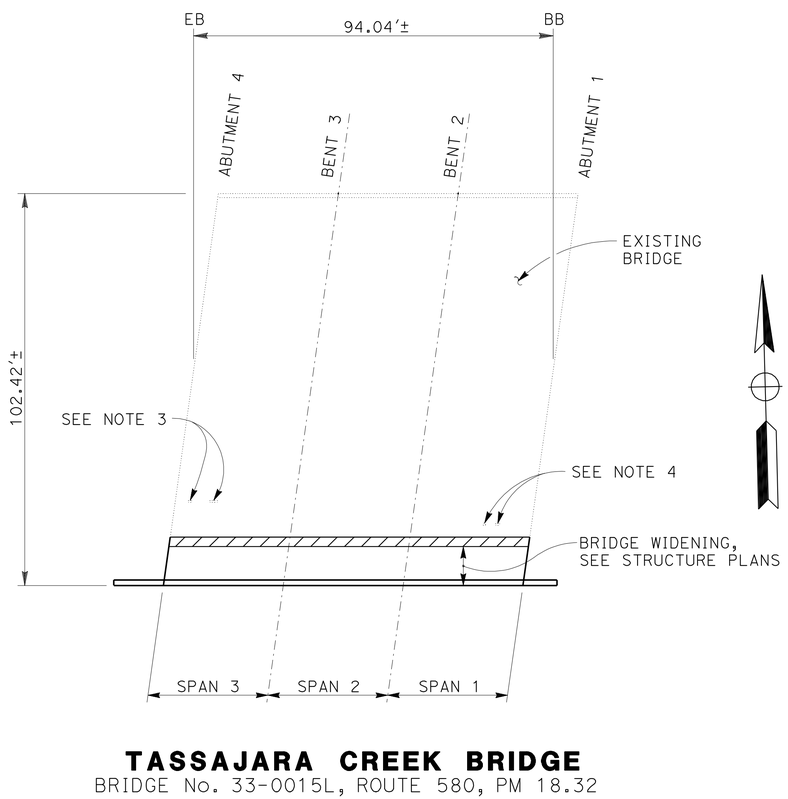

TASSAJARA CREEK BRIDGE
BRIDGE No. 33-0015L, ROUTE 580, PM 18.32

NOTES:

1. PATCH SPALL ON RIGHT SIDE OF ABUTMENT 4 BRIDGE RAIL. SEE DETAIL 3 ON SHEET C-41.
2. INSTALL TUBULAR HANDRAILING (MODIFIED) ON EXISTING BARRIER.
3. REMOVE UNSOUND CONCRETE AND PATCH SPALLS IN LANE 6 OF SPAN 1 (2 LOCATIONS). SPALL DIMENSIONS ARE APPROXIMATELY 6"x10"x1.5" DEEP AND 6"x24"x1" DEEP.
4. REMOVE UNSOUND CONCRETE AND PATCH SPALLS IN LANE 6 OF SPAN 3 (2 LOCATIONS). SPALL DIMENSIONS ARE APPROXIMATELY 6"x12"x2" DEEP AND 8" DIAMETER x 1" DEEP.
5. THE CONTRACTOR SHALL VERIFY ALL CONTROLLING FIELD DIMENSIONS BEFORE ORDERING OR FABRICATING MATERIALS

TASSAJARA CREEK BRIDGE 33-0015Y

QUANTITIES

REMOVE UNSOUND CONCRETE	3	CF
RAPID SETTING CONCRETE (PATCH)	3	CF
TUBULAR HANDRAILING (MODIFIED)	178	LF

TASSAJARA CREEK BRIDGE 33-0015L

QUANTITIES

REMOVE UNSOUND CONCRETE	1	CF
RAPID SETTING CONCRETE (PATCH)	1	CF

CONSTRUCTION DETAILS
BRIDGE REHABILITATION
NO SCALE

C-39

REVISED BY	DATE REVISED
RSR	9/23/11
RSR	5/25/11

RICARDO RIVAS — INES LI
CALCULATED-DESIGNED BY — CHECKED BY
CONSULTANT FUNCTIONAL SUPERVISOR — ROY M. SCHNABEL

STATE OF CALIFORNIA - DEPARTMENT OF TRANSPORTATION
Caltrans

2007236 (2007236YC39)

LAST REVISION 09/23/11 | DATE PLOTTED => 13-APR-2012 | TIME PLOTTED => 07:46

Dist	COUNTY	ROUTE	POST MILES TOTAL PROJECT	SHEET No.	TOTAL SHEETS
04	Ala	580	R14.6/R21.6	116	804

REGISTERED CIVIL ENGINEER 9/23/11 DATE

4-9-12
PLANS APPROVAL DATE

REGISTERED PROFESSIONAL ENGINEER ROY M SCHNABEL No. C46828 Exp.6/30/13 CIVIL STATE OF CALIFORNIA

THE STATE OF CALIFORNIA OR ITS OFFICERS OR AGENTS SHALL NOT BE RESPONSIBLE FOR THE ACCURACY OR COMPLETENESS OF SCANNED COPIES OF THIS PLAN SHEET.

BIGGS CARDOSA ASSOCIATES INC.
865 THE ALAMEDA
SAN JOSE, CALIFORNIA 95126

ALAMEDA CTC
1333 BROADWAY, SUITE 200
OAKLAND, CA 94612

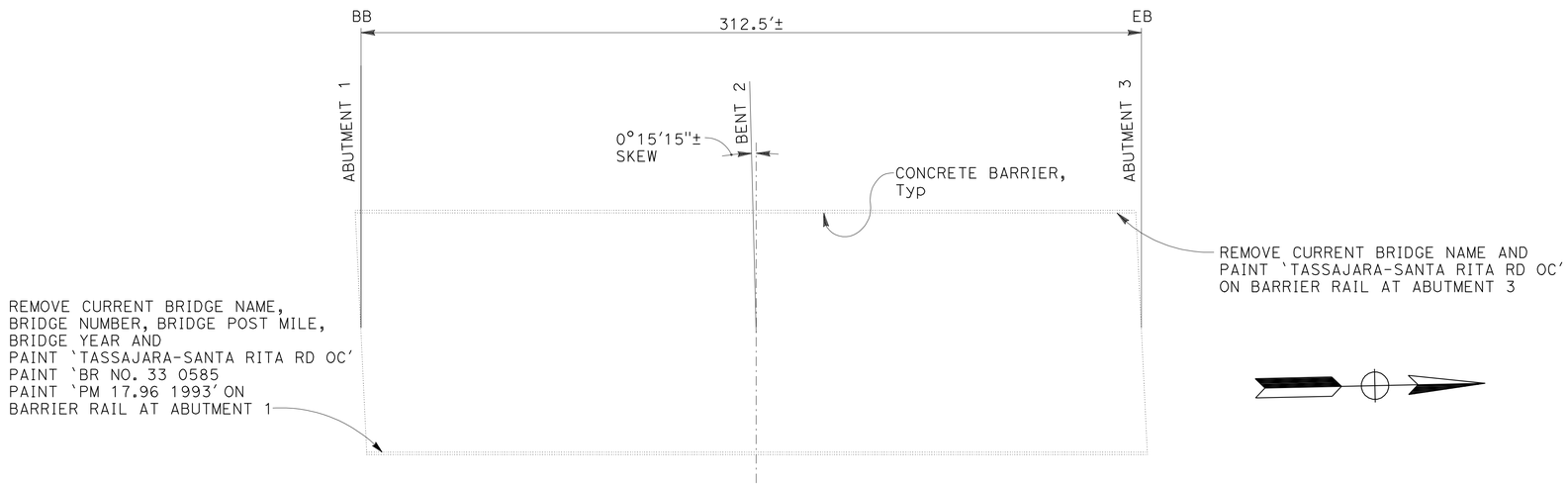

NOTE:

THE CONTRACTOR SHALL VERIFY ALL CONTROLLING FIELD DIMENSIONS BEFORE ORDERING OR FABRICATING MATERIALS

TASSAJARA - SANTA RITA RD OC 33-0585

QUANTITIES

PAINT BRIDGE IDENTIFICATION	1	LS

TASSAJARA - SANTA RITA RD OC

BRIDGE No. 33-0585, ROUTE 580, PM 17.96

CONSTRUCTION DETAILS
BRIDGE REHABILITATION

NO SCALE

C-40

REVISED BY	DATE REVISED
RSR	5/25/11
RSR	9/23/11

RICARDO RIVAS — INES LI

CALCULATED-DESIGNED BY — CHECKED BY

CONSULTANT FUNCTIONAL SUPERVISOR — ROY M. SCHNABEL

STATE OF CALIFORNIA - DEPARTMENT OF TRANSPORTATION

Caltrans

2007236 (2007236YC40)

LAST REVISION 09/23/11 | DATE PLOTTED => 13-APR-2012 | TIME PLOTTED => 07:46

Dist	COUNTY	ROUTE	POST MILES TOTAL PROJECT	SHEET No.	TOTAL SHEETS
04	Ala	580	R14.6/R21.6	117	804

REGISTERED CIVIL ENGINEER 9/23/11 DATE

4-9-12
PLANS APPROVAL DATE

REGISTERED PROFESSIONAL ENGINEER ROY M SCHNABEL No. C46828 Exp.6/30/13 CIVIL STATE OF CALIFORNIA

THE STATE OF CALIFORNIA OR ITS OFFICERS OR AGENTS SHALL NOT BE RESPONSIBLE FOR THE ACCURACY OR COMPLETENESS OF SCANNED COPIES OF THIS PLAN SHEET.

BIGGS CARDOSA ASSOCIATES INC.
865 THE ALAMEDA
SAN JOSE, CALIFORNIA 95126

ALAMEDA CTC
1333 BROADWAY, SUITE 200
OAKLAND, CA 94612

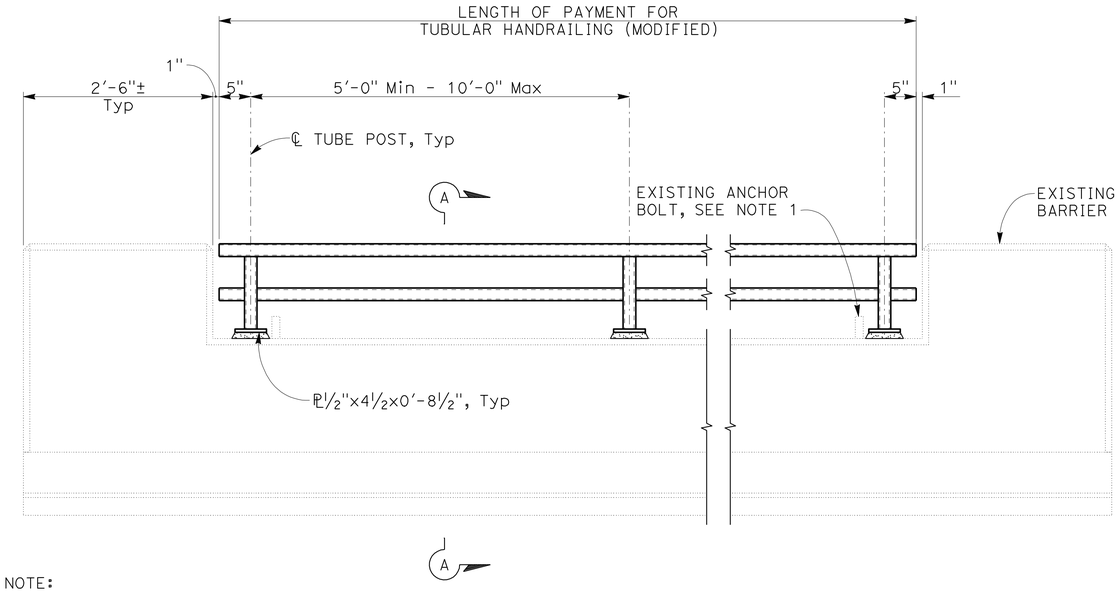

NOTE:
EXISTING TYPE 2 CONCRETE BARRIER SHOWN,
EXISTING TYPE 1 CONCRETE BARRIER IS SIMILAR

TUBULAR HANDRAILING ON EXISTING BARRIER - DETAIL 1

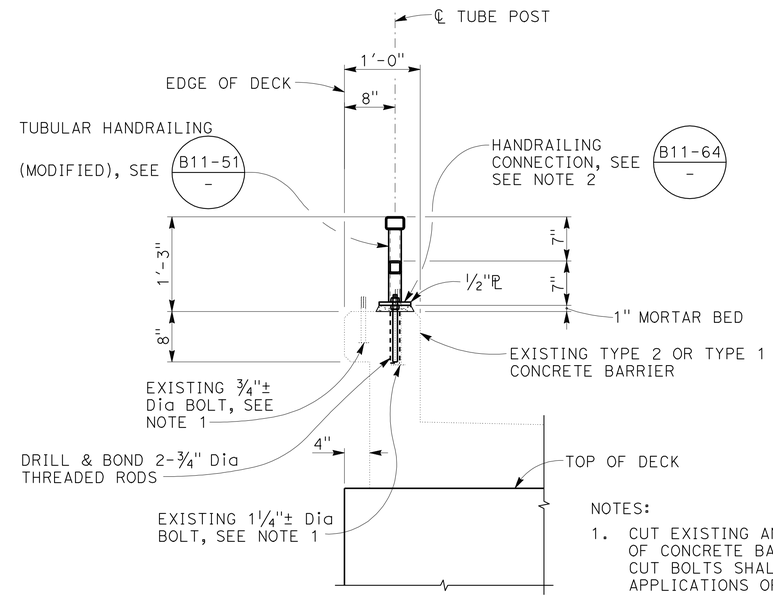

SECTION A-A

NOTES:

1. CUT EXISTING ANCHOR BOLTS FLUSH WITH TOP OF CONCRETE BARRIER. EXPOSED SURFACES OF CUT BOLTS SHALL BE PAINTED WITH 2 APPLICATIONS OF UNTHINNED ZINC-RICH PRIMER.
2. INSTALL TUBULAR HANDRAILING ON EXISTING CONCRETE BARRIER. SEE B11-64 - FOR CONNECTION DETAILS NOT NOTED.

LEGEND:

LIMITS OF PAYMENT FOR REMOVE UNSOUND CONCRETE AND RAPID SETTING CONCRETE (PATCH)

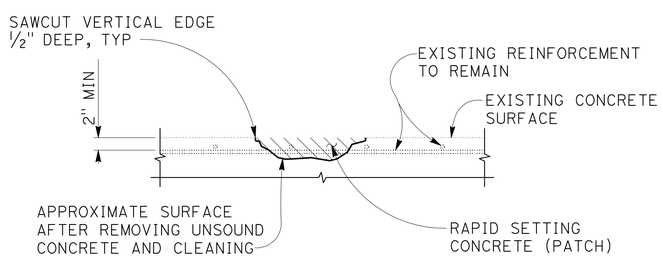

NOTE:
REINFORCEMENT MAY BE ENCOUNTERED DURING DECK CONCRETE REMOVAL AND IS TO REMAIN UNCHANGED

TYPICAL SPALL REPAIR - DETAIL 2

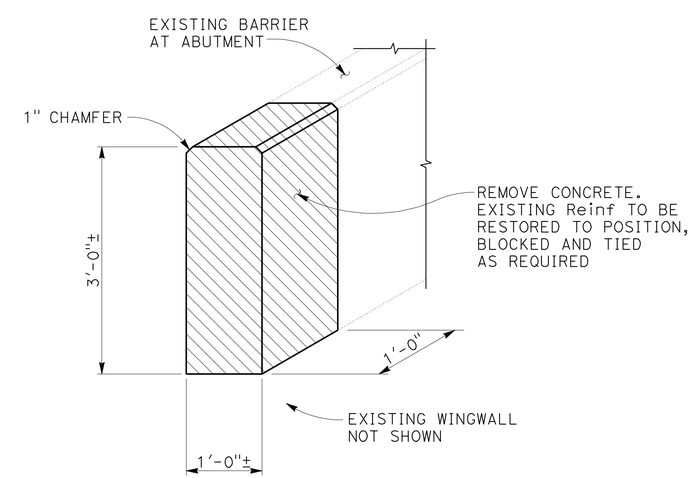

TASSAJARA CREEK BRIDGE RAIL REPAIR - DETAIL 3

CONSTRUCTION DETAILS BRIDGE REHABILITATION

NO SCALE

C-41

RSR	9/23/11		
RSR	5/25/11		
REVISED BY	DATE REVISED		
RICARDO RIVAS	INES LI		
CALCULATED-DESIGNED BY	CHECKED BY		
CONSULTANT FUNCTIONAL SUPERVISOR	ROY M. SCHNABEL		
STATE OF CALIFORNIA - DEPARTMENT OF TRANSPORTATION	Caltrans		

2007236 (2007236YC35)

LAST REVISION 09/23/11 | DATE PLOTTED => 13-APR-2012 TIME PLOTTED => 07:46

Dist	COUNTY	ROUTE	POST MILES TOTAL PROJECT	SHEET No.	TOTAL SHEETS
04	Ala	580	R14.6/R21.6	118	804

REGISTERED CIVIL ENGINEER 9/23/11 DATE

4-9-12
PLANS APPROVAL DATE

REGISTERED PROFESSIONAL ENGINEER N.V. BERNARDI No. 45407 Exp. 9/30/12 CIVIL STATE OF CALIFORNIA

THE STATE OF CALIFORNIA OR ITS OFFICERS OR AGENTS SHALL NOT BE RESPONSIBLE FOR THE ACCURACY OR COMPLETENESS OF SCANNED COPIES OF THIS PLAN SHEET.

BKF ENGINEERS
4670 WILLOW ROAD, SUITE 250
PLEASANTON, CA. 94588

ALAMEDA CTC
1333 BROADWAY SUITE 220
OAKLAND, CA. 94612

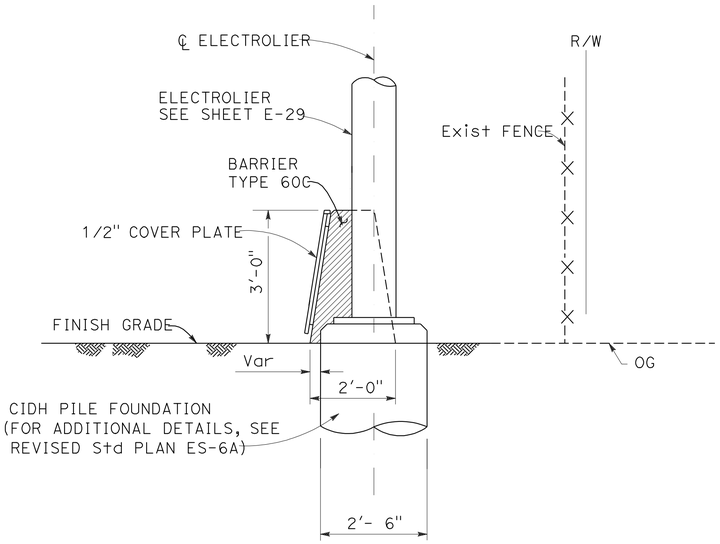

SECTION A-A

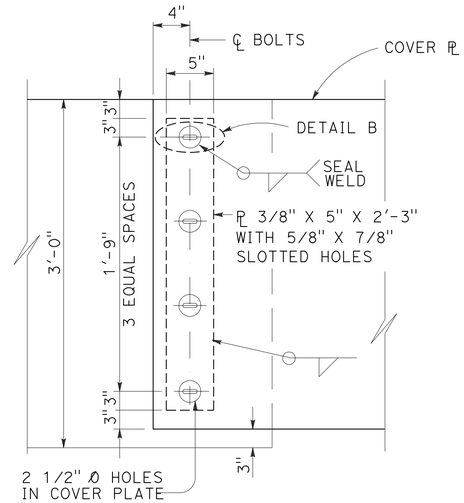

DETAIL A

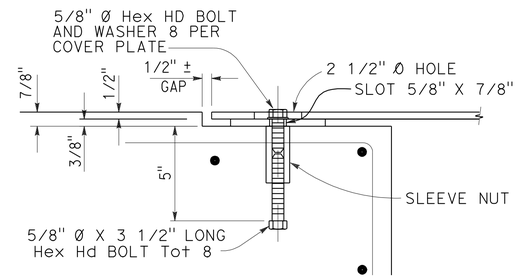

DETAIL B

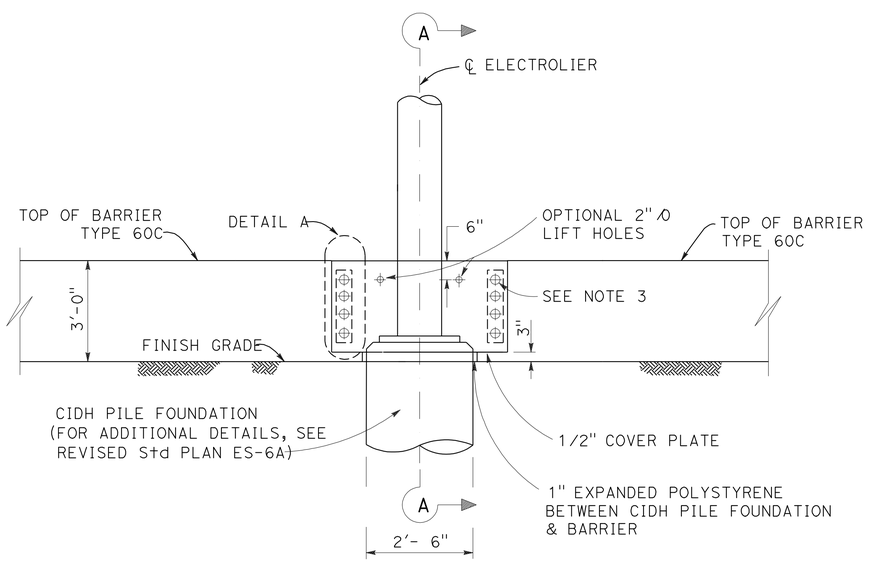

ELEVATION

NOTES:

1. RESIN CAPSULE ANCHORAGE IS SUBJECT TO APPROVAL OF THE ENGINEER. INSTALLATION PROCEDURES SHALL COMPLY WITH MANUFACTURER'S INSTRUCTIONS.
2. DETAIL C SIMILAR TO DETAIL D EXCEPT FOR ANCHORAGE DEVICES.
3. 5/8" Ø SLEEVE NUT ANCHORAGE (SEE DETAIL B) OR RESIN CAPSULE ANCHORAGE (SEE ALTERNATIVE ANCHORAGE). A TOTAL OF 8 ANCHORAGE UNITS REQUIRED PER PLATE. ALL METAL PLATES TO BE GALVANIZED AFTER FABRICATION. HARDWARE TO BE GALVANIZED OR NON-CORROSIVE.

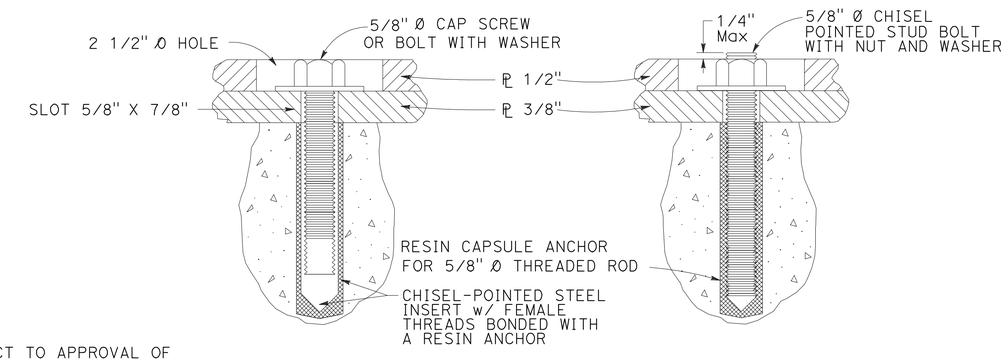

DETAIL C DETAIL D

ALTERNATIVE ANCHORAGE

CONCRETE BARRIER (TYPE 60C) TRANSITION AT ELECTROLIER

CONSTRUCTION DETAILS

NO SCALE

C-42

FOR NOTES, LEGEND AND ABBREVIATION, SEE SHEET C-1

REVISED BY	DATE REVISED
DQN	9/23/11

DAT Q. NGUYEN — LUIS GARCIA — CALCULATED-DESIGNED BY — CHECKED BY

NATALINA V. BERNARDI — CONSULTANT FUNCTIONAL SUPERVISOR

STATE OF CALIFORNIA - DEPARTMENT OF TRANSPORTATION

LAST REVISION 09-23-11 — DATE PLOTTED => 13-APR-2012 — TIME PLOTTED => 07:39

Dist	COUNTY	ROUTE	POST MILES TOTAL PROJECT	SHEET No.	TOTAL SHEETS
04	Ala	580	R14.6/R21.6	119	804

9/23/11
REGISTERED CIVIL ENGINEER DATE

4-9-12
PLANS APPROVAL DATE

REGISTERED PROFESSIONAL ENGINEER
N.V. BERNARDI
No. 45407
Exp. 9/30/12
CIVIL
STATE OF CALIFORNIA

THE STATE OF CALIFORNIA OR ITS OFFICERS OR AGENTS SHALL NOT BE RESPONSIBLE FOR THE ACCURACY OR COMPLETENESS OF SCANNED COPIES OF THIS PLAN SHEET.

BKF ENGINEERS
4670 WILLOW ROAD, SUITE 250
PLEASANTON, CA. 94588

ALAMEDA CTC
1333 BROADWAY SUITE 220
OAKLAND, CA. 94612

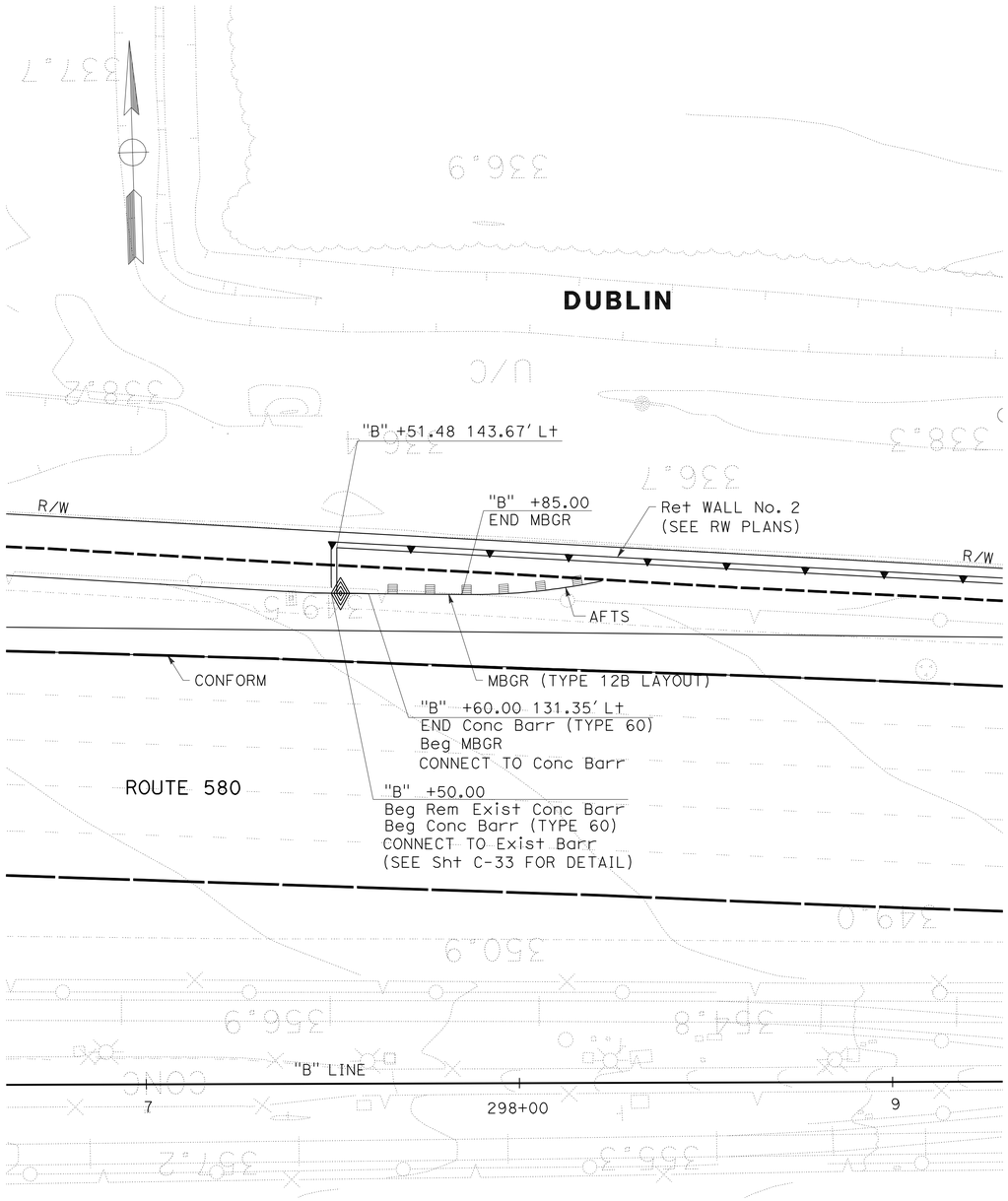

CONSTRUCTION DETAILS

SCALE: 1" = 20'

C-43

REVISED BY	DATE REVISED
TC	9/23/11

TRAVIS CHAN
LUIS GARCIA

CALCULATED-DESIGNED BY
CHECKED BY

CONSULTANT FUNCTIONAL SUPERVISOR
NATALINA V. BERNARDI

STATE OF CALIFORNIA - DEPARTMENT OF TRANSPORTATION

LAST REVISION 09-23-11
DATE PLOTTED => 13-APR-2012
TIME PLOTTED => 07:39

Dist	COUNTY	ROUTE	POST MILES TOTAL PROJECT	SHEET No.	TOTAL SHEETS
04	Ala	580	R14.6/R21.6	120	804

1/3/12
REGISTERED CIVIL ENGINEER DATE

4-9-12
PLANS APPROVAL DATE

REGISTERED PROFESSIONAL ENGINEER
N.V. BERNARDI
No. 45407
Exp. 9/30/12
CIVIL
STATE OF CALIFORNIA

THE STATE OF CALIFORNIA OR ITS OFFICERS OR AGENTS SHALL NOT BE RESPONSIBLE FOR THE ACCURACY OR COMPLETENESS OF SCANNED COPIES OF THIS PLAN SHEET.

BKF ENGINEERS
4670 WILLOW ROAD, SUITE 250
PLEASANTON, CA. 94588

ALAMEDA CTC
1333 BROADWAY SUITE 220
OAKLAND, CA. 94612

LEGEND:

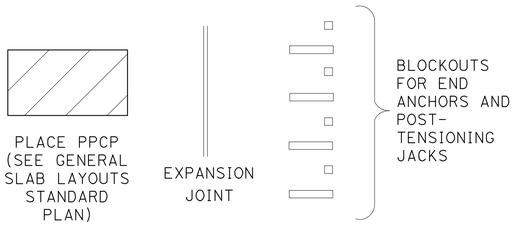

ABBREVIATION:

(s) Exist JOINT SPACING

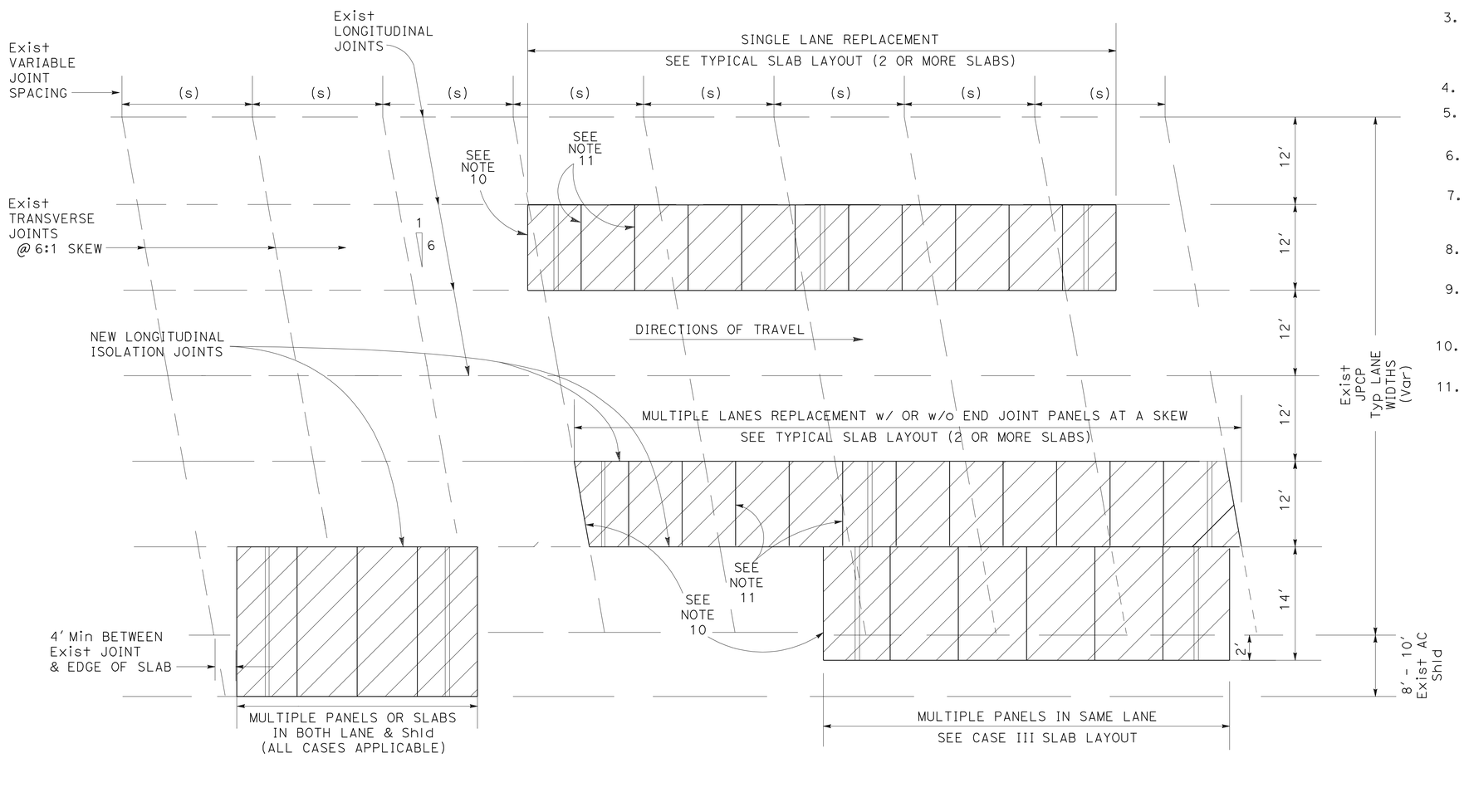

TYPICAL VARIABLE LAYOUTS

NOTES:

1. SKEW PANELS HAVE A MINIMUM LENGTH OF 4' FROM THE EXPANSION JOINT.
2. Exist JOINT SPACING (S) VARIES BASED ON YEAR OF DESIGN AND ARE TYPICALLY AT A SKEW OF 6:1. NEW PANEL JOINTS ARE NOT NECESSARILY REQUIRED TO MATCH w/ THE Exist JOINTS.
3. FOR DETAILS OF BASE PANELS, CENTRAL STRESSING PANELS, TYPE C1 JOINT PANELS, TYPE C2 JOINT PANELS AND TYPE C3 JOINT PANELS, SEE THE INDIVIDUAL Std PLANS FOR EACH OF THESE PANELS.
4. MAXIMUM SLAB LENGTH VARIES w/ TEMPERATURE.
5. CASE IA & IB SINGLE SLAB LAYOUTS ARE PRESTRESSED w/o POST-TENSIONING.
6. SKEW JOINT PANELS ARE OPTIONAL & ARE USED TO MATCH Exist.
7. Min Std PANEL LENGTH (L) = 8'. Min PANEL WIDTH (W) = DIMENSION AS NEEDED. Max PANEL WIDTH (W) = 60'.
8. IF POSSIBLE, LINE UP THE TRANSVERSE JOINTS WHEN MULTIPLE LANES OF PANELS ARE USED.
9. FOR LONGITUDINAL ISOLATION JOINTS, SEE "ISOLATION JOINT DETAIL" ON MISCELLANEOUS PANEL DETAILS Std PLAN.
10. FOR PPCP NEXT TO Exist PCC Pvmt, SEE "DOWEL BAR RETROFIT Std PLAN.
11. FOR TRANSVERSE JOINTS OF PPCP PANELS, SEE "KEY & KEYWAY DETAIL" ON CONSTRUCTION DETAILS PLAN.

CONSTRUCTION DETAILS
GENERAL LAYOUTS
PRECAST PRESTRESSED CONCRETE PAVEMENT (PPCP)

NO SCALE

C-44

REVISED BY	DATE REVISED
CC	1/3/12

CARMELO CECILIO
LUIS GARCIA
CALCULATED-DESIGNED BY
CHECKED BY
CONSULTANT FUNCTIONAL SUPERVISOR
NATALINA V. BERNARDI
STATE OF CALIFORNIA - DEPARTMENT OF TRANSPORTATION
Caltrans

LAST REVISION 01-03-12
DATE PLOTTED => 13-APR-2012
TIME PLOTTED => 07:39

Dist	COUNTY	ROUTE	POST MILES TOTAL PROJECT	SHEET No.	TOTAL SHEETS
04	Ala	580	R14.6/R21.6	121	804

REGISTERED CIVIL ENGINEER 1/3/12 DATE

4-9-12
PLANS APPROVAL DATE

REGISTERED PROFESSIONAL ENGINEER N.V. BERNARDI No. 45407 Exp. 9/30/12 CIVIL STATE OF CALIFORNIA

THE STATE OF CALIFORNIA OR ITS OFFICERS OR AGENTS SHALL NOT BE RESPONSIBLE FOR THE ACCURACY OR COMPLETENESS OF SCANNED COPIES OF THIS PLAN SHEET.

BKF ENGINEERS
4670 WILLOW ROAD, SUITE 250
PLEASANTON, CA. 94588

ALAMEDA CTC
1333 BROADWAY SUITE 220
OAKLAND, CA. 94612

NOTES:

1. SEE Misc PANEL DETAILS FOR CENTRAL STRESSING BLOCKOUT DETAIL.
2. L IS THE LENGTH DIMENSION ALONG THE DIRECTION OF TRAVEL.
3. CASE 1A SINGLE SLAB IS A SINGLE PRECAST CONCRETE PANEL w/ NO POST-TENSIONING. USED FOR INDIVIDUAL SLAB REPLACEMENT. FOR DETAILS, SEE INDIVIDUAL SLAB REPLACEMENT LAYOUT Std PLAN.

LEGEND:

- SMALL BLOCKOUTS FOR END ANCHORS
- LARGE BLOCKOUTS FOR POST-TENSIONING JACKS
- TYPICAL DIRECTION OF POST-TENSIONING PULL & LOCATION OF TENSION LOCK.
- POST-TENSIONING DUCT

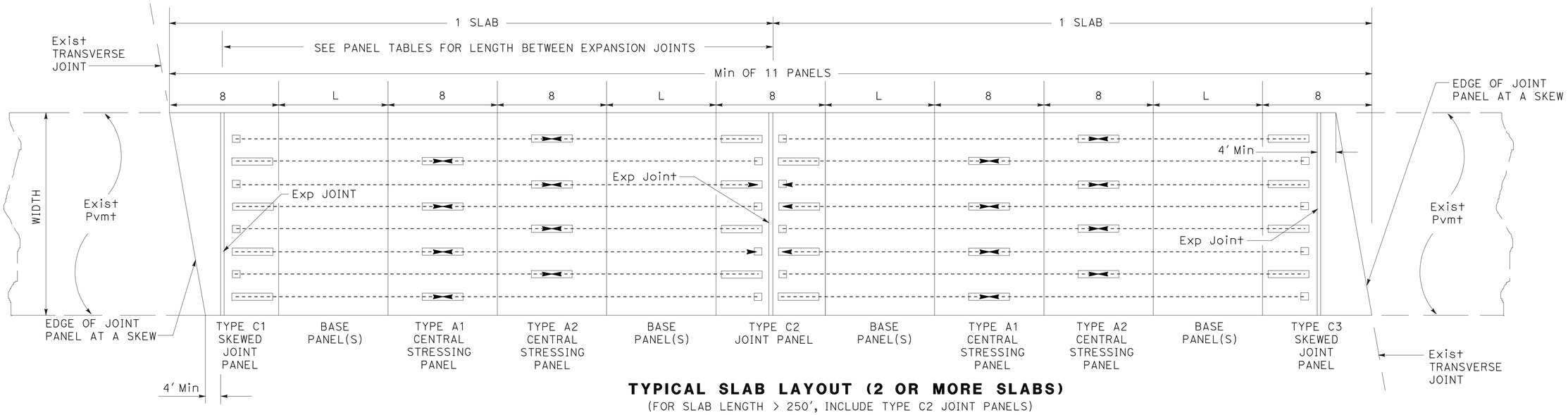

TYPICAL SLAB LAYOUT (2 OR MORE SLABS)
(FOR SLAB LENGTH > 250', INCLUDE TYPE C2 JOINT PANELS)

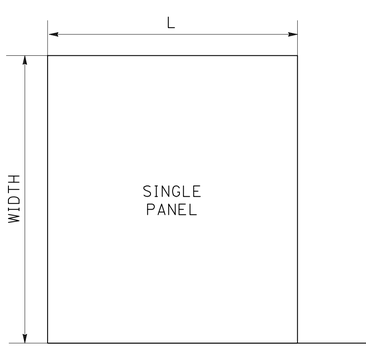

CASE I SINGLE SLAB LAYOUT (L< 15')

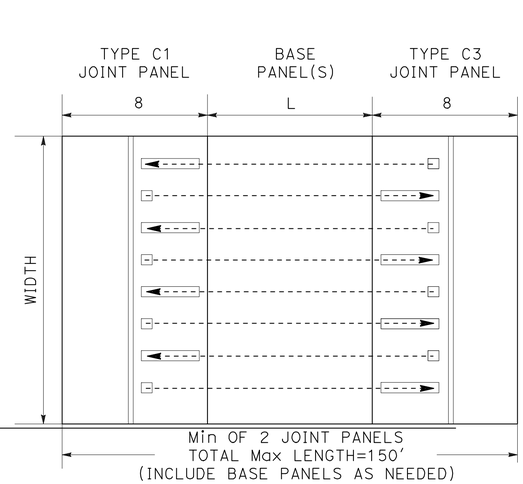

CASE II SLAB LAYOUT

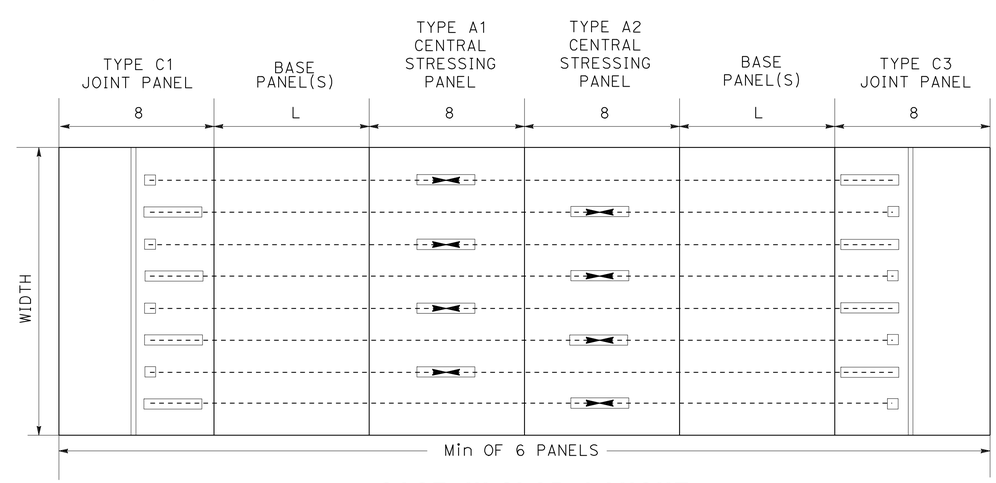

CASE III SLAB LAYOUT
(FOR SLAB LENGTH > 150' & < 250')

CONSTRUCTION DETAILS
GENERAL SLAB LAYOUTS
PRECAST PRESTRESSED CONCRETE PAVEMENT (PPCP)

NO SCALE

C-45

REVISED BY	DATE REVISED
CC	1/3/12

CARMELO CECILIO — LUIS GARCIA — CALCULATED-DESIGNED BY — CHECKED BY

CONSULTANT FUNCTIONAL SUPERVISOR: NATALINA V. BERNARDI

STATE OF CALIFORNIA - DEPARTMENT OF TRANSPORTATION

LAST REVISION 01-03-12 | DATE PLOTTED => 13-APR-2012 | TIME PLOTTED => 07:40

Dist	COUNTY	ROUTE	POST MILES TOTAL PROJECT	SHEET No.	TOTAL SHEETS
04	Ala	580	R14.6/R21.6	122	804

1/3/12
REGISTERED CIVIL ENGINEER DATE

4-9-12
PLANS APPROVAL DATE

REGISTERED PROFESSIONAL ENGINEER
N.V. BERNARDI
No. 45407
Exp. 9/30/12
CIVIL
STATE OF CALIFORNIA

THE STATE OF CALIFORNIA OR ITS OFFICERS OR AGENTS SHALL NOT BE RESPONSIBLE FOR THE ACCURACY OR COMPLETENESS OF SCANNED COPIES OF THIS PLAN SHEET.

BKF ENGINEERS
4670 WILLOW ROAD, SUITE 250
PLEASANTON, CA. 94588

ALAMEDA CTC
1333 BROADWAY SUITE 220
OAKLAND, CA. 94612

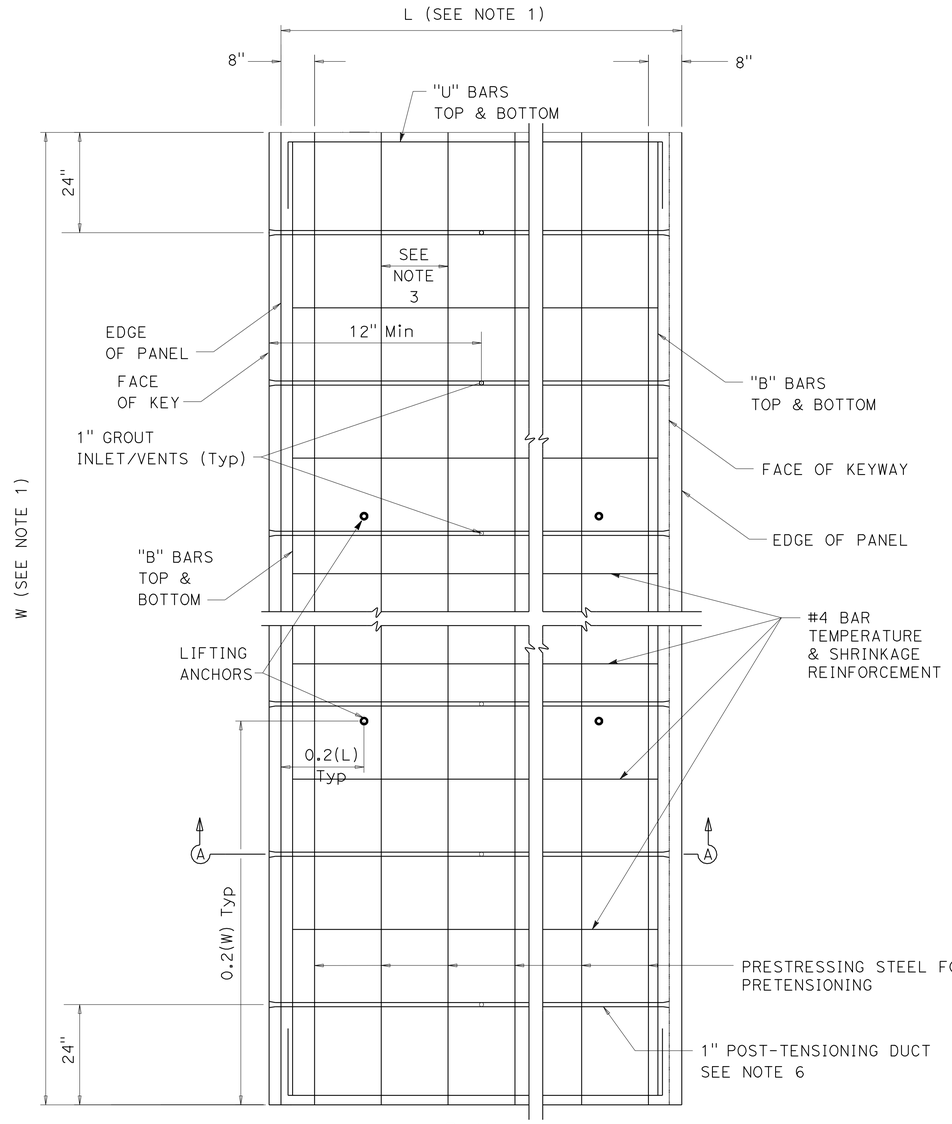

PLAN

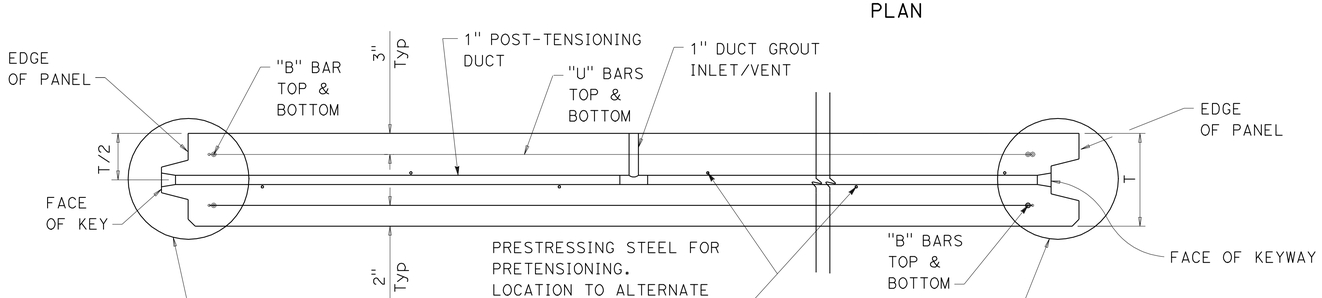

SECTION A-A

BASE PANEL

NOTES:

1. SEE TABLES A AND B FOR LENGTH (L) OR WIDTH (W) FOR BASE PANELS.
2. THE SPACING BETWEEN PRETENSIONING STRANDS SHOULD NOT BE MORE THAN 16" C-C.
3. SEE Misc PANEL DETAILS FOR KEY & KEYWAY DETAIL.
4. FOR "U" BAR LENGTH, SEE TABLE A FOR BASE PANELS.
5. ALL REINFORCEMENT DIMENSIONS & QUANTITIES ARE TO BE VERIFIED BY THE MANUFACTURER BEFORE PANEL FABRICATION.
6. 1" POST-TENSIONING DUCTS ARE SPACED UNIFORMLY @ MAXIMUM 36" C-C APART ALONG THE 'W' DIMENSION BETWEEN THE 1ST & LAST P-T DUCT.

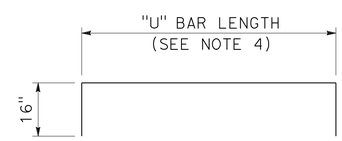

PLAN

"U" BARS
SIZE #4

CONSTRUCTION DETAILS
BASE PANEL LAYOUT
PRECAST PRESTRESSED
CONCRETE PAVEMENT (PPCP)

NO SCALE

C-46

STATE OF CALIFORNIA - DEPARTMENT OF TRANSPORTATION
Caltrans

CONSULTANT FUNCTIONAL SUPERVISOR: NATALINA V. BERNARDI
CALCULATED-DESIGNED BY: CARMELO CECILIO
CHECKED BY: LUIS GARCIA
REVISED BY: CC
DATE REVISED: 1/3/12

LAST REVISION 01-03-12 | DATE PLOTTED => 13-APR-2012 | TIME PLOTTED => 07:40

Dist	COUNTY	ROUTE	POST MILES TOTAL PROJECT	SHEET No.	TOTAL SHEETS
04	Ala	580	R14.6/R21.6	123	804

REGISTERED CIVIL ENGINEER 1/3/12 DATE

4-9-12
PLANS APPROVAL DATE

REGISTERED PROFESSIONAL ENGINEER N.V. BERNARDI No. 45407 Exp. 9/30/12 CIVIL STATE OF CALIFORNIA

THE STATE OF CALIFORNIA OR ITS OFFICERS OR AGENTS SHALL NOT BE RESPONSIBLE FOR THE ACCURACY OR COMPLETENESS OF SCANNED COPIES OF THIS PLAN SHEET.

BKF ENGINEERS
4670 WILLOW ROAD, SUITE 250
PLEASANTON, CA. 94588

ALAMEDA CTC
1333 BROADWAY SUITE 220
OAKLAND, CA. 94612

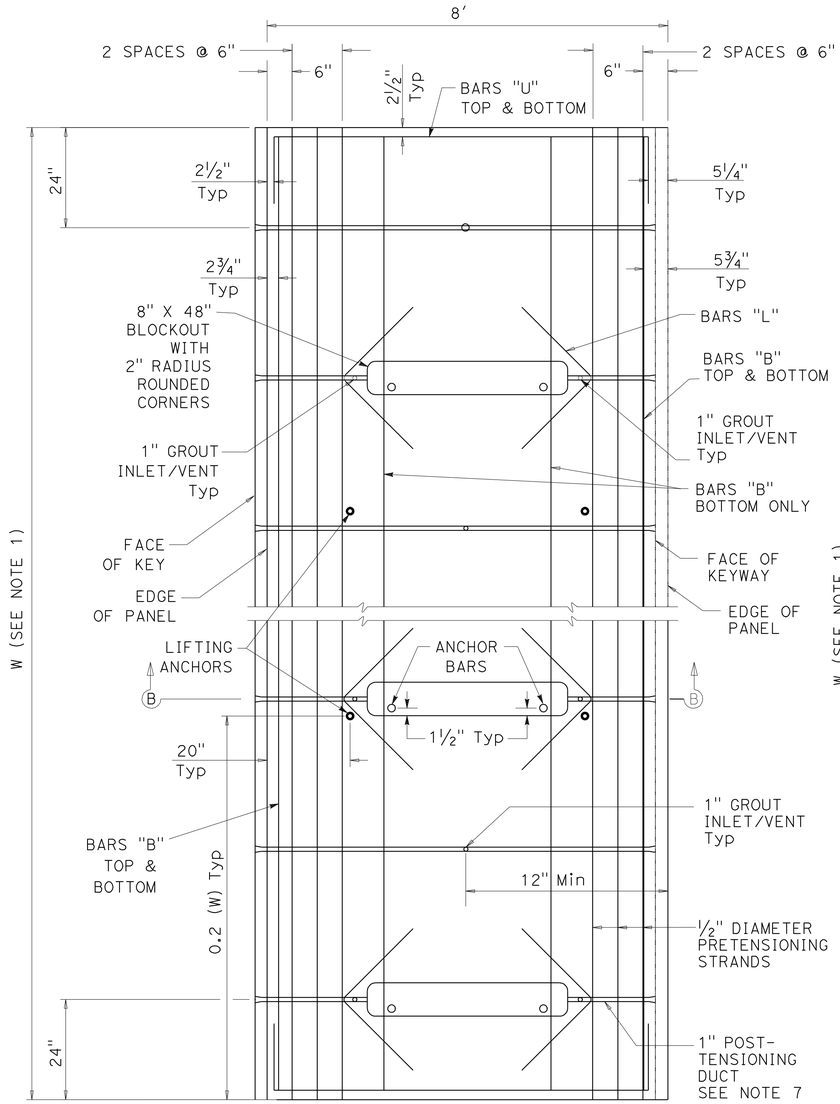

PLAN
TYPE A1

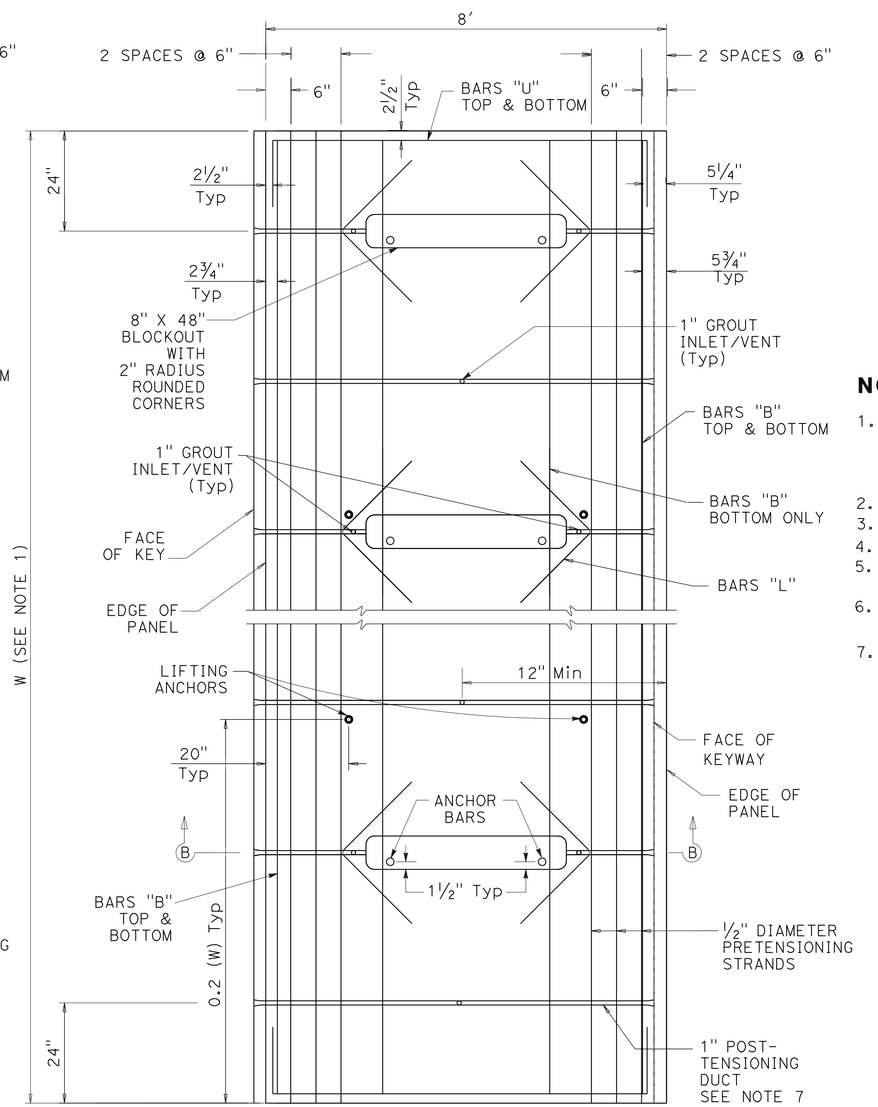

PLAN
TYPE A2

NOTES:

1. SEE TABLE B FOR BASE PANELS FOR NUMBER OF P-T DUCTS & LENGTH OF PRETENSIONING STRANDS. NUMBER OF BARS ASSOCIATED WITH EACH TYPE OF BLOCK-OUT IS CALCULATED BASED ON THE NUMBER OF THAT TYPE.
2. THE SPACING BETWEEN PRETENSIONING STRANDS IS 6" C-C.
3. SEE MISCELLANEOUS PANEL DETAILS FOR KEY & KEYWAY DETAIL.
4. SEE MISCELLANEOUS PANEL DETAILS FOR GROUT INLET/VENT.
5. SEE CENTRAL STRESSING BLOCKOUT DETAIL AND ANCHOR BAR DETAIL IN MISCELLANEOUS PANEL DETAILS.
6. ALL REINFORCEMENT DIMENSIONS ARE TO BE VERIFIED BY THE MANUFACTURER BEFORE PANEL FABRICATION.
7. 1" POST-TENSIONING DUCTS ARE SPACED UNIFORMLY @ MAXIMUM 36" C-C APART ALONG THE 'W' DIMENSION BETWEEN THE 1ST & LAST P-T DUCT.

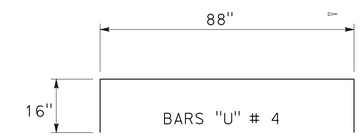

PLAN

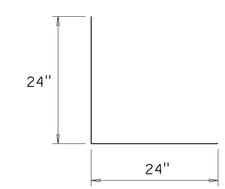

BARS "L"

PLAN

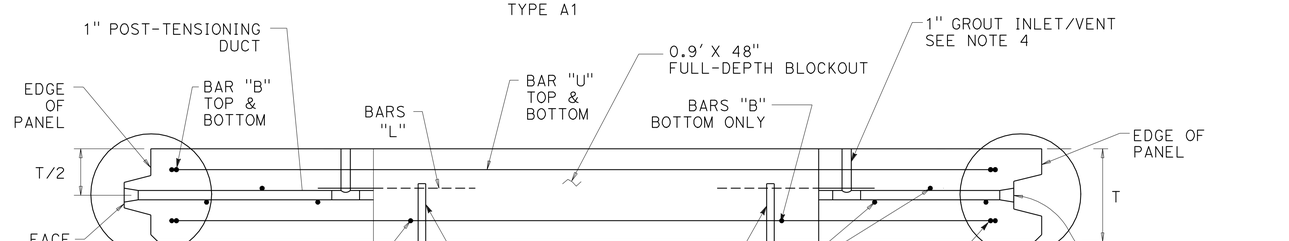

SECTION B-B

CENTRAL STRESSING PANELS (TYPE A1 & A2)

CONSTRUCTION DETAILS
PRECAST PRESTRESSED CONCRETE PAVEMENT
NO SCALE

C-47

STATE OF CALIFORNIA - DEPARTMENT OF TRANSPORTATION
Caltrans

CONSULTANT FUNCTIONAL SUPERVISOR: NATALINA V. BERNARDI
CALCULATED-DESIGNED BY: CARMELO CECILIO
CHECKED BY: LUIS GARCIA
REVISED BY: CC
DATE REVISED: 1/3/12

LAST REVISION 01-03-12
DATE PLOTTED => 13-APR-2012
TIME PLOTTED => 07:40

Dist	COUNTY	ROUTE	POST MILES TOTAL PROJECT	SHEET No.	TOTAL SHEETS
04	Ala	580	R14.6/R21.6	124	804

1/3/12
REGISTERED CIVIL ENGINEER DATE

4-9-12
PLANS APPROVAL DATE

REGISTERED PROFESSIONAL ENGINEER N.V. BERNARDI No. 45407 Exp. 9/30/12 CIVIL STATE OF CALIFORNIA

THE STATE OF CALIFORNIA OR ITS OFFICERS OR AGENTS SHALL NOT BE RESPONSIBLE FOR THE ACCURACY OR COMPLETENESS OF SCANNED COPIES OF THIS PLAN SHEET.

BKF ENGINEERS
4670 WILLOW ROAD, SUITE 250
PLEASANTON, CA. 94588

ALAMEDA CTC
1333 BROADWAY SUITE 220
OAKLAND, CA. 94612

NOTES:

1. SEE TABLE B FOR BASE PANELS FOR NUMBER OF P-T DUCTS & LENGTH OF PRETENSIONING STRANDS. NUMBER OF BARS ASSOCIATED WITH EACH TYPE OF BLOCK-OUT IS CALCULATED BASED ON THE NUMBER OF THAT TYPE.
2. SEE MISCELLANEOUS PANEL DETAILS FOR KEY & KEYWAY DETAIL.
3. SEE MISCELLANEOUS PANEL DETAILS FOR GROUT INLET/VENT.
4. THE SECTION OF DOWEL EXTENDING INTO THE EXPANSION SLEEVE SHALL BE GREASED PRIOR TO BEING INSERTED INTO THE EXPANSION SLEEVE PRIOR TO CASTING.
5. ALL REINFORCEMENT DIMENSIONS ARE TO BE VERIFIED BY THE MANUFACTURER BEFORE PANEL FABRICATION.
6. 1" POST-TENSIONING DUCTS ARE SPACED UNIFORMLY @ MAXIMUM 36" C-C APART ALONG THE 'W' DIMENSION BETWEEN THE 1ST & LAST P-T DUCT.

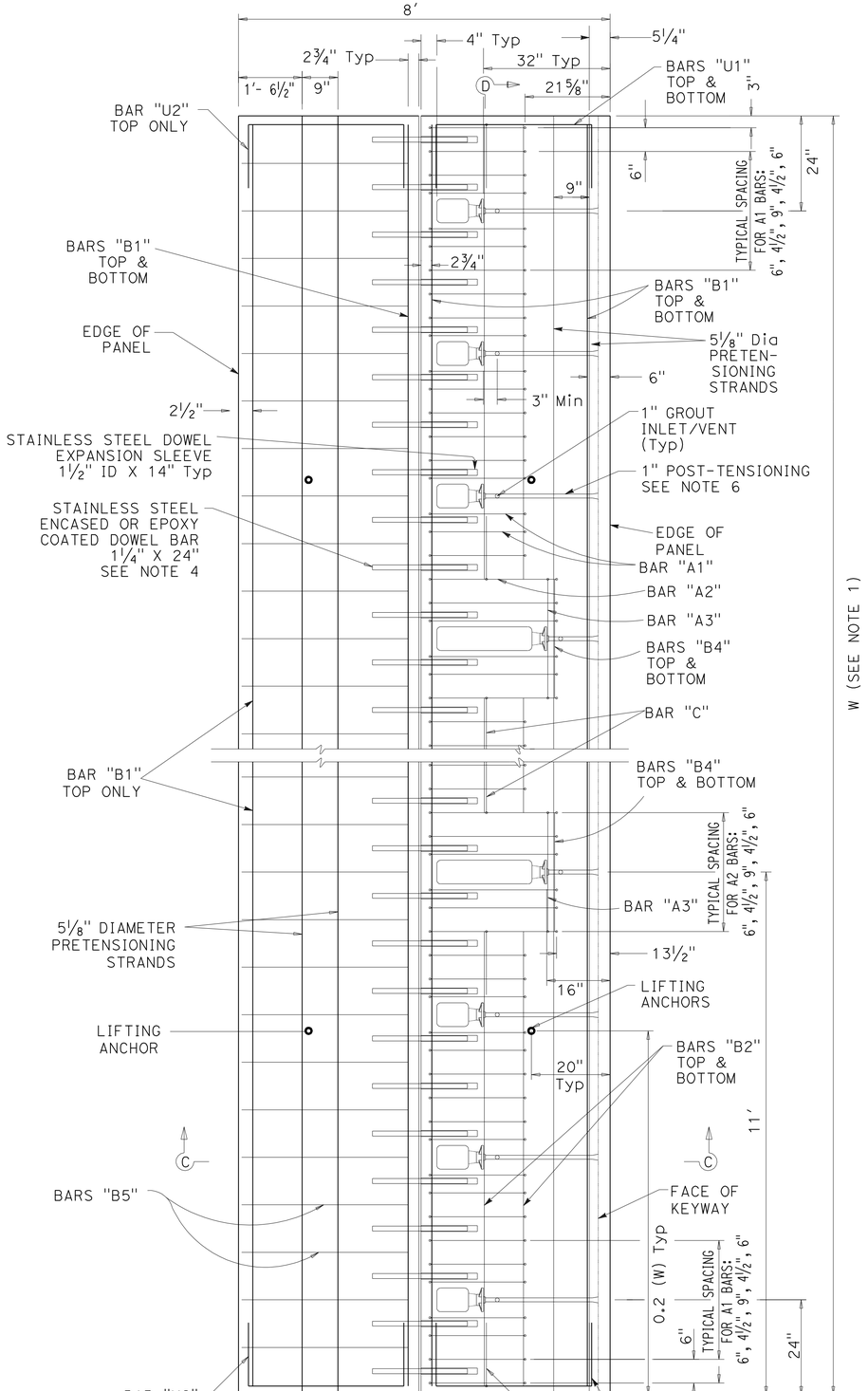

PLAN

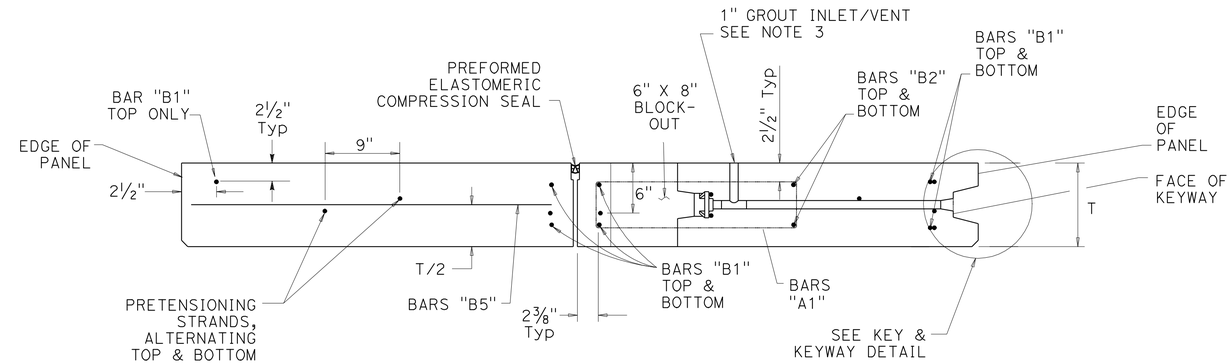

SECTION C-C

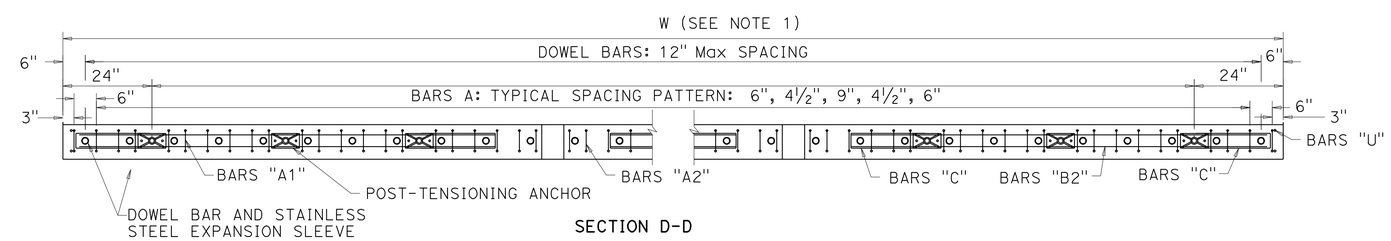

SECTION D-D

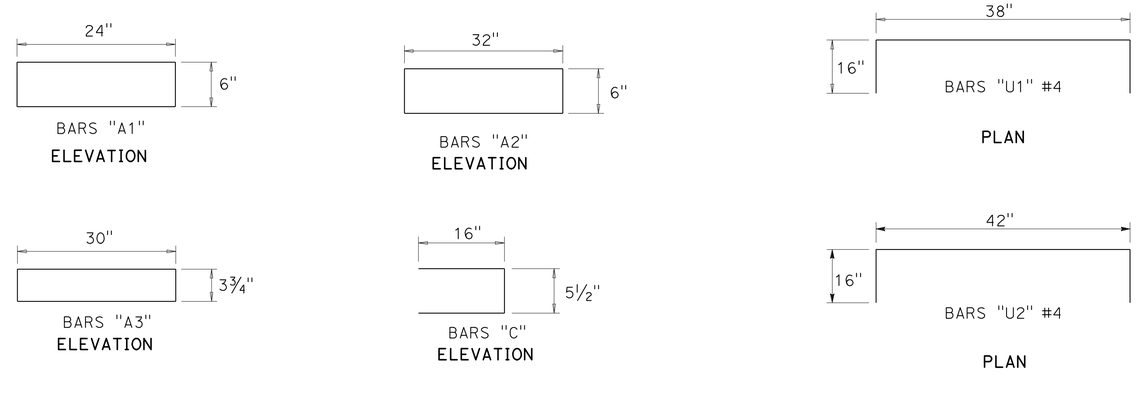

JOINT PANEL TYPE C1

CONSTRUCTION DETAILS
PRECAST PRESTRESSED CONCRETE PAVEMENT

NO SCALE

C-48

STATE OF CALIFORNIA - DEPARTMENT OF TRANSPORTATION
Caltrans

CONSULTANT FUNCTIONAL SUPERVISOR: NATALINA V. BERNARDI

CALCULATED-DESIGNED BY: CARMELO CECILIO
CHECKED BY: LUIS GARCIA

REVISED BY: CC
DATE REVISED: 1/3/12

LAST REVISION: 01-03-12
DATE PLOTTED => 13-APR-2012
TIME PLOTTED => 07:40

Dist	COUNTY	ROUTE	POST MILES TOTAL PROJECT	SHEET No.	TOTAL SHEETS
04	Ala	580	R14.6/R21.6	125	804

1/3/12
REGISTERED CIVIL ENGINEER DATE

4-9-12
PLANS APPROVAL DATE

REGISTERED PROFESSIONAL ENGINEER N.V. BERNARDI No. 45407 Exp. 9/30/12 CIVIL STATE OF CALIFORNIA

THE STATE OF CALIFORNIA OR ITS OFFICERS OR AGENTS SHALL NOT BE RESPONSIBLE FOR THE ACCURACY OR COMPLETENESS OF SCANNED COPIES OF THIS PLAN SHEET.

BKF ENGINEERS
4670 WILLOW ROAD, SUITE 250
PLEASANTON, CA. 94588

ALAMEDA CTC
1333 BROADWAY SUITE 220
OAKLAND, CA. 94612

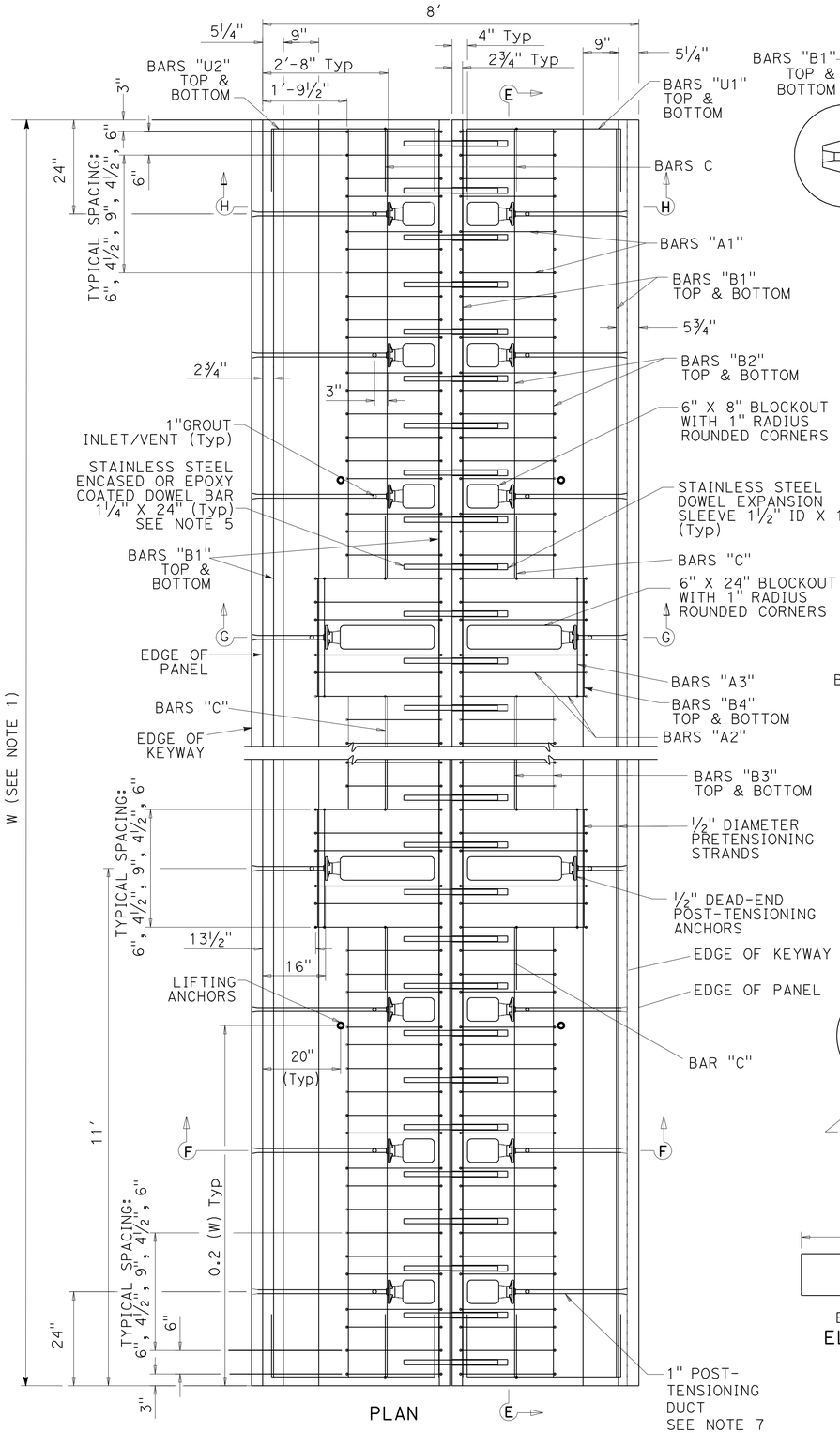

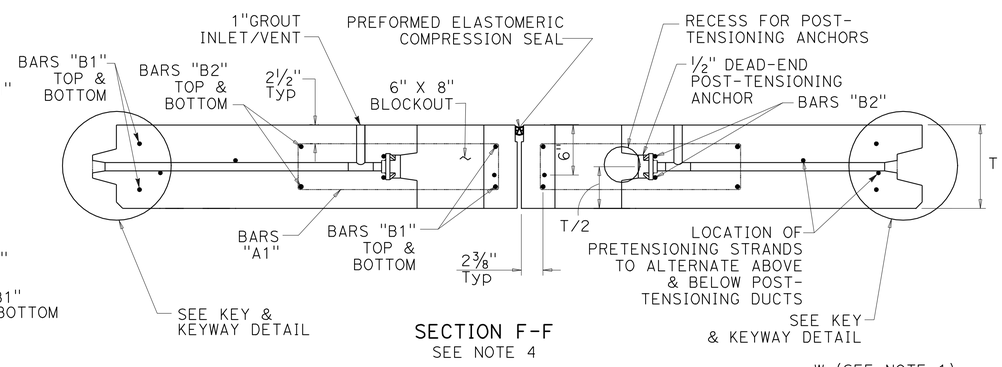

SECTION F-F
SEE NOTE 4

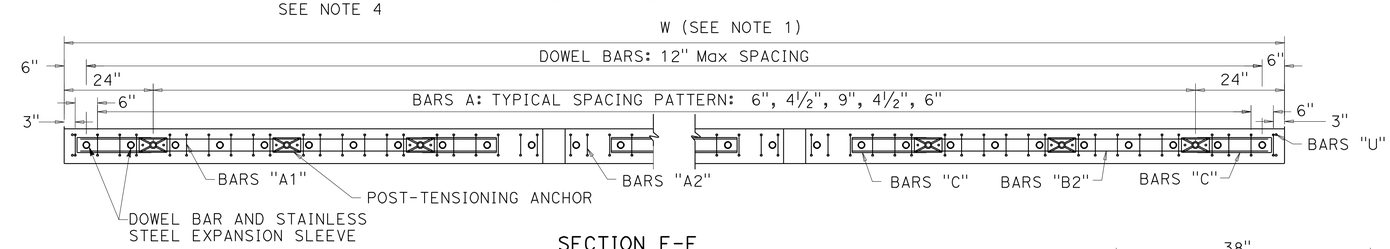

SECTION E-E

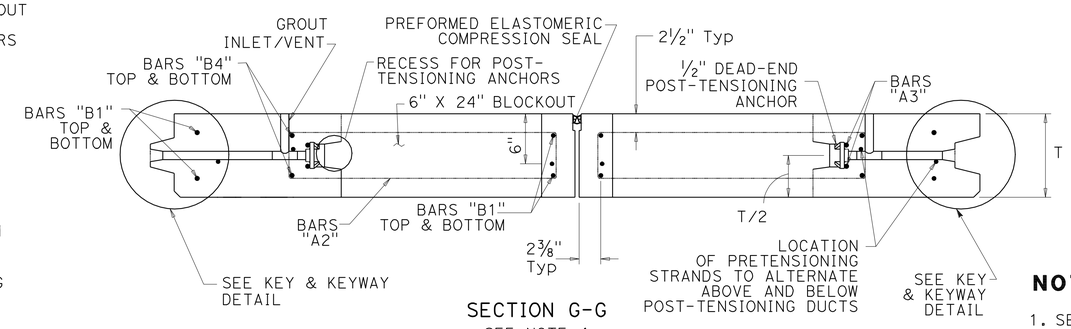

SECTION G-G
SEE NOTE 4

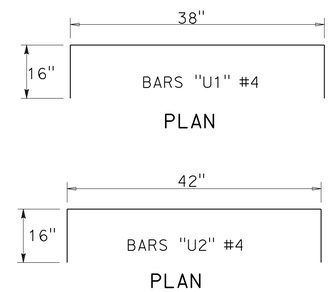

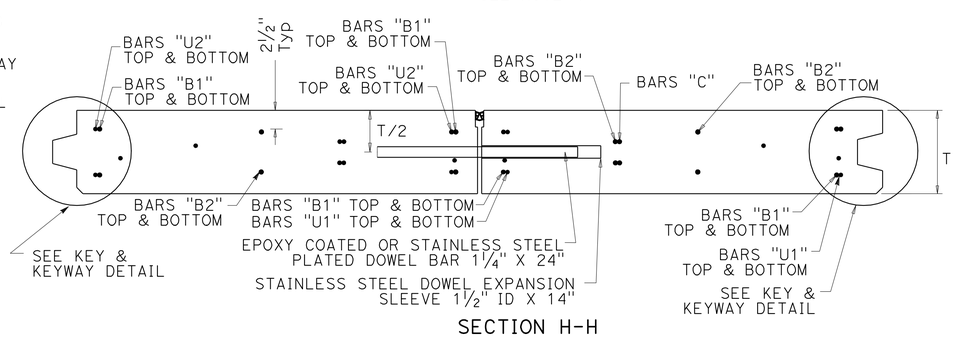

SECTION H-H

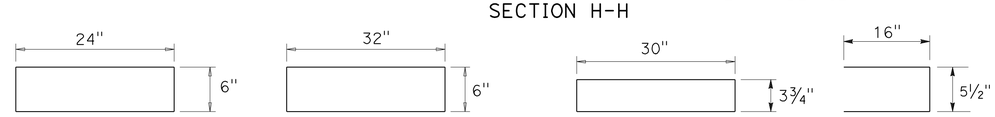

NOTES:

1. SEE TABLE B FOR BASE PANELS FOR NUMBER OF P-T DUCTS & LENGTH OF PRETENSIONING STRANDS. NUMBER OF BARS ASSOCIATED WITH EACH TYPE OF BLOCK-OUT IS CALCULATED BASED ON THE NUMBER OF THAT TYPE.
2. SEE MISCELLANEOUS PANEL DETAILS FOR KEY & KEYWAY DETAIL.
3. SEE MISCELLANEOUS PANEL DETAILS FOR GROUT INLET/VENT.
4. SEE MISCELLANEOUS PANEL DETAILS FOR EXPANSION JOINT/ANCHOR DETAIL.
5. THE SECTION OF DOWEL EXTENDING INTO THE EXPANSION SLEEVE SHALL BE GREASED PRIOR TO BEING INSERTED INTO THE EXPANSION SLEEVE PRIOR TO CASTING.
6. ALL REINFORCEMENT DIMENSIONS ARE TO BE VERIFIED BY THE MANUFACTURER BEFORE PANEL FABRICATION.
7. 1" POST-TENSIONING DUCTS ARE SPACED UNIFORMLY @ MAXIMUM 36" C-C APART ALONG THE 'W' DIMENSION BETWEEN THE 1ST & LAST P-T DUCT.

JOINT PANEL TYPE C2

CONSTRUCTION DETAILS
PRECAST PRESTRESSED CONCRETE PAVEMENT

NO SCALE

C-49

STATE OF CALIFORNIA - DEPARTMENT OF TRANSPORTATION
Caltrans
CONSULTANT FUNCTIONAL SUPERVISOR: NATALINA V. BERNARDI
CALCULATED-DESIGNED BY: CARMELO CECILIO
CHECKED BY: LUIS GARCIA
REVISED BY: CC
DATE REVISED: 1/3/12

LAST REVISION 01-03-12
DATE PLOTTED => 13-APR-2012
TIME PLOTTED => 07:40

Dist	COUNTY	ROUTE	POST MILES TOTAL PROJECT	SHEET No.	TOTAL SHEETS
04	Ala	580	R14.6/R21.6	126	804

REGISTERED CIVIL ENGINEER 1/3/12 DATE

4-9-12
PLANS APPROVAL DATE

REGISTERED PROFESSIONAL ENGINEER N.V. BERNARDI No. 45407 Exp. 9/30/12 CIVIL STATE OF CALIFORNIA

THE STATE OF CALIFORNIA OR ITS OFFICERS OR AGENTS SHALL NOT BE RESPONSIBLE FOR THE ACCURACY OR COMPLETENESS OF SCANNED COPIES OF THIS PLAN SHEET.

BKF ENGINEERS
4670 WILLOW ROAD, SUITE 250
PLEASANTON, CA. 94588

ALAMEDA CTC
1333 BROADWAY SUITE 220
OAKLAND, CA. 94612

NOTES:

1. SEE TABLE B FOR BASE PANELS FOR NUMBER OF P-T DUCTS & LENGTH OF PRETENSIONING STRANDS. NUMBER OF BARS ASSOCIATED WITH EACH TYPE OF BLOCK-OUT IS CALCULATED BASED ON THE NUMBER OF THAT TYPE.
2. SEE MISCELLANEOUS PANEL DETAILS FOR KEY & KEYWAY DETAIL.
3. SEE MISCELLANEOUS PANEL DETAILS FOR GROUT INLET/VENT.
4. THE SECTION OF DOWEL EXTENDING INTO THE EXPANSION SLEEVE SHALL BE GREASED PRIOR TO BEING INSERTED INTO THE EXPANSION SLEEVE PRIOR TO CASTING.
5. ALL REINFORCEMENT DIMENSIONS ARE TO BE VERIFIED BY THE MANUFACTURER BEFORE PANEL FABRICATION.
6. 1" POST-TENSIONING DUCTS ARE SPACED UNIFORMLY @ MAXIMUM 36" C-C APART ALONG THE `W' DIMENSION BETWEEN THE 1ST & LAST P-T DUCT.

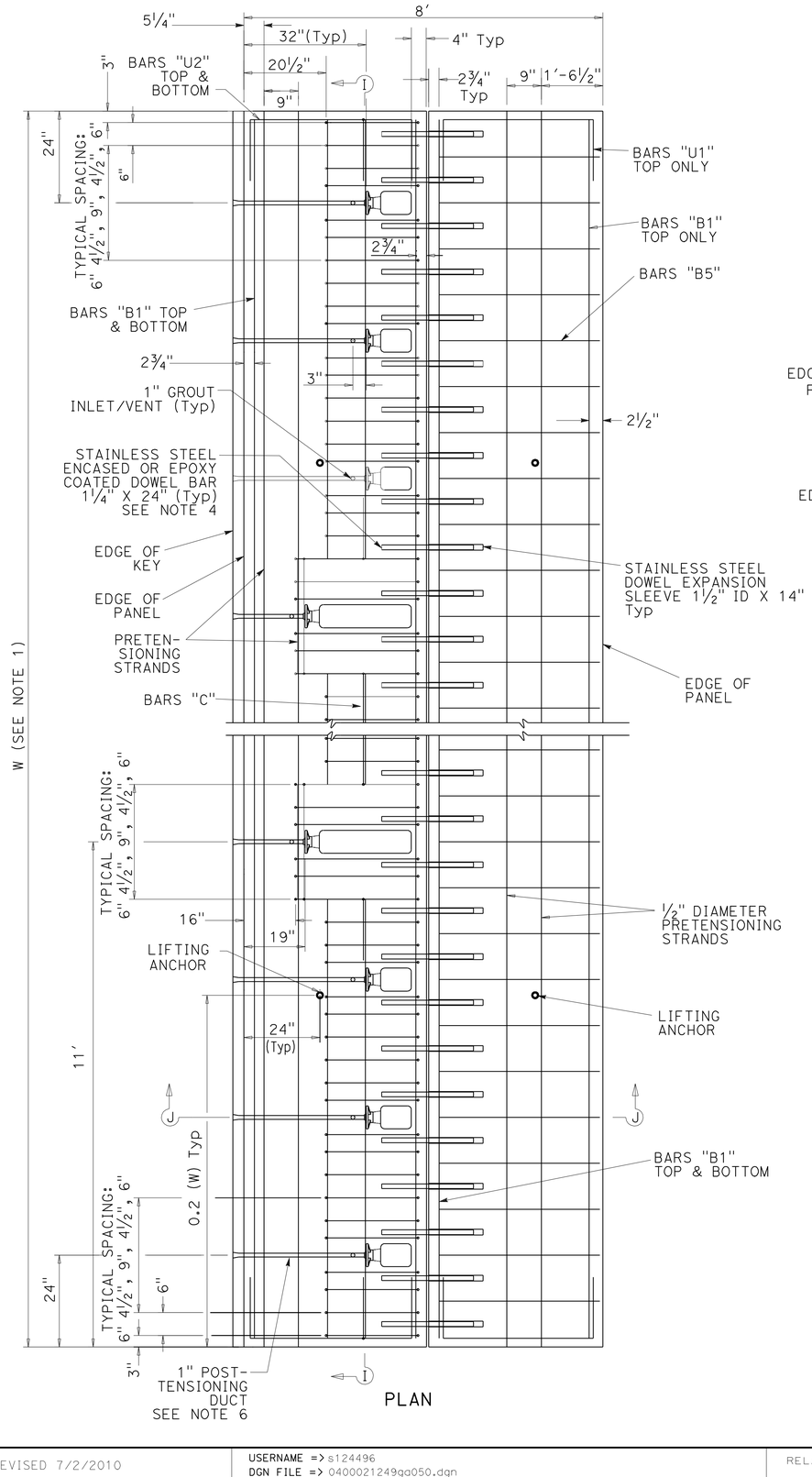

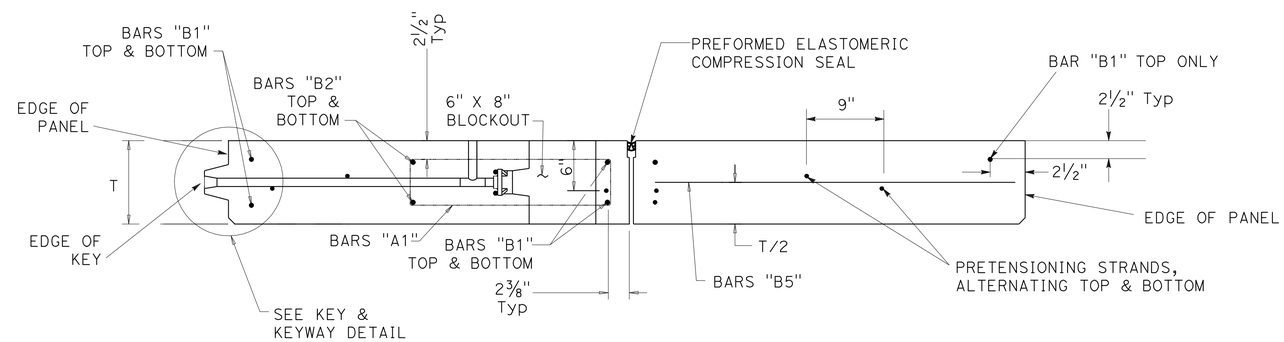

SECTION J-J

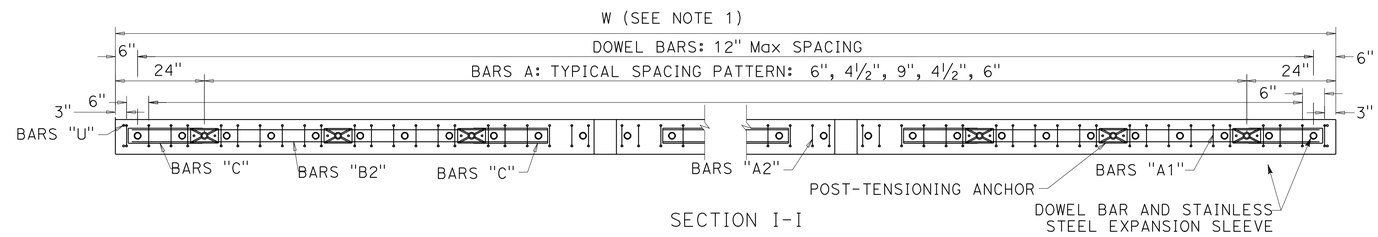

SECTION I-I

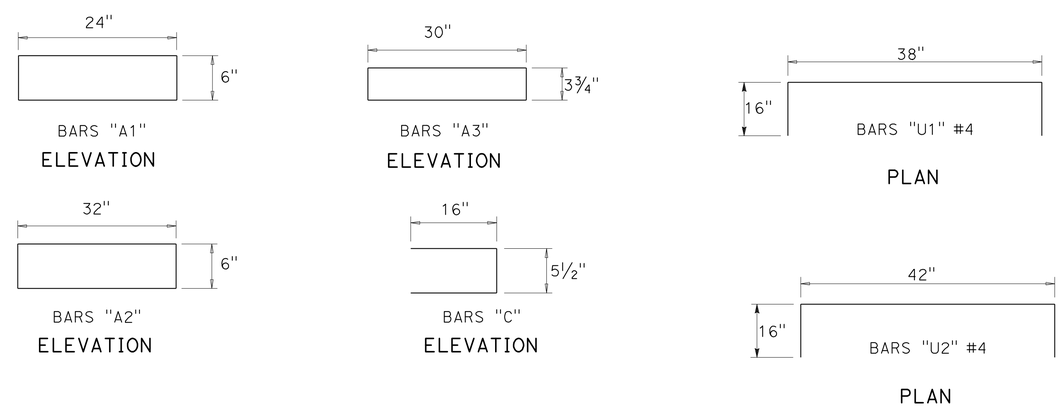

JOINT PANEL TYPE C3

CONSTRUCTION DETAILS
PRECAST PRESTRESSED CONCRETE PAVEMENT

NO SCALE

C-50

STATE OF CALIFORNIA - DEPARTMENT OF TRANSPORTATION

CONSULTANT FUNCTIONAL SUPERVISOR: NATALINA V. BERNARDI

CALCULATED-DESIGNED BY: CARMELO CECILIO — REVISED BY: CC

CHECKED BY: LUIS GARCIA — DATE REVISED: 1/3/12

LAST REVISION 01-03-12 | DATE PLOTTED => 13-APR-2012 | TIME PLOTTED => 07:40

Dist	COUNTY	ROUTE	POST MILES TOTAL PROJECT	SHEET No.	TOTAL SHEETS
04	Ala	580	R14.6/R21.6	127	804

REGISTERED CIVIL ENGINEER 1/3/12 DATE

4-9-12
PLANS APPROVAL DATE

REGISTERED PROFESSIONAL ENGINEER N.V. BERNARDI No. 45407 Exp. 9/30/12 CIVIL STATE OF CALIFORNIA

THE STATE OF CALIFORNIA OR ITS OFFICERS OR AGENTS SHALL NOT BE RESPONSIBLE FOR THE ACCURACY OR COMPLETENESS OF SCANNED COPIES OF THIS PLAN SHEET.

BKF ENGINEERS
4670 WILLOW ROAD, SUITE 250
PLEASANTON, CA. 94588

ALAMEDA CTC
1333 BROADWAY SUITE 220
OAKLAND, CA. 94612

NOTES:

1. SEE TABLE B FOR BASE PANELS FOR NUMBER OF P-T DUCTS & LENGTH OF PRETENSIONING STRANDS. NUMBER OF BARS ASSOCIATED WITH EACH TYPE OF BLOCK-OUT IS CALCULATED BASED ON THE NUMBER OF THAT TYPE.
2. SEE MISCELLANEOUS PANEL DETAILS FOR KEY & KEYWAY DETAIL.
3. SEE MISCELLANEOUS PANEL DETAILS FOR GROUT INLET/VENT.
4. SEE MISCELLANEOUS PANEL DETAILS FOR EXPANSION JOINT/ANCHOR DETAIL.
5. THE SECTION OF DOWEL EXTENDING INTO THE EXPANSION SLEEVE SHALL BE GREASED PRIOR TO BEING INSERTED INTO THE EXPANSION SLEEVE PRIOR TO CASTING.
6. 1" POST-TENSIONING DUCTS ARE SPACED UNIFORMLY @ MAXIMUM 36" C-C APART ALONG THE 'W' DIMENSION BETWEEN THE 1ST & LAST P-T DUCT.

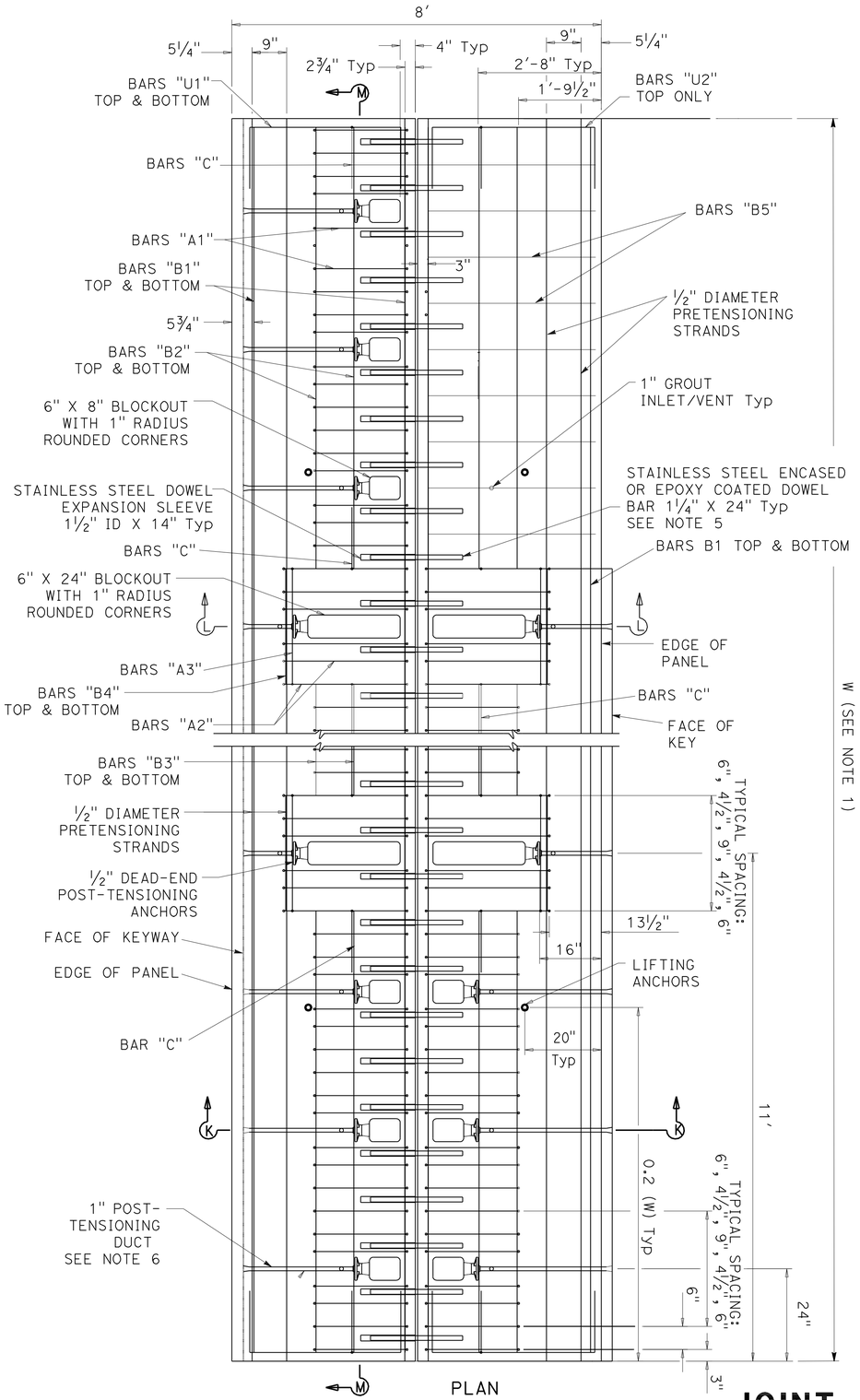

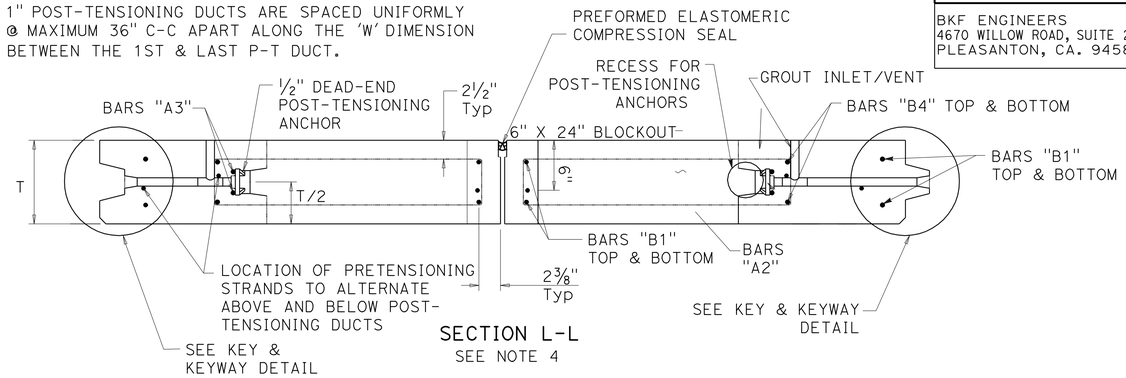

SECTION L-L
SEE NOTE 4

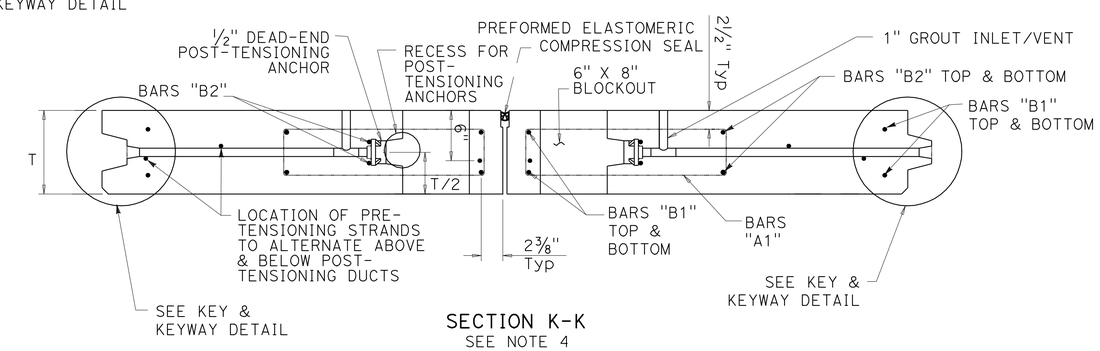

SECTION K-K
SEE NOTE 4

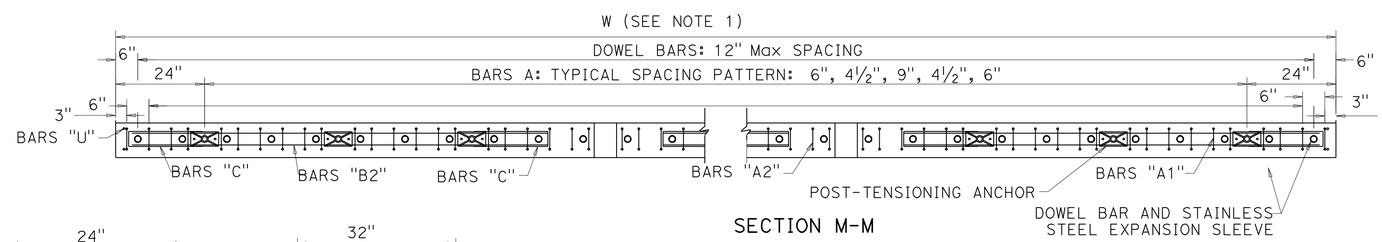

SECTION M-M

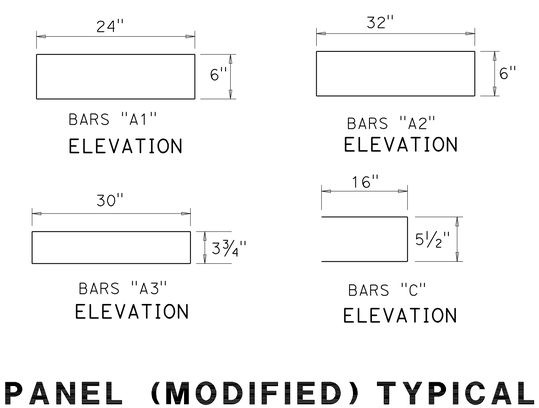

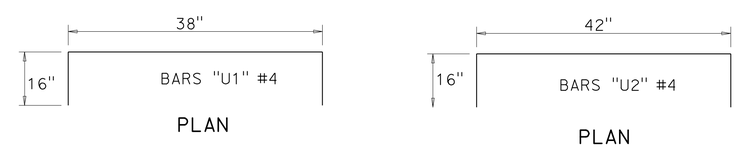

CONSTRUCTION DETAILS
PRECAST PRESTRESSED CONCRETE PAVEMENT
NO SCALE

JOINT PANEL (MODIFIED) TYPICAL

C-51

CC	1/3/12	CARMELO CECILIO	LUIS GARCIA
REVISED BY	DATE REVISED	CALCULATED-DESIGNED BY	CHECKED BY

CONSULTANT FUNCTIONAL SUPERVISOR: NATALINA V. BERNARDI

STATE OF CALIFORNIA - DEPARTMENT OF TRANSPORTATION

Caltrans

LAST REVISION 01-03-12 | DATE PLOTTED => 13-APR-2012 | TIME PLOTTED => 07:40

Dist	COUNTY	ROUTE	POST MILES TOTAL PROJECT	SHEET No.	TOTAL SHEETS
04	Ala	580	R14.6/R21.6	128	804

REGISTERED CIVIL ENGINEER 1/3/12 DATE

4-9-12
PLANS APPROVAL DATE

REGISTERED PROFESSIONAL ENGINEER N.V. BERNARDI No. 45407 Exp. 9/30/12 CIVIL STATE OF CALIFORNIA

THE STATE OF CALIFORNIA OR ITS OFFICERS OR AGENTS SHALL NOT BE RESPONSIBLE FOR THE ACCURACY OR COMPLETENESS OF SCANNED COPIES OF THIS PLAN SHEET.

BKF ENGINEERS
4670 WILLOW ROAD, SUITE 250
PLEASANTON, CA. 94588

ALAMEDA CTC
1333 BROADWAY SUITE 220
OAKLAND, CA. 94612

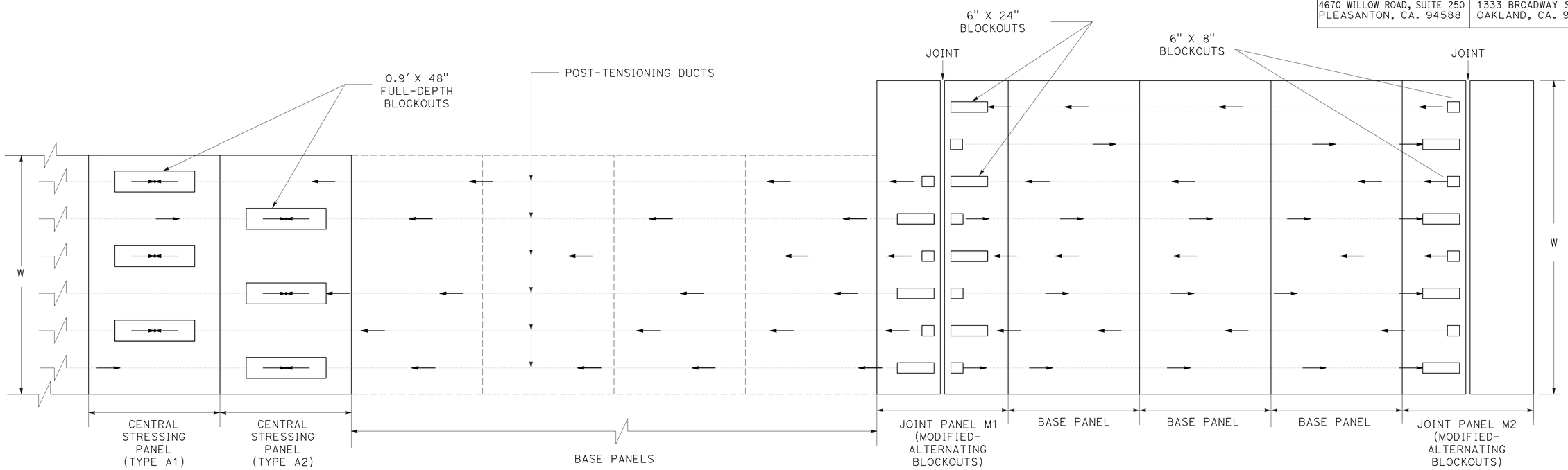

TYPICAL LAYOUT OF PANELS WITH VARIABLE WIDTHS (W) & ALTERNATING BLOCKOUTS

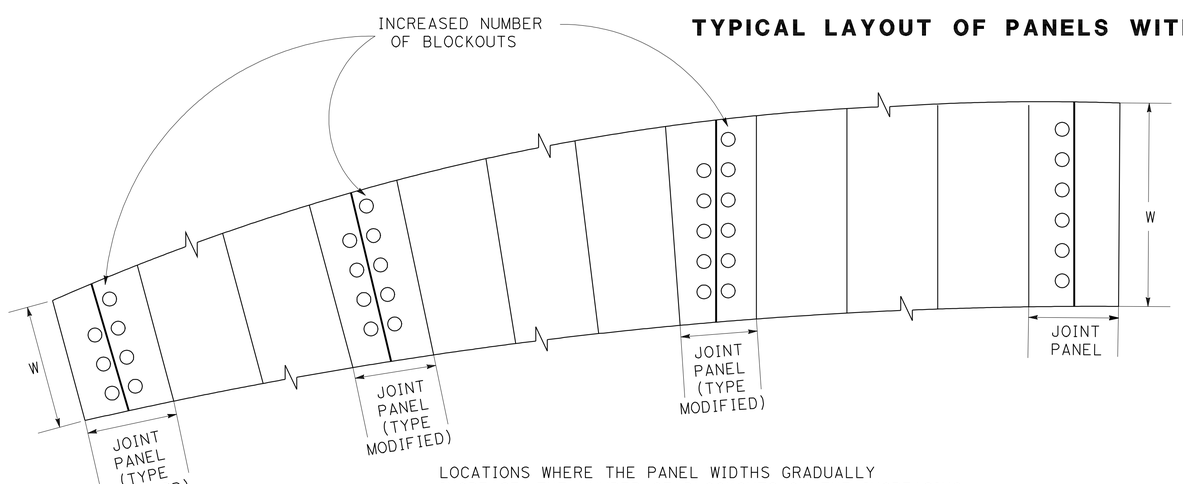

LOCATIONS WHERE THE PANEL WIDTHS GRADUALLY INCREASE, THE NUMBER OF BLOCKOUTS ON THE INCREASING SIDE OF THE JOINT PANEL SHALL HAVE THE SAME NUMBER OF BLOCKOUTS AS THE NEXT LONGER JOINT PANEL.

NUMBER OF BLOCKOUTS

SYMBOLS:

← DIRECTION OF PULL FOR POST-TENSIONING

○ REPRESENTATION OF BLOCKOUTS (SMALL: 6"X8" OR LARGE: 6"X24")

CONSTRUCTION DETAILS

PRECAST PRESTRESSED CONCRETE PAVEMENT JOINT PANELS M1 & M2 LAYOUT

NO SCALE

C-52

REVISED BY	DATE REVISED
CC	1/3/12

CARMELO CECILIO — LUIS GARCIA — CALCULATED-DESIGNED BY / CHECKED BY

CONSULTANT FUNCTIONAL SUPERVISOR — NATALINA V. BERNARDI

STATE OF CALIFORNIA - DEPARTMENT OF TRANSPORTATION

Caltrans

LAST REVISION 01-03-12 | DATE PLOTTED => 13-APR-2012 | TIME PLOTTED => 07:40

Dist	COUNTY	ROUTE	POST MILES TOTAL PROJECT	SHEET No.	TOTAL SHEETS
04	Ala	580	R14.6/R21.6	129	804

1/3/12
REGISTERED CIVIL ENGINEER DATE

4-9-12
PLANS APPROVAL DATE

REGISTERED PROFESSIONAL ENGINEER N.V. BERNARDI No. 45407 Exp. 9/30/12 CIVIL STATE OF CALIFORNIA

THE STATE OF CALIFORNIA OR ITS OFFICERS OR AGENTS SHALL NOT BE RESPONSIBLE FOR THE ACCURACY OR COMPLETENESS OF SCANNED COPIES OF THIS PLAN SHEET.

BKF ENGINEERS
4670 WILLOW ROAD, SUITE 250
PLEASANTON, CA. 94588

ALAMEDA CTC
1333 BROADWAY SUITE 220
OAKLAND, CA. 94612

NOTES:

1. SEE MISCELLANEOUS PANEL DETAILS FOR KEY & KEYWAY DETAIL.
2. SEE MISCELLANEOUS PANELS DETAILS FOR GROUT INLET/VENT.
3. SEE MISCELLANEOUS PANEL DETAILS FOR EXPANSION JOINT/ANCHOR DETAIL.
4. THE SECTION OF DOWEL EXTENDING INTO THE EXPANSION SLEEVE SHALL BE GREASED PRIOR TO BEING INSERTED INTO THE EXPANSION SLEEVE PRIOR TO CASTING.
5. 1" POST-TENSIONING DUCTS ARE SPACED UNIFORMLY @ MAXIMUM 36" C-C APART ALONG THE 'W' DIMENSION BETWEEN THE 1ST & LAST P-T DUCT.

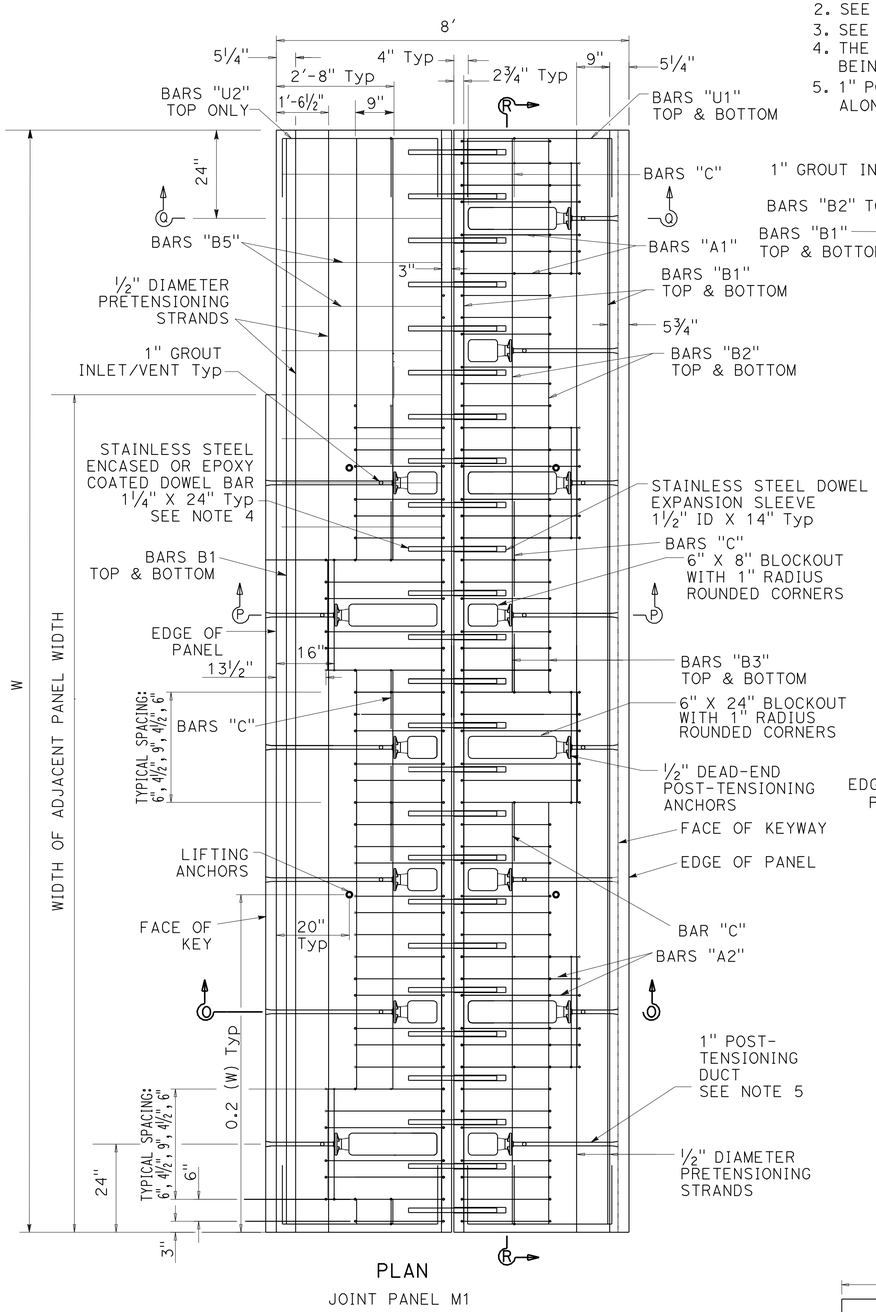

PLAN
JOINT PANEL M1

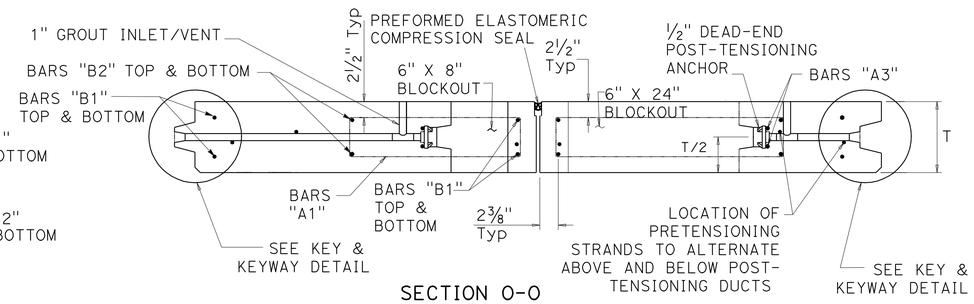

SECTION O-O
SEE NOTE 3

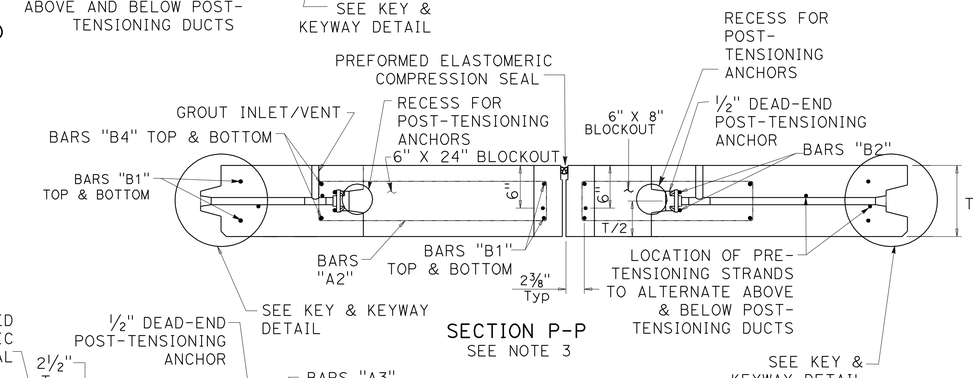

SECTION P-P
SEE NOTE 3

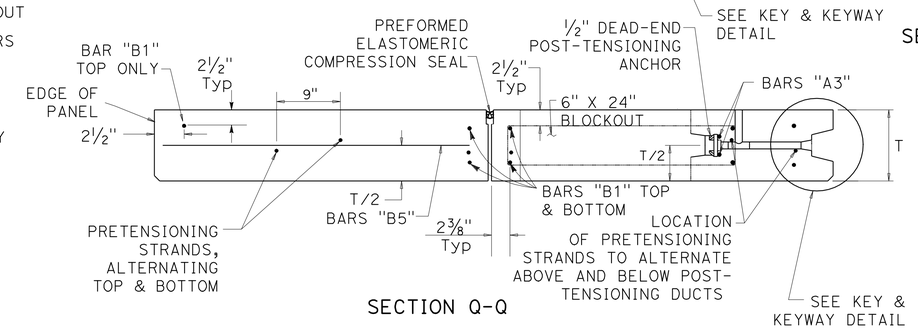

SECTION Q-Q

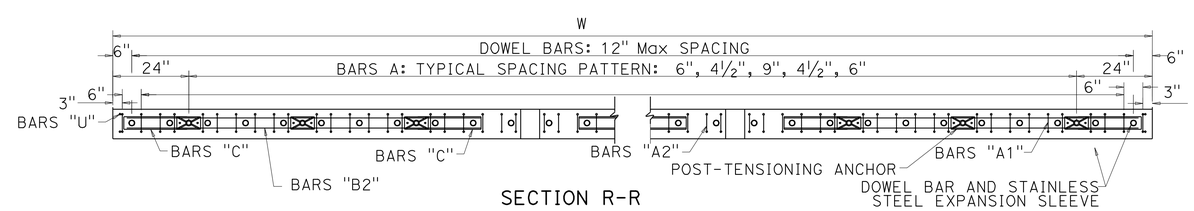

SECTION R-R

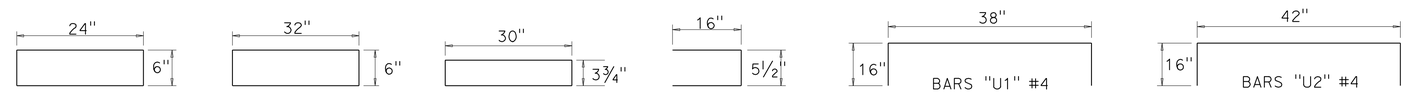

BARS "A1" ELEVATION
BARS "A2" ELEVATION
BARS "A3" ELEVATION
BARS "C" ELEVATION
BARS "U1" #4 PLAN
BARS "U2" #4 PLAN

JOINT PANELS M1 (MODIFIED-ALTERNATING BLOCKOUTS)

CONSTRUCTION DETAILS
PRECAST PRESTRESSED CONCRETE PAVEMENT
NO SCALE

C-53

REVISED BY	DATE REVISED
CC	1/3/12

CALCULATED-DESIGNED BY
CHECKED BY
CONSULTANT FUNCTIONAL SUPERVISOR
CARMELO CECILIO
LUIS GARCIA
NATALINA V. BERNARDI

STATE OF CALIFORNIA - DEPARTMENT OF TRANSPORTATION
Caltrans

LAST REVISION 01-03-12
DATE PLOTTED => 13-APR-2012
TIME PLOTTED => 07:40

Dist	COUNTY	ROUTE	POST MILES TOTAL PROJECT	SHEET No.	TOTAL SHEETS
04	Ala	580	R14.6/R21.6	130	804

1/3/12
REGISTERED CIVIL ENGINEER DATE

4-9-12
PLANS APPROVAL DATE

REGISTERED PROFESSIONAL ENGINEER N.V. BERNARDI No. 45407 Exp. 9/30/12 CIVIL STATE OF CALIFORNIA

THE STATE OF CALIFORNIA OR ITS OFFICERS OR AGENTS SHALL NOT BE RESPONSIBLE FOR THE ACCURACY OR COMPLETENESS OF SCANNED COPIES OF THIS PLAN SHEET.

BKF ENGINEERS
4670 WILLOW ROAD, SUITE 250
PLEASANTON, CA. 94588

ALAMEDA CTC
1333 BROADWAY SUITE 220
OAKLAND, CA. 94612

NOTES:

1. SEE MISCELLEANEOUS PANEL DETAILS FOR KEY & KEYWAY DETAIL.
2. SEE MISCELLANEOUS PANEL DETAILS FOR GROUT INLET/VENT.
3. SEE MISCELLANEOUS PANEL DETAILS FOR EXPANSION JOINT/ANCHOR DETAIL.
4. THE SECTION OF DOWEL EXTENDING INTO THE EXPANSION SLEEVE SHALL BE GREASED PRIOR TO BEING INSERTED INTO THE EXPANSION SLEEVE PRIOR TO CASTING.
5. 1" POST-TENSIONING DUCTS ARE SPACED UNIFORMLY @ MAXIMUM 36" C-C APART ALONG THE 'W' DIMENSION BETWEEN THE 1ST & LAST P-T DUCT.

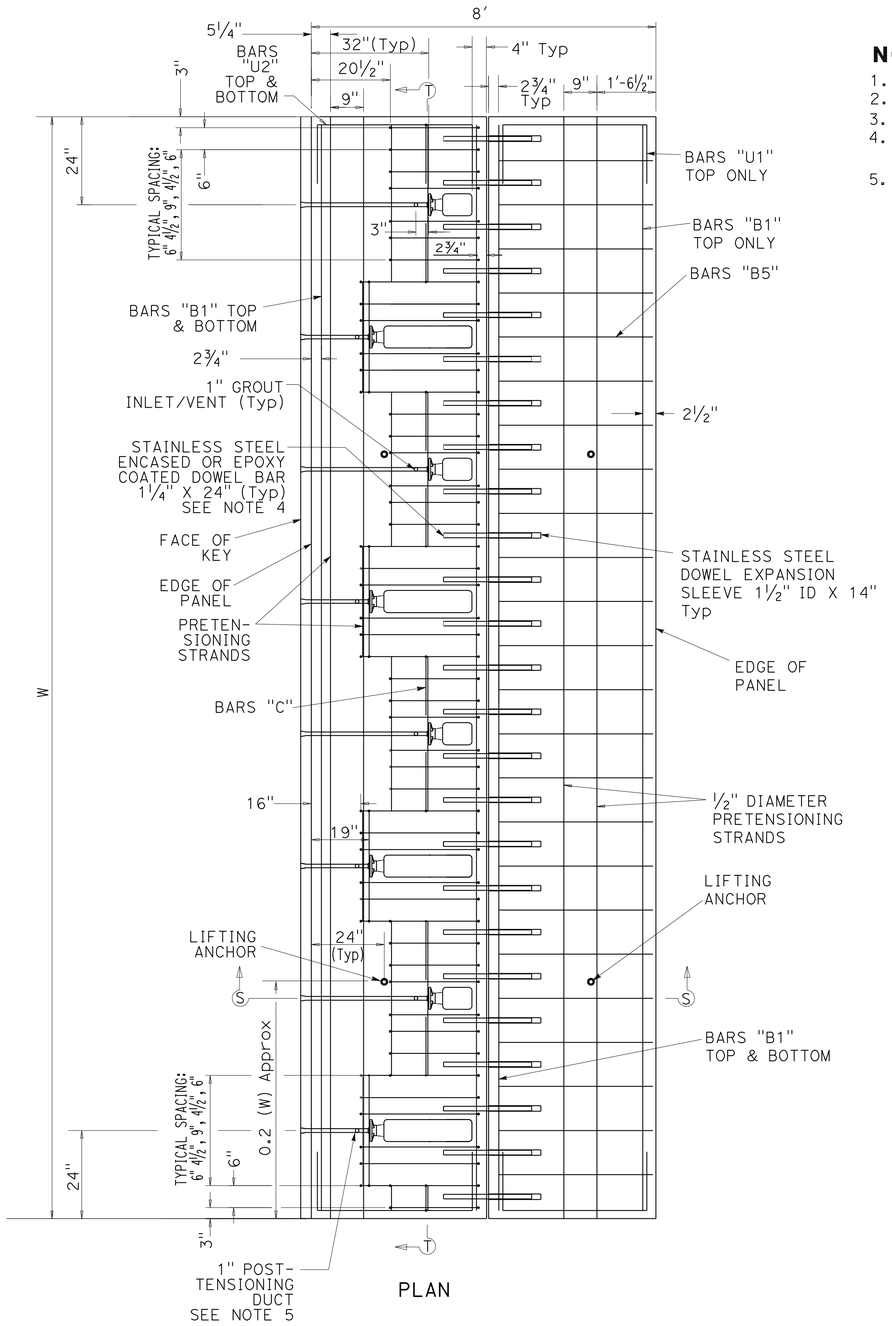

JOINT PANEL M2

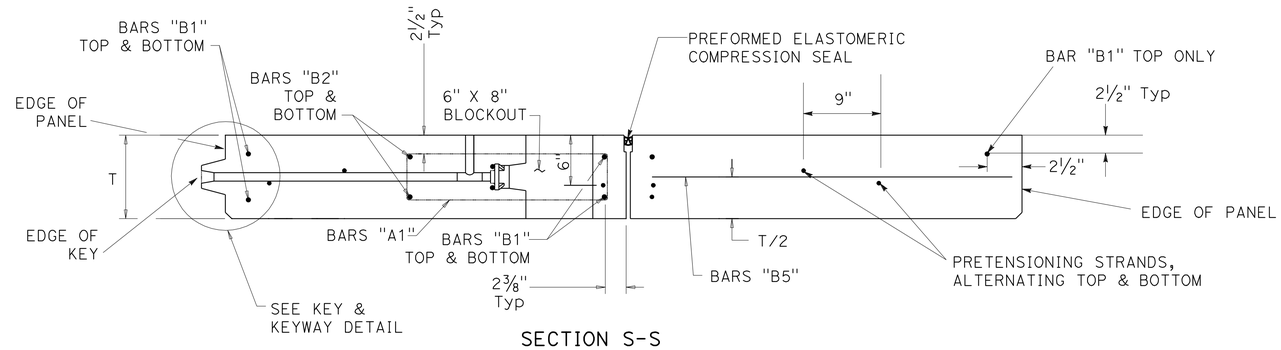

SECTION S-S

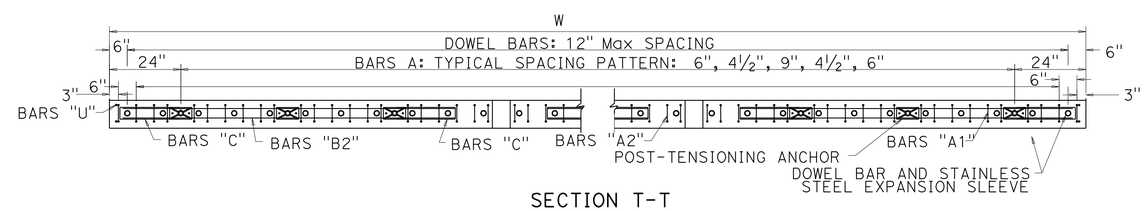

SECTION T-T

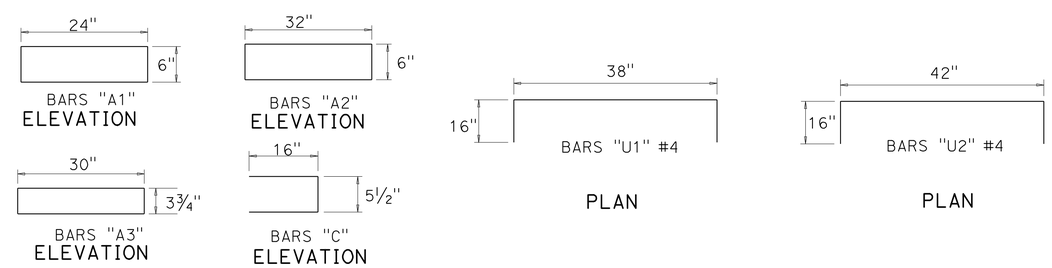

JOINT PANEL M2 (MODIFIED-ALTERNATING BLOCKOUTS)

CONSTRUCTION DETAILS
PRECAST PRESTRESSED CONCRETE PAVEMENT

NO SCALE

C-54

STATE OF CALIFORNIA - DEPARTMENT OF TRANSPORTATION

CONSULTANT FUNCTIONAL SUPERVISOR: NATALINA V. BERNARDI

CALCULATED-DESIGNED BY: CARMELO CECILIO — REVISED BY: CC

CHECKED BY: LUIS GARCIA — DATE REVISED: 1/3/12

LAST REVISION 01-03-12 | DATE PLOTTED => 13-APR-2012 | TIME PLOTTED => 07:40

Dist	COUNTY	ROUTE	POST MILES TOTAL PROJECT	SHEET No.	TOTAL SHEETS
04	Ala	580	R14.6/R21.6	131	804

REGISTERED CIVIL ENGINEER 1/3/12 DATE

4-9-12
PLANS APPROVAL DATE

REGISTERED PROFESSIONAL ENGINEER N.V. BERNARDI No. 45407 Exp. 9/30/12 CIVIL STATE OF CALIFORNIA

THE STATE OF CALIFORNIA OR ITS OFFICERS OR AGENTS SHALL NOT BE RESPONSIBLE FOR THE ACCURACY OR COMPLETENESS OF SCANNED COPIES OF THIS PLAN SHEET.

BKF ENGINEERS
4670 WILLOW ROAD, SUITE 250
PLEASANTON, CA. 94588

ALAMEDA CTC
1333 BROADWAY SUITE 220
OAKLAND, CA. 94612

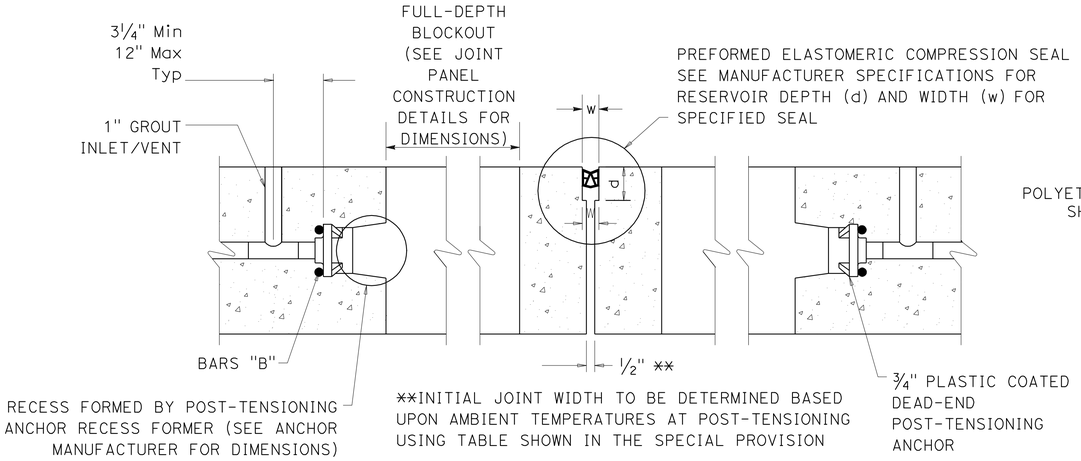

EXPANSION JOINT/ANCHOR DETAIL

FOR TYPE C2 JOINT PANELS AND ALL MODIFIED JOINT PANELS

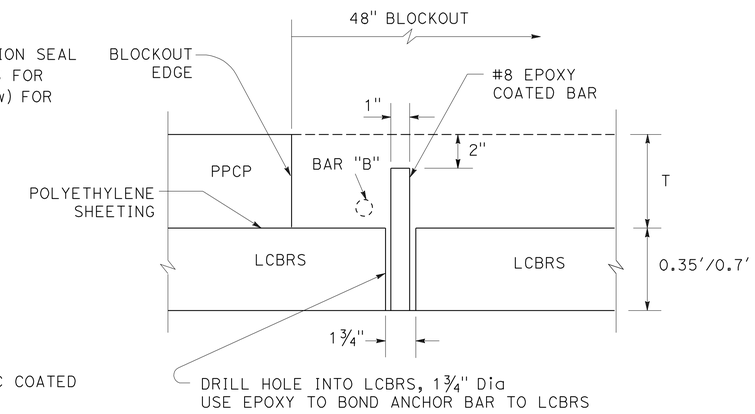

ANCHOR BAR DETAIL AT FULL-DEPTH BLOCKOUTS FOR CENTRAL STRESSING PANELS

ABBREVIATIONS:

LCBRS = LEAN CONCRETE BASE RAPID SETTING
PPCP = PRECAST PRESTRESSED CONCRETE PAVEMENT
P-T = POST TENSIONING

NOTE:

X = 1'' MINIMUM

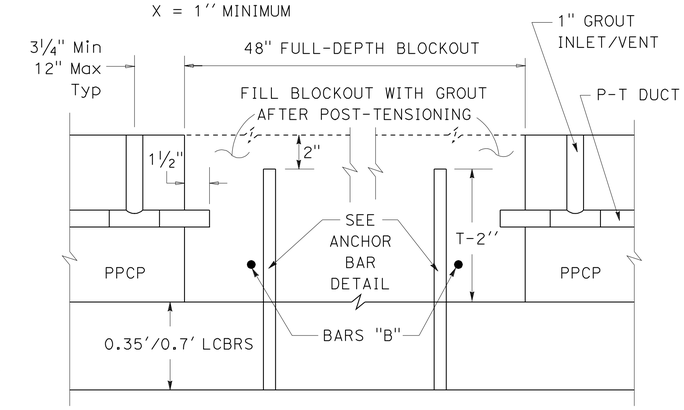

CENTRAL STRESSING BLOCKOUT DETAIL

FOR TYPE A1 AND TYPE A2 CENTRAL STRESSING PANELS

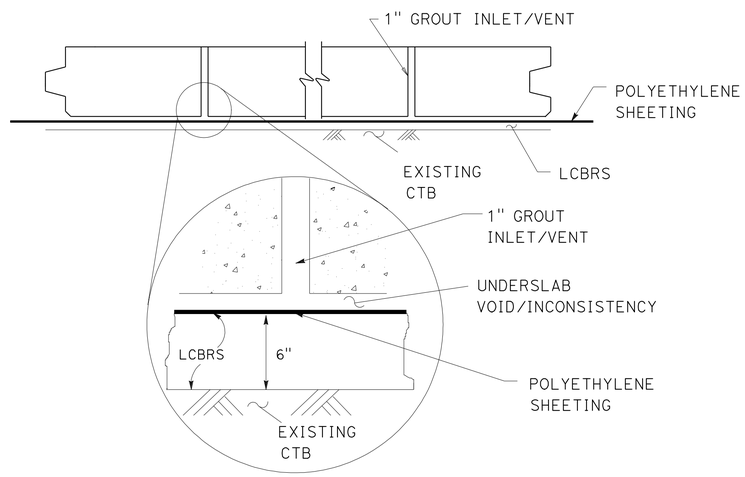

UNDERSLAB GROUT INLET/VENT AND POLYETHYLENE SHEETING

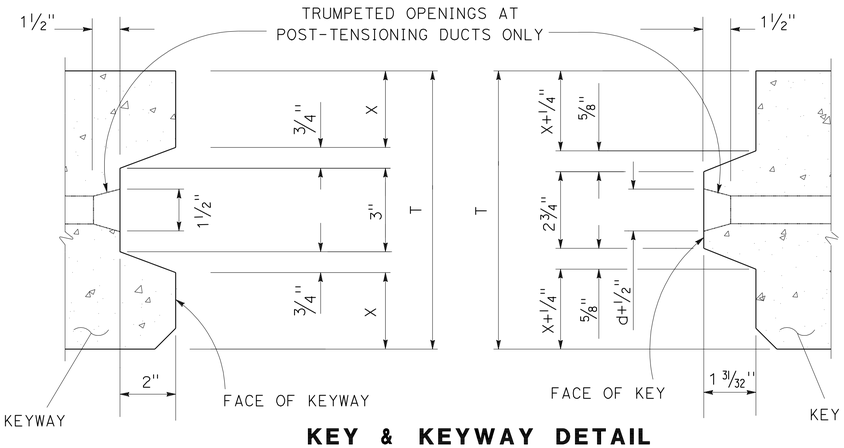

KEY & KEYWAY DETAIL

d = DIAMETER OF THE POST-TENSIONING DUCT = 1"

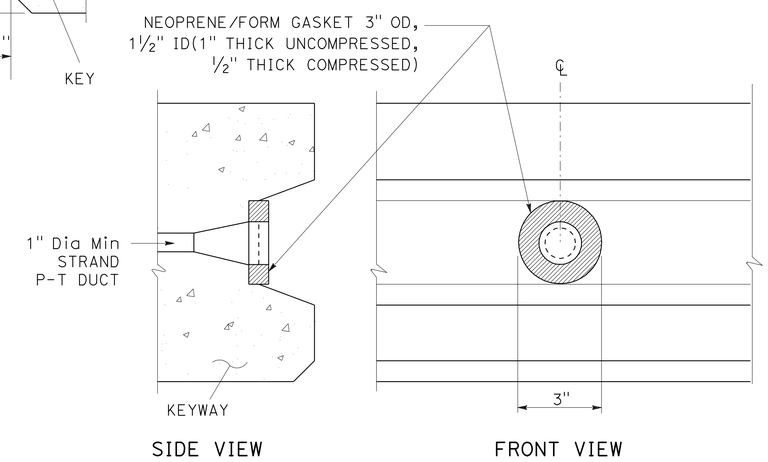

STRAND POST-TENSIONING DUCT SEAL DETAIL

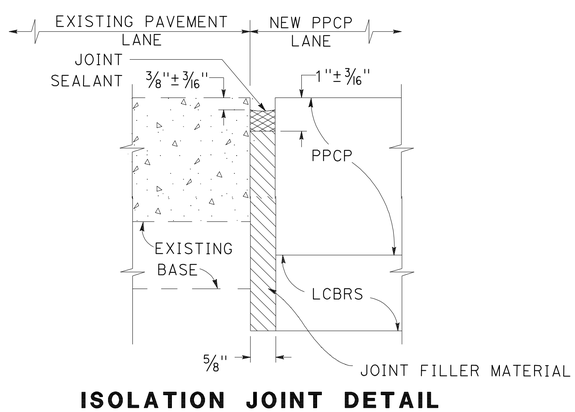

ISOLATION JOINT DETAIL

FOR LONGITUDINAL JOINTS ADJACENT TO EXISTING PAVEMENT, JPCP, RSC, AND PPCP

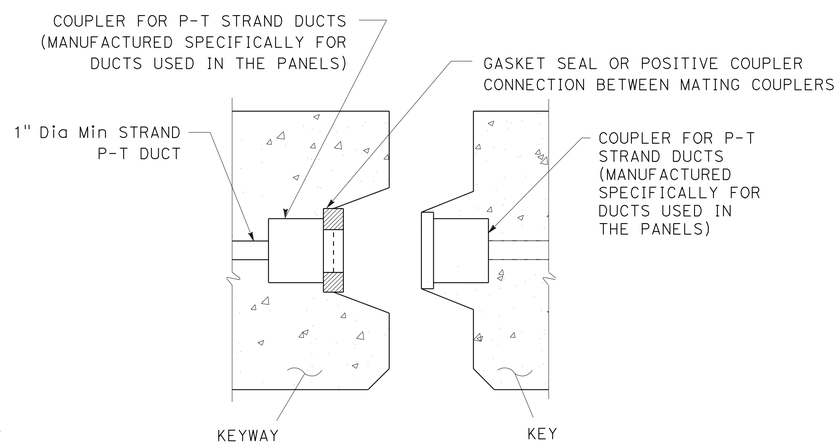

COUPLER ALTERNATIVE FOR STRAND POST-TENSIONING DUCT SEAL

CONSTRUCTION DETAILS

PRECAST PRESTRESSED CONCRETE PAVEMENT MISCELLANEOUS PANEL DETAILS

NO SCALE

C-55

STATE OF CALIFORNIA - DEPARTMENT OF TRANSPORTATION

CONSULTANT FUNCTIONAL SUPERVISOR: NATALINA V. BERNARDI

CALCULATED-DESIGNED BY: CARMELO CECILIO — CHECKED BY: LUIS GARCIA

REVISED BY: CC — DATE REVISED: 1/3/12

LAST REVISION 01-03-12 | DATE PLOTTED => 13-APR-2012 | TIME PLOTTED => 07:40

Dist	COUNTY	ROUTE	POST MILES TOTAL PROJECT	SHEET No.	TOTAL SHEETS
04	Ala	580	R14.6/R21.6	132	804

1/3/12
REGISTERED CIVIL ENGINEER DATE

4-9-12
PLANS APPROVAL DATE

REGISTERED PROFESSIONAL ENGINEER N.V. BERNARDI No. 45407 Exp. 9/30/12 CIVIL STATE OF CALIFORNIA

THE STATE OF CALIFORNIA OR ITS OFFICERS OR AGENTS SHALL NOT BE RESPONSIBLE FOR THE ACCURACY OR COMPLETENESS OF SCANNED COPIES OF THIS PLAN SHEET.

BKF ENGINEERS
4670 WILLOW ROAD, SUITE 250
PLEASANTON, CA. 94588

ALAMEDA CTC
1333 BROADWAY SUITE 220
OAKLAND, CA. 94612

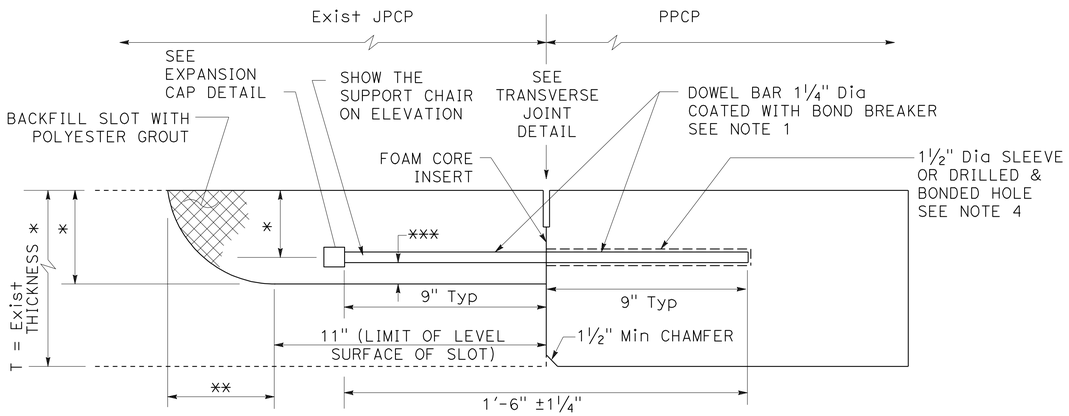

ELEVATION

T = EXISTING THICKNESS OF JPCP OR NEW PPCP
* T/2 ±¼"
** T/2 +1½"
*** Min Clr ½" BETWEEN BAR AND BOTTOM OF SLOT

ABBREVIATIONS:

LCBRS = LEAN CONCRETE BASE RAPID SETTING
P-T = POST-TENSIONING
RSC = RAPID STRENGTH CONCRETE
PPCP = PRECAST PRESTRESSED CONCRETE PAVEMENT

NOTES:

1. 1½" DIAMETER DOWEL BARS 1'-6" ±¼" LENGTH ARE TO BE USED WHEN THE EXISTING PAVEMENT THICKNESS, D, IS EQUAL TO OR GREATER THAN 0.70'. FOR A PAVEMENT THICKNESS, D, LESS THAN 0.70', USE 1¼" DIAMETER DOWEL BAR 1'-6" ±¼" IN LENGTH.
2. SEAL EXISTING TRANSVERSE JOINT AT BOTTOM AND SIDES OF THE DOWEL BAR SLOT WITH CAULKING FILLER PRIOR TO PLACING DOWEL BAR AND FOAM CORE INSERT.
3. SEE STANDARD PLAN P7 FOR FOAM CORE INSERT DETAIL.
4. CAST SLEEVES EVERY 1' C-C DURING PANEL FABRICATION OR DRILL AND BOND HOLE EVERY 1' C-C. SLEEVES OR DRILLED HOLES ARE ⅛" LARGER THAN THE DOWEL DIAMETER.

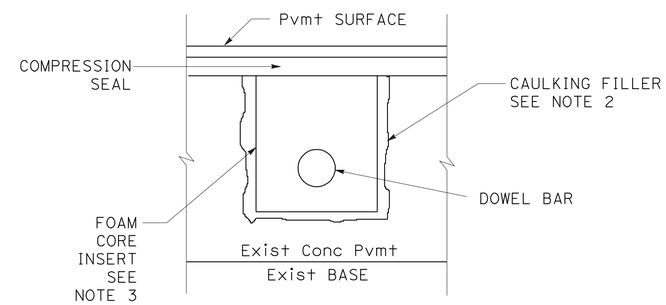

SECTION N-N

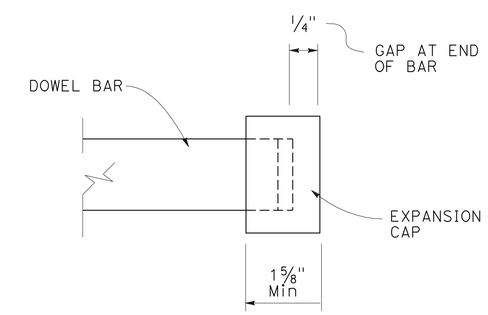

EXPANSION CAP DETAIL

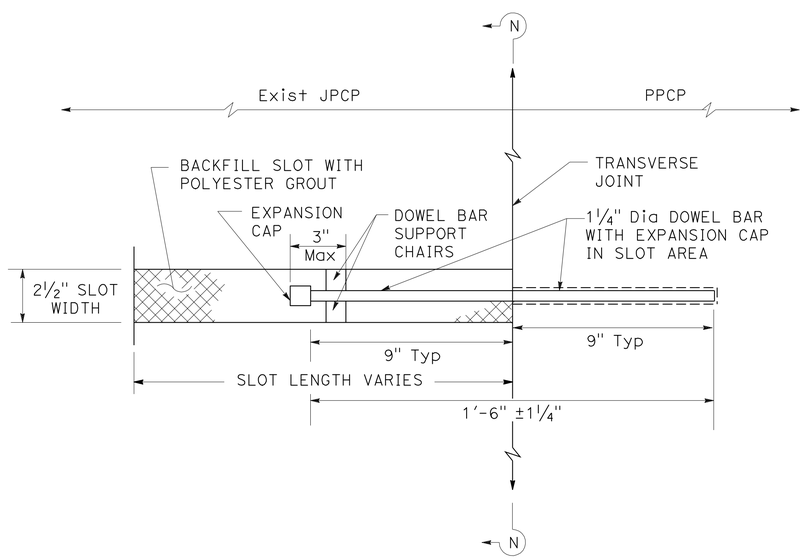

PLAN

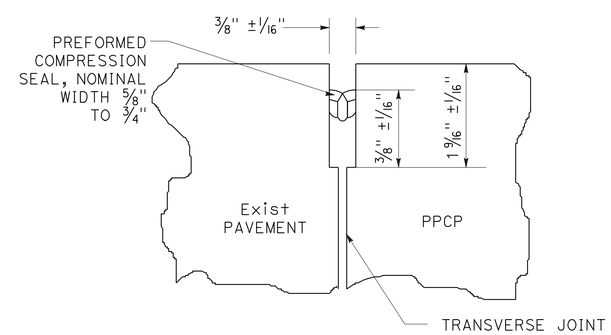

TRANSVERSE JOINT DETAIL (COMPRESSION SEAL)

DOWEL SLOT & DOWEL BAR PLACEMENT AT THE TRANSVERSE CONTACT JOINT WITH PCC, JPCP, OR RSC

CONSTRUCTION DETAILS
PRECAST PRESTRESSED CONCRETE PAVEMENT DOWEL BAR RETROFIT

NO SCALE

C-56

STATE OF CALIFORNIA - DEPARTMENT OF TRANSPORTATION
Caltrans
CONSULTANT FUNCTIONAL SUPERVISOR: NATALINA V. BERNARDI
CALCULATED-DESIGNED BY: CARMELO CECILIO
CHECKED BY: LUIS GARCIA
REVISED BY: CC
DATE REVISED: 1/3/12

LAST REVISION 01-03-12
DATE PLOTTED => 13-APR-2012
TIME PLOTTED => 07:40

Dist	COUNTY	ROUTE	POST MILES TOTAL PROJECT	SHEET No.	TOTAL SHEETS
04	Ala	580	R14.6/R21.6	133	804

1/3/12
REGISTERED CIVIL ENGINEER DATE

4-9-12
PLANS APPROVAL DATE

REGISTERED PROFESSIONAL ENGINEER
N.V. BERNARDI
No. 45407
Exp. 9/30/12
CIVIL
STATE OF CALIFORNIA

THE STATE OF CALIFORNIA OR ITS OFFICERS OR AGENTS SHALL NOT BE RESPONSIBLE FOR THE ACCURACY OR COMPLETENESS OF SCANNED COPIES OF THIS PLAN SHEET.

BKF ENGINEERS
4670 WILLOW ROAD, SUITE 250
PLEASANTON, CA. 94588

ALAMEDA CTC
1333 BROADWAY SUITE 220
OAKLAND, CA. 94612

NOTES:

1. FOR PANELS WITH A RADIUS (WEDGE PANELS), THE DIMENSIONS AND QUANTITIES OF THE REINFORCEMENT ARE CONSIDERED THE SAME AND VARY MINIMALLY WITH RESPECT TO THE LENGTH (L) AND IN WIDTH (W).
2. FOR TABLE A, REINFORCEMENT IS PLACED OR MEASURED IN THE LONGITUDINAL DIRECTION, UNLESS INDICATED OTHERWISE.
3. FOR TABLE B, REINFORCEMENT IS PLACED OR MEASURED IN THE TRANSVERSE DIRECTION, UNLESS INDICATED OTHERWISE.
4. ALL REINFORCEMENT DIMENSIONS ARE TO BE VERIFIED BY THE MANUFACTURER BEFORE PANEL FABRICATION.

ABBREVIATION:

P-T POST-TENSIONING

TABLE A

L	COUNT OF PRETENSIONING STRANDS (7-WIRE 1/2") PLACED TRANSVERSELY (1)	LENGTH OF EACH P-T DUCT (2)	COUNT OF BAR "U"	LENGTH OF EACH BAR "U"	COUNT OF LIFTING ANCHORS
FT	EA	FT	EA	FT-IN	EA
7	6	7	4	9'-0"	4
8	6	8	4	10'-0"	4
9	8	9	4	11'-0"	4
10	8	10	4	12'-0"	4

(1) SEE TABLE B FOR LENGTH OF EACH PRETENSIONING STRAND.
(2) SEE TABLE B FOR COUNT OF P-T DUCTS.

TABLE B

W	COUNT OF P-T DUCTS PLACED LONGITUDINALLY (1)	COUNT OF BAR "B"	LENGTH OF EACH BAR "B"	LENGTH OF EACH PRETENSIONING STRAND (7-WIRE 1/2") (2)
FT	EA		FT-IN	FT
12	4	4	11'-7"	12
12.5	4	4	12'-1"	12.5
13	4	4	12'-7"	13
13.5	5	4	13'-1"	13.5
14	5	4	13'-7"	14
14.5	5	4	14'-1"	14.5
15	5	4	14'-7"	15
15.5	5	4	15'-1"	15.5
16	5	4	15'-7"	16
16.5	6	4	16'-1"	16.5

(1) SEE TABLE A FOR LENGTH OF EACH P-T DUCT.
(2) SEE TABLE A FOR COUNT OF PRETENSIONING STRANDS.

FOR BASE PANELS

CONSTRUCTION DETAILS

PRECAST PRESTRESSED CONCRETE PAVEMENT REINFORCEMENT DIMENSIONS AND QUANTITIES

C-57

STATE OF CALIFORNIA - DEPARTMENT OF TRANSPORTATION
Caltrans
CONSULTANT FUNCTIONAL SUPERVISOR: NATALINA V. BERNARDI
CALCULATED-DESIGNED BY: CARMELO CECILIO
CHECKED BY: LUIS GARCIA
REVISED BY: CC
DATE REVISED: 1/3/12

LAST REVISION 01-03-12
DATE PLOTTED => 13-APR-2012
TIME PLOTTED => 07:41

Dist	COUNTY	ROUTE	POST MILES TOTAL PROJECT	SHEET No.	TOTAL SHEETS
04	Ala	580	R14.6/R21.6	134	804

1/3/12
REGISTERED CIVIL ENGINEER DATE

4-9-12
PLANS APPROVAL DATE

REGISTERED PROFESSIONAL ENGINEER N.V. BERNARDI No. 45407 Exp. 9/30/12 CIVIL STATE OF CALIFORNIA

THE STATE OF CALIFORNIA OR ITS OFFICERS OR AGENTS SHALL NOT BE RESPONSIBLE FOR THE ACCURACY OR COMPLETENESS OF SCANNED COPIES OF THIS PLAN SHEET.

BKF ENGINEERS
4670 WILLOW ROAD, SUITE 250
PLEASANTON, CA. 94588

ALAMEDA CTC
1333 BROADWAY SUITE 220
OAKLAND, CA. 94612

NOTES:

1. FOR PANELS WITH A RADIUS (WEDGE PANELS), THE DIMENSIONS AND QUANTITIES OF THE REINFORCEMENT ARE CONSIDERED THE SAME AND VARY MINIMALLY WITH RESPECT TO THE LENGTH (L) AND IN WIDTH (W).
2. FOR TABLE A, REINFORCEMENT IS PLACED OR MEASURED IN THE LONGITUDINAL DIRECTION, UNLESS INDICATED OTHERWISE.
3. FOR TABLE B, REINFORCEMENT IS PLACED OR MEASURED IN THE TRANSVERSE DIRECTION, UNLESS INDICATED OTHERWISE.
4. ALL REINFORCEMENT DIMENSIONS ARE TO BE VERIFIED BY THE MANUFACTURER BEFORE PANEL FABRICATION.

ABBREVIATION:

P-T POST-TENSIONING

TABLE B

W	COUNT OF P-T DUCTS PLACED LONGITUDINALLY (1)	COUNT OF BAR "B"	LENGTH OF EACH BAR "B"	LENGTH OF EACH PRETENSIONING STRAND (7-WIRE 1/2") (2)
FT	EA		FT-IN	FT
17	6	4	16'-7"	17
17.5	6	4	17'-1"	17.5
18	6	4	17'-7"	18
18.5	6	4	18'-1"	18.5
19	6	4	18'-7"	19
19.5	7	4	19'-1"	19.5
20	7	4	19'-7"	20
20.5	7	4	20'-1"	20.5
21	7	4	20'-7"	21
21.5	7	4	21'-1"	21.5
22	7	4	21'-7"	22
22.5	8	4	22'-1"	22.5
23	8	4	22'-7"	23
23.5	8	4	23'-1"	23.5
24	8	4	23'-7"	24
24.5	8	4	24'-1"	24.5
25	8	4	24'-7"	25
25.5	9	4	25'-1"	25.5
26	9	4	25'-7"	26
26.5	9	4	26'-1"	26.5

(1) SEE TABLE A FOR LENGTH OF EACH P-T DUCT.
(2) SEE TABLE A FOR COUNT OF PRETENSIONING STRANDS.

FOR BASE PANELS

TABLE B

W	COUNT OF P-T DUCTS PLACED LONGITUDINALLY (1)	COUNT OF BAR "B"	LENGTH OF EACH BAR "B"	LENGTH OF EACH PRETENSIONING STRAND (7-WIRE 1/2") (2)
FT	EA		FT-IN	FT
27	9	4	26'-7"	27
27.5	9	4	27'-1"	27.5
28	9	4	27'-7"	28
28.5	10	4	28'-1"	28.5
29	10	4	28'-7"	29
29.5	10	4	29'-1"	29.5
30	10	4	29'-7"	30
30.5	10	4	30'-1"	30.5
31	10	4	30'-7"	31
31.5	11	4	31'-1"	31.5
32	11	4	31'-7"	32
32.5	11	4	32'-1"	32.5
33	11	4	32'-7"	33
33.5	11	4	33'-1"	33.5
34	11	4	33'-7"	34
34.5	12	4	34'-1"	34.5
35	12	4	34'-7"	35
35.5	12	4	35'-1"	35.5
36	12	4	35'-7"	36
36.5	12	4	36'-1"	36.5

(1) SEE TABLE A FOR LENGTH OF EACH P-T DUCT.
(2) SEE TABLE A FOR COUNT OF PRETENSIONING STRANDS.

CONSTRUCTION DETAILS
PRECAST PRESTRESSED CONCRETE PAVEMENT REINFORCEMENT DIMENSIONS AND QUANTITIES

C-58

STATE OF CALIFORNIA - DEPARTMENT OF TRANSPORTATION
CONSULTANT FUNCTIONAL SUPERVISOR: NATALINA V. BERNARDI
CALCULATED-DESIGNED BY: CARMELO CECILIO
CHECKED BY: LUIS GARCIA
REVISED BY: CC
DATE REVISED: 1/3/12

LAST REVISION 01-03-12 | DATE PLOTTED => 13-APR-2012 | TIME PLOTTED => 07:41

Dist	COUNTY	ROUTE	POST MILES TOTAL PROJECT	SHEET No.	TOTAL SHEETS
04	Ala	580	R14.6/R21.6	135	804

1/3/12
REGISTERED CIVIL ENGINEER DATE

4-9-12
PLANS APPROVAL DATE

REGISTERED PROFESSIONAL ENGINEER N.V. BERNARDI No. 45407 Exp. 9/30/12 CIVIL STATE OF CALIFORNIA

THE STATE OF CALIFORNIA OR ITS OFFICERS OR AGENTS SHALL NOT BE RESPONSIBLE FOR THE ACCURACY OR COMPLETENESS OF SCANNED COPIES OF THIS PLAN SHEET.

BKF ENGINEERS
4670 WILLOW ROAD, SUITE 250
PLEASANTON, CA. 94588

ALAMEDA CTC
1333 BROADWAY SUITE 220
OAKLAND, CA. 94612

NOTES:

1. FOR PANELS WITH A RADIUS (WEDGE PANELS), THE DIMENSIONS AND QUANTITIES OF THE REINFORCEMENT ARE CONSIDERED THE SAME AND VARY MINIMALLY WITH RESPECT TO THE LENGTH (L) AND IN WIDTH (W).
2. FOR TABLE A, REINFORCEMENT IS PLACED OR MEASURED IN THE LONGITUDINAL DIRECTION, UNLESS INDICATED OTHERWISE.
3. FOR TABLE B, REINFORCEMENT IS PLACED OR MEASURED IN THE TRANSVERSE DIRECTION, UNLESS INDICATED OTHERWISE.
4. ALL REINFORCEMENT DIMENSIONS ARE TO BE VERIFIED BY THE MANUFACTURER BEFORE PANEL FABRICATION.

ABBREVIATION:

P-T POST-TENSIONING

TABLE B

W	COUNT OF P-T DUCTS PLACED LONGITUDINALLY (1)	COUNT OF BAR "B"	LENGTH OF EACH BAR "B"	LENGTH OF EACH PRETENSIONING STRAND (7-WIRE 1/2") (2)
FT	EA		FT-IN	FT
37	12	4	36'-7"	37
37.5	13	4	37'-1"	37.5
38	13	4	37'-7"	38
38.5	13	4	38'-1"	38.5
39	13	4	38'-7"	39
39.5	13	4	39'-1"	39.5
40	13	4	39'-7"	40
40.5	14	4	40'-1"	40.5
41	14	4	40'-7"	41
41.5	14	4	41'-1"	41.5
42	14	4	41'-7"	42
42.5	14	4	42'-1"	42.5
43	14	4	42'-7"	43
43.5	15	4	43'-1"	43.5
44	15	4	43'-7"	44
44.5	15	4	44'-1"	44.5
45	15	4	44'-7"	45
45.5	15	4	45'-1"	45.5
46	15	4	45'-7"	46
46.5	16	4	46'-1"	46.5

(1) SEE TABLE A FOR LENGTH OF EACH P-T DUCT.
(2) SEE TABLE A FOR COUNT OF PRETENSIONING STRANDS.

TABLE B

W	COUNT OF P-T DUCTS PLACED LONGITUDINALLY (1)	COUNT OF BAR "B"	LENGTH OF EACH BAR "B"	LENGTH OF EACH PRETENSIONING STRAND (7-WIRE 1/2") (2)
FT	EA		FT-IN	FT
47	16	4	46'-7"	47
47.5	16	4	47'-1"	47.5
48	16	4	47'-7"	48
48.5	16	4	48'-1"	48.5
49	16	4	48'-7"	49
49.5	17	4	49'-1"	49.5
50	17	4	49'-7"	50

(1) SEE TABLE A FOR LENGTH OF EACH P-T DUCT.
(2) SEE TABLE A FOR COUNT OF PRETENSIONING STRANDS.

FOR BASE PANELS

CONSTRUCTION DETAILS
REINFORCEMENT DIMENSIONS AND QUANTITIES
PRECAST PRESTRESSED CONCRETE PAVEMENT

C-59

REVISED BY	DATE REVISED
CC	1/3/12

CARMELO CECILIO — LUIS GARCIA — CALCULATED-DESIGNED BY — CHECKED BY

CONSULTANT FUNCTIONAL SUPERVISOR: NATALINA V. BERNARDI

STATE OF CALIFORNIA - DEPARTMENT OF TRANSPORTATION

Caltrans

LAST REVISION 01-03-12 — DATE PLOTTED => 13-APR-2012 — TIME PLOTTED => 07:41

Dist	COUNTY	ROUTE	POST MILES TOTAL PROJECT	SHEET No.	TOTAL SHEETS
04	Ala	580	R14.6/R21.6	136	804

1/3/12
REGISTERED CIVIL ENGINEER DATE

4-9-12
PLANS APPROVAL DATE

REGISTERED PROFESSIONAL ENGINEER
N.V. BERNARDI
No. 45407
Exp. 9/30/12
CIVIL
STATE OF CALIFORNIA

THE STATE OF CALIFORNIA OR ITS OFFICERS OR AGENTS SHALL NOT BE RESPONSIBLE FOR THE ACCURACY OR COMPLETENESS OF SCANNED COPIES OF THIS PLAN SHEET.

BKF ENGINEERS
4670 WILLOW ROAD, SUITE 250
PLEASANTON, CA. 94588

ALAMEDA CTC
1333 BROADWAY SUITE 220
OAKLAND, CA. 94612

NOTE:

FOR DETAILS NOT SHOWN, SEE "INSTALLATION AND CONNECTION DETAILS", "PANEL DETAILS", AND "MISCELLANEOUS DETAILS" SHEETS.

ABBREVIATIONS:

JPCP = JOINTED PLAIN CONCRETE PAVEMENT
LCBRS = LEAN CONCRETE BASE RAPID SETTING
PCC = PORTLAND CEMENT CONCRETE
PCP = PRECAST CONCRETE PANEL
RSC = RAPID STRENGTH CONCRETE

LEGEND:

REPLACE CONCRETE PAVEMENT

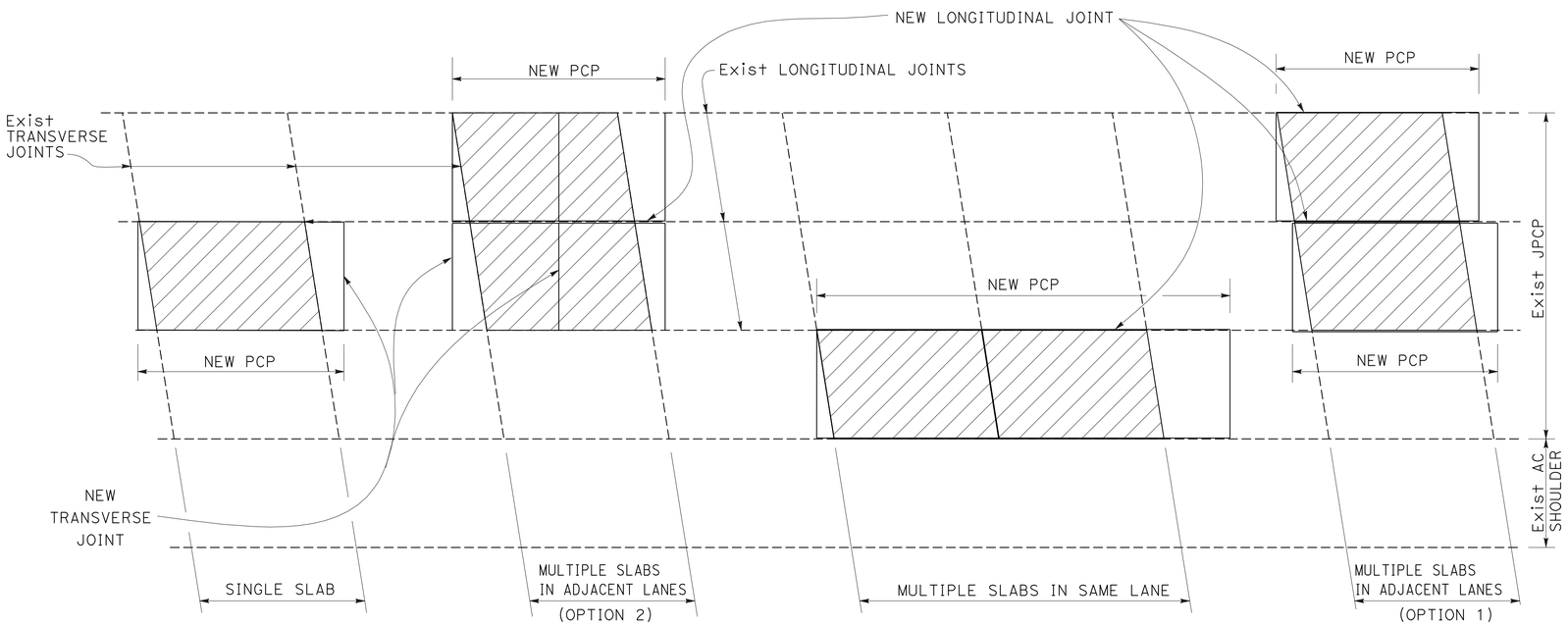

PLAN

CONSTRUCTION DETAILS
INDIVIDUAL SLAB REPLACEMENT PRECAST CONCRETE PANEL LAYOUT
NO SCALE

C-60

STATE OF CALIFORNIA - DEPARTMENT OF TRANSPORTATION
Caltrans

CONSULTANT FUNCTIONAL SUPERVISOR: NATALINA V. BERNARDI
CALCULATED-DESIGNED BY: CARMELO CECILIO
CHECKED BY: LUIS GARCIA
REVISED BY: CC
DATE REVISED: 1/3/12

LAST REVISION 01-03-12
DATE PLOTTED => 13-APR-2012
TIME PLOTTED => 07:41

Dist	COUNTY	ROUTE	POST MILES TOTAL PROJECT	SHEET No.	TOTAL SHEETS
04	Ala	580	R14.6/R21.6	137	804

1/3/12
REGISTERED CIVIL ENGINEER DATE

4-9-12
PLANS APPROVAL DATE

REGISTERED PROFESSIONAL ENGINEER N.V. BERNARDI No. 45407 Exp. 9/30/12 CIVIL STATE OF CALIFORNIA

THE STATE OF CALIFORNIA OR ITS OFFICERS OR AGENTS SHALL NOT BE RESPONSIBLE FOR THE ACCURACY OR COMPLETENESS OF SCANNED COPIES OF THIS PLAN SHEET.

BKF ENGINEERS
4670 WILLOW ROAD, SUITE 250
PLEASANTON, CA. 94588

ALAMEDA CTC
1333 BROADWAY SUITE 220
OAKLAND, CA. 94612

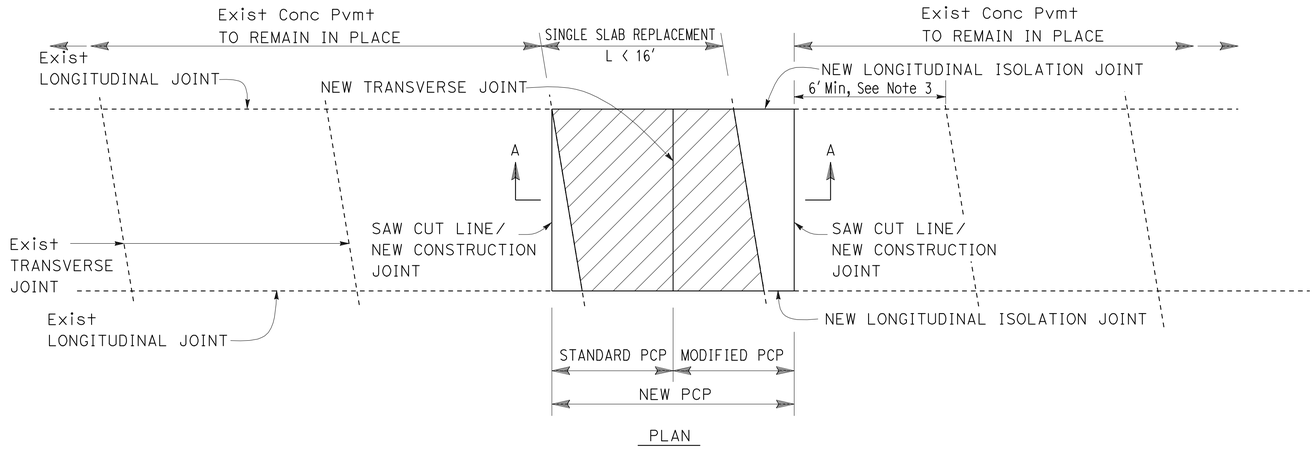

PLAN

NOTES:

1. FOR PRECAST PANEL DETAILS, SEE "PANEL DETAILS" SHEET.
2. FOR DOWEL BAR AND JOINT DETAILS, SEE "MISCELLANEOUS DETAILS No. 1 AND No. 2" SHEETS.
3. 6' Min LENGTH OF EXISTING SLAB SHOULD REMAIN, OTHERWISE, ADD A STANDARD PCP.

CROSS SECTIONS OF INDIVIDUAL PRECAST PANELS GOING TO BE INSTALLED:

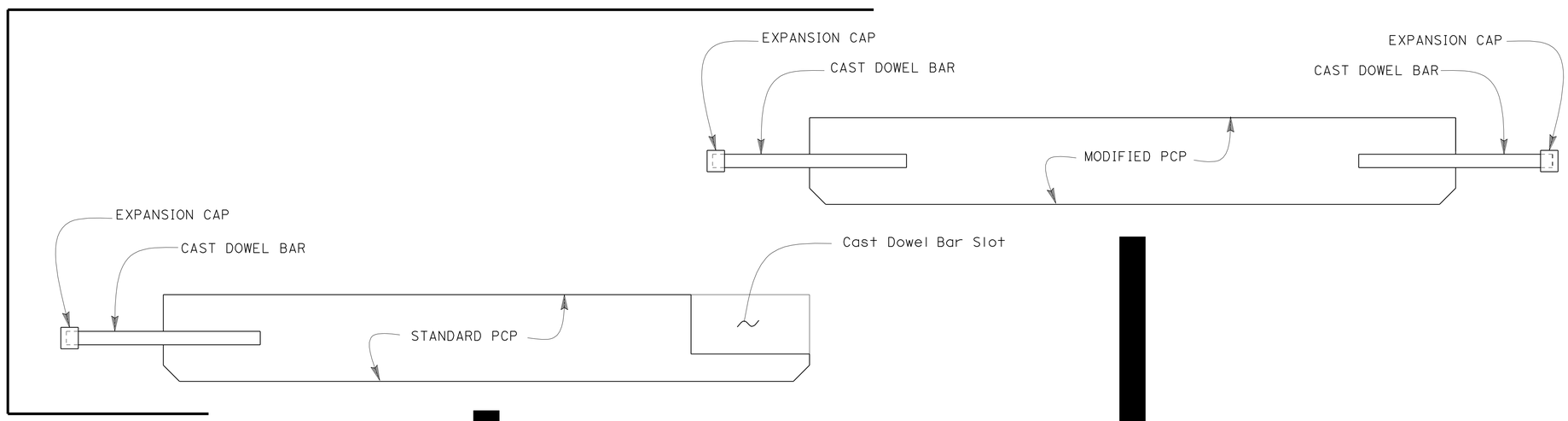

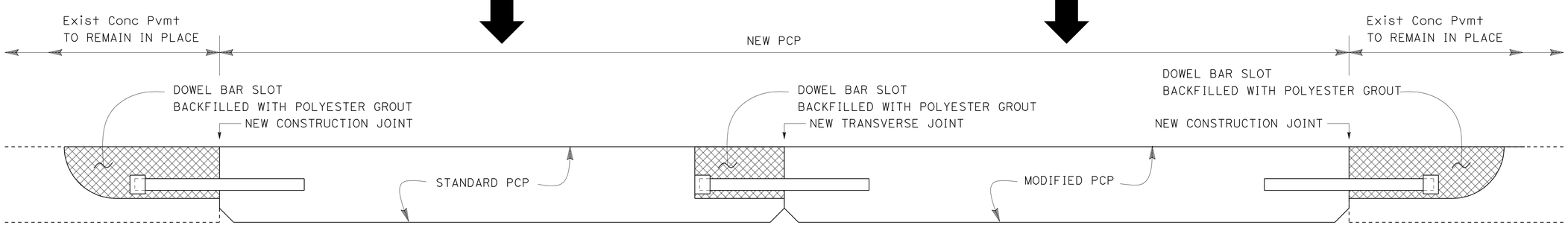

SECTION A-A

SINGLE SLAB REPLACEMENT, L< 16'

CONSTRUCTION DETAILS
INDIVIDUAL SLAB REPLACEMENT (PRECAST CONCRETE PANEL) INSTALLATION AND CONNECTION DETAILS No. 1

NO SCALE

C-61

STATE OF CALIFORNIA - DEPARTMENT OF TRANSPORTATION

CONSULTANT FUNCTIONAL SUPERVISOR: NATALINA V. BERNARDI

CALCULATED-DESIGNED BY: CARMELO CECILIO

CHECKED BY: LUIS GARCIA

REVISED BY: CC

DATE REVISED: 1/3/12

LAST REVISION 01-03-12

DATE PLOTTED => 13-APR-2012
TIME PLOTTED => 07:41

Dist	COUNTY	ROUTE	POST MILES TOTAL PROJECT	SHEET No.	TOTAL SHEETS
04	Ala	580	R14.6/R21.6	138	804

1/3/12
REGISTERED CIVIL ENGINEER DATE

4-9-12
PLANS APPROVAL DATE

REGISTERED PROFESSIONAL ENGINEER N.V. BERNARDI No. 45407 Exp. 9/30/12 CIVIL STATE OF CALIFORNIA

THE STATE OF CALIFORNIA OR ITS OFFICERS OR AGENTS SHALL NOT BE RESPONSIBLE FOR THE ACCURACY OR COMPLETENESS OF SCANNED COPIES OF THIS PLAN SHEET.

BKF ENGINEERS
4670 WILLOW ROAD, SUITE 250
PLEASANTON, CA. 94588

ALAMEDA CTC
1333 BROADWAY SUITE 220
OAKLAND, CA. 94612

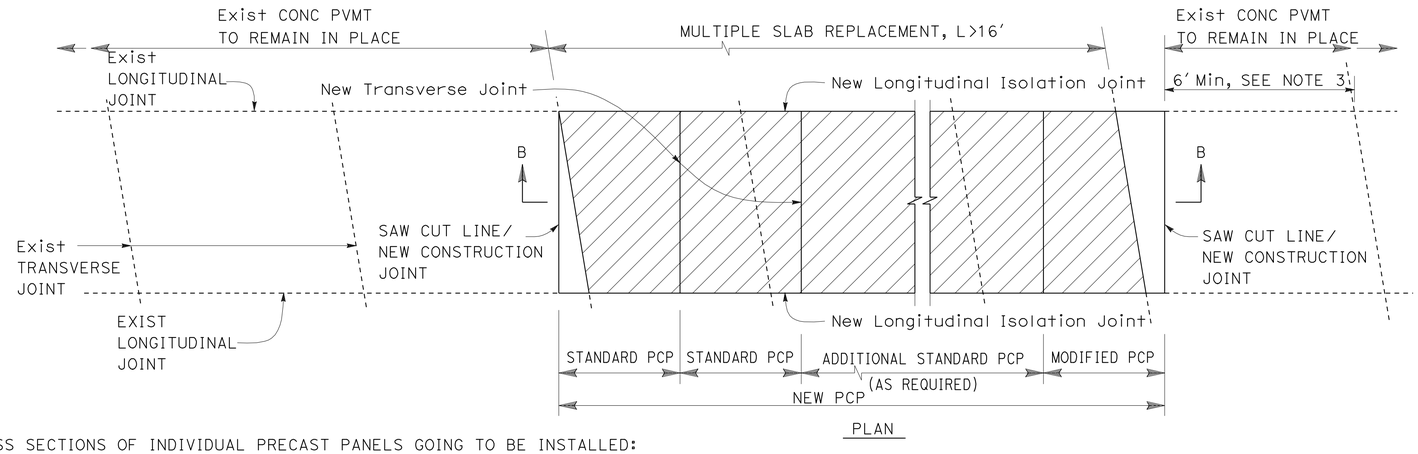

PLAN

NOTES:

1. FOR PRECAST PANEL DETAILS, SEE "PANEL DETAILS" SHEET.
2. FOR DOWEL BAR AND JOINT DETAILS, SEE "MISCELLANEOUS DETAILS NO. 1 AND NO. 2" SHEETS.
3. 6' MIN LENGTH OF EXISTING SLAB SHOULD REMAIN, OTHERWISE, ADD A STANDARD PCP.

CROSS SECTIONS OF INDIVIDUAL PRECAST PANELS GOING TO BE INSTALLED:

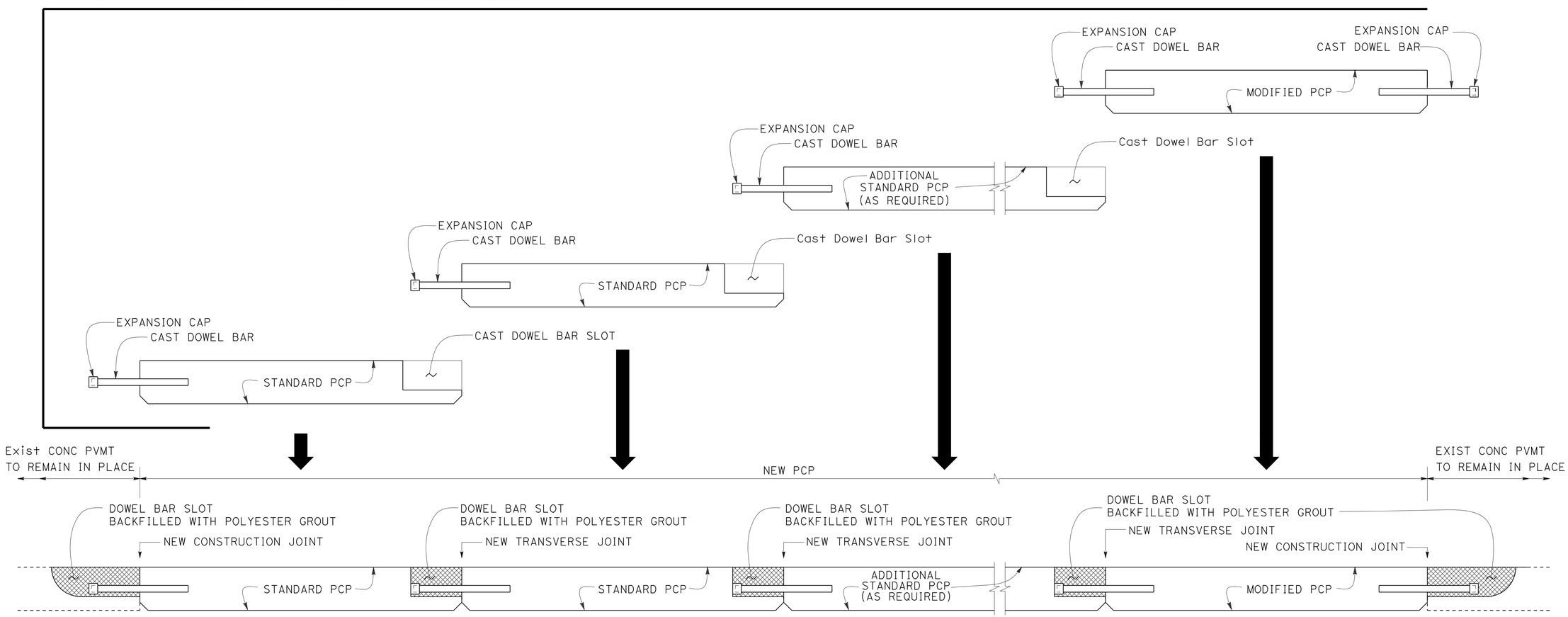

SECTION B-B

MULTIPLE SLAB REPLACEMENT, L>16'

CONSTRUCTION DETAILS
INDIVIDUAL SLAB REPLACEMENT (PRECAST CONCRETE PANEL) INSTALLATION AND CONNECTION DETAILS No. 2

NO SCALE

C-62

STATE OF CALIFORNIA - DEPARTMENT OF TRANSPORTATION
Caltrans

CONSULTANT FUNCTIONAL SUPERVISOR: NATALINA V. BERNARDI
CALCULATED-DESIGNED BY: CARMELO CECILIO
CHECKED BY: LUIS GARCIA
REVISED BY: CC
DATE REVISED: 1/3/12

LAST REVISION 01-03-12
DATE PLOTTED => 13-APR-2012
TIME PLOTTED => 07:41

Dist	COUNTY	ROUTE	POST MILES TOTAL PROJECT	SHEET No.	TOTAL SHEETS
04	Ala	580	R14.6/R21.6	139	804

REGISTERED CIVIL ENGINEER — DATE 1/3/12

PLANS APPROVAL DATE 4-9-12

REGISTERED PROFESSIONAL ENGINEER — N.V. BERNARDI — No. 45407 — Exp. 9/30/12 — CIVIL — STATE OF CALIFORNIA

THE STATE OF CALIFORNIA OR ITS OFFICERS OR AGENTS SHALL NOT BE RESPONSIBLE FOR THE ACCURACY OR COMPLETENESS OF SCANNED COPIES OF THIS PLAN SHEET.

BKF ENGINEERS
4670 WILLOW ROAD, SUITE 250
PLEASANTON, CA. 94588

ALAMEDA CTC
1333 BROADWAY SUITE 220
OAKLAND, CA. 94612

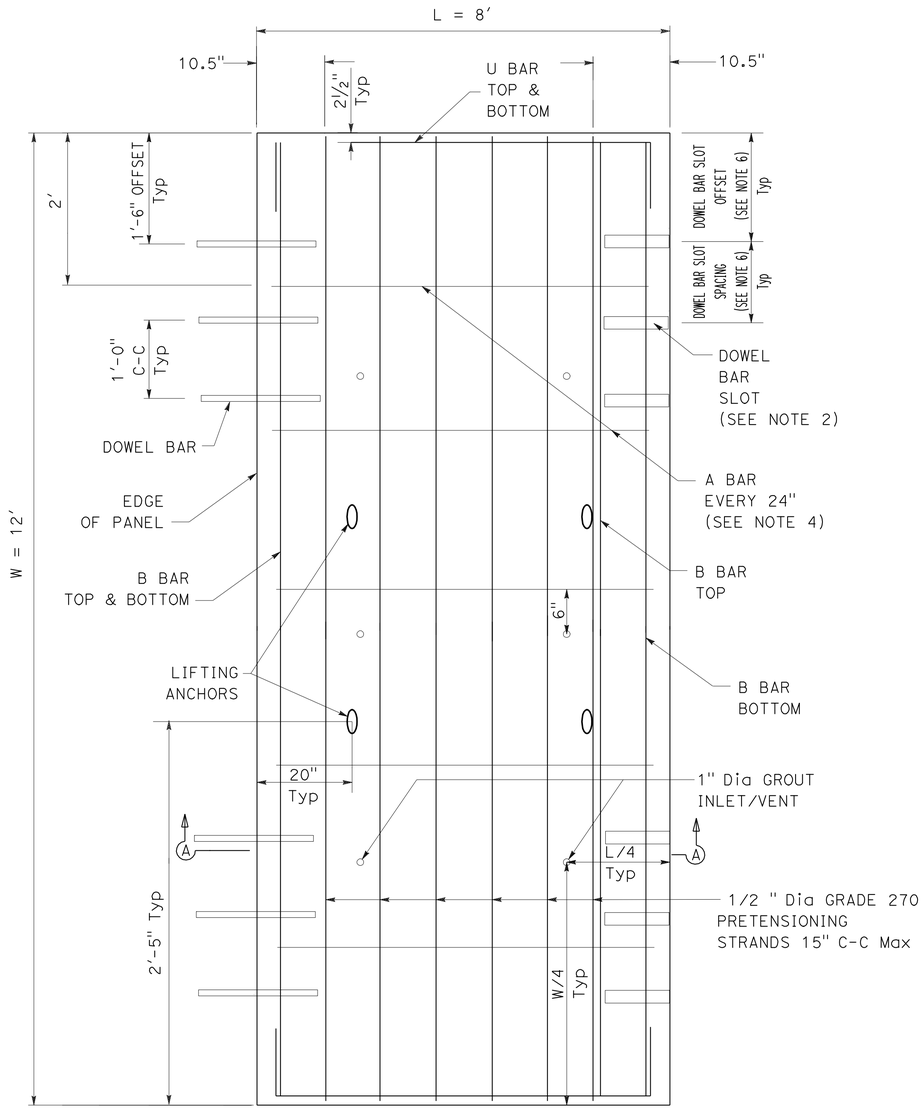

PLAN
STANDARD PCP

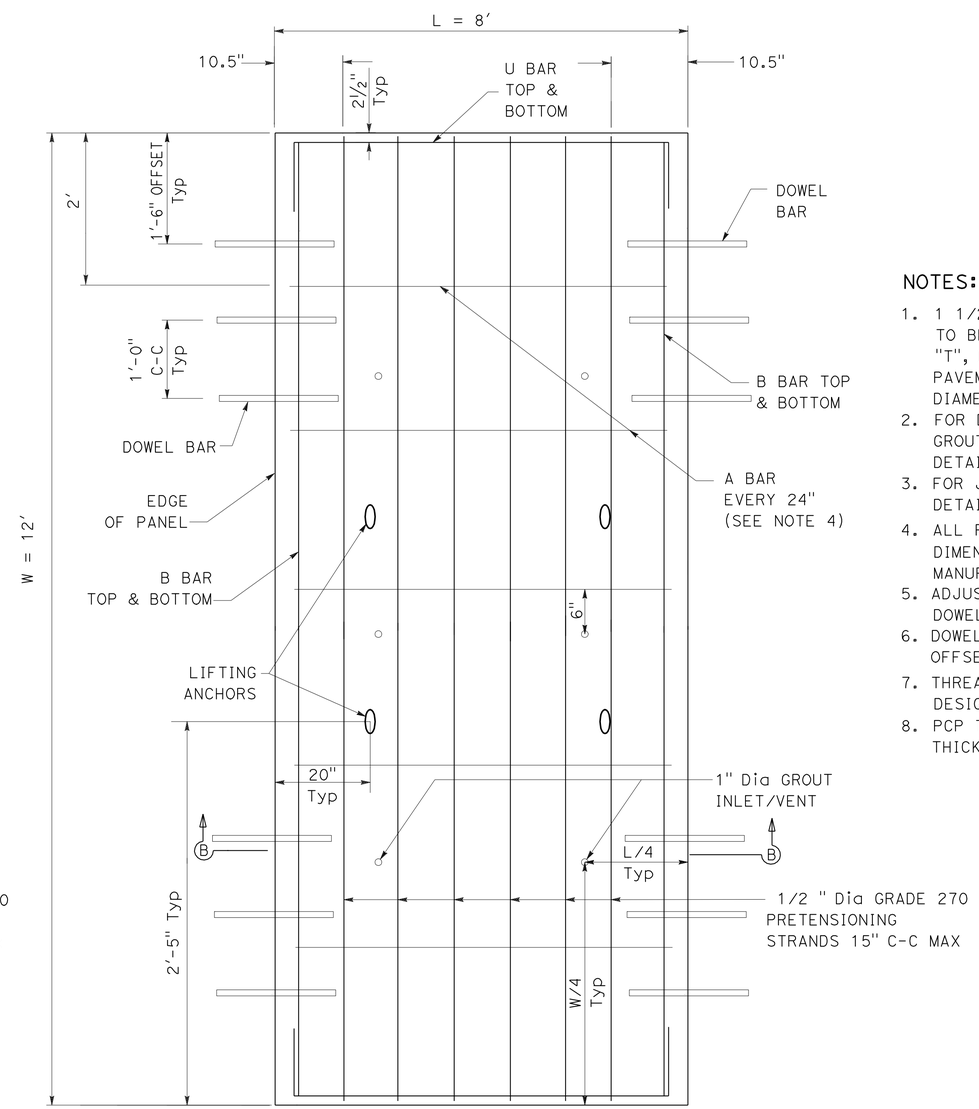

PLAN
MODIFIED PCP

NOTES:

1. 1 1/2" DIAMETER DOWEL BARS 1′-6" LENGTH ARE TO BE USED WHEN THE EXISTING PAVEMENT THICKNESS, "T", IS EQUAL TO OR GREATER THAN 0.70′. FOR A PAVEMENT THICKNESS, "T", LESS THAN 0.70′, USE 1 1/4" DIAMETER DOWEL BAR 1′-6" IN LENGTH.
2. FOR DOWEL BAR SLOT DIMENSIONS, BACKFILLING, AND GROUT INLET/VENT DETAILS, SEE "MISCELLANEOUS DETAILS No. 1" SHEET.
3. FOR JOINT DETAILS, SEE "MISCELLANEOUS DETAILS No. 2" SHEET.
4. ALL REINFORCEMENT AND PRETENSIONING STRAND DIMENSIONS ARE TO BE VERIFIED BY THE MANUFACTURER BEFORE PANEL FABRICATION.
5. ADJUST LOCATION OF "A" BAR TO ACCOMMODATE DOWEL BARS AND DOWEL BAR SLOTS.
6. DOWEL BAR SLOT OFFSET AND SPACING TO MATCH OFFSET AND SPACING OF DOWELS IN ADJACENT PCP.
7. THREADED AND RECESSED LIFTING ANCHORS TO BE DESIGNED BY THE CONTRACTOR.
8. PCP THICKNESS, T, TO MATCH EXISTING CONCRETE SLAB THICKNESS BUT NOT LESS THAN 0.70′.

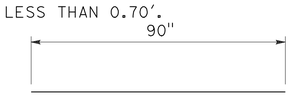

A BAR 5 # 4 PER PANEL

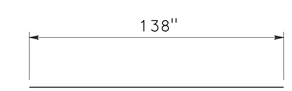

B BAR 4 # 4 PER PANEL

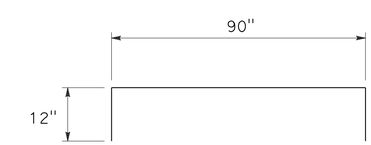

U BAR 4 # 4 PER PANEL

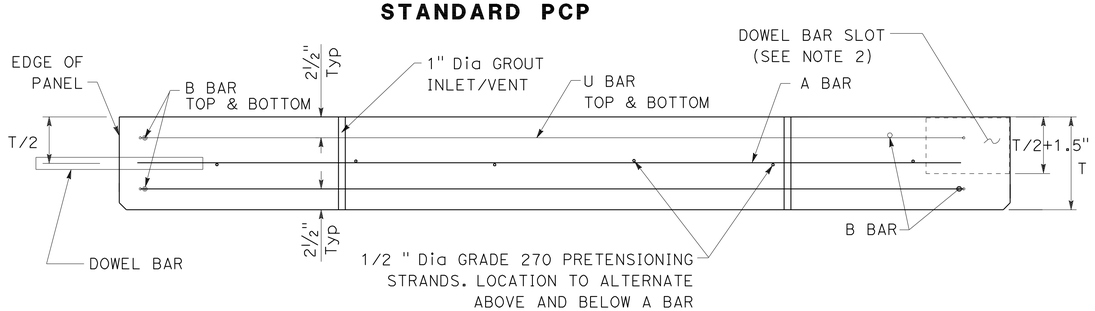

SECTION A-A

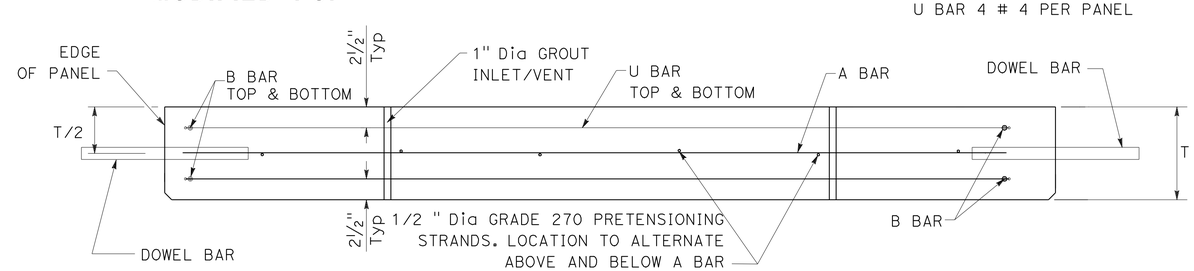

SECTION B-B

PRECAST CONCRETE PANELS (PCP)

NOT TO SCALE

CONSTRUCTION DETAILS
INDIVIDUAL SLAB REPLACEMENT (PRECAST CONCRETE PANEL) PANEL DETAILS

NO SCALE

C-63

STATE OF CALIFORNIA - DEPARTMENT OF TRANSPORTATION

CONSULTANT FUNCTIONAL SUPERVISOR: NATALINA V. BERNARDI

CALCULATED-DESIGNED BY: LUIS GARCIA — CHECKED BY: CARMELO CECILIO

REVISED BY: CC — DATE REVISED: 1/3/12

LAST REVISION 01-03-12 — DATE PLOTTED => 13-APR-2012 — TIME PLOTTED => 07:41

Dist	COUNTY	ROUTE	POST MILES TOTAL PROJECT	SHEET No.	TOTAL SHEETS
04	Ala	580	R14.6/R21.6	140	804

REGISTERED CIVIL ENGINEER 1/3/12 DATE

4-9-12
PLANS APPROVAL DATE

REGISTERED PROFESSIONAL ENGINEER N.V. BERNARDI No. 45407 Exp. 9/30/12 CIVIL STATE OF CALIFORNIA

THE STATE OF CALIFORNIA OR ITS OFFICERS OR AGENTS SHALL NOT BE RESPONSIBLE FOR THE ACCURACY OR COMPLETENESS OF SCANNED COPIES OF THIS PLAN SHEET.

BKF ENGINEERS
4670 WILLOW ROAD, SUITE 250
PLEASANTON, CA. 94588

ALAMEDA CTC
1333 BROADWAY SUITE 220
OAKLAND, CA. 94612

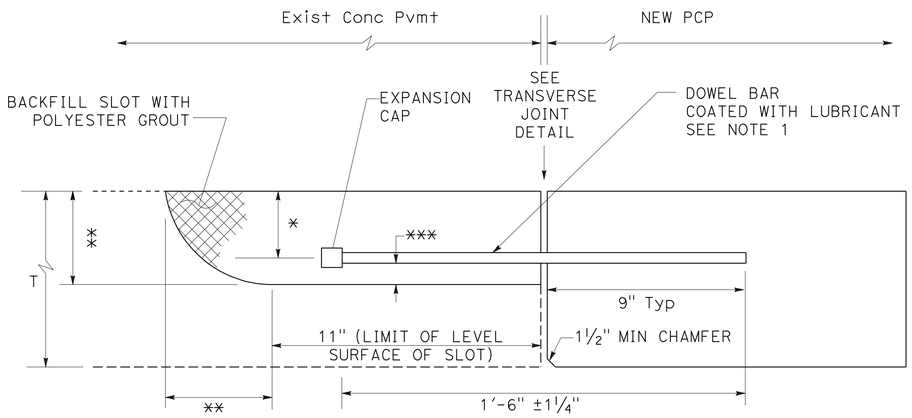

ELEVATION

T = EXISTING THICKNESS OF PCC, JPCP, OR RSC
* T/2 ± 1/4 "
** T/2 +1 1/2 "
*** Min Clr ½" BETWEEN BAR AND BOTTOM OF SLOT

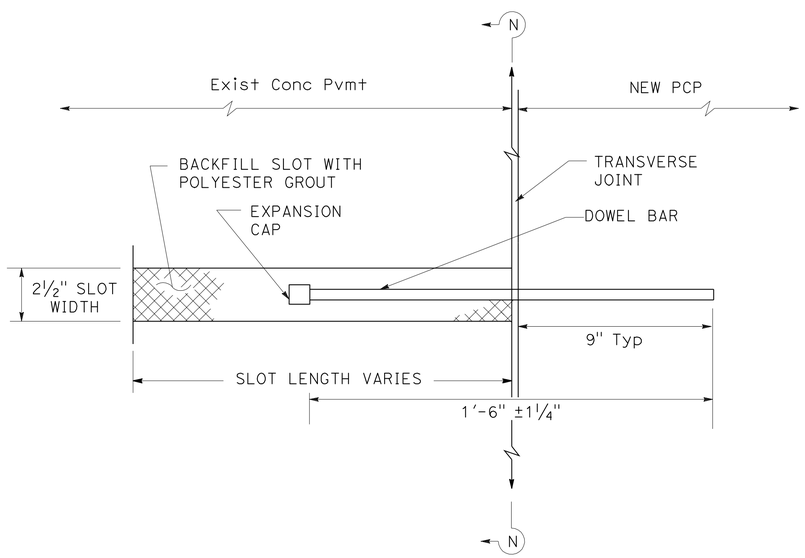

PLAN

DOWEL BAR SLOT BACKFILLING

NOTES:

1. FOR DIAMETER, SEE "PANEL DETAILS" SHEET, NOTE No. 1.
2. SEAL EXISTING TRANSVERSE JOINT AT BOTTOM AND SIDES OF THE DOWEL BAR SLOT WITH CAULKING FILLER PRIOR TO PLACING DOWEL BAR AND FOAM CORE INSERT.
3. THE TOP OF THE FOAM CORE INSERT IS TO MATCH THE TOP OF THE EXISTING PAVEMENT SURFACE INITIALLY. THE FOAM CORE INSERT TO BE REMOVED BEFORE PLACING JOINT FILLER MATERIAL.

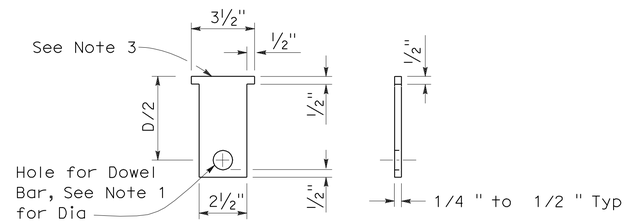

FOAM CORE INSERT DETAIL

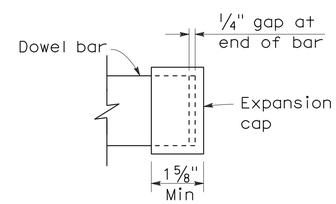

EXPANSION CAP DETAIL
(Minimum Requirement)

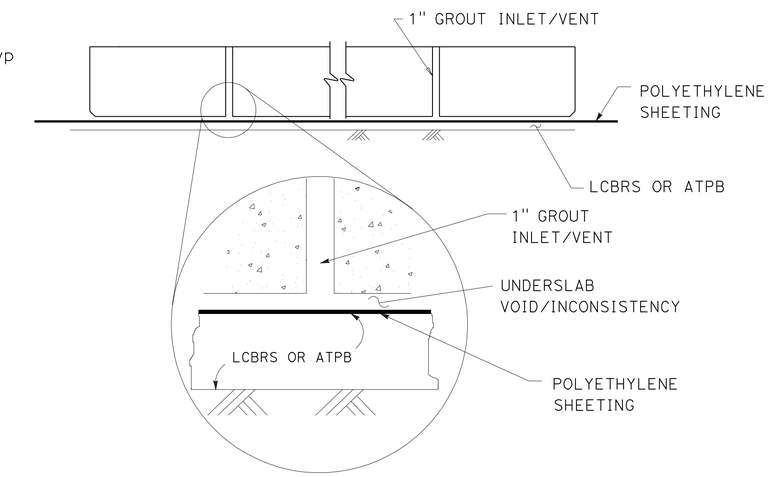

UNDERSLAB GROUT INLET/VENT AND POLYETHYLENE SHEETING

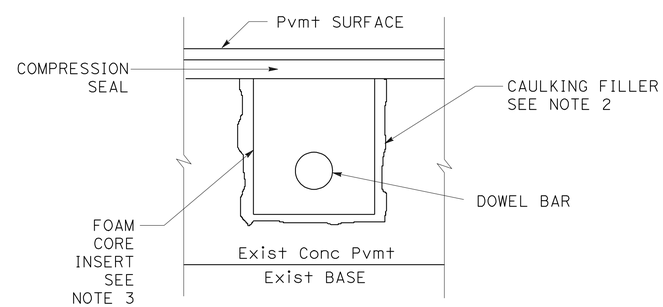

SECTION N-N

CONSTRUCTION DETAILS
INDIVIDUAL SLAB REPLACEMENT (PRECAST CONCRETE PANEL) MISCELLANEOUS DETAILS No. 1

NO SCALE

C-64

CC	1/3/12	
REVISED BY	DATE REVISED	
CARMELO CECILIO	LUIS GARCIA	
CALCULATED-DESIGNED BY	CHECKED BY	
CONSULTANT FUNCTIONAL SUPERVISOR	NATALINA V. BERNARDI	
STATE OF CALIFORNIA - DEPARTMENT OF TRANSPORTATION	Caltrans	

LAST REVISION 01-03-12 | DATE PLOTTED => 13-APR-2012 | TIME PLOTTED => 07:41

Dist	COUNTY	ROUTE	POST MILES TOTAL PROJECT	SHEET No.	TOTAL SHEETS
04	Ala	580	R14.6/R21.6	141	804

1/3/12
REGISTERED CIVIL ENGINEER DATE

4-9-12
PLANS APPROVAL DATE

REGISTERED PROFESSIONAL ENGINEER
N.V. BERNARDI
No. 45407
Exp. 9/30/12
CIVIL
STATE OF CALIFORNIA

THE STATE OF CALIFORNIA OR ITS OFFICERS OR AGENTS SHALL NOT BE RESPONSIBLE FOR THE ACCURACY OR COMPLETENESS OF SCANNED COPIES OF THIS PLAN SHEET.

BKF ENGINEERS
4670 WILLOW ROAD, SUITE 250
PLEASANTON, CA. 94588

ALAMEDA CTC
1333 BROADWAY SUITE 220
OAKLAND, CA. 94612

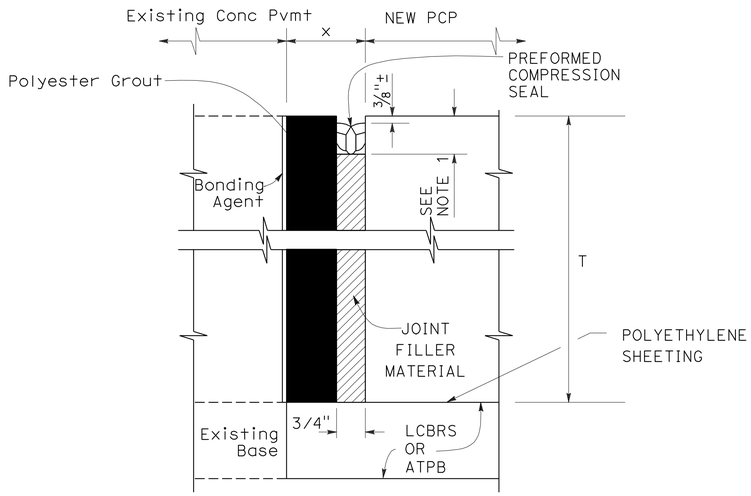

LONGITUDINAL ISOLATION JOINT DETAIL

(FOR WIDER JOINTS, 1" < x < 1 1/2")

NOTE:

NOMINAL WIDTH FOR PREFORMED COMPRESSION SEALS TO BE SELECTED BASED ON THE ACTUAL JOINT WIDTH SO THAT THE SEALS ARE COMPRESSED 40 TO 50 PERCENT FOR THE JOINT WIDTH AND DEPTH.

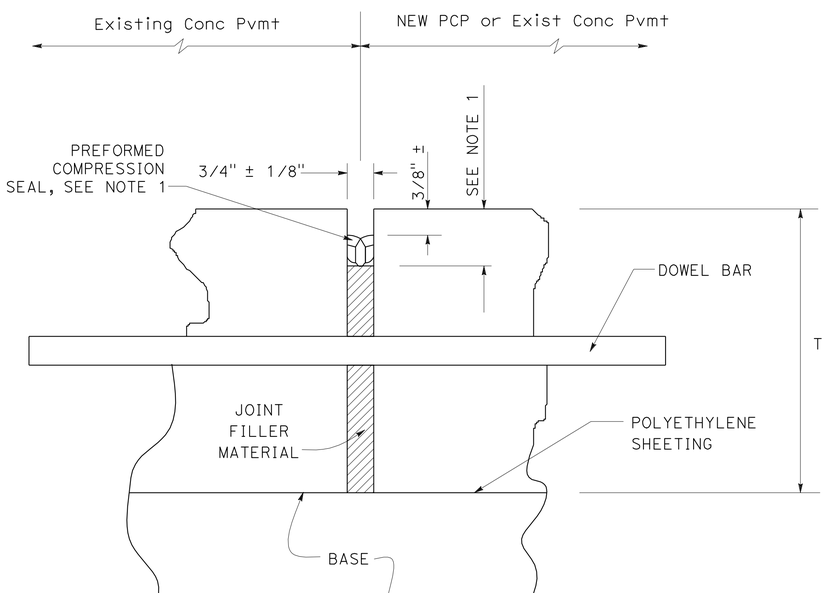

CONSTRUCTION AND TRANSVERSE JOINT DETAIL

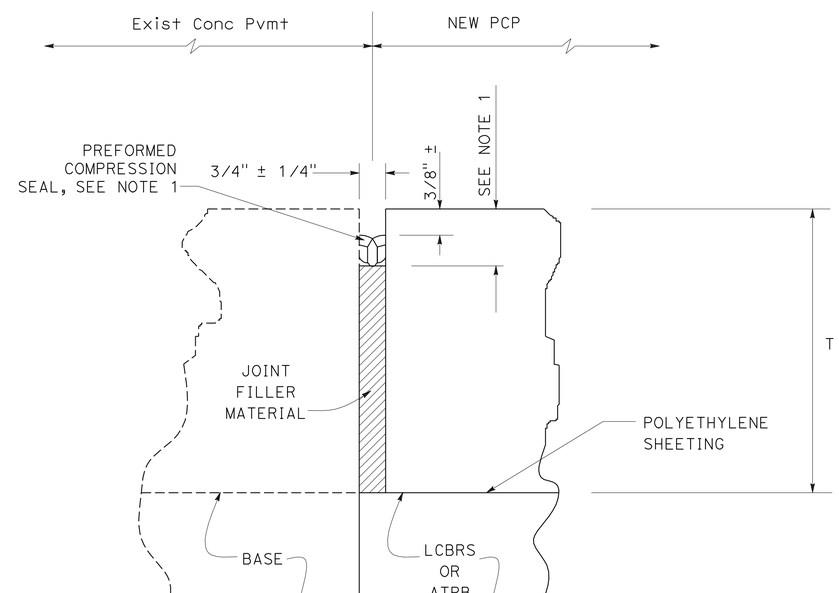

LONGITUDINAL ISOLATION JOINT DETAIL

CONSTRUCTION DETAILS
INDIVIDUAL SLAB REPLACEMENT (PRECAST CONCRETE PANEL) MISCELLANEOUS DETAILS No. 2

NO SCALE

C-65

REVISED BY	DATE REVISED
CC	1/3/12

CARMELO CECILIO
LUIS GARCIA
CALCULATED-DESIGNED BY
CHECKED BY
NATALINA V. BERNARDI
CONSULTANT FUNCTIONAL SUPERVISOR

STATE OF CALIFORNIA - DEPARTMENT OF TRANSPORTATION

LAST REVISION 01-03-12
DATE PLOTTED => 13-APR-2012
TIME PLOTTED => 07:41

Dist	COUNTY	ROUTE	POST MILES TOTAL PROJECT	SHEET No.	TOTAL SHEETS
04	Ala	580	R14.6/R21.6	142	804

REGISTERED CIVIL ENGINEER 9/23/2011 DATE

4-9-12
PLANS APPROVAL DATE

REGISTERED PROFESSIONAL ENGINEER
DAVID M. DICKINSON
No. 50815
Exp. 9-30-13
CIVIL
STATE OF CALIFORNIA

THE STATE OF CALIFORNIA OR ITS OFFICERS OR AGENTS SHALL NOT BE RESPONSIBLE FOR THE ACCURACY OR COMPLETENESS OF SCANNED COPIES OF THIS PLAN SHEET.

WMH CORPORATION
555 12th St
Suite 1900
Oakland, CA 94607

ALAMEDA CTC
1333 Broadway
Suite 220
Oakland, CA 94612

TEMPORARY WATER POLLUTION CONTROL QUANTITIES

	TEMPORARY SILT FENCE	TEMPORARY CONCRETE WASHOUT (PORTABLE)	TEMPORARY CONSTRUCTION ENTRANCE	TEMPORARY COVER	TEMPORARY DRAINAGE INLET PROTECTION
Total	5540.0	1	10	1,000	85

TEMPORARY WATER POLLUTION CONTROL QUANTITIES

WPCQ-1

REVISED BY	DATE REVISED
YF	09/05/11
YF	06/09/11
AV	02/22/10

CALCULATED-DESIGNED BY: Y. FAROUQI \ A. VALASQUEZ
CHECKED BY: DAVID M. DICKINSON
CONSULTANT FUNCTIONAL SUPERVISOR: TIMOTHY J. LEE

STATE OF CALIFORNIA - DEPARTMENT OF TRANSPORTATION
Caltrans

X:\580 WB HOV\000_CAD\Sheets\West of Sta 540+00\CT-ELECTRONIC-SUBMITTAL 20111017\WPC\0400021249gd001.dgn

LAST REVISION 09-23-11 | DATE PLOTTED => 13-APR-2012 | TIME PLOTTED => 07:41

Dist	COUNTY	ROUTE	POST MILES TOTAL PROJECT	SHEET No.	TOTAL SHEETS
04	Ala	580	R14.6/R21.6	143	804

REGISTERED CIVIL ENGINEER 9/23/2011 DATE

4-9-12
PLANS APPROVAL DATE

REGISTERED PROFESSIONAL ENGINEER DAVID M. DICKINSON No. 50815 Exp. 9-30-13 CIVIL STATE OF CALIFORNIA

THE STATE OF CALIFORNIA OR ITS OFFICERS OR AGENTS SHALL NOT BE RESPONSIBLE FOR THE ACCURACY OR COMPLETENESS OF SCANNED COPIES OF THIS PLAN SHEET.

WMH CORPORATION
555 12th St
Suite 1900
Oakland, CA 94607

ALAMEDA CTC
1333 Broadway
Suite 220
Oakland, CA 94612

FOR ACCURATE RIGHT OF WAY DATA, CONTACT RIGHT OF WAY ENGINEERING AT THE DISTRICT OFFICE

LEGEND

- FR — FIBER ROLLS
- DIRECTION OF FLOW
- PROPOSED STORM DRAIN INLET AND PIPE SYSTEM
- EXISTING STORM DRAIN INLET AND PIPE SYSTEM
- EXISTING BIO-FILTRATION STRIP/SWALE
- BIO-FILTRATION STRIP & LINEAR BIO-RETENTION, COMPOST (INCORPORATE) & EROSION CONTROL (COMPOST BLANKET)
- ROLLED EROSION CONTROL PRODUCT (NETTING)
- EROSION CONTROL (HYDROSEED)

NOTES:

1. EROSION CONTROL ADJUSTMENTS ARE SUBJECT TO ACTUAL SITE CONDITIONS AND AS DIRECTED BY THE ENGINEER.
2. EROSION CONTROL (HYDROSEED) SHALL BE APPLIED TO ALL DISTURBED AREAS AS PROVIDED IN THE SPECIAL PROVISIONS.
3. SEE ECD SHEETS FOR DETAILS OF FIBER ROLLS, BIOFILTRATION STRIPS AND LINEAR BIO-RETENTION.
4. ALL ROLLED EROSION CONTROL PRODUCT (NETTING) SHALL BE TYPE B

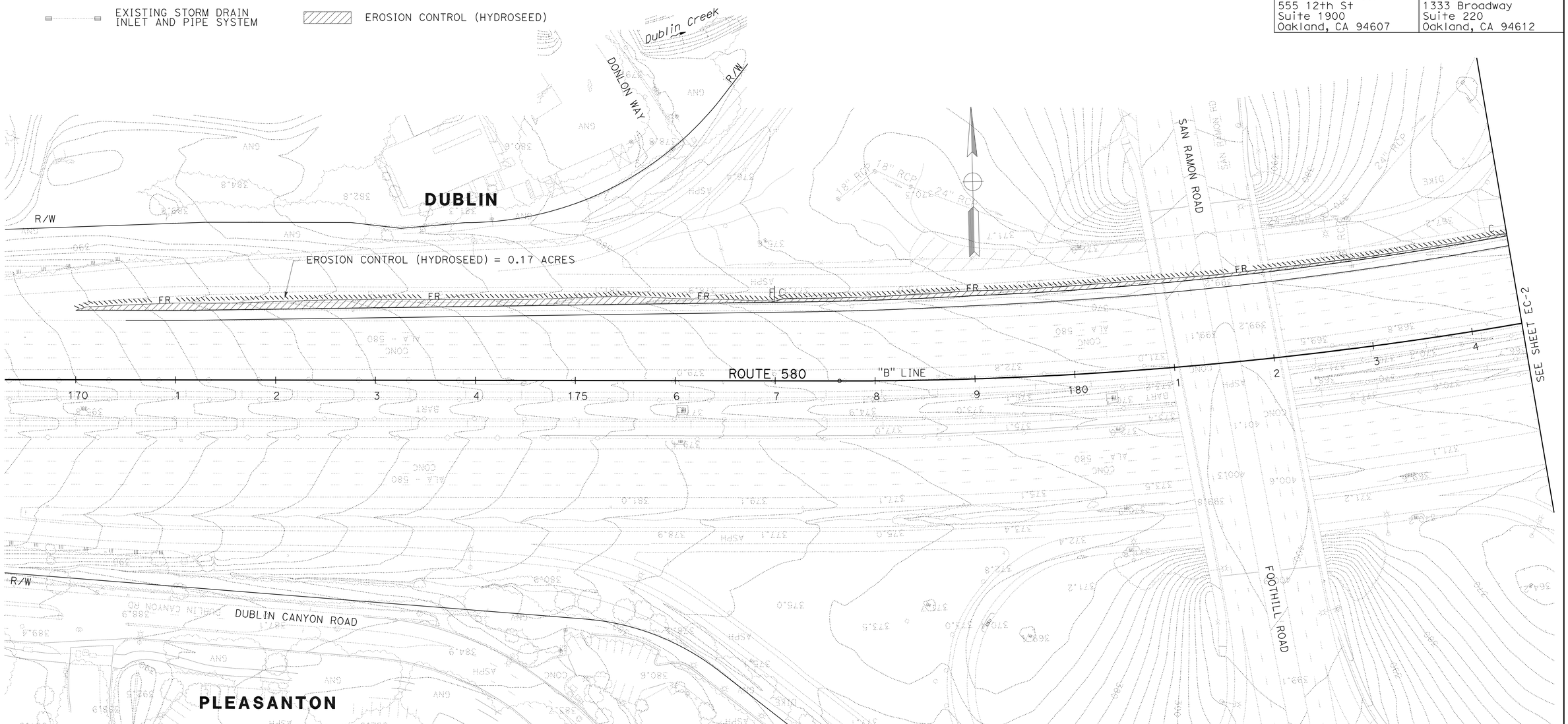

THIS PLAN ACCURATE FOR EROSION CONTROL WORK ONLY.

EROSION CONTROL PLAN

SCALE: 1" = 50'

EC-1

09/05/11	YF	
04/18/11	YF	
08/30/10	YF	
DATE REVISED	REVISED BY	

CHECKED BY: DAVID M. DICKINSON
CALCULATED-DESIGNED BY: Y. FAROUQI \ A. VALASQUEZ
CONSULTANT FUNCTIONAL SUPERVISOR: TIMOTHY J. LEE

STATE OF CALIFORNIA - DEPARTMENT OF TRANSPORTATION
Caltrans

X:\580 WB HOV\000_CAD\Sheets\West of Sta 540+00\CT-ELECTRONIC-SUBMITTAL 20111017\Erosion Control\04000212491ge001.dgn

LAST REVISION 09-23-11 | DATE PLOTTED => 13-APR-2012 TIME PLOTTED => 07:41

Dist	COUNTY	ROUTE	POST MILES TOTAL PROJECT	SHEET No.	TOTAL SHEETS
04	Ala	580	R14.6/R21.6	144	804

REGISTERED CIVIL ENGINEER 9/23/2011 DATE

4-9-12
PLANS APPROVAL DATE

REGISTERED PROFESSIONAL ENGINEER DAVID M. DICKINSON No. 50815 Exp. 9-30-13 CIVIL STATE OF CALIFORNIA

THE STATE OF CALIFORNIA OR ITS OFFICERS OR AGENTS SHALL NOT BE RESPONSIBLE FOR THE ACCURACY OR COMPLETENESS OF SCANNED COPIES OF THIS PLAN SHEET.

WMH CORPORATION
555 12th St
Suite 1900
Oakland, CA 94607

ALAMEDA CTC
1333 Broadway
Suite 220
Oakland, CA 94612

FOR ACCURATE RIGHT OF WAY DATA, CONTACT RIGHT OF WAY ENGINEERING AT THE DISTRICT OFFICE

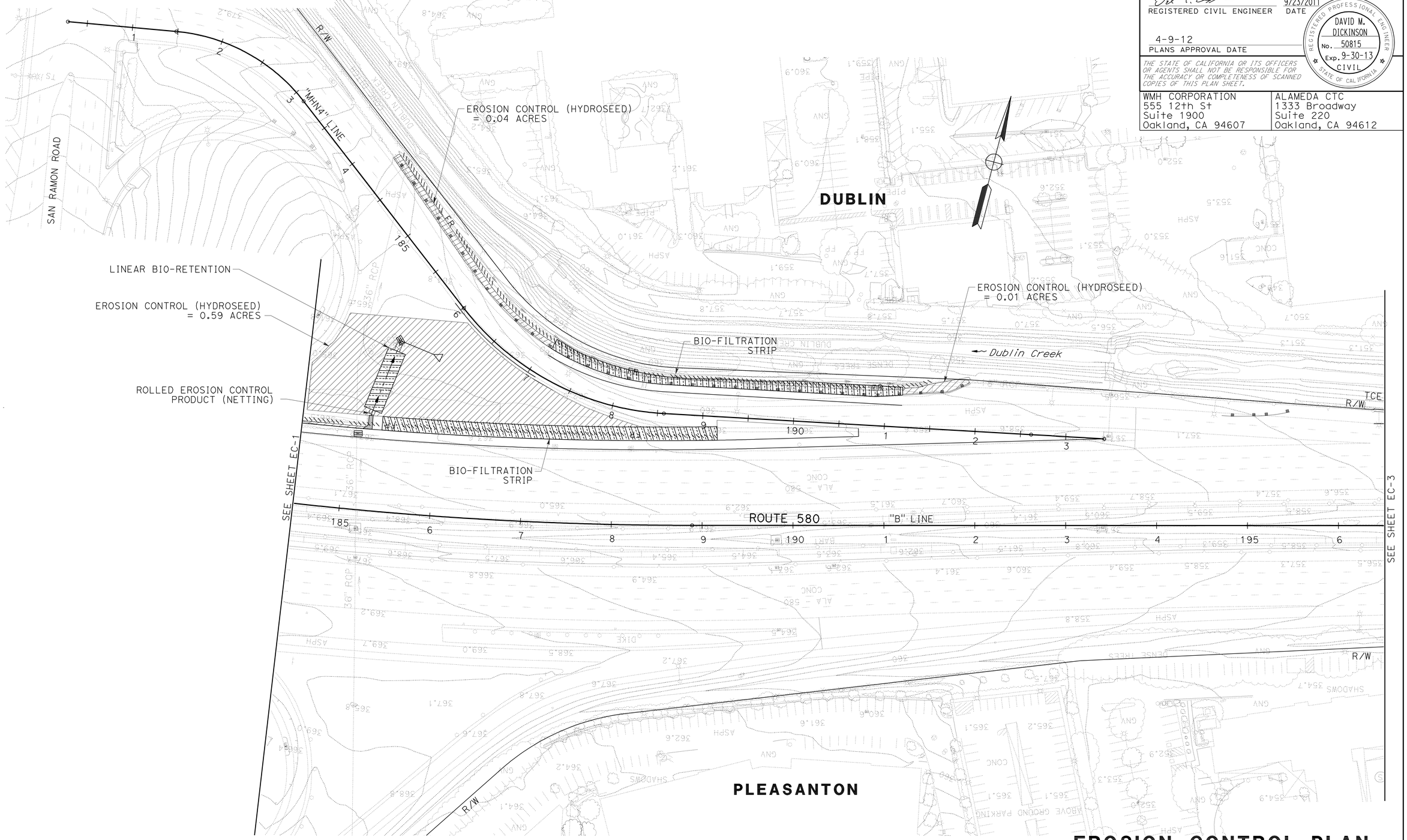

FOR NOTES, AND LEGEND, SEE SHEET EC-1

THIS PLAN ACCURATE FOR EROSION CONTROL WORK ONLY.

EROSION CONTROL PLAN

SCALE: 1" = 50'

EC- 2

YF	YF	YF	Y. FAROUQI \ A. VALASQUEZ
09/05/11	04/18/11	08/30/10	DAVID M. DICKINSON
		REVISED BY	CALCULATED-DESIGNED BY
		DATE REVISED	CHECKED BY
			TIMOTHY J. LEE
			CONSULTANT FUNCTIONAL SUPERVISOR

STATE OF CALIFORNIA - DEPARTMENT OF TRANSPORTATION

Caltrans

X:\580 WB HOV\000_CAD\Sheets\West of Sta 540+00\CT-ELECTRONIC-SUBMITTAL 20111017\Erosion Control\0400021249ge002.dgn

LAST REVISION 09-23-11 DATE PLOTTED => 13-APR-2012 TIME PLOTTED => 07:41

FOR ACCURATE RIGHT OF WAY DATA, CONTACT
RIGHT OF WAY ENGINEERING AT THE DISTRICT OFFICE

Dist	COUNTY	ROUTE	POST MILES TOTAL PROJECT	SHEET No.	TOTAL SHEETS
04	Ala	580	R14.6/R21.6	145	804

REGISTERED CIVIL ENGINEER 9/23/2011 DATE

4-9-12
PLANS APPROVAL DATE

REGISTERED PROFESSIONAL ENGINEER
DAVID M. DICKINSON
No. 50815
Exp. 9-30-13
CIVIL
STATE OF CALIFORNIA

THE STATE OF CALIFORNIA OR ITS OFFICERS OR AGENTS SHALL NOT BE RESPONSIBLE FOR THE ACCURACY OR COMPLETENESS OF SCANNED COPIES OF THIS PLAN SHEET.

WMH CORPORATION
555 12th St
Suite 1900
Oakland, CA 94607

ALAMEDA CTC
1333 Broadway
Suite 220
Oakland, CA 94612

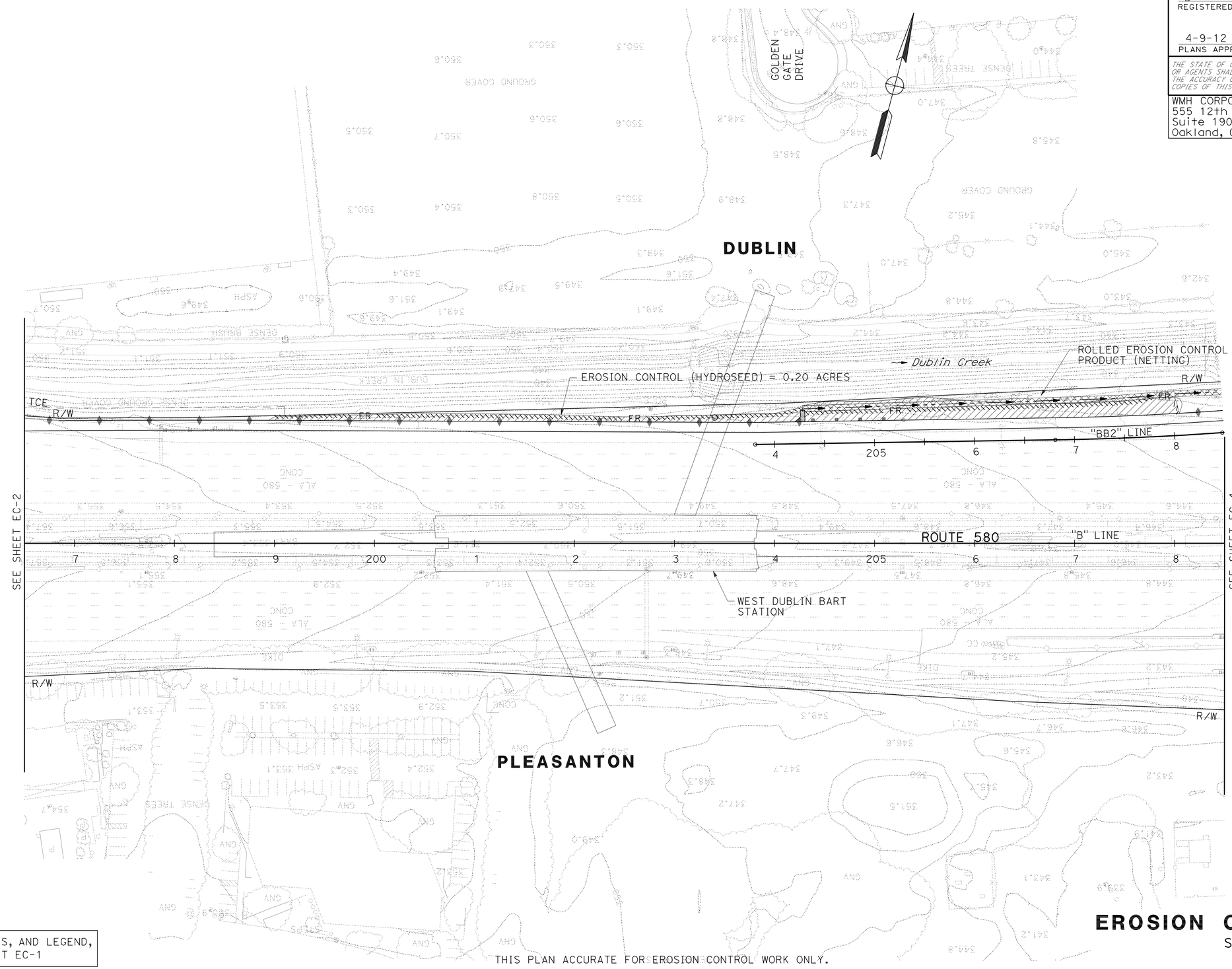

FOR NOTES, AND LEGEND, SEE SHEET EC-1

THIS PLAN ACCURATE FOR EROSION CONTROL WORK ONLY.

EROSION CONTROL PLAN

SCALE: 1" = 50'

EC-3

YF	YF	YF
09/05/11	04/18/11	08/30/10

REVISED BY
DATE REVISED

Y. FAROUQI \ A. VALASQUEZ
CALCULATED-DESIGNED BY

DAVID M. DICKINSON
CHECKED BY

TIMOTHY J. LEE
CONSULTANT FUNCTIONAL SUPERVISOR

STATE OF CALIFORNIA - DEPARTMENT OF TRANSPORTATION
Caltrans

X:\580 WB HOV\000_CAD\Sheets\West of Sta 540+00\CT-ELECTRONIC-SUBMITTAL 20111017\Erosion Control\04000212491ge003.dgn

LAST REVISION 09-23-11
DATE PLOTTED => 13-APR-2012
TIME PLOTTED => 07:42

Dist	COUNTY	ROUTE	POST MILES TOTAL PROJECT	SHEET No.	TOTAL SHEETS
04	Ala	580	R14.6/R21.6	146	804

REGISTERED CIVIL ENGINEER 9/23/2011 DATE

4-9-12
PLANS APPROVAL DATE

REGISTERED PROFESSIONAL ENGINEER DAVID M. DICKINSON No. 50815 Exp. 9-30-13 CIVIL STATE OF CALIFORNIA

THE STATE OF CALIFORNIA OR ITS OFFICERS OR AGENTS SHALL NOT BE RESPONSIBLE FOR THE ACCURACY OR COMPLETENESS OF SCANNED COPIES OF THIS PLAN SHEET.

WMH CORPORATION
555 12th St
Suite 1900
Oakland, CA 94607

ALAMEDA CTC
1333 Broadway
Suite 220
Oakland, CA 94612

FOR ACCURATE RIGHT OF WAY DATA, CONTACT
RIGHT OF WAY ENGINEERING AT THE DISTRICT OFFICE

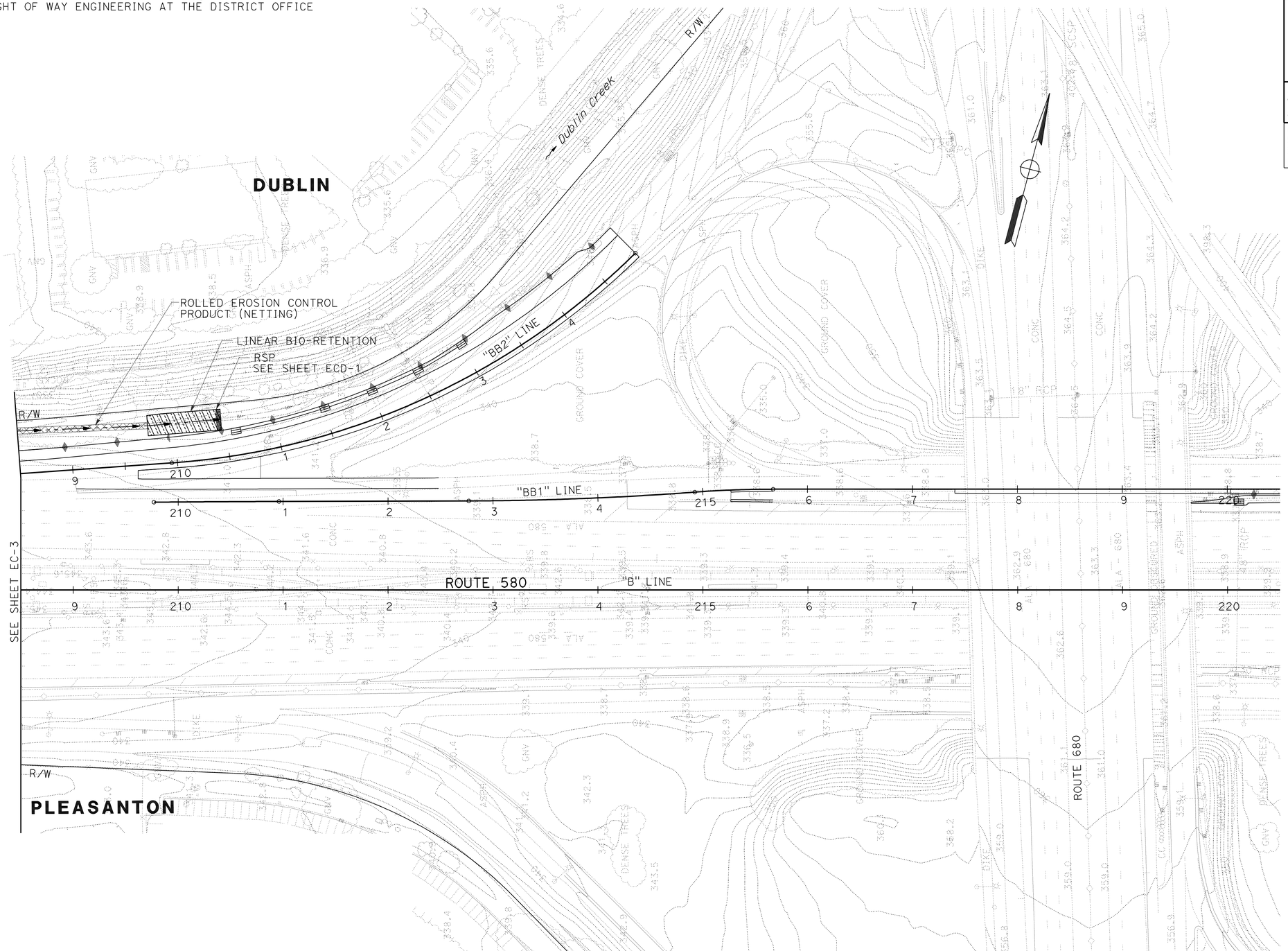

FOR NOTES, AND LEGEND,
SEE SHEET EC-1

THIS PLAN ACCURATE FOR EROSION CONTROL WORK ONLY.

EROSION CONTROL PLAN

SCALE: 1" = 50'

EC- 4

09/05/11	YF		
04/18/11	YF		
08/30/10	YF		
DATE REVISED	REVISED BY		
DAVID M. DICKINSON	Y. FAROUQI \ A. VALASQUEZ		
CHECKED BY	CALCULATED-DESIGNED BY		
TIMOTHY J. LEE	CONSULTANT FUNCTIONAL SUPERVISOR		
STATE OF CALIFORNIA - DEPARTMENT OF TRANSPORTATION			

Caltrans

X:\580 WB HOV\000_CAD\Sheets\West of Sta 540+00\CT-ELECTRONIC-SUBMITTAL 20111017\Erosion Control\04000212491ge004.dgn

LAST REVISION 09-23-11 | DATE PLOTTED => 13-APR-2012 TIME PLOTTED => 07:42

Dist	COUNTY	ROUTE	POST MILES TOTAL PROJECT	SHEET No.	TOTAL SHEETS
04	Ala	580	R14.6/R21.6	147	804

REGISTERED CIVIL ENGINEER 9/23/2011 DATE

4-9-12
PLANS APPROVAL DATE

REGISTERED PROFESSIONAL ENGINEER DAVID M. DICKINSON No. 50815 Exp. 9-30-13 CIVIL STATE OF CALIFORNIA

THE STATE OF CALIFORNIA OR ITS OFFICERS OR AGENTS SHALL NOT BE RESPONSIBLE FOR THE ACCURACY OR COMPLETENESS OF SCANNED COPIES OF THIS PLAN SHEET.

WMH CORPORATION
555 12th St
Suite 1900
Oakland, CA 94607

ALAMEDA CTC
1333 Broadway
Suite 220
Oakland, CA 94612

FOR ACCURATE RIGHT OF WAY DATA, CONTACT
RIGHT OF WAY ENGINEERING AT THE DISTRICT OFFICE

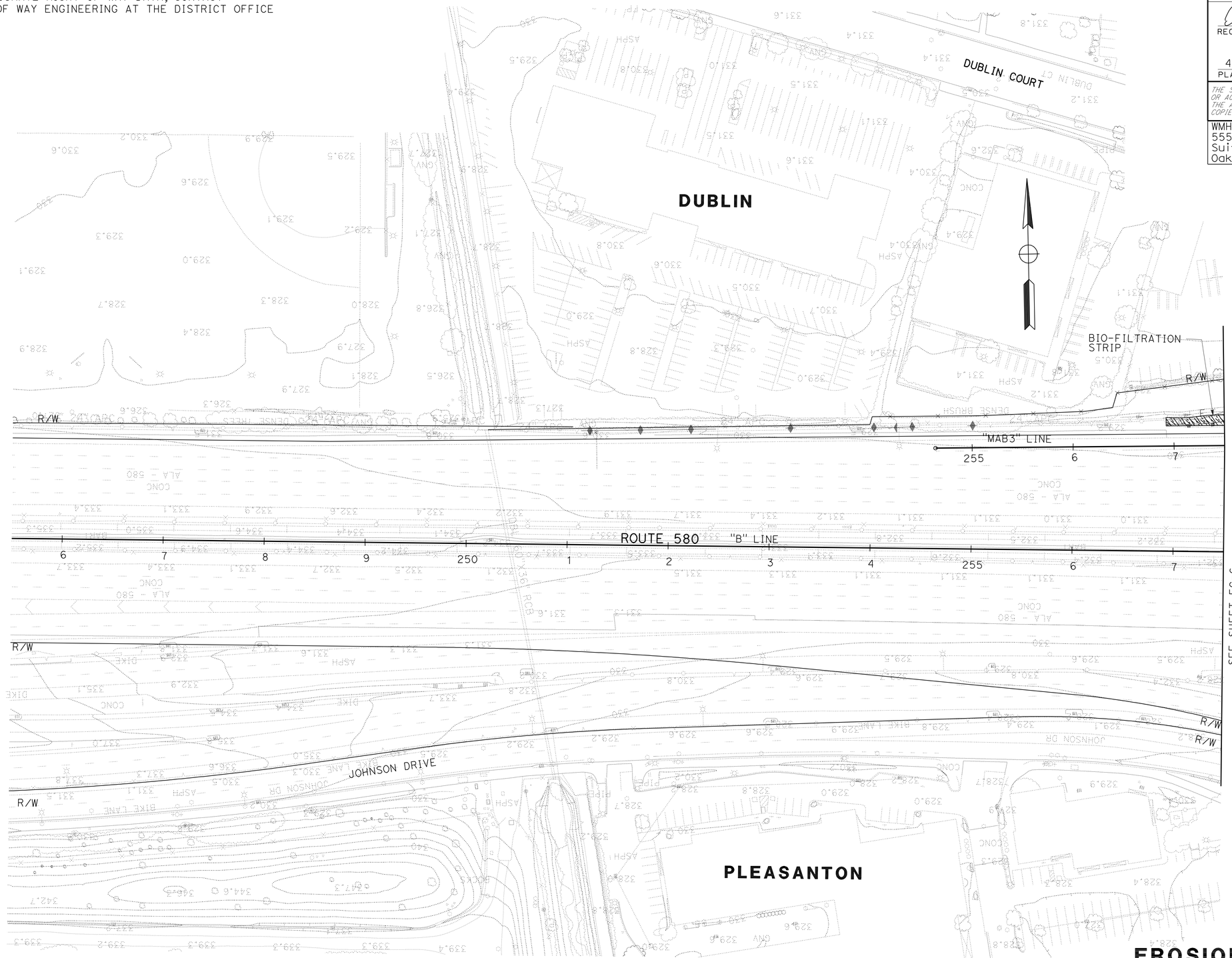

FOR NOTES, AND LEGEND,
SEE SHEET EC-1

THIS PLAN ACCURATE FOR EROSION CONTROL WORK ONLY.

EROSION CONTROL PLAN

SCALE: 1" = 50'

EC-5

YF	YF	YF	Y. FAROUQI \ A. VALASQUEZ
09/05/11	04/18/11	08/30/10	DAVID M. DICKINSON
		DATE REVISED	CHECKED BY

REVISED BY | CALCULATED-DESIGNED BY

CONSULTANT FUNCTIONAL SUPERVISOR: TIMOTHY J. LEE

STATE OF CALIFORNIA - DEPARTMENT OF TRANSPORTATION

Caltrans

X:\580 WB HOV\000_CAD\Sheets\West of Sta 540+00\CT-ELECTRONIC-SUBMITTAL 20111017\Erosion Control\0400021249ge005.dgn

LAST REVISION 09-23-11 | DATE PLOTTED => 13-APR-2012 TIME PLOTTED => 07:42

Dist	COUNTY	ROUTE	POST MILES TOTAL PROJECT	SHEET No.	TOTAL SHEETS
04	Ala	580	R14.6/R21.6	148	804

REGISTERED CIVIL ENGINEER 9/23/2011 DATE

4-9-12
PLANS APPROVAL DATE

REGISTERED PROFESSIONAL ENGINEER
DAVID M. DICKINSON
No. 50815
Exp. 9-30-13
CIVIL
STATE OF CALIFORNIA

THE STATE OF CALIFORNIA OR ITS OFFICERS OR AGENTS SHALL NOT BE RESPONSIBLE FOR THE ACCURACY OR COMPLETENESS OF SCANNED COPIES OF THIS PLAN SHEET.

WMH CORPORATION
555 12th St
Suite 1900
Oakland, CA 94607

ALAMEDA CTC
1333 Broadway
Suite 220
Oakland, CA 94612

FOR ACCURATE RIGHT OF WAY DATA, CONTACT
RIGHT OF WAY ENGINEERING AT THE DISTRICT OFFICE

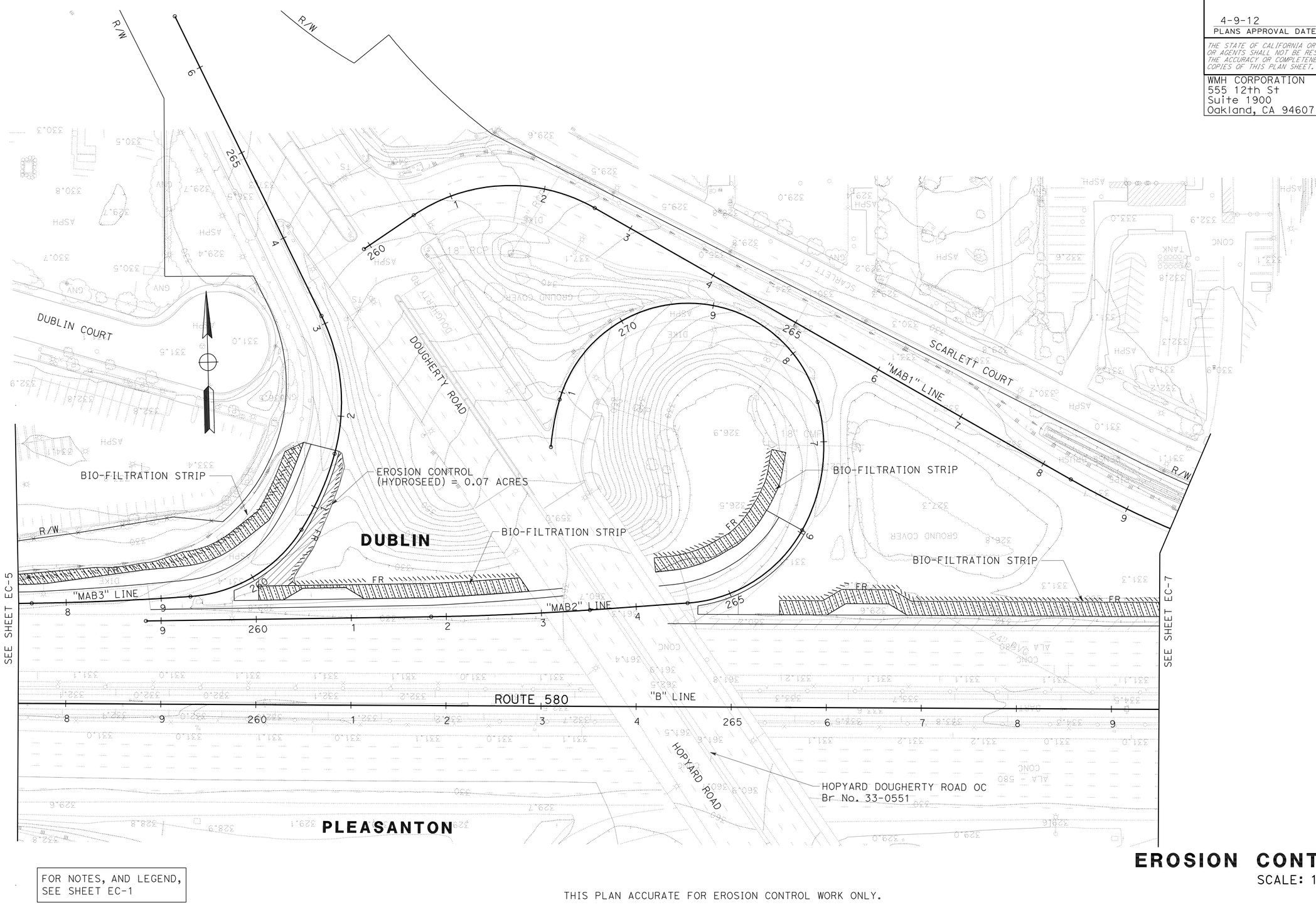

FOR NOTES, AND LEGEND,
SEE SHEET EC-1

THIS PLAN ACCURATE FOR EROSION CONTROL WORK ONLY.

EROSION CONTROL PLAN

SCALE: 1" = 50'

EC-6

YF	YF	YF	REVISED BY
09/05/11	04/18/11	08/30/10	DATE REVISED

CALCULATED-DESIGNED BY: Y. FAROUQI \ A. VALASQUEZ
CHECKED BY: DAVID M. DICKINSON
CONSULTANT FUNCTIONAL SUPERVISOR: TIMOTHY J. LEE

STATE OF CALIFORNIA - DEPARTMENT OF TRANSPORTATION
Caltrans

X:\580 WB HOV\000_CAD\Sheets\West of Sta 540+00\CT-ELECTRONIC-SUBMITTAL 20111017\Erosion Control\04000212491ge006.dgn

LAST REVISION 09-23-11 | DATE PLOTTED => 13-APR-2012 | TIME PLOTTED => 07:42

Dist	COUNTY	ROUTE	POST MILES TOTAL PROJECT	SHEET No.	TOTAL SHEETS
04	Ala	580	R14.6/R21.6	149	804

REGISTERED CIVIL ENGINEER 9/23/2011 DATE

4-9-12
PLANS APPROVAL DATE

REGISTERED PROFESSIONAL ENGINEER DAVID M. DICKINSON No. 50815 Exp. 9-30-13 CIVIL STATE OF CALIFORNIA

THE STATE OF CALIFORNIA OR ITS OFFICERS OR AGENTS SHALL NOT BE RESPONSIBLE FOR THE ACCURACY OR COMPLETENESS OF SCANNED COPIES OF THIS PLAN SHEET.

WMH CORPORATION
555 12th St
Suite 1900
Oakland, CA 94607

ALAMEDA CTC
1333 Broadway
Suite 220
Oakland, CA 94612

FOR ACCURATE RIGHT OF WAY DATA, CONTACT
RIGHT OF WAY ENGINEERING AT THE DISTRICT OFFICE

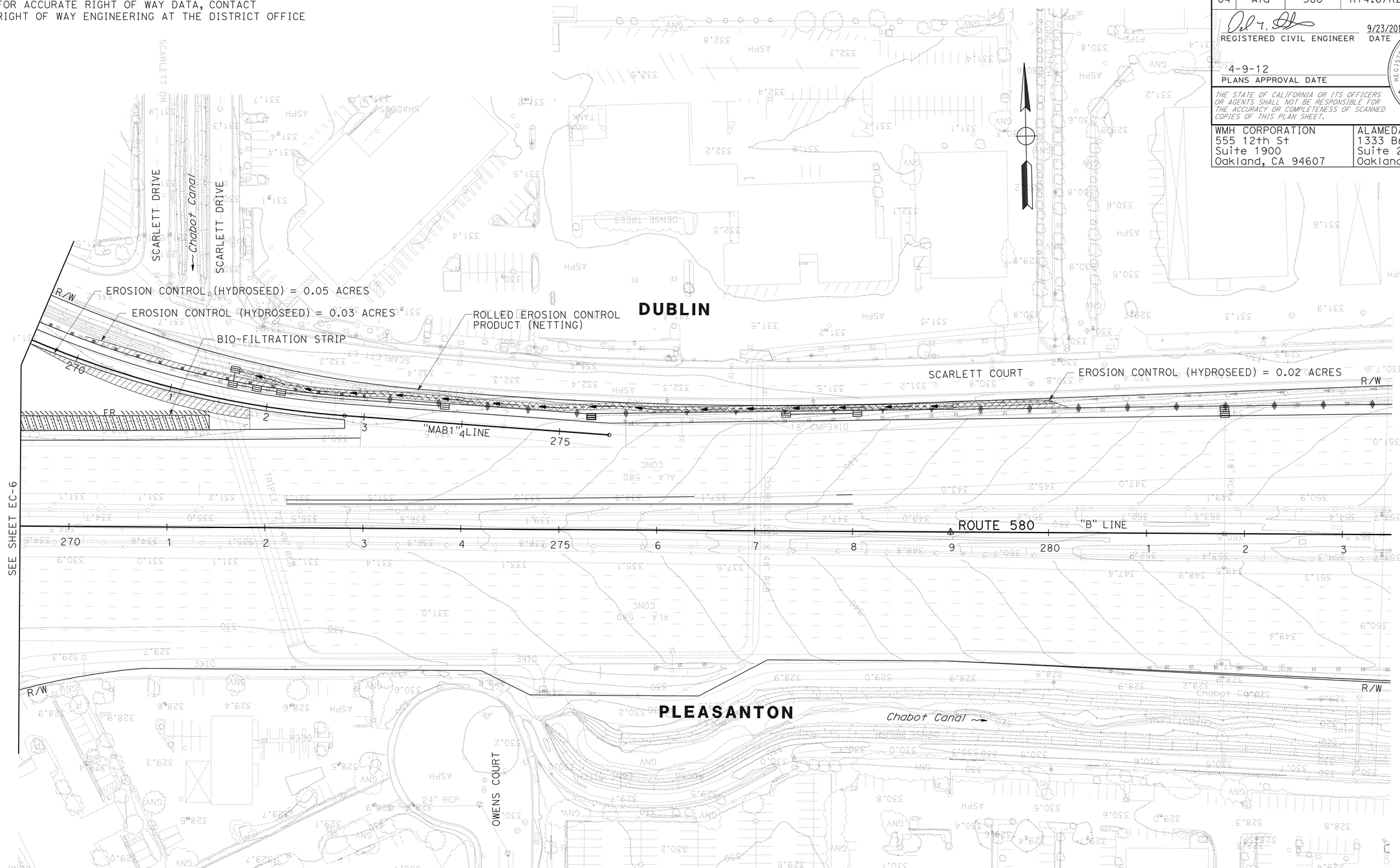

FOR NOTES, AND LEGEND,
SEE SHEET EC-1

THIS PLAN ACCURATE FOR EROSION CONTROL WORK ONLY.

EROSION CONTROL PLAN

SCALE: 1" = 50'

EC-7

YF	YF	YF
09/05/11	04/18/11	08/30/10

REVISED BY
DATE REVISED

Y. FAROUQI \ A. VALASQUEZ
DAVID M. DICKINSON

CALCULATED-DESIGNED BY
CHECKED BY

CONSULTANT FUNCTIONAL SUPERVISOR
TIMOTHY J. LEE

STATE OF CALIFORNIA - DEPARTMENT OF TRANSPORTATION
Caltrans

X:\580 WB HOV\000_CAD\Sheets\West of Sta 540+00\CT-ELECTRONIC-SUBMITTAL 20111017\Erosion Control\04000212491ge007.dgn

LAST REVISION 09-23-11
DATE PLOTTED => 13-APR-2012
TIME PLOTTED => 07:42

Dist	COUNTY	ROUTE	POST MILES TOTAL PROJECT	SHEET No.	TOTAL SHEETS
04	Ala	580	R14.6/R21.6	150	804

REGISTERED CIVIL ENGINEER 9/23/2011 DATE

4-9-12
PLANS APPROVAL DATE

REGISTERED PROFESSIONAL ENGINEER DAVID M. DICKINSON No. 50815 Exp. 9-30-13 CIVIL STATE OF CALIFORNIA

THE STATE OF CALIFORNIA OR ITS OFFICERS OR AGENTS SHALL NOT BE RESPONSIBLE FOR THE ACCURACY OR COMPLETENESS OF SCANNED COPIES OF THIS PLAN SHEET.

WMH CORPORATION
555 12th St
Suite 1900
Oakland, CA 94607

ALAMEDA CTC
1333 Broadway
Suite 220
Oakland, CA 94612

FOR ACCURATE RIGHT OF WAY DATA, CONTACT
RIGHT OF WAY ENGINEERING AT THE DISTRICT OFFICE

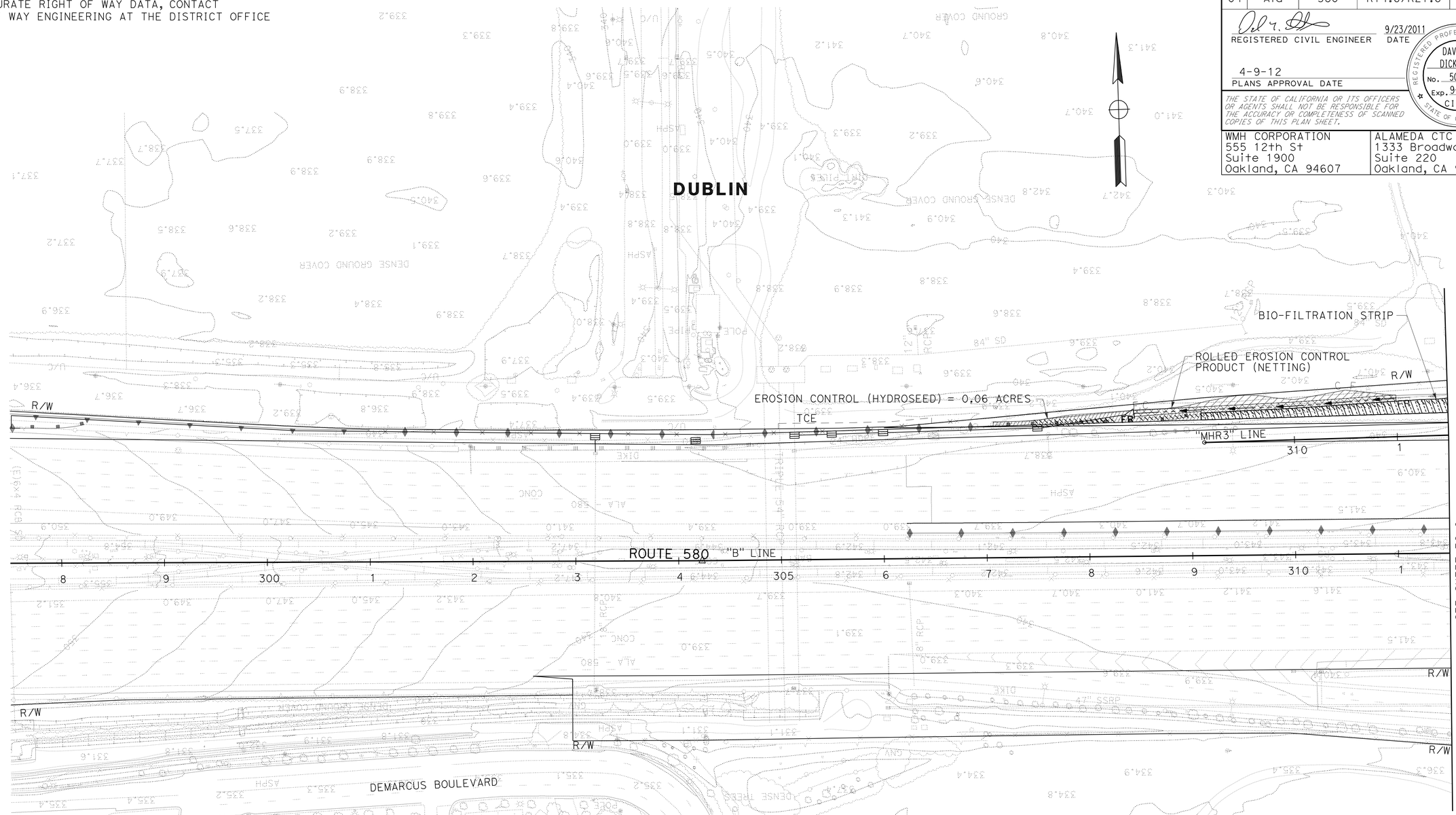

FOR NOTES, AND LEGEND,
SEE SHEET EC-1

THIS PLAN ACCURATE FOR EROSION CONTROL WORK ONLY.

EROSION CONTROL PLAN

SCALE: 1" = 50'

EC-8

09/05/11	YF		
04/18/11	YF		
08/30/10	YF		
DATE REVISED	REVISED BY		

Y. FAROUQI \ A. VALASQUEZ — CALCULATED-DESIGNED BY
DAVID M. DICKINSON — CHECKED BY
TIMOTHY J. LEE — CONSULTANT FUNCTIONAL SUPERVISOR

STATE OF CALIFORNIA - DEPARTMENT OF TRANSPORTATION
Caltrans

X:\580 WB HOV\000_CAD\Sheets\West of Sta 540+00\CT-ELECTRONIC-SUBMITTAL 20111017\Erosion Control\04000212491ge008.dgn

LAST REVISION 09-23-11
DATE PLOTTED => 13-APR-2012
TIME PLOTTED => 07:43

Dist	COUNTY	ROUTE	POST MILES TOTAL PROJECT	SHEET No.	TOTAL SHEETS
04	Ala	580	R14.6/R21.6	151	804

REGISTERED CIVIL ENGINEER 9/23/2011 DATE

4-9-12
PLANS APPROVAL DATE

REGISTERED PROFESSIONAL ENGINEER DAVID M. DICKINSON No. 50815 Exp. 9-30-13 CIVIL STATE OF CALIFORNIA

THE STATE OF CALIFORNIA OR ITS OFFICERS OR AGENTS SHALL NOT BE RESPONSIBLE FOR THE ACCURACY OR COMPLETENESS OF SCANNED COPIES OF THIS PLAN SHEET.

WMH CORPORATION
555 12th St
Suite 1900
Oakland, CA 94607

ALAMEDA CTC
1333 Broadway
Suite 220
Oakland, CA 94612

FOR ACCURATE RIGHT OF WAY DATA, CONTACT
RIGHT OF WAY ENGINEERING AT THE DISTRICT OFFICE

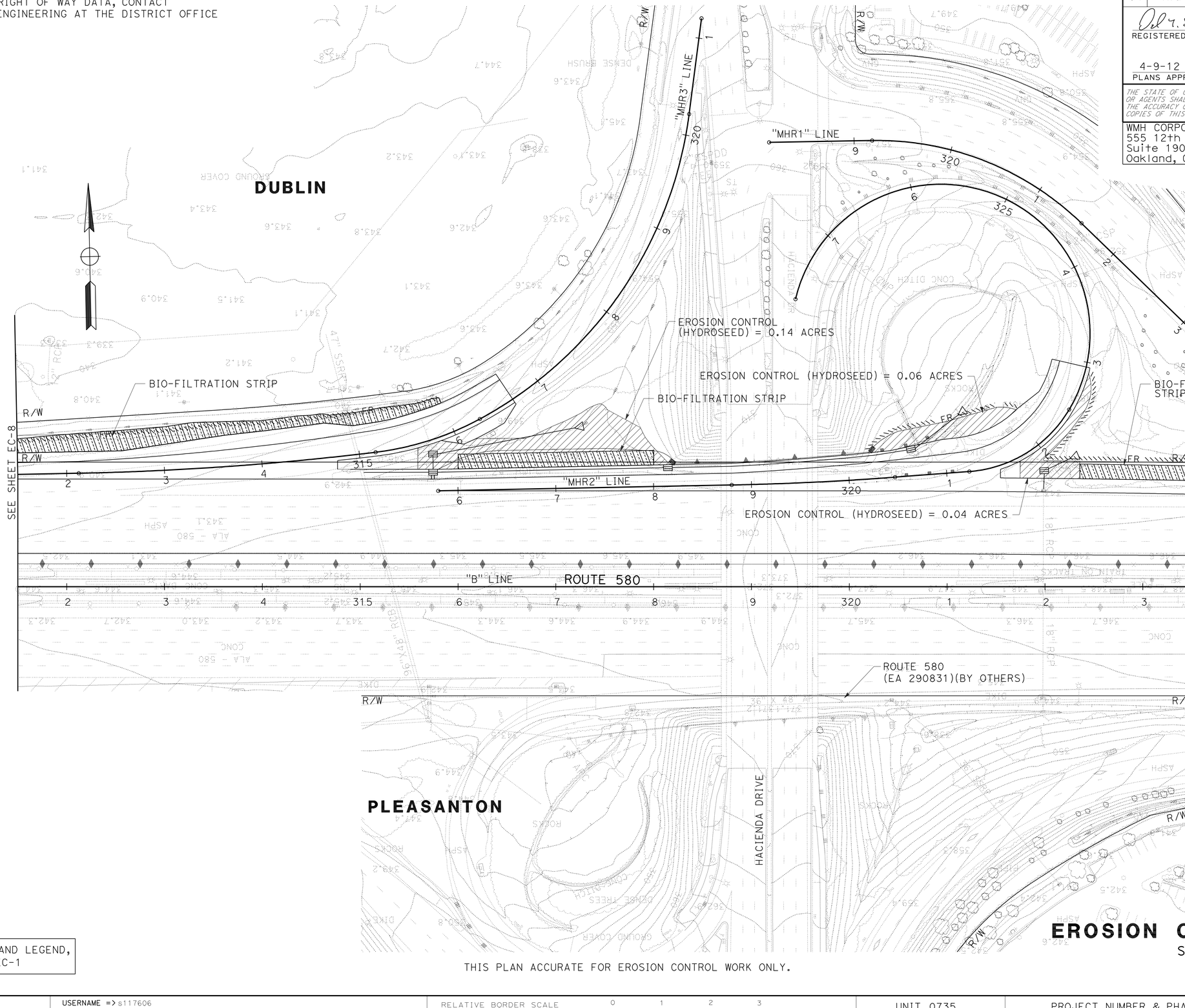

FOR NOTES, AND LEGEND, SEE SHEET EC-1

THIS PLAN ACCURATE FOR EROSION CONTROL WORK ONLY.

EROSION CONTROL PLAN

SCALE: 1" = 50'

EC-9

YF	YF	YF	Y. FAROUQI \ A. VALASQUEZ
09/05/11	04/18/11	08/30/10	DAVID M. DICKINSON
DATE REVISED			CALCULATED-DESIGNED BY
REVISED BY			CHECKED BY

TIMOTHY J. LEE — CONSULTANT FUNCTIONAL SUPERVISOR

STATE OF CALIFORNIA - DEPARTMENT OF TRANSPORTATION

Caltrans

X:\580 WB HOV\000_CAD\Sheets\West of Sta 540 00\CT ELECTRONIC SUBMITTAL 20111017\Erosion Control\04000212 49ge009.dgn

LAST REVISION 09-23-11 | DATE PLOTTED => 13 APR 2012 | TIME PLOTTED => 10:28

Dist	COUNTY	ROUTE	POST MILES TOTAL PROJECT	SHEET No.	TOTAL SHEETS
04	Ala	580	R14.6/R21.6	152	804

REGISTERED CIVIL ENGINEER 9/23/2011 DATE

4-9-12
PLANS APPROVAL DATE

REGISTERED PROFESSIONAL ENGINEER DAVID M. DICKINSON No. 50815 Exp. 9-30-13 CIVIL STATE OF CALIFORNIA

THE STATE OF CALIFORNIA OR ITS OFFICERS OR AGENTS SHALL NOT BE RESPONSIBLE FOR THE ACCURACY OR COMPLETENESS OF SCANNED COPIES OF THIS PLAN SHEET.

WMH CORPORATION
555 12th St
Suite 1900
Oakland, CA 94607

ALAMEDA CTC
1333 Broadway
Suite 220
Oakland, CA 94612

FOR ACCURATE RIGHT OF WAY DATA, CONTACT
RIGHT OF WAY ENGINEERING AT THE DISTRICT OFFICE

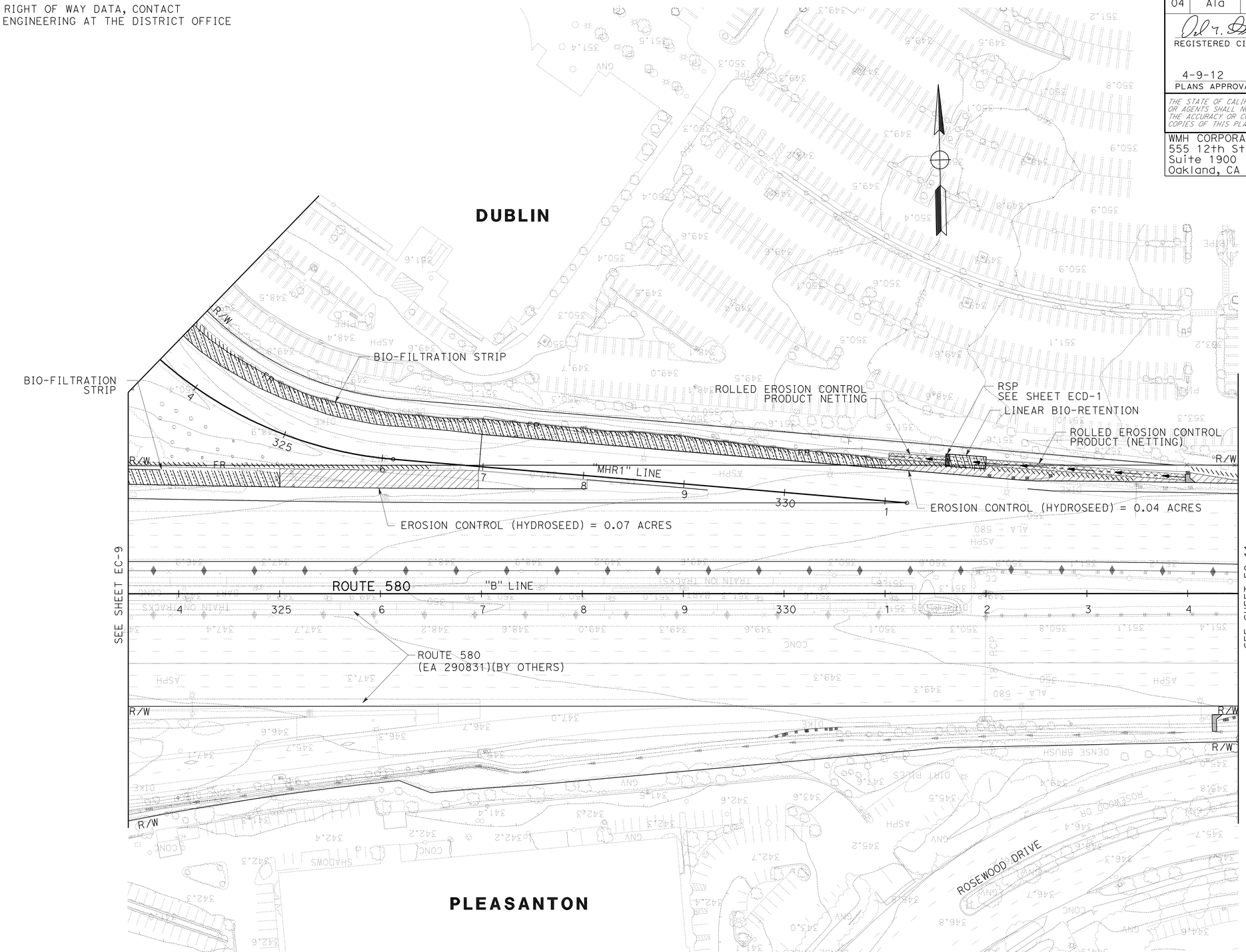

FOR NOTES, AND LEGEND,
SEE SHEET EC-1

THIS PLAN ACCURATE FOR EROSION CONTROL WORK ONLY.

EROSION CONTROL PLAN

SCALE: 1" = 50'

EC-10

YF	YF	YF
09/05/11	04/18/11	08/30/10

REVISED BY
DATE REVISED

Y. FAROUQI \ A. VALASQUEZ
DAVID M. DICKINSON

CALCULATED-DESIGNED BY
CHECKED BY

TIMOTHY J. LEE

CONSULTANT FUNCTIONAL SUPERVISOR

STATE OF CALIFORNIA - DEPARTMENT OF TRANSPORTATION

Caltrans

X:\580 WB HOV\000_CAD\Sheets\West of Sta 540 00\CT ELECTRONIC SUBMITTAL 20111017\Erosion Control\0400021249ge010.dgn

LAST REVISION 09-23-11
DATE PLOTTED => 13 APR 2012
TIME PLOTTED => 10:29

Dist	COUNTY	ROUTE	POST MILES TOTAL PROJECT	SHEET No.	TOTAL SHEETS
04	Ala	580	R14.6/R21.6	153	804

REGISTERED CIVIL ENGINEER 9/23/2011 DATE

4-9-12
PLANS APPROVAL DATE

REGISTERED PROFESSIONAL ENGINEER DAVID M. DICKINSON No. 50815 Exp. 9-30-13 CIVIL STATE OF CALIFORNIA

THE STATE OF CALIFORNIA OR ITS OFFICERS OR AGENTS SHALL NOT BE RESPONSIBLE FOR THE ACCURACY OR COMPLETENESS OF SCANNED COPIES OF THIS PLAN SHEET.

WMH CORPORATION
555 12th St
Suite 1900
Oakland, CA 94607

ALAMEDA CTC
1333 Broadway
Suite 220
Oakland, CA 94612

FOR ACCURATE RIGHT OF WAY DATA, CONTACT
RIGHT OF WAY ENGINEERING AT THE DISTRICT OFFICE

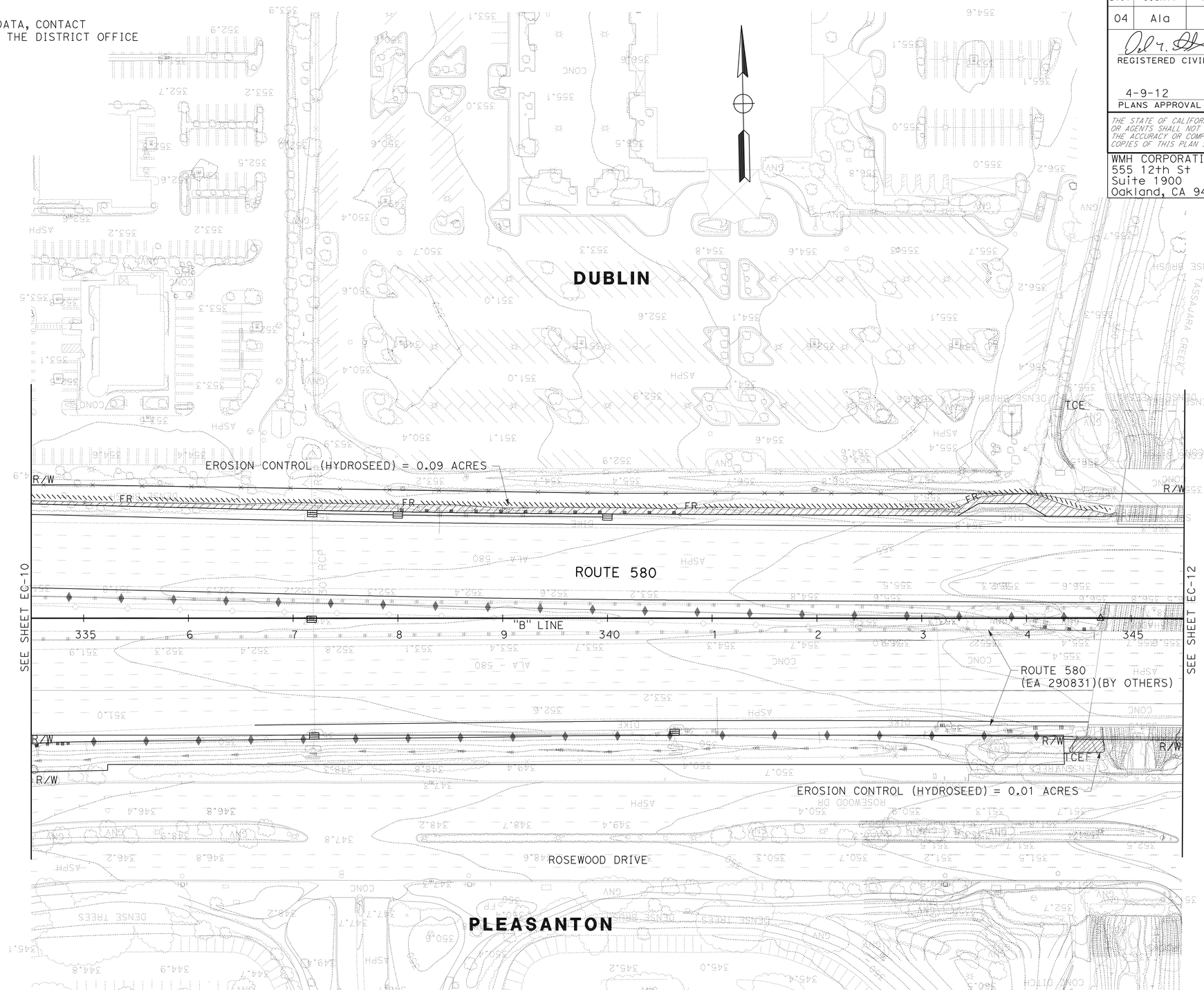

FOR NOTES, AND LEGEND,
SEE SHEET EC-1

THIS PLAN ACCURATE FOR EROSION CONTROL WORK ONLY.

EROSION CONTROL PLAN

SCALE: 1" = 50'

EC-11

YF	YF	YF	YF
09/05/11	04/18/11	08/30/10	DATE REVISED

REVISED BY

Y. FAROUQI \ A. VALASQUEZ — CALCULATED-DESIGNED BY

DAVID M. DICKINSON — CHECKED BY

TIMOTHY J. LEE — CONSULTANT FUNCTIONAL SUPERVISOR

STATE OF CALIFORNIA - DEPARTMENT OF TRANSPORTATION

Caltrans

X:\580 WB HOV\000_CAD\Sheets\West of Sta 540 00\CT ELECTRONIC SUBMITTAL 20111017\Erosion Control\04000212491ge011.dgn

LAST REVISION 09-23-11 | DATE PLOTTED => 13 APR 2012 | TIME PLOTTED => 10:29

Dist	COUNTY	ROUTE	POST MILES TOTAL PROJECT	SHEET No.	TOTAL SHEETS
04	Ala	580	R14.6/R21.6	154	804

REGISTERED CIVIL ENGINEER 9/23/2011 DATE

4-9-12
PLANS APPROVAL DATE

REGISTERED PROFESSIONAL ENGINEER DAVID M. DICKINSON No. 50815 Exp. 9-30-13 CIVIL STATE OF CALIFORNIA

THE STATE OF CALIFORNIA OR ITS OFFICERS OR AGENTS SHALL NOT BE RESPONSIBLE FOR THE ACCURACY OR COMPLETENESS OF SCANNED COPIES OF THIS PLAN SHEET.

WMH CORPORATION
555 12th St
Suite 1900
Oakland, CA 94607

ALAMEDA CTC
1333 Broadway
Suite 220
Oakland, CA 94612

FOR ACCURATE RIGHT OF WAY DATA, CONTACT
RIGHT OF WAY ENGINEERING AT THE DISTRICT OFFICE

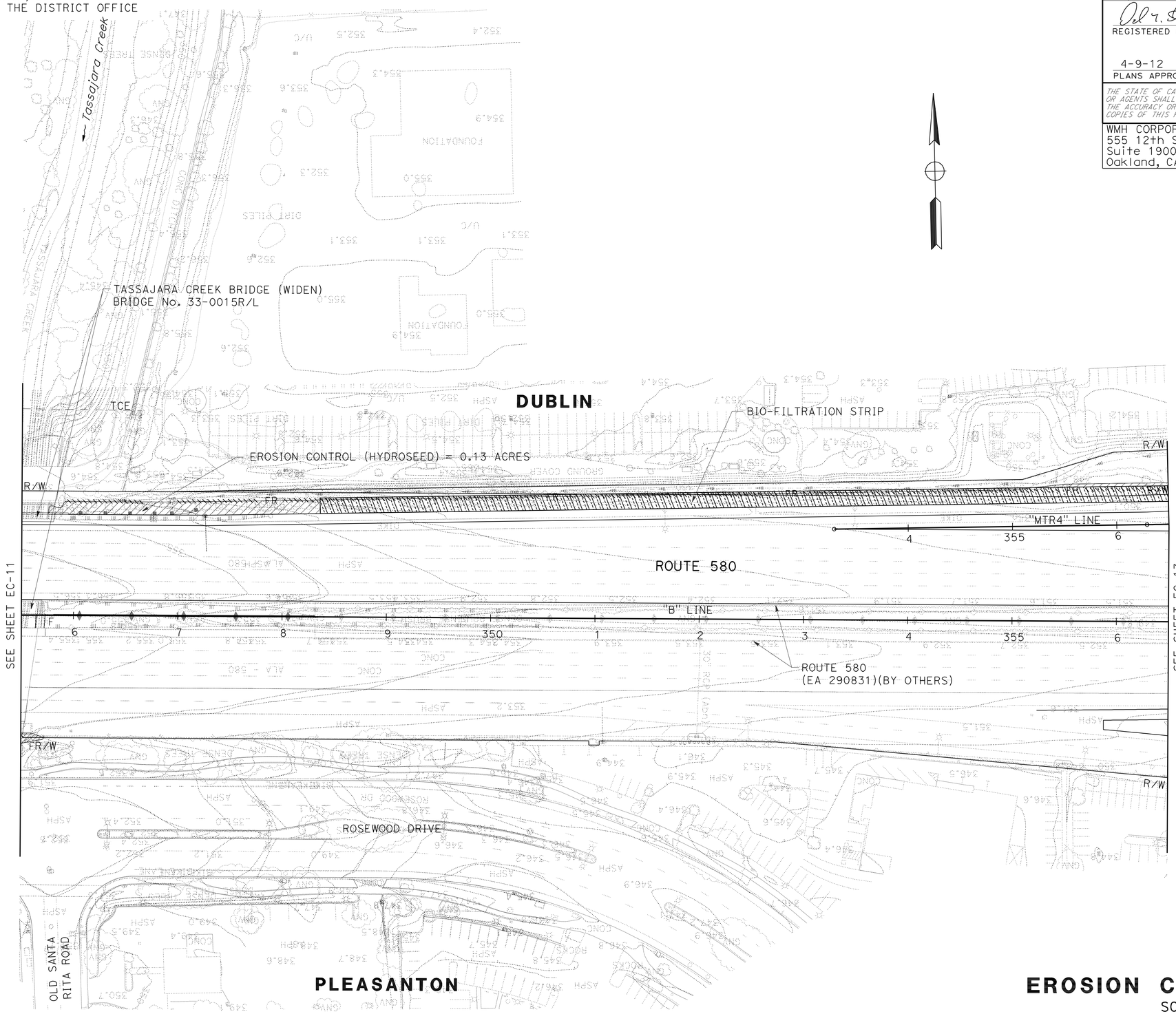

FOR NOTES, AND LEGEND, SEE SHEET EC-1

THIS PLAN ACCURATE FOR EROSION CONTROL WORK ONLY.

EROSION CONTROL PLAN

SCALE: 1" = 50'

EC-12

STATE OF CALIFORNIA - DEPARTMENT OF TRANSPORTATION

Caltrans

CONSULTANT FUNCTIONAL SUPERVISOR: TIMOTHY J. LEE

CALCULATED-DESIGNED BY: Y. FAROUQI \ A. VALASQUEZ

CHECKED BY: DAVID M. DICKINSON

REVISED BY / DATE REVISED: YF 08/30/10 | YF 04/18/11 | YF 09/05/11

X:\580 WB HOV\000_CAD\Sheets\West of Sta 540 00\CT ELECTRONIC SUBMITTAL 20111017\Erosion Control\0400021249ge012.dgn

LAST REVISION 09-23-11 | DATE PLOTTED => 13 APR 2012 | TIME PLOTTED => 10:30

Dist	COUNTY	ROUTE	POST MILES TOTAL PROJECT	SHEET No.	TOTAL SHEETS
04	Ala	580	R14.6/R21.6	155	804

REGISTERED CIVIL ENGINEER — DATE 9/23/2011

4-9-12
PLANS APPROVAL DATE

REGISTERED PROFESSIONAL ENGINEER — DAVID M. DICKINSON — No. 50815 — Exp. 9-30-13 — CIVIL — STATE OF CALIFORNIA

THE STATE OF CALIFORNIA OR ITS OFFICERS OR AGENTS SHALL NOT BE RESPONSIBLE FOR THE ACCURACY OR COMPLETENESS OF SCANNED COPIES OF THIS PLAN SHEET.

WMH CORPORATION
555 12th St
Suite 1900
Oakland, CA 94607

ALAMEDA CTC
1333 Broadway
Suite 220
Oakland, CA 94612

FOR ACCURATE RIGHT OF WAY DATA, CONTACT
RIGHT OF WAY ENGINEERING AT THE DISTRICT OFFICE

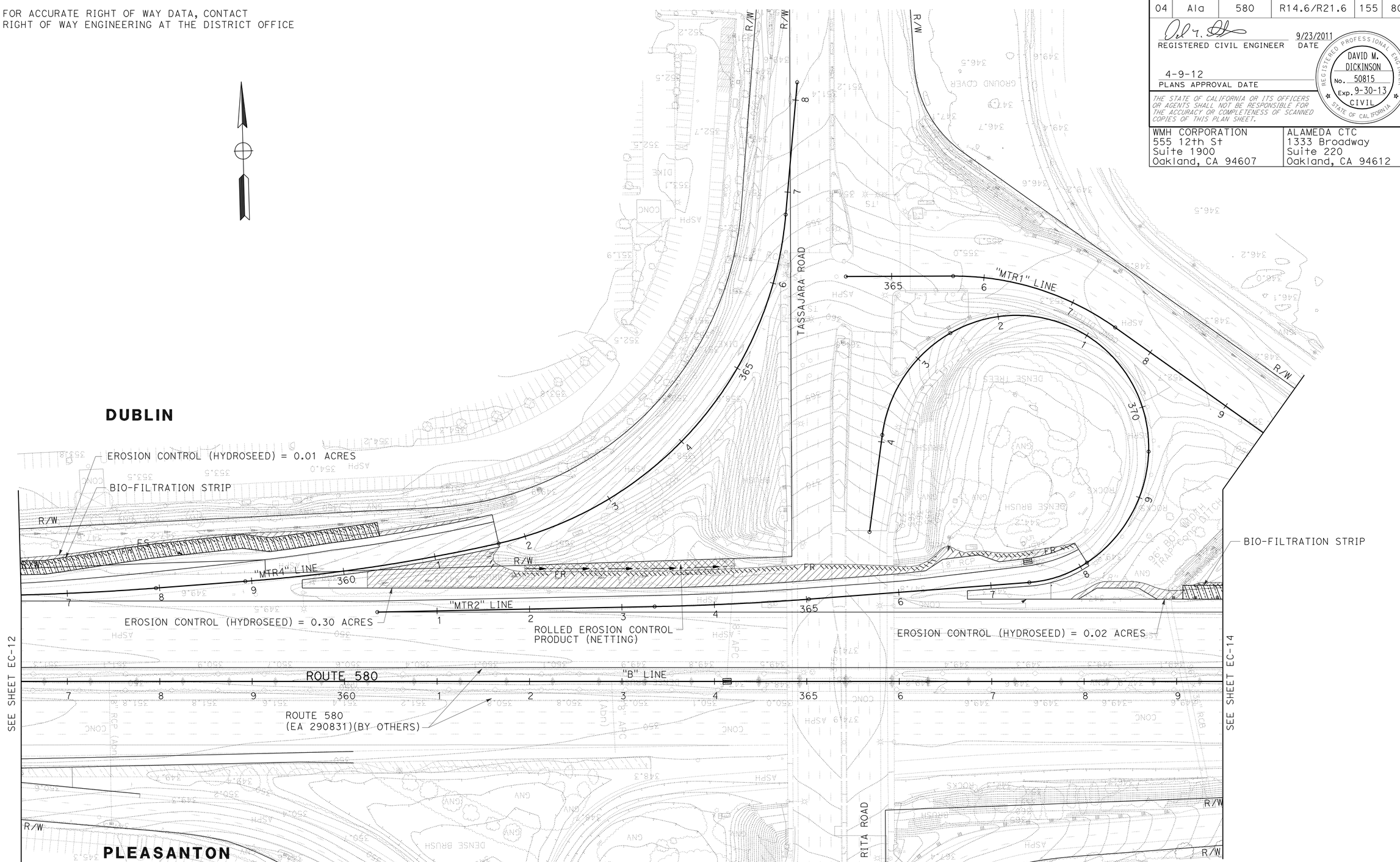

FOR NOTES, AND LEGEND, SEE SHEET EC-1

THIS PLAN ACCURATE FOR EROSION CONTROL WORK ONLY.

EROSION CONTROL PLAN

SCALE: 1" = 50'

EC-13

YF	YF	YF	Y. FAROUQI \ A. VALASQUEZ
09/05/11	04/18/11	08/30/10	DAVID M. DICKINSON
		DATE REVISED	CALCULATED-DESIGNED BY
		REVISED BY	CHECKED BY

CONSULTANT FUNCTIONAL SUPERVISOR: TIMOTHY J. LEE

STATE OF CALIFORNIA - DEPARTMENT OF TRANSPORTATION

Caltrans

X:\580 WB HOV\000_CAD\Sheets\West of Sta 540 00\CT ELECTRONIC SUBMITTAL 20111017\Erosion Control\04000212491ge013.dgn

LAST REVISION — DATE PLOTTED => 13 APR 2012 — TIME PLOTTED => 10:30
09-23-11

Dist	COUNTY	ROUTE	POST MILES TOTAL PROJECT	SHEET No.	TOTAL SHEETS
04	Ala	580	R14.6/R21.6	156	804

REGISTERED CIVIL ENGINEER 9/23/2011 DATE

4-9-12
PLANS APPROVAL DATE

REGISTERED PROFESSIONAL ENGINEER DAVID M. DICKINSON No. 50815 Exp. 9-30-13 CIVIL STATE OF CALIFORNIA

THE STATE OF CALIFORNIA OR ITS OFFICERS OR AGENTS SHALL NOT BE RESPONSIBLE FOR THE ACCURACY OR COMPLETENESS OF SCANNED COPIES OF THIS PLAN SHEET.

WMH CORPORATION
555 12th St
Suite 1900
Oakland, CA 94607

ALAMEDA CTC
1333 Broadway
Suite 220
Oakland, CA 94612

FOR ACCURATE RIGHT OF WAY DATA, CONTACT
RIGHT OF WAY ENGINEERING AT THE DISTRICT OFFICE

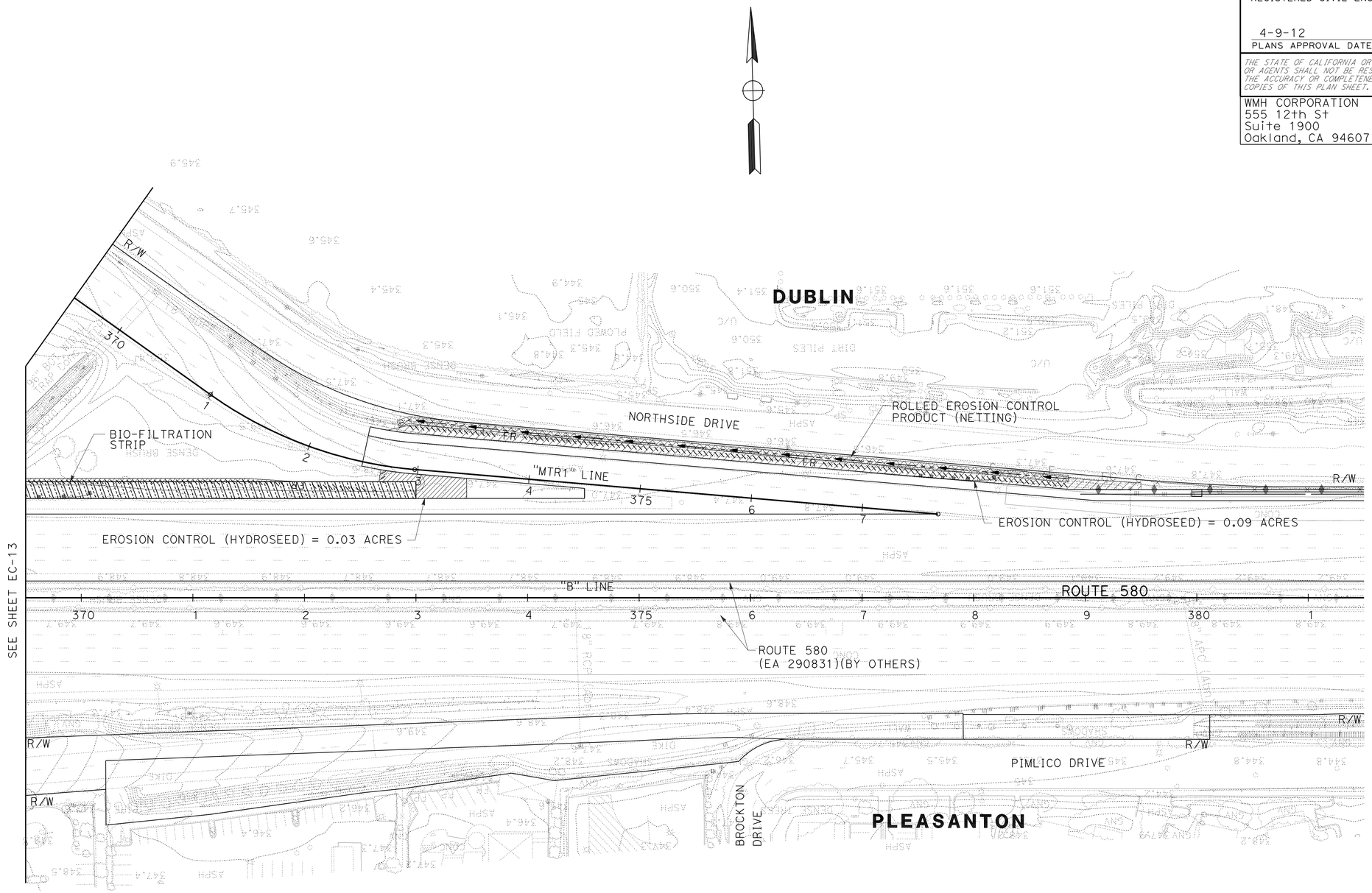

FOR NOTES, AND LEGEND, SEE SHEET EC-1

THIS PLAN ACCURATE FOR EROSION CONTROL WORK ONLY.

EROSION CONTROL PLAN

SCALE: 1" = 50'

EC-14

YF	YF	YF	YF
09/05/11	04/18/11	08/30/10	DATE REVISED

REVISED BY

Y. FAROUQI \ A. VALASQUEZ — CALCULATED-DESIGNED BY

DAVID M. DICKINSON — CHECKED BY

TIMOTHY J. LEE — CONSULTANT FUNCTIONAL SUPERVISOR

STATE OF CALIFORNIA - DEPARTMENT OF TRANSPORTATION

Caltrans

X:\580 WB HOV\000_CAD\Sheets\West of Sta 540 00\CT ELECTRONIC SUBMITTAL 20111017\Erosion Control\04000212491ge014.dgn

LAST REVISION 09-23-11 — DATE PLOTTED => 13 APR 2012 — TIME PLOTTED => 10:31

BORDER LAST REVISED 7/2/2010 — USERNAME => s117606 — DGN FILE => 04000212491ge014.dgn — RELATIVE BORDER SCALE IS IN INCHES 0 1 2 3 — UNIT 0735 — PROJECT NUMBER & PHASE 04000212491

Dist	COUNTY	ROUTE	POST MILES TOTAL PROJECT	SHEET No.	TOTAL SHEETS
04	Ala	580	R14.6/R21.6	157	804

REGISTERED CIVIL ENGINEER 9/23/2011 DATE

4-9-12
PLANS APPROVAL DATE

REGISTERED PROFESSIONAL ENGINEER DAVID M. DICKINSON No. 50815 Exp. 9-30-13 CIVIL STATE OF CALIFORNIA

THE STATE OF CALIFORNIA OR ITS OFFICERS OR AGENTS SHALL NOT BE RESPONSIBLE FOR THE ACCURACY OR COMPLETENESS OF SCANNED COPIES OF THIS PLAN SHEET.

WMH CORPORATION
555 12th St
Suite 1900
Oakland, CA 94607

ALAMEDA CTC
1333 Broadway
Suite 220
Oakland, CA 94612

FOR ACCURATE RIGHT OF WAY DATA, CONTACT
RIGHT OF WAY ENGINEERING AT THE DISTRICT OFFICE

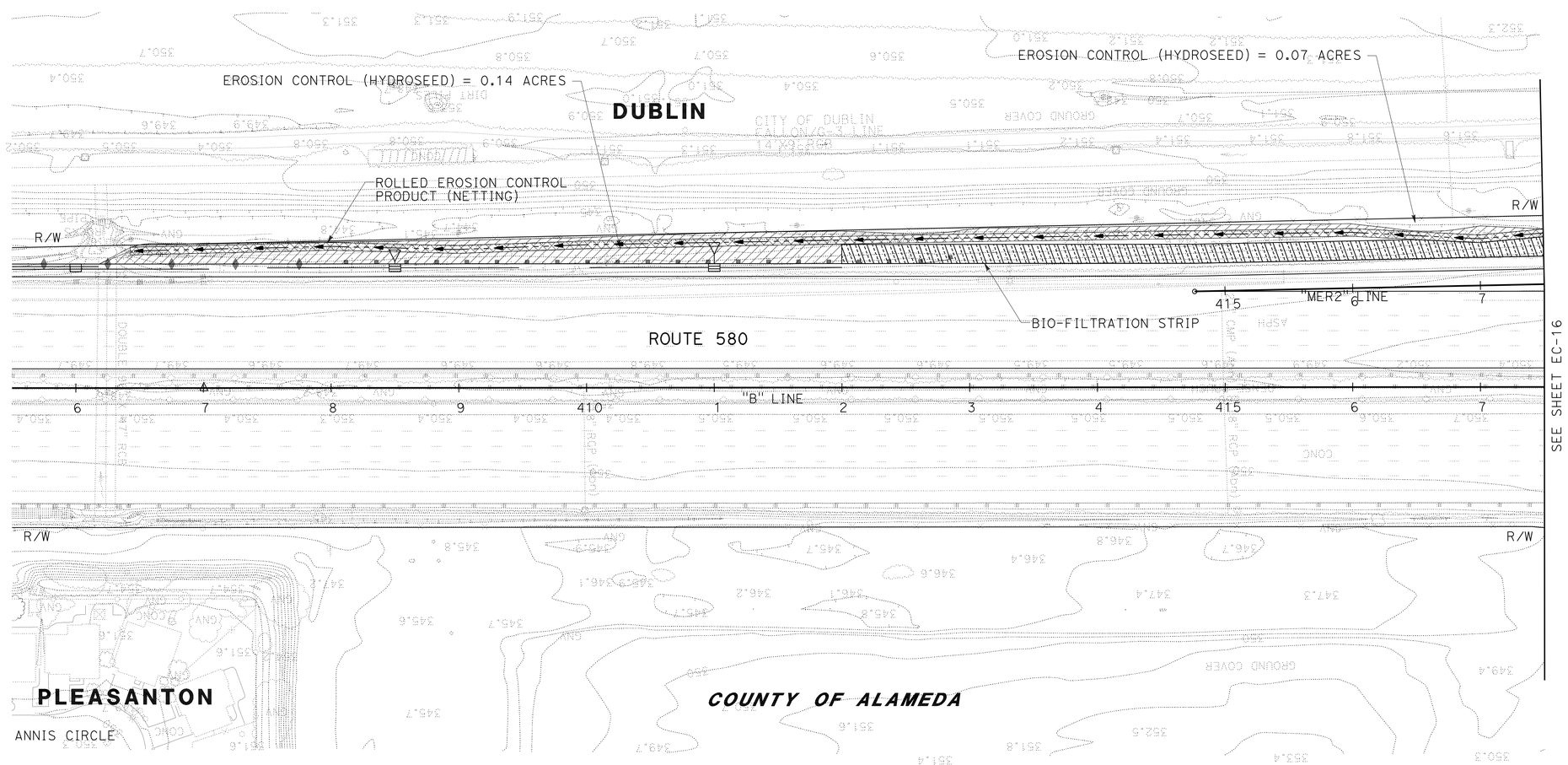

FOR NOTES, AND LEGEND,
SEE SHEET EC-1

THIS PLAN ACCURATE FOR EROSION CONTROL WORK ONLY.

EROSION CONTROL PLAN

SCALE: 1" = 50'

EC-15

REVISED BY	DATE REVISED
YF	09/05/11
YF	04/18/11
YF	08/30/10

CALCULATED-DESIGNED BY: Y. FAROUQI \ A. VALASQUEZ
CHECKED BY: DAVID M. DICKINSON
CONSULTANT FUNCTIONAL SUPERVISOR: TIMOTHY J. LEE

STATE OF CALIFORNIA - DEPARTMENT OF TRANSPORTATION
Caltrans

X:\580 WB HOV\000_CAD\Sheets\West of Sta 540 00\CT ELECTRONIC SUBMITTAL 20111017\Erosion Control\0400021249ge015.dgn

LAST REVISION 09-23-11
DATE PLOTTED => 13 APR 2012
TIME PLOTTED => 10:31

Dist	COUNTY	ROUTE	POST MILES TOTAL PROJECT	SHEET No.	TOTAL SHEETS
04	Ala	580	R14.6/R21.6	158	804

REGISTERED CIVIL ENGINEER 9/23/2011 DATE

4-9-12
PLANS APPROVAL DATE

REGISTERED PROFESSIONAL ENGINEER DAVID M. DICKINSON No. 50815 Exp. 9-30-13 CIVIL STATE OF CALIFORNIA

THE STATE OF CALIFORNIA OR ITS OFFICERS OR AGENTS SHALL NOT BE RESPONSIBLE FOR THE ACCURACY OR COMPLETENESS OF SCANNED COPIES OF THIS PLAN SHEET.

WMH CORPORATION
555 12th St
Suite 1900
Oakland, CA 94607

ALAMEDA CTC
1333 Broadway
Suite 220
Oakland, CA 94612

FOR ACCURATE RIGHT OF WAY DATA, CONTACT
RIGHT OF WAY ENGINEERING AT THE DISTRICT OFFICE

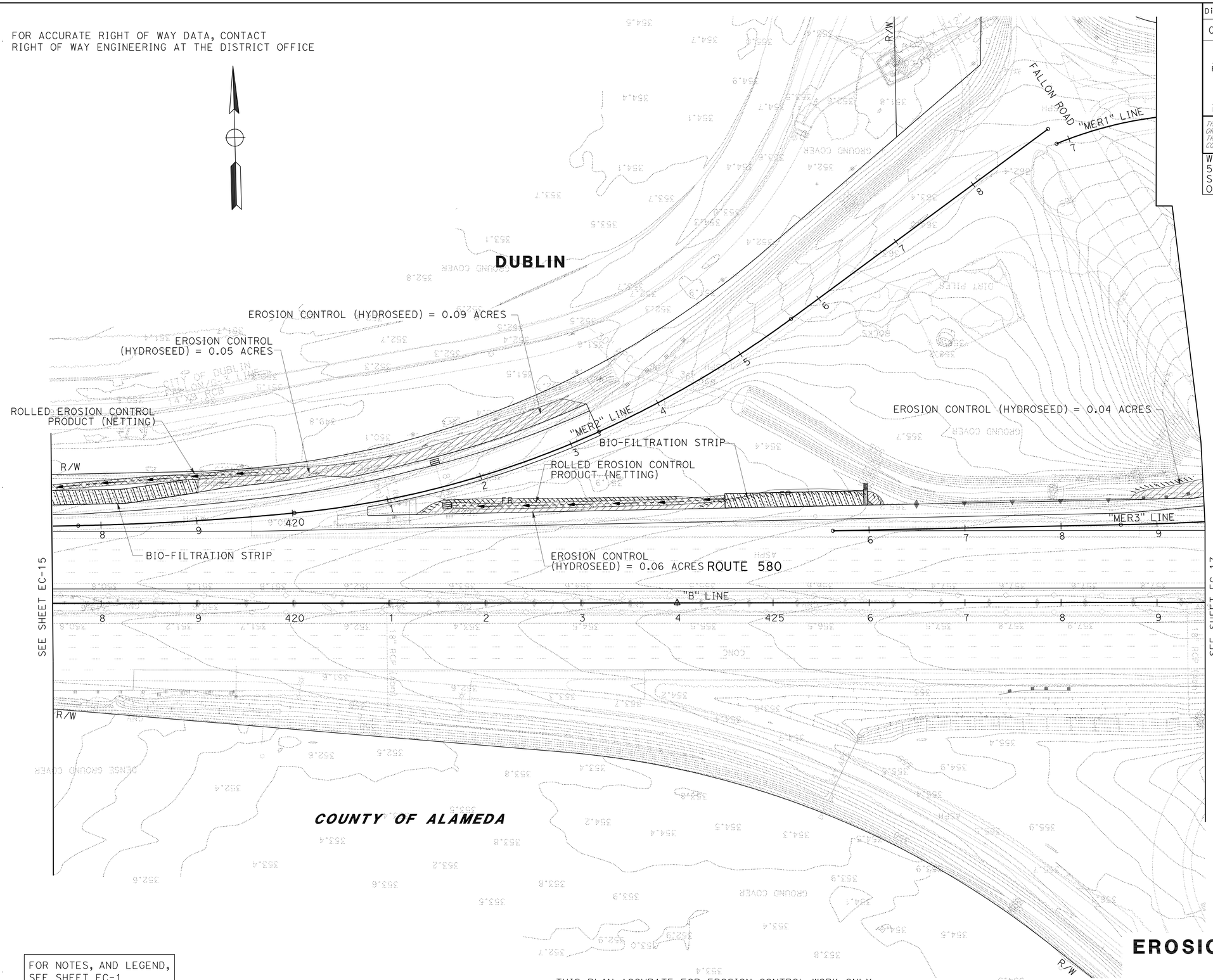

FOR NOTES, AND LEGEND, SEE SHEET EC-1

THIS PLAN ACCURATE FOR EROSION CONTROL WORK ONLY.

EROSION CONTROL PLAN

SCALE: 1" = 50'

EC-16

YF	09/05/11		
YF	04/18/11		
YF	08/30/10	REVISED BY	DATE REVISED
Y. FAROUQI \ A. VALASQUEZ		CALCULATED-DESIGNED BY	
DAVID M. DICKINSON		CHECKED BY	
TIMOTHY J. LEE		CONSULTANT FUNCTIONAL SUPERVISOR	

STATE OF CALIFORNIA - DEPARTMENT OF TRANSPORTATION

Caltrans

X:\580 WB HOV\000_CAD\Sheets\West of Stg 540 00\CT ELECTRONIC SUBMITTAL 20111017\Erosion Control\0400021249ge016.dgn

LAST REVISION 09-23-11 DATE PLOTTED => 13 APR 2012 TIME PLOTTED => 10:31

Dist	COUNTY	ROUTE	POST MILES TOTAL PROJECT	SHEET No.	TOTAL SHEETS
04	Ala	580	R14.6/R21.6	159	804

REGISTERED CIVIL ENGINEER 9/23/2011 DATE

4-9-12
PLANS APPROVAL DATE

REGISTERED PROFESSIONAL ENGINEER DAVID M. DICKINSON No. 50815 Exp. 9-30-13 CIVIL STATE OF CALIFORNIA

THE STATE OF CALIFORNIA OR ITS OFFICERS OR AGENTS SHALL NOT BE RESPONSIBLE FOR THE ACCURACY OR COMPLETENESS OF SCANNED COPIES OF THIS PLAN SHEET.

WMH CORPORATION
555 12th St
Suite 1900
Oakland, CA 94607

ALAMEDA CTC
1333 Broadway
Suite 220
Oakland, CA 94612

FOR ACCURATE RIGHT OF WAY DATA, CONTACT
RIGHT OF WAY ENGINEERING AT THE DISTRICT OFFICE

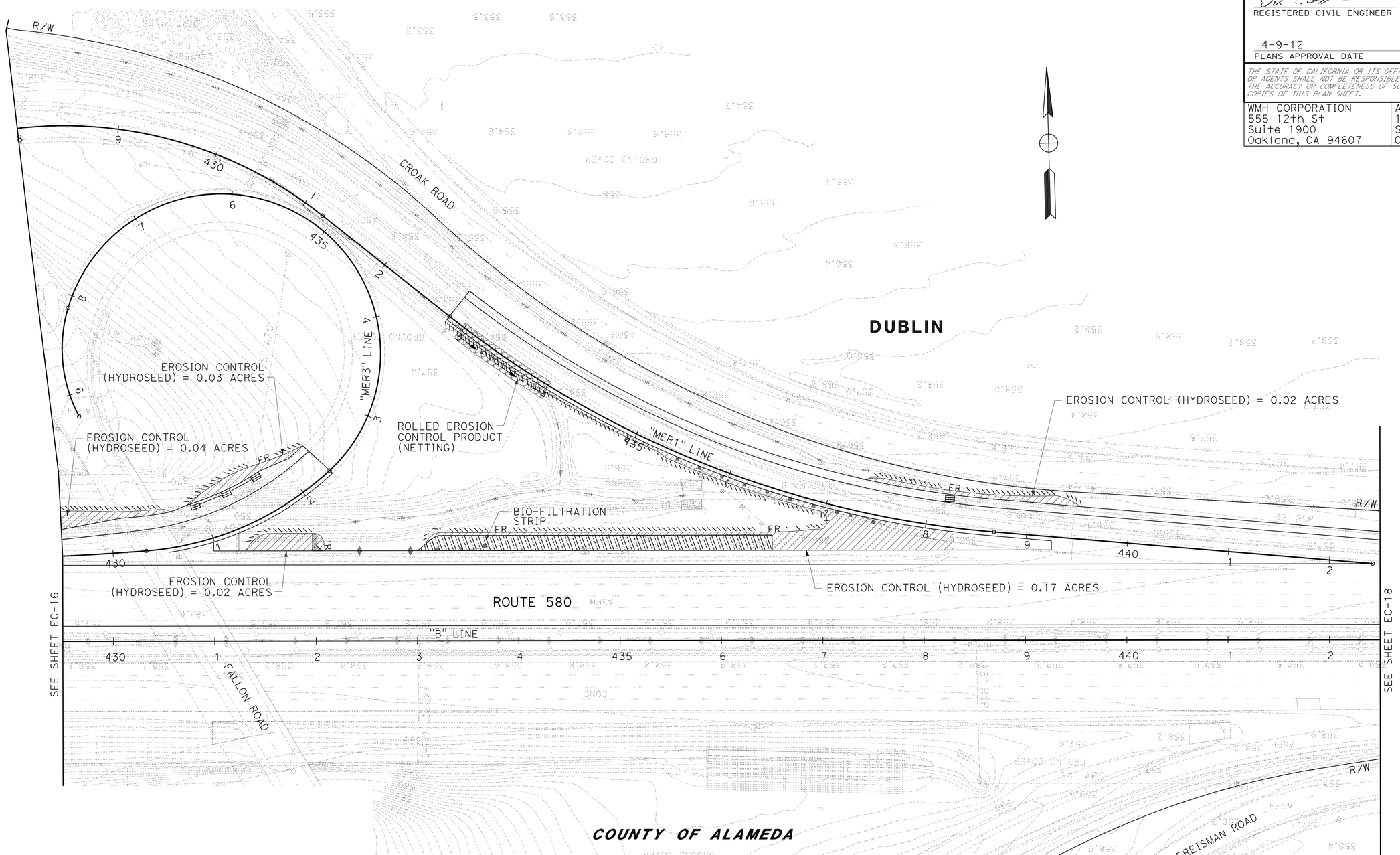

FOR NOTES, AND LEGEND, SEE SHEET EC-1

THIS PLAN ACCURATE FOR EROSION CONTROL WORK ONLY.

EROSION CONTROL PLAN

SCALE: 1" = 50'

EC-17

REVISED BY	DATE REVISED
YF	08/30/10
YF	04/18/11
YF	09/05/11

CALCULATED-DESIGNED BY: Y. FAROUQI \ A. VALASQUEZ
CHECKED BY: DAVID M. DICKINSON
CONSULTANT FUNCTIONAL SUPERVISOR: TIMOTHY J. LEE

STATE OF CALIFORNIA - DEPARTMENT OF TRANSPORTATION
Caltrans

X:\580 WB HOV\000_CAD\Sheets\West of Sta 540 00\CT ELECTRONIC SUBMITTAL 20111017\Erosion Control\04000212491ge017.dgn

LAST REVISION 09-23-11 | DATE PLOTTED => 13 APR 2012 | TIME PLOTTED => 10:31

Dist	COUNTY	ROUTE	POST MILES TOTAL PROJECT	SHEET No.	TOTAL SHEETS
04	Ala	580	R14.6/R21.6	160	804

REGISTERED CIVIL ENGINEER 9/23/2011 DATE

4-9-12
PLANS APPROVAL DATE

REGISTERED PROFESSIONAL ENGINEER DAVID M. DICKINSON No. 50815 Exp. 9-30-13 CIVIL STATE OF CALIFORNIA

THE STATE OF CALIFORNIA OR ITS OFFICERS OR AGENTS SHALL NOT BE RESPONSIBLE FOR THE ACCURACY OR COMPLETENESS OF SCANNED COPIES OF THIS PLAN SHEET.

WMH CORPORATION
555 12th St
Suite 1900
Oakland, CA 94607

ALAMEDA CTC
1333 Broadway
Suite 220
Oakland, CA 94612

FOR ACCURATE RIGHT OF WAY DATA, CONTACT
RIGHT OF WAY ENGINEERING AT THE DISTRICT OFFICE

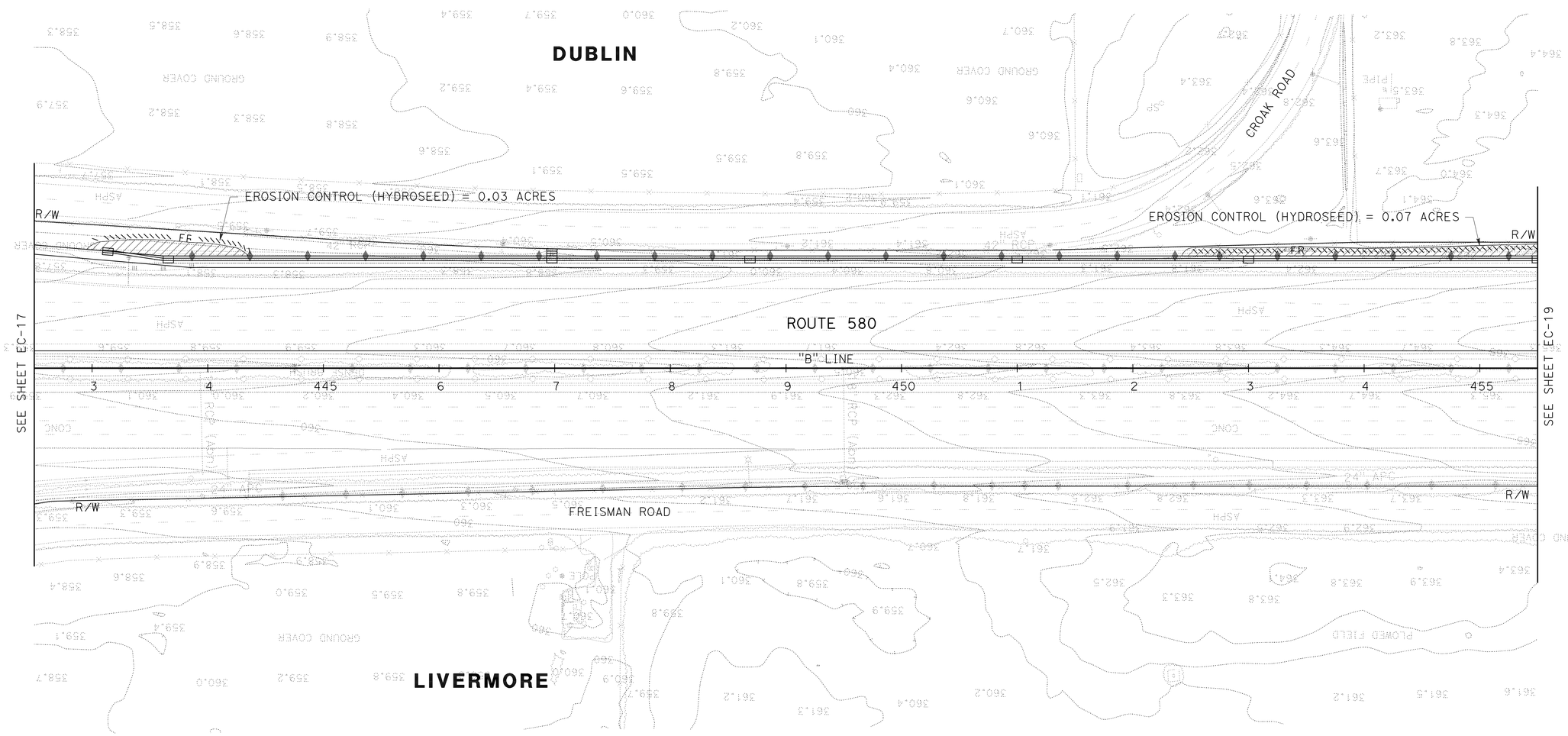

FOR NOTES, AND LEGEND,
SEE SHEET EC-1

THIS PLAN ACCURATE FOR EROSION CONTROL WORK ONLY.

EROSION CONTROL PLAN

SCALE: 1" = 50'

EC-18

REVISED BY	DATE REVISED
YF	08/30/10
YF	04/18/11
YF	09/05/11

CALCULATED-DESIGNED BY: Y. FAROUQI \ A. VALASQUEZ
CHECKED BY: DAVID M. DICKINSON
CONSULTANT FUNCTIONAL SUPERVISOR: TIMOTHY J. LEE

STATE OF CALIFORNIA - DEPARTMENT OF TRANSPORTATION
Caltrans

X:\580 WB HOV\000_CAD\Sheets\West of Sta 540 00\CT ELECTRONIC SUBMITTAL 20111017\Erosion Control\04000212491ge018.dgn

LAST REVISION 09-23-11
DATE PLOTTED => 13 APR 2012
TIME PLOTTED => 10:32

Dist	COUNTY	ROUTE	POST MILES TOTAL PROJECT	SHEET No.	TOTAL SHEETS
04	Ala	580	R14.6/R21.6	161	804

REGISTERED CIVIL ENGINEER 9/23/2011 DATE

4-9-12
PLANS APPROVAL DATE

REGISTERED PROFESSIONAL ENGINEER DAVID M. DICKINSON No. 50815 Exp. 9-30-13 CIVIL STATE OF CALIFORNIA

THE STATE OF CALIFORNIA OR ITS OFFICERS OR AGENTS SHALL NOT BE RESPONSIBLE FOR THE ACCURACY OR COMPLETENESS OF SCANNED COPIES OF THIS PLAN SHEET.

WMH CORPORATION
555 12th St
Suite 1900
Oakland, CA 94607

ALAMEDA CTC
1333 Broadway
Suite 220
Oakland, CA 94612

FOR ACCURATE RIGHT OF WAY DATA, CONTACT
RIGHT OF WAY ENGINEERING AT THE DISTRICT OFFICE

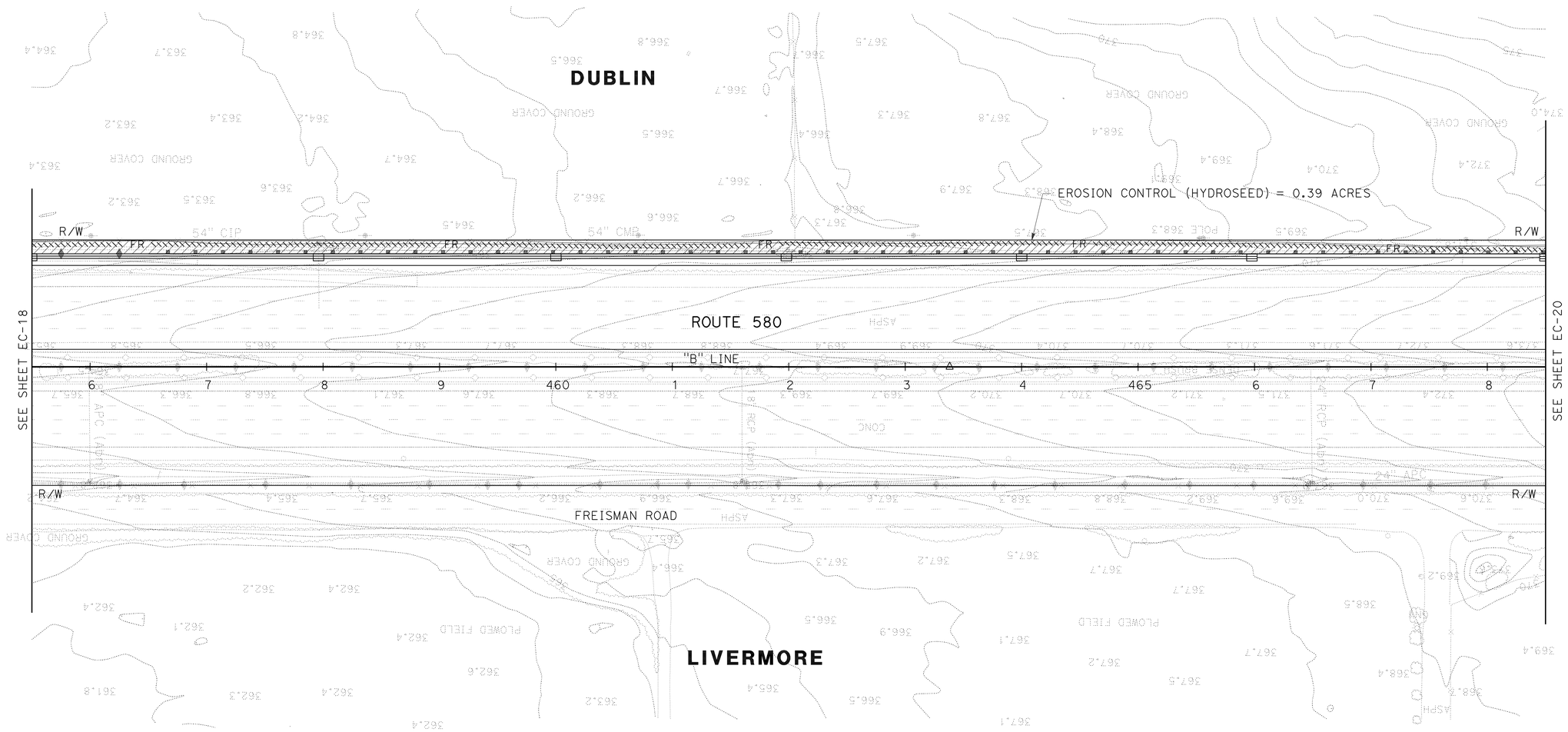

FOR NOTES, AND LEGEND,
SEE SHEET EC-1

THIS PLAN ACCURATE FOR EROSION CONTROL WORK ONLY.

EROSION CONTROL PLAN

SCALE: 1" = 50'

EC-19

YF	YF	YF	YF
09/05/11	04/18/11	08/30/10	DATE REVISED

REVISED BY

CALCULATED-DESIGNED BY: Y. FAROUQI \ A. VALASQUEZ
CHECKED BY: DAVID M. DICKINSON
CONSULTANT FUNCTIONAL SUPERVISOR: TIMOTHY J. LEE

STATE OF CALIFORNIA - DEPARTMENT OF TRANSPORTATION
Caltrans

X:\580 WB HOV\000_CAD\Sheets\West of Sta 540 00\CT ELECTRONIC SUBMITTAL 20111017\Erosion Control\0400021249ge019.dgn

LAST REVISION 09-23-11
DATE PLOTTED => 13 APR 2012
TIME PLOTTED => 10:32

Dist	COUNTY	ROUTE	POST MILES TOTAL PROJECT	SHEET No.	TOTAL SHEETS
04	Ala	580	R14.6/R21.6	162	804

REGISTERED CIVIL ENGINEER 9/23/2011 DATE

4-9-12
PLANS APPROVAL DATE

REGISTERED PROFESSIONAL ENGINEER DAVID M. DICKINSON No. 50815 Exp. 9-30-13 CIVIL STATE OF CALIFORNIA

THE STATE OF CALIFORNIA OR ITS OFFICERS OR AGENTS SHALL NOT BE RESPONSIBLE FOR THE ACCURACY OR COMPLETENESS OF SCANNED COPIES OF THIS PLAN SHEET.

WMH CORPORATION
555 12th St
Suite 1900
Oakland, CA 94607

ALAMEDA CTC
1333 Broadway
Suite 220
Oakland, CA 94612

FOR ACCURATE RIGHT OF WAY DATA, CONTACT
RIGHT OF WAY ENGINEERING AT THE DISTRICT OFFICE

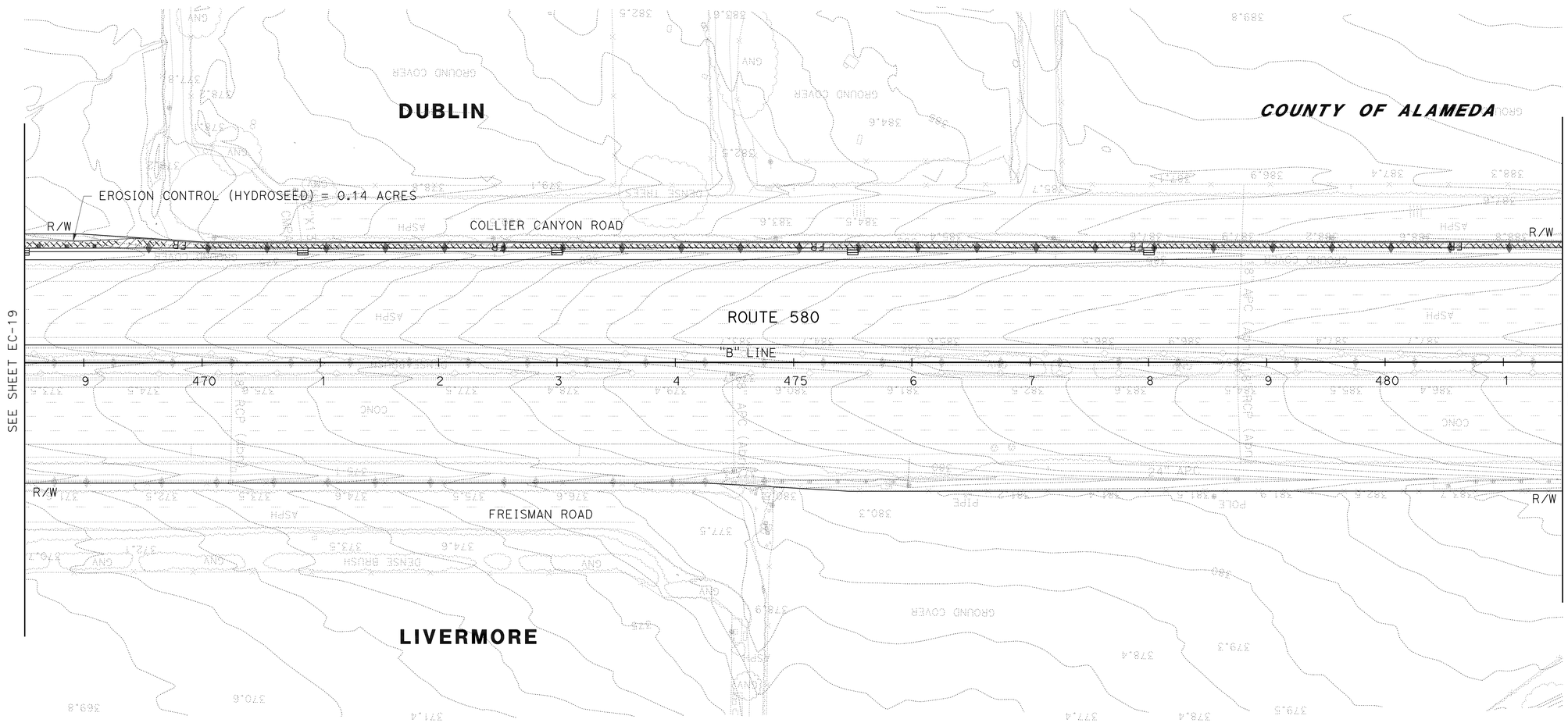

FOR NOTES, AND LEGEND,
SEE SHEET EC-1

THIS PLAN ACCURATE FOR EROSION CONTROL WORK ONLY.

EROSION CONTROL PLAN

SCALE: 1" = 50'

EC-20

YF	YF	YF	YF
09/05/11	04/18/11	08/30/10	DATE REVISED

REVISED BY

Y. FAROUQI \ A. VALASQUEZ
DAVID M. DICKINSON
CALCULATED-DESIGNED BY
CHECKED BY
TIMOTHY J. LEE
SUPERVISOR
CONSULTANT FUNCTIONAL SUPERVISOR

STATE OF CALIFORNIA - DEPARTMENT OF TRANSPORTATION
Caltrans

X:\580 WB HOV\000_CAD\Sheets\West of Stg 540 00\CT ELECTRONIC SUBMITTAL 20111017\Erosion Control\04000212491ge020.dgn

LAST REVISION 09-23-11
DATE PLOTTED => 13 APR 2012
TIME PLOTTED => 10:32

Dist	COUNTY	ROUTE	POST MILES TOTAL PROJECT	SHEET No.	TOTAL SHEETS
04	Ala	580	R14.6/R21.6	163	804

REGISTERED CIVIL ENGINEER 9/23/2011 DATE

4-9-12
PLANS APPROVAL DATE

REGISTERED PROFESSIONAL ENGINEER DAVID M. DICKINSON No. 50815 Exp. 9-30-13 CIVIL STATE OF CALIFORNIA

THE STATE OF CALIFORNIA OR ITS OFFICERS OR AGENTS SHALL NOT BE RESPONSIBLE FOR THE ACCURACY OR COMPLETENESS OF SCANNED COPIES OF THIS PLAN SHEET.

WMH CORPORATION
555 12th St
Suite 1900
Oakland, CA 94607

ALAMEDA CTC
1333 Broadway
Suite 220
Oakland, CA 94612

FOR ACCURATE RIGHT OF WAY DATA, CONTACT
RIGHT OF WAY ENGINEERING AT THE DISTRICT OFFICE

COUNTY OF ALAMEDA

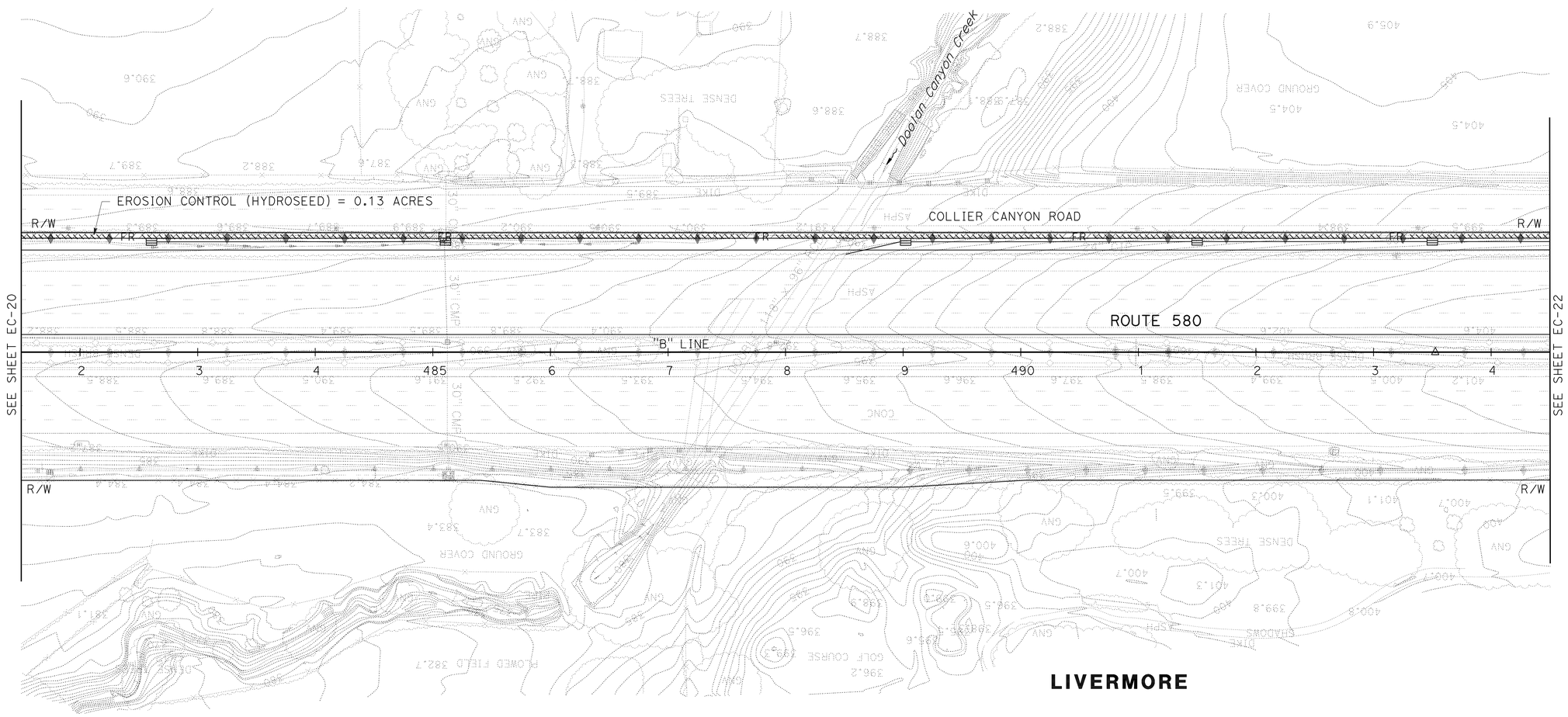

FOR NOTES, AND LEGEND,
SEE SHEET EC-1

THIS PLAN ACCURATE FOR EROSION CONTROL WORK ONLY.

EROSION CONTROL PLAN

SCALE: 1" = 50'

EC-21

YF	YF	YF	REVISED BY
09/05/11	04/18/11	08/30/10	DATE REVISED

Y. FAROUQI \ A. VALASQUEZ — CALCULATED-DESIGNED BY
DAVID M. DICKINSON — CHECKED BY
TIMOTHY J. LEE — CONSULTANT FUNCTIONAL SUPERVISOR

STATE OF CALIFORNIA - DEPARTMENT OF TRANSPORTATION
Caltrans

X:\580 WB HOV\000_CAD\Sheets\West of Sta 540 00\CT ELECTRONIC SUBMITTAL 20111017\Erosion Control\04000212491ge021.dgn

LAST REVISION 09-23-11 | DATE PLOTTED => 13 APR 2012 | TIME PLOTTED => 10:32

Dist	COUNTY	ROUTE	POST MILES TOTAL PROJECT	SHEET No.	TOTAL SHEETS
04	Ala	580	R14.6/R21.6	164	804

REGISTERED CIVIL ENGINEER 9/23/2011 DATE

4-9-12
PLANS APPROVAL DATE

REGISTERED PROFESSIONAL ENGINEER DAVID M. DICKINSON No. 50815 Exp. 9-30-13 CIVIL STATE OF CALIFORNIA

THE STATE OF CALIFORNIA OR ITS OFFICERS OR AGENTS SHALL NOT BE RESPONSIBLE FOR THE ACCURACY OR COMPLETENESS OF SCANNED COPIES OF THIS PLAN SHEET.

WMH CORPORATION
555 12th St
Suite 1900
Oakland, CA 94607

ALAMEDA CTC
1333 Broadway
Suite 220
Oakland, CA 94612

FOR ACCURATE RIGHT OF WAY DATA, CONTACT
RIGHT OF WAY ENGINEERING AT THE DISTRICT OFFICE

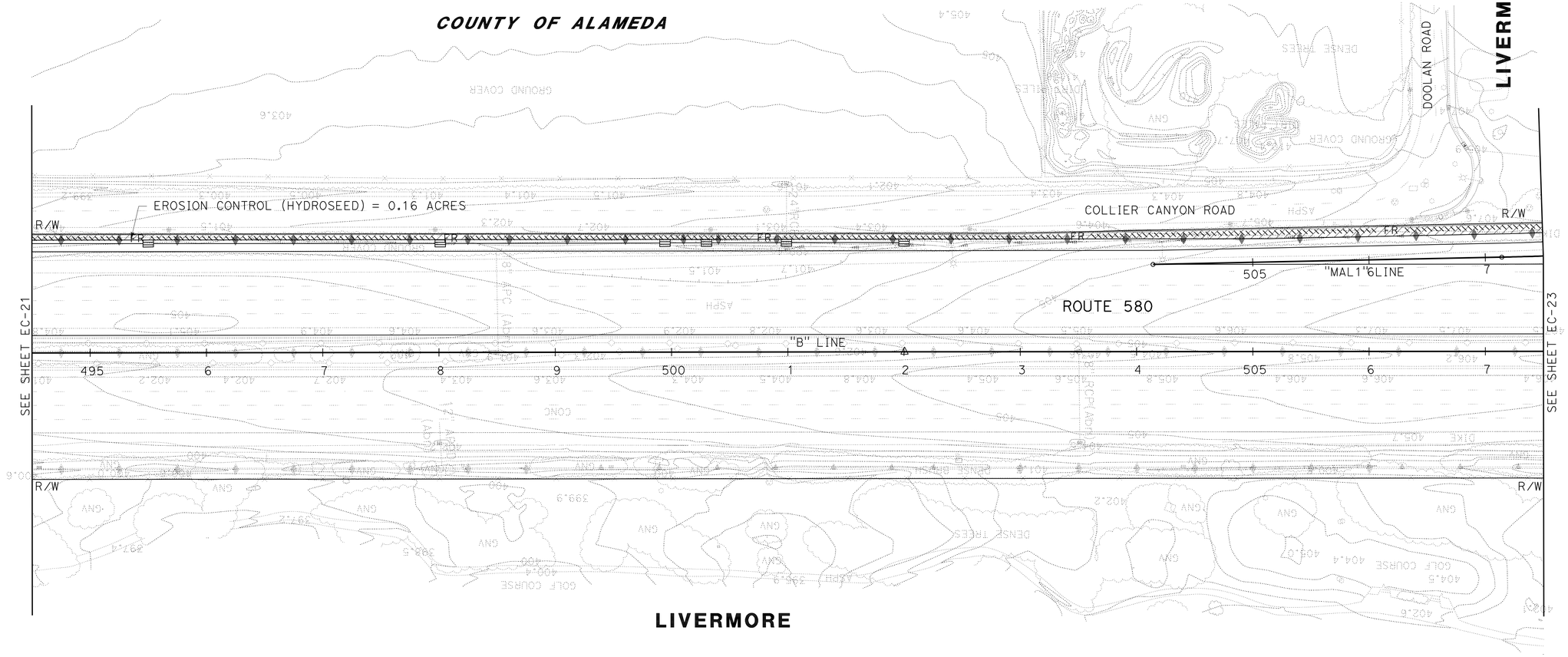

FOR NOTES, AND LEGEND,
SEE SHEET EC-1

THIS PLAN ACCURATE FOR EROSION CONTROL WORK ONLY.

EROSION CONTROL PLAN

SCALE: 1" = 50'

EC-22

YF	YF	YF	REVISED BY
09/05/11	04/18/11	08/30/10	DATE REVISED

Y. FAROUQI \ A. VALASQUEZ — CALCULATED-DESIGNED BY
DAVID M. DICKINSON — CHECKED BY
TIMOTHY J. LEE — CONSULTANT FUNCTIONAL SUPERVISOR

STATE OF CALIFORNIA - DEPARTMENT OF TRANSPORTATION
Caltrans

X:\580 WB HOV\000_CAD\Sheets\West of Sta 540 00\CT ELECTRONIC SUBMITTAL 20111017\Erosion Control\0400021249ge022.dgn

LAST REVISION 09-23-11 | DATE PLOTTED => 13 APR 2012 | TIME PLOTTED => 10:32

Dist	COUNTY	ROUTE	POST MILES TOTAL PROJECT	SHEET No.	TOTAL SHEETS
04	Ala	580	R14.6/R21.6	165	804

REGISTERED CIVIL ENGINEER 9/23/2011 DATE

4-9-12
PLANS APPROVAL DATE

REGISTERED PROFESSIONAL ENGINEER DAVID M. DICKINSON No. 50815 Exp. 9-30-13 CIVIL STATE OF CALIFORNIA

THE STATE OF CALIFORNIA OR ITS OFFICERS OR AGENTS SHALL NOT BE RESPONSIBLE FOR THE ACCURACY OR COMPLETENESS OF SCANNED COPIES OF THIS PLAN SHEET.

WMH CORPORATION
555 12th St
Suite 1900
Oakland, CA 94607

ALAMEDA CTC
1333 Broadway
Suite 220
Oakland, CA 94612

FOR ACCURATE RIGHT OF WAY DATA, CONTACT
RIGHT OF WAY ENGINEERING AT THE DISTRICT OFFICE

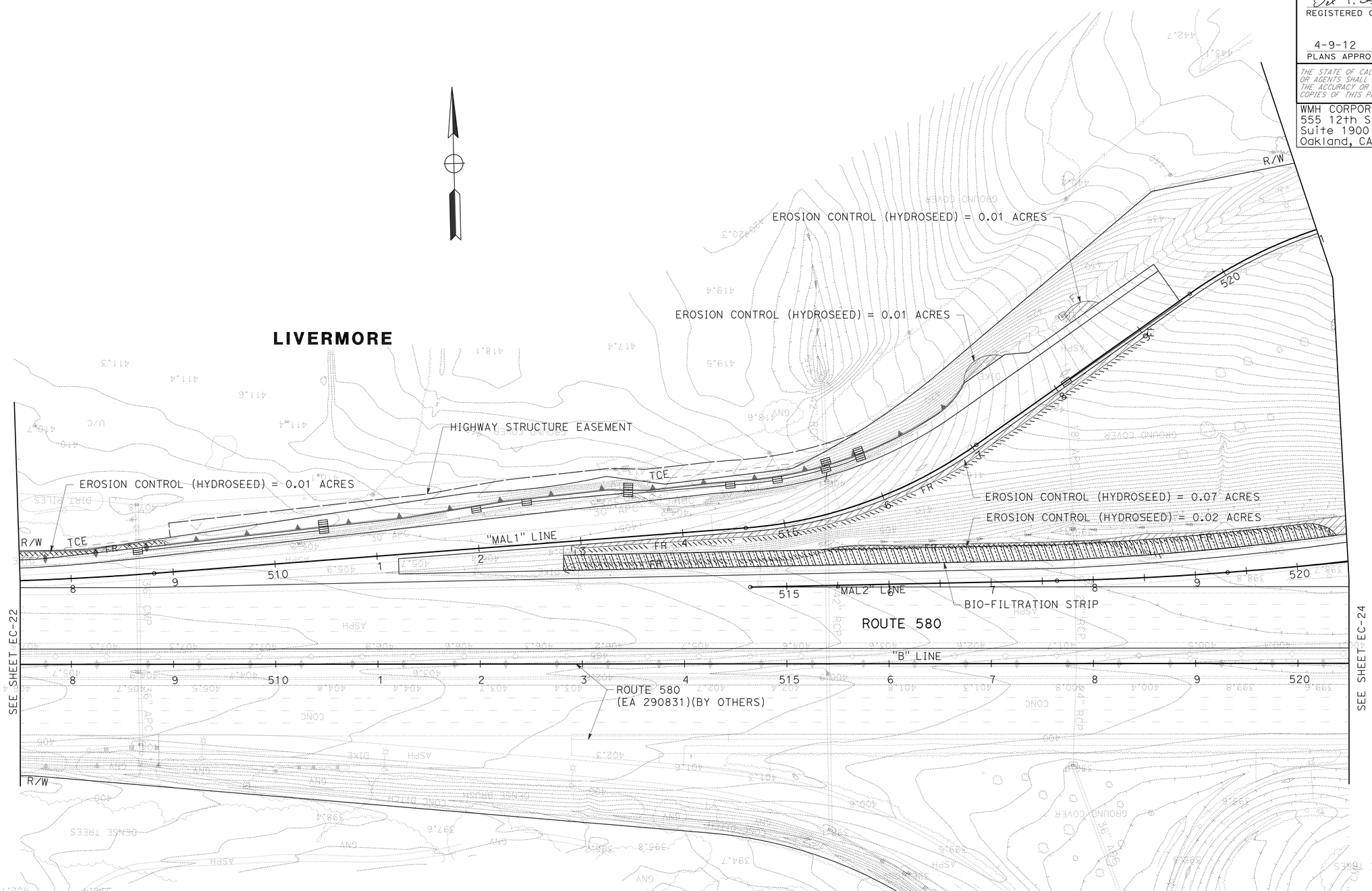

FOR NOTES, AND LEGEND,
SEE SHEET EC-1

THIS PLAN ACCURATE FOR EROSION CONTROL WORK ONLY.

EROSION CONTROL PLAN

SCALE: 1" = 50'

EC-23

	REVISED BY	DATE REVISED
YF	YF	YF
09/05/11	04/18/11	08/30/10

Y. FAROUQI \ A. VALASQUEZ — CALCULATED-DESIGNED BY
DAVID M. DICKINSON — CHECKED BY
TIMOTHY J. LEE — CONSULTANT FUNCTIONAL SUPERVISOR

STATE OF CALIFORNIA - DEPARTMENT OF TRANSPORTATION
Caltrans

X:\580 WB HOV\000_CAD\Sheets\West of Sta 540 00\CT ELECTRONIC SUBMITTAL 20111017\Erosion Control\04000212491ge023.dgn

LAST REVISION 09-23-11
DATE PLOTTED => 13 APR 2012
TIME PLOTTED => 10:32

Dist	COUNTY	ROUTE	POST MILES TOTAL PROJECT	SHEET No.	TOTAL SHEETS
04	Ala	580	R14.6/R21.6	166	804

REGISTERED CIVIL ENGINEER 9/23/2011 DATE

4-9-12
PLANS APPROVAL DATE

REGISTERED PROFESSIONAL ENGINEER DAVID M. DICKINSON No. 50815 Exp. 9-30-13 CIVIL STATE OF CALIFORNIA

THE STATE OF CALIFORNIA OR ITS OFFICERS OR AGENTS SHALL NOT BE RESPONSIBLE FOR THE ACCURACY OR COMPLETENESS OF SCANNED COPIES OF THIS PLAN SHEET.

WMH CORPORATION
555 12th St
Suite 1900
Oakland, CA 94607

ALAMEDA CTC
1333 Broadway
Suite 220
Oakland, CA 94612

FOR ACCURATE RIGHT OF WAY DATA, CONTACT
RIGHT OF WAY ENGINEERING AT THE DISTRICT OFFICE

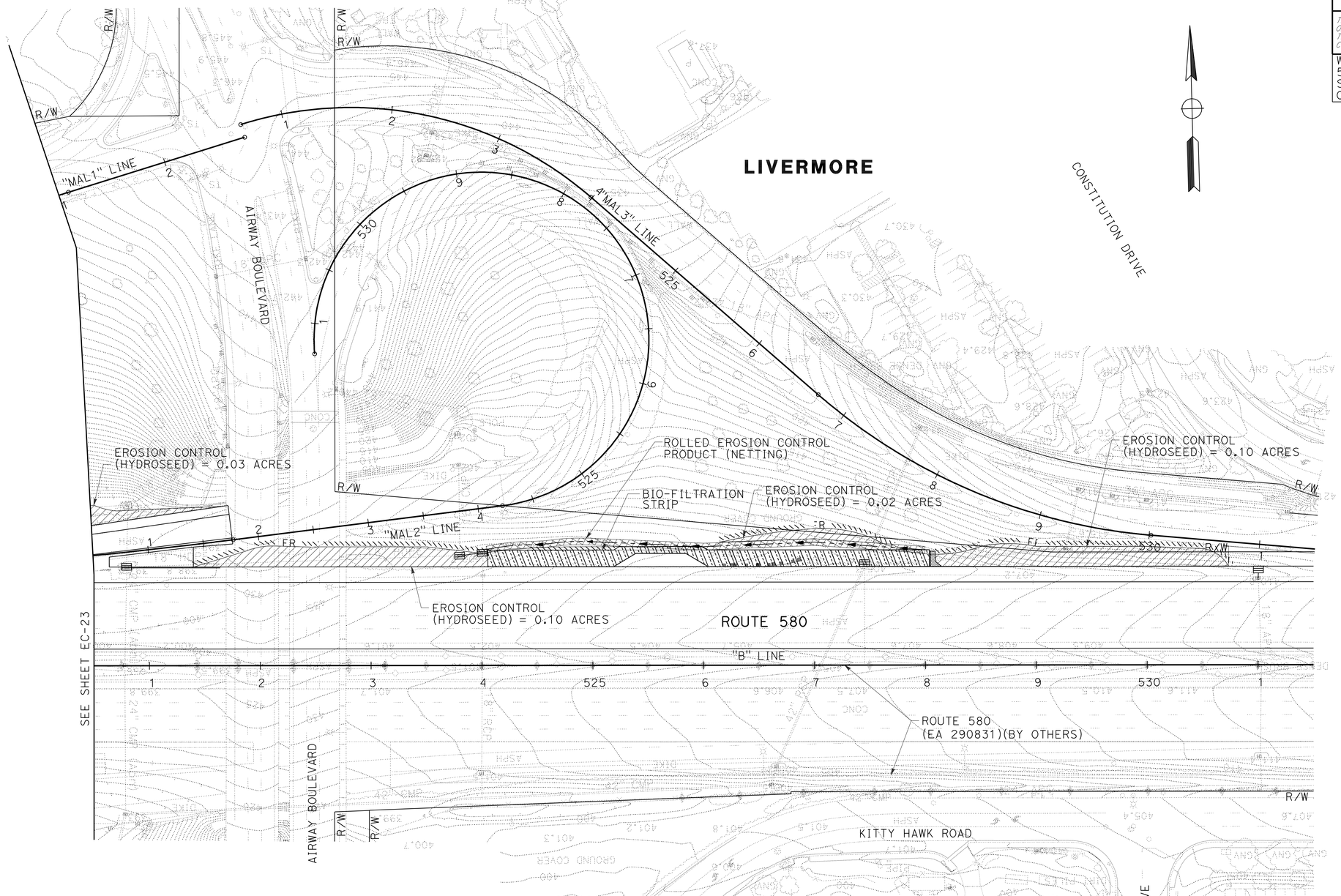

FOR NOTES, AND LEGEND, SEE SHEET EC-1

THIS PLAN ACCURATE FOR EROSION CONTROL WORK ONLY.

EROSION CONTROL PLAN

SCALE: 1" = 50'

EC-24

YF	YF	YF	YF
09/05/11	04/18/11	08/30/10	DATE REVISED
REVISED BY			
Y. FAROUQI \ A. VALASQUEZ			CALCULATED-DESIGNED BY
DAVID M. DICKINSON			CHECKED BY
TIMOTHY J. LEE			CONSULTANT FUNCTIONAL SUPERVISOR

STATE OF CALIFORNIA - DEPARTMENT OF TRANSPORTATION

Caltrans

X:\580 WB HOV\000_CAD\Sheets\West of Sta 540 00\CT ELECTRONIC SUBMITTAL 20111017\Erosion Control\04000212491ge024.dgn

LAST REVISION 09-23-11 DATE PLOTTED => 13 APR 2012 TIME PLOTTED => 10:33

Dist	COUNTY	ROUTE	POST MILES TOTAL PROJECT	SHEET No.	TOTAL SHEETS
04	Ala	580	R14.6/R21.6	167	804

REGISTERED CIVIL ENGINEER 9/23/2011 DATE

4-9-12
PLANS APPROVAL DATE

REGISTERED PROFESSIONAL ENGINEER
DAVID M. DICKINSON
No. 50815
Exp. 9-30-13
CIVIL
STATE OF CALIFORNIA

THE STATE OF CALIFORNIA OR ITS OFFICERS OR AGENTS SHALL NOT BE RESPONSIBLE FOR THE ACCURACY OR COMPLETENESS OF SCANNED COPIES OF THIS PLAN SHEET.

WMH CORPORATION
555 12th St
Suite 1900
Oakland, CA 94607

ALAMEDA CTC
1333 Broadway
Suite 220
Oakland, CA 94612

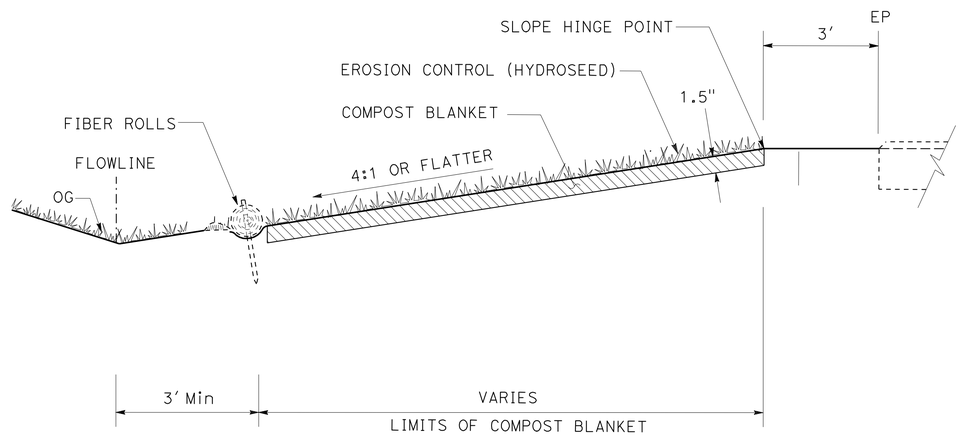

BIOFILTRATION STRIP

EROSION CONTROL DETAILS

NO SCALE

ECD-1

CALCULATED-DESIGNED BY	Y. FAROUQI \ A. VALASQUEZ	REVISED BY	YF	YF	YF
CHECKED BY	DAVID M. DICKINSON	DATE REVISED	08/30/10	04/18/11	09/05/11
SUPERVISOR	TIMOTHY J. LEE				
CONSULTANT FUNCTIONAL SUPERVISOR					

STATE OF CALIFORNIA - DEPARTMENT OF TRANSPORTATION
Caltrans

X:\580 WB HOV\000_CAD\Sheets\West of Sta 540 00\CT ELECTRONIC SUBMITTAL 20111017\Erosion Control\04000212491gf001.dgn

LAST REVISION 09-23-11
DATE PLOTTED => 13 APR 2012
TIME PLOTTED => 10:33

Dist	COUNTY	ROUTE	POST MILES TOTAL PROJECT	SHEET No.	TOTAL SHEETS
04	Ala	580	R14.6/R21.6	168	804

REGISTERED CIVIL ENGINEER 9/23/2011 DATE

4-9-12
PLANS APPROVAL DATE

REGISTERED PROFESSIONAL ENGINEER DAVID M. DICKINSON No. 50815 Exp. 9-30-13 CIVIL STATE OF CALIFORNIA

THE STATE OF CALIFORNIA OR ITS OFFICERS OR AGENTS SHALL NOT BE RESPONSIBLE FOR THE ACCURACY OR COMPLETENESS OF SCANNED COPIES OF THIS PLAN SHEET.

WMH CORPORATION
555 12th St
Suite 1900
Oakland, CA 94607

ALAMEDA CTC
1333 Broadway
Suite 220
Oakland, CA 94612

NOTES:

1. EXACT LIMITS OF LINER PLANTING SHALL BE DETERMINED BY THE ENGINEER.
2. DIMENSIONS MAY VARY TO FIT FIELD CONDITIONS.
3. BEGINNING AND END OF LINEAR BIO-RETENTION FIELD CONDITIONS MAY VARY.
4. WHERE LINER PLANTS ARE PROPOSED, SEEDING SHALL BE APPLIED.
5. WEED GERMINATION SHALL BE PERFORMED WITHIN LIMITS OF LINEAR BIO-RETENTION PLANTING.

LINEAR BIO-RETENTION BOTTOM WIDTH

SHEET No.	STATION	BOTTOM WIDTH
EC-2	"B" 185+29 to "MHN4" 185+88	12.0′
EC-4	"BB2" 209+75 to 210+45	6.0′
EC-10	"B" 331+60 to 332+00	4.0′

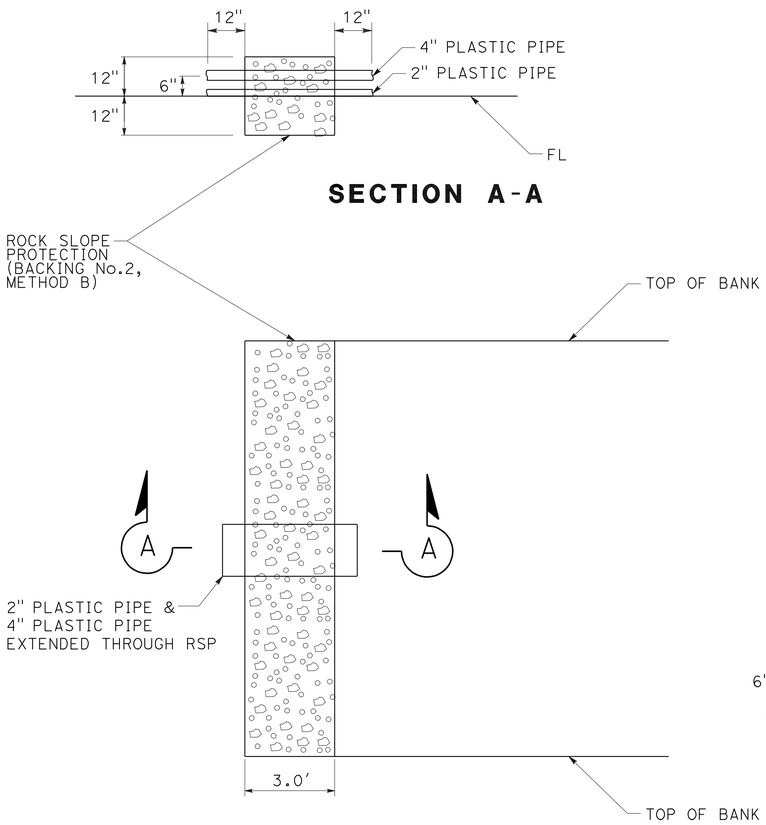

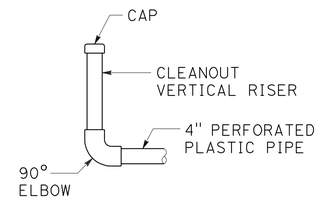

ELEVATION
UNDERDRAIN CLEANOUT

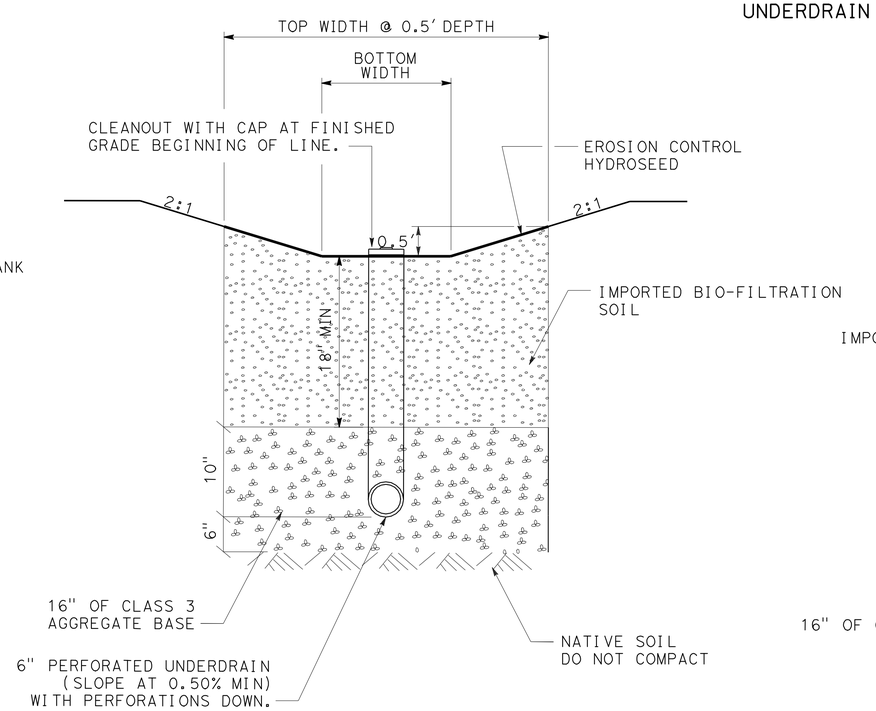

SINGLE UNDERDRAIN
"B" 185+29 to "MHN4" 185+88

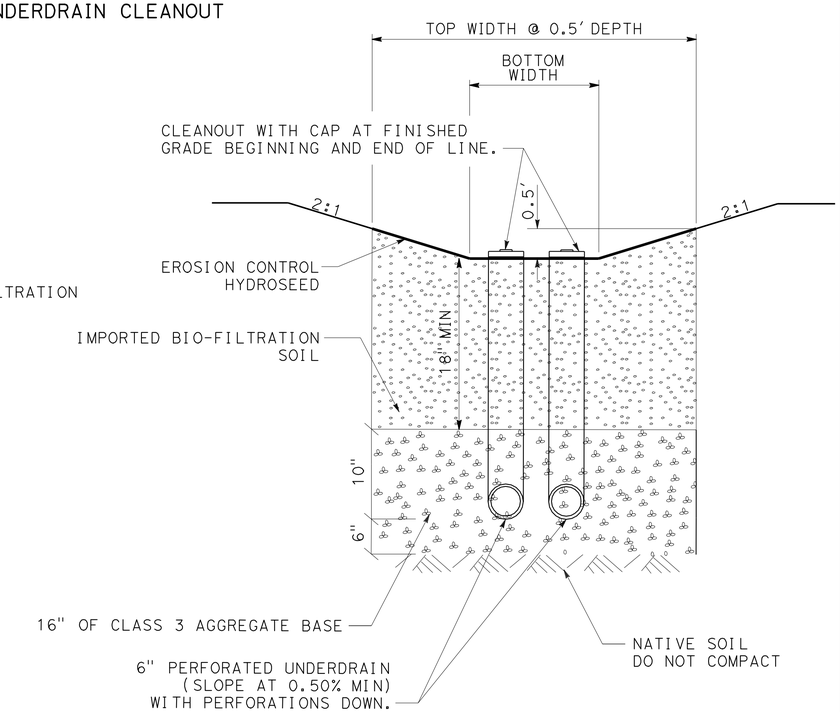

DOUBLE UNDERDRAIN
"BB2" 209+75 to 210+45
"B" 331+60 to 332+00

SECTION
LINEAR BIO-RETENTION

LINEAR BIO-RETENTION RSP
"B" 210+45 & "B" 331+60

EROSION CONTROL DETAILS
NO SCALE

ECD-2

REVISED BY	DATE REVISED
YF	09/05/11
YF	04/18/11
YF	08/30/10

CALCULATED-DESIGNED BY: Y. FAROUQI \ A. VALASQUEZ
CHECKED BY: DAVID M. DICKINSON
CONSULTANT FUNCTIONAL SUPERVISOR: TIMOTHY J. LEE

STATE OF CALIFORNIA - DEPARTMENT OF TRANSPORTATION
Caltrans

X:\580 WB HOV\000_CAD\Sheets\West of Sta 540+00\CT-ELECTRONIC-SUBMITTAL 20111017\Erosion Control\0400021249gf002.dgn

LAST REVISION 09-23-11 | DATE PLOTTED => 16-APR-2012 | TIME PLOTTED => 09:08

Dist	COUNTY	ROUTE	POST MILES TOTAL PROJECT	SHEET No.	TOTAL SHEETS
04	Ala	580	R14.6/R21.6	169	804

REGISTERED CIVIL ENGINEER 9/23/2011 DATE

4-9-12
PLANS APPROVAL DATE

REGISTERED PROFESSIONAL ENGINEER DAVID M. DICKINSON No. 50815 Exp. 9-30-13 CIVIL STATE OF CALIFORNIA

THE STATE OF CALIFORNIA OR ITS OFFICERS OR AGENTS SHALL NOT BE RESPONSIBLE FOR THE ACCURACY OR COMPLETENESS OF SCANNED COPIES OF THIS PLAN SHEET.

WMH CORPORATION
555 12th St
Suite 1900
Oakland, CA 94607

ALAMEDA CTC
1333 Broadway
Suite 220
Oakland, CA 94612

EROSION CONTROL QUANTITIES

SHEET	FIBER ROLLS	EROSION CONTROL (HYDROSEED)
	LF	ACRES
EC-1	1,420	0.17
EC-2	1240	0.84
EC-3	912	0.20
EC-4		0.03
EC-5	58	0.03
EC-6	1,371	0.44
EC-7	193	0.30
EC-8	374	0.09
EC-9	1,146	0.50
EC-10	1,351	0.40
EC-11	1,009	0.10
EC-12	1,153	0.49
EC-13	1,166	0.43
EC-14	927	0.26
EC-15		0.41
EC-16	706	0.29
EC-17	1,405	0.38
EC-18	389	0.10
EC-19	1,300	0.39
EC-20	1,300	0.14
EC-21	1,300	0.13
EC-22	1,300	0.16
EC-23	1,420	0.37
EC-24	724	0.40
TOTAL	22,163	7.05

SHEET	MOVE IN/MOVE OUT (EROSION CONTROL)
	EA
EC-1 TO EC-24	8

EROSION CONTROL QUANTITIES

ECQ- 1

YF	YF	YF	YF
09/05/11	04/18/11	08/30/10	DATE REVISED

REVISED BY

Y. FAROUQI \ A. VALASQUEZ — CALCULATED-DESIGNED BY

DAVID M. DICKINSON — CHECKED BY

TIMOTHY J. LEE — CONSULTANT FUNCTIONAL SUPERVISOR

STATE OF CALIFORNIA - DEPARTMENT OF TRANSPORTATION

Caltrans

X:\580 WB HOV\000_CAD\Sheets\West of Sta 540 00\CT ELECTRONIC SUBMITTAL 20111017\Erosion Control\0400021249gh001.dgn

LAST REVISION 09-23-11 | DATE PLOTTED => 13 APR 2012 | TIME PLOTTED => 10:33

Dist	COUNTY	ROUTE	POST MILES TOTAL PROJECT	SHEET No.	TOTAL SHEETS
04	Ala	580	R14.6/R21.6	170	804

REGISTERED CIVIL ENGINEER 9/23/2011 DATE

4-9-12
PLANS APPROVAL DATE

REGISTERED PROFESSIONAL ENGINEER DAVID M. DICKINSON No. 50815 Exp. 9-30-13 CIVIL STATE OF CALIFORNIA

THE STATE OF CALIFORNIA OR ITS OFFICERS OR AGENTS SHALL NOT BE RESPONSIBLE FOR THE ACCURACY OR COMPLETENESS OF SCANNED COPIES OF THIS PLAN SHEET.

WMH CORPORATION
555 12th St
Suite 1900
Oakland, CA 94607

ALAMEDA CTC
1333 Broadway
Suite 220
Oakland, CA 94612

EROSION CONTROL QUANTITIES

SHEET	LOCATION	EROSION CONTROL (COMPOST BLANKET)	ROLLED EROSION CONTROL PRODUCT (NETTING)	6" PERFORATED PLASTIC PIPE UNDERDRAIN	2" PLASTIC PIPE (N)	4" PLASTIC PIPE (N)	IMPORTED BIOFILTRATION SOIL	CLASS 3 AB	ROCK SLOPE PROTECTION (BACKING No. 2, METHOD B)
		CY	SQFT	LF	LF	LF	CY	CY	CY
LINEAR BIO-RETENTION									
EC-2	"B" STA 185+30 Lt TO "MHN4" STA 185+90 Rt		1,730	80			51.6	45.9	
EC-4	"BB2" STA 209+75 Lt TO STA 210+45 Lt		1,730	152	4	4	27.2	24.2	3.1
EC-10	"B" STA 331+60 Lt TO STA 332+00 Lt		1,100	102	4	4	11.1	9.9	2.7
DRAINAGE DITCHES									
EC-2	"B" STA 185+26 Lt TO "MHN4" STA 185+90 Rt		176						
DRAINAGE GUTTERS									
EC-3	"BB2" STA 204+28 Lt TO STA 208+50 Lt		5031						
EC-4	"BB2" STA 208+50 Lt TO STA 209+75 Lt		1488						
EC-7	"MAB1" STA 271+66 Lt TO "B" STA 279+00 Lt		8784						
EC-8	"B" STA 308+44 TO "MHR3" STA 311+00 Lt		3060						
EC-10	"MHR1" STA 331+00 Lt TO "B" STA 331+60 Lt		672						
	"B" STA 332+00 Lt TO "B" STA 334+00 Lt		2376						
EC-13	"MTR2" STA 361+95.73 Lt TO "MTR2" STA 364+21.44 Lt		2700						
EC-14	"MTR1" STA 373+00 Lt TO "B" STA 378+85 Lt		7248						
EC-15	"B" STA 406+43 Lt TO "MER2" STA 417+50 Lt		13284						
EC-16	"MER2" STA 417+50 Lt TO "MER2" STA 419+68.07 Lt		2964						
	"MER2" STA 421+63 Rt TO "B" STA 424+50 Lt		3420						
EC-17	"MER1" STA 433+00 Rt TO "MER1" STA 433+95.50 Lt		888						
EC-24	"B" STA 524+00 Lt TO "B" STA 528+00 Lt		3600						
BIOFILTRATION STRIPS									
EC-2	"B" STA 185+40 Lt TO "B" STA 189+15 Lt	26							
EC-2	"MHN4" STA 187+08 Lt TO "MHN4" STA 191+18 Lt	19							
EC-5	"MAB3" STA 256+95 Lt TO "MAB3" STA 257+50 Lt	2							
EC-6	"MAB3" STA 257+50 Lt TO "MAB3" STA 261+50 Lt	20							
	"MAB2" STA 260+00 Lt TO "MAB2" STA 263+00 Lt	19							
	"MAB2" STA 264+25 Lt TO "MAB2" STA 266+95 Lt	14							
	"B" STA 265+50 Lt TO "B" STA 269+50 Lt	28							
EC-7	"B" STA 269+50 Lt TO "MAB1" STA 271+50 Lt	13							
EC-8	"MHR3" STA 309+00 Lt TO "MHR3" STA 311+50 Lt	11							
EC-9	"MHR3" STA 311+50 Lt TO "MHR3" STA 316+00 Lt	27							
	"MHR2" STA 316+00 Lt TO "MHR2" STA 318+00 Lt	14							
	"MHR1" STA 323+30 Lt TO "MHR1" STA 323+50 Lt	1							
	"B" STA 322+35 Lt TO "B" STA 323+50 Lt	8							
EC-10	"B" STA 323+50 Lt TO "B" STA 325+00 Lt	10							
	"MHR1" STA 323+50 Lt TO "MHR1" STA 331+00 Lt	44							
EC-12	"B" STA 348+30 Lt TO "MTR4" STA 356+50 Lt	56							
EC-13	"MTR4" STA 356+50 Lt TO "MTR4" 360+50 Lt	27							
	"B" STA 369+10 Lt TO "B" STA 369+50 Lt	3							
EC-14	"B" STA 369+50 Lt TO "B" STA 373+00 Lt	21							
EC-15	"B" STA 412+00 Lt TO "MER2" STA 417+50 Lt	37							
EC-16	"MER2" STA 417+50 Lt TO "MER2" STA 419+00	11							
	"B" STA 424+50 Lt TO "MER3" 426+00 Lt	10							
EC-17	"B" STA 433+00 Lt TO "B" STA 436+50 Lt	23							
EC-23	"MAL1" 512+85 Rt TO "MAL2" 520+40 Lt	52							
EC-24	"B" STA 524+00 Lt TO "B" STA 528+00 Lt	25							
TOTAL		523	60,075	334	8	8	89.9	80.0	5.8

EROSION CONTROL QUANTITIES

ECQ-2

REVISED BY	DATE REVISED
YF	09/05/11
YF	04/18/11
YF	08/30/10

CALCULATED-DESIGNED BY: Y. FAROUQI \ A. VALASQUEZ
CHECKED BY: DAVID M. DICKINSON
CONSULTANT FUNCTIONAL SUPERVISOR: TIMOTHY J. LEE

STATE OF CALIFORNIA - DEPARTMENT OF TRANSPORTATION
Caltrans

X:\580 WB HOV\000_CAD\Sheets\West of Sta 540 00\CT ELECTRONIC SUBMITTAL 20111017\Erosion Control\0400021249gh002.dgn

LAST REVISION 09-23-11 | DATE PLOTTED => 13 APR 2012 | TIME PLOTTED => 10:33

FOR ACCURATE RIGHT OF WAY DATA, CONTACT
RIGHT OF WAY ENGINEERING AT THE DISTRICT OFFICE.

Dist	COUNTY	ROUTE	POST MILES TOTAL PROJECT	SHEET No.	TOTAL SHEETS
04	Ala	580	R14.6/R21.6	171	804

9/23/11
REGISTERED CIVIL ENGINEER DATE

4-9-12
PLANS APPROVAL DATE

REGISTERED PROFESSIONAL ENGINEER
N.V. BERNARDI
No. 45407
Exp. 9/30/12
CIVIL
STATE OF CALIFORNIA

THE STATE OF CALIFORNIA OR ITS OFFICERS OR AGENTS SHALL NOT BE RESPONSIBLE FOR THE ACCURACY OR COMPLETENESS OF SCANNED COPIES OF THIS PLAN SHEET.

BKF ENGINEERS
4670 WILLOW ROAD, SUITE 250
PLEASANTON, CA. 94588

ALAMEDA CTC
1333 BROADWAY SUITE 220
OAKLAND, CA. 94612

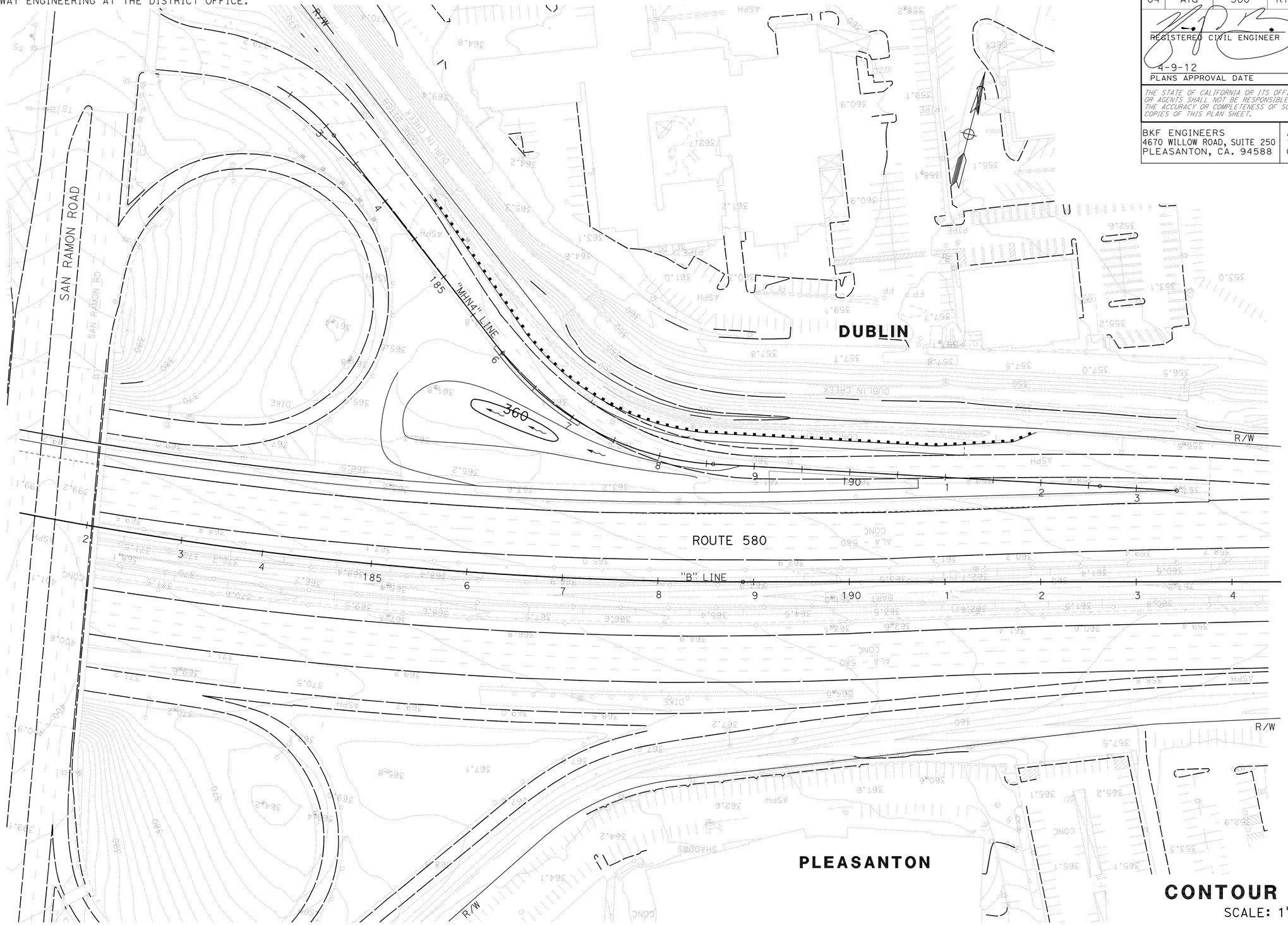

CONTOUR GRADING

SCALE: 1" = 50'

G-1

THIS PLAN ACCURATE FOR CONTOUR GRADING WORK ONLY

REVISED BY	AL
DATE REVISED	9/23/11
ARMANDO LOERA	
LUIS GARCIA	
CALCULATED-DESIGNED BY	
CHECKED BY	
CONSULTANT FUNCTIONAL SUPERVISOR	
NATALINA V. BERNARDI	

STATE OF CALIFORNIA - DEPARTMENT OF TRANSPORTATION

LAST REVISION 09-23-11 | DATE PLOTTED => 13-APR-2012 | TIME PLOTTED => 07:57

FOR ACCURATE RIGHT OF WAY DATA, CONTACT
RIGHT OF WAY ENGINEERING AT THE DISTRICT OFFICE.

Dist	COUNTY	ROUTE	POST MILES TOTAL PROJECT	SHEET No.	TOTAL SHEETS
04	Ala	580	R14.6/R21.6	172	804

9/23/11
REGISTERED CIVIL ENGINEER DATE

4-9-12
PLANS APPROVAL DATE

REGISTERED PROFESSIONAL ENGINEER
N.V. BERNARDI
No. 45407
Exp. 9/30/12
CIVIL
STATE OF CALIFORNIA

THE STATE OF CALIFORNIA OR ITS OFFICERS OR AGENTS SHALL NOT BE RESPONSIBLE FOR THE ACCURACY OR COMPLETENESS OF SCANNED COPIES OF THIS PLAN SHEET.

BKF ENGINEERS
4670 WILLOW ROAD, SUITE 250
PLEASANTON, CA. 94588

ALAMEDA CTC
1333 BROADWAY SUITE 220
OAKLAND, CA. 94612

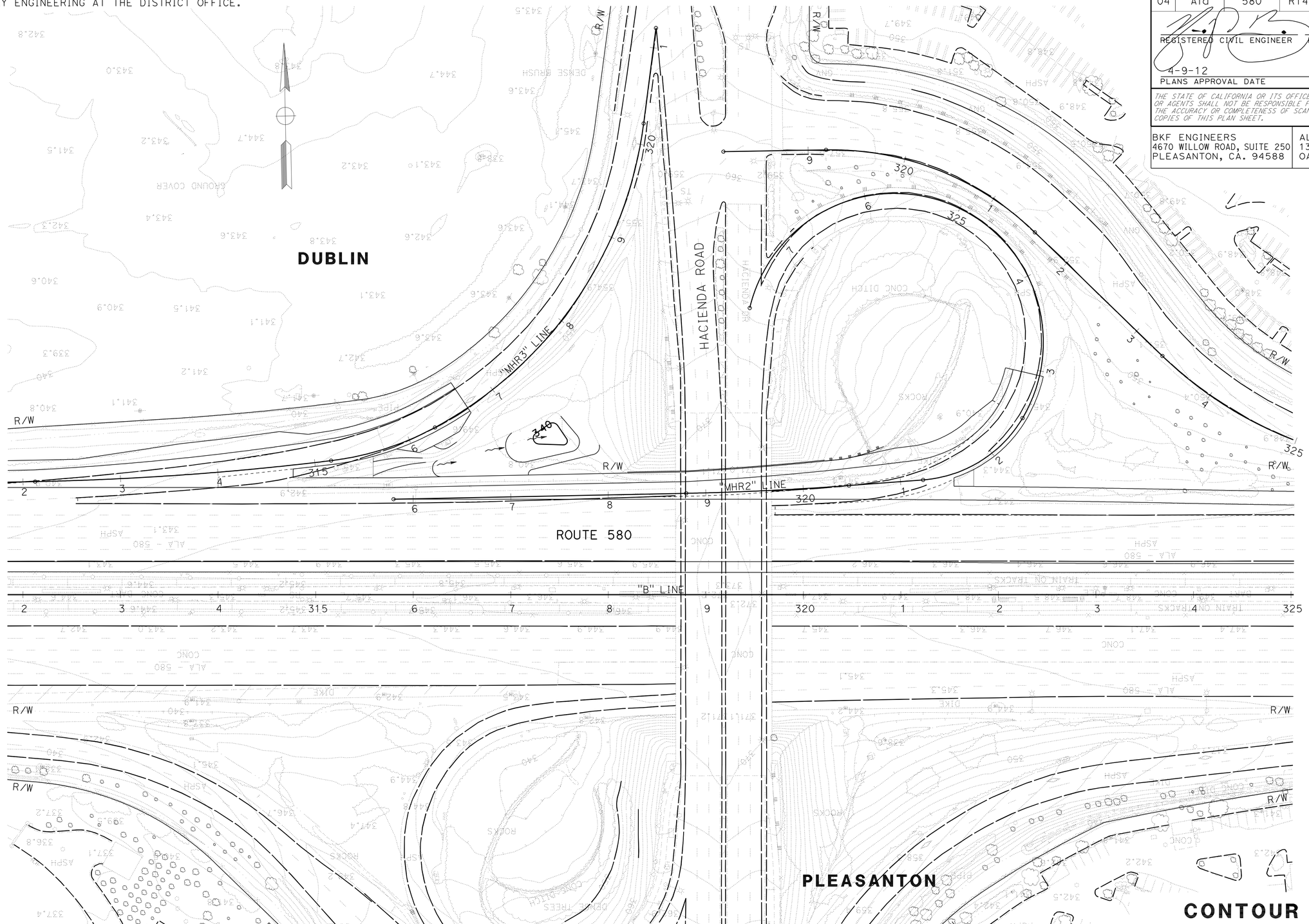

CONTOUR GRADING

SCALE: 1" = 50'

G-2

THIS PLAN ACCURATE FOR CONTOUR GRADING WORK ONLY

STATE OF CALIFORNIA - DEPARTMENT OF TRANSPORTATION
Caltrans

CONSULTANT FUNCTIONAL SUPERVISOR: NATALINA V. BERNARDI
CALCULATED-DESIGNED BY: ARMANDO LOERA
CHECKED BY: LUIS GARCIA
REVISED BY: AL
DATE REVISED: 9/23/11

LAST REVISION: 09-23-11
DATE PLOTTED => $DATE
TIME PLOTTED => $TIME

Dist	COUNTY	ROUTE	POST MILES TOTAL PROJECT	SHEET No.	TOTAL SHEETS
04	Ala	580	R14.6/R21.6	173	804

REGISTERED CIVIL ENGINEER 9/23/2011 DATE

4-9-12
PLANS APPROVAL DATE

REGISTERED PROFESSIONAL ENGINEER DAVID M. DICKINSON No. 50815 Exp. 9-30-13 CIVIL STATE OF CALIFORNIA

THE STATE OF CALIFORNIA OR ITS OFFICERS OR AGENTS SHALL NOT BE RESPONSIBLE FOR THE ACCURACY OR COMPLETENESS OF SCANNED COPIES OF THIS PLAN SHEET.

WMH CORPORATION
555 12th St
Suite 1900
Oakland, CA 94607

ALAMEDA CTC
1333 Broadway
Suite 220
Oakland, CA 94612

FOR ACCURATE RIGHT OF WAY DATA, CONTACT RIGHT OF WAY ENGINEERING AT THE DISTRICT OFFICE

NOTES:

1. FOR UTILITIES, SEE EXISTING UTILITIES PLAN SHEETS.
2. STATION & OFFSET TIES TO DRAINAGE STRUCTURES ARE MEASURED PER DETAILS ON SHEET DD-1.
3. FOR FINISHED GRADE, SEE PROFILES, CONSTRUCTION DETAILS AND PAVEMENT ELEVATION SHEETS.
4. CONTRACTOR IS RESPONSIBLE TO PROVIDE POSITIVE DRAINAGE FROM ALL ROADWAY AREA AT ALL TIMES TO PREVENT FLOODING.
5. LOCATIONS OF EXISTING DRAINAGE FACILITIES ARE APPROXIMATE. VERIFY LOCATION AND ELEVATION OF EXISTING DRAINAGE FACILITIES PRIOR TO MODIFYING.
6. THE CONTRACTOR SHALL VERIFY ALL CONTROLLING FIELD DIMENSIONS BEFORE ORDERING OR FABRICATING ANY MATERIAL.
7. GRATED LINE DRAIN SHALL HAVE REMOVABLE GRATES AND INTEGRAL FRAME WITH THE POLYMER CONCRETE CHANNEL. SEE STD PLANS D98C.
8. PROPOSED RCB CULVERTS ARE DESIGNATED AS 10′ MAXIMUM EARTH COVER.

LEGEND

- NO. DRAINAGE SYSTEM No.
- a DRAINAGE UNIT
- HMAOD
- EXISTING DRAINAGE INLET
- DRAINAGE INLET
- EXISTING DITCH FLOW LINE
- GUTTER/DITCH FLOW LINE
- EXISTING BIO-FILTRATION SWALE
- BIO-FILTRATION SWALE
- EXISTING ROCK SLOPE PROTECTION
- ROCK SLOPE PROTECTION

ABBREVIATONS

HMAOD	HOT MIX ASPHALT OVERSIDE DRAIN
SGD	STANDARD GUTTER DEPRESSION
TW	TOP OF WALL
w/	WITH
DA	DEPRESSED APRON
TCE	TEMPORARY CONSTRUCTION EASEMENT

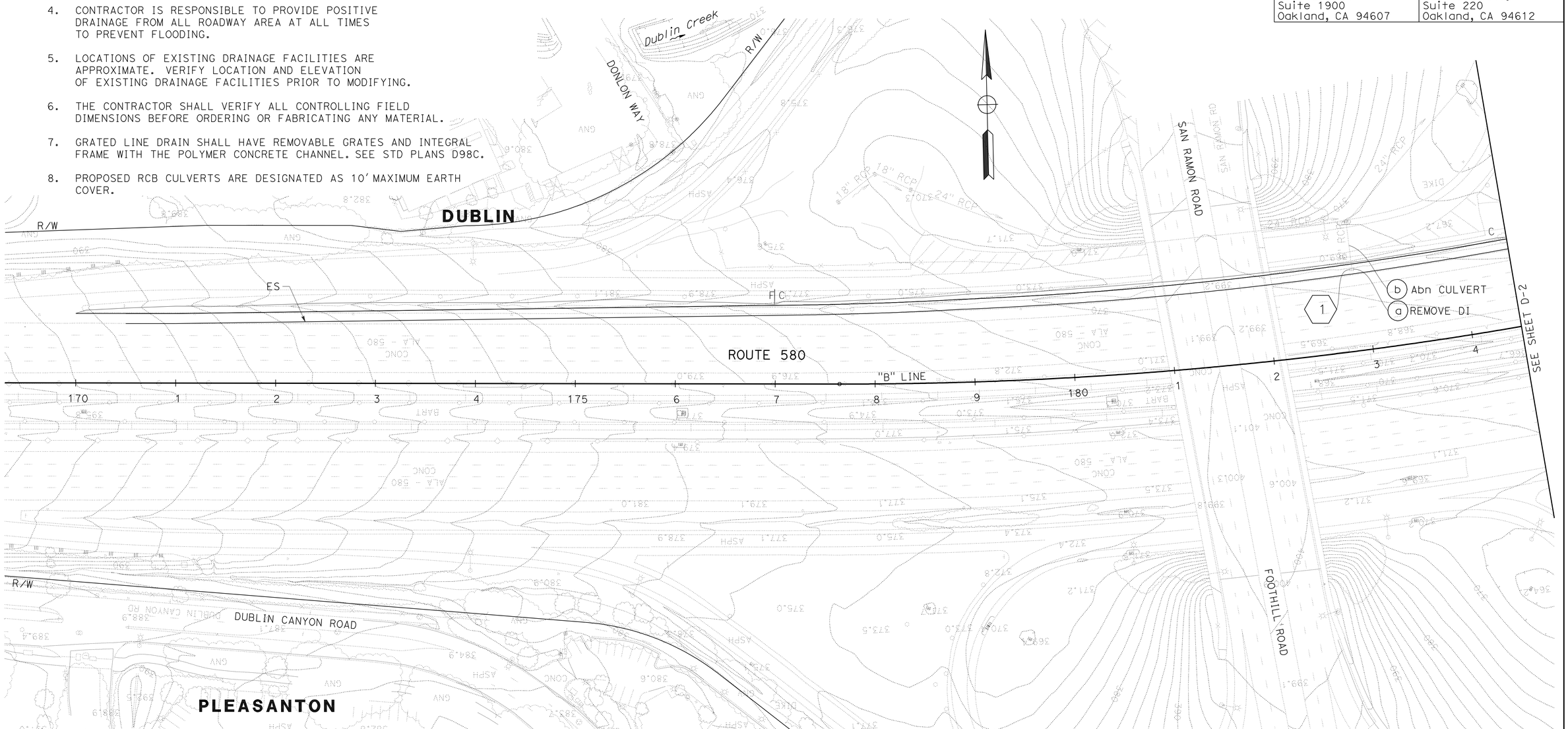

THIS PLAN FOR DRAINAGE WORK ONLY.

DRAINAGE PLAN

SCALE: 1" = 50′

D-1

STATE OF CALIFORNIA - DEPARTMENT OF TRANSPORTATION

Caltrans

CONSULTANT FUNCTIONAL SUPERVISOR: TIMOTHY J. LEE

CALCULATED-DESIGNED BY: Y. FAROUQI \ A. VALASQUEZ

CHECKED BY: DAVID M. DICKINSON

REVISED BY / DATE REVISED: YF 09/05/11; YF 04/18/11; YF 08/30/10

X:\580 WB HOV\000_CAD\Sheets\West of Sta 540+00\CT-ELECTRONIC-SUBMITTAL 20111017\Drainage\04000212491a001.dgn

LAST REVISION 09-23-11 | DATE PLOTTED => 13-APR-2012 | TIME PLOTTED => 07:57

Dist	COUNTY	ROUTE	POST MILES TOTAL PROJECT	SHEET No.	TOTAL SHEETS
04	Ala	580	R14.6/R21.6	174	804

REGISTERED CIVIL ENGINEER — DATE 9/23/2011

4-9-12
PLANS APPROVAL DATE

REGISTERED PROFESSIONAL ENGINEER — DAVID M. DICKINSON — No. 50815 — Exp. 9-30-13 — CIVIL — STATE OF CALIFORNIA

THE STATE OF CALIFORNIA OR ITS OFFICERS OR AGENTS SHALL NOT BE RESPONSIBLE FOR THE ACCURACY OR COMPLETENESS OF SCANNED COPIES OF THIS PLAN SHEET.

WMH CORPORATION
555 12th St
Suite 1900
Oakland, CA 94607

ALAMEDA CTC
1333 Broadway
Suite 220
Oakland, CA 94612

FOR ACCURATE RIGHT OF WAY DATA, CONTACT
RIGHT OF WAY ENGINEERING AT THE DISTRICT OFFICE

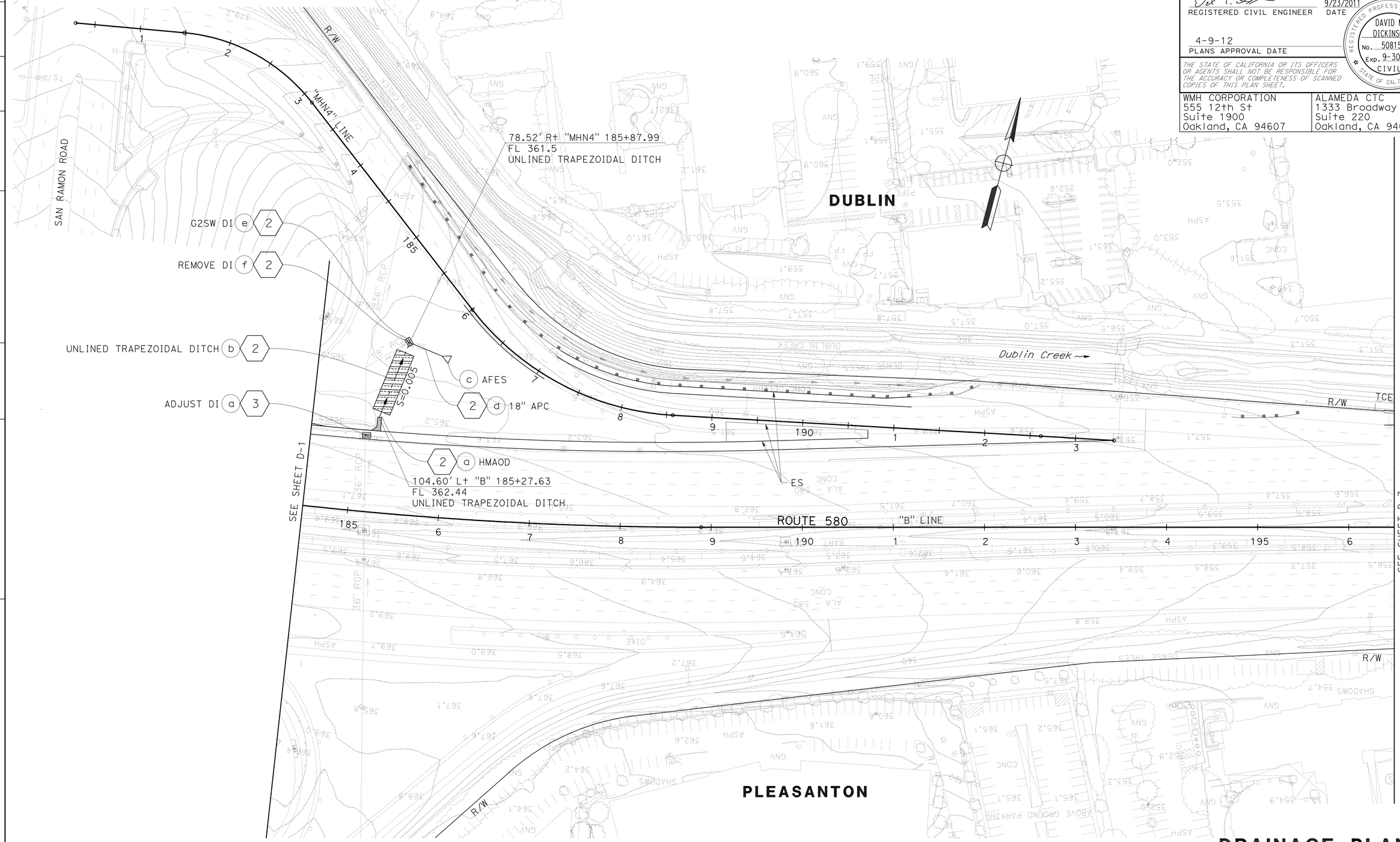

FOR NOTES, ABBREVIATIONS AND LEGEND, SEE SHEET D-1

THIS PLAN FOR DRAINAGE WORK ONLY.

DRAINAGE PLAN

SCALE: 1" = 50'

D-2

YF	YF	YF	Y. FAROUQI \ A. VALASQUEZ
09/05/11	04/18/11	08/30/10	DAVID M. DICKINSON
REVISED BY			CALCULATED-DESIGNED BY
DATE REVISED			CHECKED BY

TIMOTHY J. LEE — CONSULTANT FUNCTIONAL SUPERVISOR

STATE OF CALIFORNIA - DEPARTMENT OF TRANSPORTATION — Caltrans

X:\580 WB HOV\000_CAD\Sheets\West of Sta 540+00\CT-ELECTRONIC-SUBMITTAL 20111017\Drainage\04000212491a002.dgn

LAST REVISION 09-23-11 — DATE PLOTTED => 13-APR-2012 — TIME PLOTTED => 07:57

Dist	COUNTY	ROUTE	POST MILES TOTAL PROJECT	SHEET No.	TOTAL SHEETS
04	Ala	580	R14.6/R21.6	175	804

REGISTERED CIVIL ENGINEER 9/23/2011 DATE

4-9-12
PLANS APPROVAL DATE

REGISTERED PROFESSIONAL ENGINEER DAVID M. DICKINSON No. 50815 Exp. 9-30-13 CIVIL STATE OF CALIFORNIA

THE STATE OF CALIFORNIA OR ITS OFFICERS OR AGENTS SHALL NOT BE RESPONSIBLE FOR THE ACCURACY OR COMPLETENESS OF SCANNED COPIES OF THIS PLAN SHEET.

WMH CORPORATION
555 12th St
Suite 1900
Oakland, CA 94607

ALAMEDA CTC
1333 Broadway
Suite 220
Oakland, CA 94612

FOR ACCURATE RIGHT OF WAY DATA, CONTACT
RIGHT OF WAY ENGINEERING AT THE DISTRICT OFFICE

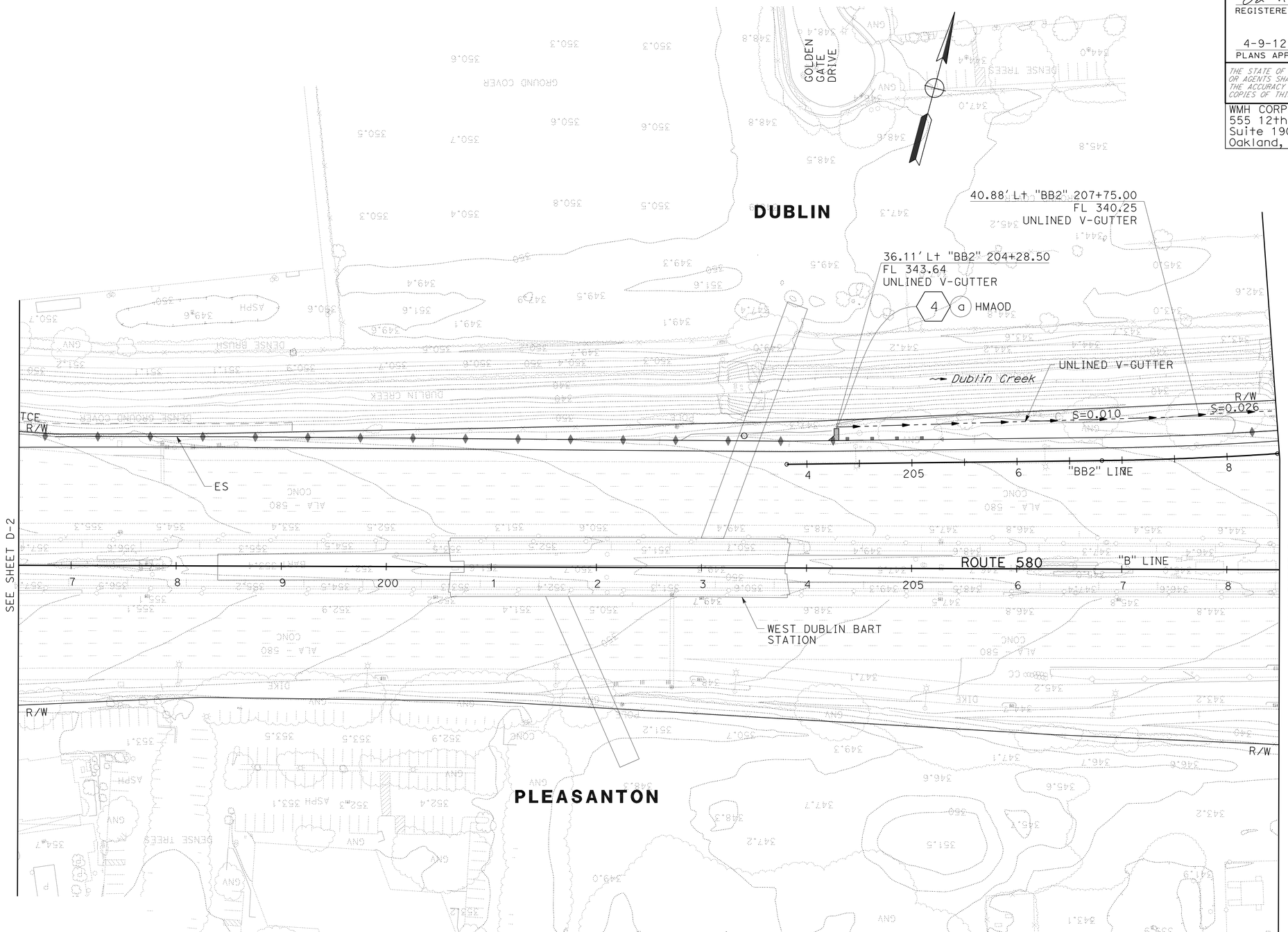

FOR NOTES, ABBREVIATIONS AND LEGEND, SEE SHEET D-1

THIS PLAN FOR DRAINAGE WORK ONLY.

DRAINAGE PLAN

SCALE: 1" = 50'

D-3

YF	YF	YF	REVISED BY
09/05/11	04/18/11	08/30/10	DATE REVISED

Y. FAROUQI \ A. VALASQUEZ — CALCULATED-DESIGNED BY
DAVID M. DICKINSON — CHECKED BY
TIMOTHY J. LEE — CONSULTANT FUNCTIONAL SUPERVISOR

STATE OF CALIFORNIA - DEPARTMENT OF TRANSPORTATION
Caltrans

X:\580 WB HOV\000_CAD\Sheets\West of Sta 540+00\CT-ELECTRONIC-SUBMITTAL 20111017\Drainage\04000212491a003.dgn

LAST REVISION 09-23-11 | DATE PLOTTED => 13-APR-2012 | TIME PLOTTED => 07:58

Dist	COUNTY	ROUTE	POST MILES TOTAL PROJECT	SHEET No.	TOTAL SHEETS
04	Ala	580	R14.6/R21.6	176	804

REGISTERED CIVIL ENGINEER 9/23/2011 DATE

4-9-12
PLANS APPROVAL DATE

REGISTERED PROFESSIONAL ENGINEER DAVID M. DICKINSON No. 50815 Exp. 9-30-13 CIVIL STATE OF CALIFORNIA

THE STATE OF CALIFORNIA OR ITS OFFICERS OR AGENTS SHALL NOT BE RESPONSIBLE FOR THE ACCURACY OR COMPLETENESS OF SCANNED COPIES OF THIS PLAN SHEET.

WMH CORPORATION
555 12th St
Suite 1900
Oakland, CA 94607

ALAMEDA CTC
1333 Broadway
Suite 220
Oakland, CA 94612

FOR ACCURATE RIGHT OF WAY DATA, CONTACT
RIGHT OF WAY ENGINEERING AT THE DISTRICT OFFICE

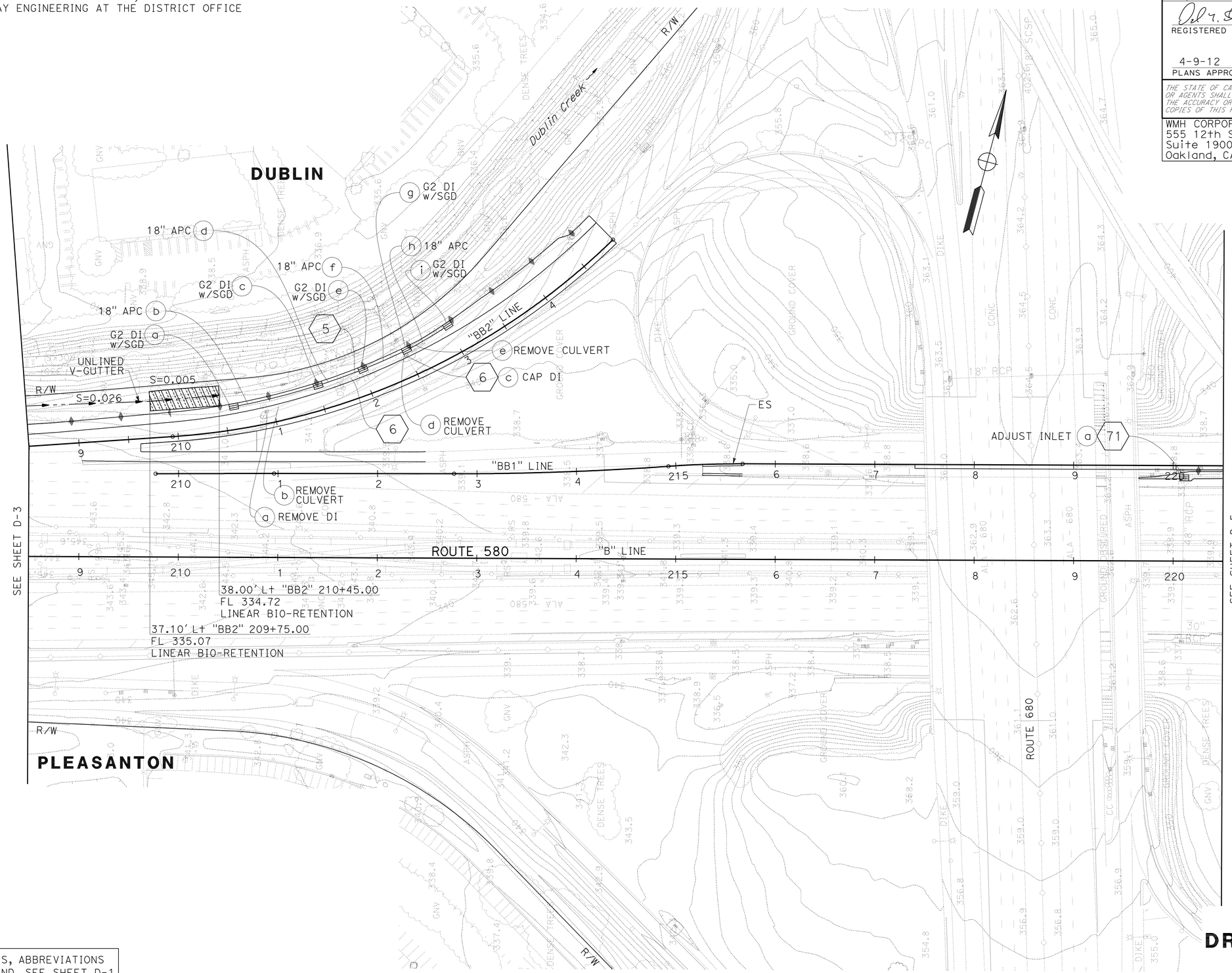

FOR NOTES, ABBREVIATIONS AND LEGEND, SEE SHEET D-1

THIS PLAN FOR DRAINAGE WORK ONLY.

DRAINAGE PLAN

SCALE: 1" = 50'

D-4

REVISED BY	DATE REVISED
YF	09/05/11
YF	04/18/11
YF	08/30/10

CALCULATED-DESIGNED BY: Y. FAROUQI \ A. VALASQUEZ
CHECKED BY: DAVID M. DICKINSON
CONSULTANT FUNCTIONAL SUPERVISOR: TIMOTHY J. LEE

STATE OF CALIFORNIA - DEPARTMENT OF TRANSPORTATION
Caltrans

X:\580 WB HOV\000_CAD\Sheets\West of Sta 540+00\CT-ELECTRONIC-SUBMITTAL 20111017\Drainage\04000212491d004.dgn

LAST REVISION 09-23-11
DATE PLOTTED => 13-APR-2012
TIME PLOTTED => 07:58

Dist	COUNTY	ROUTE	POST MILES TOTAL PROJECT	SHEET No.	TOTAL SHEETS
04	Ala	580	R14.6/R21.6	177	804

REGISTERED CIVIL ENGINEER 9/23/2011 DATE

4-9-12
PLANS APPROVAL DATE

REGISTERED PROFESSIONAL ENGINEER DAVID M. DICKINSON No. 50815 Exp. 9-30-13 CIVIL STATE OF CALIFORNIA

THE STATE OF CALIFORNIA OR ITS OFFICERS OR AGENTS SHALL NOT BE RESPONSIBLE FOR THE ACCURACY OR COMPLETENESS OF SCANNED COPIES OF THIS PLAN SHEET.

WMH CORPORATION
555 12th St
Suite 1900
Oakland, CA 94607

ALAMEDA CTC
1333 Broadway
Suite 220
Oakland, CA 94612

FOR ACCURATE RIGHT OF WAY DATA, CONTACT
RIGHT OF WAY ENGINEERING AT THE DISTRICT OFFICE

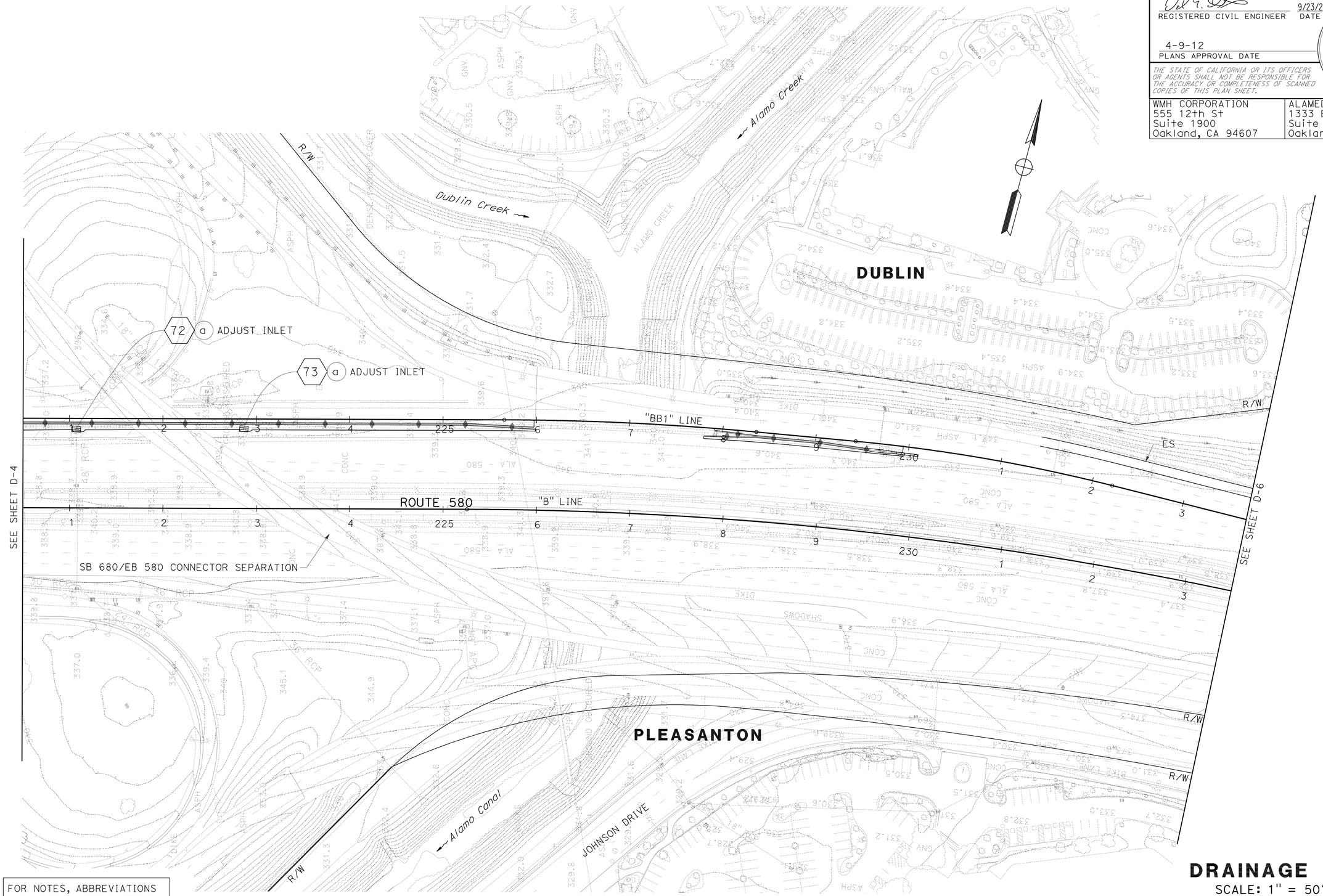

FOR NOTES, ABBREVIATIONS AND LEGEND, SEE SHEET D-1

THIS PLAN FOR DRAINAGE WORK ONLY.

DRAINAGE PLAN

SCALE: 1" = 50'

D-5

STATE OF CALIFORNIA - DEPARTMENT OF TRANSPORTATION	CONSULTANT FUNCTIONAL SUPERVISOR	CALCULATED-DESIGNED BY	REVISED BY
Caltrans	TIMOTHY J. LEE	DAVID M. DICKINSON	DATE REVISED
		CHECKED BY	08/30/10 YF 04/18/11 YF 09/05/11 YF

X:\580 WB HOV\000_CAD\Sheets\West of Sta 540+00\CT-ELECTRONIC-SUBMITTAL 20111017\Drainage\04000212491a005.dgn

LAST REVISION 09-23-11 DATE PLOTTED => 13-APR-2012 TIME PLOTTED => 07:58

BORDER LAST REVISED 7/2/2010 | USERNAME => s124496 DGN FILE => 04000212491a005.dgn | RELATIVE BORDER SCALE IS IN INCHES 0 1 2 3 | UNIT 0735 | PROJECT NUMBER & PHASE 04000212491

Dist	COUNTY	ROUTE	POST MILES TOTAL PROJECT	SHEET No.	TOTAL SHEETS
04	Ala	580	R14.6/R21.6	178	804

REGISTERED CIVIL ENGINEER 9/23/2011 DATE

4-9-12
PLANS APPROVAL DATE

REGISTERED PROFESSIONAL ENGINEER DAVID M. DICKINSON No. 50815 Exp. 9-30-13 CIVIL STATE OF CALIFORNIA

THE STATE OF CALIFORNIA OR ITS OFFICERS OR AGENTS SHALL NOT BE RESPONSIBLE FOR THE ACCURACY OR COMPLETENESS OF SCANNED COPIES OF THIS PLAN SHEET.

WMH CORPORATION
555 12th St
Suite 1900
Oakland, CA 94607

ALAMEDA CTC
1333 Broadway
Suite 220
Oakland, CA 94612

FOR ACCURATE RIGHT OF WAY DATA, CONTACT
RIGHT OF WAY ENGINEERING AT THE DISTRICT OFFICE

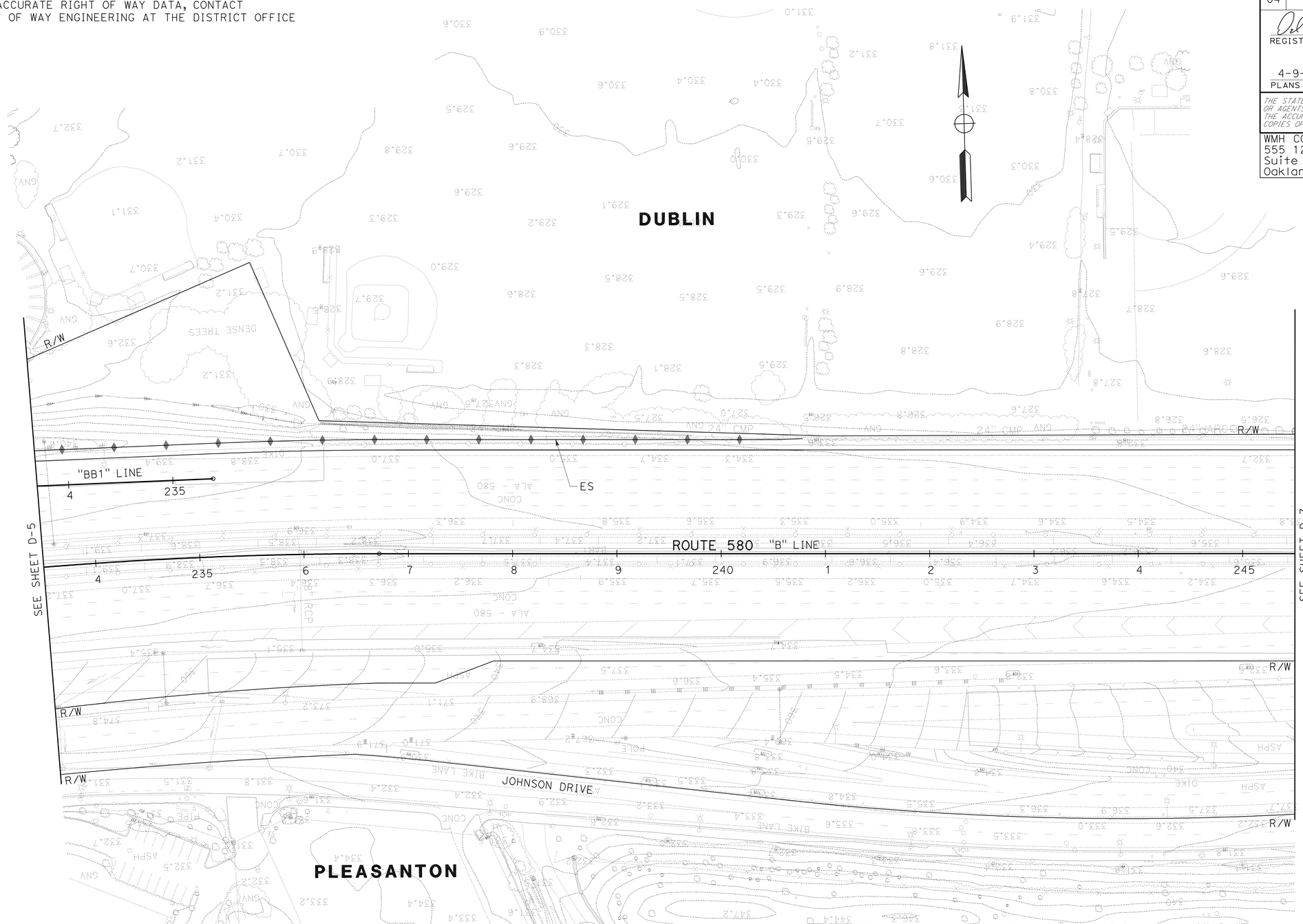

FOR NOTES, ABBREVIATIONS AND LEGEND, SEE SHEET D-1

THIS PLAN FOR DRAINAGE INFORMATION ONLY.

DRAINAGE PLAN

SCALE: 1" = 50'

D-6

REVISED BY	DATE REVISED
YF	09/05/11
YF	04/18/11
YF	08/30/10

CALCULATED-DESIGNED BY: Y. FAROUQI \ A. VALASQUEZ
CHECKED BY: DAVID M. DICKINSON
CONSULTANT FUNCTIONAL SUPERVISOR: TIMOTHY J. LEE

STATE OF CALIFORNIA - DEPARTMENT OF TRANSPORTATION
Caltrans

X:\580 WB HOV\000_CAD\Sheets\West of Sta 540+00\CT-ELECTRONIC-SUBMITTAL 20111017\Drainage\04000212491a006.dgn

LAST REVISION 09-23-11 DATE PLOTTED => 13-APR-2012 TIME PLOTTED => 07:58

Dist	COUNTY	ROUTE	POST MILES TOTAL PROJECT	SHEET No.	TOTAL SHEETS
04	Ala	580	R14.6/R21.6	179	804

REGISTERED CIVIL ENGINEER 9/23/2011 DATE

4-9-12
PLANS APPROVAL DATE

REGISTERED PROFESSIONAL ENGINEER DAVID M. DICKINSON No. 50815 Exp. 9-30-13 CIVIL STATE OF CALIFORNIA

THE STATE OF CALIFORNIA OR ITS OFFICERS OR AGENTS SHALL NOT BE RESPONSIBLE FOR THE ACCURACY OR COMPLETENESS OF SCANNED COPIES OF THIS PLAN SHEET.

WMH CORPORATION
555 12th St
Suite 1900
Oakland, CA 94607

ALAMEDA CTC
1333 Broadway
Suite 220
Oakland, CA 94612

FOR ACCURATE RIGHT OF WAY DATA, CONTACT
RIGHT OF WAY ENGINEERING AT THE DISTRICT OFFICE

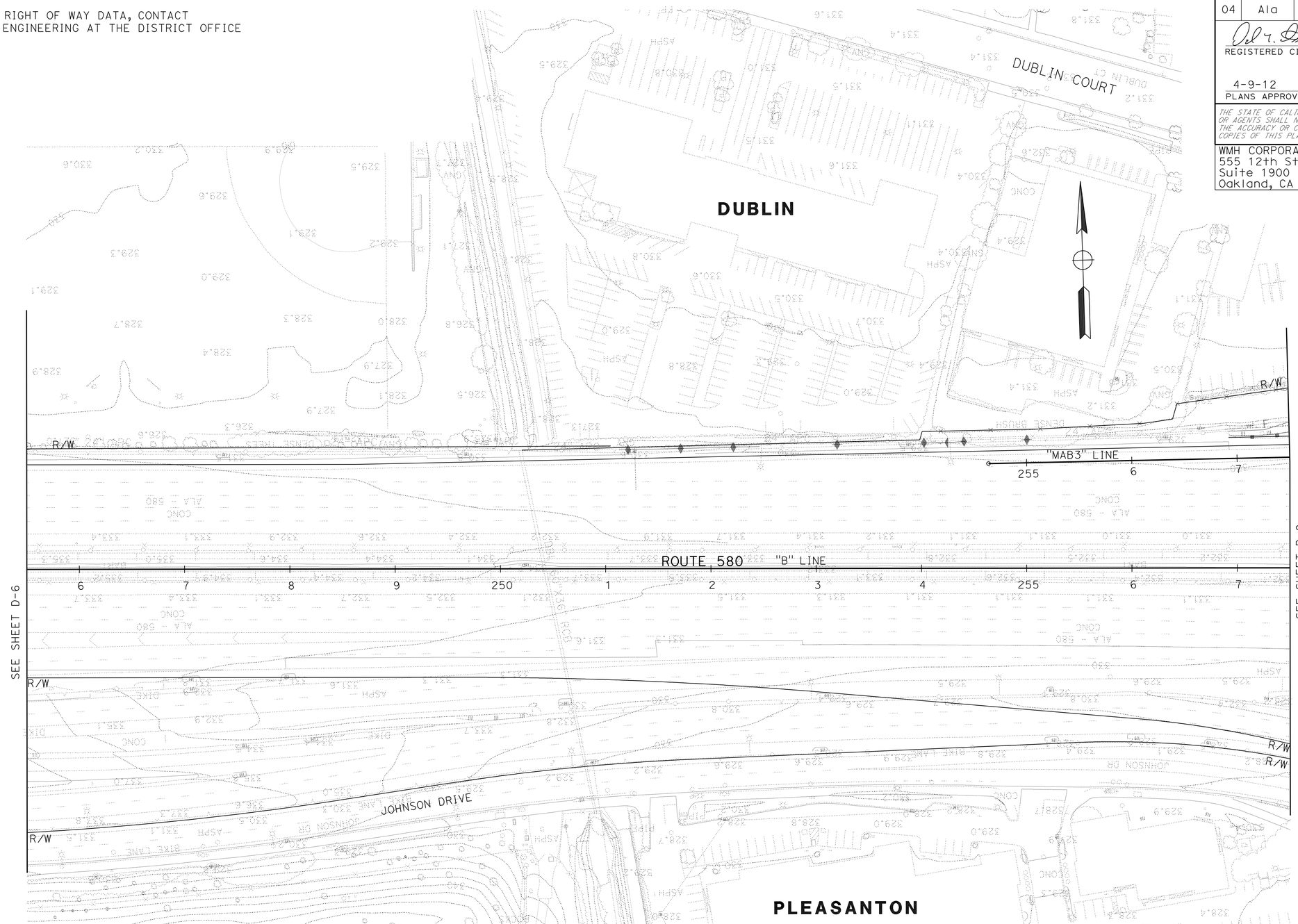

FOR NOTES, ABBREVIATIONS AND LEGEND, SEE SHEET D-1

THIS PLAN FOR DRAINAGE INFORMATION ONLY.

DRAINAGE PLAN

SCALE: 1" = 50'

D-7

YF	YF	YF	YF
09/05/11	04/18/11	08/30/10	DATE REVISED
REVISED BY			
Y. FAROUQI \ A. VALASQUEZ			
DAVID M. DICKINSON			
CALCULATED-DESIGNED BY			
CHECKED BY			
CONSULTANT FUNCTIONAL SUPERVISOR			
TIMOTHY J. LEE			

STATE OF CALIFORNIA - DEPARTMENT OF TRANSPORTATION
Caltrans

X:\580 WB HOV\000_CAD\Sheets\West of Sta 540+00\CT-ELECTRONIC-SUBMITTAL 20111017\Drainage\04000212491a007.dgn

LAST REVISION 09-23-11 | DATE PLOTTED => 13-APR-2012 | TIME PLOTTED => 07:58

Dist	COUNTY	ROUTE	POST MILES TOTAL PROJECT	SHEET No.	TOTAL SHEETS
04	Ala	580	R14.6/R21.6	180	804

REGISTERED CIVIL ENGINEER — DATE 9/23/2011

4-9-12
PLANS APPROVAL DATE

REGISTERED PROFESSIONAL ENGINEER — DAVID M. DICKINSON — No. 50815 — Exp. 9-30-13 — CIVIL — STATE OF CALIFORNIA

THE STATE OF CALIFORNIA OR ITS OFFICERS OR AGENTS SHALL NOT BE RESPONSIBLE FOR THE ACCURACY OR COMPLETENESS OF SCANNED COPIES OF THIS PLAN SHEET.

WMH CORPORATION
555 12th St
Suite 1900
Oakland, CA 94607

ALAMEDA CTC
1333 Broadway
Suite 220
Oakland, CA 94612

FOR ACCURATE RIGHT OF WAY DATA, CONTACT
RIGHT OF WAY ENGINEERING AT THE DISTRICT OFFICE

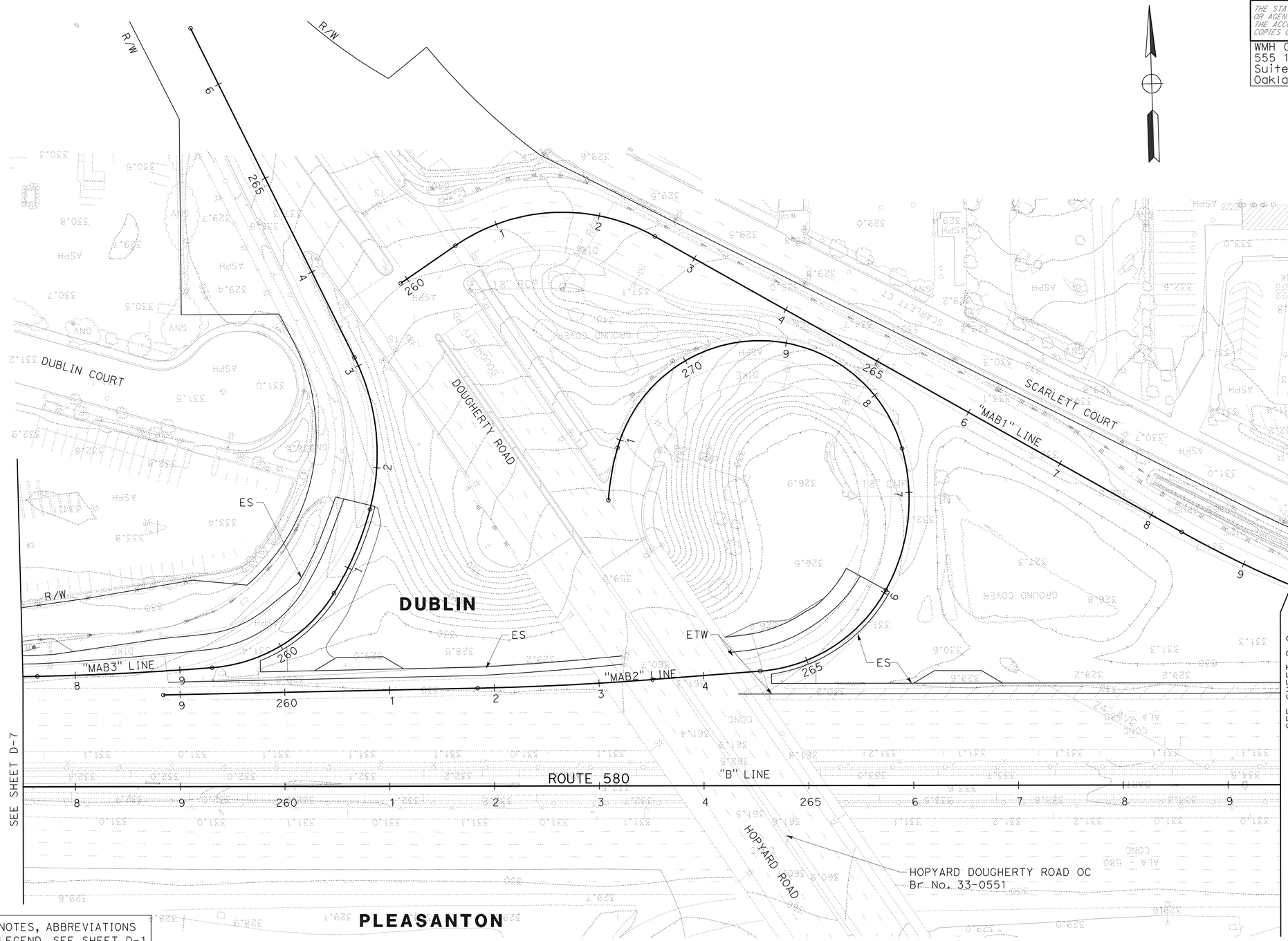

FOR NOTES, ABBREVIATIONS AND LEGEND, SEE SHEET D-1

THIS PLAN FOR DRAINAGE INFORMATION ONLY.

DRAINAGE PLAN

SCALE: 1" = 50'

D-8

YF	09/05/11	
YF	04/18/11	
YF	08/30/10	
REVISED BY	DATE REVISED	

CALCULATED-DESIGNED BY: Y. FAROUQI \ A. VALASQUEZ
CHECKED BY: DAVID M. DICKINSON
CONSULTANT FUNCTIONAL SUPERVISOR: TIMOTHY J. LEE

STATE OF CALIFORNIA - DEPARTMENT OF TRANSPORTATION
Caltrans

X:\580 WB HOV\000_CAD\Sheets\West of Sta 540+00\CT-ELECTRONIC-SUBMITTAL 20111017\Drainage\04000212491a008.dgn

LAST REVISION 09-23-11 | DATE PLOTTED => 13-APR-2012 | TIME PLOTTED => 07:59

Dist	COUNTY	ROUTE	POST MILES TOTAL PROJECT	SHEET No.	TOTAL SHEETS
04	Ala	580	R14.6/R21.6	181	804

REGISTERED CIVIL ENGINEER 9/23/2011 DATE

4-9-12
PLANS APPROVAL DATE

REGISTERED PROFESSIONAL ENGINEER DAVID M. DICKINSON No. 50815 Exp. 9-30-13 CIVIL STATE OF CALIFORNIA

THE STATE OF CALIFORNIA OR ITS OFFICERS OR AGENTS SHALL NOT BE RESPONSIBLE FOR THE ACCURACY OR COMPLETENESS OF SCANNED COPIES OF THIS PLAN SHEET.

WMH CORPORATION
555 12th St
Suite 1900
Oakland, CA 94607

ALAMEDA CTC
1333 Broadway
Suite 220
Oakland, CA 94612

FOR ACCURATE RIGHT OF WAY DATA, CONTACT
RIGHT OF WAY ENGINEERING AT THE DISTRICT OFFICE

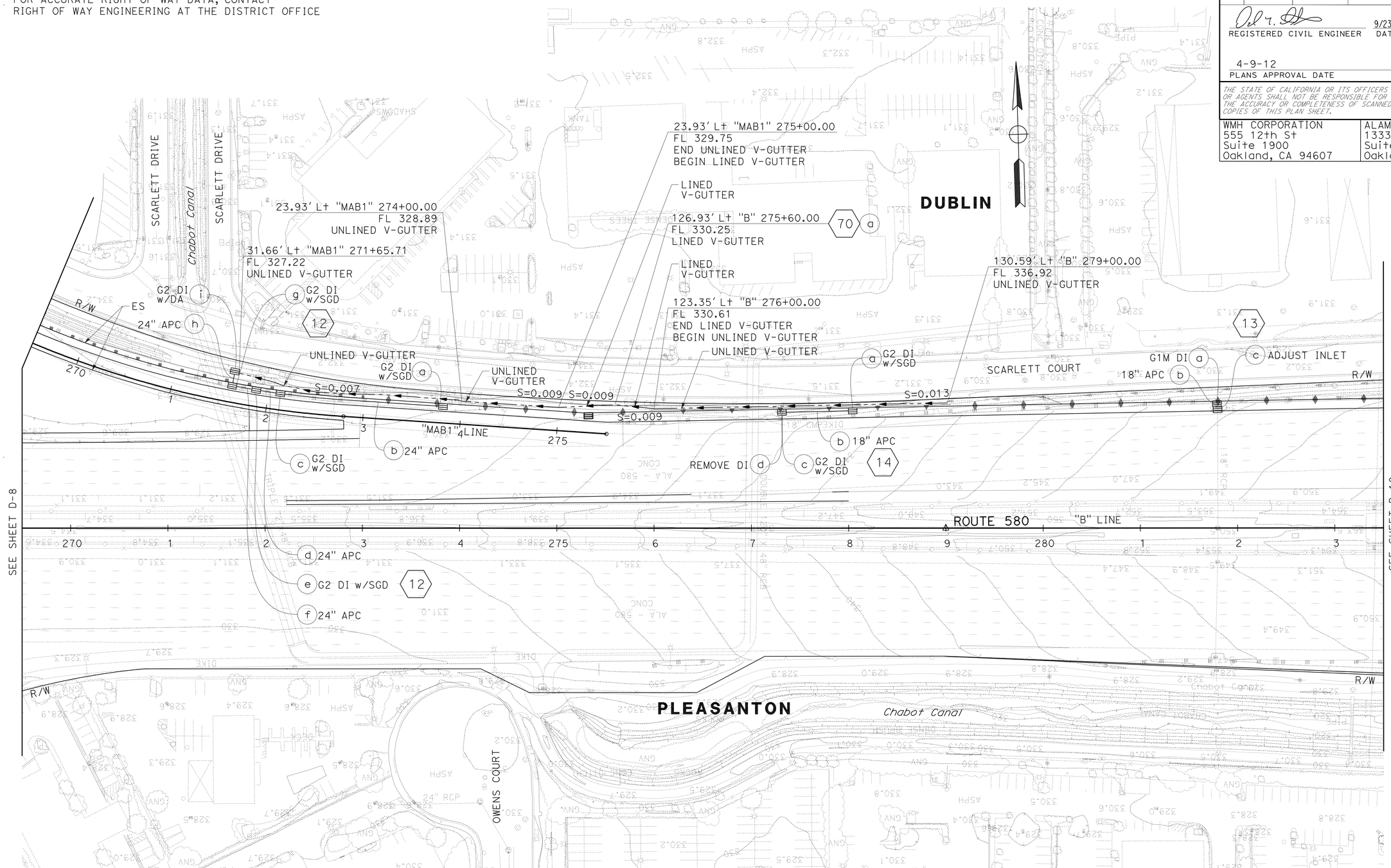

FOR NOTES, ABBREVIATIONS AND LEGEND, SEE SHEET D-1

THIS PLAN FOR DRAINAGE WORK ONLY.

DRAINAGE PLAN

SCALE: 1" = 50'

D-9

YF	09/05/11		
YF	04/18/11		
YF	08/30/10	REVISED BY	DATE REVISED

Y. FAROUQI \ A. VALASQUEZ — CALCULATED-DESIGNED BY
DAVID M. DICKINSON — CHECKED BY
TIMOTHY J. LEE — CONSULTANT FUNCTIONAL SUPERVISOR

STATE OF CALIFORNIA - DEPARTMENT OF TRANSPORTATION

Caltrans

X:\580 WB HOV\000_CAD\Sheets\West of Sta 540+00\CT-ELECTRONIC-SUBMITTAL 20111017\Drainage\04000212491d009.dgn

LAST REVISION 09-23-11
DATE PLOTTED => 13-APR-2012
TIME PLOTTED => 07:59

Dist	COUNTY	ROUTE	POST MILES TOTAL PROJECT	SHEET No.	TOTAL SHEETS
04	Ala	580	R14.6/R21.6	182	804

REGISTERED CIVIL ENGINEER 9/23/2011 DATE

4-9-12
PLANS APPROVAL DATE

REGISTERED PROFESSIONAL ENGINEER DAVID M. DICKINSON No. 50815 Exp. 9-30-13 CIVIL STATE OF CALIFORNIA

THE STATE OF CALIFORNIA OR ITS OFFICERS OR AGENTS SHALL NOT BE RESPONSIBLE FOR THE ACCURACY OR COMPLETENESS OF SCANNED COPIES OF THIS PLAN SHEET.

WMH CORPORATION
555 12th St
Suite 1900
Oakland, CA 94607

ALAMEDA CTC
1333 Broadway
Suite 220
Oakland, CA 94612

FOR ACCURATE RIGHT OF WAY DATA, CONTACT
RIGHT OF WAY ENGINEERING AT THE DISTRICT OFFICE

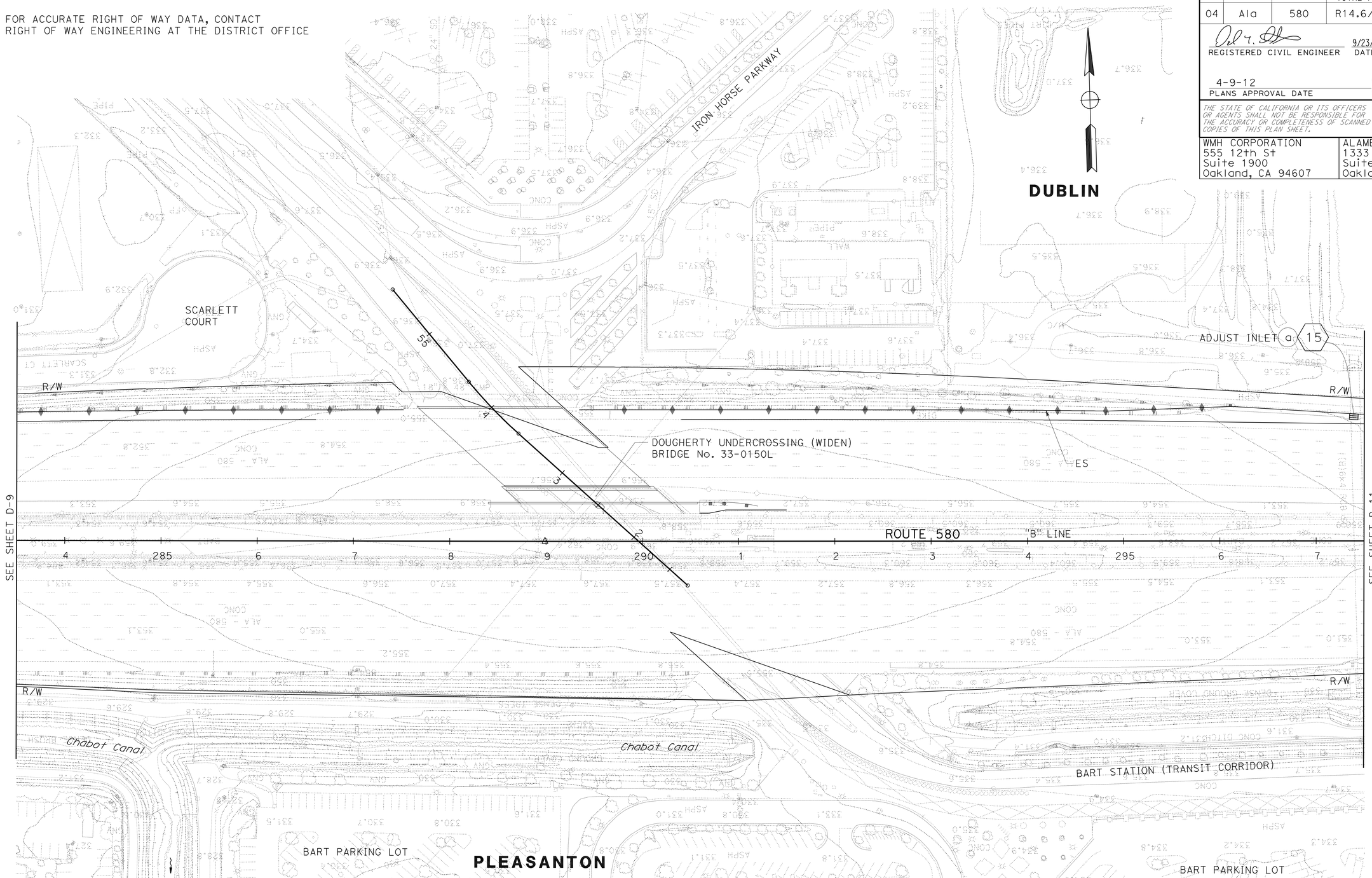

FOR NOTES, ABBREVIATIONS AND LEGEND, SEE SHEET D-1

THIS PLAN FOR DRAINAGE WORK ONLY.

DRAINAGE PLAN

SCALE: 1" = 50'

D-10

YF	YF	YF	REVISED BY
09/05/11	04/18/11	08/30/10	DATE REVISED

CALCULATED-DESIGNED BY: Y. FAROUQI \ A. VALASQUEZ
CHECKED BY: DAVID M. DICKINSON
CONSULTANT FUNCTIONAL SUPERVISOR: TIMOTHY J. LEE

STATE OF CALIFORNIA - DEPARTMENT OF TRANSPORTATION
Caltrans

X:\580 WB HOV\000_CAD\Sheets\West of Sta 540+00\CT-ELECTRONIC-SUBMITTAL 20111017\Drainage\04000212491a010.dgn

LAST REVISION 09-23-11
DATE PLOTTED => 13-APR-2012
TIME PLOTTED => 07:59

Dist	COUNTY	ROUTE	POST MILES TOTAL PROJECT	SHEET No.	TOTAL SHEETS
04	Ala	580	R14.6/R21.6	183	804

REGISTERED CIVIL ENGINEER 9/23/2011 DATE

4-9-12
PLANS APPROVAL DATE

REGISTERED PROFESSIONAL ENGINEER DAVID M. DICKINSON No. 50815 Exp. 9-30-13 CIVIL STATE OF CALIFORNIA

THE STATE OF CALIFORNIA OR ITS OFFICERS OR AGENTS SHALL NOT BE RESPONSIBLE FOR THE ACCURACY OR COMPLETENESS OF SCANNED COPIES OF THIS PLAN SHEET.

WMH CORPORATION
555 12th St
Suite 1900
Oakland, CA 94607

ALAMEDA CTC
1333 Broadway
Suite 220
Oakland, CA 94612

FOR ACCURATE RIGHT OF WAY DATA, CONTACT
RIGHT OF WAY ENGINEERING AT THE DISTRICT OFFICE

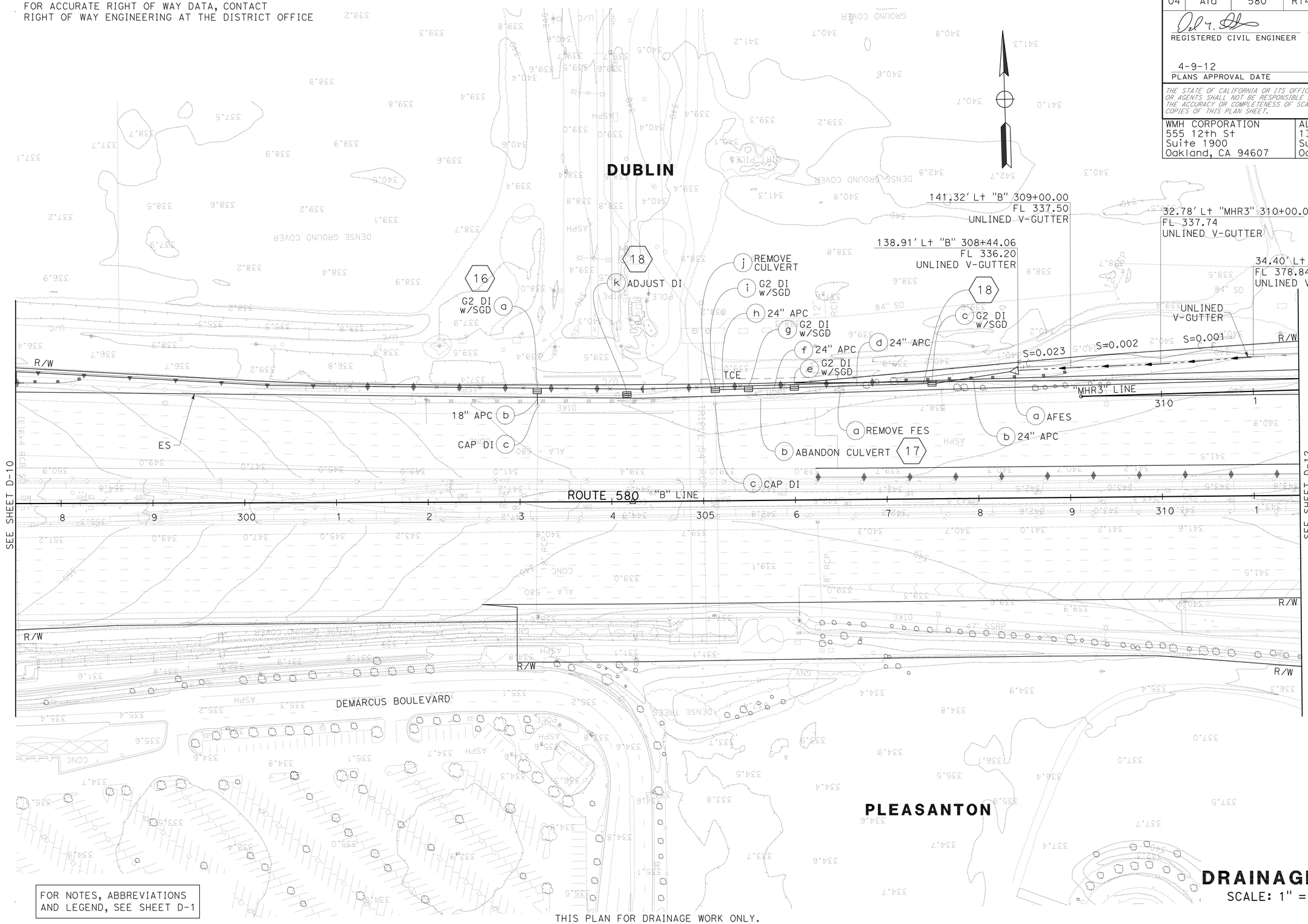

FOR NOTES, ABBREVIATIONS AND LEGEND, SEE SHEET D-1

THIS PLAN FOR DRAINAGE WORK ONLY.

DRAINAGE PLAN

SCALE: 1" = 50'

D - 11

REVISED BY	DATE REVISED
YF	09/05/11
YF	04/18/11
YF	08/30/10

Y. FAROUQI \ A. VALASQUEZ — CALCULATED-DESIGNED BY
DAVID M. DICKINSON — CHECKED BY
TIMOTHY J. LEE — CONSULTANT FUNCTIONAL SUPERVISOR

STATE OF CALIFORNIA - DEPARTMENT OF TRANSPORTATION
Caltrans

X:\580 WB HOV\000_CAD\Sheets\West of Sta 540+00\CT-ELECTRONIC-SUBMITTAL 20111017\Drainage\04000212491a011.dgn

LAST REVISION 09-23-11
DATE PLOTTED => 13-APR-2012
TIME PLOTTED => 07:59

Dist	COUNTY	ROUTE	POST MILES TOTAL PROJECT	SHEET No.	TOTAL SHEETS
04	Ala	580	R14.6/R21.6	184	804

REGISTERED CIVIL ENGINEER 9/23/2011 DATE

4-9-12
PLANS APPROVAL DATE

REGISTERED PROFESSIONAL ENGINEER DAVID M. DICKINSON No. 50815 Exp. 9-30-13 CIVIL STATE OF CALIFORNIA

THE STATE OF CALIFORNIA OR ITS OFFICERS OR AGENTS SHALL NOT BE RESPONSIBLE FOR THE ACCURACY OR COMPLETENESS OF SCANNED COPIES OF THIS PLAN SHEET.

WMH CORPORATION
555 12th St
Suite 1900
Oakland, CA 94607

ALAMEDA CTC
1333 Broadway
Suite 220
Oakland, CA 94612

FOR ACCURATE RIGHT OF WAY DATA, CONTACT
RIGHT OF WAY ENGINEERING AT THE DISTRICT OFFICE

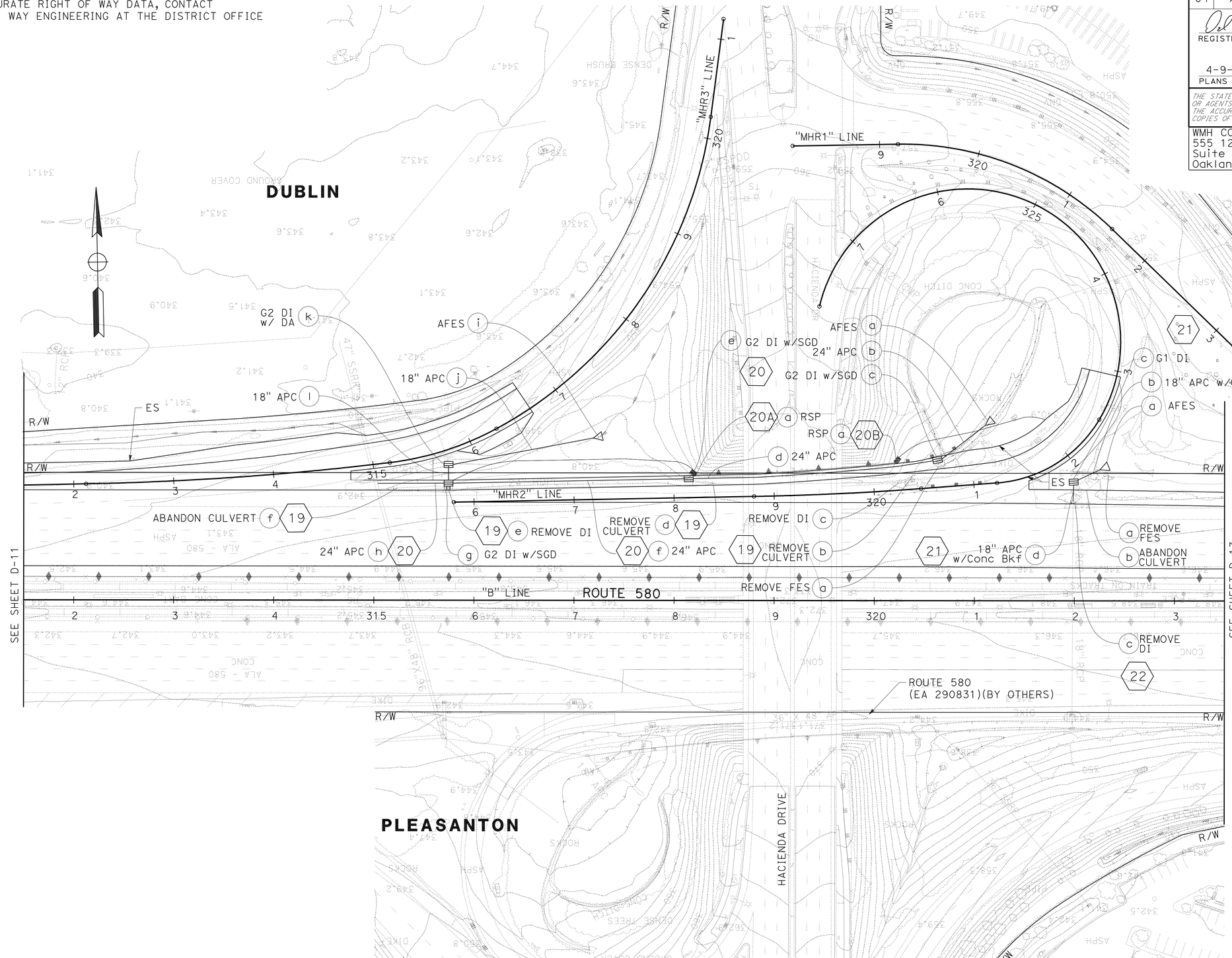

FOR NOTES, ABBREVIATIONS AND LEGEND, SEE SHEET D-1

THIS PLAN FOR DRAINAGE WORK ONLY.

DRAINAGE PLAN

SCALE: 1" = 50'

D-12

YF	YF	YF
09/05/11	04/18/11	08/30/10

REVISED BY / DATE REVISED

Y. FAROUQI \ A. VALASQUEZ
DAVID M. DICKINSON

CALCULATED-DESIGNED BY
CHECKED BY

CONSULTANT FUNCTIONAL SUPERVISOR
TIMOTHY J. LEE

STATE OF CALIFORNIA - DEPARTMENT OF TRANSPORTATION
Caltrans

X:\580 WB HOV\000_CAD\Sheets\West of Sta 540+00\CT-ELECTRONIC-SUBMITTAL 20111017\Drainage\04000212491a012.dgn

LAST REVISION 09-23-11
DATE PLOTTED => 13-APR-2012
TIME PLOTTED => 08:00

Dist	COUNTY	ROUTE	POST MILES TOTAL PROJECT	SHEET No.	TOTAL SHEETS
04	Ala	580	R14.6/R21.6	185	804

REGISTERED CIVIL ENGINEER 9/23/2011 DATE

4-9-12
PLANS APPROVAL DATE

REGISTERED PROFESSIONAL ENGINEER DAVID M. DICKINSON No. 50815 Exp. 9-30-13 CIVIL STATE OF CALIFORNIA

THE STATE OF CALIFORNIA OR ITS OFFICERS OR AGENTS SHALL NOT BE RESPONSIBLE FOR THE ACCURACY OR COMPLETENESS OF SCANNED COPIES OF THIS PLAN SHEET.

WMH CORPORATION
555 12th St
Suite 1900
Oakland, CA 94607

ALAMEDA CTC
1333 Broadway
Suite 220
Oakland, CA 94612

FOR ACCURATE RIGHT OF WAY DATA, CONTACT
RIGHT OF WAY ENGINEERING AT THE DISTRICT OFFICE

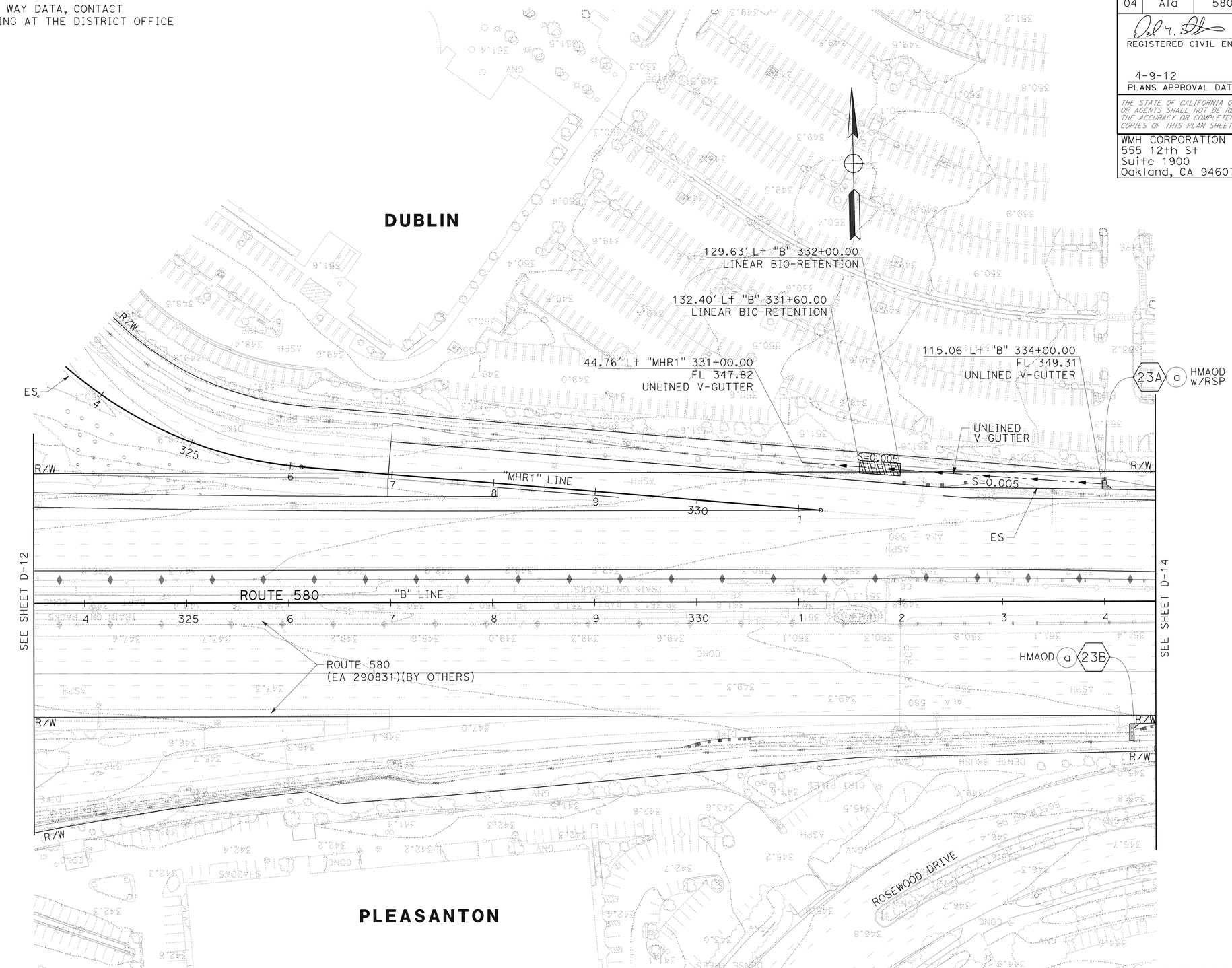

FOR NOTES, ABBREVIATIONS AND LEGEND, SEE SHEET D-1

THIS PLAN FOR DRAINAGE WORK ONLY.

DRAINAGE PLAN

SCALE: 1" = 50'

D-13

YF	YF	YF
09/05/11	04/18/11	08/30/10

REVISED BY
DATE REVISED

Y. FAROUQI \ A. VALASQUEZ
DAVID M. DICKINSON

CALCULATED-DESIGNED BY
CHECKED BY

TIMOTHY J. LEE

CONSULTANT FUNCTIONAL SUPERVISOR

STATE OF CALIFORNIA - DEPARTMENT OF TRANSPORTATION

Caltrans

X:\580 WB HOV\000_CAD\Sheets\West of Sta 540+00\CT-ELECTRONIC-SUBMITTAL 20111017\Drainage\04000212491a013.dgn

LAST REVISION 09-23-11
DATE PLOTTED => 13-APR-2012
TIME PLOTTED => 08:00

Dist	COUNTY	ROUTE	POST MILES TOTAL PROJECT	SHEET No.	TOTAL SHEETS
04	Ala	580	R14.6/R21.6	186	804

REGISTERED CIVIL ENGINEER 9/23/2011 DATE

4-9-12
PLANS APPROVAL DATE

REGISTERED PROFESSIONAL ENGINEER DAVID M. DICKINSON No. 50815 Exp. 9-30-13 CIVIL STATE OF CALIFORNIA

THE STATE OF CALIFORNIA OR ITS OFFICERS OR AGENTS SHALL NOT BE RESPONSIBLE FOR THE ACCURACY OR COMPLETENESS OF SCANNED COPIES OF THIS PLAN SHEET.

WMH CORPORATION
555 12th St
Suite 1900
Oakland, CA 94607

ALAMEDA CTC
1333 Broadway
Suite 220
Oakland, CA 94612

FOR ACCURATE RIGHT OF WAY DATA, CONTACT
RIGHT OF WAY ENGINEERING AT THE DISTRICT OFFICE

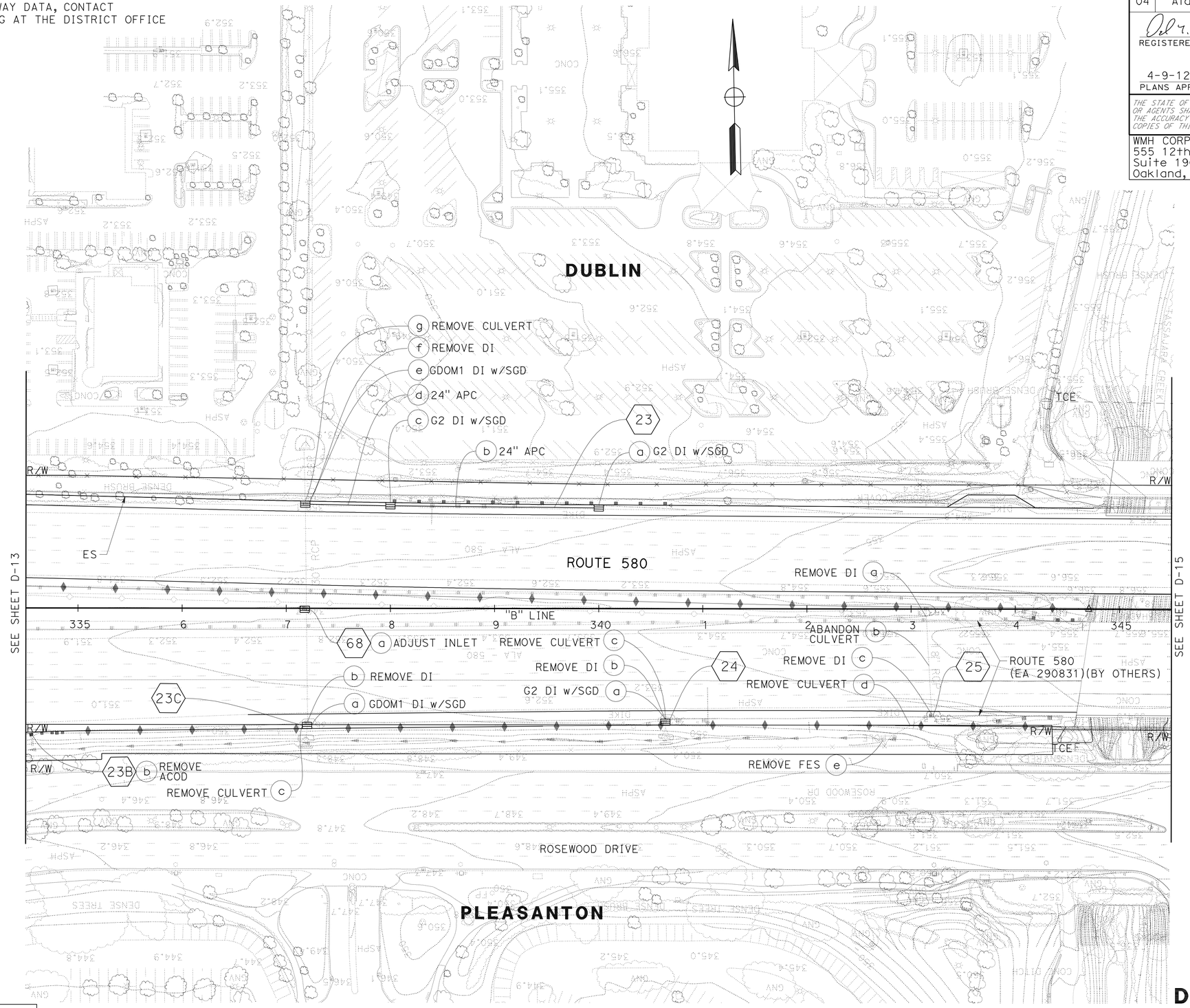

FOR NOTES, ABBREVIATIONS AND LEGEND, SEE SHEET D-1

THIS PLAN FOR DRAINAGE WORK ONLY.

DRAINAGE PLAN

SCALE: 1" = 50'

D-14

YF	YF	YF	YF
09/05/11	04/18/11	08/30/10	DATE REVISED
REVISED BY			
Y. FAROUQI \ A. VALASQUEZ			
DAVID M. DICKINSON			
CALCULATED-DESIGNED BY			
CHECKED BY			
CONSULTANT FUNCTIONAL SUPERVISOR			
TIMOTHY J. LEE			

STATE OF CALIFORNIA - DEPARTMENT OF TRANSPORTATION

Caltrans

X:\580 WB HOV\000_CAD\Sheets\West of Sta 540+00\CT-ELECTRONIC-SUBMITTAL 20111017\Drainage\0400021249ia014.dgn

LAST REVISION 09-23-11 DATE PLOTTED => 13-APR-2012 TIME PLOTTED => 08:00

Dist	COUNTY	ROUTE	POST MILES TOTAL PROJECT	SHEET No.	TOTAL SHEETS
04	Ala	580	R14.6/R21.6	187	804

REGISTERED CIVIL ENGINEER 9/23/2011 DATE

4-9-12
PLANS APPROVAL DATE

REGISTERED PROFESSIONAL ENGINEER DAVID M. DICKINSON No. 50815 Exp. 9-30-13 CIVIL STATE OF CALIFORNIA

THE STATE OF CALIFORNIA OR ITS OFFICERS OR AGENTS SHALL NOT BE RESPONSIBLE FOR THE ACCURACY OR COMPLETENESS OF SCANNED COPIES OF THIS PLAN SHEET.

WMH CORPORATION
555 12th St
Suite 1900
Oakland, CA 94607

ALAMEDA CTC
1333 Broadway
Suite 220
Oakland, CA 94612

FOR ACCURATE RIGHT OF WAY DATA, CONTACT
RIGHT OF WAY ENGINEERING AT THE DISTRICT OFFICE

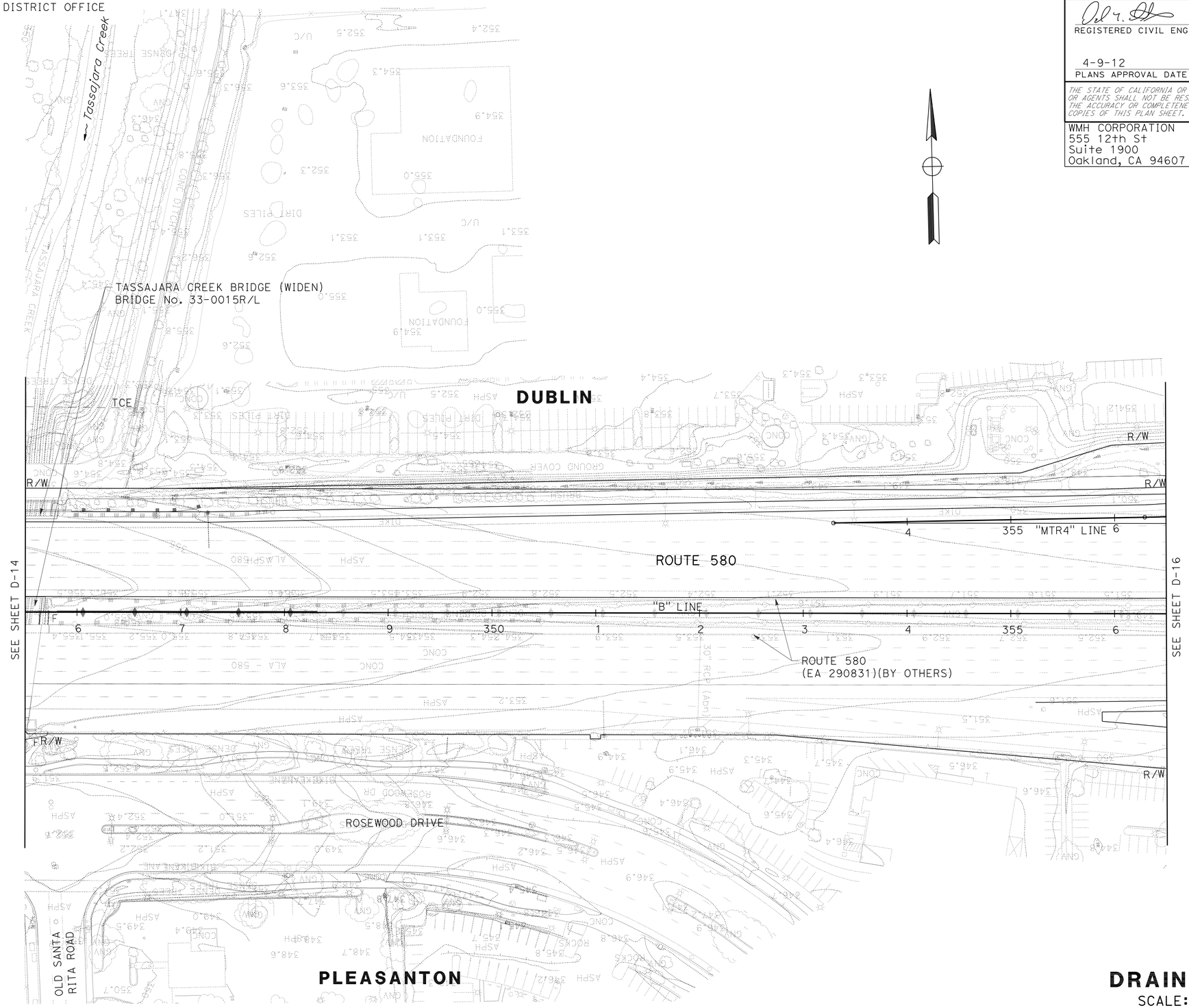

FOR NOTES, ABBREVIATIONS AND LEGEND, SEE SHEET D-1

THIS PLAN FOR DRAINAGE INFORMATION ONLY.

DRAINAGE PLAN

SCALE: 1" = 50'

D-15

09/05/11	YF	
04/18/11	YF	
08/30/10	YF	
DATE REVISED	REVISED BY	
DAVID M. DICKINSON	Y. FAROUQI \ A. VALASQUEZ	CALCULATED-DESIGNED BY
		CHECKED BY
TIMOTHY J. LEE	CONSULTANT FUNCTIONAL SUPERVISOR	

STATE OF CALIFORNIA - DEPARTMENT OF TRANSPORTATION

Caltrans

X:\580 WB HOV\000_CAD\Sheets\West of Sta 540+00\CT-ELECTRONIC-SUBMITTAL 20111017\Drainage\04000212491io15.dgn

LAST REVISION 09-23-11 | DATE PLOTTED => 13-APR-2012 | TIME PLOTTED => 08:01

Dist	COUNTY	ROUTE	POST MILES TOTAL PROJECT	SHEET No.	TOTAL SHEETS
04	Ala	580	R14.6/R21.6	188	804

REGISTERED CIVIL ENGINEER 9/23/2011 DATE

4-9-12
PLANS APPROVAL DATE

REGISTERED PROFESSIONAL ENGINEER DAVID M. DICKINSON No. 50815 Exp. 9-30-13 CIVIL STATE OF CALIFORNIA

THE STATE OF CALIFORNIA OR ITS OFFICERS OR AGENTS SHALL NOT BE RESPONSIBLE FOR THE ACCURACY OR COMPLETENESS OF SCANNED COPIES OF THIS PLAN SHEET.

WMH CORPORATION
555 12th St
Suite 1900
Oakland, CA 94607

ALAMEDA CTC
1333 Broadway
Suite 220
Oakland, CA 94612

FOR ACCURATE RIGHT OF WAY DATA, CONTACT
RIGHT OF WAY ENGINEERING AT THE DISTRICT OFFICE

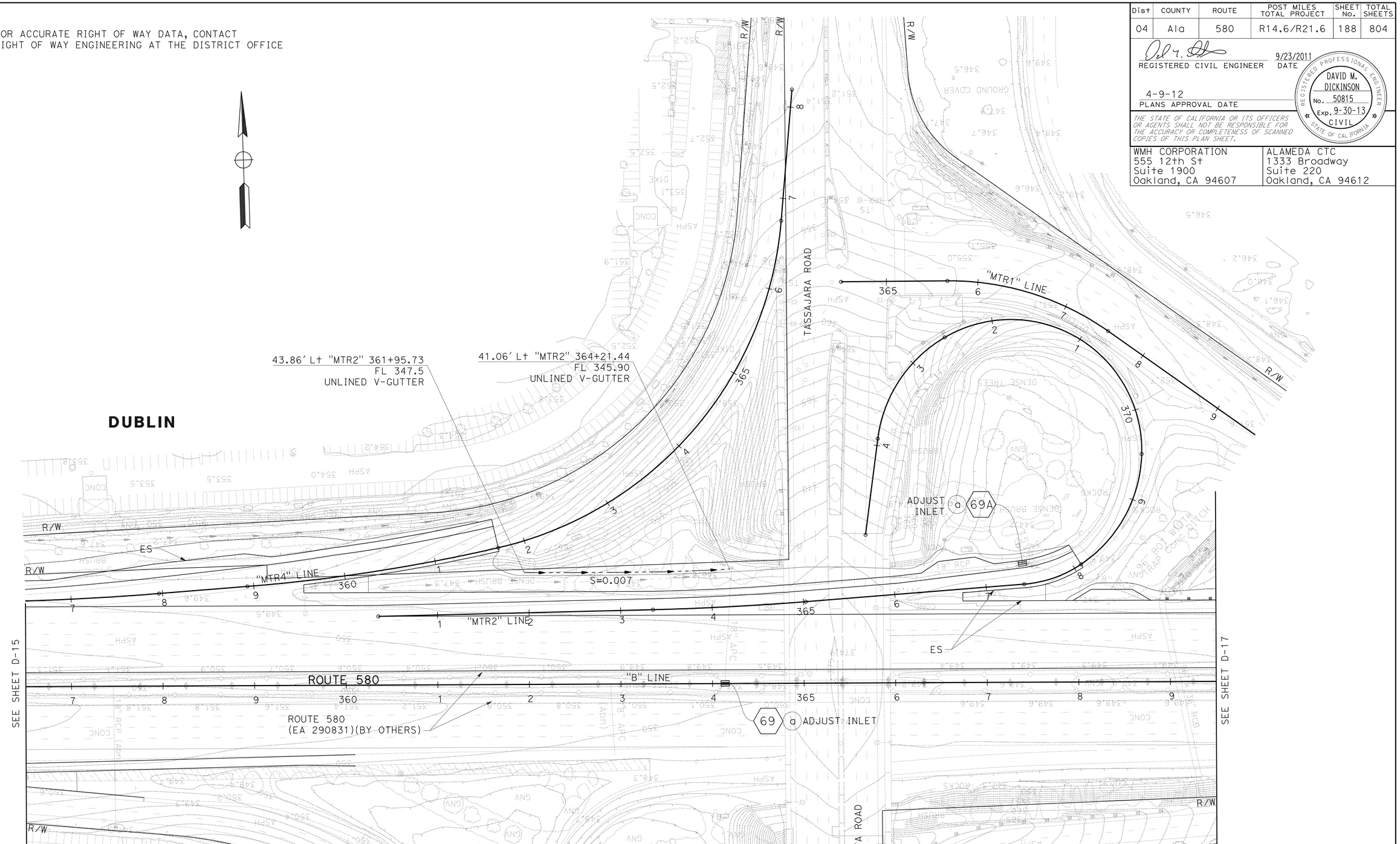

FOR NOTES, ABBREVIATIONS AND LEGEND, SEE SHEET D-1

THIS PLAN FOR DRAINAGE WORK ONLY.

DRAINAGE PLAN

SCALE: 1" = 50'

D-16

YF	YF	YF
09/05/11	04/18/11	08/30/10

REVISED BY — DATE REVISED

Y. FAROUQI \ A. VALASQUEZ — CALCULATED-DESIGNED BY
DAVID M. DICKINSON — CHECKED BY
TIMOTHY J. LEE — CONSULTANT FUNCTIONAL SUPERVISOR

STATE OF CALIFORNIA - DEPARTMENT OF TRANSPORTATION
Caltrans

X:\580 WB HOV\000_CAD\Sheets\West of Sta 540+00\CT-ELECTRONIC-SUBMITTAL 20111017\Drainage\04000212491a016.dgn

LAST REVISION 09-23-11 | DATE PLOTTED => 13-APR-2012 | TIME PLOTTED => 08:01

Dist	COUNTY	ROUTE	POST MILES TOTAL PROJECT	SHEET No.	TOTAL SHEETS
04	Ala	580	R14.6/R21.6	189	804

REGISTERED CIVIL ENGINEER 9/23/2011 DATE

4-9-12
PLANS APPROVAL DATE

REGISTERED PROFESSIONAL ENGINEER DAVID M. DICKINSON No. 50815 Exp. 9-30-13 CIVIL STATE OF CALIFORNIA

THE STATE OF CALIFORNIA OR ITS OFFICERS OR AGENTS SHALL NOT BE RESPONSIBLE FOR THE ACCURACY OR COMPLETENESS OF SCANNED COPIES OF THIS PLAN SHEET.

WMH CORPORATION
555 12th St
Suite 1900
Oakland, CA 94607

ALAMEDA CTC
1333 Broadway
Suite 220
Oakland, CA 94612

FOR ACCURATE RIGHT OF WAY DATA, CONTACT
RIGHT OF WAY ENGINEERING AT THE DISTRICT OFFICE

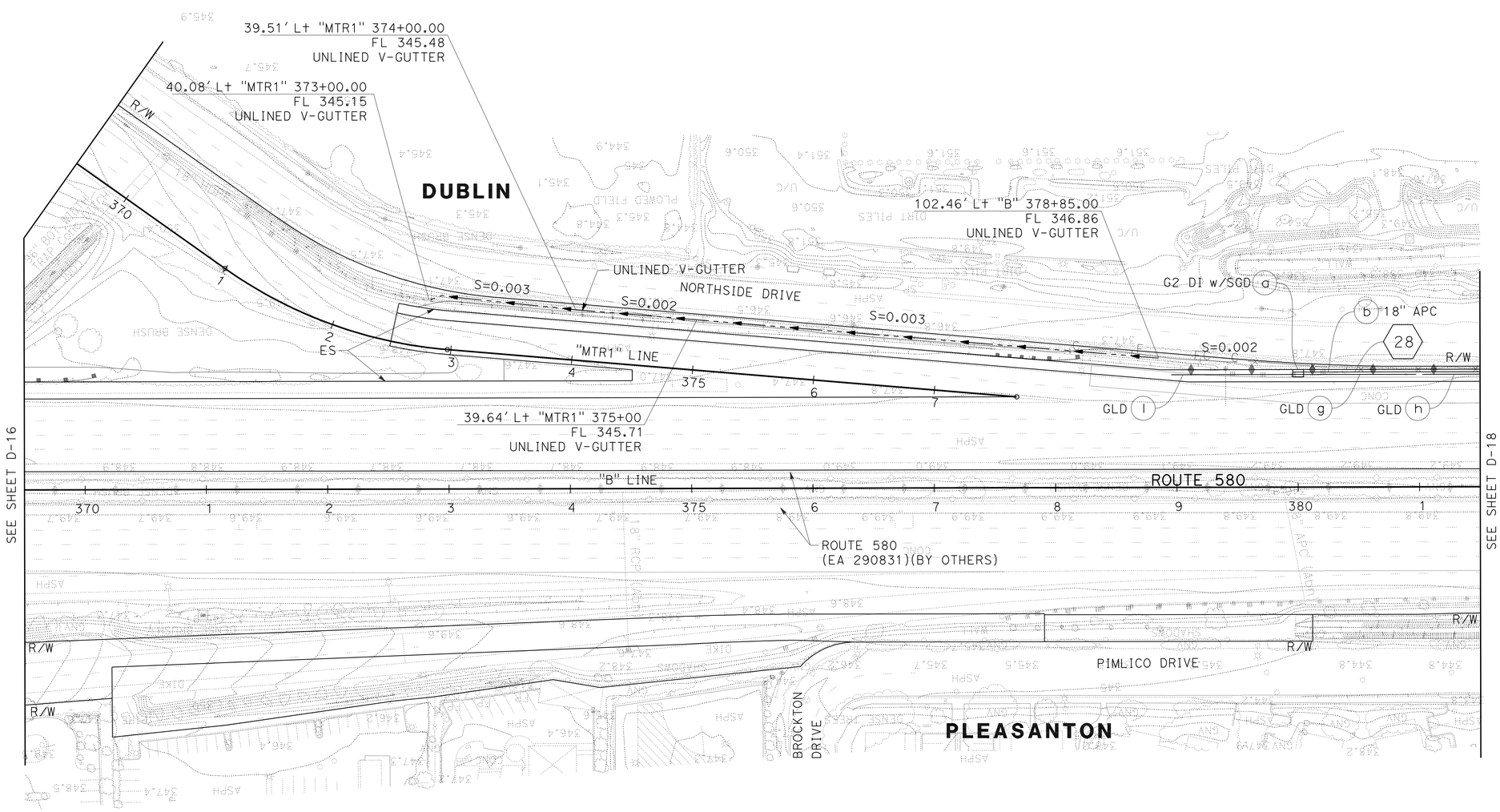

FOR NOTES, ABBREVIATIONS AND LEGEND, SEE SHEET D-1

THIS PLAN FOR DRAINAGE WORK ONLY.

DRAINAGE PLAN

SCALE: 1" = 50'

D-17

YF	YF	YF	REVISED BY
09/05/11	04/18/11	08/30/10	DATE REVISED

CALCULATED-DESIGNED BY: Y. FAROUQI \ A. VALASQUEZ
CHECKED BY: DAVID M. DICKINSON
CONSULTANT FUNCTIONAL SUPERVISOR: TIMOTHY J. LEE

STATE OF CALIFORNIA - DEPARTMENT OF TRANSPORTATION
Caltrans

X:\580 WB HOV\000_CAD\Sheets\West of Sta 540+00\CT-ELECTRONIC-SUBMITTAL 20111017\Drainage\04000212491a017.dgn

LAST REVISION 09-23-11
DATE PLOTTED => 13-APR-2012
TIME PLOTTED => 08:01

FOR ACCURATE RIGHT OF WAY DATA, CONTACT
RIGHT OF WAY ENGINEERING AT THE DISTRICT OFFICE

Dist	COUNTY	ROUTE	POST MILES TOTAL PROJECT	SHEET No.	TOTAL SHEETS
04	Ala	580	R14.6/R21.6	190	804

REGISTERED CIVIL ENGINEER 9/23/2011 DATE

4-9-12
PLANS APPROVAL DATE

REGISTERED PROFESSIONAL ENGINEER
DAVID M. DICKINSON
No. 50815
Exp. 9-30-13
CIVIL
STATE OF CALIFORNIA

THE STATE OF CALIFORNIA OR ITS OFFICERS OR AGENTS SHALL NOT BE RESPONSIBLE FOR THE ACCURACY OR COMPLETENESS OF SCANNED COPIES OF THIS PLAN SHEET.

WMH CORPORATION
555 12th St
Suite 1900
Oakland, CA 94607

ALAMEDA CTC
1333 Broadway
Suite 220
Oakland, CA 94612

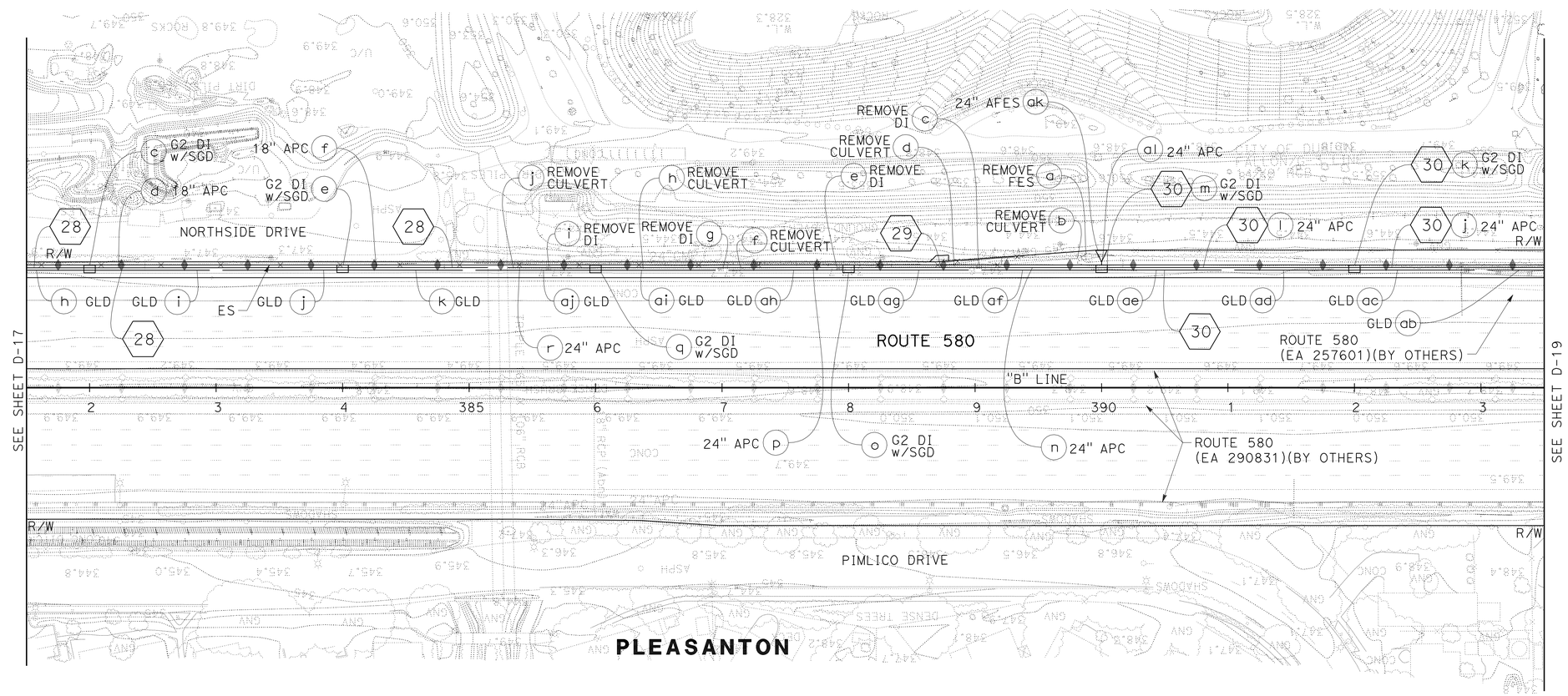

FOR NOTES, ABBREVIATIONS AND LEGEND, SEE SHEET D-1

THIS PLAN FOR DRAINAGE WORK ONLY.

DRAINAGE PLAN

SCALE: 1" = 50'

D-18

YF	YF	YF	REVISED BY
09/05/11	04/18/11	08/30/10	DATE REVISED

Y. FAROUQI \ A. VALASQUEZ — CALCULATED-DESIGNED BY
DAVID M. DICKINSON — CHECKED BY
TIMOTHY J. LEE — SUPERVISOR
CONSULTANT FUNCTIONAL SUPERVISOR

STATE OF CALIFORNIA - DEPARTMENT OF TRANSPORTATION
Caltrans

X:\580 WB HOV\000_CAD\Sheets\West of Sta 540+00\CT-ELECTRONIC-SUBMITTAL 20111017\Drainage\04000212491d018.dgn

LAST REVISION 09-23-11 | DATE PLOTTED => 13-APR-2012 | TIME PLOTTED => 08:01

FOR ACCURATE RIGHT OF WAY DATA, CONTACT
RIGHT OF WAY ENGINEERING AT THE DISTRICT OFFICE

Dist	COUNTY	ROUTE	POST MILES TOTAL PROJECT	SHEET No.	TOTAL SHEETS
04	Ala	580	R14.6/R21.6	191	804

REGISTERED CIVIL ENGINEER 9/23/2011 DATE

4-9-12
PLANS APPROVAL DATE

REGISTERED PROFESSIONAL ENGINEER
DAVID M. DICKINSON
No. 50815
Exp. 9-30-13
CIVIL
STATE OF CALIFORNIA

THE STATE OF CALIFORNIA OR ITS OFFICERS OR AGENTS SHALL NOT BE RESPONSIBLE FOR THE ACCURACY OR COMPLETENESS OF SCANNED COPIES OF THIS PLAN SHEET.

WMH CORPORATION
555 12th St
Suite 1900
Oakland, CA 94607

ALAMEDA CTC
1333 Broadway
Suite 220
Oakland, CA 94612

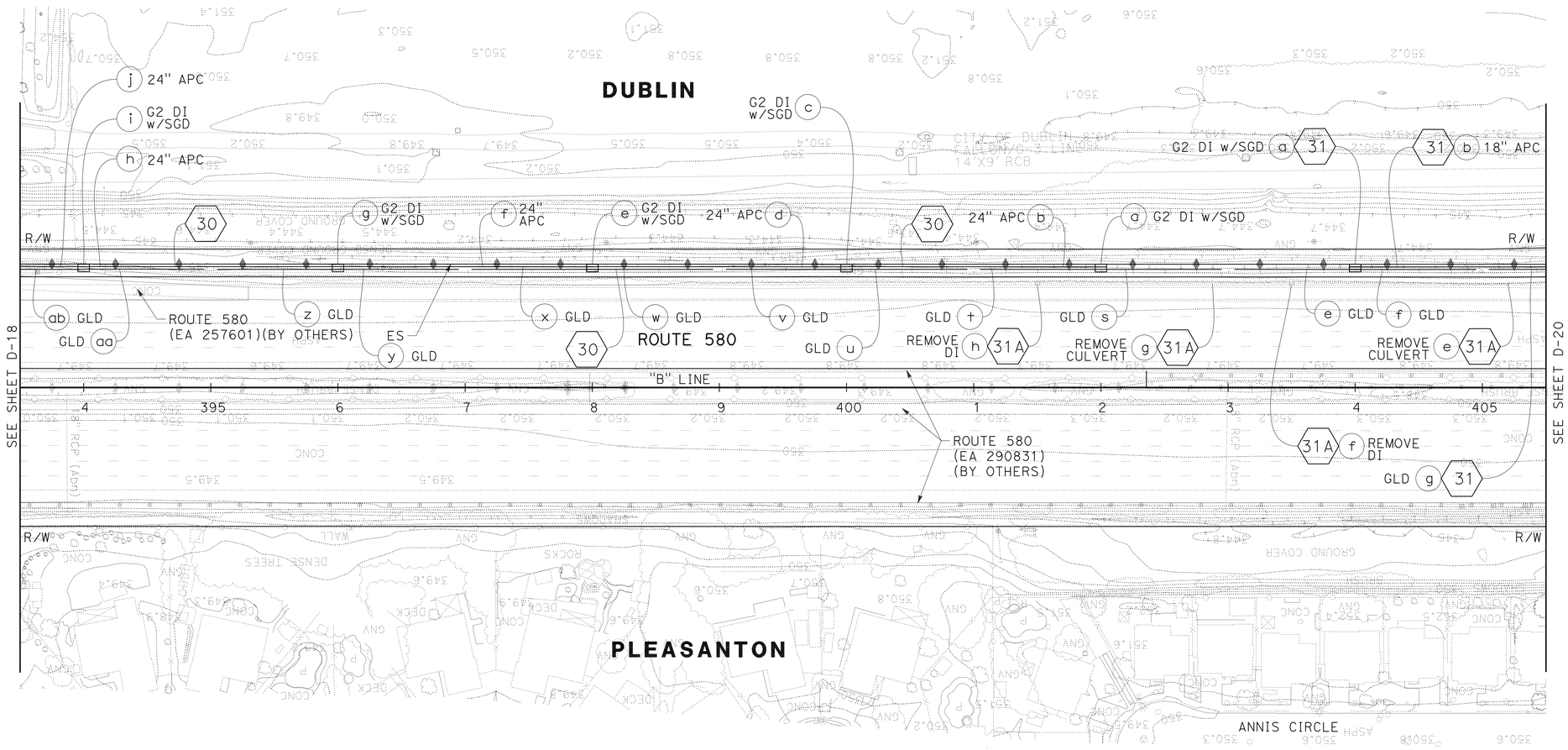

FOR NOTES, ABBREVIATIONS AND LEGEND, SEE SHEET D-1

THIS PLAN FOR DRAINAGE WORK ONLY.

DRAINAGE PLAN

SCALE: 1" = 50'

D-19

YF	YF	YF
09/05/11	04/18/11	08/30/10

REVISED BY
DATE REVISED

Y. FAROUQI \ A. VALASQUEZ
DAVID M. DICKINSON
CALCULATED-DESIGNED BY
CHECKED BY
TIMOTHY J. LEE
CONSULTANT FUNCTIONAL SUPERVISOR

STATE OF CALIFORNIA - DEPARTMENT OF TRANSPORTATION
Caltrans

X:\580 WB HOV\000_CAD\Sheets\West of Sta 540+00\CT-ELECTRONIC-SUBMITTAL 20111017\Drainage\04000212491a019.dgn

LAST REVISION 09-23-11
DATE PLOTTED => 13-APR-2012
TIME PLOTTED => 08:02

Dist	COUNTY	ROUTE	POST MILES TOTAL PROJECT	SHEET No.	TOTAL SHEETS
04	Ala	580	R14.6/R21.6	192	804

REGISTERED CIVIL ENGINEER 9/23/2011 DATE

4-9-12
PLANS APPROVAL DATE

REGISTERED PROFESSIONAL ENGINEER DAVID M. DICKINSON No. 50815 Exp. 9-30-13 CIVIL STATE OF CALIFORNIA

THE STATE OF CALIFORNIA OR ITS OFFICERS OR AGENTS SHALL NOT BE RESPONSIBLE FOR THE ACCURACY OR COMPLETENESS OF SCANNED COPIES OF THIS PLAN SHEET.

WMH CORPORATION
555 12th St
Suite 1900
Oakland, CA 94607

ALAMEDA CTC
1333 Broadway
Suite 220
Oakland, CA 94612

FOR ACCURATE RIGHT OF WAY DATA, CONTACT
RIGHT OF WAY ENGINEERING AT THE DISTRICT OFFICE

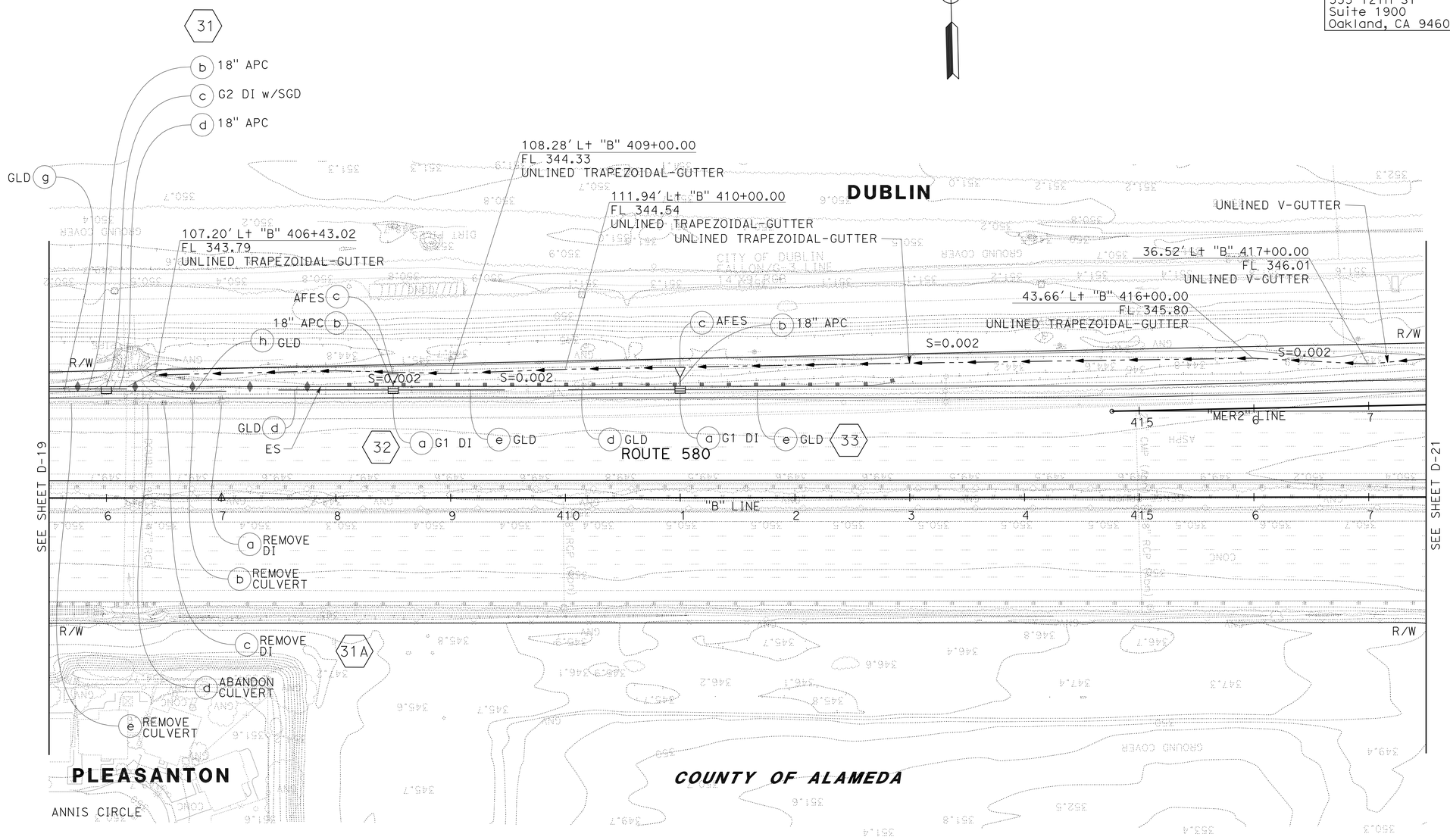

FOR NOTES, ABBREVIATIONS AND LEGEND, SEE SHEET D-1

THIS PLAN FOR DRAINAGE WORK ONLY.

DRAINAGE PLAN

SCALE: 1" = 50'

D-20

REVISED BY	DATE REVISED
YF	09/05/11
YF	04/18/11
YF	08/30/10

CALCULATED-DESIGNED BY: Y. FAROUQI \ A. VALASQUEZ
CHECKED BY: DAVID M. DICKINSON
CONSULTANT FUNCTIONAL SUPERVISOR: TIMOTHY J. LEE

STATE OF CALIFORNIA - DEPARTMENT OF TRANSPORTATION
Caltrans

X:\580 WB HOV\000_CAD\Sheets\West of Sta 540+00\CT-ELECTRONIC-SUBMITTAL 20111017\Drainage\04000212491ia020.dgn

LAST REVISION 09-23-11
DATE PLOTTED => 13-APR-2012
TIME PLOTTED => 08:02

Dist	COUNTY	ROUTE	POST MILES TOTAL PROJECT	SHEET No.	TOTAL SHEETS
04	Ala	580	R14.6/R21.6	193	804

REGISTERED CIVIL ENGINEER 9/23/2011 DATE

4-9-12
PLANS APPROVAL DATE

REGISTERED PROFESSIONAL ENGINEER DAVID M. DICKINSON No. 50815 Exp. 9-30-13 CIVIL STATE OF CALIFORNIA

THE STATE OF CALIFORNIA OR ITS OFFICERS OR AGENTS SHALL NOT BE RESPONSIBLE FOR THE ACCURACY OR COMPLETENESS OF SCANNED COPIES OF THIS PLAN SHEET.

WMH CORPORATION
555 12th St
Suite 1900
Oakland, CA 94607

ALAMEDA CTC
1333 Broadway
Suite 220
Oakland, CA 94612

FOR ACCURATE RIGHT OF WAY DATA, CONTACT
RIGHT OF WAY ENGINEERING AT THE DISTRICT OFFICE

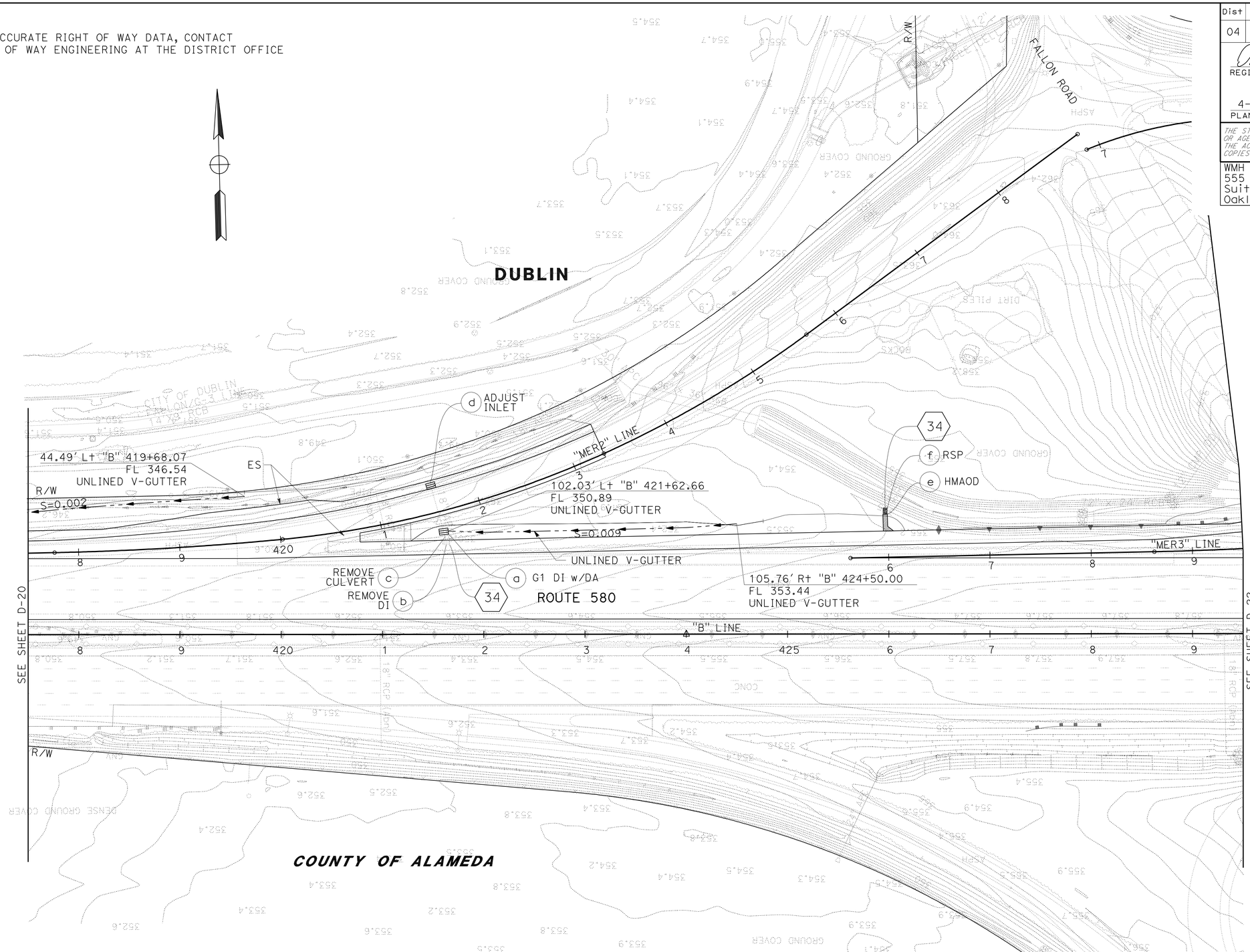

FOR NOTES, ABBREVIATIONS AND LEGEND, SEE SHEET D-1

THIS PLAN FOR DRAINAGE WORK ONLY.

DRAINAGE PLAN

SCALE: 1" = 50'

D-21

YF	YF	YF	Y. FAROUQI \ A. VALASQUEZ
09/05/11	04/18/11	08/30/10	DAVID M. DICKINSON
		REVISED BY	CALCULATED-DESIGNED BY
		DATE REVISED	CHECKED BY

CONSULTANT FUNCTIONAL SUPERVISOR: TIMOTHY J. LEE

STATE OF CALIFORNIA - DEPARTMENT OF TRANSPORTATION

Caltrans

X:\580 WB HOV\000_CAD\Sheets\West of Sta 540+00\CT-ELECTRONIC-SUBMITTAL 20111017\Drainage\0400021249ia021.dgn

LAST REVISION 09-23-11 | DATE PLOTTED => 13-APR-2012 | TIME PLOTTED => 08:02

Dist	COUNTY	ROUTE	POST MILES TOTAL PROJECT	SHEET No.	TOTAL SHEETS
04	Ala	580	R14.6/R21.6	194	804

REGISTERED CIVIL ENGINEER 9/23/2011 DATE

4-9-12
PLANS APPROVAL DATE

REGISTERED PROFESSIONAL ENGINEER DAVID M. DICKINSON No. 50815 Exp. 9-30-13 CIVIL STATE OF CALIFORNIA

THE STATE OF CALIFORNIA OR ITS OFFICERS OR AGENTS SHALL NOT BE RESPONSIBLE FOR THE ACCURACY OR COMPLETENESS OF SCANNED COPIES OF THIS PLAN SHEET.

WMH CORPORATION
555 12th St
Suite 1900
Oakland, CA 94607

ALAMEDA CTC
1333 Broadway
Suite 220
Oakland, CA 94612

FOR ACCURATE RIGHT OF WAY DATA, CONTACT
RIGHT OF WAY ENGINEERING AT THE DISTRICT OFFICE

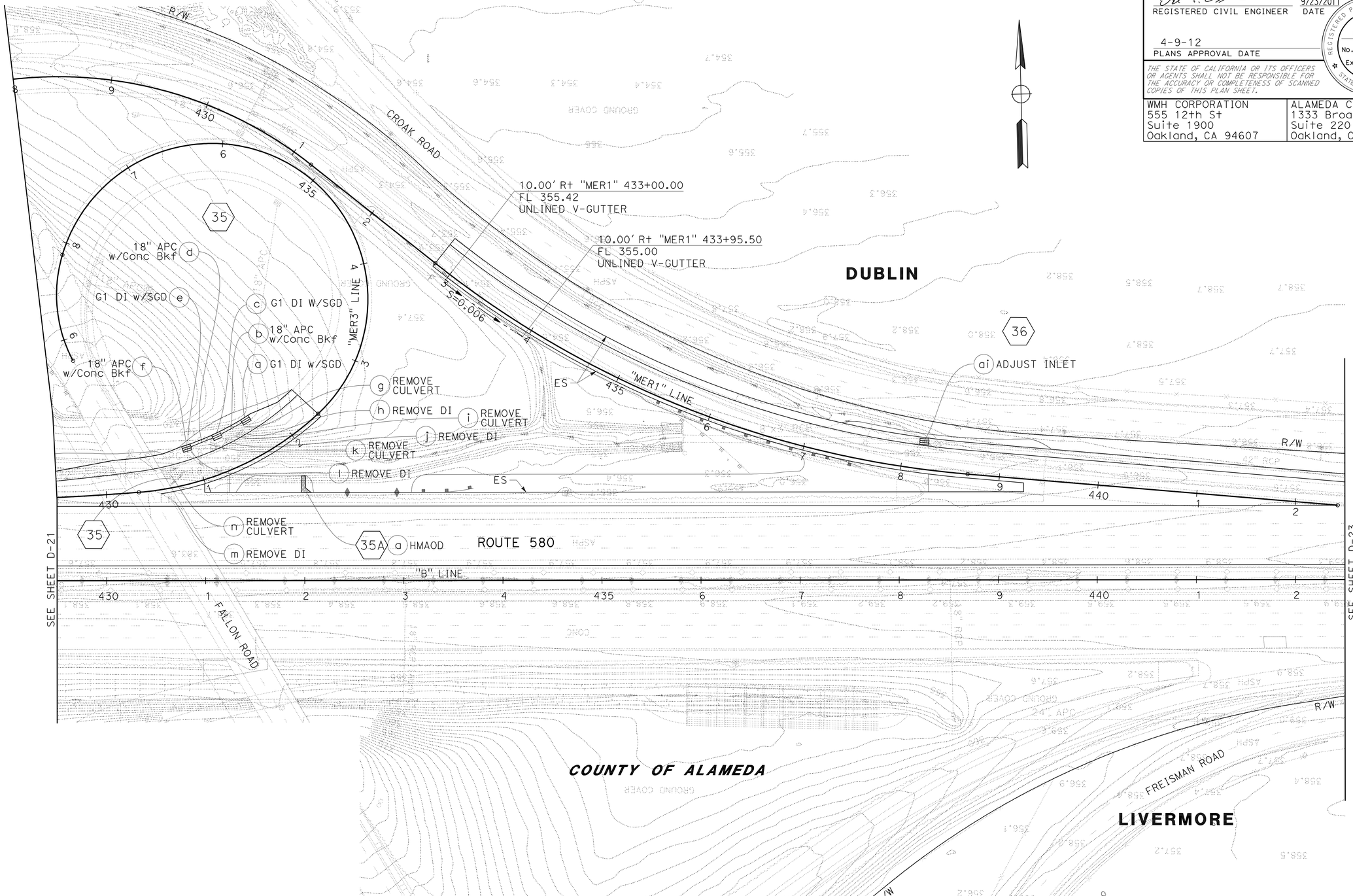

FOR NOTES, ABBREVIATIONS AND LEGEND, SEE SHEET D-1

THIS PLAN FOR DRAINAGE WORK ONLY.

DRAINAGE PLAN

SCALE: 1" = 50'

D-22

YF	YF	YF	YF
09/05/11	04/18/11	08/30/10	DATE REVISED

REVISED BY

Y. FAROUQI \ A. VALASQUEZ — CALCULATED-DESIGNED BY

DAVID M. DICKINSON — CHECKED BY

TIMOTHY J. LEE — CONSULTANT FUNCTIONAL SUPERVISOR

STATE OF CALIFORNIA - DEPARTMENT OF TRANSPORTATION

Caltrans

X:\580 WB HOV\000_CAD\Sheets\West of Sta 540+00\CT-ELECTRONIC-SUBMITTAL 20111017\Drainage\04000212491a022.dgn

LAST REVISION 09-23-11 | DATE PLOTTED => 13-APR-2012 | TIME PLOTTED => 08:02

FOR ACCURATE RIGHT OF WAY DATA, CONTACT
RIGHT OF WAY ENGINEERING AT THE DISTRICT OFFICE

Dist	COUNTY	ROUTE	POST MILES TOTAL PROJECT	SHEET No.	TOTAL SHEETS
04	Ala	580	R14.6/R21.6	195	804

REGISTERED CIVIL ENGINEER 9/23/2011 DATE

4-9-12
PLANS APPROVAL DATE

REGISTERED PROFESSIONAL ENGINEER
DAVID M. DICKINSON
No. 50815
Exp. 9-30-13
CIVIL
STATE OF CALIFORNIA

THE STATE OF CALIFORNIA OR ITS OFFICERS OR AGENTS SHALL NOT BE RESPONSIBLE FOR THE ACCURACY OR COMPLETENESS OF SCANNED COPIES OF THIS PLAN SHEET.

WMH CORPORATION
555 12th St
Suite 1900
Oakland, CA 94607

ALAMEDA CTC
1333 Broadway
Suite 220
Oakland, CA 94612

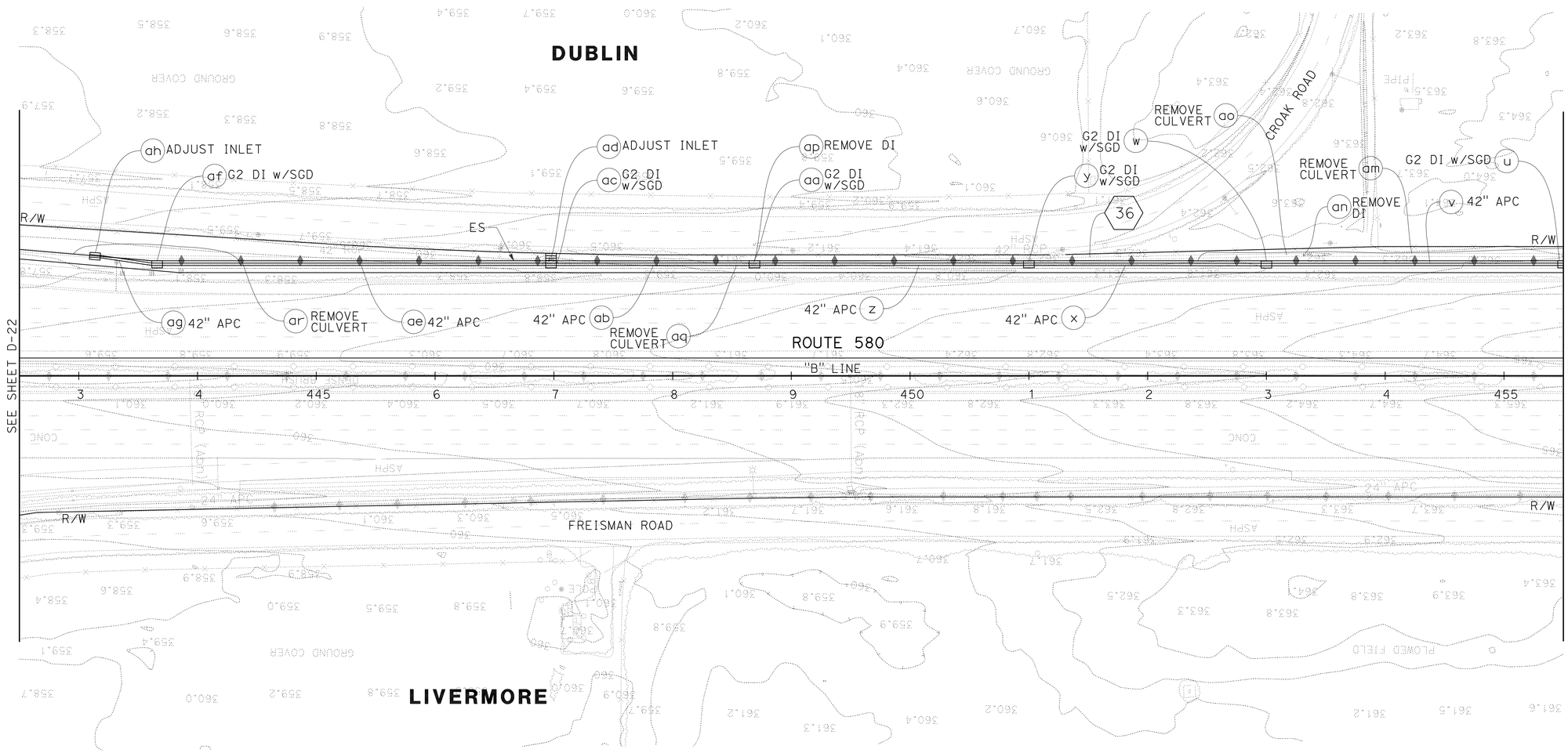

FOR NOTES, ABBREVIATIONS AND LEGEND, SEE SHEET D-1

THIS PLAN FOR DRAINAGE WORK ONLY.

DRAINAGE PLAN

SCALE: 1" = 50'

D-23

YF	YF	YF	REVISED BY
09/05/11	04/18/11	08/30/10	DATE REVISED

Y. FAROUQI \ A. VALASQUEZ
DAVID M. DICKINSON
CALCULATED-DESIGNED BY
CHECKED BY
TIMOTHY J. LEE
CONSULTANT FUNCTIONAL SUPERVISOR

STATE OF CALIFORNIA - DEPARTMENT OF TRANSPORTATION
Caltrans

X:\580 WB HOV\000_CAD\Sheets\West of Sta 540+00\CT-ELECTRONIC-SUBMITTAL 20111017\Drainage\04000212491ia023.dgn

LAST REVISION 09-23-11
DATE PLOTTED => 13-APR-2012
TIME PLOTTED => 08:02

Dist	COUNTY	ROUTE	POST MILES TOTAL PROJECT	SHEET No.	TOTAL SHEETS
04	Ala	580	R14.6/R21.6	196	804

REGISTERED CIVIL ENGINEER 9/23/2011 DATE

4-9-12
PLANS APPROVAL DATE

REGISTERED PROFESSIONAL ENGINEER DAVID M. DICKINSON No. 50815 Exp. 9-30-13 CIVIL STATE OF CALIFORNIA

THE STATE OF CALIFORNIA OR ITS OFFICERS OR AGENTS SHALL NOT BE RESPONSIBLE FOR THE ACCURACY OR COMPLETENESS OF SCANNED COPIES OF THIS PLAN SHEET.

WMH CORPORATION
555 12th St
Suite 1900
Oakland, CA 94607

ALAMEDA CTC
1333 Broadway
Suite 220
Oakland, CA 94612

FOR ACCURATE RIGHT OF WAY DATA, CONTACT
RIGHT OF WAY ENGINEERING AT THE DISTRICT OFFICE

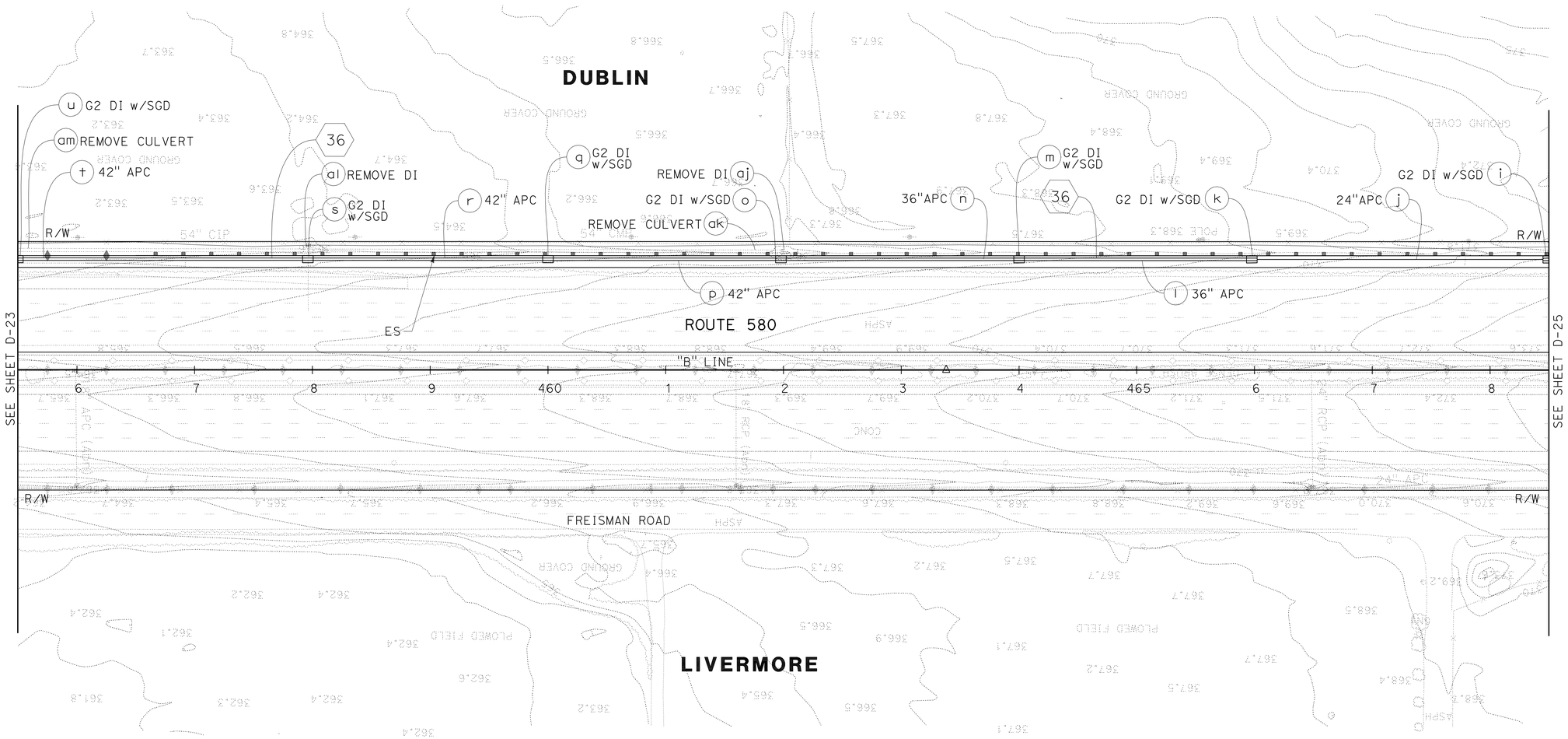

FOR NOTES, ABBREVIATIONS
AND LEGEND, SEE SHEET D-1

THIS PLAN FOR DRAINAGE WORK ONLY.

DRAINAGE PLAN

SCALE: 1" = 50'

D-24

YF	YF	YF
09/05/11	04/18/11	08/30/10

REVISED BY
DATE REVISED

Y. FAROUQI \ A. VALASQUEZ
DAVID M. DICKINSON

CALCULATED-DESIGNED BY
CHECKED BY

TIMOTHY J. LEE

CONSULTANT FUNCTIONAL SUPERVISOR

STATE OF CALIFORNIA - DEPARTMENT OF TRANSPORTATION
Caltrans

X:\580 WB HOV\000_CAD\Sheets\West of Sta 540+00\CT-ELECTRONIC-SUBMITTAL 20111017\Drainage\04000212491ia024.dgn

LAST REVISION 09-23-11
DATE PLOTTED => 13-APR-2012
TIME PLOTTED => 08:02

Dist	COUNTY	ROUTE	POST MILES TOTAL PROJECT	SHEET No.	TOTAL SHEETS
04	Ala	580	R14.6/R21.6	197	804

REGISTERED CIVIL ENGINEER 9/23/2011 DATE

4-9-12
PLANS APPROVAL DATE

REGISTERED PROFESSIONAL ENGINEER DAVID M. DICKINSON No. 50815 Exp. 9-30-13 CIVIL STATE OF CALIFORNIA

THE STATE OF CALIFORNIA OR ITS OFFICERS OR AGENTS SHALL NOT BE RESPONSIBLE FOR THE ACCURACY OR COMPLETENESS OF SCANNED COPIES OF THIS PLAN SHEET.

WMH CORPORATION
555 12th St
Suite 1900
Oakland, CA 94607

ALAMEDA CTC
1333 Broadway
Suite 220
Oakland, CA 94612

FOR ACCURATE RIGHT OF WAY DATA, CONTACT
RIGHT OF WAY ENGINEERING AT THE DISTRICT OFFICE

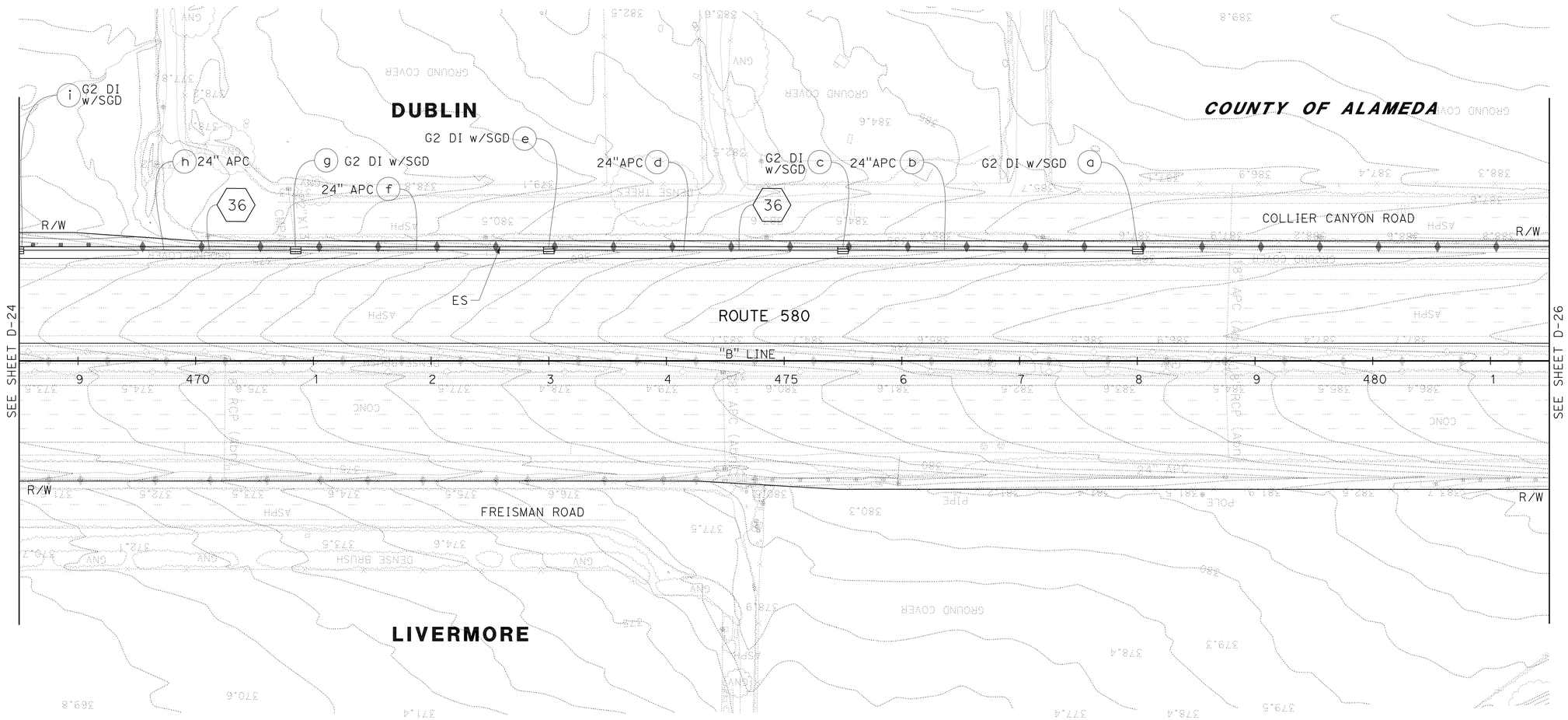

FOR NOTES, ABBREVIATIONS AND LEGEND, SEE SHEET D-1

THIS PLAN FOR DRAINAGE WORK ONLY.

DRAINAGE PLAN

SCALE: 1" = 50'

D-25

YF	YF	YF	YF
09/05/11	04/18/11	08/30/10	DATE REVISED

REVISED BY

Y. FAROUQI \ A. VALASQUEZ — CALCULATED-DESIGNED BY

DAVID M. DICKINSON — CHECKED BY

TIMOTHY J. LEE — CONSULTANT FUNCTIONAL SUPERVISOR

STATE OF CALIFORNIA - DEPARTMENT OF TRANSPORTATION

Caltrans

X:\580 WB HOV\000_CAD\Sheets\West of Sta 540+00\CT-ELECTRONIC-SUBMITTAL 20111017\Drainage\04000212491d025.dgn

LAST REVISION 09-23-11 — DATE PLOTTED => 13-APR-2012 TIME PLOTTED => 08:02

Dist	COUNTY	ROUTE	POST MILES TOTAL PROJECT	SHEET No.	TOTAL SHEETS
04	Ala	580	R14.6/R21.6	198	804

REGISTERED CIVIL ENGINEER 9/23/2011 DATE

4-9-12
PLANS APPROVAL DATE

REGISTERED PROFESSIONAL ENGINEER DAVID M. DICKINSON No. 50815 Exp. 9-30-13 CIVIL STATE OF CALIFORNIA

THE STATE OF CALIFORNIA OR ITS OFFICERS OR AGENTS SHALL NOT BE RESPONSIBLE FOR THE ACCURACY OR COMPLETENESS OF SCANNED COPIES OF THIS PLAN SHEET.

WMH CORPORATION
555 12th St
Suite 1900
Oakland, CA 94607

ALAMEDA CTC
1333 Broadway
Suite 220
Oakland, CA 94612

FOR ACCURATE RIGHT OF WAY DATA, CONTACT
RIGHT OF WAY ENGINEERING AT THE DISTRICT OFFICE

COUNTY OF ALAMEDA

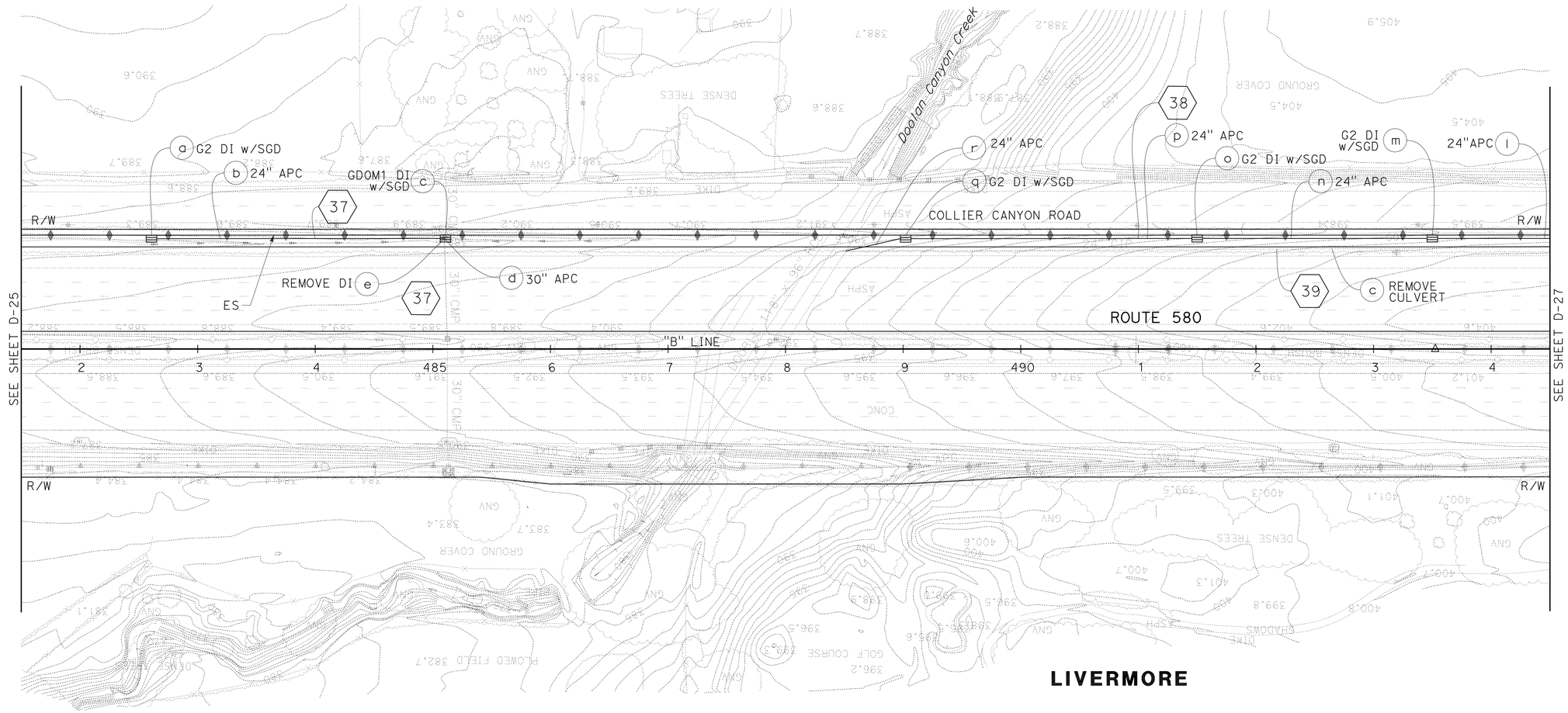

FOR NOTES, ABBREVIATIONS AND LEGEND, SEE SHEET D-1

THIS PLAN FOR DRAINAGE WORK ONLY.

DRAINAGE PLAN

SCALE: 1" = 50'

D-26

REVISED BY	DATE REVISED
YF	09/05/11
YF	04/18/11
YF	08/30/10

CALCULATED-DESIGNED BY: Y. FAROUQI \ A. VALASQUEZ
CHECKED BY: DAVID M. DICKINSON
CONSULTANT FUNCTIONAL SUPERVISOR: TIMOTHY J. LEE

STATE OF CALIFORNIA - DEPARTMENT OF TRANSPORTATION
Caltrans

X:\580 WB HOV\000_CAD\Sheets\West of Sta 540+00\CT-ELECTRONIC-SUBMITTAL 20111017\Drainage\04000212491d026.dgn

LAST REVISION 09-23-11
DATE PLOTTED => 13-APR-2012
TIME PLOTTED => 08:02

FOR ACCURATE RIGHT OF WAY DATA, CONTACT
RIGHT OF WAY ENGINEERING AT THE DISTRICT OFFICE

Dist	COUNTY	ROUTE	POST MILES TOTAL PROJECT	SHEET No.	TOTAL SHEETS
04	Ala	580	R14.6/R21.6	199	804

REGISTERED CIVIL ENGINEER 9/23/2011 DATE

4-9-12
PLANS APPROVAL DATE

REGISTERED PROFESSIONAL ENGINEER
DAVID M. DICKINSON
No. 50815
Exp. 9-30-13
CIVIL
STATE OF CALIFORNIA

THE STATE OF CALIFORNIA OR ITS OFFICERS OR AGENTS SHALL NOT BE RESPONSIBLE FOR THE ACCURACY OR COMPLETENESS OF SCANNED COPIES OF THIS PLAN SHEET.

WMH CORPORATION
555 12th St
Suite 1900
Oakland, CA 94607

ALAMEDA CTC
1333 Broadway
Suite 220
Oakland, CA 94612

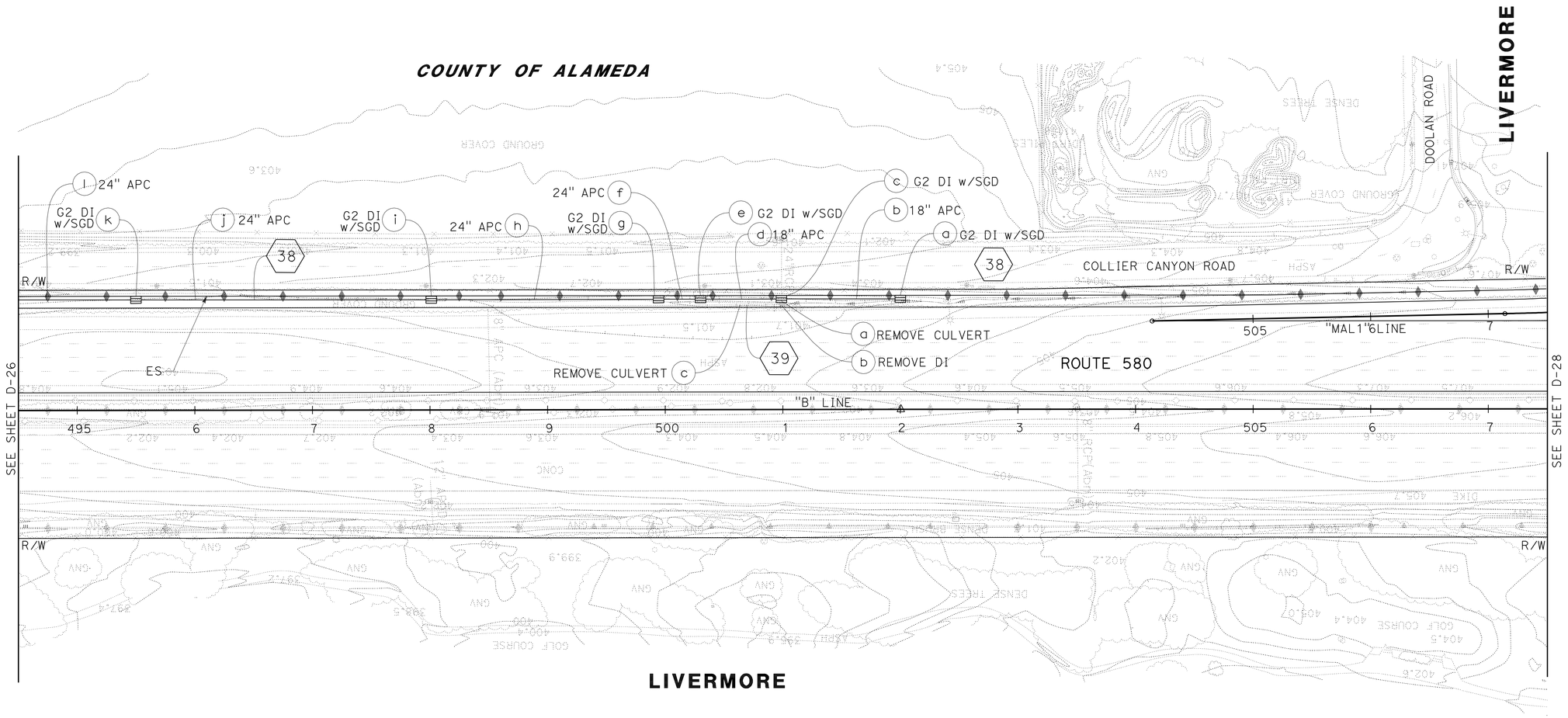

FOR NOTES, ABBREVIATIONS AND LEGEND, SEE SHEET D-1

THIS PLAN FOR DRAINAGE WORK ONLY.

DRAINAGE PLAN

SCALE: 1" = 50'

D-27

YF	YF	YF	YF
09/05/11	04/18/11	08/30/10	DATE REVISED

REVISED BY

Y. FAROUQI \ A. VALASQUEZ — CALCULATED-DESIGNED BY

DAVID M. DICKINSON — CHECKED BY

TIMOTHY J. LEE — CONSULTANT FUNCTIONAL SUPERVISOR

STATE OF CALIFORNIA - DEPARTMENT OF TRANSPORTATION

Caltrans

X:\580 WB HOV\000_CAD\Sheets\West of Sta 540+00\CT-ELECTRONIC-SUBMITTAL 20111017\Drainage\04000212491ia027.dgn

LAST REVISION 09-23-11 | DATE PLOTTED => 13-APR-2012 | TIME PLOTTED => 08:03

Dist	COUNTY	ROUTE	POST MILES TOTAL PROJECT	SHEET No.	TOTAL SHEETS
04	Ala	580	R14.6/R21.6	200	804

REGISTERED CIVIL ENGINEER 9/23/2011 DATE

4-9-12
PLANS APPROVAL DATE

REGISTERED PROFESSIONAL ENGINEER DAVID M. DICKINSON No. 50815 Exp. 9-30-13 CIVIL STATE OF CALIFORNIA

THE STATE OF CALIFORNIA OR ITS OFFICERS OR AGENTS SHALL NOT BE RESPONSIBLE FOR THE ACCURACY OR COMPLETENESS OF SCANNED COPIES OF THIS PLAN SHEET.

WMH CORPORATION
555 12th St
Suite 1900
Oakland, CA 94607

ALAMEDA CTC
1333 Broadway
Suite 220
Oakland, CA 94612

FOR ACCURATE RIGHT OF WAY DATA, CONTACT
RIGHT OF WAY ENGINEERING AT THE DISTRICT OFFICE

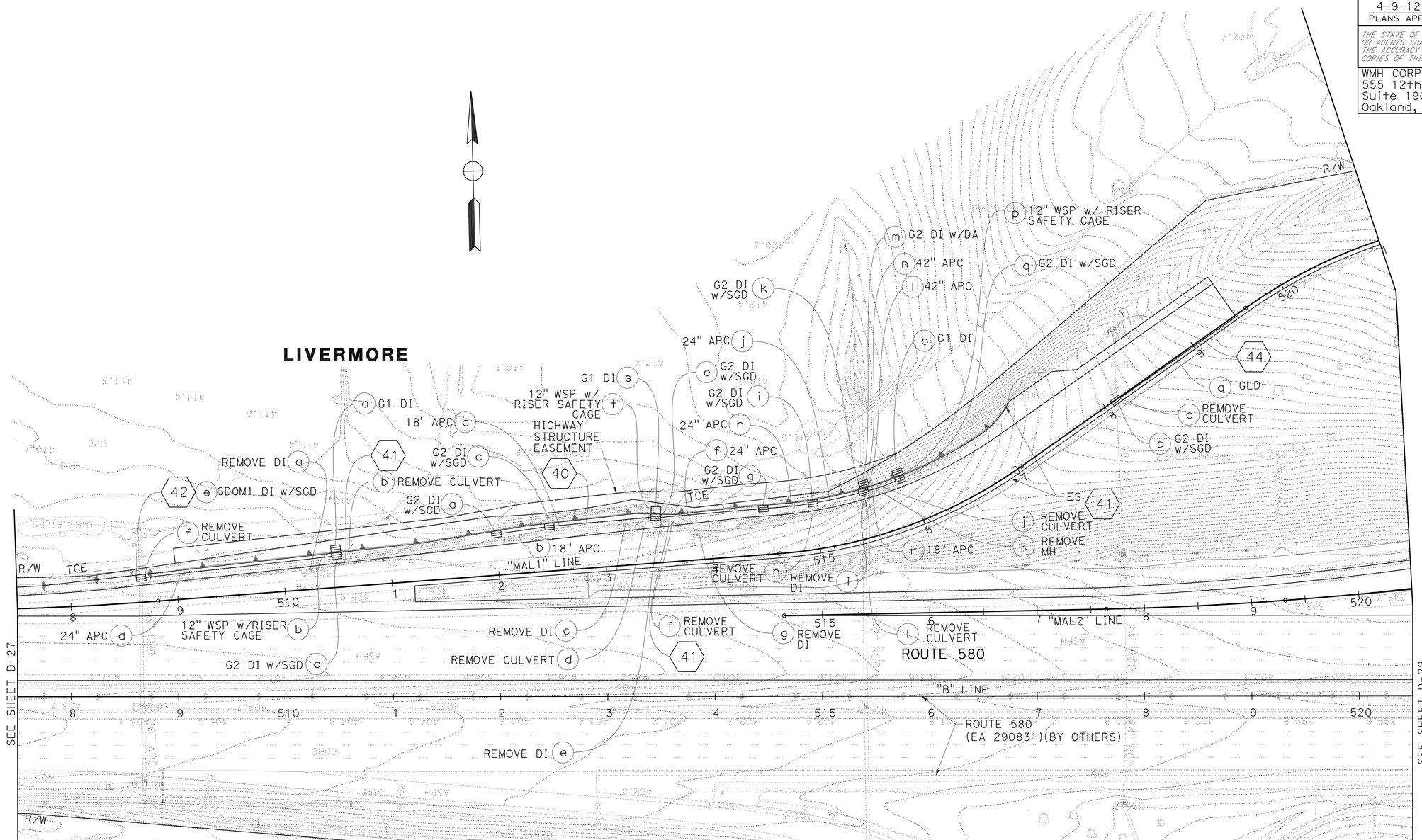

LIVERMORE

FOR NOTES, ABBREVIATIONS AND LEGEND, SEE SHEET D-1

THIS PLAN FOR DRAINAGE WORK ONLY.

DRAINAGE PLAN

SCALE: 1" = 50'

D-28

YF	YF	YF	YF
09/05/11	04/18/11	08/30/10	DATE REVISED

REVISED BY

Y. FAROUQI \ A. VALASQUEZ — CALCULATED-DESIGNED BY

DAVID M. DICKINSON — CHECKED BY

TIMOTHY J. LEE — CONSULTANT FUNCTIONAL SUPERVISOR

STATE OF CALIFORNIA - DEPARTMENT OF TRANSPORTATION — Caltrans

X:\580 WB HOV\000_CAD\Sheets\West of Sta 540+00\CT-ELECTRONIC-SUBMITTAL 20111017\Drainage\04000212491ia028.dgn

LAST REVISION 09-23-11 | DATE PLOTTED => 13-APR-2012 | TIME PLOTTED => 08:03