DIST	COUNTY	ROUTE	POST MILES TOTAL PROJECT	SHEET NO.	TOTAL SHEETS
04	Ala	580	R8.4/R14.6	701	853

LICENSED LANDSCAPE ARCHITECT

April 3, 2009
PLANS APPROVAL DATE

The State of California or its officers or agents shall not be responsible for the accuracy or completeness of electronic copies of this plan sheet.

LICENSED LANDSCAPE ARCHITECT — ROBERT B. SCHOTT — 3025 — Signature — 11-30-10 Renewal Date — 2-25-09 Date — STATE OF CALIFORNIA

To accompany plans dated 5-14-12

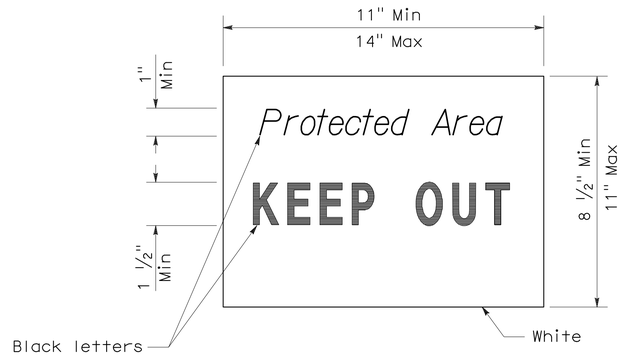

SIGN DETAIL

NOTE:

1. Temporary silt fence and temporary straw bale barrier shown for reference purposes only.

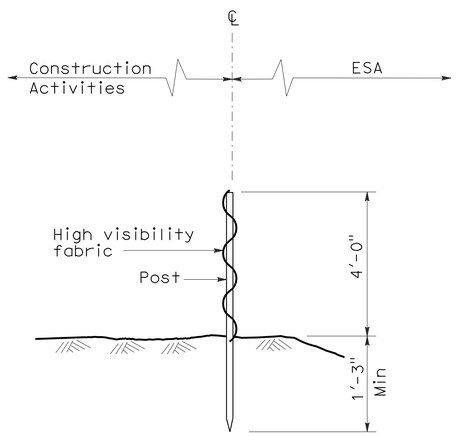

SECTION
TEMPORARY FENCE (TYPE ESA)

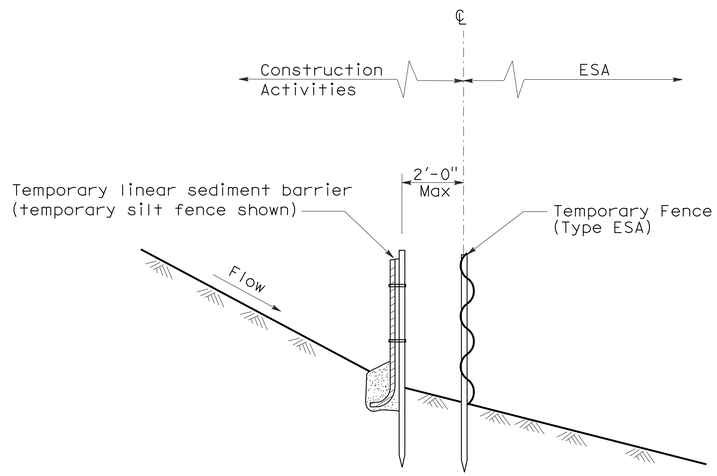

SECTION
PLACEMENT DETAIL
FOR TEMPORARY LINEAR SEDIMENT BARRIER
USED WITH TEMPORARY
FENCE (TYPE ESA)
(See Note 1)

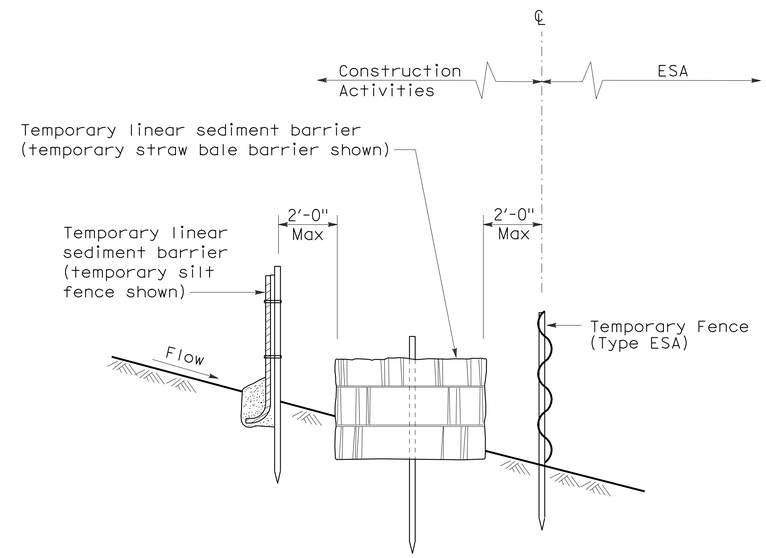

SECTION
PLACEMENT DETAIL
FOR TEMPORARY SILT FENCE
AND TEMPORARY STRAW BALE BARRIER
USED WITH TEMPORARY FENCE (TYPE ESA)
(See Note 1)

STATE OF CALIFORNIA
DEPARTMENT OF TRANSPORTATION

TEMPORARY WATER POLLUTION CONTROL DETAILS [TEMPORARY FENCE (TYPE ESA)]

NO SCALE

NSP T65 DATED APRIL 3, 2009 SUPPLEMENTS
THE STANDARD PLANS BOOK DATED MAY 2006.

NEW STANDARD PLAN NSP T65

2006 NEW STANDARD PLAN NSP T65

DIST	COUNTY	ROUTE	POST MILES TOTAL PROJECT	SHEET NO.	TOTAL SHEETS
04	Ala	580	R8.4/R14.6	702	853

REGISTERED CIVIL ENGINEER

October 5, 2007
PLANS APPROVAL DATE

REGISTERED PROFESSIONAL ENGINEER Efthymios Delis No. C51434 Exp. 6-30-08 CIVIL STATE OF CALIFORNIA

The State of California or its officers or agents shall not be responsible for the accuracy or completeness of electronic copies of this plan sheet.

To accompany plans dated 5-14-12

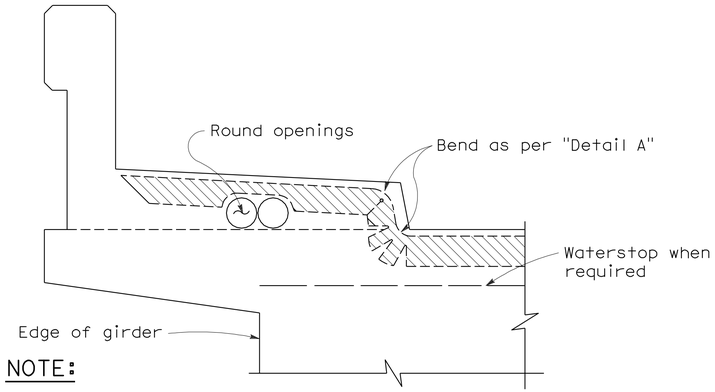

NOTE:

Type "B" seal shown. Type "A" seals to comform to the general path of seal shown, cuts for bending not required. Bend Type "A" seals 3" up into curb or barrier rail on only the low end of the seal.

CONCRETE BARRIER AND SIDEWALK

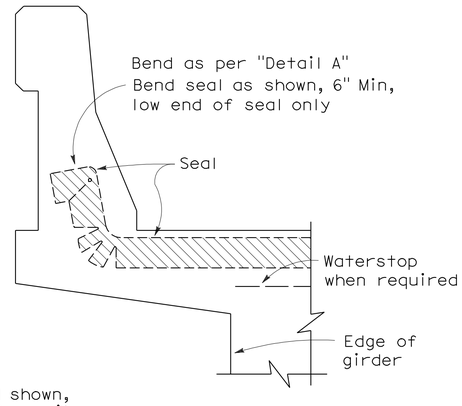

CONCRETE BARRIER

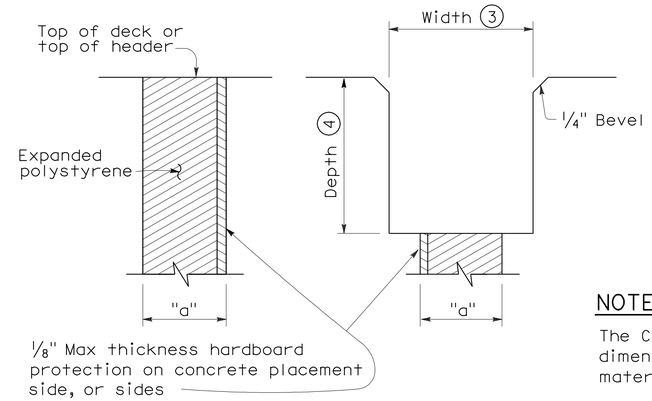

FORMING DETAIL SAWCUT DETAIL

NOTE:

The Contractor shall verify all controlling field dimensions before ordering or fabricatiing any material.

JOINT SEALS DETAILS

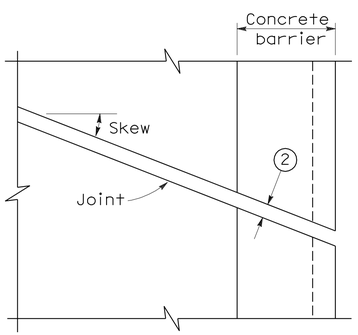

PLAN OF JOINT (SKEW ≤ 20°)

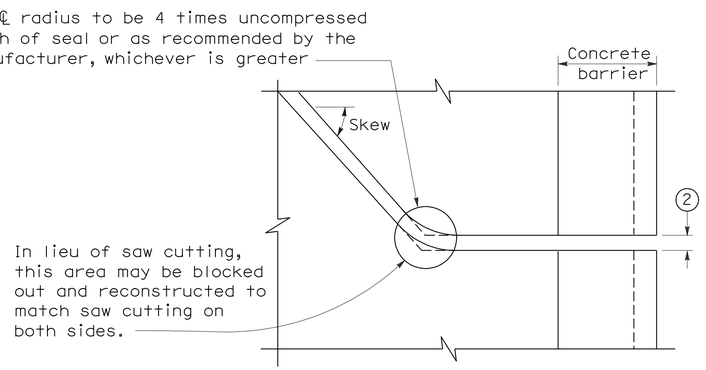

PLAN OF JOINT (SKEW > 20°)

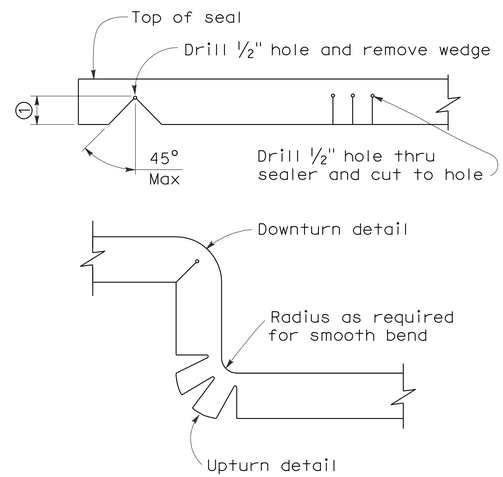

DETAIL A

NOTES:

1. Make smooth cuts from the bottom of seal to 1½" clear of top leaving at least one complete cell between the top of the cut and top of the seal. When necessary cut back of seal to clear conduit and round openings.
2. Opening in barrier to match width of sawn deck joint.
3. Sawcut groove widths shall be as ordered by the Engineer.
4. Depth of sawcut: Type A - Depth to be 2" minimum.
   Type B - Depth to be equal to or greater than the depth of seal measured along the contact surface, when compressed to minimum width position (W_2) plus dimensions shown.
5. MR (movement rating) as shown on other plan sheets.
6. Other depths must be approved by the Engineer.

DIMENSIONS "a" OF JOINT REQUIRED

Movement Rating (MR) (5)	Bridge Type	"a" Dimension Deck Concrete Placed		
		Winter	Fall-Spring	Summer
2"	All except CIP/PS	1½"	1¼"	¾"
	CIP/PS	1¼"	1"	½"
1½"	All except CIP/PS	1¼"	1"	½"
	CIP/PS	1"	¾"	½"
1"	All except CIP/PS	1"	¾"	½"
	CIP/PS	¾"	½"	½"
½"	All except CIP/PS	¾"	¾"	½"
	CIP/PS	½"	½"	½"

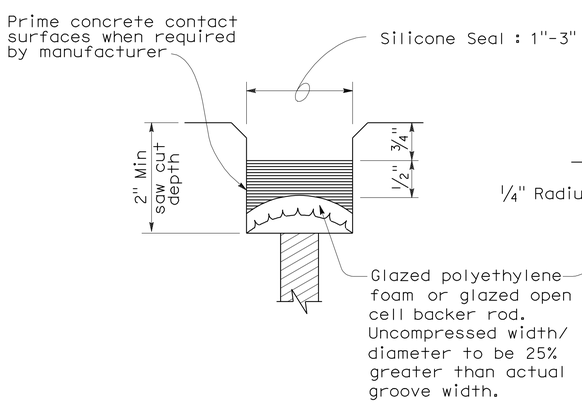

TYPE A SEAL

Movement rating : Silicone = 1" Max

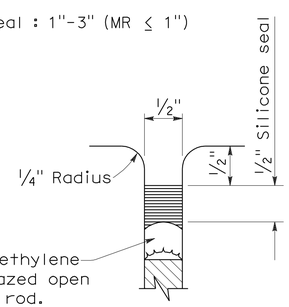

TYPE AL SEAL

Longitudinal joints only

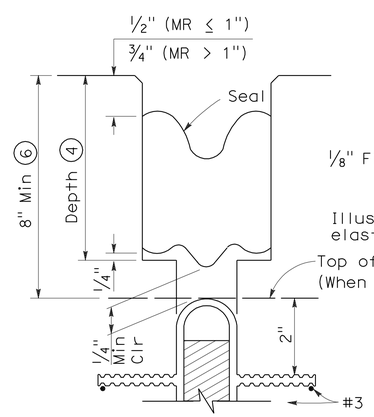

TYPE B JOINT SEAL
IN MINIMUM WIDTH POSITION (W_2)

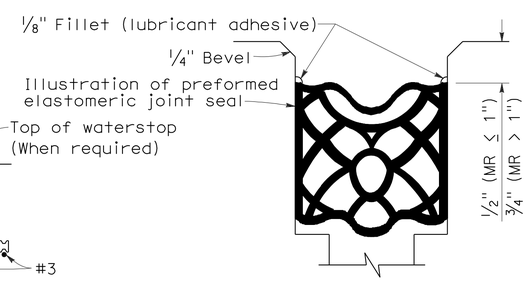

TYPE B SEAL

Movement Rating ≤ 2"

STATE OF CALIFORNIA
DEPARTMENT OF TRANSPORTATION

JOINT SEALS (MAXIMUM MOVEMENT RATING = 2")

NO SCALE

RSP B6-21 DATED OCTOBER 5, 2007 SUPERSEDES STANDARD PLAN B6-21 DATED MAY 1, 2006 - PAGE 258 OF THE STANDARD PLANS BOOK DATED MAY 2006.

REVISED STANDARD PLAN RSP B6-21

2006 REVISED STANDARD PLAN RSP B6-21

5-8-07

DIST	COUNTY	ROUTE	POST MILES TOTAL PROJECT	SHEET NO.	TOTAL SHEETS
04	Ala	580	R8.4/R14.6	703	853

REGISTERED CIVIL ENGINEER

October 21, 2011
PLANS APPROVAL DATE

REGISTERED PROFESSIONAL ENGINEER
Tillat Satter
No. C42892
Exp. 3-31-12
CIVIL
STATE OF CALIFORNIA

The State of California or its officers or agents shall not be responsible for the accuracy or completeness of electronic copies of this plan sheet.

To accompany plans dated 5-14-12

2006 REVISED STANDARD PLAN RSP B11-47

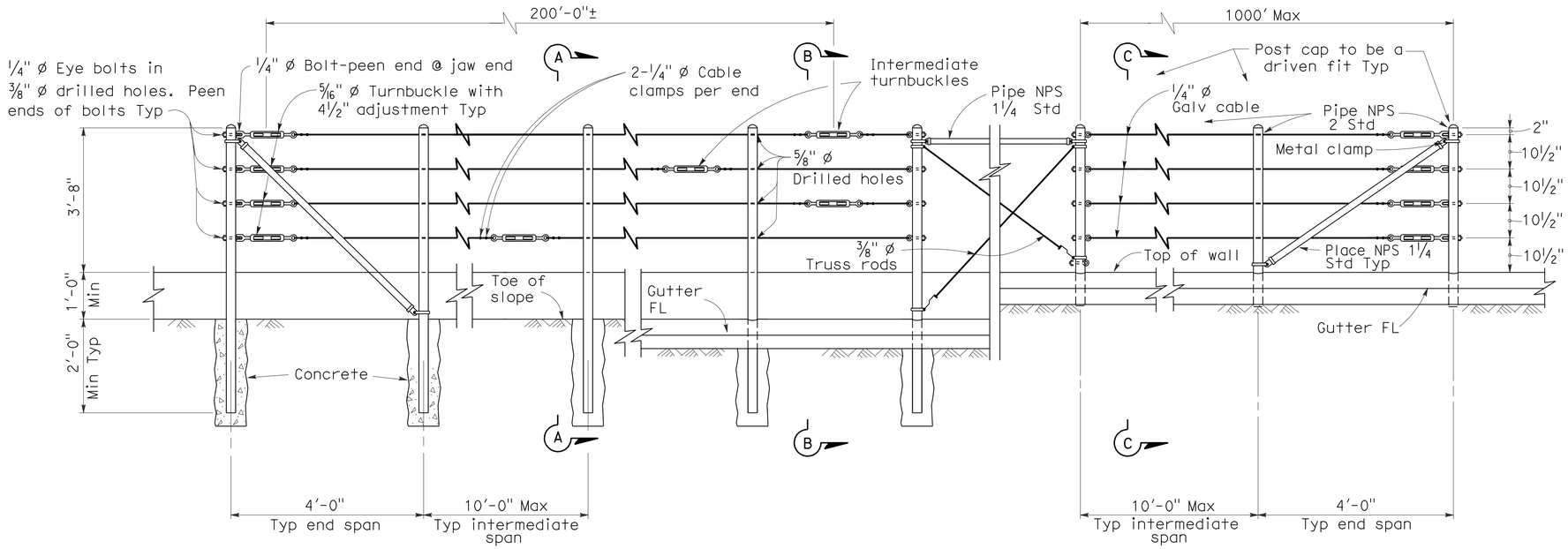

EXISTING WALL (WITHOUT GUTTER)
Existing

RETAINING WALL (WITH GUTTER)
Existing

RETAINING WALL (WITH GUTTER)
New construction

ELEVATION

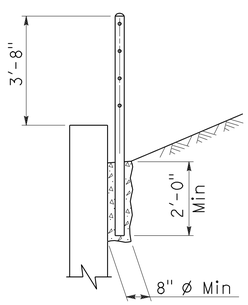

SECTION A-A
Existing

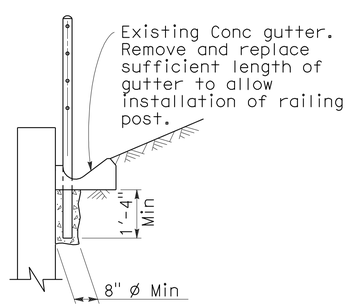

SECTION B-B
Existing

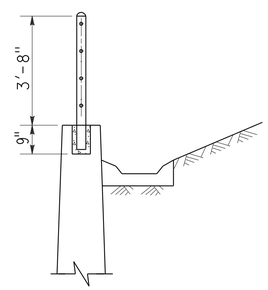

SECTION C-C
New construction

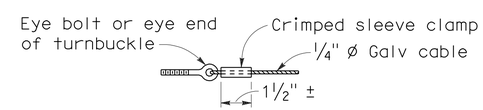

ALTERNATIVE CABLE CONNECTION

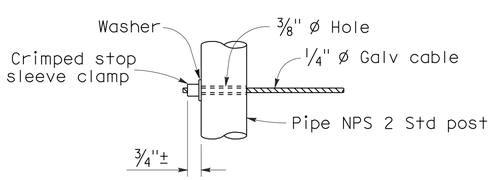

ALTERNATIVE DEAD END ANCHORAGE

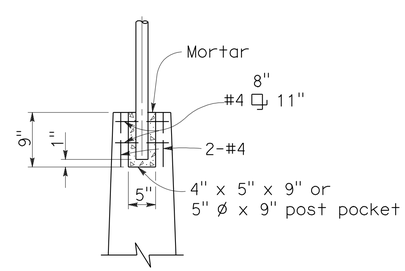

POST POCKET

NOTES:

1. Maximum distance between turnbuckles shall be 200'-0"±.
2. Intermediate turnbuckles to be placed in adjacent spans.
3. Cable shall not be spliced between intermediate turnbuckles and end posts.
4. All posts, cable, and hardware to be galvanized.
5. Posts to be vertical.
6. Alignment of holes in posts may vary to conform to slope of top of retaining wall.
7. The Contractor shall verify all dependent dimensions in the field before ordering or fabricating any material.
8. Alternative details may be submitted by the Contractor for approval by the Engineer.
9. Line posts shall be braced horizontally and trussed diagonally in both directions at intervals not to exceed 1000'.
10. Post pockets to be centered in top of wall.
11. Typical end spans, braced in both directions, shall be constructed at changes in line where the angle of deflection is 15° or more.
12. Provide thimbles at all cable loops.

STATE OF CALIFORNIA
DEPARTMENT OF TRANSPORTATION

CABLE RAILING

NO SCALE

RSP B11-47 DATED OCTOBER 21, 2011 SUPERSEDES STANDARD PLAN B11-47 DATED MAY 1, 2006 - PAGE 268 OF THE STANDARD PLANS BOOK DATED MAY 2006.

REVISED STANDARD PLAN RSP B11-47

9-19-11

DIST	COUNTY	ROUTE	POST MILES TOTAL PROJECT	SHEET NO.	TOTAL SHEETS
04	Ala	580	R8.4/R14.6	704	853

REGISTERED ELECTRICAL ENGINEER

October 5, 2007
PLANS APPROVAL DATE

REGISTERED PROFESSIONAL ENGINEER
Jeffery G. McRae
No. E14512
Exp. 6-30-08
ELECTRICAL
STATE OF CALIFORNIA

The State of California or its officers or agents shall not be responsible for the accuracy or completeness of electronic copies of this plan sheet.

To accompany plans dated 5-14-12

ELECTROLIERS

STANDARD TYPES
15, 15D
15 STRUCTURE
21, 21D STRUCTURE
30
31
32
35
36-20A

High mast light pole

Double Arm lighting standard

Existing electrolier

Electrolier foundation (Future installation)

NOTES:

1. Luminaires shall be 310 W HPS when installed on Type 21, 21D, 30, 31, 32, 35 and 36-20A Standards, unless otherwise specified. Luminaires shall be 200 W HPS when installed on other type standards or poles, unless otherwise specified.
2. Luminaires shall be the cutoff type, ANSI Type Ⅲ medium cutoff lighting distribution, unless otherwise specified.
3. Variations noted adjacent to symbol on project plans.

Electrolier (see project notes or project plans)

Luminaire on wood pole

STANDARD NOTES:

- AB — Abandon. If applied to conduit, remove conductors.
- BC — Install pull box in existing conduit run.
- BP — Pedestrian barricade, type as indicated on plan.
- CB — Install conduit into existing pull box.
- CC — Connect new and existing conduit. Remove existing conductors and install conductors as indicated.
- CF — Conduit to remain for future use. Remove conductors. Install pull wire or rope.
- DH — Detector handhole.
- FA — Foundation to be abandoned.
- IS — Install sign on signal mast arm.
- NS — No slip base on standard.
- PEC — Photoelectric control.
- PEU — Photoelectric unit.
- RC — Equipment or material to be removed and become the property of the Contractor.
- RE — Remove electrolier, fuses and ballast. Tape ends of conductors.
- RL — Relocate equipment.
- RR — Remove and reuse equipment.
- RS — Remove and salvage equipment.
- SC — Splice new to existing conductors.
- SD — Service disconnect.
- SF — Standard to remain for future use. Remove luminaire, pole conductors, fuses and ballast.
- TSP — Telephone service point.

ABBREVIATIONS AND EQUIPMENT DESIGNATIONS

PROPOSED	EXISTING	
BBS	bbs	Battery backup system
BC	bc	Bolt circle
C	C	Conduit
CCTV	cctv	Closed circuit television
CKT	ckt	Circuit
CMS	cms	Changeable message sign
DLC	dlc	Loop detector lead-in cable
EMS	ems	Extinguishable message sign
EVC	evc	Emergency vehicle cable
EVD	evd	Emergency vehicle detector
FB	fb	Flashing beacon
FBCA	fbca	Flashing beacon control assembly
FBS	fbs	Flashing beacon with slip base
FO	fo	Fiber optic
G	G	Ground (Equipment Grounding Conductor)
GFCI	GFCI	Ground fault circuit interrupt
HAR	har	Highway advisory radio
HEX	hex	Hexagonal
HPS	hps	High pressure sodium
IISNS	iisns	Internally illuminated street name sign
ISL	isl	Induction sign lighting
LED	led	Light emitting diode
LMA	lma	Luminaire mast arm
LPS	lps	Low pressure sodium
LTG	ltg	Lighting
LUM	lum	Luminaire
MAT	mat	Mast arm mounting vehicle signal faces, top attachment
MAS	mas	Mast arm mounting vehicle signal faces, side attachment
MAS-4A	mas-4A	Mast arm mounting vehicle signal faces, side attachment - 4 signal section
MAS-4B	mas-4B	
MAS-4C	mas-4C	
MAS-5A	mas-5A	Mast arm mounting vehicle signal faces, side attachment - 5 signal section
MAS-5B	mas-5B	
MC	mc	Mercury contactor
M/M	m/m	Multiple to multiple transformer
MT	mt	Conduit with pull wire or rope only
MTG	mtg	Mounting
	mv	Mercury vapor lighting fixture
N	N	Neutral (Grounded Conductor)
NC	NC	Normally closed
NO	NO	Normally open
PB	pb	Pull box
PEC	pec	Photoelectric control (Type Ⅰ, Ⅱ, Ⅲ, Ⅳ or Ⅴ as shown)
PED	ped	Pedestrian
PEU	peu	Photoelectric unit
PPB	ppb	Pedestrian push button
RL		Relocated equipment
RM	rm	Ramp metering
SB	sb	Slip base
SIC	sic	Signal interconnect cable
SIG	sig	Signal
SMA	sma	Signal mast arm
SNS	sns	Street name sign
SP	sp	Service point
TDC	tdc	Telephone demarcation cabinet
TMS	tms	Traffic monitoring station
TOS	tos	Traffic Operations System
VEH	veh	Vehicle
XFMR	xfmr	Transformer
COMM	comm	Communication
RWIS	rwis	Roadway weather information system

SOFFIT AND WALL MOUNTED LUMINAIRES

Pendant, 70 W HPS unless otherwise specified.

Flush, 70 W HPS unless otherwise specified.

Wall surface, 70 W HPS unless otherwise specified.

Existing soffit or wall luminaire to remain unmodified.

Existing soffit or wall luminaire to be modified as specified.

NOTE:

Arrow indicates "street side" of luminaire.

STATE OF CALIFORNIA
DEPARTMENT OF TRANSPORTATION

ELECTRICAL SYSTEMS (SYMBOLS AND ABBREVIATIONS)

NO SCALE

RSP ES-1A DATED OCTOBER 5, 2007 SUPERSEDES STANDARD PLAN ES-1A DATED MAY 1, 2006 - PAGE 400 OF THE STANDARD PLANS BOOK DATED MAY 2006.

REVISED STANDARD PLAN RSP ES-1A

2006 REVISED STANDARD PLAN RSP ES-1A

DIST	COUNTY	ROUTE	POST MILES TOTAL PROJECT	SHEET NO.	TOTAL SHEETS
04	Ala	580	R8.4/R14.6	705	853

REGISTERED ELECTRICAL ENGINEER

October 5, 2007
PLANS APPROVAL DATE

REGISTERED PROFESSIONAL ENGINEER Jeffery G. McRae No. E14512 Exp. 6-30-08 ELECTRICAL STATE OF CALIFORNIA

The State of California or its officers or agents shall not be responsible for the accuracy or completeness of electronic copies of this plan sheet.

To accompany plans dated 5-14-12

CONDUIT

PROPOSED	EXISTING	
		Lighting Conduit, unless otherwise indicated or noted
		Traffic signal conduit
C	c	Communication conduit
T	t	Telephone conduit
F	f	Fire alarm conduit
FO	fo	Fiber optic conduit
		Conduit termination (RSP ES-9A C)
R	r	Conduit riser in/on structure or service pole

SERVICE EQUIPMENT

PROPOSED	EXISTING	
OH	oh	Overhead lines
U	U	Wood pole "U" indicates utility owned
		Pole guy with anchor
		Utility transformer - ground mounted
III		Service equipment enclosure type
		Service equipment enclosure door indicates front of enclosure
T	t	Telephone demarcation cabinet

POLE-MOUNTED SERVICE DESIGNATION

Type of installation

TYPE H SERVICE - 28'-10" ← Pole height above grade

ILLUMINATED OVERHEAD SIGN

PROPOSED	EXISTING	
		Overhead sign - Single post
		Overhead sign - Two post
		Overhead sign - Mounted on structure
		Overhead sign with electrolier

SIGNAL EQUIPMENT

PROPOSED	EXISTING	
		Pedestrian signal face
		Pedestrian push button post
		Pedestrian barricade
		Vehicle signal face (with backplate, 3-Section: red, yellow and green)
		Vehicle signal face with angle visors
PV	PV	Modifications of basic symbols: "L" indicates all non-arrow sections louvered "LG" indicates louvered green section only "PV" indicates 12" programmed visibility sections "8" indicates all 8" sections (only when specified)
		Type 15TS and Vehicle signal face
		Vehicle signal face with red, yellow and green left arrow sections
		Vehicle signal face with red and yellow sections and up green arrow
		Vehicle signal face (5 Section) with red, yellow and green sections and yellow and green right arrows
		Type 1 Standard and attached vehicle signal faces
		Standard with signal mast arm only and attached vehicle signal faces and internally illuminated street name sign
		Type 33 Standard, Left-turn vehicle signal face and sign
		Standard with luminaire and signal mast arms and attached vehicle signal faces
		Cantilever flashing beacon Type 9 Frame, with a sign unless otherwise specified or indicated
		Type 15-FBS Standard with two vehicle signal face sections with lens, backplate and visor with a sign
R	Y	Flashing beacon. One vehicle signal face section with lens, backplate and visor. "R" indicates red indication, "Y" indicates yellow indication
		Controller assembly. Door indicates front of cabinet

SIGNAL EQUIPMENT Cont

PROPOSED	EXISTING	
		Guard post
		Type 1 Standard with "Meter On" sign
		Emergency Vehicle detector

NOTES:

1. All signal sections shall be 12" unless shown otherwise.
2. Signal heads shall be provided with backplates unless shown otherwise.
3. Signal indication shall be LED.

STATE OF CALIFORNIA
DEPARTMENT OF TRANSPORTATION

ELECTRICAL SYSTEMS (SYMBOLS AND ABBREVIATIONS)

NO SCALE

RSP ES-1B DATED OCTOBER 5, 2007 SUPERCEDES STANDARD PLAN ES-1B DATED MAY 1, 2006 - PAGE 401 OF THE STANDARD PLANS BOOK DATED MAY 2006.

REVISED STANDARD PLAN RSP ES-1B

2006 REVISED STANDARD PLAN RSP ES-1B

DIST	COUNTY	ROUTE	POST MILES TOTAL PROJECT	SHEET NO.	TOTAL SHEETS
04	Ala	580	R8.4/R14.6	706	853

REGISTERED ELECTRICAL ENGINEER

October 5, 2007
PLANS APPROVAL DATE

REGISTERED PROFESSIONAL ENGINEER Jeffery G. McRae No. E14512 Exp. 6-30-08 ELECTRICAL STATE OF CALIFORNIA

The State of California or its officers or agents shall not be responsible for the accuracy or completeness of electronic copies of this plan sheet.

To accompany plans dated 5-14-12

EQUIPMENT IDENTIFICATION

ILLUMINATED SIGN IDENTIFICATION NUMBER:

Sign No. 12345 — Sign number - Place on post or structure

10 ISL SCI 1.0

- 1.0 — Transformer rating (kVA)
- SCI — Lighting control type
- ISL — Number and type of fixtures

Do NOT place on standard or structure

ELECTROLIER OR EQUIPMENT IDENTIFICATION NUMBER:

12345 - 15'-0"

- 15'-0" — Mast arm length, if shown. Do not place on standard or structure.
- 12345 — Equipment number - Place on standard or structure. Existing equipment numbers are shown in parenthesis

CONDUIT AND CONDUCTOR IDENTIFICATION:

1½"C, 2#10, 15#14, 2 DLC

- 2#10, 15#14, 2 DLC — Number and size of conductors and cables
- 1½"C — Size of conduit in inches

Ø1, Ø2, Ø2P, etc.	Traffic phase identification for signal faces, detectors and phase diagrams
1 2 3	Project note numbers
A B C	Equipment description, installation or item numbers
1 2 3	Conduit run numbers

SIGNAL AND LIGHTING STANDARD (TYPICAL DESIGNATION):

19A - 3 - 100

- 100 — Wind velocity = 100 mph
- 3 — Case 3 arm loading
- 19A — Standard type
- Standard Plan sheet number
- Detail number or letter

MISCELLANEOUS EQUIPMENT

PROPOSED	EXISTING	
CMS	cms	Changeable message sign
		Closed circuit television camera
		Highway advisory radio pole and antenna
EMS	ems	Extinguishable message sign
M V	m v	Detection device M = Microwave sensor V = Video image sensor

WIRING DIAGRAM LEGEND

P	Pole
CB	Circuit breaker
A	Ampere
V	Volt
M	Metered
UM	Unmetered
NB	Neutral bus
GB	Ground bus
G	Equipment grounding conductor
N	Grounded conductor (Neutral)

- External conductor
- Conductor or bus
- Tie point
- Contactor coil
- Contactor, Contact NO
- Terminal blocks
- Contactor, Contact NC
- Enclosure bond
- Grounding electrode
- Circuit breaker
- Receptacle

PULL BOXES

PROPOSED EXISTING

Pull box-No. 5 unless otherwise indicated or noted.

3 — 9A(21)

Pull box-Additional designations or descriptions

3	= No. 3½ pull box
5	= No. 5 pull box
6	= No. 6 pull box
7	= No. 7 (Ceiling pull box)
8	= No. 8 (Pendant soffit pull box)
9	= No. 9 pull box
9A	= No. 9A pull box

(C)	= Communications pull box
(E)	= Pull box with extension
(S)	= Sprinkler control pull box
(21)	= Anchor bolts and conduit for future installation of Type 21 Standard
(T)	= Traffic pull box

VEHICLE DETECTORS

5 J 9 U

- U = Upper
- L = Lower
- Slot number in input file
- Input file (I or J)
- Phase

PROPOSED EXISTING

	Type A detector loop. Outline of sawcut shown.
	Type B detector loop. Outline of sawcut shown.
	Type C detector loop. Outline of sawcut shown.
	Type D detector loop. Outline of sawcut shown.
	Type E detector loop. Outline of sawcut shown.
	Type Q detector loop. Outline of sawcut shown.
	Magnetic detector
DH / dh	Detector handhole
	Microwave or video detection zone

STATE OF CALIFORNIA
DEPARTMENT OF TRANSPORTATION

ELECTRICAL SYSTEMS (SYMBOLS AND ABBREVIATIONS)

NO SCALE

RSP ES-1C DATED OCTOBER 5, 2007 SUPERCEDES STANDARD PLAN ES-1C DATED MAY 1, 2006 - PAGE 402 OF THE STANDARD PLANS BOOK DATED MAY 2006.

REVISED STANDARD PLAN RSP ES-1C

2006 REVISED STANDARD PLAN RSP ES-1C

7-10-07

DIST	COUNTY	ROUTE	POST MILES TOTAL PROJECT	SHEET NO.	TOTAL SHEETS
04	Ala	580	R8.4/R14.6	707	853

REGISTERED ELECTRICAL ENGINEER

October 5, 2007
PLANS APPROVAL DATE

REGISTERED PROFESSIONAL ENGINEER Jeffery G. McRae No. E14512 Exp. 6-30-08 ELECTRICAL STATE OF CALIFORNIA

The State of California or its officers or agents shall not be responsible for the accuracy or completeness of electronic copies of this plan sheet.

To accompany plans dated 5-14-12

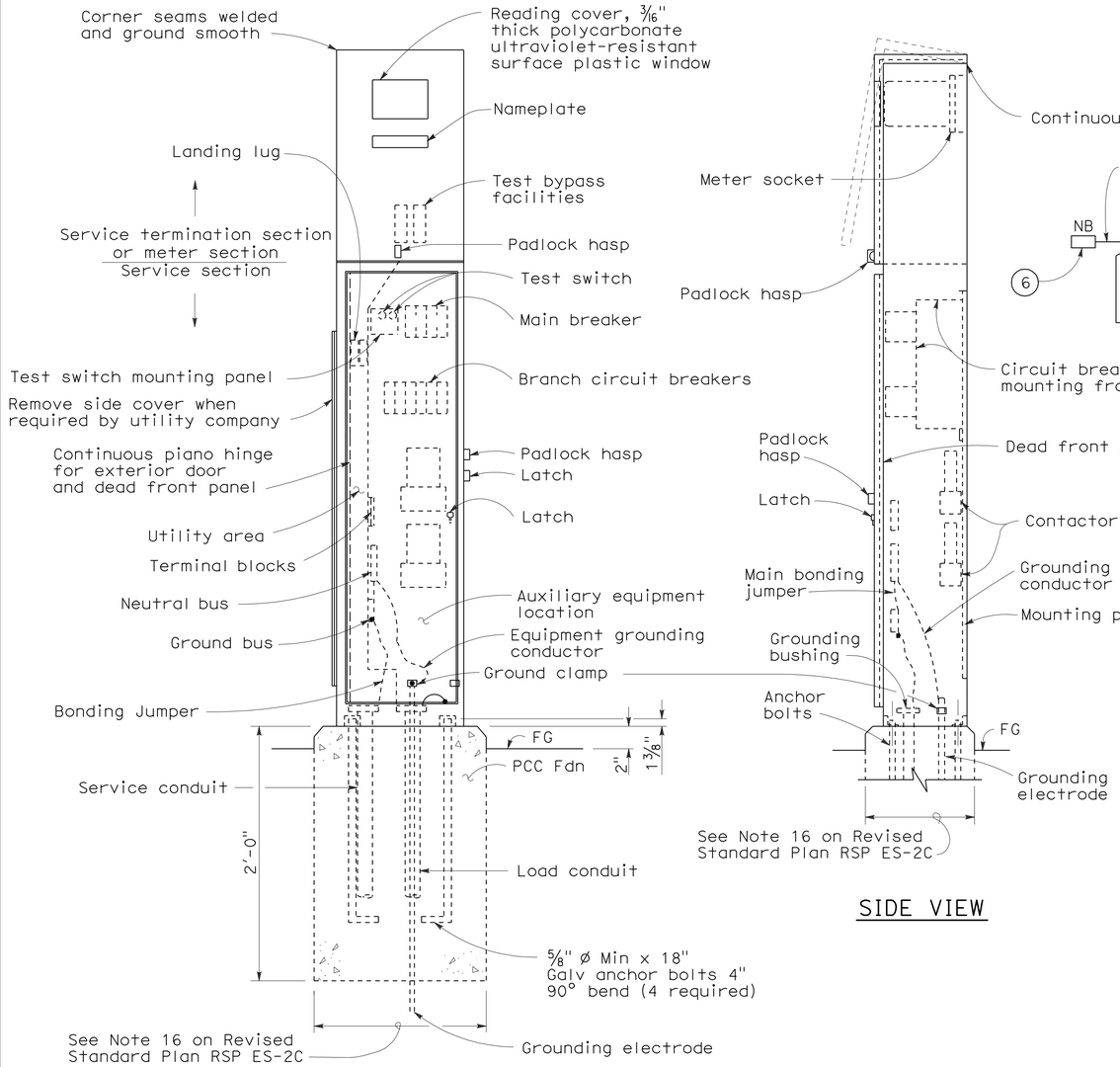

TYPE III-AF SERVICE EQUIPMENT ENCLOSURE (TYPICAL)

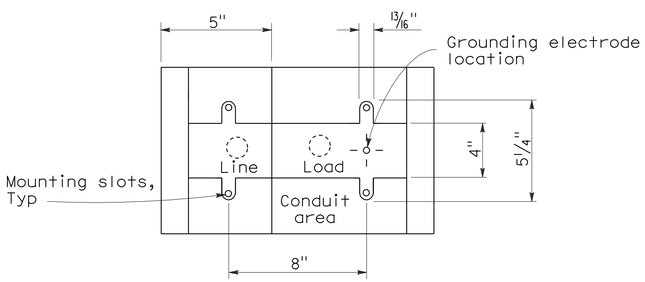

BASE FOR TYPE III-A SERVICE EQUIPMENT ENCLOSURE

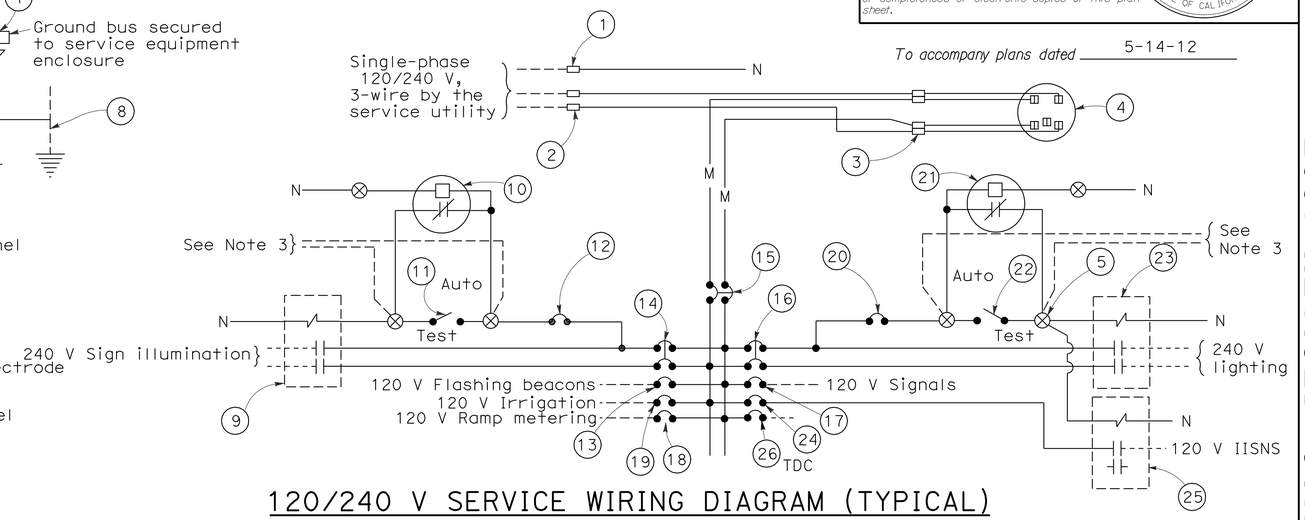

120/240 V SERVICE WIRING DIAGRAM (TYPICAL)

TYPE III-A SERVICE (120/240 V) EQUIPMENT LEGEND

ITEM No.	COMPONENT	NAME PLATE DESCRIPTION	ITEM No.	COMPONENT	NAME PLATE DESCRIPTION
1	Neutral lug		14	30 A, 240 V, 2P, CB	Sign Illumination
2	Landing lug (Note 6)		15	100 A, 240 V, 2P, CB	Main Breaker
3	Test bypass facility		16	30 A, 240 V, 2P, CB	Lighting
4	Meter socket and support		17	50 A, 120 V, 1P, CB	Signals
5	Terminal blocks		18	30 A, 120 V, 1P, CB	Ramp Metering
6	Neutral bus		19	20 A, 120 V, 1P, CB	Irrigation
7	Ground bus		20	15 A, 120 V, 1P, CB	Lighting Control
8	Grounding electrode		21	Photoelectric unit (Note 7)	
9	30 A, 2PNO Contactor	Sign Illumination	22	15 A, 1P, Test switch	Lighting Test Switch
10	Photoelectric unit (Note 7)		23	60 A, 2PNO Contactor	Lighting
11	15 A, 1P, Test switch	Sign Illumination Test Switch	24	15 A, 120 V, 1P, CB	IISNS
12	15 A, 120 V, 1P, CB	Sign Illumination Control	25	30 A, 2PNO Contactor	IISNS
13	15 A, 120 V, 1P, CB	Flashing Beacon	26	20 A, 120 V, 1P, CB	Telephone Demarcation Cabinet

NOTES: (FOR SERVICE EQUIPMENT ENCLOSURE)

1. Voltage ratings of service equipment shall conform to the service voltages indicated on the plans.
2. Unless otherwise indicated on the plans, service equipment items shall be provided for each service equipment enclosure as shown.
3. Connect to remote test switch mounted on lighting standards, sign post or structure when required.
4. Items No. 1 and 6 shall be isolated from the service equipment enclosure.
5. Meter sockets shall be 5 clip type.
6. The landing lug shall be suitable for multiple conductors.
7. Type V photoelectric control shall be used unless otherwise indicated on the plans.

STATE OF CALIFORNIA
DEPARTMENT OF TRANSPORTATION

ELECTRICAL SYSTEMS (SERVICE EQUIPMENT AND TYPICAL WIRING DIAGRAM, TYPE III-A SERIES)

NO SCALE

RSP ES-2D DATED OCTOBER 5, 2007 SUPERCEDES STANDARD PLAN ES-2D DATED MAY 1, 2006 - PAGE 406 OF THE STANDARD PLANS BOOK DATED MAY 2006.

REVISED STANDARD PLAN RSP ES-2D

2006 REVISED STANDARD PLAN RSP ES-2D

DIST	COUNTY	ROUTE	POST MILES TOTAL PROJECT	SHEET NO.	TOTAL SHEETS
04	Ala	580	R8.4/R14.6	708	853

REGISTERED ELECTRICAL ENGINEER

June 6, 2008
PLANS APPROVAL DATE

REGISTERED PROFESSIONAL ENGINEER
Jeffery G. McRae
No. E14512
Exp. 6-30-10
ELECTRICAL
STATE OF CALIFORNIA

The State of California or its officers or agents shall not be responsible for the accuracy or completeness of electronic copies of this plan sheet.

To accompany plans dated 5-14-12

VISORS

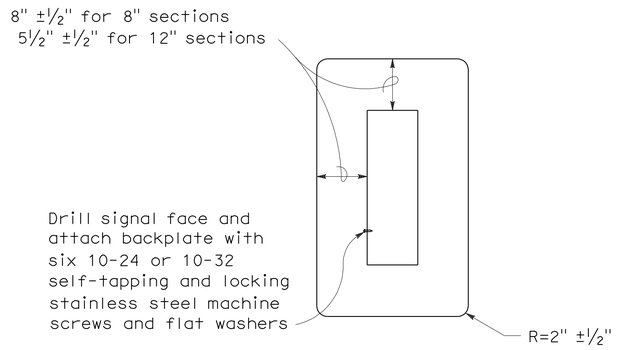

8" AND 12" SECTIONS

BACKPLATE

1/16" minimum thickness
3001-14 aluminum, or plastic when specified

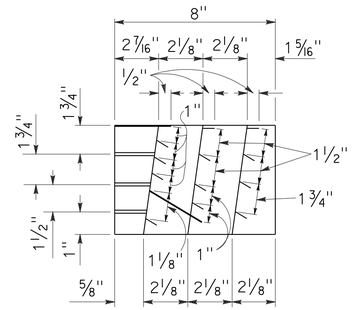

SECTION A-A

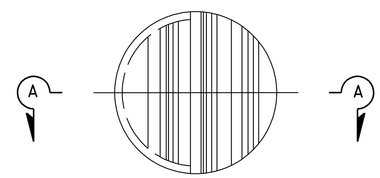

FRONT VIEW

DIRECTIONAL LOUVER

Directional louvers shall be oriented as directed by the Engineer and secured in place with one plated brass machine screw and nut.

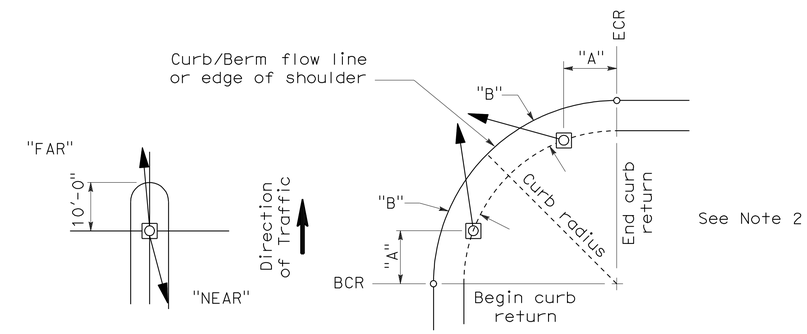

NOTES:

1. Typical signal pole placement unless dimensioned on plans.
2. For "A" and "B" dimensions, see Pole Schedule, or as directed by the Engineer.

SIGNAL STANDARD PLACEMENT DIMENSIONS AND EQUIPMENT LOCATIONS

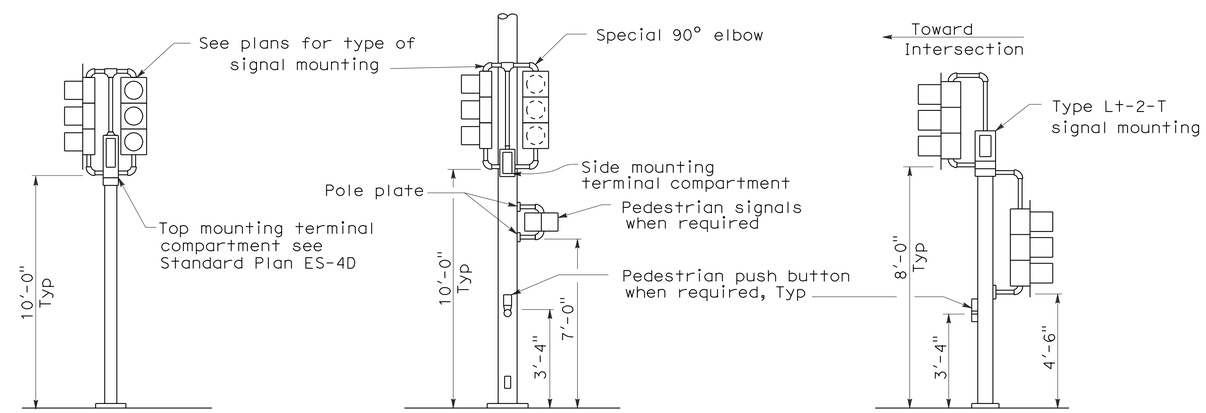

TOP MOUNTED SIGNALS (TV)

Type 1-A, 1-B, 1-C and 1-D standard as indicated on the plans

SIDE MOUNTED SIGNALS (SV AND SP)

Normally used on standards with luminaire or signal mast arm

LEFT TURN LANE SIGNAL

Type 1-A, 1-B, 1-C and 1-D standard as indicated on plans

TYPICAL SIGNAL INSTALLATIONS

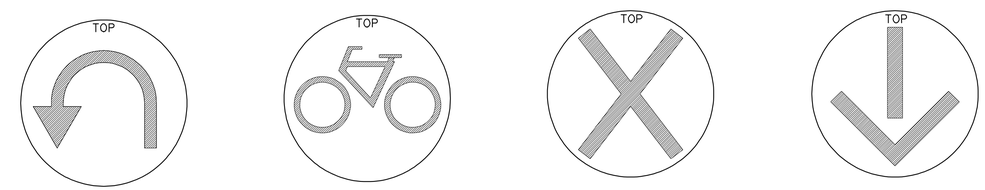

U-TURN SIGNAL FACE | BICYCLE SIGNAL FACE | LANE CONTROL SIGNAL FACE | LANE CONTROL SIGNAL FACE

STATE OF CALIFORNIA
DEPARTMENT OF TRANSPORTATION

ELECTRICAL SYSTEMS (SIGNAL HEADS AND MOUNTINGS)

NO SCALE

RSP ES-4C DATED JUNE 6, 2008 SUPERSEDES STANDARD PLAN ES-4C DATED MAY 1, 2006 - PAGE 420 OF THE STANDARD PLANS BOOK DATED MAY 2006.

REVISED STANDARD PLAN RSP ES-4C

2006 REVISED STANDARD PLAN RSP ES-4C

5-19-08

DIST	COUNTY	ROUTE	POST MILES TOTAL PROJECT	SHEET NO.	TOTAL SHEETS
04	Ala	580	R8.4/R14.6	709	853

REGISTERED ELECTRICAL ENGINEER

June 6, 2008
PLANS APPROVAL DATE

REGISTERED PROFESSIONAL ENGINEER Jeffery G. McRae No. E14512 Exp. 6-30-10 ELECTRICAL STATE OF CALIFORNIA

The State of California or its officers or agents shall not be responsible for the accuracy or completeness of electronic copies of this plan sheet.

To accompany plans dated 5-14-12

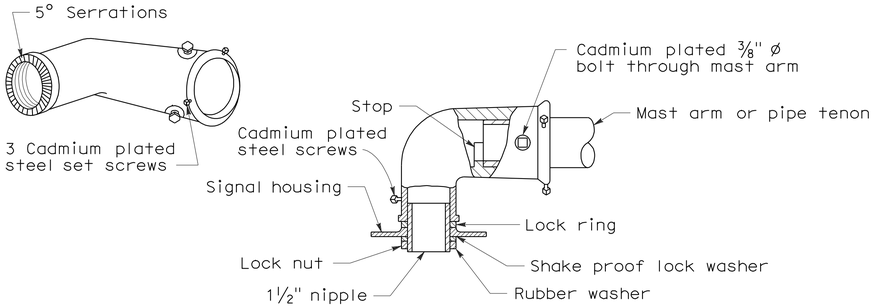

MAST ARM MOUNTING - TYPE "MAT"

For 2 NPS pipe, see Note 1.

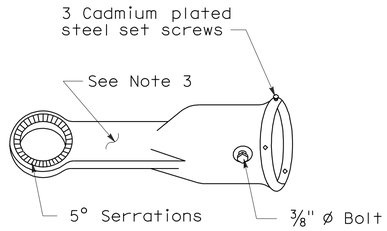

MAST ARM MOUNTING - TYPE "MAS"

For 2 NPS pipe. See Note 1.

SIGNAL SLIP FITTERS

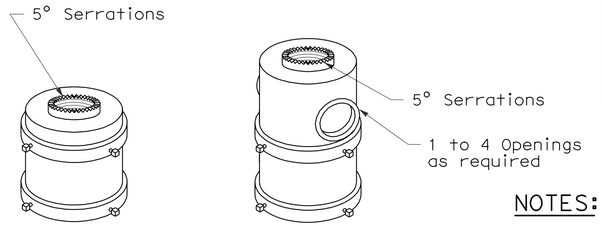

For one mounting For mulitiple mountings

TOP MOUNTINGS

For 4 NPS pipe, see Note 2.

NOTES:

1. After mast arm signal has been plumbed and secured, drill 7/16" hole through mast arm tenon in line with slip fitter hole. Place a cadmium plated 3/8" ø galvanized bolt with washer under bolt head through hole and secure with washer, nut, and locknut. Seal openings between mast arm mountings and mast arm with mastic.
2. (a) Threaded top mounted slip fitter openings shall be 1½ NPS.
   (b) Serrations in fittings shall match those on bottom of signal heads or in lock ring.
   (c) Top opening shall be offset when backplate is used.
3. Wireway shall have a cross section area of 0.95 square inch minimum. Minimum width of ½".

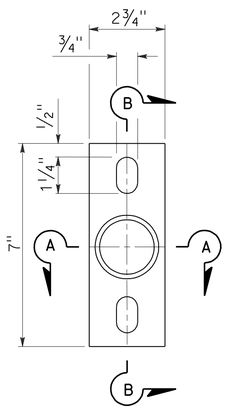

POLE PLATE

For side mountings

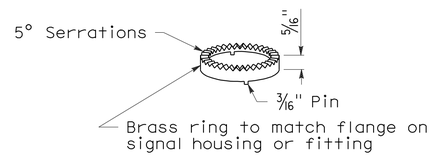

LOCK RING

Use where locking ring is not integral with signal housing or fitting.

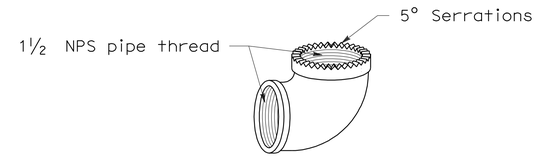

SPECIAL 90° ELBOW

One for each signal head, except those with special slip fitter mounting

MISCELLANEOUS MOUNTING HARDWARE

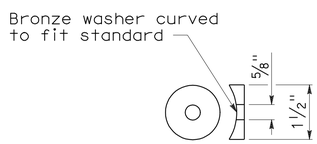

DETAIL "C"

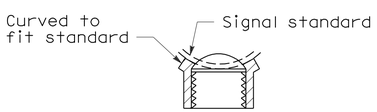

SECTION A-A

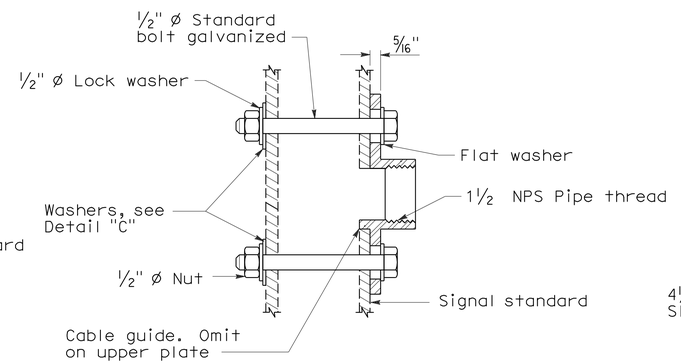

SECTION B-B

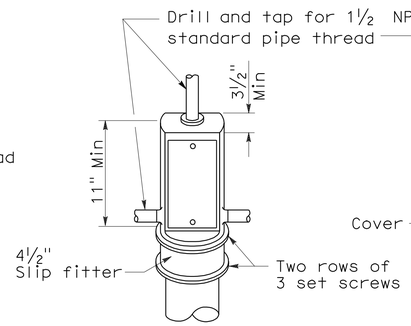

TOP MOUNTING

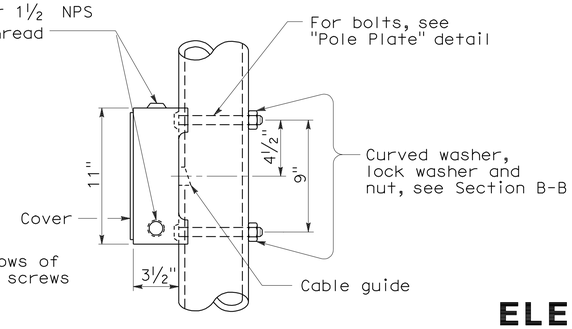

SIDE MOUNTING

TERMINAL COMPARTMENTS

STATE OF CALIFORNIA
DEPARTMENT OF TRANSPORTATION

ELECTRICAL SYSTEMS (SIGNAL HEADS AND MOUNTINGS)

NO SCALE

RSP ES-4D DATED June 6, 2008 SUPERSEDES STANDARD PLAN ES-4D
DATED MAY 1, 2006 - PAGE 421 OF THE STANDARD PLANS BOOK DATED MAY 2006.

REVISED STANDARD PLAN RSP ES-4D

2006 REVISED STANDARD PLAN RSP ES-4D

5-19-08

DIST	COUNTY	ROUTE	POST MILES TOTAL PROJECT	SHEET NO.	TOTAL SHEETS
04	Ala	580	R8.4/R14.6	710	853

REGISTERED ELECTRICAL ENGINEER

October 5, 2007
PLANS APPROVAL DATE

REGISTERED PROFESSIONAL ENGINEER Jeffery G. McRae No. E14512 Exp. 6-30-08 ELECTRICAL STATE OF CALIFORNIA

The State of California or its officers or agents shall not be responsible for the accuracy or completeness of electronic copies of this plan sheet.

To accompany plans dated 5-14-12

LOOP INSTALLATION PROCEDURE

1. Loops shall be centered in lanes.
2. Saw slots in pavement for loop conductors as shown in details.
3. Distance between side of loop and a lead-in saw cut from adjacent detectors shall be 2'-0" minimum. Distance between lead-in saw cuts shall be 6" minimum.
4. Bottom of saw slot shall be smooth with no sharp edges.
5. Slots shall be washed until clean, blown out and thoroughly dried before installing loop conductors.
6. Adjacent loops on the same sensor unit channel shall be wound in opposite directions.
7. Identify and tag loop circuit pairs in the pull box with loop number, start (S) and finish (F) of conductor. Identify and tag lead-in-cable with sensor number and phase.
8. Install loop conductor in slot using a 3/16" to 1/4" thick wood paddle. Hold loop conductors with wood paddles (at the bottom of the sawed slot) during sealant placement.
9. No more than 2 twisted pairs shall be installed in one sawed slot.
10. Allow additional 5'-0" of slack length of conductor for the lead-in run to pull box.
11. The additional length of each conductor for each loop shall be twisted together into a pair (6 turns per 3'-4" minimum) before being placed in the slot and conduit leading to pull box.
12. Test each loop circuit for continuity, circuit resistance and insulation resistance at the pull box before filling slots.
13. Fill slots as shown in details.
14. Splice loop conductors to lead-in-cable. Splices shall be soldered.
15. End of lead-in-cable and Type 2 loop conductor shall be waterproofed prior to installing in conduit to prevent moisture from entering the cable.
16. Lead-in-cable shall not be spliced between the pull box and the controller cabinet terminals.
17. Test each loop circuit for continuity, circuit resistance and insulation resistance at the controller cabinet location.
18. Where loop conductors are not to be spliced to a lead-in-cable, the ends of the conductors shall be taped and waterproofed with electrical insulating coating.

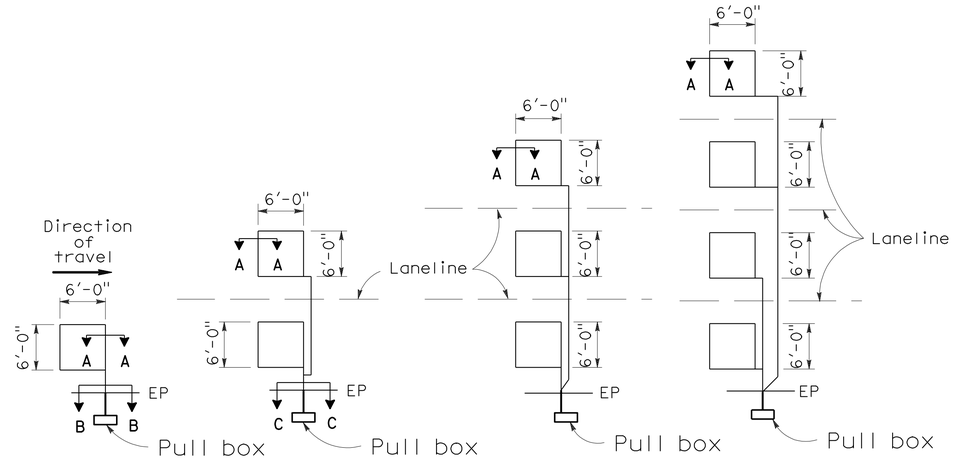

TYPE 1A INSTALLATION | TYPE 2A INSTALLATION | TYPE 3A INSTALLATION | TYPE 4A INSTALLATION

SAWCUT DETAILS

(Type A loop detector configurations illustrated)

1. 1A thru 4A = 1 Type A loop configuration in each lane.
2. 1B thru 4B = 1 Type B loop configuration in each lane.
3. 1C = 1 Type C loop configuration entering lanes as required.
4. 1D thru 4D = 1 Type D loop configuration in each lane.
5. 1E thru 4E = 1 Type E loop configuration in each lane.
6. 1Q thru 4Q = 1 Type Q loop configuration in each lane. (Use Type A, B, C, D, E or Q loop detector configurations only when specified or shown on plans)

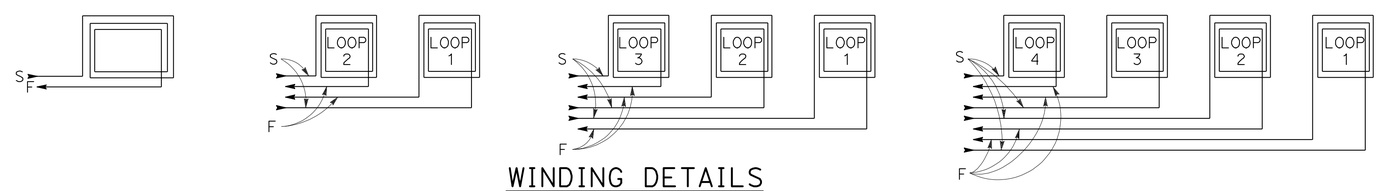

WINDING DETAILS

See Notes 6 and 7

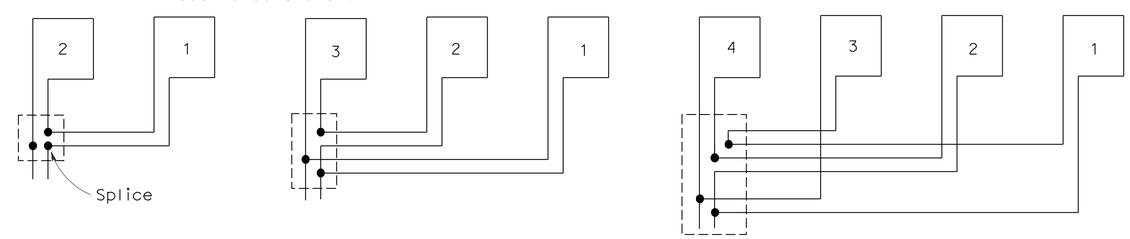

TYPICAL LOOP CONNECTIONS

(Dashed lines represent the pull box)

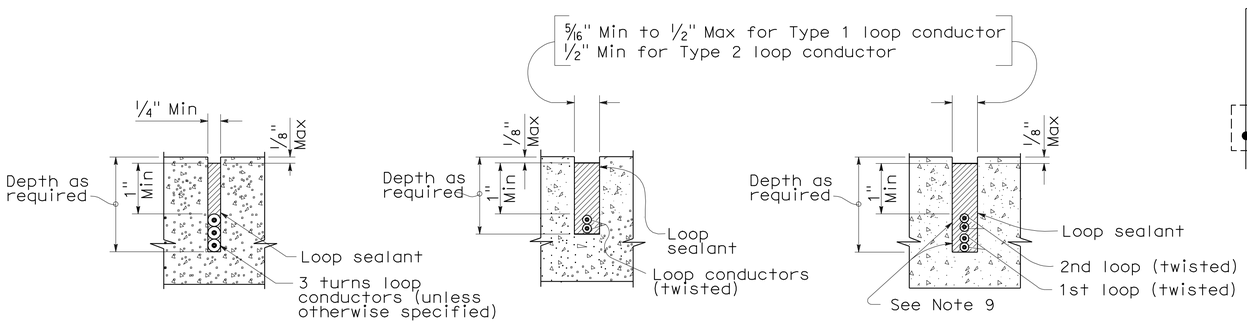

SECTION A-A | SECTION B-B | SECTION C-C

SLOT DETAILS - TYPE 1 AND TYPE 2 LOOP CONDUCTOR

STATE OF CALIFORNIA
DEPARTMENT OF TRANSPORTATION

ELECTRICAL SYSTEMS (DETECTORS)

NO SCALE

RSP ES-5A DATED OCTOBER 5, 2007 SUPERCEDES STANDARD PLAN ES-5A DATED MAY 1, 2006 - PAGE 423 OF THE STANDARD PLANS BOOK DATED MAY 2006.

REVISED STANDARD PLAN RSP ES-5A

2006 REVISED STANDARD PLAN RSP ES-5A

DIST	COUNTY	ROUTE	POST MILES TOTAL PROJECT	SHEET NO.	TOTAL SHEETS
04	Ala	580	R8.4/R14.6	711	853

REGISTERED CIVIL ENGINEER

October 5, 2007
PLANS APPROVAL DATE

REGISTERED PROFESSIONAL ENGINEER
Stanley P. Johnson
No. C57793
Exp. 3-31-08
CIVIL
STATE OF CALIFORNIA

The State of California or its officers or agents shall not be responsible for the accuracy or completeness of electronic copies of this plan sheet.

To accompany plans dated 5-14-12

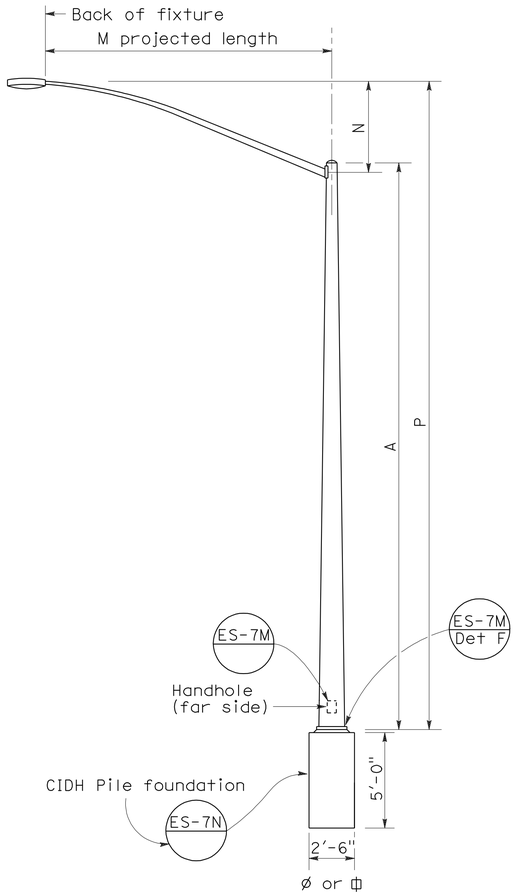

ELEVATION
TYPE 15 AND TYPE 21

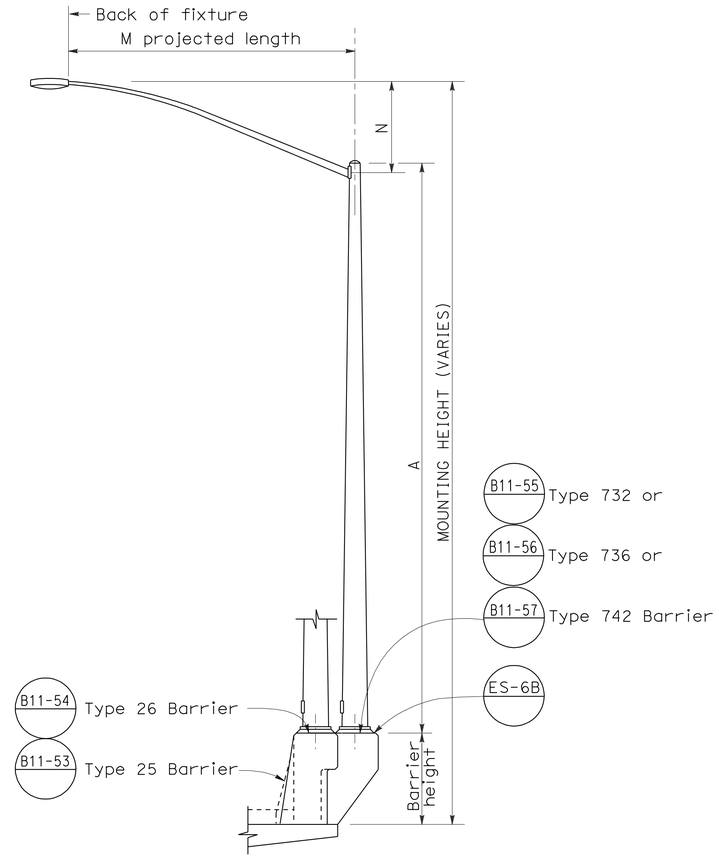

ELEVATION
TYPE 15 AND TYPE 21 BARRIER RAIL MOUNTED

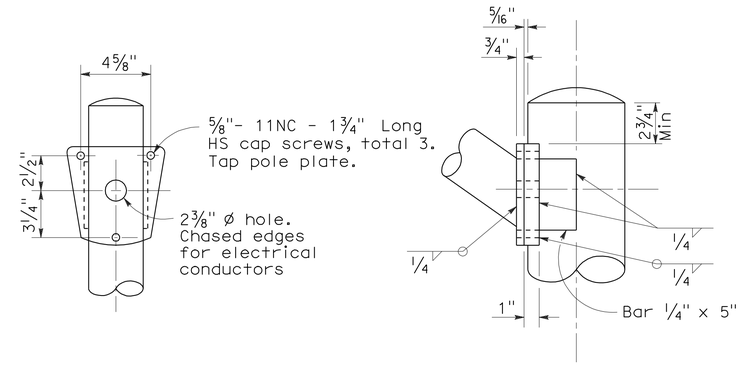

DETAIL R
LUMINAIRE ARM CONNECTION

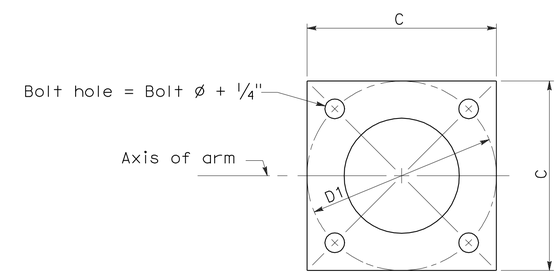

BASE PLATE

POLE TYPE	POLE DATA				BASE PLATE DATA				LUMINAIRE ARM
	A Height	Min OD Base	Min OD Top	Wall Thickness	C	D1 Bolt Circle	Thick-ness	Anchor Bolts Size	
15	30'	8"	3 7/8"	0.1196"	1'-0"	1'-0"	1"	1" ø x 3'-0" x 4"*	6' - 15' [12']
21	35'	8 5/8"	3 7/8"	0.1196"	1'-0"	1'-0"	1"	1 1/4"ø x 3'-0" x 4"*	6' - 15' [12']

* For barrier rail bolts, see Standard Plan ES-6B.

LUMINAIRE ARM DATA					
M Projected Length	N Rise	Min OD At Pole	Nominal Thickness	P Type 15	P Type 21
6'-0"	2'-0"±	3 1/4"	0.1196"	31'-6"±	36'-6"±
8'-0"	2'-6"±	3 1/2"	0.1196"	32'-0"±	37'-0"±
10'-0"	3'-3"±	3 7/8"	0.1196"	32'-9"±	37'-9"±
12'-0"	4'-3"±	3 7/8"	0.1196"	33'-9"±	38'-9"±
15'-0"	4'-9"±	4 1/4"	0.1196"	34'-3"±	39'-3"±

NOTES:

1. ☐ Indicates arm length to be used unless otherwise noted on the plans.
2. For Type 15-SB, use Type 15 standard with Type 30 slip base plate details, see Standard Plan ES-6F.
3. For additional notes, see Standard Plan ES-7M and ES-7N.

STATE OF CALIFORNIA
DEPARTMENT OF TRANSPORTATION

ELECTRICAL SYSTEMS (LIGHTING STANDARD TYPES 15 AND 21)

NO SCALE

RSP ES-6A DATED OCTOBER 5, 2007 SUPERCEDES STANDARD PLAN ES-6A DATED MAY 1, 2006 - PAGE 427 OF THE STANDARD PLANS BOOK DATED MAY 2006.

REVISED STANDARD PLAN RSP ES-6A

2006 REVISED STANDARD PLAN RSP ES-6A

DIST	COUNTY	ROUTE	POST MILES TOTAL PROJECT	SHEET NO.	TOTAL SHEETS
04	Ala	580	R8.4/R14.6	712	853

REGISTERED CIVIL ENGINEER

January 18, 2008
PLANS APPROVAL DATE

REGISTERED PROFESSIONAL ENGINEER
Stanley P. Johnson
No. C57793
Exp. 03-31-08
CIVIL
STATE OF CALIFORNIA

The State of California or its officers or agents shall not be responsible for the accuracy or completeness of electronic copies of this plan sheet.

To accompany plans dated 5-14-12

LUMINAIRE ARM DATA

PROJECTED LENGTH	THICKNESS	MINIMUM OD @ POLE	MOUNTING HEIGHT
* 6'-0"	0.1196"	3¼"	36'-9"±
8'-0"		3½"	37'-3"±
10'-0"		3¾"	38'-0"±
12'-0"		3¾"	39'-0"±
15'-0"		4¼"	39'-6"±
** 20'-0"	0.1793"	5"	37'-0"±

* Type 30 - arm length 6'-0" - 15'-0" maximum
** Type 31 - arm lengths 20'-0"

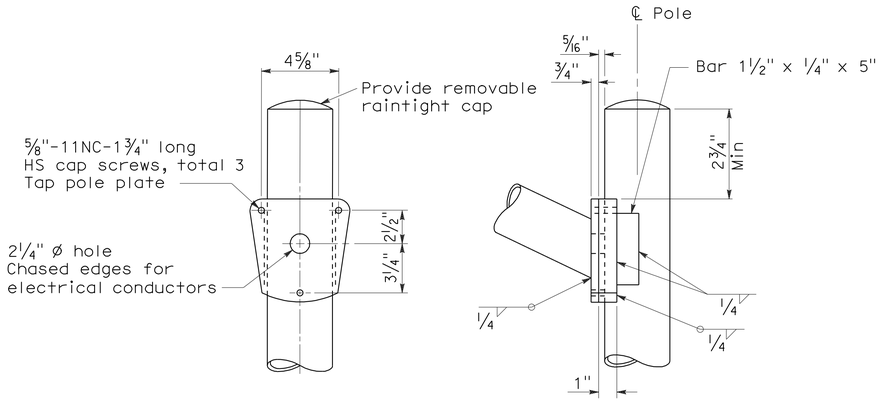

DETAIL A - TYPE 30

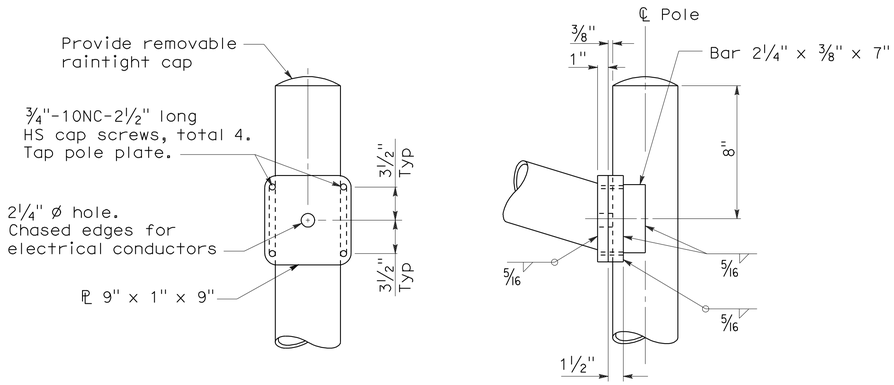

DETAIL A - TYPE 31

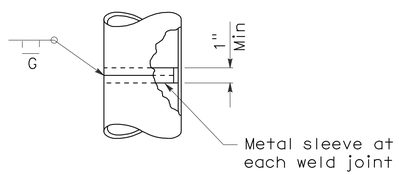

POLE SPLICE

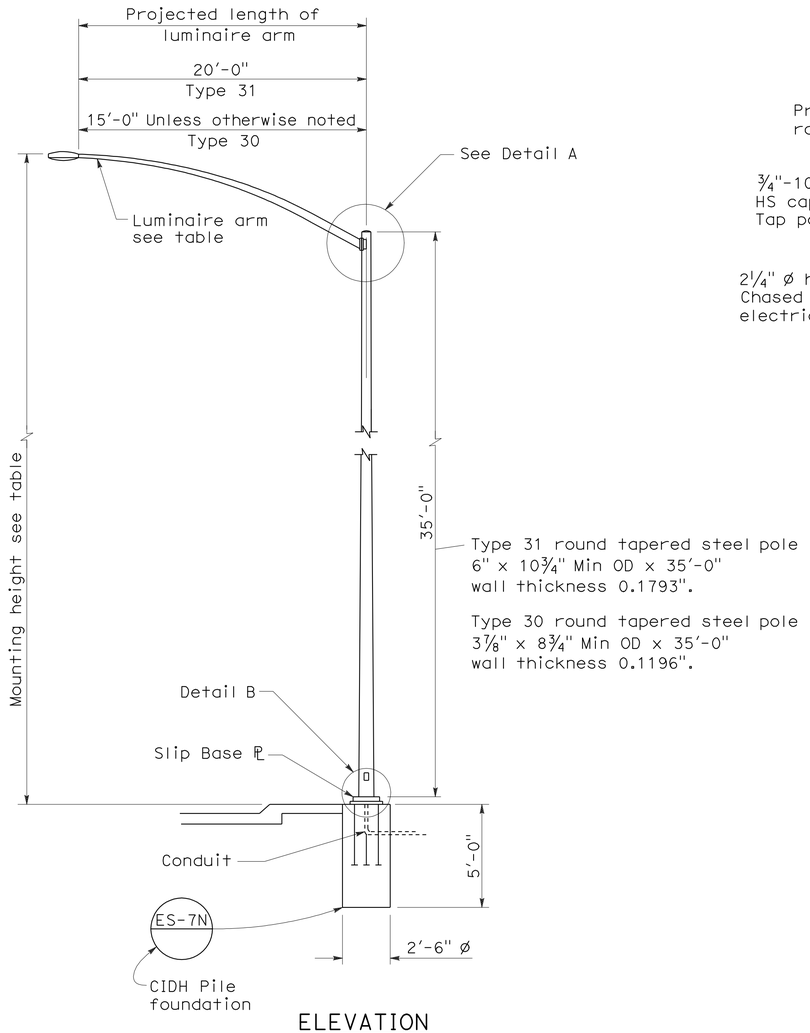

ELEVATION

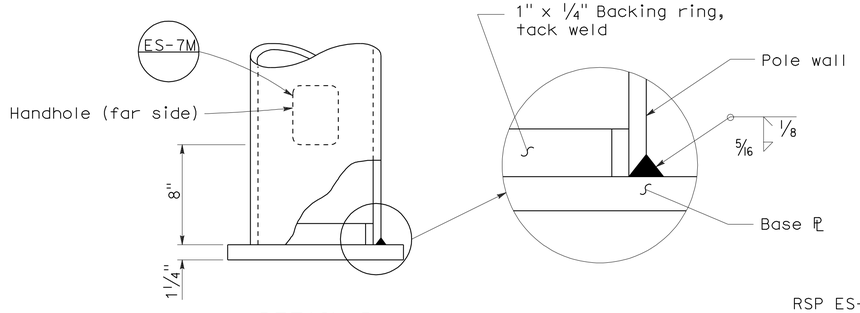

DETAIL B

NOTES:

1. Sheet steel shall have a minimum yield of 48,000 psi.
2. For slip base details see Standard Plan ES-6F.
3. For Type 30 fixed base use Type 15 base plate, and foundation shown on Revised Standard Plan RSP ES-6A. Use 1¼" Dia x 3'-6" x 4" anchor bolts.
4. For Type 31 fixed base use Type 32 base plate, anchor bolts and foundation on Standard Plan ES-6G.
5. Handhole shall be located on downstream side of traffic unless noted otherwise on plans.
6. For additional general notes refer to Standard Plan ES-7M.

STATE OF CALIFORNIA
DEPARTMENT OF TRANSPORTATION

ELECTRICAL SYSTEMS (LIGHTING STANDARD TYPES 30 AND 31)

NO SCALE

RSP ES-6E DATED JANUARY 18, 2008 SUPERCEDES STANDARD PLAN ES-6E DATED MAY 1, 2006 - PAGE 430 OF THE STANDARD PLANS BOOK DATED MAY 2006.

REVISED STANDARD PLAN RSP ES-6E

2006 REVISED STANDARD PLAN RSP ES-6E

11-19-07

DIST	COUNTY	ROUTE	POST MILES TOTAL PROJECT	SHEET NO.	TOTAL SHEETS
04	Ala	580	R8.4/R14.6	713	853

REGISTERED CIVIL ENGINEER

October 5, 2007
PLANS APPROVAL DATE

REGISTERED PROFESSIONAL ENGINEER
Stanley P. Johnson
No. C57793
Exp. 3-31-08
CIVIL
STATE OF CALIFORNIA

The State of California or its officers or agents shall not be responsible for the accuracy or completeness of electronic copies of this plan sheet.

To accompany plans dated 5-14-12

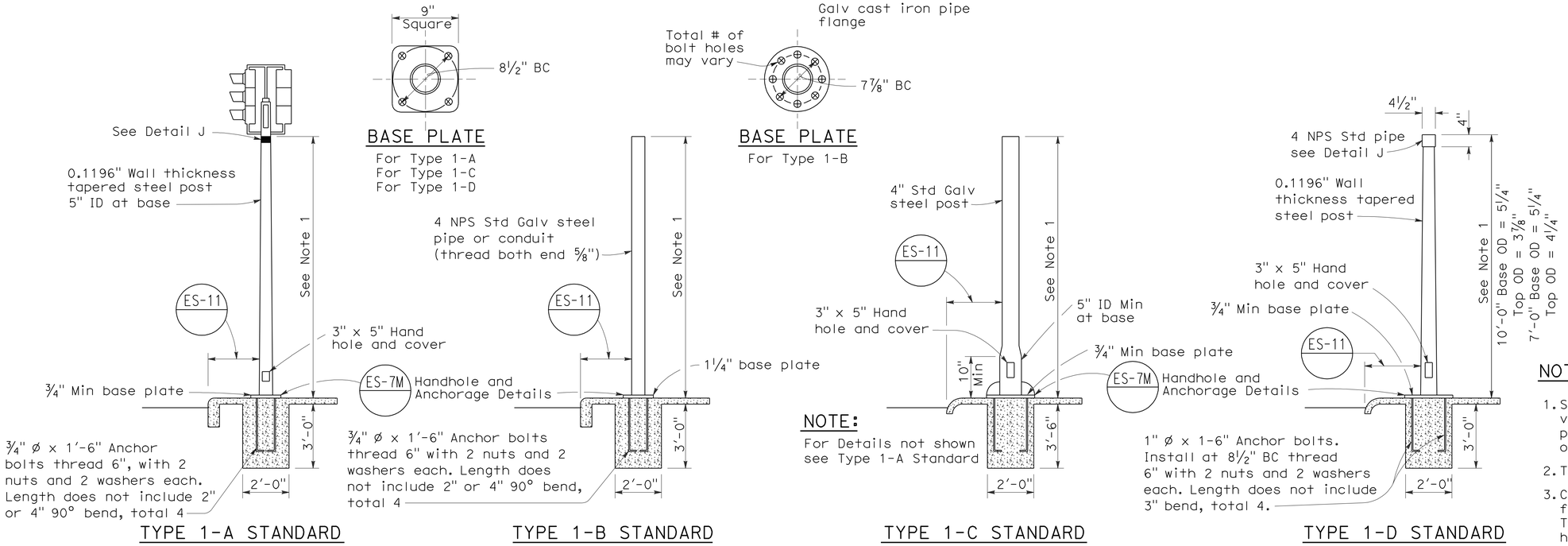

TYPE 1 SIGNAL STANDARDS

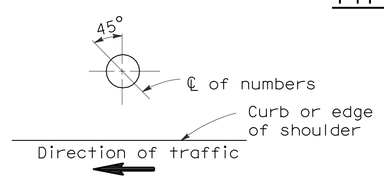

PLAN

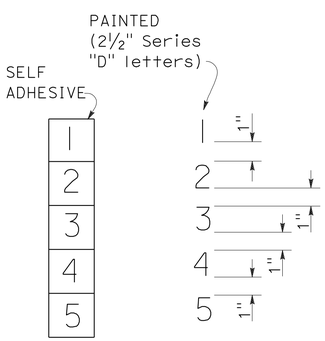

NUMBER DETAIL

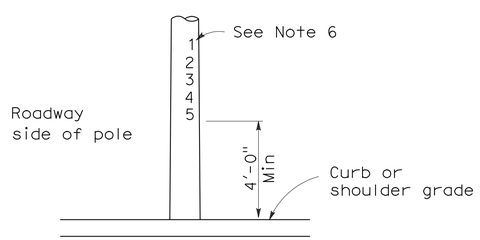

TYPICAL NUMBER FORMAT

LOCATION OF EQUIPMENT NUMBERS ON STANDARDS AND POSTS

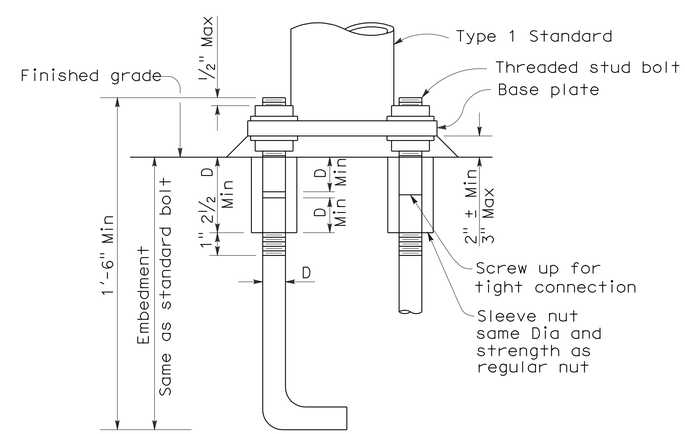

ANCHOR BOLTS WITH SLEEVE NUTS

Sleeve nuts to be used only when shown or specified on Project Plans

D = Diameter of anchor bolt

NOTES:

1. Standards shall be 10'-0" ± 2" for vehicle signals and 7'-0" ± 2" for pedestrian signals unless otherwise noted on plans.
2. Top of standards shall be 4½" OD.
3. Conduits shall extend 2" maximum above finished surface of foundation and for Types 1-A, 1-C and 1-D shall be sloped toward handhole.
4. Anchor bolts shall be bonded to conduit or grounding conductor.
5. Conduit between standard and adjacent pull box shall be 2" minimum.
6. Paint numbers on roadway side facing traffic when electrolier or post is left of direction of traffic.

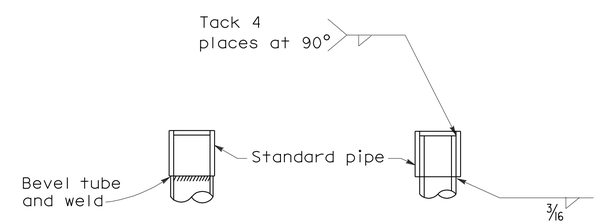

DETAIL J

Tube may be inserted into pipe or butted as required

STATE OF CALIFORNIA
DEPARTMENT OF TRANSPORTATION

ELECTRICAL SYSTEMS (SIGNAL AND LIGHTING STANDARD TYPE 1 STANDARD AND EQUIPMENT NUMBERING)

NO SCALE

RSP ES-7B DATED OCTOBER 5, 2007 SUPERCEDES STANDARD PLAN ES-7B DATED MAY 1, 2006 - PAGE 438 OF THE STANDARD PLANS BOOK DATED MAY 2006.

REVISED STANDARD PLAN RSP ES-7B

2006 REVISED STANDARD PLAN RSP ES-7B

7-10-07

DIST	COUNTY	ROUTE	POST MILES TOTAL PROJECT	SHEET NO.	TOTAL SHEETS
04	Ala	580	R8.4/R14.6	714	853

REGISTERED CIVIL ENGINEER

October 5, 2007
PLANS APPROVAL DATE

REGISTERED PROFESSIONAL ENGINEER
Stanley P. Johnson
No. C57793
Exp. 3-31-08
CIVIL
STATE OF CALIFORNIA

The State of California or its officers or agents shall not be responsible for the accuracy or completeness of electronic copies of this plan sheet.

To accompany plans dated 5-14-12

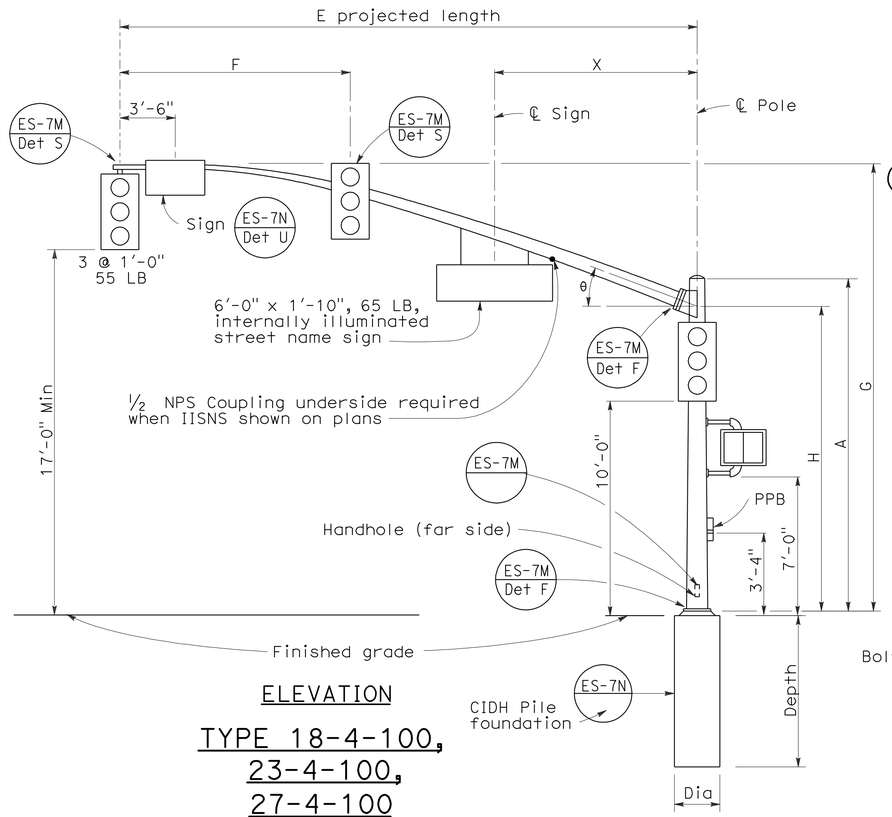

ELEVATION

TYPE 18-4-100, 23-4-100, 27-4-100

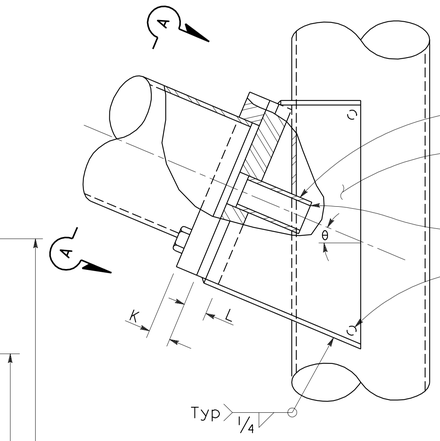

ELEVATION

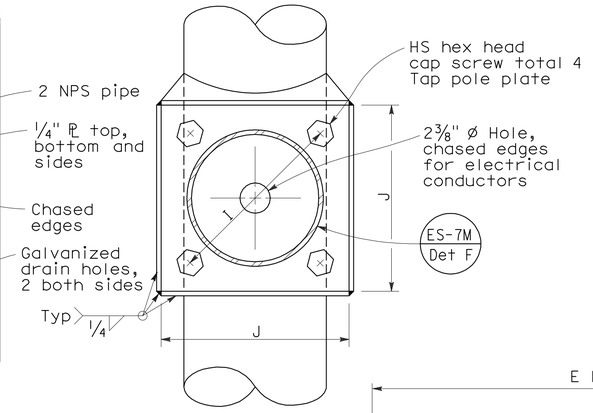

VIEW A-A

SIGNAL ARM CONNECTION DETAILS

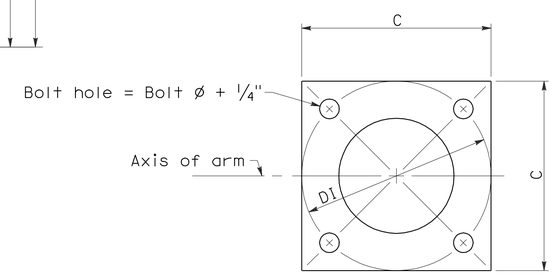

BASE PLATE

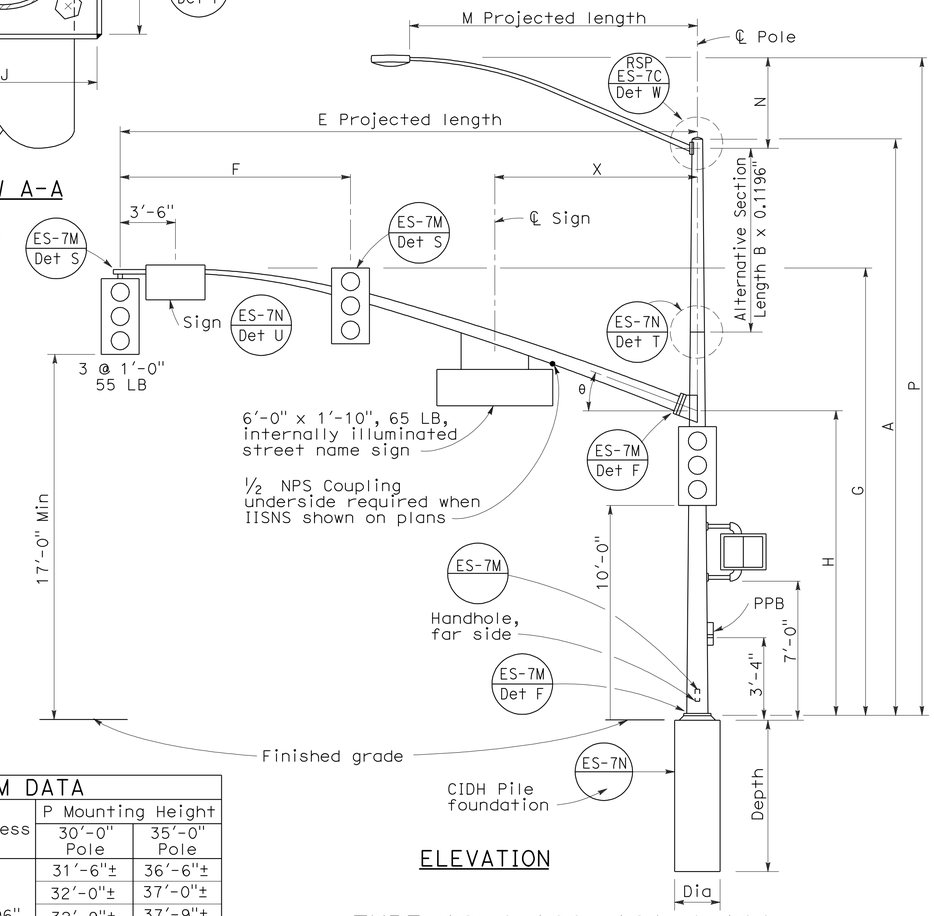

ELEVATION

TYPE 19-4-100, 19A-4-100, 24-4-100, 24A-4-100, 26-4-100, 26A-4-100

SIGNAL ARM DATA												
E Projected Length	F Min Spacing	G Mounting Height	H	Min OD at Pole	Thickness	I Bolt Circle	HS Cap Screws	J Plate Size	K Arm PL Thickness	L Pole PL Thickness	θ	X Max
25'-0"	10'-0"	22'-8"±	16'-0"	7 5/16"	0.2391"	12"	1¼"-7NC-3"	1'-0"	1¼"	1½"	23°	10'-6"
30'-0"	12'-0"	23'-0"±		8"								
35'-0"	14'-0"			8 11/16"		13½"		1'-1½"	1½"	1¾"	21°	13'-0"
40'-0"	15'-0"			9⅜"							15°	
45'-0"		23'-8"±		10¼"								

LUMINAIRE ARM DATA					
M Projected Length	N Rise	Min OD at Pole	Thickness	P Mounting Height 30'-0" Pole	P Mounting Height 35'-0" Pole
6'-0"	2'-0"±	3¼"	0.1196"	31'-6"±	36'-6"±
8'-0"	2'-6"±	3½"		32'-0"±	37'-0"±
10'-0"	3'-3"±	3⅞"		32'-9"±	37'-9"±
12'-0"	4'-3"±			33'-9"±	38'-9"±
15'-0"	4'-9"±	4¼"		34'-3"±	39'-3"±

POLE DATA									BASE PLATE DATA						CIDH PILE FOUNDATION		
Pole Type	Load Case	Wind Velocity mph	A Height	Min OD Base	Min OD Top	Thickness	Alternative Section B Length	Alternative Section Bottom	Alternative Section Top	C	DI Bolt Circle	Thickness	Anchor Bolts Size	Luminaire Arm	Signal Arm	Dia	Depth	Reinforced
18-4-100	4	100	17'-0"	12"	9"	0.2391"	None	9⅜"		1'-6"	1'-6"	1½"	2" Ø x 42" x 6"	None	25'-0", 30'-0"	3'-0"	9'-0"	Yes
19-4-100			30'-0"		8"		10'-0"		8"					6'-15' 12'-0"				
19A-4-100			35'-0"		7 5/16"		15'-0'		7 5/16"					6'-15' 15'-0"				
23-4-100			17'-0"		9"		None							None	35'-0"			
24-4-100			30'-0"		8"		10'-0"	9⅜"	8"					6'-15' 12'-0"				
24A-4-100			35'-0"		7 5/16"		15'-0"		7 5/16"					6'-15' 15'-0"				
26-4-100			30'-0"	12½"	8"	0.3125"	10'-0"	9¾"	8⅜"					6'-15' 12'-0"	40'-0", 45'-0"			
26A-4-100			35'-0"		7 5/16"		15'-0"		7 11/16"					6'-15' 15'-0"				
27-4-100			17'-0"		9¾"		None							None				

☐ Indicates arm length to be used unless otherwise noted on plans.

STATE OF CALIFORNIA
DEPARTMENT OF TRANSPORTATION

ELECTRICAL SYSTEMS (SIGNAL AND LIGHTING STANDARD CASE 4 ARM LOADING WIND VELOCITY=100 MPH ARM LENGTHS 25' TO 45')

NO SCALE

RSP ES-7F DATED OCTOBER 5, 2007 SUPERCEDES RSP ES-7F DATED NOVEMBER 17, 2006 AND STANDARD PLAN ES-7F DATED MAY 1, 2006 - PAGE 442 OF THE STANDARD PLANS BOOK DATED MAY 2006.

REVISED STANDARD PLAN RSP ES-7F

2006 REVISED STANDARD PLAN RSP ES-7F

7-10-07

DIST	COUNTY	ROUTE	POST MILES TOTAL PROJECT	SHEET NO.	TOTAL SHEETS
04	Ala	580	R8.4/R14.6	715	853

REGISTERED ELECTRICAL ENGINEER

January 20, 2012
PLANS APPROVAL DATE

REGISTERED PROFESSIONAL ENGINEER Jeffery G. McRae No. E14512 Exp. 6-30-12 ELECTRICAL STATE OF CALIFORNIA

The State of California or its officers or agents shall not be responsible for the accuracy or completeness of electronic copies of this plan sheet.

To accompany plans dated 5-14-12

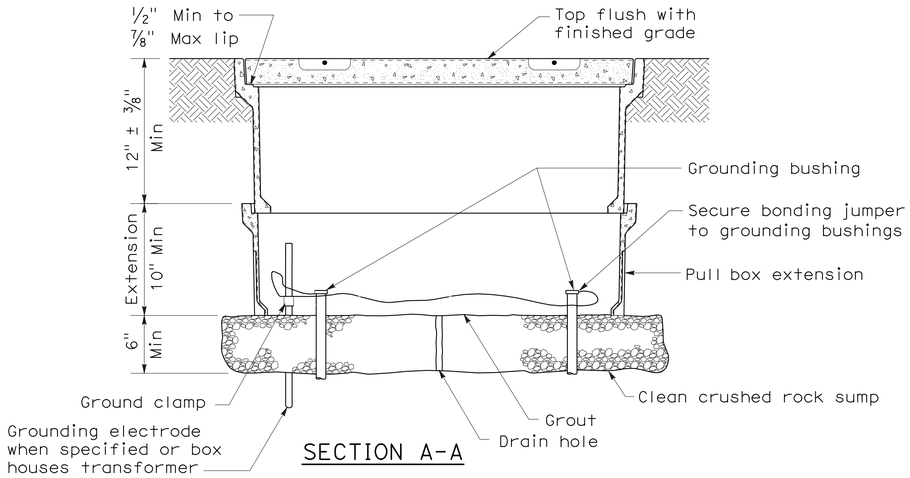

SECTION A-A

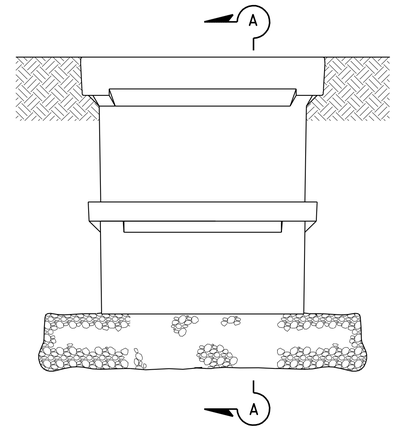

SIDE VIEW

INSTALLATION DETAILS

DETAIL A

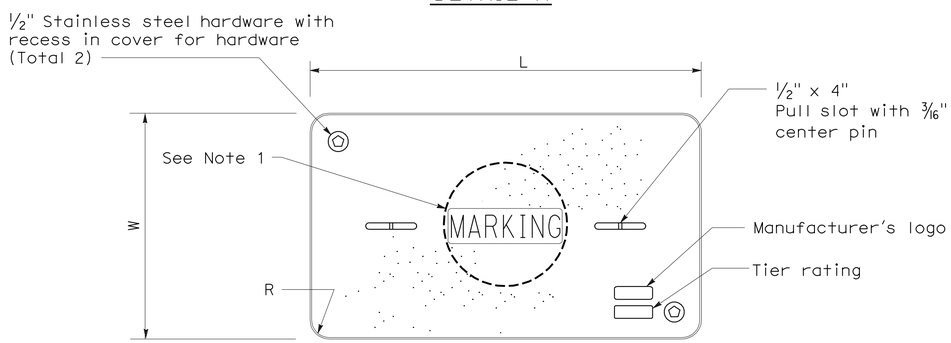

COVER TOP VIEW

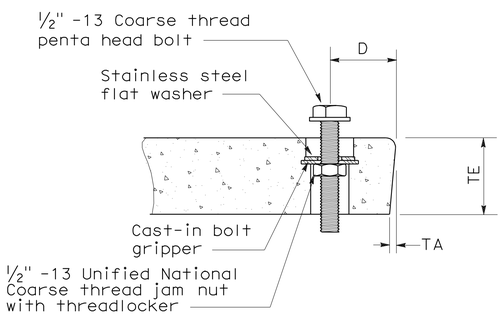

TYPICAL COVER CAPTIVE BOLT

(Or similar)

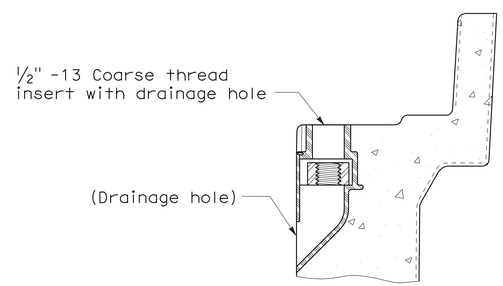

TYPICAL THREADED INSERT

(Or similar)

DIMENSION TABLE										
PULL BOX	PULL BOX			COVER						
	Minimum Depth Box	Minimum Depth Extension	Maximum Weight	L	W	R	TE	TA	D	Maximum Weight
No. 3 1/2	12"	N/A	40 lb	1' - 3 3/8"	10 1/8"	1 3/8"	2"	1/8"	1 3/4"	30 lb
No. 5	12"	10"	55 lb	1' - 11 1/4"	1' - 1 3/4"	1 3/8"	2"	1/8"	1 3/4"	60 lb
No. 6	12"	10"	70 lb	2' - 6 1/2"	1' - 5 1/2"	1 3/8"	2"	1/8"	2"	85 lb

NOTES ON PULL BOXES:

1. Pull box covers must be marked as follows: "SERVICE" Service circuits between service point and service disconnect; "SPRINKLER-CONTROL" sprinkler control circuits, 50 V or less; "CALTRANS" on all pull boxes, except pull boxes marked "SPRINKLER-CONTROL"; and "TELEPHONE" Telephone service;

   A) No. 3 1/2 pull box.
      1) "SIGNAL" - Traffic signal circuits with or without street or sign lighting circuits.
      2) "ST LIGHTING" - Street or sign lighting circuits where voltage is under 600 V.

   B) No. 5, 6, 9 or 9A pull box.
      1) "TRAFFIC SIGNAL" - Traffic signal circuits with or without street or sign lighting circuits.
      2) "STREET LIGHTING" - Street or sign lighting circuits where voltage is under 600 V.
      3) "STREET LIGHTING-HIGH VOLTAGE" - Street or sign lighting circuits where voltage is above 600 V.
      4) "IRRIGATION" - Circuits to irrigation controller 120 V or more.
      5) "RAMP METER" - Ramp meter circuits.
      6) "COUNT STATION" - Count or speed monitor circuits.
      7) "COMMUNICATIONS" - Communication circuits.
      8) "TOS COMMUNICATIONS" - TOS communication line.
      9) "TOS POWER" -TOS power.
      10) "TDC POWER" - Telephone demarcation cabinet power.
      11) "CCTV" - Closed circuit television circuits.
      12) "TMS" - Traffic monitoring station circuits.
      13) "CMS" - Changeable message sign circuits.
      14) "HAR" - Highway advisory radio circuits.

2. The nominal dimensions of the opening in which the cover sets must be the same as the cover dimensions (L and W) plus 1/8" or greater.

3. Covers and boxes must be interchangeable with California Standard. When interchanged with a standard, the top surfaces must be flush within 1/8". Top outside radius of covers and pull boxes must have a 1/8" radius.

4. Pull box extension may be another pull box as long as the bottom edge of the pull box can fit into the cover opening.

STATE OF CALIFORNIA
DEPARTMENT OF TRANSPORTATION

ELECTRICAL SYSTEMS (PULL BOX)

NO SCALE

NSP ES-8A DATED JANUARY 20, 2012 SUPPLEMENTS THE STANDARD PLANS BOOK DATED MAY 2006.

NEW STANDARD PLAN NSP ES-8A

2006 NEW STANDARD PLAN NSP ES-8A

9-28-11

DIST	COUNTY	ROUTE	POST MILES TOTAL PROJECT	SHEET NO.	TOTAL SHEETS
04	Ala	580	R8.4/R14.6	716	853

REGISTERED ELECTRICAL ENGINEER

January 20, 2012
PLANS APPROVAL DATE

REGISTERED PROFESSIONAL ENGINEER Jeffery G. McRae No. E14512 Exp. 6-30-12 ELECTRICAL STATE OF CALIFORNIA

The State of California or its officers or agents shall not be responsible for the accuracy or completeness of electronic copies of this plan sheet.

To accompany plans dated 5-14-12

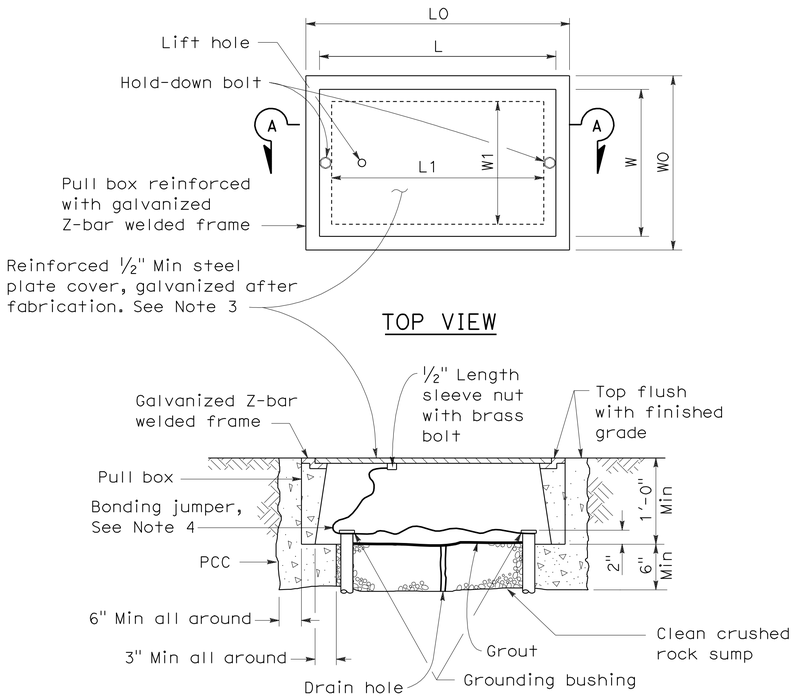

SECTION A-A

No. 3½(T), No. 5(T) AND No. 6(T) TRAFFIC PULL BOX

NOTES ON PULL BOXES:

1. Traffic pull box shall be provided with steel cover and special concrete footing. Steel cover shall have embossed non-skid pattern.
2. Steel reinforcing shall be as regularly used in the standard products of the respective manufacturer.
3. Pull box covers must be marked as follows: "SERVICE" Service circuits between service point and service disconnect; "SPRINKLER-CONTROL" Sprinkler control circuits, 50 V or less; "CALTRANS" On all pull boxes, except pull boxes marked "SPRINKLER-CONTROL"; and "TELEPHONE" Telephone service.
   - A) No. 3½(T) pull box.
     - 1) "SIGNAL" - Traffic signal circuits with or without street or sign lighting circuits.
     - 2) "ST LIGHTING" - Street or sign lighting circuits where voltage is under 600 V.
   - B) No. 5(T) or 6(T) pull box.
     - 1) "TRAFFIC SIGNAL" - Traffic signal circuits with or without street or sign lighting circuits.
     - 2) "STREET LIGHTING" - Street or sign lighting circuits where voltage is under 600 V.
     - 3) "STREET LIGHTING-HIGH VOLTAGE" - Street or sign lighting circuits where voltage is above 600 V.
     - 4) "IRRIGATION" - Circuits to irrigation controller 120 V or more.
     - 5) "RAMP METER" - Ramp meter circuits.
     - 6) "COUNT STATION" - Count or speed monitor circuits.
     - 7) "COMMUNICATION" - Communication circuits.
     - 8) "TOS COMMUNICATIONS" - TOS communications line.
     - 9) "TOS POWER" - TOS power.
     - 10) "TDC POWER" - Telephone demarcation cabinet power.
     - 11) "CCTV" - Closed circuit television circuits.
     - 12) "TMS" - Traffic monitoring station circuits.
     - 13) "CMS" - Changeable message sign circuits.
     - 14) "HAR" - Highway advisory radio circuits.
4. Bonding jumper for metal covers shall be 3' long, minimum.
5. The nominal dimensions of the opening in which the cover sets must be the same as the cover dimensions except the length and width dimensions shall be ⅛" greater.
6. Covers and boxes must be interchangeable with California standard male and female gages. When interchanged with a standard male or female gage, the top surfaces must be flush within ⅛".

DIMENSION TABLE

PULL BOX	BOX						COVER				
	Minimum * Thickness	Minimum Depth Box and Extension	WO	LO	L1	W1	L **	W **	R	Edge Thickness	Edge Taper
No. 3½(T)	1½"	1'-0"	1'-5"± 1"	1'-8⅞"±	1'-2½"±	10⅝"± 1"	1'-8"±	1'-1¾"±	0"	½"	None
No. 5(T)	1¾"	1'-0"	1'-11½"± 1"	2'-5½"±	1'-7"±	1'-1"± 1"	2'-3"±	1'-4"±	0"	½"	None
No. 6(T)	2"	1'-0"	2'-6"± 1"	2'-11½"±	1'-11½"±	1'-5"± 1"	2'-9"±	1'-8"±	0"	½"	None

* Excluding conduit web ** Top dimension

STATE OF CALIFORNIA
DEPARTMENT OF TRANSPORTATION

ELECTRICAL SYSTEMS (TRAFFIC RATED PULL BOX)

NO SCALE

NSP ES-8B DATED JANUARY 20, 2012 SUPPLEMENTS THE STANDARD PLANS BOOK DATED MAY 2006.

NEW STANDARD PLAN NSP ES-8B

2006 NEW STANDARD PLAN NSP ES-8B

9-28-11

DIST	COUNTY	ROUTE	POST MILES TOTAL PROJECT	SHEET NO.	TOTAL SHEETS
04	Ala	580	R8.4/R14.6	717	853

REGISTERED ELECTRICAL ENGINEER

October 5, 2007
PLANS APPROVAL DATE

REGISTERED PROFESSIONAL ENGINEER
Jeffery G. McRae
No. E14512
Exp. 6-30-08
ELECTRICAL
STATE OF CALIFORNIA

The State of California or its officers or agents shall not be responsible for the accuracy or completeness of electronic copies of this plan sheet.

To accompany plans dated 5-14-12

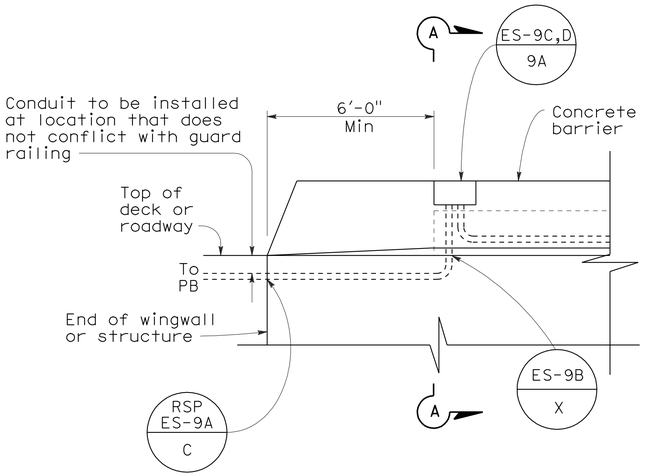

SIDEVIEW

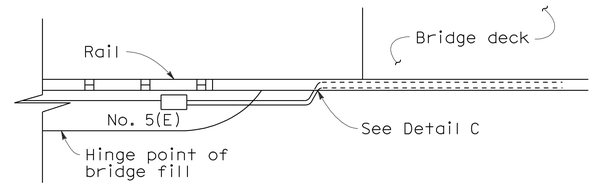

TOP VIEW

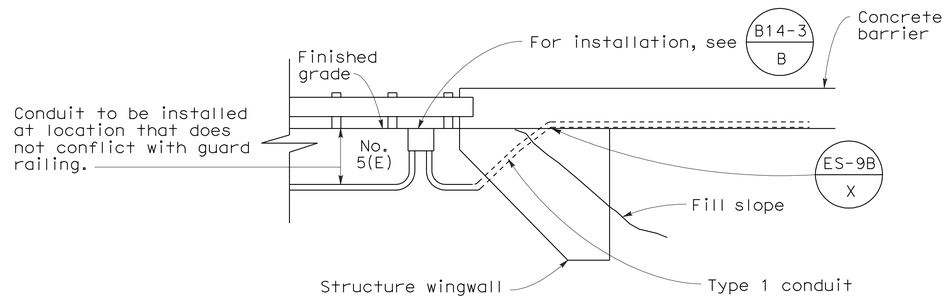

SIDE VIEW
DETAIL I
CONDUIT TERMINATION

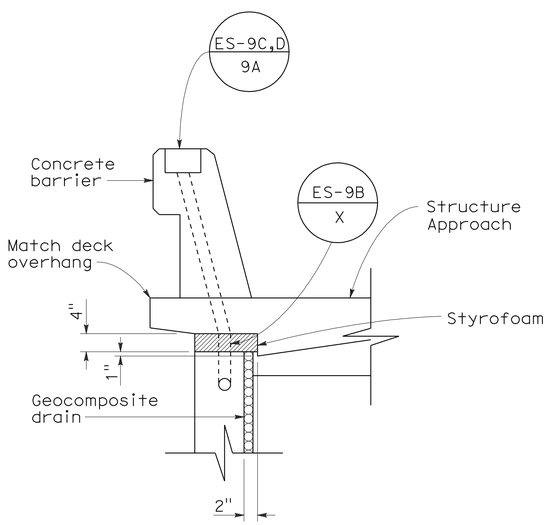

SECTION A-A

DETAIL A
CONDUIT TERMINATION

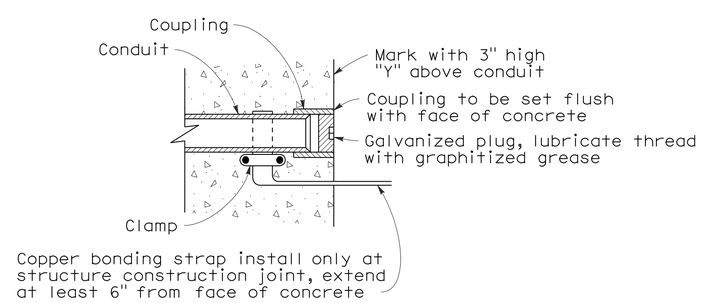

DETAIL C
CONDUIT TERMINATION

STATE OF CALIFORNIA
DEPARTMENT OF TRANSPORTATION

ELECTRICAL SYSTEMS (ELECTRICAL DETAILS STRUCTURE INSTALLATIONS)

NO SCALE

RSP ES-9A DATED OCTOBER 5, 2007 SUPERCEDES STANDARD PLAN ES-9A DATED MAY 1, 2006 - PAGE 454 OF THE STANDARD PLANS BOOK DATED MAY 2006.

REVISED STANDARD PLAN RSP ES-9A

2006 REVISED STANDARD PLAN RSP ES-9A

7-11-07

DIST	COUNTY	ROUTE	POST MILES TOTAL PROJECT	SHEET NO.	TOTAL SHEETS
04	Ala	580	R8.4/R14.6	718	853

REGISTERED ELECTRICAL ENGINEER

October 5, 2007
PLANS APPROVAL DATE

The State of California or its officers or agents shall not be responsible for the accuracy or completeness of electronic copies of this plan sheet.

REGISTERED PROFESSIONAL ENGINEER Jeffery G. McRae No. E14512 Exp. 6-30-08 ELECTRICAL STATE OF CALIFORNIA

To accompany plans dated 5-14-12

2006 REVISED STANDARD PLAN RSP ES-9C

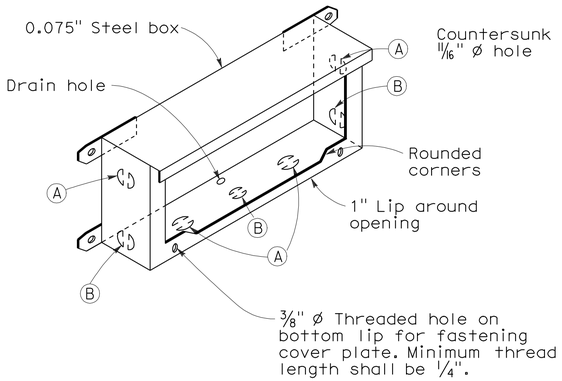

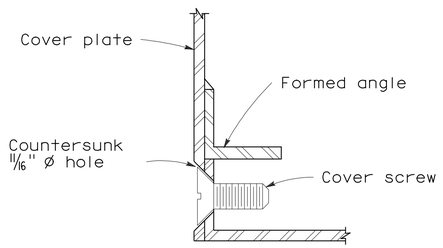

DETAIL J

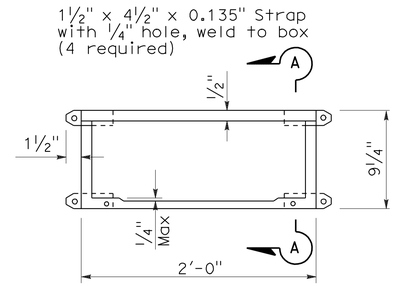

PLAN

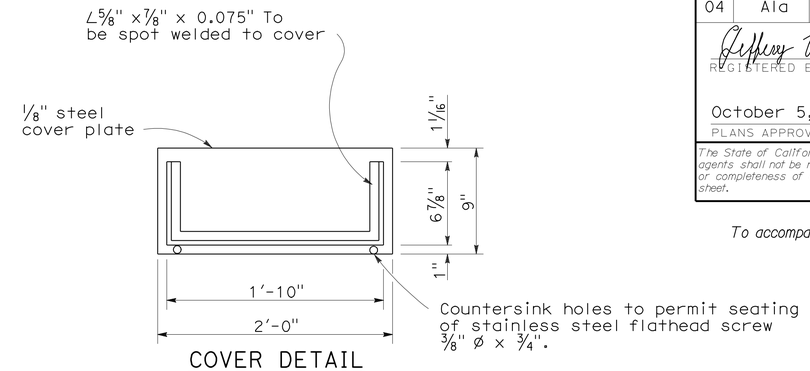

COVER DETAIL

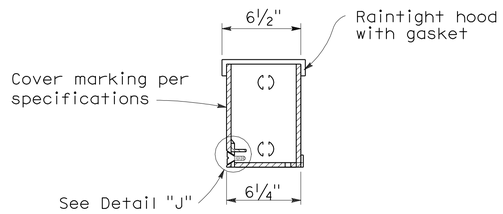

SECTION A-A

INSTALLATION NOTE:

Box shall be parallel to top of railing. Close cover box during pouring with 1/4" plywood of sufficient size to provide 1:1 chamfer on 3 sides of cover. Upper edge of plywood shall fit against lower edge of raintight hood.

No. 9 STRUCTURE PULL BOX

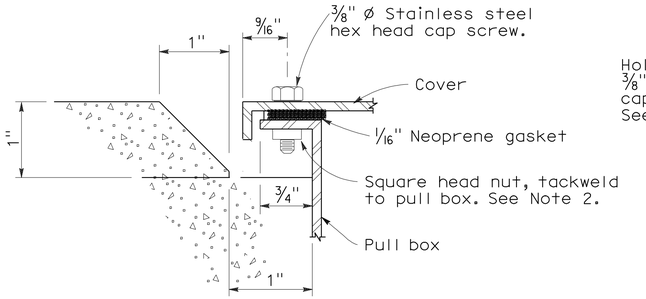

SECTION C-C

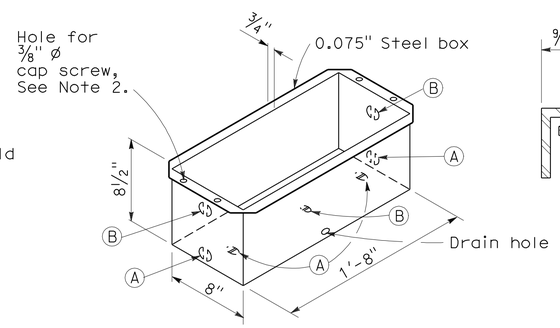

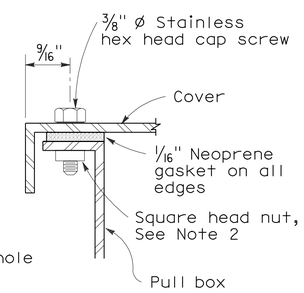

DETAIL A

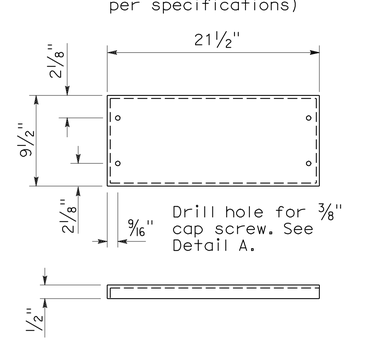

COVER DETAIL

NOTES: No. 9 and 9A Pull Box

1. Corner joints shall be lapped and secured by spot welding or riveting.
2. Where cap screws are used to attach cover to box, either of the following methods of providing adequate threading may be used:
   a. Tack weld square nut to bottom of flange (Total 4), or
   b. Tack weld a 1/4" x 5/8" x 8" bar beneath flange (Total 2).
3. Pound knockouts flat after punching.
4. Multiple size knockouts shall not be permitted.
5. Pull box covers shall be marked as shown on Standard Plan ES-8.

No. 9A STRUCTURE PULL BOX

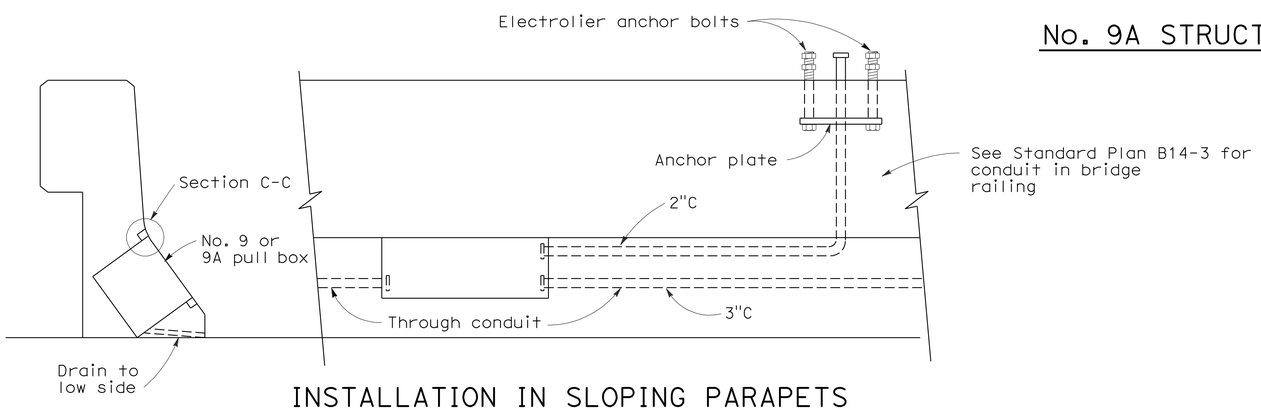

INSTALLATION IN SLOPING PARAPETS

For reinforcement in area of electrolier, see railing sheets. For electrolier anchor bolts, see Standard Plan ES-6B.

KNOCKOUT SCHEDULE
No. 9 AND 9A PULL BOX

(A) 2"C, 1 each end, 2 on bottom.

(B) 3"C, 1 each end, 1 on bottom.

STATE OF CALIFORNIA
DEPARTMENT OF TRANSPORTATION

ELECTRICAL SYSTEMS (ELECTRICAL DETAILS STRUCTURE INSTALLATIONS)

NO SCALE

RSP ES-9C DATED OCTOBER 5, 2007 SUPERCEDES STANDARD PLAN ES-9C DATED MAY 1, 2006 - PAGE 456 OF THE STANDARD PLANS BOOK DATED MAY 2006.

REVISED STANDARD PLAN RSP ES-9C

7-26-07

DIST	COUNTY	ROUTE	POST MILES TOTAL PROJECT	SHEET NO.	TOTAL SHEETS
04	Ala	580	R8.4/R14.6	719	853

REGISTERED ELECTRICAL ENGINEER

October 5, 2007
PLANS APPROVAL DATE

REGISTERED PROFESSIONAL ENGINEER
Jeffery G. McRae
No. E14512
Exp. 6-30-08
ELECTRICAL
STATE OF CALIFORNIA

The State of California or its officers or agents shall not be responsible for the accuracy or completeness of electronic copies of this plan sheet.

To accompany plans dated 5-14-12

2006 REVISED STANDARD PLAN RSP ES-14A

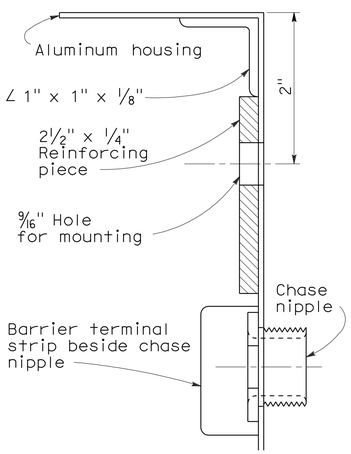

REINFORCING DETAIL

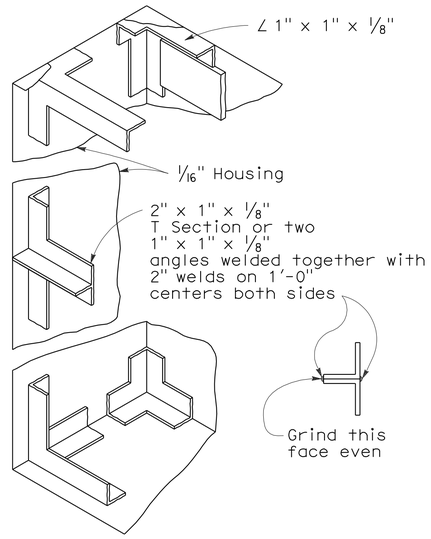

FRAMING DETAILS

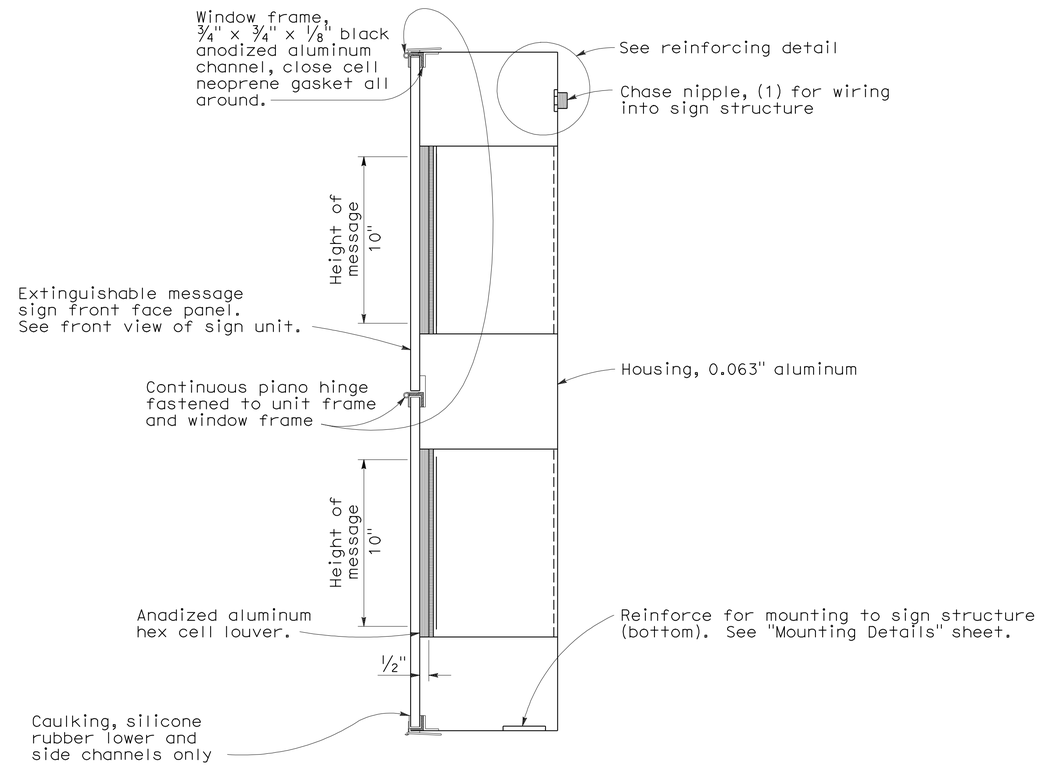

CROSS-SECTION OF SIGN

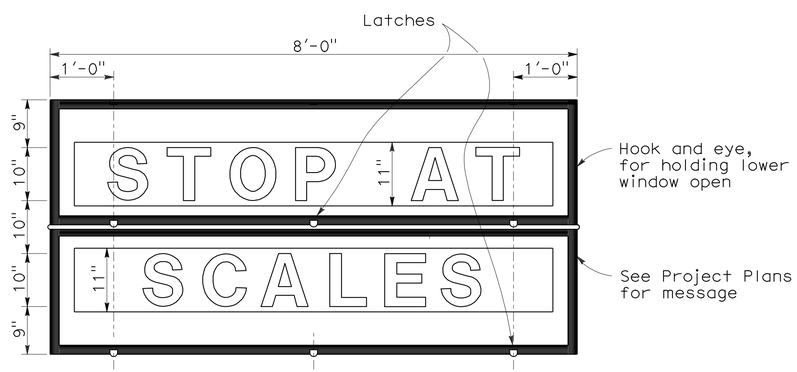

FRONT VIEW OF SIGN

Note:

See Wiring Notes and Symbols on Revised Standard Plan RSP ES-14B.

STATE OF CALIFORNIA
DEPARTMENT OF TRANSPORTATION

ELECTRICAL SYSTEMS (LED EXTINGUISHABLE MESSAGE SIGN 10" LETTERS)

NO SCALE

RSP ES-14A DATED OCTOBER 5, 2007 SUPERCEDES STANDARD PLAN ES-14A DATED MAY 1, 2006 - PAGE 466 OF THE STANDARD PLANS BOOK DATED MAY 2006.

REVISED STANDARD PLAN RSP ES-14A

8-17-07

DIST	COUNTY	ROUTE	POST MILES TOTAL PROJECT	SHEET NO.	TOTAL SHEETS
04	Ala	580	R8.4/R14.6	720	853

REGISTERED ELECTRICAL ENGINEER

October 5, 2007
PLANS APPROVAL DATE

REGISTERED PROFESSIONAL ENGINEER
Jeffery G. McRae
No. E14512
Exp. 6-30-08
ELECTRICAL
STATE OF CALIFORNIA

The State of California or its officers or agents shall not be responsible for the accuracy or completeness of electronic copies of this plan sheet.

To accompany plans dated 5-14-12

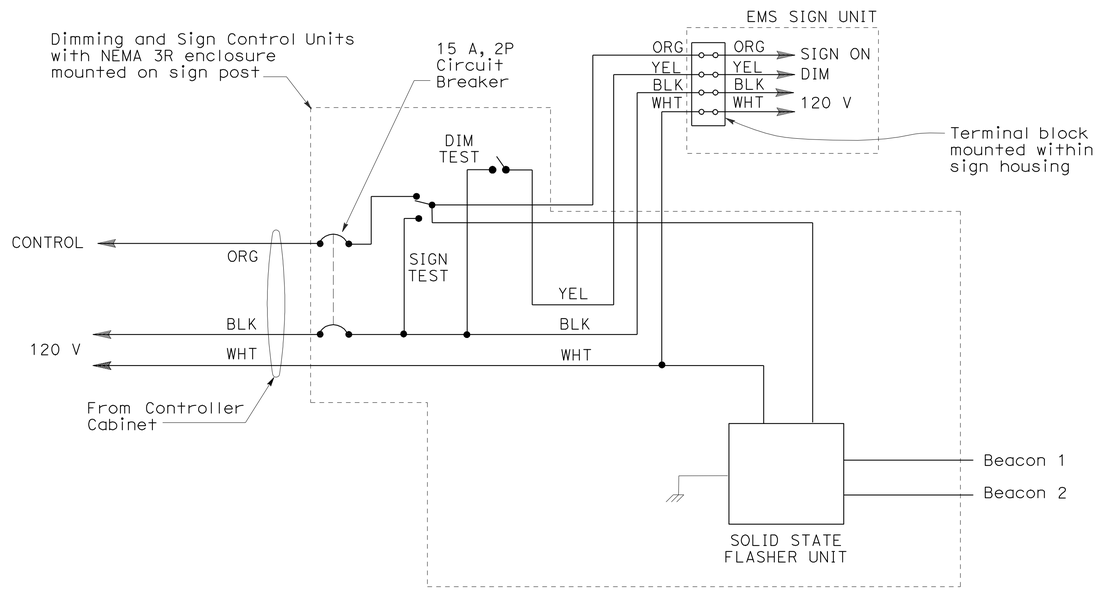

STATE OF CALIFORNIA
DEPARTMENT OF TRANSPORTATION

ELECTRICAL SYSTEMS (LED EXTINGUISHABLE MESSAGE SIGN WIRING DIAGRAM)

NO SCALE

RSP ES-14B DATED OCTOBER 5, 2007 SUPERCEDES STANDARD PLAN ES-14B DATED MAY 1, 2006 - PAGE 467 OF THE STANDARD PLANS BOOK DATED MAY 2006.

REVISED STANDARD PLAN RSP ES-14B

2006 REVISED STANDARD PLAN RSP ES-14B

7-10-07

DIST	COUNTY	ROUTE	POST MILES TOTAL PROJECT	SHEET NO.	TOTAL SHEETS
04	Ala	580	R8.4/R14.6	721	853

REGISTERED ELECTRICAL ENGINEER

October 5, 2007
PLANS APPROVAL DATE

REGISTERED PROFESSIONAL ENGINEER
Jeffery G. McRae
No. E14512
Exp. 6-30-08
ELECTRICAL
STATE OF CALIFORNIA

The State of California or its officers or agents shall not be responsible for the accuracy or completeness of electronic copies of this plan sheet.

To accompany plans dated 5-14-12

2006 REVISED STANDARD PLAN RSP ES-15D

NOTES: (FOR LIGHTING AND SIGN ILLUMINATION CONTROL)

1. The ballast voltages of lighting fixtures and luminaires shall match line service voltages.
2. Voltage rating of photoelectric controls shall conform to the service voltage indicated on the plans.
3. Terminal strip shall be provided for wiring to fixtures.
4. Type SC1A, SC2A, SC3A controls are similar to Types SC1, SC2 and SC3 controls respectively except test switch and wiring are not required.

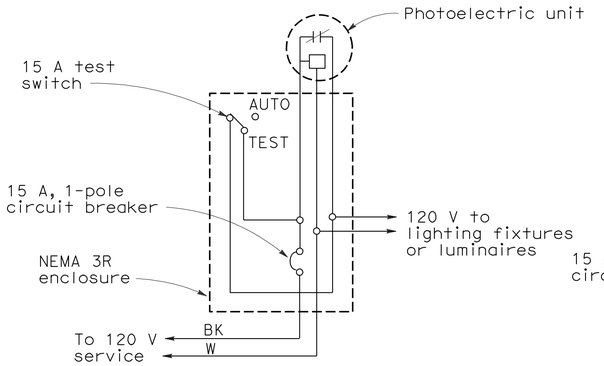

TYPE LC1 CONTROL

For 120 V unswitched circuit with no more than 800 W load.

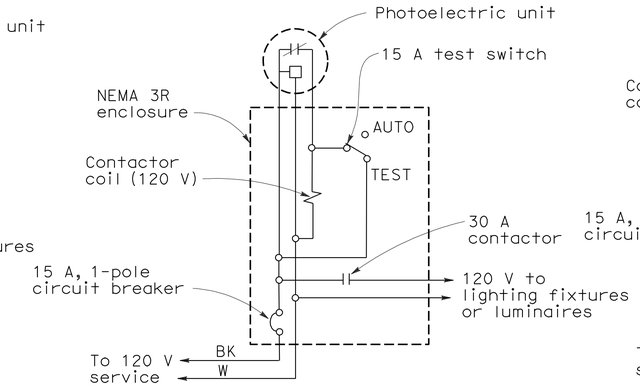

TYPE LC2 CONTROL

For 120 V unswitched circuit

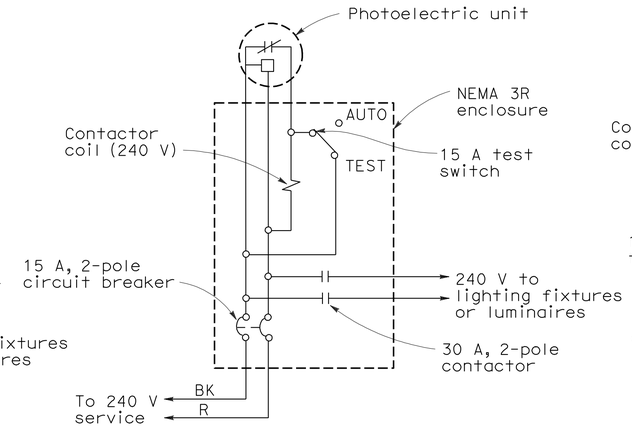

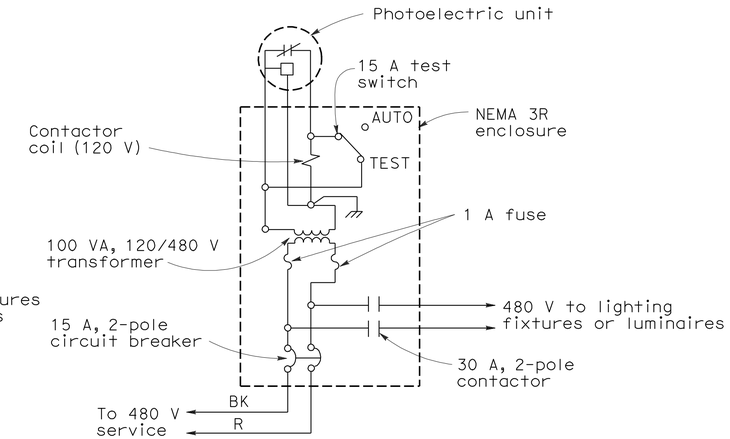

TYPE LC3 CONTROL

For 240 V and 480 V unswitched circuits

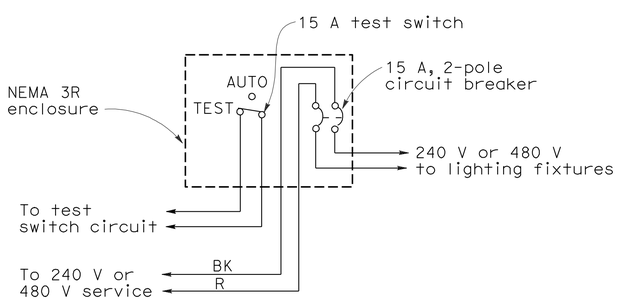

TYPE SC1 CONTROL

For 240 V or 480 V switched circuit, see Note 4 for Type SC1A

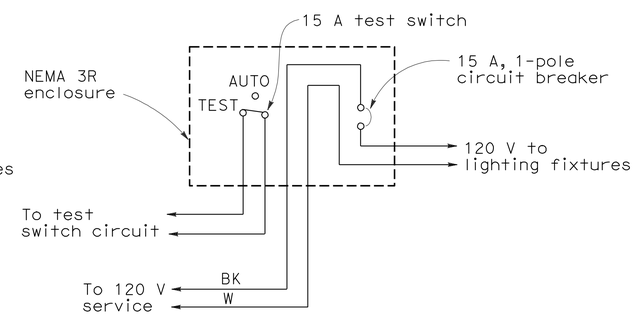

TYPE SC2 CONTROL

For 120 V switched circuit, see Note 4 for Type SC2A

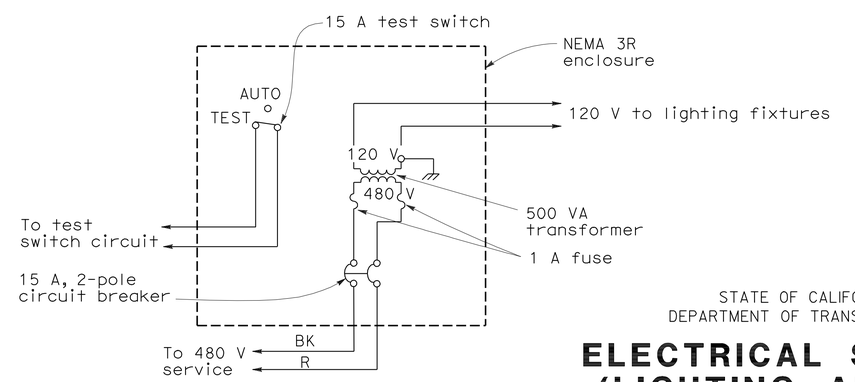

TYPE SC3 CONTROL

For 480 V switched sign circuit, see Note 4 for Type SC3A

STATE OF CALIFORNIA
DEPARTMENT OF TRANSPORTATION

ELECTRICAL SYSTEMS (LIGHTING AND SIGN ILLUMINATION CONTROL)

NO SCALE

RSP ES-15D DATED OCTOBER 5, 2007 SUPERCEDES STANDARD PLAN ES-15D DATED MAY 1, 2006 - PAGE 472 OF THE STANDARD PLANS BOOK DATED MAY 2006.

REVISED STANDARD PLAN RSP ES-15D

FOR ACCURATE RIGHT OF WAY AND ACCESS DATA, CONTACT
RIGHT OF WAY ENGINEERING AT THE DISTRICT OFFICE

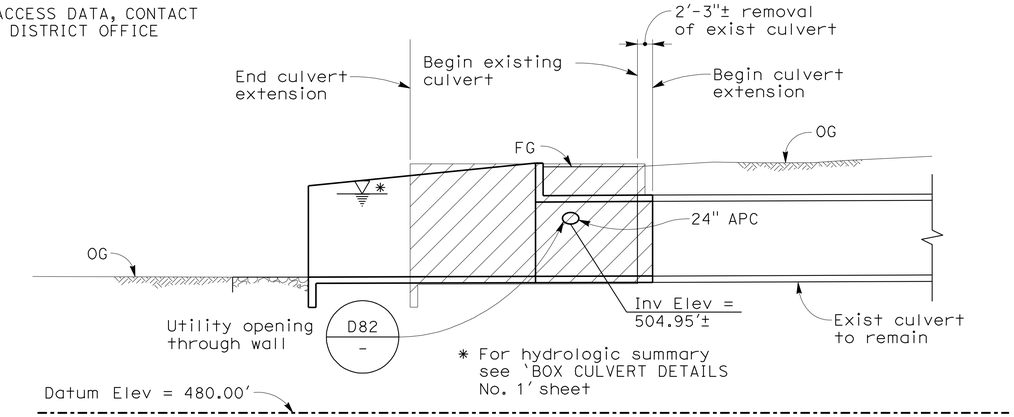

ELEVATION

1" = 10'

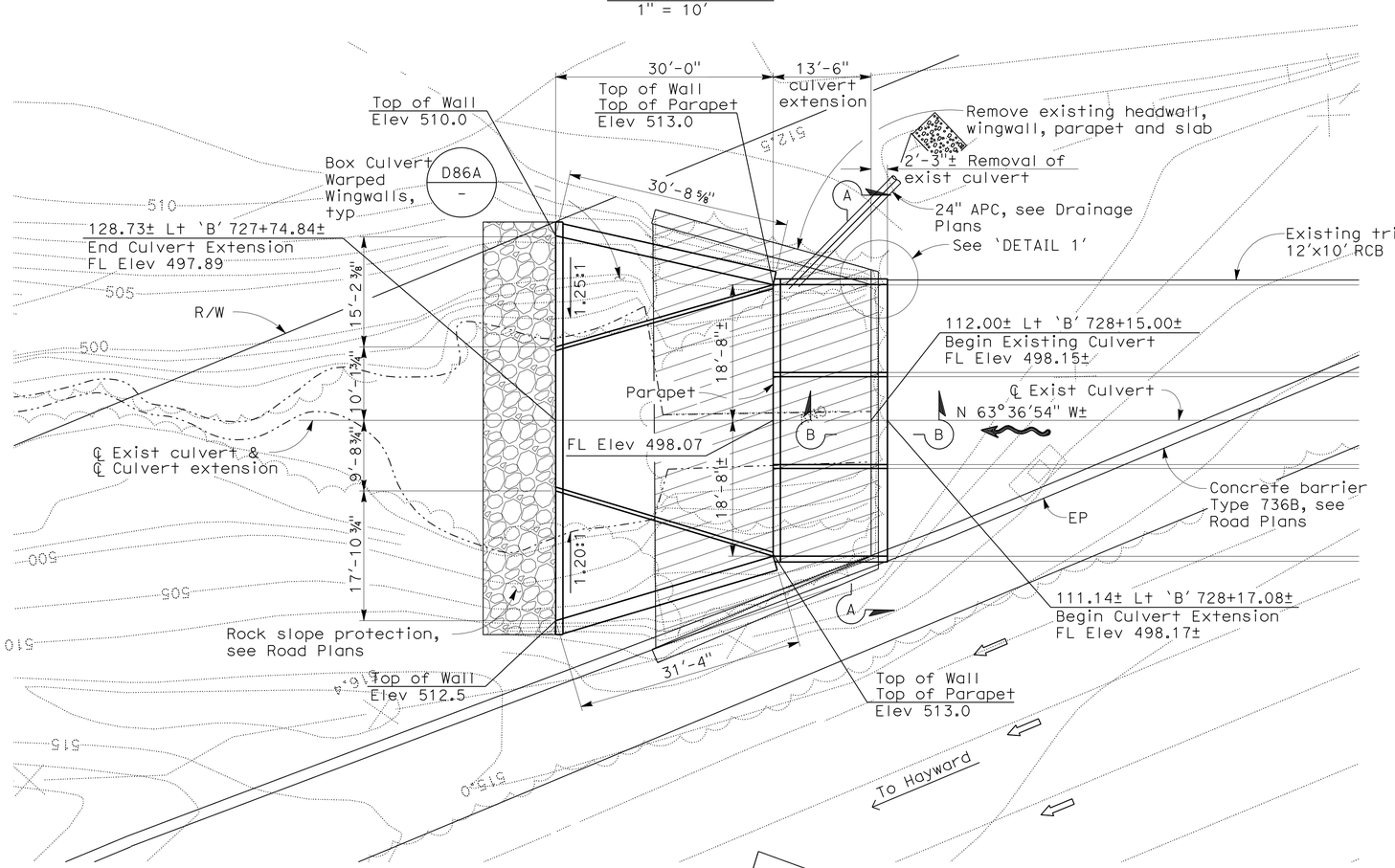

PLAN

1" = 10'

NOTE:
The Contractor shall verify all controlling field dimensions before ordering or fabricating any material

INDEX TO BRIDGE PLANS

SHEET NO.	TITLE
1	GENERAL PLAN
2	BOX CULVERT DETAILS No. 1
3	BOX CULVERT DETAILS No. 2

STANDARD PLANS DATED MAY 2006

A10A	ACRONYMS AND ABBREVIATIONS (SHEET 1 OF 2)
A10B	ACRONYMS AND ABBREVIATIONS (SHEET 2 OF 2)
BO-5	BRIDGE DETAILS
D81	CAST-IN-PLACE REINFORCED CONCRETE DOUBLE BOX CULVERT
D82	CAST-IN-PLACE REINFORCED CONCRETE BOX CULVERT MISCELLANEOUS
D86A	BOX CULVERT WARPED WINGWALLS
D88	CONSTRUCTION LOADS ON CULVERTS

DIST	COUNTY	ROUTE	POST MILES TOTAL PROJECT	SHEET No	TOTAL SHEETS
04	Ala	580	R8.4/R14.6	722	853

REGISTERED CIVIL ENGINEER — DATE 1/5/12

5-14-12
PLANS APPROVAL DATE

REGISTERED PROFESSIONAL ENGINEER — INES S. LI — No. C51561 — Exp. 6/30/12 — CIVIL — STATE OF CALIFORNIA

The State of California or its officers or agents shall not be responsible for the accuracy or completeness of scanned copies of this plan sheet.

BIGGS CARDOSA ASSOCIATES INC.
865 THE ALAMEDA
SAN JOSE, CALIFORNIA 95126

ALAMEDA CTC
1333 BROADWAY, SUITE 220
OAKLAND, CALIFORNIA 94612

ARROYO SECO CREEK CULVERT EXTENSION — BR. NO. 33-0066

QUANTITIES

BRIDGE REMOVAL (PORTION), LOCATION D	LUMP	SUM
STRUCTURAL CONCRETE, BOX CULVERT	126	CY
BAR REINFORCING STEEL (BOX CULVERT)	26,820	LB

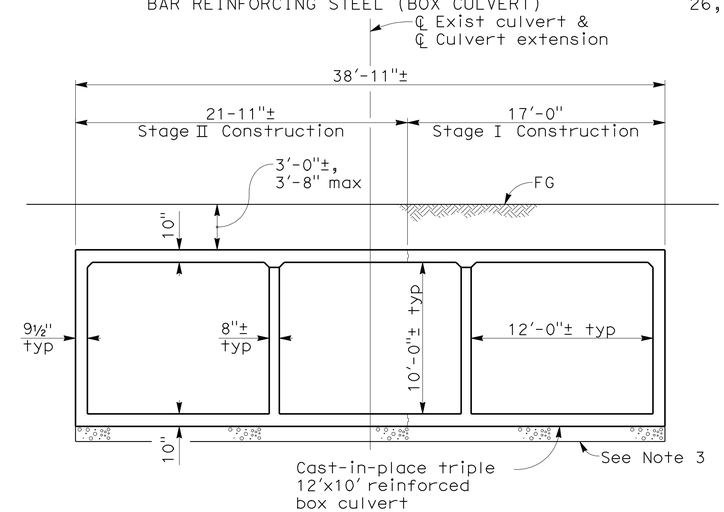

TYPICAL SECTION

1" = 5'

NOTES:

1. For General Notes and 'SECTION A-A', see 'BOX CULVERT DETAILS No. 1' sheet
2. For 'DETAIL 1' and 'SECTION B-B', see 'BOX CULVERT DETAILS No. 2' sheet
3. Prior to construction of box culvert, Contractor shall remove one foot of material below bottom of invert slab and replace with one foot of Class 2 aggregate base wrapped in subgrade enhancement geotexture

Legend:

- Indicates direction of traffic
- Indicates exist structure
- Indicates new construction
- Indicates concrete removal

DESIGN OVERSIGHT Yiwei Hu — 1/25/12 SIGN OFF DATE	DESIGN	BY Z. VUKMIROVIC	CHECKED D. CHAN	LOAD & RESISTANCE FACTOR DESIGN
	DETAILS	BY I. LI	CHECKED D. CHAN	LAYOUT: BY I. LI — D. DEVLIN
	QUANTITIES	BY R. RIVAS	CHECKED B. GHORBANI	SPECIFICATIONS: BY I. LI — PLANS AND SPECS COMPARED D. DEVLIN

PREPARED FOR THE STATE OF CALIFORNIA DEPARTMENT OF TRANSPORTATION

INES S. LI
PROJECT ENGINEER

BRIDGE NO. 33-0066
POST MILES 11.04

ARROYO SECO CREEK CULVERT EXTENSION
GENERAL PLAN

DESIGN GENERAL PLAN SHEET (ENGLISH) (REV. 7/16/10)

ORIGINAL SCALE IN INCHES FOR REDUCED PLANS 0 1 2 3

UNIT: 0735
PROJECT NUMBER & PHASE: 04000212481 CONTRACT NO.: 04-2908C4

DISREGARD PRINTS BEARING EARLIER REVISION DATES — REVISION DATES 12/24/09 03/25/10 11/8/11 1/5/12 — SHEET 1 OF 3

FILE => 33-0066-a-gp01.dgn

USERNAME => s124396 DATE PLOTTED => 23-MAY-2012 TIME PLOTTED => 06:58 2007236 (2007236-S1)

DIST	COUNTY	ROUTE	POST MILES TOTAL PROJECT	SHEET No	TOTAL SHEETS
04	Ala	580	R8.4/R14.6	723	853

REGISTERED CIVIL ENGINEER 1/5/12 DATE

5-14-12
PLANS APPROVAL DATE

REGISTERED PROFESSIONAL ENGINEER INES S. LI No. C51561 Exp.6/30/12 CIVIL STATE OF CALIFORNIA

The State of California or its officers or agents shall not be responsible for the accuracy or completeness of scanned copies of this plan sheet.

BIGGS CARDOSA ASSOCIATES INC.
865 THE ALAMEDA
SAN JOSE, CALIFORNIA 95126

ALAMEDA CTC
1333 BROADWAY, SUITE 220
OAKLAND, CALIFORNIA 94612

GENERAL NOTES
LOAD FACTOR DESIGN

DESIGN: Bridge Design Specifications LFD version April 2000 (1996 Sixteenth Edition AASHTO with interims and revisions by Caltrans)

LIVE LOADING: HS20-44 truck - Apply impact only to roof slab

LOAD FACTORS: 1.5D + 1.5E + 2.5 (L+I)
Where D = Dead Load
E = Earth Load
L = Live Load
I = Impact
Capacity reduction factor is included

CONCRETE: f'c = 3700 psi

REINFORCING STEEL: fy = 60,000 psi

Hydrologic Summary
Drainage area: 29.8 square miles

	Design Flood	Base Flood	Overtopping Flood	Flood of Record
Frequency (years)	50-yr	100-yr	N/A	-
Discharge (cfs)	1,700	2,250	N/A	-
Water surface elevation (ft)	507.8	509.9	N/A	-

Flood Plan Data are based upon information available when the plans were prepared and are shown to meet Federal requirements. The accuracy of said information is not warranted by the State and interested or affected parties should make their own investigation.

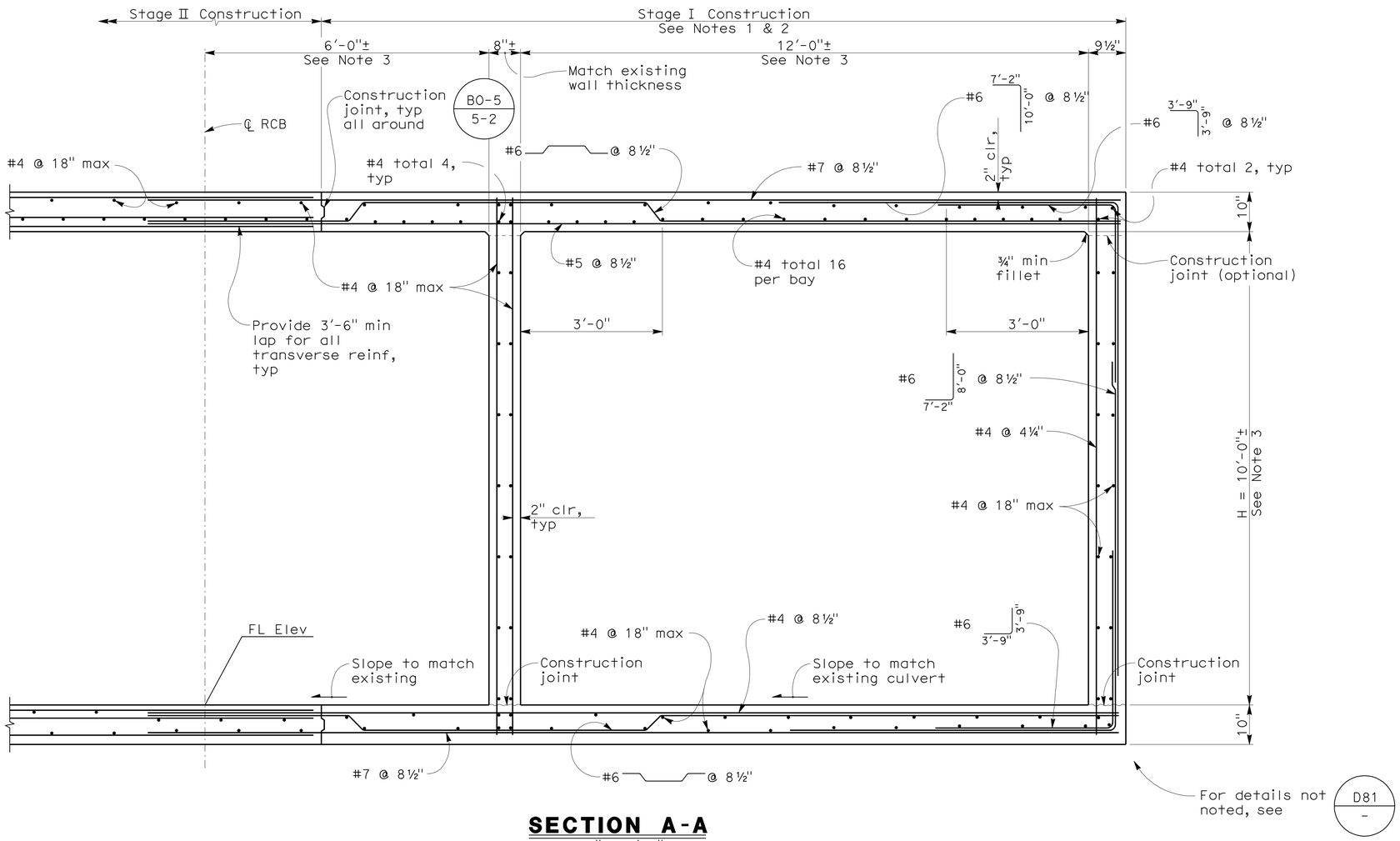

SECTION A-A
3/4" = 1'-0"

NOTES:
1. 17'-0" Stage IConstruction may be on the north side instead of the south side as shown
2. Stage construction limits shall extend along ℄ Culvert to end of apron slab
3. Match cell interior dimensions with existing culvert, typ

NOTE:
The Contractor shall verify all controlling field dimensions before ordering or fabricating any material

DESIGN OVERSIGHT Yiwei Hu
1/25/12
SIGN OFF DATE

	BY	CHECKED
DESIGN	Z. VUKMIROVIC	D. CHAN
DETAILS	I. LI	D. CHAN
QUANTITIES	R. RIVAS	B. GHORBANI

PREPARED FOR THE STATE OF CALIFORNIA DEPARTMENT OF TRANSPORTATION

INES LI
PROJECT ENGINEER

BRIDGE NO. 33-0066
POST MILES 11.04

ARROYO SECO CREEK CULVERT EXTENSION
BOX CULVERT DETAILS No. 1

DESIGN GENERAL PLAN SHEET (ENGLISH) (REV. 7/16/10)

ORIGINAL SCALE IN INCHES FOR REDUCED PLANS 0 1 2 3

UNIT: 0735
PROJECT NUMBER & PHASE: 04000212481 CONTRACT NO.: 04-2908C4

DISREGARD PRINTS BEARING EARLIER REVISION DATES 12/23/09 3/25/10 11/8/11 1/5/12

SHEET 2 OF 3

FILE => 33-0066-b-bcvd1.dgn

USERNAME => s124496 DATE PLOTTED => 23-MAY-2012 TIME PLOTTED => 06:58

2007236 (2007236F-S2)

DIST	COUNTY	ROUTE	POST MILES TOTAL PROJECT	SHEET No	TOTAL SHEETS
04	Ala	580	R8.4/R14.6	724	853

REGISTERED CIVIL ENGINEER 1/5/12 DATE

5-14-12
PLANS APPROVAL DATE

REGISTERED PROFESSIONAL ENGINEER INES S. LI No. C51561 Exp.6/30/12 CIVIL STATE OF CALIFORNIA

The State of California or its officers or agents shall not be responsible for the accuracy or completeness of scanned copies of this plan sheet.

BIGGS CARDOSA ASSOCIATES INC.
865 THE ALAMEDA
SAN JOSE, CALIFORNIA 95126

ALAMEDA CTC
1333 BROADWAY, SUITE 220
OAKLAND, CALIFORNIA 94612

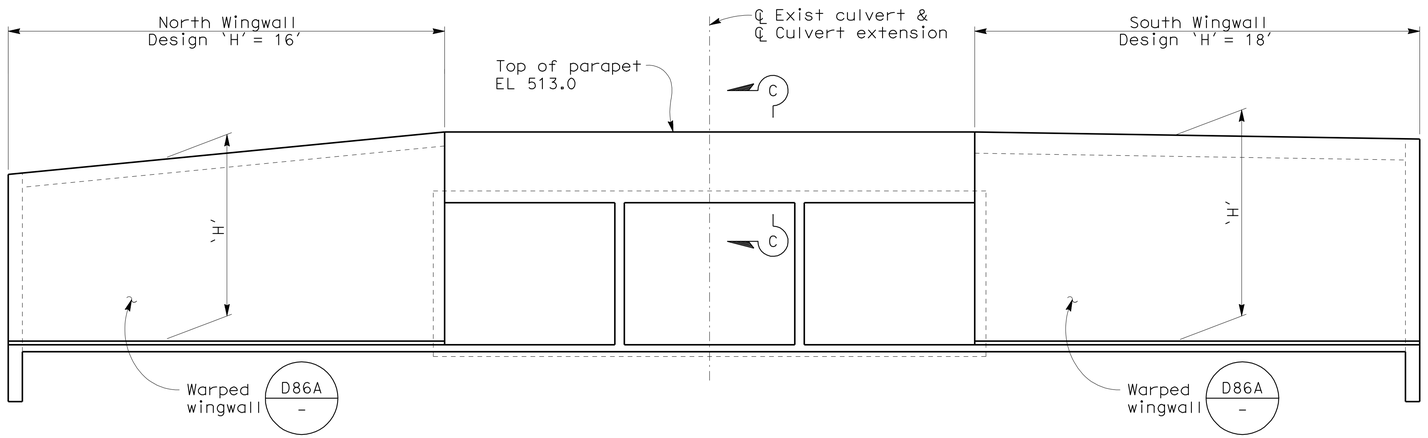

DEVELOPED ELEVATION
3/16" = 1'-0"

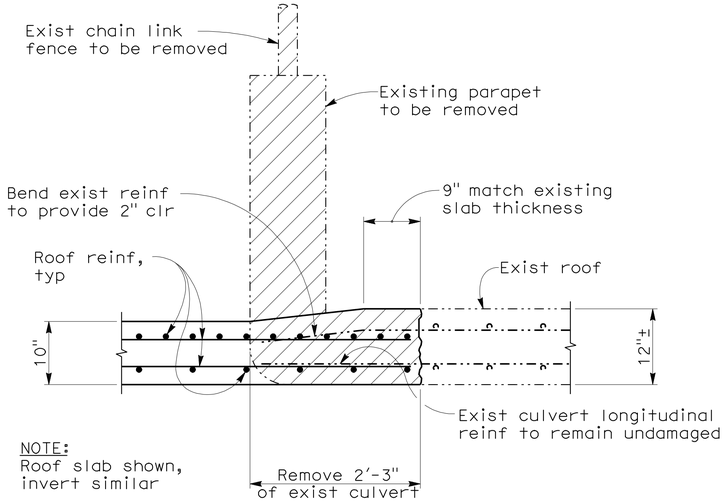

SECTION B-B
1" = 1'-0"

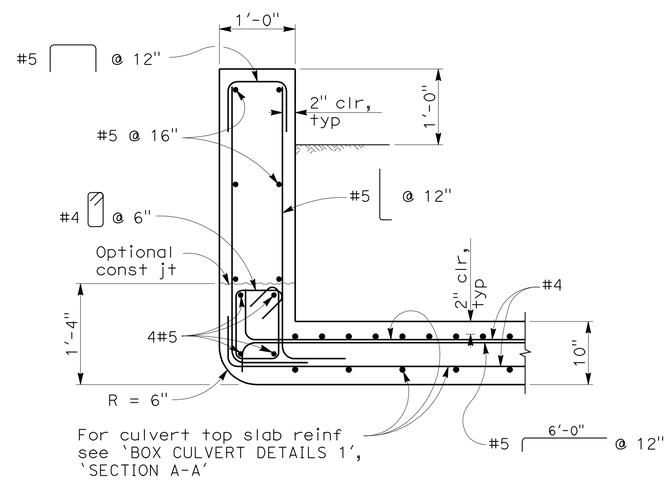

SECTION C-C
1" = 1'-0"

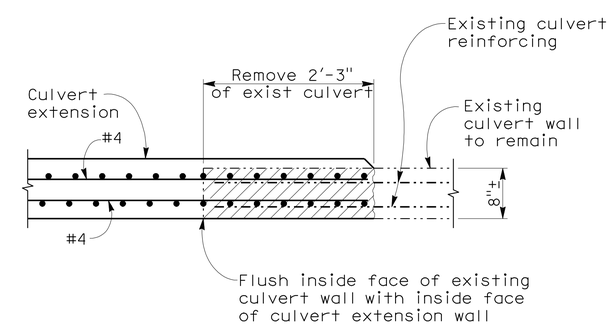

NOTE:
Outer wall shown, inner wall similar

DETAIL 1
1" = 1'-0"

NOTE:
The Contractor shall verify all controlling field dimensions before ordering or fabricating any material

DESIGN OVERSIGHT Yiwei Hu
1/25/12
SIGN OFF DATE

	BY	CHECKED
DESIGN	Z. VUKMIROVIC	D. CHAN
DETAILS	I. LI	D. CHAN
QUANTITIES	R. RIVAS	B. GHORBANI

PREPARED FOR THE STATE OF CALIFORNIA DEPARTMENT OF TRANSPORTATION

INES LI
PROJECT ENGINEER

BRIDGE NO. 33-0066
POST MILES 11.04

ARROYO SECO CREEK CULVERT EXTENSION
BOX CULVERT DETAILS No. 2

DESIGN GENERAL PLAN SHEET (ENGLISH) (REV. 7/16/10)

ORIGINAL SCALE IN INCHES FOR REDUCED PLANS 0 1 2 3

UNIT: 0735
PROJECT NUMBER & PHASE: 04000212481 CONTRACT NO.: 04-2908C4

DISREGARD PRINTS BEARING EARLIER REVISION DATES → 12/23/09 3/25/10 11/8/11 1/5/12

SHEET 3 OF 3

FILE => 33-0066-b-bcvd2.dgn

USERNAME => s124496 DATE PLOTTED => 23-MAY-2012 TIME PLOTTED => 06:58 2007236 (2007236F53)

FOR ACCURATE RIGHT OF WAY DATA, CONTACT
RIGHT OF WAY ENGINEERING AT THE DISTRICT OFFICE

DIST	COUNTY	ROUTE	POST MILES TOTAL PROJECT	SHEET No	TOTAL SHEETS
04	Ala	580	R8.4/R14.6	725	853

REGISTERED CIVIL ENGINEER 1/5/12 DATE

5-14-12
PLANS APPROVAL DATE

REGISTERED PROFESSIONAL ENGINEER INES S. LI No. C51561 Exp.6/30/12 CIVIL STATE OF CALIFORNIA

The State of California or its officers or agents shall not be responsible for the accuracy or completeness of scanned copies of this plan sheet.

BIGGS CARDOSA ASSOCIATES INC.
865 THE ALAMEDA
SAN JOSE, CALIFORNIA 95126

ALAMEDA CTC
1333 BROADWAY, SUITE 220
OAKLAND, CALIFORNIA 94612

LEGEND:
- Indicates direction of traffic
- Indicates exist structure
- Indicates new construction
- Indicates bridge removal (Portion)

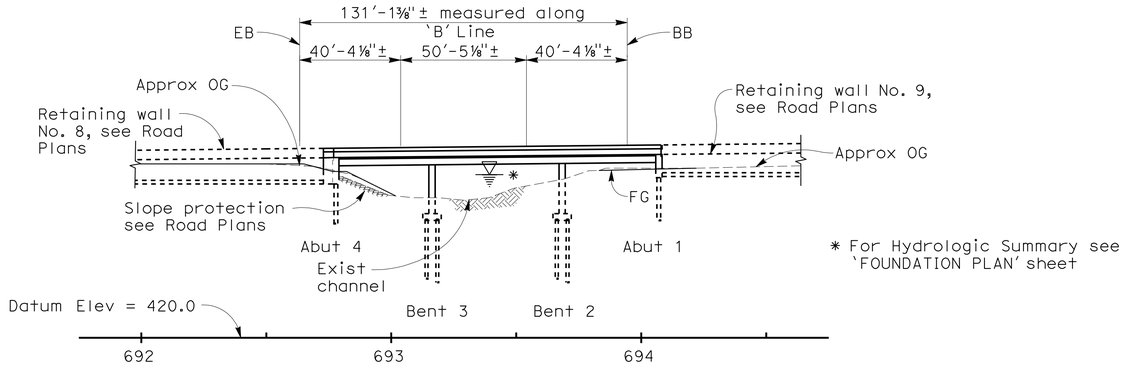

MIRRORED ELEVATION
1" = 30'

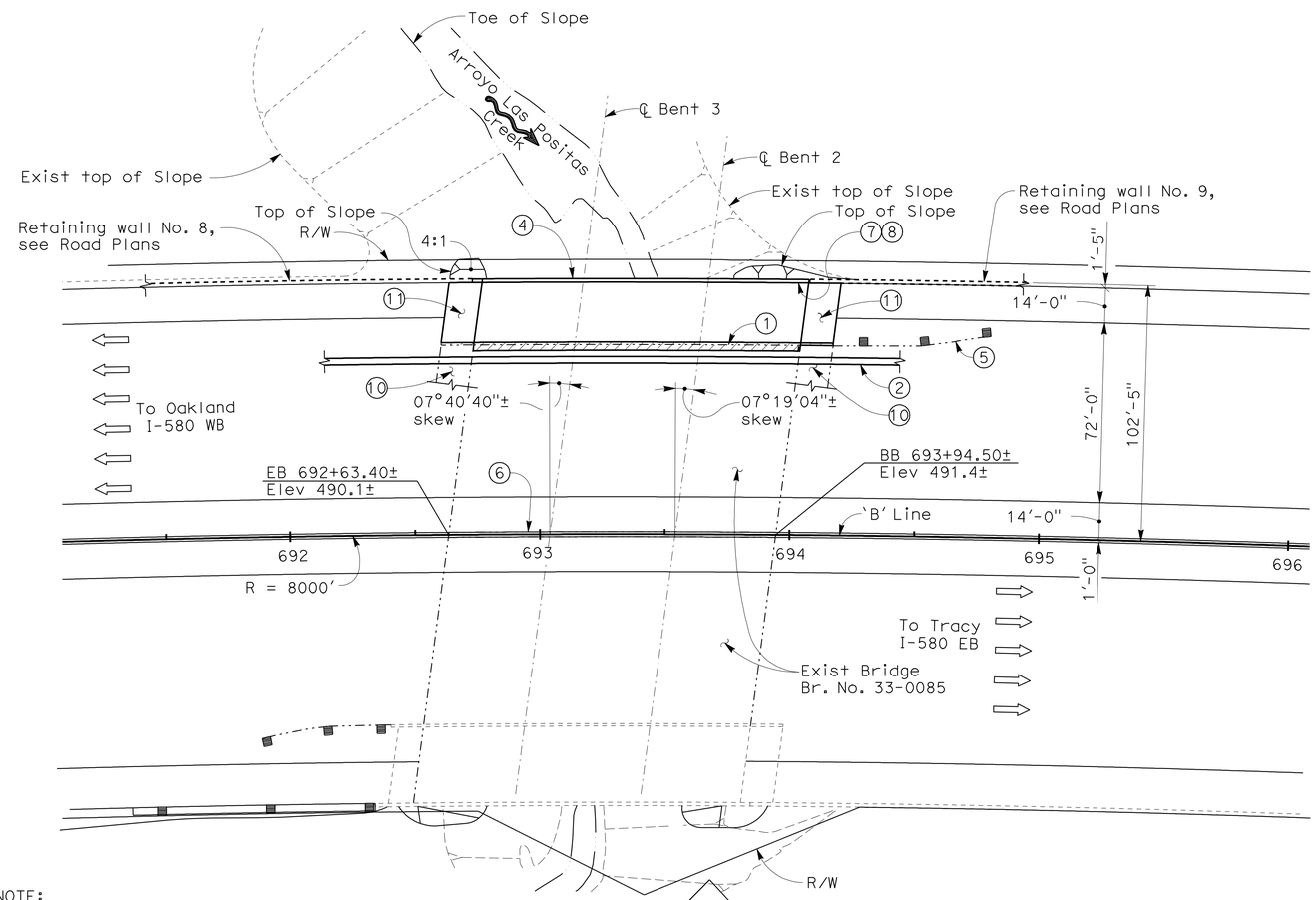

PLAN
1" = 30'

NOTE:
The Contractor shall verify all controlling field dimensions before ordering or fabricating any material

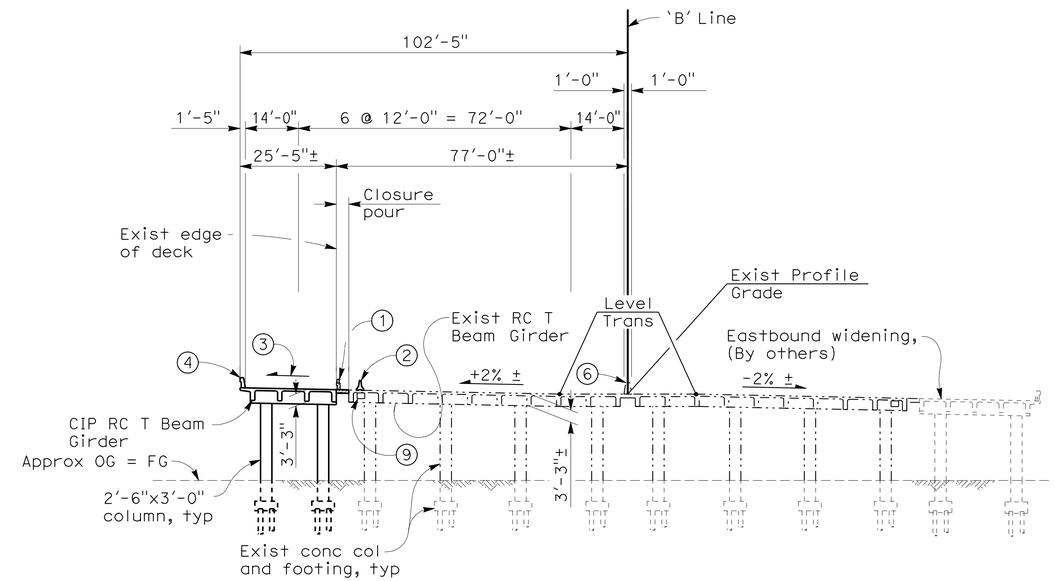

TYPICAL SECTION
1" = 20'

NOTES:
1. Remove existing overhang, concrete barrier, metal bridge railing and portion of wingwalls
2. Temporary Railing (Type K)
3. Match existing cross slope
4. Concrete Barrier Type 732
5. Existing metal beam guard railing to be removed, see Road Plans
6. Existing Concrete Barrier (Type 60A Mod)
7. Paint 'Bridge No. 33-0085'
8. Paint 'Arroyo Las Positas'
9. Existing future utility opening
10. Existing structure approach slab
11. Structure approach slab (Type N Modified)
12. For Index to Bridge Plans & General Notes, see 'INDEX TO PLANS' sheet
13. For Pile Data Table, see 'FOUNDATION PLAN' sheet
14. For Quantities, see 'INDEX TO PLAN' sheet

DESIGN OVERSIGHT Yiwei Hu
1/25/12
SIGN OFF DATE

	BY	CHECKED
DESIGN	R. RIVAS	A. REJAIE
DETAILS	Z. VUKMIROVIC	S. MOYLES
QUANTITIES	R. RIVAS	M. FRECHETTE

LOAD & RESISTANCE FACTOR DESIGN — LIVE LOADING: HL93 W/"LOW-BOY"; PERMIT DESIGN VEHICLE

	BY	CHECKED
LAYOUT	I. LI	S. MOYLES
SPECIFICATIONS	I. LI	PLANS AND SPECS COMPARED D. DEVLIN

PREPARED FOR THE STATE OF CALIFORNIA DEPARTMENT OF TRANSPORTATION

INES LI
PROJECT ENGINEER

BRIDGE NO. 33-0085
POST MILES 11.72

ARROYO LAS POSITAS BRIDGE (WIDEN)
GENERAL PLAN

DESIGN GENERAL PLAN SHEET (ENGLISH) (REV. 7/16/10)

ORIGINAL SCALE IN INCHES FOR REDUCED PLANS 0 1 2 3

UNIT: 0735
PROJECT NUMBER & PHASE: 04000212481 CONTRACT NO.: 04-2908C4

DISREGARD PRINTS BEARING EARLIER REVISION DATES 12/23/09 3/25/10 11/8/11 1/5/12

SHEET 1 OF 15

FILE => 33-0085I-a-gp01.dgn

USERNAME => s124496 DATE PLOTTED => 23-MAY-2012 TIME PLOTTED => 06:58
2007236.2 (2007236ES1-WB)

DIST	COUNTY	ROUTE	POST MILES TOTAL PROJECT	SHEET No	TOTAL SHEETS
04	Ala	580	R8.4/R14.6	726	853

REGISTERED CIVIL ENGINEER 1/5/12 DATE

5-14-12
PLANS APPROVAL DATE

REGISTERED PROFESSIONAL ENGINEER INES S. LI No. C51561 Exp.6/30/12 CIVIL STATE OF CALIFORNIA

The State of California or its officers or agents shall not be responsible for the accuracy or completeness of scanned copies of this plan sheet.

BIGGS CARDOSA ASSOCIATES INC.
865 THE ALAMEDA
SAN JOSE, CALIFORNIA 95126

ALAMEDA CTC
1333 BROADWAY, SUITE 220
OAKLAND, CALIFORNIA 94612

INDEX TO BRIDGE PLANS

SHEET NO.	TITLE
1	GENERAL PLAN
2	INDEX TO PLANS
3	FOUNDATION PLAN
4	ABUTMENT LAYOUT
5	ABUTMENT DETAILS
6	BENT LAYOUT
7	BENT DETAILS
8	TYPICAL SECTION
9	GIRDER LAYOUT
10	GIRDER REINFORCEMENT
11	STRUCTURE APPROACH (TYPE N MODIFIED)
12	LOG OF TEST BORINGS 1 OF 4
13	LOG OF TEST BORINGS 2 OF 4
14	LOG OF TEST BORINGS 3 OF 4
15	LOG OF TEST BORINGS 4 OF 4

STANDARD PLANS DATED MAY 2006

A10A	ACRONYMS AND ABBREVIATIONS (SHEET 1 OF 2)
A10B	ACRONYMS AND ABBREVIATIONS (SHEET 2 OF 2)
A10C	SYMBOLS (SHEET 1 OF 2)
A10D	SYMBOLS (SHEET 2 OF 2)
A62C	LIMITS OF PAYMENT FOR EXCAVATION AND BACKFILL BRIDGE
B0-1	BRIDGE DETAILS
B0-3	BRIDGE DETAILS
B0-5	BRIDGE DETAILS
B0-13	BRIDGE DETAILS
B3-1	RETAINING WALL TYPE 1 H=4′ THROUGH 30′
B6-1	T-BEAM DETAILS
B6-21	JOINT SEALS (MAXIMUM MOVEMENT RATING = 2")
B11-55	CONCRETE BARRIER TYPE 732
T3	TEMPORARY RAILING (TYPE K)

ABBREVIATIONS

Eq	Equal
OH	Opposite Hand
TOF	Top of footing

B6-1 — Indicates Standard Plan Sheet No.
D-1 — Indicates Detail No.

GENERAL NOTES
LOAD & RESISTANCE FACTOR DESIGN

DESIGN: AASHTO LRFD Bridge Design Specifications, 4th Edition with California Amendments; except that bridge barriers are designed using Bridge Design Specifications ('96 AASHTO w/ Revisions by Caltrans)

SEISMIC DESIGN: Caltrans Seismic Design Criteria (SDC) Version 1.4, dated June 2006

DEAD LOAD: Includes 35 psf for future wearing surface.

LIVE LOADING: HL93 w/ Low Boy and Permit Design Vehicle

SEISMIC LOADING: Caltrans SDC (v 1.4, June 2006), Figure B.8
Governing Fault: Greenville Fault
Fault Distance = 4.50 miles
(Mmax = 7.25, Soil Profile Type D, PBA = 0.5g)

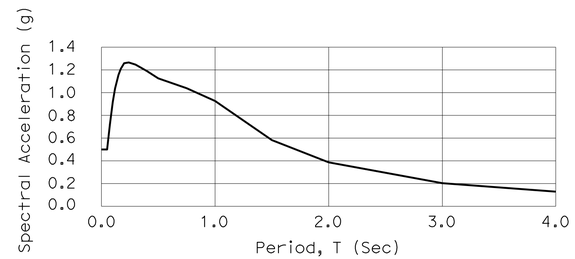

With the following modifications:

(1) No change of Sa for structural periods < 0.5 sec
(2) 20% increase of Sa for structural periods > 1 sec
(3) Linear interpolation for structural periods between 0.5 and 1 sec

REINFORCED CONCRETE: fy = 60 ksi
f'c = 3.6 ksi (except as shown on 'CONCRETE STRENGTH AND TYPE LIMITS' diagram)

STEEL HP PILES: ASTM A572 Grade 50

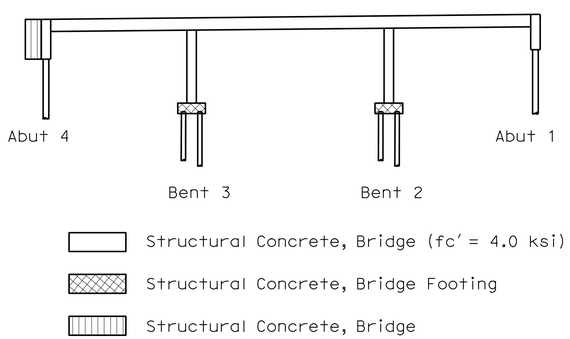

CONCRETE STRENGTH AND TYPE LIMITS
NO SCALE

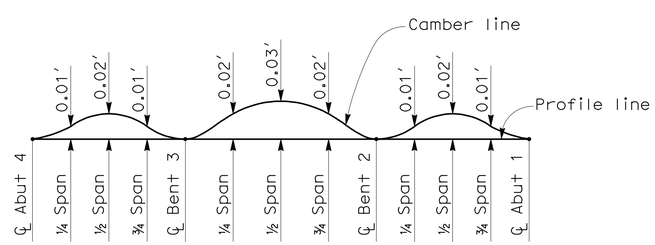

Note:
Camber does not include allowance for falsework settlement

CAMBER DIAGRAM
NO SCALE

ARROYO LAS POSITAS BRIDGE (WIDEN) BR. NO. 33-0085

QUANTITIES

BRIDGE REMOVAL (PORTION), LOCATION C	LUMP	SUM
STRUCTURE EXCAVATION (BRIDGE)	53	CY
STRUCTURE EXCAVATION (TYPE D)	79	CY
STRUCTURE BACKFILL (BRIDGE)	29	CY
FURNISH STEEL PILING (HP 12 X 53)	575	LF
DRIVE STEEL PILE (HP 12 X 53)	24	EA
STRUCTURAL CONCRETE, BRIDGE FOOTING	16	CY
STRUCTURAL CONCRETE, BRIDGE	249	CY
STRUCTURAL CONCRETE, APPROACH SLAB (TYPE N MODIFIED)	19	CY
DRILL AND BOND DOWEL	14	LF
JOINT SEAL (MR½")	56	LF
BAR REINFORCING STEEL (BRIDGE)	90,500	LB
CONCRETE BARRIER (TYPE 732)	136	LF

NOTE:
The Contractor shall verify all controlling field dimensions before ordering or fabricating any material

DESIGN OVERSIGHT Yiwei Hu
1/25/12
SIGN OFF DATE

	BY	CHECKED
DESIGN	R. RIVAS	A. REJAIE
DETAILS	Z. VUKMIROVIC	S. MOYLES
QUANTITIES	R. RIVAS	M. FRECHETTE

PREPARED FOR THE STATE OF CALIFORNIA DEPARTMENT OF TRANSPORTATION

INES LI
PROJECT ENGINEER

BRIDGE NO. 33-0085
POST MILES 11.72

ARROYO LAS POSITAS BRIDGE (WIDEN)
INDEX TO PLANS

DESIGN GENERAL PLAN SHEET (ENGLISH) (REV. 7/16/10)

ORIGINAL SCALE IN INCHES FOR REDUCED PLANS 0 1 2 3

UNIT: 0735
PROJECT NUMBER & PHASE: 04000212481 CONTRACT NO.: 04-2908C4

DISREGARD PRINTS BEARING EARLIER REVISION DATES → REVISION DATES 12/23/09 03/25/10 11/8/11 1/5/12 SHEET 2 OF 15

FILE => 33-0085I-a-itp.dgn

USERNAME => s124496 DATE PLOTTED => 23-MAY-2012 TIME PLOTTED => 06:58 2007236 (2007236ES2-WB)

FOR ACCURATE RIGHT OF WAY DATA, CONTACT
RIGHT OF WAY ENGINEERING AT THE DISTRICT OFFICE

DIST	COUNTY	ROUTE	POST MILES TOTAL PROJECT	SHEET No	TOTAL SHEETS
04	Ala	580	R8.4/R14.6	727	853

REGISTERED CIVIL ENGINEER 1/5/12 DATE

5-14-12
PLANS APPROVAL DATE

REGISTERED PROFESSIONAL ENGINEER INES S. LI No. C51561 Exp.6/30/12 CIVIL STATE OF CALIFORNIA

The State of California or its officers or agents shall not be responsible for the accuracy or completeness of scanned copies of this plan sheet.

BIGGS CARDOSA ASSOCIATES INC.
865 THE ALAMEDA
SAN JOSE, CALIFORNIA 95126

ALAMEDA CTC
1333 BROADWAY, SUITE 220
OAKLAND, CALIFORNIA 94612

Hydrologic Summary
Drainage area: 51.1 square miles

	Design Flood	Base Flood	Overtopping Flood	Flood of Record
Frequency (years)	50-yr	100-yr	N/A	-
Discharge (cfs)	3,500	4,600	N/A	-
Water surface elevation (ft)	484.0	485.3	N/A	-

Flood Plan Data are based upon information available when the plans were prepared and are shown to meet Federal requirements. The accuracy of said information is not warranted by the State and interested or affected parties should make their own investigation.

NOTE:
The Contractor shall verify all controlling field dimensions before ordering or fabricating any material

FOUNDATION PLAN
1" = 20'

N

LEGEND:

466.4 Indicates bottom of footing elevation

488 Indicates spot elevation, typ

Indicates steel pile, not all piles shown

Indicates exist bridge wingwall to be removed.

WWLOL's are concentric to 'B' Line.

Notes:
1. Utilities shown are for illustrative purposes only, verify with Utility Drawings.
2. There is a vertical datum difference between the project datum (NAVD 88) and the as-built datum (NGVD 29). The following conversion was used in design: Datum Conversion: Elev (NAVD 88) = Elev (NGVD 29) + 2.64'.
3. Contractor to facilitate shoring if necessary during construction of abut on widening.

PILE DATA TABLE

Location	Pile Type	Nominal Resistance (kips) Compression	Nominal Resistance (kips) Tension	Design Tip Elevation (ft)	Specified Tip Elevation (ft)	Nominal Driving Resistance (kips)
Abutment 1	HP 12x53	160	0	460.5(a);461.5(d)	460.5	160
Bent 2	HP 12x53	250	50	442.0(a);455.0(b) 446.4(d)	442.0	250
Bent 3	HP 12x53	250	50	442.0(a);455.5(b) 449.4(d)	442.0	250
Abutment 4	HP 12x53	160	0	460.0(a); 462.5(d)	460.0	160

NOTES:
1. Design tip elevation for Abutments are controlled by: (a) Compression, (c) Settlement, (d) Lateral Loads
2. Design tip elevation for Bents are controlled by: (a) Compression, (b) Tension, (c) Settlement, (d) Lateral Loads
3. The specified tip elevation shall not be raised above the design tip elevations for tension load, lateral load, and tolerable settlement.

BENCH MARK AND DATUM

Monument	Coordinates Northing	Coordinates Easting	Elev	Description/location
1071	2080544.081	6194693.589	473.45	Fly cross T.Y. Lin mag
1074	2080919.359	6198042.119	497.26	Fly cross T.Y. Lin pk nail

GEOTECHNICAL PROFESSIONAL APPROVAL DATE 11/8/11

DESIGN OVERSIGHT Yiwei Hu
1/25/12
SIGN OFF DATE

SCALE:	VERT.DATUM	HORZ.DATUM
PHOTOGRAMMETRY AS OF:		ALIGNMENT TIES
SURVEYED	BY	DRAFTED BY
FIELD CHECKED	BY	CHECKED BY

DESIGN	BY R. RIVAS	CHECKED	A. REJAIE
DETAILS	BY Z. VUKMIROVIC	CHECKED	S. MOYLES
QUANTITIES	BY R. RIVAS	CHECKED	M. FRECHETTE

PREPARED FOR THE STATE OF CALIFORNIA DEPARTMENT OF TRANSPORTATION

INES LI
PROJECT ENGINEER

BRIDGE NO. 33-0085
POST MILES 11.72

ARROYO LAS POSITAS BRIDGE (WIDEN)
FOUNDATION PLAN

FOUNDATION PLAN SHEET (ENGLISH) (REV. 7-16-10)

ORIGINAL SCALE IN INCHES FOR REDUCED PLANS 0 1 2 3

UNIT: 0735
PROJECT NUMBER & PHASE: 04000212481 CONTRACT NO.: 04-2908C4

DISREGARD PRINTS BEARING EARLIER REVISION DATES 12/23/09 3/25/10 11/8/11 1/5/12

SHEET 3 OF 15

FILE => 33-0085I-f-fp01.dgn

USERNAME => s124496 DATE PLOTTED => 23-MAY-2012 TIME PLOTTED => 06:59 2007236.2 (2007236ES3-WB)

DIST	COUNTY	ROUTE	POST MILES TOTAL PROJECT	SHEET No	TOTAL SHEETS
04	Ala	580	R8.4/R14.6	728	853

REGISTERED CIVIL ENGINEER 1/5/12 DATE

5-14-12
PLANS APPROVAL DATE

REGISTERED PROFESSIONAL ENGINEER INES S. LI No. C51561 Exp.6/30/12 CIVIL STATE OF CALIFORNIA

The State of California or its officers or agents shall not be responsible for the accuracy or completeness of scanned copies of this plan sheet.

BIGGS CARDOSA ASSOCIATES INC.
865 THE ALAMEDA
SAN JOSE, CALIFORNIA 95126

ALAMEDA CTC
1333 BROADWAY, SUITE 220
OAKLAND, CALIFORNIA 94612

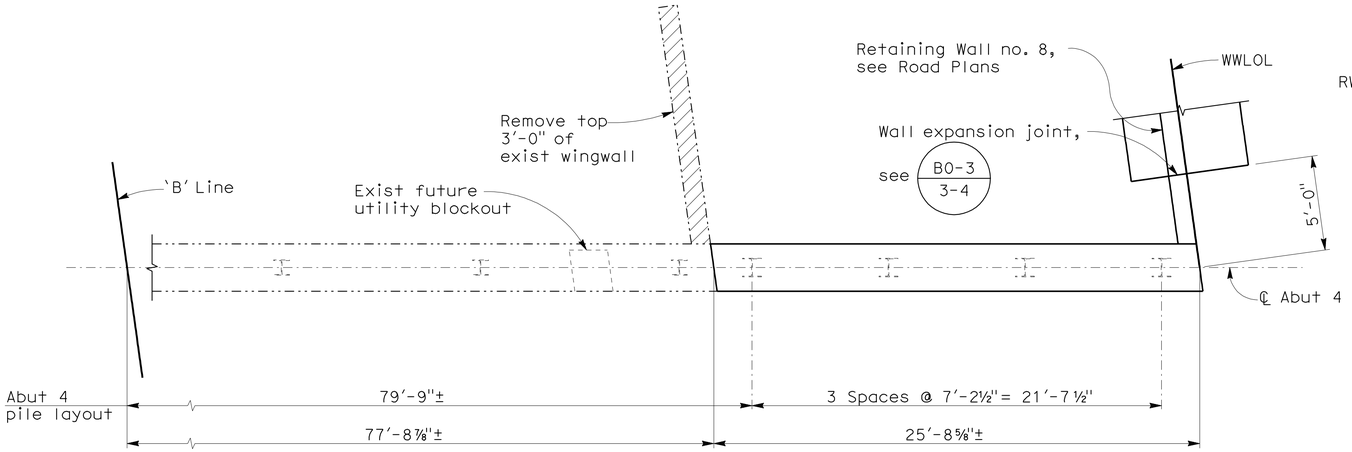

ABUTMENT PLAN

1/4" = 1'-0"

NOTE:
Abutment 4 shown, Abutment 1 similar

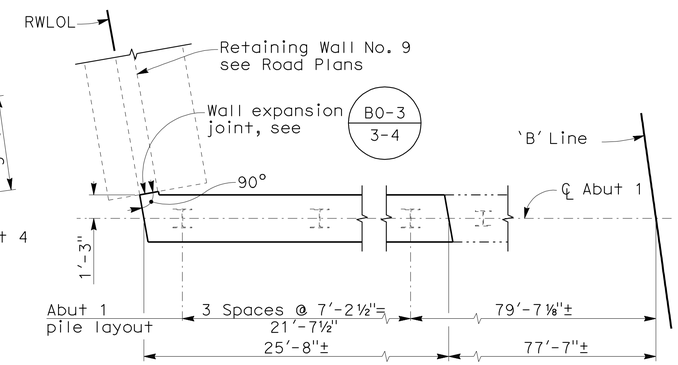

ABUTMENT 1 PARTIAL PLAN

1/4" = 1'-0"

LEGEND:

Indicates steel HP pile

Indicates exist concrete to be removed

NOTES:

1. Abutment diaphragm shall be braced until superstructure concrete reaches 28-day strength
2. Backfilling behind abutments shall be done simultaneously
3. For wingwall elevation, see 'ABUTMENT DETAILS' sheet

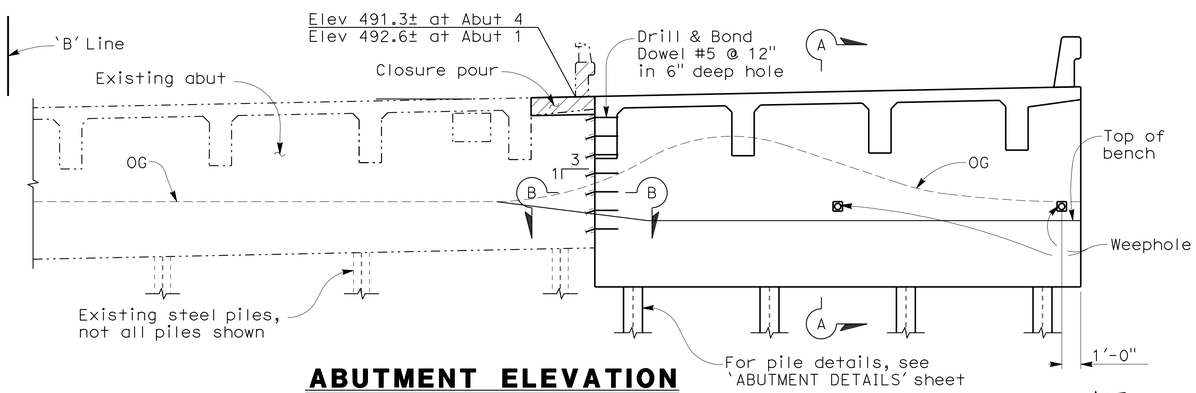

ABUTMENT ELEVATION

1/4" = 1'-0"

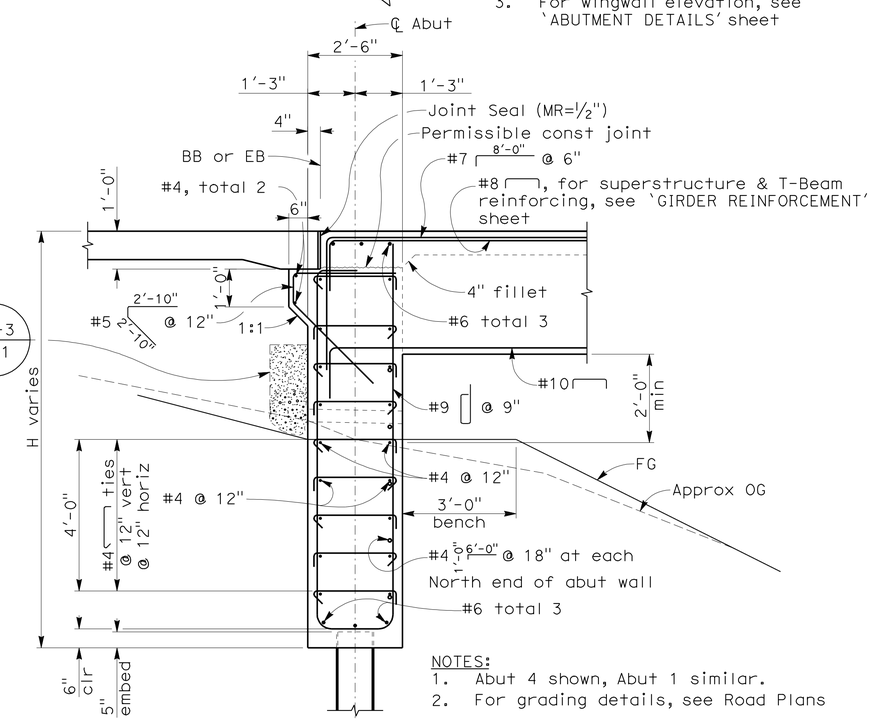

NOTES:

1. Abut 4 shown, Abut 1 similar.
2. For grading details, see Road Plans

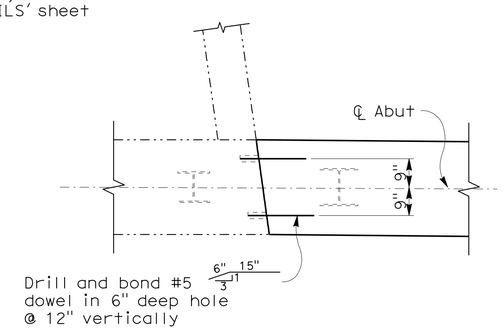

SECTION B-B

1/2" = 1'-0"

SECTION A-A

1/2" = 1'-0"

NOTE:
The Contractor shall verify all controlling field dimensions before ordering or fabricating any material

DESIGN OVERSIGHT Yiwei Hu
1/25/12
SIGN OFF DATE

	BY	CHECKED
DESIGN	R. RIVAS	A. REJAIE
DETAILS	Z. VUKMIROVIC	S. MOYLES
QUANTITIES	R. RIVAS	M. FRECHETTE

PREPARED FOR THE STATE OF CALIFORNIA DEPARTMENT OF TRANSPORTATION

INES LI
PROJECT ENGINEER

BRIDGE NO. 33-0085
POST MILES 11.72

ARROYO LAS POSITAS BRIDGE (WIDEN)
ABUTMENT LAYOUT

DESIGN GENERAL PLAN SHEET (ENGLISH) (REV. 7/16/10)

ORIGINAL SCALE IN INCHES FOR REDUCED PLANS 0 1 2 3

UNIT: 0735
PROJECT NUMBER & PHASE: 04000212481 CONTRACT NO.: 04-2908C4

DISREGARD PRINTS BEARING EARLIER REVISION DATES 12/23/09 3/25/10 11/8/11 1/5/12

SHEET 4 OF 15

FILE => 33-0085I-h-a04-lo1.dgn

USERNAME => s124496 DATE PLOTTED => 23-MAY-2012 TIME PLOTTED => 08:53

2007236 (2007236ES4-WB)

DIST	COUNTY	ROUTE	POST MILES TOTAL PROJECT	SHEET No	TOTAL SHEETS
04	Ala	580	R8.4/R14.6	729	853

REGISTERED CIVIL ENGINEER 1/5/12 DATE

5-14-12
PLANS APPROVAL DATE

REGISTERED PROFESSIONAL ENGINEER INES S. LI No. C51561 Exp.6/30/12 CIVIL STATE OF CALIFORNIA

The State of California or its officers or agents shall not be responsible for the accuracy or completeness of scanned copies of this plan sheet.

BIGGS CARDOSA ASSOCIATES INC.
865 THE ALAMEDA
SAN JOSE, CALIFORNIA 95126

ALAMEDA CTC
1333 BROADWAY, SUITE 220
OAKLAND, CALIFORNIA 94612

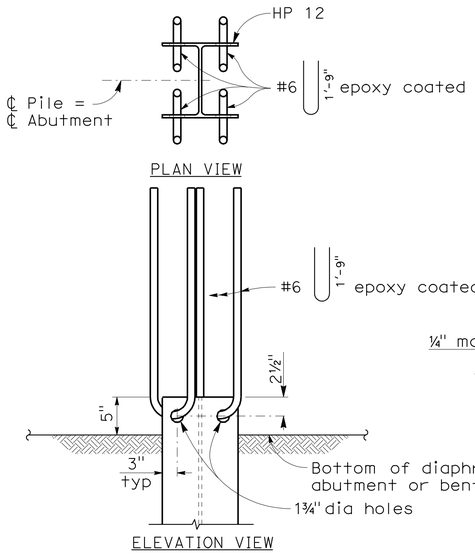

ANCHOR DETAILS

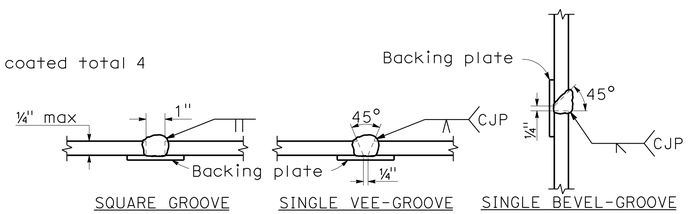

NOTES:
1. Single Vee-Groove and Square Groove permitted for all positions
2. Single Bevel-Groove permitted for horizontal joints only.

PILE WELDING DETAIL

STEEL HP PILE DETAIL 1

NO SCALE

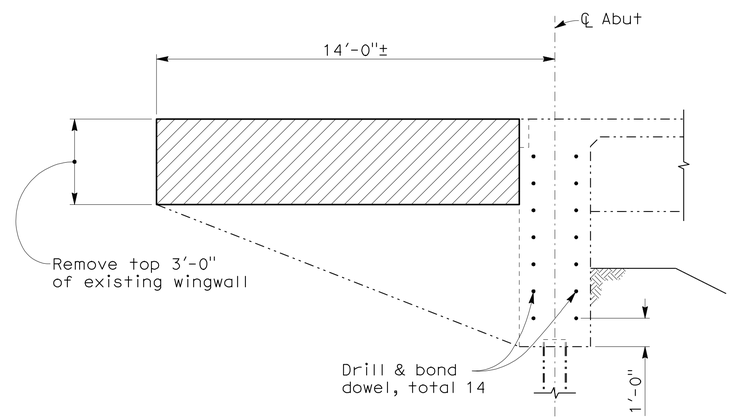

EXISTING WINGWALL ELEVATION

3/8" = 1'-0'

LEGEND:
Indicates exist concrete to be removed

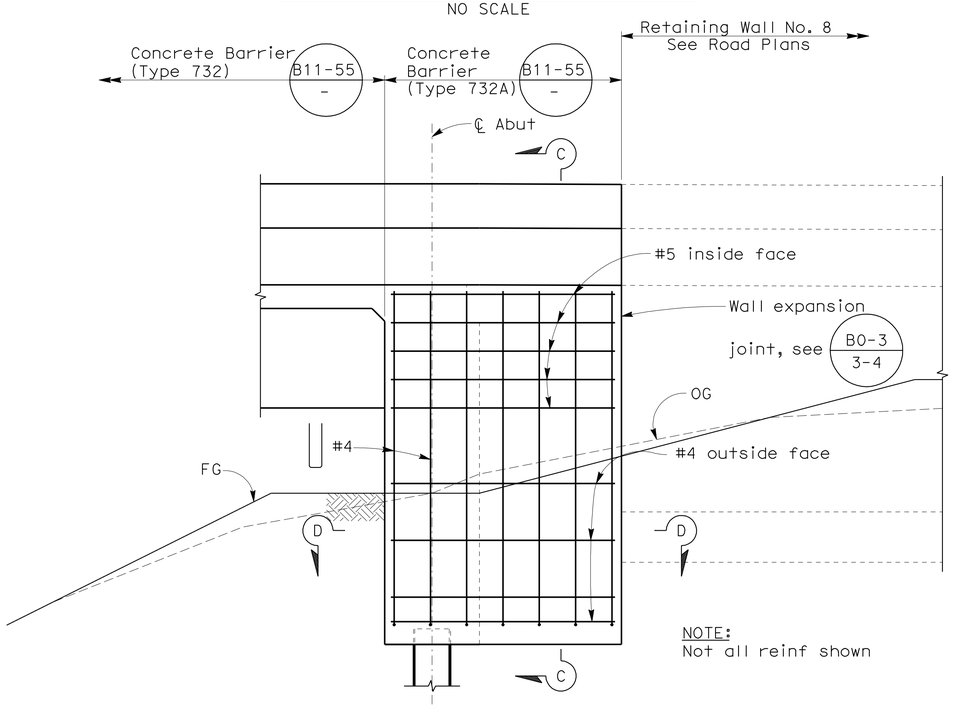

WINGWALL AT ABUT 4 ELEVATION

1/2" = 1'-0'

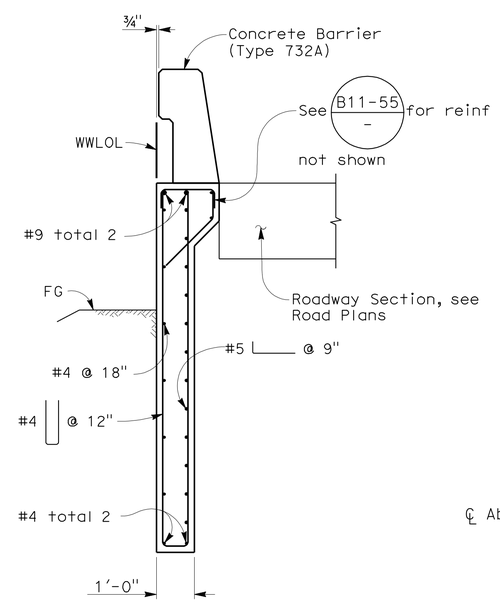

SECTION C-C

1/2" = 1'-0"

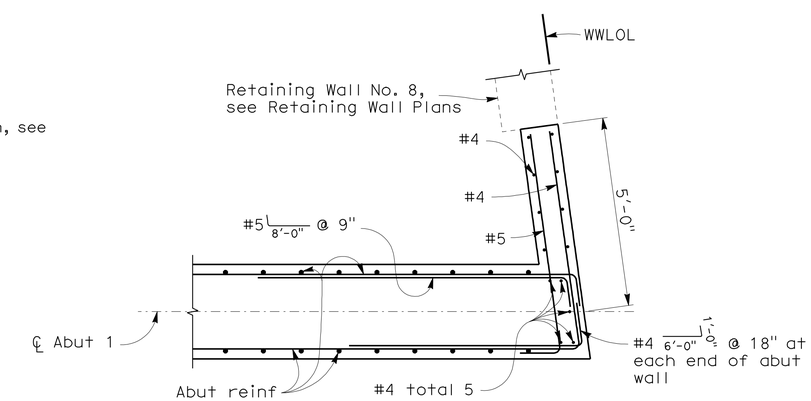

SECTION D-D

1/2" = 1'-0"

NOTE:
The Contractor shall verify all controlling field dimensions before ordering or fabricating any material

DESIGN OVERSIGHT Yiwei Hu	DESIGN	BY R. RIVAS	CHECKED A. REJAIE
1/25/12 SIGN OFF DATE	DETAILS	BY Z. VUKMIROVIC	CHECKED S. MOYLES
	QUANTITIES	BY R. RIVAS	CHECKED M. FRECHETTE

PREPARED FOR THE STATE OF CALIFORNIA DEPARTMENT OF TRANSPORTATION

INES LI
PROJECT ENGINEER

BRIDGE NO. 33-0085
POST MILES 11.72

ARROYO LAS POSITAS BRIDGE (WIDEN)
ABUTMENT DETAILS

DESIGN GENERAL PLAN SHEET (ENGLISH) (REV. 7/16/10)

ORIGINAL SCALE IN INCHES FOR REDUCED PLANS 0 1 2 3

UNIT: 0735
PROJECT NUMBER & PHASE: 04000212481 CONTRACT NO.: 04-2908C4

DISREGARD PRINTS BEARING EARLIER REVISION DATES → REVISION DATES 12/23/09 03/25/10 11/8/11 1/5/12 SHEET 5 OF 15

FILE => 33-0085I-h-a05d1.dgn

USERNAME => s1244496 DATE PLOTTED => 23-MAY-2012 TIME PLOTTED => 06:59 2007236 (2007236ES5-WB)

DIST	COUNTY	ROUTE	POST MILES TOTAL PROJECT	SHEET No	TOTAL SHEETS
04	Ala	580	R8.4/R14.6	730	853

REGISTERED CIVIL ENGINEER — DATE 1/5/12

5-14-12
PLANS APPROVAL DATE

REGISTERED PROFESSIONAL ENGINEER — INES S. LI — No. C51561 — Exp. 6/30/12 — CIVIL — STATE OF CALIFORNIA

The State of California or its officers or agents shall not be responsible for the accuracy or completeness of scanned copies of this plan sheet.

BIGGS CARDOSA ASSOCIATES INC.
865 THE ALAMEDA
SAN JOSE, CALIFORNIA 95126

ALAMEDA CTC
1333 BROADWAY, SUITE 220
OAKLAND, CALIFORNIA 94612

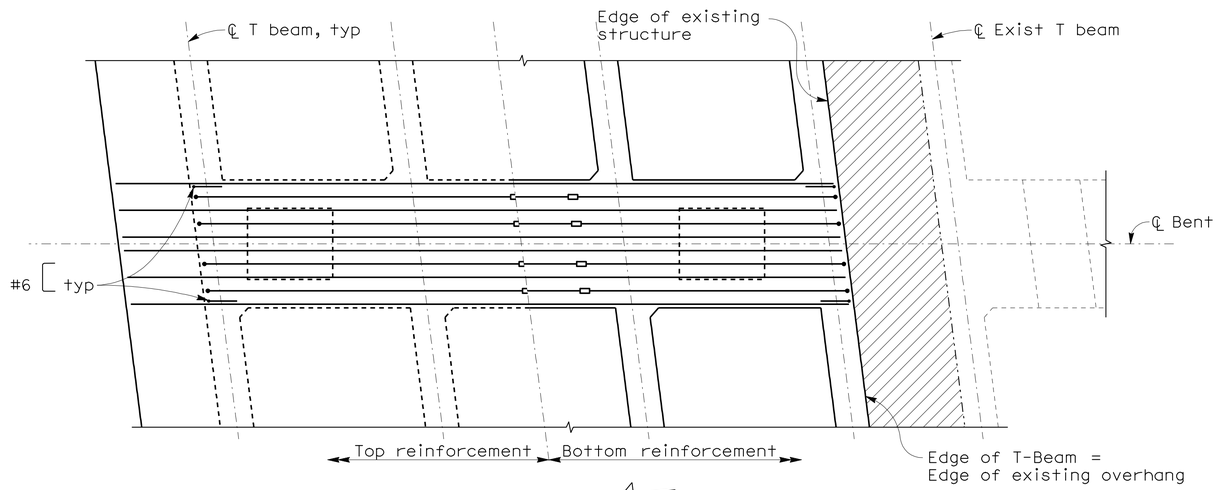

PLAN
3/8" = 1'-0"

NOTES:
1. For 'SECTION A-A, 'SECTION B-B', 'SECTION C-C' and 'SECTION D-D' see 'BENT DETAILS' sheet
2. Column ties shall clear bent cap reinforcement
3. No splices permitted in column main reinforcement
4. Bent cap stirrups shall be placed parallel to ℄ Bridge and spaced along ℄ Bent

LEGEND:
- Indicates service level mechanical coupler
- Indicates pile
- Indicates exist concrete to be removed

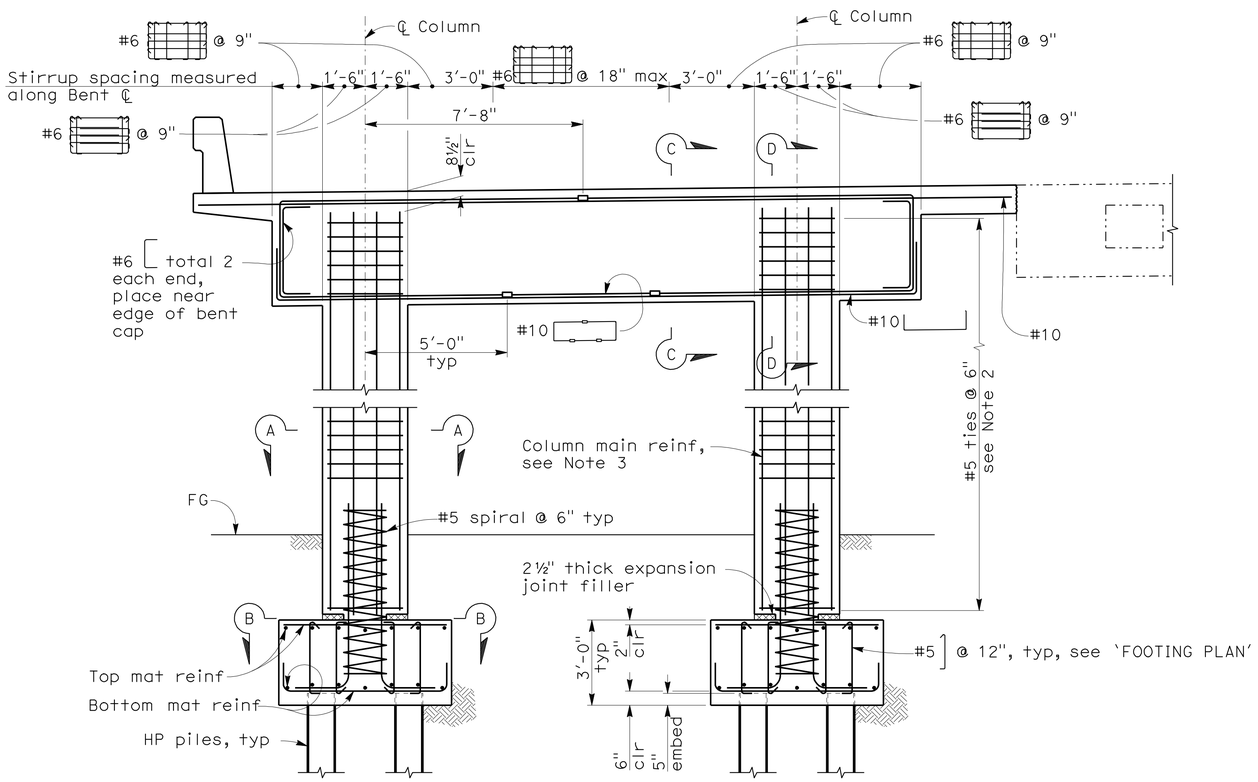

BENT ELEVATION
3/8" = 1'-0"

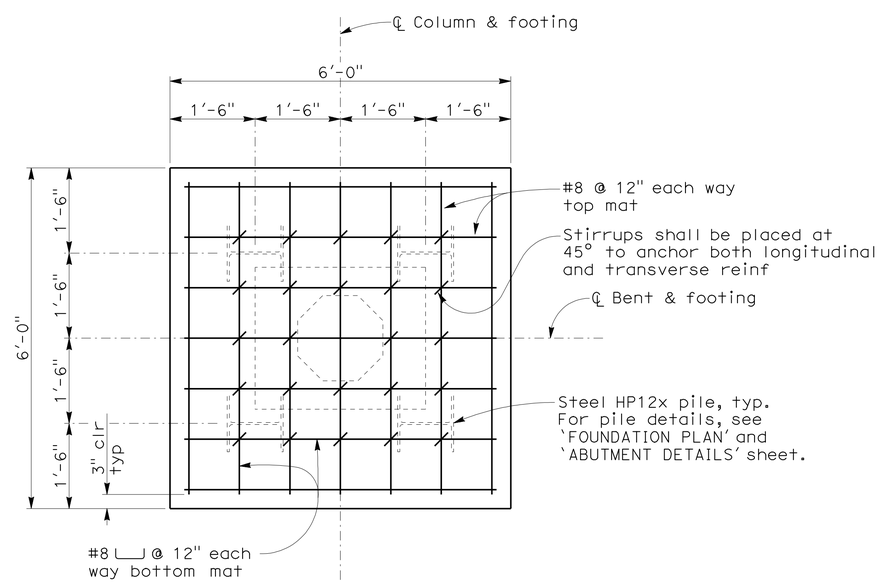

FOOTING PLAN
3/4" = 1'-0"

NOTE:
The Contractor shall verify all controlling field dimensions before ordering or fabricating any material

DESIGN OVERSIGHT Yiwei Hu
1/25/12
SIGN OFF DATE

	BY	CHECKED
DESIGN	R. RIVAS	A. REJAIE
DETAILS	Z. VUKMIROVIC	S. MOYLES
QUANTITIES	R. RIVAS	M. FRECHETTE

PREPARED FOR THE STATE OF CALIFORNIA DEPARTMENT OF TRANSPORTATION

INES LI
PROJECT ENGINEER

BRIDGE NO. 33-0085
POST MILES 11.72

ARROYO LAS POSITAS BRIDGE (WIDEN)
BENT LAYOUT

DESIGN GENERAL PLAN SHEET (ENGLISH) (REV. 7/16/10)

ORIGINAL SCALE IN INCHES FOR REDUCED PLANS 0 1 2 3

UNIT: 0735
PROJECT NUMBER & PHASE: 04000212481
CONTRACT NO.: 04-2908C4

DISREGARD PRINTS BEARING EARLIER REVISION DATES — REVISION DATES 12/23/09 3/25/10 11/8/11 1/5/12

SHEET 6 OF 15

FILE => 33-0085I-j-b06-lo1.dgn

USERNAME => s1224496 DATE PLOTTED => 23-MAY-2012 TIME PLOTTED => 06:59
2007236 (2007236ES6-WB)

DIST	COUNTY	ROUTE	POST MILES TOTAL PROJECT	SHEET No	TOTAL SHEETS
04	Ala	580	R8.4/R14.6	731	853

REGISTERED CIVIL ENGINEER — DATE 1/5/12

5-14-12
PLANS APPROVAL DATE

REGISTERED PROFESSIONAL ENGINEER — INES S. LI — No. C51561 — Exp.6/30/12 — CIVIL — STATE OF CALIFORNIA

The State of California or its officers or agents shall not be responsible for the accuracy or completeness of scanned copies of this plan sheet.

BIGGS CARDOSA ASSOCIATES INC.
865 THE ALAMEDA
SAN JOSE, CALIFORNIA 95126

ALAMEDA CTC
1333 BROADWAY, SUITE 220
OAKLAND, CALIFORNIA 94612

LEGEND:
—▫— Indicates mechanical coupler

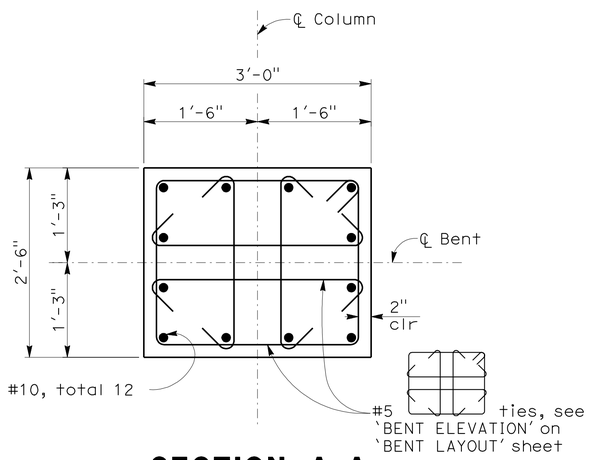

SECTION A-A
1" = 1'-0"

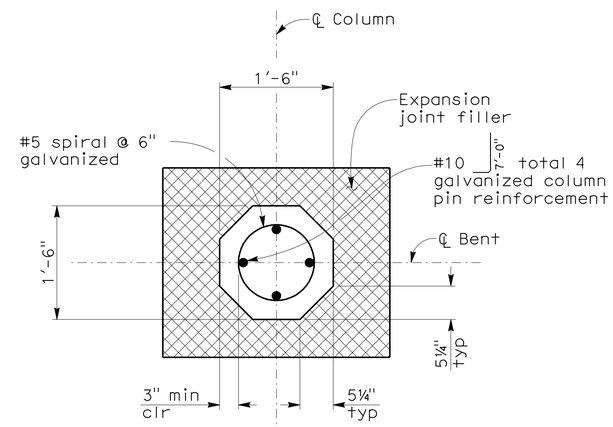

SECTION B-B
1" = 1'-0"

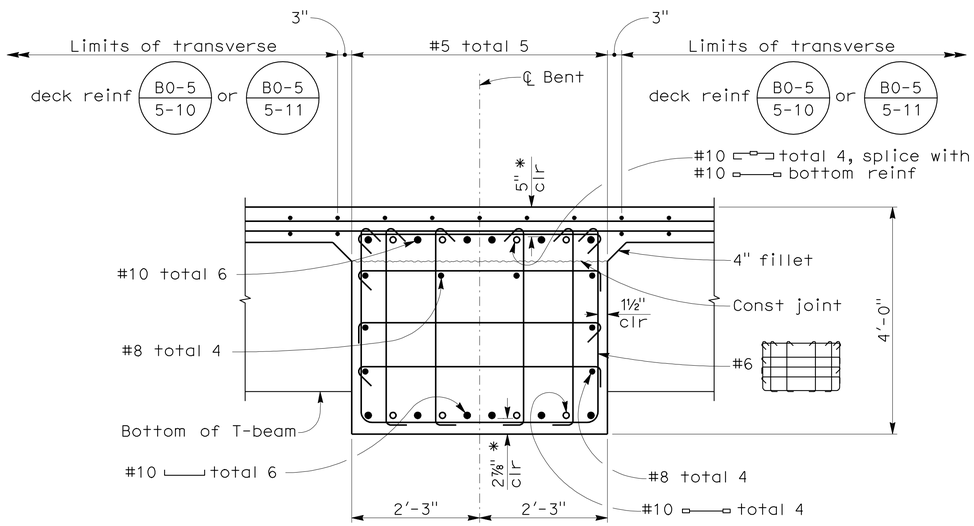

* Clearance to main cap reinforement

SECTION C-C
3/4" = 1'-0"

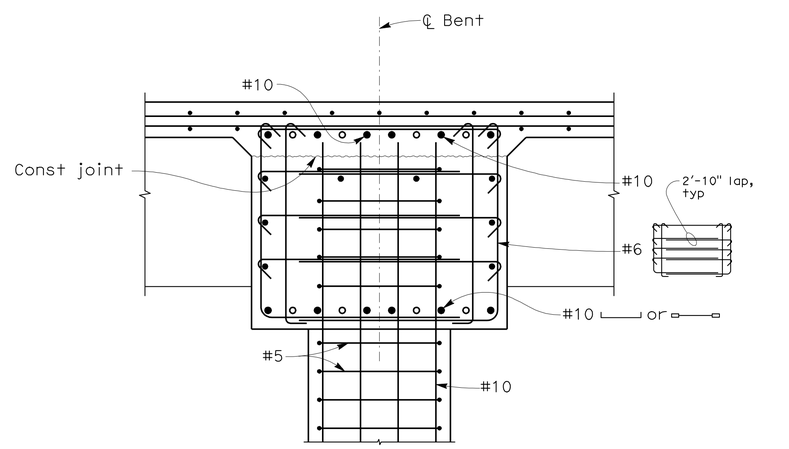

See 'SECTION C-C' for details not noted

SECTION D-D
3/4" = 1'-0"

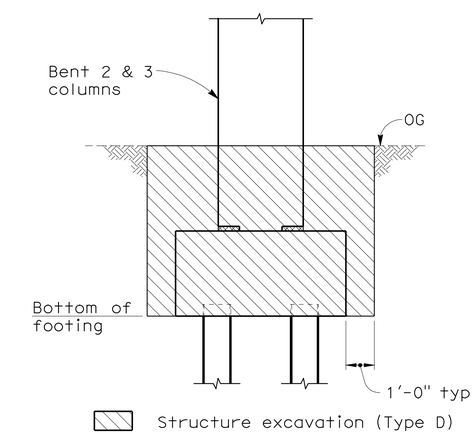

PAYMENT FOR LIMITS OF EXCAVATION (TYPE D)
NO SCALE

NOTE:
The Contractor shall verify all controlling field dimensions before ordering or fabricating any material

DESIGN OVERSIGHT Yiwei Hu
1/25/12
SIGN OFF DATE

	BY	CHECKED
DESIGN	R. RIVAS	A. REJAIE
DETAILS	Z. VUKMIROVIC	S. MOYLES
QUANTITIES	R. RIVAS	M. FRECHETTE

PREPARED FOR THE STATE OF CALIFORNIA DEPARTMENT OF TRANSPORTATION

INES LI
PROJECT ENGINEER

BRIDGE NO. 33-0085
POST MILES 11.72

ARROYO LAS POSITAS BRIDGE (WIDEN)
BENT DETAILS

DESIGN GENERAL PLAN SHEET (ENGLISH) (REV. 7/16/10)

ORIGINAL SCALE IN INCHES FOR REDUCED PLANS 0 1 2 3

UNIT: 0735
PROJECT NUMBER & PHASE: 04000212481 CONTRACT NO.: 04-2908C4

DISREGARD PRINTS BEARING EARLIER REVISION DATES → REVISION DATES 12/23/09 3/25/10 11/8/11 1/5/12 SHEET 7 OF 15

FILE => 33-0085I-j-b07d1.dgn

USERNAME => s124496 DATE PLOTTED => 23-MAY-2012 TIME PLOTTED => 06:59 2007236 (2007236ES7-WB)

DIST	COUNTY	ROUTE	POST MILES TOTAL PROJECT	SHEET No	TOTAL SHEETS
04	Ala	580	R8.4/R14.6	732	853

REGISTERED CIVIL ENGINEER 1/5/12 DATE

5-14-12
PLANS APPROVAL DATE

REGISTERED PROFESSIONAL ENGINEER INES S. LI No. C51561 Exp.6/30/12 CIVIL STATE OF CALIFORNIA

The State of California or its officers or agents shall not be responsible for the accuracy or completeness of scanned copies of this plan sheet.

BIGGS CARDOSA ASSOCIATES INC.
865 THE ALAMEDA
SAN JOSE, CALIFORNIA 95126

ALAMEDA CTC
1333 BROADWAY, SUITE 220
OAKLAND, CALIFORNIA 94612

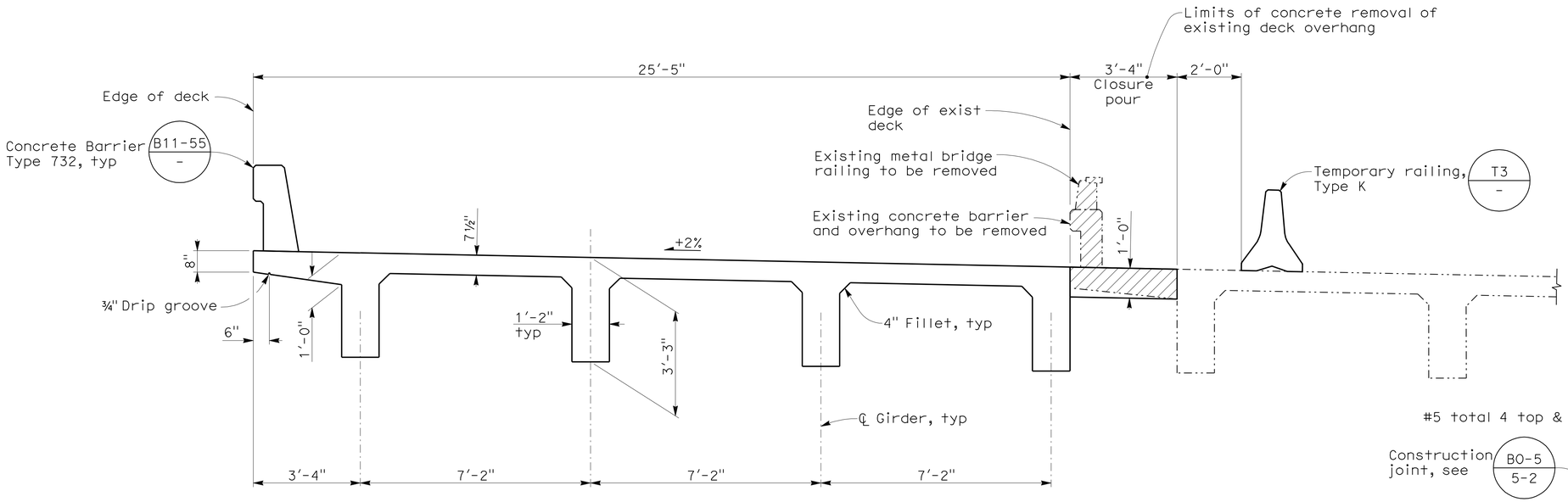

TYPICAL SECTION

1/2" = 1'-0"

FALSEWORK RELEASE NOTES

1. Alternative 1:
   Falsework shall be released as soon as permitted by the specifications. Closure pour and intermediate diaphragms shall not be placed sooner than 60 days after the falsework has been released.

   Alternative 2:
   Falsework shall not be released less than 28 days after the last concrete has been placed. Closure pour and intermediate diaphragms shall not be placed sooner than 14 days after the falsework has been released.

   When falsework release alternative 2 is used, camber values are 0.75 times those shown.

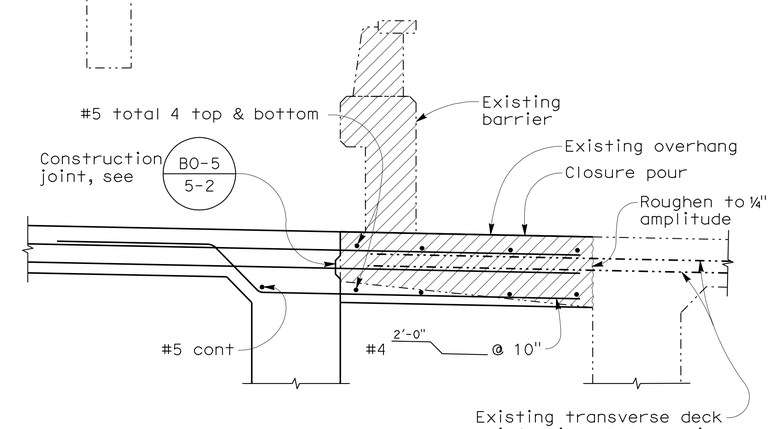

DETAIL 1

1" = 1'-0"

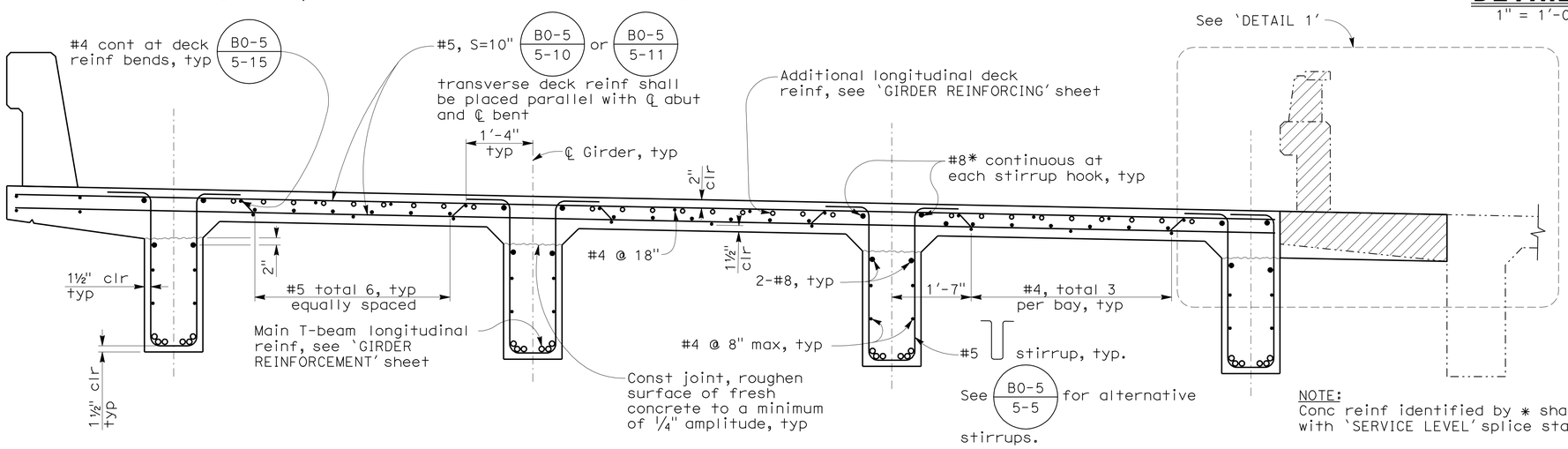

LEGEND:

Indicates exist concrete and metal bridge railing to be removed

NOTE:
Conc reinf identified by * shall be spliced with 'SERVICE LEVEL' splice staggered at 4' min

TYPICAL SECTION REINFORCING

3/4" = 1'-0"

B6-1 - B0-5 -

NOTE:
The Contractor shall verify all controlling field dimensions before ordering or fabricating any material

DESIGN OVERSIGHT Yiwei Hu
1/25/12
SIGN OFF DATE

	BY	CHECKED
DESIGN	R. RIVAS	A. REJAIE
DETAILS	Z. VUKMIROVIC	S. MOYLES
QUANTITIES	R. RIVAS	M. FRECHETTE

PREPARED FOR THE STATE OF CALIFORNIA DEPARTMENT OF TRANSPORTATION

INES LI
PROJECT ENGINEER

BRIDGE NO. 33-0085
POST MILES 11.72

ARROYO LAS POSITAS BRIDGE (WIDEN)

TYPICAL SECTION

DESIGN GENERAL PLAN SHEET (ENGLISH) (REV. 7/16/10)

ORIGINAL SCALE IN INCHES FOR REDUCED PLANS 0 1 2 3

UNIT: 0735
PROJECT NUMBER & PHASE: 04000212481 CONTRACT NO.: 04-2908C4

DISREGARD PRINTS BEARING EARLIER REVISION DATES

REVISION DATES 12/23/09 03/25/10 11/8/11 1/5/12

SHEET 8 OF 15

FILE => 33-0085I-m-ts1.dgn

USERNAME => s124496 DATE PLOTTED => 23-MAY-2012 TIME PLOTTED => 08:59

2007236 (2007236ES8-WB)

DIST	COUNTY	ROUTE	POST MILES TOTAL PROJECT	SHEET No	TOTAL SHEETS
04	Ala	580	R8.4/R14.6	733	853

REGISTERED CIVIL ENGINEER 1/5/12 DATE

5-14-12
PLANS APPROVAL DATE

REGISTERED PROFESSIONAL ENGINEER INES S. LI No. C51561 Exp.6/30/12 CIVIL STATE OF CALIFORNIA

The State of California or its officers or agents shall not be responsible for the accuracy or completeness of scanned copies of this plan sheet.

BIGGS CARDOSA ASSOCIATES INC.
865 THE ALAMEDA
SAN JOSE, CALIFORNIA 95126

ALAMEDA CTC
1333 BROADWAY, SUITE 220
OAKLAND, CALIFORNIA 94612

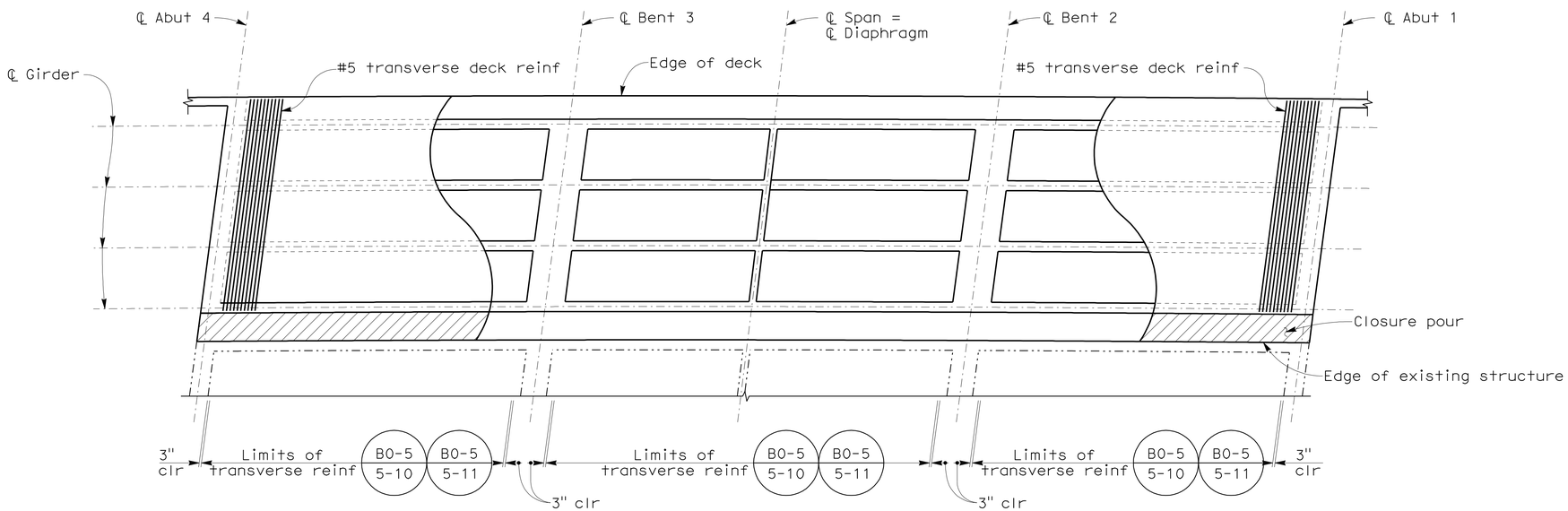

GIRDER LAYOUT
1/8" = 1"-0"

N

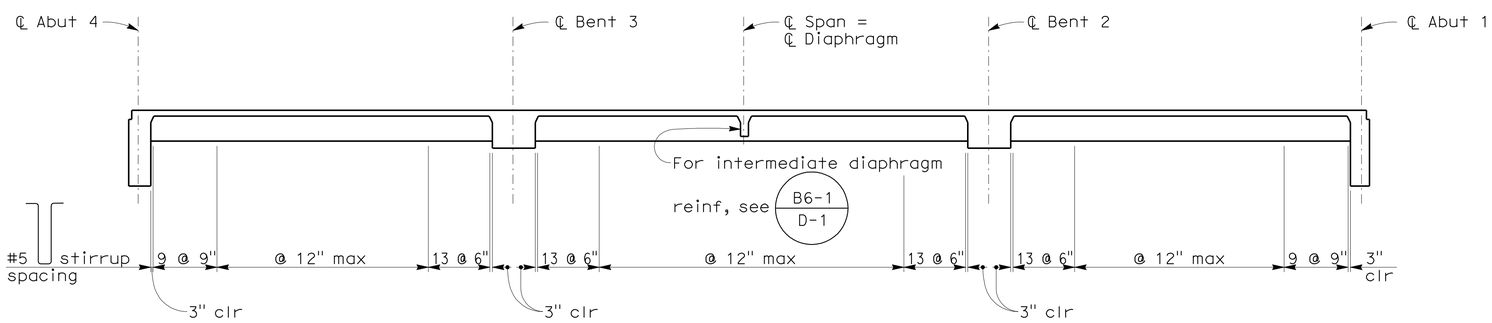

LONGITUDINAL SECTION
NO SCALE

NOTE:
For 'CONCRETE STRENGTH AND TYPE LIMITS', see 'INDEX TO PLANS' sheet

NOTE:
The Contractor shall verify all controlling field dimensions before ordering or fabricating any material

DESIGN OVERSIGHT Yiwei Hu
1/25/12
SIGN OFF DATE

	BY	CHECKED
DESIGN	R. RIVAS	A. REJAIE
DETAILS	Z. VUKMIROVIC	S. MOYLES
QUANTITIES	R. RIVAS	M. FRECHETTE

PREPARED FOR THE STATE OF CALIFORNIA DEPARTMENT OF TRANSPORTATION

INES LI
PROJECT ENGINEER

BRIDGE NO. 33-0085
POST MILES 11.72

ARROYO LAS POSITAS BRIDGE (WIDEN)
GIRDER LAYOUT

DESIGN GENERAL PLAN SHEET (ENGLISH) (REV. 7/16/10)

ORIGINAL SCALE IN INCHES FOR REDUCED PLANS 0 1 2 3

UNIT: 0735
PROJECT NUMBER & PHASE: 04000212481 CONTRACT NO.: 04-2908C4

DISREGARD PRINTS BEARING EARLIER REVISION DATES 12/23/09 3/25/10 11/8/11 1/5/12

SHEET 9 OF 15

FILE => 33-0085I-n-g-lo01.dgn

USERNAME => s124936 DATE PLOTTED => 23-MAY-2012 TIME PLOTTED => 06:59 2007236 (2007236ES9-WB)

DIST	COUNTY	ROUTE	POST MILES TOTAL PROJECT	SHEET No	TOTAL SHEETS
04	Ala	580	R8.4/R14.6	734	853

REGISTERED CIVIL ENGINEER 1/5/12 DATE

5-14-12
PLANS APPROVAL DATE

REGISTERED PROFESSIONAL ENGINEER INES S. LI No. C51561 Exp.6/30/12 CIVIL STATE OF CALIFORNIA

The State of California or its officers or agents shall not be responsible for the accuracy or completeness of scanned copies of this plan sheet.

BIGGS CARDOSA ASSOCIATES INC.
865 THE ALAMEDA
SAN JOSE, CALIFORNIA 95126

ALAMEDA CTC
1333 BROADWAY, SUITE 220
OAKLAND, CALIFORNIA 94612

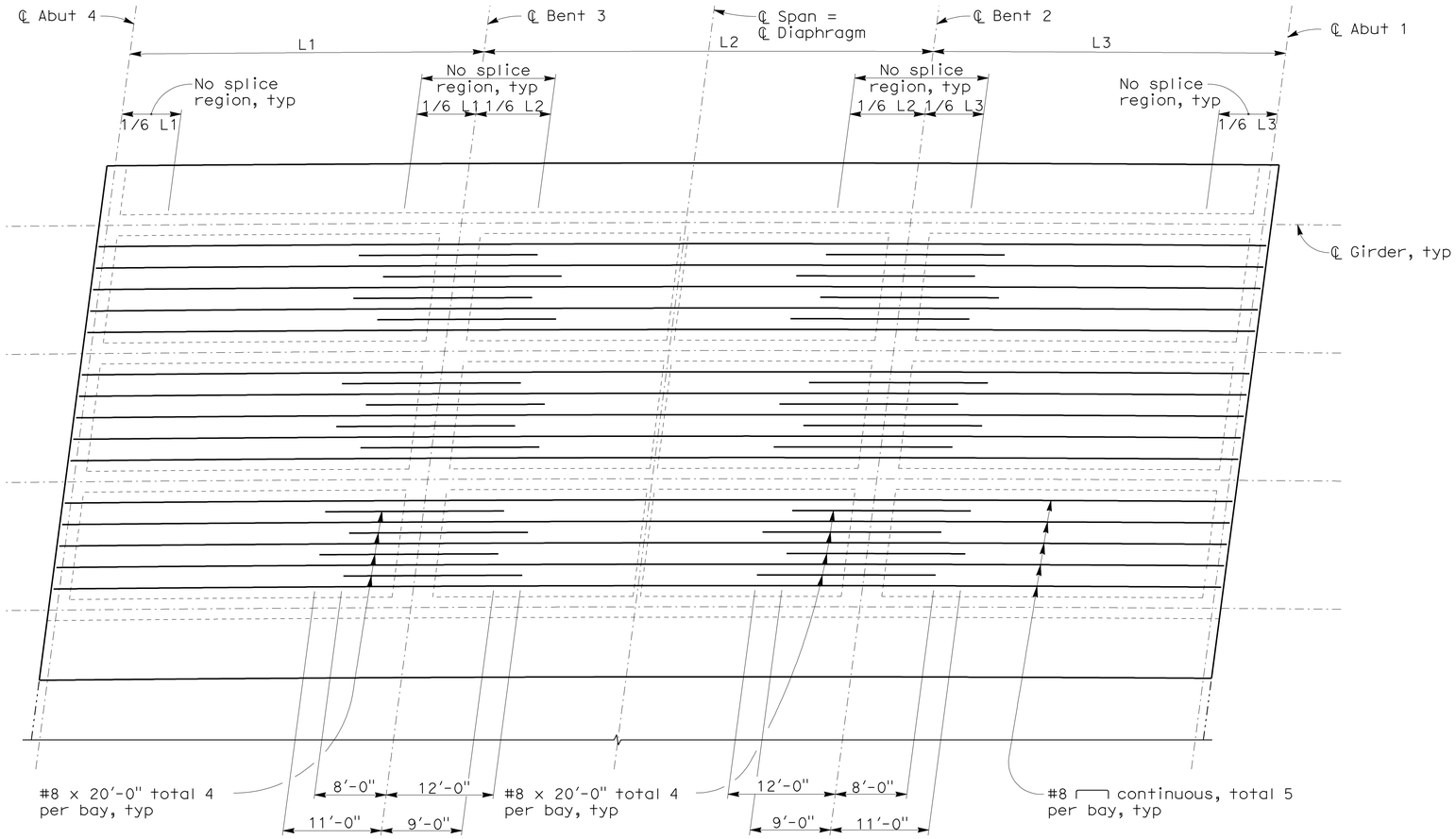

ADDITIONAL DECK REINFORCEMENT

NO SCALE

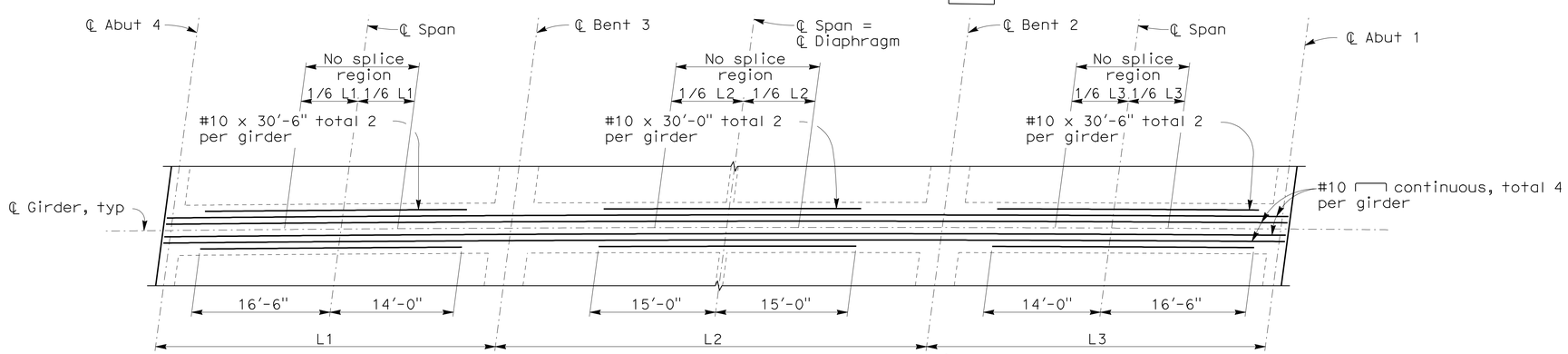

BOTTOM T-BEAM REINFORCEMENT

NO SCALE

NOTES:

1. Additional top deck reinforcing shown. See 'TYPICAL SECTION' sheet for typical deck reinforcement not shown
2. No lap splices permitted
3. Space additional reinforcement approximately equally within each bay
4. Additional deck and beam reinforcing shall be spliced with service level splices as needed

NOTE:
The Contractor shall verify all controlling field dimensions before ordering or fabricating any material

DESIGN OVERSIGHT Yiwei Hu
1/25/12
SIGN OFF DATE

	BY	CHECKED
DESIGN	R. RIVAS	A. REJAIE
DETAILS	Z. VUKMIROVIC	S. MOYLES
QUANTITIES	R. RIVAS	M. FRECHETTE

PREPARED FOR THE STATE OF CALIFORNIA DEPARTMENT OF TRANSPORTATION

INES LI
PROJECT ENGINEER

BRIDGE NO. 33-0085
POST MILES 11.72

ARROYO LAS POSITAS BRIDGE (WIDEN)
GIRDER REINFORCEMENT

DESIGN GENERAL PLAN SHEET (ENGLISH) (REV. 7/16/10)

ORIGINAL SCALE IN INCHES FOR REDUCED PLANS 0 1 2 3

UNIT: 0735
PROJECT NUMBER & PHASE: 04000212481 CONTRACT NO.: 04-2908C4

DISREGARD PRINTS BEARING EARLIER REVISION DATES → REVISION DATES 12/23/09 03/25/10 11/8/11 1/5/12

SHEET 10 OF 15

FILE => 33-0085I-q-g-rf01.dgn

USERNAME => s124496 DATE PLOTTED => 23-MAY-2012 TIME PLOTTED => 06:59

2007236 (2007236ES10-WB)

DIST	COUNTY	ROUTE	POST MILES TOTAL PROJECT	SHEET No	TOTAL SHEETS
04	Ala	580	R8.4/R14.6	735	853

REGISTERED CIVIL ENGINEER 1/5/12 DATE

5-14-12
PLANS APPROVAL DATE

REGISTERED PROFESSIONAL ENGINEER INES S. LI No. C51561 Exp.6/30/12 CIVIL STATE OF CALIFORNIA

The State of California or its officers or agents shall not be responsible for the accuracy or completeness of scanned copies of this plan sheet.

BIGGS CARDOSA ASSOCIATES INC.
865 THE ALAMEDA
SAN JOSE, CALIFORNIA 95126

ALAMEDA CTC
1333 BROADWAY, SUITE 220
OAKLAND, CALIFORNIA 94612

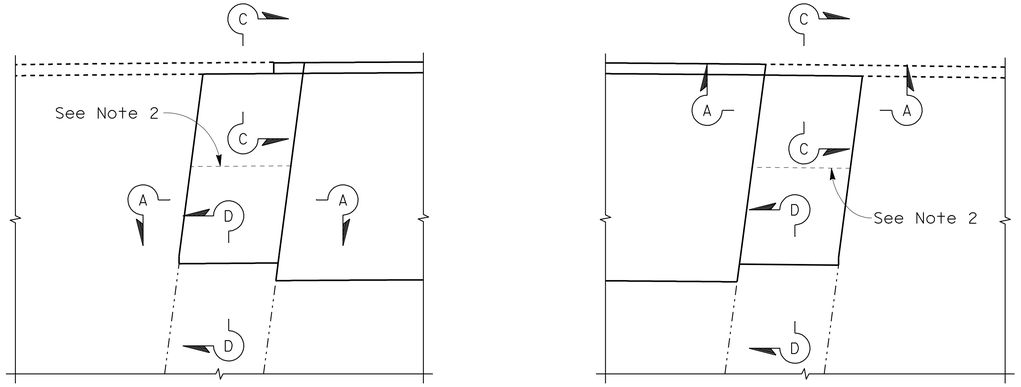

PLAN
1" = 10'

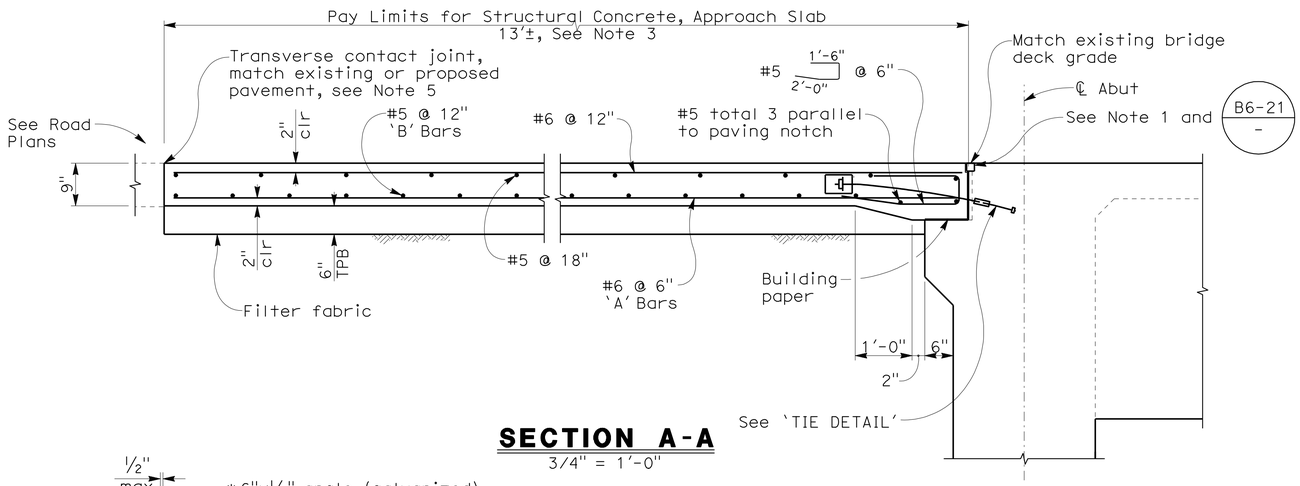

SECTION A-A
3/4" = 1'-0"

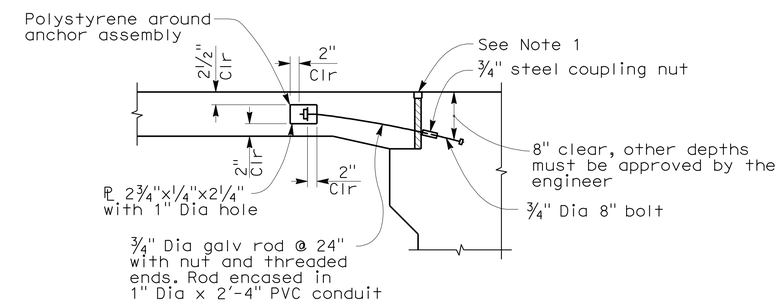

DIAPHRAGM TYPE ABUTMENT TIE DETAIL
3/4" = 1'-0"

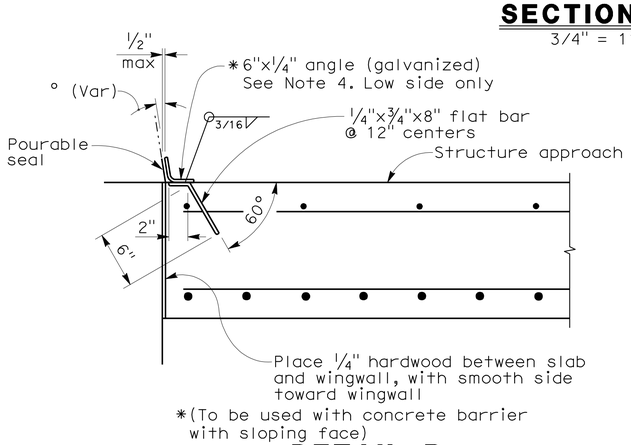

DETAIL B
NO SCALE

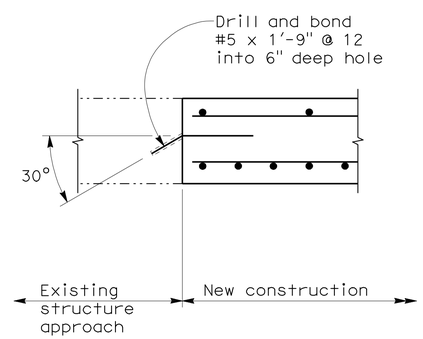

DETAIL D-D
1 1/2" = 1'-0"

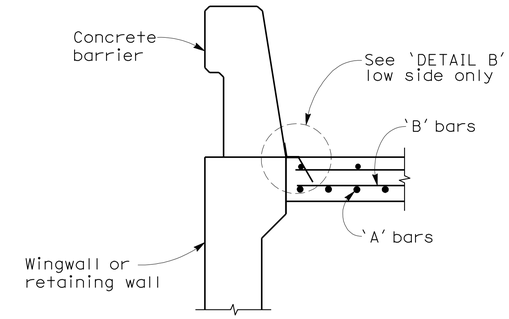

SECTION C-C
3/4" = 1'-0"

NOTES:

1. For details not noted or shown, see Structure Plans. Adjust bar reinforcement to clear a sawcut for sealed joint, when required
2. Longitudinal construction joints, when permitted by the Engineer, shall be located on lane lines
3. Length of approach slab shown is approximate. Construct approach slab length to match existing
4. End angle or plate at beginning of barrier transition, end of wingwall or end of structure approach as applicable
5. For transverse contact joint with new PCC paving, refer to Standard Plan P10

NOTE:
The Contractor shall verify all controlling field dimensions before ordering or fabricating any material

DESIGN OVERSIGHT Yiwei Hu
1/25/12
SIGN OFF DATE

	BY	CHECKED
DESIGN	R. RIVAS	A. REJAIE
DETAILS	Z. VUKMIROVIC	S. MOYLES
QUANTITIES	R. RIVAS	M. FRECHETTE

PREPARED FOR THE STATE OF CALIFORNIA DEPARTMENT OF TRANSPORTATION

INES LI
PROJECT ENGINEER

BRIDGE NO. 33-0085
POST MILES 11.72

ARROYO LAS POSITAS BRIDGE (WIDEN)
STRUCTURE APPROACH (TYPE N MOD)

DESIGN GENERAL PLAN SHEET (ENGLISH) (REV. 7/16/10)

ORIGINAL SCALE IN INCHES FOR REDUCED PLANS 0 1 2 3

UNIT: 0735
PROJECT NUMBER & PHASE: 04000212481 CONTRACT NO.: 04-2908C4

DISREGARD PRINTS BEARING EARLIER REVISION DATES → REVISION DATES 12/23/09 03/25/10 11/8/11 1/5/12 SHEET 11 OF 15

FILE => 33-0085I-t-sad.dgn

USERNAME => s1224496 DATE PLOTTED => 23-MAY-2012 TIME PLOTTED => 06:59 2007236 (2007236ES11-WB)

REFERENCE: CALTRANS SOIL & ROCK LOGGING, CLASSIFICATION, AND PRESENTATION MANUAL (2010)

DIST	COUNTY	ROUTE	POST MILES TOTAL PROJECT	SHEET No	TOTAL SHEETS
04	Ala	580	R8.4/R14.6	736	853

GEOTECHNICAL PROFESSIONAL — DATE 1/5/12

5-14-12
PLANS APPROVAL DATE

REGISTERED PROFESSIONAL ENGINEER — GARY PARIKH — No. G.E. 666 — Exp. 12/31/13 — GEOTECHNICAL — STATE OF CALIFORNIA

The State of California or its officers or agents shall not be responsible for the accuracy or completeness of electronic copies of this plan sheet.

ALAMEDA CTC
1333 BROADWAY, SUITE 220
OAKLAND, CA 94612

PARIKH CONSULTANTS, INC.
2360 QUME DRIVE, SUITE A
SAN JOSE, CA 95131

CEMENTATION

Description	Criteria
Weak	Crumbles or breaks with handling or little finger pressure.
Moderate	Crumbles or breaks with considerable finger pressure.
Strong	Will not crumble or break with finger pressure.

BOREHOLE IDENTIFICATION

Symbol	Hole Type	Description
Size	A	Auger Boring (hollow or solid stem bucket)
Size	R RW RC P	Rotary drilled boring (conventional) Rotary drilled with self-casing wire-line Rotary core with continuously-sampled, self-casing wire-line Rotary percussion boring (air)
Size	R	Rotary drilled diamond core
Size	HD HA	Hand driven (1-inch soil tube) Hand Auger
●	D	Dynamic Cone Penetration Boring
▲	CPT	Cone Penetration Test (ASTM D 5778)
⬚	O	Other (note on LOTB)

Note: Size in inches.

CONSISTENCY OF COHESIVE SOILS

Description	Shear Strength (tsf)	Pocket Penetrometer Measurement, PP, (tsf)	Torvane Measurement, TV, (tsf)	Vane Shear Measurement, VS, (tsf)
Very Soft	Less than 0.12	Less than 0.25	Less than 0.12	Less than 0.12
Soft	0.12 - 0.25	0.25 - 0.5	0.12 - 0.25	0.12 - 0.25
Medium Stiff	0.25 - 0.5	0.5 - 1	0.25 - 0.5	0.25 - 0.5
	0.5 - 1	1 - 2	0.5 - 1	0.5 - 1
Very Stiff	1 - 2	2 - 4	1 - 2	1 - 2
Hard	Greater than 2	Greater than 4	Greater than 2	Greater than 2

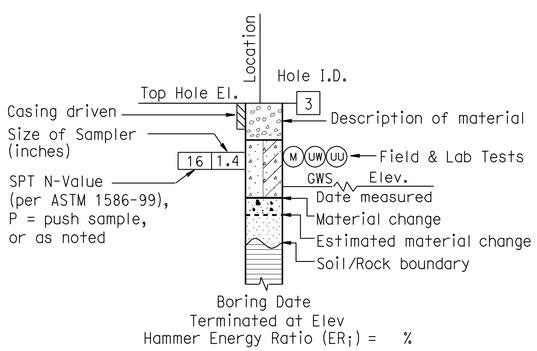

ROTARY BORING

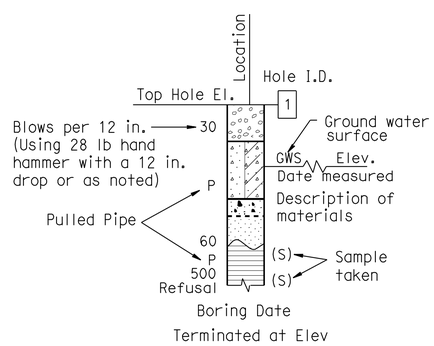

HAND BORING

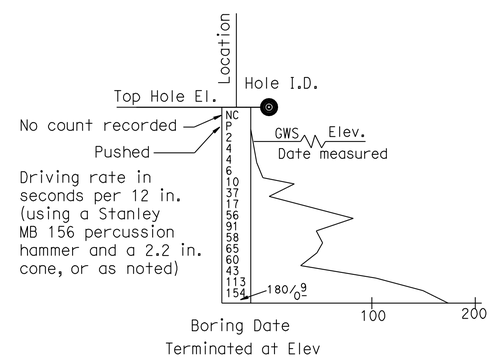

DYNAMIC CONE PENETRATION BORING

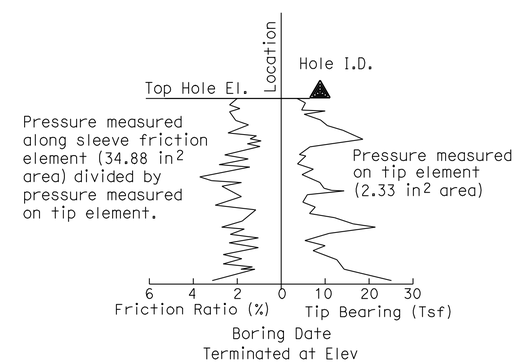

CONE PENETRATION TEST (CPT) BORING

DESIGN OVERSIGHT Yiwei Hu	DRAWN BY	O. GOUTHIER	S.DUDDU
1/25/12 SIGN OFF DATE	CHECKED BY	P. SIRCAR	FIELD INVESTIGATION BY: DATE: DECEMBER 2008- JANUARY 2009

PREPARED FOR THE STATE OF CALIFORNIA DEPARTMENT OF TRANSPORTATION

P. SIRCAR
PROJECT ENGINEER

BRIDGE NO. 33-0085
POST MILES 11.72

ARROYO LAS POSITAS BRIDGE (WIDEN)

LOG OF TEST BORINGS 1 OF 4

ORIGINAL SCALE IN INCHES FOR REDUCED PLANS 0 1 2 3

UNIT: 0735
PROJECT NUMBER & PHASE: 04000212481
CONTRACT NO.: 04-2908C4

DISREGARD PRINTS BEARING EARLIER REVISION DATES — REVISION DATES 12/17/09 06/18/10 12/18/11 1/5/12

SHEET 12 OF 15

FILE => 33-0085-z-1tb01.dgn

USERNAME => s124496 DATE PLOTTED => 23-MAY-2012 TIME PLOTTED => 07:00

REFERENCE: CALTRANS SOIL & ROCK LOGGING, CLASSIFICATION, AND PRESENTATION MANUAL (JUNE 2007)

DIST	COUNTY	ROUTE	POST MILES TOTAL PROJECT	SHEET No	TOTAL SHEETS
04	Ala	580	R8.4/R14.6	737	853

GEOTECHNICAL PROFESSIONAL — DATE 1/5/12

5-14-12
PLANS APPROVAL DATE

REGISTERED PROFESSIONAL ENGINEER — GARY PARIKH — No. G.E. 666 — Exp. 12/31/13 — GEOTECHNICAL — STATE OF CALIFORNIA

The State of California or its officers or agents shall not be responsible for the accuracy or completeness of electronic copies of this plan sheet.

ALAMEDA CTC
1333 BROADWAY, SUITE 220
OAKLAND, CA 94612

PARIKH CONSULTANTS, INC.
2360 QUME DRIVE, SUITE A
SAN JOSE, CA 95131

GROUP SYMBOLS AND NAMES

Graphic/Symbol	Group Names
GW	Well-graded GRAVEL Well-graded GRAVEL with SAND
GP	Poorly graded GRAVEL Poorly graded GRAVEL with SAND
GW-GM	Well-graded GRAVEL with SILT Well-graded GRAVEL with SILT and SAND
GW-GC	Well-graded GRAVEL with CLAY (or SILTY CLAY) Well-graded GRAVEL with CLAY and SAND (or SILTY CLAY and SAND)
GP-GM	Poorly graded GRAVEL with SILT Poorly graded GRAVEL with SILT and SAND
GP-GC	Poorly graded GRAVEL with CLAY (or SILTY CLAY) Poorly graded GRAVEL with CLAY and SAND (or SILTY CLAY and SAND)
GM	SILTY GRAVEL SILTY GRAVEL with SAND
GC	CLAYEY GRAVEL CLAYEY GRAVEL with SAND
GC-GM	SILTY, CLAYEY GRAVEL SILTY, CLAYEY GRAVEL with SAND
SW	Well-graded SAND Well-graded SAND with GRAVEL
SP	Poorly graded SAND Poorly graded SAND with GRAVEL
SW-SM	Well-graded SAND with SILT Well-graded SAND with SILT and GRAVEL
SW-SC	Well-graded SAND with CLAY (or SILTY CLAY) Well-graded SAND with CLAY and GRAVEL (or SILTY CLAY and GRAVEL)
SP-SM	Poorly graded SAND with SILT Poorly graded SAND with SILT and GRAVEL
SP-SC	Poorly graded SAND with CLAY (or SILTY CLAY) Poorly graded SAND with CLAY and GRAVEL (or SILTY CLAY and GRAVEL)
SM	SILTY SAND SILTY SAND with GRAVEL
SC	CLAYEY SAND CLAYEY SAND with GRAVEL
SC-SM	SILTY, CLAYEY SAND SILTY, CLAYEY SAND with GRAVEL
PT	PEAT
	COBBLES COBBLES and BOULDERS BOULDERS

Graphic/Symbol	Group Names
CL	Lean CLAY Lean CLAY with SAND Lean CLAY with GRAVEL SANDY lean CLAY SANDY lean CLAY with GRAVEL GRAVELLY lean CLAY GRAVELLY lean CLAY with SAND
CL-ML	SILTY CLAY SILTY CLAY with SAND SILTY CLAY with GRAVEL SANDY SILTY CLAY SANDY SILTY CLAY with GRAVEL GRAVELLY SILTY CLAY GRAVELLY SILTY CLAY with SAND
ML	SILT SILT with SAND SILT with GRAVEL SANDY SILT SANDY SILT with GRAVEL GRAVELLY SILT GRAVELLY SILT with SAND
OL	ORGANIC lean CLAY ORGANIC lean CLAY with SAND ORGANIC lean CLAY with GRAVEL SANDY ORGANIC lean CLAY SANDY ORGANIC lean CLAY with GRAVEL GRAVELLY ORGANIC lean CLAY GRAVELLY ORGANIC lean CLAY with SAND
OL	ORGANIC SILT ORGANIC SILT with SAND ORGANIC SILT with GRAVEL SANDY ORGANIC SILT SANDY ORGANIC SILT with GRAVEL GRAVELLY ORGANIC SILT GRAVELLY ORGANIC SILT with SAND
CH	Fat CLAY Fat CLAY with SAND Fat CLAY with GRAVEL SANDY fat CLAY SANDY fat CLAY with GRAVEL GRAVELLY fat CLAY GRAVELLY fat CLAY with SAND
MH	Elastic SILT Elastic SILT with SAND Elastic SILT with GRAVEL SANDY elastic SILT SANDY elastic SILT with GRAVEL GRAVELLY elastic SILT GRAVELLY elastic SILT with SAND
OH	ORGANIC fat CLAY ORGANIC fat CLAY with SAND ORGANIC fat CLAY with GRAVEL SANDY ORGANIC fat CLAY SANDY ORGANIC fat CLAY with GRAVEL GRAVELLY ORGANIC fat CLAY GRAVELLY ORGANIC fat CLAY with SAND
OH	ORGANIC elastic SILT ORGANIC elastic SILT with SAND ORGANIC elastic SILT with GRAVEL SANDY ORGANIC elastic SILT SANDY ORGANIC elastic SILT with GRAVEL GRAVELLY ORGANIC elastic SILT GRAVELLY ORGANIC elastic SILT with SAND
OL/OH	ORGANIC SOIL ORGANIC SOIL with SAND ORGANIC SOIL with GRAVEL SANDY ORGANIC SOIL SANDY ORGANIC SOIL with GRAVEL GRAVELLY ORGANIC SOIL GRAVELLY ORGANIC SOIL with SAND

FIELD AND LABORATORY TESTING

- (C) Consolidation (ASTM D 2435)
- (CL) Collapse Potential (ASTM D 5333)
- (CP) Compaction Curve (CTM 216)
- (CR) Corrosivity Testing (CTM 643, CTM 422, CTM 417)
- (CU) Consolidated Undrained Triaxial (ASTM D 4767)
- (DS) Direct Shear (ASTM D 3080)
- (EI) Expansion Index (ASTM D 4829)
- (M) Moisture Content (ASTM D 2216)
- (OC) Organic Content-% (ASTM D 2974)
- (P) Permeability (CTM 220)
- (PA) Particle Size Analysis (ASTM D 422)
- (PI) Plasticity Index (AASHTO T 90) Liquid Limit (AASHTO T 89)
- (PL) Point Load Index (ASTM D 5731)
- (PM) Pressure Meter
- (PP) Pocket Penetrometer
- (R) R-Value (CTM 301)
- (SE) Sand Equivalent (CTM 217)
- (SG) Specific Gravity (AASHTO T 100)
- (SL) Shrinkage Limit (ASTM D 427)
- (SW) Swell Potential (ASTM D 4546)
- (TV) Pocket Torvane
- (UC) Unconfined Compression-Soil (ASTM D 2166) Unconfined Compression-Rock (ASTM D 2938)
- (UU) Unconsolidated Undrained Triaxial (ASTM D 2850)
- (UW) Unit Weight (ASTM D 4767)
- (VS) Vane Shear (AASHTO T 223)

APPARENT DENSITY OF COHESIONLESS SOILS

Description	SPT N_{60} (Blows / 12 inches)
Very loose	0 - 4
Loose	5 - 10
Medium Dense	11 - 30
Dense	31 - 50
Very Dense	> 50

MOISTURE

Description	Criteria
Dry	Absence of moisture, dusty, dry to the touch
Moist	Damp but no visible water
Wet	Visible free water, usually soil is below water table

PERCENT OR PROPORTION OF SOILS

Description	Criteria
Trace	Particles are present but estimated to be less than 5%
Few	5 to 10%
Little	15 to 25%
Some	30 to 45%
Mostly	50 to 100%

PARTICLE SIZE

Description		Size
Boulder		> 12"
Cobble		3" to 12"
Gravel	Coarse	3/4" to 3"
	Fine	No. 4 to 3/4"
Sand	Coarse	No. 10 to No. 4
	Medium	No. 40 to No. 10
	Fine	No. 200 to No. 40

DESIGN OVERSIGHT — Yiwei Hu
1/25/12
SIGN OFF DATE

DRAWN BY: O. GOUTHIER
CHECKED BY: P. SIRCAR

S.DUDDU
FIELD INVESTIGATION BY:
DATE: DECEMBER 2008- JANUARY 2009

PREPARED FOR THE STATE OF CALIFORNIA DEPARTMENT OF TRANSPORTATION

P. SIRCAR
PROJECT ENGINEER

BRIDGE NO. 33-0085
POST MILES 11.72

ARROYO LAS POSITAS BRIDGE (WIDEN)
LOG OF TEST BORINGS 2 OF 4

ORIGINAL SCALE IN INCHES FOR REDUCED PLANS 0 1 2 3

UNIT: 0735
PROJECT NUMBER & PHASE: 04000212481
CONTRACT NO.: 04-2908C4

DISREGARD PRINTS BEARING EARLIER REVISION DATES
REVISION DATES: 12/22/09 06/16/10 11/8/11 1/5/12

SHEET 13 OF 15

FILE => 33-0085-z-1tb02.dgn

USERNAME => S13224396 DATE PLOTTED => 23-MAY-2012 TIME PLOTTED => 07:00

DIST	COUNTY	ROUTE	POST MILES TOTAL PROJECT	SHEET No	TOTAL SHEETS
04	Ala	580	R8.4/R14.6	738	853

GEOTECHNICAL PROFESSIONAL — DATE 1/5/12

5-14-12
PLANS APPROVAL DATE

The State of California or its officers or agents shall not be responsible for the accuracy or completeness of electronic copies of this plan sheet.

REGISTERED PROFESSIONAL ENGINEER — GARY PARIKH — No. G.E. 666 — Exp. 12/31/13 — GEOTECHNICAL — STATE OF CALIFORNIA

ALAMEDA CTC
1333 BROADWAY, SUITE 220
OAKLAND, CA 94612

PARIKH CONSULTANTS, INC.
2360 QUME DRIVE, SUITE A
SAN JOSE, CA 95131

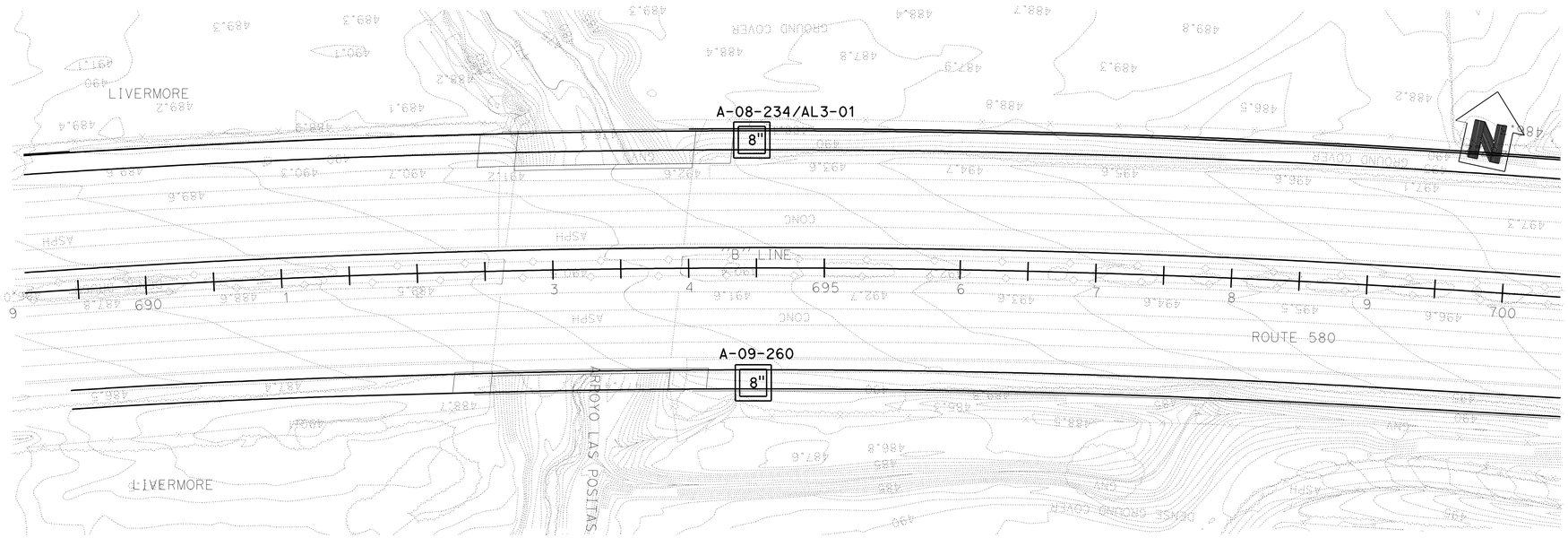

BENCHMARK:
The Vertical Datum shown hereon is based on North American Vertical Datum of 1988 (NAVD). The 1988 Elevations for this project were Established ising Digital Levelling & GPS Survey Measurements and a Least Squares Adjustment Holdings NGS Benchmarks GPS control point 35 - PID DE8495, L 1259 - PID HS4075, CHABOT A - PID AI7653, & OLD RM 3 = TIDAL 5 - PID HS3429 fixed to their published values.

All Dimensions are in Feet unless otherwise shown.

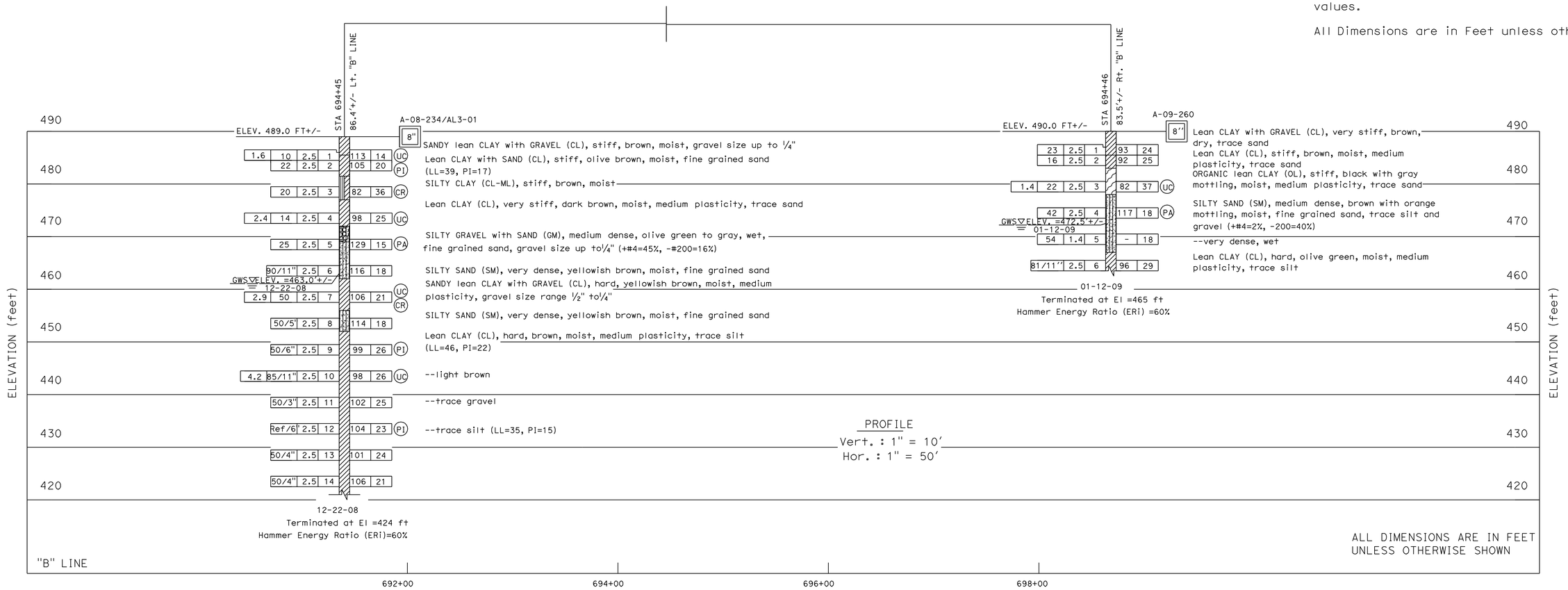

DESIGN OVERSIGHT Yiwei Hu — 1/25/12 SIGN OFF DATE	DRAWN BY O. GOUTHIER	S.DUDDU — FIELD INVESTIGATION BY:	PREPARED FOR THE STATE OF CALIFORNIA DEPARTMENT OF TRANSPORTATION
	CHECKED BY P. SIRCAR	DATE: DECEMBER 2008- JANUARY 2009	P. SIRCAR — PROJECT ENGINEER

BRIDGE NO. 33-0085 — POST MILES 11.72

ARROYO LAS POSITAS BRIDGE (WIDEN)

LOG OF TEST BORINGS 3 OF 4

ORIGINAL SCALE IN INCHES FOR REDUCED PLANS 0 1 2 3

UNIT: 0735
PROJECT NUMBER & PHASE: 04000212481 CONTRACT NO.: 04-2908C4

DISREGARD PRINTS BEARING EARLIER REVISION DATES → 12/21/09 06/16/10 11/18/11 1/5/12

SHEET 14 OF 15

FILE => 33-0085-z-ltb03.dgn

USERNAME => S124496 DATE PLOTTED => 23-MAY-2012 TIME PLOTTED => 07:00

DIVISION OF ENGINEERING SERVICES – GEOTECHNICAL SERVICES

As-Built Log of Test Borings sheet is considered an informational document only. As such, the State of California registration seal with signature, license number and registration certificate expiration date confirm that this is a true and accurate copy of the original document. This drawing is available and presented only for the convenience of any bidder, contractor or other interested party.

DIST.	COUNTY	ROUTE	POST MILES-TOTAL PROJECT	Sheet No.	Total Sheets
04	Ala	580	R8.4/R14.6	739	853

REGISTERED CIVIL ENGINEER — DATE 1/5/12

REGISTERED PROFESSIONAL ENGINEER — GARY PARIKH — No. G.E. 666 — Exp. 12/31/13 — GEOTECHNICAL — STATE OF CALIFORNIA

ARROYO LAS POSITAS BRIDGE (WIDEN)

LOG OF TEST BORINGS 4 OF 4

NOTE: A COPY OF THIS LOG OF TEST BORINGS IS AVAILABLE AT OFFICE OF STRUCTURE MAINTENANCE AND INVESTIGATIONS, SACRAMENTO, CALIFORNIA

UNIT: 0735
PROJECT NUMBER & PHASE: 04000212481

BRIDGE No.	Sheet	of
33-0085	15	15

To accompany plans dated 5-14-12

DIST.	COUNTY	ROUTE	POST MIL.	TOTAL SHEETS
04	ALA	580	8.4/R1	185	248

April 27 1970

"F8" Line corresponds to the "B" line.
Revisions made to this Log of Test Borings from the original 1965 Log of Test Borings are the addition of the following table and notes:

Boring	Station	Offset from 'B LINE'
B-1	692+58	75 feet Rt.
B-3	692+56	74 feet Lt.
B-4	693+09	7 feet Lt.
B-3	693+84	6 feet Lt.

1. See the General Plan and/or Foundation Plan for the Stationing.
2. The data are the locations for the As-Built Test Borings referenced to the proposed new structure location. This table is presented on the As-Built Log of Test Boring sheet for the convenience of any bidder, contractor or other interested party.

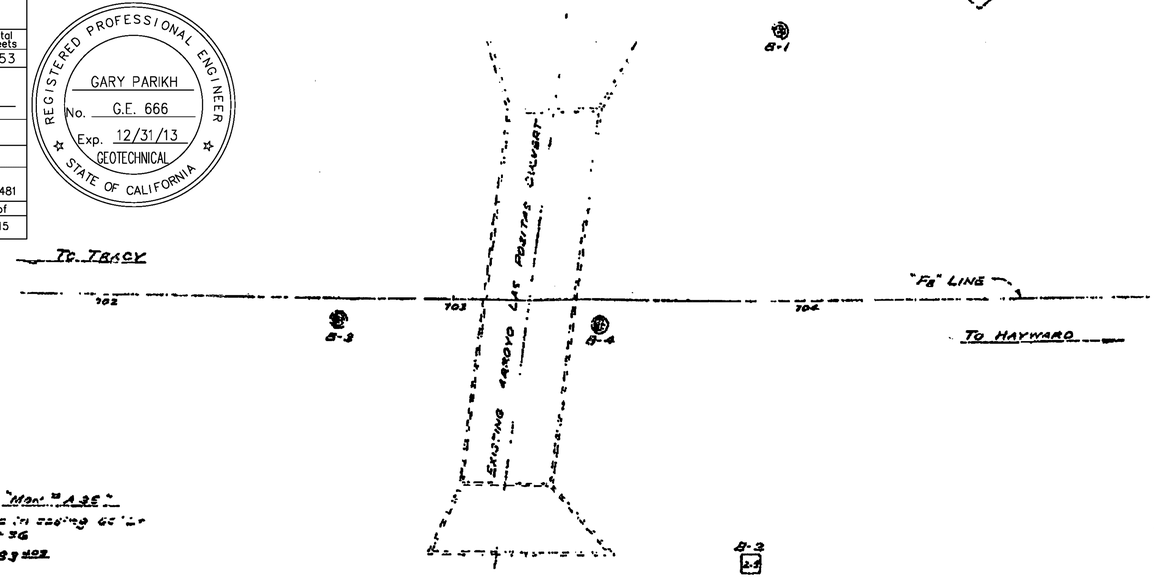

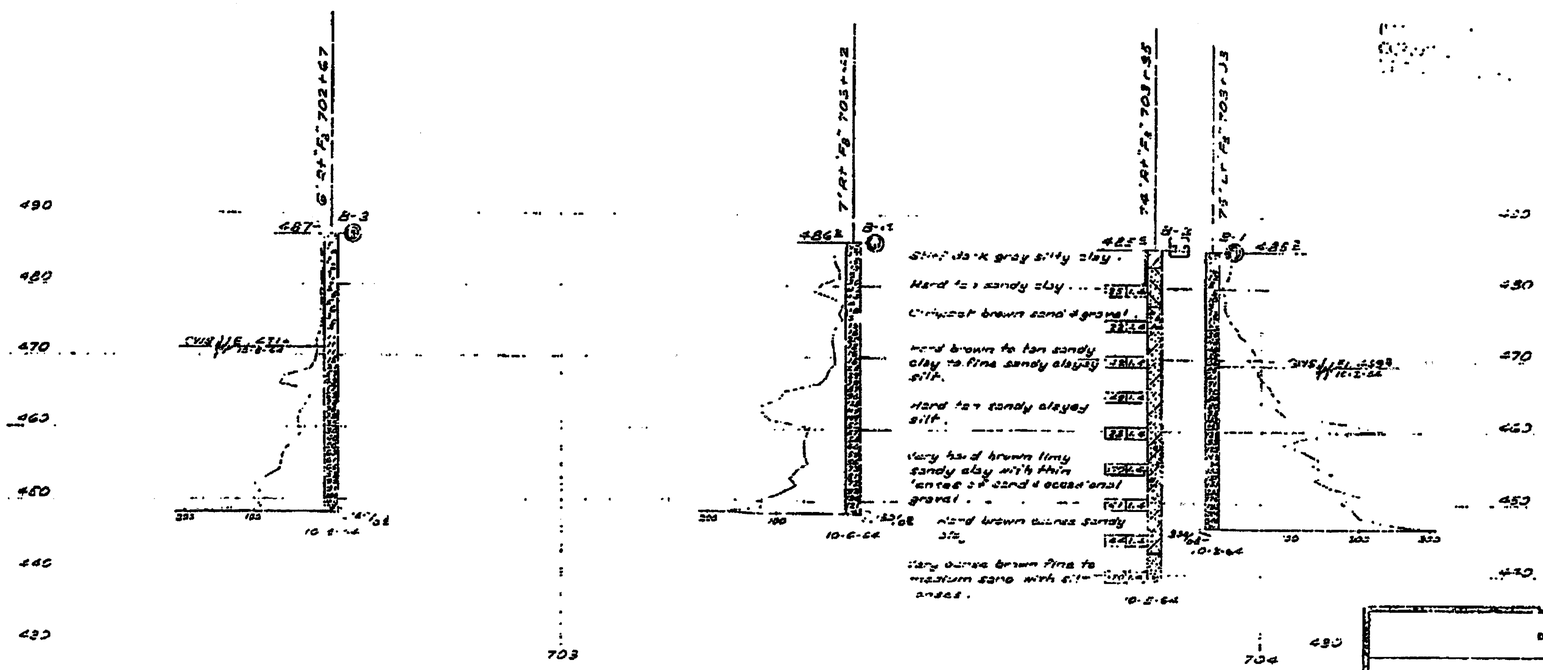

LEGEND OF EARTH MATERIALS

INDICATION OF MATERIAL BASED ON STANDARD PENETRATION RESISTANCE

NOTE: Classification of earth material as shown on this sheet is based upon field inspection and is not to be construed to imply mechanical analysis.

AS BUILT PLANS
Contract No. 04-136444
Date Completed 9-25-72
Document No. 6229

STATE OF CALIFORNIA
DEPARTMENT OF PUBLIC WORKS
DIVISION OF HIGHWAYS

ARROYO LAS POSITAS BRIDGE

LOG OF TEST BORINGS

SCALE — DRAWN — FILE — DATE 12-5-72 DRAWING — SHEET 4 OF 9

PREL. DRAWING NO. PR-

32

DIST	COUNTY	ROUTE	POST MILES TOTAL PROJECT	SHEET No	TOTAL SHEETS
04	Ala	580	R8.4/R14.6	740	853

REGISTERED CIVIL ENGINEER 1/5/12 DATE

5-14-12
PLANS APPROVAL DATE

REGISTERED PROFESSIONAL ENGINEER INES S. LI No. C51561 Exp. 6/30/12 CIVIL STATE OF CALIFORNIA

The State of California or its officers or agents shall not be responsible for the accuracy or completeness of scanned copies of this plan sheet.

BIGGS CARDOSA ASSOCIATES INC.
865 THE ALAMEDA
SAN JOSE, CALIFORNIA 95126

ALAMEDA CTC
1333 BROADWAY, SUITE 220
OAKLAND, CALIFORNIA 94612

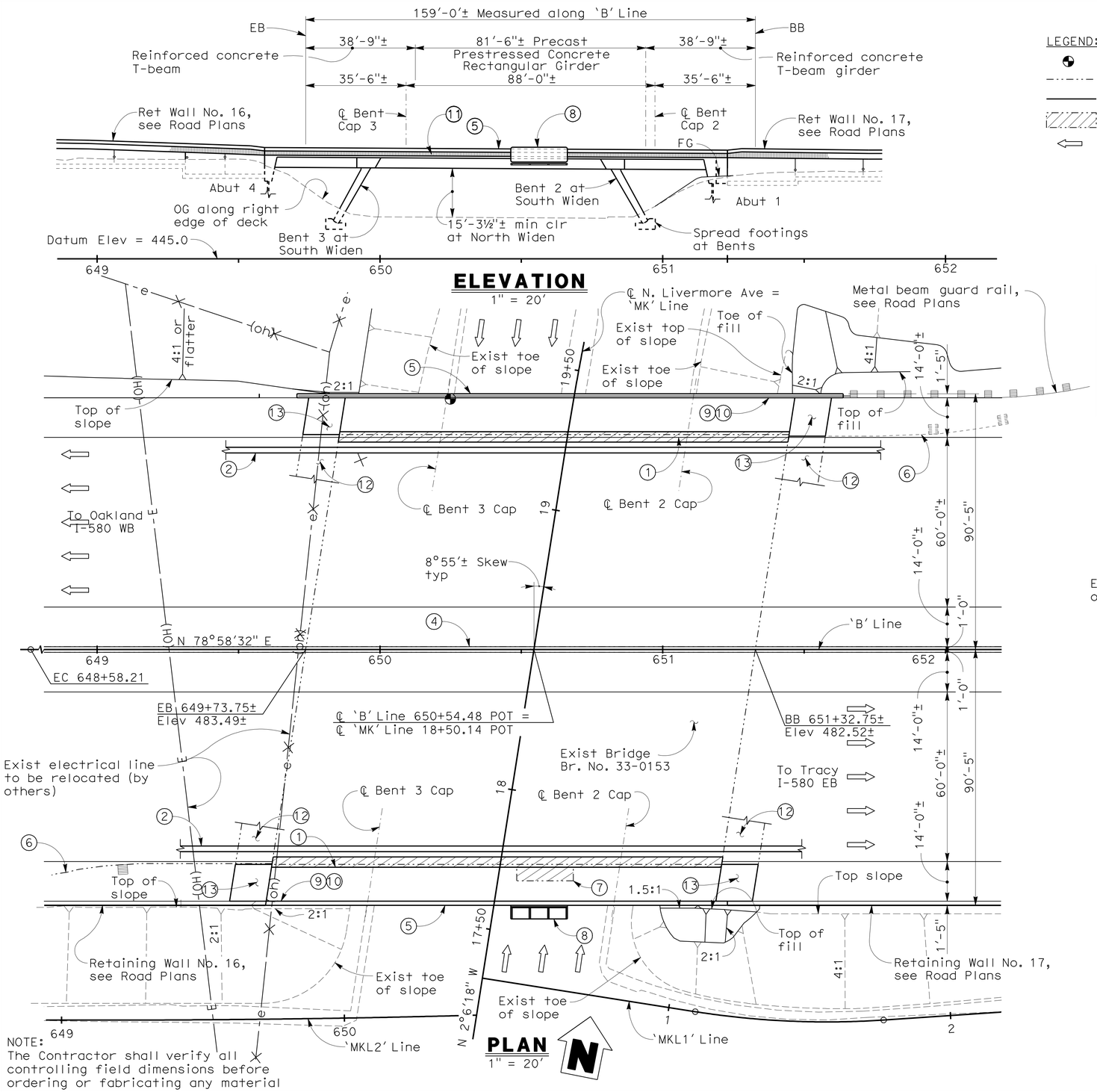

NOTE:
The Contractor shall verify all controlling field dimensions before ordering or fabricating any material

LEGEND:

- Indicates point of min vert clearance
- Indicates exist structure
- Indicates new construction
- Indicates bridge removal (Portion)
- Indicates direction of traffic

PILE DATA TABLE

Location	Pile Type	Nominal Resistance (kips) Compression	Nominal Resistance (kips) Tension	Design Tip Elev (ft)	Specified Tip Elev (ft)	Nominal Driving Resistance (kips)
Abutment 1	Steel H pile HP12x53	170	0	448.0 (a) 457.0 (c)	448.0	170
Abutment 4	Steel H pile HP12x53	170	0	447.0 (a) 459.0 (c)	447.0	170

Design tip elevation is controlled by the following demands:
(a) Compression; (b) Tension; (c) Lateral loads

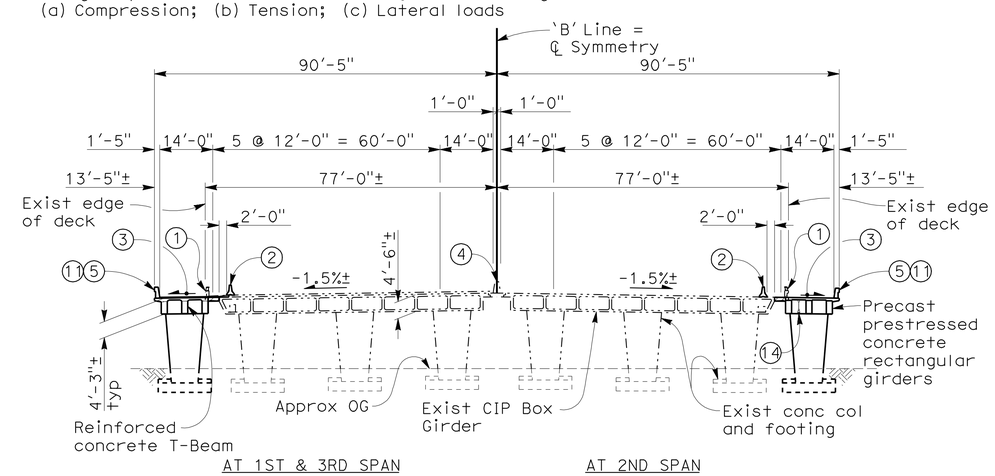

TYPICAL SECTION

1" = 20'

NOTES:

1. Remove existing overhang, concrete barrier, metal bridge railing and portion of wingwalls
2. Temporary Railing (Type K), see Road Plans
3. Match existing cross slope
4. Existing Concrete Barrier Type 60A
5. Concrete Barrier (Type 732 Mod)
6. Existing metal beam guard railing to be removed
7. Exist bridge mounted sign to be removed and relocated, see Road Plans
8. Install bridge mounted sign, see 'SIGN STRUCTURE DETAILS No. 1' and 'SIGN STRUCTURE DETAILS No. 2' sheets
9. Paint 'Bridge No. 33-0153'
10. Paint 'North Livermore Ave UC'
11. Fractured rib texture
12. Exist structure approach slab
13. Structure approach slab (Type N Mod)
14. Pendant soffit luminaire, see Electrical Plans
15. For Index To Bridge Plans Quantities, and General Notes, see 'INDEX TO PLANS' sheet
16. Slope indicated is approximate. See Road Plans for grading

DESIGN OVERSIGHT Yiwei Hu
1/25/12
SIGN OFF DATE

	BY	CHECKED			
DESIGN	D. CHAN	S. KOTAMALA	LOAD & RESISTANCE FACTOR DESIGN	LIVE LOADING: HL93 W/"LOW-BOY"; PERMIT DESIGN VEHICLE	
DETAILS	D. CHAN	S. KOTAMALA	LAYOUT	I. LI	D. DEVLIN
QUANTITIES	H. BEDAIR	B. GHORBANI	SPECIFICATIONS	I. LI	D. DEVLIN (PLANS AND SPECS COMPARED)

PREPARED FOR THE STATE OF CALIFORNIA DEPARTMENT OF TRANSPORTATION

INES LI
PROJECT ENGINEER

BRIDGE NO. 33-0153
POST MILES 12.53

NORTH LIVERMORE AVE UC (WIDEN)
GENERAL PLAN

DESIGN GENERAL PLAN SHEET (ENGLISH) (REV. 7/16/10)

ORIGINAL SCALE IN INCHES FOR REDUCED PLANS 0 1 2 3

UNIT: 0735
PROJECT NUMBER & PHASE: 04000212481 CONTRACT NO.: 04-2908C4

DISREGARD PRINTS BEARING EARLIER REVISION DATES 12/23/09 03/25/10 11/8/11 1/5/12

SHEET	OF
1	21

FILE => 33-0153-a-gp01.dgn

USERNAME => S13244496 DATE PLOTTED => 23-MAY-2012 TIME PLOTTED => 07:00 2007236.2 (2007236DS1)

DIST	COUNTY	ROUTE	POST MILES TOTAL PROJECT	SHEET No	TOTAL SHEETS
04	Ala	580	R8.4/R14.6	741	853

REGISTERED CIVIL ENGINEER 1/5/12 DATE

5-14-12
PLANS APPROVAL DATE

REGISTERED PROFESSIONAL ENGINEER INES S. LI No. C51561 Exp.6/30/12 CIVIL STATE OF CALIFORNIA

The State of California or its officers or agents shall not be responsible for the accuracy or completeness of scanned copies of this plan sheet.

BIGGS CARDOSA ASSOCIATES INC.
865 THE ALAMEDA
SAN JOSE, CALIFORNIA 95126

ALAMEDA CTC
1333 BROADWAY, SUITE 220
OAKLAND, CALIFORNIA 94612

INDEX TO BRIDGE PLANS

SHEET NO.	TITLE
1	GENERAL PLAN
2	INDEX TO PLANS
3	FOUNDATION PLAN
4	ABUTMENT LAYOUT
5	ABUTMENT DETAILS No. 1
6	ABUTMENT DETAILS No. 2
7	BENT DETAILS No. 1
8	BENT DETAILS No. 2
9	BENT DETAILS No. 3
10	TYPICAL SECTION
11	GIRDER LAYOUT
12	LONGITUDINAL REINFORCEMENT
13	PRECAST PRESTRESSED GIRDER DETAILS
14	CONSTRUCTION SEQUENCE
15	SIGN STRUCTURE DETAILS No. 1
16	SIGN STRUCTURE DETAILS No. 2
17	STRUCTURE APPROACH (TYPE N MODIFIED)
18	LOG OF TEST BORINGS 1 OF 4
19	LOG OF TEST BORINGS 2 OF 4
20	LOG OF TEST BORINGS 3 OF 4
21	LOG OF TEST BORINGS 4 OF 4

STANDARD PLANS DATED MAY 2006

A10A	ACRONYMS AND ABBREVIATIONS (SHEET 1 OF 2)
A10B	ACRONYMS AND ABBREVIATIONS (SHEET 2 OF 2
A10C	SYMBOLS (SHEET 1 OF 2)
A10D	SYMBOLS (SHEET 2 OF 2)
A62B	LIMITS OF PAYMENT FOR EXCAVATION AND BACKFILL - BRIDGE SURCHARGE AND WALL
B0-1	BRIDGE DETAILS
B0-3	BRIDGE DETAILS
B0-5	BRIDGE DETAILS
B0-13	BRIDGE DETAILS
B6-1	T-BEAM DETAILS
B6-21	JOINT SEALS (MAXIMUM MOVEMENT RATING = 2")
B11-55	CONCRETE BARRIER TYPE 732
T3	TEMPORARY RAILING (TYPE K)
S16	OVERHEAD SIGN - WALKWAY DETAILS No. 1
S17	OVERHEAD SIGN - WALKWAY DETAILS No. 2
S17A	OVERHEAD SIGN - WALKWAY DETAILS No. 3
S18	OVERHEAD SIGN - WALKWAY SAFETY RAILING DETAILS
S20	OVERHEAD SIGNS STEEL FRAMES - REMOVABLE SIGN PANEL FRAMES

ABBREVIATIONS

Eq	Equal
OH	Opposite Hand
TOF	Top of footing

B6-1 — Indicates Standard Plan Sheet No.
D-1 — Indicates Detail No.

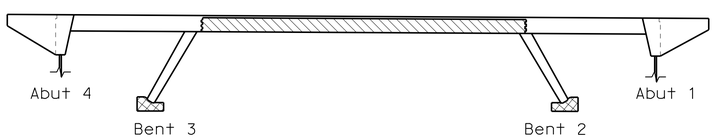

Structural Concrete, Bridge (fc' = 4.0 ksi)

Structural Concrete, Bridge Footing

Precast Prestressed Concrete Girder
See 'PRECAST PRESTRESSED GIRDER DETAILS' sheet

CONCRETE STRENGTH AND TYPE LIMITS

NO SCALE

NOTE:
The Contractor shall verify all controlling field dimensions before ordering or fabricating any material

GENERAL NOTES
LOAD & RESISTANCE FACTOR DESIGN

DESIGN: AASHTO LRFD Bridge Design Specifications, 4th Edition and California Amendments; except that bridge barrier and approach slabs are designed using Bridge Design Specifications ('96 AASHTO w/ Revisions by Caltrans)

SEISMIC DESIGN: Caltrans Seismic Design Criteria (SDC) Version 1.4, dated June 2006

DEAD LOAD: Includes 35 psf for future wearing surface. Additional future wearing surface shall not be allowed for I580 WB widen due to new 3" Max overlay to be placed on widen. The deck load between the precast prestressed girders has been increased by a factor of 10% to allow for the use of steel deck forms.

LIVE LOADING: HL93 with Low-Boy and Permit Design Vehicle

SEISMIC LOADING: Caltrans SDC (v 1.4, June 2006), Figure B.8
Governing Fault: Greenville Fault
Fault Distance = 4.80 miles
(Mmax = 7.25, Soil Profile Type D, PBA = 0.5g)

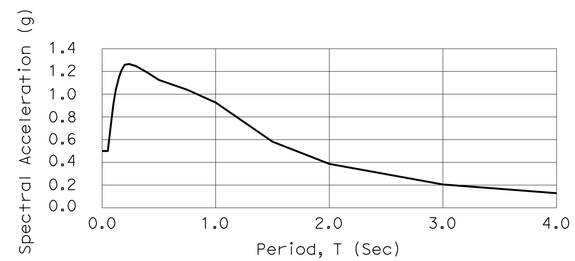

ARS DESIGN CURVE

NO SCALE

With the following modifications:

(1) No change of Sa for structural periods < 0.5 sec
(2) 20% increase of Sa for structural periods > 1 sec
(3) Linear interpolation for structural periods between 0.5 and 1 sec

REINFORCED CONCRETE: fy = 60 ksi
f'c = 3.6 ksi (except as shown on 'CONCRETE STRENGTH AND TYPE LIMITS' diagram)

PRESTRESSED CONCRETE: See 'PRECAST/PRESTRESSED GIRDER DETAILS' sheet

NORTH LIVERMORE AVE UC (WIDEN) BR. NO. 33-0153

QUANTITIES

BRIDGE REMOVAL (PORTION), LOCATION B	LUMP	SUM
STRUCTURE EXCAVATION (BRIDGE)	280	CY
STRUCTURE BACKFILL (BRIDGE)	195	CY
FURNISH STEEL PILING (HP 12 X 53)	300	LF
DRIVE STEEL PILE (HP 12 X 53)	12	EA
STRUCTURAL CONCRETE, BRIDGE FOOTING	43	CY
STRUCTURAL CONCRETE, BRIDGE	455	CY
STRUCTURAL CONCRETE, APPROACH SLAB (TYPE N MODIFIED)	20	CY
FRACTURED RIB TEXTURE	517	SQFT
DRILL AND BOND DOWEL	64	LF
FURNISH PRECAST PRESTRESSED CONCRETE GIRDER (80'-90')	6	EA
ERECT PRECAST PRESTRESSED CONCRETE GIRDER	6	EA
JOINT SEAL (MR1/2")	32	LF
BAR REINFORCING STEEL (BRIDGE)	129,500	LB
FURNISH SIGN STRUCTURE (BRIDGE MOUNTED WITH WALKWAY)	1,700	LB
INSTALL SIGN STRUCTURE (BRIDGE MOUNTED WITH WALKWAY)	1,700	LB
CONCRETE BARRIER (TYPE 732 MODIFIED)	355	LF

DESIGN OVERSIGHT Yiwei Hu
1/25/12
SIGN OFF DATE

	BY	CHECKED
DESIGN	D. CHAN	S. KOTAMALA
DETAILS	D. CHAN	S. KOTAMALA
QUANTITIES	H. BEDAIR	B. GHORBANI

PREPARED FOR THE STATE OF CALIFORNIA DEPARTMENT OF TRANSPORTATION

INES LI
PROJECT ENGINEER

BRIDGE NO. 33-0153
POST MILES 12.53

NORTH LIVERMORE AVE UC (WIDEN)
INDEX TO PLANS

DESIGN GENERAL PLAN SHEET (ENGLISH) (REV. 7/16/10)

ORIGINAL SCALE IN INCHES FOR REDUCED PLANS 0 1 2 3

UNIT: 0735
PROJECT NUMBER & PHASE: 04000212481 CONTRACT NO.: 04-2908C4

DISREGARD PRINTS BEARING EARLIER REVISION DATES 12/23/09 03/25/10 11/8/11 1/5/12

SHEET 2 OF 21

FILE => 33-0153-a-itp.dgn

USERNAME => ST224496 DATE PLOTTED => 23-MAY-2012 TIME PLOTTED => 07:00

2007236 (2007236DS2)

DIST	COUNTY	ROUTE	POST MILES TOTAL PROJECT	SHEET No	TOTAL SHEETS
04	Ala	580	R8.4/R14.6	742	853

REGISTERED CIVIL ENGINEER 1/5/12 DATE

5-14-12
PLANS APPROVAL DATE

REGISTERED PROFESSIONAL ENGINEER INES S. LI No. C51561 Exp.6/30/12 CIVIL STATE OF CALIFORNIA

The State of California or its officers or agents shall not be responsible for the accuracy or completeness of scanned copies of this plan sheet.

BIGGS CARDOSA ASSOCIATES INC.
865 THE ALAMEDA
SAN JOSE, CALIFORNIA 95126

ALAMEDA CTC
1333 BROADWAY, SUITE 220
OAKLAND, CALIFORNIA 94612

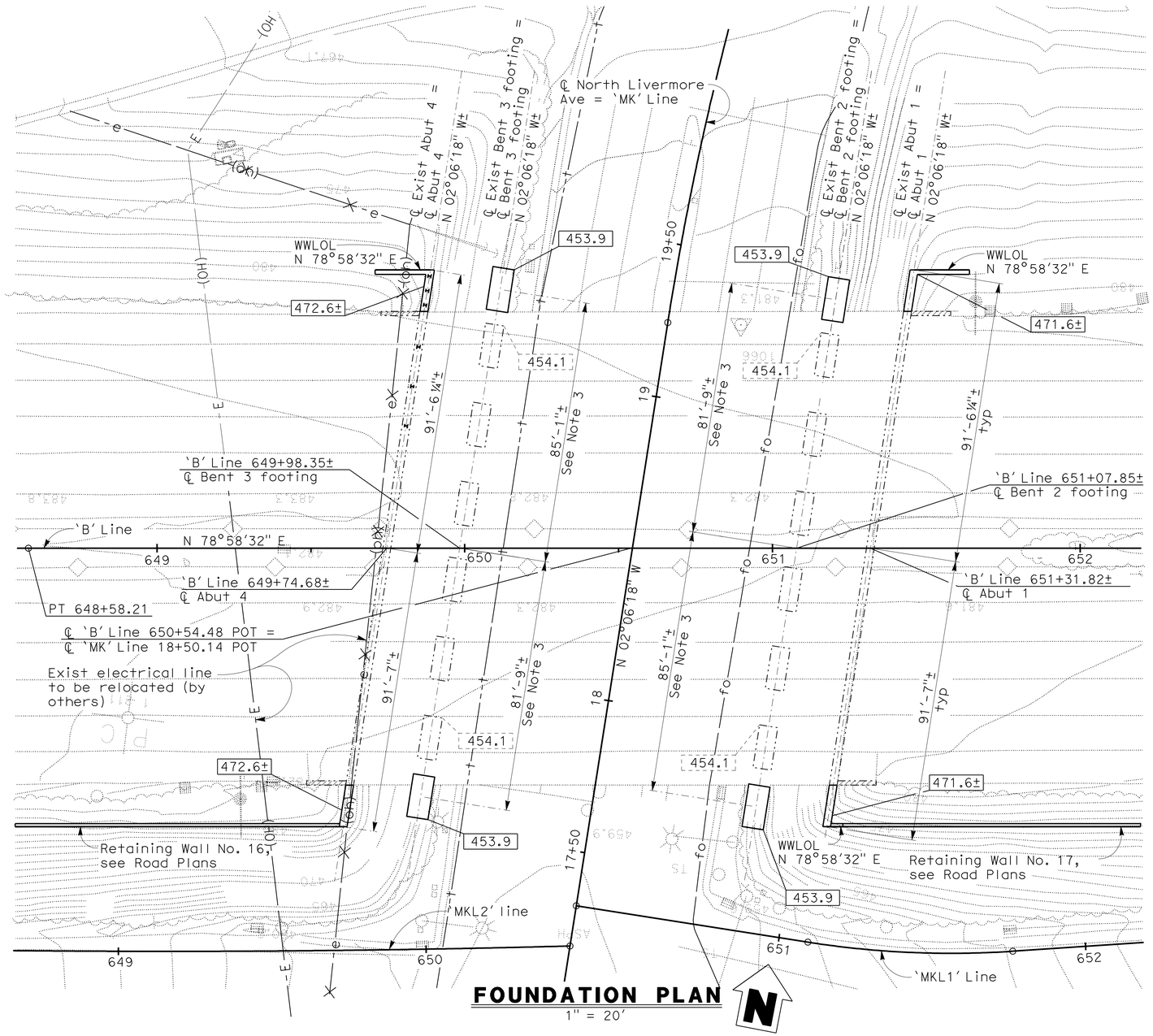

FOUNDATION PLAN
1" = 20'

NOTE:
The Contractor shall verify all controlling field dimensions before ordering or fabricating any material

LEGEND:

453.9	Indicates bottom of footing elevation (NAVD88)
453.9	Indicates bottom of existing footing elevation (NAVD88)
446.7	Indicates spot elevation
	Indicates HP steel pile, not all piles shown
	Indicates exist concrete to be removed
	Indicates exist structure
	Indicates new structure

NOTES:
1. Utilities shown are for illustrative purposes only, verify with utility drawings
2. There is a vertical datum difference between the project datum (NAVD 88) and the as-built datum (NGVD 29). The following conversion was used in design: Datum conversion: Elev (NAVD 88) = Elev (NGVD 29) + 2.64'
3. For footing location, see 'BENT DETAILS No. 1' Sheet for controlling dimensions. Adjust footing offset dimension so that east and west pier faces align with exist pier faces and so that new and exist pier center lines are parallel.

SPREAD FOOTING DATA TABLE

Support Location	Load and Resistance Factor Design (LRFD)		
	Service Permissible Net Contact Stress Settlement (ksf)	Strength Factored Gross Nominal Bearing Resistance ϕ_b = 0.45 (ksf)	Extreme Event Factored Gross Nominal Bearing Resistance ϕ_b = 1.00 (ksf)
Bent 2	8.6	14.0	31.0
Bent 3	8.6	14.0	31.0

BENCH MARK AND DATUM

Monument	Coordinates		Elev	Description/location
	Northing	Easting		
1066	2080247.157	6193174.946	481.30	T.Y. Lin mag nail at center of flight cross in outside shld of WB I-580 at North Livermore UC

GEOTECHNICAL PROFESSIONAL 11/8/11 APPROVAL DATE

DESIGN OVERSIGHT Yiwei Hu
1/25/12
SIGN OFF DATE

SCALE:	VERT.DATUM	HORZ.DATUM
PHOTOGRAMMETRY AS OF:		ALIGNMENT TIES
SURVEYED	BY	DRAFTED BY
FIELD CHECKED	BY	CHECKED BY

DESIGN	BY D. CHAN	CHECKED	S. KOTAMALA
DETAILS	BY D. CHAN	CHECKED	S. KOTAMALA
QUANTITIES	BY H. BEDAIR	CHECKED	B. GHORBANI

PREPARED FOR THE STATE OF CALIFORNIA DEPARTMENT OF TRANSPORTATION

INES LI
PROJECT ENGINEER

BRIDGE NO. 33-0153
POST MILES 12.53

NORTH LIVERMORE AVE UC (WIDEN)
FOUNDATION PLAN

FOUNDATION PLAN SHEET (ENGLISH) (REV. 7-16-10)

ORIGINAL SCALE IN INCHES FOR REDUCED PLANS 0 1 2 3

UNIT: 0735
PROJECT NUMBER & PHASE: 04000212481 CONTRACT NO.: 04-2908C4

DISREGARD PRINTS BEARING EARLIER REVISION DATES → REVISION DATES 12/23/09 03/25/10 11/8/11 1/5/12 SHEET 3 OF 21

FILE => 33-0153-f-fp01.dgn

USERNAME => s6124496 DATE PLOTTED => 23-MAY-2012 TIME PLOTTED => 07:00 2007236.2 (2007236053)

DIST	COUNTY	ROUTE	POST MILES TOTAL PROJECT	SHEET No	TOTAL SHEETS
04	Ala	580	R8.4/R14.6	743	853

REGISTERED CIVIL ENGINEER 1/5/12 DATE

5-14-12
PLANS APPROVAL DATE

REGISTERED PROFESSIONAL ENGINEER INES S. LI No. C51561 Exp.6/30/12 CIVIL STATE OF CALIFORNIA

The State of California or its officers or agents shall not be responsible for the accuracy or completeness of scanned copies of this plan sheet.

BIGGS CARDOSA ASSOCIATES INC.
865 THE ALAMEDA
SAN JOSE, CALIFORNIA 95126

ALAMEDA CTC
1333 BROADWAY, SUITE 220
OAKLAND, CALIFORNIA 94612

LEGEND:

- Indicates exist piles
- Indicates new piles
- Indicates exist structure
- Indicates new structure
- Indicates concrete to be removed

NOTES:

For 'SECTION A-A' and 'SECTION B-B', 'DETAIL 1' and 'DETAIL 2', see 'ABUTMENT DETAILS No. 1' sheet

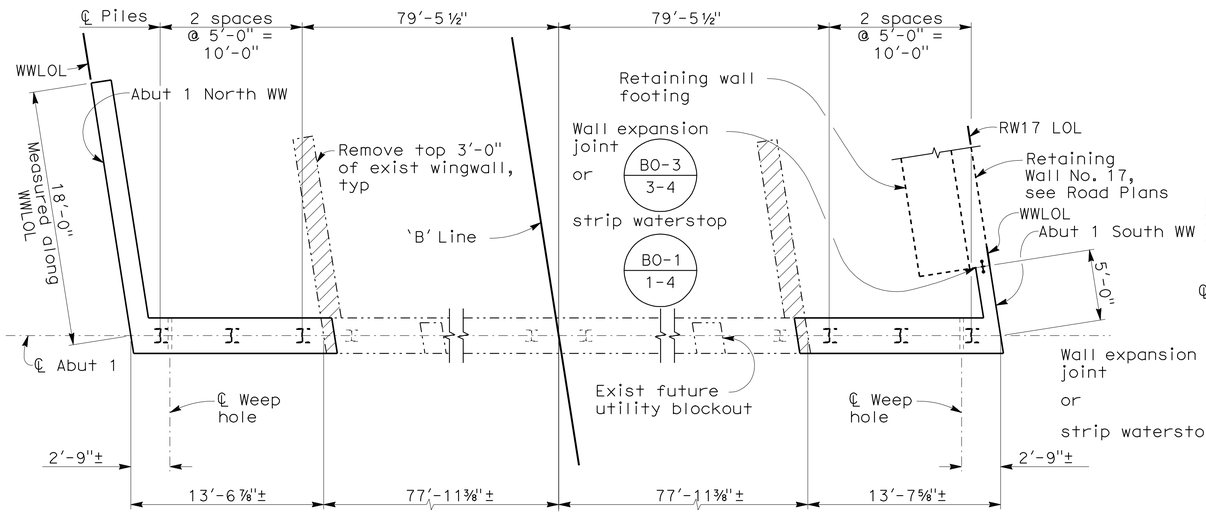

ABUTMENT 1 PLAN

3/16" = 1'-0"

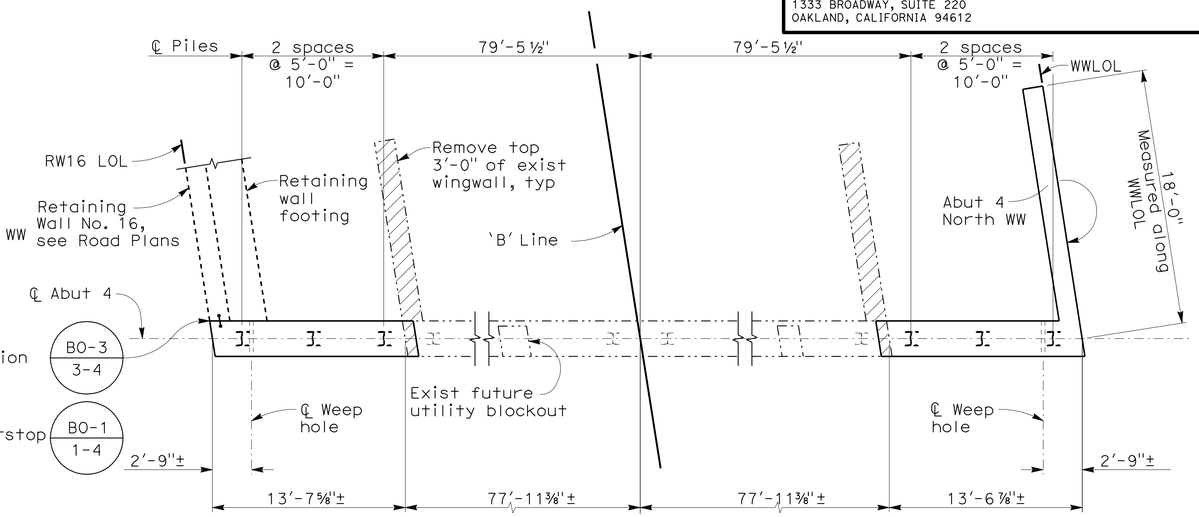

ABUTMENT 4 PLAN

3/16" = 1'-0"

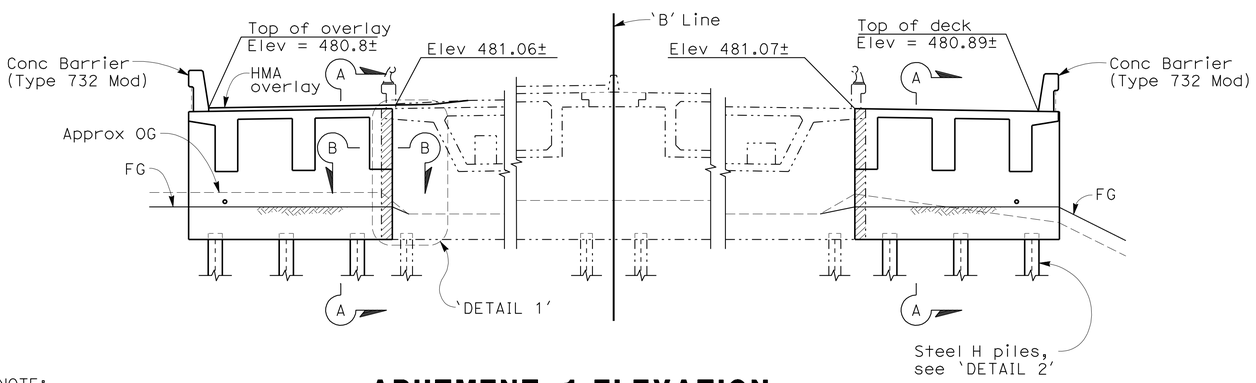

ABUTMENT 1 ELEVATION

3/16" = 1'-0"

NOTE:
All piles not shown.

NOTE:
The Contractor shall verify all controlling field dimensions before ordering or fabricating any material

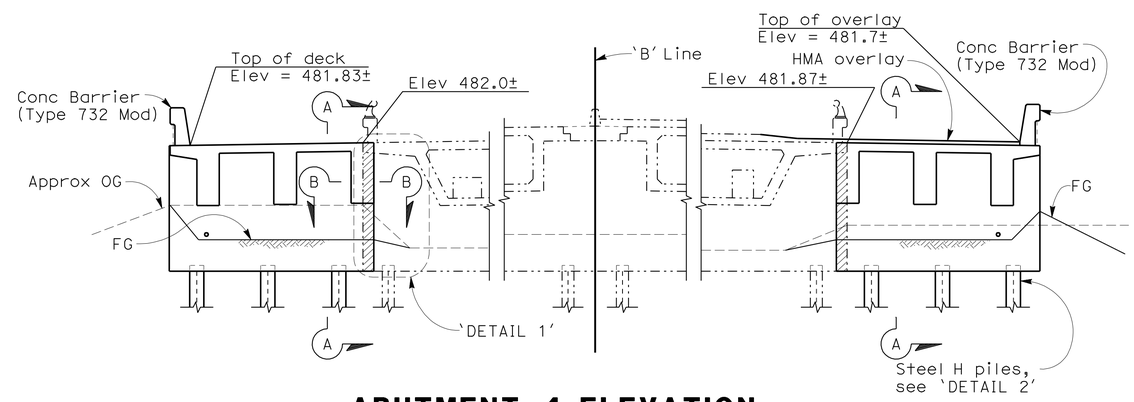

ABUTMENT 4 ELEVATION

3/16" = 1'-0"

NOTE:
All piles not shown.

DESIGN OVERSIGHT Yiwei Hu
1/25/12
SIGN OFF DATE

	BY	CHECKED
DESIGN	D. CHAN	S. KOTAMALA
DETAILS	D. CHAN	S. KOTAMALA
QUANTITIES	H. BEDAIR	B. GHORBANI

PREPARED FOR THE STATE OF CALIFORNIA DEPARTMENT OF TRANSPORTATION

INES LI
PROJECT ENGINEER

BRIDGE NO. 33-0153
POST MILES 12.53

NORTH LIVERMORE AVE UC (WIDEN)
ABUTMENT LAYOUT

DESIGN GENERAL PLAN SHEET (ENGLISH) (REV. 7/16/10)

ORIGINAL SCALE IN INCHES FOR REDUCED PLANS 0 1 2 3

UNIT: 0735
PROJECT NUMBER & PHASE: 04000212481 CONTRACT NO.: 04-2908C4

DISREGARD PRINTS BEARING EARLIER REVISION DATES 12/23/09 3/25/10 11/8/11 1/5/12

SHEET 4 OF 21

FILE => 33-0153-h-a04-lo1.dgn

USERNAME => s124496 DATE PLOTTED => 23-MAY-2012 TIME PLOTTED => 07:00

2007236.2 (2007236D54)

DIST	COUNTY	ROUTE	POST MILES TOTAL PROJECT	SHEET No	TOTAL SHEETS
04	Ala	580	R8.4/R14.6	744	853

REGISTERED CIVIL ENGINEER 1/5/12 DATE

5-14-12
PLANS APPROVAL DATE

REGISTERED PROFESSIONAL ENGINEER INES S. LI No. C51561 Exp.6/30/12 CIVIL STATE OF CALIFORNIA

The State of California or its officers or agents shall not be responsible for the accuracy or completeness of scanned copies of this plan sheet.

BIGGS CARDOSA ASSOCIATES INC.
865 THE ALAMEDA
SAN JOSE, CALIFORNIA 95126

ALAMEDA CTC
1333 BROADWAY, SUITE 220
OAKLAND, CALIFORNIA 94612

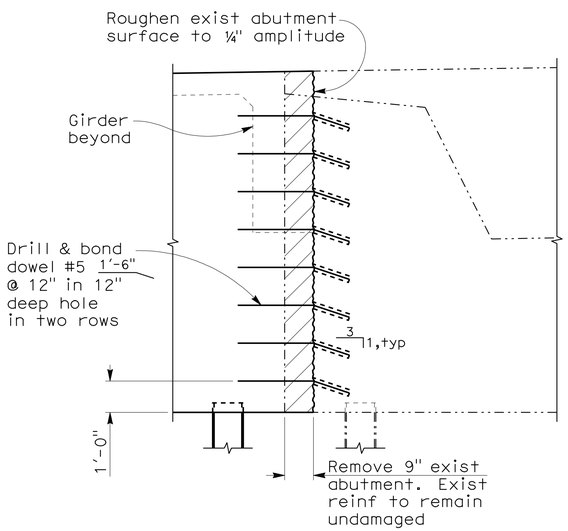

DETAIL 1
1/2" = 1'-0"

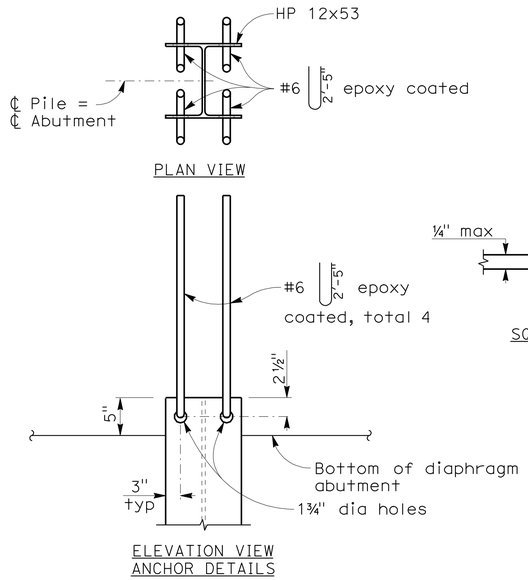

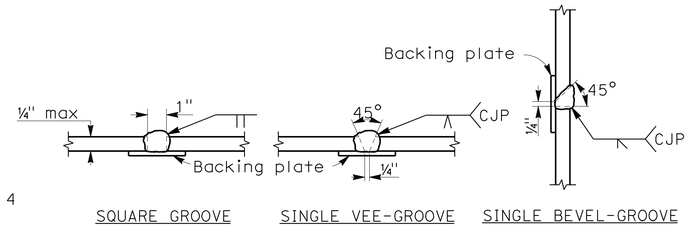

Notes:
1. Single Vee-Groove and Square Groove permitted for all positions
2. Single Bevel-Groove permitted for horizontal joints only.

PILE SPLICE DETAIL

STEEL H PILE DETAIL 2
NO SCALE

LEGEND:
- Indicates concrete to be removed
- Indicates exist structure
- Indicates new structure

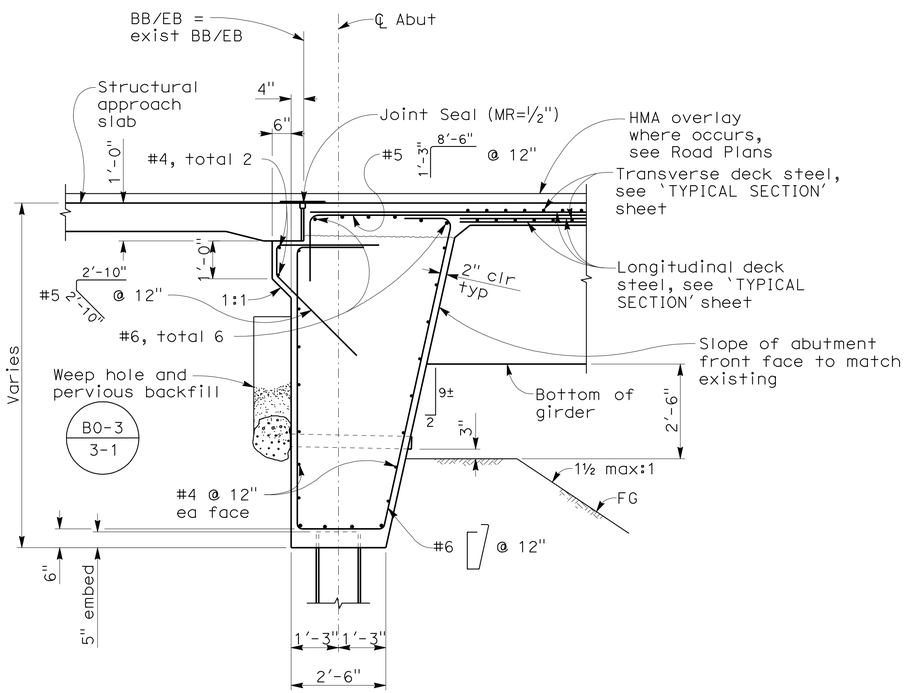

SECTION A-A
1/2" = 1'-0"

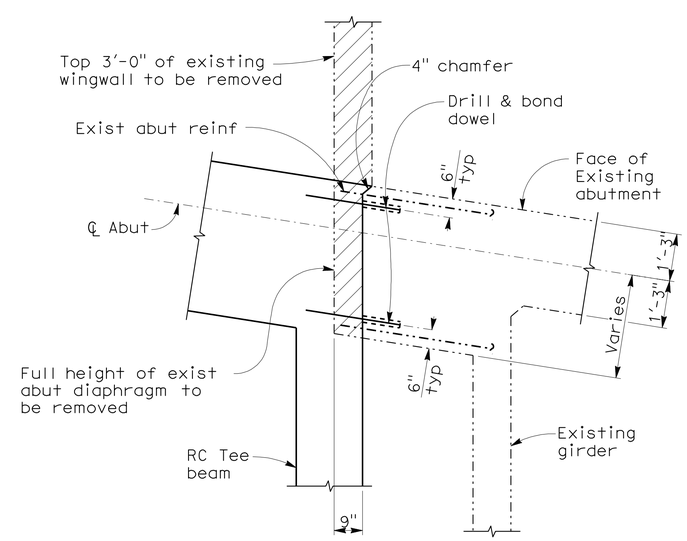

SECTION B-B
1/2" = 1'-0"

NOTE:
The Contractor shall verify all controlling field dimensions before ordering or fabricating any material

DESIGN OVERSIGHT Yiwei Hu
1/25/12
SIGN OFF DATE

	BY	CHECKED
DESIGN	D. CHAN	S. KOTAMALA
DETAILS	D. CHAN	S. KOTAMALA
QUANTITIES	H. BEDAIR	B. GHORBANI

PREPARED FOR THE STATE OF CALIFORNIA DEPARTMENT OF TRANSPORTATION

INES LI
PROJECT ENGINEER

BRIDGE NO. 33-0153
POST MILES 12.53

NORTH LIVERMORE AVE UC (WIDEN)
ABUTMENT DETAILS No. 1

DESIGN GENERAL PLAN SHEET (ENGLISH) (REV. 7/16/10)

ORIGINAL SCALE IN INCHES FOR REDUCED PLANS 0 1 2 3

UNIT: 0735
PROJECT NUMBER & PHASE: 04000212481 CONTRACT NO.: 04-2908C4

DISREGARD PRINTS BEARING EARLIER REVISION DATES 12/23/09 3/25/10 11/8/11 1/5/12

SHEET 5 OF 21

FILE => 33-0153-h-a05d1.dgn

USERNAME => S124496 DATE PLOTTED => 23-MAY-2012 TIME PLOTTED => 07:01 2007236.2 (2007236055)

DIST	COUNTY	ROUTE	POST MILES TOTAL PROJECT	SHEET No	TOTAL SHEETS
04	Ala	580	R8.4/R14.6	745	853

REGISTERED CIVIL ENGINEER 1/5/12 DATE

5-14-12
PLANS APPROVAL DATE

REGISTERED PROFESSIONAL ENGINEER INES S. LI No. C51561 Exp.6/30/12 CIVIL STATE OF CALIFORNIA

The State of California or its officers or agents shall not be responsible for the accuracy or completeness of scanned copies of this plan sheet.

BIGGS CARDOSA ASSOCIATES INC.
865 THE ALAMEDA
SAN JOSE, CALIFORNIA 95126

ALAMEDA CTC
1333 BROADWAY, SUITE 220
OAKLAND, CALIFORNIA 94612

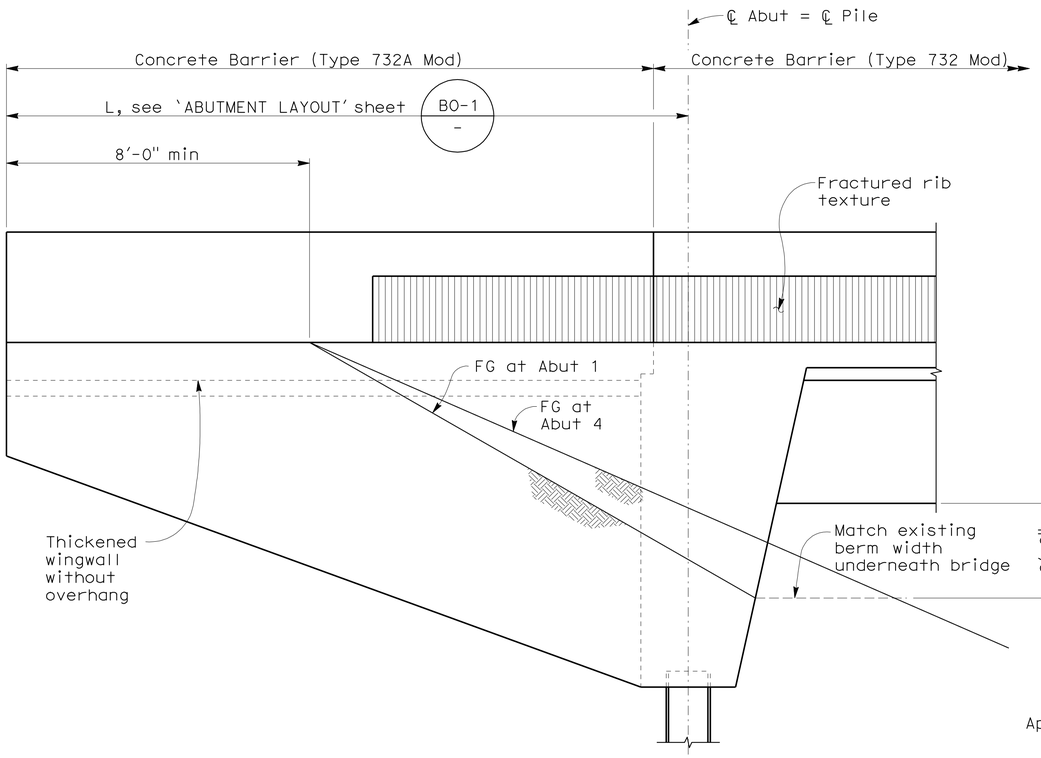

ABUTMENTS 1 & 4 NORTH WINGWALL ELEVATION

1/2" = 1'-0"

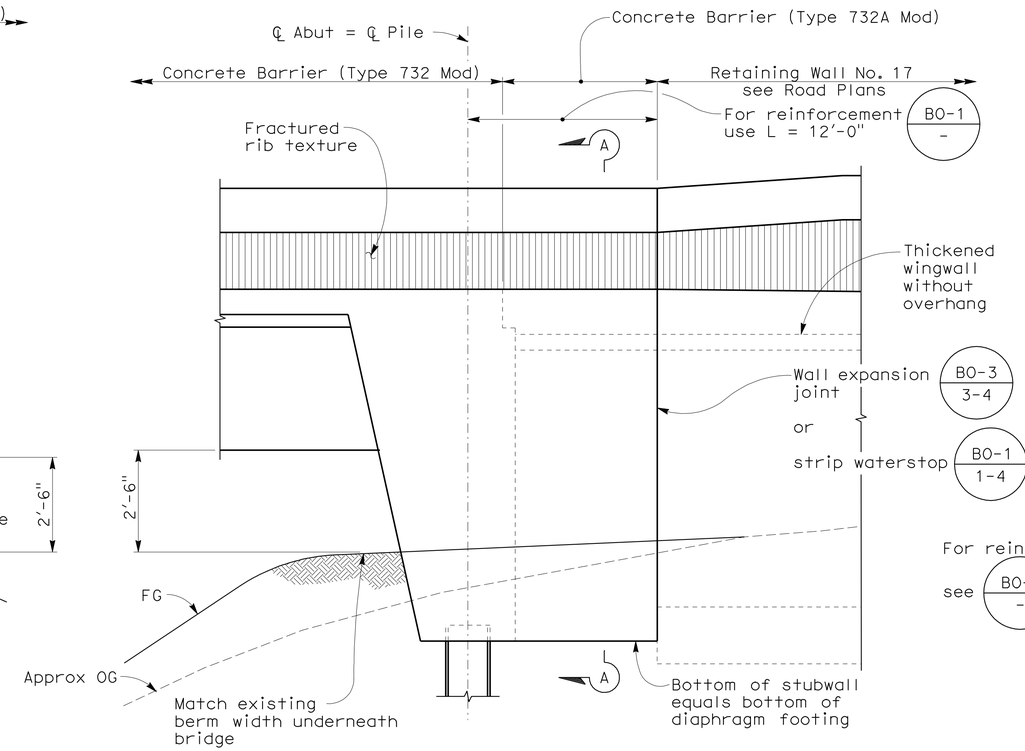

ABUTMENT 1 SOUTH WINGWALL ELEVATION

1/2" = 1'-0"

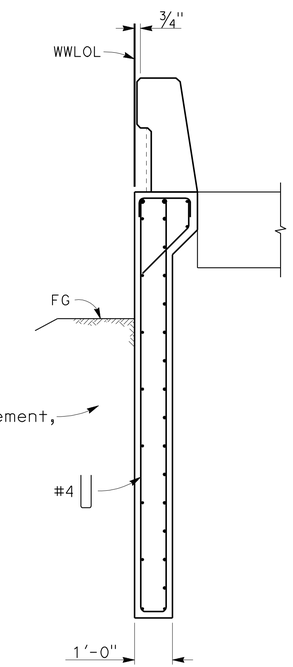

SECTION A-A

1/2" = 1'-0"

NOTE:
The Contractor shall verify all controlling field dimensions before ordering or fabricating any material

DESIGN OVERSIGHT Yiwei Hu
1/25/12
SIGN OFF DATE

	BY	CHECKED
DESIGN	D. CHAN	S. KOTAMALA
DETAILS	D. CHAN	S. KOTAMALA
QUANTITIES	H. BEDAIR	B. GHORBANI

PREPARED FOR THE STATE OF CALIFORNIA DEPARTMENT OF TRANSPORTATION

INES LI
PROJECT ENGINEER

BRIDGE NO. 33-0153
POST MILES 12.53

NORTH LIVERMORE AVE UC (WIDEN)
ABUTMENT DETAILS No. 2

DESIGN GENERAL PLAN SHEET (ENGLISH) (REV. 7/16/10)

ORIGINAL SCALE IN INCHES FOR REDUCED PLANS 0 1 2 3

UNIT: 0735
PROJECT NUMBER & PHASE: 04000212481 CONTRACT NO.: 04-2908C4

DISREGARD PRINTS BEARING EARLIER REVISION DATES → 12/23/09 3/25/10 11/8/11 1/5/12

SHEET 6 OF 21

FILE => 33-0153-h-a06d2.dgn

USERNAME => s124496 DATE PLOTTED => 23-MAY-2012 TIME PLOTTED => 07:01

2007236.2 (2007236DS6)

DIST	COUNTY	ROUTE	POST MILES TOTAL PROJECT	SHEET No	TOTAL SHEETS
04	Ala	580	R8.4/R14.6	746	853

REGISTERED CIVIL ENGINEER 1/5/12 DATE

5-14-12
PLANS APPROVAL DATE

REGISTERED PROFESSIONAL ENGINEER INES S. LI No. C51561 Exp.6/30/12 CIVIL STATE OF CALIFORNIA

The State of California or its officers or agents shall not be responsible for the accuracy or completeness of scanned copies of this plan sheet.

BIGGS CARDOSA ASSOCIATES INC.
865 THE ALAMEDA
SAN JOSE, CALIFORNIA 95126

ALAMEDA CTC
1333 BROADWAY, SUITE 220
OAKLAND, CALIFORNIA 94612

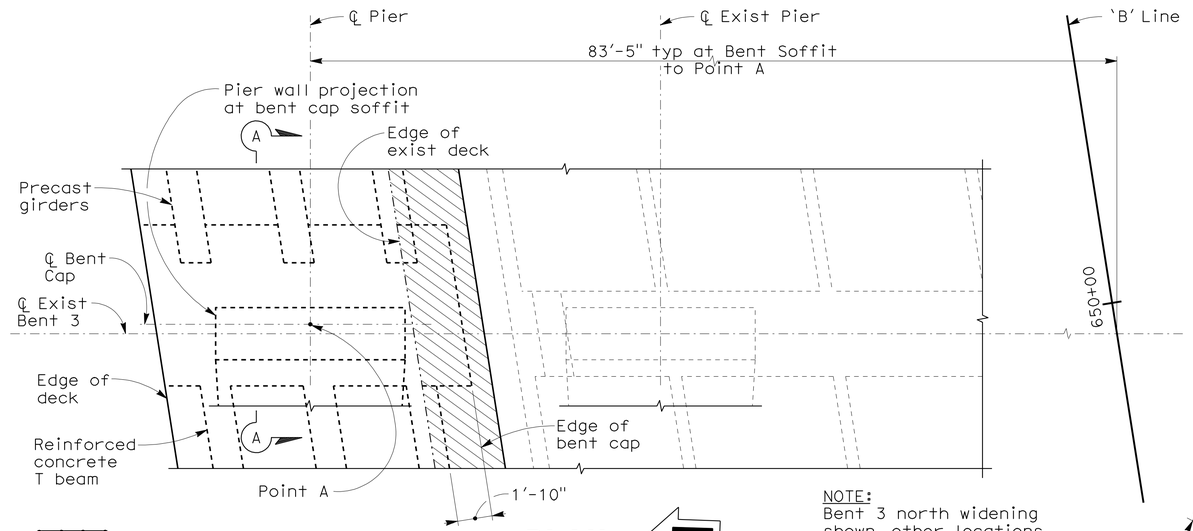

NOTE:
Bent 3 north widening shown, other locations similar

PLAN
1/4" = 1'-0"

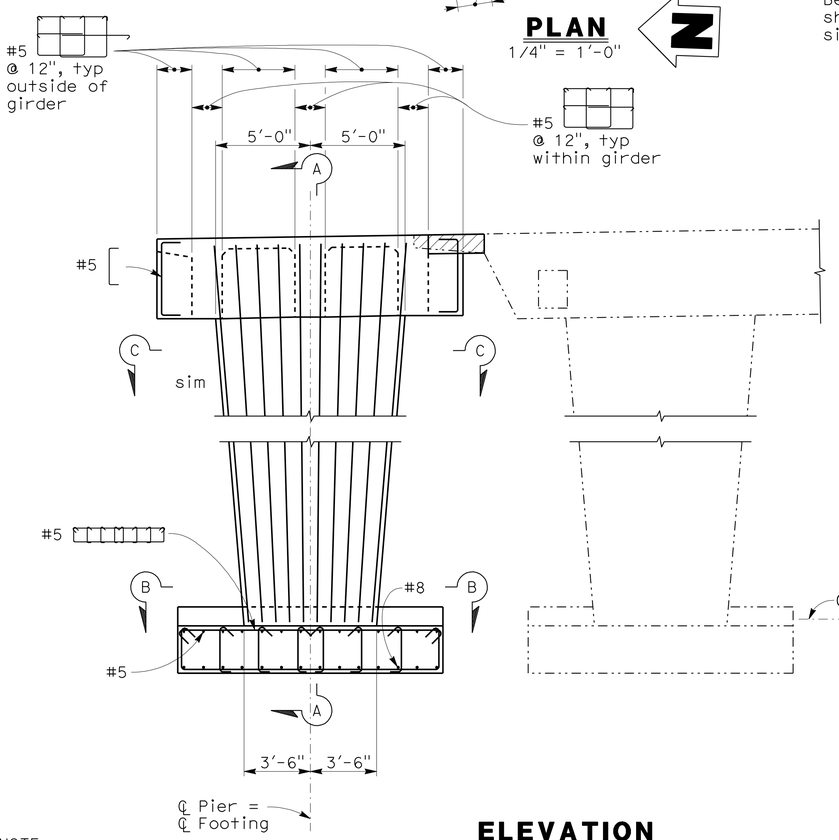

ELEVATION
1/4" = 1'-0"

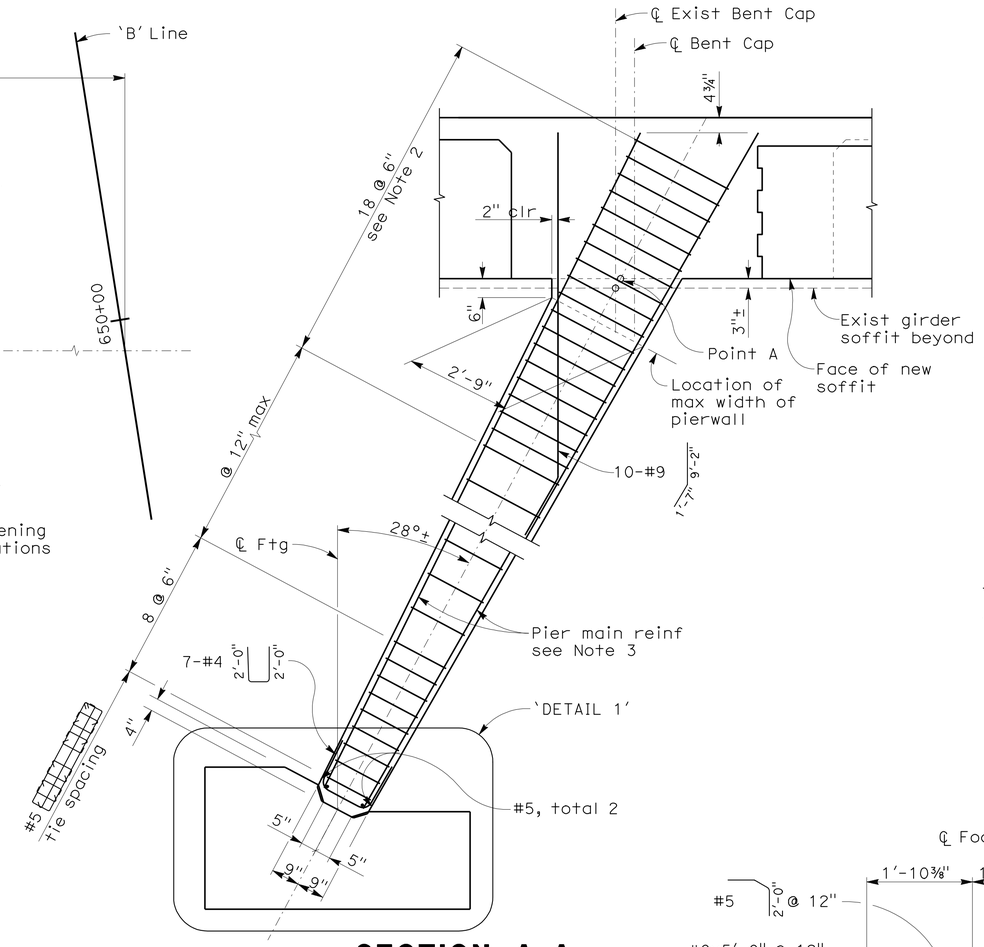

SECTION A-A
1/2" = 1'-0"

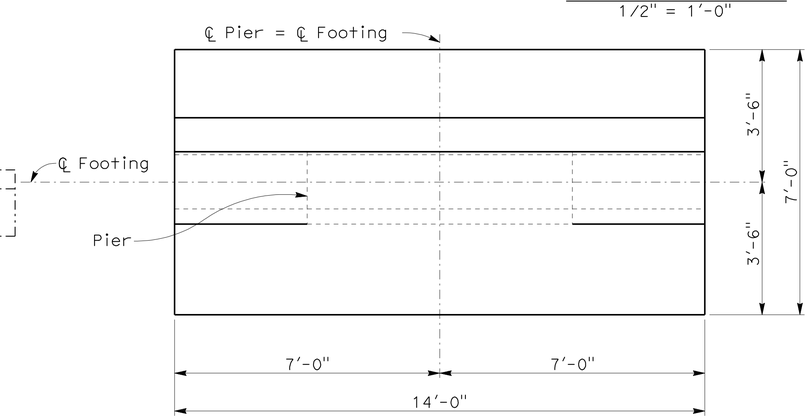

FOOTING PLAN
1/2" = 1'-0"

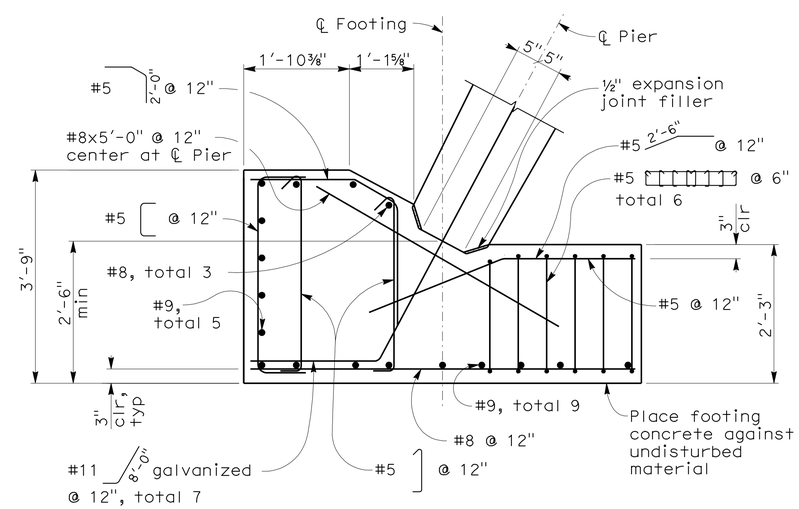

DETAIL 1
3/4" = 1'-0"

NOTES:
1. For 'SECTION B-B' & 'SECTION C-C', see 'BENT DETAILS No. 2' sheet.
2. Pier #5 ties shall clear bent cap reinf
3. No splice permitted in pier main reinf

LEGEND:
- Indicates concrete to be removed
- Indicates exist structure
- Indicates new structure

NOTE:
The Contractor shall verify all controlling field dimensions before ordering or fabricating any material

DESIGN OVERSIGHT Yiwei Hu
1/25/12
SIGN OFF DATE

	BY	CHECKED
DESIGN	D. CHAN	S. KOTAMALA
DETAILS	D. CHAN	S. KOTAMALA
QUANTITIES	H. BEDAIR	B. GHORBANI

PREPARED FOR THE STATE OF CALIFORNIA DEPARTMENT OF TRANSPORTATION

INES LI
PROJECT ENGINEER

BRIDGE NO. 33-0153
POST MILES 12.53

NORTH LIVERMORE AVE UC (WIDEN)
BENT DETAILS No. 1

DESIGN GENERAL PLAN SHEET (ENGLISH) (REV. 7/16/10)

ORIGINAL SCALE IN INCHES FOR REDUCED PLANS 0 1 2 3

UNIT: 0735
PROJECT NUMBER & PHASE: 04000212481 CONTRACT NO.: 04-2908C4

DISREGARD PRINTS BEARING EARLIER REVISION DATES

REVISION DATES 12/23/09 3/25/10 11/8/11 1/5/12 | SHEET 7 | OF 21

FILE => 33-0153-j-b07d1.dgn

USERNAME => s124196 DATE PLOTTED => 23-MAY-2012 TIME PLOTTED => 08:38 2007236.2 (2007236DS7)

DIST	COUNTY	ROUTE	POST MILES TOTAL PROJECT	SHEET No	TOTAL SHEETS
04	Ala	580	R8.4/R14.6	747	853

REGISTERED CIVIL ENGINEER 1/5/12 DATE

5-14-12
PLANS APPROVAL DATE

REGISTERED PROFESSIONAL ENGINEER INES S. LI No. C51561 Exp.6/30/12 CIVIL STATE OF CALIFORNIA

The State of California or its officers or agents shall not be responsible for the accuracy or completeness of scanned copies of this plan sheet.

BIGGS CARDOSA ASSOCIATES INC.
865 THE ALAMEDA
SAN JOSE, CALIFORNIA 95126

ALAMEDA CTC
1333 BROADWAY, SUITE 220
OAKLAND, CALIFORNIA 94612

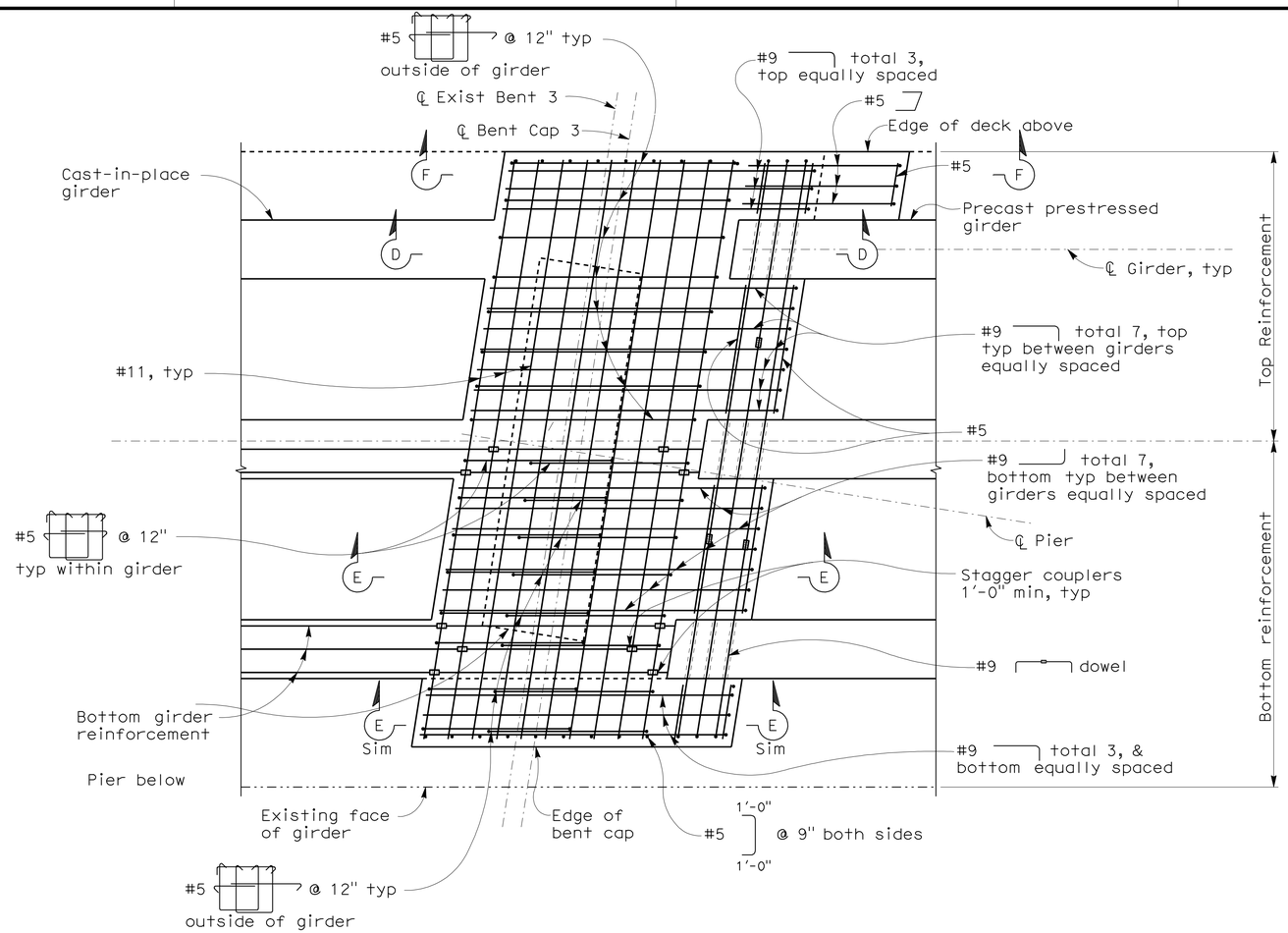

BENT CAP REINFORCEMENT PLAN

1/2" = 1'-0"

N

Bent 3 shown, Bent 2 similar

NOTES:

1. Bent cap stirrups shall to be placed parallel to the girder and spaced along ℄ Bent
2. For 'SECTION D-D' & 'SECTION E-E' see 'BENT DETAILS No. 3' sheet

LEGEND:

- Indicates service splice couplers
- Indicates exist structure
- Indicates new structure

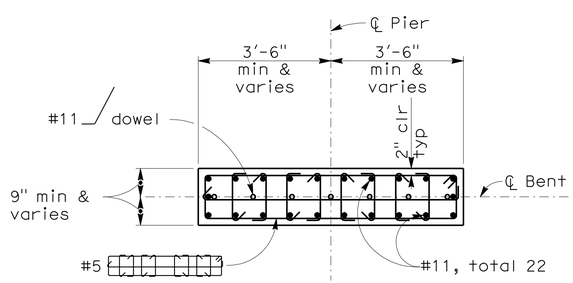

SECTION B-B

1/2" = 1'-0"

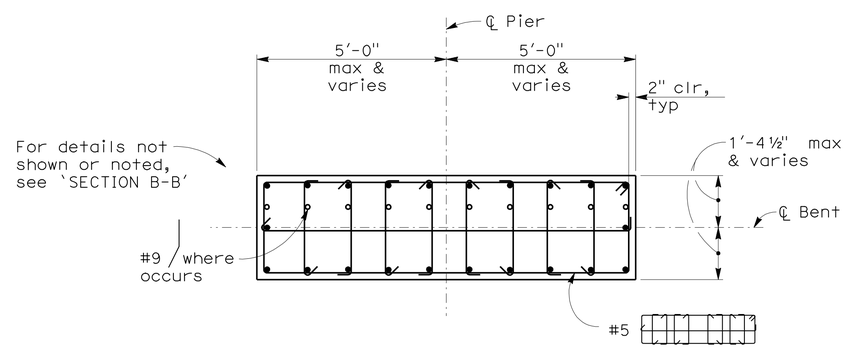

SECTION C-C

1/2" = 1'-0"

NOTE:
The Contractor shall verify all controlling field dimensions before ordering or fabricating any material

DESIGN OVERSIGHT Yiwei Hu
1/25/12
SIGN OFF DATE

	BY	CHECKED
DESIGN	D. CHAN	S. KOTAMALA
DETAILS	D. CHAN	S. KOTAMALA
QUANTITIES	H. BEDAIR	B. GHORBANI

PREPARED FOR THE STATE OF CALIFORNIA DEPARTMENT OF TRANSPORTATION

INES LI
PROJECT ENGINEER

BRIDGE NO. 33-0153
POST MILES 12.53

NORTH LIVERMORE AVE UC (WIDEN)

BENT DETAILS No. 2

DESIGN GENERAL PLAN SHEET (ENGLISH) (REV. 7/16/10)

ORIGINAL SCALE IN INCHES FOR REDUCED PLANS 0 1 2 3

UNIT: 0735
PROJECT NUMBER & PHASE: 04000212481 CONTRACT NO.: 04-2908C4

DISREGARD PRINTS BEARING EARLIER REVISION DATES → 12/23/09 03/25/10 11/8/11 1/5/12

SHEET 8 OF 21

FILE => 33-0153-j-b08d2.dgn

USERNAME => s6124496 DATE PLOTTED => 23-MAY-2012 TIME PLOTTED => 07:01

2007236.2 (2007236DS8)

DIST	COUNTY	ROUTE	POST MILES TOTAL PROJECT	SHEET No	TOTAL SHEETS
04	Ala	580	R8.4/R14.6	748	853

REGISTERED CIVIL ENGINEER 1/5/12 DATE

5-14-12
PLANS APPROVAL DATE

REGISTERED PROFESSIONAL ENGINEER INES S. LI No. C51561 Exp.6/30/12 CIVIL STATE OF CALIFORNIA

The State of California or its officers or agents shall not be responsible for the accuracy or completeness of scanned copies of this plan sheet.

BIGGS CARDOSA ASSOCIATES INC.
865 THE ALAMEDA
SAN JOSE, CALIFORNIA 95126

ALAMEDA CTC
1333 BROADWAY, SUITE 220
OAKLAND, CALIFORNIA 94612

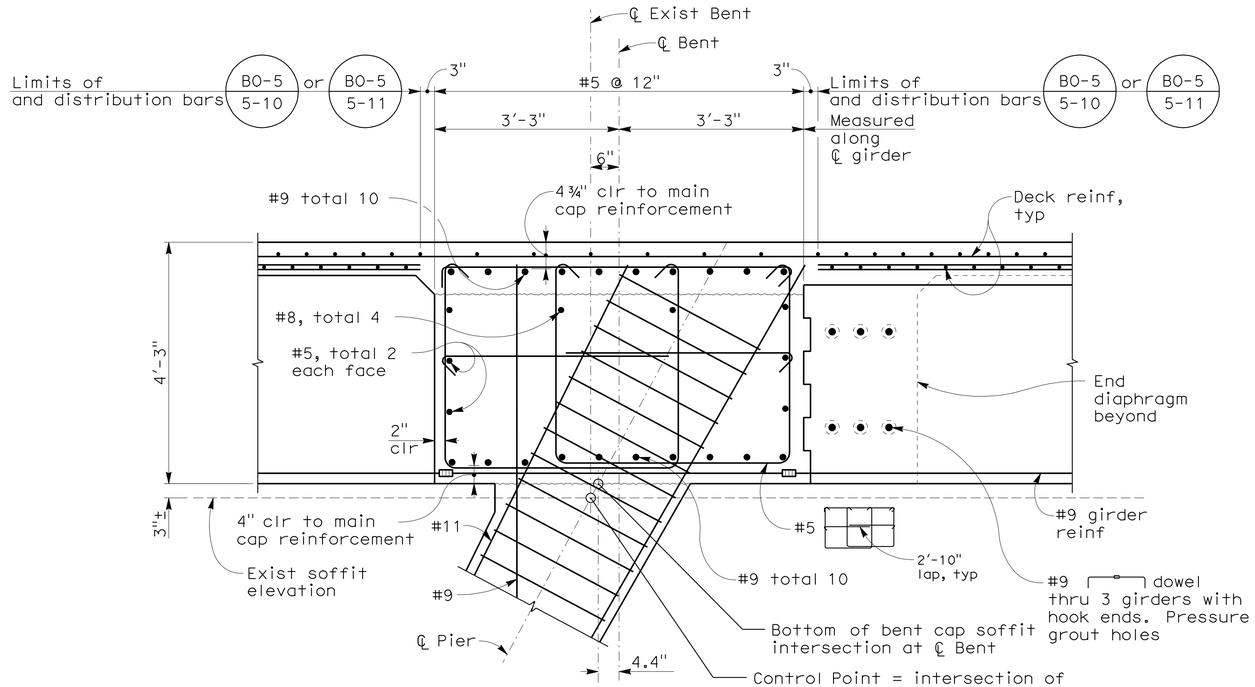

AT GIRDER

SECTION D-D

3/4" = 1'-0"

LEGEND:

Indicates service splice couplers

NOTE:
No splice allowed on top & bottom bent cap main reinforcement

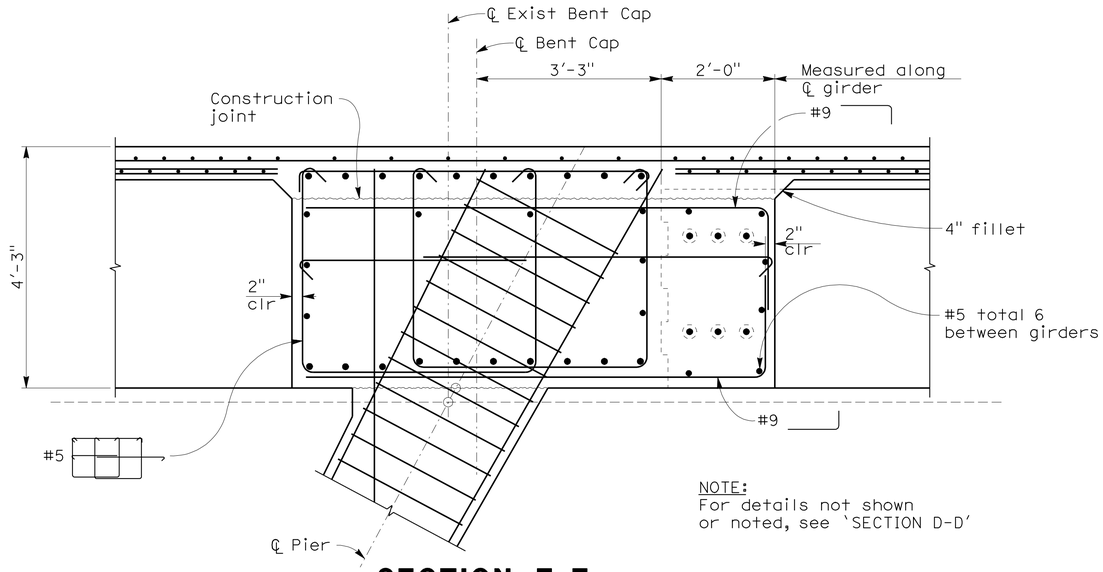

SECTION E-E

3/4" = 1'-0"

NOTE:
For details not shown or noted, see 'SECTION D-D'

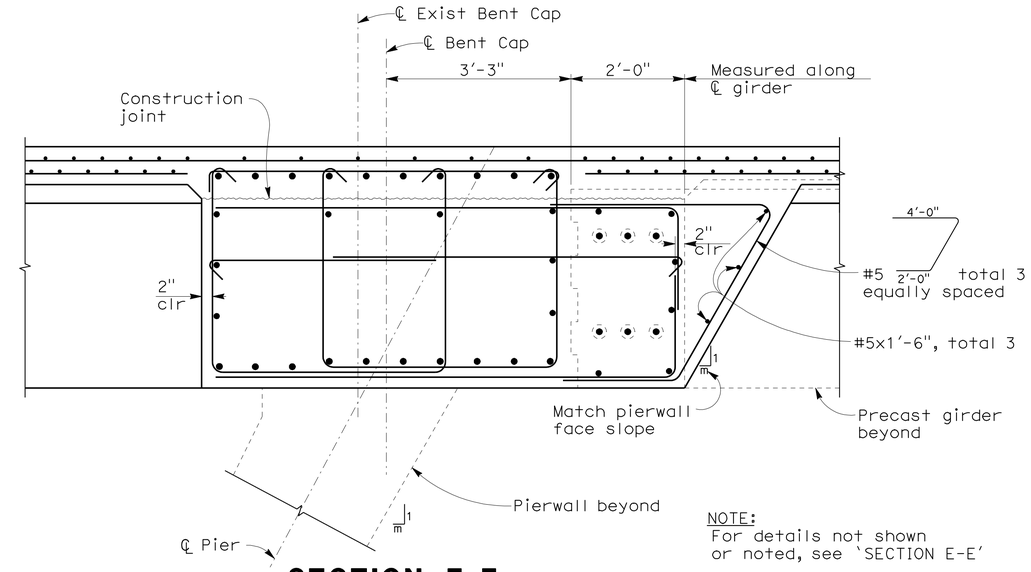

SECTION F-F

3/4" = 1'-0"

NOTE:
For details not shown or noted, see 'SECTION E-E'

NOTE:
The Contractor shall verify all controlling field dimensions before ordering or fabricating any material

DESIGN OVERSIGHT Yiwei Hu
1/25/12
SIGN OFF DATE

	BY	CHECKED
DESIGN	D. CHAN	S. KOTAMALA
DETAILS	D. CHAN	S. KOTAMALA
QUANTITIES	H. BEDAIR	B. GHORBANI

PREPARED FOR THE STATE OF CALIFORNIA DEPARTMENT OF TRANSPORTATION

INES LI
PROJECT ENGINEER

BRIDGE NO. 33-0153
POST MILES 12.53

NORTH LIVERMORE AVE UC (WIDEN)

BENT DETAILS No. 3

DESIGN GENERAL PLAN SHEET (ENGLISH) (REV. 7/16/10)

ORIGINAL SCALE IN INCHES FOR REDUCED PLANS 0 1 2 3

UNIT: 0735
PROJECT NUMBER & PHASE: 04000212481 CONTRACT NO.: 04-2908C4

DISREGARD PRINTS BEARING EARLIER REVISION DATES 12/23/09 03/25/10 11/18/11 1/5/12

SHEET 9 OF 21

FILE => 33-0153-j-b09d3.dgn

USERNAME => s124496 DATE PLOTTED => 23-MAY-2012 TIME PLOTTED => 07:01

2007236.2 (2007236059)

DIST	COUNTY	ROUTE	POST MILES TOTAL PROJECT	SHEET No	TOTAL SHEETS
04	Ala	580	R8.4/R14.6	749	853

REGISTERED CIVIL ENGINEER 1/5/12 DATE

5-14-12
PLANS APPROVAL DATE

REGISTERED PROFESSIONAL ENGINEER INES S. LI No. C51561 Exp.6/30/12 CIVIL STATE OF CALIFORNIA

The State of California or its officers or agents shall not be responsible for the accuracy or completeness of scanned copies of this plan sheet.

BIGGS CARDOSA ASSOCIATES INC.
865 THE ALAMEDA
SAN JOSE, CALIFORNIA 95126

ALAMEDA CTC
1333 BROADWAY, SUITE 220
OAKLAND, CALIFORNIA 94612

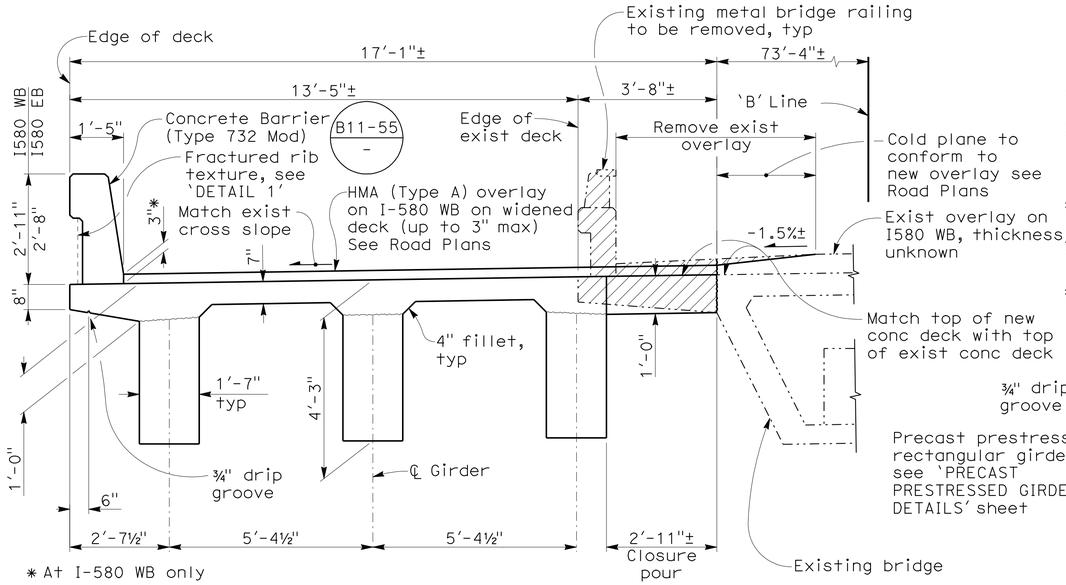

SECTION AT CAST-IN-PLACE SEGMENT

1/2" = 1'-0"

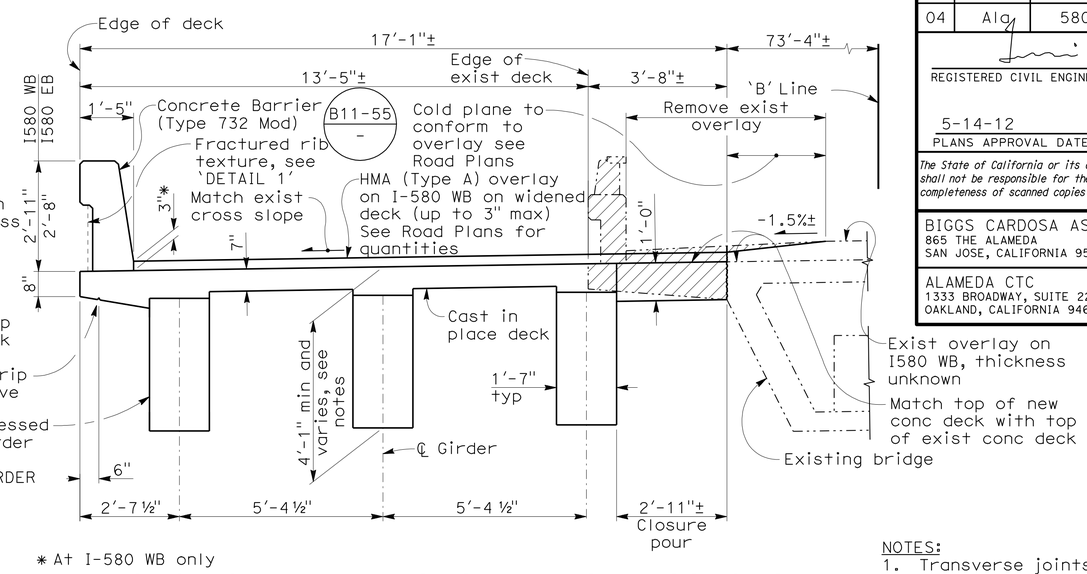

SECTION AT PRECAST/PRESTRESS SEGMENT

1/2" = 1'-0"

FALSEWORK RELEASE NOTES

1. Alternative 1:
   Falsework shall be released as soon as permitted by the specifications. Closure pour and intermediate diaphragms shall not be placed sooner than 60 days after the falsework has been released.

   Alternative 2:
   Falsework shall not be released less than 28 days after the last concrete has been placed. Closure pour and intermediate diaphragms shall not be placed sooner than 14 days after the falsework has been released.

LEGEND:

- Indicates exist concrete barrier, metal bridge railing and deck overhang to be removed and existing overlay to be removed where occurs
- Indicates exist structure
- Indicates new structure

NOTES:

1. Transverse joints, in deck may be located at ¼ point of span. The portion over the supports shall be placed last, see B0-5 / - notes.
2. Structural depth shall be 4'-3" at girder ends along ℄ girder.
3. I-580 WB widen shown. I-580 EB is similar.
4. Transverse deck reinf shall be placed parallel to ℄ abutment and spaced along ℄ girder
5. For 'DETAIL 1' see 'CONSTRUCTION SEQUENCE' sheet

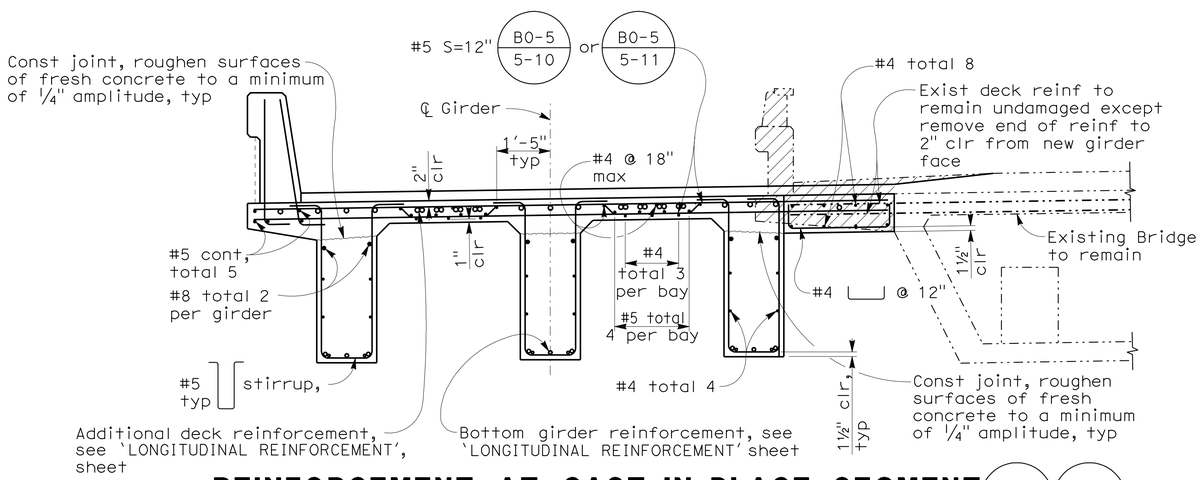

REINFORCEMENT AT CAST-IN-PLACE SEGMENT

B6-1 / - B0-5 / -

1/2" = 1'-0"

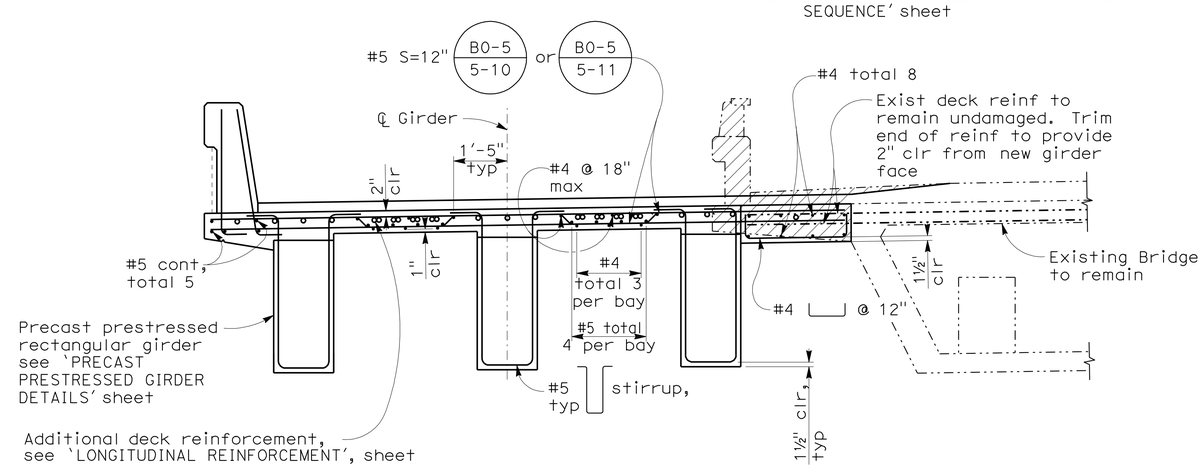

REINFORCEMENT AT PRECAST/PRESTRESS SEGMENT

B0-5 / -

1/2" = 1'-0"

NOTE:
The Contractor shall verify all controlling field dimensions before ordering or fabricating any material

DESIGN OVERSIGHT Yiwei Hu 1/25/12 SIGN OFF DATE	DESIGN	BY D. CHAN	CHECKED S. KOTAMALA
	DETAILS	BY D. CHAN	CHECKED S. KOTAMALA
	QUANTITIES	BY H. BEDAIR	CHECKED B. GHORBANI

PREPARED FOR THE STATE OF CALIFORNIA DEPARTMENT OF TRANSPORTATION

INES LI
PROJECT ENGINEER

BRIDGE NO. 33-0153
POST MILES 12.53

NORTH LIVERMORE AVE UC (WIDEN)

TYPICAL SECTION

DESIGN GENERAL PLAN SHEET (ENGLISH) (REV. 7/16/10)

ORIGINAL SCALE IN INCHES FOR REDUCED PLANS 0 1 2 3

UNIT: 0735
PROJECT NUMBER & PHASE: 04000212481 CONTRACT NO.: 04-2908C4

DISREGARD PRINTS BEARING EARLIER REVISION DATES — REVISION DATES 12/23/09 3/25/10 11/8/11 1/5/12

SHEET 10 OF 21

FILE => 33-0153-m-ts1.dgn

USERNAME => s124496 DATE PLOTTED => 23-MAY-2012 TIME PLOTTED => 07:01

2007236.2 (20072360510)

DIST	COUNTY	ROUTE	POST MILES TOTAL PROJECT	SHEET No	TOTAL SHEETS
04	Ala	580	R8.4/R14.6	750	853

REGISTERED CIVIL ENGINEER — DATE 1/5/12

PLANS APPROVAL DATE 5-14-12

REGISTERED PROFESSIONAL ENGINEER — INES S. LI — No. C51561 — Exp. 6/30/12 — CIVIL — STATE OF CALIFORNIA

The State of California or its officers or agents shall not be responsible for the accuracy or completeness of scanned copies of this plan sheet.

BIGGS CARDOSA ASSOCIATES INC.
865 THE ALAMEDA
SAN JOSE, CALIFORNIA 95126

ALAMEDA CTC
1333 BROADWAY, SUITE 220
OAKLAND, CALIFORNIA 94612

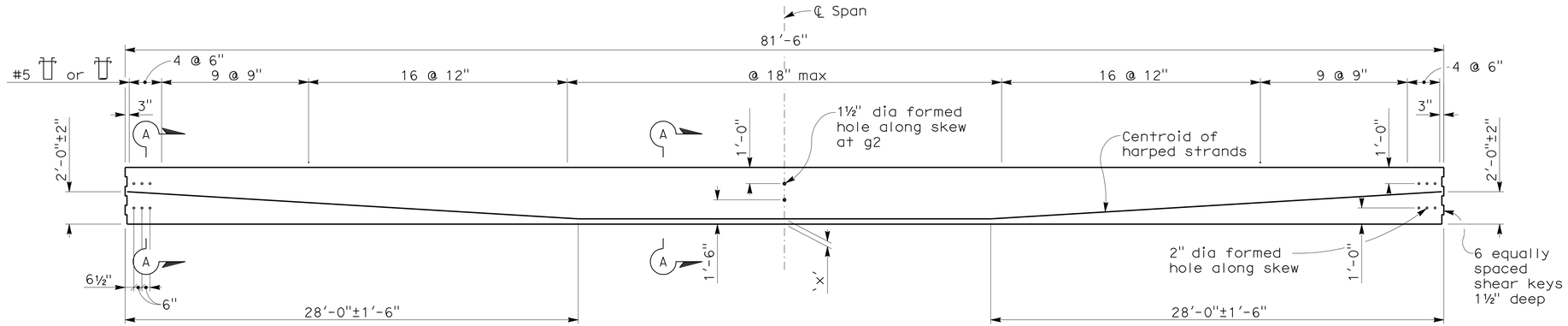

LONGITUDINAL SECTION

1/4" = 1'-0"

Girder	'x'	Jacking Force (P) in Kips	Concrete Strength (ksi)		Midspan Deflection @ time of erection - components in inches	
			f'ci	f'c	△ Deck DL *	△ Barrier DL **
g1,g2,g3	5.97"	835	4.5	6.0	-0.92±	0.00
	8.21"	923				

PRESTRESSING NOTES:

1. Design based on 270 ksi low relaxation strands
2. Jacking Force (P): The manufacturer jacking force required at point of control along the span. The jacking force does not include any fabrication specific losses.
3. Deflection components are for information only and for setting screed line elevations. Negative values indicate downward deflections
4. Deflections do not include camber due to prestressing
5. Concrete Strength: f'ci is at time of initial stressing
   f'c is at 28 days
6. For CIP bolts for sign structure, see 'SIGN STRUCTURE DETAILS No. 1' sheet.
7. Contractor may interpolate P and 'x' values between limits shown, as approved by the Engineer.

* Deflection of girder at noncomposite stage. Includes stay in place form loads

** Deflection of composite girder with deck

The Contractor shall determine the screed line elevation

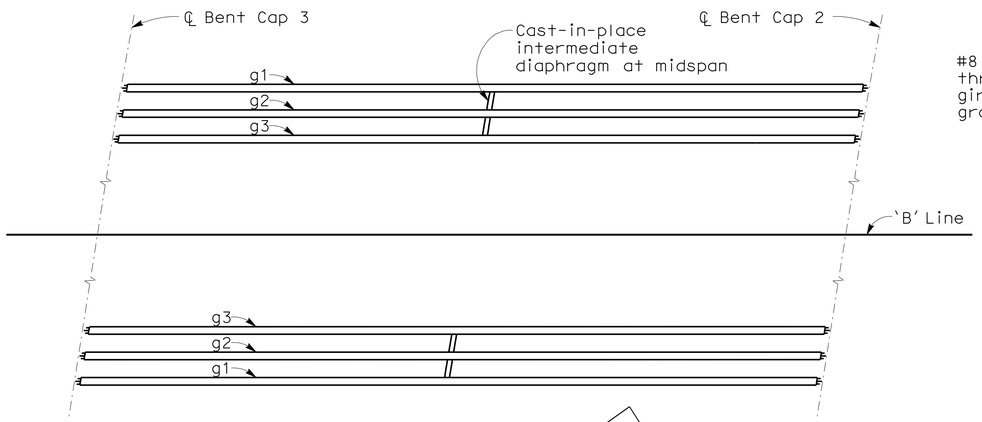

GIRDER LAYOUT

1/16" = 1'-0"

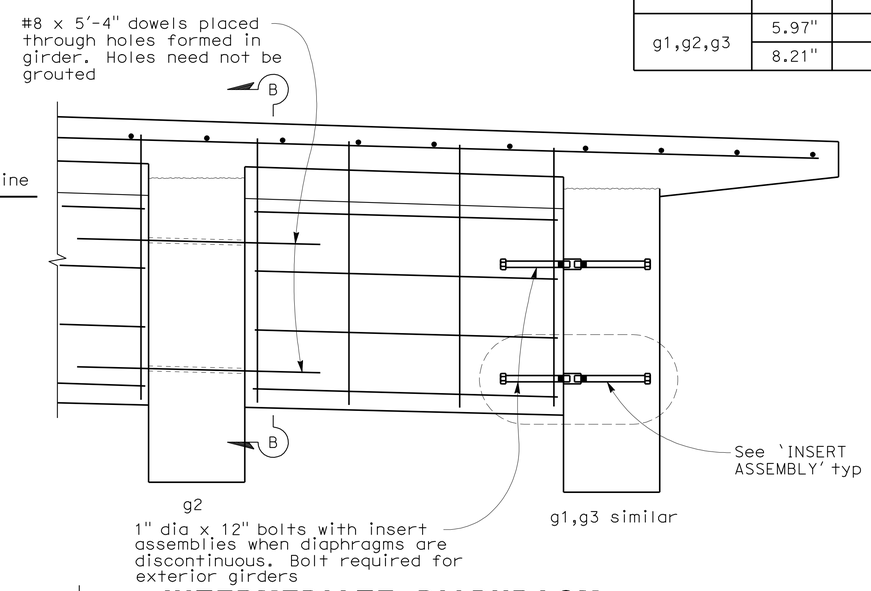

INTERMEDIATE DIAPHRAGM

NO SCALE

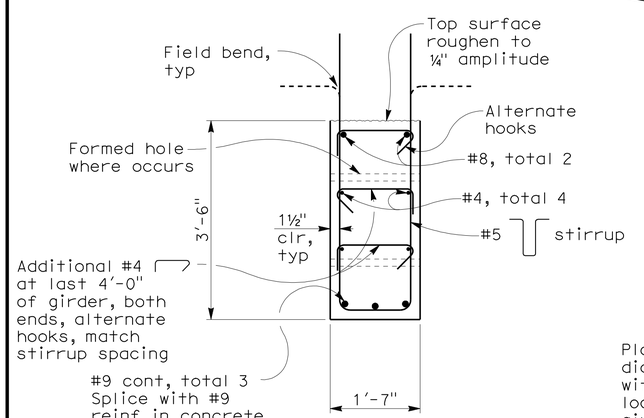

SECTION A-A

3/4" = 1'-0"

NOTE:
The Contractor shall verify all controlling field dimensions before ordering or fabricating any material

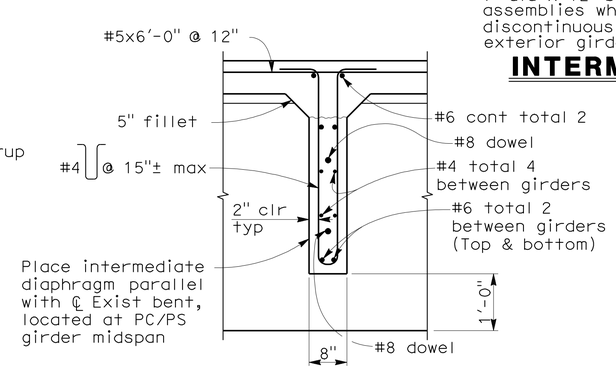

SECTION B-B

3/4" = 1'-0"

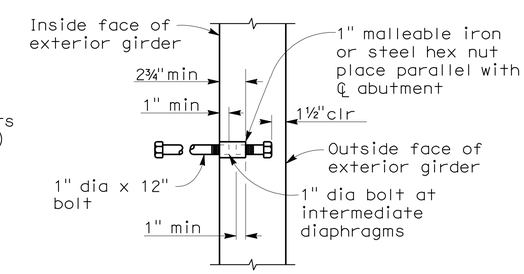

INSERT ASSEMBLY

1 1/2" = 1'-0"

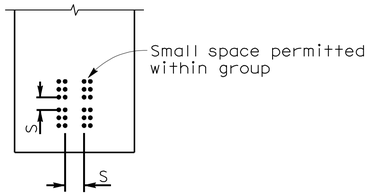

CLEARANCES FOR PRETENSIONED STRANDS

1. Strands may be bundled in groups consisting of 3 vertically 2 horizontally, and separated at the ends.
2. The min distance "S" between groups or individual strands is 1½" for ⅜" strands, 1 ¾" for 7/16" strands and ½" strands and 2" for 0.6" strands.
3. "S" is measured between centers of adjacent strands.
4. Approval of Engineer is required for deviation.

DESIGN OVERSIGHT — Yiwei Hu — 1/25/12 SIGN OFF DATE

	BY	CHECKED
DESIGN	D. CHAN	S. KOTAMALA
DETAILS	D. CHAN	S. KOTAMALA
QUANTITIES	H. BEDAIR	B. GHORBANI

PREPARED FOR THE STATE OF CALIFORNIA DEPARTMENT OF TRANSPORTATION

INES LI — PROJECT ENGINEER

BRIDGE NO. 33-0153 — POST MILES 12.53

NORTH LIVERMORE AVE UC (WIDEN)
PRECAST PRESTRESSED GIRDER DETAILS

DESIGN GENERAL PLAN SHEET (ENGLISH) (REV. 7/16/10)

ORIGINAL SCALE IN INCHES FOR REDUCED PLANS 0 1 2 3

UNIT: 0735
PROJECT NUMBER & PHASE: 04000212481 — CONTRACT NO.: 04-2908C4

DISREGARD PRINTS BEARING EARLIER REVISION DATES — REVISION DATES 12/23/09 03/25/10 11/8/11 1/5/12 — SHEET 13 OF 21

FILE => 33-0153-n-g-rf01.dgn

USERNAME => S124496 DATE PLOTTED => 23-MAY-2012 TIME PLOTTED => 07:01 2007236.2 (20072360513)

DIST	COUNTY	ROUTE	POST MILES TOTAL PROJECT	SHEET No	TOTAL SHEETS
04	Ala	580	R8.4/R14.6	751	853

REGISTERED CIVIL ENGINEER 1/5/12 DATE

5-14-12
PLANS APPROVAL DATE

REGISTERED PROFESSIONAL ENGINEER INES S. LI No. C51561 Exp.6/30/12 CIVIL STATE OF CALIFORNIA

The State of California or its officers or agents shall not be responsible for the accuracy or completeness of scanned copies of this plan sheet.

BIGGS CARDOSA ASSOCIATES INC.
865 THE ALAMEDA
SAN JOSE, CALIFORNIA 95126

ALAMEDA CTC
1333 BROADWAY, SUITE 220
OAKLAND, CALIFORNIA 94612

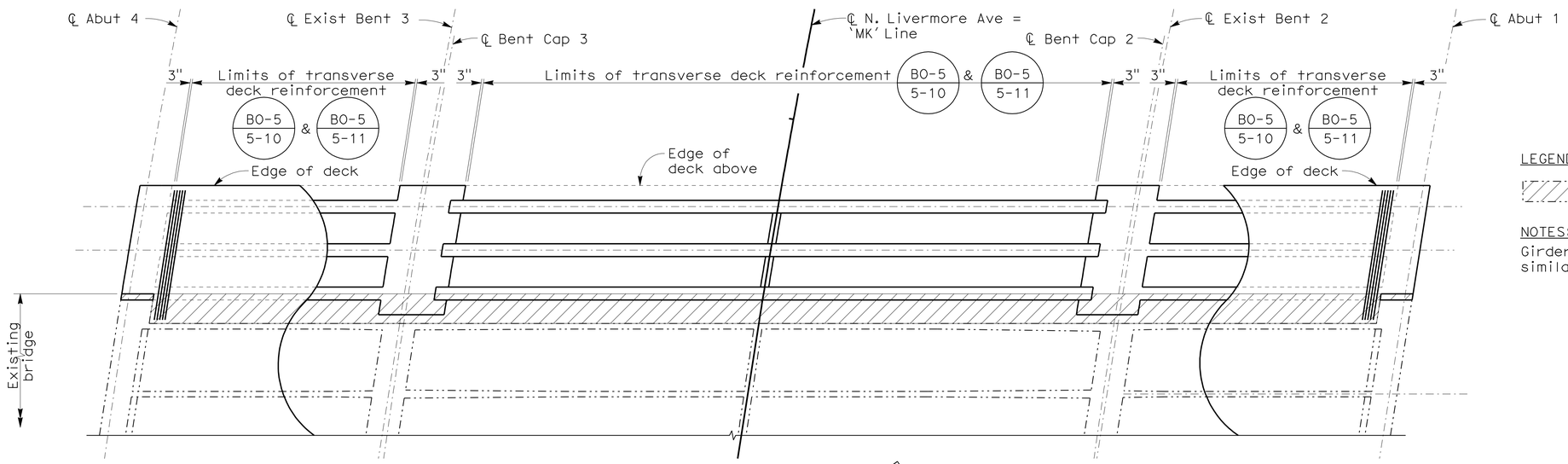

GIRDER LAYOUT

1/8" = 1'-0"

N

LEGEND:

Indicates concrete to be removed

NOTES:

Girder layout for I-580 WB shown, I-580 EB similar

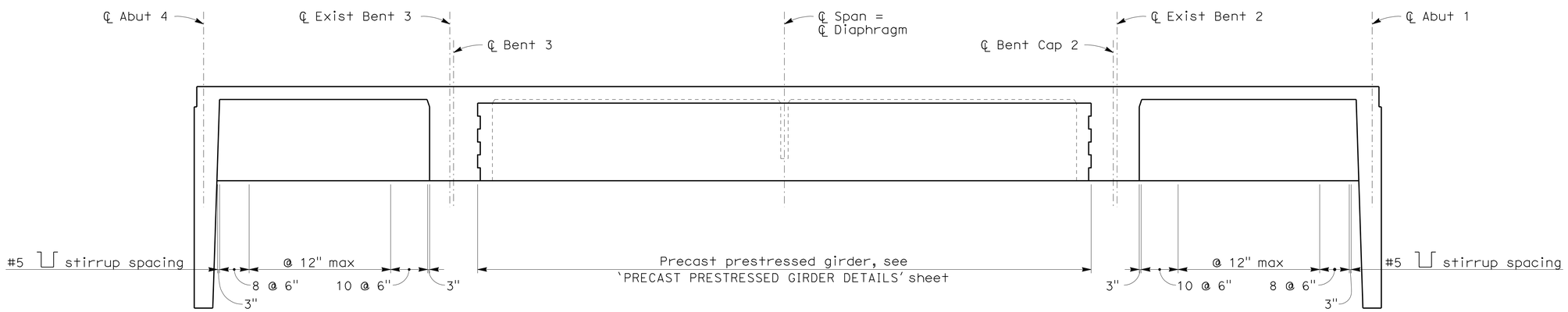

LONGITUDINAL SECTION

NO SCALE

NOTE:
The Contractor shall verify all controlling field dimensions before ordering or fabricating any material

DESIGN OVERSIGHT Yiwei Hu
1/25/12
SIGN OFF DATE

	BY	CHECKED
DESIGN	D. CHAN	S. KOTAMALA
DETAILS	D. CHAN	S. KOTAMALA
QUANTITIES	H. BEDAIR	B. GHORBANI

PREPARED FOR THE STATE OF CALIFORNIA DEPARTMENT OF TRANSPORTATION

INES LI
PROJECT ENGINEER

BRIDGE NO. 33-0153
POST MILES 12.53

NORTH LIVERMORE AVE UC (WIDEN)
GIRDER LAYOUT

DESIGN GENERAL PLAN SHEET (ENGLISH) (REV. 7/16/10)

ORIGINAL SCALE IN INCHES FOR REDUCED PLANS 0 1 2 3

UNIT: 0735
PROJECT NUMBER & PHASE: 04000212481 CONTRACT NO.: 04-2908C4

DISREGARD PRINTS BEARING EARLIER REVISION DATES → 12/23/09 3/25/10 11/8/11 1/5/12

SHEET 11 OF 21

FILE => 33-0153-n-g-lo01.dgn

USERNAME => s124496 DATE PLOTTED => 23-MAY-2012 TIME PLOTTED => 07:01

2007236.2 (2007236DS11)

DIST	COUNTY	ROUTE	POST MILES TOTAL PROJECT	SHEET No	TOTAL SHEETS
04	Ala	580	R8.4/R14.6	752	853

REGISTERED CIVIL ENGINEER 1/5/12 DATE

5-14-12
PLANS APPROVAL DATE

REGISTERED PROFESSIONAL ENGINEER INES S. LI No. C51561 Exp.6/30/12 CIVIL STATE OF CALIFORNIA

The State of California or its officers or agents shall not be responsible for the accuracy or completeness of scanned copies of this plan sheet.

BIGGS CARDOSA ASSOCIATES INC.
865 THE ALAMEDA
SAN JOSE, CALIFORNIA 95126

ALAMEDA CTC
1333 BROADWAY, SUITE 220
OAKLAND, CALIFORNIA 94612

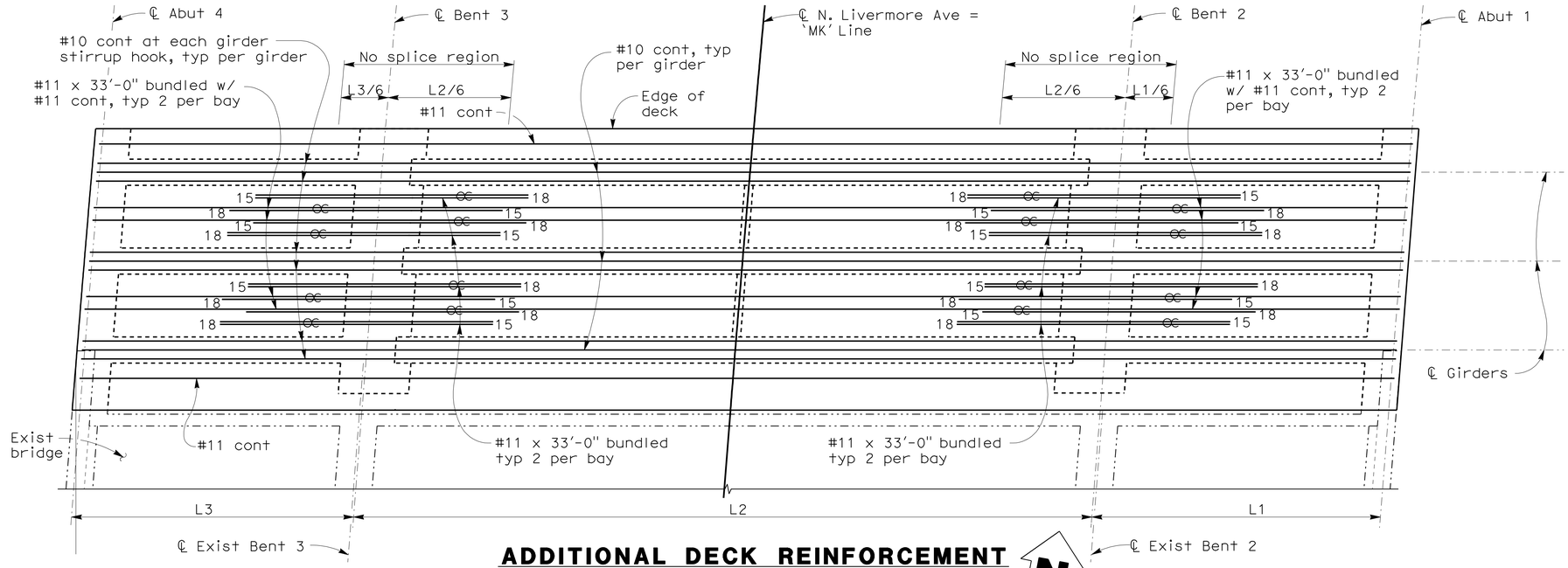

ADDITIONAL DECK REINFORCEMENT

NO SCALE

NOTES:

1. Additional top deck reinforcement shown. See 'TYPICAL SECTION' sheet for typical deck reinforcement not shown.
2. Space additional reinforcement approximately equal within each bay
3. Additional reinforcement for I580 WB North Widen shown, I580 EB South Widen similar
4. Numbers at ends of bars indicate distance in feet from ℄ Bent
5. Additional deck and girder reinf shall be spliced with service level splices as required

LEGEND:

- Indicates service splice couplers
- Indicates bundled reinforcing bars
- Indicates exist structure
- Indicates new structure

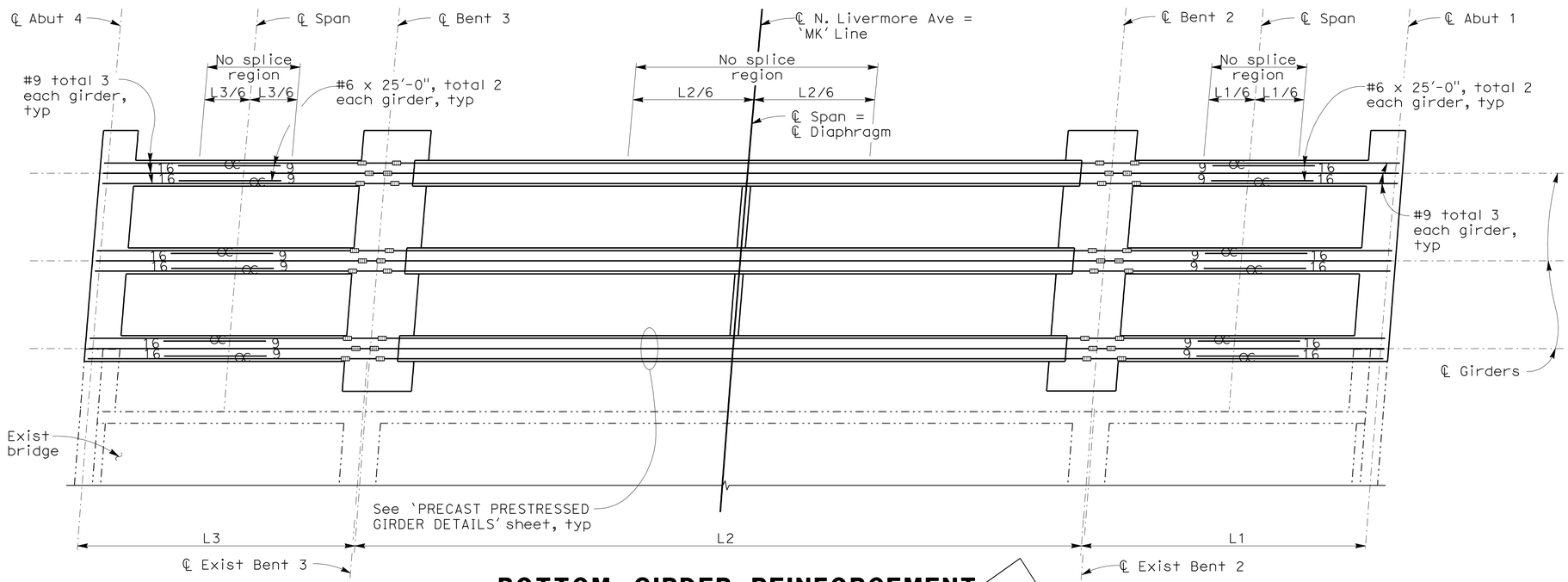

BOTTOM GIRDER REINFORCEMENT

NO SCALE

NOTE:
The Contractor shall verify all controlling field dimensions before ordering or fabricating any material

DESIGN OVERSIGHT Yiwei Hu
1/25/12
SIGN OFF DATE

	BY	CHECKED
DESIGN	D. CHAN	S. KOTAMALA
DETAILS	D. CHAN	S. KOTAMALA
QUANTITIES	H. BEDAIR	B. GHORBANI

PREPARED FOR THE STATE OF CALIFORNIA DEPARTMENT OF TRANSPORTATION

INES LI
PROJECT ENGINEER

BRIDGE NO. 33-0153
POST MILES 12.53

NORTH LIVERMORE AVE UC (WIDEN)
LONGITUDINAL REINFORCEMENT

DESIGN GENERAL PLAN SHEET (ENGLISH) (REV. 7/16/10)

ORIGINAL SCALE IN INCHES FOR REDUCED PLANS 0 1 2 3

UNIT: 0735
PROJECT NUMBER & PHASE: 04000212481 CONTRACT NO.: 04-2908C4

DISREGARD PRINTS BEARING EARLIER REVISION DATES

REVISION DATES 12/23/09 3/25/10 11/8/11 1/5/12 SHEET 12 OF 21

FILE => 33-0153-n-gd01.dgn

USERNAME => s124196 DATE PLOTTED => 23-MAY-2012 TIME PLOTTED => 07:01 2007236.2 (20072360512)

DIST	COUNTY	ROUTE	POST MILES TOTAL PROJECT	SHEET No	TOTAL SHEETS
04	Ala	580	R8.4/R14.6	753	853

REGISTERED CIVIL ENGINEER 1/5/12 DATE

5-14-12
PLANS APPROVAL DATE

REGISTERED PROFESSIONAL ENGINEER INES S. LI No. C51561 Exp.6/30/12 CIVIL STATE OF CALIFORNIA

The State of California or its officers or agents shall not be responsible for the accuracy or completeness of scanned copies of this plan sheet.

BIGGS CARDOSA ASSOCIATES INC.
865 THE ALAMEDA
SAN JOSE, CALIFORNIA 95126

ALAMEDA CTC
1333 BROADWAY, SUITE 220
OAKLAND, CALIFORNIA 94612

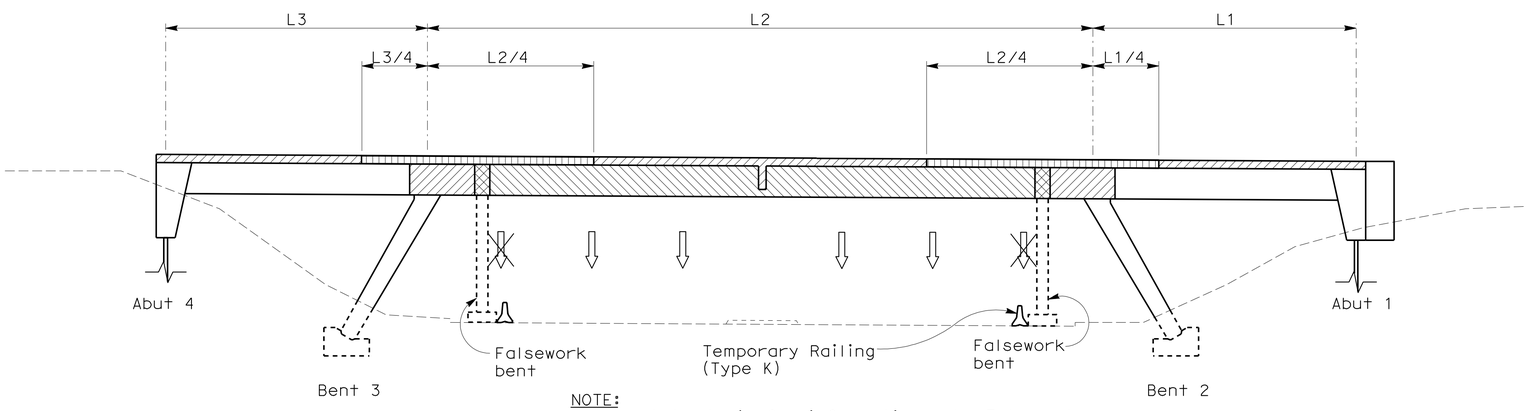

NOTE:
Falsework bents is for information only. Falsework design is contractor's responsibility

1. Construct cast-in-place footings, piers, abutments, wingwalls, and T-beam girders on falsework
2. Close lane closest to bent, see Road Plans. Erect precast prestressed girders on falsework bents
3. Construct cast-in-place bent cap, precast girder diaphragms, and portion at deck
4. Place deck over support region
5. Release falsework after bent cap and deck concrete has attained a compressive strength of 3500 psi, but no less than 10 days after last concrete placement
6. Construct deck closure, see 'TYPICAL SECTION' sheet

CONSTRUCTION SEQUENCE

NO SCALE

LEGEND:

Indicates lane to be closed

Indicates open lane

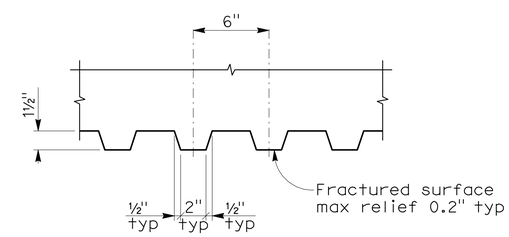

FRACTURED RIB TEXTURE - DETAIL 1

NO SCALE

NOTE:
The Contractor shall verify all controlling field dimensions before ordering or fabricating any material

DESIGN OVERSIGHT Yiwei Hu
1/25/12
SIGN OFF DATE

	BY	CHECKED
DESIGN	D. CHAN	S. KOTAMALA
DETAILS	D. CHAN	S. KOTAMALA
QUANTITIES	H. BEDAIR	B. GHORBANI

PREPARED FOR THE STATE OF CALIFORNIA DEPARTMENT OF TRANSPORTATION

INES LI
PROJECT ENGINEER

BRIDGE NO. 33-0153
POST MILES 12.53

NORTH LIVERMORE AVE UC (WIDEN)
CONSTRUCTION SEQUENCE

DESIGN GENERAL PLAN SHEET (ENGLISH) (REV. 7/16/10)

ORIGINAL SCALE IN INCHES FOR REDUCED PLANS 0 1 2 3

UNIT: 0735
PROJECT NUMBER & PHASE: 04000212481 CONTRACT NO.: 04-2908C4

DISREGARD PRINTS BEARING EARLIER REVISION DATES 12/23/09 03/25/10 11/18/11 1/5/12

SHEET 14 OF 21

FILE => 33-0153-o-cs01.dgn

USERNAME => s6124496 DATE PLOTTED => 23-MAY-2012 TIME PLOTTED => 07:01
2007236.2 (2007236DS14)

DIST	COUNTY	ROUTE	POST MILES TOTAL PROJECT	SHEET No	TOTAL SHEETS
04	Ala	580	R8.4/R14.6	754	853

REGISTERED CIVIL ENGINEER 1/5/12 DATE

5-14-12
PLANS APPROVAL DATE

REGISTERED PROFESSIONAL ENGINEER INES S. LI No. C51561 Exp.6/30/12 CIVIL STATE OF CALIFORNIA

The State of California or its officers or agents shall not be responsible for the accuracy or completeness of scanned copies of this plan sheet.

BIGGS CARDOSA ASSOCIATES INC.
865 THE ALAMEDA
SAN JOSE, CALIFORNIA 95126

ALAMEDA CTC
1333 BROADWAY, SUITE 220
OAKLAND, CALIFORNIA 94612

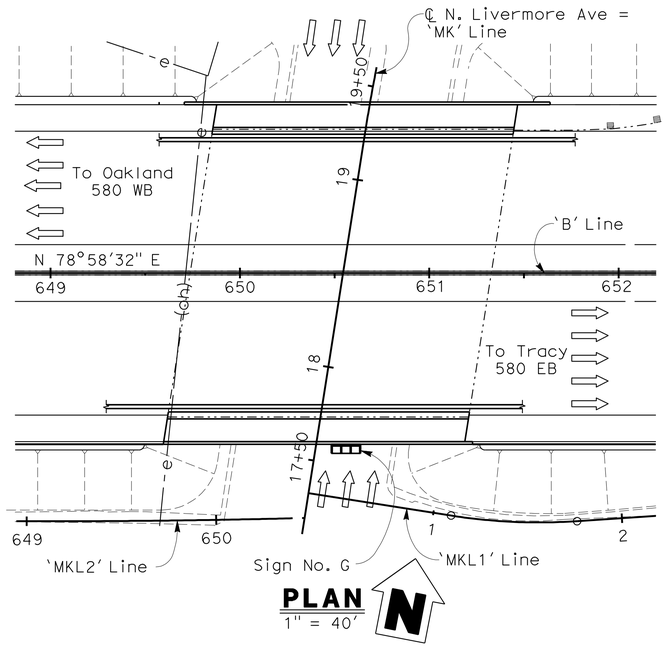

PLAN
1" = 40'

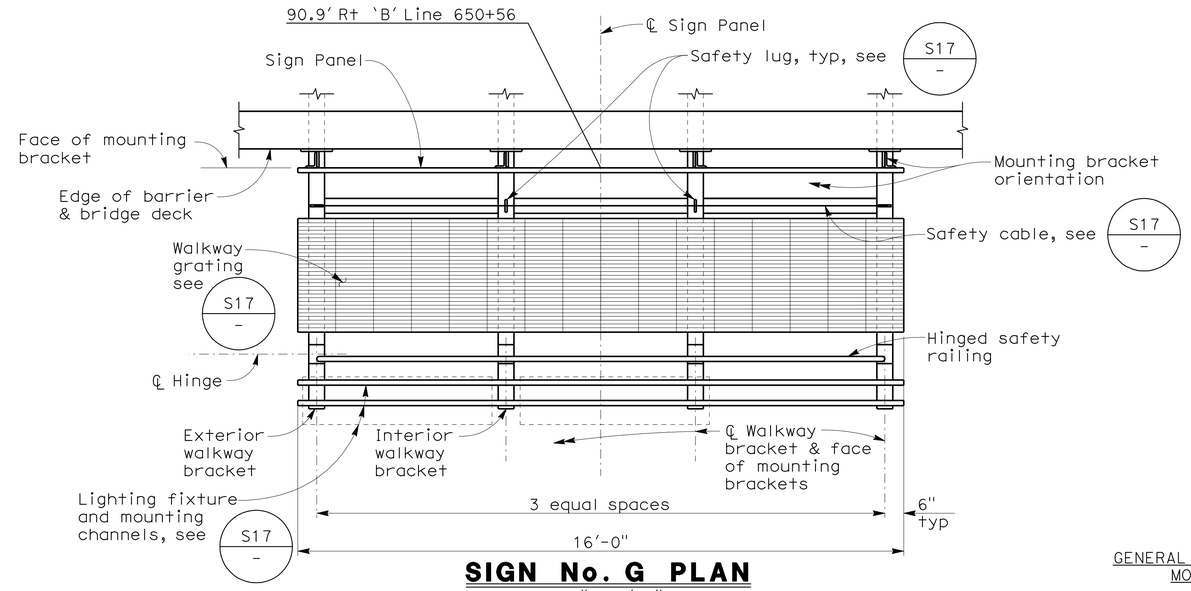

SIGN No. G PLAN
1/2" = 1'-0"

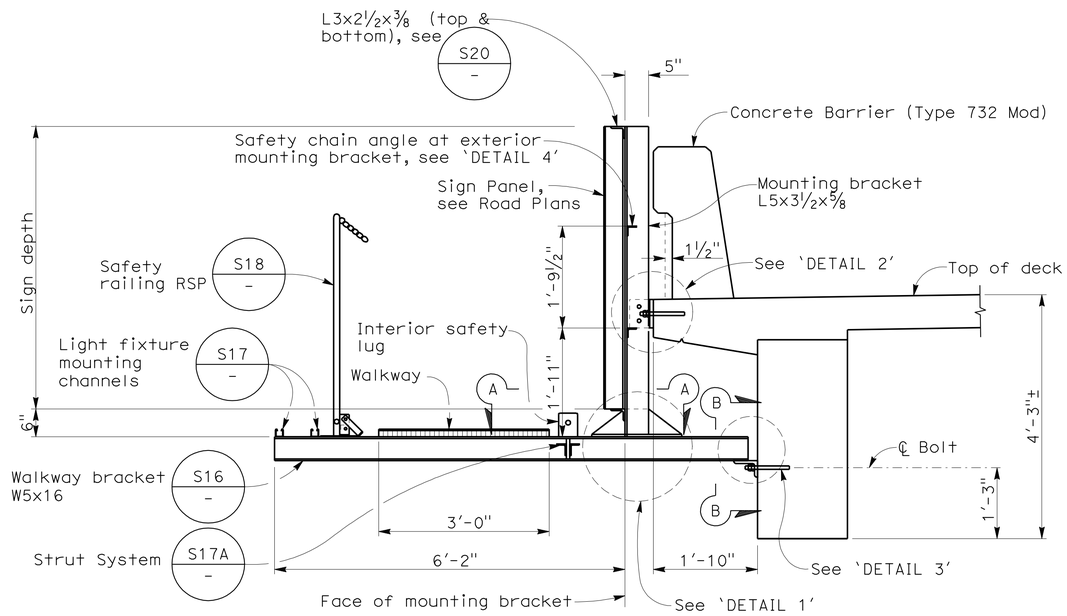

TYPICAL MOUNTING BRACKET ASSEMBLY
3/4" = 1'-0"

NOTE:
The Contractor shall verify all controlling field dimensions before ordering or fabricating any material

GENERAL NOTES FOR BRIDGE MOUNTED SIGNS

DESIGN: AASHTO Standard Specifications for Structural Supports for Highway Signs, Luminaires and Traffic Signals 5th ed.

LOADING: WIND LOADING:
Normal to face of sign: 25 psf
Transverse to face of sign: 20% of normal force
WALKWAY LOADING:
Dead load + 500 LB concentrated live load
STRUCTURAL STEEL:
fy = 36 ksi min
HIGH STRENGTH BOLT:
ASTM A325 or A449

WELDING: All welding shall be continuous unless otherwise noted on the plans.
All welding shall be done in accordance with the Standard Specifications.

S10 — Standard Plan Sheet No.
Detail No.

NOTES:

1. Galvanize all assemblies after fabrication.
2. All high strength (HS) bolts shall be pretensioned per AISC requirements.
3. Minimum size fillet weld is ¼" or thinner piece thickness unless noted otherwise.
4. Contractor to provide anchor bolt layout for review by Engineer before anchor bolts are placed.
5. For 'SECTION A-A', 'SECTION B-B', 'SECTION C-C', 'DETAIL1', 'DETAIL 2', 'DETAIL 3', and 'DETAIL 4', see 'SIGN STRUCTURE DETAILS No. 2' sheet.

DESIGN OVERSIGHT Yiwei Hu
1/25/12
SIGN OFF DATE

	BY	CHECKED
DESIGN	D. CHAN	S. KOTAMALA
DETAILS	D. CHAN	S. KOTAMALA
QUANTITIES	H. BEDAIR	B. GHORBANI

PREPARED FOR THE STATE OF CALIFORNIA DEPARTMENT OF TRANSPORTATION

INES LI
PROJECT ENGINEER

BRIDGE NO. 33-0153
POST MILES 12.53

NORTH LIVERMORE AVE UC (WIDEN)
SIGN STRUCTURE DETAILS No. 1

DESIGN GENERAL PLAN SHEET (ENGLISH) (REV. 7/16/10)

ORIGINAL SCALE IN INCHES FOR REDUCED PLANS 0 1 2 3

UNIT: 0735
PROJECT NUMBER & PHASE: 04000212481 CONTRACT NO.: 04-2908C4

DISREGARD PRINTS BEARING EARLIER REVISION DATES 12/23/09 03/25/10 11/18/11 1/5/12

SHEET 15 OF 21

FILE => 33-0153-p-ssdt01.dgn

USERNAME => S7E24496 DATE PLOTTED => 23-MAY-2012 TIME PLOTTED => 07:02

2007236 (20072360515)

DIST	COUNTY	ROUTE	POST MILES TOTAL PROJECT	SHEET No	TOTAL SHEETS
04	Ala	580	R8.4/R14.6	755	853

REGISTERED CIVIL ENGINEER 1/5/12 DATE

5-14-12
PLANS APPROVAL DATE

REGISTERED PROFESSIONAL ENGINEER INES S. LI No. C51561 Exp.6/30/12 CIVIL STATE OF CALIFORNIA

The State of California or its officers or agents shall not be responsible for the accuracy or completeness of scanned copies of this plan sheet.

BIGGS CARDOSA ASSOCIATES INC.
865 THE ALAMEDA
SAN JOSE, CALIFORNIA 95126

ALAMEDA CTC
1333 BROADWAY, SUITE 220
OAKLAND, CALIFORNIA 94612

NOTES:

1. The exterior mounting bracket to face outward to accommodate the walkway chain angle.
2. All holes are standard unless otherwise noted

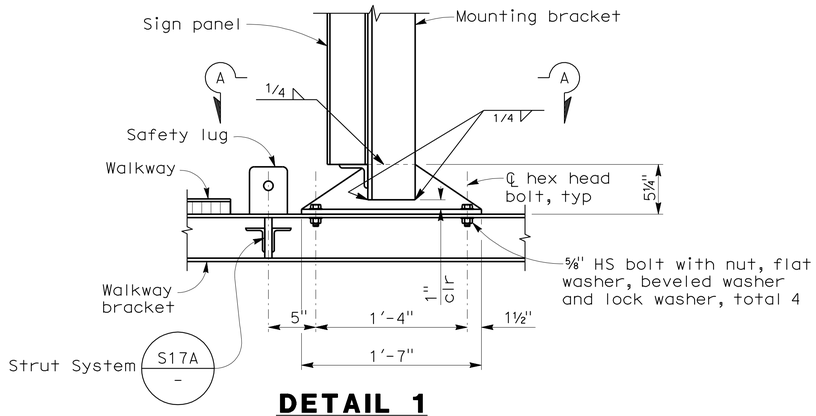

DETAIL 1
1½" = 1'-0"

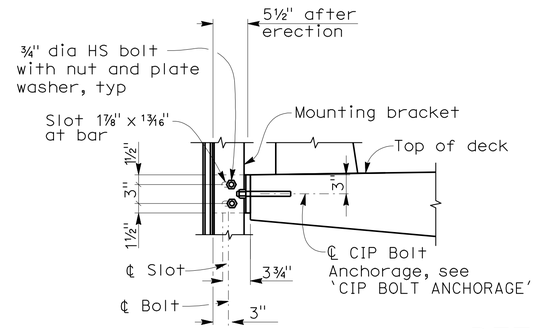

DETAIL 2
1" = 1'-0"

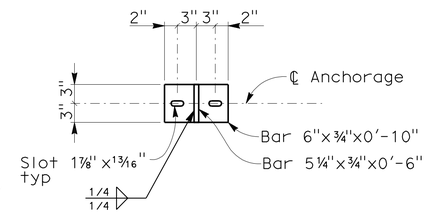

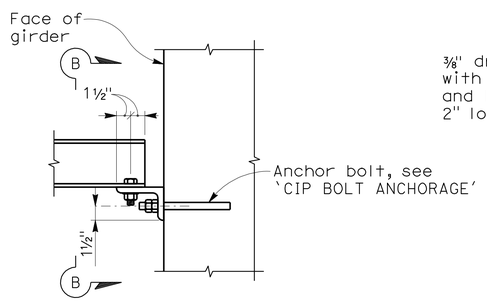

DETAIL 3
1 1/2" = 1'-0"

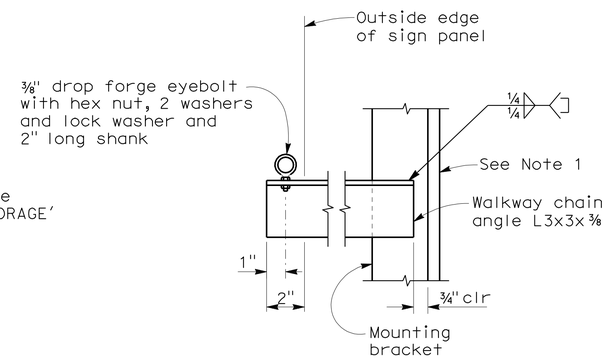

DETAIL 4
NO SCALE

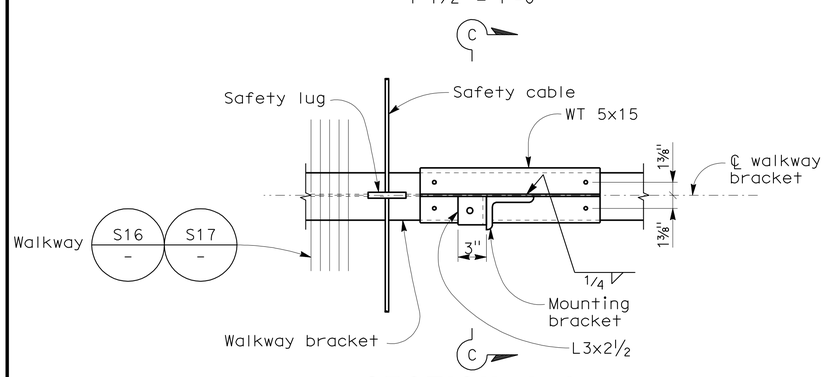

SECTION A-A
1½" = 1'-0"

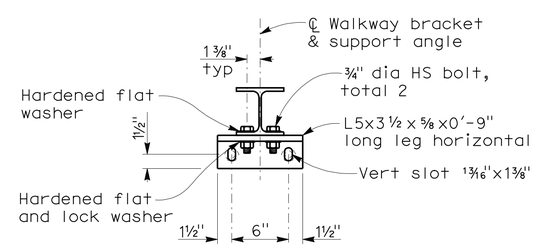

SECTION B-B
1 1/2" = 1'-0"

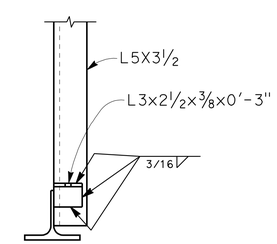

SECTION C-C
1 1/2" = 1'-0"

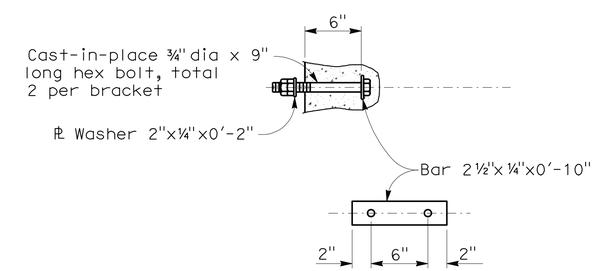

CIP BOLT ANCHORAGE
1 1/2" = 1'-0"

NOTE:
The Contractor shall verify all controlling field dimensions before ordering or fabricating any material

DESIGN OVERSIGHT Yiwei Hu
1/25/12
SIGN OFF DATE

	BY	CHECKED
DESIGN	D. CHAN	S. KOTAMALA
DETAILS	D. CHAN	S. KOTAMALA
QUANTITIES	H. BEDAIR	B. GHORBANI

PREPARED FOR THE STATE OF CALIFORNIA DEPARTMENT OF TRANSPORTATION

INES LI
PROJECT ENGINEER

BRIDGE NO. 33-0153
POST MILES 12.53

NORTH LIVERMORE AVE UC (WIDEN)
SIGN STRUCTURE DETAILS No. 2

DESIGN GENERAL PLAN SHEET (ENGLISH) (REV. 7/16/10)

ORIGINAL SCALE IN INCHES FOR REDUCED PLANS 0 1 2 3

UNIT: 0735
PROJECT NUMBER & PHASE: 04000212481
CONTRACT NO.: 04-2908C4

DISREGARD PRINTS BEARING EARLIER REVISION DATES
REVISION DATES 12/23/09 03/25/10 11/8/11 1/5/12
SHEET 16 OF 21

FILE => 33-0153-p-ssdt02.dgn

USERNAME => s124496 DATE PLOTTED => 23-MAY-2012 TIME PLOTTED => 07:02
2007236 (2007236DS16)

DIST	COUNTY	ROUTE	POST MILES TOTAL PROJECT	SHEET No	TOTAL SHEETS
04	Ala	580	R8.4/R14.6	756	853

REGISTERED CIVIL ENGINEER 1/5/12 DATE

5-14-12
PLANS APPROVAL DATE

REGISTERED PROFESSIONAL ENGINEER INES S. LI No. C51561 Exp.6/30/12 CIVIL STATE OF CALIFORNIA

The State of California or its officers or agents shall not be responsible for the accuracy or completeness of scanned copies of this plan sheet.

BIGGS CARDOSA ASSOCIATES INC.
865 THE ALAMEDA
SAN JOSE, CALIFORNIA 95126

ALAMEDA CTC
1333 BROADWAY, SUITE 220
OAKLAND, CALIFORNIA 94612

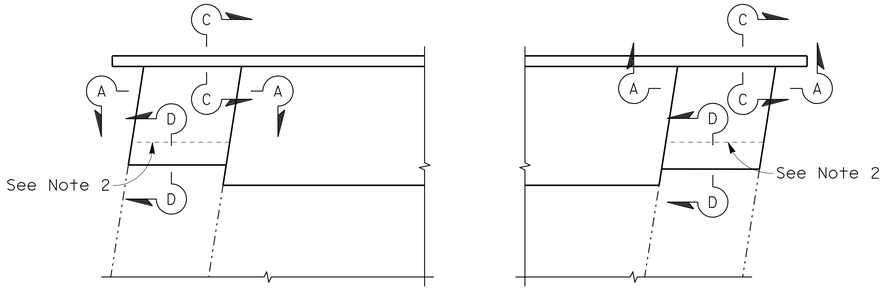

PLAN
1" = 10'

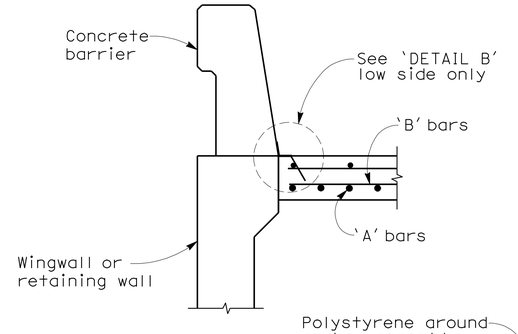

SECTION C-C
3/4" = 1'-0"

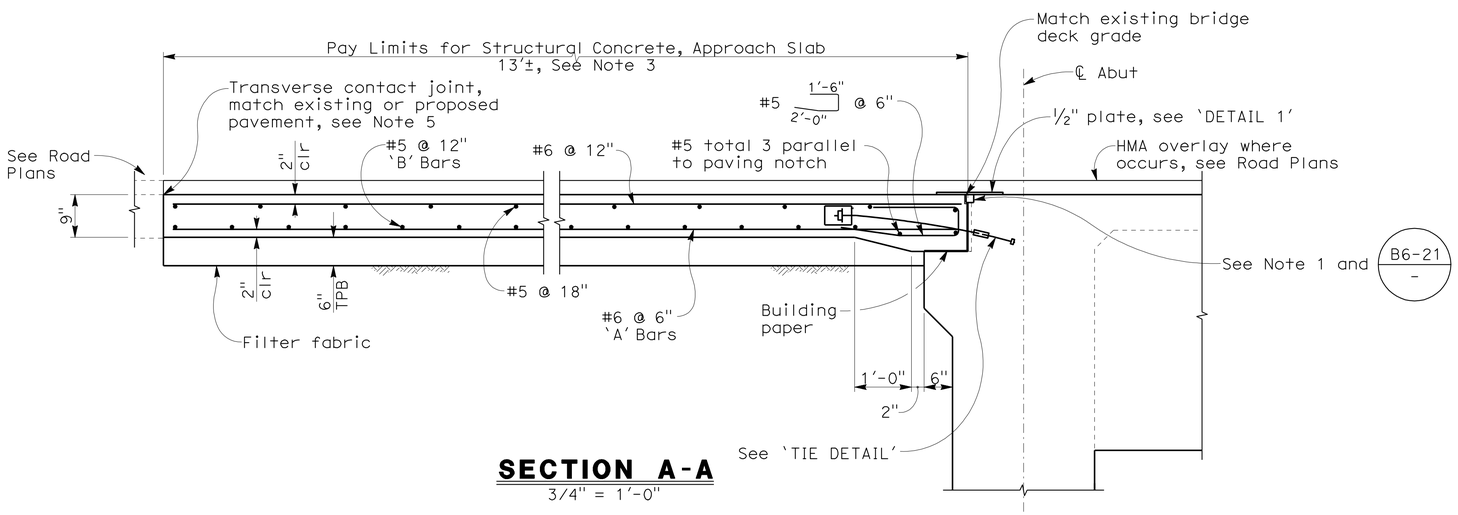

SECTION A-A
3/4" = 1'-0"

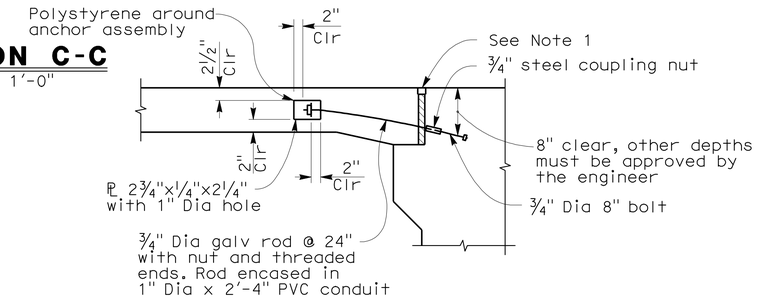

DIAPHRAGM TYPE ABUTMENT TIE DETAIL
3/4" = 1'-0"

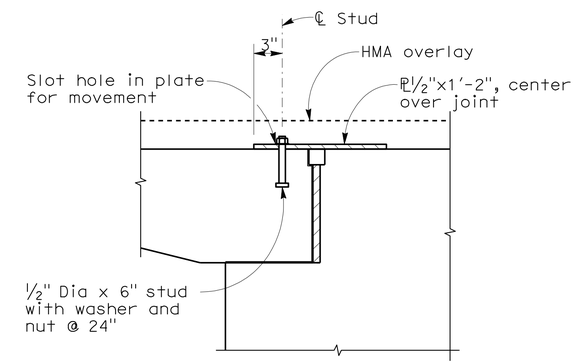

DETAIL 1
1 1/2" = 1'-0"

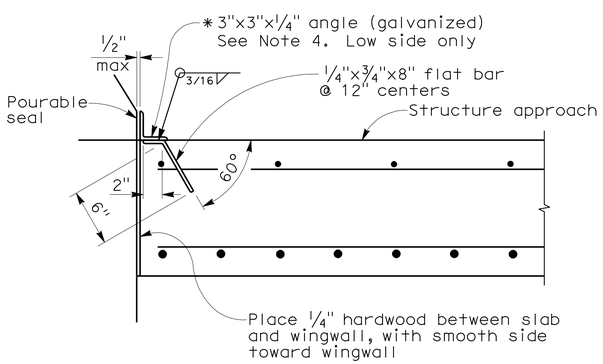

*(To be used with concrete barrier with vertical face)

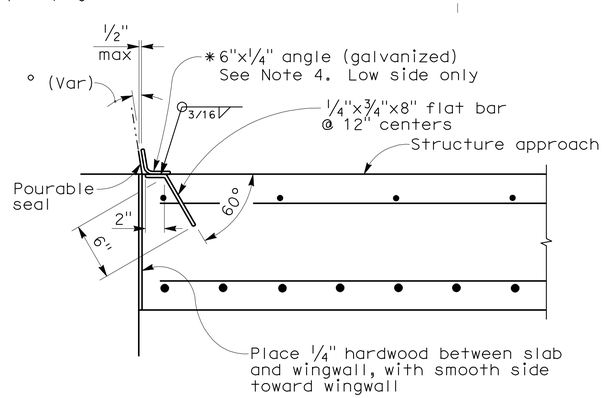

*(To be used with concrete barrier with sloping face)

DETAIL B
NO SCALE

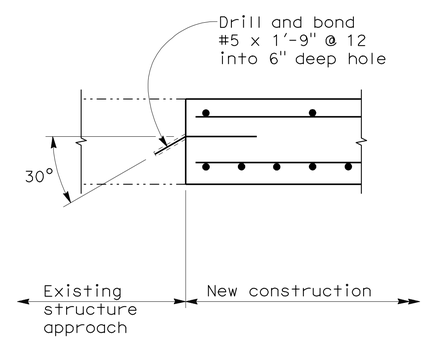

DETAIL D-D
1 1/2" = 1'-0"

NOTES:

1. For details not noted or shown, see Structure Plans. Adjust bar reinforcement to clear a sawcut for sealed joint, when required
2. Longitudinal construction joints, when permitted by the Engineer, shall be located on lane lines
3. Length of approach slab shown is approximate. Construct approach slab length to match existing
4. End angle or plate at beginning of barrier transition, end of wingwall or end of structure approach as applicable
5. For transverse contact joint with new PCC paving, refer to Standard Plan P10

NOTE:
The Contractor shall verify all controlling field dimensions before ordering or fabricating any material

DESIGN OVERSIGHT Yiwei Hu
1/25/12
SIGN OFF DATE

	BY	CHECKED
DESIGN	D. CHAN	S. KOTAMALA
DETAILS	D. CHAN	S. KOTAMALA
QUANTITIES	H. BEDAIR	B. GHORBANI

PREPARED FOR THE STATE OF CALIFORNIA DEPARTMENT OF TRANSPORTATION

INES LI
PROJECT ENGINEER

BRIDGE NO. 33-0153
POST MILES 12.53

NORTH LIVERMORE AVE UC (WIDEN)
STRUCTURE APPROACH (TYPE N MOD)

DESIGN GENERAL PLAN SHEET (ENGLISH) (REV. 7/16/10)

ORIGINAL SCALE IN INCHES FOR REDUCED PLANS 0 1 2 3

UNIT: 0735
PROJECT NUMBER & PHASE: 04000212481 CONTRACT NO.: 04-2908C4

DISREGARD PRINTS BEARING EARLIER REVISION DATES 12/23/09 3/25/10 11/8/11 1/5/12

SHEET 17 OF 21

FILE => 33-0153-t-sad.dgn

USERNAME => s124496 DATE PLOTTED => 23-MAY-2012 TIME PLOTTED => 07:02

2007236 (20072360517)

DIST	COUNTY	ROUTE	POST MILES TOTAL PROJECT	SHEET No	TOTAL SHEETS
04	Ala	580	R8.4/R14.6	757	853

GEOTECHNICAL PROFESSIONAL — DATE 1/5/12

5-14-12
PLANS APPROVAL DATE

REGISTERED PROFESSIONAL ENGINEER — GARY PARIKH — No. G.E. 666 — Exp. 12/31/13 — GEOTECHNICAL — STATE OF CALIFORNIA

The State of California or its officers or agents shall not be responsible for the accuracy or completeness of electronic copies of this plan sheet.

ALAMEDA CTC
1333 BROADWAY, SUITE 220
OAKLAND, CA 94612

PARIKH CONSULTANTS, INC.
2360 QUME DRIVE, SUITE A
SAN JOSE, CA 95131

REFERENCE: CALTRANS SOIL & ROCK LOGGING, CLASSIFICATION, AND PRESENTATION MANUAL (JUNE 2007)

GROUP SYMBOLS AND NAMES

Graphic/Symbol	Group Names
GW	Well-graded GRAVEL Well-graded GRAVEL with SAND
GP	Poorly graded GRAVEL Poorly graded GRAVEL with SAND
GW-GM	Well-graded GRAVEL with SILT Well-graded GRAVEL with SILT and SAND
GW-GC	Well-graded GRAVEL with CLAY (or SILTY CLAY) Well-graded GRAVEL with CLAY and SAND (or SILTY CLAY and SAND)
GP-GM	Poorly graded GRAVEL with SILT Poorly graded GRAVEL with SILT and SAND
GP-GC	Poorly graded GRAVEL with CLAY (or SILTY CLAY) Poorly graded GRAVEL with CLAY and SAND (or SILTY CLAY and SAND)
GM	SILTY GRAVEL SILTY GRAVEL with SAND
GC	CLAYEY GRAVEL CLAYEY GRAVEL with SAND
GC-GM	SILTY, CLAYEY GRAVEL SILTY, CLAYEY GRAVEL with SAND
SW	Well-graded SAND Well-graded SAND with GRAVEL
SP	Poorly graded SAND Poorly graded SAND with GRAVEL
SW-SM	Well-graded SAND with SILT Well-graded SAND with SILT and GRAVEL
SW-SC	Well-graded SAND with CLAY (or SILTY CLAY) Well-graded SAND with CLAY and GRAVEL (or SILTY CLAY and GRAVEL)
SP-SM	Poorly graded SAND with SILT Poorly graded SAND with SILT and GRAVEL
SP-SC	Poorly graded SAND with CLAY (or SILTY CLAY) Poorly graded SAND with CLAY and GRAVEL (or SILTY CLAY and GRAVEL)
SM	SILTY SAND SILTY SAND with GRAVEL
SC	CLAYEY SAND CLAYEY SAND with GRAVEL
SC-SM	SILTY, CLAYEY SAND SILTY, CLAYEY SAND with GRAVEL
PT	PEAT
	COBBLES COBBLES and BOULDERS BOULDERS

Graphic/Symbol	Group Names
CL	Lean CLAY Lean CLAY with SAND Lean CLAY with GRAVEL SANDY lean CLAY SANDY lean CLAY with GRAVEL GRAVELLY lean CLAY GRAVELLY lean CLAY with SAND
CL-ML	SILTY CLAY SILTY CLAY with SAND SILTY CLAY with GRAVEL SANDY SILTY CLAY SANDY SILTY CLAY with GRAVEL GRAVELLY SILTY CLAY GRAVELLY SILTY CLAY with SAND
ML	SILT SILT with SAND SILT with GRAVEL SANDY SILT SANDY SILT with GRAVEL GRAVELLY SILT GRAVELLY SILT with SAND
OL	ORGANIC lean CLAY ORGANIC lean CLAY with SAND ORGANIC lean CLAY with GRAVEL SANDY ORGANIC lean CLAY SANDY ORGANIC lean CLAY with GRAVEL GRAVELLY ORGANIC lean CLAY GRAVELLY ORGANIC lean CLAY with SAND
OL	ORGANIC SILT ORGANIC SILT with SAND ORGANIC SILT with GRAVEL SANDY ORGANIC SILT SANDY ORGANIC SILT with GRAVEL GRAVELLY ORGANIC SILT GRAVELLY ORGANIC SILT with SAND
CH	Fat CLAY Fat CLAY with SAND Fat CLAY with GRAVEL SANDY fat CLAY SANDY fat CLAY with GRAVEL GRAVELLY fat CLAY GRAVELLY fat CLAY with SAND
MH	Elastic SILT Elastic SILT with SAND Elastic SILT with GRAVEL SANDY elastic SILT SANDY elastic SILT with GRAVEL GRAVELLY elastic SILT GRAVELLY elastic SILT with SAND
OH	ORGANIC fat CLAY ORGANIC fat CLAY with SAND ORGANIC fat CLAY with GRAVEL SANDY ORGANIC fat CLAY SANDY ORGANIC fat CLAY with GRAVEL GRAVELLY ORGANIC fat CLAY GRAVELLY ORGANIC fat CLAY with SAND
OH	ORGANIC elastic SILT ORGANIC elastic SILT with SAND ORGANIC elastic SILT with GRAVEL SANDY ORGANIC elastic SILT SANDY ORGANIC elastic SILT with GRAVEL GRAVELLY ORGANIC elastic SILT GRAVELLY ORGANIC elastic SILT with SAND
OL/OH	ORGANIC SOIL ORGANIC SOIL with SAND ORGANIC SOIL with GRAVEL SANDY ORGANIC SOIL SANDY ORGANIC SOIL with GRAVEL GRAVELLY ORGANIC SOIL GRAVELLY ORGANIC SOIL with SAND

FIELD AND LABORATORY TESTING

- (C) Consolidation (ASTM D 2435)
- (CL) Collapse Potential (ASTM D 5333)
- (CP) Compaction Curve (CTM 216)
- (CR) Corrosivity Testing (CTM 643, CTM 422, CTM 417)
- (CU) Consolidated Undrained Triaxial (ASTM D 4767)
- (DS) Direct Shear (ASTM D 3080)
- (EI) Expansion Index (ASTM D 4829)
- (M) Moisture Content (ASTM D 2216)
- (OC) Organic Content-% (ASTM D 2974)
- (P) Permeability (CTM 220)
- (PA) Particle Size Analysis (ASTM D 422)
- (PI) Plasticity Index (AASHTO T 90) Liquid Limit (AASHTO T 89)
- (PL) Point Load Index (ASTM D 5731)
- (PM) Pressure Meter
- (PP) Pocket Penetrometer
- (R) R-Value (CTM 301)
- (SE) Sand Equivalent (CTM 217)
- (SG) Specific Gravity (AASHTO T 100)
- (SL) Shrinkage Limit (ASTM D 427)
- (SW) Swell Potential (ASTM D 4546)
- (TV) Pocket Torvane
- (UC) Unconfined Compression-Soil (ASTM D 2166) Unconfined Compression-Rock (ASTM D 2938)
- (UU) Unconsolidated Undrained Triaxial (ASTM D 2850)
- (UW) Unit Weight (ASTM D 4767)
- (VS) Vane Shear (AASHTO T 223)

APPARENT DENSITY OF COHESIONLESS SOILS

Description	SPT N_{60} (Blows / 12 inches)
Very loose	0 - 4
Loose	5 - 10
Medium Dense	11 - 30
Dense	31 - 50
Very Dense	> 50

MOISTURE

Description	Criteria
Dry	Absence of moisture, dusty, dry to the touch
Moist	Damp but no visible water
Wet	Visible free water, usually soil is below water table

PERCENT OR PROPORTION OF SOILS

Description	Criteria
Trace	Particles are present but estimated to be less than 5%
Few	5 to 10%
Little	15 to 25%
Some	30 to 45%
Mostly	50 to 100%

PARTICLE SIZE

Description		Size
Boulder		> 12"
Cobble		3" to 12"
Gravel	Coarse	3/4" to 3"
	Fine	No. 4 to 3/4"
Sand	Coarse	No. 10 to No. 4
	Medium	No. 40 to No. 10
	Fine	No. 200 to No. 40

DESIGN OVERSIGHT — Yiwei Hu
1/25/12
SIGN OFF DATE

DRAWN BY: O. GOUTHIER
CHECKED BY: P. SIRCAR

S.DUDDU
FIELD INVESTIGATION BY:
DATE: DECEMBER 2008

PREPARED FOR THE STATE OF CALIFORNIA DEPARTMENT OF TRANSPORTATION

P. SIRCAR
PROJECT ENGINEER

BRIDGE NO. 33-0153
POST MILES 12.53

NORTH LIVERMORE AVE UC (WIDEN)
LOG OF TEST BORINGS 1 OF 4

ORIGINAL SCALE IN INCHES FOR REDUCED PLANS 0 1 2 3

UNIT: 0735
PROJECT NUMBER & PHASE: 04000212481
CONTRACT NO.: 04-2908C4

DISREGARD PRINTS BEARING EARLIER REVISION DATES
REVISION DATES: 12/21/09 06/16/10 11/8/11 1/5/12

SHEET 18 OF 21

FILE => 33-0153-z-ltb01.dgn

USERNAME => s124496 DATE PLOTTED => 23-MAY-2012 TIME PLOTTED => 07:02

REFERENCE: CALTRANS SOIL & ROCK LOGGING, CLASSIFICATION, AND PRESENTATION MANUAL (2010)

DIST	COUNTY	ROUTE	POST MILES TOTAL PROJECT	SHEET No	TOTAL SHEETS
04	Ala	580	R8.4/R14.6	758	853

GEOTECHNICAL PROFESSIONAL — DATE 1/5/12

5-14-12
PLANS APPROVAL DATE

REGISTERED PROFESSIONAL ENGINEER — GARY PARIKH — No. G.E. 666 — Exp. 12/31/13 — GEOTECHNICAL — STATE OF CALIFORNIA

The State of California or its officers or agents shall not be responsible for the accuracy or completeness of electronic copies of this plan sheet.

ALAMEDA CTC
1333 BROADWAY, SUITE 220
OAKLAND, CA 94612

PARIKH CONSULTANTS, INC.
2360 QUME DRIVE, SUITE A
SAN JOSE, CA 95131

CEMENTATION

Description	Criteria
Weak	Crumbles or breaks with handling or little finger pressure.
Moderate	Crumbles or breaks with considerable finger pressure.
Strong	Will not crumble or break with finger pressure.

BOREHOLE IDENTIFICATION

Symbol	Hole Type	Description
Size	A	Auger Boring (hollow or solid stem bucket)
Size	R RW RC P	Rotary drilled boring (conventional) Rotary drilled with self-casing wire-line Rotary core with continuously-sampled, self-casing wire-line Rotary percussion boring (air)
Size	R	Rotary drilled diamond core
Size	HD HA	Hand driven (1-inch soil tube) Hand Auger
●	D	Dynamic Cone Penetration Boring
▲	CPT	Cone Penetration Test (ASTM D 5778)
⬚	O	Other (note on LOTB)

Note: Size in inches.

CONSISTENCY OF COHESIVE SOILS

Description	Shear Strength (tsf)	Pocket Penetrometer Measurement, PP, (tsf)	Torvane Measurement, TV, (tsf)	Vane Shear Measurement, VS, (tsf)
Very Soft	Less than 0.12	Less than 0.25	Less than 0.12	Less than 0.12
Soft	0.12 - 0.25	0.25 - 0.5	0.12 - 0.25	0.12 - 0.25
Medium Stiff	0.25 - 0.5	0.5 - 1	0.25 - 0.5	0.25 - 0.5
	0.5 - 1	1 - 2	0.5 - 1	0.5 - 1
Very Stiff	1 - 2	2 - 4	1 - 2	1 - 2
Hard	Greater than 2	Greater than 4	Greater than 2	Greater than 2

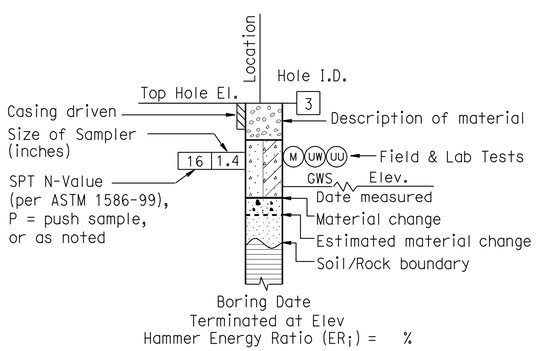

ROTARY BORING

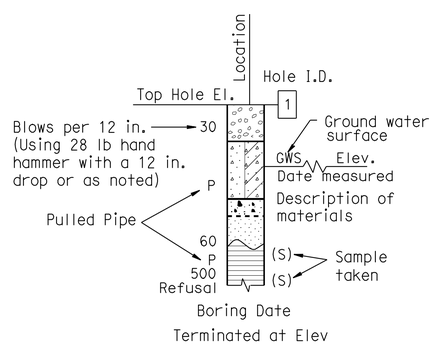

HAND BORING

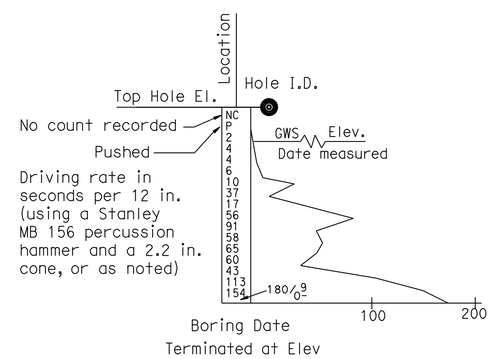

DYNAMIC CONE PENETRATION BORING

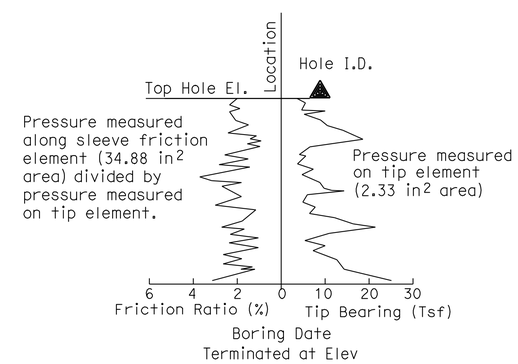

CONE PENETRATION TEST (CPT) BORING

DESIGN OVERSIGHT Yiwei Hu	DRAWN BY	O. GOUTHIER	S.DUDDU
1/25/12 SIGN OFF DATE	CHECKED BY	P. SIRCAR	FIELD INVESTIGATION BY: DATE: DECEMBER 2008

PREPARED FOR THE STATE OF CALIFORNIA DEPARTMENT OF TRANSPORTATION

P. SIRCAR
PROJECT ENGINEER

BRIDGE NO. 33-0153
POST MILES 12.53

NORTH LIVERMORE AVE UC (WIDEN)

LOG OF TEST BORINGS 2 OF 4

ORIGINAL SCALE IN INCHES FOR REDUCED PLANS 0 1 2 3

UNIT: 0735
PROJECT NUMBER & PHASE: 04000212481
CONTRACT NO.: 04-2908C4

DISREGARD PRINTS BEARING EARLIER REVISION DATES → 12/2/09 06/08/10 12/08/11 1/5/12

SHEET 19 OF 21

FILE => 33-0153-z-1tb02.dgn

USERNAME => s124496 DATE PLOTTED => 23-MAY-2012 TIME PLOTTED => 07:02

DIST	COUNTY	ROUTE	POST MILES TOTAL PROJECT	SHEET No	TOTAL SHEETS
04	Ala	580	R8.4/R14.6	759	853

GEOTECHNICAL PROFESSIONAL — DATE 1/5/12

5-14-12
PLANS APPROVAL DATE

REGISTERED PROFESSIONAL ENGINEER — GARY PARIKH — No. G.E. 666 — Exp. 12/31/13 — GEOTECHNICAL — STATE OF CALIFORNIA

The State of California or its officers or agents shall not be responsible for the accuracy or completeness of electronic copies of this plan sheet.

ALAMEDA CTC
1333 BROADWAY, SUITE 220
OAKLAND, CA 94612

PARIKH CONSULTANTS, INC.
2360 QUME DRIVE, SUITE A
SAN JOSE, CA 95131

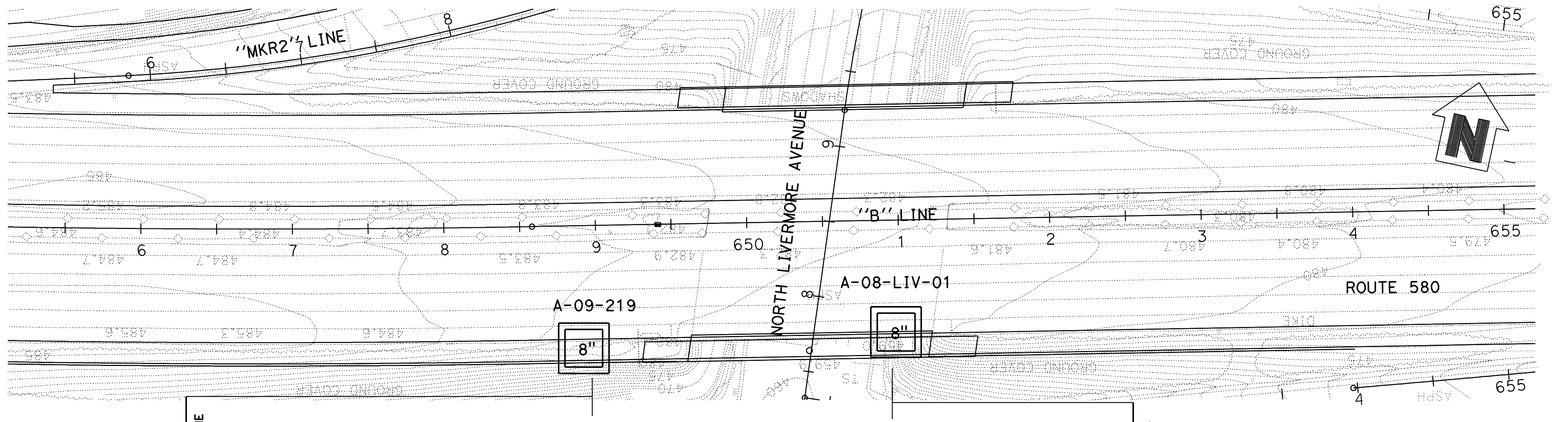

PLAN
1"= 50'

The Vertical Datum shown hereon is based on North American Vertical datum of 1988 (NAVD). The 1988 Elevations for this project were establish using digital Levelling & GPS Survey Measurements and a least Squares Adjustment Holdings NGS Benhcmarks GPS Control Point 35 - PID DE8495, L 1259 - PID HS4075, CHABOT A - PID AI7653, & OLD RM 3 = TIDAL 5 - PID HS3429 fixed to their published values.

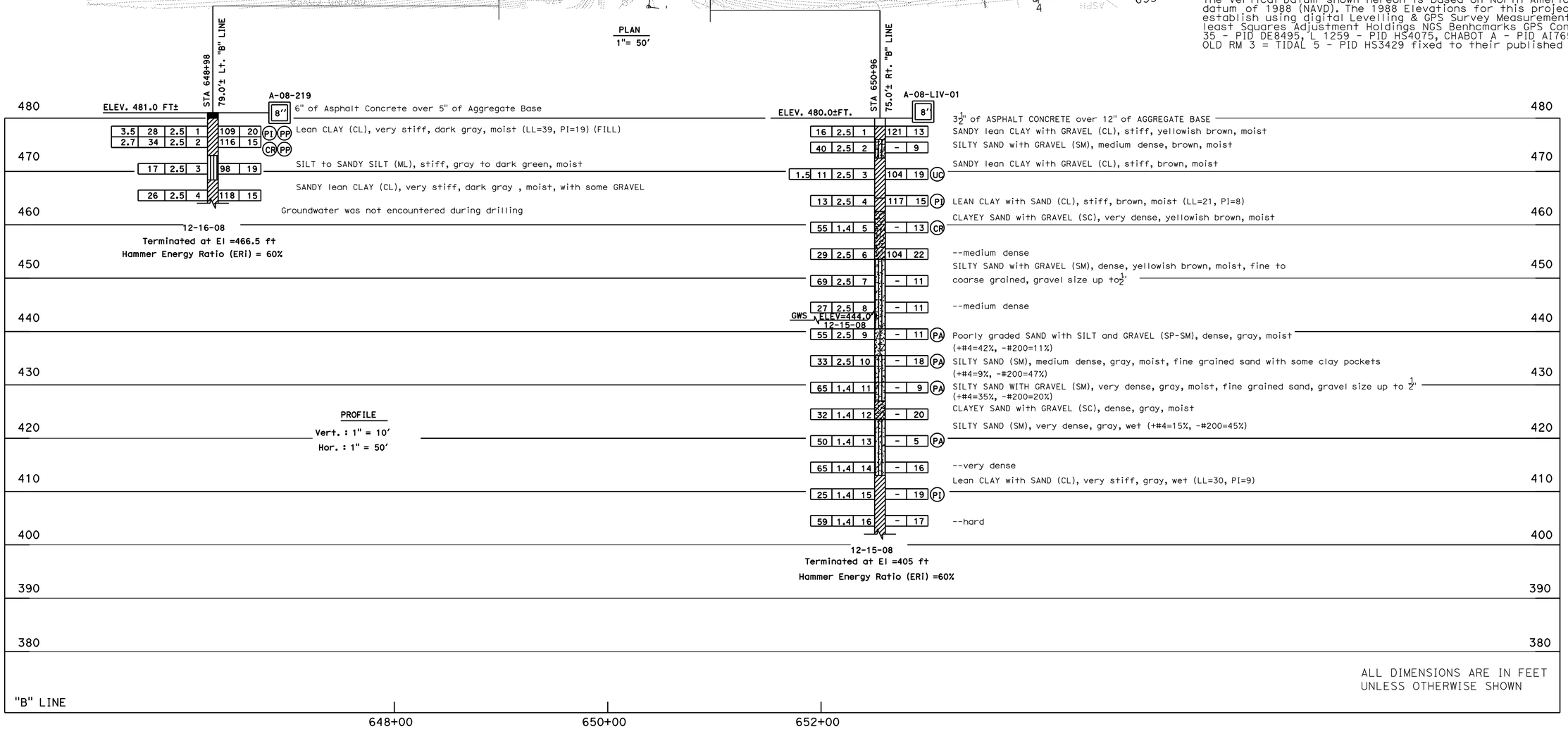

ALL DIMENSIONS ARE IN FEET UNLESS OTHERWISE SHOWN

DESIGN OVERSIGHT Yiwei Hu
1/25/12
SIGN OFF DATE

DRAWN BY	O. GOUTHIER	S.DUDDU
CHECKED BY	P. SIRCAR	FIELD INVESTIGATION BY: DATE: DECEMBER 2008

PREPARED FOR THE STATE OF CALIFORNIA DEPARTMENT OF TRANSPORTATION

P. SIRCAR
PROJECT ENGINEER

BRIDGE NO. 33-0153
POST MILES 12.53

NORTH LIVERMORE AVE UC (WIDEN)
LOG OF TEST BORINGS 3 OF 4

ORIGINAL SCALE IN INCHES FOR REDUCED PLANS 0 1 2 3

UNIT: 0735
PROJECT NUMBER & PHASE: 04000212481 CONTRACT NO.: 04-2908C4

DISREGARD PRINTS BEARING EARLIER REVISION DATES → 12/21/09 06/06/10 11/8/11 1/5/12

SHEET 20 OF 21

FILE => 33-0153-z-ltb03.dgn

USERNAME => s124496 DATE PLOTTED => 23-MAY-2012 TIME PLOTTED => 07:02

DIST.	COUNTY	ROUTE	POST MILES—TOTAL PROJECT	SHEET NO.	TOTAL SHEETS
0 4	Ala	580	9.4/18.1	195	248

DESIGN & CONSTRUCTION SUPERVISION REGISTERED CIVIL ENGINEER NO. 7044

DATE APPROVED April 27, 1970

"F8" Line corresponds to the "B" line.
Revisions made to this Log of Test Borings from the original 1965 Log of Test Borings are the addition of the following table and notes:

Boring	Station	Offset from 'B LINE'
B-6	649+61	57 feet Rt.
B-4	649+84	75 feet Lt.
B-2	651+28	77 feet Rt.
B-3	650+70	78 feet Rt.
B-5	651+40	87 feet Rt.
B-1	651+22	76 feet Lt.

Notes:

1. See the General Plan and/or Foundation Plan for the Stationing.
2. The data are the locations for the As-Built Test Borings referenced to the proposed new structure location. This table is presented on the As-Built Log of Test Boring sheet for the convenience of any bidder, contractor or other interested party.

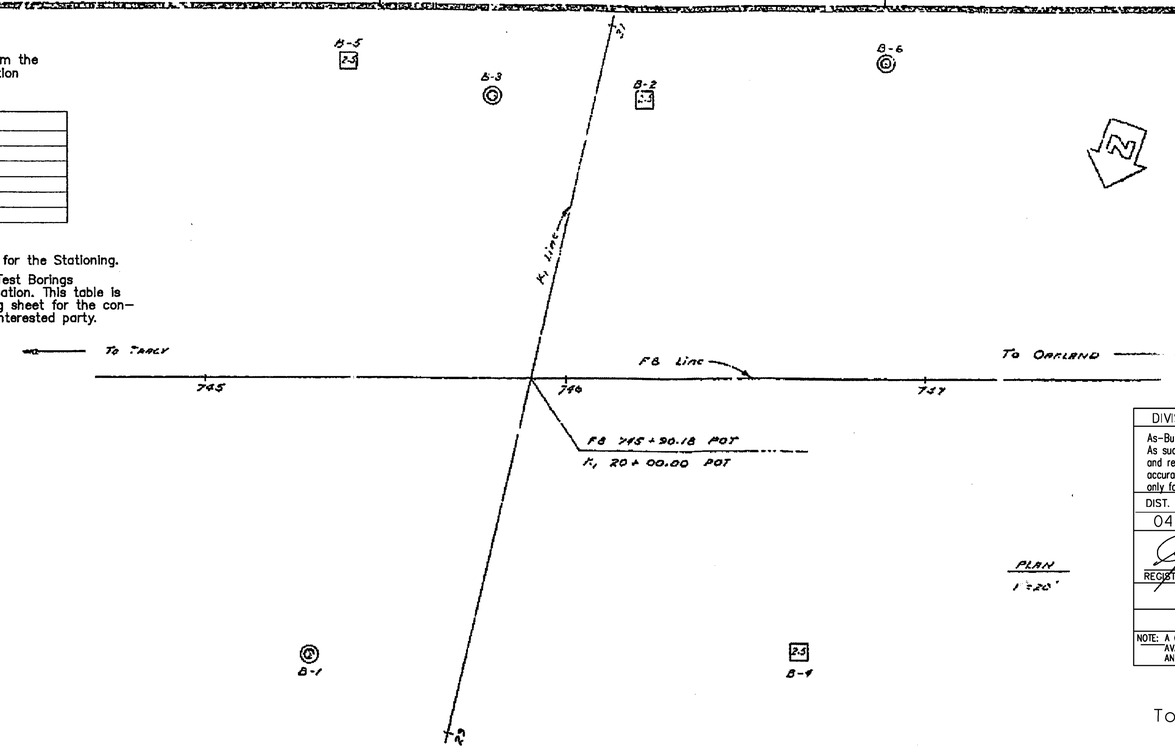

BM
"P" & Pk. Rod ≈
F8 741+92.05 LC
F4 C.I.C
Disc in Casing
Elev. 476.54

PLAN
1"=20'

DIVISION OF ENGINEERING SERVICES – GEOTECHNICAL SERVICES					
As-Built Log of Test Borings sheet is considered an informational document only. As such, the State of California registration seal with signature, license number and registration certificate expiration date confirm that this is a true and accurate copy of the original document. This drawing is available and presented only for the convenience of any bidder, contractor or other interested party.					
DIST.	COUNTY	ROUTE	POST MILES–TOTAL PROJECT	Sheet No.	Total Sheets
04	Ala	580	R8.4/R14.6	760	853
REGISTERED CIVIL ENGINEER				DATE 1/5/12	
NORTH LIVERMORE AVE UC (WIDEN)					
LOG OF TEST BORINGS 4 OF 4					
NOTE: A COPY OF THIS LOG OF TEST BORINGS IS AVAILABLE AT OFFICE OF STRUCTURE MAINTENANCE AND INVESTIGATIONS, SACRAMENTO, CALIFORNIA			UNIT: 0735 PROJECT NUMBER & PHASE: 04000212481		
BRIDGE No.	Sheet	of			
33-0153	21	21			

REGISTERED PROFESSIONAL ENGINEER
GARY PARIKH
No. G.E. 666
Exp. 12/31/13
GEOTECHNICAL
STATE OF CALIFORNIA

To accompany plans dated 5-14-12

INFORMATION ON ACTUAL FOUNDATION CONDITIONS ENCOUNTERED IN BRIDGE AND SOIL SECTION

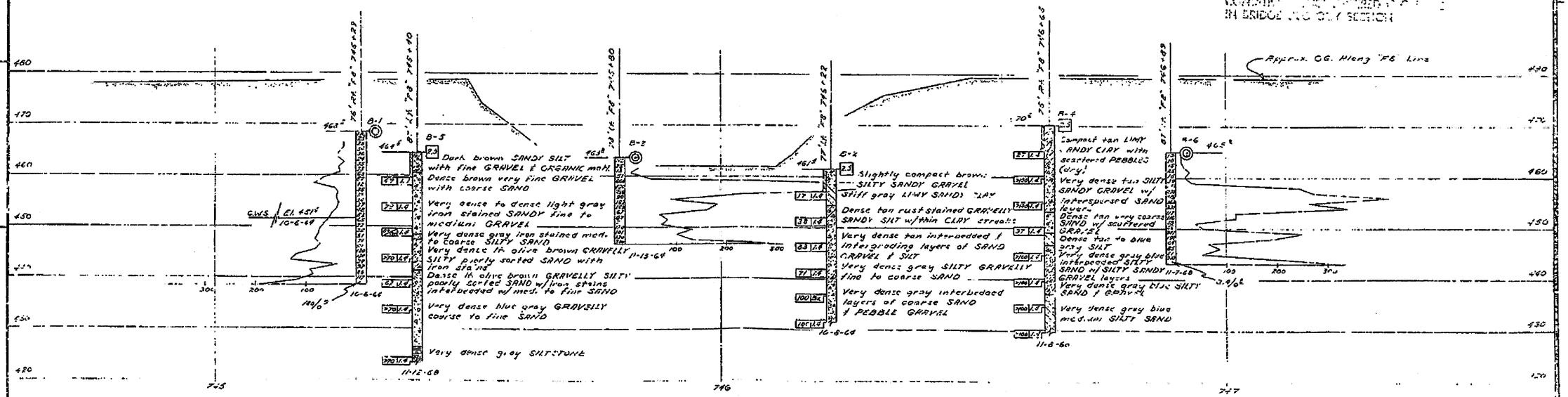

PROFILE
1"=16'

AS BUILT PLANS
Contract No. 04-136444
Date Completed 9-25-72
Document No. 6229

LEGEND OF BORING OPERATIONS

Penetrometer
2½" Core Penetrometer
Sampler Boring (dry)
Rotary Boring (wet)
Auger Boring (dry)
Jet Boring
Core Boring
Test Pit

LEGEND OF EARTH MATERIALS

Gravel
Sand
Silt
Clay
Sandy Clay or Clayey Sand
Sandy Silt or Silty Sand
Silty Clay or Clayey Silt
Peat and Organic Matter
Fill Material
Igneous Rock
Sedimentary Rock
Metamorphic Rock

IDENTIFICATION OF MATERIAL BASED ON STANDARD GRADE SIZE LIMITS

NOTE: Classification of earth material as shown on this sheet is based upon field inspection and is not to be construed to imply mechanical analysis.

STATE OF CALIFORNIA
TRANSPORTATION AGENCY
DEPARTMENT OF PUBLIC WORKS
DIVISION OF HIGHWAYS

NORTH LIVERMORE AVE. UNDERCROSSING

LOG OF TEST BORINGS

BRIDGE NO.	POST MILE	DRAWING NO.	SHEET	OF
33-153	12.53		10	10

REVISION DATES (ENGINEERING STAFF ONLY)

WO 136441 PP-93149-2

42

FOR ACCURATE RIGHT OF WAY DATA, CONTACT
RIGHT OF WAY ENGINEERING AT THE DISTRICT OFFICE

DIST	COUNTY	ROUTE	POST MILES TOTAL PROJECT	SHEET No	TOTAL SHEETS
04	Ala	580	R8.4/R14.6	761	853

REGISTERED CIVIL ENGINEER — DATE 1/5/12

5-14-12
PLANS APPROVAL DATE

REGISTERED PROFESSIONAL ENGINEER — INES S. LI — No. C51561 — Exp.6/30/12 — CIVIL — STATE OF CALIFORNIA

The State of California or its officers or agents shall not be responsible for the accuracy or completeness of scanned copies of this plan sheet.

BIGGS CARDOSA ASSOCIATES INC.
865 THE ALAMEDA
SAN JOSE, CALIFORNIA 95126

ALAMEDA CTC
1333 BROADWAY, SUITE 220
OAKLAND, CALIFORNIA 94612

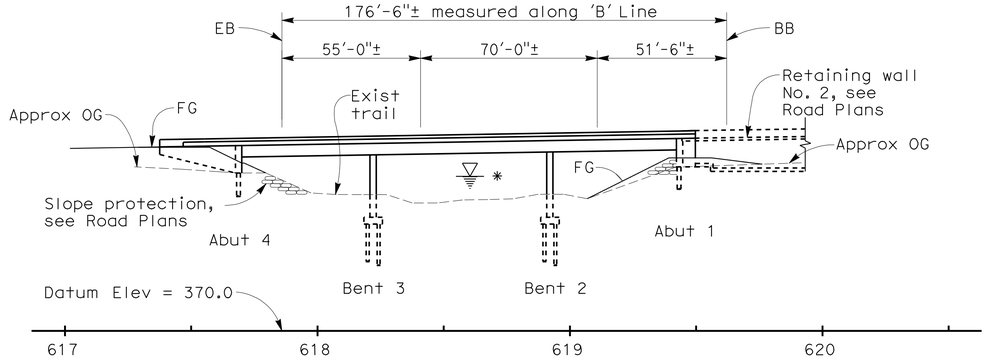

MIRRORED ELEVATION

1" = 30'

* For Hydrologic Summary see 'FOUNDATION PLAN' sheet

LEGEND:

- Indicates exist structure
- Indicates new construction
- Indicates bridge removal (Portion)
- Indicates direction of traffic
- Indicates drain inlets

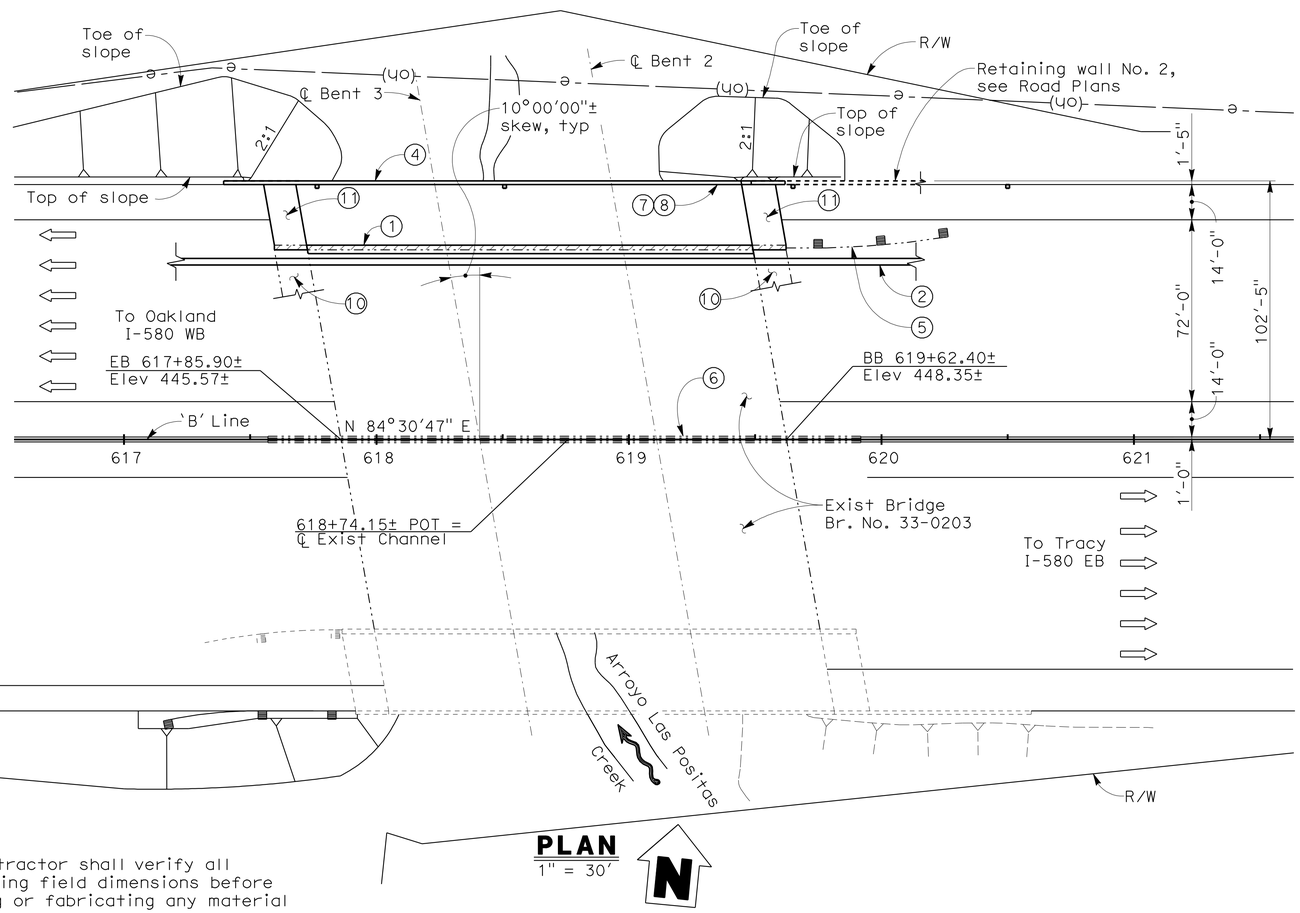

PLAN

1" = 30'

NOTE:
The Contractor shall verify all controlling field dimensions before ordering or fabricating any material

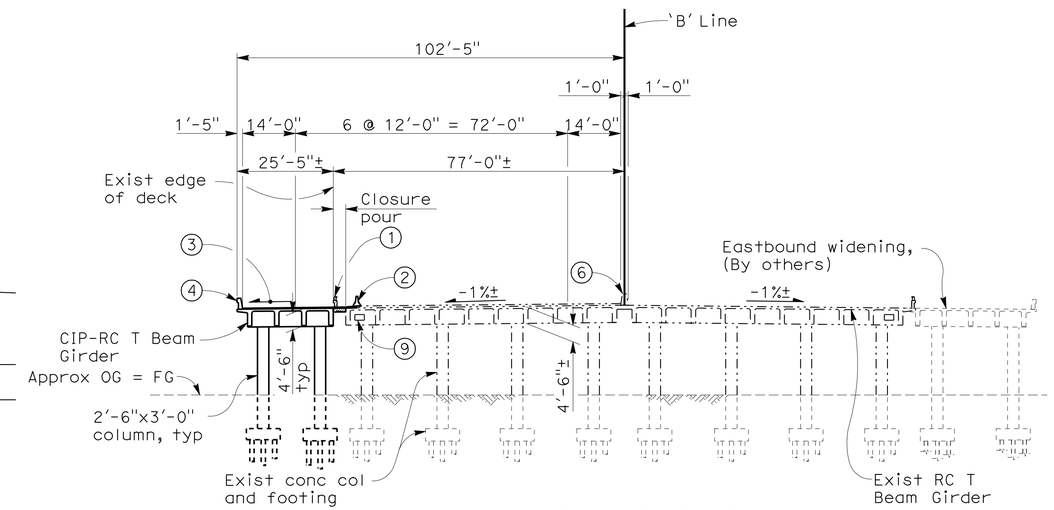

TYPICAL SECTION

1" = 20'

NOTES:

1. Remove existing overhang, concrete barrier, metal bridge railing and portion of wingwalls
2. Temporary Railing (Type K)
3. Match existing cross slope
4. Concrete Barrier (Type 732 Mod)
5. Existing metal beam guard railing to be removed, see Road Plans
6. Existing Concrete Barrier (Type 60A Mod)
7. Paint 'Bridge No. 33-0203'
8. Paint 'Arroyo Las Positas'
9. Existing future utility opening
10. Existing structure approach slab
11. Structure approach slab (Type N Modified)
12. For Index to Bridge Plans & General Notes, see 'INDEX TO PLANS' sheet
13. For Pile Data Table, see 'FOUNDATION PLAN' sheet
14. For Quantities, see 'INDEX TO PLANS' sheet

DESIGN OVERSIGHT Yiwei Hu 1/25/12 SIGN OFF DATE	DESIGN	BY Z. VUKMIROVIC	CHECKED A. REJAIE	LOAD & RESISTANCE FACTOR DESIGN	LIVE LOADING: HL93 W/"LOW-BOY"; PERMIT DESIGN VEHICLE
	DETAILS	BY Z. VUKMIROVIC	CHECKED S. MOYLES	LAYOUT BY I. LI	CHECKED S. MOYLES
	QUANTITIES	BY R. RIVAS	CHECKED M. FRECHETTE	SPECIFICATIONS BY I. LI	PLANS AND SPECS COMPARED D. DEVLIN

PREPARED FOR THE STATE OF CALIFORNIA DEPARTMENT OF TRANSPORTATION

INES LI
PROJECT ENGINEER

BRIDGE NO. 33-0203
POST MILES 13.13

ARROYO LAS POSITAS BRIDGE (WIDEN)
GENERAL PLAN

DESIGN GENERAL PLAN SHEET (ENGLISH) (REV. 7/16/10)

ORIGINAL SCALE IN INCHES FOR REDUCED PLANS 0 1 2 3

UNIT: 0735
PROJECT NUMBER & PHASE: 04000212481 CONTRACT NO.: 04-2908C4

DISREGARD PRINTS BEARING EARLIER REVISION DATES → 12/23/09 3/25/10 11/8/11 1/5/12

SHEET 1 OF 15

FILE => 33-0203I-a-gp01.dgn

USERNAME => s124496 DATE PLOTTED => 23-MAY-2012 TIME PLOTTED => 07:02 2007236.2 (2007236CS1-WB)

DIST	COUNTY	ROUTE	POST MILES TOTAL PROJECT	SHEET No	TOTAL SHEETS
04	Ala	580	R8.4/R14.6	762	853

REGISTERED CIVIL ENGINEER 1/5/12 DATE

5-14-12
PLANS APPROVAL DATE

REGISTERED PROFESSIONAL ENGINEER INES S. LI No. C51561 Exp.6/30/12 CIVIL STATE OF CALIFORNIA

The State of California or its officers or agents shall not be responsible for the accuracy or completeness of scanned copies of this plan sheet.

BIGGS CARDOSA ASSOCIATES INC.
865 THE ALAMEDA
SAN JOSE, CALIFORNIA 95126

ALAMEDA CTC
1333 BROADWAY, SUITE 220
OAKLAND, CALIFORNIA 94612

INDEX TO BRIDGE PLANS

SHEET NO.	TITLE
1	GENERAL PLAN
2	INDEX TO PLANS
3	FOUNDATION PLAN
4	ABUTMENT LAYOUT
5	ABUTMENT DETAILS
6	BENT LAYOUT
7	BENT DETAILS
8	TYPICAL SECTION
9	GIRDER LAYOUT
10	GIRDER REINFORCEMENT
11	STRUCTURE APPROACH (TYPE N MODIFIED)
12	LOG OF TEST BORINGS 1 OF 4
13	LOG OF TEST BORINGS 2 OF 4
14	LOG OF TEST BORINGS 3 OF 4
15	LOG OF TEST BORINGS 4 OF 4

STANDARD PLANS DATED MAY 2006

A10A	ACRONYMS AND ABBREVIATIONS (SHEET 1 OF 2)
A10B	ACRONYMS AND ABBREVIATIONS (SHEET 2 OF 2
A10C	SYMBOLS (SHEET 1 OF 2)
A10D	SYMBOLS (SHEET 2 OF 2)
A62C	LIMITS OF PAYMENT FOR EXCAVATION AND BACKFILL BRIDGE
B0-1	BRIDGE DETAILS
B0-3	BRIDGE DETAILS
B0-5	BRIDGE DETAILS
B0-13	BRIDGE DETAILS
B6-1	T-BEAM DETAILS
B6-10	UTILITY OPENING T-BEAM
B6-21	JOINT SEALS (MAXIMUM MOVEMENT RATING = 2")
B7-6	DECK DRAINS TYPES D-1 AND D-2
B7-8	DECK DRAINAGE DETAILS
B11-55	CONCRETE BARRIER TYPE 732
T3	TEMPORARY RAILING (TYPE K)

ABBREVIATIONS
Eq Equal
OH Opposite Hand
TOF Top of footing

B6-1 — Indicates Standard Plan Sheet No.
D-1 — Indicates Detail No.

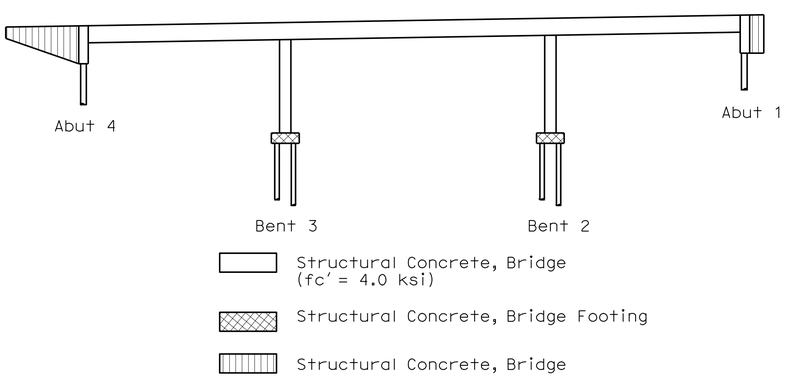

NOTE:
The Contractor shall verify all controlling field dimensions before ordering or fabricating any material

CONCRETE STRENGTH AND TYPE LIMITS
NO SCALE

GENERAL NOTES
LOAD & RESISTANCE FACTOR DESIGN

DESIGN: AASHTO LRFD Bridge Design Specifications, 4th Edition with California Amendments; except that bridge barrier is designed using Bridge Design Specifications ('96 AASHTO w/ Revisions by Caltrans)

SEISMIC DESIGN: Caltrans Seismic Design Criteria (SDC) Version 1.4, dated June 2006

DEAD LOAD: Includes 35 psf for future wearing surface. Additional future wearing surface shall not be allowed for I580WB widen due to new 3" max overlay to be placed on widen.

LIVE LOADING: HL93 w/ Low Boy and Permit Design Vehicle

SEISMIC LOADING: Caltrans SDC (v 1.4, June 2006), Figure B.8
Governing Fault: Greenville Fault
Fault Distance = 4.50 miles
(Mmax = 7.25, Soil Profile Type D, PBA = 0.5g)

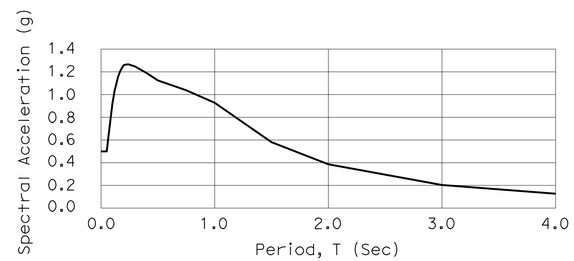

With the following modifications:
(1) No change of Sa for structural periods < 0.5 sec
(2) 20% increase of Sa for structural periods > 1 sec
(3) Linear interpolation for structural periods between 0.5 and 1 sec

REINFORCED CONCRETE: fy = 60 ksi
f'c = 3.6 ksi (except as shown on 'CONCRETE STRENGTH AND TYPE LIMITS' diagram)

STEEL HP PILES: ASTM A572 GRADE 50

ARROYO LAS POSITAS BRIDGE (WIDEN) BR. NO. 33-0203

QUANTITIES

BRIDGE REMOVAL (PORTION), LOCATION A	LUMP	SUM
STRUCTURE EXCAVATION (BRIDGE)	46	CY
STRUCTURE EXCAVATION (TYPE D)	179	CY
STRUCTURE BACKFILL (BRIDGE)	42	CY
FURNISH STEEL PILING (HP 12 X 53)	803	LF
DRIVE STEEL PILE (HP 12 X 53)	32	EA
STRUCTURAL CONCRETE, BRIDGE FOOTING	26	CY
STRUCTURAL CONCRETE, BRIDGE	365	CY
STRUCTURAL CONCRETE, APPROACH SLAB (TYPE N MODIFIED)	18	CY
DRILL AND BOND DOWEL	16	LF
JOINT SEAL (MR 1")	56	LF
BAR REINFORCING STEEL (BRIDGE)	137,075	LB
BRIDGE DECK DRAINAGE SYSTEM	2,178	LB
CONCRETE BARRIER (TYPE 732 MODIFIED)	202	LF

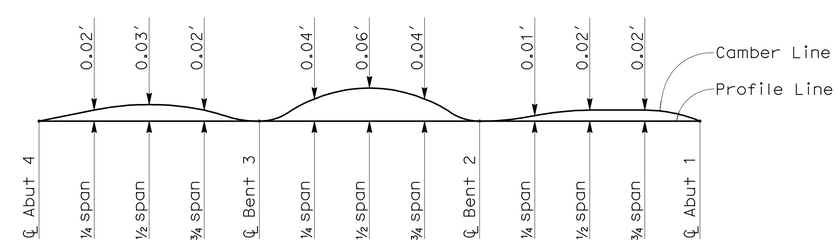

Note:
Camber does not include allowance for falsework settlement

CAMBER DIAGRAM
NO SCALE

DESIGN OVERSIGHT Yiwei Hu 1/25/12 SIGN OFF DATE	DESIGN	BY Z. VUKMIROVIC	CHECKED A. REJAIE
	DETAILS	BY Z. VUKMIROVIC	CHECKED S. MOYLES
	QUANTITIES	BY R. RIVAS	CHECKED M. FRECHETTE

PREPARED FOR THE STATE OF CALIFORNIA DEPARTMENT OF TRANSPORTATION

INES LI
PROJECT ENGINEER

BRIDGE NO. 33-0203
POST MILES 13.13

ARROYO LAS POSITAS BRIDGE (WIDEN)
INDEX TO PLANS

DESIGN GENERAL PLAN SHEET (ENGLISH) (REV. 7/16/10)

ORIGINAL SCALE IN INCHES FOR REDUCED PLANS 0 1 2 3

UNIT: 0735
PROJECT NUMBER & PHASE: 04000212481 CONTRACT NO.: 04-2908C4

DISREGARD PRINTS BEARING EARLIER REVISION DATES → REVISION DATES 12/23/09 03/25/10 11/8/11 1/5/12 SHEET 2 OF 15

FILE => 33-0203I-a-itp.dgn

USERNAME => s124496 DATE PLOTTED => 23-MAY-2012 TIME PLOTTED => 07:02

2007236 (2007236CS2-WB)

DIST	COUNTY	ROUTE	POST MILES TOTAL PROJECT	SHEET No	TOTAL SHEETS
04	Ala	580	R8.4/R14.6	763	853

REGISTERED CIVIL ENGINEER 1/5/12 DATE

5-14-12
PLANS APPROVAL DATE

REGISTERED PROFESSIONAL ENGINEER INES S. LI No. C51561 Exp.6/30/12 CIVIL STATE OF CALIFORNIA

The State of California or its officers or agents shall not be responsible for the accuracy or completeness of scanned copies of this plan sheet.

BIGGS CARDOSA ASSOCIATES INC.
865 THE ALAMEDA
SAN JOSE, CALIFORNIA 95126

ALAMEDA CTC
1333 BROADWAY, SUITE 220
OAKLAND, CALIFORNIA 94612

FOR ACCURATE RIGHT OF WAY DATA, CONTACT RIGHT OF WAY ENGINEERING AT THE DISTRICT OFFICE

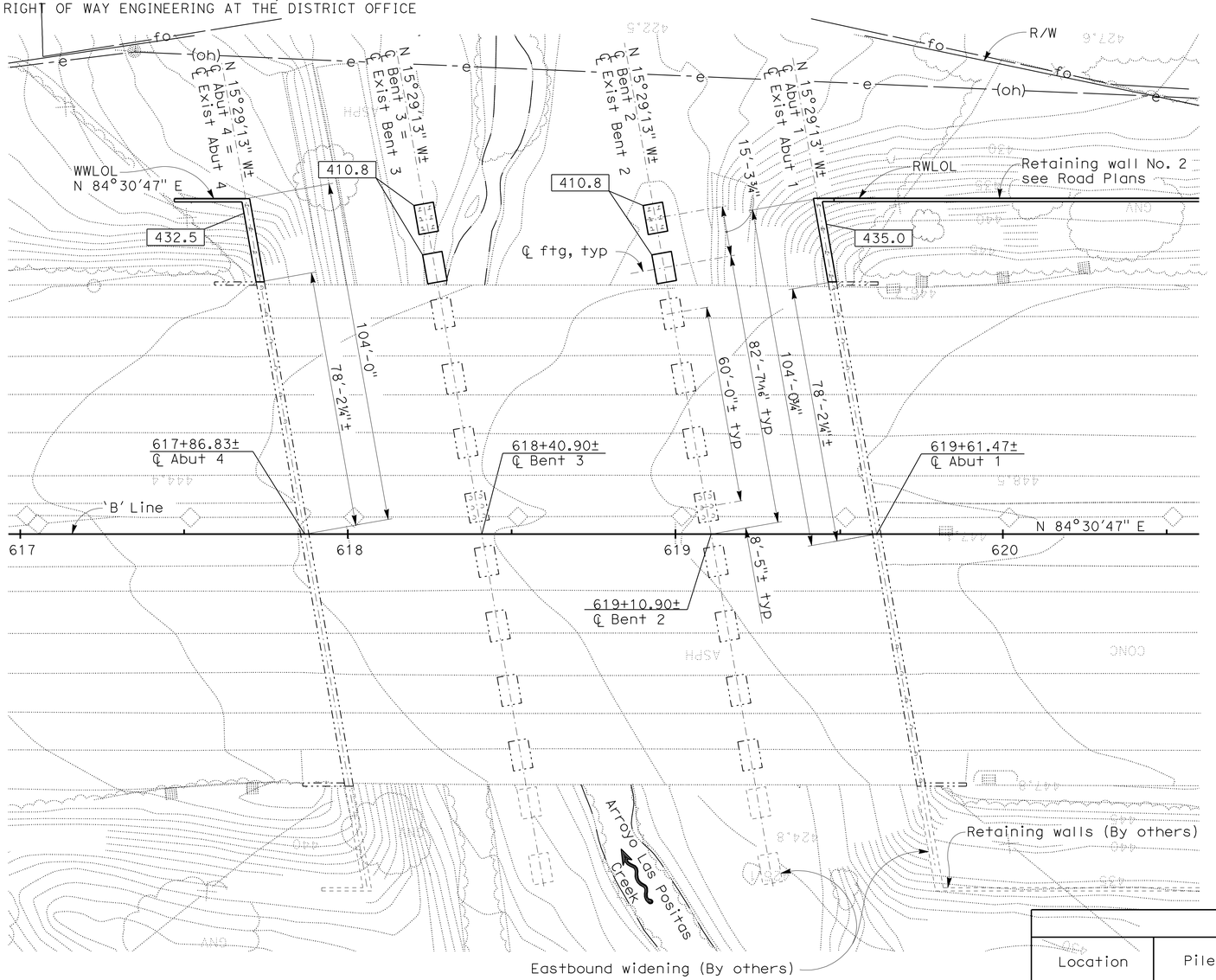

FOUNDATION PLAN

1" = 20'

N

LEGEND:

410.8	Indicates bottom of footing elevation
446.7	Indicates spot elevation
	Indicates existing pile, not all piles shown
	Indicates new pile, not all piles shown
	Indicates exist bridge wingwall to be removed

NOTES:

1. Utilities shown are for illustrative purposes only, verify with utility drawings
2. There is a vertical datum difference between the project datum (NAVD 88) and the as-built datum (NGVD 29). The following conversion was used in design: Datum Conversion: Elev (NAVD 88) = Elev (NGVD 29) + 2.64'.
3. Contractor to facilitate shoring if necessary during construction of abut on widening.

Hydrologic Summary
Drainage area: 53.9 square miles

	Design Flood	Base Flood	Overtopping Flood	Flood of Record
Frequency (years)	50-yr	100-yr	N/A	-
Discharge (cfs)	4,200	5,000	N/A	-
Water surface elevation (ft)	430.0	431.8	N/A	-

Flood Plan Data are based upon information available when the plans were prepared and are shown to meet Federal requirements. The accuracy of said information is not warranted by the State and interested or affected parties should make their own investigation.

BENCH MARK AND DATUM

Monument	Coordinates Northing	Coordinates Easting	Elev	Description/location
1050	2080288.774	6187126.395	425.07	Fly cross T.Y. Lin mag
1061	2079982.573	6191133.508	463.73	Fly cross T.Y. Lin mag

PILE DATA TABLE

Location	Pile Type	Nominal Resistance (kips) Compression	Nominal Resistance (kips) Tension	Design Tip Elevation (ft)	Specified Tip Elevation (ft)	Nominal Driving Resistance (kips)
Abutment 1	HP 12x53	200	0	406.0(a); 418.0(d)	406.0	200
Bent 2	HP 12x53	230	15	387.5(a); 406.0(b); 392.3(d)	387.5	230
Bent 3	HP 12x53	230	15	387.0(a); 406.0(b); 392.3(d)	387.0	230
Abutment 4	HP 12x53	200	0	405.5(a); 414.0(d)	405.5	200

NOTES:

1. Design tip elevation for Abutments are controlled by: (a) Compression, (c) Settlement, (d) Lateral Loads
2. Design tip elevation for Bents are controlled by: (a) Compression, (b) Tension, (c) Settlement, (d) Lateral Loads
3. The specified tip elevation shall not be raised above the design tip elevations for tension load, lateral load, and tolerable settlement.

NOTE:
The Contractor shall verify all controlling field dimensions before ordering or fabricating any material

GEOTECHNICAL PROFESSIONAL 11/8/11 APPROVAL DATE

DESIGN OVERSIGHT Yiwei Hu
1/25/12
SIGN OFF DATE

SCALE:	VERT.DATUM	HORZ.DATUM
PHOTOGRAMMETRY AS OF:	ALIGNMENT TIES	
SURVEYED BY	DRAFTED BY	
FIELD CHECKED BY	CHECKED BY	

DESIGN	BY Z. VUKMIROVIC	CHECKED A. REJAIE	
DETAILS	BY Z. VUKMIROVIC	CHECKED S. MOYLES	
QUANTITIES	BY R. RIVAS	CHECKED M. FRECHETTE	

PREPARED FOR THE STATE OF CALIFORNIA DEPARTMENT OF TRANSPORTATION

INES LI
PROJECT ENGINEER

BRIDGE NO. 33-0203
POST MILES 13.13

ARROYO LAS POSITAS BRIDGE (WIDEN)
FOUNDATION PLAN

FOUNDATION PLAN SHEET (ENGLISH) (REV. 7-16-10)

ORIGINAL SCALE IN INCHES FOR REDUCED PLANS 0 1 2 3

UNIT: 0735
PROJECT NUMBER & PHASE: 04000212481 CONTRACT NO.: 04-2908C4

DISREGARD PRINTS BEARING EARLIER REVISION DATES

REVISION DATES 12/23/09 3/25/10 11/8/11 1/5/12 SHEET 3 OF 15

FILE => 33-0203I-f-fp01.dgn

USERNAME => s124496 DATE PLOTTED => 23-MAY-2012 TIME PLOTTED => 07:03

2007236.2 (2007236C53-WB)

DIST	COUNTY	ROUTE	POST MILES TOTAL PROJECT	SHEET No	TOTAL SHEETS
04	Ala	580	R8.4/R14.6	764	853

REGISTERED CIVIL ENGINEER — DATE 1/5/12

PLANS APPROVAL DATE 5-14-12

REGISTERED PROFESSIONAL ENGINEER — INES S. LI — No. C51561 — Exp.6/30/12 — CIVIL — STATE OF CALIFORNIA

The State of California or its officers or agents shall not be responsible for the accuracy or completeness of scanned copies of this plan sheet.

BIGGS CARDOSA ASSOCIATES INC.
865 THE ALAMEDA
SAN JOSE, CALIFORNIA 95126

ALAMEDA CTC
1333 BROADWAY, SUITE 220
OAKLAND, CALIFORNIA 94612

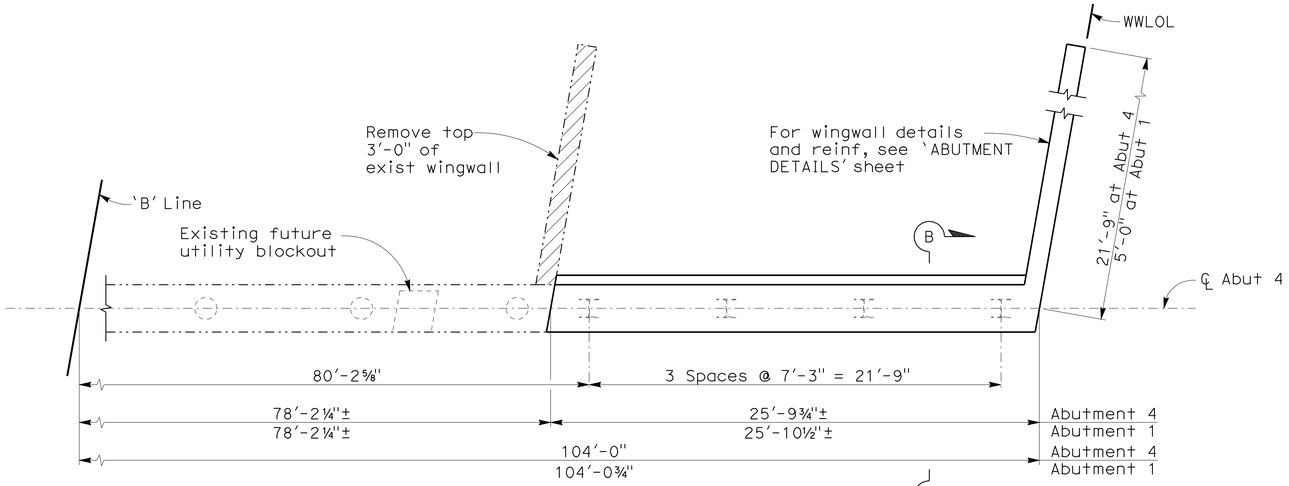

ABUTMENT PLAN

1/4" = 1'-0"

NOTE:
Abutment 4 shown, Abutment 1 similar

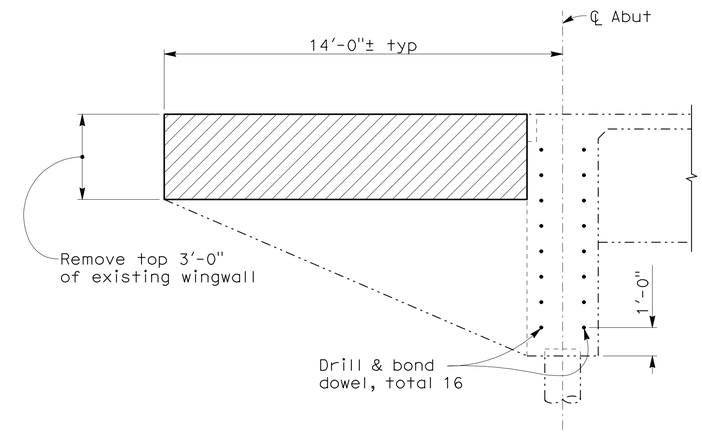

EXISTING WINGWALL ELEVATION

3/8" = 1'-0'

LEGEND:

- Indicates exist pile
- Indicates new HP pile
- Indicates exist concrete to be removed

NOTES:

1. Abutment diaphragm shall be braced until superstructure concrete reaches 28-day strength
2. Backfilling behind abutments shall be done simultaneously
3. For wingwall elevation, see 'ABUTMENT DETAILS' sheet

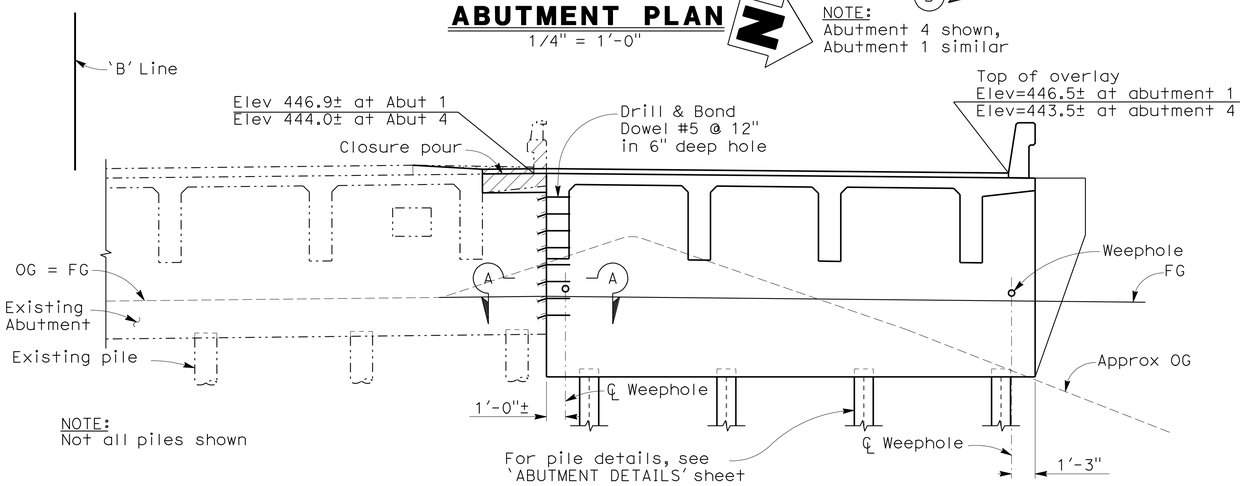

NOTE:
Not all piles shown

ABUTMENT ELEVATION

1/4" = 1'-0"

NOTE:
Abutment 4 shown, Abutment 1 similar

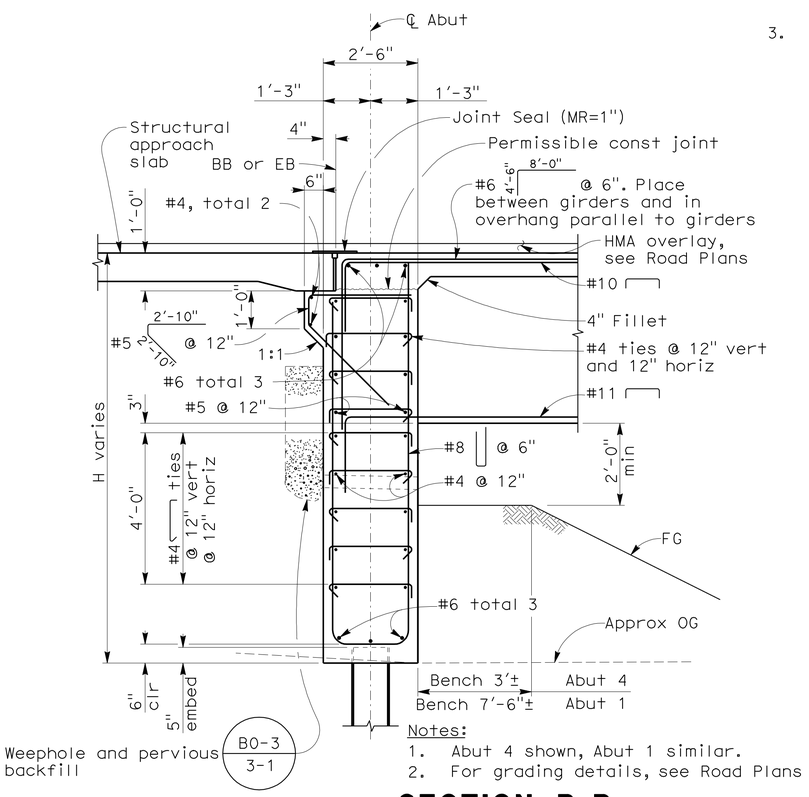

Notes:

1. Abut 4 shown, Abut 1 similar.
2. For grading details, see Road Plans

SECTION B-B

1/2" = 1'-0"

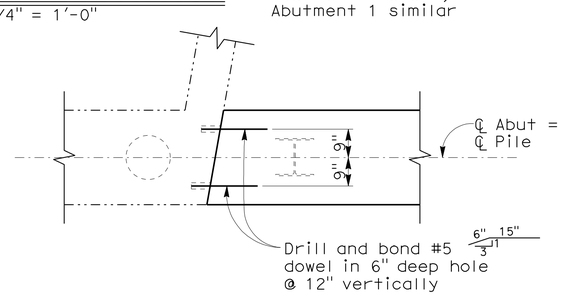

SECTION A-A

1/2" = 1'-0"

NOTE:
The Contractor shall verify all controlling field dimensions before ordering or fabricating any material

DESIGN OVERSIGHT Yiwei Hu — 1/25/12 SIGN OFF DATE	DESIGN	BY Z. VUKMIROVIC	CHECKED A. REJAIE
	DETAILS	BY Z. VUKMIROVIC	CHECKED S. MOYLES
	QUANTITIES	BY R. RIVAS	CHECKED M. FRECHETTE

PREPARED FOR THE STATE OF CALIFORNIA DEPARTMENT OF TRANSPORTATION

INES LI — PROJECT ENGINEER

BRIDGE NO. 33-0203 — POST MILES 13.13

ARROYO LAS POSITAS BRIDGE (WIDEN)

ABUTMENT LAYOUT

DESIGN GENERAL PLAN SHEET (ENGLISH) (REV. 7/16/10)

ORIGINAL SCALE IN INCHES FOR REDUCED PLANS 0 1 2 3

UNIT: 0735
PROJECT NUMBER & PHASE: 04000212481 CONTRACT NO.: 04-2908C4

DISREGARD PRINTS BEARING EARLIER REVISION DATES — REVISION DATES 12/23/09 3/25/10 11/8/11 1/5/12 — SHEET 4 OF 15

FILE => 33-0203I-h-a04-lo1.dgn

USERNAME => s124496 DATE PLOTTED => 23-MAY-2012 TIME PLOTTED => 07:03 2007236 (2007236CS4-WB)

DIST	COUNTY	ROUTE	POST MILES TOTAL PROJECT	SHEET No	TOTAL SHEETS
04	Ala	580	R8.4/R14.6	765	853

REGISTERED CIVIL ENGINEER 1/5/12 DATE

5-14-12
PLANS APPROVAL DATE

REGISTERED PROFESSIONAL ENGINEER INES S. LI No. C51561 Exp.6/30/12 CIVIL STATE OF CALIFORNIA

The State of California or its officers or agents shall not be responsible for the accuracy or completeness of scanned copies of this plan sheet.

BIGGS CARDOSA ASSOCIATES INC.
865 THE ALAMEDA
SAN JOSE, CALIFORNIA 95126

ALAMEDA CTC
1333 BROADWAY, SUITE 220
OAKLAND, CALIFORNIA 94612

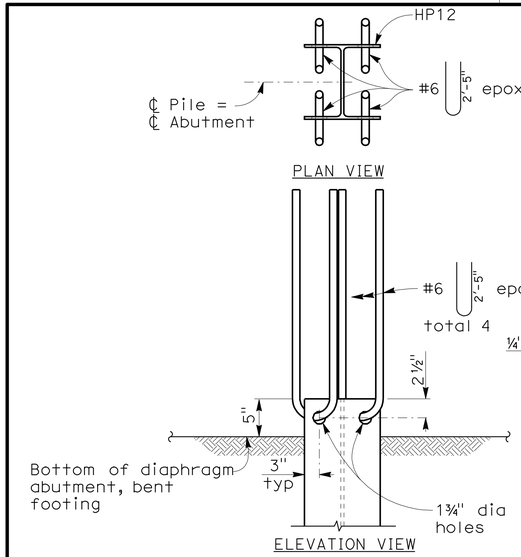

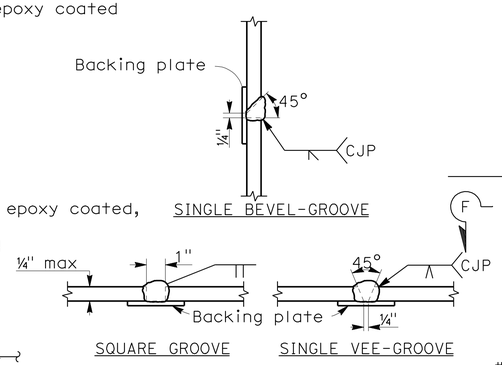

NOTES:
1. Single Vee-Groove and Square Groove permitted for all positions
2. Single Bevel-Groove permitted for horizontal joints only.

ANCHOR DETAILS **PILE WELDING DETAIL**

STEEL HP PILE DETAIL 1

NO SCALE

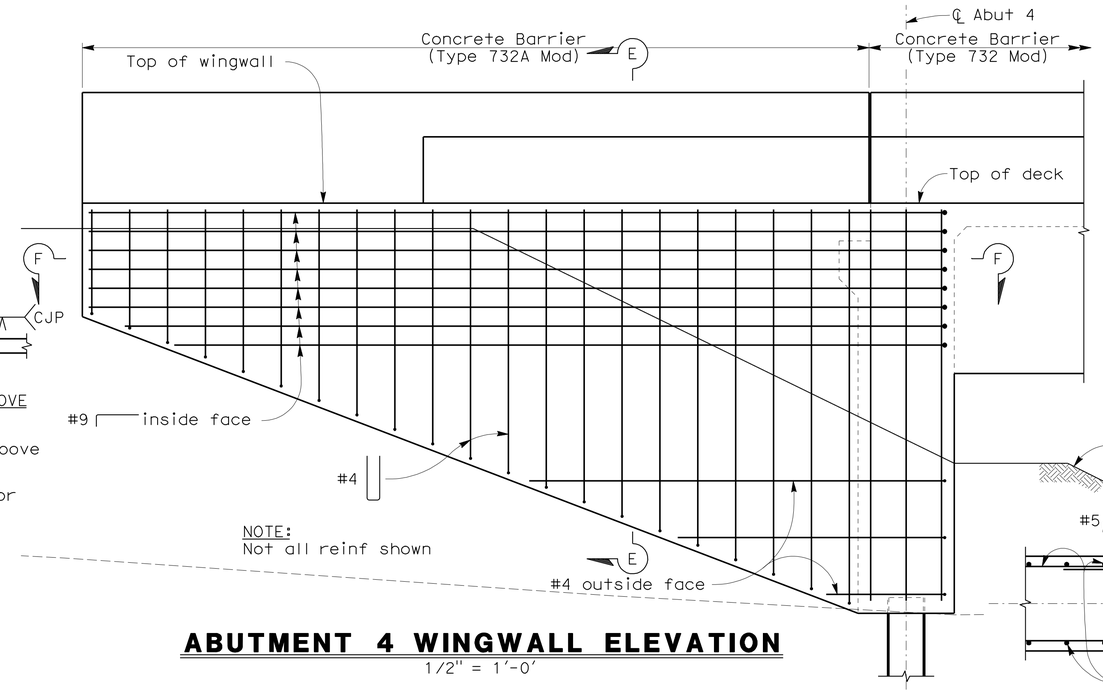

NOTE:
Not all reinf shown

ABUTMENT 4 WINGWALL ELEVATION

1/2" = 1'-0'

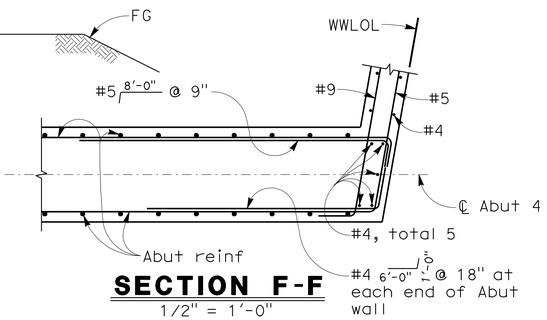

SECTION F-F

1/2" = 1'-0"

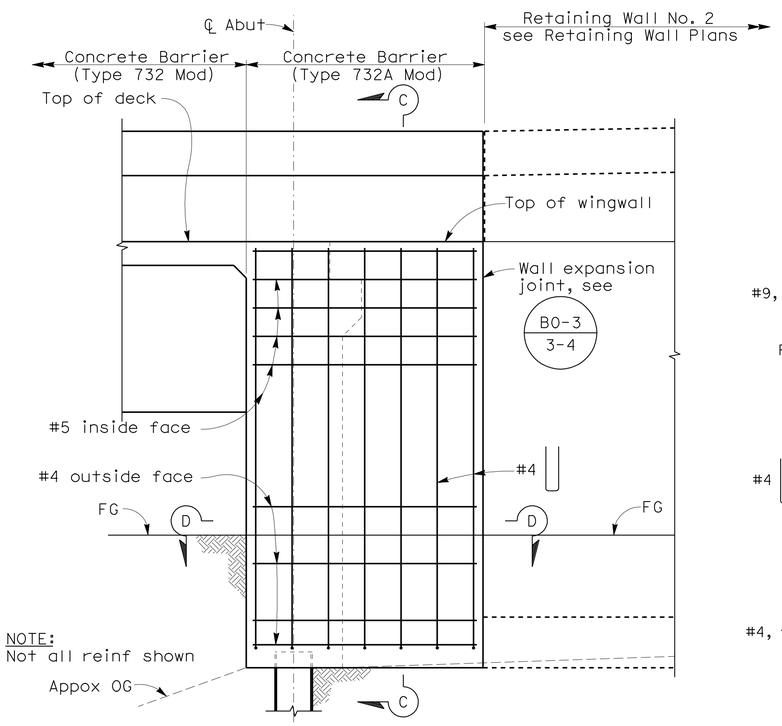

NOTE:
Not all reinf shown

ABUTMENT 1 WINGWALL MIRRORED ELEVATION

1/2" = 1'-0'

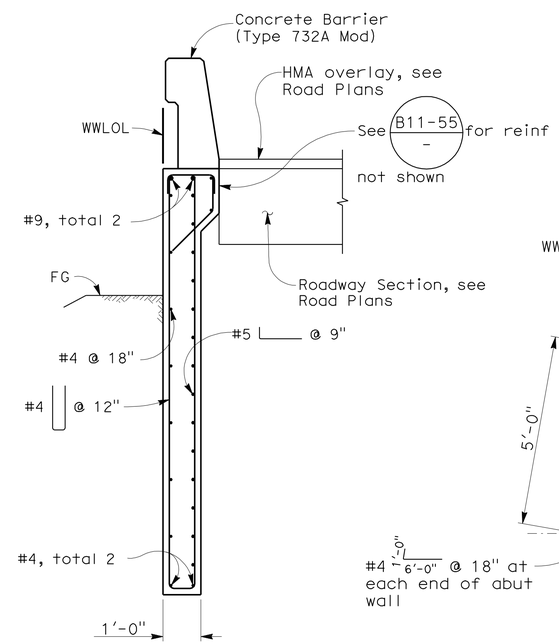

SECTION C-C

1/2" = 1'-0"

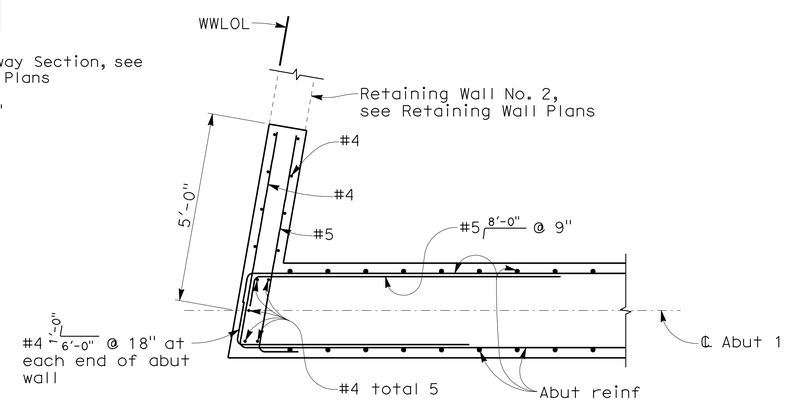

SECTION D-D

1/2" = 1'-0"

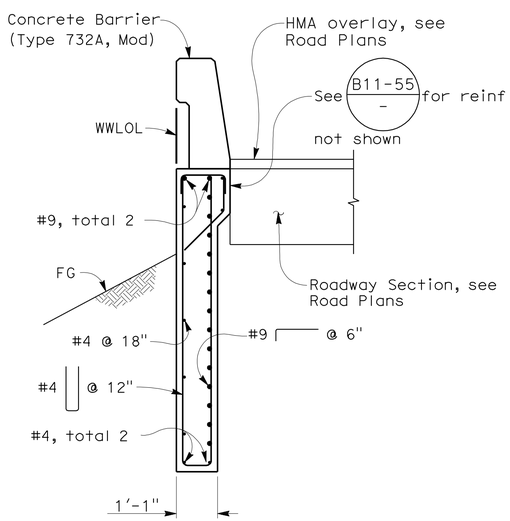

SECTION E-E

1/2" = 1'-0"

NOTE:
The Contractor shall verify all controlling field dimensions before ordering or fabricating any material

DESIGN OVERSIGHT Yiwei Hu 1/25/12 SIGN OFF DATE	DESIGN	BY Z. VUKMIROVIC	CHECKED A. REJAIE	PREPARED FOR THE STATE OF CALIFORNIA DEPARTMENT OF TRANSPORTATION	INES LI PROJECT ENGINEER
	DETAILS	BY Z. VUKMIROVIC	CHECKED S. MOYLES		
	QUANTITIES	BY R. RIVAS	CHECKED M. FRECHETTE		

BRIDGE NO. 33-0203
POST MILES 13.13

ARROYO LAS POSITAS BRIDGE (WIDEN)
ABUTMENT DETAILS

DESIGN GENERAL PLAN SHEET (ENGLISH) (REV. 7/16/10)

ORIGINAL SCALE IN INCHES FOR REDUCED PLANS 0 1 2 3

UNIT: 0735
PROJECT NUMBER & PHASE: 04000212481
CONTRACT NO.: 04-2908C4

DISREGARD PRINTS BEARING EARLIER REVISION DATES → REVISION DATES 12/23/09 03/25/10 11/8/11 1/5/12

SHEET 5 OF 15

FILE => 33-0203I-h-a05d1.dgn

USERNAME => s1244496 DATE PLOTTED => 23-MAY-2012 TIME PLOTTED => 07:03 2007236 (2007236C55-WB)

DIST	COUNTY	ROUTE	POST MILES TOTAL PROJECT	SHEET No	TOTAL SHEETS
04	Ala	580	R8.4/R14.6	766	853

REGISTERED CIVIL ENGINEER 1/5/12 DATE

5-14-12
PLANS APPROVAL DATE

REGISTERED PROFESSIONAL ENGINEER INES S. LI No. C51561 Exp.6/30/12 CIVIL STATE OF CALIFORNIA

The State of California or its officers or agents shall not be responsible for the accuracy or completeness of scanned copies of this plan sheet.

BIGGS CARDOSA ASSOCIATES INC.
865 THE ALAMEDA
SAN JOSE, CALIFORNIA 95126

ALAMEDA CTC
1333 BROADWAY, SUITE 220
OAKLAND, CALIFORNIA 94612

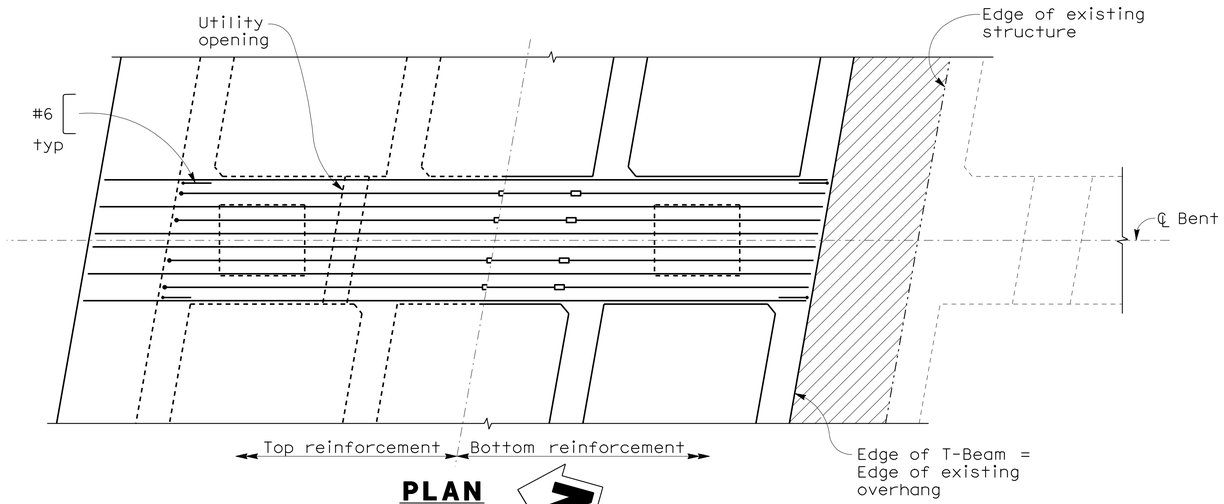

PLAN
3/8" = 1'-0"

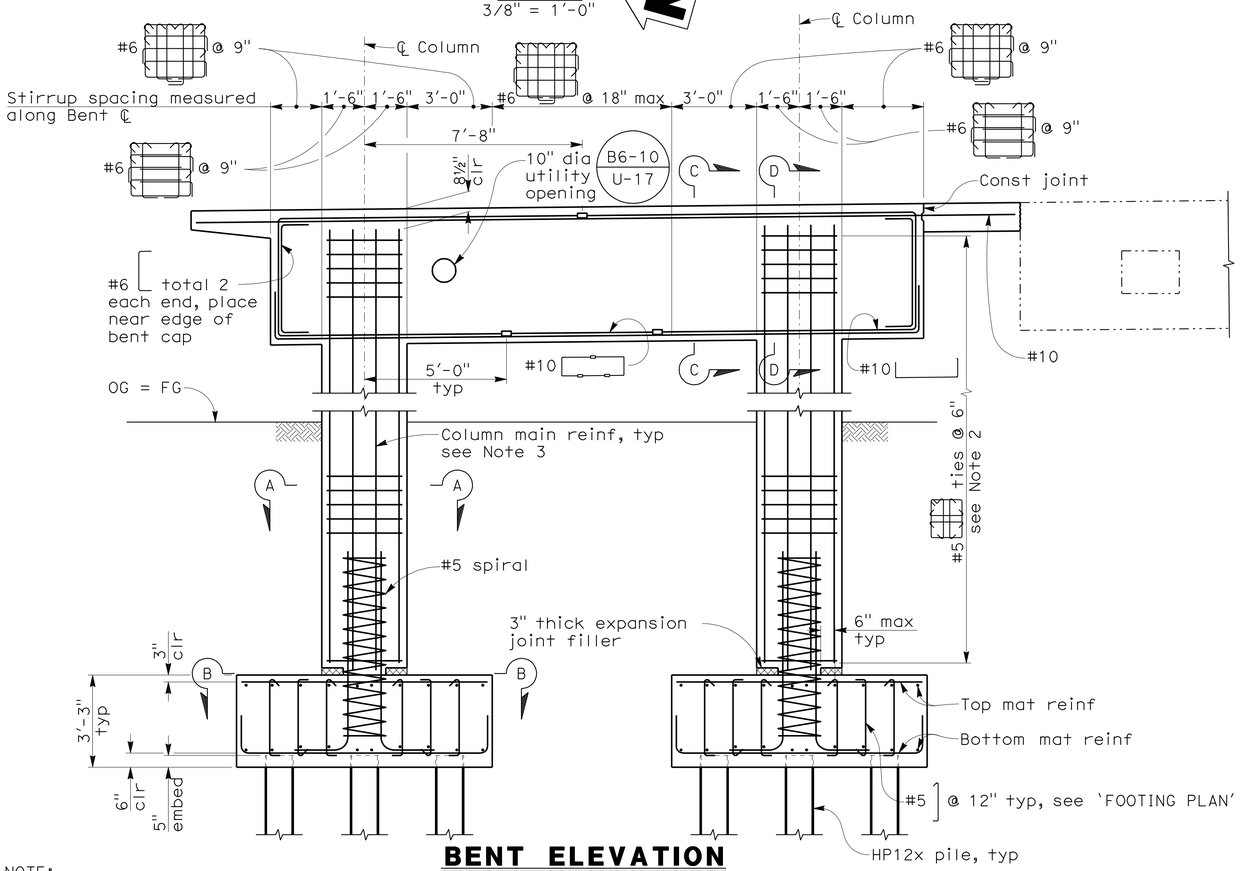

BENT ELEVATION
3/8" = 1'-0"

NOTES:

1. For 'SECTION A-A', 'SECTION B-B', 'SECTION C-C' and 'SECTION D-D' see 'BENT DETAILS' sheet
2. Column ties to clear bent cap reinforcement
3. No splices permitted in column main reinforcement
4. Bent cap stirrups shall be placed parallel to ℄ Bridge and spaced along ℄ Bent

LEGEND:

- Indicates service level mechanical coupler
- Indicates pile
- Indicates exist concrete to be removed

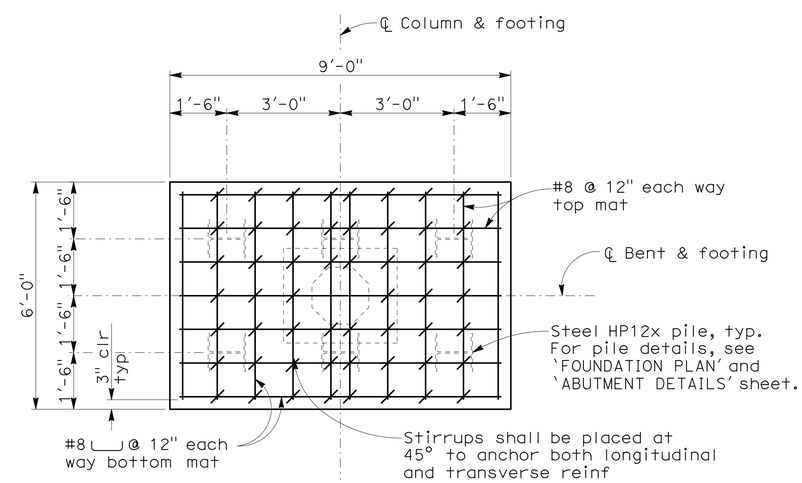

FOOTING PLAN
1/2" = 1'-0"

NOTE:
The Contractor shall verify all controlling field dimensions before ordering or fabricating any material

DESIGN OVERSIGHT Yiwei Hu
1/25/12
SIGN OFF DATE

	BY	CHECKED
DESIGN	Z. VUKMIROVIC	A. REJAIE
DETAILS	Z. VUKMIROVIC	S. MOYLES
QUANTITIES	R. RIVAS	M. FRECHETTE

PREPARED FOR THE STATE OF CALIFORNIA DEPARTMENT OF TRANSPORTATION

INES LI
PROJECT ENGINEER

BRIDGE NO. 33-0203
POST MILES 13.13

ARROYO LAS POSITAS BRIDGE (WIDEN)
BENT LAYOUT

DESIGN GENERAL PLAN SHEET (ENGLISH) (REV. 7/16/10)

ORIGINAL SCALE IN INCHES FOR REDUCED PLANS 0 1 2 3

UNIT: 0735
PROJECT NUMBER & PHASE: 04000212481 CONTRACT NO.: 04-2908C4

DISREGARD PRINTS BEARING EARLIER REVISION DATES → 12/23/09 03/25/10 11/18/11 1/5/12

SHEET 6 OF 15

FILE => 33-0203I-j-b06-lo1.dgn

USERNAME => s124496 DATE PLOTTED => 23-MAY-2012 TIME PLOTTED => 07:03 2007236 (2007236C56-WB)

DIST	COUNTY	ROUTE	POST MILES TOTAL PROJECT	SHEET No	TOTAL SHEETS
04	Ala	580	R8.4/R14.6	767	853

REGISTERED CIVIL ENGINEER 1/5/12 DATE

5-14-12
PLANS APPROVAL DATE

REGISTERED PROFESSIONAL ENGINEER INES S. LI No. C51561 Exp.6/30/12 CIVIL STATE OF CALIFORNIA

The State of California or its officers or agents shall not be responsible for the accuracy or completeness of scanned copies of this plan sheet.

BIGGS CARDOSA ASSOCIATES INC.
865 THE ALAMEDA
SAN JOSE, CALIFORNIA 95126

ALAMEDA CTC
1333 BROADWAY, SUITE 220
OAKLAND, CALIFORNIA 94612

NOTE:
Indicates mechanical coupler.

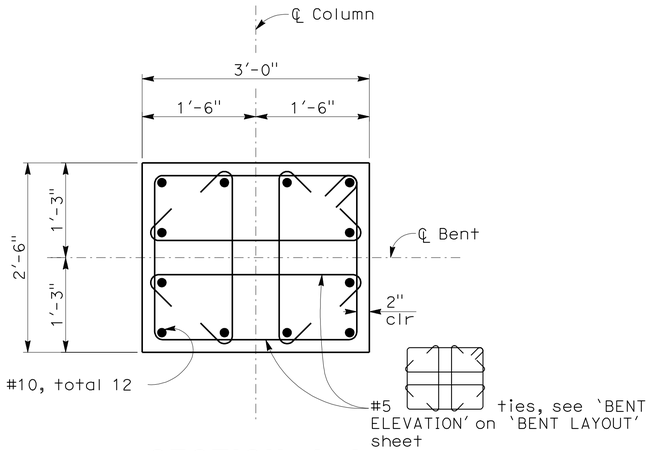

SECTION A-A
1" = 1'-0"

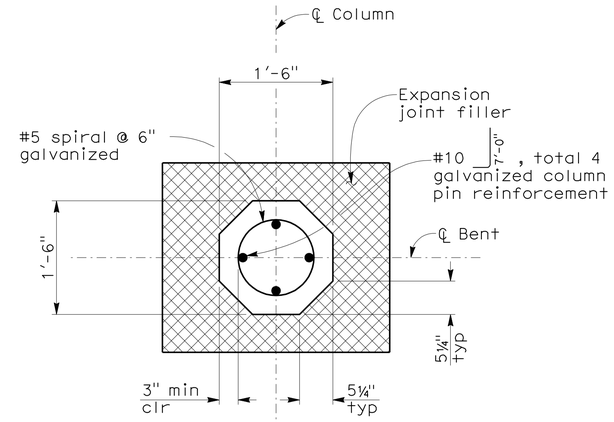

SECTION B-B
1" = 1'-0"

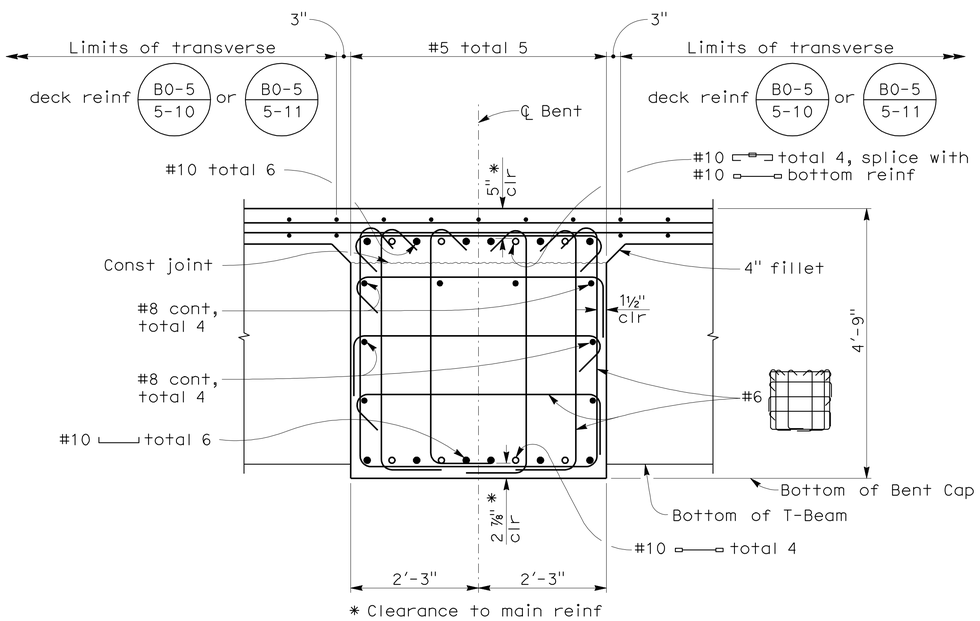

* Clearance to main reinf

SECTION C-C
3/4" = 1'-0"

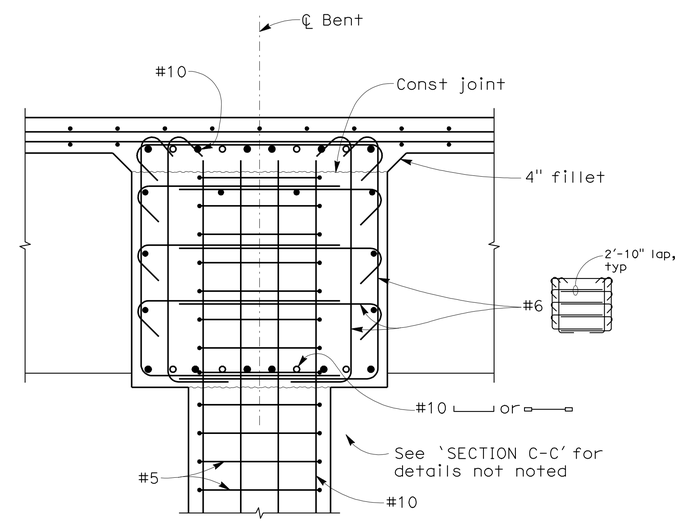

SECTION D-D
3/4" = 1'-0"

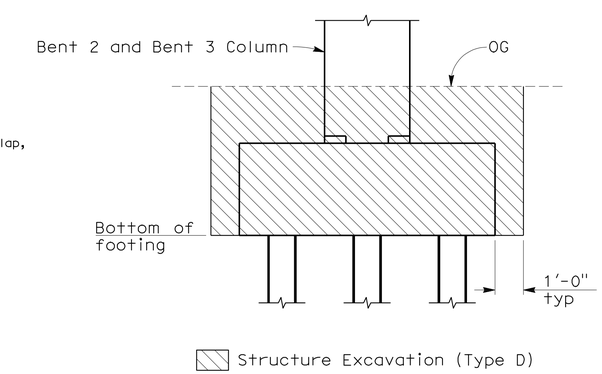

LIMITS OF PAYMENT FOR STRUCTURE EXCAVATION (TYPE D)
NO SCALE

NOTE:
The Contractor shall verify all controlling field dimensions before ordering or fabricating any material

DESIGN OVERSIGHT Yiwei Hu
1/25/12
SIGN OFF DATE

	BY	CHECKED
DESIGN	Z. VUKMIROVIC	A. REJAIE
DETAILS	Z. VUKMIROVIC	S. MOYLES
QUANTITIES	R. RIVAS	M. FRECHETTE

PREPARED FOR THE STATE OF CALIFORNIA DEPARTMENT OF TRANSPORTATION

INES LI
PROJECT ENGINEER

BRIDGE NO. 33-0203
POST MILES 13.13

ARROYO LAS POSITAS BRIDGE (WIDEN)
BENT DETAILS

DESIGN GENERAL PLAN SHEET (ENGLISH) (REV. 7/16/10)

ORIGINAL SCALE IN INCHES FOR REDUCED PLANS 0 1 2 3

UNIT: 0735
PROJECT NUMBER & PHASE: 04000212481 CONTRACT NO.: 04-2908C4

DISREGARD PRINTS BEARING EARLIER REVISION DATES 12/23/09 3/25/10 11/8/11 1/5/12

SHEET 7 OF 15

FILE => 33-0203I-j-b07d1.dgn

USERNAME => s1224496 DATE PLOTTED => 23-MAY-2012 TIME PLOTTED => 07:03 2007236 (2007236CS7-WB)

DIST	COUNTY	ROUTE	POST MILES TOTAL PROJECT	SHEET No	TOTAL SHEETS
04	Ala	580	R8.4/R14.6	768	853

REGISTERED CIVIL ENGINEER 1/5/12 DATE

5-14-12
PLANS APPROVAL DATE

REGISTERED PROFESSIONAL ENGINEER INES S. LI No. C51561 Exp.6/30/12 CIVIL STATE OF CALIFORNIA

The State of California or its officers or agents shall not be responsible for the accuracy or completeness of scanned copies of this plan sheet.

BIGGS CARDOSA ASSOCIATES INC.
865 THE ALAMEDA
SAN JOSE, CALIFORNIA 95126

ALAMEDA CTC
1333 BROADWAY, SUITE 220
OAKLAND, CALIFORNIA 94612

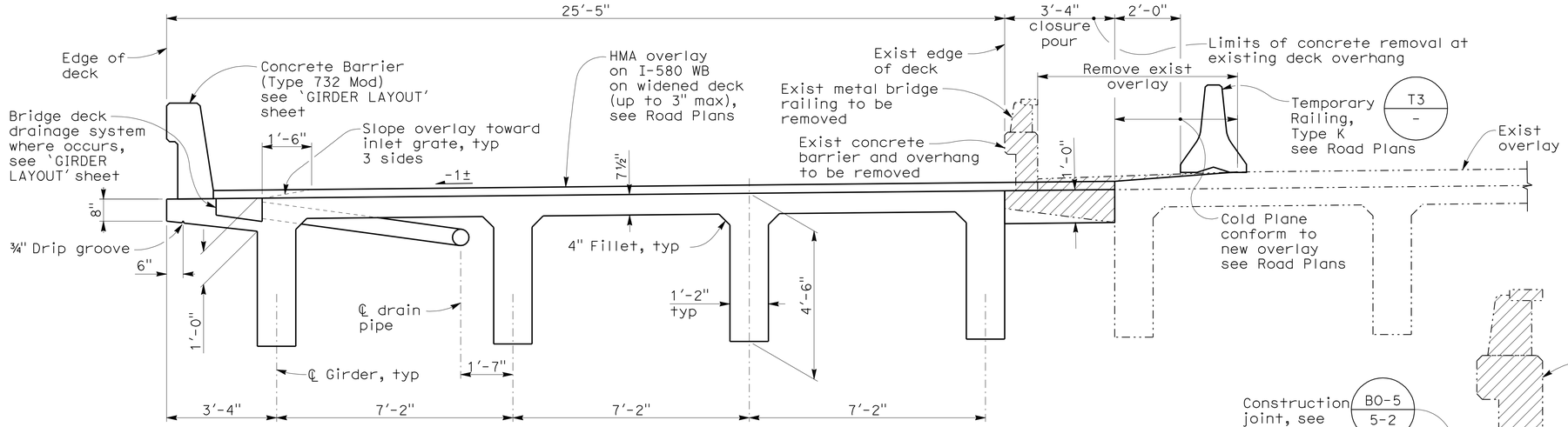

TYPICAL SECTION
1/2" = 1'-0"

FALSEWORK RELEASE NOTES

Alternative 1:
Falsework shall be released as soon as permitted by the specifications. Closure pour and intermediate diaphragms shall not be placed sooner than 60 days after the falsework has been released.

Alternative 2:
Falsework shall not be released less than 28 days after the last concrete has been placed. Closure pour and intermediate diaphragms shall not be placed sooner than 14 days after the falsework has been released.

When falsework release alternative 2 is used, camber values are 0.75 times those shown.

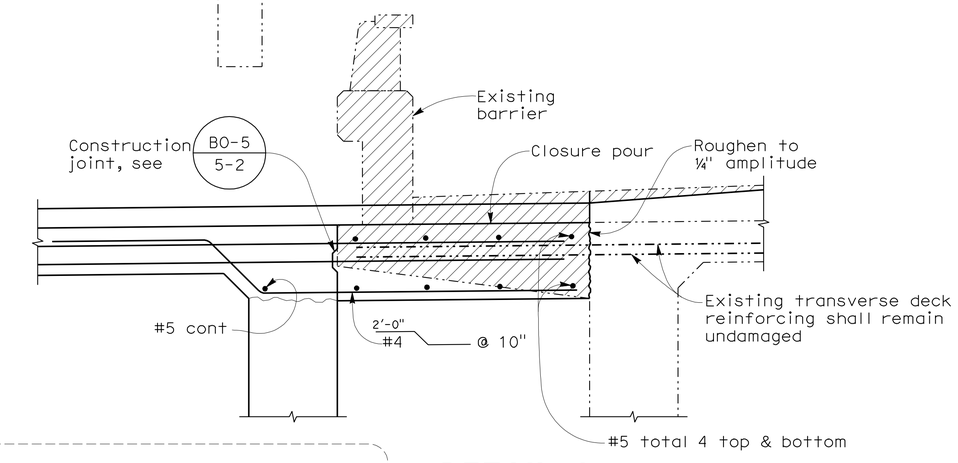

DETAIL 1
1" = 1'-0"

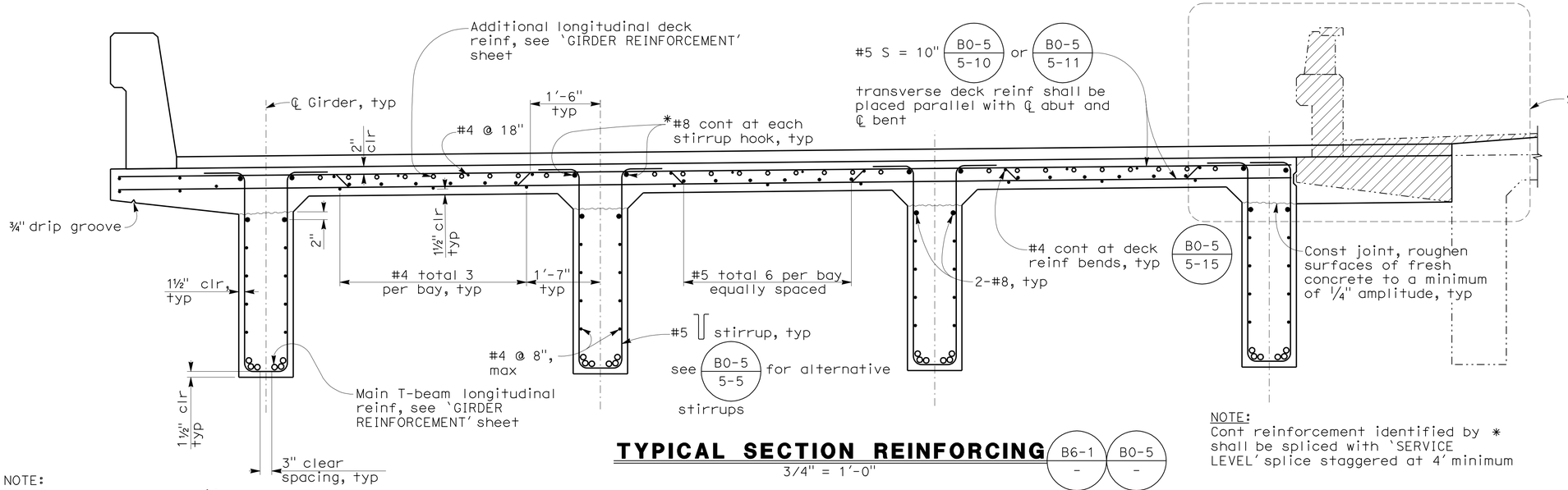

TYPICAL SECTION REINFORCING
3/4" = 1'-0"

B6-1 / - B0-5 / -

NOTE:
Cont reinforcement identified by * shall be spliced with 'SERVICE LEVEL' splice staggered at 4' minimum

LEGEND:
Indicates exist concrete and metal bridge railing to be removed

NOTE:
The Contractor shall verify all controlling field dimensions before ordering or fabricating any material

DESIGN OVERSIGHT Yiwei Hu
1/25/12
SIGN OFF DATE

	BY	CHECKED
DESIGN	Z. VUKMIROVIC	A. REJAIE
DETAILS	Z. VUKMIROVIC	S. MOYLES
QUANTITIES	R. RIVAS	M. FRECHETTE

PREPARED FOR THE STATE OF CALIFORNIA DEPARTMENT OF TRANSPORTATION

INES LI
PROJECT ENGINEER

BRIDGE NO. 33-0203
POST MILES 13.13

ARROYO LAS POSITAS BRIDGE (WIDEN)
TYPICAL SECTION

DESIGN GENERAL PLAN SHEET (ENGLISH) (REV. 7/16/10)

ORIGINAL SCALE IN INCHES FOR REDUCED PLANS 0 1 2 3

UNIT: 0735
PROJECT NUMBER & PHASE: 04000212481 CONTRACT NO.: 04-2908C4

DISREGARD PRINTS BEARING EARLIER REVISION DATES 12/23/09 03/25/10 11/18/11 1/5/12

SHEET 8 OF 15

FILE => 33-0203I-m-ts1.dgn

USERNAME => s124496 DATE PLOTTED => 23-MAY-2012 TIME PLOTTED => 07:03

2007236 (2007236CS8-WB)

DIST	COUNTY	ROUTE	POST MILES TOTAL PROJECT	SHEET No	TOTAL SHEETS
04	Ala	580	R8.4/R14.6	769	853

REGISTERED CIVIL ENGINEER 1/5/12 DATE

5-14-12
PLANS APPROVAL DATE

REGISTERED PROFESSIONAL ENGINEER INES S. LI No. C51561 Exp.6/30/12 CIVIL STATE OF CALIFORNIA

The State of California or its officers or agents shall not be responsible for the accuracy or completeness of scanned copies of this plan sheet.

BIGGS CARDOSA ASSOCIATES INC.
865 THE ALAMEDA
SAN JOSE, CALIFORNIA 95126

ALAMEDA CTC
1333 BROADWAY, SUITE 220
OAKLAND, CALIFORNIA 94612

NOTES:

1. For 'CONCRETE STRENGTH AND TYPE LIMITS', see 'INDEX TO PLANS' sheet
2. Drain pipe to connect to drain inlet 12j at FL elev 441.89, see Drainage Plans
3. For 'SECTION A-A', see 'GIRDER REINFORCEMENT' sheet

LEGEND:

⊟ Indicates drain inlets

→ Indicates direction of flow

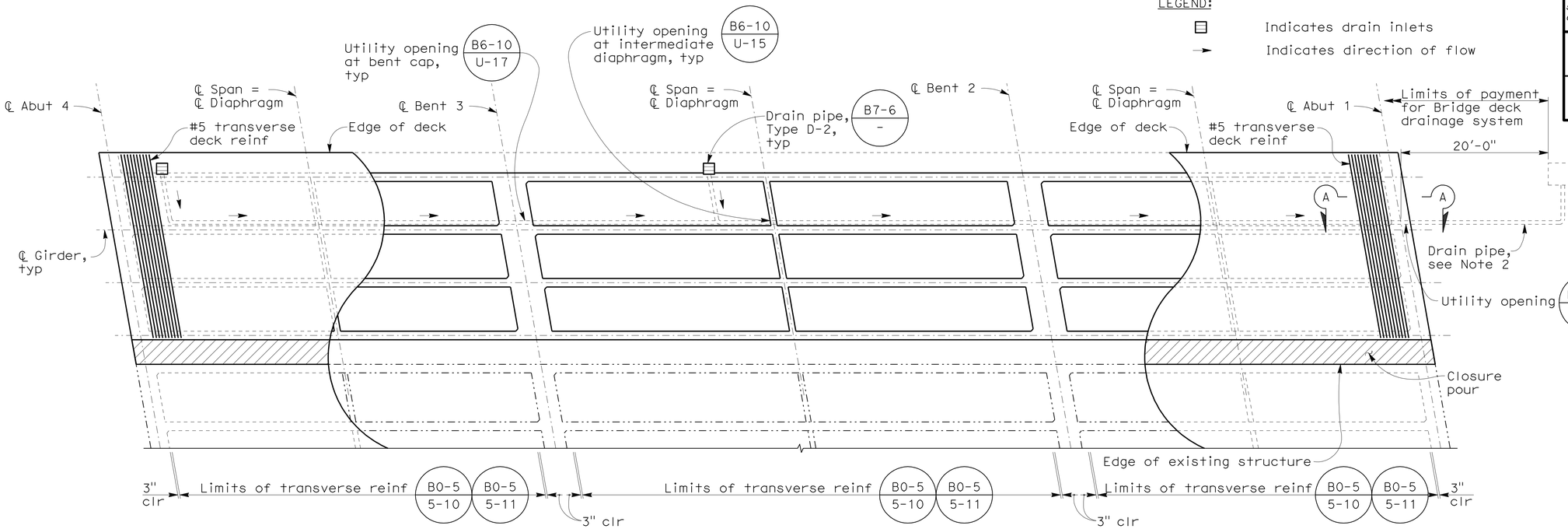

GIRDER LAYOUT

1/8" = 1'-0"

N

Drain Location, 'B' Line Station
617+76.43
618+50.73

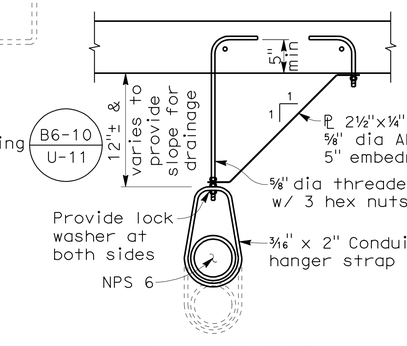

PIPE HANGER SUPPORT

DETAIL 2

NTS

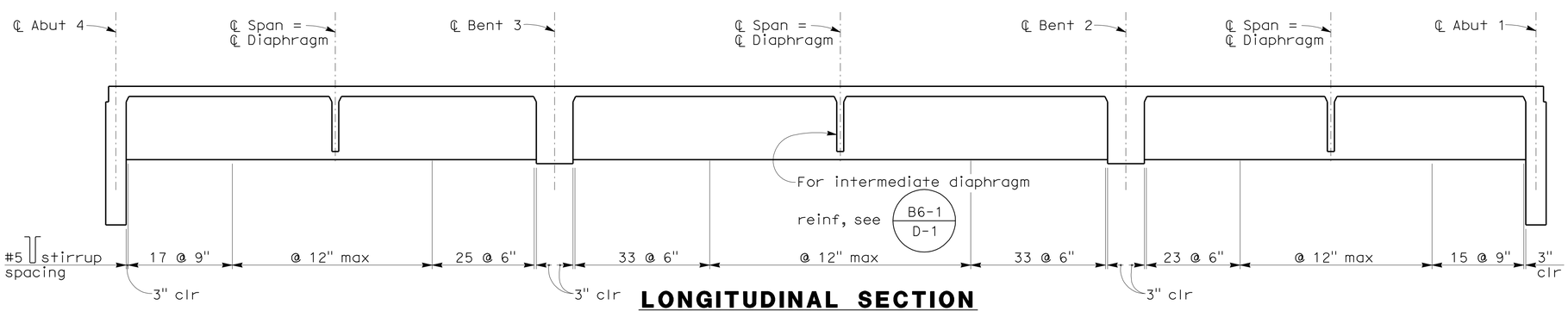

LONGITUDINAL SECTION

NO SCALE

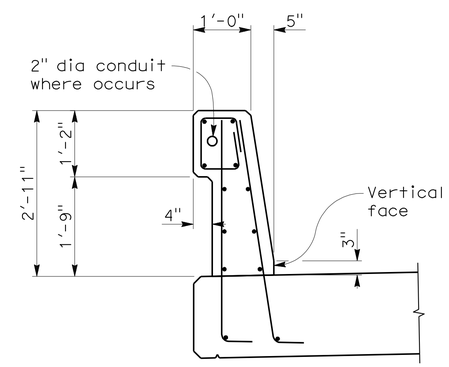

Note:
For details not shown, see B11-55 -

CONCRETE BARRIER (TYPE 732 MOD)

3/4" = 1'-0"

NOTE:
The Contractor shall verify all controlling field dimensions before ordering or fabricating any material

DESIGN OVERSIGHT Yiwei Hu
1/25/12
SIGN OFF DATE

	BY	CHECKED
DESIGN	Z. VUKMIROVIC	A. REJAIE
DETAILS	Z. VUKMIROVIC	S. MOYLES
QUANTITIES	R. RIVAS	M. FRECHETTE

PREPARED FOR THE STATE OF CALIFORNIA DEPARTMENT OF TRANSPORTATION

INES LI
PROJECT ENGINEER

BRIDGE NO. 33-0203
POST MILES 13.13

ARROYO LAS POSITAS BRIDGE (WIDEN)
GIRDER LAYOUT

DESIGN GENERAL PLAN SHEET (ENGLISH) (REV. 7/16/10)

ORIGINAL SCALE IN INCHES FOR REDUCED PLANS 0 1 2 3

UNIT: 0735
PROJECT NUMBER & PHASE: 04000212481 CONTRACT NO.: 04-2908C4

DISREGARD PRINTS BEARING EARLIER REVISION DATES 12/23/09 3/25/10 11/8/11 1/5/12

SHEET 9 OF 15

FILE => 33-0203I-n-g-lo01.dgn

USERNAME => s124496 DATE PLOTTED => 23-MAY-2012 TIME PLOTTED => 07:03

2007236 (2007236C59-WB)

DIST	COUNTY	ROUTE	POST MILES TOTAL PROJECT	SHEET No	TOTAL SHEETS
04	Ala	580	R8.4/R14.6	770	853

REGISTERED CIVIL ENGINEER 1/5/12 DATE

5-14-12
PLANS APPROVAL DATE

REGISTERED PROFESSIONAL ENGINEER INES S. LI No. C51561 Exp.6/30/12 CIVIL STATE OF CALIFORNIA

The State of California or its officers or agents shall not be responsible for the accuracy or completeness of scanned copies of this plan sheet.

BIGGS CARDOSA ASSOCIATES INC.
865 THE ALAMEDA
SAN JOSE, CALIFORNIA 95126

ALAMEDA CTC
1333 BROADWAY, SUITE 220
OAKLAND, CALIFORNIA 94612

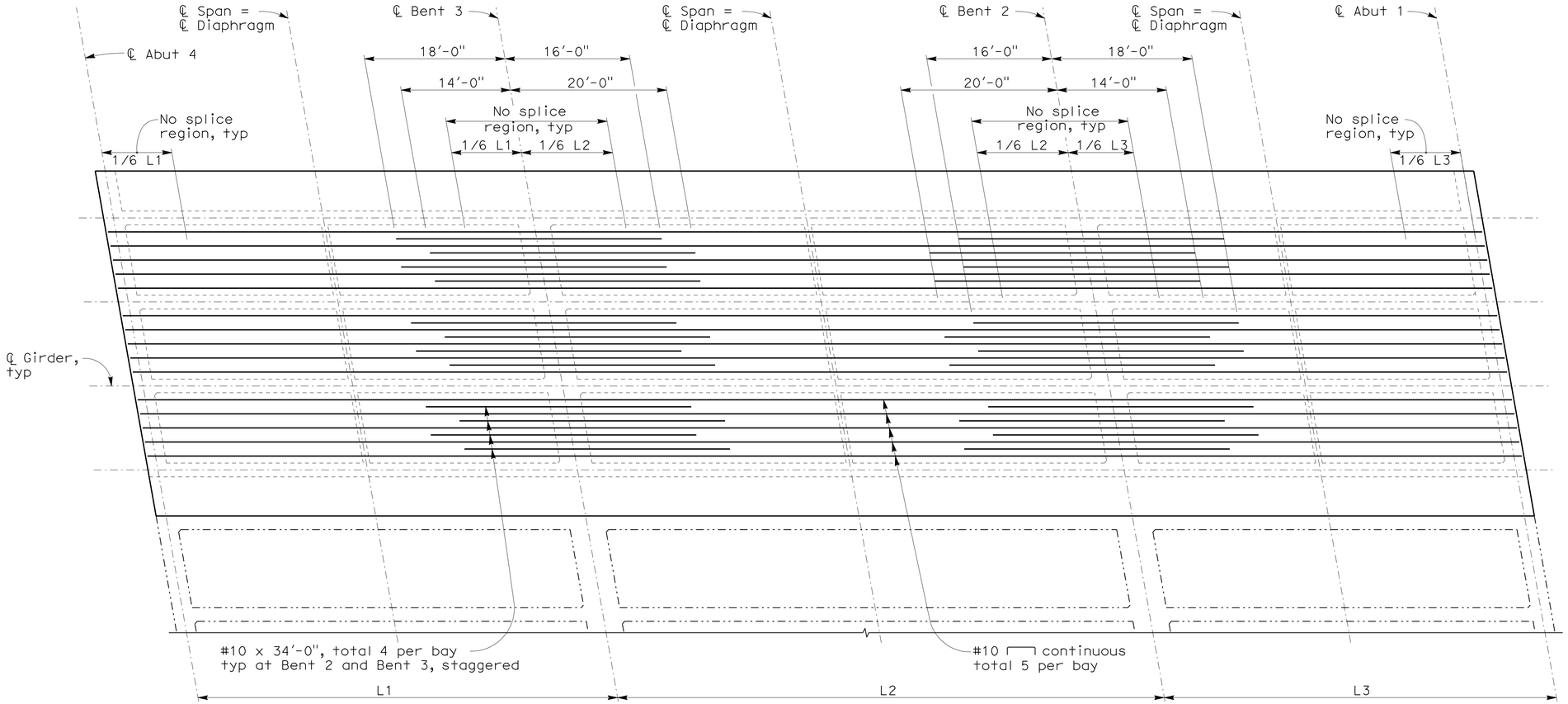

ADDITIONAL DECK REINFORCEMENT

NO SCALE

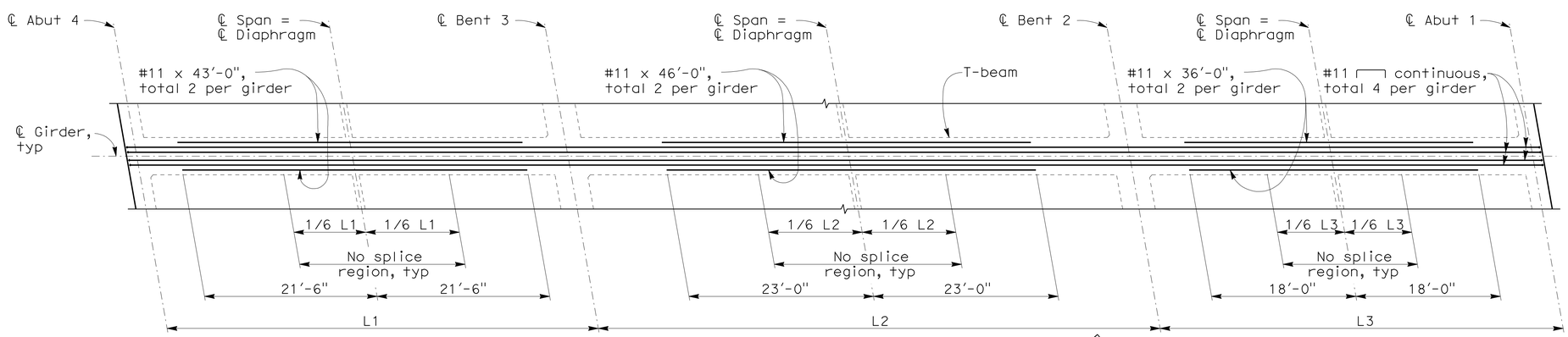

BOTTOM T-BEAM REINFORCEMENT

NO SCALE

NOTE:
The Contractor shall verify all controlling field dimensions before ordering or fabricating any material

NOTES:

1. Additional top deck reinforcement shown. See 'TYPICAL SECTION' sheet for typical deck reinforcement not shown
2. No lap splices permitted
3. Additional deck & beam reinforcing shall be spliced with service level splices as needed
4. Space additional reinforcement approximately equally within each bay
5. For 'Detail 2', see 'GIRDER LAYOUT' sheet

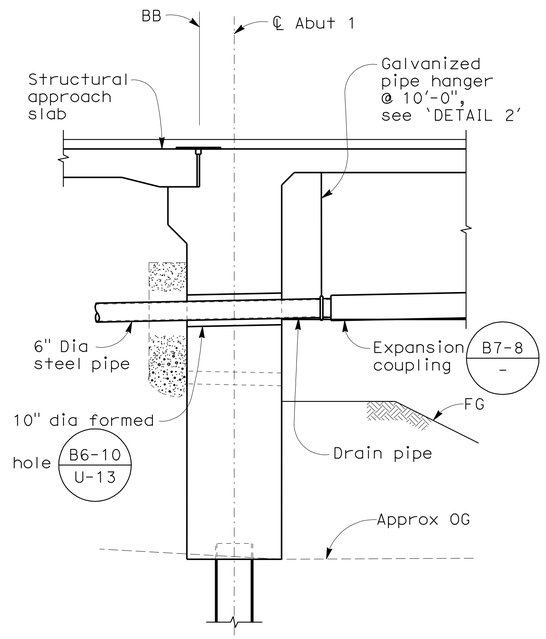

SECTION A-A

1/2" = 1'-0"

DESIGN OVERSIGHT Yiwei Hu
1/25/12
SIGN OFF DATE

	BY	CHECKED
DESIGN	Z. VUKMIROVIC	A. REJAIE
DETAILS	Z. VUKMIROVIC	S. MOYLES
QUANTITIES	R. RIVAS	M. FRECHETTE

PREPARED FOR THE STATE OF CALIFORNIA DEPARTMENT OF TRANSPORTATION

INES LI
PROJECT ENGINEER

BRIDGE NO. 33-0203
POST MILES 13.13

ARROYO LAS POSITAS BRIDGE (WIDEN)
GIRDER REINFORCEMENT

DESIGN GENERAL PLAN SHEET (ENGLISH) (REV. 7/16/10)

ORIGINAL SCALE IN INCHES FOR REDUCED PLANS 0 1 2 3

UNIT: 0735
PROJECT NUMBER & PHASE: 04000212481 CONTRACT NO.: 04-2908C4

DISREGARD PRINTS BEARING EARLIER REVISION DATES → 12/23/09 3/25/10 11/8/11 1/5/12

SHEET 10 OF 15

FILE => 33-0203I-q-g-rf01.dgn

USERNAME => s124496 DATE PLOTTED => 23-MAY-2012 TIME PLOTTED => 07:03 2007236 (2007236C510-WB)

DIST	COUNTY	ROUTE	POST MILES TOTAL PROJECT	SHEET No	TOTAL SHEETS
04	Ala	580	R8.4/R14.6	771	853

REGISTERED CIVIL ENGINEER 1/5/12 DATE

5-14-12
PLANS APPROVAL DATE

REGISTERED PROFESSIONAL ENGINEER INES S. LI No. C51561 Exp.6/30/12 CIVIL STATE OF CALIFORNIA

The State of California or its officers or agents shall not be responsible for the accuracy or completeness of scanned copies of this plan sheet.

BIGGS CARDOSA ASSOCIATES INC.
865 THE ALAMEDA
SAN JOSE, CALIFORNIA 95126

ALAMEDA CTC
1333 BROADWAY, SUITE 220
OAKLAND, CALIFORNIA 94612

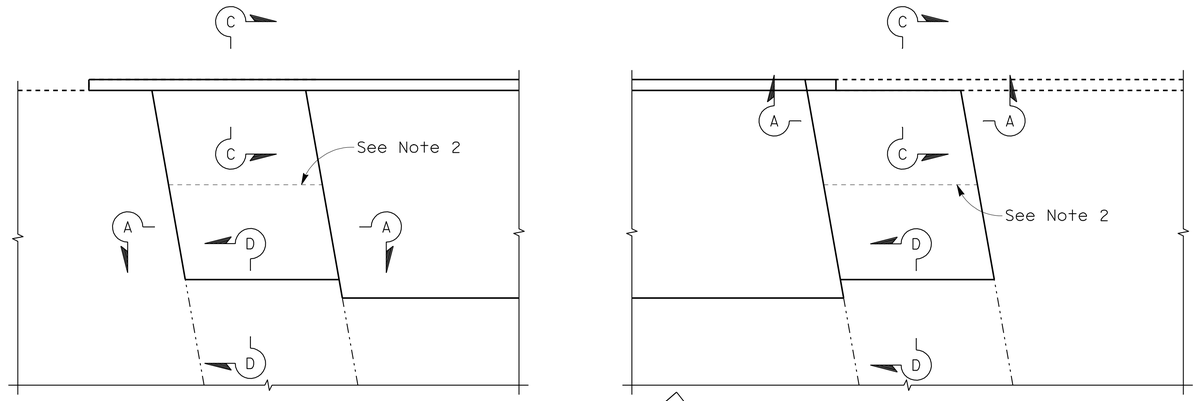

PLAN
1" = 10'

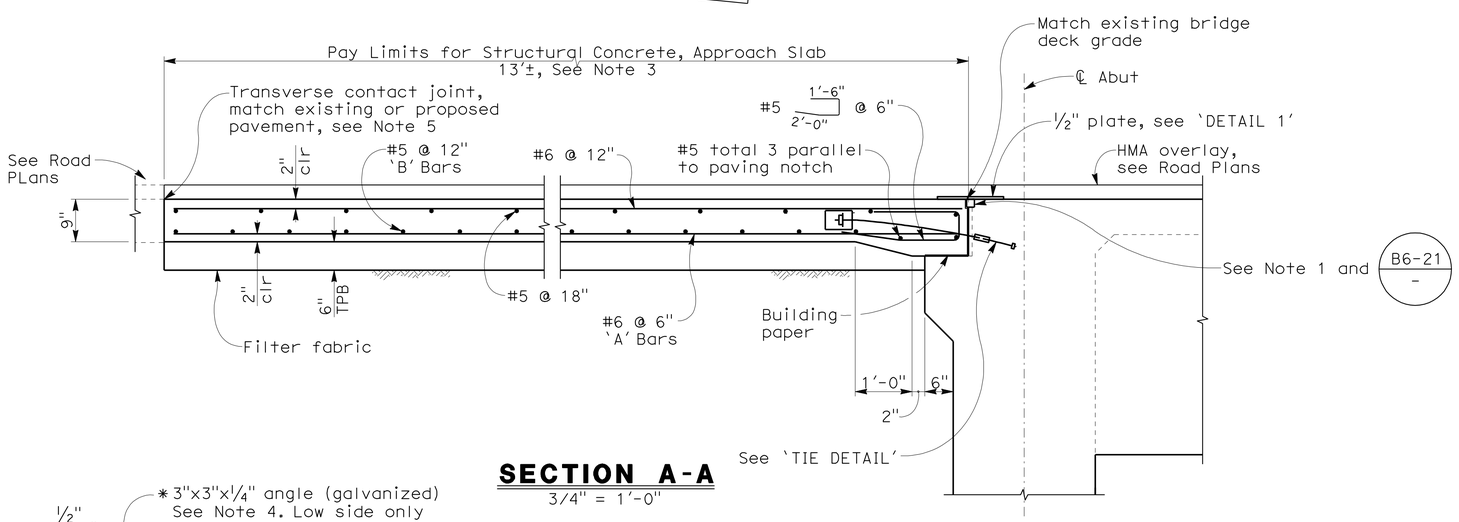

SECTION A-A
3/4" = 1'-0"

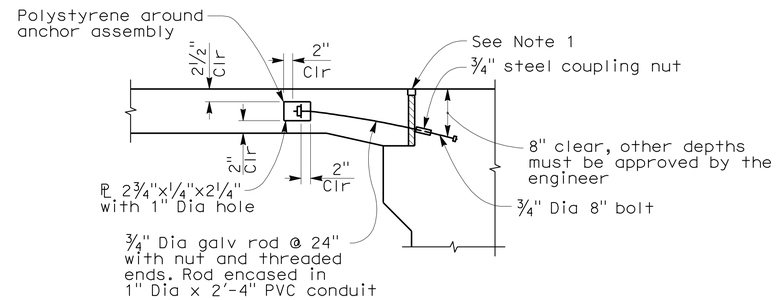

DIAPHRAGM TYPE ABUTMENT TIE DETAIL
3/4" = 1'-0"

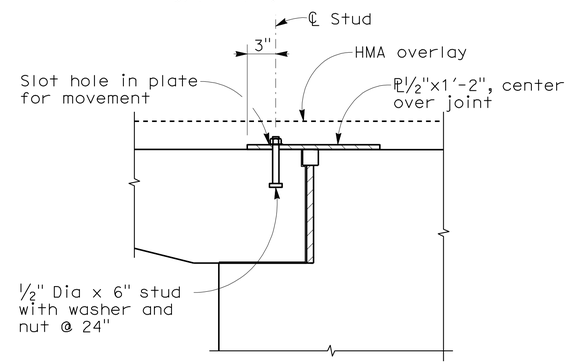

DETAIL 1
1 1/2" = 1'-0"

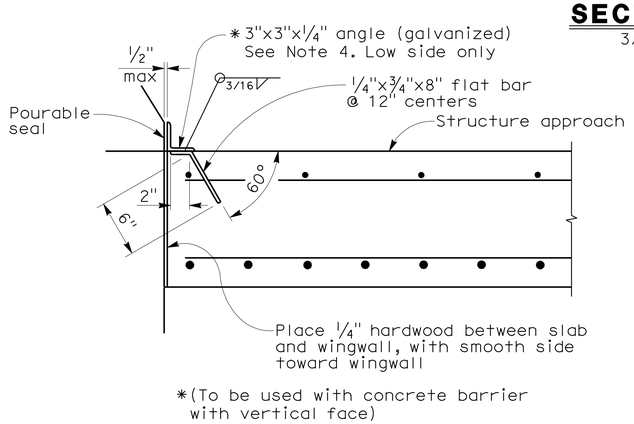

*(To be used with concrete barrier with vertical face)

DETAIL B
NO SCALE

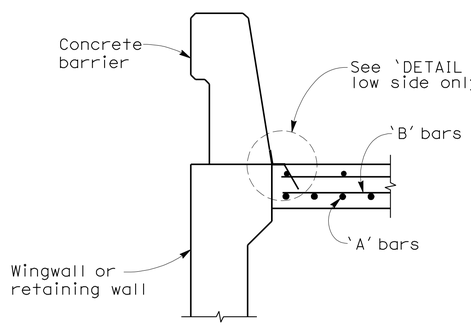

SECTION C-C
3/4" = 1'-0"

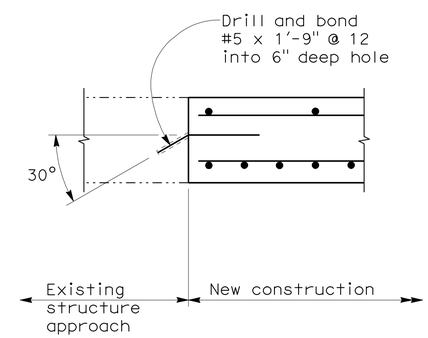

DETAIL D-D
1 1/2" = 1'-0"

NOTES:

1. For details not noted or shown, see Structure Plans. Adjust bar reinforcement to clear a sawcut for sealed joint, when required
2. Longitudinal construction joints, when permitted by the Engineer, shall be located on lane lines
3. Length of approach slab shown is approximate. Construct approach slab length to match existing
4. End angle or plate at beginning of barrier transition, end of wingwall or end of structure approach as applicable
5. For transverse contact joint with new PCC paving, refer to Standard Plan P10

NOTE:
The Contractor shall verify all controlling field dimensions before ordering or fabricating any material

DESIGN OVERSIGHT Yiwei Hu
1/25/12
SIGN OFF DATE

	BY	CHECKED
DESIGN	Z. VUKMIROVIC	A. REJAIE
DETAILS	Z. VUKMIROVIC	S. MOYLES
QUANTITIES	R. RIVAS	M. FRECHETTE

PREPARED FOR THE STATE OF CALIFORNIA DEPARTMENT OF TRANSPORTATION

INES LI
PROJECT ENGINEER

BRIDGE NO. 33-0203
POST MILES 13.13

ARROYO LAS POSITAS BRIDGE (WIDEN)
STRUCTURE APPROACH (TYPE N MOD)

DESIGN GENERAL PLAN SHEET (ENGLISH) (REV. 7/16/10)

ORIGINAL SCALE IN INCHES FOR REDUCED PLANS 0 1 2 3

UNIT: 0735
PROJECT NUMBER & PHASE: 04000212481 CONTRACT NO.: 04-2908C4

DISREGARD PRINTS BEARING EARLIER REVISION DATES 12/23/09 3/25/10 11/8/11 1/5/12

SHEET 11 OF 15

FILE => 33-0203I-t-sad.dgn

USERNAME => s124496 DATE PLOTTED => 23-MAY-2012 TIME PLOTTED => 07:03

2007236 (2007236CS11-WB)

REFERENCE: CALTRANS SOIL & ROCK LOGGING, CLASSIFICATION, AND PRESENTATION MANUAL (2010)

DIST	COUNTY	ROUTE	POST MILES TOTAL PROJECT	SHEET No	TOTAL SHEETS
04	Ala	580	R8.4/R14.6	772	853

GEOTECHNICAL PROFESSIONAL — DATE 1/5/12

5-14-12
PLANS APPROVAL DATE

REGISTERED PROFESSIONAL ENGINEER — GARY PARIKH — No. G.E. 666 — Exp. 12/31/13 — GEOTECHNICAL — STATE OF CALIFORNIA

The State of California or its officers or agents shall not be responsible for the accuracy or completeness of electronic copies of this plan sheet.

ALAMEDA CTC
1333 BROADWAY, SUITE 220
OAKLAND, CA 94612

PARIKH CONSULTANTS, INC.
2360 QUME DRIVE, SUITE A
SAN JOSE, CA 95131

CEMENTATION

Description	Criteria
Weak	Crumbles or breaks with handling or little finger pressure.
Moderate	Crumbles or breaks with considerable finger pressure.
Strong	Will not crumble or break with finger pressure.

BOREHOLE IDENTIFICATION

Symbol	Hole Type	Description
Size	A	Auger Boring (hollow or solid stem bucket)
Size	R RW RC P	Rotary drilled boring (conventional) Rotary drilled with self-casing wire-line Rotary core with continuously-sampled, self-casing wire-line Rotary percussion boring (air)
Size	R	Rotary drilled diamond core
Size	HD HA	Hand driven (1-inch soil tube) Hand Auger
●	D	Dynamic Cone Penetration Boring
▲	CPT	Cone Penetration Test (ASTM D 5778)
⬚	O	Other (note on LOTB)

Note: Size in inches.

CONSISTENCY OF COHESIVE SOILS

Description	Shear Strength (tsf)	Pocket Penetrometer Measurement, PP, (tsf)	Torvane Measurement, TV, (tsf)	Vane Shear Measurement, VS, (tsf)
Very Soft	Less than 0.12	Less than 0.25	Less than 0.12	Less than 0.12
Soft	0.12 - 0.25	0.25 - 0.5	0.12 - 0.25	0.12 - 0.25
Medium Stiff	0.25 - 0.5	0.5 - 1	0.25 - 0.5	0.25 - 0.5
	0.5 - 1	1 - 2	0.5 - 1	0.5 - 1
Very Stiff	1 - 2	2 - 4	1 - 2	1 - 2
Hard	Greater than 2	Greater than 4	Greater than 2	Greater than 2

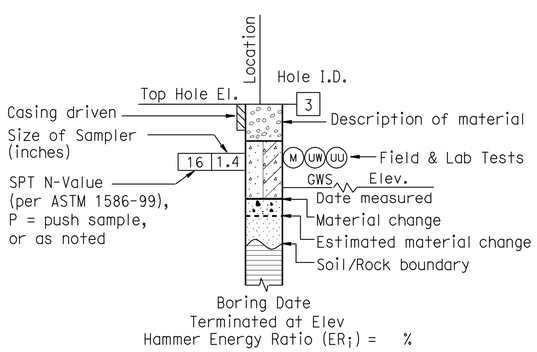

ROTARY BORING

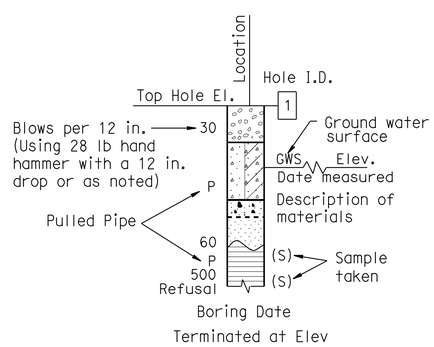

HAND BORING

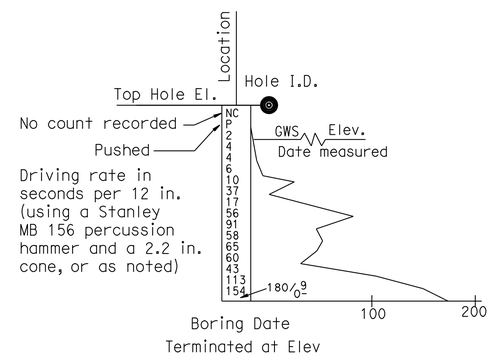

DYNAMIC CONE PENETRATION BORING

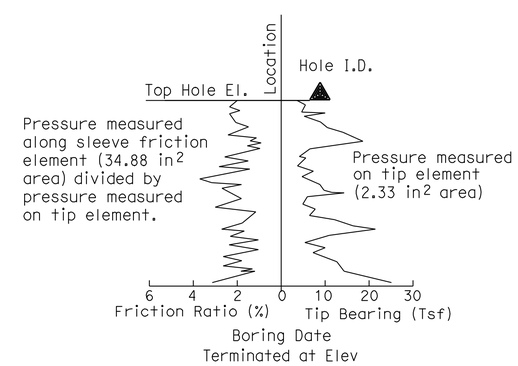

CONE PENETRATION TEST (CPT) BORING

DESIGN OVERSIGHT Yiwei Hu 1/25/12 SIGN OFF DATE	DRAWN BY O. GOUTHIER CHECKED BY P. SIRCAR	S.DUDDU FIELD INVESTIGATION BY: DATE: DECEMBER 2008-FEBRUARY-JANUARY 2009	PREPARED FOR THE STATE OF CALIFORNIA DEPARTMENT OF TRANSPORTATION

P. SIRCAR
PROJECT ENGINEER

BRIDGE NO. 33-0203
POST MILES 13.13

ARROYO LAS POSITAS BRIDGE (WIDEN)
LOG OF TEST BORINGS 1 OF 4

ORIGINAL SCALE IN INCHES FOR REDUCED PLANS 0 1 2 3

UNIT: 0735
PROJECT NUMBER & PHASE: 04000212481
CONTRACT NO.: 04-2908C4

DISREGARD PRINTS BEARING EARLIER REVISION DATES → 12/2/09 06/18/10 12/8/11 1/5/12

SHEET 12 OF 15

FILE => 33-0203-z-1tb01.dgn

USERNAME => s124496 DATE PLOTTED => 23-MAY-2012 TIME PLOTTED => 07:04

DIST	COUNTY	ROUTE	POST MILES TOTAL PROJECT	SHEET No	TOTAL SHEETS
04	Ala	580	R8.4/R14.6	773	853

GEOTECHNICAL PROFESSIONAL — DATE 1/5/12

5-14-12
PLANS APPROVAL DATE

REGISTERED PROFESSIONAL ENGINEER — GARY PARIKH — No. G.E. 666 — Exp. 12/31/13 — GEOTECHNICAL — STATE OF CALIFORNIA

The State of California or its officers or agents shall not be responsible for the accuracy or completeness of electronic copies of this plan sheet.

ALAMEDA CTC
1333 BROADWAY, SUITE 220
OAKLAND, CA 94612

PARIKH CONSULTANTS, INC.
2360 QUME DRIVE, SUITE A
SAN JOSE, CA 95131

REFERENCE: CALTRANS SOIL & ROCK LOGGING, CLASSIFICATION, AND PRESENTATION MANUAL (JUNE 2007)

GROUP SYMBOLS AND NAMES

Graphic/Symbol	Group Names
GW	Well-graded GRAVEL Well-graded GRAVEL with SAND
GP	Poorly graded GRAVEL Poorly graded GRAVEL with SAND
GW-GM	Well-graded GRAVEL with SILT Well-graded GRAVEL with SILT and SAND
GW-GC	Well-graded GRAVEL with CLAY (or SILTY CLAY) Well-graded GRAVEL with CLAY and SAND (or SILTY CLAY and SAND)
GP-GM	Poorly graded GRAVEL with SILT Poorly graded GRAVEL with SILT and SAND
GP-GC	Poorly graded GRAVEL with CLAY (or SILTY CLAY) Poorly graded GRAVEL with CLAY and SAND (or SILTY CLAY and SAND)
GM	SILTY GRAVEL SILTY GRAVEL with SAND
GC	CLAYEY GRAVEL CLAYEY GRAVEL with SAND
GC-GM	SILTY, CLAYEY GRAVEL SILTY, CLAYEY GRAVEL with SAND
SW	Well-graded SAND Well-graded SAND with GRAVEL
SP	Poorly graded SAND Poorly graded SAND with GRAVEL
SW-SM	Well-graded SAND with SILT Well-graded SAND with SILT and GRAVEL
SW-SC	Well-graded SAND with CLAY (or SILTY CLAY) Well-graded SAND with CLAY and GRAVEL (or SILTY CLAY and GRAVEL)
SP-SM	Poorly graded SAND with SILT Poorly graded SAND with SILT and GRAVEL
SP-SC	Poorly graded SAND with CLAY (or SILTY CLAY) Poorly graded SAND with CLAY and GRAVEL (or SILTY CLAY and GRAVEL)
SM	SILTY SAND SILTY SAND with GRAVEL
SC	CLAYEY SAND CLAYEY SAND with GRAVEL
SC-SM	SILTY, CLAYEY SAND SILTY, CLAYEY SAND with GRAVEL
PT	PEAT
	COBBLES COBBLES and BOULDERS BOULDERS

Graphic/Symbol	Group Names
CL	Lean CLAY Lean CLAY with SAND Lean CLAY with GRAVEL SANDY lean CLAY SANDY lean CLAY with GRAVEL GRAVELLY lean CLAY GRAVELLY lean CLAY with SAND
CL-ML	SILTY CLAY SILTY CLAY with SAND SILTY CLAY with GRAVEL SANDY SILTY CLAY SANDY SILTY CLAY with GRAVEL GRAVELLY SILTY CLAY GRAVELLY SILTY CLAY with SAND
ML	SILT SILT with SAND SILT with GRAVEL SANDY SILT SANDY SILT with GRAVEL GRAVELLY SILT GRAVELLY SILT with SAND
OL	ORGANIC lean CLAY ORGANIC lean CLAY with SAND ORGANIC lean CLAY with GRAVEL SANDY ORGANIC lean CLAY SANDY ORGANIC lean CLAY with GRAVEL GRAVELLY ORGANIC lean CLAY GRAVELLY ORGANIC lean CLAY with SAND
OL	ORGANIC SILT ORGANIC SILT with SAND ORGANIC SILT with GRAVEL SANDY ORGANIC SILT SANDY ORGANIC SILT with GRAVEL GRAVELLY ORGANIC SILT GRAVELLY ORGANIC SILT with SAND
CH	Fat CLAY Fat CLAY with SAND Fat CLAY with GRAVEL SANDY fat CLAY SANDY fat CLAY with GRAVEL GRAVELLY fat CLAY GRAVELLY fat CLAY with SAND
MH	Elastic SILT Elastic SILT with SAND Elastic SILT with GRAVEL SANDY elastic SILT SANDY elastic SILT with GRAVEL GRAVELLY elastic SILT GRAVELLY elastic SILT with SAND
OH	ORGANIC fat CLAY ORGANIC fat CLAY with SAND ORGANIC fat CLAY with GRAVEL SANDY ORGANIC fat CLAY SANDY ORGANIC fat CLAY with GRAVEL GRAVELLY ORGANIC fat CLAY GRAVELLY ORGANIC fat CLAY with SAND
OH	ORGANIC elastic SILT ORGANIC elastic SILT with SAND ORGANIC elastic SILT with GRAVEL SANDY ORGANIC elastic SILT SANDY ORGANIC elastic SILT with GRAVEL GRAVELLY ORGANIC elastic SILT GRAVELLY ORGANIC elastic SILT with SAND
OL/OH	ORGANIC SOIL ORGANIC SOIL with SAND ORGANIC SOIL with GRAVEL SANDY ORGANIC SOIL SANDY ORGANIC SOIL with GRAVEL GRAVELLY ORGANIC SOIL GRAVELLY ORGANIC SOIL with SAND

FIELD AND LABORATORY TESTING

- (C) Consolidation (ASTM D 2435)
- (CL) Collapse Potential (ASTM D 5333)
- (CP) Compaction Curve (CTM 216)
- (CR) Corrosivity Testing (CTM 643, CTM 422, CTM 417)
- (CU) Consolidated Undrained Triaxial (ASTM D 4767)
- (DS) Direct Shear (ASTM D 3080)
- (EI) Expansion Index (ASTM D 4829)
- (M) Moisture Content (ASTM D 2216)
- (OC) Organic Content-% (ASTM D 2974)
- (P) Permeability (CTM 220)
- (PA) Particle Size Analysis (ASTM D 422)
- (PI) Plasticity Index (AASHTO T 90) Liquid Limit (AASHTO T 89)
- (PL) Point Load Index (ASTM D 5731)
- (PM) Pressure Meter
- (PP) Pocket Penetrometer
- (R) R-Value (CTM 301)
- (SE) Sand Equivalent (CTM 217)
- (SG) Specific Gravity (AASHTO T 100)
- (SL) Shrinkage Limit (ASTM D 427)
- (SW) Swell Potential (ASTM D 4546)
- (TV) Pocket Torvane
- (UC) Unconfined Compression-Soil (ASTM D 2166) Unconfined Compression-Rock (ASTM D 2938)
- (UU) Unconsolidated Undrained Triaxial (ASTM D 2850)
- (UW) Unit Weight (ASTM D 4767)
- (VS) Vane Shear (AASHTO T 223)

APPARENT DENSITY OF COHESIONLESS SOILS

Description	SPT N_{60} (Blows / 12 inches)
Very loose	0 - 4
Loose	5 - 10
Medium Dense	11 - 30
Dense	31 - 50
Very Dense	> 50

MOISTURE

Description	Criteria
Dry	Absence of moisture, dusty, dry to the touch
Moist	Damp but no visible water
Wet	Visible free water, usually soil is below water table

PERCENT OR PROPORTION OF SOILS

Description	Criteria
Trace	Particles are present but estimated to be less than 5%
Few	5 to 10%
Little	15 to 25%
Some	30 to 45%
Mostly	50 to 100%

PARTICLE SIZE

Description		Size
Boulder		> 12"
Cobble		3" to 12"
Gravel	Coarse	3/4" to 3"
	Fine	No. 4 to 3/4"
Sand	Coarse	No. 10 to No. 4
	Medium	No. 40 to No. 10
	Fine	No. 200 to No. 40

DESIGN OVERSIGHT — Yiwei Hu
1/25/12
SIGN OFF DATE

DRAWN BY: O. GOUTHIER
CHECKED BY: P. SIRCAR

S.DUDDU
FIELD INVESTIGATION BY: DECEMBER 2008-
DATE: FEBRUARY-JANUARY 2009

PREPARED FOR THE STATE OF CALIFORNIA DEPARTMENT OF TRANSPORTATION

P. SIRCAR
PROJECT ENGINEER

BRIDGE NO. 33-0203
POST MILES 13.13

ARROYO LAS POSITAS BRIDGE (WIDEN)
LOG OF TEST BORINGS 2 OF 4

ORIGINAL SCALE IN INCHES FOR REDUCED PLANS 0 1 2 3

UNIT: 0735
PROJECT NUMBER & PHASE: 04000212481
CONTRACT NO.: 04-2908C4

DISREGARD PRINTS BEARING EARLIER REVISION DATES
REVISION DATES: 12/22/09 06/16/10 11/8/11 1/5/12

SHEET 13 OF 15

FILE => 33-0203-z-1tb02.dgn

USERNAME => S13C24396 DATE PLOTTED => 23-MAY-2012 TIME PLOTTED => 07:04

DIST	COUNTY	ROUTE	POST MILES TOTAL PROJECT	SHEET No	TOTAL SHEETS
04	Ala	580	R8.4/R14.6	774	853

GEOTECHNICAL PROFESSIONAL — DATE 1/5/12

5-14-12
PLANS APPROVAL DATE

REGISTERED PROFESSIONAL ENGINEER — GARY PARIKH — No. G.E. 666 — Exp. 12/31/13 — GEOTECHNICAL — STATE OF CALIFORNIA

The State of California or its officers or agents shall not be responsible for the accuracy or completeness of electronic copies of this plan sheet.

ALAMEDA CTC
1333 BROADWAY, SUITE 220
OAKLAND, CA 94612

PARIKH CONSULTANTS, INC.
2360 QUME DRIVE, SUITE A
SAN JOSE, CA 95131

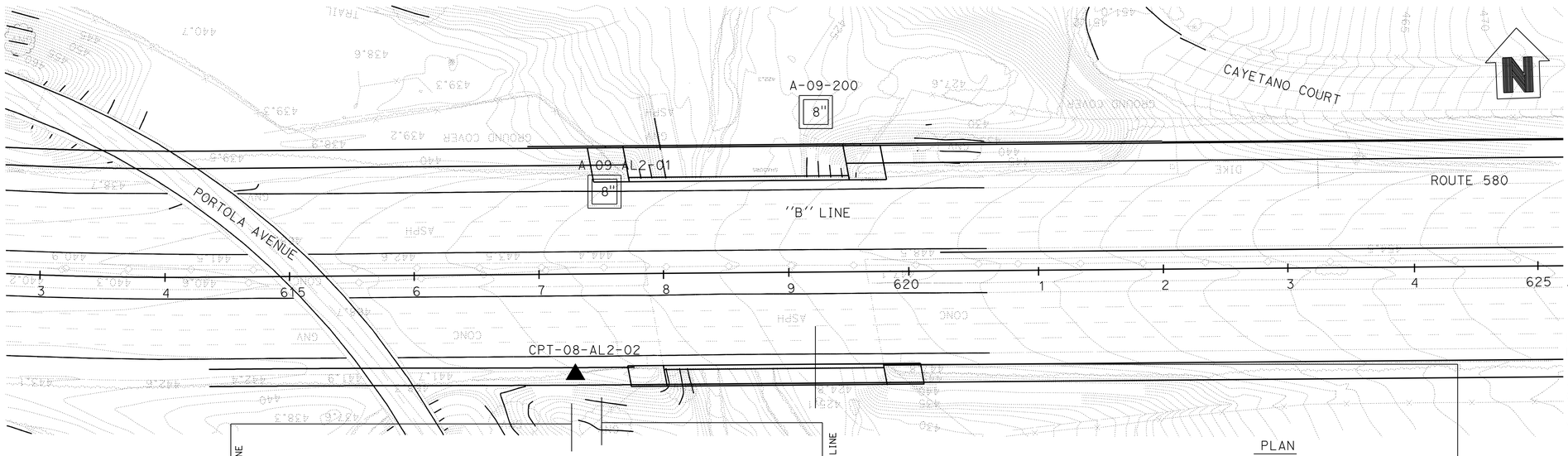

PLAN
1"=50'

BENCHMARK:
The Vertical Datum shown hereon is based on North American Vertical Datum of 1988 (NAVD). The 1988 Elevations for this project were Established ising Digital Levelling & GPS Survey Measurements and a Least Squares Adjustment Holdings NGS Benchmarks GPS control point 35 - PID DE8495, L 1259 - PID HS4075, CHABOT A - PID AI7653, & OLD RM 3 = TIDAL 5 - PID HS3429 fixed to their published values.

All Dimensions are in Feet unless otherwise shown.

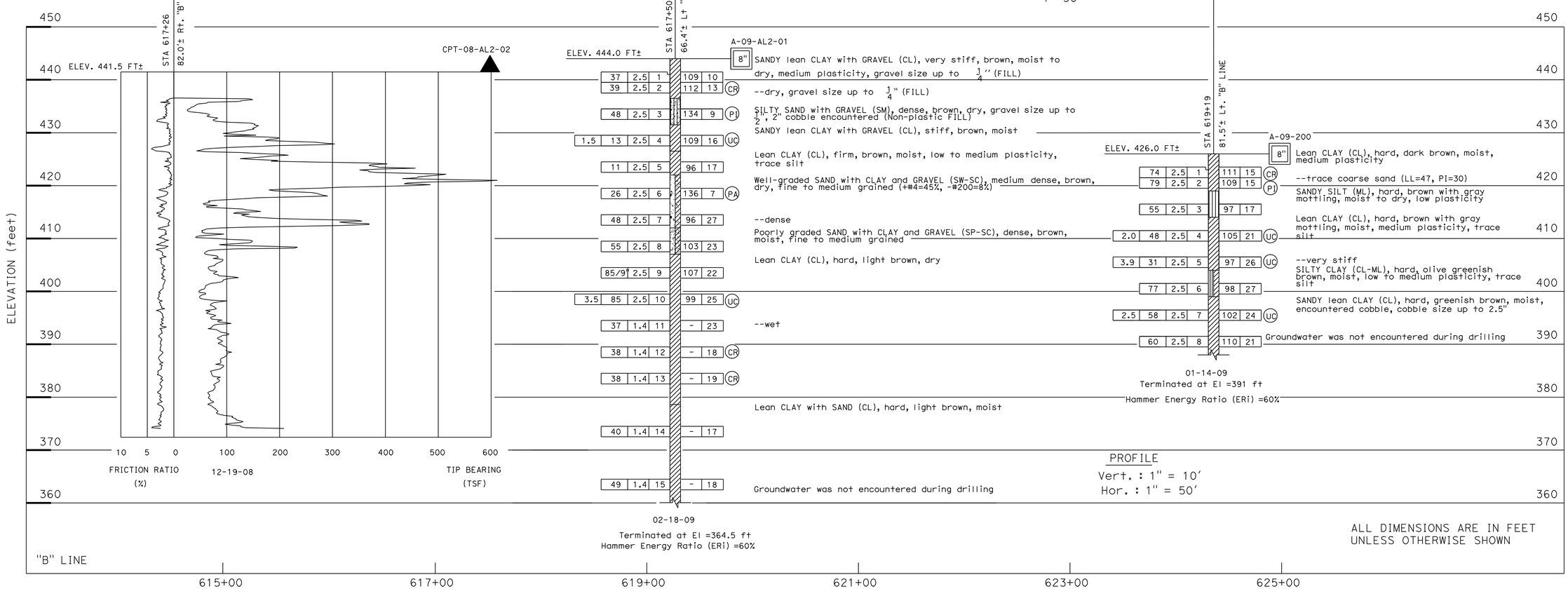

ALL DIMENSIONS ARE IN FEET UNLESS OTHERWISE SHOWN

DESIGN OVERSIGHT — Yiwei Hu
1/25/12
SIGN OFF DATE

DRAWN BY: O. GOUTHIER
CHECKED BY: P. SIRCAR

S.DUDDU
FIELD INVESTIGATION BY: DECEMBER 2008-
DATE: FEBRUARY-JANUARY 2009

PREPARED FOR THE STATE OF CALIFORNIA DEPARTMENT OF TRANSPORTATION

P. SIRCAR
PROJECT ENGINEER

BRIDGE NO. 33-0203
POST MILES 13.13

ARROYO LAS POSITAS BRIDGE (WIDEN)
LOG OF TEST BORINGS 3 OF 4

ORIGINAL SCALE IN INCHES FOR REDUCED PLANS 0 1 2 3

UNIT: 0735
PROJECT NUMBER & PHASE: 04000212481
CONTRACT NO.: 04-2908C

DISREGARD PRINTS BEARING EARLIER REVISION DATES
REVISION DATES 12/24/09 06/16/10 11/18/11 1/5/12

SHEET 14 OF 15

FILE => 33-0203-z-ltb03.dgn

USERNAME => S124196 DATE PLOTTED => 23-MAY-2012 TIME PLOTTED => 07:04

DIVISION OF ENGINEERING SERVICES – GEOTECHNICAL SERVICES					
As-Built Log of Test Borings sheet is considered an informational document only. As such, the State of California registration seal with signature, license number and registration certificate expiration date confirm that this is a true and accurate copy of the original document. This drawing is available and presented only for the convenience of any bidder, contractor or other interested party.					
DIST.	COUNTY	ROUTE	POST MILES–TOTAL PROJECT	Sheet No.	Total Sheets
04	Ala	580	R8.4/R14.6	775	853

REGISTERED CIVIL ENGINEER — 1/5/12 DATE

REGISTERED PROFESSIONAL ENGINEER — GARY PARIKH — No. G.E. 666 — Exp. 12/31/13 — GEOTECHNICAL — STATE OF CALIFORNIA

ARROYO LAS POSITAS BRIDGE (WIDEN)

LOG OF TEST BORINGS 4 OF 4

NOTE: A COPY OF THIS LOG OF TEST BORINGS IS AVAILABLE AT OFFICE OF STRUCTURE MAINTENANCE AND INVESTIGATIONS, SACRAMENTO, CALIFORNIA

UNIT: 0735
PROJECT NUMBER & PHASE: 04000212481

BRIDGE No.	Sheet	of
33-0203	15	15

To accompany plans dated 5-14-12

DIST.	COUNTY	ROUTE	SECTION	SHEET No.	TOTAL SHEETS
04	ALA	580	9A/181	212	248

DATE APPROVED April 27, 1970

"F8" Line corresponds to the "B" line.
Revisions made to this Log of Test Borings from the original 1965 Log of Test Borings are the addition of the following table and notes:

Boring	Station	Offset from 'B LINE'
B–4	619+41	47 feet Rt.
B–3	619+34	35 feet Lt.
B–6	618+79	46 feet Rt.
B–1	343+80	3 feet Lt.
B–5	343+80	50 feet Lt.

Notes:

1. See the General Plan and/or Foundation Plan for the Stationing.
2. The data are the locations for the As–Built Test Borings referenced to the proposed new structure location. This table is presented on the As–Built Log of Test Boring sheet for the convenience of any bidder, contractor or other interested party.

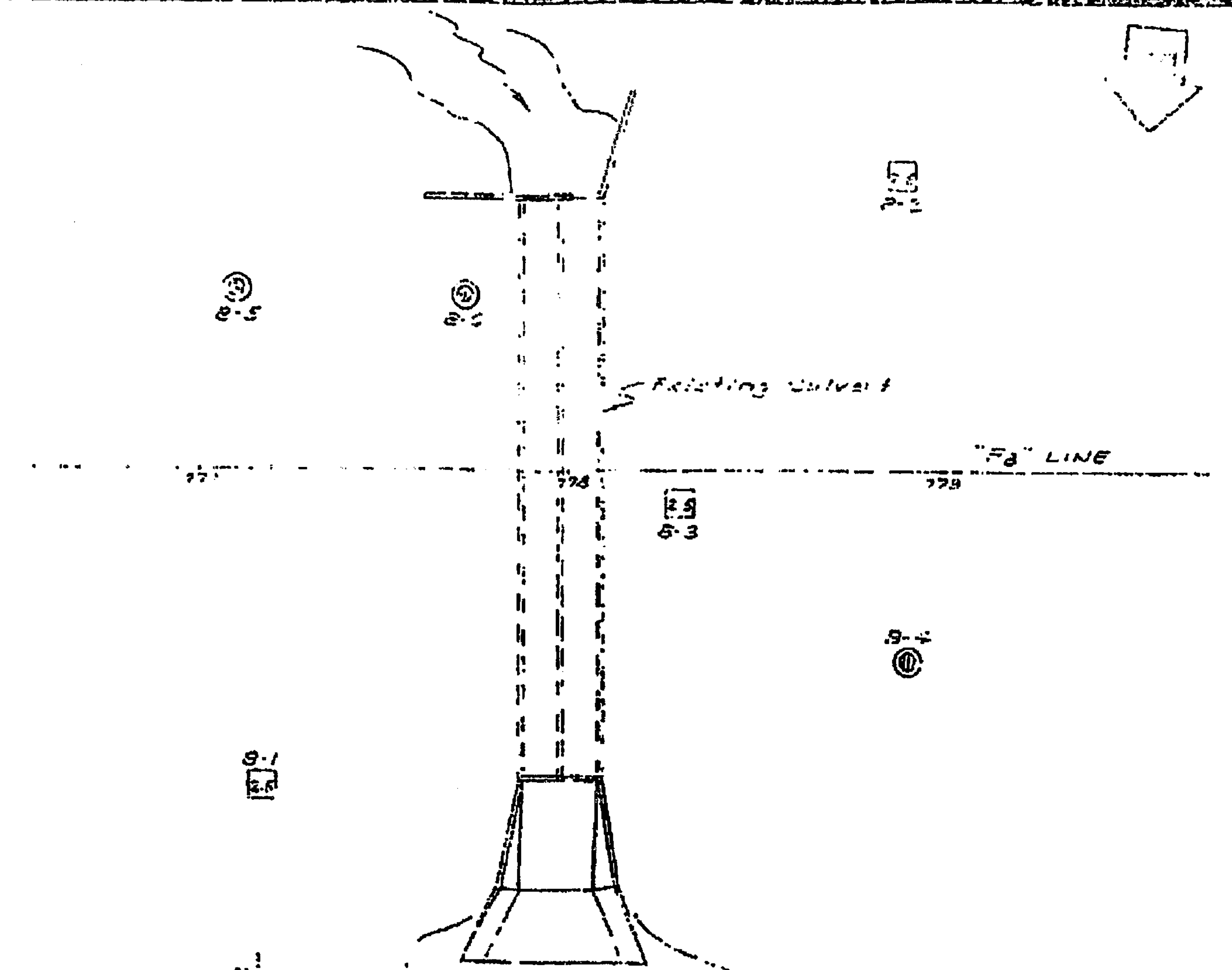

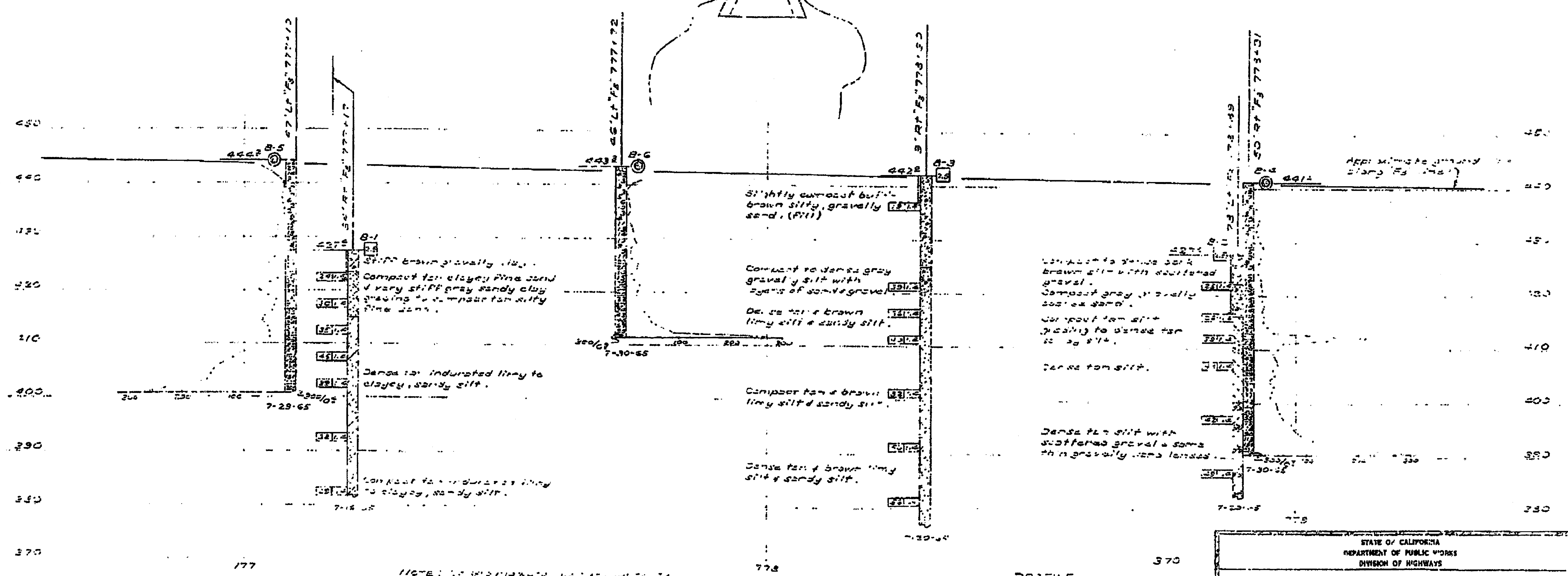

NOTE: Classification of earth material as shown on this sheet is based upon field inspection and is not to be construed to imply mechanical analysis.

AS BUILT PLANS
Contract No. 04-136444
Date Completed 9-25-72

STATE OF CALIFORNIA
DEPARTMENT OF PUBLIC WORKS
DIVISION OF HIGHWAYS

ARROYO LAS POSITAS
BRIDGE

LOG OF TEST BORINGS

BRIDGE 33-203 — SHEET 9 OF 9

51

FOR ACCURATE RIGHT OF WAY DATA, CONTACT
RIGHT OF WAY ENGINEERING AT THE DISTRICT OFFICE

DIST	COUNTY	ROUTE	POST MILES TOTAL PROJECT	SHEET No	TOTAL SHEETS
04	Ala	580	R8.4/R14.6	776	853

REGISTERED CIVIL ENGINEER — DATE 1/5/12

5-14-12
PLANS APPROVAL DATE

REGISTERED PROFESSIONAL ENGINEER — INES S. LI — No. C51561 — Exp. 6/30/12 — CIVIL — STATE OF CALIFORNIA

The State of California or its officers or agents shall not be responsible for the accuracy or completeness of scanned copies of this plan sheet.

BIGGS CARDOSA ASSOCIATES INC.
865 THE ALAMEDA
SAN JOSE, CALIFORNIA 95126

ALAMEDA CTC
1333 BROADWAY, SUITE 220
OAKLAND, CALIFORNIA 94612

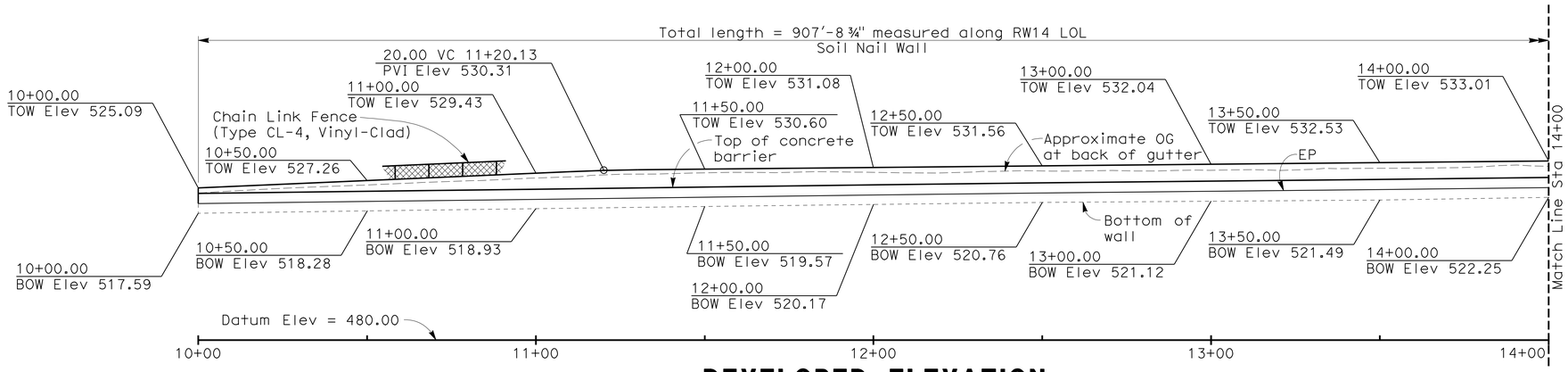

DEVELOPED ELEVATION

1" = 20'

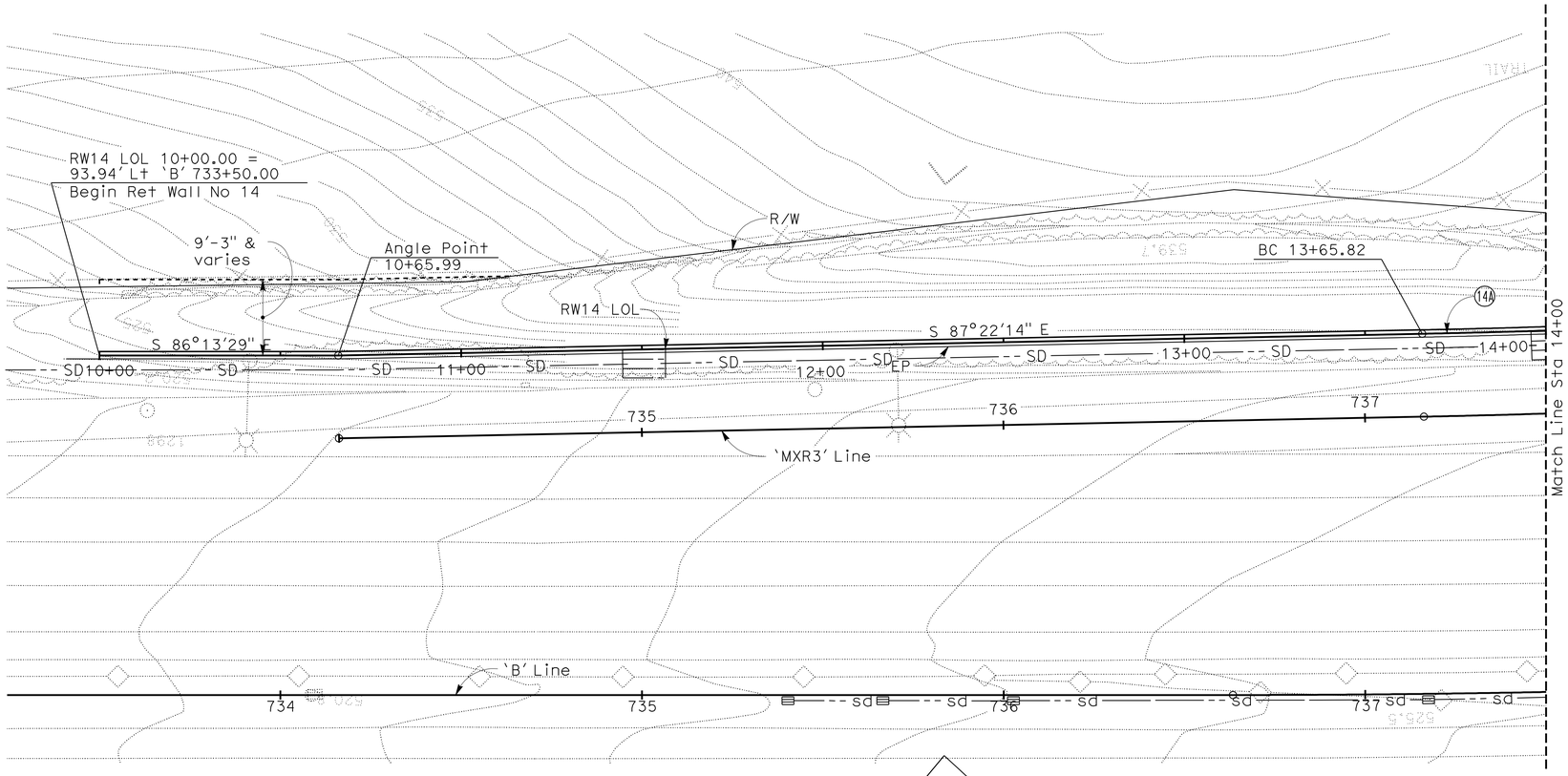

PLAN

1" = 20'

NOTES:

1. For Index to Plans, see 'GENERAL PLAN No. 2' sheet
2. For General Notes, see 'GENERAL PLAN No. 3' sheet
3. This plan accurate for retaining wall work only
4. For Fractured Rib Texture detail, see 'SOIL NAIL WALL DETAILS No. 2' sheet
5. For utilities, see Road Plans

CURVE DATA along RW15 LOL				
CURVE	RADIUS	LENGTH	TANGENT	DELTA
14A	2977.80	57.80	28.89	01°06'43"
14B	2965.06	85.52	42.76	01°39'09"
14C	2060.06	101.37	50.70	02°49'10"
14D	199.87	26.79	13.41	07°40'49"
14AE	199.06	28.23	14.13	08°07'33"

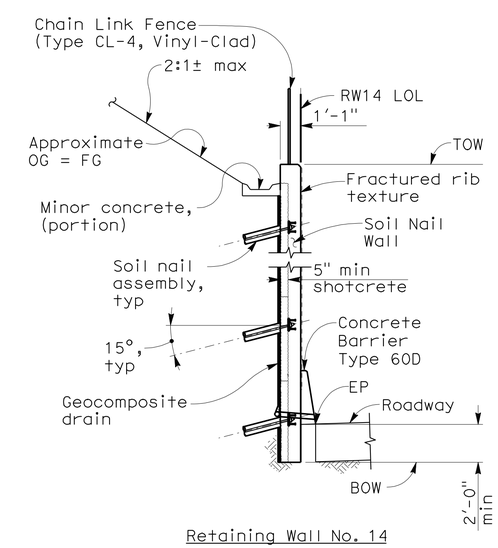

Retaining Wall No. 14

TYPICAL SECTION

DESIGN OVERSIGHT Yiwei Hu
1/25/12
SIGN OFF DATE

	BY	CHECKED			
DESIGN	H. BEDAIR	B. GHORBANI	LOAD & RESISTANCE FACTOR DESIGN		
DETAILS	H. BEDAIR	B. GHORBANI	LAYOUT	I. LI	D. DEVLIN
QUANTITIES	H. BEDAIR	B. GHORBANI	SPECIFICATIONS	I. LI	PLANS AND SPECS COMPARED D. DEVLIN

PREPARED FOR THE STATE OF CALIFORNIA DEPARTMENT OF TRANSPORTATION

INES S. LI
PROJECT ENGINEER

BRIDGE NO. 33E0200
POST MILES 10.80/10.97

RETAINING WALL No. 14 - SOIL NAIL WALL
GENERAL PLAN No. 1

DESIGN GENERAL PLAN SHEET (ENGLISH) (REV. 7/16/10)

ORIGINAL SCALE IN INCHES FOR REDUCED PLANS 0 1 2 3

UNIT: 0735
PROJECT NUMBER & PHASE: 04000212481 CONTRACT NO.: 04-2908C4

DISREGARD PRINTS BEARING EARLIER REVISION DATES 12/23/09 3/25/10 11/8/11 1/5/12

SHEET 1 OF 12

FILE => 33E0200-a-gp01.dgn

USERNAME => s124196 DATE PLOTTED => 23-MAY-2012 TIME PLOTTED => 07:04

2007236 (2007236051)

FOR ACCURATE RIGHT OF WAY DATA, CONTACT
RIGHT OF WAY ENGINEERING AT THE DISTRICT OFFICE

DIST	COUNTY	ROUTE	POST MILES TOTAL PROJECT	SHEET No	TOTAL SHEETS
04	Ala	580	R8.4/R14.6	777	853

REGISTERED CIVIL ENGINEER — DATE 1/5/12

5-14-12
PLANS APPROVAL DATE

REGISTERED PROFESSIONAL ENGINEER — INES S. LI — No. C51561 — Exp. 6/30/12 — CIVIL — STATE OF CALIFORNIA

The State of California or its officers or agents shall not be responsible for the accuracy or completeness of scanned copies of this plan sheet.

BIGGS CARDOSA ASSOCIATES INC.
865 THE ALAMEDA
SAN JOSE, CALIFORNIA 95126

ALAMEDA CTC
1333 BROADWAY, SUITE 220
OAKLAND, CALIFORNIA 94612

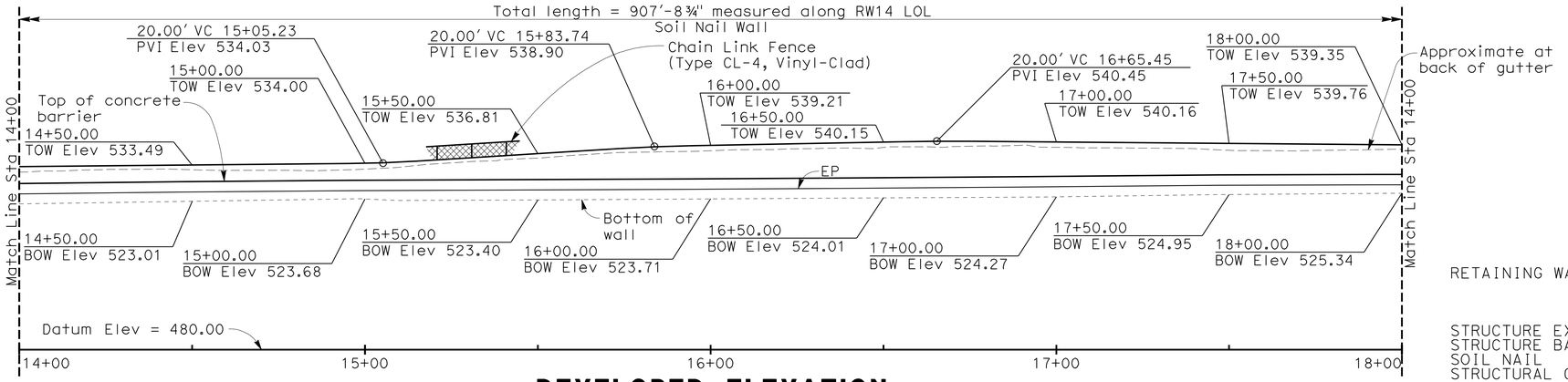

DEVELOPED ELEVATION

1" = 20'

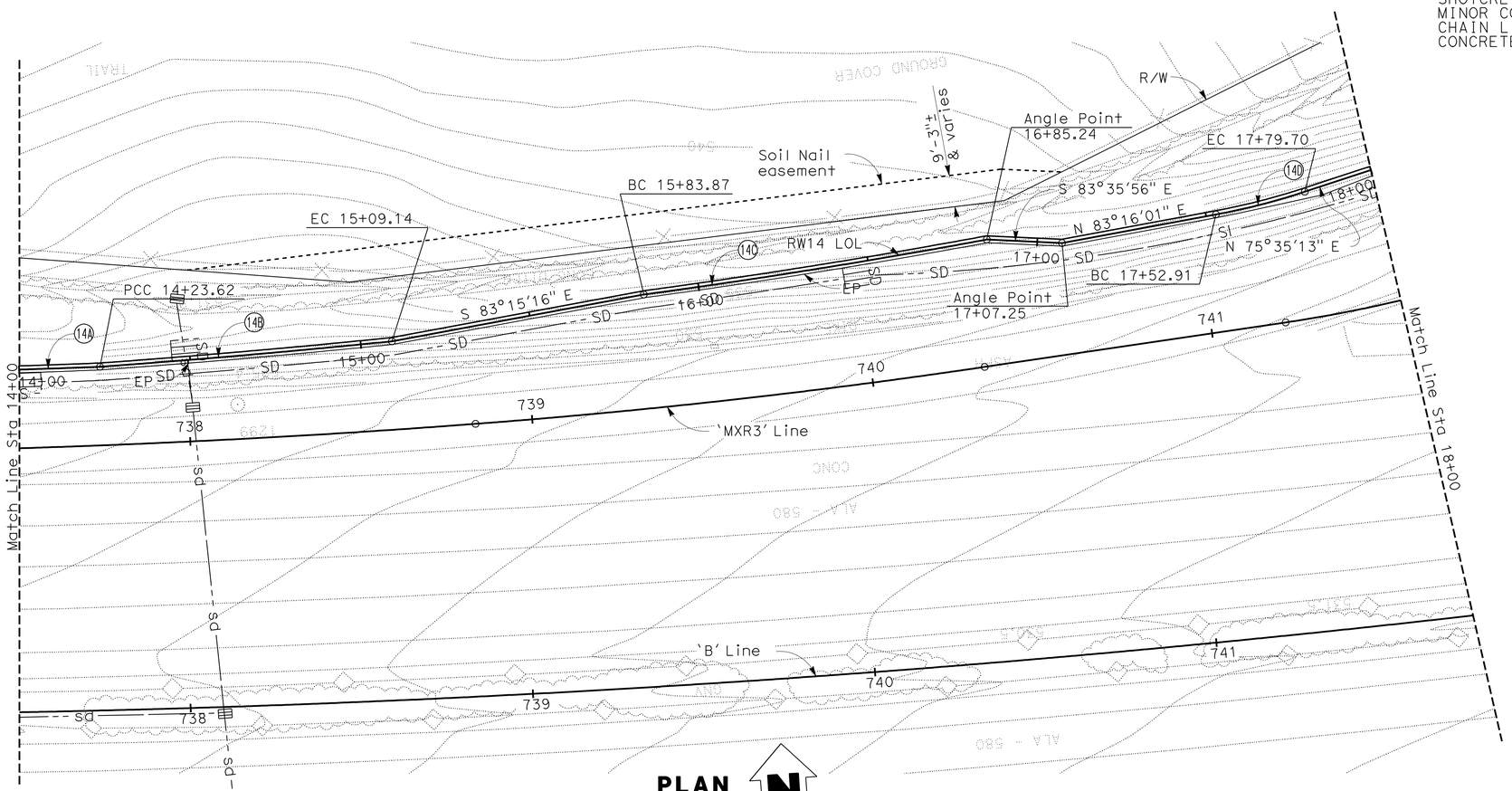

PLAN

1" = 20'

RETAINING WALL NO. 14 BR NO 33E0200

QUANTITIES

STRUCTURE EXCAVATION (SOIL NAIL WALL)	670	CY
STRUCTURE BACKFILL (SOIL NAIL WALL)	80	CY
SOIL NAIL	8,120	LF
STRUCTURAL CONCRETE, RETAINING WALL	340	CY
FRACTURED RIB TEXTURE	4,690	SQFT
BAR REINFORCING STEEL (RETAINING WALL)	45,020	LB
SHOTCRETE	148	CY
MINOR CONCRETE (GUTTER) (LF)	908	LF
CHAIN LINK FENCE (TYPE CL-4, VINYL-CLAD)	908	LF
CONCRETE BARRIER (TYPE 60D)	908	LF

NOTES:
1. This plan accurate for retaining wall work only
2. For Fractured Rib Texture detail, see 'SOIL NAIL WALL DETAILS No. 2' sheet
3. For utilities, see Road Plans

INDEX TO PLANS

SHEET NO.	TITLE
1	GENERAL PLAN No. 1
2	GENERAL PLAN No. 2
3	GENERAL PLAN No. 3
4	SOIL NAIL LAYOUT No. 1
5	SOIL NAIL LAYOUT No. 2
6	SOIL NAIL LAYOUT No. 3
7	SOIL NAIL WALL DETAILS No. 1
8	SOIL NAIL WALL DETAILS No. 2
9	SOIL NAIL WALL DRAIN DETAILS
10	LOG OF TEST BORINGS 1 OF 3
11	LOG OF TEST BORINGS 2 OF 3
12	LOG OF TEST BORINGS 3 OF 3

STANDARD PLANS DATED MAY 2006

A10A	ACRONYMS AND ABBREVIATIONS (SHEET 1 OF 2)
A10B	ACRONYMS AND ABBREVIATIONS (SHEET 2 OF 2
A10C	SYMBOLS (SHEET 1 OF 2)
A10D	SYMBOLS (SHEET 2 OF 2)
A76A	CONCRETE BARRIER TYPE 60
A85	CHAIN LINK FENCE
B3-8	RETAINING WALL DETAILS No. 1
B3-9	RETAINING WALL DETAILS No. 2
B11-47	CABLE RAILING

Abbreviations:

TOW	Top of wall
BOW	Bottom of wall

DESIGN OVERSIGHT — Yiwei Hu
1/25/12
SIGN OFF DATE

	BY	CHECKED		BY	CHECKED
DESIGN	H. BEDAIR	B. GHORBANI	LOAD & RESISTANCE FACTOR DESIGN		
DETAILS	H. BEDAIR	B. GHORBANI	LAYOUT	I. LI	D. DEVLIN
QUANTITIES	H. BEDAIR	B. GHORBANI	SPECIFICATIONS	I. LI	PLANS AND SPECS COMPARED D. DEVLIN

PREPARED FOR THE STATE OF CALIFORNIA DEPARTMENT OF TRANSPORTATION

INES S. LI
PROJECT ENGINEER

BRIDGE NO. 33E0200
POST MILES 10.80/10.97

RETAINING WALL No. 14 - SOIL NAIL WALL
GENERAL PLAN No. 2

DESIGN GENERAL PLAN SHEET (ENGLISH) (REV. 7/16/10)

ORIGINAL SCALE IN INCHES FOR REDUCED PLANS 0 1 2 3

UNIT: 0735
PROJECT NUMBER & PHASE: 04000212481 CONTRACT NO.: 04-2908C4

DISREGARD PRINTS BEARING EARLIER REVISION DATES → 12/23/09 3/25/10 11/8/11 1/5/12

SHEET 2 OF 12

FILE => 33E0200-a-gp02.dgn

USERNAME => s124196 DATE PLOTTED => 23-MAY-2012 TIME PLOTTED => 07:04 2007236 (2007236052)

FOR ACCURATE RIGHT OF WAY DATA, CONTACT
RIGHT OF WAY ENGINEERING AT THE DISTRICT OFFICE

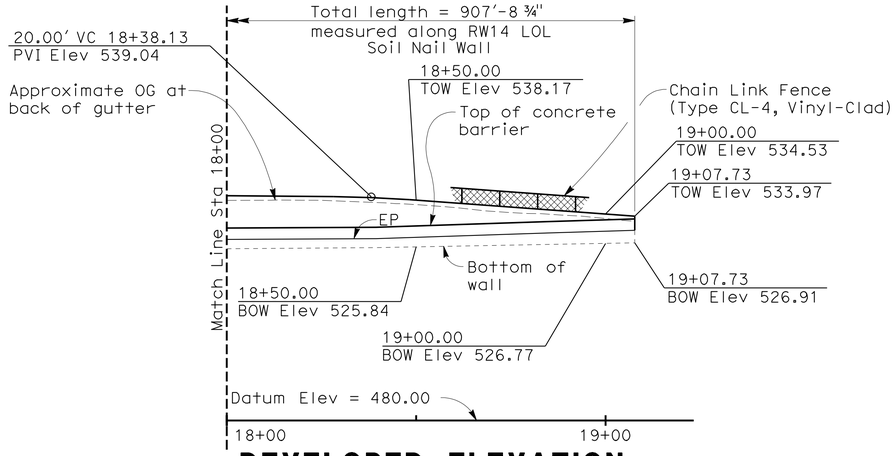

DEVELOPED ELEVATION

1" = 20'

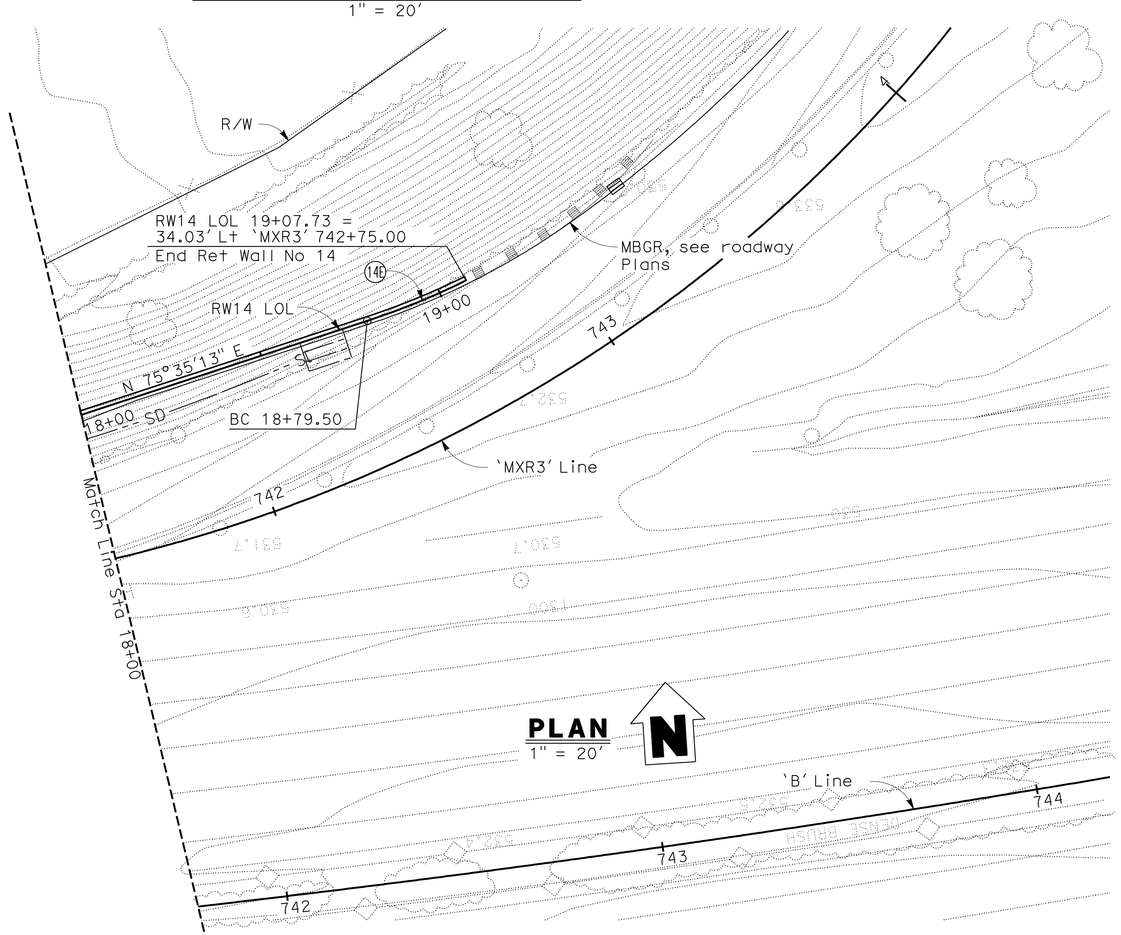

PLAN

1" = 20'

GENERAL NOTES
LOAD FACTOR DESIGN

DESIGN: Bridge Design Specifications April 2000 (LFD), (1996 AASHTO w/ interims and Revisions by Caltrans)

FHWA Publication No. FHWA0-1F-03-017 Geotechnical Engineering Circular No. 7-Soil Nail Walls

CONCRETE & SHOTCRETE: fy = 60 ksi
f'c = 4.0 ksi

STRUCTURAL STEEL: ASTM A709 Grade 36

WELDED STUDS: ASTM A108 Grade 60

SOIL NAILS: ASTM A615 or ASTM A706 Grade 60
fy = 60 ksi
Allowable punching shear capacity = 22.8 kips

SOIL NAIL WALL DESIGN DATA:

RETAINING WALL No 14 Sta 10+00 to Sta 14+50

γ = 120 pcf (0 to 5 feet); 125 pcf (below 5 feet)
φ = 30 degrees (0 to 5 feet); 40 degrees (below 5 feet)
c = 50 psf (0 to 5 feet); 0 (below 5 feet)
Q_d = 1810 lb/ft (top row)
Q_d = 2270 lb/ft (all subsequent rows)

RETAINING WALL No 14 Sta 14+50 to Sta 19+07.73

γ = 120 pcf (above Elev. 527); 125 pcf (below Elev. 527)
φ = 28 degrees (above Elev. 527); 28 degree (below Elev. 527)
c = 300 psf (above Elev. 527); 500 (below Elev. 527)
Q_d = 1360 lb/ft (top row)
Q_d = 1810 lb/ft (second rows)
Q_d = 2270 lb/ft (all subsequent rows)

LEGEND:

γ = Soil Unit Weight
c = Cohesion
φ = Internal Friction Angle of Soil
Q_d = Design pullout resistance in lb/ft

DIST	COUNTY	ROUTE	POST MILES TOTAL PROJECT	SHEET No	TOTAL SHEETS
04	Ala	580	R8.4/R14.6	778	853

REGISTERED CIVIL ENGINEER — DATE 1/5/12

5-14-12
PLANS APPROVAL DATE

REGISTERED PROFESSIONAL ENGINEER — INES S. LI — No. C51561 — Exp.6/30/12 — CIVIL — STATE OF CALIFORNIA

The State of California or its officers or agents shall not be responsible for the accuracy or completeness of scanned copies of this plan sheet.

BIGGS CARDOSA ASSOCIATES INC.
865 THE ALAMEDA
SAN JOSE, CALIFORNIA 95126

ALAMEDA CTC
1333 BROADWAY, SUITE 220
OAKLAND, CALIFORNIA 94612

NOTES:
1. This plan accurate for retaining wall work only
2. For Fractured Rib Texture detail, see 'SOIL NAIL WALL DETAILS No. 2' sheet
3. For utilities, see Road Plans

DESIGN OVERSIGHT Yiwei Hu	DESIGN	BY H. BEDAIR	CHECKED B. GHORBANI	LOAD & RESISTANCE FACTOR DESIGN		
1/25/12 SIGN OFF DATE	DETAILS	BY H. BEDAIR	CHECKED B. GHORBANI	LAYOUT	BY I. LI	CHECKED D. DEVLIN
	QUANTITIES	BY H. BEDAIR	CHECKED B. GHORBANI	SPECIFICATIONS	BY I. LI	PLANS AND SPECS COMPARED D. DEVLIN

PREPARED FOR THE STATE OF CALIFORNIA DEPARTMENT OF TRANSPORTATION

INES S. LI
PROJECT ENGINEER

BRIDGE NO. 33E0200
POST MILES 10.80/10.97

RETAINING WALL No. 14 - SOIL NAIL WALL
GENERAL PLAN No. 3

DESIGN GENERAL PLAN SHEET (ENGLISH) (REV. 7/16/10)

ORIGINAL SCALE IN INCHES FOR REDUCED PLANS 0 1 2 3

UNIT: 0735
PROJECT NUMBER & PHASE: 04000212481 CONTRACT NO.: 04-2908C4

DISREGARD PRINTS BEARING EARLIER REVISION DATES → 12/23/03 3/25/10 11/8/11 1/5/12

SHEET 3 OF 12

FILE => 33E0200-a-gp03.dgn

USERNAME => s124496 DATE PLOTTED => 23-MAY-2012 TIME PLOTTED => 07:04

2007236 (2007236053)

DIST	COUNTY	ROUTE	POST MILES TOTAL PROJECT	SHEET No	TOTAL SHEETS
04	Ala	580	R8.4/R14.6	779	853

REGISTERED CIVIL ENGINEER 1/5/12 DATE

5-14-12
PLANS APPROVAL DATE

REGISTERED PROFESSIONAL ENGINEER INES S. LI No. C51561 Exp.6/30/12 CIVIL STATE OF CALIFORNIA

The State of California or its officers or agents shall not be responsible for the accuracy or completeness of scanned copies of this plan sheet.

BIGGS CARDOSA ASSOCIATES INC.
865 THE ALAMEDA
SAN JOSE, CALIFORNIA 95126

ALAMEDA CTC
1333 BROADWAY, SUITE 220
OAKLAND, CALIFORNIA 94612

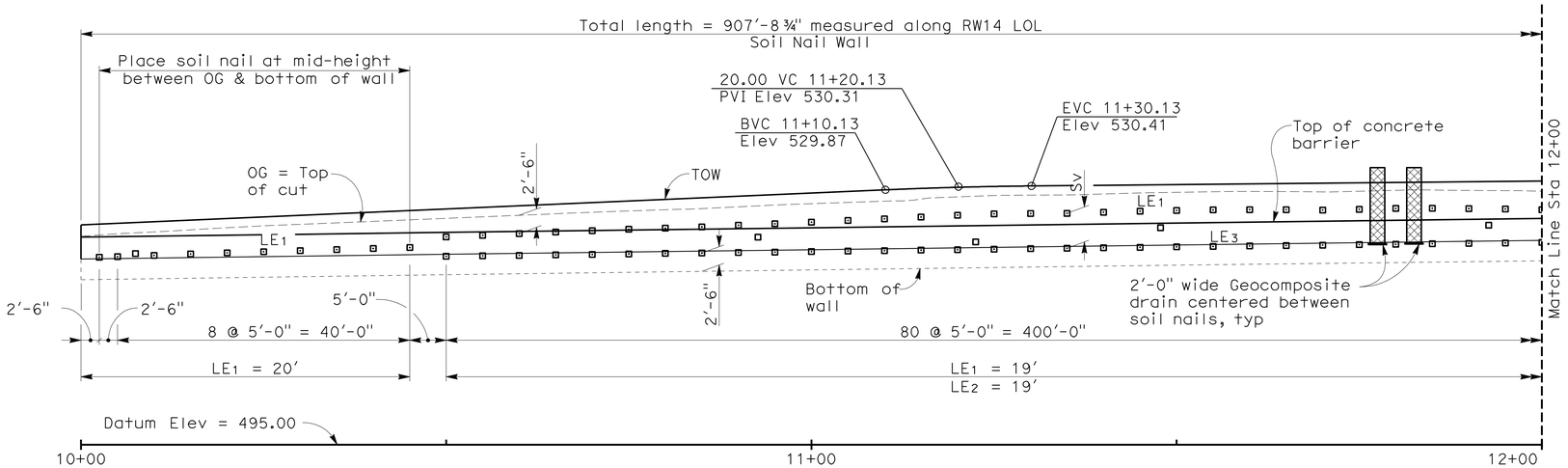

DEVELOPED ELEVATION

1" = 10'

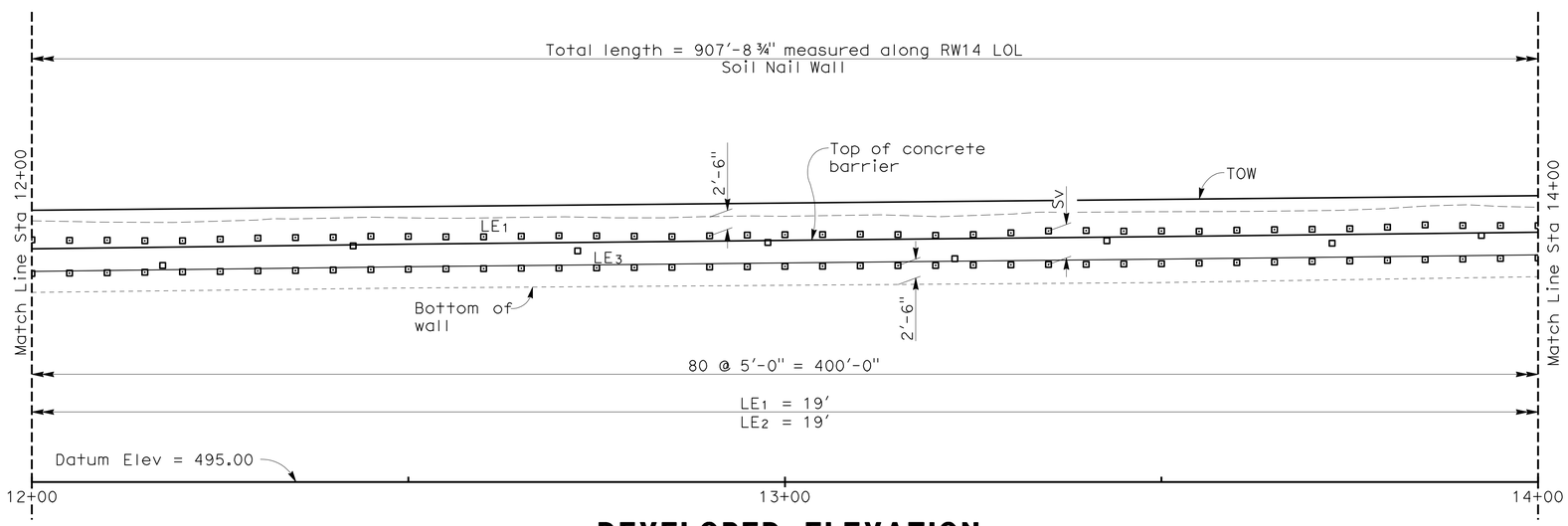

DEVELOPED ELEVATION

1" = 10'

LEGEND:

- ⊡ Indicates soil nail assembly location
- ☐ Indicates proof test soil nail location. Location may be adjusted by the Engineer
- LE Indicates soil nail embedment length
- S_V Indicates vertical spacing of soil nail assemblies
  - S_V = 2'-6" min, 5'-0" max UON
  - S_V = 6'-0" max from Sta 14+50 to 15+25 & from Sta 18+55 to 18+95

NOTE:
For wall elevations not noted see 'GENERAL PLAN' sheets

2007236.2 (2007236054)

DESIGN OVERSIGHT Yiwei Hu
1/25/12
SIGN OFF DATE

	BY	CHECKED
DESIGN	H. BEDAIR	B. GHORBANI
DETAILS	H. BEDAIR	B. GHORBANI
QUANTITIES	H. BEDAIR	B. GHORBANI

PREPARED FOR THE STATE OF CALIFORNIA DEPARTMENT OF TRANSPORTATION

INES LI
PROJECT ENGINEER

BRIDGE NO. 33E0200
POST MILES 10.80/10.97

RETAINING WALL No. 14 - SOIL NAIL WALL
SOIL NAIL LAYOUT No. 1

DESIGN GENERAL PLAN SHEET (ENGLISH) (REV. 7/16/10)

ORIGINAL SCALE IN INCHES FOR REDUCED PLANS 0 1 2 3

UNIT: 0735
PROJECT NUMBER & PHASE: 04000212481 CONTRACT NO.: 04-2908C4

DISREGARD PRINTS BEARING EARLIER REVISION DATES → REVISION DATES 12/23/09 03/25/10 11/18/11 1/5/12

SHEET 4 OF 12

FILE => 33E0200-b-sn-lo01.dgn

USERNAME => s124496 DATE PLOTTED => 23-MAY-2012 TIME PLOTTED => 07:04

DIST	COUNTY	ROUTE	POST MILES TOTAL PROJECT	SHEET No	TOTAL SHEETS
04	Ala	580	R8.4/R14.6	780	853

REGISTERED CIVIL ENGINEER 1/5/12 DATE

5-14-12
PLANS APPROVAL DATE

REGISTERED PROFESSIONAL ENGINEER INES S. LI No. C51561 Exp.6/30/12 CIVIL STATE OF CALIFORNIA

The State of California or its officers or agents shall not be responsible for the accuracy or completeness of scanned copies of this plan sheet.

BIGGS CARDOSA ASSOCIATES INC.
865 THE ALAMEDA
SAN JOSE, CALIFORNIA 95126

ALAMEDA CTC
1333 BROADWAY, SUITE 220
OAKLAND, CALIFORNIA 94612

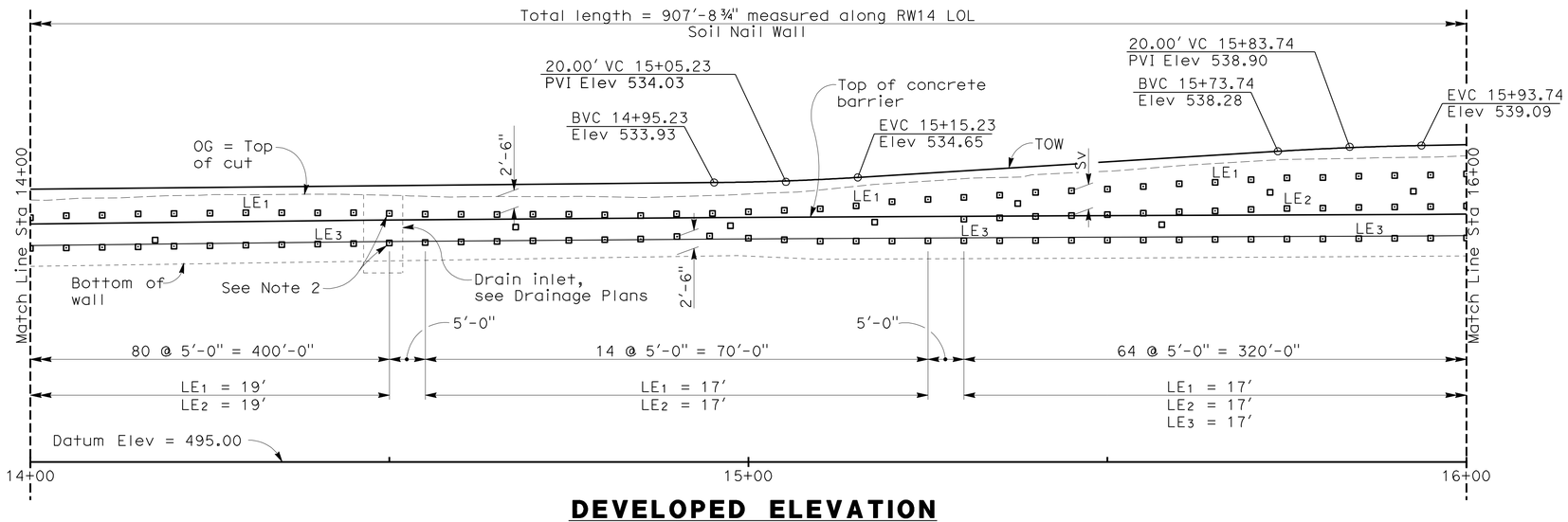

DEVELOPED ELEVATION

1" = 10'

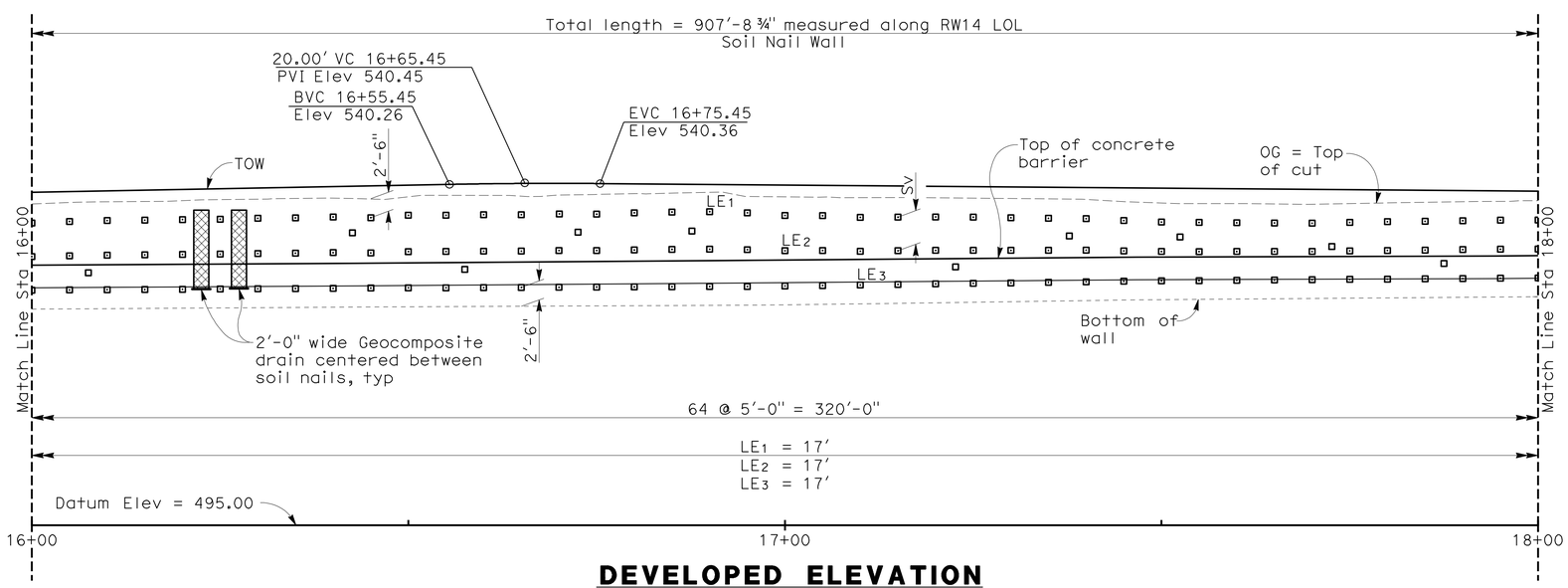

DEVELOPED ELEVATION

1" = 10'

LEGEND:

- ⊡ Indicates soil nail assembly location
- □ Indicates proof test soil nail location. Location may be adjusted by the Engineer
- LE Indicates soil nail embedment length
- S_V Indicates vertical spacing of soil nail assemblies
  S_V = 2'-6" min, 5'-0" max UON
  S_V = 6'-0" max from Sta 14+50 to 15+25 & from Sta 18+55 to 18+95

NOTES:

1. For wall elevations not noted see 'GENERAL PLAN' sheets
2. Adjust soil nail as needed at drain inlet to achieve 6" min clearance between soil nail and drain inlet.

DESIGN OVERSIGHT Yiwei Hu
1/25/12
SIGN OFF DATE

	BY	CHECKED
DESIGN	H. BEDAIR	B. GHORBANI
DETAILS	H. BEDAIR	B. GHORBANI
QUANTITIES	H. BEDAIR	B. GHORBANI

PREPARED FOR THE STATE OF CALIFORNIA DEPARTMENT OF TRANSPORTATION

INES LI
PROJECT ENGINEER

BRIDGE NO. 33E0200
POST MILES 10.80/10.97

RETAINING WALL No. 14 - SOIL NAIL WALL
SOIL NAIL LAYOUT No. 2

DESIGN GENERAL PLAN SHEET (ENGLISH) (REV. 7/16/10)

ORIGINAL SCALE IN INCHES FOR REDUCED PLANS 0 1 2 3

UNIT: 0735
PROJECT NUMBER & PHASE: 04000212481 CONTRACT NO.: 04-2908C4

DISREGARD PRINTS BEARING EARLIER REVISION DATES

REVISION DATES 12/23/09 03/25/10 11/18/11 1/5/12 SHEET 5 OF 12

FILE => 33E0200-b-sn-lo02.dgn

USERNAME => s124496 DATE PLOTTED => 23-MAY-2012 TIME PLOTTED => 07:04

2007236.2 (2007236055)

DIST	COUNTY	ROUTE	POST MILES TOTAL PROJECT	SHEET No	TOTAL SHEETS
04	Ala	580	R8.4/R14.6	781	853

REGISTERED CIVIL ENGINEER 1/5/12 DATE

5-14-12
PLANS APPROVAL DATE

REGISTERED PROFESSIONAL ENGINEER INES S. LI No. C51561 Exp.6/30/12 CIVIL STATE OF CALIFORNIA

The State of California or its officers or agents shall not be responsible for the accuracy or completeness of scanned copies of this plan sheet.

BIGGS CARDOSA ASSOCIATES INC.
865 THE ALAMEDA
SAN JOSE, CALIFORNIA 95126

ALAMEDA CTC
1333 BROADWAY, SUITE 220
OAKLAND, CALIFORNIA 94612

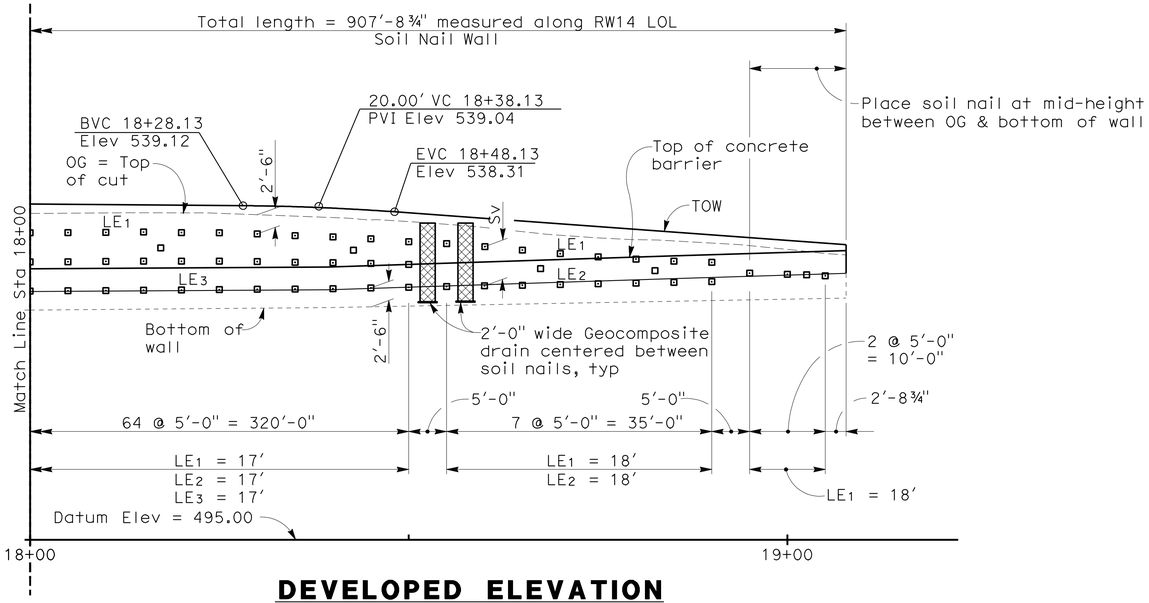

DEVELOPED ELEVATION

1" = 10'

LEGEND:

⊡ Indicates soil nail assembly location

□ Indicates proof test soil nail location. Location may be adjusted by the Engineer

LE Indicates soil nail embedment length

S_V Indicates vertical spacing of soil nail assemblies
S_V = 2'-6" min, 5'-0" max, UON
S_V = 6'-0" max from Sta 14+50 to 15+25 & from Sta 18+55 to 18+95

NOTE:
For wall elevations not noted see 'GENERAL PLAN' sheets

DESIGN OVERSIGHT Yiwei Hu
1/25/12
SIGN OFF DATE

	BY	CHECKED
DESIGN	H. BEDAIR	B. GHORBANI
DETAILS	H. BEDAIR	B. GHORBANI
QUANTITIES	H. BEDAIR	B. GHORBANI

PREPARED FOR THE STATE OF CALIFORNIA DEPARTMENT OF TRANSPORTATION

INES LI
PROJECT ENGINEER

BRIDGE NO. 33E0200
POST MILES 10.80/10.97

RETAINING WALL No. 14 - SOIL NAIL WALL
SOIL NAIL LAYOUT No. 3

DESIGN GENERAL PLAN SHEET (ENGLISH) (REV. 7/16/10)

ORIGINAL SCALE IN INCHES FOR REDUCED PLANS 0 1 2 3

UNIT: 0735
PROJECT NUMBER & PHASE: 04000212481 CONTRACT NO.: 04-2908C4

DISREGARD PRINTS BEARING EARLIER REVISION DATES → REVISION DATES 12/23/09 03/25/10 11/18/11 1/5/12

SHEET 6 OF 12

FILE => 33E0200-b-sn-1o03.dgn

USERNAME => s124496 DATE PLOTTED => 23-MAY-2012 TIME PLOTTED => 07:04

2007236 (2007236056)

DIST	COUNTY	ROUTE	POST MILES TOTAL PROJECT	SHEET No	TOTAL SHEETS
04	Ala	580	R8.4/R14.6	782	853

REGISTERED CIVIL ENGINEER — DATE 1/5/12

PLANS APPROVAL DATE 5-14-12

REGISTERED PROFESSIONAL ENGINEER — INES S. LI — No. C51561 — Exp. 6/30/12 — CIVIL — STATE OF CALIFORNIA

The State of California or its officers or agents shall not be responsible for the accuracy or completeness of scanned copies of this plan sheet.

BIGGS CARDOSA ASSOCIATES INC.
865 THE ALAMEDA
SAN JOSE, CALIFORNIA 95126

ALAMEDA CTC
1333 BROADWAY, SUITE 220
OAKLAND, CALIFORNIA 94612

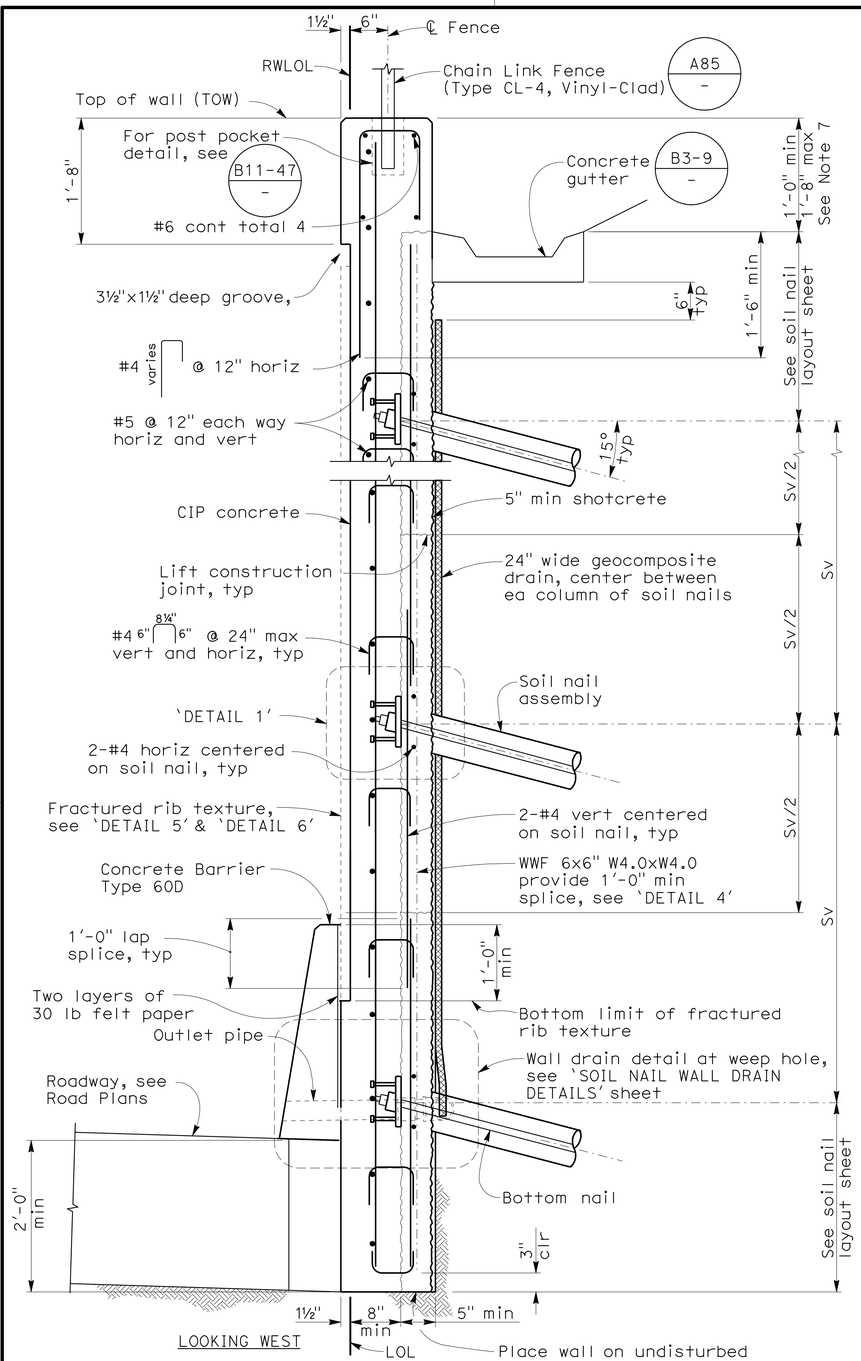

TYPICAL SECTION

1" = 1'-0"

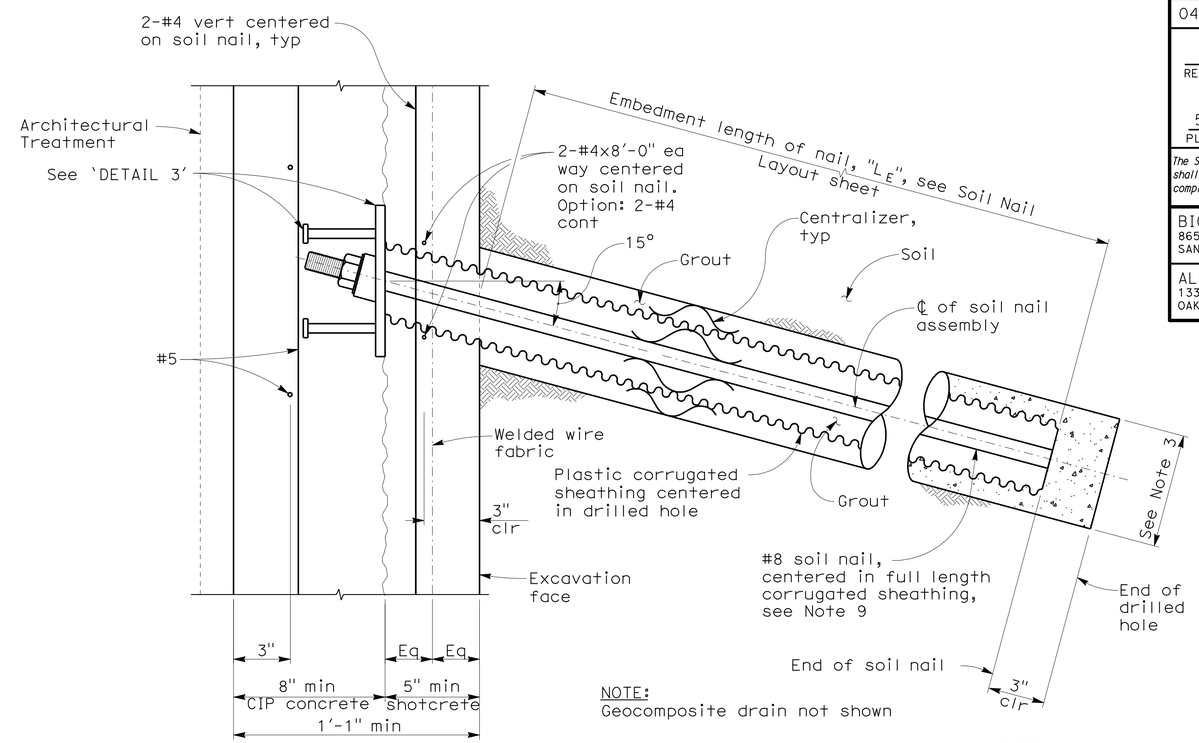

NOTE:
Geocomposite drain not shown

DETAIL 1 - SOIL NAIL ASSEMBLY

3" = 1'-0"

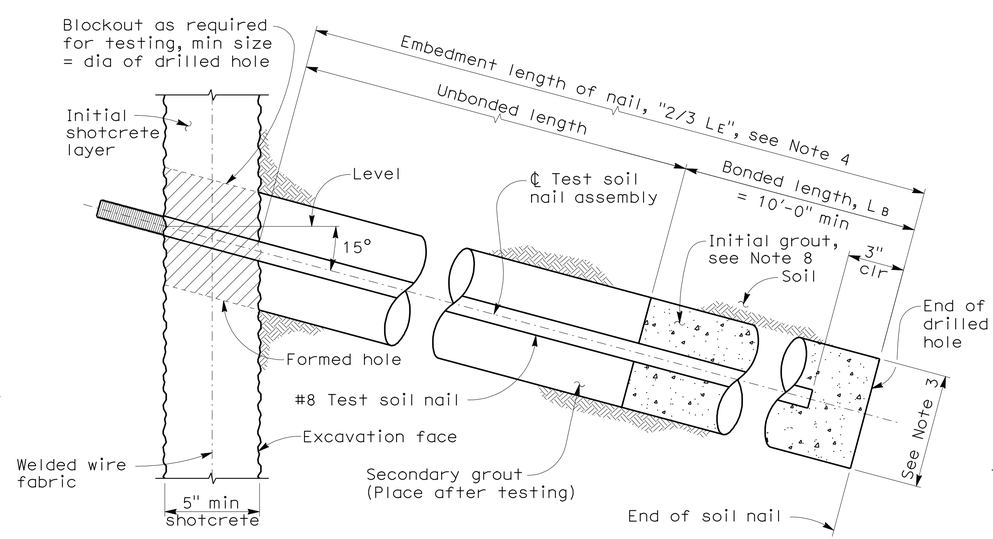

DETAIL 2 - TEST SOIL NAIL ASSEMBLY

3" = 1'-0"

NOTES:

1. For vert and horiz soil nail spacing, see `SOIL NAIL LAYOUT' sheets
2. For `DETAIL 3', `DETAIL 4', `DETAIL 5', and `DETAIL 6', see `SOIL NAIL WALL DETAILS No. 2' sheet
3. The diameter of drilled hole will be determined by contractor.
4. The test nail assembly length shall be equal to ⅔ of the embedment length, L_E, of adjacent production soil nail assemblies, but not less than 12'-0"
5. The total length of the test nail assembly equals the embedment length plus the length required for jacking equipment
6. For location of proof test nail see `SOIL NAIL LAYOUT' sheets. Additional proof test nails will be installed and tested per special provisions
7. Concrete gutter elevation shall be adjusted to drain towards inlets. See drainage plans for inlet locations.
8. Finish grout surface to be normal to the bar
9. Partial length corrugated sheathing to be used if soil nail reinforcement consists of epoxy-coated prefabricated reinforcement

LEGEND
Sv = Vertical spacing of soil nail assemblies

DESIGN OVERSIGHT Yiwei Hu
1/25/12
SIGN OFF DATE

	BY	CHECKED
DESIGN	H. BEDAIR	B. GHORBANI
DETAILS	H. BEDAIR	B. GHORBANI
QUANTITIES	H. BEDAIR	B. GHORBANI

PREPARED FOR THE STATE OF CALIFORNIA DEPARTMENT OF TRANSPORTATION

INES LI
PROJECT ENGINEER

BRIDGE NO. 33E0200
POST MILES 10.80/10.97

RETAINING WALL No. 14 - SOIL NAIL WALL
SOIL NAIL WALL DETAILS No. 1

DESIGN GENERAL PLAN SHEET (ENGLISH) (REV. 7/16/10)

ORIGINAL SCALE IN INCHES FOR REDUCED PLANS 0 1 2 3

UNIT: 0735
PROJECT NUMBER & PHASE: 04000212481
CONTRACT NO.: 04-2908C4

DISREGARD PRINTS BEARING EARLIER REVISION DATES — REVISION DATES 12/23/09 03/25/10 11/18/11 1/5/12 — SHEET 7 OF 12

FILE => 33E0200-c-snd1.dgn

USERNAME => s124496 DATE PLOTTED => 23-MAY-2012 TIME PLOTTED => 07:05

2007236.2 (2007236057)

DIST	COUNTY	ROUTE	POST MILES TOTAL PROJECT	SHEET No	TOTAL SHEETS
04	Ala	580	R8.4/R14.6	783	853

REGISTERED CIVIL ENGINEER 1/5/12 DATE

5-14-12
PLANS APPROVAL DATE

REGISTERED PROFESSIONAL ENGINEER INES S. LI No. C51561 Exp.6/30/12 CIVIL STATE OF CALIFORNIA

The State of California or its officers or agents shall not be responsible for the accuracy or completeness of scanned copies of this plan sheet.

BIGGS CARDOSA ASSOCIATES INC.
865 THE ALAMEDA
SAN JOSE, CALIFORNIA 95126

ALAMEDA CTC
1333 BROADWAY, SUITE 220
OAKLAND, CALIFORNIA 94612

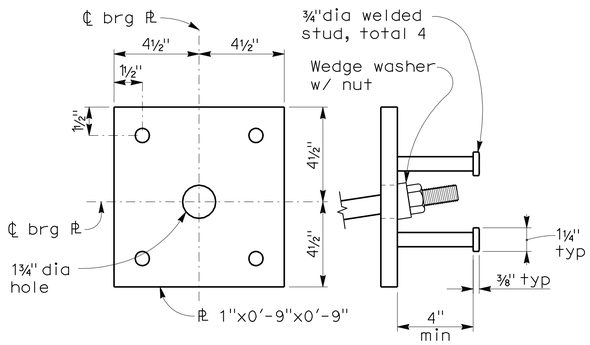

PLAN SECTION

BEARING PLATE - DETAIL 3

3" = 1'-0"

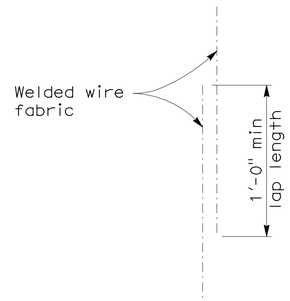

WWF SLAB SPLICE - DETAIL 4

NO SCALE

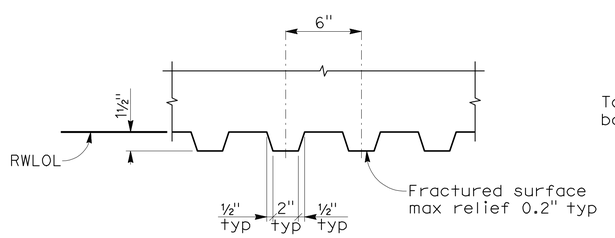

FRACTURED RIB TEXTURE - DETAIL 5

NO SCALE

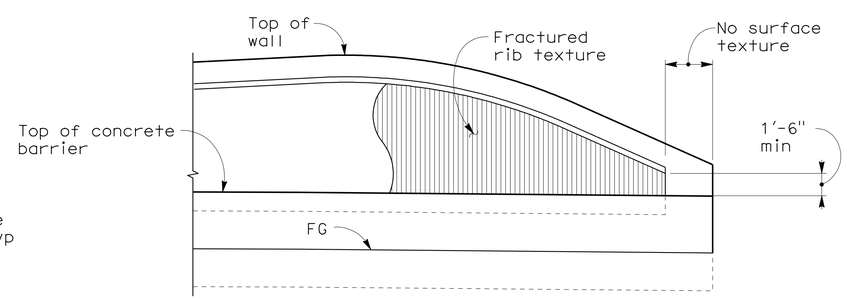

DETAIL 6

NO SCALE

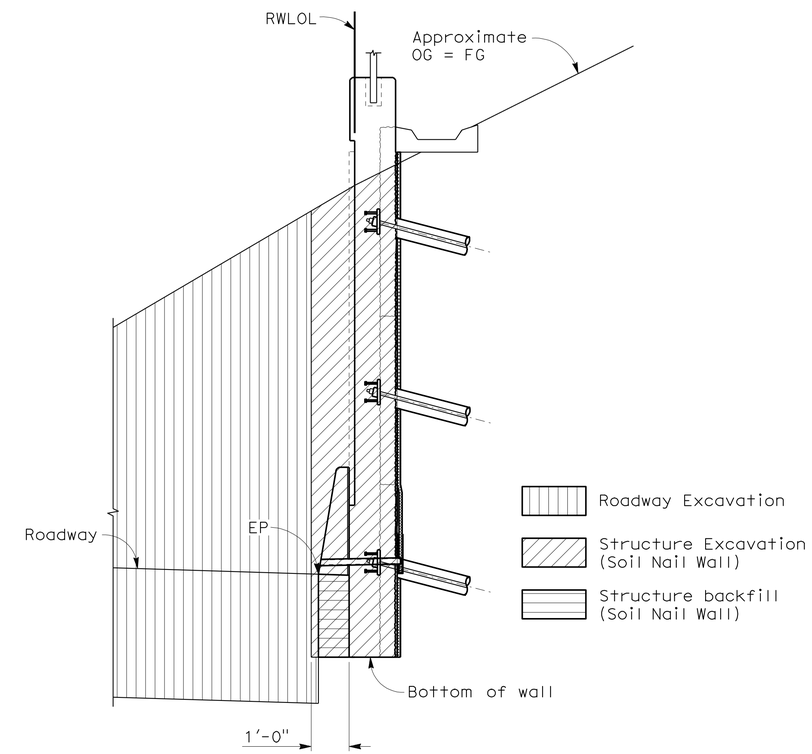

LIMITS OF PAYMENT FOR EXCAVATION & BACKFILL

NO SCALE

DESIGN OVERSIGHT Yiwei Hu
1/25/12
SIGN OFF DATE

	BY	CHECKED
DESIGN	H. BEDAIR	B. GHORBANI
DETAILS	H. BEDAIR	B. GHORBANI
QUANTITIES	H. BEDAIR	B. GHORBANI

PREPARED FOR THE STATE OF CALIFORNIA DEPARTMENT OF TRANSPORTATION

INES LI
PROJECT ENGINEER

BRIDGE NO. 33E0200
POST MILES 10.80/10.97

RETAINING WALL No. 14 - SOIL NAIL WALL
SOIL NAIL WALL DETAILS No. 2

DESIGN GENERAL PLAN SHEET (ENGLISH) (REV. 7/16/10)

ORIGINAL SCALE IN INCHES FOR REDUCED PLANS 0 1 2 3

UNIT: 0735
PROJECT NUMBER & PHASE: 04000212481 CONTRACT NO.: 04-2908C4

DISREGARD PRINTS BEARING EARLIER REVISION DATES

REVISION DATES 12/23/09 3/25/10 11/8/11 1/5/12 SHEET 8 OF 12

FILE => 33E0200-c-snd2.dgn

USERNAME => s124496 DATE PLOTTED => 23-MAY-2012 TIME PLOTTED => 07:05 2007236.2 (2007236058)

DIST	COUNTY	ROUTE	POST MILES TOTAL PROJECT	SHEET No	TOTAL SHEETS
04	Ala	580	R8.4/R14.6	784	853

REGISTERED CIVIL ENGINEER 1/5/12 DATE

5-14-12
PLANS APPROVAL DATE

REGISTERED PROFESSIONAL ENGINEER INES S. LI No. C51561 Exp.6/30/12 CIVIL STATE OF CALIFORNIA

The State of California or its officers or agents shall not be responsible for the accuracy or completeness of scanned copies of this plan sheet.

BIGGS CARDOSA ASSOCIATES INC.
865 THE ALAMEDA
SAN JOSE, CALIFORNIA 95126

ALAMEDA CTC
1333 BROADWAY, SUITE 220
OAKLAND, CALIFORNIA 94612

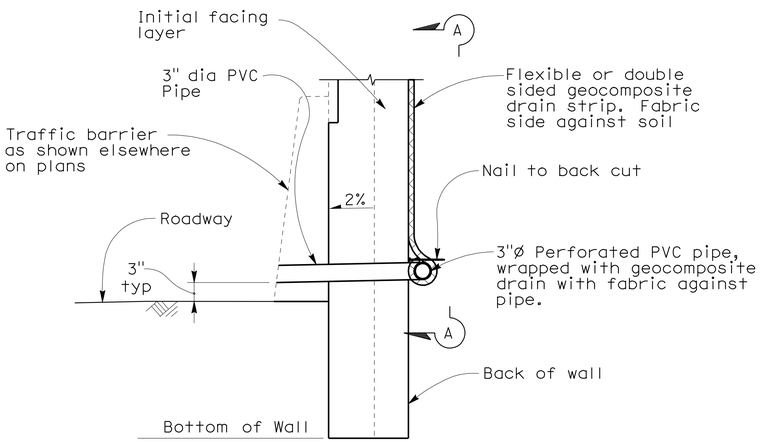

WALL DRAIN DETAIL AT WEEPHOLE
OPTION A
No scale

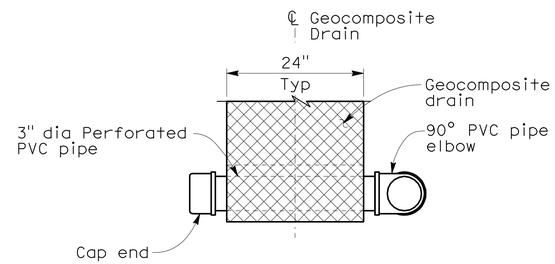

VIEW A-A
No scale

Note:
Geocomposite drain strip per Section 88 Geosynthetics of the Standard Specifications.

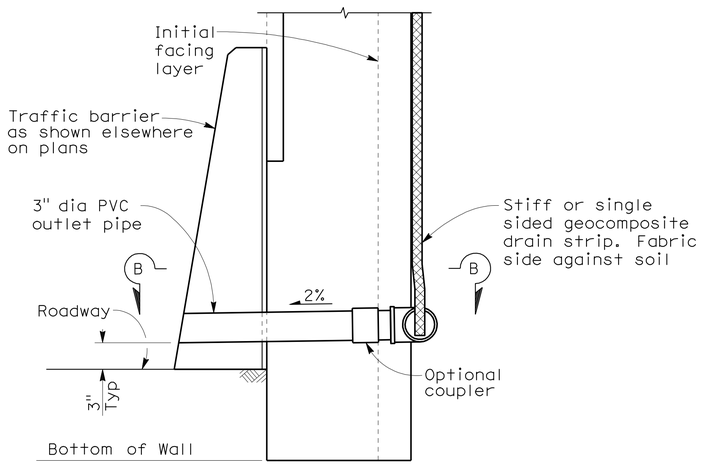

WALL DRAIN DETAIL AT WEEPHOLE
OPTION B
No scale

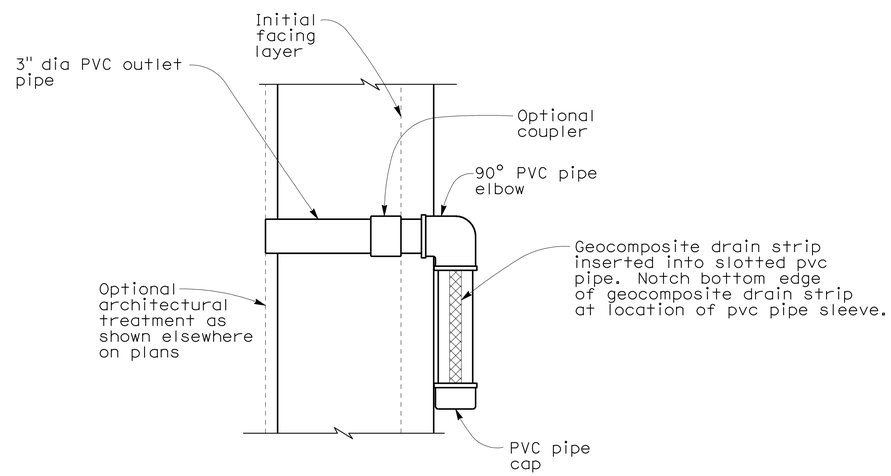

SECTION B-B
No Scale

NOTE:
The Contractor shall verify all controlling field dimensions before ordering or fabricating any material

DESIGN OVERSIGHT Yiwei Hu
1/25/12
SIGN OFF DATE

	BY	CHECKED
DESIGN	H. BEDAIR	B. GHORBANI
DETAILS	H. BEDAIR	B. GHORBANI
QUANTITIES	D. UPADHYAY	B. GHORBANI

PREPARED FOR THE STATE OF CALIFORNIA DEPARTMENT OF TRANSPORTATION

INES LI
PROJECT ENGINEER

BRIDGE NO. 33E0200
POST MILES 10.80/10.97

RETAINING WALL No. 14 - SOIL NAIL WALL
SOIL NAIL WALL DRAIN DETAILS

DESIGN GENERAL PLAN SHEET (ENGLISH) (REV. 7/16/10)

ORIGINAL SCALE IN INCHES FOR REDUCED PLANS 0 1 2 3

UNIT: 0735
PROJECT NUMBER & PHASE: 04000212481 CONTRACT NO.: 04-2908C4

DISREGARD PRINTS BEARING EARLIER REVISION DATES → 12/23/09 03/25/10 11/8/11 1/5/12

SHEET 9 OF 12

FILE => 33E0200-d-sndd.dgn

USERNAME => s1224496 DATE PLOTTED => 23-MAY-2012 TIME PLOTTED => 07:05
2007236 (2007236059)

REFERENCE: CALTRANS SOIL & ROCK LOGGING, CLASSIFICATION, AND PRESENTATION MANUAL (2010)

DIST	COUNTY	ROUTE	POST MILES TOTAL PROJECT	SHEET No	TOTAL SHEETS
04	Ala	580	R8.4/R14.6	785	853

GEOTECHNICAL PROFESSIONAL — DATE 1/5/12

5-14-12
PLANS APPROVAL DATE

REGISTERED PROFESSIONAL ENGINEER — GARY PARIKH — No. G.E. 666 — Exp. 12/31/13 — GEOTECHNICAL — STATE OF CALIFORNIA

The State of California or its officers or agents shall not be responsible for the accuracy or completeness of electronic copies of this plan sheet.

ALAMEDA CTC
1333 BROADWAY, SUITE 220
OAKLAND, CA 94612

PARIKH CONSULTANTS, INC.
2360 QUME DRIVE, SUITE A
SAN JOSE, CA 95131

CEMENTATION

Description	Criteria
Weak	Crumbles or breaks with handling or little finger pressure.
Moderate	Crumbles or breaks with considerable finger pressure.
Strong	Will not crumble or break with finger pressure.

BOREHOLE IDENTIFICATION

Symbol	Hole Type	Description
Size	A	Auger Boring (hollow or solid stem bucket)
Size	R RW RC P	Rotary drilled boring (conventional) Rotary drilled with self-casing wire-line Rotary core with continuously-sampled, self-casing wire-line Rotary percussion boring (air)
Size	R	Rotary drilled diamond core
Size	HD HA	Hand driven (1-inch soil tube) Hand Auger
●	D	Dynamic Cone Penetration Boring
▲	CPT	Cone Penetration Test (ASTM D 5778)
⬚	O	Other (note on LOTB)

Note: Size in inches.

CONSISTENCY OF COHESIVE SOILS

Description	Shear Strength (tsf)	Pocket Penetrometer Measurement, PP, (tsf)	Torvane Measurement, TV, (tsf)	Vane Shear Measurement, VS, (tsf)
Very Soft	Less than 0.12	Less than 0.25	Less than 0.12	Less than 0.12
Soft	0.12 - 0.25	0.25 - 0.5	0.12 - 0.25	0.12 - 0.25
Medium Stiff	0.25 - 0.5	0.5 - 1	0.25 - 0.5	0.25 - 0.5
	0.5 - 1	1 - 2	0.5 - 1	0.5 - 1
Very Stiff	1 - 2	2 - 4	1 - 2	1 - 2
Hard	Greater than 2	Greater than 4	Greater than 2	Greater than 2

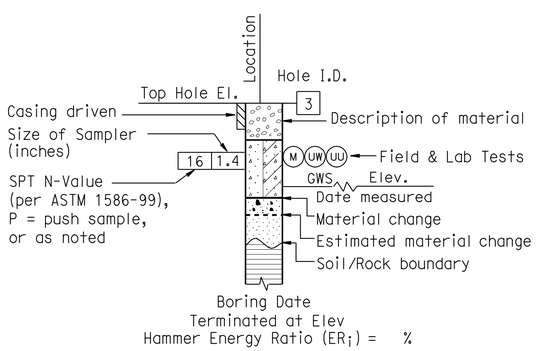

ROTARY BORING

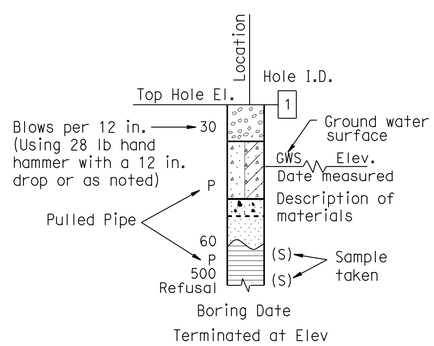

HAND BORING

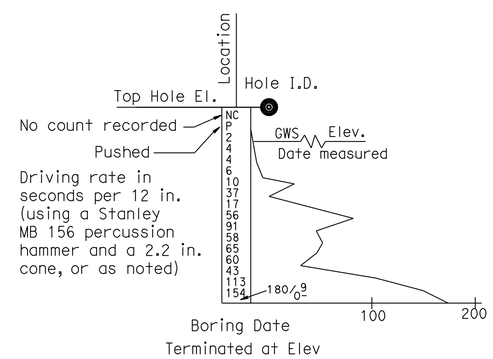

DYNAMIC CONE PENETRATION BORING

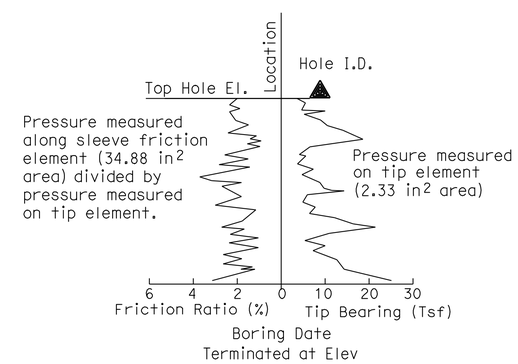

CONE PENETRATION TEST (CPT) BORING

DESIGN OVERSIGHT Yiwei Hu 1/25/12 SIGN OFF DATE	DRAWN BY O. GOUTHIER CHECKED BY P. SIRCAR	S.DUDDU FIELD INVESTIGATION BY: DATE: DECEMBER 2008-FEBRUARY 2009	PREPARED FOR THE STATE OF CALIFORNIA DEPARTMENT OF TRANSPORTATION

P. SIRCAR
PROJECT ENGINEER

BRIDGE NO. 33E0200
POST MILES 10.80/10.97

RETAINING WALL NO. 14- SOIL NAIL WALL
LOG OF TEST BORINGS 1 OF 3

ORIGINAL SCALE IN INCHES FOR REDUCED PLANS 0 1 2 3

UNIT: 0735
PROJECT NUMBER & PHASE: 04000212481 CONTRACT NO.: 04-2908C4

DISREGARD PRINTS BEARING EARLIER REVISION DATES → 06/14/10 03/18/10 11/18/11 1/5/12

SHEET 10 OF 12

FILE => 33E0200-z-1tb01.dgn

USERNAME => s124496 DATE PLOTTED => 23-MAY-2012 TIME PLOTTED => 07:05

REFERENCE: CALTRANS SOIL & ROCK LOGGING, CLASSIFICATION, AND PRESENTATION MANUAL (2010)

DIST	COUNTY	ROUTE	POST MILES TOTAL PROJECT	SHEET No	TOTAL SHEETS
04	Ala	580	R8.4/R14.6	786	853

GEOTECHNICAL PROFESSIONAL — DATE 1/5/12

5-14-12
PLANS APPROVAL DATE

REGISTERED PROFESSIONAL ENGINEER — GARY PARIKH — No. G.E. 666 — Exp. 12/31/13 — GEOTECHNICAL — STATE OF CALIFORNIA

The State of California or its officers or agents shall not be responsible for the accuracy or completeness of electronic copies of this plan sheet.

ALAMEDA CTC
1333 BROADWAY, SUITE 220
OAKLAND, CA 94612

PARIKH CONSULTANTS, INC.
2360 QUME DRIVE, SUITE A
SAN JOSE, CA 95131

GROUP SYMBOLS AND NAMES

Graphic/Symbol	Group Names	Graphic/Symbol	Group Names
GW	Well-graded GRAVEL Well-graded GRAVEL with SAND	CL	Lean CLAY Lean CLAY with SAND Lean CLAY with GRAVEL SANDY lean CLAY SANDY lean CLAY with GRAVEL GRAVELLY lean CLAY GRAVELLY lean CLAY with SAND
GP	Poorly-graded GRAVEL Poorly-graded GRAVEL with SAND		
GW-GM	Well-graded GRAVEL with SILT Well-graded GRAVEL with SILT and SAND	CL-ML	SILTY CLAY SILTY CLAY with SAND SILTY CLAY with GRAVEL SANDY SILTY CLAY SANDY SILTY CLAY with GRAVEL GRAVELLY SILTY CLAY GRAVELLY SILTY CLAY with SAND
GW-GC	Well-graded GRAVEL with CLAY (or SILTY CLAY) Well-graded GRAVEL with CLAY and SAND (or SILTY CLAY and SAND)		
GP-GM	Poorly-graded GRAVEL with SILT Poorly-graded GRAVEL with SILT and SAND	ML	SILT SILT with SAND SILT with GRAVEL SANDY SILT SANDY SILT with GRAVEL GRAVELLY SILT GRAVELLY SILT with SAND
GP-GC	Poorly-graded GRAVEL with CLAY (or SILTY CLAY) Poorly-graded GRAVEL with CLAY and SAND (or SILTY CLAY and SAND)		
GM	SILTY GRAVEL SILTY GRAVEL with SAND	OL	ORGANIC lean CLAY ORGANIC lean CLAY with SAND ORGANIC lean CLAY with GRAVEL SANDY ORGANIC lean CLAY SANDY ORGANIC lean CLAY with GRAVEL GRAVELLY ORGANIC lean CLAY GRAVELLY ORGANIC lean CLAY with SAND
GC	CLAYEY GRAVEL CLAYEY GRAVEL with SAND		
GC-GM	SILTY, CLAYEY GRAVEL SILTY, CLAYEY GRAVEL with SAND	OL	ORGANIC SILT ORGANIC SILT with SAND ORGANIC SILT with GRAVEL SANDY ORGANIC SILT SANDY ORGANIC SILT with GRAVEL GRAVELLY ORGANIC SILT GRAVELLY ORGANIC SILT with SAND
SW	Well-graded SAND Well-graded SAND with GRAVEL		
SP	Poorly-graded SAND Poorly-graded SAND with GRAVEL	CH	Fat CLAY Fat CLAY with SAND Fat CLAY with GRAVEL SANDY fat CLAY SANDY fat CLAY with GRAVEL GRAVELLY fat CLAY GRAVELLY fat CLAY with SAND
SW-SM	Well-graded SAND with SILT Well-graded SAND with SILT and GRAVEL		
SW-SC	Well-graded SAND with CLAY (or SILTY CLAY) Well-graded SAND with CLAY and GRAVEL (or SILTY CLAY and GRAVEL)	MH	Elastic SILT Elastic SILT with SAND Elastic SILT with GRAVEL SANDY elastic SILT SANDY elastic SILT with GRAVEL GRAVELLY elastic SILT GRAVELLY elastic SILT with SAND
SP-SM	Poorly-graded SAND with SILT Poorly-graded SAND with SILT and GRAVEL		
SP-SC	Poorly-graded SAND with CLAY (or SILTY CLAY) Poorly-graded SAND with CLAY and GRAVEL (or SILTY CLAY and GRAVEL)	OH	ORGANIC fat CLAY ORGANIC fat CLAY with SAND ORGANIC fat CLAY with GRAVEL SANDY ORGANIC fat CLAY SANDY ORGANIC fat CLAY with GRAVEL GRAVELLY ORGANIC fat CLAY GRAVELLY ORGANIC fat CLAY with SAND
SM	SILTY SAND SILTY SAND with GRAVEL		
SC	CLAYEY SAND CLAYEY SAND with GRAVEL	OH	ORGANIC elastic SILT ORGANIC elastic SILT with SAND ORGANIC elastic SILT with GRAVEL SANDY ORGANIC elastic SILT SANDY ORGANIC elastic SILT with GRAVEL GRAVELLY ORGANIC elastic SILT GRAVELLY ORGANIC elastic SILT with SAND
SC-SM	SILTY, CLAYEY SAND SILTY, CLAYEY SAND with GRAVEL		
PT	PEAT	OL/OH	ORGANIC SOIL ORGANIC SOIL with SAND ORGANIC SOIL with GRAVEL SANDY ORGANIC SOIL SANDY ORGANIC SOIL with GRAVEL GRAVELLY ORGANIC SOIL GRAVELLY ORGANIC SOIL with SAND
	COBBLES COBBLES and BOULDERS BOULDERS		

FIELD AND LABORATORY TESTING

- (C) Consolidation (ASTM D 2435)
- (CL) Collapse Potential (ASTM D 5333)
- (CP) Compaction Curve (CTM 216)
- (CR) Corrosivity Testing (CTM 643, CTM 422, CTM 417)
- (CU) Consolidated Undrained Triaxial (ASTM D 4767)
- (DS) Direct Shear (ASTM D 3080)
- (EI) Expansion Index (ASTM D 4829)
- (M) Moisture Content (ASTM D 2216)
- (OC) Organic Content-% (ASTM D 2974)
- (P) Permeability (CTM 220)
- (PA) Particle Size Analysis (ASTM D 422)
- (PI) Plasticity Index (AASHTO T 90) Liquid Limit (AASHTO T 89)
- (PL) Point Load Index (ASTM D 5731)
- (PM) Pressure Meter
- (R) R-Value (CTM 301)
- (SE) Sand Equivalent (CTM 217)
- (SG) Specific Gravity (AASHTO T 100)
- (SL) Shrinkage Limit (ASTM D 427)
- (SW) Swell Potential (ASTM D 4546)
- (UC) Unconfined Compression-Soil (ASTM D 2166) Unconfined Compression-Rock (ASTM D 2938)
- (UU) Unconsolidated Undrained Triaxial (ASTM D 2850)
- (UW) Unit Weight (ASTM D 4767)

APPARENT DENSITY OF COHESIONLESS SOILS

Description	SPT N_{60} (Blows / 12 in.)
Very Loose	0 - 5
Loose	5 - 10
Medium Dense	10 - 30
Dense	30 - 50
Very Dense	Greater than 50

MOISTURE

Description	Criteria
Dry	No discernable moisture
Moist	Moisture present, but no free water
Wet	Visible free water

PERCENT OR PROPORTION OF SOILS

Description	Criteria
Trace	Particles are present but estimated to be less than 5%
Few	5% - 10%
Little	15% - 25%
Some	30% - 45%
Mostly	50% - 100%

PARTICLE SIZE

Description		Size (in.)
Boulder		Greater than 12
Cobble		3 - 12
Gravel	Coarse	3/4 - 3
	Fine	1/5 - 3/4
Sand	Coarse	1/16 - 1/5
	Medium	1/64 - 1/16
	Fine	1/300 - 1/64
Silt and Clay		Less than 1/300

DESIGN OVERSIGHT — Yiwei Hu
1/25/12
SIGN OFF DATE

DRAWN BY: O. GOUTHIER
CHECKED BY: P. SIRCAR

S.DUDDU
FIELD INVESTIGATION BY:
DATE: DECEMBER 2008-FEBRUARY 2009

PREPARED FOR THE STATE OF CALIFORNIA DEPARTMENT OF TRANSPORTATION

P.SIRCAR
PROJECT ENGINEER

BRIDGE NO. 33E0200
POST MILES 10.80/10.97

RETAINING WALL NO. 14- SOIL NAIL WALL
LOG OF TEST BORINGS 2 OF 3

GS LOTB SOIL LEGEND SHEET 2 (ENGLISH) (REV. 07/16/10)

ORIGINAL SCALE IN INCHES FOR REDUCED PLANS 0 1 2 3

UNIT: 0735
PROJECT NUMBER & PHASE: 04000212481
CONTRACT NO.: 04-2908C4

DISREGARD PRINTS BEARING EARLIER REVISION DATES
REVISION DATES: 06/16/10 01/06/10 11/8/11 1/5/12
SHEET 11 OF 12

FILE => 33E0200-z-1tb02.dgn

USERNAME => s124496 DATE PLOTTED => 23-MAY-2012 TIME PLOTTED => 07:05

DIST	COUNTY	ROUTE	POST MILES TOTAL PROJECT	SHEET No	TOTAL SHEETS
04	Ala	580	R8.4/R14.6	787	853

GEOTECHNICAL PROFESSIONAL — DATE 1/5/12

5-14-12
PLANS APPROVAL DATE

The State of California or its officers or agents shall not be responsible for the accuracy or completeness of electronic copies of this plan sheet.

REGISTERED PROFESSIONAL ENGINEER — GARY PARIKH — No. G.E. 666 — Exp. 12/31/13 — GEOTECHNICAL — STATE OF CALIFORNIA

ALAMEDA CTC
1333 BROADWAY, SUITE 220
OAKLAND, CA 94612

PARIKH CONSULTANTS, INC.
2360 QUME DRIVE, SUITE A
SAN JOSE, CA 95131

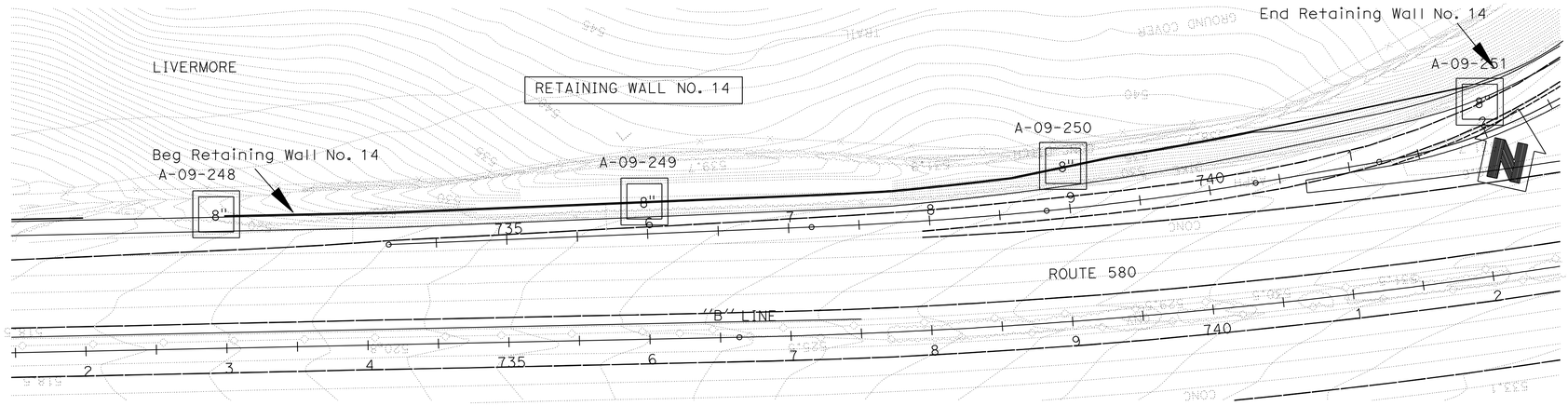

PLAN
1"=50'

BENCHMARK:
The Vertical Datum shown hereon is based on North American Vertical Datum of 1988 (NAVD). The 1988 Elevations for this project were Established ising Digital Levelling & GPS Survey Measurements and a Least Squares Adjustment Holdings NGS Benchmarks GPS control point 35 - PID DE8495, L 1259 - PID HS4075, CHABOT A - PID AI7653, & OLD RM 3 = TIDAL 5 - PID HS3429 fixed to their published values.

All Dimensions are in Feet unless otherwise shown.

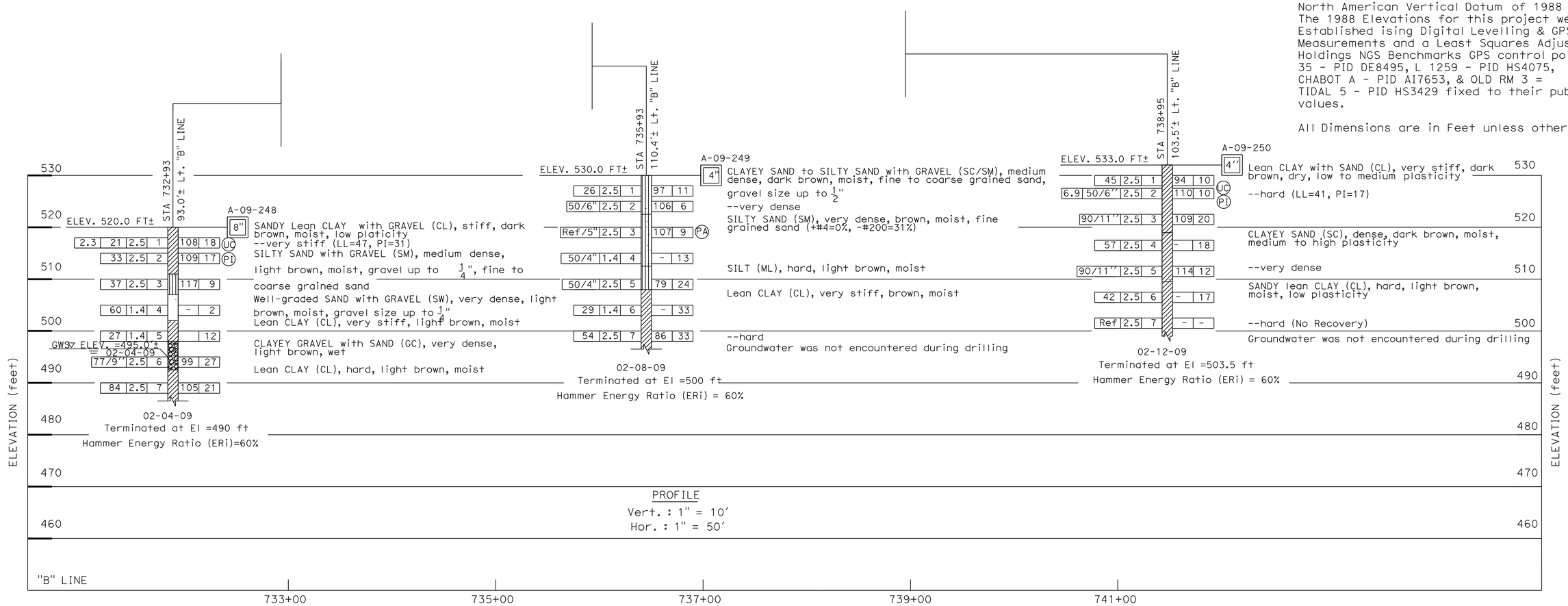

DESIGN OVERSIGHT Yiwei Hu	DRAWN BY O. GOUTHIER	S.DUDDU FIELD INVESTIGATION BY:	PREPARED FOR THE STATE OF CALIFORNIA DEPARTMENT OF TRANSPORTATION
1/25/12 SIGN OFF DATE	CHECKED BY P. SIRCAR	DATE: DECEMBER 2008-JANUARY 2009	

P.SIRCAR
PROJECT ENGINEER

BRIDGE NO. 33E0200
POST MILES 10.80/10.97

RETAINING WALL NO. 14- SOIL NAIL WALL
LOG OF TEST BORINGS 3 OF 3

GS LOTB SOIL LEGEND SHEET 2 (ENGLISH) (REV. 07/16/10)

ORIGINAL SCALE IN INCHES FOR REDUCED PLANS 0 1 2 3

UNIT: 0735
PROJECT NUMBER & PHASE: 04000212481 CONTRACT NO.: 04-2908C4

DISREGARD PRINTS BEARING EARLIER REVISION DATES → 06/16/10 03/16/10 11/18/11 1/5/12

SHEET 12 OF 12

FILE => 33E0200-z-1tb03.dgn

USERNAME => s124496 DATE PLOTTED => 23-MAY-2012 TIME PLOTTED => 07:05

FOR ACCURATE RIGHT OF WAY DATA, CONTACT
RIGHT OF WAY ENGINEERING AT THE DISTRICT OFFICE

DIST	COUNTY	ROUTE	POST MILES TOTAL PROJECT	SHEET No	TOTAL SHEETS
04	Ala	580	R8.4/R14.6	788	853

REGISTERED CIVIL ENGINEER — DATE 1/5/12

5-14-12
PLANS APPROVAL DATE

REGISTERED PROFESSIONAL ENGINEER — INES S. LI — No. C51561 — Exp.6/30/12 — CIVIL — STATE OF CALIFORNIA

The State of California or its officers or agents shall not be responsible for the accuracy or completeness of scanned copies of this plan sheet.

BIGGS CARDOSA ASSOCIATES INC.
865 THE ALAMEDA
SAN JOSE, CALIFORNIA 95126

ALAMEDA CTC
1333 BROADWAY, SUITE 220
OAKLAND, CALIFORNIA 94612

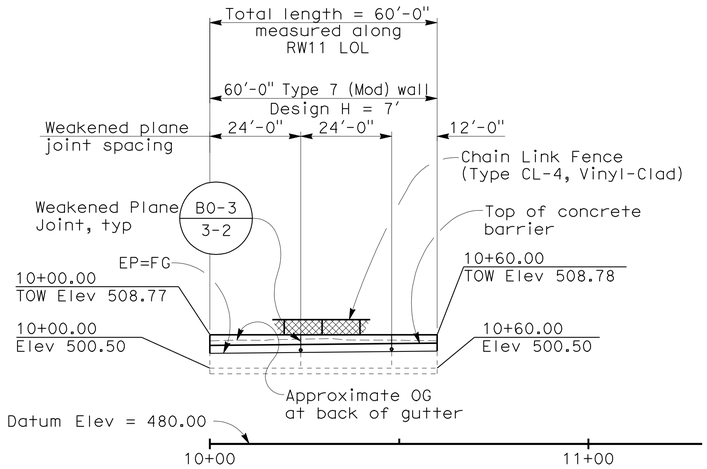

DEVELOPED ELEVATION

1" = 20'

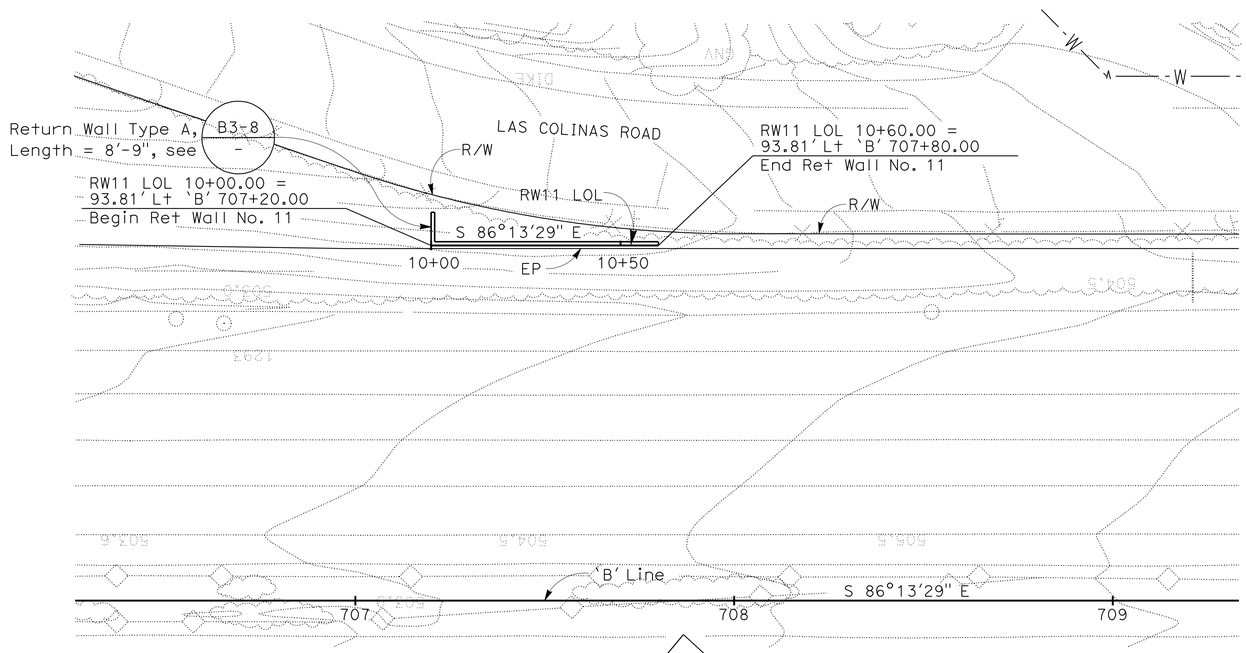

PLAN

1" = 20'

N

INDEX TO PLANS

SHEET NO.	TITLE
1	GENERAL PLAN
2	RETAINING WALL TYPE 7 (Mod) DETAILS
3	LOG OF TEST BORINGS 1 OF 3
4	LOG OF TEST BORINGS 2 OF 3
5	LOG OF TEST BORINGS 3 OF 3

STANDARD PLANS DATED MAY 2006

A10A	ACRONYMS AND ABBREVIATIONS (SHEET 1 OF 2)
A10B	ACRONYMS AND ABBREVIATIONS (SHEET 2 OF 2
A10C	SYMBOLS (SHEET 1 OF 2)
A10D	SYMBOLS (SHEET 2 OF 2)
A76A	CONCRETE BARRIER TYPE 60
A85	CHAIN LINK FENCE
B0-3	BRIDGE DETAILS
B3-8	RETAINING WALL DETAILS No. 1
B3-9	RETAINING WALL DETAILS No. 2
B11-47	CABLE RAILING

NOTE:
For General Notes, see 'RETAINING WALL TYPE 7 (Mod) DETAILS' sheet

Abbreviations:

TOW	Top of wall
BOW	Bottom of wall

RETAINING WALL NO. 11 BR NO 33E0201

QUANTITIES

STRUCTURE EXCAVATION (RETAINING WALL)	69	CY
STRUCTURE BACKFILL (RETAINING WALL)	20	CY
PERVIOUS BACKFILL MATERIAL (RETAINING WALL)	4	CY
STRUCTURAL CONCRETE, RETAINING WALL	50	CY
BAR REINFORCING STEEL (RETAINING WALL)	4,615	LB
MINOR CONCRETE (GUTTER) (LF)	60	LF
CHAIN LINK FENCE (TYPE CL-4, VINYL-CLAD)	60	LF
CONCRETE BARRIER (TYPE 60D)	60	LF

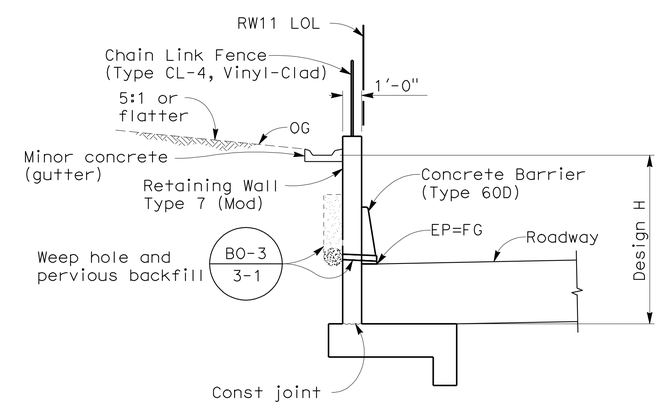

Retaining Wall No. 11

TYPICAL SECTION

1/4" = 1'-0"

DESIGN OVERSIGHT Yiwei Hu — 1/25/12 SIGN OFF DATE	DESIGN	BY H. BEDAIR	CHECKED B. GHORBANI	LOAD & RESISTANCE FACTOR DESIGN	
	DETAILS	BY H. BEDAIR	CHECKED B. GHORBANI	LAYOUT BY I. LI	CHECKED D. DEVLIN
	QUANTITIES	BY H. BEDAIR	CHECKED B. GHORBANI	SPECIFICATIONS BY I. LI	PLANS AND SPECS COMPARED D. DEVLIN

PREPARED FOR THE STATE OF CALIFORNIA DEPARTMENT OF TRANSPORTATION

INES S. LI
PROJECT ENGINEER

BRIDGE NO. 33E0201
POST MILES 11.45/11.47

RETAINING WALL No. 11 - TYPE 7 (MOD)
GENERAL PLAN

DESIGN GENERAL PLAN SHEET (ENGLISH) (REV. 7/16/10)

ORIGINAL SCALE IN INCHES FOR REDUCED PLANS 0 1 2 3

UNIT: 0735
PROJECT NUMBER & PHASE: 04000212481 CONTRACT NO.: 04-2908C4

DISREGARD PRINTS BEARING EARLIER REVISION DATES — REVISION DATES 12/23/09 03/25/10 11/8/11 1/5/12 — SHEET 1 OF 5

FILE => 33E0201-a-gp01.dgn

USERNAME => s124496 DATE PLOTTED => 23-MAY-2012 TIME PLOTTED => 07:05 2007236 (2007236PS1)

DIST	COUNTY	ROUTE	POST MILES TOTAL PROJECT	SHEET No	TOTAL SHEETS
04	Ala	580	R8.4/R14.6	789	853

REGISTERED CIVIL ENGINEER 1/5/12 DATE

5-14-12
PLANS APPROVAL DATE

REGISTERED PROFESSIONAL ENGINEER INES S. LI No. C51561 Exp.6/30/12 CIVIL STATE OF CALIFORNIA

The State of California or its officers or agents shall not be responsible for the accuracy or completeness of scanned copies of this plan sheet.

BIGGS CARDOSA ASSOCIATES INC.
865 THE ALAMEDA
SAN JOSE, CALIFORNIA 95126

ALAMEDA CTC
1333 BROADWAY, SUITE 220
OAKLAND, CALIFORNIA 94612

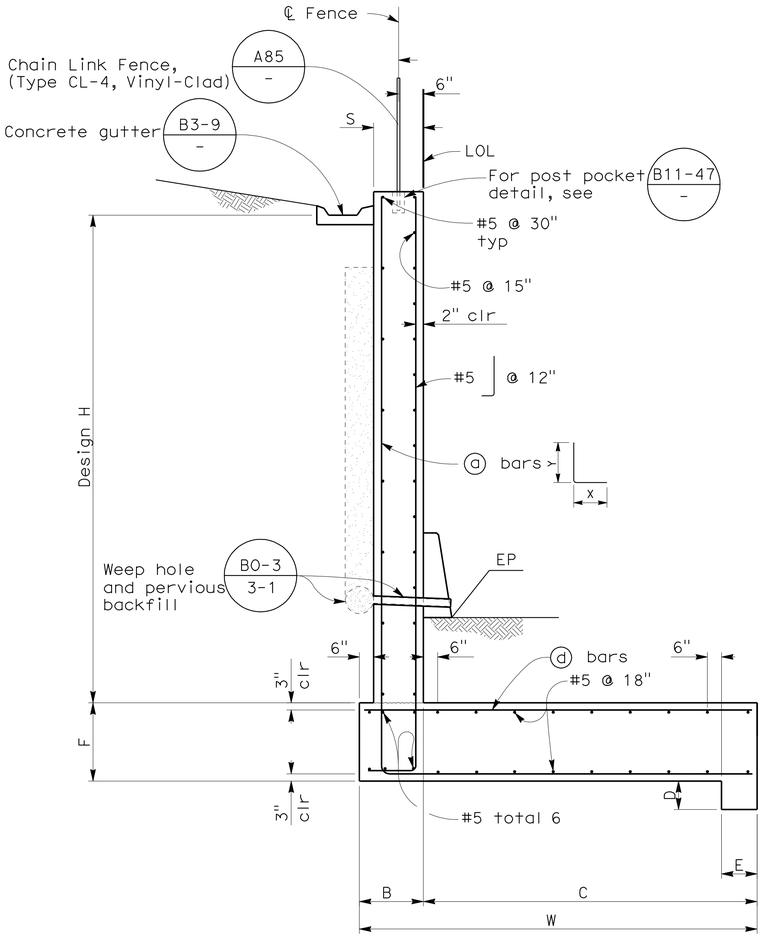

SECTION A-A
NO SCALE

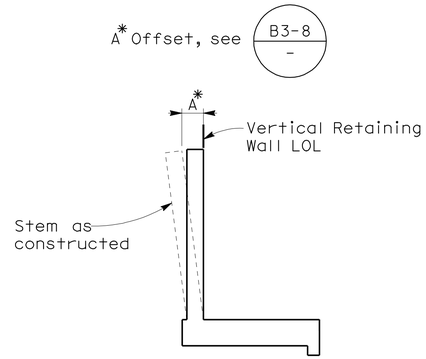

Values for offsetting forms to be determined by Contractor

SECTION A-A
NO SCALE

NOTES:

1. For details not shown and drainage notes, see B3-8 / -
2. Footing coverage, 2'-0" minimum
3. Increasing stem thickness not permitted
4. Place footing key concrete against undisturbed material

TABLE OF REINFORCING STEEL DIMENSIONS AND DATA

Design H	7'
W	7'-0"
C	5'-6"
B	1'-6"
F (ftg depth)	1'-9"
D (ftg key depth)	1'-0"
E (ftg key width)	1'-3"
S (Stem thickness)	1'-0"
ⓐ Bars	#5 @ 12
X	cont
Y	cont
ⓓ Bars	#5 @ 18

DESIGN DATA

DESIGN: Caltrans Bridge Design Specifications April 2000 (LFD) (1996 AASHTO with Interims and Revisions by Caltrans) Service Load Design

LOADING CASE:
1. Level slope with 240 psf live load surcharge
2. 5:1 limited slope 3' max height with 240 psf live load surcharge

CONCRETE: n = 9, f'c = 3600 psi, fc = 1450 psi

REINFORCING STEEL:
fy = 60 ksi
fs = 24 ksi

SOIL: φ = 34° γ = 120 pcf

Active earth pressure (equivalent fluid pressure) = 35 pcf for determination of toe pressure (level backfill)
Passive earth pressure = 3000 psf (uniform)
Allowable bearing pressure = 5.0 ksf
Design Toe Pressure = 1.2 ksf
Friction Coefficient = 0.35

DESIGN OVERSIGHT Yiwei Hu
1/25/12
SIGN OFF DATE

	BY	CHECKED
DESIGN	H. BEDAIR	B. GHORBANI
DETAILS	H. BEDAIR	B. GHORBANI
QUANTITIES	H. BEDAIR	B. GHORBANI

PREPARED FOR THE STATE OF CALIFORNIA DEPARTMENT OF TRANSPORTATION

INES LI
PROJECT ENGINEER

BRIDGE NO. 33E0201
POST MILES 11.45/11.47

RETAINING WALL No. 11 - TYPE 7 (MOD)
RETAINING WALL TYPE 7 (MOD) DETAILS

DESIGN GENERAL PLAN SHEET (ENGLISH) (REV. 7/16/10)

ORIGINAL SCALE IN INCHES FOR REDUCED PLANS 0 1 2 3

UNIT: 0735
PROJECT NUMBER & PHASE: 04000212481 CONTRACT NO.: 04-2908C4

DISREGARD PRINTS BEARING EARLIER REVISION DATES → REVISION DATES 12/23/09 3/25/10 11/8/11 1/5/12 SHEET 2 OF 5

FILE => 33E0201-b-rwd1.dgn

USERNAME => s124496 DATE PLOTTED => 23-MAY-2012 TIME PLOTTED => 07:05

(2007236PS2) 2007236

REFERENCE: CALTRANS SOIL & ROCK LOGGING, CLASSIFICATION, AND PRESENTATION MANUAL (2010)

DIST	COUNTY	ROUTE	POST MILES TOTAL PROJECT	SHEET No	TOTAL SHEETS
04	Ala	580	R8.4/R14.6	790	853

GEOTECHNICAL PROFESSIONAL — DATE 1/5/12

5-14-12
PLANS APPROVAL DATE

REGISTERED PROFESSIONAL ENGINEER — GARY PARIKH — No. G.E. 666 — Exp. 12/31/13 — GEOTECHNICAL — STATE OF CALIFORNIA

The State of California or its officers or agents shall not be responsible for the accuracy or completeness of electronic copies of this plan sheet.

ALAMEDA CTC
1333 BROADWAY, SUITE 220
OAKLAND, CA 94612

PARIKH CONSULTANTS, INC.
2360 QUME DRIVE, SUITE A
SAN JOSE, CA 95131

CEMENTATION

Description	Criteria
Weak	Crumbles or breaks with handling or little finger pressure.
Moderate	Crumbles or breaks with considerable finger pressure.
Strong	Will not crumble or break with finger pressure.

BOREHOLE IDENTIFICATION

Symbol	Hole Type	Description
Size	A	Auger Boring (hollow or solid stem bucket)
Size	R RW RC P	Rotary drilled boring (conventional) Rotary drilled with self-casing wire-line Rotary core with continuously-sampled, self-casing wire-line Rotary percussion boring (air)
Size	R	Rotary drilled diamond core
Size	HD HA	Hand driven (1-inch soil tube) Hand Auger
●	D	Dynamic Cone Penetration Boring
▲	CPT	Cone Penetration Test (ASTM D 5778)
⬚	O	Other (note on LOTB)

Note: Size in inches.

CONSISTENCY OF COHESIVE SOILS

Description	Shear Strength (tsf)	Pocket Penetrometer Measurement, PP, (tsf)	Torvane Measurement, TV, (tsf)	Vane Shear Measurement, VS, (tsf)
Very Soft	Less than 0.12	Less than 0.25	Less than 0.12	Less than 0.12
Soft	0.12 - 0.25	0.25 - 0.5	0.12 - 0.25	0.12 - 0.25
Medium Stiff	0.25 - 0.5	0.5 - 1	0.25 - 0.5	0.25 - 0.5
	0.5 - 1	1 - 2	0.5 - 1	0.5 - 1
Very Stiff	1 - 2	2 - 4	1 - 2	1 - 2
Hard	Greater than 2	Greater than 4	Greater than 2	Greater than 2

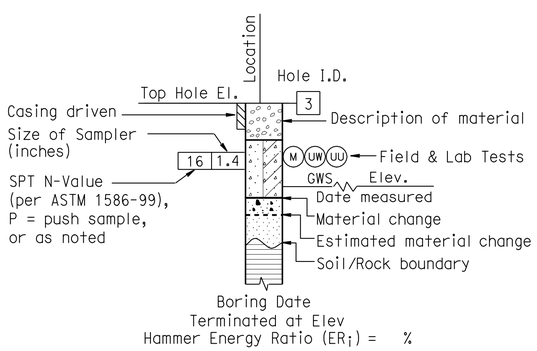

ROTARY BORING

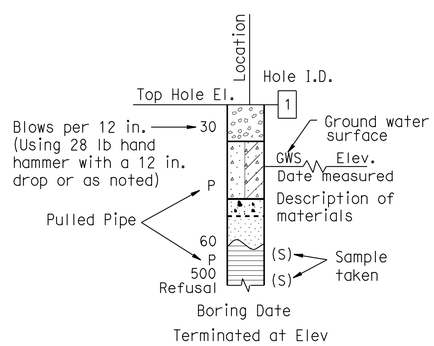

HAND BORING

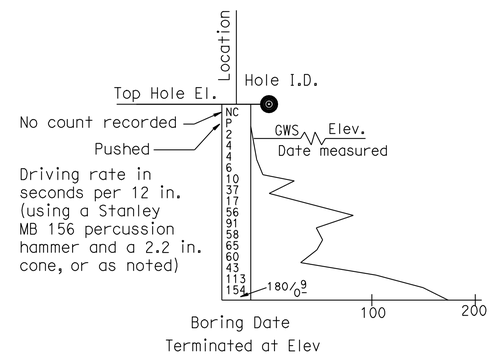

DYNAMIC CONE PENETRATION BORING

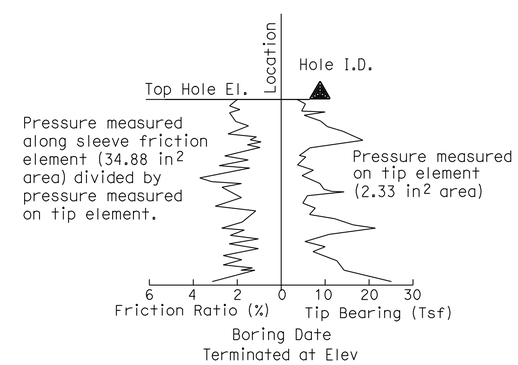

CONE PENETRATION TEST (CPT) BORING

DESIGN OVERSIGHT Yiwei Hu	DRAWN BY	O. GOUTHIER	S.DUDDU
1/25/12 SIGN OFF DATE	CHECKED BY	P. SIRCAR	FIELD INVESTIGATION BY: DATE: DECEMBER 2008-FEBRUARY 2009

PREPARED FOR THE STATE OF CALIFORNIA DEPARTMENT OF TRANSPORTATION

P.SIRCAR
PROJECT ENGINEER

BRIDGE NO. 33E0201
POST MILES 11.45/11.47

RETAINING WALL NO. 11- TYPE 7 (MOD) WALL

LOG OF TEST BORINGS 1 OF 3

ORIGINAL SCALE IN INCHES FOR REDUCED PLANS 0 1 2 3

UNIT: 0735
PROJECT NUMBER & PHASE: 04000212481 CONTRACT NO.: 04-2908C4

DISREGARD PRINTS BEARING EARLIER REVISION DATES → 06/14/10 03/18/10 11/9/11 1/5/12

SHEET 3 OF 5

FILE => 33E0201-z-1tb01.dgn

USERNAME => s124496 DATE PLOTTED => 23-MAY-2012 TIME PLOTTED => 07:05

REFERENCE: CALTRANS SOIL & ROCK LOGGING, CLASSIFICATION, AND PRESENTATION MANUAL (2010)

DIST	COUNTY	ROUTE	POST MILES TOTAL PROJECT	SHEET No	TOTAL SHEETS
04	Ala	580	R8.4/R14.6	791	853

GEOTECHNICAL PROFESSIONAL — DATE 1/5/12

5-14-12
PLANS APPROVAL DATE

REGISTERED PROFESSIONAL ENGINEER — GARY PARIKH — No. G.E. 666 — Exp. 12/31/13 — GEOTECHNICAL — STATE OF CALIFORNIA

The State of California or its officers or agents shall not be responsible for the accuracy or completeness of electronic copies of this plan sheet.

ALAMEDA CTC
1333 BROADWAY, SUITE 220
OAKLAND, CA 94612

PARIKH CONSULTANTS, INC.
2360 QUME DRIVE, SUITE A
SAN JOSE, CA 95131

GROUP SYMBOLS AND NAMES

Graphic/Symbol	Group Names	Graphic/Symbol	Group Names
GW	Well-graded GRAVEL Well-graded GRAVEL with SAND	CL	Lean CLAY Lean CLAY with SAND Lean CLAY with GRAVEL SANDY lean CLAY SANDY lean CLAY with GRAVEL GRAVELLY lean CLAY GRAVELLY lean CLAY with SAND
GP	Poorly-graded GRAVEL Poorly-graded GRAVEL with SAND		
GW-GM	Well-graded GRAVEL with SILT Well-graded GRAVEL with SILT and SAND	CL-ML	SILTY CLAY SILTY CLAY with SAND SILTY CLAY with GRAVEL SANDY SILTY CLAY SANDY SILTY CLAY with GRAVEL GRAVELLY SILTY CLAY GRAVELLY SILTY CLAY with SAND
GW-GC	Well-graded GRAVEL with CLAY (or SILTY CLAY) Well-graded GRAVEL with CLAY and SAND (or SILTY CLAY and SAND)		
GP-GM	Poorly-graded GRAVEL with SILT Poorly-graded GRAVEL with SILT and SAND	ML	SILT SILT with SAND SILT with GRAVEL SANDY SILT SANDY SILT with GRAVEL GRAVELLY SILT GRAVELLY SILT with SAND
GP-GC	Poorly-graded GRAVEL with CLAY (or SILTY CLAY) Poorly-graded GRAVEL with CLAY and SAND (or SILTY CLAY and SAND)		
GM	SILTY GRAVEL SILTY GRAVEL with SAND	OL	ORGANIC lean CLAY ORGANIC lean CLAY with SAND ORGANIC lean CLAY with GRAVEL SANDY ORGANIC lean CLAY SANDY ORGANIC lean CLAY with GRAVEL GRAVELLY ORGANIC lean CLAY GRAVELLY ORGANIC lean CLAY with SAND
GC	CLAYEY GRAVEL CLAYEY GRAVEL with SAND		
GC-GM	SILTY, CLAYEY GRAVEL SILTY, CLAYEY GRAVEL with SAND	OL	ORGANIC SILT ORGANIC SILT with SAND ORGANIC SILT with GRAVEL SANDY ORGANIC SILT SANDY ORGANIC SILT with GRAVEL GRAVELLY ORGANIC SILT GRAVELLY ORGANIC SILT with SAND
SW	Well-graded SAND Well-graded SAND with GRAVEL		
SP	Poorly-graded SAND Poorly-graded SAND with GRAVEL	CH	Fat CLAY Fat CLAY with SAND Fat CLAY with GRAVEL SANDY fat CLAY SANDY fat CLAY with GRAVEL GRAVELLY fat CLAY GRAVELLY fat CLAY with SAND
SW-SM	Well-graded SAND with SILT Well-graded SAND with SILT and GRAVEL		
SW-SC	Well-graded SAND with CLAY (or SILTY CLAY) Well-graded SAND with CLAY and GRAVEL (or SILTY CLAY and GRAVEL)	MH	Elastic SILT Elastic SILT with SAND Elastic SILT with GRAVEL SANDY elastic SILT SANDY elastic SILT with GRAVEL GRAVELLY elastic SILT GRAVELLY elastic SILT with SAND
SP-SM	Poorly-graded SAND with SILT Poorly-graded SAND with SILT and GRAVEL		
SP-SC	Poorly-graded SAND with CLAY (or SILTY CLAY) Poorly-graded SAND with CLAY and GRAVEL (or SILTY CLAY and GRAVEL)	OH	ORGANIC fat CLAY ORGANIC fat CLAY with SAND ORGANIC fat CLAY with GRAVEL SANDY ORGANIC fat CLAY SANDY ORGANIC fat CLAY with GRAVEL GRAVELLY ORGANIC fat CLAY GRAVELLY ORGANIC fat CLAY with SAND
SM	SILTY SAND SILTY SAND with GRAVEL		
SC	CLAYEY SAND CLAYEY SAND with GRAVEL	OH	ORGANIC elastic SILT ORGANIC elastic SILT with SAND ORGANIC elastic SILT with GRAVEL SANDY ORGANIC elastic SILT SANDY ORGANIC elastic SILT with GRAVEL GRAVELLY ORGANIC elastic SILT GRAVELLY ORGANIC elastic SILT with SAND
SC-SM	SILTY, CLAYEY SAND SILTY, CLAYEY SAND with GRAVEL		
PT	PEAT	OL/OH	ORGANIC SOIL ORGANIC SOIL with SAND ORGANIC SOIL with GRAVEL SANDY ORGANIC SOIL SANDY ORGANIC SOIL with GRAVEL GRAVELLY ORGANIC SOIL GRAVELLY ORGANIC SOIL with SAND
	COBBLES COBBLES and BOULDERS BOULDERS		

FIELD AND LABORATORY TESTING

- (C) Consolidation (ASTM D 2435)
- (CL) Collapse Potential (ASTM D 5333)
- (CP) Compaction Curve (CTM 216)
- (CR) Corrosivity Testing (CTM 643, CTM 422, CTM 417)
- (CU) Consolidated Undrained Triaxial (ASTM D 4767)
- (DS) Direct Shear (ASTM D 3080)
- (EI) Expansion Index (ASTM D 4829)
- (M) Moisture Content (ASTM D 2216)
- (OC) Organic Content-% (ASTM D 2974)
- (P) Permeability (CTM 220)
- (PA) Particle Size Analysis (ASTM D 422)
- (PI) Plasticity Index (AASHTO T 90) Liquid Limit (AASHTO T 89)
- (PL) Point Load Index (ASTM D 5731)
- (PM) Pressure Meter
- (R) R-Value (CTM 301)
- (SE) Sand Equivalent (CTM 217)
- (SG) Specific Gravity (AASHTO T 100)
- (SL) Shrinkage Limit (ASTM D 427)
- (SW) Swell Potential (ASTM D 4546)
- (UC) Unconfined Compression-Soil (ASTM D 2166) Unconfined Compression-Rock (ASTM D 2938)
- (UU) Unconsolidated Undrained Triaxial (ASTM D 2850)
- (UW) Unit Weight (ASTM D 4767)

APPARENT DENSITY OF COHESIONLESS SOILS

Description	SPT N_{60} (Blows / 12 in.)
Very Loose	0 - 5
Loose	5 - 10
Medium Dense	10 - 30
Dense	30 - 50
Very Dense	Greater than 50

MOISTURE

Description	Criteria
Dry	No discernable moisture
Moist	Moisture present, but no free water
Wet	Visible free water

PERCENT OR PROPORTION OF SOILS

Description	Criteria
Trace	Particles are present but estimated to be less than 5%
Few	5% - 10%
Little	15% - 25%
Some	30% - 45%
Mostly	50% - 100%

PARTICLE SIZE

Description		Size (in.)
Boulder		Greater than 12
Cobble		3 - 12
Gravel	Coarse	3/4 - 3
	Fine	1/5 - 3/4
Sand	Coarse	1/16 - 1/5
	Medium	1/64 - 1/16
	Fine	1/300 - 1/64
Silt and Clay		Less than 1/300

DESIGN OVERSIGHT Yiwei Hu
1/25/12
SIGN OFF DATE

DRAWN BY O. GOUTHIER
CHECKED BY P. SIRCAR

S.DUDDU
FIELD INVESTIGATION BY:
DATE: DECEMBER 2008-FEBRUARY 2009

PREPARED FOR THE STATE OF CALIFORNIA DEPARTMENT OF TRANSPORTATION

P.SIRCAR
PROJECT ENGINEER

BRIDGE NO. 33E0201
POST MILES 11.45/11.47

RETAINING WALL NO. 11- TYPE 7 (MOD) WALL

LOG OF TEST BORINGS 2 OF 3

GS LOTB SOIL LEGEND SHEET 2 (ENGLISH) (REV. 07/16/10)

ORIGINAL SCALE IN INCHES FOR REDUCED PLANS 0 1 2 3

UNIT: 0735
PROJECT NUMBER & PHASE: 04000212481 CONTRACT NO.: 04-2908C4

DISREGARD PRINTS BEARING EARLIER REVISION DATES

REVISION DATES 06/16/10 03/15/10 11/8/11 1/5/12 SHEET 4 OF 5

FILE => 33E0201-z-1tb02.dgn

USERNAME => s124496 DATE PLOTTED => 23-MAY-2012 TIME PLOTTED => 07:06

DIST	COUNTY	ROUTE	POST MILES TOTAL PROJECT	SHEET No	TOTAL SHEETS
04	Ala	580	R8.4/R14.6	792	853

GEOTECHNICAL PROFESSIONAL — DATE 1/5/12

5-14-12
PLANS APPROVAL DATE

REGISTERED PROFESSIONAL ENGINEER — GARY PARIKH — No. G.E. 666 — Exp. 12/31/13 — GEOTECHNICAL — STATE OF CALIFORNIA

The State of California or its officers or agents shall not be responsible for the accuracy or completeness of electronic copies of this plan sheet.

ALAMEDA CTC
1333 BROADWAY, SUITE 220
OAKLAND, CA 94612

PARIKH CONSULTANTS, INC.
2360 QUME DRIVE, SUITE A
SAN JOSE, CA 95131

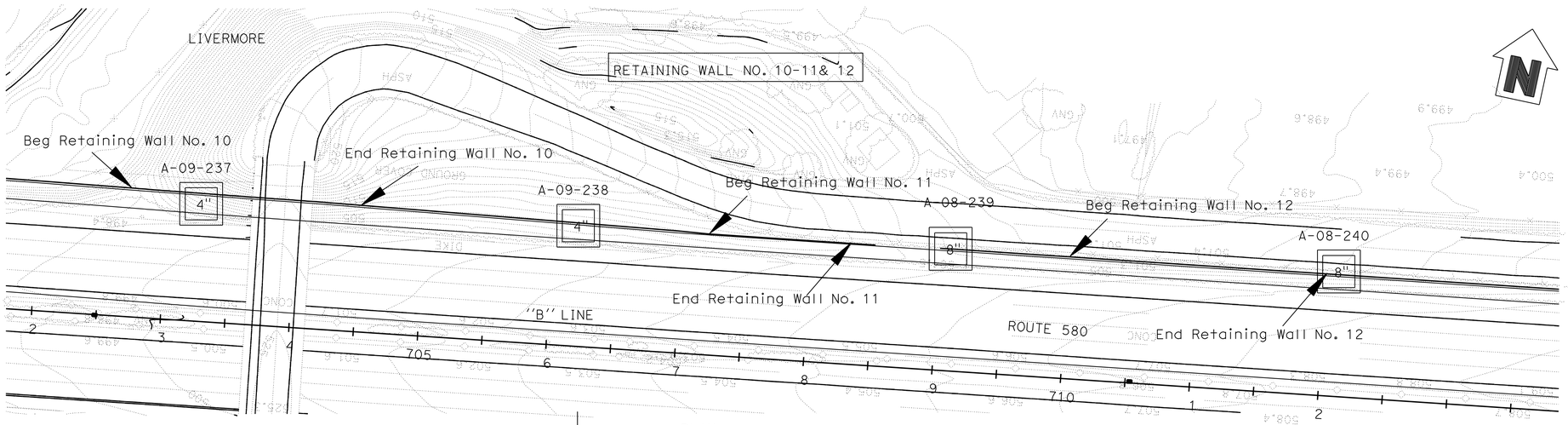

PLAN
1"=50'

BENCHMARK:
The Vertical Datum shown hereon is based on North American Vertical Datum of 1988 (NAVD). The 1988 Elevations for this project were Established ising Digital Levelling & GPS Survey Measurements and a Least Squares Adjustment Holdings NGS Benchmarks GPS control point 35 - PID DE8495, L 1259 - PID HS4075, CHABOT A - PID AI7653, & OLD RM 3 = TIDAL 5 - PID HS3429 fixed to their published values.

All Dimensions are in Feet unless otherwise shown.

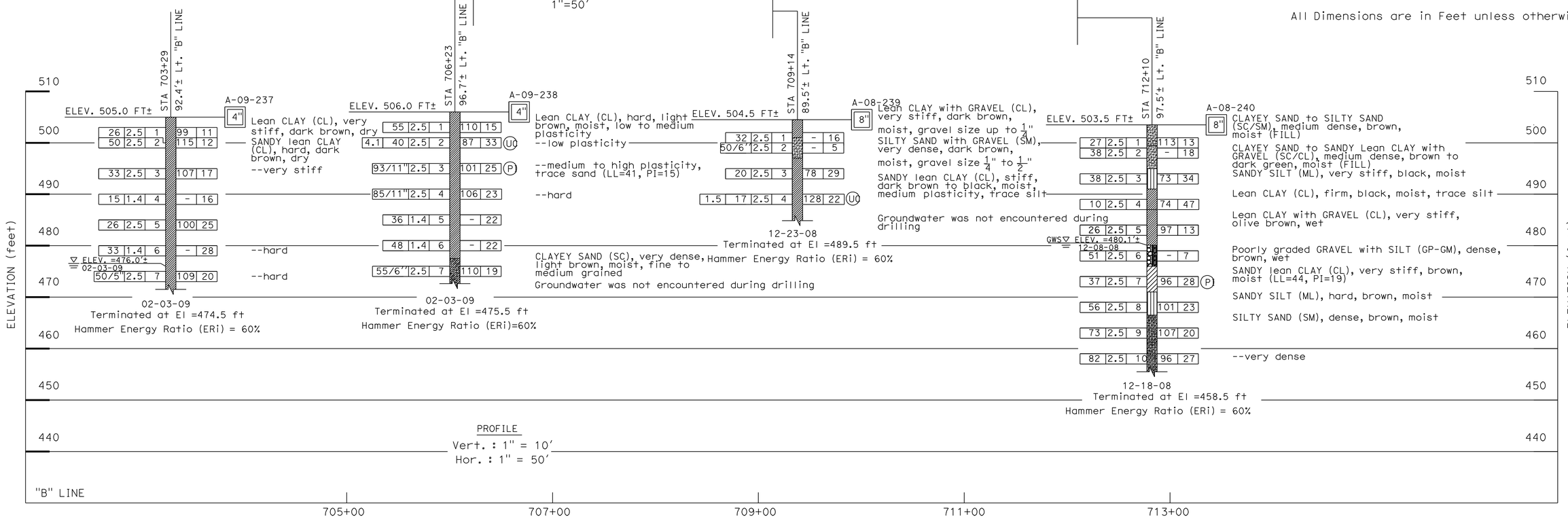

DESIGN OVERSIGHT Yiwei Hu	DRAWN BY O. GOUTHIER	S.DUDDU FIELD INVESTIGATION BY:	PREPARED FOR THE STATE OF CALIFORNIA DEPARTMENT OF TRANSPORTATION
1/25/12 SIGN OFF DATE	CHECKED BY P. SIRCAR	DATE: DECEMBER 2008-JANUARY 2009	P.SIRCAR PROJECT ENGINEER

BRIDGE NO. 33E0201 — POST MILES 11.45/11.47

RETAINING WALL NO. 11- TYPE 7 (MOD) WALL
LOG OF TEST BORINGS 3 OF 3

GS LOTB SOIL LEGEND SHEET 2 (ENGLISH) (REV. 07/16/10)

ORIGINAL SCALE IN INCHES FOR REDUCED PLANS 0 1 2 3

UNIT: 0735
PROJECT NUMBER & PHASE: 04000212481 CONTRACT NO.: 04-2908C4

DISREGARD PRINTS BEARING EARLIER REVISION DATES → 06/16/10 03/16/10 11/8/11 1/5/12

SHEET 5 OF 5

FILE => 33E0201-z-1tb03.dgn

USERNAME => s124496 DATE PLOTTED => 23-MAY-2012 TIME PLOTTED => 07:06

FOR ACCURATE RIGHT OF WAY DATA, CONTACT
RIGHT OF WAY ENGINEERING AT THE DISTRICT OFFICE

DIST	COUNTY	ROUTE	POST MILES TOTAL PROJECT	SHEET No	TOTAL SHEETS
04	Ala	580	R8.4/R14.6	793	853

REGISTERED CIVIL ENGINEER — DATE 1/5/12

5-14-12
PLANS APPROVAL DATE

REGISTERED PROFESSIONAL ENGINEER — INES S. LI — No. C51561 — Exp.6/30/12 — CIVIL — STATE OF CALIFORNIA

The State of California or its officers or agents shall not be responsible for the accuracy or completeness of scanned copies of this plan sheet.

BIGGS CARDOSA ASSOCIATES INC.
865 THE ALAMEDA
SAN JOSE, CALIFORNIA 95126

ALAMEDA CTC
1333 BROADWAY, SUITE 220
OAKLAND, CALIFORNIA 94612

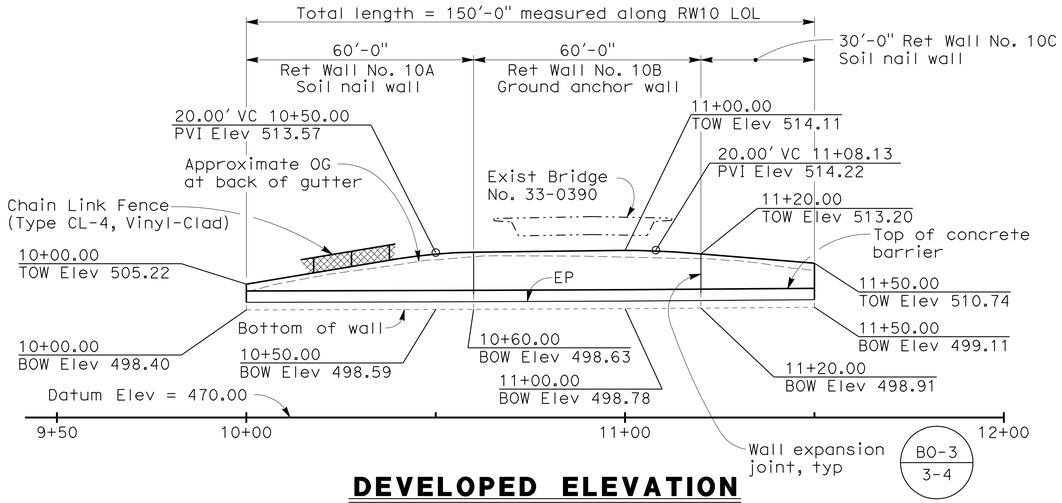

DEVELOPED ELEVATION

1" = 20'

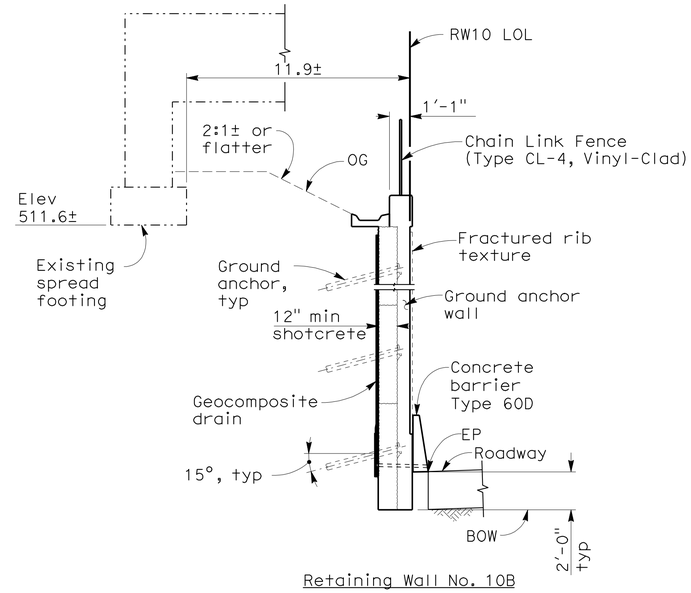

Retaining Wall No. 10B

TYPICAL SECTION AT BRIDGE

1/4" = 1'-0"

NOTES:

1. For Index to Plans, see 'INDEX TO PLANS' sheet
2. This plan accurate for retaining wall work only
3. For Fractured Rib Texture detail, see 'SOIL NAIL WALL DETAILS No. 2' sheet
4. For utilities, see Road Plans

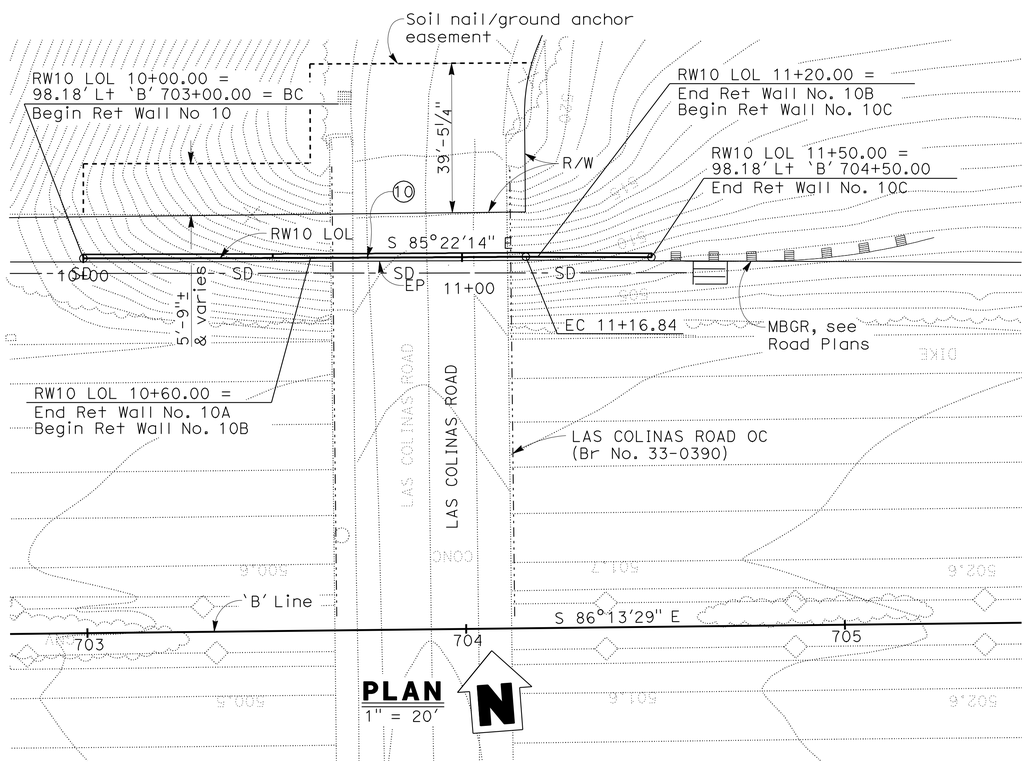

PLAN

1" = 20'

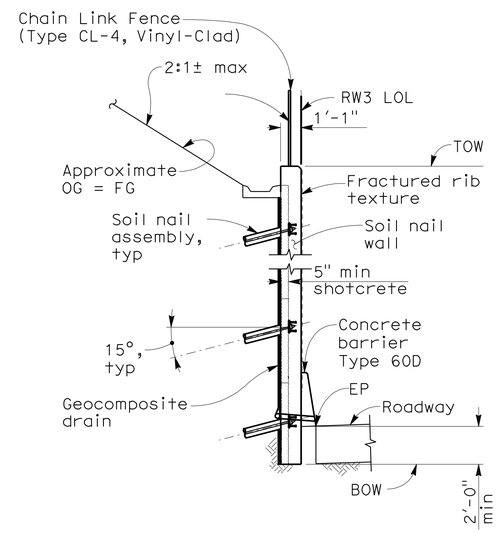

Retaining Wall No. 10A & 10C

TYPICAL SECTION BEYOND BRIDGE

1/4" = 1'-0"

CURVE DATA along RW10 LOL				
CURVE	RADIUS	LENGTH	TANGENT	DELTA
10	19913.00	116.84	58.42	00°20'10"

RETAINING WALL NO. 10 BR NO 33E0202

QUANTITIES

STRUCTURE EXCAVATION (SOIL NAIL WALL)	66	CY
STRUCTURE EXCAVATION (GROUND ANCHOR WALL)	79	CY
STRUCTURE BACKFILL (GROUND ANCHOR WALL)	4	CY
STRUCTURE BACKFILL (SOIL NAIL WALL)	6	CY
GROUND ANCHOR	18	EA
SOIL NAIL	1,049	LF
STRUCTURAL CONCRETE, RETAINING WALL	58	CY
FRACTURED RIB TEXTURE	1,088	SQFT
BAR REINFORCING STEEL (RETAINING WALL)	17,220	LB
SHOTCRETE	45	CY
MINOR CONCRETE (GUTTER) (LF)	151	LF
CHAIN LINK FENCE (TYPE CL-4, VINYL-CLAD)	151	LF
CONCRETE BARRIER (TYPE 60D)	151	LF

DESIGN OVERSIGHT — Yiwei Hu
1/25/12
SIGN OFF DATE

	BY	CHECKED		BY	CHECKED
DESIGN	H. BEDAIR	B. GHORBANI	LOAD & RESISTANCE FACTOR DESIGN		
DETAILS	H. BEDAIR	B. GHORBANI	LAYOUT	I. LI	D. DEVLIN
QUANTITIES	H. BEDAIR	B. GHORBANI	SPECIFICATIONS	I. LI	PLANS AND SPECS COMPARED D. DEVLIN

DESIGN GENERAL PLAN SHEET (ENGLISH) (REV. 7/16/10)

PREPARED FOR THE STATE OF CALIFORNIA DEPARTMENT OF TRANSPORTATION

INES S. LI
PROJECT ENGINEER

BRIDGE NO. 33E0202
POST MILES 11.52/11.55

RETAINING WALL No. 10A, 10B & 10C
GENERAL PLAN

ORIGINAL SCALE IN INCHES FOR REDUCED PLANS 0 1 2 3

UNIT: 0735
PROJECT NUMBER & PHASE: 04000212481
CONTRACT NO.: 04-2908C4

DISREGARD PRINTS BEARING EARLIER REVISION DATES → REVISION DATES 12/23/09 3/25/10 11/8/11 1/5/12

SHEET 1 OF 11

FILE => 33E0202-a-gp01.dgn

USERNAME => s124396 DATE PLOTTED => 23-MAY-2012 TIME PLOTTED => 07:06

(2007236NS1) 2007236

DIST	COUNTY	ROUTE	POST MILES TOTAL PROJECT	SHEET No	TOTAL SHEETS
04	Ala	580	R8.4/R14.6	794	853

REGISTERED CIVIL ENGINEER 1/5/12 DATE

5-14-12
PLANS APPROVAL DATE

REGISTERED PROFESSIONAL ENGINEER INES S. LI No. C51561 Exp.6/30/12 CIVIL STATE OF CALIFORNIA

The State of California or its officers or agents shall not be responsible for the accuracy or completeness of scanned copies of this plan sheet.

BIGGS CARDOSA ASSOCIATES INC.
865 THE ALAMEDA
SAN JOSE, CALIFORNIA 95126

ALAMEDA CTC
1333 BROADWAY, SUITE 220
OAKLAND, CALIFORNIA 94612

INDEX TO PLANS

SHEET NO.	TITLE
1	GENERAL PLAN
2	INDEX TO PLANS
3	SOIL NAIL/GROUND ANCHOR LAYOUT
4	SOIL NAIL WALL DETAILS
5	GROUND ANCHOR WALL DETAILS
6	SUB HORIZONTAL GROUND ANCHOR DETAILS
7	MISCELLANEOUS WALL DETAILS
8	WALL DRAIN DETAILS
9	LOG OF TEST BORINGS 1 OF 3
10	LOG OF TEST BORINGS 2 OF 3
11	LOG OF TEST BORINGS 3 OF 3

STANDARD PLANS DATED MAY 2006

A10A	ACRONYMS AND ABBREVIATIONS (SHEET 1 OF 2)
A10B	ACRONYMS AND ABBREVIATIONS (SHEET 2 OF 2)
A10C	SYMBOLS (SHEET 1 OF 2)
A10D	SYMBOLS (SHEET 2 OF 2)
A76A	CONCRETE BARRIER TYPE 60
A85	CHAIN LINK FENCE
B3-8	RETAINING WALL DETAILS No. 1
B3-9	RETAINING WALL DETAILS No. 2
B11-47	CABLE RAILING

ABBRIEVIATIONS

TOW	TOP OF WALL
BOW	BOTTOM OF WALL

GENERAL NOTES
LOAD FACTOR DESIGN

DESIGN: Bridge Design Specifications April 2000 (LFD), (1996 AASHTO w/ interims and Revisions by Caltrans)

FHWA Publication No. FHWA0-1F-03-017 Geotechnical Engineering Circular No. 7-Soil Nail Walls

CONCRETE & SHOTCRETE: fy = 60 ksi
f'c = 4.0 ksi

STRUCTURAL STEEL: ASTM A709 Grade 36

WELDED STUDS: ASTM A108 Grade 60

SOIL NAILS: ASTM A615 or ASTM A706 Grade 60
fy = 60 ksi
Allowable punching shear capacity = 22.8 kips

GROUND ANCHORS: See 'GENERAL NOTES' on 'SUB HORIZONTAL GROUND ANCHOR DETAILS' sheet

SOIL NAIL WALL DESIGN DATA:

RETAINING WALL No. 10

γ = 125 pcf
φ = 28 degrees
c = 300 psf
Q_d = 1360 lb/ft (top row)
Q_d = 1810 lb/ft (all subsequent rows)

LEGEND:

γ = Soil Unit Weight
c = Cohesion
φ = Internal Friction Angle of Soil
Q_d = Design pullout resistance in lb/ft

DESIGN OVERSIGHT Yiwei Hu
1/25/12
SIGN OFF DATE

DESIGN GENERAL PLAN SHEET (ENGLISH) (REV. 7/16/10)

	BY	CHECKED
DESIGN	H. BEDAIR	B. GHORBANI
DETAILS	H. BEDAIR	B. GHORBANI
QUANTITIES	H. BEDAIR	B. GHORBANI

ORIGINAL SCALE IN INCHES FOR REDUCED PLANS 0 1 2 3

PREPARED FOR THE STATE OF CALIFORNIA DEPARTMENT OF TRANSPORTATION

INES LI
PROJECT ENGINEER

BRIDGE NO. 33E0202
POST MILES 11.52/11.55

RETAINING WALL No. 10A, 10B & 10C
INDEX OF PLANS

UNIT: 0735
PROJECT NUMBER & PHASE: 04000212481 CONTRACT NO.: 04-2908C4

DISREGARD PRINTS BEARING EARLIER REVISION DATES

REVISION DATES 12/23/09 3/25/10 11/8/11 1/5/12

SHEET 2 OF 11

FILE => 33E0202-a-itp.dgn

USERNAME => s124496 DATE PLOTTED => 23-MAY-2012 TIME PLOTTED => 07:06

2007236.2 (2007236NS2)

DIST	COUNTY	ROUTE	POST MILES TOTAL PROJECT	SHEET No	TOTAL SHEETS
04	Ala	580	R8.4/R14.6	795	853

REGISTERED CIVIL ENGINEER 1/5/12 DATE

5-14-12
PLANS APPROVAL DATE

REGISTERED PROFESSIONAL ENGINEER INES S. LI No. C51561 Exp.6/30/12 CIVIL STATE OF CALIFORNIA

The State of California or its officers or agents shall not be responsible for the accuracy or completeness of scanned copies of this plan sheet.

BIGGS CARDOSA ASSOCIATES INC.
865 THE ALAMEDA
SAN JOSE, CALIFORNIA 95126

ALAMEDA CTC
1333 BROADWAY, SUITE 220
OAKLAND, CALIFORNIA 94612

Legend:

- ⊡ Indicates soil nail assembly location
- □ Indicates proof test soil nail location. Location may be adjusted by the Engineer
- ⊙ Indicates ground anchor location
- LE Indicates soil nail embedment length
- S_v Indicates vertical spacing of soil nail assemblies S_v = 2′-6″ min, 5′-0″ max UON

NOTE:

For wall elevations not noted, see 'GENERAL PLANS' sheet

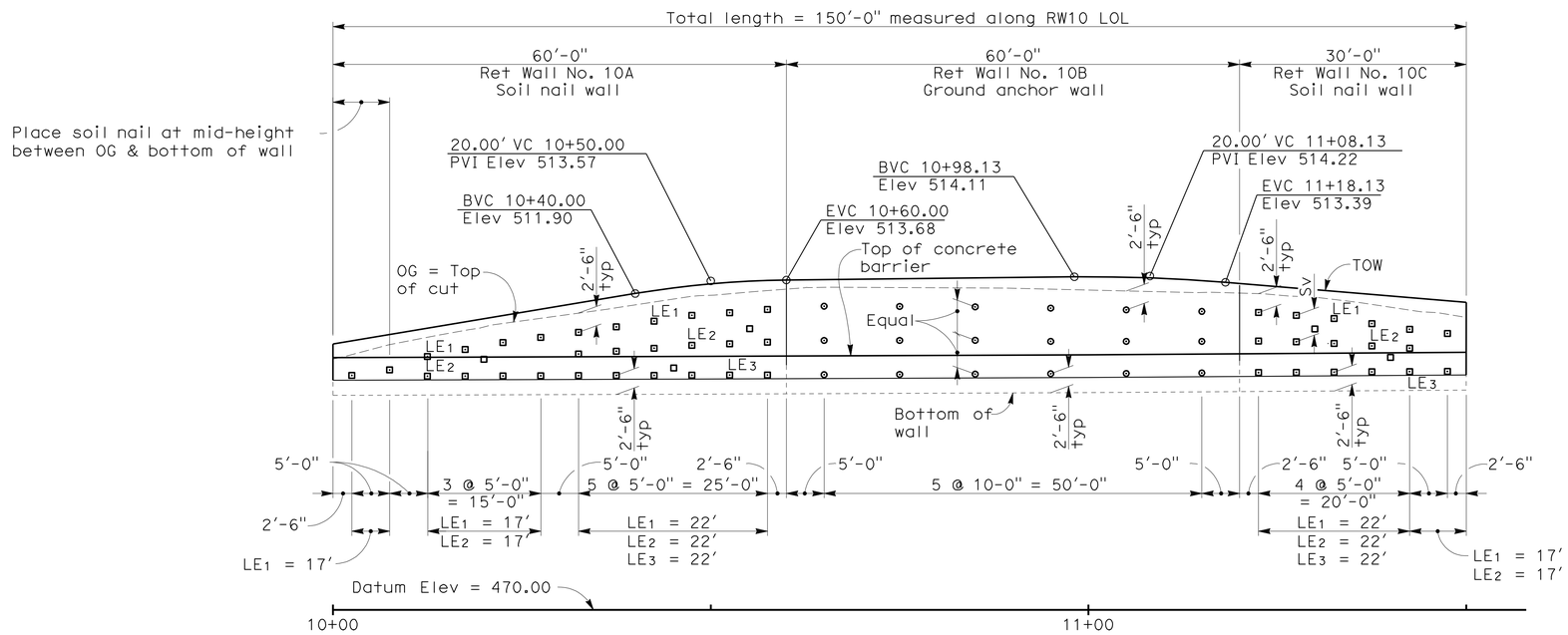

DEVELOPED ELEVATION

1″ = 10′

DESIGN OVERSIGHT Yiwei Hu 1/25/12 SIGN OFF DATE	DESIGN	BY H. BEDAIR	CHECKED B. GHORBANI	PREPARED FOR THE STATE OF CALIFORNIA DEPARTMENT OF TRANSPORTATION	INES LI PROJECT ENGINEER
	DETAILS	BY H. BEDAIR	CHECKED B. GHORBANI		
	QUANTITIES	BY H. BEDAIR	CHECKED B. GHORBANI		

BRIDGE NO. 33E0202
POST MILES 11.52/11.55

RETAINING WALL No. 10A, 10B & 10C
SOIL NAIL/GROUND ANCHOR LAYOUT

DESIGN GENERAL PLAN SHEET (ENGLISH) (REV. 7/16/10)

ORIGINAL SCALE IN INCHES FOR REDUCED PLANS 0 1 2 3

UNIT: 0735
PROJECT NUMBER & PHASE: 04000212481 CONTRACT NO.: 04-2908C4

DISREGARD PRINTS BEARING EARLIER REVISION DATES → REVISION DATES 12/23/09 3/25/10 11/8/11 1/5/12 SHEET 3 OF 11

FILE => 33E0202-b-sn-lo.dgn

USERNAME => s124496 DATE PLOTTED => 23-MAY-2012 TIME PLOTTED => 07:06 2007236.2 (2007236N53)

DIST	COUNTY	ROUTE	POST MILES TOTAL PROJECT	SHEET No	TOTAL SHEETS
04	Ala	580	R8.4/R14.6	796	853

REGISTERED CIVIL ENGINEER 1/5/12 DATE

5-14-12
PLANS APPROVAL DATE

REGISTERED PROFESSIONAL ENGINEER INES S. LI No. C51561 Exp.6/30/12 CIVIL STATE OF CALIFORNIA

The State of California or its officers or agents shall not be responsible for the accuracy or completeness of scanned copies of this plan sheet.

BIGGS CARDOSA ASSOCIATES INC.
865 THE ALAMEDA
SAN JOSE, CALIFORNIA 95126

ALAMEDA CTC
1333 BROADWAY, SUITE 220
OAKLAND, CALIFORNIA 94612

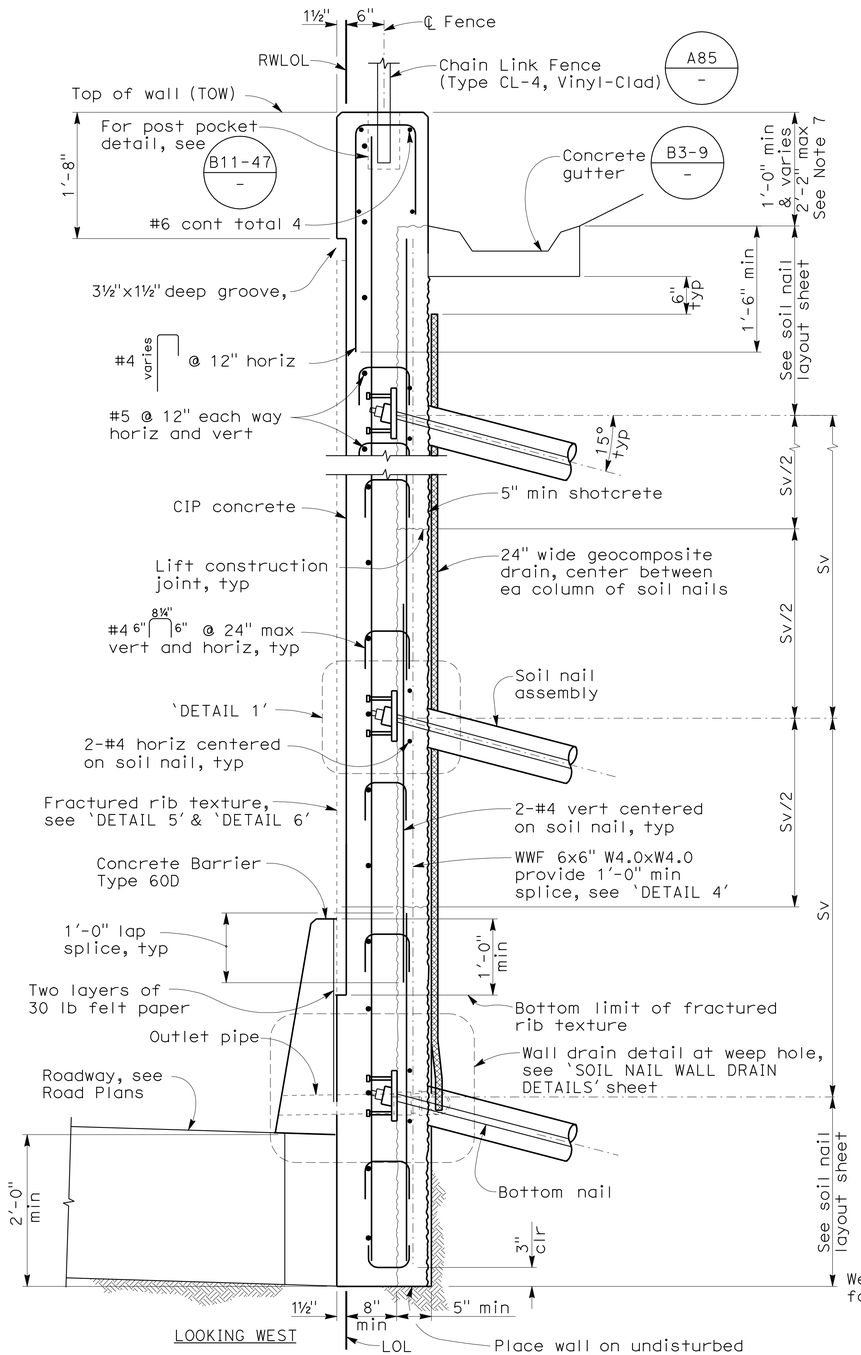

TYPICAL SECTION

1" = 1'-0"

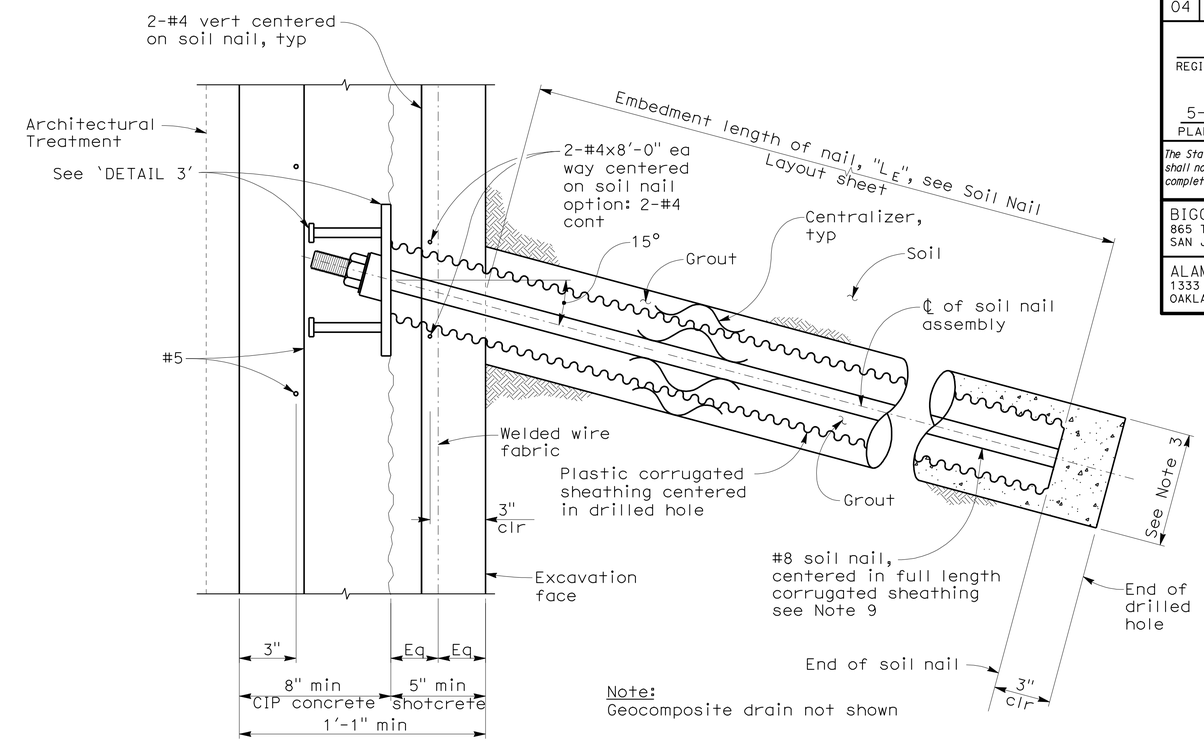

Note:
Geocomposite drain not shown

DETAIL 1 - SOIL NAIL ASSEMBLY

3" = 1'-0"

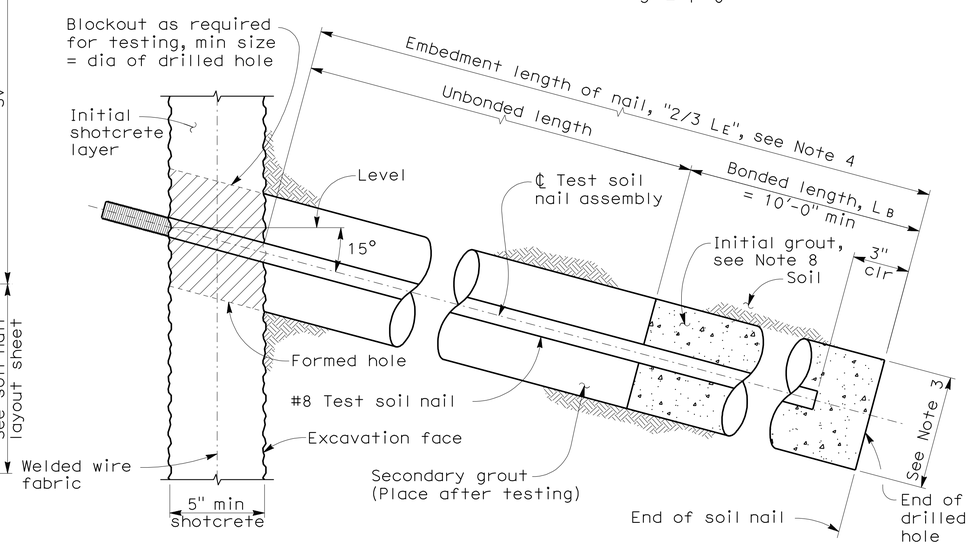

DETAIL 2 - TEST SOIL NAIL ASSEMBLY

3" = 1'-0"

NOTES:

1. For vert and horiz soil nail spacing, see 'SOIL NAIL/GROUND ANCHOR LAYOUT' sheets
2. For 'DETAIL 3', 'DETAIL 4', 'DETAIL 5', and 'DETAIL 6', see 'MISCELLANEOUS WALL DETAILS' sheet
3. The diameter of drilled hole will be determined by contractor.
4. The test nail assembly length shall be equal to ⅔ of the embedment length, L_E, of adjacent production soil nail assemblies, but not less than 12'-0"
5. The total length of the test nail assembly equals the embedment length plus the length required for jacking equipment
6. For location of proof test nail see 'SOIL NAIL LAYOUT' sheets. Additional proof test nails will be installed and tested per special provisions
7. Concrete gutter elevation shall be adjusted to drain towards inlets. See drainage plans for inlet locations
8. Finish grout surface to be normal to the bar
9. Partial length corrugated sheathing to be used if soil nail reinforcement consists of epoxy-coated prefabricated reinforcement

Legend:

Sv = Vertical spacing of soil nail assemblies

DESIGN OVERSIGHT Yiwei Hu
1/25/12
SIGN OFF DATE

	BY	CHECKED
DESIGN	H. BEDAIR	B. GHORBANI
DETAILS	H. BEDAIR	B. GHORBANI
QUANTITIES	H. BEDAIR	B. GHORBANI

PREPARED FOR THE STATE OF CALIFORNIA DEPARTMENT OF TRANSPORTATION

INES LI
PROJECT ENGINEER

BRIDGE NO. 33E0202
POST MILES 11.52/11.55

RETAINING WALL No.10A, 10B & 10C
SOIL NAIL WALL DETAILS

DESIGN GENERAL PLAN SHEET (ENGLISH) (REV. 7/16/10)

ORIGINAL SCALE IN INCHES FOR REDUCED PLANS 0 1 2 3

UNIT: 0735
PROJECT NUMBER & PHASE: 04000212481 CONTRACT NO.: 04-2908C4

DISREGARD PRINTS BEARING EARLIER REVISION DATES → REVISION DATES 12/23/09 03/25/10 11/8/11 1/5/12 SHEET 4 OF 11

FILE => 33E0202-c-snd1.dgn

USERNAME => s124496 DATE PLOTTED => 23-MAY-2012 TIME PLOTTED => 07:06

2007236.2 (2007236NS4)

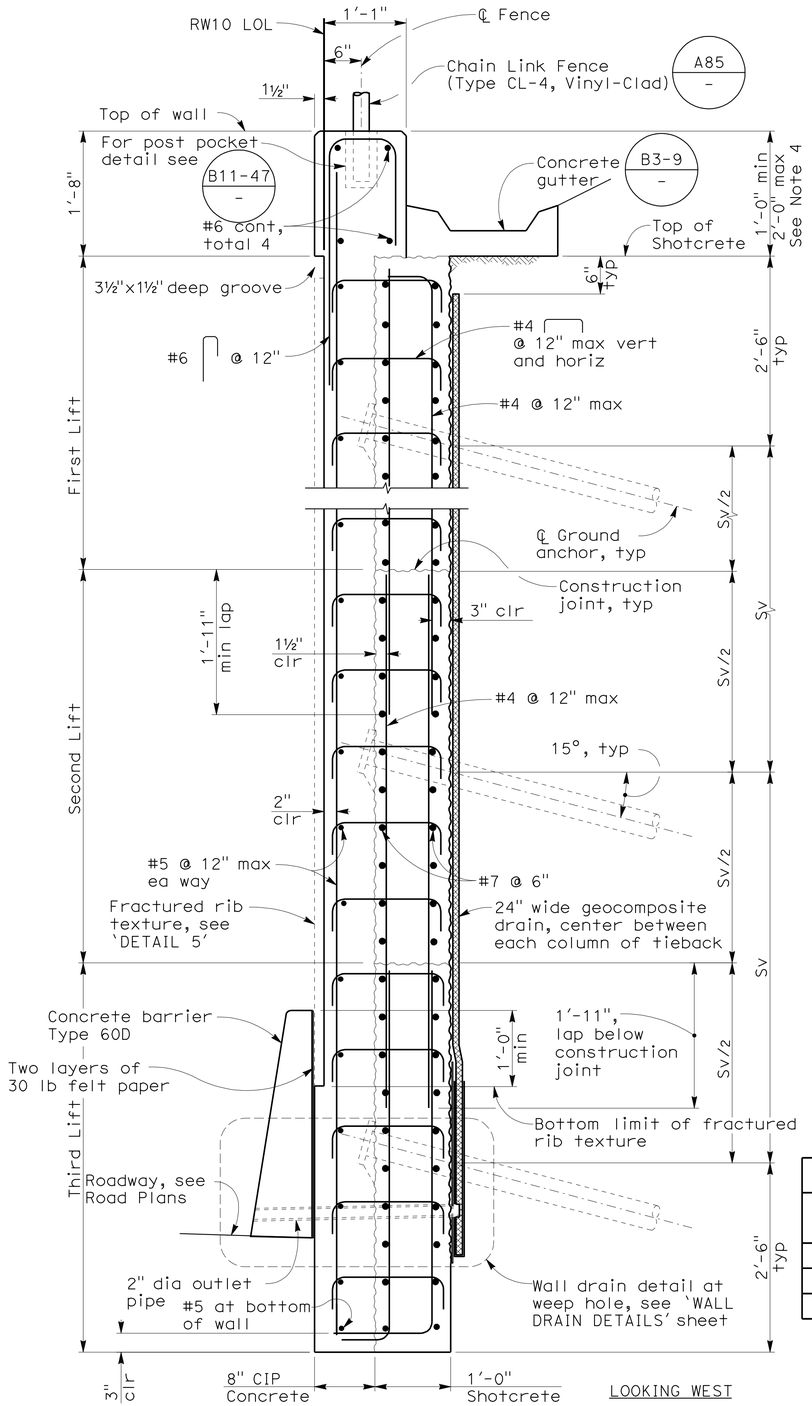

SECTION AT RETAINING WALL No. 10B

1" = 1'-0"

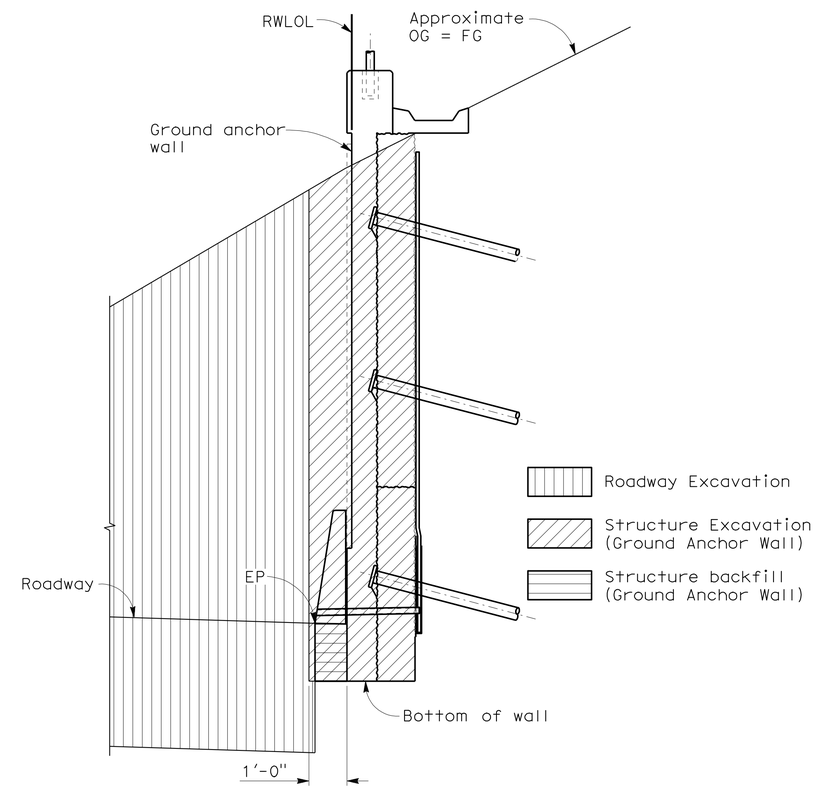

LIMITS OF PAYMENT FOR EXCAVATION & BACKFILL

NO SCALE

GROUND ANCHOR DESIGN TABLE

Location	Design Force T (kips)	Lock-off load (kips)	Unbonded length (ft)
Top row	50	50	20
Center row	78	75	15
Bottom row	65	65	15

DIST	COUNTY	ROUTE	POST MILES TOTAL PROJECT	SHEET No	TOTAL SHEETS
04	Ala	580	R8.4/R14.6	797	853

REGISTERED CIVIL ENGINEER — DATE 1/5/12

5-14-12
PLANS APPROVAL DATE

REGISTERED PROFESSIONAL ENGINEER — INES S. LI — No. C51561 — Exp.6/30/12 — CIVIL — STATE OF CALIFORNIA

The State of California or its officers or agents shall not be responsible for the accuracy or completeness of scanned copies of this plan sheet.

BIGGS CARDOSA ASSOCIATES INC.
865 THE ALAMEDA
SAN JOSE, CALIFORNIA 95126

ALAMEDA CTC
1333 BROADWAY, SUITE 220
OAKLAND, CALIFORNIA 94612

NOTES:

1. For vertical and horizontal ground anchor spacing, see 'SOIL NAIL/GROUND ANCHOR LAYOUT' sheet
2. For 'DETAIL 5', see 'MISCELLANEOUS WALL DETAILS' sheet
3. Ground anchor shall have a minimum design force T as shown in the 'GROUND ANCHOR DESIGN TABLE'
4. Concrete gutter elevation shall be adjusted to drain towards inlets. See drainage plans for inlet locations

Legend:

Sv = Vertical spacing of ground anchors

2007236.2 (2007236NS5)

USERNAME => s1224496 DATE PLOTTED => 23-MAY-2012 TIME PLOTTED => 07:06

DESIGN OVERSIGHT Yiwei Hu
1/25/12
SIGN OFF DATE

	BY	CHECKED
DESIGN	H. BEDAIR	B. GHORBANI
DETAILS	H. BEDAIR	B. GHORBANI
QUANTITIES	H. BEDAIR	B. GHORBANI

PREPARED FOR THE STATE OF CALIFORNIA DEPARTMENT OF TRANSPORTATION

INES LI
PROJECT ENGINEER

BRIDGE NO. 33E0202
POST MILES 11.52/11.55

RETAINING WALL No. 10A, 10B & 10C
GROUND ANCHOR WALL DETAILS

DESIGN GENERAL PLAN SHEET (ENGLISH) (REV. 7/16/10)

ORIGINAL SCALE IN INCHES FOR REDUCED PLANS 0 1 2 3

UNIT: 0735
PROJECT NUMBER & PHASE: 04000212481 CONTRACT NO.: 04-2908C4

DISREGARD PRINTS BEARING EARLIER REVISION DATES

REVISION DATES 12/23/09 3/25/10 11/8/11 1/5/12 — SHEET 5 OF 11

FILE => 33E0202-c-snd2.dgn

DIST.	COUNTY	ROUTE	MILE POST TOTAL PROJECT	SHEET NO.	TOTAL SHEETS
04	Ala	580	R8.4/R14.6	798	853

1/5/12
11/8/11
REGISTERED ENGINEER - CIVIL

5-14-12
PLANS APPROVAL DATE

REGISTERED PROFESSIONAL ENGINEER INES S. LI No. C51561 Exp.6/30/12 CIVIL STATE OF CALIFORNIA

The State of California or its officers or agents shall not be responsible for the accuracy or completeness of electronic copies of this plan sheet.

GENERAL NOTES

DESIGN:

AASHTO LRFD Bridge Design Specifications, 4th Edition with California Amendments.

PRESTRESSING STEEL:

Bars - ASTM Designation: A722 Type II (150 ksi)

Strand Tendons-ASTM Designation: A416 (270 Ksi Low Relaxation steel)

T = Design Force per anchor (Kips) 2

fpu = Minimum tensile strength of prestressing steel

As = Minimum cross sectional area of prestressing steel in ground anchor (square inch)

$$As(Min) = \frac{1.50\ T}{0.75\ fpu}\ \text{(Strands)}\ \langle 2 \rangle$$

$$As(Min) = \frac{1.50\ T}{0.80\ fpu}\ \text{(Bars)}\ \langle 2 \rangle$$

NOTES:

(A) Level of initial grouting for drill hole 6" in diameter or smaller

(B) Level of secondary grouting

(C) Level of initial grouting inside corrugated sheathing

(D) Bonded length shall be determined by the contractor

(E) For unbonded length, see PROJECT PLANS

(F) For inclination, see PROJECT PLANS

(G) Face of Wall Excavation

NOTES:

1. Anchorage enclosure shall only be used when anchor head assembly is not enclosed in concrete.
2. Anchorage enclosure shall have provisions to allow injecting grout at low end and venting at high end. Galvanize after fabrication.
3. Silicone sealant to cover full width of flange.
4. Steel tube (Min thickness = 1/4") welded to bearing plate. Galvanize assembly after fabrication
5. Steel tube welded to bearing plate. Inside diameter of steel tube (Min thickness = 1/4") to be 1" greater than outside diameter of smooth sheathing.
6. Galvanize assembly after fabrication.
7. For other wall details, see PROJECT PLANS.

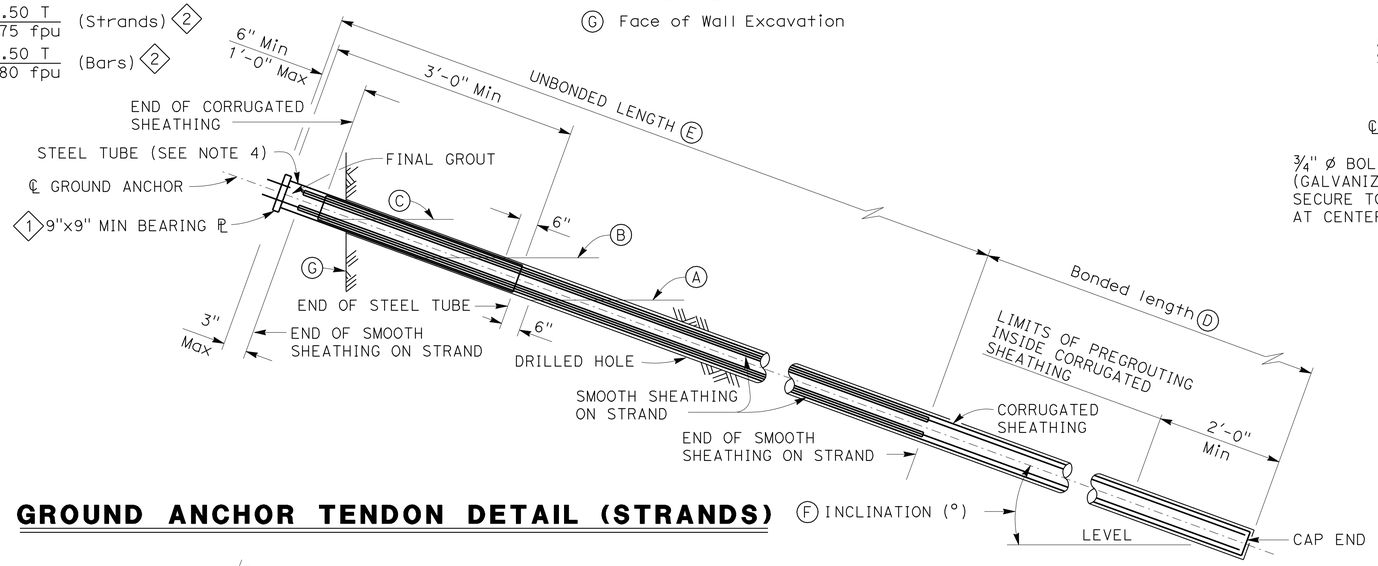

GROUND ANCHOR TENDON DETAIL (STRANDS)

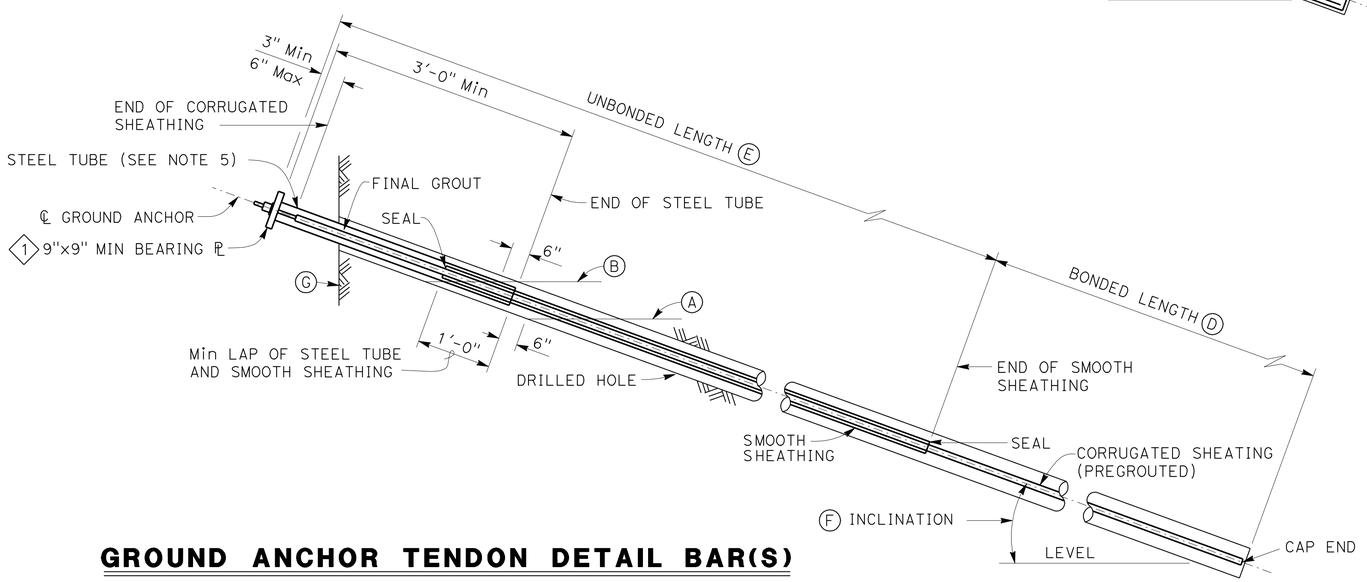

GROUND ANCHOR TENDON DETAIL BAR(S)

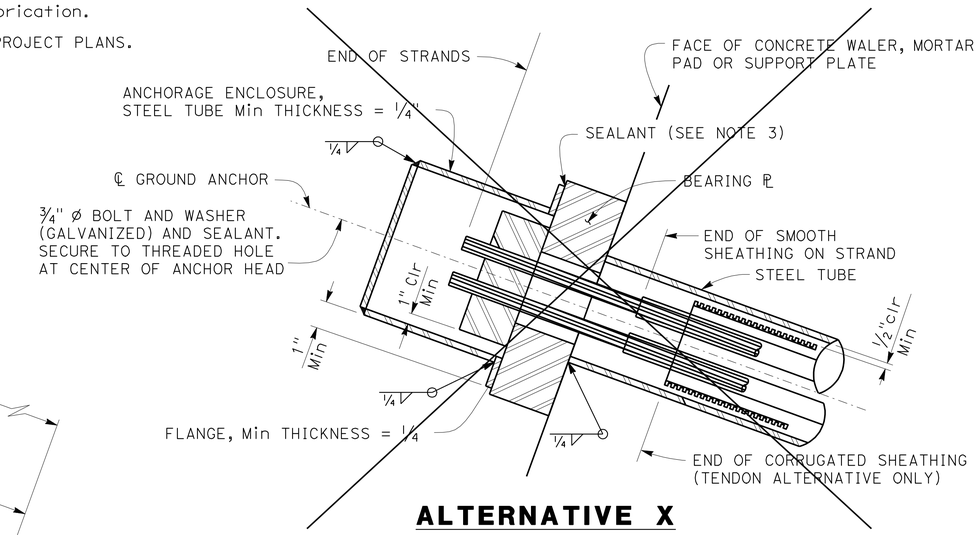

ALTERNATIVE X

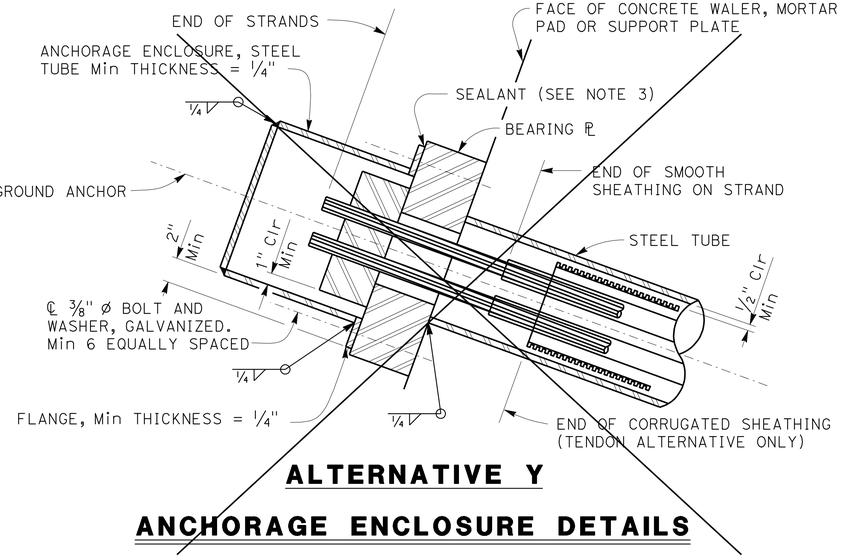

ALTERNATIVE Y

ANCHORAGE ENCLOSURE DETAILS

NO SCALE

PLAN CHECK SET/NOT FOR CONSTRUCTION (11/2/11)

REVISED STANDARD DRAWING

FILE NO. xs12-040

APPROVAL DATE JULY 2011

1 NOTE REVISED

2 REVISED FOR WSD

STATE OF CALIFORNIA DEPARTMENT OF TRANSPORTATION

DIVISION OF ENGINEERING SERVICES

BRIDGE NO. 33E0202

MILE POST 11.52/11.55

RETAINING WALL No. 10A, 10B & 10C

SUB HORIZONTAL GROUND ANCHOR DETAILS

DS OSD 2147A (ENGLISH STANDARD DRAWING "XS" BORDER REV. (02-02-11)

ORIGINAL SCALE IN INCHES FOR REDUCED PLANS 0 1 2 3

UNIT: 0735

PROJECT NUMBER & PHASE: 04000212481

CONTRACT NO.: 04-2908C4

DISREGARD PRINTS BEARING EARLIER REVISION DATES

REVISION DATES 10/2/09 12/23/09 3/25/10 11/8/11

SHEET 6 OF 11

FILE => 33E0202-c-snd3.dgn

USERNAME => s124496 DATE PLOTTED => 23-MAY-2012 TIME PLOTTED => 07:06

2007236.2 (2007236\S3)

DIST	COUNTY	ROUTE	POST MILES TOTAL PROJECT	SHEET No	TOTAL SHEETS
04	Ala	580	R8.4/R14.6	799	853

REGISTERED CIVIL ENGINEER 1/5/12 DATE

5-14-12
PLANS APPROVAL DATE

REGISTERED PROFESSIONAL ENGINEER INES S. LI No. C51561 Exp.6/30/12 CIVIL STATE OF CALIFORNIA

The State of California or its officers or agents shall not be responsible for the accuracy or completeness of scanned copies of this plan sheet.

BIGGS CARDOSA ASSOCIATES INC.
865 THE ALAMEDA
SAN JOSE, CALIFORNIA 95126

ALAMEDA CTC
1333 BROADWAY, SUITE 220
OAKLAND, CALIFORNIA 94612

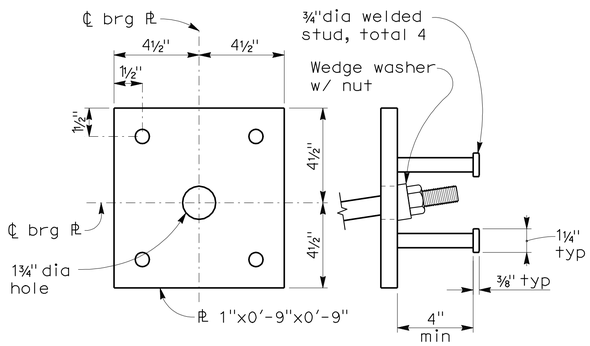

PLAN SECTION

BEARING PLATE - DETAIL 3

3" = 1'-0"

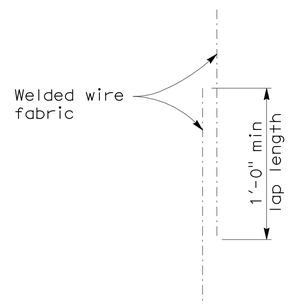

WWF SLAB SPLICE - DETAIL 4

NO SCALE

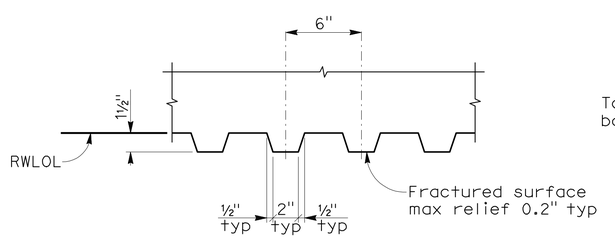

FRACTURED RIB TEXTURE - DETAIL 5

NO SCALE

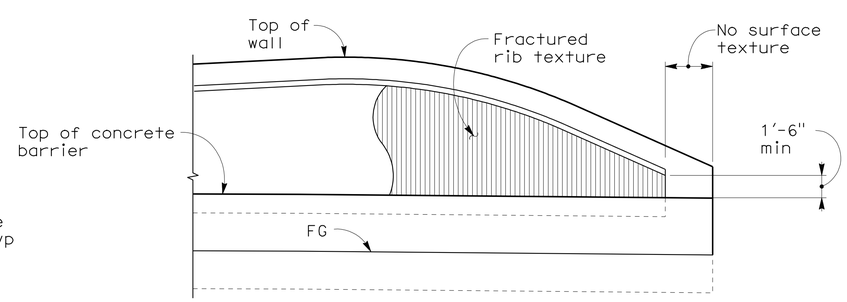

DETAIL 6

NO SCALE

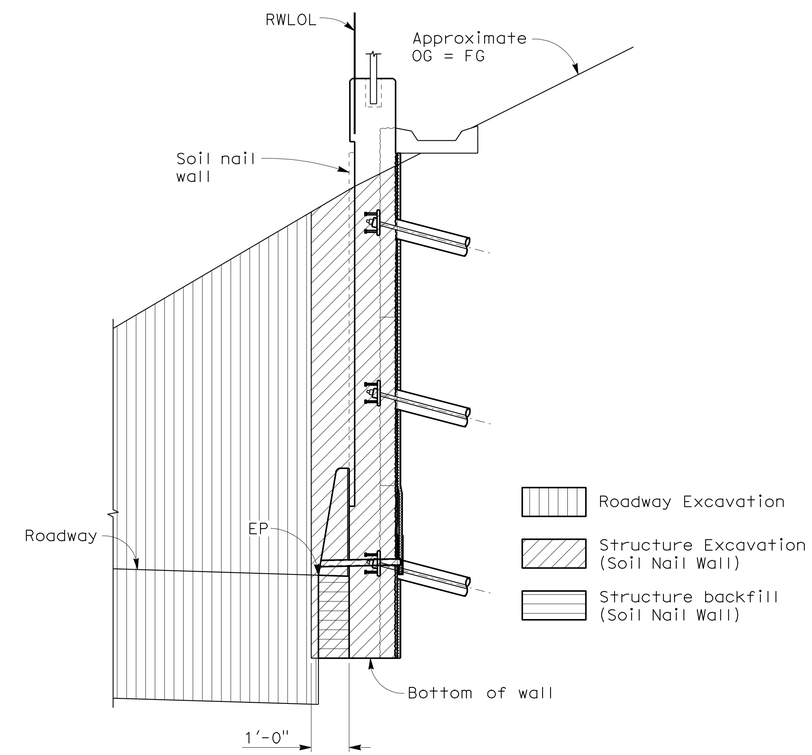

LIMITS OF PAYMENT FOR EXCAVATION & BACKFILL

NO SCALE

DESIGN OVERSIGHT Yiwei Hu
1/25/12
SIGN OFF DATE

	BY	CHECKED
DESIGN	H. BEDAIR	B. GHORBANI
DETAILS	H. BEDAIR	B. GHORBANI
QUANTITIES	H. BEDAIR	B. GHORBANI

PREPARED FOR THE STATE OF CALIFORNIA DEPARTMENT OF TRANSPORTATION

INES LI
PROJECT ENGINEER

BRIDGE NO. 33E0202
POST MILES 11.52/11.55

RETAINING WALL No. 10A, 10B & 10C
MISCELLANEOUS WALL DETAILS

DESIGN GENERAL PLAN SHEET (ENGLISH) (REV. 7/16/10)

ORIGINAL SCALE IN INCHES FOR REDUCED PLANS 0 1 2 3

UNIT: 0735
PROJECT NUMBER & PHASE: 04000212481 CONTRACT NO.: 04-2908C4

DISREGARD PRINTS BEARING EARLIER REVISION DATES → 12/23/09 3/25/10 11/8/11 1/5/12

SHEET 7 OF 11

FILE => 33E0202-c-snd4.dgn

USERNAME => s114640 DATE PLOTTED => 23-MAY-2012 TIME PLOTTED => 08:25

2007236.2 (2007236NS7)

DIST	COUNTY	ROUTE	POST MILES TOTAL PROJECT	SHEET No	TOTAL SHEETS
04	Ala	580	R8.4/R14.6	800	853

REGISTERED CIVIL ENGINEER 1/5/12 DATE

5-14-12
PLANS APPROVAL DATE

REGISTERED PROFESSIONAL ENGINEER INES S. LI No. C51561 Exp.6/30/12 CIVIL STATE OF CALIFORNIA

The State of California or its officers or agents shall not be responsible for the accuracy or completeness of scanned copies of this plan sheet.

BIGGS CARDOSA ASSOCIATES INC.
865 THE ALAMEDA
SAN JOSE, CALIFORNIA 95126

ALAMEDA CTC
1333 BROADWAY, SUITE 220
OAKLAND, CALIFORNIA 94612

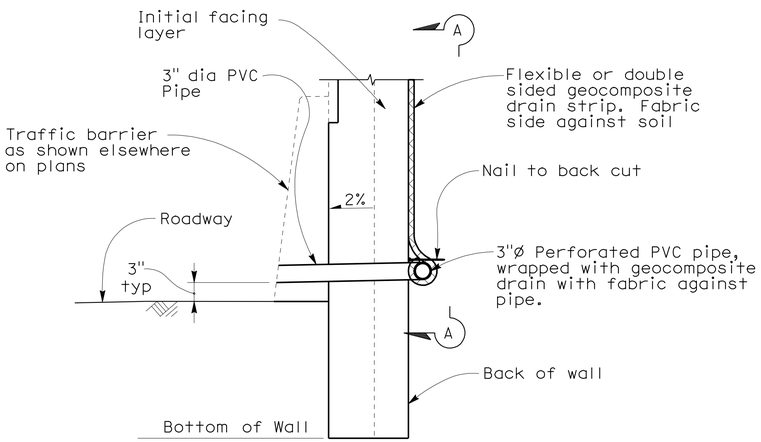

WALL DRAIN DETAIL AT WEEPHOLE
OPTION A
No scale

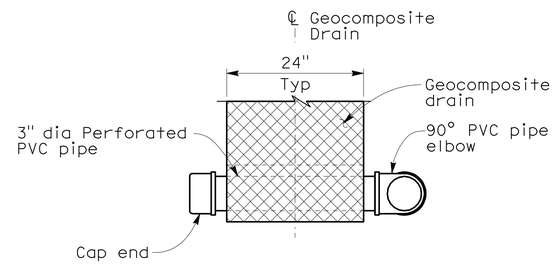

VIEW A-A
No scale

Note:
Geocomposite drain strip per Section 88 Geosynthetics of the Standard Specifications.

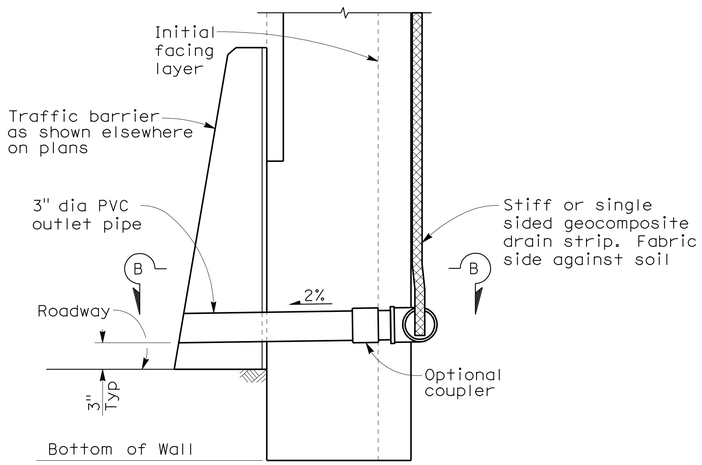

WALL DRAIN DETAIL AT WEEPHOLE
OPTION B
No scale

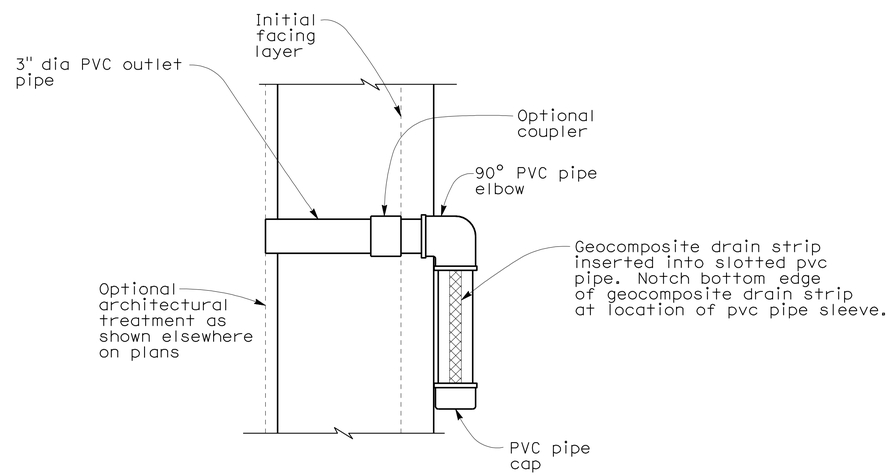

SECTION B-B
No Scale

NOTE:
The Contractor shall verify all controlling field dimensions before ordering or fabricating any material

DESIGN OVERSIGHT Yiwei Hu
1/25/12
SIGN OFF DATE

	BY	CHECKED
DESIGN	H. BEDAIR	B. GHORBANI
DETAILS	H. BEDAIR	B. GHORBANI
QUANTITIES	D. UPADHYAY	B. GHORBANI

PREPARED FOR THE STATE OF CALIFORNIA DEPARTMENT OF TRANSPORTATION

INES LI
PROJECT ENGINEER

BRIDGE NO. 33E0202
POST MILES 11.52/11.55

RETAINING WALL No. 10A, 10B & 10C
SOIL NAIL WALL DRAIN DETAILS

DESIGN GENERAL PLAN SHEET (ENGLISH) (REV. 7/16/10)

ORIGINAL SCALE IN INCHES FOR REDUCED PLANS 0 1 2 3

UNIT: 0735
PROJECT NUMBER & PHASE: 04000212481 CONTRACT NO.: 04-2908C4

DISREGARD PRINTS BEARING EARLIER REVISION DATES → 12/23/09 03/25/10 11/8/11 1/5/12

SHEET 8 OF 11

FILE => 33E0202-d-sndd.dgn

USERNAME => s114640 DATE PLOTTED => 23-MAY-2012 TIME PLOTTED => 08:25
2007236 (2007236NS8)