Dist	COUNTY	ROUTE	POST MILES TOTAL PROJECT	SHEET No.	TOTAL SHEETS
04	Ala	580	R8.4/R14.6	601	853

David W. Clow 05/11/12
REGISTERED ELECTRICAL ENGINEER DATE

5-14-12
PLANS APPROVAL DATE

REGISTERED PROFESSIONAL ENGINEER DAVID W. CLOW No. 12883 Exp. 12/31/12 ELECTRICAL STATE OF CALIFORNIA

THE STATE OF CALIFORNIA OR ITS OFFICERS OR AGENTS SHALL NOT BE RESPONSIBLE FOR THE ACCURACY OR COMPLETENESS OF SCANNED COPIES OF THIS PLAN SHEET.

ALLIANCE ENGINEERING CONSULTANT, INC.
4701 PATRICK HENRY DR., #10
SANTA CLARA, CA 95054

ALAMEDA CTC
1 333 BROADWAY SUITE 220
OAKLAND, CA 94612

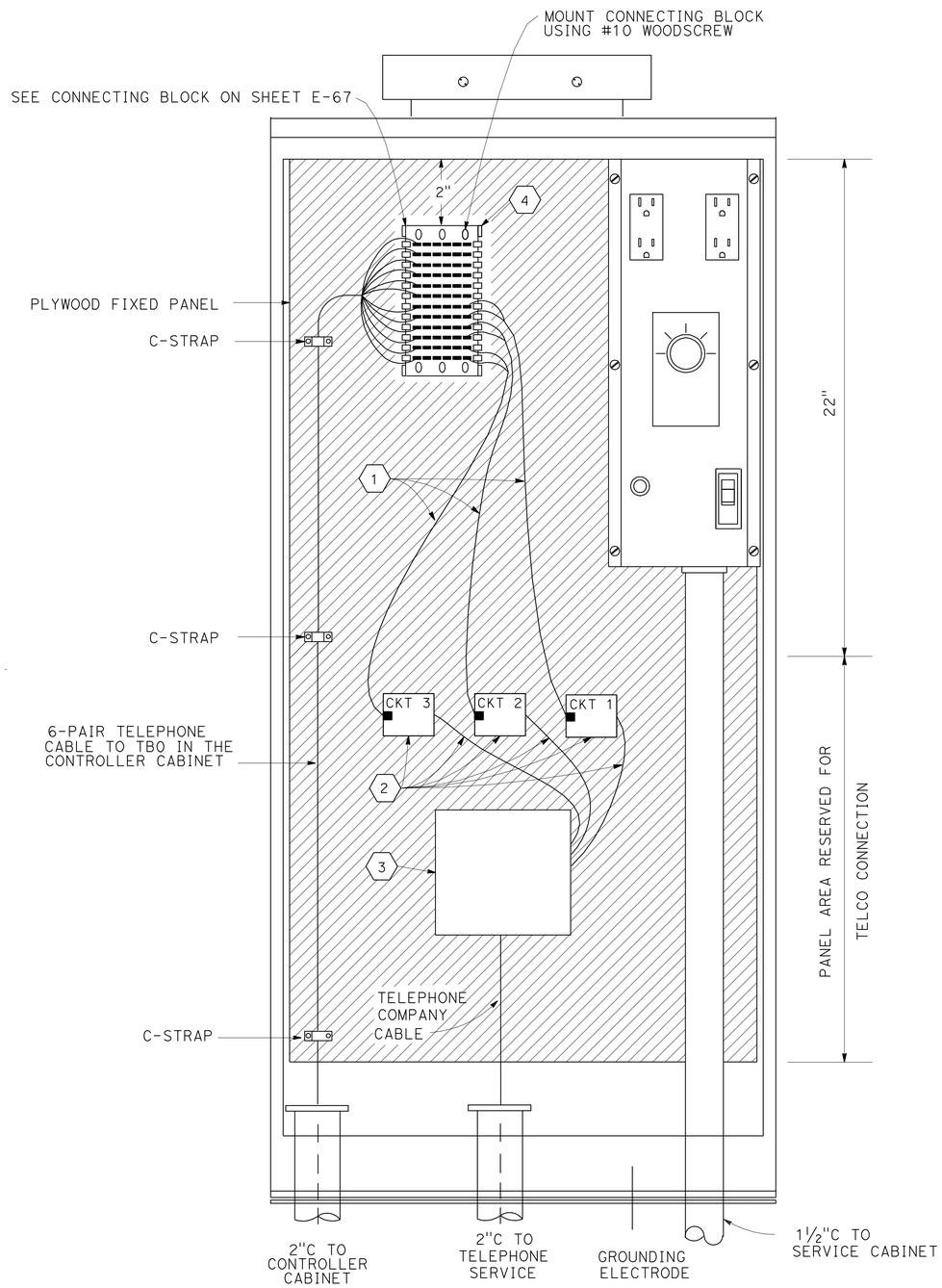

TELEPHONE DEMARCATION CABINET, TYPE B WIRING DETAIL

SEE RSP ES-3E

ABBREVIATIONS

T/R	TIP AND RING
N/C	NO CONNECTION
TBO	TERMINAL BLOCK 0
TC	TELEPHONE CABLE

CONDUCTOR LIST FOR DEMARCATION CABINET

CABLE TYPE	FUNCTION	PAIR COLORS	12 ROW PUNCH BLOCK
TC	SPARE	WHITE & BLUE	ROW 1, ROW 2
TC	SPARE	WHITE & ORANGE	ROW 3, ROW 4
TC	SPARE	WHITE & GREEN	ROW 5, ROW 6
TC	CIRCUIT 1	WHITE & BROWN	ROW 7, ROW 8
TC	CIRCUIT 2	WHITE & GRAY	ROW 9, ROW 10
TC	CIRCUIT 3 (DIAL-UP: T/R PAIR)	RED & BLUE	ROW 11, ROW 12

NOTES: (FOR THIS SHEET ONLY)

1. 3' SINGLE ENDED 2-PAIR MODULAR CORD WITH RJ11 PLUG CONNECTOR. CONDUCTORS SHALL BE No. 22 AWG, SOLID.
2. SERVICE CORD AND CONNECTION BLOCK FURNISHED AND INSTALLED BY TELEPHONE COMPANY
3. TELEPHONE COMPANY STANDARD PROTECTOR EQIUPMENT FURNISHED AND INSTALLED BY TELEPHONE COMPANY.
4. CONNECTING BLOCK SHALL BE TYPE SIEMON S66B1-6 OR EQUIVALENT.

ELECTRICAL DETAILS

NO SCALE

E-66

APPROVED FOR ELECTRICAL WORK ONLY

SB	5/11/12
REVISED BY	DATE REVISED
HENRY ROBINO	DAVID CLOW
CALCULATED-DESIGNED BY	CHECKED BY
CONSULTANT FUNCTIONAL SUPERVISOR	KEN NGAI

STATE OF CALIFORNIA - DEPARTMENT OF TRANSPORTATION

Caltrans

LAST REVISION 05-11-12 | DATE PLOTTED => 23-MAY-2012 TIME PLOTTED => 08:14

Dist	COUNTY	ROUTE	POST MILES TOTAL PROJECT	SHEET No.	TOTAL SHEETS
04	Ala	580	R8.4/R14.6	602	853

David W. Clow 05/11/12
REGISTERED ELECTRICAL ENGINEER DATE

5-14-12
PLANS APPROVAL DATE

REGISTERED PROFESSIONAL ENGINEER DAVID W. CLOW No. 12883 Exp. 12/31/12 ELECTRICAL STATE OF CALIFORNIA

THE STATE OF CALIFORNIA OR ITS OFFICERS OR AGENTS SHALL NOT BE RESPONSIBLE FOR THE ACCURACY OR COMPLETENESS OF SCANNED COPIES OF THIS PLAN SHEET.

ALLIANCE ENGINEERING CONSULTANT, INC.
4701 PATRICK HENRY DR., #10
SANTA CLARA, CA 95054

ALAMEDA CTC
1 333 BROADWAY SUITE 220
OAKLAND, CA 94612

NOTES: (FOR THIS SHEET ONLY)

1. SINGLE ENDED 2-PAIR MODULAR CORD, 3' LONG. CONDUCTORS SHALL BE No. 22 AWG, SOLID.
2. USE PUNCH DOWN IMPACT TOOL TO TERMINAL CONDUCTORS ON THE CLIP. STRIP INSULATION 1/4" FROM THE END OF CONDUCTOR BEFORE TERMINATING TO THE CLIP.
3. TERMINATE EACH CABLE TO A COLUMN OF CLIPS AS SHOWN.
4. USE SAME TWISTED PAIR CONDUCTOR COLOR ARRANGEMENT FOR OTHER CABLES IF REQUIRED.
5. PLUG CONTACTS SHALL BE GRADE A COPPER ALLOY PLATED WITH 50 MICRO INCHES GOLD OVER NICKEL.

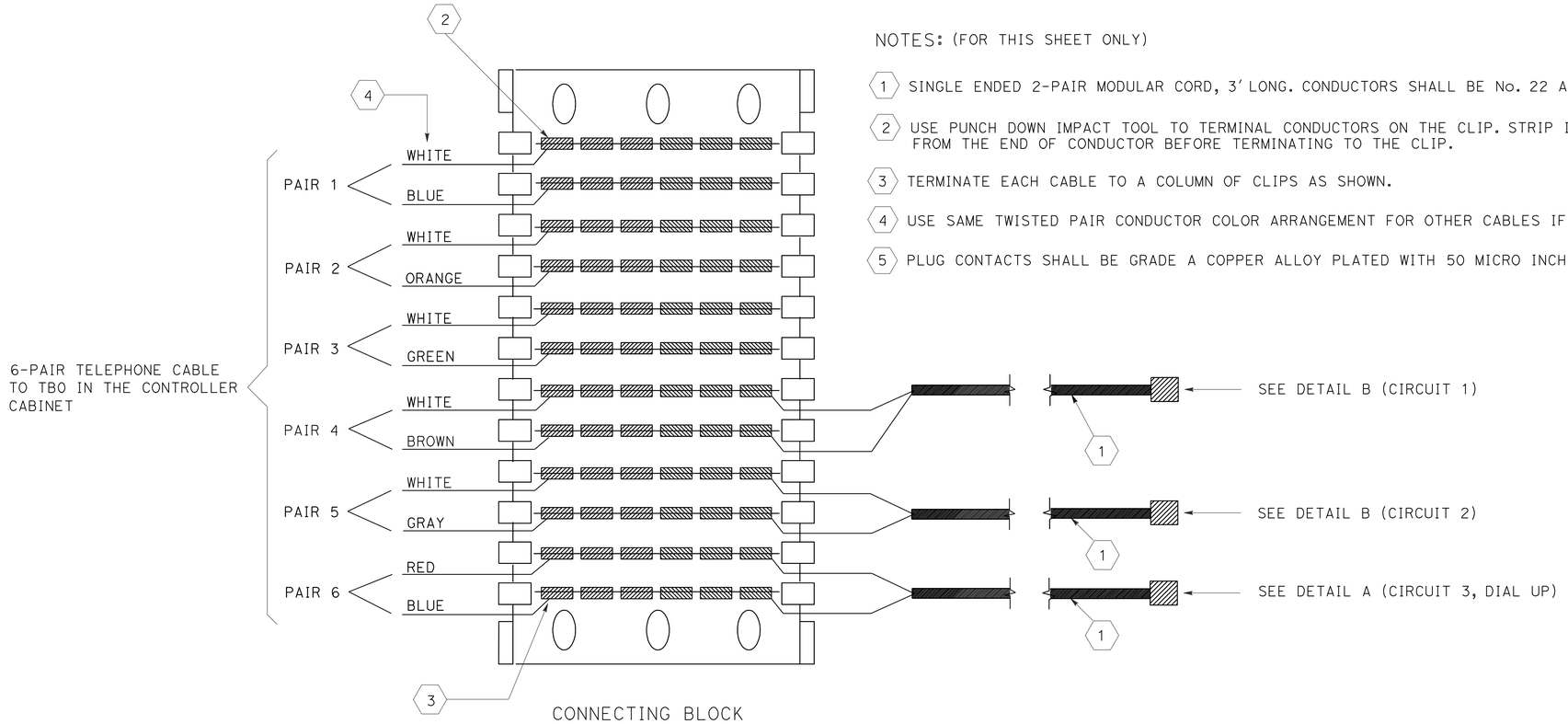

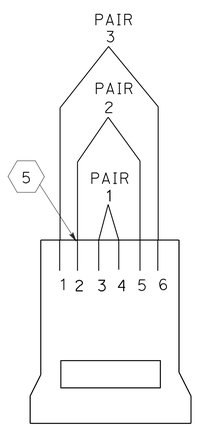

PAIR ID	PIN #	
T1	4	T/R PAIR FOR DIAL-UP CIRCUIT
R1	3	
T2	2	N/C
R2	5	
T3	6	N/C
R3	1	

DETAIL A

RJ11 6P-4C MODULAR PLUG

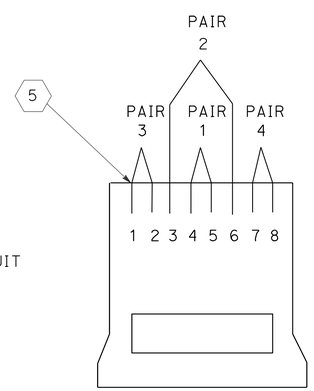

PAIR ID	PIN #	FUNCTION
T1	5	TRANSMIT AND RECEIVE PAIR
R1	4	
T2	3	N/C
R2	6	
T3	1	N/C
R3	2	
T4	7	N/C
R4	8	

DETAIL B

RJ45 8P-8C MODULAR PLUG

ABBREVIATIONS

T/R	TIP AND RING
N/C	NO CONNECTION
TBO	TERMINAL BLOCK 0
TC	TELEPHONE CABLE

TELEPHONE DEMARCATION CABINET, TYPE B WIRING DETAIL

SEE ES-3E

ELECTRICAL DETAILS

NO SCALE

E-67

APPROVED FOR ELECTRICAL WORK ONLY

REVISED BY	SB
DATE REVISED	5/11/12
CALCULATED-DESIGNED BY	HENRY ROBINO
CHECKED BY	DAVID CLOW
CONSULTANT FUNCTIONAL SUPERVISOR	KEN NGAI

STATE OF CALIFORNIA - DEPARTMENT OF TRANSPORTATION

Caltrans

LAST REVISION 05-11-12 | DATE PLOTTED => 23-MAY-2012 | TIME PLOTTED => 08:14

Dist	COUNTY	ROUTE	POST MILES TOTAL PROJECT	SHEET No.	TOTAL SHEETS
04	Ala	580	R8.4/R14.6	603	853

David W. Clow 05/11/12
REGISTERED ELECTRICAL ENGINEER DATE

5-14-12
PLANS APPROVAL DATE

REGISTERED PROFESSIONAL ENGINEER
DAVID W. CLOW
No. 12883
Exp. 12/31/12
ELECTRICAL
STATE OF CALIFORNIA

THE STATE OF CALIFORNIA OR ITS OFFICERS OR AGENTS SHALL NOT BE RESPONSIBLE FOR THE ACCURACY OR COMPLETENESS OF SCANNED COPIES OF THIS PLAN SHEET.

ALLIANCE ENGINEERING CONSULTANT, INC.
4701 PATRICK HENRY DR., #10
SANTA CLARA, CA 95054

ALAMEDA CTC
1 333 BROADWAY SUITE 220
OAKLAND, CA 94612

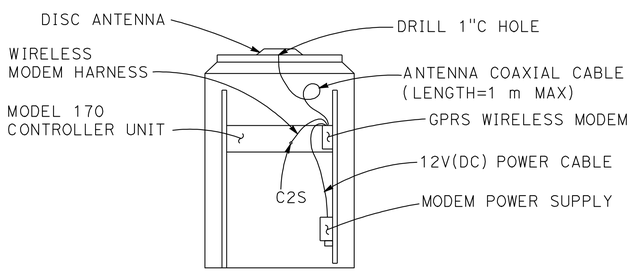

REAR VIEW OF THE MODEL 334 CONTROLLER CABINET

GPRS WIRELESS MODEM AND ANTENNA INSTALLATION DETAIL

ABBREVIATION:

SIM	SUBSCRIBER IDENTIFICATION MODULE
APN	ACCESS POINT NAME
PDP	PACKARD DATA PROTOCOL

CONTRACTOR'S WORK IN THE CONTROLLER CABINET

1. INFORM THE ENGINEER 30 WORKING DAYS BEFORE INSTALLATION IS PLANNED SO THAT THE PDP CONTEXT AND APN CAN BE OBTAINED. PROVIDE THE SERIAL AND SIM NUMBERS OF THE MODEM TO THE ENGINEER AT THAT TIME. THE ENGINEER WILL PROVIDE THE PDP CONTEXT AND APN WITHIN 5 WORKING DAYS. THE CONTRACTOR SHALL PROGRAM THE PDP CONTEXT AND APN IN THE MODEM BEFORE INSTALLATION.
2. DRILL 1" HOLE THROUGH THE TOP OF THE CABINET. ATTACH THE ANTENNA ON THE CABINET WITH STICK PAD PROVIDED BY THE MANUFACTURER.
3. MOUNT THE MODEM UNIT ON THE CABINET REAR MOUNTING RAIL WITH MOUNTING BRACKET PROVIDED BY THE MANUFACTURER.
4. MOUNT THE MODEM 12 V (dc) POWER SUPPLY DIRECTLY TO CABINET.
5. CONNECT POWER CABLE TO 12 V(dc) POWER ADAPTER.
6. CONNECT THE ANTENNA COAXIAL CABLE TO THE MODEM.
7. CONNECT MODEM HARNESS BETWEEN THE MODEM AND THE MODEL 170 CONTROLLER UNIT AS SHOWN.
8. RECORD THE SERIAL NUMBER OF THE MODEM ON THE CHECK LIST SHEET.

WIRELESS MODEM HARNESS INSTALLATION DETAILS

1. CABLE PIN OUT DIAGRAM

AMP 201360-2-ND DB9-P

L ——— 2
K ——— 3
N ——— 5
D, H, J, M — 1,4,6,7,8,9 N/C

2. CONSTRUCT AND INSTALL COMMUNICATION CABLE. SEE SPECIAL PROVISIONS FOR CABLE TYPE AND OTHER INFORMATION.

ELECTRICAL DETAILS

NO SCALE

E-68

APPROVED FOR ELECTRICAL WORK ONLY

REVISED BY	SB
DATE REVISED	5/11/12
HENRY ROBINO	
DAVID CLOW	
CALCULATED-DESIGNED BY	
CHECKED BY	
CONSULTANT FUNCTIONAL SUPERVISOR	KEN NGAI

STATE OF CALIFORNIA - DEPARTMENT OF TRANSPORTATION
Caltrans

LAST REVISION 05-11-12
DATE PLOTTED => 23-MAY-2012
TIME PLOTTED => 08:14

Dist	COUNTY	ROUTE	POST MILES TOTAL PROJECT	SHEET No.	TOTAL SHEETS
04	Ala	580	R8.4/R14.6	604	853

David W. Clow 05/11/12
REGISTERED ELECTRICAL ENGINEER DATE

5-14-12
PLANS APPROVAL DATE

REGISTERED PROFESSIONAL ENGINEER DAVID W. CLOW No. 12883 Exp. 12/31/12 ELECTRICAL STATE OF CALIFORNIA

THE STATE OF CALIFORNIA OR ITS OFFICERS OR AGENTS SHALL NOT BE RESPONSIBLE FOR THE ACCURACY OR COMPLETENESS OF SCANNED COPIES OF THIS PLAN SHEET.

ALLIANCE ENGINEERING CONSULTANT, INC.
4701 PATRICK HENRY DR., #10
SANTA CLARA, CA 95054

ALAMEDA CTC
1 333 BROADWAY SUITE 220
OAKLAND, CA 94612

GENERAL NOTES FOR STAGE CONSTRUCTION
(SHEETS E-70 THROUGH E-98)

1. EXISTING EQUIPMENT SHOWN WITHOUT PROJECT NOTES AND EXISTING EQUIPMENT NOT SHOWN SHALL BE MAINTAINED IN CONTINUOUS OPERATION UNLESS OTHERWISE NOTED ON OTHER PARTS OF THE CONTRACT PLANS.
2. TEMPORARY ELECTRICAL EQUIPMENT NOT TO BECOME PART OF PERMANENT SYSTEM SHALL BE REMOVED AND DISPOSED OF WHEN NO LONGER REQUIRED.
3. EXACT LOCATION OF TEMPORARY ELECTRICAL EQUIPMENT WILL BE DETERMINED BY THE ENGINEER.
4. ALL TEMPORARY ELECTRICAL EQUIPMENT NO LONGER REQUIRED AT THE END OF A STAGE SHALL BE REMOVED OR REUSED IN STAGES TO FOLLOW. PULL BOXES SHALL BE REMOVED AND BECOME PROPERTY OF CONTRACTOR.
5. OTHER PERMANENT ELECTRICAL EQUIPMENT NOT SHOWN ON THE STAGE CONSTRUCTION PLANS CAN BE INSTALLED AT ANY STAGE IF NOT INTERFERING WITH CONSTRUCTION AND TRAFFIC AND AS DIRECTED BY THE ENGINEER.
6. ALL TEMPORARY WOOD POLES FOR HIGHWAY LIGHTING SHALL BE PLACED BEHIND CONCRETE BARRIER GUARD RAIL OR JUST BEHIND THE K-RAIL AND OUTSIDE THE WORK AREA. AFTER THESE TEMPORARY POLES HAVE BEEN REMOVED, THE HOLES SHALL BE FILLED WITH SLURRY CONCRETE.
7. MESSENGER WIRE SHALL BE 3/8" 7 STRAND GALVANIZED STEEL WIRE. IT SHALL BE UTILITIES GRADE #1 WITH 6,000 POUND BREAKING STRENGTH OR STRONGER GRADE.
8. RAMP METERING SYSTEM AT LOCATIONS 1, 2, 3, 4, 5, 6, 7, 8 & 9 DURING STAGE 1 SHALL OPERATE ON FIXED TIME BASIS BASED ON HISTORICAL MAINLINE TRAFFIC VOLUME DATA.
9. RAMP METERING SYSTEM AT LOCATIONS 1 AND 2 DURING STAGE 2 SHALL OPERATE ON FIXED TIME BASIS BASED ON HISTORICAL MAINLINE TRAFFIC VOLUME DATA.
10. PERMANENT RAMP METERING SYSTEM AT LOCATIONS 5, 8 & 9 DURING STAGE 3 SHALL BE INSTALLED AND OPERATED ON FIXED TIME BASIS BASED ON HISTORICAL MAINLINE TRAFFIC VOLUME DATA.
11. SEE SHEET E-2 AND E-3 FOR OTHER NOTES.

STAGE CONSTRUCTION PROJECT NOTES
(SHEETS E-70 THROUGH E-98)

1A PERMANENT ELECTRICAL EQUIPMENT TO BE INSTALLED AND IN EFFECTIVE OPERATION AT THE BEGINNING OF THE STAGE AS SHOWN ON THE PLAN OR AS NOTED.

2A TURN OFF THE ELECTROLIER DURING THIS STAGE.

3A ELECTRICAL EQUIPMENT TO BE INSTALLED FOR TEMPORARY LIGHTING OR RAMP METERING AND IN EFFECTIVE OPERATION FOR THE STAGE CONSTRUCTION AS SHOWN ON THE PLAN OR AS NOTED. WHEN NO LONGER REQUIRED ALL ABOVE GROUND ELECTRICAL EQUIPMENT SHALL BE REMOVED. PULL BOXES AND FOUNDATIONS SHALL BE REMOVED AND BECOME PROPERTY OF THE CONTRACTOR AND CONDUIT SHALL BE ABANDONED.

4A COORDINATE NEW 120/240 V SERVICE CONNECTION WITH PG&E.

5A INSTALL 2"C, 2 #8 (SIGN LIGHTING, 240 V)
2#14 (TEST SWITCH, 120 V)

6A INSTALL 2#8 (LIGHTING, 240 V)
2#8 (SIGN LIGHTING, 240 V)
2#14 (SIGN TEST SWITCH, 120 V)

7A INSTALL 2#8 (LIGHTING, 240 V)

8A INSTALL 1½"C, 2#6

9A INSTALL 1½"C, 2#8 (LIGHTING, 240 V)

10A INSTALL 2"C, 2#6 (LIGHTING, 240 V)
2#8 (SIGN LIGHTING, 240 V)
2#14 (SIGN TEST SWITCH, 120 V)

11A INSTALL 1½"C, 2#8 (RAMP METERING, 120 V)
3#14 (SIGNAL, 120 V)
1#8 (SIGNAL NEUTRAL)
2#8 (METER-ON SIGN, 120 V)

12A INSTALL 3"C, 2#6

13A INSTALL 3"C, 2#8 (LIGHTING, 240 V)
2#8 (SIGN LIGHTING, 240 V)
2#14 (SIGN TEST SWITCH, 120 V)

14A INSTALL 2#8

15A INSTALL 1½"C, 6#14 (SIGNAL, 120 V)
1#8 (SIGNAL NEUTRAL)

16A INSTALL 1½"C, 3#14 (SIGNAL, 120 V)
1#8 (SIGNAL NEUTRAL)

17A INSTALL 2#8 (LIGHTING, 240 V)
2#6 (RM CABINET, 120 V)
2#8 (METER-ON SIGN, 120 V)

18A INSTALL 3#14 (SIGNAL, 120 V)
1#8 (SIGNAL NEUTRAL)

19A RAMP METERING SYSTEM SHALL OPERATE ON FIXED TIME BASIS BASED ON HISTORICAL MAINLINE TRAFFIC VOLUME DATA.

20A INSTALL 2"C, 2#8 (METER-ON SIGN, 120 V)
3#14 (SIGNAL, 120 V)
1#8 (SIGNAL NEUTRAL)

21A INSTALL 2#6 (RAMP METERING, 120 V)
2#8 (METER-ON SIGN, 120 V)

22A INSTALL 2"C, 2#6 (RAMP METERING, 120 V)
2#8 (METER-ON SIGN, 120 V)
6#14 (SIGNAL)
1#8 (SIGNAL NEUTRAL)

23A INSTALL 2#8 (RAMP METERING, 120 V)

24A INSTALL METER-ON SIGN 7'-0" FROM THE GRADE ON THE 50'-0" WOODEN POLE.

25A INSTALL 2#6 (RAMP METERING, 120 V)
2#8 (METER-ON SIGN, 120 V)
6#14 (SIGNAL, 120 V)
1#8 (SIGNAL NEUTRAL)

26A INSTALL 2#6 (RAMP METERING, 120 V),
2#8 (METER-ON SIGN, 120 V),
6#14 (SIGNAL, 120 V),
1#8 (SIGNAL NEUTRAL)

27A INSTALL 2#6 (LIGHTING, 240 V),
2#6 (RAMP METERING, 120 V),

28A INSTALL 2#6 (LIGHTING, 240 V),
2#8 (METER-ON SIGN, 120 V),

29A INSTALL 2#8 (LIGHTING, 240 V),
6#14 (SIGNAL, 120 V),
1#8 (SIGNAL NEUTRAL)

30A INSTALL 2"C, 6#14 (SIGNAL, 120 V)
1#8 (SIGNAL NEUTRAL)
2#8 (METER-ON SIGN, 120 V)

31A INSTALL, 6#14 (SIGNAL, 120 V)
1#8 (SIGNAL NEUTRAL)

32A INSTALL 2"C, 2#6 (RM CABINET, 120 V)
2#8 (METER-ON SIGN, 120 V)

33A INSTALL 2#1/0 (RM CABINET, 120 V)
2#4 (METER-ON SIGN, 120 V)

34A SPLICE OVERHEAD CONDUCTORS TO EXISTING CONDUCTORS IN PULLBOX NEAR BOTTOM OF ELECTROLIER.

34B INSTALL METER-ON SIGNS ON EXISTING ELECTROLIER WITH TYPE SP-2-T MOUNTING.

35A INSTALL 2"C, 2 #6 (RM CABINET, 120 V)
2 #8 (LIGHTING, 240 V)

36A INSTALL 2"C, 2 #6 (RM CABINET, 120 V)
2 #8 (METER-ON SIGN, 120 V)
3 #14 (SIGNAL, 120 V)
1 #8 (SIGNAL NEUTRAL)

SYMBOLS (STAGE CONSTRUCTION)
(SHEETS E-70 THROUGH E-98)
SEE RSP ES-1A, RSP ES-1B & RSP ES-1C FOR OTHER SYMBOLS

EXISTING	NEW	
		TEMPORARY STATE 200 W HPS LUMINAIRE ON 50'-0" WOOD POLE. SEE SHEETS E-96, E-97 AND E-98.
oh	OH	OVERHEAD CONDUCTORS AS INDICATED WITH 3/8" MESSENGER WIRE. SEE GENERAL NOTE 7.
		WOOD POLE (50'-0")
		POLE ANCHOR
		TEMPORARY RAMP METERING SIGNAL SEE SHEET E-96

APPROVED FOR ELECTRICAL WORK ONLY

ELECTRICAL (STAGE CONSTRUCTION)

E-69

REVISED BY	DATE REVISED
SB	5/11/12

HENRY ROBINO — CALCULATED-DESIGNED BY
DAVID CLOW — CHECKED BY
KEN NGAI — CONSULTANT FUNCTIONAL SUPERVISOR
STATE OF CALIFORNIA - DEPARTMENT OF TRANSPORTATION
Caltrans

LAST REVISION 05-11-12
DATE PLOTTED => 23-MAY-2012
TIME PLOTTED => 08:14

Dist	COUNTY	ROUTE	POST MILES TOTAL PROJECT	SHEET No.	TOTAL SHEETS
04	Ala	580	R8.4/R14.6	605	853

David W. Clow 05/11/12
REGISTERED ELECTRICAL ENGINEER DATE

5-14-12
PLANS APPROVAL DATE

REGISTERED PROFESSIONAL ENGINEER
DAVID W. CLOW
No. 12883
Exp. 12/31/12
ELECTRICAL
STATE OF CALIFORNIA

THE STATE OF CALIFORNIA OR ITS OFFICERS OR AGENTS SHALL NOT BE RESPONSIBLE FOR THE ACCURACY OR COMPLETENESS OF SCANNED COPIES OF THIS PLAN SHEET.

ALLIANCE ENGINEERING CONSULTANT, INC.
4701 PATRICK HENRY DR., #10
SANTA CLARA, CA 95054

ALAMEDA CTC
1 333 BROADWAY SUITE 220
OAKLAND, CA 94612

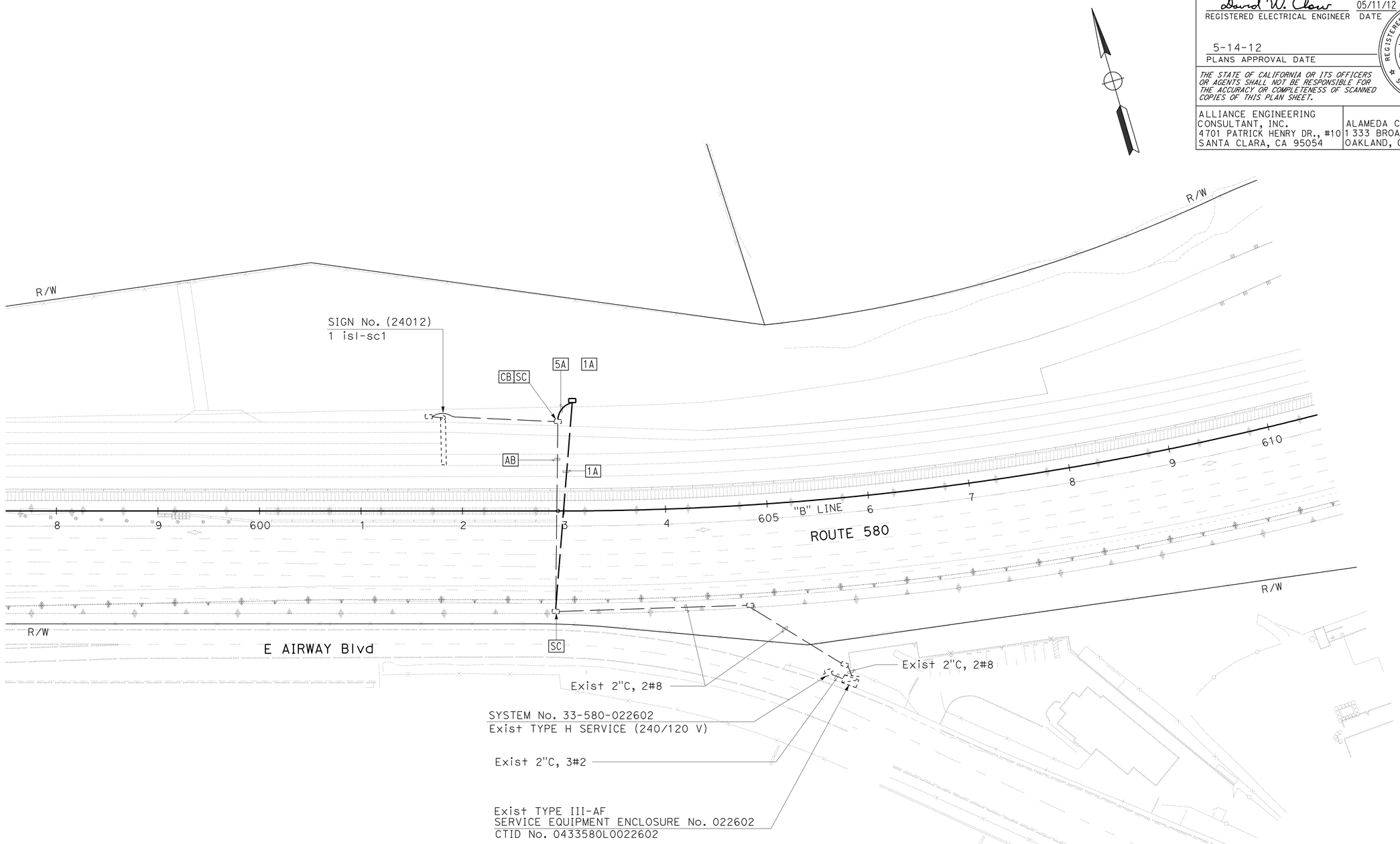

LIGHTING AND SIGN ILLUMINATION (STAGE CONSTRUCTION)

STAGE 1

SCALE: 1" = 50'

E-70

FOR NOTES, ABBREVIATIONS AND LEGEND, SEE SHEET E-69

APPROVED FOR ELECTRICAL WORK ONLY

REVISED BY	SB
DATE REVISED	5/11/12
HENRY ROBINO	
DAVID CLOW	
CALCULATED-DESIGNED BY	
CHECKED BY	
CONSULTANT FUNCTIONAL SUPERVISOR	
KEN NGAI	

STATE OF CALIFORNIA - DEPARTMENT OF TRANSPORTATION
Caltrans

LAST REVISION 05-11-12
DATE PLOTTED => 23-MAY-2012
TIME PLOTTED => 08:14

FOR ACCURATE RIGHT OF WAY DATA, CONTACT
RIGHT OF WAY ENGINEERING AT THE DISTRICT OFFICE.

Dist	COUNTY	ROUTE	POST MILES TOTAL PROJECT	SHEET No.	TOTAL SHEETS
04	Ala	580	R8.4/R14.6	606	853

David W. Clow 05/11/12
REGISTERED ELECTRICAL ENGINEER DATE

5-14-12
PLANS APPROVAL DATE

REGISTERED PROFESSIONAL ENGINEER
DAVID W. CLOW
No. 12883
Exp. 12/31/12
ELECTRICAL
STATE OF CALIFORNIA

THE STATE OF CALIFORNIA OR ITS OFFICERS OR AGENTS SHALL NOT BE RESPONSIBLE FOR THE ACCURACY OR COMPLETENESS OF SCANNED COPIES OF THIS PLAN SHEET.

ALLIANCE ENGINEERING CONSULTANT, INC.
4701 PATRICK HENRY DR., #10
SANTA CLARA, CA 95054

ALAMEDA CTC
1 333 BROADWAY SUITE 220
OAKLAND, CA 94612

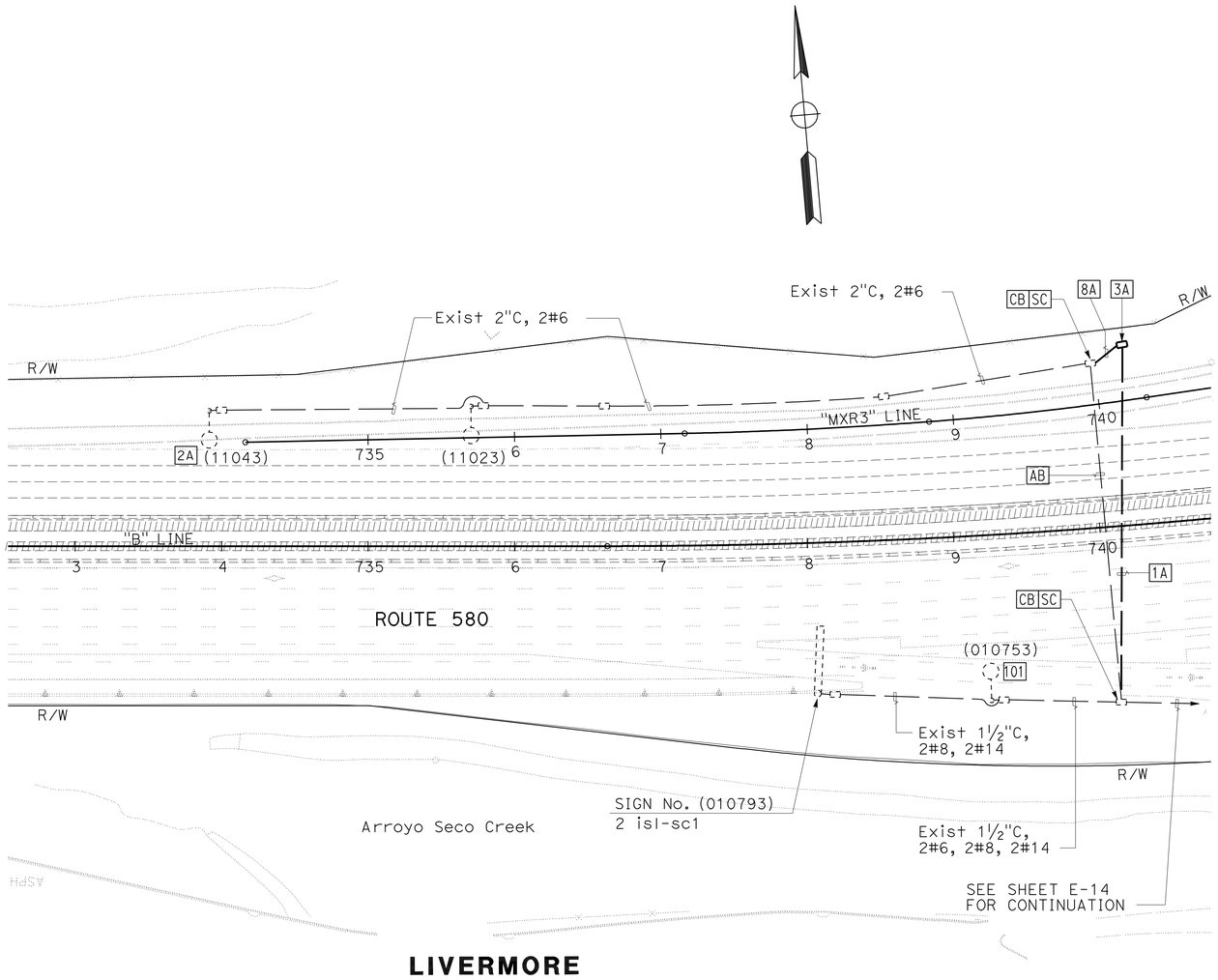

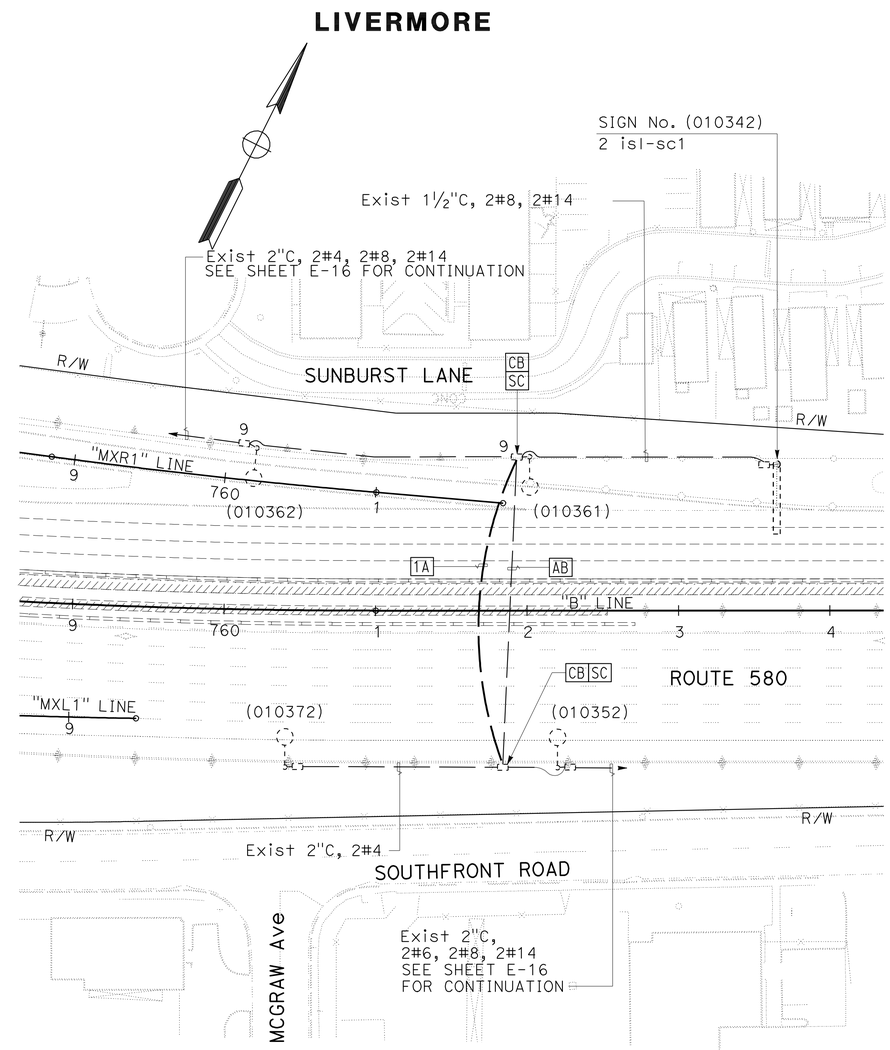

FOR NOTES, ABBREVIATIONS AND LEGEND, SEE SHEET E-69

APPROVED FOR ELECTRICAL WORK ONLY

LIGHTING AND SIGN ILLUMINATION (STAGE CONSTRUCTION)

STAGE 1

SCALE: 1" = 50'

E-71

REVISED BY	DATE REVISED
SB	5/11/12

HENRY ROBINO — DAVID CLOW
CALCULATED-DESIGNED BY — CHECKED BY
CONSULTANT FUNCTIONAL SUPERVISOR — KEN NGAI

STATE OF CALIFORNIA - DEPARTMENT OF TRANSPORTATION
Caltrans

LAST REVISION 05-11-12
DATE PLOTTED => 23-MAY-2012
TIME PLOTTED => 08:15

FOR ACCURATE RIGHT OF WAY DATA, CONTACT
RIGHT OF WAY ENGINEERING AT THE DISTRICT OFFICE.

Dist	COUNTY	ROUTE	POST MILES TOTAL PROJECT	SHEET No.	TOTAL SHEETS
04	Ala	580	R8.4/R14.6	607	853

David W. Clow 05/11/12
REGISTERED ELECTRICAL ENGINEER DATE

5-14-12
PLANS APPROVAL DATE

REGISTERED PROFESSIONAL ENGINEER
DAVID W. CLOW
No. 12883
Exp. 12/31/12
ELECTRICAL
STATE OF CALIFORNIA

THE STATE OF CALIFORNIA OR ITS OFFICERS OR AGENTS SHALL NOT BE RESPONSIBLE FOR THE ACCURACY OR COMPLETENESS OF SCANNED COPIES OF THIS PLAN SHEET.

ALLIANCE ENGINEERING CONSULTANT, INC.
4701 PATRICK HENRY DR., #10
SANTA CLARA, CA 95054

ALAMEDA CTC
1 333 BROADWAY SUITE 220
OAKLAND, CA 94612

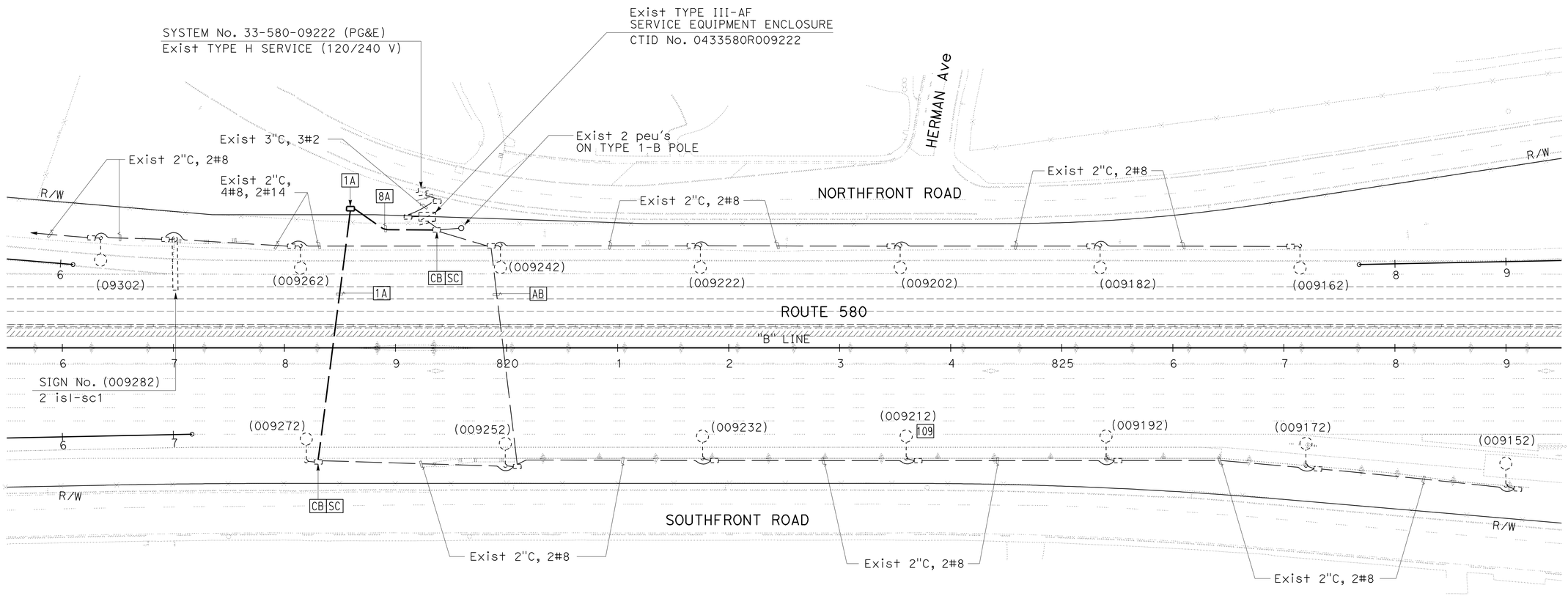

LIVERMORE

FOR NOTES, ABBREVIATIONS AND LEGEND, SEE SHEET E-69

APPROVED FOR ELECTRICAL WORK ONLY

LIGHTING AND SIGN ILLUMINATION (STAGE CONSTRUCTION)

STAGE 1

SCALE: 1" = 50'

E-72

REVISED BY	SB
DATE REVISED	5/11/12
CALCULATED-DESIGNED BY	HENRY ROBINO
CHECKED BY	DAVID CLOW
CONSULTANT FUNCTIONAL SUPERVISOR	KEN NGAI

STATE OF CALIFORNIA - DEPARTMENT OF TRANSPORTATION
Caltrans

LAST REVISION 05-11-12
DATE PLOTTED => 23-MAY-2012
TIME PLOTTED => 08:15

FOR ACCURATE RIGHT OF WAY DATA, CONTACT
RIGHT OF WAY ENGINEERING AT THE DISTRICT OFFICE.

Dist	COUNTY	ROUTE	POST MILES TOTAL PROJECT	SHEET No.	TOTAL SHEETS
04	Ala	580	R8.4/R14.6	608	853

David W. Clow 05/11/12
REGISTERED ELECTRICAL ENGINEER DATE

5-14-12
PLANS APPROVAL DATE

REGISTERED PROFESSIONAL ENGINEER
DAVID W. CLOW
No. 12883
Exp. 12/31/12
ELECTRICAL
STATE OF CALIFORNIA

THE STATE OF CALIFORNIA OR ITS OFFICERS OR AGENTS SHALL NOT BE RESPONSIBLE FOR THE ACCURACY OR COMPLETENESS OF SCANNED COPIES OF THIS PLAN SHEET.

ALLIANCE ENGINEERING CONSULTANT, INC.
4701 PATRICK HENRY DR., #10
SANTA CLARA, CA 95054

ALAMEDA CTC
1 333 BROADWAY SUITE 220
OAKLAND, CA 94612

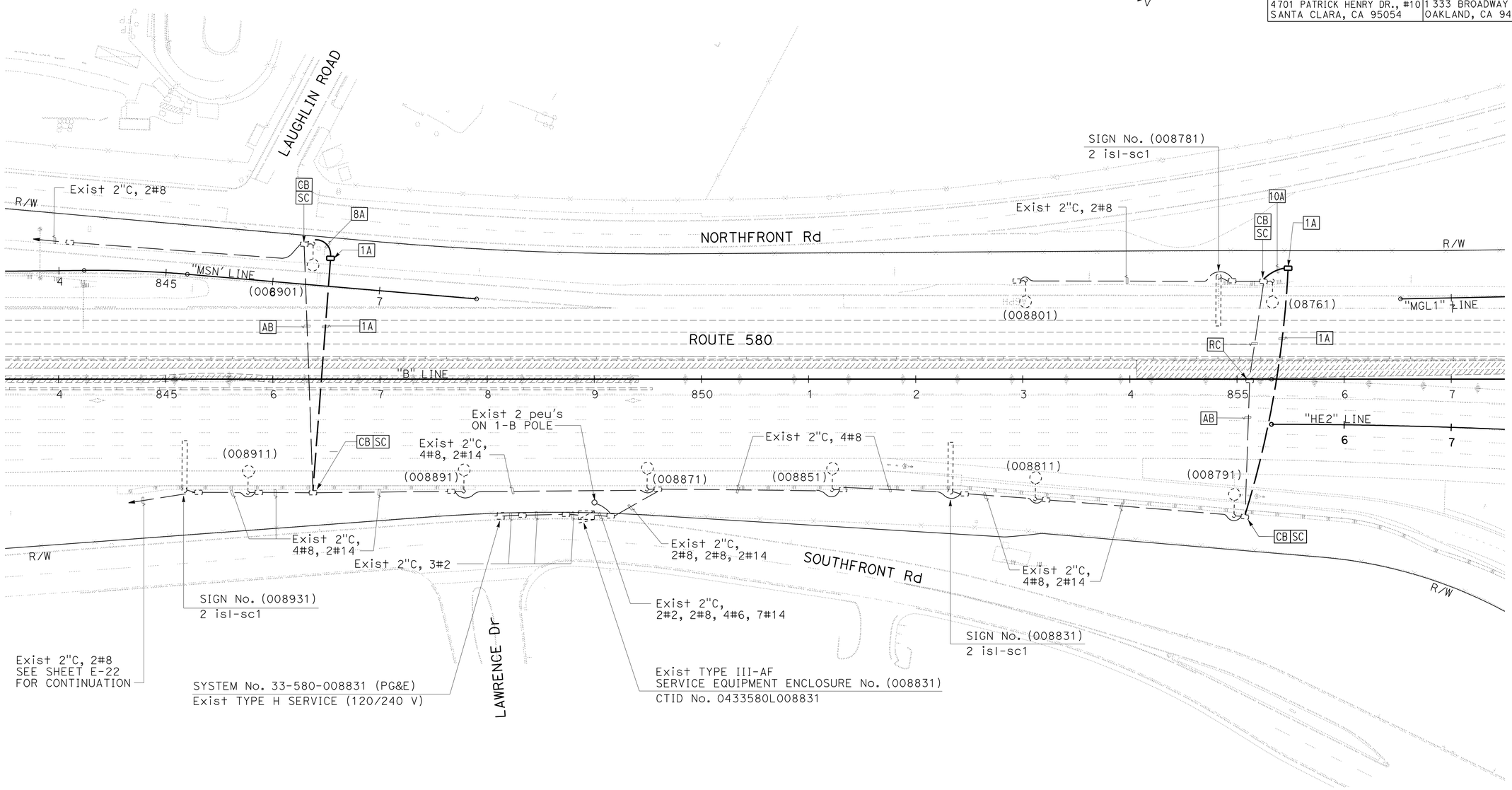

LIGHTING AND SIGN ILLUMINATION
(STAGE CONSTRUCTION)
STAGE 1

SCALE: 1" = 50'

FOR NOTES, ABBREVIATIONS AND LEGEND, SEE SHEET E-69

APPROVED FOR ELECTRICAL WORK ONLY

E-73

REVISED BY	SB
DATE REVISED	5/11/12
CALCULATED-DESIGNED BY	HENRY ROBINO
CHECKED BY	DAVID CLOW
CONSULTANT FUNCTIONAL SUPERVISOR	KEN NGAI

STATE OF CALIFORNIA - DEPARTMENT OF TRANSPORTATION
Caltrans

LAST REVISION 05-11-12
DATE PLOTTED => 23-MAY-2012
TIME PLOTTED => 08:10

FOR ACCURATE RIGHT OF WAY DATA, CONTACT
RIGHT OF WAY ENGINEERING AT THE DISTRICT OFFICE.

Dist	COUNTY	ROUTE	POST MILES TOTAL PROJECT	SHEET No.	TOTAL SHEETS
04	Ala	580	R8.4/R14.6	609	853

David W. Clow 05/11/12
REGISTERED ELECTRICAL ENGINEER DATE

5-14-12
PLANS APPROVAL DATE

REGISTERED PROFESSIONAL ENGINEER
DAVID W. CLOW
No. 12883
Exp. 12/31/12
ELECTRICAL
STATE OF CALIFORNIA

THE STATE OF CALIFORNIA OR ITS OFFICERS OR AGENTS SHALL NOT BE RESPONSIBLE FOR THE ACCURACY OR COMPLETENESS OF SCANNED COPIES OF THIS PLAN SHEET.

ALLIANCE ENGINEERING CONSULTANT, INC.
4701 PATRICK HENRY DR., #10
SANTA CLARA, CA 95054

ALAMEDA CTC
1 333 BROADWAY SUITE 220
OAKLAND, CA 94612

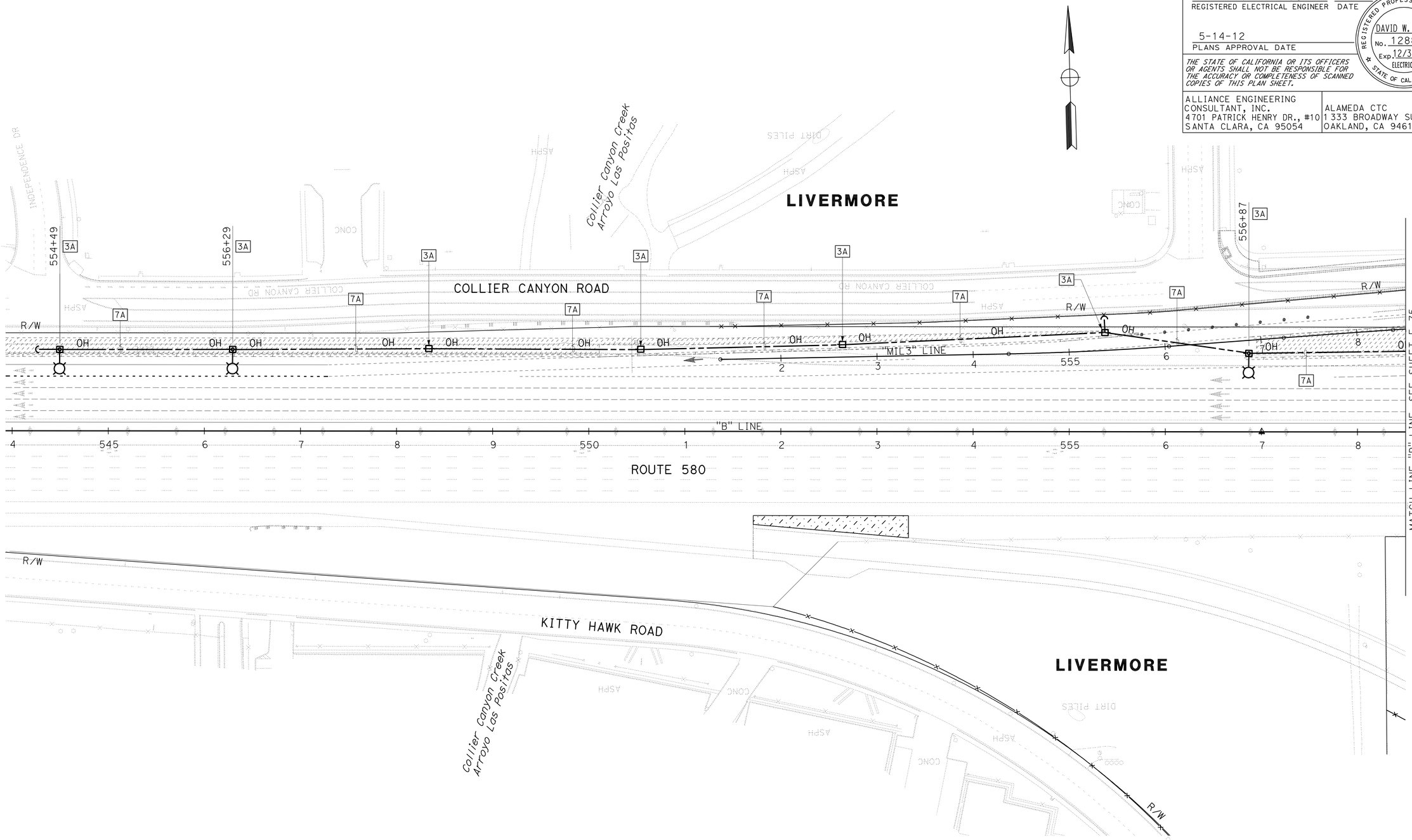

FOR NOTES, ABBREVIATIONS AND LEGEND, SEE SHEET E-69

APPROVED FOR ELECTRICAL WORK ONLY

LIGHTING AND SIGN ILLUMINATION (STAGE CONSTRUCTION)

STAGE 2

SCALE: 1" = 50'

E-74

STATE OF CALIFORNIA - DEPARTMENT OF TRANSPORTATION	CONSULTANT FUNCTIONAL SUPERVISOR	REVISED BY	SB
Caltrans	KEN NGAI	DATE REVISED	5/11/12
	CALCULATED-DESIGNED BY	HENRY ROBINO	
	CHECKED BY	DAVID CLOW	

LAST REVISION 05-11-12 | DATE PLOTTED => 23-MAY-2012 | TIME PLOTTED => 08:10

BORDER LAST REVISED 7/2/2010 | USERNAME => s114937 | DGN FILE => 0400021248ua074.dgn | RELATIVE BORDER SCALE IS IN INCHES 0 1 2 3 | UNIT 0735 | PROJECT NUMBER & PHASE 04000212481

FOR ACCURATE RIGHT OF WAY DATA, CONTACT
RIGHT OF WAY ENGINEERING AT THE DISTRICT OFFICE.

Dist	COUNTY	ROUTE	POST MILES TOTAL PROJECT	SHEET No.	TOTAL SHEETS
04	Ala	580	R8.4/R14.6	610	853

David W. Clow 05/11/12
REGISTERED ELECTRICAL ENGINEER DATE

5-14-12
PLANS APPROVAL DATE

REGISTERED PROFESSIONAL ENGINEER
DAVID W. CLOW
No. 12883
Exp. 12/31/12
ELECTRICAL
STATE OF CALIFORNIA

THE STATE OF CALIFORNIA OR ITS OFFICERS OR AGENTS SHALL NOT BE RESPONSIBLE FOR THE ACCURACY OR COMPLETENESS OF SCANNED COPIES OF THIS PLAN SHEET.

ALLIANCE ENGINEERING
CONSULTANT, INC.
4701 PATRICK HENRY DR., #10
SANTA CLARA, CA 95054

ALAMEDA CTC
1 333 BROADWAY SUITE 220
OAKLAND, CA 94612

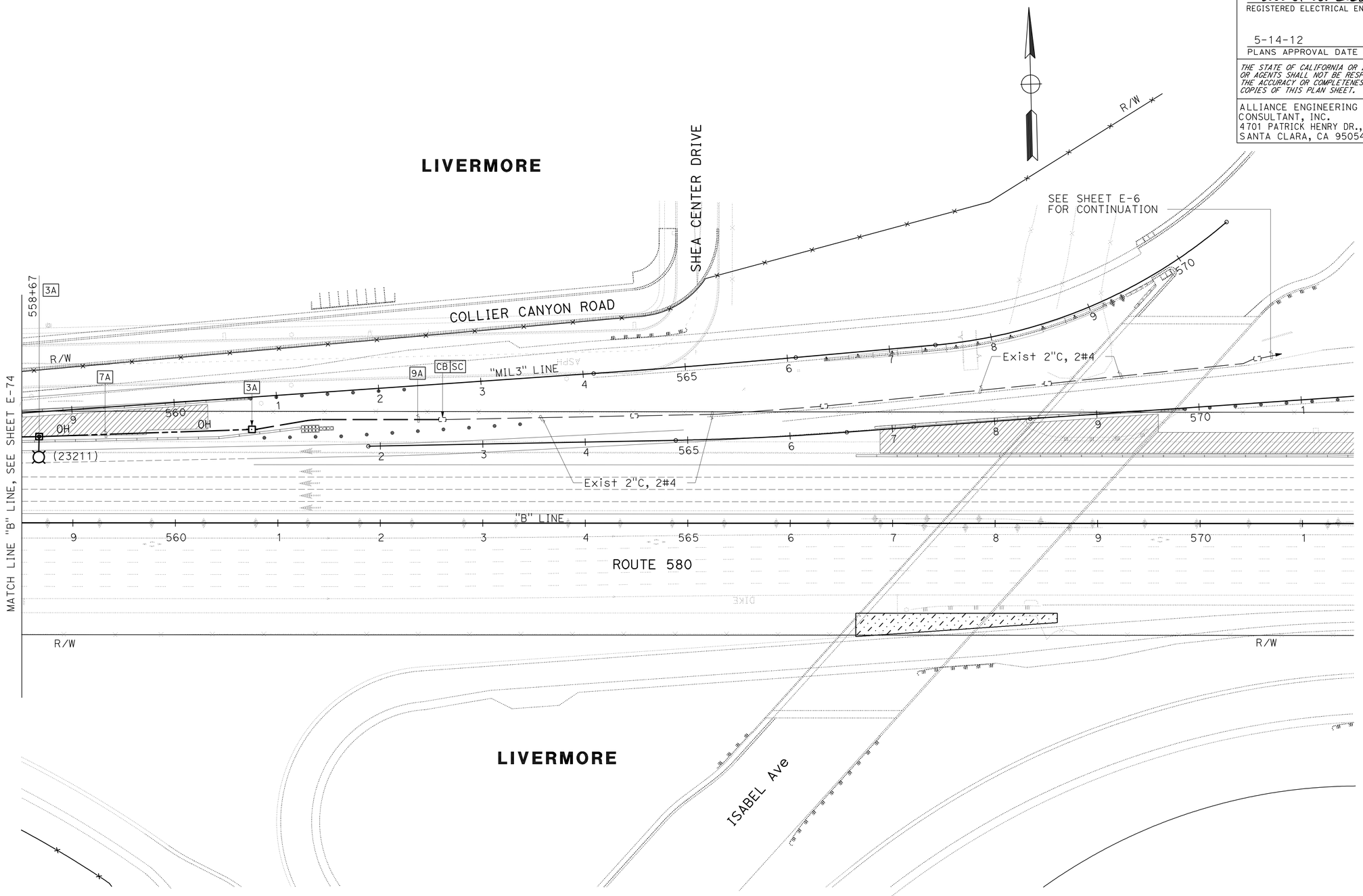

LIGHTING AND SIGN ILLUMINATION
(STAGE CONSTRUCTION)
STAGE 2

FOR NOTES, ABBREVIATIONS AND LEGEND, SEE SHEET E-69

APPROVED FOR ELECTRICAL WORK ONLY

SCALE: 1" = 50'

E-75

REVISED BY	SB
DATE REVISED	5/11/12
HENRY ROBINO	
DAVID CLOW	
CALCULATED-DESIGNED BY	
CHECKED BY	
CONSULTANT FUNCTIONAL SUPERVISOR	
KEN NGAI	

STATE OF CALIFORNIA - DEPARTMENT OF TRANSPORTATION
Caltrans

LAST REVISION 05-11-12
DATE PLOTTED => 23-MAY-2012
TIME PLOTTED => 08:10

Dist	COUNTY	ROUTE	POST MILES TOTAL PROJECT	SHEET No.	TOTAL SHEETS
04	Ala	580	R8.4/R14.6	611	853

David W. Clow 05/11/12
REGISTERED ELECTRICAL ENGINEER DATE

5-14-12
PLANS APPROVAL DATE

REGISTERED PROFESSIONAL ENGINEER
DAVID W. CLOW
No. 12883
Exp. 12/31/12
ELECTRICAL
STATE OF CALIFORNIA

THE STATE OF CALIFORNIA OR ITS OFFICERS OR AGENTS SHALL NOT BE RESPONSIBLE FOR THE ACCURACY OR COMPLETENESS OF SCANNED COPIES OF THIS PLAN SHEET.

ALLIANCE ENGINEERING CONSULTANT, INC.
4701 PATRICK HENRY DR., #10
SANTA CLARA, CA 95054

ALAMEDA CTC
1 333 BROADWAY SUITE 220
OAKLAND, CA 94612

FOR ACCURATE RIGHT OF WAY DATA, CONTACT
RIGHT OF WAY ENGINEERING AT THE DISTRICT OFFICE.

SHEET NOTES:

1. INSTALL RAMP METERING SIGNAL 10 Ft FROM THE GROUND ON A 50'-0" WOODEN POLE.

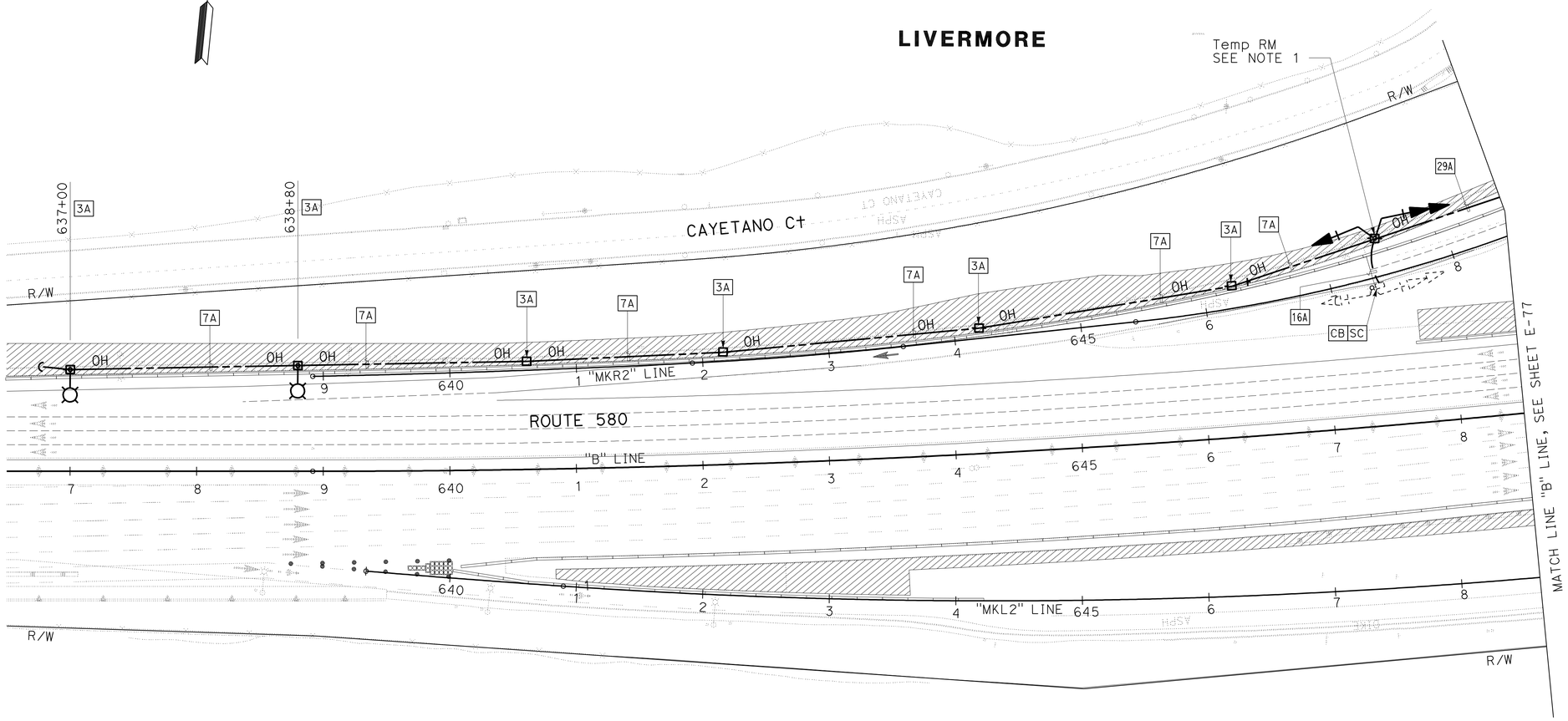

LIGHTING AND SIGN ILLUMINATION (STAGE CONSTRUCTION) RAMP METERING SYSTEM (STAGE CONSTRUCTION)

STAGE 2

FOR NOTES, ABBREVIATIONS AND LEGEND, SEE SHEET E-69

APPROVED FOR ELECTRICAL WORK ONLY

SCALE: 1" = 50'

E-76

STATE OF CALIFORNIA - DEPARTMENT OF TRANSPORTATION	CONSULTANT FUNCTIONAL SUPERVISOR	KEN NGAI
Caltrans	CALCULATED-DESIGNED BY	HENRY ROBINO
	CHECKED BY	DAVID CLOW
	REVISED BY	SB
	DATE REVISED	5/11/12

LAST REVISION 05-11-12
DATE PLOTTED => 23-MAY-2012
TIME PLOTTED => 08:10

FOR ACCURATE RIGHT OF WAY DATA, CONTACT
RIGHT OF WAY ENGINEERING AT THE DISTRICT OFFICE.

Dist	COUNTY	ROUTE	POST MILES TOTAL PROJECT	SHEET No.	TOTAL SHEETS
04	Ala	580	R8.4/R14.6	612	853

David W. Clow 05/11/12
REGISTERED ELECTRICAL ENGINEER DATE

5-14-12
PLANS APPROVAL DATE

REGISTERED PROFESSIONAL ENGINEER
DAVID W. CLOW
No. 12883
Exp. 12/31/12
ELECTRICAL
STATE OF CALIFORNIA

THE STATE OF CALIFORNIA OR ITS OFFICERS OR AGENTS SHALL NOT BE RESPONSIBLE FOR THE ACCURACY OR COMPLETENESS OF SCANNED COPIES OF THIS PLAN SHEET.

ALLIANCE ENGINEERING CONSULTANT, INC.
4701 PATRICK HENRY DR., #10
SANTA CLARA, CA 95054

ALAMEDA CTC
1 333 BROADWAY SUITE 220
OAKLAND, CA 94612

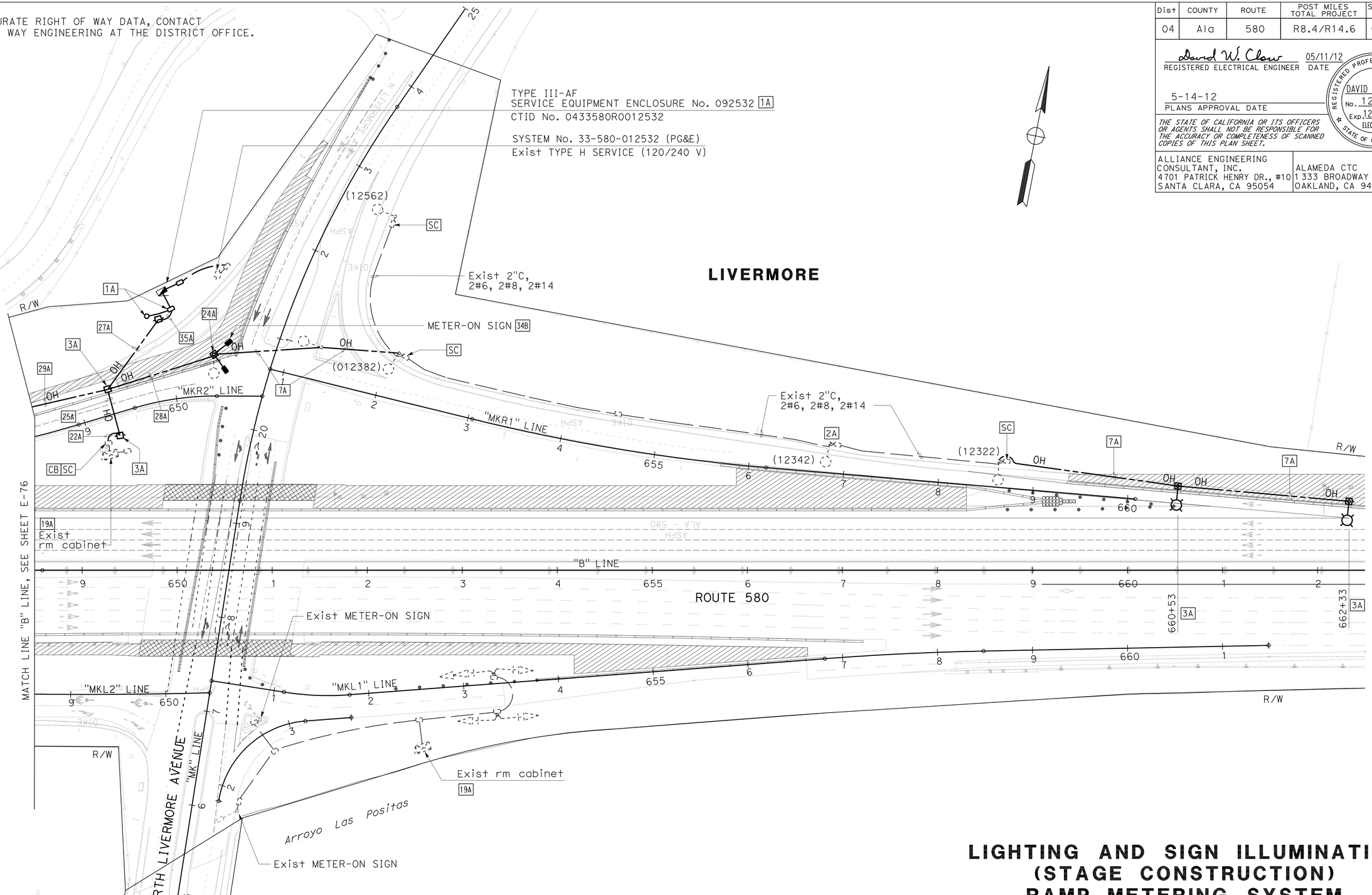

LIVERMORE

LIGHTING AND SIGN ILLUMINATION (STAGE CONSTRUCTION) RAMP METERING SYSTEM (STAGE CONSTRUCTION)

STAGE 2

FOR NOTES, ABBREVIATIONS AND LEGEND, SEE SHEET E-69

APPROVED FOR ELECTRICAL WORK ONLY

SCALE: 1" = 50'

E-77

		SB	5/11/12
		REVISED BY	DATE REVISED
		HENRY ROBINO	DAVID CLOW
		CALCULATED-DESIGNED BY	CHECKED BY
		CONSULTANT FUNCTIONAL SUPERVISOR	KEN NGAI
		STATE OF CALIFORNIA - DEPARTMENT OF TRANSPORTATION	Caltrans

LAST REVISION 05-11-12 | DATE PLOTTED => 23-MAY-2012 | TIME PLOTTED => 08:10

Dist	COUNTY	ROUTE	POST MILES TOTAL PROJECT	SHEET No.	TOTAL SHEETS
04	Ala	580	R8.4/R14.6	613	853

David W. Clow 05/11/12
REGISTERED ELECTRICAL ENGINEER DATE

5-14-12
PLANS APPROVAL DATE

REGISTERED PROFESSIONAL ENGINEER
DAVID W. CLOW
No. 12883
Exp. 12/31/12
ELECTRICAL
STATE OF CALIFORNIA

THE STATE OF CALIFORNIA OR ITS OFFICERS OR AGENTS SHALL NOT BE RESPONSIBLE FOR THE ACCURACY OR COMPLETENESS OF SCANNED COPIES OF THIS PLAN SHEET.

ALLIANCE ENGINEERING CONSULTANT, INC.
4701 PATRICK HENRY DR., #10
SANTA CLARA, CA 95054

ALAMEDA CTC
1 333 BROADWAY SUITE 220
OAKLAND, CA 94612

FOR ACCURATE RIGHT OF WAY DATA, CONTACT
RIGHT OF WAY ENGINEERING AT THE DISTRICT OFFICE.

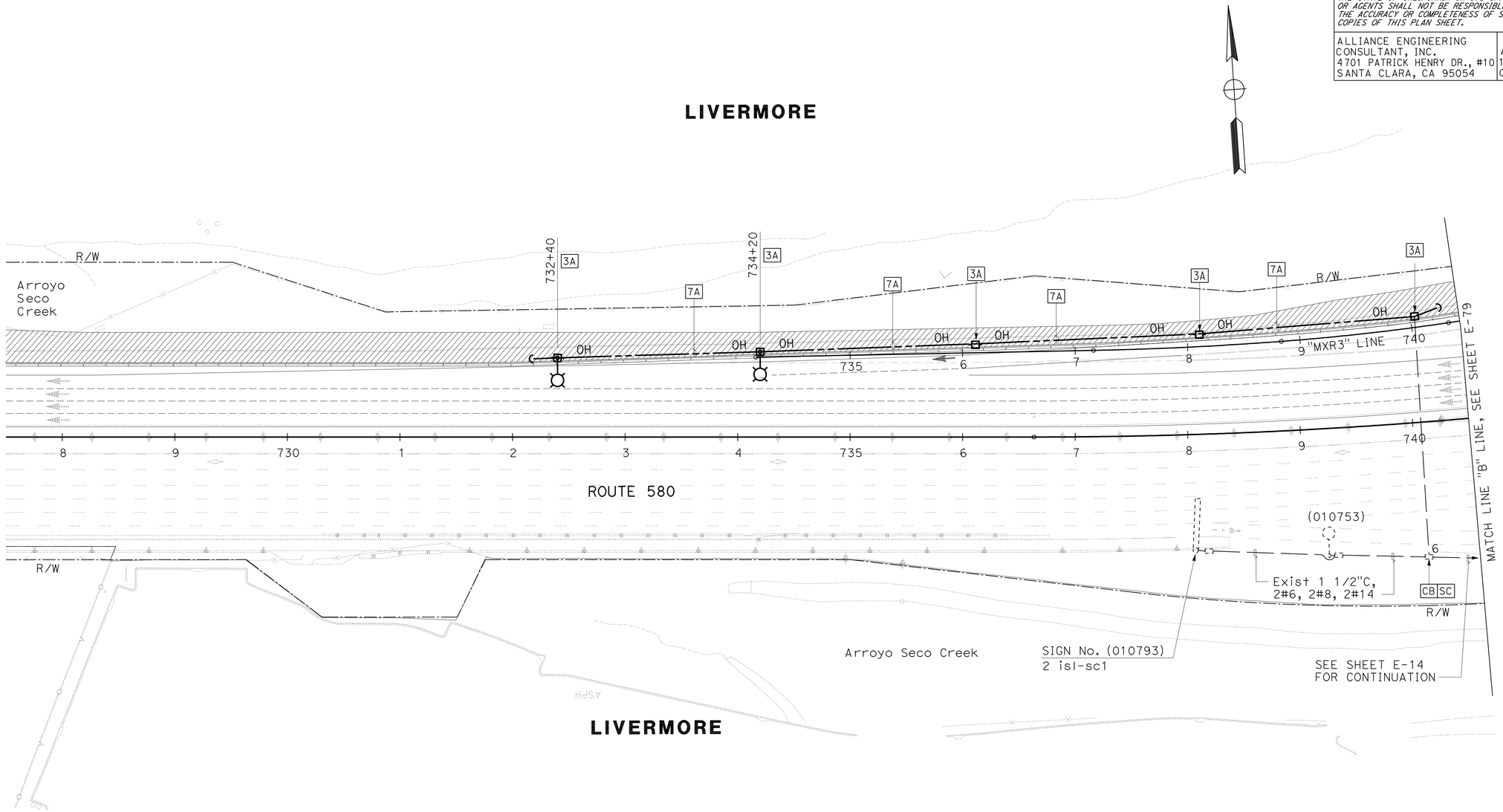

LIGHTING AND SIGN ILLUMINATION
(STAGE CONSTRUCTION)
STAGE 2

FOR NOTES, ABBREVIATIONS AND LEGEND, SEE SHEET E-69

APPROVED FOR ELECTRICAL WORK ONLY

SCALE: 1" = 50'

E-78

REVISED BY	DATE REVISED
SB	5/11/12

HENRY ROBINO — CALCULATED-DESIGNED BY
DAVID CLOW — CHECKED BY
KEN NGAI — CONSULTANT FUNCTIONAL SUPERVISOR

STATE OF CALIFORNIA - DEPARTMENT OF TRANSPORTATION
Caltrans

LAST REVISION 05-11-12
DATE PLOTTED => 23-MAY-2012
TIME PLOTTED => 08:11

Dist	COUNTY	ROUTE	POST MILES TOTAL PROJECT	SHEET No.	TOTAL SHEETS
04	Ala	580	R8.4/R14.6	614	853

David W. Clow 05/11/12
REGISTERED ELECTRICAL ENGINEER DATE

5-14-12
PLANS APPROVAL DATE

REGISTERED PROFESSIONAL ENGINEER DAVID W. CLOW No. 12883 Exp. 12/31/12 ELECTRICAL STATE OF CALIFORNIA

THE STATE OF CALIFORNIA OR ITS OFFICERS OR AGENTS SHALL NOT BE RESPONSIBLE FOR THE ACCURACY OR COMPLETENESS OF SCANNED COPIES OF THIS PLAN SHEET.

ALLIANCE ENGINEERING CONSULTANT, INC.
4701 PATRICK HENRY DR., #10
SANTA CLARA, CA 95054

ALAMEDA CTC
1 333 BROADWAY SUITE 220
OAKLAND, CA 94612

FOR ACCURATE RIGHT OF WAY DATA, CONTACT RIGHT OF WAY ENGINEERING AT THE DISTRICT OFFICE.

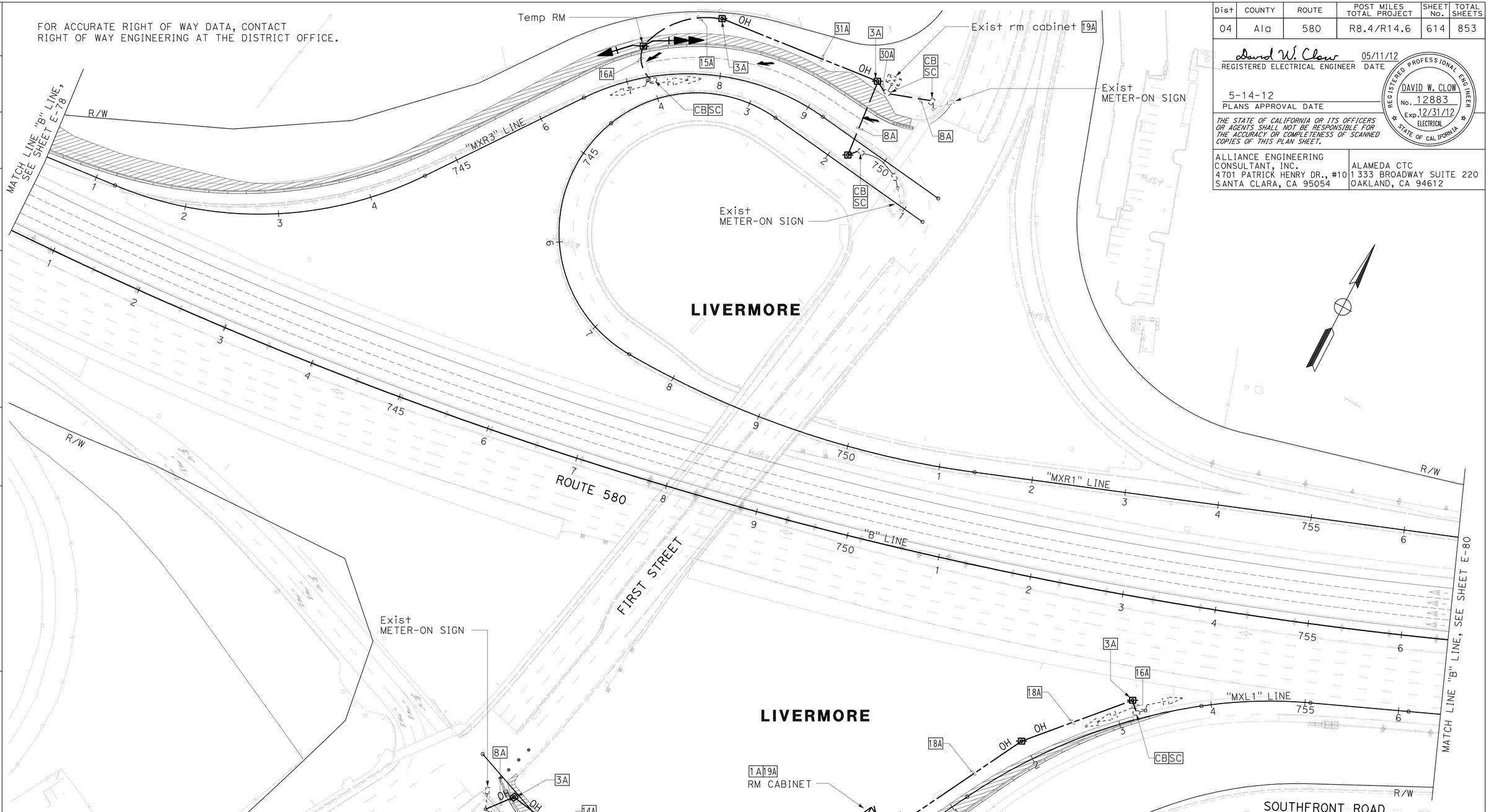

FOR NOTES, ABBREVIATIONS AND LEGEND, SEE SHEET E-69

APPROVED FOR ELECTRICAL WORK ONLY

RAMP METERING SYSTEM (STAGE CONSTRUCTION)
STAGE 2

SCALE: 1" = 50'

E-79

REVISED BY	SB
DATE REVISED	5/11/12
HENRY ROBINO	
DAVID CLOW	
CALCULATED-DESIGNED BY	
CHECKED BY	
CONSULTANT FUNCTIONAL SUPERVISOR	KEN NGAI

STATE OF CALIFORNIA - DEPARTMENT OF TRANSPORTATION
Caltrans

LAST REVISION 05-11-12 | DATE PLOTTED => 23-MAY-2012 | TIME PLOTTED => 08:11

FOR ACCURATE RIGHT OF WAY DATA, CONTACT
RIGHT OF WAY ENGINEERING AT THE DISTRICT OFFICE.

Dist	COUNTY	ROUTE	POST MILES TOTAL PROJECT	SHEET No.	TOTAL SHEETS
04	Ala	580	R8.4/R14.6	615	853

David W. Clow 05/11/12
REGISTERED ELECTRICAL ENGINEER DATE

5-14-12
PLANS APPROVAL DATE

REGISTERED PROFESSIONAL ENGINEER
DAVID W. CLOW
No. 12883
Exp. 12/31/12
ELECTRICAL
STATE OF CALIFORNIA

THE STATE OF CALIFORNIA OR ITS OFFICERS OR AGENTS SHALL NOT BE RESPONSIBLE FOR THE ACCURACY OR COMPLETENESS OF SCANNED COPIES OF THIS PLAN SHEET.

ALLIANCE ENGINEERING CONSULTANT, INC.
4701 PATRICK HENRY DR., #10
SANTA CLARA, CA 95054

ALAMEDA CTC
1 333 BROADWAY SUITE 220
OAKLAND, CA 94612

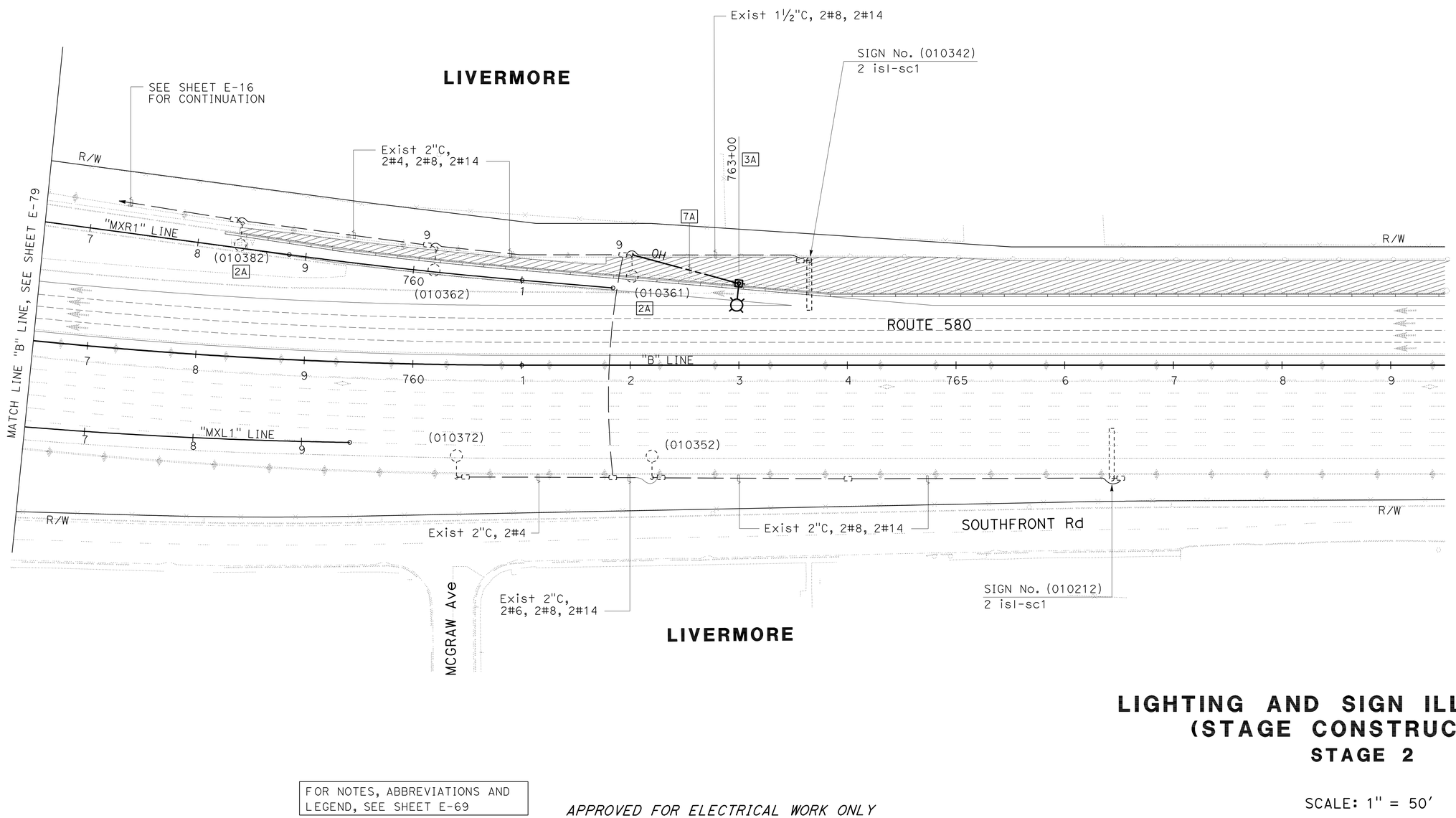

LIGHTING AND SIGN ILLUMINATION
(STAGE CONSTRUCTION)
STAGE 2

FOR NOTES, ABBREVIATIONS AND LEGEND, SEE SHEET E-69

APPROVED FOR ELECTRICAL WORK ONLY

SCALE: 1" = 50'

E-80

REVISED BY	SB
DATE REVISED	5/11/12
HENRY ROBINO	
DAVID CLOW	
CALCULATED-DESIGNED BY	
CHECKED BY	
CONSULTANT FUNCTIONAL SUPERVISOR	KEN NGAI

STATE OF CALIFORNIA - DEPARTMENT OF TRANSPORTATION
Caltrans

LAST REVISION 05-11-12
DATE PLOTTED => 23-MAY-2012
TIME PLOTTED => 08:11

FOR ACCURATE RIGHT OF WAY DATA, CONTACT
RIGHT OF WAY ENGINEERING AT THE DISTRICT OFFICE.

Dist	COUNTY	ROUTE	POST MILES TOTAL PROJECT	SHEET No.	TOTAL SHEETS
04	Ala	580	R8.4/R14.6	616	853

David W. Clow 05/11/12
REGISTERED ELECTRICAL ENGINEER DATE

5-14-12
PLANS APPROVAL DATE

REGISTERED PROFESSIONAL ENGINEER
DAVID W. CLOW
No. 12883
Exp. 12/31/12
ELECTRICAL
STATE OF CALIFORNIA

THE STATE OF CALIFORNIA OR ITS OFFICERS OR AGENTS SHALL NOT BE RESPONSIBLE FOR THE ACCURACY OR COMPLETENESS OF SCANNED COPIES OF THIS PLAN SHEET.

ALLIANCE ENGINEERING CONSULTANT, INC.
4701 PATRICK HENRY DR., #10
SANTA CLARA, CA 95054

ALAMEDA CTC
1333 BROADWAY SUITE 220
OAKLAND, CA 94612

LIVERMORE

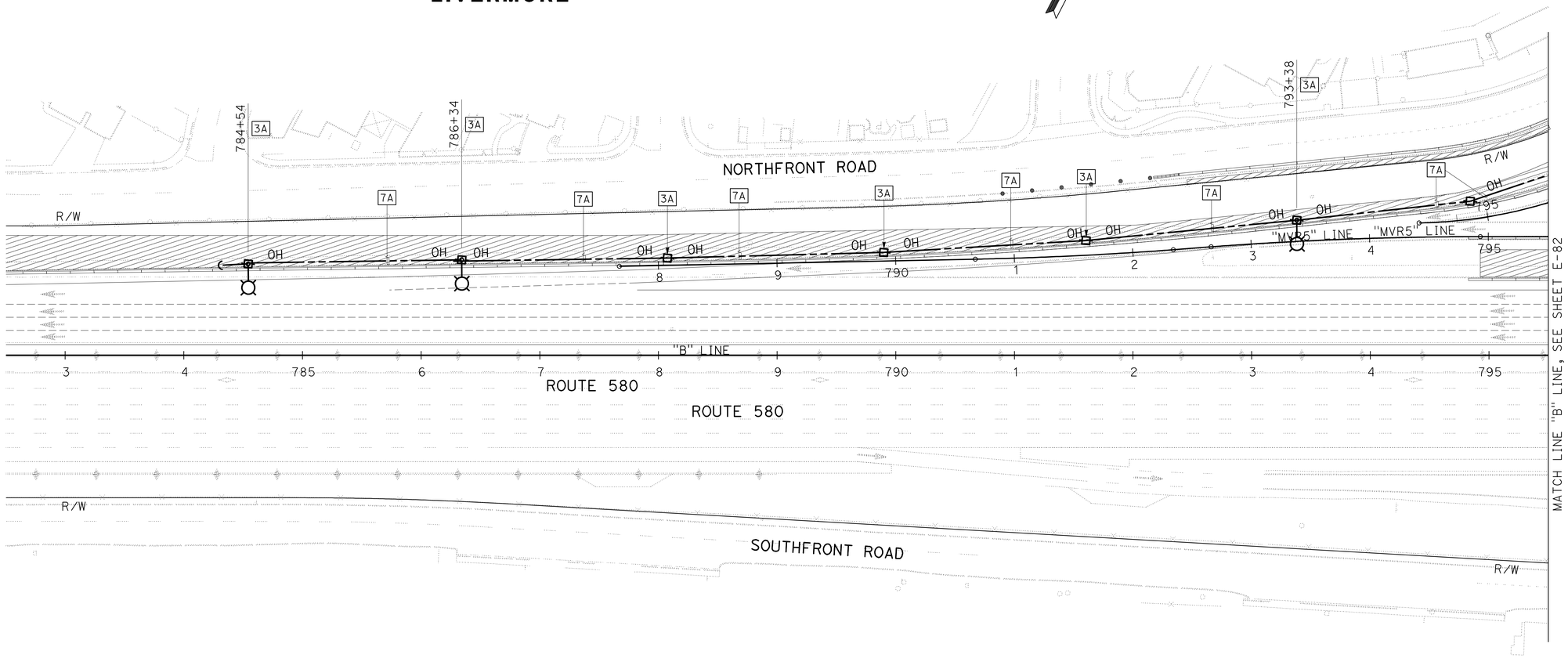

LIVERMORE

LIGHTING AND SIGN ILLUMINATION (STAGE CONSTRUCTION)

STAGE 2

SCALE: 1" = 50'

E-81

FOR NOTES, ABBREVIATIONS AND LEGEND, SEE SHEET E-69

APPROVED FOR ELECTRICAL WORK ONLY

REVISED BY	SB
DATE REVISED	5/11/12
HENRY ROBINO	
DAVID CLOW	
CALCULATED-DESIGNED BY	
CHECKED BY	
CONSULTANT FUNCTIONAL SUPERVISOR	
KEN NGAI	

STATE OF CALIFORNIA - DEPARTMENT OF TRANSPORTATION
Caltrans

LAST REVISION 05-11-12
DATE PLOTTED => 23-MAY-2012
TIME PLOTTED => 08:11

FOR ACCURATE RIGHT OF WAY DATA, CONTACT
RIGHT OF WAY ENGINEERING AT THE DISTRICT OFFICE.

Dist	COUNTY	ROUTE	POST MILES TOTAL PROJECT	SHEET No.	TOTAL SHEETS
04	Ala	580	R8.4/R14.6	617	853

David W. Clow 05/11/12
REGISTERED ELECTRICAL ENGINEER DATE

5-14-12
PLANS APPROVAL DATE

REGISTERED PROFESSIONAL ENGINEER
DAVID W. CLOW
No. 12883
Exp. 12/31/12
ELECTRICAL
STATE OF CALIFORNIA

THE STATE OF CALIFORNIA OR ITS OFFICERS OR AGENTS SHALL NOT BE RESPONSIBLE FOR THE ACCURACY OR COMPLETENESS OF SCANNED COPIES OF THIS PLAN SHEET.

ALLIANCE ENGINEERING CONSULTANT, INC.
4701 PATRICK HENRY DR., #10
SANTA CLARA, CA 95054

ALAMEDA CTC
1 333 BROADWAY SUITE 220
OAKLAND, CA 94612

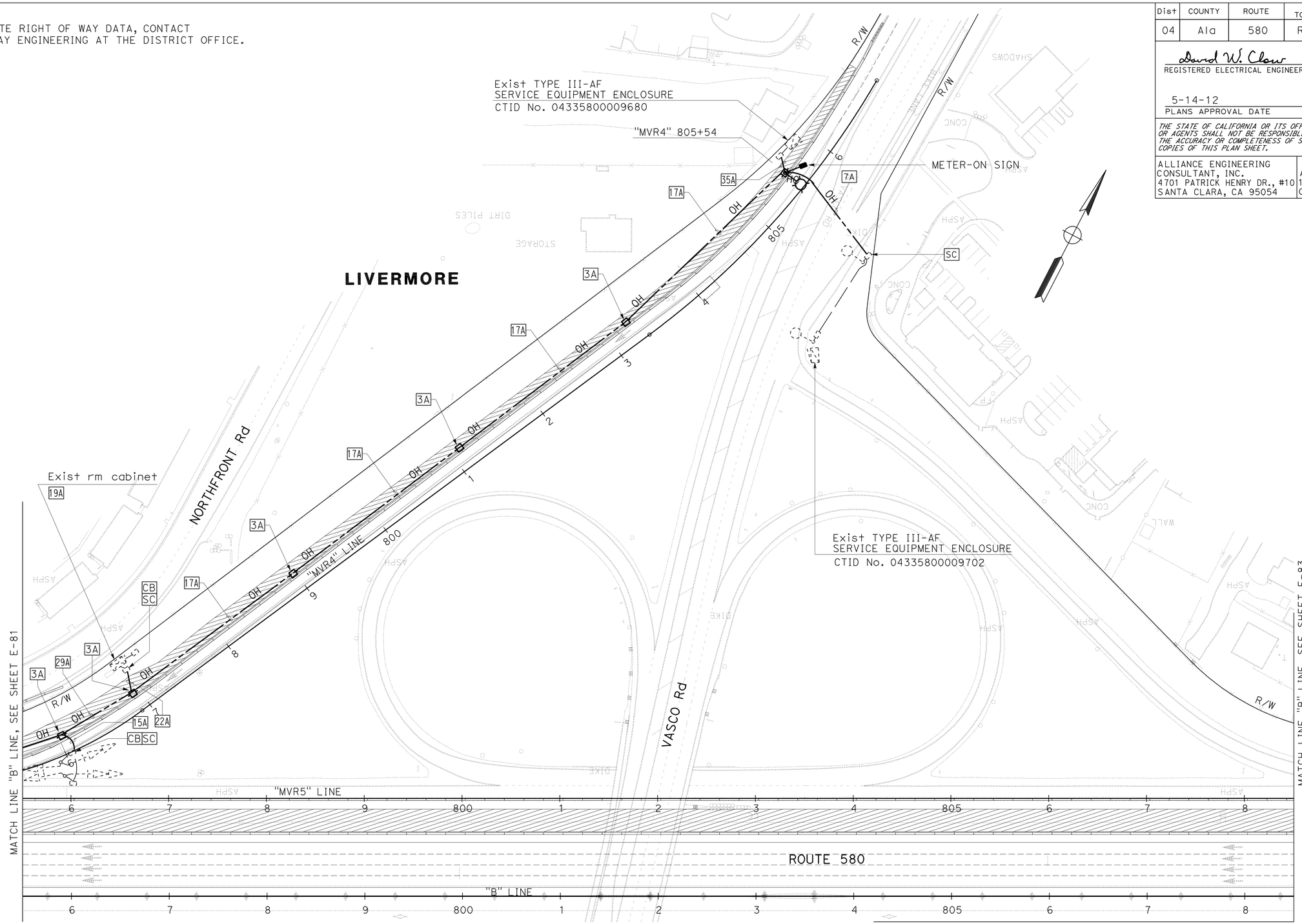

MATCH LINE "B" LINE, SEE SHEET E-83

RAMP METERING SYSTEM (STAGE CONSTRUCTION)

STAGE 2

SCALE: 1" = 50'

E-82

FOR NOTES, ABBREVIATIONS AND LEGEND, SEE SHEET E-69

APPROVED FOR ELECTRICAL WORK ONLY

REVISED BY	SB
DATE REVISED	5/11/12
HENRY ROBINO	
DAVID CLOW	
CALCULATED-DESIGNED BY	
CHECKED BY	
CONSULTANT FUNCTIONAL SUPERVISOR	
KEN NGAI	

STATE OF CALIFORNIA - DEPARTMENT OF TRANSPORTATION

Caltrans

LAST REVISION 05-11-12
DATE PLOTTED => 23-MAY-2012
TIME PLOTTED => 08:11

Dist	COUNTY	ROUTE	POST MILES TOTAL PROJECT	SHEET No.	TOTAL SHEETS
04	Ala	580	R8.4/R14.6	618	853

David W. Clow 05/11/12
REGISTERED ELECTRICAL ENGINEER DATE

5-14-12
PLANS APPROVAL DATE

REGISTERED PROFESSIONAL ENGINEER
DAVID W. CLOW
No. 12883
Exp. 12/31/12
ELECTRICAL
STATE OF CALIFORNIA

THE STATE OF CALIFORNIA OR ITS OFFICERS OR AGENTS SHALL NOT BE RESPONSIBLE FOR THE ACCURACY OR COMPLETENESS OF SCANNED COPIES OF THIS PLAN SHEET.

ALLIANCE ENGINEERING CONSULTANT, INC.
4701 PATRICK HENRY DR., #10
SANTA CLARA, CA 95054

ALAMEDA CTC
1 333 BROADWAY SUITE 220
OAKLAND, CA 94612

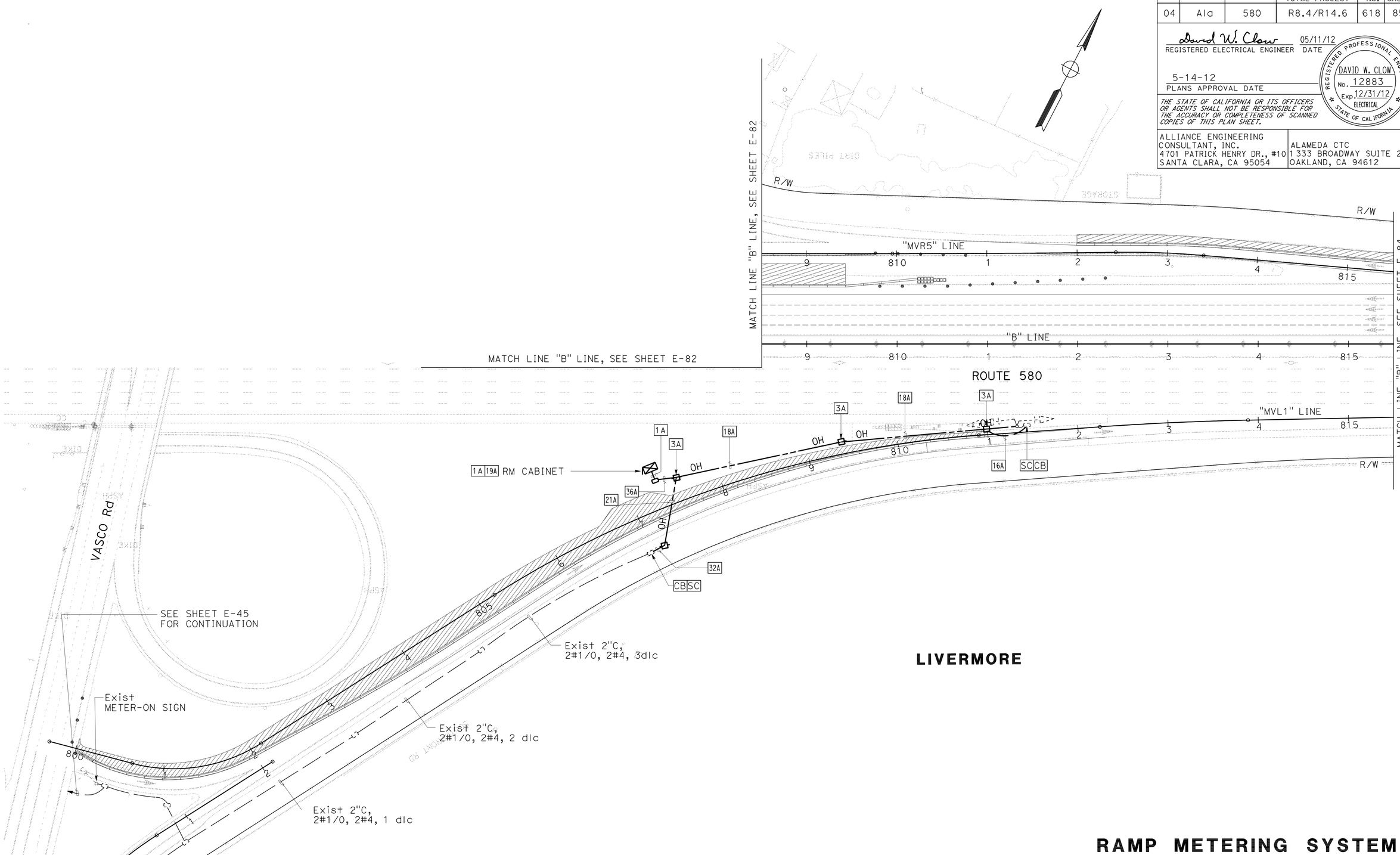

APPROVED FOR ELECTRICAL WORK ONLY

FOR NOTES, ABBREVIATIONS AND LEGEND, SEE SHEET E-69

RAMP METERING SYSTEM (STAGE CONSTRUCTION)

STAGE 2

SCALE: 1" = 50'

E-83

REVISED BY	DATE REVISED
SB	5/11/12

HENRY ROBINO — CALCULATED-DESIGNED BY
DAVID CLOW — CHECKED BY
KEN NGAI — CONSULTANT FUNCTIONAL SUPERVISOR

STATE OF CALIFORNIA - DEPARTMENT OF TRANSPORTATION
Caltrans

LAST REVISION 05-11-12 | DATE PLOTTED => 23-MAY-2012 | TIME PLOTTED => 08:11

Dist	COUNTY	ROUTE	POST MILES TOTAL PROJECT	SHEET No.	TOTAL SHEETS
04	Ala	580	R8.4/R14.6	619	853

David W. Clow 05/11/12
REGISTERED ELECTRICAL ENGINEER DATE

5-14-12
PLANS APPROVAL DATE

REGISTERED PROFESSIONAL ENGINEER DAVID W. CLOW No. 12883 Exp. 12/31/12 ELECTRICAL STATE OF CALIFORNIA

THE STATE OF CALIFORNIA OR ITS OFFICERS OR AGENTS SHALL NOT BE RESPONSIBLE FOR THE ACCURACY OR COMPLETENESS OF SCANNED COPIES OF THIS PLAN SHEET.

ALLIANCE ENGINEERING CONSULTANT, INC.
4701 PATRICK HENRY DR., #10
SANTA CLARA, CA 95054

ALAMEDA CTC
1 333 BROADWAY SUITE 220
OAKLAND, CA 94612

FOR ACCURATE RIGHT OF WAY DATA, CONTACT
RIGHT OF WAY ENGINEERING AT THE DISTRICT OFFICE.

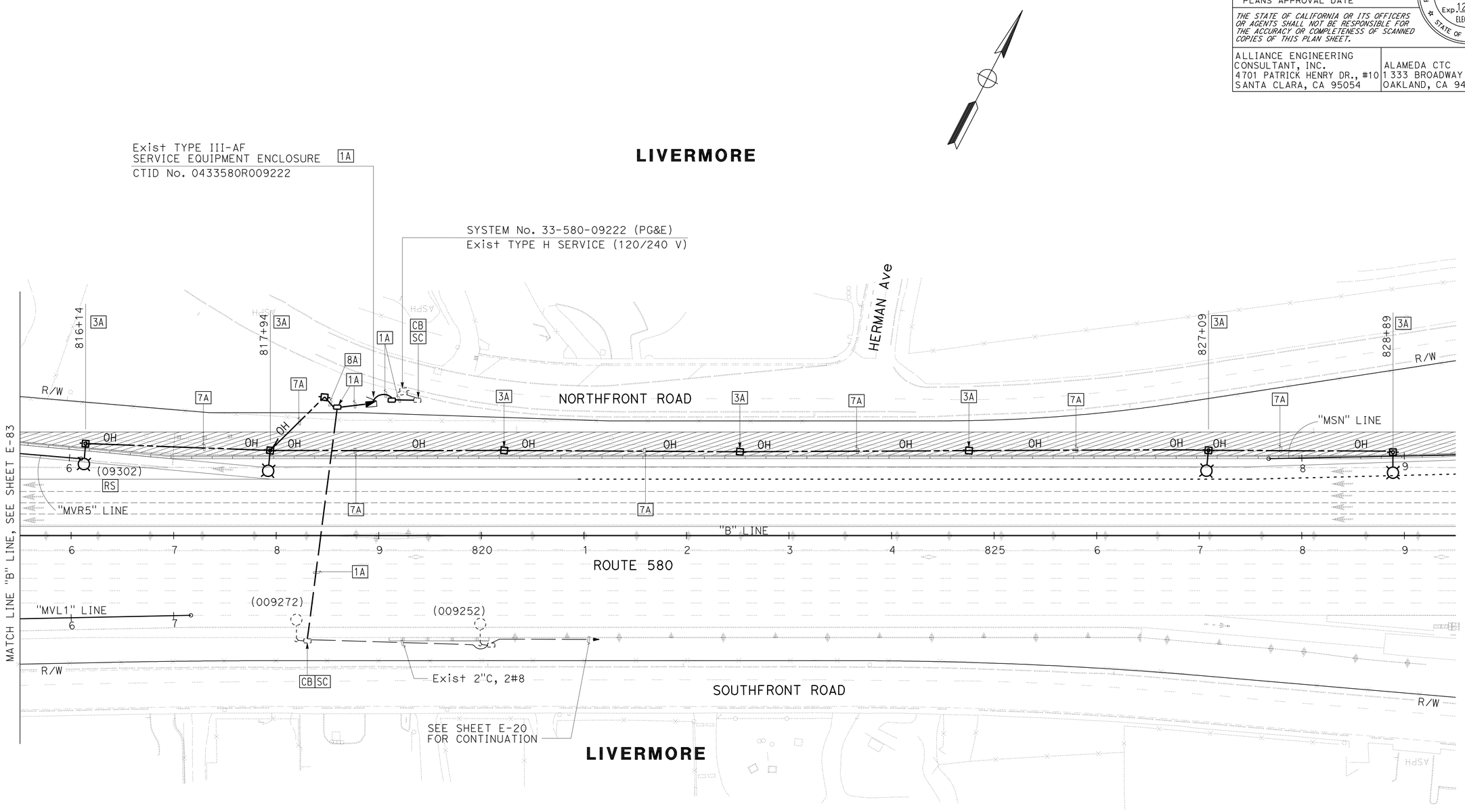

FOR NOTES, ABBREVIATIONS AND LEGEND, SEE SHEET E-69

APPROVED FOR ELECTRICAL WORK ONLY

LIGHTING AND SIGN ILLUMINATION (STAGE CONSTRUCTION) STAGE 2

SCALE: 1" = 50'

E-84

STATE OF CALIFORNIA - DEPARTMENT OF TRANSPORTATION
Caltrans

CONSULTANT FUNCTIONAL SUPERVISOR: KEN NGAI
CALCULATED-DESIGNED BY: HENRY ROBINO
CHECKED BY: DAVID CLOW
REVISED BY: SB
DATE REVISED: 5/11/12

LAST REVISION 05-11-12
DATE PLOTTED => 23-MAY-2012
TIME PLOTTED => 08:12

Dist	COUNTY	ROUTE	POST MILES TOTAL PROJECT	SHEET No.	TOTAL SHEETS
04	Ala	580	R8.4/R14.6	620	853

David W. Clow 05/11/12
REGISTERED ELECTRICAL ENGINEER DATE

5-14-12
PLANS APPROVAL DATE

REGISTERED PROFESSIONAL ENGINEER DAVID W. CLOW No. 12883 Exp. 12/31/12 ELECTRICAL STATE OF CALIFORNIA

THE STATE OF CALIFORNIA OR ITS OFFICERS OR AGENTS SHALL NOT BE RESPONSIBLE FOR THE ACCURACY OR COMPLETENESS OF SCANNED COPIES OF THIS PLAN SHEET.

ALLIANCE ENGINEERING CONSULTANT, INC.
4701 PATRICK HENRY DR., #10
SANTA CLARA, CA 95054

ALAMEDA CTC
1 333 BROADWAY SUITE 220
OAKLAND, CA 94612

FOR ACCURATE RIGHT OF WAY DATA, CONTACT
RIGHT OF WAY ENGINEERING AT THE DISTRICT OFFICE.

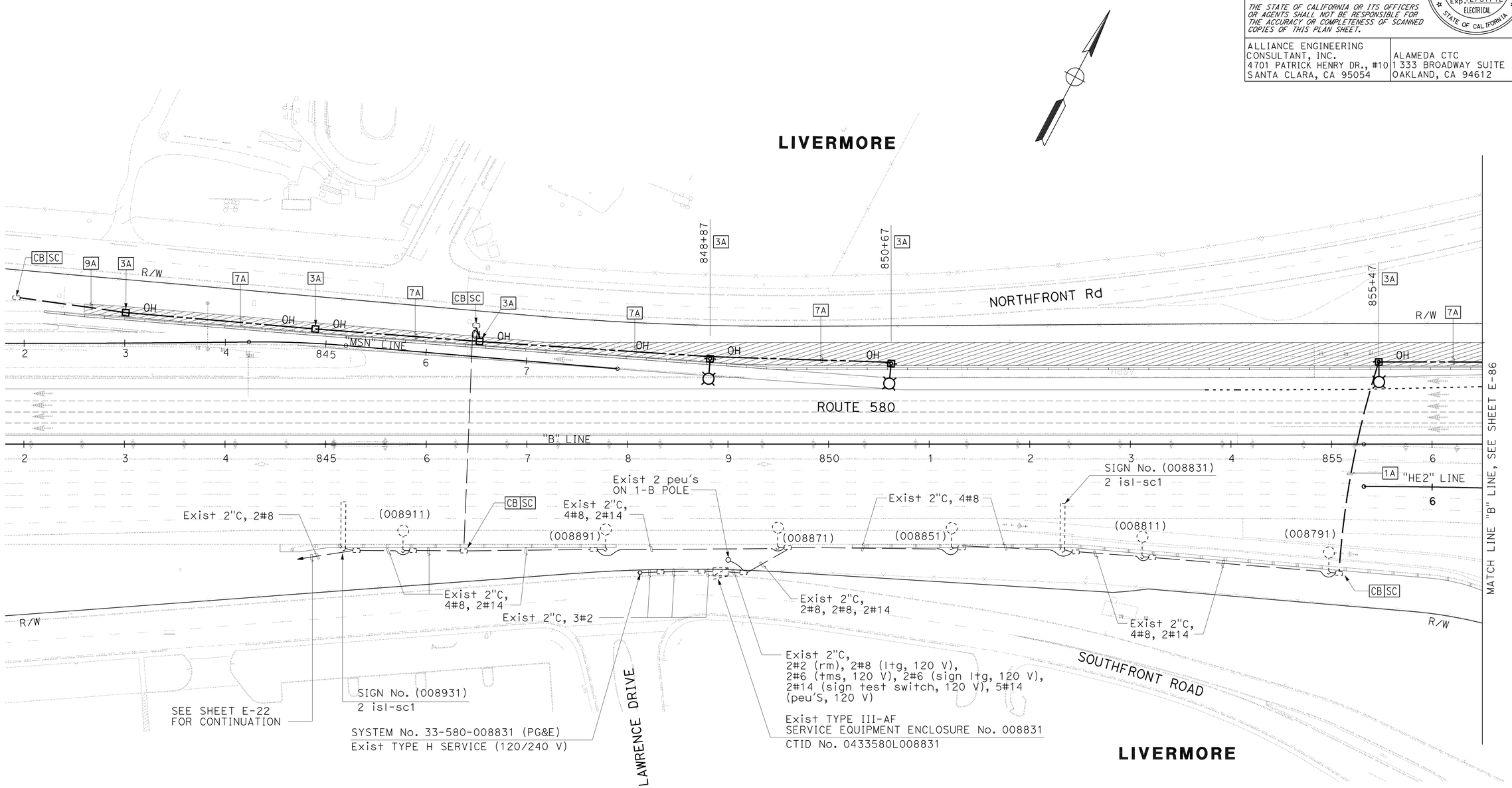

FOR NOTES, ABBREVIATIONS AND LEGEND, SEE SHEET E-69

APPROVED FOR ELECTRICAL WORK ONLY

LIGHTING AND SIGN ILLUMINATION (STAGE CONSTRUCTION)

STAGE 2

SCALE: 1" = 50'

E-85

STATE OF CALIFORNIA - DEPARTMENT OF TRANSPORTATION
Caltrans

CONSULTANT FUNCTIONAL SUPERVISOR: KEN NGAI
CALCULATED-DESIGNED BY: HENRY ROBINO
CHECKED BY: DAVID CLOW
REVISED BY: SB
DATE REVISED: 5/11/12

LAST REVISION 05-11-12
DATE PLOTTED => 23-MAY-2012
TIME PLOTTED => 08:17

FOR ACCURATE RIGHT OF WAY DATA, CONTACT
RIGHT OF WAY ENGINEERING AT THE DISTRICT OFFICE.

Dist	COUNTY	ROUTE	POST MILES TOTAL PROJECT	SHEET No.	TOTAL SHEETS
04	Ala	580	R8.4/R14.6	621	853

David W. Clow 05/11/12
REGISTERED ELECTRICAL ENGINEER DATE

5-14-12
PLANS APPROVAL DATE

REGISTERED PROFESSIONAL ENGINEER
DAVID W. CLOW
No. 12883
Exp. 12/31/12
ELECTRICAL
STATE OF CALIFORNIA

THE STATE OF CALIFORNIA OR ITS OFFICERS OR AGENTS SHALL NOT BE RESPONSIBLE FOR THE ACCURACY OR COMPLETENESS OF SCANNED COPIES OF THIS PLAN SHEET.

ALLIANCE ENGINEERING CONSULTANT, INC.
4701 PATRICK HENRY DR., #10
SANTA CLARA, CA 95054

ALAMEDA CTC
1 333 BROADWAY SUITE 220
OAKLAND, CA 94612

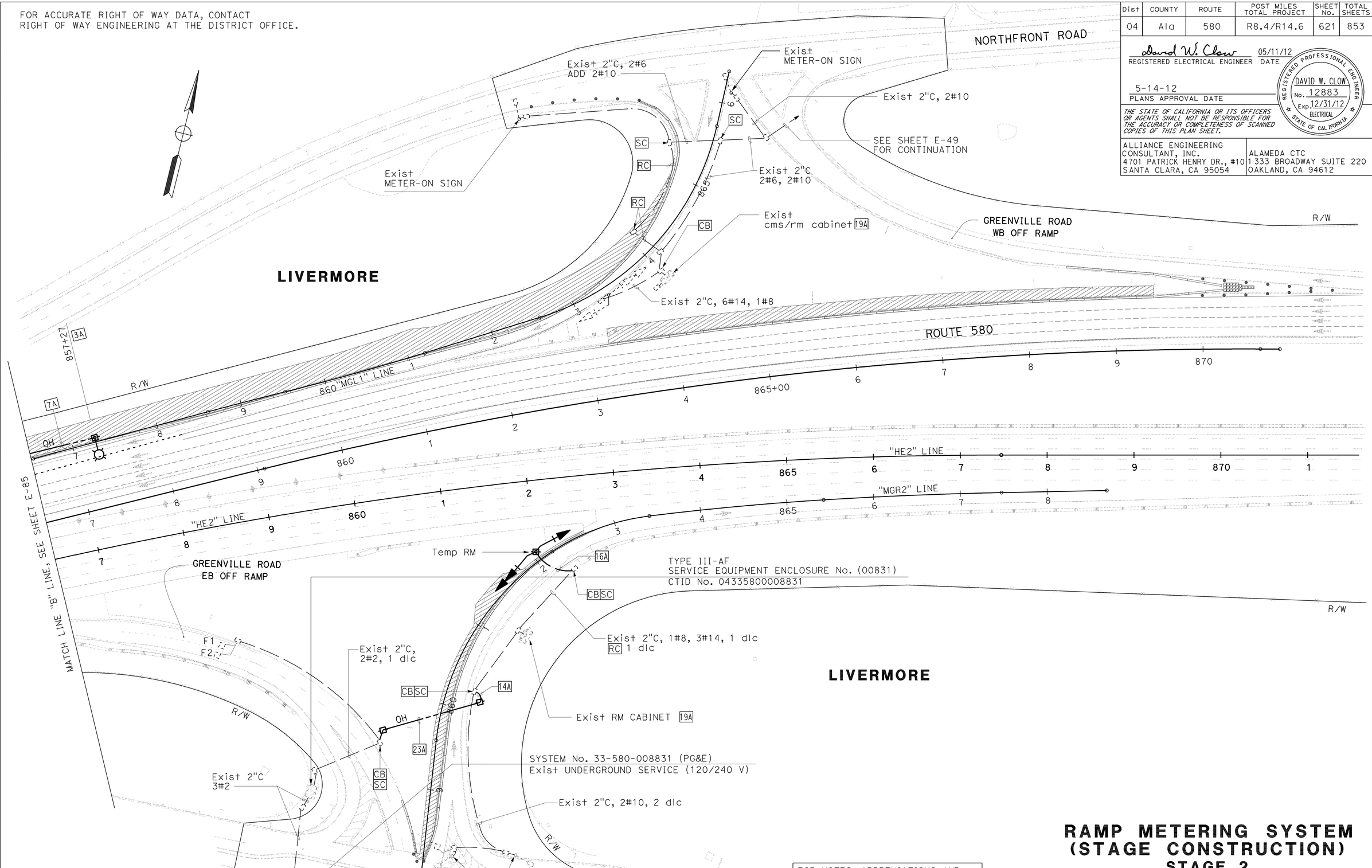

FOR NOTES, ABBREVIATIONS AND LEGEND, SEE SHEET E-69

APPROVED FOR ELECTRICAL WORK ONLY

RAMP METERING SYSTEM (STAGE CONSTRUCTION)

STAGE 2

SCALE: 1" = 50'

E-86

SB	5/11/12		
REVISED BY	DATE REVISED		
HENRY ROBINO	DAVID CLOW		
CALCULATED-DESIGNED BY	CHECKED BY		
CONSULTANT FUNCTIONAL SUPERVISOR	KEN NGAI		

STATE OF CALIFORNIA - DEPARTMENT OF TRANSPORTATION
Caltrans

LAST REVISION 05-11-12 | DATE PLOTTED => 23-MAY-2012 TIME PLOTTED => 08:17

Dist	COUNTY	ROUTE	POST MILES TOTAL PROJECT	SHEET No.	TOTAL SHEETS
04	Ala	580	R8.4/R14.6	622	853

David W. Clow 05/11/12
REGISTERED ELECTRICAL ENGINEER DATE

5-14-12
PLANS APPROVAL DATE

REGISTERED PROFESSIONAL ENGINEER DAVID W. CLOW No. 12883 Exp. 12/31/12 ELECTRICAL STATE OF CALIFORNIA

THE STATE OF CALIFORNIA OR ITS OFFICERS OR AGENTS SHALL NOT BE RESPONSIBLE FOR THE ACCURACY OR COMPLETENESS OF SCANNED COPIES OF THIS PLAN SHEET.

ALLIANCE ENGINEERING CONSULTANT, INC.
4701 PATRICK HENRY DR., #10
SANTA CLARA, CA 95054

ALAMEDA CTC
1 333 BROADWAY SUITE 220
OAKLAND, CA 94612

FOR ACCURATE RIGHT OF WAY DATA, CONTACT
RIGHT OF WAY ENGINEERING AT THE DISTRICT OFFICE.

SHEET NOTE:

1. INSTALL RAMP METERING SIGNAL 10 F† FROM THE GROUND ON A 50'-0" WOODEN POLE.

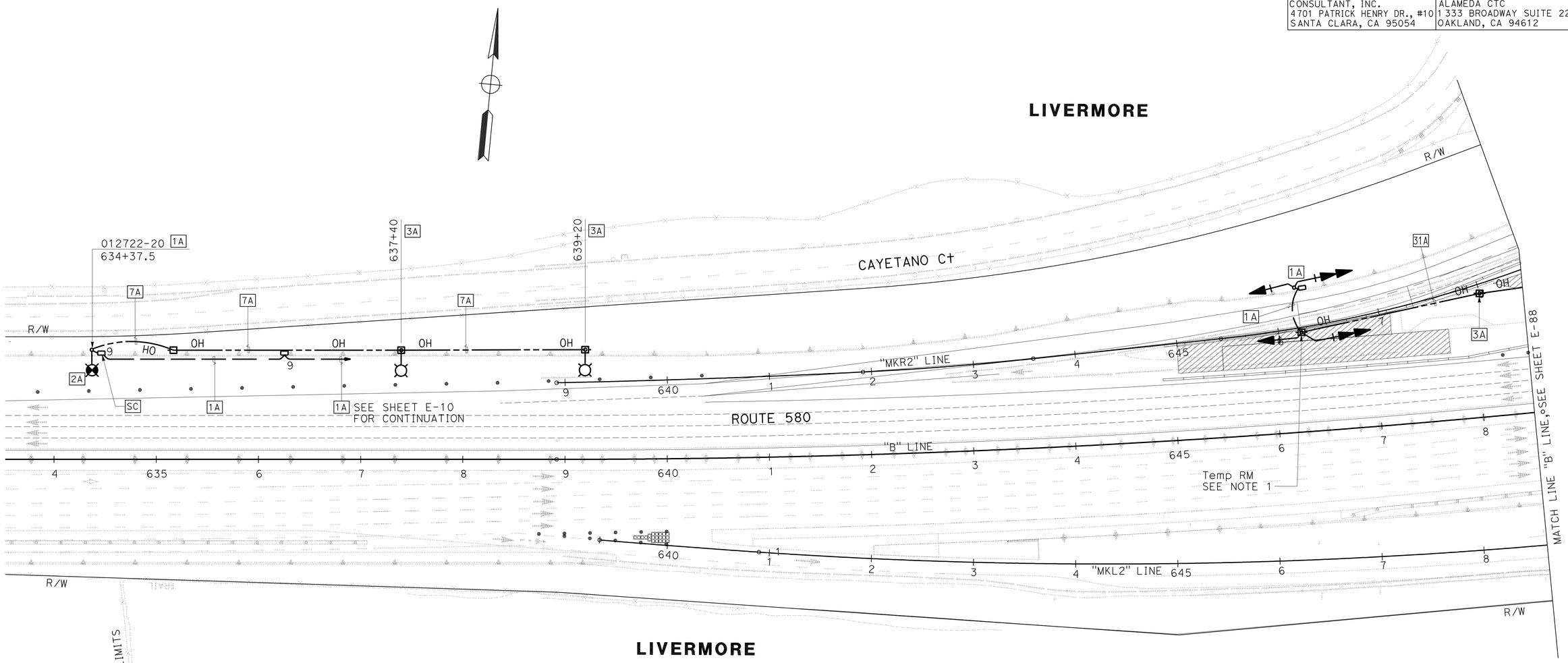

FOR NOTES, ABBREVIATIONS AND LEGEND, SEE SHEET E-69

APPROVED FOR ELECTRICAL WORK ONLY

LIGHTING AND SIGN ILLUMINATION
(STAGE CONSTRUCTION)
RAMP METERING SYSTEM
(STAGE CONSTRUCTION)
STAGE 3

SCALE: 1" = 50'

E-87

REVISED BY	DATE REVISED
SB	5/11/12

HENRY ROBINO — CALCULATED-DESIGNED BY
DAVID CLOW — CHECKED BY
KEN NGAI — CONSULTANT FUNCTIONAL SUPERVISOR

STATE OF CALIFORNIA - DEPARTMENT OF TRANSPORTATION
Caltrans

LAST REVISION 05-11-12 | DATE PLOTTED => 23-MAY-2012 | TIME PLOTTED => 08:17

Dist	COUNTY	ROUTE	POST MILES TOTAL PROJECT	SHEET No.	TOTAL SHEETS
04	Ala	580	R8.4/R14.6	623	853

David W. Clow 05/11/12
REGISTERED ELECTRICAL ENGINEER DATE

5-14-12
PLANS APPROVAL DATE

REGISTERED PROFESSIONAL ENGINEER
DAVID W. CLOW
No. 12883
Exp. 12/31/12
ELECTRICAL
STATE OF CALIFORNIA

THE STATE OF CALIFORNIA OR ITS OFFICERS OR AGENTS SHALL NOT BE RESPONSIBLE FOR THE ACCURACY OR COMPLETENESS OF SCANNED COPIES OF THIS PLAN SHEET.

ALLIANCE ENGINEERING CONSULTANT, INC.
4701 PATRICK HENRY DR., #10
SANTA CLARA, CA 95054

ALAMEDA CTC
1 333 BROADWAY SUITE 220
OAKLAND, CA 94612

FOR ACCURATE RIGHT OF WAY DATA, CONTACT
RIGHT OF WAY ENGINEERING AT THE DISTRICT OFFICE.

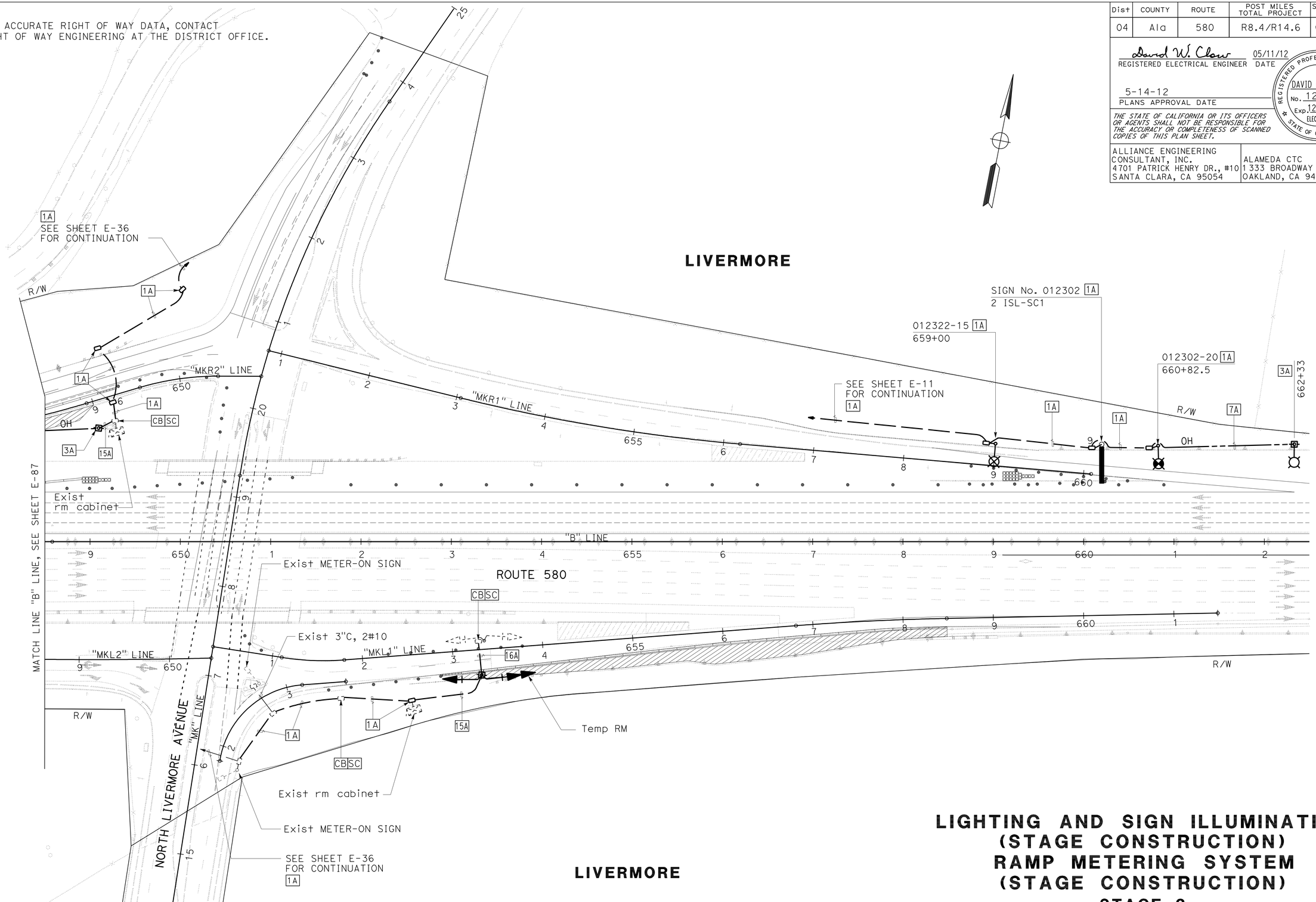

FOR NOTES, ABBREVIATIONS AND LEGEND, SEE SHEET E-69

APPROVED FOR ELECTRICAL WORK ONLY

LIGHTING AND SIGN ILLUMINATION (STAGE CONSTRUCTION) RAMP METERING SYSTEM (STAGE CONSTRUCTION)

STAGE 3

SCALE: 1" = 50'

E-88

REVISED BY	DATE REVISED
SB	5/11/12

HENRY ROBINO — DAVID CLOW — CALCULATED-DESIGNED BY — CHECKED BY

KEN NGAI — CONSULTANT FUNCTIONAL SUPERVISOR

STATE OF CALIFORNIA - DEPARTMENT OF TRANSPORTATION — Caltrans

LAST REVISION 05-11-12 — DATE PLOTTED => 23-MAY-2012 — TIME PLOTTED => 08:17

FOR ACCURATE RIGHT OF WAY DATA, CONTACT
RIGHT OF WAY ENGINEERING AT THE DISTRICT OFFICE.

Dist	COUNTY	ROUTE	POST MILES TOTAL PROJECT	SHEET No.	TOTAL SHEETS
04	Ala	580	R8.4/R14.6	624	853

David W. Clow 05/11/12
REGISTERED ELECTRICAL ENGINEER DATE

5-14-12
PLANS APPROVAL DATE

REGISTERED PROFESSIONAL ENGINEER
DAVID W. CLOW
No. 12883
Exp. 12/31/12
ELECTRICAL
STATE OF CALIFORNIA

THE STATE OF CALIFORNIA OR ITS OFFICERS OR AGENTS SHALL NOT BE RESPONSIBLE FOR THE ACCURACY OR COMPLETENESS OF SCANNED COPIES OF THIS PLAN SHEET.

ALLIANCE ENGINEERING CONSULTANT, INC.
4701 PATRICK HENRY DR., #10
SANTA CLARA, CA 95054

ALAMEDA CTC
1 333 BROADWAY SUITE 220
OAKLAND, CA 94612

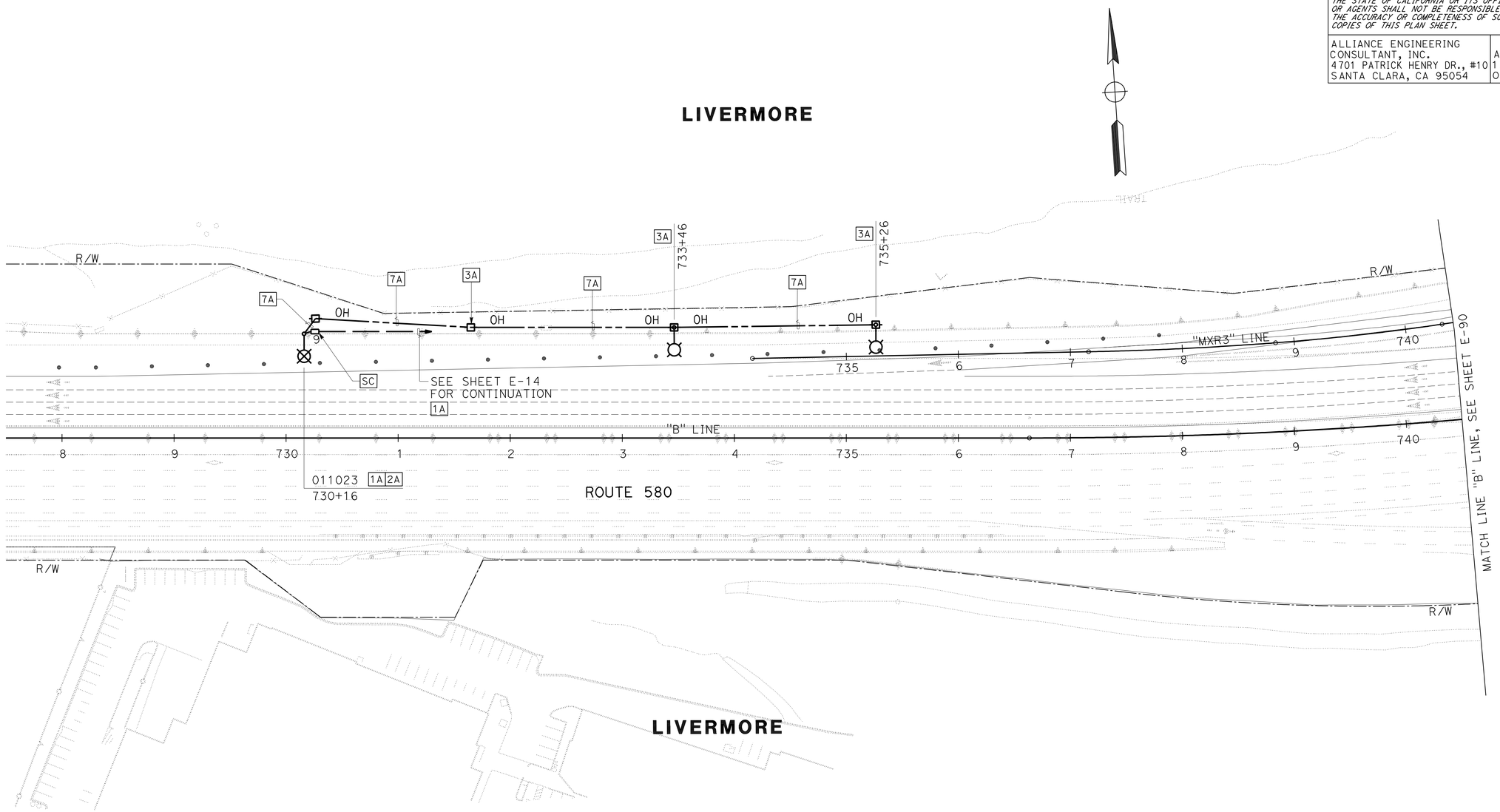

FOR NOTES, ABBREVIATIONS AND LEGEND, SEE SHEET E-69

APPROVED FOR ELECTRICAL WORK ONLY

LIGHTING AND SIGN ILLUMINATION (STAGE CONSTRUCTION)

STAGE 3

SCALE: 1" = 50'

E-89

REVISED BY	SB
DATE REVISED	5/11/12
HENRY ROBINO	
DAVID CLOW	
CALCULATED-DESIGNED BY	
CHECKED BY	
CONSULTANT FUNCTIONAL SUPERVISOR	
KEN NGAI	

STATE OF CALIFORNIA - DEPARTMENT OF TRANSPORTATION
Caltrans

LAST REVISION 05-11-12
DATE PLOTTED => 23-MAY-2012
TIME PLOTTED => 08:17

Dist	COUNTY	ROUTE	POST MILES TOTAL PROJECT	SHEET No.	TOTAL SHEETS
04	Ala	580	R8.4/R14.6	625	853

David W. Clow 05/11/12
REGISTERED ELECTRICAL ENGINEER DATE

5-14-12
PLANS APPROVAL DATE

REGISTERED PROFESSIONAL ENGINEER
DAVID W. CLOW
No. 12883
Exp. 12/31/12
ELECTRICAL
STATE OF CALIFORNIA

THE STATE OF CALIFORNIA OR ITS OFFICERS OR AGENTS SHALL NOT BE RESPONSIBLE FOR THE ACCURACY OR COMPLETENESS OF SCANNED COPIES OF THIS PLAN SHEET.

ALLIANCE ENGINEERING CONSULTANT, INC.
4701 PATRICK HENRY DR., #10
SANTA CLARA, CA 95054

ALAMEDA CTC
1 333 BROADWAY SUITE 220
OAKLAND, CA 94612

FOR ACCURATE RIGHT OF WAY DATA, CONTACT RIGHT OF WAY ENGINEERING AT THE DISTRICT OFFICE.

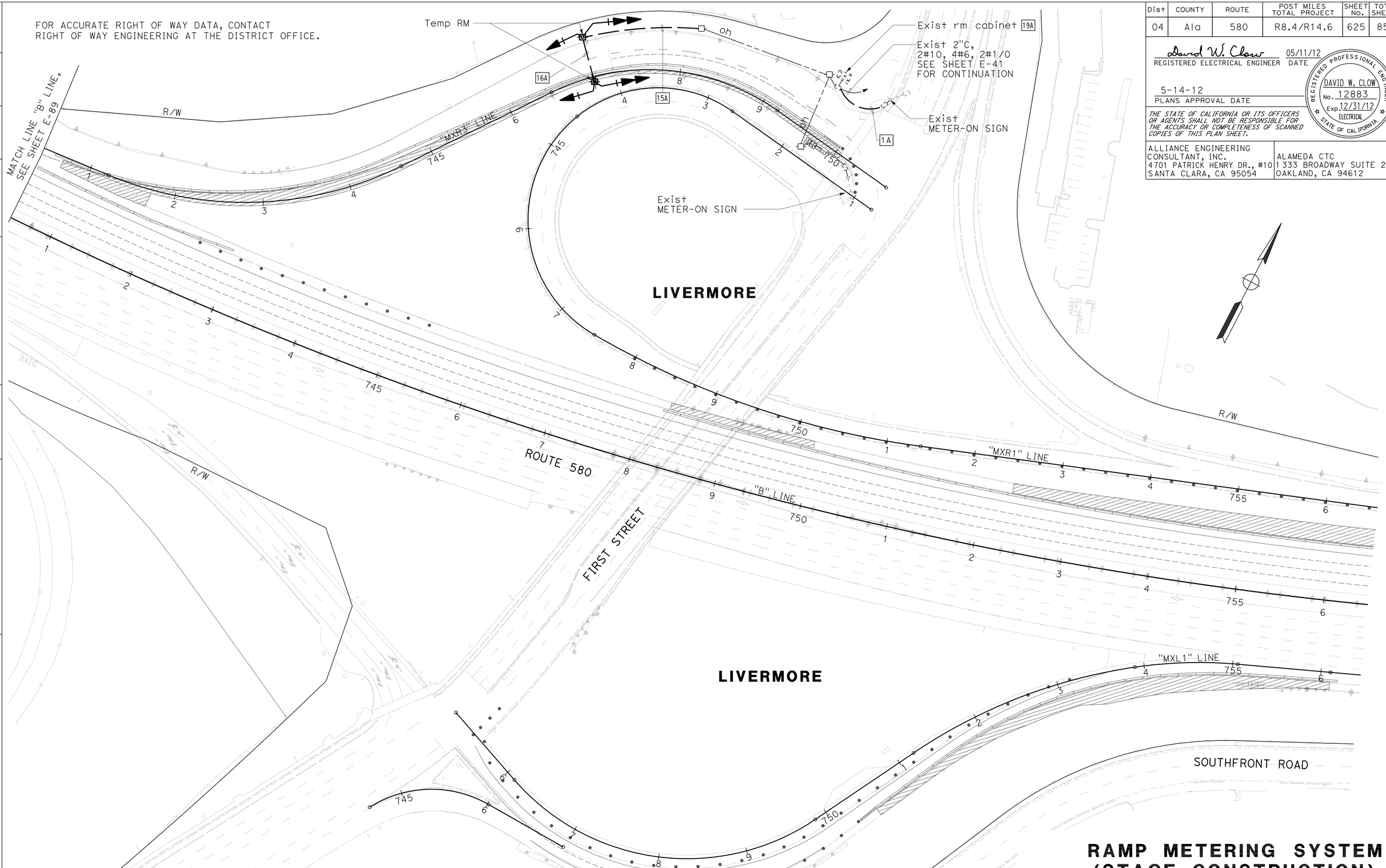

FOR NOTES, ABBREVIATIONS AND LEGEND, SEE SHEET E-69

APPROVED FOR ELECTRICAL WORK ONLY

RAMP METERING SYSTEM (STAGE CONSTRUCTION)

STAGE 3

SCALE: 1" = 50'

E-90

REVISED BY	DATE REVISED
SB	5/11/12

HENRY ROBINO — DAVID CLOW

CALCULATED-DESIGNED BY — CHECKED BY

CONSULTANT FUNCTIONAL SUPERVISOR — KEN NGAI

STATE OF CALIFORNIA - DEPARTMENT OF TRANSPORTATION

Caltrans

LAST REVISION 05-11-12 — DATE PLOTTED => 23-MAY-2012 TIME PLOTTED => 08:17

Dist	COUNTY	ROUTE	POST MILES TOTAL PROJECT	SHEET No.	TOTAL SHEETS
04	Ala	580	R8.4/R14.6	626	853

David W. Clow 05/11/12
REGISTERED ELECTRICAL ENGINEER DATE

5-14-12
PLANS APPROVAL DATE

REGISTERED PROFESSIONAL ENGINEER
DAVID W. CLOW
No. 12883
Exp. 12/31/12
ELECTRICAL
STATE OF CALIFORNIA

THE STATE OF CALIFORNIA OR ITS OFFICERS OR AGENTS SHALL NOT BE RESPONSIBLE FOR THE ACCURACY OR COMPLETENESS OF SCANNED COPIES OF THIS PLAN SHEET.

ALLIANCE ENGINEERING CONSULTANT, INC.
4701 PATRICK HENRY DR., #10
SANTA CLARA, CA 95054

ALAMEDA CTC
1 333 BROADWAY SUITE 220
OAKLAND, CA 94612

FOR ACCURATE RIGHT OF WAY DATA, CONTACT
RIGHT OF WAY ENGINEERING AT THE DISTRICT OFFICE.

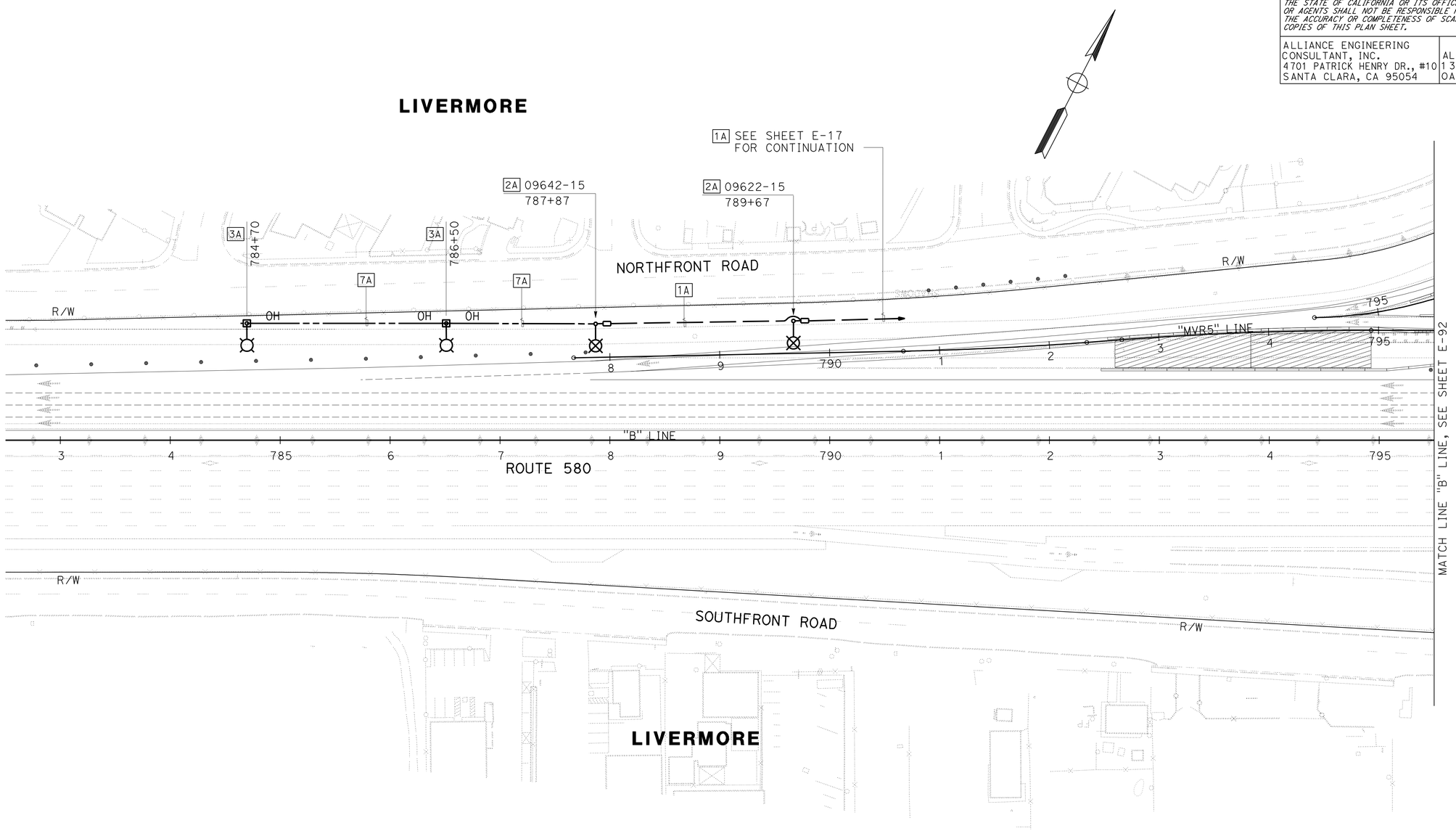

LIGHTING AND SIGN ILLUMINATION (STAGE CONSTRUCTION)

STAGE 3

SCALE: 1" = 50'

E-91

FOR NOTES, ABBREVIATIONS AND LEGEND, SEE SHEET E-69

APPROVED FOR ELECTRICAL WORK ONLY

REVISED BY	DATE REVISED
SB	5/11/12

HENRY ROBINO — DAVID CLOW — CALCULATED-DESIGNED BY — CHECKED BY

CONSULTANT FUNCTIONAL SUPERVISOR — KEN NGAI

STATE OF CALIFORNIA - DEPARTMENT OF TRANSPORTATION — Caltrans

LAST REVISION 05-11-12 — DATE PLOTTED => 23-MAY-2012 — TIME PLOTTED => 08:18

Dist	COUNTY	ROUTE	POST MILES TOTAL PROJECT	SHEET No.	TOTAL SHEETS
04	Ala	580	R8.4/R14.6	627	853

David W. Clow 05/11/12
REGISTERED ELECTRICAL ENGINEER DATE

5-14-12
PLANS APPROVAL DATE

REGISTERED PROFESSIONAL ENGINEER
DAVID W. CLOW
No. 12883
Exp. 12/31/12
ELECTRICAL
STATE OF CALIFORNIA

THE STATE OF CALIFORNIA OR ITS OFFICERS OR AGENTS SHALL NOT BE RESPONSIBLE FOR THE ACCURACY OR COMPLETENESS OF SCANNED COPIES OF THIS PLAN SHEET.

ALLIANCE ENGINEERING CONSULTANT, INC.
4701 PATRICK HENRY DR., #10
SANTA CLARA, CA 95054

ALAMEDA CTC
1 333 BROADWAY SUITE 220
OAKLAND, CA 94612

FOR ACCURATE RIGHT OF WAY DATA, CONTACT
RIGHT OF WAY ENGINEERING AT THE DISTRICT OFFICE.

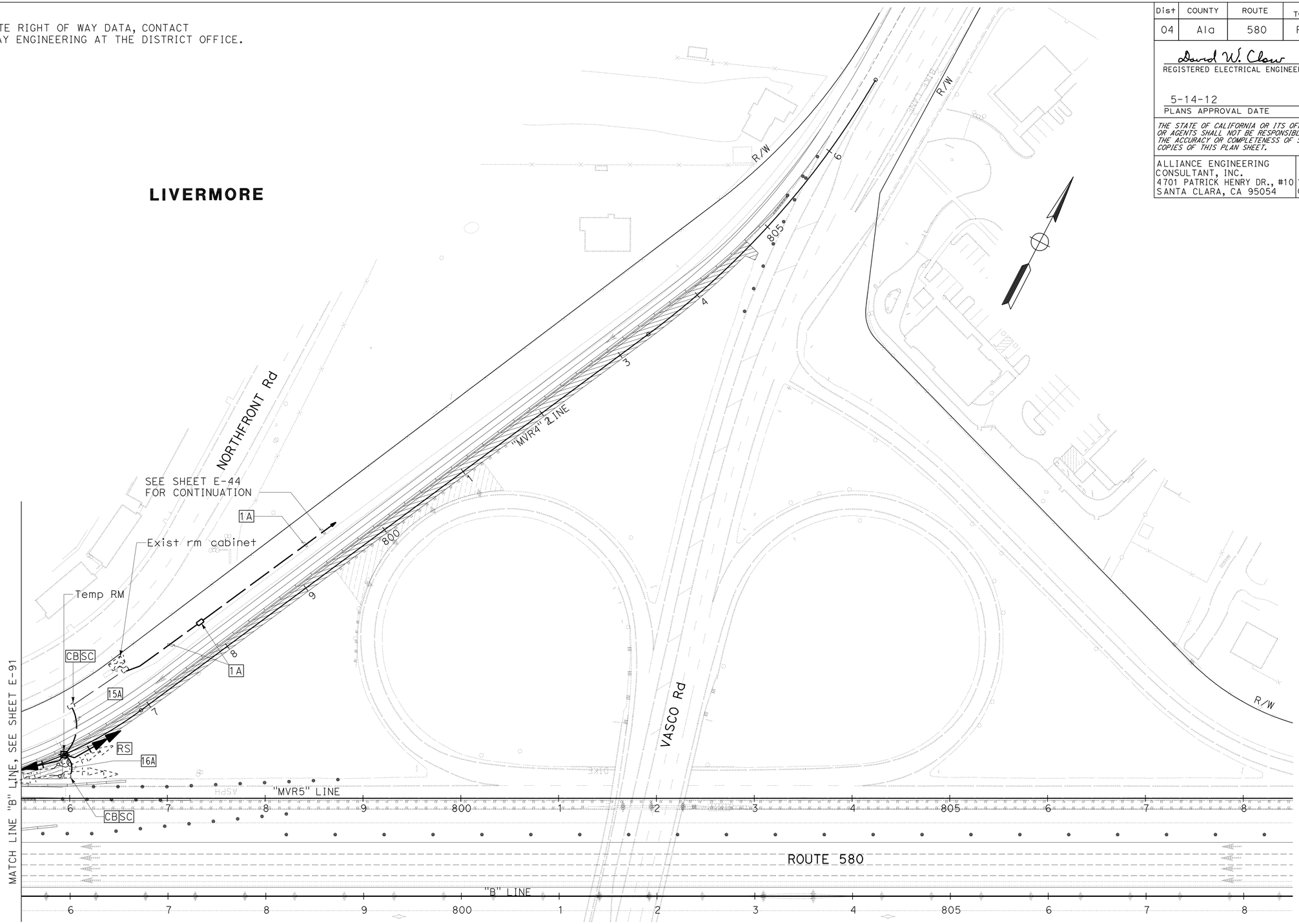

FOR NOTES, ABBREVIATIONS AND
LEGEND, SEE SHEET E-69

APPROVED FOR ELECTRICAL WORK ONLY

RAMP METERING SYSTEM (STAGE CONSTRUCTION)

STAGE 3

SCALE: 1" = 50'

E-92

REVISED BY	DATE REVISED
SB	5/11/12

HENRY ROBINO — DAVID CLOW

CALCULATED-DESIGNED BY — CHECKED BY

CONSULTANT FUNCTIONAL SUPERVISOR — KEN NGAI

STATE OF CALIFORNIA - DEPARTMENT OF TRANSPORTATION

Caltrans

LAST REVISION 05-11-12 | DATE PLOTTED => 23-MAY-2012 | TIME PLOTTED => 08:18

FOR ACCURATE RIGHT OF WAY DATA, CONTACT
RIGHT OF WAY ENGINEERING AT THE DISTRICT OFFICE.

Dist	COUNTY	ROUTE	POST MILES TOTAL PROJECT	SHEET No.	TOTAL SHEETS
04	Ala	580	R8.4/R14.6	628	853

David W. Clow 05/11/12
REGISTERED ELECTRICAL ENGINEER DATE

5-14-12
PLANS APPROVAL DATE

REGISTERED PROFESSIONAL ENGINEER
DAVID W. CLOW
No. 12883
Exp. 12/31/12
ELECTRICAL
STATE OF CALIFORNIA

THE STATE OF CALIFORNIA OR ITS OFFICERS OR AGENTS SHALL NOT BE RESPONSIBLE FOR THE ACCURACY OR COMPLETENESS OF SCANNED COPIES OF THIS PLAN SHEET.

ALLIANCE ENGINEERING CONSULTANT, INC.
4701 PATRICK HENRY DR., #10
SANTA CLARA, CA 95054

ALAMEDA CTC
1 333 BROADWAY SUITE 220
OAKLAND, CA 94612

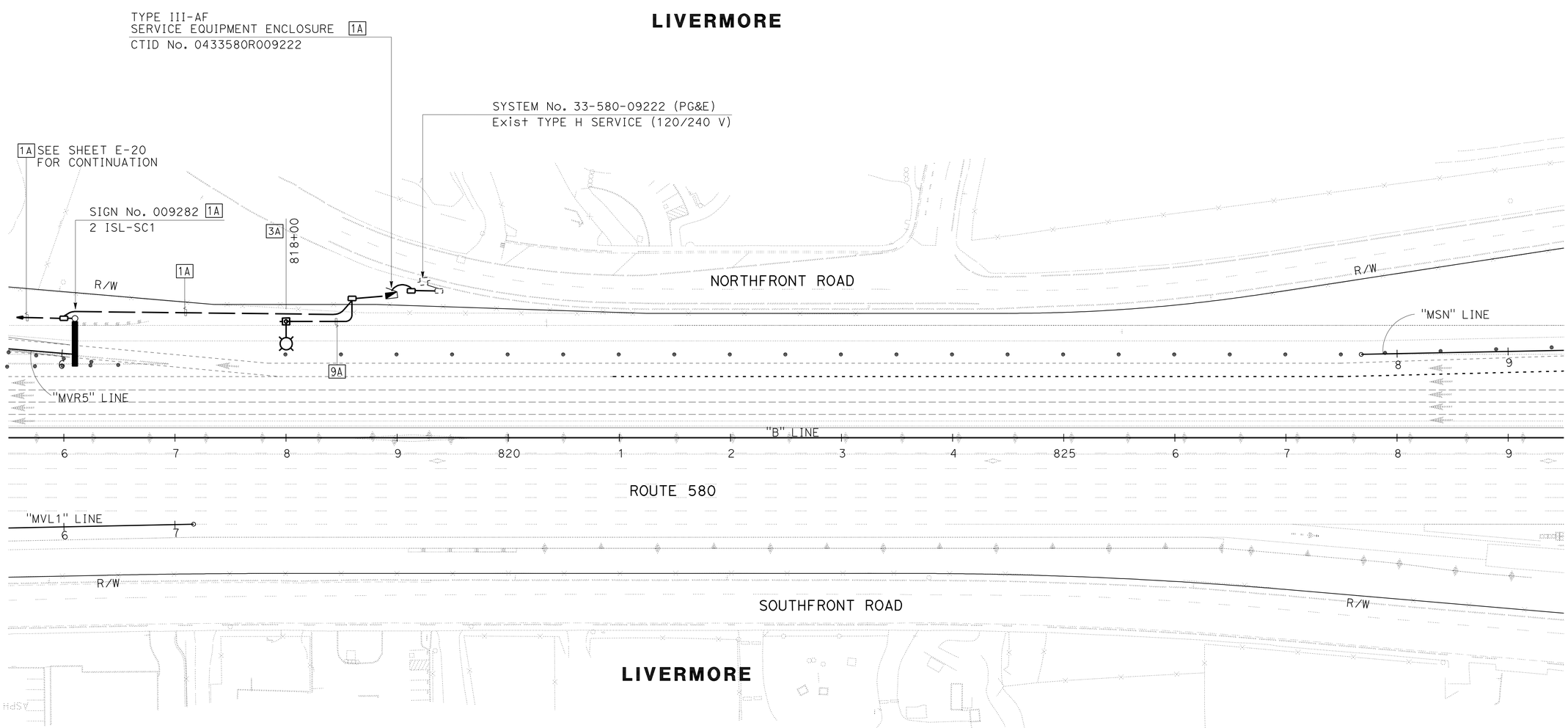

LIGHTING AND SIGN ILLUMINATION (STAGE CONSTRUCTION)

STAGE 3

SCALE: 1" = 50'

FOR NOTES, ABBREVIATIONS AND LEGEND, SEE SHEET E-69

APPROVED FOR ELECTRICAL WORK ONLY

E-93

REVISED BY	DATE REVISED
SB	5/11/12

HENRY ROBINO — DAVID CLOW — CALCULATED-DESIGNED BY — CHECKED BY

CONSULTANT FUNCTIONAL SUPERVISOR — KEN NGAI

STATE OF CALIFORNIA - DEPARTMENT OF TRANSPORTATION — Caltrans

LAST REVISION 05-11-12 — DATE PLOTTED => 23-MAY-2012 — TIME PLOTTED => 08:18

FOR ACCURATE RIGHT OF WAY DATA, CONTACT
RIGHT OF WAY ENGINEERING AT THE DISTRICT OFFICE.

Dist	COUNTY	ROUTE	POST MILES TOTAL PROJECT	SHEET No.	TOTAL SHEETS
04	Ala	580	R8.4/R14.6	629	853

David W. Clow 05/11/12
REGISTERED ELECTRICAL ENGINEER DATE

5-14-12
PLANS APPROVAL DATE

REGISTERED PROFESSIONAL ENGINEER
DAVID W. CLOW
No. 12883
Exp. 12/31/12
ELECTRICAL
STATE OF CALIFORNIA

THE STATE OF CALIFORNIA OR ITS OFFICERS OR AGENTS SHALL NOT BE RESPONSIBLE FOR THE ACCURACY OR COMPLETENESS OF SCANNED COPIES OF THIS PLAN SHEET.

ALLIANCE ENGINEERING CONSULTANT, INC.
4701 PATRICK HENRY DR., #10
SANTA CLARA, CA 95054

ALAMEDA CTC
1 333 BROADWAY SUITE 220
OAKLAND, CA 94612

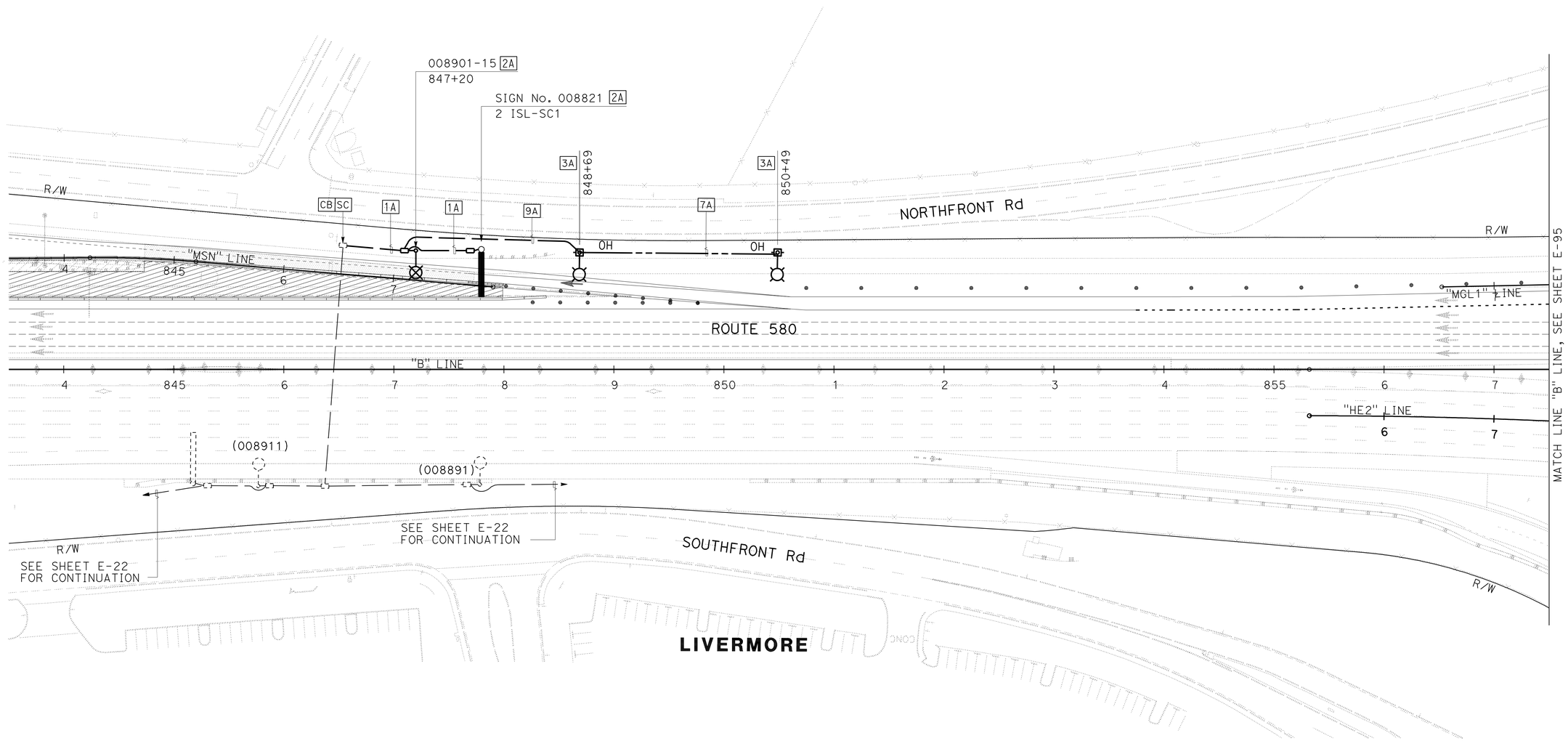

LIGHTING AND SIGN ILLUMINATION
(STAGE CONSTRUCTION)
STAGE 3

SCALE: 1" = 50'

E-94

FOR NOTES, ABBREVIATIONS AND LEGEND, SEE SHEET E-69

APPROVED FOR ELECTRICAL WORK ONLY

HENRY ROBINO	REVISED BY
DAVID CLOW	DATE REVISED
SB	
5/11/12	
CALCULATED-DESIGNED BY	
CHECKED BY	
CONSULTANT FUNCTIONAL SUPERVISOR	
KEN NGAI	

STATE OF CALIFORNIA - DEPARTMENT OF TRANSPORTATION
Caltrans

LAST REVISION 05-11-12
DATE PLOTTED => 23-MAY-2012
TIME PLOTTED => 08:18

FOR ACCURATE RIGHT OF WAY DATA, CONTACT
RIGHT OF WAY ENGINEERING AT THE DISTRICT OFFICE.

Dist	COUNTY	ROUTE	POST MILES TOTAL PROJECT	SHEET No.	TOTAL SHEETS
04	Ala	580	R8.4/R14.6	630	853

David W. Clow 05/11/12
REGISTERED ELECTRICAL ENGINEER DATE

5-14-12
PLANS APPROVAL DATE

REGISTERED PROFESSIONAL ENGINEER
DAVID W. CLOW
No. 12883
Exp. 12/31/12
ELECTRICAL
STATE OF CALIFORNIA

THE STATE OF CALIFORNIA OR ITS OFFICERS OR AGENTS SHALL NOT BE RESPONSIBLE FOR THE ACCURACY OR COMPLETENESS OF SCANNED COPIES OF THIS PLAN SHEET.

ALLIANCE ENGINEERING CONSULTANT, INC.
4701 PATRICK HENRY DR., #10
SANTA CLARA, CA 95054

ALAMEDA CTC
1 333 BROADWAY SUITE 220
OAKLAND, CA 94612

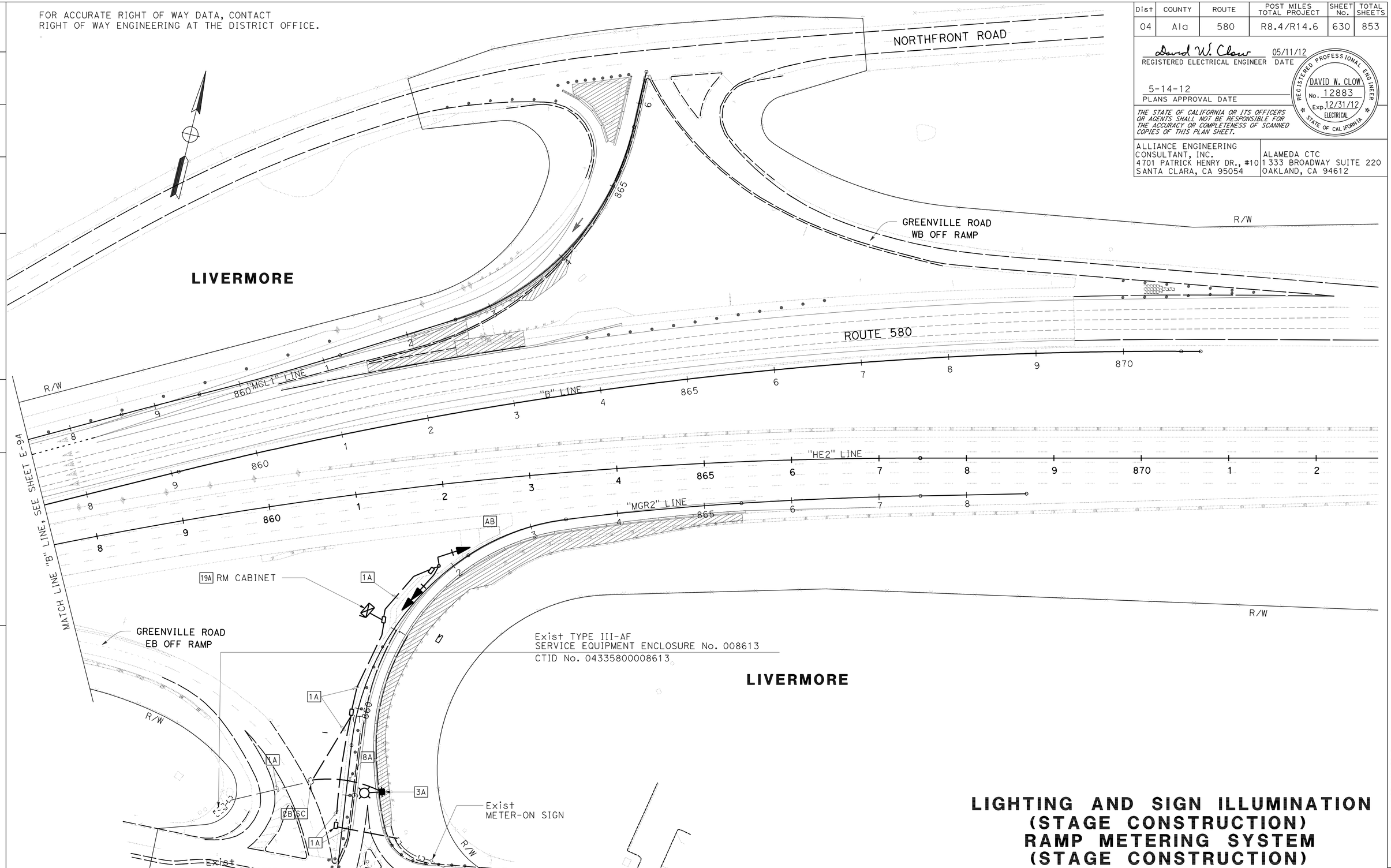

FOR NOTES, ABBREVIATIONS AND LEGEND, SEE SHEET E-69

LIGHTING AND SIGN ILLUMINATION (STAGE CONSTRUCTION) RAMP METERING SYSTEM (STAGE CONSTRUCTION)

STAGE 3

SCALE: 1" = 50'

E-95

REVISED BY	DATE REVISED
SB	5/11/12

HENRY ROBINO — DAVID CLOW
CALCULATED-DESIGNED BY — CHECKED BY
CONSULTANT FUNCTIONAL SUPERVISOR — KEN NGAI
STATE OF CALIFORNIA - DEPARTMENT OF TRANSPORTATION
Caltrans

LAST REVISION 05-11-12
DATE PLOTTED => 23-MAY-2012
TIME PLOTTED => 08:18

Dist	COUNTY	ROUTE	POST MILES TOTAL PROJECT	SHEET No.	TOTAL SHEETS
04	Ala	580	R8.4/R14.6	631	853

05/11/12
REGISTERED CIVIL ENGINEER DATE

5-14-12
PLANS APPROVAL DATE

REGISTERED PROFESSIONAL ENGINEER N.V. BERNARDI No. 45407 Exp. 9/30/12 CIVIL STATE OF CALIFORNIA

THE STATE OF CALIFORNIA OR ITS OFFICERS OR AGENTS SHALL NOT BE RESPONSIBLE FOR THE ACCURACY OR COMPLETENESS OF SCANNED COPIES OF THIS PLAN SHEET.

BKF ENGINEERS
4670 WILLOW ROAD, SUITE 250
PLEASANTON, CA. 94588

ALAMEDA CTC
1333 BROADWAY SUITE 220
OAKLAND, CA. 94612

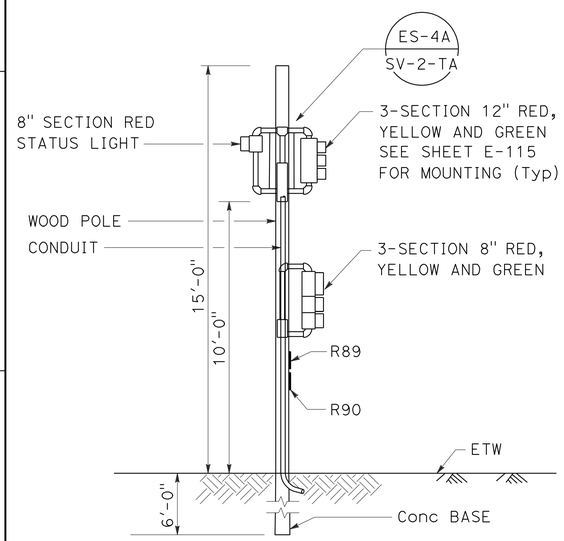

TEMPORARY RAMP METERING SIGNAL

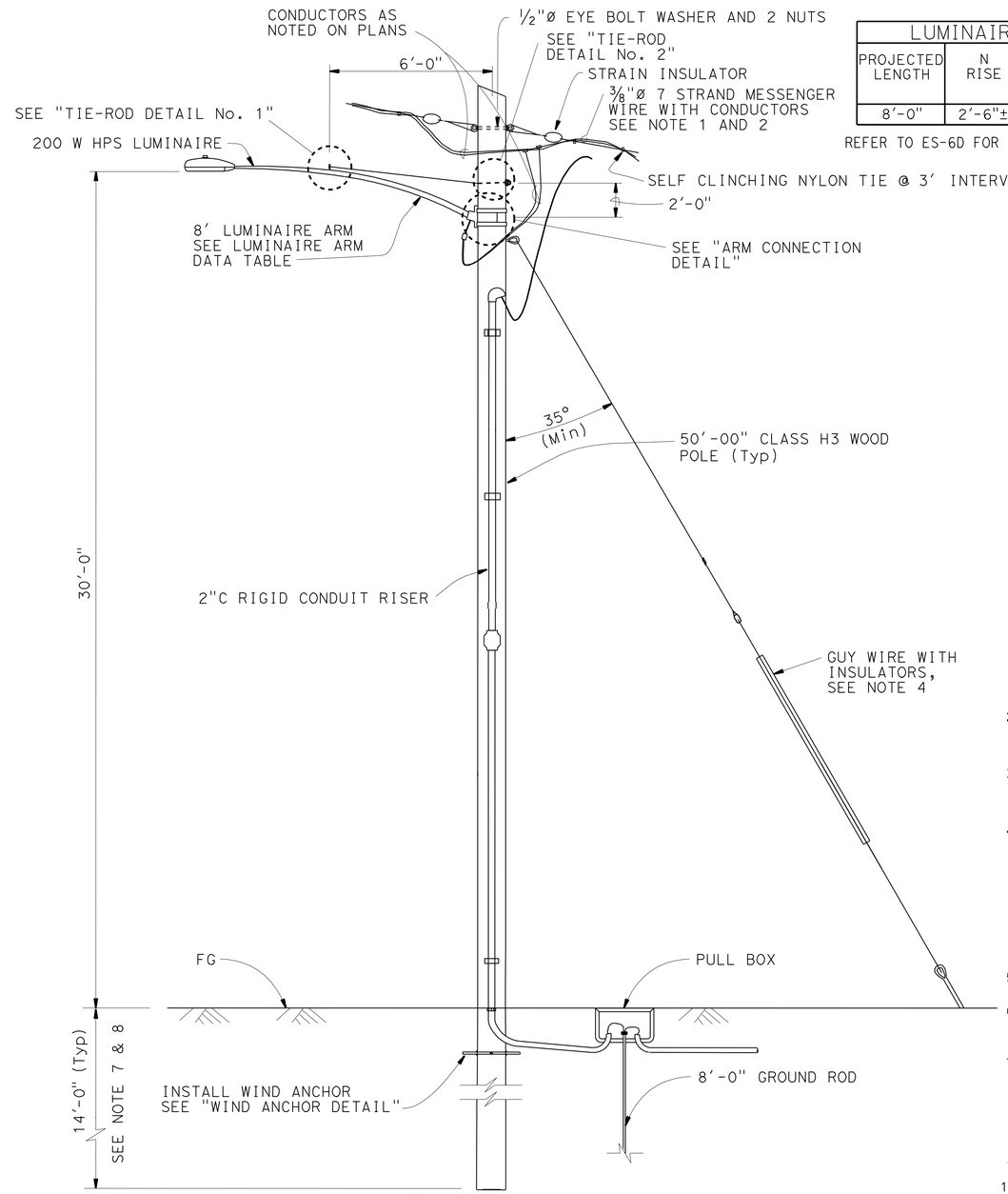

TYPICAL WOOD POLE SUPPORT WITH LUMINAIRE

LUMINAIRE ARM DATA			
PROJECTED LENGTH	N RISE	Min OD AT POLE	THICKNESS
8'-0"	2'-6"±	3 1/2"	0.1196"

REFER TO ES-6D FOR LUMINAIRE ARM DETAILS

GENERAL NOTES:

SPECIFICATIONS

DESIGN:

1. AASHTO STANDARD SPECIFICATIONS FOR STRUCTURAL SUPPORTS FOR HIGHWAY SIGNS, LUMINAIRES AND TRAFFIC SIGNALS DATED 2001.
2. GENERAL ORDER No. 95 OF PUBLIC UTILITIES COMMISSION.
3. NATIONAL ELECTRICAL SAFETY CODE.
4. CALTRANS STANDARD SPECIFICATIONS MAY 2006.
5. WIND LOADINGS: 85 MPH.

UNIT STRESSES

TIMBER POLES: Fb = 1850 psi TAPERED TREATED ROUND POLE
Fv = 110 psi ASTM D2899 STANDARD
E = 1500 x 10^3 psi

TREATMENT

TO CONFORM WITH SECTION 86 STANDARD SPECIFICATIONS.

NOTES:

1. ALL OVERHEAD CABLES SHALL BE INSTALLED WITH 25'-0" MINIMUM OVERHEAD CLEARANCE.
2. CONDUCTORS SHALL BE SUSPENDED FROM SPAN-WIRE AS FOLLOWS: A) MAIN RUN 3/8" SPAN-WIRE WITH A MAXIMUM OF 4.5% SAG. NO SPARE CONDUCTORS ALLOWED EXCEPT AS NOTED.
3. OVERHEAD LINE CONSTRUCTION NOT SPECIFICALLY COVERED HERE SHALL CONFORM WITH THE PROVISIONS OF GENERAL ORDER No. 95 OF PUBLIC UTILITIES COMMISSION.
4. WOOD POLES SHALL BE STABILIZED USING GUY WIRES, BREAST BLOCKS OR RAKES AT EACH DEAD END, CORNER, OH DROP OR LINE DEVIATION MORE THAN 15° FROM STRAIGHT LINE. THE DIRECTION OF THE GUY SHALL COUNTERACT THE RESULTANT OF UNBALANCED FORCE APPLIED TO POLE. WHERE SPACE OR CONFLICT PREVENT GUY INSTALLATION, A DIAGONAL BRACE SHALL BE USED. THE BRACE SHALL BE WOOD AND SHALL BE CONNECTED TO THE POLE BY MEANS TO SATISFY STRUCTURAL AND ELECTRICAL REQUIREMENTS. THE DIRECTION OF THE BRACE SHALL COUNTERACT THE RESULTANT OF UNBALANCED HORIZONTAL FORCE OF 4000 POUNDS (Min) APPLIED TO THE POLE.
5. GUY SHALL BE ATTACHED TO POLE AS NEARLY AS PRACTICAL TO THE CENTER OF CONDUCTORS LOAD, OR 4'-0" Max OTHERWISE, SEE NOTE 4.
6. ALL ATTACHMENTS SHALL BE MOUNTED WITH STAINLESS STEEL STRAPS OR OTHER MANUFACTURERS METHODS WITHOUT DRILLING HOLES IN POLE, EXCEPT AS SHOWN. DRILLING THROUGH POLE WILL REQUIRE THE ENGINEER'S APPROVAL.
7. FOUNDATION DESIGN IS BASED ON AASHTO 2001 ARTICLE 13.6 BROMS' APPROXIMATE PROCEDURE ASSUMING A COHESSIONLESS MATERIAL. THE ANGLE OF INTERNAL FRICTION USED IS 30° AND UNIT WEIGHT OF SOIL USED IS 120 Lb/FT^3. THE CONTRACTOR TO VERIFY ACTUAL SOIL CONDITION.
8. IF POLE IS LOCATED ON A STEEP SLOPE ADD 2 FEET EXTRA FOR EMBEDMENT.
9. SEE SHEETS E-97 AND E-98 FOR DETAILS.
10. FOR DETAILS NOT SHOWN, SEE "2006 STANDARD PLANS" AND "2006 REVISED STANDARD PLANS".
11. ALL TEMPORARY POLES SUPPORT OH CONDUCTORS. ATTACH LUMINAIRE ARM AND/OR COMBINATION OF ATTACHMENTS AS SPECIFIED AT LOCATIONS WHERE INDICATED ON ELECTRICAL SHEETS.
12. ATTACHMENTS SHOWN ON POLE APPLY AS NOTED ON PLANS.
13. WOOD POLES AND UTILITY GRADE WIRES SHALL CONFORM TO CALTRANS STANDARD SPECIFICATIONS MAY 2006.
14. WOOD POLE SHALL BE PROTECTED FROM TRAFFIC BY MEANS ACCORDING TO CALIFORNIA DEPARTMENT OF TRANSPORTATION HIGHWAY DESIGN MANUAL REQUEREMENTS SEE ROADWAY PLANS.

ELECTRICAL DETAILS (STAGE CONSTRUCTION)
TEMPORARY WOOD POLE

NO SCALE

E-96

APPROVED FOR ELECTRICAL WORK ONLY

STATE OF CALIFORNIA - DEPARTMENT OF TRANSPORTATION
Caltrans

CONSULTANT FUNCTIONAL SUPERVISOR: NATALINA V. BERNARDI
CALCULATED-DESIGNED BY: CARMELO CECILIO
CHECKED BY: LUIS GARCIA
REVISED BY: CC
DATE REVISED: 05/11/12

LAST REVISION 05-11-12
DATE PLOTTED => 23-MAY-2012
TIME PLOTTED => 08:18

Dist	COUNTY	ROUTE	POST MILES TOTAL PROJECT	SHEET No.	TOTAL SHEETS
04	Ala	580	R8.4/R14.6	632	853

05/11/12
REGISTERED CIVIL ENGINEER DATE

5-14-12
PLANS APPROVAL DATE

REGISTERED PROFESSIONAL ENGINEER N.V. BERNARDI No. 45407 Exp. 9/30/12 CIVIL STATE OF CALIFORNIA

THE STATE OF CALIFORNIA OR ITS OFFICERS OR AGENTS SHALL NOT BE RESPONSIBLE FOR THE ACCURACY OR COMPLETENESS OF SCANNED COPIES OF THIS PLAN SHEET.

BKF ENGINEERS
4670 WILLOW ROAD, SUITE 250
PLEASANTON, CA. 94588

ALAMEDA CTC
1333 BROADWAY SUITE 220
OAKLAND, CA. 94612

NOTES:

1. ALL HARDWARE AND STEEL SHALL BE GALVANIZED AFTER FABRICATION.
2. ARM BASE CONNECTION DETAILS SHALL BE IN COMPLIANCE WITH STANDARD PLANS DETAIL SHEET ES-6D WITH NOTED MODIFICATIONS.
3. 2000 LB Min CAPACITY STRAP SYSTEM SHALL BE USED FOR TOP AND BOTTOM OF PLATE.
4. THE CONTRACTOR TO VERIFY POLE DIMENSIONS AT TIE-ROD ATTACHMENT HEIGHT. FABRICATE 8" FLAT BAR WITH "L" DIMENSION TO MAINTAIN AN OPEN GAP BETWEEN ENCASEMENT IN FINISHED INSTALLATION.

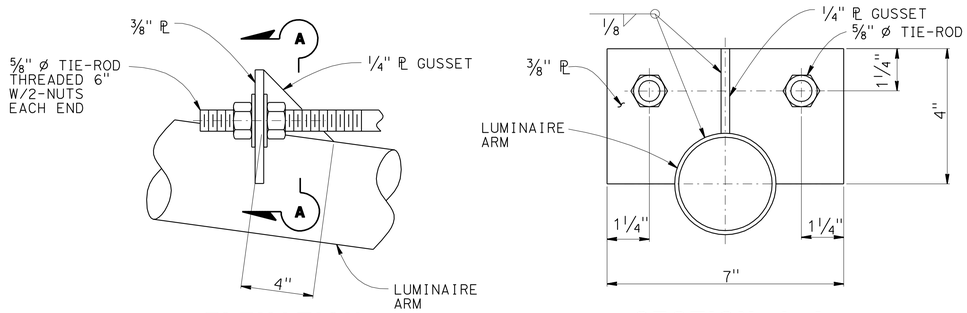

ELEVATION

SECTION A-A

TIE-ROD DETAIL No. 1

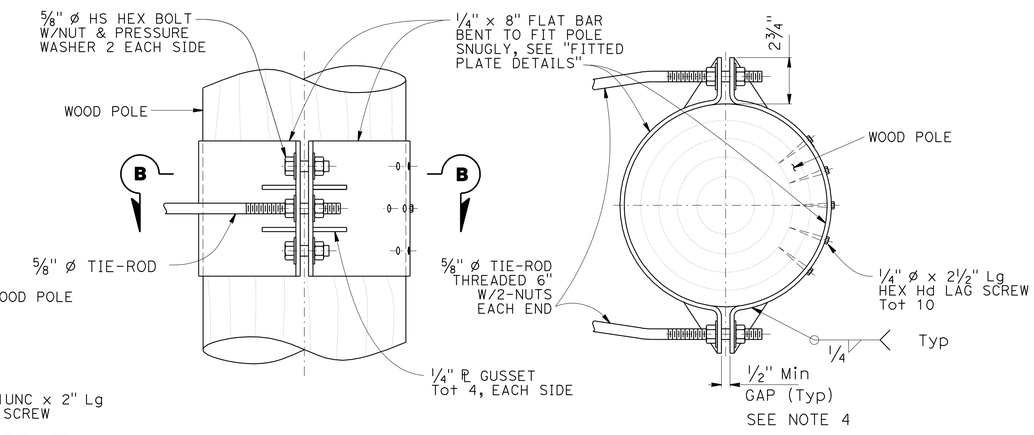

ELEVATION

SECTION B-B

TIE-ROD DETAIL No. 2

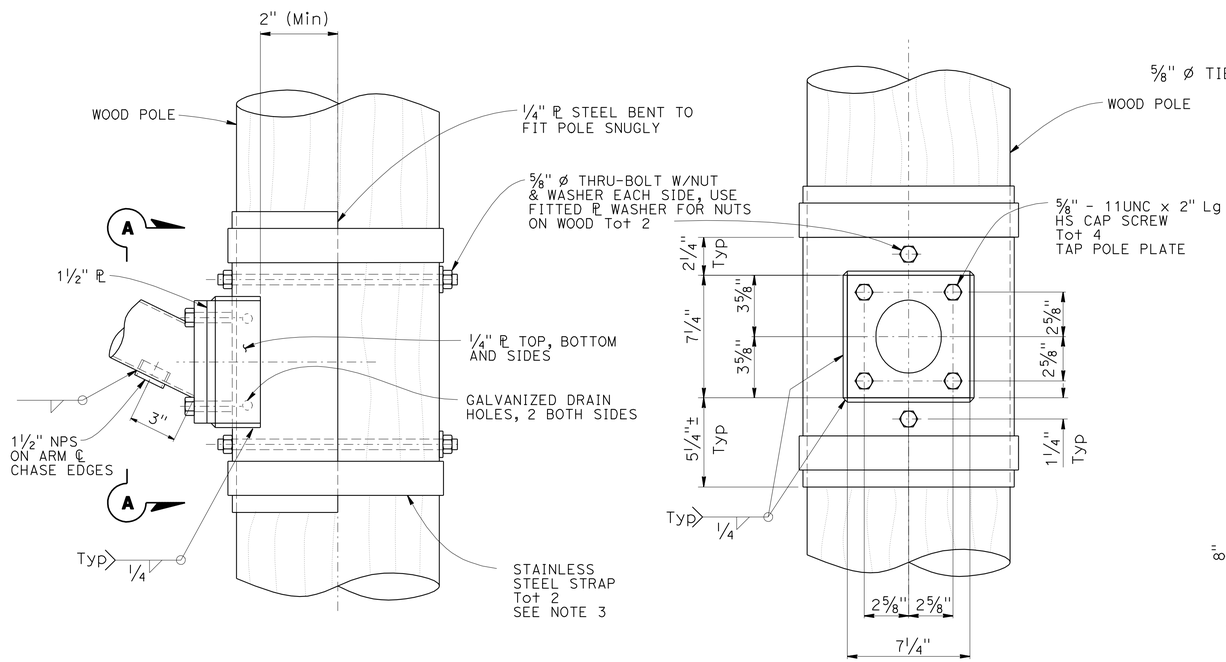

ELEVATION

VIEW A-A

ARM CONNECTION DETAILS

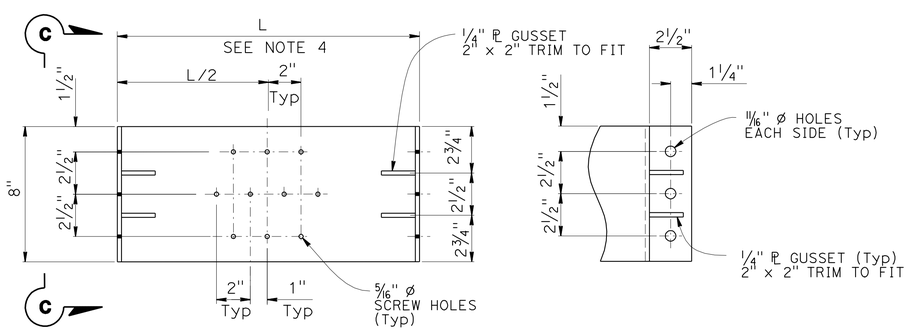

ELEVATION

SECTION C-C

FITTED PLATE DETAILS

NOTE: 2 REQUIRED (1 W/SCREW HOLES, 1 WITHOUT)

NOTE:
THE CONTRACTOR SHALL VERIFY ALL CONTROLLING FIELD DIMENSIONS BEFORE ORDERING OR FABRICATING ANY MATERIAL.

ELECTRICAL DETAILS (STAGE CONSTRUCTION)
WOOD POLE MOUNTING DETAILS

APPROVED FOR ELECTRICAL WORK ONLY

NO SCALE

E-97

STATE OF CALIFORNIA - DEPARTMENT OF TRANSPORTATION

CONSULTANT FUNCTIONAL SUPERVISOR	CALCULATED-DESIGNED BY	CHECKED BY	REVISED BY	DATE REVISED	CC	5/11/12
NATALINA V. BERNARDI	CARMELO CECILIO	LUIS GARCIA				

Caltrans

LAST REVISION 05-11-12 | DATE PLOTTED => 23-MAY-2012 | TIME PLOTTED => 08:18

Dist	COUNTY	ROUTE	POST MILES TOTAL PROJECT	SHEET No.	TOTAL SHEETS
04	Ala	580	R8.4/R14.6	633	853

REGISTERED CIVIL ENGINEER 05/11/12 DATE

5-14-12
PLANS APPROVAL DATE

REGISTERED PROFESSIONAL ENGINEER N.V. BERNARDI No. 45407 Exp. 9/30/12 CIVIL STATE OF CALIFORNIA

THE STATE OF CALIFORNIA OR ITS OFFICERS OR AGENTS SHALL NOT BE RESPONSIBLE FOR THE ACCURACY OR COMPLETENESS OF SCANNED COPIES OF THIS PLAN SHEET.

BKF ENGINEERS
4670 WILLOW ROAD, SUITE 250
PLEASANTON, CA. 94588

ALAMEDA CTC
1333 BROADWAY SUITE 220
OAKLAND, CA. 94612

NOTE:

1. THE CONTRACTOR TO VERIFY SOIL CONDITIONS, SLOPE, AND ADJUST ANCHORING TO SATISFY BASIC DESIGN REQUIREMENTS. SEE NOTE 7 ON SHEET E-96.
2. THE CONTRACTOR SHALL VERIFY ALL CONTROLLING FIELD DIMENSIONS BEFORE ORDERING OR FABRICATING ANY MATERIAL.

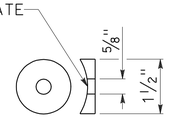

DETAIL "C"

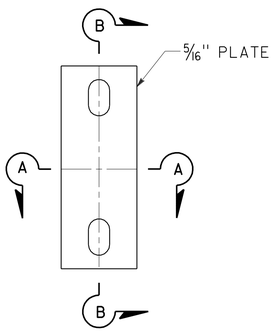

COMPARTMENT PLATE

MODIFIED POLE PLATE SEE Std DETAIL "POLE PLATE" FOR SIDE MOUNTINGS

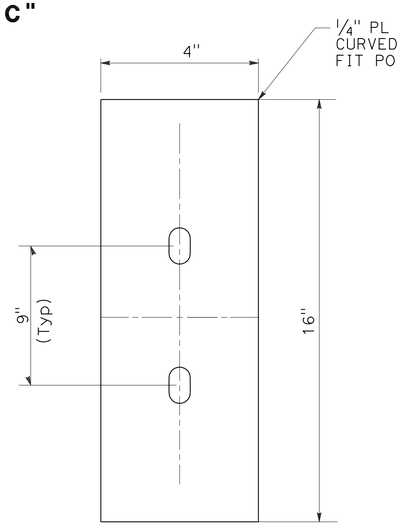

BACK PLATE

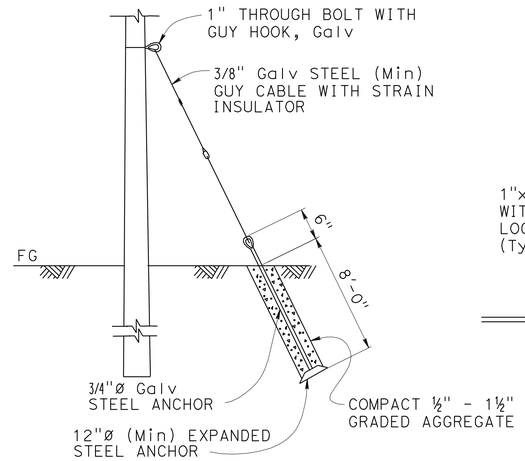

GUY WIRE INSTALLATION DETAIL

NOTE:

THE CONTRACTOR SHALL VERIFY ALL CONTROLLING FIELD DIMENSIONS BEFORE ORDERING OR FABRICATING ANY MATERIAL.

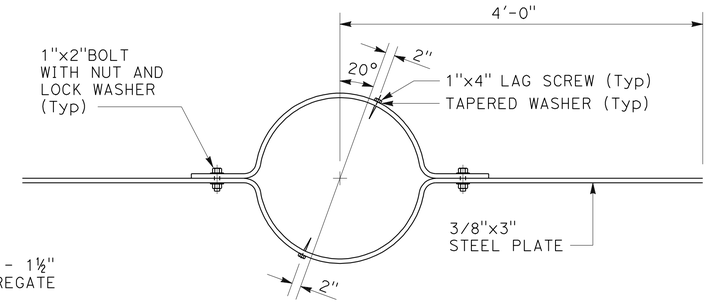

WIND ANCHOR

TO BE INSTALLED PERPENDICULAR TO MAST ARMS AND 2'-0" Min BELOW GRADE

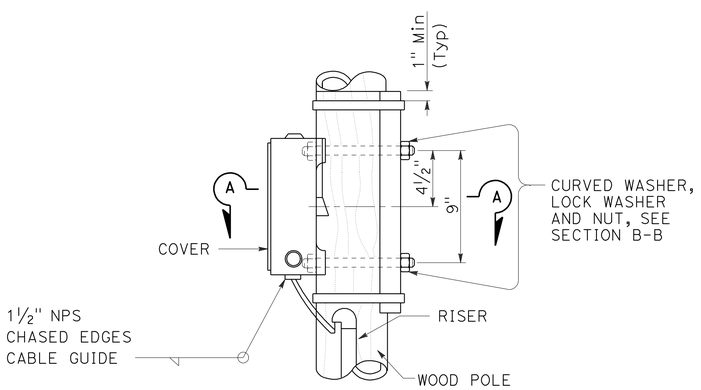

SIDE MOUNTING

TERMINAL COMPARTMENTS

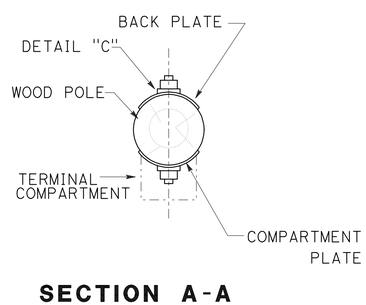

SECTION A-A

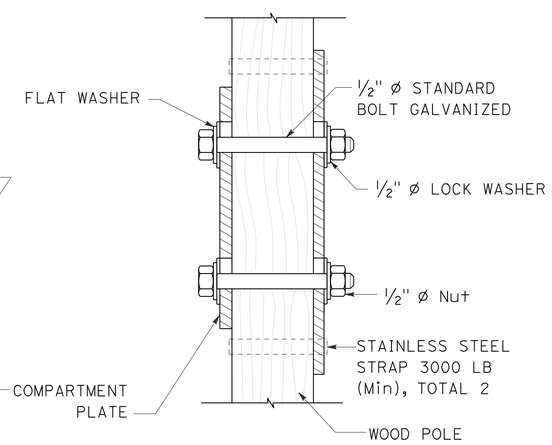

SECTION B-B

SIGNAL HEADS MOUNTING

(FOR DETAILS NOT SHOWN SEE RSP ES-4D)

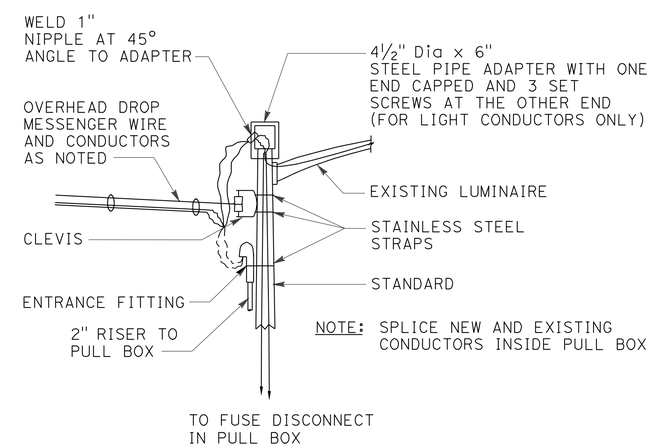

TYPICAL OVERHEAD DROP INSTALLATION DETAIL

(FOR FIXED BASE ELECTROLIER ONLY)

ELECTRICAL DETAILS (STAGE CONSTRUCTION)

WOOD POLE DETAILS

APPROVED FOR ELECTRICAL WORK ONLY

NO SCALE

E-98

STATE OF CALIFORNIA - DEPARTMENT OF TRANSPORTATION

CONSULTANT FUNCTIONAL SUPERVISOR: NATALINA V. BERNARDI

CALCULATED-DESIGNED BY: CARMELO CECILIO — REVISED BY: CC

CHECKED BY: LUIS GARCIA — DATE REVISED: 5/11/12

LAST REVISION 05-11-12 | DATE PLOTTED => 23-MAY-2012 | TIME PLOTTED => 08:19

DIST	COUNTY	ROUTE	POST MILES TOTAL PROJECT	SHEET No	TOTAL SHEETS
04	Ala	580	R8.4/R14.6	634	853

GEOTECHNICAL PROFESSIONAL — DATE 1/18/12

5-14-12
PLANS APPROVAL DATE

REGISTERED PROFESSIONAL ENGINEER — GARY PARIKH — No. G.E. 666 — Exp. 12/31/13 — GEOTECHNICAL — STATE OF CALIFORNIA

The State of California or its officers or agents shall not be responsible for the accuracy or completeness of electronic copies of this plan sheet.

ALAMEDA CTC
1333 BROADWAY, SUITE 220
OAKLAND, CALIFORNIA 94612

PARIKH CONSULTANTS, INC.
2360 QUME DRIVE, SUITE A
SAN JOSE, CA 95131

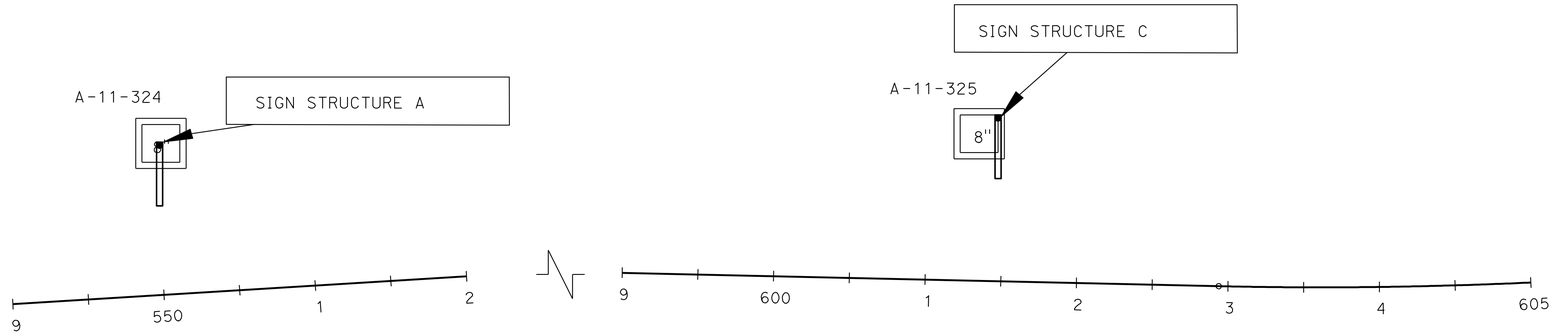

PLAN
1" = 50'

BENCHMARK :
The Vertical Datum shown hereon is based on North American Vertical Datum of 1988 (NAVD). The 1988 Elevations for this project were Established using Digital Levelling & GPS Survey Measurements and a Least Squares Adjustment Holdings NGS Benchmarks GPS Control Point 35 - PID DE8495, L 1259 - PID HS4075, CHABOT A - PID AI7653, & OLD RM 3 = TIDAL 5 - PID HS3429 fixed to their published values.

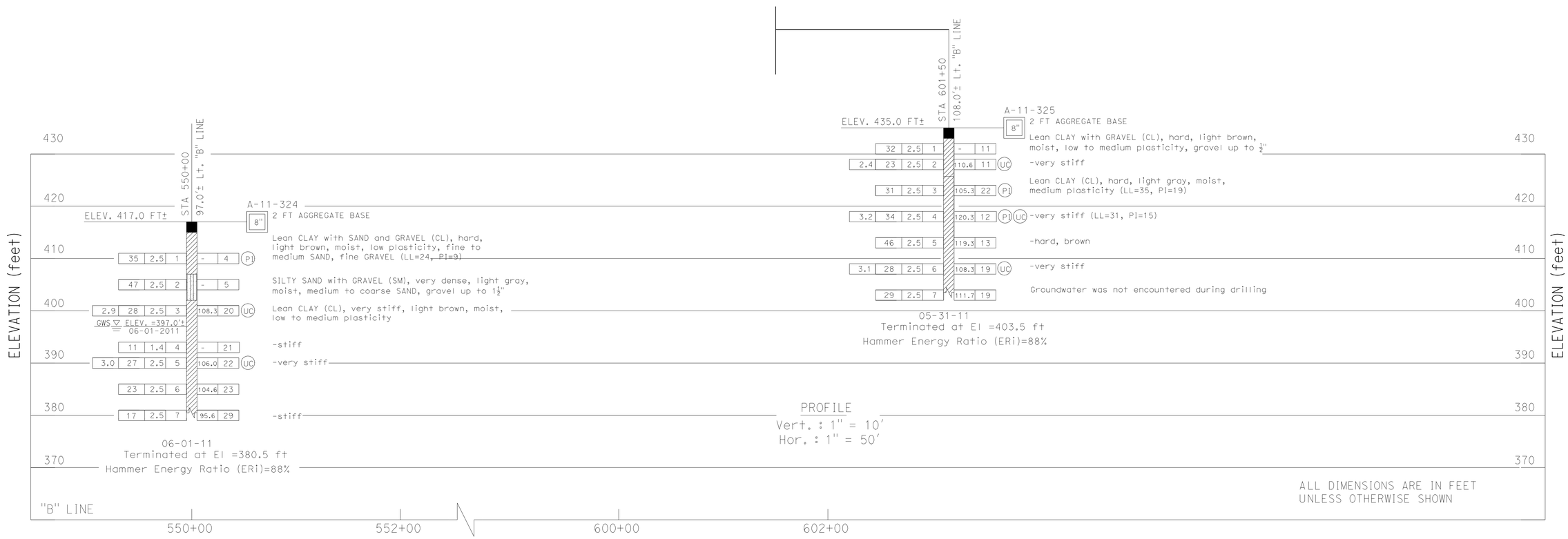

DESIGN OVERSIGHT	DRAWN BY	O. GOUTHIER	S. DUDDU FIELD INVESTIGATION BY:	PREPARED FOR THE STATE OF CALIFORNIA DEPARTMENT OF TRANSPORTATION	P. SIRCAR PROJECT ENGINEER
SIGN OFF DATE	CHECKED BY	P. SIRCAR	DATE: DECEMBER 2008 - JUNE 2011		

BRIDGE NO. / POST MILES

ROUTE 580 WB HOV LANE WIDENING- EASTERN SEGMENT

LOG OF TEST BORINGS

GS GEOTECHNICAL LOG OF TEST BORINGS SHEET (ENGLISH) (REV. 7/16/10)

ORIGINAL SCALE IN INCHES FOR REDUCED PLANS 0 1 2 3

UNIT: 0735
PROJECT NUMBER & PHASE: 04000212481 CONTRACT NO.: 04-2908C4

DISREGARD PRINTS BEARING EARLIER REVISION DATES → 11/18/09 12/23/09 8/9/11 1/18/12

SHEET OF

FILE => 0400021248oe001.dgn

USERNAME => s135518 DATE PLOTTED => 23-MAY-2012 TIME PLOTTED => 08:22

DIST	COUNTY	ROUTE	POST MILES TOTAL PROJECT	SHEET No	TOTAL SHEETS
04	Ala	580	R8.4/R14.6	635	853

GEOTECHNICAL PROFESSIONAL — DATE 1/18/12

5-14-12
PLANS APPROVAL DATE

REGISTERED PROFESSIONAL ENGINEER — GARY PARIKH — No. G.E. 666 — Exp. 12/31/13 — GEOTECHNICAL — STATE OF CALIFORNIA

The State of California or its officers or agents shall not be responsible for the accuracy or completeness of electronic copies of this plan sheet.

ALAMEDA CTC
1333 BROADWAY, SUITE 220
OAKLAND, CALIFORNIA 94612

PARIKH CONSULTANTS, INC.
2360 QUME DRIVE, SUITE A
SAN JOSE, CA 95131

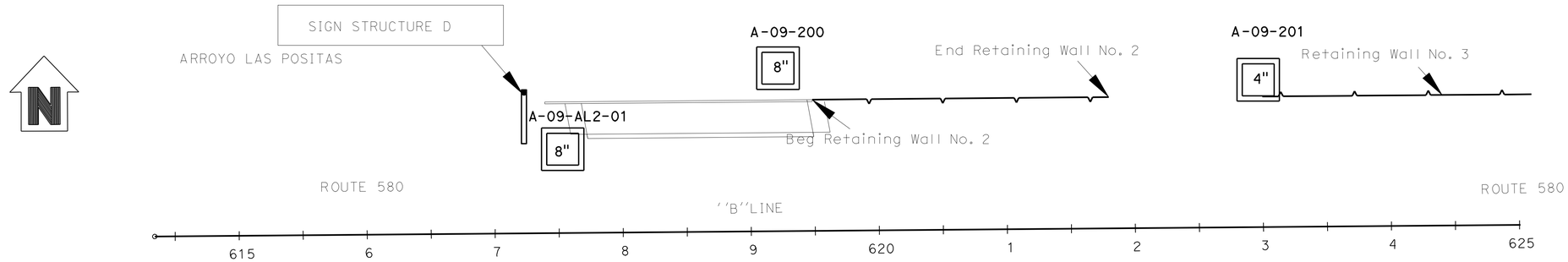

PLAN
1"=50'

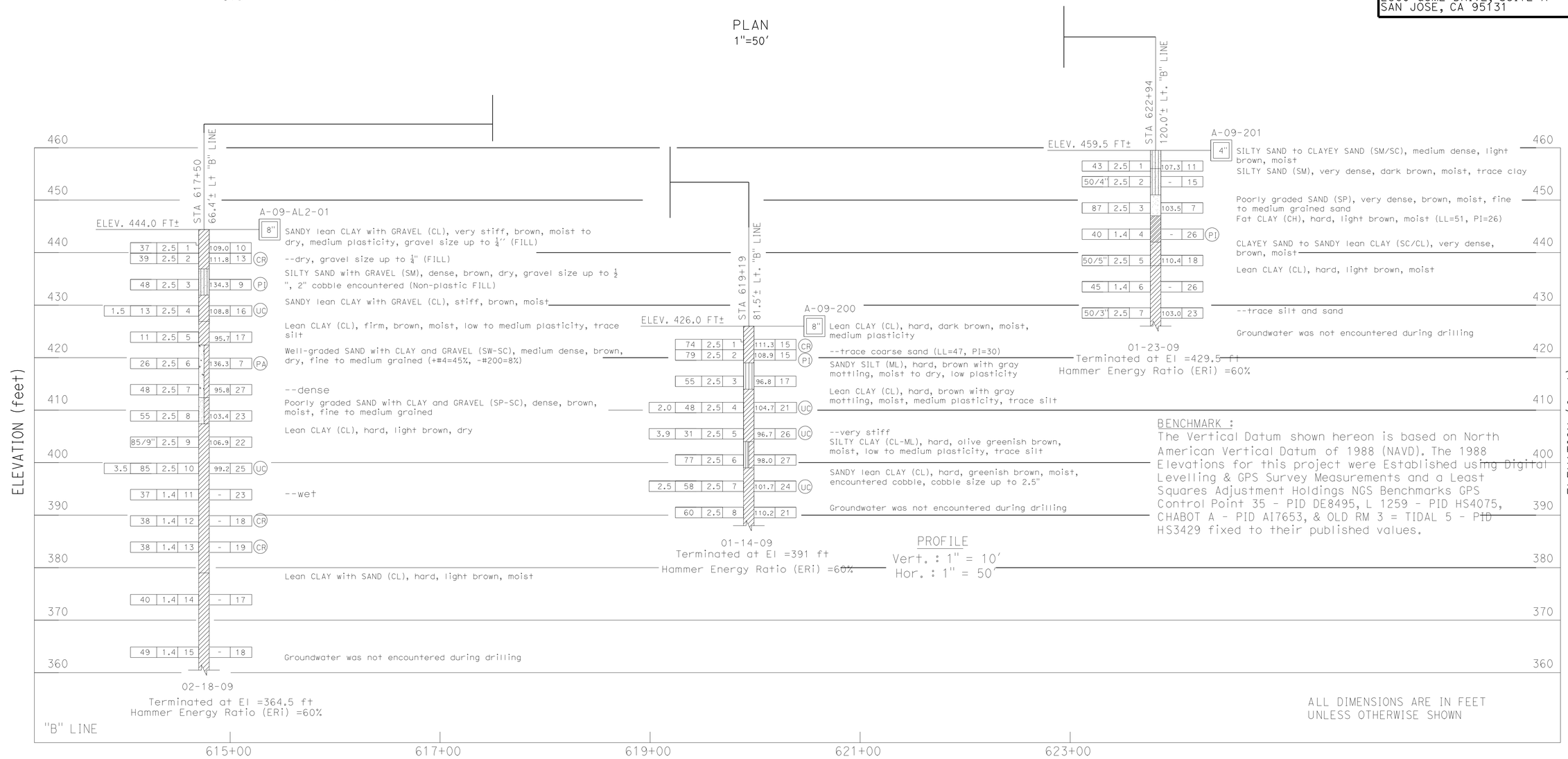

DESIGN OVERSIGHT	DRAWN BY	O. GOUTHIER	S. DUDDU FIELD INVESTIGATION BY:	PREPARED FOR THE STATE OF CALIFORNIA DEPARTMENT OF TRANSPORTATION	P. SIRCAR PROJECT ENGINEER	BRIDGE NO.	ROUTE 580 WB HOV LANE WIDENING- EASTERN SEGMENT
SIGN OFF DATE	CHECKED BY	P. SIRCAR	DATE: DECEMBER 2008 - JUNE 2011			POST MILES	LOG OF TEST BORINGS

GS GEOTECHNICAL LOG OF TEST BORINGS SHEET (ENGLISH) (REV. 7/16/10)

ORIGINAL SCALE IN INCHES FOR REDUCED PLANS 0 1 2 3

UNIT: 0735
PROJECT NUMBER & PHASE: 04000212481 CONTRACT NO.: 04-2908C4

DISREGARD PRINTS BEARING EARLIER REVISION DATES — REVISION DATES 11/13/09 12/23/09 8/9/11 1/18/12 — SHEET — OF

FILE => 0400021248oe002.dgn

USERNAME => s135318 DATE PLOTTED => 23-MAY-2012 TIME PLOTTED => 08:22

DIST	COUNTY	ROUTE	POST MILES TOTAL PROJECT	SHEET No	TOTAL SHEETS
04	Ala	580	R8.4/R14.6	636	853

GEOTECHNICAL PROFESSIONAL — DATE 1/18/12

5-14-12
PLANS APPROVAL DATE

REGISTERED PROFESSIONAL ENGINEER — GARY PARIKH — No. G.E. 666 — Exp. 12/31/13 — GEOTECHNICAL — STATE OF CALIFORNIA

The State of California or its officers or agents shall not be responsible for the accuracy or completeness of electronic copies of this plan sheet.

ALAMEDA CTC
1333 BROADWAY, SUITE 220
OAKLAND, CALIFORNIA 94612

PARIKH CONSULTANTS, INC.
2360 QUME DRIVE, SUITE A
SAN JOSE, CA 95131

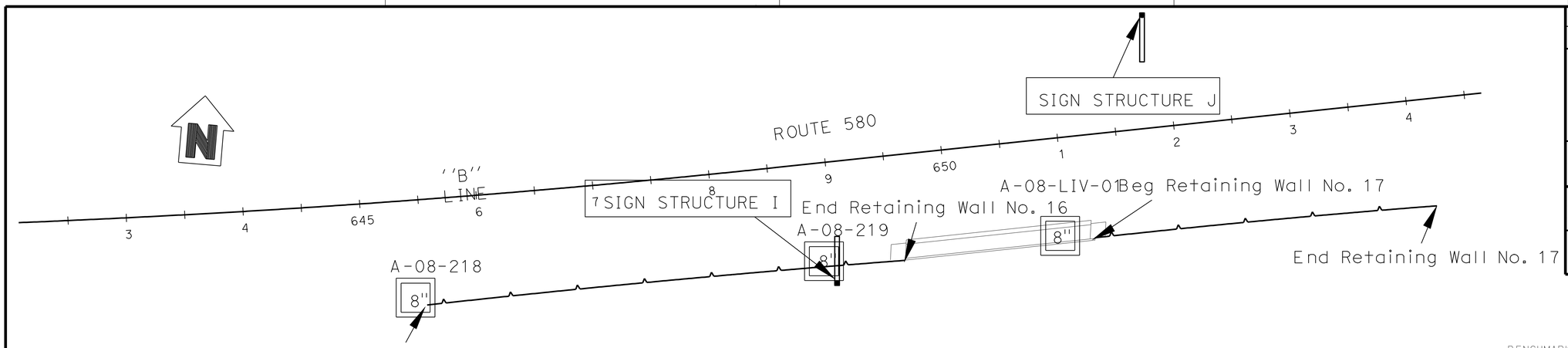

BENCHMARK :
The Vertical Datum shown hereon is based on North American Vertical Datum of 1988 (NAVD). The 1988 Elevations for this project were Established using Digital Levelling & GPS Survey Measurements and a Least Squares Adjustment Holdings NGS Benchmarks GPS Control Point 35 - PID DE8495, L 1259 - PID HS4075, CHABOT A - PID AI7653, & OLD RM 3 = TIDAL 5 - PID HS3429 fixed to their published values.

PLAN
1"=50'

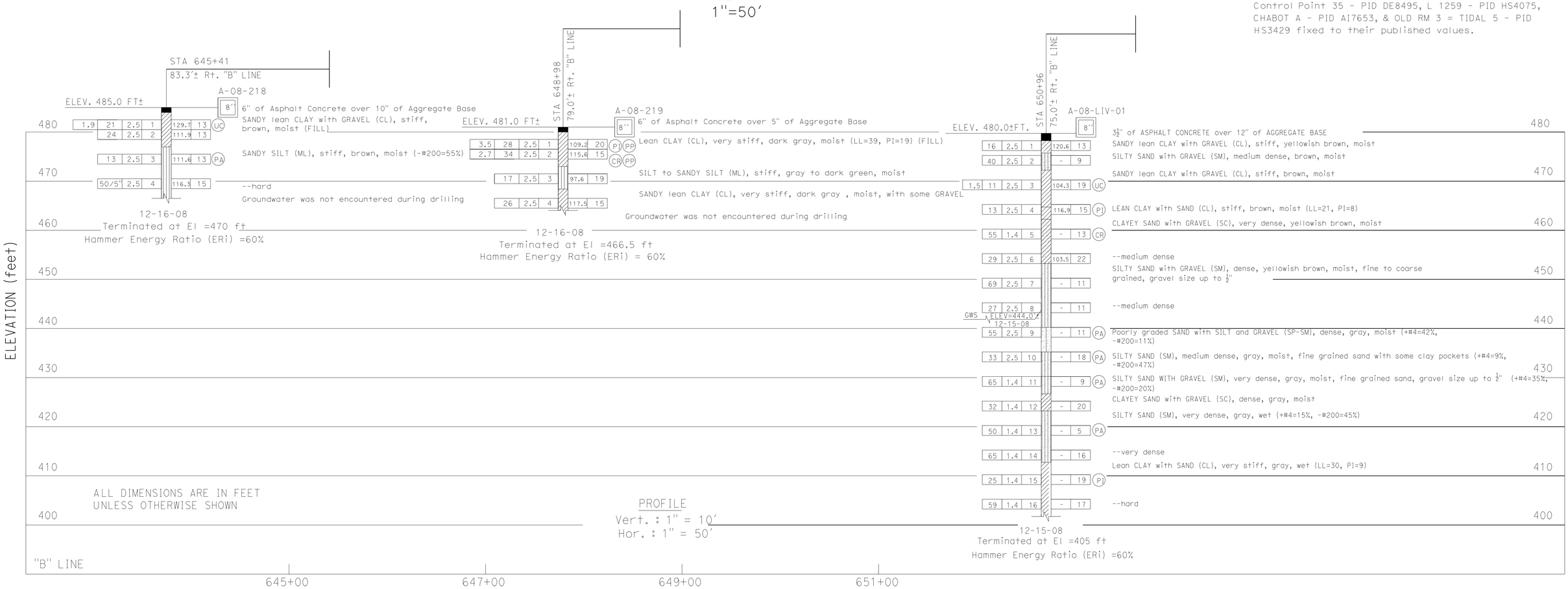

ALL DIMENSIONS ARE IN FEET UNLESS OTHERWISE SHOWN

PROFILE
Vert. : 1" = 10'
Hor. : 1" = 50'

DESIGN OVERSIGHT	DRAWN BY	O. GOUTHIER	S. DUDDU — FIELD INVESTIGATION BY:
SIGN OFF DATE	CHECKED BY	P. SIRCAR	DATE: DECEMBER 2008 - JUNE 2011

PREPARED FOR THE STATE OF CALIFORNIA DEPARTMENT OF TRANSPORTATION

P. SIRCAR
PROJECT ENGINEER

BRIDGE NO.
POST MILES

ROUTE 580 WB HOV LANE WIDENING- EASTERN SEGMENT

LOG OF TEST BORINGS

GS GEOTECHNICAL LOG OF TEST BORINGS SHEET (ENGLISH) (REV. 7/16/10)

ORIGINAL SCALE IN INCHES FOR REDUCED PLANS 0 1 2 3

UNIT: 0735
PROJECT NUMBER & PHASE: 04000212481 CONTRACT NO.: 04-2908C4

DISREGARD PRINTS BEARING EARLIER REVISION DATES

REVISION DATES: 11/13/09 12/23/09 8/9/11 1/18/12 — SHEET — OF

FILE => 0400021248oe003.dgn

USERNAME => s135318 DATE PLOTTED => 23-MAY-2012 TIME PLOTTED => 08:22

DIST	COUNTY	ROUTE	POST MILES TOTAL PROJECT	SHEET No	TOTAL SHEETS
04	Ala	580	R8.4/R14.6	637	853

GEOTECHNICAL PROFESSIONAL — 1/18/12 DATE

5-14-12
PLANS APPROVAL DATE

REGISTERED PROFESSIONAL ENGINEER — GARY PARIKH — No. G.E. 666 — Exp. 12/31/13 GEOTECHNICAL — STATE OF CALIFORNIA

The State of California or its officers or agents shall not be responsible for the accuracy or completeness of electronic copies of this plan sheet.

ALAMEDA CTC
1333 BROADWAY, SUITE 220
OAKLAND, CALIFORNIA 94612

PARIKH CONSULTANTS, INC.
2360 QUME DRIVE, SUITE A
SAN JOSE, CA 95131

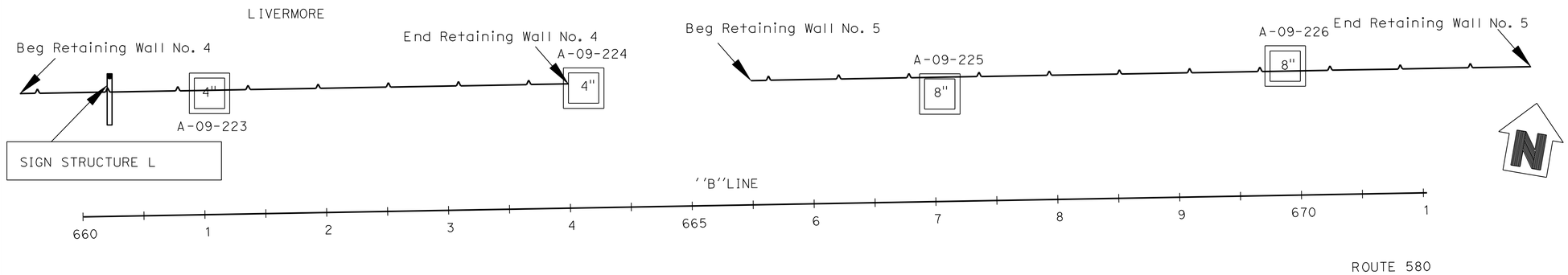

BENCHMARK :
The Vertical Datum shown hereon is based on North American Vertical Datum of 1988 (NAVD). The 1988 Elevations for this project were Established using Digital Levelling & GPS Survey Measurements and a Least Squares Adjustment Holdings NGS Benchmarks GPS Control Point 35 - PID DE8495, L 1259 - PID HS4075, CHABOT A - PID AI7653, & OLD RM 3 = TIDAL 5 - PID HS3429 fixed to their published values.

PLAN
1"=50'

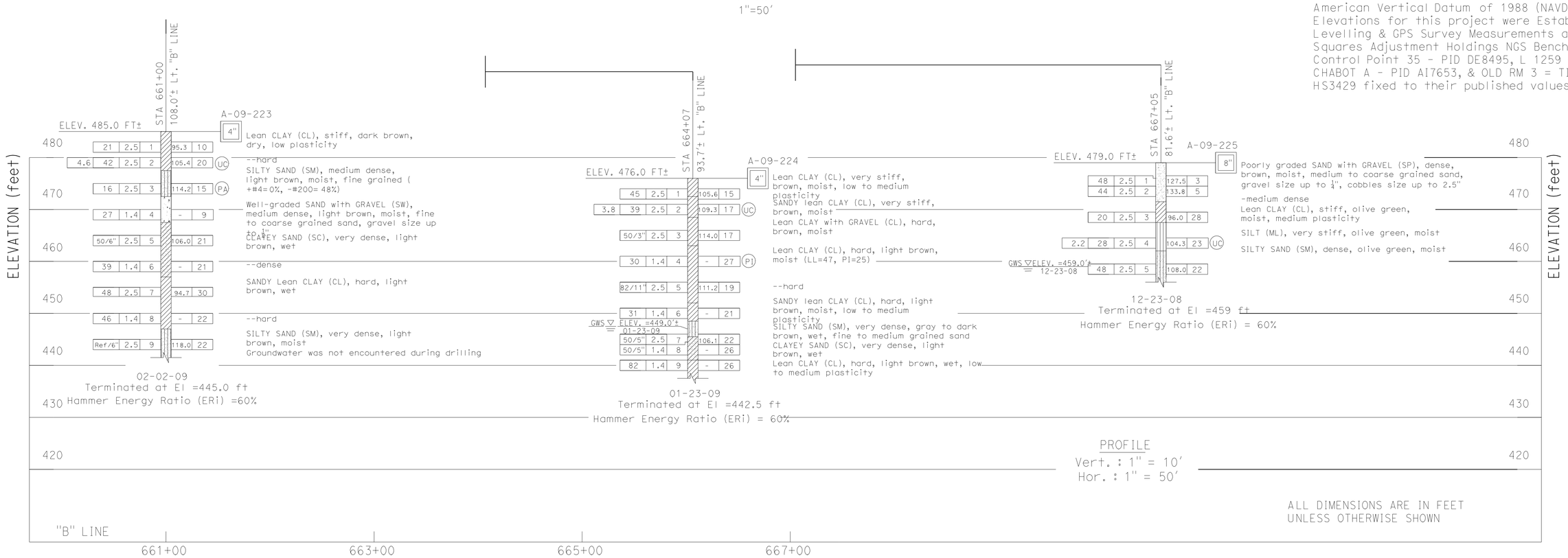

DESIGN OVERSIGHT	DRAWN BY	O. GOUTHIER	S. DUDDU FIELD INVESTIGATION BY:	PREPARED FOR THE STATE OF CALIFORNIA DEPARTMENT OF TRANSPORTATION	P. SIRCAR PROJECT ENGINEER
SIGN OFF DATE	CHECKED BY	P. SIRCAR	DATE: DECEMBER 2008 - JUNE 2011		

BRIDGE NO. / POST MILES

ROUTE 580 WB HOV LANE WIDENING- EASTERN SEGMENT

LOG OF TEST BORINGS

GS GEOTECHNICAL LOG OF TEST BORINGS SHEET (ENGLISH) (REV. 7/16/10)

ORIGINAL SCALE IN INCHES FOR REDUCED PLANS 0 1 2 3

UNIT: 0735
PROJECT NUMBER & PHASE: 04000212481 CONTRACT NO.: 04-2908C4

DISREGARD PRINTS BEARING EARLIER REVISION DATES

REVISION DATES: 11/13/09 12/23/09 3/3/11 1/18/12 SHEET OF

FILE => 0400021248oe004.dgn

USERNAME => s135318 DATE PLOTTED => 23-MAY-2012 TIME PLOTTED => 08:22

DIST	COUNTY	ROUTE	POST MILES TOTAL PROJECT	SHEET No	TOTAL SHEETS
04	Ala	580	R8.4/R14.6	638	853

GEOTECHNICAL PROFESSIONAL — DATE 1/18/12

5-14-12
PLANS APPROVAL DATE

REGISTERED PROFESSIONAL ENGINEER — GARY PARIKH — No. G.E. 666 — Exp. 12/31/13 GEOTECHNICAL — STATE OF CALIFORNIA

The State of California or its officers or agents shall not be responsible for the accuracy or completeness of electronic copies of this plan sheet.

ALAMEDA CTC
1333 BROADWAY, SUITE 220
OAKLAND, CALIFORNIA 94612

PARIKH CONSULTANTS, INC.
2360 QUME DRIVE, SUITE A
SAN JOSE, CA 95131

BENCHMARK :
The Vertical Datum shown hereon is based on North American Vertical Datum of 1988 (NAVD). The 1988 Elevations for this project were Established using Digital Levelling & GPS Survey Measurements and a Least Squares Adjustment Holdings NGS Benchmarks GPS Control Point 35 - PID DE8495, L 1259 - PID HS4075, CHABOT A - PID AI7653, & OLD RM 3 = TIDAL 5 - PID HS3429 fixed to their published values.

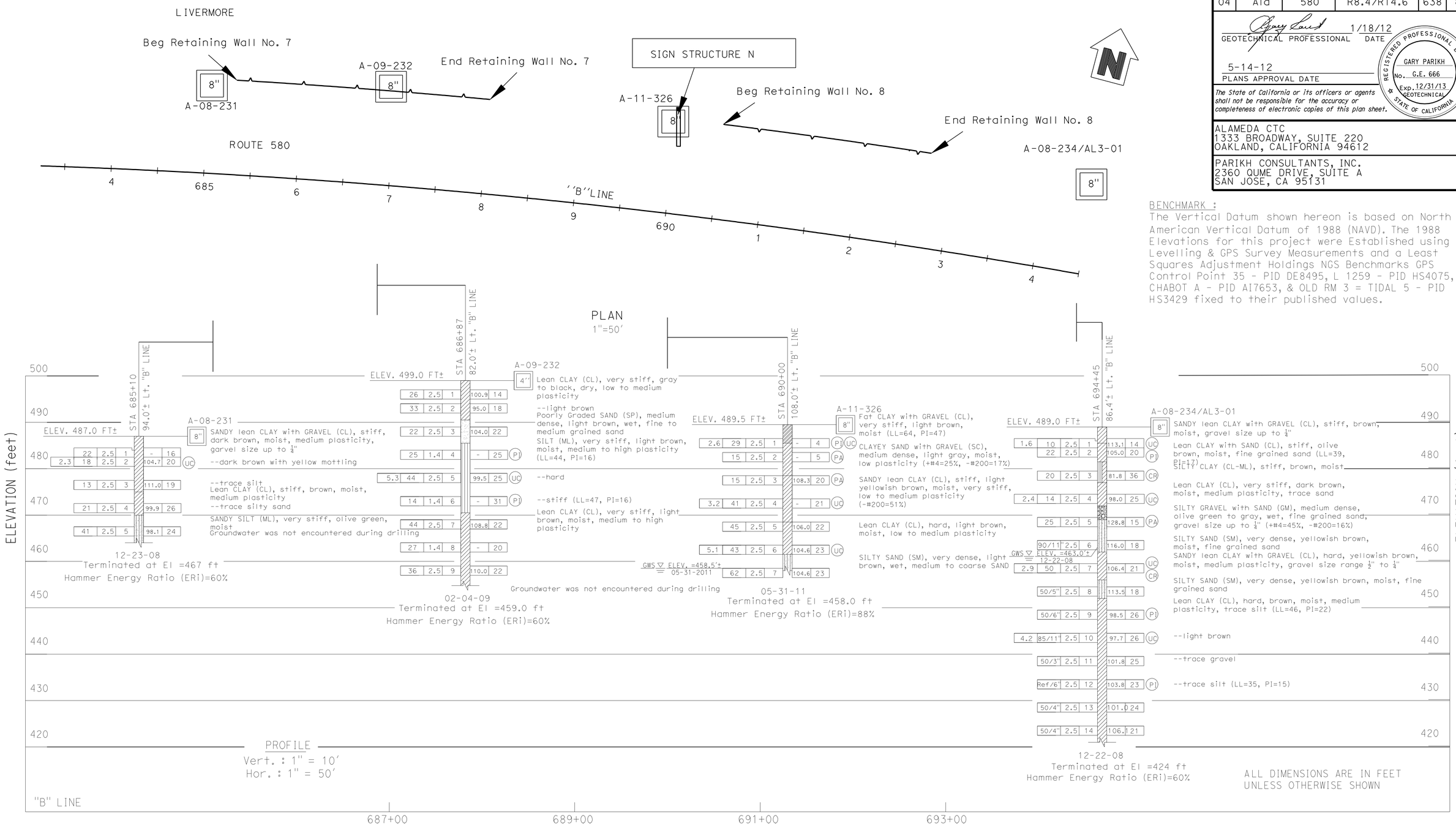

DESIGN OVERSIGHT	DRAWN BY	O. GOUTHIER	S. DUDDU — FIELD INVESTIGATION BY:
SIGN OFF DATE	CHECKED BY	P. SIRCAR	DATE: DECEMBER 2008 - JUNE 2011

PREPARED FOR THE STATE OF CALIFORNIA DEPARTMENT OF TRANSPORTATION

P. SIRCAR — PROJECT ENGINEER

BRIDGE NO.
POST MILES

ROUTE 580 WB HOV LANE WIDENING- EASTERN SEGMENT

LOG OF TEST BORINGS

GS GEOTECHNICAL LOG OF TEST BORINGS SHEET (ENGLISH) (REV. 7/16/10)

ORIGINAL SCALE IN INCHES FOR REDUCED PLANS 0 1 2 3

UNIT: 0735
PROJECT NUMBER & PHASE: 04000212481 CONTRACT NO.: 04-2908C4

DISREGARD PRINTS BEARING EARLIER REVISION DATES

REVISION DATES: 11/13/09 12/23/09 8/9/11 1/18/12 — SHEET — OF

FILE => 0400021248oe005.dgn

USERNAME => s135318 DATE PLOTTED => 23-MAY-2012 TIME PLOTTED => 08:22

DIST	COUNTY	ROUTE	POST MILES TOTAL PROJECT	SHEET No	TOTAL SHEETS
04	Ala	580	R8.4/R14.6	639	853

GEOTECHNICAL PROFESSIONAL — DATE 1/18/12

5-14-12
PLANS APPROVAL DATE

The State of California or its officers or agents shall not be responsible for the accuracy or completeness of electronic copies of this plan sheet.

REGISTERED PROFESSIONAL ENGINEER — GARY PARIKH — No. G.E. 666 — Exp. 12/31/13 — GEOTECHNICAL — STATE OF CALIFORNIA

ALAMEDA CTC
1333 BROADWAY, SUITE 220
OAKLAND, CALIFORNIA 94612

PARIKH CONSULTANTS, INC.
2360 QUME DRIVE, SUITE A
SAN JOSE, CA 95131

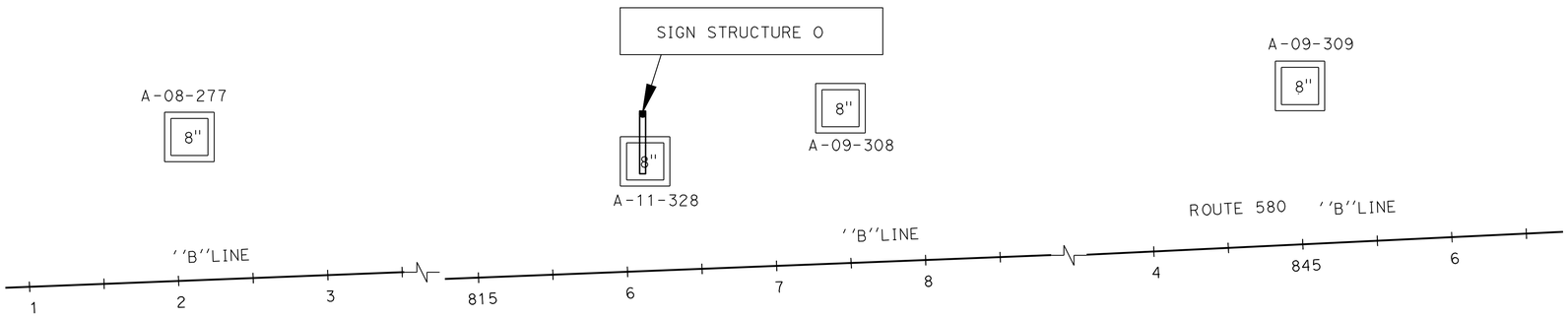

PLAN
1"=50'

BENCHMARK :
The Vertical Datum shown hereon is based on North American Vertical Datum of 1988 (NAVD). The 1988 Elevations for this project were Established using Digital Levelling & GPS Survey Measurements and a Least Squares Adjustment Holdings NGS Benchmarks GPS Control Point 35 - PID DE8495, L 1259 - PID HS4075, CHABOT A - PID AI7653, & OLD RM 3 = TIDAL 5 - PID HS3429 fixed to their published values.

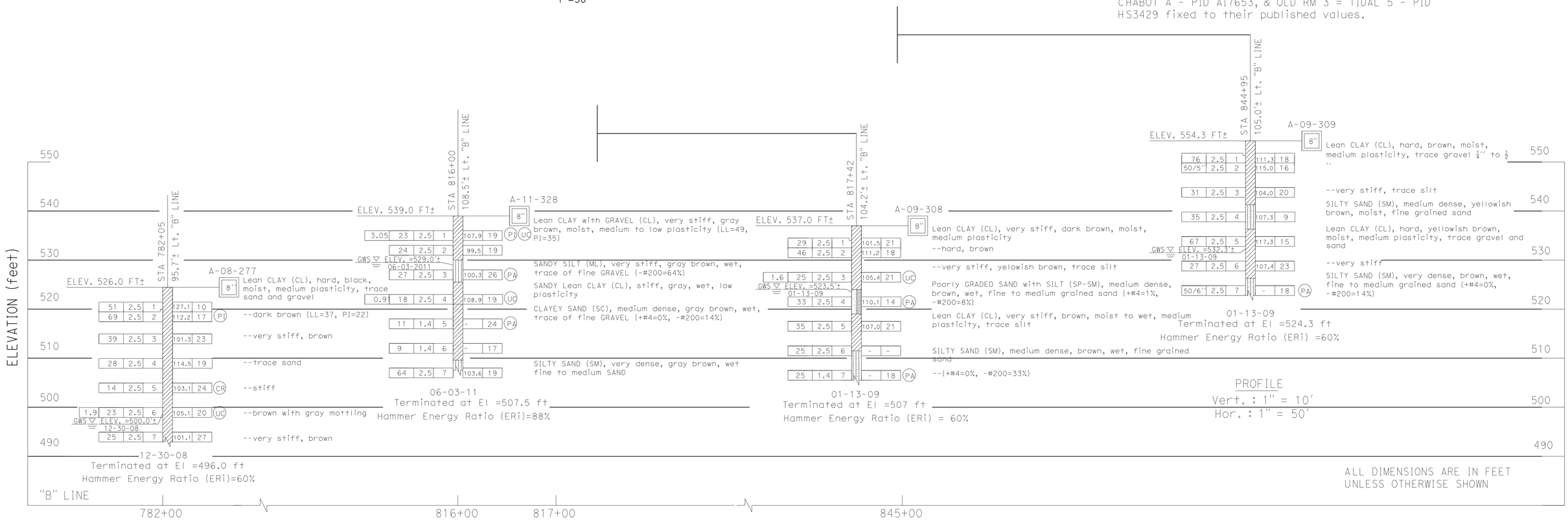

DESIGN OVERSIGHT	DRAWN BY	O. GOUTHIER	S. DUDDU FIELD INVESTIGATION BY:	PREPARED FOR THE STATE OF CALIFORNIA DEPARTMENT OF TRANSPORTATION	P. SIRCAR PROJECT ENGINEER
SIGN OFF DATE	CHECKED BY	P. SIRCAR	DATE: DECEMBER 2008 - JUNE 2011		

BRIDGE NO. — POST MILES

ROUTE 580 WB HOV LANE WIDENING- EASTERN SEGMENT

LOG OF TEST BORINGS

GS GEOTECHNICAL LOG OF TEST BORINGS SHEET (ENGLISH) (REV. 7/16/10)

ORIGINAL SCALE IN INCHES FOR REDUCED PLANS 0 1 2 3

UNIT: 0735
PROJECT NUMBER & PHASE: 04000212481 CONTRACT NO.: 04-2908C4

DISREGARD PRINTS BEARING EARLIER REVISION DATES

REVISION DATES: 11/18/09 12/23/09 8/9/11 1/18/12 — SHEET — OF

FILE => 0400021248oe006.dgn

USERNAME => s135318 DATE PLOTTED => 23-MAY-2012 TIME PLOTTED => 08:23

DIST	COUNTY	ROUTE	POST MILES TOTAL PROJECT	SHEET No	TOTAL SHEETS
04	Ala	580	R8.4/R14.6	640	853

GEOTECHNICAL PROFESSIONAL — DATE 1/18/12

5-14-12
PLANS APPROVAL DATE

REGISTERED PROFESSIONAL ENGINEER — GARY PARIKH — No. G.E. 666 — Exp. 12/31/13 — GEOTECHNICAL — STATE OF CALIFORNIA

The State of California or its officers or agents shall not be responsible for the accuracy or completeness of electronic copies of this plan sheet.

ALAMEDA CTC
1333 BROADWAY, SUITE 220
OAKLAND, CALIFORNIA 94612

PARIKH CONSULTANTS, INC.
2360 QUME DRIVE, SUITE A
SAN JOSE, CA 95131

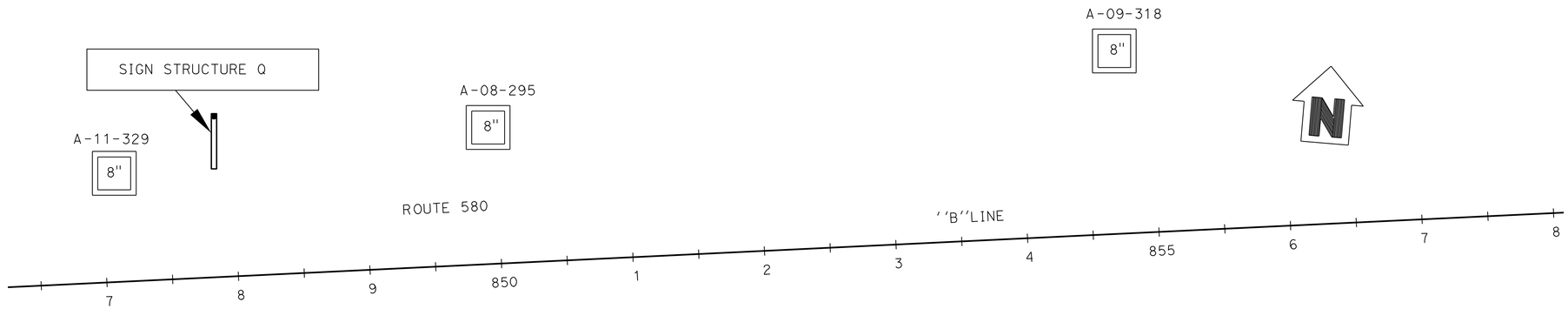

PLAN
1"=50'

BENCHMARK :
The Vertical Datum shown hereon is based on North American Vertical Datum of 1988 (NAVD). The 1988 Elevations for this project were Established using Digital Levelling & GPS Survey Measurements and a Least Squares Adjustment Holdings NGS Benchmarks GPS Control Point 35 - PID DE8495, L 1259 - PID HS4075, CHABOT A - PID AI7653, & OLD RM 3 = TIDAL 5 - PID HS3429 fixed to their published values.

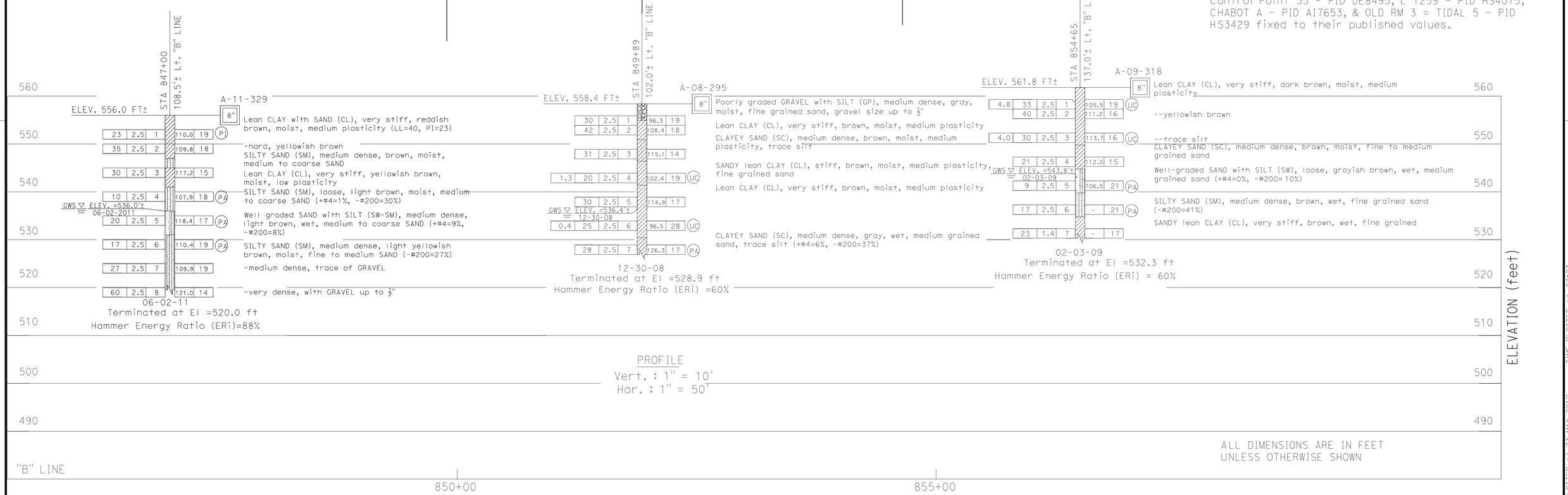

DESIGN OVERSIGHT	DRAWN BY	O. GOUTHIER	S. DUDDU FIELD INVESTIGATION BY:	PREPARED FOR THE STATE OF CALIFORNIA DEPARTMENT OF TRANSPORTATION	P. SIRCAR PROJECT ENGINEER
SIGN OFF DATE	CHECKED BY	P. SIRCAR	DATE: DECEMBER 2008 - JUNE 2011		

BRIDGE NO.
POST MILES

ROUTE 580 WB HOV LANE WIDENING- EASTERN SEGMENT

LOG OF TEST BORINGS

GS GEOTECHNICAL LOG OF TEST BORINGS SHEET (ENGLISH) (REV. 7/16/10)

ORIGINAL SCALE IN INCHES FOR REDUCED PLANS 0 1 2 3

UNIT: 0735
PROJECT NUMBER & PHASE: 04000212481 CONTRACT NO.: 04-2908C4

DISREGARD PRINTS BEARING EARLIER REVISION DATES

REVISION DATES: 11/13/09 12/23/09 8/9/11 1/18/12 — SHEET — OF

FILE => 0400021248oe007.dgn

USERNAME => s135318 DATE PLOTTED => 23-MAY-2012 TIME PLOTTED => 08:23

DIST	COUNTY	ROUTE	POST MILES TOTAL PROJECT	SHEET No	TOTAL SHEETS
04	Ala	580	R8.4/R14.6	641	853

GEOTECHNICAL PROFESSIONAL — DATE 1/18/12

5-14-12
PLANS APPROVAL DATE

The State of California or its officers or agents shall not be responsible for the accuracy or completeness of electronic copies of this plan sheet.

REGISTERED PROFESSIONAL ENGINEER — GARY PARIKH — No. G.E. 666 — Exp. 12/31/13 — GEOTECHNICAL — STATE OF CALIFORNIA

ALAMEDA CTC
1333 BROADWAY, SUITE 220
OAKLAND, CALIFORNIA 94612

PARIKH CONSULTANTS, INC.
2360 QUME DRIVE, SUITE A
SAN JOSE, CA 95131

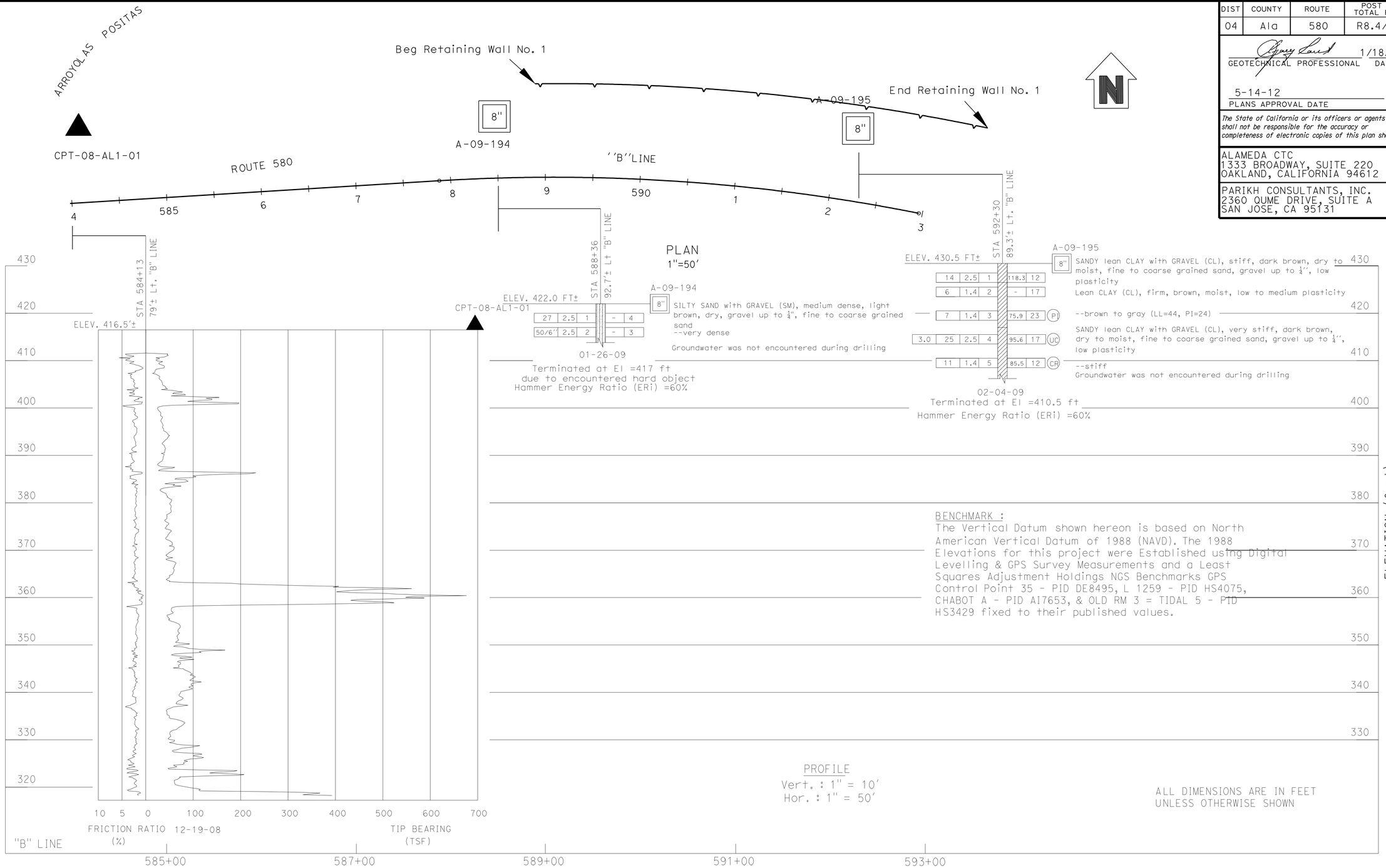

DESIGN OVERSIGHT	DRAWN BY	O. GOUTHIER	S. DUDDU — FIELD INVESTIGATION BY:
SIGN OFF DATE	CHECKED BY	P. SIRCAR	DATE: DECEMBER 2008 - JUNE 2011

PREPARED FOR THE STATE OF CALIFORNIA DEPARTMENT OF TRANSPORTATION

P. SIRCAR
PROJECT ENGINEER

BRIDGE NO.
POST MILES

ROUTE 580 WB HOV LANE WIDENING- EASTERN SEGMENT

LOG OF TEST BORINGS

GS GEOTECHNICAL LOG OF TEST BORINGS SHEET (ENGLISH) (REV. 7/16/10)

ORIGINAL SCALE IN INCHES FOR REDUCED PLANS 0 1 2 3

UNIT: 0735
PROJECT NUMBER & PHASE: 04000212481 CONTRACT NO.: 04-2908C4

DISREGARD PRINTS BEARING EARLIER REVISION DATES

REVISION DATES: 11/13/09 12/23/09 3/9/11 1/18/12 — SHEET — OF

FILE => 0400021248gn001.dgn

USERNAME => s135318 DATE PLOTTED => 23-MAY-2012 TIME PLOTTED => 08:23

DIST	COUNTY	ROUTE	POST MILES TOTAL PROJECT	SHEET No	TOTAL SHEETS
04	Ala	580	R8.4/R14.6	642	853

GEOTECHNICAL PROFESSIONAL — DATE 1/18/12

5-14-12
PLANS APPROVAL DATE

REGISTERED PROFESSIONAL ENGINEER — GARY PARIKH — No. G.E. 666 — Exp. 12/31/13 — GEOTECHNICAL — STATE OF CALIFORNIA

The State of California or its officers or agents shall not be responsible for the accuracy or completeness of electronic copies of this plan sheet.

ALAMEDA CTC
1333 BROADWAY, SUITE 220
OAKLAND, CALIFORNIA 94612

PARIKH CONSULTANTS, INC.
2360 QUME DRIVE, SUITE A
SAN JOSE, CA 95131

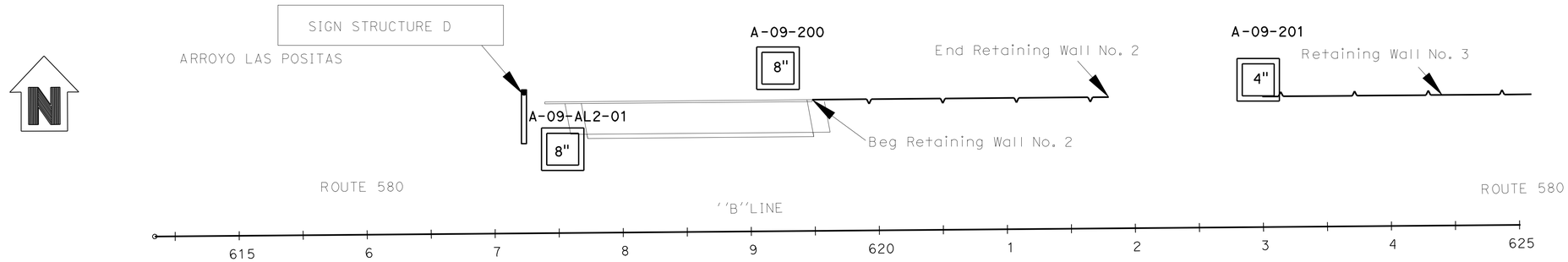

PLAN
1"=50'

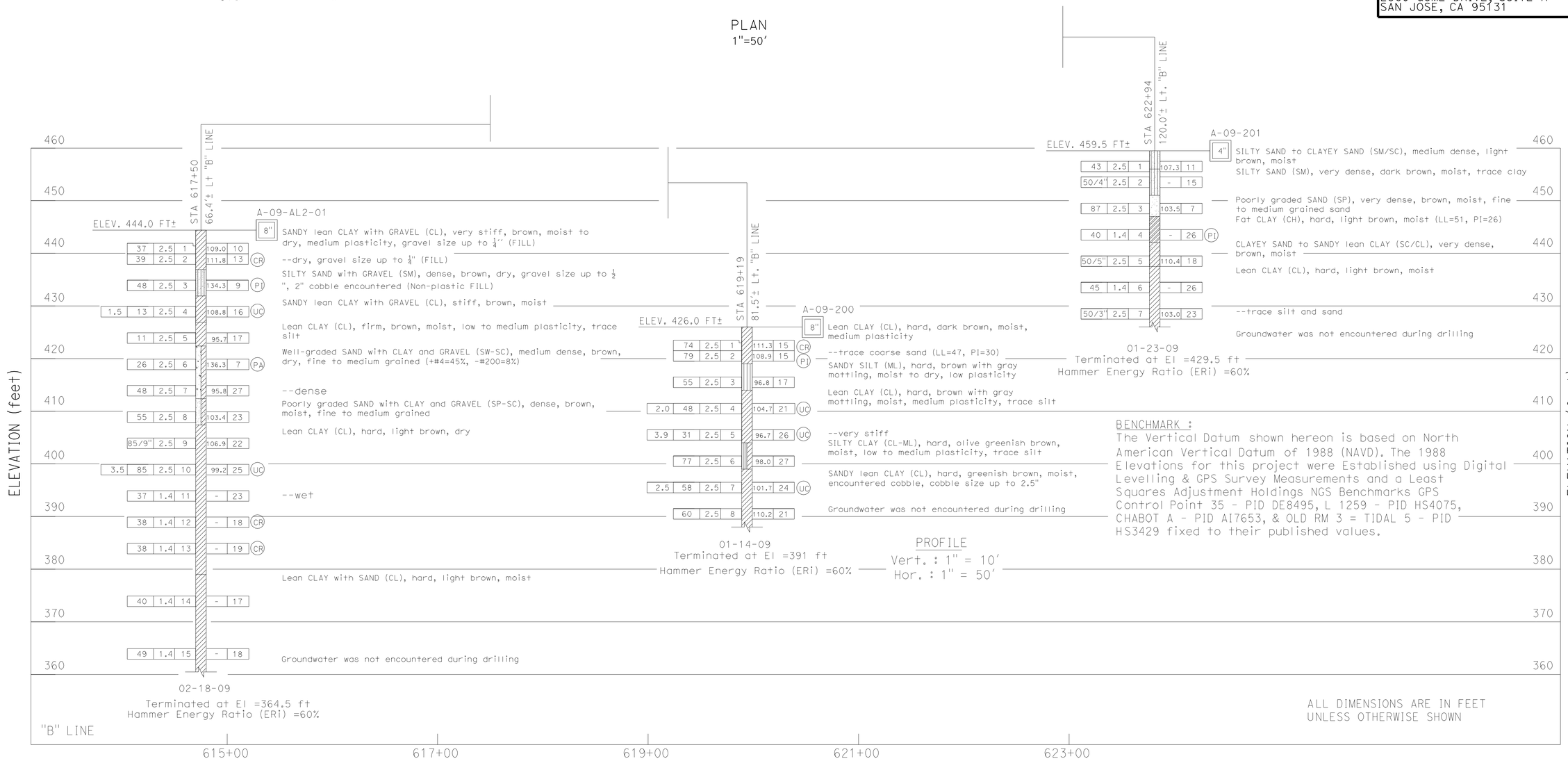

DESIGN OVERSIGHT	DRAWN BY	O. GOUTHIER	S. DUDDU FIELD INVESTIGATION BY:	PREPARED FOR THE STATE OF CALIFORNIA DEPARTMENT OF TRANSPORTATION	P. SIRCAR PROJECT ENGINEER
SIGN OFF DATE	CHECKED BY	P. SIRCAR	DATE: DECEMBER 2008 - JUNE 2011		

BRIDGE NO. / POST MILES

ROUTE 580 WB HOV LANE WIDENING- EASTERN SEGMENT

LOG OF TEST BORINGS

GS GEOTECHNICAL LOG OF TEST BORINGS SHEET (ENGLISH) (REV. 7/16/10)

ORIGINAL SCALE IN INCHES FOR REDUCED PLANS 0 1 2 3

UNIT: 0735
PROJECT NUMBER & PHASE: 04000212481 CONTRACT NO.: 04-2908C4

DISREGARD PRINTS BEARING EARLIER REVISION DATES — REVISION DATES: 11/13/09 12/23/09 8/9/11 1/18/12 — SHEET — OF

FILE => 0400021248gn002.gdn

USERNAME => s135318 DATE PLOTTED => 23-MAY-2012 TIME PLOTTED => 08:23

DIST	COUNTY	ROUTE	POST MILES TOTAL PROJECT	SHEET No	TOTAL SHEETS
04	Ala	580	R8.4/R14.6	643	853

GEOTECHNICAL PROFESSIONAL — DATE 1/18/12

5-14-12
PLANS APPROVAL DATE

The State of California or its officers or agents shall not be responsible for the accuracy or completeness of electronic copies of this plan sheet.

REGISTERED PROFESSIONAL ENGINEER — GARY PARIKH — No. G.E. 666 — Exp. 12/31/13 — GEOTECHNICAL — STATE OF CALIFORNIA

ALAMEDA CTC
1333 BROADWAY, SUITE 220
OAKLAND, CALIFORNIA 94612

PARIKH CONSULTANTS, INC.
2360 QUME DRIVE, SUITE A
SAN JOSE, CA 95131

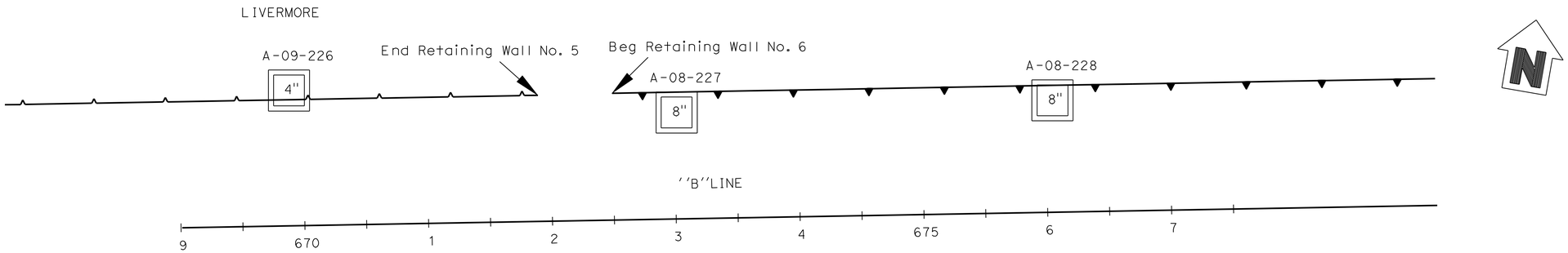

BENCHMARK :
The Vertical Datum shown hereon is based on North American Vertical Datum of 1988 (NAVD). The 1988 Elevations for this project were Established using Digital Levelling & GPS Survey Measurements and a Least Squares Adjustment Holdings NGS Benchmarks GPS Control Point 35 - PID DE8495, L 1259 - PID HS4075, CHABOT A - PID AI7653, & OLD RM 3 = TIDAL 5 - PID HS3429 fixed to their published values.

PLAN
1"=50'

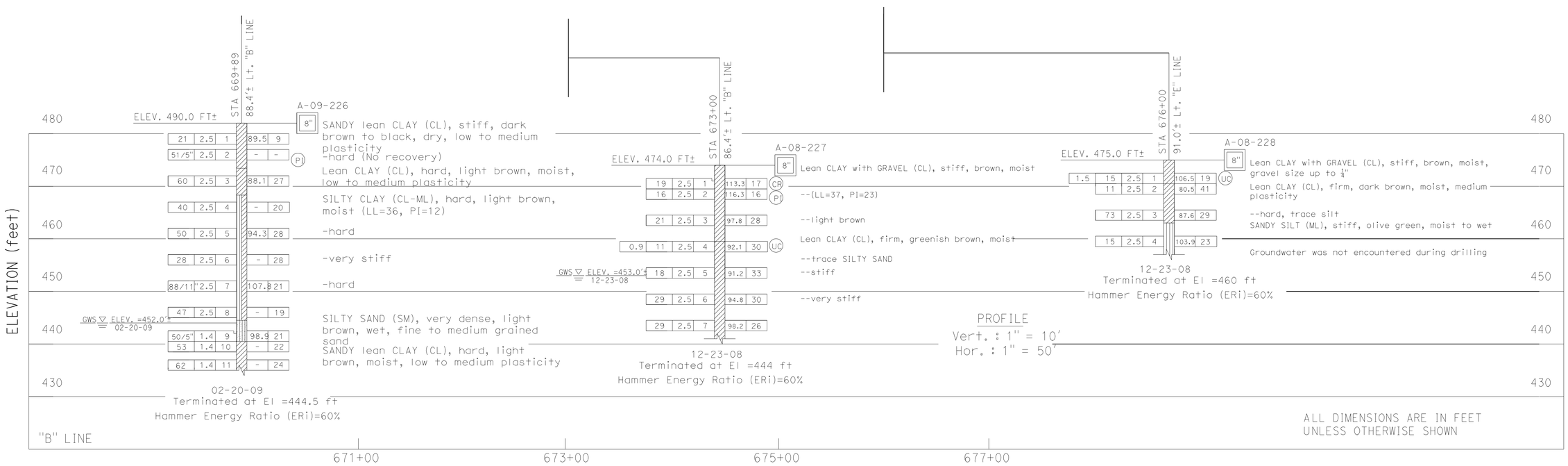

DESIGN OVERSIGHT	DRAWN BY	O. GOUTHIER	S. DUDDU FIELD INVESTIGATION BY:	PREPARED FOR THE STATE OF CALIFORNIA DEPARTMENT OF TRANSPORTATION	P. SIRCAR PROJECT ENGINEER
SIGN OFF DATE	CHECKED BY	P. SIRCAR	DATE: DECEMBER 2008 - JUNE 2011		

BRIDGE NO. / POST MILES

ROUTE 580 WB HOV LANE WIDENING- EASTERN SEGMENT

LOG OF TEST BORINGS

GS GEOTECHNICAL LOG OF TEST BORINGS SHEET (ENGLISH) (REV. 7/16/10)

ORIGINAL SCALE IN INCHES FOR REDUCED PLANS 0 1 2 3

UNIT: 0735
PROJECT NUMBER & PHASE: 04000212481 CONTRACT NO.: 04-2908C4

DISREGARD PRINTS BEARING EARLIER REVISION DATES

REVISION DATES: 11/18/09 12/23/09 3/9/11 1/18/12 — SHEET — OF

FILE => 0400021248gn003.dgn

USERNAME => s135318 DATE PLOTTED => 23-MAY-2012 TIME PLOTTED => 08:23

DIST	COUNTY	ROUTE	POST MILES TOTAL PROJECT	SHEET No	TOTAL SHEETS
04	Ala	580	R8.4/R14.6	644	853

GEOTECHNICAL PROFESSIONAL — DATE 1/18/12

5-14-12
PLANS APPROVAL DATE

REGISTERED PROFESSIONAL ENGINEER — GARY PARIKH — No. G.E. 666 — Exp. 12/31/13 — GEOTECHNICAL — STATE OF CALIFORNIA

The State of California or its officers or agents shall not be responsible for the accuracy or completeness of electronic copies of this plan sheet.

ALAMEDA CTC
1333 BROADWAY, SUITE 220
OAKLAND, CALIFORNIA 94612

PARIKH CONSULTANTS, INC.
2360 QUME DRIVE, SUITE A
SAN JOSE, CA 95131

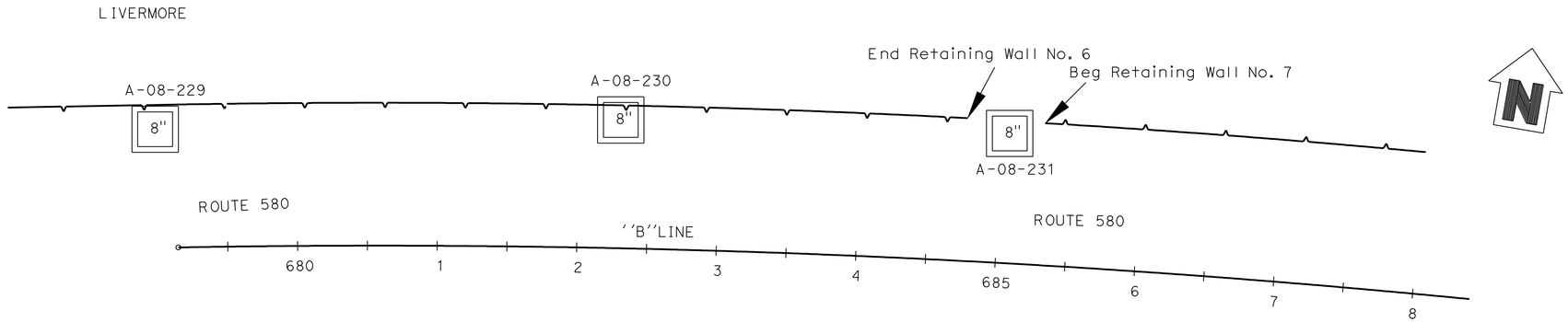

BENCHMARK :
The Vertical Datum shown hereon is based on North American Vertical Datum of 1988 (NAVD). The 1988 Elevations for this project were Established using Digital Levelling & GPS Survey Measurements and a Least Squares Adjustment Holdings NGS Benchmarks GPS Control Point 35 - PID DE8495, L 1259 - PID HS4075, CHABOT A - PID AI7653, & OLD RM 3 = TIDAL 5 - PID HS3429 fixed to their published values.

PLAN
1"=50'

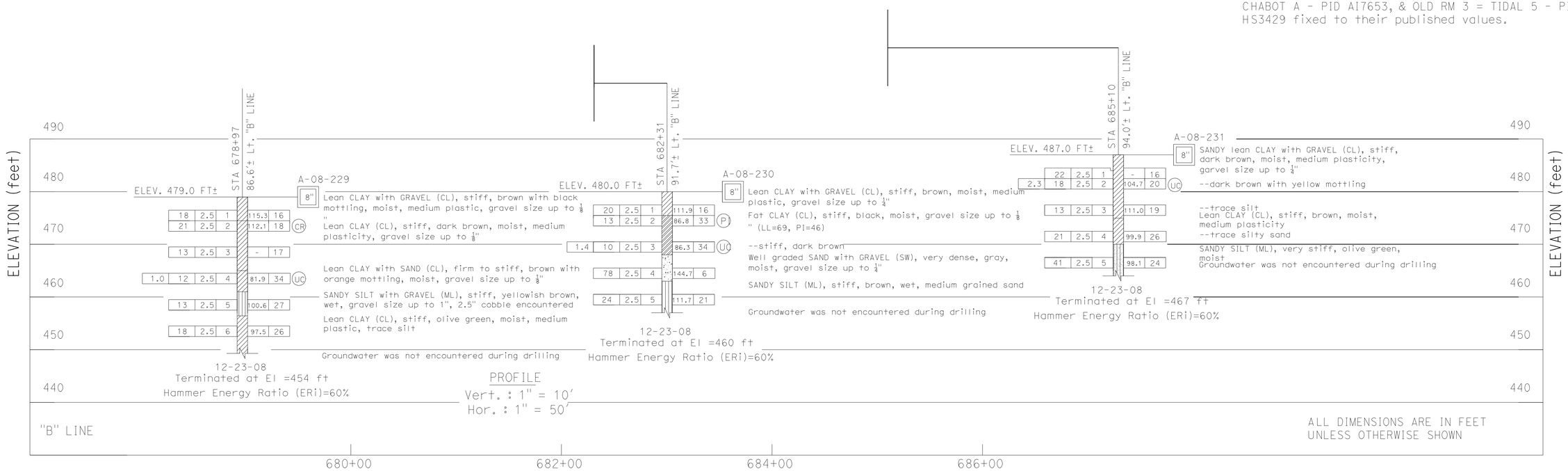

DESIGN OVERSIGHT	DRAWN BY	O. GOUTHIER	S. DUDDU — FIELD INVESTIGATION BY:
SIGN OFF DATE	CHECKED BY	P. SIRCAR	DATE: DECEMBER 2008 - JUNE 2011

PREPARED FOR THE STATE OF CALIFORNIA DEPARTMENT OF TRANSPORTATION

P. SIRCAR — PROJECT ENGINEER

BRIDGE NO. / POST MILES

ROUTE 580 WB HOV LANE WIDENING- EASTERN SEGMENT

LOG OF TEST BORINGS

GS GEOTECHNICAL LOG OF TEST BORINGS SHEET (ENGLISH) (REV. 7/16/10)

ORIGINAL SCALE IN INCHES FOR REDUCED PLANS 0 1 2 3

UNIT: 0735
PROJECT NUMBER & PHASE: 04000212481 CONTRACT NO.: 04-2908C4

DISREGARD PRINTS BEARING EARLIER REVISION DATES

REVISION DATES: 11/13/09 12/23/09 3/9/11 1/18/12 — SHEET — OF

FILE => 0400021248gn004.dgn

USERNAME => s135318 DATE PLOTTED => 23-MAY-2012 TIME PLOTTED => 08:23

DIST	COUNTY	ROUTE	POST MILES TOTAL PROJECT	SHEET No	TOTAL SHEETS
04	Ala	580	R8.4/R14.6	645	853

GEOTECHNICAL PROFESSIONAL — DATE 1/18/12

5-14-12
PLANS APPROVAL DATE

The State of California or its officers or agents shall not be responsible for the accuracy or completeness of electronic copies of this plan sheet.

REGISTERED PROFESSIONAL ENGINEER — GARY PARIKH — No. G.E. 666 — Exp. 12/31/13 — GEOTECHNICAL — STATE OF CALIFORNIA

ALAMEDA CTC
1333 BROADWAY, SUITE 220
OAKLAND, CALIFORNIA 94612

PARIKH CONSULTANTS, INC.
2360 QUME DRIVE, SUITE A
SAN JOSE, CA 95131

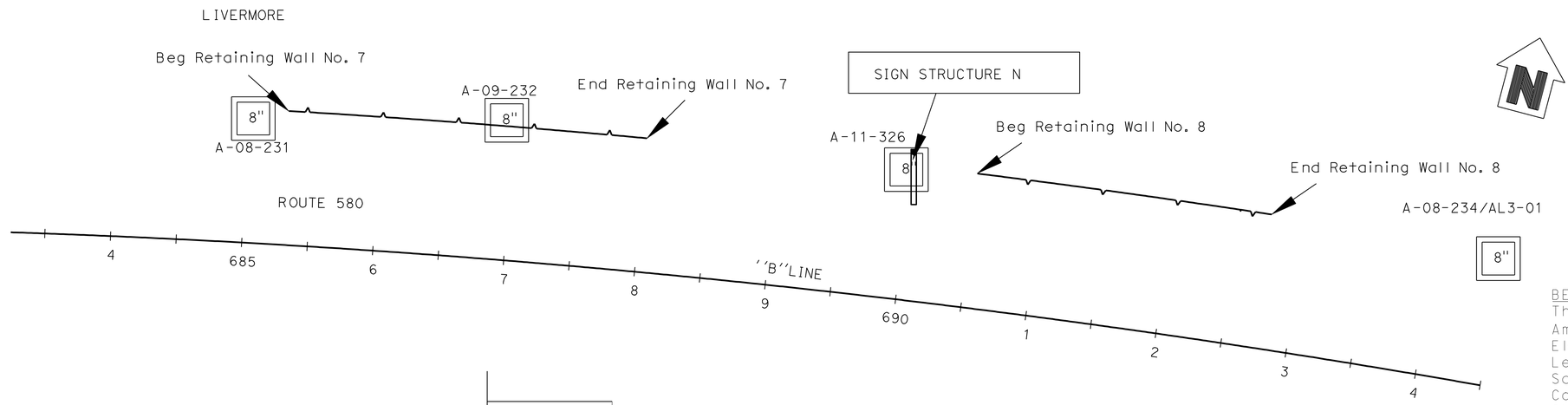

BENCHMARK :
The Vertical Datum shown hereon is based on North American Vertical Datum of 1988 (NAVD). The 1988 Elevations for this project were Established using Digital Levelling & GPS Survey Measurements and a Least Squares Adjustment Holdings NGS Benchmarks GPS Control Point 35 - PID DE8495, L 1259 - PID HS4075, CHABOT A - PID AI7653, & OLD RM 3 = TIDAL 5 - PID HS3429 fixed to their published values.

PLAN
1"=50'

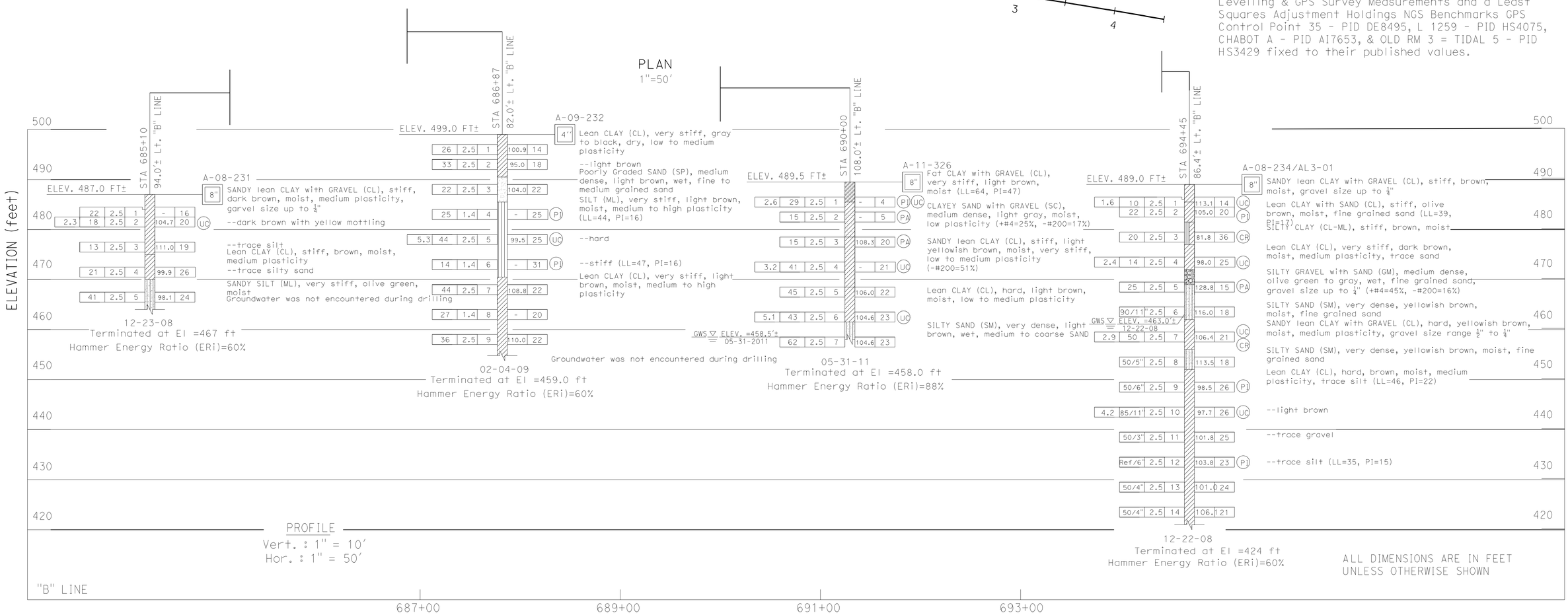

ALL DIMENSIONS ARE IN FEET UNLESS OTHERWISE SHOWN

DESIGN OVERSIGHT	DRAWN BY	O. GOUTHIER	S. DUDDU — FIELD INVESTIGATION BY:
SIGN OFF DATE	CHECKED BY	P. SIRCAR	DATE: DECEMBER 2008 - JUNE 2011

PREPARED FOR THE STATE OF CALIFORNIA DEPARTMENT OF TRANSPORTATION

P. SIRCAR — PROJECT ENGINEER

BRIDGE NO.
POST MILES

ROUTE 580 WB HOV LANE WIDENING- EASTERN SEGMENT

LOG OF TEST BORINGS

GS GEOTECHNICAL LOG OF TEST BORINGS SHEET (ENGLISH) (REV. 7/16/10)

ORIGINAL SCALE IN INCHES FOR REDUCED PLANS 0 1 2 3

UNIT: 0735
PROJECT NUMBER & PHASE: 04000212481 CONTRACT NO.: 04-2908C4

DISREGARD PRINTS BEARING EARLIER REVISION DATES

REVISION DATES: 11/30/09 12/23/09 8/9/11 1/18/12 — SHEET — OF

FILE => 0400021248gn005.dgn

USERNAME => s135318 DATE PLOTTED => 23-MAY-2012 TIME PLOTTED => 08:23

DIST	COUNTY	ROUTE	POST MILES TOTAL PROJECT	SHEET No	TOTAL SHEETS
04	Ala	580	R8.4/R14.6	646	853

GEOTECHNICAL PROFESSIONAL — DATE 1/18/12

5-14-12
PLANS APPROVAL DATE

The State of California or its officers or agents shall not be responsible for the accuracy or completeness of electronic copies of this plan sheet.

REGISTERED PROFESSIONAL ENGINEER — GARY PARIKH — No. G.E. 666 — Exp. 12/31/13 — GEOTECHNICAL — STATE OF CALIFORNIA

ALAMEDA CTC
1333 BROADWAY, SUITE 220
OAKLAND, CALIFORNIA 94612

PARIKH CONSULTANTS, INC.
2360 QUME DRIVE, SUITE A
SAN JOSE, CA 95131

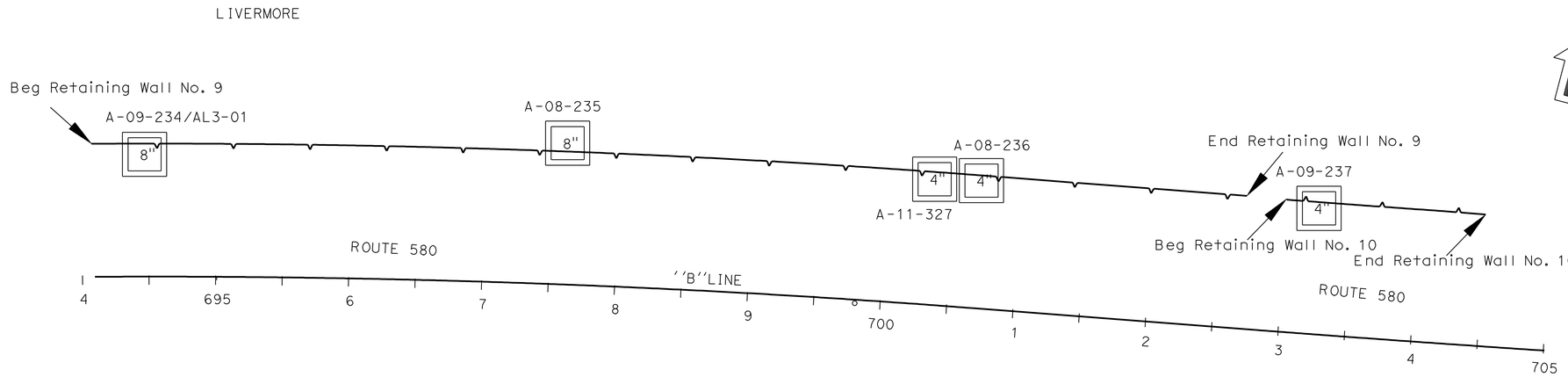

PLAN
1"=50'

BENCHMARK :
The Vertical Datum shown hereon is based on North American Vertical Datum of 1988 (NAVD). The 1988 Elevations for this project were Established using Digital Levelling & GPS Survey Measurements and a Least Squares Adjustment Holdings NGS Benchmarks GPS Control Point 35 - PID DE8495, L 1259 - PID HS4075, CHABOT A - PID AI7653, & OLD RM 3 = TIDAL 5 - PID HS3429 fixed to their published values.

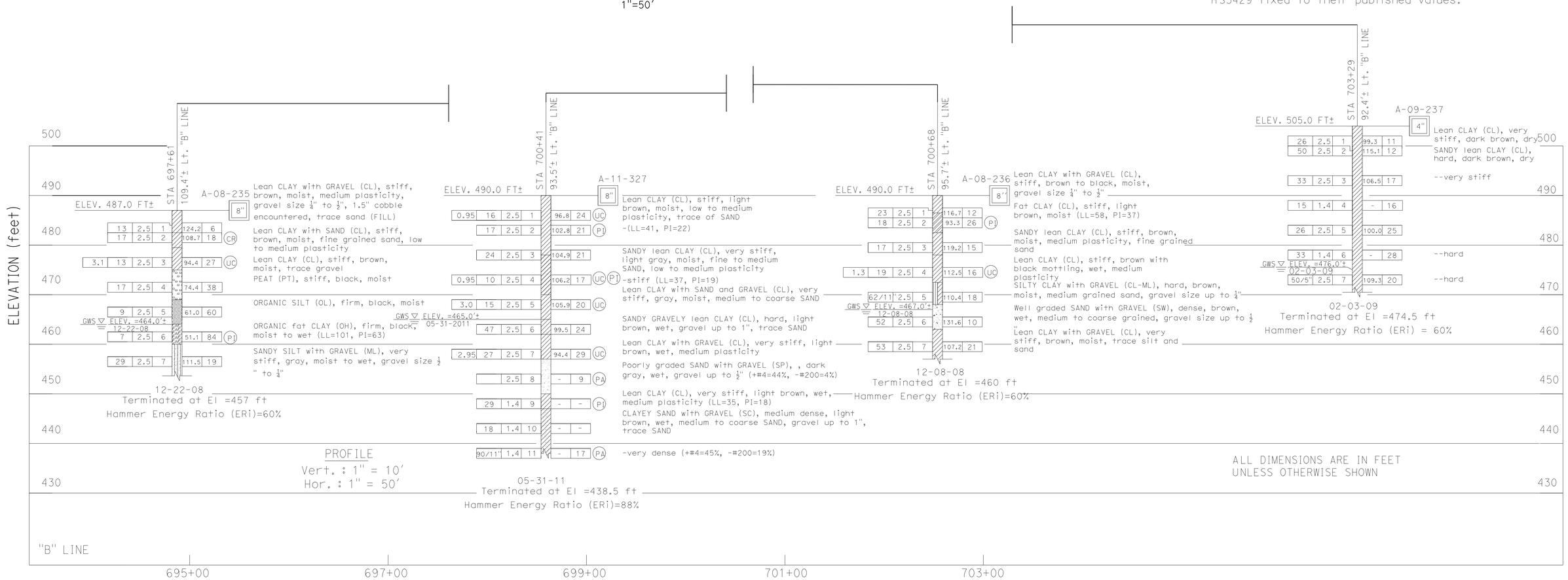

DESIGN OVERSIGHT	DRAWN BY	O. GOUTHIER	S. DUDDU FIELD INVESTIGATION BY:	PREPARED FOR THE STATE OF CALIFORNIA DEPARTMENT OF TRANSPORTATION	P. SIRCAR PROJECT ENGINEER
SIGN OFF DATE	CHECKED BY	P. SIRCAR	DATE: DECEMBER 2008 - JUNE 2011		

BRIDGE NO. / POST MILES

ROUTE 580 WB HOV LANE WIDENING- EASTERN SEGMENT

LOG OF TEST BORINGS

GS GEOTECHNICAL LOG OF TEST BORINGS SHEET (ENGLISH) (REV. 7/16/10)

ORIGINAL SCALE IN INCHES FOR REDUCED PLANS 0 1 2 3

UNIT: 0735
PROJECT NUMBER & PHASE: 04000212481 CONTRACT NO.: 04-2908C4

DISREGARD PRINTS BEARING EARLIER REVISION DATES

REVISION DATES: 11/18/09 12/23/09 8/9/11 1/18/12 — SHEET — OF

FILE => 0400021248gn006.dgn

USERNAME => s135318 DATE PLOTTED => 23-MAY-2012 TIME PLOTTED => 08:23

DIST	COUNTY	ROUTE	POST MILES TOTAL PROJECT	SHEET No	TOTAL SHEETS
04	Ala	580	R8.4/R14.6	647	853

GEOTECHNICAL PROFESSIONAL — DATE 1/18/12

5-14-12
PLANS APPROVAL DATE

REGISTERED PROFESSIONAL ENGINEER — GARY PARIKH — No. G.E. 666 — Exp. 12/31/13 — GEOTECHNICAL — STATE OF CALIFORNIA

The State of California or its officers or agents shall not be responsible for the accuracy or completeness of electronic copies of this plan sheet.

ALAMEDA CTC
1333 BROADWAY, SUITE 220
OAKLAND, CALIFORNIA 94612

PARIKH CONSULTANTS, INC.
2360 QUME DRIVE, SUITE A
SAN JOSE, CA 95131

BENCHMARK :
The Vertical Datum shown hereon is based on North American Vertical Datum of 1988 (NAVD). The 1988 Elevations for this project were Established using Digital Levelling & GPS Survey Measurements and a Least Squares Adjustment Holdings NGS Benchmarks GPS Control Point 35 - PID DE8495, L 1259 - PID HS4075, CHABOT A - PID AI7653, & OLD RM 3 = TIDAL 5 - PID HS3429 fixed to their published values.

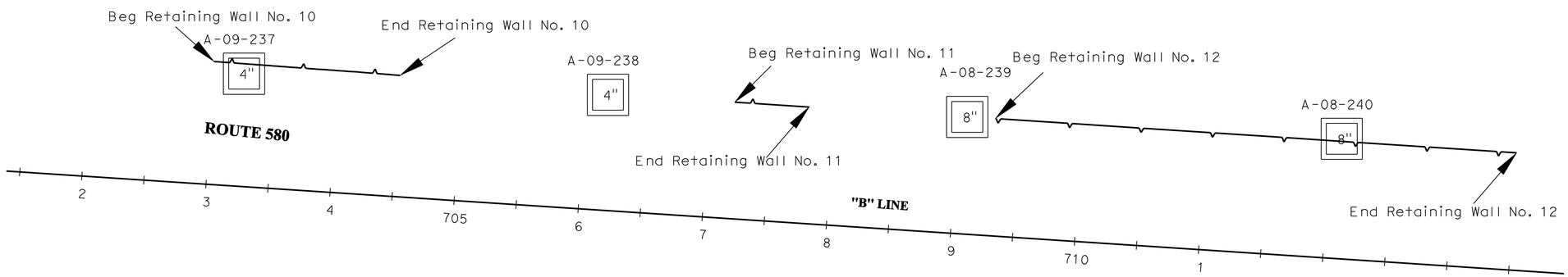

PLAN
1"=50'

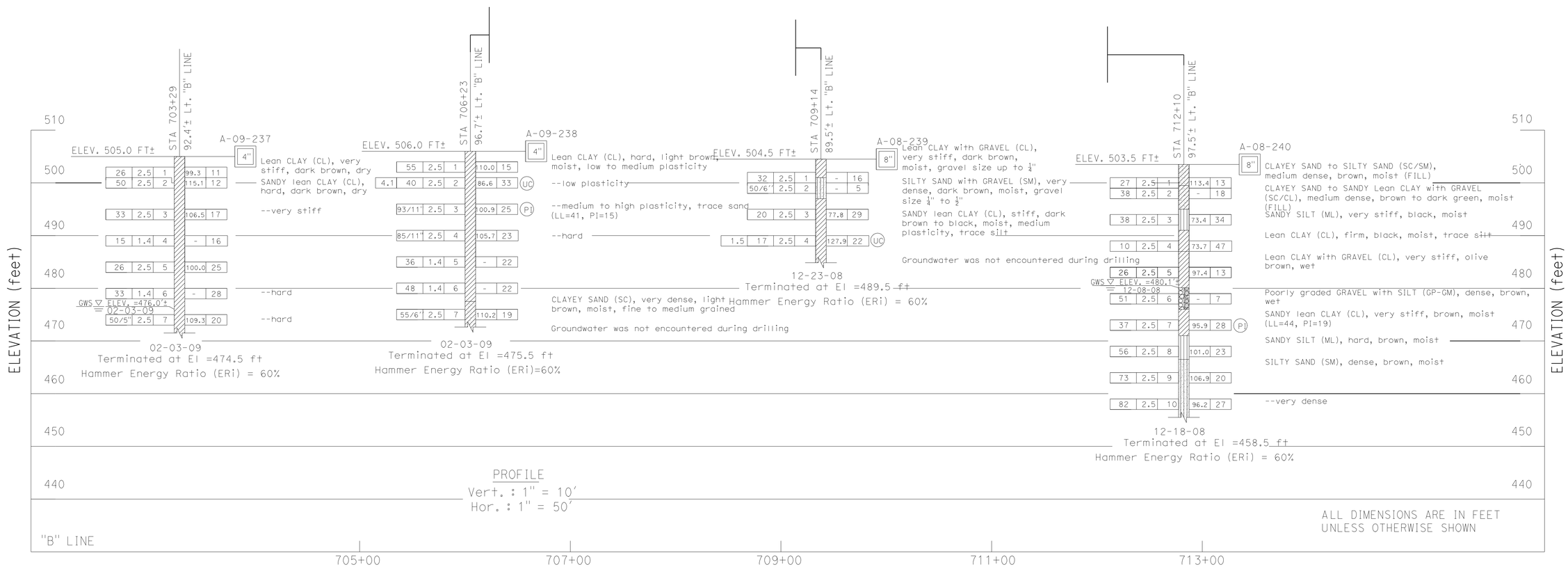

PROFILE
Vert. : 1" = 10'
Hor. : 1" = 50'

ALL DIMENSIONS ARE IN FEET UNLESS OTHERWISE SHOWN

DESIGN OVERSIGHT	DRAWN BY	O. GOUTHIER	S. DUDDU — FIELD INVESTIGATION BY:
SIGN OFF DATE	CHECKED BY	P. SIRCAR	DATE: DECEMBER 2008 - JUNE 2011

PREPARED FOR THE STATE OF CALIFORNIA DEPARTMENT OF TRANSPORTATION

P. SIRCAR — PROJECT ENGINEER

BRIDGE NO.
POST MILES

ROUTE 580 WB HOV LANE WIDENING- EASTERN SEGMENT

LOG OF TEST BORINGS

GS GEOTECHNICAL LOG OF TEST BORINGS SHEET (ENGLISH) (REV. 7/16/10)

ORIGINAL SCALE IN INCHES FOR REDUCED PLANS 0 1 2 3

UNIT: 0735
PROJECT NUMBER & PHASE: 04000212481 CONTRACT NO.: 04-2908C4

DISREGARD PRINTS BEARING EARLIER REVISION DATES

REVISION DATES: 11/13/09 12/23/09 3/9/11 1/18/12 — SHEET — OF

FILE => 0400021248gn007.dgn

USERNAME => s135318 DATE PLOTTED => 23-MAY-2012 TIME PLOTTED => 08:23

DIST	COUNTY	ROUTE	POST MILES TOTAL PROJECT	SHEET No	TOTAL SHEETS
04	Ala	580	R8.4/R14.6	648	853

GEOTECHNICAL PROFESSIONAL — DATE 1/18/12

5-14-12
PLANS APPROVAL DATE

The State of California or its officers or agents shall not be responsible for the accuracy or completeness of electronic copies of this plan sheet.

REGISTERED PROFESSIONAL ENGINEER — GARY PARIKH — No. G.E. 666 — Exp. 12/31/13 — GEOTECHNICAL — STATE OF CALIFORNIA

ALAMEDA CTC
1333 BROADWAY, SUITE 220
OAKLAND, CALIFORNIA 94612

PARIKH CONSULTANTS, INC.
2360 QUME DRIVE, SUITE A
SAN JOSE, CA 95131

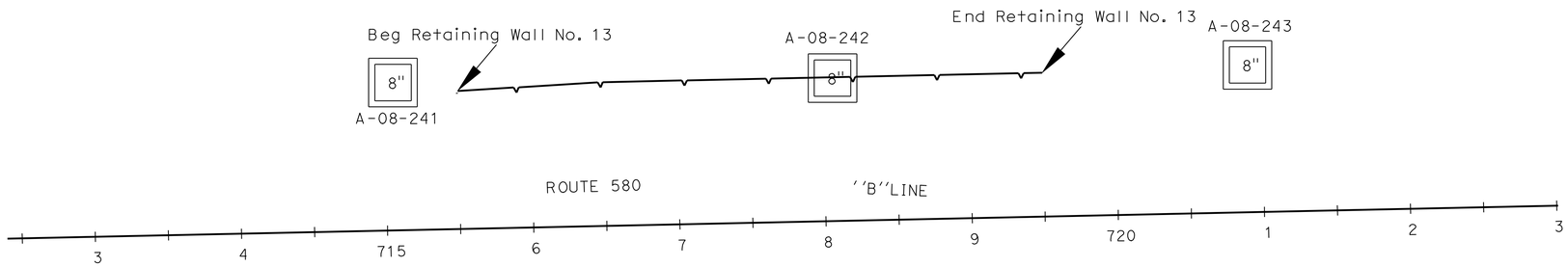

PLAN
1"=50'

BENCHMARK :
The Vertical Datum shown hereon is based on North American Vertical Datum of 1988 (NAVD). The 1988 Elevations for this project were Established using Digital Levelling & GPS Survey Measurements and a Least Squares Adjustment Holdings NGS Benchmarks GPS Control Point 35 - PID DE8495, L 1259 - PID HS4075, CHABOT A - PID AI7653, & OLD RM 3 = TIDAL 5 - PID HS3429 fixed to their published values.

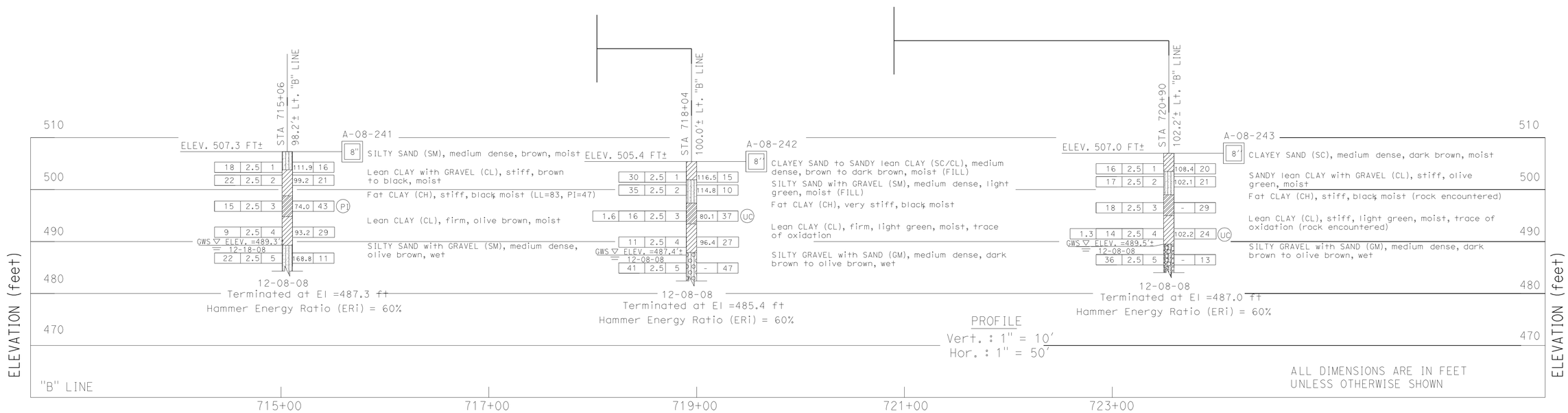

DESIGN OVERSIGHT	DRAWN BY	O. GOUTHIER	S. DUDDU FIELD INVESTIGATION BY:	PREPARED FOR THE STATE OF CALIFORNIA DEPARTMENT OF TRANSPORTATION	P. SIRCAR PROJECT ENGINEER
SIGN OFF DATE	CHECKED BY	P. SIRCAR	DATE: DECEMBER 2008 - JUNE 2011		

BRIDGE NO.
POST MILES

ROUTE 580 WB HOV LANE WIDENING- EASTERN SEGMENT

LOG OF TEST BORINGS

GS GEOTECHNICAL LOG OF TEST BORINGS SHEET (ENGLISH) (REV. 7/16/10)

ORIGINAL SCALE IN INCHES FOR REDUCED PLANS 0 1 2 3

UNIT: 0735
PROJECT NUMBER & PHASE: 04000212481 CONTRACT NO.: 04-2908C4

DISREGARD PRINTS BEARING EARLIER REVISION DATES

REVISION DATES: 11/13/09 12/23/09 8/9/11 1/18/12 — SHEET — OF

FILE => 0400021248gn008.dgn

USERNAME => s135318 DATE PLOTTED => 23-MAY-2012 TIME PLOTTED => 08:24

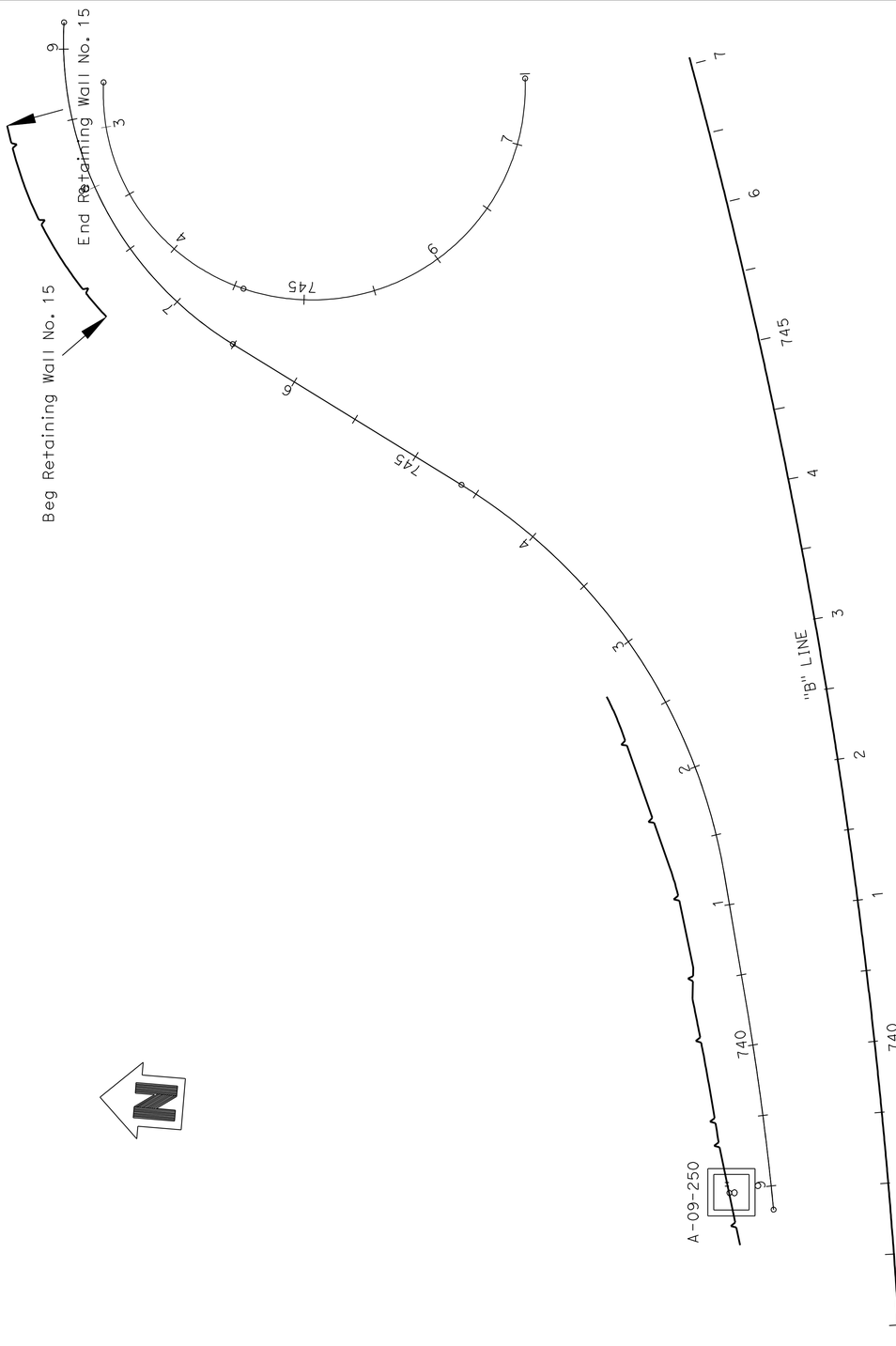

PLAN
1"=50'

BENCHMARK :
The Vertical Datum shown hereon is based on North American Vertical Datum of 1988 (NAVD). The 1988 Elevations for this project were Established using Digital Levelling & GPS Survey Measurements and a Least Squares Adjustment Holdings NGS Benchmarks GPS Control Point 35 - PID DE8495, L 1259 - PID HS4075, CHABOT A - PID AI7653, & OLD RM 3 = TIDAL 5 - PID HS3429 fixed to their published values.

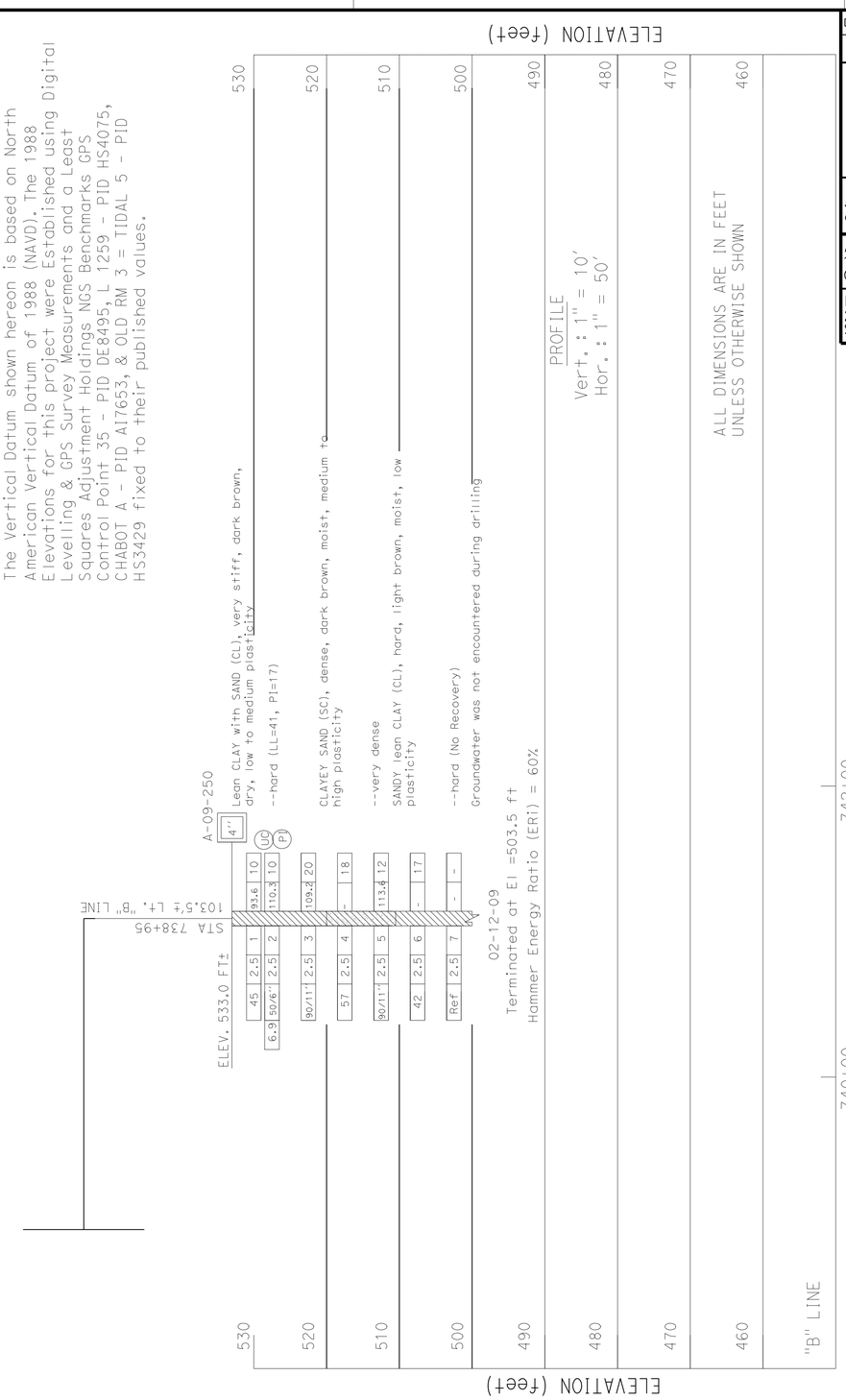

DIST	COUNTY	ROUTE	POST MILES TOTAL PROJECT	SHEET No	TOTAL SHEETS
04	Ala	580	R8.4/R14.6	649	853

GEOTECHNICAL PROFESSIONAL — DATE 1/18/12

5-14-12
PLANS APPROVAL DATE

REGISTERED PROFESSIONAL ENGINEER — GARY PARIKH — No. G.E. 666 — Exp. 12/31/13 — GEOTECHNICAL — STATE OF CALIFORNIA

The State of California or its officers or agents shall not be responsible for the accuracy or completeness of electronic copies of this plan sheet.

ALAMEDA CTC
1333 BROADWAY, SUITE 220
OAKLAND, CALIFORNIA 94612

PARIKH CONSULTANTS, INC.
2360 QUME DRIVE, SUITE A
SAN JOSE, CA 95131

DESIGN OVERSIGHT	DRAWN BY	O. GOUTHIER	S. DUDDU — FIELD INVESTIGATION BY:
SIGN OFF DATE	CHECKED BY	P. SIRCAR	DATE: DECEMBER 2008 - JUNE 2011

PREPARED FOR THE STATE OF CALIFORNIA DEPARTMENT OF TRANSPORTATION

P. SIRCAR — PROJECT ENGINEER

BRIDGE NO. / POST MILES

ROUTE 580 WB HOV LANE WIDENING- EASTERN SEGMENT

LOG OF TEST BORINGS

GS GEOTECHNICAL LOG OF TEST BORINGS SHEET (ENGLISH) (REV. 7/16/10)

ORIGINAL SCALE IN INCHES FOR REDUCED PLANS 0 1 2 3

UNIT: 0735
PROJECT NUMBER & PHASE: 04000212481 CONTRACT NO.: 04-2908C4

DISREGARD PRINTS BEARING EARLIER REVISION DATES → 11/13/08 12/23/08 8/9/11 1/18/12

SHEET OF

FILE => 0400021248gn009.dgn

USERNAME => s135318 DATE PLOTTED => 23-MAY-2012 TIME PLOTTED => 08:24

DIST	COUNTY	ROUTE	POST MILES TOTAL PROJECT	SHEET No	TOTAL SHEETS
04	Ala	580	R8.4/R14.6	650	853

GEOTECHNICAL PROFESSIONAL — DATE 1/18/12

5-14-12
PLANS APPROVAL DATE

The State of California or its officers or agents shall not be responsible for the accuracy or completeness of electronic copies of this plan sheet.

REGISTERED PROFESSIONAL ENGINEER — GARY PARIKH — No. G.E. 666 — Exp. 12/31/13 — GEOTECHNICAL — STATE OF CALIFORNIA

ALAMEDA CTC
1333 BROADWAY, SUITE 220
OAKLAND, CALIFORNIA 94612

PARIKH CONSULTANTS, INC.
2360 QUME DRIVE, SUITE A
SAN JOSE, CA 95131

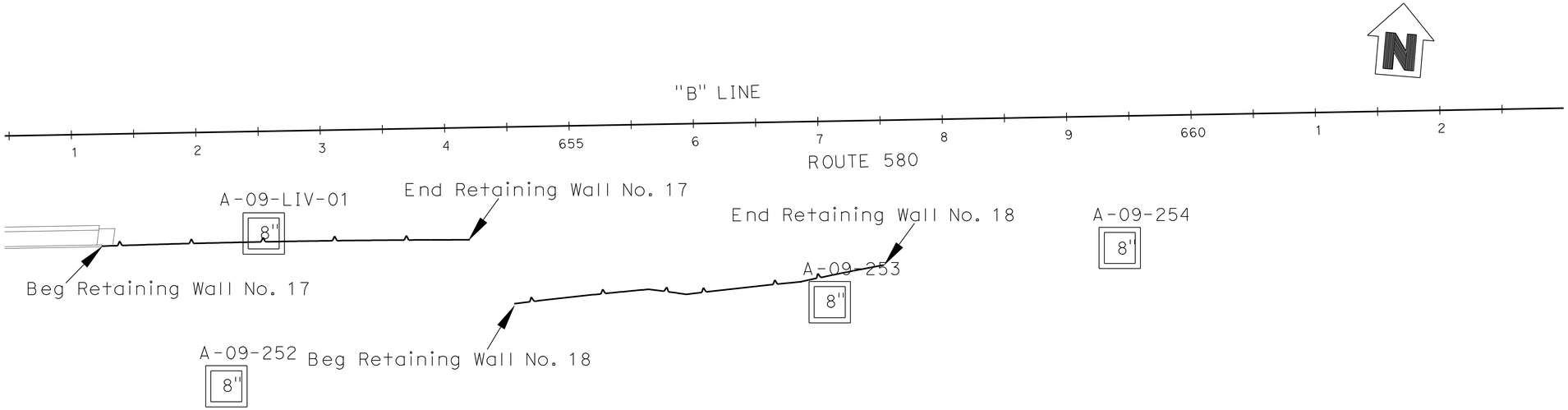

PLAN
1"=50'

BENCHMARK :
The Vertical Datum shown hereon is based on North American Vertical Datum of 1988 (NAVD). The 1988 Elevations for this project were Established using Digital Levelling & GPS Survey Measurements and a Least Squares Adjustment Holdings NGS Benchmarks GPS Control Point 35 - PID DE8495, L 1259 - PID HS4075, CHABOT A - PID AI7653, & OLD RM 3 = TIDAL 5 - PID HS3429 fixed to their published values.

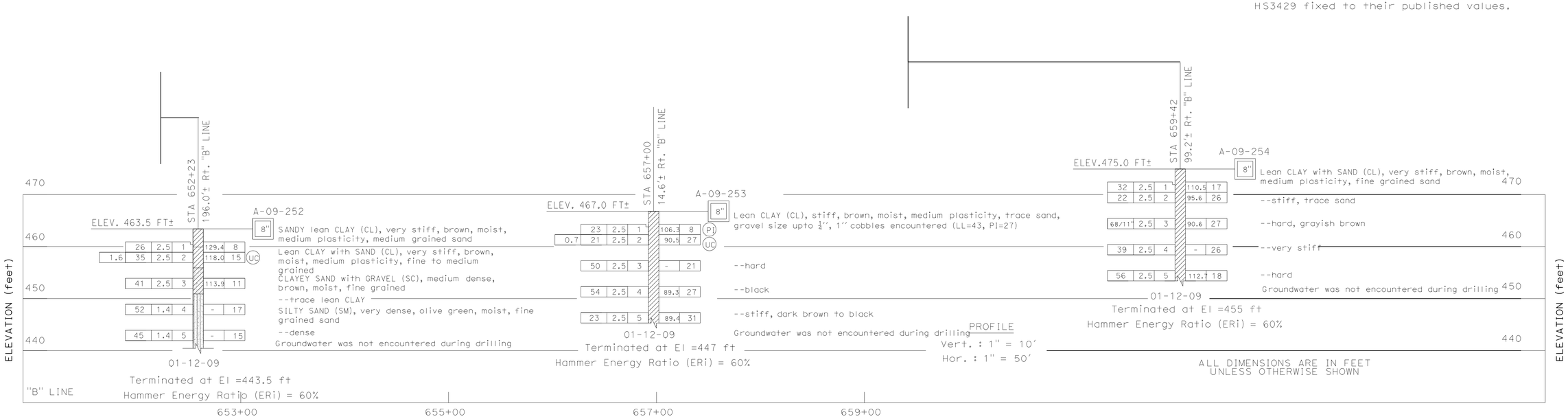

DESIGN OVERSIGHT	DRAWN BY	O. GOUTHIER	S. DUDDU — FIELD INVESTIGATION BY:
SIGN OFF DATE	CHECKED BY	P. SIRCAR	DATE: DECEMBER 2008 - JUNE 2011

PREPARED FOR THE STATE OF CALIFORNIA DEPARTMENT OF TRANSPORTATION

P. SIRCAR — PROJECT ENGINEER

BRIDGE NO.
POST MILES

ROUTE 580 WB HOV LANE WIDENING- EASTERN SEGMENT

LOG OF TEST BORINGS

GS GEOTECHNICAL LOG OF TEST BORINGS SHEET (ENGLISH) (REV. 7/16/10)

ORIGINAL SCALE IN INCHES FOR REDUCED PLANS 0 1 2 3

UNIT: 0735
PROJECT NUMBER & PHASE: 04000212481 CONTRACT NO.: 04-2908C4

DISREGARD PRINTS BEARING EARLIER REVISION DATES — REVISION DATES: 11/18/09 12/23/09 8/9/11 1/18/12 — SHEET — OF

FILE => 0400021248gn010.dgn

USERNAME => s124496 DATE PLOTTED => 23-MAY-2012 TIME PLOTTED => 08:13

DIST	COUNTY	ROUTE	POST MILES TOTAL PROJECT	SHEET No	TOTAL SHEETS
04	Ala	580	R8.4/R14.6	651	853

GEOTECHNICAL PROFESSIONAL — DATE 1/18/12

5-14-12
PLANS APPROVAL DATE

REGISTERED PROFESSIONAL ENGINEER — GARY PARIKH — No. G.E. 666 — Exp. 12/31/13 — GEOTECHNICAL — STATE OF CALIFORNIA

The State of California or its officers or agents shall not be responsible for the accuracy or completeness of electronic copies of this plan sheet.

ALAMEDA CTC
1333 BROADWAY, SUITE 220
OAKLAND, CALIFORNIA 94612

PARIKH CONSULTANTS, INC.
2360 QUME DRIVE, SUITE A
SAN JOSE, CA 95131

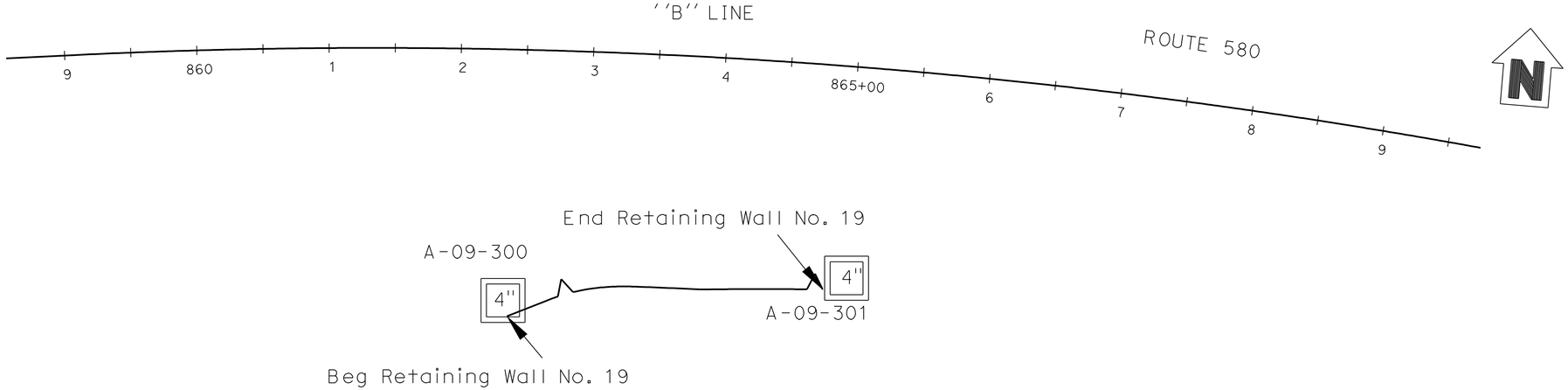

BENCHMARK :
The Vertical Datum shown hereon is based on North American Vertical Datum of 1988 (NAVD). The 1988 Elevations for this project were Established using Digital Levelling & GPS Survey Measurements and a Least Squares Adjustment Holdings NGS Benchmarks CPS Control Point 35 - PID DE8495, L 1259 - PID HS4075, CHABOT A - PID AI7653, & OLD RM 3 = TIDAL 5 - PID HS3429 fixed to their published values.

PLAN
1"=50'

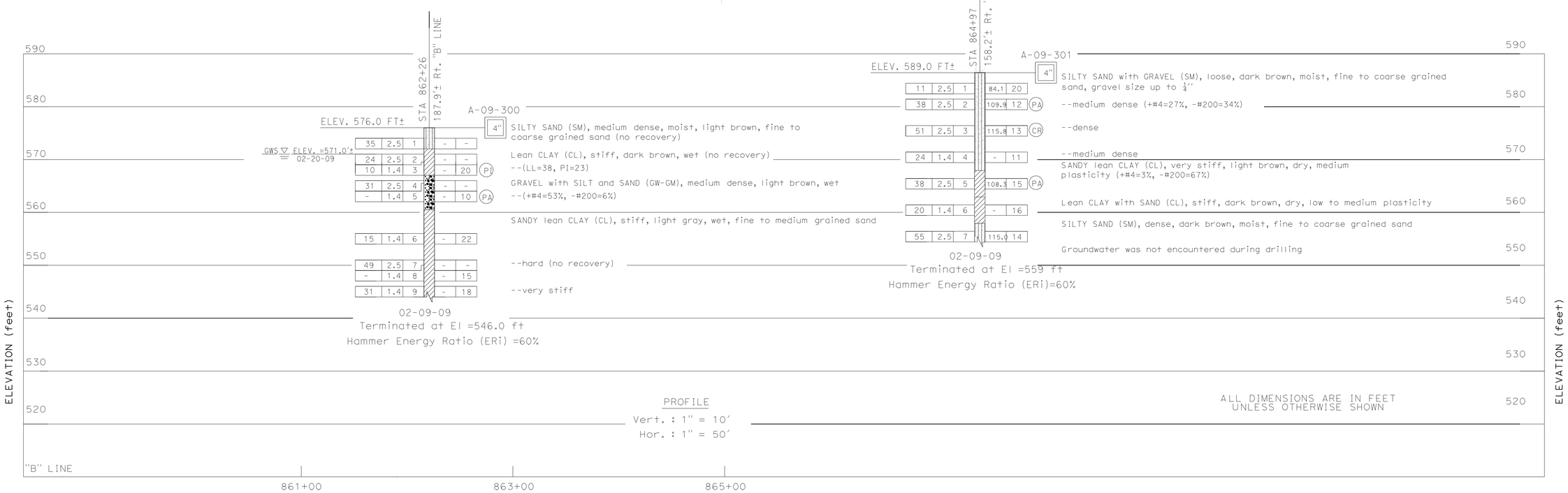

DESIGN OVERSIGHT	DRAWN BY	O. GOUTHIER	S. DUDDU FIELD INVESTIGATION BY:	PREPARED FOR THE STATE OF CALIFORNIA DEPARTMENT OF TRANSPORTATION	P. SIRCAR PROJECT ENGINEER
SIGN OFF DATE	CHECKED BY	P. SIRCAR	DATE: DECEMBER 2008 - JUNE 2011		

BRIDGE NO. / POST MILES

ROUTE 580 WB HOV LANE WIDENING- EASTERN SEGMENT

LOG OF TEST BORINGS

GS GEOTECHNICAL LOG OF TEST BORINGS SHEET (ENGLISH) (REV. 7/16/10)

ORIGINAL SCALE IN INCHES FOR REDUCED PLANS 0 1 2 3

UNIT: 0735
PROJECT NUMBER & PHASE: 04000212481 CONTRACT NO.: 04-2908C4

DISREGARD PRINTS BEARING EARLIER REVISION DATES → REVISION DATES 11/13/09 12/23/09 8/9/11 1/18/12 SHEET OF

FILE => 0400021248gn011.dgn

USERNAME => s124496 DATE PLOTTED => 23-MAY-2012 TIME PLOTTED => 08:13

DIST	COUNTY	ROUTE	POST MILES TOTAL PROJECT	SHEET NO.	TOTAL SHEETS
04	Ala	580	R8.4/R14.6	652	853

REGISTERED CIVIL ENGINEER

April 20, 2012
PLANS APPROVAL DATE

REGISTERED PROFESSIONAL ENGINEER
Roberta L. McLaughlin
No. C40375
Exp. 3-31-13
CIVIL
STATE OF CALIFORNIA

The State of California or its officers or agents shall not be responsible for the accuracy or completeness of electronic copies of this plan sheet.

To accompany plans dated 5-14-12

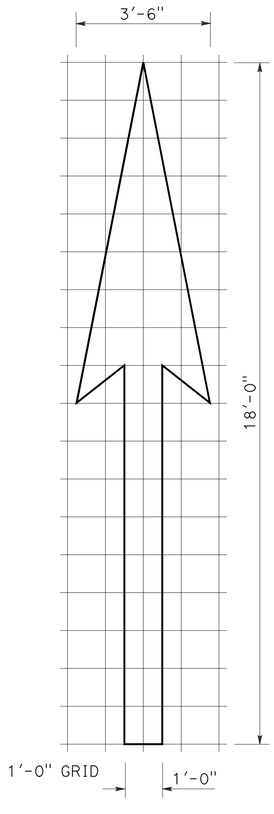

A=25 sq ft

TYPE I 18'-0" ARROW

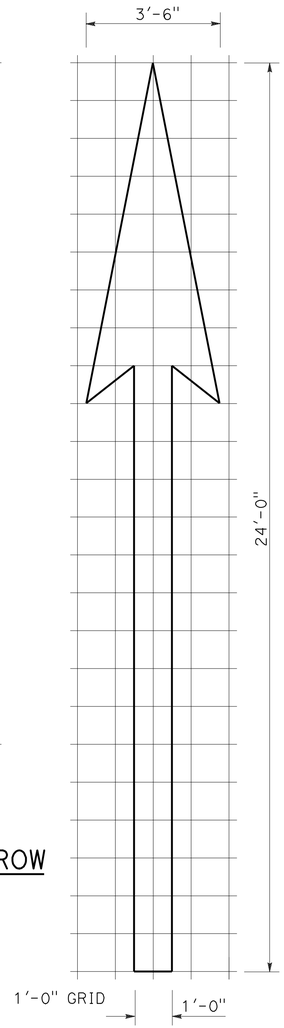

A=31 sq ft

TYPE I 24'-0" ARROW

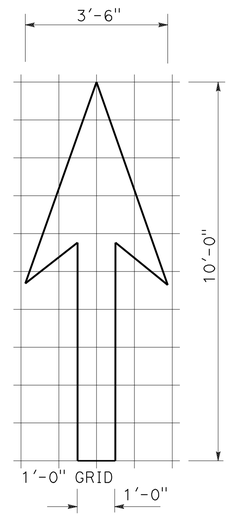

A=14 sq ft

TYPE I 10'-0" ARROW

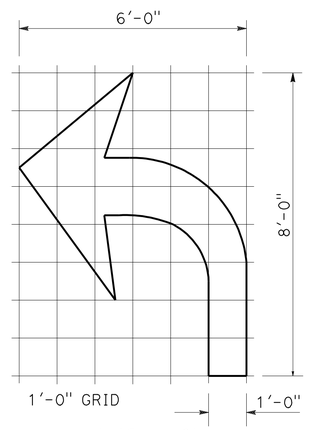

A=15 sq ft

TYPE IV (L) ARROW

(FOR TYPE IV (R) ARROW, USE MIRROR IMAGE)

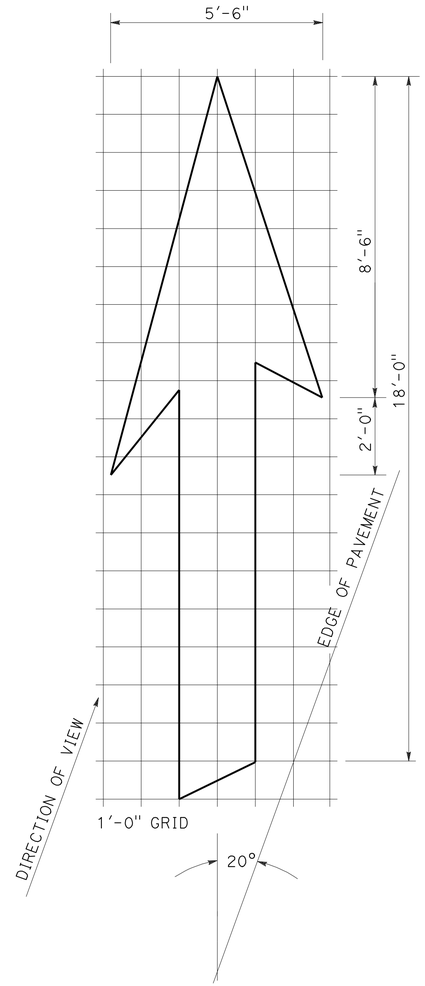

A=42 sq ft

TYPE VI ARROW

RIGHT LANE DROP ARROW (FOR LEFT LANE, USE MIRROR IMAGE)

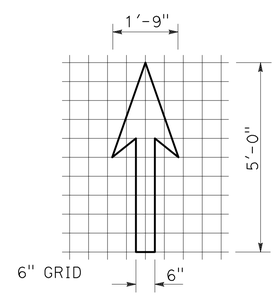

A=3.5 sq ft

BIKE LANE ARROW

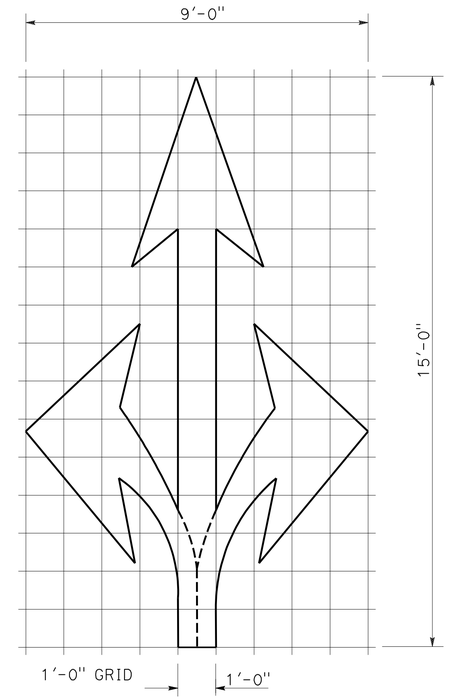

A=36 sq ft

TYPE VIII ARROW

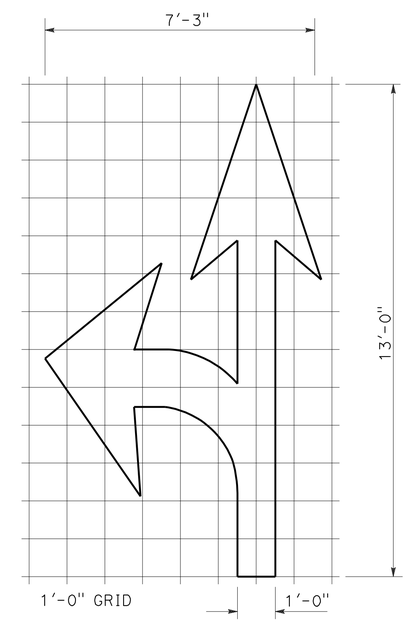

A=27 sq ft

TYPE VII (L) ARROW

(FOR TYPE VII (R) ARROW, USE MIRROR IMAGE)

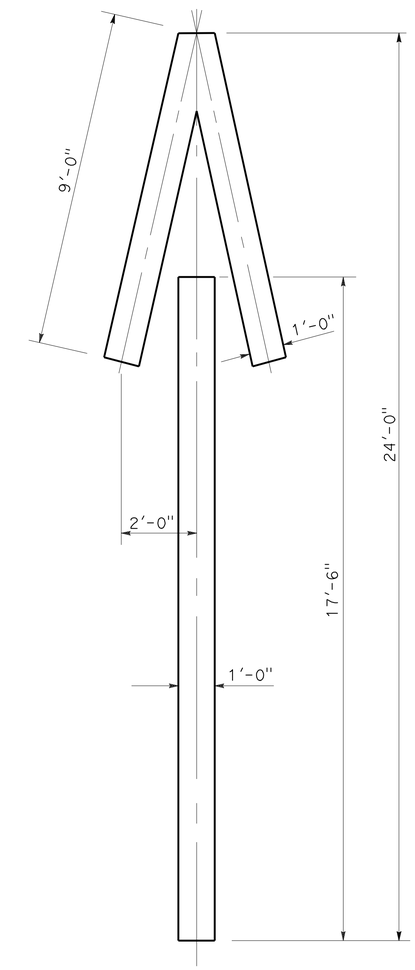

A=33 sq ft

TYPE V ARROW

NOTE:

MINOR VARIATIONS IN DIMENSIONS MAY BE ACCEPTED BY THE ENGINEER.

STATE OF CALIFORNIA
DEPARTMENT OF TRANSPORTATION

PAVEMENT MARKINGS ARROWS

NO SCALE

RSP A24A DATED APRIL 20, 2012 SUPERSEDES STANDARD PLAN A24A DATED MAY 1, 2006 - PAGE 9 OF THE STANDARD PLANS BOOK DATED MAY 2006.

REVISED STANDARD PLAN RSP A24A

2006 REVISED STANDARD PLAN RSP A24A

3-14-12

DIST	COUNTY	ROUTE	POST MILES TOTAL PROJECT	SHEET NO.	TOTAL SHEETS
04	Ala	580	R8.4/R14.6	653	853

REGISTERED CIVIL ENGINEER

June 6, 2008
PLANS APPROVAL DATE

REGISTERED PROFESSIONAL ENGINEER
Donald E. Howe
No. C46402
Exp. 3-31-09
CIVIL
STATE OF CALIFORNIA

The State of California or its officers or agents shall not be responsible for the accuracy or completeness of electronic copies of this plan sheet.

To accompany plans dated 5-14-12

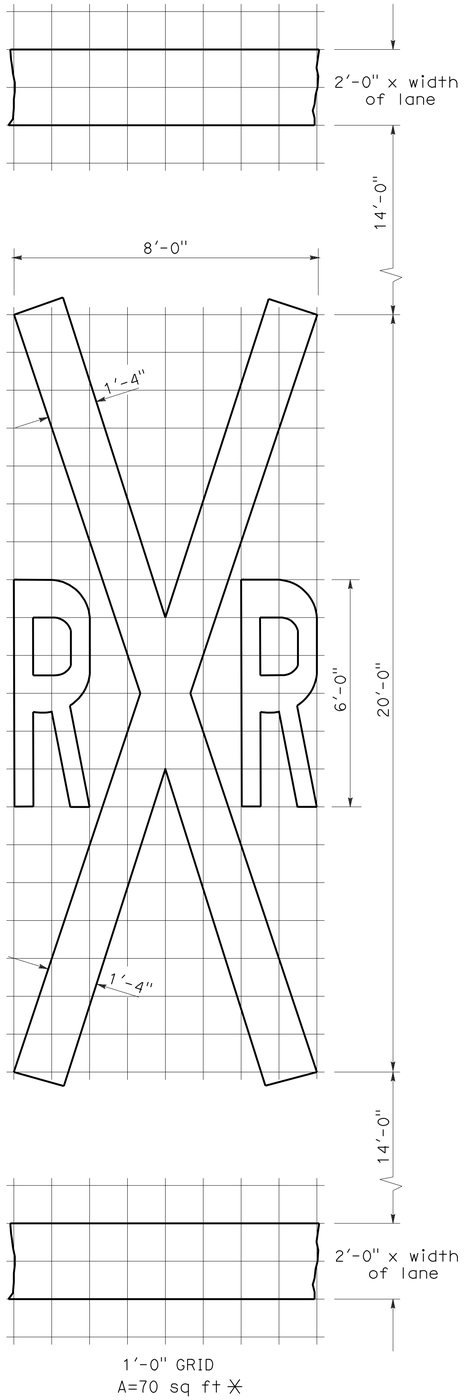

RAILROAD CROSSING SYMBOL

✳70 sq ft DOES NOT INCLUDE THE 2'-0" x VARIABLE WIDTH TRANSVERSE LINES.

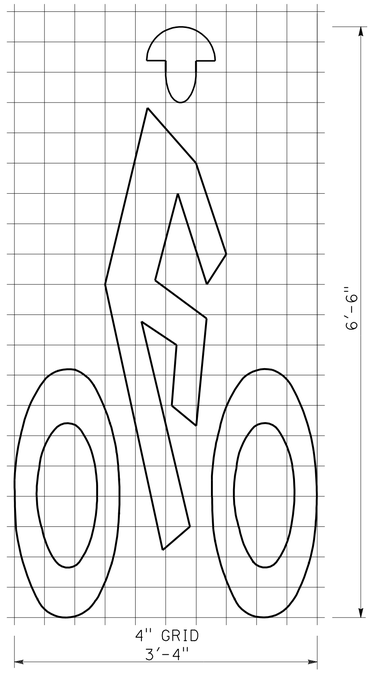

BIKE LANE SYMBOL

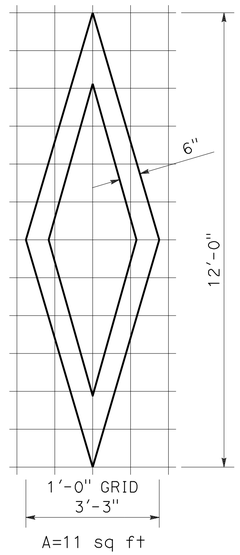

DIAMOND SYMBOL

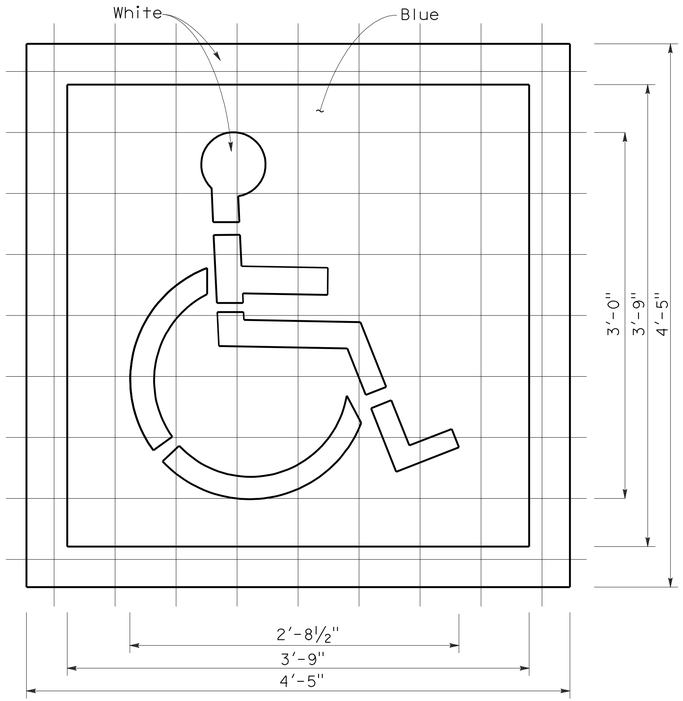

INTERNATIONAL SYMBOL OF ACCESSIBILITY MARKING

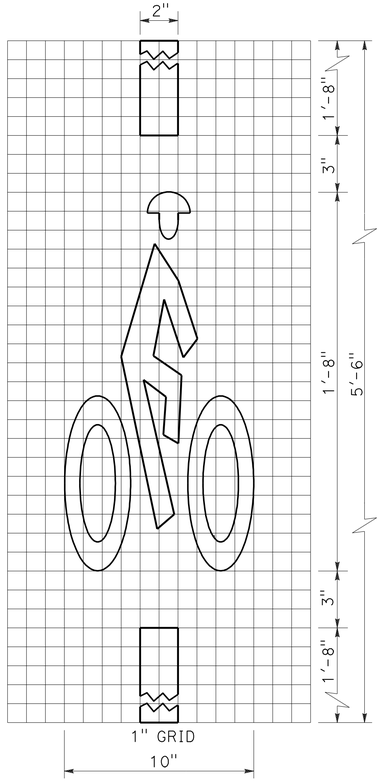

BICYCLE LOOP DETECTOR SYMBOL

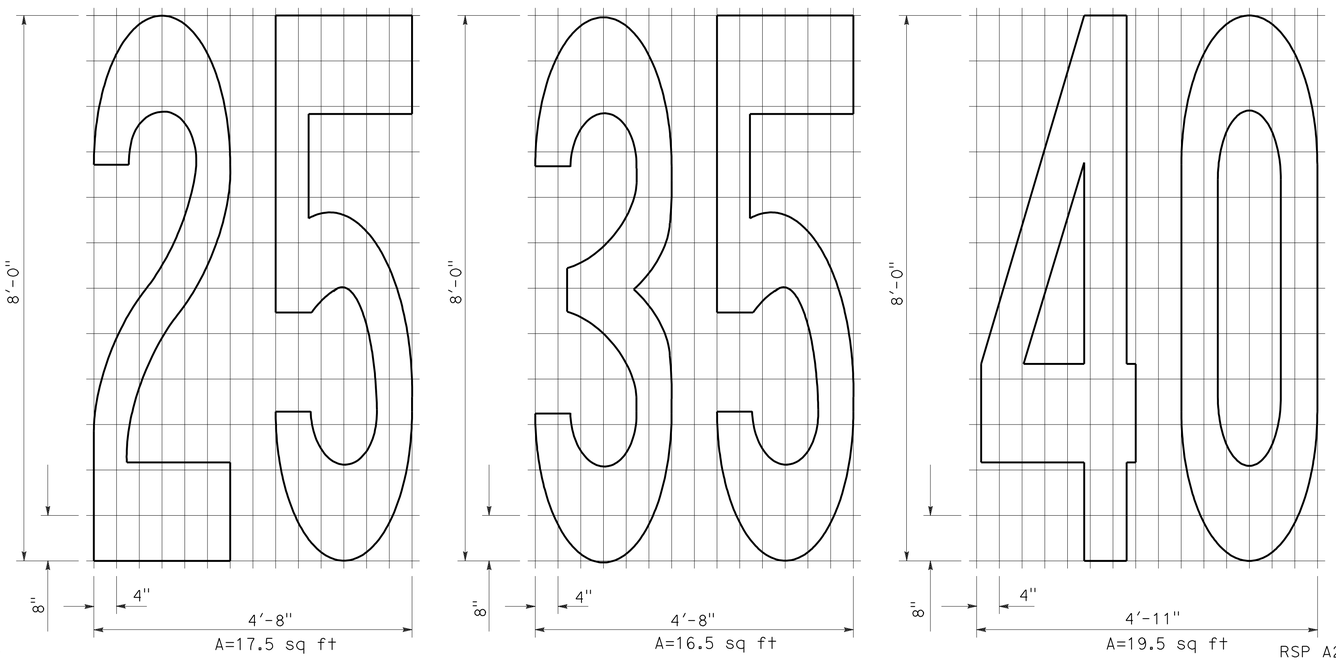

NUMERALS

NOTE:

1. Minor variations in dimensions may be accepted by the Engineer.

STATE OF CALIFORNIA
DEPARTMENT OF TRANSPORTATION

PAVEMENT MARKINGS SYMBOLS AND NUMERALS

NO SCALE

RSP A24C DATED JUNE 6, 2008 SUPERSEDES STANDARD PLAN A24C DATED MAY 1, 2006 - PAGE 11 OF THE STANDARD PLANS BOOK DATED MAY 2006.

REVISED STANDARD PLAN RSP A24C

2006 REVISED STANDARD PLAN RSP A24C

5-27-08

DIST	COUNTY	ROUTE	POST MILES TOTAL PROJECT	SHEET NO.	TOTAL SHEETS
04	Ala	580	R8.4/R14.6	654	853

REGISTERED CIVIL ENGINEER

November 17, 2006
PLANS APPROVAL DATE

REGISTERED PROFESSIONAL ENGINEER
Dallas Forester
No. C37765
Exp. 12-31-06
CIVIL
STATE OF CALIFORNIA

The State of California or its officers or agents shall not be responsible for the accuracy or completeness of electronic copies of this plan sheet.

To accompany plans dated 5-14-12

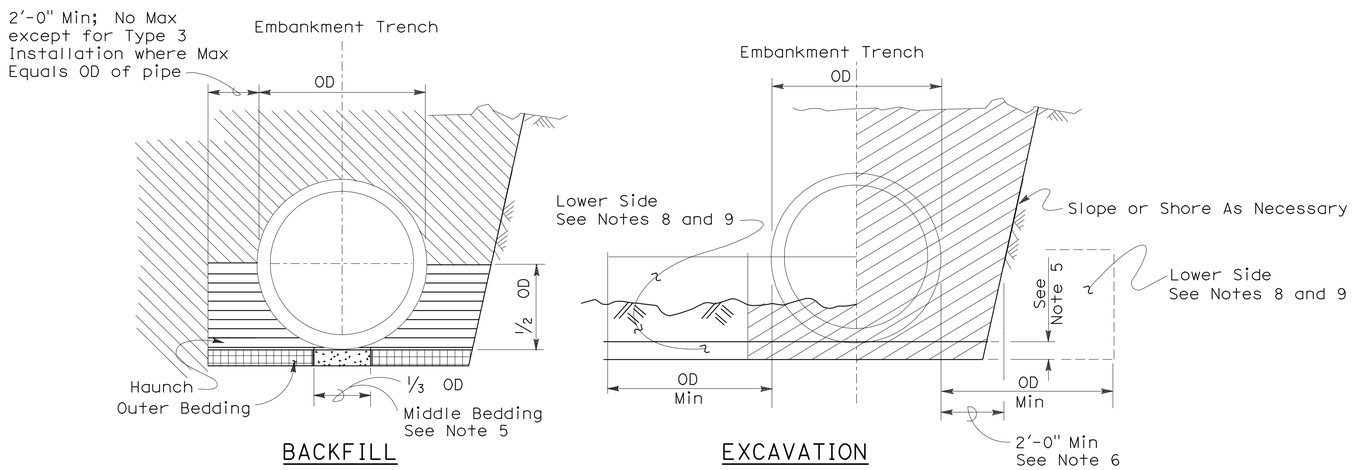

Roadway Embankment

Structure Backfill (Culvert) See Note 6

Structure Backfill (Culvert) See Note 6

Loose Backfill

Excavation Structure (Culvert)

TYPE 1 INSTALLATION:

The haunch and outer bedding shall be compacted to a minimum 90 percent relative compaction. In addition, the minimum sand equivalent in these areas shall be 30 and the maximum percentage passing the 75 μm sieve size shall be 12.

TYPE 2 INSTALLATION:

The haunch and outer bedding shall be compacted to a minimum 90 percent relative compaction. In addition, the minimum sand equivalent in these areas shall be 25.

TYPE 3 INSTALLATION:

The haunch and outer bedding shall be compacted to a minimum 85 percent relative compaction. 90 percent relative compaction will be required where the fill over the pipe is less than 4'-0" or 1/2 OD.

INSTALLATION TYPE 1

MINIMUM CLASS AND D-LOAD	COVER	
	108" Dia AND SMALLER	OVER 108" Dia
Class II 1000D	14.9'	12.9'
Class III 1350D	15.0' - 20.9'	13.0' - 18.9'
Class III Special 1700D	21.0' - 26.9'	19.0' - 24.9'
Class IV 2000D	27.0' - 31.9'	25.0' - 29.9'
Class IV Special 2500D	32.0' - 40.9'	30.0' - 38.9'
Class V 3000D	41.0' - 49.9'	39.0' - 46.9'
Class V Special 3600D	50.0' - 59.0'	47.0' - 58.0'

INSTALLATION TYPE 2

MINIMUM CLASS AND D-LOAD	COVER
Class II 1000D	9.9'
Class III 1350D	10.0'- 14.9'
Class III Special 1700D	15.0' - 19.9'
Class IV 2000D	20.0' - 24.9'
Class IV Special 2500D	25.0' - 31.9'
Class V 3000D	32.0' - 38.9'
Class V Special 3600D	39.0' - 47.0'

INSTALLATION TYPE 3

MINIMUM CLASS AND D-LOAD	COVER	
	48" Dia AND SMALLER	OVER 48" Dia
Class II 1000D	7.9'	5.9'
Class III 1350D	8.0' - 10.9'	6.0' - 8.9'
Class III Special 1700D	11.0' - 14.9'	9.0' - 12.9'
Class IV 2000D	15.0' - 17.9'	13.0' - 15.9'
Class IV Special 2500D	18.0' - 21.9'	16.0' - 19.9'
Class V 3000D	22.0' - 26.9'	20.0' - 24.9'
Class V Special 3600D	30.0' - 33.0'	25.0' - 31.0'

NOTES:

1. Unless otherwise shown on the plans or specified in the special provision, the Contractor shall have the option of selecting the class of RCP and the type of installation to be used, provided the height of cover does not exceed the value shown for the RCP selected.
   Example: 24" RCP culvert with maximum cover of 19'-0" the options are:
   a) Class III or stronger with Installation Type 1.
   b) Class III Special or stronger with Installation Type 2.
   c) Class IV Special or stronger with Installation Type 3.
   Cover is defined as the maximum vertical distance from top of the pipe to finished grade within the length of any given culvert.
2. The class of RCP and Installation Type selected shall be the same throughout the length of any given culvert.
3. The "length of any culvert" is defined as the culvert between:
   a) Successive drainage structure (inlets, junction boxes, headwalls, etc.).
   b) A drainage structure and the inlet or outlet end of the culvert.
   c) The inlet and outlet end of the culvert when there are no intervening drainage structures.
4. Oval and arch shaped RCP shall not be used.
5. 1/25 OD Min, not less than 3".
6. Slurry cement backfill may be substituted for backfill in the outer bedding and haunch areas. If slurry is used the outer and middle beddings shall be omitted. Prior to installation the soil under the middle 1/3 of the outside diameter of the pipe shall be softened by scarifying or other means to a minimum depth of 1/25 OD, but not less than 3". Where slurry cement backfill is used clear distance to trench wall may be reduced as set forth in Section 19-3.062 of the Standard Specifications.
7. Backfill shall be placed full width of excavation except where dimensions are shown for backfill width or thickness. Dimensions shown are minimums.
8. Lower side shall be suitable material as determined by the Engineer. Otherwise it shall be considered unsuitable as set forth in Section 19-2.02 of the Standard Specifications. See Note 9.
9. Where the pipe is placed in a trench, if the trench walls are sloped at 5 vertical to 1 horizontal or steeper for at least 90 percent of the trench height or up to not less than 12" from the grading plane, the firmness of the soil in the lower side need not be considered.
10. Non-reinforced precast concrete pipe sizes 3'-0" or smaller may be placed under installation Types 1, 2 or 3.

STATE OF CALIFORNIA
DEPARTMENT OF TRANSPORTATION

EXCAVATION AND BACKFILL CONCRETE PIPE CULVERTS

NO SCALE

RSP A62DA DATED NOVEMBER 17, 2006 SUPERSEDES STANDARD PLAN A62DA DATED MAY 1, 2006 - PAGE 20 OF THE STANDARD PLANS BOOK DATED MAY 2006.

REVISED STANDARD PLAN RSP A62DA

2006 REVISED STANDARD PLAN RSP A62DA

10-26-06

DIST	COUNTY	ROUTE	POST MILES TOTAL PROJECT	SHEET NO.	TOTAL SHEETS
04	Ala	580	R8.4/R14.6	655	853

Randell D. Hiatt
REGISTERED CIVIL ENGINEER

June 6, 2008
PLANS APPROVAL DATE

REGISTERED PROFESSIONAL ENGINEER
Randell D. Hiatt
No. C50200
Exp. 6-30-09
CIVIL
STATE OF CALIFORNIA

The State of California or its officers or agents shall not be responsible for the accuracy or completeness of electronic copies of this plan sheet.

To accompany plans dated 5-14-12

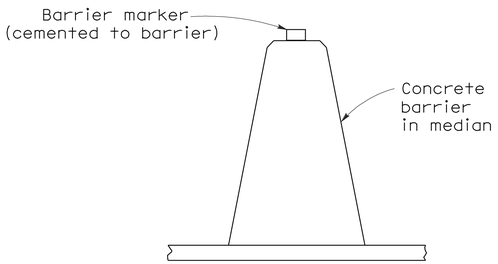

CONCRETE BARRIER TYPE 60 DELINEATION

See Notes 7 and 8

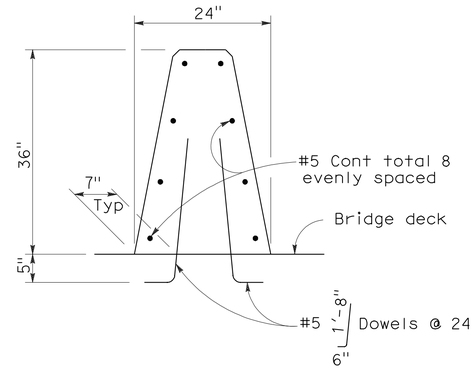

CONCRETE BARRIER TYPE 60A

Details similar to Type 60 except as noted.

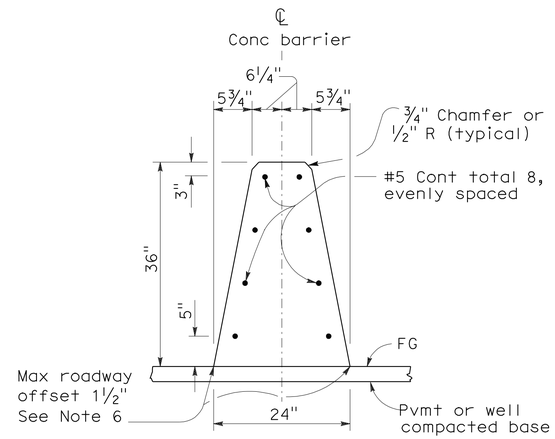

CONCRETE BARRIER TYPE 60

NOTES:

1. See Standard Plan A76B for details of Concrete Barrier Type 60 end anchors, connection to structures and transitions to Concrete Barrier Type 50 and Concrete Barrier Type 60S.
2. See Standard Plan A76C for Concrete Barrier Type 60 transitions at bridge column and sign pedestals.
3. Where glare screen is required on Concrete Barrier Type 60, use Concrete Barrier Type 60G.
4. Where the concrete barrier is added to the face of existing concrete structure, match existing weep holes.
5. Expansion joints in concrete barrier shall be located at all deck, pavement and principal wall joints. Expansion joint filler material shall be the same size as joint or ½" minimum.
6. Where roadway offset is greater than 1½", see Concrete Barrier Type 60C.
7. Barrier delineation to be used when required by the Special Provisions.
8. Spacing of barrier markers to match spacing of raised pavement markers on the adjacent median edgeline pavement delineation.
9. Reinforcing stirrup not required for roadway offsets less than 1'-0".
10. For roadway surfaces offset greater than 1½" to 3", no rebars required. For roadway surfaces offset greater than 3" to 8" use two #4 rebars at 3" above the lower roadway surface. For roadway surfaces offset greater than 8" to 12", use two #4 rebars at 3" above the lower roadway surface and two #4 rebars at 8" above the lower roadway surface. For roadway surfaces offset greater than 12" to 36", use two #4 rebars at 3" above the lower roadway surface and two #4 rebars at every 8" increment vertical spacing above the first two #4 rebars.

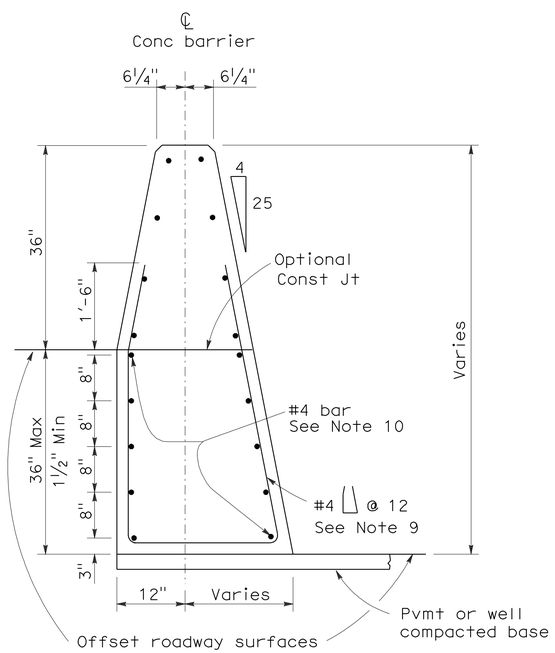

CONCRETE BARRIER TYPE 60C

Details similar to Type 60 except as noted.
Concrete barrier end anchor when necessary.
36" roadway surfaces offset shown.

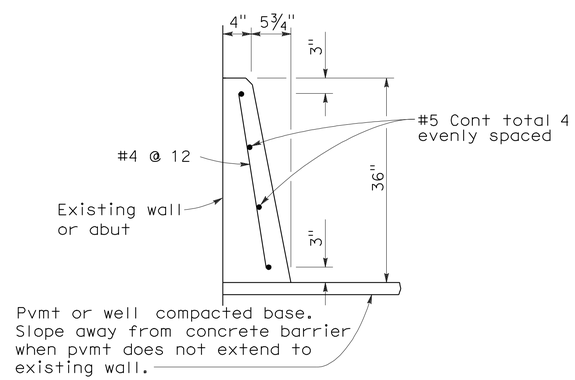

CONCRETE BARRIER TYPE 60D

STATE OF CALIFORNIA
DEPARTMENT OF TRANSPORTATION

CONCRETE BARRIER TYPE 60

NO SCALE

RSP A76A DATED JUNE 6, 2008 SUPERSEDES STANDARD PLAN A76A
DATED MAY 1, 2006 - PAGE 29 OF THE STANDARD PLANS BOOK DATED MAY 2006.

REVISED STANDARD PLAN RSP A76A

2006 REVISED STANDARD PLAN RSP A76A

5-21-08

Dist	COUNTY	ROUTE	POST MILES TOTAL PROJECT	SHEET No.	TOTAL SHEETS
04	Ala	580	R8.4/R14.6	656	853

Randell D. Hiatt
REGISTERED CIVIL ENGINEER

May 20, 2011
PLANS APPROVAL DATE

REGISTERED PROFESSIONAL ENGINEER
Randell D. Hiatt
No. C50200
Exp. 6-30-11
CIVIL
STATE OF CALIFORNIA

The State of California or its officers or agents shall not be responsible for the accuracy or completeness of electronic copies of this plan sheet.

To accompany plans dated 5-14-12

2006 REVISED STANDARD PLAN RSP A77A1

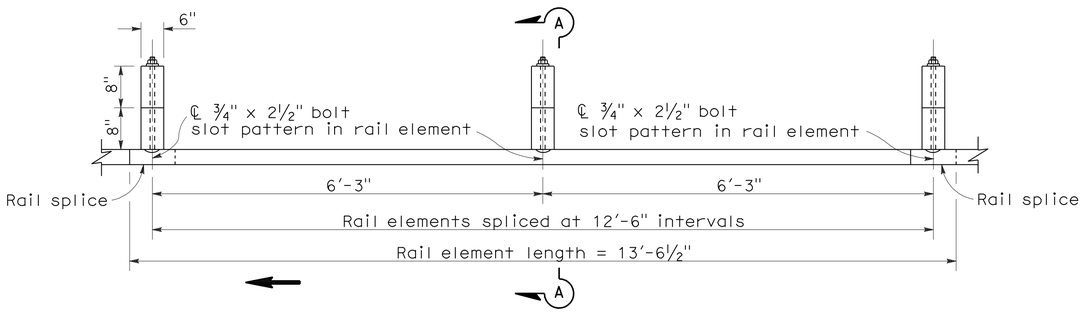

PLAN

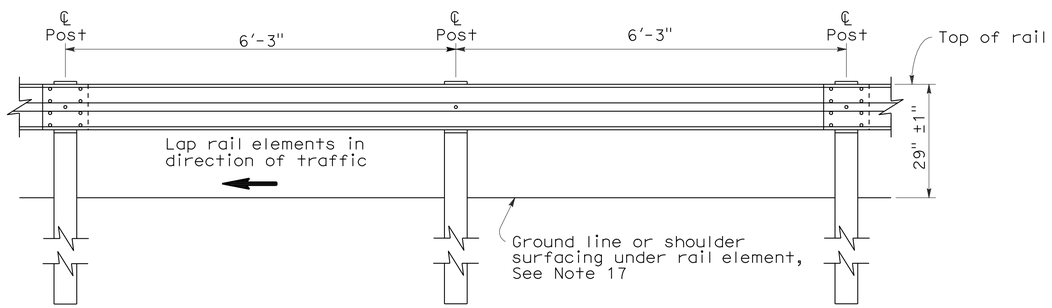

ELEVATION

METAL BEAM GUARD RAILING WITH WOOD POST AND BLOCKS

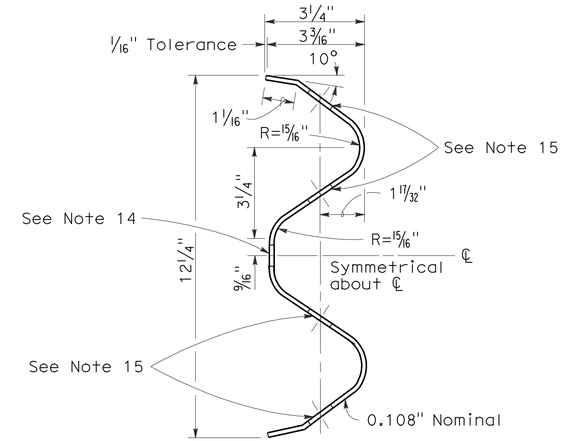

SECTION THRU RAIL ELEMENT

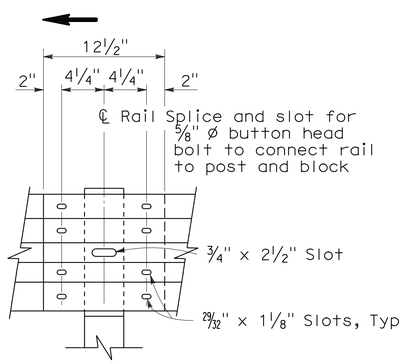

ELEVATION

RAIL ELEMENT SPLICE DETAIL

a) Connect the over lapped end of the rail elements with ⅝" ø x 1⅜" button head oval shoulder splice bolts inserted into the 29⁄32" x 1⅛" slots and bolted together with ⅝" ø recessed hex nuts. Recess of hex nut points toward rail element. A total of 8 bolts and nuts are to be used at each rail splice connection.

b) The ends of the rail elements are to be overlapped in the direction of traffic (see details).

c) Where end cap is to be attached to the end of a rail element, a total of 4 of the above described splice bolts and nuts are to be used.

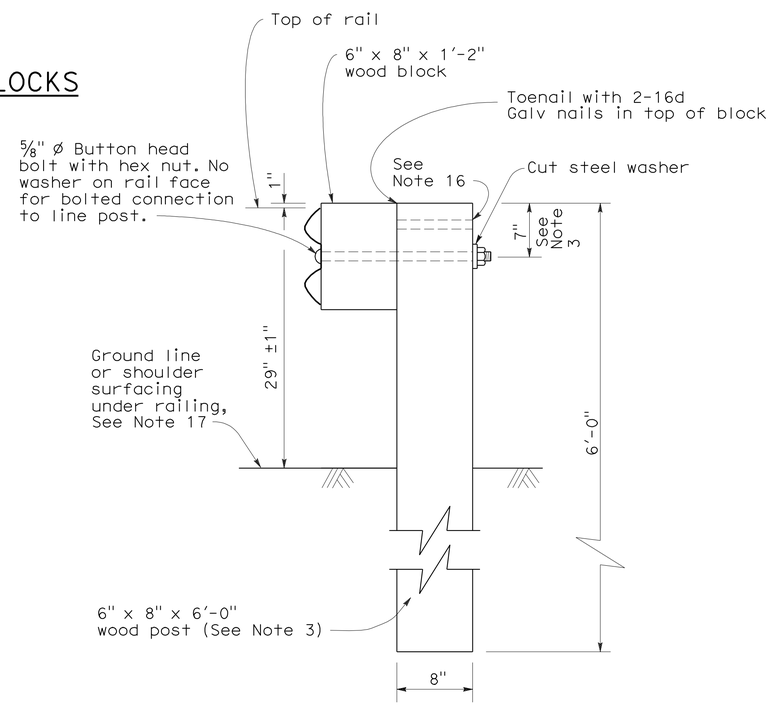

SECTION A-A

TYPICAL WOOD LINE POST INSTALLATION

See Note 4

NOTES:

1. For details of steel post installations, see Standard Plan A77A2.
2. For details of standard hardware used to construct guard railing, see Standard Plan A77B1.
3. For details of wood posts and wood blocks used to construct guard railing, see Standard Plan A77C1.
4. For additional installation details, see Standard Plan A77C3.
5. Guard railing post spacing to be 6'-3" center to center, except as otherwise noted.
6. For guard railing typical layouts, see the A77E, A77F and A77G Series of Standard Plans.
7. For terminal system end treatment details, see the A77L Series of Standard Plans. To connect railing to terminal system end treatment, transition the top of railing height at a ratio of 120:1 to terminal system end treatment height plus one 12'-6" standard railing section at the transitioned height for a horizontal connection to the end treatment.
8. For guard railing end anchor details, see Standard Plans A77H1 and A77I2.
9. For details of guard railing transition to bridge railing, see Standard Plan A77J4.
10. For additional details of guard railing connection to bridge railings, see Standard Plans A77J1, A77J2 and A77K1.
11. For guard railing connection details to abutments and walls, see Standard Plan A77J3.
12. Direction of adjacent traffic indicated by ➡.
13. For typical guard railing delineation and dike positioning details, see Standard Plan A77C4.
14. Slotted hole for bolted connection of rail element to block and post. See "Section Thru Rail Element".
15. Slotted holes for splice bolts to overlap ends of rail element. See "Section Thru Rail Element".
16. Additional hole in uppermost portion of line post is for potential future adjustments of railing height. See Standard Plan A77C1.
17. Install posts in soil.

STATE OF CALIFORNIA
DEPARTMENT OF TRANSPORTATION

METAL BEAM GUARD RAILING STANDARD RAILING SECTION (WOOD POST WITH WOOD BLOCK)

NO SCALE

RSP A77A1 DATED MAY 20, 2011 SUPERSEDES STANDARD PLAN A77A1
DATED MAY 1, 2006 - PAGE 41 OF THE STANDARD PLANS BOOK DATED MAY 2006.

REVISED STANDARD PLAN RSP A77A1

3-10-11

Dist	COUNTY	ROUTE	POST MILES TOTAL PROJECT	SHEET No.	TOTAL SHEETS
04	Ala	580	R8.4/R14.6	657	853

Randell D. Hiatt
REGISTERED CIVIL ENGINEER

May 20, 2011
PLANS APPROVAL DATE

REGISTERED PROFESSIONAL ENGINEER
Randell D. Hiatt
No. C50200
Exp. 6-30-11
CIVIL
STATE OF CALIFORNIA

The State of California or its officers or agents shall not be responsible for the accuracy or completeness of electronic copies of this plan sheet.

To accompany plans dated 5-14-12

NOTES:

1. When necessary to place dike in front of face of guard railing, only Type C dike may be used. For dike details, see Standard Plan A87B.
2. For standard railing post embedment, see Standard Plans A77C3.
3. Guard railing delineation to be used where shown on the Project Plans.
4. When dike or curb is placed under guard railing, the maximum height of the dike or curb shall be 4". Mountable dike should not be used. For dike and curb details, see Standard Plans A87A and A87B.
5. For details of typical distance between the face of rail and hinge point, see Standard Plan A77C3.
6. For steel line posts, use ¼ - 20 self-tapping screws in 0.22" diameter holes or ¼" bolts in 9/32" diameter holes.

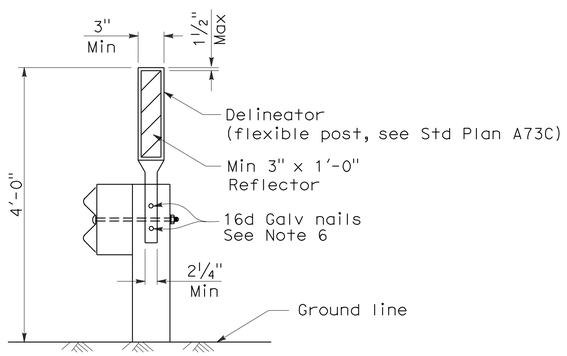

GUARD RAILING DELINEATION

See Note 3

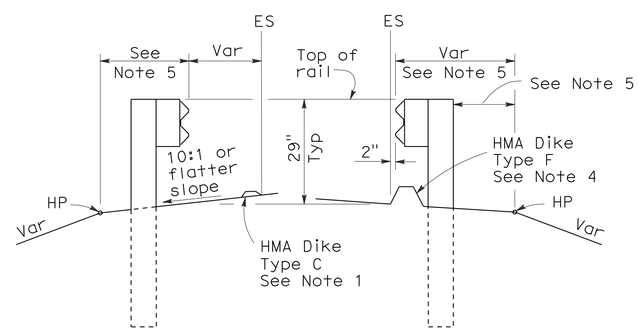

DIKE POSITIONING

See Note 1

STATE OF CALIFORNIA
DEPARTMENT OF TRANSPORTATION

METAL BEAM GUARD RAILING TYPICAL RAILING DELINEATION AND DIKE POSITIONING DETAILS

NO SCALE

RSP A77C4 DATED MAY 20, 2011 SUPERSEDES RSP A77C4 DATED JUNE 6, 2008 AND STANDARD PLAN A77C4 DATED MAY 1, 2006 - PAGE 47 OF THE STANDARD PLANS BOOK DATED MAY 2006.

REVISED STANDARD PLAN RSP A77C4

2006 REVISED STANDARD PLAN RSP A77C4

3-10-11

DIST	COUNTY	ROUTE	POST MILES TOTAL PROJECT	SHEET NO.	TOTAL SHEETS
04	Ala	580	R8.4/R14.6	658	853

Randell D. Hiatt
REGISTERED CIVIL ENGINEER

October 20, 2006
PLANS APPROVAL DATE

REGISTERED PROFESSIONAL ENGINEER
Randell D. Hiatt
No. C50200
Exp. 6-30-07
CIVIL
STATE OF CALIFORNIA

The State of California or its officers or agents shall not be responsible for the accuracy or completeness of electronic copies of this plan sheet.

To accompany plans dated 5-14-12

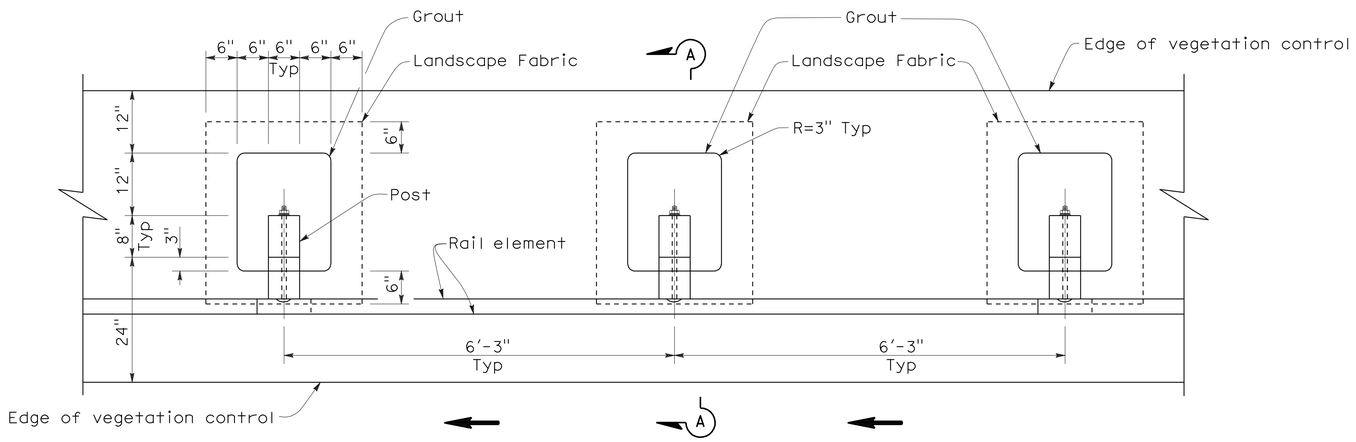

PLAN

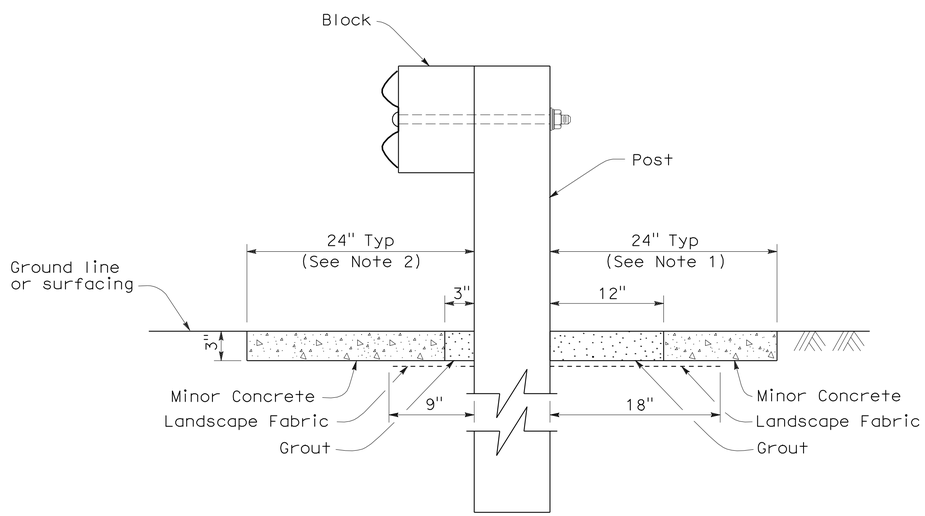

SECTION A-A

NOTES:

1. Where the distance between back of post and hinge point is less than 24", vegetation control to be constructed flush with the back edge of the post.
2. Where dike is constructed under railing, construct vegetation control to back edge of dike. Where paved shoulder is constructed within 24" in front of the post, construct vegetation control to the edge of paved shoulder.
3. Direction of adjacent traffic indicated by ← .

STATE OF CALIFORNIA
DEPARTMENT OF TRANSPORTATION

METAL BEAM GUARD RAILING TYPICAL VEGETATION CONTROL STANDARD RAILING SECTION

NO SCALE

NSP A77C5 DATED OCTOBER 20, 2006 SUPPLEMENTS THE STANDARD PLANS BOOK DATED MAY 2006.

NEW STANDARD PLAN NSP A77C5

2006 NEW STANDARD PLAN NSP A77C5

DIST	COUNTY	ROUTE	POST MILES TOTAL PROJECT	SHEET NO.	TOTAL SHEETS
04	Ala	580	R8.4/R14.6	659	853

Randell D. Hiatt
REGISTERED CIVIL ENGINEER

October 20, 2006
PLANS APPROVAL DATE

REGISTERED PROFESSIONAL ENGINEER
Randell D. Hiatt
No. C50200
Exp. 6-30-07
CIVIL
STATE OF CALIFORNIA

The State of California or its officers or agents shall not be responsible for the accuracy or completeness of electronic copies of this plan sheet.

To accompany plans dated 5-14-12

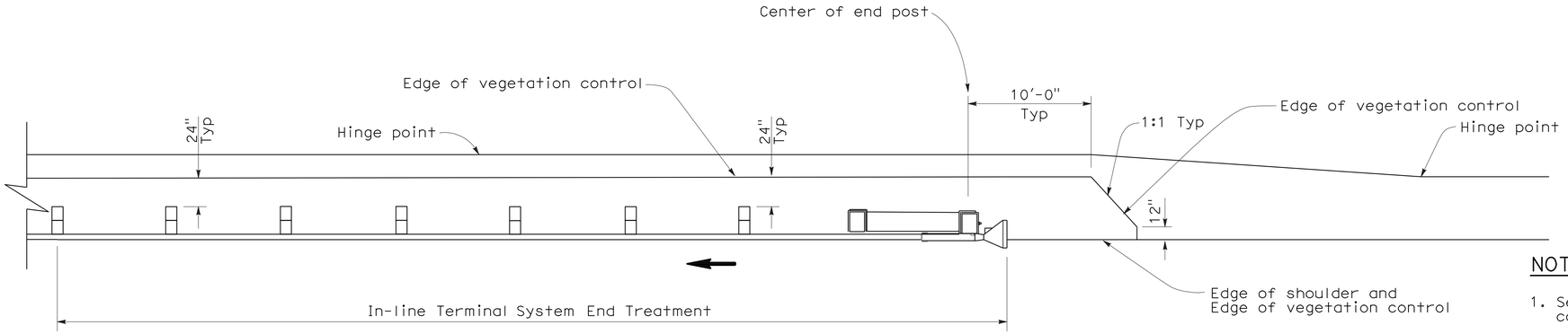

PLAN

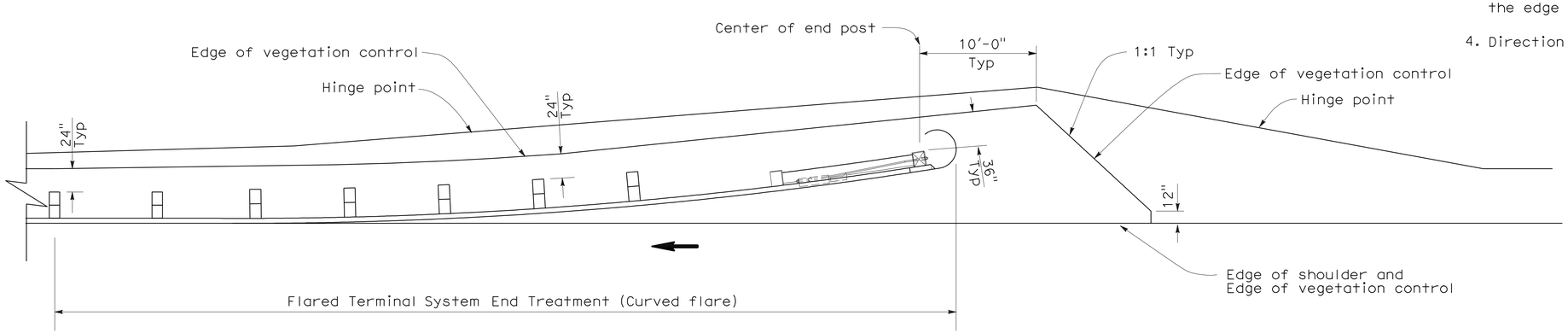

PLAN

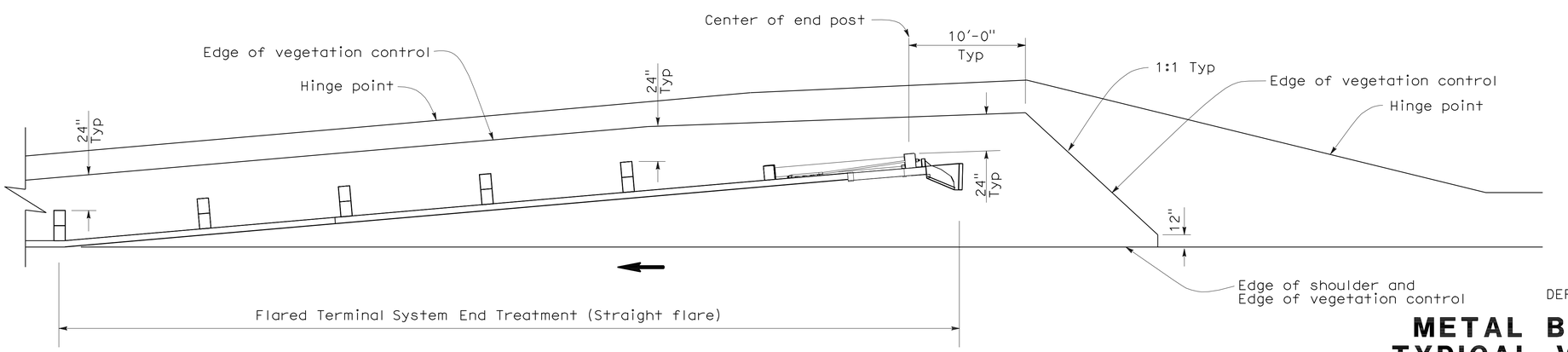

PLAN

NOTES:

1. See New Standard Plan NSP A77C5 for additional vegetation control details.
2. Where the distance between back of post and hinge point is less than 24", vegetation control to be constructed flush with the back edge of the post.
3. Where dike is constructed under railing, construct vegetation control to back edge of dike. Where paved shoulder is constructed within 24" in front of the post, construct vegetation control to the edge of paved shoulder.
4. Direction of adjacent traffic indicated by ←.

STATE OF CALIFORNIA
DEPARTMENT OF TRANSPORTATION

METAL BEAM GUARD RAILING TYPICAL VEGETATION CONTROL FOR TERMINAL SYSTEM END TREATMENTS

NO SCALE

NSP A77C6 DATED OCTOBER 20, 2006 SUPPLEMENTS THE STANDARD PLANS BOOK DATED MAY 2006.

NEW STANDARD PLAN NSP A77C6

2006 NEW STANDARD PLAN NSP A77C6

7-17-06

DIST	COUNTY	ROUTE	POST MILES TOTAL PROJECT	SHEET NO.	TOTAL SHEETS
04	Ala	580	R8.4/R14.6	660	853

Randell D. Hiatt
REGISTERED CIVIL ENGINEER

October 20, 2006
PLANS APPROVAL DATE

REGISTERED PROFESSIONAL ENGINEER
Randell D. Hiatt
No. C50200
Exp. 6-30-07
CIVIL
STATE OF CALIFORNIA

The State of California or its officers or agents shall not be responsible for the accuracy or completeness of electronic copies of this plan sheet.

To accompany plans dated 5-14-12

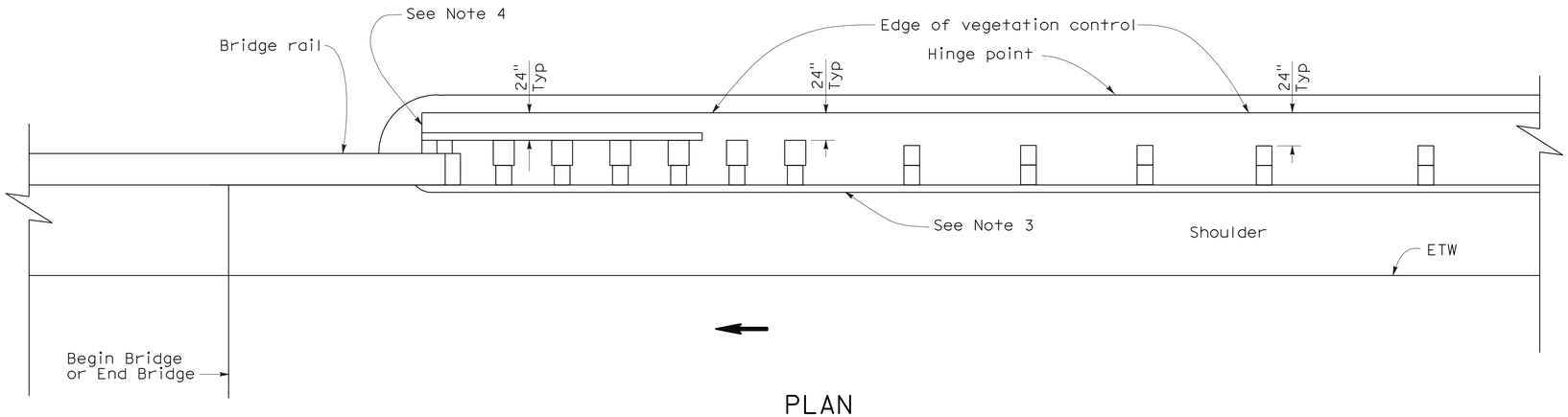

PLAN

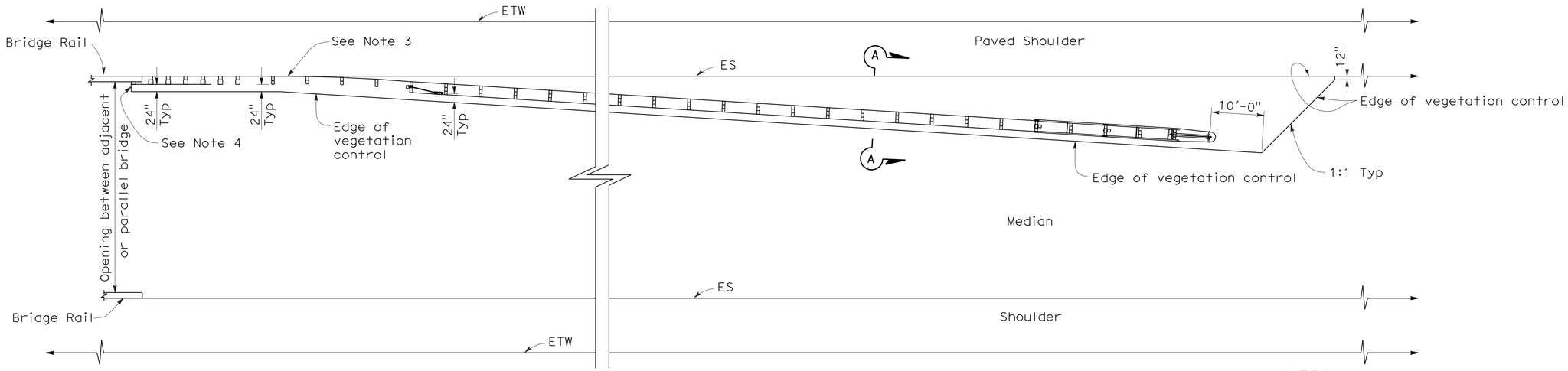

PLAN

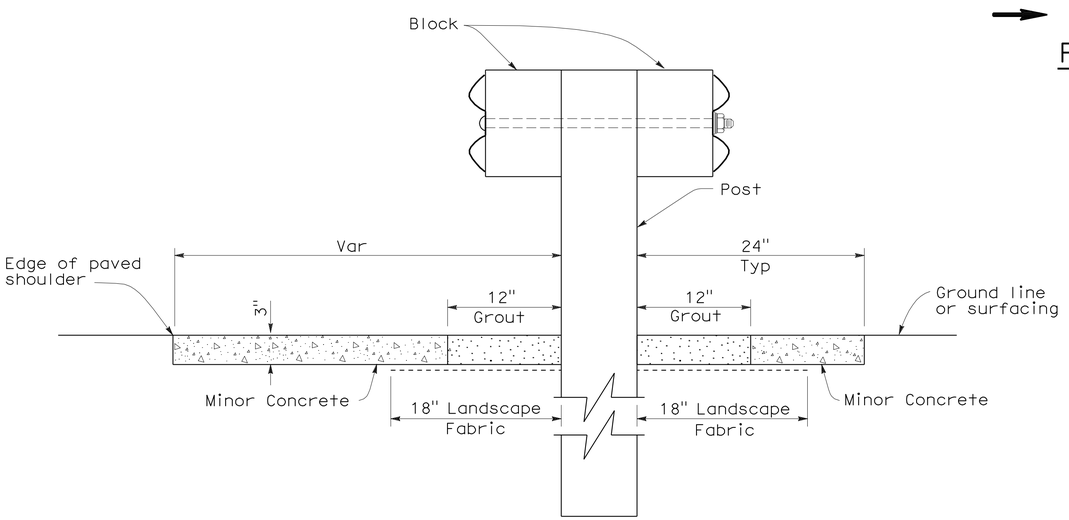

SECTION A-A

NOTES:

1. See New Standard Plan NSP A77C5 for additional vegetation control details.
2. Where the distance between back of post and hinge point is less than 24", vegetation control to be constructed flush with the back edge of the post.
3. Where dike is constructed under railing, construct vegetation control to back edge of dike. Where paved shoulder is constructed within 24" in front of the post, construct vegetation control to the edge of paved shoulder.
4. End vegetation control at end of backside rail element.
5. Direction of adjacent traffic indicated by ←.

STATE OF CALIFORNIA
DEPARTMENT OF TRANSPORTATION

METAL BEAM GUARD RAILING TYPICAL VEGETATION CONTROL AT STRUCTURE APPROACH AND DEPARTURE

NO SCALE

NSP A77C7 DATED OCTOBER 20, 2006 SUPPLEMENTS THE STANDARD PLANS BOOK DATED MAY 2006.

NEW STANDARD PLAN NSP A77C7

2006 NEW STANDARD PLAN NSP A77C7

7-17-06

DIST	COUNTY	ROUTE	POST MILES TOTAL PROJECT	SHEET NO.	TOTAL SHEETS
04	Ala	580	R8.4/R14.6	661	853

Randell D. Hiatt
REGISTERED CIVIL ENGINEER

October 20, 2006
PLANS APPROVAL DATE

REGISTERED PROFESSIONAL ENGINEER
Randell D. Hiatt
No. C50200
Exp. 6-30-07
CIVIL
STATE OF CALIFORNIA

The State of California or its officers or agents shall not be responsible for the accuracy or completeness of electronic copies of this plan sheet.

To accompany plans dated 5-14-12

NOTES:

1. See New Standard Plan NSP A77C5 for additional vegetation control details.
2. Where the distance between back of post and hinge point is less than 24", vegetation control to be constructed flush with the back edge of the post.
3. Where dike is constructed under railing, construct vegetation control to back edge of dike. Where paved shoulder is constructed within 24" in front of the post, construct vegetation control to the edge of paved shoulder.
4. Direction of adjacent traffic indicated by ←.

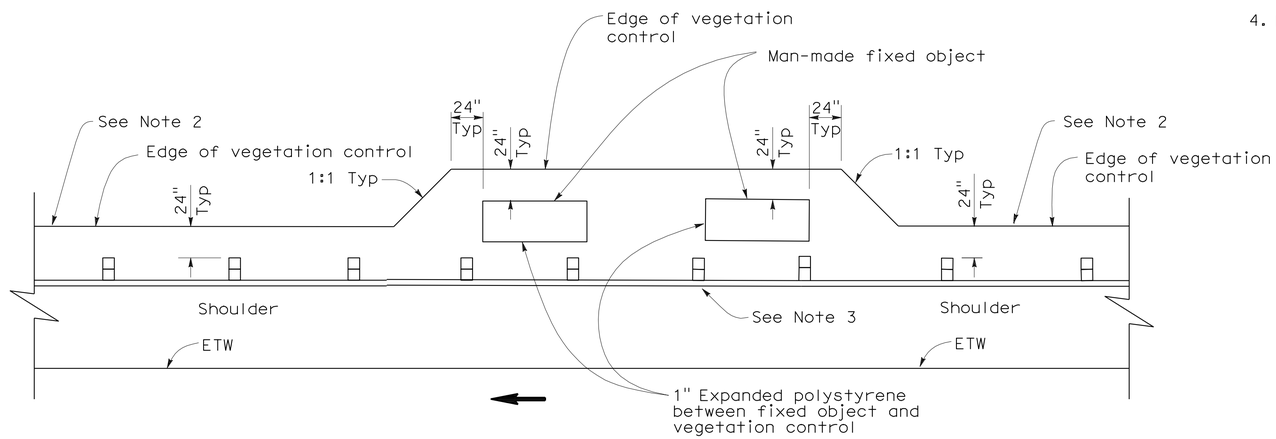

PLAN

FIXED OBJECT(S) ON SHOULDER

STATE OF CALIFORNIA
DEPARTMENT OF TRANSPORTATION

METAL BEAM GUARD RAILING TYPICAL VEGETATION CONTROL AT FIXED OBJECT

NO SCALE

NSP A77C8 DATED OCTOBER 20, 2006 SUPPLEMENTS THE STANDARD PLANS BOOK DATED MAY 2006.

NEW STANDARD PLAN NSP A77C8

2006 NEW STANDARD PLAN NSP A77C8

7-17-06

DIST	COUNTY	ROUTE	POST MILES TOTAL PROJECT	SHEET NO.	TOTAL SHEETS
04	Ala	580	R8.4/R14.6	662	853

Randell D. Hiatt
REGISTERED CIVIL ENGINEER

October 20, 2006
PLANS APPROVAL DATE

REGISTERED PROFESSIONAL ENGINEER
Randell D. Hiatt
No. C50200
Exp. 6-30-07
CIVIL
STATE OF CALIFORNIA

The State of California or its officers or agents shall not be responsible for the accuracy or completeness of electronic copies of this plan sheet.

To accompany plans dated 5-14-12

NOTES:

1. See New Standard Plan NSP A77C5 for additional vegetation control details.
2. Where dike is constructed under railing, construct vegetation control to back edge of dike. Where paved shoulder is constructed within 24" in front of the post, construct vegetation control to the edge of paved shoulder.
3. Direction of adjacent traffic indicated by ← .

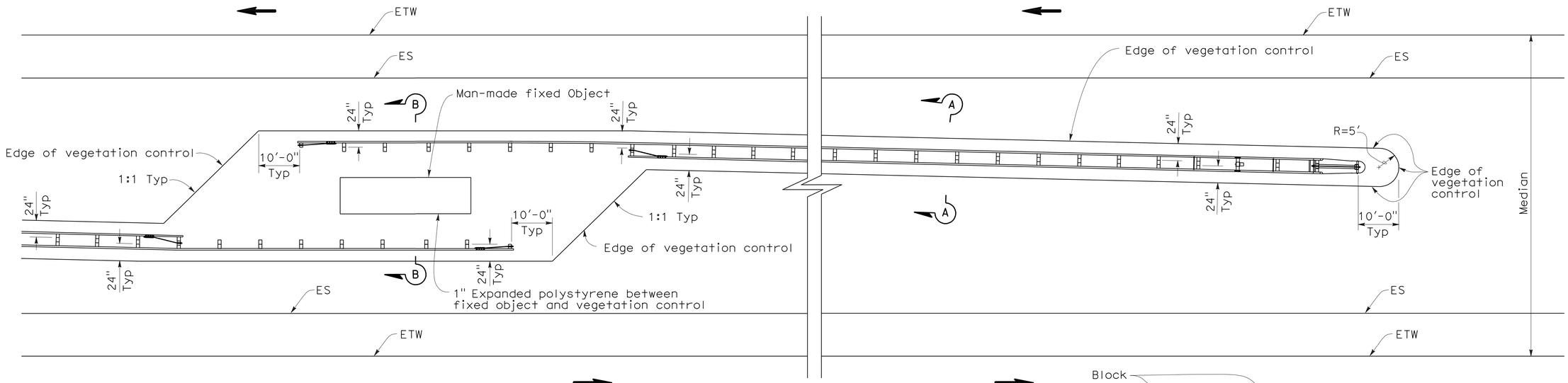

PLAN

FIXED OBJECT(S) IN MEDIAN

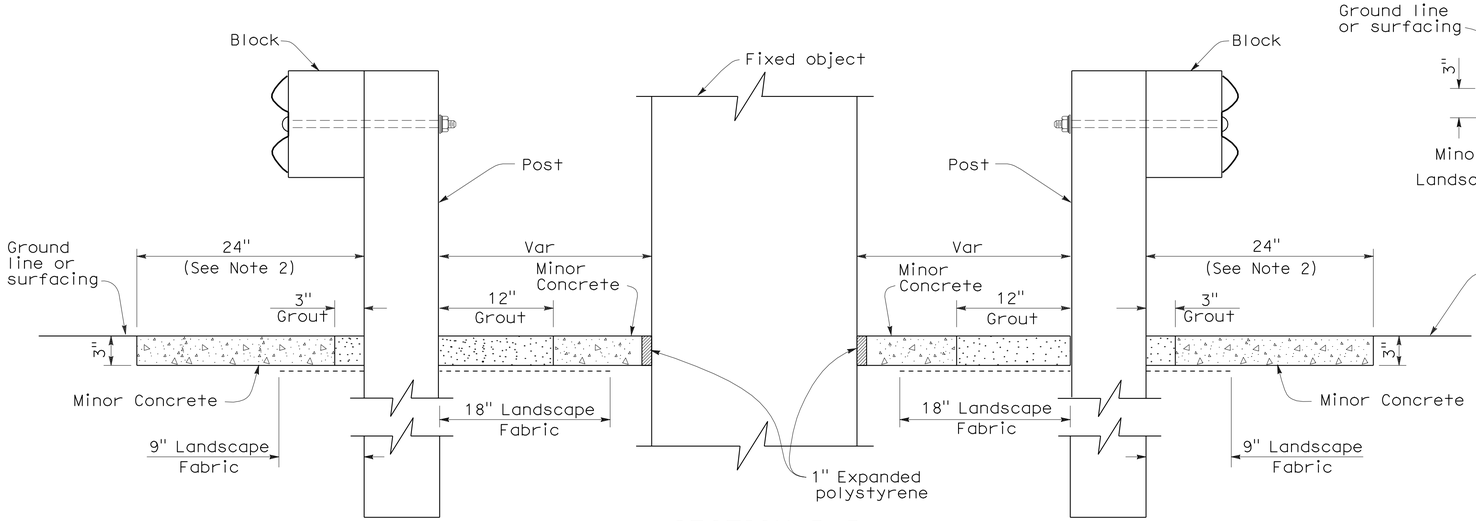

SECTION B-B

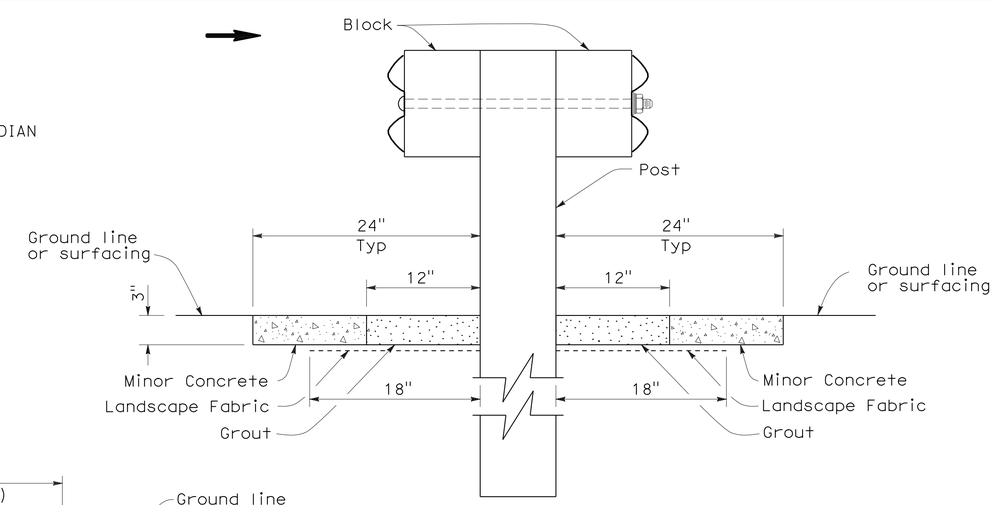

SECTION A-A

STATE OF CALIFORNIA
DEPARTMENT OF TRANSPORTATION

METAL BEAM GUARD RAILING TYPICAL VEGETATION CONTROL AT FIXED OBJECT

NO SCALE

NSP A77C9 DATED OCTOBER 20, 2006 SUPPLEMENTS THE STANDARD PLANS BOOK DATED MAY 2006.

NEW STANDARD PLAN NSP A77C9

2006 NEW STANDARD PLAN NSP A77C9

7-17-06

DIST	COUNTY	ROUTE	POST MILES TOTAL PROJECT	SHEET NO.	TOTAL SHEETS
04	Ala	580	R8.4/R14.6	663	853

Randell D. Hiatt
REGISTERED CIVIL ENGINEER

October 20, 2006
PLANS APPROVAL DATE

REGISTERED PROFESSIONAL ENGINEER
Randell D. Hiatt
No. C50200
Exp. 6-30-07
CIVIL
STATE OF CALIFORNIA

The State of California or its officers or agents shall not be responsible for the accuracy or completeness of electronic copies of this plan sheet.

To accompany plans dated 5-14-12

NOTES:

1. See New Standard Plan NSP A77C5 for additional vegetation control details.
2. Where dike is constructed under railing, construct vegetation control to back edge of dike. Where paved shoulder is constructed within 24" in front of the post, construct vegetation control to the edge of paved shoulder.
3. Direction of adjacent traffic indicated by ←.

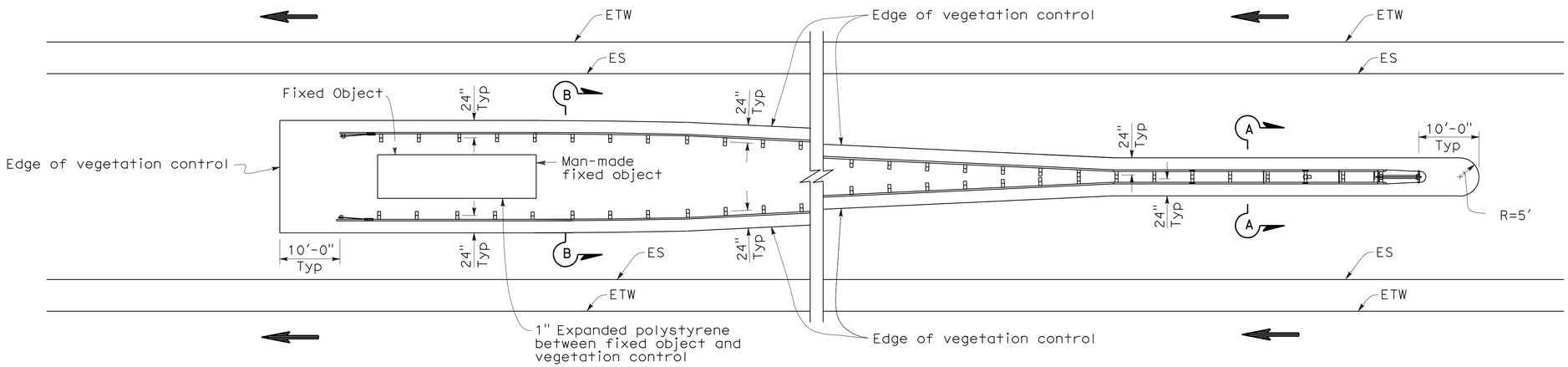

PLAN

FIXED OBJECT(S) BETWEEN SEPARATE ROADBEDS
(ONE-WAY TRAFFIC)

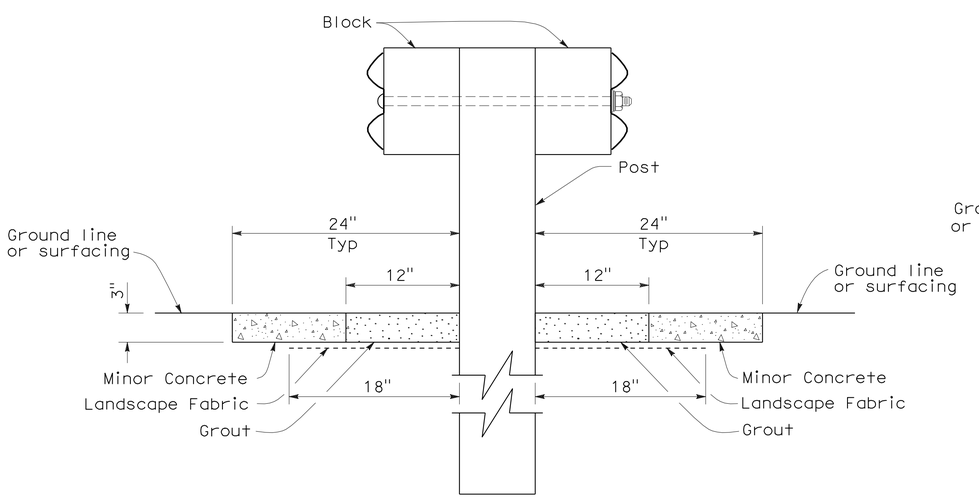

SECTION A-A

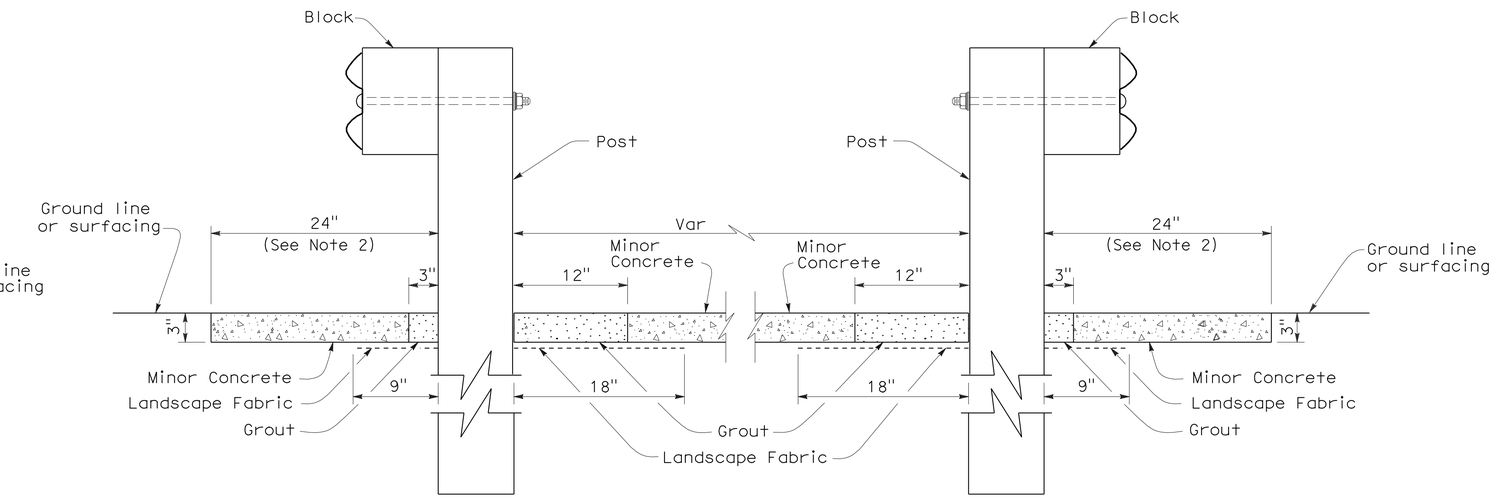

SECTION B-B

STATE OF CALIFORNIA
DEPARTMENT OF TRANSPORTATION

METAL BEAM GUARD RAILING TYPICAL VEGETATION CONTROL AT FIXED OBJECT

NO SCALE

NSP A77C10 DATED OCTOBER 20, 2006 SUPPLEMENTS THE STANDARD PLANS BOOK DATED MAY 2006.

NEW STANDARD PLAN NSP A77C10

2006 NEW STANDARD PLAN NSP A77C10

7-17-06

DIST	COUNTY	ROUTE	POST MILES TOTAL PROJECT	SHEET NO.	TOTAL SHEETS
04	Ala	580	R8.4/R14.6	664	853

Randell D. Hiatt
REGISTERED CIVIL ENGINEER

June 6, 2008
PLANS APPROVAL DATE

REGISTERED PROFESSIONAL ENGINEER
Randell D. Hiatt
No. C50200
Exp. 6-30-09
CIVIL
STATE OF CALIFORNIA

The State of California or its officers or agents shall not be responsible for the accuracy or completeness of electronic copies of this plan sheet.

To accompany plans dated 5-14-12

2006 REVISED STANDARD PLAN RSP A77F1

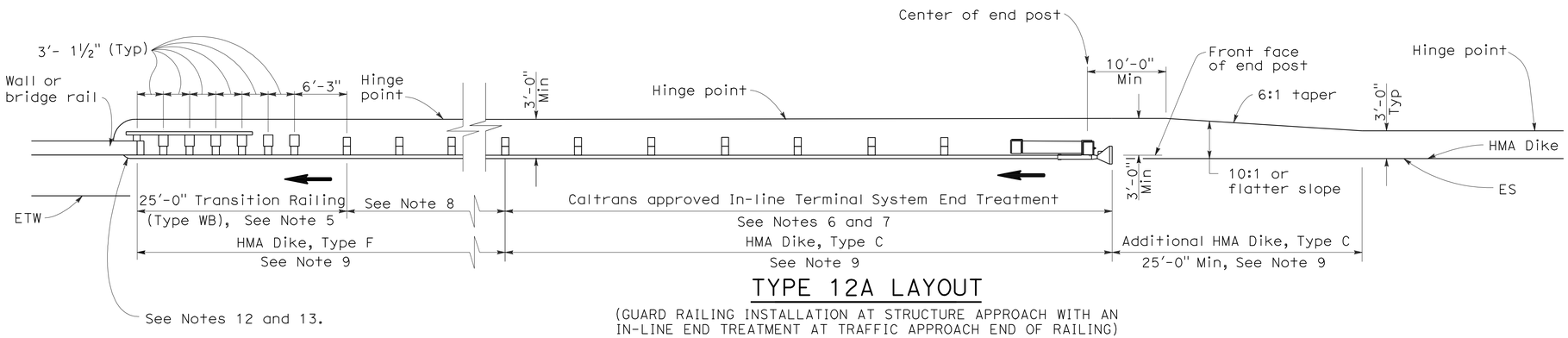

TYPE 12A LAYOUT

(GUARD RAILING INSTALLATION AT STRUCTURE APPROACH WITH AN IN-LINE END TREATMENT AT TRAFFIC APPROACH END OF RAILING)
See Notes 10

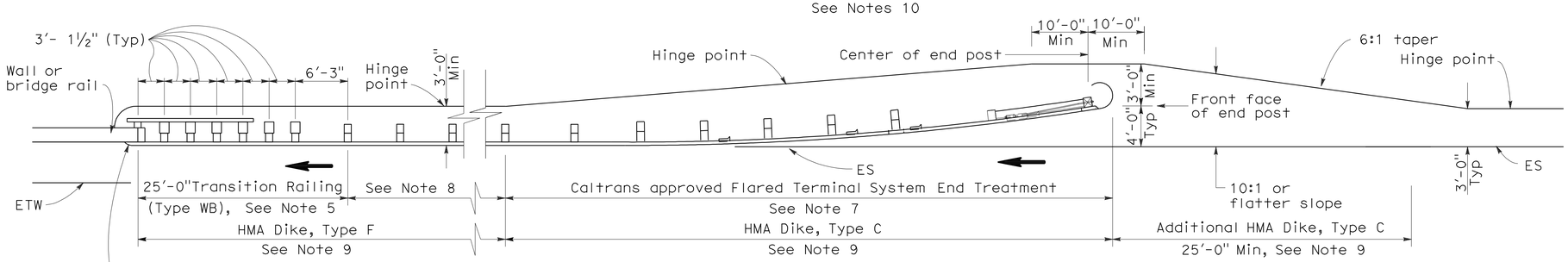

TYPE 12B LAYOUT

(GUARD RAILING INSTALLATION AT STRUCTURE APPROACH WITH A FLARED END TREATMENT AT TRAFFIC APPROACH END OF RAILING)
See Notes 10

NOTES:

1. Line post, blocks and hardware to be used are shown on Standard Plans A77A1, A77A2, A77B1, A77C1 and A77C2.
2. Guard rail post spacing to be 6'-3" center to center, except as otherwise noted.
3. Except as noted, line posts are 6" x 8" x 6'-0" wood with 6" x 8" x 1'-2" wood blocks. W6 x 9 steel posts, 6'-0" in length, with 6" x 8" x 1'-2" notched wood blocks or plastic blocks may be used for 6" x 8" x 6'-0" wood posts with 6" x 8" x 1'-2" wood blocks where applicable and when specified.
4. Direction of adjacent traffic indicated by ➡.
5. For Transition Railing (Type WB) details for Types 12A and 12B Layouts, see Standard Plan A77J4.
6. In-line Terminal System End Treatments are used where site conditions will not accommodate a flared end treatment.
7. The type of terminal system end treatment to be used will be shown on the Project Plans.
8. Dependent on site conditions (embankment height, side slopes, or other fixed objects), it may be advisable to construct additional guard railing (a length equal to multiples of 12'-6" with 6'-3" post spacing) between the transition railing and end treatment.
9. Where placement of dike is required with guard railing installations, see Revised Standard Plan RSP A77C4 for dike positioning details.
10. Type 12A or Type 12B Layouts are typically used:
    a. To the right of approaching traffic, at the end of a structure, on two-lane conventional highway where the roadbed width across the structure is less than 40 feet.
    b. To the left of approaching traffic, at the end of a structure, on two-lane conventional highway where the roadbed width across the structure is less than 40 feet.
    c. To the right of approaching traffic at the end of each structure on multilane freeways or expressways with separate adjacent or parallel bridges.
    d. To the right of approaching traffic at the end of the structure on multilane freeways or expressways with decked median on the bridge.
11. See Revised Standard Plan RSP A77F3 for typical layout used left of approaching traffic at the ends of each structure on multilane freeways or expressways with separate adjacent or parallel bridges.
12. For additional details of typical connections to bridge rail, see Connection Detail AA on Revised Standard Plans RSP A77J1 and RSP A77J2 and Connection Detail FF on Standard Plans A77K1 and A77K2.
13. For additional details of a typical connection to walls or abutments, see Standard Plan A77J3.

STATE OF CALIFORNIA
DEPARTMENT OF TRANSPORTATION

METAL BEAM GUARD RAILING TYPICAL LAYOUTS FOR STRUCTURE APPROACH

NO SCALE

RSP A77F1 DATED JUNE 6, 2008 SUPERSEDES STANDARD PLAN A77F1
DATED MAY 1, 2006 - PAGE 54 OF THE STANDARD PLANS BOOK DATED MAY 2006.

REVISED STANDARD PLAN RSP A77F1

12-10-07

Dist	COUNTY	ROUTE	POST MILES TOTAL PROJECT	SHEET No.	TOTAL SHEETS
04	Ala	580	R8.4/R14.6	665	853

Randell D. Hiatt
REGISTERED CIVIL ENGINEER

May 20, 2011
PLANS APPROVAL DATE

REGISTERED PROFESSIONAL ENGINEER
Randell D. Hiatt
No. C50200
Exp. 6-30-11
CIVIL
STATE OF CALIFORNIA

The State of California or its officers or agents shall not be responsible for the accuracy or completeness of electronic copies of this plan sheet.

To accompany plans dated 5-14-12

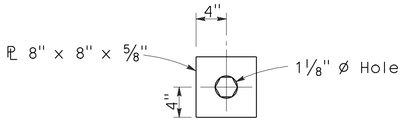

DETAIL A
CABLE CONNECTION
END PLATE

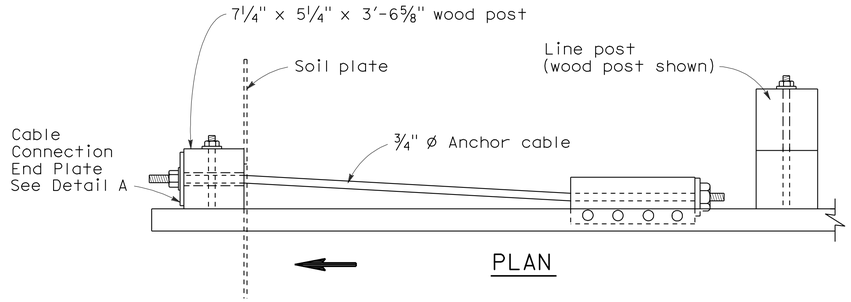

PLAN

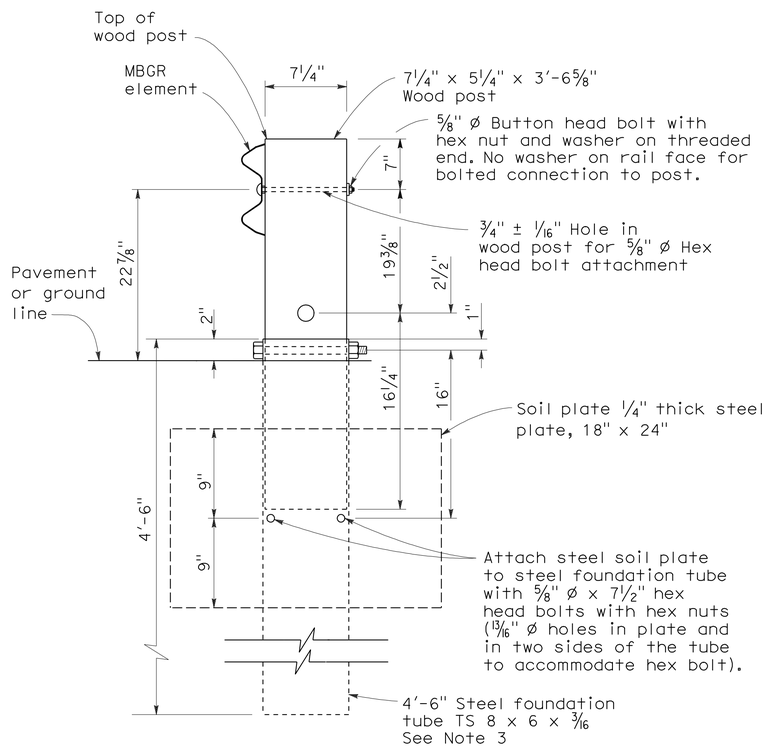

SECTION A-A

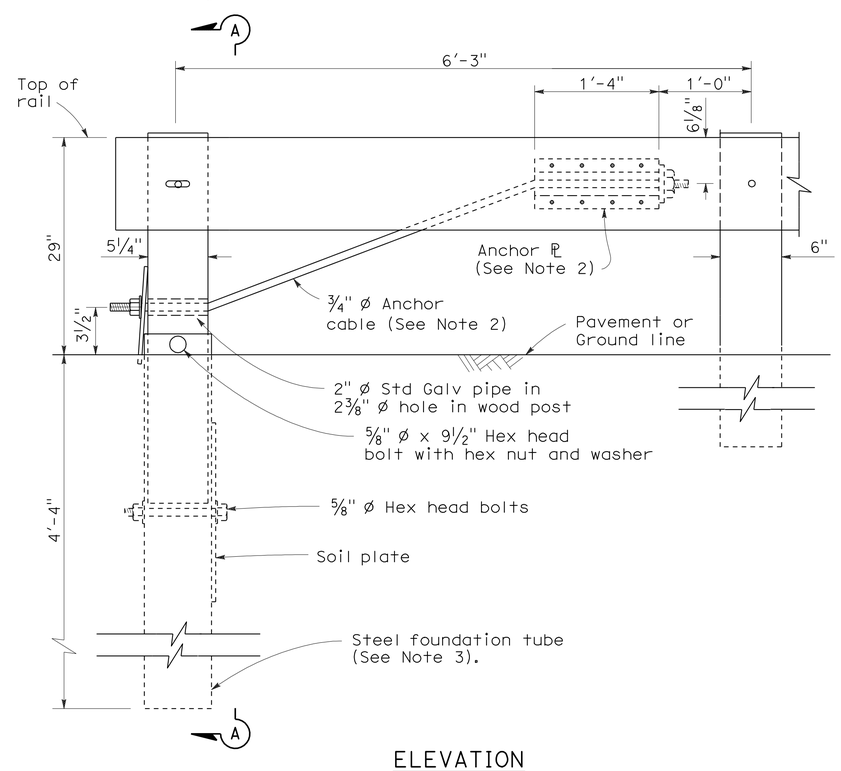

ELEVATION
END ANCHOR
ASSEMBLY (TYPE SFT)
See Note 1

NOTES:

1. See the A77E, A77F and A77G series of Standard Plans for typical use of End Anchor Assembly (Type SFT).
2. For details of the anchor plate and 3/4" cable, see Standard Plan A77H3.
3. A 6'-0" length steel foundation tube, TS 8 x 6 x 3/16, without a soil plate, may be furnished and installed in place of the 4'-6" length steel foundation tube and soil plate shown. Minimum embedment of the 6'-0" length tube shall be 5'-9". A 5/8" Ø hex head bolt and nut shall be installed in the hole in the 6'-0" length tube to keep the wood post from dropping into the tube.
4. Direction of traffic indicated by ⟹.
5. Install line post, steel foundation tube and soil plate in soil.

STATE OF CALIFORNIA
DEPARTMENT OF TRANSPORTATION

METAL RAILING END ANCHOR ASSEMBLY (TYPE SFT)

NO SCALE

RSP A77H1 DATED MAY 20, 2011 SUPERSEDES STANDARD PLAN A77H1
DATED MAY 1, 2006 - PAGE 67 OF THE STANDARD PLANS BOOK DATED MAY 2006.

REVISED STANDARD PLAN RSP A77H1

2006 REVISED STANDARD PLAN RSP A77H1

2-10-07

Dist	COUNTY	ROUTE	POST MILES TOTAL PROJECT	SHEET No.	TOTAL SHEETS
04	Ala	580	R8.4/R14.6	666	853

Randell D. Hiatt
REGISTERED CIVIL ENGINEER

May 20, 2011
PLANS APPROVAL DATE

REGISTERED PROFESSIONAL ENGINEER
Randell D. Hiatt
No. C50200
Exp. 6-30-11
CIVIL
STATE OF CALIFORNIA

The State of California or its officers or agents shall not be responsible for the accuracy or completeness of electronic copies of this plan sheet.

To accompany plans dated 5-14-12

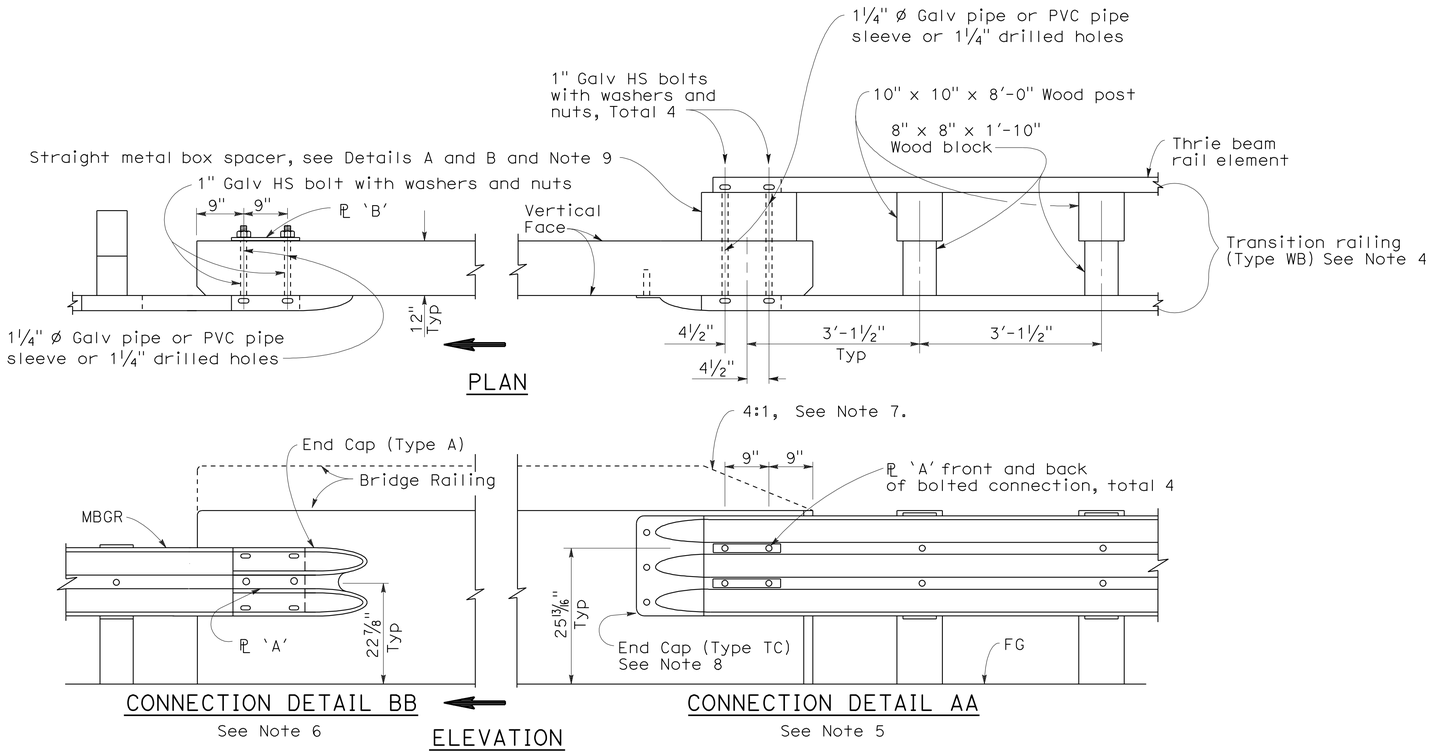

GUARD RAILING CONNECTION TO BRIDGE RAILING WITHOUT SIDEWALK

NOTES:

1. See Revised Standard Plan RSP A77J2 for additional connection details to bridges without sidewalks.
2. Additional details of posts, blocks and hardware are shown on Standard Plan A77B1, A77C1 and A77C2.
3. Direction of adjacent traffic indicated by ➡.
4. For additional details of Transition Railing (Type WB), see Standard Plan A77J4. Transition Railing (Type WB) transitions the 12 gage w-beam standard railing section of guard railing to a heavier gage nested thrie beam railing section which is connected to the concrete bridge railing.
5. For typical use of Connection Detail AA, see Layout Types 12A and 12B on Revised Standard Plan RSP A77F1, Layout Types 12C and 12D on Standard Plan A77F2, and Layout Type 12E on Revised Standard Plan RSP A77F3.
6. For typical use of Connection Detail BB, see Layout Type 12D (structure departure railing connection) on Standard Plan A77F2 and Layout Type 12DD on Standard Plan A77F5.
7. Where the height of the bridge railing exceeds the height of the thrie beam railing by more than 1" at Connection Detail AA, taper the top of the end of the bridge railing at 4:1 to match the top elevation of the thrie beam rail.
8. For details of End Cap (Type TC), see Standard Plan A77J4.
9. See Standard Plan A77J4 for additional details regarding depth dimension for straight metal box spacer.

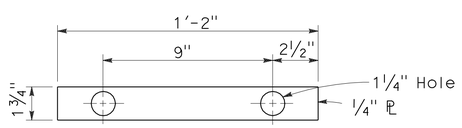

PLATE 'A'

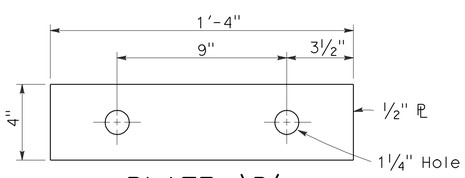

PLATE 'B'
(For backside of connection BB)

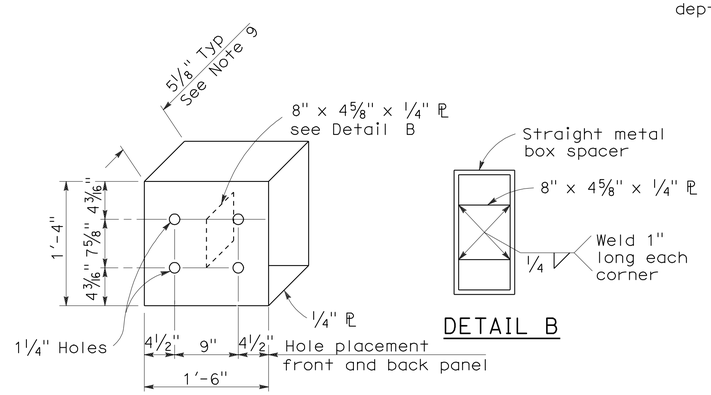

DETAIL B

DETAIL A

STRAIGHT METAL BOX SPACER

STATE OF CALIFORNIA
DEPARTMENT OF TRANSPORTATION

METAL BEAM GUARD RAILING CONNECTIONS TO BRIDGE RAILINGS WITHOUT SIDEWALKS DETAILS No.1

NO SCALE

RSP A77J1 DATED MAY 20, 2011 SUPERSEDES RSP A77J1 DATED JUNE 6, 2008 AND STANDARD PLAN A77J1 DATED MAY 1, 2006 - PAGE 72 OF THE STANDARD PLANS BOOK DATED MAY 2006.

REVISED STANDARD PLAN RSP A77J1

2006 REVISED STANDARD PLAN RSP A77J1

3-10-11

DIST	COUNTY	ROUTE	POST MILES TOTAL PROJECT	SHEET NO.	TOTAL SHEETS
04	Ala	580	R8.4/R14.6	667	853

Randell D. Hiatt
REGISTERED CIVIL ENGINEER

June 6, 2008
PLANS APPROVAL DATE

REGISTERED PROFESSIONAL ENGINEER
Randell D. Hiatt
No. C50200
Exp. 6-30-09
CIVIL
STATE OF CALIFORNIA

The State of California or its officers or agents shall not be responsible for the accuracy or completeness of electronic copies of this plan sheet.

To accompany plans dated 5-14-12

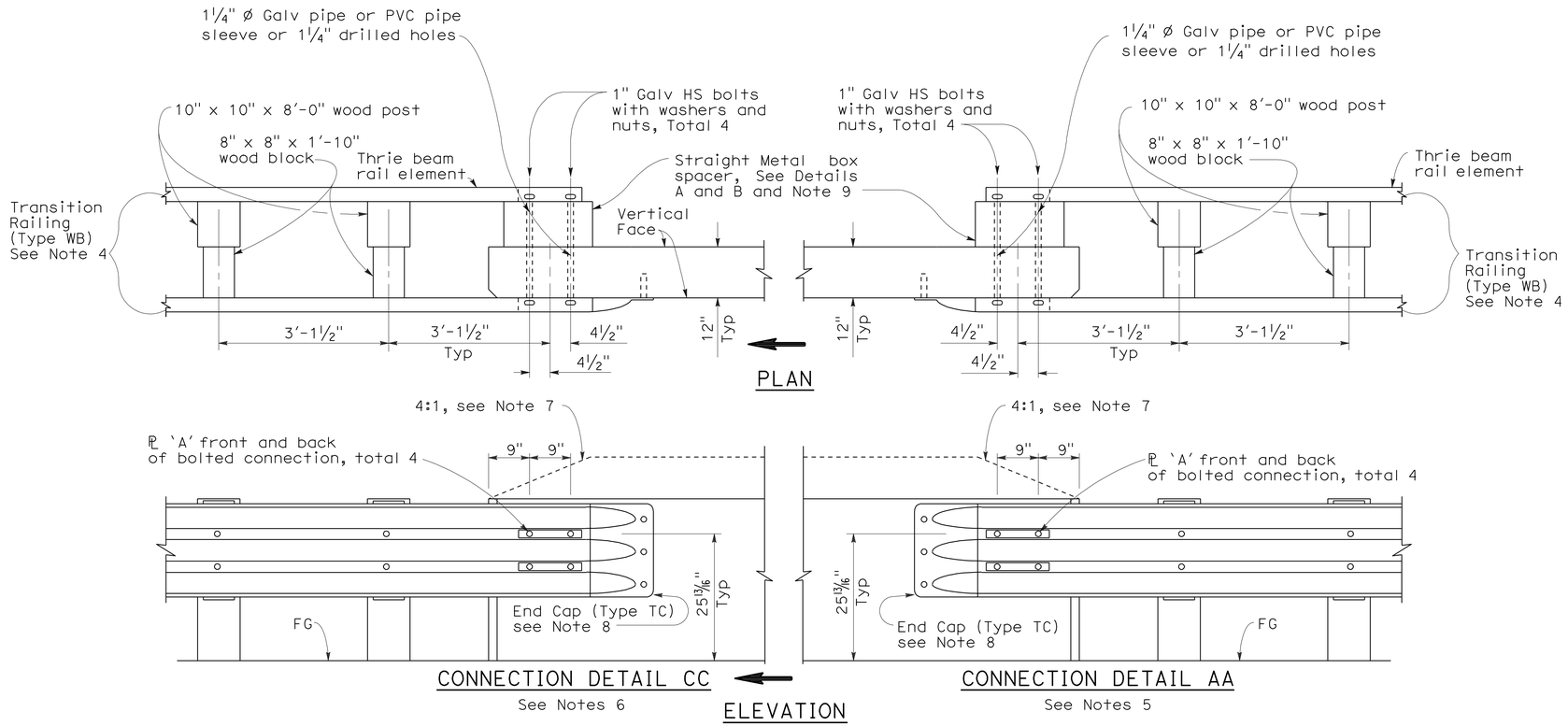

GUARD RAILING CONNECTION TO BRIDGE RAILING WITHOUT SIDEWALK

NOTES:

1. See Revised Standard Plan RSP A77J1 for additional connection details to bridges without sidewalks.
2. Additional details of posts, blocks and hardware are shown on Standard Plan A77B1, A77C1 and A77C2.
3. Direction of adjacent traffic indicated by ⟹.
4. For additional details of Transition Railing (Type WB), see Standard Plan A77J4. Transition Railing (Type WB) transitions the 12 gage w-beam standard railing section of guard railing to a heavier gage nested thrie beam railing section which is connected to the concrete bridge railing.
5. For typical use of Connection Detail AA, see Layout Types 12A and 12B on Revised Standard Plan RSP A77F1, Layout Types 12C and 12D on Standard Plan A77F2, and Layout Type 12E on Revised Standard Plan RSP A77F3.
6. For typical use of Connection Detail CC, see Layout Types 12AA and 12BB on Standard Plan A77F4 and Layout Type 12CC on Standard Plan A77F5.
7. Where the height of the bridge railing exceeds the height of the thrie beam railing by more than 1" at Connection Detail AA and connection Detail CC, taper the top of the end of the bridge railing at 4:1 to match the top elevation of the thrie beam railing.
8. For details of End Cap (Type TC), see Standard Plans A77J4.
9. See Standard Plans A77J4 for additional details regarding depth dimension for straight metal box spacer.

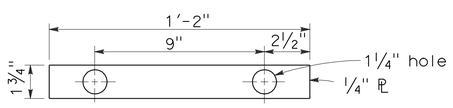

PLATE 'A'

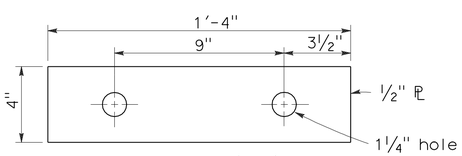

PLATE 'B'
(For backside of connection BB)

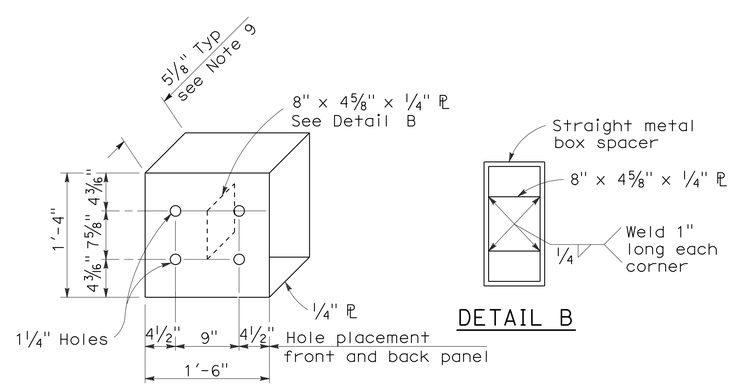

DETAIL A

DETAIL B

STRAIGHT METAL BOX SPACER

STATE OF CALIFORNIA
DEPARTMENT OF TRANSPORTATION

METAL BEAM GUARD RAILING CONNECTIONS TO BRIDGE RAILINGS WITHOUT SIDEWALKS DETAILS No.2

NO SCALE

RSP A77J2 DATED JUNE 6, 2008 SUPERSEDES STANDARD PLAN A77J2 DATED MAY 1, 2006 - PAGE 73 OF THE STANDARD PLANS BOOK DATED MAY 2006.

REVISED STANDARD PLAN RSP A77J2

2006 REVISED STANDARD PLAN RSP A77J2

12-10-07

Dist	COUNTY	ROUTE	POST MILES TOTAL PROJECT	SHEET No.	TOTAL SHEETS
04	Ala	580	R8.4/R14.6	668	853

Randell D. Hiatt
REGISTERED CIVIL ENGINEER

May 20, 2011
PLANS APPROVAL DATE

REGISTERED PROFESSIONAL ENGINEER
Randell D. Hiatt
No. C50200
Exp. 6-30-11
CIVIL
STATE OF CALIFORNIA

The State of California or its officers or agents shall not be responsible for the accuracy or completeness of electronic copies of this plan sheet.

To accompany plans dated 5-14-12

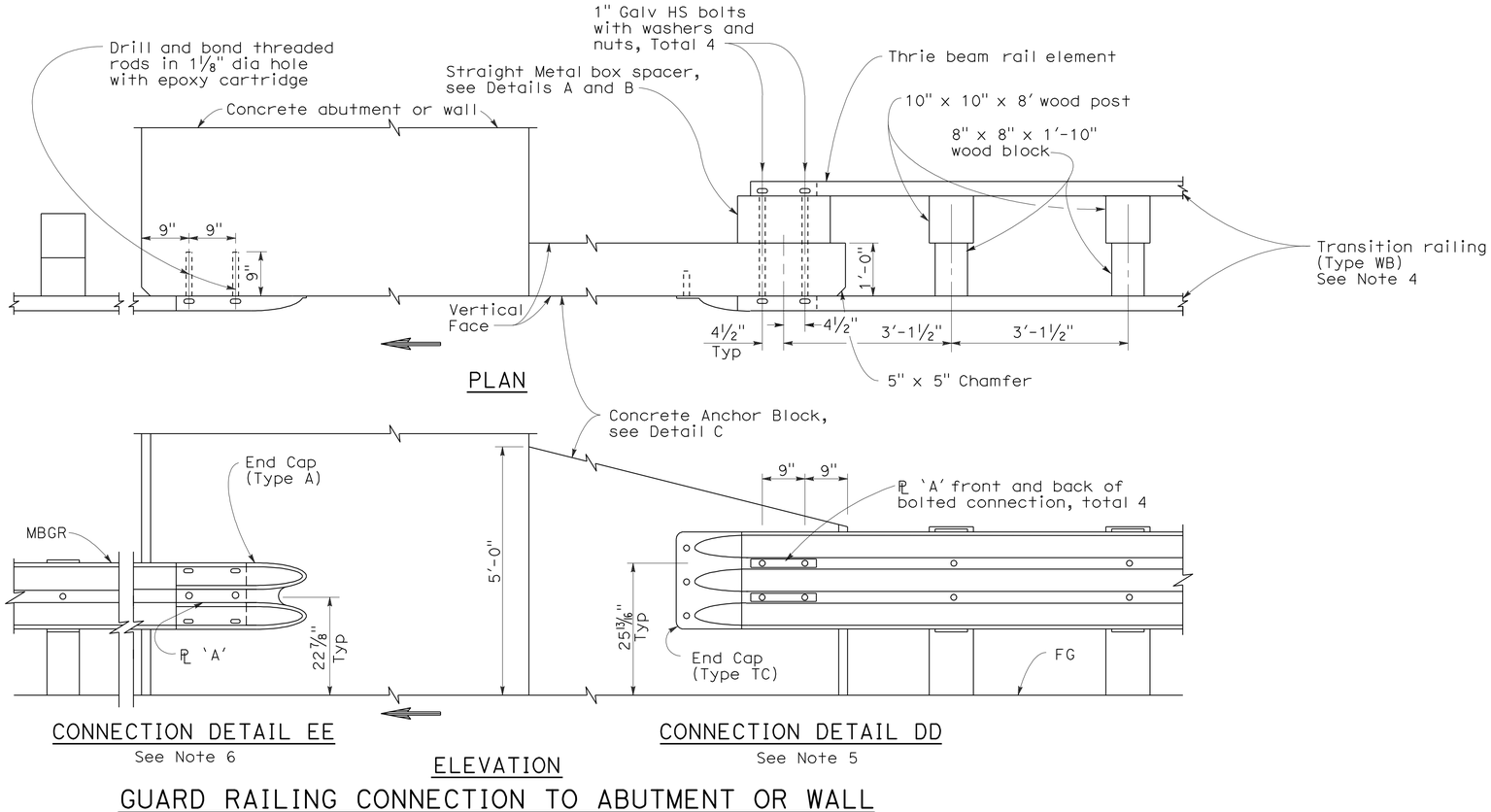

GUARD RAILING CONNECTION TO ABUTMENT OR WALL

NOTES:

1. These connection details apply to abutments and walls.
2. Additional details of posts, blocks and hardware are shown on Standard Plans A77B1, A77C1 and A77C2.
3. Direction of adjacent traffic indicated by ➡.
4. For additional details of Transition Railing (Type WB), see Standard Plan A77J4 Transition Railing (Type WB) transitions the 12 gage w-beam standard railing section of guard railing to a heavier gage nested thrie beam railing section which is connected to the concrete anchor block.
5. For typical use of Connection Details DD, See Layout Types 12A and 12B on Standard Plan A77F1 and Layout Types 12C and 12D on Standard Plan A77F2.
6. For typical use of Connection Detail EE, see Layout Type 12D on Standard Plan A77F2 and Layout Type 12DD on Standard Plan A77F5.

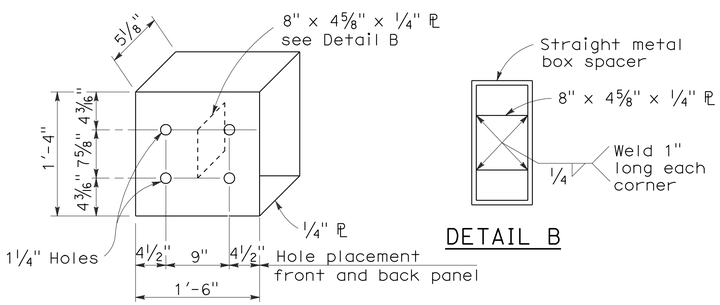

DETAIL A

STRAIGHT METAL BOX SPACER

DETAIL B

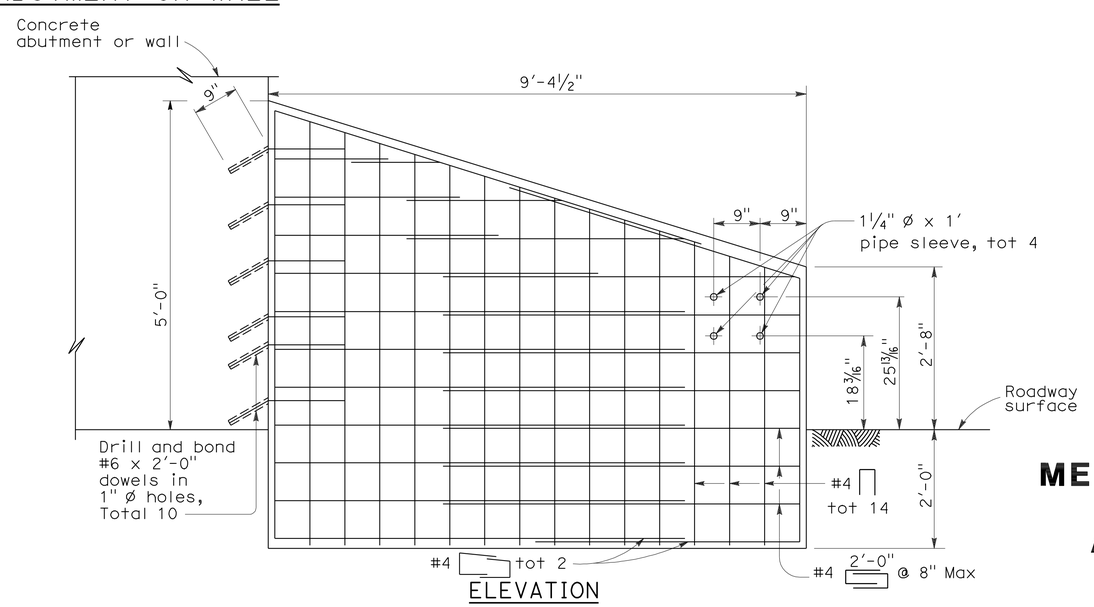

ELEVATION

ANCHOR BLOCK FOR TRANSITION RAILING CONNECTION

DETAIL C

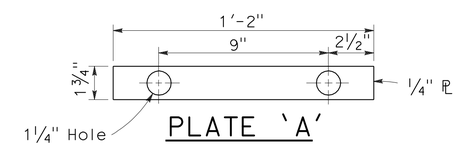

PLATE 'A'

STATE OF CALIFORNIA
DEPARTMENT OF TRANSPORTATION

METAL BEAM GUARD RAILING CONNECTIONS TO ABUTMENTS AND WALLS

NO SCALE

RSP A77J3 DATED MAY 20, 2011 SUPERSEDES STANDARD PLAN A77J3 DATED MAY 1, 2006 - PAGE 74 OF THE STANDARD PLANS BOOK DATED MAY 2006.

REVISED STANDARD PLAN RSP A77J3

2006 REVISED STANDARD PLAN RSP A77J3

3-10-11

Dist	COUNTY	ROUTE	POST MILES TOTAL PROJECT	SHEET No.	TOTAL SHEETS
04	Ala	580	R8.4/R14.6	669	853

Randell D. Hiatt
REGISTERED CIVIL ENGINEER

May 20, 2011
PLANS APPROVAL DATE

REGISTERED PROFESSIONAL ENGINEER Randell D. Hiatt No. C50200 Exp. 6-30-11 CIVIL STATE OF CALIFORNIA

To accompany plans dated 5-14-12

The State of California or its officers or agents shall not be responsible for the accuracy or completeness of electronic copies of this plan sheet.

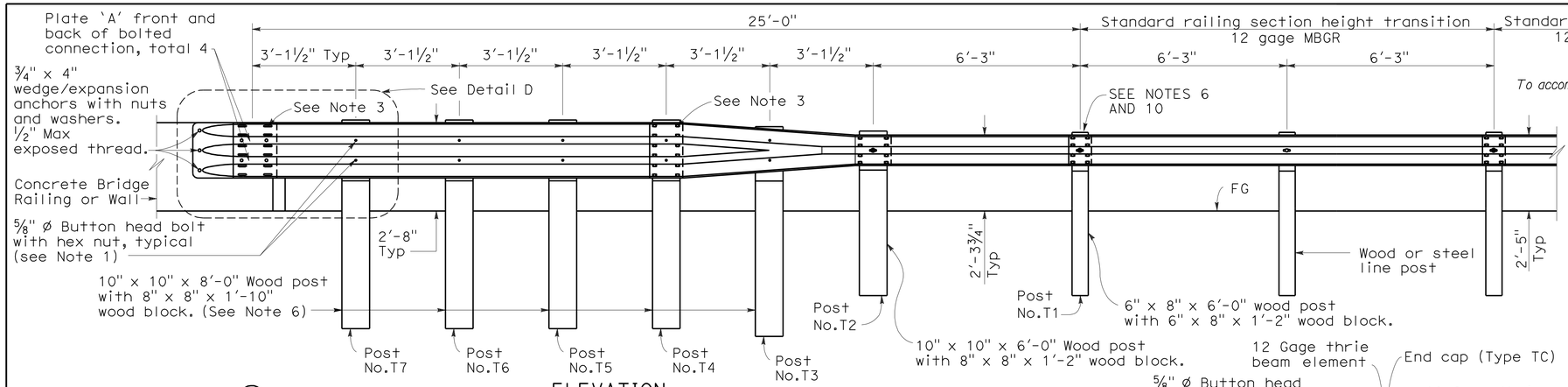

ELEVATION

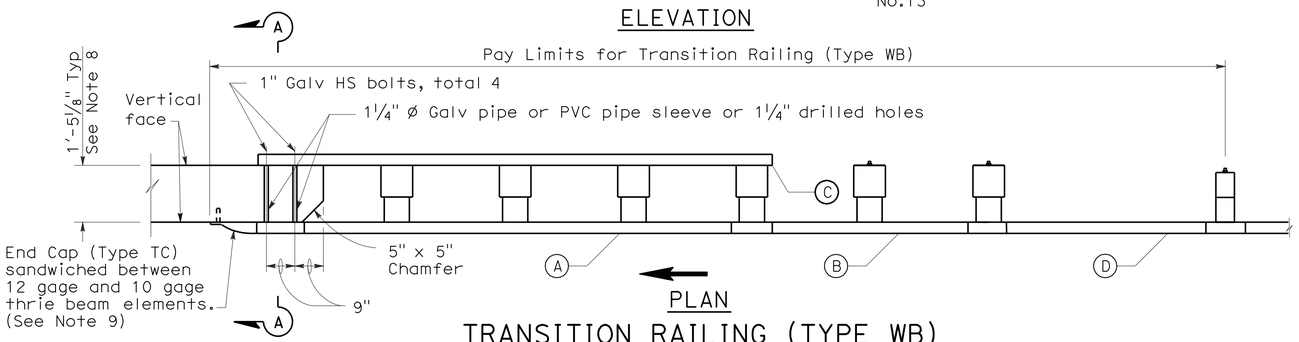

PLAN

TRANSITION RAILING (TYPE WB)

(No Blockout Attachment)

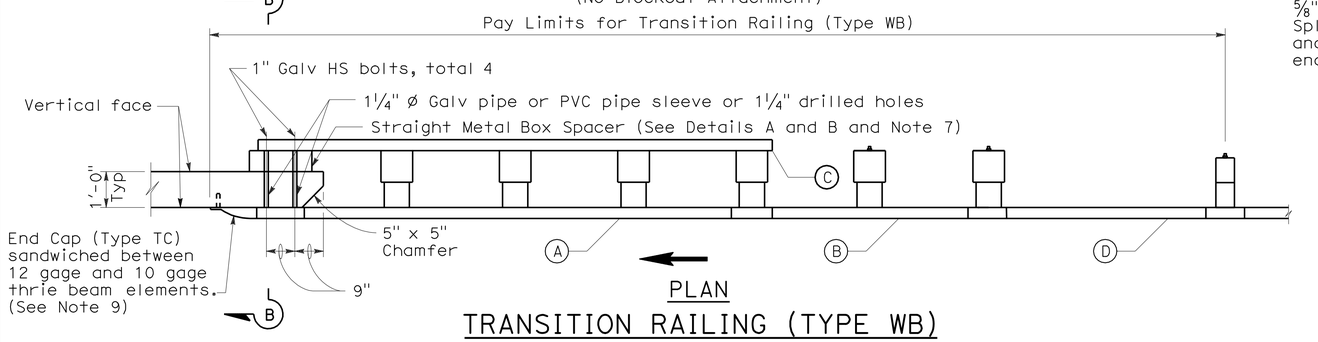

PLAN

TRANSITION RAILING (TYPE WB)

(Blockout Attachment)

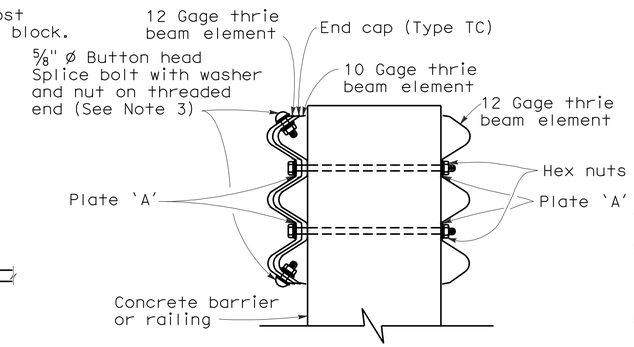

SECTION A-A

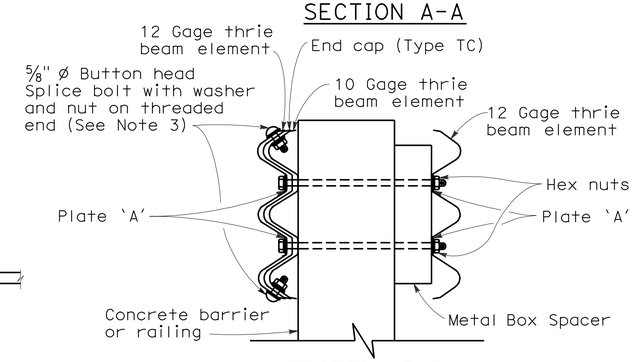

SECTION B-B

NOTES:

1. Use ⅝" ø Button head bolts and hex nuts for connections to posts. No washer on rail face for bolted connections to post.
2. The nested rail elements, end cap, and 'W' beam to thrie beam element may be spliced together prior to bolting the elements to the wood post and concrete barrier or railing.
3. Exterior splice bolt holes for rail element splices at Post No. T4 and the connection to the concrete barrier or railing shall be the standard 29/32" x 1⅛" slot size. Interior splice bolt holes at these locations may be increased up to 1¼" ø. Only the top 2 and the bottom 2 splice bolts with washers and nuts are required for rail splices at Post No. T4 and the connection to the concrete barrier or railing.
4. Direction of adjacent traffic indicated by ➡.
5. The top elevation of Posts No. T2 through No. T7 shall not project more than 1" above the top elevation of the rail element.
6. Typically, the railing connected to Transition Railing (Type WB) will be either standard railing section of metal beam guard railing with height transition ratio of 120:1 or an approved Caltrans end treatment attached to Post No. T1.
7. The depth of the metal box spacer varies from the 5⅛" to 1½" and is dependent on the width of the concrete railing or wall. The combined dimension for the depth of the metal box spacer plus the width of railing or wall is typically 17⅛". Where the space between the backside of the concrete railing or wall and the rear thrie beam element is less than 1½", metal plates similar to Plate 'A' are to be used as spacers.
8. Where the width of the concrete railing or wall is greater than 17⅛", wood blocks are to be used to fill the space created between the backside of Posts No. T4 through No. T7 and the rear thrie beam element. These wood blocks shall be 8" in width and 1'-2" in length. The dimension between the front thrie beam element and the rear thrie beam element is to match the width of the concrete railing or wall.
9. End cap may be installed over 12 gage and 10 gage thrie beam elements where transition railing is installed on the departure end of bridge railing.
10. Conform standard railing section height to 2'-3¾" at Post No. T1 using height transition ratio of 120:1.

LEGEND

(A) Nested thrie beam elements (one 12 gage element nested over one 10 gage element).

(B) One 10 gage "W" beam to thrie beam element.

(C) One 12 gage thrie beam element.

(D) One 10 gage "W" beam rail element (7'-3½" length)

10 gage = 0.135" thick

12 gage = 0.108" thick

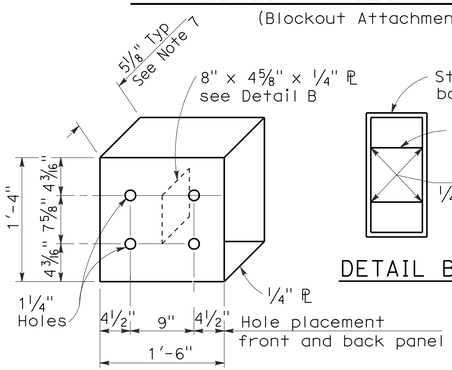

DETAIL A

STRAIGHT METAL BOX SPACER

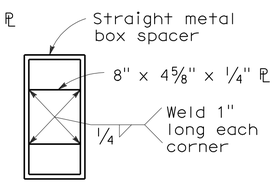

DETAIL B

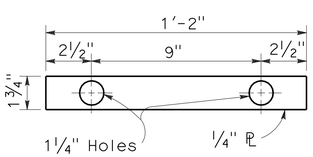

DETAIL C

PLATE 'A'

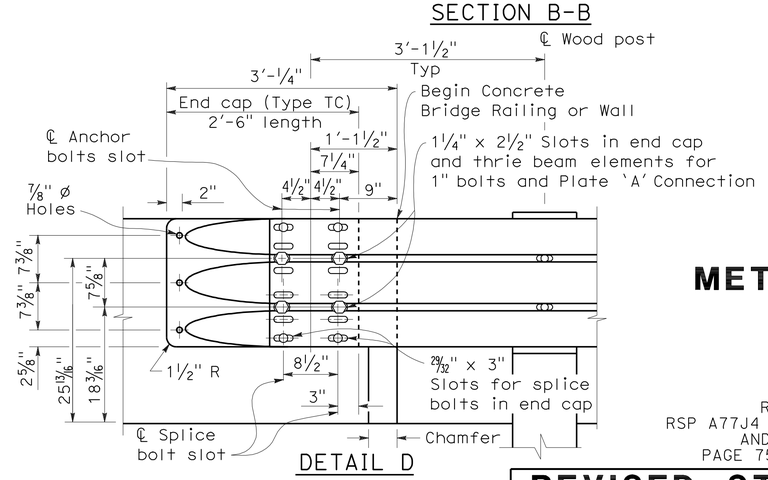

DETAIL D

STATE OF CALIFORNIA
DEPARTMENT OF TRANSPORTATION

METAL BEAM GUARD RAILING TRANSITION RAILING (TYPE WB)

NO SCALE

RSP A77J4 DATED MAY 20, 2011 SUPERSEDES
RSP A77J4 DATED JUNE 5, 2009, RSP A77J4 DATED JUNE 6, 2008
AND STANDARD PLAN A77J4 DATED MAY 1, 2006 -
PAGE 75 OF THE STANDARD PLANS BOOK DATED MAY 2006.

REVISED STANDARD PLAN RSP A77J4

2006 REVISED STANDARD PLAN RSP A77J4

DIST	COUNTY	ROUTE	POST MILES TOTAL PROJECT	SHEET NO.	TOTAL SHEETS
04	Ala	580	R8.4/R14.6	670	853

Randell D. Hiatt
REGISTERED CIVIL ENGINEER

October 20, 2006
PLANS APPROVAL DATE

REGISTERED PROFESSIONAL ENGINEER
Randell D. Hiatt
No. C50200
Exp. 6-30-07
CIVIL
STATE OF CALIFORNIA

The State of California or its officers or agents shall not be responsible for the accuracy or completeness of electronic copies of this plan sheet.

To accompany plans dated 5-14-12

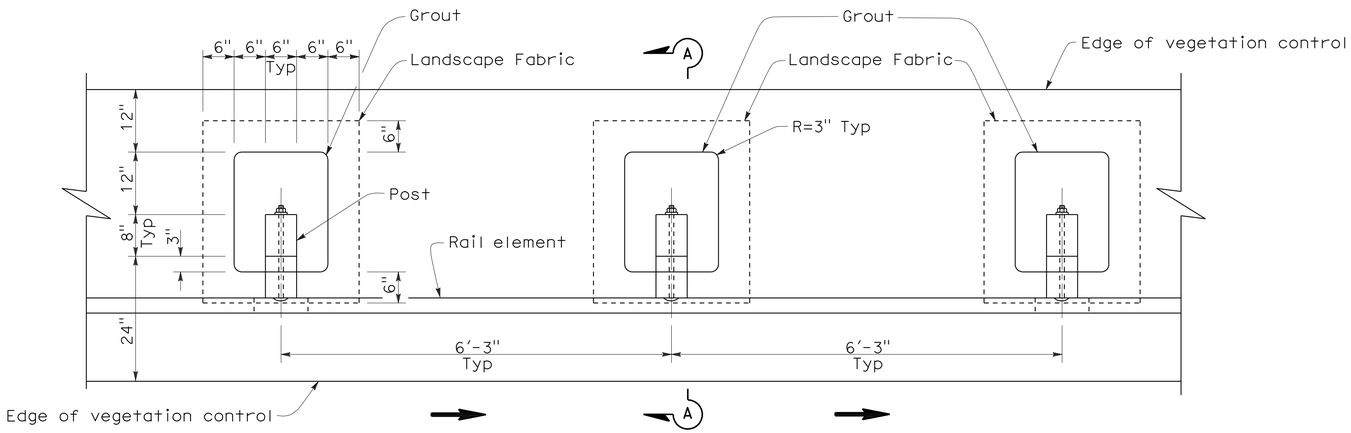

PLAN

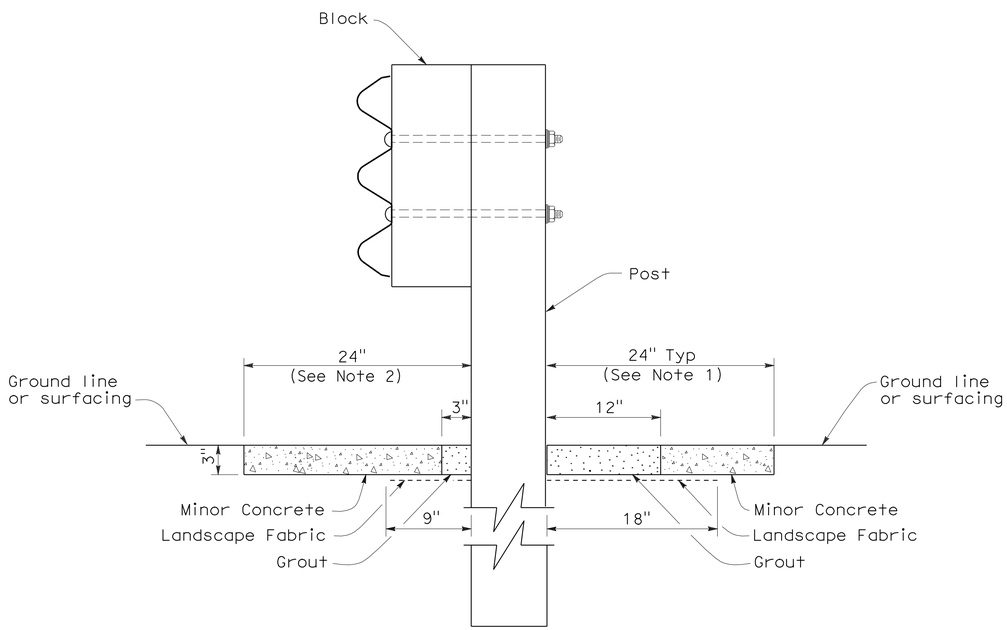

SECTION A-A

NOTES:

1. Where the distance between back of post and hinge point is less than 24", vegetation control to be constructed flush with the back edge of the post.
2. Where dike is constructed under barrier, construct vegetation control to back edge of dike. Where paved shoulder is constructed within 24" in front of the post, construct vegetation control to the edge of paved shoulder.
3. Direction of adjacent traffic indicated by ⟶.

STATE OF CALIFORNIA
DEPARTMENT OF TRANSPORTATION

SINGLE THRIE BEAM BARRIER TYPICAL VEGETATION CONTROL STANDARD BARRIER RAILING SECTION

NO SCALE

NSP A78C3 DATED OCTOBER 20, 2006 SUPPLEMENTS THE STANDARD PLANS BOOK DATED MAY 2006.

NEW STANDARD PLAN NSP A78C3

2006 NEW STANDARD PLAN NSP A78C3

7-17-06

DIST	COUNTY	ROUTE	POST MILES TOTAL PROJECT	SHEET NO.	TOTAL SHEETS
04	Ala	580	R8.4/R14.6	671	853

Randell D. Hiatt
REGISTERED CIVIL ENGINEER

October 20, 2006
PLANS APPROVAL DATE

REGISTERED PROFESSIONAL ENGINEER
Randell D. Hiatt
No. C50200
Exp. 6-30-07
CIVIL
STATE OF CALIFORNIA

The State of California or its officers or agents shall not be responsible for the accuracy or completeness of electronic copies of this plan sheet.

To accompany plans dated 5-14-12

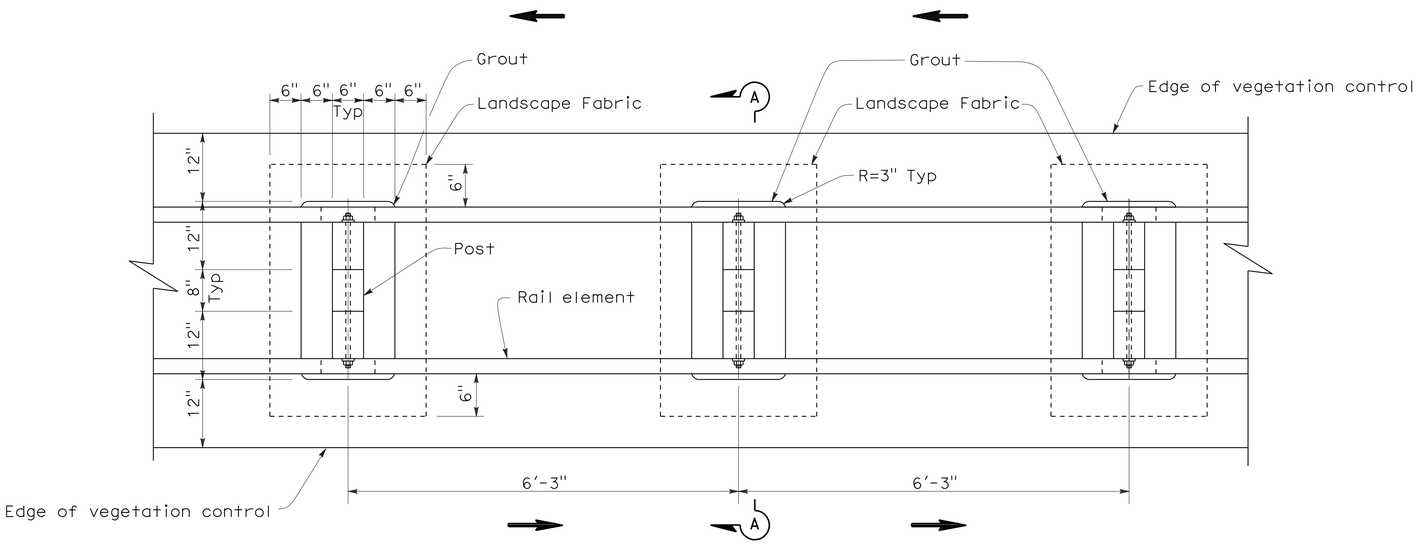

PLAN

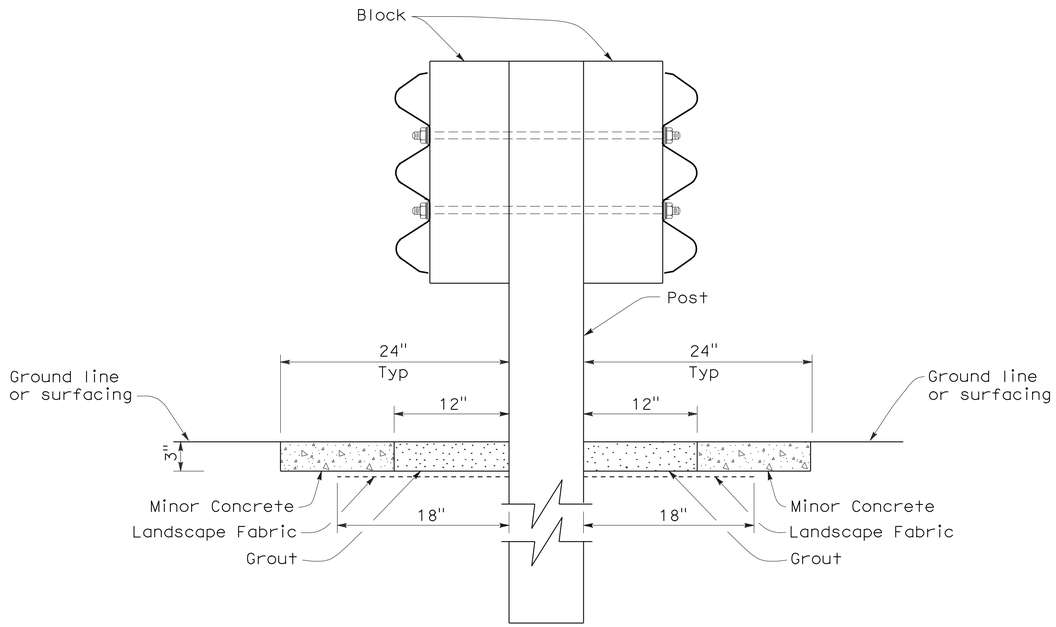

SECTION A-A

NOTE:

1. Direction of adjacent traffic indicated by ⟶.

STATE OF CALIFORNIA
DEPARTMENT OF TRANSPORTATION

DOUBLE THRIE BEAM BARRIER TYPICAL VEGETATION CONTROL STANDARD BARRIER RAILING SECTION

NO SCALE

NSP A78C4 DATED OCTOBER 20, 2006 SUPPLEMENTS THE STANDARD PLANS BOOK DATED MAY 2006.

NEW STANDARD PLAN NSP A78C4

2006 NEW STANDARD PLAN NSP A78C4

7-17-06

DIST	COUNTY	ROUTE	POST MILES TOTAL PROJECT	SHEET NO.	TOTAL SHEETS
04	Ala	580	R8.4/R14.6	672	853

Randell D. Hiatt
REGISTERED CIVIL ENGINEER

October 20, 2006
PLANS APPROVAL DATE

REGISTERED PROFESSIONAL ENGINEER
Randell D. Hiatt
No. C50200
Exp. 6-30-07
CIVIL
STATE OF CALIFORNIA

The State of California or its officers or agents shall not be responsible for the accuracy or completeness of electronic copies of this plan sheet.

To accompany plans dated 5-14-12

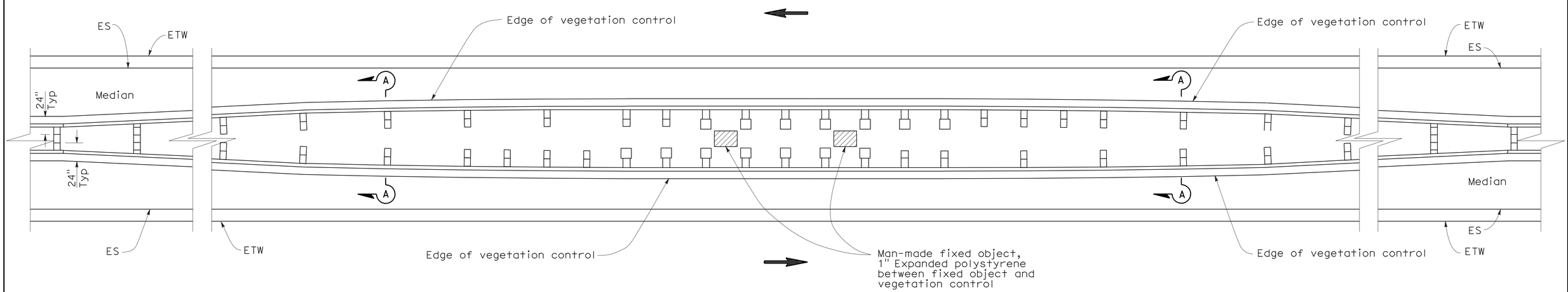

PLAN

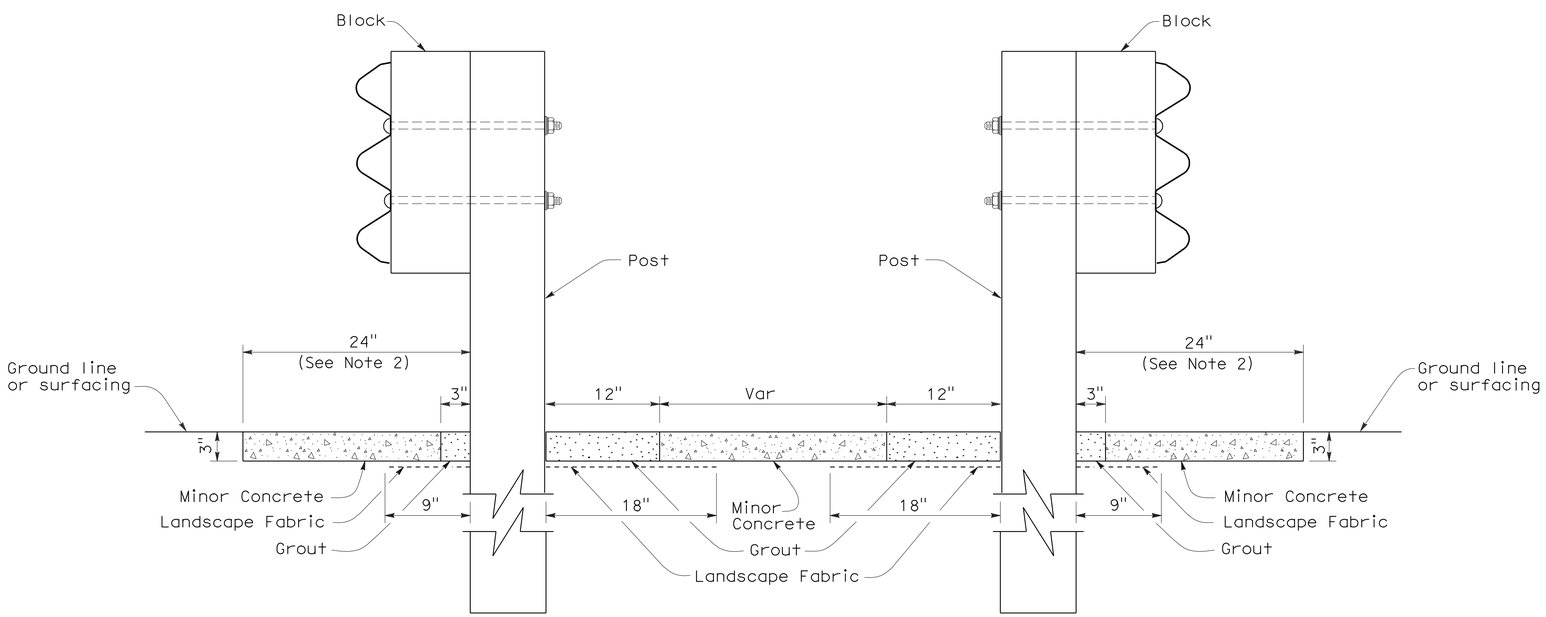

SECTION A-A

NOTES:

1. See New Standard Plan NSP A78C3 for additional vegetation control.
2. Where dike is constructed under barrier, construct vegetation control to back edge of dike. Where paved shoulder is constructed within 24" in front of the post, construct vegetation control to the edge of paved shoulder.
3. Direction of adjacent traffic indicated by ←.

STATE OF CALIFORNIA
DEPARTMENT OF TRANSPORTATION

THRIE BEAM BARRIER TYPICAL VEGETATION CONTROL AT FIXED OBJECTS IN MEDIAN

NO SCALE

NSP A78C5 DATED OCTOBER 20, 2006 SUPPLEMENTS THE STANDARD PLANS BOOK DATED MAY 2006.

NEW STANDARD PLAN NSP A78C5

2006 NEW STANDARD PLAN NSP A78C5

7-17-06

DIST	COUNTY	ROUTE	POST MILES TOTAL PROJECT	SHEET NO.	TOTAL SHEETS
04	Ala	580	R8.4/R14.6	673	853

Randell D. Hiatt
REGISTERED CIVIL ENGINEER

October 20, 2006
PLANS APPROVAL DATE

REGISTERED PROFESSIONAL ENGINEER
Randell D. Hiatt
No. C50200
Exp. 6-30-07
CIVIL
STATE OF CALIFORNIA

The State of California or its officers or agents shall not be responsible for the accuracy or completeness of electronic copies of this plan sheet.

To accompany plans dated 5-14-12

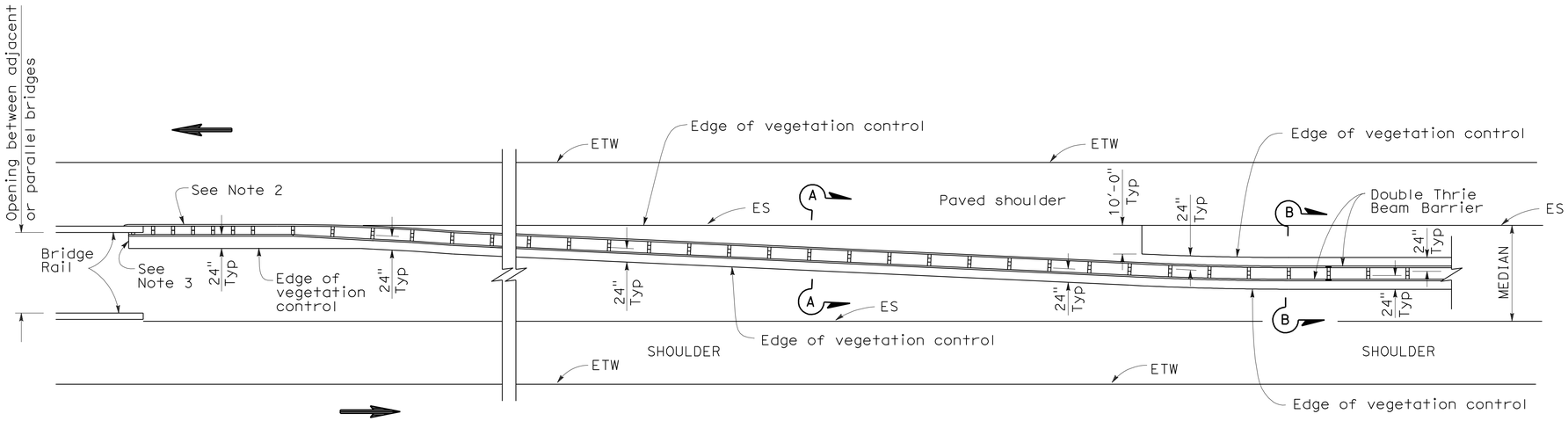

PLAN

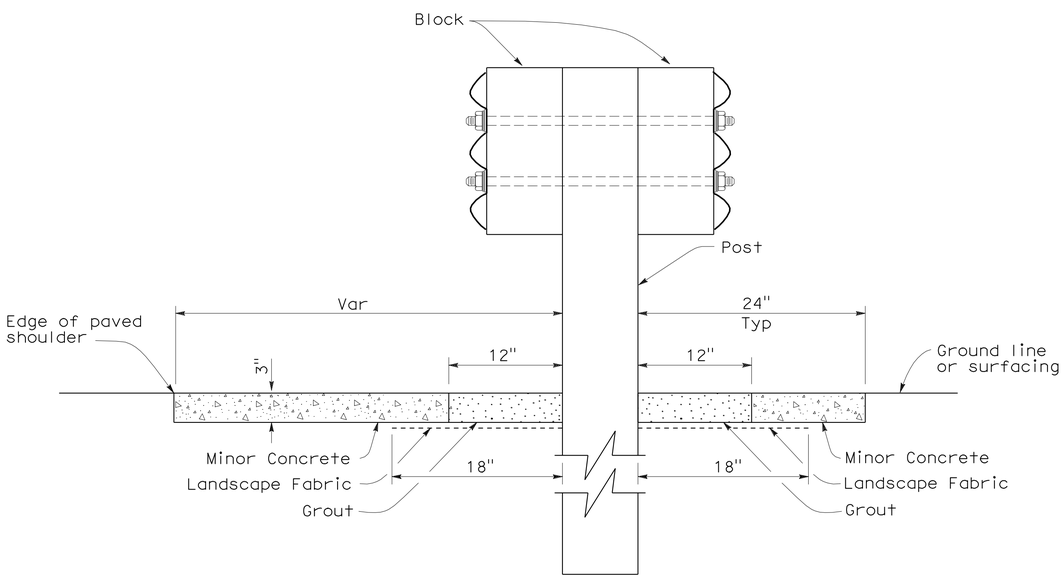

SECTION A-A

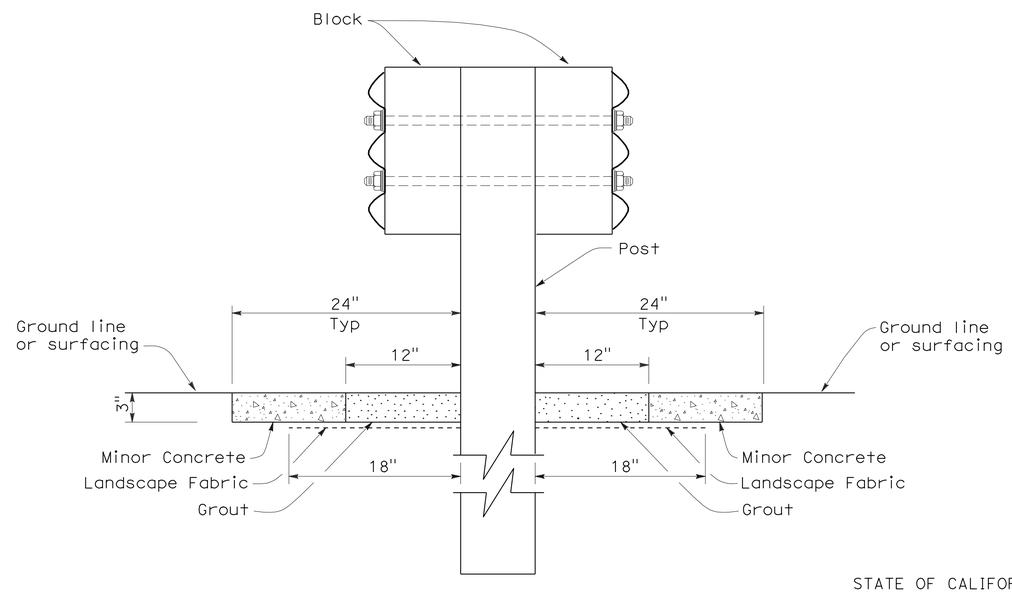

SECTION B-B

NOTES:

1. See New Standard Plan NSP A78C4 for additional vegetation control details.
2. Where dike is constructed under barrier, construct vegetation control to back edge of dike. Where paved shoulder is constructed within 24" in front of the post, construct vegetation control to the edge of paved shoulder.
3. End vegetation control at end of backside rail element attached to bridge railing.
4. Direction of adjacent traffic indicated by ←.

STATE OF CALIFORNIA
DEPARTMENT OF TRANSPORTATION

THRIE BEAM BARRIER TYPICAL VEGETATION CONTROL AT STRUCTURE APPROACH

NO SCALE

NSP A78C6 DATED OCTOBER 20, 2006 SUPPLEMENTS THE STANDARD PLANS BOOK DATED MAY 2006.

NEW STANDARD PLAN NSP A78C6

2006 NEW STANDARD PLAN NSP A78C6

7-17-06

DIST	COUNTY	ROUTE	POST MILES TOTAL PROJECT	SHEET NO.	TOTAL SHEETS
04	Ala	580	R8.4/R14.6	674	853

Randell D. Hiatt
REGISTERED CIVIL ENGINEER

June 6, 2008
PLANS APPROVAL DATE

REGISTERED PROFESSIONAL ENGINEER
Randell D. Hiatt
No. C50200
Exp. 6-30-09
CIVIL
STATE OF CALIFORNIA

The State of California or its officers or agents shall not be responsible for the accuracy or completeness of electronic copies of this plan sheet.

To accompany plans dated 5-14-12

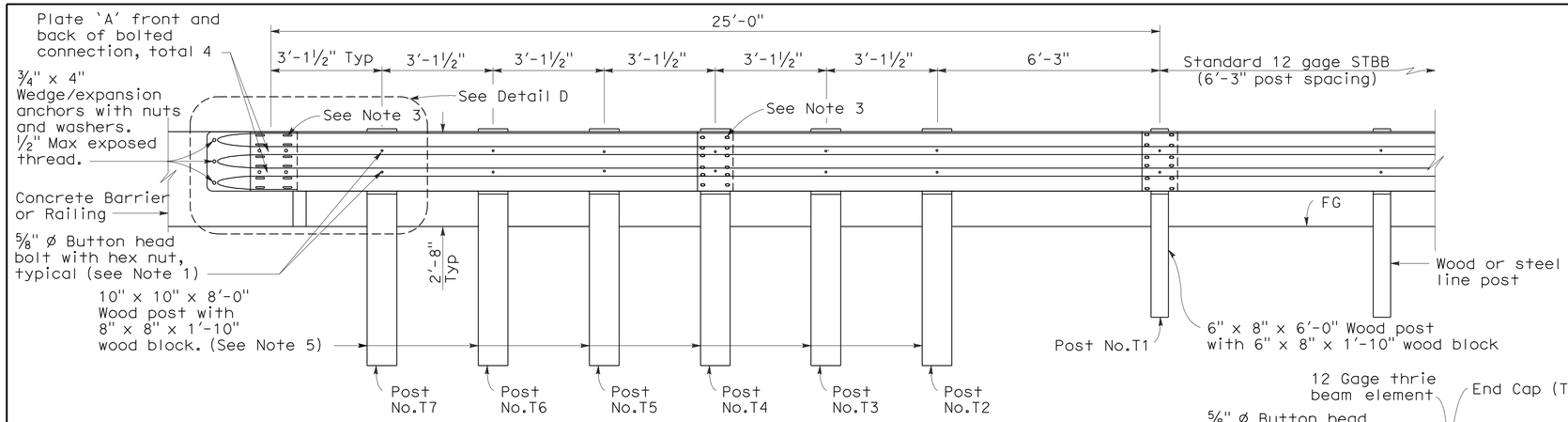

ELEVATION

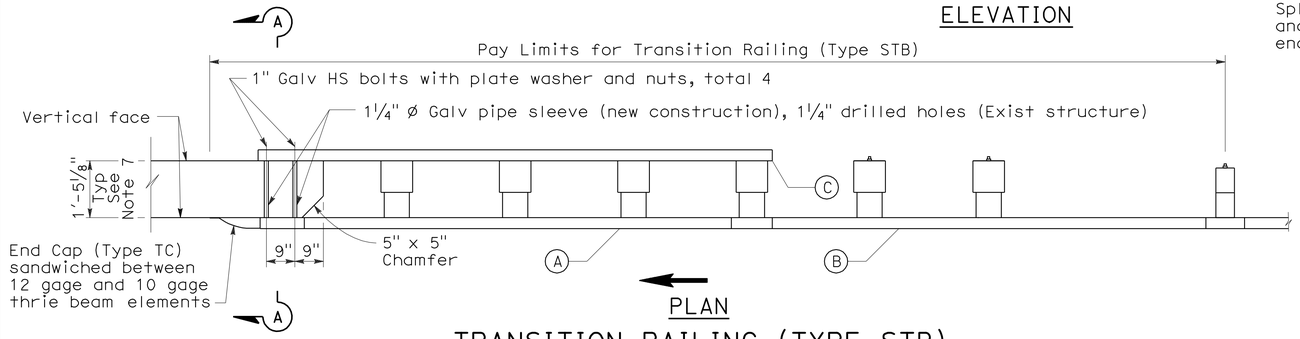

PLAN

TRANSITION RAILING (TYPE STB)

(No Blockout Attachment)

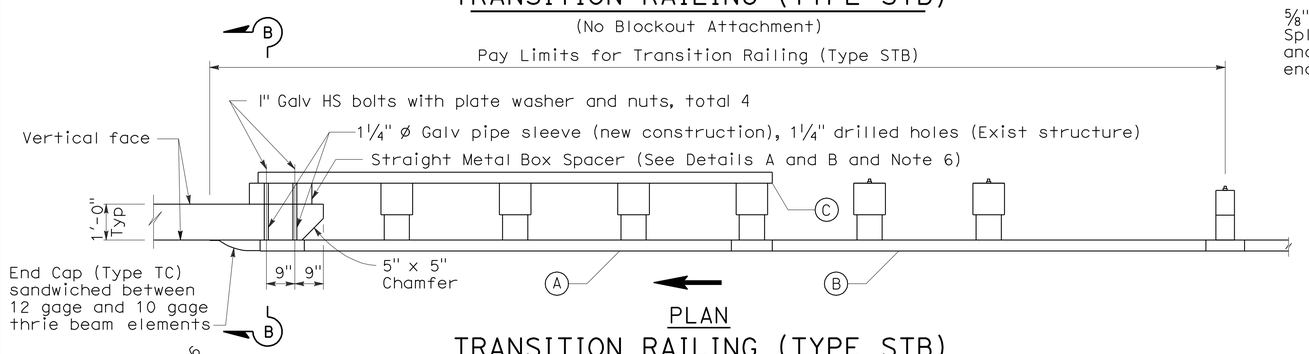

PLAN

TRANSITION RAILING (TYPE STB)

(Blockout Attachment)

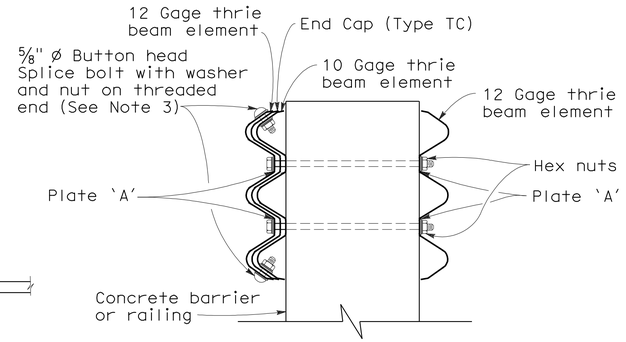

SECTION A-A

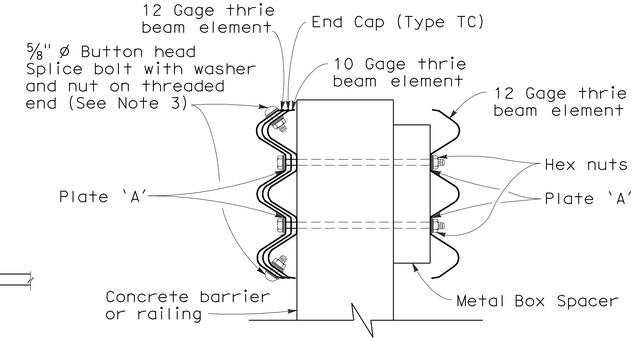

SECTION B-B

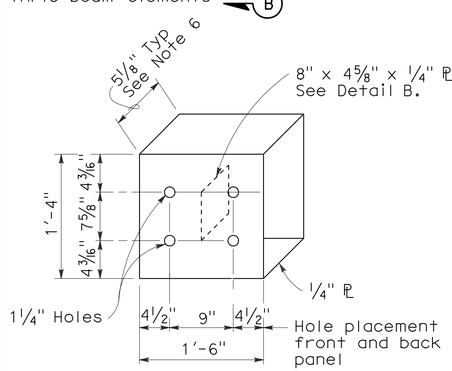

DETAIL A

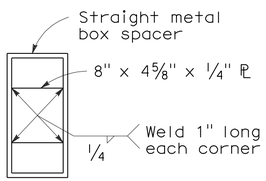

DETAIL B

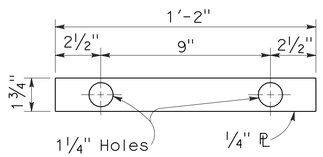

DETAIL C

STRAIGHT METAL BOX SPACER

PLATE 'A'

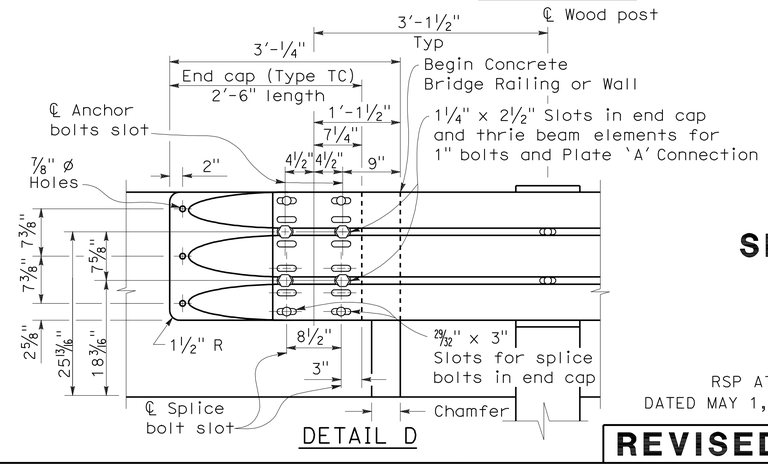

DETAIL D

LEGEND

(A) Nested thrie beam elements (one 12 gage element nested over one 10 gage element).

(B) One 10 gage thrie beam element.

(C) One 12 gage thrie beam element.

10 gage = 0.135" thick

12 gage = 0.108" thick

NOTES:

1. Use ⅝" ø Button head bolts and hex nuts for connection to posts. No washer on rail face for bolted connections to post.
2. The nested rail elements, end cap and single 10 gage thrie beam element, may be spliced together prior to bolting the elements to the wood post and concrete barrier or railing.
3. Exterior splice bolt holes for rail element splices at Post No.T4 and the connection to the concrete barrier or railing shall be the standard 29⁄32" x 1⅛" slot size. Interior splice bolt holes at these locations may be increased up to 1¼" ø. Only the top 2 and the bottom 2 splice bolts with washers and nuts are required for rail splices at Post No.T4 and the connection to the concrete barrier or railing.
4. Direction of adjacent traffic indicated by ⟶.
5. The top elevation of Post Nos.T2 through T7 shall not project more than 1" above the top elevation of the rail element.
6. The depth of the metal box spacer varies from the 5⅛" to 1½" and is dependent on the width of the concrete railing or wall. The combined dimension for the depth of the metal box spacer plus the width of railing or wall is typically 17⅛". Where the space between the backside of the concrete railing or wall and the rear thrie beam element is less than 1½" metal plates similar to Plate 'A' are to be used as spacers.
7. Where the width of the concrete railing or wall is greater than 17⅛", wood blocks are to be used to fill the space created between the backside of Post No.4 through No.7 and the rear thrie beam element. These wood blocks shall be 8" in width and 1'-2" in length. The dimension between the front thrie beam element and the rear thrie beam element is to match the width of the concrete railing or wall.
8. For details of End Cap (Type TC), see Revised Standard Plan RSP A78C1.

STATE OF CALIFORNIA
DEPARTMENT OF TRANSPORTATION

SINGLE THRIE BEAM BARRIER TRANSITION RAILING (TYPE STB)

NO SCALE

RSP A78J DATED JUNE 6, 2008 SUPERSEDES STANDARD PLAN A78J DATED MAY 1, 2006 - PAGE 97 OF THE STANDARD PLANS BOOK DATED MAY 2006.

REVISED STANDARD PLAN RSP A78J

2006 REVISED STANDARD PLAN RSP A78J

5-1-08

DIST	COUNTY	ROUTE	POST MILES TOTAL PROJECT	SHEET NO.	TOTAL SHEETS
04	Ala	580	R8.4/R14.6	675	853

REGISTERED CIVIL ENGINEER

June 5, 2009
PLANS APPROVAL DATE

REGISTERED PROFESSIONAL ENGINEER Glenn DeCou No. C34547 Exp. 9-30-09 CIVIL STATE OF CALIFORNIA

The State of California or its officers or agents shall not be responsible for the accuracy or completeness of electronic copies of this plan sheet.

To accompany plans dated 5-14-12

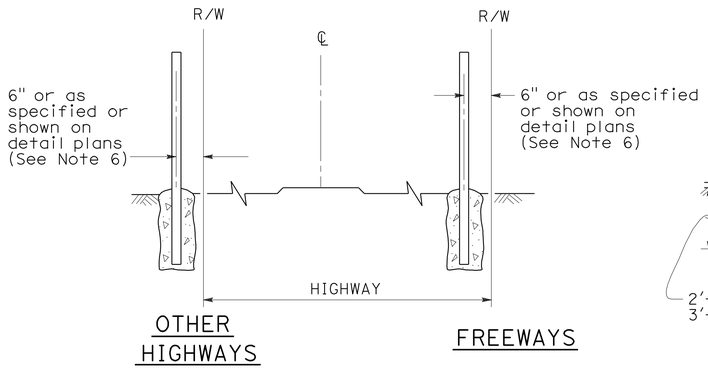

FENCE LOCATION

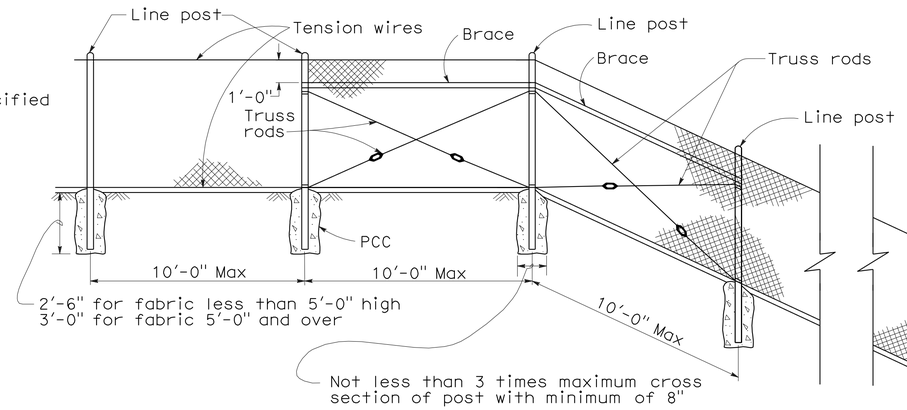

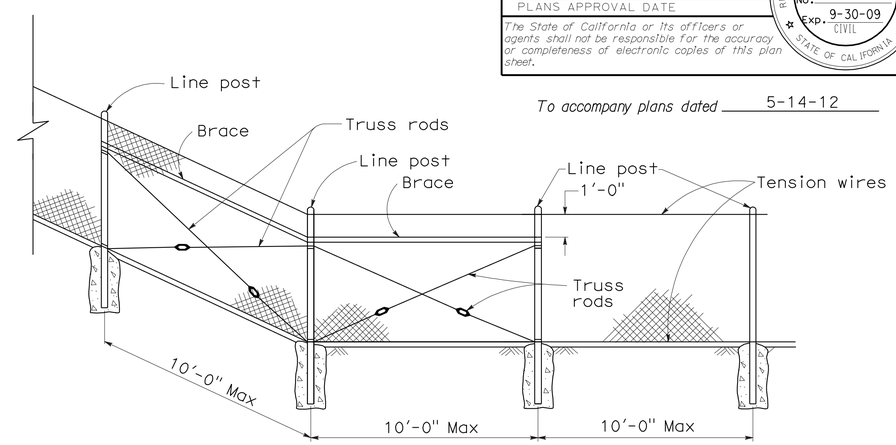

CHAIN LINK FENCE ON SHARP BREAK IN GRADE

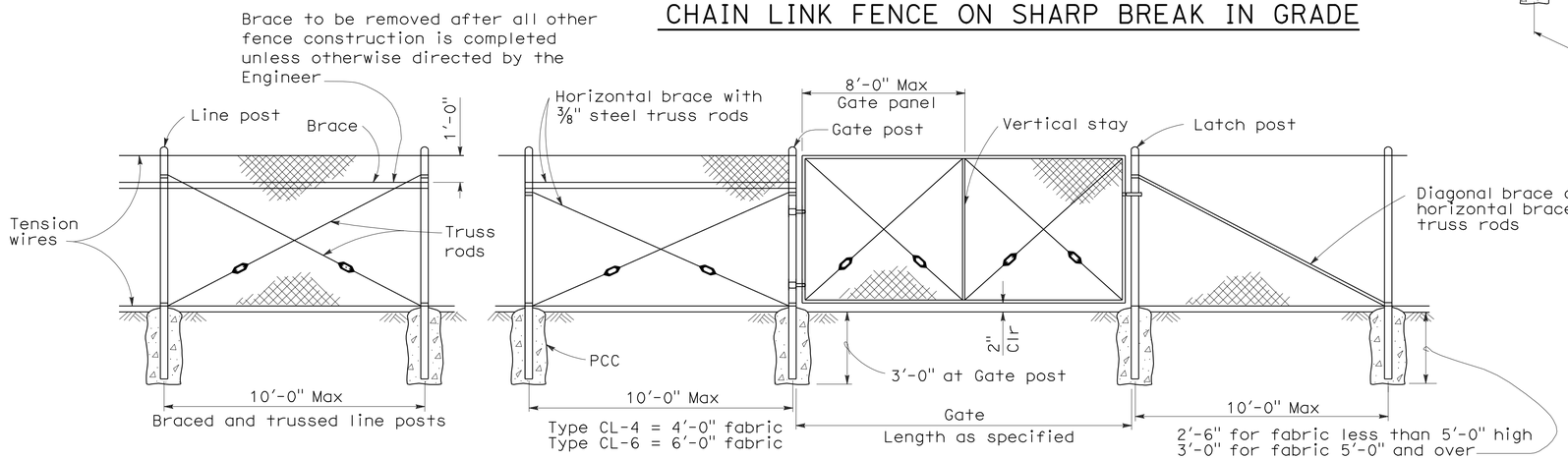

CHAIN LINK GATE INSTALLATION

GATE POST			
FENCE HEIGHT	GATE WIDTHS	NOMINAL ID	WEIGHT PER FOOT
6'-0" and Less	Up thru 6'-0"	2½"	4.95 LB
	Over 6'-0" thru 12'-0"	4"	10.79 LB
	Over 12'-0" thru 18'-0"	5"	14.62 LB
	Over 18'-0" to 24'-0" Max	6"	18.97 LB
Over 6'-0"	Up thru 6'-0"	3"	7.58 LB
	Over 6'-0" thru 12'-0"	5"	14.62 LB
	Over 12'-0" thru 18'-0"	6"	18.97 LB
	Over 18'-0" to 24'-0" Max	8"	28.55 LB

Above post dimensions and weights are minimums. Larger sizes may be used on approval of the Engineer.

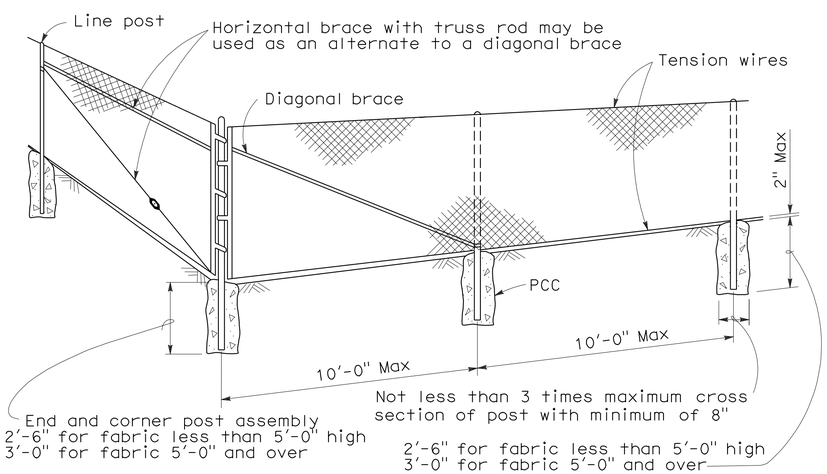

CORNER POST

NOTES:

1. The below table shows examples of post and brace sections which may comply with the Specifications.
2. Sections shown in the tables must also comply with the strength requirements and other provisions of the Specifications.
3. Other sections which comply with the strength requirements and other provisions of the Specifications may be used on approval of the Engineer.
4. Options exercised shall be uniform on any one project.
5. Dimensions shown are nominal.
6. Offset to be 2'-0" at monument locations, measured at right angles to R/W lines. Taper to achieve offset to be at least 20'-0" long.

TYPICAL MEMBER DIMENSIONS (See Notes)											
FENCE HEIGHT	LINE POSTS			END, LATCH & CORNER POSTS				BRACES			
	ROUND ID	H	ROLL FORMED	ROUND ID	ROLL FORMED			ROUND ID	H	ROLL FORMED	
6' & less	1½"	1⅞" × 1⅝"	1⅞" × 1⅝"	2"	3½" × 3½"	2" × 1¾"		1¼"	1½" × 1 5/16"	1⅝" × 1¼"	1¾" × 1¼"
Over 6'	2"	2¼" × 2"	2" × 1¾"	2½"	3½" × 3½"	2½" × 2½"		1¼"	1½" × 1 5/16"	1⅝" × 1¼"	1¾" × 1¼"

STATE OF CALIFORNIA
DEPARTMENT OF TRANSPORTATION

CHAIN LINK FENCE

NO SCALE

RSP A85 DATED JUNE 5, 2009 SUPERSEDES STANDARD PLAN A85
DATED MAY 1, 2006 - PAGE 111 OF THE STANDARD PLANS BOOK DATED MAY 2006.

REVISED STANDARD PLAN RSP A85

2006 REVISED STANDARD PLAN RSP A85

DIST	COUNTY	ROUTE	POST MILES TOTAL PROJECT	SHEET NO.	TOTAL SHEETS
04	Ala	580	R8.4/R14.6	676	853

REGISTERED CIVIL ENGINEER

June 5, 2009
PLANS APPROVAL DATE

REGISTERED PROFESSIONAL ENGINEER Glenn DeCou No. C34547 Exp. 9-30-09 CIVIL STATE OF CALIFORNIA

The State of California or its officers or agents shall not be responsible for the accuracy or completeness of electronic copies of this plan sheet.

To accompany plans dated 5-14-12

NOTES:

1. H is 2'-6" for fabric less than 5'-0" high. H is 3'-0" for fabric 5'-0" and over.
2. T is not less than 3 times maximum cross section of post with minimum of 8".
3. Arms with barbed wire to be used where shown on plans.
4. See Revised Standard Plan RSP A85 for Chain Link Fencing dimensions.
5. Reinforcing must comply with ASTM A 706.
6. See Detail A on New Standard Plan NSP A86B for connection at headwall.

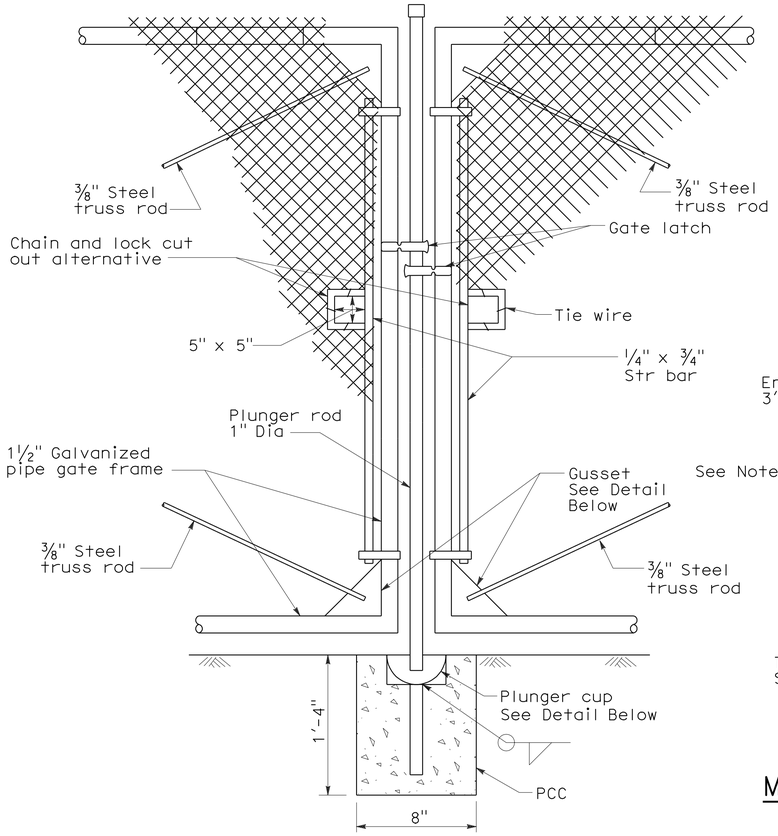

TYPICAL DOUBLE GATE REMOVABLE CENTER POST

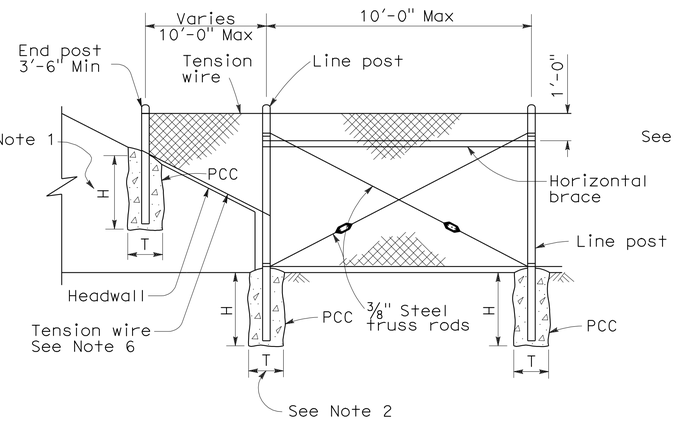

METHOD OF TYING FENCE TO HEADWALL

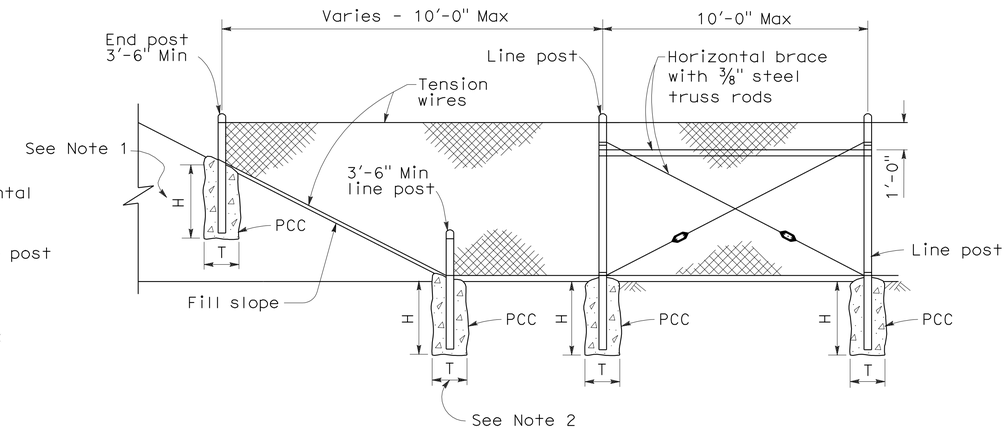

METHOD OF ERECTING FENCE FOR FILL SLOPE

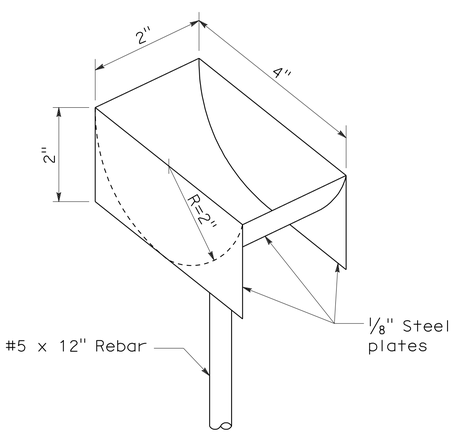

PLUNGER CUP DETAIL

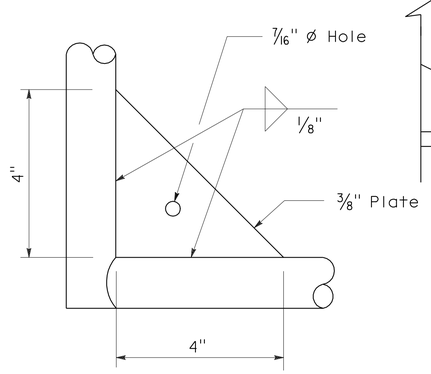

GUSSET DETAIL

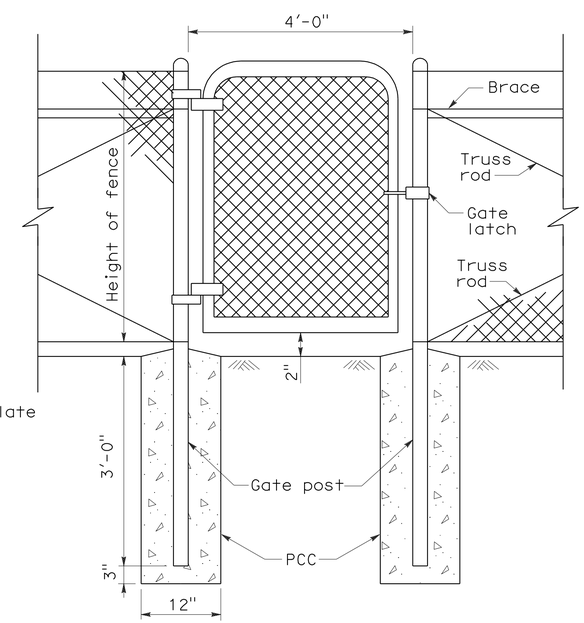

WALK GATE

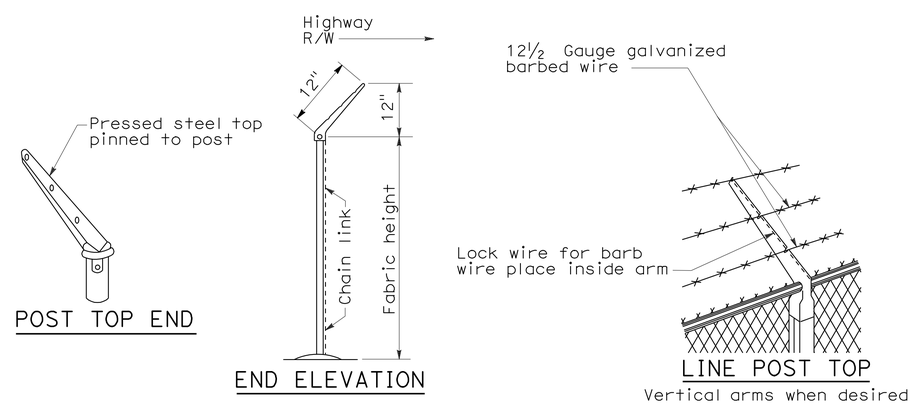

POST TOP END

END ELEVATION

LINE POST TOP
Vertical arms when desired

BARBED WIRE POST TOP
See Note 3

STATE OF CALIFORNIA
DEPARTMENT OF TRANSPORTATION

CHAIN LINK FENCE DETAILS

NO SCALE

NSP A85A DATED JUNE 5, 2009 SUPPLEMENTS THE STANDARD PLANS BOOK DATED MAY 2006.

NEW STANDARD PLAN NSP A85A

2006 NEW STANDARD PLAN NSP A85A

5-7-09

DIST	COUNTY	ROUTE	POST MILES TOTAL PROJECT	SHEET NO.	TOTAL SHEETS
04	Ala	580	R8.4/R14.6	677	853

REGISTERED CIVIL ENGINEER

June 5, 2009
PLANS APPROVAL DATE

REGISTERED PROFESSIONAL ENGINEER Glenn DeCou No. C34547 Exp. 9-30-09 CIVIL STATE OF CALIFORNIA

The State of California or its officers or agents shall not be responsible for the accuracy or completeness of electronic copies of this plan sheet.

To accompany plans dated 5-14-12

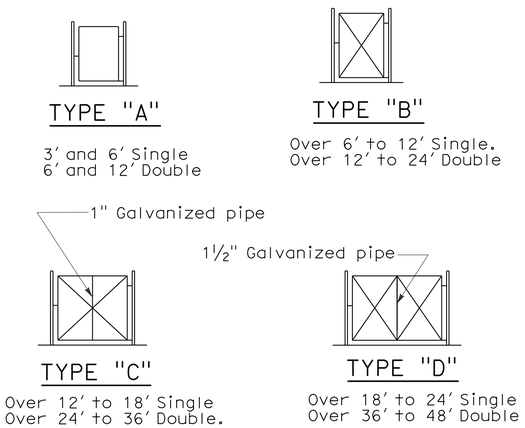

TYPICAL FRAMEWORK SHOWING NUMBER OF BAYS IN GATE

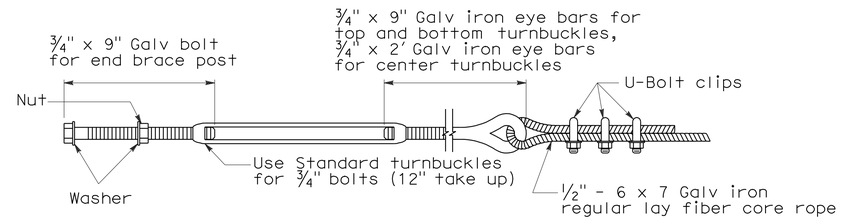

TURNBUCKLE A

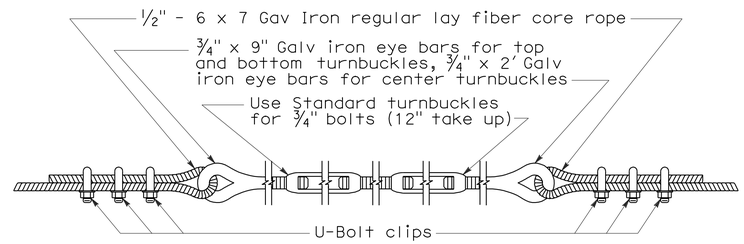

TURNBUCKLE B

NOTES:

1. All material for abutment connection to be galvanized.
2. The chain link fabric shall be replaced by barbed wire strands at 12" maximum centers between the double posts.
3. When the width of the culvert makes it necessary to anchor a post to the top of the culvert, a cast iron shoe or other device approved by the Engineer shall be used.
4. Fencing over stream and around headwall may also use Barbed Wire or Wire Mesh fencing with either wood post or steel post installation.
5. See Revised Standard Plan RSP A85 for Chain Link fence dimensions. See Standard Plan A86 for Barbed Wire and Wire Mesh fence dimensions and for wood post and steel post installation.

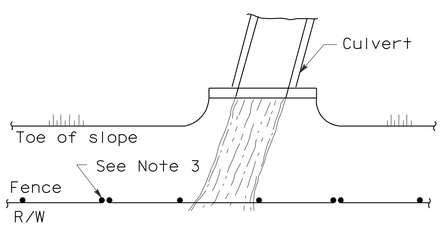

PLAN

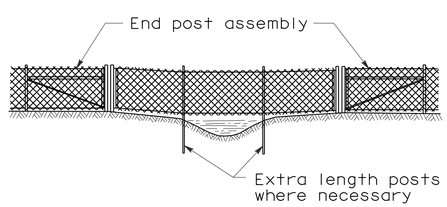

ELEVATION

INSTALLATION OVER STREAM

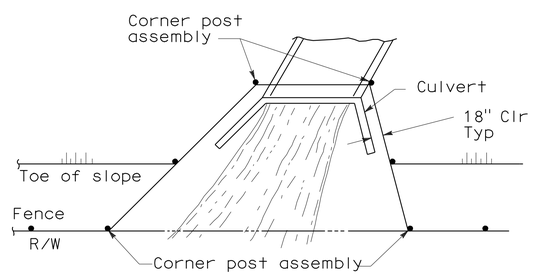

PLAN

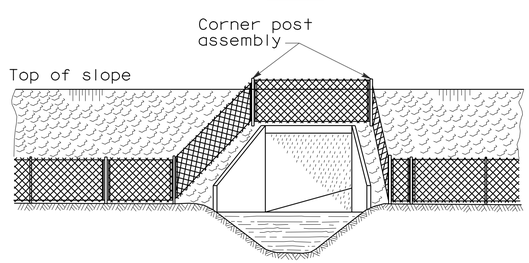

ELEVATION

INSTALLATION AROUND HEADWALL

See Note 4

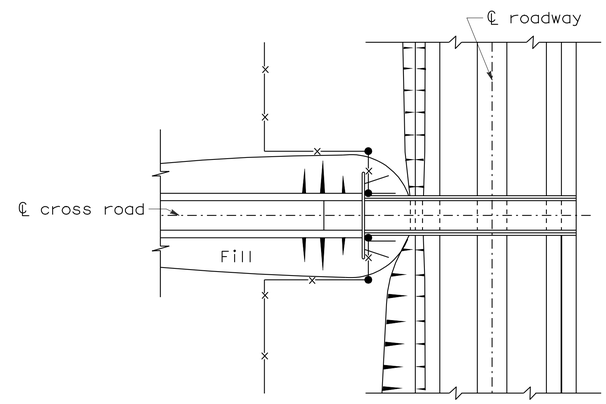

PLAN OF ROADWAY - UNDERPASS

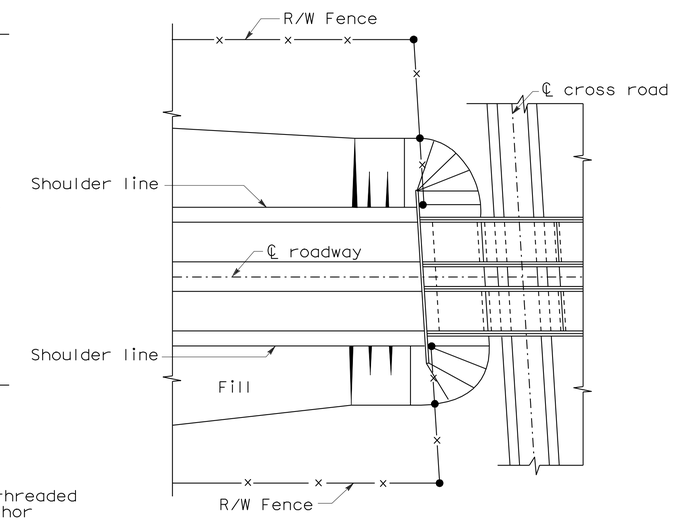

PLAN OF ROADWAY - OVERPASS

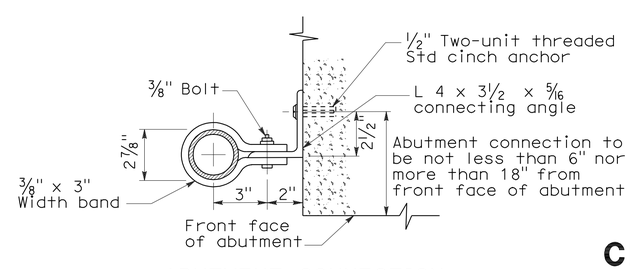

ABUTMENT CONNECTION

TYPICAL INSTALLATION AT BRIDGES

STATE OF CALIFORNIA
DEPARTMENT OF TRANSPORTATION

CHAIN LINK FENCE DETAILS

NO SCALE

NSP A85B DATED JUNE 5, 2009 SUPPLEMENTS THE STANDARD PLANS BOOK DATED MAY 2006.

NEW STANDARD PLAN NSP A85B

2006 NEW STANDARD PLAN NSP A85B

5-12-09

DIST	COUNTY	ROUTE	POST MILES TOTAL PROJECT	SHEET NO.	TOTAL SHEETS
04	Ala	580	R8.4/R14.6	678	853

REGISTERED CIVIL ENGINEER

November 17, 2006
PLANS APPROVAL DATE

REGISTERED PROFESSIONAL ENGINEER Michael Janzen No. 44788 Exp. 03-31-08 CIVIL STATE OF CALIFORNIA

The State of California or its officers or agents shall not be responsible for the accuracy or completeness of electronic copies of this plan sheet.

To accompany plans dated 5-14-12

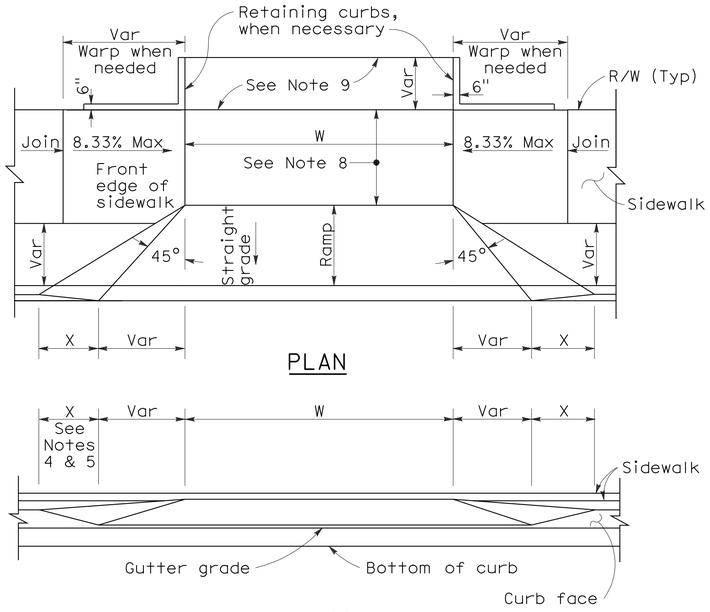

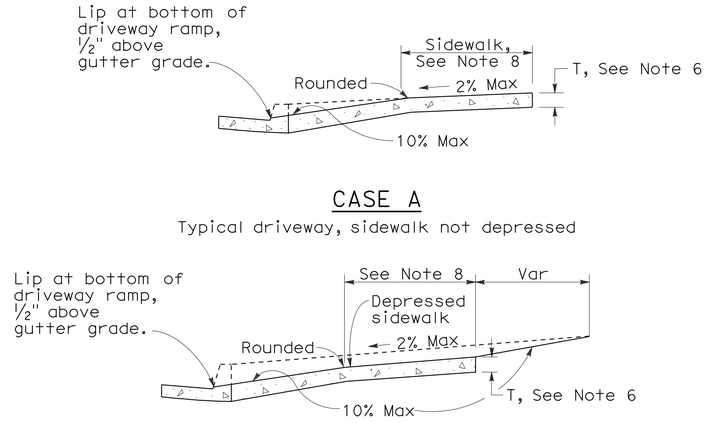

CURB QUANTITIES

TYPE	CUBIC YARDS PER LINEAR FOOT
A1-6	0.02585
A1-8	0.03084
A2-6	0.05903
A2-8	0.06379
A3-6	0.01036
A3-8	0.01435
B1-4	0.02185
B1-6	0.02930
B2-4	0.05515
B2-6	0.06171
B3-4	0.00641
B3-6	0.01074
B4	0.05709
D-4	0.04083
D-6	0.06804
E	0.06661

TABLE A

CURB TYPE	DIMENSIONS "H1"	"H2"	"W1"	"W2"
A1-6	1'-2"	6"	7½"	1½"
A1-8	1'-4"	8"	8"	2"
A2-6	1'-0"	6"	2'-7½"	1½"
A2-8	1'-2"	8"	2'-8"	2"
A3-6	6"	5"	7¼"	1¼"
A3-8	8"	7"	7¾"	1¾"
B1-4	1'-0"	4"	7½"	2½"
B1-6	1'-2"	6"	9"	4"
B2-4	10"	4"	2'-7½"	2½"
B2-6	1'-0"	6"	2'-9"	4"
B3-4	4"	3"	7"	2"
B3-6	6"	5"	8½"	3½"
D-4	10"	4"	1'-6"	1'-1"
D-6	1'-0"	6"	2'-2"	1'-8"

DRIVEWAYS

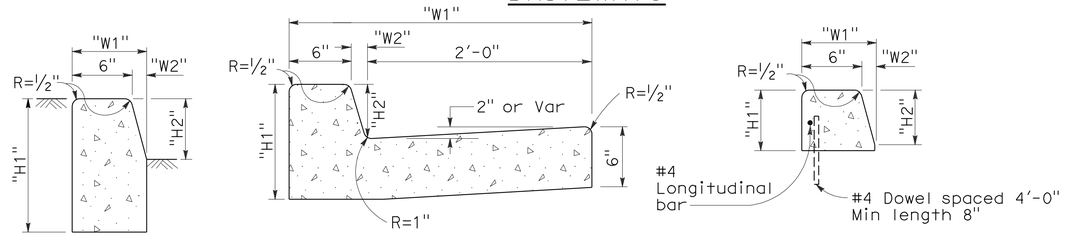

TYPE A1 CURBS
See Table A

TYPE A2 CURBS
See Table A

TYPE A3 CURBS
Superimposed on existing pavement
See Table A

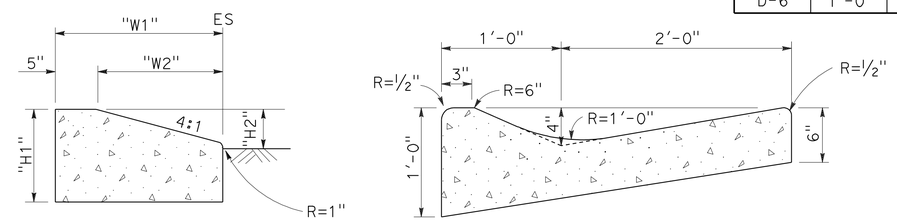

TYPE D CURBS
See Table A

TYPE E CURB

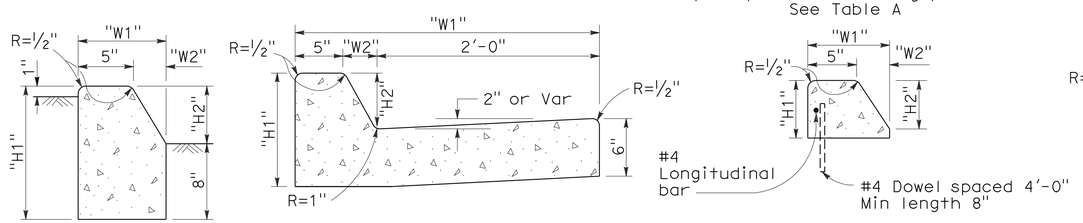

TYPE B1 CURBS
See Table A

TYPE B2 CURBS
See Table A

TYPE B3 CURBS
Superimposed on existing pavement
See Table A

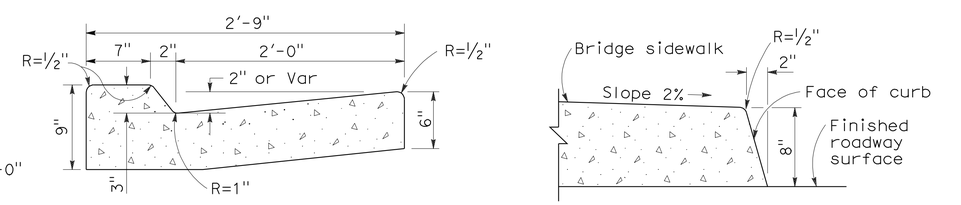

TYPE B4 CURBS

TYPE H CURB
On Bridges

CURBS

NOTES:

1. Case A driveway section typically applies.
2. Use Case B driveway section when ramp slopes would exceed 10% in Case A.
3. Use Case B driveway section when sidewalk cross slope would exceed 2% in Case A.
4. X=3'-0" except for curb heights over 10" where 4:1 slopes shall be used on curb slope.
5. X is a variable when sidewalk is located where wheelchairs may traverse the surface. Slopes shall not exceed 8.33%.
6. Sidewalk and ramp thickness "T" at driveway shall be 4" for residental and 6" for commercial.
7. Difference in slope of the driveway ramp and the slope of a line between the gutter and a point on the roadway 5'-0" from gutter line shall not exceed 15%. Reduce driveway ramp slope, not gutter slope, where required.
8. Minimum width of clear passageway for sidewalk shall be 4'-0".
9. Retaining curbs and acquisition of construction easement may be necessary for narrow sidewalks or curb heights in excess of 6".
10. Across the pedestrian route at curb ramp locations, the gutter pan slope shall not exceed 1" of depth for each 2'-0" of width.

STATE OF CALIFORNIA
DEPARTMENT OF TRANSPORTATION

CURBS AND DRIVEWAYS

NO SCALE

RSP A87A DATED NOVEMBER 17, 2006 SUPERSEDES STANDARD PLAN A87A DATED MAY 1, 2006 - PAGE 113 OF THE STANDARD PLANS BOOK DATED MAY 2006.

REVISED STANDARD PLAN RSP A87A

2006 REVISED STANDARD PLAN RSP A87A

10-25-06

DIST	COUNTY	ROUTE	POST MILES TOTAL PROJECT	SHEET NO.	TOTAL SHEETS
04	Ala	580	R8.4/R14.6	679	853

REGISTERED CIVIL ENGINEER

September 1, 2006
PLANS APPROVAL DATE

REGISTERED PROFESSIONAL ENGINEER Hector David Cordova No. C41957 Exp. 3-31-08 CIVIL STATE OF CALIFORNIA

The State of California or its officers or agents shall not be responsible for the accuracy or completeness of electronic copies of this plan sheet.

To accompany plans dated 5-14-12

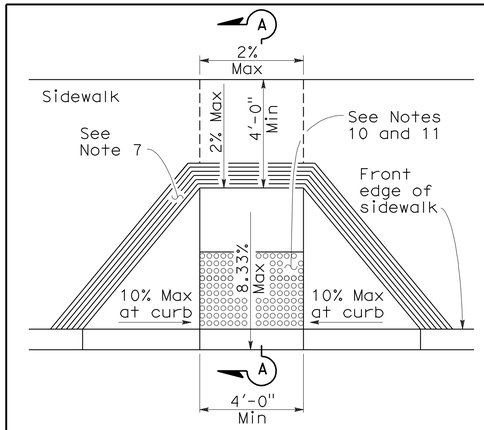

CASE A

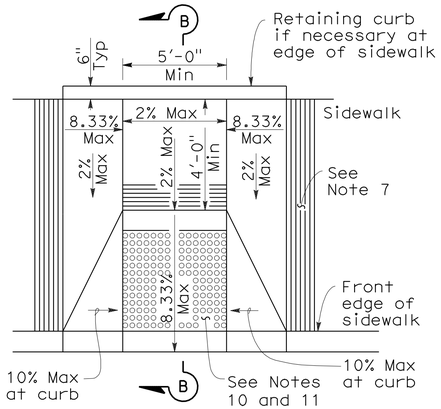

CASE B

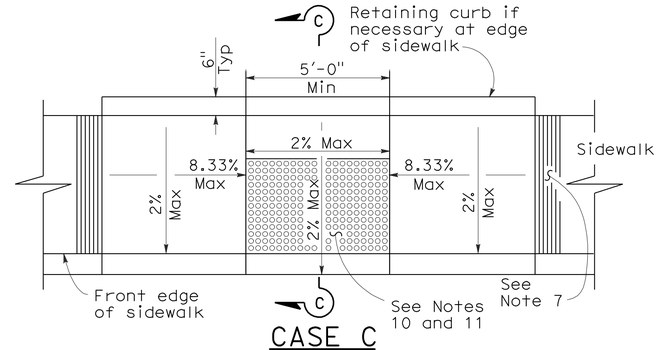

CASE C

CASE D

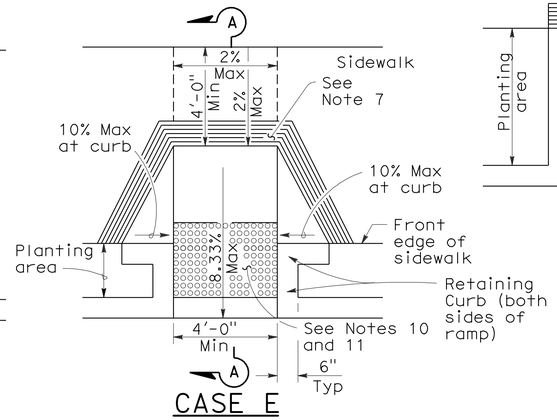

CASE E

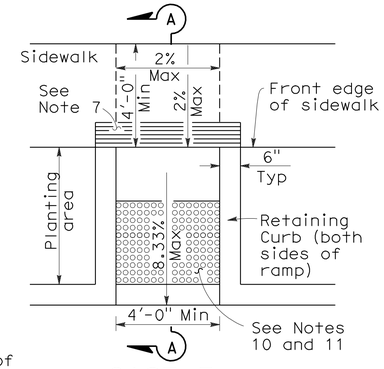

CASE F

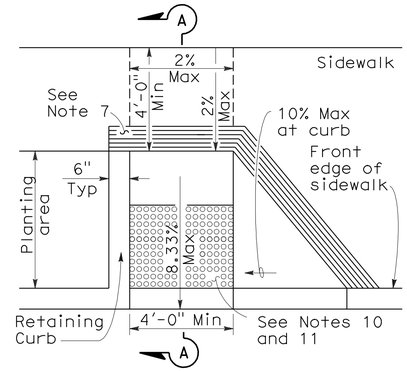

CASE G

See Note 4

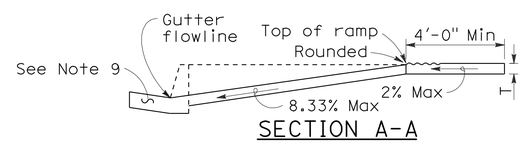

SECTION A-A

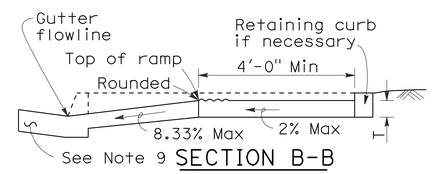

SECTION B-B

Depress entire sidewalk as required

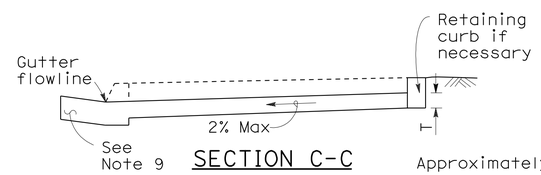

SECTION C-C

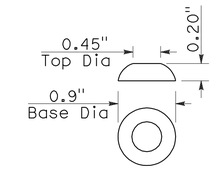

RAISED TRUNCATED DOME

NOTES:

1. As site conditions dictate, Case A through Case G curb ramps may be used for corner installations similar to those shown in Detail A and Detail B. The case of curb ramps used in Detail A do not have to be the same. Case A through Case G curb ramps also may be used at mid block locations, as site conditions dictate.
2. If distance from curb to back of sidewalk is too short to accommodate ramp and 4'-0" platform (landing) as shown in Case A, the sidewalk may be depressed longitudinally as in Case B, or C or may be widened as in Case D.
3. When ramp is located in center of curb return, crosswalk configuration must be similar to that shown for Detail B.
4. As site conditions dictate, the retaining curb side and the flared side of the Case G ramp shall be constructed in reversed position.
5. If located on a curve, the sides of the ramp need not be parallel, but the minimum width of the ramp shall be 4'-0".
6. Side slope of ramp flares vary uniformly from a maximum of 10% at curb to conform with longitudinal sidewalk slope adjacent to top of the ramp, except in Case C and Case F.
7. The curb ramp shall be outlined, as shown, with a 1'-0" wide border with 1/4" grooves approximately 3/4" on center. See grooving detail.
8. Transitions from ramps and landing to walks, gutters or streets shall be flush and free of abrupt changes.
9. Maximum slopes of adjoining gutters, the road surface immediately adjacent to the curb ramp or accessible route shall not exceed 5 percent within 4'-0" of the top and bottom of the curb ramp.
10. Curb ramps shall have a detectable warning surface that extends the full width and 3'-0" depth of the ramp. Detectable Warning Surfaces shall conform to the details on this plan and the requirements in the Special Provisions.
11. The edge of the detectable warning surface nearest the street shall be between 6" and 8" from the gutter flowline.
12. Sidewalk and ramp thickness, "T", shall be 3 1/2" minimum.
13. Utility pull boxes, manholes, vaults and all other utility facilities within the boundaries of the curb ramp will be relocated or adjusted to grade by the owner prior to, or in conjunction with, curb ramp construction.
14. For retrofit conditions, removal and replacement of curb apron will be at the Contractor's option, unless otherwise shown on project plans.

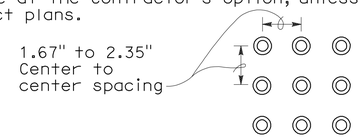

RAISED TRUNCATED DOME PATTERN (IN-LINE)

DETECTABLE WARNING SURFACE

See Note 10

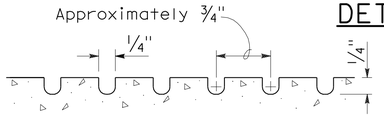

GROOVING DETAIL

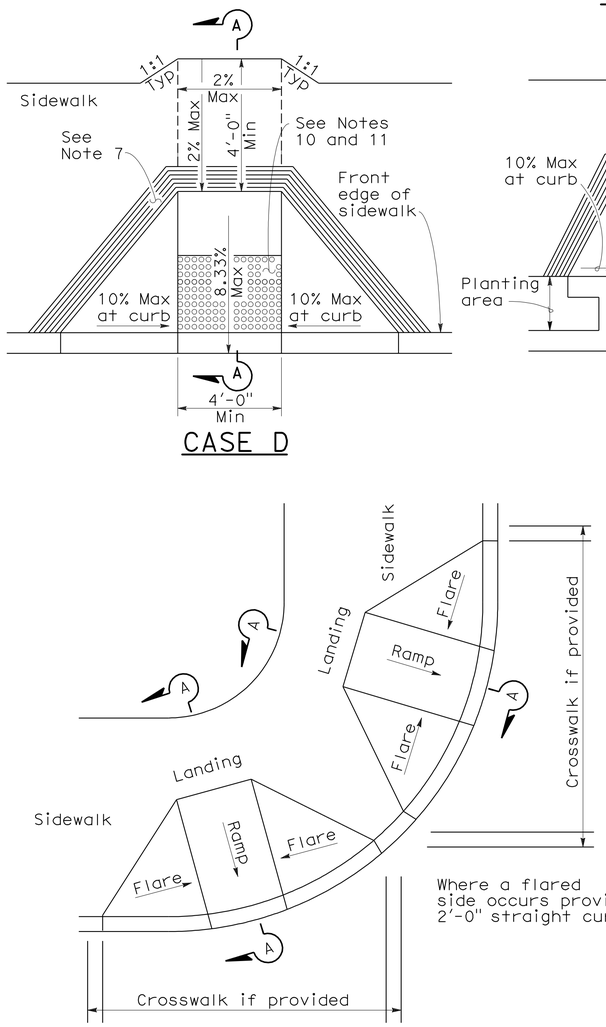

DETAIL A

TYPICAL TWO-RAMP CORNER INSTALLATION

See Note 1

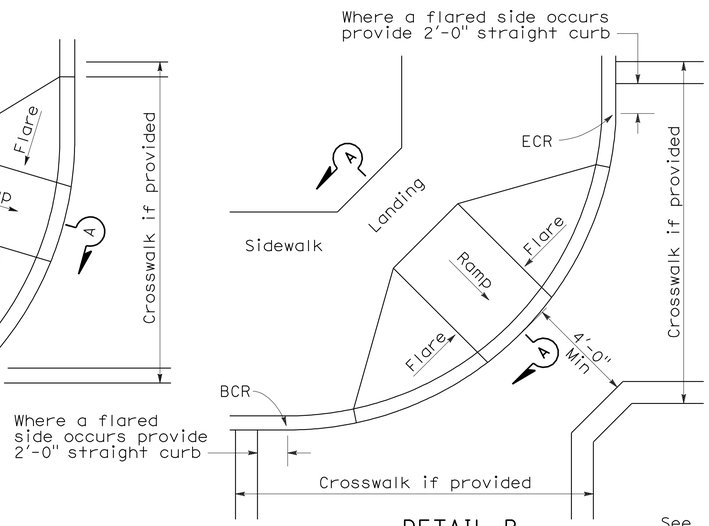

DETAIL B

TYPICAL ONE-RAMP CORNER INSTALLATION

See Notes 1 and 3

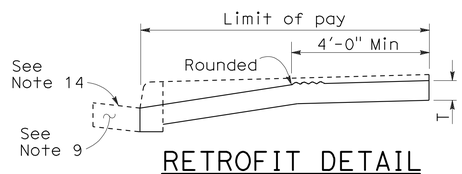

RETROFIT DETAIL

Existing curb and sidewalk

STATE OF CALIFORNIA
DEPARTMENT OF TRANSPORTATION

CURB RAMP DETAILS

NO SCALE

RSP A88A DATED SEPTEMBER 1, 2006 SUPERSEDES STANDARD PLAN A88A DATED MAY 1, 2006 - PAGE 115 OF THE STANDARD PLANS BOOK DATED MAY 2006.

REVISED STANDARD PLAN RSP A88A

2006 REVISED STANDARD PLAN RSP A88A

8-3-06

DIST	COUNTY	ROUTE	POST MILES TOTAL PROJECT	SHEET NO.	TOTAL SHEETS
04	Ala	580	R8.4/R14.6	680	853

William K. Farnbach
REGISTERED CIVIL ENGINEER

May 15, 2009
PLANS APPROVAL DATE

REGISTERED PROFESSIONAL ENGINEER
William K. Farnbach
No. C49042
Exp. 9-30-10
CIVIL
STATE OF CALIFORNIA

The State of California or its officers or agents shall not be responsible for the accuracy or completeness of electronic copies of this plan sheet.

To accompany plans dated 5-14-12

2006 REVISED STANDARD PLAN RSP P1

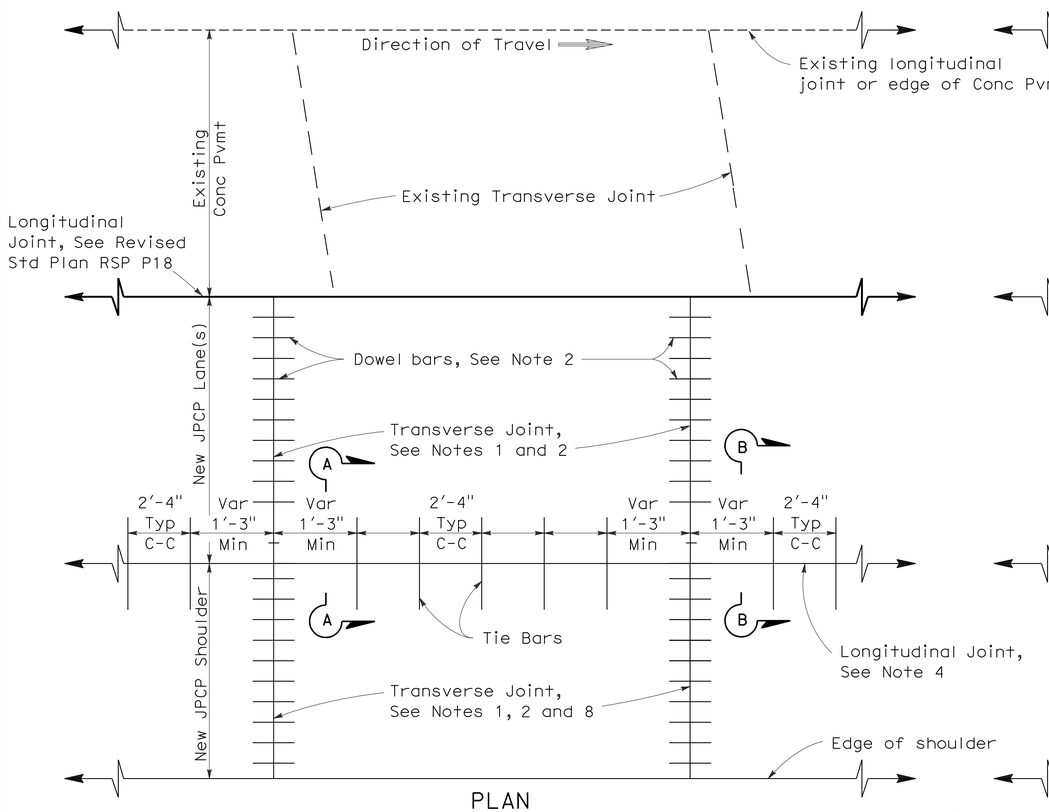

PLAN

LANE/SHOULDER ADDITION OR RECONSTRUCTION

See Notes 6 and 7

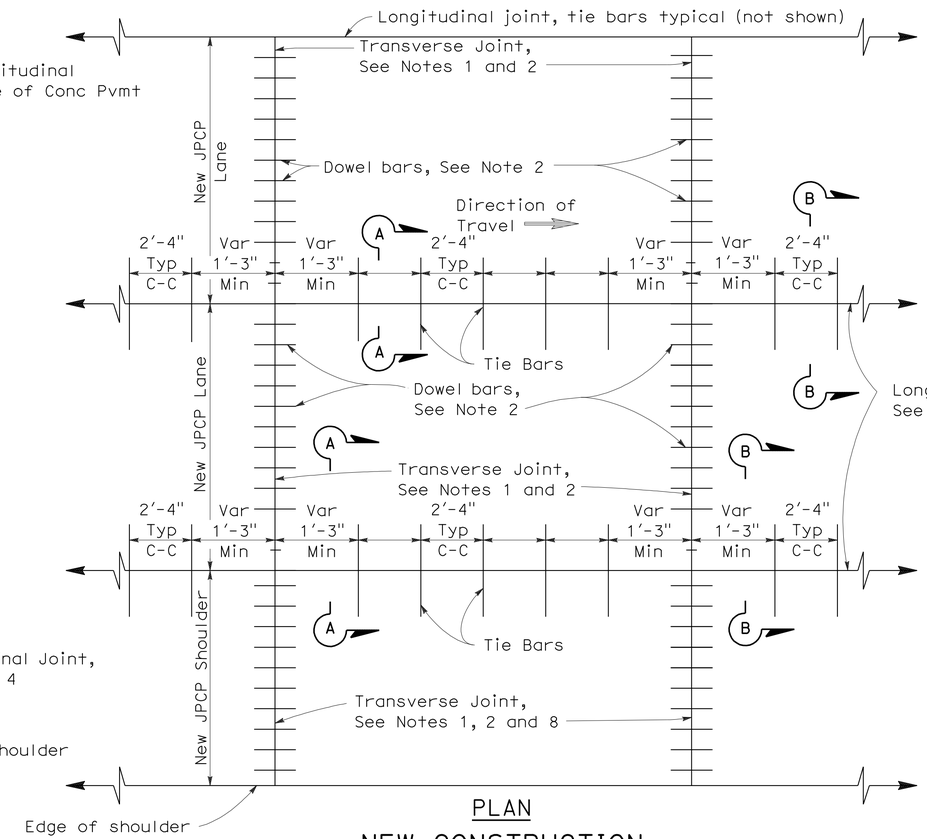

PLAN

NEW CONSTRUCTION

See Notes 6 and 7

NOTES:

1. Transverse joints shall be constructed at right angles to the longitudinal pavement joints in new jointed plain concrete pavement and spaced at successive repeated intervals of 12', 15', 13' and 14'.
2. For transverse joint and dowel bar details not shown, See Revised Standard Plan RSP P10.
3. Construct longitudinal contraction joints as shown in Section A-A when more than one lane or shoulder widths are placed at one time. If constructing one lane at a time, use longitudinal construction joint, as shown in Section B-B.
4. For additional longitudinal joint details, see Revised Standard Plan RSP P18.
5. If fresh concrete is placed adjacent to existing concrete, the top corner of the new hardened concrete does not need to be rounded to the 1/4" radius as shown.
6. Joint spacing patterns do not apply to intersections.
7. Details can also apply to inside widening.
8. Dowel bars may be omitted from shoulders when the shoulder cross slope is not the same as the adjacent traffic lane.

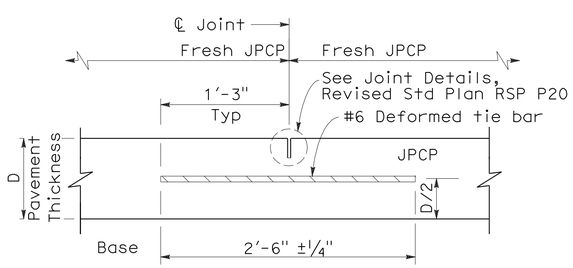

SECTION A-A

LONGITUDINAL CONTRACTION JOINT

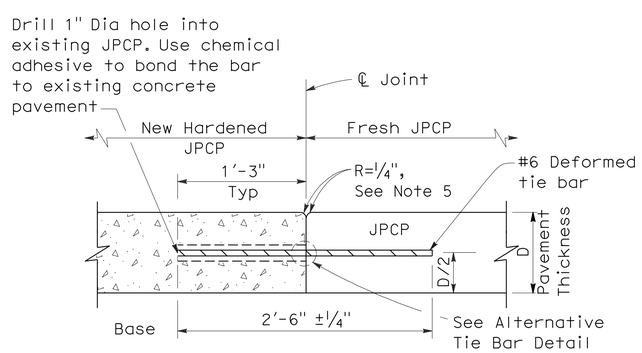

SECTION B-B

LONGITUDINAL CONSTRUCTION JOINT

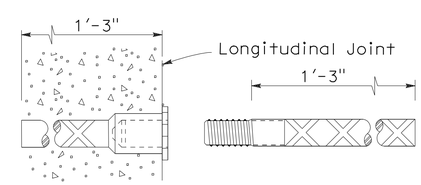

ALTERNATIVE TIE BAR SPLICE DETAIL

(Splice Coupler)

TIE BAR DETAILS

STATE OF CALIFORNIA
DEPARTMENT OF TRANSPORTATION

JOINTED PLAIN CONCRETE PAVEMENT

NO SCALE

RSP P1 DATED MAY 15, 2009 SUPERSEDES STANDARD PLAN P1
DATED MAY 1, 2006 - PAGE 119 OF THE STANDARD PLANS BOOK DATED MAY 2006.

REVISED STANDARD PLAN RSP P1

5-8-09

DIST	COUNTY	ROUTE	POST MILES TOTAL PROJECT	SHEET NO.	TOTAL SHEETS
04	Ala	580	R8.4/R14.6	681	853

William K. Farnbach
REGISTERED CIVIL ENGINEER

June 5, 2009
PLANS APPROVAL DATE

REGISTERED PROFESSIONAL ENGINEER
William K. Farnbach
No. C49042
Exp. 9-30-10
CIVIL
STATE OF CALIFORNIA

The State of California or its officers or agents shall not be responsible for the accuracy or completeness of electronic copies of this plan sheet.

To accompany plans dated 5-14-12

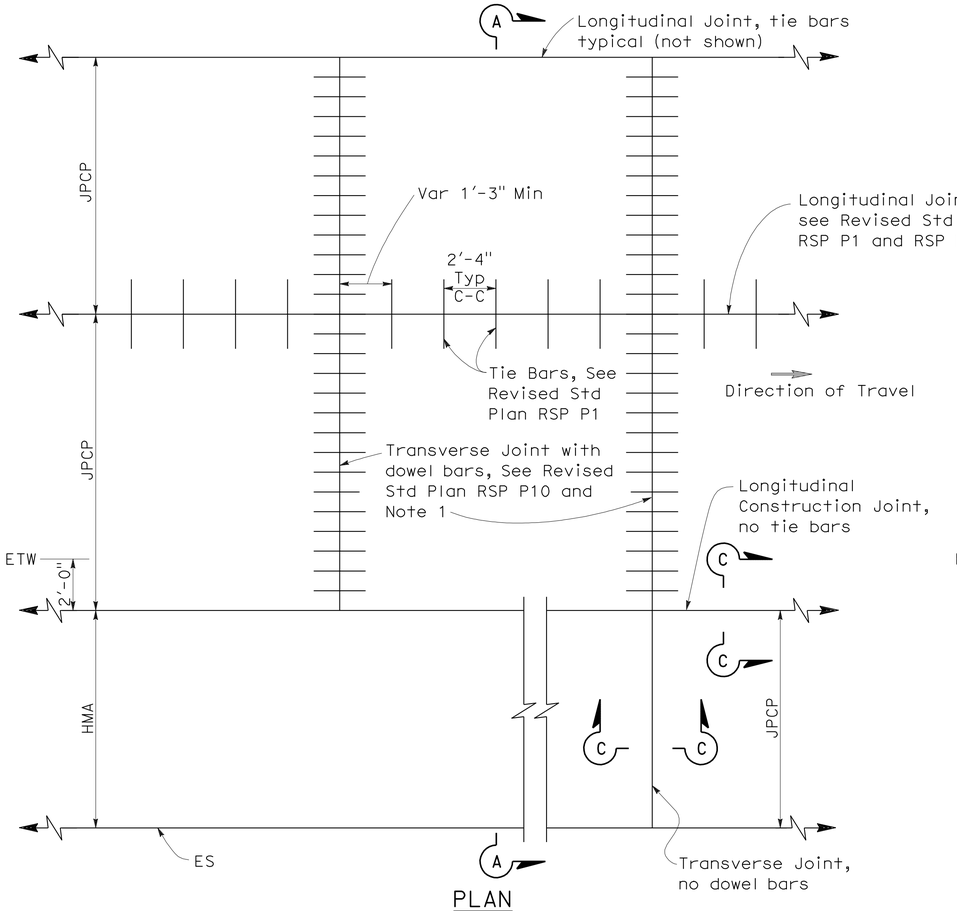

PLAN

NEW CONSTRUCTION

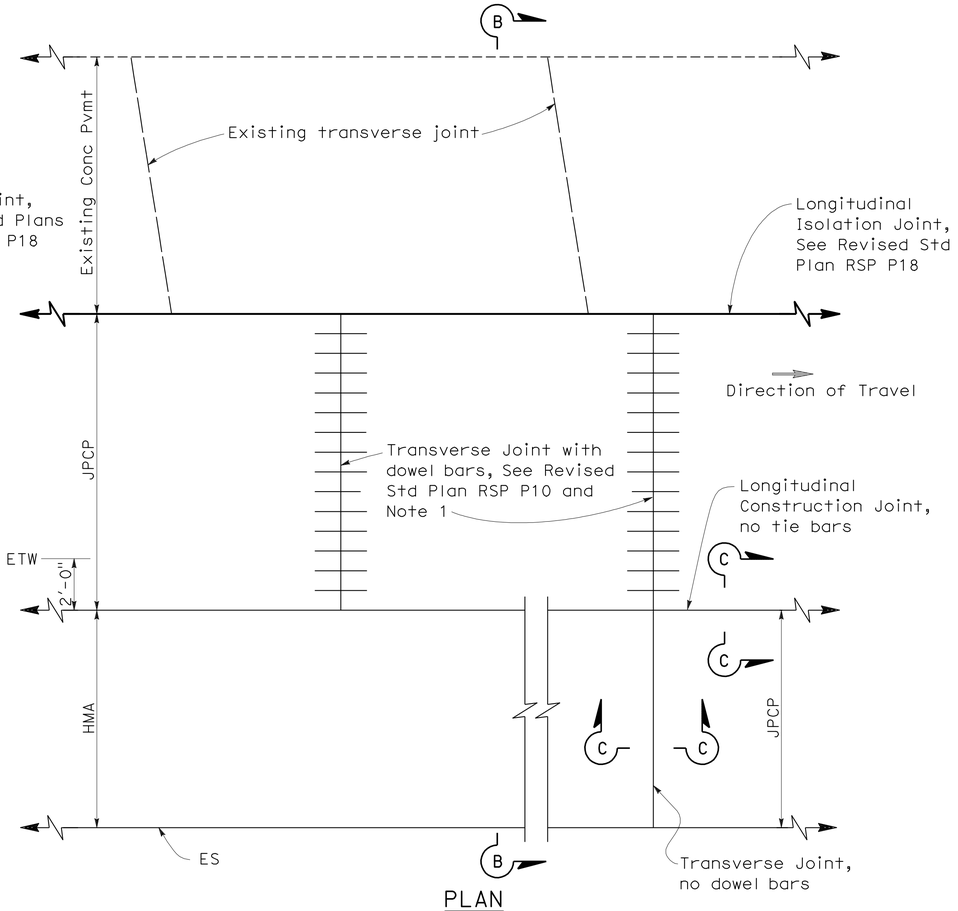

PLAN

LANE/SHOULDER ADDITION OR RECONSTRUCTION

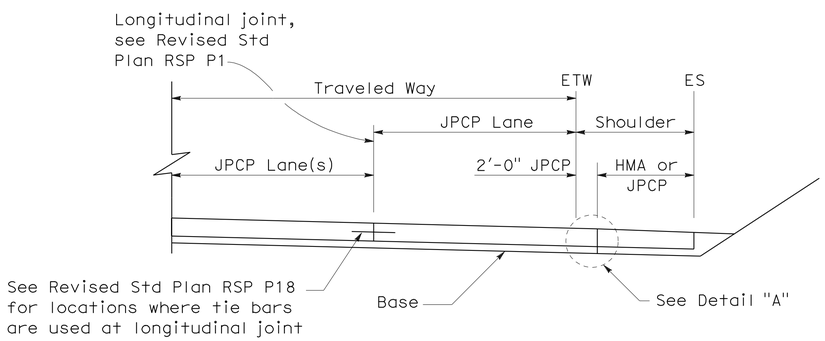

SECTION A-A

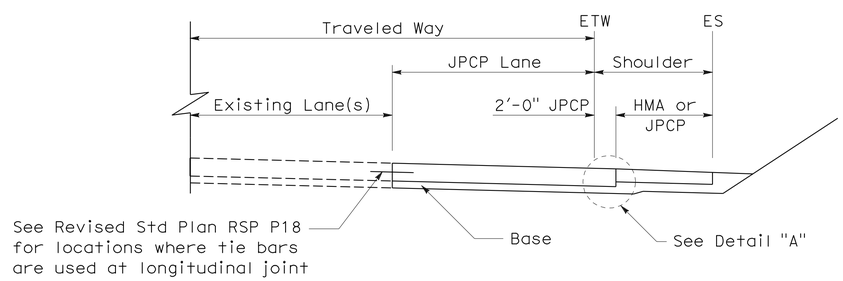

SECTION B-B

NOTES:

1. Transverse joints shall be constructed at right angles to the longitudinal pavement joints in new Jointed Plain Concrete Pavement and spaced at successive repeated intervals of 12', 15', 13' and 14'.
2. For locations of rumble strips, see project plans. For rumble strip details not shown, see Standard Plans A40A and A40B.
3. Joint spacing patterns do not apply to intersections.

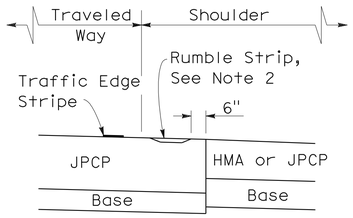

DETAIL "A"

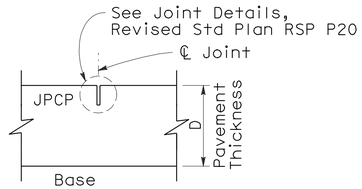

SECTION C-C

TRANSVERSE/LONGITUDINAL JOINT

(no dowel bars/tie bars)

STATE OF CALIFORNIA
DEPARTMENT OF TRANSPORTATION

JOINTED PLAIN CONCRETE PAVEMENT-WIDENED SLAB DETAILS

NO SCALE

RSP P2 DATED JUNE 5, 2009 SUPERCEDES STANDARD PLAN P2
DATED MAY 1, 2006 - PAGE 120 OF THE STANDARD PLANS BOOK DATED MAY 2006.

REVISED STANDARD PLAN RSP P2

2006 REVISED STANDARD PLAN RSP P2

5-19-09

DIST	COUNTY	ROUTE	POST MILES TOTAL PROJECT	SHEET NO.	TOTAL SHEETS
04	Ala	580	R8.4/R14.6	682	853

William K. Farnbach
REGISTERED CIVIL ENGINEER

April 20, 2012
PLANS APPROVAL DATE

REGISTERED PROFESSIONAL ENGINEER — William K. Farnbach — No. C49042 — Exp. 9-30-12 — CIVIL — STATE OF CALIFORNIA

The State of California or its officers or agents shall not be responsible for the accuracy or completeness of electronic copies of this plan sheet.

To accompany plans dated 5-14-12

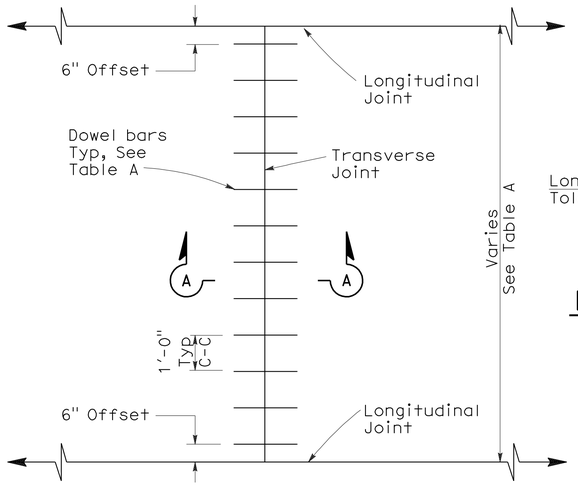

TRANSVERSE JOINT DOWEL BAR LAYOUT

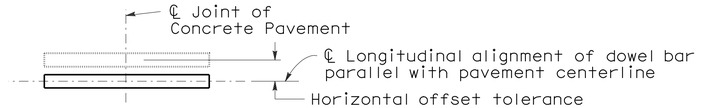

PLAN

HORIZONTAL OFFSET TOLERANCE

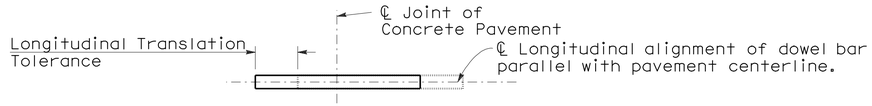

PLAN

LONGITUDINAL TRANSLATION TOLERANCE

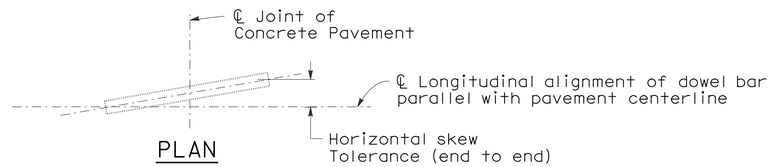

PLAN

HORIZONTAL SKEW TOLERANCE

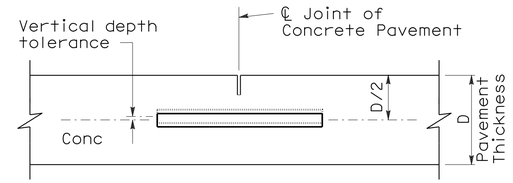

ELEVATION

VERTICAL DEPTH TOLERANCE

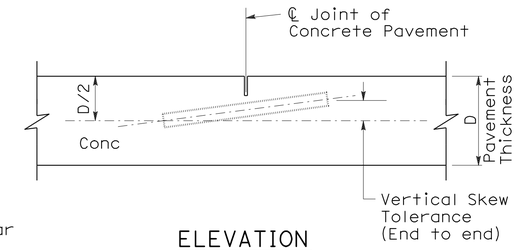

ELEVATION

VERTICAL SKEW TOLERANCE

NOTES:

1. See Revised Standard Plan RSP P1 for typical dowel bar placement and locations.
2. 1½" Dia dowel bars are to be used with a pavement thickness, D, equal to or greater than 0.70 feet. For pavement thickness, D, less than 0.70 feet, use 1¼" Dia dowel bars.
3. For widths not shown, see Project Plans.
4. If fresh concrete pavement is placed adjacent to existing concrete pavement, the top corner of the existing concrete pavement does not need to be rounded to the ¼" radius, as shown.
5. May also use ¾" Dia dowel bars 2'-4" ± ¼" in length. Center the length of dowel bars at the centerline of longitudinal joint.

TABLE A (See Note 3)

Dowel Bar Transverse Spacing Table	
Width between Longitudinal Joints	Number of Dowels between Longitudinal Joints
14'-0"	14
13'-0"	13
12'-0"	12
11'-0"	11
10'-0"	10
8'-0"	8
5'-0"	5
4'-0"	4

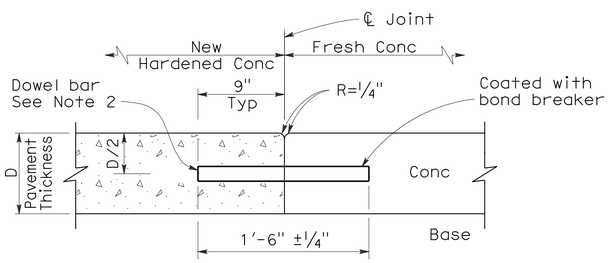

SECTION A-A

TRANSVERSE CONSTRUCTION JOINT DETAIL

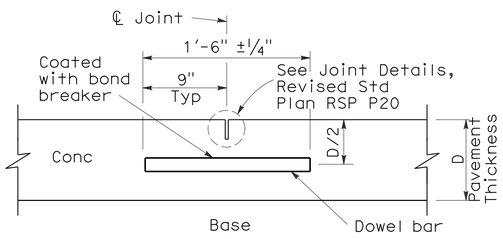

TRANSVERSE CONTRACTION JOINT

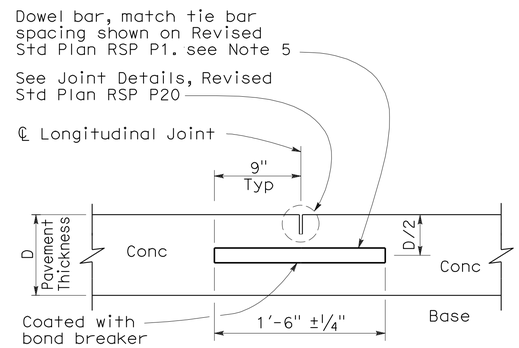

LONGITUDINAL CONTRACTION JOINT WITH DOWEL BARS

See Revised Std Plan RSP P18

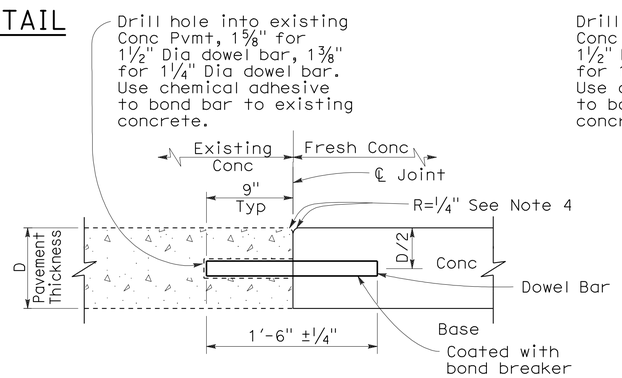

TRANSVERSE CONSTRUCTION JOINT FOR EXISTING CONCRETE PAVEMENT

Drill and bond locations

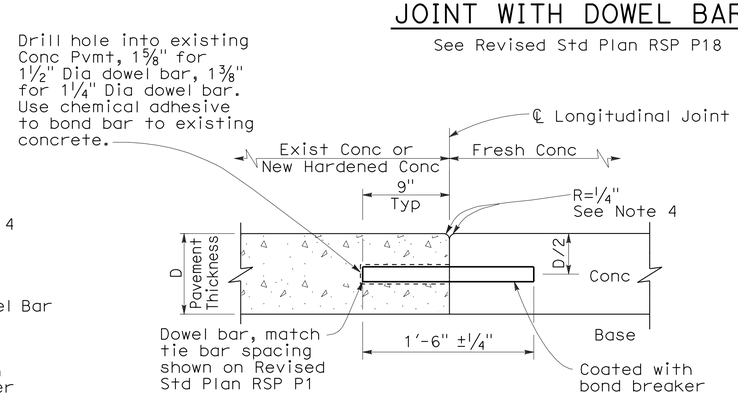

LONGITUDINAL CONSTRUCTION JOINT WITH DOWEL BARS

See Revised Std Plan RSP P18

STATE OF CALIFORNIA
DEPARTMENT OF TRANSPORTATION

CONCRETE PAVEMENT-DOWEL BAR DETAILS

NO SCALE

RSP P10 DATED APRIL 20, 2012 SUPERSEDES RSP P10 DATED MAY 15, 2009 AND STANDARD PLAN P10 DATED MAY 1, 2006 - PAGE 124 OF THE STANDARD PLANS BOOK DATED MAY 2006.

REVISED STANDARD PLAN RSP P10

2006 REVISED STANDARD PLAN RSP P10

2-22-12

DIST	COUNTY	ROUTE	POST MILES TOTAL PROJECT	SHEET NO.	TOTAL SHEETS
04	Ala	580	R8.4/R14.6	683	853

William K. Farnbach
REGISTERED CIVIL ENGINEER

May 15, 2009
PLANS APPROVAL DATE

REGISTERED PROFESSIONAL ENGINEER
William K. Farnbach
No. C49042
Exp. 9-30-10
CIVIL
STATE OF CALIFORNIA

The State of California or its officers or agents shall not be responsible for the accuracy or completeness of electronic copies of this plan sheet.

To accompany plans dated 5-14-12

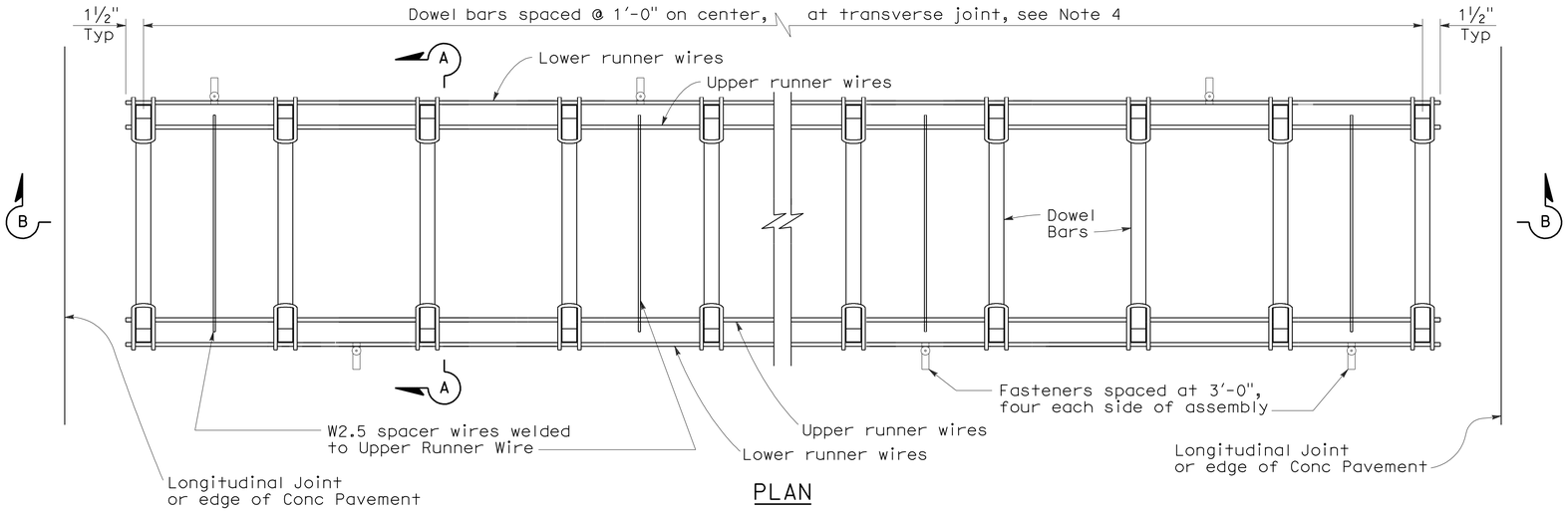

PLAN

DOWEL BAR BASKET (TRANSVERSE JOINT)

See Note 1

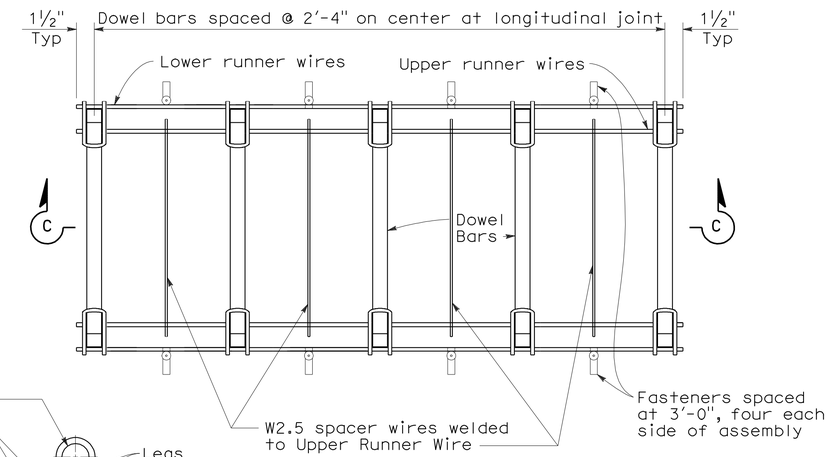

PLAN

DOWEL BAR BASKET (LONGITUDINAL JOINT)

See Note 1

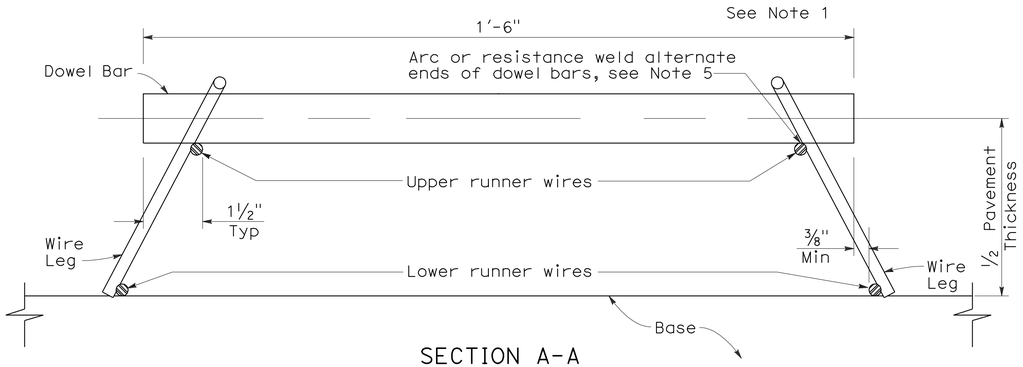

SECTION A-A

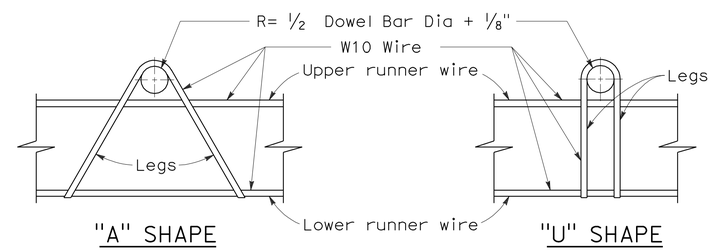

"A" SHAPE "U" SHAPE

ASSEMBLY FRAME DETAILS

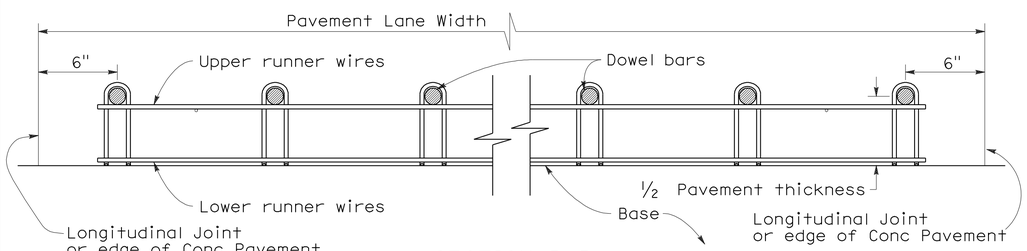

SECTION B-B

See Note 1

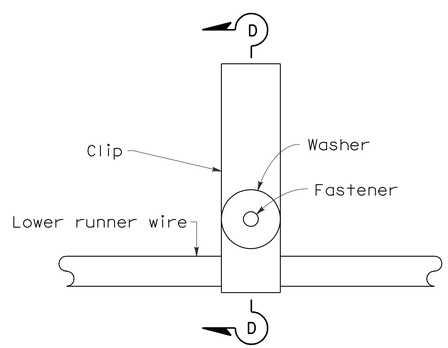

PLAN

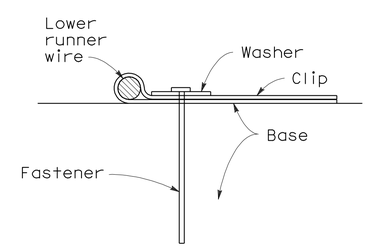

SECTION D-D

FASTENER DETAIL

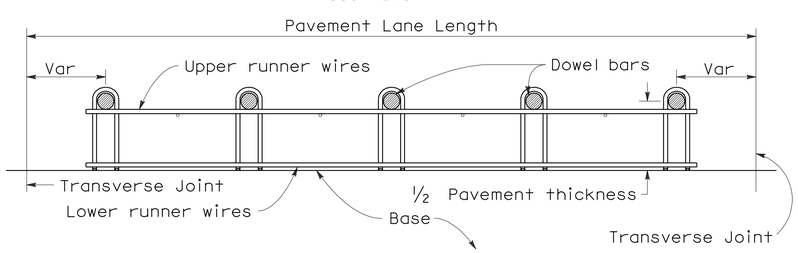

SECTION C-C

See Notes 1 and 4

NOTES:

1. "U" frame shape assembly shown. "U" frame shape or "A" frame shape are acceptable.
2. Wire sizes shown are minimum required.
3. All wire intersections are to be resistance welded.
4. Use tie bar spacing for longitudinal dowel bar locations. See Revised Std Plans RSPs P1, P2, and P3 for tie bar requirements.
5. Weld may be at top or bottom of dowel bar.

STATE OF CALIFORNIA
DEPARTMENT OF TRANSPORTATION

CONCRETE PAVEMENT-DOWEL BAR BASKET DETAILS

NO SCALE

RSP P12 DATED MAY 15, 2009 SUPERSEDES RSP P12 DATED NOVEMBER 17, 2006 AND STANDARD PLAN P12 DATED MAY 1, 2006 - PAGE 125 OF THE STANDARD PLANS BOOK DATED MAY 2006.

REVISED STANDARD PLAN RSP P12

2006 REVISED STANDARD PLAN RSP P12

5-8-09

DIST	COUNTY	ROUTE	POST MILES TOTAL PROJECT	SHEET NO.	TOTAL SHEETS
04	Ala	580	R8.4/R14.6	684	853

William K. Farnbach
REGISTERED CIVIL ENGINEER

May 15, 2009
PLANS APPROVAL DATE

REGISTERED PROFESSIONAL ENGINEER
William K. Farnbach
No. C49042
Exp. 9-30-10
CIVIL
STATE OF CALIFORNIA

The State of California or its officers or agents shall not be responsible for the accuracy or completeness of electronic copies of this plan sheet.

To accompany plans dated 5-14-12

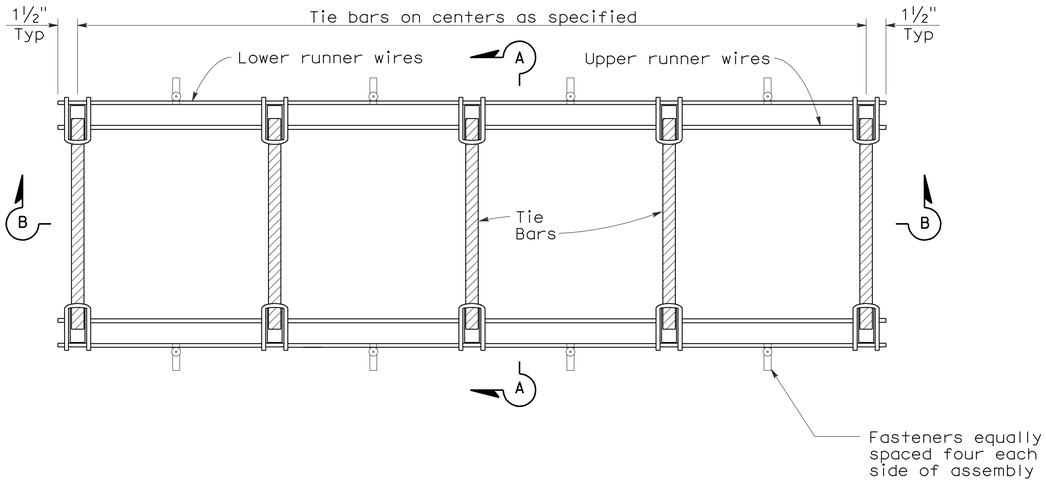

PLAN

TIE BAR BASKET

(TIE BARS AT LONGITUDINAL JOINT)
See Note 1

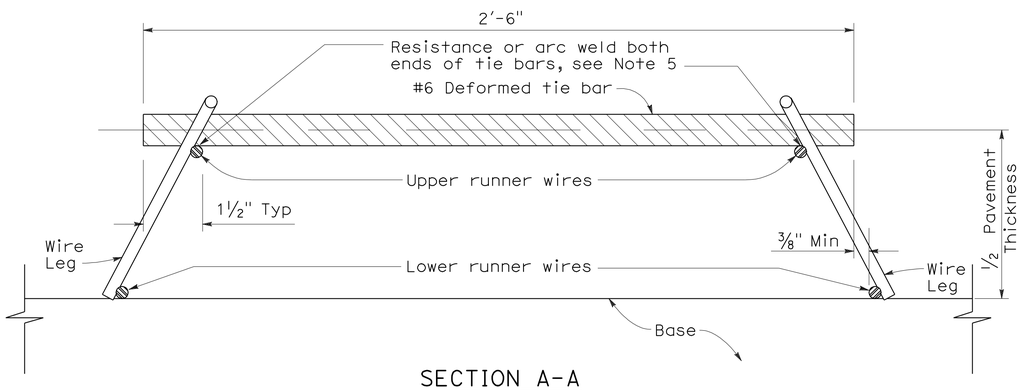

SECTION A-A

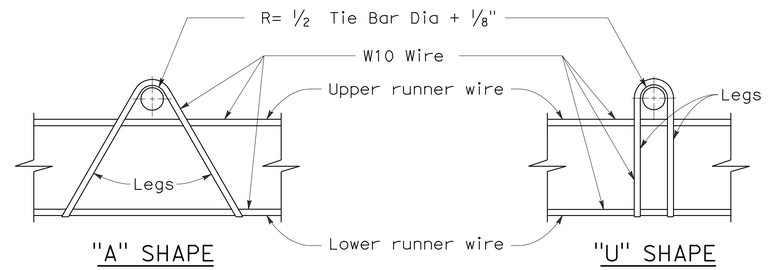

ASSEMBLY FRAME DETAILS

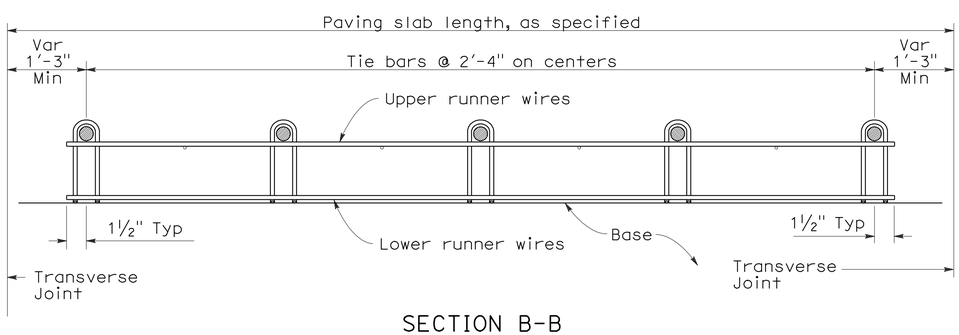

SECTION B-B
See Note 1

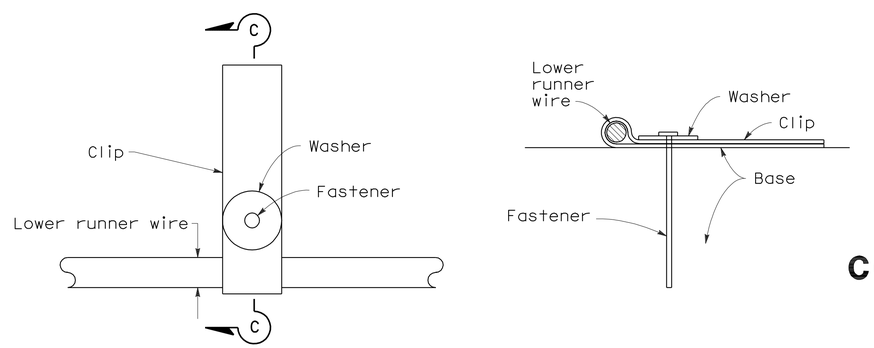

PLAN

SECTION C-C

FASTENER DETAIL

NOTES:

1. "U" frame shape assembly shown. "U" frame shape or "A" frame shape are acceptable.
2. Wire sizes shown are minimum required.
3. All wire intersections are to be resistance welded.
4. Not for use on nondoweled skewed jointed plain concrete pavement.
5. Weld may be at top or bottom of tie bar.

STATE OF CALIFORNIA
DEPARTMENT OF TRANSPORTATION

CONCRETE PAVEMENT-TIE BAR BASKET DETAILS

NO SCALE

RSP P17 DATED MAY 15, 2009 SUPERSEDES RSP P17 DATED NOVEMBER 17, 2006 AND STANDARD PLAN P17 DATED MAY 1, 2006 - PAGE 126 OF THE STANDARD PLANS BOOK DATED MAY 2006.

REVISED STANDARD PLAN RSP P17

2006 REVISED STANDARD PLAN RSP P17

5-8-09

DIST	COUNTY	ROUTE	POST MILES TOTAL PROJECT	SHEET NO.	TOTAL SHEETS
04	Ala	580	R8.4/R14.6	685	853

William K. Farnbach
REGISTERED CIVIL ENGINEER

April 20, 2012
PLANS APPROVAL DATE

REGISTERED PROFESSIONAL ENGINEER
William K. Farnbach
No. C49042
Exp. 9-30-12
CIVIL
STATE OF CALIFORNIA

The State of California or its officers or agents shall not be responsible for the accuracy or completeness of electronic copies of this plan sheet.

To accompany plans dated 5-14-12

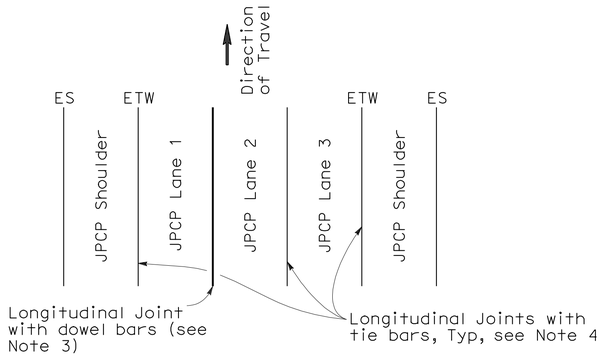

3 LANES WITH TIED CONCRETE SHOULDERS
PLAN

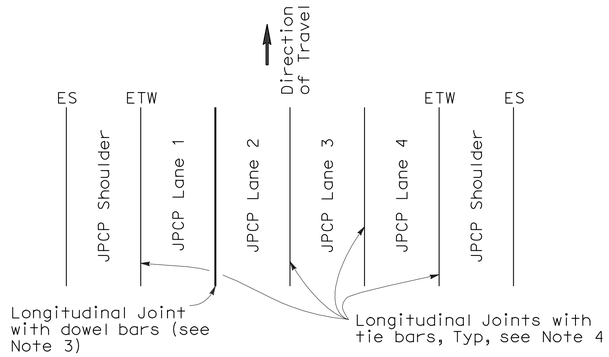

4 LANES WITH TIED CONCRETE SHOULDERS
PLAN

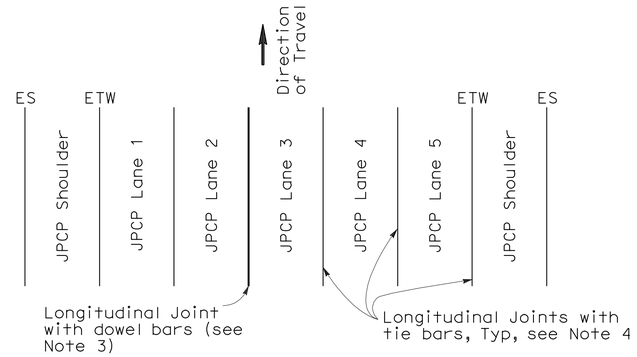

5 LANES WITH TIED CONCRETE SHOULDERS
PLAN

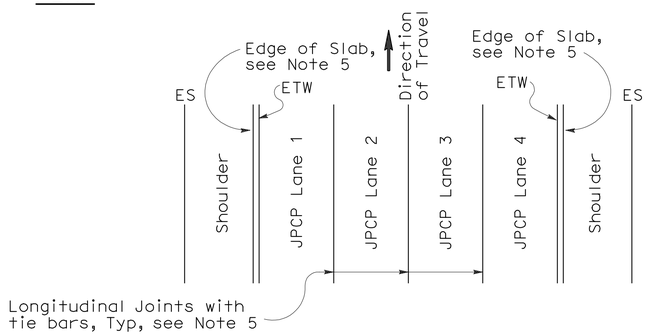

4 LANES OR LESS WITH WIDENED SLAB
PLAN

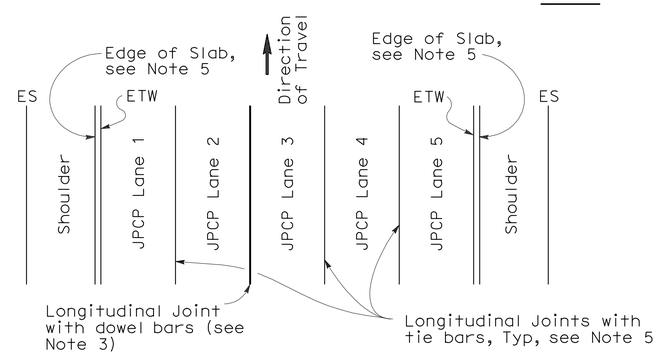

5 LANES WITH WIDENED SLAB
PLAN

NEW CONSTRUCTION

Location of Longitudinal Joints
For JPCP

NOTES:

1. Where Lean Concrete Base is not used as base material, the joint filler material used for the longitudinal isolation joint shall only extend to the bottom of the new concrete slab. See Detail A.
2. Use 5/8" ±1/16" dimension for silicone sealant.
3. See Revised Standard Plan RSP P10 for longitudinal joint with dowel bars.
4. See Revised Standard Plan RSP P1.
5. See Revised Standard Plan RSP P2.

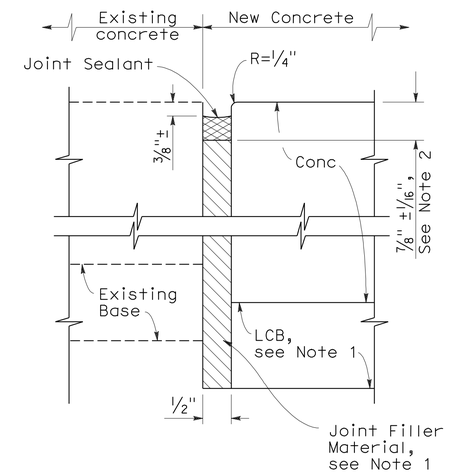

DETAIL A

ISOLATION JOINT

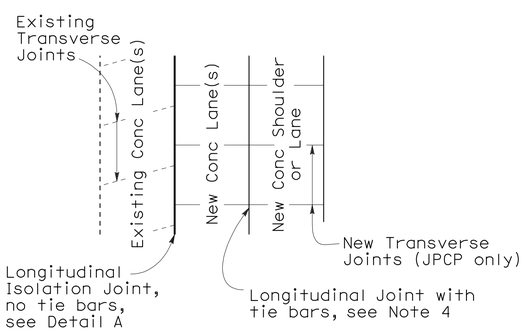

CASE 1
PLAN

Transverse Joints do not align between new and existing

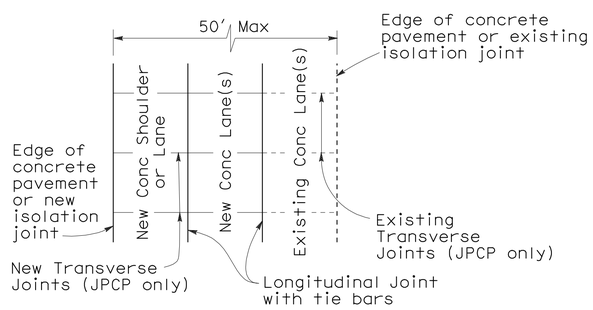

CASE 2
PLAN

Transverse Joints align between new and existing

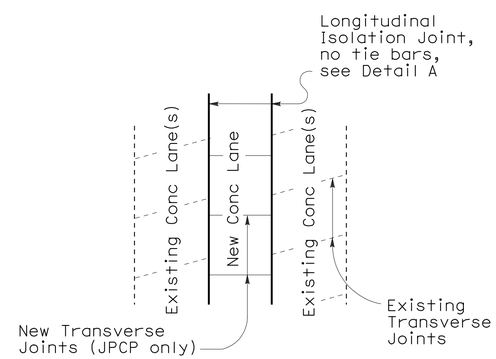

CASE 3 (INTERIOR LANE REPLACEMENT)
PLAN

Transverse Joints do not align between new and existing

LANE/SHOULDER ADDITION OR RECONSTRUCTION

For JPCP and CRCP

STATE OF CALIFORNIA
DEPARTMENT OF TRANSPORTATION

CONCRETE PAVEMENT-LANE SCHEMATICS AND ISOLATION JOINT DETAIL

NO SCALE

RSP P18 DATED APRIL 20, 2012 SUPERSEDES RSP P18 DATED JUNE 5, 2009, RSP P18 DATED MAY 15, 2009, RSP P18 DATED NOVEMBER 17, 2006 AND STANDARD PLAN P18 DATED MAY 1, 2006 - PAGE 127 OF THE STANDARD PLANS BOOK DATED MAY 2006.

REVISED STANDARD PLAN RSP P18

2006 REVISED STANDARD PLAN RSP P18

2-22-12

DIST	COUNTY	ROUTE	POST MILES TOTAL PROJECT	SHEET NO.	TOTAL SHEETS
04	Ala	580	R8.4/R14.6	686	853

William K. Farnbach
REGISTERED CIVIL ENGINEER

May 15, 2009
PLANS APPROVAL DATE

REGISTERED PROFESSIONAL ENGINEER
William K. Farnbach
No. C49042
Exp. 9-30-10
CIVIL
STATE OF CALIFORNIA

The State of California or its officers or agents shall not be responsible for the accuracy or completeness of electronic copies of this plan sheet.

To accompany plans dated 5-14-12

2006 REVISED STANDARD PLAN RSP P20

NOTE:

1. Tie bars, dowel bars, and reinforcement are not shown in joint seal details, see Revised Standard Plans RSP P1, RSP P3, RSP P10, RSP P35, RSP P45, or RSP P46 as applicable.

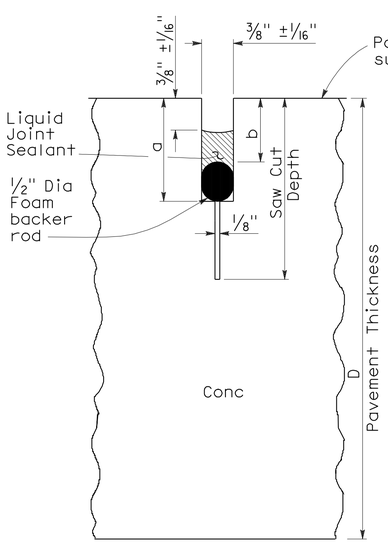

LIQUID SEALANT

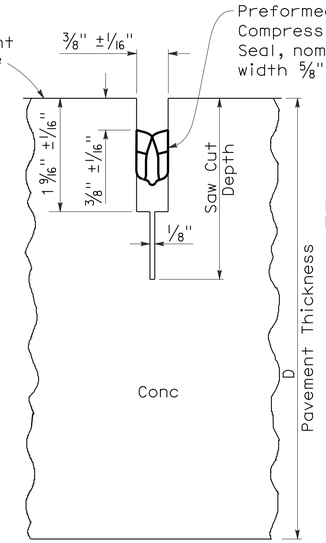

COMPRESSION SEAL

TYPE A1

Transverse Contraction Joints

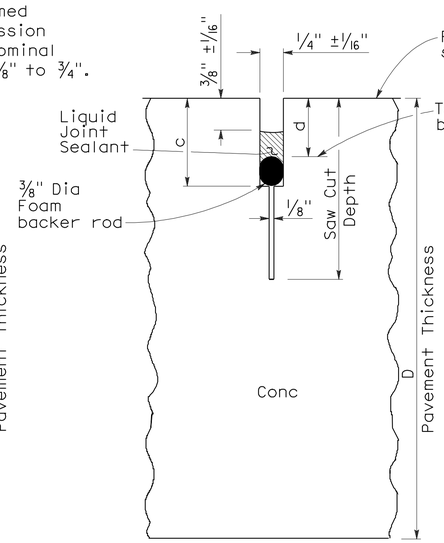

LIQUID SEALANT

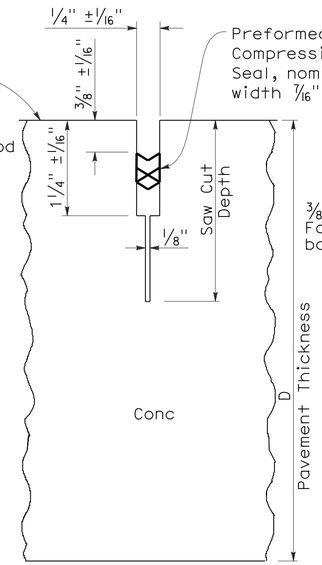

COMPRESSION SEAL

TYPE A2

Longitudinal Contraction Joints

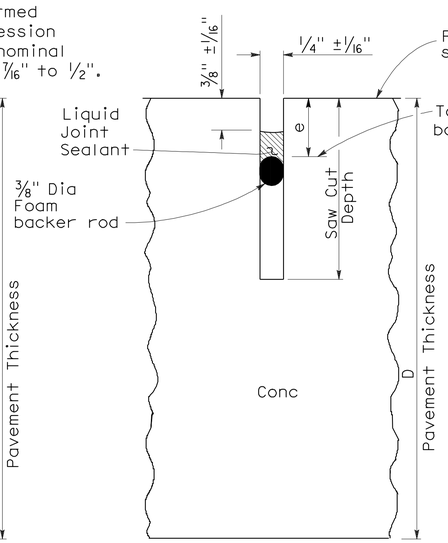

LIQUID SEALANT

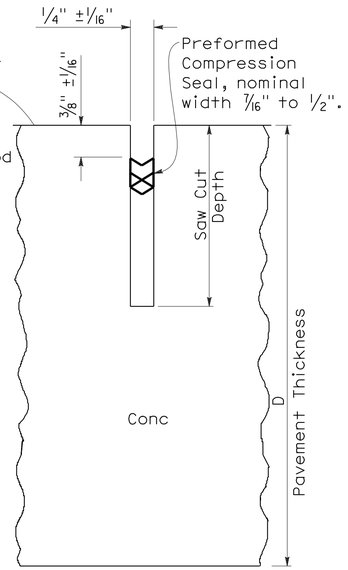

COMPRESSION SEAL

TYPE B

Longitudinal or Transverse Contraction Joint

LIQUID SEALANT RESERVOIR DEPTH

LIQUID SEALANT MATERIAL	3/8" Joint Width Type A1		1/4" Joint Width Type A2		1/4" Joint Width Type B
	DIMENSION		DIMENSION		DIMENSION
	a	b	c	d	e
SILCONE	1" ±1/16"	5/8" ±1/16"	15/16" ±1/16"	9/16" ±1/16"	9/16" ±1/16"
ASPHALT RUBBER	1 3/16" ±1/16"	3/4" ±1/16"	1 1/16" ±1/16"	11/16" ±1/16"	11/16" ±1/16"

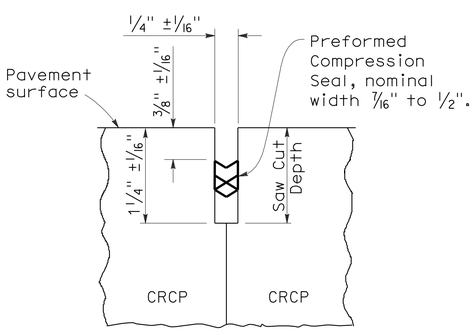

COMPRESSION SEAL

TYPE C

Transverse and Longitudinal Construction Joints (For CRCP)

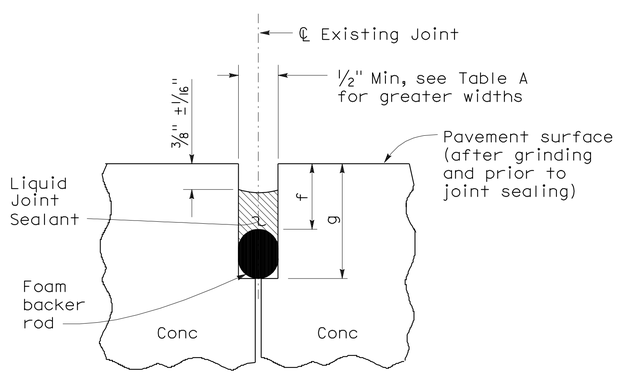

LIQUID SEALANT

TYPE R

Retrofit Transverse and Longitudinal Joints

TABLE A (TYPE R JOINT)

Sawn Joint Width	Backer Rod Diameter ± 1/16"	DIMENSION "f"	DIMENSION "g"
1"	1 5/16"	7/8"	2 1/4"
7/8"	1 3/16"	13/16"	2"
3/4"	1"	3/4"	1 3/4"
5/8"	7/8"	11/16"	1 1/2"
1/2"	11/16"	5/8"	1 1/4"

STATE OF CALIFORNIA
DEPARTMENT OF TRANSPORTATION

CONCRETE PAVEMENT-JOINT DETAILS

NO SCALE

RSP P20 DATED MAY 15, 2009 SUPERSEDES STANDARD PLAN P20
DATED MAY 1, 2006 - PAGE 128 OF THE STANDARD PLANS BOOK DATED MAY 2006.

REVISED STANDARD PLAN RSP P20

5-8-09

DIST	COUNTY	ROUTE	POST MILES TOTAL PROJECT	SHEET NO.	TOTAL SHEETS
04	Ala	580	R8.4/R14.6	687	853

William K. Farnbach
REGISTERED CIVIL ENGINEER

April 20, 2012
PLANS APPROVAL DATE

REGISTERED PROFESSIONAL ENGINEER
William K. Farnbach
No. C49042
Exp. 9-30-12
CIVIL
STATE OF CALIFORNIA

The State of California or its officers or agents shall not be responsible for the accuracy or completeness of electronic copies of this plan sheet.

To accompany plans dated 5-14-12

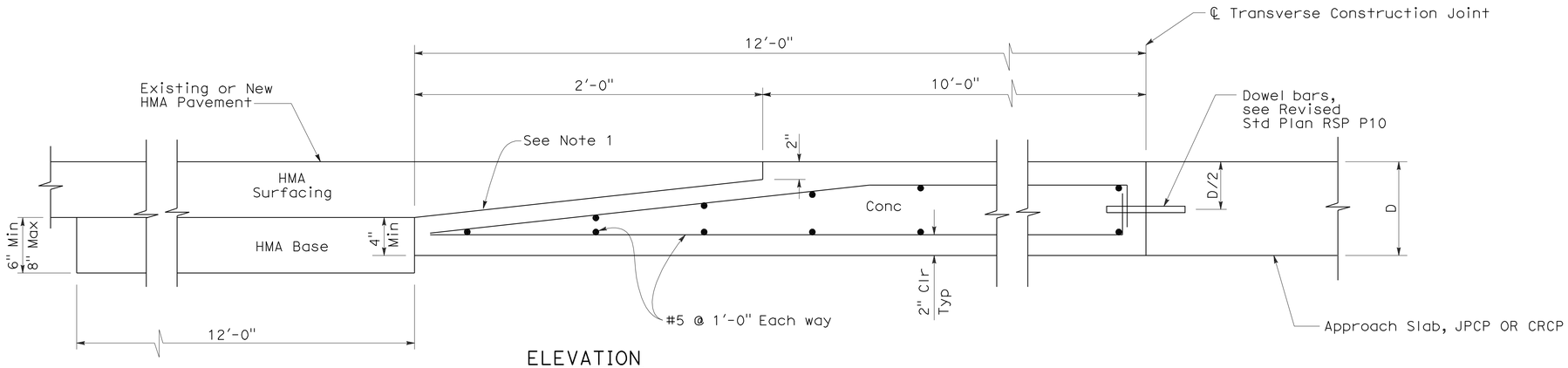

ELEVATION

CONCRETE PAVEMENT TRANSITION PANEL

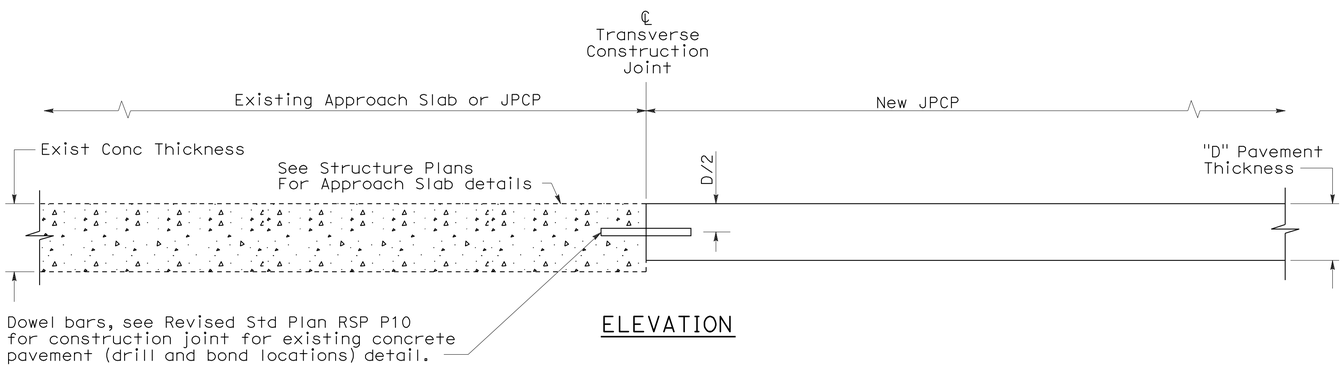

ELEVATION

TERMINAL JOINT TYPE 1

For Exist JPCP or Structure Approach Slab

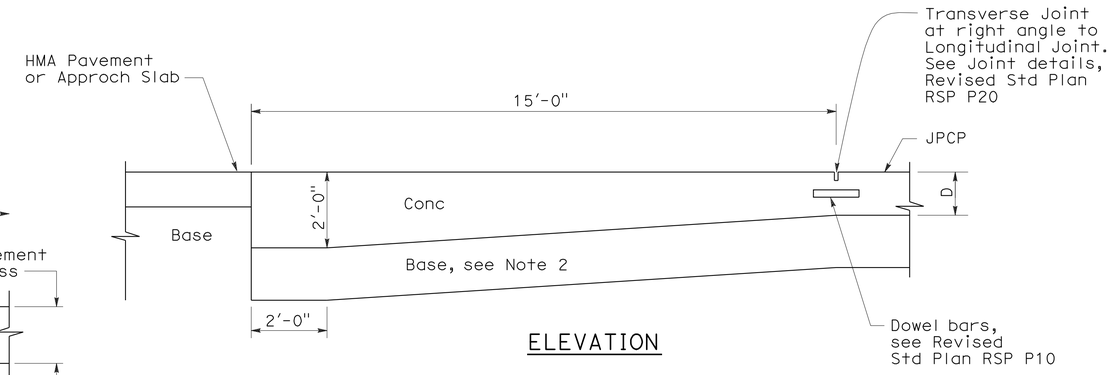

ELEVATION

PAVEMENT END ANCHOR

For HMA Pvmt or Structure Approach Slab

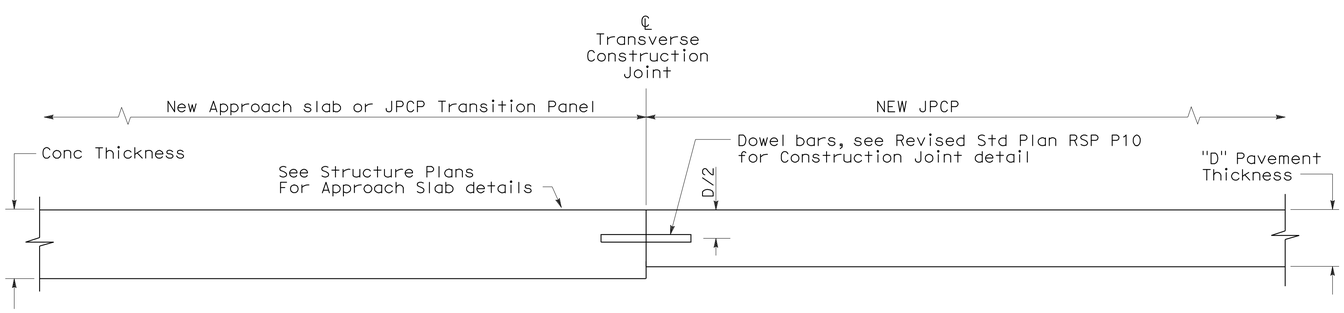

ELEVATION

TERMINAL JOINT TYPE 2

For JPCP Transition Panel or Structure Approach Slab

NOTES:

1. Heavy broom finish.
2. Maintain same base thickness as JPCP.

STATE OF CALIFORNIA
DEPARTMENT OF TRANSPORTATION

CONCRETE PAVEMENT-END PANEL PAVEMENT TRANSITIONS

NO SCALE

RSP P30 DATED APRIL 20, 2012 SUPERSEDES RSP P30 DATED MAY 15, 2009 AND STANDARD PLAN P30 DATED MAY 1, 2006 - PAGE 129 OF THE STANDARD PLANS BOOK DATED MAY 2006.

REVISED STANDARD PLAN RSP P30

2006 REVISED STANDARD PLAN RSP P30

2-22-12

DIST	COUNTY	ROUTE	POST MILES TOTAL PROJECT	SHEET NO.	TOTAL SHEETS
04	Ala	580	R8.4/R14.6	688	853

Raymond Don Tsztoo
REGISTERED CIVIL ENGINEER

March 7, 2008
PLANS APPROVAL DATE

REGISTERED PROFESSIONAL ENGINEER
Raymond Don Tsztoo
No. C37332
Exp. 6-30-08
CIVIL
STATE OF CALIFORNIA

The State of California or its officers or agents shall not be responsible for the accuracy or completeness of electronic copies of this plan sheet.

To accompany plans dated 5-14-12

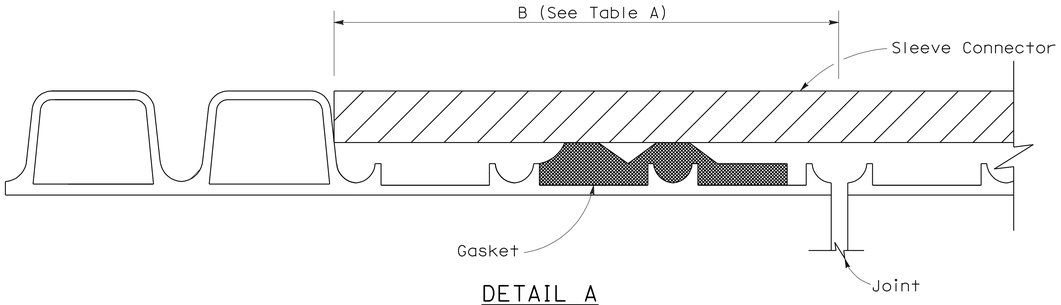

DETAIL A

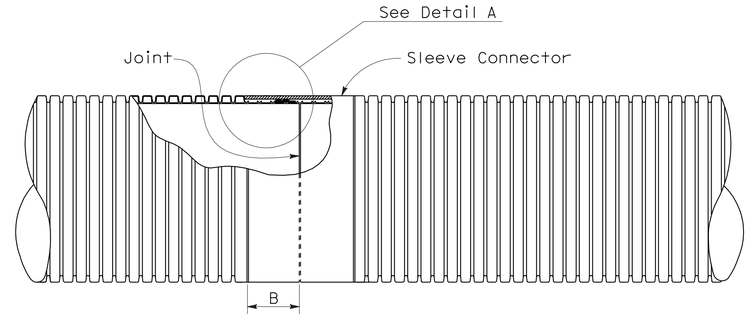

PLAN VIEW
Liner Insert
See Note 4

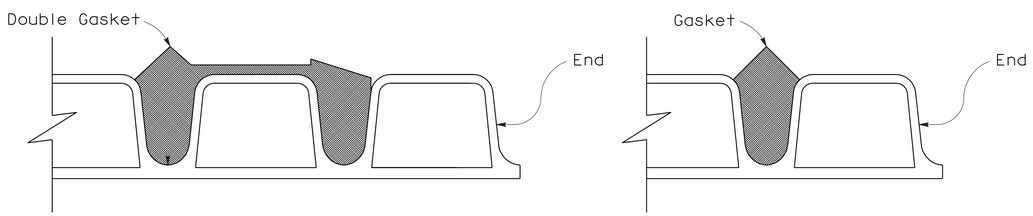

Double Gasket

Single Gasket

DETAIL B

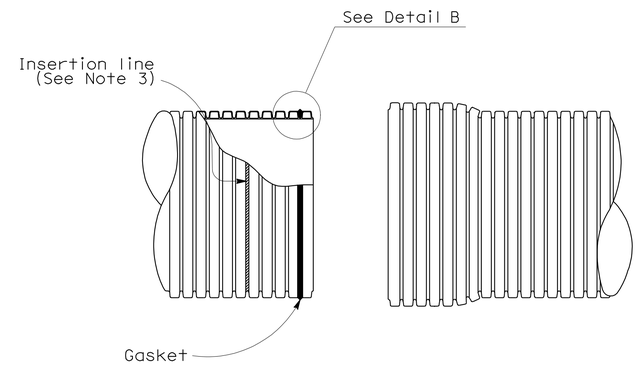

SPIGOT

BELL

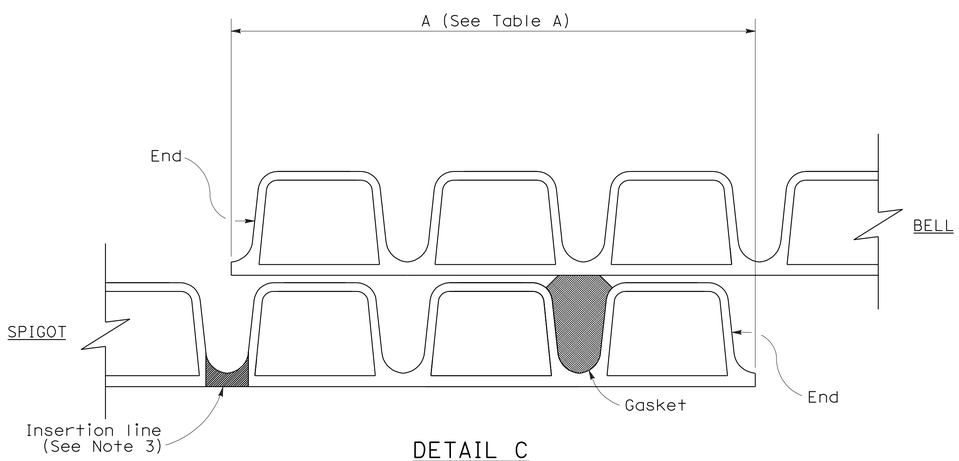

DETAIL C
(Single gasket shown)

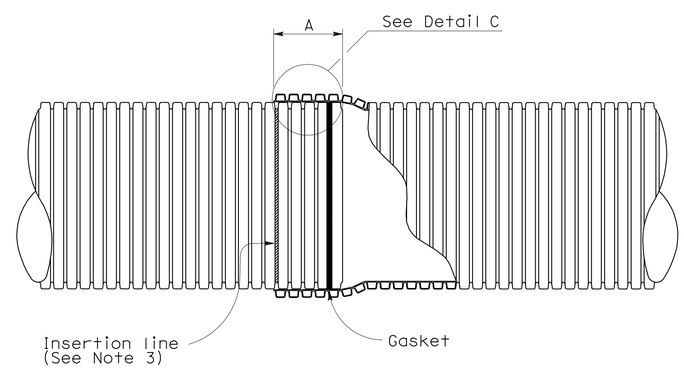

BELL AND SPIGOT JOINT

NOTES:

1. For pipe sections installed on straight alignment, the pipe sections shall be joined to achieve maxium joint overlap at all points on the periphery as indicated in Table A where the plans call for positive or watertight joints. Maxium joint overlap is recommended where the plans call for standard joints, but in no case shall the joint overlap be less than 3½".

2. For pipe sections installed on curved alignment, the maxium angle of deflection from straight alignment at any joint shall not exceed two degrees. Where the plans call for watertightness, field testing for compliance is required. Where plans call for positive joints, the pipe sections shall be joined to achieve Table A Dimensions on one side of the joint. Joints classified as standard shall have no less than 3½" joint overlap at any point on the periphery.

3. Factory applied insertion line limit shall be placed on spigot.

4. Liner insert to be used inside of existing pipe.

TABLE A

JOINT OVERLAP DIMENSIONS		
PIPE Dia (NOMINAL)	A	B
12"	5¾"	4¼"
15"	6¾"	5⅝"
18"	6¾"	5⅝"
21"	8½"	5⅝"
24"	8½"	6⅛"
30"	8½"	7⅛"
36"	8½"	8⅛"

STATE OF CALIFORNIA
DEPARTMENT OF TRANSPORTATION

CORRUGATED POLYVINYL CHLORIDE PIPE WITH SMOOTH INTERIOR STANDARD AND POSITIVE JOINTS

NO SCALE

NSP D97I DATED MARCH 7, 2008 SUPPLEMENTS THE STANDARD PLANS BOOK DATED MAY 2006.

NEW STANDARD PLAN NSP D97I

2006 NEW STANDARD PLAN NSP D97I

2-13-08

DIST	COUNTY	ROUTE	POST MILES TOTAL PROJECT	SHEET NO.	TOTAL SHEETS
04	Ala	580	R8.4/R14.6	689	853

LICENSED LANDSCAPE ARCHITECT

April 3, 2009
PLANS APPROVAL DATE

The State of California or its officers or agents shall not be responsible for the accuracy or completeness of electronic copies of this plan sheet.

LICENSED LANDSCAPE ARCHITECT
Gregory A. Balzer 3878
02-28-11 Renewal Date
03-04-09 Date
STATE OF CALIFORNIA

To accompany plans dated 5-14-12

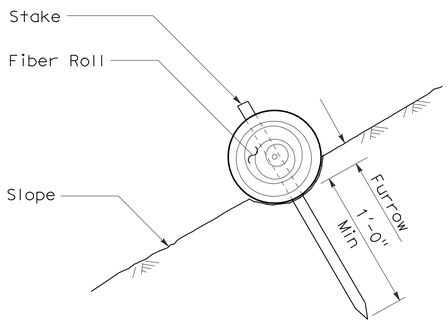

SECTION

FIBER ROLL (TYPE 1)

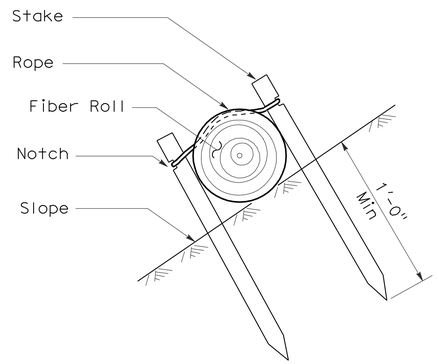

SECTION

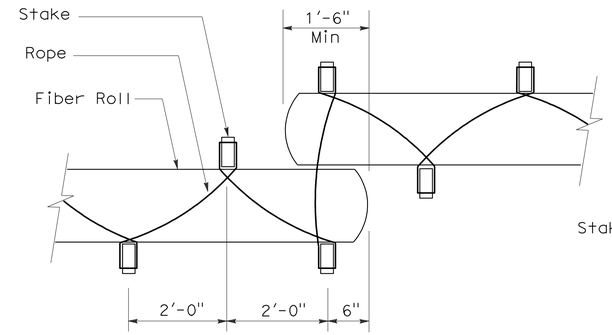

PLAN

FIBER ROLL (TYPE 2)

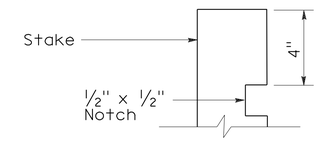

ELEVATION

STAKE NOTCH DETAIL

NOTES:

1. Fiber roll spacing varies depending upon slope inclination.
2. Installations shown in the perspectives are for slope inclination of 10:1 and steeper.

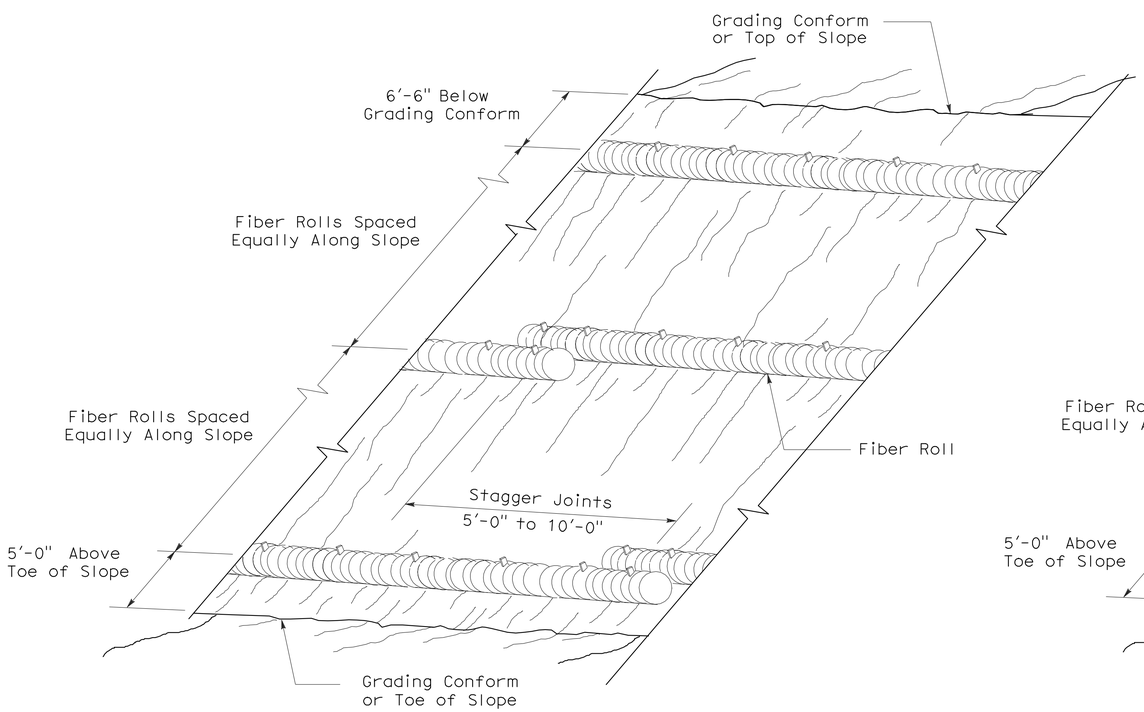

PERSPECTIVE

FIBER ROLL (TYPE 1)

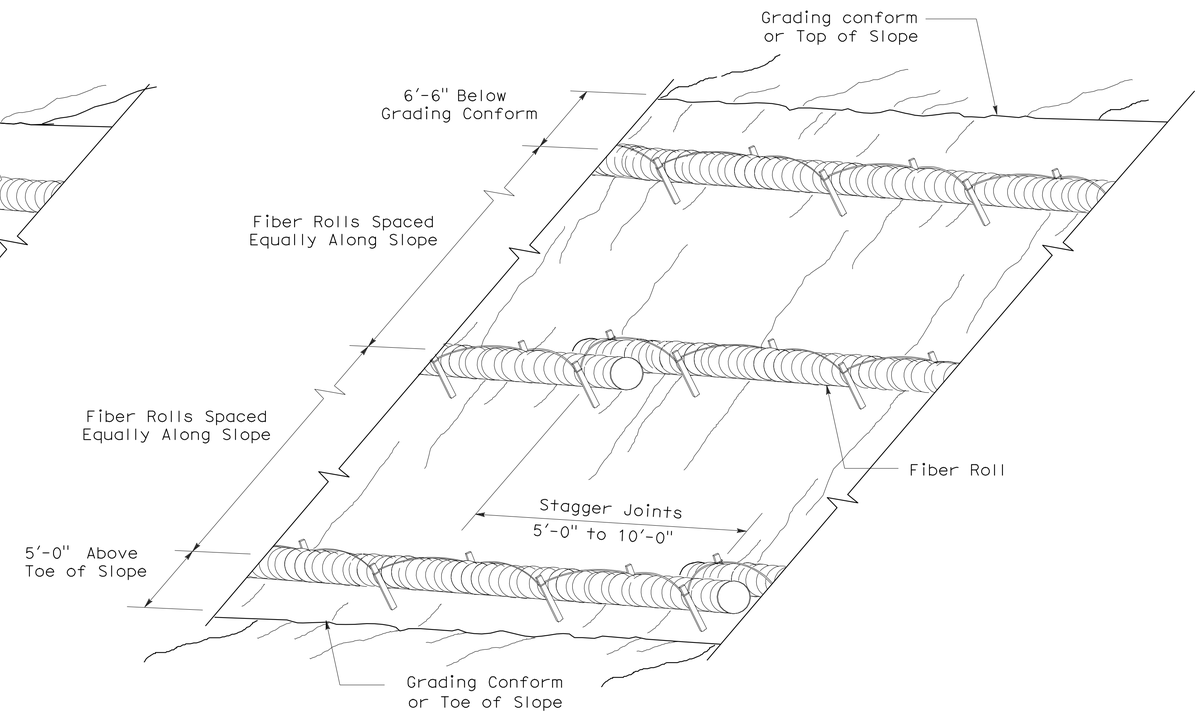

PERSPECTIVE

FIBER ROLL (TYPE 2)

STATE OF CALIFORNIA
DEPARTMENT OF TRANSPORTATION

EROSION CONTROL DETAILS (FIBER ROLL)

NO SCALE

RNSP H51 DATED APRIL 3, 2009 SUPERSEDES NSP H51 DATED DECEMBER 1, 2006 THAT SUPPLEMENTS THE STANDARD PLANS BOOK DATED MAY 2006.

REVISED NEW STANDARD PLAN RNSP H51

2006 REVISED NEW STANDARD PLAN RNSP H51

DIST	COUNTY	ROUTE	POST MILES TOTAL PROJECT	SHEET NO.	TOTAL SHEETS
04	Ala	580	R8.4/R14.6	690	853

LICENSED LANDSCAPE ARCHITECT

June 5, 2009
PLANS APPROVAL DATE

The State of California or its officers or agents shall not be responsible for the accuracy or completeness of electronic copies of this plan sheet.

LICENSED LANDSCAPE ARCHITECT — Gregory A. Balzer — 2498 Expires 2-28-11 Renewal Date — 5-14-09 Date — STATE OF CALIFORNIA

To accompany plans dated 5-14-12

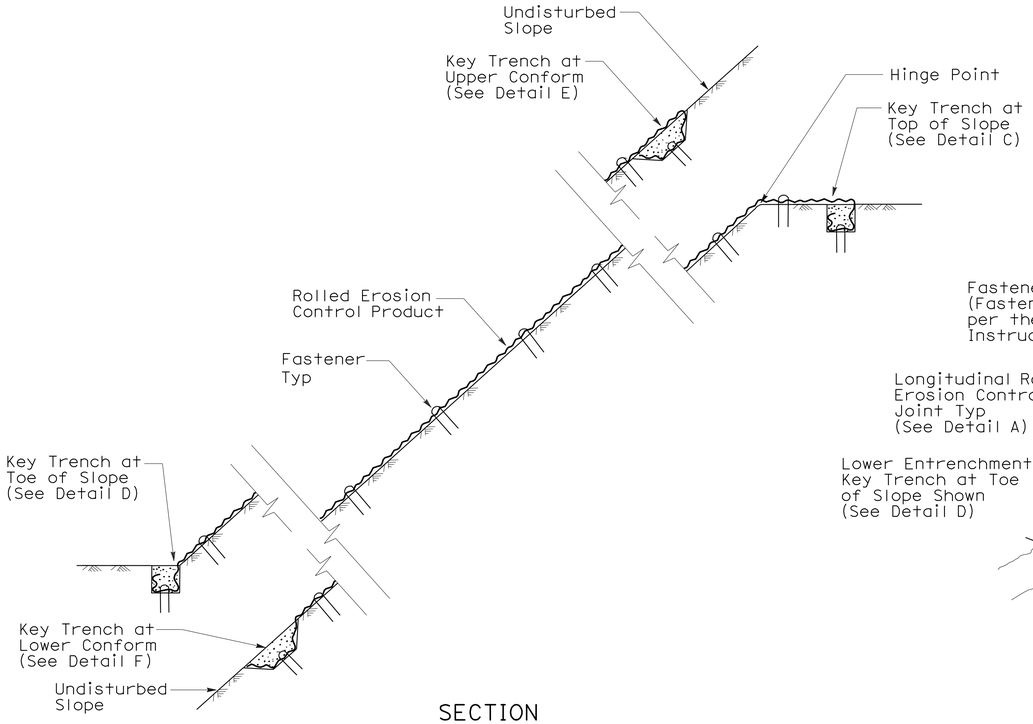

SECTION

ROLLED EROSION CONTROL PRODUCT ON SLOPE WITH VARIOUS KEY ENTRENCHMENTS

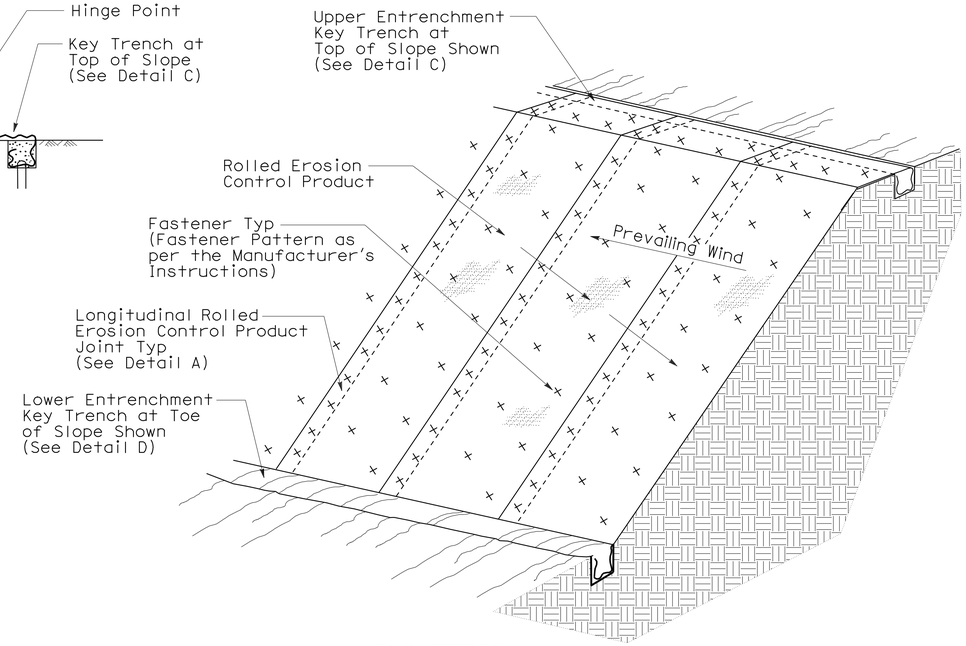

ISOMETRIC

ROLLED EROSION CONTROL PRODUCT ON SLOPE

NOTE:

1. Fiber Roll/Compost Sock shown for reference purposes only.
2. If transverse rolled erosion control product joints are required on slopes, see Detail B.

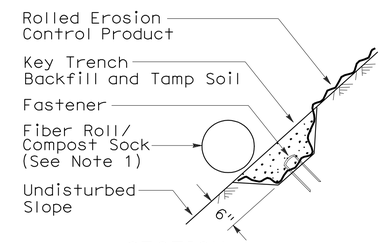

SECTION

DETAIL F
KEY TRENCH AT LOWER CONFORM

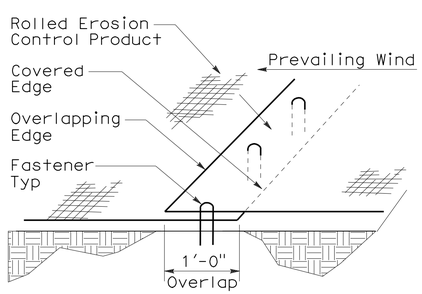

PERSPECTIVE

DETAIL A
LONGITUDINAL ROLLED EROSION CONTROL PRODUCT JOINT

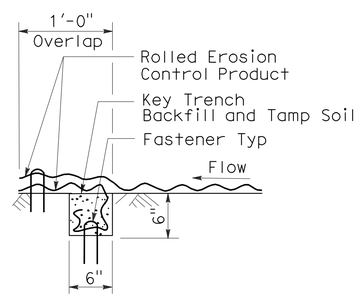

SECTION

DETAIL B
TRANSVERSE ROLLED EROSION CONTROL PRODUCT JOINT

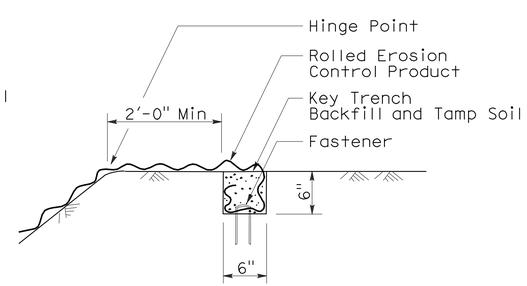

SECTION

DETAIL C
KEY TRENCH AT TOP OF SLOPE

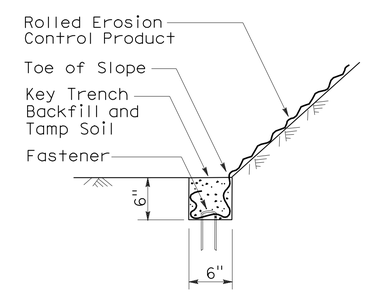

SECTION

DETAIL D
KEY TRENCH AT TOE OF SLOPE

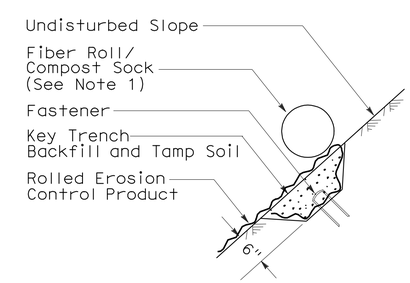

SECTION

DETAIL E
KEY TRENCH AT UPPER CONFORM

STATE OF CALIFORNIA
DEPARTMENT OF TRANSPORTATION

ROLLED EROSION CONTROL PRODUCT

NO SCALE

NSP H53 DATED JUNE 5, 2009 SUPPLEMENTS
THE STANDARD PLANS BOOK DATED MAY 2006.

NEW STANDARD PLAN NSP H53

2006 NEW STANDARD PLAN NSP H53

3-4-09

DIST	COUNTY	ROUTE	POST MILES TOTAL PROJECT	SHEET NO.	TOTAL SHEETS
04	Ala	580	R8.4/R14.6	691	853

Randell D. Hiatt
REGISTERED CIVIL ENGINEER

June 6, 2008
PLANS APPROVAL DATE

REGISTERED PROFESSIONAL ENGINEER
Randell D. Hiatt
No. C50200
Exp. 6-30-09
CIVIL
STATE OF CALIFORNIA

The State of California or its officers or agents shall not be responsible for the accuracy or completeness of electronic copies of this plan sheet.

To accompany plans dated 5-14-12

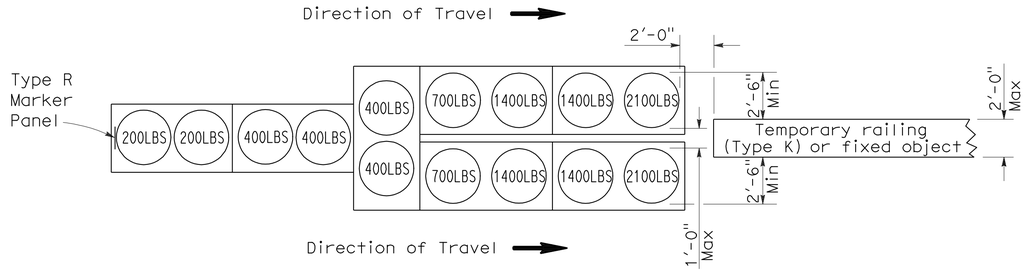

ARRAY 'TU14'

Approach speed 45 mph or more

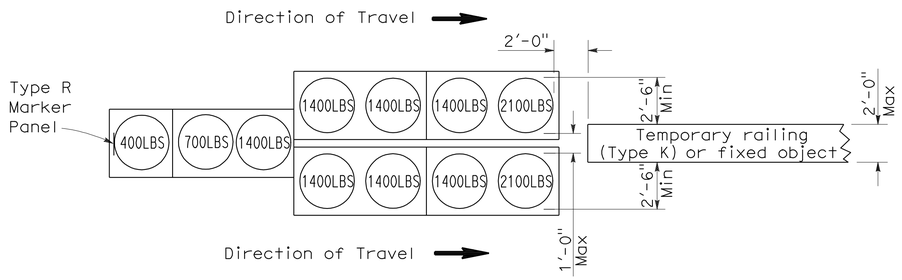

ARRAY 'TU11'

Approach speed less than 45 mph

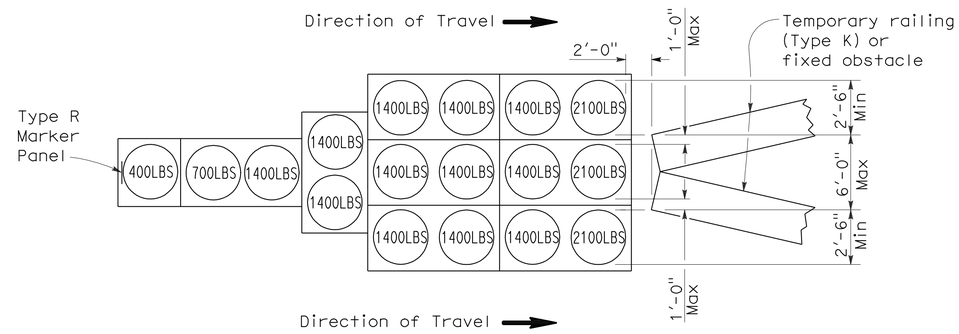

ARRAY 'TU17'

Approach speed less than 45 mph

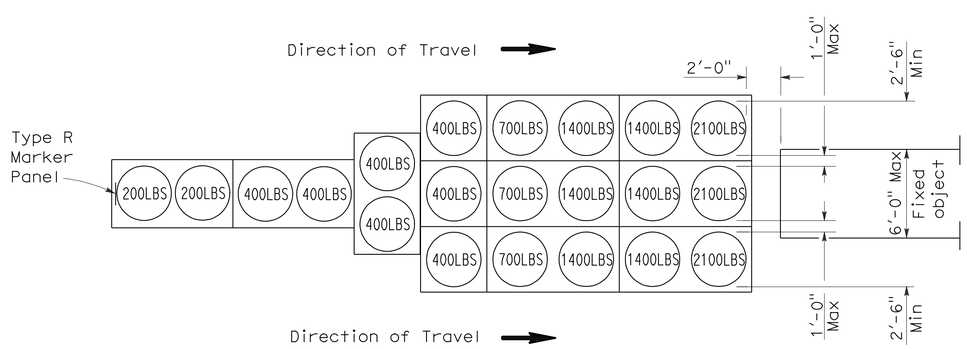

ARRAY 'TU21'

Approach speed 45 mph or more

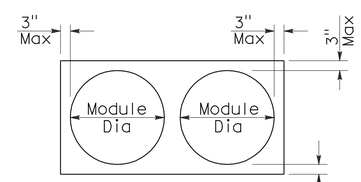

PLAN

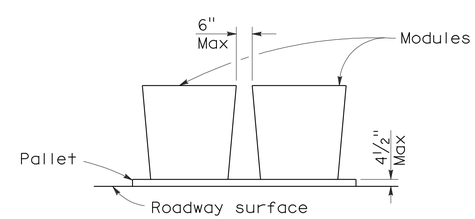

ELEVATION

CRASH CUSHION PALLET DETAIL

See Note 7

NOTES:

1. (XXX) Indicates sand filled module location and weight of sand in pounds for each module. Module spacing is based on the greater diameter of the module.
2. All sand weights are nominal.
3. Temporary crash cushion arrays shall not encroach on the traveled way.
4. Place the top of Type R marker panel 1" below the module lid.
5. Refer to Standard Plan A73B for marker details.
6. Approach speeds indicated conform to NCHRP 350 Report criteria.
7. Use of pallets is optional.

STATE OF CALIFORNIA
DEPARTMENT OF TRANSPORTATION

TEMPORARY CRASH CUSHION, SAND FILLED (UNIDIRECTIONAL)

NO SCALE

RSP T1A DATED JUNE 6, 2008 SUPERSEDES STANDARD PLAN T1A
DATED MAY 1, 2006 - PAGE 211 OF THE STANDARD PLANS BOOK DATED MAY 2006.

REVISED STANDARD PLAN RSP T1A

2006 REVISED STANDARD PLAN RSP T1A

DIST	COUNTY	ROUTE	POST MILES TOTAL PROJECT	SHEET NO.	TOTAL SHEETS
04	Ala	580	R8.4/R14.6	692	853

Randell D. Hiatt
REGISTERED CIVIL ENGINEER

June 6, 2008
PLANS APPROVAL DATE

REGISTERED PROFESSIONAL ENGINEER
Randell D. Hiatt
No. C50200
Exp. 6-30-09
CIVIL
STATE OF CALIFORNIA

The State of California or its officers or agents shall not be responsible for the accuracy or completeness of electronic copies of this plan sheet.

To accompany plans dated 5-14-12

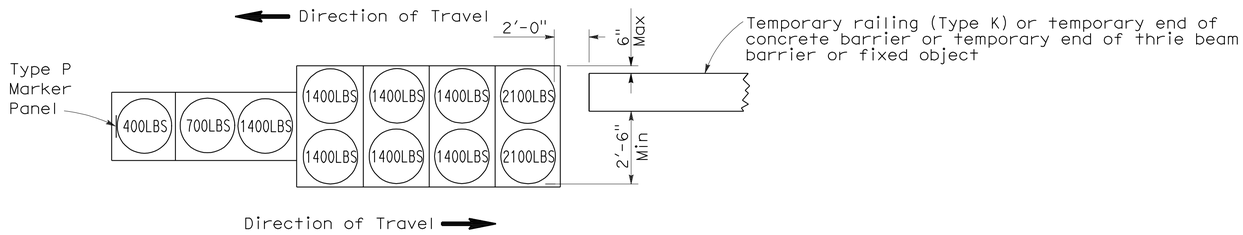

ARRAY 'TB11'

Approach speed less than 45 mph

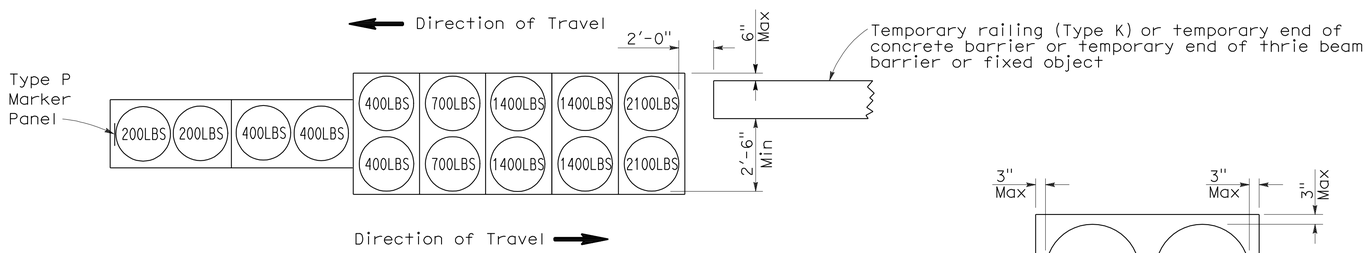

ARRAY 'TB14'

Approach speed 45 mph or more

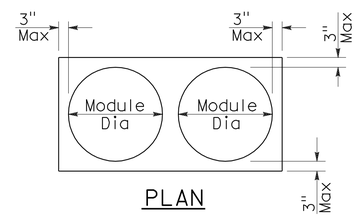

PLAN

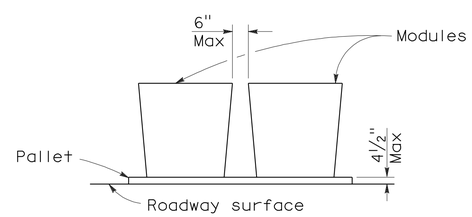

ELEVATION

CRASH CUSHION PALLET DETAIL

See Note 7

NOTES:

1. (XXX) Indicates sand filled module location and weight of sand in pounds for each module. Module spacing is based on the greater diameter of the module.
2. All sand weights are nominal.
3. Temporary crash cushion arrays shall not encroach on the traveled way.
4. Place the Type P marker panel so that the bottom of the panel rests upon the pallet.
5. Refer to Standard Plan A73B for marker details.
6. Approach speeds indicated conform to NCHRP 350 Report criteria.
7. Use of pallets is optional.

STATE OF CALIFORNIA
DEPARTMENT OF TRANSPORTATION

TEMPORARY CRASH CUSHION, SAND FILLED (BIDIRECTIONAL)

NO SCALE

RSP T1B DATED JUNE 6, 2008 SUPERSEDES STANDARD PLAN T1B
DATED MAY 1, 2006 - PAGE 212 OF THE STANDARD PLANS BOOK DATED MAY 2006.

REVISED STANDARD PLAN RSP T1B

2006 REVISED STANDARD PLAN RSP T1B

DIST	COUNTY	ROUTE	POST MILES TOTAL PROJECT	SHEET NO.	TOTAL SHEETS
04	Ala	580	R8.4/R14.6	693	853

Randell D. Hiatt
REGISTERED CIVIL ENGINEER

June 6, 2008
PLANS APPROVAL DATE

REGISTERED PROFESSIONAL ENGINEER
Randell D. Hiatt
No. C50200
Exp. 6-30-09
CIVIL
STATE OF CALIFORNIA

The State of California or its officers or agents shall not be responsible for the accuracy or completeness of electronic copies of this plan sheet.

To accompany plans dated 5-14-12

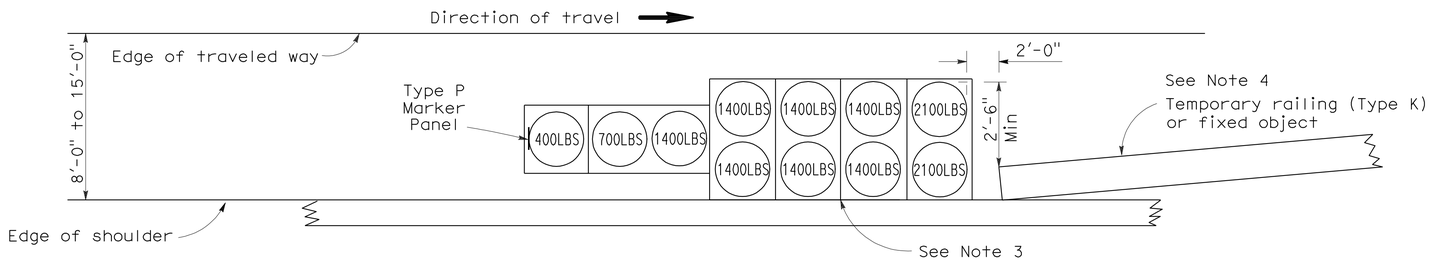

ARRAY 'TS11'

Approach speed less than 45 mph
See Note 9

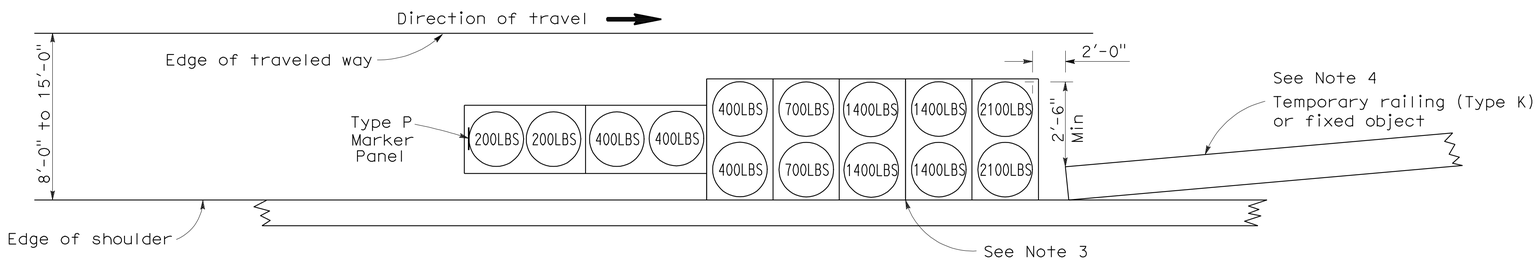

ARRAY 'TS14'

Approach speed 45 mph or more
See Note 9

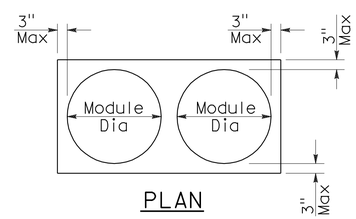

PLAN

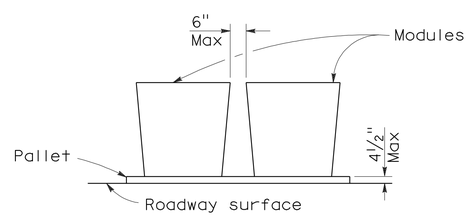

ELEVATION

CRASH CUSHION PALLET DETAIL

See Note 11

NOTES:

1. (XXX) Indicates sand filled module location and weight of sand in pounds for each module. Module spacing is based on the greater diameter of the module.
2. All sand weights are nominal.
3. The temporary crash cushion arrays shown on this plan shall be used only in locations where there will be traffic on one side of the temporary crash cushion array.
4. If the fixed object or approach end of the temporary railing is less than 15'-0" from the edge of traveled way, a temporary crash cushion is required in a construction or work zone.
5. Temporary crash cushion arrays shall not encroach on the traveled way.
6. Arrays for median shoulders shall conform to details shown on this plan for outside shoulders.
7. Place the Type P marker panel so that the bottom of the panel rests upon the pallet and faces traffic.
8. Refer to Standard Plan A73B for marker details.
9. For shoulder widths less than 8'-0", appropriate approved crash cushion protection, other than sand filled modules, shall be provided at fixed objects and at approach ends of temporary railing. The specific type of crash cushion shall be as shown on the project plans or as specified in the Special Provisions, or if not shown on the project plans or specified in the Special Provisions, shall be as approved by the Engineer.
10. Approach speeds indicated conform to NCHRP 350 Report criteria.
11. Use of pallets is optional.

STATE OF CALIFORNIA
DEPARTMENT OF TRANSPORTATION

TEMPORARY CRASH CUSHION, SAND FILLED (SHOULDER INSTALLATIONS)

NO SCALE

RSP T2 DATED JUNE 6, 2008 SUPERSEDES STANDARD PLAN T2
DATED MAY 1, 2006 - PAGE 213 OF THE STANDARD PLANS BOOK DATED MAY 2006.

REVISED STANDARD PLAN RSP T2

2006 REVISED STANDARD PLAN RSP T2

5-15-08

Dist	COUNTY	ROUTE	POST MILES TOTAL PROJECT	SHEET No.	TOTAL SHEETS
04	Ala	580	R8.4/R14.6	694	853

Randell D. Hiatt
REGISTERED CIVIL ENGINEER

May 20, 2011
PLANS APPROVAL DATE

REGISTERED PROFESSIONAL ENGINEER
Randell D. Hiatt
No. C50200
Exp. 6-30-11
CIVIL
STATE OF CALIFORNIA

The State of California or its officers or agents shall not be responsible for the accuracy or completeness of electronic copies of this plan sheet.

To accompany plans dated 5-14-12

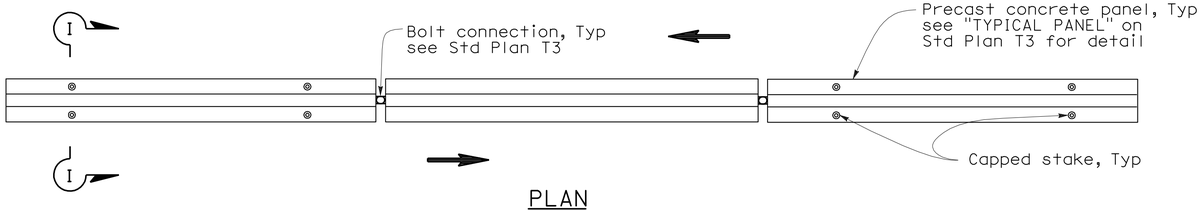

PLAN

RAILING STAKING CONFIGURATION FOR TWO-WAY TRAFFIC

See Note 1

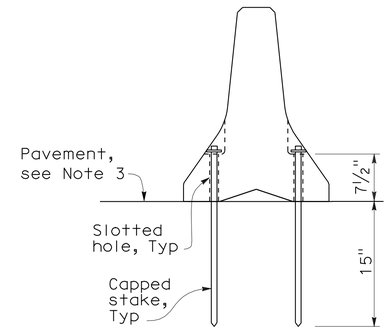

SECTION I-I

NOTES:

1. Where Type K Temporary Railing is placed as a temporary or long term barrier in two-way traffic on highways with less than 24" from the edge of traveled way, use four capped stakes per every other panel with end panels staked.
2. Where Type K Temporary Railing is placed 3" to 24" from the edge of an excavation on highways, use two capped stakes per panel along the traffic side.
3. Staked Type K Temporary Railing must be supported by at least 4" thick concrete, hot mix asphalt or existing asphalt concrete pavement.
4. The minimum yield strength for the washer must be 60,000 psi.
5. Direction of adjacent traffic indicated by ⟹.

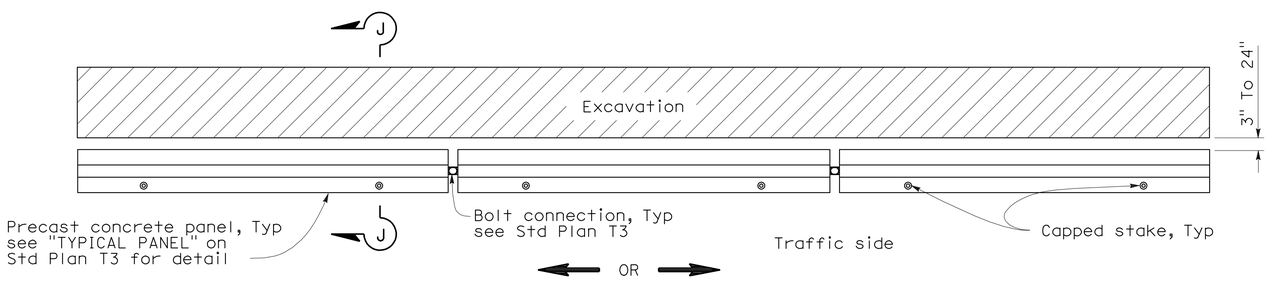

PLAN

RAILING STAKING CONFIGURATION ADJACENT TO AN EXCAVATION

See Note 2

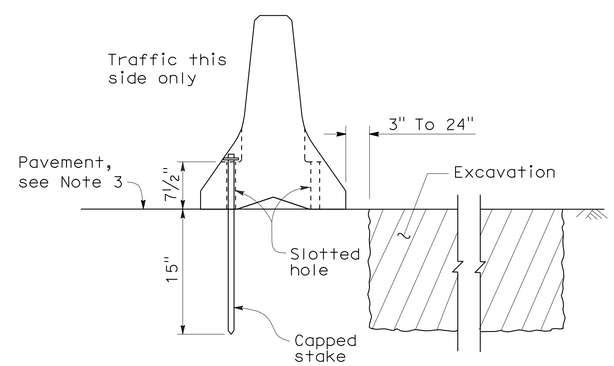

SECTION J-J

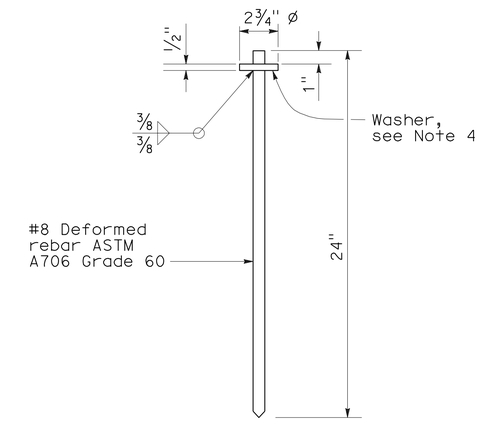

CAPPED STAKE DETAIL

STATE OF CALIFORNIA
DEPARTMENT OF TRANSPORTATION

TEMPORARY RAILING (TYPE K)

NO SCALE

NSP T3A DATED MAY 20, 2011 SUPPLEMENTS
THE STANDARD PLANS BOOK DATED MAY 2006.

NEW STANDARD PLAN NSP T3A

2006 NEW STANDARD PLAN NSP T3A

DIST	COUNTY	ROUTE	POST MILES TOTAL PROJECT	SHEET NO.	TOTAL SHEETS
04	Ala	580	R8.4/R14.6	695	853

REGISTERED CIVIL ENGINEER

November 17, 2006
PLANS APPROVAL DATE

REGISTERED PROFESSIONAL ENGINEER
Greg W. Edwards
No. C36386
Exp. 6-30-08
CIVIL
STATE OF CALIFORNIA

The State of California or its officers or agents shall not be responsible for the accuracy or completeness of electronic copies of this plan sheet.

To accompany plans dated 5-14-12

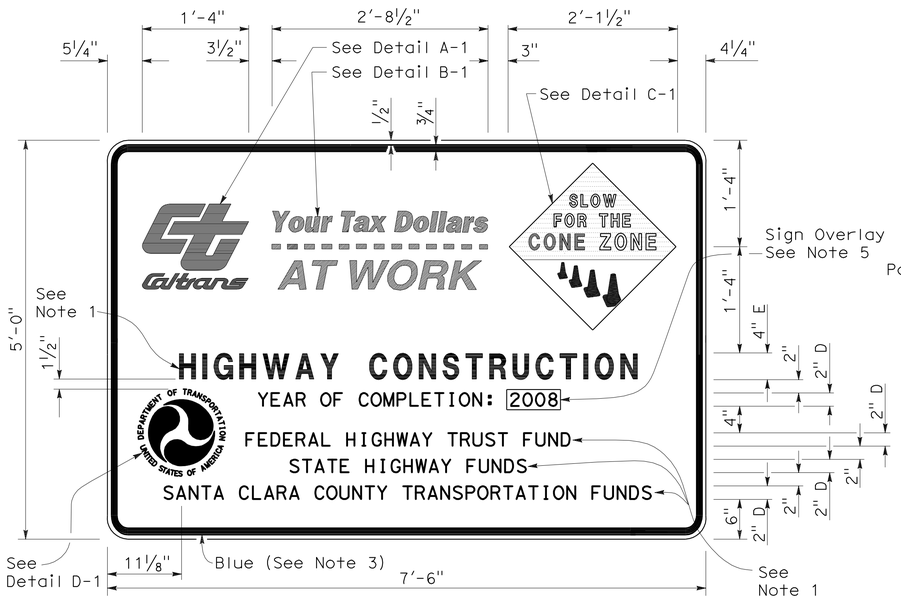

TYPE 1

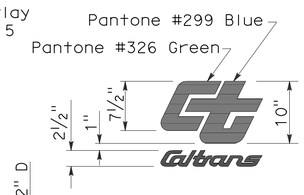

DETAIL A-1

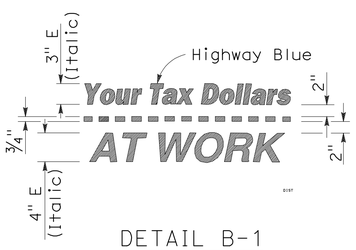

DETAIL B-1
(See Note 3)

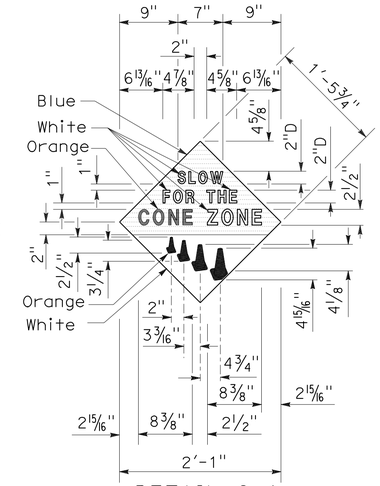

DETAIL C-1
(See Note 4)

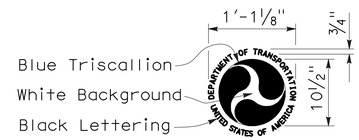

DETAIL D-1
(See Note 6)

NOTES:

1. The sign messages shown for type of project and fund types are examples only. See the Special Provisions for the applicable type of project and fund type messages to be used.
2. Except as otherwise shown, the legend of sign shall be black on a white background (non-reflective).
3. The border of the signs and details "B-1" and "B-2" shall be blue (non-reflective).
4. The diamond in details "C-1" and "C-2" shall be blue for the background of message, " SLOW FOR THE CONE ZONE", and white background for the orange cones. The color and type of font for the "SLOW FOR THE CONE ZONE" message shall be: "SLOW" white D; "FOR THE" white D; "CONE" orange Arial font; "ZONE" white Arial font.
5. Year of completion of project construction shown on the overlay is an example only. See the Special Provisions.
6. Use when the Project involves Federal Highway Trust Fund.

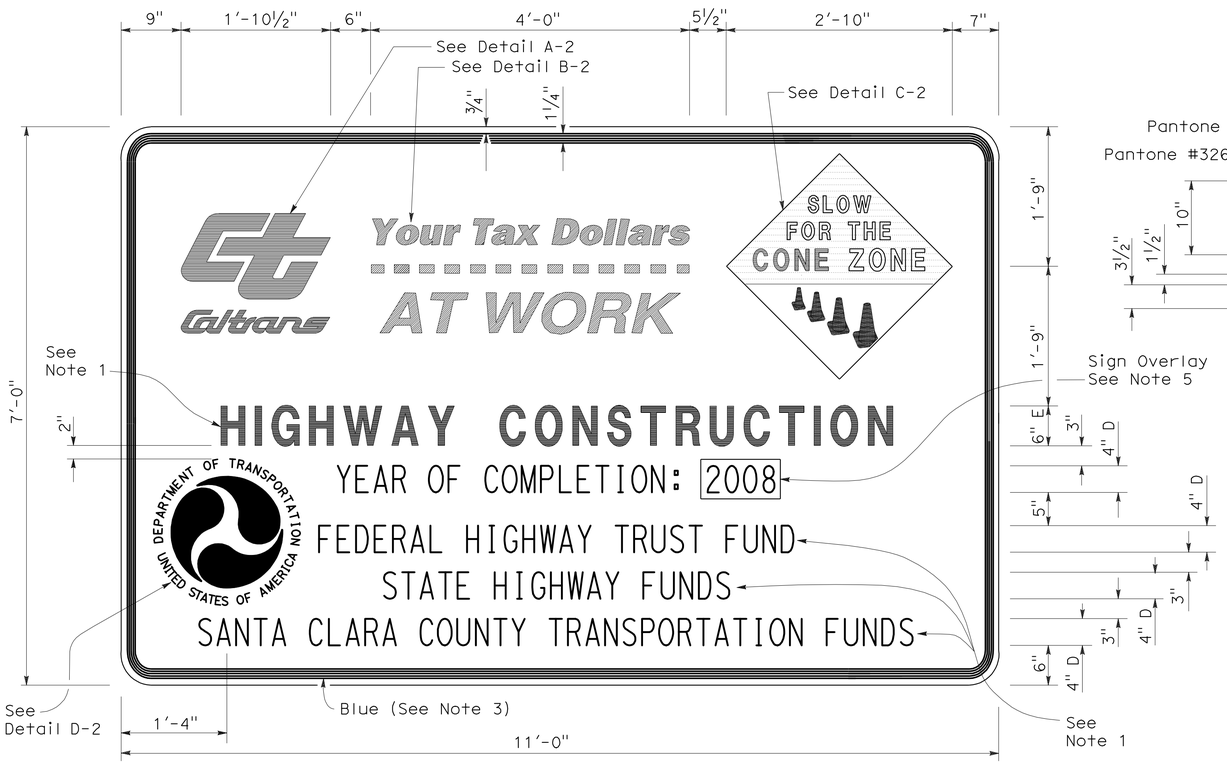

TYPE 2

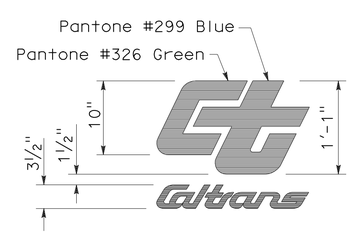

DETAIL A-2

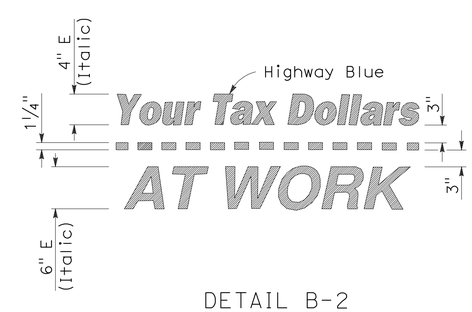

DETAIL B-2
(See Note 3)

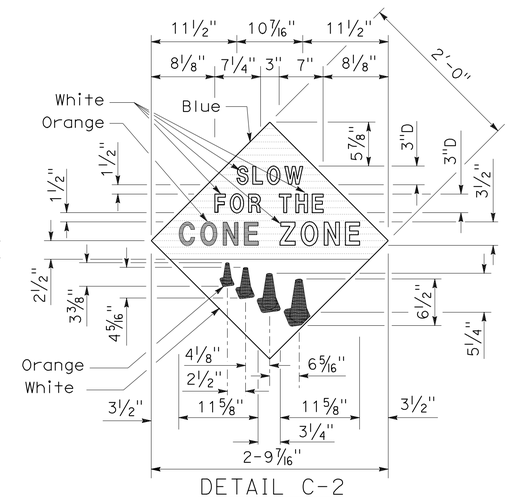

DETAIL C-2
(See Note 4)

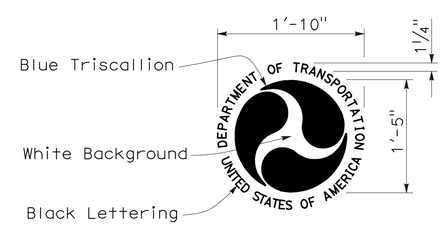

DETAIL D-2
(See Note 6)

STATE OF CALIFORNIA
DEPARTMENT OF TRANSPORTATION

CONSTRUCTION PROJECT FUNDING IDENTIFICATION SIGNS

NO SCALE

RSP T7 DATED NOVEMBER 17, 2006 SUPERSEDES STANDARD PLAN T7
DATED MAY 1, 2006 - PAGE 217 OF THE STANDARD PLANS BOOK DATED MAY 2006.

REVISED STANDARD PLAN RSP T7

2006 REVISED STANDARD PLAN RSP T7

9-7-06

DIST	COUNTY	ROUTE	POST MILES TOTAL PROJECT	SHEET NO.	TOTAL SHEETS
04	Ala	580	R8.4/R14.6	696	853

LICENSED LANDSCAPE ARCHITECT

April 3, 2009
PLANS APPROVAL DATE

The State of California or its officers or agents shall not be responsible for the accuracy or completeness of electronic copies of this plan sheet.

LICENSED LANDSCAPE ARCHITECT — Robert B. Schott — Signature — 11-30-10 Renewal Date — 2-25-09 Date — STATE OF CALIFORNIA

To accompany plans dated 5-14-12

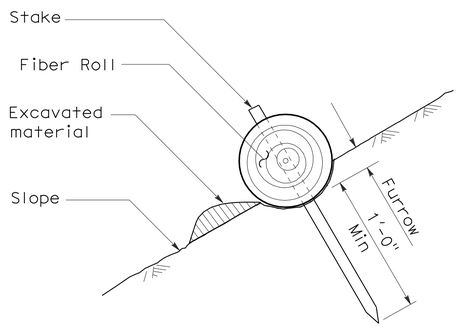

SECTION

TEMPORARY FIBER ROLL (TYPE 1)

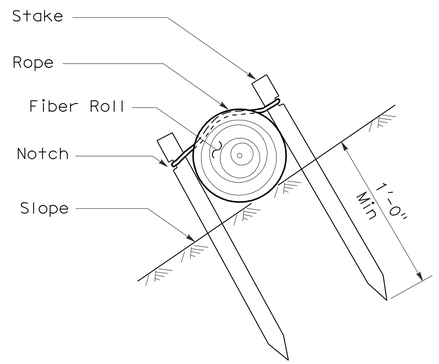

SECTION

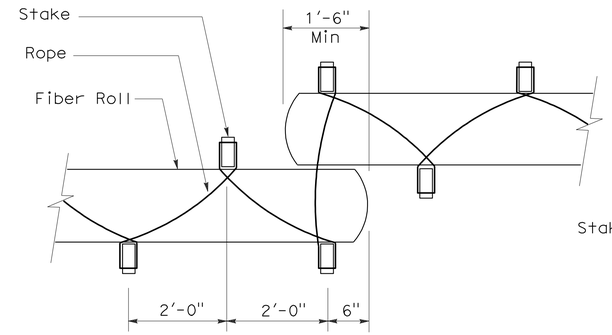

PLAN

TEMPORARY FIBER ROLL (TYPE 2)

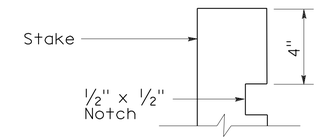

ELEVATION

STAKE NOTCH DETAIL

NOTES:

1. Temporary fiber roll spacing varies depending upon slope inclination.
2. Installations shown in the perspectives are for slope inclination of 10:1 and steeper.

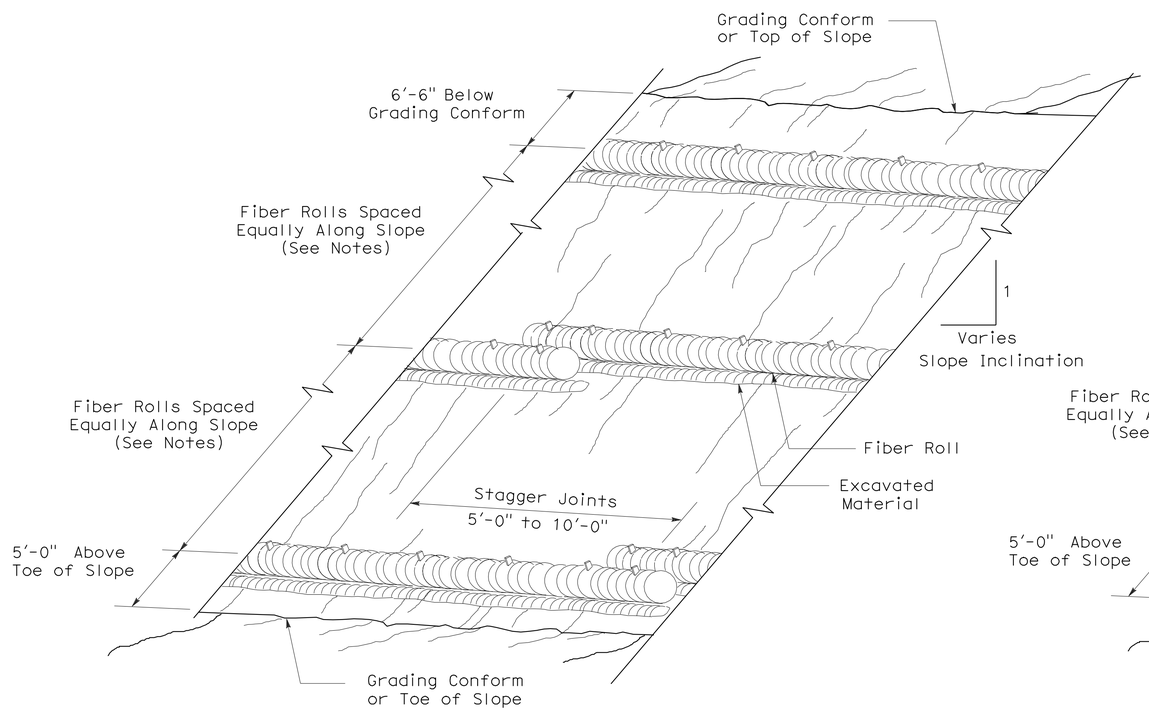

PERSPECTIVE

TEMPORARY FIBER ROLL (TYPE 1)

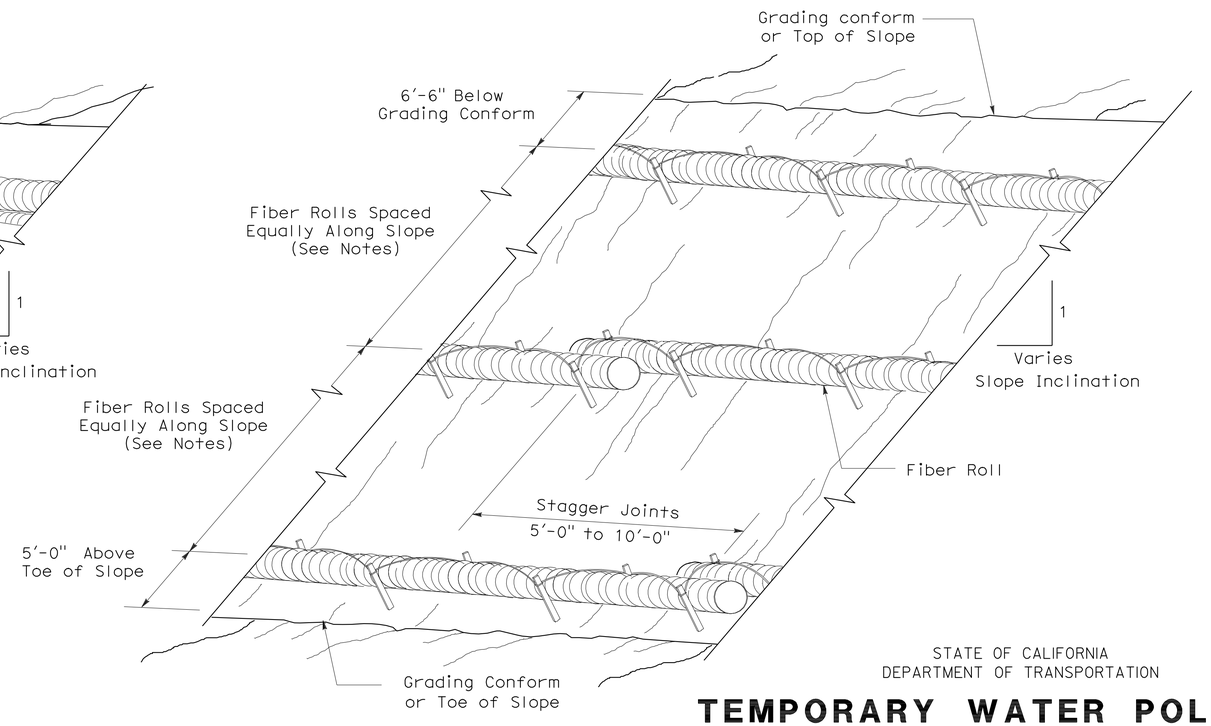

PERSPECTIVE

TEMPORARY FIBER ROLL (TYPE 2)

STATE OF CALIFORNIA
DEPARTMENT OF TRANSPORTATION

TEMPORARY WATER POLLUTION CONTROL DETAILS (TEMPORARY FIBER ROLL)

NO SCALE

RSP T56 DATED APRIL 3, 2009 SUPERSEDES STANDARD PLAN T56
DATED MAY 1, 2006 - PAGE 232 OF THE STANDARD PLANS BOOK DATED MAY 2006.

REVISED STANDARD PLAN RSP T56

2006 REVISED STANDARD PLAN RSP T56

2-23-09

DIST	COUNTY	ROUTE	POST MILES TOTAL PROJECT	SHEET NO.	TOTAL SHEETS
04	Ala	580	R8.4/R14.6	697	853

LICENSED LANDSCAPE ARCHITECT

August 15, 2008
PLANS Approval DATE

LICENSED LANDSCAPE ARCHITECT
Robert B. Schott
Signature
11-04-08
Renewal Date
08-11-08
Date
STATE OF CALIFORNIA

The State of California or its officers or agents shall not be responsible for the accuracy or completeness of electronic copies of this plan sheet.

To accompany plans dated 5-14-12

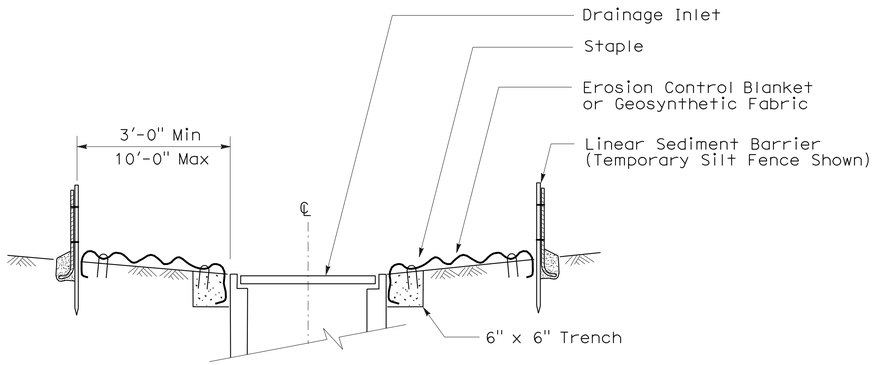

SECTION A-A

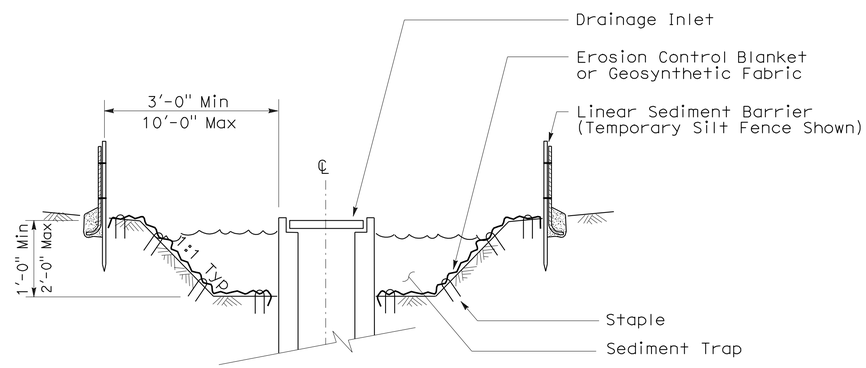

SECTION B-B

NOTES:

1. See Standard Plan T51 for Temporary Silt Fence.
2. Dimensions may vary to fit field conditions.

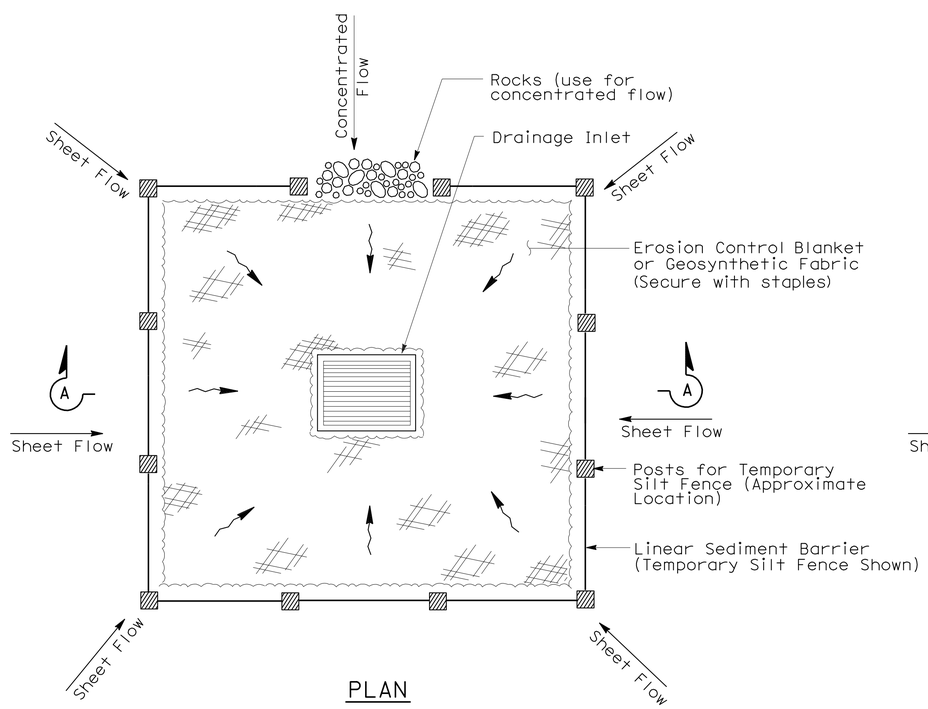

PLAN

TEMPORARY DRAINAGE
INLET PROTECTION (TYPE 1)

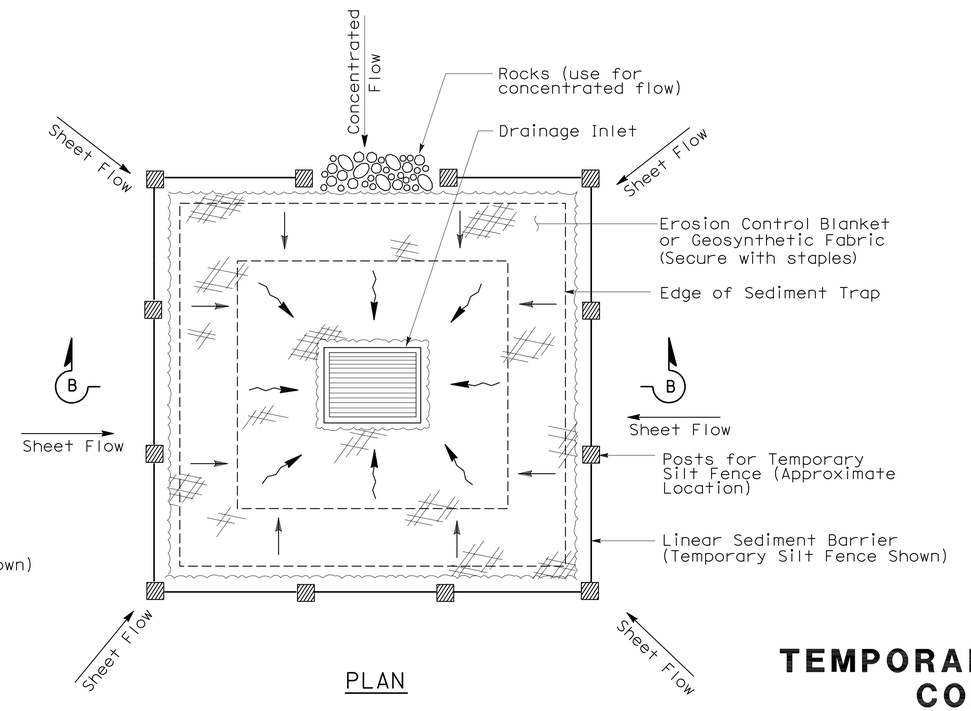

PLAN

TEMPORARY DRAINAGE
INLET PROTECTION (TYPE 2)
(EXCAVATED SEDIMENT TRAP)

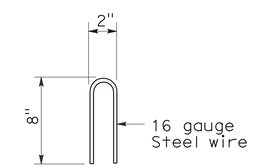

STAPLE DETAIL

STATE OF CALIFORNIA
DEPARTMENT OF TRANSPORTATION

TEMPORARY WATER POLLUTION CONTROL DETAILS (TEMPORARY DRAINAGE INLET PROTECTION)

NO SCALE

NSP T61 DATED AUGUST 15, 2008 SUPPLEMENTS
THE STANDARD PLANS BOOK DATED MAY 2006.

NEW STANDARD PLAN NSP T61

2006 NEW STANDARD PLAN NSP T61

7-11-08

DIST	COUNTY	ROUTE	POST MILES TOTAL PROJECT	SHEET NO.	TOTAL SHEETS
04	Ala	580	R8.4/R14.6	698	853

LICENSED LANDSCAPE ARCHITECT

August 15, 2008
PLANS APPROVAL DATE

LICENSED LANDSCAPE ARCHITECT Robert B. Schott 3625 Signature 11-04-08 Renewal Date 08-11-08 Date STATE OF CALIFORNIA

The State of California or its officers or agents shall not be responsible for the accuracy or completeness of electronic copies of this plan sheet.

To accompany plans dated 5-14-12

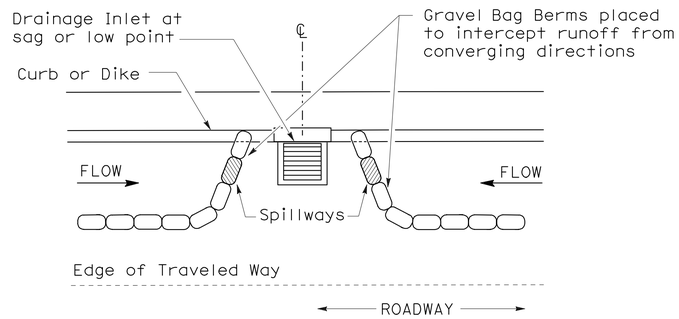

PLAN

CONFIGURATION FOR SAG POINT INLET (GRAVEL BAG BERM)

GRAVEL BAG BERM (TYPE 3A) SPACING TABLE

SLOPE OF ROADWAY (PERCENT)	1 to 3.9	4 to 5.9	6 to 7.9	8 to 10	10+
INTERVAL BETWEEN BERM	100′	75′	50′	25′	12′

For slope of less than 1%, install barriers only if erosion/sediment is prevalent

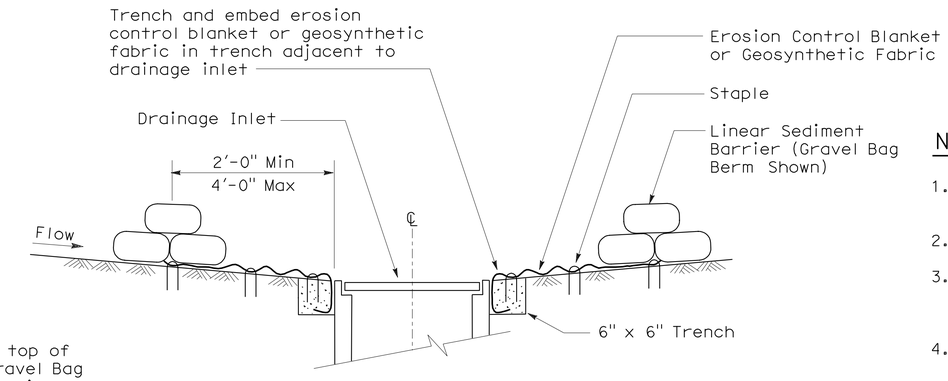

SECTION A-A

NOTES:

1. Place safety cones adjacent to drainage inlet protection.
2. Dimensions may vary to fit field conditions.
3. Install a minimum of 3 gravel bag berms upstream of each drainage inlet to be protected.
4. Position erosion control blanket or geosynthetic fabric at edge of concrete apron and secure in trench.
5. Erosion control blanket or geosynthetic fabric is not required if the area adjacent to the drainage inlet is vegetated or paved.

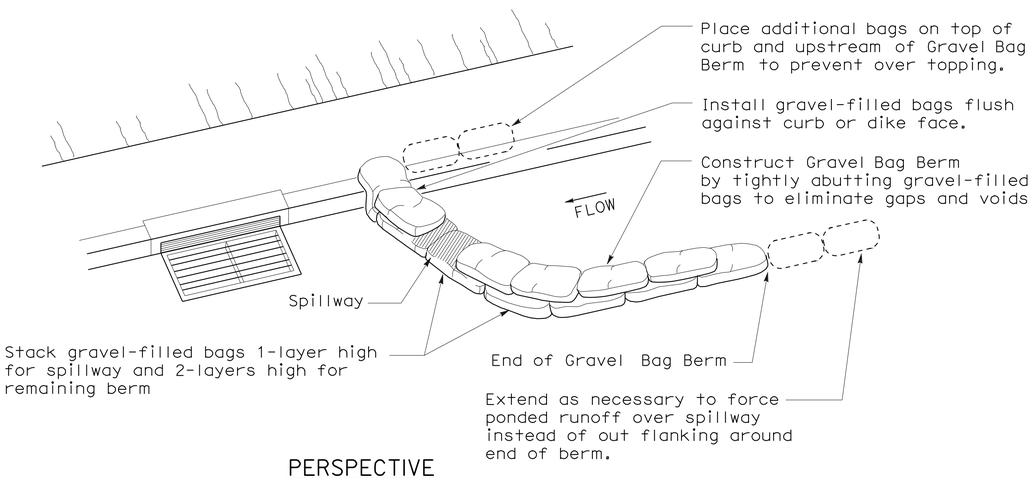

PERSPECTIVE

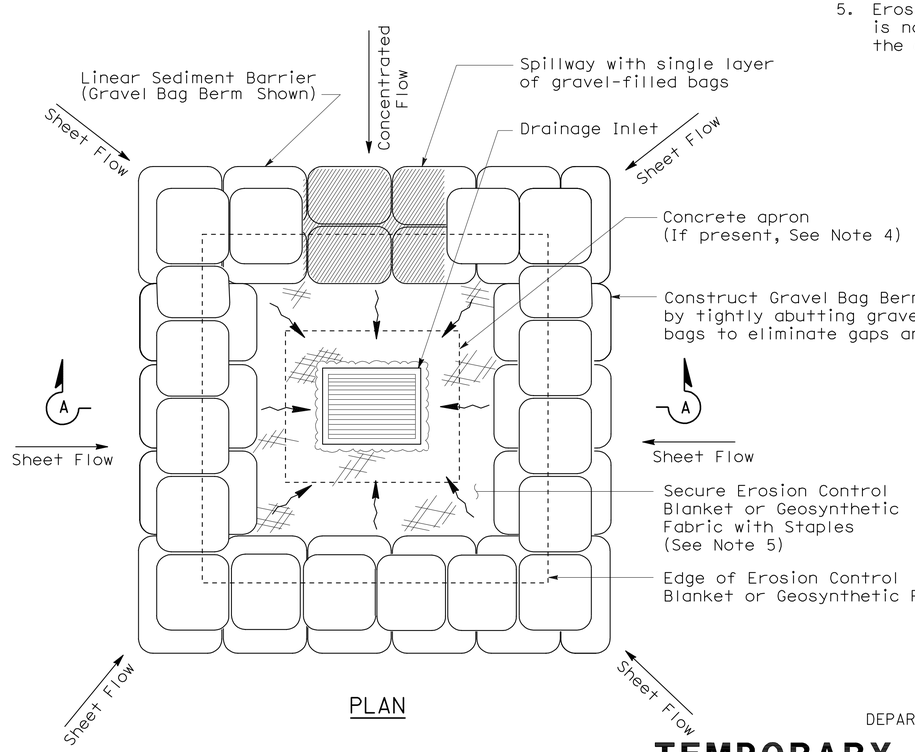

PLAN

TEMPORARY DRAINAGE INLET PROTECTION (TYPE 3B)

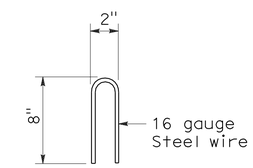

STAPLE DETAIL

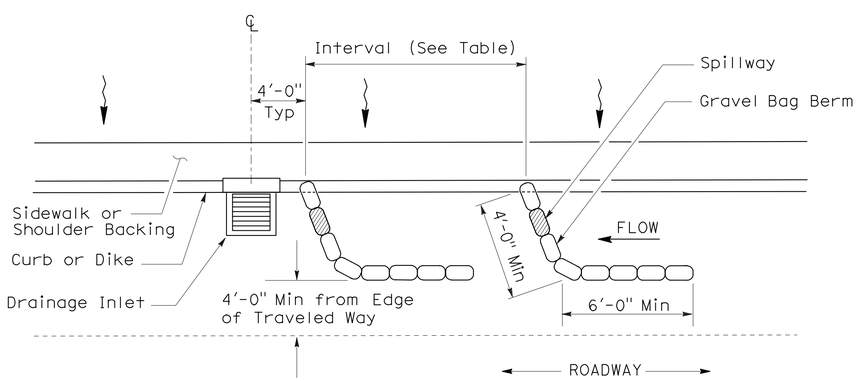

PLAN

TEMPORARY DRAINAGE INLET PROTECTION (TYPE 3A) (GRAVEL BAG BERM)

STATE OF CALIFORNIA
DEPARTMENT OF TRANSPORTATION

TEMPORARY WATER POLLUTION CONTROL DETAILS (TEMPORARY DRAINAGE INLET PROTECTION)

NO SCALE

NSP T62 DATED AUGUST 15, 2008 SUPPLEMENTS THE STANDARD PLANS BOOK DATED MAY 2006.

NEW STANDARD PLAN NSP T62

2006 NEW STANDARD PLAN NSP T62

7-11-08

DIST	COUNTY	ROUTE	POST MILES TOTAL PROJECT	SHEET NO.	TOTAL SHEETS
04	Ala	580	R8.4/R14.6	699	853

Robert B Schott
LICENSED LANDSCAPE ARCHITECT

August 15, 2008
PLANS APPROVAL DATE

LICENSED LANDSCAPE ARCHITECT Robert B. Schott 3625 Signature 11-04-08 Renewal Date 08-11-08 Date STATE OF CALIFORNIA

The State of California or its officers or agents shall not be responsible for the accuracy or completeness of electronic copies of this plan sheet.

To accompany plans dated 5-14-12

FLEXIBLE SEDIMENT BARRIER SPACING TABLE

SLOPE OF ROADWAY (PERCENT)	0 to 0.9	1 to 1.9	2 to 2.9	3 to 4	5+
INTERVAL BETWEEN BARRIERS	50′	35′	30′	25′	20′
ANGLE FROM FACE OF CURB	70°	70°	70°	45°	45°
SUGGESTED BARRIER LENGTH	6′	6′	6′	6′	6′

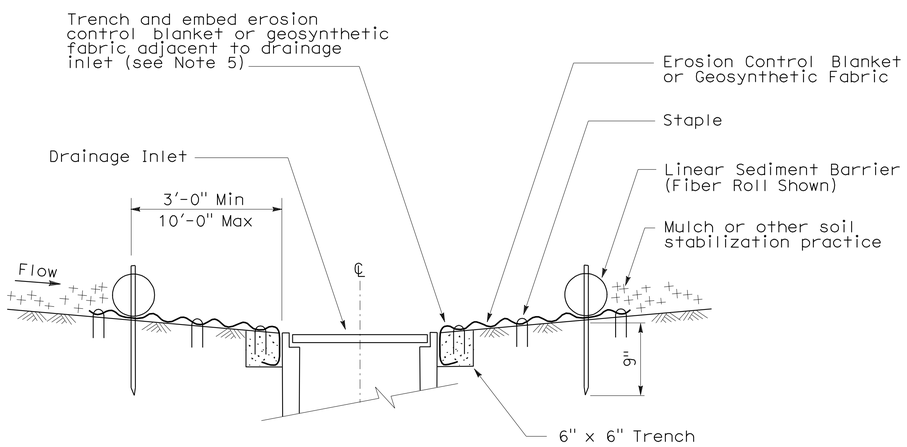

SECTION A-A

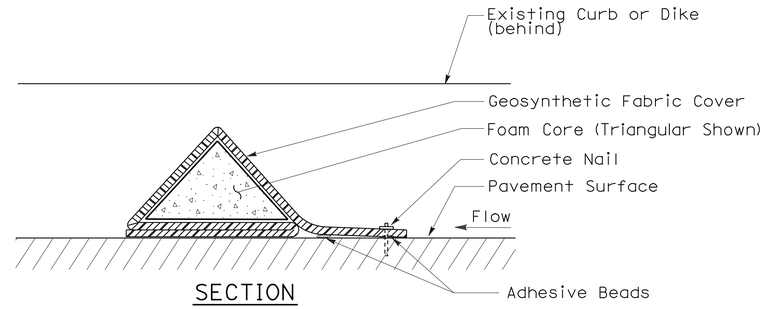

SECTION

FLEXIBLE SEDIMENT BARRIER DETAIL (FOAM BARRIER SHOWN)

NOTES:

1. See Standard Plan T51 for Temporary Silt Fence.
2. Dimensions may vary to fit field conditions.
3. Install a minimum of 3 flexible sediment barriers upstream of each drainage inlet to be protected.
4. Position erosion control blanket or geosynthetic fabric at edge of concrete apron and secure in trench.
5. Erosion control blanket or geosynthetic fabric is not required if the area adjacent to the drainage inlet is vegetated.

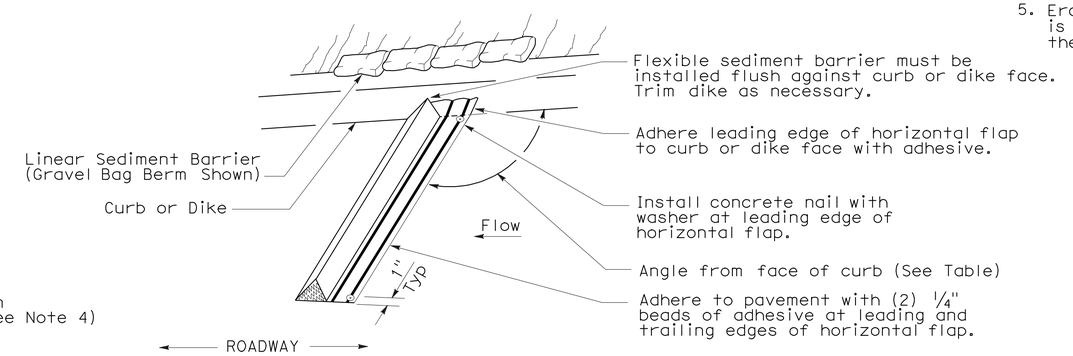

PERSPECTIVE

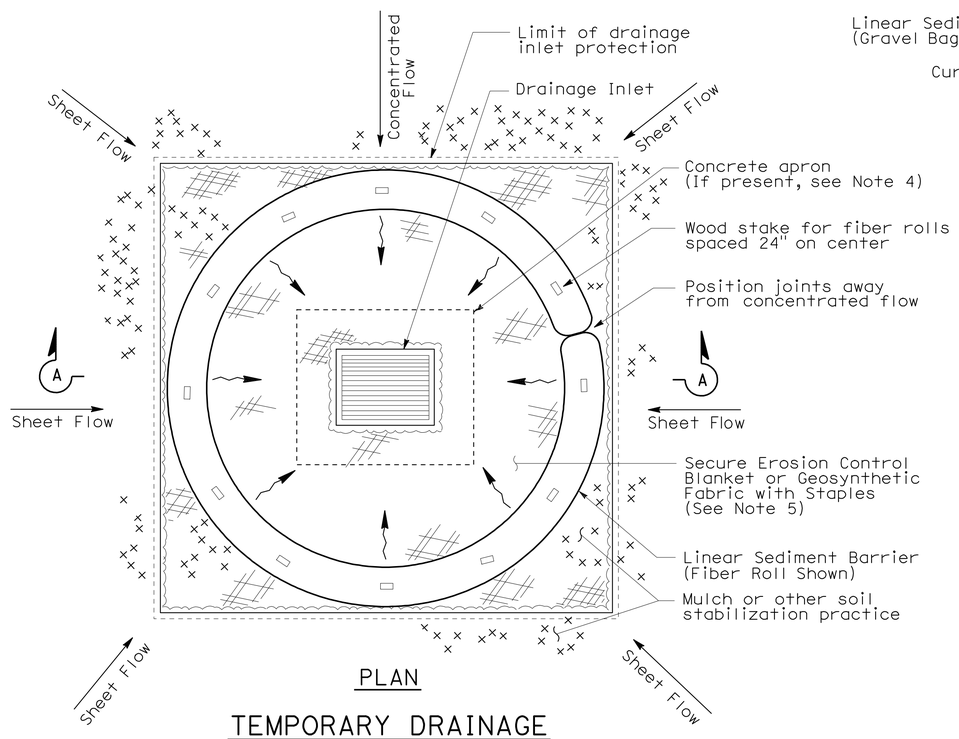

PLAN

TEMPORARY DRAINAGE INLET PROTECTION (TYPE 4A)

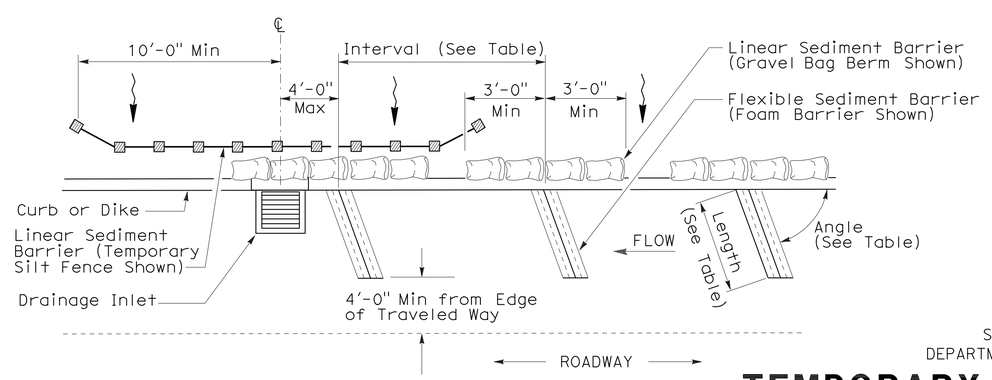

PLAN

TEMPORARY DRAINAGE INLET PROTECTION (TYPE 4B) FLEXIBLE SEDIMENT BARRIER

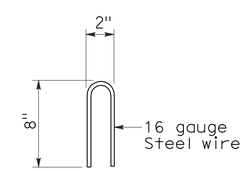

STAPLE DETAIL

STATE OF CALIFORNIA
DEPARTMENT OF TRANSPORTATION

TEMPORARY WATER POLLUTION CONTROL DETAILS (TEMPORARY DRAINAGE INLET PROTECTION)

NO SCALE

NSP T63 DATED AUGUST 15, 2008 SUPPLEMENTS THE STANDARD PLANS BOOK DATED MAY 2006.

NEW STANDARD PLAN NSP T63

2006 NEW STANDARD PLAN NSP T63

7-11-08

DIST	COUNTY	ROUTE	POST MILES TOTAL PROJECT	SHEET NO.	TOTAL SHEETS
04	Ala	580	R8.4/R14.6	700	853

LICENSED LANDSCAPE ARCHITECT

August 15, 2008
PLANS APPROVAL DATE

The State of California or its officers or agents shall not be responsible for the accuracy or completeness of electronic copies of this plan sheet.

LICENSED LANDSCAPE ARCHITECT — Robert B. Schott — Signature 11-04-08 Renewal Date — 08-11-08 Date — STATE OF CALIFORNIA

To accompany plans dated 5-14-12

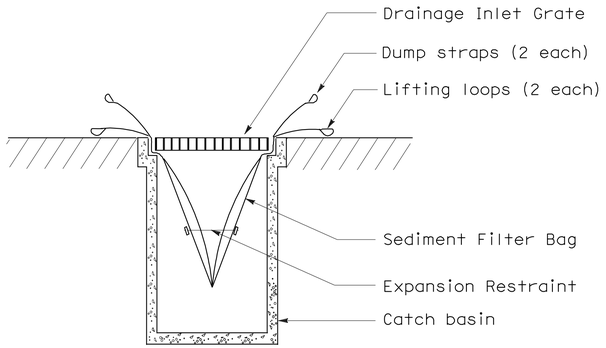

SECTION B-B

SEDIMENT FILTER BAG DETAIL

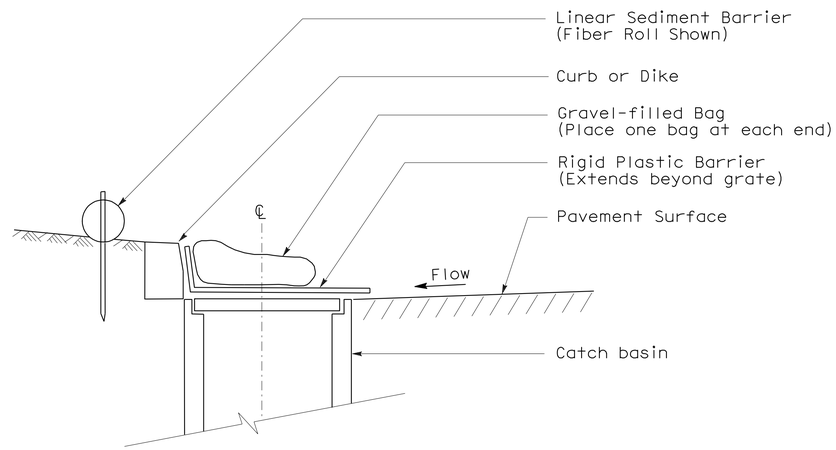

SECTION

TEMPORARY DRAINAGE INLET PROTECTION (TYPE 6A) (CATCH BASIN WITH GRATE)

NOTES:

1. See Standard Plan T51 for Temporary Silt Fence.
2. Dimensions may vary to fit field conditions.

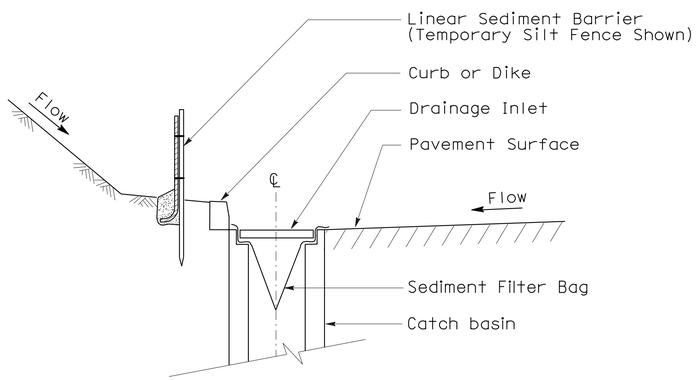

SECTION A-A

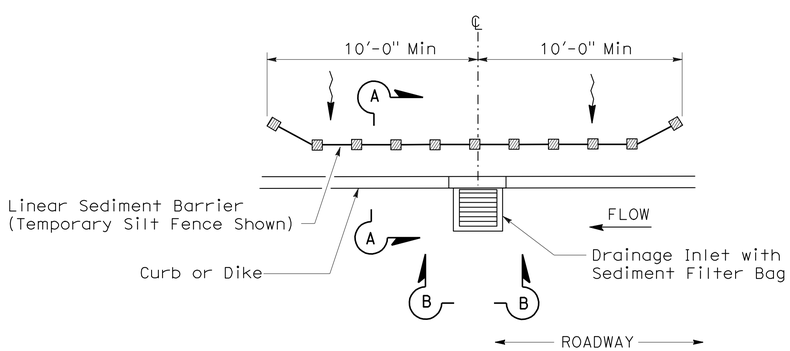

PLAN

TEMPORARY DRAINAGE INLET PROTECTION (TYPE 5) (SEDIMENT FILTER BAG)

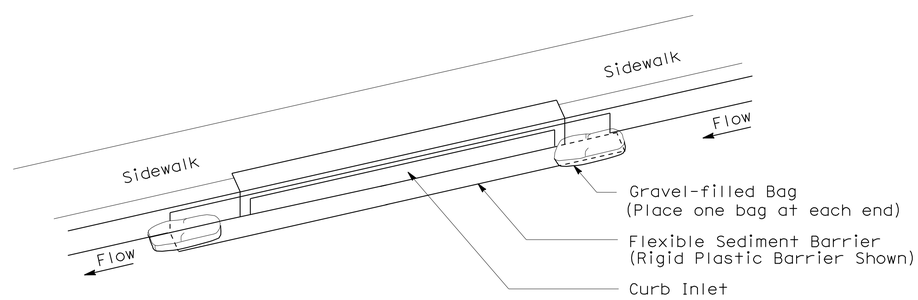

PERSPECTIVE

TEMPORARY DRAINAGE INLET PROTECTION (TYPE 6B) (CURB INLET WITHOUT GRATE)

STATE OF CALIFORNIA
DEPARTMENT OF TRANSPORTATION

TEMPORARY WATER POLLUTION CONTROL DETAILS (TEMPORARY DRAINAGE INLET PROTECTION)

NO SCALE

NSP T64 DATED AUGUST 15, 2008 SUPPLEMENTS THE STANDARD PLANS BOOK DATED MAY 2006.

NEW STANDARD PLAN NSP T64

2006 NEW STANDARD PLAN NSP T64