Dist	COUNTY	ROUTE	POST MILES TOTAL PROJECT	SHEET No.	TOTAL SHEETS
04	Ala	580	R8.4/R14.6	501	853

REGISTERED CIVIL ENGINEER 1/13/2012 DATE

5-14-12
PLANS APPROVAL DATE

REGISTERED PROFESSIONAL ENGINEER SEAN A. CHARLES No. 50767 Exp. 9/30/13 CIVIL STATE OF CALIFORNIA

THE STATE OF CALIFORNIA OR ITS OFFICERS OR AGENTS SHALL NOT BE RESPONSIBLE FOR THE ACCURACY OR COMPLETENESS OF SCANNED COPIES OF THIS PLAN SHEET.

WMH CORPORATION
555 12th St
Suite 1900
Oakland, CA 94607

ALAMEDA CTC
1333 Broadway
Suite 220
Oakland, CA 94612

SIGN PANEL SUMMARY

SIGN No.	SIGN CODE	SIGN SIZE L x D (INCHES x INCHES)	SINGLE FACED	DOUBLE FACED	SIGN FACING MATERIAL: SHEETING COLOR (BACKGROUND)	RETROFLECTIVE ASTM TYPE (BACKGROUND)	SHEETING COLOR (BORDER & LEGEND)	RETROFLECTIVE ASTM TYPE (BORDER & LEGEND)	STANDARD (PROTECTIVE FILM)	PREMIUM (PROTECTIVE FILM)	FURNISH FORMED PANEL SIGN (OVERHEAD) SQFT	FURNISH SINGLE SHEET ALUMINIM SIGN (0.063" - UNFRAMED) SQFT	FURNISH SINGLE SHEET ALUMINIM SIGN (0.080" - FRAMED) SQFT	REMARKS
S1-1	R18A (CA)	66 X 48	X		WHITE	III	BLACK	PLAIN		X		22.0		
S2-2	W4-7	48 X 48	X		YELLOW	III	BLACK	PLAIN		X		16.0		
A	G85-10 (CA)	264 X 120	X		GREEN	IV	WHITE	IX		X	220.0			
S2-4	G86-5 (CA)	108 X 72	X		GREEN	IV	WHITE	IX		X			54.0	
	G94-1 (CA)	30 X 36	X		WHITE	III	BLACK	PLAIN		X		6.3		See SD-4
	D9-11	30 X 30	X		WHITE	III	BLACK	PLAIN		X		6.3		See SD-4
S2-5	R86-3 (CA)	30 X 66	X		WHITE	III	BLACK	PLAIN		X		6.3		
S3-1	R93-2 (CA)	30 X 72	X		WHITE	III	BLACK	PLAIN		X		13.8		
S4-1	G86-5 (CA)	96 X 60	X		GREEN	IV	WHITE	IX		X			40.0	
S4-2	R86-3 (CA)	30 X 66	X		WHITE	III	BLACK	PLAIN		X		13.8		
S4-3	R6-4 (CA)	48 X 60	X		WHITE	III	BLACK	PLAIN		X		20.0		
S5-1	R6-3 (CA)	48 X 60	X		WHITE	III	BLACK	PLAIN		X		20.0		
S5-2	R93-2 (CA)	30 X 72	X		WHITE	III	BLACK	PLAIN		X		15.0		
S6-1	R2-1 (65)	48 X 60	X		WHITE	III	BLACK	PLAIN		X		20.0		
	R48-1 (CA)	48 X 24	X		WHITE	III	BLACK	PLAIN		X		8.0		
S7-1	R86-3 (CA)	30 X 66	X		WHITE	III	BLACK	PLAIN		X		13.8		
S8-1	R93-2 (CA)	30 X 72	X		WHITE	III	BLACK	PLAIN		X		15.0		
S8-2	SR50-2 (CA)	30 X 66	X		WHITE	III	BLACK	PLAIN		X		13.8		
S9-4	SR50-2 (CA)	30 X 66	X		WHITE	III	BLACK	PLAIN		X		13.8		
S10-5	R86-3 (CA)	30 X 66	X		WHITE	III	BLACK	PLAIN		X		13.8		
G	G85-10 (CA)	192 X 60	X		GREEN	IV	WHITE	IX		X	80.0			
I	G23-1 (CA)	264 X 100	X		GREEN	IV	WHITE	IX		X	183.3			
J	G23-2 (CA)	240 X 100	X		GREEN	IV	WHITE	IX		X	166.7			
S10-6	R91-3 (CA)	30 X 48	X		WHITE	III	BLACK	PLAIN		X		10.0		
S10-7	R91-3 (CA)	30 X 48	X		WHITE	III	BLACK	PLAIN		X		10.0		
S10-8	R91-3 (CA)	30 X 48	X		WHITE	III	BLACK	PLAIN		X		10.0		
S10-13	R93-2 (CA)	30 X 72	X		WHITE	III	BLACK	PLAIN		X		15.0		
L	G83-5 (CA)	216 X 120	X		GREEN	IV	WHITE	IX		X	180.0			
	G85-10 (CA)	264 X 120	X		GREEN	IV	WHITE	IX		X	220.0			
S11-1	R18A (CA)	66 X 48	X		WHITE	III	BLACK	PLAIN		X		22.0		
S11-2	W4-7	48 X 48	X		YELLOW	III	BLACK	PLAIN		X		16.0		
S12-1	R86-3 (CA)	30 X 66	X		WHITE	III	BLACK	PLAIN		X		13.8		
N	G85-10 (CA)	264 X 120	X		GREEN	IV	WHITE	IX		X	220.0			
S13-3	R93-2 (CA)	30 X 72	X		WHITE	III	BLACK	PLAIN		X		15.0		
SQ-8 TOTALS											1270.0	349.5	94.0	

L=LENGTH OF SIGN

D=DEPTH OF SIGN

NOTE: CALIFORNIA SIGN CODES ARE DESIGNATED BY (CA). OTHERWISE, FEDERAL MUTCD SIGN CODES ARE SHOWN.

SIGN QUANTITIES

SQ-8

LMH	1/12/12	REVISED BY	HEATHER CHARLES
SCV	11/18/11	DATE REVISED	SEAN A. CHARLES
HAC	4/23/10	CALCULATED-DESIGNED BY	TIMOTHY J. LEE
		CHECKED BY	

CONSULTANT FUNCTIONAL SUPERVISOR

STATE OF CALIFORNIA - DEPARTMENT OF TRANSPORTATION

Caltrans

X:\580 WB HOV\000_CAD\Sheets\East of Sta 540+00\CT-Electronic-Submittal 20120113\021-Signs\OD-Quantities\04000212480d008.dgn

LAST REVISION 01-13-12 DATE PLOTTED => 23-MAY-2012 TIME PLOTTED => 07:53

Dist	COUNTY	ROUTE	POST MILES TOTAL PROJECT	SHEET No.	TOTAL SHEETS
04	Ala	580	R8.4/R14.6	502	853

REGISTERED CIVIL ENGINEER 1/13/2012 DATE

5-14-12
PLANS APPROVAL DATE

REGISTERED PROFESSIONAL ENGINEER SEAN A. CHARLES No. 50767 Exp. 9/30/13 CIVIL STATE OF CALIFORNIA

THE STATE OF CALIFORNIA OR ITS OFFICERS OR AGENTS SHALL NOT BE RESPONSIBLE FOR THE ACCURACY OR COMPLETENESS OF SCANNED COPIES OF THIS PLAN SHEET.

WMH CORPORATION
555 12th St
Suite 1900
Oakland, CA 94607

ALAMEDA CTC
1333 Broadway
Suite 220
Oakland, CA 94612

SIGN PANEL SUMMARY

SIGN No.	SIGN CODE	SIGN SIZE L x D (INCHES x INCHES)	SINGLE FACED	DOUBLE FACED	SIGN FACING MATERIAL: SHEETING COLOR (BACKGROUND)	SIGN FACING MATERIAL: RETROFLECTIVE ASTM TYPE (BACKGROUND)	SIGN FACING MATERIAL: SHEETING COLOR (BORDER & LEGEND)	SIGN FACING MATERIAL: RETROFLECTIVE ASTM TYPE (BORDER & LEGEND)	SIGN FACING MATERIAL: STANDARD (PROTECTIVE FILM)	SIGN FACING MATERIAL: PREMIUM (PROTECTIVE FILM)	FURNISH FORMED PANEL SIGN (OVERHEAD) SQFT	FURNISH SINGLE SHEET ALUMINIM SIGN (0.063" - UNFRAMED) SQFT	FURNISH SINGLE SHEET ALUMINIM SIGN (0.080" - FRAMED) SQFT	REMARKS
S15-1	R86-3 (CA)	30 X 66	X		WHITE	III	BLACK	PLAIN		X		13.8		
S15-3	R93-2 (CA)	30 X 72	X		WHITE	III	BLACK	PLAIN		X		15.0		
S16-1	SR50-2 (CA)	30 X 66	X		WHITE	III	BLACK	PLAIN		X		13.8		
S17-4	R91-3 (CA)	30 X 42	X		WHITE	III	BLACK	PLAIN		X		10.0		
S17-5	R91-3 (CA)	30 X 42	X		WHITE	III	BLACK	PLAIN		X		10.0		
S17-6	R91-3 (CA)	30 X 42	X		WHITE	III	BLACK	PLAIN		X		10.0		
S17-9	R91-3 (CA)	30 X 42	X		WHITE	III	BLACK	PLAIN		X		10.0		
S17-10	R86-3 (CA)	30 X 66	X		WHITE	III	BLACK	PLAIN		X		13.8		
S17-11	R91-3 (CA)	30 X 42	X		WHITE	III	BLACK	PLAIN		X		10.0		
S17-12	R91-3 (CA)	30 X 42	X		WHITE	III	BLACK	PLAIN		X		10.0		
S17-13	R91-3 (CA)	30 X 42	X		WHITE	III	BLACK	PLAIN		X		10.0		
S17-15	R89-1 (CA)	48 X 60	X		WHITE	III	BLACK	PLAIN		X		1.7		
	R10-6	48 X 24	X		WHITE	III	BLACK	PLAIN		X		5.0		
S18-2	R93-2 (CA)	30 X 72	X		WHITE	III	BLACK	PLAIN		X		15.0		
S19-3	R86-3 (CA)	30 X 66	X		WHITE	III	BLACK	PLAIN		X		13.8		
S20-3	R93-2 (CA)	30 X 72	X		WHITE	III	BLACK	PLAIN		X		15.0		
S21-3	R89-1 (CA)	48 X 60	X		WHITE	III	BLACK	PLAIN		X		1.7		
	R10-6	48 X 24	X		WHITE	III	BLACK	PLAIN		X		5.0		
S21-4	R91-3 (CA)	30 X 42	X		WHITE	III	BLACK	PLAIN		X		10.0		
S21-5	R91-3 (CA)	30 X 42	X		WHITE	III	BLACK	PLAIN		X		10.0		
S21-9	R91-3 (CA)	30 X 42	X		WHITE	III	BLACK	PLAIN		X		10.0		
S22-2	R91-3 (CA)	30 X 42	X		WHITE	III	BLACK	PLAIN		X		10.0		
S22-3	R91-3 (CA)	30 X 42	X		WHITE	III	BLACK	PLAIN		X		10.0		
S22-4	R91-3 (CA)	30 X 42	X		WHITE	III	BLACK	PLAIN		X		10.0		
S22-5	R89-1 (CA)	48 X 60	X		WHITE	III	BLACK	PLAIN		X		1.7		
	R10-6	48 X 24	X		WHITE	III	BLACK	PLAIN		X		5.0		
S22-7	R86-3 (CA)	30 X 66	X		WHITE	III	BLACK	PLAIN		X		13.8		
O	G83-5 (CA)	240 X 120	X		GREEN	IV	WHITE	IX		X	200.0			
	G85-10 (CA)	168 X 120	X		GREEN	IV	WHITE	IX		X	140.0			
S23-5	R93-2 (CA)	30 X 72	X		WHITE	III	BLACK	PLAIN		X		15.0		
S24-2	SR50-2 (CA)	30 X 66	X		WHITE	III	BLACK	PLAIN		X		13.8		
SQ-9 TOTALS											340.0	292.9	0	

L=LENGTH OF SIGN

D=DEPTH OF SIGN

NOTE: CALIFORNIA SIGN CODES ARE DESIGNATED BY (CA). OTHERWISE, FEDERAL MUTCD SIGN CODES ARE SHOWN.

SIGN QUANTITIES

SQ-9

REVISED BY	HAC	SCV	LMH
DATE REVISED	4/23/10	11/18/11	1/12/12

HEATHER CHARLES — CALCULATED-DESIGNED BY
SEAN A. CHARLES — CHECKED BY
TIMOTHY J. LEE — CONSULTANT FUNCTIONAL SUPERVISOR

STATE OF CALIFORNIA - DEPARTMENT OF TRANSPORTATION

Caltrans

X:\580 WB HOV\000_CAD\Sheets\East of Sta 540+00\CT-Electronic-Submittal 20120113\021-Signs\OD-Quantities\04000212480d009.dgn

LAST REVISION 01-13-12 | DATE PLOTTED => 23-MAY-2012 | TIME PLOTTED => 07:53

Dist	COUNTY	ROUTE	POST MILES TOTAL PROJECT	SHEET No.	TOTAL SHEETS
04	Ala	580	R8.4/R14.6	503	853

REGISTERED CIVIL ENGINEER 1/13/2012 DATE

5-14-12
PLANS APPROVAL DATE

REGISTERED PROFESSIONAL ENGINEER SEAN A. CHARLES No. 50767 Exp. 9/30/13 CIVIL STATE OF CALIFORNIA

THE STATE OF CALIFORNIA OR ITS OFFICERS OR AGENTS SHALL NOT BE RESPONSIBLE FOR THE ACCURACY OR COMPLETENESS OF SCANNED COPIES OF THIS PLAN SHEET.

WMH CORPORATION
555 12th St
Suite 1900
Oakland, CA 94607

ALAMEDA CTC
1333 Broadway
Suite 220
Oakland, CA 94612

SIGN PANEL SUMMARY

SIGN No.	SIGN CODE	SIGN SIZE L x D (INCHES x INCHES)	SINGLE FACED	DOUBLE FACED	SIGN FACING MATERIAL: SHEETING COLOR (BACKGROUND)	SIGN FACING MATERIAL: RETROFLECTIVE ASTM TYPE (BACKGROUND)	SIGN FACING MATERIAL: SHEETING COLOR (BORDER & LEGEND)	SIGN FACING MATERIAL: RETROFLECTIVE ASTM TYPE (BORDER & LEGEND)	SIGN FACING MATERIAL: STANDARD (PROTECTIVE FILM)	SIGN FACING MATERIAL: PREMIUM (PROTECTIVE FILM)	FURNISH FORMED PANEL SIGN (OVERHEAD) SQFT	FURNISH SINGLE SHEET ALUMINIM SIGN (0.063" - UNFRAMED) SQFT	FURNISH SINGLE SHEET ALUMINIM SIGN (0.080" - FRAMED) SQFT	REMARKS
S25-1	R86-3 (CA)	30 x 30	X		WHITE	III	BLACK	PLAIN		X		13.8		
S	G83-1 (CA)	168 x 100	X		GREEN	IV	WHITE	IX		X	116.7			
	G85-1 (CA)	216 x 100	X		GREEN	IV	WHITE	IX		X	150.0			
S26-6	R91-3 (CA)	30 x 42	X		WHITE	III	BLACK	PLAIN		X		10.0		
S26-7	R91-3 (CA)	30 x 42	X		WHITE	III	BLACK	PLAIN		X		10.0		
S26-8	R48-2 (CA)	48 x 60	X		WHITE	III	BLACK	PLAIN		X		20.0		
S26-10	R86-3 (CA)	30 x 66	X		WHITE	III	BLACK	PLAIN		X		13.8		
S26-11	R82-1 (CA)	30 x 60	X		WHITE	III	BLACK	PLAIN		X		12.5		
S26-13	R91-3 (CA)	30 x 42	X		WHITE	III	BLACK	PLAIN		X		10.0		
S26-14	R91-3 (CA)	30 x 42	X		WHITE	III	BLACK	PLAIN		X		10.0		
S26-15	R89-1 (CA)	48 x 60	X		WHITE	III	BLACK	PLAIN		X		1.7		
	R10-6	48 x 24	X		WHITE	III	BLACK	PLAIN		X		5.0		
SQ-10 TOTALS											266.7	106.8	0	
SQ-9 TOTALS											340.0	292.9	0	
SQ-8 TOTALS											1270.0	349.5	94.0	
TOTAL											1876.7	749.2	94.0	

L=LENGTH OF SIGN

D=DEPTH OF SIGN

NOTE: CALIFORNIA SIGN CODES ARE DESIGNATED BY (CA). OTHERWISE, FEDERAL MUTCD SIGN CODES ARE SHOWN.

SIGN QUANTITIES

SQ-10

REVISED BY	DATE REVISED	CALCULATED-DESIGNED BY	CHECKED BY	SUPERVISOR	CONSULTANT FUNCTIONAL SUPERVISOR
LMH	1/12/12	HEATHER CHARLES	SEAN A. CHARLES	TIMOTHY J. LEE	
SCV	11/18/11				
HAC	4/23/10				

STATE OF CALIFORNIA - DEPARTMENT OF TRANSPORTATION

Caltrans

X:\580 WB HOV\000_CAD\Sheets\East of Stg 540+00\CT-Electronic-Submittal 20120113\021-Signs\0D-Quantities\0400021248od010.dgn

LAST REVISION 01-13-12 | DATE PLOTTED => 23-MAY-2012 TIME PLOTTED => 07:53

Dist	COUNTY	ROUTE	POST MILES TOTAL PROJECT	SHEET No.	TOTAL SHEETS
04	Ala	580	R8.4/R14.6	504	853

REGISTERED CIVIL ENGINEER 5/7/12 DATE

5-14-12
PLANS APPROVAL DATE

REGISTERED PROFESSIONAL ENGINEER N.V. BERNARDI No. 45407 Exp. 9/30/12 CIVIL STATE OF CALIFORNIA

THE STATE OF CALIFORNIA OR ITS OFFICERS OR AGENTS SHALL NOT BE RESPONSIBLE FOR THE ACCURACY OR COMPLETENESS OF SCANNED COPIES OF THIS PLAN SHEET.

BKF ENGINEERS
4670 WILLOW ROAD, SUITE 250
PLEASANTON, CA. 94588

ALAMEDA CTC
1333 BROADWAY SUITE 220
OAKLAND, CA. 94612

ROADWAY QUANTITIES

STATION	SIDE	LIME	LIME STABILIZED SOIL	CLASS 4 AS	CLASS 3 AB	ASPHALTIC EMULSION (CURING SEAL)	LCB	HMA	HMA (OPEN GRADED)	JOINTED PLAIN CONCRETE PAVEMENT	RUBBERIZED HMA (GAP GRADED)	GEOSYNTHETIC PAVEMENT INTERLAYER (PAVING MAT)	PAVING ASPHALT (BINDER, GEOSYNTHETIC PAVEMENT INTERLAYER	PRECAST PRESTRESSED CONCRETE PAVEMENT	INDIVIDUAL SLAB REPLACEMENT (PRECAST CONCRETE PANEL)	LEAN CONCRETE BASE-RAPID SETTING	INDIVIDUAL SLAB REPLACEMENT (RAPID STRENGTH CONCRETE)	TACK COAT	MINOR CONCRETE
		TON	SQYD	CY	CY	TON	CY	TON	TON	CY	TON	SQYD	TON	CY	CY	CY	CY	TON	CY
PAVEMENT SECTION TYPE 1:																			
"B" 540+00.00 TO 550+11.00	L†	51.0	1854			4.0	495	814	126		251							1.70	
"B" 556+94.96 TO 558+50.98	L†	9.3	336			0.8	90	148	23		46							0.31	
"B" 566+87.63 TO 579+20.00	L†	77.4	2812			6.0	750	1234	190		380							2.58	
"B" 592+11.50 TO 615+60.00	L†	186.0	6764			14.4	1804	2968	457		914							6.20	
"B" 621+95.00 TO "MKR2" 641+35.00	L†	184.3	6702			14.3	1788	2941	453		905							6.15	
"B" 645+04.82 TO 647+84.00	L†	22.3	809			1.8	216	355	55		110							0.75	
"B" 647+88.00 TO 649+49.00	R†	6.3	229			0.5	62	101	16		31							0.21	
"B" 651+31.71 TO 654+17.74	R†	11.2	405			0.9	108	178	28		55							0.38	
"B" 653+65.00 TO 658+30.56	L†	34.8	1265			2.7	338	555	86		171							1.16	
"B" 660+08.22 TO 691+00.00	L†	327.5	11909			25.3	3176	5225	804		1608							10.92	
"B" 695+15.00 TO 738+46.53	L†	377.6	13730			29.2	3662	6024	927		1854							12.58	
"B" 752+31.89 TO 759+35.69	L†	38.9	1413			3.1	377	620	96		191							1.30	
"B" 761+77.98 TO 789+12.45	L†	250.2	9096			19.4	2426	3991	614		1228							8.34	
"B" 793+83.19 TO 799+00.00	L†	36.4	1321			2.9	353	580	90		179							1.22	
"B" 805+00.00 TO 814+24.48	L†	66.4	2414			5.2	644	1059	163		326							2.22	
"B" 815+86.65 TO 831+35.99	L†	104.0	3779			8.1	1008	1658	256		511							3.47	
"B" 834+14.44 TO 844+73.22	L†	78.5	2852			6.1	761	1252	193		385							2.62	
"B" 849+00.00 TO 858+88.58	L†	72.6	2637			5.7	704	1157	178		356							2.42	
"B" 861+43.47 TO 868+20.00	L†	33.1	1204			2.6	321	528	82		163							1.11	
PAVEMENT SECTION TYPE 2:																			
"B" 540+00.00 TO 580+30.00	L†							1530	333		665	4926	5.8					3.49	
"B" 550+11.00 TO "MIR2" 568+31.20	L†							2189	406		811	6005	7.1					5.51	
"B" 587+00.00 TO 601+97.36	L†							1860	252		503	3723	4.4					3.42	
"B" 587+00.00 TO 615+60.00	L†							1012	199		397	2939	3.5					2.70	
"B" 621+95.00 TO 647+84.00	L†							1376	175		349	2581	3.1					2.91	
"MKR2" 645+00.02 TO 646+21.14	L†/R†							143	15		30	216	0.3					0.25	
"B" 653+65.00 TO 691+00.00	L†							1665	253		505	3736	4.4					3.43	
"MKR1" 656+90.46 TO 658+30.24	L†/R†							244	27		53	393	0.5					0.45	
"B" 695+15.00 TO 799+00.00	L†							5607	701		1402	10383	12.2					11.68	
"B" 732+30.74 TO "MXR3" 740+68.34	L†							667	75		149	1097	1.3					1.24	
"MXR1"757+50.00 TO "B" 763+84.31	L†							636	91		182	1345	1.6					1.24	
"B" 805+00.00 TO 844+73.22	L†							2682	269		537	3974	4.7					4.47	
"MVR5" 812+93.41 TO "MSN" 834+15.13	L†							1807	259		517	3824	4.5					3.51	
"B" 847+72.32 TO 854+06.51	L†							386	43		86	635	0.8					0.72	
"B" 851+32.86 TO "MGL1" 862+03.84	L†/R†							965	108		215	1589	1.9					1.79	
PAVEMENT SECTION TYPE 3:																			
"B" 540+00.00 TO 580+30.00	L†			2419			1075	2694	273		545							4.54	
"B" 587+00.00 TO 615+60.00	L†			1631			725	1763	184		367							3.06	
"B" 621+95.00 TO 615+60.00	L†			1381			614	1958	156		311							3.55	
"B" 653+65.00 TO 691+00.00	L†			1994			886	2715	225		449							4.43	
"B" 695+15.00 TO 799+00.00	L†			5445			2420	4288	613		1225							8.32	
"B" 805+00.00 TO 844+73.22	L†			2119			942	2218	239		477							3.98	
"B" 847+72.32 TO 862+00.00				1013			450	1367	114		228							2.25	
SUBTOTAL Q-1		1967.8	71531	16002		153.0	26195	71160	9847		19667	47366	56.1					142.58	

SUMMARY OF QUANTITIES
Q-1

STATE OF CALIFORNIA - DEPARTMENT OF TRANSPORTATION

CONSULTANT FUNCTIONAL SUPERVISOR: NATALINA V. BERNARDI

CALCULATED-DESIGNED BY: ARMANDO LOERA | CHECKED BY: LUIS GARCIA

REVISED BY: AL | DATE REVISED: 5/7/12

LAST REVISION 05-07-12 | DATE PLOTTED => 23-MAY-2012 | TIME PLOTTED => 07:53

Dist	COUNTY	ROUTE	POST MILES TOTAL PROJECT	SHEET No.	TOTAL SHEETS
04	Ala	580	R8.4/R14.6	505	853

REGISTERED CIVIL ENGINEER 5/7/12 DATE

5-14-12
PLANS APPROVAL DATE

REGISTERED PROFESSIONAL ENGINEER N.V. BERNARDI No. 45407 Exp. 9/30/12 CIVIL STATE OF CALIFORNIA

THE STATE OF CALIFORNIA OR ITS OFFICERS OR AGENTS SHALL NOT BE RESPONSIBLE FOR THE ACCURACY OR COMPLETENESS OF SCANNED COPIES OF THIS PLAN SHEET.

BKF ENGINEERS
4670 WILLOW ROAD, SUITE 250
PLEASANTON, CA. 94588

ALAMEDA CTC
1333 BROADWAY SUITE 220
OAKLAND, CA. 94612

ROADWAY QUANTITIES

STATION	SIDE	LIME	LIME STABILIZED SOIL	CLASS 4 AS	CLASS 3 AB	ASPHALTIC EMULSION (CURING SEAL)	LCB	HMA	HMA (OPEN GRADED)	JOINTED PLAIN CONCRETE PAVEMENT	RUBBERIZED HMA (GAP GRADED)	GEOSYNTHETIC PAVEMENT INTERLAYER (PAVING MAT)	PAVING ASPHALT (BINDER, GEOSYNTHETIC PAVEMENT INTERLAYER	PRECAST PRESTRESSED CONCRETE PAVEMENT	INDIVIDUAL SLAB REPLACEMENT (PRECAST CONCRETE PANEL)	LEAN CONCRETE BASE-RAPID SETTING	INDIVIDUAL SLAB REPLACEMENT (RAPID STRENGTH CONCRETE)	TACK COAT	MINOR CONCRETE
		TON	SQYD	CY	CY	TON	CY	TON	TON	CY	TON	SQYD	TON	CY	CY	CY	CY	TON	CY
PAVEMENT SECTION TYPE 4:																			
"MVR5" 793+83.03 TO "MVR4" 796+00.00	L†			156			63	180										0.13	
"MVR5" 795+53.87 TO 796+00.00	R†			27			11	31										0.03	
"MVR5" 812+00.00 TO 813+40.31	L†			71			29	82										0.06	
"MGR2" 858+19.02 TO 862+63.93	L†			214			86	246										0.18	
"MGR2" 858+71.04 TO 862+63.27	R†			327			131	376										0.28	
"MGL1" 864+00.00 TO 865+74.13	L†			58			24	68										0.05	
"MGL1" 862+68.84 TO 866+34.37	R†			54			22	63										0.05	
PAVEMENT SECTION TYPE 5:																			
"MKR2" 646+21.14 TO 649+34.30	L†			170	120			230										0.27	
PAVEMENT SECTION TYPE 6:																			
"MXR3" 740+68.34 TO 750+06.37	L†							1088										1.64	
"MGR2" 859+00.00 TO 864+00.00	R†							508										0.77	
PAVEMENT SECTION TYPE 7:																			
"MKL1" 653+02.16 TO 656+63.38	R†			201	142			102			68							0.21	
"MXL1" 745+50.00 TO 753+15.75	L†			485	344			246			164							0.51	
"MXL1" 750+49.85 TO 756+10.79	R†			324	229			164			110							0.34	
PAVEMENT SECTION TYPE 8:																			
"MVR4" 796+00.00 TO 806+87.00	L†			726			291	588										0.31	
"MVR4" 796+00.00 TO 804+74.21	R†			555			222	450										0.24	
"MVL1" 800+01.71 TO 811+00.00	L†			1045			418	847										0.44	
"MVL2" 800+50.00 TO 810+95.93	R†			799			320	647										0.34	
PAVEMENT SECTION TYPE 9:																			
"MXL1" 745+50.00 TO 746+50.00	R†							117			22							0.21	
PAVEMENT SECTION TYPE 10:																			
B 844+73.22 TO 847+72.32	L†							1077				1595	1.9					1.47	
PAVEMENT SECTION TYPE 11:																			
"B" 695+15.00 TO 799+00.00	L†							3157	395		789	5845	6.9					7.06	
"B" 805+00.00 TO 844+73.22	L†							12922	1436		2872	21270	24.9					30.12	
"B" 847+72.32 TO 868+20.00	L†							6524	816		1631	12081	14.1					14.60	
PAVEMENT SECTION TYPE 12 & 15:																			
FROM PRECAST PRESTRESSED CONCRETE PAVEMENT				922										3389		2147			
PAVEMENT SECTION TYPE 13:																			
"B" 540+00.00 TO 580+30.00	L†							6212	1445		2890							16.94	
"B" 587+00.00 TO 615+60.00	L†							5278	1015		2030							15.03	
"B" 621+95.00 TO 647+84.00	L†							5668	915		1829							13.54	
"B" 653+65.00 TO 691+00.00	L†							7127	1320		2640							19.55	
PAVEMENT SECTION TYPE 14:																			
"B" 540+00.00 TO 550+11.00	L†							477	87		174	1283	1.5					1.77	
"B" 633+15.00 TO 645+04.82	L†							881	130		259	1918	2.3					2.64	
"B" 658+30.56 TO 662+75.15	L†							513	69		137	1011	1.2					1.39	
SUBTOTAL Q-2				6134	835		1617	55869	7628		15615	45003	52.8	3389		2147		130.17	

SUMMARY OF QUANTITIES
Q-2

STATE OF CALIFORNIA - DEPARTMENT OF TRANSPORTATION

CONSULTANT FUNCTIONAL SUPERVISOR: NATALINA V. BERNARDI

CALCULATED-DESIGNED BY: ARMANDO LOERA | CHECKED BY: LUIS GARCIA

REVISED BY: AL | DATE REVISED: 5/7/12

LAST REVISION 05-07-12 | DATE PLOTTED => 23-MAY-2012 | TIME PLOTTED => 07:53

Dist	COUNTY	ROUTE	POST MILES TOTAL PROJECT	SHEET No.	TOTAL SHEETS
04	Ala	580	R8.4/R14.6	506	853

REGISTERED CIVIL ENGINEER 5/7/12 DATE

5-14-12
PLANS APPROVAL DATE

REGISTERED PROFESSIONAL ENGINEER N.V. BERNARDI No. 45407 Exp. 9/30/12 CIVIL STATE OF CALIFORNIA

THE STATE OF CALIFORNIA OR ITS OFFICERS OR AGENTS SHALL NOT BE RESPONSIBLE FOR THE ACCURACY OR COMPLETENESS OF SCANNED COPIES OF THIS PLAN SHEET.

BKF ENGINEERS
4670 WILLOW ROAD, SUITE 250
PLEASANTON, CA. 94588

ALAMEDA CTC
1333 BROADWAY SUITE 220
OAKLAND, CA. 94612

ROADWAY QUANTITIES

STATION	SIDE	LIME	LIME STABILIZED SOIL	CLASS 4 AS	CLASS 3 AB	ASPHALTIC EMULSION (CURING SEAL)	LCB	HMA	HMA (OPEN GRADED)	JOINTED PLAIN CONCRETE PAVEMENT	RUBBERIZED HMA (GAP GRADED)	GEOSYNTHETIC PAVEMENT INTERLAYER (PAVING MAT)	PAVING ASPHALT (BINDER, GEOSYNTHETIC PAVEMENT INTERLAYER	PRECAST PRESTRESSED CONCRETE PAVEMENT	INDIVIDUAL SLAB REPLACEMENT (PRECAST CONCRETE PANEL)	LEAN CONCRETE BASE-RAPID SETTING	INDIVIDUAL SLAB REPLACEMENT (RAPID STRENGTH CONCRETE)	TACK COAT	MINOR CONCRETE
		TON	SQYD	CY	CY	TON	CY	TON	TON	CY	TON	SQYD	TON	CY	CY	CY	CY	TON	CY
PAVEMENT SECTION TYPE 16:																			
"MVR5" 793+83.68 TO 797+23.19	L†							18				76	0.1					0.02	42
"MVR5" 812+00.00 TO 813+40.31	L†							8				32	0.1					0.01	18
"MGL1" 865+48.41 TO "MGL1" 866+26.54	L†							29				120	0.2					0.03	66
PAVEMENT SECTION TYPE 17:																			
FROM INDIVIDUAL SLAB REPLACEMENT																			
(PRECAST CONCRETE PANEL)															797	443			
PAVEMENT SECTION TYPE 18:																			
"B" 550+11.00 TO "MIL3" 555+37.40	L†			203			91	149	23		46							0.31	
"B" 558+50.98 TO 559+71.74	L†			36			16	27	5		9							0.06	
"B" 579+20.00 TO 580+30.00	L†			81			36	60	10		19							0.13	
"B" 558+19.37 TO 592+11.50	L†			233			104	170	27		53							0.36	
"B" 640+82.30 TO 647+88.00	R†			505			225	370	57		114							0.78	
"B" 654+17.74 TO 656+63.41	R†			196			87	143	22		44							0.30	
"MKL1" 656+63.38 TO 658+48.61	R†			158			71	116	18		36							0.25	
"MKR1" 659+36.66 TO 660+08.22	R†			47			21	35	6		11							0.08	
"MXR1" 758+36.79 TO 761+75.49	L†			223			99	163	26		51							0.34	
"MVR5" 792+00.00 TO 793+83.03	L†			144			64	106	17		33							0.22	
"MVL1" 810+95.93 TO 813+88.93	R†			343			153	251	39		78							0.53	
"MVR5" 813+40.31 TO 815+86.22	L†			140			62	102	16		32							0.22	
"MGR2" 862+63.27 TO 865+42.73	R†			291			129	213	33		66							0.45	
PAVEMENT SECTION TYPE 20:																			
"MKR2" 641+35.00 TO 646+21.14	L†	35.9	1304			2.8	348	1144	88		176							2.01	
"MGL1" 858+89.00 TO 862+03.84	L†	26.8	972			2.1	259	853	66		132							1.50	
PAVEMENT SECTION TYPE 21:																			
"MXR3" 738+44.00 TO 740+68.34	L†	15.9	577			1.3	154	363	39		78							0.65	
"MVR5" 789+13.00 TO 792+02.00	L†	16.4	595			1.3	159	374	41		81							0.67	
"MSN" 831+37.00 TO 834+84.71	L†	23.5	853			1.9	228	536	58		116							0.96	
"B" 847+86.45 TO 849+00.00	L†	5.7	205			0.5	55	130	14		28							0.24	
PAVEMENT SECTION TYPE 22:																			
"MGL1" 862+03.84 TO 864+00.00	L†			281			113	551										0.59	
PAVEMENT SECTION TYPE 23:																			
"MKR2" 649+34.30 TO "MK" 23+00.00	L†			505	358			426										0.27	
PAVEMENT SECTION TYPE 24:																			
"MXR3" 740+68.34 TO 749+97.18	L†			520	368			877										0.82	
"MXR3" 740+97.28 TO 750+31.30	R†			364	258			615										0.57	
PAVEMENT SECTION TYPE 25:																			
"B" 580+30.00 TO 582+16.17	L†			131	59			125										0.14	
"B" 583+87.46 TO 587+00.00	L†			500	222			478										0.53	
"MSN" 842+60.28 TO 843+87.66	L†			87	39			83										0.09	
"B" 844+73.22 TO 847+72.32	L†			463	206			443										0.49	
"B" 844+73.22 TO 847+72.32	L†			160	71			153										0.17	
"B" 868+20.00 TO 869+44.52	L†			101	45			96										0.11	
SUBTOTAL Q-3		124.2	4506	5712	1626	9.9	2474	9207	605		1203	228	0.4		797	443		13.90	126

SUMMARY OF QUANTITIES
Q-3

REVISED BY	DATE REVISED
AL	5/7/12

ARMANDO LOERA — LUIS GARCIA — CALCULATED-DESIGNED BY — CHECKED BY

CONSULTANT FUNCTIONAL SUPERVISOR: NATALINA V. BERNARDI

STATE OF CALIFORNIA - DEPARTMENT OF TRANSPORTATION

LAST REVISION 05-07-12 — DATE PLOTTED => 23-MAY-2012 — TIME PLOTTED => 07:53

Dist	COUNTY	ROUTE	POST MILES TOTAL PROJECT	SHEET No.	TOTAL SHEETS
04	Ala	580	R8.4/R14.6	507	853

REGISTERED CIVIL ENGINEER 5/7/12 DATE

5-14-12
PLANS APPROVAL DATE

REGISTERED PROFESSIONAL ENGINEER N.V. BERNARDI No. 45407 Exp. 9/30/12 CIVIL STATE OF CALIFORNIA

THE STATE OF CALIFORNIA OR ITS OFFICERS OR AGENTS SHALL NOT BE RESPONSIBLE FOR THE ACCURACY OR COMPLETENESS OF SCANNED COPIES OF THIS PLAN SHEET.

BKF ENGINEERS
4670 WILLOW ROAD, SUITE 250
PLEASANTON, CA. 94588

ALAMEDA CTC
1333 BROADWAY SUITE 220
OAKLAND, CA. 94612

ROADWAY QUANTITIES

STATION	SIDE	LIME	LIME STABILIZED SOIL	CLASS 4 AS	CLASS 3 AB	ASPHALTIC EMULSION (CURING SEAL)	LCB	HMA	HMA (OPEN GRADED)	JOINTED PLAIN CONCRETE PAVEMENT	RUBBERIZED HMA (GAP GRADED)	GEOSYNTHETIC PAVEMENT INTERLAYER (PAVING MAT)	PAVING ASPHALT (BINDER, GEOSYNTHETIC PAVEMENT INTERLAYER	PRECAST PRESTRESSED CONCRETE PAVEMENT	INDIVIDUAL SLAB REPLACEMENT (PRECAST CONCRETE PANEL)	LEAN CONCRETE BASE-RAPID SETTING	INDIVIDUAL SLAB REPLACEMENT (RAPID STRENGTH CONCRETE)	TACK COAT	MINOR CONCRETE
		TON	SQYD	CY	CY	TON	CY	TON	TON	CY	TON	SQYD	TON	CY	CY	CY	CY	TON	CY
PAVEMENT SECTION TYPE 26:																			
"MSN" 844+73.05 TO 847+73.00	L+	11.1	403	94			47			161									
PAVEMENT SECTION TYPE 27:																			
"B" 844+73.22 TO 847+72.32	L+							273				300	0.4					0.32	
PAVEMENT SECTION TYPE 28:																			
"MSN" 834+84.71 TO 835+47.59	L+			62			28	70										0.07	
"MSN" 843+88.63 TO 847+19.38	L+			57			26	64										0.06	
PAVEMENT SECTION TYPE 29:																			
"MSN" 844+73.10 TO 847+85.00	L+			179			80	188										0.19	
PAVEMENT SECTION TYPE 30:																			
"B" 615+60.00 TO 617+61.24	L+	21.6	783			1.7	209	449										0.49	
"B" 619+63.91 TO 621+95.00	L+	25.4	924			2.0	247	530										0.58	
"B" 647+84.00 TO 649+71.10	L+	13.6	492			1.1	132	283										0.31	
"B" 651+55.96 TO 653+65.00	L+	14.9	541			1.2	145	311										0.34	
"B" 691+00.00 TO 692+62.27	L+	17.9	649			1.4	173	372										0.41	
"B" 694+15.54 TO 695+15.00	L+	10.6	384			0.9	103	220										0.24	
PAVEMENT SECTION TYPE 31:																			
"B" 580+30.00 TO 581+76.08	L+			86			39	132										0.15	
"B" 583+49.44 TO 587+00.00	L+			213			95	323										0.37	
"B" 615+60.00 TO 617+69.65	L+			120			54	183										0.21	
"B" 619+72.51 TO 621+95.00	L+			126			56	192										0.22	
"B" 647+84.00 TO 649+63.72	L+			103			46	156										0.18	
"B" 651+48.58 TO 653+65.00	L+			124			55	188										0.22	
"B" 691+00.00 TO 692+59.49	L+			91			41	138										0.16	
"B" 694+09.76 TO 695+15.00	L+			57			26	87										0.10	
PAVEMENT SECTION TYPE 32:																			
FROM INDIVIDUAL SLAB REPLACEMENT																			
(RAPID STRENGTH CONCRETE)																895	1363		
PAVEMENT SECTION TYPE 33:																			
"MVR5" 792+02.00 TO 793+83.68	L+							1204										1.39	
OVERLAY																			
"B" 538+90.00 TO 540+00.00	L+							119	80		159	1174	1.4					0.54	
"MIL3" 558+50.84 TO 561+10.88	L+/R+							237										0.36	
"MIR2" 568+31.20 TO 569+14.00	L+/R+							99										0.15	
"B" 580+30.00 TO 581+76.08	L+							52				167	0.2					0.08	
"B" 583+36.30 TO 587+00.00	L+							135				441	0.6					0.21	
"MIR3" 584+34.29 TO 585+80.00	L+/R+							157										0.24	
"B" 615+60.00 TO 617+72.75	L+							66				212	0.3					0.10	
"B" 617+61.24 TO 619+63.91	L+							142				460	0.6					0.22	
"B" 619+74.06 TO 621+95.00	L+							68				220	0.3					0.11	
SUBTOTAL Q-4		115.1	4176	1312		8.3	1602	6438	80	161	159	2974	3.8			895	1363	8.02	

SUMMARY OF QUANTITIES
Q-4

REVISED BY	DATE REVISED
AL	5/7/12

ARMANDO LOERA — LUIS GARCIA

CALCULATED-DESIGNED BY — CHECKED BY

CONSULTANT FUNCTIONAL SUPERVISOR — NATALINA V. BERNARDI

STATE OF CALIFORNIA - DEPARTMENT OF TRANSPORTATION

LAST REVISION 05-07-12 | DATE PLOTTED =>23-MAY-2012 | TIME PLOTTED =>07:53

Dist	COUNTY	ROUTE	POST MILES TOTAL PROJECT	SHEET No.	TOTAL SHEETS
04	Ala	580	R8.4/R14.6	508	853

REGISTERED CIVIL ENGINEER 5/7/12 DATE

5-14-12
PLANS APPROVAL DATE

REGISTERED PROFESSIONAL ENGINEER N.V. BERNARDI No. 45407 Exp. 9/30/12 CIVIL STATE OF CALIFORNIA

THE STATE OF CALIFORNIA OR ITS OFFICERS OR AGENTS SHALL NOT BE RESPONSIBLE FOR THE ACCURACY OR COMPLETENESS OF SCANNED COPIES OF THIS PLAN SHEET.

BKF ENGINEERS
4670 WILLOW ROAD, SUITE 250
PLEASANTON, CA. 94588

ALAMEDA CTC
1333 BROADWAY SUITE 220
OAKLAND, CA. 94612

ROADWAY QUANTITIES

STATION	SIDE	LIME	LIME STABILIZED SOIL	CLASS 4 AS	CLASS 3 AB	ASPHALTIC EMULSION (CURING SEAL)	LCB	HMA	HMA (OPEN GRADED)	JOINTED PLAIN CONCRETE PAVEMENT	RUBBERIZED HMA (GAP GRADED)	GEOSYNTHETIC PAVEMENT INTERLAYER (PAVING MAT)	PAVING ASPHALT (BINDER, GEOSYNTHETIC PAVEMENT INTERLAYER	PRECAST PRESTRESSED CONCRETE PAVEMENT	INDIVIDUAL SLAB REPLACEMENT (PRECAST CONCRETE PANEL)	LEAN CONCRETE BASE-RAPID SETTING	INDIVIDUAL SLAB REPLACEMENT (RAPID STRENGTH CONCRETE)	TACK COAT	MINOR CONCRETE
		TON	SQYD	CY	CY	TON	CY	TON	TON	CY	TON	SQYD	TON	CY	CY	CY	CY	TON	CY
"MKR4" 646+21.14 TO 649+34.30	L†/R†							354										0.52	
"B" 647+84.00 TO 649+63.72	L†							54				178	0.3					0.09	
"B" 649+69.19 TO 651+55.96	L†							129				418	0.5					0.20	
"B" 651+45.84 TO 653+65.00	L†							68				219	0.3					0.11	
"B" 651+33.85 TO 658+00.00	R†							732				2403	2.9					1.11	
"MKR1" 655+51.21 TO 656+90.46	L†/R†							165										0.25	
"B" 691+00.00 TO 692+58.98	L†							50				159	0.2					0.08	
"B" 694+08.79 TO 695+15.00	L†							34				107	0.2					0.05	
"MVR5" 793+83.68 TO 797+23.19	L†							291										0.44	
"B" 799+00.00 TO 805+00.00	L†							183				600	0.7					0.28	
"MVR4" 804+84.20 TO 805+58.37	R†							48										0.07	
"MVR5" 812+00.00 TO 812+93.41	L†							36										0.06	
"MGL1" 862+68.84 TO 866+25.81	R†							260										0.39	
"MGR2" 858+68.48 TO 859+00.00	R†							39										0.06	
"B" 868+20.00 TO 869+44.52	L†							14	10		19	135	0.2					0.07	
FROM PLACE HMA DIKE								573			204								
FROM CONCRETE BARRIER					565														
FROM MINOR CONCRETE					628														
FROM MAINTENANCE VEHICLE PULLOUT					218			240										0.20	
FROM DRAINAGE					36			17.2											
SUBTOTAL Q-5					1411			3287.2	10		223	4219	5.3					3.98	
SUBTOTAL Q-4		115.1	4176	1312		8.3	1602	6438	80	161	159	2974	3.8			895	1363	8.02	
SUBTOTAL Q-3		124.2	4506	5712	1626	9.9	2474	9207	605		1203	228	0.4		797	443		13.90	126
SUBTOTAL Q-2				6134	835		1617	55869	7628		15615	45003	52.8	3389		2147		130.17	
SUBTOTAL Q-1		1967.8	71531	16002		153.0	26195	71160	9847		19667	47366	56.1					142.58	
GRAND TOTAL		2207.1	80213	29160	3908	171.2	31888	145961.2	18170	161	36867	99790	118.4	3389	797	3485	1363	298.65	126

SUMMARY OF QUANTITIES
Q-5

REVISED BY	DATE REVISED
AL	5/7/12

ARMANDO LOERA — LUIS GARCIA

CALCULATED-DESIGNED BY — CHECKED BY

CONSULTANT FUNCTIONAL SUPERVISOR — NATALINA V. BERNARDI

STATE OF CALIFORNIA - DEPARTMENT OF TRANSPORTATION

LAST REVISION 05-07-12 — DATE PLOTTED =>23-MAY-2012 TIME PLOTTED =>07:53

Dist	COUNTY	ROUTE	POST MILES TOTAL PROJECT	SHEET No.	TOTAL SHEETS
04	Ala	580	R8.4/R14.6	509	853

REGISTERED CIVIL ENGINEER 5/7/12 DATE

5-14-12 PLANS APPROVAL DATE

REGISTERED PROFESSIONAL ENGINEER N.V. BERNARDI No. 45407 Exp. 9/30/12 CIVIL STATE OF CALIFORNIA

THE STATE OF CALIFORNIA OR ITS OFFICERS OR AGENTS SHALL NOT BE RESPONSIBLE FOR THE ACCURACY OR COMPLETENESS OF SCANNED COPIES OF THIS PLAN SHEET.

BKF ENGINEERS
4670 WILLOW ROAD, SUITE 250
PLEASANTON, CA. 94588

ALAMEDA CTC
1333 BROADWAY SUITE 220
OAKLAND, CA. 94612

PLACE HOT MIX ASPHALT DIKE

STATION	SIDE	HMA DIKE TYPE C	HMA DIKE TYPE D	HMA DIKE TYPE E	HMA DIKE TYPE F	HMA	RUBBERIZED HMA (GAP GRADED)
		LF	LF	LF	LF	TON	TON
"MIL3" 551+42.90 TO 551+67.90	L+				25	0.5	0.3
"MIL3" 551+67.90 TO 552+30.40	L+	63				0.8	0.6
"MIL3" 552+30.40 TO 561+10.88	L+		880			80.9	
"B" 560+31.79 TO "MIR2"569+14.00	L+			881		32.0	17.6
"B" 568+30.72 TO 569+59.09	L+			129		4.7	2.6
"B" 575+50.00 TO 579+70.00	L+			421		15.3	8.4
"MIR3" 584+74.95 TO 584+99.95	L+				25	0.7	
"MIR3" 584+99.95 TO 585+62.45	L+	63				1.1	
"MIR3" 585+62.45 TO 587+00.02	L+			138		6.5	2.8
"B" 604+50.00 TO 615+65.00	L+		1082			81.8	35.2
"B" 616+50.00 TO 617+39.45	L+		90			639	2.9
"MKR2" 649+00.21 TO 649+25.21	L+				25	0.7	
"MKR2" 649+25.21 TO 649+83.25	L+	63				1.1	
"MKR2" 649+83.25 TO "MK" 23+00.00	L+			301		14.0	6.0
"B" 651+63.80 TO 652+13.80	L+				50	1.0	0.5
"B" 652+13.80 TO 652+30.00	L+	17				0.3	0.2
"MKL1" 652+50.00 TO 653+12.50	R+			63		3.0	
"MKL1" 653+12.50 TO 653+75.00	RT	63				1.1	
"MKL1" 653+75.00 TO 654+00.00	R+				25	0.7	
"B" 654+17.74 TO 655+62.89	L+			146		5.4	2.9
"MKR1" 656+51.21 TO 659+48.00	L+			397		14.5	7.9
"B" 704+50.00 TO 704+75.00	L+				25	0.5	0.3
"B" 704+75.00 TO 705+37.50	L+	63				0.8	0.6
"B" 705+37.50 TO 707+20.00	L+			183		6.7	3.7
"B" 724+15.00 TO 724+40.00	L+				25	0.5	0.3
"B" 724+40.00 TO 725+02.50	L+	63				0.8	0.6
"B" 725+02.50 TO 727+00.00	L+			205		7.4	4.1
"MXR3" 743+75.00 TO 743+00.00	L+				24	0.6	
"MXR3" 743+00.00 TO 743+62.50	L+	58				1.1	
"MXR3" 743+62.50 TO 746+73.52	L+			307		14.2	
"MXR3" 749+60.54 TO 749+97.18	L+			40		1.9	
"MXL1" 754+00.00 TO 755+23.66	R+			118		5.6	
"MXL1" 755+23.66 TO 755+85.80	R+	63				1.1	
"MXL1" 755+85.80 TO 756+10.80	R+				25	0.7	0.3
"B" 782+00.00 TO 782+25.00	L+				25	0.5	0.3
"B" 782+25.00 TO 782+87.50	L+	63				0.8	0.6
"B" 782+87.50 TO 788+00.00	L+			513		18.7	10.2
"B" 793+83.19 TO 801+59.56	L+				777	14.3	7.8
"B" 802+19.68 TO 811+89.68	L+				970	17.9	9.7
"B" 811+89.68 TO 813+39.61	L+	150				2.0	1.5
"MVL1" 800+01.71 TO 801+62.50	L+			162		7.5	
"MVL1" 801+62.50 TO 802+06.52	L+	42				0.8	
"MVL1" 812+70.00 TO 813+88.93	R+		119			11.0	
"B" 821+50.00 TO "MSN" 835+47.69	L+		1399			105.8	45.5
"B" 834+84.18 TO 843+73.22	L+		889			67.2	28.9
"B" 843+73.22 TO 844+35.72	L+				63	1.2	0.6
"B" 844+35.72 TO 844+73.22	L+	38				0.5	0.4
"MGL1" 860+60.00 TO 861+00.00	L+			40		1.5	0.8
"MGL1" 863+00.00 TO 863+27.98	L+				25	0.7	
"MGL1" 863+27.98 TO 863+97.95	L+	63				1.1	
"MGL1" 863+97.95 TO 864+28.00	L+			27		1.3	
"MGR2" 861+00.00 TO 862+25.00	R+			113		5.3	
TOTAL		872	4459	4184	2109	573*	204*

* QUANTITY INCLUDED IN ROADWAY QUANTITIES TABLE.

REMOVE MBGR

STATION	SIDE	LENGTH
		LF
"B" 550+34.91 TO 550+97.94	L+	64
"B" 580+08.01 TO 580+81.20	L+	80
"MR3" 584+74.95 TO 585+49.28	L+	81
"B" 593+26.25 TO 594+03.33	L+	84
"B" 601+71.94 TO 602+44.97	L+	80
"B" 619+62.75 TO 620+25.03	L+	63
"B" 623+15.59 TO 624+42.87	L+	128
"B" 646+63.37 TO 649+48.60	R+	288
"B" 651+33.57 TO 653+70.44	R+	237
"B" 651+58.27 TO 652+22.69	L+	65
"B" 661+97.44 TO 662+74.29	L+	77
"B" 694+16.46 TO 694+79.73	L+	65
"B" 748+00.46 TO 748+17.15	R+	65
"B" 749+18.37 TO 749+77.65	L+	59
"B" 801+48.54 TO 802+50.71	L+	103
"B" 801+49.00 TO 802+50.93	L+	103
"B" 816+92.59 TO 817+68.58	L+	77
"B" 843+65.69 TO 844+35.34	L+	70
"B" 854+77.03 TO 855+52.32	L+	76
"B" 862+46.20 TO 863+58.31	L+	113
"MGR2" 862+57.20 TO 865+47.57	R+	286
TOTAL		2264

REMOVE SINGLE THRIE BEAM BARRIER

STATION	SIDE	LENGTH
		LF
"B" 854+06.51 TO 859+96.19	L+	590
TOTAL		590

TEMPORARY FENCE (WILDLIFE EXCLUSION)

STATION	SIDE	LENGTH
		LF
"B" 608+20.75 TO 618+02.23	L+	1040
"B" 619+07.21 TO "MK" 24+24.32	L+	3520
"MK" 24+59.33 TO "B" 692+86.55	L+	4305
"B" 693+86.32 TO 726+00.00	L+	3330
"B" 728+02.96 TO "MXR3" 748+99.96	L+	2102
"B" 855+00 TO "MGL1" 863+99.39	L+	1126
"MGL1" 866+22.82 TO "B" 869+44.52	R+/L+	858
TOTAL		16281

CRASH CUSHION (SAND FILLED)

STATION	SIDE	ARRAY B11
		EA
"MXR3" 749+63.87	L+	1
TOTAL		1

REMOVE CONCRETE

STATION	SIDE	TEXTURED PAVING	SWALE	MEDIAN PAVING	CURB RAMP	SIDEWALK	CURB	CURB AND GUTTER
		CY	CY	CY	CY	CY	LF	LF
"B" 556+94.96 TO 559+71.73	L+	61						
"B" 566+87.63 TO 568+80.42	L+	38						
"B" 640+82.30 TO 642+62.22	L+	36						
"MKR2" 649+47.20 TO "MK" 21+37.45	L+							367
"B" 655+15.62 TO 656+63.41	L+	28						
"MXR1" 741+34.18 TO "MXR3" 750+11.23	L+/R+				2	2		
"MXR3" 741+26.72 TO 750+29.70	R+							901
"MXL1" 745+51.28 TO 746+09.18	L+/R+							67
"MVR5" 793+00.98 TO 797+23.19	R+							423
"MVL1" 809+50.01 TO 810+85.22	L+	14						
"MVR5" 812+00.00 TO 814+00.00	R+							200
"B" 821+21.52 TO 823+87.70	L+		15					
"MGR2" 858+26.92 TO 859+72.64	L+/R+						122	41
"MGR2" 862+14.91 TO 862+66.60	L+	12						
"B" 862+41.66 TO "MGL1" 866+28.89	L+/R+							593
"MGL1" 864+51.85 TO 865+74.13	L+							129
"MGL1" 865+50.42 TO 866+20.49	L+			31				198
TOTAL		239					122	2919

SUMMARY OF QUANTITIES
Q-6

STATE OF CALIFORNIA - DEPARTMENT OF TRANSPORTATION
CONSULTANT FUNCTIONAL SUPERVISOR: NATALINA V. BERNARDI
CALCULATED-DESIGNED BY: ARMANDO LOERA
CHECKED BY: LUIS GARCIA
REVISED BY: AL
DATE REVISED: 5/7/12

LAST REVISION 05-07-12
DATE PLOTTED => 23-MAY-2012
TIME PLOTTED => 07:53

Dist	COUNTY	ROUTE	POST MILES TOTAL PROJECT	SHEET No.	TOTAL SHEETS
04	Ala	580	R8.4/R14.6	510	853

REGISTERED CIVIL ENGINEER 5/7/12 DATE

5-14-12
PLANS APPROVAL DATE

REGISTERED PROFESSIONAL ENGINEER N.V. BERNARDI No. 45407 Exp. 9/30/12 CIVIL STATE OF CALIFORNIA

THE STATE OF CALIFORNIA OR ITS OFFICERS OR AGENTS SHALL NOT BE RESPONSIBLE FOR THE ACCURACY OR COMPLETENESS OF SCANNED COPIES OF THIS PLAN SHEET.

BKF ENGINEERS
4670 WILLOW ROAD, SUITE 250
PLEASANTON, CA. 94588

ALAMEDA CTC
1333 BROADWAY SUITE 220
OAKLAND, CA. 94612

CONCRETE BARRIER

STATION	SIDE	TYPE 60	TYPE 60C	TYPE 60E	TYPE 60E Mod	TYPE 60R Mod	TYPE 736B	TYPE 736B Mod	CLASS 3 AB
		LF	LF	LF	LF	LF	LF	LF	CY
"B" 538+90.00 TO 544+12.00	L+		522						13.5
"B" 540+00.00 TO 549+97.04	L+		997						25.8
"B" 549+97.04 TO 550+02.96	L+				6				0.2
"B" 550+02.96 TO "MIL3" 551+42.90	L+		140						3.6
"B" 573+30.00 TO 580+00.00	L+		670						17.4
"B" 587+35.00 TO 591+86.00	L+		451						11.7
"B" 588+19.58 TO 588+90.00	L+		68						1.8
"B" 593+50.00 TO 593+89.00	L+		39						1.0
"B" 600+06.00 TO 602+85.00			279						7.2
"B" 619+62.40 TO 623+86.60			425						11.0
"B" 621+80.00 TO 623+00.00	L+		120						3.1
"B" 623+86.60 TO 625+07.54	L+		121						3.1
"B" 625+07.54 TO 649+73.91			2467						64.0
"B" 643+58.81 TO 645+50.00	R+		193						5.0
"MKR2" 648+50.32 TO 649+00.21	L+		49						1.3
"B" 651+32.91 TO 674+35.00			2302						59.7
"MKL1" 654+00.00 TO 654+50.00	R+							50	1.3
"MKL1" 657+50.00 TO 659+04.30	R+							154	4.0
"B" 664+00.00 TO 665+50.00	L+		150						3.9
"B" 671+90.00 TO 672+50.00	L+		60						1.6
"B" 684+75.00 TO 685+30.00	L+						56		1.5
"B" 689+50.00 TO 689+97.04	L+		48						1.2
"B" 689+97.04 TO 690+02.96	L+				6				0.2
"B" 690+02.96 TO 690+50.00	L+		48						1.2
"B" 702+70.00 TO 703+00.00	L+		30						0.8
"B" 707+80.00 TO 708+50.00	L+		70						1.8
"B" 708+50.00 TO 709+30.00	L+							80	2.1
"B" 713+50.00 TO 715+50.00	L+							199	5.2
"B" 719+50.00 TO 724+15.00	L+		465						12.1
"B" 727+00.00 TO 729+25.50	L+		229						5.9
"B" 729+28.93 TO 733+50.00	L+		424						11.0
"B" 731+64.00 TO 747+56.44			1592						41.3
"MXR3" 746+25.00 TO 749+63.87	R+		335						8.7
"MXR3" 746+73.52 TO 747+25.00	L+							60	1.6
"MXR3" 748+55.00 TO 749+60.54	L+							120	3.1
"B" 747+56.44 TO 749+38.63	L+			183					4.7
"B" 748+28.38 TO 749+20.00	L+		90						2.3
"B" 749+38.63 TO 750+34.21			96						2.5
"B" 750+34.21 TO 751+55.16	L+		121						3.1
"B" 751+55.16 TO 762+53.00			1098						28.5
"B" 762+45.89 TO 764+81.47	L+					235			6.1
"B" 772+22.11 TO 782+00.00	L+		978						25.4
"B" 772+29.00 TO 776+58.88			430						11.2
"B" 776+58.88 TO 777+79.82	L+		121						3.1
"B" 777+79.82 TO 797+90.00			2011						52.1
"MVR4" 799+34.98 TO 801+22.11	R+		202						5.2
"B" 801+29.56 TO 801+39.56	L+	10							0.3
"B" 801+39.56 TO 802+39.68	L+			120					3.1
"B" 802+39.68 TO 802+49.68	L+	10							0.3
"MVL1" 802+50.00 TO 803+50.00	L+		100						2.6
"B" 809+78.00 TO 813+24.00			346						9.0
"MSN" 834+84.70 TO 844+10.36	R+	926							24.0
"B" 835+32.00 TO 844+82.99			951						24.7
"B" 844+82.99 TO 846+03.94	L+		121						3.1
"B" 846+03.94 TO 849+41.00	L+		337						8.7
"MGR2" 859+52.00 TO 859+85.00	R+	30							0.8
"MGL1" 861+00.00 TO 863+00.00	L+		197						5.1
"B" 862+73.15 TO 863+04.85	L+					32			0.8
TOTAL		976	19493	303	12	267	56	663	564.4*

* QUANTITY INCLUDED IN ROADWAY QUANTITIES TABLE.

CRASH CUSHION (ADIEM)

STATION	SIDE	QUANTITY
		EA
"B" 643+58.81	R+	1
"B" 764+81.47	L+	1
TOTAL		2

REMOVE CRASH CUSHION

STATION	SIDE	EACH
"B" 540+40.23 TO 540+71.56	L+	1
"MXL1" 755+05.68 TO 755+37.23	R+	1
"MVR5" 802+54.85 TO 802+93.25	R+	1
TOTAL		3

TEMPORARY FENCE (TYPE ESA)

STATION	SIDE	LENGTH
		LF
"B" 582+07.16 TO 582+13.71	L+	32
"B" 584+75.72 TO 586+16.17	L+	144
"B" 617+83.49 TO 617+97.30	L+	83
"B" 619+11.09 TO 619+11.09	L+	84
"B" 673+50.00 TO 674+30.00	L+	80
"B" 692+83.59 TO 692+81.54	L+	33
"B" 693+89.74 TO 693+68.85	L+	40
"B" 700+12.38 TO 700+72.18	L+	60
"B" 821+50.00 TO "MGL1" 863+99.39	L+	4467
TOTAL		5023

CHAIN LINK FENCE

STATION	SIDE	CHAIN LINK FENCE (TYPE CL-4 VINYL-CLAD)	CHAIN LINK FENCE (TYPE CL-6)	CHAIN LINK GATE (TYPE CL-6) 5'
		LF	LF	EA
"B" 622+89.00	L+			2
"B" 672+40.00 TO 679+06.53	L+		667	
"B" 687+22.76 TO 688+00.00	L+		80	
"B" 690+40.13 TO 692+67.55	L+		228	
"B" 694+17.80 TO 703+65.32	L+		956	
"B" 707+12.08 TO 715+67.30	L+		857	
"B" 727+06.46 TO 728+26.50	L+		121	
"MVR5" 792+39.35 TO 792+63.66	L+		25	
"MSN" 834+84.70 TO 844+10.36	R+	926		
TOTAL		926	2952	2

SUMMARY OF QUANTITIES
Q-7

REVISED BY	DATE REVISED
AL	5/7/12

ARMANDO LOERA — LUIS GARCIA — CALCULATED-DESIGNED BY — CHECKED BY

CONSULTANT FUNCTIONAL SUPERVISOR: NATALINA V. BERNARDI

STATE OF CALIFORNIA - DEPARTMENT OF TRANSPORTATION

Caltrans

LAST REVISION 05-07-12 — DATE PLOTTED =>23-MAY-2012 TIME PLOTTED =>07:54

Dist	COUNTY	ROUTE	POST MILES TOTAL PROJECT	SHEET No.	TOTAL SHEETS
04	Ala	580	R8.4/R14.6	511	853

REGISTERED CIVIL ENGINEER 5/7/12 DATE

5-14-12
PLANS APPROVAL DATE

REGISTERED PROFESSIONAL ENGINEER N.V. BERNARDI No. 45407 Exp. 9/30/12 CIVIL STATE OF CALIFORNIA

THE STATE OF CALIFORNIA OR ITS OFFICERS OR AGENTS SHALL NOT BE RESPONSIBLE FOR THE ACCURACY OR COMPLETENESS OF SCANNED COPIES OF THIS PLAN SHEET.

BKF ENGINEERS
4670 WILLOW ROAD, SUITE 250
PLEASANTON, CA. 94588

ALAMEDA CTC
1333 BROADWAY SUITE 220
OAKLAND, CA. 94612

COLD PLANE AC PAVEMENT

STATION	SIDE	AREA
		SQYD
"B" 538+90.00 TO 550+11.23	L+	2255
"MIL3" 558+51.33 TO 561+10.88	L+/R+	776
"MIR2" 568+31.19 TO 569+14.00	L+/R+	325
"B" 580+30.00 TO 581+69.86	L+	166
"B" 583+36.30 TO 587+00.00	L+	440
"B" 585+00.00 TO "B 587+02.87	L+	1771
"MIR3" 584+35.09 TO 585+80.02	L+/R+	516
"B" 615+60.00 TO 617+72.78	L+	212
"B" 619+74.06 TO 621+95.00	L+	221
"B" 633+15.00 TO 645+04.82	L+	1917
"MKR2" 646+21.14 TO 649+44.30	L+/R+	1161
"B" 647+84.00 TO 649+62.39	L+	178
"B" 649+69.19 TO 651+54.05	L+	418
"B" 651+45.84 TO 653+65.00	L+	219
"MKL1" 651+26.44 TO 658+00.50	L+/R+	2402
"MKR1" 655+51.06 TO 656+90.46	L+/R+	534
"B" 658+30.56 TO 662+75.17	L+	1011
"B" 691+00.00 TO 692+59.02	L+	159
"B" 694+07.77 TO 695+15.00	L+	107
"MXR1" 757+50.00 TO "B" 760+50.00	L+/R+	804
"MVR5" 793+83.68 TO 797+23.19	L+	951
"B" 799+00.00 TO 805+00.00	L+	600
"MVR4" 804+74.20 TO 805+58.37	L+/R+	149
"MSN" 843+87.69 TO 844+72.97	L+/R+	156
"MGR2" 858+68.48 TO 859+00.00	R+	119
"MGL1" 862+68.84 TO 866+25.80	L+/R+	851
"B" 868+20.00 TO 869+44.52	L+	134
TOTAL		18552

VEGETATION CONTROL

STATION	SIDE	VEGETATION CONTROL (MINOR CONCRETE)
		SQYD
"B" 551+32.39 TO "MIL3" 552+24.24	L+	49
"MIR3" 584+64.95 TO 585+55.34	L+	48
"B" 593+89.00 TO 594+70.34	L+	45
"B" 601+28.00 TO 602+32.19	L+	54
"MKR2" 649+00.18 TO 649+80.57	L+	58
"B" 651+63.80 TO 652+70.14	L+	55
"MKL1" 653+15.44 TO 654+00.00	R+	58
"B" 688+00.00 TO 688+80.33	L+	32
"B" 704+49.98 TO 705+31.38	L+	45
"B" 724+15.00 TO 724+96.41	L+	45
"MXR3" 742+74.93 TO 743+63.39	L+	45
"B" 745+15.95 to 746+10.00	R+	51
"B" 749+20.00 TO 750+02.17	L+	43
"MXL1" 745+25.85 TO 745+39.99	L+	60
"MKL1" 755+29.84 TO 756+10.79	L+	43
"MVL1" 801+67.46 TO 802+50.00	L+	43
"MVR4" 798+88.38 TO 799+34.98	R+	44
"MVR4" 801+22.11 TO 802+11.87	L+	49
"B" 782+00.00 TO 782+81.34	L+	31
"B" 794+95.81 TO 801+29.56	L+	640
"MVR5" 801+40.14 TO 802+40.27	R+	66
"B" 802+49.68 TO "MVR5" 812+42.95	L+	1014
"B" 815+92.00 TO 816+96.06	L+	54
"B" 847+62.00 TO 848+66.01	L+	54
"MGR2" 858+71.04 TO 859+52.00	R+	44
"MGR2" 859+85.00 TO 862+25.00	R+	83
"MGR2" 864+85.00 TO 865+52.76	R+	26
"B" 863+04.85 TO 863+74.15	L+	46
"MGL1" 862+68.27 TO 863+71.87	R+	55
"MGL1" 863+00.00 TO 863+90.66	L+	45
TOTAL		3025

MAINTENANCE VEHICLE PULLOUT

SHEET No.	No. OF MVP (N)	HMA	CLASS 3 AB	TACK COAT
		TON	CY	TON
L-6	1	32	28	0.03
L-7	1	24	23	0.02
L-9	1	24	23	0.02
L-15	1	24	23	0.02
L-16	1	24	16	0.02
L-17	2	39	34	0.03
L-22	1	25	24	0.02
L-26	2	48	47	0.04
TOTAL	10	*240	*218	*0.20

(N) - NOT A SEPARATE PAY ITEM, FOR INFORMATION ONLY
* QUANTITY INCLUDED IN ROADWAY QUANTITIES TABLE.

SHOULDER BACKING

STATION	SIDE	WEIGHT
		TON
"B" 557+00.00 TO "B" 558+00.00	L+	2
"B" 584+50.00 TO "B" 585+00.00	L+	2
"B" 868+00.00 TO "B" 869+00.00	L+	5
TOTAL		9

PREPARE AND PAINT POST MILE MARKING ON CONCRETE BARRIER

STATION	POST MILE	SIDE	SQYD
"B" 541+88.00	14.6	L+/R+	0.286
"B" 573+56.00	14	L+/R+	0.286
"B" 578+84.00	13.9	L+/R+	0.286
"B" 589+40.00	13.7	L+/R+	0.286
"B" 621+08.00	13.1	L+/R+	0.286
"B" 626+36.00	13	L+/R+	0.286
"B" 631+64.00	12.9	L+/R+	0.286
"B" 636+92.00	12.8	L+/R+	0.286
"B" 642+20.00	12.7	L+/R+	0.286
"B" 647+48.00	12.6	L+/R+	0.286
"B" 652+76.00	12.5	L+/R+	0.286
"B" 658+04.00	12.4	L+/R+	0.286
"B" 663+32.00	12.3	L+/R+	0.286
"B" 668+60.00	12.2	L+/R+	0.286
"B" 673+88.00	12.1	L+/R+	0.286
"B" 731+96.00	11	L+/R+	0.286
"B" 737+24.00	10.9	L+/R+	0.286
"B" 742+52.00	10.8	L+/R+	0.286
"B" 747+80.00	10.7	L+/R+	0.286
"B" 753+08.00	10.6	L+/R+	0.286
"B" 758+36.00	10.5	L+/R+	0.286
"B" 774+20.00	10.2	L+/R+	0.286
"B" 779+48.00	10.1	L+/R+	0.286
"B" 784+76.00	10	L+/R+	0.286
"B" 790+04.00	9.9	L+/R+	0.286
"B" 795+32.00	9.8	L+/R+	0.286
"B" 811+16.00	9.5	L+/R+	0.286
"B" 837+56.00	9	L+/R+	0.286
"B" 842+84.00	8.9	L+/R+	0.286
"B" 848+12.00	8.8	L+/R+	0.286
TOTAL			8.58

SEAL PAVEMENT JOINT

STATION	SEAL ISOLATION JOINT	SEAL PAVEMENT JOINT
	LF	LF
FROM INDIVIDUAL SLAB REPLACEMENT PRECAST CONCRETE PANEL	3552	3732
FROM PRESTRESSED PRECAST CONCRETE PANEL	8727	13166
TOTAL	12279	16898

REMOVE PORTLAND CEMENT CONCRETE PAVEMENT

STATION	AREA
	SQYD
MSN 844+73.05 TO 847+73.00 L+	410

REMOVE CONCRETE BARRIER

STATION	SIDE	LENGTH
		LF
"B" 538+90.00 TO 544+12.00	L+/R+	522
"B" 540+00.37 TO 540+39.84	L+	40
"B" 573+30.00 TO 580+00.00	L+/R+	670
"B" 587+35.00 TO 591+86.00	L+/R+	451
"B" 588+66.97 TO 593+26.25	L+	480
"B" 600+06.02 TO 602+85.00	L+/R+	279
"B" 619+62.35 TO 649+73.91	L+/R+	3012
"B" 651+32.91 TO 674+35.00	L+/R+	2302
"B" 731+64.00 TO 762+53.00	L+/R+	3089
"MXL1" 755+37.62 TO 756+10.80	R+	74
"B" 772+29.00 TO 797+90.00	L+/R+	2561
"B" 809+78.00 TO 813+24.00	L+/R+	346
"B" 835+32.00 TO 849+41.00	L+/R+	1409
TOTAL		15235

SUMMARY OF QUANTITIES
Q-8

REVISED BY	DATE REVISED
AL	5/7/12

ARMANDO LOERA — LUIS GARCIA

CALCULATED-DESIGNED BY — CHECKED BY

CONSULTANT FUNCTIONAL SUPERVISOR: NATALINA V. BERNARDI

STATE OF CALIFORNIA - DEPARTMENT OF TRANSPORTATION

Caltrans

LAST REVISION 05-07-12 | DATE PLOTTED => 23-MAY-2012 | TIME PLOTTED => 07:54

Dist	COUNTY	ROUTE	POST MILES TOTAL PROJECT	SHEET No.	TOTAL SHEETS
04	Ala	580	R8.4/R14.6	512	853

REGISTERED CIVIL ENGINEER 5/7/12 DATE

5-14-12
PLANS APPROVAL DATE

REGISTERED PROFESSIONAL ENGINEER N.V. BERNARDI No. 45407 Exp. 9/30/12 CIVIL STATE OF CALIFORNIA

THE STATE OF CALIFORNIA OR ITS OFFICERS OR AGENTS SHALL NOT BE RESPONSIBLE FOR THE ACCURACY OR COMPLETENESS OF SCANNED COPIES OF THIS PLAN SHEET.

BKF ENGINEERS
4670 WILLOW ROAD, SUITE 250
PLEASANTON, CA. 94588

ALAMEDA CTC
1333 BROADWAY SUITE 220
OAKLAND, CA. 94612

EARTHWORK SUMMARY

STATION	ROADWAY EXCAVATION	ROADWAY EXCAVATION (TYPE Y-1) (AERIALLY DEPOSITED LEAD)	EMBANKMENT (N)
	CY	CY	CY
WESTBOUND			
"B" 540+00.00 TO 581+76.08	6195	710	521
"B" 583+49.44 TO 617+85.90	6288	211	3449
"B" 619+62.40 TO 649+73.83	14346	203	826
"B" 651+32.75 TO 692+63.44	11787	354	1839
"B" 693+94.27 TO 869+44.97	29422	3102	7089
"MGL1" 862+03.69 TO 866+34.37	705	0	109
"MIL3" 558+50.84 TO 561+10.88	80	4	48
"MK" 20+36.75 TO 23+04.04	504	28	6
"MKR2" 646+02.16 TO 650+90.05	1252	0	13
"MSN" 834+84.71 TO 835+47.59	83	0	0
"MSN" 842+59.49 TO 844+72.11	327	0	7
"MVR4" 794+41.88 TO 806+87.00	2759	193	387
"MVR5" 793+83.68 TO 797+23.19	46	0	1
"MVR5" 812+00.00 TO 813+40.31	104	0	41
"MXR1" 757+50.00 TO 758+66.20	36	0	0
"MXR3" 740+67.11 TO 750+06.37	1801	0	434
EASTBOUND			
"B" 640+82.30 TO 649+73.83	422	468	7
"B" 651+32.75 TO 659+04.75	55	613	69
"MGR2" 858+19.01 TO 863+00.00	1069	0	181
"MKL1" 652+50.00 TO 656+00.00	0	233	8
"MVL1" 800+00.70 TO 811+00.00	3001	631	490
"MVL2" 800+50.00 TO 802+12.86	143	24	8
"MXL1" 745+50.00 TO 754+50.00	1477	0	900
TOTAL	81901	6774	16433

(N) - NOT A SEPARATE PAY ITEM, FOR INFORMATION ONLY

REMOVE PCC PAVEMENT (PCP)

STATION	AREA
	SQYD
FROM INDIVIDUAL SLAB REPLACEMENT PRECAST CONCRETE PANEL	2999
FROM PRESTRESSED PRECAST CONCRETE PANEL	9237
TOTAL	12236

REMOVE BASE AND SURFACING

STATION	SIDE	REMOVE BASE AND SURFACING		
		AREA (N)	DEPTH (N)	VOLUME
		SQFT	Ft	CY
"MKR2" 649+11.45 TO "MK" 21+93.37	Lt	3498	3	389
"MGR2" 861+81.67 TO 862+40.24	Lt	62	2.3	6
"MGL1" 862+66.86 TO 864+21.27	Rt	831	3	93
TOTAL				488

(N) - NOT A SEPARATE PAY ITEM, FOR INFORMATION ONLY

CRACK EXISTING CONCRETE PAVEMENT

STATION	SIDE	AREA
		SQYD
"B" 695+15.00 TO 799+00.00	Lt	60520
"B" 804+35.00 TO 868+20.00	Lt	40674
TOTAL		101194

SINGLE THRIE BEAM BARRIER

STATION	SIDE	STBB	TRANSITION RAILING (TYPE STB)	END CAP (TYPE TC) (N)	END ANCHOR ASSEMBLY (TYPE SFT) (N)	TERMINAL SYSTEM (TYPE CAT) BACKUP	TERMINAL SYSTEM (TYPE CAT)
		LF	EA	EA	EA	EA	EA
"MVR5" 794+95.27 TO "B" 811+95.93	Rt	1702			1	1	1
"B" 794+95.81 TO 801+04.56	Lt	609	1	1	1		
"B" 802+74.63 TO 811+95.93	Lt	921	1	1			
TOTAL		3232	2	2	2*	1	1

(N) - NOT A SEPARATE PAY ITEM, FOR INFORMATION ONLY
* ADDITIONAL QUANTITY ALSO INLCUDED IN METAL BEAM GUARD RAILING TABLE.

MINOR CONCRETE

STATION	SIDE	TEXTURED PAVING	CLASS 3 AB	MINOR CONCRETE (MISCELLANEOUS CONSTRUCTION) MEDIAN PAVING	CURB (TYPE A2-6)	CURB (TYPE A2-6 MOD)	RETAINING CURB (TYPE A1-6)	ISLAND PASSAGEWAY	CURB RAMP AND SIDEWALK
		SQFT	CY	CY	CY	CY	CY	CY	CY
"B" 558+50.98 TO 560+31.83	Lt	3538	65.5						
"B" 568+30.72 TO 569+59.09	Lt	1732	32.1						
"B" 641+99.41 TO 643+58.81	Rt	2368	43.9						
"B" 646+27.17 TO 647+27.74	Lt	1482	27.4						
"B" 654+17.74 TO 655+62.89	Rt	2104	39.9						
"B" 655+88.51 TO 656+91.26	Lt	1376	25.5						
"B" 740+75.65 TO 741+82.70	Lt	1285	23.8						
"MXR1" 741+28.12 TO "MXR3" 750+17.22	Rt		0.2				1		
"MXR1" 741+34.18 TO "MXR3" 750+11.23	Rt		4.5					3	1
"MXR1" 741+40.28 TO "MXR3" 750+05.13	Lt/Rt		0.2				1		
"MXR3" 749+43.87 TO 750+29.70	Rt		3.4		6				
"B" 757+92.44 TO 758+62.36	Lt	794	14.7						
"B" 793+83.19 TO 794+92.72	Lt	898	16.6						
"MVR4" 795+71.41 TO 795+95.69	Rt	345	6.4						
"MVR5" 799+34.98 TO 801+22.11	Rt	3545	65.6						
"MVL1" 809+52.65 TO 810+85.22	Lt	778	14.4						
"B" 812+42.36 TO 813+39.61	Lt	930	17.2						
"B" 834+84.18 TO 844+73.22	Lt	9213	170.6						
"MSN" 844+72.97 TO 847+73.00	Lt								
"B" 861+97.98 TO 862+61.47	Lt	1117	20.7						
"MGR2" 862+39.16 to 862+63.93	Rt	310	5.7						
"MGL1" 864+97.12 TO 865+74.13	Lt		3.3		5				
"MGL1" 865+70.36 TO 866+17.66	Lt		27.0	15	3	6			
SUBTOTAL				15	14	6	2	3	1
FROM DRAINAGE QUANTITIES				210					
TOTAL		31815	628*	251					

* QUANTITY INCLUDED IN ROADWAY QUANTITIES TABLE.

REMOVE FENCE

STATION	SIDE	LENGTH
		LF
"B" 622+84.00 TO 622+94.00	Lt	10
"B" 672+40.00 TO 679+06.53	Lt	667
"B" 687+22.76 TO 688+00.00	Lt	80
"B" 690+40.13 TO 692+67.55	Lt	228
"B" 694+17.80 TO 703+65.32	Lt	956
"B" 707+12.08 TO 715+67.30	Lt	857
"B" 727+06.46 TO 728+26.50	Lt	121
"MVR5" 792+39.35 TO 795+52.55	Lt	321
"MSN" 836+84.71 TO 844+06.85	Rt	723
TOTAL		3981

REMOVE ASPHALT CONCRETE DIKE

STATION	SIDE	LENGTH
		LF
"MIL3" 555+37.40 TO 561+10.88	Lt	574
"B" 560+31.79 TO "MIR2" 569+14.00	Lt	881
"MIR3" 584+74.95 TO 588+19.58	Rt	344
"MKL1" 652+50.00 TO 653+02.16	Rt	53
"MKR1" 655+51.21 TO 659+36.66	Lt	385
TOTAL		2237

SUMMARY OF QUANTITIES
Q-9

REVISED BY	DATE REVISED
AL	5/7/12

CALCULATED-DESIGNED BY: ARMANDO LOERA
CHECKED BY: LUIS GARCIA
CONSULTANT FUNCTIONAL SUPERVISOR: NATALINA V. BERNARDI

STATE OF CALIFORNIA - DEPARTMENT OF TRANSPORTATION

LAST REVISION 05-07-12
DATE PLOTTED => 23-MAY-2012
TIME PLOTTED => 07:54

Dist	COUNTY	ROUTE	POST MILES TOTAL PROJECT	SHEET No.	TOTAL SHEETS
04	Ala	580	R8.4/R14.6	513	853

REGISTERED CIVIL ENGINEER 5/7/12 DATE

5-14-12
PLANS APPROVAL DATE

REGISTERED PROFESSIONAL ENGINEER N.V. BERNARDI No. 45407 Exp. 9/30/12 CIVIL STATE OF CALIFORNIA

THE STATE OF CALIFORNIA OR ITS OFFICERS OR AGENTS SHALL NOT BE RESPONSIBLE FOR THE ACCURACY OR COMPLETENESS OF SCANNED COPIES OF THIS PLAN SHEET.

BKF ENGINEERS
4670 WILLOW ROAD, SUITE 250
PLEASANTON, CA. 94588

ALAMEDA CTC
1333 BROADWAY SUITE 220
OAKLAND, CA. 94612

INDIVIDUAL SLAB REPLACEMENT PRECAST CONCRETE PANEL

STATION	SIDE	LANE 1 SLAB (N)	LANE 2 SLAB (N)	LANE 3 SLAB (N)	LANE 4 SLAB (N)	WIDTH (N)	INDIVIDUAL SLAB REPLACEMENT PRECAST CONCRETE PANEL	LEAN CONCRETE BASE RAPID SETTING	SEAL ISOLATION JOINT	SEAL PAVEMENT JOINT	REMOVE PCC PAVEMENT (PCP)
						LF	CY	CY	LF	LF	SQYD
"B" 647+84.00 TO 649+71.10	L+	23	23	24	24	12	254	141	1136	1176	957
"B" 691+00.00 TO 692+62.27	L+	21	21	21	21	12	226	125	1008	1056	850
"B" 694+09.76 TO 695+15.00	L+	14	13	13	13	12	142	80	640	684	548
"B" 868+20.00 TO 869+44.52	L+	16	16	16	16	12	172	157	768	816	644
TOTAL		76	73	74	74		797*	443*	3552**	3732**	2999

(N) - NOT A SEPARATE PAY ITEM, FOR INFORMATION ONLY
* QUANTITY INCLUDED IN ROADWAY QUANTITIES TABLE.
* * QUANTITY INCLUDED IN TABLE ON Q-8.

REPLACE AC SURFACING

STATION	SIDE	LANE No.	LENGTH (N)	WIDTH (N)	DEPTH (N)	REPLACE AC SURFACING
			LF	LF	LF	CY
"B" 815+56.37 TO 815+74.99	L+	5	19	12	0.33	3
"B" 816+30.34 TO 818+29.99	L+	5	388	4	0.33	19
"B" 816+40.46 TO 816+80.31	L+	5	40	5	0.33	3
"B" 817+55.99 TO 817+75.62	L+	5	20	8	0.33	2
"B" 818+38.99 TO 818+50.99	L+	5	12	10	0.33	2
"B" 819+77.49 TO 820+02.49	L+	5	25	12	0.33	4
"B" 820+43.99 TO 820+67.50	L+	5	24	6	0.33	2
"B" 820+67.50 TO 820+92.49	L+	5	25	12	0.33	4
"B" 822+05.99 TO 822+54.99	L+	5	50	6	0.33	4
"B" 822+95.99 TO 823+03.99	L+	5	8	4	0.33	1
"B" 824+34.99 TO 825+24.99	L+	5	90	4	0.33	5
"B" 825+86.99 TO 825+92.99	L+	5	6	5	0.33	1
"B" 826+57.99 TO 826+61.99	L+	5	4	4	0.33	1
"B" 827+57.98 TO 828+51.49	L+	5	94	4	0.33	5
"B" 829+84.99 TO 830+94.99	L+	5	110	12	0.33	17
"B" 829+84.99 TO 831+75.99	L+	5	192	5	0.33	12
"B" 832+35.99 TO 832+82.99	L+	5	47	6	0.33	4
"B" 833+49.91 TO 834+25.99	L+	5	76	6	0.33	6
"B" 833+89.99 TO 834+25.99	L+	5	36	20	0.33	9
"B" 854+41.99 TO 854+47.99	L+	5	6	12	0.33	1
"B" 855+34.98 TO 858+29.99	L+	5	295	4	0.33	15
"B" 855+48.99 TO 855+60.99	L+	5	12	10	0.33	2
"B" 855+98.99 TO 856+04.99	L+	5	6	10	0.33	1
"B" 856+82.99 TO 857+52.99	L+	5	70	8	0.33	7
"B" 858+47.99 TO 858+69.99	L+	5	22	6	0.33	2
"B" 858+97.02 TO 859+03.02	L+	5	6	12	0.33	1
"B" 859+85.22 TO 860+16.05	L+	5	32	5	0.33	2
"B" 860+88.06 TO 860+91.99	L+	5	4	15	0.33	1
TOTAL						136

METAL BEAM GUARD RAILING

STATION	SIDE	LAYOUT (N)	MBGR (WOOD POST)	END ANCHOR ASSEMBLY (TYPE SFT)	ALTERNATIVE FLARED TERMINAL SYSTEM	ALTERNATIVE IN-LINE TERMINAL SYSTEM	TRANSITION RAILING (TYPE WB)	END CAP (TYPE A) (N)
			LF	EA	EA	EA	EA	EA
"MIL3" 551+42.90 TO 551+67.90	L+	12B			1		1	1
"MIR3" 584+74.95 TO 584+99.95	L+	12B			1		1	1
"B" 593+89.00 TO 594+14.00	L+	12B			1		1	1
"B" 601+38.00 TO 601+75.50	L+	16B	37.5	1	1			
"MKR2" 649+00.21 TO 649+25.21	L+	12B			1		1	1
"B" 651+63.80 TO 652+13.80	L+	12B	25		1		1	1
"MKL1" 653+75.00 TO 654+00.00	R+	12B			1		1	1
"B" 688+00.00 TO 688+25.00	L+	12B				1	1	1
"B" 704+50.00 TO 704+75.00	L+	12B			1		1	1
"B" 724+15.00 TO 724+40.00	L+	12B			1		1	1
"MXR3" 742+75.00 TO 743+00.00	L+	12B			1		1	1
"B" 745+72.50 TO 746+10.00	R+	16B	13		1		1	
"B" 749+20.00 TO 749+45.00	L+	12B			1		1	1
"MXL1" 745+25.85 TO 745+29.98	L+	12B			1		1	1
"MXL1" 755+85.80 TO 756+10.80	R+	12B			1		1	1
"B" 782+00.00 TO 782+25.00	L+	12A				1	1	1
"MVR4" 799+34.98 TO 801+54.98	R+	11B	225	1	1			
"MVR4" 799+17.23 TO 799+34.98	R+	12B			1		1	1
"MVL1" 802+25.00 TO 802+50.00	L+	12B			1		1	1
"B" 816+02.00 TO 816+39.50	L+	16B	37.5	1	1			
"B" 843+73.22 TO 844+35.72	L+	16B	62.5	1	1			
"MSN" 844+10.36 TO 844+35.39	L+	12B			1		1	1
"B" 847+72.00 TO 848+09.50	L+	16B	37.5	1	1			
"MGL1" 863+00.00 TO 863+27.98	L+	12B			1		1	1
"MGL1" 862+78.91 TO 863+15.91	R+	11B	37.5	1	1			
"B" 863+04.85 TO 863+29.42	L+	12B			1		1	1
"MGR2" 859+27.48 TO 859+52.00	R+	12B			1		1	1
"MGR2" 859+85.00 TO 861+25.00	R+	12D	215				1	1
"MGR2" 864+84.85 TO 865+47.57	R+	12D	37.5				1	1
TOTAL			728	6*	25	2	24	23

(N) - NOT A SEPARATE PAY ITEM, FOR INFORMATION ONLY
* ADDITIONAL QUANTITY ALSO INCLUDED IN SINGLE THRIE BEAM BARRIER TABLE.

BRIDGE REHABILITATION

BRIDGE NAME	BRIDGE NUMBER	REMOVE UNSOUND CONCRETE	RAPID SETTING CONCRETE (PATCH)	PAINT BRIDGE IDENTIFICATION	INJECT CRACK (EPOXY)	CORE CONCRETE (1")	MISC METAL (BRIDGE)	CLEAN EXPANSION JOINT	JOINT SEAL (ASPHALTIC PLUG)
		CF	CF	LS	LF	LF	LB	LF	LF
VASCO Rd OC	33-0400	-	-	1	-	-	-	-	-
FIRST St OC	33-0389	5.0	5.0	-	-	-	-	-	-
ARROYO SECO CULVERT	33-0066	-	-	-	100	-	-	-	-
NORTH LIVERMORE UC	33-0153	-	-	-	-	34	2635	152	179
ARROYO LAS POSITAS	33-0012	-	-	-	-	-	-	-	-
ARROYO LAS POSITAS	33-0203	-	-	-	-	-	-	153	203
TOTAL		5.0	5.0	1	100	34	2635	305	382

SUMMARY OF QUANTITIES
Q-10

REVISED BY	DATE REVISED
AL	5/7/12

ARMANDO LOERA — LUIS GARCIA
CALCULATED-DESIGNED BY — CHECKED BY
CONSULTANT FUNCTIONAL SUPERVISOR — NATALINA V. BERNARDI

STATE OF CALIFORNIA - DEPARTMENT OF TRANSPORTATION
Caltrans

LAST REVISION 05-07-12 DATE PLOTTED => 23-MAY-2012 TIME PLOTTED => 07:54

Dist	COUNTY	ROUTE	POST MILES TOTAL PROJECT	SHEET No.	TOTAL SHEETS
04	Ala	580	R8.4/R14.6	514	853

REGISTERED CIVIL ENGINEER 5/7/12 DATE

5-14-12
PLANS APPROVAL DATE

REGISTERED PROFESSIONAL ENGINEER N.V. BERNARDI No. 45407 Exp. 9/30/12 CIVIL STATE OF CALIFORNIA

THE STATE OF CALIFORNIA OR ITS OFFICERS OR AGENTS SHALL NOT BE RESPONSIBLE FOR THE ACCURACY OR COMPLETENESS OF SCANNED COPIES OF THIS PLAN SHEET.

BKF ENGINEERS
4670 WILLOW ROAD, SUITE 250
PLEASANTON, CA. 94588

ALAMEDA CTC
1333 BROADWAY SUITE 220
OAKLAND, CA. 94612

CONCRETE BARRIERS WITH VARIABLE HEIGHT

STATION	SIDE	BARRIER TYPE	ELEVATION (N) LEFT FT	ELEVATION (N) RIGHT FT	DIFFERENCE (N) FT
"B" 540+00	L+	60C	425.34	423.67	1.67
"B" 540+50	L+	60C	425.25	423.97	1.28
"B" 541+00	L+	60C	425.17	424.23	0.94
"B" 541+50	L+	60C	424.81	424.39	0.42
"B" 542+00	L+	60C	424.56	424.47	0.09
"B" 542+50	L+	60C	424.25	424.46	0.21
"B" 543+00	L+	60C	424.59	424.37	0.22
"B" 543+50	L+	60C	424.56	424.18	0.38
"B" 544+00	L+	60C	424.30	423.91	0.39
"B" 544+50	L+	60C	423.95	423.55	0.40
"B" 545+00	L+	60C	423.66	423.11	0.55
"B" 545+50	L+	60C	423.37	422.57	0.80
"B" 546+00	L+	60C	423.05	422.00	1.05
"B" 546+50	L+	60C	422.80	421.42	1.38
"B" 547+00	L+	60C	422.54	420.88	1.66
"B" 547+50	L+	60C	421.96	420.42	1.54
"B" 548+00	L+	60C	421.39	420.04	1.35
"B" 548+50	L+	60C	420.13	419.73	0.40
"B" 549+00	L+	60C	418.82	419.52	0.70
"B" 549+50	L+	60C	418.29	419.37	1.08
"B" 550+00	L+	60C	417.56	419.32	1.76
"B" 550+50	L+	60C	417.89	419.35	1.46
"MIL3" 551+00	L+	60C	417.53	419.42	1.89
"B" 588+50	L+	60C	421.75	423.86	2.11
"B" 593+50	L+	60C	431.59	433.34	1.75
"B" 622+00	L+	60C	447.87	450.87	3.00
"B" 622+50	L+	60C	454.40	451.66	2.74
"B" 623+00	L+	60C	455.44	452.44	3.00
"B" 638+00	L+ / R+	60C	478.29	476.96	1.33
"B" 638+50	L+ / R+	60C	479.08	477.54	1.54
"B" 639+00	L+ / R+	60C	479.86	478.22	1.64
"B" 639+50	L+ / R+	60C	480.65	478.91	1.74
"B" 640+00	L+ / R+	60C	481.43	479.65	1.78
"B" 640+50	L+ / R+	60C	482.22	480.48	1.74
"B" 641+00	L+ / R+	60C	482.97	481.23	1.74
"B" 641+50	L+ / R+	60C	483.65	481.95	1.70
"B" 642+00	L+ / R+	60C	484.25	482.55	1.70
"B" 642+50	L+ / R+	60C	484.77	483.13	1.64
"B" 643+00	L+ / R+	60C	485.21	483.66	1.55
"B" 643+50	L+ / R+	60C	485.58	484.13	1.45
"B" 644+00	L+ / R+	60C	485.87	484.47	1.40
"B" 644+50	L+ / R+	60C	486.08	484.64	1.44
"B" 645+00	L+ / R+	60C	486.22	484.81	1.41
"B" 645+50	L+ / R+	60C	486.27	484.88	1.39
"B" 646+00	L+ / R+	60C	486.25	484.82	1.43
"B" 646+50	L+ / R+	60C	486.15	484.68	1.47
"B" 647+00	L+ / R+	60C	485.98	484.52	1.46
"B" 647+50	L+ / R+	60C	485.72	484.28	1.44
"B" 648+00	L+ / R+	60C	485.35	484.11	1.24
"B" 648+50	L+ / R+	60C	484.81	483.88	0.93
"B" 649+00	L+ / R+	60C	484.27	483.42	0.85
"B" 649+50	L+ / R+	60C	483.73	483.20	0.53
"B" 644+00	R+	60C	486.06	484.28	1.78
"B" 644+50	R+	60C	486.39	484.24	2.15
"B" 645+00	R+	60C	486.51	484.27	2.24
"B" 645+50	R+	60C	486.64	483.98	2.66
"MKR" 649+00	L+	60C	470.54	469.03	1.51
"MKR" 649+50	L+	60C	466.57	466.69	0.12

(N) - NOT A SEPARATE PAY ITEM, FOR INFORMATION ONLY

CONCRETE BARRIERS WITH VARIABLE HEIGHT (CONTINUED)

STATION	SIDE	BARRIER TYPE	ELEVATION (N) LEFT FT	ELEVATION (N) RIGHT FT	DIFFERENCE (N) FT
"B" 651+50	L+ / R+	60C	482.48	482.12	0.36
"B" 652+00	L+ / R+	60C	482.41	482.03	0.38
"B" 652+50	L+ / R+	60C	482.34	481.92	0.42
"B" 653+00	L+ / R+	60C	482.28	481.68	0.60
"B" 653+50	L+ / R+	60C	482.21	481.33	0.88
"B" 654+00	L+ / R+	60C	481.98	481.06	0.92
"B" 654+50	L+ / R+	60C	481.68	480.76	0.92
"B" 655+00	L+ / R+	60C	481.38	480.40	0.98
"B" 655+50	L+ / R+	60C	481.08	480.13	0.95
"B" 656+00	L+ / R+	60C	480.78	479.84	0.94
"B" 656+50	L+ / R+	60C	480.48	479.58	0.90
"B" 657+00	L+ / R+	60C	480.18	479.32	0.86
"B" 657+50	L+ / R+	60C	479.88	479.10	0.78
"B" 658+00	L+ / R+	60C	479.58	478.81	0.77
"B" 658+50	L+ / R+	60C	479.28	478.51	0.77
"B" 659+00	L+ / R+	60C	478.98	478.15	0.83
"B" 659+50	L+ / R+	60C	478.68	477.92	0.76
"B" 660+00	L+ / R+	60C	478.38	477.70	0.68
"B" 660+50	L+ / R+	60C	478.08	477.38	0.70
"B" 661+00	L+ / R+	60C	477.78	477.00	0.78
"B" 661+50	L+ / R+	60C	477.48	476.71	0.77
"B" 662+00	L+ / R+	60C	477.18	476.38	0.80
"B" 662+50	L+ / R+	60C	476.88	476.14	0.74
"B" 663+00	L+ / R+	60C	476.58	475.83	0.75
"B" 663+50	L+ / R+	60C	476.28	475.52	0.76
"B" 664+00	L+ / R+	60C	475.99	475.22	0.77
"B" 664+50	L+ / R+	60C	475.79	475.01	0.78
"B" 665+00	L+ / R+	60C	475.72	474.94	0.78
"B" 665+50	L+ / R+	60C	475.76	474.86	0.90
"MKL1" 654+00	R+	736B Mod	472.64	471.30	1.34
"MKL1" 654+50	R+	736B Mod	473.90	471.98	1.92
"MKL1" 657+50	R+	736B Mod	476.93	475.78	1.15
"MKL1" 658+00	R+	736B Mod	476.78	476.32	0.46
"MKL1" 658+50	R+	736B Mod	476.56	476.16	0.40
"MKL1" 659+00	R+	736B Mod	475.96	475.87	0.09
"B" 664+00	L+	60C	476.69	473.69	3.00
"B" 664+50	L+	60C	476.49	473.49	3.00
"B" 665+00	L+	60C	476.42	473.42	3.00
"B" 672+00	L+	60C	477.85	475.82	2.03
"B" 672+50	L+	60C	473.53	476.03	2.50
"B" 689+50	L+	60C	488.87	490.57	1.70
"B" 689+97.04	L+	60C	488.22	490.94	2.72
"B" 690+02.96	L+	60C	488.22	490.94	2.72
"B" 690+50	L+	60C	488.46	491.32	2.86
"B" 703+00	L+	60C	502.98	500.40	2.58
"B" 708+00	L+	60C	506.84	504.66	2.18
"B" 708+50	L+	60C	505.43	505.11	0.32
"B" 709+00	L+	736B Mod	504.18	505.56	1.38
"B" 713+50	L+	736B Mod	505.85	508.64	2.79
"B" 714+00	L+	736B Mod	506.73	508.89	2.16
"B" 714+50	L+	736B Mod	507.38	509.14	1.76
"B" 715+00	L+	736B Mod	507.65	509.39	1.74
"B" 719+50	L+	60C	508.56	511.56	3.00
"B" 720+00	L+	60C	508.93	511.81	2.88
"B" 720+50	L+	60C	509.58	512.06	2.48
"B" 721+00	L+	60C	509.93	512.31	2.38

(N) - NOT A SEPARATE PAY ITEM, FOR INFORMATION ONLY

SUMMARY OF QUANTITIES

Q-11

STATE OF CALIFORNIA - DEPARTMENT OF TRANSPORTATION

CONSULTANT FUNCTIONAL SUPERVISOR: NATALINA V. BERNARDI

CALCULATED-DESIGNED BY: ARMANDO LOERA

CHECKED BY: LUIS GARCIA

REVISED BY: AL

DATE REVISED: 5/7/12

LAST REVISION 05-07-12 | DATE PLOTTED =>23-MAY-2012 | TIME PLOTTED =>07:54

Dist	COUNTY	ROUTE	POST MILES TOTAL PROJECT	SHEET No.	TOTAL SHEETS
04	Ala	580	R8.4/R14.6	515	853

REGISTERED CIVIL ENGINEER 5/7/12 DATE

5-14-12
PLANS APPROVAL DATE

REGISTERED PROFESSIONAL ENGINEER N.V. BERNARDI No. 45407 Exp. 9/30/12 CIVIL STATE OF CALIFORNIA

THE STATE OF CALIFORNIA OR ITS OFFICERS OR AGENTS SHALL NOT BE RESPONSIBLE FOR THE ACCURACY OR COMPLETENESS OF SCANNED COPIES OF THIS PLAN SHEET.

BKF ENGINEERS
4670 WILLOW ROAD, SUITE 250
PLEASANTON, CA. 94588

ALAMEDA CTC
1333 BROADWAY SUITE 220
OAKLAND, CA. 94612

CONCRETE BARRIERS WITH VARIABLE HEIGHT (CONTINUED)

STATION		SIDE	BARRIER TYPE	ELEVATION (N) LEFT	ELEVATION (N) RIGHT	DIFFERENCE (N)
				FT	FT	FT
"B"	721+50	L+	60C	510.37	512.56	2.19
"B"	722+00	L+	60C	510.84	512.81	1.97
"B"	722+50	L+	60C	511.62	513.06	1.44
"B"	723+00	L+	60C	512.47	513.31	0.84
"B"	723+50	L+	60C	512.54	513.56	1.02
"B"	724+00	L+	60C	510.81	513.81	3.00
"B"	727+00	L+	60C	513.56	515.31	1.75
"B"	727+50	L+	60C	515.33	515.59	0.26
"B"	728+00	L+	60C	515.70	515.88	0.18
"B"	728+50	L+	60C	514.37	516.14	1.77
"B"	729+00	L+	60C	515.11	516.39	1.28
"B"	729+50	L+	60C	515.39	516.64	1.25
"B"	730+00	L+	60C	515.21	516.89	1.68
"B"	730+50	L+	60C	515.21	517.15	1.94
"B"	731+00	L+	60C	515.15	517.49	2.34
"B"	731+50	L+	60C	515.22	517.93	2.71
"B"	732+00	L+	60C	516.89	518.47	1.58
"B"	732+50	L+	60C	518.26	519.10	0.84
"B"	733+00	L+	60C	520.74	519.75	0.99
"MXR3"	746+50	R+	60C	536.81	536.11	0.70
"MXR3"	747+00	R+	60C	536.81	536.15	0.66
"MXR3"	747+50	R+	60C	536.85	535.51	1.34
"MXR3"	748+00	R+	60C	537.00	534.70	2.30
"MXR3"	748+50	R+	60C	537.25	536.26	0.99
"MXR3"	749+00	R+	60C	537.71	537.71	0.00
"MXR3"	747+00	L+	736B Mod	536.74	539.30	2.56
"B"	748+50	L+	60C	527.18	527.96	0.78
"B"	749+00	L+	60C	526.69	527.56	0.87
"MXR3"	749+00	L+	736B Mod	535.57	538.57	3.00
"B"	752+50	L+ / R+	60C	526.55	525.83	0.72
"B"	753+00	L+ / R+	60C	526.24	525.58	0.66
"B"	753+50	L+ / R+	60C	526.01	525.40	0.61
"B"	754+00	L+ / R+	60C	525.86	525.31	0.55
"B"	754+50	L+ / R+	60C	525.79	525.22	0.57
"B"	755+00	L+ / R+	60C	525.79	525.22	0.57
"B"	755+50	L+ / R+	60C	525.86	525.28	0.58
"B"	756+00	L+ / R+	60C	525.94	525.30	0.64
"B"	756+50	L+ / R+	60C	526.01	525.28	0.73
"B"	757+00	L+ / R+	60C	526.09	525.19	0.90
"B"	757+50	L+ / R+	60C	526.16	525.28	0.88
"B"	758+00	L+ / R+	60C	526.24	525.38	0.86
"B"	758+50	L+ / R+	60C	526.31	525.37	0.94
"B"	772+50	L+	60C	525.11	526.28	1.17
"B"	773+00	L+	60C	525.98	526.48	0.50
"B"	773+50	L+	60C	525.32	526.61	1.29
"B"	774+00	L+	60C	525.13	526.75	1.62
"B"	774+50	L+	60C	525.15	526.88	1.73
"B"	775+00	L+	60C	525.14	527.03	1.89
"B"	775+50	L+	60C	525.23	527.18	1.95
"B"	776+00	L+	60C	525.71	527.34	1.63
"B"	776+50	L+	60C	525.80	527.49	1.69
"B"	777+00	L+	60C	526.10	527.65	1.55
"B"	777+50	L+	60C	526.23	527.80	1.57
"B"	778+00	L+	60C	526.39	527.96	1.57
"B"	778+50	L+	60C	526.74	528.11	1.37
"B"	779+00	L+	60C	526.75	528.27	1.52
"B"	779+50	L+	60C	526.99	528.42	1.43
"B"	780+00	L+	60C	527.04	528.58	1.54
"B"	780+50	L+	60C	527.36	528.73	1.37

(N) - NOT A SEPARATE PAY ITEM, FOR INFORMATION ONLY

CONCRETE BARRIERS WITH VARIABLE HEIGHT (CONTINUED)

STATION		SIDE	BARRIER TYPE	ELEVATION (N) LEFT	ELEVATION (N) RIGHT	DIFFERENCE (N)
				FT	FT	FT
"B"	781+00	L+	60C	526.06	528.89	2.83
"B"	781+50	L+	60C	526.55	529.04	2.49
"MVR"	799+50	R+	60C	537.16	537.16	0.00
"MVR"	800+00	R+	60C	539.26	539.26	0.00
"MVR"	800+50	R+	60C	540.34	541.4	1.06
"MVR"	800+00	R+	60C	543.64	543.64	0.00
"MVL1"	802+50	L+	60C	541.43	539.46	1.97
"MVL1"	803+00	L+	60C	541.11	540.26	0.85
"MVL1"	803+00	L+	60C	539.56	540.8	1.24
"B"	810+00	L+ / R+	60C	540.38	539.87	0.51
"B"	810+50	L+ / R+	60C	540.56	539.95	0.61
"B"	811+00	L+ / R+	60C	540.71	540.10	0.61
"B"	811+50	L+ / R+	60C	540.84	540.21	0.63
"B"	812+00	L+ / R+	60C	540.94	540.34	0.60
"B"	812+50	L+ / R+	60C	541.02	540.48	0.54
"B"	813+00	L+ / R+	60C	541.09	540.57	0.52
"MGL1"	861+00	L+	60C	566.05	569.05	3.00
"MGL1"	861+50	L+	60C	566.14	569.14	3.00
"MGL1"	862+00	L+	60C	566.14	569.14	3.00
"MGL1"	862+50	L+	60C	566.30	568.57	2.27

(N) - NOT A SEPARATE PAY ITEM, FOR INFORMATION ONLY

ROCK SLOPE PROTECTION

LOCATION	1/4T, METHOD B	BACKING No. 2, METHOD B
	CY	CY
ARROYO SECO BOX CULVERT	15	-
"B" 692+70 TO 694+10 L+	-	163
FROM DRAINAGE	-	67
TOTAL	15	230

CONCRETED - ROCK SLOPE PROTECTION

LOCATION	1/4T, METHOD A
	CY
ARROYO SECO BOX CULVERT	25
TOTAL	25

ROCK SLOPE PROTECTION FABRIC

LOCATION	SQYD
ARROYO SECO BOX CULVERT	87
"B" 692+70 TO 694+10 L+	339
FROM DRAINAGE PLANS	139
TOTAL	565

SOUND WALL QUANTITIES

SW No.	SOUND WALL (PRECAST CONCRETE PANEL)
	SQFT
1	4648
TOTAL	4648

IRRIGATION CROSSOVERS

LOCATION	CONDUIT TYPE ①	(N) WATER LINE CROSSOVER SIZE (IN) DN	(N) SPRINKLER CONTROL CROSSOVER SIZE (IN) DN
STATION	SIZE (IN) DN 8 LENGTH (LF)		
"MKR2" 649+10	50	3	2
"MKR1" 652+90	40	3	2
"MKL1" 652+80	40	3	2
"MXR3" 743+80	40	3	2
"MXR3" 748+80	60	3	2
"MXL1" 747+50	52	3	2
"MXL1" 751+80	40	3	2
"MVR4" 797+50	40	3	2
"MVR4" 803+50	40	3	2
"MVL1" 802+40	58	3	2
"MVL1" 808+40	46	3	2
"MGL1" 864+80	40	3	2
"MGR2" 859+20	54	3	2
TOTAL	600		

(N) NOT A SEPARATE PAY ITEM FOR INFORMATION ONLY

DN DIAMETER NOMINAL

CONDUIT TYPE
(APPLICABLE WHEN CIRCLE BELOW AND SHOWN UNDER THE "CONDUIT TYPE" COLUMN HEADING)

① WELDED STEEL PIPE (0.25 INCH THICK)

SUMMARY OF QUANTITIES

Q-12

STATE OF CALIFORNIA - DEPARTMENT OF TRANSPORTATION
CONSULTANT FUNCTIONAL SUPERVISOR NATALINA V. BERNARDI
CALCULATED-DESIGNED BY ARMANDO LOERA
CHECKED BY LUIS GARCIA
REVISED BY AL
DATE REVISED 5/7/12

LAST REVISION 05-07-12
DATE PLOTTED => 23-MAY-2012
TIME PLOTTED => 07:55

Dist	COUNTY	ROUTE	POST MILES TOTAL PROJECT	SHEET No.	TOTAL SHEETS
04	Ala	580	R8.4/R14.6	516	853

REGISTERED CIVIL ENGINEER 5/7/12 DATE

5-14-12
PLANS APPROVAL DATE

REGISTERED PROFESSIONAL ENGINEER N.V. BERNARDI No. 45407 Exp. 9/30/12 CIVIL STATE OF CALIFORNIA

THE STATE OF CALIFORNIA OR ITS OFFICERS OR AGENTS SHALL NOT BE RESPONSIBLE FOR THE ACCURACY OR COMPLETENESS OF SCANNED COPIES OF THIS PLAN SHEET.

BKF ENGINEERS
4670 WILLOW ROAD, SUITE 250
PLEASANTON, CA. 94588

ALAMEDA CTC
1333 BROADWAY SUITE 220
OAKLAND, CA. 94612

INDIVIDUAL SLAB REPLACEMENT (RAPID STRENGTH CONCRETE)

STATION	SIDE	LANE 1 SLAB (N)	LANE 2 SLAB (N)	LANE 3 SLAB (N)	LANE 4 SLAB (N)	LANE 5 SLAB (N)	LENGTH (N)	WIDTH (N)	REMOVE Exist PCC DEPTH (N)	INDIVIDUAL SLAB REPLACEMENT (RSC)	REMOVE Exist BASE DEPTH (N)	LEAN CONCRETE BASE-RAPID SETTING
							LF	LF	LF	CY	LF	CY
"B" 695+45.10 TO 695+74.90	Lt				2		30	12	0.75	10	0.50	7
"B" 701+20.00 TO 701+80.00	Lt				4		60	12	0.75	20	0.50	14
"B" 701+35.00 TO 701+65.00	Lt	2					30	12	0.70	10	0.35	5
"B" 701+35.00 TO 701+65.00	Lt			2			30	12	0.75	10	0.50	7
"B" 706+00.00 TO 706+60.00	Lt				4		60	12	0.75	20	0.50	14
"B" 706+15.00 TO 706+45.00	Lt			2			30	12	0.75	10	0.50	7
"B" 709+47.53 TO 709+92.53	Lt			3			45	12	0.75	15	0.50	10
"B" 709+62.53 TO 709+77.53	Lt				1		15	12	0.75	5	0.50	4
"B" 713+90.00 TO 715+10.00	Lt				8		120	12	0.75	40	0.50	27
"B" 719+52.03 TO 719+82.03	Lt			2			30	12	0.75	10	0.50	7
"B" 726+77.50 TO 727+22.50	Lt				3		45	12	0.75	15	0.50	10
"B" 726+85.00 TO 727+15.00	Lt			2			30	12	0.75	10	0.50	7
"B" 732+55.03 TO 732+85.03	Lt				2		30	12	0.75	10	0.50	7
"B" 732+62.53 TO 732+77.53	Lt	1					15	12	0.70	5	0.35	3
"B" 732+62.53 TO 732+77.53	Lt			1			15	12	0.75	5	0.35	4
"B" 734+75.00 TO 735+05.00	Lt		2				30	12	0.70	10	0.35	5
"B" 734+75.00 TO 735+05.00	Lt				2		30	12	0.75	10	0.50	7
"B" 739+62.24 TO 740+37.76	Lt		5				75	12	0.70	24	0.35	12
"B" 739+84.86 TO 740+15.14	Lt			2			30	12	0.75	10	0.50	7
"B" 743+69.93 TO 744+30.37	Lt				4		60	12	0.75	20	0.50	14
"B" 745+59.45 TO 746+50.55	Lt				6		90	12	0.75	30	0.50	20
"B" 745+74.71 TO 746+35.29	Lt		4				60	12	0.70	19	0.35	10
"B" 745+74.71 TO 746+35.29	Lt			4			60	12	0.75	20	0.50	14
"B" 752+79.43 TO 754+00.57	Lt			8			120	12	0.75	40	0.50	27
"B" 752+94.70 TO 753+85.30	Lt		6				90	12	0.70	28	0.35	14
"B" 753+02.04 TO 753+77.96	Lt				5		75	12	0.75	25	0.50	17
"B" 757+58.02 TO 761+61.37	Lt				27		400	12	0.75	134	0.50	89
"B" 759+37.41 TO 759+82.59	Lt		3				45	12	0.70	14	0.35	7
"B" 759+44.90 TO 759+75.10	Lt			2			30	12	0.75	10	0.50	7
"B" 765+07.50 TO 765+52.50	Lt		3				45	12	0.70	14	0.35	7
"B" 767+65.00 TO 767+95.00	Lt			2			30	12	0.75	10	0.50	7
"B" 767+72.50 TO 767+87.50	Lt		1				15	12	0.70	5	0.35	3
"B" 770+50.00 TO 771+10.00	Lt				4		60	12	0.75	20	0.50	14
"B" 770+57.50 TO 771+02.50	Lt			3			45	12	0.75	15	0.50	10
"B" 772+35.00 TO 772+65.00	Lt		2				30	12	0.70	10	0.35	5
"B" 773+12.50 TO 773+27.50	Lt				1		15	12	0.75	5	0.50	4
"B" 774+57.50 TO 775+02.50	Lt				3		45	12	0.75	15	0.50	10
"B" 774+65.00 TO 774+95.00	Lt			2			30	12	0.75	10	0.50	7
"B" 777+75.00 TO 778+05.00	Lt			2			30	12	0.75	10	0.50	7
"B" 778+62.50 TO 779+37.50	Lt				5		75	12	0.75	25	0.50	17
"B" 778+70.00 TO 779+30.00	Lt			4			60	12	0.75	20	0.50	14
"B" 780+45.00 TO 781+05.00	Lt				4		60	12	0.75	20	0.50	14
"B" 780+60.00 TO 780+90.00	Lt			2			30	12	0.75	10	0.50	7
"B" 782+35.00 TO 782+65.00	Lt	2					30	12	0.70	10	0.35	5
"B" 782+35.00 TO 782+65.00	Lt		2				30	12	0.70	10	0.35	5
"B" 782+42.50 TO 782+57.50	Lt			1			15	12	0.75	5	0.50	4
"B" 790+42.50 TO 790+57.50	Lt				1		15	12	0.75	5	0.50	4
"B" 792+35.00 TO 792+65.00	Lt				2		30	12	0.75	10	0.50	7
"B" 794+36.50 TO 794+81.50	Lt				3		45	12	0.75	15	0.50	10
"B" 804+62.50 TO 805+37.50	Lt		5				75	12	0.70	24	0.35	12
"B" 804+77.50 TO 805+22.50	Lt	3					45	12	0.70	14	0.35	7
"B" 805+45.00 TO 805+75.00	Lt			2			30	12	0.75	10	0.50	7
"B" 806+90.00 TO 807+50.00	Lt				2		30	12	0.75	10	0.50	7
"B" 806+90.00 TO 807+50.00	Lt			4			60	12	0.75	20	0.50	14
"B" 806+90.00 TO 807+50.00	Lt				4		60	12	0.75	20	0.50	14
"B" 807+05.00 TO 807+35.00	Lt		2				30	12	0.70	10	0.35	5
"B" 807+12.50 TO 807+27.50	Lt	1					15	12	0.70	5	0.35	3
"B" 809+70.00 TO 810+30.00	Lt			4			60	12	0.75	20	0.50	14
"B" 809+77.50 TO 810+22.50	Lt		3				45	12	0.70	14	0.35	7
"B" 810+45.00 TO 810+75.00	Lt			2			30	12	0.75	10	0.50	7
"B" 810+52.50 TO 810+67.50	Lt	1					15	12	0.70	5	0.35	3
"B" 813+20.00 TO 813+80.00	Lt				4		60	12	0.75	20	0.50	14
"B" 813+35.00 TO 813+65.00	Lt			2			30	12	0.75	10	0.50	7
SUBTOTAL		10	38	58	101	0				1025*		665*

(N) - NOT A SEPARATE PAY ITEM, FOR INFORMATION ONLY
* QUANTITY INCLUDED IN ROADWAY QUANTITIES TABLE.

SUMMARY OF QUANTITIES

Q-13

STATE OF CALIFORNIA - DEPARTMENT OF TRANSPORTATION

Caltrans

CONSULTANT FUNCTIONAL SUPERVISOR: NATALINA V. BERNARDI

CALCULATED-DESIGNED BY: ARMANDO LOERA

CHECKED BY: LUIS GARCIA

REVISED BY: AL

DATE REVISED: 5/7/12

LAST REVISION 05-07-12

DATE PLOTTED => 23-MAY-2012
TIME PLOTTED => 07:55

Dist	COUNTY	ROUTE	POST MILES TOTAL PROJECT	SHEET No.	TOTAL SHEETS
04	Ala	580	R8.4/R14.6	517	853

REGISTERED CIVIL ENGINEER 5/7/12 DATE

5-14-12
PLANS APPROVAL DATE

REGISTERED PROFESSIONAL ENGINEER N.V. BERNARDI No. 45407 Exp. 9/30/12 CIVIL STATE OF CALIFORNIA

THE STATE OF CALIFORNIA OR ITS OFFICERS OR AGENTS SHALL NOT BE RESPONSIBLE FOR THE ACCURACY OR COMPLETENESS OF SCANNED COPIES OF THIS PLAN SHEET.

BKF ENGINEERS
4670 WILLOW ROAD, SUITE 250
PLEASANTON, CA. 94588

ALAMEDA CTC
1333 BROADWAY SUITE 220
OAKLAND, CA. 94612

INDIVIDUAL SLAB REPLACEMENT (RAPID STRENGTH CONCRETE) (CONTINUED)

STATION	SIDE	LANE 1 SLAB (N)	LANE 2 SLAB (N)	LANE 3 SLAB (N)	LANE 4 SLAB (N)	LANE 5 SLAB (N)	LENGTH (N)	WIDTH (N)	REMOVE Exist PCC DEPTH (N)	INDIVIDUAL SLAB REPLACEMENT (RSC)	REMOVE Exist BASE DEPTH (N)	LEAN CONCRETE BASE-RAPID SETTING
							LF	LF	LF	CY	LF	CY
"B" 815+55.00 TO 815+85.00	Lt				2		30	12	0.75	10	0.50	7
"B" 818+77.50 TO 819+22.50	Lt				3		45	12	0.75	15	0.50	10
"B" 823+19.99 TO 823+79.99	Lt				4		60	12	0.75	20	0.50	14
"B" 826+65.00 TO 826+95.00	Lt				2		30	12	0.75	10	0.50	7
"B" 832+50.00 TO 833+50.00	Lt				7		100	8	0.75	23	0.50	15
"B" 832+85.00 TO 833+15.00	Lt	1					15	12	0.70	5	0.35	3
"B" 835+01.00 TO 835+49.00	Lt				4		48	12	0.75	16	0.50	11
"B" 835+05.00 TO 835+45.00	Lt			3			40	12	0.75	14	0.50	9
"B" 836+93.00 TO 837+77.00	Lt				6		84	12	0.75	28	0.50	19
"B" 837+20.00 TO 837+50.00	Lt			2			30	12	0.75	10	0.50	7
"B" 840+50.97 TO 840+99.03	Lt				4		48	12	0.75	16	0.50	11
"B" 842+22.00 TO 842+82.00	Lt				4		60	12	0.75	20	0.50	14
"B" 842+44.50 TO 842+59.50	Lt			1			15	12	0.75	5	0.50	4
"B" 843+92.49 TO 844+07.49	Lt			1			15	12	0.75	5	0.50	4
"B" 843+92.49 TO 844+07.49	Lt				1		15	12	0.75	5	0.50	4
"B" 848+09.00 TO 851+32.86	Lt					22	330	12	0.75	110	0.50	74
"B" 859+80.22 TO 860+19.77	Lt				3		40	12	0.75	14	0.50	9
"B" 864+32.69 TO 864+67.31	Lt				3		35	12	0.75	12	0.50	8
SUBTOTAL THIS SHEET		1	0	7	43	22				338		230
SUBTOTAL FROM Q-13		10	38	58	101	0				1025		665
GRAND TOTAL		11	38	65	144	22				1363*		895*

(N) - NOT A SEPARATE PAY ITEM, FOR INFORMATION ONLY
* QUANTITY INCLUDED IN ROADWAY QUANTITIES TABLE.

PRECAST PRESTRESSED CONCRETE PAVEMENT

STATION	SIDE	LANE No. (N)	PRECAST PRESTRESSED CONCRETE PAVEMENT		LEAN CONCRETE BASE-RAPID SETTING		CLASS 4 AS		REMOVE PCC PAVEMENT (PCP)	SEAL ISOLATION JOINT	SEAL PAVEMENT JOINT
			THICKNESS (N)	VOLUME	THICKNESS (N)	VOLUME	THICKNESS (N)	VOLUME			
			LF	CY	LF	CY	LF	CY	SQYD	LF	LF
"B" 580+30.00 TO 582+08.69	Lt	1, 2	0.90	124	0.80	110			412	351	654
"B" 580+30.00 TO 582+08.69	Lt	3, 4	0.90	134	0.90	134			446	465	504
"B" 583+49.44 TO 587+00.00	Lt	1, 2	0.90	282	0.80	250			938	1029	1056
"B" 583+49.44 TO 587+00.00	Lt	3, 4	0.90	255	0.90	255			849	648	996
"B" 615+60.00 TO 617+69.65	Lt	1, 2	0.90	167	0.50	93			554	624	660
"B" 615+60.00 TO 617+69.65	Lt	3, 4	0.90	156	0.80	139			520	405	648
"B" 619+63.91 TO 621+95.00	Lt	1, 2	0.90	180	0.50	100			600	675	708
"B" 619+63.91 TO 621+95.00	Lt	3, 4	0.90	176	0.80	157			586	464	648
"B" 651+48.58 TO 653+65.00	Lt	1, 2	0.90	172	0.83	159			172	645	672
"B" 651+48.58 TO 653+65.00	Lt	3, 4	0.90	162	0.75	135			162	421	672
"B" 799+00.00 TO 805+00.00	Lt	1,2,3,4	0.90	966	0.35	376			3220	2400	3648
"B" 799+00.00 TO 805+00.00	Lt	OUTSIDE Shld	0.90	460	0.35	179	1.35	690		690	690
"B" 799+00.00 TO 805+00.00	Lt	INSIDE Shld	0.90	155	0.35	60	1.35	232		232	232
TOTAL				3389*		2147*		922*	9237**	8727**	13166

(N) - NOT A SEPARATE PAY ITEM, FOR INFORMATION ONLY
* QUANTITY INCLUDED IN ROADWAY QUANTITIES TABLE.
* * QUANTITY INCLUDED IN TABLE ON Q-8.

SUMMARY OF QUANTITIES

Q-14

STATE OF CALIFORNIA - DEPARTMENT OF TRANSPORTATION

Caltrans

CONSULTANT FUNCTIONAL SUPERVISOR: NATALINA V. BERNARDI

CALCULATED-DESIGNED BY: ARMANDO LOERA

CHECKED BY: LUIS GARCIA

REVISED BY: AL

DATE REVISED: 5/7/12

LAST REVISION DATE PLOTTED => 23-MAY-2012
TIME PLOTTED => 07:55

05-07-12

FOR ACCURATE RIGHT OF WAY DATA, CONTACT
RIGHT OF WAY ENGINEERING AT THE DISTRICT OFFICE

Dist	COUNTY	ROUTE	POST MILES TOTAL PROJECT	SHEET No.	TOTAL SHEETS
04	Alg	580	R8.4/R14.6	518	853

REGISTERED CIVIL ENGINEER 01/18/12 DATE

5-14-12
PLANS APPROVAL DATE

REGISTERED PROFESSIONAL ENGINEER INES S. LI No. C51561 Exp.6/30/12 CIVIL STATE OF CALIFORNIA

THE STATE OF CALIFORNIA OR ITS OFFICERS OR AGENTS SHALL NOT BE RESPONSIBLE FOR THE ACCURACY OR COMPLETENESS OF SCANNED COPIES OF THIS PLAN SHEET.

BIGGS CARDOSA ASSOCIATES INC.
865 THE ALAMEDA
SAN JOSE, CA 95126

ALAMEDA CTC
1333 BROADWAY, SUITE 220
OAKLAND, CA 94612

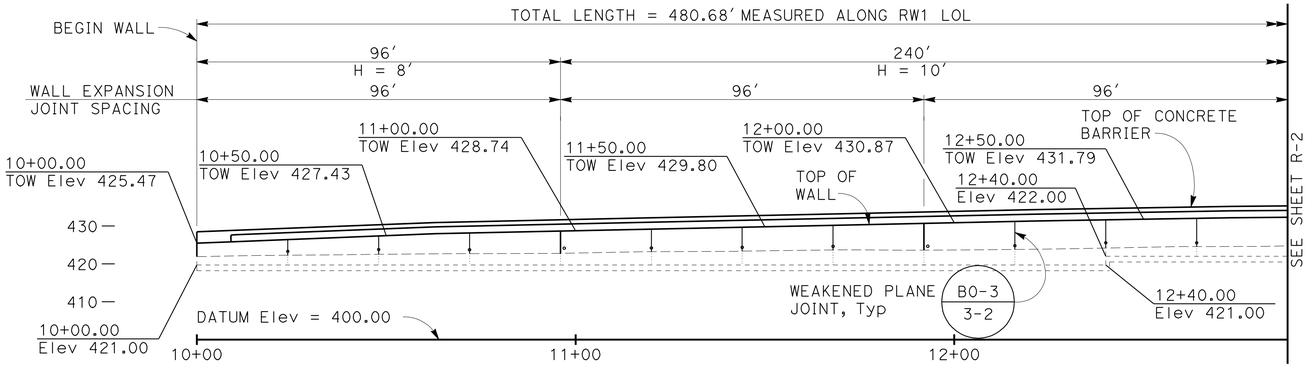

DEVELOPED MIRRORED ELEVATION

SCALE: 1" = 20'

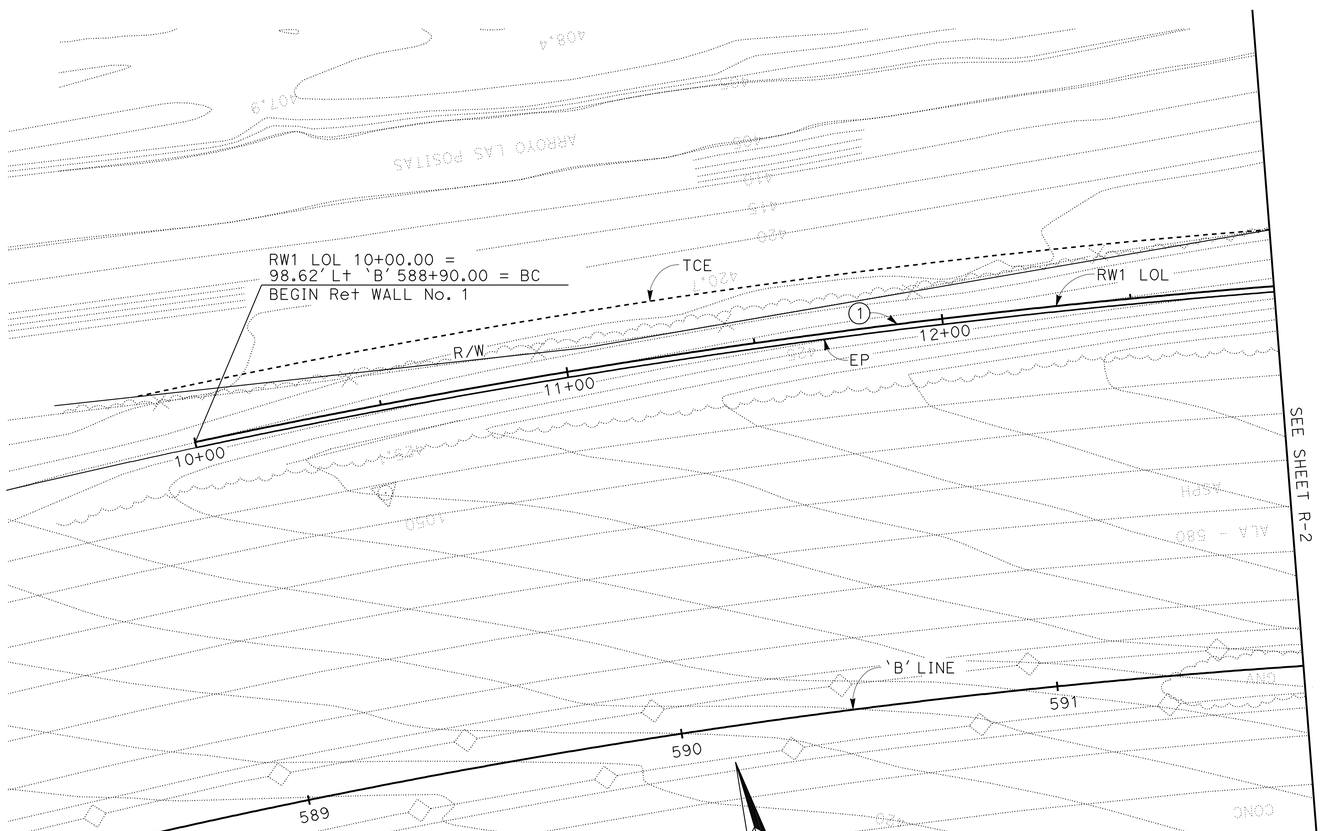

PLAN

SCALE: 1" = 20'

THIS PLAN ACCURATE FOR RETAINING WALL WORK ONLY

NOTES:

1. TOP OF WALL PROFILES ARE LINEAR BETWEEN POINTS SHOWN UNLESS NOTED OTHERWISE
2. TOP OF FOOTING IS LEVEL, Typ
3. FOR FOOTING STEP DETAIL, SEE B3-8 / -
4. FOR UTILITIES NOT SHOWN, SEE UTILITY PLANS
5. REMOVE 2' OF SOIL BELOW BOTTOM OF FOOTING AND REPLACE WITH CLASS 2 AGGREGATE BASE FOR H = 8' AND H = 10'
6. REMOVE 3' OF SOIL BELOW BOTTOM OF FOOTING AND REPLACE WITH CLASS 2 AGGREGATE BASE FOR AND H = 12'

ABBREVIATION:

TOW TOP OF WALL

CURVE DATA ALONG RW1 LOL				
CURVE	RADIUS	LENGTH	TANGENT	DELTA
1	2187.48	457.94	229.81	11°59'41"

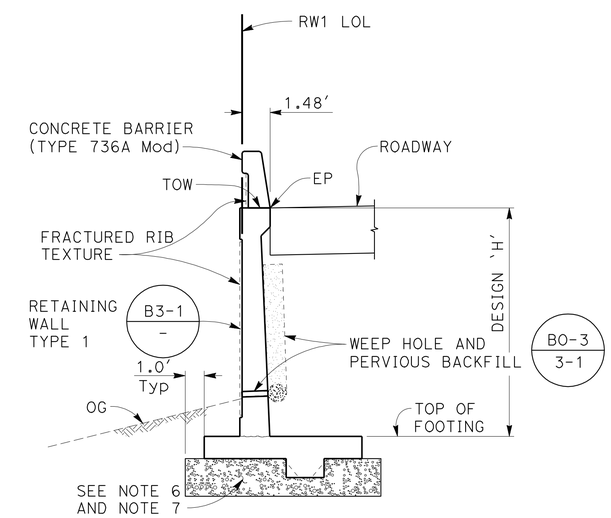

RETAINING WALL No. 1

TYPICAL SECTION

NO SCALE

RETAINING WALL No. 1
GENERAL PLAN No. 1

SCALE AS SHOWN

R-1

REVISED BY	DATE REVISED
RSR	01/18/12
RSR	11/18/11

CALCULATED-DESIGNED BY: HATEM BEDAIR
CHECKED BY: INES LI
CONSULTANT FUNCTIONAL SUPERVISOR: ROY M. SCHNABEL

STATE OF CALIFORNIA - DEPARTMENT OF TRANSPORTATION
Caltrans

LAST REVISION 01/18/12
DATE PLOTTED => 23-MAY-2012
TIME PLOTTED => 07:56
2007236 (2007236ic1)

FOR ACCURATE RIGHT OF WAY DATA, CONTACT
RIGHT OF WAY ENGINEERING AT THE DISTRICT OFFICE

Dist	COUNTY	ROUTE	POST MILES TOTAL PROJECT	SHEET No.	TOTAL SHEETS
04	Alg	580	R8.4/R14.6	519	853

REGISTERED CIVIL ENGINEER 01/18/12 DATE

5-14-12
PLANS APPROVAL DATE

REGISTERED PROFESSIONAL ENGINEER INES S. LI No. C51561 Exp.6/30/12 CIVIL STATE OF CALIFORNIA

THE STATE OF CALIFORNIA OR ITS OFFICERS OR AGENTS SHALL NOT BE RESPONSIBLE FOR THE ACCURACY OR COMPLETENESS OF SCANNED COPIES OF THIS PLAN SHEET.

BIGGS CARDOSA ASSOCIATES INC.
865 THE ALAMEDA
SAN JOSE, CA 95126

ALAMEDA CTC
1333 BROADWAY, SUITE 220
OAKLAND, CA 94612

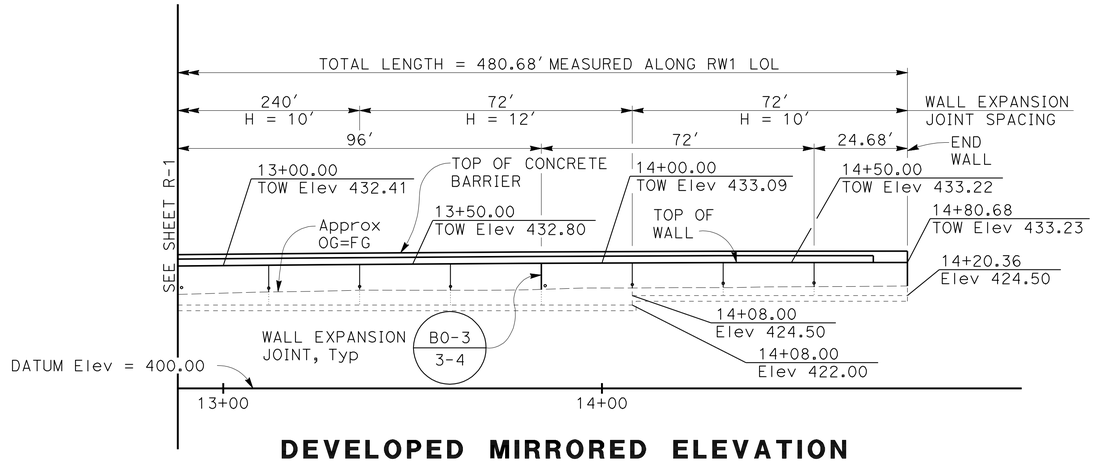

DEVELOPED MIRRORED ELEVATION

SCALE: 1" = 20'

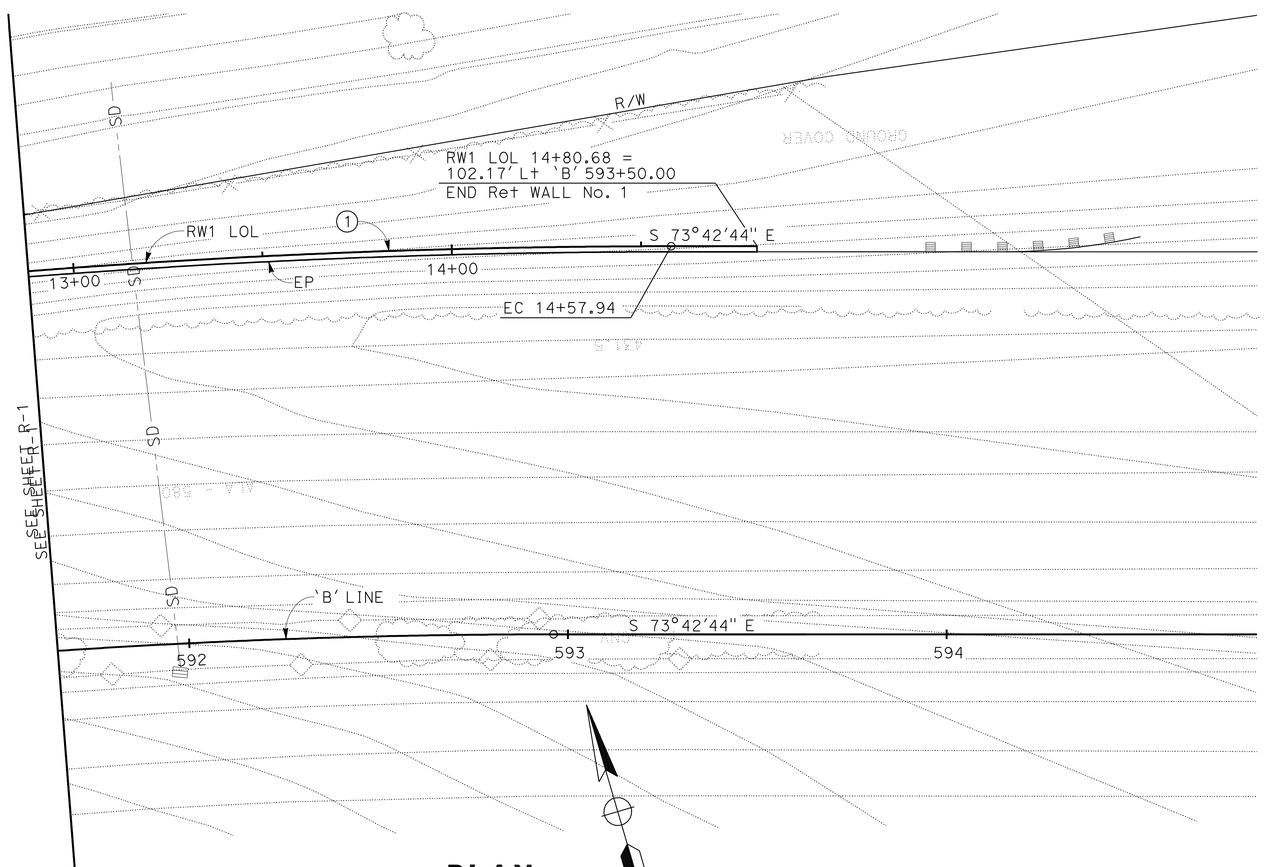

PLAN

SCALE: 1" = 20'

THIS PLAN ACCURATE FOR RETAINING WALL WORK ONLY

RETAINING WALL No. 1
GENERAL PLAN No. 2

SCALE AS SHOWN

R-2

RSR	01/18/12		
RSR	11/18/11		
REVISED BY	DATE REVISED		
HATEM BEDAIR	INES LI	CALCULATED-DESIGNED BY	CHECKED BY
CONSULTANT FUNCTIONAL SUPERVISOR	ROY M. SCHNABEL		
STATE OF CALIFORNIA - DEPARTMENT OF TRANSPORTATION	Caltrans		

LAST REVISION 01/18/12
DATE PLOTTED => 23-MAY-2012
TIME PLOTTED => 07:56

2007236 (2007236ic2)

FOR ACCURATE RIGHT OF WAY DATA, CONTACT
RIGHT OF WAY ENGINEERING AT THE DISTRICT OFFICE

Dist	COUNTY	ROUTE	POST MILES TOTAL PROJECT	SHEET No.	TOTAL SHEETS
04	Ala	580	R8.4/R14.6	520	853

REGISTERED CIVIL ENGINEER — DATE 01/18/12

5-14-12
PLANS APPROVAL DATE

REGISTERED PROFESSIONAL ENGINEER — INES S. LI — No. C51561 — Exp. 6/30/12 — CIVIL — STATE OF CALIFORNIA

THE STATE OF CALIFORNIA OR ITS OFFICERS OR AGENTS SHALL NOT BE RESPONSIBLE FOR THE ACCURACY OR COMPLETENESS OF SCANNED COPIES OF THIS PLAN SHEET.

BIGGS CARDOSA ASSOCIATES INC.
865 THE ALAMEDA
SAN JOSE, CA 95126

ALAMEDA CTC
1333 BROADWAY, SUITE 220
OAKLAND, CA 94612

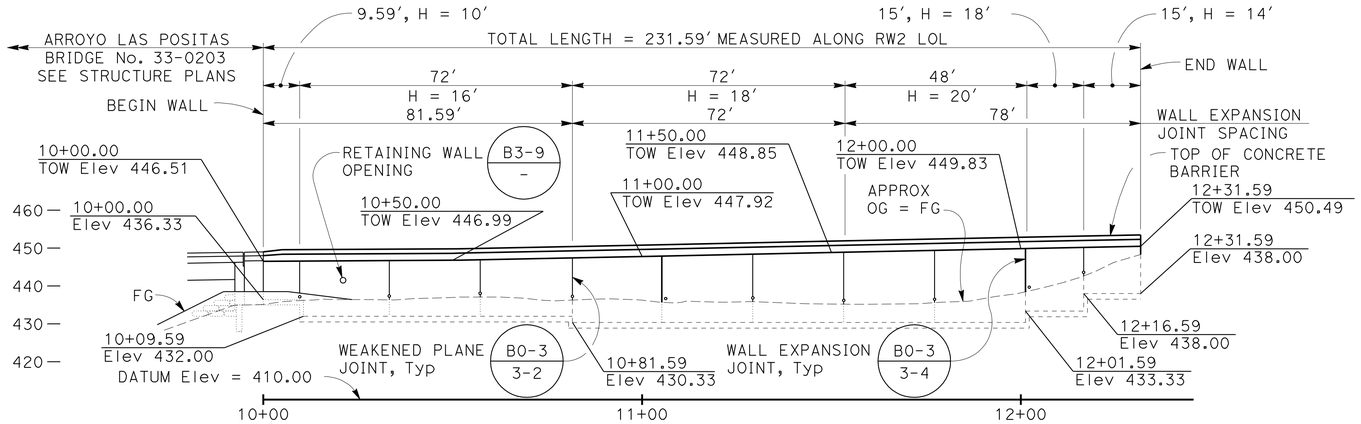

DEVELOPED ELEVATION

SCALE: 1" = 20′

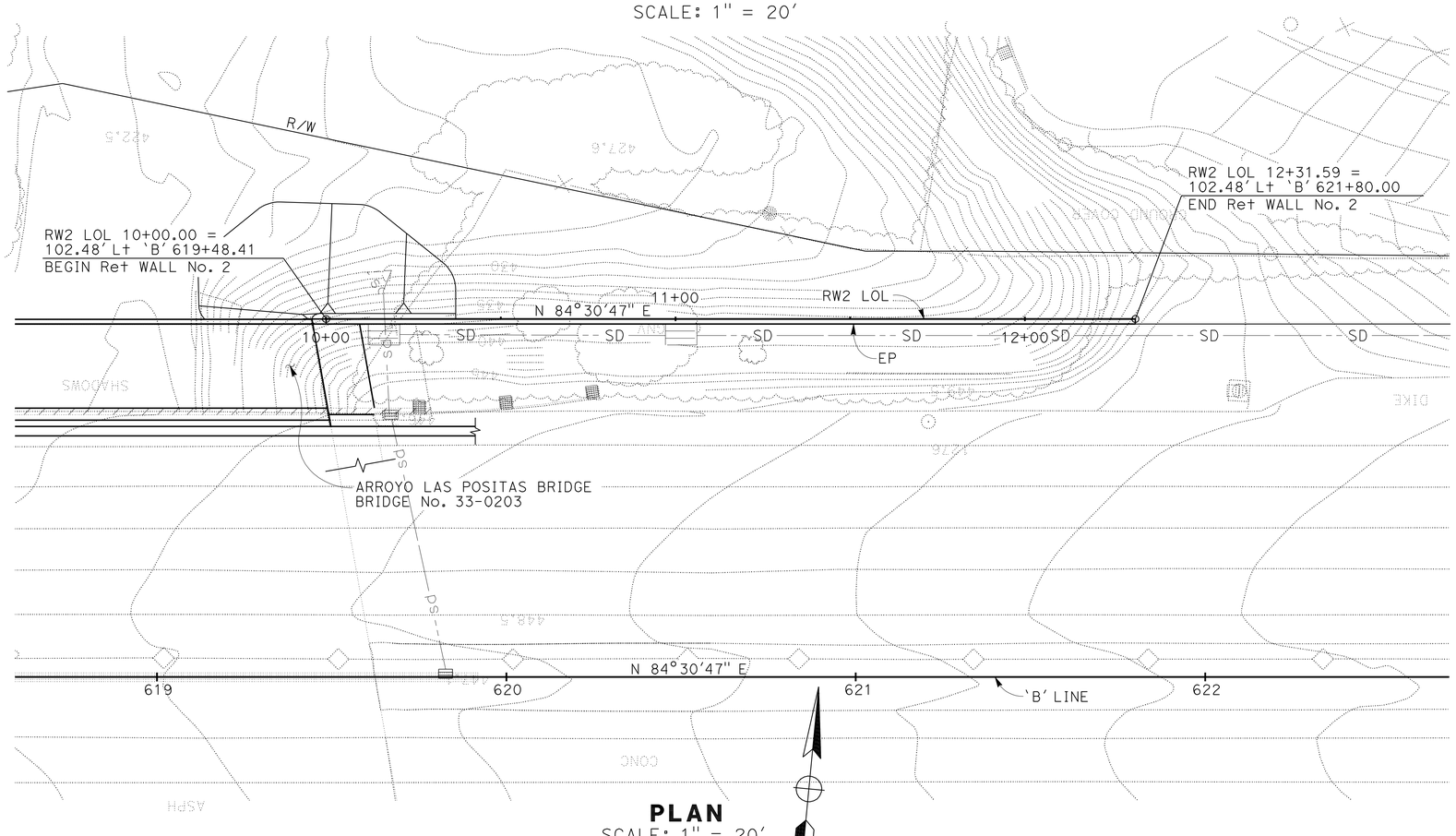

PLAN

SCALE: 1" = 20′

THIS PLAN ACCURATE FOR RETAINING WALL WORK ONLY

NOTES:

1. TOP OF WALL PROFILES ARE LINEAR BETWEEN POINTS SHOWN UNLESS NOTED OTHERWISE
2. TOP OF FOOTING IS LEVEL, Typ
3. FOR FOOTING STEP DETAIL, SEE B3-8 / -
4. FOR UTILITIES NOT SHOWN, SEE UTILITY PLANS

ABBREVIATION:

TOW TOP OF WALL

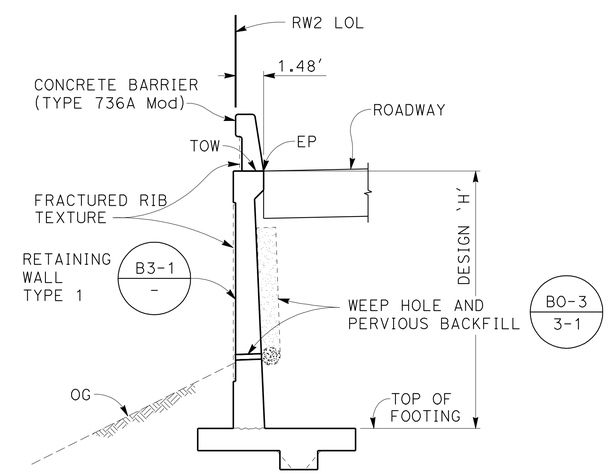

RETAINING WALL No. 2

TYPICAL SECTION

NO SCALE

RETAINING WALL No. 2 GENERAL PLAN

SCALE AS SHOWN

R-3

REVISED BY	DATE REVISED
RSR	01/18/12
RSR	11/18/11

CALCULATED-DESIGNED BY: HATEM BEDAIR
CHECKED BY: INES LI
SUPERVISOR: ROY M. SCHNABEL
CONSULTANT FUNCTIONAL

STATE OF CALIFORNIA - DEPARTMENT OF TRANSPORTATION
Caltrans

2007236 (2007236.dc3)

LAST REVISION 01/18/12
DATE PLOTTED => 23-MAY-2012
TIME PLOTTED => 07:56

FOR ACCURATE RIGHT OF WAY DATA, CONTACT
RIGHT OF WAY ENGINEERING AT THE DISTRICT OFFICE

Dist	COUNTY	ROUTE	POST MILES TOTAL PROJECT	SHEET No.	TOTAL SHEETS
04	Ala	580	R8.4/R14.6	521	853

REGISTERED CIVIL ENGINEER 01/18/12 DATE

5-14-12
PLANS APPROVAL DATE

REGISTERED PROFESSIONAL ENGINEER INES S. LI No. C51561 Exp.6/30/12 CIVIL STATE OF CALIFORNIA

THE STATE OF CALIFORNIA OR ITS OFFICERS OR AGENTS SHALL NOT BE RESPONSIBLE FOR THE ACCURACY OR COMPLETENESS OF SCANNED COPIES OF THIS PLAN SHEET.

BIGGS CARDOSA ASSOCIATES INC.
865 THE ALAMEDA
SAN JOSE, CA 95126

ALAMEDA CTC
1333 BROADWAY, SUITE 220
OAKLAND, CA 94612

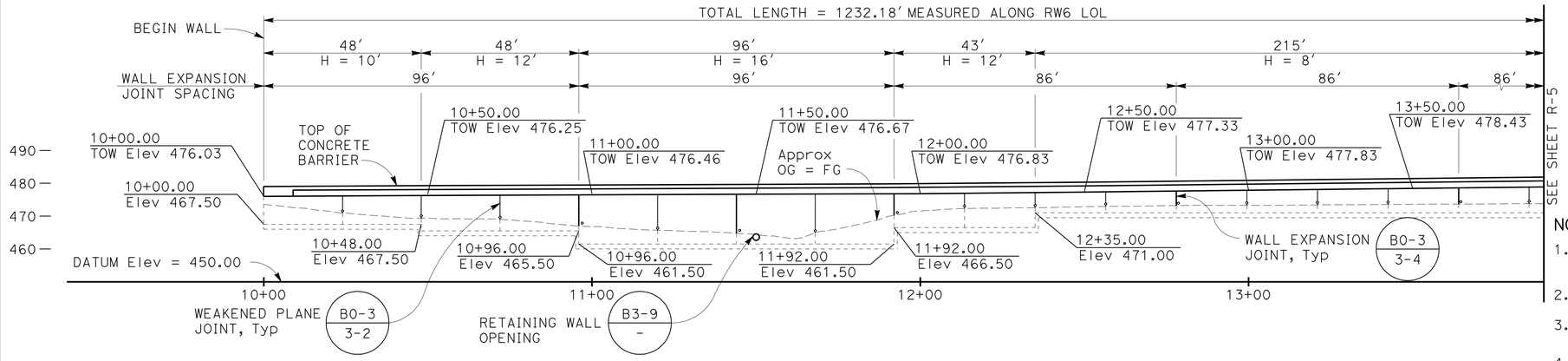

DEVELOPED MIRRORED ELEVATION

SCALE: 1" = 20'

NOTES:

1. TOP OF WALL PROFILES ARE LINEAR BETWEEN POINTS SHOWN UNLESS NOTED OTHERWISE
2. TOP OF FOOTING IS LEVEL, Typ
3. FOR FOOTING STEP DETAIL, SEE B3-8 / -
4. FOR UTILITIES NOT SHOWN, SEE UTILITY PLANS
5. REMOVE 2' OF SOIL BELOW BOTTOM OF FOOTING AND REPLACE WITH CLASS 2 AGGREGATE BASE FOR H = 8' AND H = 18'
6. REMOVE 3' OF SOIL BELOW BOTTOM OF FOOTING AND REPLACE WITH CLASS 2 AGGREGATE BASE FOR AND H = 10'

CURVE DATA ALONG RW6 LOL				
CURVE	RADIUS	LENGTH	TANGENT	DELTA
6	8102.48	567.65	283.94	04°00'51"

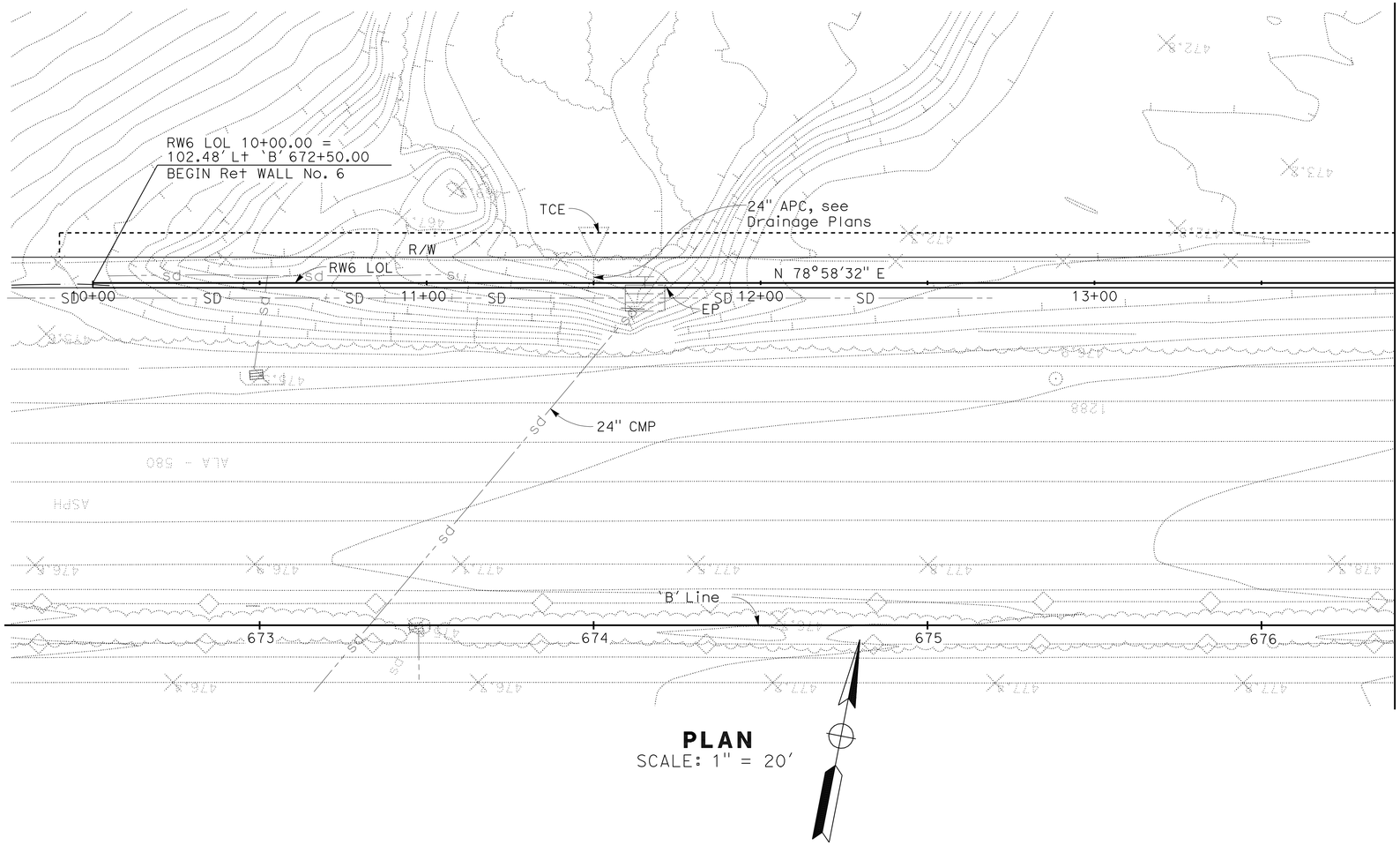

PLAN

SCALE: 1" = 20'

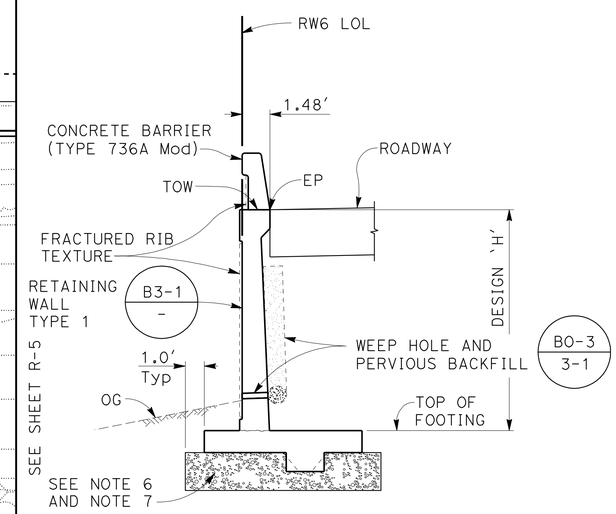

RETAINING WALL No. 6

TYPICAL SECTION

NO SCALE

THIS PLAN ACCURATE FOR RETAINING WALL WORK ONLY

RETAINING WALL No. 6
GENERAL PLAN No. 1

SCALE AS SHOWN

R-4

REVISED BY	DATE REVISED
RSR	01/18/12
RSR	11/18/11

HATEM BEDAIR — INES LI
CALCULATED-DESIGNED BY — CHECKED BY
CONSULTANT FUNCTIONAL SUPERVISOR — ROY M. SCHNABEL

STATE OF CALIFORNIA - DEPARTMENT OF TRANSPORTATION
Caltrans

LAST REVISION 01/18/12
DATE PLOTTED => 23-MAY-2012
TIME PLOTTED => 07:56
2007236 (2007236:C4)

FOR ACCURATE RIGHT OF WAY DATA, CONTACT
RIGHT OF WAY ENGINEERING AT THE DISTRICT OFFICE

Dist	COUNTY	ROUTE	POST MILES TOTAL PROJECT	SHEET No.	TOTAL SHEETS
04	Alg	580	R8.4/R14.6	522	853

REGISTERED CIVIL ENGINEER 01/18/12 DATE

5-14-12
PLANS APPROVAL DATE

REGISTERED PROFESSIONAL ENGINEER INES S. LI No. C51561 Exp.6/30/12 CIVIL STATE OF CALIFORNIA

THE STATE OF CALIFORNIA OR ITS OFFICERS OR AGENTS SHALL NOT BE RESPONSIBLE FOR THE ACCURACY OR COMPLETENESS OF SCANNED COPIES OF THIS PLAN SHEET.

BIGGS CARDOSA ASSOCIATES INC.
865 THE ALAMEDA
SAN JOSE, CA 95126

ALAMEDA CTC
1333 BROADWAY, SUITE 220
OAKLAND, CA 94612

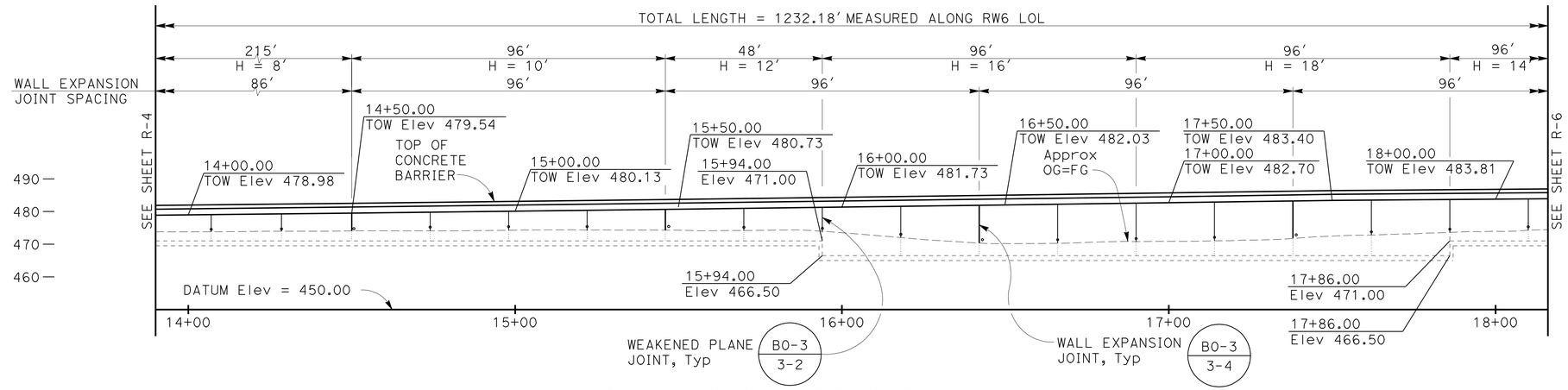

DEVELOPED MIRRORED ELEVATION

SCALE: 1" = 20'

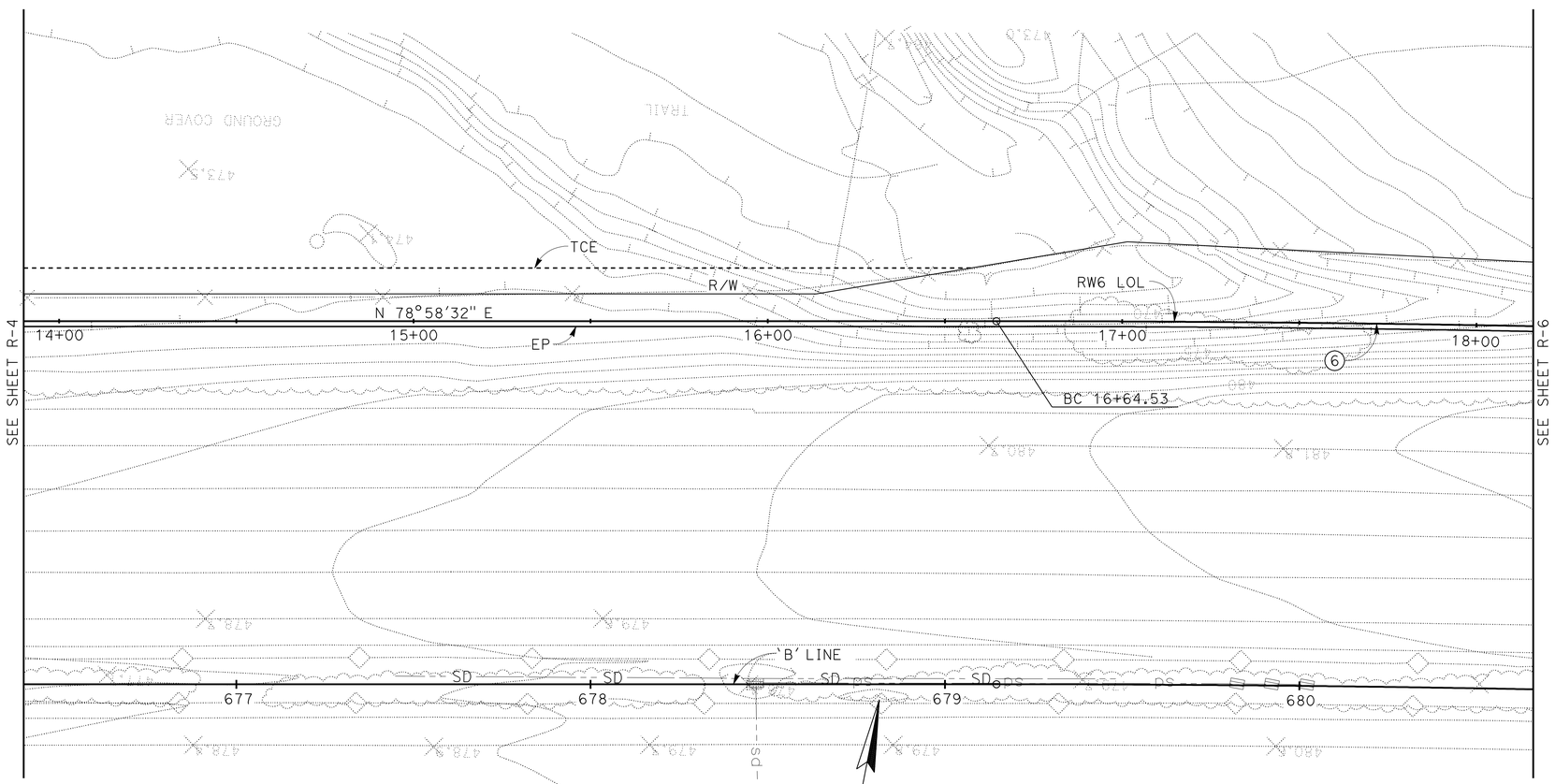

PLAN

SCALE: 1" = 20'

THIS PLAN ACCURATE FOR RETAINING WALL WORK ONLY

RETAINING WALL No. 6
GENERAL PLAN No. 2

SCALE AS SHOWN

R-5

REVISED BY	DATE REVISED
RSR	01/18/12
RSR	11/18/11

CALCULATED-DESIGNED BY: HATEM BEDAIR
CHECKED BY: INES LI
CONSULTANT FUNCTIONAL SUPERVISOR: ROY M. SCHNABEL

STATE OF CALIFORNIA - DEPARTMENT OF TRANSPORTATION
Caltrans

LAST REVISION 01/18/12
DATE PLOTTED => 23-MAY-2012
TIME PLOTTED => 07:57

2007236 (2007236ic5)

FOR ACCURATE RIGHT OF WAY DATA, CONTACT
RIGHT OF WAY ENGINEERING AT THE DISTRICT OFFICE

Dist	COUNTY	ROUTE	POST MILES TOTAL PROJECT	SHEET No.	TOTAL SHEETS
04	Ala	580	R8.4/R14.6	523	853

REGISTERED CIVIL ENGINEER 01/18/12 DATE

5-14-12
PLANS APPROVAL DATE

REGISTERED PROFESSIONAL ENGINEER INES S. LI No. C51561 Exp.6/30/12 CIVIL STATE OF CALIFORNIA

THE STATE OF CALIFORNIA OR ITS OFFICERS OR AGENTS SHALL NOT BE RESPONSIBLE FOR THE ACCURACY OR COMPLETENESS OF SCANNED COPIES OF THIS PLAN SHEET.

BIGGS CARDOSA ASSOCIATES INC.
865 THE ALAMEDA
SAN JOSE, CA 95126

ALAMEDA CTC
1333 BROADWAY, SUITE 220
OAKLAND, CA 94612

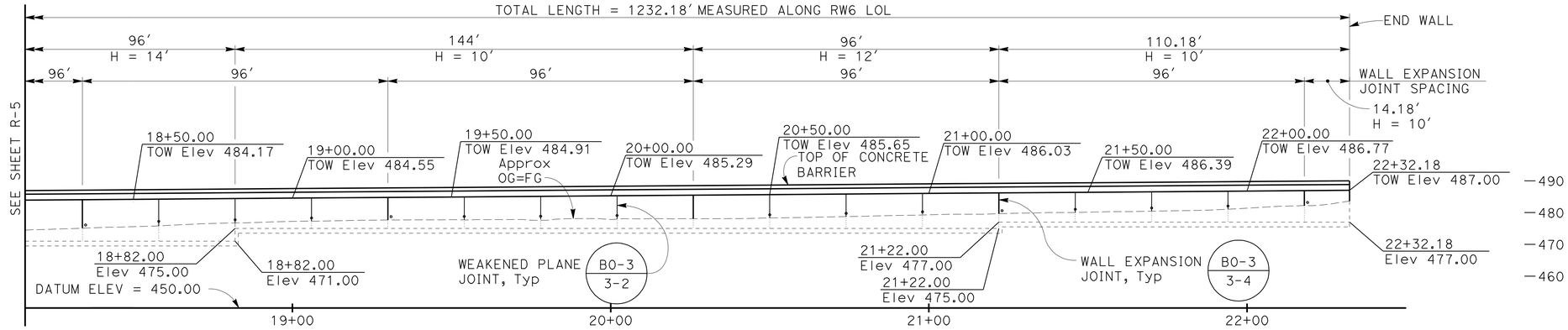

DEVELOPED MIRRORED ELEVATION

SCALE: 1" = 20'

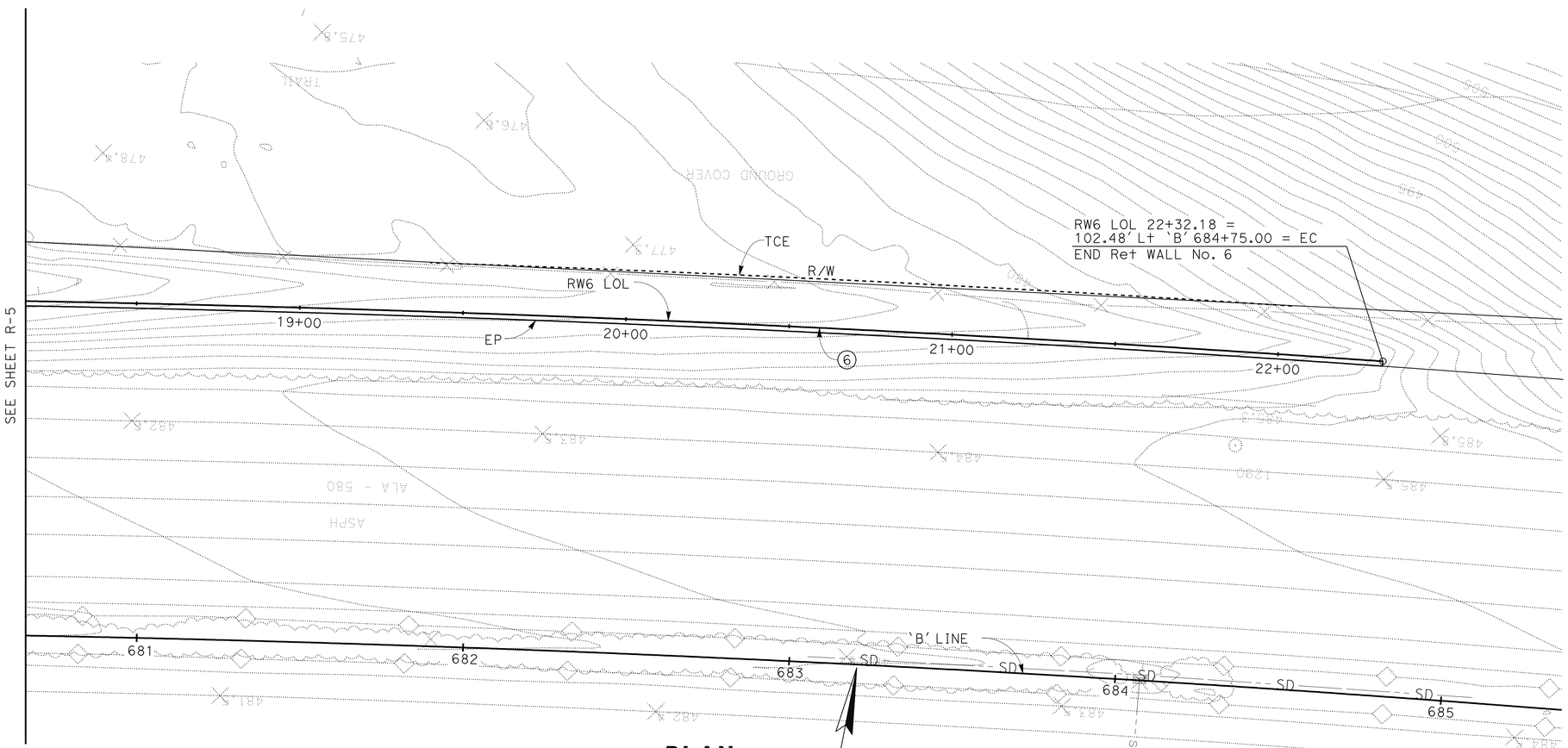

PLAN

SCALE: 1" = 20'

THIS PLAN ACCURATE FOR RETAINING WALL WORK ONLY

RETAINING WALL No. 6
GENERAL PLAN NO. 3

SCALE AS SHOWN

R-6

RSR	01/18/12		
RSR	11/18/11		
REVISED BY	DATE REVISED		
HATEM BEDAIR	INES LI		
CALCULATED-DESIGNED BY	CHECKED BY		
CONSULTANT FUNCTIONAL SUPERVISOR	ROY M. SCHNABEL		

STATE OF CALIFORNIA - DEPARTMENT OF TRANSPORTATION
Caltrans

LAST REVISION 01/18/12
DATE PLOTTED => 23-MAY-2012
TIME PLOTTED => 07:57

2007236 (2007236:C6)

FOR ACCURATE RIGHT OF WAY DATA, CONTACT
RIGHT OF WAY ENGINEERING AT THE DISTRICT OFFICE

Dist	COUNTY	ROUTE	POST MILES TOTAL PROJECT	SHEET No.	TOTAL SHEETS
04	Alg	580	R8.4/R14.6	524	853

REGISTERED CIVIL ENGINEER 01/18/12 DATE

5-14-12
PLANS APPROVAL DATE

REGISTERED PROFESSIONAL ENGINEER INES S. LI No. C51561 Exp.6/30/12 CIVIL STATE OF CALIFORNIA

THE STATE OF CALIFORNIA OR ITS OFFICERS OR AGENTS SHALL NOT BE RESPONSIBLE FOR THE ACCURACY OR COMPLETENESS OF SCANNED COPIES OF THIS PLAN SHEET.

BIGGS CARDOSA ASSOCIATES INC.
865 THE ALAMEDA
SAN JOSE, CA 95126

ALAMEDA CTC
1333 BROADWAY, SUITE 220
OAKLAND, CA 94612

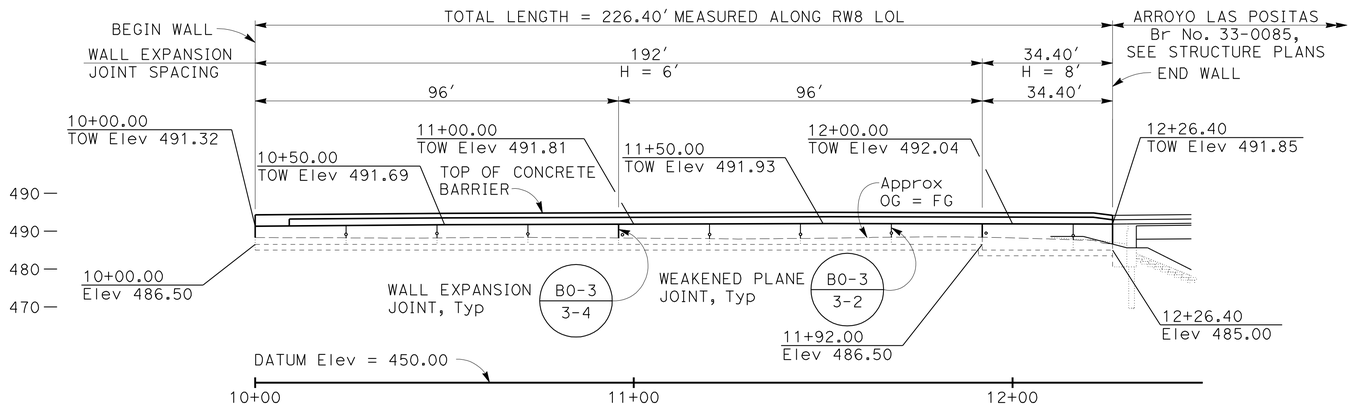

DEVELOPED ELEVATION

SCALE: 1" = 20′

NOTES:

1. TOP OF WALL PROFILES ARE LINEAR BETWEEN POINTS SHOWN UNLESS NOTED OTHERWISE
2. TOP OF FOOTING IS LEVEL, Typ
3. FOR FOOTING STEP DETAIL, SEE B3-8 / -
4. FOR UTILITIES NOT SHOWN, SEE UTILITY PLANS

ABBREVIATION:

TOW TOP OF WALL

CURVE DATA ALONG RW8 LOL				
CURVE	RADIUS	LENGTH	TANGENT	DELTA
8	8102.48	226.40	113.21	01°36′04"

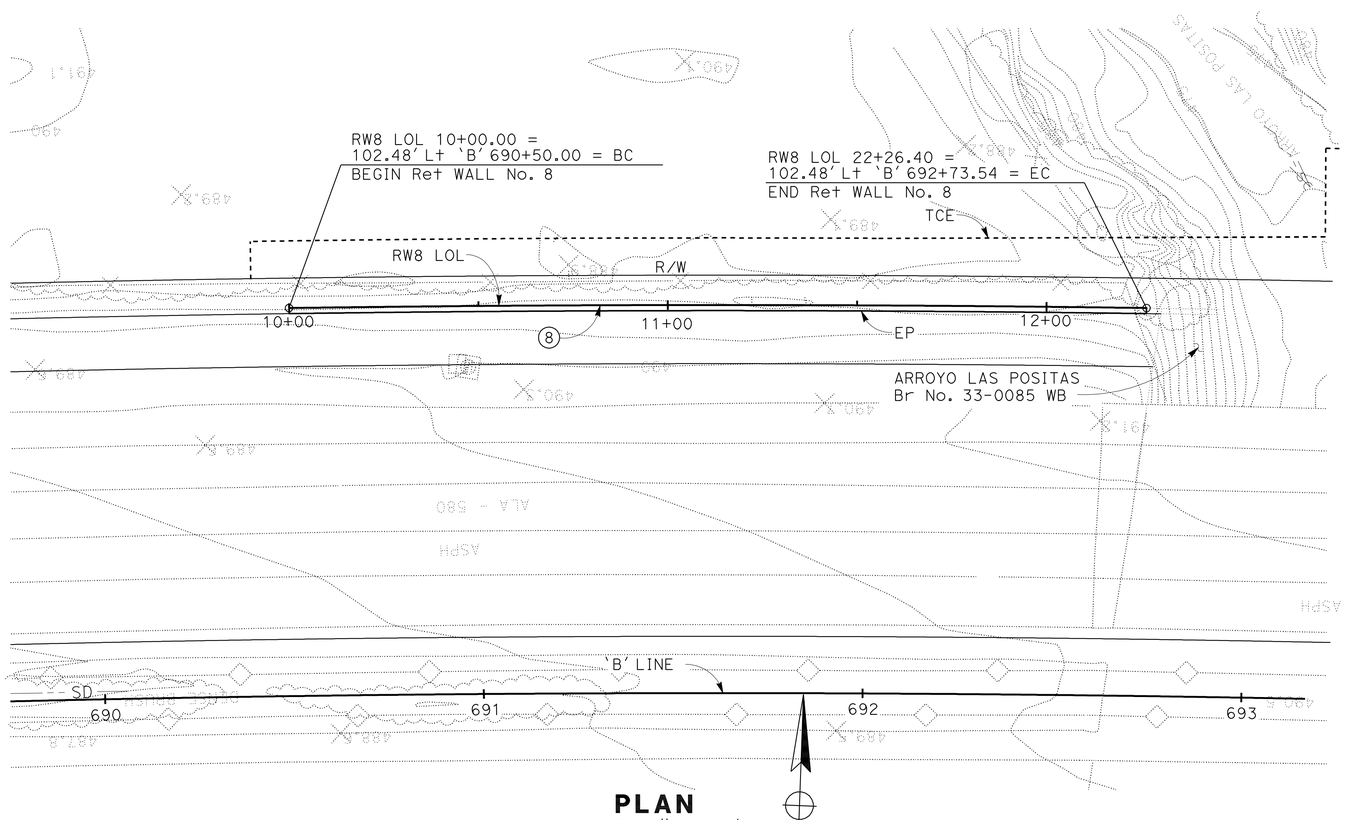

PLAN

SCALE: 1" = 20′

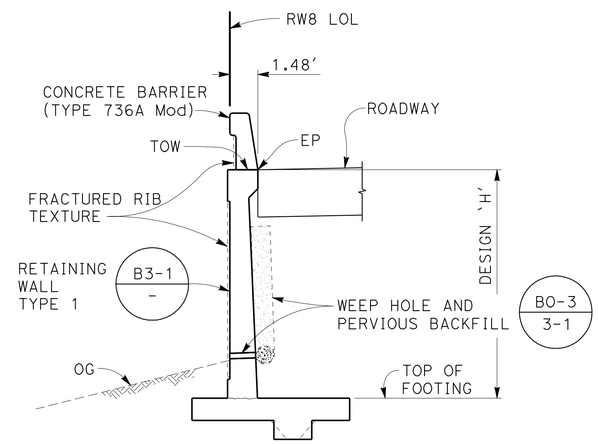

RETAINING WALL No. 8

TYPICAL SECTION

NO SCALE

THIS PLAN ACCURATE FOR RETAINING WALL WORK ONLY

RETAINING WALL No. 8 GENERAL PLAN

SCALE AS SHOWN

R-7

RSR	01/18/12	
RSR	11/18/11	
REVISED BY	DATE REVISED	
HATEM BEDAIR	INES LI	
CALCULATED-DESIGNED BY	CHECKED BY	
CONSULTANT FUNCTIONAL SUPERVISOR	ROY M. SCHNABEL	

STATE OF CALIFORNIA - DEPARTMENT OF TRANSPORTATION

Caltrans

2007236 (2007236ic7)

LAST REVISION 01/18/12 DATE PLOTTED => 23-MAY-2012 TIME PLOTTED => 07:57

Dist	COUNTY	ROUTE	POST MILES TOTAL PROJECT	SHEET No.	TOTAL SHEETS
04	Ala	580	R8.4/R14.6	525	853

REGISTERED CIVIL ENGINEER 01/18/12 DATE

5-14-12
PLANS APPROVAL DATE

REGISTERED PROFESSIONAL ENGINEER INES S. LI No. C51561 Exp.6/30/12 CIVIL STATE OF CALIFORNIA

THE STATE OF CALIFORNIA OR ITS OFFICERS OR AGENTS SHALL NOT BE RESPONSIBLE FOR THE ACCURACY OR COMPLETENESS OF SCANNED COPIES OF THIS PLAN SHEET.

BIGGS CARDOSA ASSOCIATES INC.
865 THE ALAMEDA
SAN JOSE, CA 95126

ALAMEDA CTC
1333 BROADWAY, SUITE 220
OAKLAND, CA 94612

FOR ACCURATE RIGHT OF WAY DATA, CONTACT RIGHT OF WAY ENGINEERING AT THE DISTRICT OFFICE

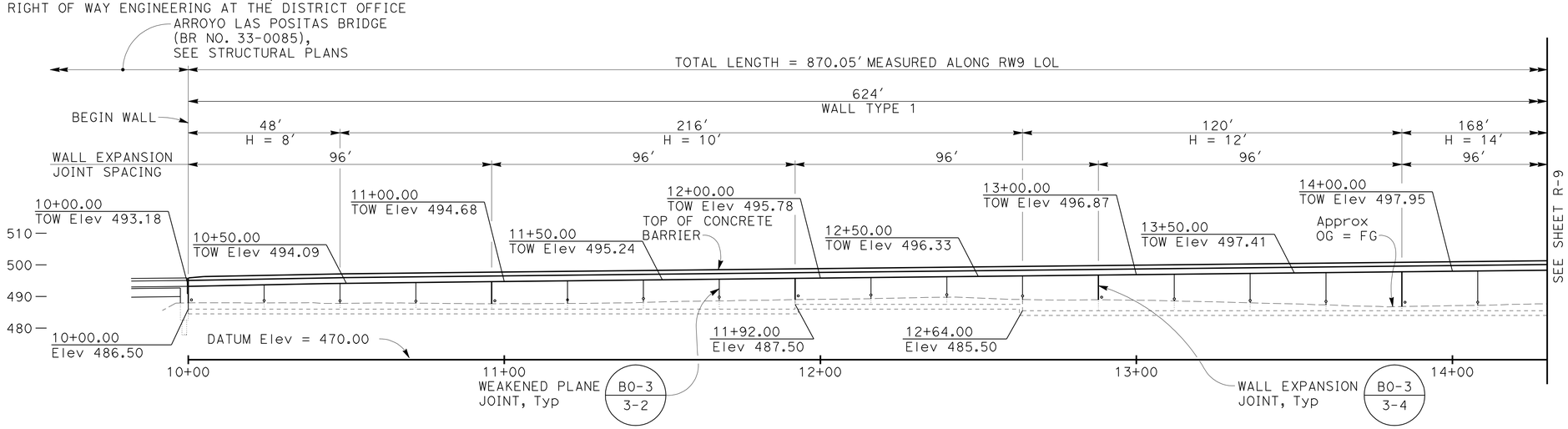

DEVELOPED MIRRORED ELEVATION

SCALE: 1" = 20'

CURVE DATA ALONG RW9 LOL				
CURVE	RADIUS	LENGTH	TANGENT	DELTA
9	8102.48	669.57	334.98	06°09'08"

NOTES:

1. TOP OF WALL PROFILES ARE LINEAR BETWEEN POINTS SHOWN UNLESS NOTED OTHERWISE
2. TOP OF FOOTING IS LEVEL, Typ
3. FOR FOOTING STEP DETAIL, SEE B3-8 / -
4. FOR UTILITIES NOT SHOWN, SEE UTILITY PLANS
5. REMOVE 2' OF SOIL BELOW BOTTOM OF FOOTING AND REPLACE WITH CLASS 2 AGGREGATE BASE FOR H = 14' AND H = 16'
6. REMOVE 3' OF SOIL BELOW BOTTOM OF FOOTING AND REPLACE WITH CLASS 2 AGGREGATE BASE FOR H = 18'

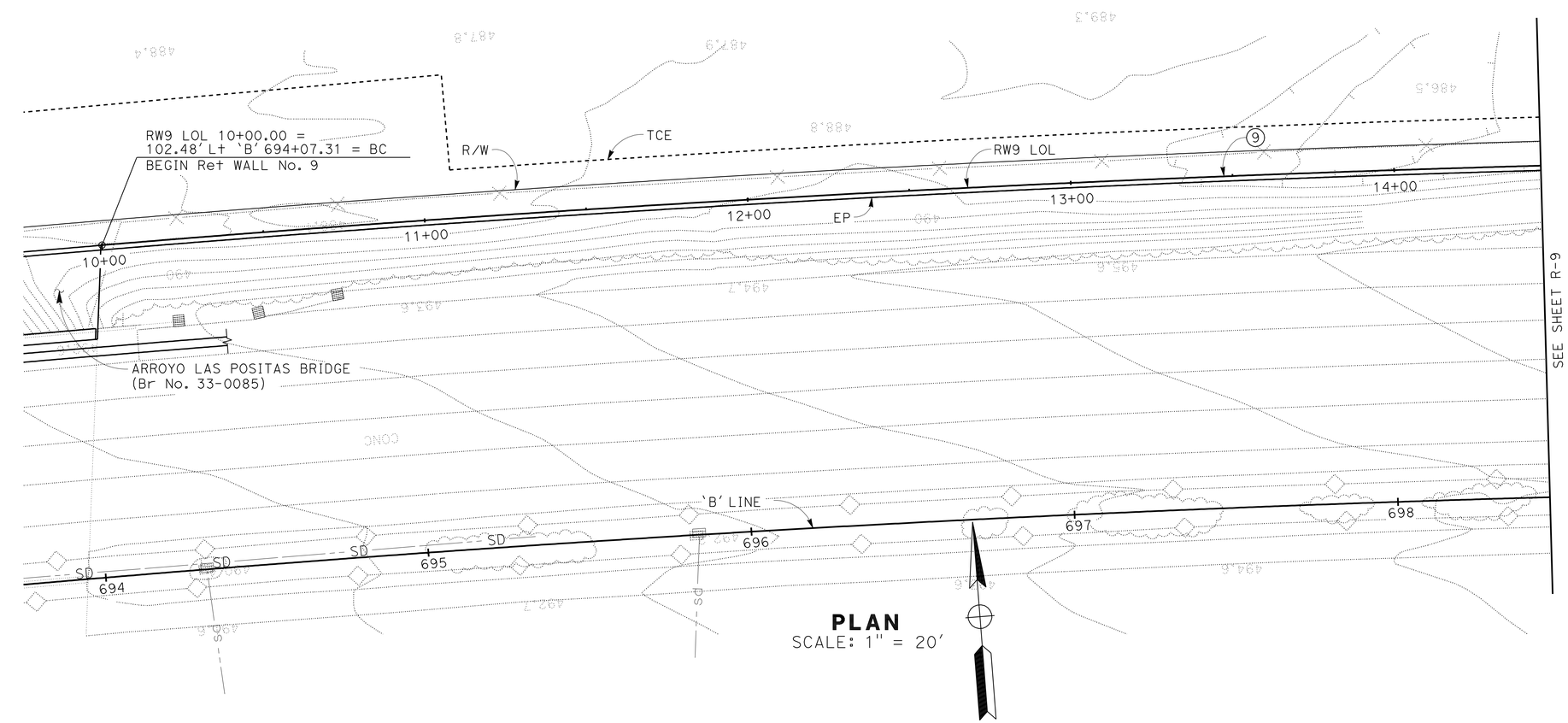

PLAN

SCALE: 1" = 20'

THIS PLAN ACCURATE FOR RETAINING WALL WORK ONLY

ABBREVIATION:

TOW TOP OF WALL

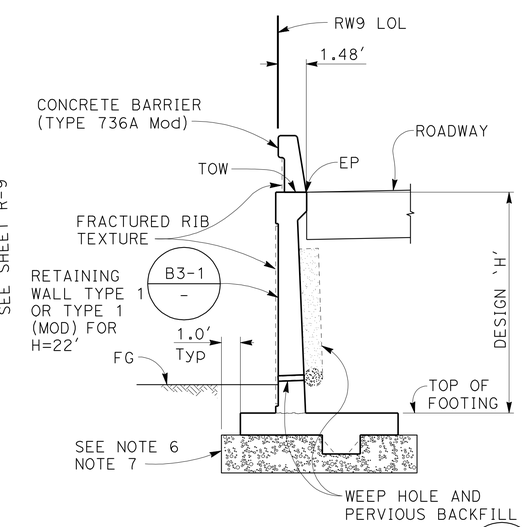

RETAINING WALL No. 9 B0-3 / 3-1

TYPICAL SECTION

NO SCALE

RETAINING WALL No. 9
GENERAL PLAN No. 1

SCALE AS SHOWN

R-8

REVISED BY	DATE REVISED
RSR	01/18/12
RSR	11/18/11

HATEM BEDAIR — INES LI

CALCULATED-DESIGNED BY — CHECKED BY

CONSULTANT FUNCTIONAL SUPERVISOR — ROY M. SCHNABEL

STATE OF CALIFORNIA - DEPARTMENT OF TRANSPORTATION — Caltrans

LAST REVISION 01/18/12 — DATE PLOTTED => 23-MAY-2012 TIME PLOTTED => 07:57

2007236 (2007236ic8)

FOR ACCURATE RIGHT OF WAY DATA, CONTACT
RIGHT OF WAY ENGINEERING AT THE DISTRICT OFFICE

Dist	COUNTY	ROUTE	POST MILES TOTAL PROJECT	SHEET No.	TOTAL SHEETS
04	Ala	580	R8.4/R14.6	526	853

REGISTERED CIVIL ENGINEER 11/18/11 DATE

5-14-12
PLANS APPROVAL DATE

REGISTERED PROFESSIONAL ENGINEER INES S. LI No. C51561 Exp.6/30/12 CIVIL STATE OF CALIFORNIA

THE STATE OF CALIFORNIA OR ITS OFFICERS OR AGENTS SHALL NOT BE RESPONSIBLE FOR THE ACCURACY OR COMPLETENESS OF SCANNED COPIES OF THIS PLAN SHEET.

BIGGS CARDOSA ASSOCIATES INC.
865 THE ALAMEDA
SAN JOSE, CA 95126

ALAMEDA CTC
1333 BROADWAY, SUITE 220
OAKLAND, CA 94612

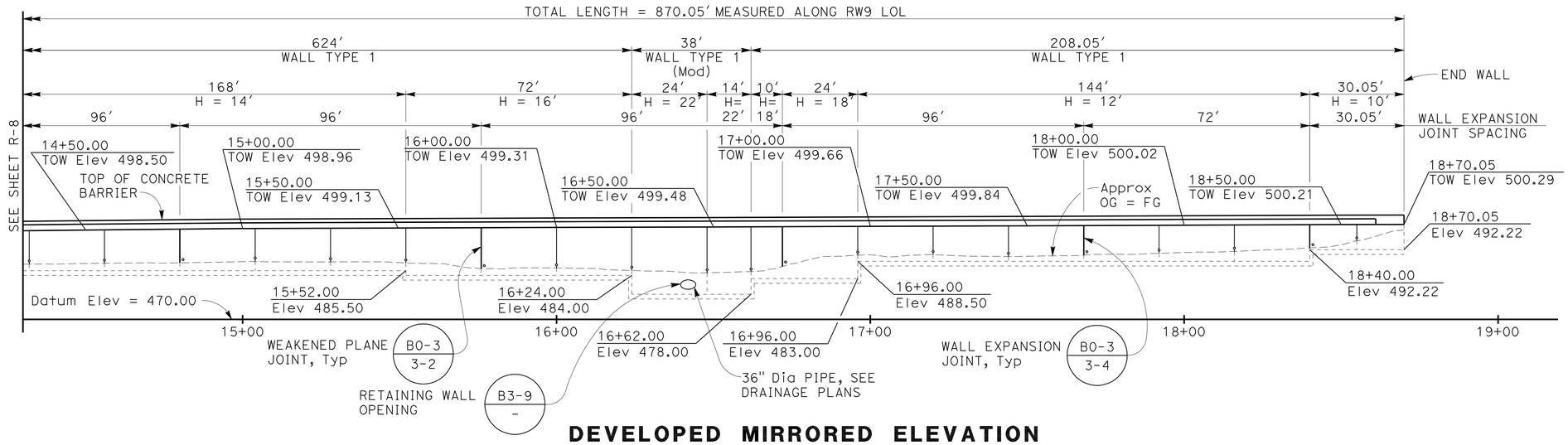

DEVELOPED MIRRORED ELEVATION

SCALE: 1" = 20'

NOTE:

FOR CURVE DATA, SEE "GENERAL PLAN No. 1" SHEET

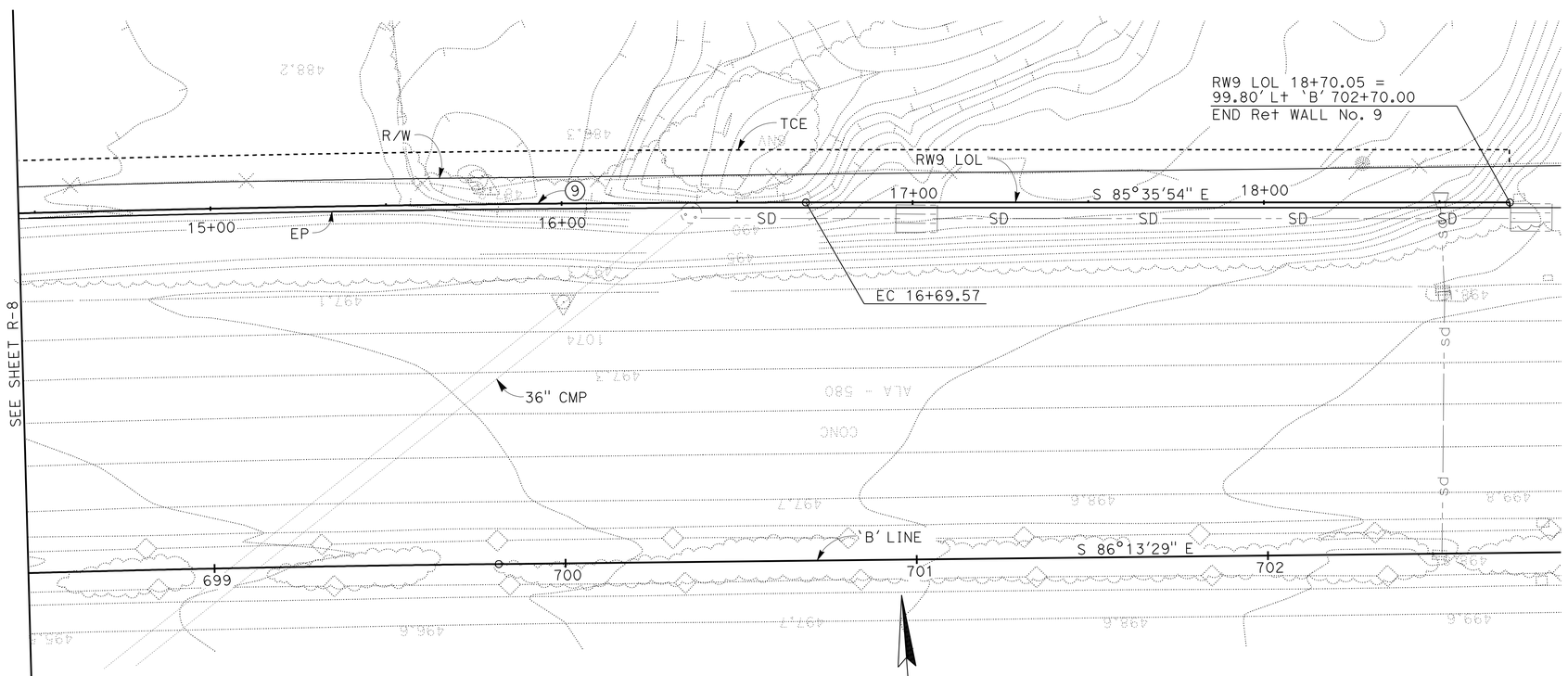

PLAN

SCALE: 1" = 20'

THIS PLAN ACCURATE FOR RETAINING WALL WORK ONLY

RETAINING WALL No. 9
GENERAL PLAN No. 2

SCALE AS SHOWN

R-9

STATE OF CALIFORNIA - DEPARTMENT OF TRANSPORTATION
Caltrans

CONSULTANT FUNCTIONAL SUPERVISOR: ROY M. SCHNABEL
CALCULATED-DESIGNED BY: HATEM BEDAIR
CHECKED BY: INES LI
REVISED BY: RSR
DATE REVISED: 11/18/11

LAST REVISION 11/18/11
DATE PLOTTED => 23-MAY-2012
TIME PLOTTED => 07:57

2007236 (2007236ic9)

FOR ACCURATE RIGHT OF WAY DATA, CONTACT
RIGHT OF WAY ENGINEERING AT THE DISTRICT OFFICE

Dist	COUNTY	ROUTE	POST MILES TOTAL PROJECT	SHEET No.	TOTAL SHEETS
04	Ala	580	R8.4/R14.6	527	853

REGISTERED CIVIL ENGINEER 01/18/12 DATE

5-14-12
PLANS APPROVAL DATE

REGISTERED PROFESSIONAL ENGINEER INES S. LI No. C51561 Exp.6/30/12 CIVIL STATE OF CALIFORNIA

THE STATE OF CALIFORNIA OR ITS OFFICERS OR AGENTS SHALL NOT BE RESPONSIBLE FOR THE ACCURACY OR COMPLETENESS OF SCANNED COPIES OF THIS PLAN SHEET.

BIGGS CARDOSA ASSOCIATES INC.
865 THE ALAMEDA
SAN JOSE, CA 95126

ALAMEDA CTC
1333 BROADWAY, SUITE 220
OAKLAND, CA 94612

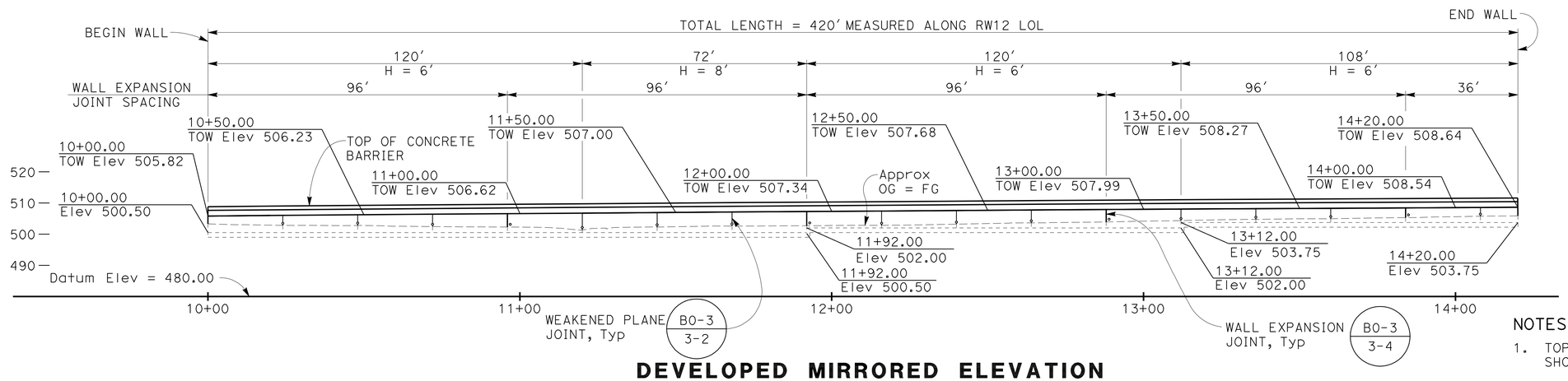

DEVELOPED MIRRORED ELEVATION

SCALE: 1" = 20'

NOTES:

1. TOP OF WALL PROFILES ARE LINEAR BETWEEN POINTS SHOWN UNLESS NOTED OTHERWISE
2. TOP OF FOOTING IS LEVEL, Typ
3. FOR FOOTING STEP DETAIL, SEE B3-8 / -
4. FOR UTILITIES NOT SHOWN, SEE UTILITY PLANS

ABBREVIATION:

TOW TOP OF WALL

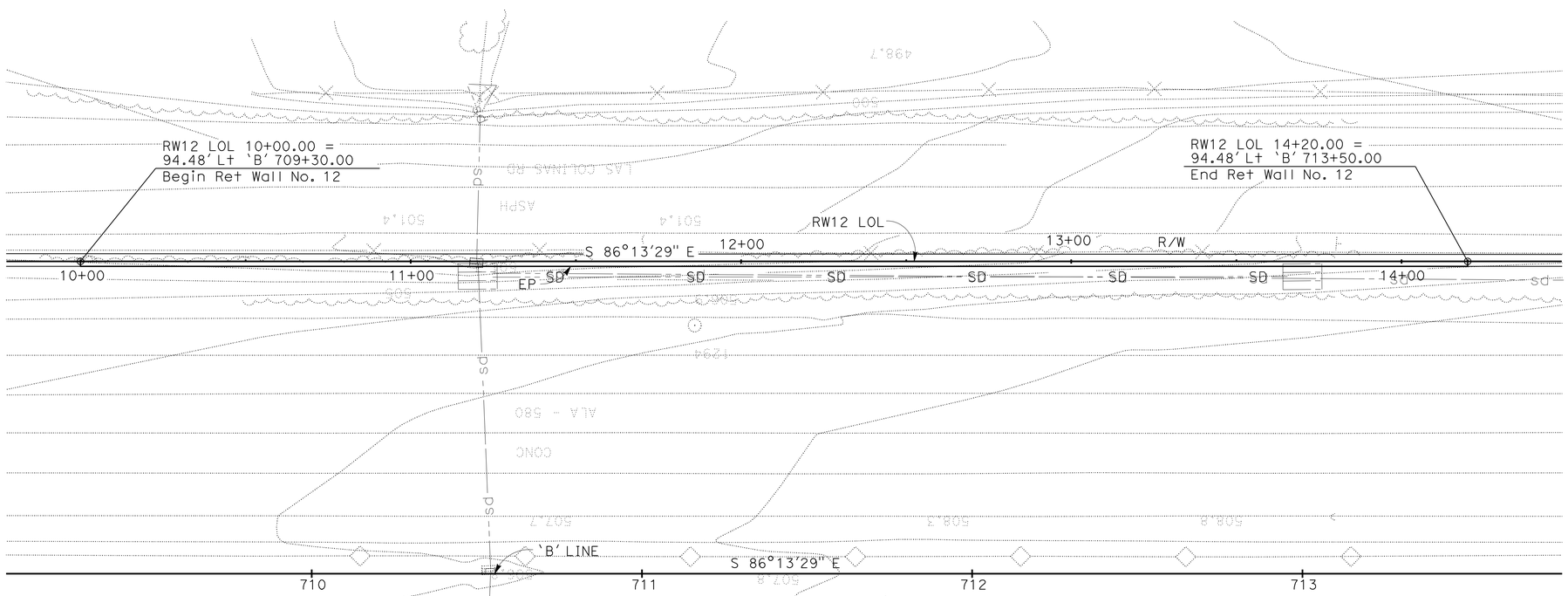

PLAN

SCALE: 1" = 20'

THIS PLAN ACCURATE FOR RETAINING WALL WORK ONLY

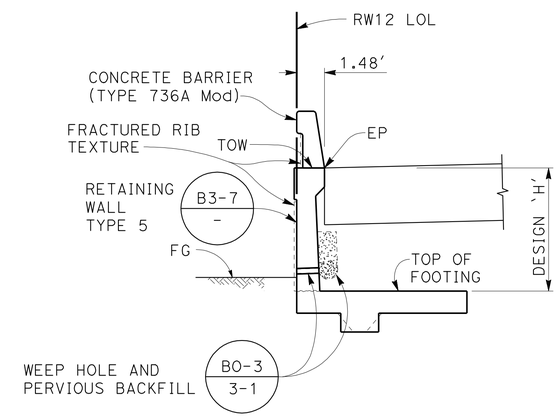

RETAINING WALL No. 12

TYPICAL SECTION

NO SCALE

RETAINING WALL No. 12 GENERAL PLAN

SCALE AS SHOWN

R-10

REVISED BY	DATE REVISED
RSR	01/18/12
RSR	11/18/11

HATEM BEDAIR — INES LI
CALCULATED-DESIGNED BY — CHECKED BY
CONSULTANT FUNCTIONAL SUPERVISOR — ROY M. SCHNABEL

STATE OF CALIFORNIA - DEPARTMENT OF TRANSPORTATION
Caltrans

LAST REVISION 01/18/12 | DATE PLOTTED => 23-MAY-2012 | TIME PLOTTED => 07:57

2007236 (2007236JC10)

FOR ACCURATE RIGHT OF WAY DATA, CONTACT
RIGHT OF WAY ENGINEERING AT THE DISTRICT OFFICE

Dist	COUNTY	ROUTE	POST MILES TOTAL PROJECT	SHEET No.	TOTAL SHEETS
04	Ala	580	R8.4/R14.6	528	853

REGISTERED CIVIL ENGINEER 01/18/12 DATE

5-14-12
PLANS APPROVAL DATE

REGISTERED PROFESSIONAL ENGINEER INES S. LI No. C51561 Exp.6/30/12 CIVIL STATE OF CALIFORNIA

THE STATE OF CALIFORNIA OR ITS OFFICERS OR AGENTS SHALL NOT BE RESPONSIBLE FOR THE ACCURACY OR COMPLETENESS OF SCANNED COPIES OF THIS PLAN SHEET.

BIGGS CARDOSA ASSOCIATES INC.
865 THE ALAMEDA
SAN JOSE, CA 95126

ALAMEDA CTC
1333 BROADWAY, SUITE 220
OAKLAND, CA 94612

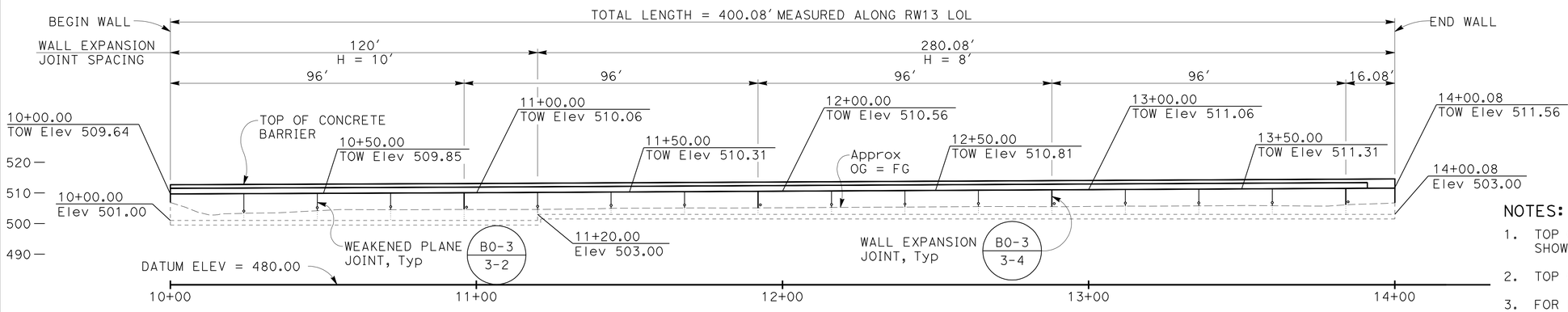

DEVELOPED MIRRORED ELEVATION

SCALE: 1" = 20'

NOTES:

1. TOP OF WALL PROFILES ARE LINEAR BETWEEN POINTS SHOWN UNLESS NOTED OTHERWISE
2. TOP OF FOOTING IS LEVEL, Typ
3. FOR FOOTING STEP DETAIL, SEE B3-8 / -
4. FOR UTILITIES NOT SHOWN, SEE UTILITY PLANS

ABBREVIATION:

TOW TOP OF WALL

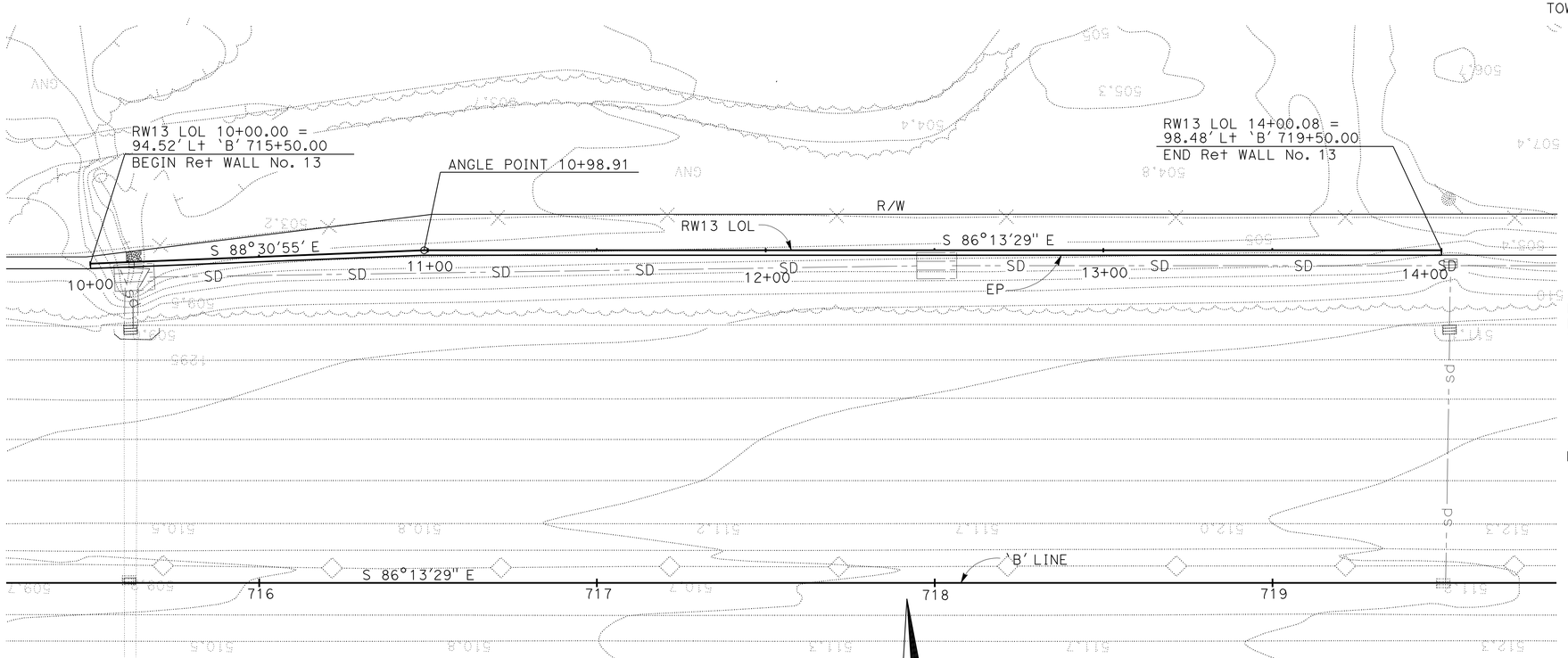

PLAN

SCALE: 1" = 20'

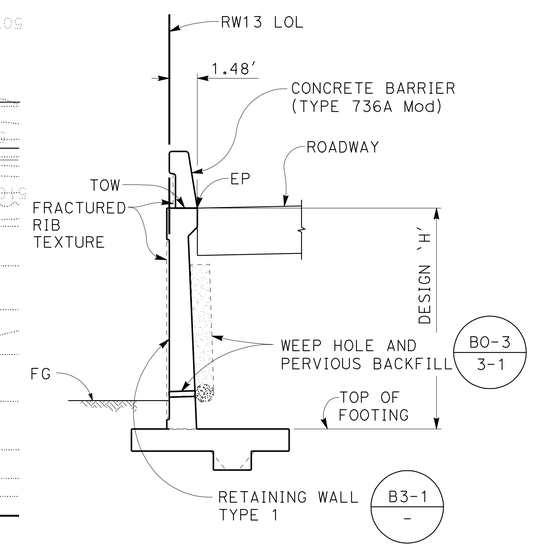

RETAINING WALL No. 13

TYPICAL SECTION

NO SCALE

THIS PLAN ACCURATE FOR RETAINING WALL WORK ONLY

RETAINING WALL No. 13
GENERAL PLAN

SCALE AS SHOWN

R-11

RSR	01/18/12
RSR	11/18/11
REVISED BY	DATE REVISED
HATEM BEDAIR	INES LI
CALCULATED-DESIGNED BY	CHECKED BY
CONSULTANT FUNCTIONAL SUPERVISOR	ROY M. SCHNABEL

STATE OF CALIFORNIA - DEPARTMENT OF TRANSPORTATION

Caltrans

2007236 (2007236JC11)

DATE PLOTTED => 23-MAY-2012
TIME PLOTTED => 07:57

LAST REVISION 01/18/12

FOR ACCURATE RIGHT OF WAY DATA, CONTACT
RIGHT OF WAY ENGINEERING AT THE DISTRICT OFFICE

Dist	COUNTY	ROUTE	POST MILES TOTAL PROJECT	SHEET No.	TOTAL SHEETS
04	Alg	580	R8.4/R14.6	529	853

REGISTERED CIVIL ENGINEER 01/18/12 DATE

5-14-12
PLANS APPROVAL DATE

REGISTERED PROFESSIONAL ENGINEER INES S. LI No. C51561 Exp.6/30/12 CIVIL STATE OF CALIFORNIA

THE STATE OF CALIFORNIA OR ITS OFFICERS OR AGENTS SHALL NOT BE RESPONSIBLE FOR THE ACCURACY OR COMPLETENESS OF SCANNED COPIES OF THIS PLAN SHEET.

BIGGS CARDOSA ASSOCIATES INC.
865 THE ALAMEDA
SAN JOSE, CA 95126

ALAMEDA CTC
1333 BROADWAY, SUITE 220
OAKLAND, CA 94612

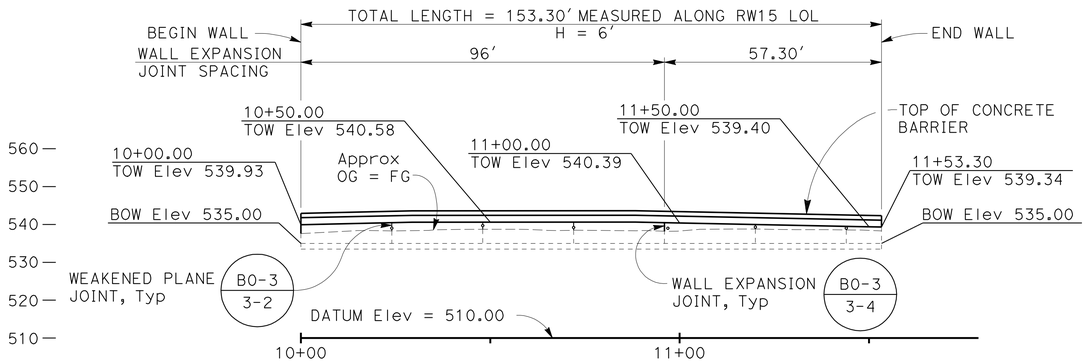

DEVELOPED MIRRORED ELEVATION

SCALE: 1" = 20'

NOTES:

1. TOP OF WALL PROFILES ARE LINEAR BETWEEN POINTS SHOWN UNLESS NOTED OTHERWISE
2. TOP OF FOOTING IS LEVEL, Typ
3. FOR UTILITIES NOT SHOWN, SEE UTILITY PLANS

ABBREVIATION:

TOW TOP OF WALL

CURVE DATA ALONG RW15 LOL				
CURVE	RADIUS	LENGTH	TANGENT	DELTA
15A	283.48	96.54	48.74	19°30'43"
15B	295.48	56.76	28.47	11°00'25"

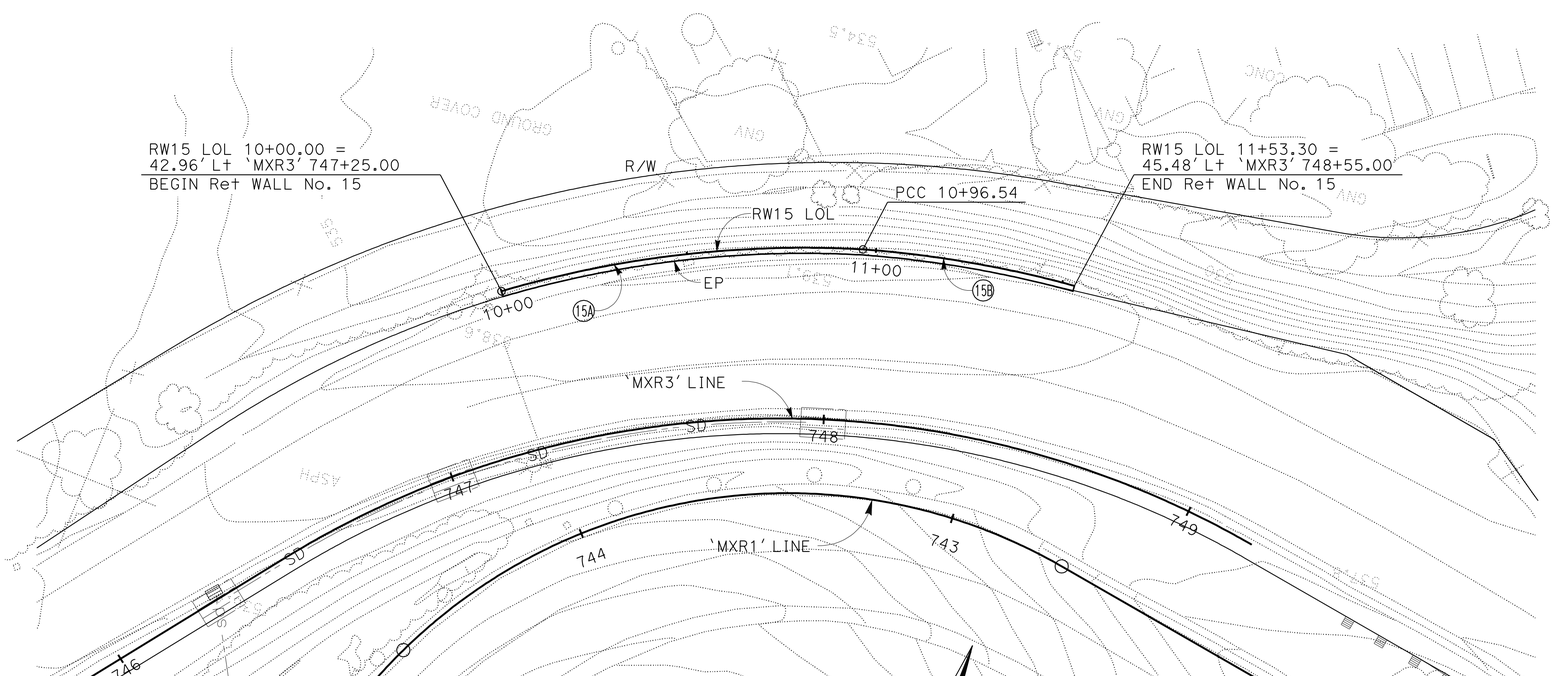

PLAN

SCALE: 1" = 20'

THIS PLAN ACCURATE FOR RETAINING WALL WORK ONLY

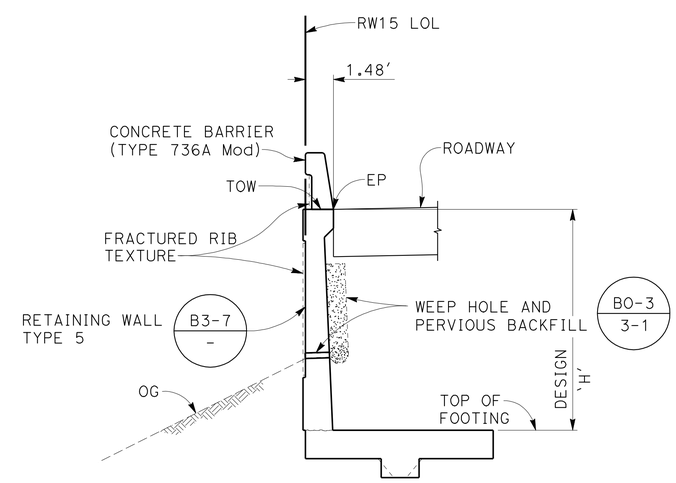

RETAINING WALL No. 15

TYPICAL SECTION

NO SCALE

RETAINING WALL No. 15
GENERAL PLAN

SCALE AS SHOWN

R-12

RSR	01/18/12
RSR	11/18/11
REVISED BY	DATE REVISED
HATEM BEDAIR	INES LI
CALCULATED-DESIGNED BY	CHECKED BY
CONSULTANT FUNCTIONAL SUPERVISOR	ROY M. SCHNABEL

STATE OF CALIFORNIA - DEPARTMENT OF TRANSPORTATION
Caltrans

2007236

LAST REVISION 01/18/12
DATE PLOTTED => 23-MAY-2012
TIME PLOTTED => 07:57

FOR ACCURATE RIGHT OF WAY DATA, CONTACT
RIGHT OF WAY ENGINEERING AT THE DISTRICT OFFICE

Dist	COUNTY	ROUTE	POST MILES TOTAL PROJECT	SHEET No.	TOTAL SHEETS
04	Alg	580	R8.4/R14.6	530	853

REGISTERED CIVIL ENGINEER 01/18/12 DATE

5-14-12
PLANS APPROVAL DATE

REGISTERED PROFESSIONAL ENGINEER INES S. LI No. C51561 Exp.6/30/12 CIVIL STATE OF CALIFORNIA

THE STATE OF CALIFORNIA OR ITS OFFICERS OR AGENTS SHALL NOT BE RESPONSIBLE FOR THE ACCURACY OR COMPLETENESS OF SCANNED COPIES OF THIS PLAN SHEET.

BIGGS CARDOSA ASSOCIATES INC.
865 THE ALAMEDA
SAN JOSE, CA 95126

ALAMEDA CTC
1333 BROADWAY, SUITE 220
OAKLAND, CA 94612

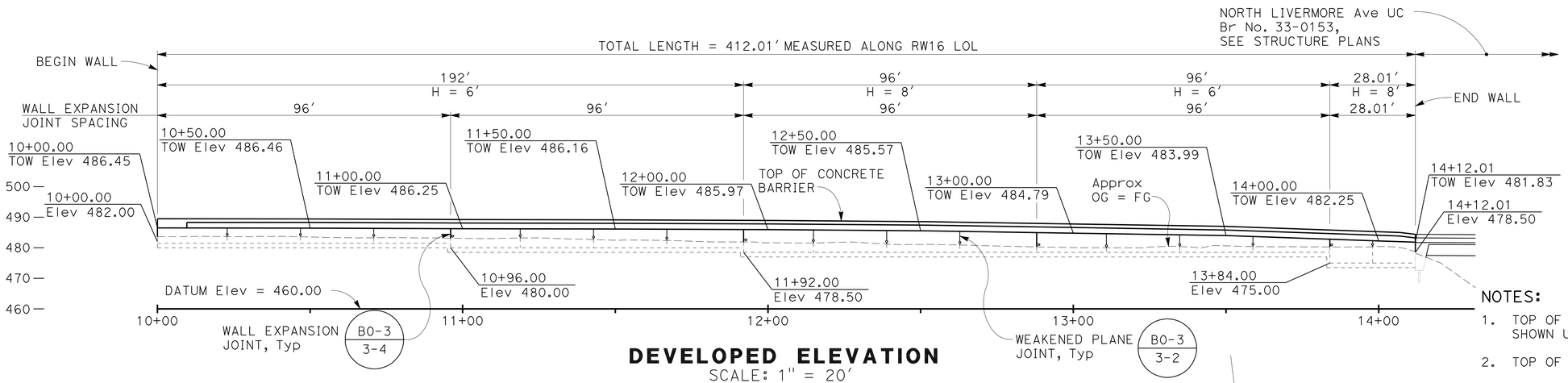

DEVELOPED ELEVATION
SCALE: 1" = 20'

NOTES:

1. TOP OF WALL PROFILES ARE LINEAR BETWEEN POINTS SHOWN UNLESS NOTED OTHERWISE
2. TOP OF FOOTING IS LEVEL, Typ
3. FOR FOOTING STEP DETAIL, SEE B3-8 / -
4. FOR UTILITIES NOT SHOWN, SEE UTILITY PLANS

ABBREVIATION:

TOW TOP OF WALL

CURVE CURVE	RADIUS	LENGTH	TANGENT	DELTA
16	10090.48	311.00	155.51	01°45'57"

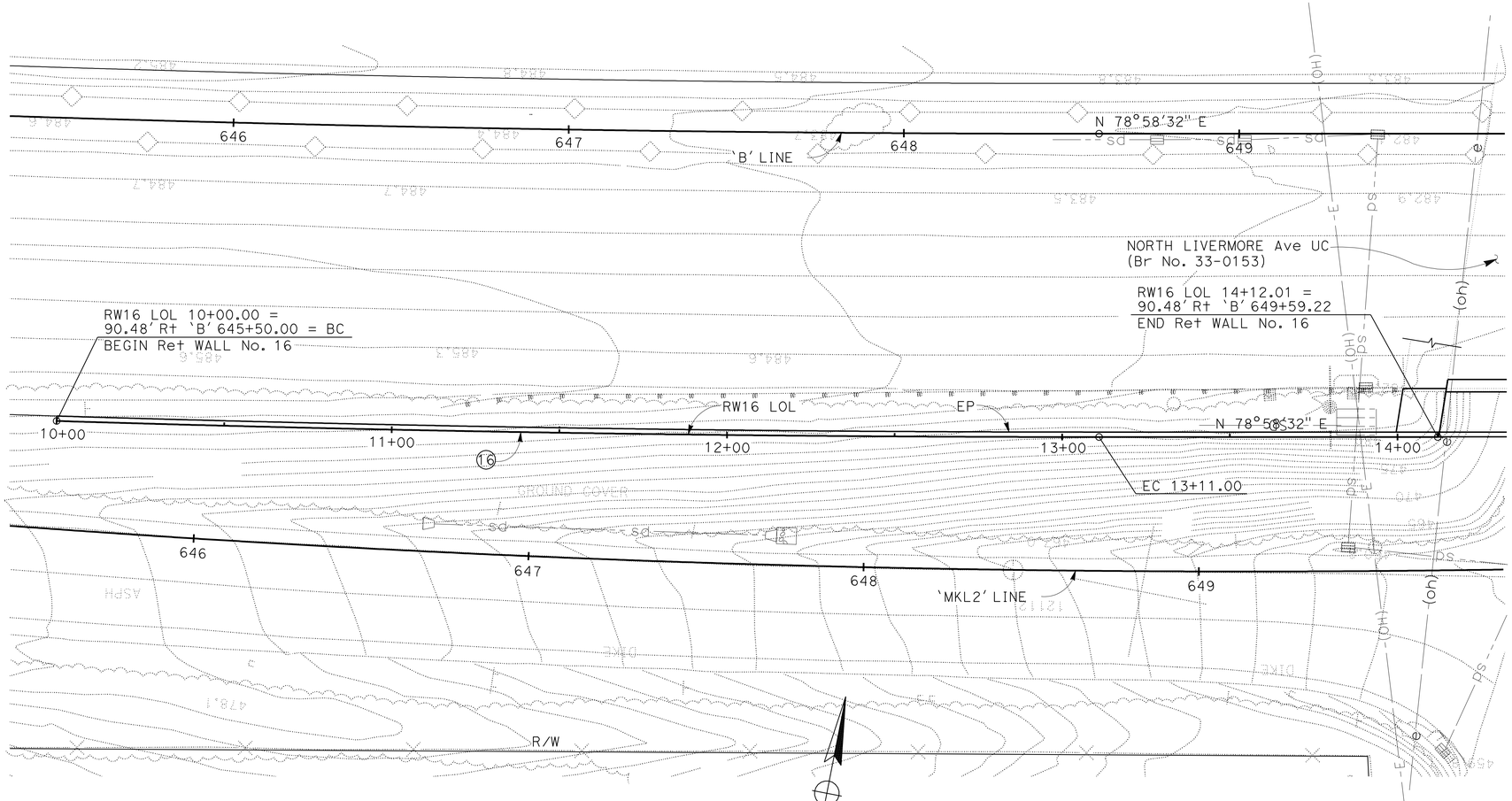

PLAN
SCALE: 1" = 20'

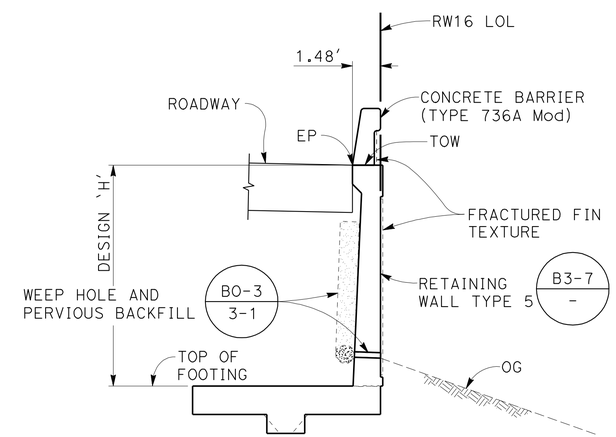

RETAINING WALL No. 16
TYPICAL SECTION
NO SCALE

THIS PLAN ACCURATE FOR RETAINING WALL WORK ONLY

RETAINING WALL No. 16
GENERAL PLAN
SCALE AS SHOWN

R-13

STATE OF CALIFORNIA - DEPARTMENT OF TRANSPORTATION
Caltrans

CONSULTANT FUNCTIONAL SUPERVISOR: ROY M. SCHNABEL

CALCULATED-DESIGNED BY: HATEM BEDAIR
CHECKED BY: INES LI

REVISED BY: RSR, RSR
DATE REVISED: 01/18/12, 11/18/11

2007236 (2007236jc13)

LAST REVISION 01/18/12
DATE PLOTTED => 23-MAY-2012
TIME PLOTTED => 07:58

FOR ACCURATE RIGHT OF WAY DATA, CONTACT
RIGHT OF WAY ENGINEERING AT THE DISTRICT OFFICE

Dist	COUNTY	ROUTE	POST MILES TOTAL PROJECT	SHEET No.	TOTAL SHEETS
04	Alg	580	R8.4/R14.6	531	853

REGISTERED CIVIL ENGINEER 01/18/12 DATE

5-14-12
PLANS APPROVAL DATE

REGISTERED PROFESSIONAL ENGINEER INES S. LI No. C51561 Exp.6/30/12 CIVIL STATE OF CALIFORNIA

THE STATE OF CALIFORNIA OR ITS OFFICERS OR AGENTS SHALL NOT BE RESPONSIBLE FOR THE ACCURACY OR COMPLETENESS OF SCANNED COPIES OF THIS PLAN SHEET.

BIGGS CARDOSA ASSOCIATES INC.
865 THE ALAMEDA
SAN JOSE, CA 95126

ALAMEDA CTC
1333 BROADWAY, SUITE 220
OAKLAND, CA 94612

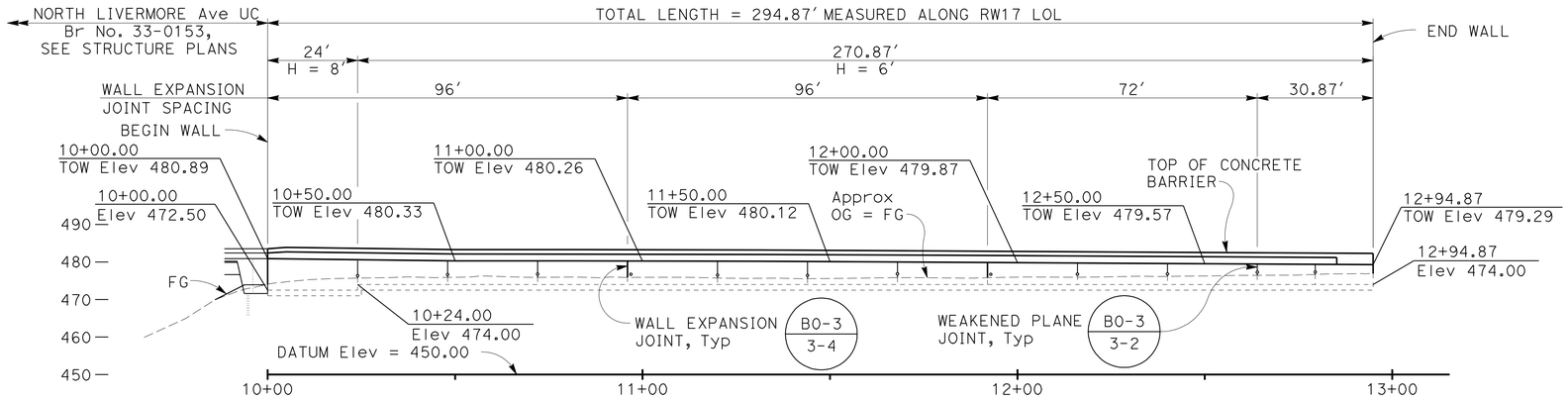

DEVELOPED ELEVATION

SCALE: 1" = 20'

NOTES:

1. TOP OF WALL PROFILES ARE LINEAR BETWEEN POINTS SHOWN UNLESS NOTED OTHERWISE
2. TOP OF FOOTING IS LEVEL, Typ
3. FOR FOOTING STEP DETAIL, SEE B3-8 / -
4. FOR UTILITIES NOT SHOWN, SEE UTILITY PLANS
5. REMOVE 2' OF SOIL BELOW BOTTOM OF FOOTING AND REPLACE WITH CLASS 2 AGGREGATE BASE

ABBREVIATION:

TOW TOP OF WALL

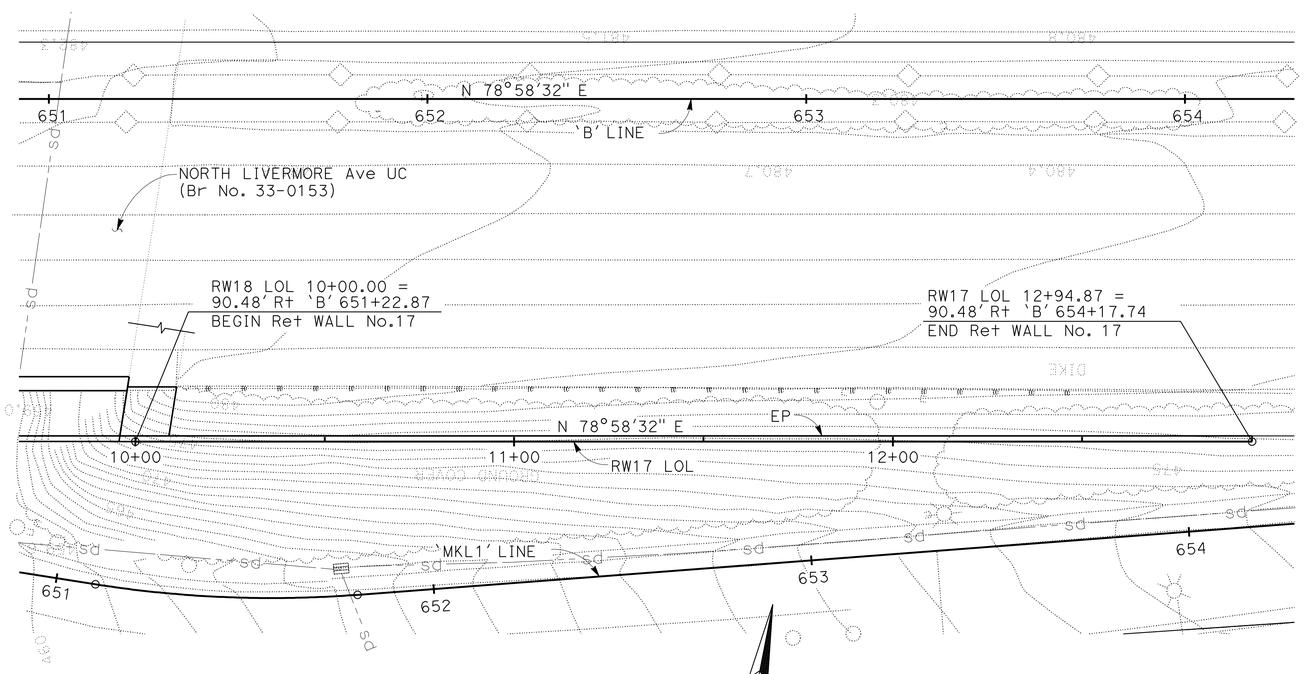

PLAN

SCALE: 1" = 20'

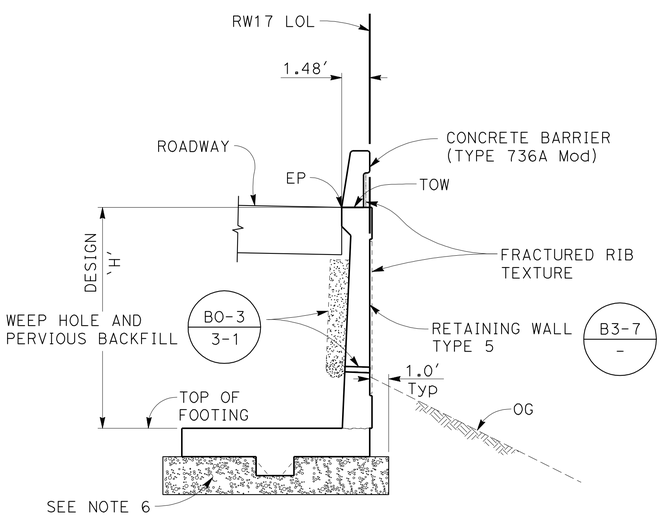

RETAINING WALL No. 17

TYPICAL SECTION

NO SCALE

THIS PLAN ACCURATE FOR RETAINING WALL WORK ONLY

RETAINING WALL No. 17
GENERAL PLAN

SCALE AS SHOWN

R-14

REVISED BY	DATE REVISED
RSR	01/18/12
RSR	11/18/11

HATEM BEDAIR — INES LI
CALCULATED-DESIGNED BY — CHECKED BY
CONSULTANT FUNCTIONAL SUPERVISOR — ROY M. SCHNABEL

STATE OF CALIFORNIA - DEPARTMENT OF TRANSPORTATION
Caltrans

2007236 (2007236JC14)

LAST REVISION 01/18/12 — DATE PLOTTED => 23-MAY-2012 — TIME PLOTTED => 07:58

FOR ACCURATE RIGHT OF WAY DATA, CONTACT
RIGHT OF WAY ENGINEERING AT THE DISTRICT OFFICE

Dist	COUNTY	ROUTE	POST MILES TOTAL PROJECT	SHEET No.	TOTAL SHEETS
04	Ala	580	R8.4/R14.6	532	853

REGISTERED CIVIL ENGINEER 01/18/12 DATE

5-14-12
PLANS APPROVAL DATE

REGISTERED PROFESSIONAL ENGINEER INES S. LI No. C51561 Exp.6/30/12 CIVIL STATE OF CALIFORNIA

THE STATE OF CALIFORNIA OR ITS OFFICERS OR AGENTS SHALL NOT BE RESPONSIBLE FOR THE ACCURACY OR COMPLETENESS OF SCANNED COPIES OF THIS PLAN SHEET.

BIGGS CARDOSA ASSOCIATES INC.
865 THE ALAMEDA
SAN JOSE, CA 95126

ALAMEDA CTC
1333 BROADWAY, SUITE 220
OAKLAND, CA 94612

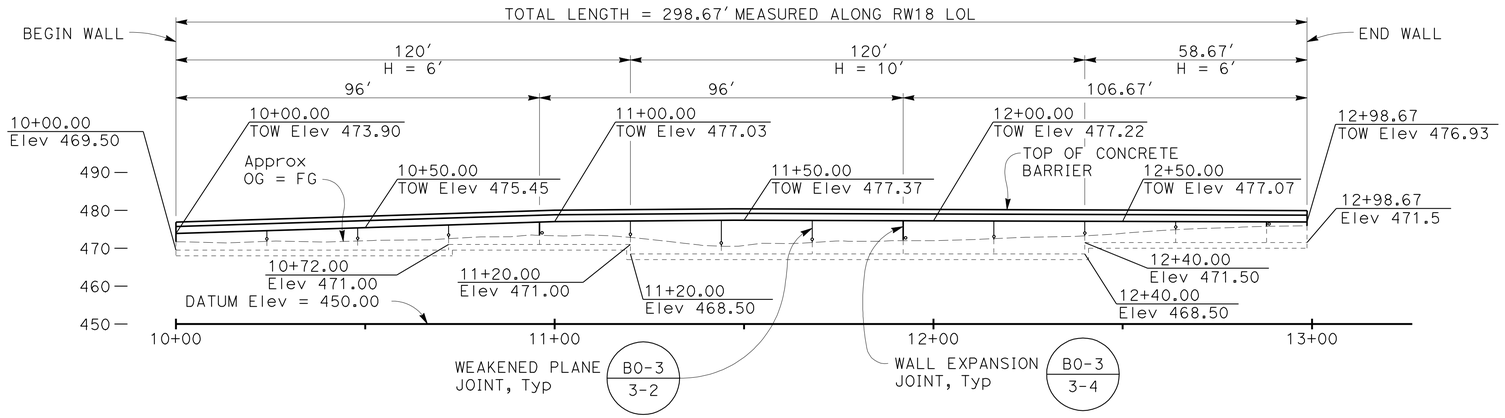

DEVELOPED ELEVATION

SCALE: 1" = 20'

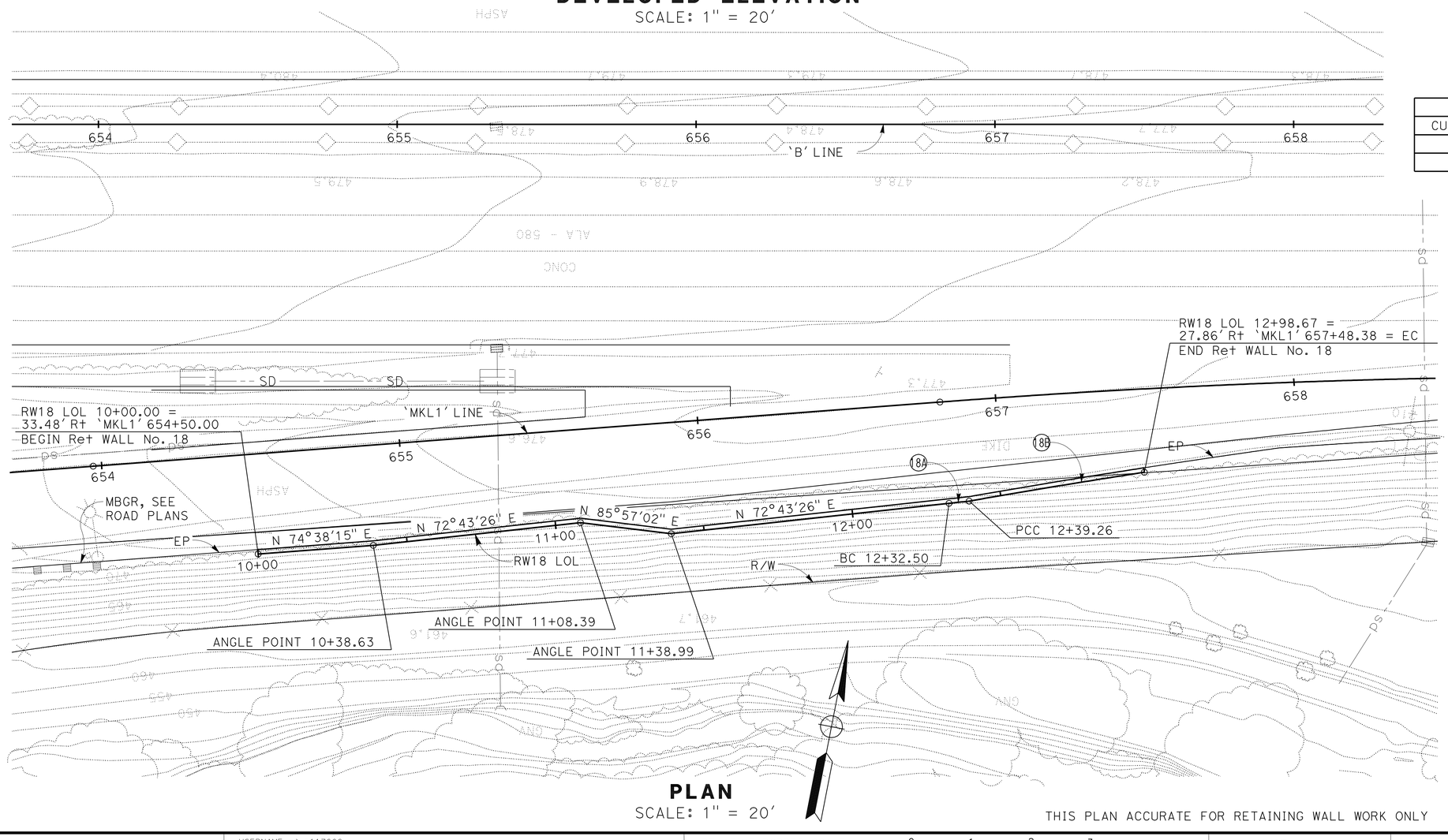

PLAN

SCALE: 1" = 20'

THIS PLAN ACCURATE FOR RETAINING WALL WORK ONLY

NOTES:

1. TOP OF WALL PROFILES ARE LINEAR BETWEEN POINTS SHOWN UNLESS NOTED OTHERWISE
2. TOP OF FOOTING IS LEVEL, Typ
3. FOR FOOTING STEP DETAIL, SEE B3-8 / -
4. FOR UTILITIES NOT SHOWN, SEE UTILITY PLANS

ABBREVIATION:

TOW TOP OF WALL

CURVE DATA ALONG RW18 LOL				
CURVE	RADIUS	LENGTH	TANGENT	DELTA
18A	2971.52	6.76	3.38	00°07'49"
18B	2978.52	59.41	29.71	01°08'34"

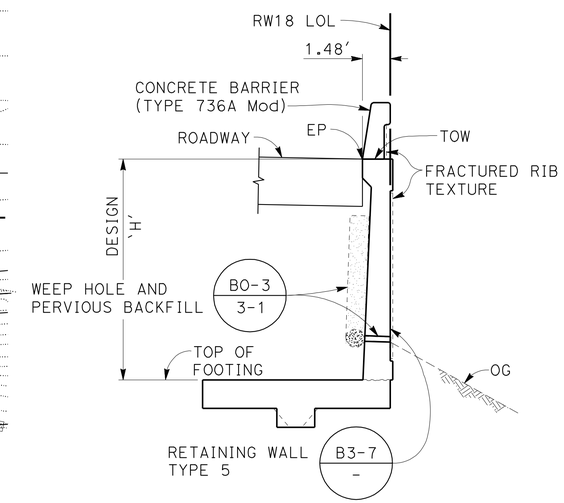

RETAINING WALL No. 18
TYPICAL SECTION
NO SCALE

RETAINING WALL No. 18 GENERAL PLAN

SCALE AS SHOWN

R-15

REVISED BY	DATE REVISED
RSR	01/18/12
RSR	11/18/11

CALCULATED-DESIGNED BY: HATEM BEDAIR
CHECKED BY: INES LI
CONSULTANT FUNCTIONAL SUPERVISOR: ROY M. SCHNABEL

STATE OF CALIFORNIA - DEPARTMENT OF TRANSPORTATION
Caltrans

LAST REVISION 01/18/12
DATE PLOTTED => 23-MAY-2012
TIME PLOTTED => 07:58
2007236 (2007236JG15)

FOR ACCURATE RIGHT OF WAY DATA, CONTACT
RIGHT OF WAY ENGINEERING AT THE DISTRICT OFFICE

Dist	COUNTY	ROUTE	POST MILES TOTAL PROJECT	SHEET No.	TOTAL SHEETS
04	Alg	580	R8.4/R14.6	533	853

REGISTERED CIVIL ENGINEER 01/18/12 DATE

5-14-12
PLANS APPROVAL DATE

REGISTERED PROFESSIONAL ENGINEER INES S. LI No. C51561 Exp. 6/30/12 CIVIL STATE OF CALIFORNIA

THE STATE OF CALIFORNIA OR ITS OFFICERS OR AGENTS SHALL NOT BE RESPONSIBLE FOR THE ACCURACY OR COMPLETENESS OF SCANNED COPIES OF THIS PLAN SHEET.

BIGGS CARDOSA ASSOCIATES INC.
865 THE ALAMEDA
SAN JOSE, CA 95126

ALAMEDA CTC
1333 BROADWAY, SUITE 220
OAKLAND, CA 94612

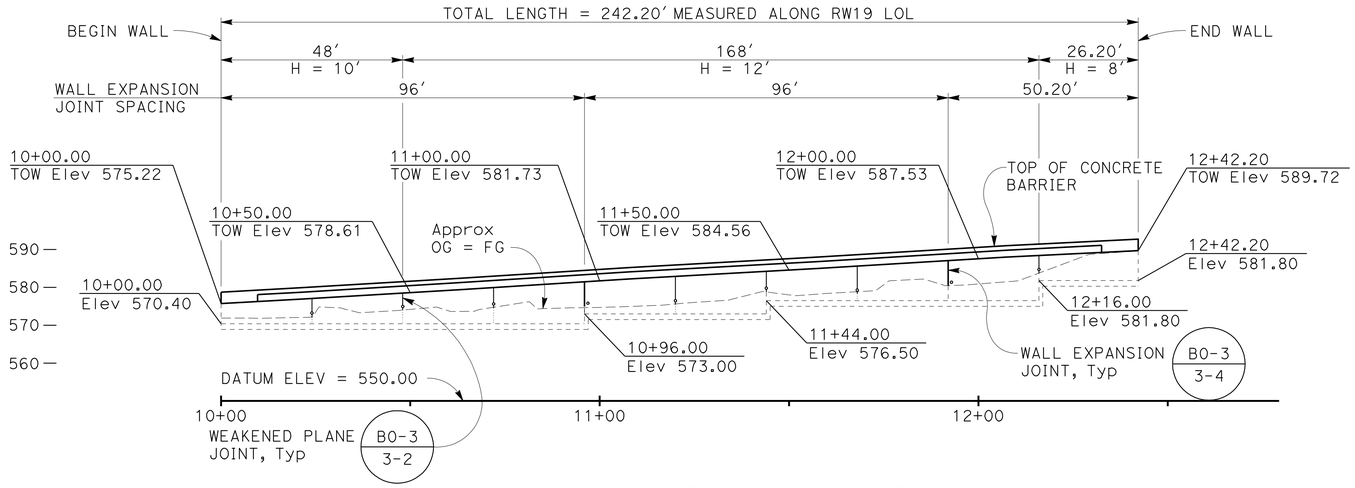

DEVELOPED MIRRORED ELEVATION

SCALE: 1" = 20′

NOTES:

1. TOP OF WALL PROFILES ARE LINEAR BETWEEN POINTS SHOWN UNLESS NOTED OTHERWISE
2. TOP OF FOOTING IS LEVEL, Typ
3. FOR FOOTING STEP DETAIL, SEE B3-8 / -
4. FOR UTILITIES NOT SHOWN, SEE UTILITY PLANS

ABBREVIATION:

TOW TOP OF WALL

CURVE DATA ALONG RW19 LOL				
CURVE	RADIUS	LENGTH	TANGENT	DELTA
19A	150.02	49.58	25.02	18°56′08″
19B	223.52	18.54	9.28	04°45′10″
19C	3283.52	48.69	24.35	00°50′59″
19D	3290.52	92.95	53.11	01°50′59″

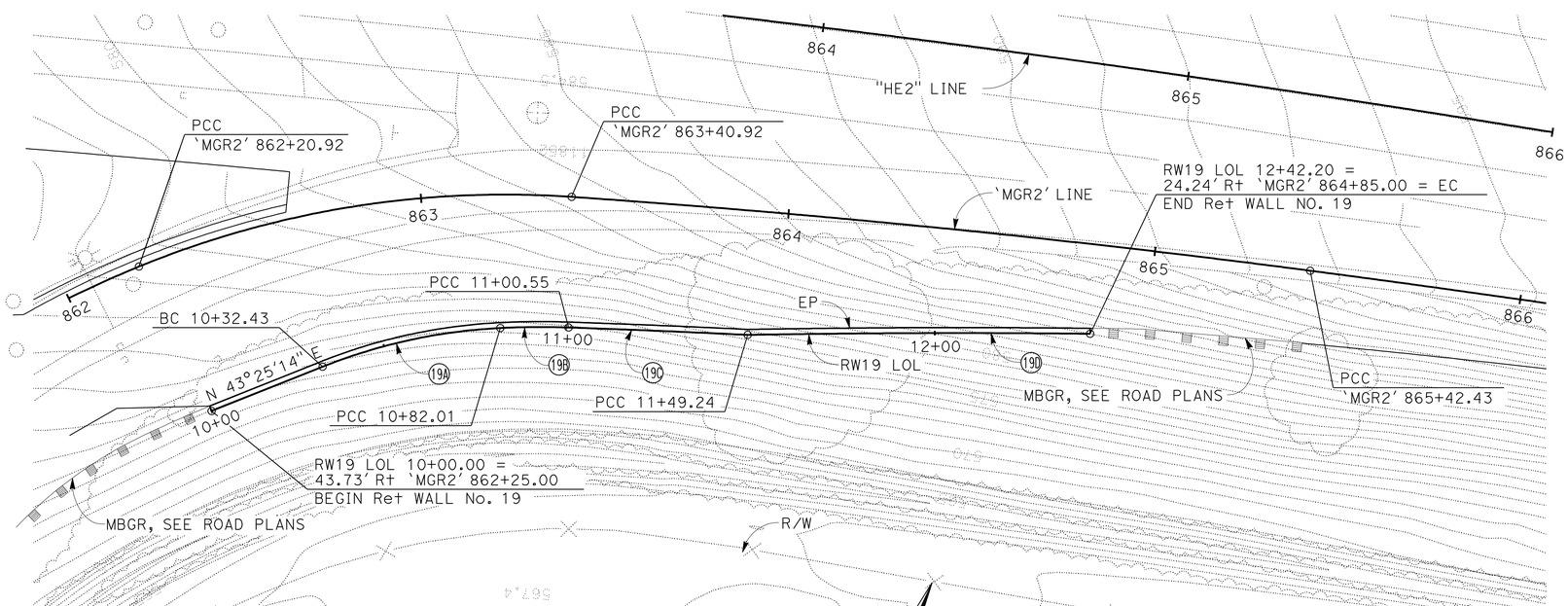

PLAN

SCALE: 1" = 20′

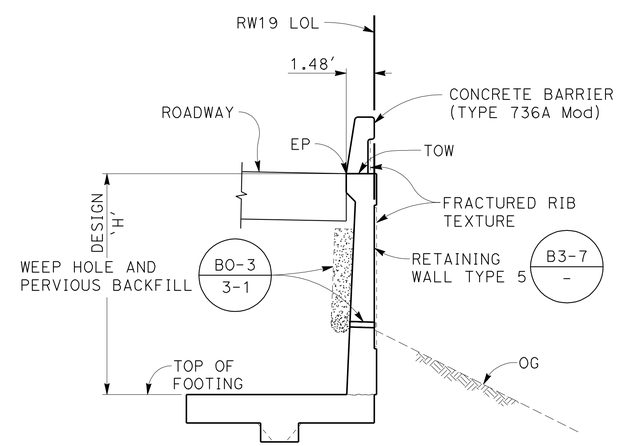

RETAINING WALL No. 19
TYPICAL SECTION
NO SCALE

THIS PLAN ACCURATE FOR RETAINING WALL WORK ONLY

RETAINING WALL No. 19 GENERAL PLAN

SCALE AS SHOWN

R-16

RSR	01/18/12
RSR	11/18/11
REVISED BY	DATE REVISED
HATEM BEDAIR	INES LI
CALCULATED-DESIGNED BY	CHECKED BY
CONSULTANT FUNCTIONAL SUPERVISOR	ROY M. SCHNABEL

STATE OF CALIFORNIA - DEPARTMENT OF TRANSPORTATION
Caltrans

2007236 (2007236JC16)

LAST REVISION 01/18/12 DATE PLOTTED => 23-MAY-2012 TIME PLOTTED => 07:58

Dist	COUNTY	ROUTE	POST MILES TOTAL PROJECT	SHEET No.	TOTAL SHEETS
04	Alm	580	R8.4/R14.6	534	853

REGISTERED CIVIL ENGINEER 1/18/12 DATE

5-14-12
PLANS APPROVAL DATE

REGISTERED PROFESSIONAL ENGINEER ROY M SCHNABEL No. C46828 Exp.6/30/13 CIVIL STATE OF CALIFORNIA

THE STATE OF CALIFORNIA OR ITS OFFICERS OR AGENTS SHALL NOT BE RESPONSIBLE FOR THE ACCURACY OR COMPLETENESS OF SCANNED COPIES OF THIS PLAN SHEET.

BIGGS CARDOSA ASSOCIATES INC.
865 THE ALAMEDA
SAN JOSE, CA 95126

ALAMEDA CTC
1333 BROADWAY, SUITE 220
OAKLAND, CA 94612

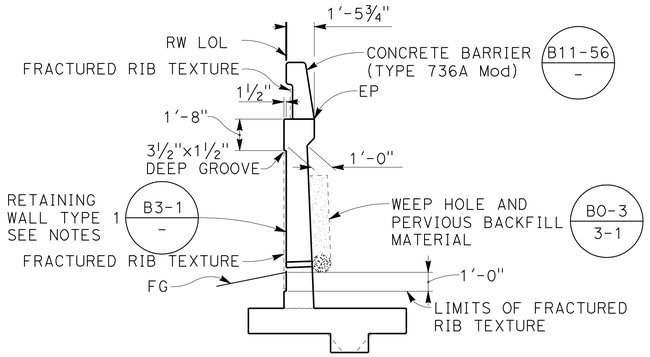

NOTES:

1. TYPE 1 RETAINING WALL SHOWN, TYPE 5 RETAINING WALL SIMILAR
2. FOR TYPE 5 RETAINING WALL DETAILS, SEE B3-7 -

TYPICAL SECTION

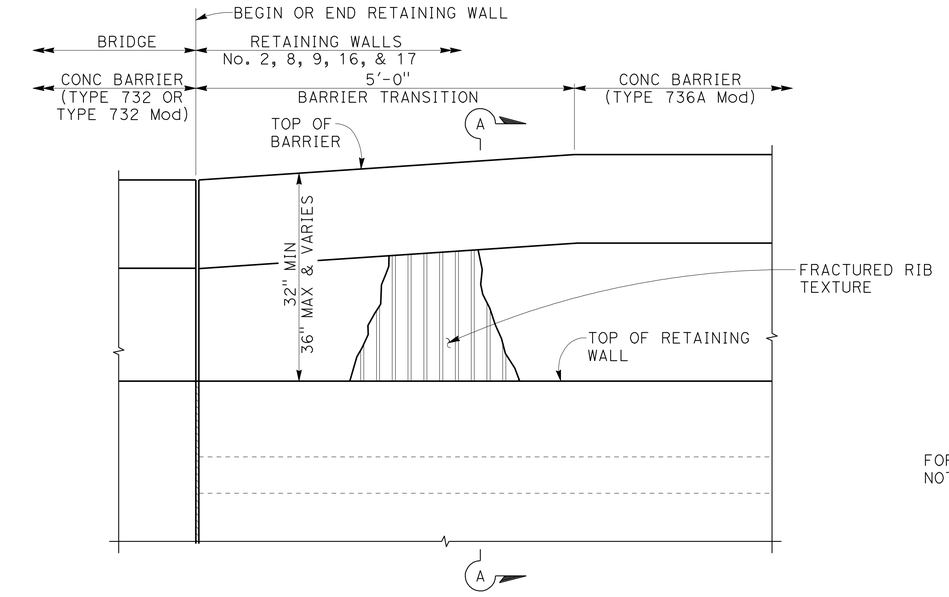

ELEVATION

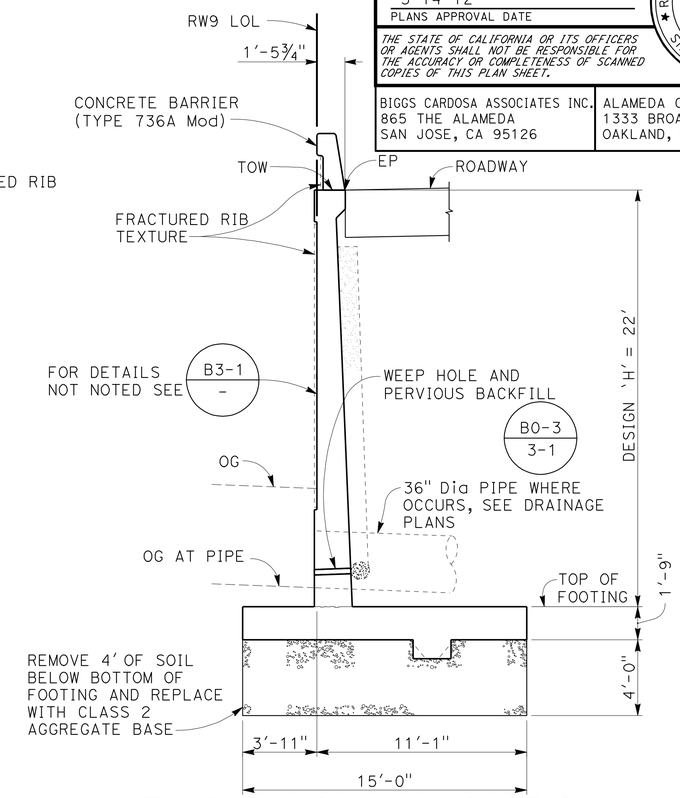

TYPE 1 (MODIFIED) SECTION AT RETAINING WALL No. 9 (H=22')

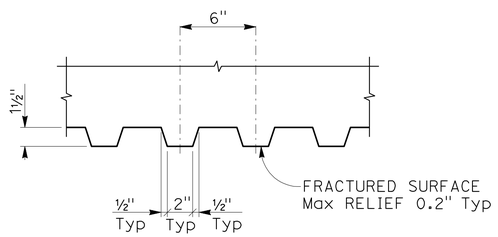

FRACTURED RIB TEXTURE DETAIL

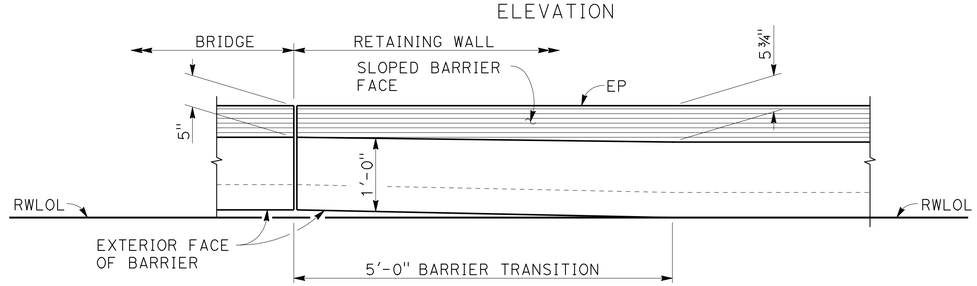

PLAN

TRANSITION BARRIER TYPE 732 OR TYPE 732 (MOD) TO TYPE 736A

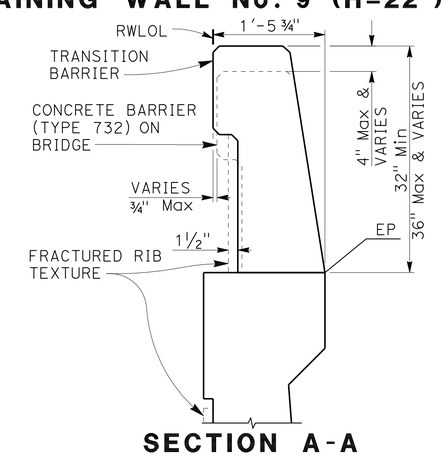

SECTION A-A

RETAINING WALL QUANTITIES

RW NO	RW TYPE	STRUCTURE EXCAVATION (RETAINING WALL)	STRUCTURE BACKFILL (RETAINING WALL)	PERVIOUS BACKFILL MATERIAL (RETAINING WALL)	STRUCTURAL CONCRETE (RETAINING WALL)	FRACTURED RIB TEXTURE	BAR REINFORCING STEEL (RETAINING WALL)	CONCRETE BARRIER (TYPE 736A Mod)
		CY	CY	CY	CY	SQ FT	LB	LF
1	1	812	908	93	357	4389	36,936	481
2	1	688	835	107	327	3116	47,046	232
6	1	2741	2986	236	1132	12,513	129,371	1233
8	1	193	143	13	110	1460	8285	227
9	1 & 1 (MOD)	1639	2262	229	876	10,304	105,602	871
12	5	373	345	29	221	2810	19,246	420
13	1	495	407	43	266	3215	21,946	401
15	5	210	141	2	75	724	5622	154
16	5	455	412	25	229	2699	18,687	413
17	5	411	468	42	158	2053	13,201	295
18	5	473	368	17	201	2036	16,892	299
19	5	417	490	32	221	1964	25,095	243
TOTAL		8907	9765	868	4173	47,283	447,929	5269

RETAINING WALL DETAILS

NO SCALE

R-17

REVISED BY	DATE REVISED
RSR	1/18/12
RSR	11/18/11

HATEM BEDAIR — INES LI

CALCULATED-DESIGNED BY — CHECKED BY

CONSULTANT FUNCTIONAL SUPERVISOR — ROY M. SCHNABEL

STATE OF CALIFORNIA - DEPARTMENT OF TRANSPORTATION — Caltrans

2007236

LAST REVISION 01/18/12 — DATE PLOTTED => 23-MAY-2012 — TIME PLOTTED => 07:58

(2007236ic17)

Dist	COUNTY	ROUTE	POST MILES TOTAL PROJECT	SHEET No.	TOTAL SHEETS
04	Ala	580	R8.4/R14.6	535	853

REGISTERED CIVIL ENGINEER 5/7/12 DATE

5-14-12
PLANS APPROVAL DATE

REGISTERED PROFESSIONAL ENGINEER N.V. BERNARDI No. 45407 Exp. 9/30/12 CIVIL STATE OF CALIFORNIA

THE STATE OF CALIFORNIA OR ITS OFFICERS OR AGENTS SHALL NOT BE RESPONSIBLE FOR THE ACCURACY OR COMPLETENESS OF SCANNED COPIES OF THIS PLAN SHEET.

BKF ENGINEERS
4670 WILLOW ROAD, SUITE 250
PLEASANTON, CA. 94588

ALAMEDA CTC
1333 BROADWAY SUITE 220
OAKLAND, CA. 94612

NOTE:

FOR ACCURATE RIGHT OF WAY DATA, CONTACT RIGHT OF WAY ENGINEERING AT THE DISTRICT OFFICE.

CURVE DATA

No.	R	Δ	T	L
1	375.00′	16°21′30"	53.90′	107.06′

ABBREVIATIONS:

LOL	LAYOUT LINE
OG	ORIGINAL GROUND
SW	SOUND WALL
W	PANEL WIDTH

LEGEND:

532.80 BOTTOM WALL ELEVATION

NOTES:

1. CONTRACTOR SHALL INSTALL PRECAST CONCRETE PANEL SOUND WALL OR APPROVED EQUAL.
2. SOUND WALL PANEL WIDTH SHALL BE DESIGNED AND DETERMINED BY CONTRACTOR'S REGISTERED ENGINEER.
3. FOR DESIGN PARAMETERS, CONTRACTOR SHALL ADHERE TO CALTRANS BRIDGE MEMO TO DESIGNERS 22-1.
4. PRIOR TO ORDERING SOUND WALL, CONTRACTOR SHALL SUBMIT, SIGNED AND STAMPED WORKING DRAWINGS FOR ENGINEER'S REVIEW AND APPROVAL.
5. SOUND WALL PANEL LENGTH SHALL BE 19′ MAXIMUM FROM CENTER TO CENTER OF COLUMNS.
6. NO GAP SHALL BE PROVIDED BETWEEN BOTTOM OF SOUND WALL TO FINISHED GROUND.
7. THE COLOR, TEXTURE, AND PATTERN OF SOUND WALL PANELS AND COLUMNS SHALL MATCH THE EXISTING SOUND WALL DIRECTLY ADJACENT ON THE WEST.

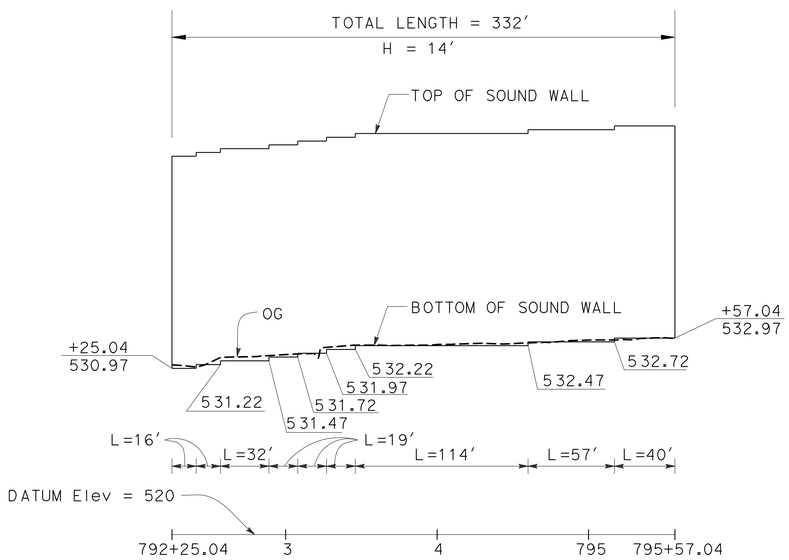

ELEVATION

SCALE: Horiz 1" = 50′
Vert 1" = 5′

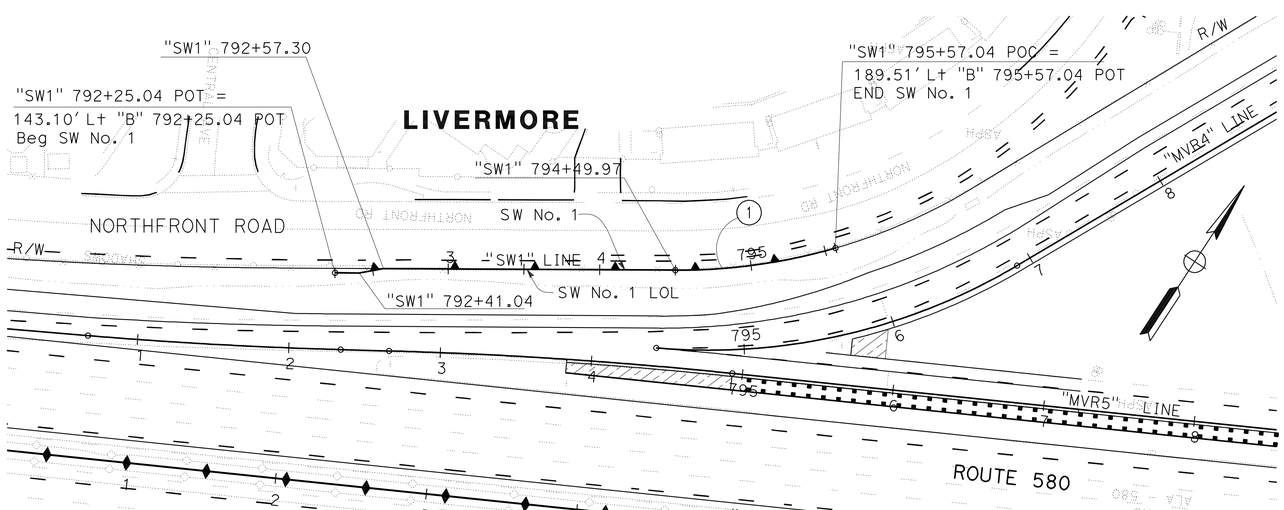

PLAN

SCALE: 1" = 50′

THIS PLAN ACCURATE FOR SOUND WALL WORK ONLY

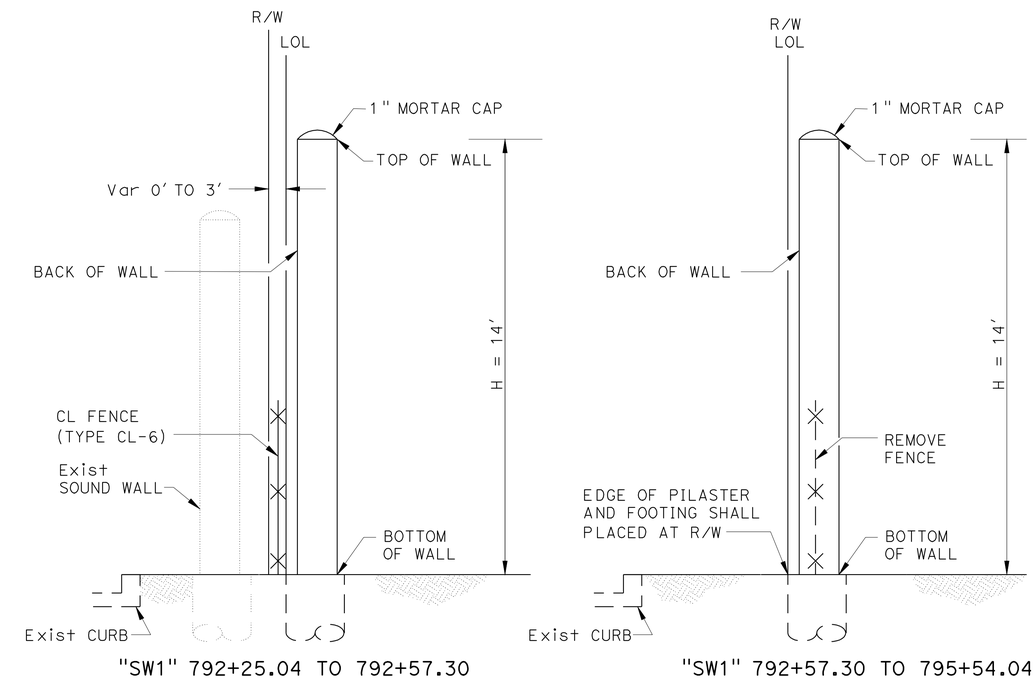

TYPICAL SECTIONS
PRECAST CONCRETE PANEL SOUND WALL

NO SCALE

SOUND WALL PLAN

SCALE AS SHOWN

SW-1

DQN	5/7/12
REVISED BY	DATE REVISED
DAT Q. NGUYEN	LUIS GARCIA
CALCULATED-DESIGNED BY	CHECKED BY
CONSULTANT FUNCTIONAL SUPERVISOR	NATALINA V. BERNARDI

STATE OF CALIFORNIA - DEPARTMENT OF TRANSPORTATION

Caltrans

LAST REVISION 05-07-12 | DATE PLOTTED => 23-MAY-2012 | TIME PLOTTED => 07:58

Dist	COUNTY	ROUTE	POST MILES TOTAL PROJECT	SHEET No.	TOTAL SHEETS
04	Ala	580	R8.4/R14.6	536	853

David W. Clow 05/11/12
REGISTERED ELECTRICAL ENGINEER DATE

5-14-12
PLANS APPROVAL DATE

REGISTERED PROFESSIONAL ENGINEER
DAVID W. CLOW
No. 12883
Exp. 12/31/12
ELECTRICAL
STATE OF CALIFORNIA

THE STATE OF CALIFORNIA OR ITS OFFICERS OR AGENTS SHALL NOT BE RESPONSIBLE FOR THE ACCURACY OR COMPLETENESS OF SCANNED COPIES OF THIS PLAN SHEET.

ALLIANCE ENGINEERING CONSULTANT, INC.
4701 PATRICK HENRY DR., #10
SANTA CLARA, CA 95054

ALAMEDA CTC
1 333 BROADWAY SUITE 220
OAKLAND, CA 94612

GENERAL NOTES

1. NO ABOVE GROUND ELECTRICAL WORK SHALL BE PERFORMED ON ANY SYSTEM WITHIN THE PROJECT SITE UNTIL ALL CONTRACTOR-FURNISHED ELECTRICAL MATERIALS FOR THAT INDIVIDUAL SYSTEM HAVE BEEN TESTED AND DELIVERED TO CONTRACTOR.
2. THE NEUTRAL CONDUCTOR SHALL RUN FROM THE SERVICE EQUIPMENT ENCLOSURE TO THE CONTROLLER CABINET WITHOUT SPLICING TO ANY OTHER NEUTRAL CONDUCTOR.
3. THE CLEARANCE BETWEEN THE BOTTOM OF THE LOWEST CIRCUIT BREAKER AND THE BOTTOM OF THE SERVICE EQUIPMENT ENCLOSURE FOR A TYPE III-A SERIES SHALL BE 24 INCHES MINIMUM.
4. NO OVERHEAD SIGN PANEL SHALL BE INSTALLED UNTIL THE OVERHEAD SIGN LIGHTING IS COMPLETELY OPERATIONAL.
5. WHERE 6 OR MORE 3-INCH CONDUITS ENTER A No. 6 PULL BOX, THE CONDUITS SHALL ENTER AT AN ANGLE NOT GREATER THAN 45-DEGREES FROM THE HORIZONTAL.
6. ROUTE CONDUIT 12" MINIMUM AWAY FROM MBGR POSTS.
7. PULL BOXES SHALL BE LOCATED MINIMUM 3 Ft FROM THE EDGE OF SHOULDER.
8. AT LEAST THREE WORKING DAYS PRIOR TO PERFORMING ANY WORK ON EACH EXISTING SYSTEM, THE CONTRACTOR SHALL NOTIFY THE DEPARTMENT OF TRANSPORTATION, ELECTRICAL AND SIGNAL MAINTENANCE SUPERINTENDENT, PHONE (415) 330-6500.
9. ALL PULL BOXES TO BE REMOVED AND REPLACED TO MATCH FINISH GRADE.

SYMBOLS AND ABBREVIATIONS

(SEE ALSO RSP ES-1A, RSP ES-1B AND RSP ES-1C)

PROPOSED	EXISTING	
		RAMP METER SIGNAL SEE DETAILS ON SHEET E-59
		SPEAKER
		VEHICLE SENSOR NODE
NI		NON-ILLUMINATED SIGN. PROVIDE EMPTY CONDUIT FOR FUTURE SIGN LIGHTING. SEE ES-15C
ACC		ANTENNA COAXIAL CABLE
AFC		ANTENNA FEEDING CABLE
AT&T		AMERICAN TELEPHONE & TELEGRAPH
CTID No.		CALTRANS IDENTIFICATION NUMBER
(G)		GROUND
GPRS	gprs	GENERAL PACKET RADIO SYSTEM
HCC		HYBRID CAMERA CABLE
LED		LIGHT EMITTING DIODE
MVDS	mvds	MICROWAVE VEHICLE DETECTION SYSTEM
(N)		NEW
PG&E		PACIFIC GAS AND ELECTRIC
SWIM		SLOW WEIGH-IN MOTION
TC	tc	TELEPHONE CABLE
TOU		TIME OF USE
TS		TRAFFIC SIGNAL
TSP		TELEPHONE SERVICE POINT
UON		UNLESS OTHERWISE NOTED
WVDS	wvds	WIRELESS VEHICLE DETECTOR SYSTEM

INDEX, SYMBOLS, ABBREVIATIONS AND GENERAL NOTES

E-1

HENRY ROBINO	REVISED BY	SB	
DAVID CLOW	DATE REVISED	5/11/12	
CALCULATED-DESIGNED BY			
CHECKED BY			
CONSULTANT FUNCTIONAL SUPERVISOR			
KEN NGAI			

STATE OF CALIFORNIA - DEPARTMENT OF TRANSPORTATION
Caltrans

LAST REVISION 05-11-12 | DATE PLOTTED => 23-MAY-2012 | TIME PLOTTED => 15:23

Dist	COUNTY	ROUTE	POST MILES TOTAL PROJECT	SHEET No.	TOTAL SHEETS
04	Ala	580	R8.4/R14.6	537	853

David W. Clow 05/11/12
REGISTERED ELECTRICAL ENGINEER DATE

5-14-12
PLANS APPROVAL DATE

REGISTERED PROFESSIONAL ENGINEER DAVID W. CLOW No. 12883 Exp. 12/31/12 ELECTRICAL STATE OF CALIFORNIA

THE STATE OF CALIFORNIA OR ITS OFFICERS OR AGENTS SHALL NOT BE RESPONSIBLE FOR THE ACCURACY OR COMPLETENESS OF SCANNED COPIES OF THIS PLAN SHEET.

ALLIANCE ENGINEERING CONSULTANT, INC.
4701 PATRICK HENRY DR., #10
SANTA CLARA, CA 95054

ALAMEDA CTC
1 333 BROADWAY SUITE 220
OAKLAND, CA 94612

PROJECT NOTES (CONTINUED)

1 INSTALL 3"C, 2#6 (CCTV, 120 V)
2#6 (WINCH MOTOR)
3#6 (CMS SIGN, 120/240 V)
2#6 (CMS CABINET, 120 V)
2#10 (TDC, 120 V)

1A INSTALL 3"C, 3#6 (CMS SIGN, 120/240 V)
2#6 (CMS CABINET, 120 V)

2 INSTALL 1½"C, 2#10 (TDC, 120 V)

3 INSTALL 3"C, 3#6 (CMS SIGN, 120/240 V)
3"C, RELOCATED (HARNESS 4 & 5)

4 INSTALL 3"C, 2#6 (CMS CABINET, 120 V)
3"C, RELOCATED (HARNESS 4 & 5)

5 INSTALL 2"C, 3#2 (SERVICE, 120/240 V)

6 INSTALL 3"C, MT(CONDUCTORS BY PG&E)
DEPTH TO MEET PG&E REQUIREMENTS.

7 INSTALL 2"C, MT(CABLE BY AT&T)
DEPTH TO MEET AT&T REQUIREMENTS.

8 Exist 2"C, 2#6 (RM CABINET, 120 V)

9 Exist (2)3"C, 2#6 (TS CONTROLLER, 120 V)
2#6 (STREET LTG, 240 V)
3#14 (PEU, 120 V)
2#10 (IISNS, 120 V)
2#8 (LIGHTING, 240 V)
2#8 (SIGN LTG, 240 V)
2#14 (SIGN TEST SWITCH, 120 V)
2#6 (RM LOCATION 1, 120 V)
2#6 (RM LOCATION 2, 120 V)
2#6 (rm LOCATION 2, 120 V)
ADD 2#6 (WINCH MOTOR, 120 V)
2#10 (TDC, 120 V)

10 RELOCATED TYPE 1-B Std FROM THE LOCATION INDICATED BY NOTE 11. RS (2) PEUS AND INSTALL (1) PEU. SEE RSP ES-7N

11 RELOCATE TYPE 1-B Std TO LOCATION INDICATED BY NOTE 10 .

12 RS Exist 480 V LUMINAIRE AND INSTALL 240 V LUMINAIRE

13 INSTALL 2"C, MT

14 INSTALL CONDUIT EXPANSION FITTING IN ALL CONDUITS PASSING THROUGH EXPANSION JOINT PER DETAIL XY ON ES-9B.

15 INSTALL 1½"C, 2#6 (LTG, 240 V)

16 INSTALL 2"C, 2#8 (LTG, 240 V)
2#8 (SIGN LTG, 240 V)
2#14 (SIGN TEST SWITCH, 120 V)

17 INSTALL 2"C, 2#8 (SIGN LTG, 240 V)
2#14 (SIGN TEST SWITCH, 120 V)

17A INSTALL 1½"C, 2#8 (SIGN LTG, 240 V)
2#14 (SIGN TEST SWITCH, 120 V)

18 INSTALL 2"C, 2#6 (LTG, 240 V)
2#8 (SIGN LTG, 240 V)
2#14 (SIGN TEST SWITCH, 120 V)

19 INSTALL 2"C, 2#6 (LTG, 240 V)

20 INSTALL NEW LOOP DETECTOR AS SHOWN ON SHEET E-57.

21 INSTALL RAMP METERING SIGNAL AS SHOWN IN DETAIL 6 ON SHEET E-59.

21A INSTALL RAMP METERING SIGNAL ON THE BARRIER WALL AS SHOWN IN DETAIL 6 ON SHEET E-59.

21B INSTALL RAMP METERING SIGNAL IN FRONT OF RW AS SHOWN IN DETAIL 2 ON SHEET E-59.

21C RELOCATE RM SIGNAL TO LOCATION INDICATED BY NOTE 21D.

21D RELOCATED RAMP METERING SIGNAL. SEE DETAIL 1 ON SHEET E-59.

22 INSTALL NEW LOOP DETECTORS AS SHOWN ON SHEET E-58.

23 RC Exist PULL BOX AND INSTALL (N) PULL BOX AT SAME LOCATION

23A RC Exist PULL BOX IN THE Exist BARRIER AND INSTALL (N) PULL BOX IN THE CONCRETE BARRIER AS PER DETAILS ON SHEET E-56.

24 INSTALL 1½"C, 4#8 (EMS, 120 V)

25 INSTALL 1½"C, 2#8 (METER ON SIGN, 120 V)

26 INSTALL (3) STATE FURNISHED LOOP DETECTOR SENSOR UNITS AND ROUTER FOR CCTV. INSTALL CONTRACTOR FURNISHED VEU, CCU IN EXISTING CABINET. SEE SHEET E-62.

27 INSTALL 2½"C, 2#6 (WINCH MOTOR, 120 V)
2#6 (RM/CCTV CABINET, 120 V)
2#10 (TDC, 120 V)

28 INSTALL 2½"C, 2#6 (RM, 120 V)
2#10 (METER-ON SIGN, 120 V)
4 DLC

29 INSTALL 1½"C, 1 DLC

30 INSTALL 1½"C, 2 DLC

31 INSTALL 2½"C, 6#14, 3#14 (SPARES)
1#8 (SIGNAL NEUTRAL)
4 DLC

32 INSTALL 2"C, 4 DLC

33 INSTALL 2"C, 6 DLC

33A INSTALL 2"C, 8 DLC

34 INSTALL 3"C, 24 DLC

35 INSTALL 2"C, 3 DLC
2#8 (METER-ON SIGN, 120 V)

36 INSTALL 2"C, 10 DLC

37 INSTALL 2½"C, 12 DLC

38 Exist 2"C, 1 tc, REMOVE 1 tc,
INSTALL 1 TC (12#19)

39 INSTALL 2"C, 1 TC (12#19)

39A INSTALL 2"C, 2 TC (12#19)

40 INSTALL 3"C, 6#14 (SIGNAL), 3#14 (SPARE),
1#8 (SIGNAL NEUTRAL), 14 DLC

41 INSTALL 2"C, 3#14 (SIGNAL), 3#14 (SPARE)
1#8 (SIGNAL NEUTRAL), 2 DLC

42 INSTALL 3"C, 6#14 (SIGNAL), 3#14 (SPARE),
1#8 (SIGNAL NEUTRAL)

43 INSTALL 3"C, 6#14 (SIGNAL), 3#14 (SPARE),
1#8 (SIGNAL NEUTRAL), 17 DLC,
2#8 (METER-ON SIGN, 120 V)

44 INSTALL 2½"C, 3#14 (SIGNAL), 3#14 (SPARE),
1#8 (SIGNAL NEUTRAL),
12 DLC

45 Exist 3"C, 2#6, 2 dlc, 2#8
RC 2#6, 2#8, 2 dlc. ADD 2 DLC.

46 INSTALL (1) STATE FURNISHED LOOP DETECTOR SENSOR UNIT IN THE CONTROLLER CABINET.

46A INSTALL (2) STATE FURNISHED LOOP DETECTOR SENSOR UNITS IN THE CONTROLLER CABINET.

46B INSTALL (2) STATE FURNISHED LOOP DETECTOR SENSOR UNITS AND ROUTER FOR CCTV. INSTALL CONTRACTOR FURNISHED VEU, CCU IN EXISTING CABINET. SEE SHEET E-62.

46C INSTALL (1) STATE FURNISHED LOOP DETECTOR SENSOR UNITS AND ROUTER FOR CCTV. INSTALL CONTRACTOR FURNISHED VEU, CCU IN EXISTING CABINET SEE SHEET E-62.

47 INSTALL (2) 3"C, 2#6, 9#14, 1#8, 2#8,
19 DLC, 1-HCC

48 INSTALL 2"C, 1 DLC
2#8 (METER-ON SIGN, 120 V)

49 INSTALL HAR EMS (LED) ON WOOD POLES. SEE DETAIL ON SHEET E-63.

50 Exist (2) 3"C, 9#14, 4#6, 1#8, 14 dlc
RC 12 dlc, 9#14, 1#8
INSTALL 9#14, 1#8, 14 DLC, 1-HCC, 1-TC

51 Exist 3"C, 12#14, 1#8, 12 dlc
RC Exist CONDUCTORS, AND INSTALL 6#14,
1#8, 14 DLC, 3#14 (SPARE)

52 Exist 3"C, 6#14, 1#8, 10 dlc
RC Exist CONDUCTORS AND INSTALL 3#14,
1#8, 12 DLC, 3#14 (SPARE)

53 Exist 2"C, 8 dlc
RC Exist CONDUCTORS AND INSTALL 10 DLC

54 Exist (2)3"C, 4#6, 19 dlc, 15#14, 1#8
RC 15#14, 1#8, 19 dlc AND INSTALL
15#14, 1#8, 21 DLC, 2#10

55 Exist 3"C, 14 dlc, 12#14, 1#8
RC Exist CONDUCTORS AND
INSTALL 15#14, 1#8, 16 DLC

56 Exist 2"C, 6#14, 1#8, 10 dlc
RC Exist CONDUCTORS
INSTALL 6#14, 1#8, 12 DLC

57 INSTALL 1½"C, 2#6 (RM, 120 V)

58 Exist (2)3"C, 9#14, 1#8, 2#10, 2#6, 18 dlc
RC Exist Exist CONDUCTORS AND INSTALL
9#14, 1#8, 2#10, 2#6, 18 DLC

59 Exist 3"C, 2#4, 20 dlc
RC Exist CONDUCTORS AND INSTALL
2#4, 24 DLC

60 Exist (2) 3"C, 2#8, 2#4, 18 dlc, 4#8
RC Exist CONDUCTORS AND
INSTALL 2#10, 2#8, 2#4, 24 DLC

61 REMOVE Exist RM/CCTC CABINET JUST BEFORE REGRADING AND INSTALL ON NEW FOUNDATION JUST WEST OF Exist LOCATION

62 NOT USED

63 NOT USED

64 NOT USED

65 INSTALL 2"C, 2#2 (TMS, 120 V)

66 INSTALL (2) 3"C, 24 DLC
2#2 (TMS CABINET, 120 V)
4#8 (EMS 120 V)

67 INSTALL METER-ON SIGN AS SHOWN IN DETAIL 1 ON E-57, EXCEPT WITH TP-2-T MOUNTING.

68 INSTALL 2 1/2"C, 2#6 (RM, 120 V)
2#2 (TMS, 120 V)

69 INSTALL 2"C, 2#8 (METER-ON SIGN, 120 V)
4#8 (EMS, 120 V)
3 DLC

70 INSTALL 2½"C, 2#8 (METER-ON SIGN, 120 V)
4#8 (EMS, 120 V)
6 DLC

71 INSTALL (2)3"C, 6#14 SIGNAL, 3#14 (SPARE),
1#8 (SIGNAL NEUTRAL)
4#8 (EMS, 120 V)
2#8 (METER ON SIGN, 120 V)
2#6 (RM, 120 V)
20 DLC

72 Exist (2)3"C, 20 dlc, 2#2
RC 8 dlc AND INSTALL 12 DLC

73 Exist (2) 3"C, 9#14, 1#8, 17 dlc, 2#8, 2#6
RC Exist CONDUCTORS AND INSTALL 2#6, 12#14, 1#8,
22 DLC, 2#8 (METER ON SIGN, 120 V), 1-HCC

74 INSTALL CONTRACTOR FURNISHED MODEL 334L CABINET, VEU, CCU AND STATE FURNISHED ROUTER FOR CCTV ON NEW FOUNDATION PER STANDARD PLAN ES-3C. SEE DETAIL ON SHEET E-62.

75 INSTALL 3"C, 1 - HCC
2"C, 2#6 (WINCH MOTOR, 120 V)

76 INSTALL 2"C, 2#6 (WINCH MOTOR, 120 V)

76A INSTALL 3"C, 1-HCC (CCTV)

77 INSTALL (2) 3"C, 2#6 (RM, 120 V)
9#14 (SIGNAL)
1#8 (SIGNAL NEUTRAL)
19 DLC

78 INSTALL 2"C, 2#6 (RM, 120 V)

79 INSTALL 3"C, 1-HCC
2"C, 2#6 (RM, 120 V)

80 INSTALL 3"C, 1-HCC
2"C, 2#6 (CCTV CABINET, 120 V)

81 INSTALL SWIM SIGNAL ON THE BARRIER AS SHOWN IN DETAIL 5 ON E-59.

82 INSTALL 1½"C, 3#6 (CCTV AND HAR CABINET, 120 V)

83 INSTALL CONDUITS IN BRIDGE BARRIER.

84 INSTALL NEW TYPE III-AF SERVICE EQUIPMENT ENCLOSURE
PROVIDE EQUIPMENT ITEMS (1) THROUGH (9), (22) LABEL AS "WINCH MOTOR", (24), (25), (28), AND (29) AS SHOWN ON SHEET E-55.
SEE RSP ES-2D FOR FOUNDATION DETAILS.
ENCLOSURE SHALL BE INSTALLED 30 FT MIN. FROM THE ETW OR BEHIND MBGR.

85 INSTALL 2"C, 2#8 (METER-ON SIGN, 120 V)
4 DLC

86 INSTALL 3"C, 6#14 (SIGNAL) 3#14 (SPARE)
1#8 (SIGNAL NEUTRAL)
18 DLC

87 AB Exist LOOP DETECTORS AND INSTALL NEW LOOP AS SHOWN ON SHEET E-58.

88 INSTALL 2½"C, 3#14 (SIGNAL), 3#14 (SPARE)
1#8 (SIGNAL NEUTRAL) 12 DLC

89 Exist (2) 3"C, 6#14 (SIGNAL), 3#14 (SPARE)
2#8 (METER-ON SIGN), 2#6 (RM, 120 V),
1#8 (SIGNAL NEUTRAL), 17 dlc
RC Exist CONDUCTORS AND INSTALL 6#14 (SIGNAL),
3#14 (SPARE), 1#8 (SIGNAL NEUTRAL), 19 DLC,
2#8 (METER-ON SIGN, 120 V), 2#6 (RM CABINET, 120 V)

90 INSTALL PULL BOX WITHIN 5'-0" OF SERVICE EQUIPMENT ENCLOSURE. COVER SHALL BE MARKED "CALTRANS/PG&E".
SC BY PG&E.
INSTALL PG&E PULL BOX PER SERVICE UTILITY REQUIREMENTS.

90A COVER SHALL BE MARKED "PG&E".

ELECTRICAL NOTES

E-2

REVISED BY	DATE REVISED
SB	5/11/12

HENRY ROBINO — DAVID CLOW
CALCULATED-DESIGNED BY — CHECKED BY
CONSULTANT FUNCTIONAL SUPERVISOR — KEN NGAI

STATE OF CALIFORNIA - DEPARTMENT OF TRANSPORTATION
Caltrans

LAST REVISION 05-11-12 | DATE PLOTTED => 23-MAY-2012 | TIME PLOTTED => 07:59

Dist	COUNTY	ROUTE	POST MILES TOTAL PROJECT	SHEET No.	TOTAL SHEETS
04	Ala	580	R8.4/R14.6	538	853

David W. Clow 05/11/12
REGISTERED ELECTRICAL ENGINEER DATE

5-14-12
PLANS APPROVAL DATE

REGISTERED PROFESSIONAL ENGINEER DAVID W. CLOW No. 12883 Exp. 12/31/12 ELECTRICAL STATE OF CALIFORNIA

THE STATE OF CALIFORNIA OR ITS OFFICERS OR AGENTS SHALL NOT BE RESPONSIBLE FOR THE ACCURACY OR COMPLETENESS OF SCANNED COPIES OF THIS PLAN SHEET.

ALLIANCE ENGINEERING CONSULTANT, INC.
4701 PATRICK HENRY DR., #10
SANTA CLARA, CA 95054

ALAMEDA CTC
1 333 BROADWAY SUITE 220
OAKLAND, CA 94612

PROJECT NOTES (CONTINUED)

90A INSTALL PG&E PULL BOX PER SERVICE UTILITY REQUIREMENTS. COVER SHALL BE MARKED "PG&E".

91 INSTALL CCTV CAMERA UNIT (PTZ) ON A POLE TYPE 60 ON NEW FOUNDATION. SEE STANDARD PLAN ES-16C AND DETAILS ON SHEETS E-60 THROUGH E-62 FOR INSTALLATION DETAILS.

92 INSTALL TYPE B TELEPHONE DEMARCATION CABINET ON NEW FOUNDATION, PER ES-3E AND DETAILS ON SHEETS E-66 AND E-67.

93 INSTALL 2"C, 2#2 (HAR/EMS/TMS CABINET, 120 V)

94 INSTALL 2"C, 2#10 (TDC, 120 V)
2#8 (METER-ON SIGN, 120 V)

95 REMOVE SECTION OF EXISTING CONCRETE BARRIER TYPE 60C AND INSTALL NEW SECTION WITH THE SAME TYPE OF BARRIER WITH A NEW No. 9 PULL BOX. SEE E-56 FOR DETAILS.

96 AB Exist LOOP DETECTORS AND INSTALL NEW LOOP DETECTORS AS SHOWN.

97 INSTALL 2"C, 2#8 (METER-ON SIGN, 120 V)
2 DLC

98 INSTALL 3"C, 2#6 (LIGHTING, 240 V)
2#8 (SIGN LIGHTING, 240 V)
2#14 (SIGN TEST SW, 120 V)
3#14 (PEU, 120 V)
2#6 (RM WB ON RAMP/CCTV CABINET 120 V)
2#6 EAST BOUND ON RAMP, 120 V
2#6 (WINCH MOTOR, 120 V
2#10 (TDC, 120 V)

99 INSTALL (2) 3"C, 2#6 (RM CABINET, 120 V),
6#14 (SIGNAL), 3#14 (SPARE),
1#8 (NEUTRAL),4#8 (EMS, 120V)
19 DLC

100 Exist (2) 3"C, 2#6, 6#14, 13 dlc, 2#10, 1#8
RC Exist CONDUCTORS
INSTALL 9#14, 2#8 (METER-ON SIGN)
16 DLC, 2#6, 1#8

101 TYPE 30

102 TYPE 15

103 RELOCATE Exist ELECTROLIER TO NEW LOCATION INDICATED BY NOTE 104

104 RELOCATED FROM LOCATION INDICATED BY NOTE 103

105 RELABEL QUEUE DETECTOR AS SHOWN.

106 INSTALL 2"C, 2#8 (METER-ON SIGN, 120 V)
6 DLC

107 NOT USED

108 SPLICE NEW 3#4, 5#10 TO Exist 8#10

109 TYPE 21

110 INSTALL 3"C, 2#6 (LTG, 240 V)

111 INSTALL 3"C, 2#4 (LTG, 240 V)
2#8 (SIGN LTG, 120 V)
2#14 (SIGN TEST SWITCH, 120 V)

112 Exist 2"C, 2#2 (tms, 120 V)
2#6 (rm, 120 V)
2#6 (ltg, 120 V)
2#8 (sign ltg, 240 V)
5#14 (2 peu's, 120 V)
2#14 (sign test switch, 120 V)

113 Exist 3"C, INSTALL 2#2 (TMS, 120 V)
2#6 (RM, 120 V)

114 INSTALL PEU ON TYPE 1-B Std

115 INSTALL 1½"C, 3#14 (PEU, 120 V)

116 INSTALL 3"C, 2#8 (LTG, 240 V)
2#6 (RM/CCTV, 120 V)
2#6 (WINCH MOTOR, 120 V)
2#10 (TDC, 120 V)

117 RL Exist ELECTROLIER TO THE LOCATION INDICATED.

118 INSTALL 3"C, 2#8 (LTG, 240 V)
2#8 (SIGN LTG, 240 V)
2#14 (SIGN TEST SWITCH, 120 V)

119 INSTALL 2"C, 2#8 (LTG, 240 V)

119A INSTALL 2"C, 2#8 (SOFFIT LTG, 240 V)

119B INSTALL 1"C, 2#8 (LTG, 240 V)

120 INSTALL 3"C, 2#8 (LTG, 240 V)

121 INSTALL 2"C, 2#6 (LTG, 240 V)
2#8 (SIGN LTG, 240 V)
2#14 (SIGN TEST SWITCH, 120 V)
3#14 (PEU, 120 V)

122 RS Exist TYPE III-AF SERVICE EQUIPMENT ENCLOSURE AND INSTALL A NEW TYPE III-AF SERVICE EQUIPMENT ENCLOSURE ON THE EXISTING FOUDATION. PROVIDE EQUIPMENT ITEMS 1 THROUGH 10, 13, 17, 18, 19, 24, 25, 2-26 28 AND 29, AS SHOWN ON SHEET E-55.

123 RL (2) 85W - ISL AND (1) SC-1 TO NEW LOCATION INDICATED BY NOTE 124

124 RELOCATED FROM LOCATION INDICATED BY NOTE 123

125 RS Exist TYPE III-AF SERVICE EQUIPMENT ENCLOSURE AND INSTALL A TYPE III-AF SERVICE EQUIPMENT ENCLOSURE ON THE EXISTING FOUDATION. PROVIDE EQUIPMENT ITEMS 1 THROUGH 14 AND 23 AS SHOWN ON SHEET E-55.

126 INSTALL PULL BOX IN THE CONCRETE BARRIER AS PER DETAILS ON SHEET E-56.

127 RS Exist TYPE III-AF SERVICE EQUIPMENT ENCLOSURE AND INSTALL A TYPE III-AF SERVICE EQUIPMENT ENCLOSURE ON THE EXISTING FOUDATION. PROVIDE EQUIPMENT ITEMS 1 THROUGH 14, 17, 19, 23, 26 AS SHOWN ON SHEET E-55.

128 NOT USED

129 Exist 2"C, 2#4 (har ems/tms controller, 120 V),
2#6 (rm, 120 V), 2#6 (rm, 120 V),
2#8 (tdc, 120 V), 3#14 (peu, 120 V)
RC 2#8 (tdc, 120 V), 2#6 (rm, 120 V)

130 INSTALL 3"C, 2#6 (LTG, 240 V)
2#8 (SIGN LTG, 120 V)
2#14 (SIGN TEST SWITCH, 120 V)
2#10 (TDC, 120 V)
2#6 (WINCH MOTOR, 120 V)
2#6 (RM/CCTV CABINET, 120 V)
3#14 (PEU, 120 V)

131 NOT USED

132 Exist 1½"C, 2#8. ADD 2#8, 2#14

133 RL Exist SERVICE CABINET TO NEW LOCATION AS INDICATED. FA Exist FOUNDATION. SEE ES-2D FOR NEW FOUNDATION.

134 INSTALL TYPE III-AF SERVICE EQUIPMENT ENCLOSURE. PROVIDE EQUIPMENT ITEMS 1 THROUGH 14, 2-23, 24 AS SHOWN ON SHEET E-55 AND 20A, 1P, CIRCUIT BREAKER FOR WINCH MOTOR. SEE RSP ES-2D FOR FOUNDATION DETAIL.

135 Exist 3"C, 20 dlc
RC Exist CONDUCTORS AND INSTALL 12 DLC.

136 Exist 3"C, 20 dlc
RC Exist CONDUCTORS AND INSTALL 24 DLC.

137 Exist 2-3"C, 20 dlc, 2#6
RC 20 dlc AND INSTALL 24 DLC

138 NOT USED

139 NOT USED

140 INSTALL 2"C, 2#6 (RM/CCTV CABINET, 120 V)
2#6 (WINCH MOTOR, 120 V)

141 INSTALL SWIM SIGNAL AND SPEAKER ON THE BARRIER AS SHOWN IN DETAIL 4 ON SHEET E-59.

142 INSTALL 3"C, 6#14 (SIGNAL), 3#14 (SPARE), 10 DLC,
1#8 (SIGNAL NEUTRAL), 2#8 (METER-ON SIGN)

143 INSTALL 3"C, 3#14 (SIGNAL), 3#14 (SPARE), 6 DLC,
1#8 (SIGNAL NEUTRAL), 2#8 (METER-ON SIGN)

144 INSTALL 3"C, 3#14 (SIGNAL), 3#14 (SPARE), 10 DLC

145 RS Exist TYPE III-AF SERVICE EQUIPMENT ENCLOSURE AND INSTALL A NEW TYPE III-AF SERVICE EQUIPMENT ENCLOSURE ON THE EXISTING FOUDATION. PROVIDE EQUIPMENT ITEMS 1 THROUGH 17, 19, 21, 23 ,(2 EACH) AND 24 AS SHOWN ON SHEET E-55 AND 20A, 1P, 120V CIRCUIT BREAKER FOR WINCH MOTOR.

146 INSTALL 2"C, 2#6 (WINCH MOTOR, 120 V)
2#10 (TDC, 120 V)

147 INSTALL METER-ON SIGN AS SHOWN ON DETAIL 1 ON SHEET E-57

148 Exist (2) 3"C, 2#6, 20 dlc
RC 8 dlc, INSTALL 12 DLC

149 INSTALL 2"C, 3#4 AND 5#10

150 Exist 2"C, 8 dlc RC 8 dlc
INSTALL 10 DLC

151 Exist (2) 3"C - 18 dlc, 2#6
RC 8 dlc, INSTALL 10 DLC

152 INSTALL 2"C, 4#8 (EMS, 120V)
2 DLC

153 Exist 2"C, 2#2 (RM/EMS, 120V)
ADD 2#8 (LTG, 240 V)
3#14 (PEU, 120 V)

154 EXISTING MODEL 2070 CONTROLLER ASSEMBLY IN TYPE 332 CABINET TO REMAIN.

155 INSTALL 4-SECTION SIGNAL HEADS. SEE DETAIL A ON SHEET E-24.

156 EXISTING MODEL 170 CONTROLLER ASSEMBLY IN MODEL 332 CABINET TO REMAIN.

157 FURNISH AND INSTALL TYPE III-AF SERVICE EQUIPMENT ENCLOSURE PER DETAILS ON ES-2C OF CALTRANS STANDARD PLANS. SEE WIRING DIAGRAM ON SHEET E-55.

158 EXISTING TYPE I PEDESTRIAN BARRICADE WITH R49(CA) TO REMAIN.

159 FROM THE UPSTREAM PULL BOX CAREFULLY REMOVE THE EXISTING dlcs CABLES AND sic FROM CONDUITS LEADING TO THE EXISTING CONTROLLER. DO NOT CUT, SPLICE OR DAMAGE THE EXISTING CABLES. UPON COMPLETION OF INSTALLATION OF CONDUIT, PULL BOX, REINSTALL THE EXISTING dlcs CABLES AND sic AS INDICATED IN CONDUIT TO THE EXISTING CONTROLLER. CONTRACTOR SHALL INSTALL NEW CABLES/SIC IF THE EXISTING CABLES ARE DAMAGED DURING THE CONSTRUCTION.

160 FURNISH AND INSTALL TYPE III-AF SERVICE EQUIPMENT ENCLOSURE PER DETAILS ON ES-2C OF CALTRANS STANDARD PLANS. SEE WIRING DIAGRAM ON SHEET E-55.

161 EXISTING MODEL 170 CONTROLLER ASSEMBLY IN MODEL 332 CABINET TO REMAIN.

162 FROM THE EXISTING PULL BOX CAREFULLY REMOVE THE EXISTING DLC CABLES FROM EXISTING CONDUITS LEADING TO THE CONTROLLER CABINET. UPON COMPLETION OF INSTALLATION OF CONDUITS AND PULL BOXES, REINSTALL NEW DLC CABLES AS INDICATED ON THE PLAN AND ON CONDUCTOR SCHEDULE.

163 INSTALL NEXT TO BARRIER/SOUND WALL AS FAR AWAY FROM ETW AS POSSIBLE.

164 INSTALL TYPE III-AF SERVICE EQUIPMENT ENCLOSURE. PROVIDE EQUIPMENT ITEMS 1 THROUGH 14, 17, 19, 23 24 AS SHOWN ON SHEET E-55 AND 20 A, 1P, 120 V CIRCUIT BREAKER FOR WINCH MOTOR. SEE RSP ES-2D FOR FOUNDATION DETAIL.

165 NOT USED

166 INSTALL 1½"C, 2#14 (SIGNAL)
1 SPEAKER CABLE

167 INSTALL 1½"C, 3#14 (SIGNAL)
1#8 (SIGNAL NEUTRAL)
1 SPEAKER CABLE

168 INSTALL PULL BOX IN THE CONCRETE BARRIER AS SHOWN ON ES-9C.

169 COORDINATE WITH AT&T.

170 INSTALL PULL BOX IN THE CONCRETE BARRIER AS PER DETAIL 3 ON SHEET E-59.

ELECTRICAL NOTES

E-3

REVISED BY	DATE REVISED
SB	5/11/12

CALCULATED-DESIGNED BY	CHECKED BY
HENRY ROBINO	DAVID CLOW

CONSULTANT FUNCTIONAL SUPERVISOR: KEN NGAI

STATE OF CALIFORNIA - DEPARTMENT OF TRANSPORTATION

LAST REVISION 05-11-12 | DATE PLOTTED => 23-MAY-2012 | TIME PLOTTED => 08:04

FOR ACCURATE RIGHT OF WAY DATA,
CONTACT RIGHT OF WAY ENGINEERING AT THE DISTRICT OFFICE.

Dist	COUNTY	ROUTE	POST MILES TOTAL PROJECT	SHEET No.	TOTAL SHEETS
04	Ala	580	R8.4/R14.6	539	853

David W. Clow 5/11/12
REGISTERED ELECTRICAL ENGINEER DATE

5-14-12
PLANS APPROVAL DATE

REGISTERED PROFESSIONAL ENGINEER
DAVID W. CLOW
No. 12883
Exp. 12/31/12
ELECTRICAL
STATE OF CALIFORNIA

THE STATE OF CALIFORNIA OR ITS OFFICERS OR AGENTS SHALL NOT BE RESPONSIBLE FOR THE ACCURACY OR COMPLETENESS OF SCANNED COPIES OF THIS PLAN SHEET.

ALLIANCE ENGINEERING CONSULTANT, INC.
4701 PATRICK HENRY DR., #10
SANTA CLARA, CA 95054

ALAMEDA CTC
1 333 BROADWAY SUITE 220
OAKLAND, CA 94612

SHEET NOTE:

1. INSTALL ELECTROLIER BEHIND CONCRETE BARRIER.

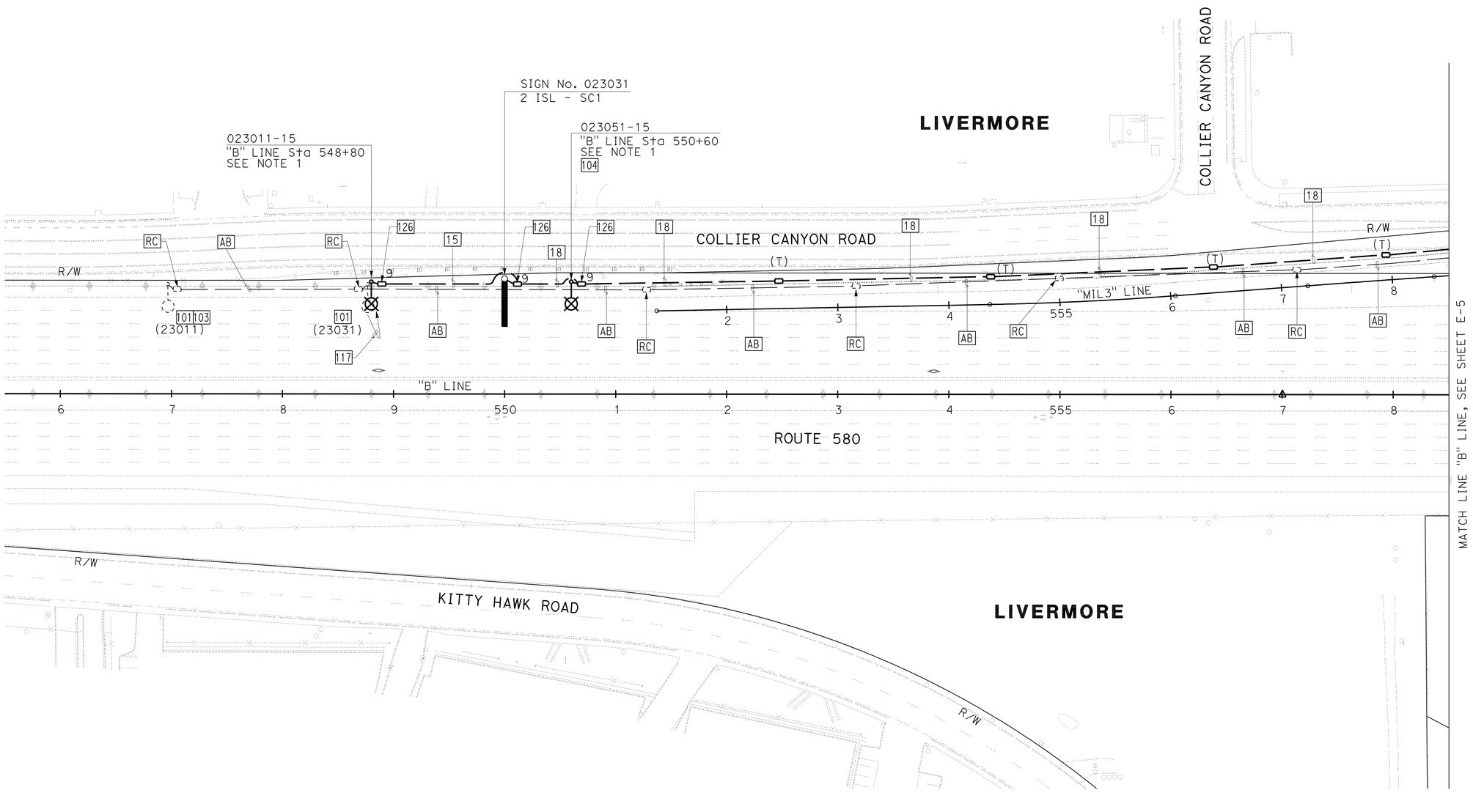

FOR NOTES, ABBREVIATIONS AND LEGEND, SEE SHEET E-1 THRU E-3

APPROVED FOR ELECTRICAL WORK ONLY

LIGHTING AND SIGN ILLUMINATION

SCALE: 1" = 50'

E-4

REVISED BY	DATE REVISED
SB	5/11/12

CALCULATED-DESIGNED BY: HENRY ROBINO
CHECKED BY: DAVID CLOW
CONSULTANT FUNCTIONAL SUPERVISOR: KEN NGAI

STATE OF CALIFORNIA - DEPARTMENT OF TRANSPORTATION
Caltrans

LAST REVISION 05-11-12
DATE PLOTTED => 23-MAY-2012
TIME PLOTTED => 08:04

FOR ACCURATE RIGHT OF WAY DATA,
CONTACT RIGHT OF WAY ENGINEERING AT THE DISTRICT OFFICE.

Dist	COUNTY	ROUTE	POST MILES TOTAL PROJECT	SHEET No.	TOTAL SHEETS
04	Ala	580	R8.4/R14.6	540	853

David W. Clow 5/11/12
REGISTERED ELECTRICAL ENGINEER DATE

5-14-12
PLANS APPROVAL DATE

REGISTERED PROFESSIONAL ENGINEER
DAVID W. CLOW
No. 12883
Exp. 12/31/12
ELECTRICAL
STATE OF CALIFORNIA

THE STATE OF CALIFORNIA OR ITS OFFICERS OR AGENTS SHALL NOT BE RESPONSIBLE FOR THE ACCURACY OR COMPLETENESS OF SCANNED COPIES OF THIS PLAN SHEET.

ALLIANCE ENGINEERING CONSULTANT, INC.
4701 PATRICK HENRY DR., #10
SANTA CLARA, CA 95054

ALAMEDA CTC
1 333 BROADWAY SUITE 220
OAKLAND, CA 94612

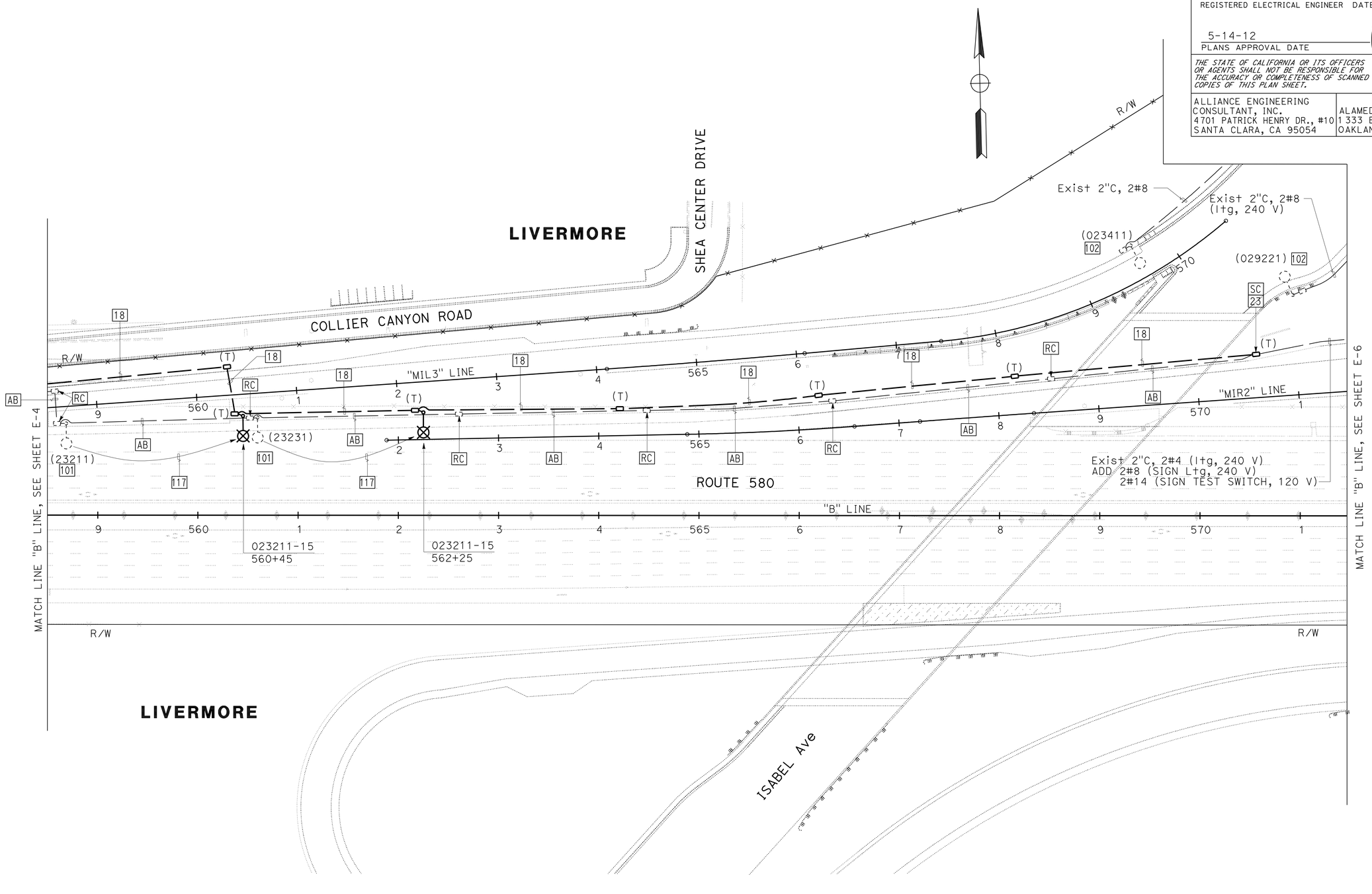

FOR NOTES, ABBREVIATIONS AND LEGEND, SEE SHEET E-1 THRU E-3

APPROVED FOR ELECTRICAL WORK ONLY

LIGHTING AND SIGN ILLUMINATION

SCALE: 1" = 50'

E-5

STATE OF CALIFORNIA - DEPARTMENT OF TRANSPORTATION	CONSULTANT FUNCTIONAL SUPERVISOR	CALCULATED-DESIGNED BY	CHECKED BY
Caltrans	KEN NGAI	HENRY ROBINO	DAVID CLOW

REVISED BY	DATE REVISED
SB	5/11/12

LAST REVISION 05-11-12
DATE PLOTTED => 23-MAY-2012
TIME PLOTTED => 08:04

Dist	COUNTY	ROUTE	POST MILES TOTAL PROJECT	SHEET No.	TOTAL SHEETS
04	Ala	580	R8.4/R14.6	541	853

David W. Clow 5/11/12
REGISTERED ELECTRICAL ENGINEER DATE

5-14-12
PLANS APPROVAL DATE

REGISTERED PROFESSIONAL ENGINEER DAVID W. CLOW No. 12883 Exp. 12/31/12 ELECTRICAL STATE OF CALIFORNIA

THE STATE OF CALIFORNIA OR ITS OFFICERS OR AGENTS SHALL NOT BE RESPONSIBLE FOR THE ACCURACY OR COMPLETENESS OF SCANNED COPIES OF THIS PLAN SHEET.

ALLIANCE ENGINEERING CONSULTANT, INC.
4701 PATRICK HENRY DR., #10
SANTA CLARA, CA 95054

ALAMEDA CTC
1 333 BROADWAY SUITE 220
OAKLAND, CA 94612

FOR ACCURATE RIGHT OF WAY DATA,
CONTACT RIGHT OF WAY ENGINEERING AT THE DISTRICT OFFICE.

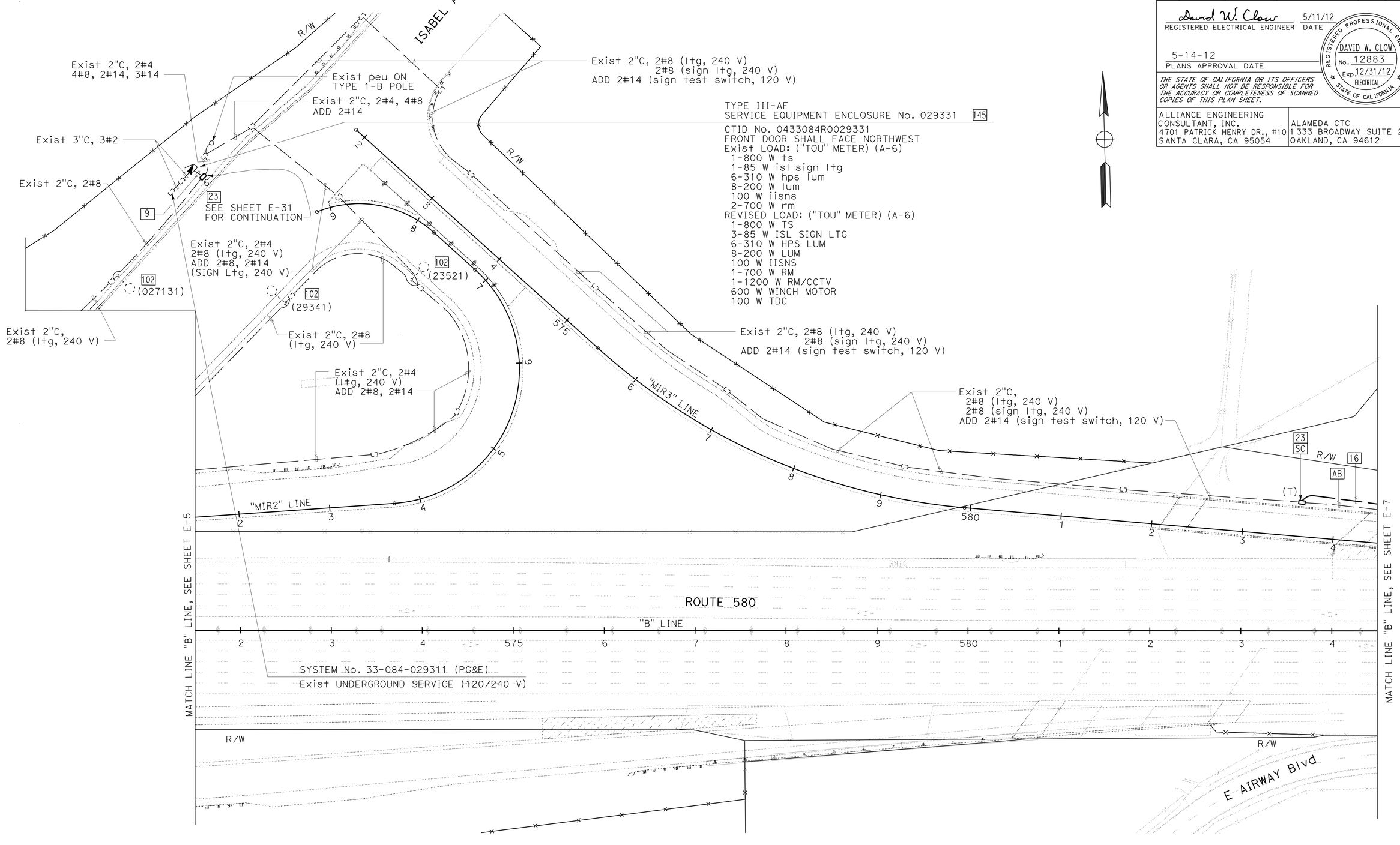

FOR NOTES, ABBREVIATIONS AND LEGEND, SEE SHEET E-1 THRU E-3

APPROVED FOR ELECTRICAL WORK ONLY

LIGHTING AND SIGN ILLUMINATION

SCALE: 1" = 50'

E-6

SB	5/11/12
REVISED BY	DATE REVISED
HENRY ROBINO	DAVID CLOW
CALCULATED-DESIGNED BY	CHECKED BY
CONSULTANT FUNCTIONAL SUPERVISOR	KEN NGAI

STATE OF CALIFORNIA - DEPARTMENT OF TRANSPORTATION

Caltrans

LAST REVISION 05-11-12 | DATE PLOTTED => 23-MAY-2012 TIME PLOTTED => 08:04

FOR ACCURATE RIGHT OF WAY DATA,
CONTACT RIGHT OF WAY ENGINEERING AT THE DISTRICT OFFICE.

Dist	COUNTY	ROUTE	POST MILES TOTAL PROJECT	SHEET No.	TOTAL SHEETS
04	Ala	580	R8.4/R14.6	542	853

David W. Clow 5/11/12
REGISTERED ELECTRICAL ENGINEER DATE

5-14-12
PLANS APPROVAL DATE

REGISTERED PROFESSIONAL ENGINEER
DAVID W. CLOW
No. 12883
Exp. 12/31/12
ELECTRICAL
STATE OF CALIFORNIA

THE STATE OF CALIFORNIA OR ITS OFFICERS OR AGENTS SHALL NOT BE RESPONSIBLE FOR THE ACCURACY OR COMPLETENESS OF SCANNED COPIES OF THIS PLAN SHEET.

ALLIANCE ENGINEERING
CONSULTANT, INC.
4701 PATRICK HENRY DR., #10
SANTA CLARA, CA 95054

ALAMEDA CTC
1 333 BROADWAY SUITE 220
OAKLAND, CA 94612

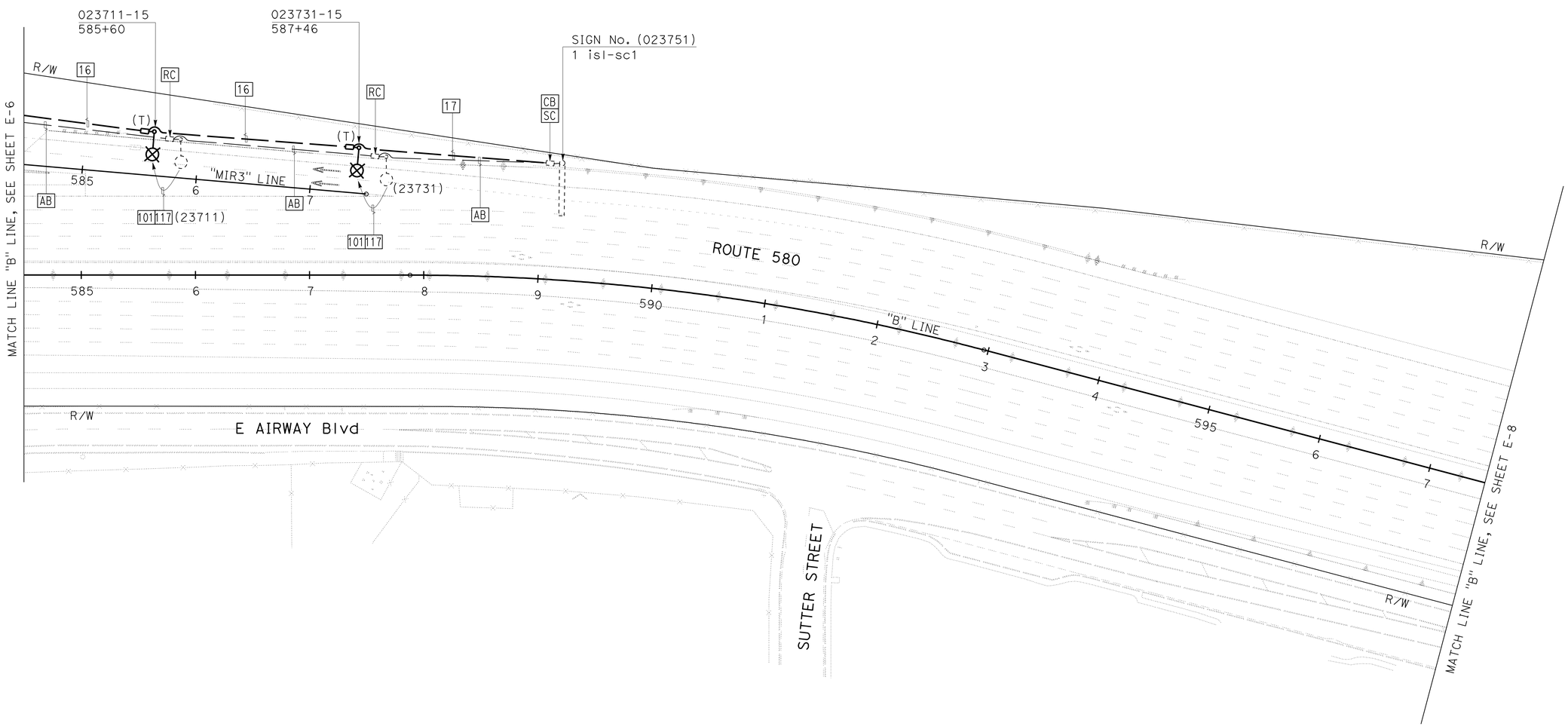

FOR NOTES, ABBREVIATIONS AND LEGEND, SEE SHEET E-1 THRU E-3

APPROVED FOR ELECTRICAL WORK ONLY

LIGHTING AND SIGN ILLUMINATION

SCALE: 1" = 50'

E-7

REVISED BY	DATE REVISED
SB	5/11/12

HENRY ROBINO — DAVID CLOW
CALCULATED-DESIGNED BY — CHECKED BY
CONSULTANT FUNCTIONAL SUPERVISOR — KEN NGAI

STATE OF CALIFORNIA - DEPARTMENT OF TRANSPORTATION
Caltrans

LAST REVISION 05-11-12
DATE PLOTTED => 23-MAY-2012
TIME PLOTTED => 08:04

FOR ACCURATE RIGHT OF WAY DATA,
CONTACT RIGHT OF WAY ENGINEERING AT THE DISTRICT OFFICE.

Dist	COUNTY	ROUTE	POST MILES TOTAL PROJECT	SHEET No.	TOTAL SHEETS
04	Ala	580	R8.4/R14.6	543	853

David W. Clow 5/11/12
REGISTERED ELECTRICAL ENGINEER DATE

5-14-12
PLANS APPROVAL DATE

REGISTERED PROFESSIONAL ENGINEER
DAVID W. CLOW
No. 12883
Exp. 12/31/12
ELECTRICAL
STATE OF CALIFORNIA

THE STATE OF CALIFORNIA OR ITS OFFICERS OR AGENTS SHALL NOT BE RESPONSIBLE FOR THE ACCURACY OR COMPLETENESS OF SCANNED COPIES OF THIS PLAN SHEET.

ALLIANCE ENGINEERING CONSULTANT, INC.
4701 PATRICK HENRY DR., #10
SANTA CLARA, CA 95054

ALAMEDA CTC
1 333 BROADWAY SUITE 220
OAKLAND, CA 94612

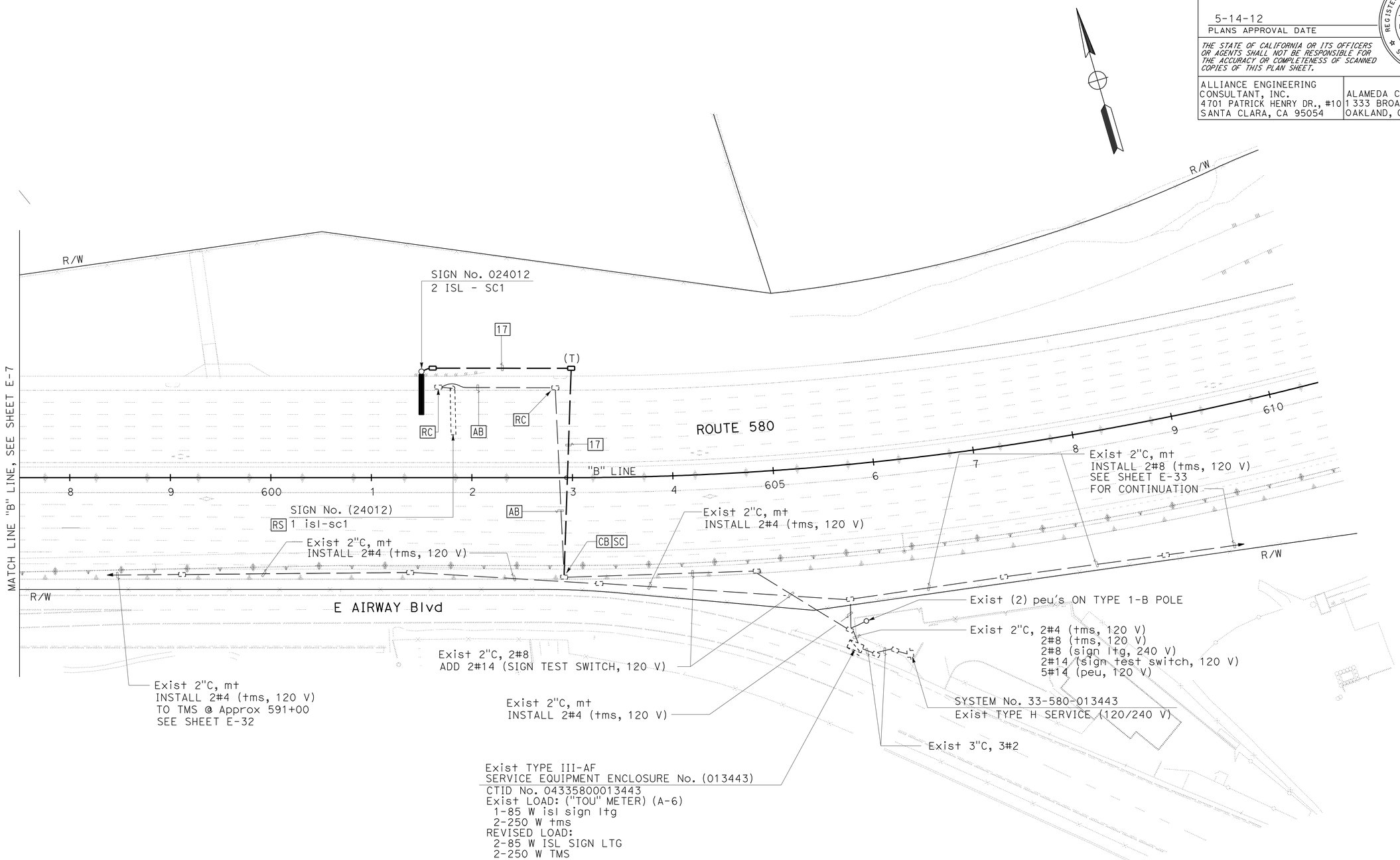

FOR NOTES, ABBREVIATIONS AND LEGEND, SEE SHEET E-1 THRU E-3

APPROVED FOR ELECTRICAL WORK ONLY

LIGHTING AND SIGN ILLUMINATION

SCALE: 1" = 50'

E-8

REVISED BY	DATE REVISED
SB	5/11/12

HENRY ROBINO — DAVID CLOW — CALCULATED-DESIGNED BY — CHECKED BY

KEN NGAI — CONSULTANT FUNCTIONAL SUPERVISOR

STATE OF CALIFORNIA - DEPARTMENT OF TRANSPORTATION — Caltrans

LAST REVISION 05-11-12 — DATE PLOTTED => 23-MAY-2012 — TIME PLOTTED => 08:04

FOR ACCURATE RIGHT OF WAY DATA,
CONTACT RIGHT OF WAY ENGINEERING AT THE DISTRICT OFFICE.

Dist	COUNTY	ROUTE	POST MILES TOTAL PROJECT	SHEET No.	TOTAL SHEETS
04	Ala	580	R8.4/R14.6	544	853

David W. Clow 5/11/12
REGISTERED ELECTRICAL ENGINEER DATE

5-14-12
PLANS APPROVAL DATE

REGISTERED PROFESSIONAL ENGINEER
DAVID W. CLOW
No. 12883
Exp. 12/31/12
ELECTRICAL
STATE OF CALIFORNIA

THE STATE OF CALIFORNIA OR ITS OFFICERS OR AGENTS SHALL NOT BE RESPONSIBLE FOR THE ACCURACY OR COMPLETENESS OF SCANNED COPIES OF THIS PLAN SHEET.

ALLIANCE ENGINEERING CONSULTANT, INC.
4701 PATRICK HENRY DR., #10
SANTA CLARA, CA 95054

ALAMEDA CTC
1 333 BROADWAY SUITE 220
OAKLAND, CA 94612

SHEET NOTE:

1. INSTALL MODIFIED TYPE 31 ELECTROLIER BEHIND RETAINING WALL AS SHOWN ON DETAIL 4, SEE SHEET E-56.

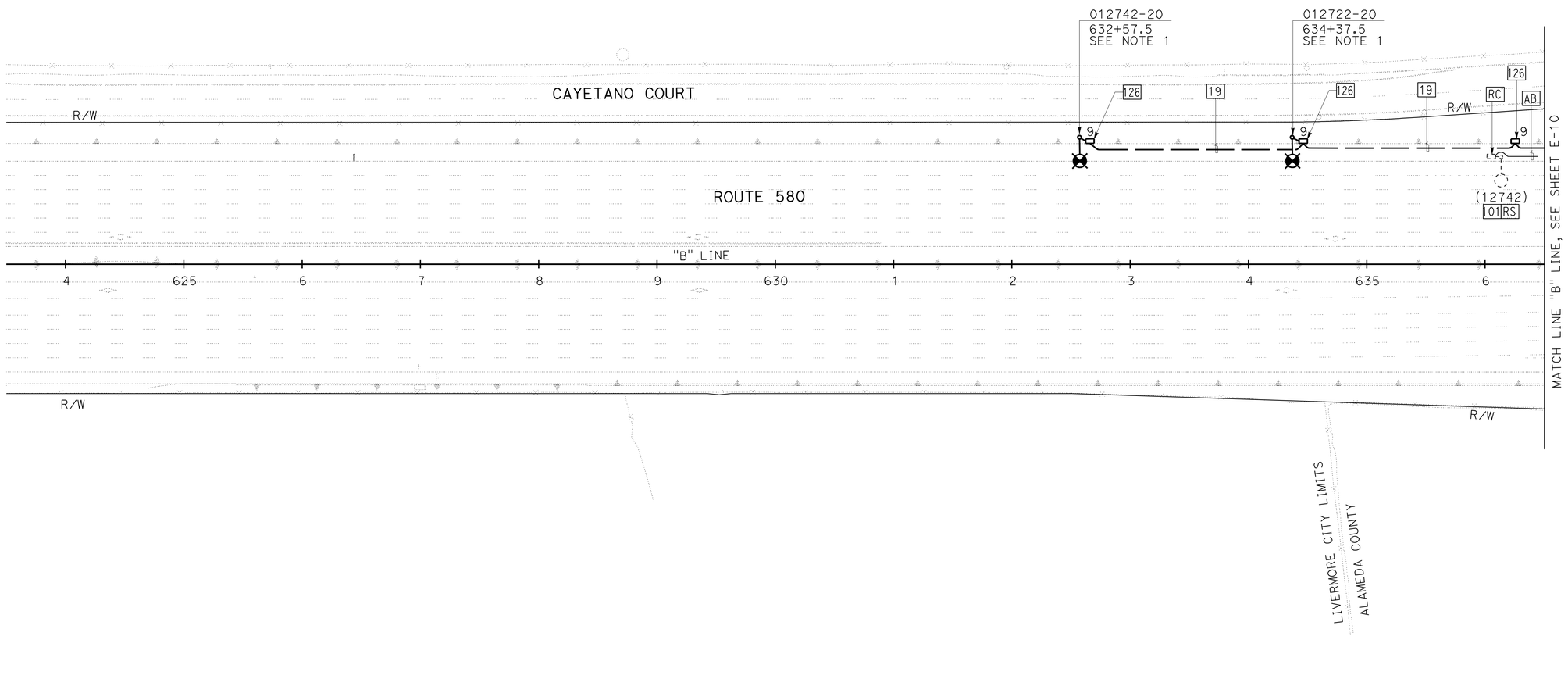

FOR NOTES, ABBREVIATIONS AND LEGEND, SEE SHEET E-1 THRU E-3

APPROVED FOR ELECTRICAL WORK ONLY

LIGHTING AND SIGN ILLUMINATION

SCALE: 1" = 50'

E-9

REVISED BY	DATE REVISED
SB	5/11/12

HENRY ROBINO — CALCULATED-DESIGNED BY
DAVID CLOW — CHECKED BY
KEN NGAI — CONSULTANT FUNCTIONAL SUPERVISOR

STATE OF CALIFORNIA - DEPARTMENT OF TRANSPORTATION
Caltrans

LAST REVISION 05-11-12
DATE PLOTTED => 23-MAY-2012
TIME PLOTTED => 08:04

Dist	COUNTY	ROUTE	POST MILES TOTAL PROJECT	SHEET No.	TOTAL SHEETS
04	Ala	580	R8.4/R14.6	545	853

David W. Clow 5/11/12
REGISTERED ELECTRICAL ENGINEER DATE

5-14-12
PLANS APPROVAL DATE

REGISTERED PROFESSIONAL ENGINEER
DAVID W. CLOW
No. 12883
Exp. 12/31/12
ELECTRICAL
STATE OF CALIFORNIA

THE STATE OF CALIFORNIA OR ITS OFFICERS OR AGENTS SHALL NOT BE RESPONSIBLE FOR THE ACCURACY OR COMPLETENESS OF SCANNED COPIES OF THIS PLAN SHEET.

ALLIANCE ENGINEERING CONSULTANT, INC.
4701 PATRICK HENRY DR., #10
SANTA CLARA, CA 95054

ALAMEDA CTC
1 333 BROADWAY SUITE 220
OAKLAND, CA 94612

FOR ACCURATE RIGHT OF WAY DATA,
CONTACT RIGHT OF WAY ENGINEERING AT THE DISTRICT OFFICE.

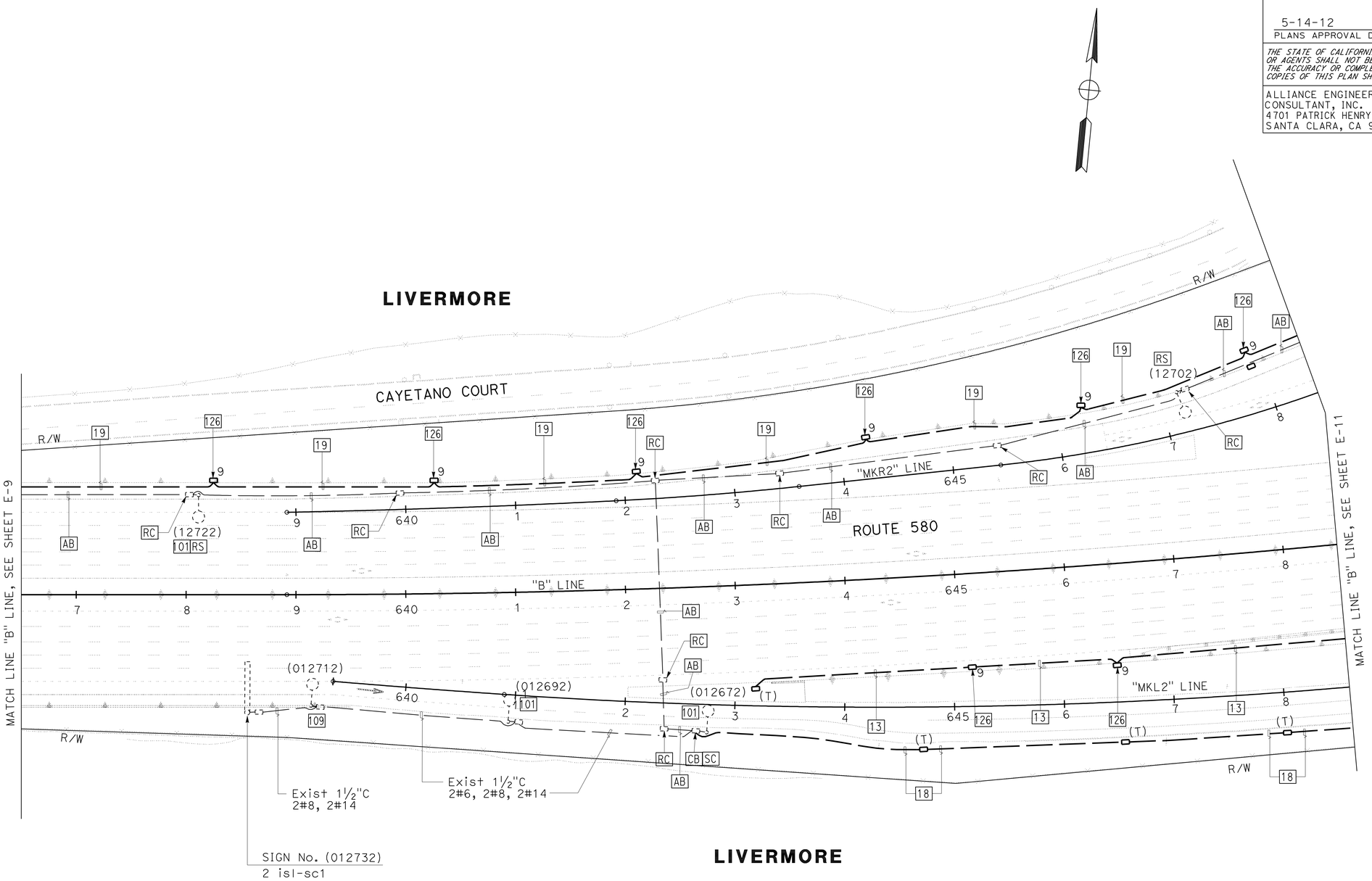

FOR NOTES, ABBREVIATIONS AND LEGEND, SEE SHEET E-1 THRU E-3

APPROVED FOR ELECTRICAL WORK ONLY

LIGHTING AND SIGN ILLUMINATION

SCALE: 1" = 50'

E-10

STATE OF CALIFORNIA - DEPARTMENT OF TRANSPORTATION
Caltrans

CONSULTANT FUNCTIONAL SUPERVISOR: KEN NGAI
CALCULATED-DESIGNED BY: HENRY ROBINO
CHECKED BY: DAVID CLOW
REVISED BY: SB
DATE REVISED: 5/11/12

LAST REVISION 05-11-12
DATE PLOTTED => 23-MAY-2012
TIME PLOTTED => 08:04

Dist	COUNTY	ROUTE	POST MILES TOTAL PROJECT	SHEET No.	TOTAL SHEETS
04	Ala	580	R8.4/R14.6	546	853

David W. Clow 5/11/12
REGISTERED ELECTRICAL ENGINEER DATE

5-14-12
PLANS APPROVAL DATE

REGISTERED PROFESSIONAL ENGINEER DAVID W. CLOW No. 12883 Exp. 12/31/12 ELECTRICAL STATE OF CALIFORNIA

THE STATE OF CALIFORNIA OR ITS OFFICERS OR AGENTS SHALL NOT BE RESPONSIBLE FOR THE ACCURACY OR COMPLETENESS OF SCANNED COPIES OF THIS PLAN SHEET.

ALLIANCE ENGINEERING CONSULTANT, INC.
4701 PATRICK HENRY DR., #10
SANTA CLARA, CA 95054

ALAMEDA CTC
1 333 BROADWAY SUITE 220
OAKLAND, CA 94612

FOR ACCURATE RIGHT OF WAY DATA,
CONTACT RIGHT OF WAY ENGINEERING AT THE DISTRICT OFFICE.

TYPE III-AF
SERVICE EQUIPMENT ENCLOSURE No. 092532 [164]
CTID No. 0433580R0012532
FRONT DOOR SHALL FACE WEST
Exist LOAD: (A-6)
11-310 W hps lum
6-200 W hps lum
4-85 W isl sign ltg
REVISED LOAD: ("TOU" METER) (A-6)
4-310 W HPS LUM
2-200 W HPS LUM
4-85 W ISL SIGN LTG
150 W TDC
800 W RM/CCTV CABINET
600 W WINCH MOTOR

SYSTEM No. 33-580-012532 (PG&E)
Exist TYPE H - SERVICE (120/240 V)

Exist TYPE III-AF
SERVICE EQUIPMENT ENCLOSURE No. (092532) [RS]
CTID No. 0433580R0012532

Exist 2 peu's [11]
ON TYPE 1-B Std

SHEET NOTES:

1. INSTALL MODIFIED TYPE 31 ELECTROLIER BEHIND RETAINING WALL AS SHOWN IN DETAIL 4 ON SHEET E-56.
2. INSTALL SOFFIT LIGHT CENTERED 40 Ft FROM THE BB/EB. SEE DETAIL 5 ON SHEET E-56. (Typ OF 4)

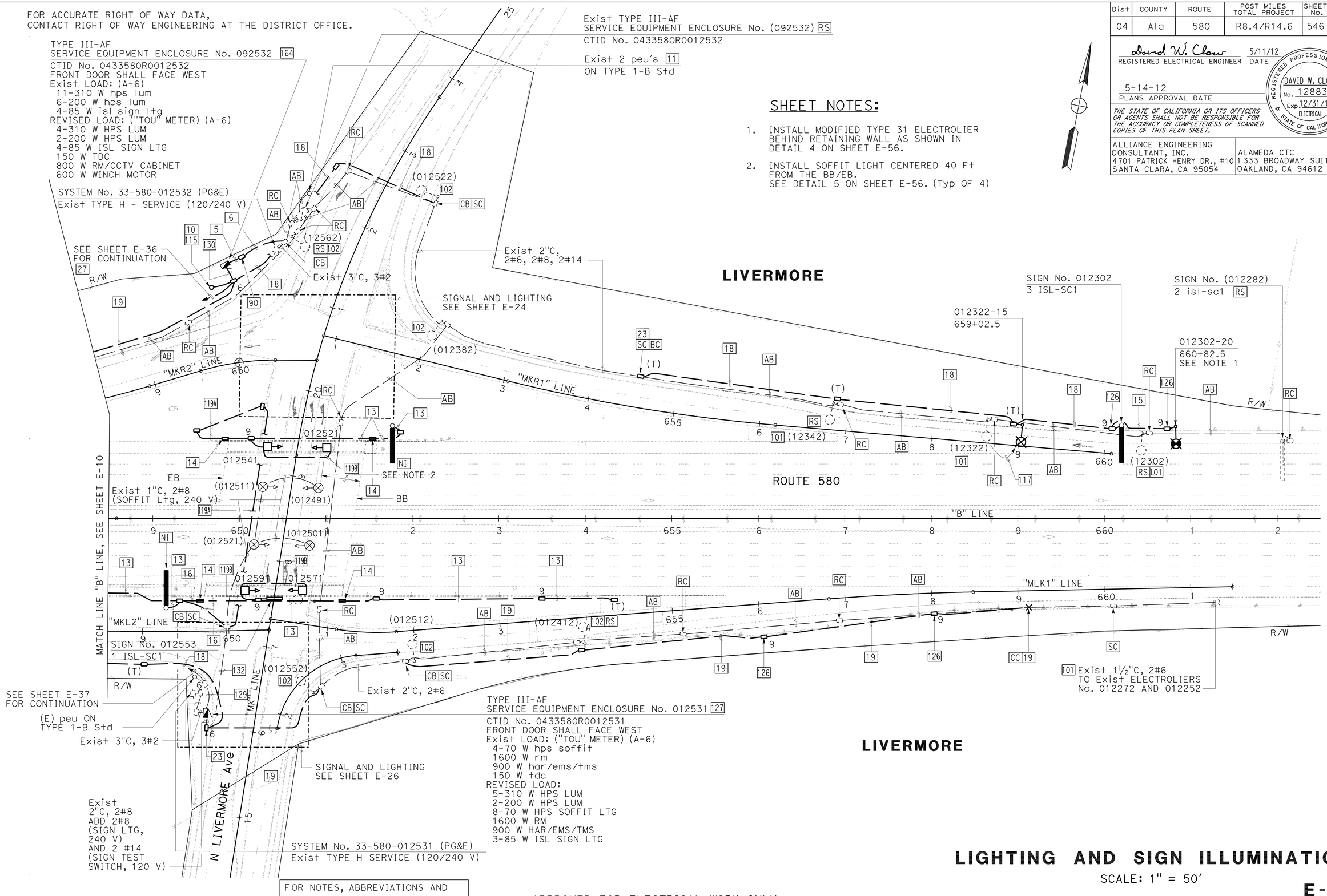

FOR NOTES, ABBREVIATIONS AND LEGEND, SEE SHEET E-1 THRU E-3

APPROVED FOR ELECTRICAL WORK ONLY

LIGHTING AND SIGN ILLUMINATION

SCALE: 1" = 50'

E-11

REVISED BY	DATE REVISED	SB	5/11/12
HENRY ROBINO	DAVID CLOW		
CALCULATED-DESIGNED BY	CHECKED BY		
CONSULTANT FUNCTIONAL SUPERVISOR	KEN NGAI		

STATE OF CALIFORNIA - DEPARTMENT OF TRANSPORTATION
Caltrans

LAST REVISION 05-11-12
DATE PLOTTED => 23-MAY-2012
TIME PLOTTED => 08:04

FOR ACCURATE RIGHT OF WAY DATA,
CONTACT RIGHT OF WAY ENGINEERING AT THE DISTRICT OFFICE.

Dist	COUNTY	ROUTE	POST MILES TOTAL PROJECT	SHEET No.	TOTAL SHEETS
04	Ala	580	R8.4/R14.6	547	853

David W. Clow 5/11/12
REGISTERED ELECTRICAL ENGINEER DATE

5-14-12
PLANS APPROVAL DATE

REGISTERED PROFESSIONAL ENGINEER
DAVID W. CLOW
No. 12883
Exp. 12/31/12
ELECTRICAL
STATE OF CALIFORNIA

THE STATE OF CALIFORNIA OR ITS OFFICERS OR AGENTS SHALL NOT BE RESPONSIBLE FOR THE ACCURACY OR COMPLETENESS OF SCANNED COPIES OF THIS PLAN SHEET.

ALLIANCE ENGINEERING CONSULTANT, INC.
4701 PATRICK HENRY DR., #10
SANTA CLARA, CA 95054

ALAMEDA CTC
1 333 BROADWAY SUITE 220
OAKLAND, CA 94612

LIVERMORE

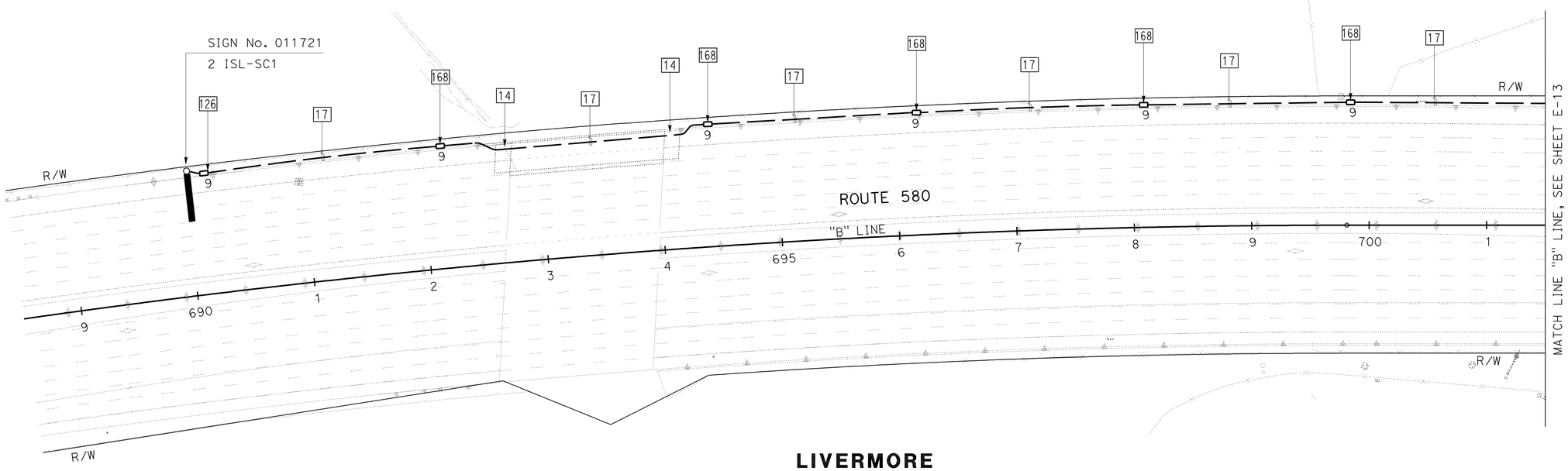

LIVERMORE

FOR NOTES, ABBREVIATIONS AND LEGEND, SEE SHEET E-1 THRU E-3

APPROVED FOR ELECTRICAL WORK ONLY

LIGHTING AND SIGN ILLUMINATION

SCALE: 1" = 50'

E-12

REVISED BY	DATE REVISED
SB	5/11/12

HENRY ROBINO — CALCULATED-DESIGNED BY
DAVID CLOW — CHECKED BY
KEN NGAI — CONSULTANT FUNCTIONAL SUPERVISOR

STATE OF CALIFORNIA - DEPARTMENT OF TRANSPORTATION
Caltrans

LAST REVISION 05-11-12
DATE PLOTTED => 23-MAY-2012
TIME PLOTTED => 08:04

FOR ACCURATE RIGHT OF WAY DATA,
CONTACT RIGHT OF WAY ENGINEERING AT THE DISTRICT OFFICE.

Dist	COUNTY	ROUTE	POST MILES TOTAL PROJECT	SHEET No.	TOTAL SHEETS
04	Ala	580	R8.4/R14.6	548	853

David W. Clow 5/11/12
REGISTERED ELECTRICAL ENGINEER DATE

5-14-12
PLANS APPROVAL DATE

REGISTERED PROFESSIONAL ENGINEER
DAVID W. CLOW
No. 12883
Exp. 12/31/12
ELECTRICAL
STATE OF CALIFORNIA

THE STATE OF CALIFORNIA OR ITS OFFICERS OR AGENTS SHALL NOT BE RESPONSIBLE FOR THE ACCURACY OR COMPLETENESS OF SCANNED COPIES OF THIS PLAN SHEET.

ALLIANCE ENGINEERING CONSULTANT, INC.
4701 PATRICK HENRY DR., #10
SANTA CLARA, CA 95054

ALAMEDA CTC
1333 BROADWAY SUITE 220
OAKLAND, CA 94612

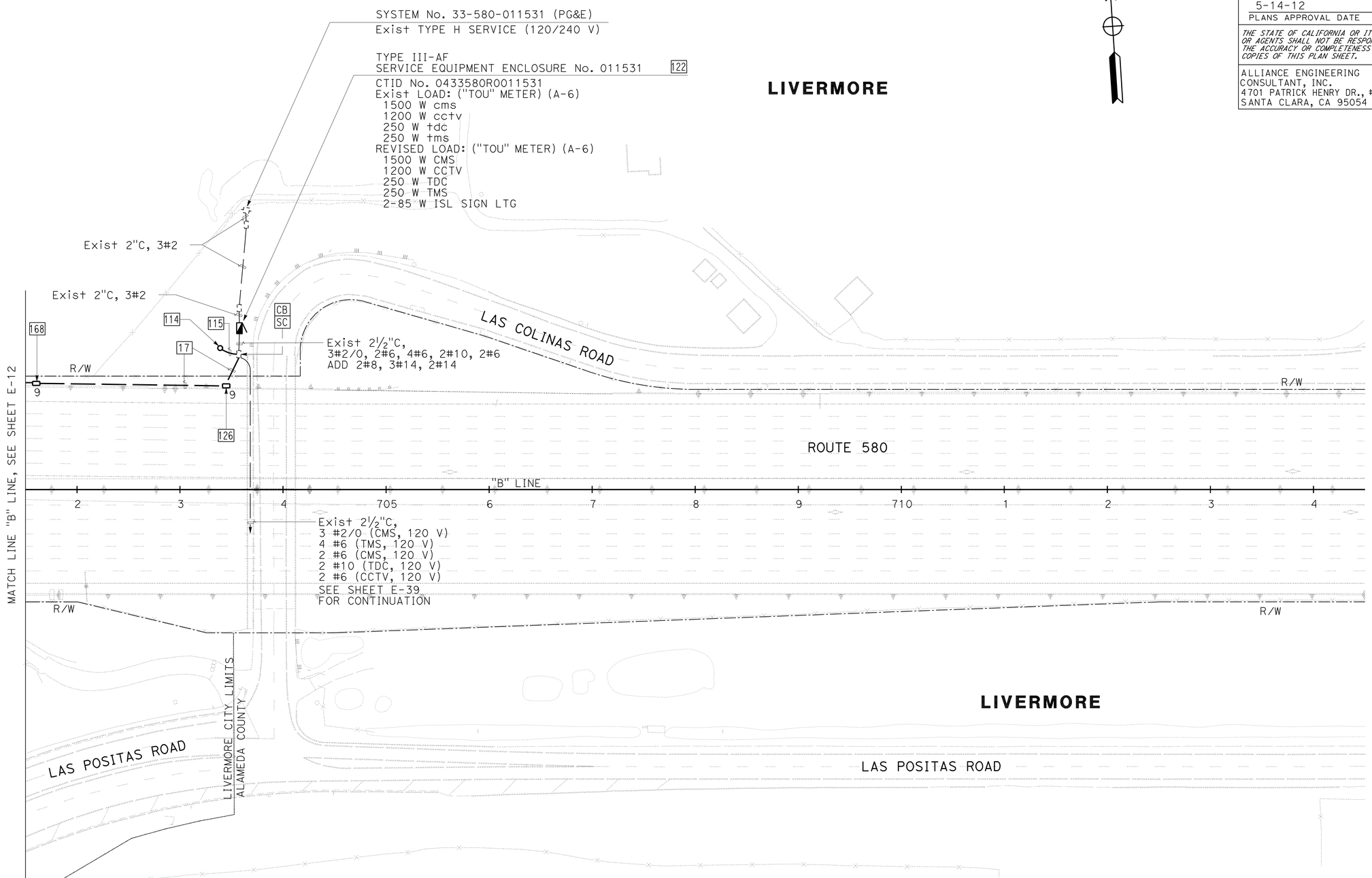

FOR NOTES, ABBREVIATIONS AND LEGEND, SEE SHEET E-1 THRU E-3

APPROVED FOR ELECTRICAL WORK ONLY

LIGHTING AND SIGN ILLUMINATION

SCALE: 1" = 50'

E-13

REVISED BY	SB
DATE REVISED	5/11/12
HENRY ROBINO	
DAVID CLOW	
CALCULATED-DESIGNED BY	
CHECKED BY	
CONSULTANT FUNCTIONAL SUPERVISOR	KEN NGAI

STATE OF CALIFORNIA - DEPARTMENT OF TRANSPORTATION
Caltrans

LAST REVISION 05-11-12
DATE PLOTTED => 23-MAY-2012
TIME PLOTTED => 08:04

FOR ACCURATE RIGHT OF WAY DATA,
CONTACT RIGHT OF WAY ENGINEERING AT THE DISTRICT OFFICE.

Dist	COUNTY	ROUTE	POST MILES TOTAL PROJECT	SHEET No.	TOTAL SHEETS
04	Ala	580	R8.4/R14.6	549	853

David W. Clow 5/11/12
REGISTERED ELECTRICAL ENGINEER DATE

5-14-12
PLANS APPROVAL DATE

REGISTERED PROFESSIONAL ENGINEER
DAVID W. CLOW
No. 12883
Exp. 12/31/12
ELECTRICAL
STATE OF CALIFORNIA

THE STATE OF CALIFORNIA OR ITS OFFICERS OR AGENTS SHALL NOT BE RESPONSIBLE FOR THE ACCURACY OR COMPLETENESS OF SCANNED COPIES OF THIS PLAN SHEET.

ALLIANCE ENGINEERING CONSULTANT, INC.
4701 PATRICK HENRY DR., #10
SANTA CLARA, CA 95054

ALAMEDA CTC
1333 BROADWAY SUITE 220
OAKLAND, CA 94612

SHEET NOTE:

1. INSTALL ELECTROLIER IN BREAK IN TYPE 60C BARRIER. FOUNDATION EMBEDMENT 5'-0" Min WITH EXTENSION TO TOP ROADWAY ±2'-0". SEE CIVIL PLAN C-72 FOR DETAILS. POLE HANDHOLE SHALL BE AT 180°.

LIVERMORE

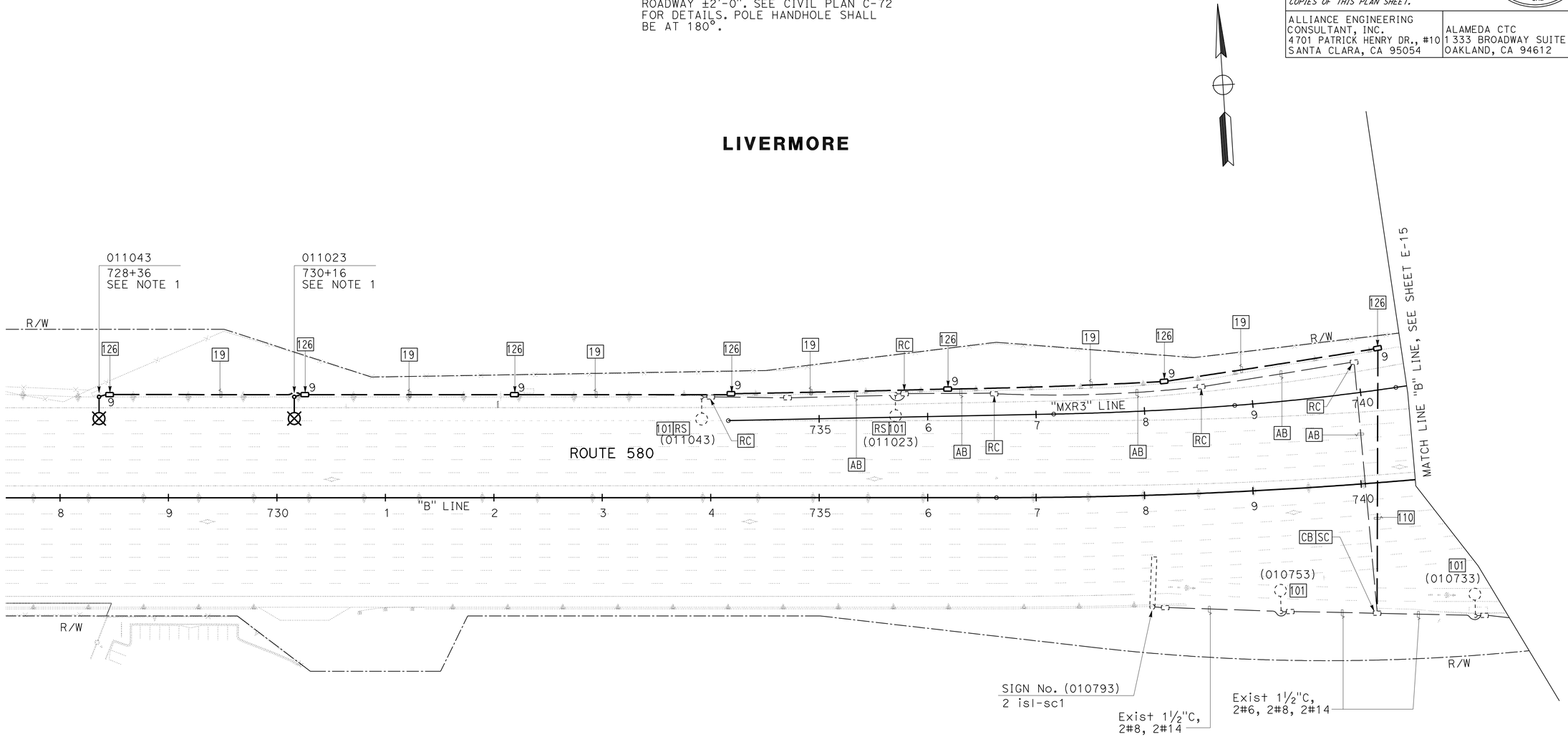

LIVERMORE

LIGHTING AND SIGN ILLUMINATION

SCALE: 1" = 50'

E-14

FOR NOTES, ABBREVIATIONS AND LEGEND, SEE SHEET E-1 THRU E-3

APPROVED FOR ELECTRICAL WORK ONLY

REVISED BY	DATE REVISED
SB	5/11/12

CALCULATED-DESIGNED BY: HENRY ROBINO
CHECKED BY: DAVID CLOW
CONSULTANT FUNCTIONAL SUPERVISOR: KEN NGAI

STATE OF CALIFORNIA - DEPARTMENT OF TRANSPORTATION
Caltrans

LAST REVISION 05-11-12
DATE PLOTTED => 23-MAY-2012
TIME PLOTTED => 08:04

FOR ACCURATE RIGHT OF WAY DATA,
CONTACT RIGHT OF WAY ENGINEERING AT THE DISTRICT OFFICE.

Dist	COUNTY	ROUTE	POST MILES TOTAL PROJECT	SHEET No.	TOTAL SHEETS
04	Ala	580	R8.4/R14.6	550	853

David W. Clow 5/11/12
REGISTERED ELECTRICAL ENGINEER DATE

5-14-12
PLANS APPROVAL DATE

REGISTERED PROFESSIONAL ENGINEER DAVID W. CLOW No. 12883 Exp. 12/31/12 ELECTRICAL STATE OF CALIFORNIA

THE STATE OF CALIFORNIA OR ITS OFFICERS OR AGENTS SHALL NOT BE RESPONSIBLE FOR THE ACCURACY OR COMPLETENESS OF SCANNED COPIES OF THIS PLAN SHEET.

ALLIANCE ENGINEERING CONSULTANT, INC.
4701 PATRICK HENRY DR., #10
SANTA CLARA, CA 95054

ALAMEDA CTC
1 333 BROADWAY SUITE 220
OAKLAND, CA 94612

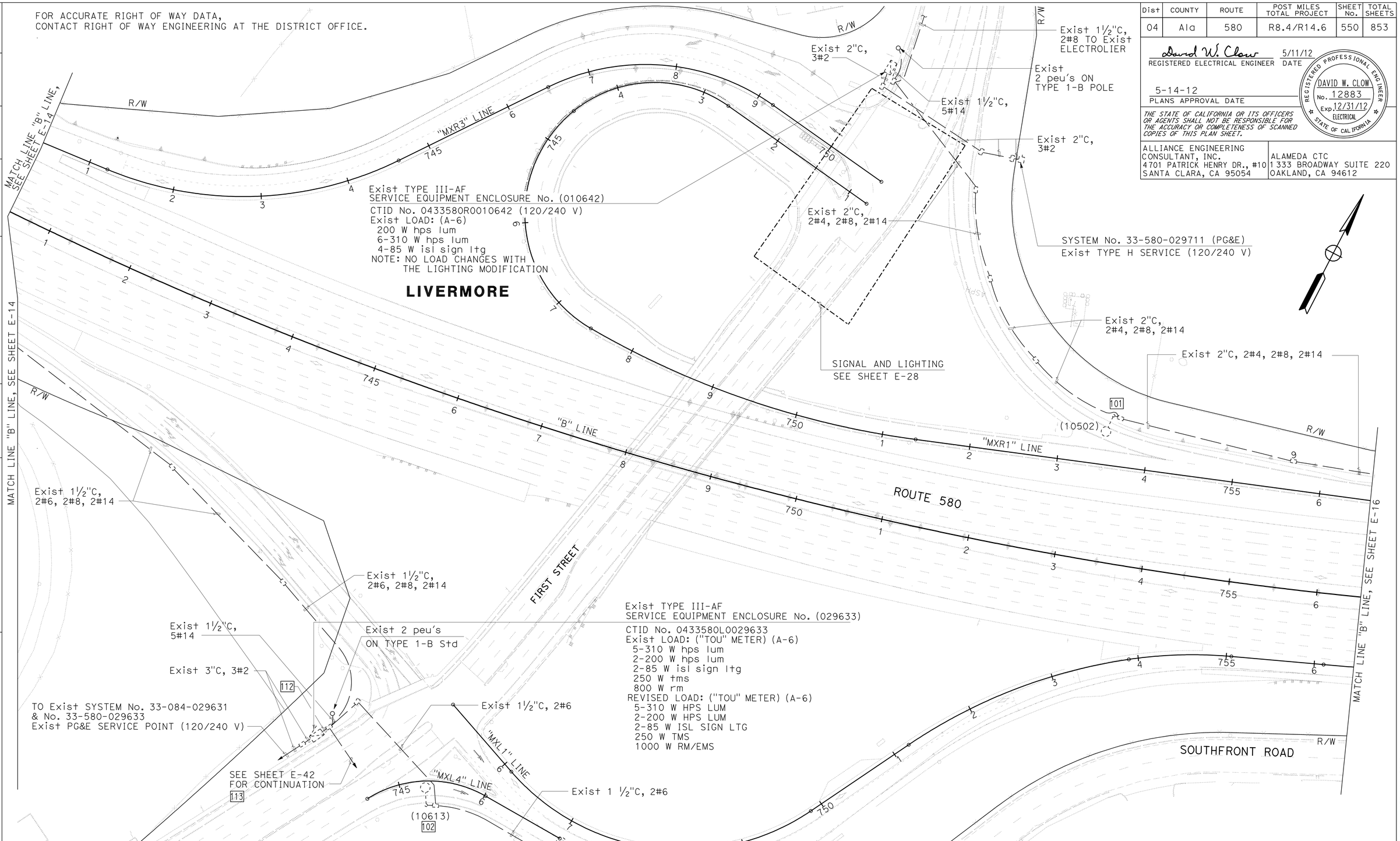

FOR NOTES, ABBREVIATIONS AND LEGEND, SEE SHEET E-1 THRU E-3

APPROVED FOR ELECTRICAL WORK ONLY

LIGHTING AND SIGN ILLUMINATION

SCALE: 1" = 50'

E-15

REVISED BY	SB
DATE REVISED	5/11/12
CALCULATED-DESIGNED BY	HENRY ROBINO
CHECKED BY	DAVID CLOW
CONSULTANT FUNCTIONAL SUPERVISOR	KEN NGAI

STATE OF CALIFORNIA - DEPARTMENT OF TRANSPORTATION

Caltrans

LAST REVISION 05-11-12
DATE PLOTTED => 23-MAY-2012
TIME PLOTTED => 08:04

FOR ACCURATE RIGHT OF WAY DATA,
CONTACT RIGHT OF WAY ENGINEERING AT THE DISTRICT OFFICE.

Dist	COUNTY	ROUTE	POST MILES TOTAL PROJECT	SHEET No.	TOTAL SHEETS
04	Ala	580	R8.4/R14.6	551	853

David W. Clow 5/11/12
REGISTERED ELECTRICAL ENGINEER DATE

5-14-12
PLANS APPROVAL DATE

REGISTERED PROFESSIONAL ENGINEER
DAVID W. CLOW
No. 12883
Exp. 12/31/12
ELECTRICAL
STATE OF CALIFORNIA

THE STATE OF CALIFORNIA OR ITS OFFICERS OR AGENTS SHALL NOT BE RESPONSIBLE FOR THE ACCURACY OR COMPLETENESS OF SCANNED COPIES OF THIS PLAN SHEET.

ALLIANCE ENGINEERING CONSULTANT, INC.
4701 PATRICK HENRY DR., #10
SANTA CLARA, CA 95054

ALAMEDA CTC
1 333 BROADWAY SUITE 220
OAKLAND, CA 94612

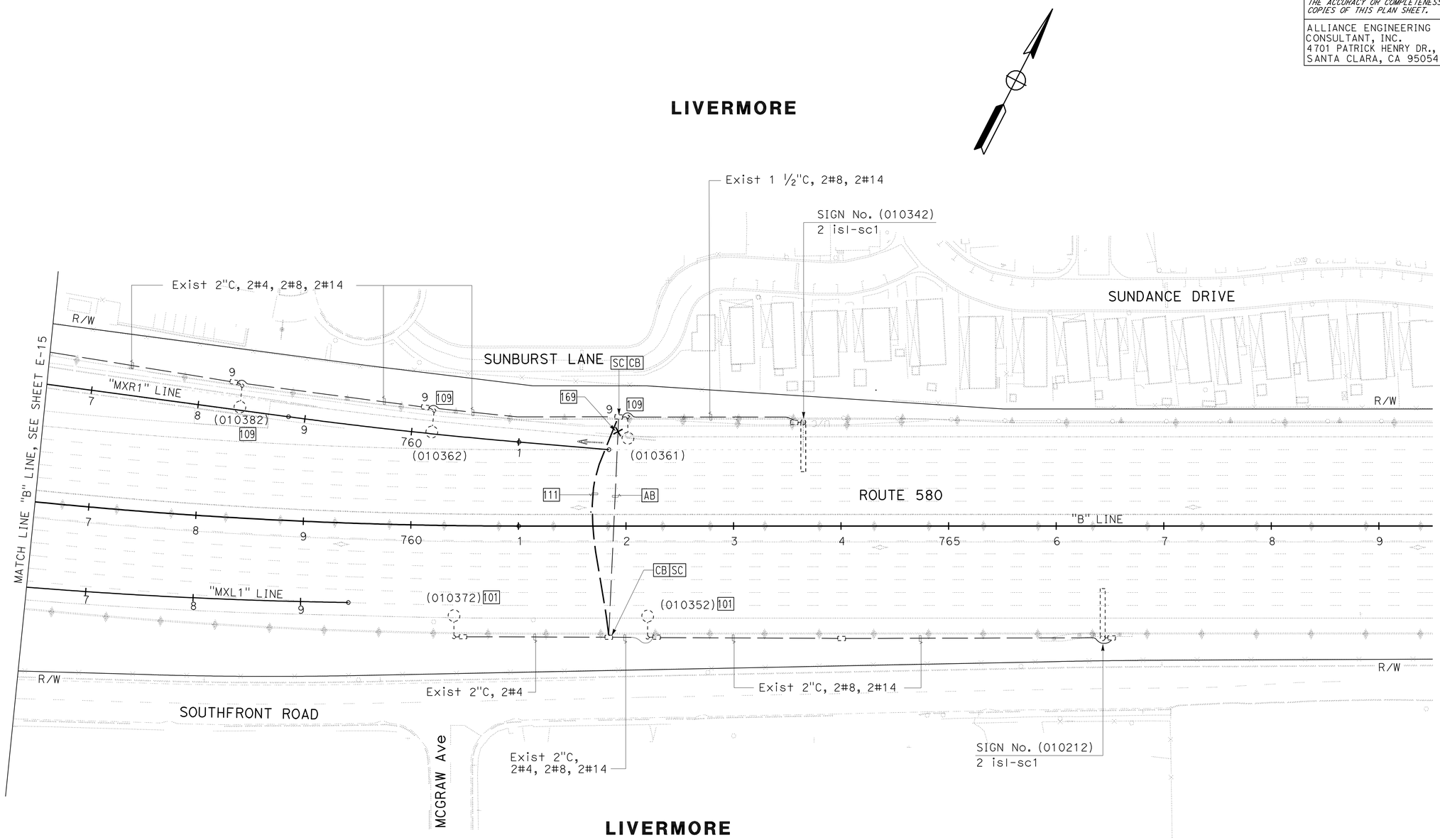

LIGHTING AND SIGN ILLUMINATION

SCALE: 1" = 50'

E-16

FOR NOTES, ABBREVIATIONS AND LEGEND, SEE SHEET E-1 THRU E-3

APPROVED FOR ELECTRICAL WORK ONLY

REVISED BY	SB	CALCULATED-DESIGNED BY	HENRY ROBINO
DATE REVISED	5/11/12	CHECKED BY	DAVID CLOW

CONSULTANT FUNCTIONAL SUPERVISOR: KEN NGAI

STATE OF CALIFORNIA - DEPARTMENT OF TRANSPORTATION

Caltrans

LAST REVISION 05-11-12 | DATE PLOTTED => 23-MAY-2012 | TIME PLOTTED => 08:04

FOR ACCURATE RIGHT OF WAY DATA,
CONTACT RIGHT OF WAY ENGINEERING AT THE DISTRICT OFFICE.

Dist	COUNTY	ROUTE	POST MILES TOTAL PROJECT	SHEET No.	TOTAL SHEETS
04	Ala	580	R8.4/R14.6	552	853

David W. Clow 5/11/12
REGISTERED ELECTRICAL ENGINEER DATE

5-14-12
PLANS APPROVAL DATE

REGISTERED PROFESSIONAL ENGINEER
DAVID W. CLOW
No. 12883
Exp. 12/31/12
ELECTRICAL
STATE OF CALIFORNIA

THE STATE OF CALIFORNIA OR ITS OFFICERS OR AGENTS SHALL NOT BE RESPONSIBLE FOR THE ACCURACY OR COMPLETENESS OF SCANNED COPIES OF THIS PLAN SHEET.

ALLIANCE ENGINEERING CONSULTANT, INC.
4701 PATRICK HENRY DR., #10
SANTA CLARA, CA 95054

ALAMEDA CTC
1 333 BROADWAY SUITE 220
OAKLAND, CA 94612

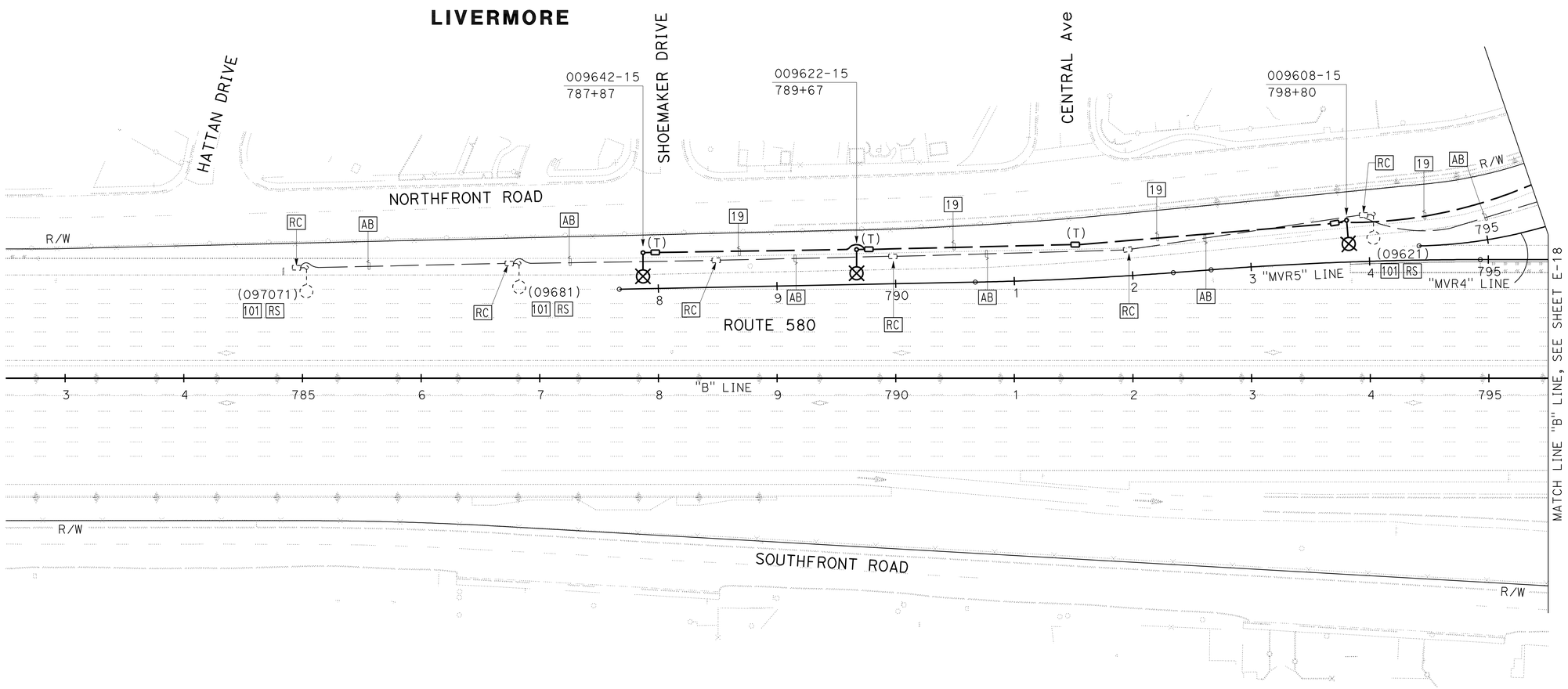

FOR NOTES, ABBREVIATIONS AND LEGEND, SEE SHEET E-1 THRU E-3

APPROVED FOR ELECTRICAL WORK ONLY

LIGHTING AND SIGN ILLUMINATION

SCALE: 1" = 50'

E-17

REVISED BY	DATE REVISED
SB	5/11/12

HENRY ROBINO — CALCULATED-DESIGNED BY
DAVID CLOW — CHECKED BY
KEN NGAI — CONSULTANT FUNCTIONAL SUPERVISOR

STATE OF CALIFORNIA - DEPARTMENT OF TRANSPORTATION
Caltrans

LAST REVISION 05-11-12
DATE PLOTTED => 23-MAY-2012
TIME PLOTTED => 08:04

FOR ACCURATE RIGHT OF WAY DATA,
CONTACT RIGHT OF WAY ENGINEERING AT THE DISTRICT OFFICE.

Dist	COUNTY	ROUTE	POST MILES TOTAL PROJECT	SHEET No.	TOTAL SHEETS
04	Ala	580	R8.4/R14.6	553	853

David W. Clow 5/11/12
REGISTERED ELECTRICAL ENGINEER DATE

5-14-12
PLANS APPROVAL DATE

REGISTERED PROFESSIONAL ENGINEER
DAVID W. CLOW
No. 12883
Exp. 12/31/12
ELECTRICAL
STATE OF CALIFORNIA

THE STATE OF CALIFORNIA OR ITS OFFICERS OR AGENTS SHALL NOT BE RESPONSIBLE FOR THE ACCURACY OR COMPLETENESS OF SCANNED COPIES OF THIS PLAN SHEET.

ALLIANCE ENGINEERING CONSULTANT, INC.
4701 PATRICK HENRY DR., #10
SANTA CLARA, CA 95054

ALAMEDA CTC
1 333 BROADWAY SUITE 220
OAKLAND, CA 94612

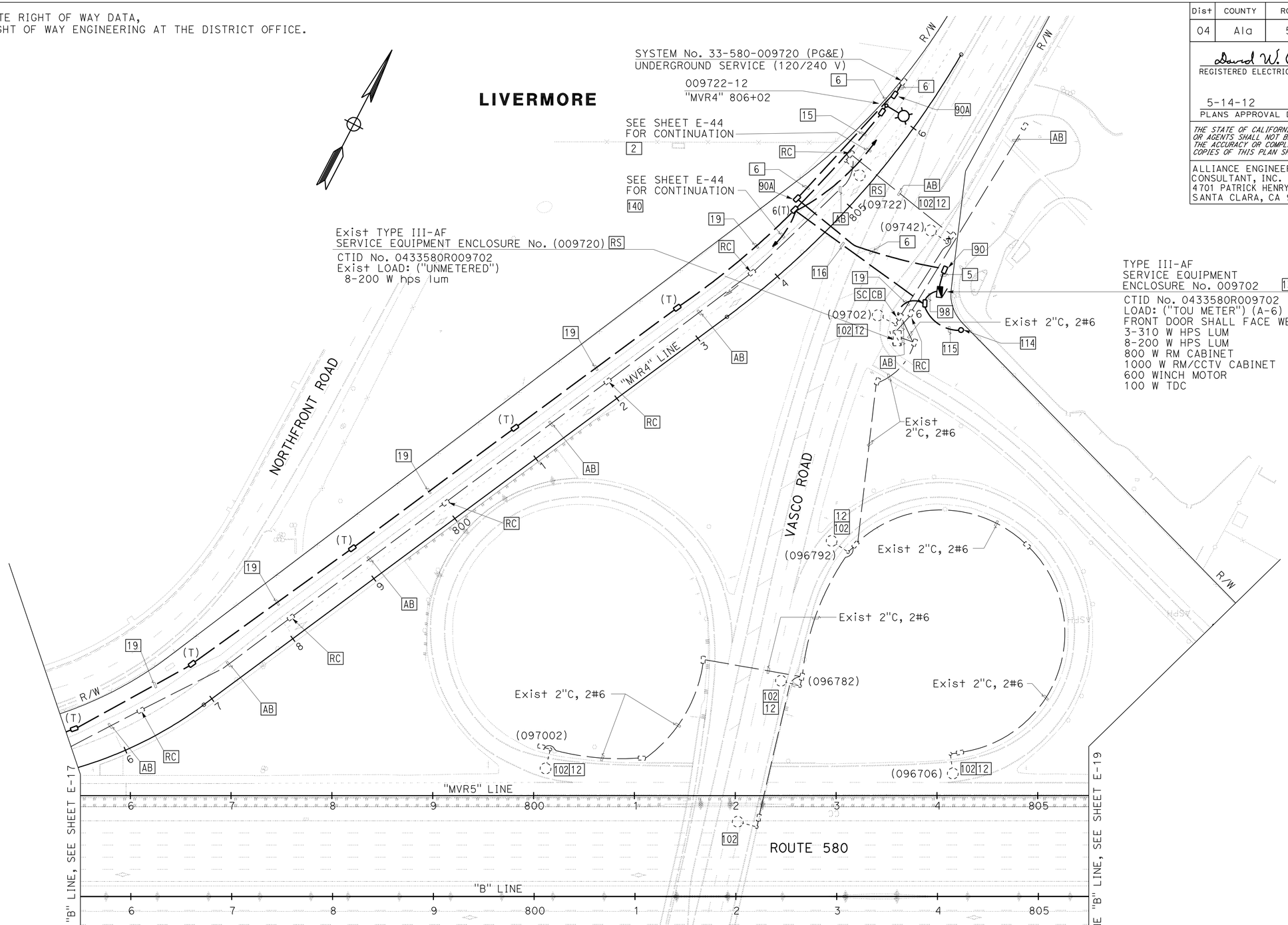

FOR NOTES, ABBREVIATIONS AND LEGEND, SEE SHEET E-1 THRU E-3

APPROVED FOR ELECTRICAL WORK ONLY

LIGHTING AND SIGN ILLUMINATION

SCALE: 1" = 50'

E-18

REVISED BY	DATE REVISED
SB	5/11/12

HENRY ROBINO — CALCULATED-DESIGNED BY
DAVID CLOW — CHECKED BY
KEN NGAI — CONSULTANT FUNCTIONAL SUPERVISOR

STATE OF CALIFORNIA - DEPARTMENT OF TRANSPORTATION
Caltrans

LAST REVISION 05-11-12
DATE PLOTTED => 23-MAY-2012
TIME PLOTTED => 08:04

Dist	COUNTY	ROUTE	POST MILES TOTAL PROJECT	SHEET No.	TOTAL SHEETS
04	Ala	580	R8.4/R14.6	554	853

David W. Clow 05/11/12
REGISTERED ELECTRICAL ENGINEER DATE

5-14-12
PLANS APPROVAL DATE

REGISTERED PROFESSIONAL ENGINEER
DAVID W. CLOW
No. 12883
Exp. 12/31/12
ELECTRICAL
STATE OF CALIFORNIA

THE STATE OF CALIFORNIA OR ITS OFFICERS OR AGENTS SHALL NOT BE RESPONSIBLE FOR THE ACCURACY OR COMPLETENESS OF SCANNED COPIES OF THIS PLAN SHEET.

ALLIANCE ENGINEERING CONSULTANT, INC.
4701 PATRICK HENRY DR., #10
SANTA CLARA, CA 95054

ALAMEDA CTC
1 333 BROADWAY SUITE 220
OAKLAND, CA 94612

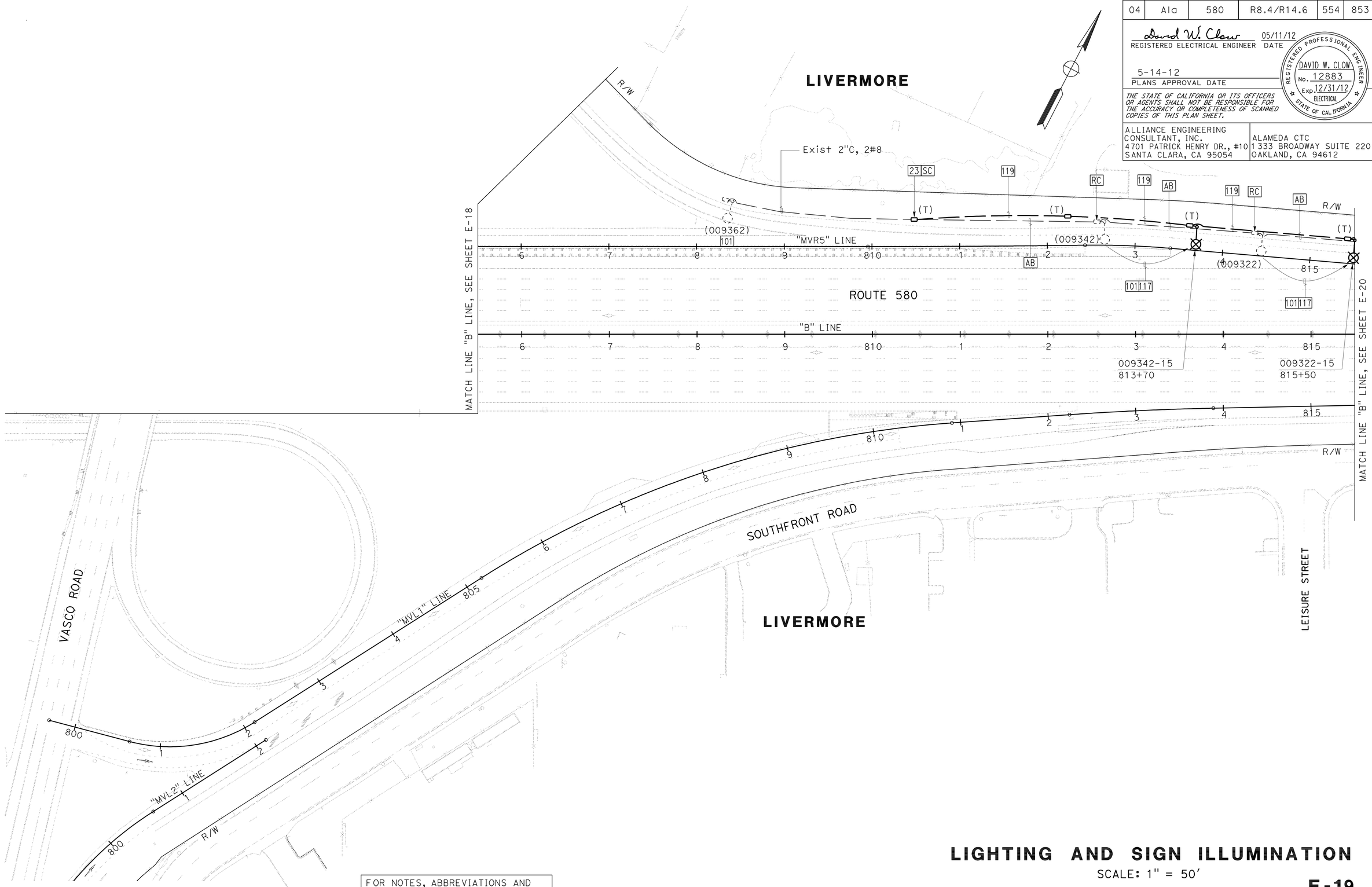

FOR NOTES, ABBREVIATIONS AND LEGEND, SEE SHEET E-1 THRU E-3

APPROVED FOR ELECTRICAL WORK ONLY

LIGHTING AND SIGN ILLUMINATION

SCALE: 1" = 50'

E-19

REVISED BY	DATE REVISED
SB	5/11/12

HENRY ROBINO — CALCULATED-DESIGNED BY
DAVID CLOW — CHECKED BY
KEN NGAI — CONSULTANT FUNCTIONAL SUPERVISOR

STATE OF CALIFORNIA - DEPARTMENT OF TRANSPORTATION
Caltrans

LAST REVISION 05-11-12
DATE PLOTTED => 23-MAY-2012
TIME PLOTTED => 08:04

FOR ACCURATE RIGHT OF WAY DATA,
CONTACT RIGHT OF WAY ENGINEERING AT THE DISTRICT OFFICE.

Dist	COUNTY	ROUTE	POST MILES TOTAL PROJECT	SHEET No.	TOTAL SHEETS
04	Ala	580	R8.4/R14.6	555	853

David W. Clow 5/11/12
REGISTERED ELECTRICAL ENGINEER DATE

5-14-12
PLANS APPROVAL DATE

REGISTERED PROFESSIONAL ENGINEER DAVID W. CLOW No. 12883 Exp. 12/31/12 ELECTRICAL STATE OF CALIFORNIA

THE STATE OF CALIFORNIA OR ITS OFFICERS OR AGENTS SHALL NOT BE RESPONSIBLE FOR THE ACCURACY OR COMPLETENESS OF SCANNED COPIES OF THIS PLAN SHEET.

ALLIANCE ENGINEERING CONSULTANT, INC.
4701 PATRICK HENRY DR., #10
SANTA CLARA, CA 95054

ALAMEDA CTC
1 333 BROADWAY SUITE 220
OAKLAND, CA 94612

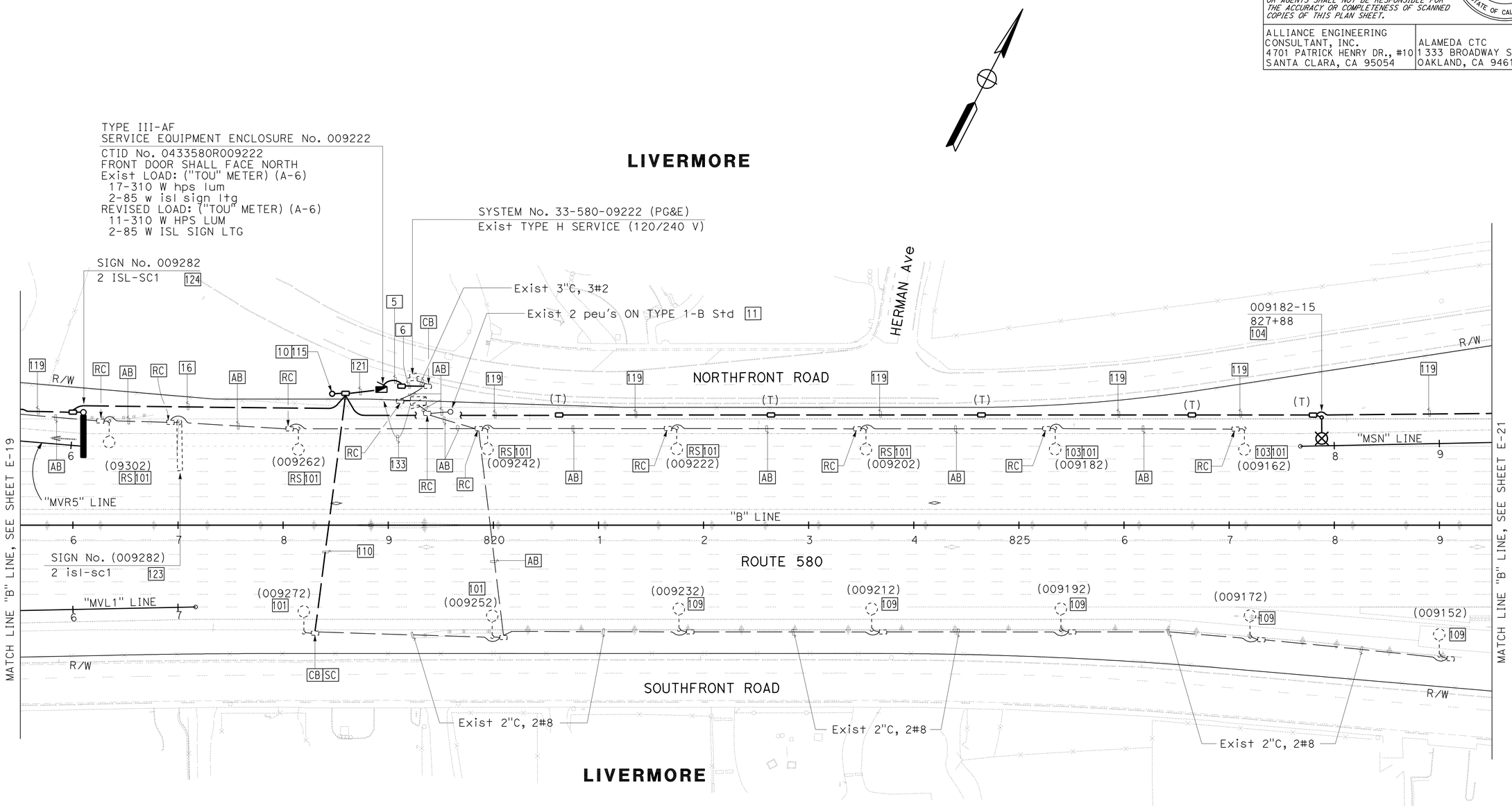

FOR NOTES, ABBREVIATIONS AND LEGEND, SEE SHEET E-1 THRU E-3

APPROVED FOR ELECTRICAL WORK ONLY

LIGHTING AND SIGN ILLUMINATION

SCALE: 1" = 50'

E-20

REVISED BY	DATE REVISED
SB	5/11/12

HENRY ROBINO — DAVID CLOW
CALCULATED-DESIGNED BY — CHECKED BY
CONSULTANT FUNCTIONAL SUPERVISOR — KEN NGAI

STATE OF CALIFORNIA - DEPARTMENT OF TRANSPORTATION
Caltrans

LAST REVISION 05-11-12
DATE PLOTTED => 23-MAY-2012
TIME PLOTTED => 08:04

BORDER LAST REVISED 7/2/2010
USERNAME => s114640
DGN FILE => 0400021248ua020.dgn
RELATIVE BORDER SCALE IS IN INCHES 0 1 2 3
UNIT 0735
PROJECT NUMBER & PHASE 04000212481

FOR ACCURATE RIGHT OF WAY DATA,
CONTACT RIGHT OF WAY ENGINEERING AT THE DISTRICT OFFICE.

Dist	COUNTY	ROUTE	POST MILES TOTAL PROJECT	SHEET No.	TOTAL SHEETS
04	Ala	580	R8.4/R14.6	556	853

David W. Clow 5/11/12
REGISTERED ELECTRICAL ENGINEER DATE

5-14-12
PLANS APPROVAL DATE

REGISTERED PROFESSIONAL ENGINEER
DAVID W. CLOW
No. 12883
Exp. 12/31/12
ELECTRICAL
STATE OF CALIFORNIA

THE STATE OF CALIFORNIA OR ITS OFFICERS OR AGENTS SHALL NOT BE RESPONSIBLE FOR THE ACCURACY OR COMPLETENESS OF SCANNED COPIES OF THIS PLAN SHEET.

ALLIANCE ENGINEERING CONSULTANT, INC.
4701 PATRICK HENRY DR., #10
SANTA CLARA, CA 95054

ALAMEDA CTC
1 333 BROADWAY SUITE 220
OAKLAND, CA 94612

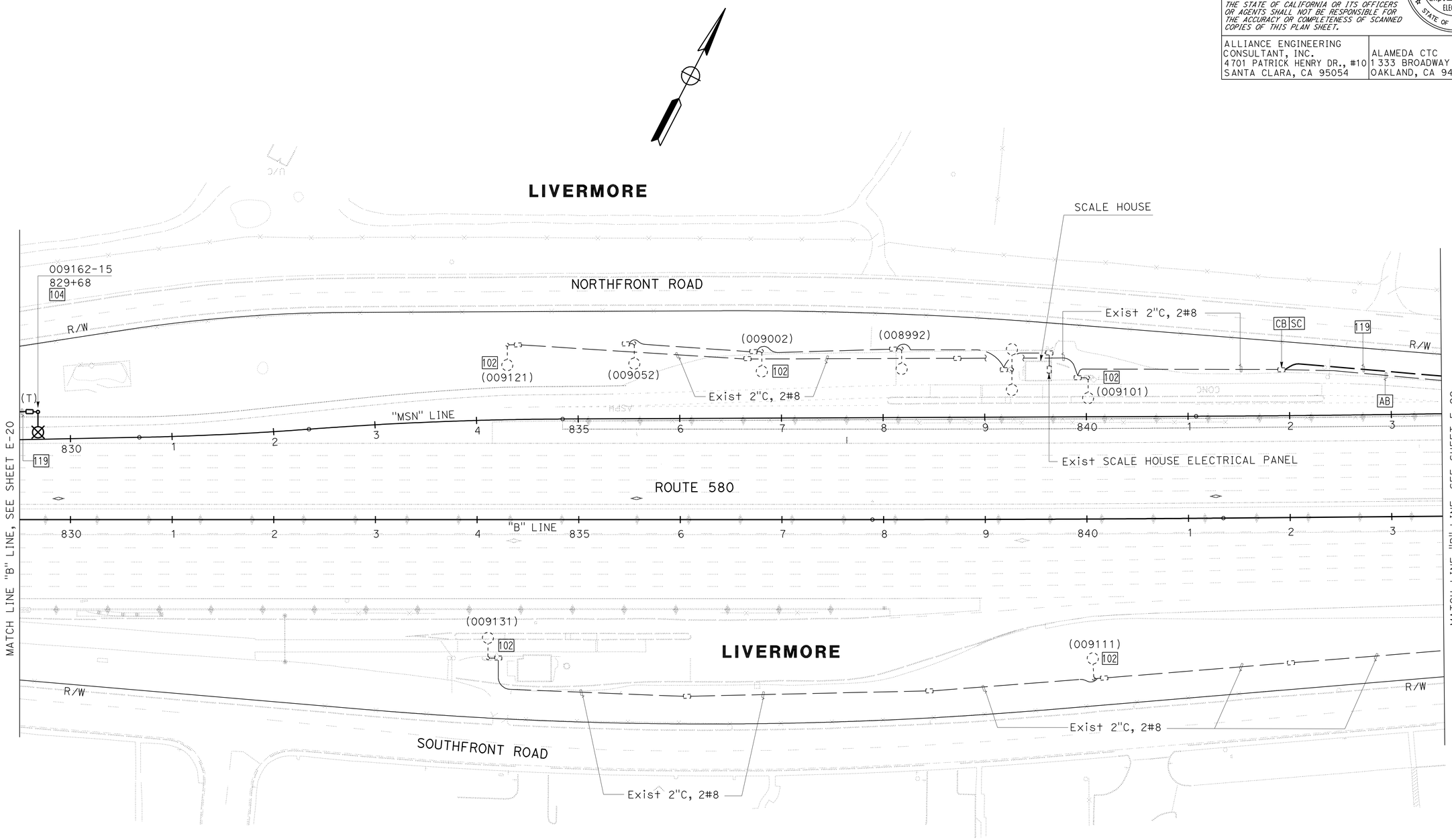

FOR NOTES, ABBREVIATIONS AND LEGEND, SEE SHEET E-1 THRU E-3

APPROVED FOR ELECTRICAL WORK ONLY

LIGHTING AND SIGN ILLUMINATION

SCALE: 1" = 50'

E-21

REVISED BY	SB		
DATE REVISED	5/11/12		
HENRY ROBINO			
DAVID CLOW			
CALCULATED-DESIGNED BY			
CHECKED BY			
CONSULTANT FUNCTIONAL SUPERVISOR			
KEN NGAI			
STATE OF CALIFORNIA - DEPARTMENT OF TRANSPORTATION			
Caltrans			

LAST REVISION 05-11-12
DATE PLOTTED => 23-MAY-2012
TIME PLOTTED => 08:04

FOR ACCURATE RIGHT OF WAY DATA,
CONTACT RIGHT OF WAY ENGINEERING AT THE DISTRICT OFFICE.

Dist	COUNTY	ROUTE	POST MILES TOTAL PROJECT	SHEET No.	TOTAL SHEETS
04	Ala	580	R8.4/R14.6	557	853

David W. Clow 5/11/12
REGISTERED ELECTRICAL ENGINEER DATE

5-14-12
PLANS APPROVAL DATE

REGISTERED PROFESSIONAL ENGINEER
DAVID W. CLOW
No. 12883
Exp. 12/31/12
ELECTRICAL
STATE OF CALIFORNIA

THE STATE OF CALIFORNIA OR ITS OFFICERS OR AGENTS SHALL NOT BE RESPONSIBLE FOR THE ACCURACY OR COMPLETENESS OF SCANNED COPIES OF THIS PLAN SHEET.

ALLIANCE ENGINEERING CONSULTANT, INC.
4701 PATRICK HENRY DR., #10
SANTA CLARA, CA 95054

ALAMEDA CTC
1333 BROADWAY SUITE 220
OAKLAND, CA 94612

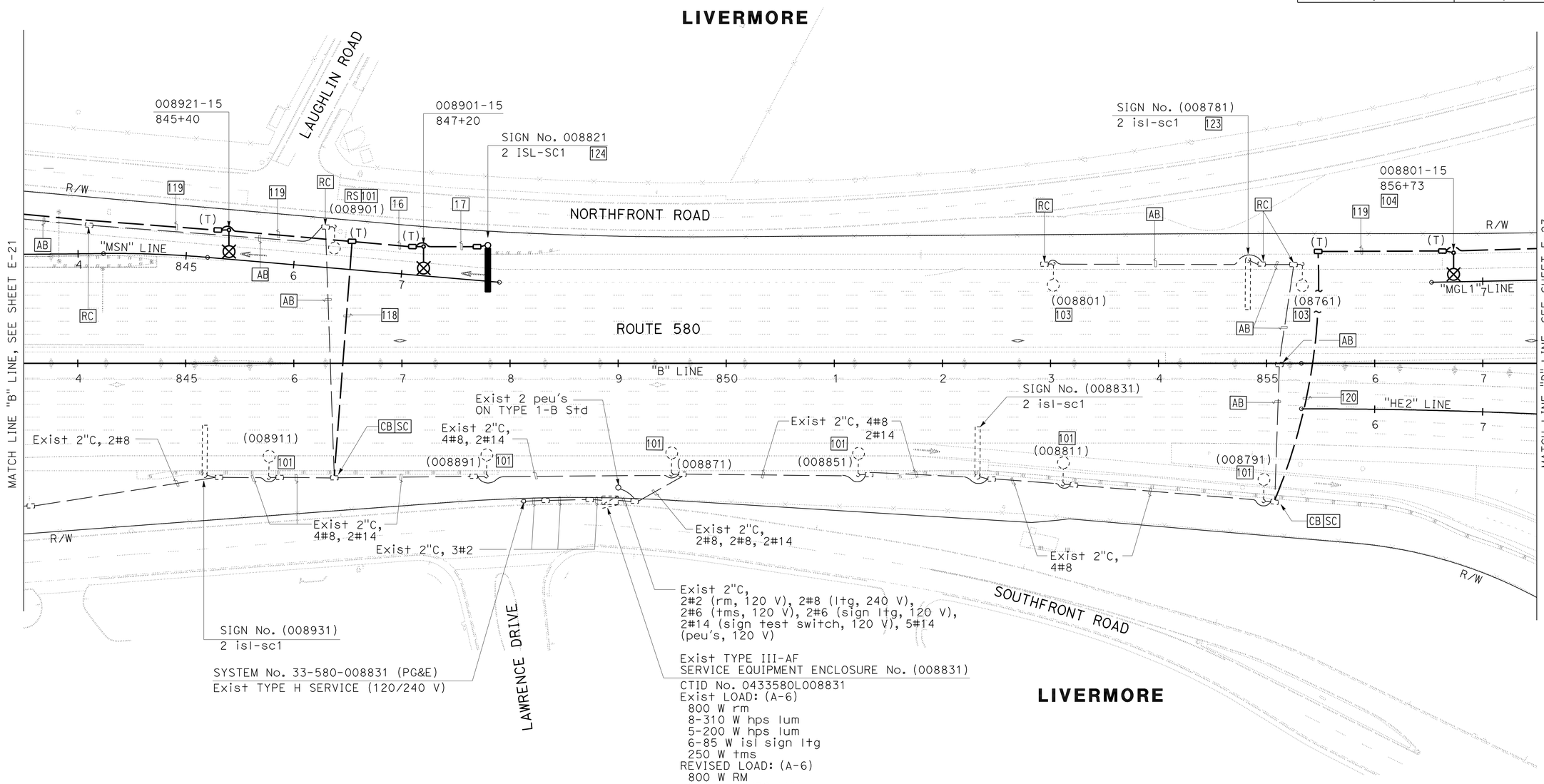

FOR NOTES, ABBREVIATIONS AND LEGEND, SEE SHEET E-1 THRU E-3

APPROVED FOR ELECTRICAL WORK ONLY

LIGHTING AND SIGN ILLUMINATION

SCALE: 1" = 50'

E-22

REVISED BY	DATE REVISED
SB	5/11/12

HENRY ROBINO — DAVID CLOW
CALCULATED-DESIGNED BY — CHECKED BY
CONSULTANT FUNCTIONAL SUPERVISOR — KEN NGAI

STATE OF CALIFORNIA - DEPARTMENT OF TRANSPORTATION
Caltrans

LAST REVISION 05-11-12 | DATE PLOTTED => 23-MAY-2012 | TIME PLOTTED => 08:04

FOR ACCURATE RIGHT OF WAY DATA,
CONTACT RIGHT OF WAY ENGINEERING AT THE DISTRICT OFFICE.

Dist	COUNTY	ROUTE	POST MILES TOTAL PROJECT	SHEET No.	TOTAL SHEETS
04	Ala	580	R8.4/R14.6	558	853

David W. Clow 5/11/12
REGISTERED ELECTRICAL ENGINEER DATE

5-14-12
PLANS APPROVAL DATE

REGISTERED PROFESSIONAL ENGINEER
DAVID W. CLOW
No. 12883
Exp. 12/31/12
ELECTRICAL
STATE OF CALIFORNIA

THE STATE OF CALIFORNIA OR ITS OFFICERS OR AGENTS SHALL NOT BE RESPONSIBLE FOR THE ACCURACY OR COMPLETENESS OF SCANNED COPIES OF THIS PLAN SHEET.

ALLIANCE ENGINEERING CONSULTANT, INC.
4701 PATRICK HENRY DR., #10
SANTA CLARA, CA 95054

ALAMEDA CTC
1 333 BROADWAY SUITE 220
OAKLAND, CA 94612

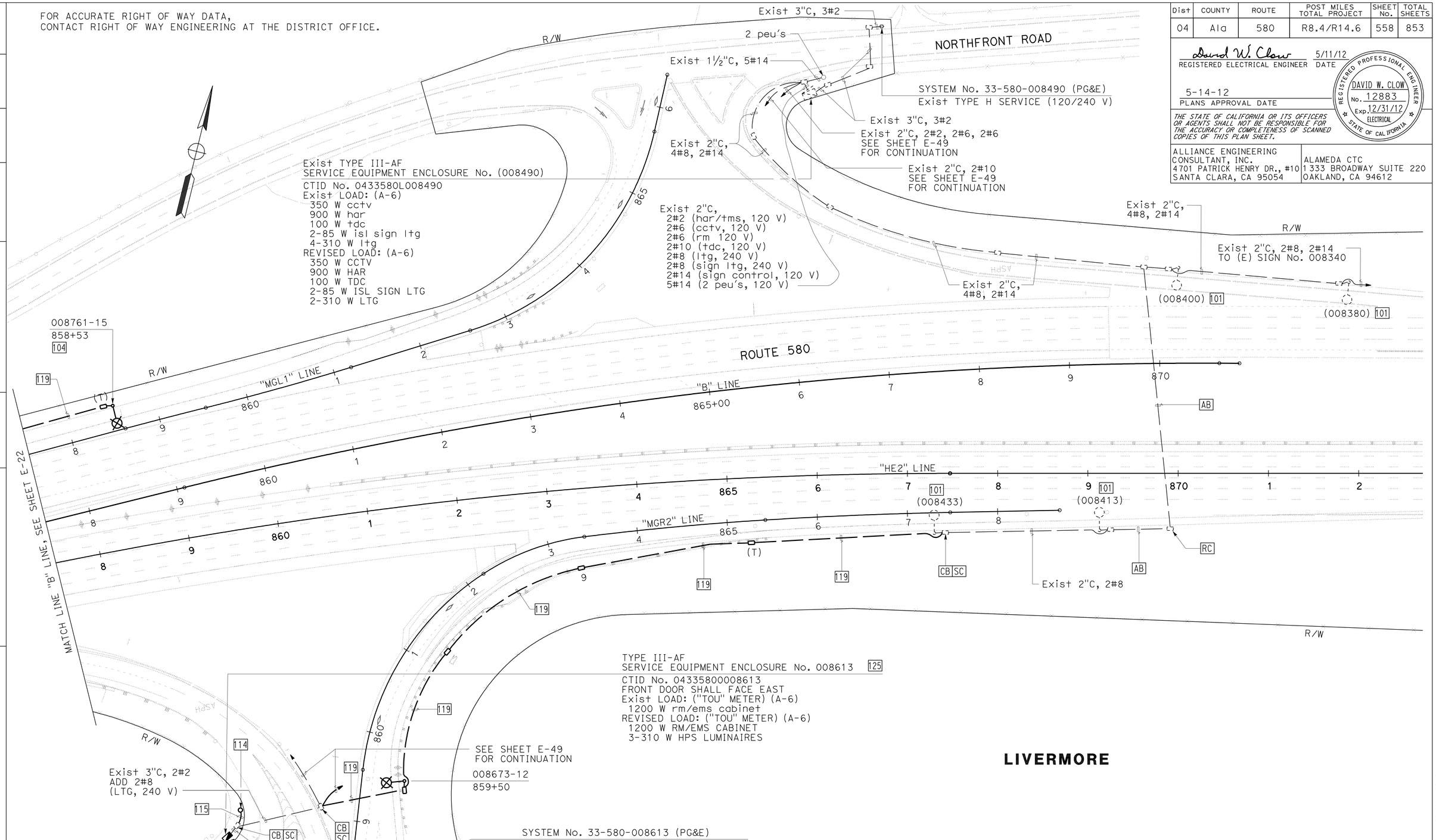

LIVERMORE

FOR NOTES, ABBREVIATIONS AND LEGEND, SEE SHEET E-1 THRU E-3

APPROVED FOR ELECTRICAL WORK ONLY

LIGHTING AND SIGN ILLUMINATION

SCALE: 1" = 50'

E-23

SB	5/11/12				
REVISED BY	DATE REVISED				
HENRY ROBINO	DAVID CLOW				
CALCULATED-DESIGNED BY	CHECKED BY				
CONSULTANT FUNCTIONAL SUPERVISOR	KEN NGAI				
STATE OF CALIFORNIA - DEPARTMENT OF TRANSPORTATION	Caltrans				

LAST REVISION 05-11-12
DATE PLOTTED => 23-MAY-2012
TIME PLOTTED => 08:04

FOR ACCURATE RIGHT OF WAY DATA,
CONTACT RIGHT OF WAY ENGINEERING AT THE DISTRICT OFFICE.

Dist	COUNTY	ROUTE	POST MILES TOTAL PROJECT	SHEET No.	TOTAL SHEETS
04	Ala	580	R8.4/R14.6	559	853

REGISTERED CIVIL ENGINEER 5/7/12 DATE

5-14-12
PLANS APPROVAL DATE

REGISTERED PROFESSIONAL ENGINEER N.V. BERNARDI No. 45407 Exp. 9/30/12 CIVIL STATE OF CALIFORNIA

THE STATE OF CALIFORNIA OR ITS OFFICERS OR AGENTS SHALL NOT BE RESPONSIBLE FOR THE ACCURACY OR COMPLETENESS OF SCANNED COPIES OF THIS PLAN SHEET.

BKF ENGINEERS
4670 WILLOW ROAD, SUITE 250
PLEASANTON, CA. 94588

ALAMEDA CTC
1333 BROADWAY SUITE 220
OAKLAND, CA. 94612

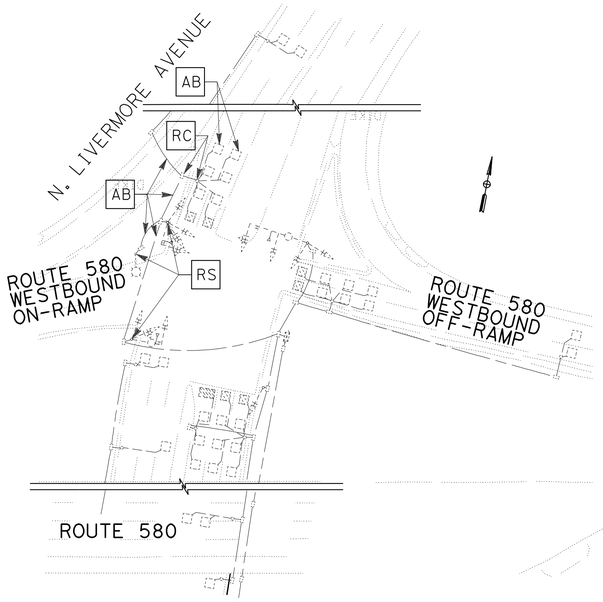

SCALE: 1" = 50'

EXISTING EQUIPMENT TO BE REMOVED AND SALVAGED:

1. 1 TYPE 15TS
2. 1 TYPE 17A-2-113 WITH 20' MAST ARM
3. 1 TYPE 18-3-113 WITH 15' MAST ARM
4. 7 VEHICLE SIGNAL HEADS

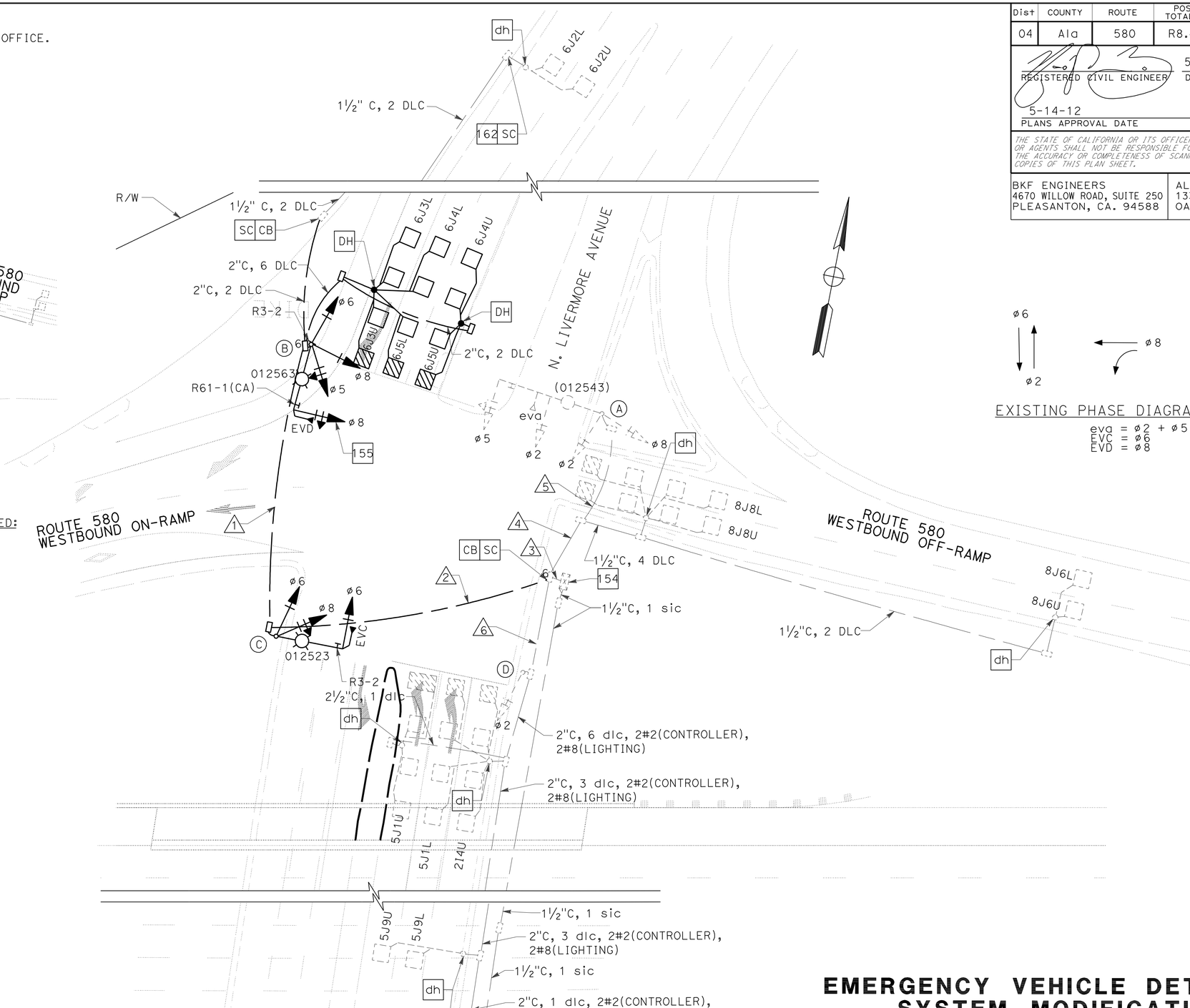

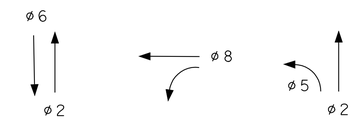

EXISTING PHASE DIAGRAM TO REMAIN

eva = ø2 + ø5
EVC = ø6
EVD = ø8

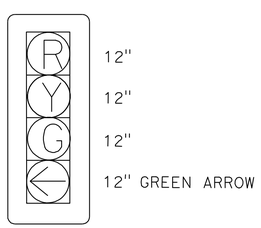

DETAIL A
4-SECTION SIGNAL HEAD
NO SCALE

FOR NOTES AND LEGEND,
SEE SHEET E-1 TO E-3.

EMERGENCY VEHICLE DETECTION SYSTEM MODIFICATION (LOCATION 1) SIGNAL AND LIGHTING (LOCATION 1)

SCALE: 1" = 20'

E-24

APPROVED FOR ELECTRICAL WORK ONLY

REVISED BY	KM
DATE REVISED	5/7/12
KEDI MEI	RODOLFO ONCHI
CALCULATED-DESIGNED BY	CHECKED BY
CONSULTANT FUNCTIONAL SUPERVISOR	NATALINA V. BERNARDI

STATE OF CALIFORNIA - DEPARTMENT OF TRANSPORTATION

LAST REVISION 05-07-12 | DATE PLOTTED => 23-MAY-2012 | TIME PLOTTED => 08:04

Dist	COUNTY	ROUTE	POST MILES TOTAL PROJECT	SHEET No.	TOTAL SHEETS
04	Ala	580	R8.4/R14.6	560	853

REGISTERED CIVIL ENGINEER 5/7/12 DATE

5-14-12
PLANS APPROVAL DATE

REGISTERED PROFESSIONAL ENGINEER N.V. BERNARDI No. 45407 Exp. 9/30/12 CIVIL STATE OF CALIFORNIA

THE STATE OF CALIFORNIA OR ITS OFFICERS OR AGENTS SHALL NOT BE RESPONSIBLE FOR THE ACCURACY OR COMPLETENESS OF SCANNED COPIES OF THIS PLAN SHEET.

BKF ENGINEERS
4670 WILLOW ROAD, SUITE 250
PLEASANTON, CA. 94588

ALAMEDA CTC
1333 BROADWAY SUITE 220
OAKLAND, CA. 94612

CONDUCTOR AND CONDUIT SCHEDULE

AWG OR CABLE	CONDUCTOR RUN	** 1	** 2	3	4	5	6
No. 14	ø2			6	3	3	3
	ø5	3	3	6	3	3	
	ø6	3	3	3			
	ø8	3	3	6	3	3	
	SPARES	3	3	6	3	3	3
	TOTAL No. 14	12	12	27	12	12	6
DLC	2I2U			1			1
	2I4U			1			1
	5J1L			1			1
	5J1U			1			1
	5J9L			1			1
	5J9U			1			1
	6J2L	1	1	1(N)			
	6J2U	1	1	1(N)			
	6J3L	1	1	1(N)			
	6J3U	1	1	1(N)			
	6J4L	1	1	1(N)			
	6J4U	1	1	1(N)			
	6J5L	1	1	1(N)			
	6J5U	1	1	1(N)			
	8J6L			1	1		
	8J6U			1	1		
	8J8U			1	1		
	8J8L			1	1		
	TOTAL DETECTOR CABLES	8	8	18	4		6
No. 8	SIGNAL NEUTRAL	1	1	1	1	1	1
	LIGHTING (240 V)	2	2		2	2	2
	TOTAL No. 8	3	3	1	3	3	3
No. 2	SERVICE TO CONTROLLER (120 V)			2			2
EVP CABLE	eva			1	1	1	
	EVC		1	1			
	EVD	1	1	1			
	TOTAL EVP CABLE	1	2	3	1	1	
	CONDUIT SIZE (INCHES)	3	3	2-3	3	3	2 1/2

(N)=INSTALL NEW CABLES OR CONDUCTORS AS INDICATED
** PROPOSED NEW CONDUIT

POLE AND EQUIPMENT SCHEDULE

LOCATION	STANDARD TYPE	STANDARD SMA	STANDARD LMA	VEH SIG MTG MAST ARM	VEH SIG MTG POLE	PED SIGNAL MTG	PPB ø	PPB ARROW	HPS LUMINAIRE (WATTS)	SPECIAL REQUIREMENTS
A	26A-4-70	40′	15′	MAS MAS	SV-2-TC				310	EXISTING eva AND R73-6(CA) SIGN ON SMA TO REMAIN.
B *	19-4-100	25′	15′	MAS	SV-3-TB				200	INSTALL EVD ON SIGNAL HEAD AND R61-1(CA) SIGN ON SMA. INSTALL R3-2 SIGN ON SIGNAL POLE.
C *	19-4-100	25′	15′	MAS	SV-2-TD				200	INSTALL EVC ON SIGNAL HEAD AND R3-2 SIGN ON SMA.
D	1-B				TV-1-T					

* PROPOSED NEW STANDARD

EMERGENCY VEHICLE DETECTION SYSTEM MODIFICATION (LOCATION 1) SIGNAL AND LIGHTING (LOCATION 1)

(CONDUCTORS AND POLE SCHEDULE)

NO SCALE

E-25

APPROVED FOR ELECTRICAL WORK ONLY

REVISED BY	DATE REVISED
KM	5/7/12

KEDI MEI — RODOLFO ONCHI — CALCULATED-DESIGNED BY — CHECKED BY

CONSULTANT FUNCTIONAL SUPERVISOR: NATALINA V. BERNARDI

STATE OF CALIFORNIA - DEPARTMENT OF TRANSPORTATION

LAST REVISION 05-07-12 | DATE PLOTTED =>23-MAY-2012 | TIME PLOTTED =>08:04

Dist	COUNTY	ROUTE	POST MILES TOTAL PROJECT	SHEET No.	TOTAL SHEETS
04	Ala	580	R8.4/R14.6	561	853

REGISTERED CIVIL ENGINEER 5/7/12 DATE

5-14-12
PLANS APPROVAL DATE

REGISTERED PROFESSIONAL ENGINEER N.V. BERNARDI No. 45407 Exp. 9/30/12 CIVIL STATE OF CALIFORNIA

THE STATE OF CALIFORNIA OR ITS OFFICERS OR AGENTS SHALL NOT BE RESPONSIBLE FOR THE ACCURACY OR COMPLETENESS OF SCANNED COPIES OF THIS PLAN SHEET.

BKF ENGINEERS
4670 WILLOW ROAD, SUITE 250
PLEASANTON, CA. 94588

ALAMEDA CTC
1333 BROADWAY SUITE 220
OAKLAND, CA. 94612

FOR ACCURATE RIGHT OF WAY DATA,
CONTACT RIGHT OF WAY ENGINEERING AT THE DISTRICT OFFICE.

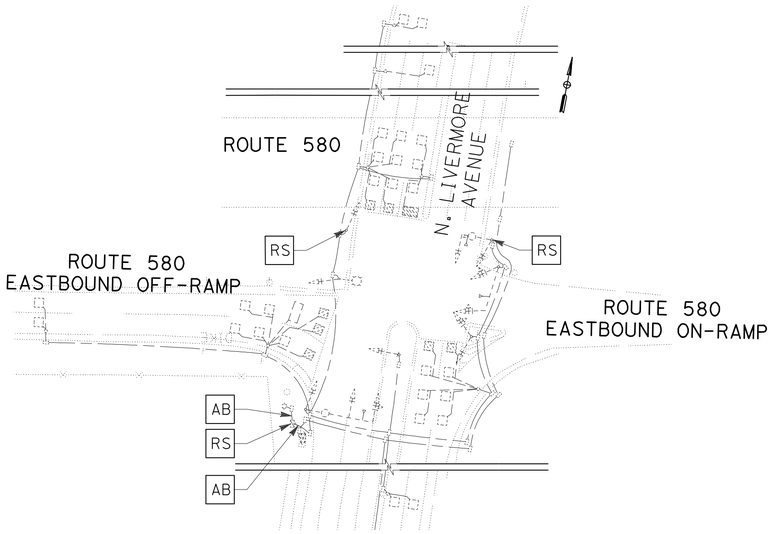

SCALE: 1" = 50'

EXISTING EQUIPMENT TO BE REMOVED AND SALVAGED:

1. 1 TYPE 1-B STANDARD
2. 1 TYPE 19A-4-113 WITH 20' MAST ARM
3. 3 VEHICLE SIGNAL HEADS
4. 1 TYPE III-AF SERVICE EQUIPMENT ENCLOSURE

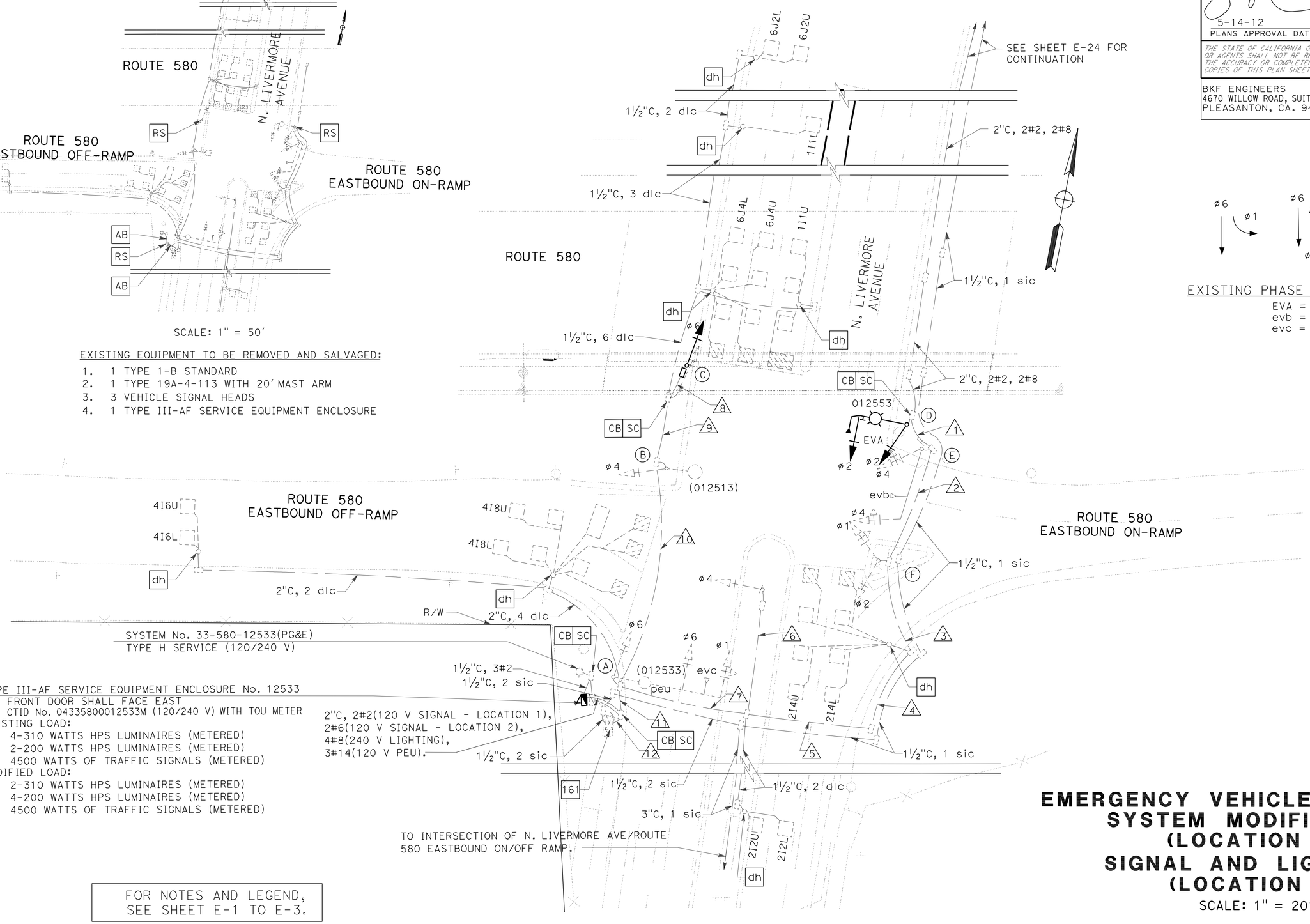

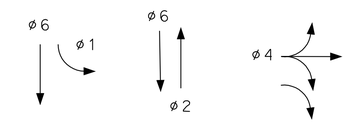

EXISTING PHASE DIAGRAM TO REMAIN

EVA = ø2
evb = ø4
evc = ø1 + ø6

FOR NOTES AND LEGEND,
SEE SHEET E-1 TO E-3.

EMERGENCY VEHICLE DETECTION SYSTEM MODIFICATION (LOCATION 2)
SIGNAL AND LIGHTING (LOCATION 2)

SCALE: 1" = 20'

E-26

APPROVED FOR ELECTRICAL WORK ONLY

REVISED BY	DATE REVISED
KM	5/7/12

KEDI MEI — RODOLFO ONCHI — CALCULATED-DESIGNED BY — CHECKED BY

CONSULTANT FUNCTIONAL SUPERVISOR: NATALINA V. BERNARDI

STATE OF CALIFORNIA - DEPARTMENT OF TRANSPORTATION

LAST REVISION 05-07-12 — DATE PLOTTED => 23-MAY-2012 — TIME PLOTTED => 08:04

Dist	COUNTY	ROUTE	POST MILES TOTAL PROJECT	SHEET No.	TOTAL SHEETS
04	Ala	580	R8.4/R14.6	562	853

REGISTERED CIVIL ENGINEER 5/7/12 DATE

5-14-12
PLANS APPROVAL DATE

REGISTERED PROFESSIONAL ENGINEER N.V. BERNARDI No. 45407 Exp. 9/30/12 CIVIL STATE OF CALIFORNIA

THE STATE OF CALIFORNIA OR ITS OFFICERS OR AGENTS SHALL NOT BE RESPONSIBLE FOR THE ACCURACY OR COMPLETENESS OF SCANNED COPIES OF THIS PLAN SHEET.

BKF ENGINEERS
4670 WILLOW ROAD, SUITE 250
PLEASANTON, CA. 94588

ALAMEDA CTC
1333 BROADWAY SUITE 220
OAKLAND, CA. 94612

CONDUCTOR AND CONDUIT SCHEDULE

AWG OR CABLE	CONDUCTOR RUN	1	2	3	4	5	6	7	8	9	10	11	12
No. 14	ø1			3	3	3		3				3	3
	ø2	3	3	3	3	3		3				3	3
	ø4		3	3	3	3	3	6			3	9	9
	ø6								3	3	3	3	3
	PEU											3	
	SPARES	3	3	3	3	3	3	3	3	3	3	6	6
	TOTAL No. 14	6	9	12	12	12	6	15	6	6	9	27	24
DLC	1I1L									1	1	1	1
	1I1U									1	1	1	1
	2I2L							1				1	1
	2I2U							1				1	1
	2I4L				1	1		1				1	1
	2I4U				1	1		1				1	1
	4I6L											1	1
	4I6U											1	1
	4I8L											1	1
	4I8U											1	1
	6J2L									1	1	1	1
	6J2U									1	1	1	1
	6J4L									1	1	1	1
	6J4U									1	1	1	1
	TOTAL DETECTOR CABLES				2	2		4		6	6	14	14
No. 8	SIGNAL NEUTRAL	1	1	1	1	1	1	2	1	1	1	3	3
	LIGHTING (240 V)	4	4	4	4	4		4			2	4	
	TOTAL No. 8												
No. 6	SERVICE TO CONTROLLER (120 V) (LOCATION 2)												2
No. 2	SERVICE TO CONTROLLER (120 V) (LOCATION 1)	2	2	2	2	2		2				2	
EVP CABLE	EVA	1	1	1	1	1		1				1	1
	evb		1	1	1	1		1				1	1
	evc											1	1
	TOTAL EVP CABLE	1	2	2	2	2		2				3	3
	CONDUIT SIZE (INCHES)	2	3	3	3	3	2	3	2	2	2	2-3	2-3

POLE AND EQUIPMENT SCHEDULE

LOCATION	STANDARD			VEH SIG MTG		PED SIGNAL MTG	PPB		HPS LUMINAIRE (WATTS)	SPECIAL REQUIREMENTS
	TYPE	SMA	LMA	MAST ARM	POLE		ø	ARROW		
A	26A-4-70	45′	15′	MAS MAS	SV-1-T				310	EXISTING evc ON SMA TO REMAIN.
B	15		15′		SV-1-T				200	
C *	1-B				TV-1-T					
D *	19A-4-100	20′	15′	MAS	SV-1-T				200	INSTALL R3-18 SIGN ON SMA. INSTALL EVA ON SIGNAL HEAD.
E	1-B				TV-2-T					EXISTING evb ON SMA TO REMAIN.
F	1-B				TV-1-T					

* PROPOSED NEW STANDARD

EMERGENCY VEHICLE DETECTION SYSTEM MODIFICATION (LOCATION 2) SIGNAL AND LIGHTING (LOCATION 2) (CONDUCTORS AND POLE SCHEDULE)

E-27

APPROVED FOR ELECTRICAL WORK ONLY

REVISED BY	DATE REVISED
KM	5/7/12

KEDI MEI — RODOLFO ONCHI

CALCULATED-DESIGNED BY — CHECKED BY

CONSULTANT FUNCTIONAL SUPERVISOR: NATALINA V. BERNARDI

STATE OF CALIFORNIA - DEPARTMENT OF TRANSPORTATION

Caltrans

LAST REVISION 05-07-12 | DATE PLOTTED =>23-MAY-2012 | TIME PLOTTED =>08:04

Dist	COUNTY	ROUTE	POST MILES TOTAL PROJECT	SHEET No.	TOTAL SHEETS
04	Ala	580	R8.4/R14.6	563	853

REGISTERED CIVIL ENGINEER 5/7/12 DATE

5-14-12
PLANS APPROVAL DATE

REGISTERED PROFESSIONAL ENGINEER N.V. BERNARDI No. 45407 Exp. 9/30/12 CIVIL STATE OF CALIFORNIA

THE STATE OF CALIFORNIA OR ITS OFFICERS OR AGENTS SHALL NOT BE RESPONSIBLE FOR THE ACCURACY OR COMPLETENESS OF SCANNED COPIES OF THIS PLAN SHEET.

BKF ENGINEERS
4670 WILLOW ROAD, SUITE 250
PLEASANTON, CA. 94588

ALAMEDA CTC
1333 BROADWAY SUITE 220
OAKLAND, CA. 94612

FOR ACCURATE RIGHT OF WAY DATA,
CONTACT RIGHT OF WAY ENGINEERING AT THE DISTRICT OFFICE.

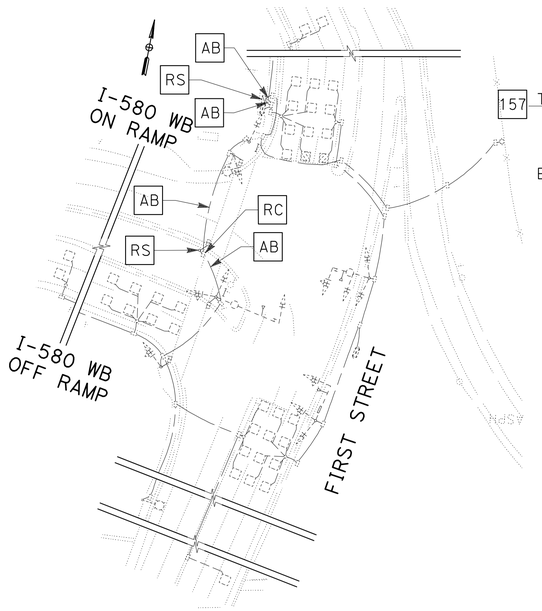

SCALE: 1" = 50'

EXISTING EQUIPMENT TO BE REMOVED AND SALVAGED:

1. 1 TYPE 1-B POLE
2. 1 PEDESTRIAN SIGNAL HEAD
3. 1 PEDESTRIAN BUTTON
4. 1 TYPE III-AF SERVICE EQUIPMENT ENCLOSURE

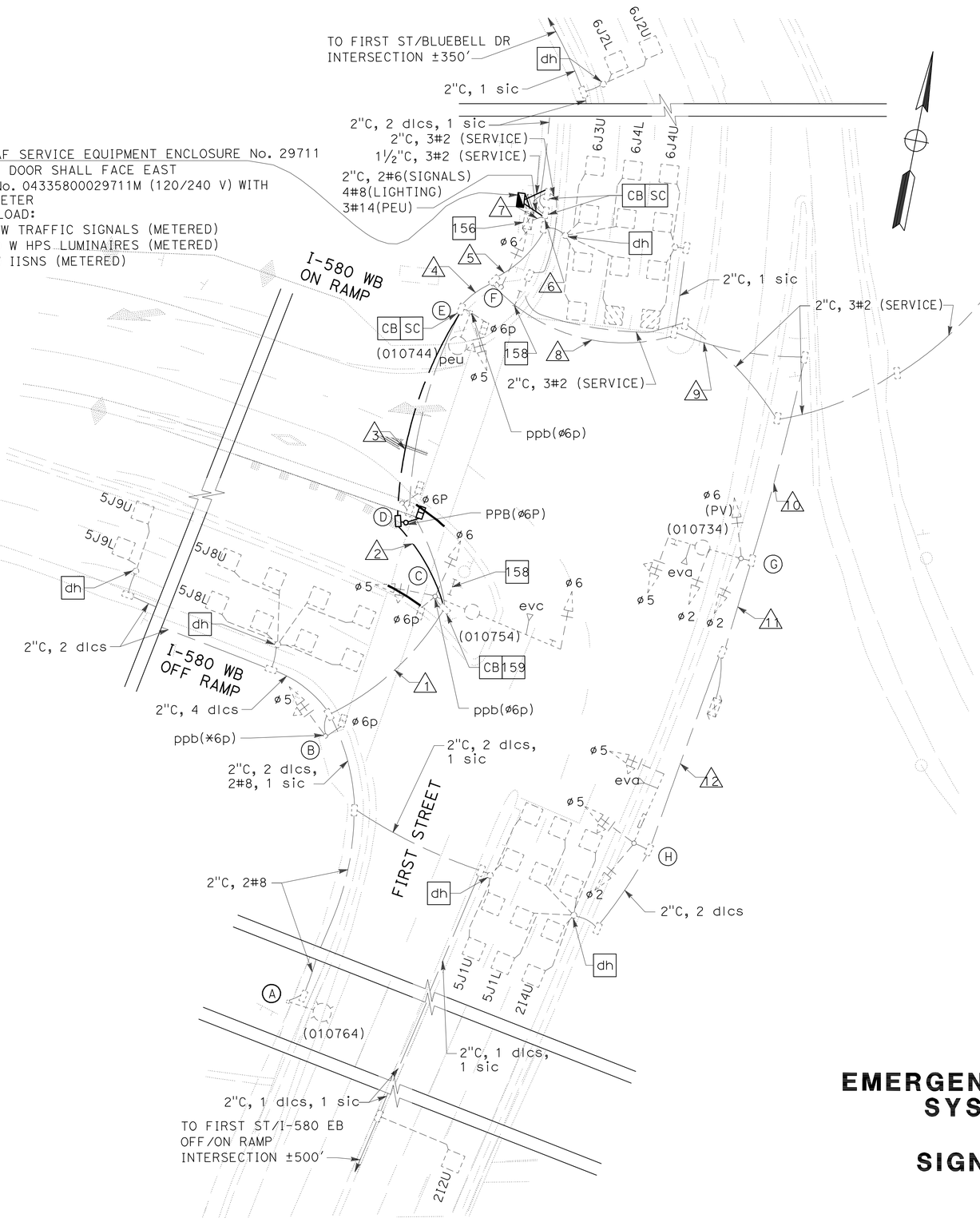

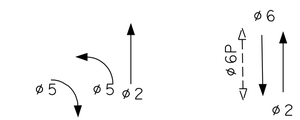

EXISTING PHASE DIAGRAM TO REMAIN

eva = ø5
evc = ø6

FOR NOTES AND LEGEND,
SEE SHEET E-1 TO E-3.

APPROVED FOR ELECTRICAL WORK ONLY

EMERGENCY VEHICLE DETECTION SYSTEM MODIFICATION (LOCATION 3)
SIGNAL AND LIGHTING (LOCATION 3)

SCALE: 1" = 20'

E-28

REVISED BY	DATE REVISED
KM	5/7/12

KEDI MEI — RODOLFO ONCHI — CALCULATED-DESIGNED BY — CHECKED BY

CONSULTANT FUNCTIONAL SUPERVISOR: NATALINA V. BERNARDI

STATE OF CALIFORNIA - DEPARTMENT OF TRANSPORTATION

LAST REVISION 05-07-12 — DATE PLOTTED =>23-MAY-2012 — TIME PLOTTED =>08:04

Dist	COUNTY	ROUTE	POST MILES TOTAL PROJECT	SHEET No.	TOTAL SHEETS
04	Ala	580	R8.4/R14.6	564	853

REGISTERED CIVIL ENGINEER 5/7/12 DATE

5-14-12
PLANS APPROVAL DATE

REGISTERED PROFESSIONAL ENGINEER N.V. BERNARDI No. 45407 Exp. 9/30/12 CIVIL STATE OF CALIFORNIA

THE STATE OF CALIFORNIA OR ITS OFFICERS OR AGENTS SHALL NOT BE RESPONSIBLE FOR THE ACCURACY OR COMPLETENESS OF SCANNED COPIES OF THIS PLAN SHEET.

BKF ENGINEERS
4670 WILLOW ROAD, SUITE 250
PLEASANTON, CA. 94588

ALAMEDA CTC
1333 BROADWAY SUITE 220
OAKLAND, CA. 94612

CONDUCTOR AND CONDUIT SCHEDULE

AWG OR CABLE	CONDUCTOR RUN	1	2**	3**	4	5	6	7	8	9	10	11	12
No. 14	ø2				1	1	1	1	1	1	1	1	1
	ø5	3	3	3	6	6	6	6	3	3	3	3	3
	ø6		3	3	6	6	6	6	3	3			
	PEU				3	3	3						
	SPARES	3	3	3	6	6	6	6	3	3	3	3	3
	TOTAL No. 14	6	9	9	22	22	22	19	10	10	7	7	7
DLC	2I2U	1	1	1	1	1	1	1					
	2I4U				1	1	1	1	1	1	1	1	1
	5J1L				1	1	1	1	1	1	1	1	1
	5J1U	1	1	1	1	1	1	1					
	5J8L	1	1	1	1	1	1	1					
	5J8U	1	1	1	1	1	1	1					
	5J9L	1	1	1	1	1	1	1					
	5J9U	1	1	1	1	1	1	1					
	6J2L							1					
	6J2U							1					
	6J3U						1	1					
	6J4L						1	1					
	6J4U						1	1					
	TOTAL DETECTOR CABLES	6	6	6	8	8	11	13	2	2	2	2	2
No. 6	SERVICE TO CONTROLLER (120 V)							2					
No. 8	SIGNAL NEUTRAL	1	1	1	1	1	1	1	1	1	1	1	1
	LIGHTING (240 V)	2	2	2	2	2	2		2	2	2		
	TOTAL No. 8	3	3	3	3	3	3	1	3	3	3	1	1
CABLE	eva				2	2	2	2	2	2	2	1	1
	evc		1	1	1(N)	1(N)	1(N)	1(N)					
	TOTAL EVP CABLE		1	1	3	3	3	3	2	2	2	1	1
	SIGNAL INTERCONNECT	1	1	1	1	1	1	1					
	CONDUIT SIZE (INCHES)												

** PROPOSED NEW CONDUIT

(N) = INSTALL NEW CABLES OR CONDUCTORS AS INDICATED

POLE AND EQUIPMENT SCHEDULE

LOCATION	STANDARD TYPE	STANDARD SMA	STANDARD LMA	VEH SIG MTG MAST ARM	VEH SIG MTG POLE	PED SIGNAL MTG	PPB ø	PPB ARROW	HPS LUMINAIRE (WATTS)	SPECIAL REQUIREMENTS
A	15TS		15′						200	
B	1-B				TV-1-T	SP-1-T	6	→		
C	26-3-70	45′	15′	MAS	SV-2-T	SP-1-T	6	→	200	EXISTING evc AND R3-4 SIGN ON SMA TO REMAIN.
D*	1-B					TP-1-T	6	→		
E	15TS		15′		SV-1-T	SP-1-T	6	←	200	
F	1-B				TV-1-T					
G	19-3-70	25′	15′	MAS MAS	SV-1-T SV-1-T				200	EXISTING eva AND R73-6(CA) SIGN ON SMA TO REMAIN.
H	18-2-70	25′	15′	MAS	SV-2-T					EXISTING eva and iisns ON SMA TO REMAIN.

* PROPOSED NEW STANDARD

EMERGENCY VEHICLE DETECTION SYSTEM MODIFICATION (LOCATION 3)
SIGNAL AND LIGHTING (LOCATION 3)
(CONDUCTORS AND POLE SCHEDULE)

E-29

APPROVED FOR ELECTRICAL WORK ONLY

STATE OF CALIFORNIA - DEPARTMENT OF TRANSPORTATION

CONSULTANT FUNCTIONAL SUPERVISOR: NATALINA V. BERNARDI

CALCULATED-DESIGNED BY: KEDI MEI | CHECKED BY: RODOLFO ONCHI

REVISED BY: KM | DATE REVISED: 5/7/12

LAST REVISION 05-07-12 | DATE PLOTTED => 23-MAY-2012 | TIME PLOTTED => 08:04

FOR ACCURATE RIGHT OF WAY DATA,
CONTACT RIGHT OF WAY ENGINEERING AT THE DISTRICT OFFICE.

Dist	COUNTY	ROUTE	POST MILES TOTAL PROJECT	SHEET No.	TOTAL SHEETS
04	Ala	580	R8.4/R14.6	565	853

David W. Clow 05/11/12
REGISTERED ELECTRICAL ENGINEER DATE

5-14-12
PLANS APPROVAL DATE

REGISTERED PROFESSIONAL ENGINEER
DAVID W. CLOW
No. 12883
Exp. 12/31/12
ELECTRICAL
STATE OF CALIFORNIA

THE STATE OF CALIFORNIA OR ITS OFFICERS OR AGENTS SHALL NOT BE RESPONSIBLE FOR THE ACCURACY OR COMPLETENESS OF SCANNED COPIES OF THIS PLAN SHEET.

ALLIANCE ENGINEERING CONSULTANT, INC.
4701 PATRICK HENRY DR., #10
SANTA CLARA, CA 95054

ALAMEDA CTC
1 333 BROADWAY SUITE 220
OAKLAND, CA 94612

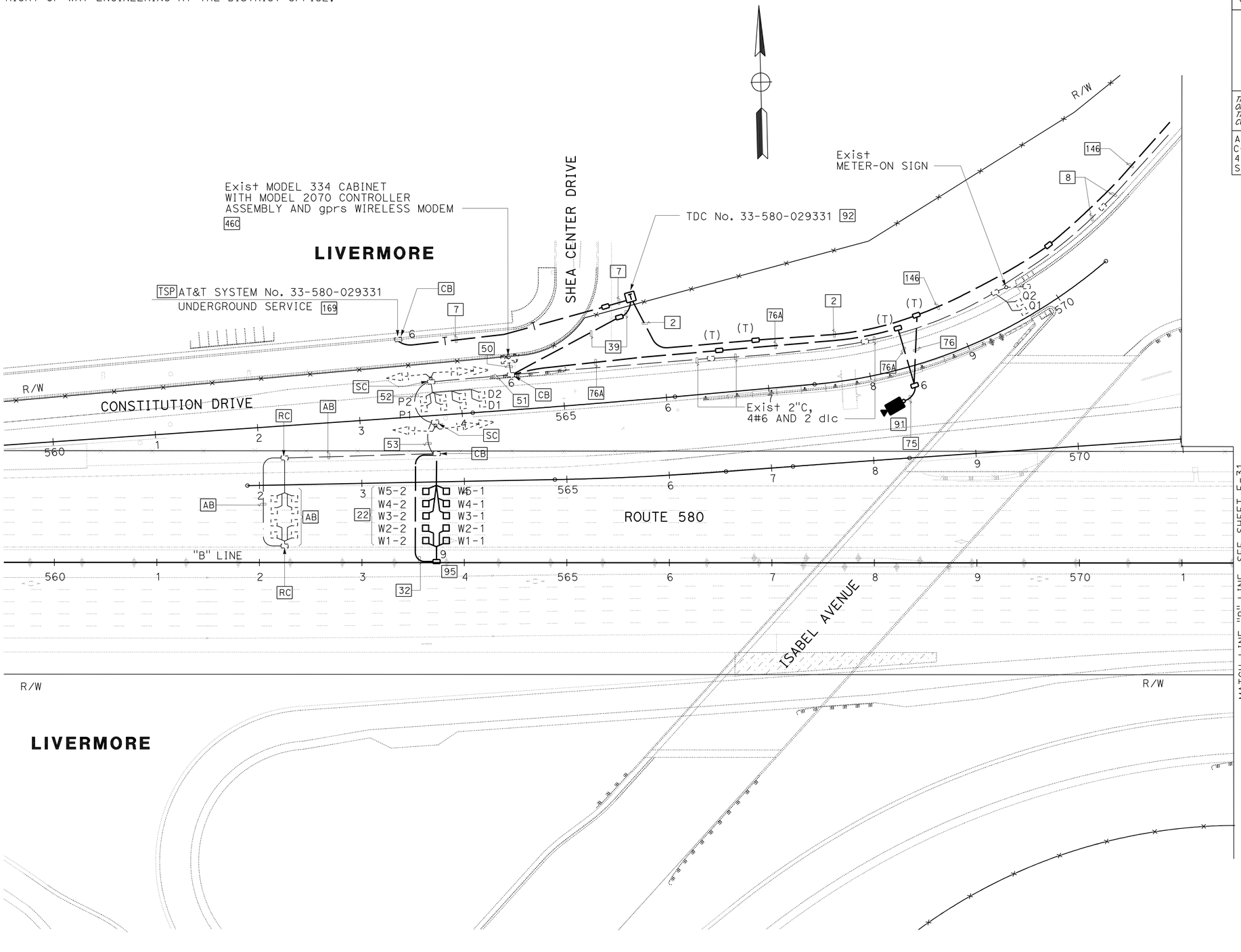

RAMP METERING SYSTEM (LOCATION 1)
CLOSED CIRCUIT TELEVISION SYSTEM (LOCATION 1)

SCALE: 1" = 50'

FOR NOTES, ABBREVIATIONS AND LEGEND, SEE SHEET E-1 THRU E-3

APPROVED FOR ELECTRICAL WORK ONLY

E-30

SB	5/11/12		
REVISED BY	DATE REVISED		
HENRY ROBINO	DAVID CLOW		
CALCULATED-DESIGNED BY	CHECKED BY		
CONSULTANT FUNCTIONAL SUPERVISOR	KEN NGAI		

STATE OF CALIFORNIA - DEPARTMENT OF TRANSPORTATION
Caltrans

LAST REVISION 05-11-12
DATE PLOTTED => 23-MAY-2012
TIME PLOTTED => 08:04

Dist	COUNTY	ROUTE	POST MILES TOTAL PROJECT	SHEET No.	TOTAL SHEETS
04	Ala	580	R8.4/R14.6	566	853

David W. Clow 05/11/12
REGISTERED ELECTRICAL ENGINEER DATE

5-14-12
PLANS APPROVAL DATE

REGISTERED PROFESSIONAL ENGINEER DAVID W. CLOW No. 12883 Exp. 12/31/12 ELECTRICAL STATE OF CALIFORNIA

THE STATE OF CALIFORNIA OR ITS OFFICERS OR AGENTS SHALL NOT BE RESPONSIBLE FOR THE ACCURACY OR COMPLETENESS OF SCANNED COPIES OF THIS PLAN SHEET.

ALLIANCE ENGINEERING CONSULTANT, INC.
4701 PATRICK HENRY DR., #10
SANTA CLARA, CA 95054

ALAMEDA CTC
1 333 BROADWAY SUITE 220
OAKLAND, CA 94612

FOR ACCURATE RIGHT OF WAY DATA,
CONTACT RIGHT OF WAY ENGINEERING AT THE DISTRICT OFFICE.

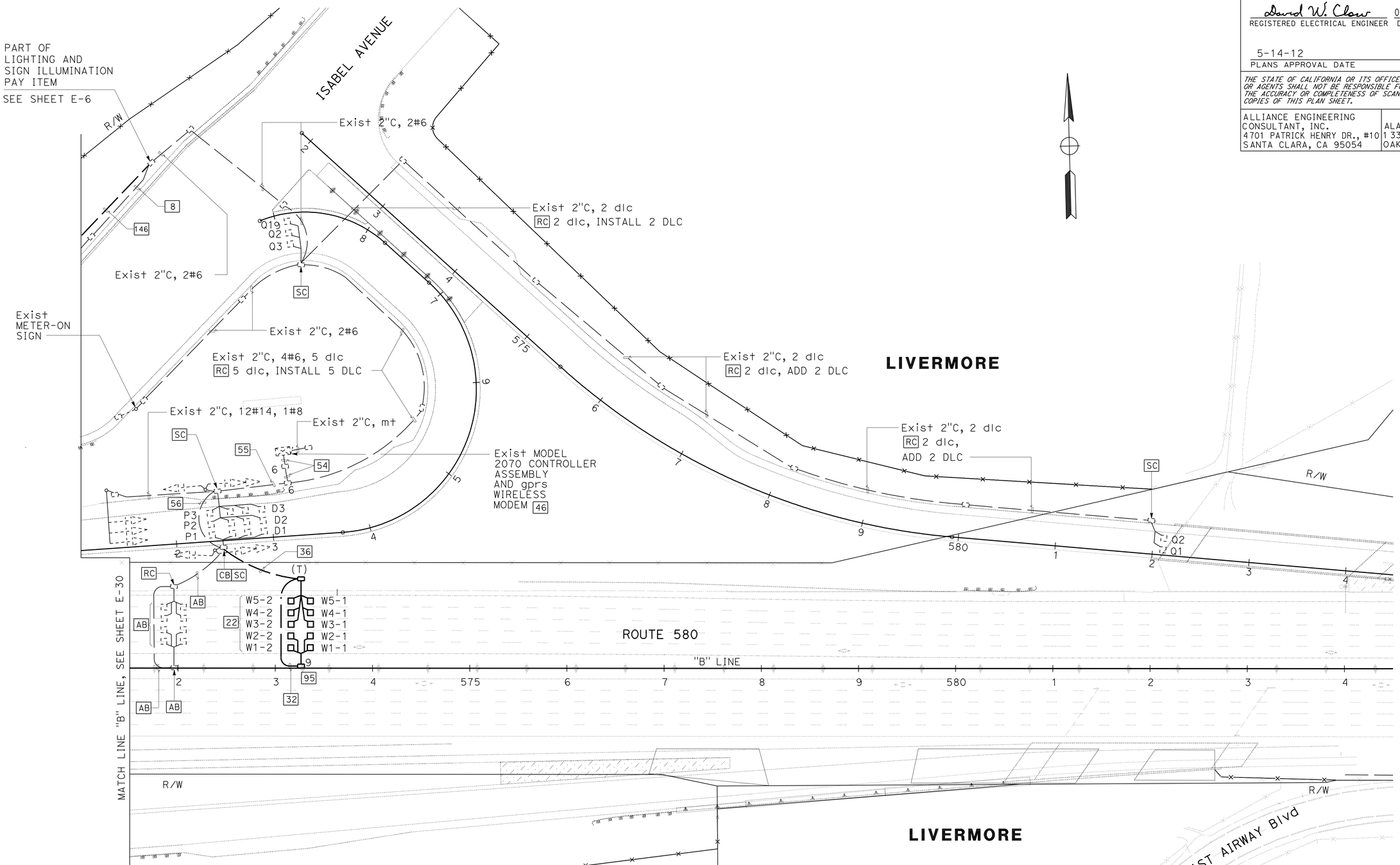

FOR NOTES, ABBREVIATIONS AND LEGEND, SEE SHEET E-1 THRU E-3

APPROVED FOR ELECTRICAL WORK ONLY

RAMP METERING SYSTEM (LOCATION 2)

SCALE: 1" = 50'

E-31

REVISED BY	SB
DATE REVISED	5/11/12
HENRY ROBINO	
DAVID CLOW	
CALCULATED-DESIGNED BY	
CHECKED BY	
CONSULTANT FUNCTIONAL SUPERVISOR	KEN NGAI

STATE OF CALIFORNIA - DEPARTMENT OF TRANSPORTATION

Caltrans

LAST REVISION 05-11-12 | DATE PLOTTED => 23-MAY-2012 | TIME PLOTTED => 08:04

BORDER LAST REVISED 7/2/2010 | USERNAME => s114640 | DGN FILE => 0400021248ua031.dgn | RELATIVE BORDER SCALE IS IN INCHES 0 1 2 3 | UNIT 0735 | PROJECT NUMBER & PHASE 04000212481

FOR ACCURATE RIGHT OF WAY DATA,
CONTACT RIGHT OF WAY ENGINEERING AT THE DISTRICT OFFICE.

Dist	COUNTY	ROUTE	POST MILES TOTAL PROJECT	SHEET No.	TOTAL SHEETS
04	Ala	580	R8.4/R14.6	567	853

David W. Clow 05/11/12
REGISTERED ELECTRICAL ENGINEER DATE

5-14-12
PLANS APPROVAL DATE

REGISTERED PROFESSIONAL ENGINEER
DAVID W. CLOW
No. 12883
Exp. 12/31/12
ELECTRICAL
STATE OF CALIFORNIA

THE STATE OF CALIFORNIA OR ITS OFFICERS OR AGENTS SHALL NOT BE RESPONSIBLE FOR THE ACCURACY OR COMPLETENESS OF SCANNED COPIES OF THIS PLAN SHEET.

ALLIANCE ENGINEERING CONSULTANT, INC.
4701 PATRICK HENRY DR., #10
SANTA CLARA, CA 95054

ALAMEDA CTC
1 333 BROADWAY SUITE 220
OAKLAND, CA 94612

LIVERMORE

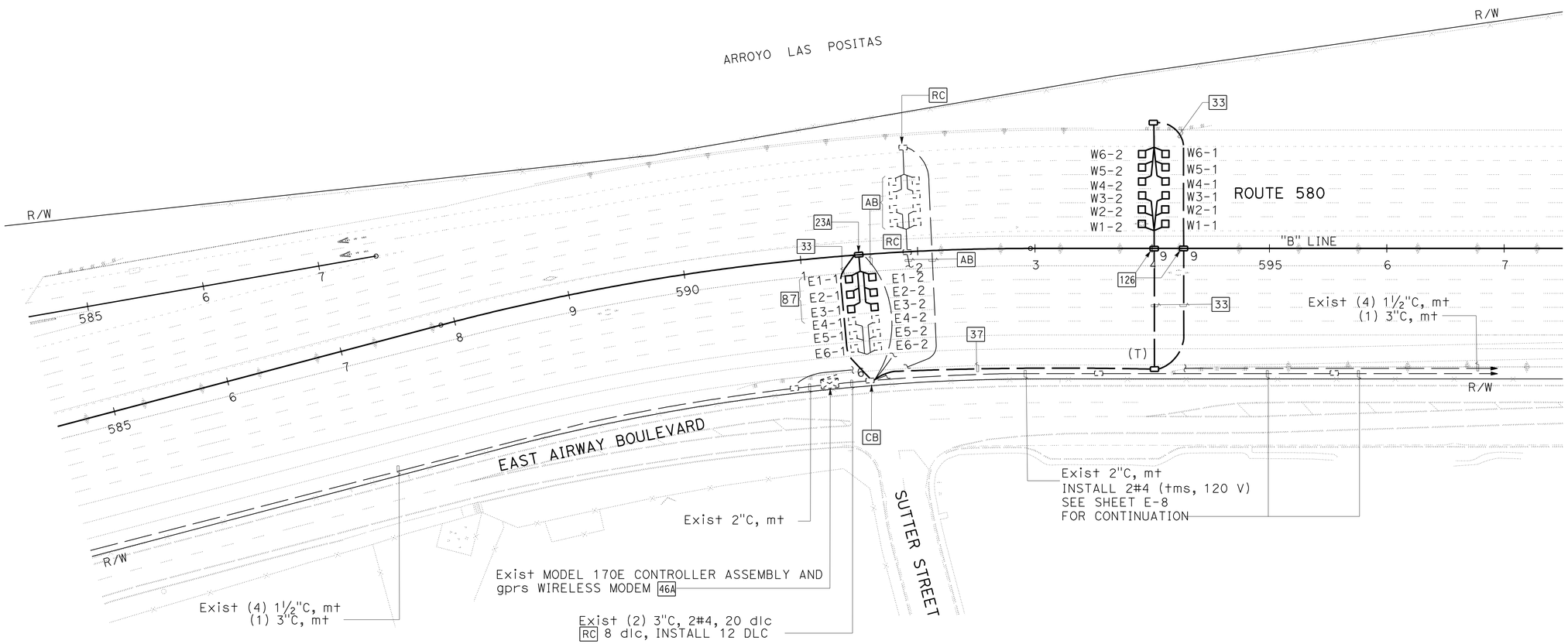

LIVERMORE

TRAFFIC MONITORING STATION (LOCATION 1)

SCALE: 1" = 50'

FOR NOTES, ABBREVIATIONS AND LEGEND, SEE SHEET E-1 THRU E-3

APPROVED FOR ELECTRICAL WORK ONLY

E-32

REVISED BY	SB		
DATE REVISED	5/11/12		
HENRY ROBINO			
DAVID CLOW			
CALCULATED-DESIGNED BY			
CHECKED BY			
SUPERVISOR			
KEN NGAI			

STATE OF CALIFORNIA - DEPARTMENT OF TRANSPORTATION
CONSULTANT FUNCTIONAL SUPERVISOR
Caltrans

LAST REVISION 05-11-12
DATE PLOTTED => 23-MAY-2012
TIME PLOTTED => 08:05

Dist	COUNTY	ROUTE	POST MILES TOTAL PROJECT	SHEET No.	TOTAL SHEETS
04	Ala	580	R8.4/R14.6	568	853

David W. Clow 05/11/12
REGISTERED ELECTRICAL ENGINEER DATE

5-14-12
PLANS APPROVAL DATE

REGISTERED PROFESSIONAL ENGINEER DAVID W. CLOW No. 12883 Exp. 12/31/12 ELECTRICAL STATE OF CALIFORNIA

THE STATE OF CALIFORNIA OR ITS OFFICERS OR AGENTS SHALL NOT BE RESPONSIBLE FOR THE ACCURACY OR COMPLETENESS OF SCANNED COPIES OF THIS PLAN SHEET.

ALLIANCE ENGINEERING CONSULTANT, INC.
4701 PATRICK HENRY DR., #10
SANTA CLARA, CA 95054

ALAMEDA CTC
1 333 BROADWAY SUITE 220
OAKLAND, CA 94612

FOR ACCURATE RIGHT OF WAY DATA,
CONTACT RIGHT OF WAY ENGINEERING AT THE DISTRICT OFFICE.

TYPE III-AF
SERVICE EQUIPMENT ENCLOSURE No. 013111 [84]
CTID No. 04335800013111
LOAD: (A - 6)
100 W - TDC
800 W - CCTV
1200 W - CMS
1-600 W WINCH MOTOR
DOOR SHALL FACE SOUTH

[RC] 8 VEHICLE SENSOR NODES.
INSTALL 12 NEW VEHICLE SENSOR NODES IN THE CENTER OF THE LANES.
SEE SHEET E-65 FOR INSTALLATION DETAILS

Exist wmvds ACCESS POINT (LOCATION 1) RECONFIGURE TO SUIT NEW VEHICLE SENSOR NODES

LIVERMORE CITY LIMITS
ALAMEDA COUNTY

RELOCATED MODEL 170E CONTROLLER ASSEMBLY FROM THE LOCATION INDICATED ON SHEET E-34, AT STA ± 623+50. FRONT DOOR SHALL FACE WEST. INSTALL 30 Ft Min FROM THE ETW. SEE ES-3C FOR FOUNDATION DETAILS.

[RL] Exist FULL CANTILEVER cms STRUCTURE, MODEL 500 CMS SIGN PANEL, CABLE HARNESS 4 & 5 AND DISCONNECT SWITCH TO LOCATION INDICATED NEAR STA "B" 617+20

[TSP] AT&T SYSTEM No. 33-580-013111 [169]

SYSTEM No. 33-580-013111
(N) TYPE H SERVICE (120/240 V)

10 FT Min

Exist 2"C, [RC] 6 dlc
INSTALL 6 DLC

TDC No. 33-580-013111 [92]

30 Ft Min FROM ETW

CAYETANO COURT

R/W

CMS

PORTOLA Ave OC

"B" LINE

ROUTE 580

ARROYO LAS POSITAS Br

Exist (4) 1½"C, mt
(1) 3"C, mt

3"C, MT

Exist 3"C, [RC] 20 dlc
INSTALL 24 DLC

Exist (4) 1½"C, mt
(1) 3"C, mt

Exist (4) 1½"C, mt
(1) 3"C, mt

TO EXISTING SERVICE
SEE SHEET E-8

Exist 2"C, mt
INSTALL 2#8 (tms, 120 V)

Exist 2"C, mt

Exist (2) 3"C,
[RC] Exist CONDUCTORS
INSTALL 24 DLC
AND 2#8

Exist MODEL 170E CONTROLLER ASSEMBLY AND gprs WIRELESS MODEM [46A]

LIVERMORE

PORTOLA Ave

CCTV CONTROLLER CABINET [74]
FRONT DOOR SHALL FACE WEST

RELOCATED, FULL CANTILEVER CMS STRUCTURE, MODEL 500 SIGN PANEL, CABLE HARNESS 4 & 5 AND DISCONNECT SWITCH FROM STATION 623+20 AS SHOWN ON THIS SHEET. SEE CIVIL SIGN PLANS FOR FOUNDATION DETAILS.

MATCH LINE "B" LINE, SEE SHEET E-34

MODIFY WIRELESS MAGNETOMETER VEHICLE DETECTION STATION (LOCATION 1)
TRAFFIC MONITORING STATION (LOCATION 2)
CLOSED CIRCUIT TELEVISION SYSTEM (LOCATION 2)
RELOCATE MODEL 500 CHANGEABLE MESSAGE SIGN SYSTEM

SCALE: 1" = 50'

FOR NOTES, ABBREVIATIONS AND LEGEND, SEE SHEET E-1 THRU E-3

APPROVED FOR ELECTRICAL WORK ONLY

E-33

REVISED BY	DATE REVISED
SB	5/11/12

HENRY ROBINO — DAVID CLOW
CALCULATED-DESIGNED BY — CHECKED BY
CONSULTANT FUNCTIONAL SUPERVISOR — KEN NGAI

STATE OF CALIFORNIA - DEPARTMENT OF TRANSPORTATION
Caltrans

LAST REVISION 05-11-12 | DATE PLOTTED => 23-MAY-2012 | TIME PLOTTED => 14:03

FOR ACCURATE RIGHT OF WAY DATA,
CONTACT RIGHT OF WAY ENGINEERING AT THE DISTRICT OFFICE.

Dist	COUNTY	ROUTE	POST MILES TOTAL PROJECT	SHEET No.	TOTAL SHEETS
04	Ala	580	R8.4/R14.6	569	853

David W. Clow 05/11/12
REGISTERED ELECTRICAL ENGINEER DATE

5-14-12
PLANS APPROVAL DATE

REGISTERED PROFESSIONAL ENGINEER
DAVID W. CLOW
No. 12883
Exp. 12/31/12
ELECTRICAL
STATE OF CALIFORNIA

THE STATE OF CALIFORNIA OR ITS OFFICERS OR AGENTS SHALL NOT BE RESPONSIBLE FOR THE ACCURACY OR COMPLETENESS OF SCANNED COPIES OF THIS PLAN SHEET.

ALLIANCE ENGINEERING CONSULTANT, INC.
4701 PATRICK HENRY DR., #10
SANTA CLARA, CA 95054

ALAMEDA CTC
1 333 BROADWAY SUITE 220
OAKLAND, CA 94612

LIVERMORE

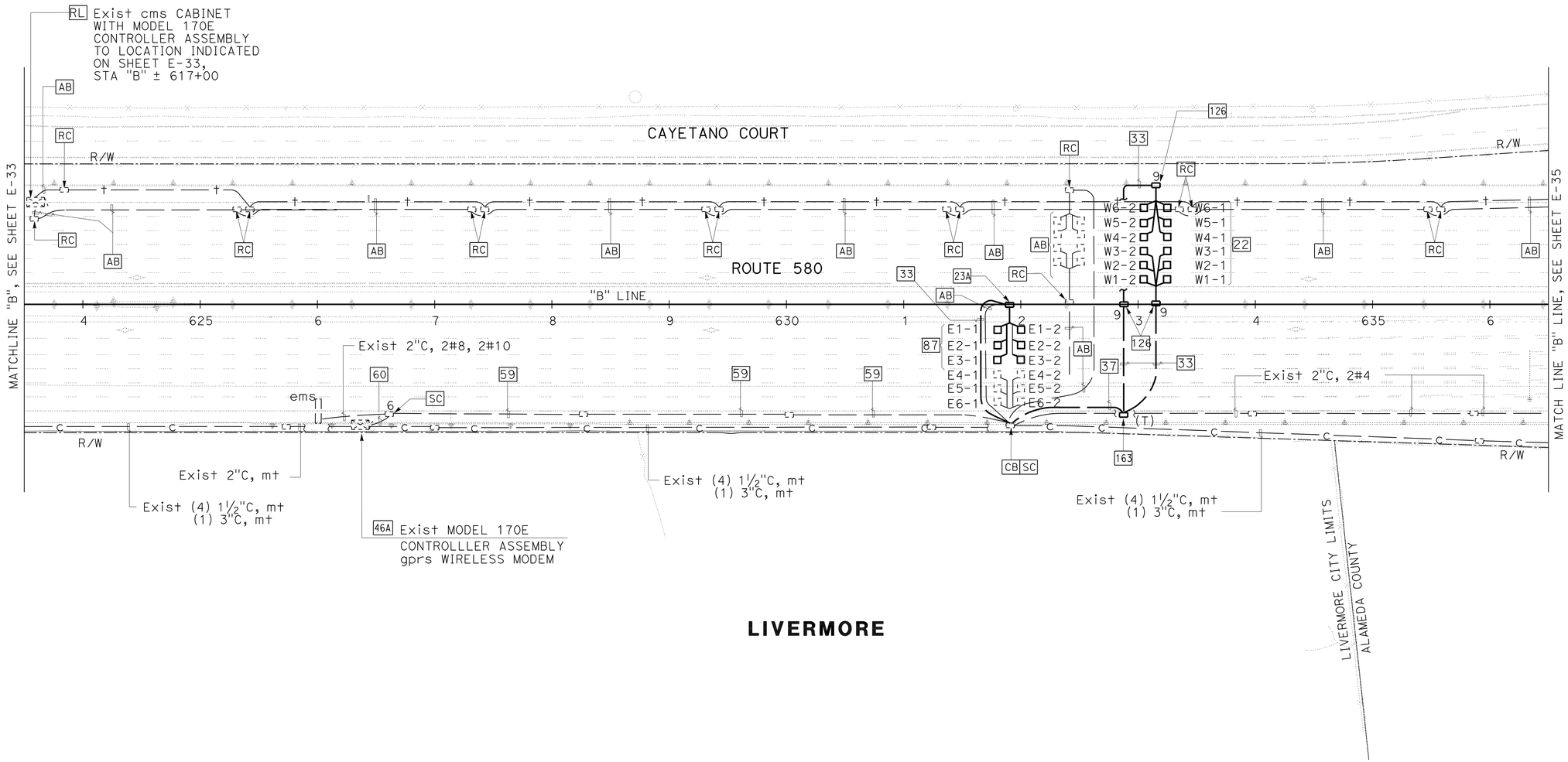

LIVERMORE

TRAFFIC MONITORING STATION (LOCATION 3)
RELOCATE MODEL 500 CHANGEABLE MESSAGE SIGN SYSTEM

SCALE: 1" = 50'

FOR NOTES, ABBREVIATIONS AND LEGEND, SEE SHEET E-1 THRU E-3

APPROVED FOR ELECTRICAL WORK ONLY

E-34

REVISED BY	SB	5/11/12	
DATE REVISED			
HENRY ROBINO			
DAVID CLOW			
CALCULATED-DESIGNED BY			
CHECKED BY			
CONSULTANT FUNCTIONAL SUPERVISOR			
KEN NGAI			

STATE OF CALIFORNIA - DEPARTMENT OF TRANSPORTATION
Caltrans

LAST REVISION 05-11-12
DATE PLOTTED => 23-MAY-2012
TIME PLOTTED => 08:05

FOR ACCURATE RIGHT OF WAY DATA,
CONTACT RIGHT OF WAY ENGINEERING AT THE DISTRICT OFFICE.

Dist	COUNTY	ROUTE	POST MILES TOTAL PROJECT	SHEET No.	TOTAL SHEETS
04	Ala	580	R8.4/R14.6	570	853

David W. Clow 5/11/12
REGISTERED ELECTRICAL ENGINEER DATE

5-14-12
PLANS APPROVAL DATE

REGISTERED PROFESSIONAL ENGINEER
DAVID W. CLOW
No. 12883
Exp. 12/31/12
ELECTRICAL
STATE OF CALIFORNIA

THE STATE OF CALIFORNIA OR ITS OFFICERS OR AGENTS SHALL NOT BE RESPONSIBLE FOR THE ACCURACY OR COMPLETENESS OF SCANNED COPIES OF THIS PLAN SHEET.

ALLIANCE ENGINEERING CONSULTANT, INC.
4701 PATRICK HENRY DR., #10
SANTA CLARA, CA 95054

ALAMEDA CTC
1 333 BROADWAY SUITE 220
OAKLAND, CA 94612

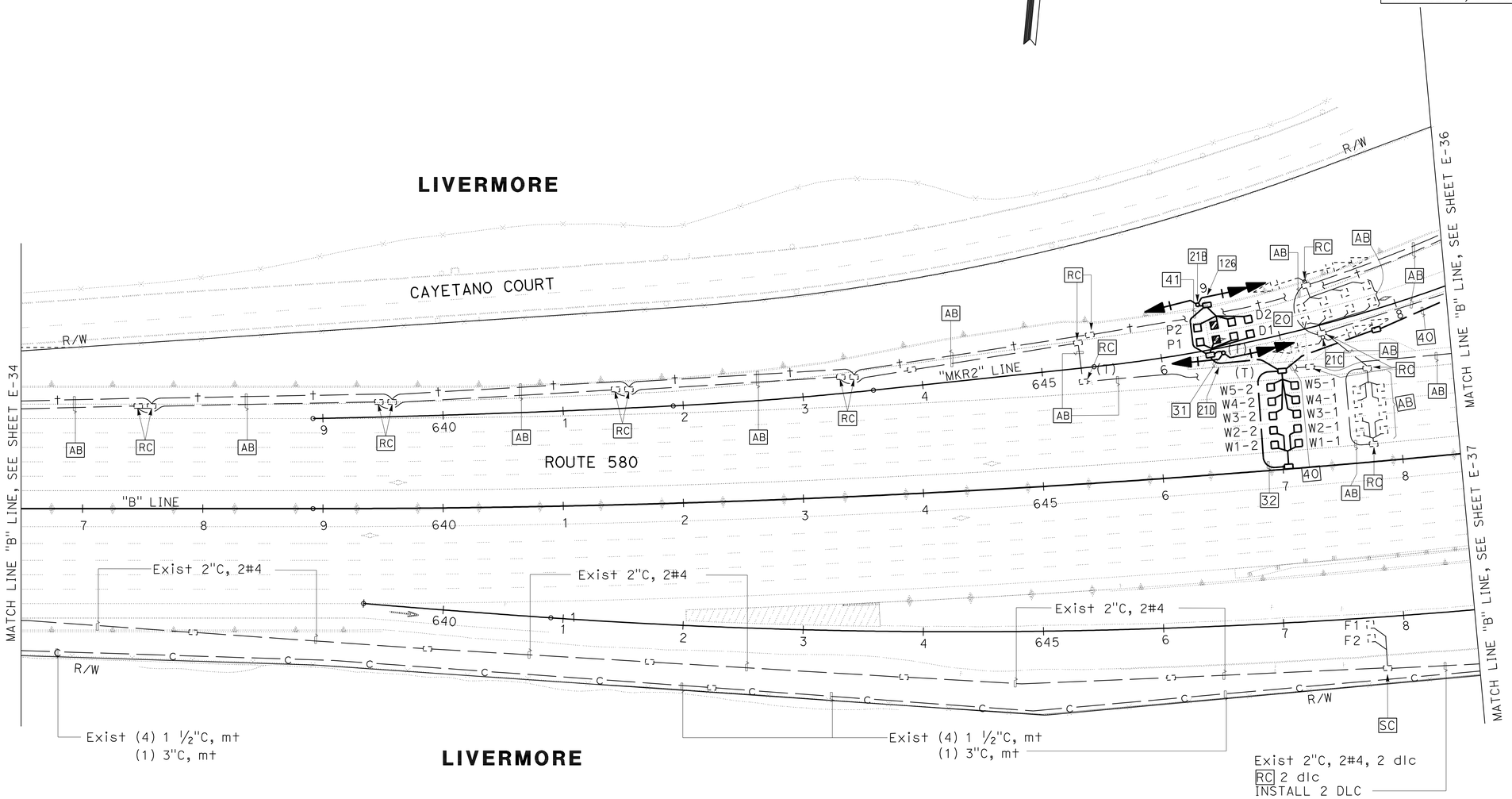

RAMP METERING SYSTEM (LOCATION 3)

SCALE: 1" = 50'

FOR NOTES, ABBREVIATIONS AND LEGEND, SEE SHEET E-1 THRU E-3

APPROVED FOR ELECTRICAL WORK ONLY

E-35

REVISED BY	DATE REVISED
SB	5/11/12

HENRY ROBINO — CALCULATED-DESIGNED BY
DAVID CLOW — CHECKED BY
KEN NGAI — CONSULTANT FUNCTIONAL SUPERVISOR

STATE OF CALIFORNIA - DEPARTMENT OF TRANSPORTATION
Caltrans

LAST REVISION 05-11-12
DATE PLOTTED => 23-MAY-2012
TIME PLOTTED => 08:05

FOR ACCURATE RIGHT OF WAY DATA,
CONTACT RIGHT OF WAY ENGINEERING AT THE DISTRICT OFFICE.

Dist	COUNTY	ROUTE	POST MILES TOTAL PROJECT	SHEET No.	TOTAL SHEETS
04	Ala	580	R8.4/R14.6	571	853

David W. Clow 05/11/12
REGISTERED ELECTRICAL ENGINEER DATE

5-14-12
PLANS APPROVAL DATE

REGISTERED PROFESSIONAL ENGINEER
DAVID W. CLOW
No. 12883
Exp. 12/31/12
ELECTRICAL
STATE OF CALIFORNIA

THE STATE OF CALIFORNIA OR ITS OFFICERS OR AGENTS SHALL NOT BE RESPONSIBLE FOR THE ACCURACY OR COMPLETENESS OF SCANNED COPIES OF THIS PLAN SHEET.

ALLIANCE ENGINEERING CONSULTANT, INC.
4701 PATRICK HENRY DR., #10
SANTA CLARA, CA 95054

ALAMEDA CTC
1 333 BROADWAY SUITE 220
OAKLAND, CA 94612

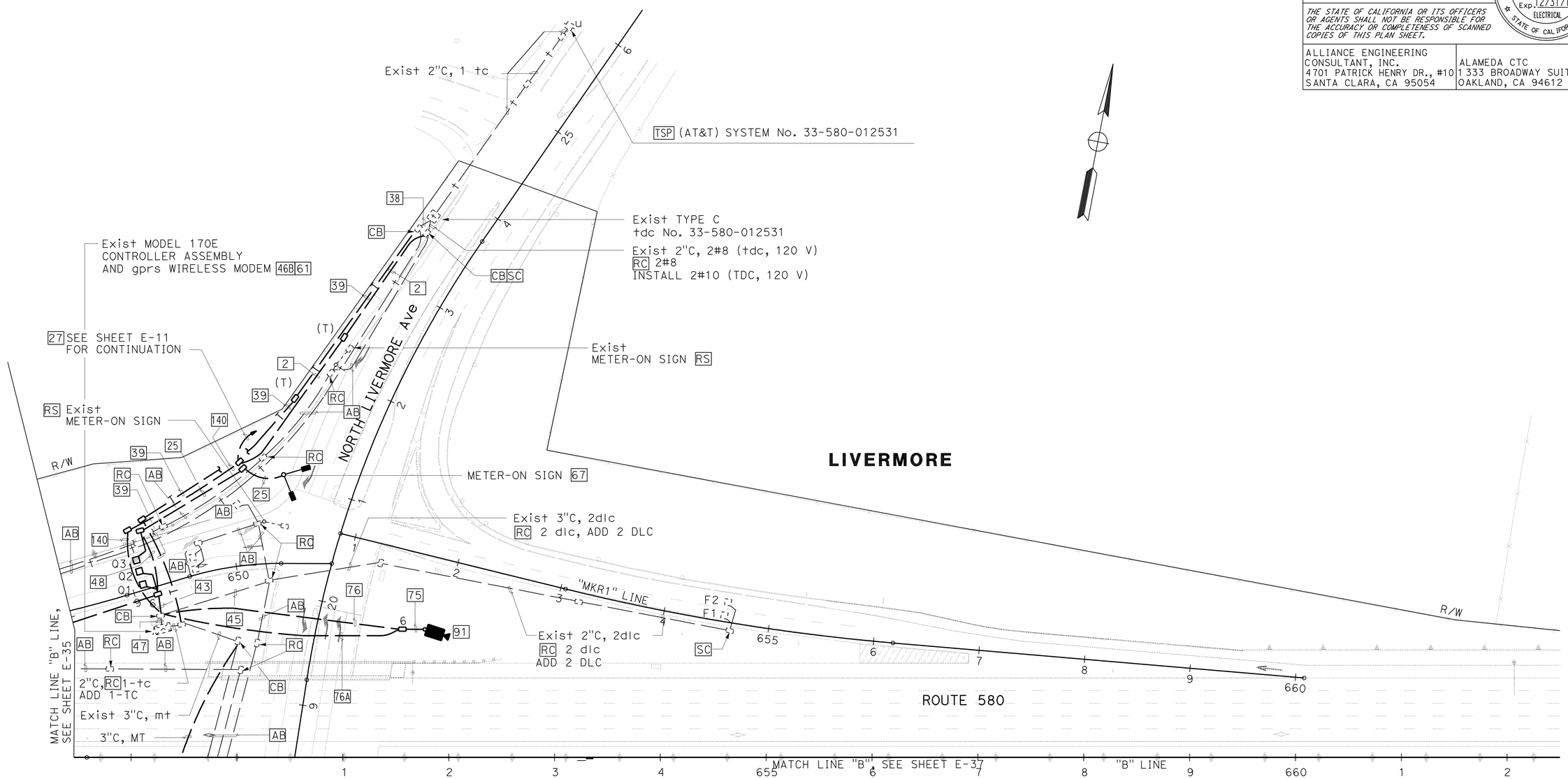

CLOSED CIRCUIT TELEVISION SYSTEM (LOCATION 3)
RAMP METERING SYSTEM (LOCATION 3)

SCALE: 1" = 50'

APPROVED FOR ELECTRICAL WORK ONLY

E-36

REVISED BY	SB
DATE REVISED	5/11/12
HENRY ROBINO	
DAVID CLOW	
CALCULATED-DESIGNED BY	
CHECKED BY	
CONSULTANT FUNCTIONAL SUPERVISOR	KEN NGAI

STATE OF CALIFORNIA - DEPARTMENT OF TRANSPORTATION
Caltrans

LAST REVISION 05-11-12
DATE PLOTTED => 23-MAY-2012
TIME PLOTTED => 08:05

FOR ACCURATE RIGHT OF WAY DATA,
CONTACT RIGHT OF WAY ENGINEERING AT THE DISTRICT OFFICE.

Dist	COUNTY	ROUTE	POST MILES TOTAL PROJECT	SHEET No.	TOTAL SHEETS
04	Ala	580	R8.4/R14.6	572	853

David W. Clow 05/11/12
REGISTERED ELECTRICAL ENGINEER DATE

5-14-12
PLANS APPROVAL DATE

REGISTERED PROFESSIONAL ENGINEER DAVID W. CLOW No. 12883 Exp. 12/31/12 ELECTRICAL STATE OF CALIFORNIA

THE STATE OF CALIFORNIA OR ITS OFFICERS OR AGENTS SHALL NOT BE RESPONSIBLE FOR THE ACCURACY OR COMPLETENESS OF SCANNED COPIES OF THIS PLAN SHEET.

ALLIANCE ENGINEERING CONSULTANT, INC.
4701 PATRICK HENRY DR., #10
SANTA CLARA, CA 95054

ALAMEDA CTC
1 333 BROADWAY SUITE 220
OAKLAND, CA 94612

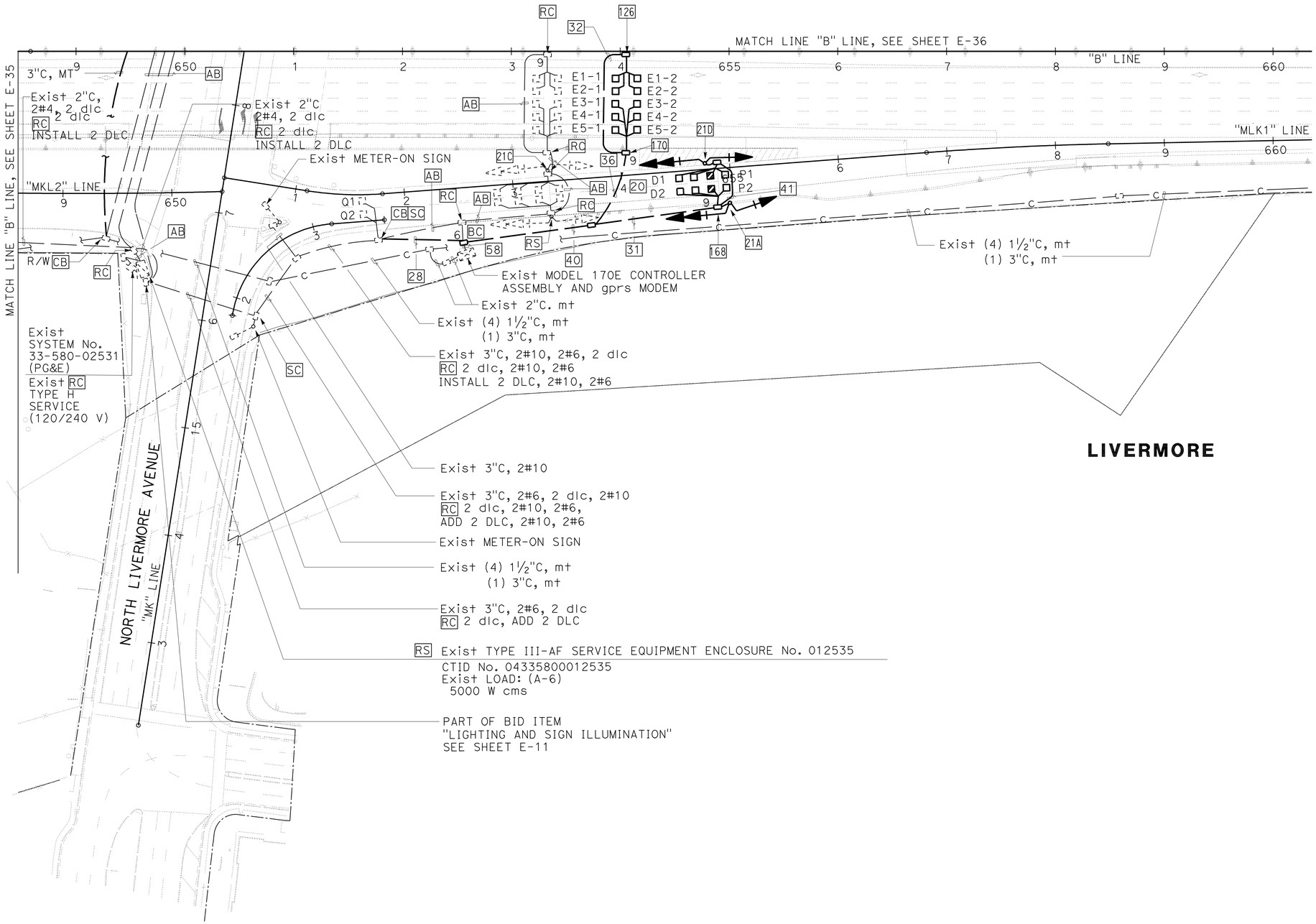

FOR NOTES, ABBREVIATIONS AND LEGEND, SEE SHEET E-1 THRU E-3

APPROVED FOR ELECTRICAL WORK ONLY

RAMP METERING SYSTEM (LOCATION 4)

SCALE: 1" = 50'

E-37

STATE OF CALIFORNIA - DEPARTMENT OF TRANSPORTATION
Caltrans

CONSULTANT FUNCTIONAL SUPERVISOR: KEN NGAI
CALCULATED-DESIGNED BY: HENRY ROBINO
CHECKED BY: DAVID CLOW
REVISED BY: SB
DATE REVISED: 5/11/12

LAST REVISION 05-11-12
DATE PLOTTED => 23-MAY-2012
TIME PLOTTED => 08:05

FOR ACCURATE RIGHT OF WAY DATA,
CONTACT RIGHT OF WAY ENGINEERING AT THE DISTRICT OFFICE.

Dist	COUNTY	ROUTE	POST MILES TOTAL PROJECT	SHEET No.	TOTAL SHEETS
04	Ala	580	R8.4/R14.6	573	853

David W. Clow 05/11/12
REGISTERED ELECTRICAL ENGINEER DATE

5-14-12
PLANS APPROVAL DATE

REGISTERED PROFESSIONAL ENGINEER
DAVID W. CLOW
No. 12883
Exp. 12/31/12
ELECTRICAL
STATE OF CALIFORNIA

THE STATE OF CALIFORNIA OR ITS OFFICERS OR AGENTS SHALL NOT BE RESPONSIBLE FOR THE ACCURACY OR COMPLETENESS OF SCANNED COPIES OF THIS PLAN SHEET.

ALLIANCE ENGINEERING
CONSULTANT, INC.
4701 PATRICK HENRY DR., #10
SANTA CLARA, CA 95054

ALAMEDA CTC
1 333 BROADWAY SUITE 220
OAKLAND, CA 94612

LIVERMORE

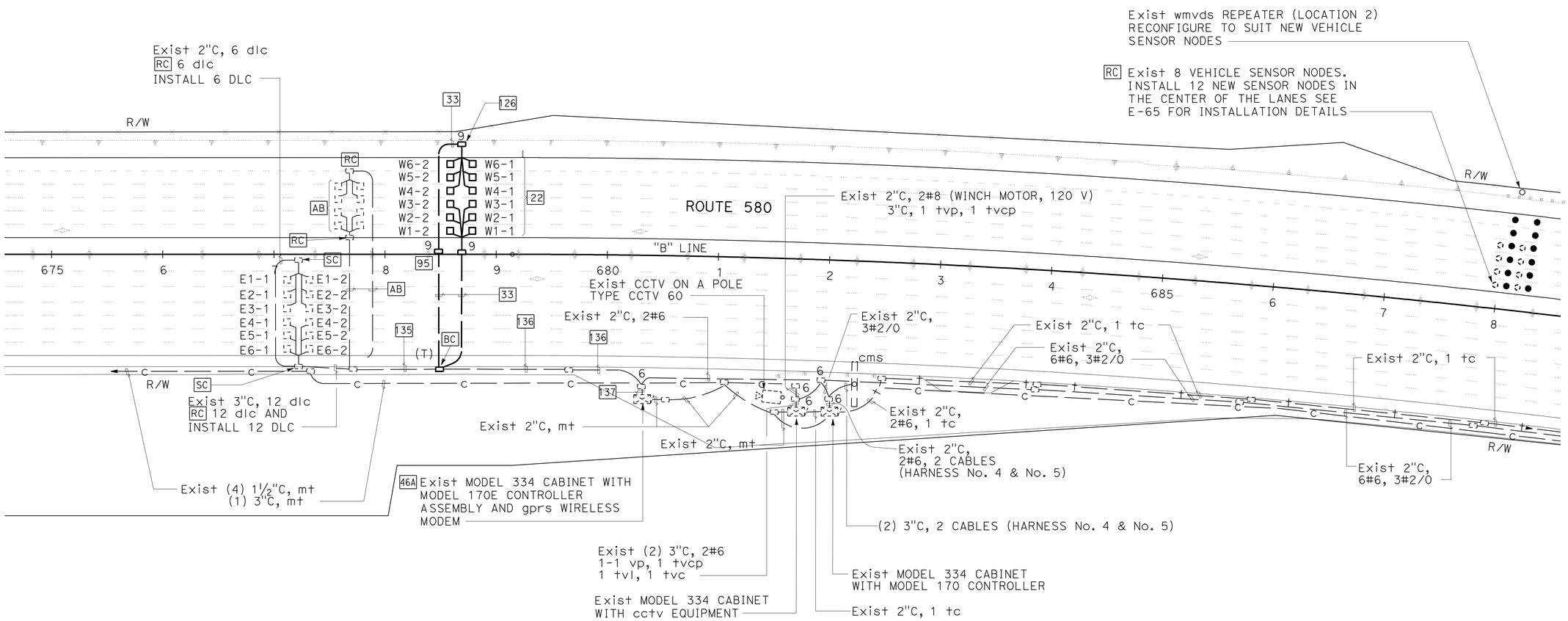

LIVERMORE

TRAFFIC MONITORING STATION (LOCATION 4)
MODIFY WIRELESS MAGNETOMETER VEHICLE DETECTION STATION (LOCATION 2)

SCALE: 1" = 50'

FOR NOTES, ABBREVIATIONS AND
LEGEND, SEE SHEET E-1 THRU E-3

APPROVED FOR ELECTRICAL WORK ONLY

E-38

REVISED BY	DATE REVISED
SB	5/11/12

HENRY ROBINO — CALCULATED-DESIGNED BY
DAVID CLOW — CHECKED BY
KEN NGAI — CONSULTANT FUNCTIONAL SUPERVISOR

STATE OF CALIFORNIA - DEPARTMENT OF TRANSPORTATION
Caltrans

LAST REVISION 05-11-12
DATE PLOTTED => 23-MAY-2012
TIME PLOTTED => 14:03

FOR ACCURATE RIGHT OF WAY DATA,
CONTACT RIGHT OF WAY ENGINEERING AT THE DISTRICT OFFICE.

Dist	COUNTY	ROUTE	POST MILES TOTAL PROJECT	SHEET No.	TOTAL SHEETS
04	Ala	580	R8.4/R14.6	574	853

David W. Clow 05/11/12
REGISTERED ELECTRICAL ENGINEER DATE

5-14-12
PLANS APPROVAL DATE

REGISTERED PROFESSIONAL ENGINEER
DAVID W. CLOW
No. 12883
Exp. 12/31/12
ELECTRICAL
STATE OF CALIFORNIA

THE STATE OF CALIFORNIA OR ITS OFFICERS OR AGENTS SHALL NOT BE RESPONSIBLE FOR THE ACCURACY OR COMPLETENESS OF SCANNED COPIES OF THIS PLAN SHEET.

ALLIANCE ENGINEERING CONSULTANT, INC.
4701 PATRICK HENRY DR., #10
SANTA CLARA, CA 95054

ALAMEDA CTC
1 333 BROADWAY SUITE 220
OAKLAND, CA 94612

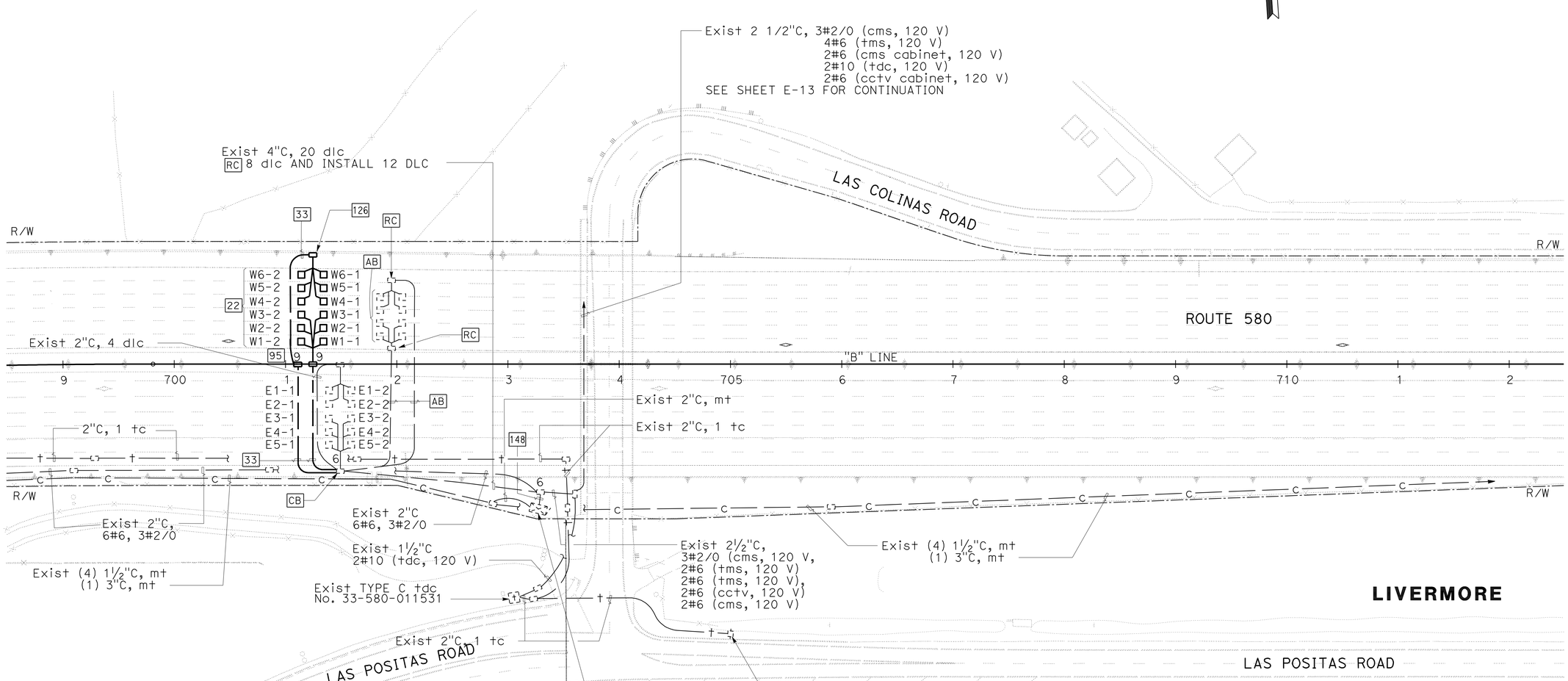

FOR NOTES, ABBREVIATIONS AND LEGEND, SEE SHEET E-1 THRU E-3

APPROVED FOR ELECTRICAL WORK ONLY

TRAFFIC MONITORING STATION (LOCATION 5)

SCALE: 1" = 50'

E-39

REVISED BY	DATE REVISED
SB	5/11/12

HENRY ROBINO — CALCULATED-DESIGNED BY
DAVID CLOW — CHECKED BY
KEN NGAI — CONSULTANT FUNCTIONAL SUPERVISOR

STATE OF CALIFORNIA - DEPARTMENT OF TRANSPORTATION
Caltrans

LAST REVISION 05-11-12
DATE PLOTTED => 23-MAY-2012
TIME PLOTTED => 07:59

FOR ACCURATE RIGHT OF WAY DATA,
CONTACT RIGHT OF WAY ENGINEERING AT THE DISTRICT OFFICE.

Dist	COUNTY	ROUTE	POST MILES TOTAL PROJECT	SHEET No.	TOTAL SHEETS
04	Ala	580	R8.4/R14.6	575	853

David W. Clow 05/11/12
REGISTERED ELECTRICAL ENGINEER DATE

5-14-12
PLANS APPROVAL DATE

REGISTERED PROFESSIONAL ENGINEER
DAVID W. CLOW
No. 12883
Exp. 12/31/12
ELECTRICAL
STATE OF CALIFORNIA

THE STATE OF CALIFORNIA OR ITS OFFICERS OR AGENTS SHALL NOT BE RESPONSIBLE FOR THE ACCURACY OR COMPLETENESS OF SCANNED COPIES OF THIS PLAN SHEET.

ALLIANCE ENGINEERING CONSULTANT, INC.
4701 PATRICK HENRY DR., #10
SANTA CLARA, CA 95054

ALAMEDA CTC
1 333 BROADWAY SUITE 220
OAKLAND, CA 94612

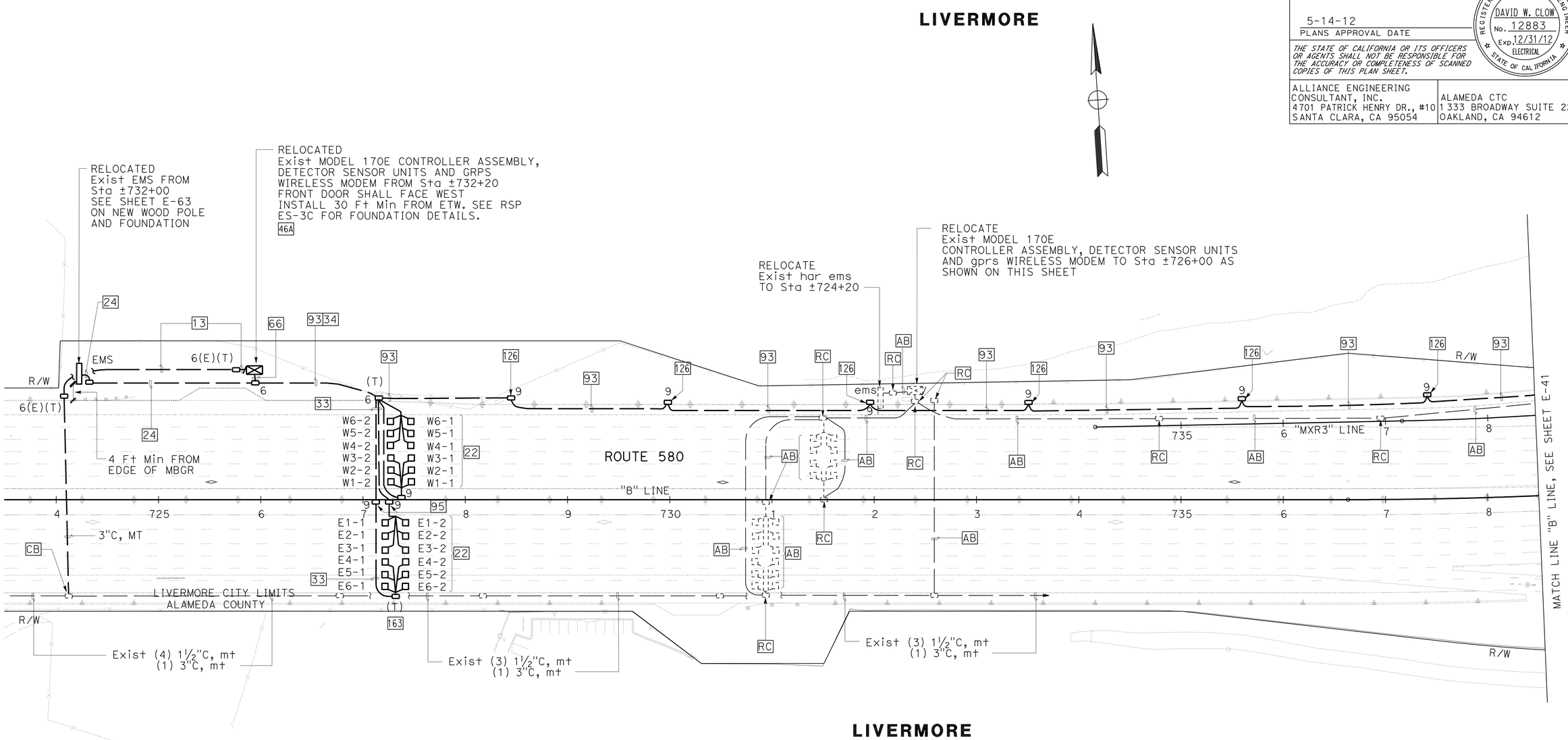

TRAFFIC MONITORING STATION (LOCATION 6)
RELOCATE EXTINGUISHABLE MESSAGE SIGN

SCALE: 1" = 50'

FOR NOTES, ABBREVIATIONS AND LEGEND, SEE SHEET E-1 THRU E-3

APPROVED FOR ELECTRICAL WORK ONLY

E-40

STATE OF CALIFORNIA - DEPARTMENT OF TRANSPORTATION
Caltrans

CONSULTANT FUNCTIONAL SUPERVISOR: KEN NGAI
CALCULATED-DESIGNED BY: HENRY ROBINO
CHECKED BY: DAVID CLOW
REVISED BY: SB
DATE REVISED: 5/11/12

LAST REVISION 05-11-12
DATE PLOTTED => 23-MAY-2012
TIME PLOTTED => 07:59

Dist	COUNTY	ROUTE	POST MILES TOTAL PROJECT	SHEET No.	TOTAL SHEETS
04	Ala	580	R8.4/R14.6	576	853

David W. Clow 05/11/12
REGISTERED ELECTRICAL ENGINEER DATE

5-14-12
PLANS APPROVAL DATE

REGISTERED PROFESSIONAL ENGINEER DAVID W. CLOW No. 12883 Exp. 12/31/12 ELECTRICAL STATE OF CALIFORNIA

THE STATE OF CALIFORNIA OR ITS OFFICERS OR AGENTS SHALL NOT BE RESPONSIBLE FOR THE ACCURACY OR COMPLETENESS OF SCANNED COPIES OF THIS PLAN SHEET.

ALLIANCE ENGINEERING CONSULTANT, INC.
4701 PATRICK HENRY DR., #10
SANTA CLARA, CA 95054

ALAMEDA CTC
1333 BROADWAY SUITE 220
OAKLAND, CA 94612

FOR ACCURATE RIGHT OF WAY DATA,
CONTACT RIGHT OF WAY ENGINEERING AT THE DISTRICT OFFICE.

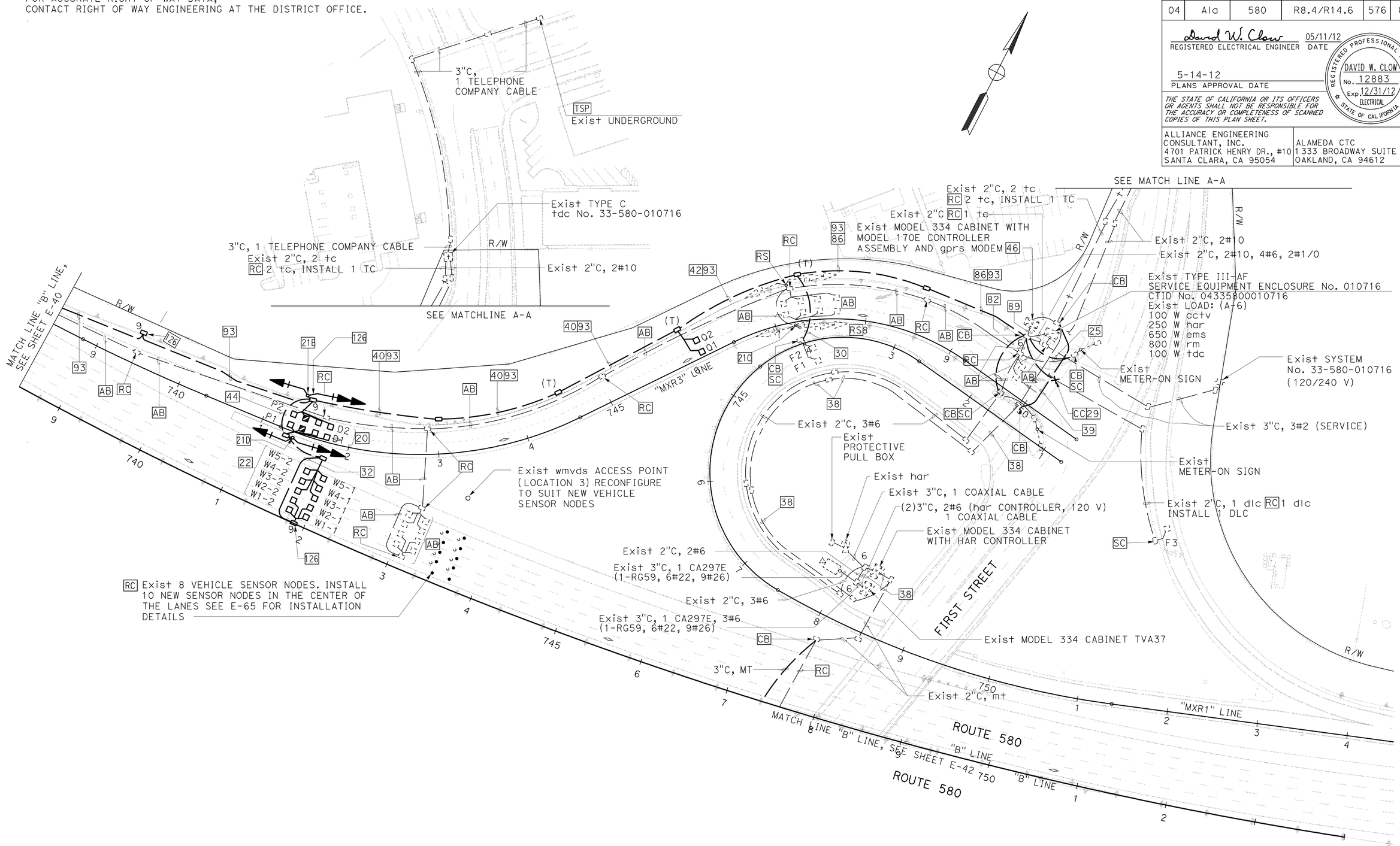

MODIFY WIRELESS MAGNETOMETER VEHICLE DETECTION STATION (LOCATION 3)
RAMP METERING SYSTEM (LOCATION 5)

SCALE: 1" = 50'

APPROVED FOR ELECTRICAL WORK ONLY

E-41

REVISED BY	SB
DATE REVISED	5/11/12
CALCULATED-DESIGNED BY	HENRY ROBINO
CHECKED BY	DAVID CLOW
CONSULTANT FUNCTIONAL SUPERVISOR	KEN NGAI

STATE OF CALIFORNIA - DEPARTMENT OF TRANSPORTATION

LAST REVISION 05-11-12 | DATE PLOTTED => 23-MAY-2012 | TIME PLOTTED => 14:03

FOR ACCURATE RIGHT OF WAY DATA,
CONTACT RIGHT OF WAY ENGINEERING AT THE DISTRICT OFFICE.

Dist	COUNTY	ROUTE	POST MILES TOTAL PROJECT	SHEET No.	TOTAL SHEETS
04	Ala	580	R8.4/R14.6	577	853

David W. Clow 05/11/12
REGISTERED ELECTRICAL ENGINEER DATE

5-14-12
PLANS APPROVAL DATE

REGISTERED PROFESSIONAL ENGINEER
DAVID W. CLOW
No. 12883
Exp. 12/31/12
ELECTRICAL
STATE OF CALIFORNIA

THE STATE OF CALIFORNIA OR ITS OFFICERS OR AGENTS SHALL NOT BE RESPONSIBLE FOR THE ACCURACY OR COMPLETENESS OF SCANNED COPIES OF THIS PLAN SHEET.

ALLIANCE ENGINEERING CONSULTANT, INC.
4701 PATRICK HENRY DR., #10
SANTA CLARA, CA 95054

ALAMEDA CTC
1 333 BROADWAY SUITE 220
OAKLAND, CA 94612

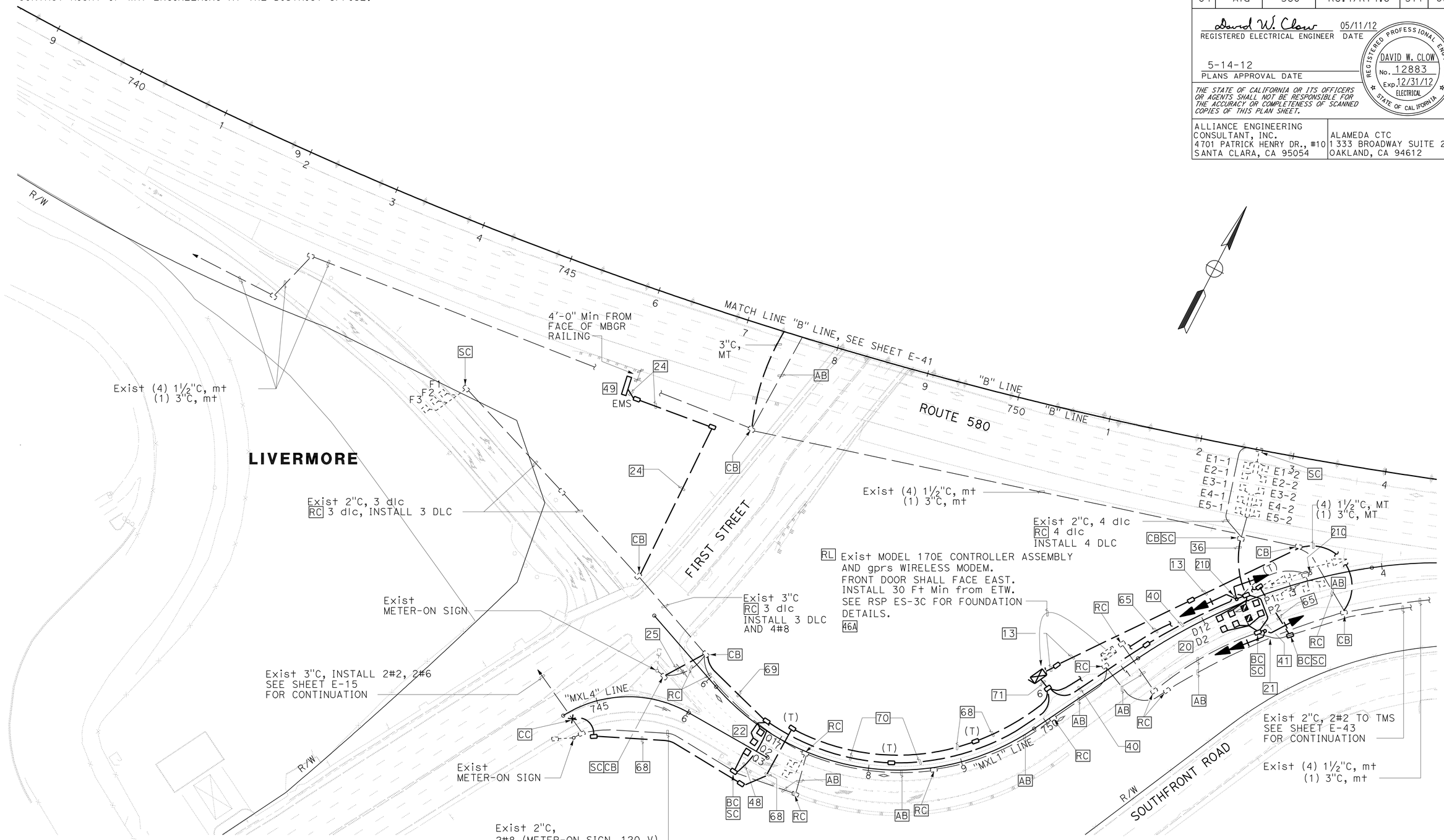

RAMP METERING SYSTEM (LOCATION 6)
EXTINGUISHABLE MESSAGE SIGN SYSTEM

SCALE: 1" = 50'

FOR NOTES, ABBREVIATIONS AND LEGEND, SEE SHEET E-1 THRU E-3

APPROVED FOR ELECTRICAL WORK ONLY

E-42

STATE OF CALIFORNIA - DEPARTMENT OF TRANSPORTATION
Caltrans

CONSULTANT FUNCTIONAL SUPERVISOR: KEN NGAI
CALCULATED-DESIGNED BY: HENRY ROBINO
CHECKED BY: DAVID CLOW
REVISED BY: SB
DATE REVISED: 5/11/12

LAST REVISION 05-11-12
DATE PLOTTED => 23-MAY-2012
TIME PLOTTED => 07:59

FOR ACCURATE RIGHT OF WAY DATA,
CONTACT RIGHT OF WAY ENGINEERING AT THE DISTRICT OFFICE.

Dist	COUNTY	ROUTE	POST MILES TOTAL PROJECT	SHEET No.	TOTAL SHEETS
04	Ala	580	R8.4/R14.6	578	853

David W. Clow 05/11/12
REGISTERED ELECTRICAL ENGINEER DATE

5-14-12
PLANS APPROVAL DATE

REGISTERED PROFESSIONAL ENGINEER
DAVID W. CLOW
No. 12883
Exp. 12/31/12
ELECTRICAL
STATE OF CALIFORNIA

THE STATE OF CALIFORNIA OR ITS OFFICERS OR AGENTS SHALL NOT BE RESPONSIBLE FOR THE ACCURACY OR COMPLETENESS OF SCANNED COPIES OF THIS PLAN SHEET.

ALLIANCE ENGINEERING CONSULTANT, INC.
4701 PATRICK HENRY DR., #10
SANTA CLARA, CA 95054

ALAMEDA CTC
1 333 BROADWAY SUITE 220
OAKLAND, CA 94612

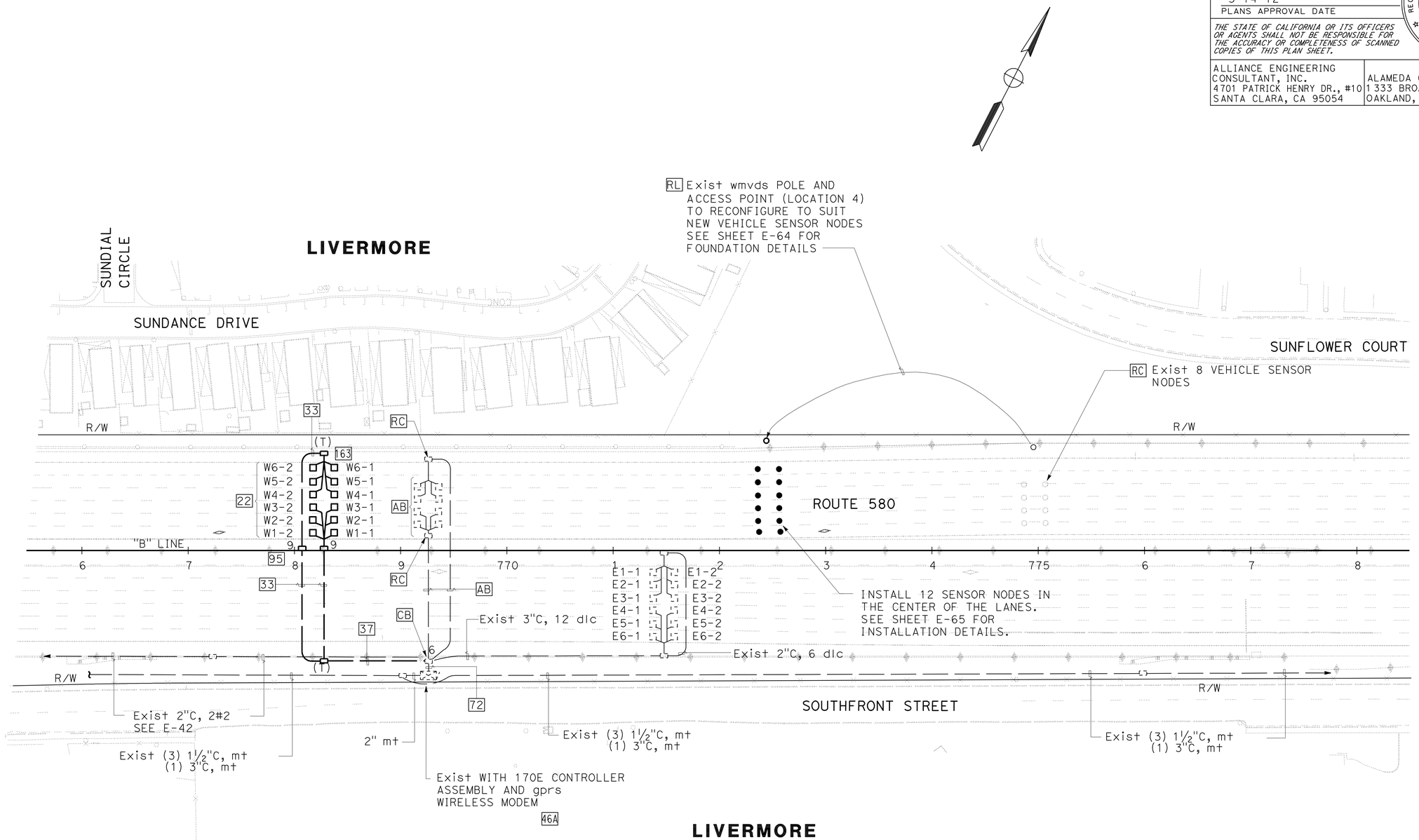

MODIFY WIRELESS MAGNETOMETER VEHICLE DETECTION STATION (LOCATION 4)
TRAFFIC MONITORING STATION (LOCATION 7)

SCALE: 1" = 50'

FOR NOTES, ABBREVIATIONS AND LEGEND, SEE SHEET E-1 THRU E-3

APPROVED FOR ELECTRICAL WORK ONLY

E-43

STATE OF CALIFORNIA - DEPARTMENT OF TRANSPORTATION	CONSULTANT FUNCTIONAL SUPERVISOR	CALCULATED-DESIGNED BY	HENRY ROBINO
Caltrans	KEN NGAI	CHECKED BY	DAVID CLOW
		REVISED BY	SB
		DATE REVISED	5/11/12

LAST REVISION 05-11-12
DATE PLOTTED => 23-MAY-2012
TIME PLOTTED => 14:04

FOR ACCURATE RIGHT OF WAY DATA,
CONTACT RIGHT OF WAY ENGINEERING AT THE DISTRICT OFFICE.

Dist	COUNTY	ROUTE	POST MILES TOTAL PROJECT	SHEET No.	TOTAL SHEETS
04	Ala	580	R8.4/R14.6	579	853

David W. Clow 05/11/12
REGISTERED ELECTRICAL ENGINEER DATE

5-14-12
PLANS APPROVAL DATE

REGISTERED PROFESSIONAL ENGINEER DAVID W. CLOW No. 12883 Exp. 12/31/12 ELECTRICAL STATE OF CALIFORNIA

THE STATE OF CALIFORNIA OR ITS OFFICERS OR AGENTS SHALL NOT BE RESPONSIBLE FOR THE ACCURACY OR COMPLETENESS OF SCANNED COPIES OF THIS PLAN SHEET.

ALLIANCE ENGINEERING CONSULTANT, INC.
4701 PATRICK HENRY DR., #10
SANTA CLARA, CA 95054

ALAMEDA CTC
1 333 BROADWAY SUITE 220
OAKLAND, CA 94612

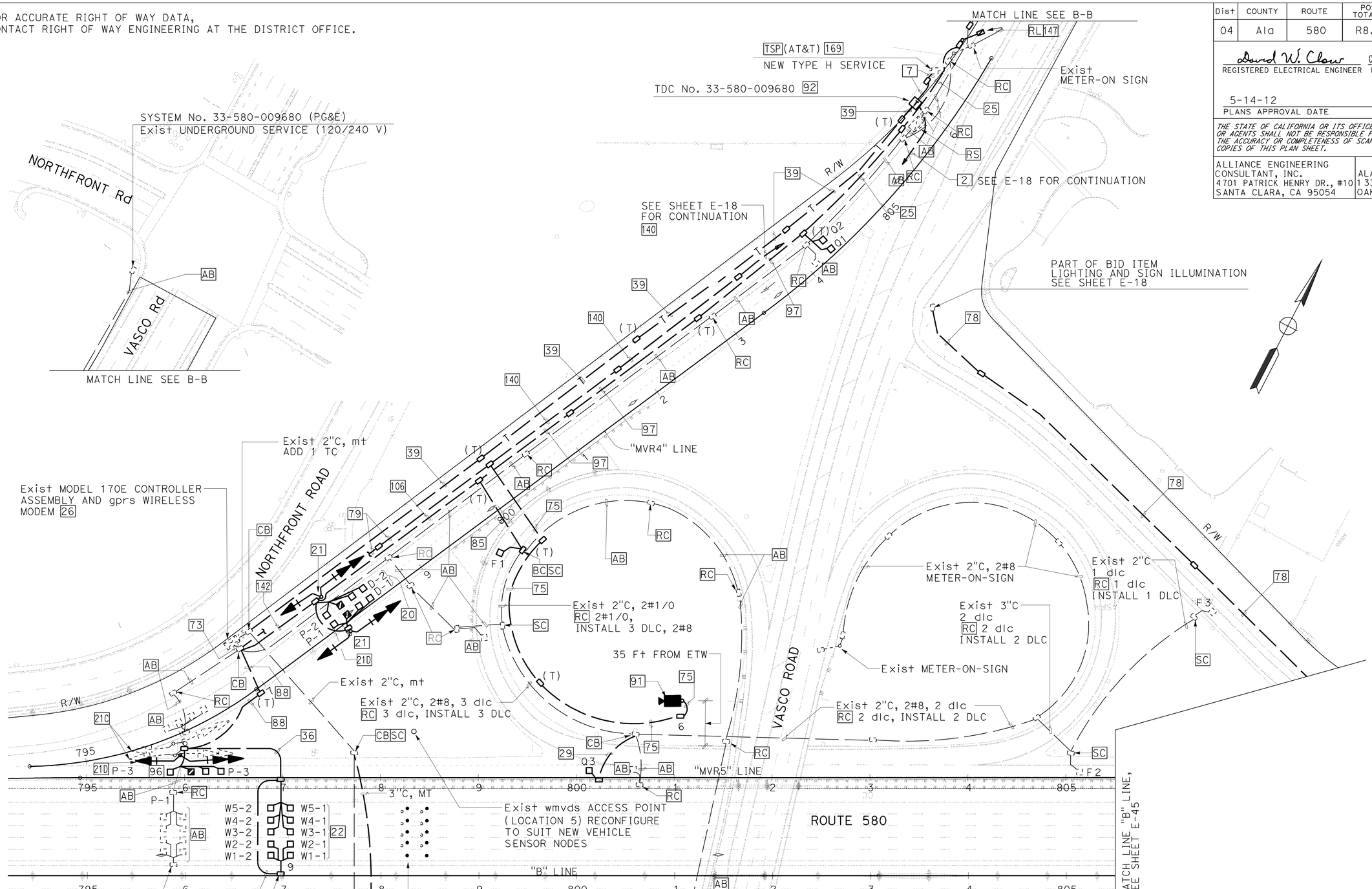

FOR NOTES, ABBREVIATIONS AND LEGEND, SEE SHEET E-1 THRU E-3

APPROVED FOR ELECTRICAL WORK ONLY

RAMP METERING SYSTEM (LOCATION 7)
CLOSED CIRCUIT TELEVISION SYSTEM (LOCATION 4)
MODIFY WIRELESS MAGNETOMETER VEHICLE DETECTION STATION (LOCATION 5)

SCALE: 1" = 50'

E-44

STATE OF CALIFORNIA - DEPARTMENT OF TRANSPORTATION
Caltrans

CONSULTANT FUNCTIONAL SUPERVISOR: KEN NGAI
CALCULATED-DESIGNED BY: HENRY ROBINO
CHECKED BY: DAVID CLOW
REVISED BY: SB
DATE REVISED: 5/11/12

LAST REVISION 05-11-12
DATE PLOTTED => 23-MAY-2012
TIME PLOTTED => 14:06

Dist	COUNTY	ROUTE	POST MILES TOTAL PROJECT	SHEET No.	TOTAL SHEETS
04	Ala	580	R8.4/R14.6	580	853

David W. Clow 05/11/12
REGISTERED ELECTRICAL ENGINEER DATE

5-14-12
PLANS APPROVAL DATE

REGISTERED PROFESSIONAL ENGINEER DAVID W. CLOW No. 12883 Exp. 12/31/12 ELECTRICAL STATE OF CALIFORNIA

THE STATE OF CALIFORNIA OR ITS OFFICERS OR AGENTS SHALL NOT BE RESPONSIBLE FOR THE ACCURACY OR COMPLETENESS OF SCANNED COPIES OF THIS PLAN SHEET.

ALLIANCE ENGINEERING CONSULTANT, INC.
4701 PATRICK HENRY DR., #10
SANTA CLARA, CA 95054

ALAMEDA CTC
1 333 BROADWAY SUITE 220
OAKLAND, CA 94612

FOR ACCURATE RIGHT OF WAY DATA,
CONTACT RIGHT OF WAY ENGINEERING AT THE DISTRICT OFFICE.

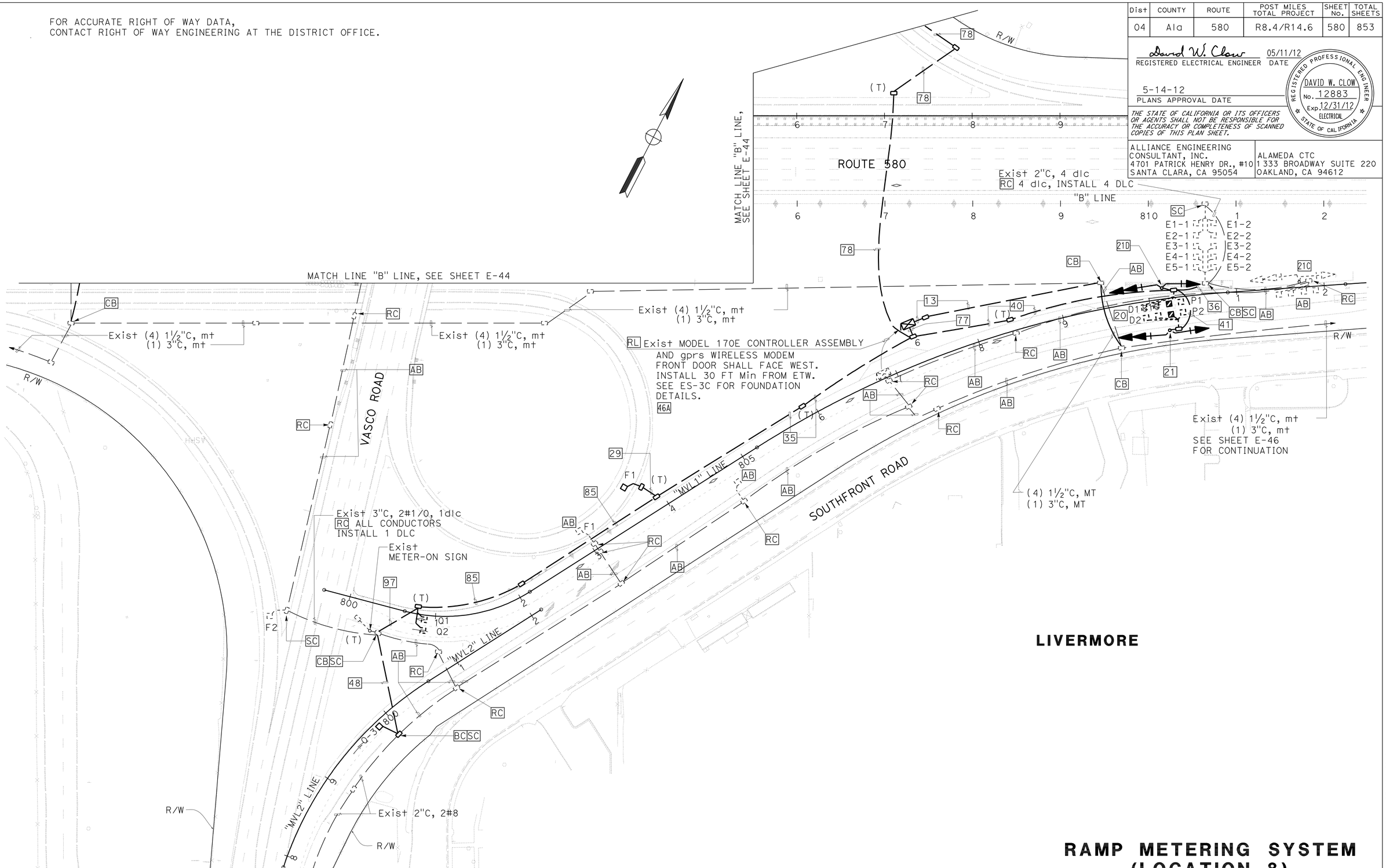

LIVERMORE

RAMP METERING SYSTEM (LOCATION 8)

SCALE: 1" = 50'

E-45

FOR NOTES, ABBREVIATIONS AND LEGEND, SEE SHEET E-1 THRU E-3

APPROVED FOR ELECTRICAL WORK ONLY

REVISED BY	SB
DATE REVISED	5/11/12
CALCULATED-DESIGNED BY	HENRY ROBINO
CHECKED BY	DAVID CLOW
CONSULTANT FUNCTIONAL SUPERVISOR	KEN NGAI

STATE OF CALIFORNIA - DEPARTMENT OF TRANSPORTATION
Caltrans

LAST REVISION 05-11-12
DATE PLOTTED => 23-MAY-2012
TIME PLOTTED => 08:00

FOR ACCURATE RIGHT OF WAY DATA,
CONTACT RIGHT OF WAY ENGINEERING AT THE DISTRICT OFFICE.

Dist	COUNTY	ROUTE	POST MILES TOTAL PROJECT	SHEET No.	TOTAL SHEETS
04	Ala	580	R8.4/R14.6	581	853

David W. Clow 05/11/12
REGISTERED ELECTRICAL ENGINEER DATE

5-14-12
PLANS APPROVAL DATE

REGISTERED PROFESSIONAL ENGINEER
DAVID W. CLOW
No. 12883
Exp. 12/31/12
ELECTRICAL
STATE OF CALIFORNIA

THE STATE OF CALIFORNIA OR ITS OFFICERS OR AGENTS SHALL NOT BE RESPONSIBLE FOR THE ACCURACY OR COMPLETENESS OF SCANNED COPIES OF THIS PLAN SHEET.

ALLIANCE ENGINEERING CONSULTANT, INC.
4701 PATRICK HENRY DR., #10
SANTA CLARA, CA 95054

ALAMEDA CTC
1 333 BROADWAY SUITE 220
OAKLAND, CA 94612

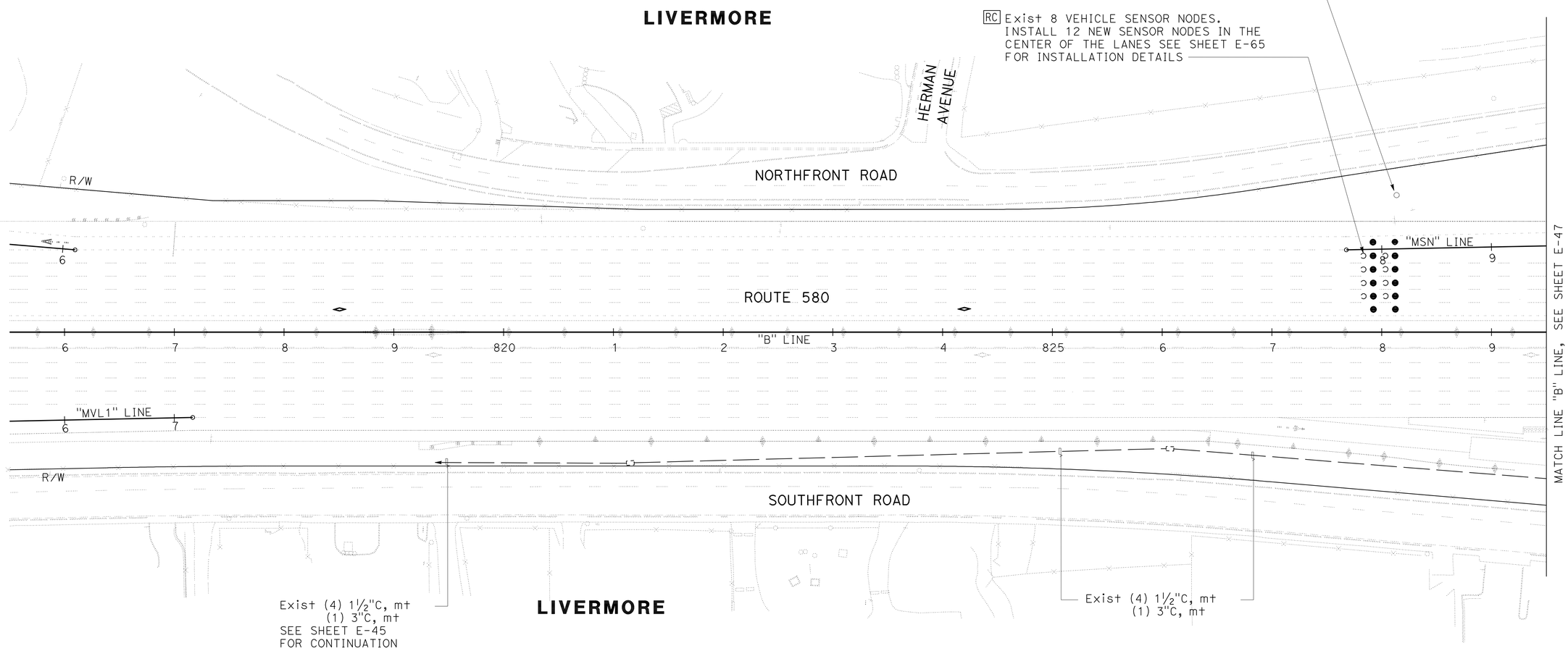

MODIFY WIRELESS MAGNETOMETER VEHICLE DETECTION STATION (LOCATION 6)

SCALE: 1" = 50'

FOR NOTES, ABBREVIATIONS AND LEGEND, SEE SHEET E-1 THRU E-3

APPROVED FOR ELECTRICAL WORK ONLY

E-46

REVISED BY	DATE REVISED
SB	5/11/12

HENRY ROBINO — DAVID CLOW — CALCULATED-DESIGNED BY — CHECKED BY

KEN NGAI — CONSULTANT FUNCTIONAL SUPERVISOR

STATE OF CALIFORNIA - DEPARTMENT OF TRANSPORTATION

Caltrans

LAST REVISION 05-11-12 — DATE PLOTTED => 23-MAY-2012 — TIME PLOTTED => 14:04

FOR ACCURATE RIGHT OF WAY DATA,
CONTACT RIGHT OF WAY ENGINEERING AT THE DISTRICT OFFICE.

Dist	COUNTY	ROUTE	POST MILES TOTAL PROJECT	SHEET No.	TOTAL SHEETS
04	Ala	580	R8.4/R14.6	582	853

David W. Clow 05/11/12
REGISTERED ELECTRICAL ENGINEER DATE

5-14-12
PLANS APPROVAL DATE

REGISTERED PROFESSIONAL ENGINEER
DAVID W. CLOW
No. 12883
Exp. 12/31/12
ELECTRICAL
STATE OF CALIFORNIA

THE STATE OF CALIFORNIA OR ITS OFFICERS OR AGENTS SHALL NOT BE RESPONSIBLE FOR THE ACCURACY OR COMPLETENESS OF SCANNED COPIES OF THIS PLAN SHEET.

ALLIANCE ENGINEERING CONSULTANT, INC.
4701 PATRICK HENRY DR., #10
SANTA CLARA, CA 95054

ALAMEDA CTC
1 333 BROADWAY SUITE 220
OAKLAND, CA 94612

SHEET NOTES:

1. INSTALL FIBER OPTIC TRANSCEIVER FOR SWIM AND CONNECT TO THE EXISTING NETWORK
2. INSTALL SWIM/SORTER SOFTWARE IN THE EXISTING SCALE HOUSE COMPUTER

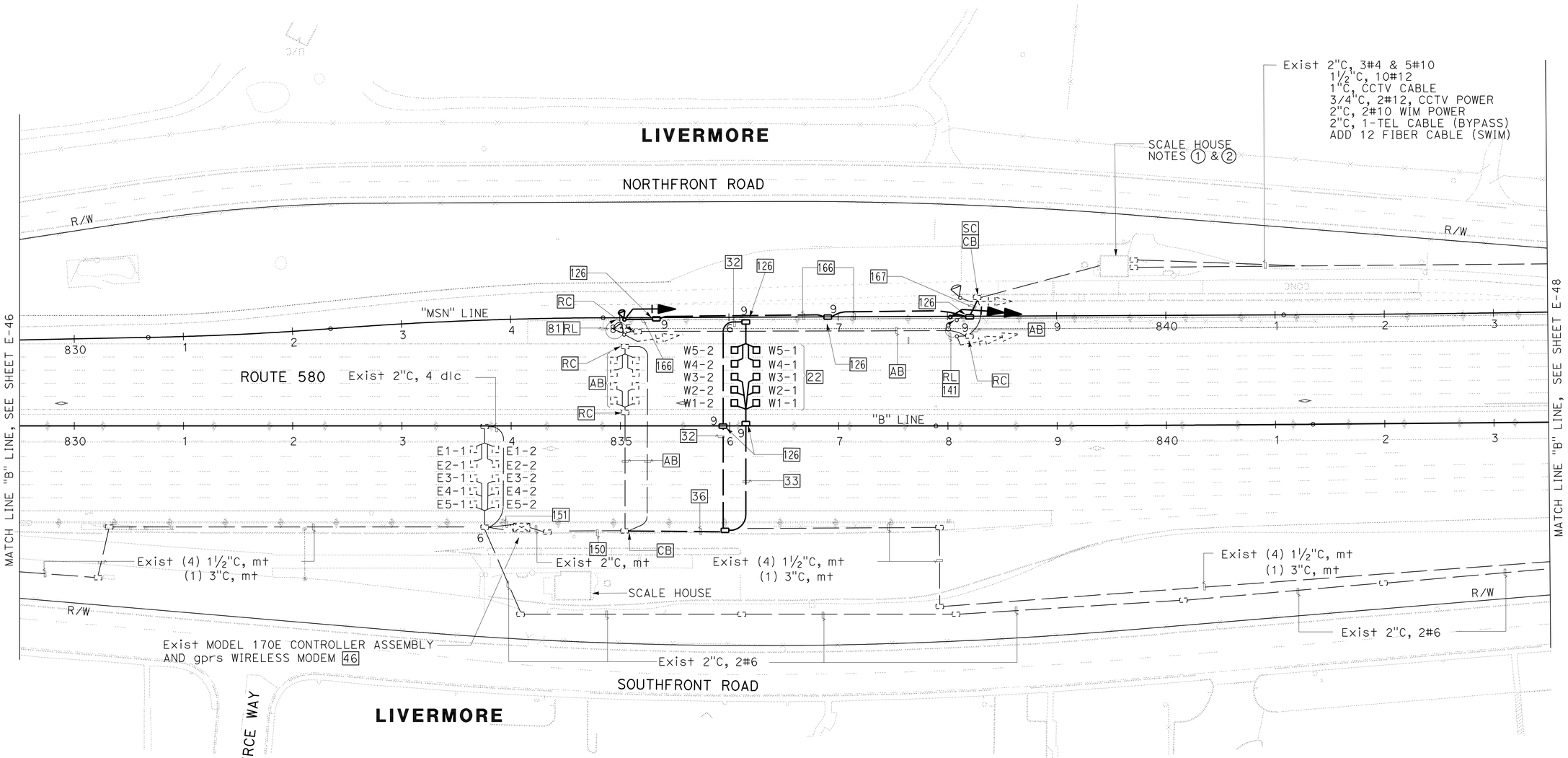

SLOW WEIGH-IN MOTION SYSTEM
TRAFFIC MONITORING STATION (LOCATION 8)

SCALE: 1" = 50'

FOR NOTES, ABBREVIATIONS AND LEGEND, SEE SHEET E-1 THRU E-3

APPROVED FOR ELECTRICAL WORK ONLY

E-47

STATE OF CALIFORNIA - DEPARTMENT OF TRANSPORTATION	CONSULTANT FUNCTIONAL SUPERVISOR	CALCULATED-DESIGNED BY	HENRY ROBINO
Caltrans	KEN NGAI	CHECKED BY	DAVID CLOW
		REVISED BY	SB
		DATE REVISED	5/11/12

LAST REVISION 05-11-12
DATE PLOTTED => 23-MAY-2012
TIME PLOTTED => 08:00

FOR ACCURATE RIGHT OF WAY DATA,
CONTACT RIGHT OF WAY ENGINEERING AT THE DISTRICT OFFICE.

Dist	COUNTY	ROUTE	POST MILES TOTAL PROJECT	SHEET No.	TOTAL SHEETS
04	Ala	580	R8.4/R14.6	583	853

David W. Clow 05/11/12
REGISTERED ELECTRICAL ENGINEER DATE

5-14-12
PLANS APPROVAL DATE

REGISTERED PROFESSIONAL ENGINEER
DAVID W. CLOW
No. 12883
Exp. 12/31/12
ELECTRICAL
STATE OF CALIFORNIA

THE STATE OF CALIFORNIA OR ITS OFFICERS OR AGENTS SHALL NOT BE RESPONSIBLE FOR THE ACCURACY OR COMPLETENESS OF SCANNED COPIES OF THIS PLAN SHEET.

ALLIANCE ENGINEERING CONSULTANT, INC.
4701 PATRICK HENRY DR., #10
SANTA CLARA, CA 95054

ALAMEDA CTC
1 333 BROADWAY SUITE 220
OAKLAND, CA 94612

LIVERMORE

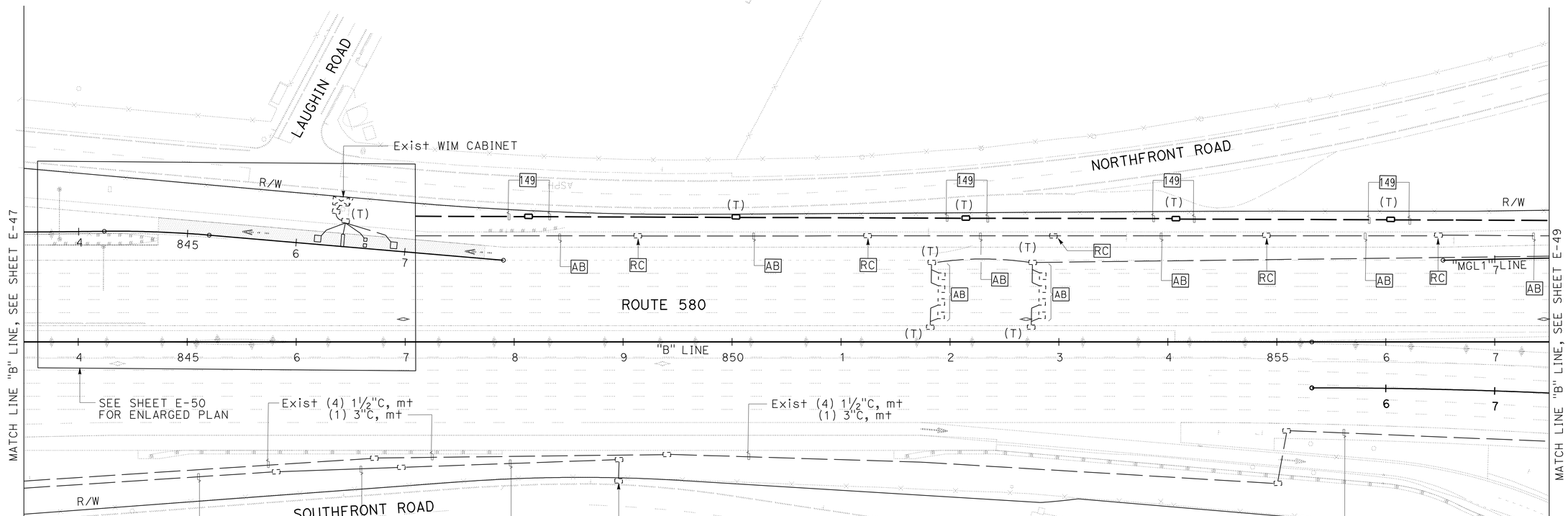

LIVERMORE

SLOW WEIGH-IN MOTION SYSTEM

SCALE: 1" = 50'

E-48

FOR NOTES, ABBREVIATIONS AND LEGEND, SEE SHEET E-1 THRU E-3

APPROVED FOR ELECTRICAL WORK ONLY

STATE OF CALIFORNIA - DEPARTMENT OF TRANSPORTATION
Caltrans

CONSULTANT FUNCTIONAL SUPERVISOR	CALCULATED-DESIGNED BY	CHECKED BY	REVISED BY	DATE REVISED
KEN NGAI	HENRY ROBINO	DAVID CLOW	SB	5/11/12

LAST REVISION 05-11-12
DATE PLOTTED => 23-MAY-2012
TIME PLOTTED => 08:00

Dist	COUNTY	ROUTE	POST MILES TOTAL PROJECT	SHEET No.	TOTAL SHEETS
04	Ala	580	R8.4/R14.6	584	853

David W. Clow 05/11/12
REGISTERED ELECTRICAL ENGINEER DATE

5-14-12
PLANS APPROVAL DATE

REGISTERED PROFESSIONAL ENGINEER DAVID W. CLOW No. 12883 Exp. 12/31/12 ELECTRICAL STATE OF CALIFORNIA

THE STATE OF CALIFORNIA OR ITS OFFICERS OR AGENTS SHALL NOT BE RESPONSIBLE FOR THE ACCURACY OR COMPLETENESS OF SCANNED COPIES OF THIS PLAN SHEET.

ALLIANCE ENGINEERING CONSULTANT, INC.
4701 PATRICK HENRY DR., #10
SANTA CLARA, CA 95054

ALAMEDA CTC
1 333 BROADWAY SUITE 220
OAKLAND, CA 94612

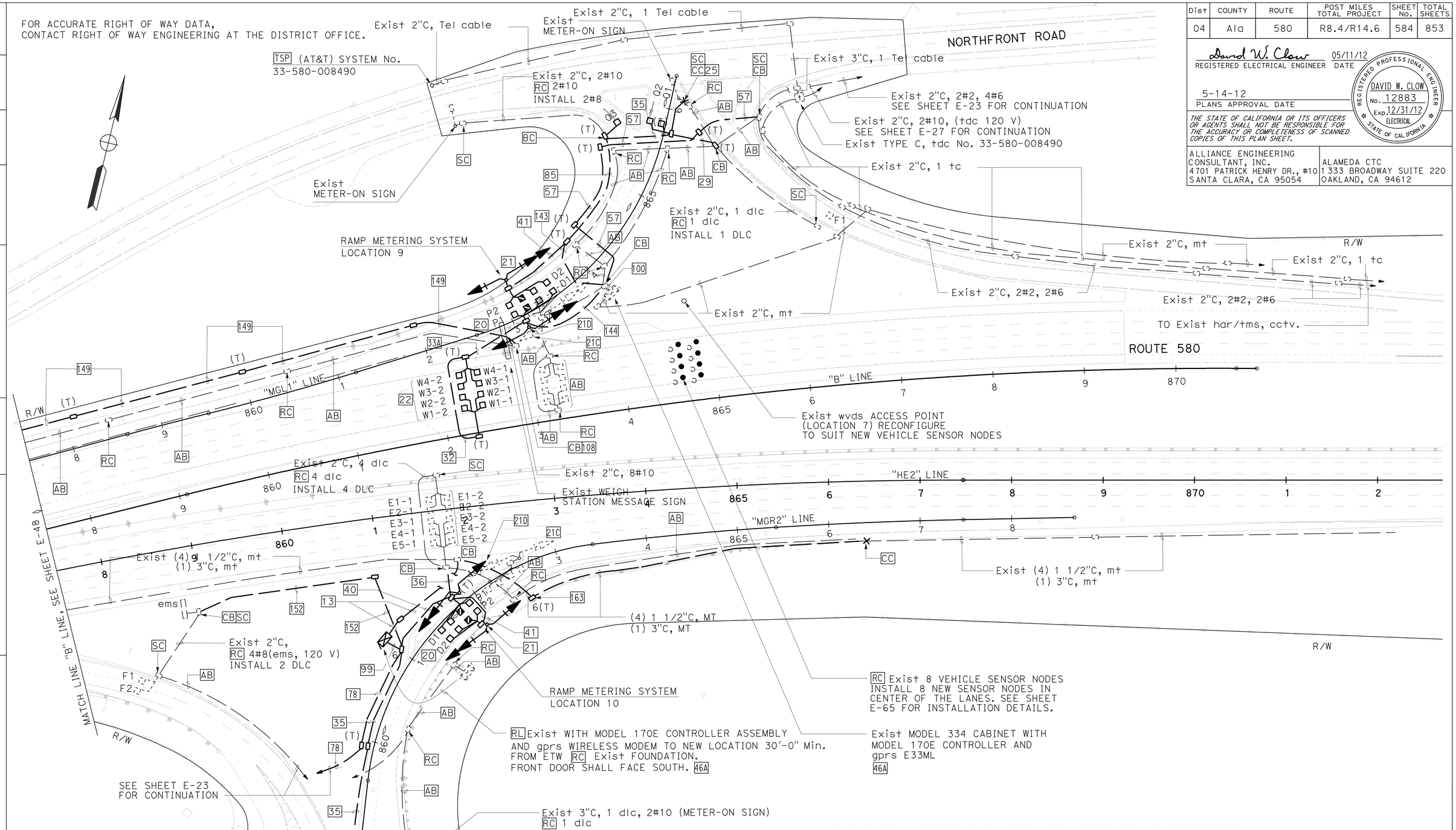

LIVERMORE

SLOW WEIGH-IN MOTION SYSTEM
RAMP METERING SYSTEM (LOCATION 7)
RAMP METERING SYSTEM (LOCATION 9)
RAMP METERING SYSTEM (LOCATION 10)
MODIFY WIRELESS MAGNETOMETER VEHICLE DETECTION STATION

FOR NOTES, ABBREVIATIONS AND LEGEND, SEE SHEET E-1 THRU E-3

SCALE: 1" = 50'

APPROVED FOR ELECTRICAL WORK ONLY

E-49

REVISED BY	DATE REVISED
SB	5/11/12

CALCULATED-DESIGNED BY: HENRY ROBINO
CHECKED BY: DAVID CLOW
CONSULTANT FUNCTIONAL SUPERVISOR: KEN NGAI

STATE OF CALIFORNIA - DEPARTMENT OF TRANSPORTATION
Caltrans

LAST REVISION 05-11-12
DATE PLOTTED => 23-MAY-2012
TIME PLOTTED => 14:04

FOR ACCURATE RIGHT OF WAY DATA,
CONTACT RIGHT OF WAY ENGINEERING AT THE DISTRICT OFFICE.

ABBREVIATIONS

AVI	AUTOMATIC VEHICLE IDENTIFICATION
SLC	SCALE LEAD-IN CABLE
STC	SCREENED TRANSMISSION CABLE

GENERAL NOTES:

1. THE EXACT LOCATION OF THE WIM SENSORS TO BE DETERMINED BY THE WIM VENDOR. THE WIM VENDOR SHALL VERIFY THE FINAL LOCATION OF THE WIM SENSORS PRIOR TO THE CONTRACTOR PERFORMING ANY WORK IN THE TRAVELED WAY OR SHOULDERS.
2. THE EXACT CONFIGURATION AND INSTALLATION PROCEDURES OF WIM SENSORS AND LOOPS SHALL CONFORM TO THE REQUIREMENT OF THE WIM VENDOR.
3. CONTRACTOR TO CONFIRM EXACT LOCATION OF EQUIPMENT AND DIMENSIONS WITH MANUFACTURER.

Dist	COUNTY	ROUTE	POST MILES TOTAL PROJECT	SHEET No.	TOTAL SHEETS
04	Ala	580	R8.4/R14.6	585	853

David W. Clow 05/11/12
REGISTERED ELECTRICAL ENGINEER DATE

5-14-12
PLANS APPROVAL DATE

REGISTERED PROFESSIONAL ENGINEER DAVID W. CLOW No. 12883 Exp. 12/31/12 ELECTRICAL STATE OF CALIFORNIA

THE STATE OF CALIFORNIA OR ITS OFFICERS OR AGENTS SHALL NOT BE RESPONSIBLE FOR THE ACCURACY OR COMPLETENESS OF SCANNED COPIES OF THIS PLAN SHEET.

ALLIANCE ENGINEERING CONSULTANT, INC.
4701 PATRICK HENRY DR., #10
SANTA CLARA, CA 95054

ALAMEDA CTC
1 333 BROADWAY SUITE 220
OAKLAND, CA 94612

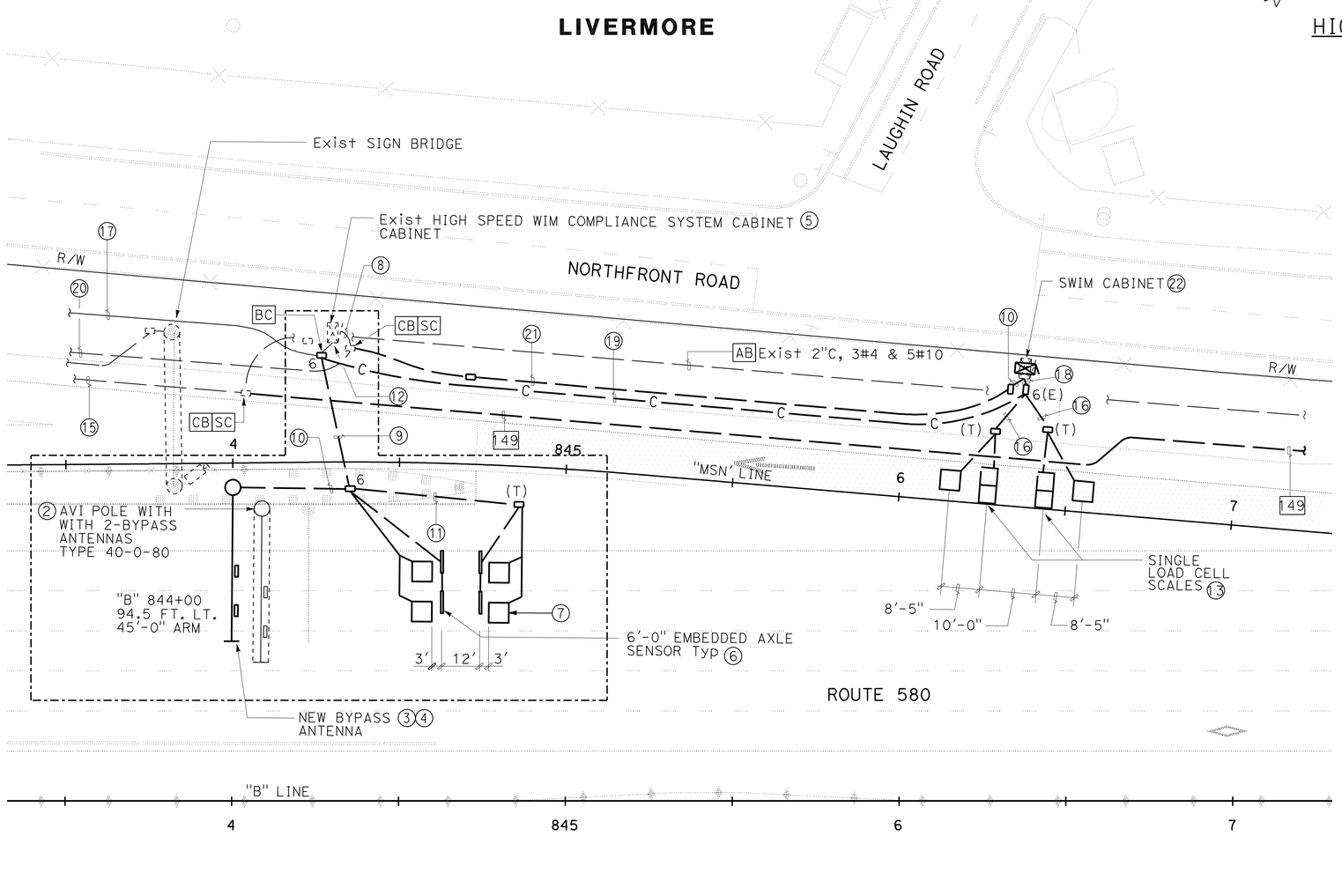

HIGH-SPEED WIM COMPLIANCE SYSTEM NOTES:

① SEE SHEET E-51 FOR ADDITIONAL DETAILS.

② RC Exist BYPASS POLE, ANTENNAS, AND POLE FOUNDATION.

③ INSTALL NEW BYPASS POLE TYPE 27-4-100 (45'-0" MAST ARM) WITH POLE ADAPTER ON NEW FOUNDATION. SEE RSP ES-7F AND SHEETS E-51, E-52. E-53 AND E-54.

④ NEW ANTENNAS FURNISHED AND INSTALLED BY THE BYPASS VENDOR.

⑤ RC Exist EQUIPMENT AND INSTALL NEW EQUIPMENT IN Exist CABINET. EXISTING COMPLIANCE EQUIPMENT TO BE REPLACED BY THE SWIM CONTRACTOR.

⑥ ABANDON EXISTYING AXLE SENSOR AND INSTALL NEW AXLE LOOP DETECTORS AFTER ROAD IS RESTRIPPED.

⑦ ABANDON EXISTING LOOP DETECTORS AND INSTALL NEW LOOP DETECTORS AFTER ROAD IS RESTRIPPED.

⑧ Exist 1½"C, 2#10 (HIGH-SPEED WIM COMPLIANCE CABINET, 120 V).

⑨ INSTALL 3"C, 4 DLC, 4 STC, 3"C, 2-ANTENNA CABLES BY THE BYPASS VENDOR.

⑩ INSTALL 2"C, 2-ANTENNA CABLES BY THE BYPASS VENDOR.

⑪ INSTALL 2"C, 2-DLC, 2-STC,

⑫ Exist 3"C, INSTALL 4 DLC, 4 STC, 2-ANTENNA CABLES BY THE BYPASS VENDOR. Exist 3"C, INSTALL 1-TEL CABLE (HIGH-SPEED WIM COMPLIANCE SYSTEM).

SWIM NOTES:

⑬ INSTALL SINGLE LOAD CELL SCALES AS DESCRIBED IN THE MANUFACTURER'S INSTALLATION MANUAL.

⑭ NOT USED.

⑮ Exist 2"C, 3#4 & 5#10.

⑯ INSTALL 2"C, 2-SLC & 1 DLC, 2-2#18 (OFF-SCALE LEAD).

⑰ Exist 2"C, 1-TEL CABLE (HIGH-SPEED WIM COMPLIANCE SYSTEM). ADD 12 FIBER OPTIC CABLE (SWIM).

⑱ INSTALL 1½"C, 12 FIBER OPTIC CABLES, 3"C, 4-SLC, 2 DLC, 4-2#18 (OFF-SCALE LEAD).

⑲ INSTALL 1½"C, 12 FIBER OPTIC CABLES.

⑳ Exist 1½"C, 2#10 (HIGH-SPEED WIM COMPLIANCE SYSTEM. 2#10 (SWIM CABINET, 120 V).

㉑ INSTALL 1½"C, 2#10 (SWIM CABINET, 120 V), 2"C, MT.

㉒ RC Exist SWIM CABINET AND FOUNDATION AND INSTALL NEW CABINET WITH NEW EQUIPMENT.

SLOW WEIGH-IN-MOTION SYSTEM
HIGH SPEED WEIGH IN MOTION COMPLIANCE SYSTEM

SCALE: 1" = 20'

E-50

FOR NOTES, ABBREVIATIONS AND LEGEND, SEE SHEET E-1 THRU E-3

APPROVED FOR ELECTRICAL WORK ONLY

REVISED BY	DATE REVISED
SB	5/11/12

CALCULATED-DESIGNED BY	CHECKED BY
HENRY ROBINO	DAVID CLOW

CONSULTANT FUNCTIONAL SUPERVISOR: KEN NGAI

STATE OF CALIFORNIA - DEPARTMENT OF TRANSPORTATION

Caltrans

LAST REVISION 05-11-12 | DATE PLOTTED => 23-MAY-2012 | TIME PLOTTED => 08:01

Dist	COUNTY	ROUTE	POST MILES TOTAL PROJECT	SHEET No.	TOTAL SHEETS
04	Ala	580	R8.4/R14.6	586	853

David W. Clow 05/11/12
REGISTERED ELECTRICAL ENGINEER DATE

5-14-12
PLANS APPROVAL DATE

REGISTERED PROFESSIONAL ENGINEER
DAVID W. CLOW
No. 12883
Exp. 12/31/12
ELECTRICAL
STATE OF CALIFORNIA

THE STATE OF CALIFORNIA OR ITS OFFICERS OR AGENTS SHALL NOT BE RESPONSIBLE FOR THE ACCURACY OR COMPLETENESS OF SCANNED COPIES OF THIS PLAN SHEET.

ALLIANCE ENGINEERING CONSULTANT, INC.
4701 PATRICK HENRY DR., #10
SANTA CLARA, CA 95054

ALAMEDA CTC
1 333 BROADWAY SUITE 220
OAKLAND, CA 94612

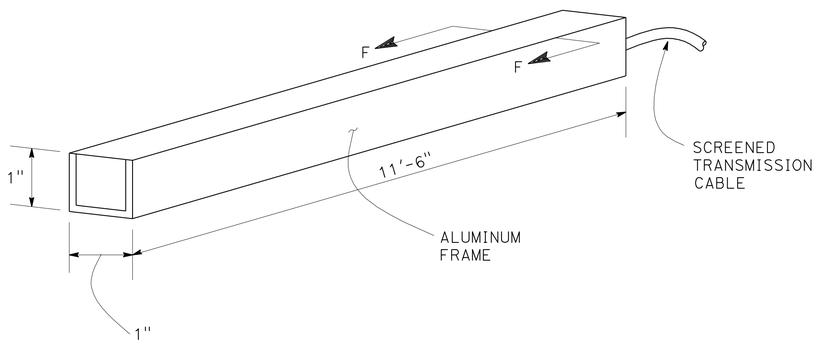

EMBEDDED AXLE SENSOR
(TYPICAL)

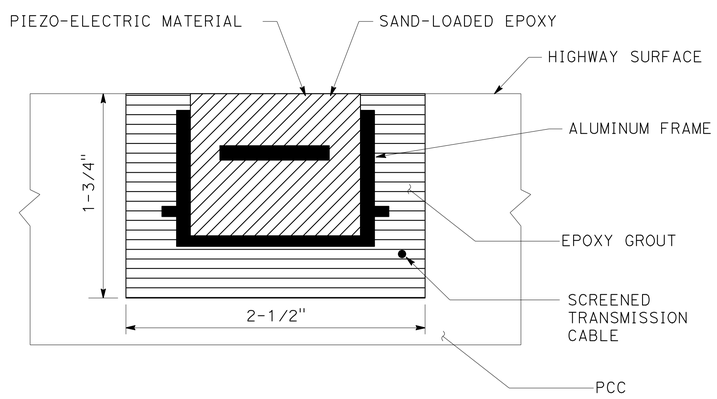

SECTION F-F

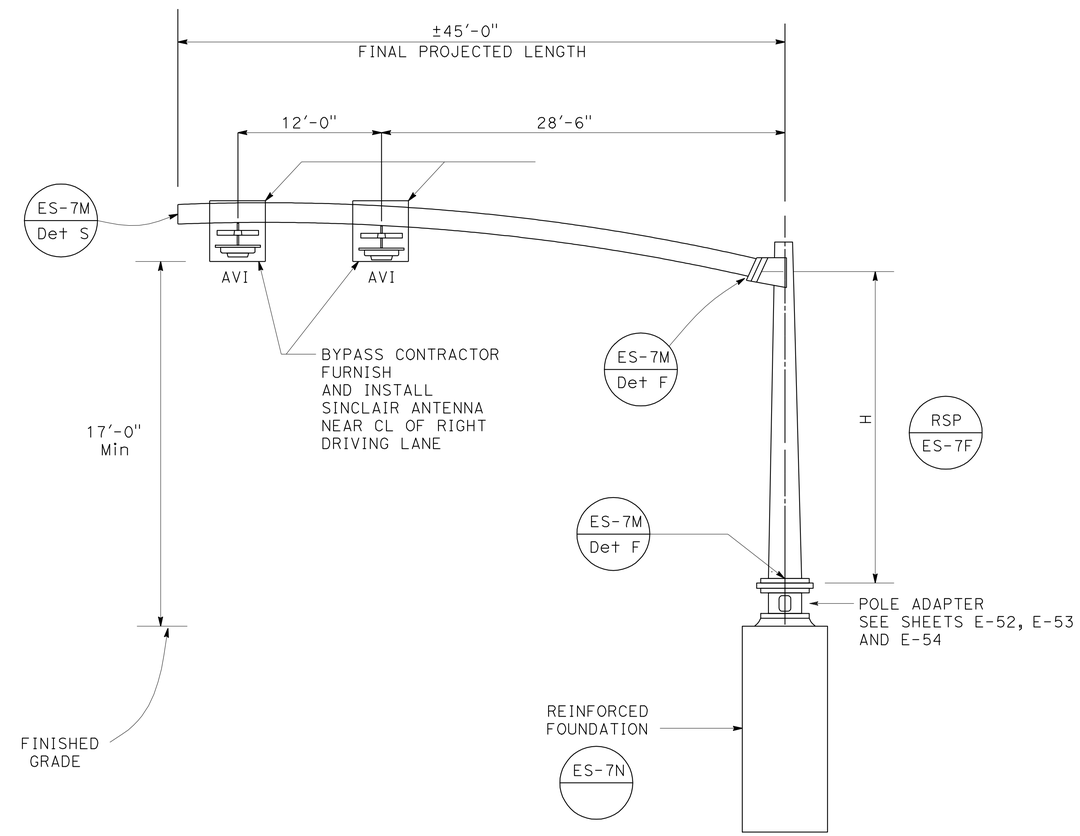

ELEVATION
27-4-100 (MOD)

HIGH SPEED WEIGH IN MOTION COMPLIANCE SYSTEM
(ELECTRICAL DETAILS)

NO SCALE

E-51

APPROVED FOR ELECTRICAL WORK ONLY

STATE OF CALIFORNIA - DEPARTMENT OF TRANSPORTATION
Caltrans

CONSULTANT FUNCTIONAL SUPERVISOR: KEN NGAI
CALCULATED-DESIGNED BY: HENRY ROBINO
CHECKED BY: DAVID CLOW
REVISED BY: SB
DATE REVISED: 5/11/12

LAST REVISION 05-11-12
DATE PLOTTED => 23-MAY-2012
TIME PLOTTED => 08:12

Dist	COUNTY	ROUTE	POST MILES TOTAL PROJECT	SHEET No.	TOTAL SHEETS
04	Ala	580	R8.4/R14.6	587	853

David W. Clow 05/11/12
REGISTERED ELECTRICAL ENGINEER DATE

5-14-12
PLANS APPROVAL DATE

REGISTERED PROFESSIONAL ENGINEER
DAVID W. CLOW
No. 12883
Exp. 12/31/12
ELECTRICAL
STATE OF CALIFORNIA

THE STATE OF CALIFORNIA OR ITS OFFICERS OR AGENTS SHALL NOT BE RESPONSIBLE FOR THE ACCURACY OR COMPLETENESS OF SCANNED COPIES OF THIS PLAN SHEET.

ALLIANCE ENGINEERING CONSULTANT, INC.
4701 PATRICK HENRY DR., #10
SANTA CLARA, CA 95054

ALAMEDA CTC
1 333 BROADWAY SUITE 220
OAKLAND, CA 94612

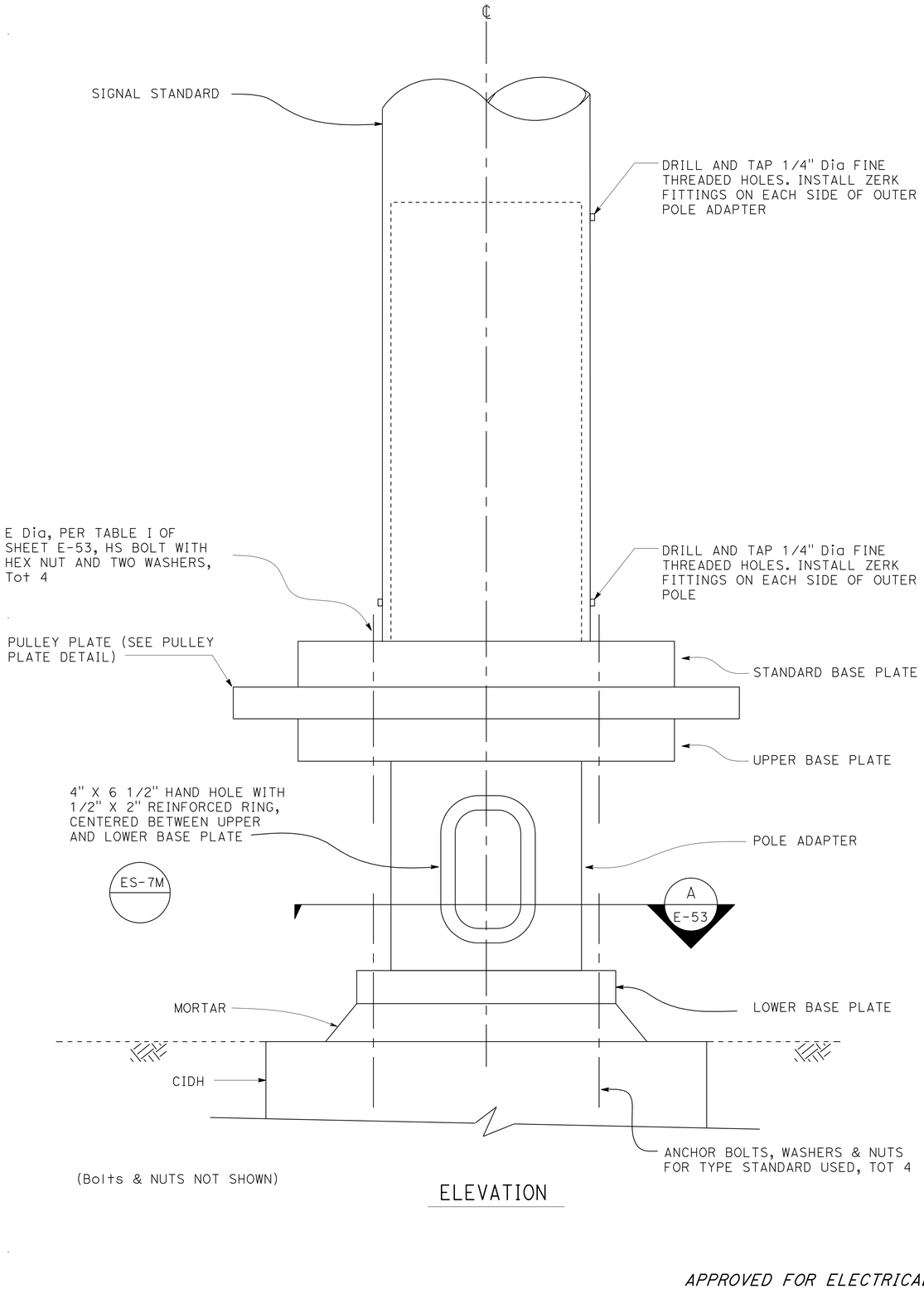

(Bolts & NUTS NOT SHOWN)

ELEVATION

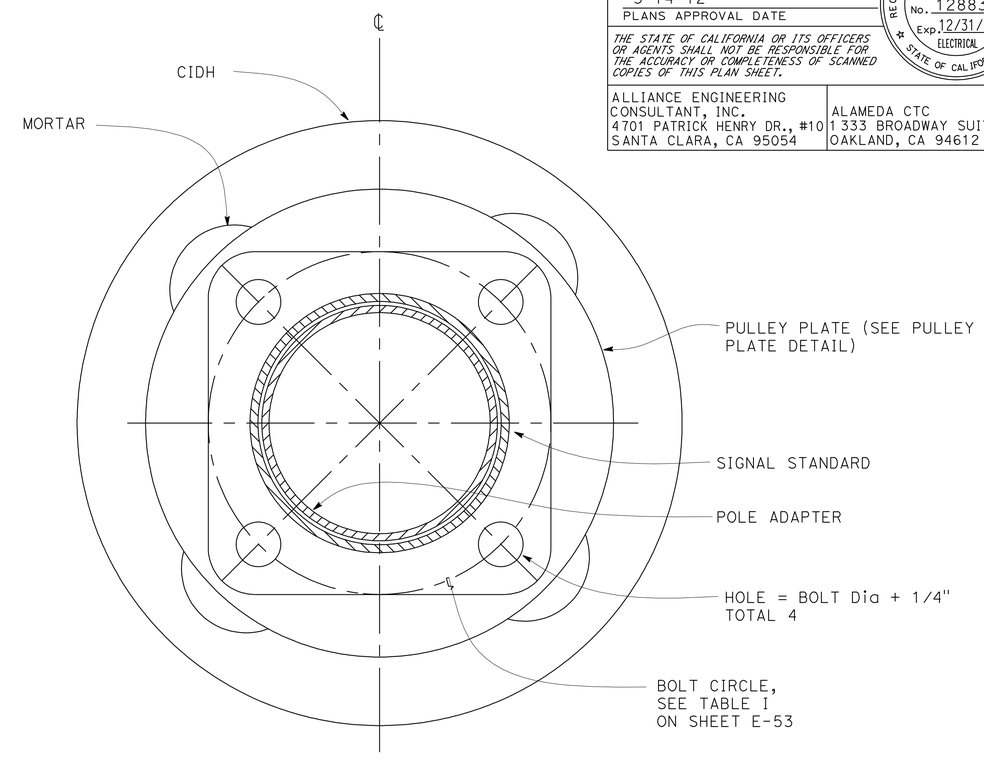

PLAN

(Bolts & NUTS NOT SHOWN)

RSP ES-7G
ES-7N
RSP ES-7E

GENERAL NOTES:

1. WASHER ASSEMBLY CONSIST OF TWO FIBER, TWO FLAT AND LOCK WASHERS.
2. ALL STEEL MINIMUM YIELD STRENGTH=330 MPa EXCEPT WHEN NOTED OTHERWISE.
3. FOR DETAILS NOT SHOWN, SEE STANDARD PLANS.
4. SIZE AND THICKNESS OF UPPER AND LOWER BASE PLATE SHALL MATCH STANDARD BASE PLATE.

DESIGN NOTE:

TYPE 27-4-100 (45 Ft SMA) (MOD)
rotating pole with AVI antenna (total 1 Max)

DESIGN: AASHTO SPECIFICATIONS FOR THE DESIGN AND CONSTRUCTION OF STRUCTURAL SUPPORT FOR HIGHWAY SIGNS, LUMINAIRES AND TRAFFIC SIGNALS, DATED 2001
WIND LOADING: 100 MPH AASHTO

HIGH SPEED WEIGH IN MOTION COMPLIANCE SYSTEM
(BYPASS POLE DETAILS)

NO SCALE

E-52

APPROVED FOR ELECTRICAL WORK ONLY

REVISED BY	DATE REVISED
	5/11/12

CALCULATED-DESIGNED BY: HENRY ROBINO
CHECKED BY: DAVID CLOW
SUPERVISOR: KEN NGAI
CONSULTANT FUNCTIONAL SUPERVISOR
STATE OF CALIFORNIA - DEPARTMENT OF TRANSPORTATION
Caltrans

LAST REVISION 05-11-12
DATE PLOTTED => 23-MAY-2012
TIME PLOTTED => 08:12

Dist	COUNTY	ROUTE	POST MILES TOTAL PROJECT	SHEET No.	TOTAL SHEETS
04	Ala	580	R8.4/R14.6	588	853

David W. Clow 05/11/12
REGISTERED ELECTRICAL ENGINEER DATE

5-14-12
PLANS APPROVAL DATE

REGISTERED PROFESSIONAL ENGINEER DAVID W. CLOW No. 12883 Exp. 12/31/12 ELECTRICAL STATE OF CALIFORNIA

THE STATE OF CALIFORNIA OR ITS OFFICERS OR AGENTS SHALL NOT BE RESPONSIBLE FOR THE ACCURACY OR COMPLETENESS OF SCANNED COPIES OF THIS PLAN SHEET.

ALLIANCE ENGINEERING CONSULTANT, INC.
4701 PATRICK HENRY DR., #10
SANTA CLARA, CA 95054

ALAMEDA CTC
1 333 BROADWAY SUITE 220
OAKLAND, CA 94612

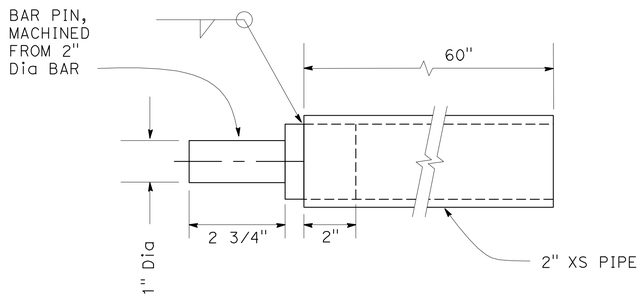

LEVERAGE BAR

TABLE I

TYPE OF SIGNAL / LIGHTING STANDARD (MOD)	BOLT CIRCLE DIAMETER	A	B	C	D	E
27-4-100 MOD (ADVANCED)	18"	30"	15"	13 1/2"	11 2/3"	2"

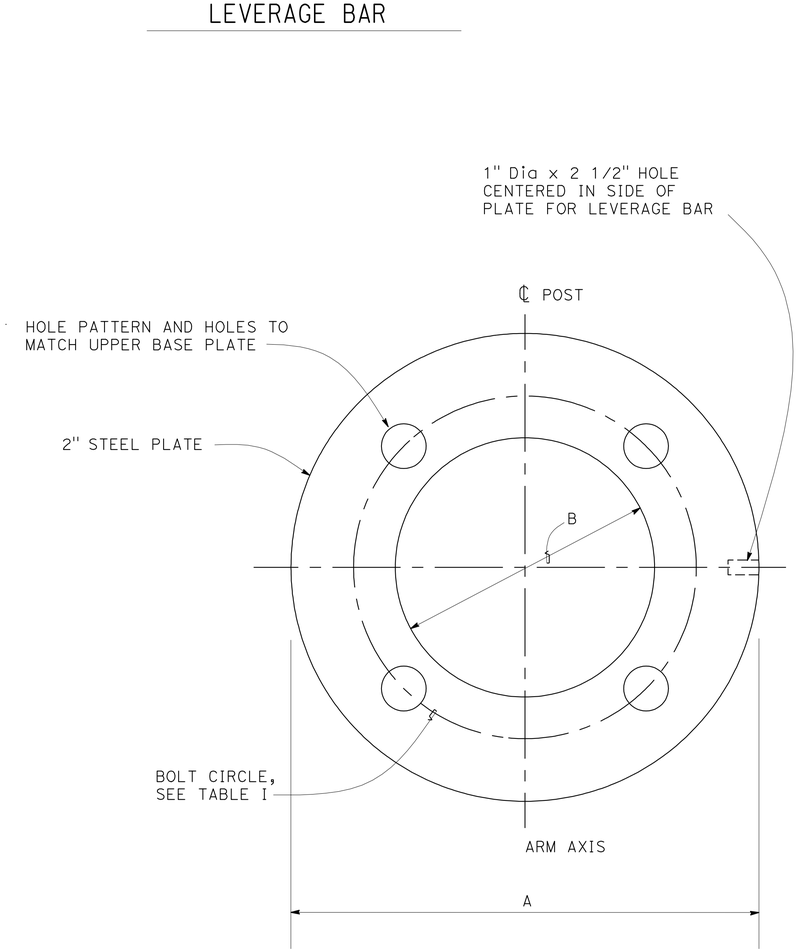

PLAN

PULLEY PLATE DETAILS

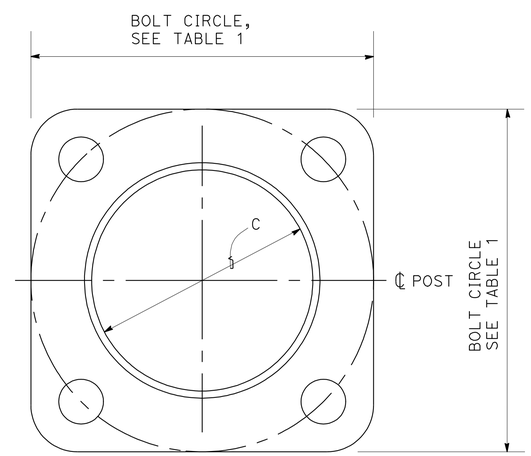

UPPER BASE PLATE

POLE ADAPTER

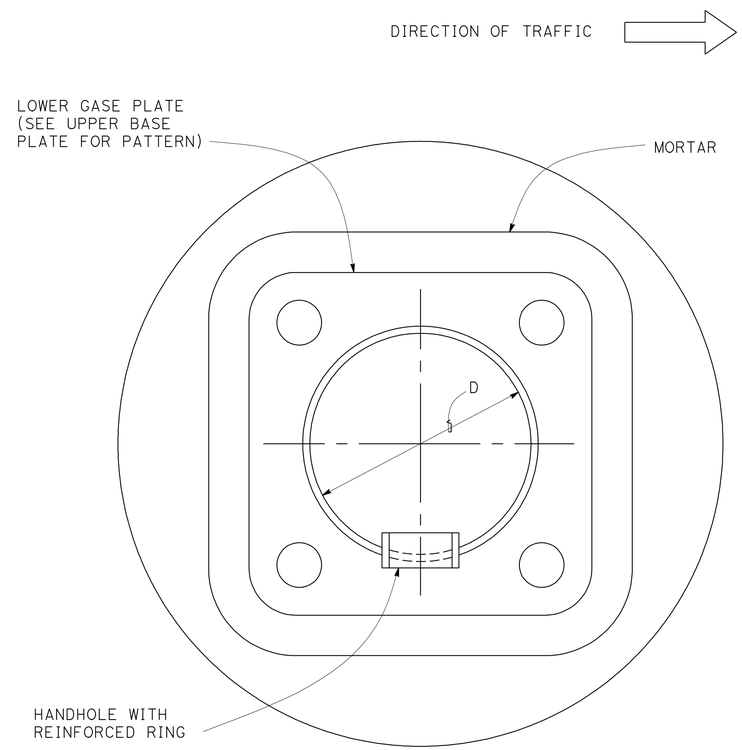

SECTION A-A

ES-7M

HIGH SPEED WEIGH IN MOTION COMPLIANCE SYSTEM
(BYPASS POLE DETAILS)

NO SCALE

E-53

APPROVED FOR ELECTRICAL WORK ONLY

STATE OF CALIFORNIA - DEPARTMENT OF TRANSPORTATION
Caltrans

CONSULTANT FUNCTIONAL SUPERVISOR: KEN NGAI
CALCULATED-DESIGNED BY: HENRY ROBINO
CHECKED BY: DAVID CLOW
REVISED BY: SB
DATE REVISED: 5/11/12

LAST REVISION 05-11-12
DATE PLOTTED => 23-MAY-2012
TIME PLOTTED => 08:13

Dist	COUNTY	ROUTE	POST MILES TOTAL PROJECT	SHEET No.	TOTAL SHEETS
04	Ala	580	R8.4/R14.6	589	853

David W. Clow 5/11/12
REGISTERED ELECTRICAL ENGINEER DATE

5-14-12
PLANS APPROVAL DATE

REGISTERED PROFESSIONAL ENGINEER
DAVID W. CLOW
No. 12883
Exp. 12/31/12
ELECTRICAL
STATE OF CALIFORNIA

THE STATE OF CALIFORNIA OR ITS OFFICERS OR AGENTS SHALL NOT BE RESPONSIBLE FOR THE ACCURACY OR COMPLETENESS OF SCANNED COPIES OF THIS PLAN SHEET.

ALLIANCE ENGINEERING CONSULTANT, INC.
4701 PATRICK HENRY DR., #10
SANTA CLARA, CA 95054

ALAMEDA CTC
1 333 BROADWAY SUITE 220
OAKLAND, CA 94612

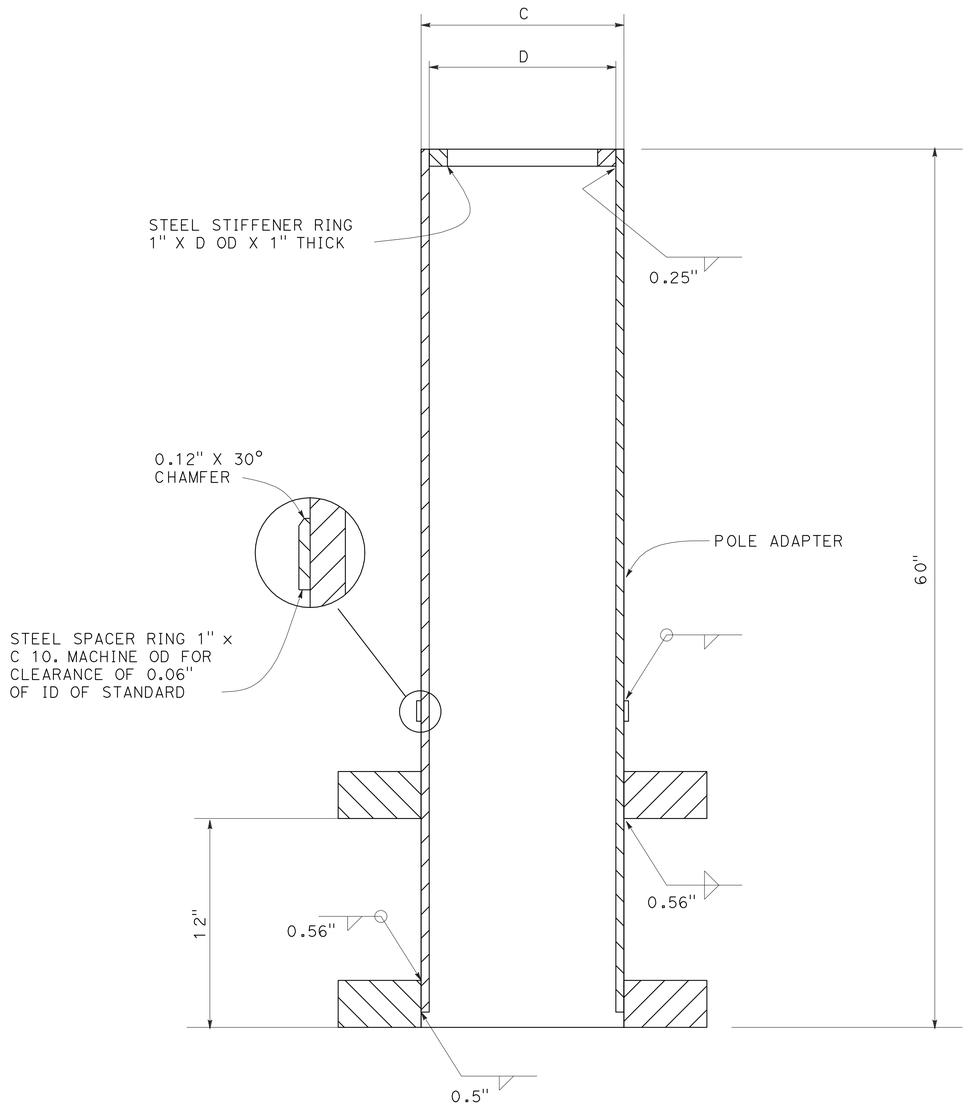

SECTION VIEW

POLE ADAPTER

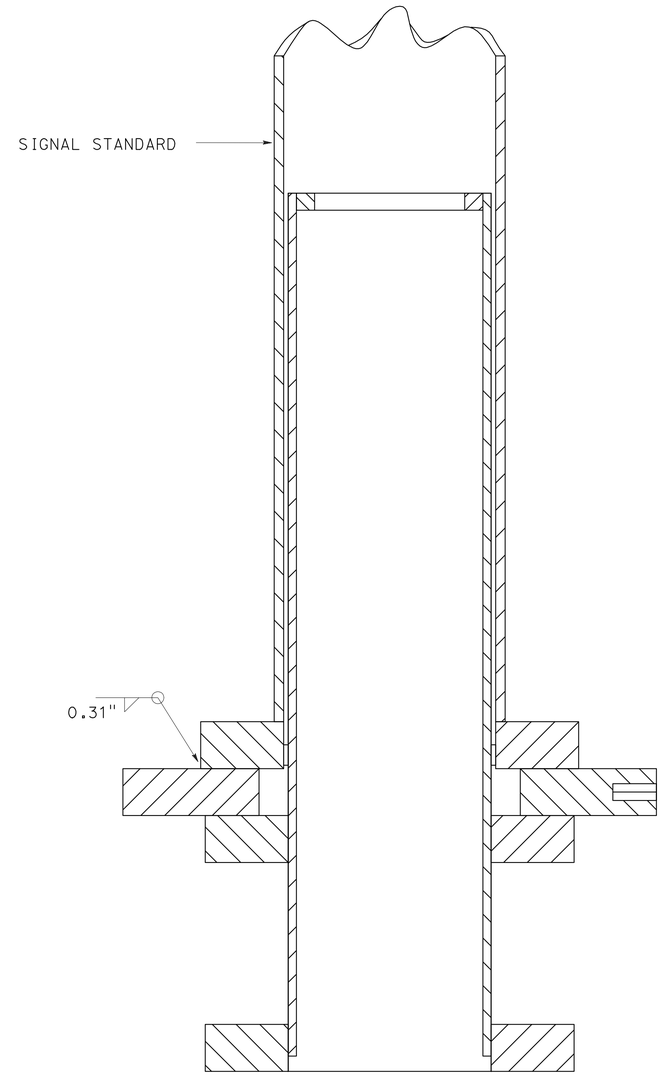

SECTION VIEW

STANDARD AND

POLE ADAPTER ASSEMBLED

NOTE:

1. SEE TABLE I ON SHEET E-53 FOR C & D DIMENSIONS

HIGH SPEED WEIGH IN MOTION COMPLIANCE SYSTEM
(BYPASS POLE DETAILS)

NO SCALE

E-54

APPROVED FOR ELECTRICAL WORK ONLY

STATE OF CALIFORNIA - DEPARTMENT OF TRANSPORTATION
Caltrans

CONSULTANT FUNCTIONAL SUPERVISOR: KEN NGAI
CALCULATED-DESIGNED BY: HENRY ROBINO
CHECKED BY: DAVID CLOW
REVISED BY: SB
DATE REVISED: 5/11/12

LAST REVISION 05-11-12
DATE PLOTTED => 23-MAY-2012
TIME PLOTTED => 08:13

Dist	COUNTY	ROUTE	POST MILES TOTAL PROJECT	SHEET No.	TOTAL SHEETS
04	Ala	580	R8.4/R14.6	590	853

David W. Clow 05/11/12
REGISTERED ELECTRICAL ENGINEER DATE

5-14-12
PLANS APPROVAL DATE

REGISTERED PROFESSIONAL ENGINEER DAVID W. CLOW No. 12883 Exp. 12/31/12 ELECTRICAL STATE OF CALIFORNIA

THE STATE OF CALIFORNIA OR ITS OFFICERS OR AGENTS SHALL NOT BE RESPONSIBLE FOR THE ACCURACY OR COMPLETENESS OF SCANNED COPIES OF THIS PLAN SHEET.

ALLIANCE ENGINEERING CONSULTANT, INC.
4701 PATRICK HENRY DR., #10
SANTA CLARA, CA 95054

ALAMEDA CTC
1 333 BROADWAY SUITE 220
OAKLAND, CA 94612

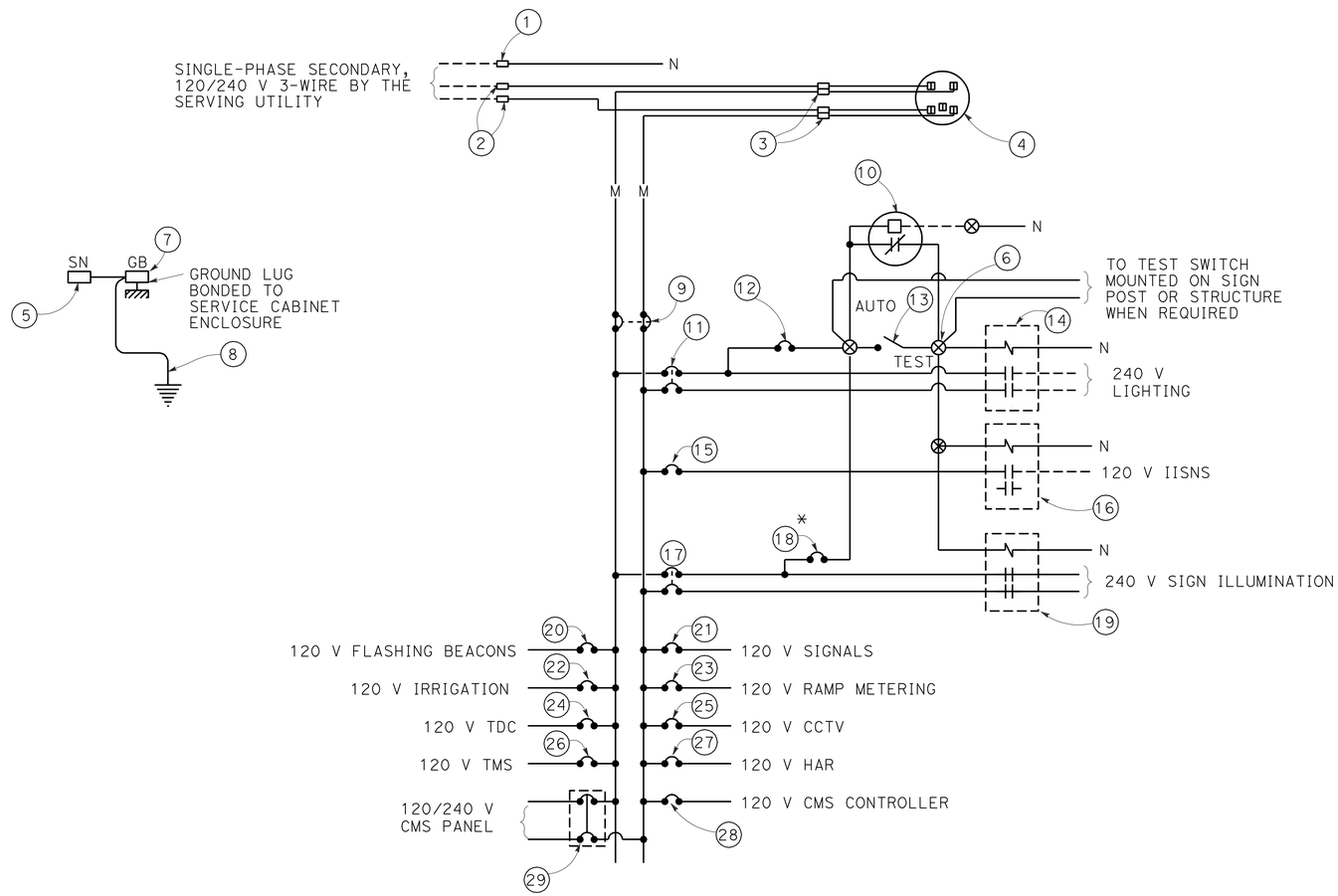

120/240 V SERVICE WIRING DIAGRAM (TYPICAL)

TYPE III-A SERVICE (120/240 V) EQUIPMENT LEGEND

ITEM No.	COMPONENT	NAME PLATE DESCRIPTION
1	NEUTRAL LUG	
2	LANDING LUG	
3	TEST BYPASS FACILITY	
4	METER SOCKET AND SUPPORT	
5	NEUTRAL BUS	
6	TERMINAL BLOCK	
7	GROUND BUS	
8	GROUNDING ELECTRODE	
9	100 A, 240 V, 2P, CB	MAIN BREAKER
10	PHOTOELECTRIC UNIT (NOTE 7)	
11	30 A, 240 V, 2P, CB	LIGHTING
12	15 A, 120 V, 1P, CB	LIGHTING CONTROL
13	15 A, IP, TEST SWITCH	TEST SWITCH
14	30 A, 2PNO, CONTACTOR	
15	15 A, 180 V, 1P, CB	IISNS
16	30A, 2PNO, CONTACTOR	

ITEM No.	COMPONENT	NAME PLATE DESCRIPTION
17	30 A, 240V, 2P, CB	SIGN ILLUMINATION
18*	15 A, 120 V, 1P, CB	SIGN ILLUMINATION CONTROL
19	30 A, 2PNO, CONTACTOR	
20	15 A, 120 V, IP, CB	FLASHING BEACON
21	50 A, 120 V, 1P, CB	SIGNALS
22	20 A, 120 V, 1P, CB	IRRIGATION
23	30 A, 120 V, 1P, CB	RAMP METERING
24	15 A, 120 V, 1P, CB	TELEPHONE DEMARCATION CABINET
25	30 A, 120 V, 1P, CB	CCTV
26	30 A, 120 V, 1P, CB	TMS
27	30 A, 120 V, 1P, CB	HAR
28	30 A, 120 V, 1P, CB	CMS CONTROLLER
29	30 A, 240 V, 2P, CB	CMS PANEL

* PROVIDE ITEM 12 WHEN BOTH CIRCUITS OF SIGN ILLUMINATION AND LIGHTING ARE USED. ITEM 18 IS NOT REQUIRED.

LEGEND: (SEE RSP ES-1A & RSP ES-1C)

NOTES (FOR SERVICE EQUIPMENT)

1. VOLTAGE RATINGS OF SERVICE EQUIPMENT SHALL CONFORM TO THE SERVICE VOLTAGES INDICATED ON THE PLANS.
2. UNLESS OTHERWISE INDICATED ON THE PLANS, ALL SERVICE EQUIPMENT ITEMS SHALL BE PROVIDED FOR EACH SERVICE EQUIPMENT ENCLOSURE AS SHOWN.
3. ITEM No. 1 AND 5 SHALL BE ISOLATED FROM THE CABINET.
4. METER SOCKETS SHALL BE 5 CLIP TYPE.
5. SERVICE UTILITY WILL INSTALL THE TIME-OF-USE METER IF APPLICABLE.
6. UNLESS OTHERWISE NOTED, THE MAXIMUM NUMBER OF SINGLE-POLE CB SPACES IN THE ENCLOSURE IS FOURTEEN.
7. PHOTOELECTRIC CONTROL SHALL BE TYPE II.

ELECTRICAL DETAILS

E-55

APPROVED FOR ELECTRICAL WORK ONLY

REVISED BY	SB
DATE REVISED	5/11/12
HENRY ROBINO	
DAVID CLOW	
CALCULATED-DESIGNED BY	
CHECKED BY	
CONSULTANT FUNCTIONAL SUPERVISOR	
KEN NGAI	

STATE OF CALIFORNIA - DEPARTMENT OF TRANSPORTATION
Caltrans

LAST REVISION 05-11-12
DATE PLOTTED => 23-MAY-2012
TIME PLOTTED => 08:13

Dist	COUNTY	ROUTE	POST MILES TOTAL PROJECT	SHEET No.	TOTAL SHEETS
04	Ala	580	R8.4/R14.6	591	853

David W. Clow 5/11/12
REGISTERED ELECTRICAL ENGINEER DATE

5-14-12
PLANS APPROVAL DATE

REGISTERED PROFESSIONAL ENGINEER DAVID W. CLOW No. 12883 Exp. 12/31/12 ELECTRICAL STATE OF CALIFORNIA

THE STATE OF CALIFORNIA OR ITS OFFICERS OR AGENTS SHALL NOT BE RESPONSIBLE FOR THE ACCURACY OR COMPLETENESS OF SCANNED COPIES OF THIS PLAN SHEET.

ALLIANCE ENGINEERING CONSULTANT, INC.
4701 PATRICK HENRY DR., #10
SANTA CLARA, CA 95054

ALAMEDA CTC
1 333 BROADWAY SUITE 220
OAKLAND, CA 94612

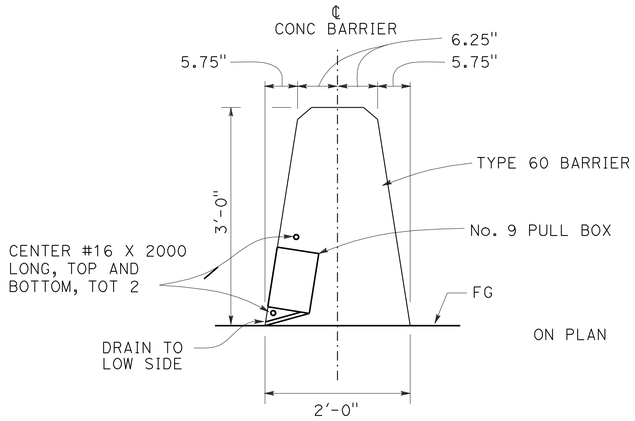

SEE CALTRANS STD PLANS A76A RSP ES-9C AND ES-9D FOR DETAILS NOT SHOWN.

1 No.9 PULL BOX IN CONCRETE BARRIER TYPE 60 (TYPE 60C AND 60D SIMILIAR)

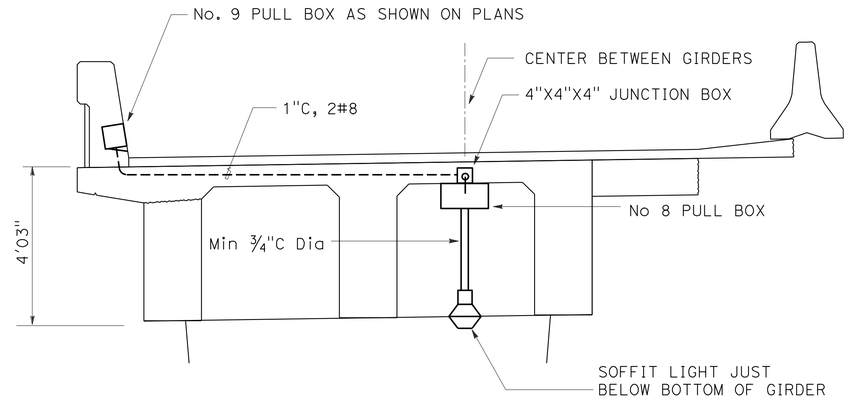

5 SOFFIT LIGHT INSTALLATION DETAIL

(N. LIVERMORE Ave)

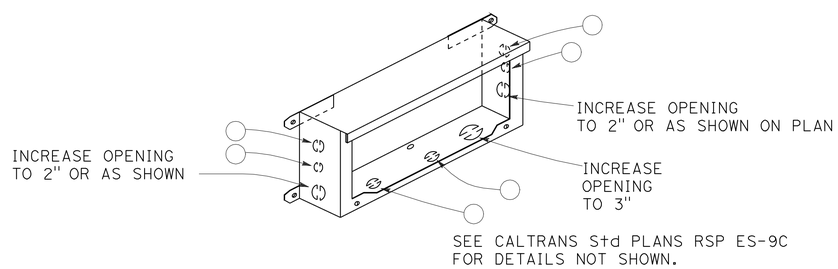

SEE CALTRANS Std PLANS RSP ES-9C FOR DETAILS NOT SHOWN.

2 No.9 STRUCTURAL PULL BOX Mod

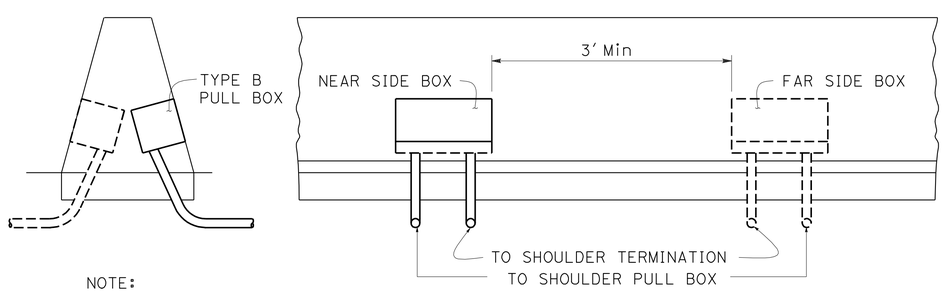

NOTE:
CONDUIT SIZE AS SHOWN ON PLANS

3 PULL BOX INSTALLATION (NEW MEDIAN BARRIER)

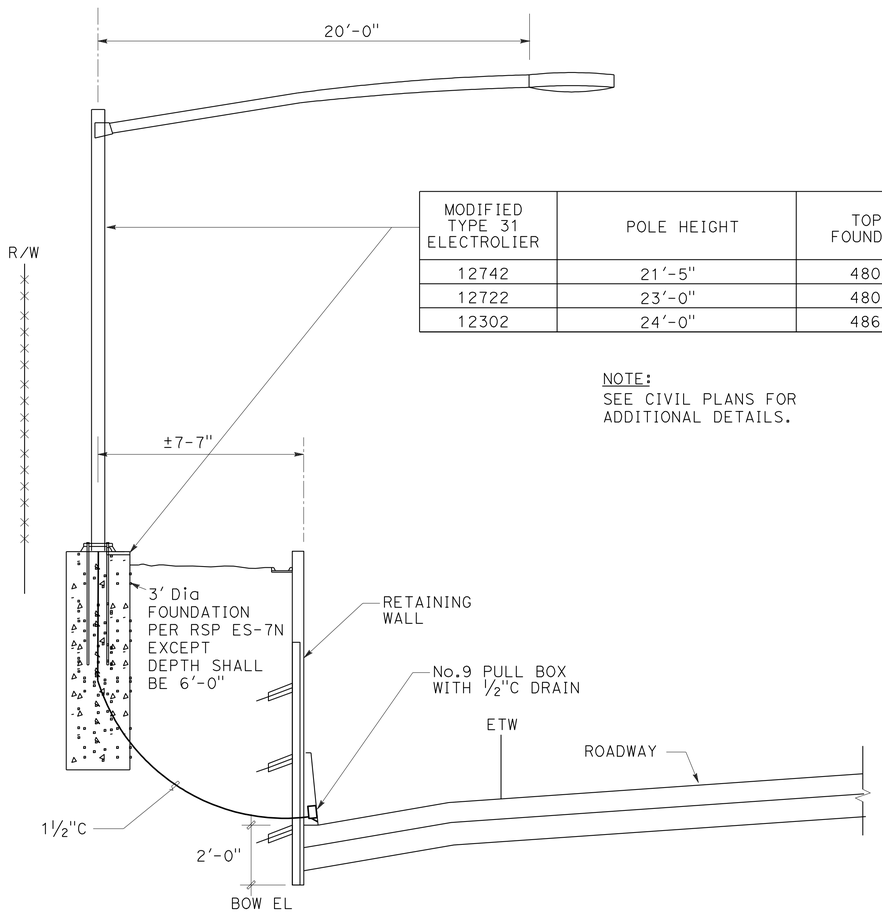

MODIFIED TYPE 31 ELECTROLIER	POLE HEIGHT	TOP OF FOUNDATION
12742	21'-5"	480.29
12722	23'-0"	480.09
12302	24'-0"	486.19

NOTE:
SEE CIVIL PLANS FOR ADDITIONAL DETAILS.

4 ELECTROLIER BEHIND RETAINING WALL

ELECTROLIER	SHEET No.	
12742	E-9	632+57.5
12722	E-9	634+37.5
12302	E-11	660+82.5

ELECTRICAL DETAILS

NO SCALE

E-56

APPROVED FOR ELECTRICAL WORK ONLY

CALCULATED-DESIGNED BY	HENRY ROBINO	REVISED BY	SB
CHECKED BY	DAVID CLOW	DATE REVISED	5/11/12
CONSULTANT FUNCTIONAL SUPERVISOR	KEN NGAI		

STATE OF CALIFORNIA - DEPARTMENT OF TRANSPORTATION
Caltrans

LAST REVISION 05-11-12
DATE PLOTTED => 23-MAY-2012
TIME PLOTTED => 08:13

Dist	COUNTY	ROUTE	POST MILES TOTAL PROJECT	SHEET No.	TOTAL SHEETS
04	Ala	580	R8.4/R14.6	592	853

David W. Clow 05/11/12
REGISTERED ELECTRICAL ENGINEER DATE

5-14-12
PLANS APPROVAL DATE

REGISTERED PROFESSIONAL ENGINEER DAVID W. CLOW No. 12883 Exp. 12/31/12 ELECTRICAL STATE OF CALIFORNIA

THE STATE OF CALIFORNIA OR ITS OFFICERS OR AGENTS SHALL NOT BE RESPONSIBLE FOR THE ACCURACY OR COMPLETENESS OF SCANNED COPIES OF THIS PLAN SHEET.

ALLIANCE ENGINEERING CONSULTANT, INC.
4701 PATRICK HENRY DR., #10
SANTA CLARA, CA 95054

ALAMEDA CTC
1 333 BROADWAY SUITE 220
OAKLAND, CA 94612

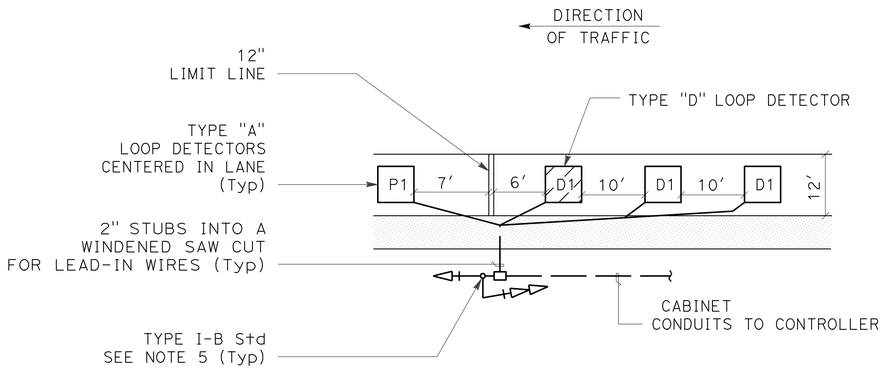

1-LANE RAMP
(WB-I580)

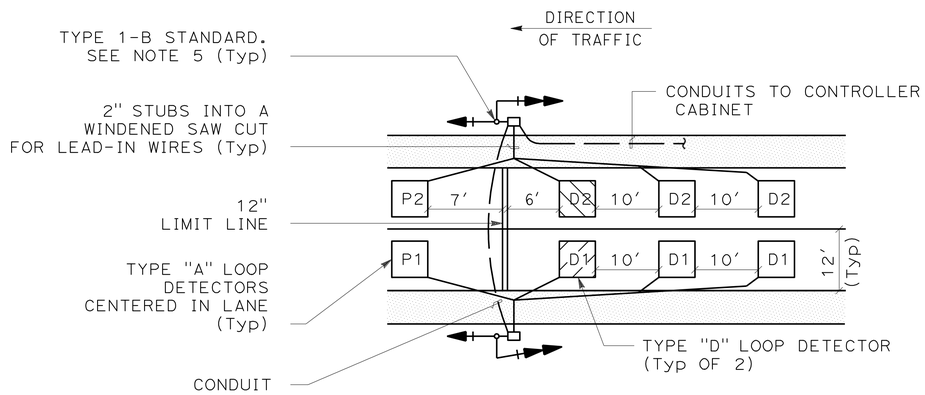

2-LANE RAMP
(WB-I580)

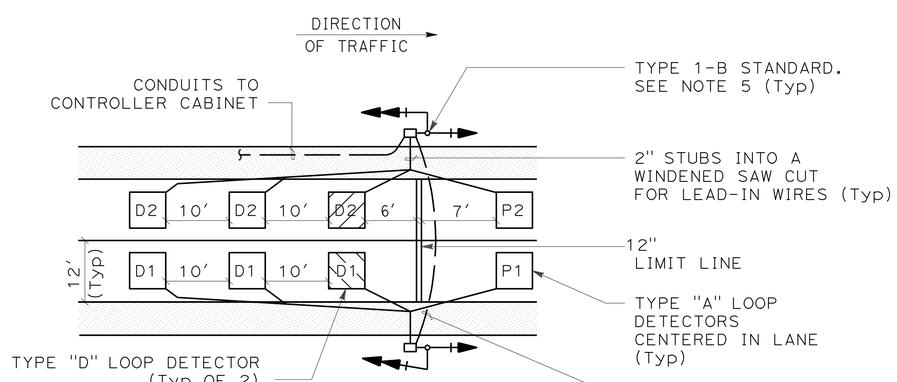

2-LANE RAMP
(WB-I580)

NOTES

1. SEE RSP ES-5A AND ES-5B FOR ADDITIONAL DETAILS.
2. LEAD-IN WIRES SHALL BE SPLICED IN NEAREST PULL BOX.
3. COORDINATE EXACT LOCATION OF LOOP DETECTORS WITH THE ENGINEER.
4. SEE PAVEMENT DELINEATION PLANS FOR EXACT LOCATION OF LIMIT LINES.
5. INSTALL TYPE 1-B STANDARD 60 INCHES DOWN STREAM OF THE LIMIT LINE AND 3.28 FT FROM THE EDGE OF SHOULDER. WITH SIGNAL HEAD AND SIGNAL MOUNT AS SHOWN ON DETAIL 1 ON SHEET E-59.

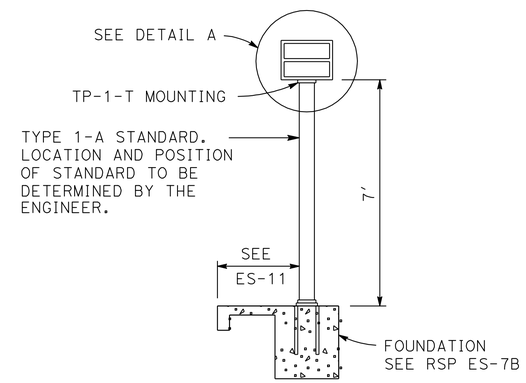

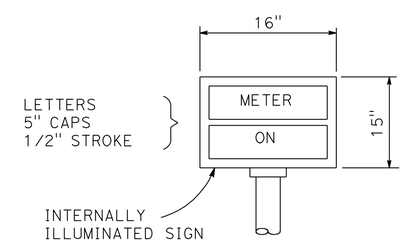

DETAIL A

1 METER ON SIGN DETAIL

RAMP METERING SYSTEM
(ELECTRICAL DETAILS)
NO SCALE

E-57

APPROVED FOR ELECTRICAL WORK ONLY

STATE OF CALIFORNIA - DEPARTMENT OF TRANSPORTATION
Caltrans

CONSULTANT FUNCTIONAL SUPERVISOR: KEN NGAI
CALCULATED-DESIGNED BY: HENRY ROBINO
CHECKED BY: DAVID CLOW
REVISED BY
DATE REVISED: 5/11/12

LAST REVISION 05-11-12
DATE PLOTTED => 23-MAY-2012
TIME PLOTTED => 08:13

Dist	COUNTY	ROUTE	POST MILES TOTAL PROJECT	SHEET No.	TOTAL SHEETS
04	Ala	580	R8.4/R14.6	593	853

David W. Clow 5/11/12
REGISTERED ELECTRICAL ENGINEER DATE

5-14-12
PLANS APPROVAL DATE

REGISTERED PROFESSIONAL ENGINEER
DAVID W. CLOW
No. 12883
Exp. 12/31/12
ELECTRICAL
STATE OF CALIFORNIA

THE STATE OF CALIFORNIA OR ITS OFFICERS OR AGENTS SHALL NOT BE RESPONSIBLE FOR THE ACCURACY OR COMPLETENESS OF SCANNED COPIES OF THIS PLAN SHEET.

ALLIANCE ENGINEERING CONSULTANT, INC.
4701 PATRICK HENRY DR., #10
SANTA CLARA, CA 95054

ALAMEDA CTC
1 333 BROADWAY SUITE 220
OAKLAND, CA 94612

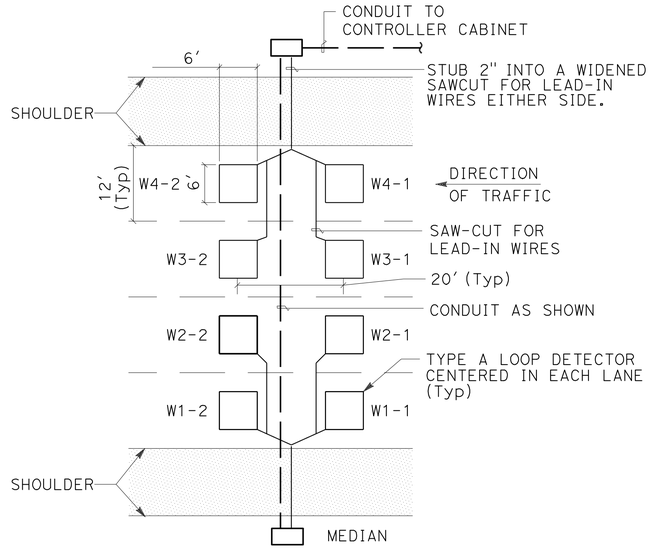

4-LANES

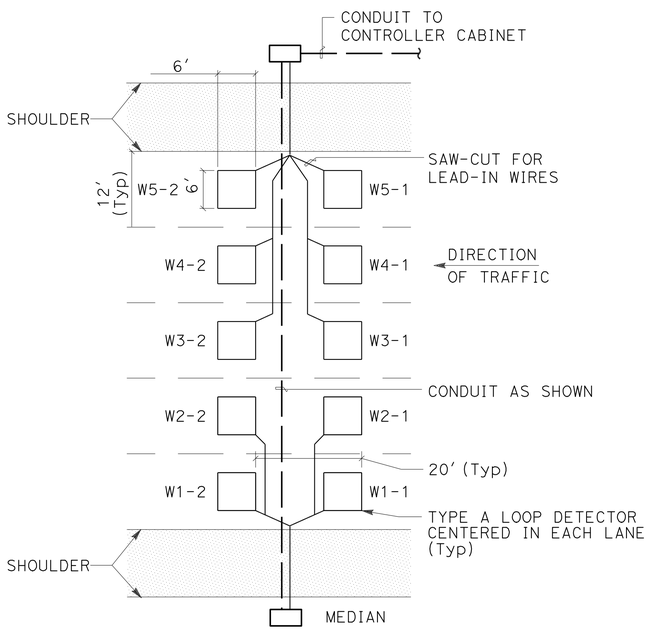

5-LANES

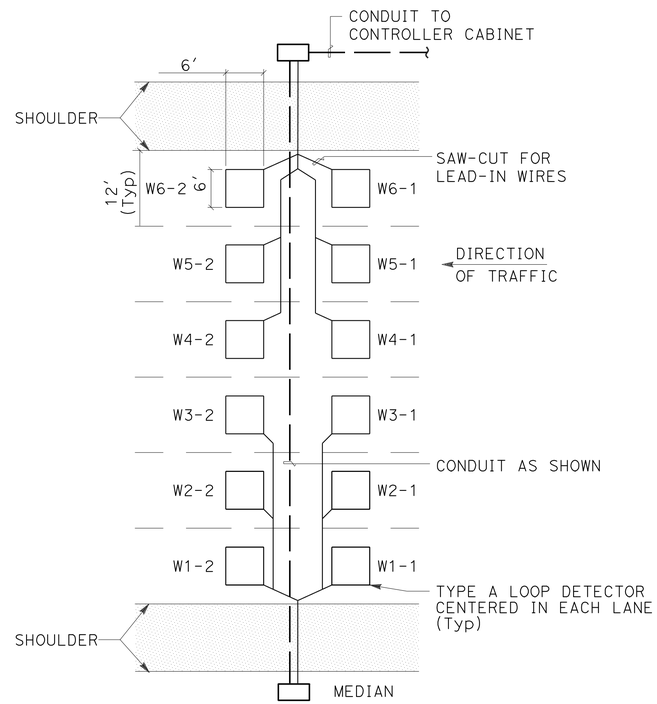

6-LANES

1 - MAIN LINE DETECTOR INSTALLATION DETAILS (TYPICAL)

RAMP DETECTOR DESIGNATION:

D = DEMAND DETECTOR
P = PASSAGE DETECTOR
Q = QUEUE DETECTOR
F = OFFRAMP DETECTOR

1 = FIRST LANE FROM LEFT
2 = SECOND LANE FROM LEFT

D-2

FREEWAY MAINLINE DETECTOR DESIGNATION:

W = WESTBOUND LANES (WB)
E = EASTBOUND LANES (EB)

NUMBER OF LANES FROM LEFT WITH RESPECT TO DIRECTION OF TRAFFIC:
1 = FIRST LANE FROM LEFT
2 = SECOND LANE FROM LEFT

NUMBER OF DETECTOR IN THE SAME LANE:
1 = ENTERING DETECTOR
2 = LEAVING DETECTOR

N 3-2

2 - DETECTOR IDENTIFICATION

RAMP METERING SYSTEM
(ELECTRICAL DETAILS)
NO SCALE

E-58

APPROVED FOR ELECTRICAL WORK ONLY

STATE OF CALIFORNIA - DEPARTMENT OF TRANSPORTATION
Caltrans
CONSULTANT FUNCTIONAL SUPERVISOR: KEN NGAI
CALCULATED-DESIGNED BY: HENRY ROBINO
CHECKED BY: DAVID CLOW
REVISED BY: SB
DATE REVISED: 5/11/12

LAST REVISION 05-11-12
DATE PLOTTED => 23-MAY-2012
TIME PLOTTED => 08:13

Dist	COUNTY	ROUTE	POST MILES TOTAL PROJECT	SHEET No.	TOTAL SHEETS
04	Ala	580	R8.4/R14.6	594	853

David W. Clow 05/11/12
REGISTERED ELECTRICAL ENGINEER DATE

5-14-12
PLANS APPROVAL DATE

REGISTERED PROFESSIONAL ENGINEER DAVID W. CLOW No. 12883 Exp. 12/31/12 ELECTRICAL STATE OF CALIFORNIA

THE STATE OF CALIFORNIA OR ITS OFFICERS OR AGENTS SHALL NOT BE RESPONSIBLE FOR THE ACCURACY OR COMPLETENESS OF SCANNED COPIES OF THIS PLAN SHEET.

ALLIANCE ENGINEERING CONSULTANT, INC.
4701 PATRICK HENRY DR., #10
SANTA CLARA, CA 95054

ALAMEDA CTC
1 333 BROADWAY SUITE 220
OAKLAND, CA 94612

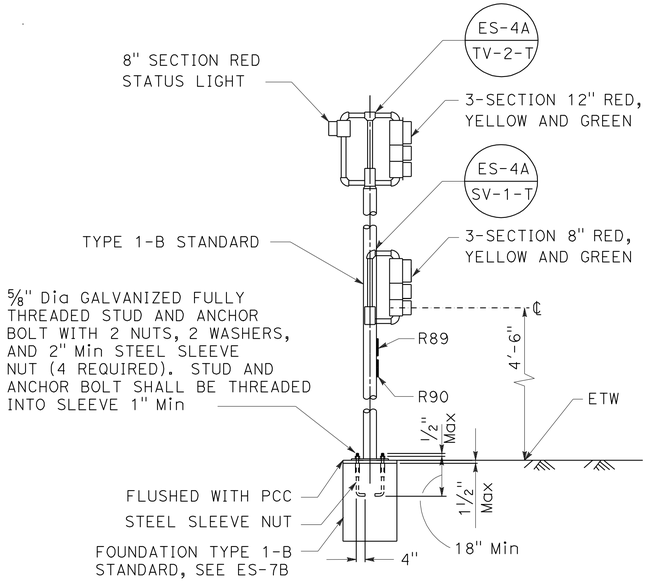

1 — RAMP METER SIGNAL, POLE MOUNTED

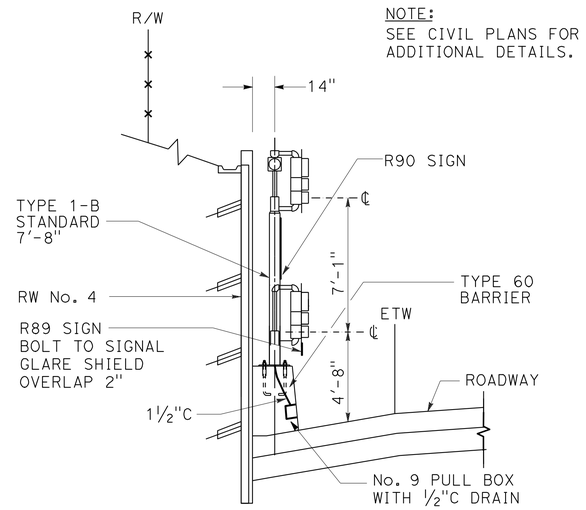

NOTE:
SEE CIVIL PLANS FOR ADDITIONAL DETAILS.

2 — RAMP METER SIGNAL, BARRIER MOUNTED

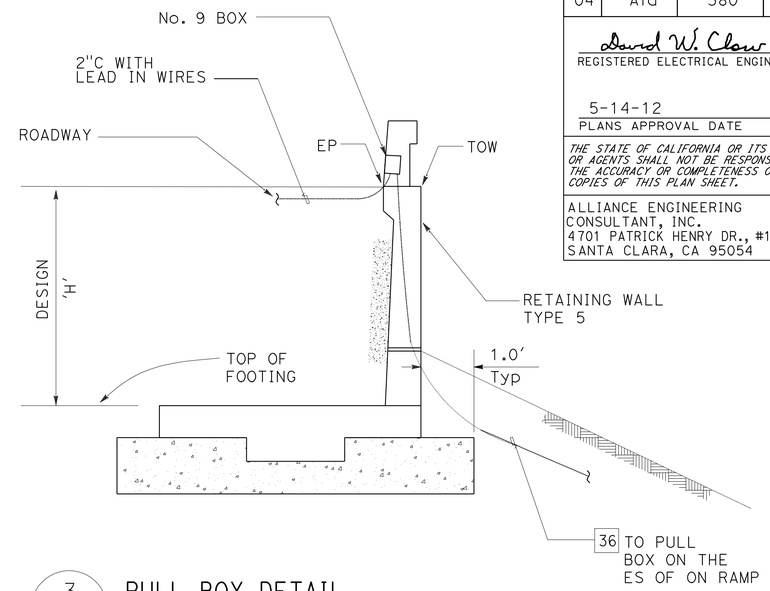

3 — PULL BOX DETAIL
STA "B" LINE 654+00 SEE SHEET E-37

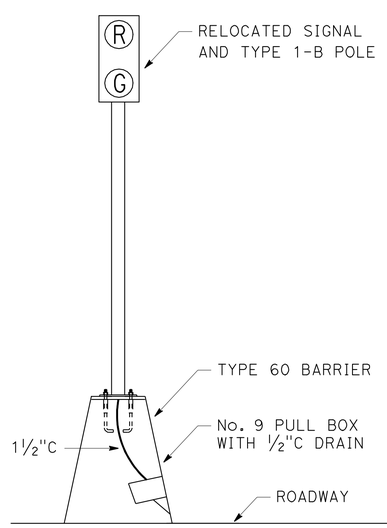

4 — SWIM SIGNAL INSTALLATION

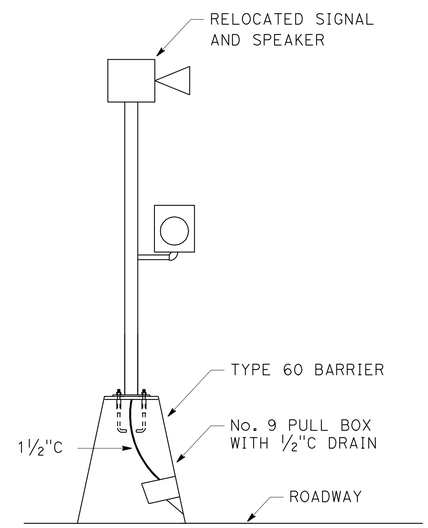

5 — SWIM SIGNAL AND SPEAKER INSTALLATION

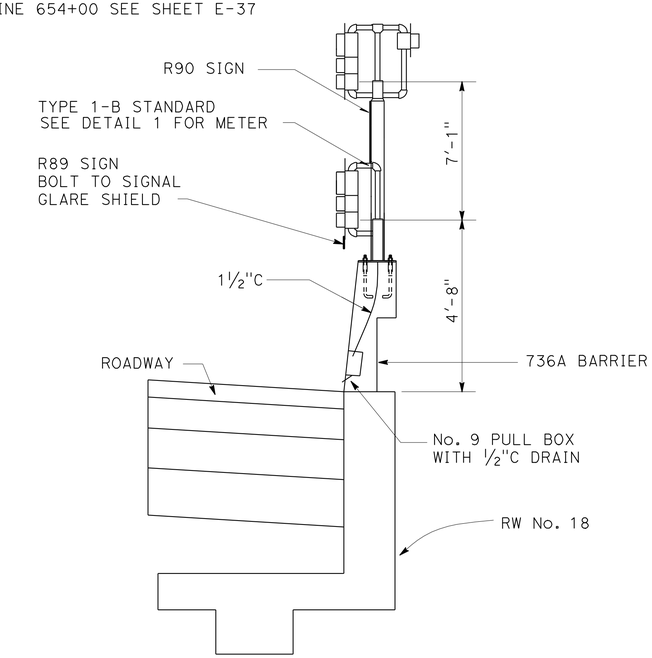

6 — RAMP METER SIGNAL, BARRIER MOUNTED
SEE SHEET E-37 (LOCATION 4) "MLK1" 654+90

APPROVED FOR ELECTRICAL WORK ONLY

SLOW WEIGH IN MOTION SYSTEM
RAMP METERING SYSTEM
(ELECTRICAL DETAILS)
NO SCALE

E-59

REVISED BY	SB	DATE REVISED	5/11/12
HENRY ROBINO		DAVID CLOW	
CALCULATED-DESIGNED BY		CHECKED BY	
CONSULTANT FUNCTIONAL SUPERVISOR	KEN NGAI		

STATE OF CALIFORNIA - DEPARTMENT OF TRANSPORTATION
Caltrans

LAST REVISION 05-11-12 | DATE PLOTTED => 23-MAY-2012 | TIME PLOTTED => 08:13

Dist	COUNTY	ROUTE	POST MILES TOTAL PROJECT	SHEET No.	TOTAL SHEETS
04	Ala	580	R8.4/R14.6	595	853

David W. Clow 5/11/12
REGISTERED ELECTRICAL ENGINEER DATE

5-14-12
PLANS APPROVAL DATE

REGISTERED PROFESSIONAL ENGINEER DAVID W. CLOW No. 12883 Exp. 12/31/12 ELECTRICAL STATE OF CALIFORNIA

THE STATE OF CALIFORNIA OR ITS OFFICERS OR AGENTS SHALL NOT BE RESPONSIBLE FOR THE ACCURACY OR COMPLETENESS OF SCANNED COPIES OF THIS PLAN SHEET.

ALLIANCE ENGINEERING CONSULTANT, INC.
4701 PATRICK HENRY DR., #10
SANTA CLARA, CA 95054

ALAMEDA CTC
1 333 BROADWAY SUITE 220
OAKLAND, CA 94612

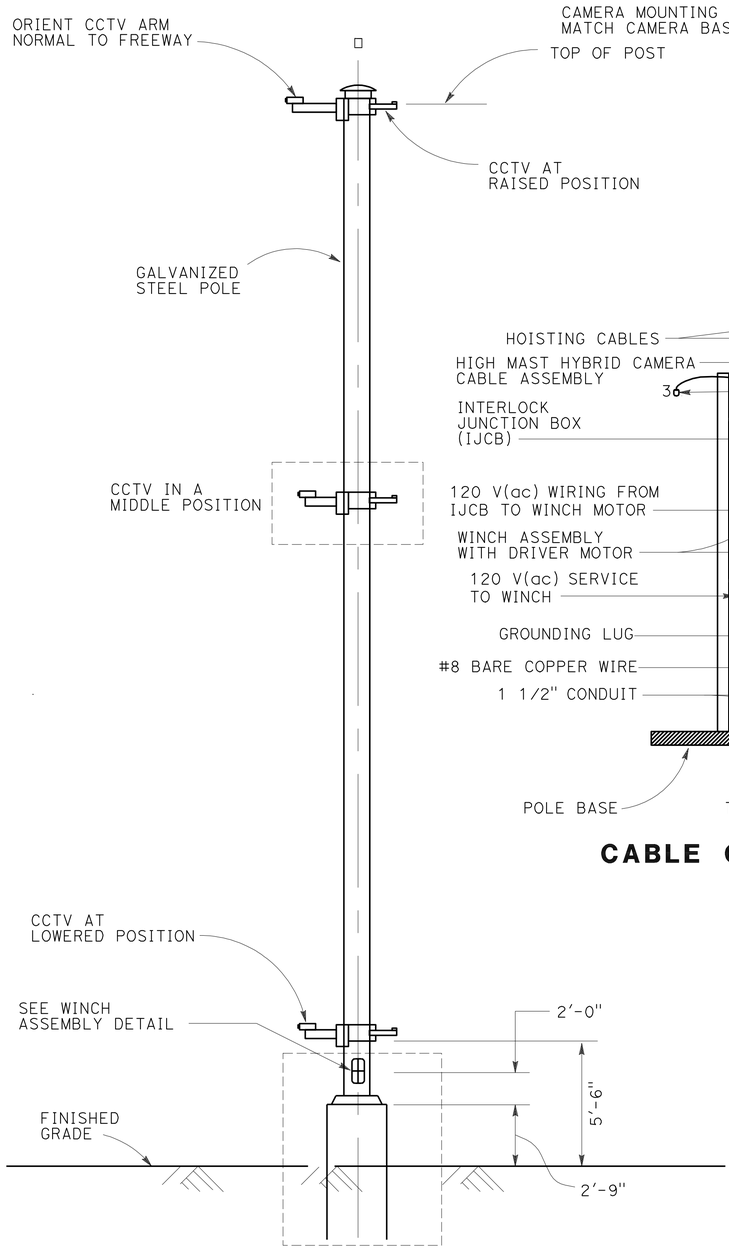

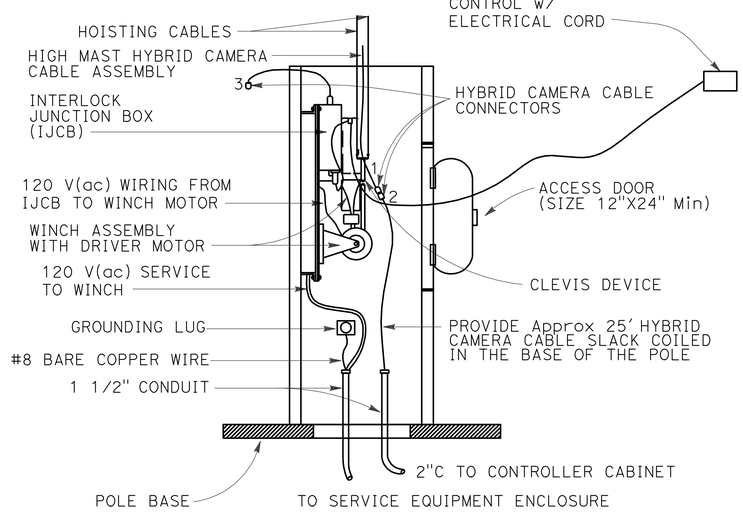

CABLE CONNECTION DETAIL

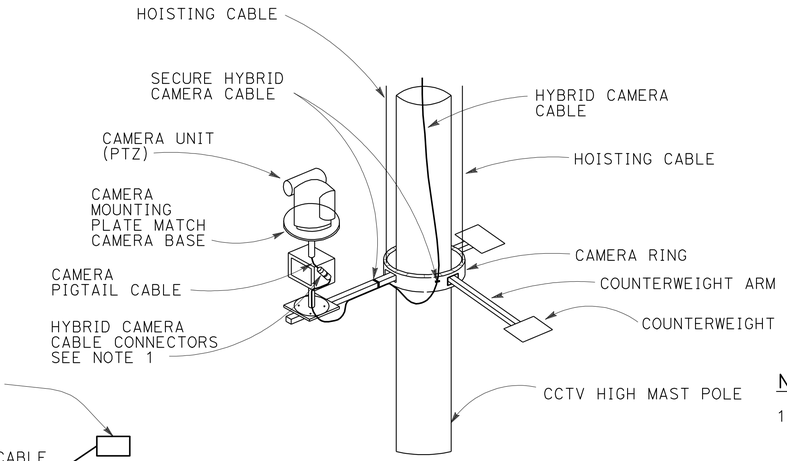

CAMERA RING AT MIDDLE POSITION

NOTES: (FOR THIS SHEET ONLY)

1. PLACE HYBRID CAMERA CABLE CONNECTORS IN ADAPTER JUNCTION BOX.
2. SEE STANDARD PLANS ES-16C FOR OTHER DETAILS.
3. PROVIDE PULL ROPE WITH LENGTH EQUAL TO POLE HEIGHT PLUS 35 FEET. TIE ONE END OF PULL ROPE ROPE TO HYBRID CAMERA CABLE CONNECTOR 1 USING CHAIN HITCH KNOTS, TAPE KNOTS TO CABLE. COIL PULL ROPE INSIDE THE POLE WHEN CAMERA RING IS AT RAISED POSITION
4. TO LOWER CAMERA RING, DISCONNECT HYBRID CAMERA CABLE CONNECTORS 1 AND 2. CONNECT HYBRID CAMERA CABLE CONNECTOR 2 TO 3 TO ENABLE WINCH MOTOR. RECONNECT HYBRID CAMERA CABLE CONNECTOR 2 TO CAMERA PIGTAIL CABLE WHEN CAMERA RING IS AT LOWERED POSITION.

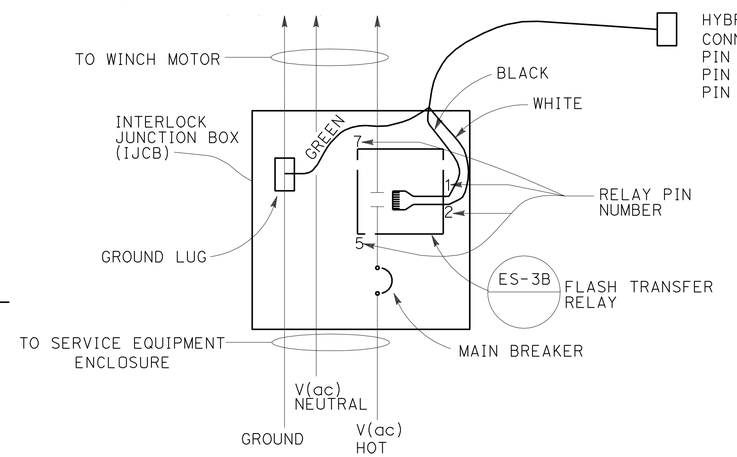

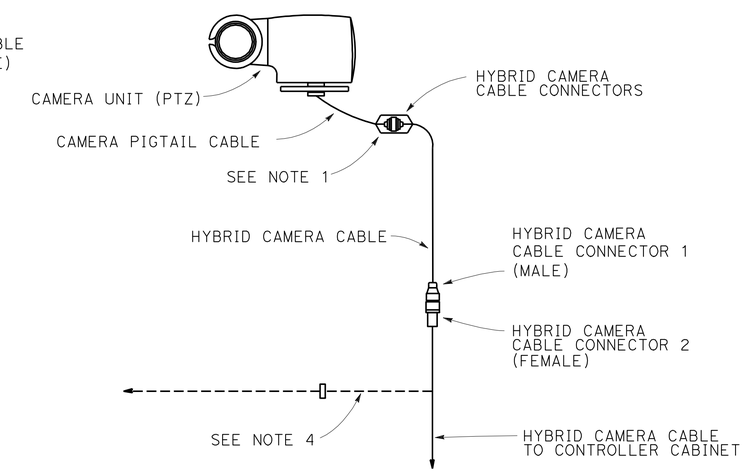

ELECTRICAL CIRCUIT DIAGRAM

TABLE A

POLE HEIGHT	RING INSIDE DIAMETER (NOMINAL)
60' - 70'	30"

CLOSED CIRCUIT TELEVISION SYSTEM
(ELECTRICAL DETAILS)

NO SCALE

E-60

APPROVED FOR ELECTRICAL WORK ONLY

STATE OF CALIFORNIA - DEPARTMENT OF TRANSPORTATION
Caltrans

CONSULTANT FUNCTIONAL SUPERVISOR: KEN NGAI
CALCULATED-DESIGNED BY: HENRY ROBINO
CHECKED BY: DAVID CLOW
REVISED BY: SB
DATE REVISED: 5/11/12

LAST REVISION 05-11-12
DATE PLOTTED => 23-MAY-2012
TIME PLOTTED => 08:13

Dist	COUNTY	ROUTE	POST MILES TOTAL PROJECT	SHEET No.	TOTAL SHEETS
04	Ala	580	R8.4/R14.6	596	853

David W. Clow 05/11/12
REGISTERED ELECTRICAL ENGINEER DATE

5-14-12
PLANS APPROVAL DATE

REGISTERED PROFESSIONAL ENGINEER DAVID W. CLOW No. 12883 Exp. 12/31/12 ELECTRICAL STATE OF CALIFORNIA

THE STATE OF CALIFORNIA OR ITS OFFICERS OR AGENTS SHALL NOT BE RESPONSIBLE FOR THE ACCURACY OR COMPLETENESS OF SCANNED COPIES OF THIS PLAN SHEET.

ALLIANCE ENGINEERING CONSULTANT, INC.
4701 PATRICK HENRY DR., #10
SANTA CLARA, CA 95054

ALAMEDA CTC
1 333 BROADWAY SUITE 220
OAKLAND, CA 94612

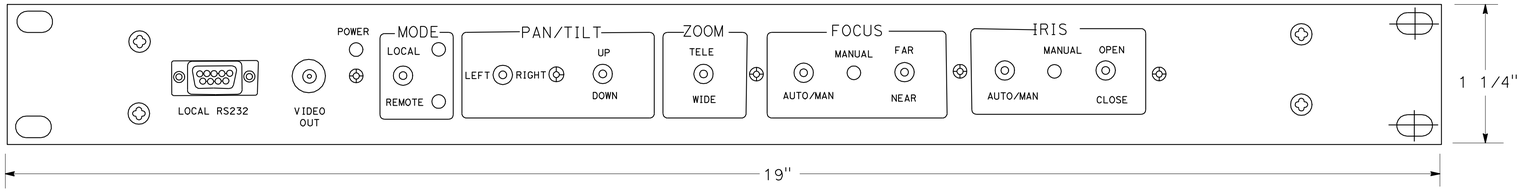

CCU FRONT PANEL LAYOUT

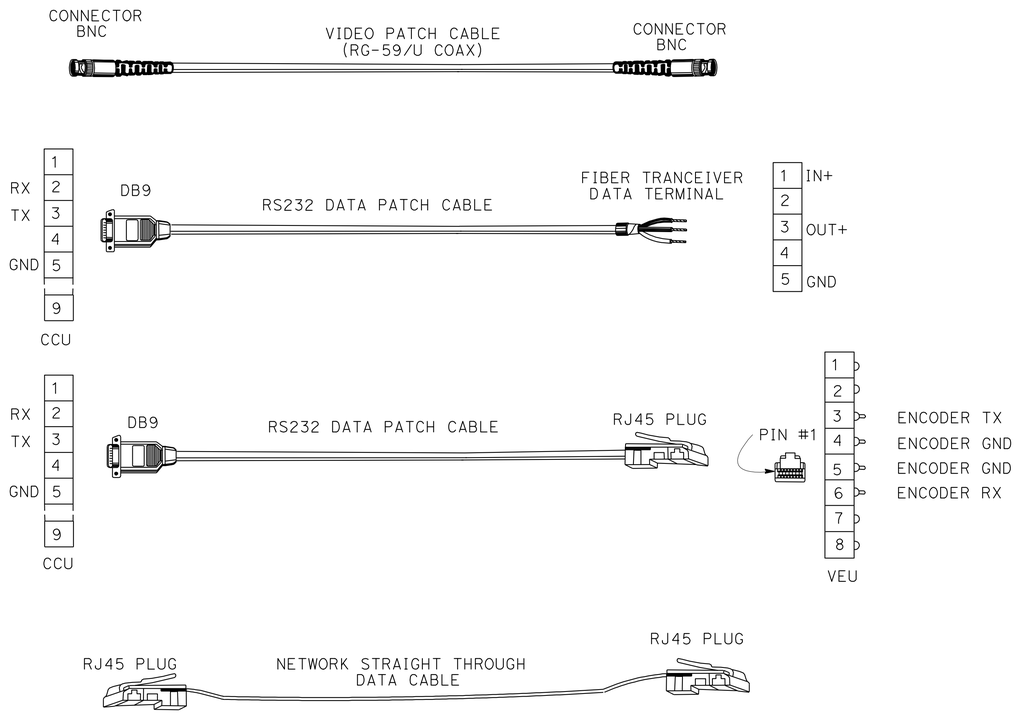

INTERFACE CABLE DETAILS

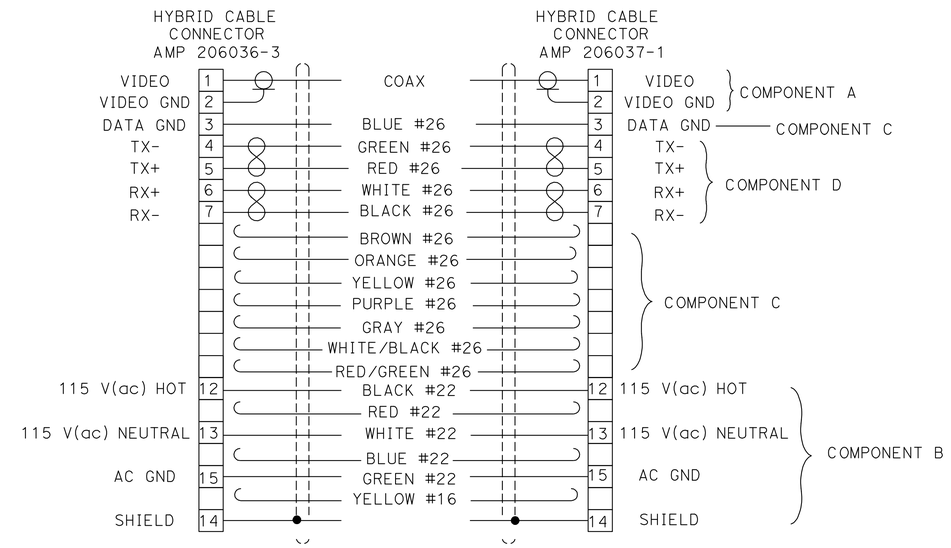

COMPONENT	CONDUCTOR	DESCRIPTION
A	COAX	75 OHM, RG-59/U TYPE, STANDARD ANALOG VIDEO CABLE, 0.242" NOMINAL DIAMETER.
B	6 CONDUCTOR	22 AWG, COPPER INSULATED CONDUCTOR, 0.048" NOMINAL DIAMETER, COLOR CODED: B1-BLACK, B2-RED, B3-GREEN, B4-WHITE, B5-BLUE, B6-YELLOW
C	8 CONDUCTOR	26 AWG, COPPER INSULATED CONDUCTOR, 0.037" NOMINAL DIAMETER, COLOR CODED: C1-BROWN, C2-BLUE, C3-ORANGE, C4-YELLOW, C5-PURPLE, C6-GRAY, C7-WHITE/BLACK, C8-RED/GREEN
D	4 CONDUCTOR	26 AWG, COPPER INSULATED CONDUCTOR, 0.037" NOMINAL DIAMETER, COLOR CODED: D1-BLACK & WHITE, D2-RED & GREEN

HYBRID CAMERA CABLE AND CONNECTORS DETAIL

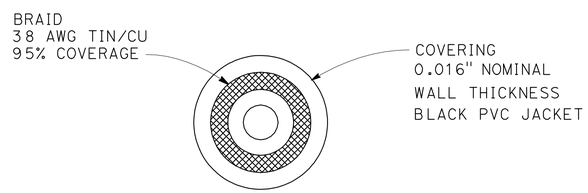

COMPONENT A

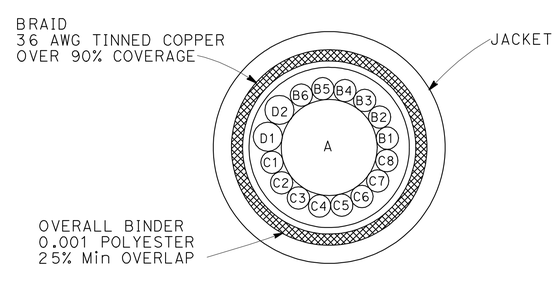

HYBRID CAMERA CABLE CROSS SECTION

CLOSED CIRCUIT TELEVISION SYSTEM
(ELECTRICAL DETAILS)

NO SCALE

E-61

APPROVED FOR ELECTRICAL WORK ONLY

STATE OF CALIFORNIA - DEPARTMENT OF TRANSPORTATION

Caltrans

CONSULTANT FUNCTIONAL SUPERVISOR: KEN NGAI

CALCULATED-DESIGNED BY: HENRY ROBINO
CHECKED BY: DAVID CLOW

REVISED BY: SB
DATE REVISED: 5/11/12

LAST REVISION 05-11-12
DATE PLOTTED => 23-MAY-2012
TIME PLOTTED => 08:13

Dist	COUNTY	ROUTE	POST MILES TOTAL PROJECT	SHEET No.	TOTAL SHEETS
04	Ala	580	R8.4/R14.6	597	853

David W. Clow 5/11/12
REGISTERED ELECTRICAL ENGINEER DATE

5-14-12
PLANS APPROVAL DATE

REGISTERED PROFESSIONAL ENGINEER DAVID W. CLOW No. 12883 Exp. 12/31/12 ELECTRICAL STATE OF CALIFORNIA

THE STATE OF CALIFORNIA OR ITS OFFICERS OR AGENTS SHALL NOT BE RESPONSIBLE FOR THE ACCURACY OR COMPLETENESS OF SCANNED COPIES OF THIS PLAN SHEET.

ALLIANCE ENGINEERING CONSULTANT, INC.
4701 PATRICK HENRY DR., #10
SANTA CLARA, CA 95054

ALAMEDA CTC
1 333 BROADWAY SUITE 220
OAKLAND, CA 94612

CONTACT POSITION ASSIGNMENT FOR 8-POSITION CONNECTING BLOCK

8-POSITION CONNECTING BLOCK		WIRE COLOR/PAIR	TBO POSITION ASSESMENT
CIRCUIT 1	GREEN TERMINAL	WHITE	7
	RED TERMINAL	BROWN	8
CIRCUIT 2	GREEN TERMINAL	WHITE	9
	RED TERMINAL	GRAY	10
CIRCUIT 3 DIAL UP	GREEN TERMINAL	RED	11
	RED TERMINAL	BLUE	12

NOTES:

1. USE ONE CONNECTING BLOCK FOR EACH REQUIRED CIRCUIT FOR EACH LOCATION.
2. N/C - NO CONNECTION.

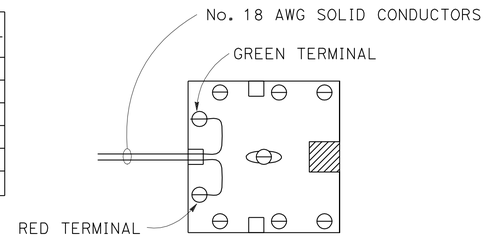

8-POSITION CONNECTING BLOCK

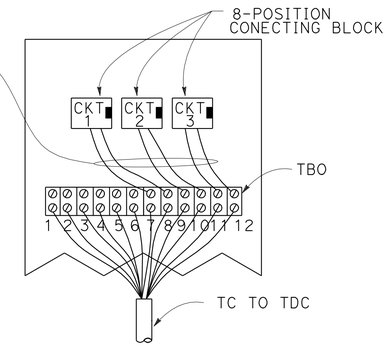

SERVICE PANEL FOR MODEL 334 CABINET

WIRING DETAIL FOR TELEPHONE CABLE INSIDE CONTROLLER CABINET

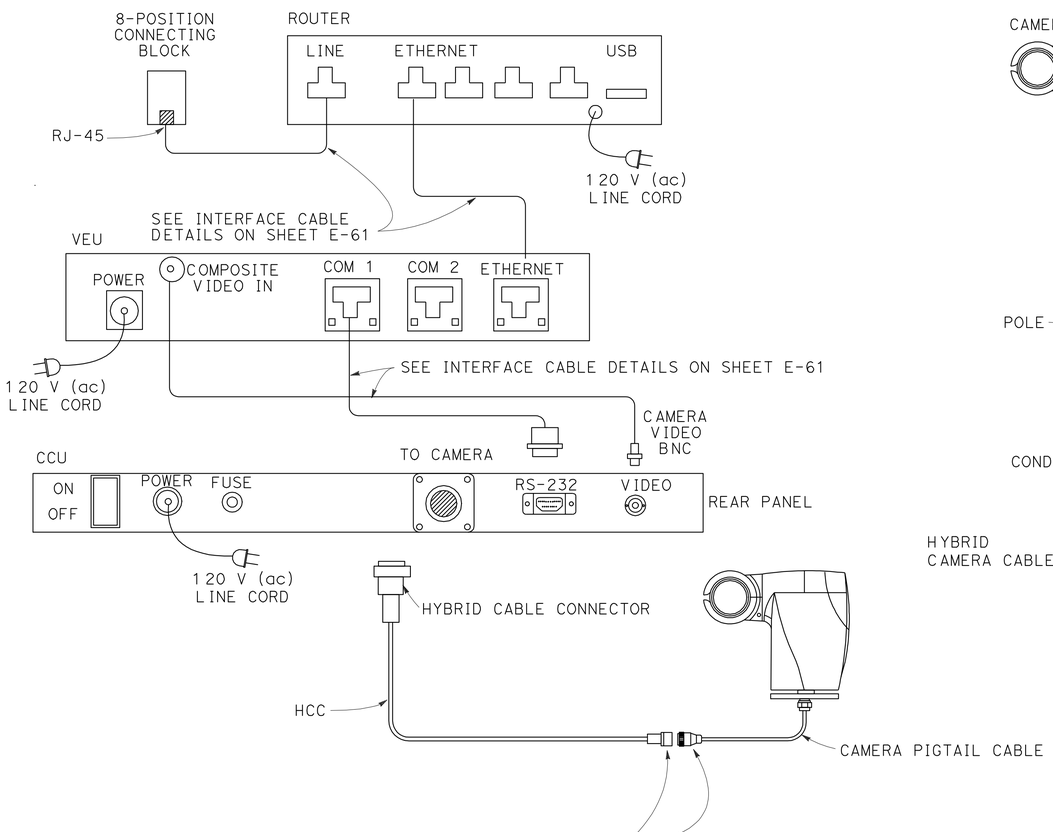

CCTV SYSTEM LAYOUT

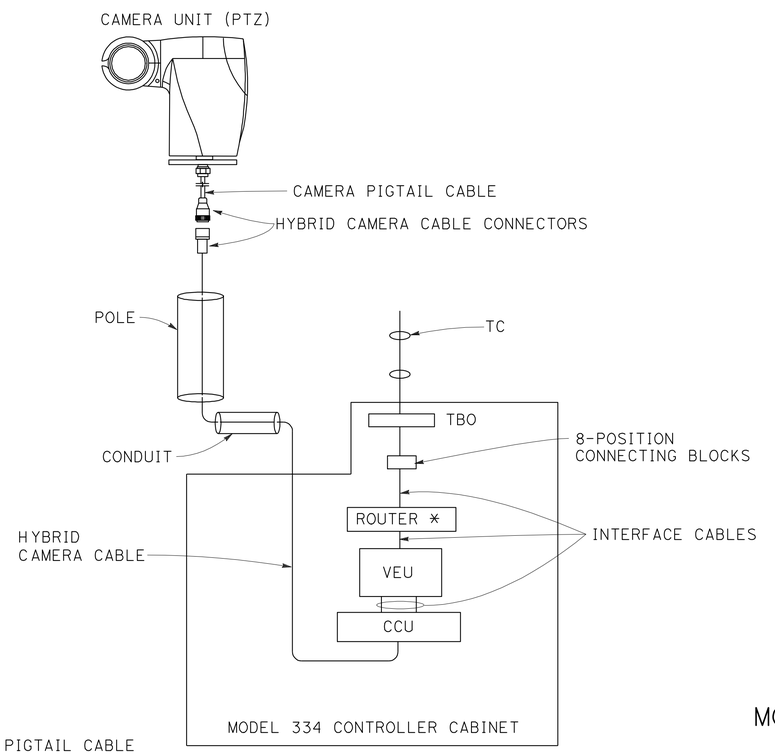

CCTV SYSTEM BLOCK DIAGRAM

TC - TELEPHONE CABLE
HCC - HYBRID CAMERA CABLE
TBO - TERMINAL BLOCK (OUTPUT)
PDA - POWER DISTRIBUTION ASSEMBLY
CCU - CAMERA CONTROL UNIT
VEU - VIDEO ENCODER UNIT

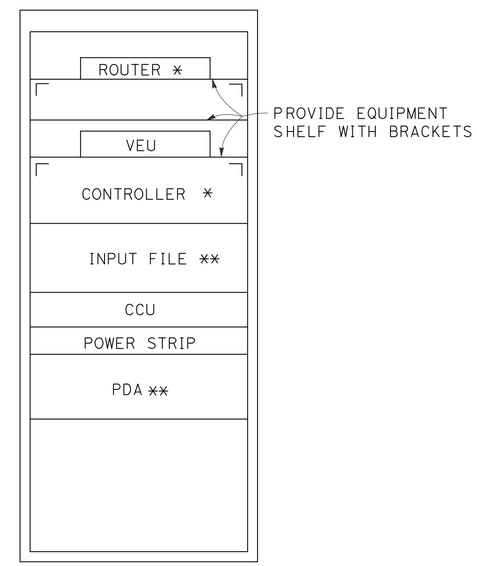

MODEL 334 CONTROLLER CABINET LAYOUT (FRONT VIEW)

* STATE-FURNISHED

** PDA AND INPUT FILE WILL BE INCLUDED ONLY WITH STATE-FURNISHED CONTROLLER CABINET

CLOSED CIRCUIT TELEVISION SYSTEM
(ELECTRICAL DETAILS)

NO SCALE

E-62

APPROVED FOR ELECTRICAL WORK ONLY

STATE OF CALIFORNIA - DEPARTMENT OF TRANSPORTATION

CONSULTANT FUNCTIONAL SUPERVISOR	CALCULATED-DESIGNED BY	REVISED BY	DATE REVISED
KEN NGAI	HENRY ROBINO	SB	5/11/12
	CHECKED BY	DAVID CLOW	

LAST REVISION 05-11-12 | DATE PLOTTED => 23-MAY-2012 | TIME PLOTTED => 08:14

Dist	COUNTY	ROUTE	POST MILES TOTAL PROJECT	SHEET No.	TOTAL SHEETS
04	Ala	580	R8.4/R14.6	598	853

David W. Clow 5/11/12
REGISTERED ELECTRICAL ENGINEER DATE

5-14-12
PLANS APPROVAL DATE

REGISTERED PROFESSIONAL ENGINEER DAVID W. CLOW No. 12883 Exp. 12/31/12 ELECTRICAL STATE OF CALIFORNIA

THE STATE OF CALIFORNIA OR ITS OFFICERS OR AGENTS SHALL NOT BE RESPONSIBLE FOR THE ACCURACY OR COMPLETENESS OF SCANNED COPIES OF THIS PLAN SHEET.

ALLIANCE ENGINEERING CONSULTANT, INC.
4701 PATRICK HENRY DR., #10
SANTA CLARA, CA 95054

ALAMEDA CTC
1 333 BROADWAY SUITE 220
OAKLAND, CA 94612

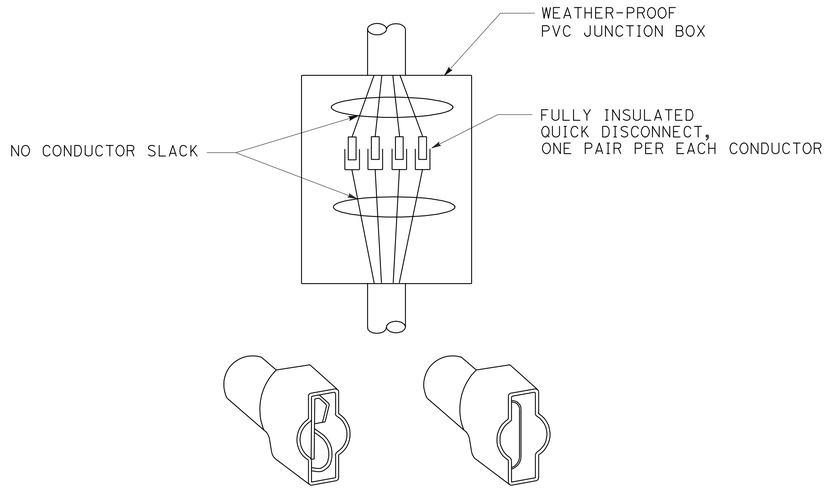

FULLY INSULATED QUICK DISCONNECTS

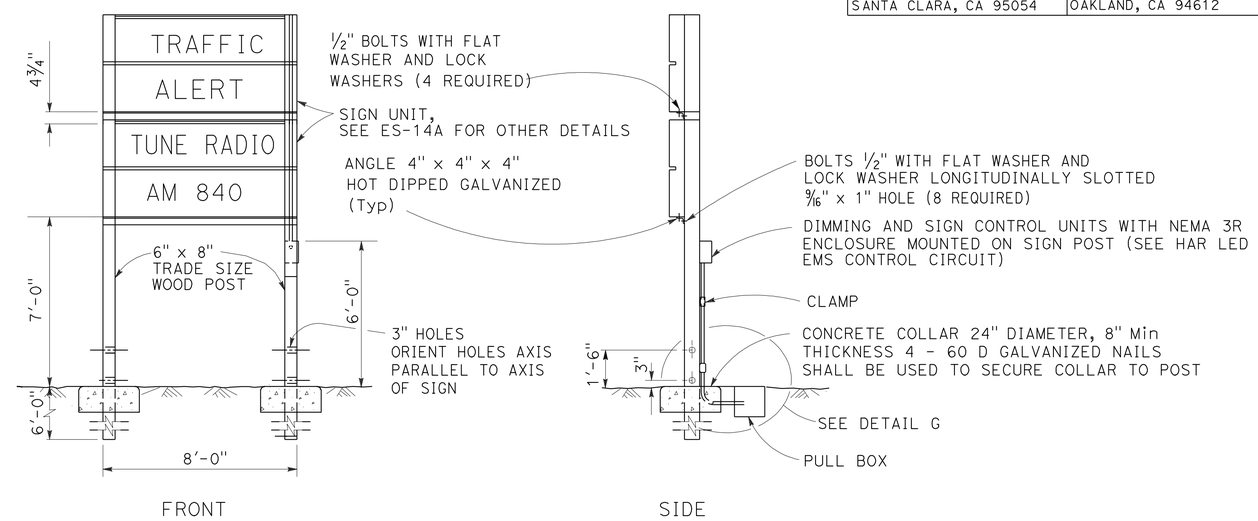

DETAIL H
HAR LED EXTINGUISHABLE MESSAGE SIGN

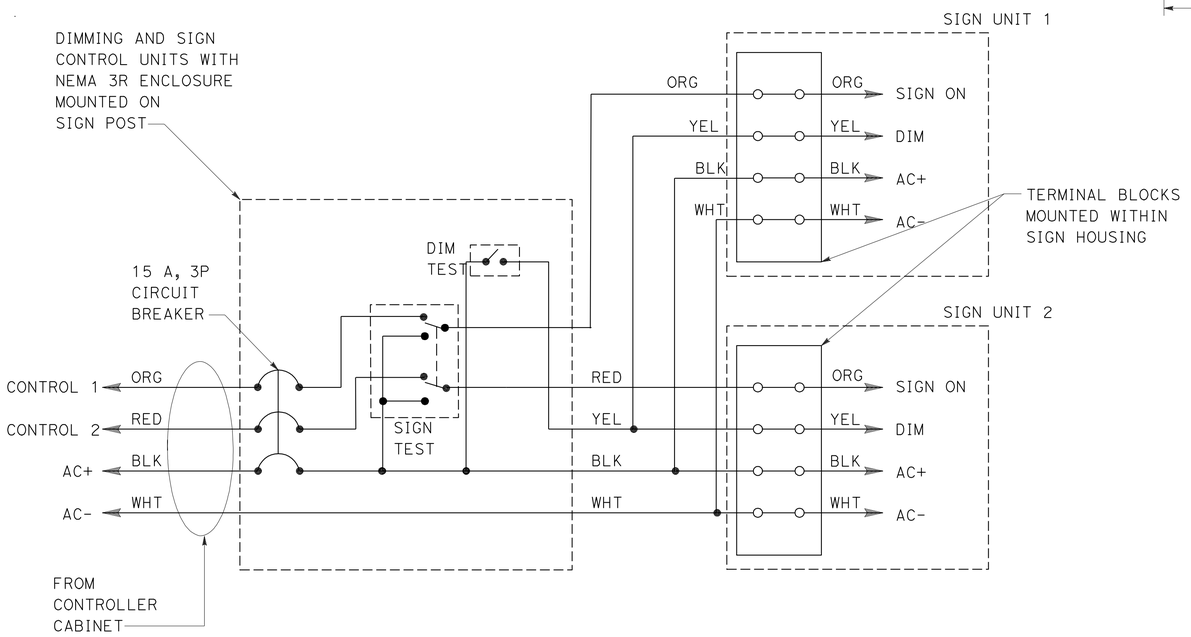

HAR LED EMS CONTROL CIRCUIT

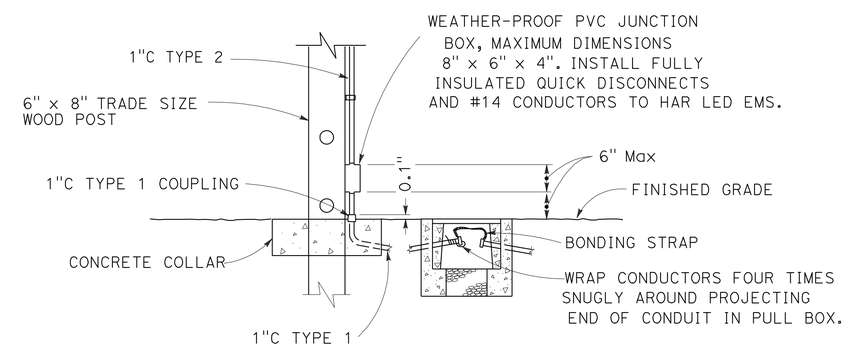

DETAIL G
CONDUIT BREAKAWAY

EXTINGUISHABLE MESSAGE SIGN
(ELECTRICAL DETAILS)

NO SCALE

E-63

APPROVED FOR ELECTRICAL WORK ONLY

STATE OF CALIFORNIA - DEPARTMENT OF TRANSPORTATION
Caltrans

CONSULTANT FUNCTIONAL SUPERVISOR: KEN NGAI
CALCULATED-DESIGNED BY: HENRY ROBINO
CHECKED BY: DAVID CLOW
REVISED BY: SB
DATE REVISED: 5/11/12

LAST REVISION 05/11/12
DATE PLOTTED => 23-MAY-2012
TIME PLOTTED => 08:14

Dist	COUNTY	ROUTE	POST MILES TOTAL PROJECT	SHEET No.	TOTAL SHEETS
04	Ala	580	R8.4/R14.6	599	853

REGISTERED CIVIL ENGINEER 5/7/12 DATE

5-14-12
PLANS APPROVAL DATE

REGISTERED PROFESSIONAL ENGINEER N.V. BERNARDI No. 45407 Exp. 9/30/12 CIVIL STATE OF CALIFORNIA

THE STATE OF CALIFORNIA OR ITS OFFICERS OR AGENTS SHALL NOT BE RESPONSIBLE FOR THE ACCURACY OR COMPLETENESS OF SCANNED COPIES OF THIS PLAN SHEET.

BKF ENGINEERS
4670 WILLOW ROAD, SUITE 250
PLEASANTON, CA. 94588

ALAMEDA CTC
1333 BROADWAY SUITE 220
OAKLAND, CA. 94612

TABLE A

POLE TYPE	(E) POLE DATA				(E) BASE PLATE DATA						
	HEIGHT "h"	Min OD		THICKNESS	"C"	THICKNESS	ANCHOR BOLTS		"D" 2'-0" Dia CIDH PILE		STRUCTURAL STEEL lbs PLUS 3.5% GALVANIZING
		BASE	TOP				SIZE	BC = BOLT CIRCLE	LEVEL GROUND	SLOPING GROUND	
VDS 40	40'	9⅜"	3⅞"	0.1793"	1'-1"	1"	1¼" X 3'-0 X 4"	1'-1"	10'-0"	12'-0"	650

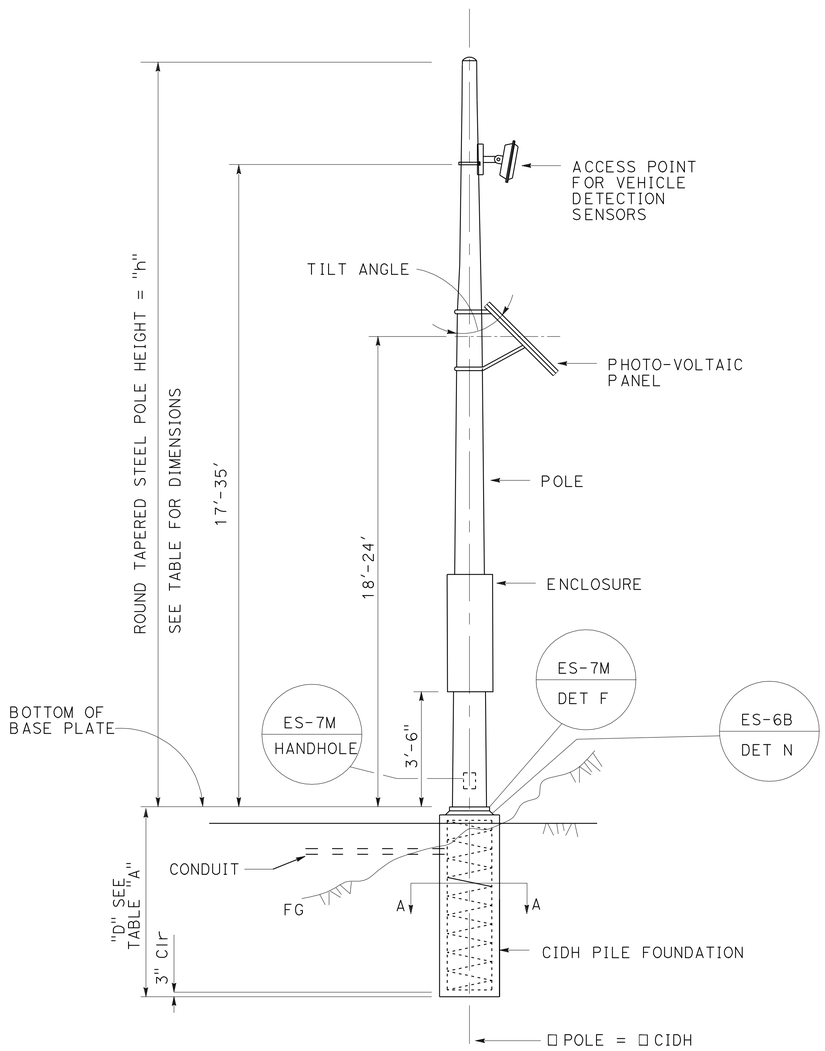

VDS 40 STANDARD WITH WMVDS
AND PHOTOVOLTAIC PANEL ARRAY

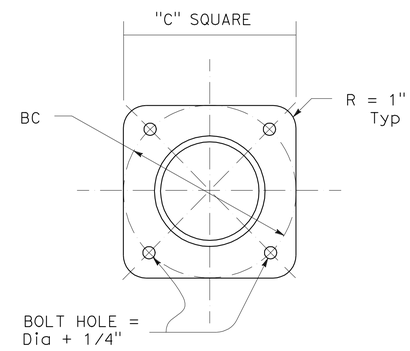

BASE PLATE

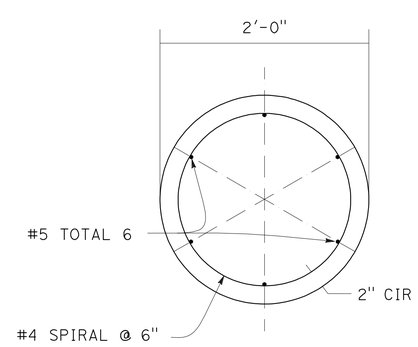

SECTION A-A

SPECIFICATIONS

DESIGN: AASHTO STANDARD SPECIFICATIONS FOR STRUCTURAL SUPPORTS FOR HIGHWAY SIGNS, LUMINAIRES AND TRAFFIC SIGNALS DATED 2001.

LOADING

WIND LOADINGS : 100 MPH

UNIT STRESS

STRUCTURAL STEEL : FY = 48,000 PSI TAPERED STEEL TUBE
FY = 36,000 PSI UNLESS OTHERWISE NOTED

ANCHOR BOLTS = A307

REINFORCED CONCRETE : F'C = 3,600 PSI
FY = 60,000 PSI

NOTES: (FOR THIS SHEET ONLY)

1. ALL EQUIPMENT IS EXISTING TO BE RELOCATED TO A NEW FOUNDATION AS SHOWN ON THE PLANS.
2. ALL STEEL SHALL BE GALVANIZED AFTER FABRICATION.
3. DURING POLE ERECTION THE POST SHALL BE RAKED AS NECESSARY WITH THE USE OF LEVELING NUTS TO PROVIDE A PLUMB POLE AXIS.
4. THE CONTRACTOR SHALL VERIFY ALL CONTROLLING FIELD DIMENSIONS BEFORE ORDERING OR FABRICATING ANY MATERIAL.

MODIFY WIRELESS MAGNETOMETER VEHICLE DETECTION STATION
(POLE DETAILS)

NO SCALE

E-64

APPROVED FOR ELECTRICAL WORK ONLY

CC	5/7/12
REVISED BY	DATE REVISED
CARMELO CECILIO	LUIS GARCIA
CALCULATED-DESIGNED BY	CHECKED BY
NATALINA V. BERNARDI	
CONSULTANT FUNCTIONAL SUPERVISOR	

STATE OF CALIFORNIA - DEPARTMENT OF TRANSPORTATION

Caltrans

LAST REVISION 05-07-12 | DATE PLOTTED => 23-MAY-2012 | TIME PLOTTED => 14:04

Dist	COUNTY	ROUTE	POST MILES TOTAL PROJECT	SHEET No.	TOTAL SHEETS
04	Ala	580	R8.4/R14.6	600	853

David W. Clow 05/11/12
REGISTERED ELECTRICAL ENGINEER DATE

5-14-12
PLANS APPROVAL DATE

REGISTERED PROFESSIONAL ENGINEER DAVID W. CLOW No. 12883 Exp. 12/31/12 ELECTRICAL STATE OF CALIFORNIA

THE STATE OF CALIFORNIA OR ITS OFFICERS OR AGENTS SHALL NOT BE RESPONSIBLE FOR THE ACCURACY OR COMPLETENESS OF SCANNED COPIES OF THIS PLAN SHEET.

ALLIANCE ENGINEERING CONSULTANT, INC.
4701 PATRICK HENRY DR., #10
SANTA CLARA, CA 95054

ALAMEDA CTC
1 333 BROADWAY SUITE 220
OAKLAND, CA 94612

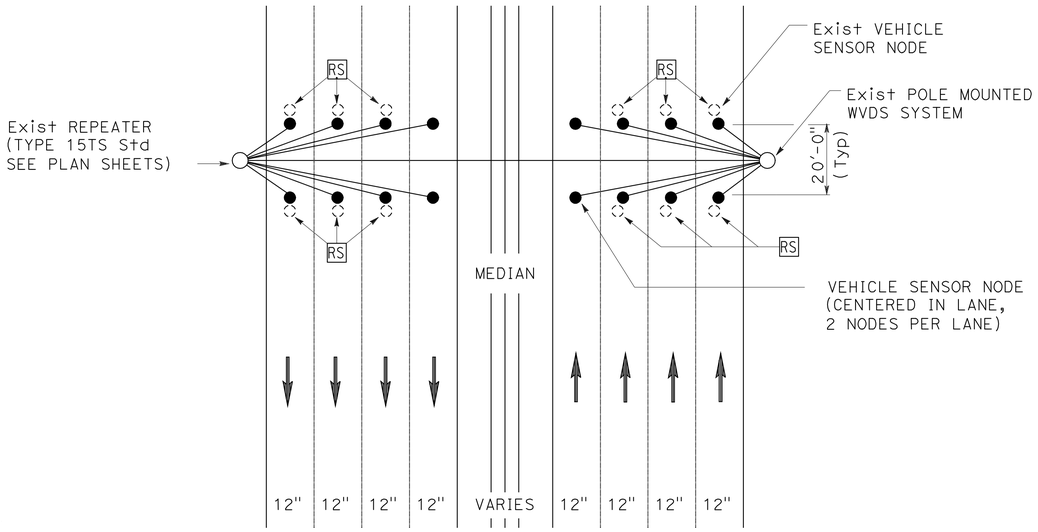

DETAIL 'D"

VEHICLE SENSOR NODE PLACEMENT DETAIL
NUMBER OF LANES VARIES - SEE PLAN SHEETS)

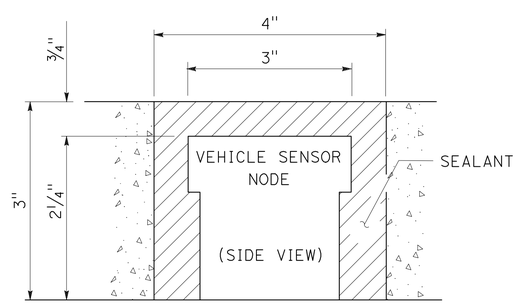

DETAIL "E"

VEHICLE SENSOR NODE
INSTALLED IN ROADWAY

WIRELESS VEHICLE DETECTOR SENSOR NODE REMOVAL PROCEDURE

1. ALWAYS WEAR SAFETY GLASSES, GLOVES, AND OBSERVE OTHER PRECAUTIONS WHEN REMOVING SENSORS.
2. DO NOT PUNCTURE OR CRUSH SENSOR WHEN DRILLING, PRYING, OR REMOVING. DOING SO MAY SUBJECT SENSOR BATTERIES TO ADVERSE SHOCK RESULTING IN EXPLOSION AND RELEASE OF HARMFUL GASES.
3. SENSORS ARE TO BE REMOVED BEFORE GRINDING ON ROADWAY.
4. LOCATE THE SENSOR TO BE REMOVED.
5. CORE A 5" Dia HOLE INTO THE ROAD AROUND THE SENSOR TO A DEPTH OF APPROXIMATELY 2½".
6. PERMANENTLY MARK THE DIRECTION OF TRAFFIC ONTO THE TOP OF THE SENSOR/EPOXY PLUG.
7. USE STEEL PRY BAR AS NEEDED TO WORK THE SENSOR/EPOXY PLUG FREE FROM THE BOTTOM OF THE HOLE.
8. PULL THE SENSOR/EPOXY PLUG FREE FROM THE HOLE.

WIRELESS VEHICLE DETECTOR SENSOR NODE INSTALLATION PROCEDURE

1. PRIOR TO INSTALLATION, IDENTIFY SENSOR'S ID, LANE NUMBER, AND LOCATION IN LANE.
2. CORE A HOLE AT LEAST 3" DEEP SO THAT WHEN INSTALLED THE TOP OF THE SENSOR IS AT LEAST ¾" BELOW THE SURFACE.
3. MAKE SURE THE SENSOR INSTALLS FLAT IN THE CORED HOLE AND IS NOT TILTED.
4. USE THE HEAT-GUN OR HOT COMPRESSED AIR TO DRY THE INSIDE OF THE CORED HOLE. THERE MUST BE ABSOLUTELY NO MOISTURE ON THE APPLIED SURFACE.
5. FILL THE HOLE ABOUT ¼ FULL OF THE SENSOR EPOXY/ADHESIVE.
6. PLACE SENSOR IN THE HOLE WITH ARROW POINTING IN THE DIRECTION OF TRAFFIC. THE EPOXY SHOULD STILL HAVE WORK TIME, SO THE SENSOR CAN BE ROTATED TO THE RIGHT POSITION. PUSH SENSOR DOWN SO IT LAYS FLAT ON THE BOTTOM OF THE HOLE. THIS ASSURES THAT THERE IS A BOND UNDERNEATH THE SENSOR WITH THE EPOXY.
7. FILL THE HOLE WITH THE REMAINING EPOXY TO COVER THE SENSOR. LEVEL EPOXY WITH THE SURFACE OF THE ROAD.
8. AFTER THE FIRST APPLICATION, DO NOT LET THE EPOXY SIT FOR MORE THAN 30 SECONDS BEFORE THE NEXT APPLICATION.
9. THE INSTALLATION PAVEMENT TEMPERATURE SHOULD BE GREATER THAN 20°F.
10. DEPENDING ON AMBIENT TEMPERATURE AND HUMIDITY, ADHESIVE DRYING TIME WILL VARY FROM 5 MINUTES TO 15 MINUTES. VERIFY HARDNESS OF EPOXY BEFORE REOPENING THE LANE FOR TRAFFIC.
11. RECORD DISTANCES BETWEEN EACH SENSOR PAIR.

MODIFY WIRELESS MAGNETOMETER VEHICLE DETECTION STATION
(VEHICLE SENSOR NODE DETAILS)

NO SCALE

E-65

APPROVED FOR ELECTRICAL WORK ONLY

REVISED BY	DATE REVISED
SB	5/11/12

HENRY ROBINO — DAVID CLOW
CALCULATED-DESIGNED BY — CHECKED BY
CONSULTANT FUNCTIONAL SUPERVISOR — KEN NGAI
STATE OF CALIFORNIA - DEPARTMENT OF TRANSPORTATION — Caltrans

LAST REVISION 05-11-12 | DATE PLOTTED => 23-MAY-2012 | TIME PLOTTED => 14:04