FOR ACCURATE RIGHT OF WAY DATA, CONTACT
RIGHT OF WAY ENGINEERING AT THE DISTRICT OFFICE.

Dist	COUNTY	ROUTE	POST MILES TOTAL PROJECT	SHEET No.	TOTAL SHEETS
04	Ala	580	R8.4/R14.6	101	853

REGISTERED CIVIL ENGINEER 5/7/12 DATE

5-14-12
PLANS APPROVAL DATE

REGISTERED PROFESSIONAL ENGINEER
N.V. BERNARDI
No. 45407
Exp. 9/30/12
CIVIL
STATE OF CALIFORNIA

THE STATE OF CALIFORNIA OR ITS OFFICERS OR AGENTS SHALL NOT BE RESPONSIBLE FOR THE ACCURACY OR COMPLETENESS OF SCANNED COPIES OF THIS PLAN SHEET.

BKF ENGINEERS
4670 WILLOW ROAD, SUITE 250
PLEASANTON, CA. 94588

ALAMEDA CTC
1333 BROADWAY SUITE 220
OAKLAND, CA. 94612

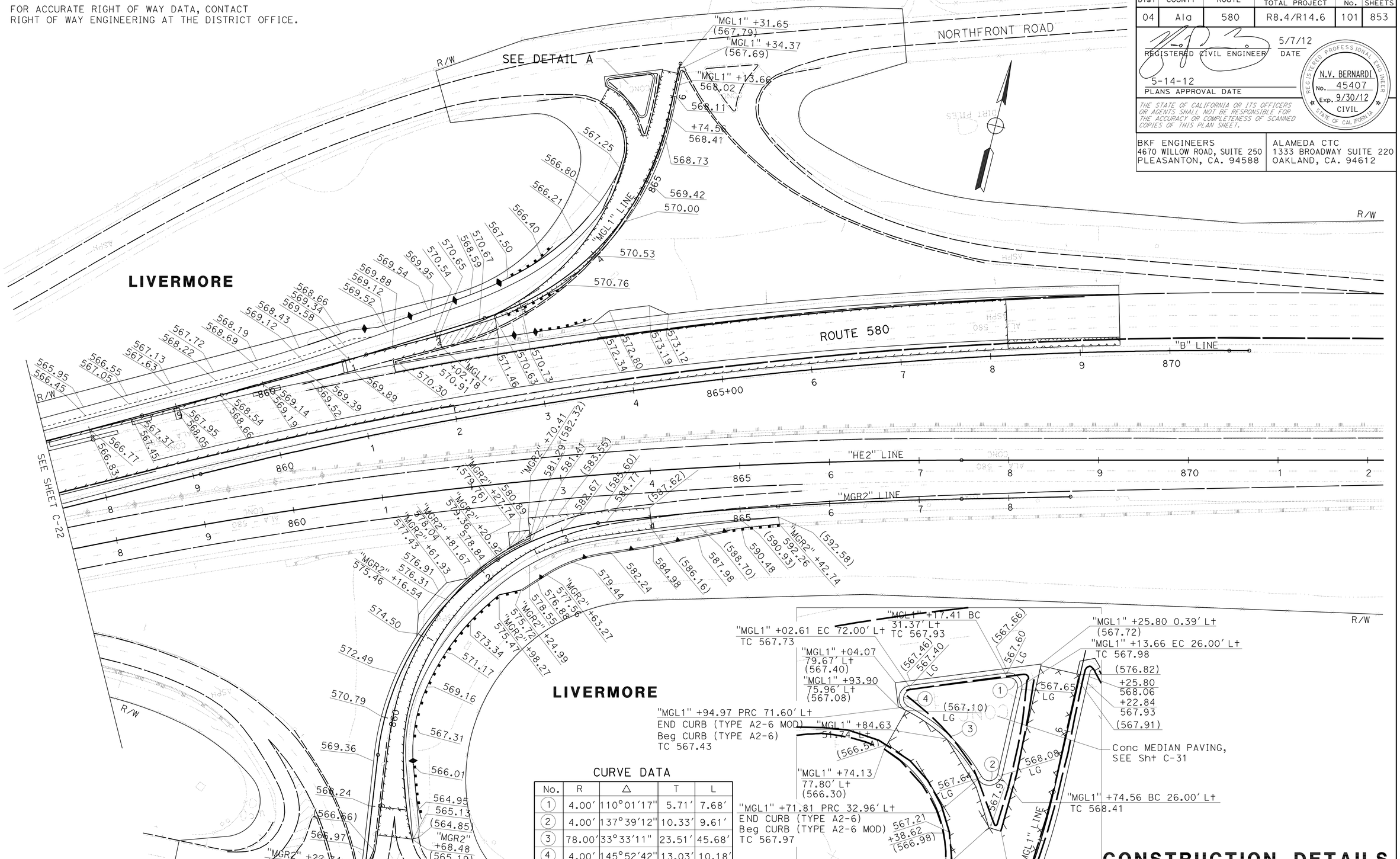

CURVE DATA

No.	R	Δ	T	L
1	4.00'	110°01'17"	5.71'	7.68'
2	4.00'	137°39'12"	10.33'	9.61'
3	78.00'	33°33'11"	23.51'	45.68'
4	4.00'	145°52'42"	13.03'	10.18'

FOR NOTES, ABBREVIATIONS AND LEGEND, SEE SHEET C-1

THIS PLAN ACCURATE FOR PAVEMENT ELEVATION WORK ONLY

CONSTRUCTION DETAILS
PAVEMENT ELEVATIONS PLAN
SCALE: 1" = 50'

C-23

DAT Q. NGUYEN	DQN
LUIS GARCIA	5/7/12
NATALINA V. BERNARDI	

REVISED BY / DATE REVISED
CALCULATED-DESIGNED BY / CHECKED BY
CONSULTANT FUNCTIONAL SUPERVISOR

STATE OF CALIFORNIA - DEPARTMENT OF TRANSPORTATION

LAST REVISION 05-07-12
DATE PLOTTED =>23-MAY-2012
TIME PLOTTED =>06:44

Dist	COUNTY	ROUTE	POST MILES TOTAL PROJECT	SHEET No.	TOTAL SHEETS
04	Ala	580	R8.4/R14.6	102	853

REGISTERED CIVIL ENGINEER 5/7/12 DATE

5-14-12
PLANS APPROVAL DATE

REGISTERED PROFESSIONAL ENGINEER N.V. BERNARDI No. 45407 Exp. 9/30/12 CIVIL STATE OF CALIFORNIA

THE STATE OF CALIFORNIA OR ITS OFFICERS OR AGENTS SHALL NOT BE RESPONSIBLE FOR THE ACCURACY OR COMPLETENESS OF SCANNED COPIES OF THIS PLAN SHEET.

BKF ENGINEERS
4670 WILLOW ROAD, SUITE 250
PLEASANTON, CA. 94588

ALAMEDA CTC
1333 BROADWAY SUITE 220
OAKLAND, CA. 94612

NOTE:

1. MINIMUM THICKNESS SHOULD MATCH THE THICKNESS OF THE TOP LIFT.

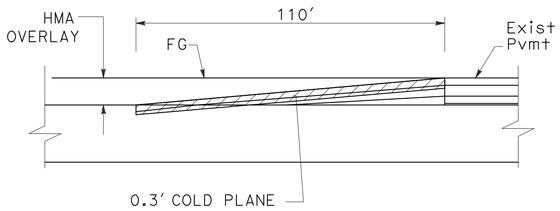

TRANSVERSE CONFORM ON MAINLINE
"B" 538+90.00 TO 540+00.00

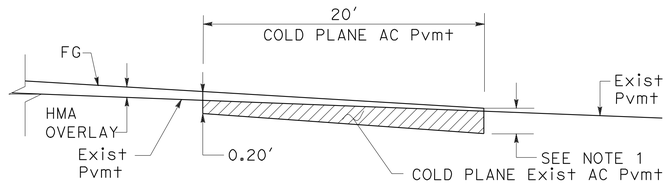

TRANSVERSE CONFORM AT RAMP (CASE A)
"MKR2" LINE "MKR1" LINE "MVR5" LINE
"MKL1" LINE "MVR4" LINE "MGR2" LINE

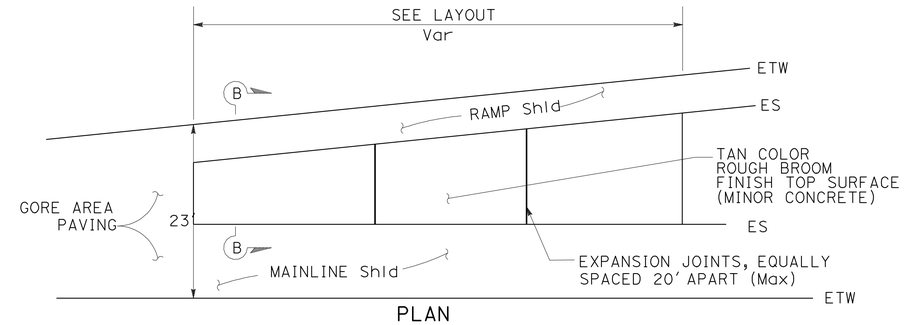

PLAN

"B" 558+50.98 TO 560+31.83
"B" 568+30.72 TO 569+59.09
"B" 646+27.17 TO 647+27.74
"B" 642+99.41 TO 643+58.81
"B" 654+17.74 TO 655+62.89
"B" 655+88.51 TO 656+91.26
"B" 740+75.65 TO 742+03.70
"B" 757+92.44 TO 758+62.31
"MVL1" 809+50.01 TO 810+85.22
"MVR5" 812+00.00 TO 813+40.31
"MGL1" 862+03.84 TO 862+68.84
"MGR2" 862+39.16 TO 862+35.69

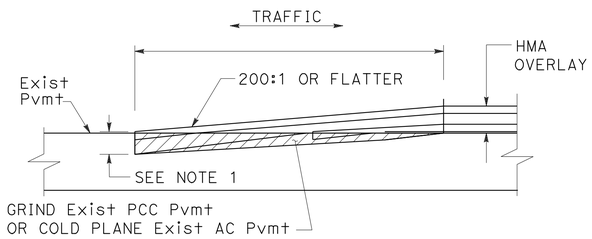

TRANSVERSE CONFORM, PCC
AND AC PAVING CONFORM AT MAINLINE

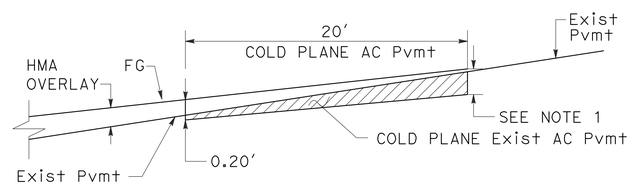

TRANSVERSE CONFORM AT RAMP (CASE B)
"MIL3" LINE "MXR3" LINE "MGL1" LINE
"MIR3" LINE "MXR1" LINE

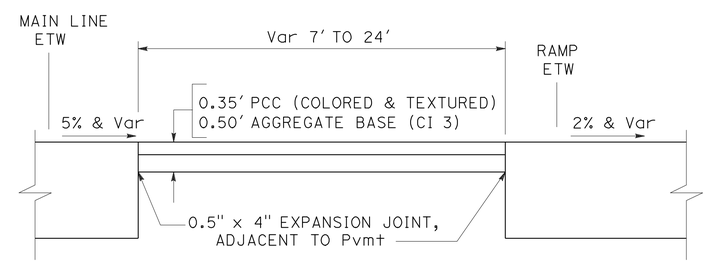

MINOR CONCRETE [TEXTURED PAVING]

CONSTRUCTION DETAILS
NO SCALE

C-24

REVISED BY	DATE REVISED
DQN	5/7/12

CALCULATED-DESIGNED BY: DAT Q. NGUYEN
CHECKED BY: LUIS GARCIA
CONSULTANT FUNCTIONAL SUPERVISOR: NATALINA V. BERNARDI

STATE OF CALIFORNIA - DEPARTMENT OF TRANSPORTATION

LAST REVISION 05-07-12 | DATE PLOTTED =>23-MAY-2012 | TIME PLOTTED =>06:44

Dist	COUNTY	ROUTE	POST MILES TOTAL PROJECT	SHEET No.	TOTAL SHEETS
04	Ala	580	R8.4/R14.6	103	853

REGISTERED CIVIL ENGINEER 1/18/12 DATE

5-14-12
PLANS APPROVAL DATE

REGISTERED PROFESSIONAL ENGINEER N.V. BERNARDI No. 45407 Exp. 9/30/12 CIVIL STATE OF CALIFORNIA

THE STATE OF CALIFORNIA OR ITS OFFICERS OR AGENTS SHALL NOT BE RESPONSIBLE FOR THE ACCURACY OR COMPLETENESS OF SCANNED COPIES OF THIS PLAN SHEET.

BKF ENGINEERS
4670 WILLOW ROAD, SUITE 250
PLEASANTON, CA. 94588

ALAMEDA CTC
1333 BROADWAY SUITE 220
OAKLAND, CA. 94612

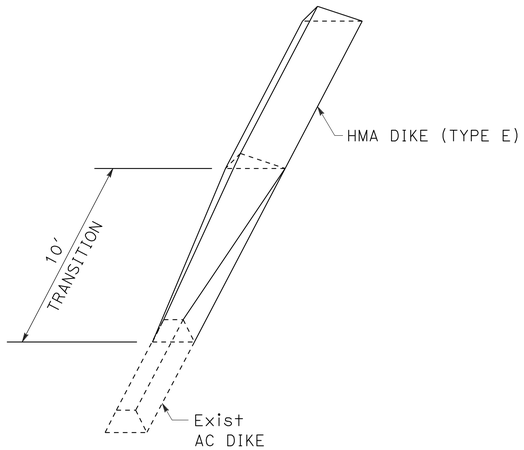

TRANSITION FROM Exist AC DIKE TO HMA DIKE (TYPE E)

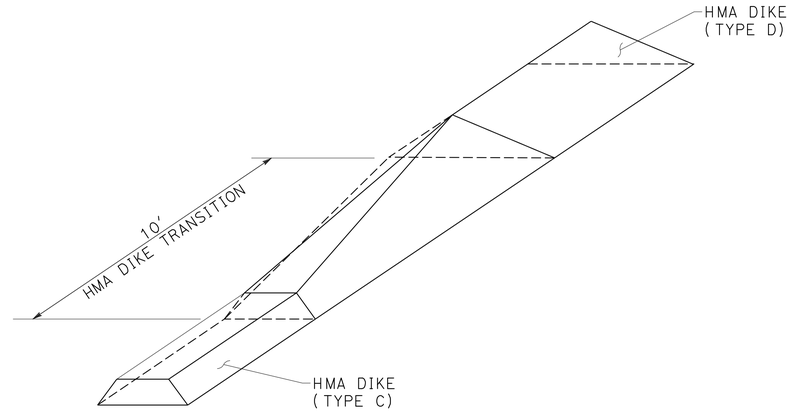

TRANSITION FROM HMA DIKE (TYPE C) TO HMA DIKE (TYPE D)

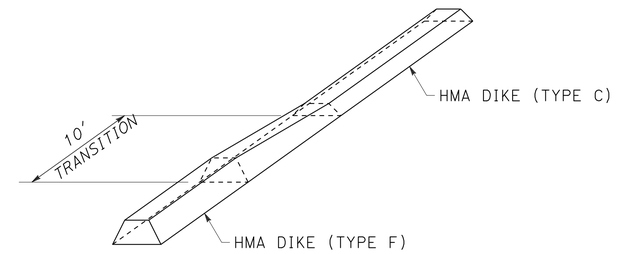

TRANSITION FROM HMA DIKE (TYPE F) TO HMA DIKE (TYPE C)

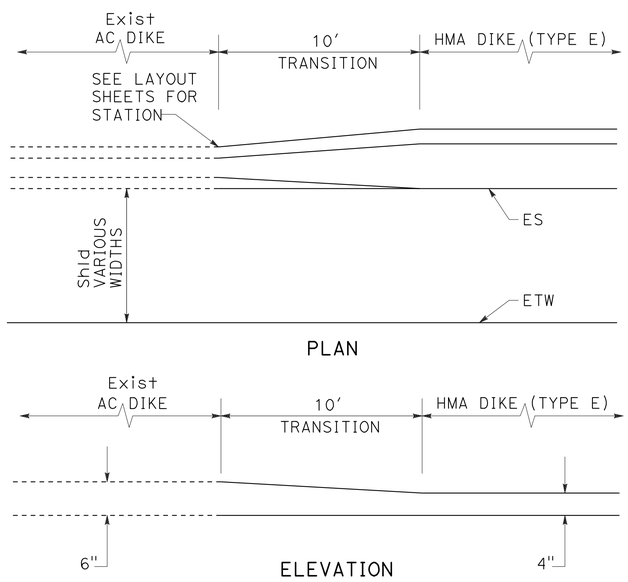

TRANSITION FROM Exist AC DIKE TO HMA DIKE (TYPE E)

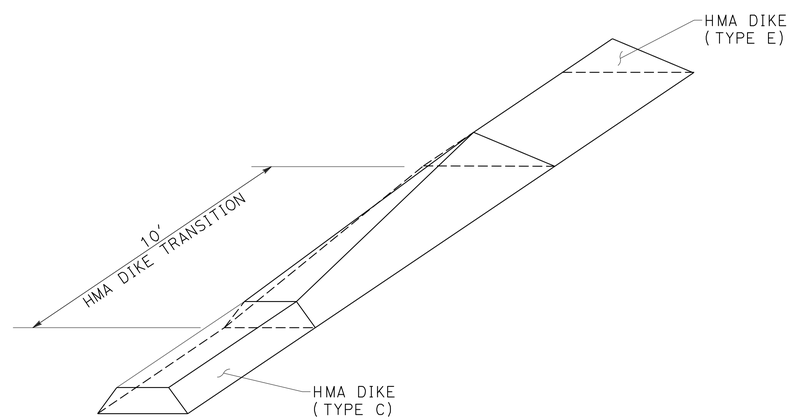

TRANSITION FROM HMA DIKE (TYPE C) TO HMA DIKE (TYPE E)

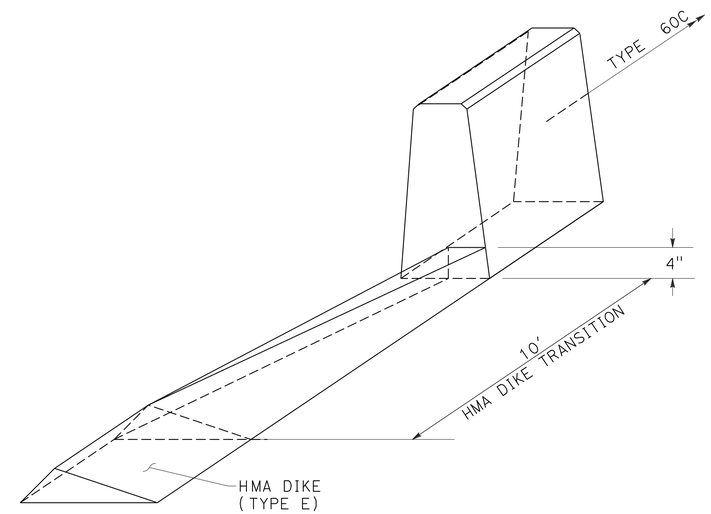

TRANSITION FROM HMA DIKE (TYPE E) TO CONCRETE BARRIER (TYPE 60C)

CONSTRUCTION DETAILS

NO SCALE

C-25

REVISED BY	DATE REVISED
DQN	1/18/12

DAT Q. NGUYEN — LUIS GARCIA

CALCULATED-DESIGNED BY — CHECKED BY

CONSULTANT FUNCTIONAL SUPERVISOR — NATALINA V. BERNARDI

STATE OF CALIFORNIA - DEPARTMENT OF TRANSPORTATION

LAST REVISION 01-18-12 — DATE PLOTTED =>23-MAY-2012 TIME PLOTTED =>06:45

Dist	COUNTY	ROUTE	POST MILES TOTAL PROJECT	SHEET No.	TOTAL SHEETS
04	Ala	580	R8.4/R14.6	104	853

REGISTERED CIVIL ENGINEER 1/18/12 DATE

5-14-12
PLANS APPROVAL DATE

REGISTERED PROFESSIONAL ENGINEER N.V. BERNARDI No. 45407 Exp. 9/30/12 CIVIL STATE OF CALIFORNIA

THE STATE OF CALIFORNIA OR ITS OFFICERS OR AGENTS SHALL NOT BE RESPONSIBLE FOR THE ACCURACY OR COMPLETENESS OF SCANNED COPIES OF THIS PLAN SHEET.

BKF ENGINEERS
4670 WILLOW ROAD, SUITE 250
PLEASANTON, CA. 94588

ALAMEDA CTC
1333 BROADWAY SUITE 220
OAKLAND, CA. 94612

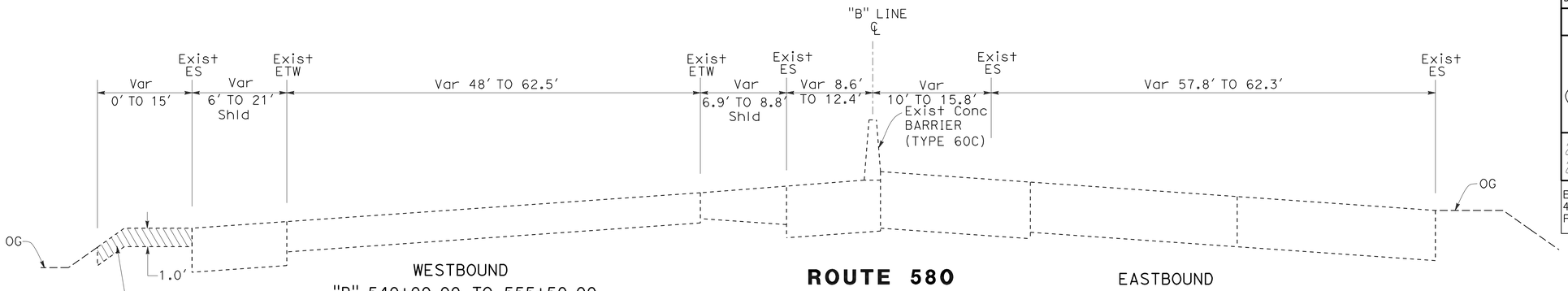

WESTBOUND

"B" 540+00.00 TO 555+50.00
"B" 569+00.00 TO 582+00.00
"B" 600+00.00 TO 602+00.00
"B" 608+00.00 TO 612+00.00
"B" 613+50.00 TO 618+00.00
"B" 620+00.00 TO 623+00.00
"B" 645+50.00 TO 650+00.00
"B" 651+50.00 TO 658+00.00
"B" 752+00.00 TO 759+00.00
"B" 772+00.00 TO 814+00.00
"B" 816+50.00 TO 833+00.00
"B" 835+00.00 TO 869+00.00

ROUTE 580

EASTBOUND

AREA CONTAINING AERIALLY DEPOSITED LEAD (TYPE Y-1)

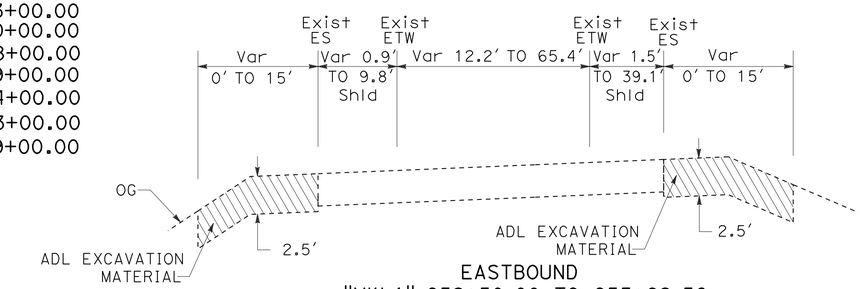

EASTBOUND
"MKL1" 652+50.00 TO 655+62.58

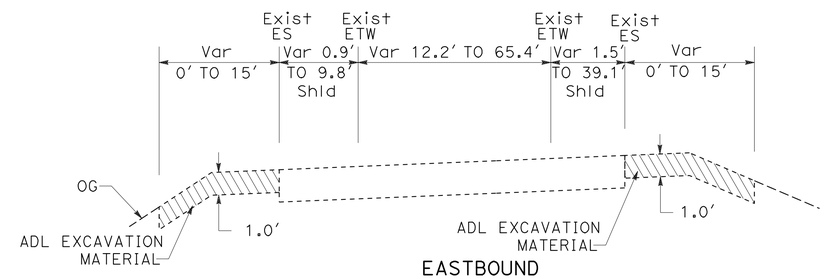

EASTBOUND
"MVL2" 800+50.00 TO 802+12.86
"MVL1" 800+50.00 TO 802+00

AREA CONTAINING AERIALLY DEPOSITED LEAD (TYPE Y-1)

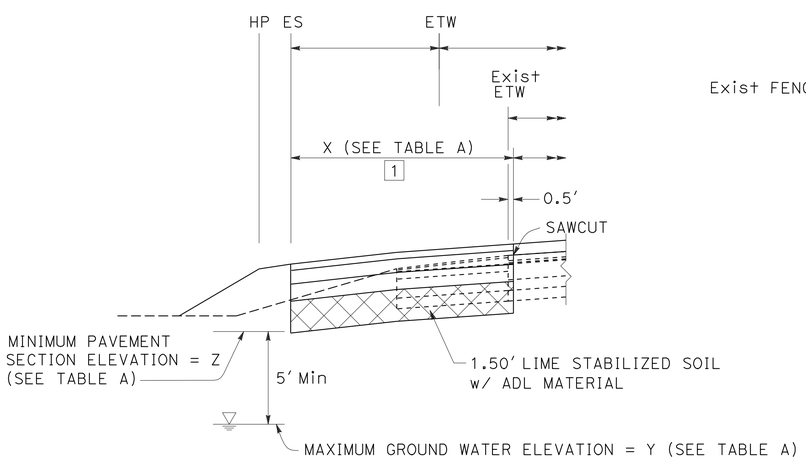

WESTBOUND

"B" 652+00.00 TO 656+91.26
"B" 665+33.00 TO 668+35.00
"B" 668+65.00 TO 669+85.00
"B" 684+75.00 TO 690+50.00
"B" 705+00.00 TO 709+30.00
"B" 713+16.00 TO 715+40.00
"B" 725+00.00 TO 728+40.00

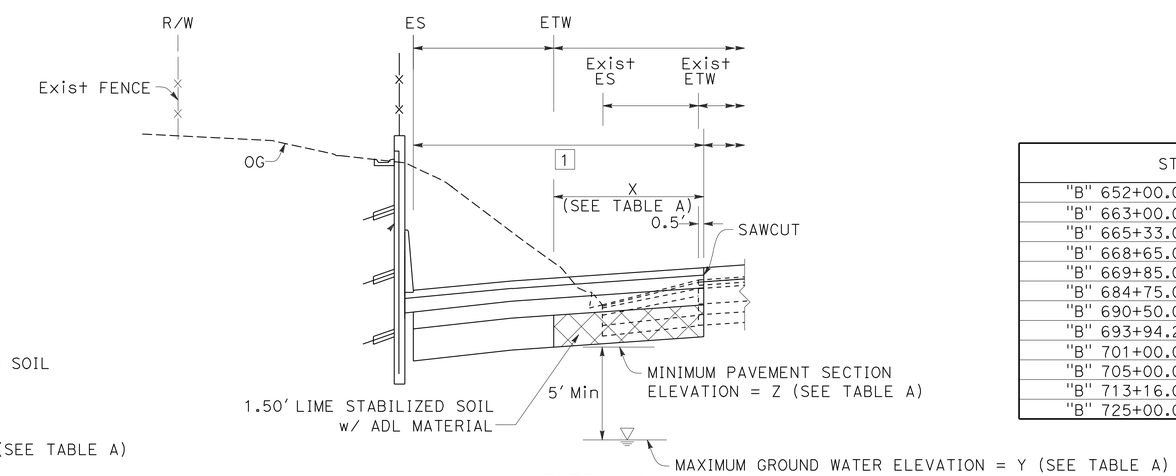

WESTBOUND

"B" 663+00.00 TO 665+33.00
"B" 669+85.00 TO 684+75.00
"B" 690+50.00 TO 692+63.44
"B" 693+94.27 TO 698+50.00
"B" 701+00.00 TO 705+00.00

TABLE A

STATION	X	Y	Z
	LF	Elev	Elev
"B" 652+00.00 TO 656+91.26	23.5	445.9	474.9
"B" 663+00.00 TO 665+33.00	20	453.2	470.2
"B" 665+33.00 TO 668+35.00	35.5	459.0	470.7
"B" 668+65.00 TO 669+85.00	35.5	455.1	471.2
"B" 669+85.00 TO 684+75.00	20	452.1	472.3
"B" 684+75.00 TO 690+50.00	35.5	456.8	483.8
"B" 690+50.00 TO 692+63.44	20	472.5	490.5
"B" 693+94.27 TO 698+50.00	20	472.5	490.5
"B" 701+00.00 TO 705+00.00	20	476.8	498.7
"B" 705+00.00 TO 709+30.00	Var 27 TO 29.9	478.8	502.6
"B" 713+16.00 TO 715+40.00	27	489.3	506.2
"B" 725+00.00 TO 728+40.00	Var 27 TO 31	496.0	512.1

ROUTE 580
PLACEMENT OF AERIALLY DEPOSITED LEAD (TYPE Y-1) TYPICAL

CONSTRUCTION DETAILS

NO SCALE

C-26

DQN	1/18/12
REVISED BY	DATE REVISED
DAT Q. NGUYEN	LUIS GARCIA
CALCULATED-DESIGNED BY	CHECKED BY
CONSULTANT FUNCTIONAL SUPERVISOR	NATALINA V. BERNARDI

STATE OF CALIFORNIA - DEPARTMENT OF TRANSPORTATION

Caltrans

LAST REVISION 01-18-12 DATE PLOTTED => 23-MAY-2012 TIME PLOTTED => 06:45

FOR ACCURATE RIGHT OF WAY AND ACCESS DATA,
CONTACT RIGHT OF WAY ENGINEERING AT THE DISTRICT OFFICE.

NOTES:

1. PRIOR TO CONSTRUCTION CONTRACTOR SHALL SURVEY CREEK AREA FROM THE TOP OF BANK TO THE TOP OF BANK. CONTRACTOR SHALL RESTORE CREEK TO EXISTING CONDITION AFTER EACH CONSTRUCTION SEASON AND AT COMPLETION OF WORK. CULVERTS AND EARTH DAMS ARE TO BE REMOVED FROM CREEK AND GRADES RESTORED TO ORIGINAL CONFIGURATION.
2. ARRANGEMENT OF LAYING THE PIPE CULVERT SHALL FOLLOW THE CONTOUR OF THE CREEK.
3. COFFER DAM SHOULD BE CONSTRUCTED OF PERMEABLE MATERIAL (RIVER RUN GRAVEL) OR GRAVEL -FILLED BAGS AT THE CONTRACTOR'S OPTION.
4. PERMEABLE MATERIAL (RIVER RUN GRAVEL) IF USED, SHALL BE BETWEEN 1.5 INCHES AND 4 INCHES DIAMETERS.
5. NO VIHICLE SHALL BE ALLOWED ON TCDS.

Dist	COUNTY	ROUTE	POST MILES TOTAL PROJECT	SHEET No.	TOTAL SHEETS
04	Ala	580	R8.4/R14.6	105	853

REGISTERED CIVIL ENGINEER 5/7/12 DATE

5-14-12
PLANS APPROVAL DATE

REGISTERED PROFESSIONAL ENGINEER N.V. BERNARDI No. 45407 Exp. 9/30/12 CIVIL STATE OF CALIFORNIA

THE STATE OF CALIFORNIA OR ITS OFFICERS OR AGENTS SHALL NOT BE RESPONSIBLE FOR THE ACCURACY OR COMPLETENESS OF SCANNED COPIES OF THIS PLAN SHEET.

BKF ENGINEERS
4670 WILLOW ROAD, SUITE 250
PLEASANTON, CA. 94588

ALAMEDA CTC
1333 BROADWAY SUITE 220
OAKLAND, CA. 94612

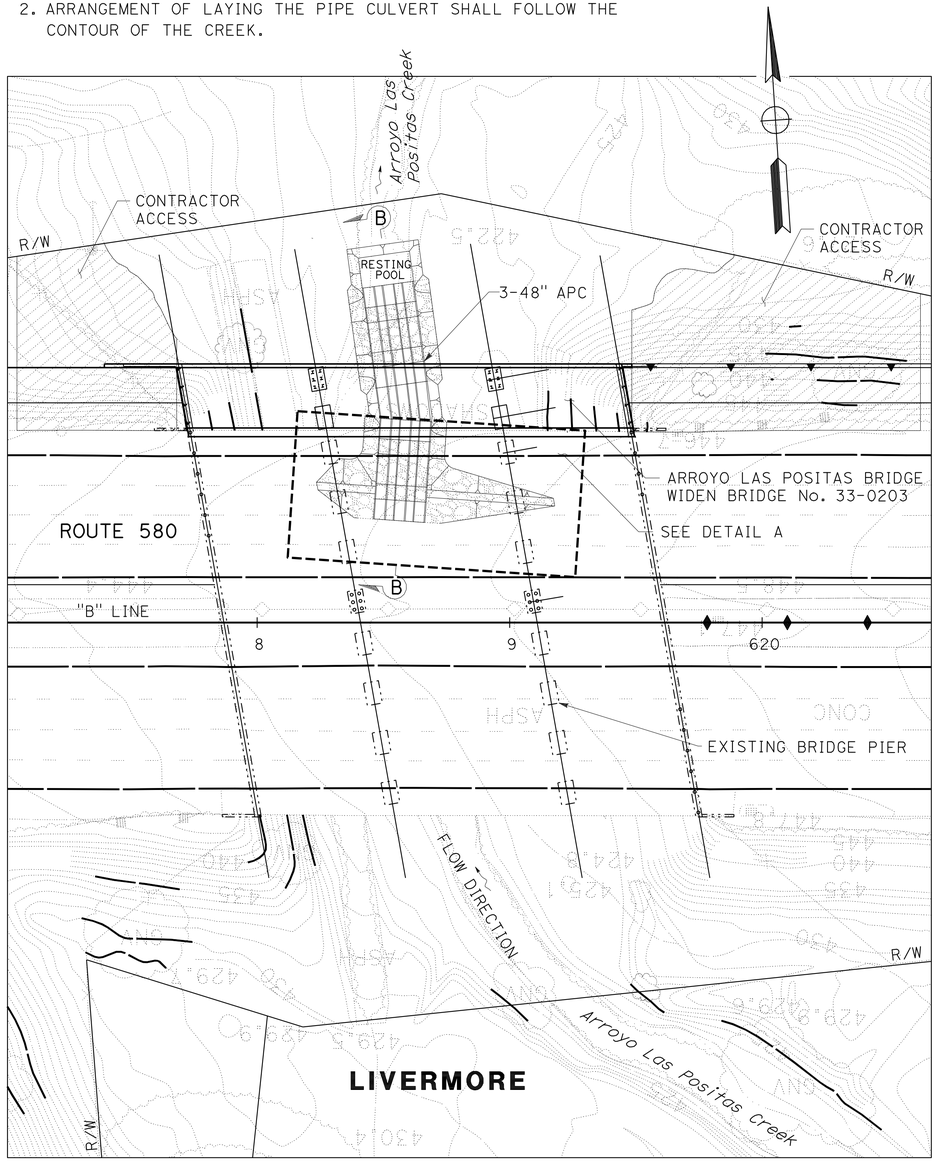

TEMPORARY CREEK DIVERSION SYSTEM
FOR ARROYO LAS POSITAS
SCALE: 1" = 30'

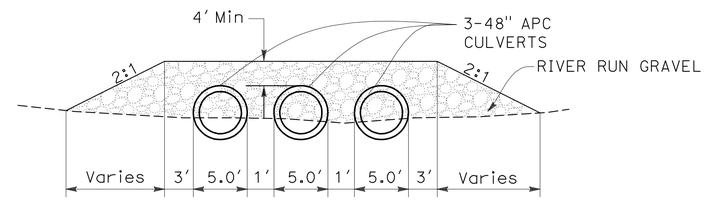

CROSS SECTION A-A
NO SCALE

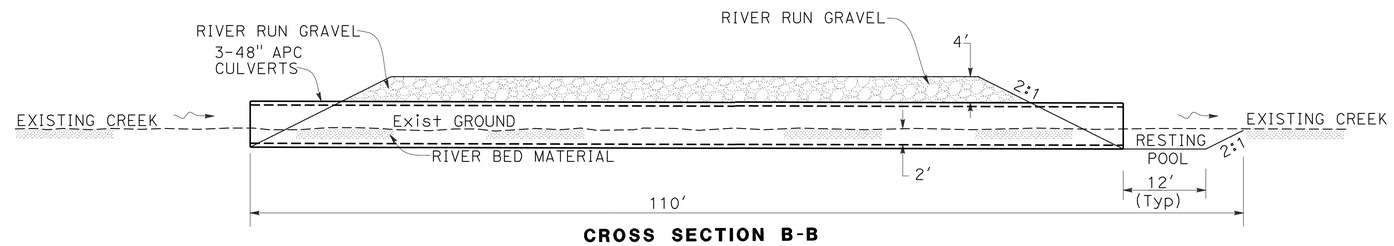

CROSS SECTION B-B
NO SCALE

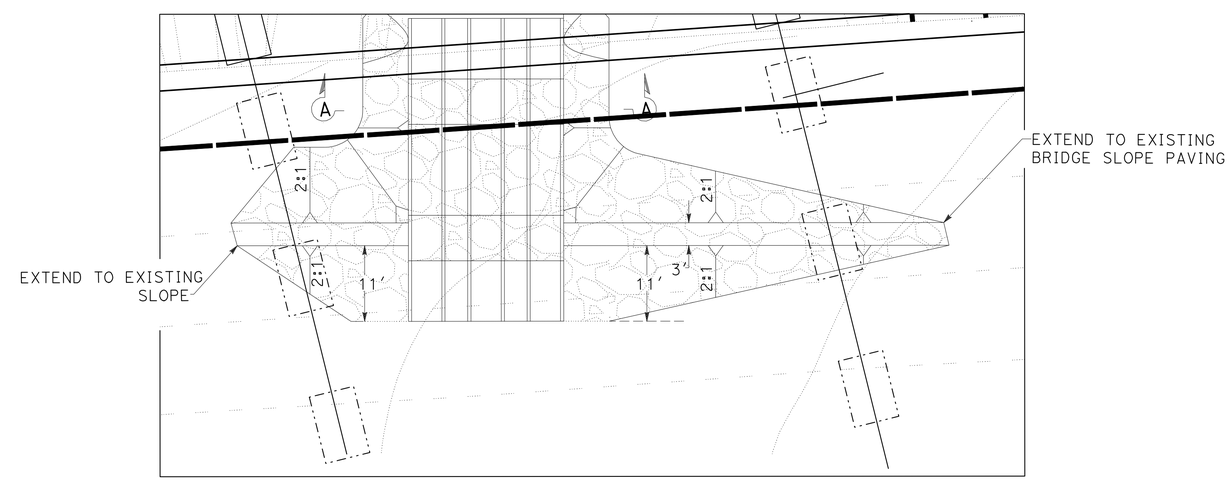

DETAIL A
SCALE: 1" = 10'

CONSTRUCTION DETAILS
TEMPORARY CREEK DIVERSION
Arroyo Las Positas Creek (No. 33-0203)

SCALE AS SHOWN

C-27

FOR NOTES, LEGEND AND ABBREVIATIONS, SEE SHEET C-1.

REVISED BY	DATE REVISED
DGN	5/7/12

DAT Q. NGUYEN — LUIS GARCIA — CALCULATED-DESIGNED BY — CHECKED BY

CONSULTANT FUNCTIONAL SUPERVISOR: NATALINA V. BERNARDI

STATE OF CALIFORNIA - DEPARTMENT OF TRANSPORTATION

LAST REVISION 05-07-12 | DATE PLOTTED => 23-MAY-2012 | TIME PLOTTED => 06:45

FOR ACCURATE RIGHT OF WAY DATA, CONTACT
RIGHT OF WAY ENGINEERING AT THE DISTRICT OFFICE.

Dist	COUNTY	ROUTE	POST MILES TOTAL PROJECT	SHEET No.	TOTAL SHEETS
04	Ala	580	R8.4/R14.6	106	853

REGISTERED CIVIL ENGINEER — DATE 1/18/12

5-14-12
PLANS APPROVAL DATE

REGISTERED PROFESSIONAL ENGINEER — N.V. BERNARDI — No. 45407 — Exp. 9/30/12 — CIVIL — STATE OF CALIFORNIA

THE STATE OF CALIFORNIA OR ITS OFFICERS OR AGENTS SHALL NOT BE RESPONSIBLE FOR THE ACCURACY OR COMPLETENESS OF SCANNED COPIES OF THIS PLAN SHEET.

BKF ENGINEERS
4670 WILLOW ROAD, SUITE 250
PLEASANTON, CA. 94588

ALAMEDA CTC
1333 BROADWAY SUITE 220
OAKLAND, CA. 94612

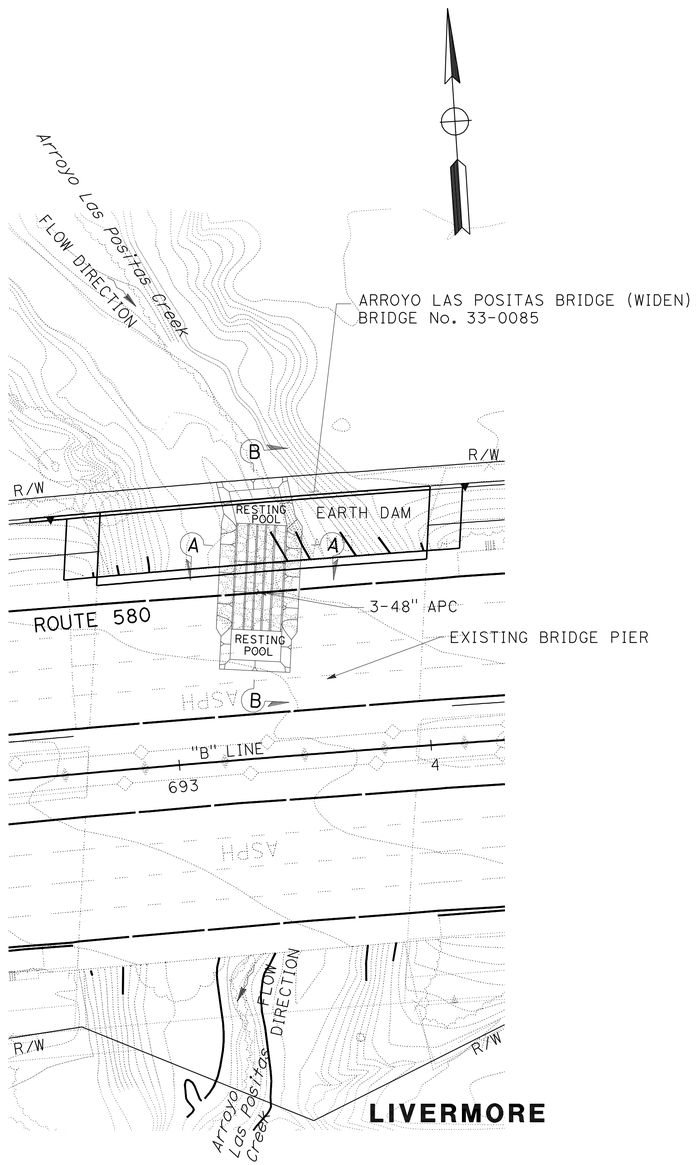

TEMPORARY CREEK DIVERSION SYSTEM
FOR ARROYO LAS POSITAS

NOTE:
NO VEHICLE ACCESS ALLOWED.

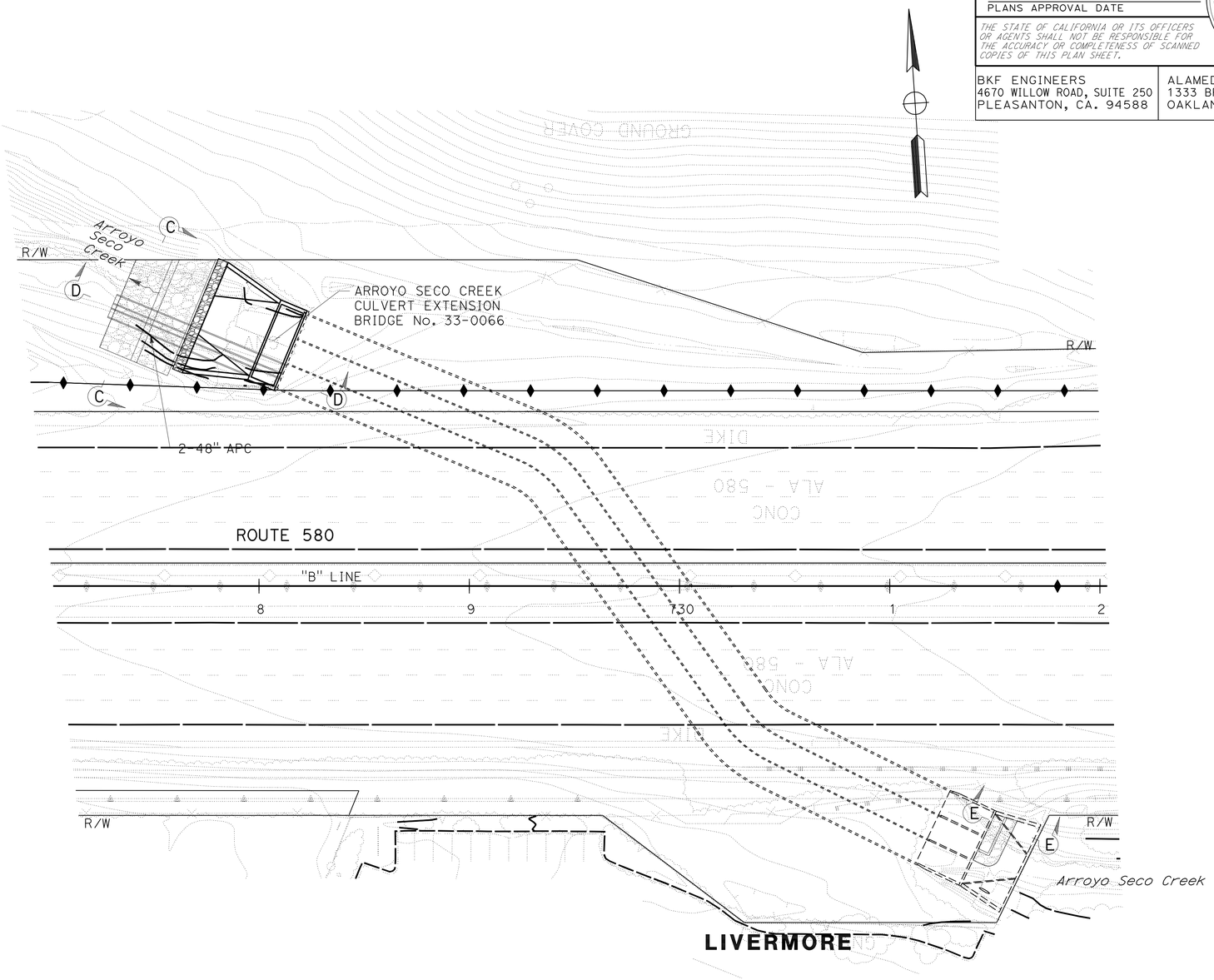

TEMPORARY CREEK DIVERSION SYSTEM
FOR ARROYO SECO CREEK

NOTE:
NO VEHICLE ACCESS ALLOWED.

CONSTRUCTION DETAILS
TEMPORARY CREEK DIVERSION
SCALE: 1" = 30'

C-28

DQN	1/18/12
REVISED BY	DATE REVISED
DAT Q. NGUYEN	LUIS GARCIA
CALCULATED-DESIGNED BY	CHECKED BY
CONSULTANT FUNCTIONAL SUPERVISOR	NATALINA V. BERNARDI

STATE OF CALIFORNIA - DEPARTMENT OF TRANSPORTATION

Caltrans

LAST REVISION 01-18-12 | DATE PLOTTED => 23-MAY-2012 | TIME PLOTTED => 08:45

Dist	COUNTY	ROUTE	POST MILES TOTAL PROJECT	SHEET No.	TOTAL SHEETS
04	Ala	580	R8.4/R14.6	107	853

REGISTERED CIVIL ENGINEER 1/18/12 DATE

5-14-12
PLANS APPROVAL DATE

REGISTERED PROFESSIONAL ENGINEER N.V. BERNARDI No. 45407 Exp. 9/30/12 CIVIL STATE OF CALIFORNIA

THE STATE OF CALIFORNIA OR ITS OFFICERS OR AGENTS SHALL NOT BE RESPONSIBLE FOR THE ACCURACY OR COMPLETENESS OF SCANNED COPIES OF THIS PLAN SHEET.

BKF ENGINEERS
4670 WILLOW ROAD, SUITE 250
PLEASANTON, CA. 94588

ALAMEDA CTC
1333 BROADWAY SUITE 220
OAKLAND, CA. 94612

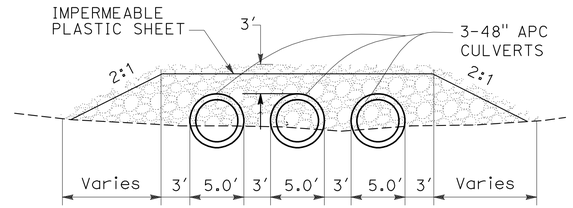

CROSS SECTION A-A

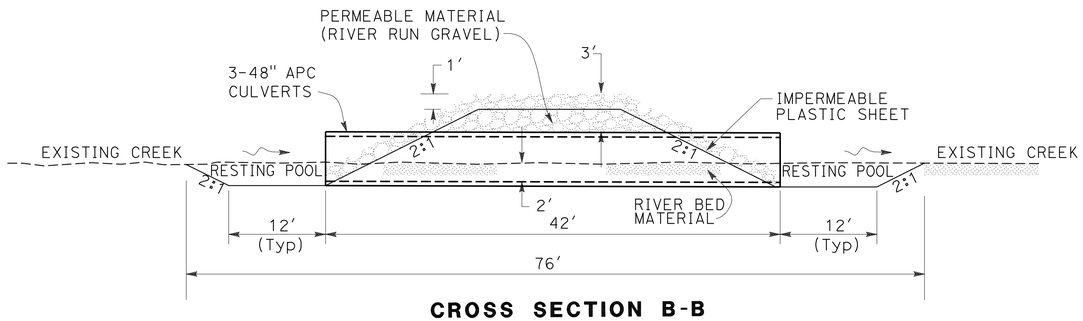

CROSS SECTION B-B

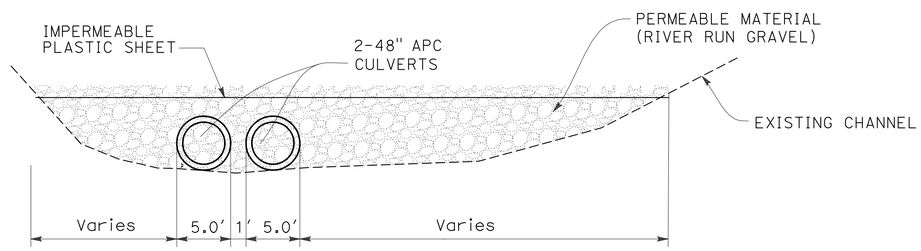

CROSS SECTION C-C

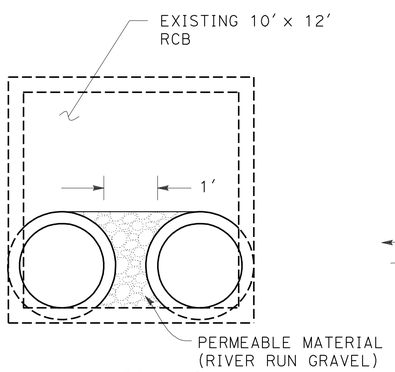

DETAIL A

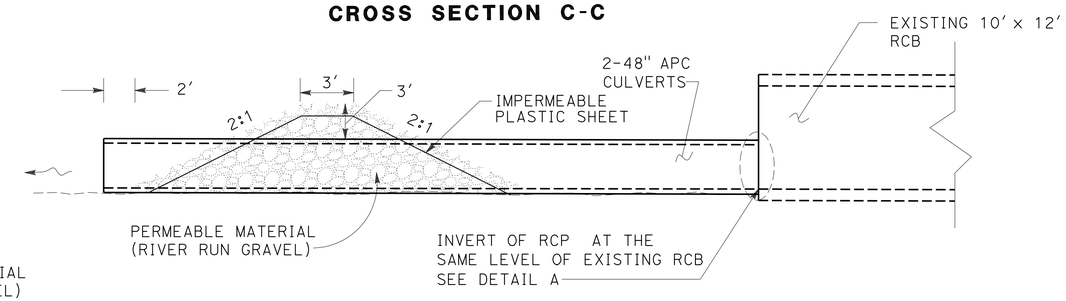

CROSS SECTION D-D

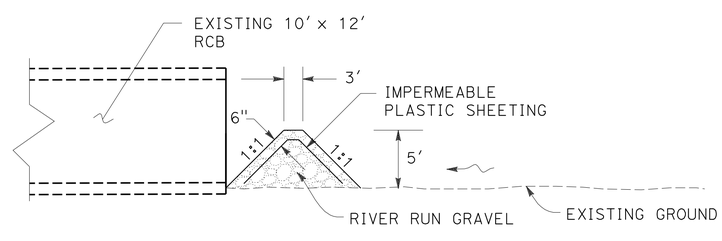

CROSS SECTION E-E

NOTE:
NO VEHICLE ACCESS ALLOWED.

CONSTRUCTION DETAILS
TEMPORARY CREEK DIVERSION
NO SCALE

C-29

DQN	1/18/12
REVISED BY	DATE REVISED
DAT Q. NGUYEN	LUIS GARCIA
CALCULATED-DESIGNED BY	CHECKED BY
CONSULTANT FUNCTIONAL SUPERVISOR	NATALINA V. BERNARDI

STATE OF CALIFORNIA - DEPARTMENT OF TRANSPORTATION

LAST REVISION 01-18-12 | DATE PLOTTED => 23-MAY-2012 | TIME PLOTTED => 06:45

Dist	COUNTY	ROUTE	POST MILES TOTAL PROJECT	SHEET No.	TOTAL SHEETS
04	Ala	580	R8.4/R14.6	108	853

REGISTERED CIVIL ENGINEER 1/18/12 DATE

5-14-12
PLANS APPROVAL DATE

REGISTERED PROFESSIONAL ENGINEER N.V. BERNARDI No. 45407 Exp. 9/30/12 CIVIL STATE OF CALIFORNIA

THE STATE OF CALIFORNIA OR ITS OFFICERS OR AGENTS SHALL NOT BE RESPONSIBLE FOR THE ACCURACY OR COMPLETENESS OF SCANNED COPIES OF THIS PLAN SHEET.

BKF ENGINEERS
4670 WILLOW ROAD, SUITE 250
PLEASANTON, CA. 94588

ALAMEDA CTC
1333 BROADWAY SUITE 220
OAKLAND, CA. 94612

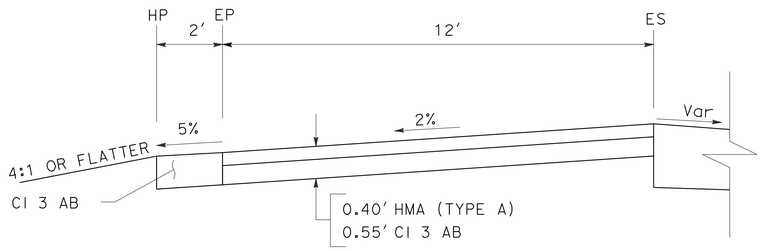

SECTION A-A
MAINTENANCE VEHICLE PULLOUT (MVP)
"MVL1" 806+57.50 TO 807+42.50

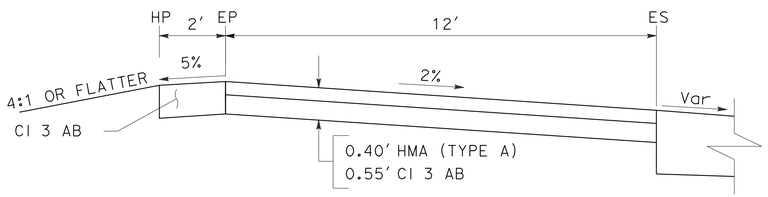

SECTION A-A
MAINTENANCE VEHICLE PULLOUT (MVP)
"MGR2" 860+96.80 TO 861+81.67

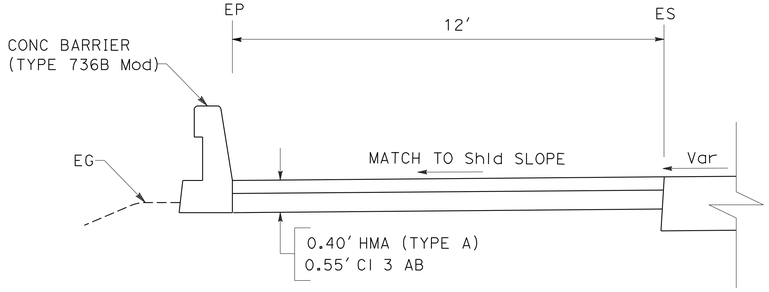

SECTION A-A
MAINTENANCE VEHICLE PULLOUT (MVP)
"MXR3" 748+98.99 TO 749+80.52

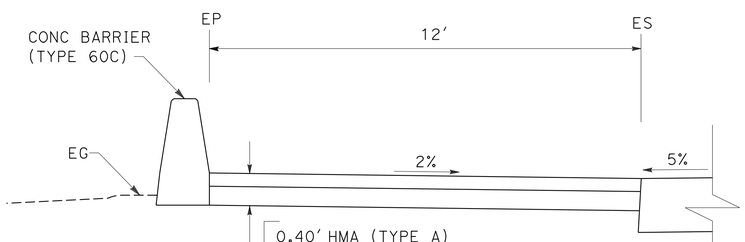

SECTION A-A
MAINTENANCE VEHICLE PULLOUT (MVP)
"B" 728+60.50 TO 729+45.50

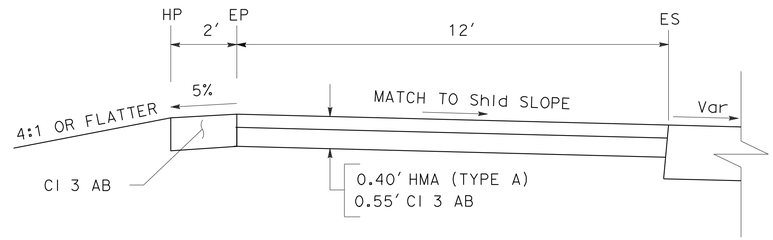

SECTION A-A
MAINTENANCE VEHICLE PULLOUT (MVP)
"B" 863+65.88 TO 864+49.45

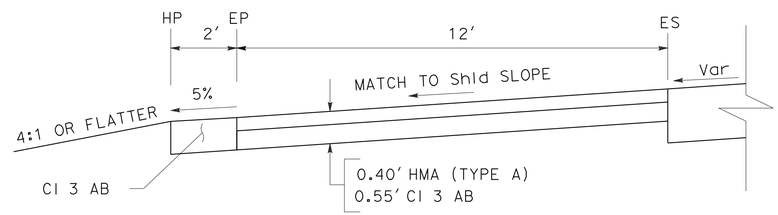

SECTION A-A
MAINTENANCE VEHICLE PULLOUT (MVP)
"B" 647+32.79 TO 648+18.55
"MXL1" 750+00.00 TO 750+85.00

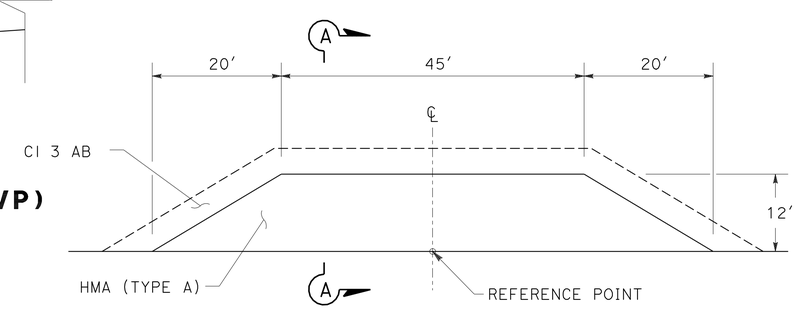

PLAN
MAINTENANCE VEHICLE PULLOUT (MVP)
(FOR ADDITIONAL MVP DETAILS NOT SHOWN, SEE STANDARD PLAN H9)

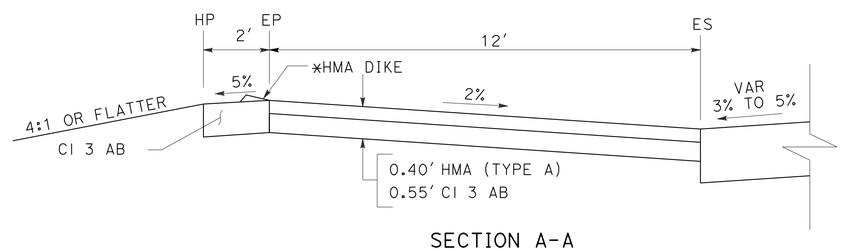

SECTION A-A
MAINTENANCE VEHICLE PULLOUT (MVP)
"B" 599+14.00 TO 599+99.00
"B" 615+65.00 TO 616+50.00
*"B" 725+20.00 TO 726+05.00
NO SCALE

CONSTRUCTION DETAILS
NO SCALE

C-30

REVISED BY	DATE REVISED
DQN	1/18/12

CALCULATED-DESIGNED BY	CHECKED BY
DAT Q. NGUYEN	LUIS GARCIA

CONSULTANT FUNCTIONAL SUPERVISOR: NATALINA V. BERNARDI

STATE OF CALIFORNIA - DEPARTMENT OF TRANSPORTATION

Caltrans

LAST REVISION 01-18-12 | DATE PLOTTED =>23-MAY-2012 | TIME PLOTTED =>06:46

Dist	COUNTY	ROUTE	POST MILES TOTAL PROJECT	SHEET No.	TOTAL SHEETS
04	Ala	580	R8.4/R14.6	109	853

REGISTERED CIVIL ENGINEER 1/18/12 DATE

5-14-12
PLANS APPROVAL DATE

REGISTERED PROFESSIONAL ENGINEER N.V. BERNARDI No. 45407 Exp. 9/30/12 CIVIL STATE OF CALIFORNIA

THE STATE OF CALIFORNIA OR ITS OFFICERS OR AGENTS SHALL NOT BE RESPONSIBLE FOR THE ACCURACY OR COMPLETENESS OF SCANNED COPIES OF THIS PLAN SHEET.

BKF ENGINEERS
4670 WILLOW ROAD, SUITE 250
PLEASANTON, CA. 94588

ALAMEDA CTC
1333 BROADWAY SUITE 220
OAKLAND, CA. 94612

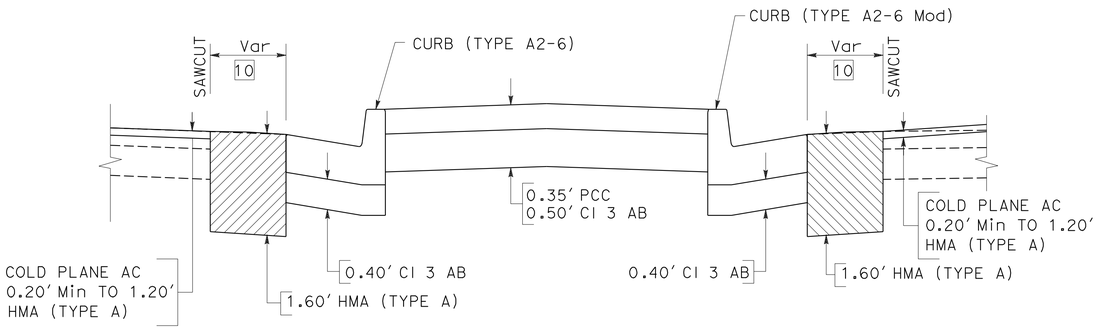

CONCRETE MEDIAN PAVING

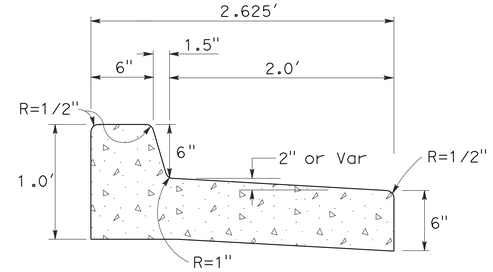

CURB TYPE A2-6 MODIFIED

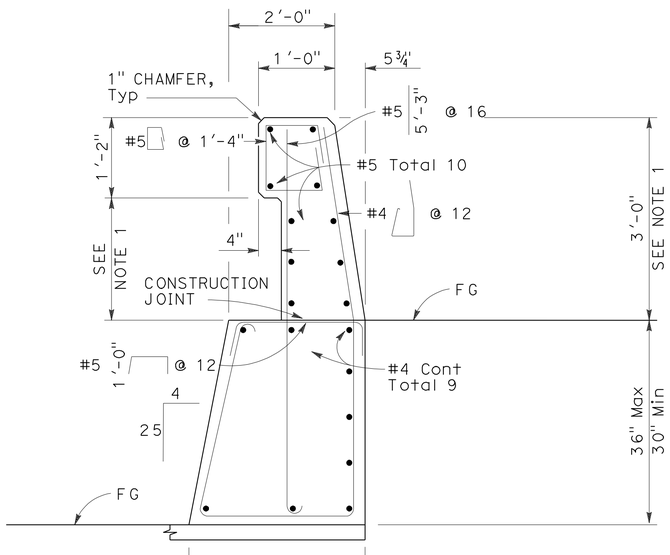

CONCRETE BARRIER TYPE 736B MODIFIED

NOTE:

DIMENSION MAY VARY WITH ROADWAY CROSS SLOPE AND WITH CERTAIN THICKNESS OF SURFACING. SEE PROJECT PLANS.

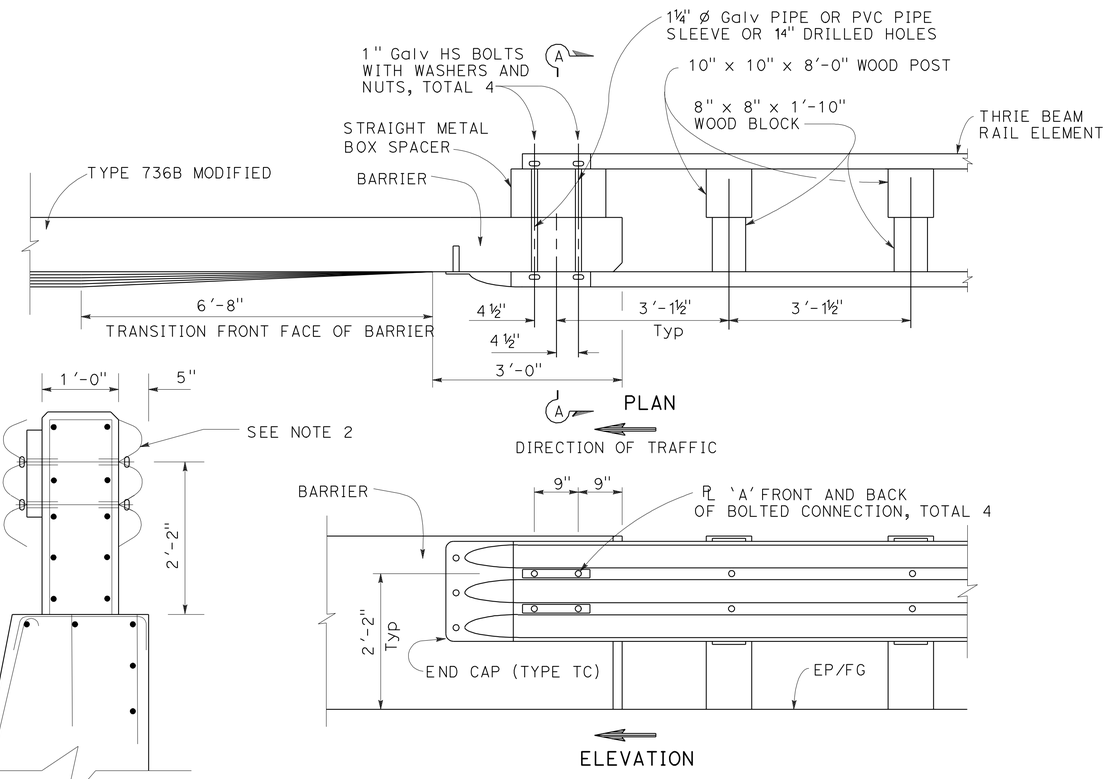

MBGR CONNECTION TO CONCRETE BARRIER TYPE 736B MODIFIED.

NOTES:

1. FOR ADDITIONAL DETAIL, SEE STANDARD PLAN B11-56.
2. FOR TYPICAL METAL RAILING CONNECTION DETAIL NOT SHOWN, SEE STANDARD PLANS A77J1 AND A77J2.

CONSTRUCTION DETAILS

NO SCALE

C-31

REVISED BY	DATE REVISED
DQN	1/18/12

DAT Q. NGUYEN — LUIS GARCIA

CALCULATED-DESIGNED BY — CHECKED BY

CONSULTANT FUNCTIONAL SUPERVISOR — NATALINA V. BERNARDI

STATE OF CALIFORNIA - DEPARTMENT OF TRANSPORTATION

Caltrans

LAST REVISION 01-18-12 | DATE PLOTTED => 23-MAY-2012 | TIME PLOTTED => 06:46

Dist	COUNTY	ROUTE	POST MILES TOTAL PROJECT	SHEET No.	TOTAL SHEETS
04	Ala	580	R8.4/R14.6	110	853

REGISTERED CIVIL ENGINEER 1/18/12 DATE

5-14-12
PLANS APPROVAL DATE

REGISTERED PROFESSIONAL ENGINEER N.V. BERNARDI No. 45407 Exp. 9/30/12 CIVIL STATE OF CALIFORNIA

THE STATE OF CALIFORNIA OR ITS OFFICERS OR AGENTS SHALL NOT BE RESPONSIBLE FOR THE ACCURACY OR COMPLETENESS OF SCANNED COPIES OF THIS PLAN SHEET.

BKF ENGINEERS
4670 WILLOW ROAD, SUITE 250
PLEASANTON, CA. 94588

ALAMEDA CTC
1333 BROADWAY SUITE 220
OAKLAND, CA. 94612

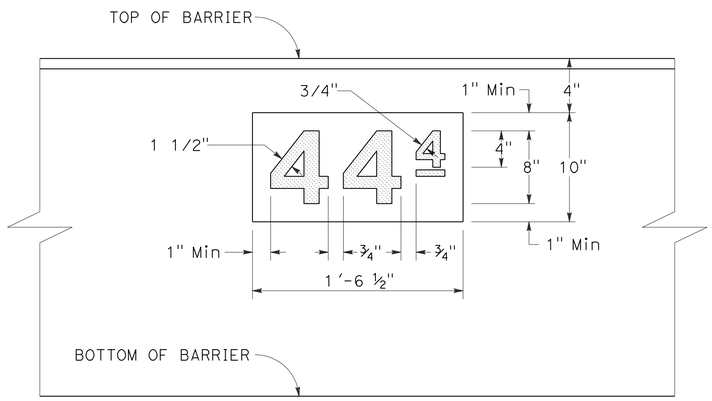

PAINT POSTMILE MARKING on Conc Barr DETAIL

NOTES:

1. POST MILE MARKINGS SHALL BE PAINTED BLACK NUMBERS CENTERED OVER A WHITE RECTANGLE.
2. POST MILE MARKING SHALL BE PAINTED ON EACH SIDE OF BARRIER.
3. WHOLE NUMBERS SHALL BE PAINTED USING A STENCIL SIZE DESIGNATION OF "8D" TENTHS SHALL BE PAINTED USING A STENCIL SIZE DESIGNATION OF "4D"
4. THE POST MILE TENTH NUMERAL SHOULD BE STENCILED ON THE CONCRETE BARRIER EVERY ONE-TENTH OF A MILE.

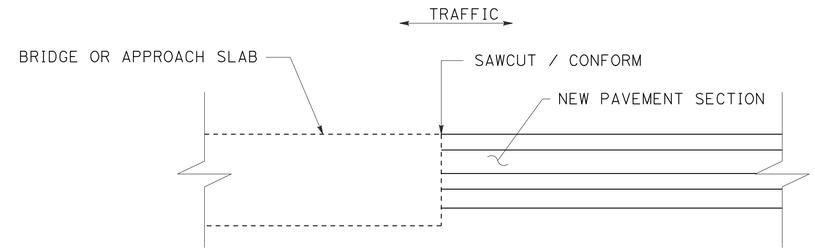

NEW PAVEMENT SECTION, CONFORM TO BRIDGE OR APPROACH SLAB

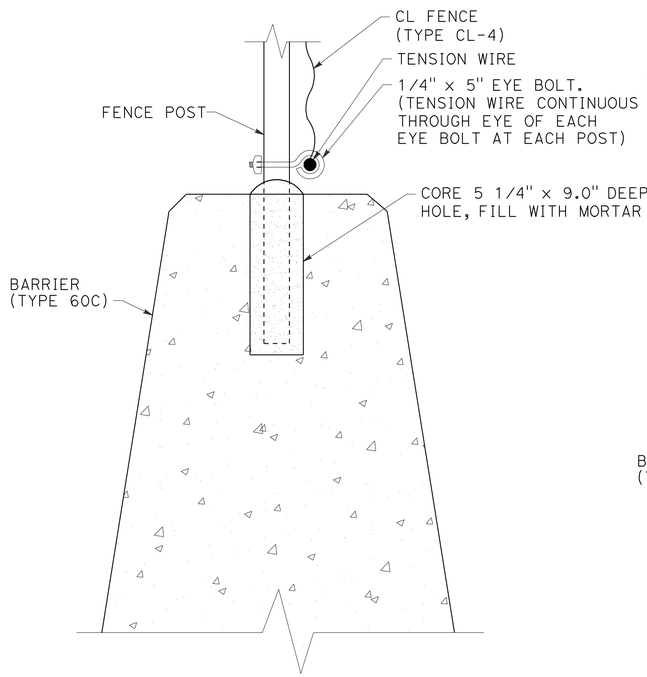

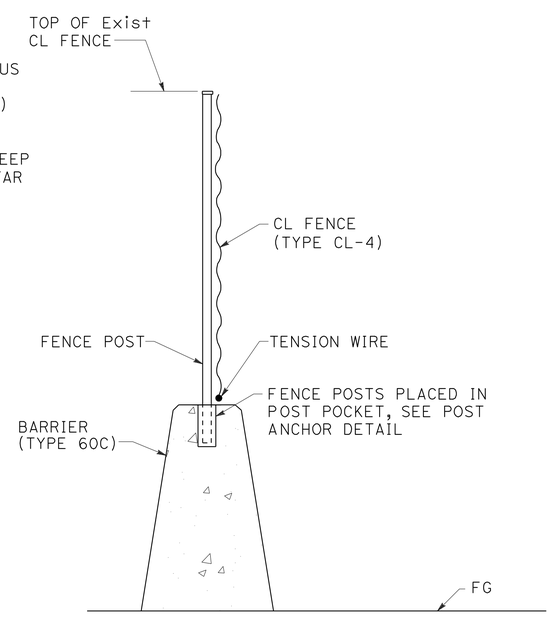

CONCRETE BARRIER (TYPE 60C) POST ANCHOR AND FENCE DETAIL

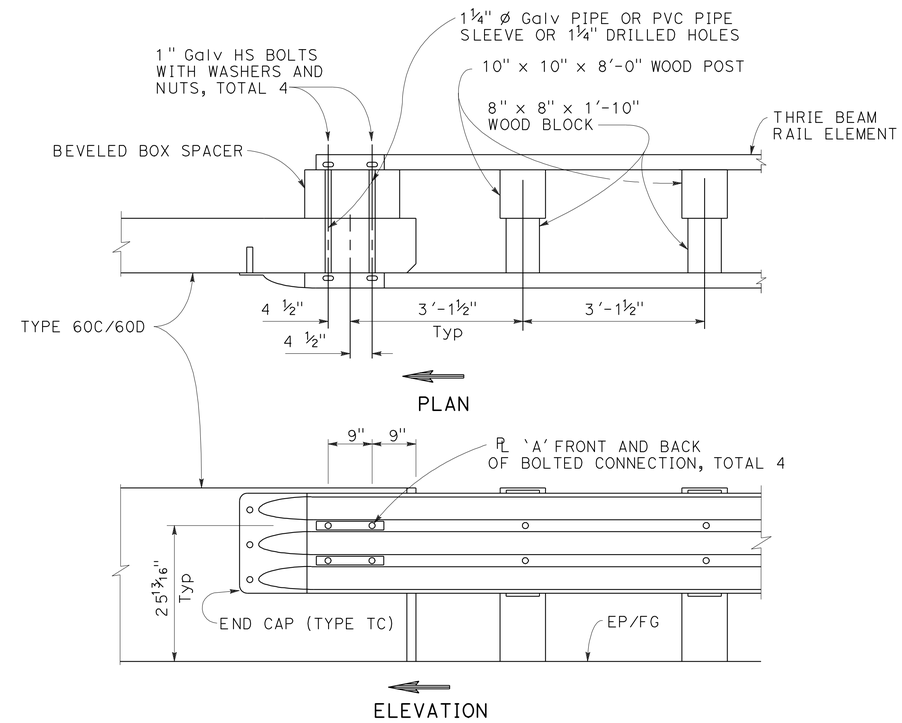

MBGR CONNECTION TO CONCRETE BARRIER TYPE 60C/60D

NOTES:

1. FOR ADDITIONAL CONNECTION DETAILS, SEE STANDARD PLAN A77J1 AND A77J2.
2. FOR BEVELED METAL BOX SPACER DETAIL AND CONNECTION, SEE STANDARD PLAN A78I.

CONSTRUCTION DETAILS

NO SCALE

C-32

REVISED BY	DATE REVISED
DQN	1/18/12

CALCULATED-DESIGNED BY	CHECKED BY
DAT Q. NGUYEN	LUIS GARCIA

CONSULTANT FUNCTIONAL SUPERVISOR: NATALINA V. BERNARDI

STATE OF CALIFORNIA - DEPARTMENT OF TRANSPORTATION

Caltrans

LAST REVISION 01-18-12 | DATE PLOTTED => 23-MAY-2012 | TIME PLOTTED => 06:46

Dist	COUNTY	ROUTE	POST MILES TOTAL PROJECT	SHEET No.	TOTAL SHEETS
04	Ala	580	R8.4/R14.6	111	853

REGISTERED CIVIL ENGINEER 1/18/12 DATE

5-14-12
PLANS APPROVAL DATE

REGISTERED PROFESSIONAL ENGINEER N.V. BERNARDI No. 45407 Exp. 9/30/12 CIVIL STATE OF CALIFORNIA

THE STATE OF CALIFORNIA OR ITS OFFICERS OR AGENTS SHALL NOT BE RESPONSIBLE FOR THE ACCURACY OR COMPLETENESS OF SCANNED COPIES OF THIS PLAN SHEET.

BKF ENGINEERS
4670 WILLOW ROAD, SUITE 250
PLEASANTON, CA. 94588

ALAMEDA CTC
1333 BROADWAY SUITE 220
OAKLAND, CA. 94612

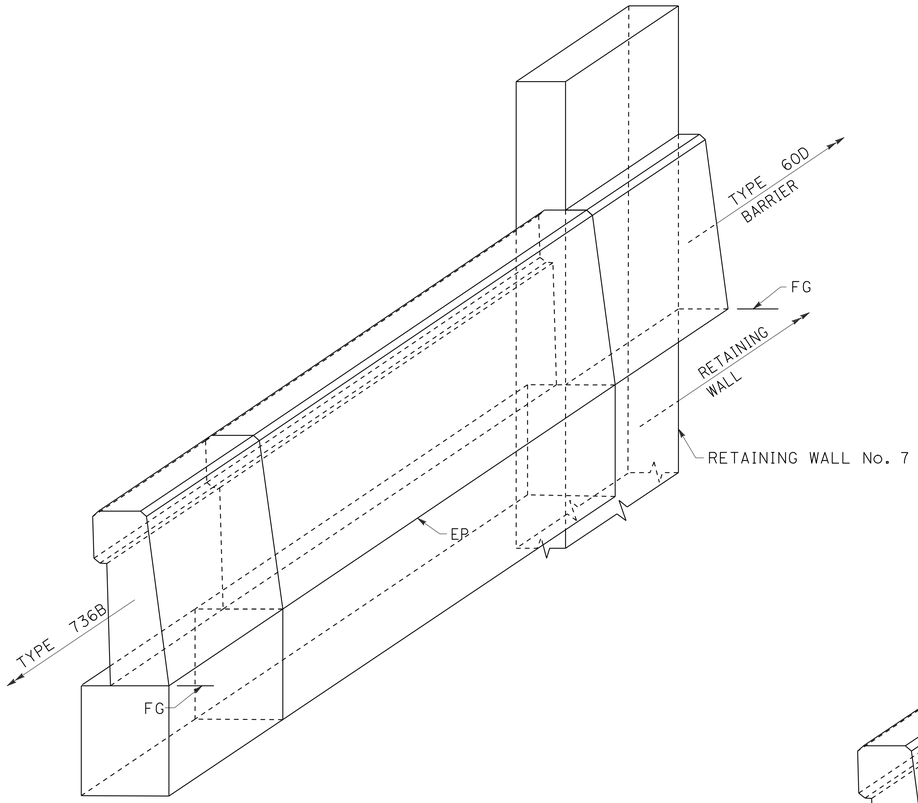

INTERFACE DETAIL CONCRETE BARRIER (TYPE 736B Mod) TO CONCRETE BARRIER (TYPE 60D)

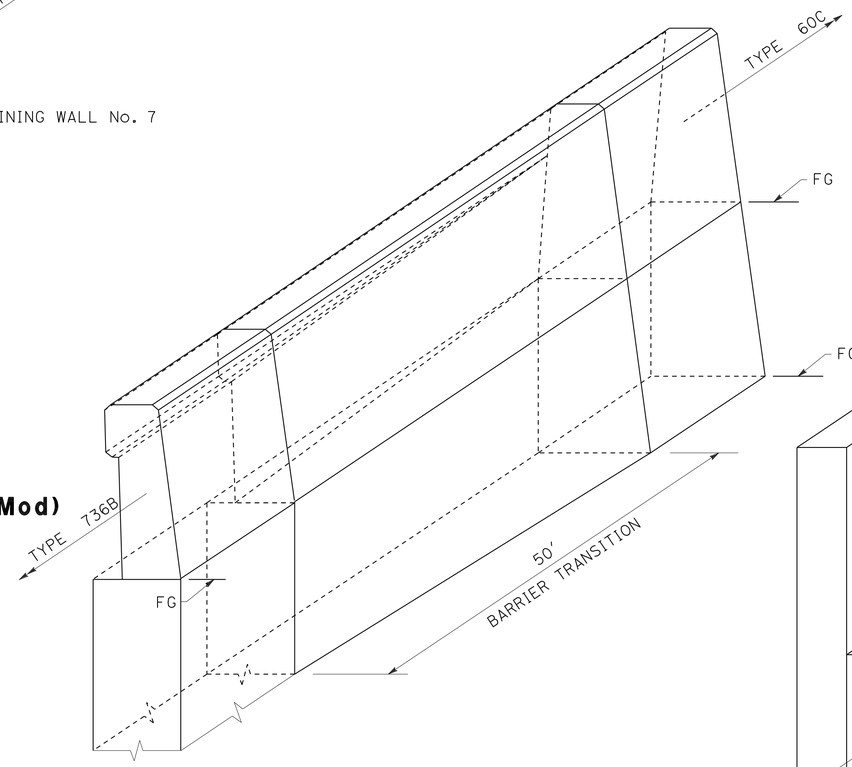

TRANSITION FROM CONCRETE BARRIER (TYPE 736B) TO CONCRETE BARRIER (TYPE 60C)

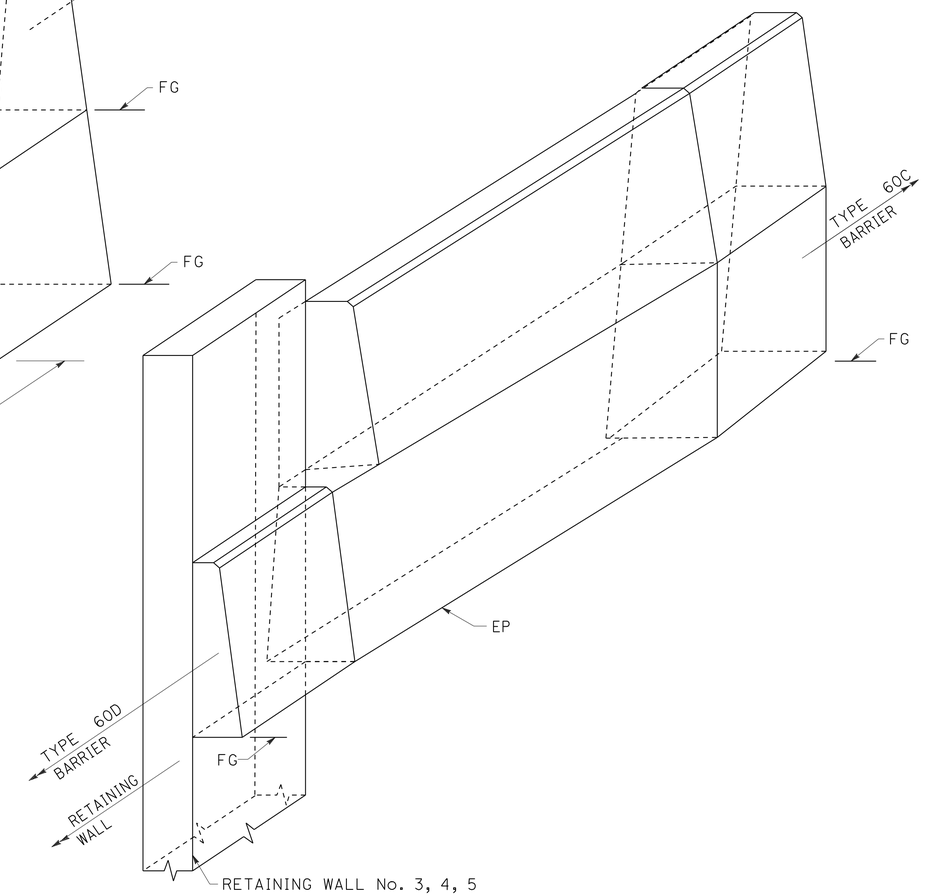

INTERFACE DETAIL CONCRETE BARRIER (TYPE 60D) TO CONCRETE BARRIER (TYPE 60C)

CONSTRUCTION DETAILS

NO SCALE

C-33

REVISED BY	DQN
DATE REVISED	1/18/12
DAT Q. NGUYEN	
LUIS GARCIA	
CALCULATED-DESIGNED BY	
CHECKED BY	
CONSULTANT FUNCTIONAL SUPERVISOR	
NATALINA V. BERNARDI	

STATE OF CALIFORNIA - DEPARTMENT OF TRANSPORTATION

Caltrans

LAST REVISION DATE PLOTTED => 23-MAY-2012
01-18-12 TIME PLOTTED => 06:46

Dist	COUNTY	ROUTE	POST MILES TOTAL PROJECT	SHEET No.	TOTAL SHEETS
04	Ala	580	R8.4/R14.6	112	853

REGISTERED CIVIL ENGINEER 1/18/12 DATE

5-14-12
PLANS APPROVAL DATE

REGISTERED PROFESSIONAL ENGINEER N.V. BERNARDI No. 45407 Exp. 9/30/12 CIVIL STATE OF CALIFORNIA

THE STATE OF CALIFORNIA OR ITS OFFICERS OR AGENTS SHALL NOT BE RESPONSIBLE FOR THE ACCURACY OR COMPLETENESS OF SCANNED COPIES OF THIS PLAN SHEET.

BKF ENGINEERS
4670 WILLOW ROAD, SUITE 250
PLEASANTON, CA. 94588

ALAMEDA CTC
1333 BROADWAY SUITE 220
OAKLAND, CA. 94612

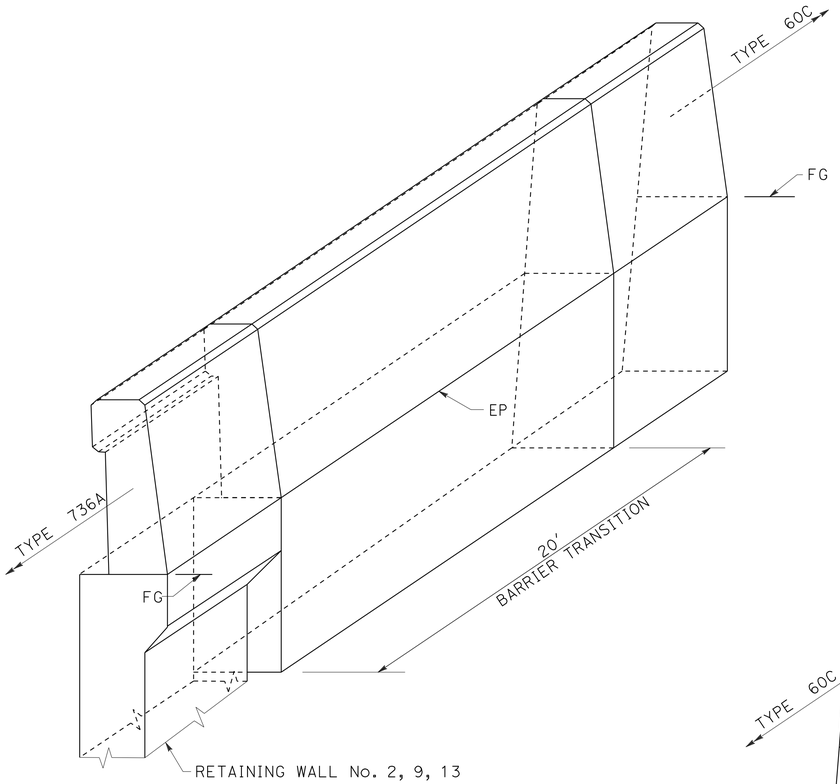

TRANSITION FROM CONCRETE BARRIER (TYPE 736A) TO CONCRETE BARRIER (TYPE 60C)

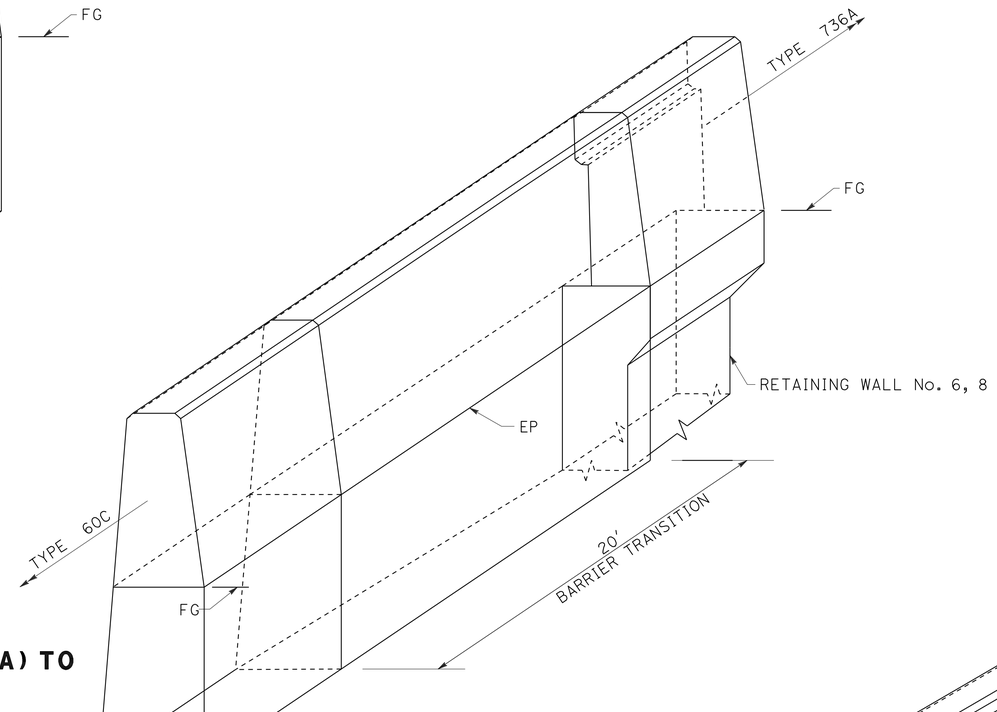

TRANSITION FROM CONCRETE BARRIER (TYPE 60C) TO CONCRETE BARRIER (TYPE 736A)

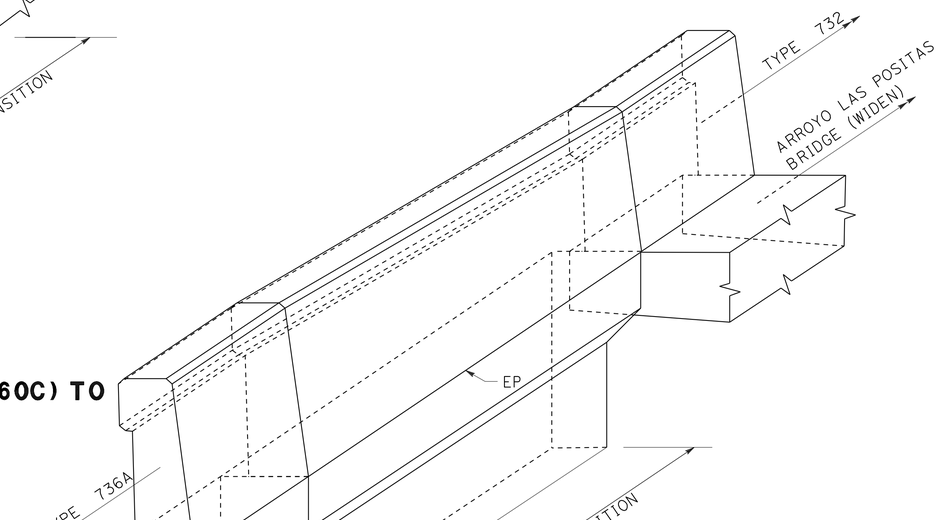

TRANSITION FROM CONCRETE BARRIER (TYPE 736A) TO CONCRETE BARRIER (TYPE 732)

CONSTRUCTION DETAILS

NO SCALE

C-34

REVISED BY	DATE REVISED
DQN	1/18/12

CALCULATED-DESIGNED BY	CHECKED BY
DAT Q. NGUYEN	LUIS GARCIA

CONSULTANT FUNCTIONAL SUPERVISOR: NATALINA V. BERNARDI

STATE OF CALIFORNIA - DEPARTMENT OF TRANSPORTATION

Caltrans

LAST REVISION 01-18-12 | DATE PLOTTED => 23-MAY-2012 | TIME PLOTTED => 06:46

Dist	COUNTY	ROUTE	POST MILES TOTAL PROJECT	SHEET No.	TOTAL SHEETS
04	Ala	580	R8.4/R14.6	113	853

REGISTERED CIVIL ENGINEER 5/7/12 DATE

5-14-12
PLANS APPROVAL DATE

REGISTERED PROFESSIONAL ENGINEER N.V. BERNARDI No. 45407 Exp. 9/30/12 CIVIL STATE OF CALIFORNIA

THE STATE OF CALIFORNIA OR ITS OFFICERS OR AGENTS SHALL NOT BE RESPONSIBLE FOR THE ACCURACY OR COMPLETENESS OF SCANNED COPIES OF THIS PLAN SHEET.

BKF ENGINEERS
4670 WILLOW ROAD, SUITE 250
PLEASANTON, CA. 94588

ALAMEDA CTC
1333 BROADWAY SUITE 220
OAKLAND, CA. 94612

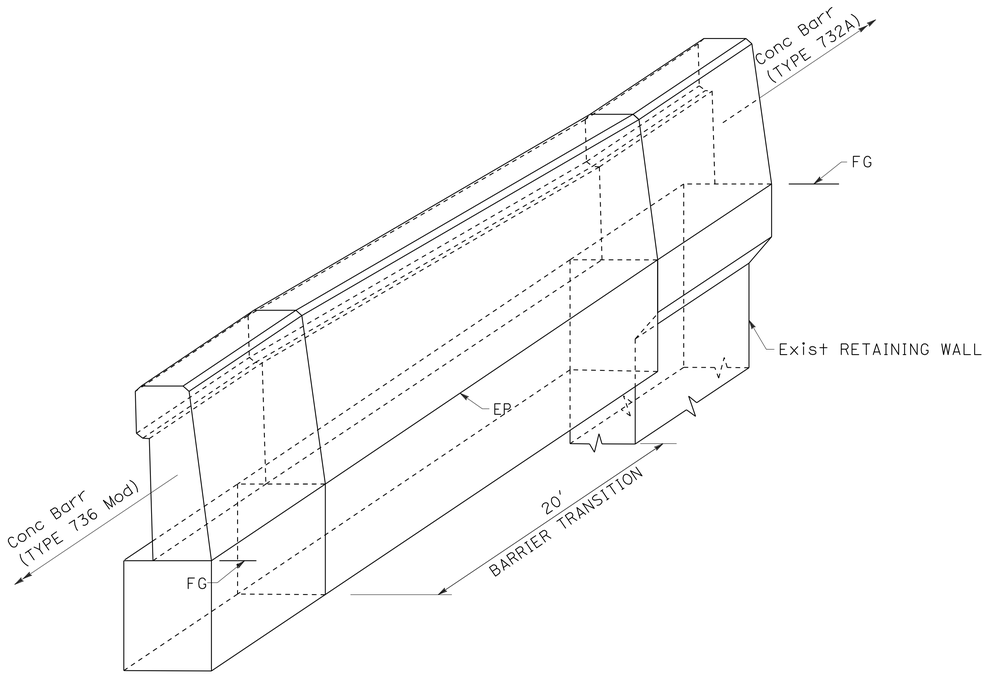

TRANSITION FROM CONCRETE BARRIER (TYPE 736B Mod) TO CONCRETE BARRIER (TYPE 732A)

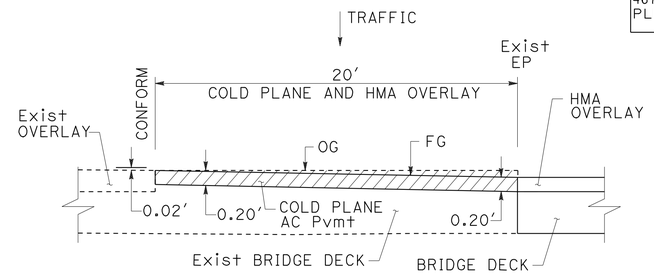

HMA OVERLAY CONFORM AT BRIDGE

ARROYO LAS POSITAS BRIDGE (WIDEN) No. 33-0203
"B" 617+85.90 TO 619+62.40

N. LIVERMORE Ave UC (WIDEN) No. 33-0153
"B" 649+73.83 TO 651+32.75

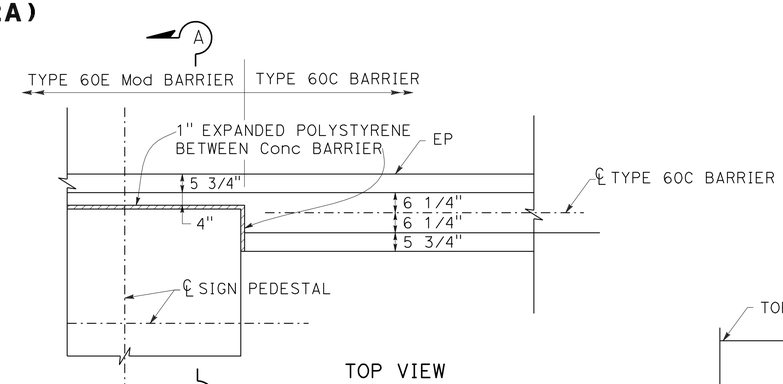

TOP VIEW

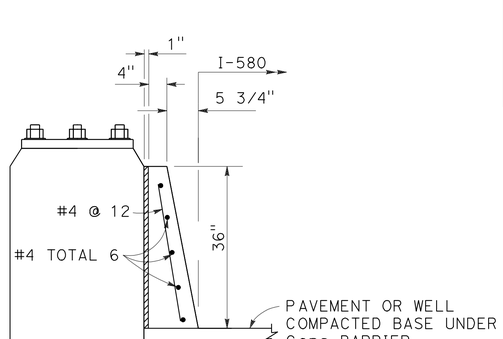

SECTION A-A

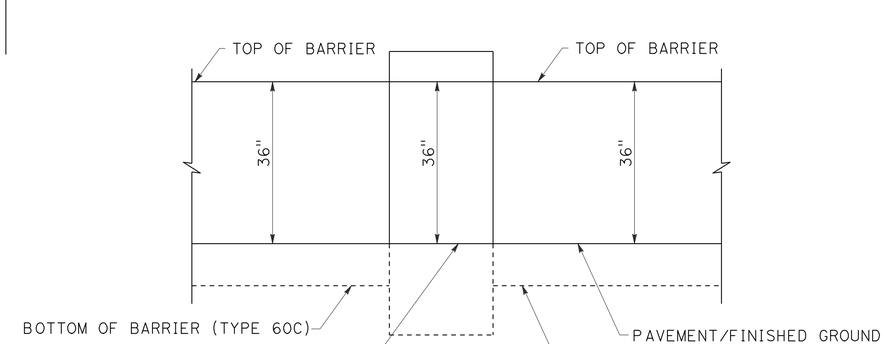

SIDE VIEW

CONCRETE BARRIER TYPE 60C / 60E Mod BARRIER AT PEDESTAL

± 100.8' Lt "B" 550+00.00
± 104.8' Lt "B" 690+00.00

CONSTRUCTION DETAILS

NO SCALE

C-35

STATE OF CALIFORNIA - DEPARTMENT OF TRANSPORTATION

CONSULTANT FUNCTIONAL SUPERVISOR: NATALINA V. BERNARDI

CALCULATED-DESIGNED BY: DAT Q. NGUYEN | REVISED BY: DQN
CHECKED BY: LUIS GARCIA | DATE REVISED: 5/7/12

LAST REVISION 05-07-12 | DATE PLOTTED => 23-MAY-2012 | TIME PLOTTED => 06:46

Dist	COUNTY	ROUTE	POST MILES TOTAL PROJECT	SHEET No.	TOTAL SHEETS
04	Ala	580	R8.4/R14.6	114	853

REGISTERED CIVIL ENGINEER 1/18/12 DATE

5-14-12
PLANS APPROVAL DATE

REGISTERED PROFESSIONAL ENGINEER N.V. BERNARDI No. 45407 Exp. 9/30/12 CIVIL STATE OF CALIFORNIA

THE STATE OF CALIFORNIA OR ITS OFFICERS OR AGENTS SHALL NOT BE RESPONSIBLE FOR THE ACCURACY OR COMPLETENESS OF SCANNED COPIES OF THIS PLAN SHEET.

BKF ENGINEERS
4670 WILLOW ROAD, SUITE 250
PLEASANTON, CA. 94588

ALAMEDA CTC
1333 BROADWAY SUITE 220
OAKLAND, CA. 94612

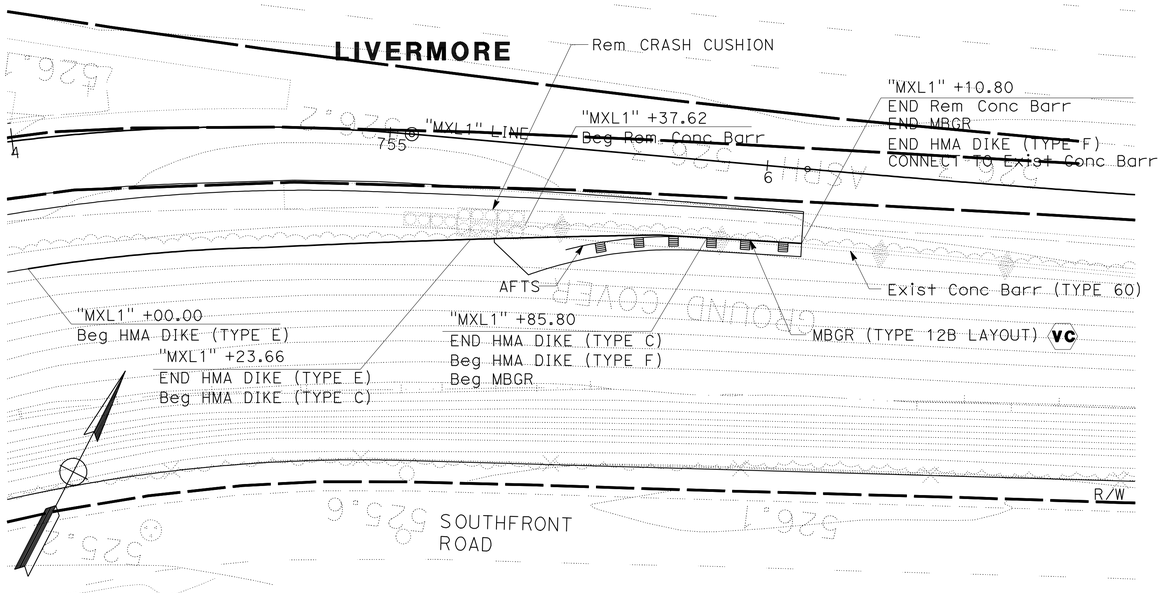

DETAIL A
SEE SHEET L-17

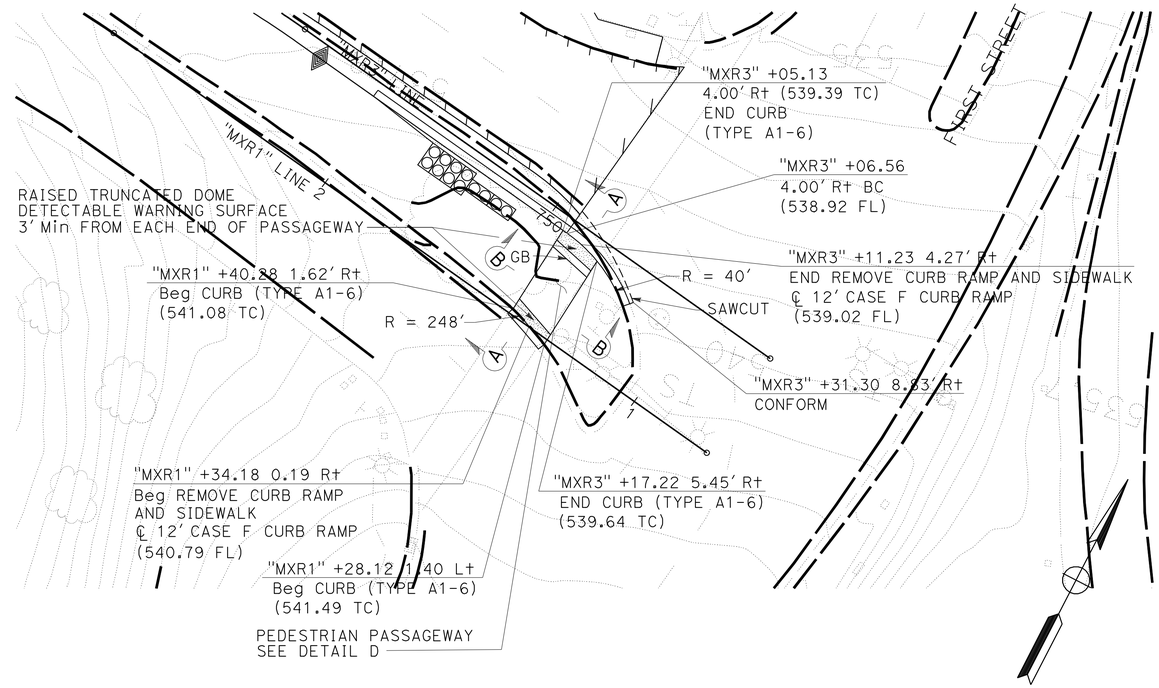

DETAIL C
SEE SHEET L-17

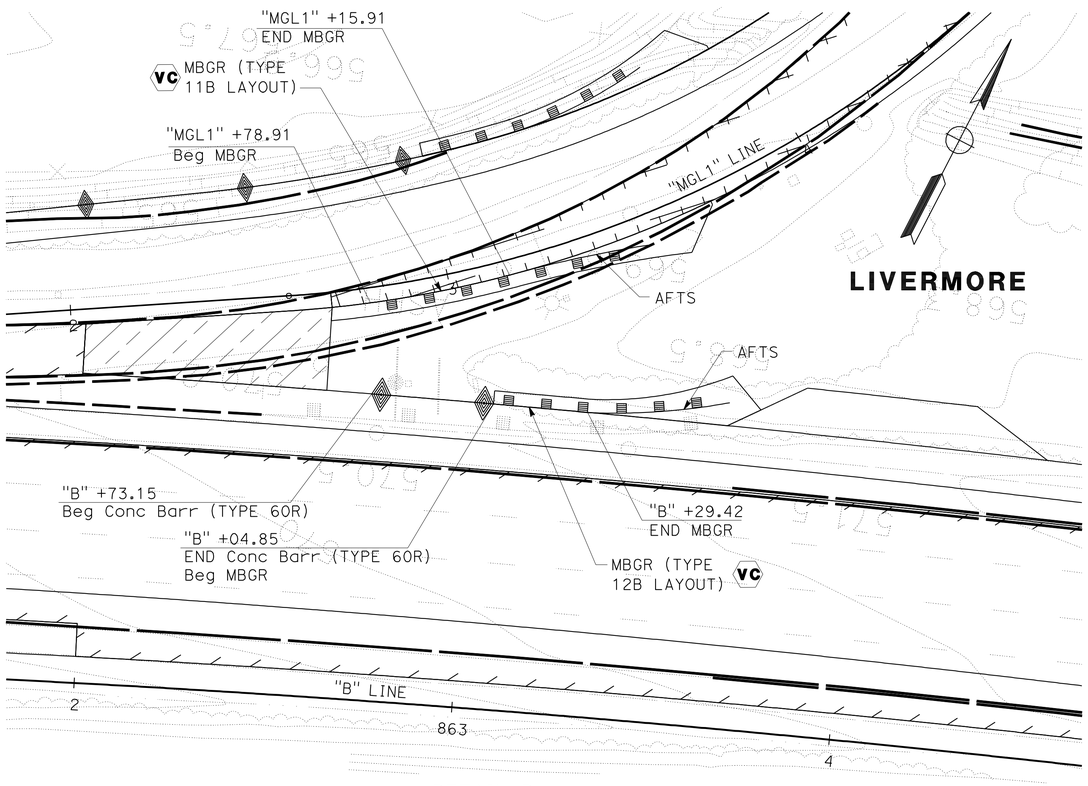

DETAIL B
SEE SHEET L-26

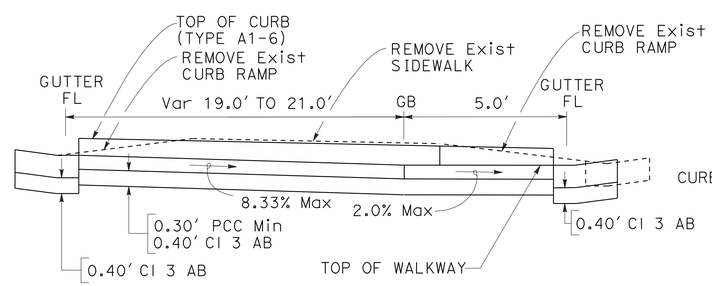

SECTION A-A

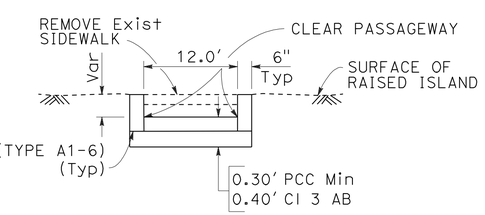

SECTION B-B

DETAIL D
NO SCALE

CONSTRUCTION DETAILS

SCALE: 1" = 20'

C-36

REVISED BY	DATE REVISED
TC	1/18/12

TRAVIS CHAN — LUIS GARCIA — CALCULATED-DESIGNED BY — CHECKED BY

CONSULTANT FUNCTIONAL SUPERVISOR: NATALINA V. BERNARDI

STATE OF CALIFORNIA - DEPARTMENT OF TRANSPORTATION

LAST REVISION 01-18-12 — DATE PLOTTED => 23-MAY-2012 — TIME PLOTTED => 06:47

Dist	COUNTY	ROUTE	POST MILES TOTAL PROJECT	SHEET No.	TOTAL SHEETS
04	Ala	580	R8.4/R14.6	115	853

1/18/12
REGISTERED CIVIL ENGINEER DATE

5-14-12
PLANS APPROVAL DATE

REGISTERED PROFESSIONAL ENGINEER
N.V. BERNARDI
No. 45407
Exp. 9/30/12
CIVIL
STATE OF CALIFORNIA

THE STATE OF CALIFORNIA OR ITS OFFICERS OR AGENTS SHALL NOT BE RESPONSIBLE FOR THE ACCURACY OR COMPLETENESS OF SCANNED COPIES OF THIS PLAN SHEET.

BKF ENGINEERS
4670 WILLOW ROAD, SUITE 250
PLEASANTON, CA. 94588

ALAMEDA CTC
1333 BROADWAY SUITE 220
OAKLAND, CA. 94612

LEGEND:

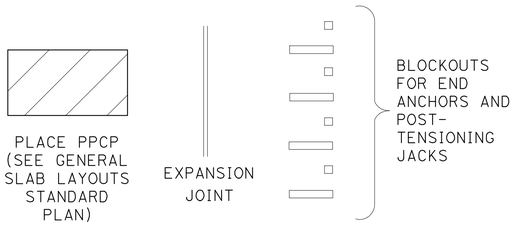

ABBREVIATION:

(s) Exist JOINT SPACING

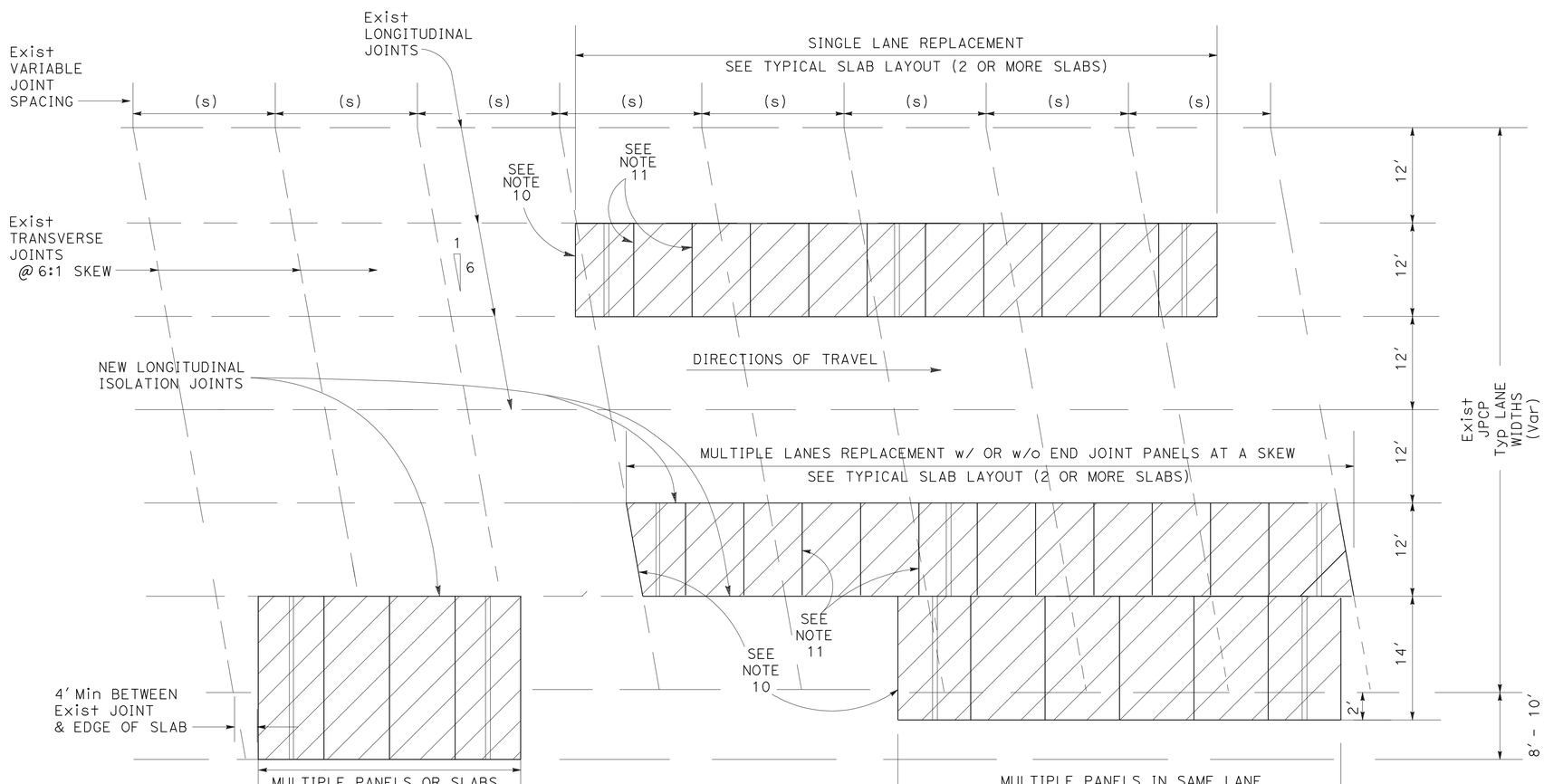

TYPICAL VARIABLE LAYOUTS

NOTES:

1. SKEW PANELS HAVE A MINIMUM LENGTH OF 4' FROM THE EXPANSION JOINT.
2. Exist JOINT SPACING (S) VARIES BASED ON YEAR OF DESIGN AND ARE TYPICALLY AT A SKEW OF 6:1. NEW PANEL JOINTS ARE NOT NECESSARILY REQUIRED TO MATCH w/ THE Exist JOINTS.
3. FOR DETAILS OF BASE PANELS, CENTRAL STRESSING PANELS, TYPE C1 JOINT PANELS, TYPE C2 JOINT PANELS AND TYPE C3 JOINT PANELS, SEE THE INDIVIDUAL Std PLANS FOR EACH OF THESE PANELS.
4. MAXIMUM SLAB LENGTH VARIES w/ TEMPERATURE.
5. CASE IA & IB SINGLE SLAB LAYOUTS ARE PRESTRESSED w/o POST-TENSIONING.
6. SKEW JOINT PANELS ARE OPTIONAL & ARE USED TO MATCH Exist.
7. Min Std PANEL LENGTH (L) = 8'.
   Min PANEL WIDTH (W) = DIMENSION AS NEEDED.
   Max PANEL WIDTH (W) = 60'.
8. IF POSSIBLE, LINE UP THE TRANSVERSE JOINTS WHEN MULTIPLE LANES OF PANELS ARE USED.
9. FOR LONGITUDINAL ISOLATION JOINTS, SEE "ISOLATION JOINT DETAIL" ON MISCELLANEOUS PANEL DETAILS Std PLAN.
10. FOR PPCP NEXT TO Exist PCC Pvmt, SEE "DOWEL BAR RETROFIT Std PLAN.
11. FOR TRANSVERSE JOINTS OF PPCP PANELS, SEE "KEY & KEYWAY DETAIL" ON CONSTRUCTION DETAILS PLAN.

CONSTRUCTION DETAILS
GENERAL LAYOUTS
PRECAST PRESTRESSED CONCRETE PAVEMENT (PPCP)

NO SCALE

C-37

REVISED BY	CC
DATE REVISED	1/18/12
CARMELO CECILIO	
LUIS GARCIA	
CALCULATED-DESIGNED BY	
CHECKED BY	
CONSULTANT FUNCTIONAL SUPERVISOR	
NATALINA V. BERNARDI	

STATE OF CALIFORNIA - DEPARTMENT OF TRANSPORTATION
Caltrans

LAST REVISION 01-18-12
DATE PLOTTED => 23-MAY-2012
TIME PLOTTED => 06:47

Dist	COUNTY	ROUTE	POST MILES TOTAL PROJECT	SHEET No.	TOTAL SHEETS
04	Ala	580	R8.4/R14.6	116	853

1/18/12
REGISTERED CIVIL ENGINEER DATE

5-14-12
PLANS APPROVAL DATE

REGISTERED PROFESSIONAL ENGINEER N.V. BERNARDI No. 45407 Exp. 9/30/12 CIVIL STATE OF CALIFORNIA

THE STATE OF CALIFORNIA OR ITS OFFICERS OR AGENTS SHALL NOT BE RESPONSIBLE FOR THE ACCURACY OR COMPLETENESS OF SCANNED COPIES OF THIS PLAN SHEET.

BKF ENGINEERS
4670 WILLOW ROAD, SUITE 250
PLEASANTON, CA. 94588

ALAMEDA CTC
1333 BROADWAY SUITE 220
OAKLAND, CA. 94612

NOTES:

1. SEE Misc PANEL DETAILS FOR CENTRAL STRESSING BLOCKOUT DETAIL.
2. L IS THE LENGTH DIMENSION ALONG THE DIRECTION OF TRAVEL.
3. CASE 1A SINGLE SLAB IS A SINGLE PRECAST CONCRETE PANEL w/ NO POST-TENSIONING. USED FOR INDIVIDUAL SLAB REPLACEMENT. FOR DETAILS, SEE INDIVIDUAL SLAB REPLACEMENT LAYOUT Std PLAN.

LEGEND:

- SMALL BLOCKOUTS FOR END ANCHORS
- LARGE BLOCKOUTS FOR POST-TENSIONING JACKS
- TYPICAL DIRECTION OF POST-TENSIONING PULL & LOCATION OF TENSION LOCK.
- POST-TENSIONING DUCT

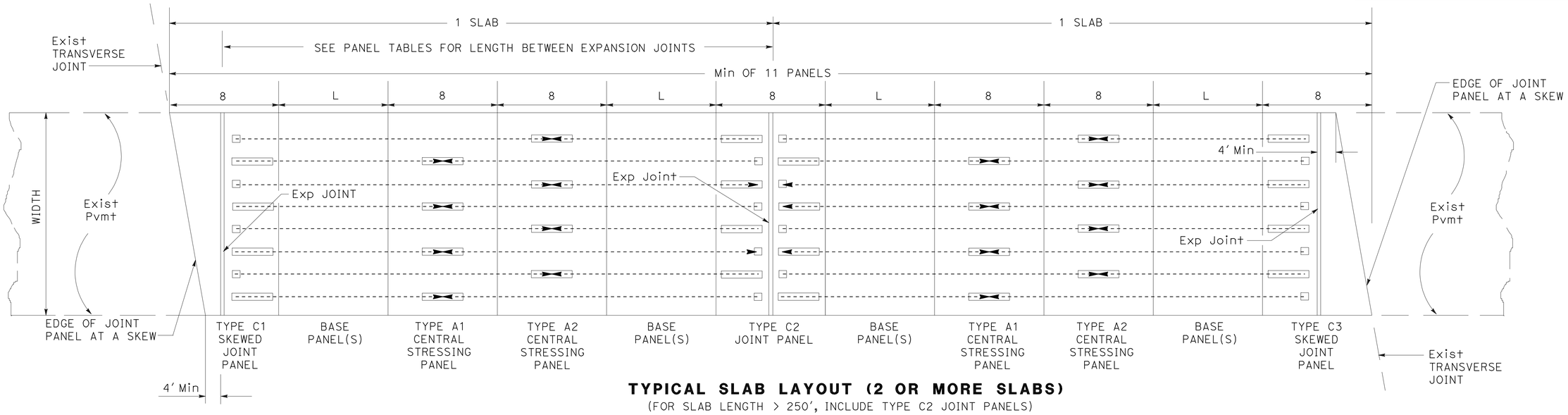

TYPICAL SLAB LAYOUT (2 OR MORE SLABS)
(FOR SLAB LENGTH > 250', INCLUDE TYPE C2 JOINT PANELS)

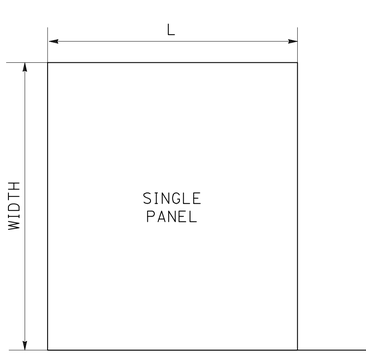

CASE I SINGLE SLAB LAYOUT (L< 15')

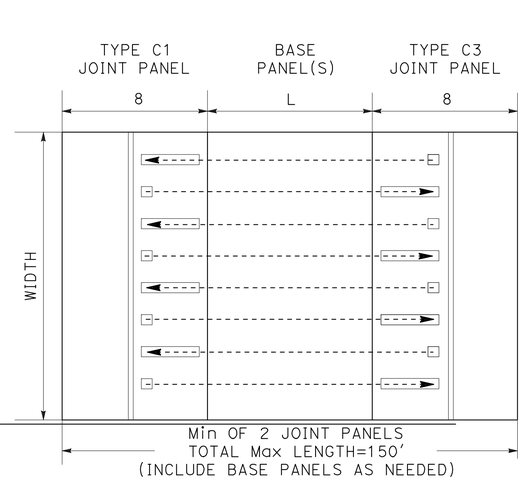

CASE II SLAB LAYOUT

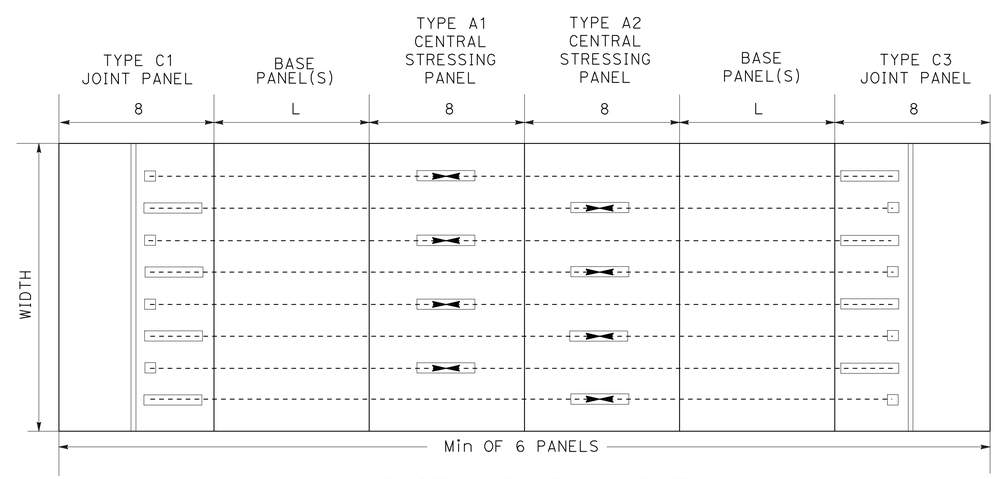

CASE III SLAB LAYOUT
(FOR SLAB LENGTH > 150' & < 250')

CONSTRUCTION DETAILS
GENERAL SLAB LAYOUTS
PRECAST PRESTRESSED CONCRETE PAVEMENT (PPCP)

NO SCALE

C-38

STATE OF CALIFORNIA - DEPARTMENT OF TRANSPORTATION
CONSULTANT FUNCTIONAL SUPERVISOR: NATALINA V. BERNARDI
CALCULATED-DESIGNED BY: LUIS GARCIA
CHECKED BY: CARMELO CECILIO
REVISED BY: CC
DATE REVISED: 1/18/12

LAST REVISION 01-18-12 | DATE PLOTTED => 23-MAY-2012 | TIME PLOTTED => 06:47

Dist	COUNTY	ROUTE	POST MILES TOTAL PROJECT	SHEET No.	TOTAL SHEETS
04	Ala	580	R8.4/R14.6	117	853

1/18/12
REGISTERED CIVIL ENGINEER DATE

5-14-12
PLANS APPROVAL DATE

REGISTERED PROFESSIONAL ENGINEER
N.V. BERNARDI
No. 45407
Exp. 9/30/12
CIVIL
STATE OF CALIFORNIA

THE STATE OF CALIFORNIA OR ITS OFFICERS OR AGENTS SHALL NOT BE RESPONSIBLE FOR THE ACCURACY OR COMPLETENESS OF SCANNED COPIES OF THIS PLAN SHEET.

BKF ENGINEERS
4670 WILLOW ROAD, SUITE 250
PLEASANTON, CA. 94588

ALAMEDA CTC
1333 BROADWAY SUITE 220
OAKLAND, CA. 94612

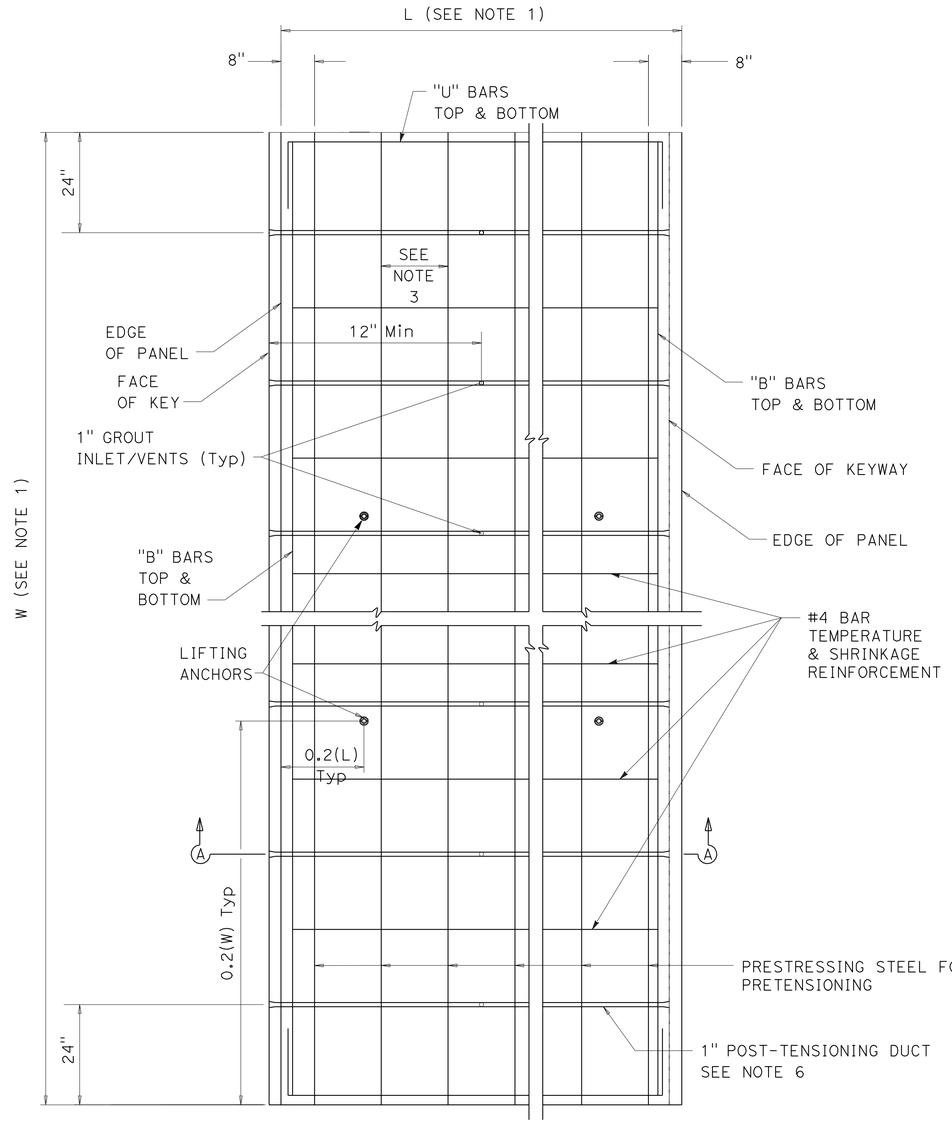

PLAN

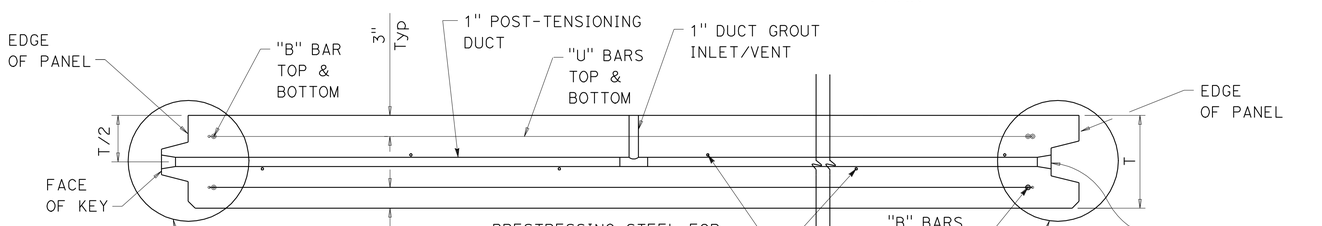

SECTION A-A

BASE PANEL

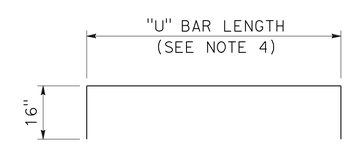

PLAN

"U" BARS
SIZE #4

NOTES:

1. SEE TABLES A AND B FOR LENGTH (L) OR WIDTH (W) FOR BASE PANELS.
2. THE SPACING BETWEEN PRETENSIONING STRANDS SHOULD NOT BE MORE THAN 16" C-C.
3. SEE Misc PANEL DETAILS FOR KEY & KEYWAY DETAIL.
4. FOR "U" BAR LENGTH, SEE TABLE A FOR BASE PANELS.
5. ALL REINFORCEMENT DIMENSIONS & QUANTITIES ARE TO BE VERIFIED BY THE MANUFACTURER BEFORE PANEL FABRICATION.
6. 1" POST-TENSIONING DUCTS ARE SPACED UNIFORMLY @ MAXIMUM 36" C-C APART ALONG THE 'W' DIMENSION BETWEEN THE 1ST & LAST P-T DUCT.

CONSTRUCTION DETAILS
BASE PANEL LAYOUT
PRECAST PRESTRESSED CONCRETE PAVEMENT (PPCP)

NO SCALE

C-39

CC	1/18/12
REVISED BY	DATE REVISED
CARMELO CECILIO	LUIS GARCIA
CALCULATED-DESIGNED BY	CHECKED BY
NATALINA V. BERNARDI	
CONSULTANT FUNCTIONAL SUPERVISOR	

STATE OF CALIFORNIA - DEPARTMENT OF TRANSPORTATION
Caltrans

LAST REVISION 01-18-12 | DATE PLOTTED => 23-MAY-2012 | TIME PLOTTED => 06:47

Dist	COUNTY	ROUTE	POST MILES TOTAL PROJECT	SHEET No.	TOTAL SHEETS
04	Ala	580	R8.4/R14.6	118	853

1/18/12
REGISTERED CIVIL ENGINEER DATE

5-14-12
PLANS APPROVAL DATE

REGISTERED PROFESSIONAL ENGINEER N.V. BERNARDI No. 45407 Exp. 9/30/12 CIVIL STATE OF CALIFORNIA

THE STATE OF CALIFORNIA OR ITS OFFICERS OR AGENTS SHALL NOT BE RESPONSIBLE FOR THE ACCURACY OR COMPLETENESS OF SCANNED COPIES OF THIS PLAN SHEET.

BKF ENGINEERS
4670 WILLOW ROAD, SUITE 250
PLEASANTON, CA. 94588

ALAMEDA CTC
1333 BROADWAY SUITE 220
OAKLAND, CA. 94612

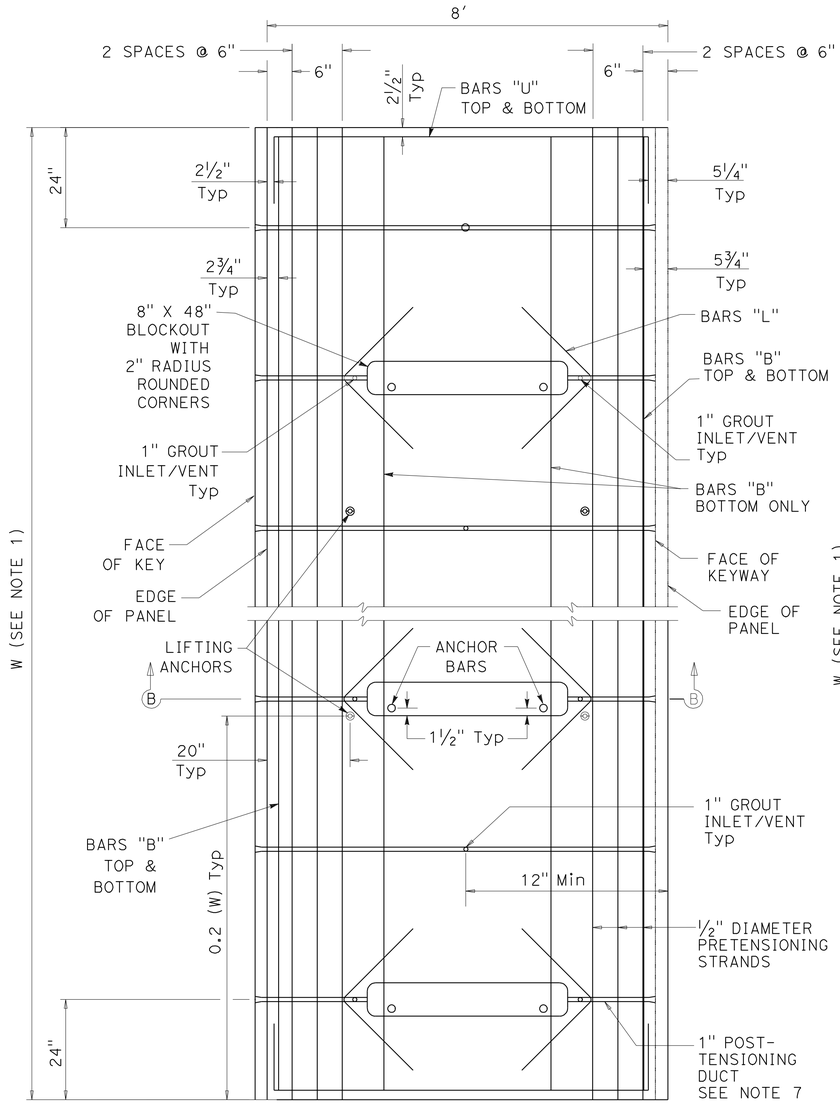

PLAN
TYPE A1

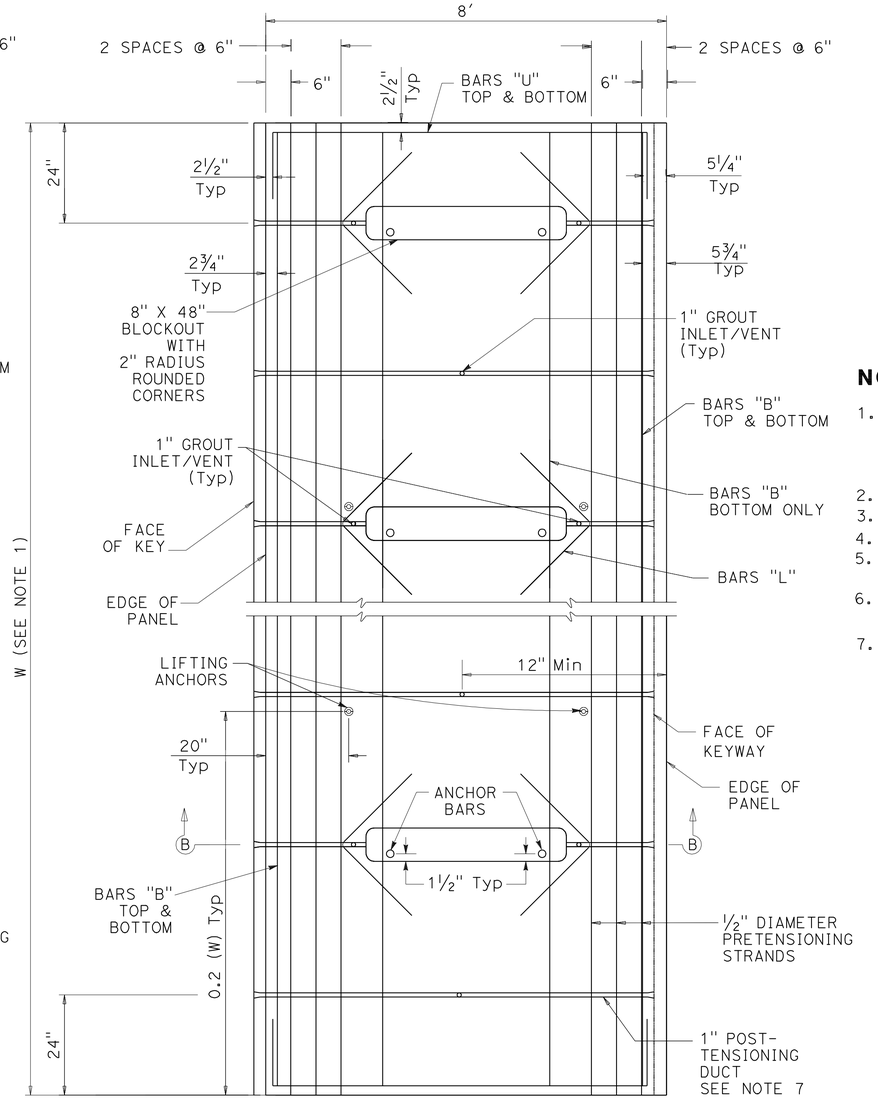

PLAN
TYPE A2

NOTES:

1. SEE TABLE B FOR BASE PANELS FOR NUMBER OF P-T DUCTS & LENGTH OF PRETENSIONING STRANDS. NUMBER OF BARS ASSOCIATED WITH EACH TYPE OF BLOCK-OUT IS CALCULATED BASED ON THE NUMBER OF THAT TYPE.
2. THE SPACING BETWEEN PRETENSIONING STRANDS IS 6" C-C.
3. SEE MISCELLANEOUS PANEL DETAILS FOR KEY & KEYWAY DETAIL.
4. SEE MISCELLANEOUS PANEL DETAILS FOR GROUT INLET/VENT.
5. SEE CENTRAL STRESSING BLOCKOUT DETAIL AND ANCHOR BAR DETAIL IN MISCELLANEOUS PANEL DETAILS.
6. ALL REINFORCEMENT DIMENSIONS ARE TO BE VERIFIED BY THE MANUFACTURER BEFORE PANEL FABRICATION.
7. 1" POST-TENSIONING DUCTS ARE SPACED UNIFORMLY @ MAXIMUM 36" C-C APART ALONG THE 'W' DIMENSION BETWEEN THE 1ST & LAST P-T DUCT.

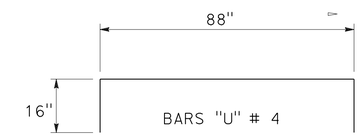

PLAN

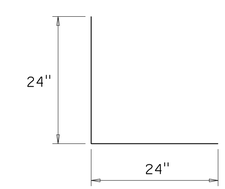

BARS "L"

PLAN

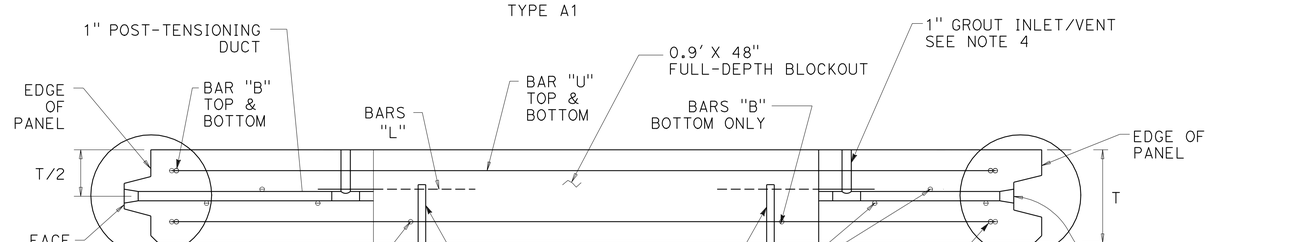

SECTION B-B

CENTRAL STRESSING PANELS (TYPE A1 & A2)

CONSTRUCTION DETAILS
PRECAST PRESTRESSED CONCRETE PAVEMENT
NO SCALE

C-40

STATE OF CALIFORNIA - DEPARTMENT OF TRANSPORTATION
Caltrans

CONSULTANT FUNCTIONAL SUPERVISOR: NATALINA V. BERNARDI
CALCULATED-DESIGNED BY: CARMELO CECILIO
CHECKED BY: LUIS GARCIA
REVISED BY: CC
DATE REVISED: 1/18/12

LAST REVISION 01-18-12
DATE PLOTTED => 23-MAY-2012
TIME PLOTTED => 06:47

Dist	COUNTY	ROUTE	POST MILES TOTAL PROJECT	SHEET No.	TOTAL SHEETS
04	Ala	580	R8.4/R14.6	119	853

REGISTERED CIVIL ENGINEER 1/18/12 DATE

5-14-12
PLANS APPROVAL DATE

REGISTERED PROFESSIONAL ENGINEER N.V. BERNARDI No. 45407 Exp. 9/30/12 CIVIL STATE OF CALIFORNIA

THE STATE OF CALIFORNIA OR ITS OFFICERS OR AGENTS SHALL NOT BE RESPONSIBLE FOR THE ACCURACY OR COMPLETENESS OF SCANNED COPIES OF THIS PLAN SHEET.

BKF ENGINEERS
4670 WILLOW ROAD, SUITE 250
PLEASANTON, CA. 94588

ALAMEDA CTC
1333 BROADWAY SUITE 220
OAKLAND, CA. 94612

NOTES:

1. SEE TABLE B FOR BASE PANELS FOR NUMBER OF P-T DUCTS & LENGTH OF PRETENSIONING STRANDS. NUMBER OF BARS ASSOCIATED WITH EACH TYPE OF BLOCK-OUT IS CALCULATED BASED ON THE NUMBER OF THAT TYPE.
2. SEE MISCELLANEOUS PANEL DETAILS FOR KEY & KEYWAY DETAIL.
3. SEE MISCELLANEOUS PANEL DETAILS FOR GROUT INLET/VENT.
4. THE SECTION OF DOWEL EXTENDING INTO THE EXPANSION SLEEVE SHALL BE GREASED PRIOR TO BEING INSERTED INTO THE EXPANSION SLEEVE PRIOR TO CASTING.
5. ALL REINFORCEMENT DIMENSIONS ARE TO BE VERIFIED BY THE MANUFACTURER BEFORE PANEL FABRICATION.
6. 1" POST-TENSIONING DUCTS ARE SPACED UNIFORMLY @ MAXIMUM 36" C-C APART ALONG THE 'W' DIMENSION BETWEEN THE 1ST & LAST P-T DUCT.

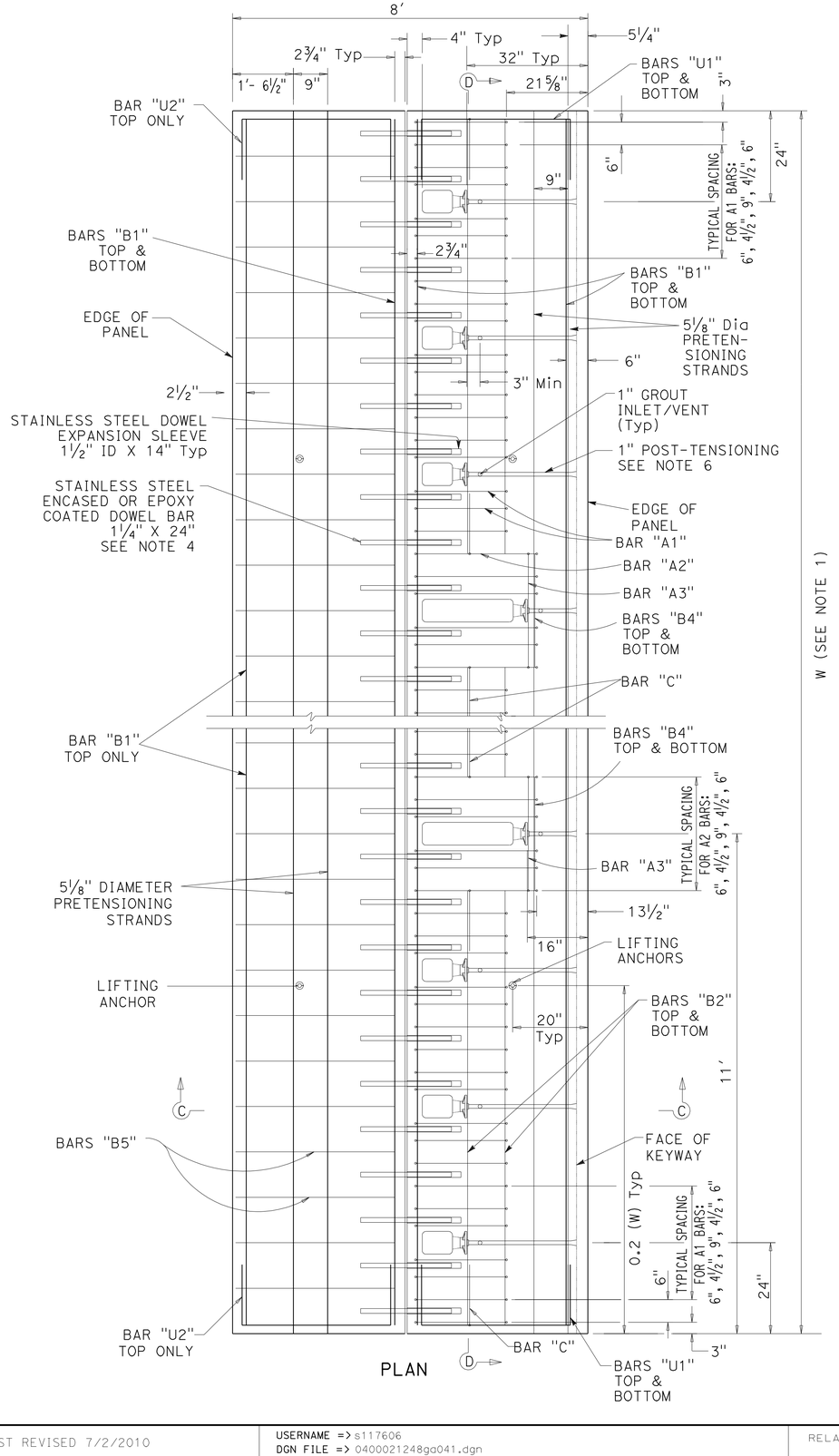

PLAN

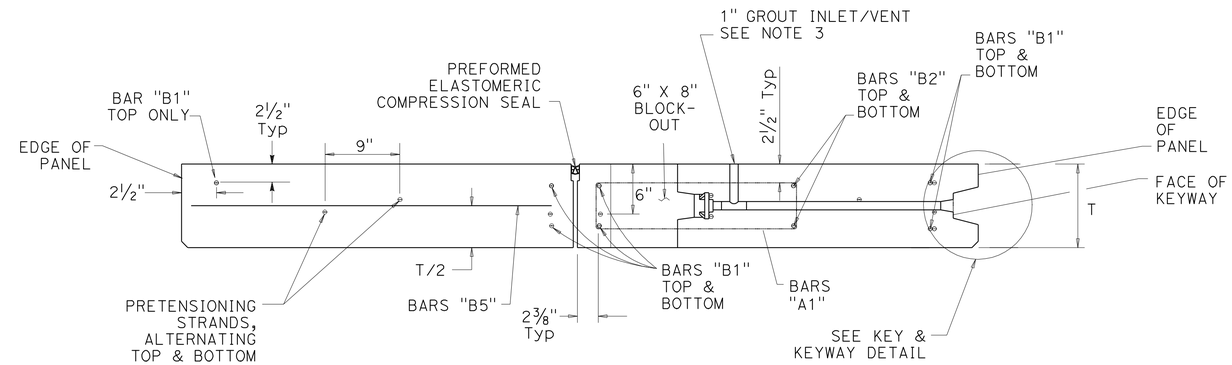

SECTION C-C

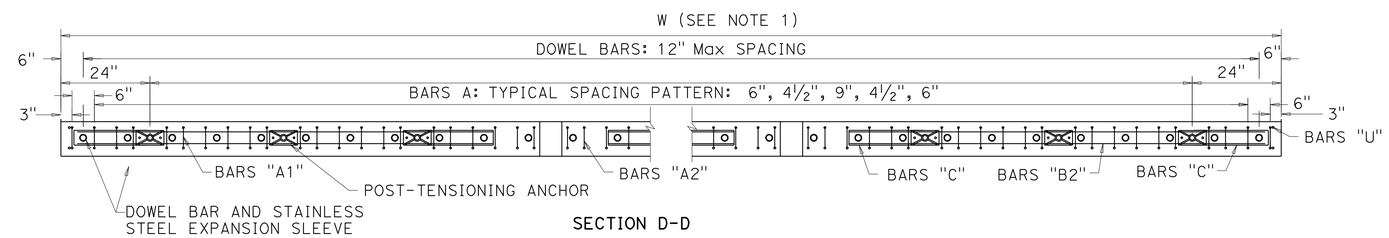

SECTION D-D

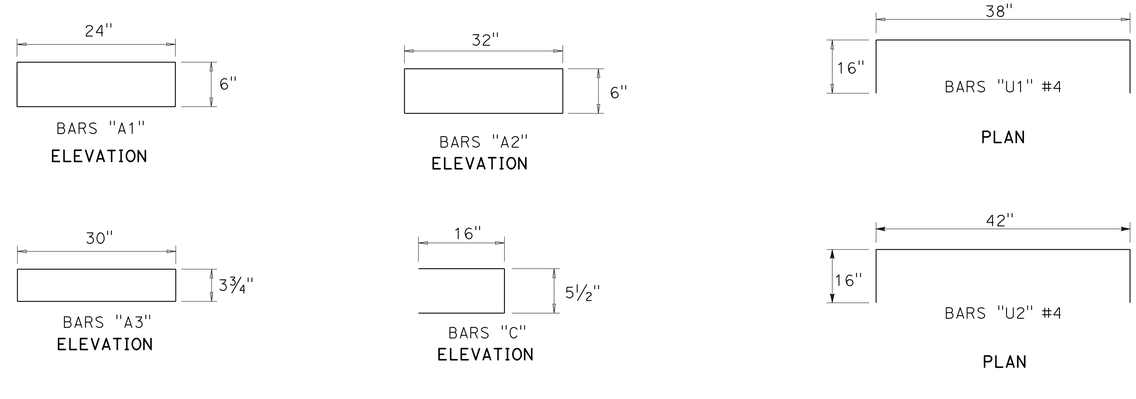

JOINT PANEL TYPE C1

CONSTRUCTION DETAILS
PRECAST PRESTRESSED CONCRETE PAVEMENT
NO SCALE

C-41

STATE OF CALIFORNIA - DEPARTMENT OF TRANSPORTATION
Caltrans

CONSULTANT FUNCTIONAL SUPERVISOR: NATALINA V. BERNARDI
CALCULATED-DESIGNED BY: CARMELO CECILIO
CHECKED BY: LUIS GARCIA
REVISED BY: CC
DATE REVISED: 1/18/12

LAST REVISION 01-18-12
DATE PLOTTED => 23-MAY-2012
TIME PLOTTED => 06:55

Dist	COUNTY	ROUTE	POST MILES TOTAL PROJECT	SHEET No.	TOTAL SHEETS
04	Ala	580	R8.4/R14.6	120	853

REGISTERED CIVIL ENGINEER 1/18/12 DATE

5-14-12
PLANS APPROVAL DATE

REGISTERED PROFESSIONAL ENGINEER N.V. BERNARDI No. 45407 Exp. 9/30/12 CIVIL STATE OF CALIFORNIA

THE STATE OF CALIFORNIA OR ITS OFFICERS OR AGENTS SHALL NOT BE RESPONSIBLE FOR THE ACCURACY OR COMPLETENESS OF SCANNED COPIES OF THIS PLAN SHEET.

BKF ENGINEERS
4670 WILLOW ROAD, SUITE 250
PLEASANTON, CA. 94588

ALAMEDA CTC
1333 BROADWAY SUITE 220
OAKLAND, CA. 94612

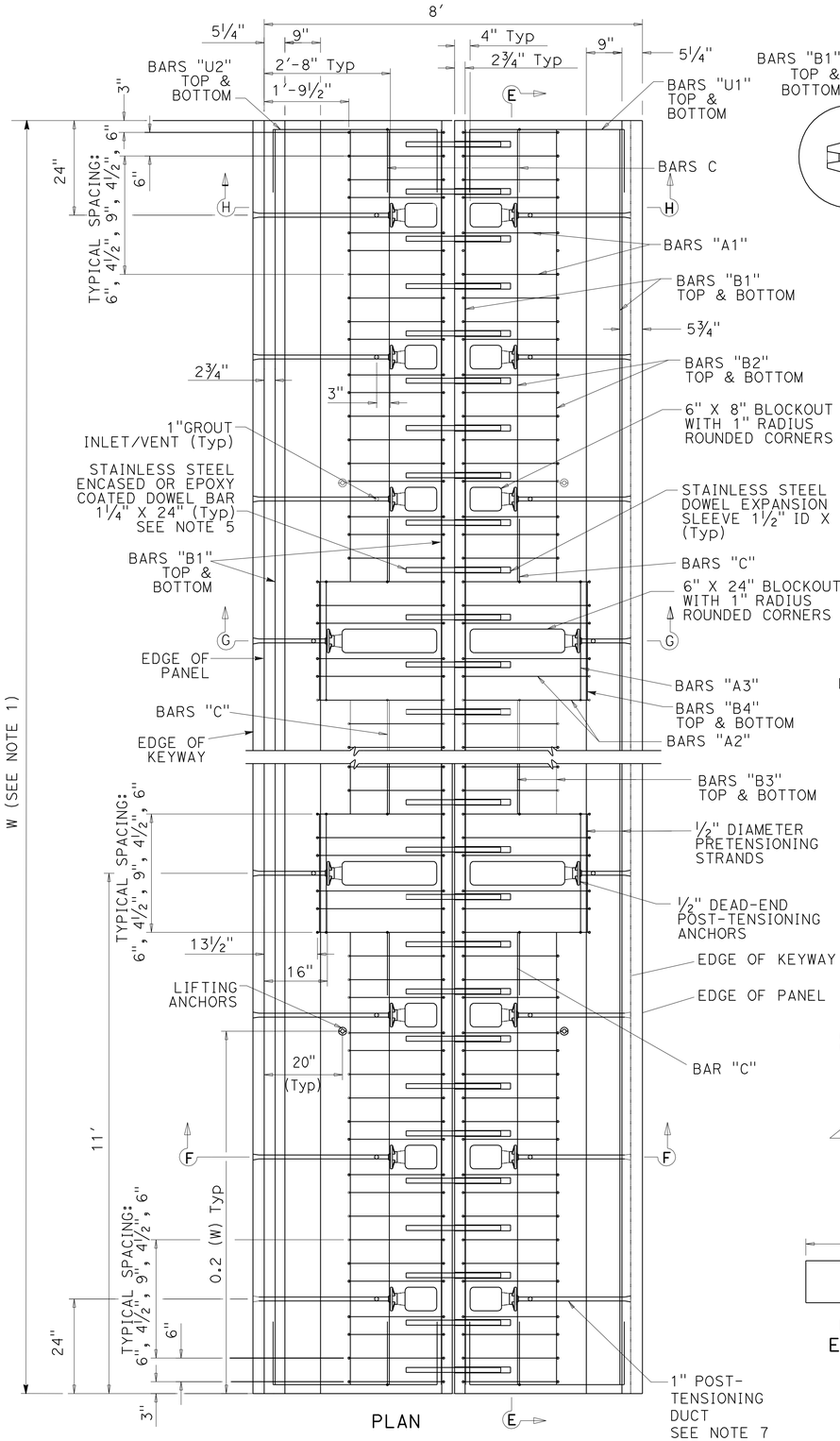

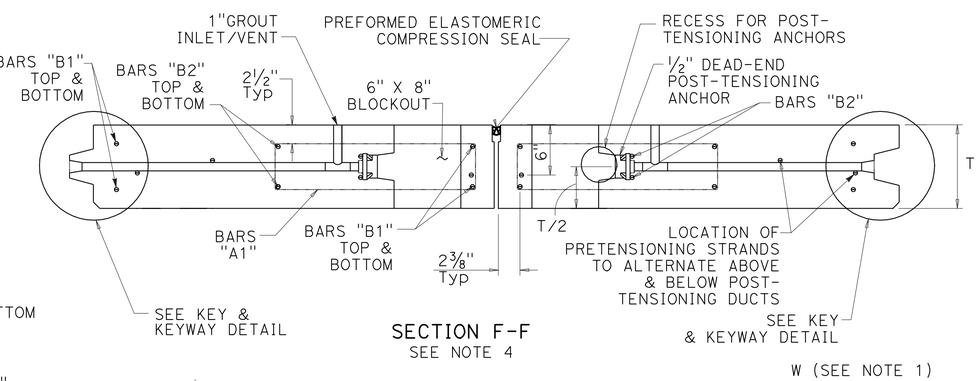

SECTION F-F
SEE NOTE 4

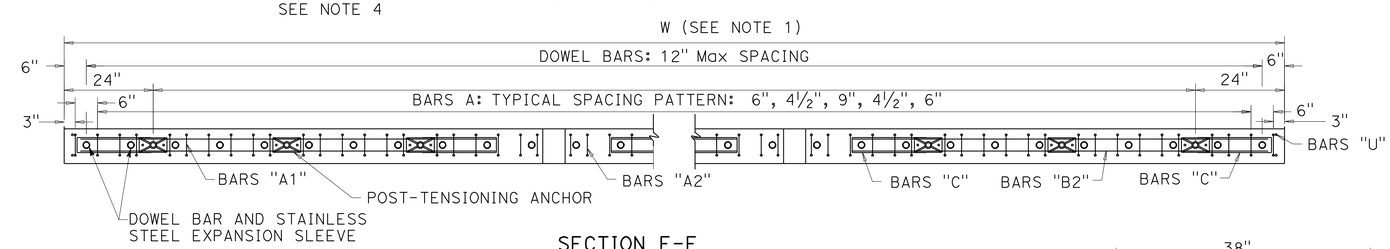

SECTION E-E

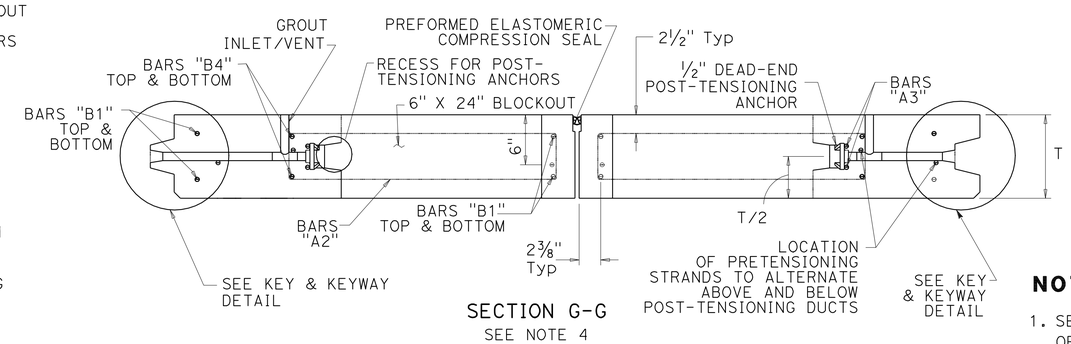

SECTION G-G
SEE NOTE 4

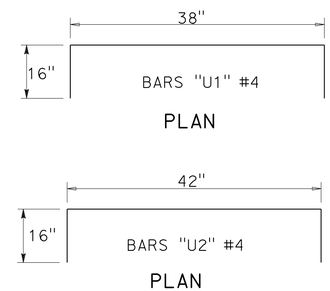

PLAN

PLAN

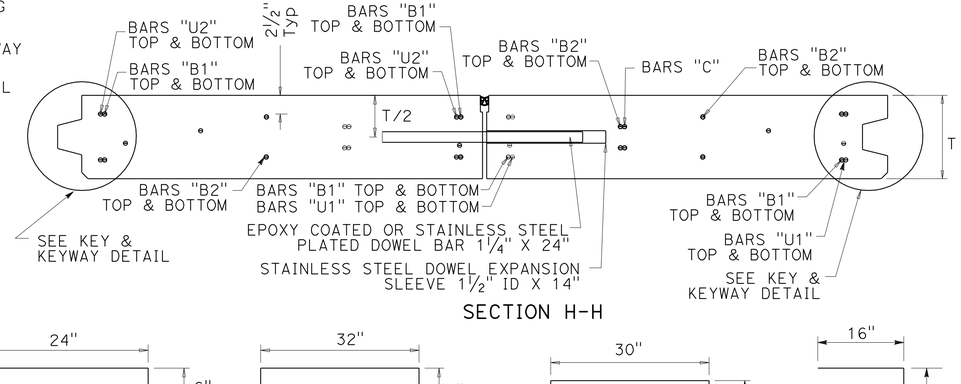

SECTION H-H

NOTES:

1. SEE TABLE B FOR BASE PANELS FOR NUMBER OF P-T DUCTS & LENGTH OF PRETENSIONING STRANDS. NUMBER OF BARS ASSOCIATED WITH EACH TYPE OF BLOCK-OUT IS CALCULATED BASED ON THE NUMBER OF THAT TYPE.
2. SEE MISCELLANEOUS PANEL DETAILS FOR KEY & KEYWAY DETAIL.
3. SEE MISCELLANEOUS PANEL DETAILS FOR GROUT INLET/VENT.
4. SEE MISCELLANEOUS PANEL DETAILS FOR EXPANSION JOINT/ANCHOR DETAIL.
5. THE SECTION OF DOWEL EXTENDING INTO THE EXPANSION SLEEVE SHALL BE GREASED PRIOR TO BEING INSERTED INTO THE EXPANSION SLEEVE PRIOR TO CASTING.
6. ALL REINFORCEMENT DIMENSIONS ARE TO BE VERIFIED BY THE MANUFACTURER BEFORE PANEL FABRICATION.
7. 1" POST-TENSIONING DUCTS ARE SPACED UNIFORMLY @ MAXIMUM 36" C-C APART ALONG THE 'W' DIMENSION BETWEEN THE 1ST & LAST P-T DUCT.

JOINT PANEL TYPE C2

CONSTRUCTION DETAILS
PRECAST PRESTRESSED CONCRETE PAVEMENT

NO SCALE

C-42

STATE OF CALIFORNIA - DEPARTMENT OF TRANSPORTATION
CONSULTANT FUNCTIONAL SUPERVISOR: NATALINA V. BERNARDI
CALCULATED-DESIGNED BY: CARMELO CECILIO
CHECKED BY: LUIS GARCIA
REVISED BY: CC
DATE REVISED: 1/18/12

LAST REVISION 01-18-12
DATE PLOTTED => 23-MAY-2012
TIME PLOTTED => 09:58

Dist	COUNTY	ROUTE	POST MILES TOTAL PROJECT	SHEET No.	TOTAL SHEETS
04	Ala	580	R8.4/R14.6	121	853

1/18/12
REGISTERED CIVIL ENGINEER DATE

5-14-12
PLANS APPROVAL DATE

REGISTERED PROFESSIONAL ENGINEER N.V. BERNARDI No. 45407 Exp. 9/30/12 CIVIL STATE OF CALIFORNIA

THE STATE OF CALIFORNIA OR ITS OFFICERS OR AGENTS SHALL NOT BE RESPONSIBLE FOR THE ACCURACY OR COMPLETENESS OF SCANNED COPIES OF THIS PLAN SHEET.

BKF ENGINEERS
4670 WILLOW ROAD, SUITE 250
PLEASANTON, CA. 94588

ALAMEDA CTC
1333 BROADWAY SUITE 220
OAKLAND, CA. 94612

NOTES:

1. SEE TABLE B FOR BASE PANELS FOR NUMBER OF P-T DUCTS & LENGTH OF PRETENSIONING STRANDS. NUMBER OF BARS ASSOCIATED WITH EACH TYPE OF BLOCK-OUT IS CALCULATED BASED ON THE NUMBER OF THAT TYPE.
2. SEE MISCELLANEOUS PANEL DETAILS FOR KEY & KEYWAY DETAIL.
3. SEE MISCELLANEOUS PANEL DETAILS FOR GROUT INLET/VENT.
4. THE SECTION OF DOWEL EXTENDING INTO THE EXPANSION SLEEVE SHALL BE GREASED PRIOR TO BEING INSERTED INTO THE EXPANSION SLEEVE PRIOR TO CASTING.
5. ALL REINFORCEMENT DIMENSIONS ARE TO BE VERIFIED BY THE MANUFACTURER BEFORE PANEL FABRICATION.
6. 1" POST-TENSIONING DUCTS ARE SPACED UNIFORMLY @ MAXIMUM 36" C-C APART ALONG THE `W' DIMENSION BETWEEN THE 1ST & LAST P-T DUCT.

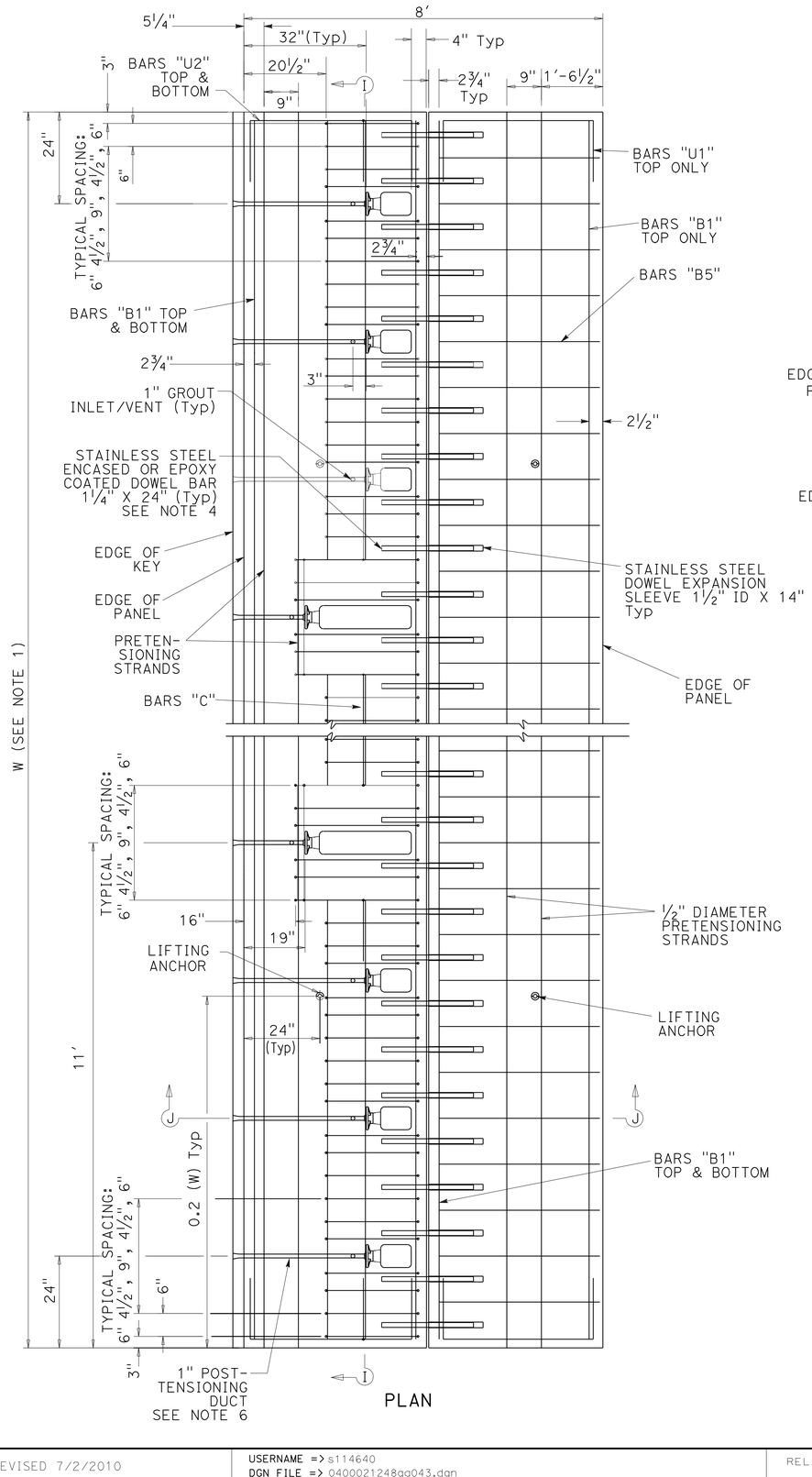

PLAN

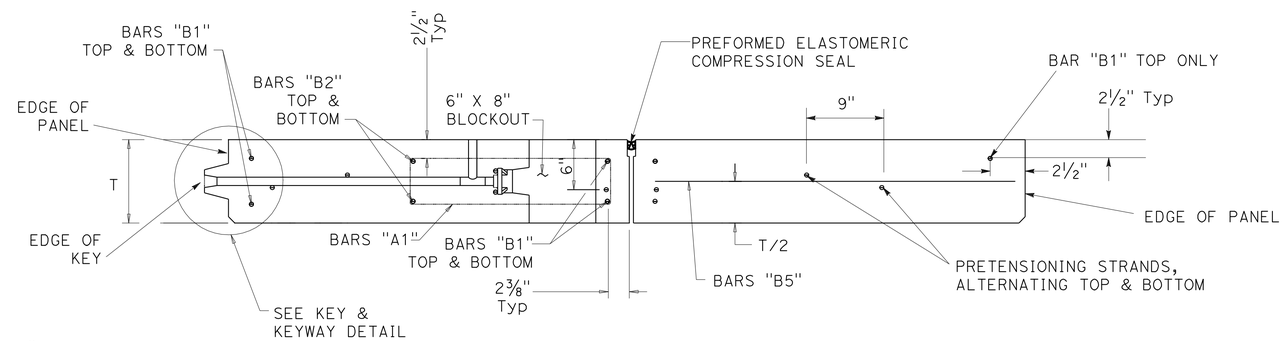

SECTION J-J

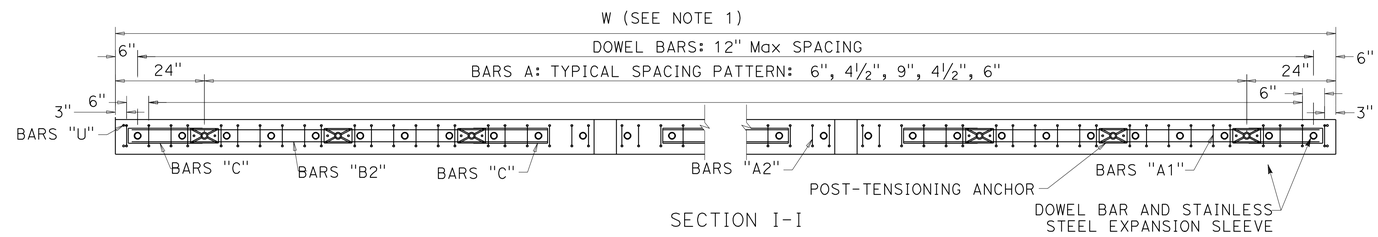

SECTION I-I

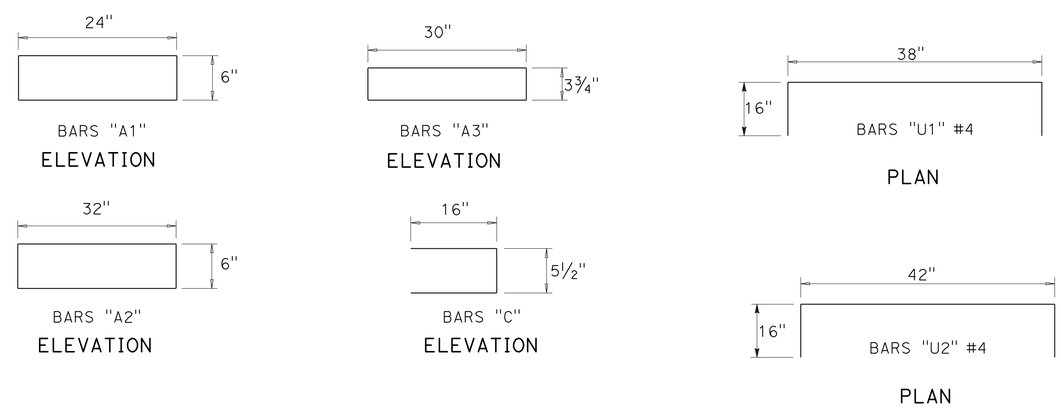

JOINT PANEL TYPE C3

CONSTRUCTION DETAILS
PRECAST PRESTRESSED CONCRETE PAVEMENT

NO SCALE

C-43

STATE OF CALIFORNIA - DEPARTMENT OF TRANSPORTATION

CONSULTANT FUNCTIONAL SUPERVISOR: NATALINA V. BERNARDI

CALCULATED-DESIGNED BY: CARMELO CECILIO — CHECKED BY: LUIS GARCIA

REVISED BY: CC — DATE REVISED: 1/18/12

LAST REVISION 01-18-12 | DATE PLOTTED => 23-MAY-2012 | TIME PLOTTED => 06:58

Dist	COUNTY	ROUTE	POST MILES TOTAL PROJECT	SHEET No.	TOTAL SHEETS
04	Ala	580	R8.4/R14.6	122	853

REGISTERED CIVIL ENGINEER 1/18/12 DATE

5-14-12
PLANS APPROVAL DATE

REGISTERED PROFESSIONAL ENGINEER N.V. BERNARDI No. 45407 Exp. 9/30/12 CIVIL STATE OF CALIFORNIA

THE STATE OF CALIFORNIA OR ITS OFFICERS OR AGENTS SHALL NOT BE RESPONSIBLE FOR THE ACCURACY OR COMPLETENESS OF SCANNED COPIES OF THIS PLAN SHEET.

BKF ENGINEERS
4670 WILLOW ROAD, SUITE 250
PLEASANTON, CA. 94588

ALAMEDA CTC
1333 BROADWAY SUITE 220
OAKLAND, CA. 94612

NOTES:

1. SEE TABLE B FOR BASE PANELS FOR NUMBER OF P-T DUCTS & LENGTH OF PRETENSIONING STRANDS. NUMBER OF BARS ASSOCIATED WITH EACH TYPE OF BLOCK-OUT IS CALCULATED BASED ON THE NUMBER OF THAT TYPE.
2. SEE MISCELLANEOUS PANEL DETAILS FOR KEY & KEYWAY DETAIL.
3. SEE MISCELLANEOUS PANEL DETAILS FOR GROUT INLET/VENT.
4. SEE MISCELLANEOUS PANEL DETAILS FOR EXPANSION JOINT/ANCHOR DETAIL.
5. THE SECTION OF DOWEL EXTENDING INTO THE EXPANSION SLEEVE SHALL BE GREASED PRIOR TO BEING INSERTED INTO THE EXPANSION SLEEVE PRIOR TO CASTING.
6. 1" POST-TENSIONING DUCTS ARE SPACED UNIFORMLY @ MAXIMUM 36" C-C APART ALONG THE 'W' DIMENSION BETWEEN THE 1ST & LAST P-T DUCT.

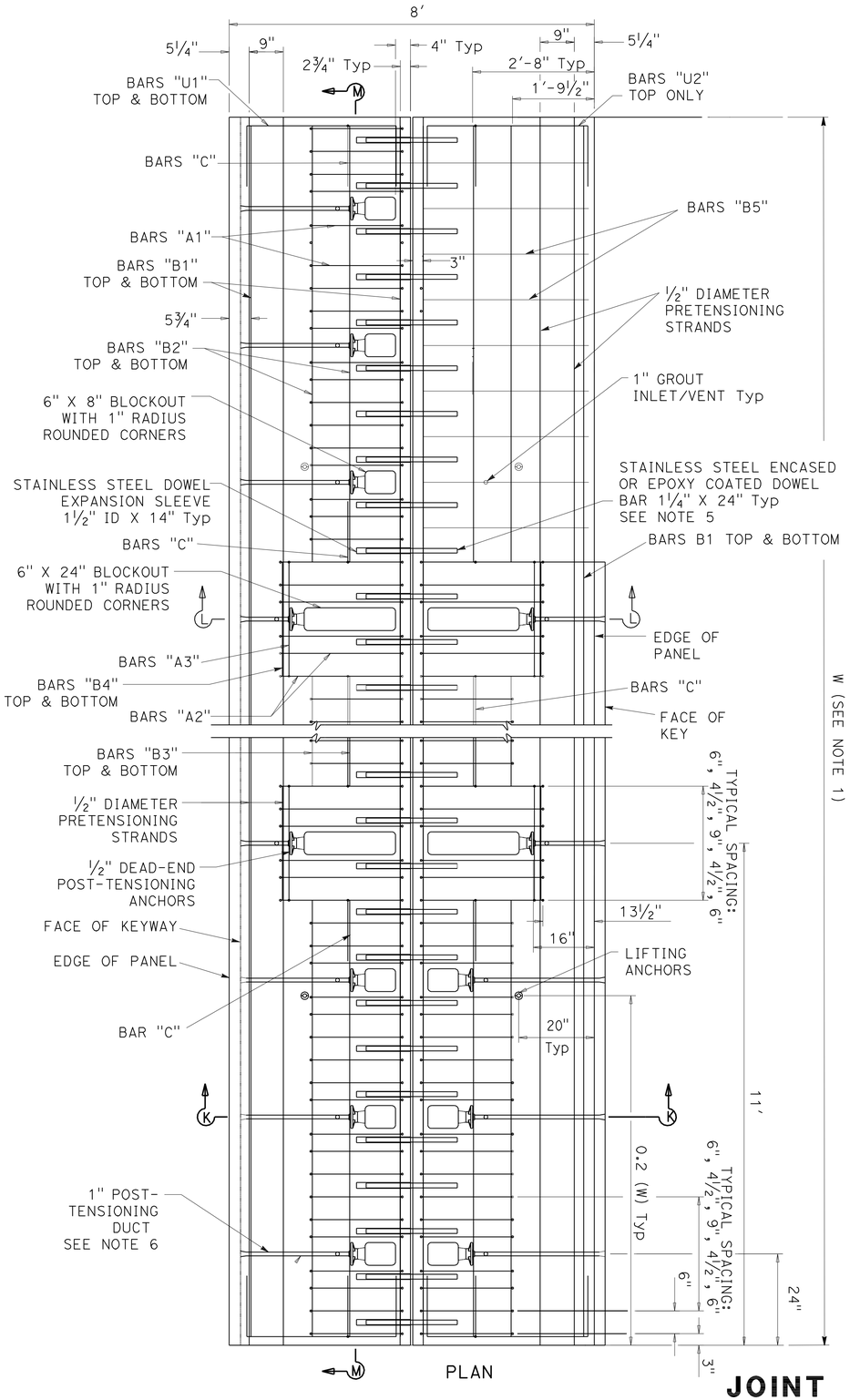

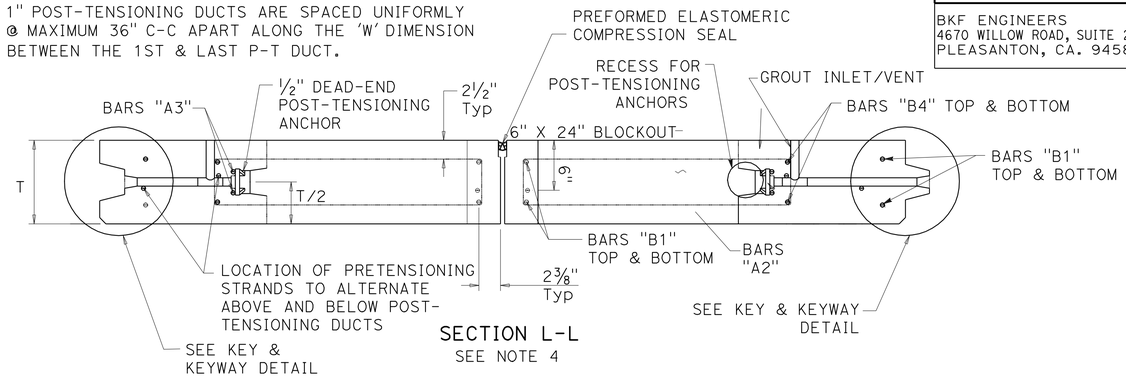

SECTION L-L
SEE NOTE 4

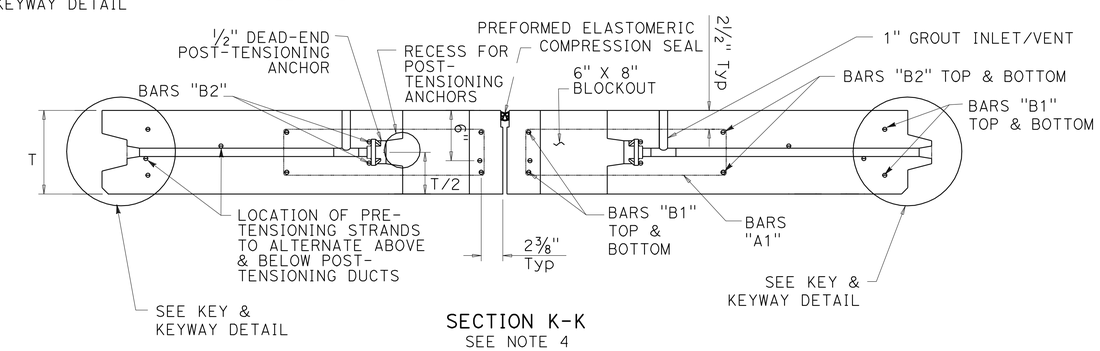

SECTION K-K
SEE NOTE 4

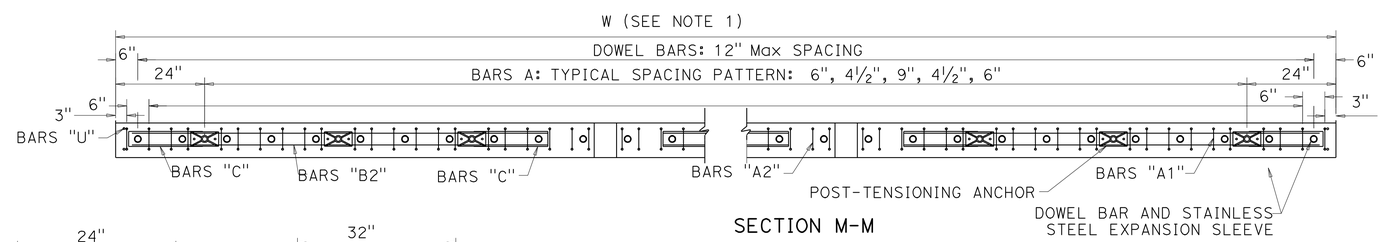

SECTION M-M

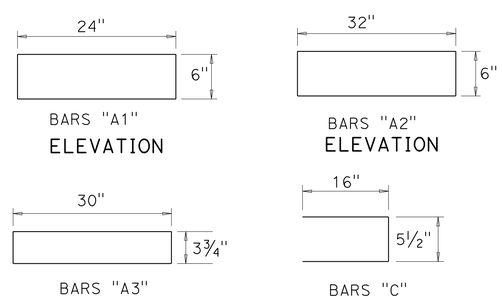

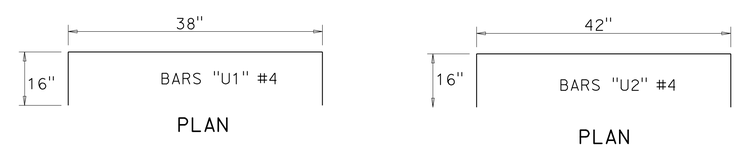

CONSTRUCTION DETAILS
PRECAST PRESTRESSED CONCRETE PAVEMENT
NO SCALE

JOINT PANEL (MODIFIED) TYPICAL

C-44

CC	1/18/12	REVISED BY	DATE REVISED
CARMELO CECILIO	LUIS GARCIA	CALCULATED-DESIGNED BY	CHECKED BY
CONSULTANT FUNCTIONAL SUPERVISOR	NATALINA V. BERNARDI		

STATE OF CALIFORNIA - DEPARTMENT OF TRANSPORTATION

LAST REVISION 01-18-12 | DATE PLOTTED => 23-MAY-2012 | TIME PLOTTED => 06:58

Dist	COUNTY	ROUTE	POST MILES TOTAL PROJECT	SHEET No.	TOTAL SHEETS
04	Ala	580	R8.4/R14.6	123	853

REGISTERED CIVIL ENGINEER 1/18/12 DATE

5-14-12
PLANS APPROVAL DATE

REGISTERED PROFESSIONAL ENGINEER N.V. BERNARDI No. 45407 Exp. 9/30/12 CIVIL STATE OF CALIFORNIA

THE STATE OF CALIFORNIA OR ITS OFFICERS OR AGENTS SHALL NOT BE RESPONSIBLE FOR THE ACCURACY OR COMPLETENESS OF SCANNED COPIES OF THIS PLAN SHEET.

BKF ENGINEERS
4670 WILLOW ROAD, SUITE 250
PLEASANTON, CA. 94588

ALAMEDA CTC
1333 BROADWAY SUITE 220
OAKLAND, CA. 94612

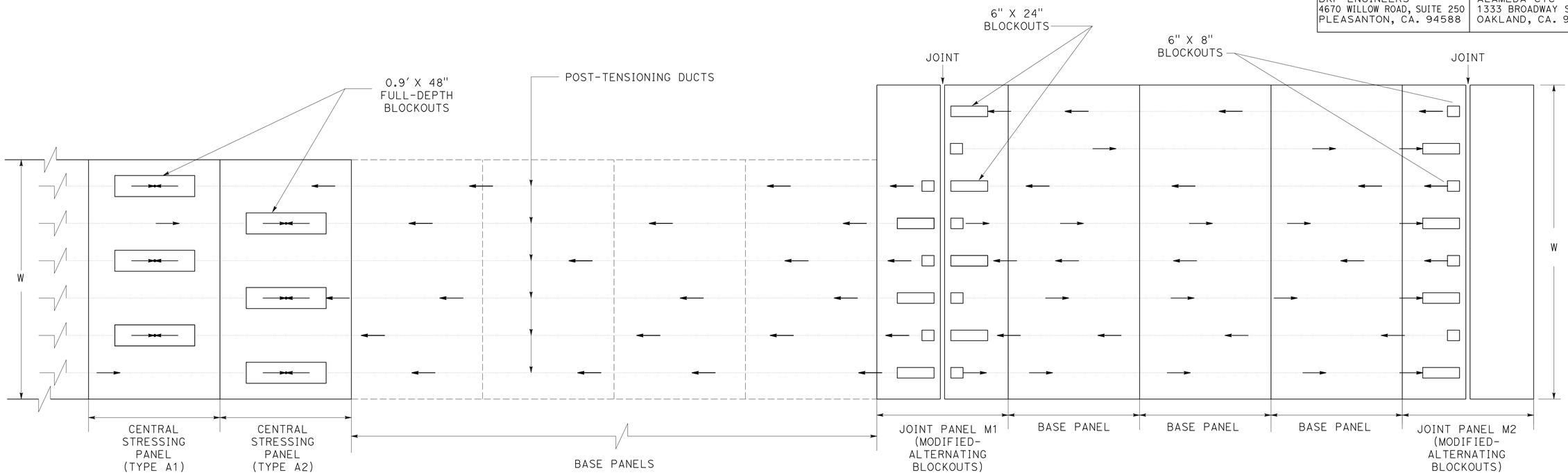

TYPICAL LAYOUT OF PANELS WITH VARIABLE WIDTHS (W) & ALTERNATING BLOCKOUTS

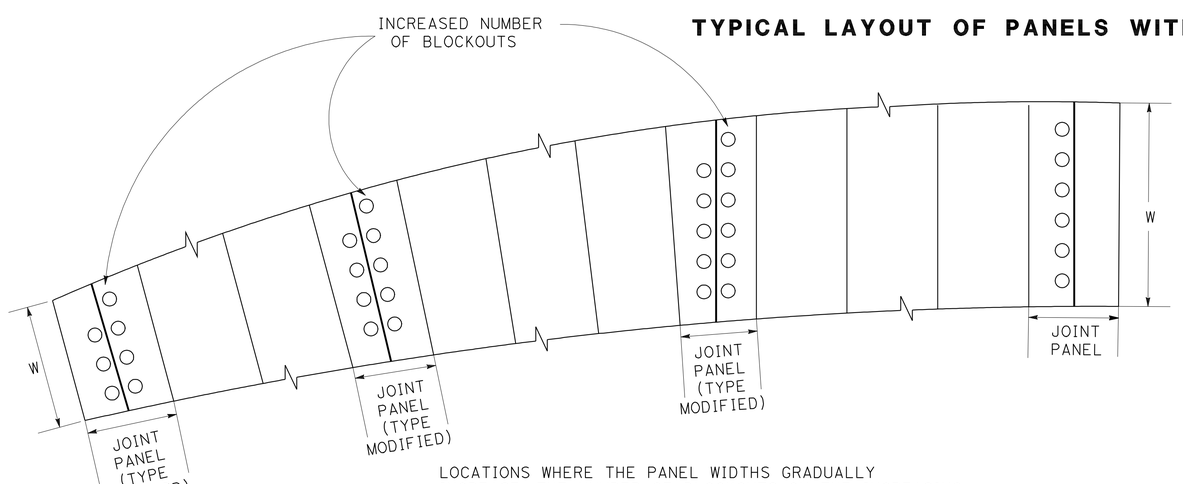

LOCATIONS WHERE THE PANEL WIDTHS GRADUALLY INCREASE, THE NUMBER OF BLOCKOUTS ON THE INCREASING SIDE OF THE JOINT PANEL SHALL HAVE THE SAME NUMBER OF BLOCKOUTS AS THE NEXT LONGER JOINT PANEL.

NUMBER OF BLOCKOUTS

SYMBOLS:

← DIRECTION OF PULL FOR POST-TENSIONING

○ REPRESENTATION OF BLOCKOUTS (SMALL: 6"X8" OR LARGE: 6"X24")

CONSTRUCTION DETAILS

PRECAST PRESTRESSED CONCRETE PAVEMENT JOINT PANELS M1 & M2 LAYOUT

NO SCALE

C-45

REVISED BY CC
DATE REVISED 1/18/12
CARMELO CECILIO
LUIS GARCIA
CALCULATED-DESIGNED BY
CHECKED BY
SUPERVISOR
NATALINA V. BERNARDI
CONSULTANT FUNCTIONAL SUPERVISOR

STATE OF CALIFORNIA - DEPARTMENT OF TRANSPORTATION

LAST REVISION 01-18-12
DATE PLOTTED => 23-MAY-2012
TIME PLOTTED => 06:58

Dist	COUNTY	ROUTE	POST MILES TOTAL PROJECT	SHEET No.	TOTAL SHEETS
04	Ala	580	R8.4/R14.6	124	853

REGISTERED CIVIL ENGINEER 1/18/12 DATE

5-14-12
PLANS APPROVAL DATE

REGISTERED PROFESSIONAL ENGINEER N.V. BERNARDI No. 45407 Exp. 9/30/12 CIVIL STATE OF CALIFORNIA

THE STATE OF CALIFORNIA OR ITS OFFICERS OR AGENTS SHALL NOT BE RESPONSIBLE FOR THE ACCURACY OR COMPLETENESS OF SCANNED COPIES OF THIS PLAN SHEET.

BKF ENGINEERS
4670 WILLOW ROAD, SUITE 250
PLEASANTON, CA. 94588

ALAMEDA CTC
1333 BROADWAY SUITE 220
OAKLAND, CA. 94612

NOTES:

1. SEE MISCELLANEOUS PANEL DETAILS FOR KEY & KEYWAY DETAIL.
2. SEE MISCELLANEOUS PANELS DETAILS FOR GROUT INLET/VENT.
3. SEE MISCELLANEOUS PANEL DETAILS FOR EXPANSION JOINT/ANCHOR DETAIL.
4. THE SECTION OF DOWEL EXTENDING INTO THE EXPANSION SLEEVE SHALL BE GREASED PRIOR TO BEING INSERTED INTO THE EXPANSION SLEEVE PRIOR TO CASTING.
5. 1" POST-TENSIONING DUCTS ARE SPACED UNIFORMLY @ MAXIMUM 36" C-C APART ALONG THE 'W' DIMENSION BETWEEN THE 1ST & LAST P-T DUCT.

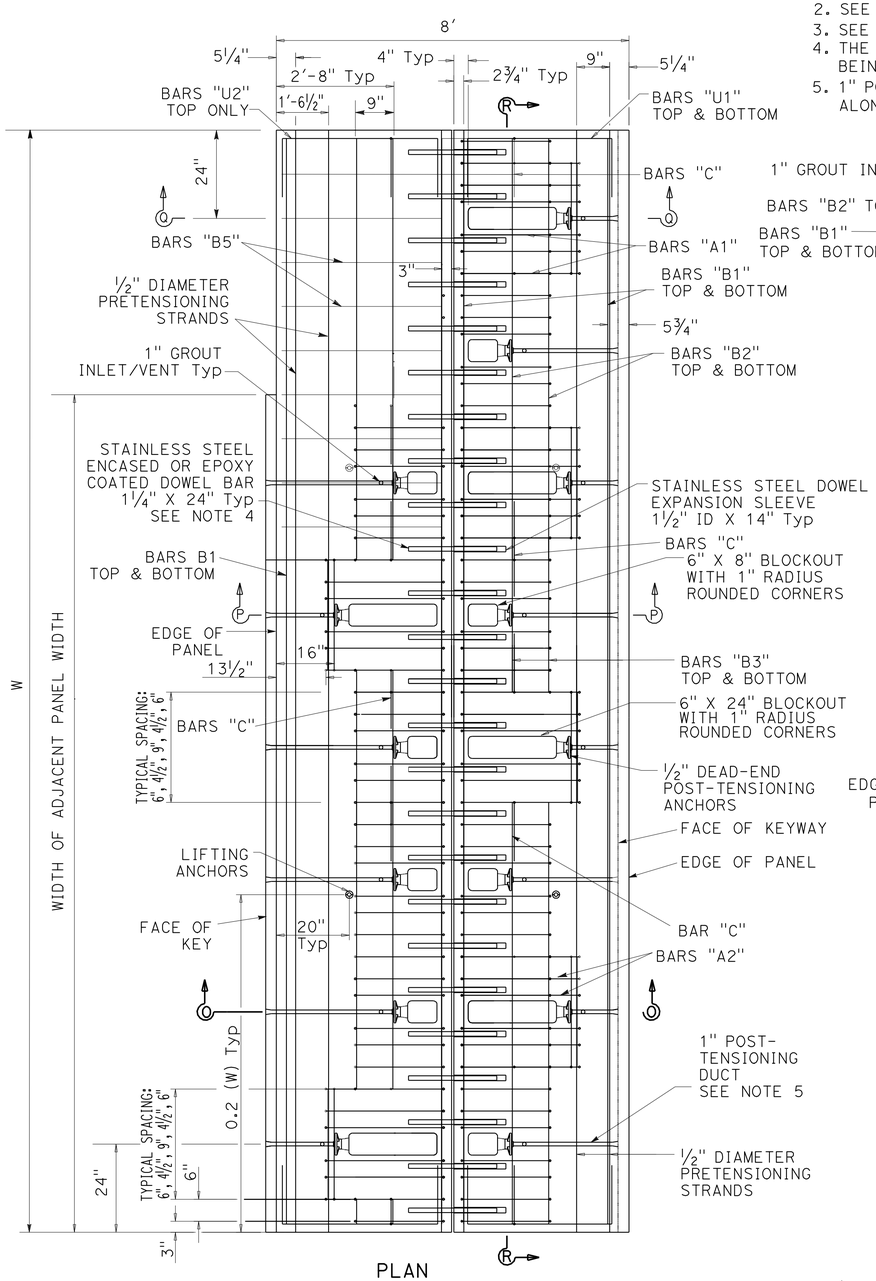

PLAN
JOINT PANEL M1

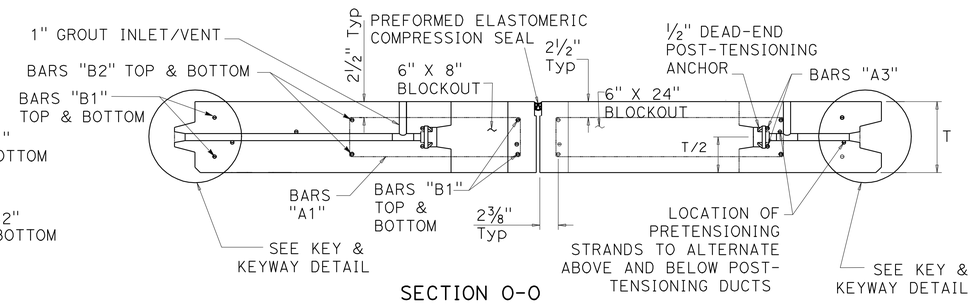

SECTION O-O
SEE NOTE 3

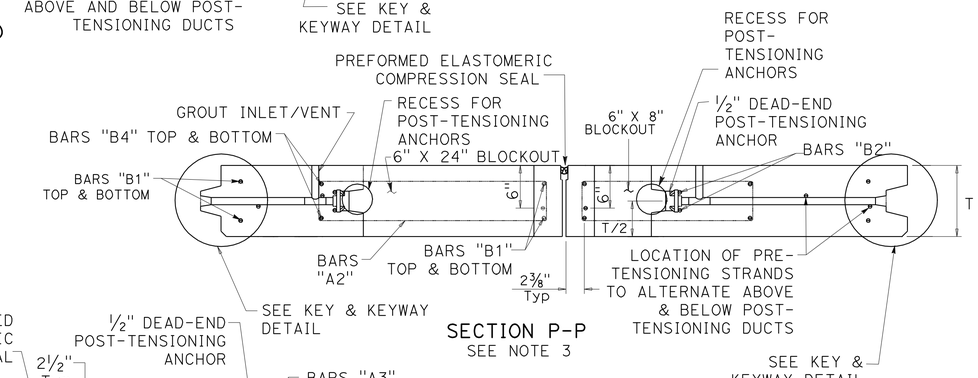

SECTION P-P
SEE NOTE 3

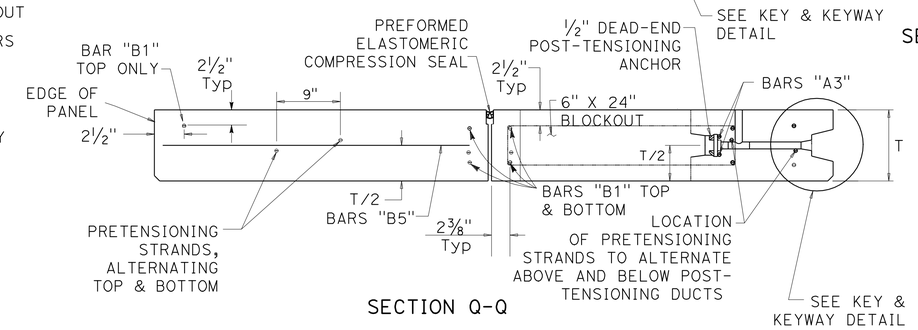

SECTION Q-Q

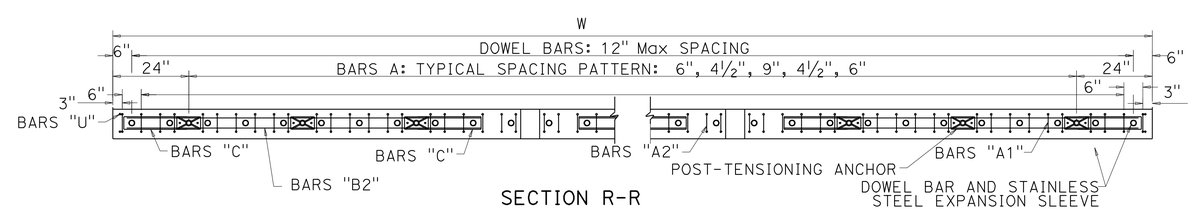

SECTION R-R

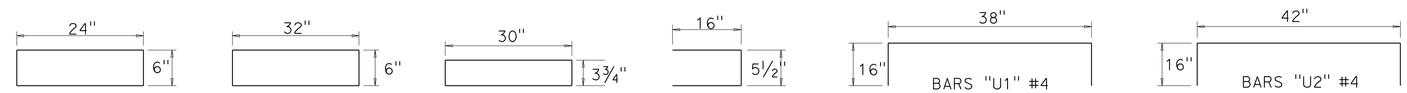

BARS "A1" ELEVATION
BARS "A2" ELEVATION
BARS "A3" ELEVATION
BARS "C" ELEVATION
BARS "U1" #4 PLAN
BARS "U2" #4 PLAN

JOINT PANELS M1 (MODIFIED-ALTERNATING BLOCKOUTS)

CONSTRUCTION DETAILS
PRECAST PRESTRESSED CONCRETE PAVEMENT
NO SCALE

C-46

STATE OF CALIFORNIA - DEPARTMENT OF TRANSPORTATION
Caltrans

CONSULTANT FUNCTIONAL SUPERVISOR: NATALINA V. BERNARDI
CARMELO CECILIO / LUIS GARCIA
CALCULATED-DESIGNED BY / CHECKED BY
REVISED BY: CC
DATE REVISED: 1/18/12

LAST REVISION 01-18-12
DATE PLOTTED => 23-MAY-2012
TIME PLOTTED => 06:58

Dist	COUNTY	ROUTE	POST MILES TOTAL PROJECT	SHEET No.	TOTAL SHEETS
04	Ala	580	R8.4/R14.6	125	853

REGISTERED CIVIL ENGINEER 1/18/12 DATE

5-14-12
PLANS APPROVAL DATE

REGISTERED PROFESSIONAL ENGINEER N.V. BERNARDI No. 45407 Exp. 9/30/12 CIVIL STATE OF CALIFORNIA

THE STATE OF CALIFORNIA OR ITS OFFICERS OR AGENTS SHALL NOT BE RESPONSIBLE FOR THE ACCURACY OR COMPLETENESS OF SCANNED COPIES OF THIS PLAN SHEET.

BKF ENGINEERS
4670 WILLOW ROAD, SUITE 250
PLEASANTON, CA. 94588

ALAMEDA CTC
1333 BROADWAY SUITE 220
OAKLAND, CA. 94612

NOTES:

1. SEE MISCELLEANEOUS PANEL DETAILS FOR KEY & KEYWAY DETAIL.
2. SEE MISCELLANEOUS PANEL DETAILS FOR GROUT INLET/VENT.
3. SEE MISCELLANEOUS PANEL DETAILS FOR EXPANSION JOINT/ANCHOR DETAIL.
4. THE SECTION OF DOWEL EXTENDING INTO THE EXPANSION SLEEVE SHALL BE GREASED PRIOR TO BEING INSERTED INTO THE EXPANSION SLEEVE PRIOR TO CASTING.
5. 1" POST-TENSIONING DUCTS ARE SPACED UNIFORMLY @ MAXIMUM 36" C-C APART ALONG THE 'W' DIMENSION BETWEEN THE 1ST & LAST P-T DUCT.

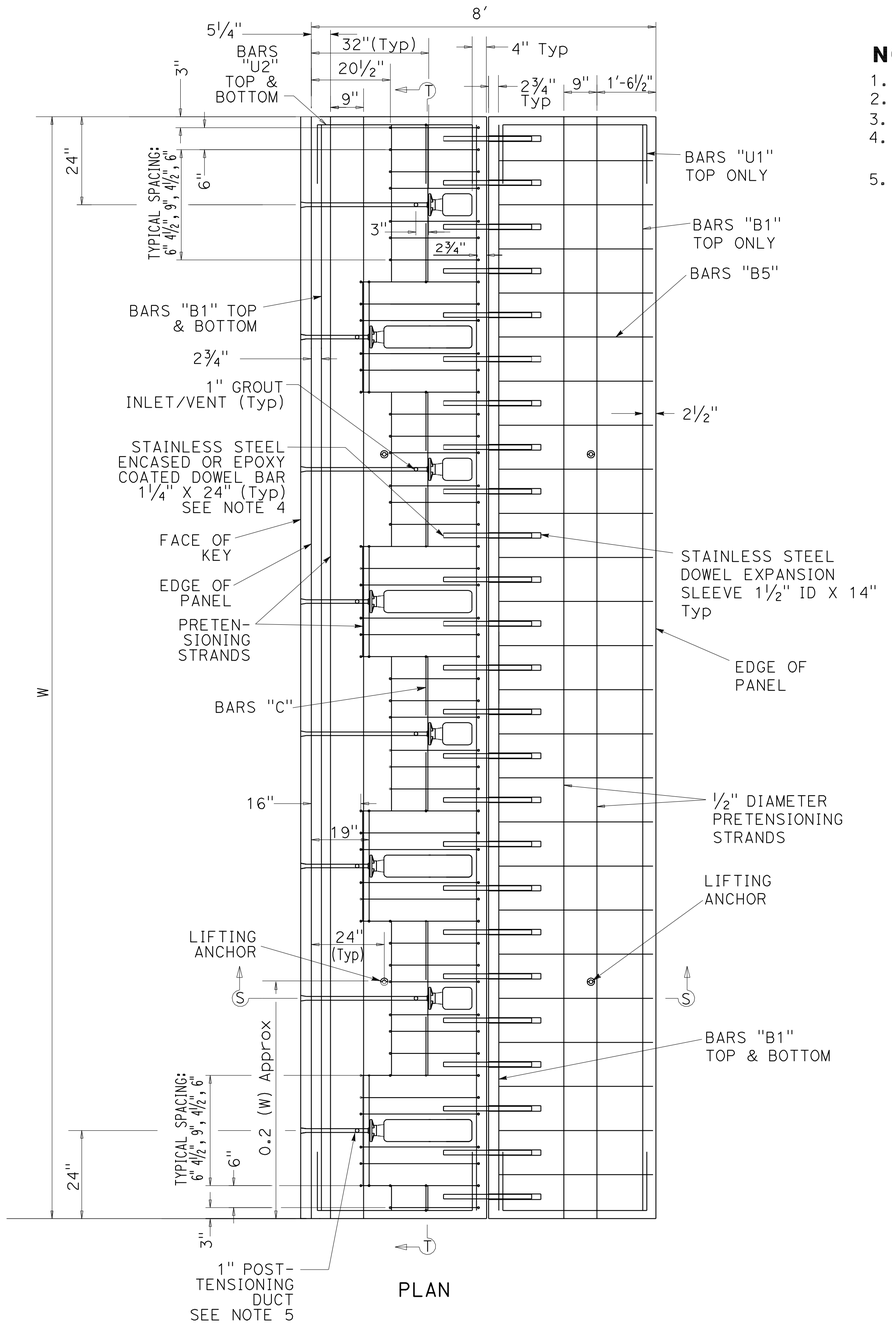

JOINT PANEL M2

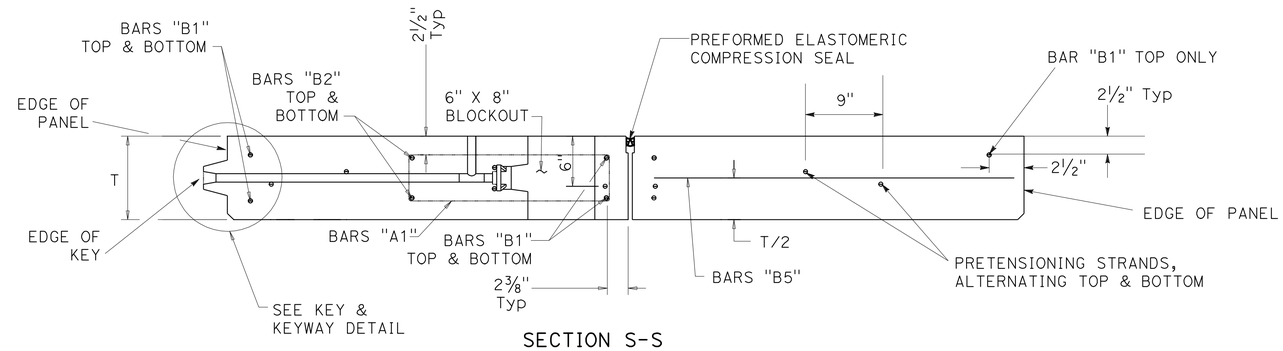

SECTION S-S

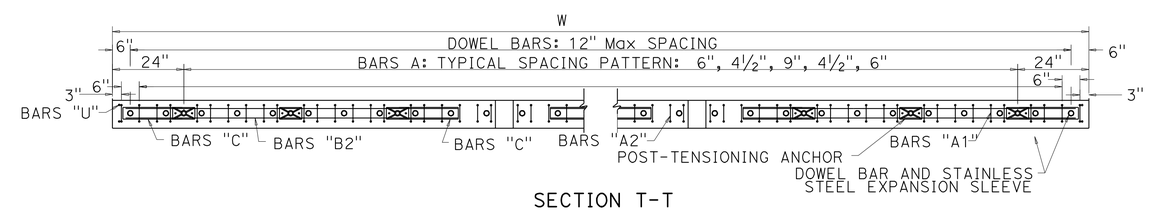

SECTION T-T

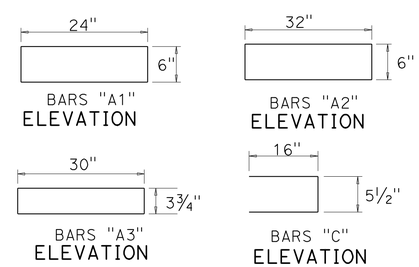

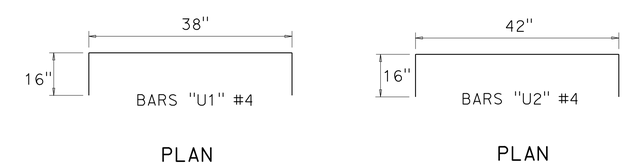

JOINT PANEL M2 (MODIFIED-ALTERNATING BLOCKOUTS)

CONSTRUCTION DETAILS
PRECAST PRESTRESSED CONCRETE PAVEMENT
NO SCALE

C-47

REVISED BY	DATE REVISED
CC	1/18/12

CARMELO CECILIO — CALCULATED-DESIGNED BY
LUIS GARCIA — CHECKED BY
NATALINA V. BERNARDI — CONSULTANT FUNCTIONAL SUPERVISOR

STATE OF CALIFORNIA - DEPARTMENT OF TRANSPORTATION

LAST REVISION 01-18-12 | DATE PLOTTED => 23-MAY-2012 | TIME PLOTTED => 06:58

Dist	COUNTY	ROUTE	POST MILES TOTAL PROJECT	SHEET No.	TOTAL SHEETS
04	Ala	580	R8.4/R14.6	126	853

REGISTERED CIVIL ENGINEER 1/18/12 DATE

5-14-12
PLANS APPROVAL DATE

REGISTERED PROFESSIONAL ENGINEER N.V. BERNARDI No. 45407 Exp. 9/30/12 CIVIL STATE OF CALIFORNIA

THE STATE OF CALIFORNIA OR ITS OFFICERS OR AGENTS SHALL NOT BE RESPONSIBLE FOR THE ACCURACY OR COMPLETENESS OF SCANNED COPIES OF THIS PLAN SHEET.

BKF ENGINEERS
4670 WILLOW ROAD, SUITE 250
PLEASANTON, CA. 94588

ALAMEDA CTC
1333 BROADWAY SUITE 220
OAKLAND, CA. 94612

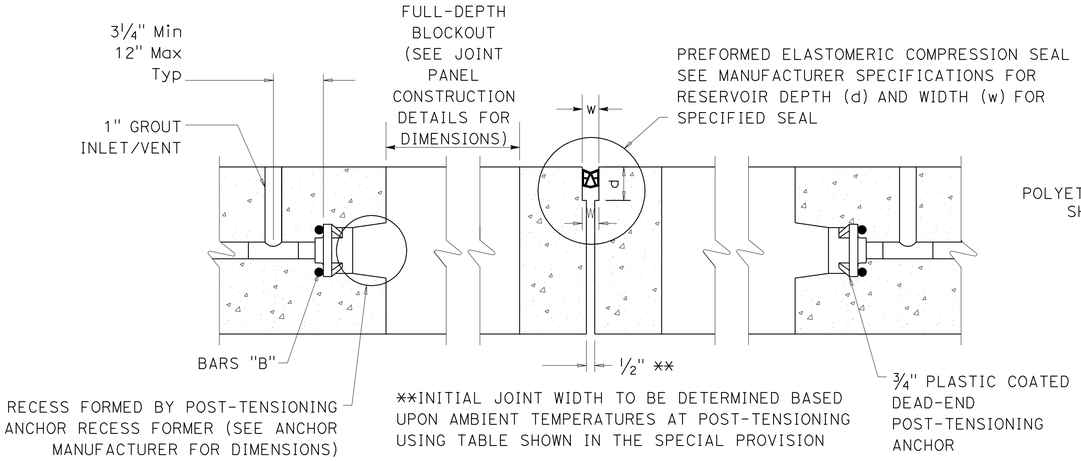

EXPANSION JOINT/ANCHOR DETAIL

FOR TYPE C2 JOINT PANELS AND ALL MODIFIED JOINT PANELS

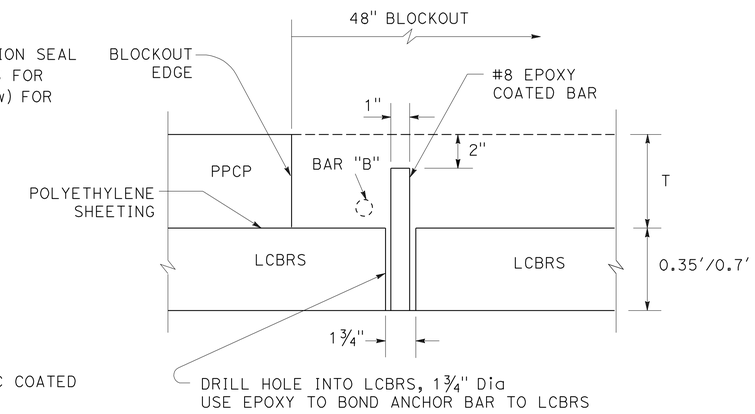

ANCHOR BAR DETAIL AT FULL-DEPTH BLOCKOUTS FOR CENTRAL STRESSING PANELS

ABBREVIATIONS:

LCBRS = LEAN CONCRETE BASE RAPID SETTING
PPCP = PRECAST PRESTRESSED CONCRETE PAVEMENT
P-T = POST TENSIONING

NOTE:

X = 1'' MINIMUM

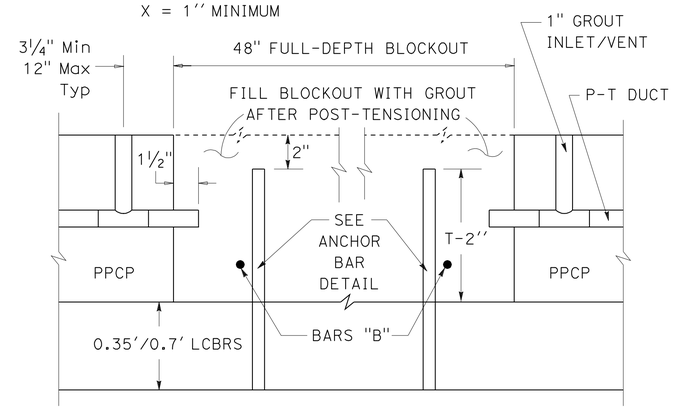

CENTRAL STRESSING BLOCKOUT DETAIL

FOR TYPE A1 AND TYPE A2 CENTRAL STRESSING PANELS

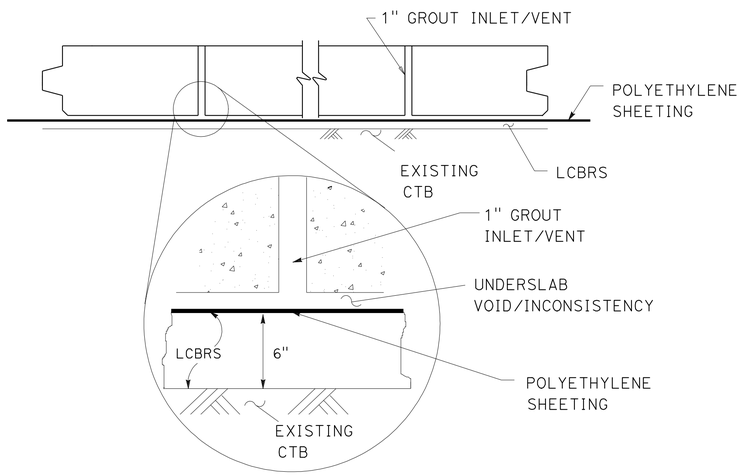

UNDERSLAB GROUT INLET/VENT AND POLYETHYLENE SHEETING

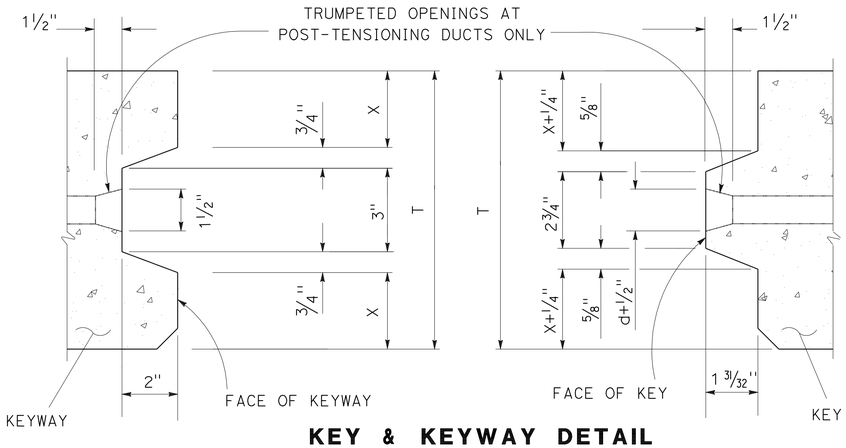

KEY & KEYWAY DETAIL

d = DIAMETER OF THE POST-TENSIONING DUCT = 1"

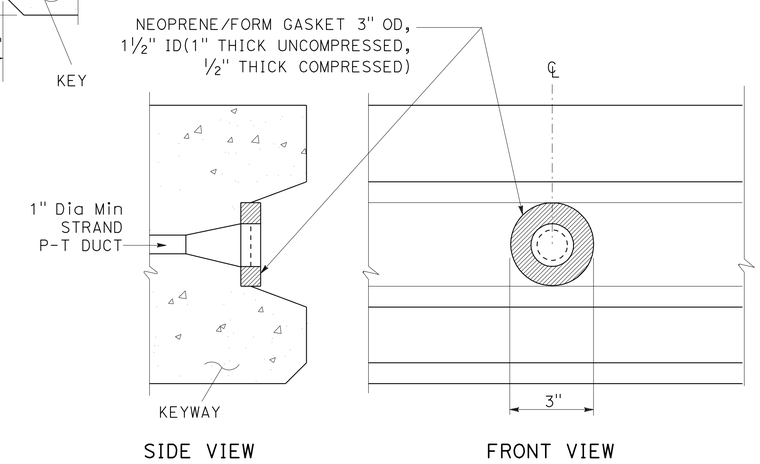

STRAND POST-TENSIONING DUCT SEAL DETAIL

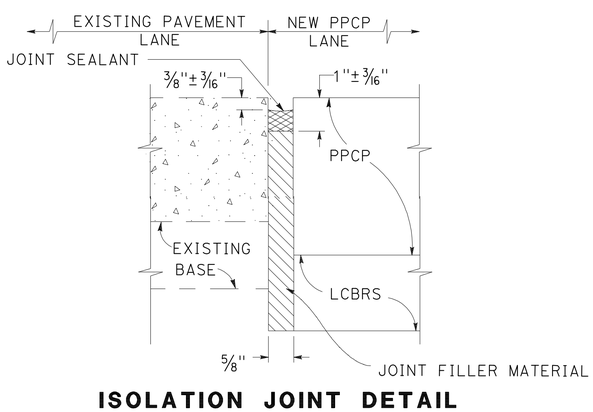

ISOLATION JOINT DETAIL

FOR LONGITUDINAL JOINTS ADJACENT TO EXISTING PAVEMENT, JPCP, RSC, AND PPCP

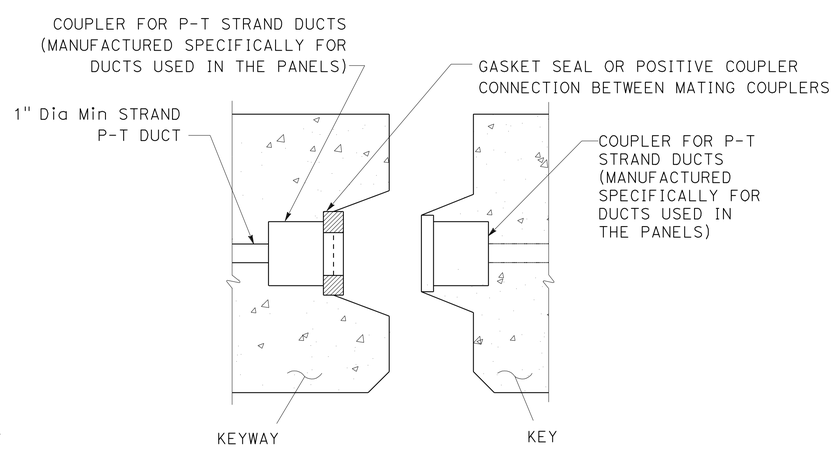

COUPLER ALTERNATIVE FOR STRAND POST-TENSIONING DUCT SEAL

CONSTRUCTION DETAILS

PRECAST PRESTRESSED CONCRETE PAVEMENT MISCELLANEOUS PANEL DETAILS

NO SCALE

C-48

STATE OF CALIFORNIA - DEPARTMENT OF TRANSPORTATION
CONSULTANT FUNCTIONAL SUPERVISOR: NATALINA V. BERNARDI
CALCULATED-DESIGNED BY: CARMELO CECILIO — REVISED BY: CC
CHECKED BY: LUIS GARCIA — DATE REVISED: 1/18/12

LAST REVISION 01-18-12 | DATE PLOTTED => 23-MAY-2012 | TIME PLOTTED => 06:58

Dist	COUNTY	ROUTE	POST MILES TOTAL PROJECT	SHEET No.	TOTAL SHEETS
04	Ala	580	R8.4/R14.6	127	853

1/18/12
REGISTERED CIVIL ENGINEER DATE

5-14-12
PLANS APPROVAL DATE

REGISTERED PROFESSIONAL ENGINEER N.V. BERNARDI No. 45407 Exp. 9/30/12 CIVIL STATE OF CALIFORNIA

THE STATE OF CALIFORNIA OR ITS OFFICERS OR AGENTS SHALL NOT BE RESPONSIBLE FOR THE ACCURACY OR COMPLETENESS OF SCANNED COPIES OF THIS PLAN SHEET.

BKF ENGINEERS
4670 WILLOW ROAD, SUITE 250
PLEASANTON, CA. 94588

ALAMEDA CTC
1333 BROADWAY SUITE 220
OAKLAND, CA. 94612

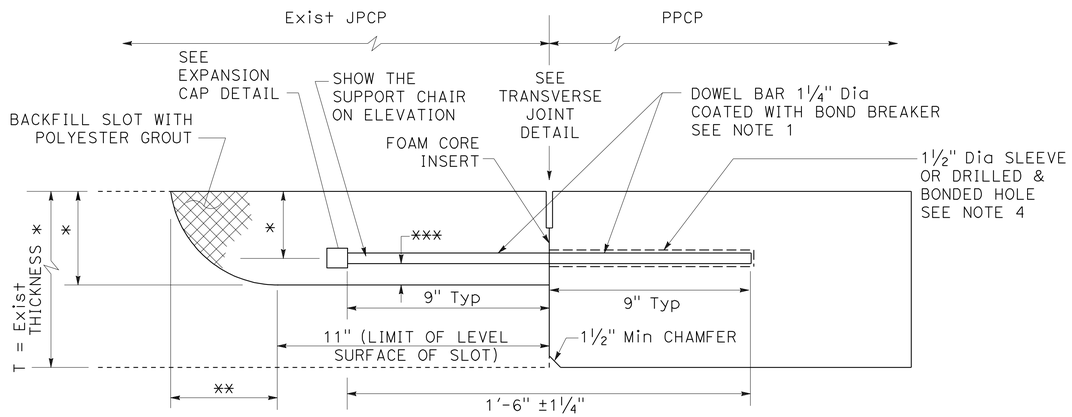

ELEVATION

T = EXISTING THICKNESS OF JPCP OR NEW PPCP
* T/2 ±¼"
** T/2 +1½"
*** Min Clr ½" BETWEEN BAR AND BOTTOM OF SLOT

ABBREVIATIONS:

LCBRS = LEAN CONCRETE BASE RAPID SETTING
P-T = POST-TENSIONING
RSC = RAPID STRENGTH CONCRETE
PPCP = PRECAST PRESTRESSED CONCRETE PAVEMENT

NOTES:

1. 1½" DIAMETER DOWEL BARS 1'-6" ±¼" LENGTH ARE TO BE USED WHEN THE EXISTING PAVEMENT THICKNESS, D, IS EQUAL TO OR GREATER THAN 0.70'. FOR A PAVEMENT THICKNESS, D, LESS THAN 0.70', USE 1¼" DIAMETER DOWEL BAR 1'-6" ±¼" IN LENGTH.
2. SEAL EXISTING TRANSVERSE JOINT AT BOTTOM AND SIDES OF THE DOWEL BAR SLOT WITH CAULKING FILLER PRIOR TO PLACING DOWEL BAR AND FOAM CORE INSERT.
3. SEE STANDARD PLAN P7 FOR FOAM CORE INSERT DETAIL.
4. CAST SLEEVES EVERY 1' C-C DURING PANEL FABRICATION OR DRILL AND BOND HOLE EVERY 1' C-C. SLEEVES OR DRILLED HOLES ARE ⅛" LARGER THAN THE DOWEL DIAMETER.

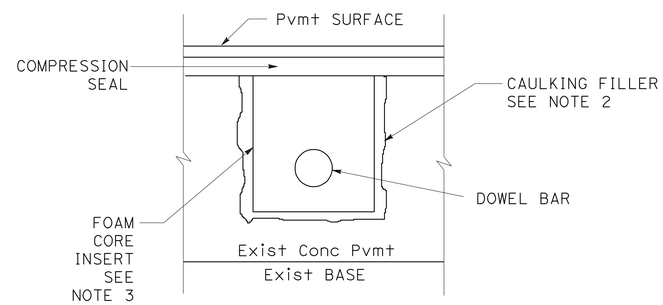

SECTION N-N

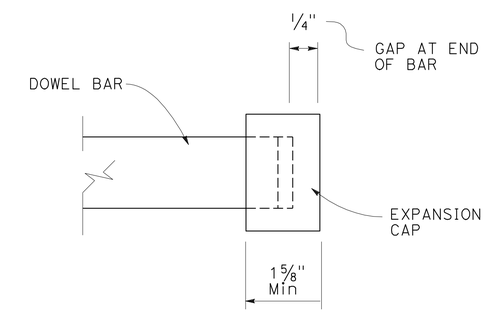

EXPANSION CAP DETAIL

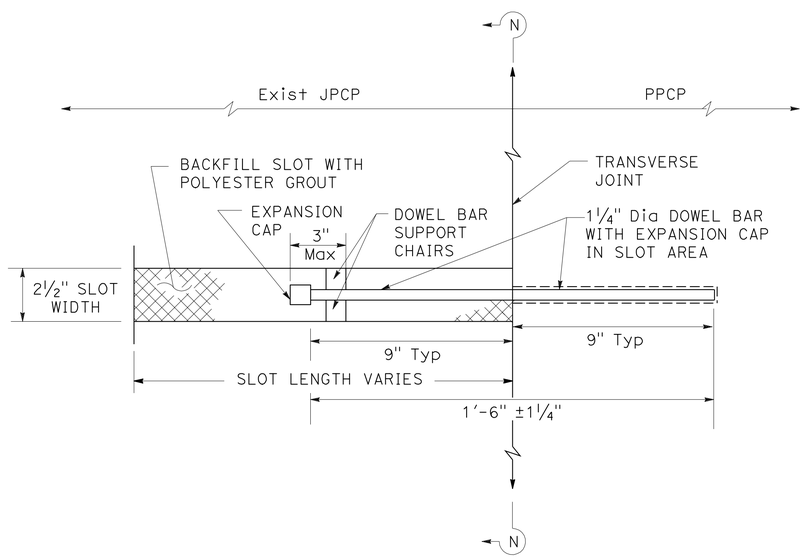

PLAN

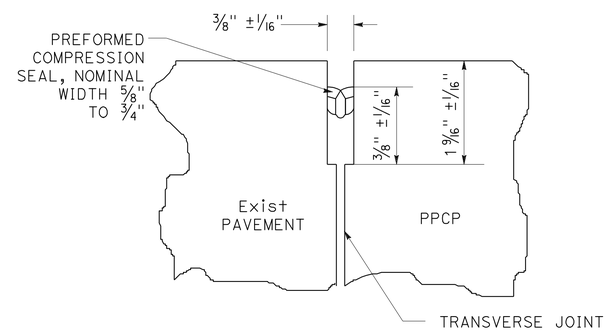

TRANSVERSE JOINT DETAIL (COMPRESSION SEAL)

DOWEL SLOT & DOWEL BAR PLACEMENT AT THE TRANSVERSE CONTACT JOINT WITH PCC, JPCP, OR RSC

CONSTRUCTION DETAILS
PRECAST PRESTRESSED CONCRETE PAVEMENT DOWEL BAR RETROFIT

NO SCALE

C-49

STATE OF CALIFORNIA - DEPARTMENT OF TRANSPORTATION
Caltrans
CONSULTANT FUNCTIONAL SUPERVISOR: NATALINA V. BERNARDI
CALCULATED-DESIGNED BY: CARMELO CECILIO
CHECKED BY: LUIS GARCIA
REVISED BY: CC
DATE REVISED: 1/18/12

LAST REVISION 01-18-12
DATE PLOTTED => 23-MAY-2012
TIME PLOTTED => 06:58

Dist	COUNTY	ROUTE	POST MILES TOTAL PROJECT	SHEET No.	TOTAL SHEETS
04	Ala	580	R8.4/R14.6	128	853

1/18/12
REGISTERED CIVIL ENGINEER DATE

5-14-12
PLANS APPROVAL DATE

REGISTERED PROFESSIONAL ENGINEER
N.V. BERNARDI
No. 45407
Exp. 9/30/12
CIVIL
STATE OF CALIFORNIA

THE STATE OF CALIFORNIA OR ITS OFFICERS OR AGENTS SHALL NOT BE RESPONSIBLE FOR THE ACCURACY OR COMPLETENESS OF SCANNED COPIES OF THIS PLAN SHEET.

BKF ENGINEERS
4670 WILLOW ROAD, SUITE 250
PLEASANTON, CA. 94588

ALAMEDA CTC
1333 BROADWAY SUITE 220
OAKLAND, CA. 94612

NOTES:

1. FOR PANELS WITH A RADIUS (WEDGE PANELS), THE DIMENSIONS AND QUANTITIES OF THE REINFORCEMENT ARE CONSIDERED THE SAME AND VARY MINIMALLY WITH RESPECT TO THE LENGTH (L) AND IN WIDTH (W).
2. FOR TABLE A, REINFORCEMENT IS PLACED OR MEASURED IN THE LONGITUDINAL DIRECTION, UNLESS INDICATED OTHERWISE.
3. FOR TABLE B, REINFORCEMENT IS PLACED OR MEASURED IN THE TRANSVERSE DIRECTION, UNLESS INDICATED OTHERWISE.
4. ALL REINFORCEMENT DIMENSIONS ARE TO BE VERIFIED BY THE MANUFACTURER BEFORE PANEL FABRICATION.

ABBREVIATION:

P-T POST-TENSIONING

TABLE A

L	COUNT OF PRETENSIONING STRANDS (7-WIRE 1/2") PLACED TRANSVERSELY (1)	LENGTH OF EACH P-T DUCT (2)	COUNT OF BAR "U"	LENGTH OF EACH BAR "U"	COUNT OF LIFTING ANCHORS
FT	EA	FT	EA	FT-IN	EA
7	6	7	4	9'-0"	4
8	6	8	4	10'-0"	4
9	8	9	4	11'-0"	4
10	8	10	4	12'-0"	4

(1) SEE TABLE B FOR LENGTH OF EACH PRETENSIONING STRAND.
(2) SEE TABLE B FOR COUNT OF P-T DUCTS.

TABLE B

W	COUNT OF P-T DUCTS PLACED LONGITUDINALLY (1)	COUNT OF BAR "B"	LENGTH OF EACH BAR "B"	LENGTH OF EACH PRETENSIONING STRAND (7-WIRE 1/2") (2)
FT	EA		FT-IN	FT
12	4	4	11'-7"	12
12.5	4	4	12'-1"	12.5
13	4	4	12'-7"	13
13.5	5	4	13'-1"	13.5
14	5	4	13'-7"	14
14.5	5	4	14'-1"	14.5
15	5	4	14'-7"	15
15.5	5	4	15'-1"	15.5
16	5	4	15'-7"	16
16.5	6	4	16'-1"	16.5

(1) SEE TABLE A FOR LENGTH OF EACH P-T DUCT.
(2) SEE TABLE A FOR COUNT OF PRETENSIONING STRANDS.

FOR BASE PANELS

CONSTRUCTION DETAILS

PRECAST PRESTRESSED CONCRETE PAVEMENT REINFORCEMENT DIMENSIONS AND QUANTITIES

C-50

REVISED BY	DATE REVISED
CC	1/18/12

CARMELO CECILIO
LUIS GARCIA
CALCULATED-DESIGNED BY
CHECKED BY
CONSULTANT FUNCTIONAL SUPERVISOR
NATALINA V. BERNARDI

STATE OF CALIFORNIA - DEPARTMENT OF TRANSPORTATION

LAST REVISION 01-18-12
DATE PLOTTED => 23-MAY-2012
TIME PLOTTED => 06:58

Dist	COUNTY	ROUTE	POST MILES TOTAL PROJECT	SHEET No.	TOTAL SHEETS
04	Ala	580	R8.4/R14.6	129	853

1/18/12
REGISTERED CIVIL ENGINEER DATE

5-14-12
PLANS APPROVAL DATE

REGISTERED PROFESSIONAL ENGINEER N.V. BERNARDI No. 45407 Exp. 9/30/12 CIVIL STATE OF CALIFORNIA

THE STATE OF CALIFORNIA OR ITS OFFICERS OR AGENTS SHALL NOT BE RESPONSIBLE FOR THE ACCURACY OR COMPLETENESS OF SCANNED COPIES OF THIS PLAN SHEET.

BKF ENGINEERS
4670 WILLOW ROAD, SUITE 250
PLEASANTON, CA. 94588

ALAMEDA CTC
1333 BROADWAY SUITE 220
OAKLAND, CA. 94612

NOTES:

1. FOR PANELS WITH A RADIUS (WEDGE PANELS), THE DIMENSIONS AND QUANTITIES OF THE REINFORCEMENT ARE CONSIDERED THE SAME AND VARY MINIMALLY WITH RESPECT TO THE LENGTH (L) AND IN WIDTH (W).
2. FOR TABLE A, REINFORCEMENT IS PLACED OR MEASURED IN THE LONGITUDINAL DIRECTION, UNLESS INDICATED OTHERWISE.
3. FOR TABLE B, REINFORCEMENT IS PLACED OR MEASURED IN THE TRANSVERSE DIRECTION, UNLESS INDICATED OTHERWISE.
4. ALL REINFORCEMENT DIMENSIONS ARE TO BE VERIFIED BY THE MANUFACTURER BEFORE PANEL FABRICATION.

ABBREVIATION:

P-T POST-TENSIONING

TABLE B

W	COUNT OF P-T DUCTS PLACED LONGITUDINALLY (1)	COUNT OF BAR "B"	LENGTH OF EACH BAR "B"	LENGTH OF EACH PRETENSIONING STRAND (7-WIRE 1/2") (2)
FT	EA		FT-IN	FT
17	6	4	16'-7"	17
17.5	6	4	17'-1"	17.5
18	6	4	17'-7"	18
18.5	6	4	18'-1"	18.5
19	6	4	18'-7"	19
19.5	7	4	19'-1"	19.5
20	7	4	19'-7"	20
20.5	7	4	20'-1"	20.5
21	7	4	20'-7"	21
21.5	7	4	21'-1"	21.5
22	7	4	21'-7"	22
22.5	8	4	22'-1"	22.5
23	8	4	22'-7"	23
23.5	8	4	23'-1"	23.5
24	8	4	23'-7"	24
24.5	8	4	24'-1"	24.5
25	8	4	24'-7"	25
25.5	9	4	25'-1"	25.5
26	9	4	25'-7"	26
26.5	9	4	26'-1"	26.5

(1) SEE TABLE A FOR LENGTH OF EACH P-T DUCT.
(2) SEE TABLE A FOR COUNT OF PRETENSIONING STRANDS.

FOR BASE PANELS

TABLE B

W	COUNT OF P-T DUCTS PLACED LONGITUDINALLY (1)	COUNT OF BAR "B"	LENGTH OF EACH BAR "B"	LENGTH OF EACH PRETENSIONING STRAND (7-WIRE 1/2") (2)
FT	EA		FT-IN	FT
27	9	4	26'-7"	27
27.5	9	4	27'-1"	27.5
28	9	4	27'-7"	28
28.5	10	4	28'-1"	28.5
29	10	4	28'-7"	29
29.5	10	4	29'-1"	29.5
30	10	4	29'-7"	30
30.5	10	4	30'-1"	30.5
31	10	4	30'-7"	31
31.5	11	4	31'-1"	31.5
32	11	4	31'-7"	32
32.5	11	4	32'-1"	32.5
33	11	4	32'-7"	33
33.5	11	4	33'-1"	33.5
34	11	4	33'-7"	34
34.5	12	4	34'-1"	34.5
35	12	4	34'-7"	35
35.5	12	4	35'-1"	35.5
36	12	4	35'-7"	36
36.5	12	4	36'-1"	36.5

(1) SEE TABLE A FOR LENGTH OF EACH P-T DUCT.
(2) SEE TABLE A FOR COUNT OF PRETENSIONING STRANDS.

CONSTRUCTION DETAILS
PRECAST PRESTRESSED CONCRETE PAVEMENT REINFORCEMENT DIMENSIONS AND QUANTITIES

C-51

STATE OF CALIFORNIA - DEPARTMENT OF TRANSPORTATION
CONSULTANT FUNCTIONAL SUPERVISOR: NATALINA V. BERNARDI
CALCULATED-DESIGNED BY: CARMELO CECILIO
CHECKED BY: LUIS GARCIA
REVISED BY: CC
DATE REVISED: 1/18/12

LAST REVISION 01-18-12
DATE PLOTTED => 23-MAY-2012
TIME PLOTTED => 06:58

Dist	COUNTY	ROUTE	POST MILES TOTAL PROJECT	SHEET No.	TOTAL SHEETS
04	Ala	580	R8.4/R14.6	130	853

1/18/12
REGISTERED CIVIL ENGINEER DATE

5-14-12
PLANS APPROVAL DATE

REGISTERED PROFESSIONAL ENGINEER
N.V. BERNARDI
No. 45407
Exp. 9/30/12
CIVIL
STATE OF CALIFORNIA

THE STATE OF CALIFORNIA OR ITS OFFICERS OR AGENTS SHALL NOT BE RESPONSIBLE FOR THE ACCURACY OR COMPLETENESS OF SCANNED COPIES OF THIS PLAN SHEET.

BKF ENGINEERS
4670 WILLOW ROAD, SUITE 250
PLEASANTON, CA. 94588

ALAMEDA CTC
1333 BROADWAY SUITE 220
OAKLAND, CA. 94612

NOTES:

1. FOR PANELS WITH A RADIUS (WEDGE PANELS), THE DIMENSIONS AND QUANTITIES OF THE REINFORCEMENT ARE CONSIDERED THE SAME AND VARY MINIMALLY WITH RESPECT TO THE LENGTH (L) AND IN WIDTH (W).
2. FOR TABLE A, REINFORCEMENT IS PLACED OR MEASURED IN THE LONGITUDINAL DIRECTION, UNLESS INDICATED OTHERWISE.
3. FOR TABLE B, REINFORCEMENT IS PLACED OR MEASURED IN THE TRANSVERSE DIRECTION, UNLESS INDICATED OTHERWISE.
4. ALL REINFORCEMENT DIMENSIONS ARE TO BE VERIFIED BY THE MANUFACTURER BEFORE PANEL FABRICATION.

ABBREVIATION:

P-T POST-TENSIONING

TABLE B

W	COUNT OF P-T DUCTS PLACED LONGITUDINALLY (1)	COUNT OF BAR "B"	LENGTH OF EACH BAR "B"	LENGTH OF EACH PRETENSIONING STRAND (7-WIRE 1/2") (2)
FT	EA		FT-IN	FT
37	12	4	36'-7"	37
37.5	13	4	37'-1"	37.5
38	13	4	37'-7"	38
38.5	13	4	38'-1"	38.5
39	13	4	38'-7"	39
39.5	13	4	39'-1"	39.5
40	13	4	39'-7"	40
40.5	14	4	40'-1"	40.5
41	14	4	40'-7"	41
41.5	14	4	41'-1"	41.5
42	14	4	41'-7"	42
42.5	14	4	42'-1"	42.5
43	14	4	42'-7"	43
43.5	15	4	43'-1"	43.5
44	15	4	43'-7"	44
44.5	15	4	44'-1"	44.5
45	15	4	44'-7"	45
45.5	15	4	45'-1"	45.5
46	15	4	45'-7"	46
46.5	16	4	46'-1"	46.5

(1) SEE TABLE A FOR LENGTH OF EACH P-T DUCT.
(2) SEE TABLE A FOR COUNT OF PRETENSIONING STRANDS.

TABLE B

W	COUNT OF P-T DUCTS PLACED LONGITUDINALLY (1)	COUNT OF BAR "B"	LENGTH OF EACH BAR "B"	LENGTH OF EACH PRETENSIONING STRAND (7-WIRE 1/2") (2)
FT	EA		FT-IN	FT
47	16	4	46'-7"	47
47.5	16	4	47'-1"	47.5
48	16	4	47'-7"	48
48.5	16	4	48'-1"	48.5
49	16	4	48'-7"	49
49.5	17	4	49'-1"	49.5
50	17	4	49'-7"	50

(1) SEE TABLE A FOR LENGTH OF EACH P-T DUCT.
(2) SEE TABLE A FOR COUNT OF PRETENSIONING STRANDS.

FOR BASE PANELS

CONSTRUCTION DETAILS
REINFORCEMENT DIMENSIONS AND QUANTITIES
PRECAST PRESTRESSED CONCRETE PAVEMENT

C-52

REVISED BY	DATE REVISED
CC	1/18/12

CARMELO CECILIO
LUIS GARCIA
CALCULATED-DESIGNED BY
CHECKED BY
CONSULTANT FUNCTIONAL SUPERVISOR
NATALINA V. BERNARDI

STATE OF CALIFORNIA - DEPARTMENT OF TRANSPORTATION
Caltrans

LAST REVISION 01-18-12
DATE PLOTTED => 23-MAY-2012
TIME PLOTTED => 06:58

Dist	COUNTY	ROUTE	POST MILES TOTAL PROJECT	SHEET No.	TOTAL SHEETS
04	Ala	580	R8.4/R14.6	131	853

1/18/12
REGISTERED CIVIL ENGINEER DATE

5-14-12
PLANS APPROVAL DATE

REGISTERED PROFESSIONAL ENGINEER
N.V. BERNARDI
No. 45407
Exp. 9/30/12
CIVIL
STATE OF CALIFORNIA

THE STATE OF CALIFORNIA OR ITS OFFICERS OR AGENTS SHALL NOT BE RESPONSIBLE FOR THE ACCURACY OR COMPLETENESS OF SCANNED COPIES OF THIS PLAN SHEET.

BKF ENGINEERS
4670 WILLOW ROAD, SUITE 250
PLEASANTON, CA. 94588

ALAMEDA CTC
1333 BROADWAY SUITE 220
OAKLAND, CA. 94612

NOTE:

FOR DETAILS NOT SHOWN, SEE "INSTALLATION AND CONNECTION DETAILS", "PANEL DETAILS", AND "MISCELLANEOUS DETAILS" SHEETS.

ABBREVIATIONS:

JPCP = JOINTED PLAIN CONCRETE PAVEMENT
LCBRS = LEAN CONCRETE BASE RAPID SETTING
PCC = PORTLAND CEMENT CONCRETE
PCP = PRECAST CONCRETE PANEL
RSC = RAPID STRENGTH CONCRETE

LEGEND:

REPLACE CONCRETE PAVEMENT

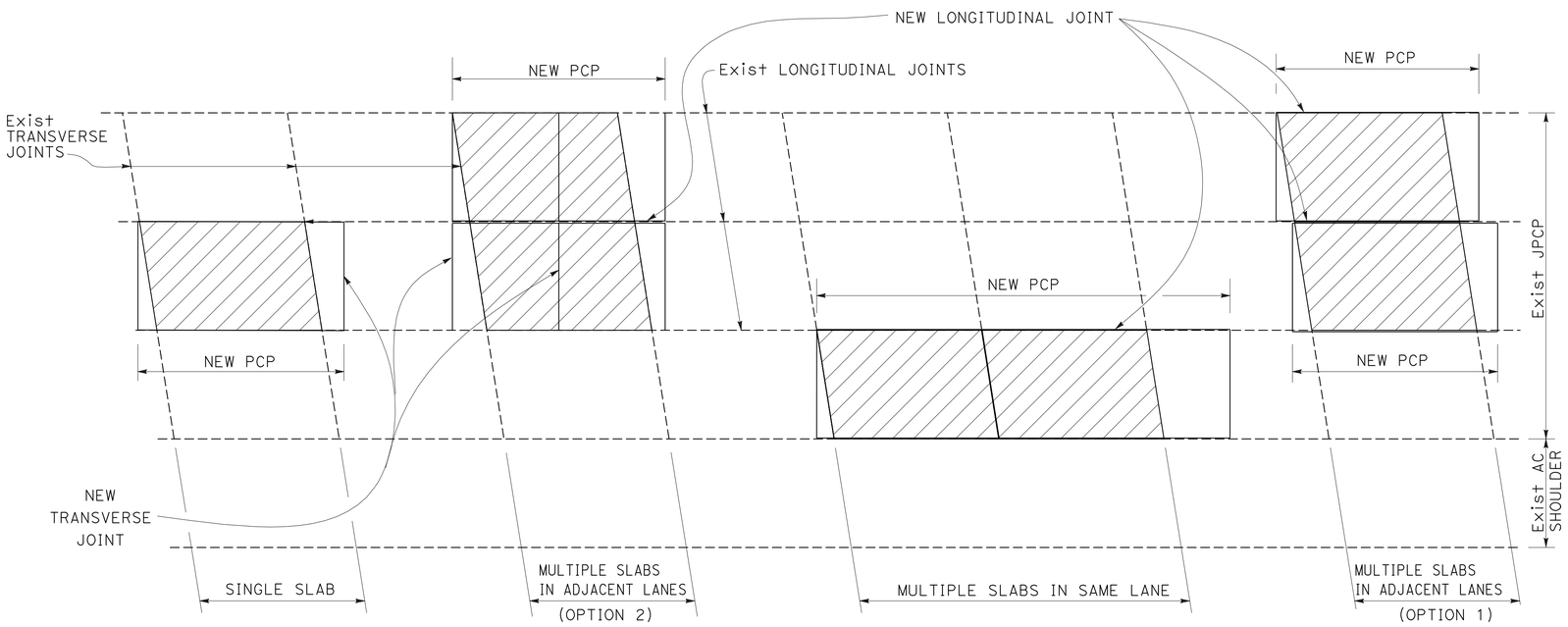

PLAN

CONSTRUCTION DETAILS
INDIVIDUAL SLAB REPLACEMENT PRECAST CONCRETE PANEL LAYOUT
NO SCALE

C-53

STATE OF CALIFORNIA - DEPARTMENT OF TRANSPORTATION
Caltrans

CONSULTANT FUNCTIONAL SUPERVISOR: NATALINA V. BERNARDI
CALCULATED-DESIGNED BY: CARMELO CECILIO
CHECKED BY: LUIS GARCIA
REVISED BY: CC
DATE REVISED: 1/18/12

LAST REVISION 01-18-12
DATE PLOTTED => 23-MAY-2012
TIME PLOTTED => 06:58

Dist	COUNTY	ROUTE	POST MILES TOTAL PROJECT	SHEET No.	TOTAL SHEETS
04	Ala	580	R8.4/R14.6	132	853

1/18/12
REGISTERED CIVIL ENGINEER DATE

5-14-12
PLANS APPROVAL DATE

REGISTERED PROFESSIONAL ENGINEER N.V. BERNARDI No. 45407 Exp. 9/30/12 CIVIL STATE OF CALIFORNIA

THE STATE OF CALIFORNIA OR ITS OFFICERS OR AGENTS SHALL NOT BE RESPONSIBLE FOR THE ACCURACY OR COMPLETENESS OF SCANNED COPIES OF THIS PLAN SHEET.

BKF ENGINEERS
4670 WILLOW ROAD, SUITE 250
PLEASANTON, CA. 94588

ALAMEDA CTC
1333 BROADWAY SUITE 220
OAKLAND, CA. 94612

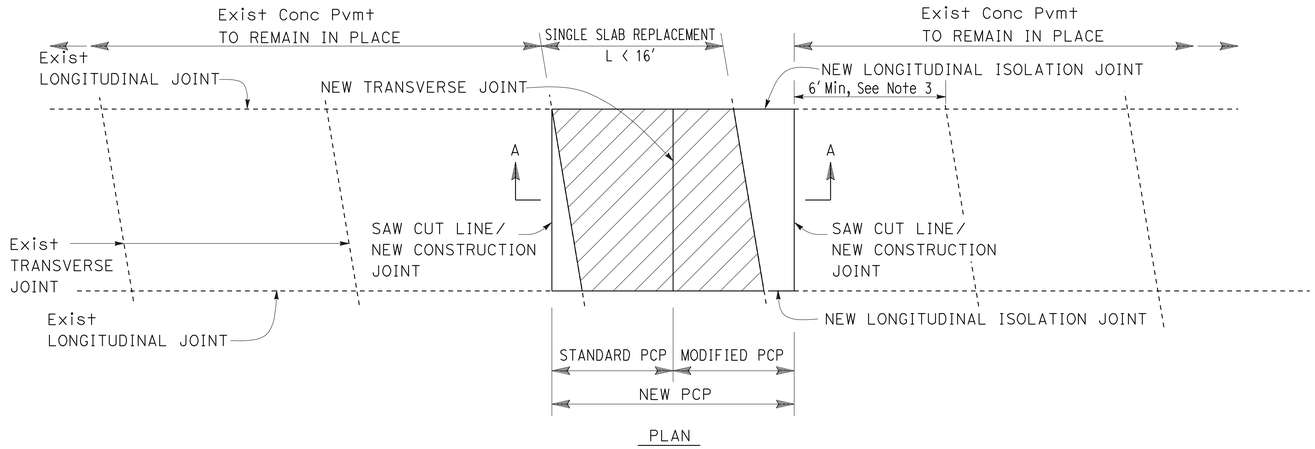

PLAN

NOTES:

1. FOR PRECAST PANEL DETAILS, SEE "PANEL DETAILS" SHEET.
2. FOR DOWEL BAR AND JOINT DETAILS, SEE "MISCELLANEOUS DETAILS No. 1 AND No. 2" SHEETS.
3. 6' Min LENGTH OF EXISTING SLAB SHOULD REMAIN, OTHERWISE, ADD A STANDARD PCP.

CROSS SECTIONS OF INDIVIDUAL PRECAST PANELS GOING TO BE INSTALLED:

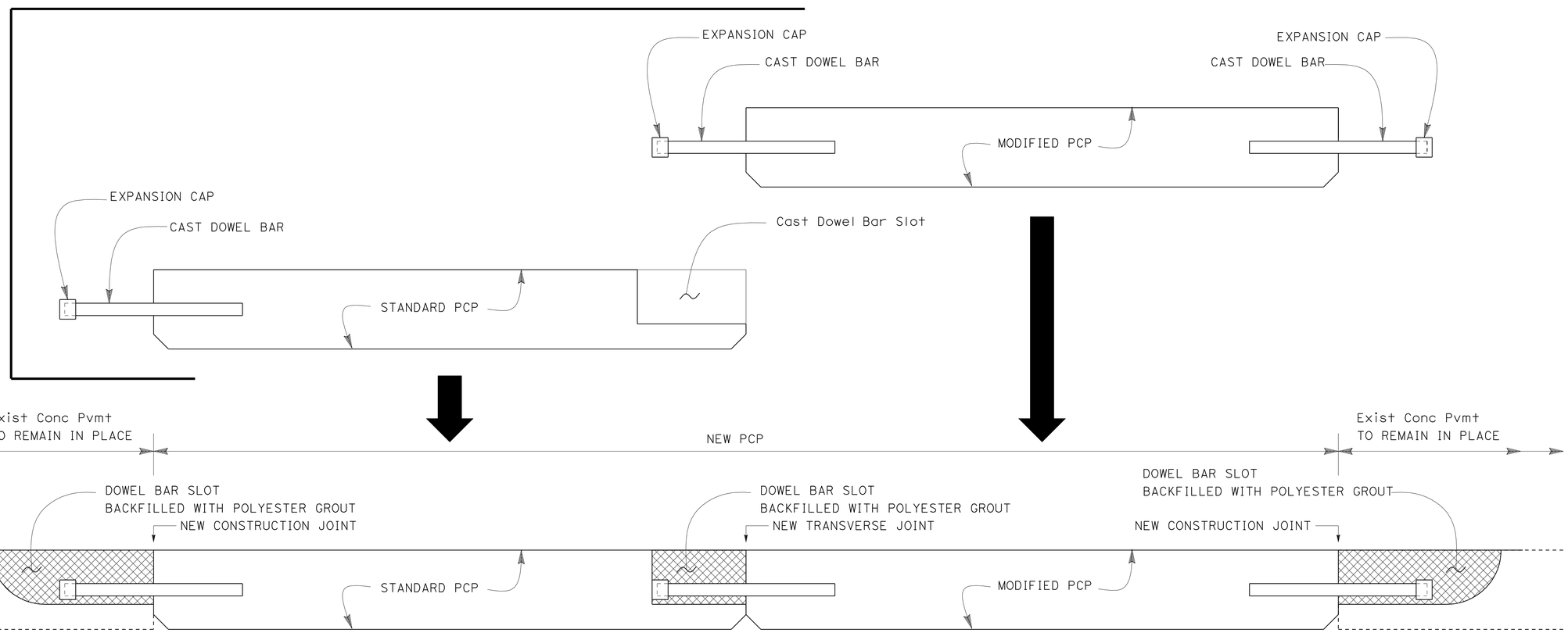

SECTION A-A

SINGLE SLAB REPLACEMENT, L< 16'

CONSTRUCTION DETAILS
INDIVIDUAL SLAB REPLACEMENT PRECAST CONCRETE PANEL INSTALLATION AND CONNECTION DETAILS No. 1

NO SCALE

C-54

STATE OF CALIFORNIA - DEPARTMENT OF TRANSPORTATION

CONSULTANT FUNCTIONAL SUPERVISOR: NATALINA V. BERNARDI

CALCULATED-DESIGNED BY: CARMELO CECILIO

CHECKED BY: LUIS GARCIA

REVISED BY: CC

DATE REVISED: 1/18/12

LAST REVISION 01-18-12

DATE PLOTTED => 23-MAY-2012
TIME PLOTTED => 06:58

Dist	COUNTY	ROUTE	POST MILES TOTAL PROJECT	SHEET No.	TOTAL SHEETS
04	Ala	580	R8.4/R14.6	133	853

1/18/12
REGISTERED CIVIL ENGINEER DATE

5-14-12
PLANS APPROVAL DATE

REGISTERED PROFESSIONAL ENGINEER
N.V. BERNARDI
No. 45407
Exp. 9/30/12
CIVIL
STATE OF CALIFORNIA

THE STATE OF CALIFORNIA OR ITS OFFICERS OR AGENTS SHALL NOT BE RESPONSIBLE FOR THE ACCURACY OR COMPLETENESS OF SCANNED COPIES OF THIS PLAN SHEET.

BKF ENGINEERS
4670 WILLOW ROAD, SUITE 250
PLEASANTON, CA. 94588

ALAMEDA CTC
1333 BROADWAY SUITE 220
OAKLAND, CA. 94612

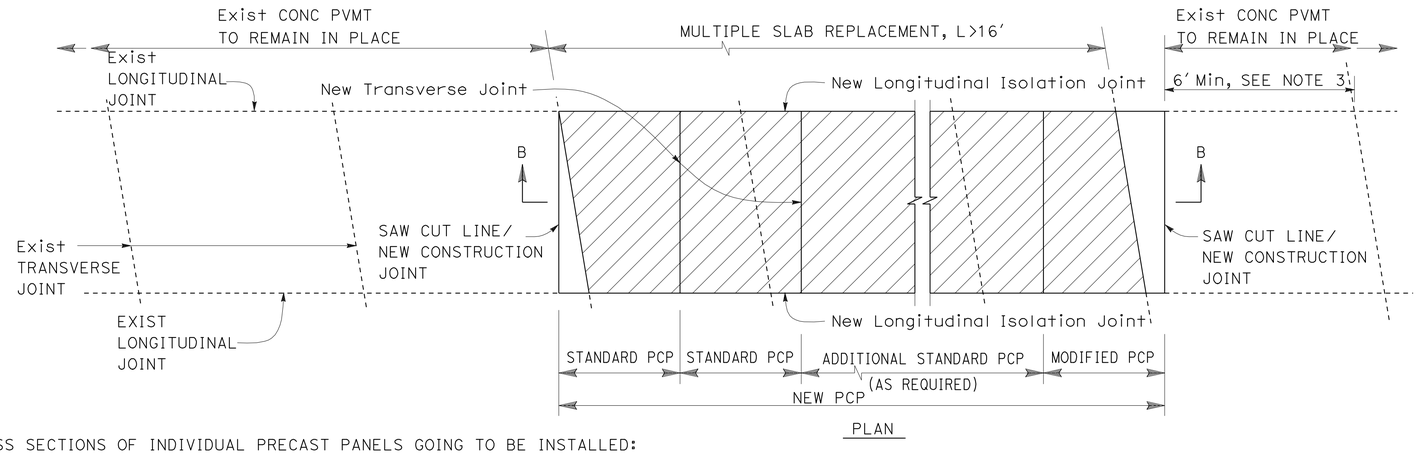

PLAN

NOTES:

1. FOR PRECAST PANEL DETAILS, SEE "PANEL DETAILS" SHEET.
2. FOR DOWEL BAR AND JOINT DETAILS, SEE "MISCELLANEOUS DETAILS NO. 1 AND NO. 2" SHEETS.
3. 6' MIN LENGTH OF EXISTING SLAB SHOULD REMAIN, OTHERWISE, ADD A STANDARD PCP.

CROSS SECTIONS OF INDIVIDUAL PRECAST PANELS GOING TO BE INSTALLED:

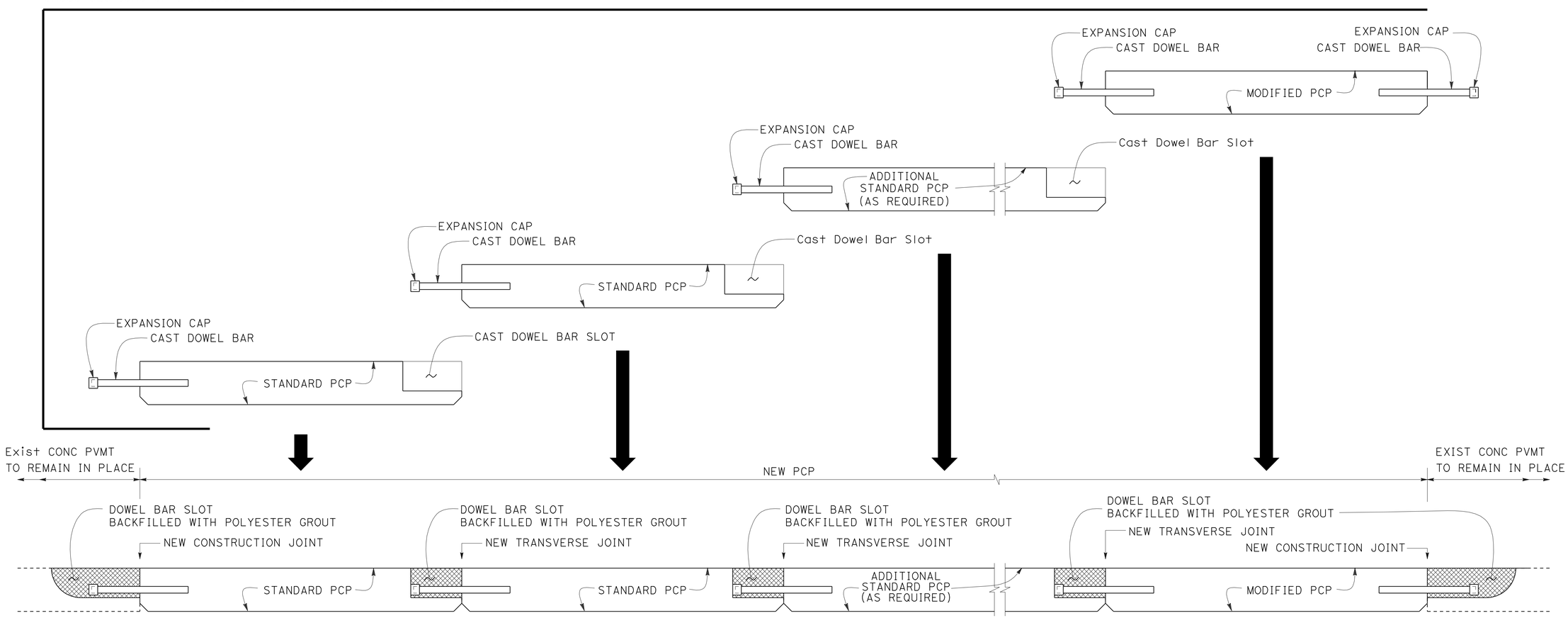

SECTION B-B

MULTIPLE SLAB REPLACEMENT, L>16'

CONSTRUCTION DETAILS
INDIVIDUAL SLAB REPLACEMENT PRECAST CONCRETE PANEL INSTALLATION AND CONNECTION DETAILS No. 2

NO SCALE

C-55

REVISED BY	DATE REVISED
CC	1/18/12

CARMELO CECILIO — LUIS GARCIA — CALCULATED-DESIGNED BY — CHECKED BY

CONSULTANT FUNCTIONAL SUPERVISOR: NATALINA V. BERNARDI

STATE OF CALIFORNIA - DEPARTMENT OF TRANSPORTATION

Caltrans

LAST REVISION 01-18-12 — DATE PLOTTED => 23-MAY-2012 — TIME PLOTTED => 06:58

Dist	COUNTY	ROUTE	POST MILES TOTAL PROJECT	SHEET No.	TOTAL SHEETS
04	Ala	580	R8.4/R14.6	134	853

1/18/12
REGISTERED CIVIL ENGINEER DATE

5-14-12
PLANS APPROVAL DATE

REGISTERED PROFESSIONAL ENGINEER N.V. BERNARDI No. 45407 Exp. 9/30/12 CIVIL STATE OF CALIFORNIA

THE STATE OF CALIFORNIA OR ITS OFFICERS OR AGENTS SHALL NOT BE RESPONSIBLE FOR THE ACCURACY OR COMPLETENESS OF SCANNED COPIES OF THIS PLAN SHEET.

BKF ENGINEERS
4670 WILLOW ROAD, SUITE 250
PLEASANTON, CA. 94588

ALAMEDA CTC
1333 BROADWAY SUITE 220
OAKLAND, CA. 94612

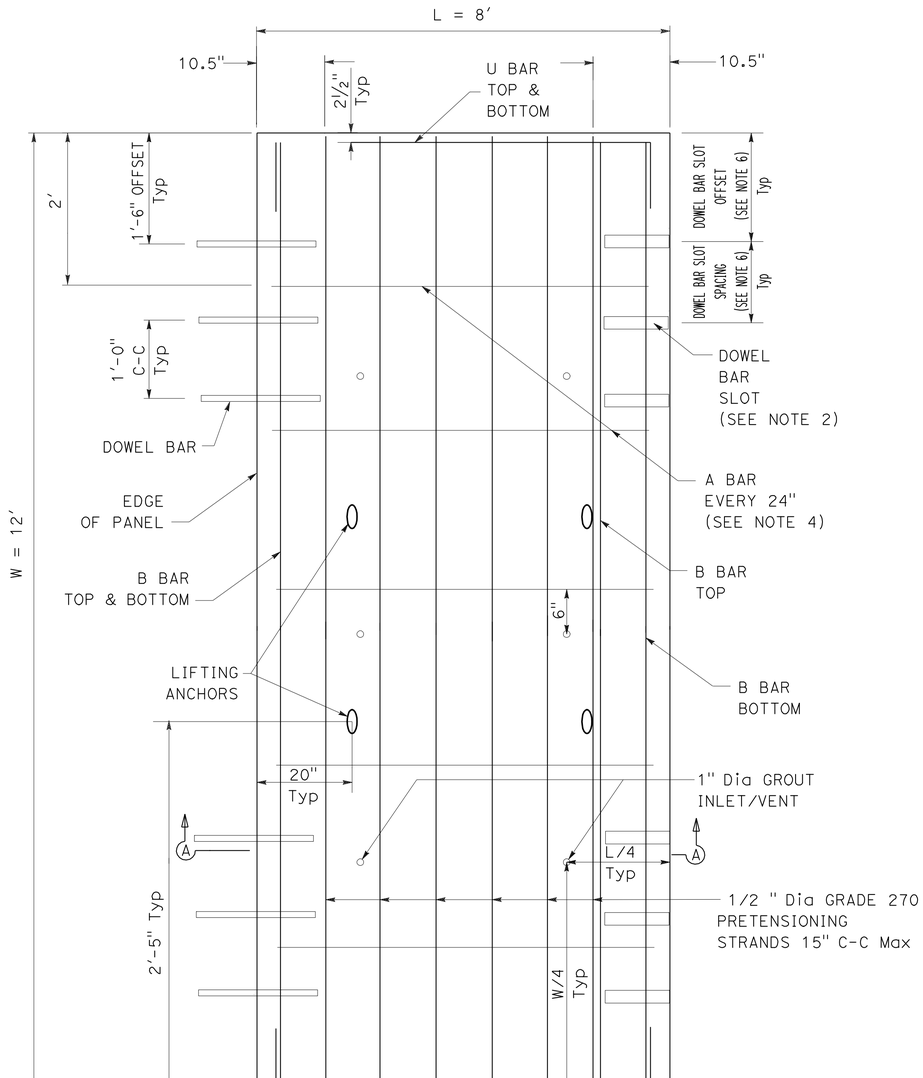

PLAN
STANDARD PCP

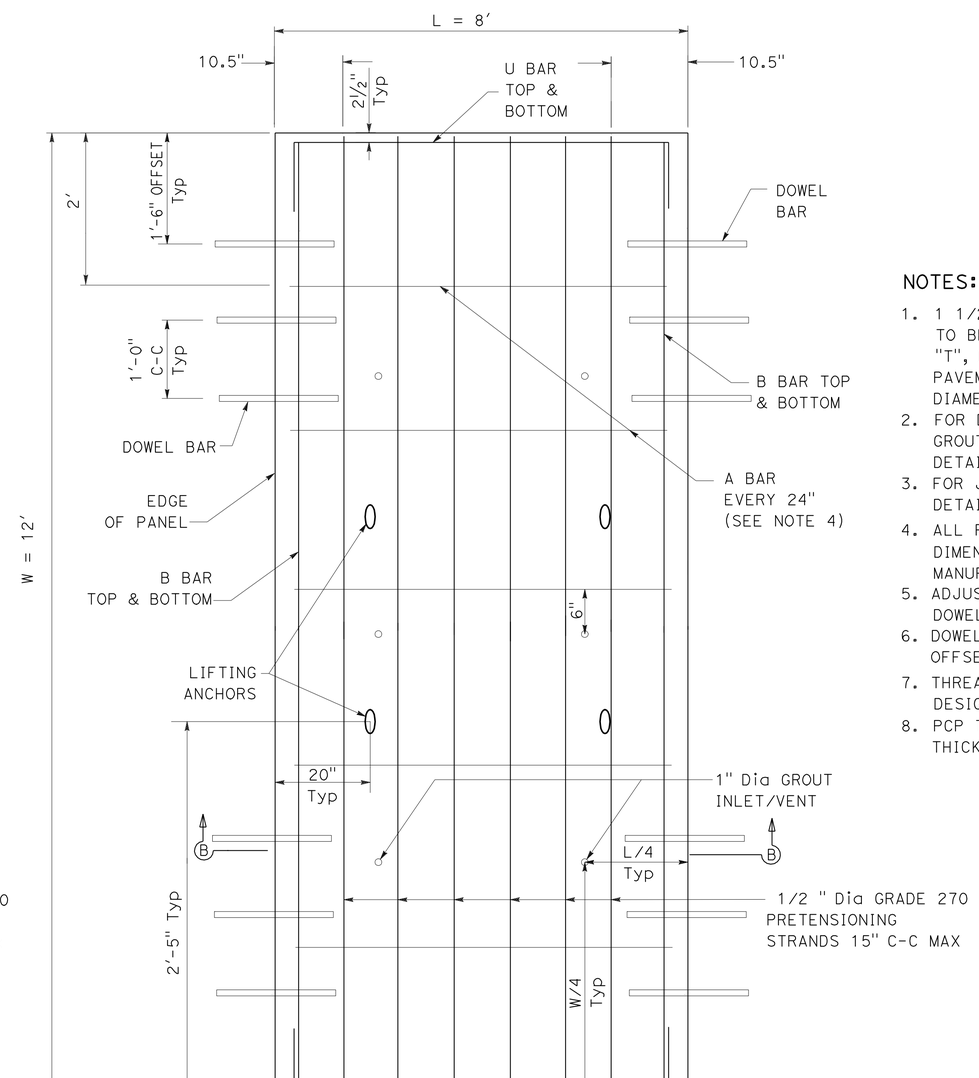

PLAN
MODIFIED PCP

NOTES:

1. 1 1/2" DIAMETER DOWEL BARS 1′-6" LENGTH ARE TO BE USED WHEN THE EXISTING PAVEMENT THICKNESS, "T", IS EQUAL TO OR GREATER THAN 0.70′. FOR A PAVEMENT THICKNESS, "T", LESS THAN 0.70′, USE 1 1/4" DIAMETER DOWEL BAR 1′-6" IN LENGTH.
2. FOR DOWEL BAR SLOT DIMENSIONS, BACKFILLING, AND GROUT INLET/VENT DETAILS, SEE "MISCELLANEOUS DETAILS No. 1" SHEET.
3. FOR JOINT DETAILS, SEE "MISCELLANEOUS DETAILS No. 2" SHEET.
4. ALL REINFORCEMENT AND PRETENSIONING STRAND DIMENSIONS ARE TO BE VERIFIED BY THE MANUFACTURER BEFORE PANEL FABRICATION.
5. ADJUST LOCATION OF "A" BAR TO ACCOMMODATE DOWEL BARS AND DOWEL BAR SLOTS.
6. DOWEL BAR SLOT OFFSET AND SPACING TO MATCH OFFSET AND SPACING OF DOWELS IN ADJACENT PCP.
7. THREADED AND RECESSED LIFTING ANCHORS TO BE DESIGNED BY THE CONTRACTOR.
8. PCP THICKNESS, T, TO MATCH EXISTING CONCRETE SLAB THICKNESS BUT NOT LESS THAN 0.70′.

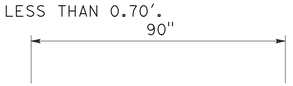

A BAR 5 # 4 PER PANEL

B BAR 4 # 4 PER PANEL

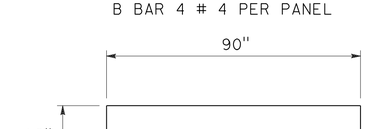

U BAR 4 # 4 PER PANEL

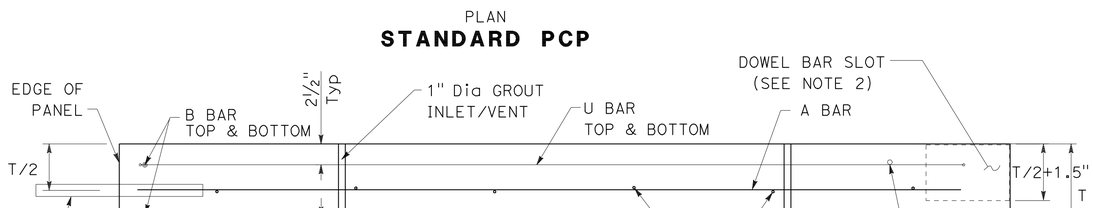

SECTION A-A

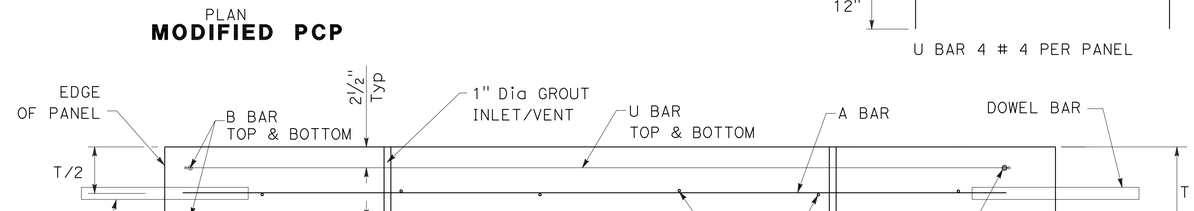

SECTION B-B

PRECAST CONCRETE PANELS (PCP)

NOT TO SCALE

CONSTRUCTION DETAILS
INDIVIDUAL SLAB REPLACEMENT PRECAST CONCRETE PANEL PANEL DETAILS

NO SCALE

C-56

STATE OF CALIFORNIA - DEPARTMENT OF TRANSPORTATION

CONSULTANT FUNCTIONAL SUPERVISOR: NATALINA V. BERNARDI

CALCULATED-DESIGNED BY: CARMELO CECILIO
CHECKED BY: LUIS GARCIA
REVISED BY: CC
DATE REVISED: 1/18/12

LAST REVISION 01-18-12
DATE PLOTTED => 23-MAY-2012
TIME PLOTTED => 06:58

Dist	COUNTY	ROUTE	POST MILES TOTAL PROJECT	SHEET No.	TOTAL SHEETS
04	Ala	580	R8.4/R14.6	135	853

REGISTERED CIVIL ENGINEER 1/18/12 DATE

5-14-12
PLANS APPROVAL DATE

REGISTERED PROFESSIONAL ENGINEER N.V. BERNARDI No. 45407 Exp. 9/30/12 CIVIL STATE OF CALIFORNIA

THE STATE OF CALIFORNIA OR ITS OFFICERS OR AGENTS SHALL NOT BE RESPONSIBLE FOR THE ACCURACY OR COMPLETENESS OF SCANNED COPIES OF THIS PLAN SHEET.

BKF ENGINEERS
4670 WILLOW ROAD, SUITE 250
PLEASANTON, CA. 94588

ALAMEDA CTC
1333 BROADWAY SUITE 220
OAKLAND, CA. 94612

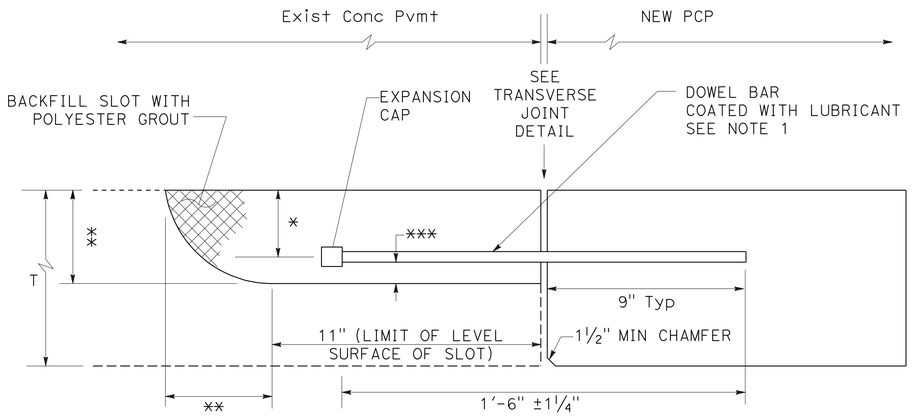

ELEVATION

T = EXISTING THICKNESS OF PCC, JPCP, OR RSC
* T/2 ± 1/4 "
** T/2 +1 1/2 "
*** Min Clr ½" BETWEEN BAR AND BOTTOM OF SLOT

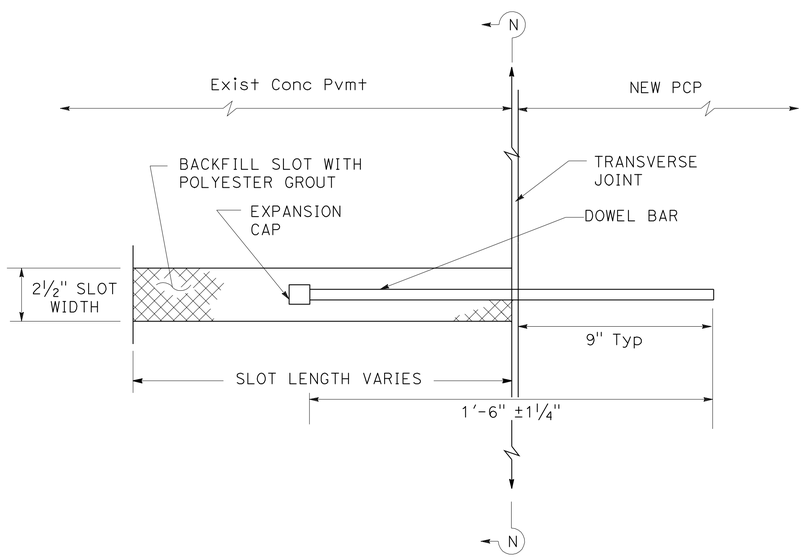

PLAN

DOWEL BAR SLOT BACKFILLING

NOTES:

1. FOR DIAMETER, SEE "PANEL DETAILS" SHEET, NOTE No. 1.
2. SEAL EXISTING TRANSVERSE JOINT AT BOTTOM AND SIDES OF THE DOWEL BAR SLOT WITH CAULKING FILLER PRIOR TO PLACING DOWEL BAR AND FOAM CORE INSERT.
3. THE TOP OF THE FOAM CORE INSERT IS TO MATCH THE TOP OF THE EXISTING PAVEMENT SURFACE INITIALLY. THE FOAM CORE INSERT TO BE REMOVED BEFORE PLACING JOINT FILLER MATERIAL.

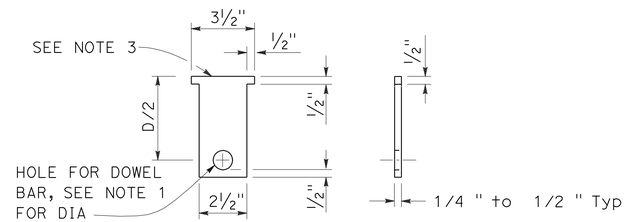

FOAM CORE INSERT DETAIL

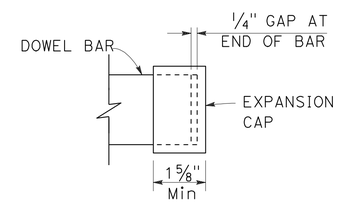

EXPANSION CAP DETAIL
(MINIMUM REQUIREMENT)

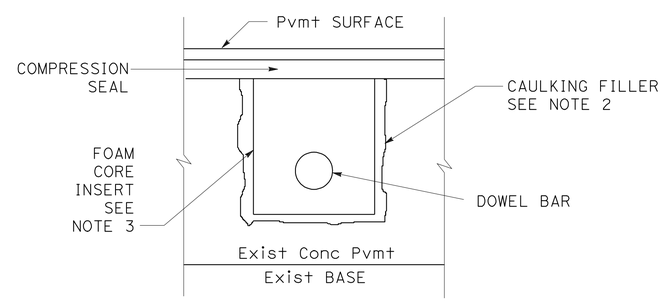

SECTION N-N

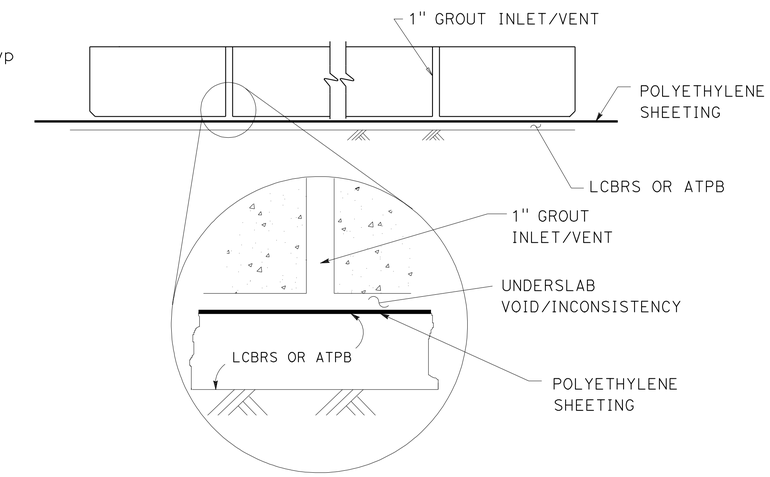

UNDERSLAB GROUT INLET/VENT AND POLYETHYLENE SHEETING

CONSTRUCTION DETAILS
INDIVIDUAL SLAB REPLACEMENT PRECAST CONCRETE PANEL MISCELLANEOUS DETAILS No. 1

NO SCALE

C-57

STATE OF CALIFORNIA - DEPARTMENT OF TRANSPORTATION
CONSULTANT FUNCTIONAL SUPERVISOR: NATALINA V. BERNARDI
CALCULATED-DESIGNED BY: CARMELO CECILIO
CHECKED BY: LUIS GARCIA
REVISED BY: CC
DATE REVISED: 1/18/12

LAST REVISION 01-18-12
DATE PLOTTED => 23-MAY-2012
TIME PLOTTED => 06:58

Dist	COUNTY	ROUTE	POST MILES TOTAL PROJECT	SHEET No.	TOTAL SHEETS
04	Ala	580	R8.4/R14.6	136	853

1/18/12
REGISTERED CIVIL ENGINEER DATE

5-14-12
PLANS APPROVAL DATE

REGISTERED PROFESSIONAL ENGINEER
N.V. BERNARDI
No. 45407
Exp. 9/30/12
CIVIL
STATE OF CALIFORNIA

THE STATE OF CALIFORNIA OR ITS OFFICERS OR AGENTS SHALL NOT BE RESPONSIBLE FOR THE ACCURACY OR COMPLETENESS OF SCANNED COPIES OF THIS PLAN SHEET.

BKF ENGINEERS
4670 WILLOW ROAD, SUITE 250
PLEASANTON, CA. 94588

ALAMEDA CTC
1333 BROADWAY SUITE 220
OAKLAND, CA. 94612

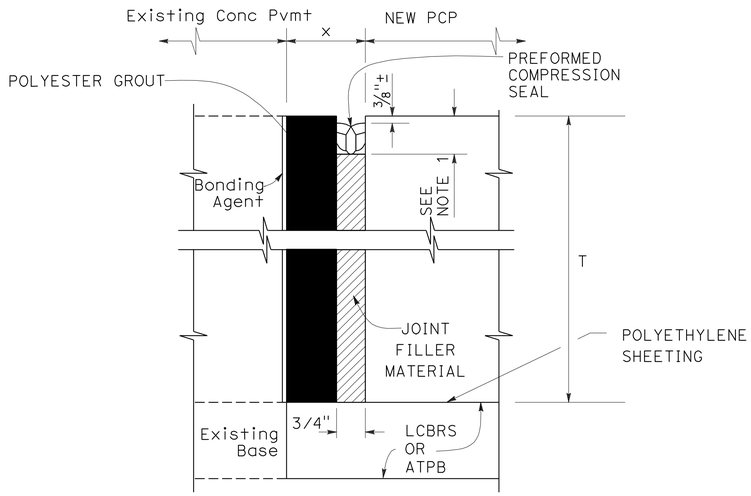

LONGITUDINAL ISOLATION JOINT DETAIL

(FOR WIDER JOINTS, 1" < x < 1 1/2")

NOTE:

NOMINAL WIDTH FOR PREFORMED COMPRESSION SEALS TO BE SELECTED BASED ON THE ACTUAL JOINT WIDTH SO THAT THE SEALS ARE COMPRESSED 40 TO 50 PERCENT FOR THE JOINT WIDTH AND DEPTH.

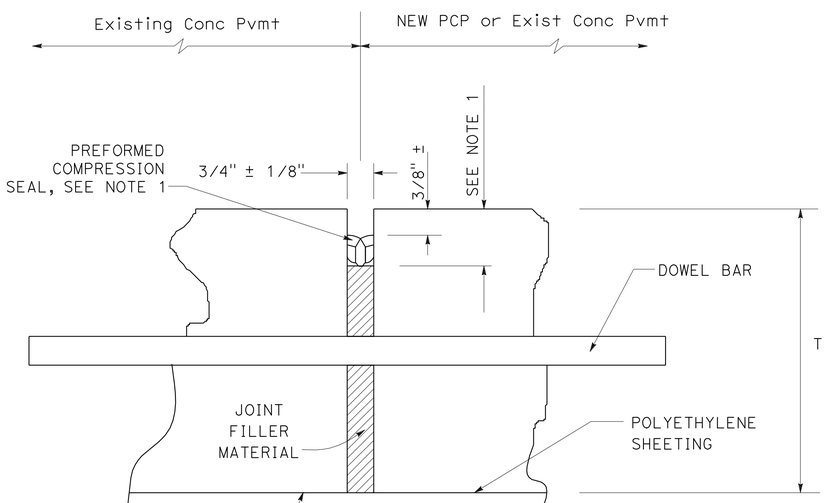

CONSTRUCTION AND TRANSVERSE JOINT DETAIL

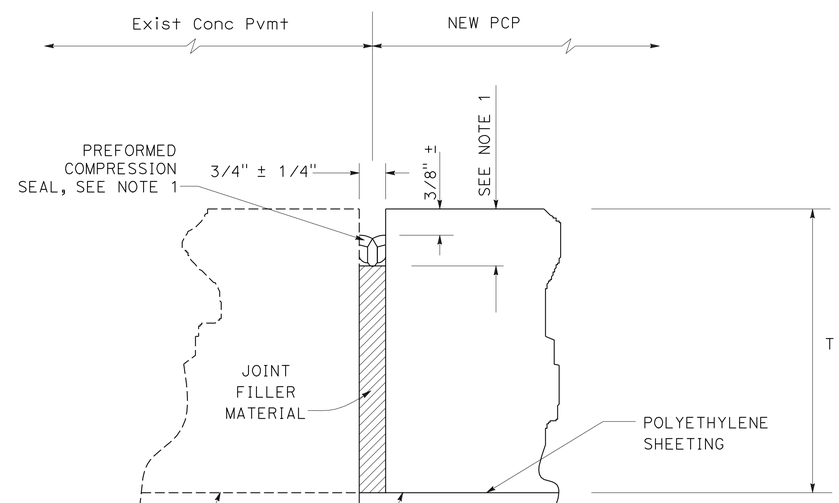

LONGITUDINAL ISOLATION JOINT DETAIL

CONSTRUCTION DETAILS
INDIVIDUAL SLAB REPLACEMENT PRECAST CONCRETE PANEL MISCELLANEOUS DETAILS No. 2

NO SCALE

C-58

CARMELO CECILIO	CC
LUIS GARCIA	1/18/12
CALCULATED-DESIGNED BY	REVISED BY
CHECKED BY	DATE REVISED
NATALINA V. BERNARDI	

CONSULTANT FUNCTIONAL SUPERVISOR

STATE OF CALIFORNIA - DEPARTMENT OF TRANSPORTATION

Caltrans

LAST REVISION 01-18-12 | DATE PLOTTED => 23-MAY-2012 | TIME PLOTTED => 06:58

Dist	COUNTY	ROUTE	POST MILES TOTAL PROJECT	SHEET No.	TOTAL SHEETS
04	Ala	580	R8.4/R14.6	137	853

REGISTERED CIVIL ENGINEER 5/7/12 DATE

5-14-12 PLANS APPROVAL DATE

REGISTERED PROFESSIONAL ENGINEER N.V. BERNARDI No. 45407 Exp. 9/30/12 CIVIL STATE OF CALIFORNIA

THE STATE OF CALIFORNIA OR ITS OFFICERS OR AGENTS SHALL NOT BE RESPONSIBLE FOR THE ACCURACY OR COMPLETENESS OF SCANNED COPIES OF THIS PLAN SHEET.

BKF ENGINEERS
4670 WILLOW ROAD, SUITE 250
PLEASANTON, CA. 94588

ALAMEDA CTC
1333 BROADWAY SUITE 220
OAKLAND, CA. 94612

NOTES

1. CONTRACTOR OPTIONS FOR FILL BETWEEN BARRIER WALLS.
   - (A) PLACE 2' PCC AT BASE BETWEEN BARRIER WALLS.
   - (B) PLACE GRANULAR MATERIAL FROM BASE TO BOTTOM.
2. FORMING MATERIAL FOR 4" CAP MAY REMAIN IN PLACE.
3. ENCLOSE COLUMN WITH 1" EXPANDED POLYSTYRENE AT LOCATION WHERE CONCRETE OR CEMENT TREATED BASE ENCASES THE COLUMN.

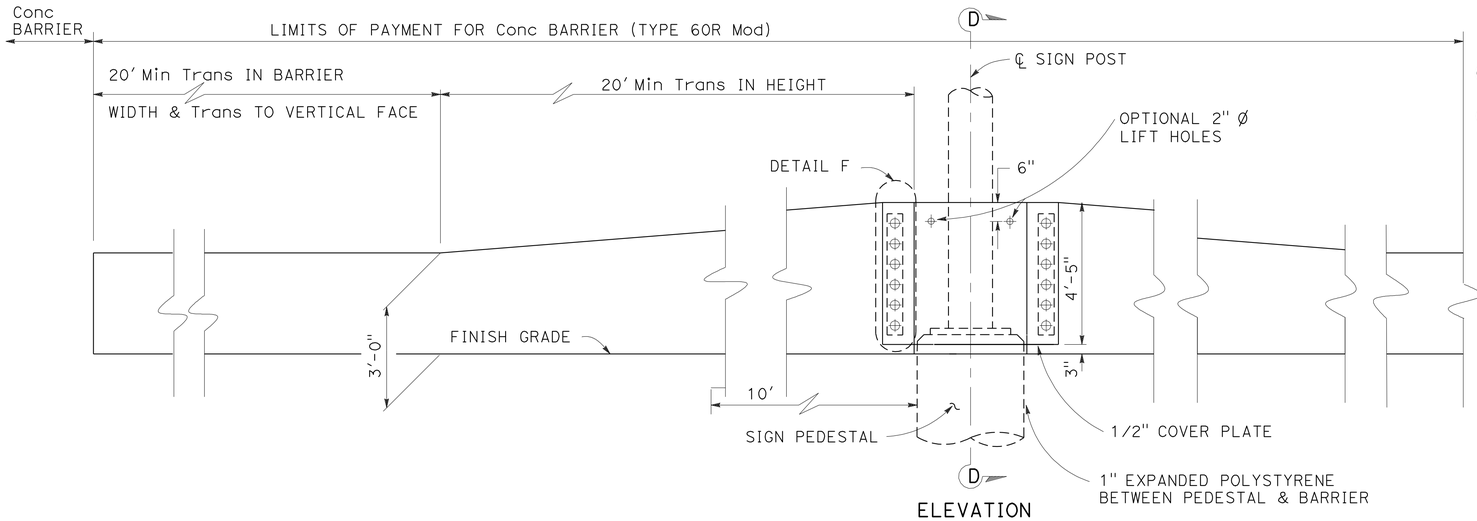

ELEVATION

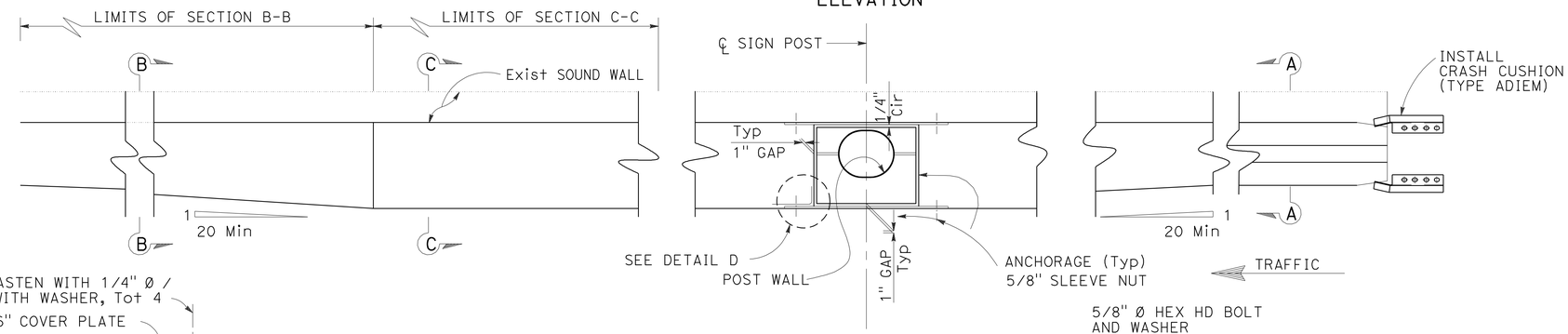

PLAN

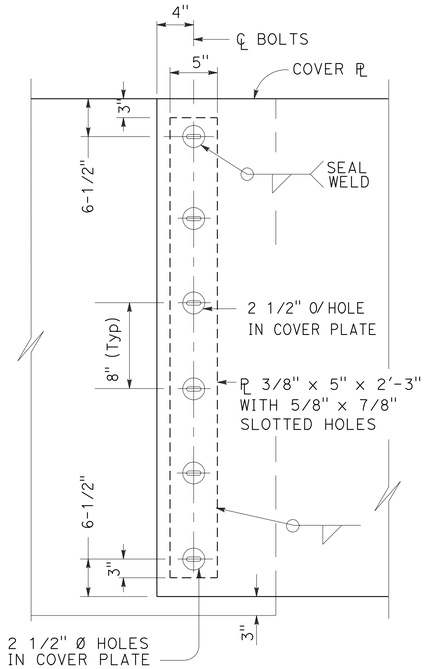

DETAIL F

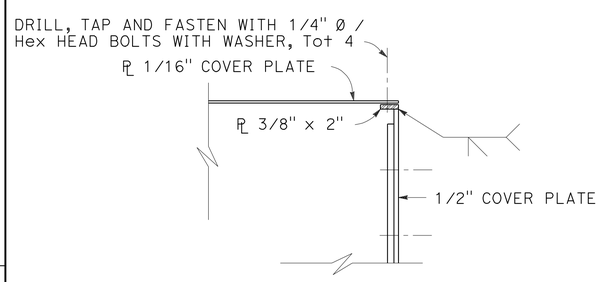

DETAIL G

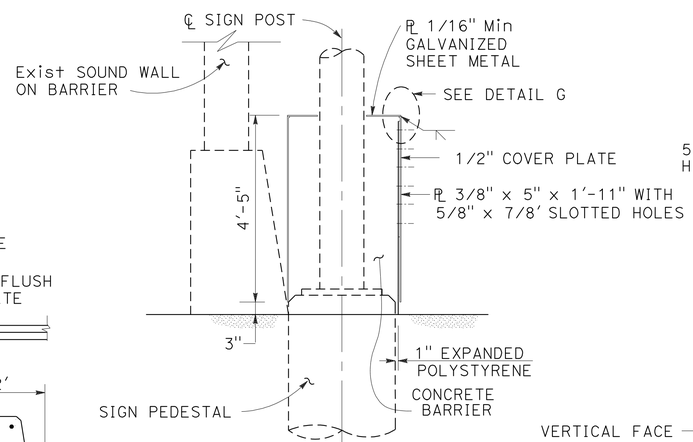

SECTION D-D

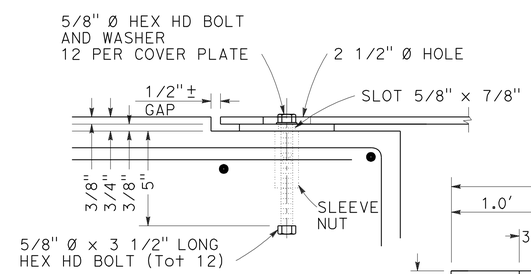

DETAIL E

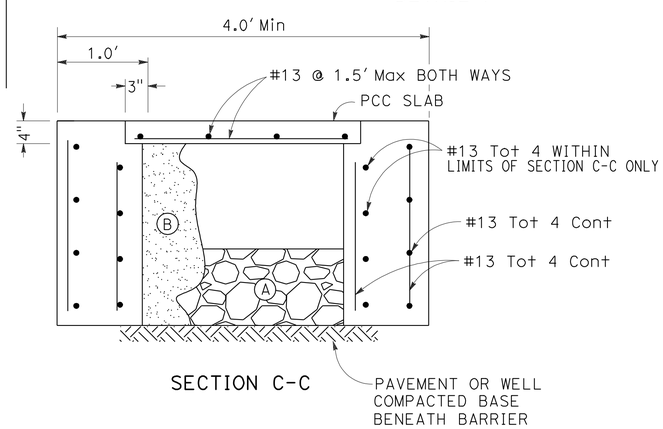

SECTION C-C

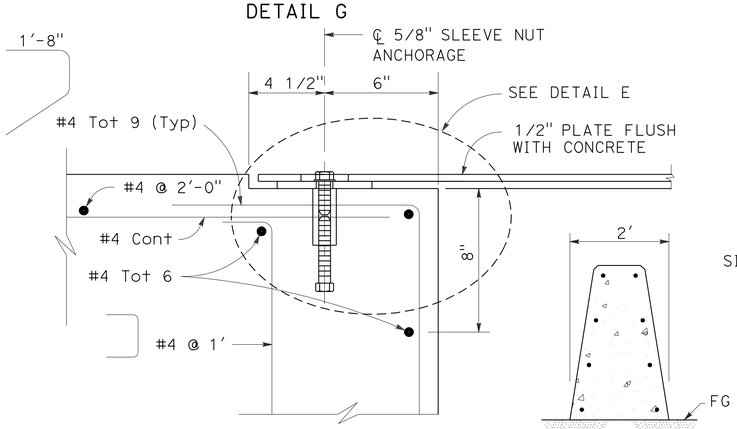

DETAIL D

SECTION A-A

NOTE:
CONCRETE BARRIER (TYPE 60R Mod) IS SYMMETRICAL ABOUT ℄ OF SIGN POST.

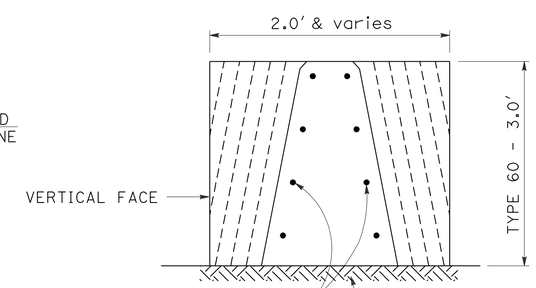

SECTION B-B

CONSTRUCTION DETAILS

CONCRETE BARRIER (TYPE 60R Mod) AT SIGN POST

NO SCALE

C-59

DAT Q. NGUYEN	DQN	5/7/12	
LUIS GARCIA	REVISED BY	DATE REVISED	
CALCULATED-DESIGNED BY	CHECKED BY		
NATALINA V. BERNARDI	CONSULTANT FUNCTIONAL SUPERVISOR		

STATE OF CALIFORNIA - DEPARTMENT OF TRANSPORTATION

Caltrans

LAST REVISION 05-07-12 | DATE PLOTTED => 23-MAY-2012 | TIME PLOTTED => 06:58

Dist	COUNTY	ROUTE	POST MILES TOTAL PROJECT	SHEET No.	TOTAL SHEETS
04	Ala	580	R8.4/R14.6	138	853

REGISTERED CIVIL ENGINEER 1/18/12 DATE

5-14-12
PLANS APPROVAL DATE

REGISTERED PROFESSIONAL ENGINEER N.V. BERNARDI No. 45407 Exp. 9/30/12 CIVIL STATE OF CALIFORNIA

THE STATE OF CALIFORNIA OR ITS OFFICERS OR AGENTS SHALL NOT BE RESPONSIBLE FOR THE ACCURACY OR COMPLETENESS OF SCANNED COPIES OF THIS PLAN SHEET.

BKF ENGINEERS
4670 WILLOW ROAD, SUITE 250
PLEASANTON, CA. 94588

ALAMEDA CTC
1333 BROADWAY SUITE 220
OAKLAND, CA. 94612

NOTES:

1. FACE OF ROCK SLOPE PROTECTION TO BE COINCIDENT WITH EXISTING SIDE SLOPE OF CHANNEL. DO NOT PACK UNTIL SMOOTH; LEAVE AS ROUGH AS POSSIBLE.
2. CARRY ROCK SLOPE PROTECTION TO TOP OF BANK, UNLESS OTHERWISE SPECIFIED.
3. ENGINEER TO BE NOTIFIED AT LEAST 48 HOURS PRIOR TO THE COMMENCEMENT OF CONSTRUCTION. COMPLETE REMOVAL OF PORTIONS OF THE WORK INSTALLED WITHOUT INSPECTION MAY BE REQUIRED IF THIS REQUIREMENT IS NOT MET.
4. ALL WORK IS TO BE IN ACCORDANCE WITH THE STATE STANDARD SPECIFICATIONS SECTION 72-2. NO WHITE ROCK MAY BE USED.
5. ANY EXCESS SOIL FROM EXCAVATION SHALL BE DISPOSED OFF OF DISTRICT RIGHT OF WAY UNLESS APPROVED BY THE ENGINEER.

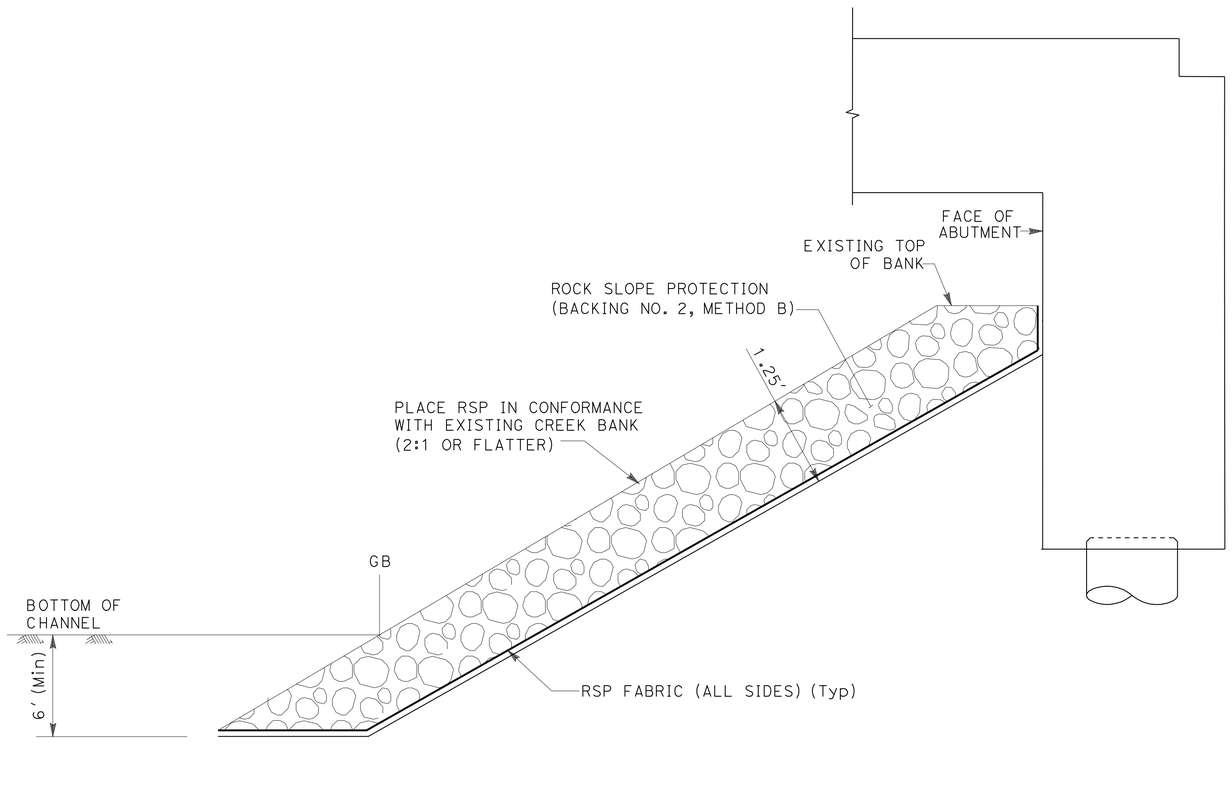

TYPICAL SECTION A-A
ROCK SLOPE PROTECTION
(SIMILAR BOTH SIDES OF CREEK)

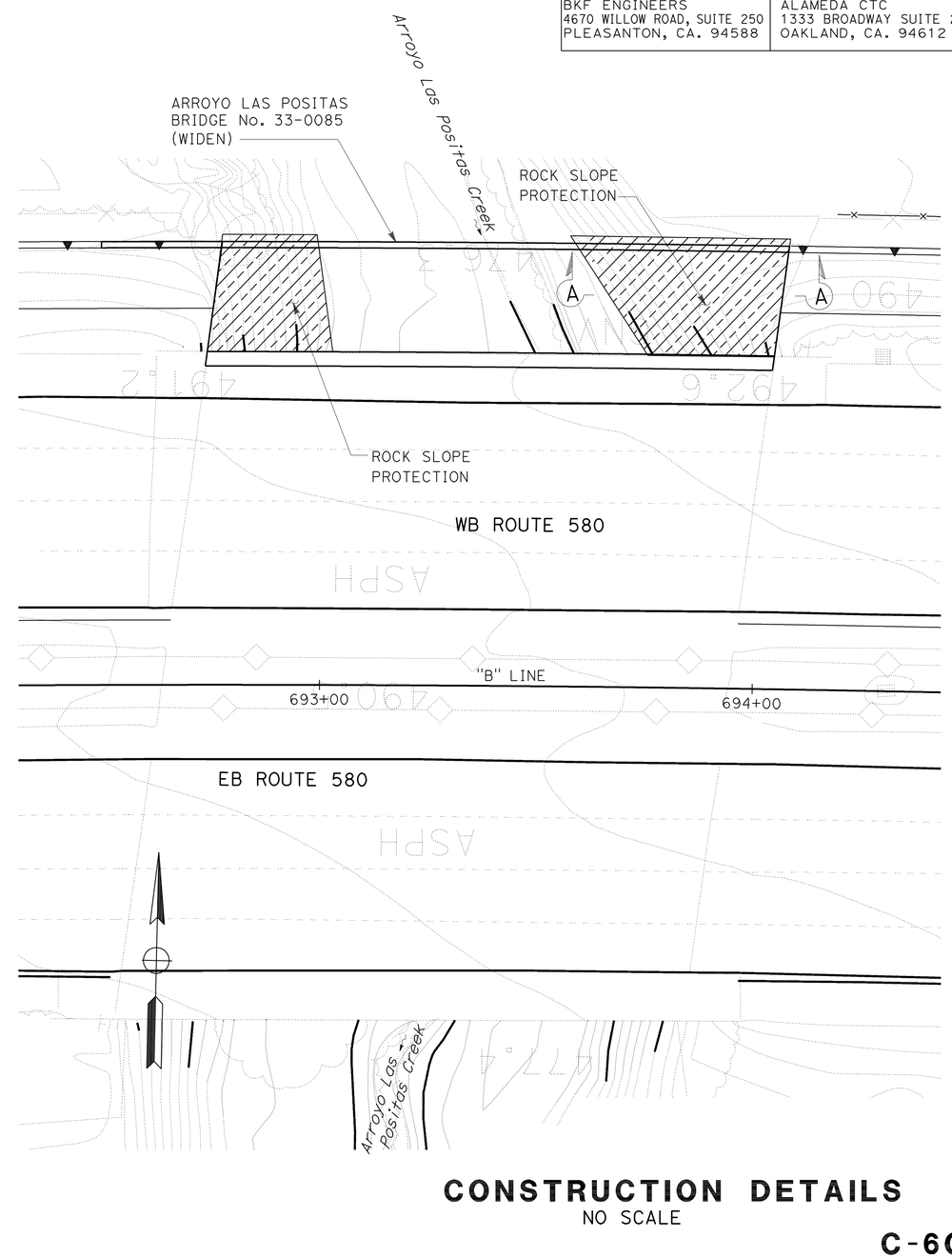

CONSTRUCTION DETAILS
NO SCALE

C-60

STATE OF CALIFORNIA - DEPARTMENT OF TRANSPORTATION
Caltrans

CONSULTANT FUNCTIONAL SUPERVISOR: NATALINA V. BERNARDI
CALCULATED-DESIGNED BY: DAT Q. NGUYEN
CHECKED BY: LUIS GARCIA
REVISED BY: DQN
DATE REVISED: 1/18/12

LAST REVISION 01-18-12
DATE PLOTTED => 23-MAY-2012
TIME PLOTTED => 06:58

Dist	COUNTY	ROUTE	POST MILES TOTAL PROJECT	SHEET No.	TOTAL SHEETS
04	Ala	580	R8.4/R14.6	139	853

REGISTERED CIVIL ENGINEER 1/18/12 DATE

5-14-12
PLANS APPROVAL DATE

REGISTERED PROFESSIONAL ENGINEER N.V. BERNARDI No. 45407 Exp. 9/30/12 CIVIL STATE OF CALIFORNIA

THE STATE OF CALIFORNIA OR ITS OFFICERS OR AGENTS SHALL NOT BE RESPONSIBLE FOR THE ACCURACY OR COMPLETENESS OF SCANNED COPIES OF THIS PLAN SHEET.

BKF ENGINEERS
4670 WILLOW ROAD, SUITE 250
PLEASANTON, CA. 94588

ALAMEDA CTC
1333 BROADWAY SUITE 220
OAKLAND, CA. 94612

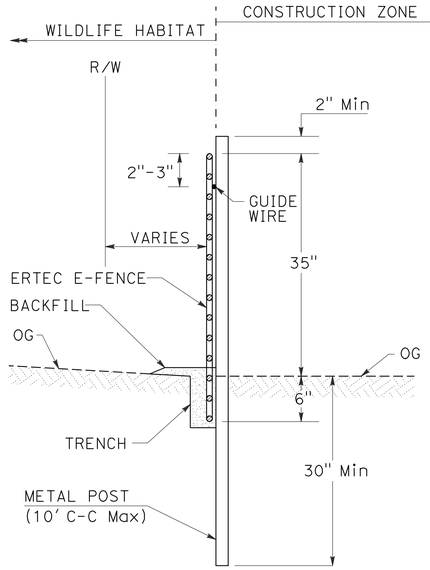

SECTION

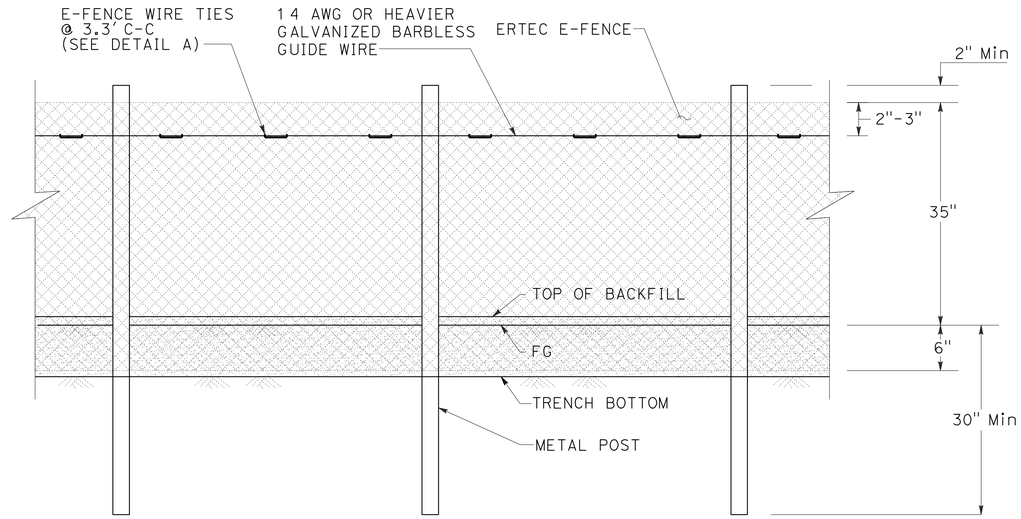

ELEVATION

TEMPORARY FENCE (WILDLIFE EXCLUSION)

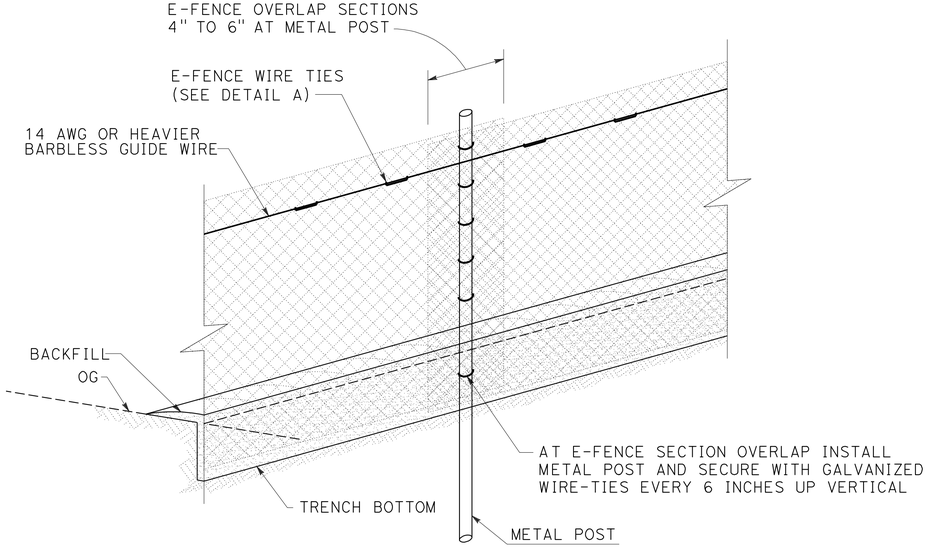

TEMPORARY FENCE OVERLAP DETAIL

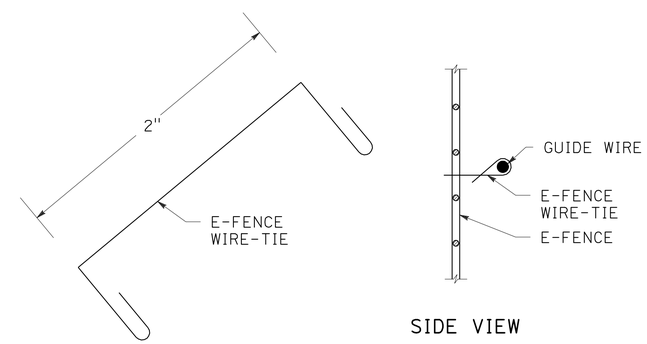

SIDE VIEW

NOTE:
INSERT E-FENCE WIRE-TIE THROUGH E-FENCE AT 3.3 FOOT INTERVALS. CRIMP LOOPS OF E-FENCE WIRE-TIE TIGHTLY AROUND 14 AWG OR HEAVIER GALVANIZED BARBLESS GUIDE WIRE FOR SECURE CONNECTION.

DETAIL A: TEMPORARY FENCE WIRE-TIE INSTALLATION

CONSTRUCTION DETAILS
NO SCALE

C-61

STATE OF CALIFORNIA - DEPARTMENT OF TRANSPORTATION
CONSULTANT FUNCTIONAL SUPERVISOR: NATALINA V. BERNARDI
CALCULATED-DESIGNED BY: DAT Q. NGUYEN
CHECKED BY: LUIS GARCIA
REVISED BY: DQN
DATE REVISED: 1/18/12

LAST REVISION 01-18-12 | DATE PLOTTED => 23-MAY-2012 | TIME PLOTTED => 06:58

Dist	COUNTY	ROUTE	POST MILES TOTAL PROJECT	SHEET No.	TOTAL SHEETS
04	Ala	580	R8.4/R14.6	140	853

REGISTERED CIVIL ENGINEER 1/18/12 DATE

5-14-12
PLANS APPROVAL DATE

REGISTERED PROFESSIONAL ENGINEER N.V. BERNARDI No. 45407 Exp. 9/30/12 CIVIL STATE OF CALIFORNIA

THE STATE OF CALIFORNIA OR ITS OFFICERS OR AGENTS SHALL NOT BE RESPONSIBLE FOR THE ACCURACY OR COMPLETENESS OF SCANNED COPIES OF THIS PLAN SHEET.

BKF ENGINEERS
4670 WILLOW ROAD, SUITE 250
PLEASANTON, CA. 94588

ALAMEDA CTC
1333 BROADWAY SUITE 220
OAKLAND, CA. 94612

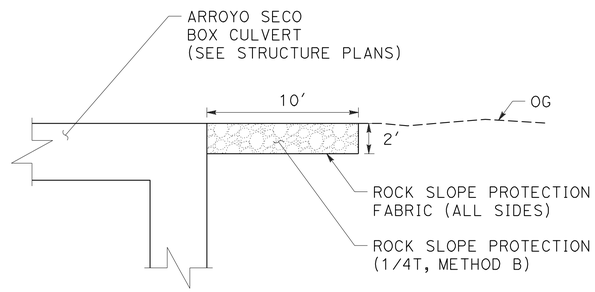

SECTION A-A
NO SCALE

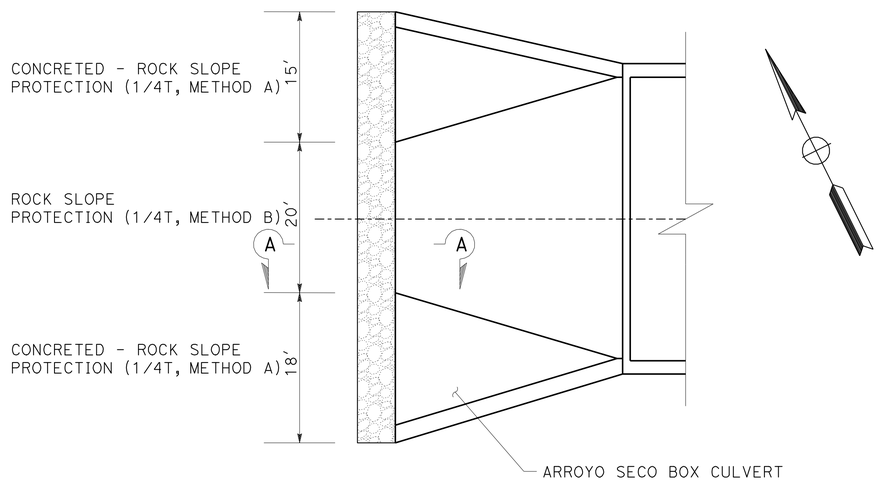

PLAN

RSP AT ARROYO SECO CREEK

CONSTRUCTION DETAILS

SCALE: 1" = 10′

C-62

STATE OF CALIFORNIA - DEPARTMENT OF TRANSPORTATION

CONSULTANT FUNCTIONAL SUPERVISOR: NATALINA V. BERNARDI

CALCULATED-DESIGNED BY: DAT Q. NGUYEN

CHECKED BY: LUIS GARCIA

REVISED BY: DQN

DATE REVISED: 1/18/12

LAST REVISION 01-18-12 | DATE PLOTTED => 23-MAY-2012 | TIME PLOTTED => 06:58

Dist	COUNTY	ROUTE	POST MILES TOTAL PROJECT	SHEET No.	TOTAL SHEETS
04	Ala	580	R8.4/R14.6	141	853

REGISTERED CIVIL ENGINEER 5/7/12 DATE

5-14-12
PLANS APPROVAL DATE

REGISTERED PROFESSIONAL ENGINEER INES S. LI No. C51561 Exp.6/30/12 CIVIL STATE OF CALIFORNIA

THE STATE OF CALIFORNIA OR ITS OFFICERS OR AGENTS SHALL NOT BE RESPONSIBLE FOR THE ACCURACY OR COMPLETENESS OF SCANNED COPIES OF THIS PLAN SHEET.

BIGGS CARDOSA ASSOCIATES INC.
865 THE ALAMEDA
SAN JOSE, CALIFORNIA 95126

ALAMEDA CTC
1333 BROADWAY, SUITE 200
OAKLAND, CA 94612

STANDARD PLANS DATED MAY 2006

SHEET No.	TITLE
A10A	ACRONYMS AND ABBRIEVIATIONS (SHEET 1 OF 2)
A10B	ACRONYMS AND ABBRIEVIATIONS (SHEET 2 OF 2)

ARROYO LAS POSITAS BRIDGE 33-0203

QUANTITIES

CLEAN EXPANSION JOINT	153	LF
JOINT SEAL (ASPHALTIC PLUG)	203	LF

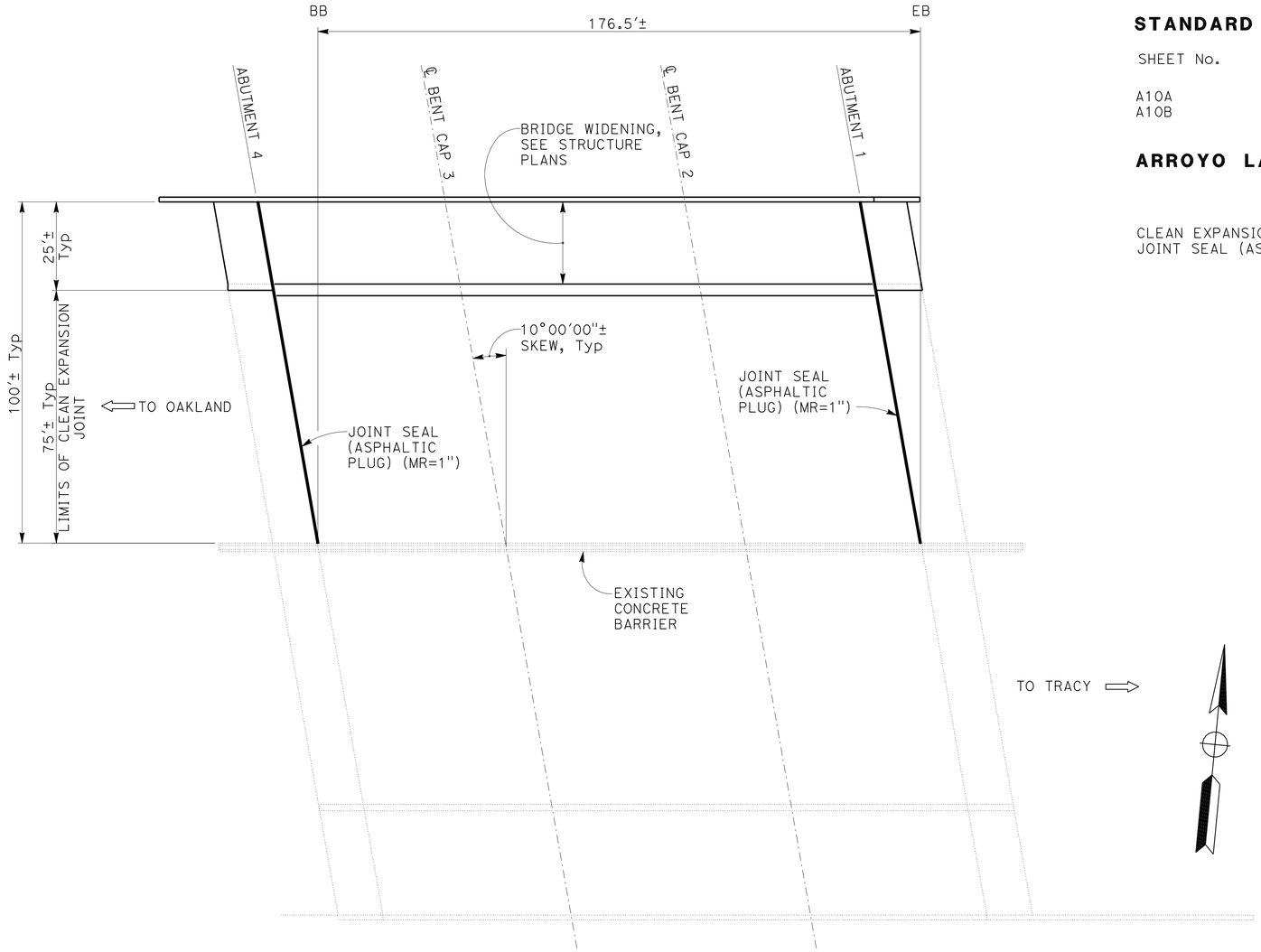

ARROYO LAS POSITAS BRIDGE

BRIDGE No. 33-0203, ROUTE 580, PM 13.13

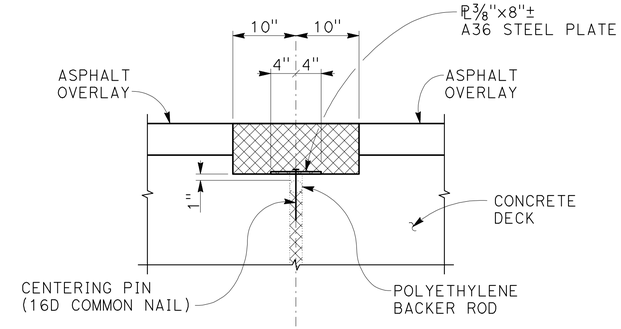

AT BRIDGE WIDENING

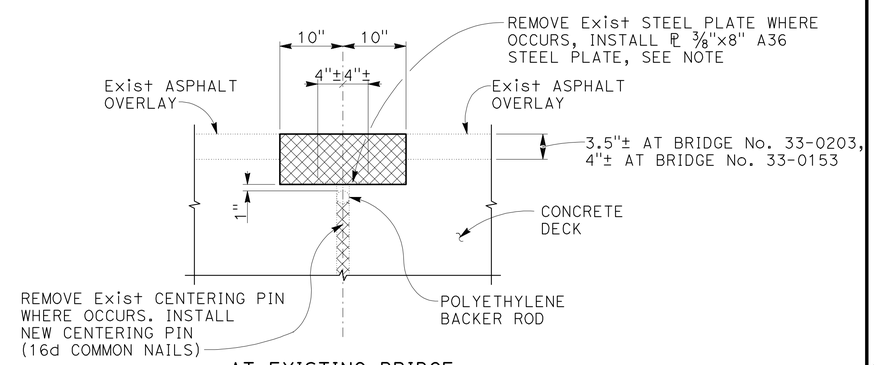

AT EXISTING BRIDGE

NOTE:
UNDAMAGED Exist STEEL PLATES MAY BE SALVAGED AND REUSED IF APPROVED BY THE ENGINEER

ASPHALTIC PLUG DETAIL

CONSTRUCTION DETAILS
BRIDGE REHABILITATION

NO SCALE

C-63

REVISED BY	DATE REVISED
RSR	5/7/12

RICARDO RIVAS — INES LI
CALCULATED-DESIGNED BY — CHECKED BY
CONSULTANT FUNCTIONAL SUPERVISOR — ROY M. SCHNABEL

STATE OF CALIFORNIA - DEPARTMENT OF TRANSPORTATION
Caltrans

LAST REVISION 05/07/12 — DATE PLOTTED => 23-MAY-2012 — TIME PLOTTED => 06:59

2007236 (2007236Y063)

Dist	COUNTY	ROUTE	POST MILES TOTAL PROJECT	SHEET No.	TOTAL SHEETS
04	Ala	580	R8.4/R14.6	142	853

REGISTERED CIVIL ENGINEER 5/7/12 DATE

5-14-12
PLANS APPROVAL DATE

REGISTERED PROFESSIONAL ENGINEER INES S. LI No. C51561 Exp.6/30/12 CIVIL STATE OF CALIFORNIA

THE STATE OF CALIFORNIA OR ITS OFFICERS OR AGENTS SHALL NOT BE RESPONSIBLE FOR THE ACCURACY OR COMPLETENESS OF SCANNED COPIES OF THIS PLAN SHEET.

BIGGS CARDOSA ASSOCIATES INC.
865 THE ALAMEDA
SAN JOSE, CALIFORNIA 95126

ALAMEDA CTC
1333 BROADWAY, SUITE 200
OAKLAND, CA 94612

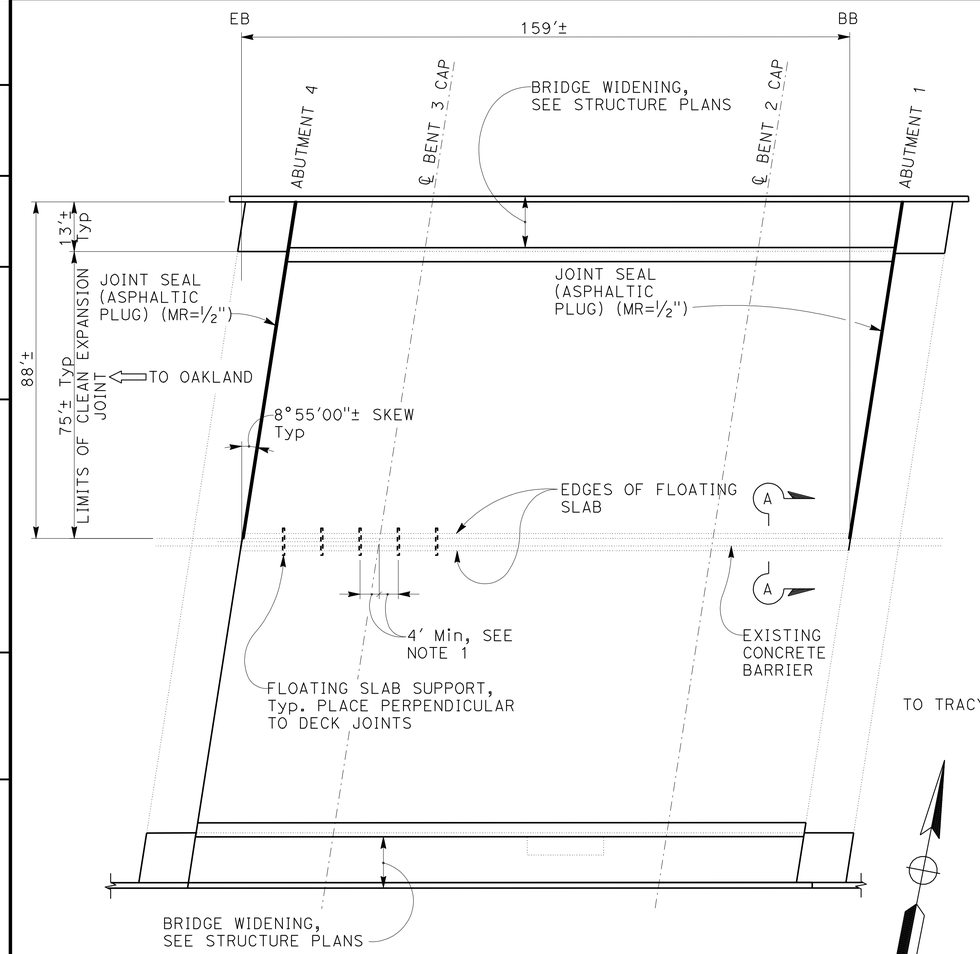

NORTH LIVERMORE AVENUE UC

BRIDGE No. 33-0153, ROUTE 580, PM 12.53

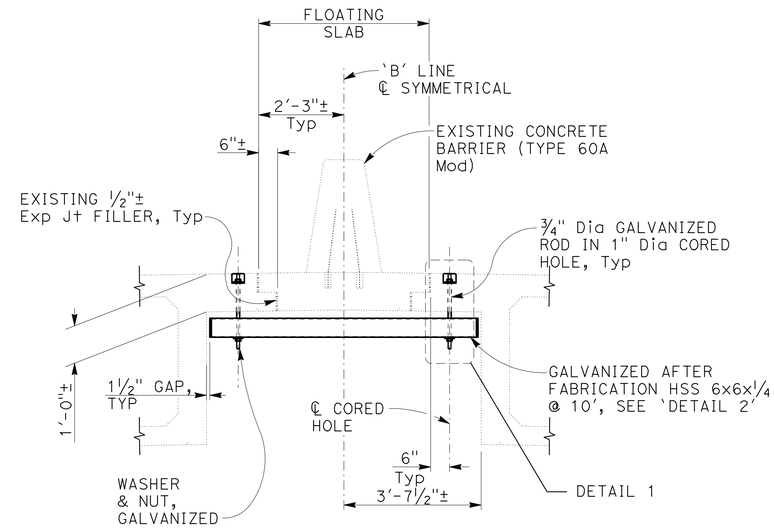

SECTION A-A

NOTES:

1. AVOID PLACING FLOATING SLAB SUPPORT WITHIN LIMITS SHOWN. NOT ALL FLOATING SLAB SUPPORTS SHOWN.
2. THE CONTRACTOR SHALL VERIFY ALL CONTROLLING FIELD DIMENSIONS BEFORE ORDERING OR FABRICATING MATERIALS.

NORTH LIVERMORE AVENUE UC 33-0153

QUANTITIES

CLEAN EXPANSION JOINT	152	LF
CORE CONCRETE (1")	34	LF
JOINT SEAL (ASPHALTIC PLUG)	179	LF
MISCELLANEOUS METAL (BRIDGE)	2635	LB

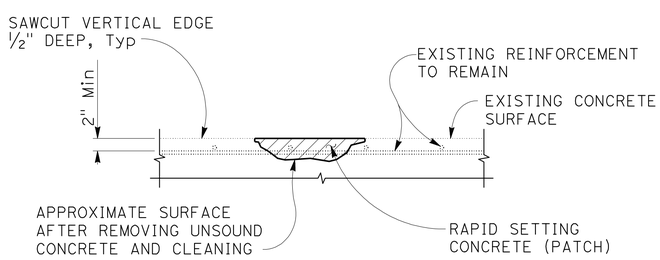

NOTE:
REINFORCEMENT MAY BE ENCOUNTERED DURING DECK CONCRETE REMOVAL AND IS TO REMAIN UNCHANGED

TYPICAL SPALL REPAIR DETAIL

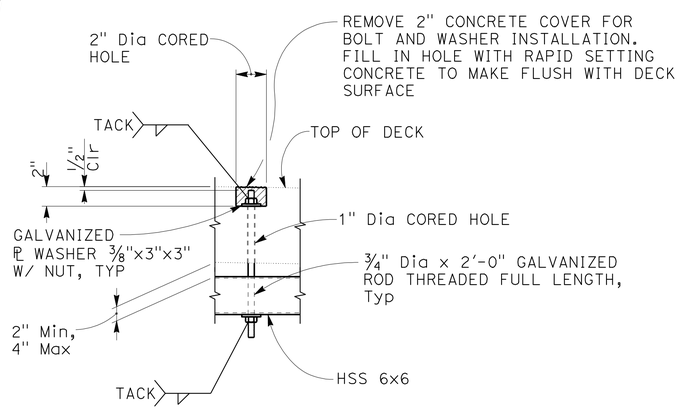

DETAIL 1

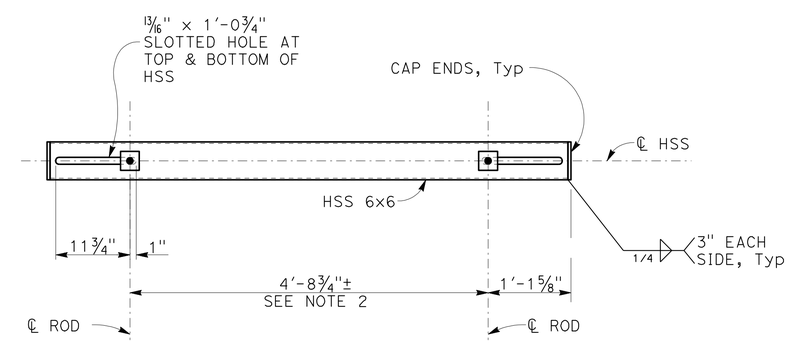

FLOATING SLAB SUPPORT - DETAIL 2

CONSTRUCTION DETAILS
BRIDGE REHABILITATION

NO SCALE

C-64

STATE OF CALIFORNIA - DEPARTMENT OF TRANSPORTATION
Caltrans

CONSULTANT FUNCTIONAL SUPERVISOR: ROY M. SCHNABEL

CALCULATED-DESIGNED BY: RICARDO RIVAS — CHECKED BY: INES LI

REVISED BY: RSR — DATE REVISED: 11/18/11
RSR — 1/18/12
RSR — 5/7/12

LAST REVISION 05/07/12 — DATE PLOTTED => 23-MAY-2012 — TIME PLOTTED => 06:59

2007236 (2007236Y064)

Dist	COUNTY	ROUTE	POST MILES TOTAL PROJECT	SHEET No.	TOTAL SHEETS
04	Alg	580	R8.4/R14.6	143	853

REGISTERED CIVIL ENGINEER 5/7/12 DATE

5-14-12
PLANS APPROVAL DATE

REGISTERED PROFESSIONAL ENGINEER INES S. LI No. C51561 Exp.6/30/12 CIVIL STATE OF CALIFORNIA

THE STATE OF CALIFORNIA OR ITS OFFICERS OR AGENTS SHALL NOT BE RESPONSIBLE FOR THE ACCURACY OR COMPLETENESS OF SCANNED COPIES OF THIS PLAN SHEET.

BIGGS CARDOSA ASSOCIATES INC.
865 THE ALAMEDA
SAN JOSE, CALIFORNIA 95126

ALAMEDA CTC
1333 BROADWAY, SUITE 200
OAKLAND, CA 94612

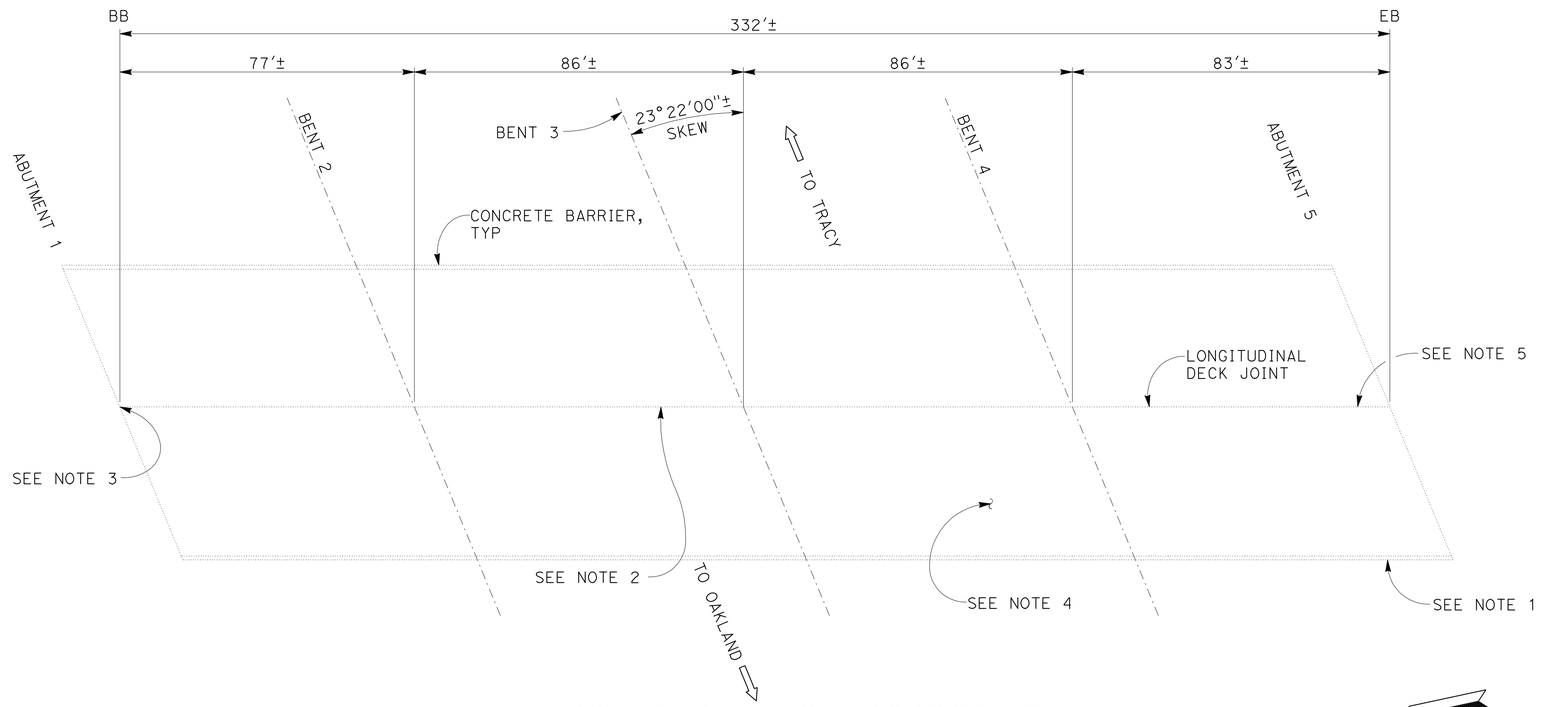

FIRST STREET OVERCROSSING

BRIDGE No. 33-0389, ROUTE 580, PM 10.69

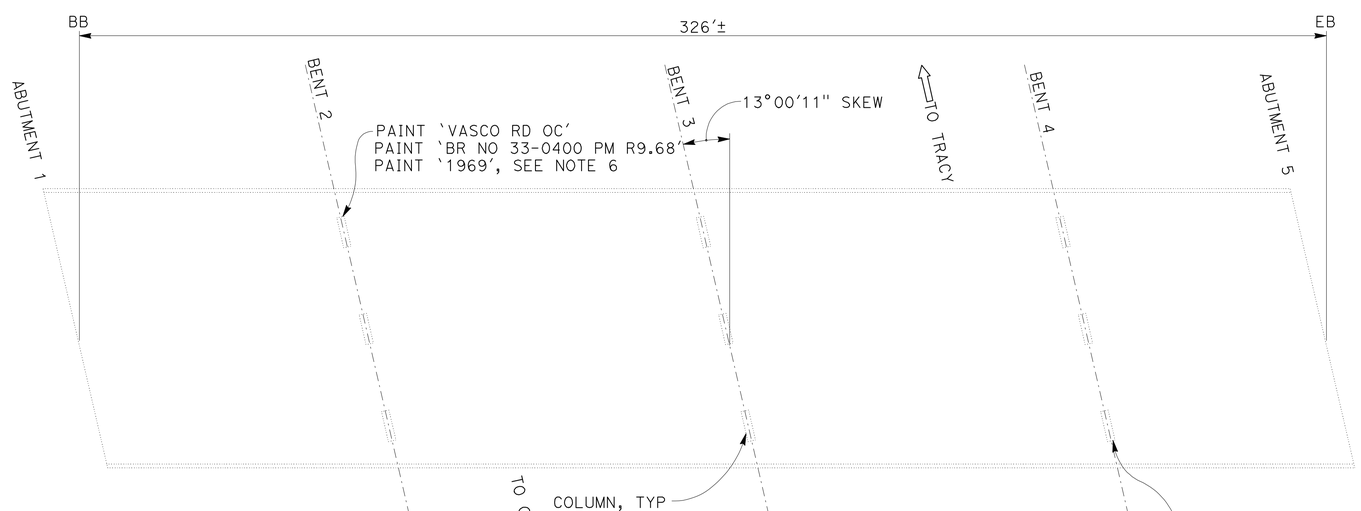

VASCO ROAD OVERCROSSING

BRIDGE No. 33-0400, ROUTE 580, PM 9.68

NOTES:

1. REMOVE UNSOUND CONCRETE AND PATCH SPALL ON OUTSIDE FACE OF RIGHT BRIDGE RAIL NEAR ABUTMENT 5 WITH RAPID SETTING CONCRETE. SPALL DIMENSIONS ARE APPROXIMATELY 2' x 10".
2. REMOVE UNSOUND CONCRETE AND PATCH SPALL FROM SPALLS LOCATED AT THE LONGITUDINAL JOINT IN SOFFIT OVER WESTBOUND LANES WITH RAPID SETTING CONCRETE.
3. REMOVE UNSOUND CONCRETE AND PATCH SOFFIT SPALL ALONG THE LONGITUDINAL JOINT AT ABUTMENT 1. SPALL DIMENSIONS ARE APPROXIMATELY 12"x6"x4" DEEP.
4. REMOVE UNSOUND CONCRETE AND PATCH SPALL ON THE BOTTOM OF DIAPHRAGM 1 IN BAY 3 WITH RAPID SETTING CONCRETE. SPALL DIMENSIONS ARE APPROXIMATELY 12"x8"x2" DEEP.
5. REMOVE UNSOUND CONCRETE AND PATCH SOFFIT SPALL ON THE LONGITUDINAL JOINT NEAR THE LEFT SIDE OF ABUTMENT 5 WITH RAPID SETTING CONCRETE. SPALL DIMENSIONS ARE APPROXIMATELY 6"x2'x2" DEEP.
6. PAINT BRIDGE IDENTIFICATION VISIBLE TO TRAFFIC ON COLUMNS SHOWN.
7. THE CONTRACTOR SHALL VERIFY ALL SPALL LOCATIONS AND ALL CONTROLLING FIELD DIMENSIONS BEFORE ORDERING MATERIALS.

FIRST STREET OVERCROSSING 33-0389

QUANTITIES

REMOVE UNSOUND CONCRETE	5	CF
RAPID SETTING CONCRETE (PATCH)	5	CF

VASCO ROAD OVERCROSSING 33-0400

QUANTITIES

PAINT BRIDGE IDENTIFICATION	1	LS

CONSTRUCTION DETAILS
BRIDGE REHABILITATION

NO SCALE

C-65

REVISED BY	DATE REVISED	CALCULATED-DESIGNED BY	CHECKED BY
RSR	5/7/12	RICARDO RIVAS	INES LI
RSR	1/18/12		
RSR	11/18/11		

CONSULTANT FUNCTIONAL SUPERVISOR: ROY M. SCHNABEL

STATE OF CALIFORNIA - DEPARTMENT OF TRANSPORTATION

Caltrans

2007236 (2007236Y065)

LAST REVISION 05/07/12 | DATE PLOTTED => 23-MAY-2012 TIME PLOTTED => 06:59

Dist	COUNTY	ROUTE	POST MILES TOTAL PROJECT	SHEET No.	TOTAL SHEETS
04	Ala	580	R8.4/R14.6	144	853

5/7/12
REGISTERED CIVIL ENGINEER DATE

5-14-12
PLANS APPROVAL DATE

REGISTERED PROFESSIONAL ENGINEER N.V. BERNARDI No. 45407 Exp. 9/30/12 CIVIL STATE OF CALIFORNIA

THE STATE OF CALIFORNIA OR ITS OFFICERS OR AGENTS SHALL NOT BE RESPONSIBLE FOR THE ACCURACY OR COMPLETENESS OF SCANNED COPIES OF THIS PLAN SHEET.

BKF ENGINEERS
4670 WILLOW ROAD, SUITE 250
PLEASANTON, CA. 94588

ALAMEDA CTC
1333 BROADWAY SUITE 220
OAKLAND, CA. 94612

NOTE:

FOR DETAILS NOT SHOWN, SEE "INSTALLATION AND CONNECTION DETAILS", "PANEL DETAILS", AND "MISCELLANEOUS DETAILS" SHEETS.

ABBREVIATIONS:

JPCP = JOINTED PLAIN CONCRETE PAVEMENT
LCBRS = LEAN CONCRETE BASE RAPID SETTING
PCC = PORTLAND CEMENT CONCRETE
PCP = PRECAST CONCRETE PANEL
RSC = RAPID STRENGTH CONCRETE

LEGEND:

REPLACE CONCRETE PAVEMENT

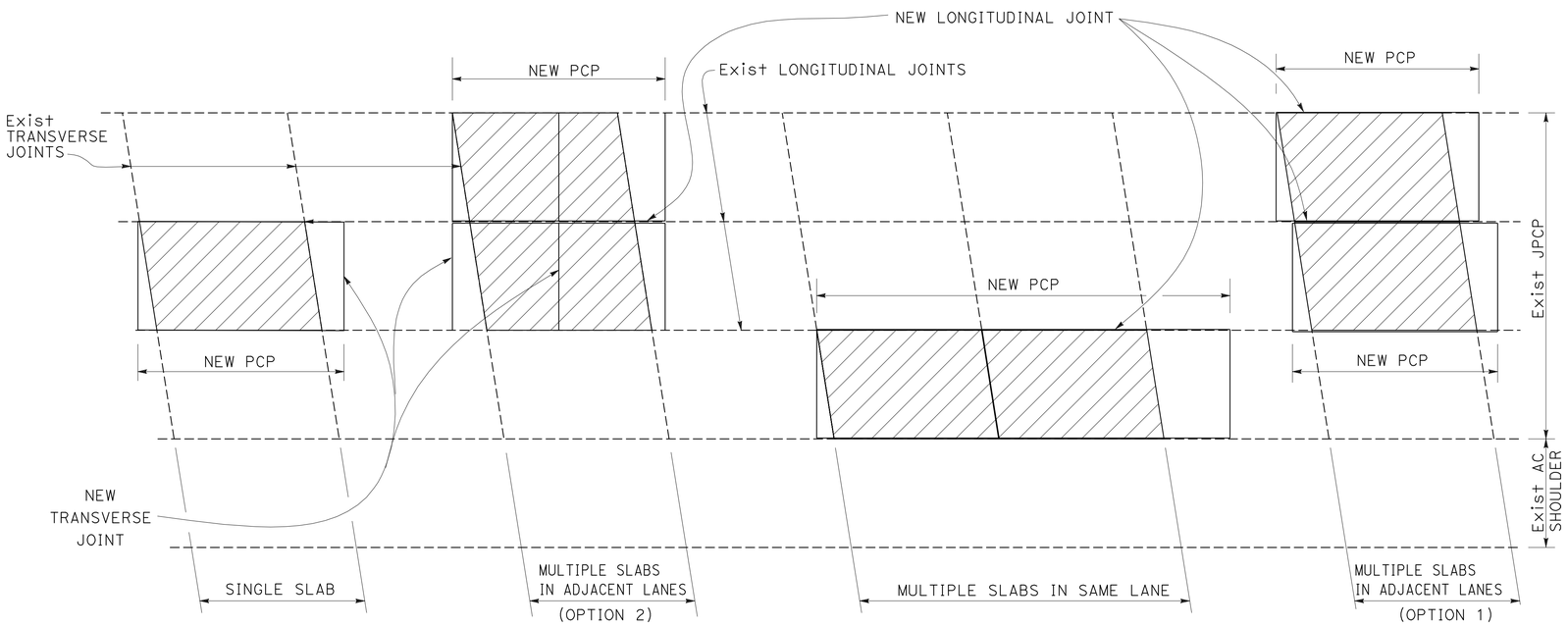

PLAN

CONSTRUCTION DETAILS
INDIVIDUAL SLAB REPLACEMENT PRECAST CONCRETE PANEL LAYOUT

NO SCALE

C-66

STATE OF CALIFORNIA - DEPARTMENT OF TRANSPORTATION
Caltrans

CONSULTANT FUNCTIONAL SUPERVISOR: NATALINA V. BERNARDI
CALCULATED-DESIGNED BY: CARMELO CECILIO
CHECKED BY: LUIS GARCIA
REVISED BY: CC
DATE REVISED: 5/7/12

LAST REVISION 05-07-12
DATE PLOTTED => 23-MAY-2012
TIME PLOTTED => 06:59

Dist	COUNTY	ROUTE	POST MILES TOTAL PROJECT	SHEET No.	TOTAL SHEETS
04	Ala	580	R8.4/R14.6	145	853

5/7/12
REGISTERED CIVIL ENGINEER DATE

5-14-12
PLANS APPROVAL DATE

REGISTERED PROFESSIONAL ENGINEER N.V. BERNARDI No. 45407 Exp. 9/30/12 CIVIL STATE OF CALIFORNIA

THE STATE OF CALIFORNIA OR ITS OFFICERS OR AGENTS SHALL NOT BE RESPONSIBLE FOR THE ACCURACY OR COMPLETENESS OF SCANNED COPIES OF THIS PLAN SHEET.

BKF ENGINEERS
4670 WILLOW ROAD, SUITE 250
PLEASANTON, CA. 94588

ALAMEDA CTC
1333 BROADWAY SUITE 220
OAKLAND, CA. 94612

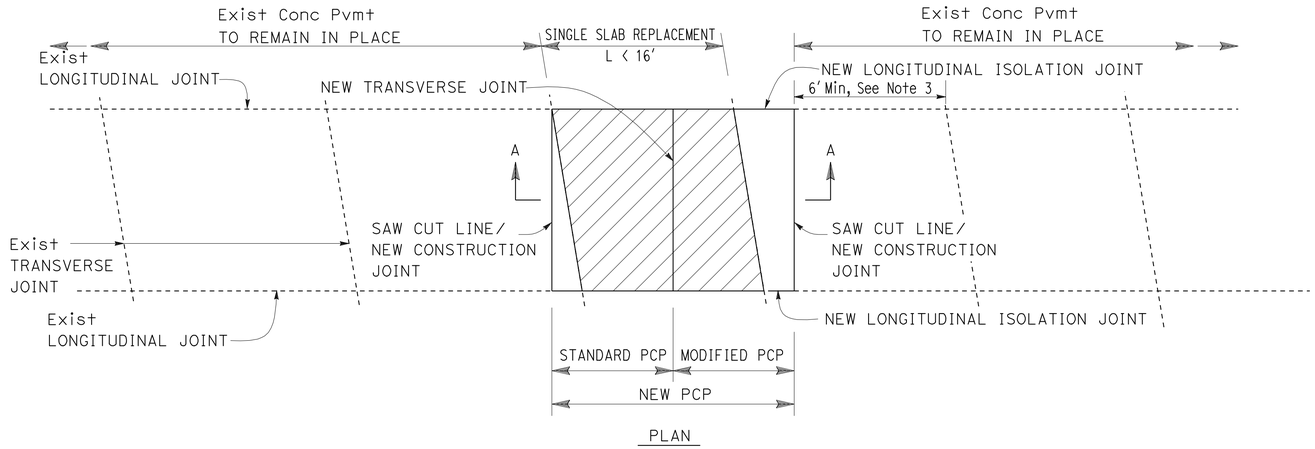

PLAN

NOTES:

1. FOR PRECAST PANEL DETAILS, SEE "PANEL DETAILS" SHEET.
2. FOR DOWEL BAR AND JOINT DETAILS, SEE "MISCELLANEOUS DETAILS No. 1 AND No. 2" SHEETS.
3. 6' Min LENGTH OF EXISTING SLAB SHOULD REMAIN, OTHERWISE, ADD A STANDARD PCP.

CROSS SECTIONS OF INDIVIDUAL PRECAST PANELS GOING TO BE INSTALLED:

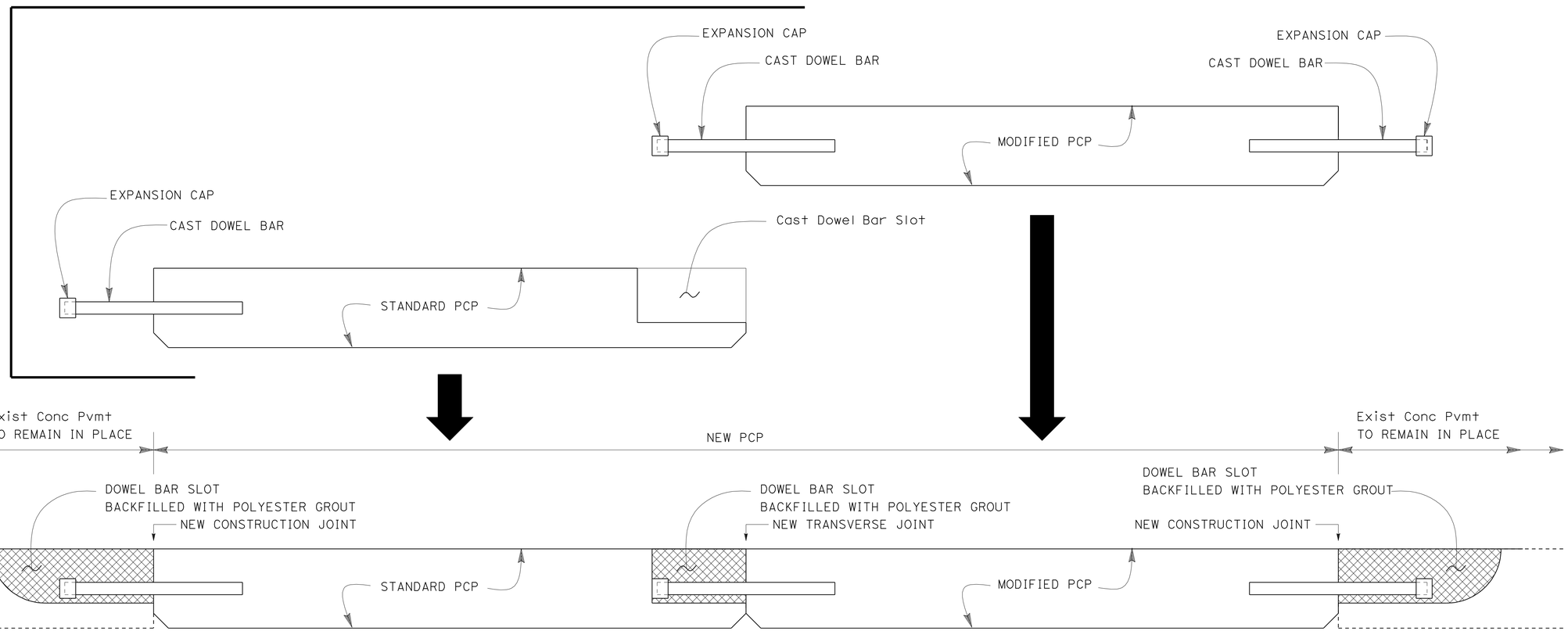

SECTION A-A

SINGLE SLAB REPLACEMENT, L< 16'

CONSTRUCTION DETAILS
INDIVIDUAL SLAB REPLACEMENT (PRECAST CONCRETE PANEL) INSTALLATION AND CONNECTION DETAILS No. 1

NO SCALE

C-67

STATE OF CALIFORNIA - DEPARTMENT OF TRANSPORTATION

CONSULTANT FUNCTIONAL SUPERVISOR: NATALINA V. BERNARDI

CALCULATED-DESIGNED BY: CARMELO CECILIO

CHECKED BY: LUIS GARCIA

REVISED BY: CC

DATE REVISED: 5/7/12

LAST REVISION 05-07-12

DATE PLOTTED => 23-MAY-2012
TIME PLOTTED => 06:59

Dist	COUNTY	ROUTE	POST MILES TOTAL PROJECT	SHEET No.	TOTAL SHEETS
04	Ala	580	R8.4/R14.6	146	853

REGISTERED CIVIL ENGINEER 5/7/12 DATE

5-14-12
PLANS APPROVAL DATE

REGISTERED PROFESSIONAL ENGINEER N.V. BERNARDI No. 45407 Exp. 9/30/12 CIVIL STATE OF CALIFORNIA

THE STATE OF CALIFORNIA OR ITS OFFICERS OR AGENTS SHALL NOT BE RESPONSIBLE FOR THE ACCURACY OR COMPLETENESS OF SCANNED COPIES OF THIS PLAN SHEET.

BKF ENGINEERS
4670 WILLOW ROAD, SUITE 250
PLEASANTON, CA. 94588

ALAMEDA CTC
1333 BROADWAY SUITE 220
OAKLAND, CA. 94612

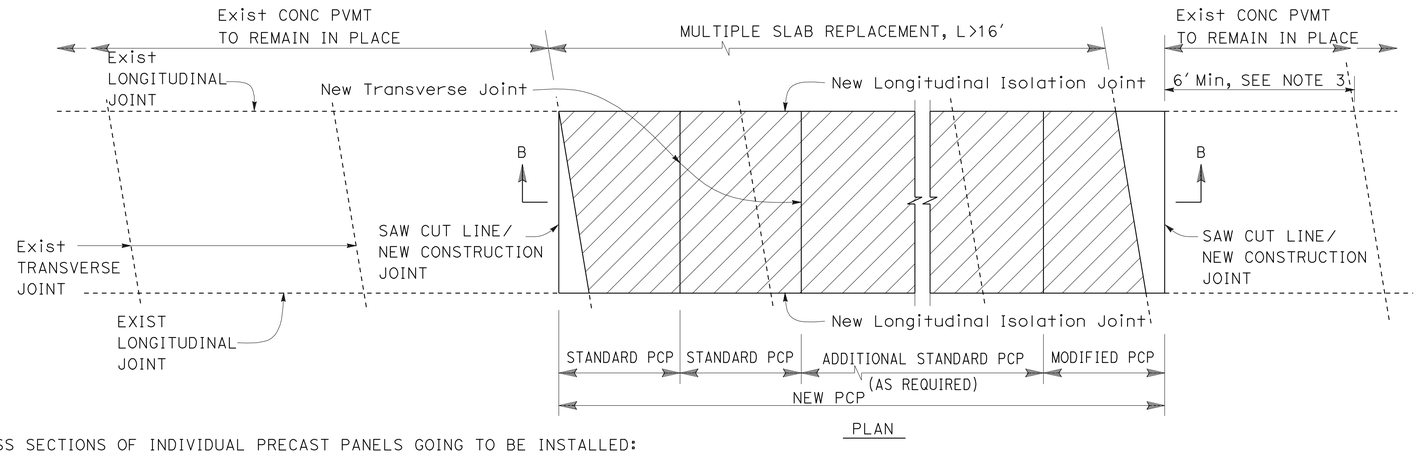

PLAN

NOTES:

1. FOR PRECAST PANEL DETAILS, SEE "PANEL DETAILS" SHEET.
2. FOR DOWEL BAR AND JOINT DETAILS, SEE "MISCELLANEOUS DETAILS NO. 1 AND NO. 2" SHEETS.
3. 6' MIN LENGTH OF EXISTING SLAB SHOULD REMAIN, OTHERWISE, ADD A STANDARD PCP.

CROSS SECTIONS OF INDIVIDUAL PRECAST PANELS GOING TO BE INSTALLED:

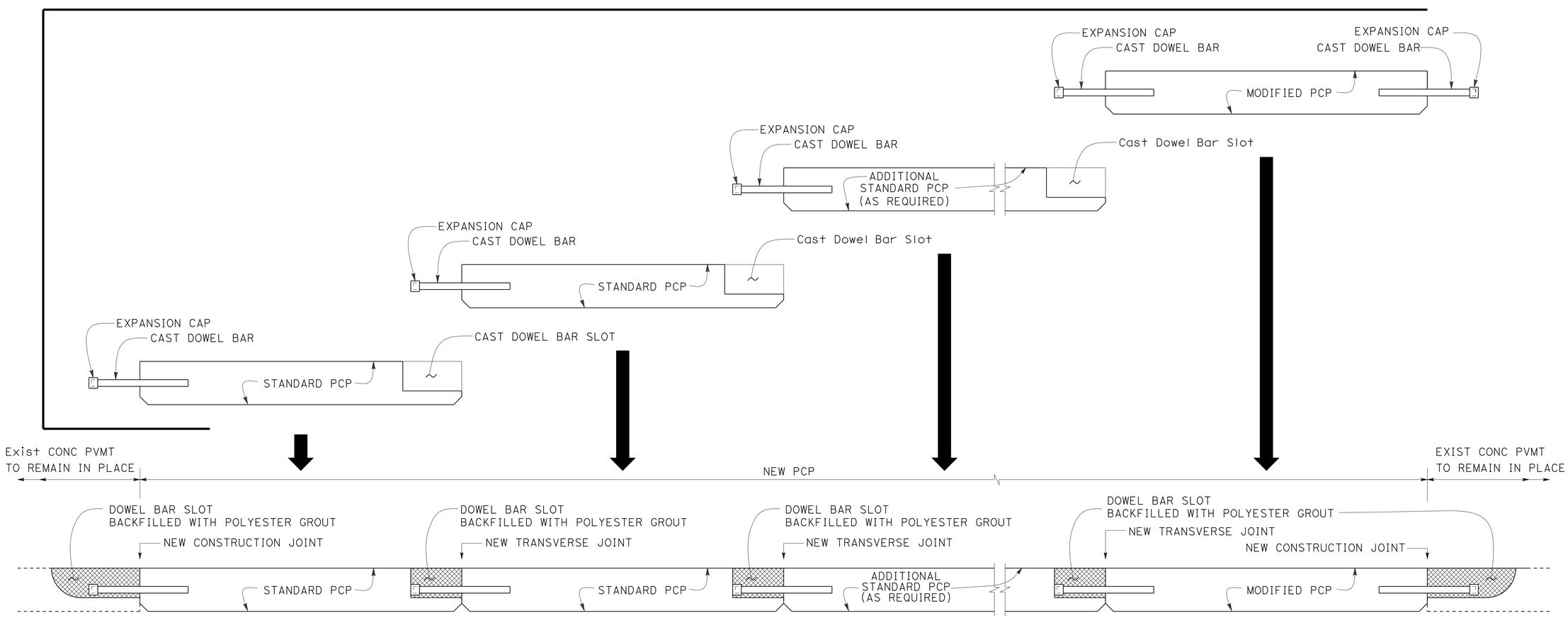

SECTION B-B

MULTIPLE SLAB REPLACEMENT, L>16'

CONSTRUCTION DETAILS

INDIVIDUAL SLAB REPLACEMENT (PRECAST CONCRETE PANEL) INSTALLATION AND CONNECTION DETAILS No. 2

NO SCALE

C-68

STATE OF CALIFORNIA - DEPARTMENT OF TRANSPORTATION

Caltrans

CONSULTANT FUNCTIONAL SUPERVISOR: NATALINA V. BERNARDI

CALCULATED-DESIGNED BY: CARMELO CECILIO

CHECKED BY: LUIS GARCIA

REVISED BY: CC

DATE REVISED: 5/7/12

LAST REVISION 05-07-12

DATE PLOTTED => 23-MAY-2012
TIME PLOTTED => 06:59

Dist	COUNTY	ROUTE	POST MILES TOTAL PROJECT	SHEET No.	TOTAL SHEETS
04	Ala	580	R8.4/R14.6	147	853

REGISTERED CIVIL ENGINEER 5/7/12 DATE

5-14-12
PLANS APPROVAL DATE

REGISTERED PROFESSIONAL ENGINEER N.V. BERNARDI No. 45407 Exp. 9/30/12 CIVIL STATE OF CALIFORNIA

THE STATE OF CALIFORNIA OR ITS OFFICERS OR AGENTS SHALL NOT BE RESPONSIBLE FOR THE ACCURACY OR COMPLETENESS OF SCANNED COPIES OF THIS PLAN SHEET.

BKF ENGINEERS
4670 WILLOW ROAD, SUITE 250
PLEASANTON, CA. 94588

ALAMEDA CTC
1333 BROADWAY SUITE 220
OAKLAND, CA. 94612

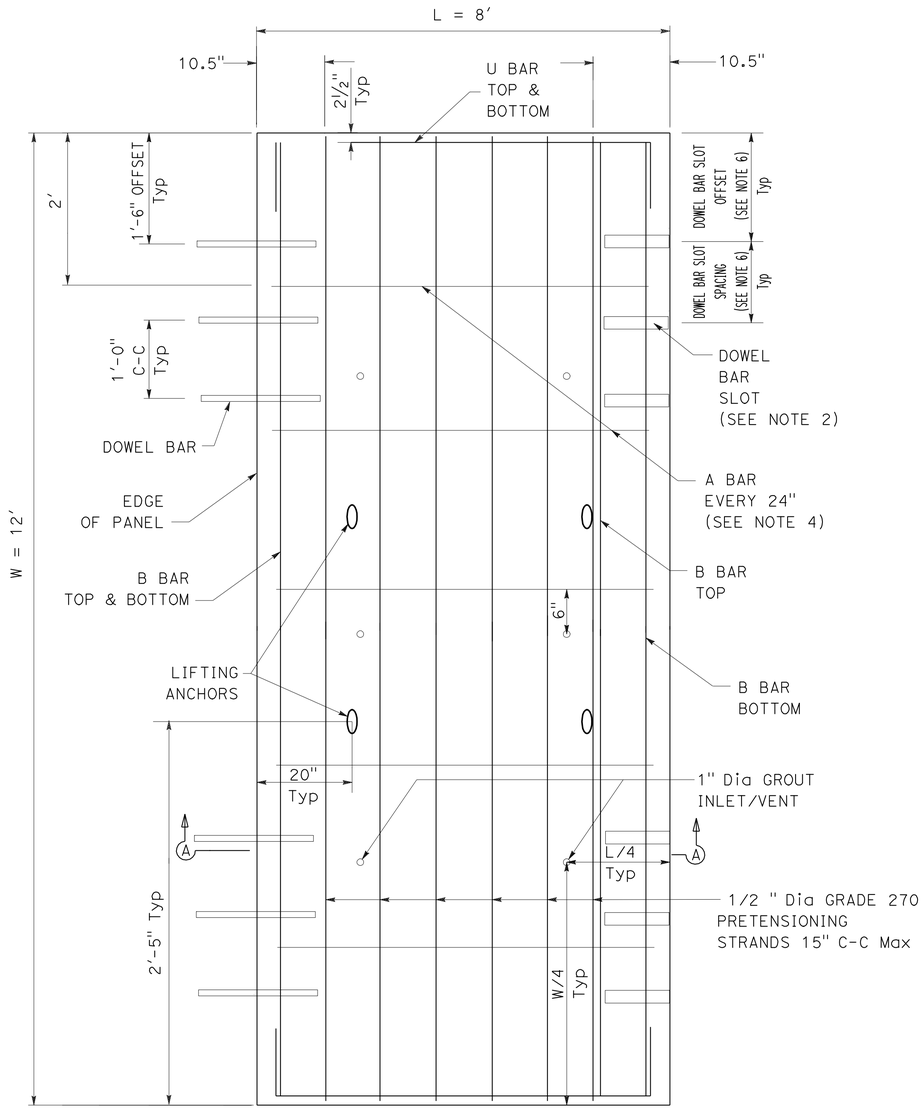

PLAN
STANDARD PCP

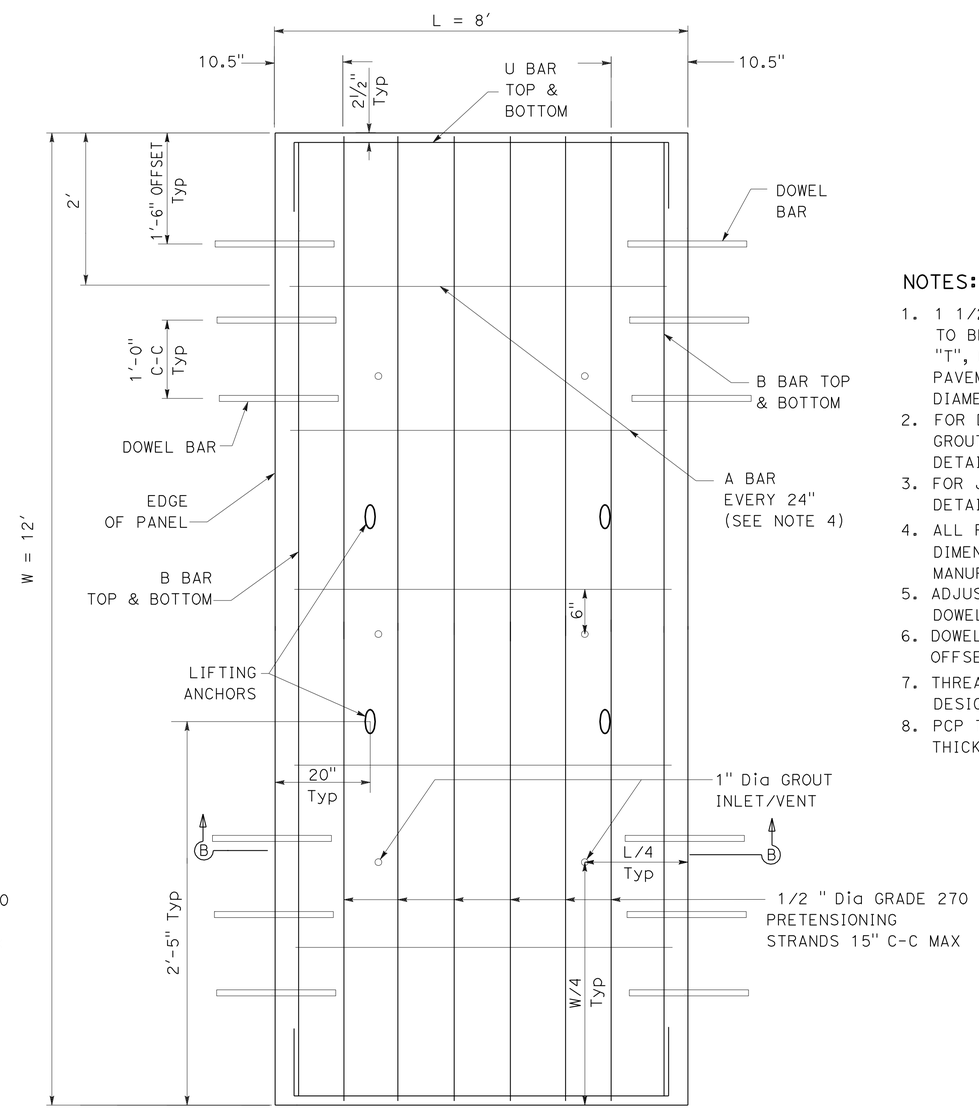

PLAN
MODIFIED PCP

NOTES:

1. 1 1/2" DIAMETER DOWEL BARS 1′-6" LENGTH ARE TO BE USED WHEN THE EXISTING PAVEMENT THICKNESS, "T", IS EQUAL TO OR GREATER THAN 0.70′. FOR A PAVEMENT THICKNESS, "T", LESS THAN 0.70′, USE 1 1/4" DIAMETER DOWEL BAR 1′-6" IN LENGTH.
2. FOR DOWEL BAR SLOT DIMENSIONS, BACKFILLING, AND GROUT INLET/VENT DETAILS, SEE "MISCELLANEOUS DETAILS No. 1" SHEET.
3. FOR JOINT DETAILS, SEE "MISCELLANEOUS DETAILS No. 2" SHEET.
4. ALL REINFORCEMENT AND PRETENSIONING STRAND DIMENSIONS ARE TO BE VERIFIED BY THE MANUFACTURER BEFORE PANEL FABRICATION.
5. ADJUST LOCATION OF "A" BAR TO ACCOMMODATE DOWEL BARS AND DOWEL BAR SLOTS.
6. DOWEL BAR SLOT OFFSET AND SPACING TO MATCH OFFSET AND SPACING OF DOWELS IN ADJACENT PCP.
7. THREADED AND RECESSED LIFTING ANCHORS TO BE DESIGNED BY THE CONTRACTOR.
8. PCP THICKNESS, T, TO MATCH EXISTING CONCRETE SLAB THICKNESS BUT NOT LESS THAN 0.70′.

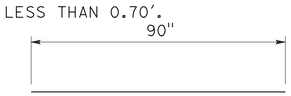

A BAR 5 # 4 PER PANEL

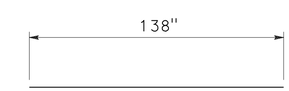

B BAR 4 # 4 PER PANEL

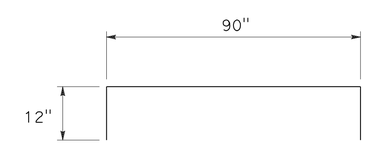

U BAR 4 # 4 PER PANEL

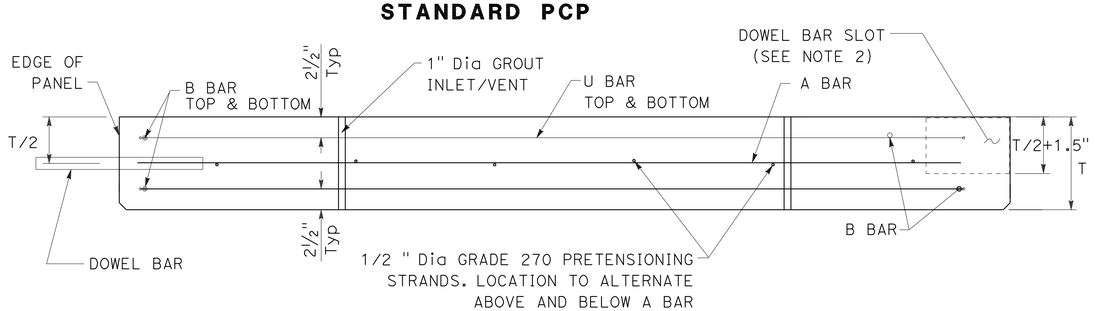

SECTION A-A

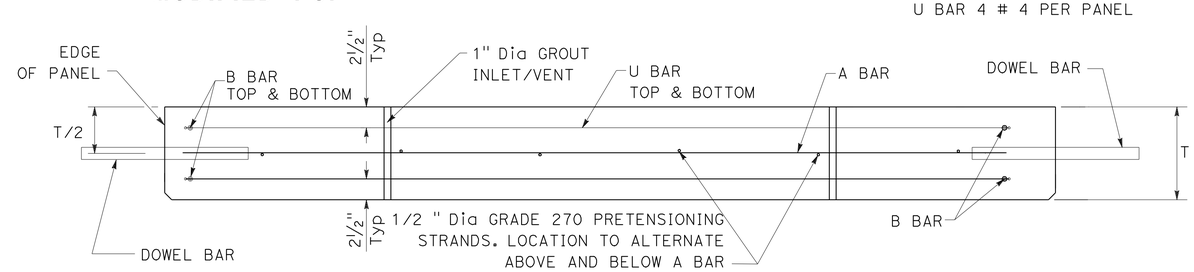

SECTION B-B

PRECAST CONCRETE PANELS (PCP)

NOT TO SCALE

CONSTRUCTION DETAILS
INDIVIDUAL SLAB REPLACEMENT (PRECAST CONCRETE PANEL) PANEL DETAILS

NO SCALE

C-69

STATE OF CALIFORNIA - DEPARTMENT OF TRANSPORTATION

CONSULTANT FUNCTIONAL SUPERVISOR: NATALINA V. BERNARDI

CALCULATED-DESIGNED BY: CARMELO CECILIO

CHECKED BY: LUIS GARCIA

REVISED BY: CC

DATE REVISED: 5/7/12

LAST REVISION 05-07-12 | DATE PLOTTED => 23-MAY-2012 | TIME PLOTTED => 06:59

Dist	COUNTY	ROUTE	POST MILES TOTAL PROJECT	SHEET No.	TOTAL SHEETS
04	Ala	580	R8.4/R14.6	148	853

REGISTERED CIVIL ENGINEER 5/7/12 DATE

5-14-12
PLANS APPROVAL DATE

REGISTERED PROFESSIONAL ENGINEER N.V. BERNARDI No. 45407 Exp. 9/30/12 CIVIL STATE OF CALIFORNIA

THE STATE OF CALIFORNIA OR ITS OFFICERS OR AGENTS SHALL NOT BE RESPONSIBLE FOR THE ACCURACY OR COMPLETENESS OF SCANNED COPIES OF THIS PLAN SHEET.

BKF ENGINEERS
4670 WILLOW ROAD, SUITE 250
PLEASANTON, CA. 94588

ALAMEDA CTC
1333 BROADWAY SUITE 220
OAKLAND, CA. 94612

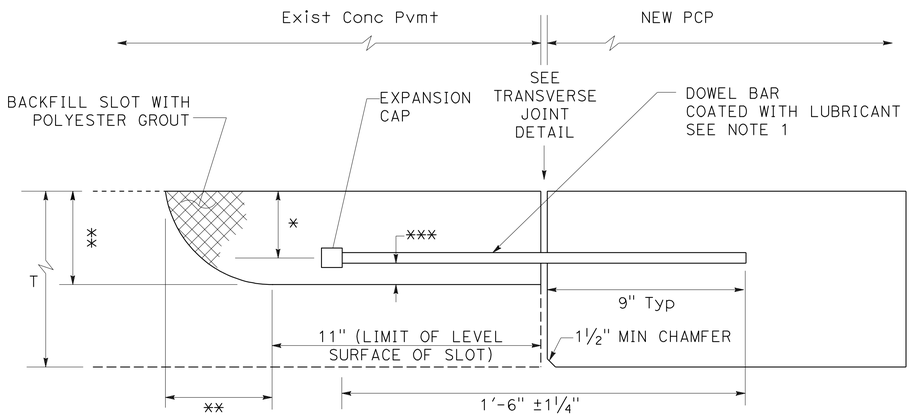

ELEVATION

T = EXISTING THICKNESS OF PCC, JPCP, OR RSC
* T/2 ± 1/4 "
** T/2 +1 1/2 "
*** Min Clr ½" BETWEEN BAR AND BOTTOM OF SLOT

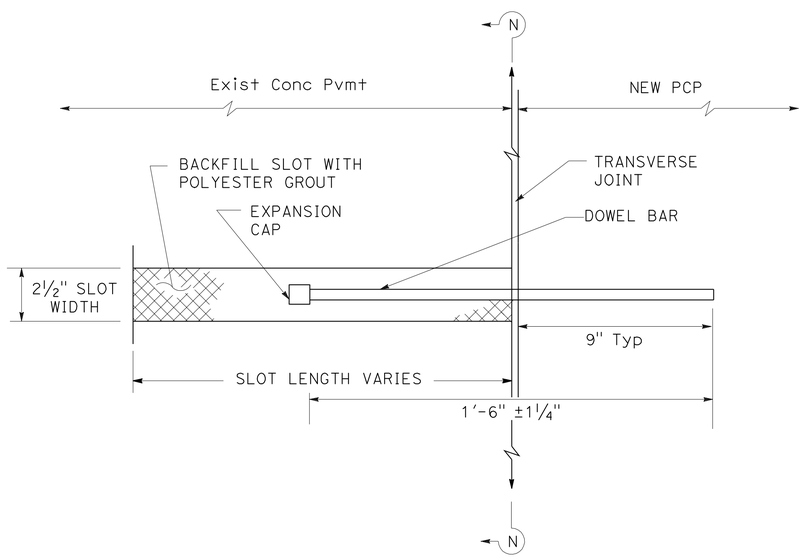

PLAN

DOWEL BAR SLOT BACKFILLING

NOTES:

1. FOR DIAMETER, SEE "PANEL DETAILS" SHEET, NOTE No. 1.
2. SEAL EXISTING TRANSVERSE JOINT AT BOTTOM AND SIDES OF THE DOWEL BAR SLOT WITH CAULKING FILLER PRIOR TO PLACING DOWEL BAR AND FOAM CORE INSERT.
3. THE TOP OF THE FOAM CORE INSERT IS TO MATCH THE TOP OF THE EXISTING PAVEMENT SURFACE INITIALLY. THE FOAM CORE INSERT TO BE REMOVED BEFORE PLACING JOINT FILLER MATERIAL.

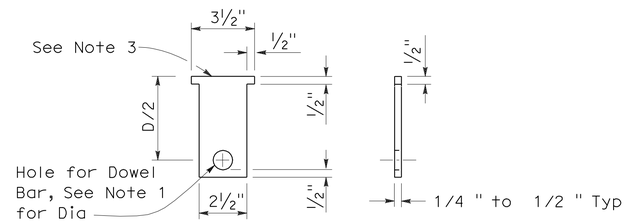

FOAM CORE INSERT DETAIL

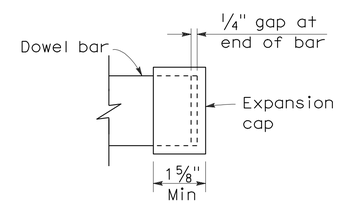

EXPANSION CAP DETAIL
(Minimum Requirement)

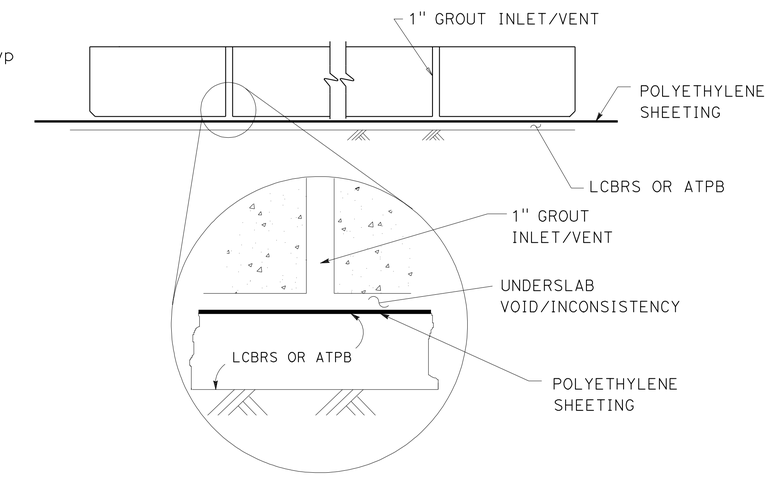

UNDERSLAB GROUT INLET/VENT AND POLYETHYLENE SHEETING

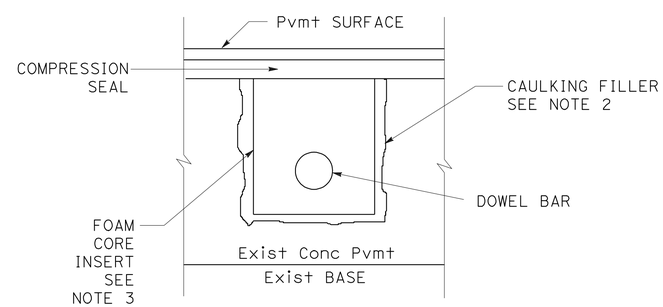

SECTION N-N

CONSTRUCTION DETAILS
INDIVIDUAL SLAB REPLACEMENT (PRECAST CONCRETE PANEL) MISCELLANEOUS DETAILS No. 1

NO SCALE

C-70

REVISED BY	DATE REVISED
CC	5/7/12

CARMELO CECILIO — LUIS GARCIA — CALCULATED-DESIGNED BY — CHECKED BY

CONSULTANT FUNCTIONAL SUPERVISOR: NATALINA V. BERNARDI

STATE OF CALIFORNIA - DEPARTMENT OF TRANSPORTATION

LAST REVISION 05-07-12 | DATE PLOTTED => 23-MAY-2012 | TIME PLOTTED => 06:59

Dist	COUNTY	ROUTE	POST MILES TOTAL PROJECT	SHEET No.	TOTAL SHEETS
04	Ala	580	R8.4/R14.6	149	853

5/7/12
REGISTERED CIVIL ENGINEER DATE

5-14-12
PLANS APPROVAL DATE

REGISTERED PROFESSIONAL ENGINEER
N.V. BERNARDI
No. 45407
Exp. 9/30/12
CIVIL
STATE OF CALIFORNIA

THE STATE OF CALIFORNIA OR ITS OFFICERS OR AGENTS SHALL NOT BE RESPONSIBLE FOR THE ACCURACY OR COMPLETENESS OF SCANNED COPIES OF THIS PLAN SHEET.

BKF ENGINEERS
4670 WILLOW ROAD, SUITE 250
PLEASANTON, CA. 94588

ALAMEDA CTC
1333 BROADWAY SUITE 220
OAKLAND, CA. 94612

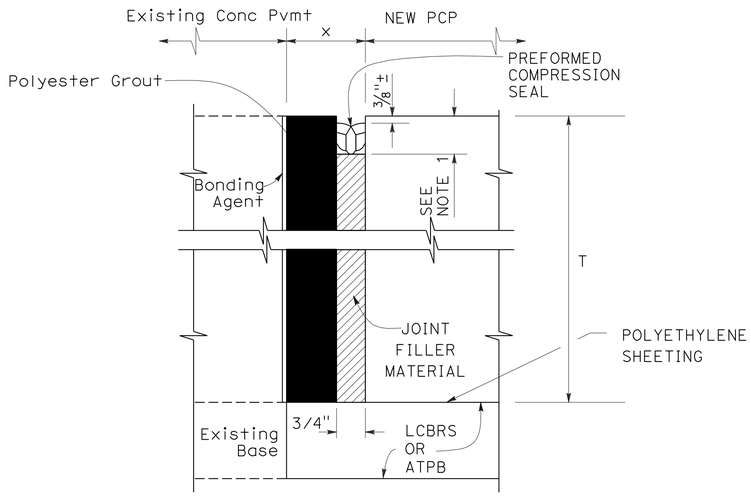

LONGITUDINAL ISOLATION JOINT DETAIL

(FOR WIDER JOINTS, 1" < x < 1 1/2")

NOTE:

NOMINAL WIDTH FOR PREFORMED COMPRESSION SEALS TO BE SELECTED BASED ON THE ACTUAL JOINT WIDTH SO THAT THE SEALS ARE COMPRESSED 40 TO 50 PERCENT FOR THE JOINT WIDTH AND DEPTH.

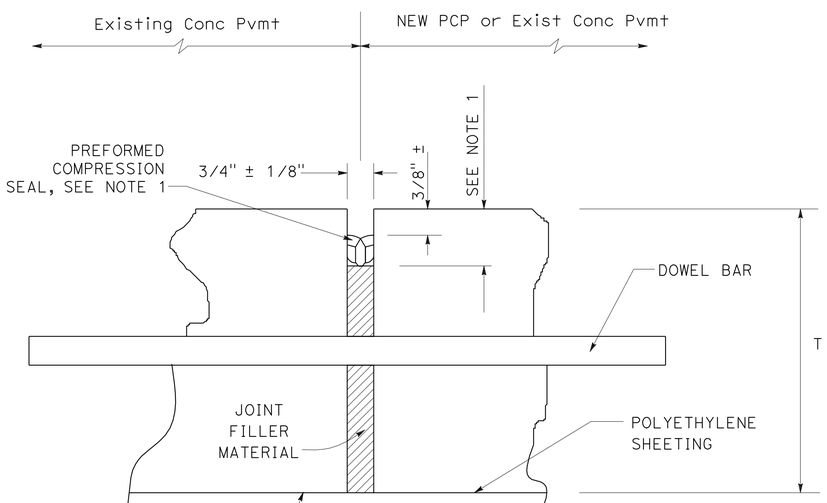

CONSTRUCTION AND TRANSVERSE JOINT DETAIL

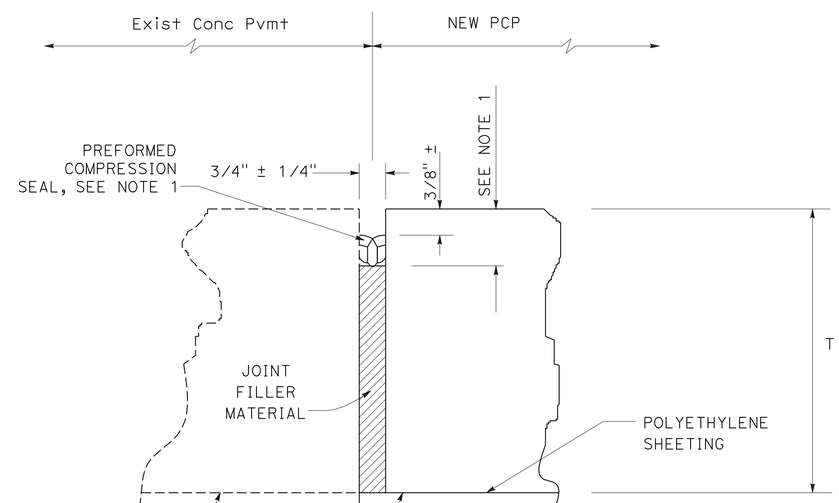

LONGITUDINAL ISOLATION JOINT DETAIL

CONSTRUCTION DETAILS
INDIVIDUAL SLAB REPLACEMENT (PRECAST CONCRETE PANEL) MISCELLANEOUS DETAILS No. 2

NO SCALE

C-71

REVISED BY	DATE REVISED
CC	5/7/12

CARMELO CECILIO
LUIS GARCIA
CALCULATED-DESIGNED BY
CHECKED BY
NATALINA V. BERNARDI
CONSULTANT FUNCTIONAL SUPERVISOR

STATE OF CALIFORNIA - DEPARTMENT OF TRANSPORTATION

LAST REVISION 05-07-12
DATE PLOTTED => 23-MAY-2012
TIME PLOTTED => 06:59

Dist	COUNTY	ROUTE	POST MILES TOTAL PROJECT	SHEET No.	TOTAL SHEETS
04	Ala	580	R8.4/R14.6	150	853

REGISTERED CIVIL ENGINEER — DATE 5/7/12

PLANS APPROVAL DATE 5-14-12

REGISTERED PROFESSIONAL ENGINEER N.V. BERNARDI No. 45407 Exp. 9/30/12 CIVIL STATE OF CALIFORNIA

THE STATE OF CALIFORNIA OR ITS OFFICERS OR AGENTS SHALL NOT BE RESPONSIBLE FOR THE ACCURACY OR COMPLETENESS OF SCANNED COPIES OF THIS PLAN SHEET.

BKF ENGINEERS
4670 WILLOW ROAD, SUITE 250
PLEASANTON, CA. 94588

ALAMEDA CTC
1333 BROADWAY SUITE 220
OAKLAND, CA. 94612

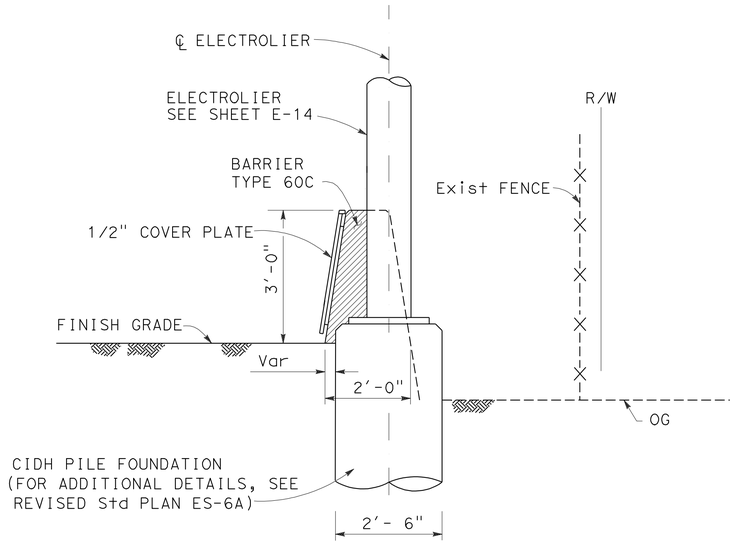

SECTION A-A

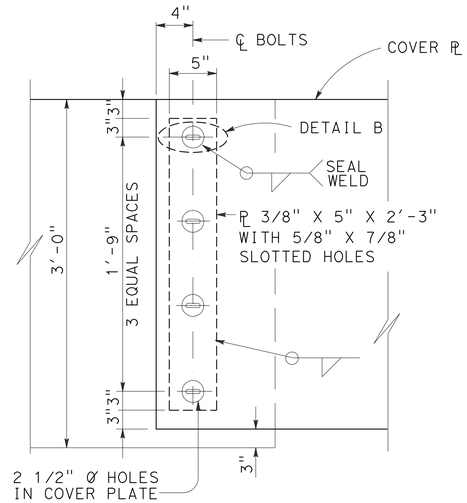

DETAIL A

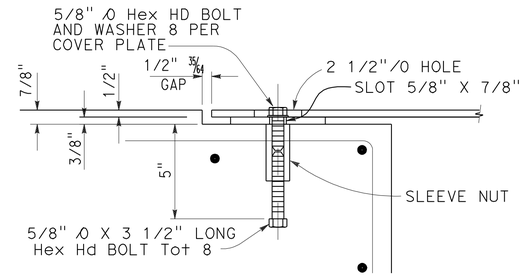

DETAIL B

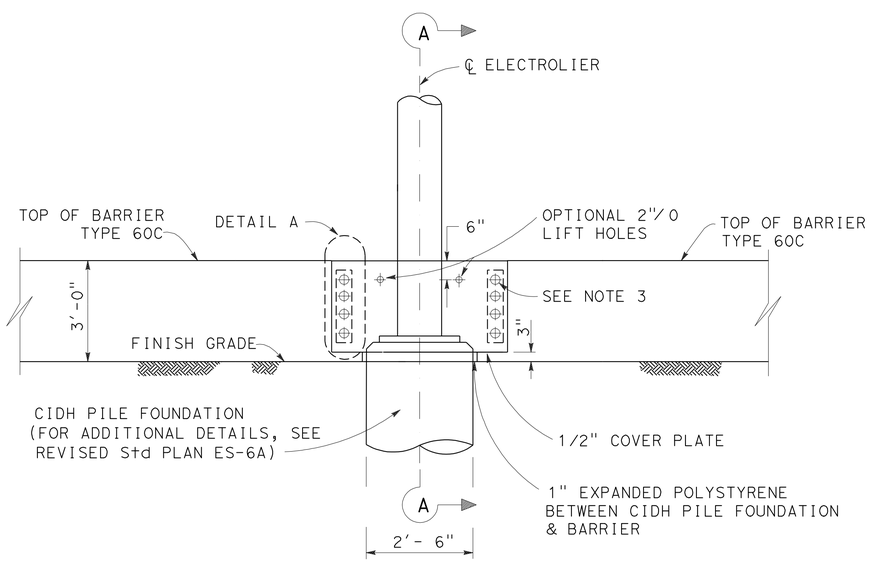

ELEVATION

NOTES:

1. RESIN CAPSULE ANCHORAGE IS SUBJECT TO APPROVAL OF THE ENGINEER. INSTALLATION PROCEDURES SHALL COMPLY WITH MANUFACTURER'S INSTRUCTIONS.
2. DETAIL C SIMILAR TO DETAIL D EXCEPT FOR ANCHORAGE DEVICES.
3. 5/8" Ø SLEEVE NUT ANCHORAGE (SEE DETAIL B) OR RESIN CAPSULE ANCHORAGE (SEE ALTERNATIVE ANCHORAGE). A TOTAL OF 8 ANCHORAGE UNITS REQUIRED PER PLATE. ALL METAL PLATES TO BE GALVANIZED AFTER FABRICATION. HARDWARE TO BE GALVANIZED OR NON-CORROSIVE.

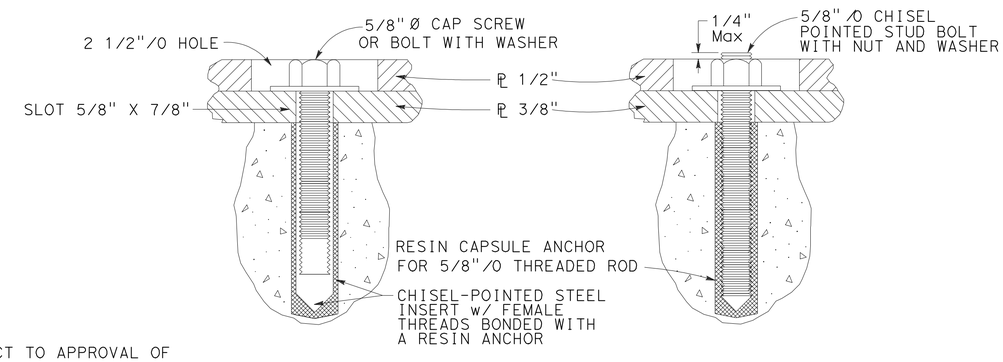

DETAIL C DETAIL D

ALTERNATIVE ANCHORAGE

CONCRETE BARRIER (TYPE 60C) TRANSITION AT ELECTROLIER

CONSTRUCTION DETAILS

NO SCALE

C-72

FOR NOTES, LEGEND AND ABBREVIATION, SEE SHEET C-1

DQN	5/7/12
REVISED BY	DATE REVISED
DAT Q. NGUYEN	LUIS GARCIA
CALCULATED-DESIGNED BY	CHECKED BY
CONSULTANT FUNCTIONAL SUPERVISOR	NATALINA V. BERNARDI

STATE OF CALIFORNIA - DEPARTMENT OF TRANSPORTATION

Caltrans

LAST REVISION 05-07-12 | DATE PLOTTED => 23-MAY-2012 | TIME PLOTTED => 06:59

Dist	COUNTY	ROUTE	POST MILES TOTAL PROJECT	SHEET No.	TOTAL SHEETS
04	Ala	580	R8.4/R14.6	151	853

REGISTERED CIVIL ENGINEER 1/13/2012 DATE

5-14-12
PLANS APPROVAL DATE

REGISTERED PROFESSIONAL ENGINEER DAVID M. DICKINSON No. 50815 Exp. 9-30-13 CIVIL STATE OF CALIFORNIA

THE STATE OF CALIFORNIA OR ITS OFFICERS OR AGENTS SHALL NOT BE RESPONSIBLE FOR THE ACCURACY OR COMPLETENESS OF SCANNED COPIES OF THIS PLAN SHEET.

WMH CORPORATION
555 12th St
Suite 1900
Oakland, CA 94607

ALAMEDA CTC
1333 Broadway
Suite 220
Oakland, CA 94612

TEMPORARY WATER POLLUTION CONTOL QUANTITIES

SHEET	TEMPORARY FIBER ROLL	TEMPORARY SILT FENCE	TEMPORARY CHECK DAM	TEMPORARY CONSTRUCTION ENTRANCE	TEMPORARY COVER	MOVE-IN/ MOVE-OUT (TEMPORARY EROSION CONTROL)	TEMPORARY DRAINAGE INLET PROTECTION	TEMPORARY HYDRAULIC MULCH (BONDED FIBER MATRIX)
	LF			EA	SQYD	EA		SQYD
TOTAL	11128	6197	100	9	3000	8	36	12827

TEMPORARY WATER POLLUTION CONTROL QUANTITIES

WPCQ-1

CALCULATED-DESIGNED BY	Y. FAROUQI	REVISED BY	YF YF YF
CHECKED BY	DAVID M. DICKINSON	DATE REVISED	05/01/10 11/11/11 01/13/12
SUPERVISOR	TIMOTHY J. LEE		

STATE OF CALIFORNIA - DEPARTMENT OF TRANSPORTATION
Caltrans

X:\580 WB HOV\000_CAD\Sheets\East of Sta 540+00\CT-Electronic-Submittal 20120113\008-Water_Pollution_Control\GD-Quantities\0400021248gd001.dgn

LAST REVISION 01-13-12 | DATE PLOTTED => 23-MAY-2012 | TIME PLOTTED => 06:59

Dist	COUNTY	ROUTE	POST MILES TOTAL PROJECT	SHEET No.	TOTAL SHEETS
04	Ala	580	R8.4/R14.6	152	853

REGISTERED CIVIL ENGINEER 1/13/2012 DATE

5-14-12
PLANS APPROVAL DATE

REGISTERED PROFESSIONAL ENGINEER DAVID M. DICKINSON No. 50815 Exp. 9-30-13 CIVIL STATE OF CALIFORNIA

THE STATE OF CALIFORNIA OR ITS OFFICERS OR AGENTS SHALL NOT BE RESPONSIBLE FOR THE ACCURACY OR COMPLETENESS OF SCANNED COPIES OF THIS PLAN SHEET.

WMH CORPORATION
555 12th St
Suite 1900
Oakland, CA 94607

ALAMEDA CTC
1333 Broadway
Suite 220
Oakland, CA 94612

FOR ACCURATE RIGHT OF WAY DATA, CONTACT
RIGHT OF WAY ENGINEERING AT THE DISTRICT OFFICE

LEGEND:

DIRECTION OF FLOW

PROPOSED STORM DRAIN INLET AND PIPE SYSTEM

EXISTING STORM DRAIN INLET AND PIPE SYSTEM

ERC (TYPE 1)
EROSION CONTROL (COMPOST BLANKET)
FIBER ROLLS
EROSION CONTROL (HYDROSEED)

ERC (TYPE 2)
EROSION CONTROL (COMPOST BLANKET)
ROLLED EROSION CONTROL PRODUCT (NETTING)
FIBER ROLLS
EROSION CONTROL (HYDROSEED)

ERC (TYPE 3)
IMPORTED BIOFILTRATION SOIL
ROLLED EROSION CONTROL PRODUCT (NETTING)
EROSION CONTROL (HYDROSEED)

NOTES:

1. EROSION CONTROL ADJUSTMENTS ARE SUBJECT TO ACTUAL SITE CONDITIONS AND AS DIRECTED BY THE ENGINEER.
2. EROSION CONTROL (HYDROSEED) SHALL BE APPLIED TO ALL DISTURBED AREAS AS PROVIDED IN THE SPECIAL PROVISIONS.
3. ROLLED EROSION CONTROL PRODUCT (NETTING) SHALL BE TYPE B

ABBREVIATION:

ERC EROSION CONTROL

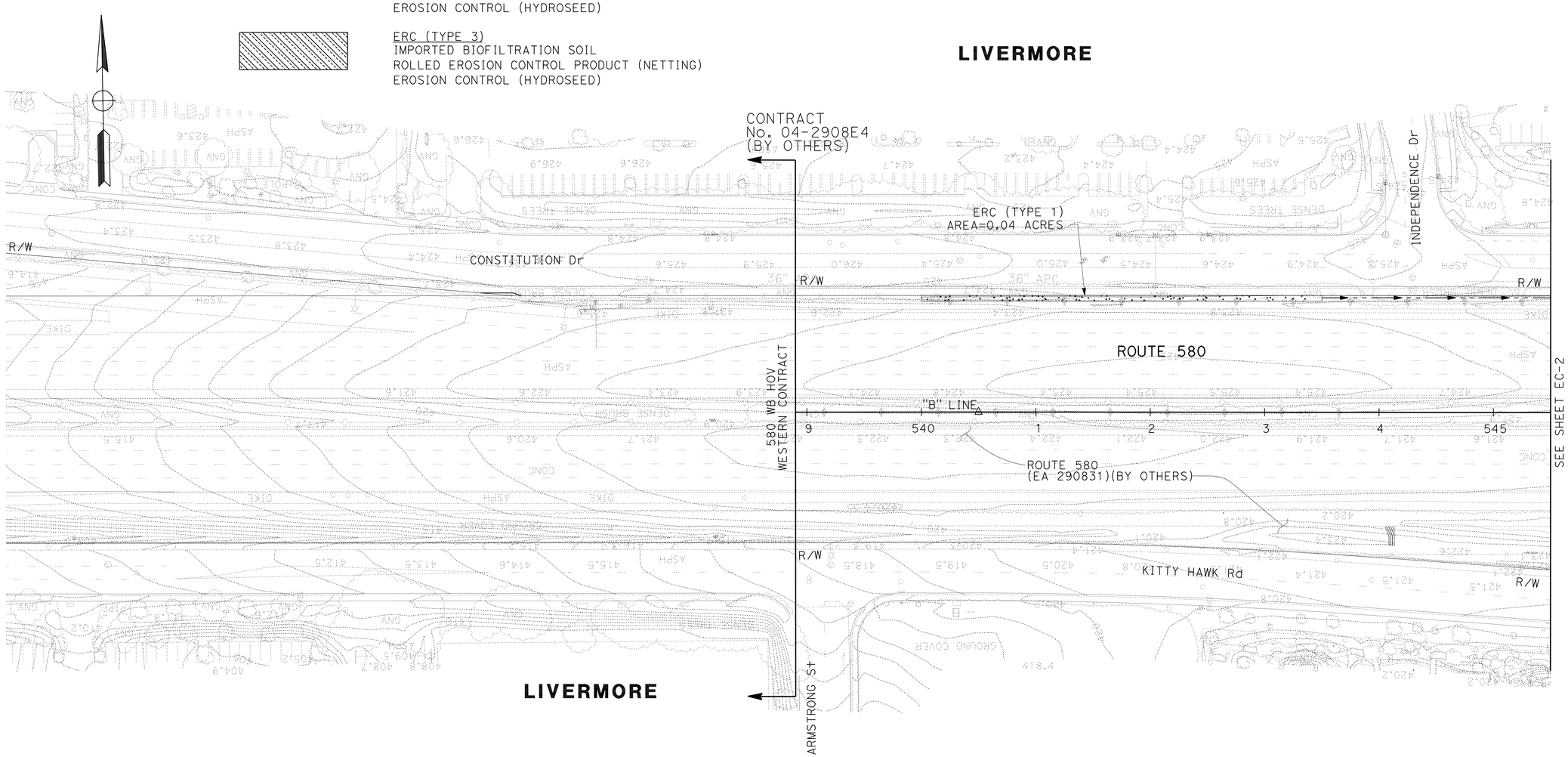

THIS PLAN ACCURATE FOR EROSION CONTROL WORK ONLY.

EROSION CONTROL PLAN

SCALE: 1" = 50'

EC-1

STATE OF CALIFORNIA - DEPARTMENT OF TRANSPORTATION
Caltrans

CONSULTANT FUNCTIONAL SUPERVISOR: TIMOTHY J. LEE
CALCULATED-DESIGNED BY: Y. FAROUQI
CHECKED BY: DAVID M. DICKINSON
REVISED BY: YF — DATE REVISED: 05/01/10
REVISED BY: YF — DATE REVISED: 11/11/11
REVISED BY: BG — DATE REVISED: 1/13/12

X:\580 WB HOV\000_CAD\Sheets\East of Sta 540+00\CT-Electronic-Submittal 20120113\009-Erosion_Control\GE-Plans\04000212481ge001.dgn

LAST REVISION 01-13-12 | DATE PLOTTED => 23-MAY-2012 | TIME PLOTTED => 06:59

Dist	COUNTY	ROUTE	POST MILES TOTAL PROJECT	SHEET No.	TOTAL SHEETS
04	Ala	580	R8.4/R14.6	153	853

REGISTERED CIVIL ENGINEER — DATE 1/13/2012

5-14-12
PLANS APPROVAL DATE

REGISTERED PROFESSIONAL ENGINEER — DAVID M. DICKINSON — No. 50815 — Exp. 9-30-13 — CIVIL — STATE OF CALIFORNIA

THE STATE OF CALIFORNIA OR ITS OFFICERS OR AGENTS SHALL NOT BE RESPONSIBLE FOR THE ACCURACY OR COMPLETENESS OF SCANNED COPIES OF THIS PLAN SHEET.

WMH CORPORATION
555 12th St
Suite 1900
Oakland, CA 94607

ALAMEDA CTC
1333 Broadway
Suite 220
Oakland, CA 94612

FOR ACCURATE RIGHT OF WAY DATA, CONTACT
RIGHT OF WAY ENGINEERING AT THE DISTRICT OFFICE

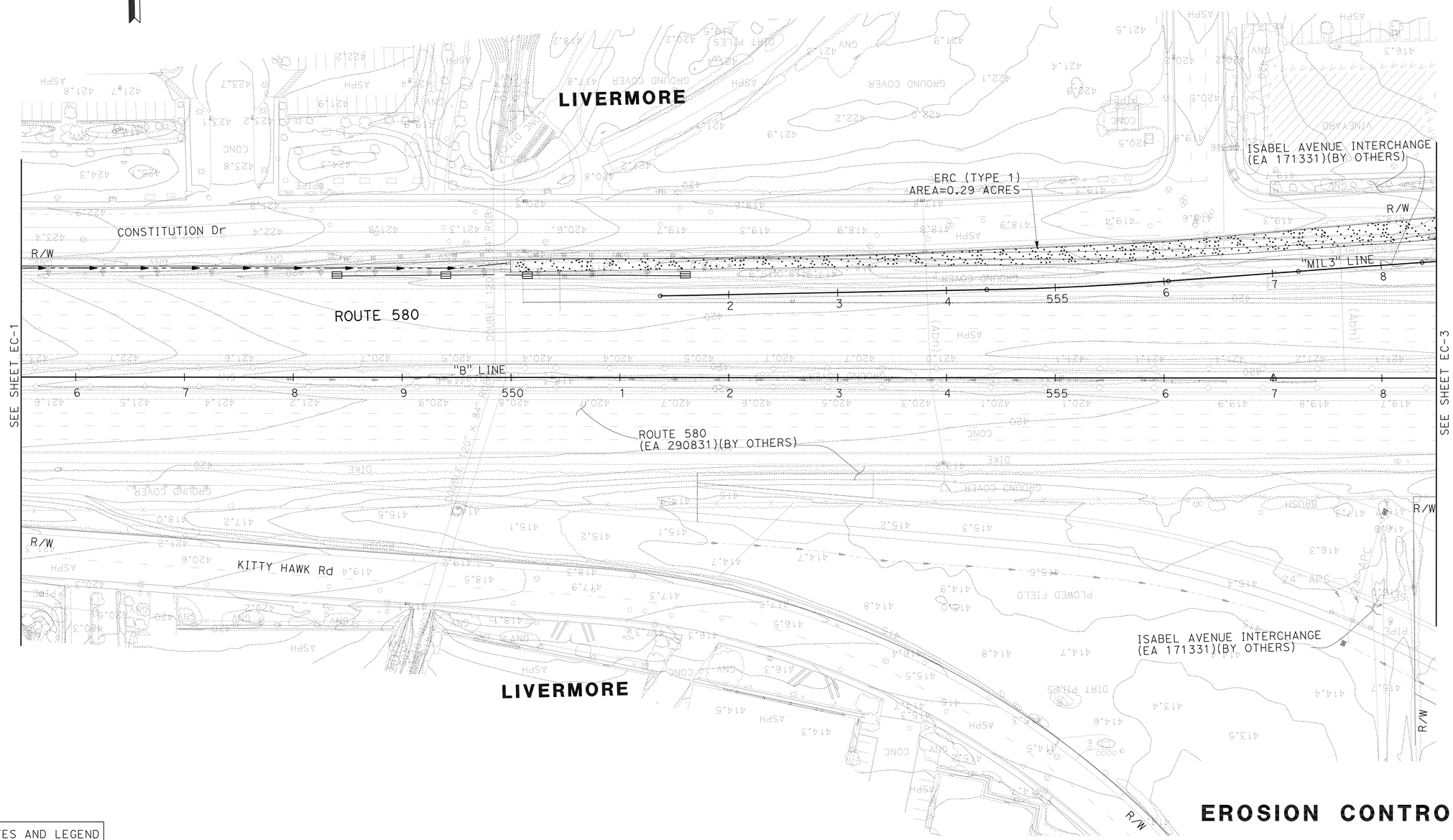

FOR NOTES AND LEGEND
SEE SHEET EC-1

THIS PLAN ACCURATE FOR EROSION CONTROL WORK ONLY.

EROSION CONTROL PLAN

SCALE: 1" = 50'

EC-2

	BY	DATE REVISED
BG		1/13/12
YF		11/11/11
YF		05/01/10

REVISED BY / DATE REVISED

CALCULATED-DESIGNED BY: Y. FAROUOI
CHECKED BY: DAVID M. DICKINSON
SUPERVISOR: TIMOTHY J. LEE
CONSULTANT FUNCTIONAL SUPERVISOR

STATE OF CALIFORNIA - DEPARTMENT OF TRANSPORTATION
Caltrans

X:\580 WB HOV\000_CAD\Sheets\East of Sta 540+00\CT-Electronic-Submittal 20120113\009-Erosion_Control\GE-Plans\04000212 48ge002.dgn

LAST REVISION 01-13-12
DATE PLOTTED => 23-MAY-2012
TIME PLOTTED => 06:59

Dist	COUNTY	ROUTE	POST MILES TOTAL PROJECT	SHEET No.	TOTAL SHEETS
04	Ala	580	R8.4/R14.6	154	853

REGISTERED CIVIL ENGINEER 1/13/2012 DATE

5-14-12
PLANS APPROVAL DATE

REGISTERED PROFESSIONAL ENGINEER DAVID M. DICKINSON No. 50815 Exp. 9-30-13 CIVIL STATE OF CALIFORNIA

THE STATE OF CALIFORNIA OR ITS OFFICERS OR AGENTS SHALL NOT BE RESPONSIBLE FOR THE ACCURACY OR COMPLETENESS OF SCANNED COPIES OF THIS PLAN SHEET.

WMH CORPORATION
555 12th St
Suite 1900
Oakland, CA 94607

ALAMEDA CTC
1333 Broadway
Suite 220
Oakland, CA 94612

FOR ACCURATE RIGHT OF WAY DATA, CONTACT
RIGHT OF WAY ENGINEERING AT THE DISTRICT OFFICE

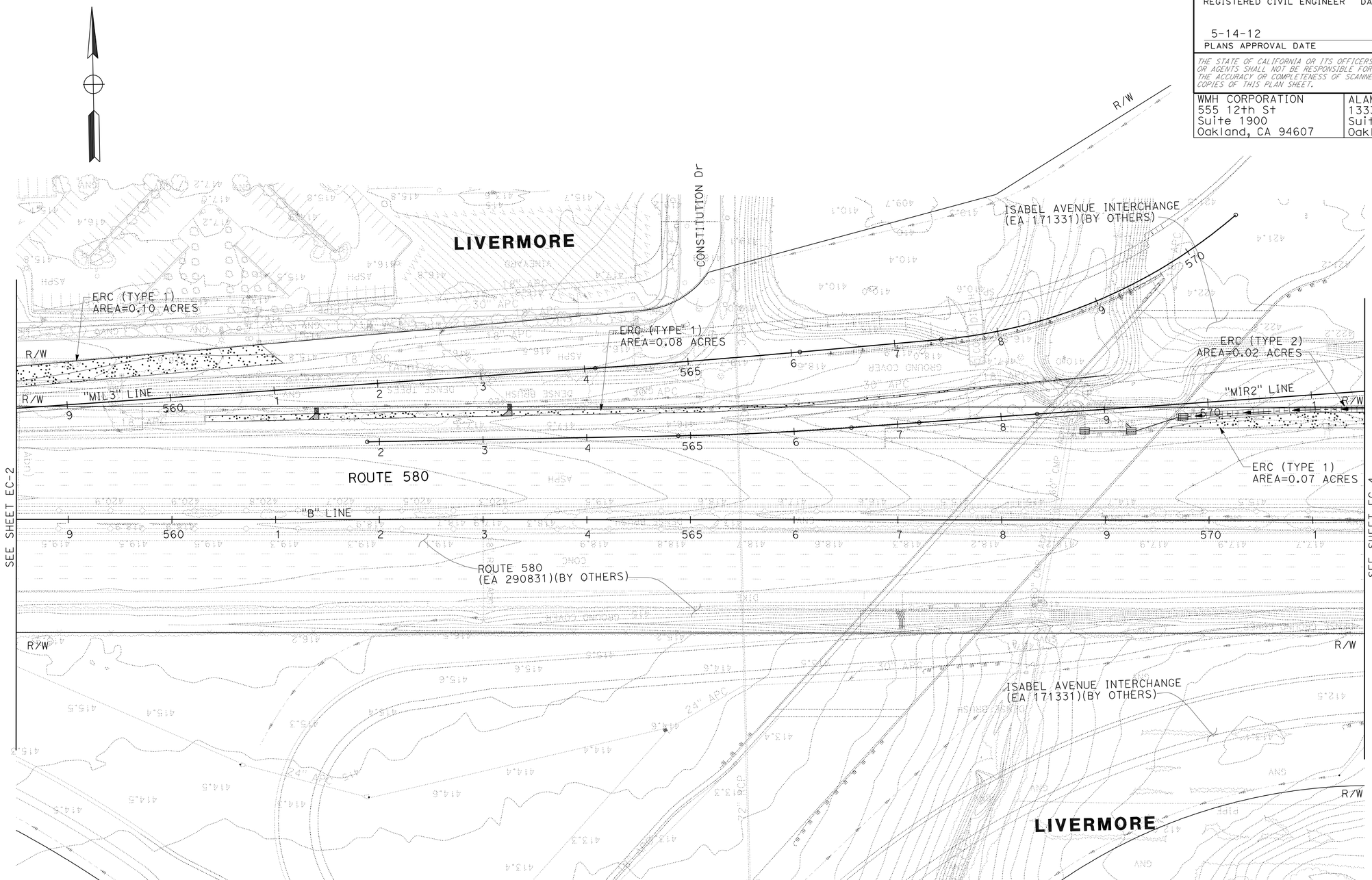

FOR NOTES AND LEGEND
SEE SHEET EC-1

THIS PLAN ACCURATE FOR EROSION CONTROL WORK ONLY.

EROSION CONTROL PLAN

SCALE: 1" = 50'

EC-3

BG	1/13/12		
YF	11/11/11		
YF	05/01/10		
REVISED BY	DATE REVISED		
Y. FAROUQI	DAVID M. DICKINSON	CALCULATED-DESIGNED BY	CHECKED BY
TIMOTHY J. LEE		CONSULTANT FUNCTIONAL SUPERVISOR	

STATE OF CALIFORNIA - DEPARTMENT OF TRANSPORTATION
Caltrans

X:\580 WB HOV\000_CAD\Sheets\East of Sta 540+00\CT-Electronic-Submittal 20120113\009-Erosion_Control\GE-Plans\0400021248ge003.dgn

LAST REVISION 01-13-12 | DATE PLOTTED => 23-MAY-2012 | TIME PLOTTED => 06:59

Dist	COUNTY	ROUTE	POST MILES TOTAL PROJECT	SHEET No.	TOTAL SHEETS
04	Ala	580	R8.4/R14.6	155	853

REGISTERED CIVIL ENGINEER 1/13/2012 DATE

5-14-12
PLANS APPROVAL DATE

REGISTERED PROFESSIONAL ENGINEER DAVID M. DICKINSON No. 50815 Exp. 9-30-13 CIVIL STATE OF CALIFORNIA

THE STATE OF CALIFORNIA OR ITS OFFICERS OR AGENTS SHALL NOT BE RESPONSIBLE FOR THE ACCURACY OR COMPLETENESS OF SCANNED COPIES OF THIS PLAN SHEET.

WMH CORPORATION
555 12th St
Suite 1900
Oakland, CA 94607

ALAMEDA CTC
1333 Broadway
Suite 220
Oakland, CA 94612

FOR ACCURATE RIGHT OF WAY DATA, CONTACT
RIGHT OF WAY ENGINEERING AT THE DISTRICT OFFICE

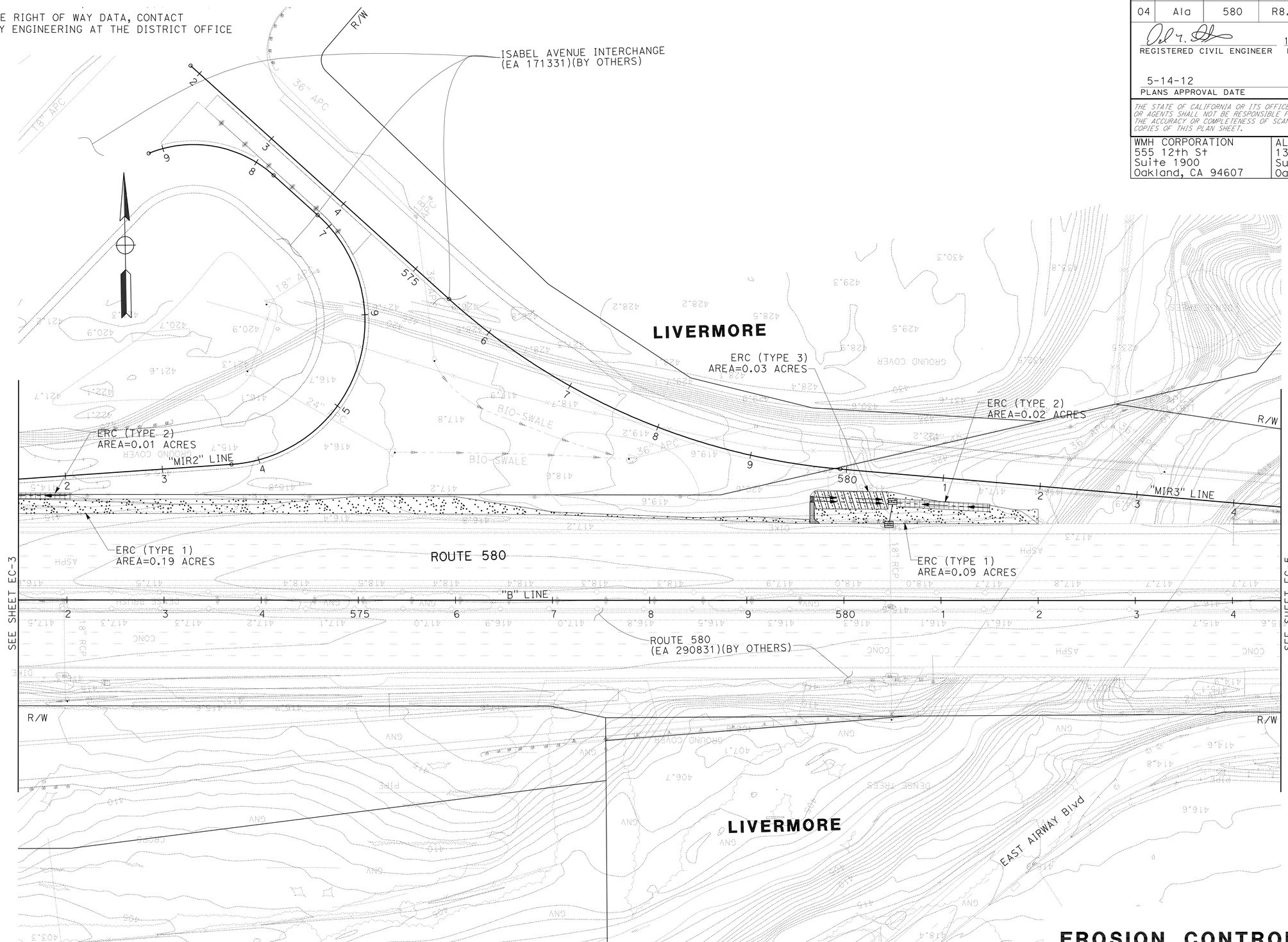

FOR NOTES AND LEGEND
SEE SHEET EC-1

THIS PLAN ACCURATE FOR EROSION CONTROL WORK ONLY.

EROSION CONTROL PLAN

SCALE: 1" = 50'

EC-4

	BG	YF	YF	Y. FAROUOI	CALCULATED-DESIGNED BY	TIMOTHY J. LEE
	1/13/12	11/11/11	05/01/10	DAVID M. DICKINSON	CHECKED BY	
			DATE REVISED	REVISED BY	CONSULTANT FUNCTIONAL SUPERVISOR	

STATE OF CALIFORNIA - DEPARTMENT OF TRANSPORTATION

Caltrans

X:\580 WB HOV\000_CAD\Sheets\East of Sta 540+00\CT-Electronic-Submittal 20120113\009-Erosion_Control\GE-Plans\04000212 48ge004.dgn

LAST REVISION 01-13-12 | DATE PLOTTED => 23-MAY-2012 | TIME PLOTTED => 06:59

Dist	COUNTY	ROUTE	POST MILES TOTAL PROJECT	SHEET No.	TOTAL SHEETS
04	Ala	580	R8.4/R14.6	156	853

REGISTERED CIVIL ENGINEER 1/13/2012 DATE

5-14-12
PLANS APPROVAL DATE

REGISTERED PROFESSIONAL ENGINEER DAVID M. DICKINSON No. 50815 Exp. 9-30-13 CIVIL STATE OF CALIFORNIA

THE STATE OF CALIFORNIA OR ITS OFFICERS OR AGENTS SHALL NOT BE RESPONSIBLE FOR THE ACCURACY OR COMPLETENESS OF SCANNED COPIES OF THIS PLAN SHEET.

WMH CORPORATION
555 12th St
Suite 1900
Oakland, CA 94607

ALAMEDA CTC
1333 Broadway
Suite 220
Oakland, CA 94612

FOR ACCURATE RIGHT OF WAY DATA, CONTACT
RIGHT OF WAY ENGINEERING AT THE DISTRICT OFFICE

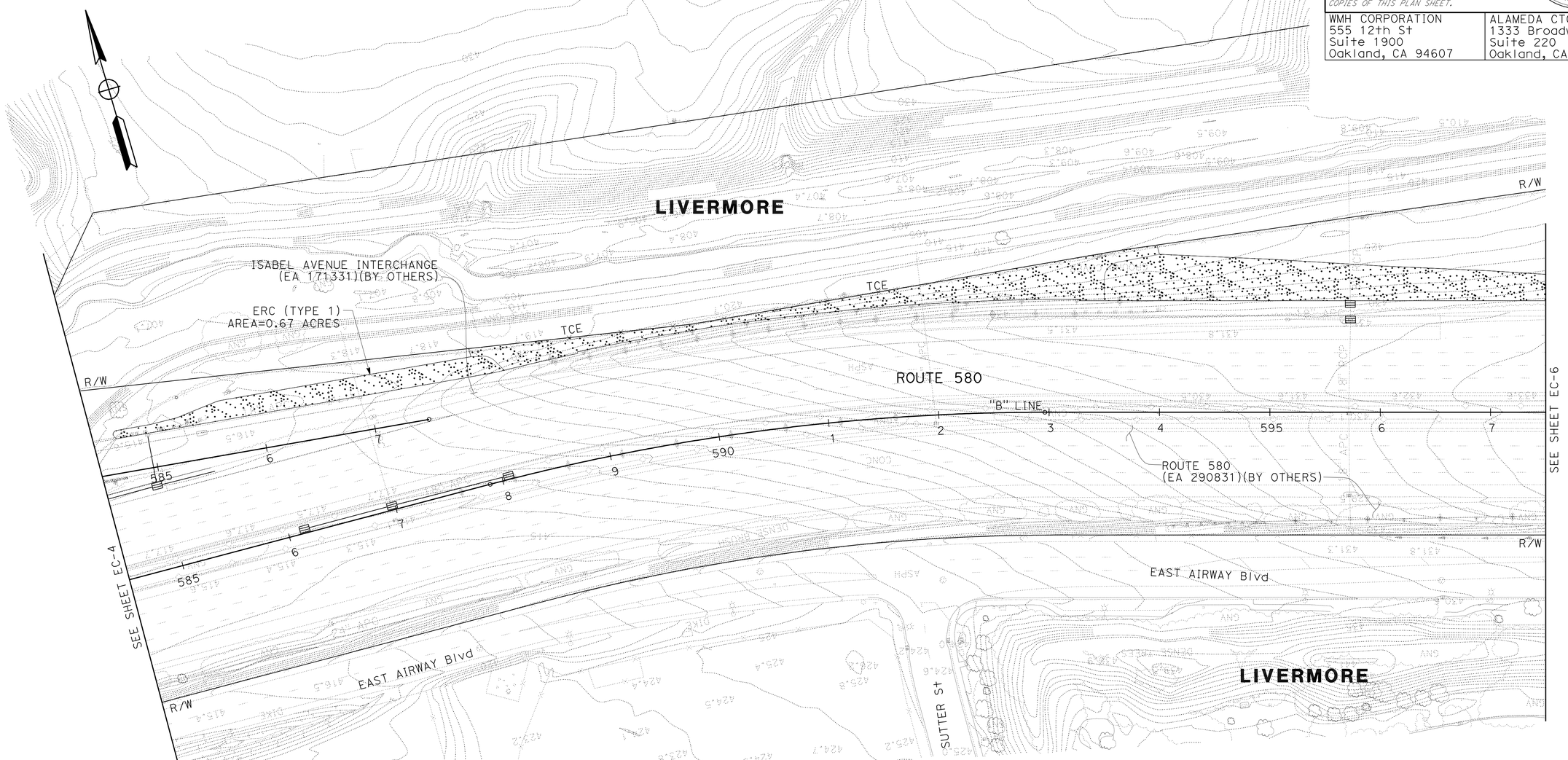

FOR NOTES AND LEGEND
SEE SHEET EC-1

THIS PLAN ACCURATE FOR EROSION CONTROL WORK ONLY.

EROSION CONTROL PLAN

SCALE: 1" = 50'

EC-5

BG	1/13/12		
YF	11/11/11		
YF	05/01/10		
REVISED BY	DATE REVISED		
Y. FAROUOI	DAVID M. DICKINSON		
CALCULATED-DESIGNED BY	CHECKED BY		
SUPERVISOR			
TIMOTHY J. LEE			
CONSULTANT FUNCTIONAL SUPERVISOR			

STATE OF CALIFORNIA - DEPARTMENT OF TRANSPORTATION
Caltrans

X:\580 WB HOV\000_CAD\Sheets\East of Sta 540+00\CT-Electronic-Submittal 20120113\009-Erosion_Control\GE-Plans\04000212 48ge005.dgn

LAST REVISION 01-13-12
DATE PLOTTED => 23-MAY-2012
TIME PLOTTED => 06:59

Dist	COUNTY	ROUTE	POST MILES TOTAL PROJECT	SHEET No.	TOTAL SHEETS
04	Ala	580	R8.4/R14.6	157	853

REGISTERED CIVIL ENGINEER 1/13/2012 DATE

5-14-12
PLANS APPROVAL DATE

REGISTERED PROFESSIONAL ENGINEER DAVID M. DICKINSON No. 50815 Exp. 9-30-13 CIVIL STATE OF CALIFORNIA

THE STATE OF CALIFORNIA OR ITS OFFICERS OR AGENTS SHALL NOT BE RESPONSIBLE FOR THE ACCURACY OR COMPLETENESS OF SCANNED COPIES OF THIS PLAN SHEET.

WMH CORPORATION
555 12th St
Suite 1900
Oakland, CA 94607

ALAMEDA CTC
1333 Broadway
Suite 220
Oakland, CA 94612

FOR ACCURATE RIGHT OF WAY DATA, CONTACT
RIGHT OF WAY ENGINEERING AT THE DISTRICT OFFICE

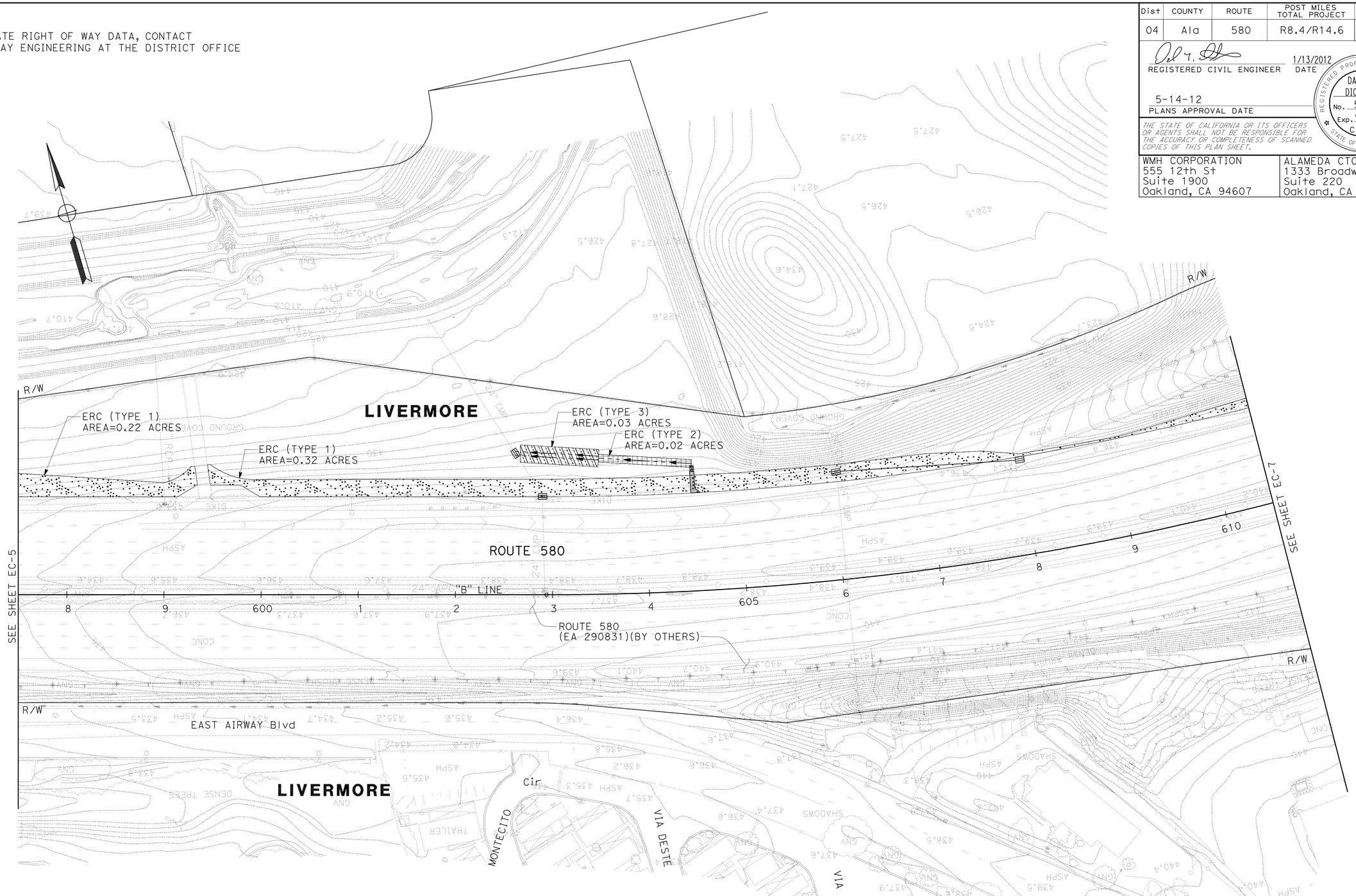

FOR NOTES AND LEGEND
SEE SHEET EC-1

THIS PLAN ACCURATE FOR EROSION CONTROL WORK ONLY.

EROSION CONTROL PLAN

SCALE: 1" = 50'

EC-6

BG	1/13/12	CALCULATED-DESIGNED BY	CHECKED BY
YF	11/11/11	CALCULATED-DESIGNED BY	CHECKED BY
YF	05/01/10	CALCULATED-DESIGNED BY	CHECKED BY
REVISED BY	DATE REVISED	CALCULATED-DESIGNED BY	CHECKED BY
Y. FAROUQI	DAVID M. DICKINSON	TIMOTHY J. LEE	

STATE OF CALIFORNIA - DEPARTMENT OF TRANSPORTATION
Caltrans
CONSULTANT FUNCTIONAL SUPERVISOR

X:\580 WB HOV\000_CAD\Sheets\East of Sta 540+00\CT-Electronic-Submittal 20120113\009-Erosion_Control\GE-Plans\0400021248ge006.dgn

LAST REVISION 01-13-12 | DATE PLOTTED => 23-MAY-2012 | TIME PLOTTED => 06:59

Dist	COUNTY	ROUTE	POST MILES TOTAL PROJECT	SHEET No.	TOTAL SHEETS
04	Ala	580	R8.4/R14.6	158	853

REGISTERED CIVIL ENGINEER 1/13/2012 DATE

5-14-12
PLANS APPROVAL DATE

REGISTERED PROFESSIONAL ENGINEER DAVID M. DICKINSON No. 50815 Exp. 9-30-13 CIVIL STATE OF CALIFORNIA

THE STATE OF CALIFORNIA OR ITS OFFICERS OR AGENTS SHALL NOT BE RESPONSIBLE FOR THE ACCURACY OR COMPLETENESS OF SCANNED COPIES OF THIS PLAN SHEET.

WMH CORPORATION
555 12th St
Suite 1900
Oakland, CA 94607

ALAMEDA CTC
1333 Broadway
Suite 220
Oakland, CA 94612

FOR ACCURATE RIGHT OF WAY DATA, CONTACT
RIGHT OF WAY ENGINEERING AT THE DISTRICT OFFICE

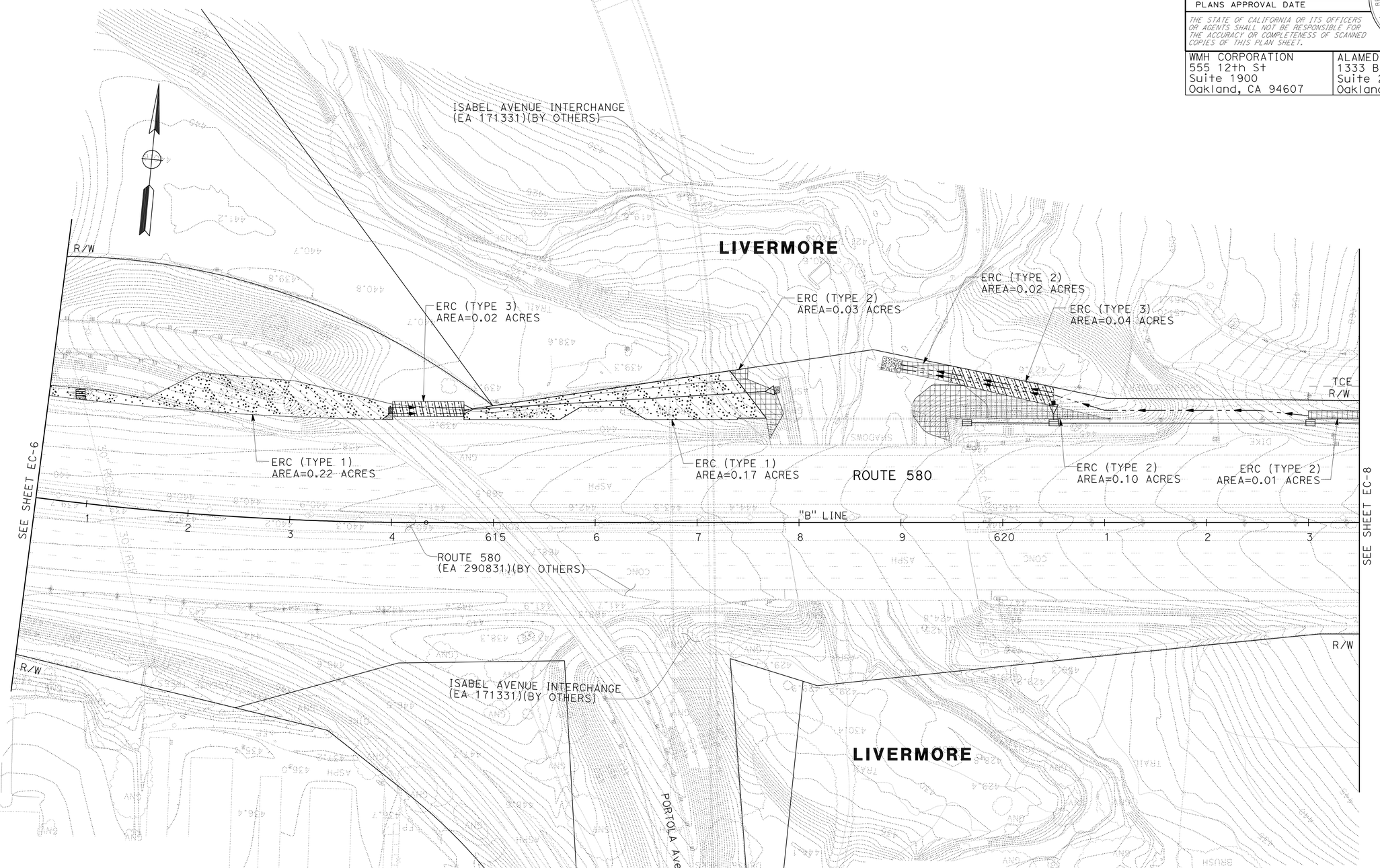

FOR NOTES AND LEGEND
SEE SHEET EC-1

THIS PLAN ACCURATE FOR EROSION CONTROL WORK ONLY.

EROSION CONTROL PLAN

SCALE: 1" = 50'

EC-7

BG	1/13/12		
YF	11/11/11		
YF	05/01/10		
REVISED BY	DATE REVISED		
Y. FAROUQI	DAVID M. DICKINSON	CALCULATED-DESIGNED BY	CHECKED BY
TIMOTHY J. LEE		CONSULTANT FUNCTIONAL SUPERVISOR	

STATE OF CALIFORNIA - DEPARTMENT OF TRANSPORTATION

Caltrans

X:\580 WB HOV\000_CAD\Sheets\East of Sta 540+00\CT-Electronic-Submittal 20120113\009-Erosion_Control\GE-Plans\04000212 48ge007.dgn

LAST REVISION 01-13-12 | DATE PLOTTED => 23-MAY-2012 | TIME PLOTTED => 06:59

Dist	COUNTY	ROUTE	POST MILES TOTAL PROJECT	SHEET No.	TOTAL SHEETS
04	Ala	580	R8.4/R14.6	159	853

REGISTERED CIVIL ENGINEER 1/13/2012 DATE

5-14-12
PLANS APPROVAL DATE

REGISTERED PROFESSIONAL ENGINEER DAVID M. DICKINSON No. 50815 Exp. 9-30-13 CIVIL STATE OF CALIFORNIA

THE STATE OF CALIFORNIA OR ITS OFFICERS OR AGENTS SHALL NOT BE RESPONSIBLE FOR THE ACCURACY OR COMPLETENESS OF SCANNED COPIES OF THIS PLAN SHEET.

WMH CORPORATION
555 12th St
Suite 1900
Oakland, CA 94607

ALAMEDA CTC
1333 Broadway
Suite 220
Oakland, CA 94612

FOR ACCURATE RIGHT OF WAY DATA, CONTACT
RIGHT OF WAY ENGINEERING AT THE DISTRICT OFFICE

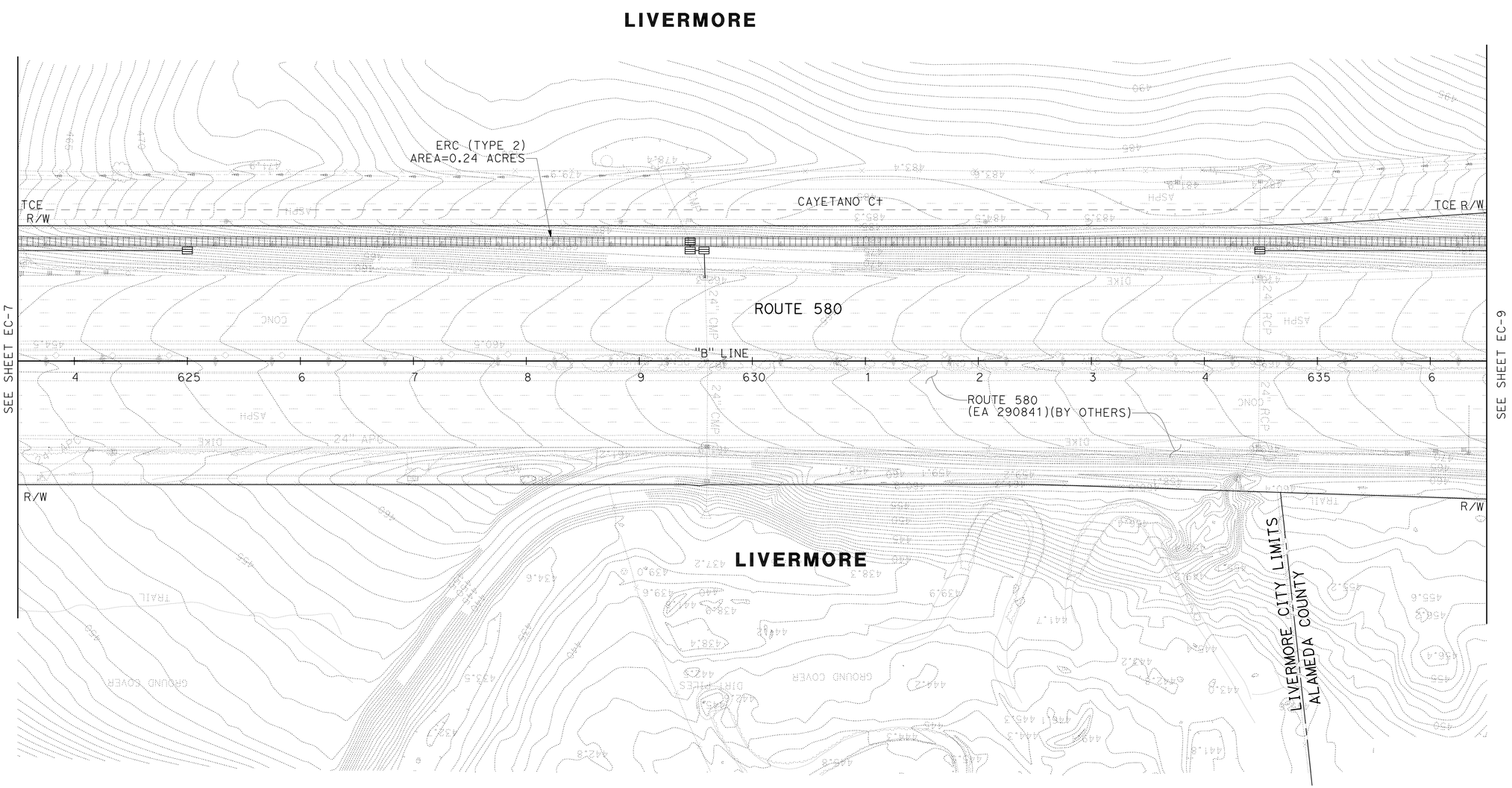

EROSION CONTROL PLAN

FOR NOTES AND LEGEND
SEE SHEET EC-1

THIS PLAN ACCURATE FOR EROSION CONTROL WORK ONLY.

SCALE: 1" = 50'

EC-8

BG	1/13/12	CALCULATED-DESIGNED BY	Y. FAROUQI
YF	11/11/11	CHECKED BY	DAVID M. DICKINSON
YF	05/01/10	REVISED BY	
		DATE REVISED	

TIMOTHY J. LEE
CONSULTANT FUNCTIONAL SUPERVISOR

STATE OF CALIFORNIA - DEPARTMENT OF TRANSPORTATION
Caltrans

X:\580 WB HOV\000_CAD\Sheets\East of Sta 540+00\CT-Electronic-Submittal 20120113\009-Erosion_Control\GE-Plans\04000212 48ge008.dgn

LAST REVISION 01-13-12
DATE PLOTTED => 23-MAY-2012
TIME PLOTTED => 06:59

Dist	COUNTY	ROUTE	POST MILES TOTAL PROJECT	SHEET No.	TOTAL SHEETS
04	Ala	580	R8.4/R14.6	160	853

REGISTERED CIVIL ENGINEER 1/13/2012 DATE

5-14-12
PLANS APPROVAL DATE

REGISTERED PROFESSIONAL ENGINEER DAVID M. DICKINSON No. 50815 Exp. 9-30-13 CIVIL STATE OF CALIFORNIA

THE STATE OF CALIFORNIA OR ITS OFFICERS OR AGENTS SHALL NOT BE RESPONSIBLE FOR THE ACCURACY OR COMPLETENESS OF SCANNED COPIES OF THIS PLAN SHEET.

WMH CORPORATION
555 12th St
Suite 1900
Oakland, CA 94607

ALAMEDA CTC
1333 Broadway
Suite 220
Oakland, CA 94612

FOR ACCURATE RIGHT OF WAY DATA, CONTACT
RIGHT OF WAY ENGINEERING AT THE DISTRICT OFFICE

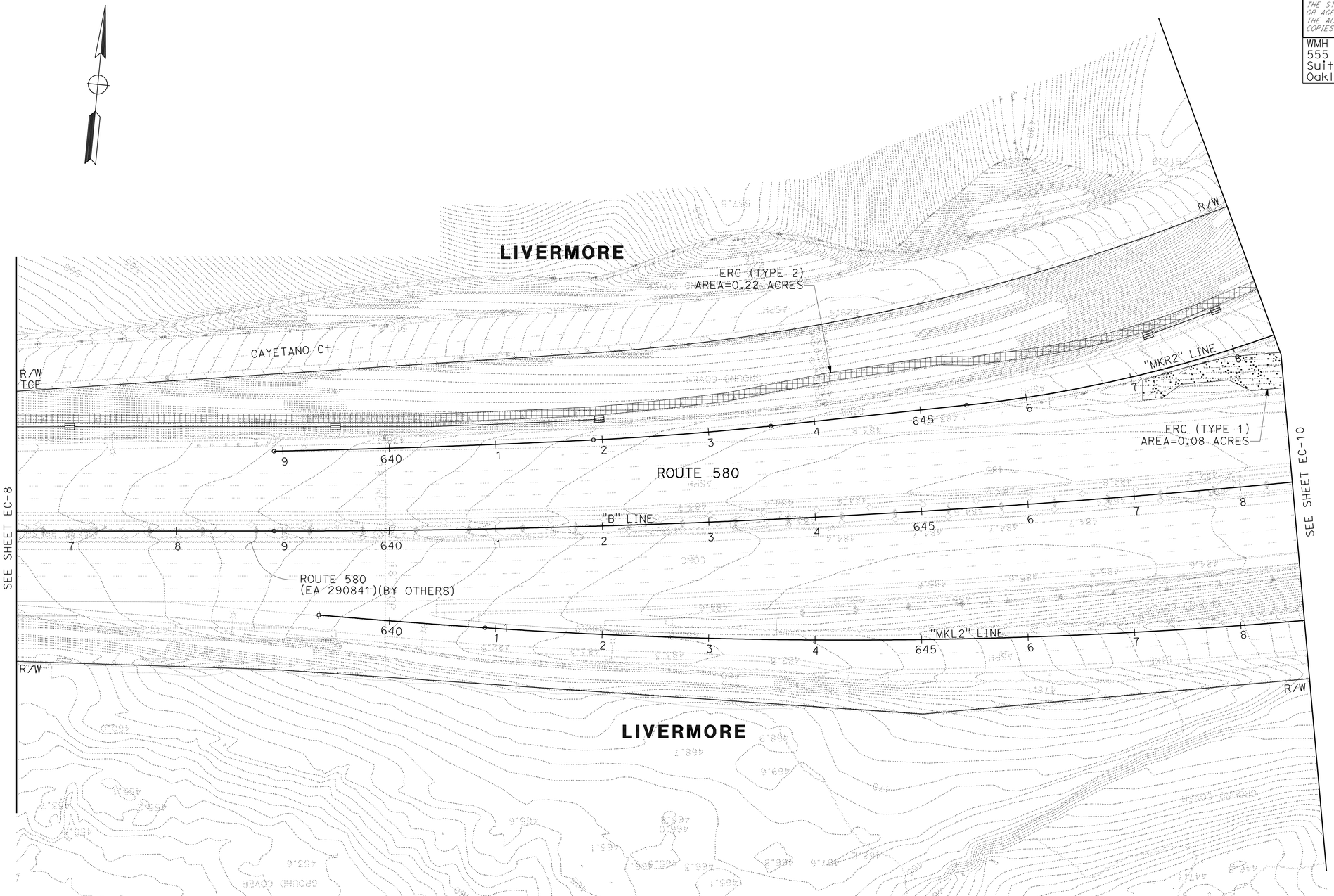

FOR NOTES AND LEGEND
SEE SHEET EC-1

THIS PLAN ACCURATE FOR EROSION CONTROL WORK ONLY.

EROSION CONTROL PLAN

SCALE: 1" = 50'

EC-9

BG	1/13/12		
YF	11/11/11		
YF	05/01/10		
REVISED BY	DATE REVISED		
Y. FAROUQI	DAVID M. DICKINSON		
CALCULATED-DESIGNED BY	CHECKED BY		
SUPERVISOR			
TIMOTHY J. LEE			
CONSULTANT FUNCTIONAL SUPERVISOR			

STATE OF CALIFORNIA - DEPARTMENT OF TRANSPORTATION
Caltrans

X:\580 WB HOV\000_CAD\Sheets\East of Sta 540+00\CT-Electronic-Submittal 20120113\009-Erosion_Control\GE-Plans\0400021248ge009.dgn

LAST REVISION 01-13-12 | DATE PLOTTED => 23-MAY-2012 | TIME PLOTTED => 06:59

Dist	COUNTY	ROUTE	POST MILES TOTAL PROJECT	SHEET No.	TOTAL SHEETS
04	Ala	580	R8.4/R14.6	161	853

REGISTERED CIVIL ENGINEER 1/13/2012 DATE

5-14-12
PLANS APPROVAL DATE

REGISTERED PROFESSIONAL ENGINEER DAVID M. DICKINSON No. 50815 Exp. 9-30-13 CIVIL STATE OF CALIFORNIA

THE STATE OF CALIFORNIA OR ITS OFFICERS OR AGENTS SHALL NOT BE RESPONSIBLE FOR THE ACCURACY OR COMPLETENESS OF SCANNED COPIES OF THIS PLAN SHEET.

WMH CORPORATION
555 12th St
Suite 1900
Oakland, CA 94607

ALAMEDA CTC
1333 Broadway
Suite 220
Oakland, CA 94612

FOR ACCURATE RIGHT OF WAY DATA, CONTACT RIGHT OF WAY ENGINEERING AT THE DISTRICT OFFICE

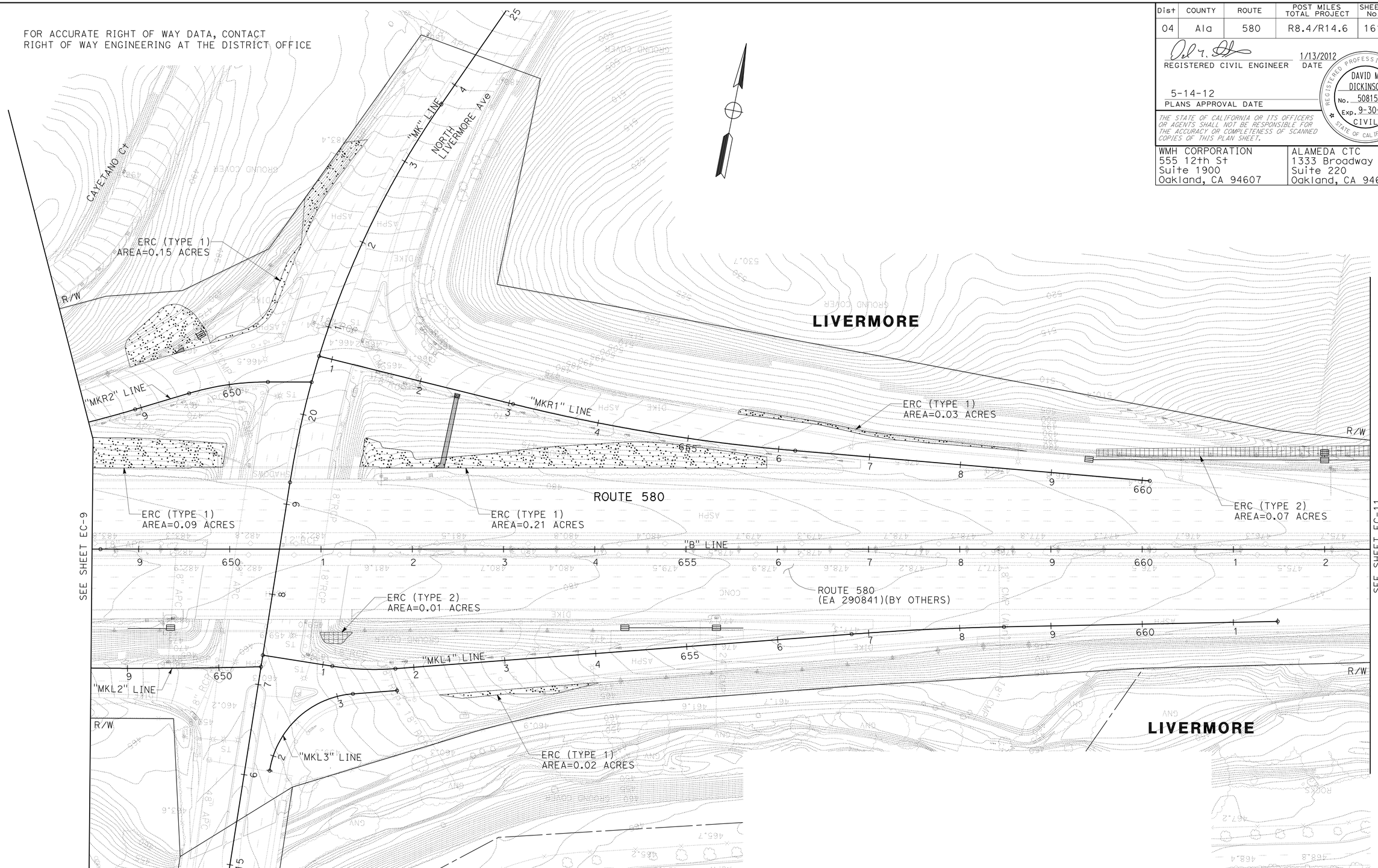

FOR NOTES AND LEGEND SEE SHEET EC-1

THIS PLAN ACCURATE FOR EROSION CONTROL WORK ONLY.

EROSION CONTROL PLAN

SCALE: 1" = 50'

EC-10

BG	1/13/12		
YF	11/11/11		
YF	05/01/10		
REVISED BY	DATE REVISED		
Y. FAROUQI	DAVID M. DICKINSON		
CALCULATED-DESIGNED BY	CHECKED BY		
SUPERVISOR			
TIMOTHY J. LEE			

CONSULTANT FUNCTIONAL SUPERVISOR

STATE OF CALIFORNIA - DEPARTMENT OF TRANSPORTATION

Caltrans

X:\580 WB HOV\000_CAD\Sheets\East of Sta 540+00\CT-Electronic-Submittal 20120113\009-Erosion_Control\GE-Plans\04000212 48ge010.dgn

LAST REVISION DATE PLOTTED => 23-MAY-2012
01-13-12 TIME PLOTTED => 07:00

Dist	COUNTY	ROUTE	POST MILES TOTAL PROJECT	SHEET No.	TOTAL SHEETS
04	Ala	580	R8.4/R14.6	162	853

REGISTERED CIVIL ENGINEER 1/13/2012 DATE

5-14-12
PLANS APPROVAL DATE

REGISTERED PROFESSIONAL ENGINEER DAVID M. DICKINSON No. 50815 Exp. 9-30-13 CIVIL STATE OF CALIFORNIA

THE STATE OF CALIFORNIA OR ITS OFFICERS OR AGENTS SHALL NOT BE RESPONSIBLE FOR THE ACCURACY OR COMPLETENESS OF SCANNED COPIES OF THIS PLAN SHEET.

WMH CORPORATION
555 12th St
Suite 1900
Oakland, CA 94607

ALAMEDA CTC
1333 Broadway
Suite 220
Oakland, CA 94612

FOR ACCURATE RIGHT OF WAY DATA, CONTACT
RIGHT OF WAY ENGINEERING AT THE DISTRICT OFFICE

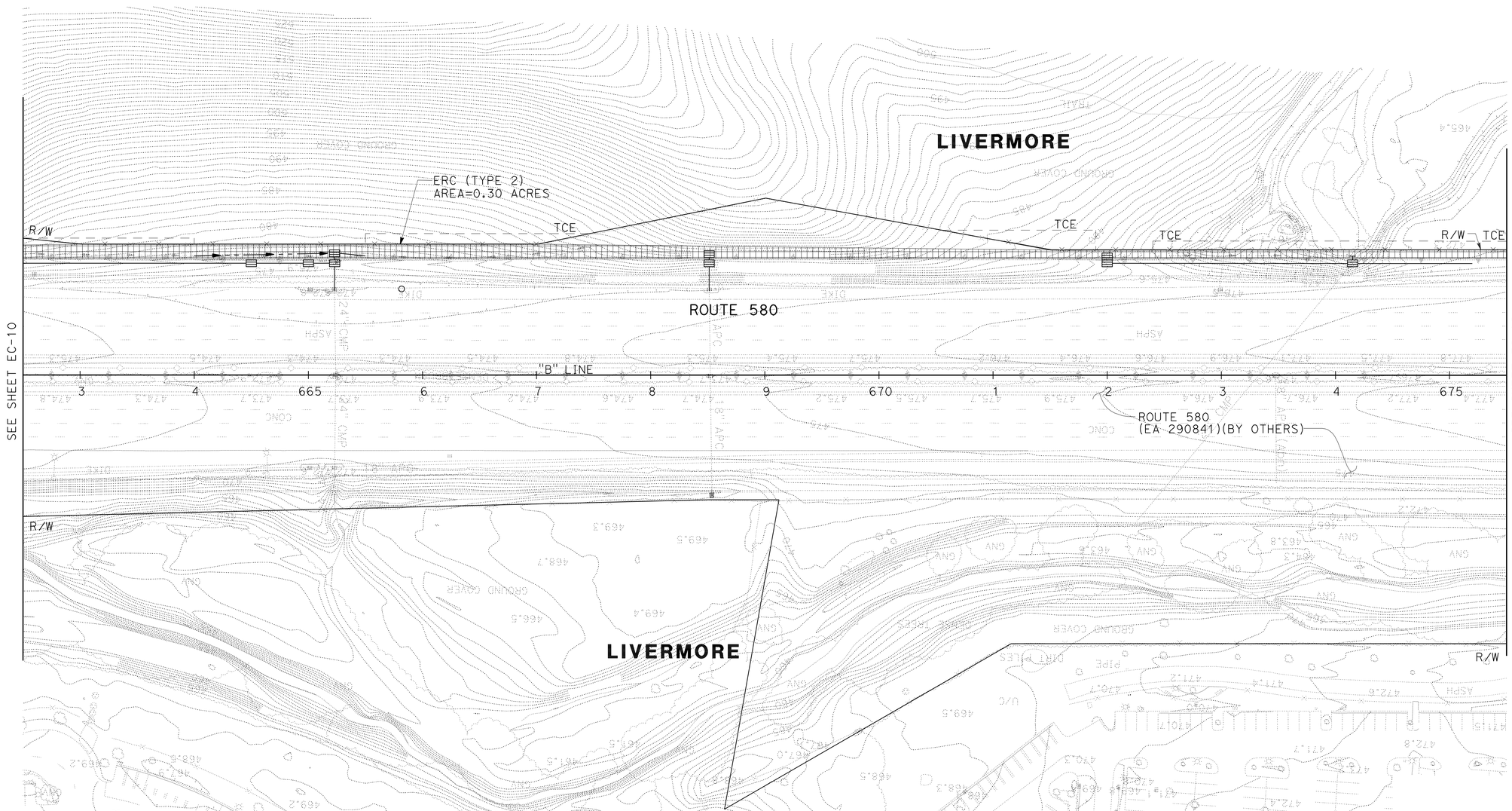

FOR NOTES AND LEGEND
SEE SHEET EC-1

THIS PLAN ACCURATE FOR EROSION CONTROL WORK ONLY.

EROSION CONTROL PLAN

SCALE: 1" = 50'

EC-11

REVISED BY	DATE REVISED
BG	1/13/12
YF	11/11/11
YF	05/01/10

Y. FAROUQI — CALCULATED-DESIGNED BY
DAVID M. DICKINSON — CHECKED BY
TIMOTHY J. LEE — CONSULTANT FUNCTIONAL SUPERVISOR

STATE OF CALIFORNIA - DEPARTMENT OF TRANSPORTATION
Caltrans

X:\580 WB HOV\000_CAD\Sheets\East of Sta 540+00\CT-Electronic-Submittal 20120113\009-Erosion_Control\GE-Plans\0400021248ge011.dgn

LAST REVISION 01-13-12
DATE PLOTTED => 23-MAY-2012
TIME PLOTTED => 07:00

Dist	COUNTY	ROUTE	POST MILES TOTAL PROJECT	SHEET No.	TOTAL SHEETS
04	Ala	580	R8.4/R14.6	163	853

REGISTERED CIVIL ENGINEER 1/13/2012 DATE

5-14-12
PLANS APPROVAL DATE

REGISTERED PROFESSIONAL ENGINEER DAVID M. DICKINSON No. 50815 Exp. 9-30-13 CIVIL STATE OF CALIFORNIA

THE STATE OF CALIFORNIA OR ITS OFFICERS OR AGENTS SHALL NOT BE RESPONSIBLE FOR THE ACCURACY OR COMPLETENESS OF SCANNED COPIES OF THIS PLAN SHEET.

WMH CORPORATION
555 12th St
Suite 1900
Oakland, CA 94607

ALAMEDA CTC
1333 Broadway
Suite 220
Oakland, CA 94612

FOR ACCURATE RIGHT OF WAY DATA, CONTACT
RIGHT OF WAY ENGINEERING AT THE DISTRICT OFFICE

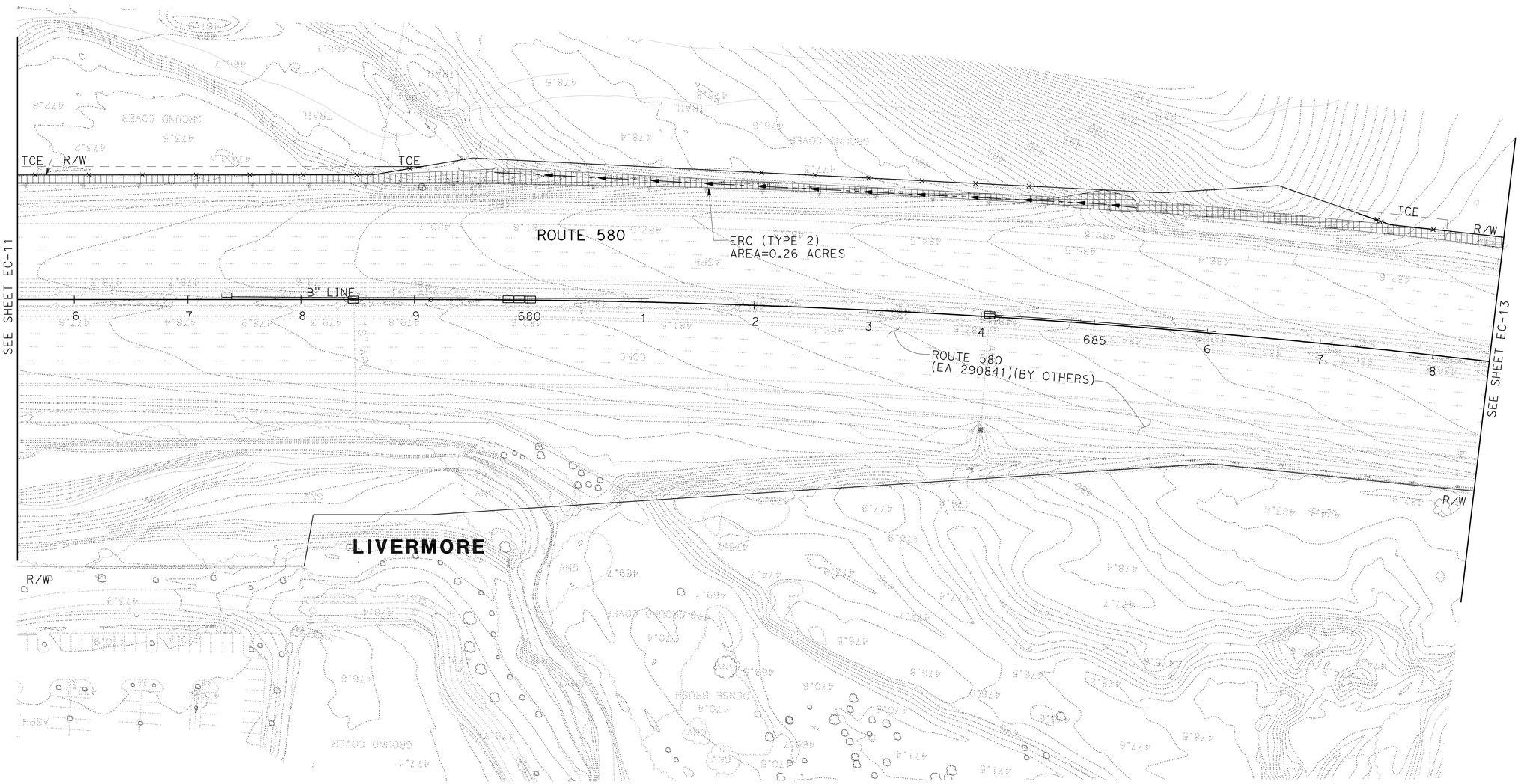

FOR NOTES AND LEGEND
SEE SHEET EC-1

THIS PLAN ACCURATE FOR EROSION CONTROL WORK ONLY.

EROSION CONTROL PLAN

SCALE: 1" = 50'

EC-12

BG	1/13/12		
YF	11/11/11		
YF	05/01/10		
REVISED BY	DATE REVISED		
Y. FAROUQI	DAVID M. DICKINSON	CALCULATED-DESIGNED BY	CHECKED BY
TIMOTHY J. LEE			

CONSULTANT FUNCTIONAL SUPERVISOR

STATE OF CALIFORNIA - DEPARTMENT OF TRANSPORTATION

Caltrans

X:\580 WB HOV\000_CAD\Sheets\East of Sta 540+00\CT-Electronic-Submittal 20120113\009-Erosion_Control\GE-Plans\04000212 48ge012.dgn

LAST REVISION 01-13-12 | DATE PLOTTED => 23-MAY-2012 | TIME PLOTTED => 07:00

Dist	COUNTY	ROUTE	POST MILES TOTAL PROJECT	SHEET No.	TOTAL SHEETS
04	Ala	580	R8.4/R14.6	164	853

REGISTERED CIVIL ENGINEER 1/13/2012 DATE

5-14-12
PLANS APPROVAL DATE

REGISTERED PROFESSIONAL ENGINEER DAVID M. DICKINSON No. 50815 Exp. 9-30-13 CIVIL STATE OF CALIFORNIA

THE STATE OF CALIFORNIA OR ITS OFFICERS OR AGENTS SHALL NOT BE RESPONSIBLE FOR THE ACCURACY OR COMPLETENESS OF SCANNED COPIES OF THIS PLAN SHEET.

WMH CORPORATION
555 12th St
Suite 1900
Oakland, CA 94607

ALAMEDA CTC
1333 Broadway
Suite 220
Oakland, CA 94612

FOR ACCURATE RIGHT OF WAY DATA, CONTACT
RIGHT OF WAY ENGINEERING AT THE DISTRICT OFFICE

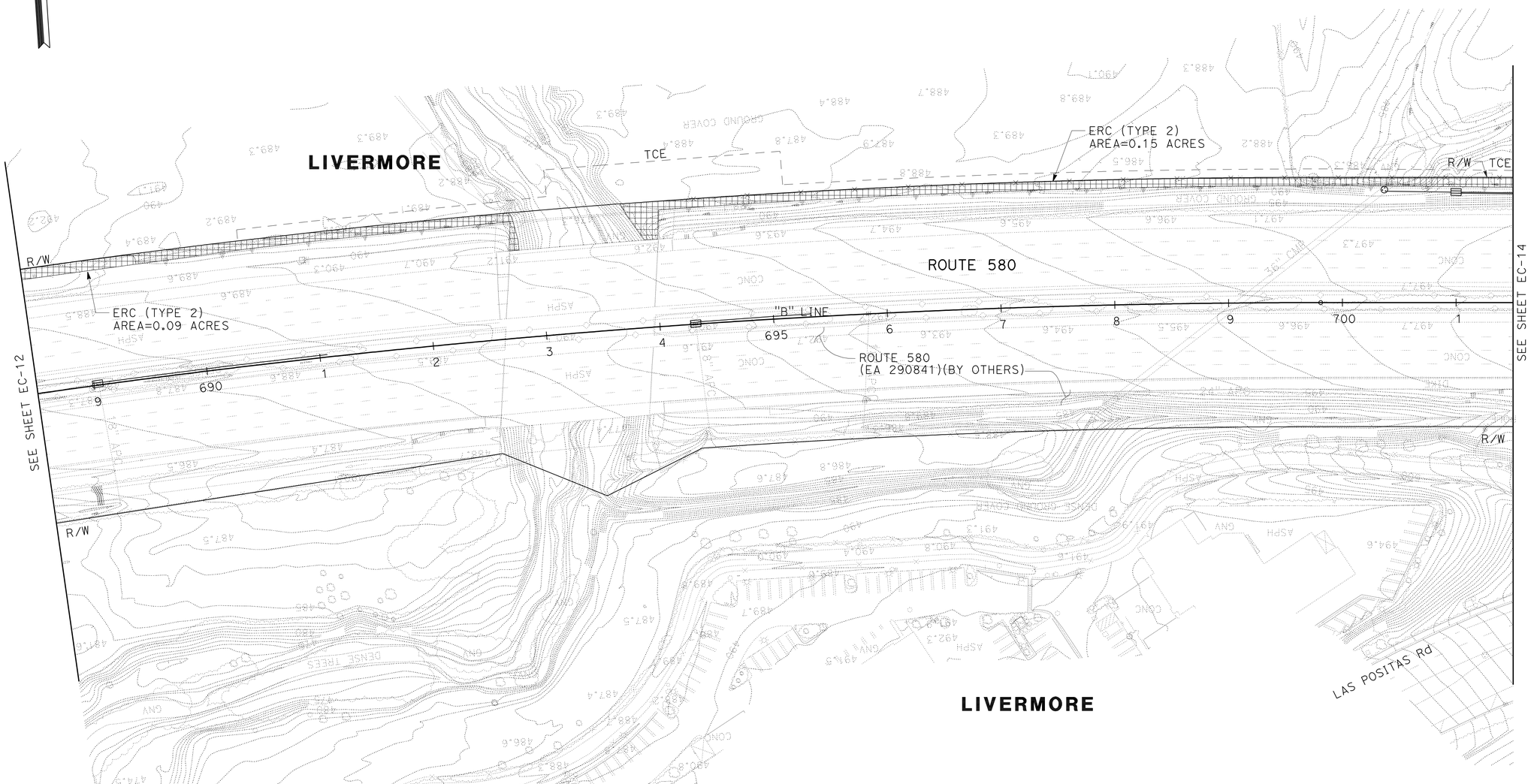

FOR NOTES AND LEGEND
SEE SHEET EC-1

THIS PLAN ACCURATE FOR EROSION CONTROL WORK ONLY.

EROSION CONTROL PLAN

SCALE: 1" = 50'

EC-13

REVISED BY	DATE REVISED
BG	1/13/12
YF	11/11/11
YF	05/01/10

CALCULATED-DESIGNED BY: Y. FAROUQI
CHECKED BY: DAVID M. DICKINSON
CONSULTANT FUNCTIONAL SUPERVISOR: TIMOTHY J. LEE

STATE OF CALIFORNIA - DEPARTMENT OF TRANSPORTATION
Caltrans

X:\580 WB HOV\000_CAD\Sheets\East of Sta 540+00\CT-Electronic-Submittal 20120113\009-Erosion_Control\GE-Plans\0400021248ge013.dgn

LAST REVISION 01-13-12 | DATE PLOTTED => 23-MAY-2012 | TIME PLOTTED => 07:00

FOR ACCURATE RIGHT OF WAY DATA, CONTACT
RIGHT OF WAY ENGINEERING AT THE DISTRICT OFFICE

Dist	COUNTY	ROUTE	POST MILES TOTAL PROJECT	SHEET No.	TOTAL SHEETS
04	Ala	580	R8.4/R14.6	165	853

REGISTERED CIVIL ENGINEER 1/13/2012 DATE

5-14-12
PLANS APPROVAL DATE

REGISTERED PROFESSIONAL ENGINEER DAVID M. DICKINSON No. 50815 Exp. 9-30-13 CIVIL STATE OF CALIFORNIA

THE STATE OF CALIFORNIA OR ITS OFFICERS OR AGENTS SHALL NOT BE RESPONSIBLE FOR THE ACCURACY OR COMPLETENESS OF SCANNED COPIES OF THIS PLAN SHEET.

WMH CORPORATION
555 12th St
Suite 1900
Oakland, CA 94607

ALAMEDA CTC
1333 Broadway
Suite 220
Oakland, CA 94612

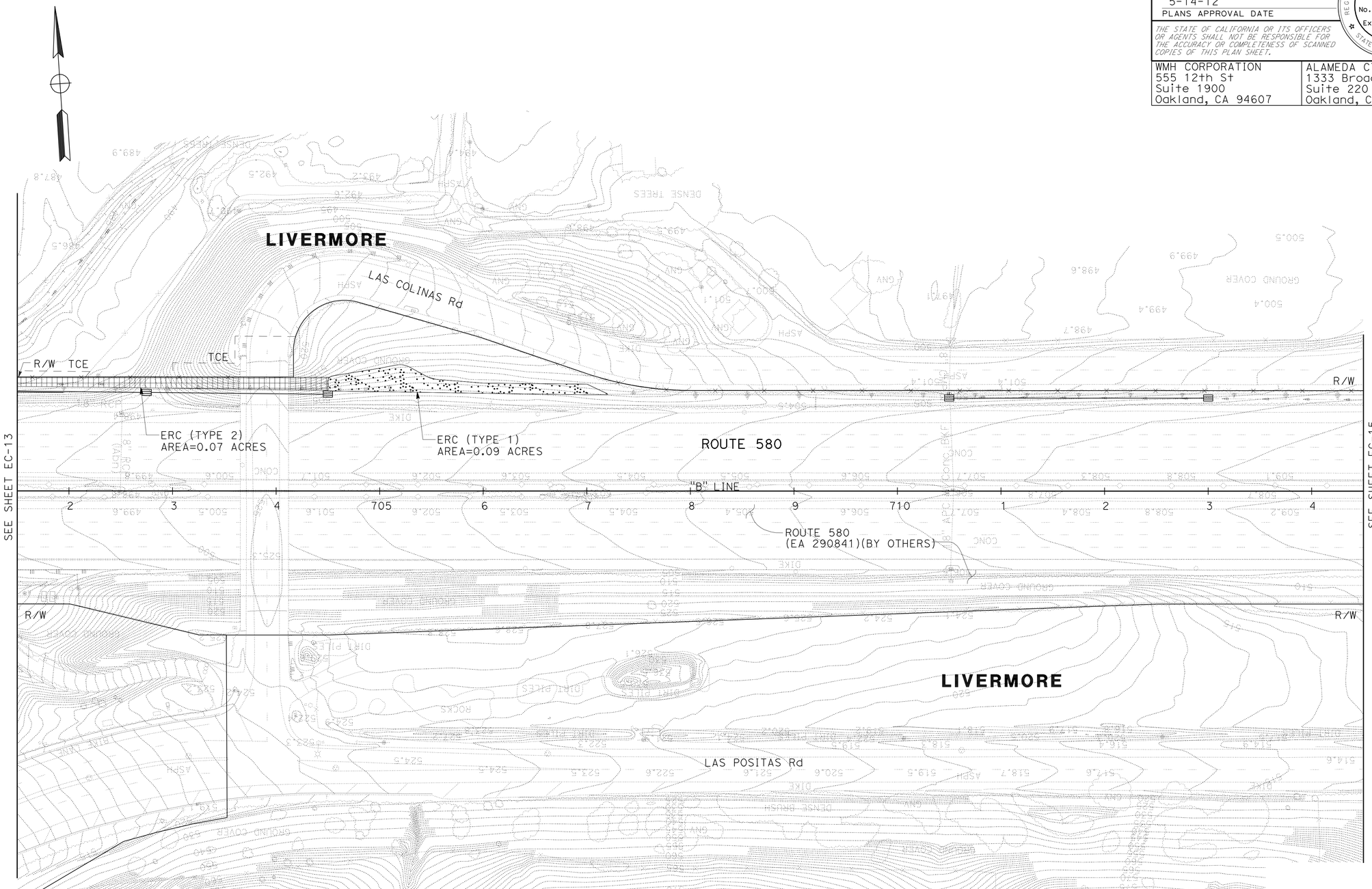

FOR NOTES AND LEGEND
SEE SHEET EC-1

THIS PLAN ACCURATE FOR EROSION CONTROL WORK ONLY.

EROSION CONTROL PLAN

SCALE: 1" = 50'

EC-14

BG	1/13/12		
YF	11/11/11		
YF	05/01/10		
REVISED BY	DATE REVISED		
Y. FAROUQI	DAVID M. DICKINSON	CALCULATED-DESIGNED BY	CHECKED BY
TIMOTHY J. LEE		CONSULTANT FUNCTIONAL SUPERVISOR	

STATE OF CALIFORNIA - DEPARTMENT OF TRANSPORTATION
Caltrans

X:\580 WB HOV\000_CAD\Sheets\East of Sta 540+00\CT-Electronic-Submittal 20120113\009-Erosion_Control\GE-Plans\04000212 48ge014.dgn

LAST REVISION 01-13-12 | DATE PLOTTED => 23-MAY-2012 | TIME PLOTTED => 07:00

Dist	COUNTY	ROUTE	POST MILES TOTAL PROJECT	SHEET No.	TOTAL SHEETS
04	Ala	580	R8.4/R14.6	166	853

REGISTERED CIVIL ENGINEER 1/13/2012 DATE

5-14-12
PLANS APPROVAL DATE

REGISTERED PROFESSIONAL ENGINEER DAVID M. DICKINSON No. 50815 Exp. 9-30-13 CIVIL STATE OF CALIFORNIA

THE STATE OF CALIFORNIA OR ITS OFFICERS OR AGENTS SHALL NOT BE RESPONSIBLE FOR THE ACCURACY OR COMPLETENESS OF SCANNED COPIES OF THIS PLAN SHEET.

WMH CORPORATION
555 12th St
Suite 1900
Oakland, CA 94607

ALAMEDA CTC
1333 Broadway
Suite 220
Oakland, CA 94612

FOR ACCURATE RIGHT OF WAY DATA, CONTACT
RIGHT OF WAY ENGINEERING AT THE DISTRICT OFFICE

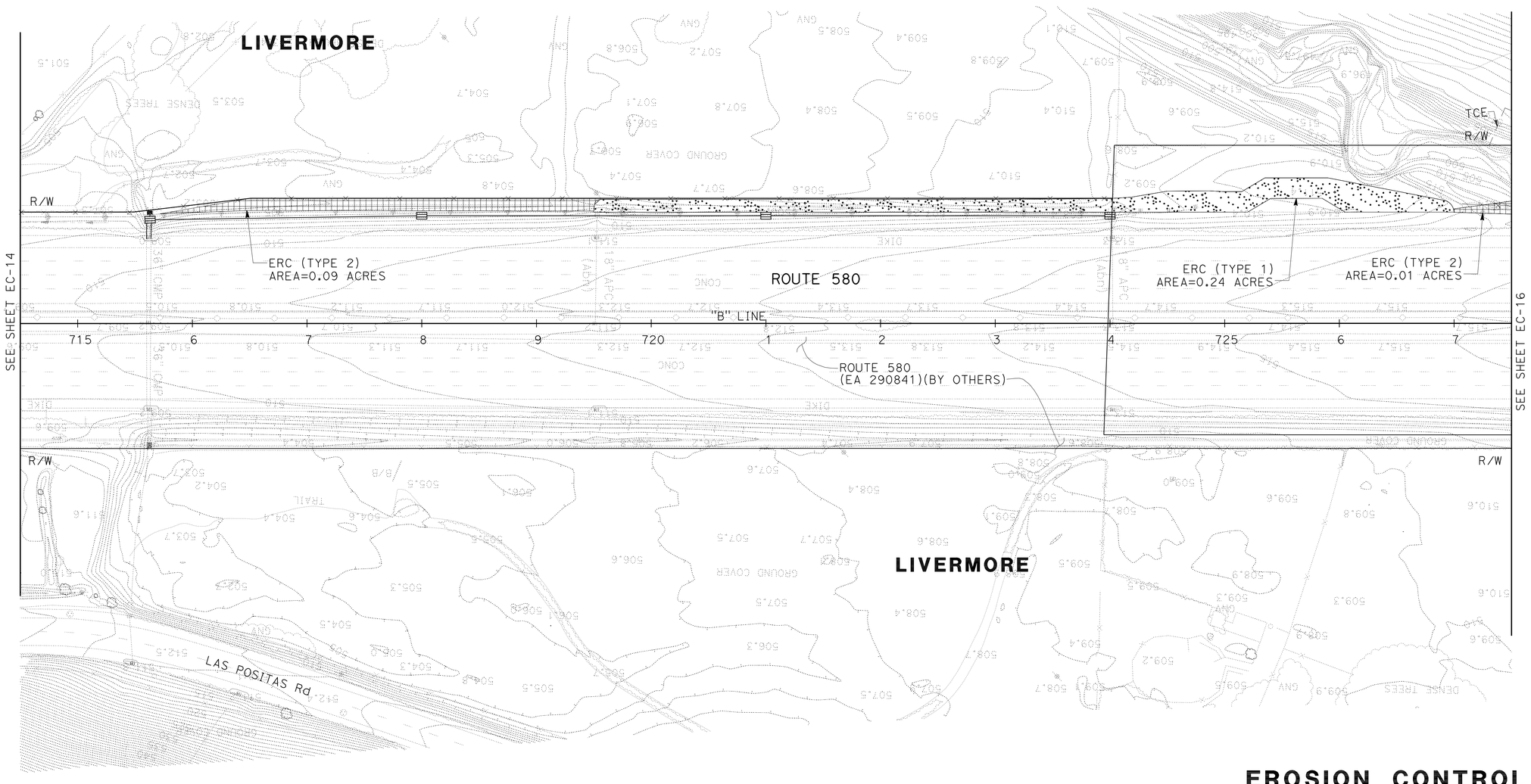

FOR NOTES AND LEGEND
SEE SHEET EC-1

THIS PLAN ACCURATE FOR EROSION CONTROL WORK ONLY.

EROSION CONTROL PLAN

SCALE: 1" = 50'

EC-15

REVISED BY	DATE REVISED
BG	1/13/12
YF	11/11/11
YF	05/01/10

Y. FAROUOI — CALCULATED-DESIGNED BY
DAVID M. DICKINSON — CHECKED BY
TIMOTHY J. LEE — CONSULTANT FUNCTIONAL SUPERVISOR

STATE OF CALIFORNIA - DEPARTMENT OF TRANSPORTATION
Caltrans

X:\580 WB HOV\000_CAD\Sheets\East of Sta 540+00\CT-Electronic-Submittal 20120113\009-Erosion_Control\GE-Plans\0400021248ge015.dgn

LAST REVISION 01-13-12 | DATE PLOTTED => 23-MAY-2012 | TIME PLOTTED => 07:00

Dist	COUNTY	ROUTE	POST MILES TOTAL PROJECT	SHEET No.	TOTAL SHEETS
04	Ala	580	R8.4/R14.6	167	853

REGISTERED CIVIL ENGINEER 1/13/2012 DATE

5-14-12
PLANS APPROVAL DATE

REGISTERED PROFESSIONAL ENGINEER DAVID M. DICKINSON No. 50815 Exp. 9-30-13 CIVIL STATE OF CALIFORNIA

THE STATE OF CALIFORNIA OR ITS OFFICERS OR AGENTS SHALL NOT BE RESPONSIBLE FOR THE ACCURACY OR COMPLETENESS OF SCANNED COPIES OF THIS PLAN SHEET.

WMH CORPORATION
555 12th St
Suite 1900
Oakland, CA 94607

ALAMEDA CTC
1333 Broadway
Suite 220
Oakland, CA 94612

FOR ACCURATE RIGHT OF WAY DATA, CONTACT
RIGHT OF WAY ENGINEERING AT THE DISTRICT OFFICE

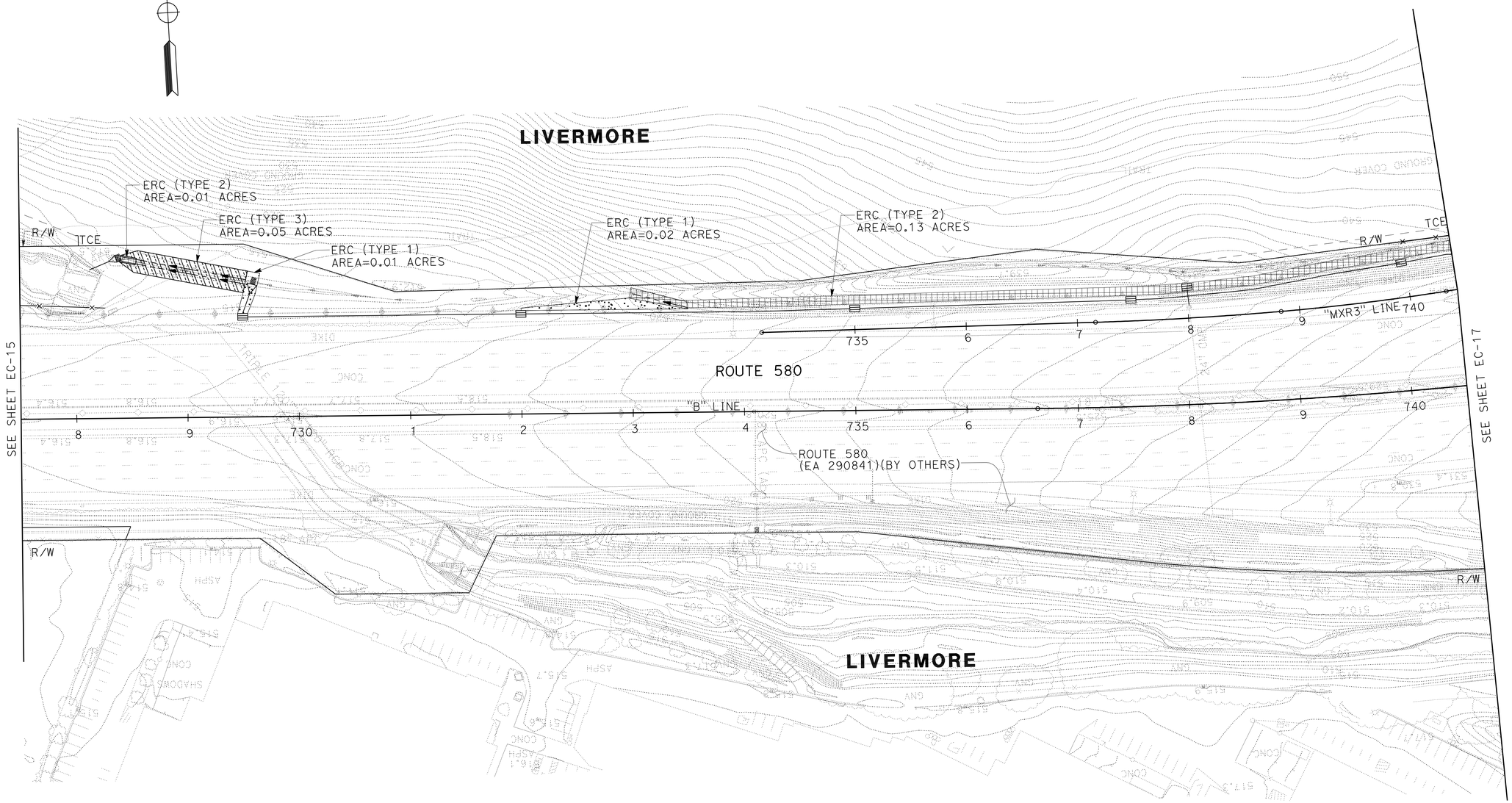

FOR NOTES AND LEGEND
SEE SHEET EC-1

THIS PLAN ACCURATE FOR EROSION CONTROL WORK ONLY.

EROSION CONTROL PLAN

SCALE: 1" = 50'

EC-16

BG	1/13/12		
YF	11/11/11		
YF	05/01/10		
REVISED BY	DATE REVISED		
Y. FAROUOI	DAVID M. DICKINSON		
CALCULATED-DESIGNED BY	CHECKED BY		
CONSULTANT FUNCTIONAL SUPERVISOR	TIMOTHY J. LEE		

STATE OF CALIFORNIA - DEPARTMENT OF TRANSPORTATION
Caltrans

X:\580 WB HOV\000_CAD\Sheets\East of Sta 540+00\CT-Electronic-Submittal 20120113\009-Erosion_Control\GE-Plans\0400021248ge016.dgn

LAST REVISION 01-13-12 | DATE PLOTTED => 23-MAY-2012 | TIME PLOTTED => 07:00

Dist	COUNTY	ROUTE	POST MILES TOTAL PROJECT	SHEET No.	TOTAL SHEETS
04	Ala	580	R8.4/R14.6	168	853

REGISTERED CIVIL ENGINEER 1/13/2012 DATE

5-14-12
PLANS APPROVAL DATE

REGISTERED PROFESSIONAL ENGINEER DAVID M. DICKINSON No. 50815 Exp. 9-30-13 CIVIL STATE OF CALIFORNIA

THE STATE OF CALIFORNIA OR ITS OFFICERS OR AGENTS SHALL NOT BE RESPONSIBLE FOR THE ACCURACY OR COMPLETENESS OF SCANNED COPIES OF THIS PLAN SHEET.

WMH CORPORATION
555 12th St
Suite 1900
Oakland, CA 94607

ALAMEDA CTC
1333 Broadway
Suite 220
Oakland, CA 94612

FOR ACCURATE RIGHT OF WAY DATA, CONTACT
RIGHT OF WAY ENGINEERING AT THE DISTRICT OFFICE

FOR NOTES AND LEGEND
SEE SHEET EC-1

THIS PLAN ACCURATE FOR EROSION CONTROL WORK ONLY.

EROSION CONTROL PLAN

SCALE: 1" = 50'

EC-17

REVISED BY	DATE REVISED
BG	1/13/12
YF	11/11/11
YF	05/01/10

Y. FAROUOI — CALCULATED-DESIGNED BY
DAVID M. DICKINSON — CHECKED BY
TIMOTHY J. LEE — CONSULTANT FUNCTIONAL SUPERVISOR

STATE OF CALIFORNIA - DEPARTMENT OF TRANSPORTATION
Caltrans

X:\580 WB HOV\000_CAD\Sheets\East of Sta 540+00\CT-Electronic-Submittal 20120113\009-Erosion_Control\GE-Plans\04000212 48ge017.dgn

LAST REVISION 01-13-12 | DATE PLOTTED => 23-MAY-2012 TIME PLOTTED => 07:00

Dist	COUNTY	ROUTE	POST MILES TOTAL PROJECT	SHEET No.	TOTAL SHEETS
04	Ala	580	R8.4/R14.6	169	853

REGISTERED CIVIL ENGINEER 1/13/2012 DATE

5-14-12
PLANS APPROVAL DATE

REGISTERED PROFESSIONAL ENGINEER DAVID M. DICKINSON No. 50815 Exp. 9-30-13 CIVIL STATE OF CALIFORNIA

THE STATE OF CALIFORNIA OR ITS OFFICERS OR AGENTS SHALL NOT BE RESPONSIBLE FOR THE ACCURACY OR COMPLETENESS OF SCANNED COPIES OF THIS PLAN SHEET.

WMH CORPORATION
555 12th St
Suite 1900
Oakland, CA 94607

ALAMEDA CTC
1333 Broadway
Suite 220
Oakland, CA 94612

FOR ACCURATE RIGHT OF WAY DATA, CONTACT
RIGHT OF WAY ENGINEERING AT THE DISTRICT OFFICE

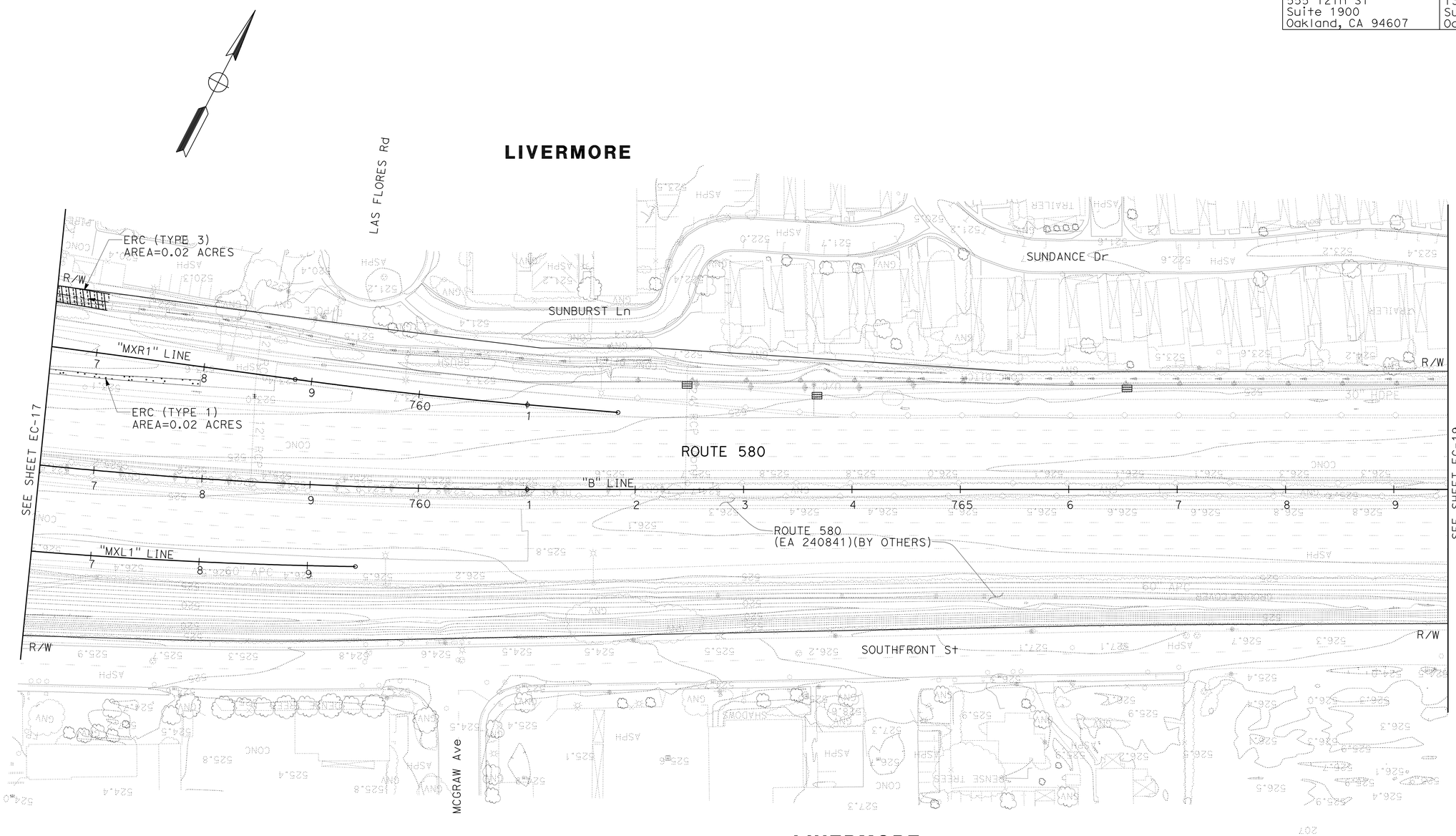

FOR NOTES AND LEGEND
SEE SHEET EC-1

THIS PLAN ACCURATE FOR EROSION CONTROL WORK ONLY.

EROSION CONTROL PLAN

SCALE: 1" = 50'

EC-18

BG	1/13/12		
YF	11/11/11		
YF	05/01/10		
REVISED BY	DATE REVISED		
Y. FAROUQI	DAVID M. DICKINSON		
CALCULATED-DESIGNED BY	CHECKED BY		
TIMOTHY J. LEE			
CONSULTANT FUNCTIONAL SUPERVISOR			

STATE OF CALIFORNIA - DEPARTMENT OF TRANSPORTATION
Caltrans

X:\580 WB HOV\000_CAD\Sheets\East of Sta 540+00\CT-Electronic-Submittal 20120113\009-Erosion_Control\GE-Plans\0400021248ge018.dgn

LAST REVISION 01-13-12 DATE PLOTTED => 23-MAY-2012 TIME PLOTTED => 07:00

Dist	COUNTY	ROUTE	POST MILES TOTAL PROJECT	SHEET No.	TOTAL SHEETS
04	Ala	580	R8.4/R14.6	170	853

REGISTERED CIVIL ENGINEER 1/13/2012 DATE

5-14-12
PLANS APPROVAL DATE

REGISTERED PROFESSIONAL ENGINEER DAVID M. DICKINSON No. 50815 Exp. 9-30-13 CIVIL STATE OF CALIFORNIA

THE STATE OF CALIFORNIA OR ITS OFFICERS OR AGENTS SHALL NOT BE RESPONSIBLE FOR THE ACCURACY OR COMPLETENESS OF SCANNED COPIES OF THIS PLAN SHEET.

WMH CORPORATION
555 12th St
Suite 1900
Oakland, CA 94607

ALAMEDA CTC
1333 Broadway
Suite 220
Oakland, CA 94612

FOR ACCURATE RIGHT OF WAY DATA, CONTACT
RIGHT OF WAY ENGINEERING AT THE DISTRICT OFFICE

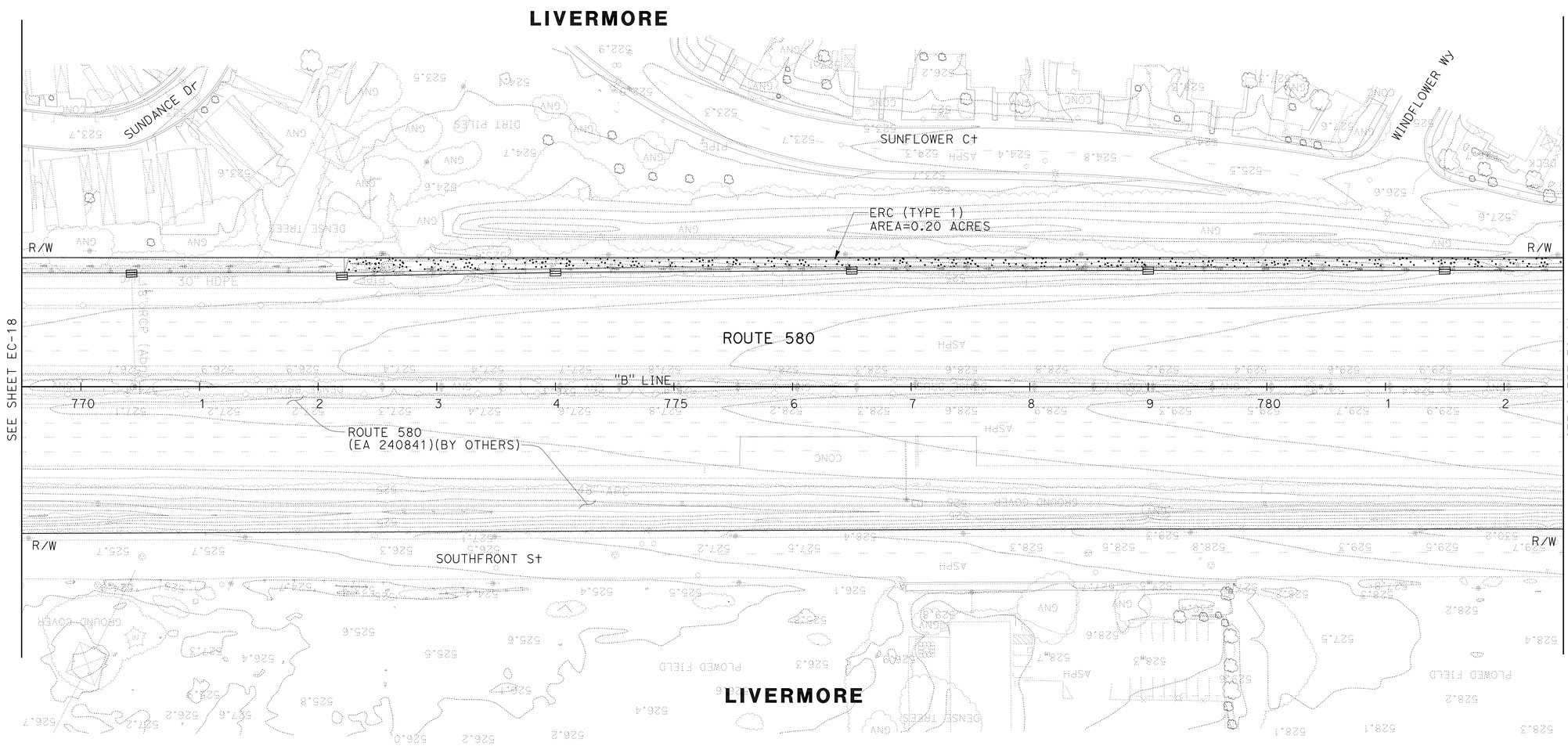

FOR NOTES AND LEGEND
SEE SHEET EC-1

THIS PLAN ACCURATE FOR EROSION CONTROL WORK ONLY.

EROSION CONTROL PLAN

SCALE: 1" = 50'

EC-19

	BG	YF	YF	Y. FAROUQI		
DATE REVISED	1/13/12	11/11/11	05/01/10	DAVID M. DICKINSON	CHECKED BY	TIMOTHY J. LEE

REVISED BY | CALCULATED-DESIGNED BY | SUPERVISOR | CONSULTANT FUNCTIONAL SUPERVISOR

STATE OF CALIFORNIA - DEPARTMENT OF TRANSPORTATION

Caltrans

X:\580 WB HOV\000_CAD\Sheets\East of Sta 540+00\CT-Electronic-Submittal 20120113\009-Erosion_Control\GE-Plans\0400021248ge019.dgn

LAST REVISION 01-13-12 | DATE PLOTTED => 23-MAY-2012 TIME PLOTTED => 07:00

Dist	COUNTY	ROUTE	POST MILES TOTAL PROJECT	SHEET No.	TOTAL SHEETS
04	Ala	580	R8.4/R14.6	171	853

REGISTERED CIVIL ENGINEER 1/13/2012 DATE

5-14-12
PLANS APPROVAL DATE

REGISTERED PROFESSIONAL ENGINEER DAVID M. DICKINSON No. 50815 Exp. 9-30-13 CIVIL STATE OF CALIFORNIA

THE STATE OF CALIFORNIA OR ITS OFFICERS OR AGENTS SHALL NOT BE RESPONSIBLE FOR THE ACCURACY OR COMPLETENESS OF SCANNED COPIES OF THIS PLAN SHEET.

WMH CORPORATION
555 12th St
Suite 1900
Oakland, CA 94607

ALAMEDA CTC
1333 Broadway
Suite 220
Oakland, CA 94612

FOR ACCURATE RIGHT OF WAY DATA, CONTACT
RIGHT OF WAY ENGINEERING AT THE DISTRICT OFFICE

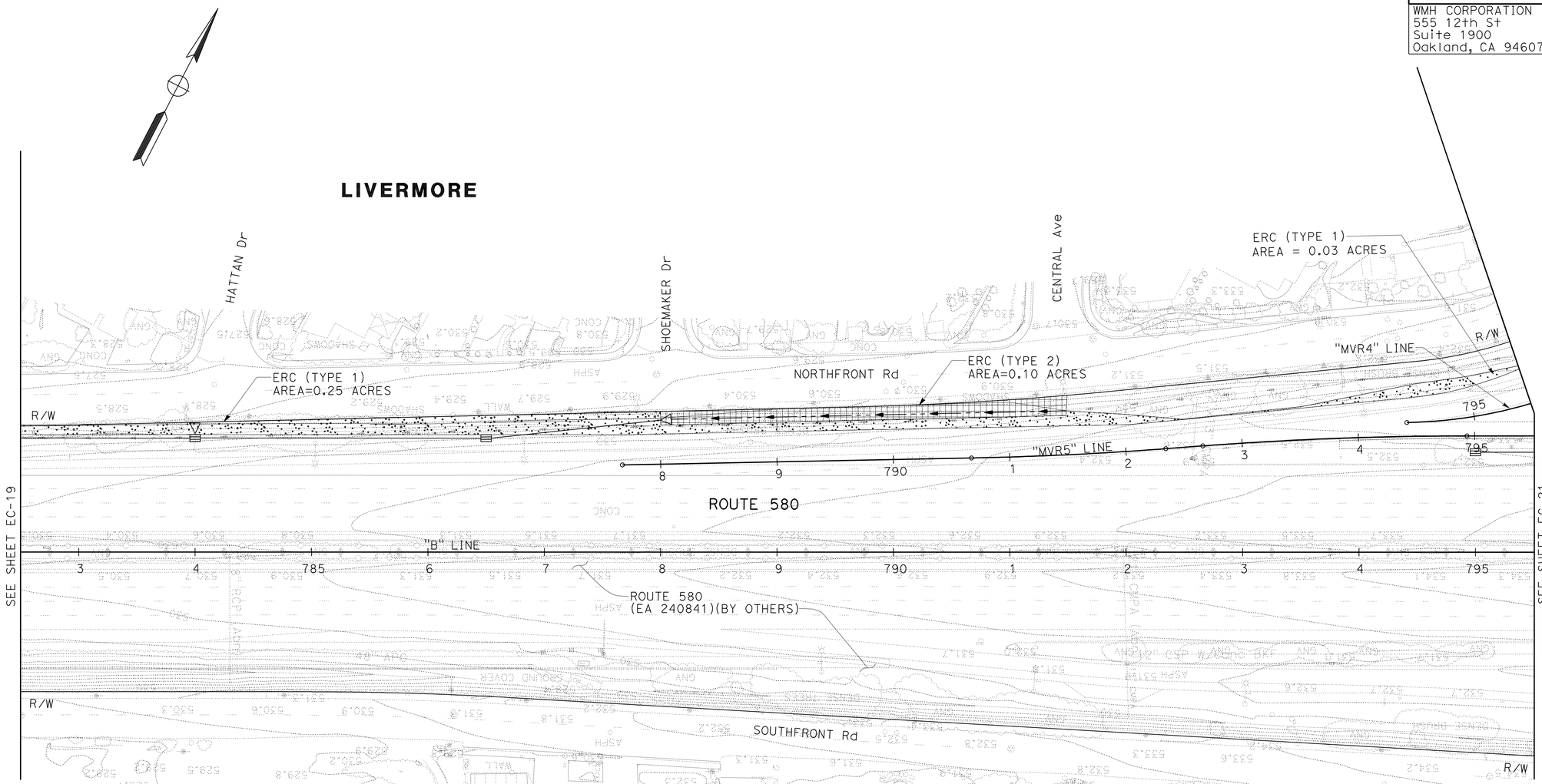

FOR NOTES AND LEGEND
SEE SHEET EC-1

THIS PLAN ACCURATE FOR EROSION CONTROL WORK ONLY.

EROSION CONTROL PLAN

SCALE: 1" = 50'

EC-20

REVISED BY	DATE REVISED
BG	1/13/12
YF	11/11/11
YF	05/01/10

Y. FAROUQI — CALCULATED-DESIGNED BY
DAVID M. DICKINSON — CHECKED BY
TIMOTHY J. LEE — CONSULTANT FUNCTIONAL SUPERVISOR

STATE OF CALIFORNIA - DEPARTMENT OF TRANSPORTATION
Caltrans

X:\580 WB HOV\000_CAD\Sheets\East of Sta 540+00\CT-Electronic-Submittal 20120113\009-Erosion_Control\GE-Plans\04000212 48ge020.dgn

LAST REVISION 01-13-12 | DATE PLOTTED => 23-MAY-2012 | TIME PLOTTED => 07:00

Dist	COUNTY	ROUTE	POST MILES TOTAL PROJECT	SHEET No.	TOTAL SHEETS
04	Ala	580	R8.4/R14.6	172	853

REGISTERED CIVIL ENGINEER 1/13/2012 DATE

5-14-12
PLANS APPROVAL DATE

REGISTERED PROFESSIONAL ENGINEER DAVID M. DICKINSON No. 50815 Exp. 9-30-13 CIVIL STATE OF CALIFORNIA

THE STATE OF CALIFORNIA OR ITS OFFICERS OR AGENTS SHALL NOT BE RESPONSIBLE FOR THE ACCURACY OR COMPLETENESS OF SCANNED COPIES OF THIS PLAN SHEET.

WMH CORPORATION
555 12th St
Suite 1900
Oakland, CA 94607

ALAMEDA CTC
1333 Broadway
Suite 220
Oakland, CA 94612

FOR ACCURATE RIGHT OF WAY DATA, CONTACT
RIGHT OF WAY ENGINEERING AT THE DISTRICT OFFICE

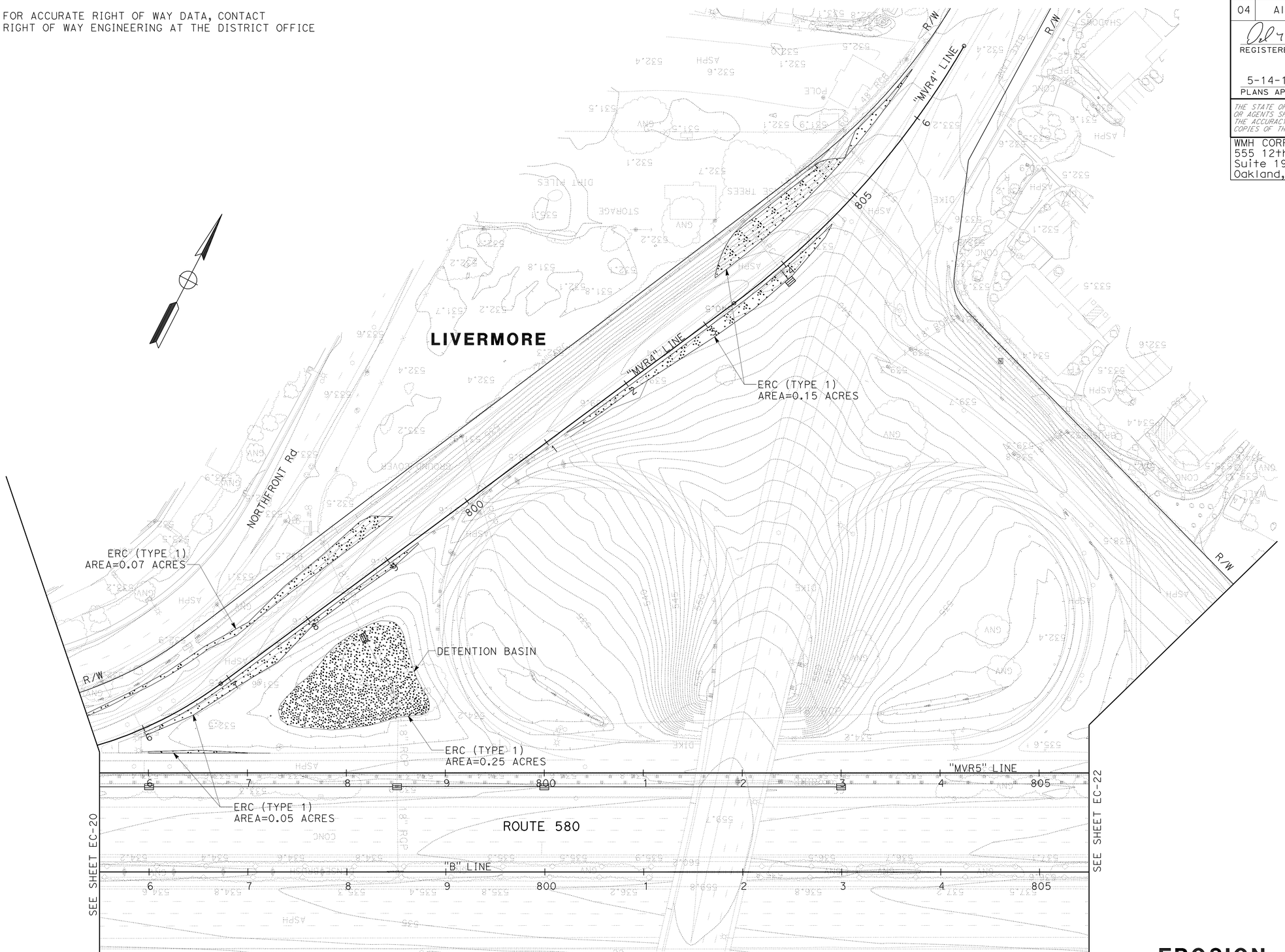

FOR NOTES AND LEGEND
SEE SHEET EC-1

THIS PLAN ACCURATE FOR EROSION CONTROL WORK ONLY.

EROSION CONTROL PLAN

SCALE: 1" = 50'

EC-21

STATE OF CALIFORNIA - DEPARTMENT OF TRANSPORTATION

Caltrans

Y. FAROUQI	REVISED BY	YF	BG
DAVID M. DICKINSON	DATE REVISED	05/01/10	11/11/11	1/13/12
CALCULATED-DESIGNED BY			
CHECKED BY			
TIMOTHY J. LEE			
CONSULTANT FUNCTIONAL SUPERVISOR			

X:\580 WB HOV\000_CAD\Sheets\East of Sta 540+00\CT-Electronic-Submittal 20120113\009-Erosion_Control\GE-Plans\0400021248ge021.dgn

LAST REVISION 01-13-12 | DATE PLOTTED => 23-MAY-2012 TIME PLOTTED => 07:00

Dist	COUNTY	ROUTE	POST MILES TOTAL PROJECT	SHEET No.	TOTAL SHEETS
04	Ala	580	R8.4/R14.6	173	853

REGISTERED CIVIL ENGINEER 1/13/2012 DATE

5-14-12
PLANS APPROVAL DATE

REGISTERED PROFESSIONAL ENGINEER DAVID M. DICKINSON No. 50815 Exp. 9-30-13 CIVIL STATE OF CALIFORNIA

THE STATE OF CALIFORNIA OR ITS OFFICERS OR AGENTS SHALL NOT BE RESPONSIBLE FOR THE ACCURACY OR COMPLETENESS OF SCANNED COPIES OF THIS PLAN SHEET.

WMH CORPORATION
555 12th St
Suite 1900
Oakland, CA 94607

ALAMEDA CTC
1333 Broadway
Suite 220
Oakland, CA 94612

FOR ACCURATE RIGHT OF WAY DATA, CONTACT
RIGHT OF WAY ENGINEERING AT THE DISTRICT OFFICE

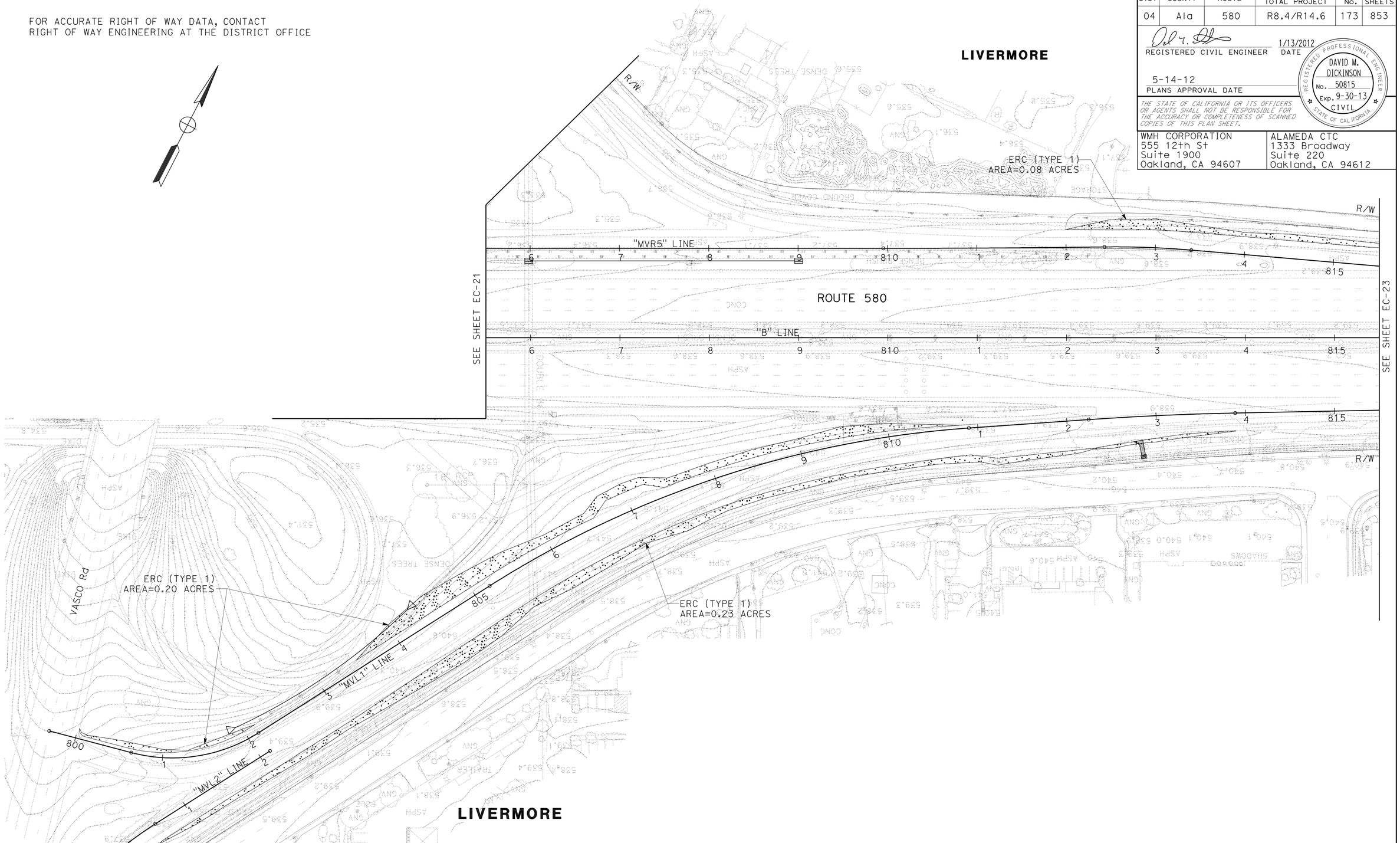

FOR NOTES, ABBREVIATIONS AND LEGEND, SEE SHEET EC-1

THIS PLAN ACCURATE FOR EROSION CONTROL WORK ONLY.

EROSION CONTROL PLAN

SCALE: 1" = 50'

EC-22

BG	1/13/12		
YF	11/11/11		
YF	05/01/10		
REVISED BY	DATE REVISED		
Y. FAROUQI	DAVID M. DICKINSON		
CALCULATED-DESIGNED BY	CHECKED BY		
TIMOTHY J. LEE			
CONSULTANT FUNCTIONAL SUPERVISOR			

STATE OF CALIFORNIA - DEPARTMENT OF TRANSPORTATION
Caltrans

X:\580 WB HOV\000_CAD\Sheets\East of Sta 540+00\CT-Electronic-Submittal 20120113\009-Erosion_Control\GE-Plans\04000212481ge022.dgn

LAST REVISION 01-13-12 | DATE PLOTTED => 23-MAY-2012 | TIME PLOTTED => 07:00

Dist	COUNTY	ROUTE	POST MILES TOTAL PROJECT	SHEET No.	TOTAL SHEETS
04	Ala	580	R8.4/R14.6	174	853

REGISTERED CIVIL ENGINEER 1/13/2012 DATE

5-14-12
PLANS APPROVAL DATE

REGISTERED PROFESSIONAL ENGINEER DAVID M. DICKINSON No. 50815 Exp. 9-30-13 CIVIL STATE OF CALIFORNIA

THE STATE OF CALIFORNIA OR ITS OFFICERS OR AGENTS SHALL NOT BE RESPONSIBLE FOR THE ACCURACY OR COMPLETENESS OF SCANNED COPIES OF THIS PLAN SHEET.

WMH CORPORATION
555 12th St
Suite 1900
Oakland, CA 94607

ALAMEDA CTC
1333 Broadway
Suite 220
Oakland, CA 94612

FOR ACCURATE RIGHT OF WAY DATA, CONTACT
RIGHT OF WAY ENGINEERING AT THE DISTRICT OFFICE

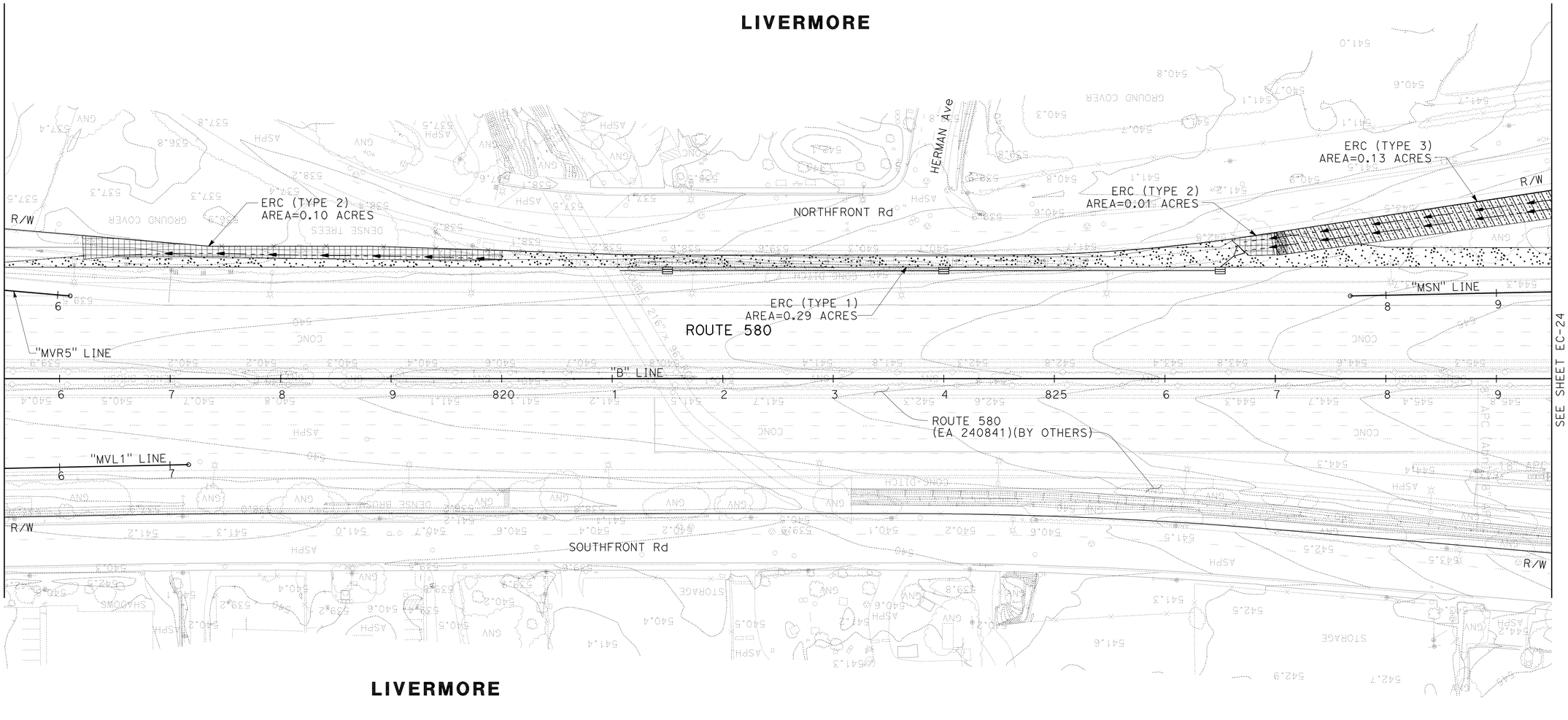

FOR NOTES AND LEGEND
SEE SHEET EC-1

THIS PLAN ACCURATE FOR EROSION CONTROL WORK ONLY.

EROSION CONTROL PLAN

SCALE: 1" = 50'

EC-23

	BG	YF	YF	Y. FAROUQI	Y. FAROUQI	TIMOTHY J. LEE
DATE REVISED	1/13/12	11/11/11	05/01/10	DAVID M. DICKINSON	CHECKED BY	

REVISED BY | CALCULATED-DESIGNED BY | SUPERVISOR | CONSULTANT FUNCTIONAL SUPERVISOR

STATE OF CALIFORNIA - DEPARTMENT OF TRANSPORTATION

Caltrans

X:\580 WB HOV\000_CAD\Sheets\East of Sta 540+00\CT-Electronic-Submittal 20120113\009-Erosion_Control\GE-Plans\0400021248ge023.dgn

LAST REVISION 01-13-12 | DATE PLOTTED => 23-MAY-2012 | TIME PLOTTED => 07:00

Dist	COUNTY	ROUTE	POST MILES TOTAL PROJECT	SHEET No.	TOTAL SHEETS
04	Ala	580	R8.4/R14.6	175	853

REGISTERED CIVIL ENGINEER 1/13/2012 DATE

5-14-12
PLANS APPROVAL DATE

REGISTERED PROFESSIONAL ENGINEER DAVID M. DICKINSON No. 50815 Exp. 9-30-13 CIVIL STATE OF CALIFORNIA

THE STATE OF CALIFORNIA OR ITS OFFICERS OR AGENTS SHALL NOT BE RESPONSIBLE FOR THE ACCURACY OR COMPLETENESS OF SCANNED COPIES OF THIS PLAN SHEET.

WMH CORPORATION
555 12th St
Suite 1900
Oakland, CA 94607

ALAMEDA CTC
1333 Broadway
Suite 220
Oakland, CA 94612

FOR ACCURATE RIGHT OF WAY DATA, CONTACT
RIGHT OF WAY ENGINEERING AT THE DISTRICT OFFICE

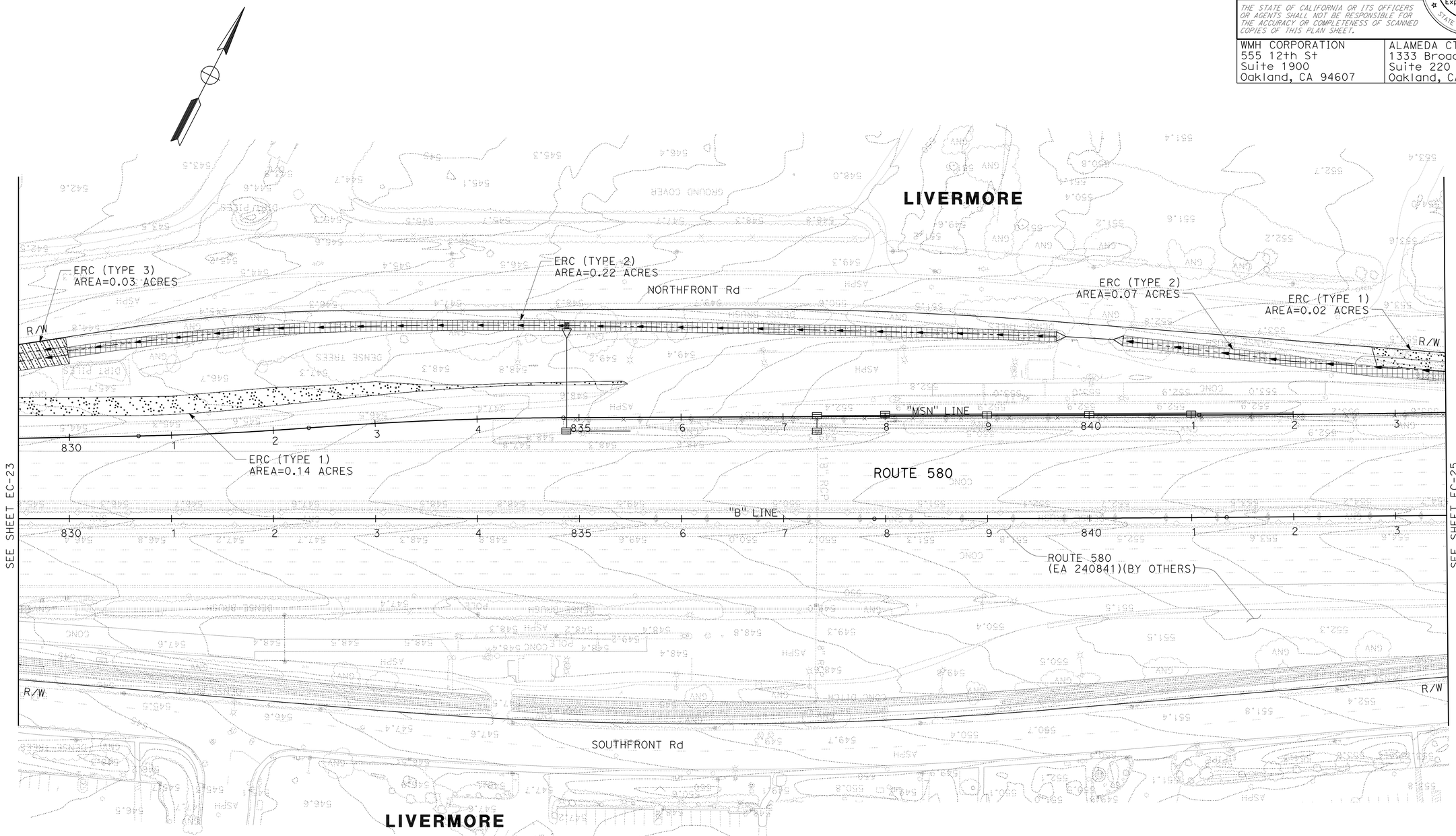

FOR NOTES AND LEGEND
SEE SHEET EC-1

THIS PLAN ACCURATE FOR EROSION CONTROL WORK ONLY.

EROSION CONTROL PLAN

SCALE: 1" = 50'

EC-24

	REVISED BY	DATE REVISED
BG	YF	YF
1/13/12	11/11/11	05/01/10

CALCULATED-DESIGNED BY: Y. FAROUQI
CHECKED BY: DAVID M. DICKINSON
SUPERVISOR: TIMOTHY J. LEE
CONSULTANT FUNCTIONAL SUPERVISOR

STATE OF CALIFORNIA - DEPARTMENT OF TRANSPORTATION
Caltrans

X:\580 WB HOV\000_CAD\Sheets\East of Sta 540+00\CT-Electronic-Submittal 20120113\009-Erosion_Control\GE-Plans\04000212 48ge024.dgn

LAST REVISION 01-13-12
DATE PLOTTED => 23-MAY-2012
TIME PLOTTED => 07:01

Dist	COUNTY	ROUTE	POST MILES TOTAL PROJECT	SHEET No.	TOTAL SHEETS
04	Ala	580	R8.4/R14.6	176	853

REGISTERED CIVIL ENGINEER 1/13/2012 DATE

5-14-12
PLANS APPROVAL DATE

REGISTERED PROFESSIONAL ENGINEER DAVID M. DICKINSON No. 50815 Exp. 9-30-13 CIVIL STATE OF CALIFORNIA

THE STATE OF CALIFORNIA OR ITS OFFICERS OR AGENTS SHALL NOT BE RESPONSIBLE FOR THE ACCURACY OR COMPLETENESS OF SCANNED COPIES OF THIS PLAN SHEET.

WMH CORPORATION
555 12th St
Suite 1900
Oakland, CA 94607

ALAMEDA CTC
1333 Broadway
Suite 220
Oakland, CA 94612

FOR ACCURATE RIGHT OF WAY DATA, CONTACT
RIGHT OF WAY ENGINEERING AT THE DISTRICT OFFICE

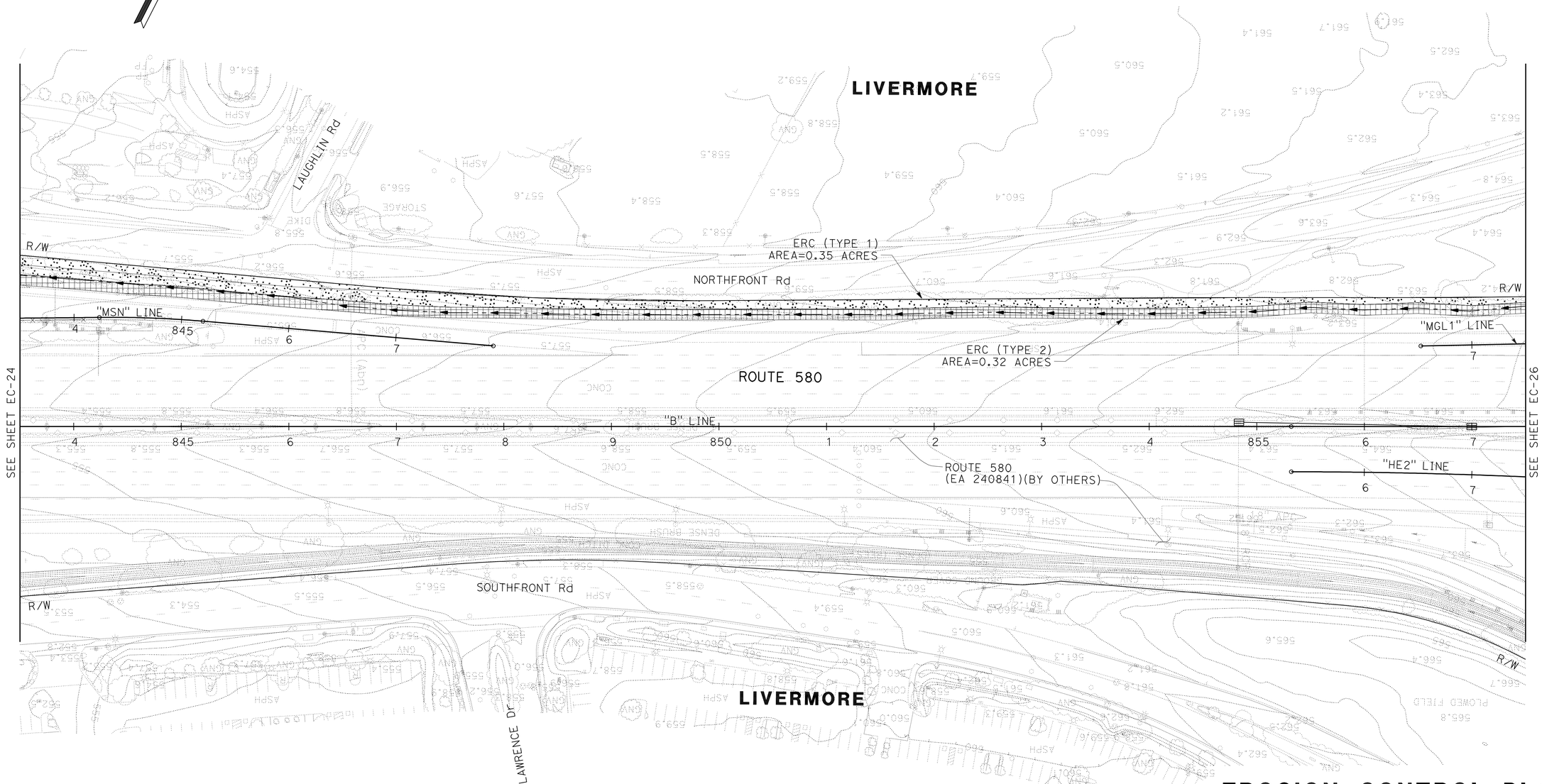

FOR NOTES AND LEGEND
SEE SHEET EC-1

THIS PLAN ACCURATE FOR EROSION CONTROL WORK ONLY.

EROSION CONTROL PLAN

SCALE: 1" = 50'

EC-25

	BG	YF	YF	Y. FAROUQI		
	1/13/12	11/11/11	05/01/10	DAVID M. DICKINSON		
				REVISED BY	CALCULATED-DESIGNED BY	SUPERVISOR
				DATE REVISED	CHECKED BY	

TIMOTHY J. LEE

CONSULTANT FUNCTIONAL SUPERVISOR

STATE OF CALIFORNIA - DEPARTMENT OF TRANSPORTATION

Caltrans

X:\580 WB HOV\000_CAD\Sheets\East of Sta 540+00\CT-Electronic-Submittal 20120113\009-Erosion_Control\GE-Plans\04000212 48ge025.dgn

LAST REVISION 01-13-12 | DATE PLOTTED => 23-MAY-2012 | TIME PLOTTED => 07:01

Dist	COUNTY	ROUTE	POST MILES TOTAL PROJECT	SHEET No.	TOTAL SHEETS
04	Ala	580	R8.4/R14.6	177	853

REGISTERED CIVIL ENGINEER 1/13/2012 DATE

5-14-12
PLANS APPROVAL DATE

REGISTERED PROFESSIONAL ENGINEER DAVID M. DICKINSON No. 50815 Exp. 9-30-13 CIVIL STATE OF CALIFORNIA

THE STATE OF CALIFORNIA OR ITS OFFICERS OR AGENTS SHALL NOT BE RESPONSIBLE FOR THE ACCURACY OR COMPLETENESS OF SCANNED COPIES OF THIS PLAN SHEET.

WMH CORPORATION
555 12th St
Suite 1900
Oakland, CA 94607

ALAMEDA CTC
1333 Broadway
Suite 220
Oakland, CA 94612

FOR ACCURATE RIGHT OF WAY DATA, CONTACT
RIGHT OF WAY ENGINEERING AT THE DISTRICT OFFICE

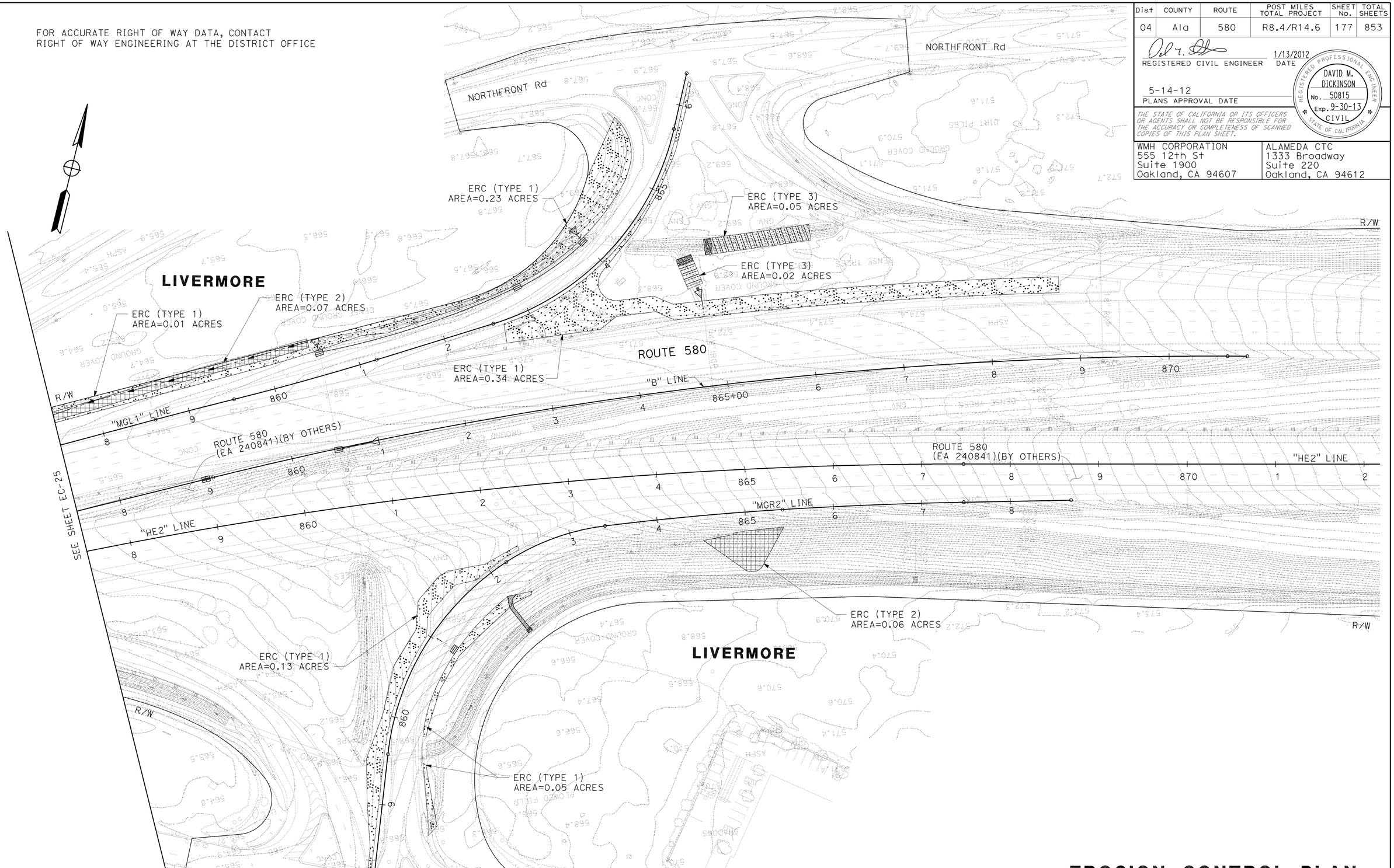

FOR NOTES AND LEGEND
SEE SHEET EC-1

THIS PLAN ACCURATE FOR EROSION CONTROL WORK ONLY.

EROSION CONTROL PLAN

SCALE: 1" = 50'

EC-26

BG	1/13/12	CALCULATED-DESIGNED BY	CHECKED BY
YF	11/11/11	CONSULTANT FUNCTIONAL SUPERVISOR	TIMOTHY J. LEE
YF	05/01/10	Y. FAROUOI	DAVID M. DICKINSON
REVISED BY	DATE REVISED	STATE OF CALIFORNIA - DEPARTMENT OF TRANSPORTATION	Caltrans

X:\580 WB HOV\000_CAD\Sheets\East of Sta 540+00\CT-Electronic-Submittal 20120113\009-Erosion_Control\GE-Plans\0400021248ge026.dgn

LAST REVISION 01-13-12 | DATE PLOTTED => 23-MAY-2012 | TIME PLOTTED => 07:01

Dist	COUNTY	ROUTE	POST MILES TOTAL PROJECT	SHEET No.	TOTAL SHEETS
04	Ala	580	R8.4/R14.6	178	853

REGISTERED CIVIL ENGINEER 1/13/2012 DATE

5-14-12
PLANS APPROVAL DATE

REGISTERED PROFESSIONAL ENGINEER DAVID M. DICKINSON No. 50815 Exp. 9-30-13 CIVIL STATE OF CALIFORNIA

THE STATE OF CALIFORNIA OR ITS OFFICERS OR AGENTS SHALL NOT BE RESPONSIBLE FOR THE ACCURACY OR COMPLETENESS OF SCANNED COPIES OF THIS PLAN SHEET.

WMH CORPORATION
555 12th St
Suite 1900
Oakland, CA 94607

ALAMEDA CTC
1333 Broadway
Suite 220
Oakland, CA 94612

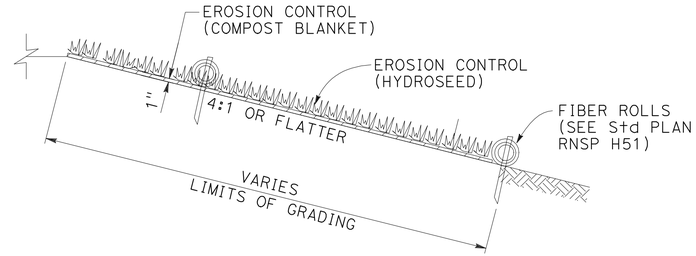

SECTION

EROSION CONTROL (TYPE 1)

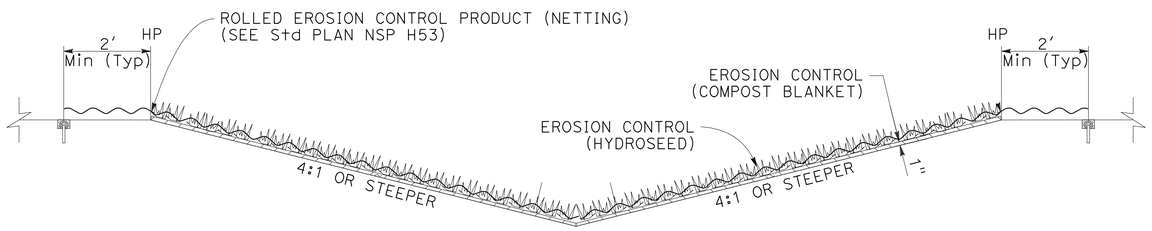

SECTION AT DITCH AND GUTTER LOCATIONS

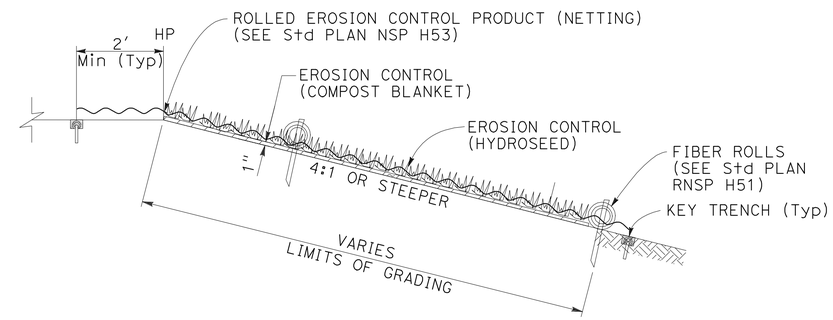

SECTION AT SLOPES 4:1 OR STEEPER

EROSION CONTROL (TYPE 2)

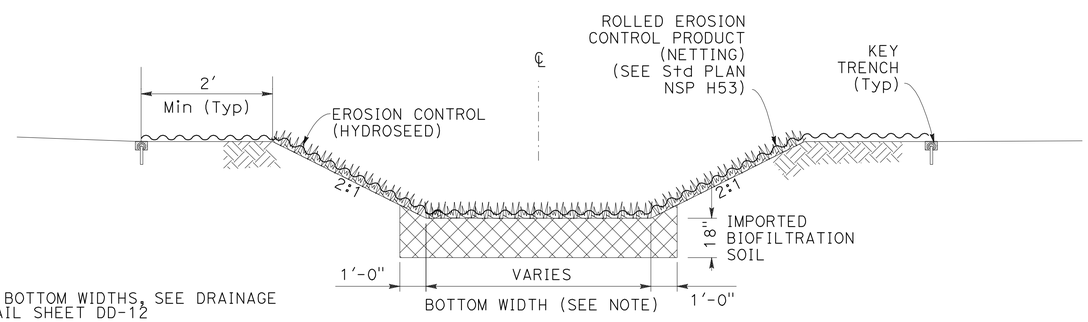

NOTE:

FOR BOTTOM WIDTHS, SEE DRAINAGE DETAIL SHEET DD-12

SECTION

EROSION CONTROL (TYPE 3)

THIS PLAN ACCURATE FOR EROSION CONTROL WORK ONLY.

EROSION CONTROL DETAILS

NO SCALE

ECD-1

YF	YF	YF	REVISED BY
01/13/12	11/11/11	05/01/10	DATE REVISED

Y. FAROUQI — CALCULATED-DESIGNED BY
DAVID M. DICKINSON — CHECKED BY
TIMOTHY J. LEE — CONSULTANT FUNCTIONAL SUPERVISOR

STATE OF CALIFORNIA - DEPARTMENT OF TRANSPORTATION
Caltrans

X:\580 WB HOV\000_CAD\Sheets\East of Sta 540+00\CT-Electronic-Submittal 20120113\009-Erosion_Control\GF-Details\0400021248gf001.dgn

LAST REVISION 01-13-12 | DATE PLOTTED => 23-MAY-2012 | TIME PLOTTED => 07:01

Dist	COUNTY	ROUTE	POST MILES TOTAL PROJECT	SHEET No.	TOTAL SHEETS
04	Ala	580	R8.4/R14.6	179	853

REGISTERED CIVIL ENGINEER 1/13/2012 DATE

5-14-12
PLANS APPROVAL DATE

REGISTERED PROFESSIONAL ENGINEER DAVID M. DICKINSON No. 50815 Exp. 9-30-13 CIVIL STATE OF CALIFORNIA

THE STATE OF CALIFORNIA OR ITS OFFICERS OR AGENTS SHALL NOT BE RESPONSIBLE FOR THE ACCURACY OR COMPLETENESS OF SCANNED COPIES OF THIS PLAN SHEET.

WMH CORPORATION
555 12th St
Suite 1900
Oakland, CA 94607

ALAMEDA CTC
1333 Broadway
Suite 220
Oakland, CA 94612

SHEET No.	EROSION CONTROL TYPE	EROSION CONTROL (COMPOST BLANKET)	EROSION CONTROL (HYDROSEED)	ROLLED EROSION CONTROL PRODUCT (NETTING)	IMPORTED BIOFILTRATION SOIL	FIBER ROLLS
		CY	ACRES	SQFT	CY	LF
EC-1	ERC (TYPE 1)	8	0.04			340
EC-2	ERC (TYPE 1)	58	0.29			820
EC-3	ERC (TYPE 1)	50	0.25			1180
	ERC (TYPE 2)	4	0.02	871		180
EC-4	ERC (TYPE 1)	56	0.28			1000
	ERC (TYPE 2)	6	0.03	1307		140
	ERC (TYPE 3)	6	0.03	1307	25	
EC-5	ERC (TYPE 1)	135	0.67			1250
EC-6	ERC (TYPE 1)	109	0.54			1230
	ERC (TYPE 2)	4	0.02	871		100
	ERC (TYPE 3)	6	0.03	1307	27	
EC-7	ERC (TYPE 1)	79	0.39			620
	ERC (TYPE 2)	32	0.16	6970		340
	ERC (TYPE 3)	12	0.06	2614	59	
EC-8	ERC (TYPE 2)	48	0.24	10454		1250
EC-9	ERC (TYPE 1)	16	0.08			130
	ERC (TYPE 2)	44	0.22	9583		1250
EC-10	ERC (TYPE 1)	101	0.50			1410
	ERC (TYPE 2)	16	0.08	3485		330
EC-11	ERC (TYPE 2)	61	0.30	13068		1300
EC-12	ERC (TYPE 2)	52	0.26	11326		1300
EC-13	ERC (TYPE 2)	48	0.24	10454		1160
EC-14	ERC (TYPE 1)	18	0.09			210
	ERC (TYPE 2)	14	0.07	3049		290
EC-15	ERC (TYPE 1)	48	0.24			730
	ERC (TYPE 2)	20	0.10	4356		410
EC-16	ERC (TYPE 1)	6	0.03			160
	ERC (TYPE 2)	28	0.14	6098		740
	ERC (TYPE 3)	10	0.05	2178	44	
EC-17	ERC (TYPE 1)	204	1.01			3750
	ERC (TYPE 2)	20	0.10	4356		520
	ERC (TYPE 3)	20	0.10	4356	181	
EC-18	ERC (TYPE 1)	4	0.02			140
	ERC (TYPE 3)	4	0.02	871	29	
EC-19	ERC (TYPE 1)	40	0.20			1000
EC-20	ERC (TYPE 1)	56	0.28			1300
	ERC (TYPE 2)	20	0.10	4356		350
EC-21	ERC (TYPE 1)	105	0.52			1880
EC-22	ERC (TYPE 1)	103	0.51			2600
EC-23	ERC (TYPE 1)	58	0.29			1300
	ERC (TYPE 2)	22	0.11	4792		420
	ERC (TYPE 3)	26	0.13	5663	139	
EC-24	ERC (TYPE 1)	32	0.16			680
	ERC (TYPE 2)	58	0.29	17872		1310
	ERC (TYPE 3)	6	0.03	1307	28	
EC-25	ERC (TYPE 1)	71	0.35			1400
	ERC (TYPE 2)	65	0.32	19539		1400
EC-26	ERC (TYPE 1)	153	0.76			2740
	ERC (TYPE 2)	26	0.13	5663		400
	ERC (TYPE 3)	14	0.07	3049	61	
TOTAL		2202	10.95	161121	593	39060

SHEET No.	MOVE IN/MOVE OUT (EROSION CONTROL)
	EA
EC-1 TO EC-26	8
TOTAL	8

EROSION CONTROL QUANTITIES

ECQ-1

YF	YF	YF	Y. FAROUQI	CALCULATED-DESIGNED BY	CONSULTANT FUNCTIONAL SUPERVISOR
01/13/12	11/11/11	05/01/10	DAVID M. DICKINSON	CHECKED BY	TIMOTHY J. LEE
REVISED BY					
DATE REVISED					

STATE OF CALIFORNIA - DEPARTMENT OF TRANSPORTATION

Caltrans

X:\580 WB HOV\000_CAD\Sheets\East of Sta 540+00\CT-Electronic-Submittal 20120113\09-Erosion_Control\GH-Quantities\0400021248gh001.dgn

LAST REVISION 01-13-12 DATE PLOTTED => 23-MAY-2012 TIME PLOTTED => 07:01

FOR ACCURATE RIGHT OF WAY DATA, CONTACT
RIGHT OF WAY ENGINEERING AT THE DISTRICT OFFICE.

Dist	COUNTY	ROUTE	POST MILES TOTAL PROJECT	SHEET No.	TOTAL SHEETS
04	Ala	580	R8.4/R14.6	180	853

REGISTERED CIVIL ENGINEER 1/18/12 DATE

5-14-12
PLANS APPROVAL DATE

REGISTERED PROFESSIONAL ENGINEER
N.V. BERNARDI
No. 45407
Exp. 9/30/12
CIVIL
STATE OF CALIFORNIA

THE STATE OF CALIFORNIA OR ITS OFFICERS OR AGENTS SHALL NOT BE RESPONSIBLE FOR THE ACCURACY OR COMPLETENESS OF SCANNED COPIES OF THIS PLAN SHEET.

BKF ENGINEERS
4670 WILLOW ROAD, SUITE 250
PLEASANTON, CA. 94588

ALAMEDA CTC
1333 BROADWAY SUITE 220
OAKLAND, CA. 94612

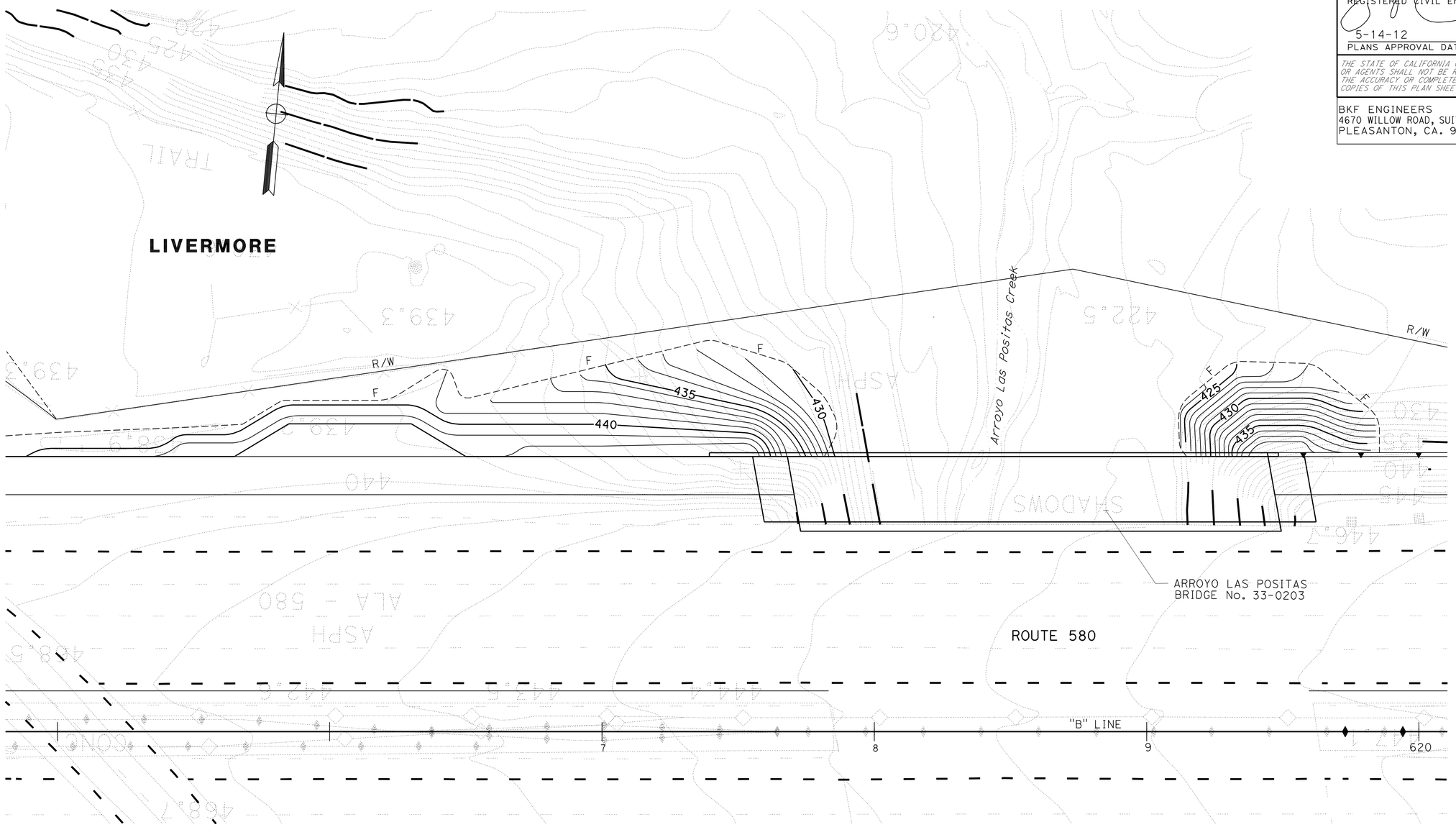

CONTOUR GRADING

SCALE: 1" = 20'

G-1

THIS PLAN ACCURATE FOR CONTOUR GRADING WORK ONLY

REVISED BY	DATE REVISED
AL	1/18/12

ARMANDO LOERA
LUIS GARCIA
CALCULATED-DESIGNED BY
CHECKED BY
CONSULTANT FUNCTIONAL SUPERVISOR
NATALINA V. BERNARDI

STATE OF CALIFORNIA - DEPARTMENT OF TRANSPORTATION
Caltrans

LAST REVISION 01-18-12
DATE PLOTTED => 23-MAY-2012
TIME PLOTTED => 07:01

Dist	COUNTY	ROUTE	POST MILES TOTAL PROJECT	SHEET No.	TOTAL SHEETS
04	Ala	580	R8.4/R14.6	181	853

REGISTERED CIVIL ENGINEER — DATE 1/18/12

5-14-12
PLANS APPROVAL DATE

REGISTERED PROFESSIONAL ENGINEER — N.V. BERNARDI — No. 45407 — Exp. 9/30/12 — CIVIL — STATE OF CALIFORNIA

THE STATE OF CALIFORNIA OR ITS OFFICERS OR AGENTS SHALL NOT BE RESPONSIBLE FOR THE ACCURACY OR COMPLETENESS OF SCANNED COPIES OF THIS PLAN SHEET.

BKF ENGINEERS
4670 WILLOW ROAD, SUITE 250
PLEASANTON, CA. 94588

ALAMEDA CTC
1333 BROADWAY SUITE 220
OAKLAND, CA. 94612

FOR ACCURATE RIGHT OF WAY DATA, CONTACT RIGHT OF WAY ENGINEERING AT THE DISTRICT OFFICE.

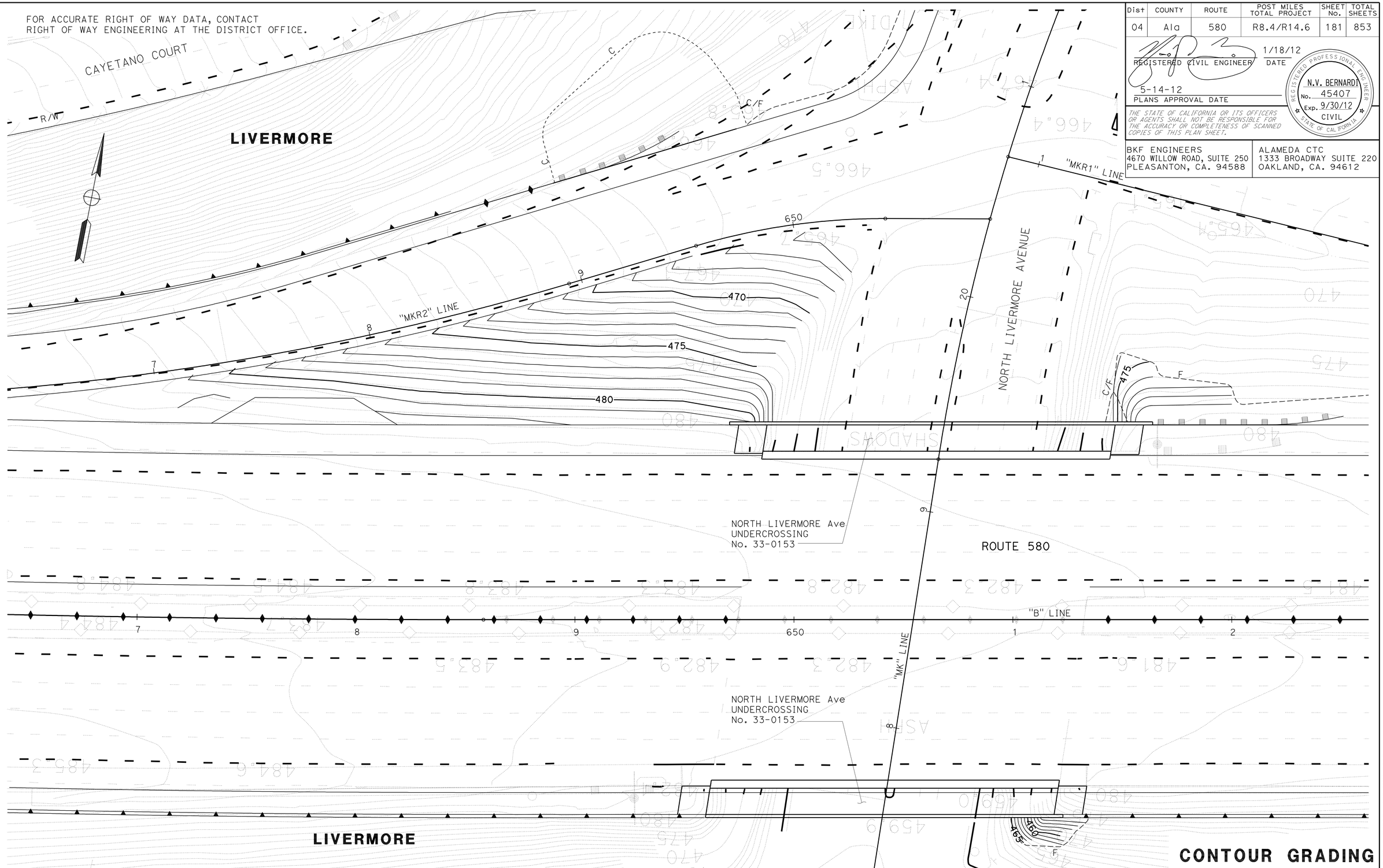

THIS PLAN ACCURATE FOR CONTOUR GRADING WORK ONLY

CONTOUR GRADING

SCALE: 1" = 20'

G-2

REVISED BY	AL	ARMANDO LOERA	CALCULATED-DESIGNED BY
DATE REVISED	1/18/12	LUIS GARCIA	CHECKED BY

CONSULTANT FUNCTIONAL SUPERVISOR: NATALINA V. BERNARDI

STATE OF CALIFORNIA - DEPARTMENT OF TRANSPORTATION

Gibbons

LAST REVISION 01-18-12 | DATE PLOTTED =>23-MAY-2012 | TIME PLOTTED =>07:01

FOR ACCURATE RIGHT OF WAY DATA, CONTACT
RIGHT OF WAY ENGINEERING AT THE DISTRICT OFFICE.

Dist	COUNTY	ROUTE	POST MILES TOTAL PROJECT	SHEET No.	TOTAL SHEETS
04	Ala	580	R8.4/R14.6	182	853

REGISTERED CIVIL ENGINEER — DATE 1/18/12

5-14-12
PLANS APPROVAL DATE

REGISTERED PROFESSIONAL ENGINEER — N.V. BERNARDI — No. 45407 — Exp. 9/30/12 — CIVIL — STATE OF CALIFORNIA

THE STATE OF CALIFORNIA OR ITS OFFICERS OR AGENTS SHALL NOT BE RESPONSIBLE FOR THE ACCURACY OR COMPLETENESS OF SCANNED COPIES OF THIS PLAN SHEET.

BKF ENGINEERS
4670 WILLOW ROAD, SUITE 250
PLEASANTON, CA. 94588

ALAMEDA CTC
1333 BROADWAY SUITE 220
OAKLAND, CA. 94612

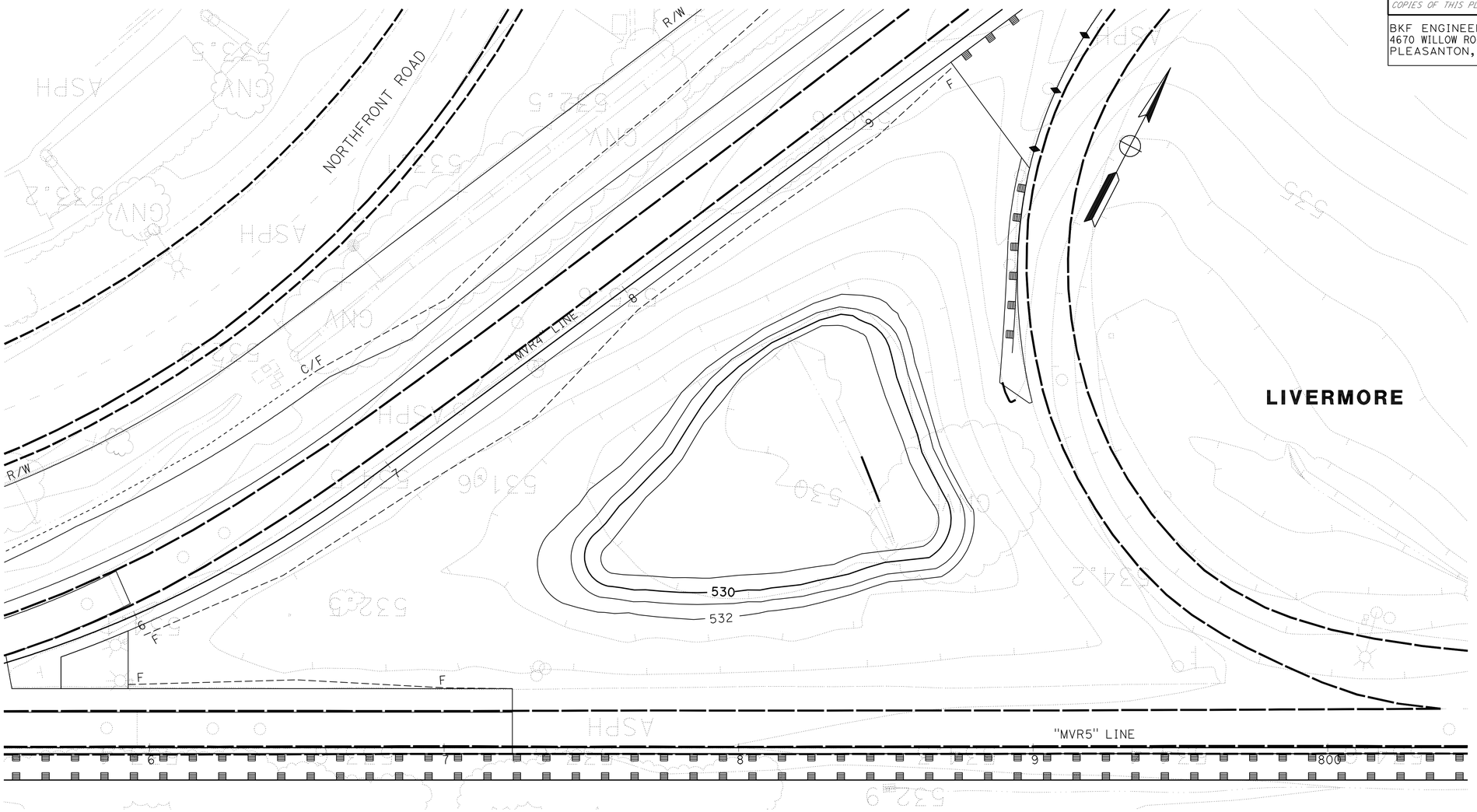

ROUTE 580

CONTOUR GRADING

SCALE: 1" = 20'

G-3

THIS PLAN ACCURATE FOR CONTOUR GRADING WORK ONLY

REVISED BY	AL
DATE REVISED	1/18/12
CALCULATED-DESIGNED BY	ARMANDO LOERA
CHECKED BY	LUIS GARCIA
CONSULTANT FUNCTIONAL SUPERVISOR	NATALINA V. BERNARDI

STATE OF CALIFORNIA - DEPARTMENT OF TRANSPORTATION

Caltrans

LAST REVISION 01-18-12 | DATE PLOTTED => 23-MAY-2012 | TIME PLOTTED => 07:01

Dist	COUNTY	ROUTE	POST MILES TOTAL PROJECT	SHEET No.	TOTAL SHEETS
04	Ala	580	R8.4/R14.6	183	853

REGISTERED CIVIL ENGINEER 1/13/2012 DATE

5-14-12
PLANS APPROVAL DATE

REGISTERED PROFESSIONAL ENGINEER DAVID M. DICKINSON No. 50815 Exp. 9-30-13 CIVIL STATE OF CALIFORNIA

THE STATE OF CALIFORNIA OR ITS OFFICERS OR AGENTS SHALL NOT BE RESPONSIBLE FOR THE ACCURACY OR COMPLETENESS OF SCANNED COPIES OF THIS PLAN SHEET.

WMH CORPORATION
555 12th St
Suite 1900
Oakland, CA 94607

ALAMEDA CTC
1333 Broadway
Suite 220
Oakland, CA 94612

FOR ACCURATE RIGHT OF WAY DATA, CONTACT RIGHT OF WAY ENGINEERING AT THE DISTRICT OFFICE

LEGEND:

- No. DRAINAGE SYSTEM NO.
- DRAINAGE UNIT
- HMAOD
- EXISTING DRAINAGE INLET
- DRAINAGE INLET
- EXISTING DITCH FLOW LINE
- GUTTER/DITCH FLOW LINE
- EXISTING LINEAR BIO-RETENTION
- LINEAR BIO-RETENTION
- EXISTING ROCK SLOPE PROTECTION
- ROCK SLOPE PROTECTION

ABBREVIATONS:

HMAOD	HOT MIX ASPHALT OVERSIDE DRAIN
SGD	STANDARD GUTTER DEPRESSION
TW	TOP OF WALL
w/	WITH
DA	DEPRESSED APRON
TCE	TEMPORARY CONSTRUCTION EASEMENT
GLD	GRATED LINE DRAIN

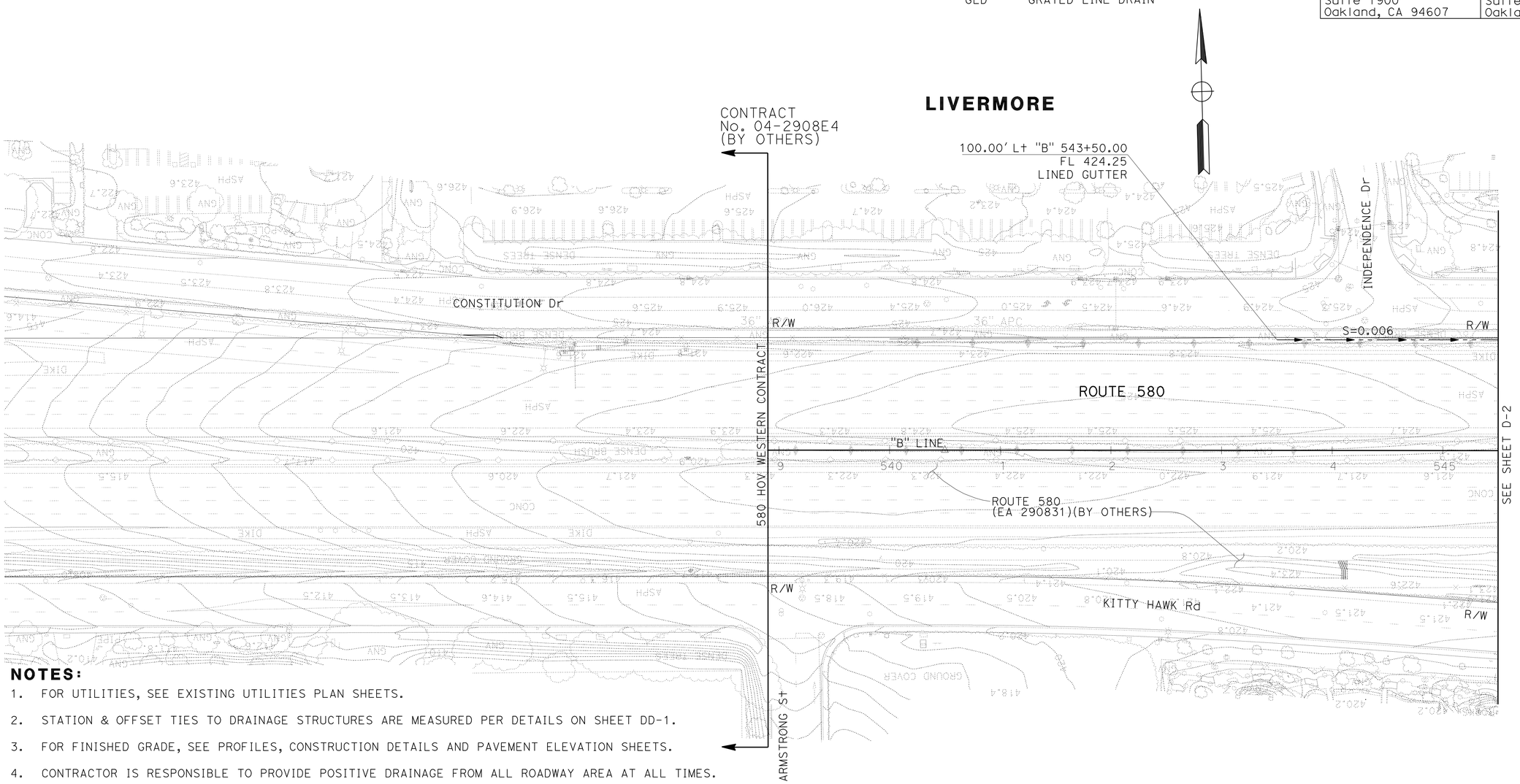

NOTES:

1. FOR UTILITIES, SEE EXISTING UTILITIES PLAN SHEETS.
2. STATION & OFFSET TIES TO DRAINAGE STRUCTURES ARE MEASURED PER DETAILS ON SHEET DD-1.
3. FOR FINISHED GRADE, SEE PROFILES, CONSTRUCTION DETAILS AND PAVEMENT ELEVATION SHEETS.
4. CONTRACTOR IS RESPONSIBLE TO PROVIDE POSITIVE DRAINAGE FROM ALL ROADWAY AREA AT ALL TIMES.
5. LOCATIONS OF EXISTING DRAINAGE FACILITIES ARE APPROXIMATE. VERIFY LOCATION AND ELEVATION OF EXISTING DRAINAGE FACILITIES PRIOR TO MODIFYING.
6. THE CONTRACTOR SHALL VERIFY ALL CONTROLLING FIELD DIMENSIONS BEFORE ORDERING OR FABRICATING ANY MATERIAL.
7. PROPOSED RCB CULVERTS ARE DESIGNATED AS 10' MAXIMUM EARTH COVER.
8. GRATED LINE DRAIN SHALL HAVE REMOVABLE GRATES AND AN INTEGRAL FRAME WITH THE POLYMER CONCRETE CHANNEL. SEE STANDARD PLAN D98C.

THIS PLAN FOR DRAINAGE WORK ONLY.

DRAINAGE PLAN

SCALE: 1" = 50'

D-1

REVISED BY	DATE REVISED
YF	01/13/12
YF	11/11/11
YF	05/01/10

Y. FAROUQI — DAVID M. DICKINSON — CALCULATED-DESIGNED BY — CHECKED BY

TIMOTHY J. LEE — CONSULTANT FUNCTIONAL SUPERVISOR

STATE OF CALIFORNIA - DEPARTMENT OF TRANSPORTATION

Caltrans

X:\580 WB HOV\000_CAD\Sheets\East of Sta 540+00\CT-Electronic-Submittal 20120113\011-Drainage\1A-Plans\04000212481a001.dgn

LAST REVISION 01-13-12 — DATE PLOTTED => 23-MAY-2012 TIME PLOTTED => 07:01

Dist	COUNTY	ROUTE	POST MILES TOTAL PROJECT	SHEET No.	TOTAL SHEETS
04	Ala	580	R8.4/R14.6	184	853

REGISTERED CIVIL ENGINEER 1/13/2012 DATE

5-14-12
PLANS APPROVAL DATE

REGISTERED PROFESSIONAL ENGINEER DAVID M. DICKINSON No. 50815 Exp. 9-30-13 CIVIL STATE OF CALIFORNIA

THE STATE OF CALIFORNIA OR ITS OFFICERS OR AGENTS SHALL NOT BE RESPONSIBLE FOR THE ACCURACY OR COMPLETENESS OF SCANNED COPIES OF THIS PLAN SHEET.

WMH CORPORATION
555 12th St
Suite 1900
Oakland, CA 94607

ALAMEDA CTC
1333 Broadway
Suite 220
Oakland, CA 94612

FOR ACCURATE RIGHT OF WAY DATA, CONTACT
RIGHT OF WAY ENGINEERING AT THE DISTRICT OFFICE

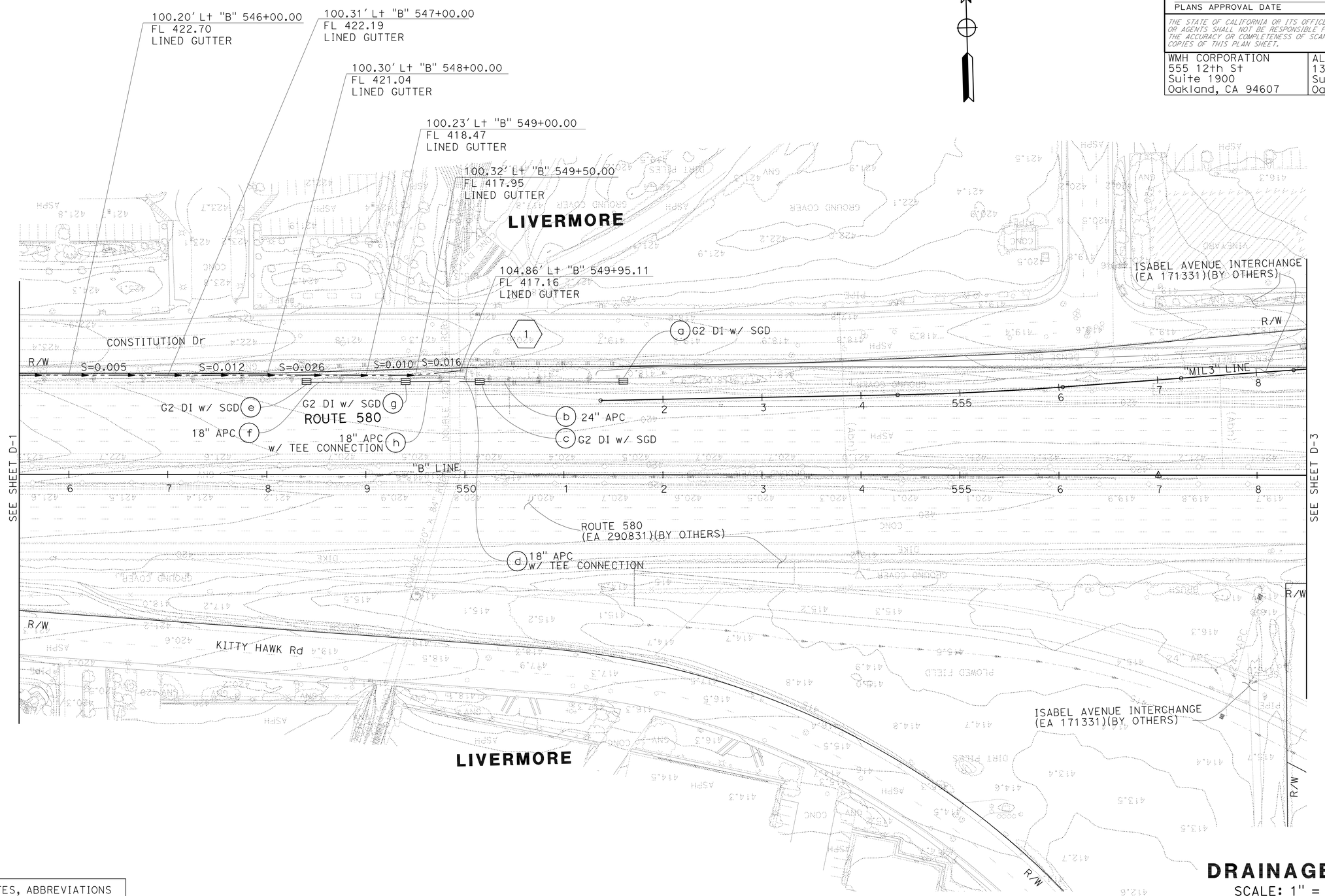

FOR NOTES, ABBREVIATIONS AND LEGEND, SEE SHEET D-1

THIS PLAN FOR DRAINAGE WORK ONLY.

DRAINAGE PLAN

SCALE: 1" = 50'

D-2

YF	01/13/12		
YF	11/11/11		
YF	05/01/10		
REVISED BY	DATE REVISED		
Y. FAROUQI	DAVID M. DICKINSON		
CALCULATED-DESIGNED BY	CHECKED BY		
SUPERVISOR	TIMOTHY J. LEE		
CONSULTANT FUNCTIONAL			

STATE OF CALIFORNIA - DEPARTMENT OF TRANSPORTATION

Caltrans

X:\580 WB HOV\000_CAD\Sheets\East of Sta 540+00\CT-Electronic-Submittal 20120113\011-Drainage\1A-Plans\04000212481a002.dgn

LAST REVISION 01-13-12 | DATE PLOTTED => 23-MAY-2012 | TIME PLOTTED => 07:01

Dist	COUNTY	ROUTE	POST MILES TOTAL PROJECT	SHEET No.	TOTAL SHEETS
04	Ala	580	R8.4/R14.6	185	853

REGISTERED CIVIL ENGINEER 1/13/2012 DATE

5-14-12
PLANS APPROVAL DATE

REGISTERED PROFESSIONAL ENGINEER DAVID M. DICKINSON No. 50815 Exp. 9-30-13 CIVIL STATE OF CALIFORNIA

THE STATE OF CALIFORNIA OR ITS OFFICERS OR AGENTS SHALL NOT BE RESPONSIBLE FOR THE ACCURACY OR COMPLETENESS OF SCANNED COPIES OF THIS PLAN SHEET.

WMH CORPORATION
555 12th St
Suite 1900
Oakland, CA 94607

ALAMEDA CTC
1333 Broadway
Suite 220
Oakland, CA 94612

FOR ACCURATE RIGHT OF WAY DATA, CONTACT
RIGHT OF WAY ENGINEERING AT THE DISTRICT OFFICE

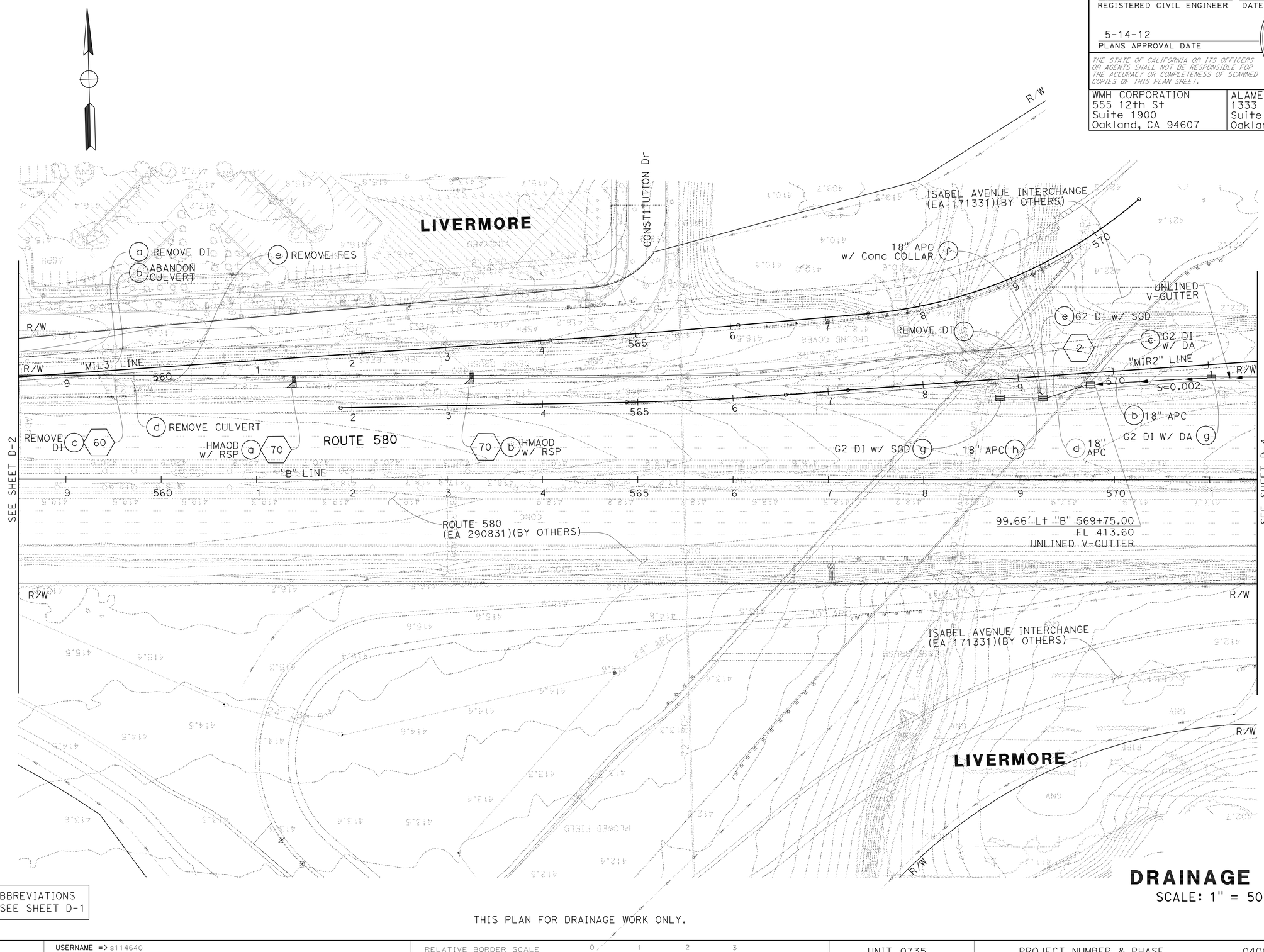

FOR NOTES, ABBREVIATIONS AND LEGEND, SEE SHEET D-1

THIS PLAN FOR DRAINAGE WORK ONLY.

DRAINAGE PLAN

SCALE: 1" = 50'

D-3

REVISED BY	DATE REVISED
YF	01/13/12
YF	11/11/11
YF	05/01/10

Y. FAROUQI — CALCULATED-DESIGNED BY
DAVID M. DICKINSON — CHECKED BY
TIMOTHY J. LEE — CONSULTANT FUNCTIONAL SUPERVISOR

STATE OF CALIFORNIA - DEPARTMENT OF TRANSPORTATION
Caltrans

X:\580 WB HOV\000_CAD\Sheets\East of Sta 540+00\CT-Electronic-Submittal 20120113\011-Drainage\1A-Plans\04000212481a003.dgn

LAST REVISION 01-13-12
DATE PLOTTED => 23-MAY-2012
TIME PLOTTED => 07:01

Dist	COUNTY	ROUTE	POST MILES TOTAL PROJECT	SHEET No.	TOTAL SHEETS
04	Ala	580	R8.4/R14.6	186	853

REGISTERED CIVIL ENGINEER 1/13/2012 DATE

5-14-12
PLANS APPROVAL DATE

REGISTERED PROFESSIONAL ENGINEER DAVID M. DICKINSON No. 50815 Exp. 9-30-13 CIVIL STATE OF CALIFORNIA

THE STATE OF CALIFORNIA OR ITS OFFICERS OR AGENTS SHALL NOT BE RESPONSIBLE FOR THE ACCURACY OR COMPLETENESS OF SCANNED COPIES OF THIS PLAN SHEET.

WMH CORPORATION
555 12th St
Suite 1900
Oakland, CA 94607

ALAMEDA CTC
1333 Broadway
Suite 220
Oakland, CA 94612

FOR ACCURATE RIGHT OF WAY DATA, CONTACT RIGHT OF WAY ENGINEERING AT THE DISTRICT OFFICE

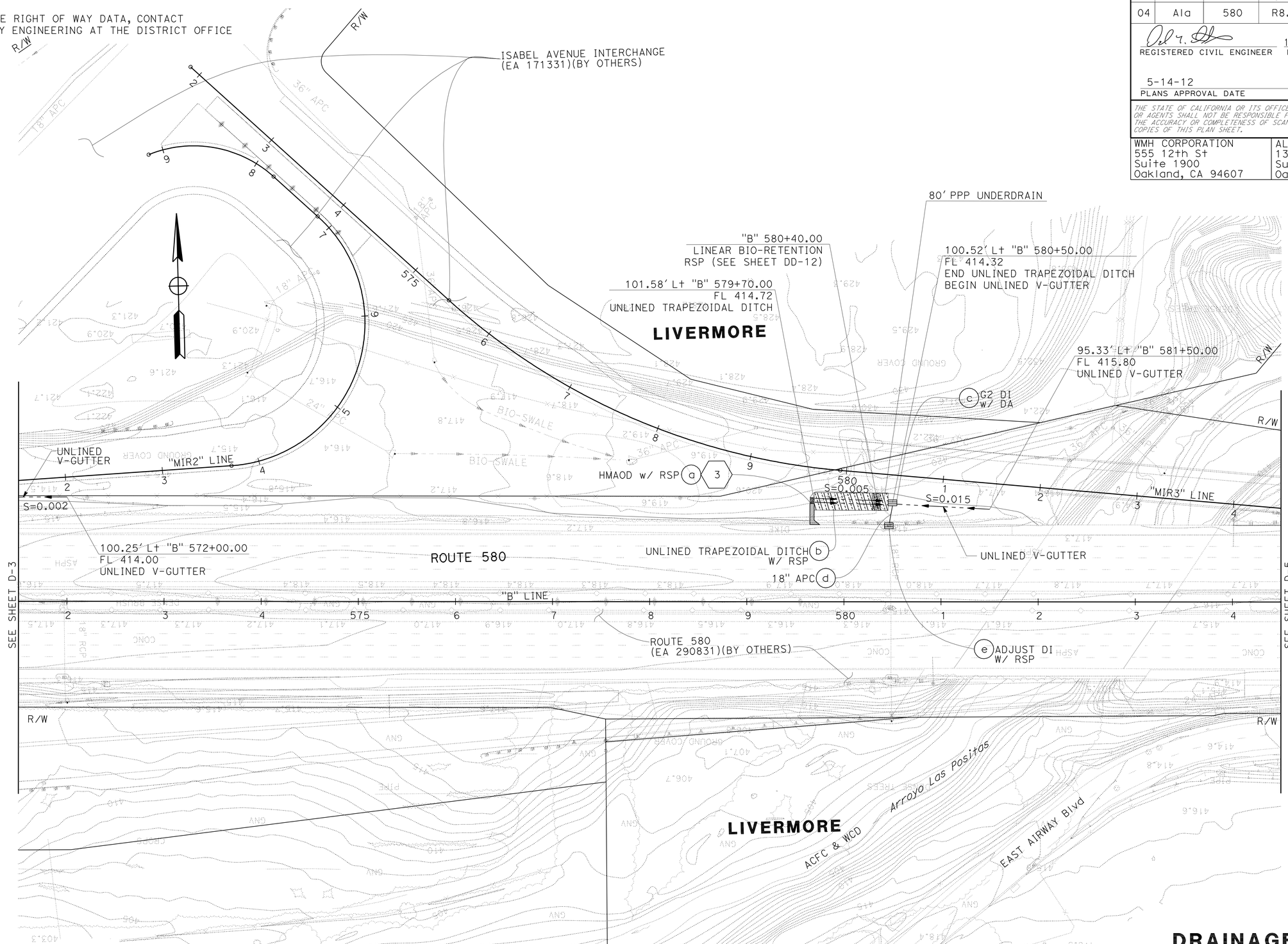

FOR NOTES, ABBREVIATIONS AND LEGEND, SEE SHEET D-1

THIS PLAN FOR DRAINAGE WORK ONLY.

DRAINAGE PLAN

SCALE: 1" = 50'

D-4

Y. FAROUQI	TIMOTHY J. LEE	YF	01/13/12
DAVID M. DICKINSON		YF	11/11/11
CALCULATED-DESIGNED BY	CONSULTANT FUNCTIONAL SUPERVISOR	YF	05/01/10
CHECKED BY		REVISED BY	DATE REVISED

STATE OF CALIFORNIA - DEPARTMENT OF TRANSPORTATION

Caltrans

X:\580 WB HOV\000_CAD\Sheets\East of Sta 540+00\CT-Electronic-Submittal 20120113\011-Drainage\IA-Plans\04000212481a004.dgn

LAST REVISION 01-13-12 | DATE PLOTTED => 23-MAY-2012 | TIME PLOTTED => 07:01

Dist	COUNTY	ROUTE	POST MILES TOTAL PROJECT	SHEET No.	TOTAL SHEETS
04	Ala	580	R8.4/R14.6	187	853

REGISTERED CIVIL ENGINEER 1/13/2012 DATE

5-14-12
PLANS APPROVAL DATE

REGISTERED PROFESSIONAL ENGINEER DAVID M. DICKINSON No. 50815 Exp. 9-30-13 CIVIL STATE OF CALIFORNIA

THE STATE OF CALIFORNIA OR ITS OFFICERS OR AGENTS SHALL NOT BE RESPONSIBLE FOR THE ACCURACY OR COMPLETENESS OF SCANNED COPIES OF THIS PLAN SHEET.

WMH CORPORATION
555 12th St
Suite 1900
Oakland, CA 94607

ALAMEDA CTC
1333 Broadway
Suite 220
Oakland, CA 94612

FOR ACCURATE RIGHT OF WAY DATA, CONTACT
RIGHT OF WAY ENGINEERING AT THE DISTRICT OFFICE

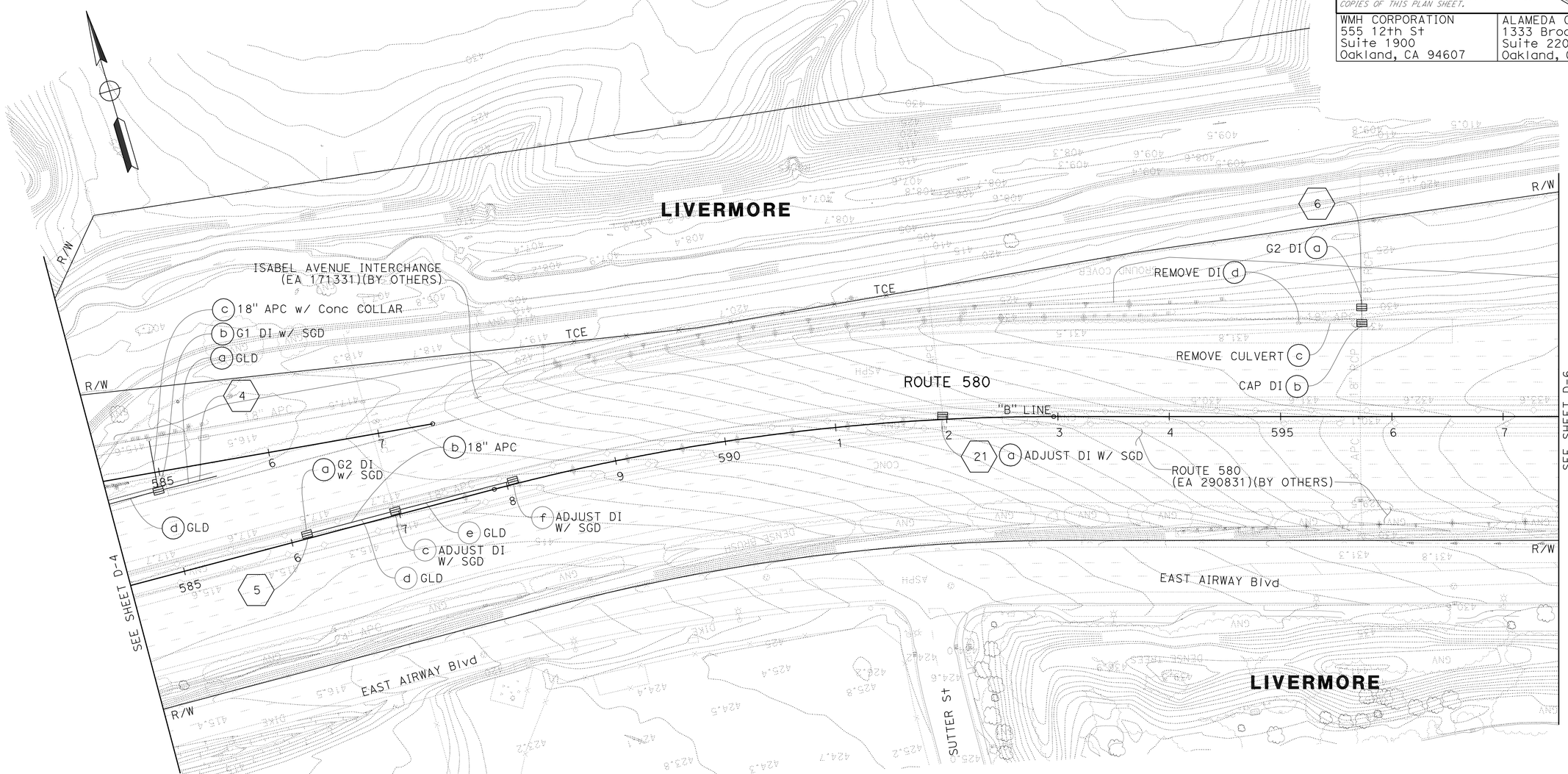

FOR NOTES, ABBREVIATIONS AND LEGEND, SEE SHEET D-1

THIS PLAN FOR DRAINAGE WORK ONLY.

DRAINAGE PLAN

SCALE: 1" = 50′ **D - 5**

DATE REVISED	REVISED BY	CALCULATED-DESIGNED BY	CHECKED BY
01/13/12	YF	Y. FAROUQI	DAVID M. DICKINSON
11/11/11	YF		
05/01/10	YF		

CONSULTANT FUNCTIONAL SUPERVISOR: TIMOTHY J. LEE

STATE OF CALIFORNIA - DEPARTMENT OF TRANSPORTATION

Caltrans

X:\580 WB HOV\000_CAD\Sheets\East of Sta 540+00\CT-Electronic-Submittal 20120113\011-Drainage\A-Plans\04000212481a005.dgn

LAST REVISION 01-13-12 DATE PLOTTED => 23-MAY-2012 TIME PLOTTED => 07:01

Dist	COUNTY	ROUTE	POST MILES TOTAL PROJECT	SHEET No.	TOTAL SHEETS
04	Ala	580	R8.4/R14.6	188	853

REGISTERED CIVIL ENGINEER — DATE 1/13/2012

5-14-12
PLANS APPROVAL DATE

REGISTERED PROFESSIONAL ENGINEER — DAVID M. DICKINSON — No. 50815 — Exp. 9-30-13 — CIVIL — STATE OF CALIFORNIA

THE STATE OF CALIFORNIA OR ITS OFFICERS OR AGENTS SHALL NOT BE RESPONSIBLE FOR THE ACCURACY OR COMPLETENESS OF SCANNED COPIES OF THIS PLAN SHEET.

WMH CORPORATION
555 12th St
Suite 1900
Oakland, CA 94607

ALAMEDA CTC
1333 Broadway
Suite 220
Oakland, CA 94612

FOR ACCURATE RIGHT OF WAY DATA, CONTACT
RIGHT OF WAY ENGINEERING AT THE DISTRICT OFFICE

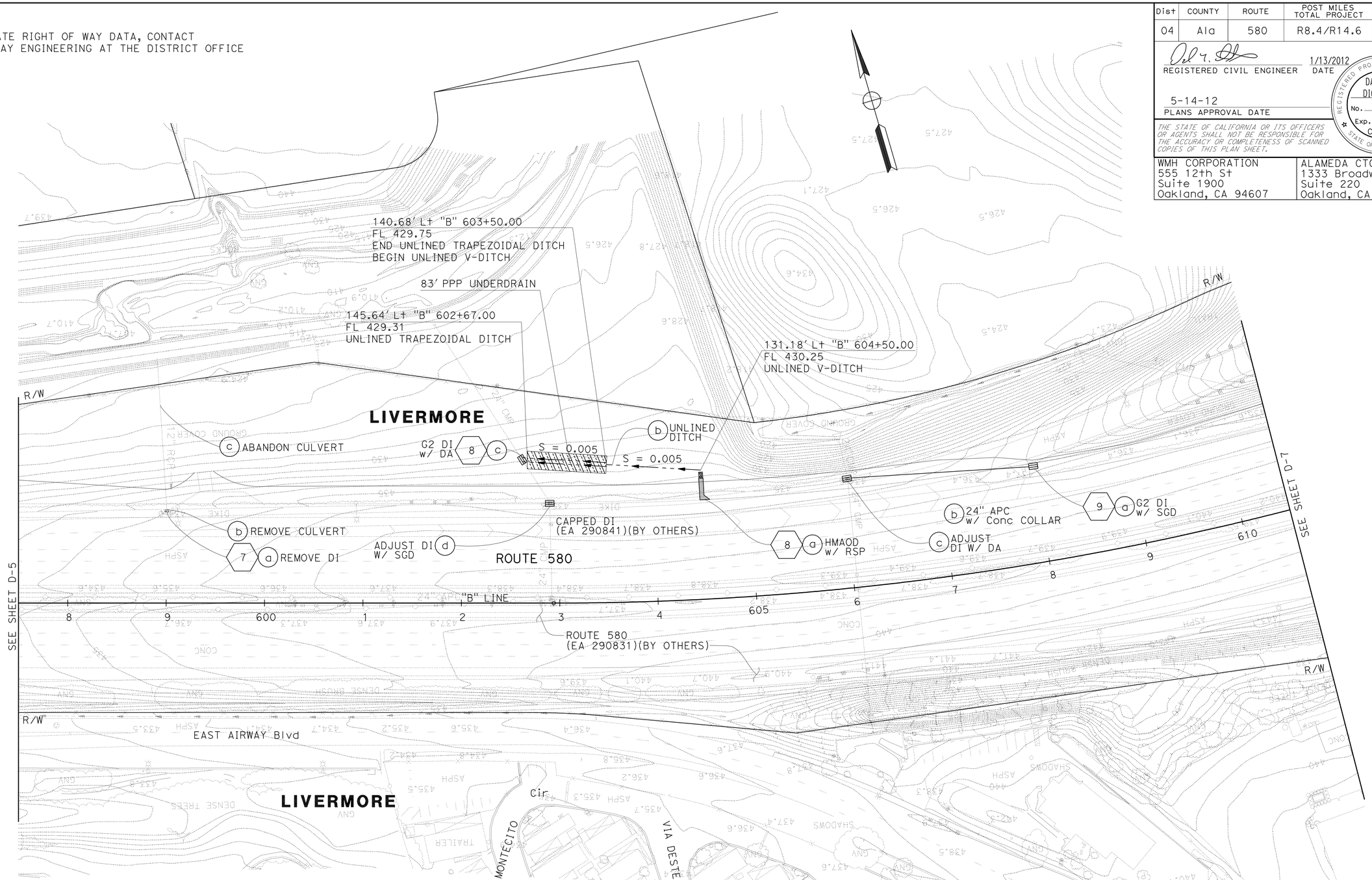

FOR NOTES, ABBREVIATIONS AND LEGEND, SEE SHEET D-1

THIS PLAN FOR DRAINAGE WORK ONLY.

DRAINAGE PLAN

SCALE: 1" = 50' **D-6**

01/13/12	YF	01/13/12	
11/11/11	YF	11/11/11	
05/01/10	YF	05/01/10	
DATE REVISED	REVISED BY	DATE REVISED	

CHECKED BY: DAVID M. DICKINSON
CALCULATED-DESIGNED BY: Y. FAROUQI
CONSULTANT FUNCTIONAL SUPERVISOR: TIMOTHY J. LEE

STATE OF CALIFORNIA - DEPARTMENT OF TRANSPORTATION
Caltrans

X:\580 WB HOV\000_CAD\Sheets\East of Sta 540+00\CT-Electronic-Submittal 20120113\011-Drainage\1A-Plans\04000212481a006.dgn

LAST REVISION 01-13-12 | DATE PLOTTED => 23-MAY-2012 | TIME PLOTTED => 07:01

Dist	COUNTY	ROUTE	POST MILES TOTAL PROJECT	SHEET No.	TOTAL SHEETS
04	Ala	580	R8.4/R14.6	189	853

REGISTERED CIVIL ENGINEER 1/13/2012 DATE

5-14-12
PLANS APPROVAL DATE

REGISTERED PROFESSIONAL ENGINEER DAVID M. DICKINSON No. 50815 Exp. 9-30-13 CIVIL STATE OF CALIFORNIA

THE STATE OF CALIFORNIA OR ITS OFFICERS OR AGENTS SHALL NOT BE RESPONSIBLE FOR THE ACCURACY OR COMPLETENESS OF SCANNED COPIES OF THIS PLAN SHEET.

WMH CORPORATION
555 12th St
Suite 1900
Oakland, CA 94607

ALAMEDA CTC
1333 Broadway
Suite 220
Oakland, CA 94612

FOR ACCURATE RIGHT OF WAY DATA, CONTACT
RIGHT OF WAY ENGINEERING AT THE DISTRICT OFFICE

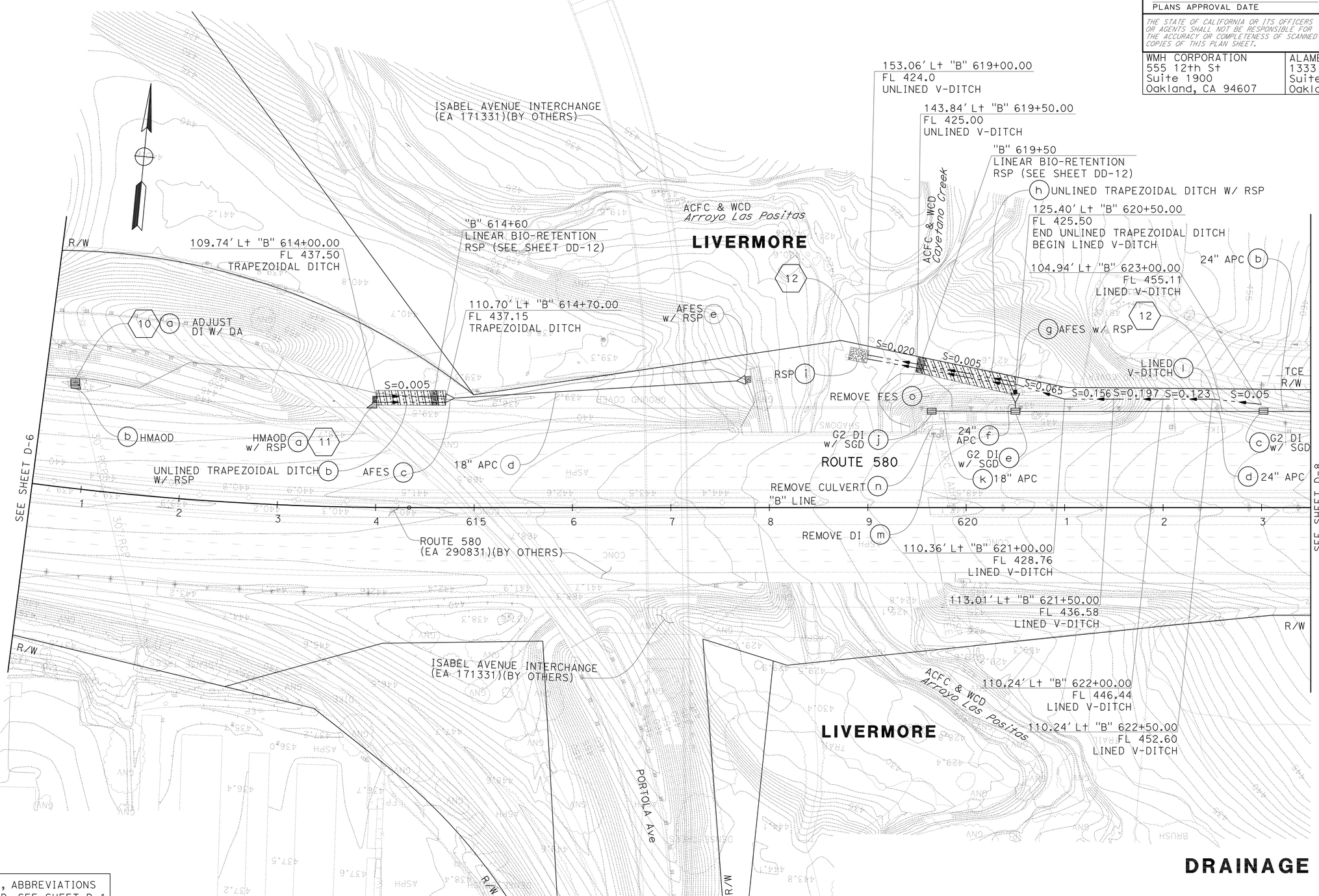

FOR NOTES, ABBREVIATIONS AND LEGEND, SEE SHEET D-1

THIS PLAN FOR DRAINAGE WORK ONLY.

DRAINAGE PLAN

SCALE: 1" = 50'

D-7

YF	YF	YF	REVISED BY
01/13/12	11/11/11	05/01/10	DATE REVISED

Y. FAROUQI — CALCULATED-DESIGNED BY
DAVID M. DICKINSON — CHECKED BY
TIMOTHY J. LEE — SUPERVISOR
CONSULTANT FUNCTIONAL SUPERVISOR

STATE OF CALIFORNIA - DEPARTMENT OF TRANSPORTATION
Caltrans

X:\580 WB HOV\000_CAD\Sheets\East of Sta 540+00\CT-Electronic-Submittal 20120113\011-Drainage\IA-Plans\0400021248ia007.dgn

LAST REVISION 01-13-12
DATE PLOTTED => 23-MAY-2012
TIME PLOTTED => 07:01

Dist	COUNTY	ROUTE	POST MILES TOTAL PROJECT	SHEET No.	TOTAL SHEETS
04	Ala	580	R8.4/R14.6	190	853

REGISTERED CIVIL ENGINEER 1/13/2012 DATE

5-14-12
PLANS APPROVAL DATE

REGISTERED PROFESSIONAL ENGINEER DAVID M. DICKINSON No. 50815 Exp. 9-30-13 CIVIL STATE OF CALIFORNIA

THE STATE OF CALIFORNIA OR ITS OFFICERS OR AGENTS SHALL NOT BE RESPONSIBLE FOR THE ACCURACY OR COMPLETENESS OF SCANNED COPIES OF THIS PLAN SHEET.

WMH CORPORATION
555 12th St
Suite 1900
Oakland, CA 94607

ALAMEDA CTC
1333 Broadway
Suite 220
Oakland, CA 94612

FOR ACCURATE RIGHT OF WAY DATA, CONTACT
RIGHT OF WAY ENGINEERING AT THE DISTRICT OFFICE

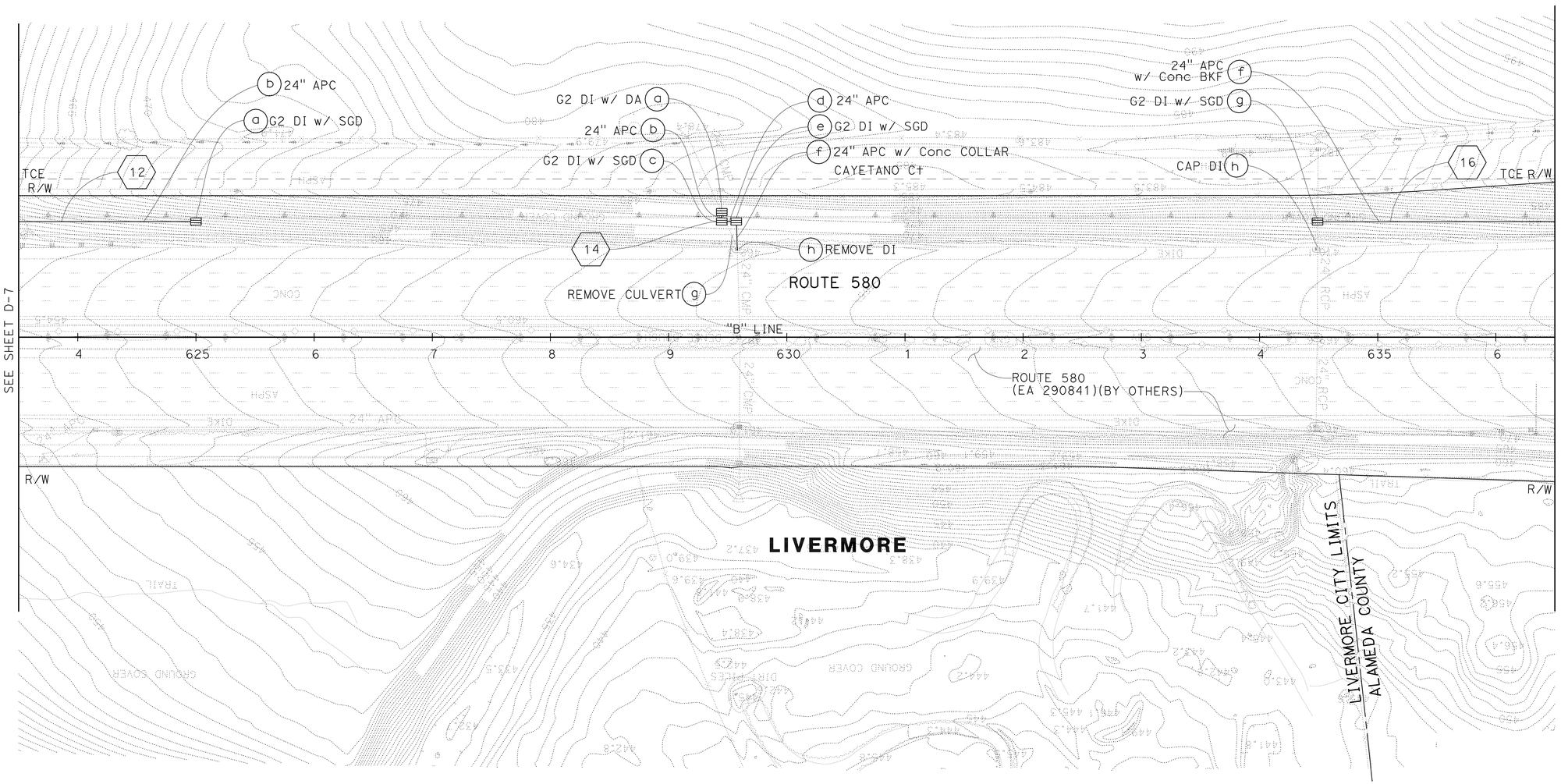

FOR NOTES, ABBREVIATIONS AND LEGEND, SEE SHEET D-1

THIS PLAN FOR DRAINAGE WORK ONLY.

DRAINAGE PLAN

SCALE: 1" = 50'

D-8

01/13/12	YF	YF	YF
11/11/11	YF	YF	YF
05/01/10	YF	YF	YF
DATE REVISED	REVISED BY		

Y. FAROUQI — CALCULATED-DESIGNED BY
DAVID M. DICKINSON — CHECKED BY
TIMOTHY J. LEE — CONSULTANT FUNCTIONAL SUPERVISOR

STATE OF CALIFORNIA - DEPARTMENT OF TRANSPORTATION
Caltrans

X:\580 WB HOV\000_CAD\Sheets\East of Sta 540+00\CT-Electronic-Submittal 20120113\011-Drainage\1A-Plans\04000212481a008.dgn

LAST REVISION 01-13-12 | DATE PLOTTED => 23-MAY-2012 | TIME PLOTTED => 07:02

Dist	COUNTY	ROUTE	POST MILES TOTAL PROJECT	SHEET No.	TOTAL SHEETS
04	Ala	580	R8.4/R14.6	191	853

REGISTERED CIVIL ENGINEER 1/13/2012 DATE

5-14-12
PLANS APPROVAL DATE

REGISTERED PROFESSIONAL ENGINEER
DAVID M. DICKINSON
No. 50815
Exp. 9-30-13
CIVIL
STATE OF CALIFORNIA

THE STATE OF CALIFORNIA OR ITS OFFICERS OR AGENTS SHALL NOT BE RESPONSIBLE FOR THE ACCURACY OR COMPLETENESS OF SCANNED COPIES OF THIS PLAN SHEET.

WMH CORPORATION
555 12th St
Suite 1900
Oakland, CA 94607

ALAMEDA CTC
1333 Broadway
Suite 220
Oakland, CA 94612

FOR ACCURATE RIGHT OF WAY DATA, CONTACT
RIGHT OF WAY ENGINEERING AT THE DISTRICT OFFICE

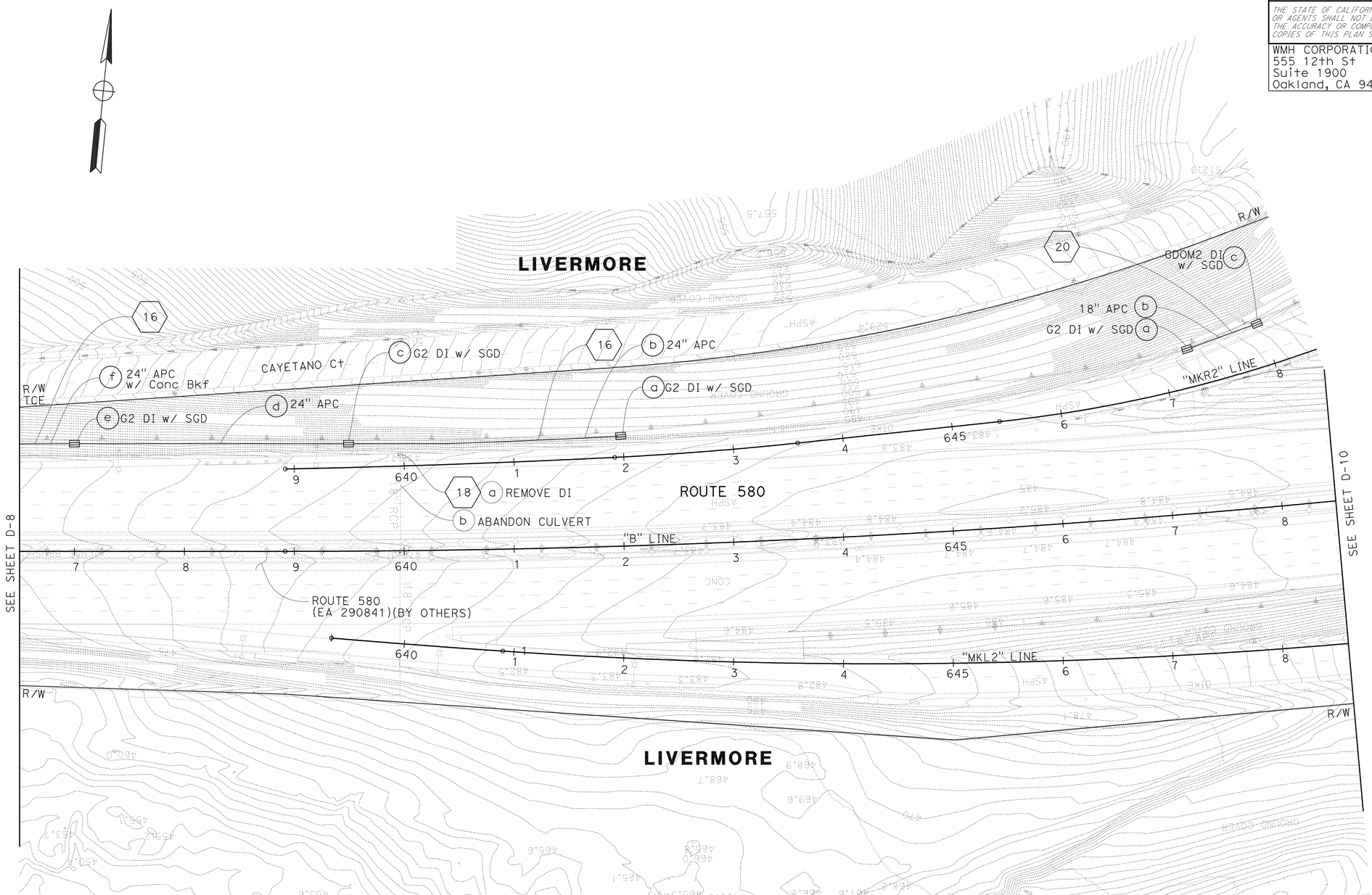

FOR NOTES, ABBREVIATIONS AND LEGEND, SEE SHEET D-1

THIS PLAN FOR DRAINAGE WORK ONLY.

DRAINAGE PLAN

SCALE: 1" = 50'

D-9

STATE OF CALIFORNIA - DEPARTMENT OF TRANSPORTATION	CONSULTANT FUNCTIONAL SUPERVISOR	CALCULATED-DESIGNED BY	CHECKED BY
Caltrans	TIMOTHY J. LEE	Y. FAROUQI	DAVID M. DICKINSON

REVISED BY	DATE REVISED
YF	05/01/10
YF	11/11/11
YF	01/13/12

X:\580 WB HOV\000_CAD\Sheets\East of Sta 540+00\CT-Electronic-Submittal 20120113\01-Drainage\1A-Plans\04000212481a009.dgn

LAST REVISION DATE PLOTTED => 23-MAY-2012
01-13-12 TIME PLOTTED => 07:02

Dist	COUNTY	ROUTE	POST MILES TOTAL PROJECT	SHEET No.	TOTAL SHEETS
04	Ala	580	R8.4/R14.6	192	853

REGISTERED CIVIL ENGINEER 1/13/2012 DATE

5-14-12
PLANS APPROVAL DATE

REGISTERED PROFESSIONAL ENGINEER DAVID M. DICKINSON No. 50815 Exp. 9-30-13 CIVIL STATE OF CALIFORNIA

THE STATE OF CALIFORNIA OR ITS OFFICERS OR AGENTS SHALL NOT BE RESPONSIBLE FOR THE ACCURACY OR COMPLETENESS OF SCANNED COPIES OF THIS PLAN SHEET.

WMH CORPORATION
555 12th St
Suite 1900
Oakland, CA 94607

ALAMEDA CTC
1333 Broadway
Suite 220
Oakland, CA 94612

FOR ACCURATE RIGHT OF WAY DATA, CONTACT RIGHT OF WAY ENGINEERING AT THE DISTRICT OFFICE

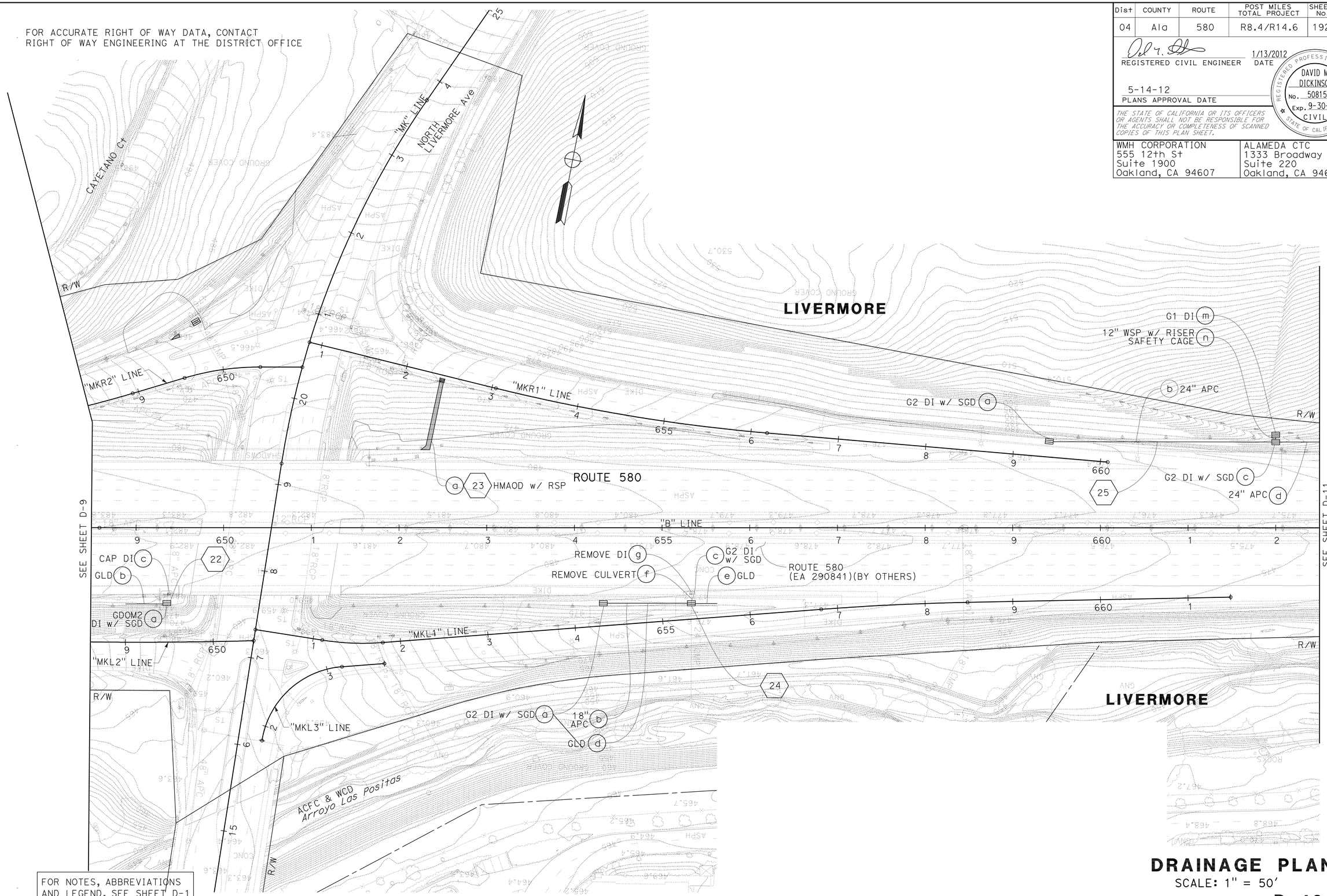

FOR NOTES, ABBREVIATIONS AND LEGEND, SEE SHEET D-1

THIS PLAN FOR DRAINAGE WORK ONLY.

DRAINAGE PLAN

SCALE: 1" = 50'

D-10

01/13/12	YF	YF	YF
11/11/11	YF		
05/01/10	YF		
DATE REVISED	REVISED BY		

Y. FAROUQI — CALCULATED-DESIGNED BY
DAVID M. DICKINSON — CHECKED BY
TIMOTHY J. LEE — SUPERVISOR
CONSULTANT FUNCTIONAL SUPERVISOR

STATE OF CALIFORNIA - DEPARTMENT OF TRANSPORTATION
Caltrans

X:\580 WB HOV\000_CAD\Sheets\East of Sta 540+00\CT-Electronic-Submittal 20120113\011-Drainage\1A-Plans\04000212481a010.dgn

LAST REVISION 01-13-12 | DATE PLOTTED => 23-MAY-2012 | TIME PLOTTED => 07:02

Dist	COUNTY	ROUTE	POST MILES TOTAL PROJECT	SHEET No.	TOTAL SHEETS
04	Ala	580	R8.4/R14.6	193	853

REGISTERED CIVIL ENGINEER 1/13/2012 DATE

5-14-12
PLANS APPROVAL DATE

REGISTERED PROFESSIONAL ENGINEER DAVID M. DICKINSON No. 50815 Exp. 9-30-13 CIVIL STATE OF CALIFORNIA

THE STATE OF CALIFORNIA OR ITS OFFICERS OR AGENTS SHALL NOT BE RESPONSIBLE FOR THE ACCURACY OR COMPLETENESS OF SCANNED COPIES OF THIS PLAN SHEET.

WMH CORPORATION
555 12th St
Suite 1900
Oakland, CA 94607

ALAMEDA CTC
1333 Broadway
Suite 220
Oakland, CA 94612

FOR ACCURATE RIGHT OF WAY DATA, CONTACT
RIGHT OF WAY ENGINEERING AT THE DISTRICT OFFICE

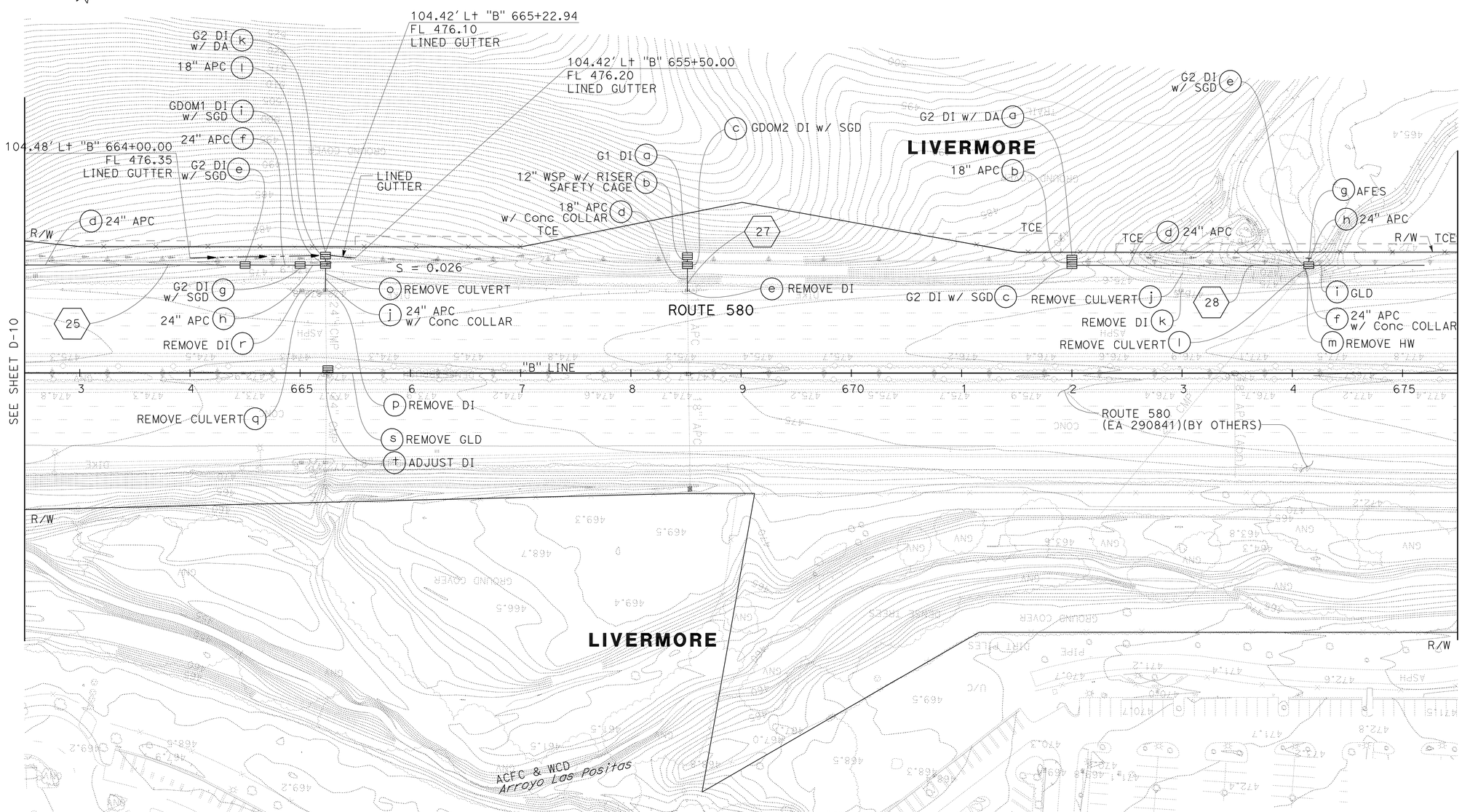

FOR NOTES, ABBREVIATIONS AND LEGEND, SEE SHEET D-1

THIS PLAN FOR DRAINAGE WORK ONLY.

DRAINAGE PLAN

SCALE: 1" = 50'

D-11

YF	YF	YF	REVISED BY
01/13/12	11/11/11	05/01/10	DATE REVISED

Y. FAROUQI — DAVID M. DICKINSON — CALCULATED-DESIGNED BY — CHECKED BY

TIMOTHY J. LEE — CONSULTANT FUNCTIONAL SUPERVISOR

STATE OF CALIFORNIA - DEPARTMENT OF TRANSPORTATION

Caltrans

X:\580 WB HOV\000_CAD\Sheets\East of Sta 540+00\CT-Electronic-Submittal 20120113\011-Drainage\IA-Plans\04000212481a011.dgn

LAST REVISION 01-13-12 — DATE PLOTTED => 23-MAY-2012 — TIME PLOTTED => 07:02

Dist	COUNTY	ROUTE	POST MILES TOTAL PROJECT	SHEET No.	TOTAL SHEETS
04	Ala	580	R8.4/R14.6	194	853

REGISTERED CIVIL ENGINEER 1/13/2012 DATE

5-14-12
PLANS APPROVAL DATE

REGISTERED PROFESSIONAL ENGINEER DAVID M. DICKINSON No. 50815 Exp. 9-30-13 CIVIL STATE OF CALIFORNIA

THE STATE OF CALIFORNIA OR ITS OFFICERS OR AGENTS SHALL NOT BE RESPONSIBLE FOR THE ACCURACY OR COMPLETENESS OF SCANNED COPIES OF THIS PLAN SHEET.

WMH CORPORATION
555 12th St
Suite 1900
Oakland, CA 94607

ALAMEDA CTC
1333 Broadway
Suite 220
Oakland, CA 94612

FOR ACCURATE RIGHT OF WAY DATA, CONTACT
RIGHT OF WAY ENGINEERING AT THE DISTRICT OFFICE

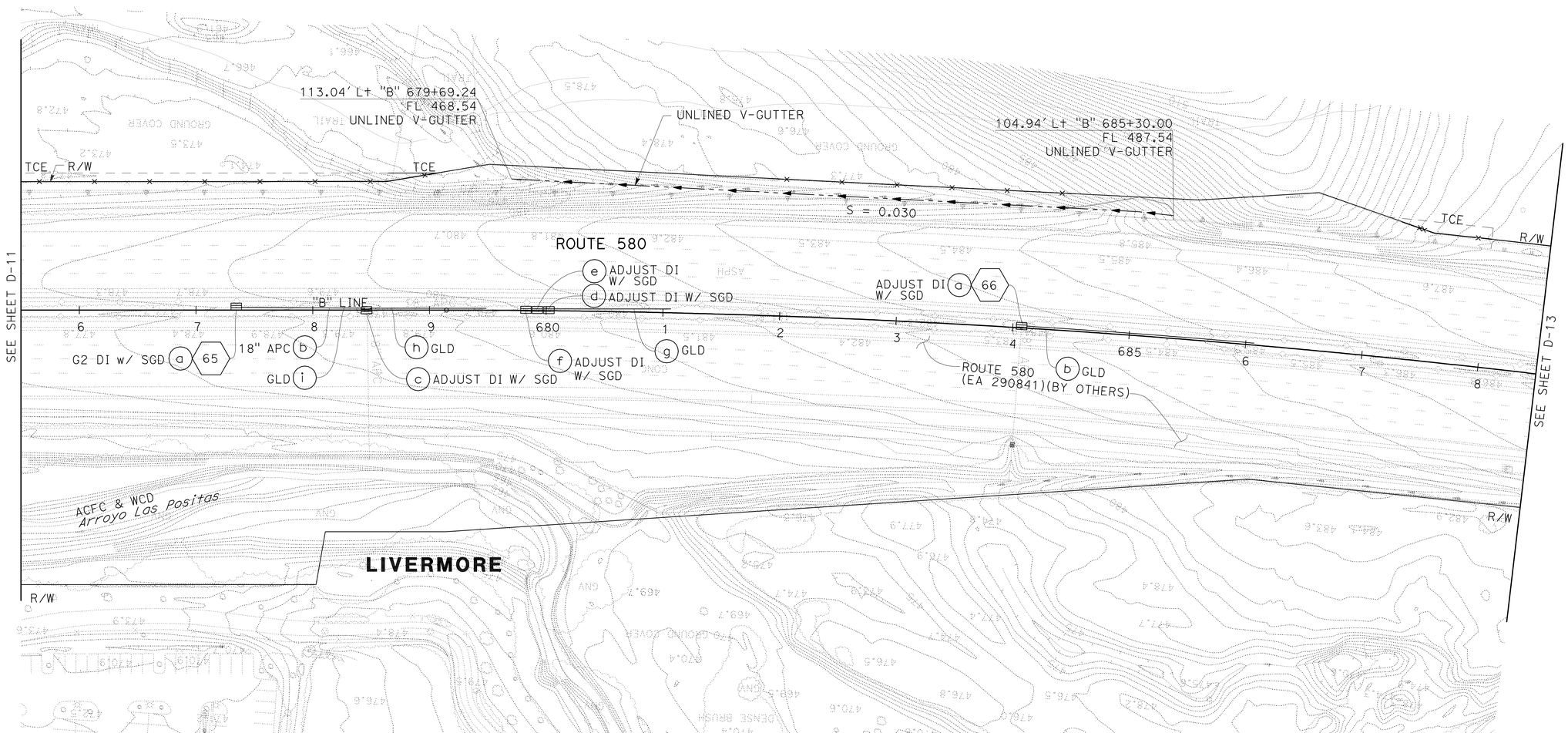

FOR NOTES, ABBREVIATIONS AND LEGEND, SEE SHEET D-1

THIS PLAN FOR DRAINAGE WORK ONLY.

DRAINAGE PLAN

SCALE: 1" = 50'

D-12

01/13/12	YF	
11/11/11	YF	
05/01/10	YF	
DATE REVISED	REVISED BY	

Y. FAROUQI — CALCULATED-DESIGNED BY
DAVID M. DICKINSON — CHECKED BY
TIMOTHY J. LEE — CONSULTANT FUNCTIONAL SUPERVISOR

STATE OF CALIFORNIA - DEPARTMENT OF TRANSPORTATION
Caltrans

X:\580 WB HOV\000_CAD\Sheets\East of Sta 540+00\CT-Electronic-Submittal 20120113\01-Drainage\IA-Plans\04000212481a012.dgn

LAST REVISION 01-13-12 | DATE PLOTTED => 23-MAY-2012 | TIME PLOTTED => 07:02

Dist	COUNTY	ROUTE	POST MILES TOTAL PROJECT	SHEET No.	TOTAL SHEETS
04	Ala	580	R8.4/R14.6	195	853

REGISTERED CIVIL ENGINEER 1/13/2012 DATE

5-14-12
PLANS APPROVAL DATE

REGISTERED PROFESSIONAL ENGINEER DAVID M. DICKINSON No. 50815 Exp. 9-30-13 CIVIL STATE OF CALIFORNIA

THE STATE OF CALIFORNIA OR ITS OFFICERS OR AGENTS SHALL NOT BE RESPONSIBLE FOR THE ACCURACY OR COMPLETENESS OF SCANNED COPIES OF THIS PLAN SHEET.

WMH CORPORATION
555 12th St
Suite 1900
Oakland, CA 94607

ALAMEDA CTC
1333 Broadway
Suite 220
Oakland, CA 94612

FOR ACCURATE RIGHT OF WAY DATA, CONTACT
RIGHT OF WAY ENGINEERING AT THE DISTRICT OFFICE

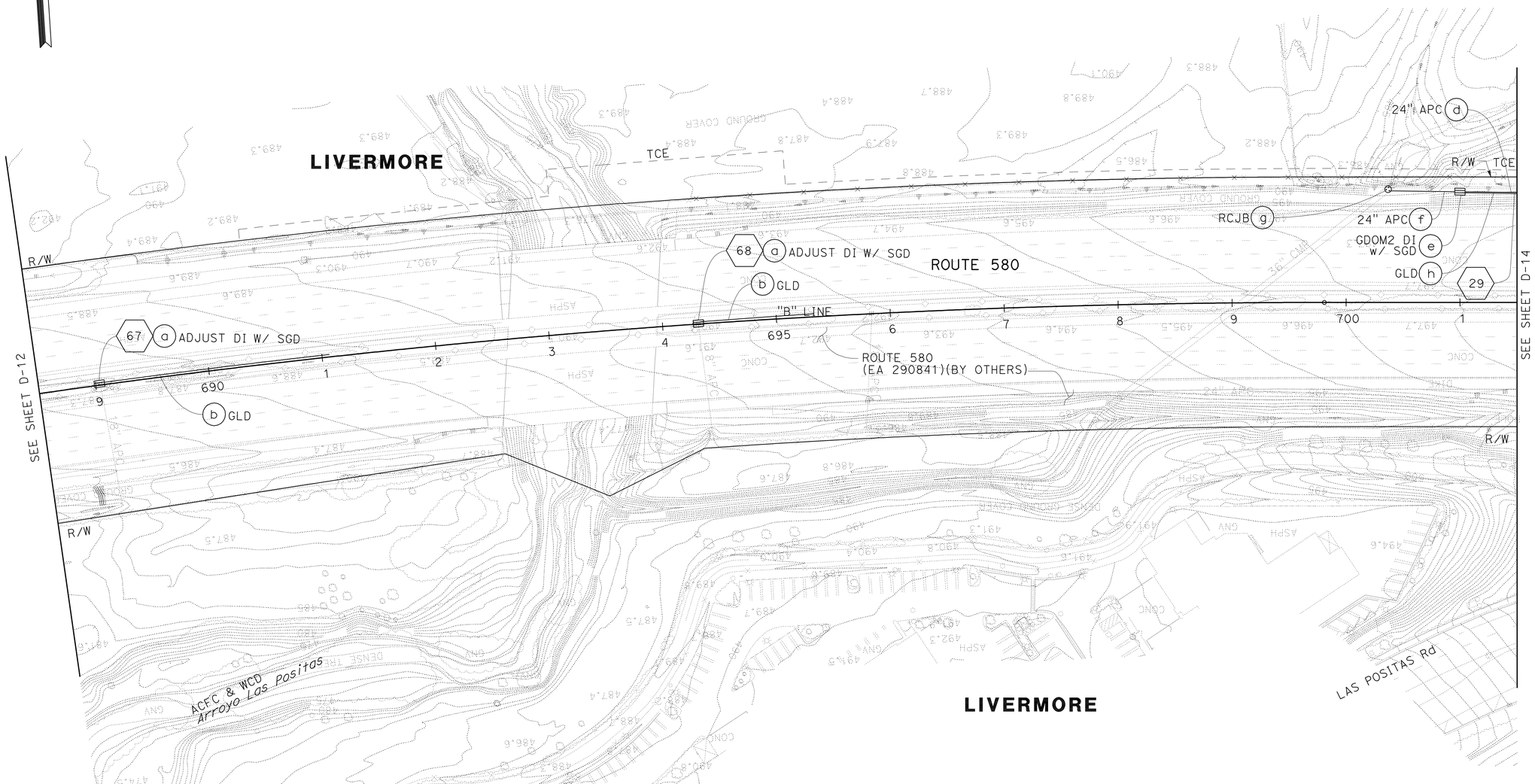

FOR NOTES, ABBREVIATIONS AND LEGEND, SEE SHEET D-1

THIS PLAN FOR DRAINAGE WORK ONLY.

DRAINAGE PLAN

SCALE: 1" = 50'

D - 13

01/13/12	YF	05/01/10	YF
11/11/11	YF		

REVISED BY / DATE REVISED

Y. FAROUQI — CALCULATED-DESIGNED BY
DAVID M. DICKINSON — CHECKED BY
TIMOTHY J. LEE — CONSULTANT FUNCTIONAL SUPERVISOR

STATE OF CALIFORNIA - DEPARTMENT OF TRANSPORTATION
Caltrans

X:\580 WB HOV\000_CAD\Sheets\East of Sta 540+00\CT-Electronic-Submittal 20120113\011-Drainage\IA-Plans\04000212481ia013.dgn

LAST REVISION 01-13-12 | DATE PLOTTED => 23-MAY-2012 | TIME PLOTTED => 07:02

Dist	COUNTY	ROUTE	POST MILES TOTAL PROJECT	SHEET No.	TOTAL SHEETS
04	Ala	580	R8.4/R14.6	196	853

REGISTERED CIVIL ENGINEER 1/13/2012 DATE

5-14-12
PLANS APPROVAL DATE

REGISTERED PROFESSIONAL ENGINEER DAVID M. DICKINSON No. 50815 Exp. 9-30-13 CIVIL STATE OF CALIFORNIA

THE STATE OF CALIFORNIA OR ITS OFFICERS OR AGENTS SHALL NOT BE RESPONSIBLE FOR THE ACCURACY OR COMPLETENESS OF SCANNED COPIES OF THIS PLAN SHEET.

WMH CORPORATION
555 12th St
Suite 1900
Oakland, CA 94607

ALAMEDA CTC
1333 Broadway
Suite 220
Oakland, CA 94612

FOR ACCURATE RIGHT OF WAY DATA, CONTACT
RIGHT OF WAY ENGINEERING AT THE DISTRICT OFFICE

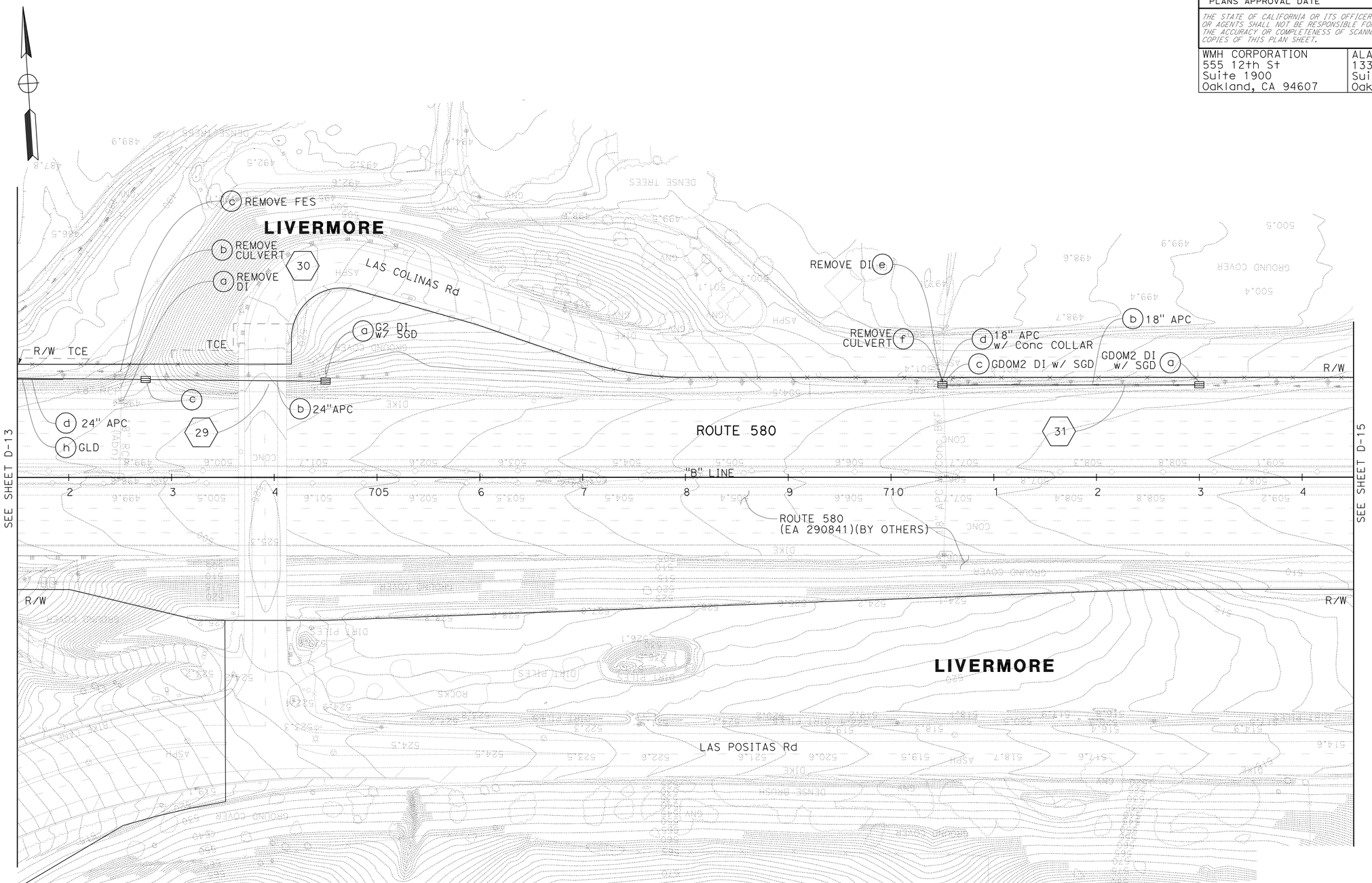

FOR NOTES, ABBREVIATIONS AND LEGEND, SEE SHEET D-1

THIS PLAN FOR DRAINAGE WORK ONLY.

DRAINAGE PLAN

SCALE: 1" = 50'

D - 14

REVISED BY	DATE REVISED
YF	05/01/10
YF	11/11/11
YF	01/13/12

Y. FAROUQI — CALCULATED-DESIGNED BY
DAVID M. DICKINSON — CHECKED BY
TIMOTHY J. LEE — CONSULTANT FUNCTIONAL SUPERVISOR

STATE OF CALIFORNIA - DEPARTMENT OF TRANSPORTATION
Caltrans

X:\580 WB HOV\000_CAD\Sheets\East of Sta 540+00\CT-Electronic-Submittal 20120113\011-Drainage\1A-Plans\04000212481a014.dgn

LAST REVISION 01-13-12 | DATE PLOTTED => 23-MAY-2012 | TIME PLOTTED => 07:02

Dist	COUNTY	ROUTE	POST MILES TOTAL PROJECT	SHEET No.	TOTAL SHEETS
04	Ala	580	R8.4/R14.6	197	853

REGISTERED CIVIL ENGINEER 1/13/2012 DATE

5-14-12
PLANS APPROVAL DATE

REGISTERED PROFESSIONAL ENGINEER DAVID M. DICKINSON No. 50815 Exp. 9-30-13 CIVIL STATE OF CALIFORNIA

THE STATE OF CALIFORNIA OR ITS OFFICERS OR AGENTS SHALL NOT BE RESPONSIBLE FOR THE ACCURACY OR COMPLETENESS OF SCANNED COPIES OF THIS PLAN SHEET.

WMH CORPORATION
555 12th St
Suite 1900
Oakland, CA 94607

ALAMEDA CTC
1333 Broadway
Suite 220
Oakland, CA 94612

FOR ACCURATE RIGHT OF WAY DATA, CONTACT
RIGHT OF WAY ENGINEERING AT THE DISTRICT OFFICE

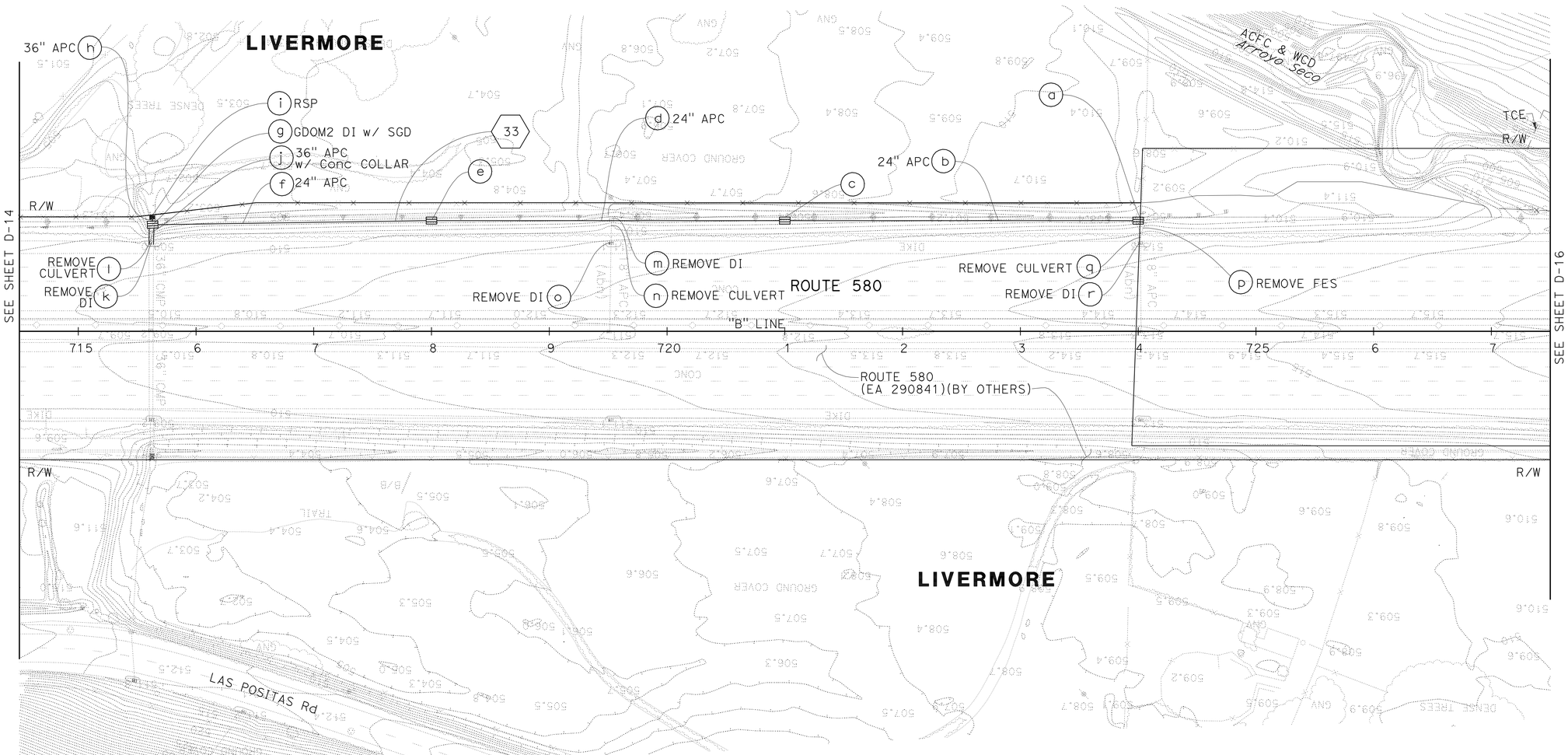

FOR NOTES, ABBREVIATIONS AND LEGEND, SEE SHEET D-1

THIS PLAN FOR DRAINAGE WORK ONLY.

DRAINAGE PLAN

SCALE: 1" = 50'

D-15

REVISED BY	DATE REVISED
YF	01/13/12
YF	11/11/11
YF	05/01/10

Y. FAROUQI — CALCULATED-DESIGNED BY
DAVID M. DICKINSON — CHECKED BY
TIMOTHY J. LEE — CONSULTANT FUNCTIONAL SUPERVISOR

STATE OF CALIFORNIA - DEPARTMENT OF TRANSPORTATION
Caltrans

X:\580 WB HOV\000_CAD\Sheets\East of Sta 540+00\CT-Electronic-Submittal 20120113\011-Drainage\IA-Plans\04000212481a015.dgn

LAST REVISION 01-13-12 | DATE PLOTTED => 23-MAY-2012 | TIME PLOTTED => 07:02

Dist	COUNTY	ROUTE	POST MILES TOTAL PROJECT	SHEET No.	TOTAL SHEETS
04	Ala	580	R8.4/R14.6	198	853

REGISTERED CIVIL ENGINEER 1/13/2012 DATE

5-14-12
PLANS APPROVAL DATE

REGISTERED PROFESSIONAL ENGINEER DAVID M. DICKINSON No. 50815 Exp. 9-30-13 CIVIL STATE OF CALIFORNIA

THE STATE OF CALIFORNIA OR ITS OFFICERS OR AGENTS SHALL NOT BE RESPONSIBLE FOR THE ACCURACY OR COMPLETENESS OF SCANNED COPIES OF THIS PLAN SHEET.

WMH CORPORATION
555 12th St
Suite 1900
Oakland, CA 94607

ALAMEDA CTC
1333 Broadway
Suite 220
Oakland, CA 94612

FOR ACCURATE RIGHT OF WAY DATA, CONTACT
RIGHT OF WAY ENGINEERING AT THE DISTRICT OFFICE

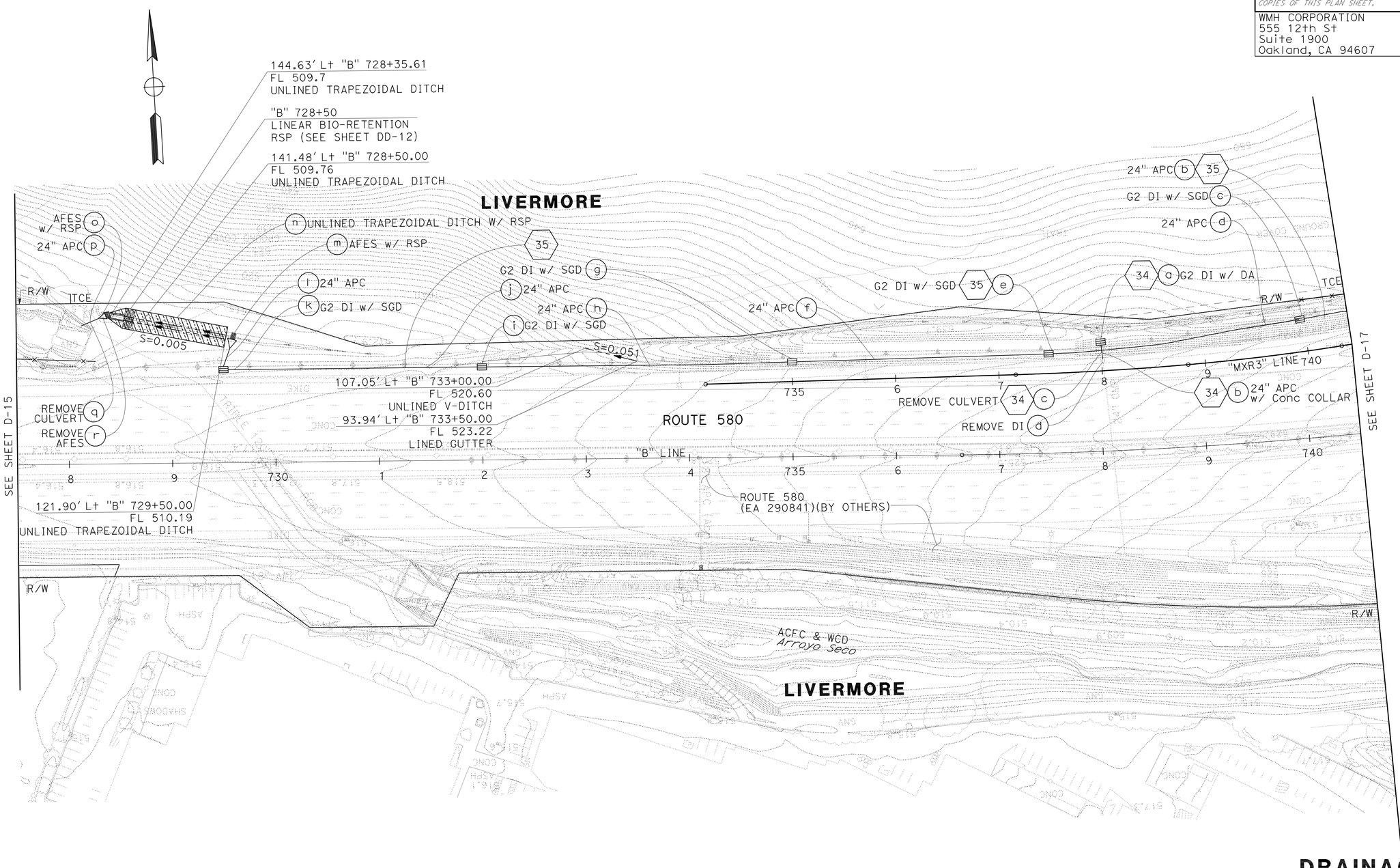

FOR NOTES, ABBREVIATIONS AND LEGEND, SEE SHEET D-1

THIS PLAN FOR DRAINAGE WORK ONLY.

DRAINAGE PLAN

SCALE: 1" = 50'

D-16

YF	YF	YF	REVISED BY
01/13/12	11/11/11	05/01/10	DATE REVISED

Y. FAROUQI — DAVID M. DICKINSON — CALCULATED-DESIGNED BY — CHECKED BY

TIMOTHY J. LEE — CONSULTANT FUNCTIONAL SUPERVISOR

STATE OF CALIFORNIA - DEPARTMENT OF TRANSPORTATION

Caltrans

X:\580 WB HOV\000_CAD\Sheets\East of Sta 540+00\CT-Electronic-Submittal 20120113\011-Drainage\1A-Plans\0400021248ia016.dgn

DATE PLOTTED => 23-MAY-2012
TIME PLOTTED => 07:02

LAST REVISION 01-13-12

Dist	COUNTY	ROUTE	POST MILES TOTAL PROJECT	SHEET No.	TOTAL SHEETS
04	Ala	580	R8.4/R14.6	199	853

REGISTERED CIVIL ENGINEER 1/13/2012 DATE

5-14-12
PLANS APPROVAL DATE

REGISTERED PROFESSIONAL ENGINEER DAVID M. DICKINSON No. 50815 Exp. 9-30-13 CIVIL STATE OF CALIFORNIA

THE STATE OF CALIFORNIA OR ITS OFFICERS OR AGENTS SHALL NOT BE RESPONSIBLE FOR THE ACCURACY OR COMPLETENESS OF SCANNED COPIES OF THIS PLAN SHEET.

WMH CORPORATION
555 12th St
Suite 1900
Oakland, CA 94607

ALAMEDA CTC
1333 Broadway
Suite 220
Oakland, CA 94612

FOR NOTES, ABBREVIATIONS AND LEGEND, SEE SHEET D-1

DRAINAGE PLAN

LIVERMORE

SCALE: 1" = 50'

D-17

YF	YF	YF	Y. FAROUQI
01/13/12	11/11/11	05/01/10	DAVID M. DICKINSON
REVISED BY	DATE REVISED	CALCULATED-DESIGNED BY	CHECKED BY

TIMOTHY J. LEE — CONSULTANT FUNCTIONAL SUPERVISOR

STATE OF CALIFORNIA - DEPARTMENT OF TRANSPORTATION

Caltrans

X:\580 WB HOV\000_CAD\Sheets\East of Sta 540+00\CT-Electronic-Submittal 20120113\011-Drainage\1A-Plans\04000212481ia017.dgn

LAST REVISION DATE PLOTTED => 23-MAY-2012
01-13-12 TIME PLOTTED => 07:02

Dist	COUNTY	ROUTE	POST MILES TOTAL PROJECT	SHEET No.	TOTAL SHEETS
04	Ala	580	R8.4/R14.6	200	853

REGISTERED CIVIL ENGINEER — DATE 1/13/2012

5-14-12
PLANS APPROVAL DATE

REGISTERED PROFESSIONAL ENGINEER — DAVID M. DICKINSON — No. 50815 — Exp. 9-30-13 — CIVIL — STATE OF CALIFORNIA

THE STATE OF CALIFORNIA OR ITS OFFICERS OR AGENTS SHALL NOT BE RESPONSIBLE FOR THE ACCURACY OR COMPLETENESS OF SCANNED COPIES OF THIS PLAN SHEET.

WMH CORPORATION
555 12th St
Suite 1900
Oakland, CA 94607

ALAMEDA CTC
1333 Broadway
Suite 220
Oakland, CA 94612

FOR ACCURATE RIGHT OF WAY DATA, CONTACT
RIGHT OF WAY ENGINEERING AT THE DISTRICT OFFICE

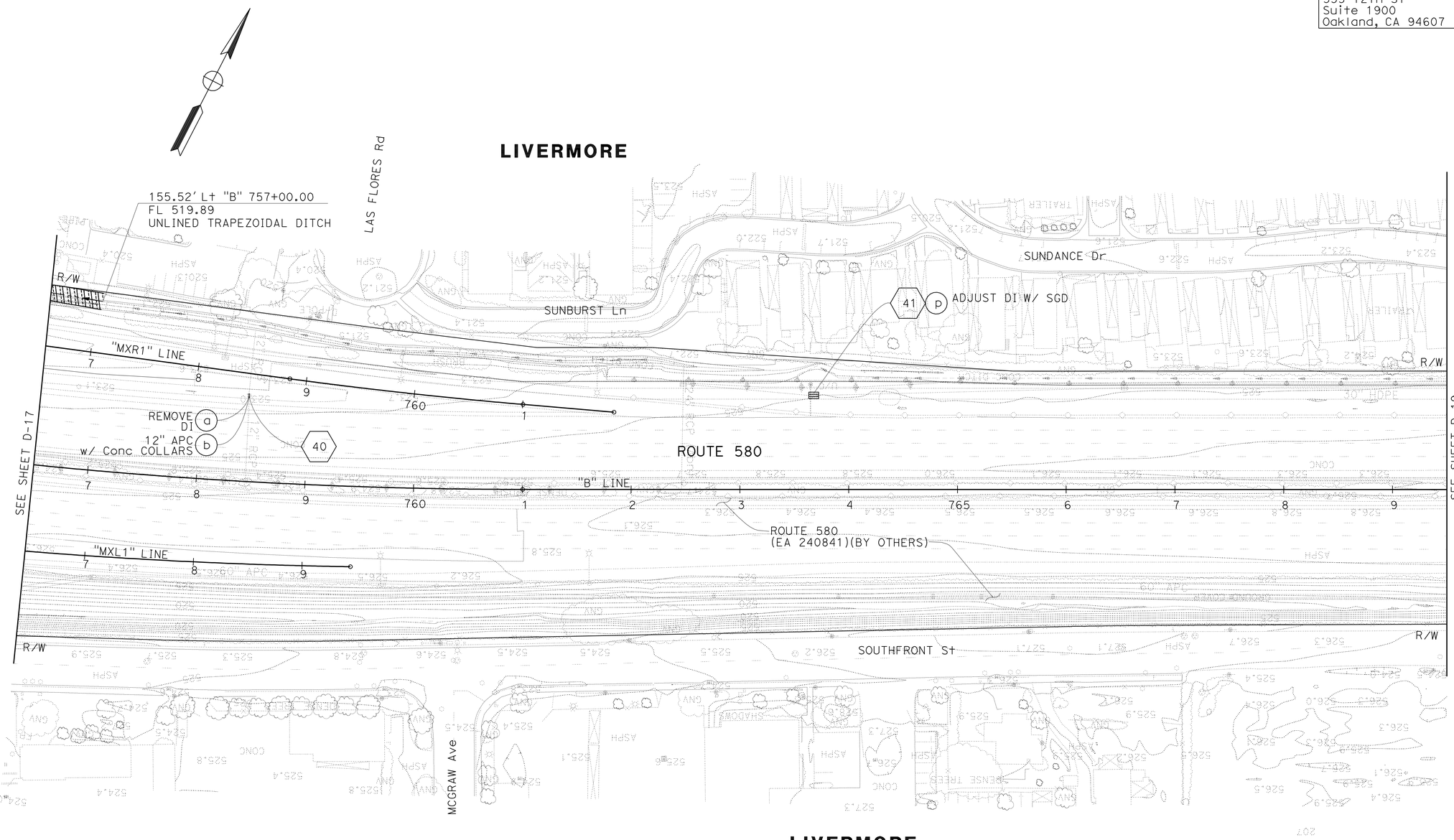

FOR NOTES, ABBREVIATIONS AND LEGEND, SEE SHEET D-1

THIS PLAN FOR DRAINAGE WORK ONLY.

DRAINAGE PLAN

SCALE: 1" = 50'

D-18

YF	YF	YF	REVISED BY
01/13/12	11/11/11	05/01/10	DATE REVISED

Y. FAROUQI — CALCULATED-DESIGNED BY
DAVID M. DICKINSON — CHECKED BY
TIMOTHY J. LEE — CONSULTANT FUNCTIONAL SUPERVISOR

STATE OF CALIFORNIA - DEPARTMENT OF TRANSPORTATION
Caltrans

X:\580 WB HOV\000_CAD\Sheets\East of Sta 540+00\CT-Electronic-Submittal 20120113\01-Drainage\1A-Plans\04000212481a018.dgn

LAST REVISION 01-13-12 — DATE PLOTTED => 23-MAY-2012 — TIME PLOTTED => 07:02