Dist	COUNTY	ROUTE	POST MILES TOTAL PROJECT	SHEET No.	TOTAL SHEETS
04	Ala	580	R8.4/R14.6	1	853

ACIM-5801-1(055)E

STATE OF CALIFORNIA

DEPARTMENT OF TRANSPORTATION

PROJECT PLANS FOR CONSTRUCTION ON

STATE HIGHWAY

IN ALAMEDA COUNTY
IN LIVERMORE
FROM 0.1 MILE WEST OF GREENVILLE ROAD UNDERCROSSING
TO 0.5 MILE WEST OF 84/580 SEPARATION

TO BE SUPPLEMENTED BY STANDARD PLANS DATED MAY 2006

INDEX OF PLANS

SHEET No.	DESCRIPTION
1	TITLE AND LOCATION MAP
2-25	TYPICAL CROSS SECTIONS
26	KEY MAP AND LINE INDEX
27-28	PROJECT CONTROL PLANS
29-54	LAYOUTS
55-78	PROFILES AND SUPERELEVATION
79-150	CONSTRUCTION DETAILS
151	TEMPORARY WATER POLLUTION CONTROL
152-179	EROSION CONTROL
180-182	CONTOUR GRADING
183-265	DRAINAGE PLANS, PROFILES, DETAILS AND QUANTITIES
266-291	UTILITY PLANS
292-310	CONSTRUCTION AREA SIGNS
311-339	STAGE CONSTRUCTION PLANS
340-415	TRAFFIC HANDLING PLANS AND QUANTITIES
416-450	PAVEMENT DELINEATION PLANS AND QUANTITIES
451-503	SIGN PLANS, DETAILS AND QUANTITIES
504-517	SUMMARY OF QUANTITIES
518-534	RETAINING WALL PLANS
535	SOUND WALL PLAN
536-633	ELECTRICAL PLANS
634-651	ROUTE 580 WB HOV LANE WIDENING-EASTERN SEGMENT
652-721	REVISED AND NEW STANDARD PLANS

STRUCTURE PLANS

722-724	ARROYO SECO CREEK CULVERT EXTENSION
725-739	ARROYO LAS POSITAS BRIDGE (WIDEN) Br No. 33-0085
740-760	NORTH LIVERMORE AVE UNDERCROSSING (WIDEN)
761-775	ARROYO LAS POSITAS BRIDGE (WIDEN) Br No. 33-0203
776-787	RETAINING WALL No. 14-SOIL NAIL WALL
788-792	RETAINING WALL No. 11-TYPE 7 (Mod)
793-803	RETAINING WALL No. 10A, 10B AND 10C
804-812	RETAINING WALL No. 7-SOIL NAIL WALL
813-822	RETAINING WALL No. 5-SOIL NAIL WALL
823-831	RETAINING WALL No. 4-SOIL NAIL WALL
832-853	RETAINING WALL No. 3-SOIL NAIL WALL

THE STANDARD PLANS LIST APPLICABLE TO THIS CONTRACT IS INCLUDED IN THE NOTICE TO BIDDERS AND SPECIAL PROVISIONS BOOK.

LOCATION MAP

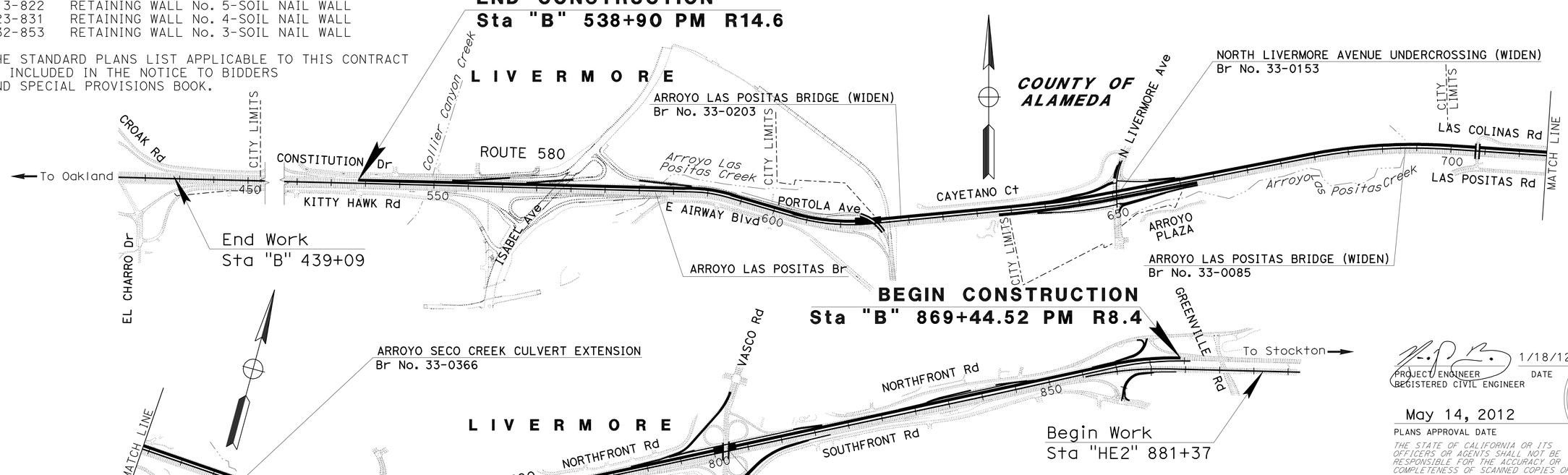

THE CONTRACTOR SHALL POSSESS THE CLASS (OR CLASSES) OF LICENSE AS SPECIFIED IN THE "NOTICE TO BIDDERS."

1/18/12
PROJECT ENGINEER REGISTERED CIVIL ENGINEER — DATE

May 14, 2012
PLANS APPROVAL DATE

REGISTERED PROFESSIONAL ENGINEER N.V. BERNARDI No. 45407 Exp. 9/30/12 CIVIL STATE OF CALIFORNIA

THE STATE OF CALIFORNIA OR ITS OFFICERS OR AGENTS SHALL NOT BE RESPONSIBLE FOR THE ACCURACY OR COMPLETENESS OF SCANNED COPIES OF THIS PLAN SHEET.

BKF ENGINEERS
4670 WILLOW ROAD, SUITE 250
PLEASANTON, CA. 94588
ALAMEDA COUNTY TRANSPORTATION COMMISSION
1333 BROADWAY SUITE 220
OAKLAND, CA. 94612

CONTRACT No.	04-2908C4
PROJECT ID	0400021248

APPROVED AS TO IMPACT ON STATE FACILITIES AND CONFORMANCE WITH APPLICABLE STATE STANDARDS AND PRACTICES AND THAT TECHNICAL OVERSIGHT WAS PERFORMED.

CONSULTANT DESIGN ENGINEER: NATALINA V. BERNARDI | REGISTRATION No. C53896 | LICENSE Exp DATE 12/31/13 | DATE SIGNED 3/14/12
CALTRANS DESIGN OVERSIGHT APPROVAL: SOTERO D. ANGELES

LAST REVISION 01-18-12 | DATE PLOTTED => 19-JUN-2012 | TIME PLOTTED => 14:57

Dist	COUNTY	ROUTE	POST MILES TOTAL PROJECT	SHEET No.	TOTAL SHEETS
04	Ala	580	R8.4/R14.6	2	853

REGISTERED CIVIL ENGINEER 5/7/12 DATE

5-14-12 PLANS APPROVAL DATE

REGISTERED PROFESSIONAL ENGINEER N.V. BERNARDI No. 45407 Exp. 9/30/12 CIVIL STATE OF CALIFORNIA

THE STATE OF CALIFORNIA OR ITS OFFICERS OR AGENTS SHALL NOT BE RESPONSIBLE FOR THE ACCURACY OR COMPLETENESS OF SCANNED COPIES OF THIS PLAN SHEET.

BKF ENGINEERS
4670 WILLOW ROAD, SUITE 250
PLEASANTON, CA. 94588

ALAMEDA CTC
1333 BROADWAY SUITE 220
OAKLAND, CA. 94612

NOTES:

1. DIMENSIONS OF THE PAVEMENT STRUCTURES (STRUCTURAL SECTIONS) ARE SUBJECT TO TOLERANCES SPECIFIED IN THE STANDARD SPECIFICATIONS.
2. SUPERELEVATION AS SHOWN OR AS DIRECTED BY THE ENGINEER.
3. FOR LOCATIONS AND LIMITS OF STBB AND DTBB, SEE LAYOUT PLANS AND SUMMARY OF QUANTITIES SHEETS.
4. WHENEVER FILL SLOPE IS STEEPER THAN 4:1 SUBBASE MATERIAL SHALL BE EXTENDED TO THE FILL SLOPE.
5. FOR LOCATIONS, LIMITS AND TYPES OF DIKE, Conc Barr, FENCE, MBGR, SEE LAYOUT PLANS AND SUMMARY OF QUANTITIES SHEETS.
6. FOR LOCATIONS, LIMITS AND DETAILS OF RETAINING WALLS, SEE STRUCTURE PLANS.
7. FOR DRAINAGE IMPROVEMENTS, SEE DRAINAGE PLANS.
8. EXTEND 0.20' OF THE TOP LAYER OF HMA (TYPE A) PLACED ON THE Shld UNDER DIKES WITH NO JOINT AT THE ES. SEE Std PLANS A87B FOR DETAIL.
9. FOR COLD PLANE AND OVERLAY CONFORM DETAIL, SEE CONSTRUCTION DETAILS.
10. FOR UNLINED DITCH LIMITS, SEE DRAINAGE PLANS.
11. EXTEND GPI (PAVING MAT) 2' BEYOND Exist PCC or AC.
12. FOR LIMITS OF REMOVAL OF Conc BARRIER, SEE LAYOUT PLANS.
13. FOR TEXTURED PAVING LIMITS & PAVEMENT SECTION, SEE LAYOUTS & CONSTRUCTION DETAILS.
14. FOR LOCATIONS, LIMITS AND DETAILS OF MVP, SEE LAYOUTS AND CONSTRUCTION DETAILS.
15. Exist OGAC LAYER SHALL BE COLD PLANED PRIOR TO OVERLAY.
16. WHERE WIDENING AT THE EXISTING EDGE OF TRAVELED WAY OR SHOULDER, THE DEPTH OF THE SAWCUT IS TO THE BOTTOM OF THE TREATED BASE.
17. FOR SHOULDER BACKING LOCATION, SEE SUMMARY OF QUANTITIES SHEETS.
18. FOR LIMITS AND LOCATIONS OF COLD PLANE AC Pvmt AND REPLACE AC SURFACING, SEE LAYOUTS AND SUMMARY OF QUANTITIES SHEETS.
19. THE CONTRACTOR SHALL REMOVE ALL EXISTING AGGREGATE SUBBASE AND BACKFILL WITH NATIVE MATERIAL PRIOR TO TREATING AREAS WITH LSTS.
20. FOR PRECAST PRESTRESSED CONCRETE PAVEMENT AND PRECAST CONCRETE PANEL DETAILS, SEE CONSTRUCTION DETAILS.
21. ROADWAY WIDENING ARE TO BE CONSTRUCTED TO AN "INTERIM GRADE (MATCH EXISTING PAVEMENT EDGE ELEVATIONS) DURING STAGE CONSTRUCTION. FINAL GRADE IS TO BE ACCOMPLISHED CONSECUTIVELY WHEN OVERLAYING THE EXISTING PAVEMENT. (SEE SC SHEETS FOR LOCATIONS).
22. FOR CONCRETE MEDIAN PAVING STRUCTURAL SECTION, SEE CONSTRUCTION DETAILS.
23. FOR ISRRSC LOCATIONS, SEE LAYOUTS AND SUMMARY OF QUANTITIES SHEETS.
24. PLACEMENT OF PPCP, ISRPCP AND ISRRSC SHALL REQUIRE THE REMOVAL OF THE UNDERLYING BASE TO ITS ENTIRETY.

ABBREVIATIONS:

Barr	BARRIER
C&G	CURB AND GUTTER
CSC	CROSS SLOPE CORRECTION
FC	FACE OF CURB
GB	GRADE BREAK
GPI	GEOSYNTHETIC PAVEMENT INTERLAYER
IBM	IMPORTED BASE MATERIAL
ISRPCP	INDIVIDUAL SLAB REPLACEMENT PRECAST CONCRETE PANEL
ISRRSC	INDIVIDUAL SLAB REPLACEMENT RAPID STRENGTH CONCRETE
LCB	LEAN CONCRETE BASE
LCB-RS	LEAN CONCRETE BASE-RAPID SETTING
LSTS	LIME STABILIZED SOIL
LTS	LIME TREATED SUBBASE (Exist)
MVP	MAINTENANCE VEHICLE PULLOUT
PPCP	PRECAST PRESTRESSED CONCRETE PAVEMENT
PCP	PRECAST CONCRETE PANEL
RAC	RUBBERIZED ASPHALT CONCRETE
Rem	REMOVE
RHMA	RUBBERIZED HOT MIX ASPHALT
RMCTB	ROAD MIXED CEMENT TREATED BASE
TWEF	TEMPORARY FENCE (WILDLIFE EXCLUSION)
TESA	TEMPORARY FENCE (TYPE ESA)

DESIGN DESIGNATION (ROUTE 580):

MAINLINE	TI=15.5, R-VALUE=5
RAMPS	TI=10.0 & 12.0, R-VALUE=5
VDESIGN	= 70 MILE/HOUR

PAVEMENT STRUCTURAL SECTIONS:

1
- 0.10' HMA (OPEN GRADED)
- 0.20' RHMA (GAP GRADED)
- 0.65' HMA (TYPE A)
- 0.80' LCB
- 1.50' LSTS

2
- 0.10' HMA (OPEN GRADED)
- 0.20' RHMA (GAP GRADED)
- 0.15' Min & Var HMA (TYPE A) (CROSS SLOPE CORRECTION)
- GPI (PAVING MAT) (SEE NOTE 11)

3
- 0.10' HMA (OPEN GRADED)
- 0.20' RHMA (GAP GRADED)
- 0.15' Min & Var HMA (TYPE A) (CROSS SLOPE CORRECTION)
- 0.50' HMA (TYPE A)
- 0.80' LCB
- 1.80' CI 4 AS

4
- Var 0.20' TO 0.50' HMA (TYPE A) (CROSS SLOPE CORRECTION)
- 0.50' HMA (TYPE A)
- 0.60' LCB
- 1.50' CI 4 AS

5
- Var 0.20' TO 0.60' HMA (TYPE A) (CROSS SLOPE CORRECTION)
- 0.40' HMA (TYPE A)
- 0.85' CI 3 AB
- 1.20' CI 4 AS

6
- 0.20' Min TO 1.2' HMA (TYPE A)

7
- 0.20' RHMA (GAP GRADED)
- 0.30' HMA (TYPE A)
- 0.85' AB (CI 3)
- 1.20' CI 4 AS

8
- 0.60' HMA (TYPE A)
- 0.60' LCB
- 1.50' CI 4 AS

9
- 0.20' RHMA (GAP GRADED)
- 1.10' HMA (TYPE A)

10
- 0.45' Min & Var HMA (TYPE A) (CROSS SLOPE CORRECTION)
- GPI (PAVING MAT) (SEE NOTE 11)
- 0.10' HMA (TYPE A)

11
- 0.10' HMA (OPEN GRADED)
- 0.20' RHMA (GAP GRADED)
- 0.15' Min & Var HMA (TYPE A) (CROSS SLOPE CORRECTION)
- GPI (PAVING MAT) (SEE NOTE 11)
- 0.10' HMA (TYPE A)

12
- 0.90' PPCP
- 0.35' LCB-RS
- 1.35' CI 4 AS

13
- 0.10' HMA (OPEN GRADED)
- 0.20' RHMA (GAP GRADED)
- 0.15' Min & Var HMA (TYPE A) (CROSS SLOPE CORRECTION)

14
- 0.10' HMA (OPEN GRADED)
- 0.20' RHMA (GAP GRADED)
- 0.15' Min & Var HMA (TYPE A) (CSC)
- GPI (PAVING MAT) (SEE NOTE 11)
- 0.10' HMA (TYPE A)
- 0.10' COLD PLANE AC Pvmt

15
- 0.90' PPCP
- 0.35' Min & Var LCB-RS

16
- 0.35' HMA (TYPE A)
- GPI (PAVING MAT) (SEE NOTE 11)
- 1.65' MINOR Conc

17
- 0.70' TO 0.80' ISRPCP
- 0.35' Min & Var LCB-RS

18
- 0.10' HMA (OPEN GRADED)
- 0.20' RHMA (GAP GRADED)
- 0.65' HMA (TYPE A)
- 0.80' LCB
- 1.80' CI 4 AS

19
- REPLACE AC SURFACING (SEE NOTE 18)

20
- 0.10' HMA (OPEN GRADED)
- 0.20' RHMA (GAP GRADED)
- Var 0.30' TO 1.30' HMA (TYPE A) CSC
- 0.50' HMA (TYPE A)
- 0.80' LCB
- 1.50' LSTS

21
- 0.10' HMA (OPEN GRADED)
- 0.20' RHMA (GAP GRADED)
- 0.15' TO 0.70' HMA (TYPE A) CSC
- 0.50' HMA (TYPE A)
- 0.80' LCB
- 1.50' LSTS

22
- Var 0.60' TO 1.30' HMA (TYPE A) CSC
- 0.50' HMA (TYPE A)
- 0.60' LCB
- 1.50' CI 4 AS

23
- 0.50' HMA (TYPE A)
- 0.85' CI 3 AB
- 1.20' CI 4 AS

24
- Var 0.10' TO 1.10' HMA (TYPE A) CSC
- 0.40' HMA (TYPE A)
- 0.85 CI 3 AB
- 1.20' CI 4 AS

25
- 0.85' HMA (TYPE A)
- 0.80' LCB
- 1.80' CI 4 AS

26
- 1.20' JPCP
- 0.35' LCB
- 0.70' CI 4 AS
- 0.65' LSTS

27
- 0.45' Min & Var HMA (TYPE A) (CROSS SLOPE CORRECTION)
- GPI (PAVING MAT) (SEE NOTE 11)

28
- Var 0.10' TO 0.40' HMA (TYPE A) CSC
- 0.75' HMA (TYPE A)
- 0.80' LCB
- 1.80' CI 4 AS

29
- Var 0.35' TO 0.50' HMA (TYPE A) CSC
- 0.50' HMA (TYPE A)
- 0.80' LCB
- 1.80' CI 4 AS

30
- 0.85' HMA (TYPE A)
- 0.80' LCB
- 1.50' LSTS

31
- Var 0.0' TO 1.00' HMA (TYPE A) CSC
- 0.85' HMA (TYPE A)
- 0.80' LCB
- 1.80' CI 4 AS

32
- 0.70' TO 0.80' ISRRSC
- 0.35' Min & Var LCB-RS

33
- 2.15' HMA (TYPE A)

TYPICAL CROSS SECTIONS

NO SCALE **X-1**

STATE OF CALIFORNIA - DEPARTMENT OF TRANSPORTATION

CONSULTANT FUNCTIONAL SUPERVISOR: NATALINA V. BERNARDI

CALCULATED-DESIGNED BY: INNA ASHUROV | CHECKED BY: LUIS GARCIA

REVISED BY: IA | DATE REVISED: 5/7/12

LAST REVISION 05-07-12 | DATE PLOTTED => 23-MAY-2012 | TIME PLOTTED => 07:05

Dist	COUNTY	ROUTE	POST MILES TOTAL PROJECT	SHEET No.	TOTAL SHEETS
04	Ala	580	R8.4/R14.6	3	853

REGISTERED CIVIL ENGINEER 5/7/12 DATE

5-14-12
PLANS APPROVAL DATE

REGISTERED PROFESSIONAL ENGINEER N.V. BERNARDI No. 45407 Exp. 9/30/12 CIVIL STATE OF CALIFORNIA

THE STATE OF CALIFORNIA OR ITS OFFICERS OR AGENTS SHALL NOT BE RESPONSIBLE FOR THE ACCURACY OR COMPLETENESS OF SCANNED COPIES OF THIS PLAN SHEET.

BKF ENGINEERS
4670 WILLOW ROAD, SUITE 250
PLEASANTON, CA. 94588

ALAMEDA CTC
1333 BROADWAY SUITE 220
OAKLAND, CA. 94612

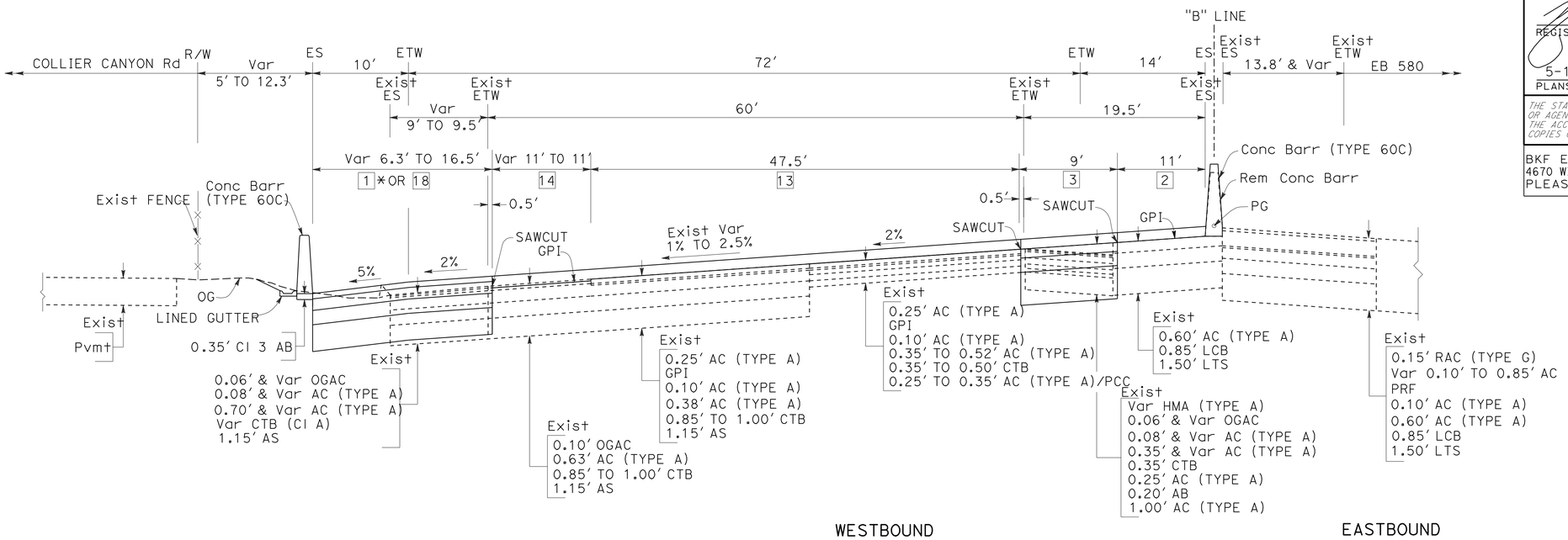

"B" 540+00.00 TO 551+36.99
1 * END @ "B" 550+11

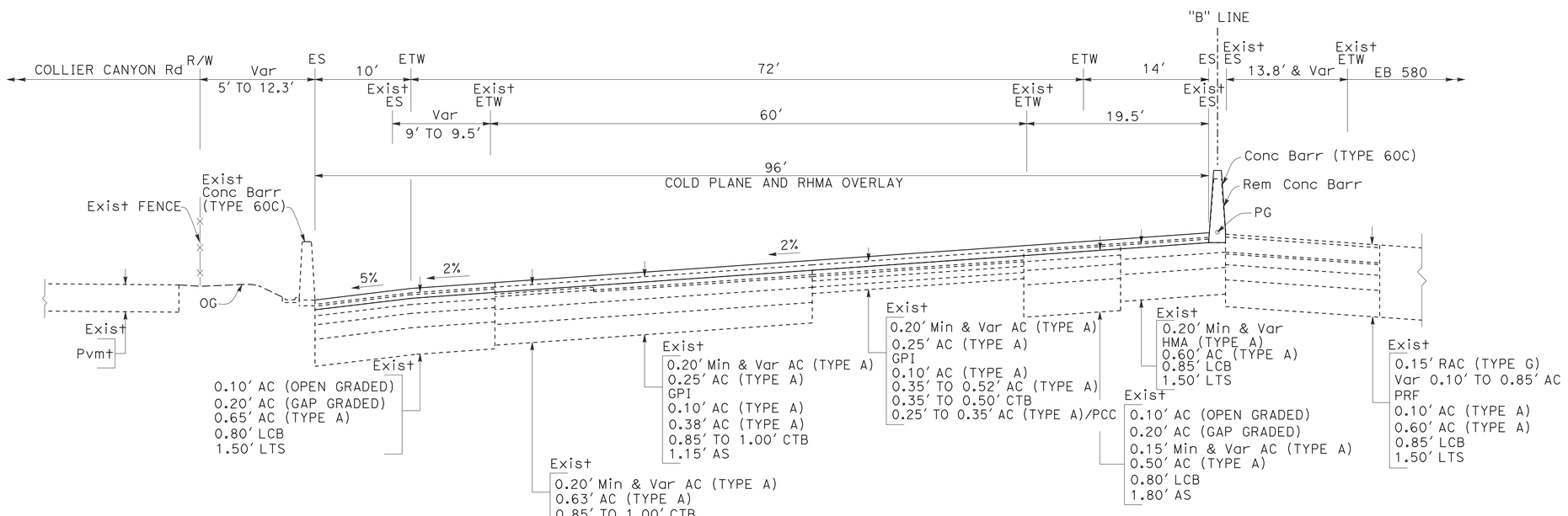

"B" 538+90.00 TO 540+00.00

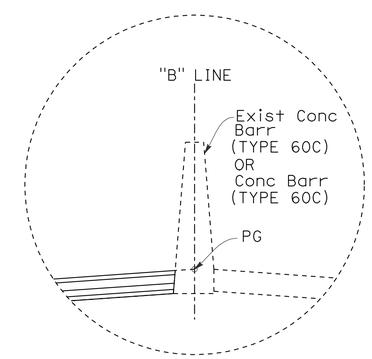

DETAIL "A"
"B" 538+90 TO 854+06.51

ROUTE 580

TYPICAL CROSS SECTIONS

NO SCALE

X-2

REVISED BY	DATE REVISED
IA	5/7/12

CALCULATED-DESIGNED BY	CHECKED BY
INNA ASHUROV	LUIS GARCIA

CONSULTANT FUNCTIONAL SUPERVISOR: NATALINA V. BERNARDI

STATE OF CALIFORNIA - DEPARTMENT OF TRANSPORTATION

Caltrans

LAST REVISION 05-07-12 | DATE PLOTTED => 23-MAY-2012 | TIME PLOTTED => 07:05

Dist	COUNTY	ROUTE	POST MILES TOTAL PROJECT	SHEET No.	TOTAL SHEETS
04	Ala	580	R8.4/R14.6	4	853

REGISTERED CIVIL ENGINEER 5/7/12 DATE

5-14-12
PLANS APPROVAL DATE

REGISTERED PROFESSIONAL ENGINEER N.V. BERNARDI No. 45407 Exp. 9/30/12 CIVIL STATE OF CALIFORNIA

THE STATE OF CALIFORNIA OR ITS OFFICERS OR AGENTS SHALL NOT BE RESPONSIBLE FOR THE ACCURACY OR COMPLETENESS OF SCANNED COPIES OF THIS PLAN SHEET.

BKF ENGINEERS
4670 WILLOW ROAD, SUITE 250
PLEASANTON, CA. 94588

ALAMEDA CTC
1333 BROADWAY SUITE 220
OAKLAND, CA. 94612

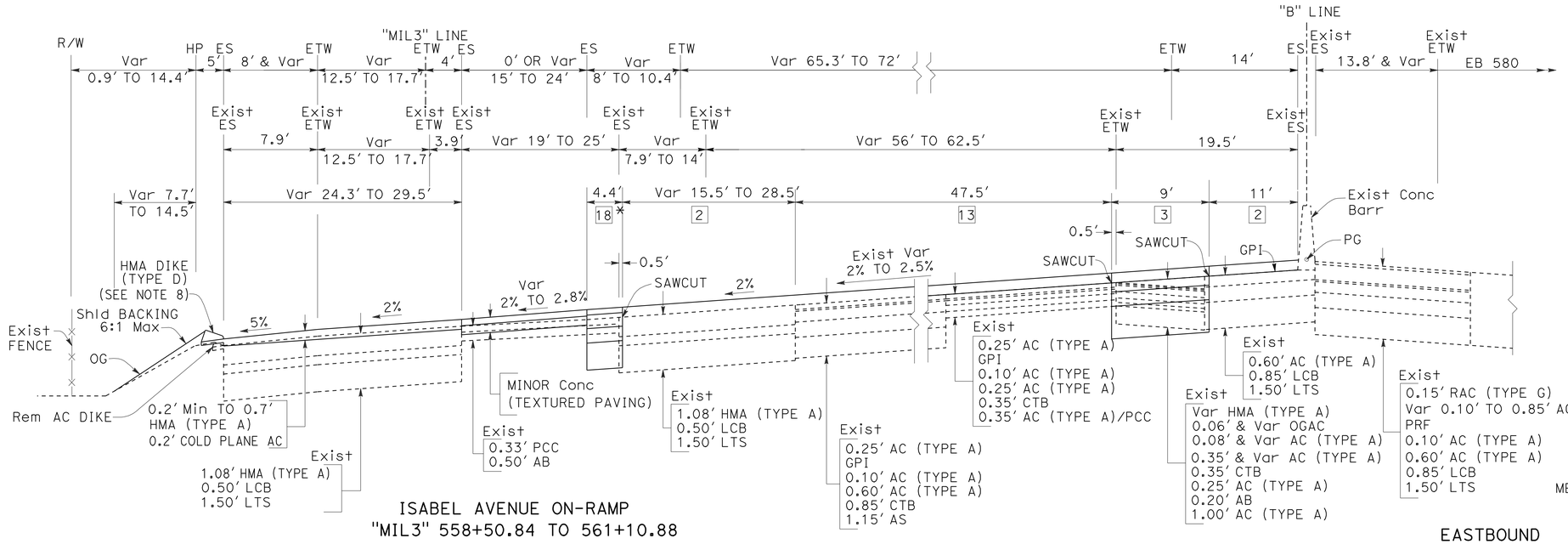

ISABEL AVENUE ON-RAMP
"MIL3" 558+50.84 TO 561+10.88

WESTBOUND

"B" 558+50.98 TO 561+88.28
18 * "B" 558+50.98 TO 559+71.74

EASTBOUND

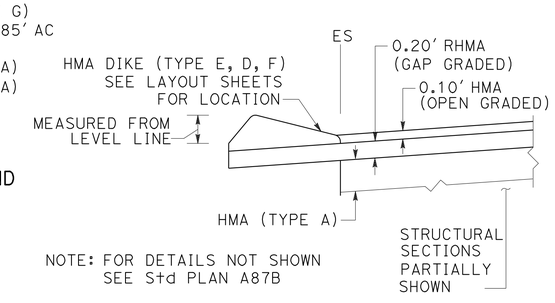

NOTE: FOR DETAILS NOT SHOWN SEE Std PLAN A87B

DETAIL "C"

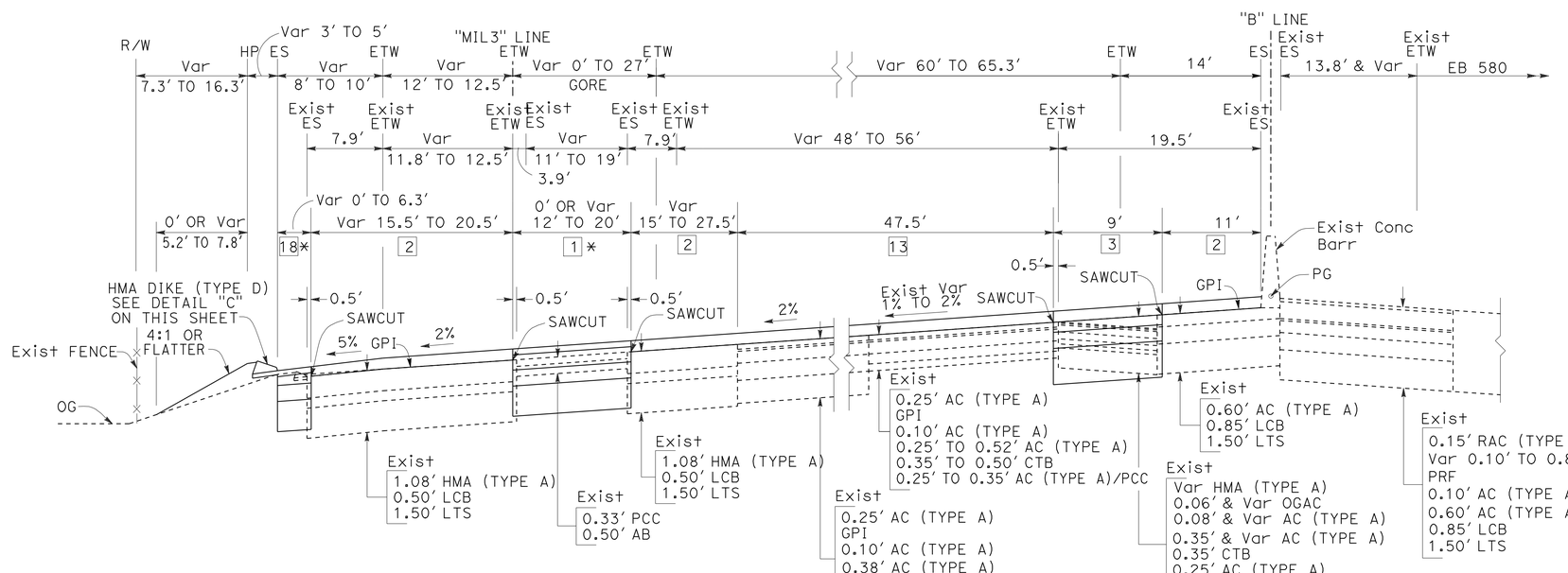

ISABEL AVENUE ON-RAMP
"MIL3" 551+36.99 TO 558+50.84
1 * "B" 556+94.96 TO 558+50.98
18 * "MIL3" 551+36.99 TO 555+37.40

WESTBOUND

"B" 551+36.99 TO 558+50.98

EASTBOUND

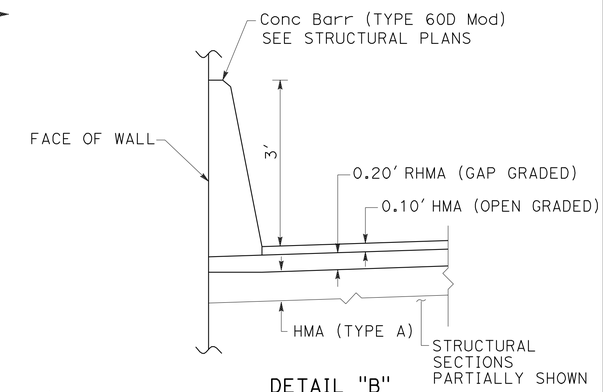

DETAIL "B"

"B" 623+00.00 TO "MKR2" 646+21.14
"B" 659+50.00 TO 664+00.00
"B" 665+50.00 TO 671+90.00
"B" 685+30.00 TO 688+00.00
"B" 703+00.00 TO 704+50.00
"B" 707+20.00 TO 707+80.00
"B" 733+50.00 TO "MXR3" 740+68.34

FOR NOTES AND ABBREVIATIONS, SEE SHEET X-1

ROUTE 580

TYPICAL CROSS SECTIONS

NO SCALE

X-3

REVISED BY	DATE REVISED
IA	5/7/12

INNA ASHUROV — LUIS GARCIA — CALCULATED-DESIGNED BY — CHECKED BY

CONSULTANT FUNCTIONAL SUPERVISOR: NATALINA V. BERNARDI

STATE OF CALIFORNIA - DEPARTMENT OF TRANSPORTATION

LAST REVISION 05-07-12 — DATE PLOTTED =>23-MAY-2012 — TIME PLOTTED =>07:05

Dist	COUNTY	ROUTE	POST MILES TOTAL PROJECT	SHEET No.	TOTAL SHEETS
04	Ala	580	R8.4/R14.6	5	853

REGISTERED CIVIL ENGINEER — DATE 5/7/12

5-14-12
PLANS APPROVAL DATE

REGISTERED PROFESSIONAL ENGINEER — N.V. BERNARDI — No. 45407 — Exp. 9/30/12 — CIVIL — STATE OF CALIFORNIA

THE STATE OF CALIFORNIA OR ITS OFFICERS OR AGENTS SHALL NOT BE RESPONSIBLE FOR THE ACCURACY OR COMPLETENESS OF SCANNED COPIES OF THIS PLAN SHEET.

BKF ENGINEERS
4670 WILLOW ROAD, SUITE 250
PLEASANTON, CA. 94588

ALAMEDA CTC
1333 BROADWAY SUITE 220
OAKLAND, CA. 94612

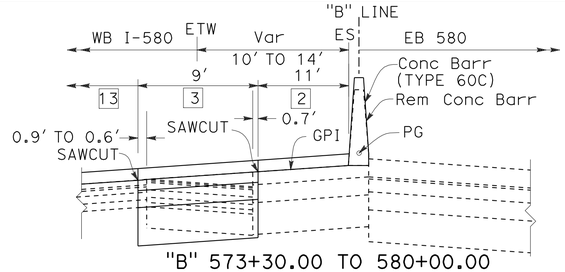

"B" 573+30.00 TO 580+00.00

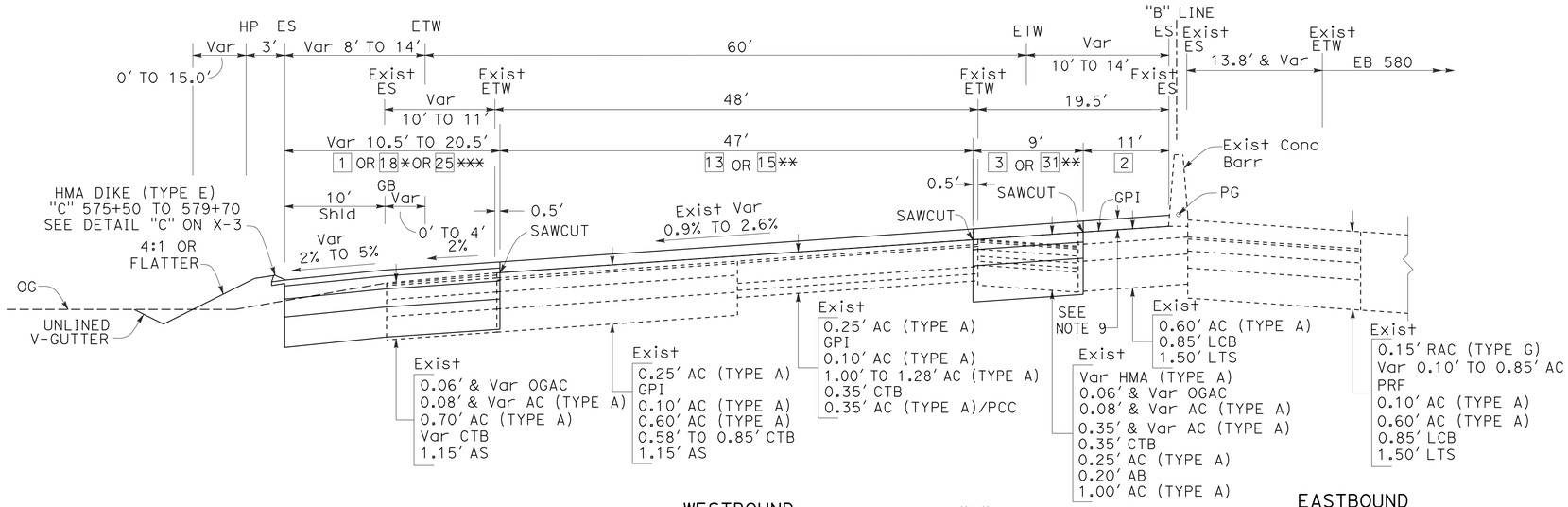

"B" 568+30.72 TO 581+76.08
"B" 583+49.44 TO 585+03.95
18* "B" 579+20 TO 580+30
15** & 31** "B" 580+30.00 TO 581+76.08
"B" 583+49.44 TO 585+03.95
25*** "B" 580+30.00 TO 582+16.17

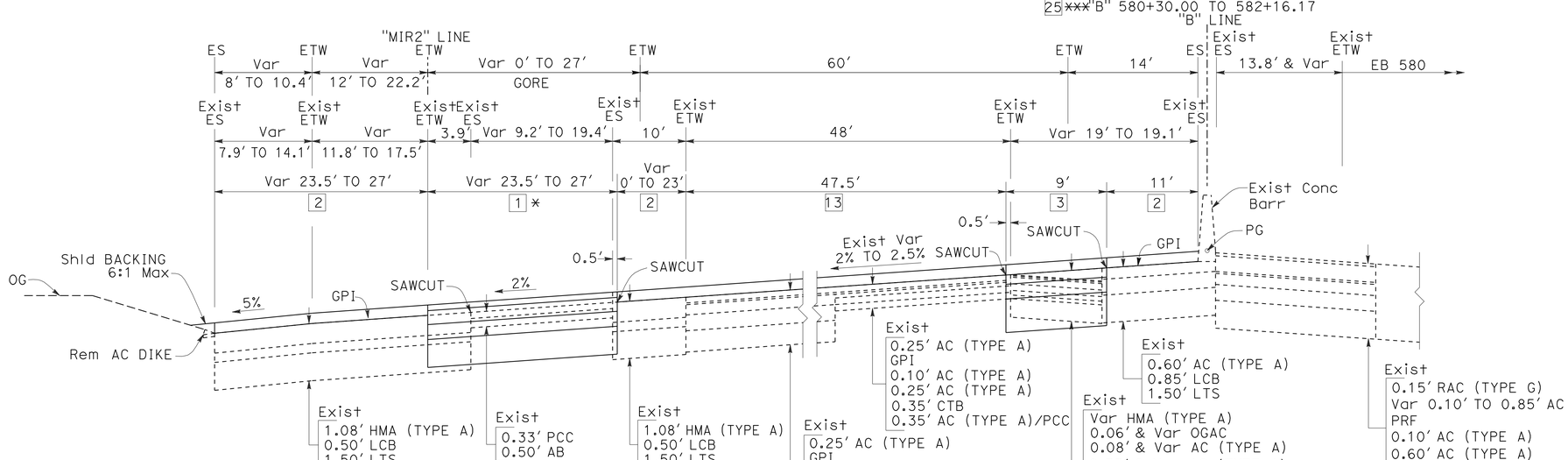

ISABEL AVENUE WB LOOP ON-RAMP
"MIR2" 561+88.28 TO 568+31.20
1 * "MIR2" 566+88.04 TO 568+31.20

"B" 561+88.28 TO 568+30.72

FOR NOTES AND ABBREVIATIONS, SEE SHEET X-1

TYPICAL CROSS SECTIONS

NO SCALE

ROUTE 580

X-4

REVISED BY	DATE REVISED
IA	5/7/12

INNA ASHUROV — LUIS GARCIA — CALCULATED-DESIGNED BY — CHECKED BY

NATALINA V. BERNARDI — CONSULTANT FUNCTIONAL SUPERVISOR

STATE OF CALIFORNIA - DEPARTMENT OF TRANSPORTATION

Caltrans

LAST REVISION 05-07-12 — DATE PLOTTED =>23-MAY-2012 — TIME PLOTTED =>07:05

Dist	COUNTY	ROUTE	POST MILES TOTAL PROJECT	SHEET No.	TOTAL SHEETS
04	Ala	580	R8.4/R14.6	6	853

REGISTERED CIVIL ENGINEER 5/7/12 DATE

5-14-12
PLANS APPROVAL DATE

REGISTERED PROFESSIONAL ENGINEER N.V. BERNARDI No. 45407 Exp. 9/30/12 CIVIL STATE OF CALIFORNIA

THE STATE OF CALIFORNIA OR ITS OFFICERS OR AGENTS SHALL NOT BE RESPONSIBLE FOR THE ACCURACY OR COMPLETENESS OF SCANNED COPIES OF THIS PLAN SHEET.

BKF ENGINEERS
4670 WILLOW ROAD, SUITE 250
PLEASANTON, CA. 94588

ALAMEDA CTC
1333 BROADWAY SUITE 220
OAKLAND, CA. 94612

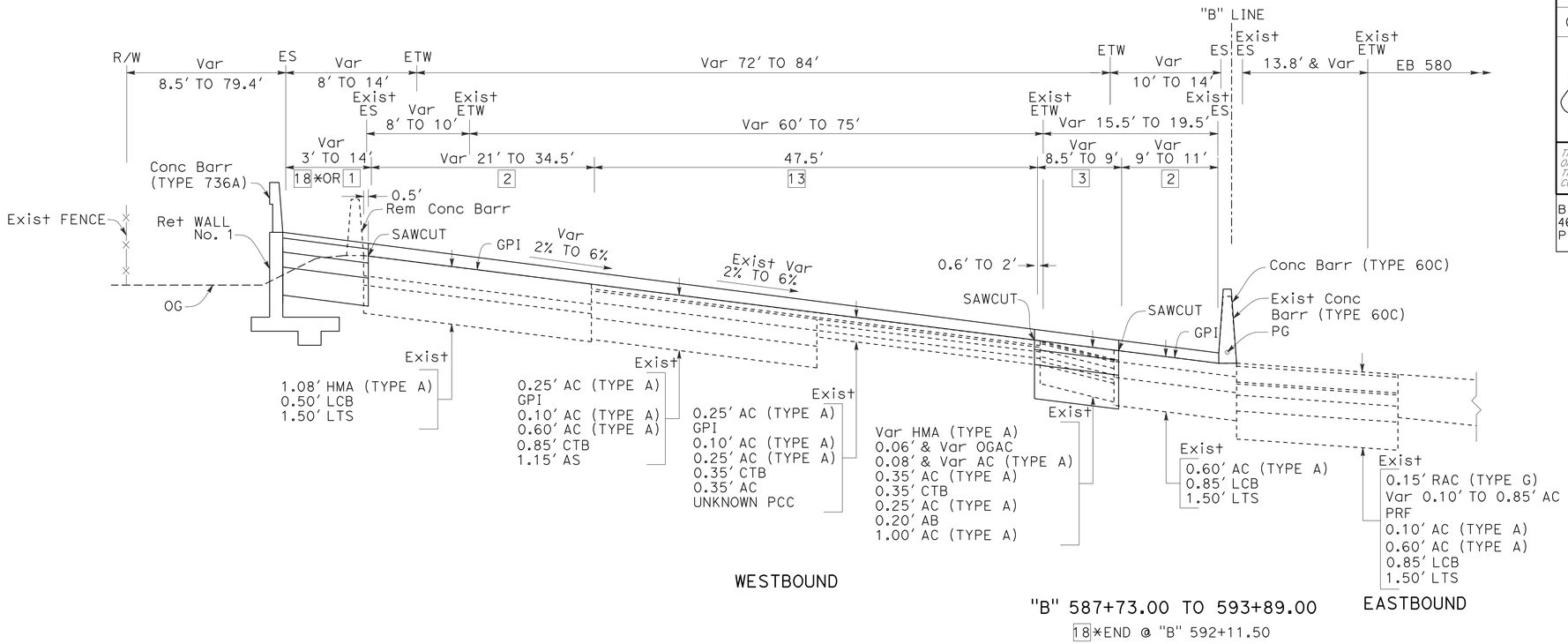

"B" 587+73.00 TO 593+89.00

18 *END @ "B" 592+11.50

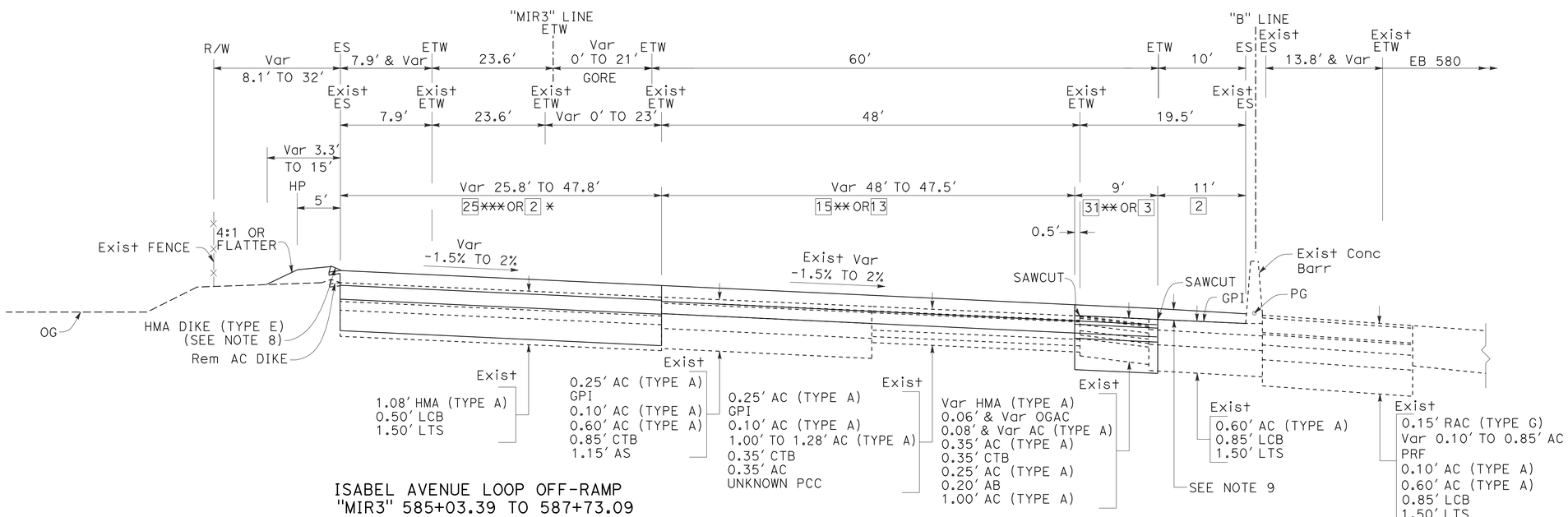

ISABEL AVENUE LOOP OFF-RAMP
"MIR3" 585+03.39 TO 587+73.09

"B" 585+03.95 TO 587+73.00

3 * & 2 * "MIR3" 587+00.00
31 ** & 15 ** "MIR3" 583+49.44 TO 587+00.00
25 *** END @ "MIR3" 587+00.00

FOR NOTES AND ABBREVIATIONS, SEE SHEET X-1

ROUTE 580

TYPICAL CROSS SECTIONS

NO SCALE

X-5

REVISED BY	DATE REVISED
IA	5/7/12

INNA ASHUROV — LUIS GARCIA — CALCULATED-DESIGNED BY — CHECKED BY

CONSULTANT FUNCTIONAL SUPERVISOR: NATALINA V. BERNARDI

STATE OF CALIFORNIA - DEPARTMENT OF TRANSPORTATION

Caltrans

LAST REVISION 05-07-12 | DATE PLOTTED => 23-MAY-2012 | TIME PLOTTED => 07:06

Dist	COUNTY	ROUTE	POST MILES TOTAL PROJECT	SHEET No.	TOTAL SHEETS
04	Ala	580	R8.4/R14.6	7	853

REGISTERED CIVIL ENGINEER 5/7/12 DATE

5-14-12
PLANS APPROVAL DATE

REGISTERED PROFESSIONAL ENGINEER N.V. BERNARDI No. 45407 Exp. 9/30/12 CIVIL STATE OF CALIFORNIA

THE STATE OF CALIFORNIA OR ITS OFFICERS OR AGENTS SHALL NOT BE RESPONSIBLE FOR THE ACCURACY OR COMPLETENESS OF SCANNED COPIES OF THIS PLAN SHEET.

BKF ENGINEERS
4670 WILLOW ROAD, SUITE 250
PLEASANTON, CA. 94588

ALAMEDA CTC
1333 BROADWAY SUITE 220
OAKLAND, CA. 94612

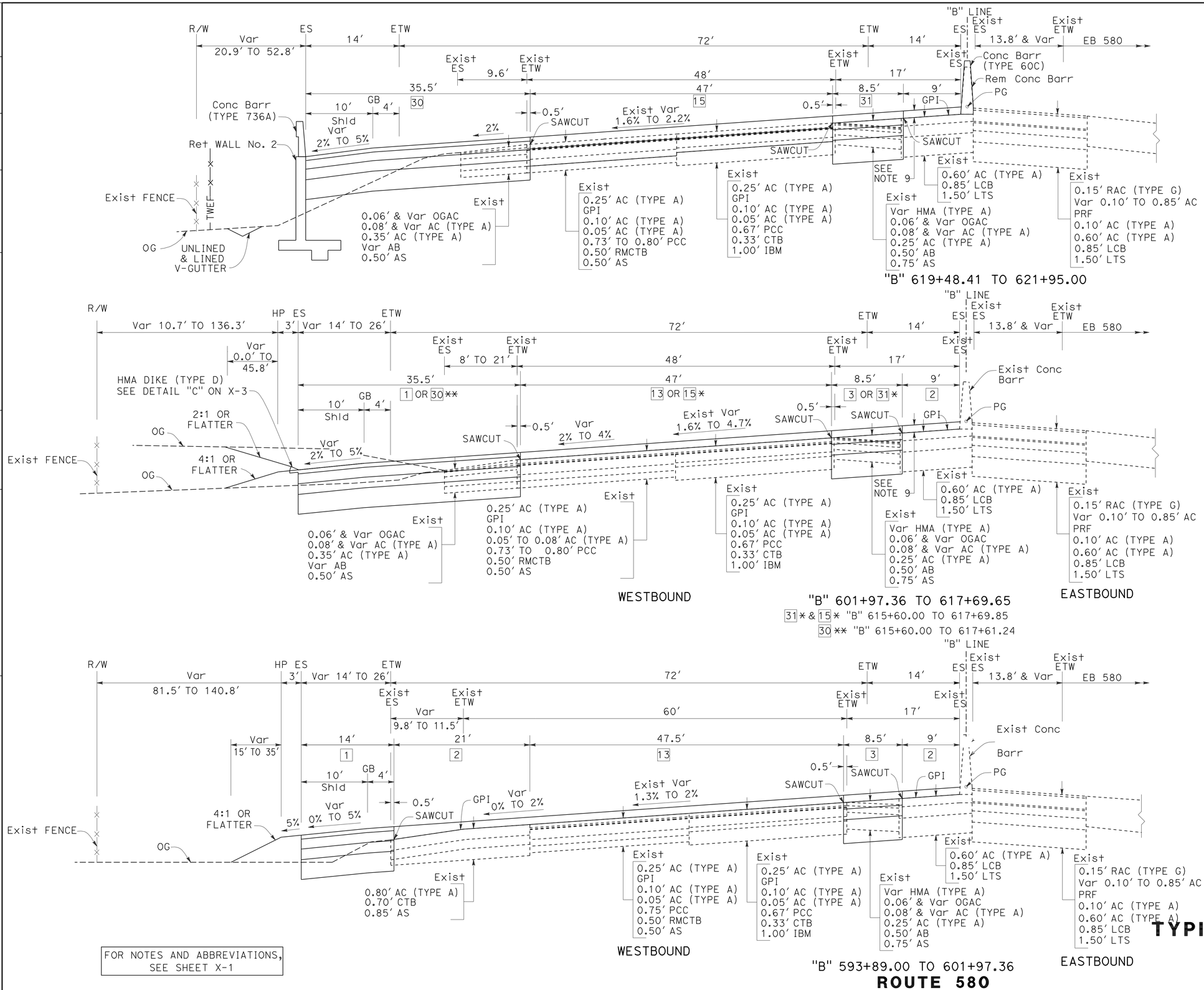

FOR NOTES AND ABBREVIATIONS, SEE SHEET X-1

TYPICAL CROSS SECTIONS

NO SCALE

ROUTE 580

X-6

REVISED BY	DATE REVISED
IA	5/7/12

CALCULATED-DESIGNED BY	CHECKED BY
INNA ASHUROV	LUIS GARCIA

CONSULTANT FUNCTIONAL SUPERVISOR: NATALINA V. BERNARDI

STATE OF CALIFORNIA - DEPARTMENT OF TRANSPORTATION

LAST REVISION 05-07-12 | DATE PLOTTED => 23-MAY-2012 | TIME PLOTTED => 07:06

Dist	COUNTY	ROUTE	POST MILES TOTAL PROJECT	SHEET No.	TOTAL SHEETS
04	Ala	580	R8.4/R14.6	8	853

REGISTERED CIVIL ENGINEER 5/7/12 DATE

5-14-12
PLANS APPROVAL DATE

REGISTERED PROFESSIONAL ENGINEER N.V. BERNARDI No. 45407 Exp. 9/30/12 CIVIL STATE OF CALIFORNIA

THE STATE OF CALIFORNIA OR ITS OFFICERS OR AGENTS SHALL NOT BE RESPONSIBLE FOR THE ACCURACY OR COMPLETENESS OF SCANNED COPIES OF THIS PLAN SHEET.

BKF ENGINEERS
4670 WILLOW ROAD, SUITE 250
PLEASANTON, CA. 94588

ALAMEDA CTC
1333 BROADWAY SUITE 220
OAKLAND, CA. 94612

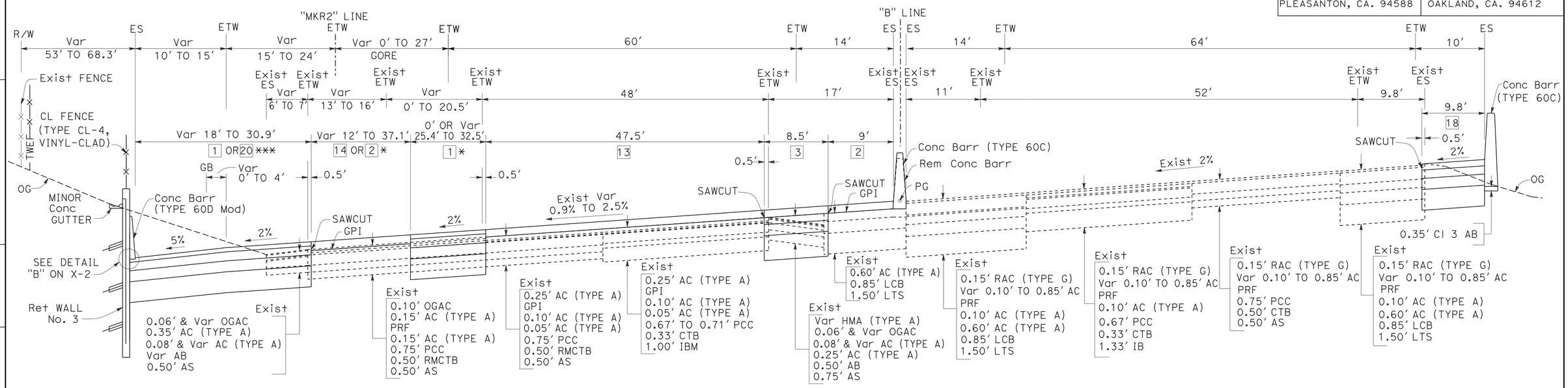

NORTH LIVERMORE AVENUE WB ON-RAMP
"MKR2" 638+91.75 TO 646+21.14

WESTBOUND
"B" 638+91.75 TO 646+27.17

EASTBOUND
"B" 640+82.30 TO 645+50.00

1 * "MKR2" 645+00.02 TO 646+21.14
2 ** "MKR2" 645+00.02 TO 646+21.14
20 *** "MKR2" 641+35.00 TO 646+21.14

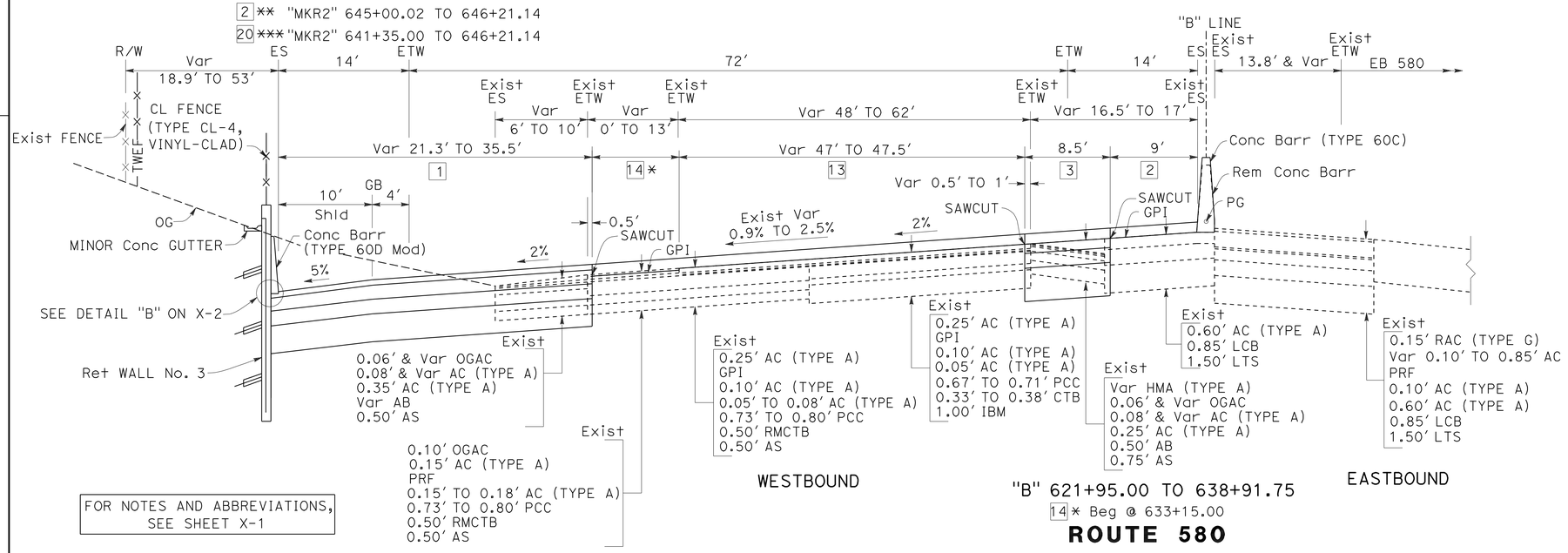

WESTBOUND

"B" 621+95.00 TO 638+91.75
14 * Beg @ 633+15.00

EASTBOUND

FOR NOTES AND ABBREVIATIONS, SEE SHEET X-1

ROUTE 580

TYPICAL CROSS SECTIONS

NO SCALE

X-7

STATE OF CALIFORNIA - DEPARTMENT OF TRANSPORTATION

CONSULTANT FUNCTIONAL SUPERVISOR: NATALINA V. BERNARDI

CALCULATED-DESIGNED BY: INNA ASHUROV | CHECKED BY: LUIS GARCIA

REVISED BY: IA | DATE REVISED: 5/7/12

LAST REVISION 05-07-12 | DATE PLOTTED => 23-MAY-2012 | TIME PLOTTED => 07:06

Dist	COUNTY	ROUTE	POST MILES TOTAL PROJECT	SHEET No.	TOTAL SHEETS
04	Ala	580	R8.4/R14.6	9	853

REGISTERED CIVIL ENGINEER 5/7/12 DATE

5-14-12
PLANS APPROVAL DATE

REGISTERED PROFESSIONAL ENGINEER N.V. BERNARDI No. 45407 Exp. 9/30/12 CIVIL STATE OF CALIFORNIA

THE STATE OF CALIFORNIA OR ITS OFFICERS OR AGENTS SHALL NOT BE RESPONSIBLE FOR THE ACCURACY OR COMPLETENESS OF SCANNED COPIES OF THIS PLAN SHEET.

BKF ENGINEERS
4670 WILLOW ROAD, SUITE 250
PLEASANTON, CA. 94588

ALAMEDA CTC
1333 BROADWAY SUITE 220
OAKLAND, CA. 94612

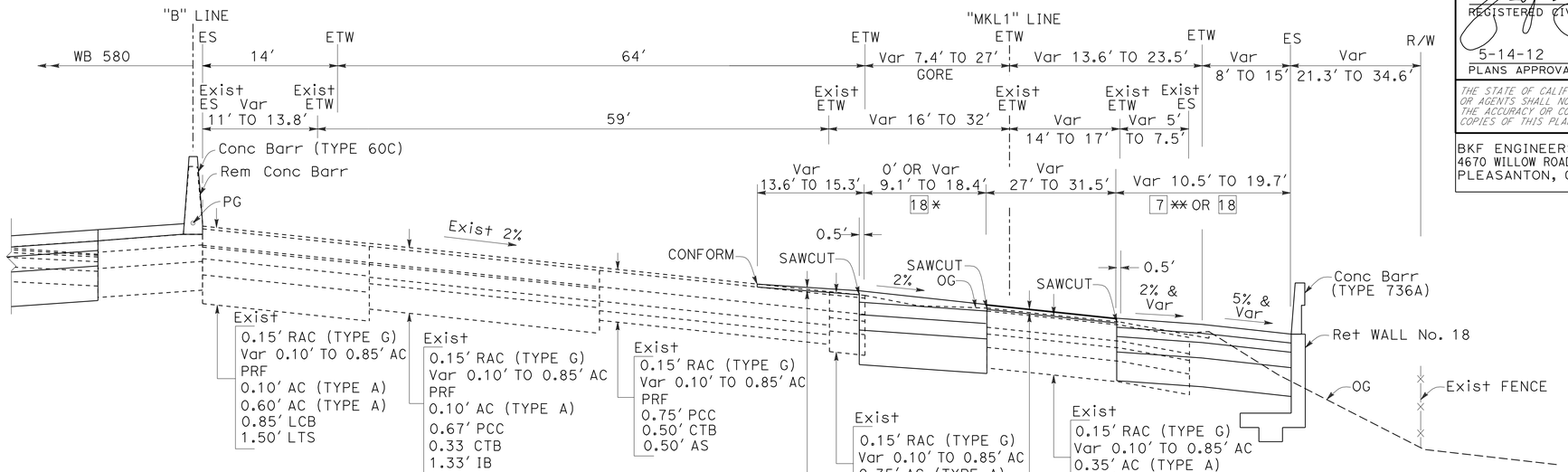

EASTBOUND
"B" 655+62.89 TO 658+00.00
18 * "B" 655+62.89 TO 656+63.41

NORTH LIVERMORE EB ON-RAMP
"MKL1" 655+62.58 TO 658+48.61
7 ** END @ "MKL1" 656+63.38

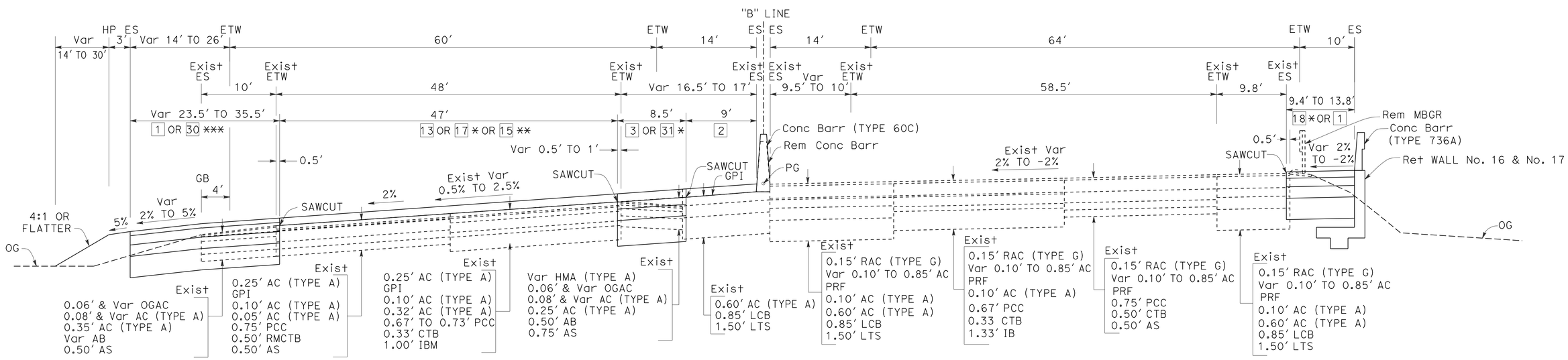

WESTBOUND
"B" 646+07.91 TO 649+73.75
"B" 651+32.75 TO 656+91.26

31 *& 17 * "B" 647+84.00 TO 649+63.72
31 *& 15 * "B" 651+48.58 TO 653+65.00
30 *** "B" 647+84.00 TO 649+71.10
"B" 651+55.96 TO 653+65.00

EASTBOUND
"B" 645+50.00 TO 649+73.75
"B" 651+32.75 TO 655+62.89
18 * "B" 645+50.00 TO 647+88
"B" 654+17.74 TO 655+62.89

FOR NOTES AND ABBREVIATIONS, SEE SHEET X-1

ROUTE 580

TYPICAL CROSS SECTIONS

NO SCALE

X-8

REVISED BY	DATE REVISED
IA	5/7/12

CALCULATED-DESIGNED BY: INNA ASHUROV
CHECKED BY: LUIS GARCIA
CONSULTANT FUNCTIONAL SUPERVISOR: NATALINA V. BERNARDI

STATE OF CALIFORNIA - DEPARTMENT OF TRANSPORTATION

Caltrans

LAST REVISION 05-07-12 | DATE PLOTTED => 23-MAY-2012 | TIME PLOTTED => 07:06

Dist	COUNTY	ROUTE	POST MILES TOTAL PROJECT	SHEET No.	TOTAL SHEETS
04	Ala	580	R8.4/R14.6	10	853

REGISTERED CIVIL ENGINEER 5/7/12 DATE

5-14-12
PLANS APPROVAL DATE

REGISTERED PROFESSIONAL ENGINEER N.V. BERNARDI No. 45407 Exp. 9/30/12 CIVIL STATE OF CALIFORNIA

THE STATE OF CALIFORNIA OR ITS OFFICERS OR AGENTS SHALL NOT BE RESPONSIBLE FOR THE ACCURACY OR COMPLETENESS OF SCANNED COPIES OF THIS PLAN SHEET.

BKF ENGINEERS
4670 WILLOW ROAD, SUITE 250
PLEASANTON, CA. 94588

ALAMEDA CTC
1333 BROADWAY SUITE 220
OAKLAND, CA. 94612

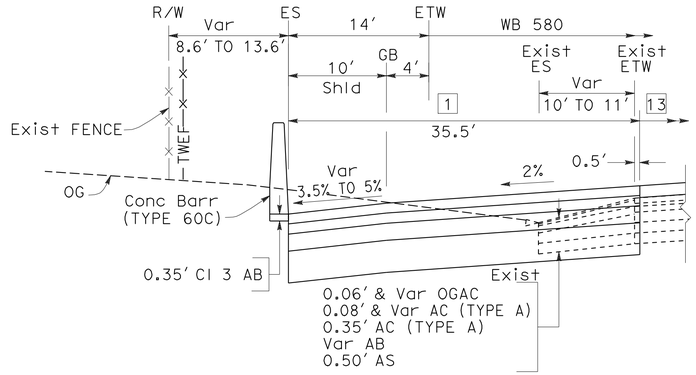

"B" 664+00 TO 665+50
"B" 671+90 TO 672+50

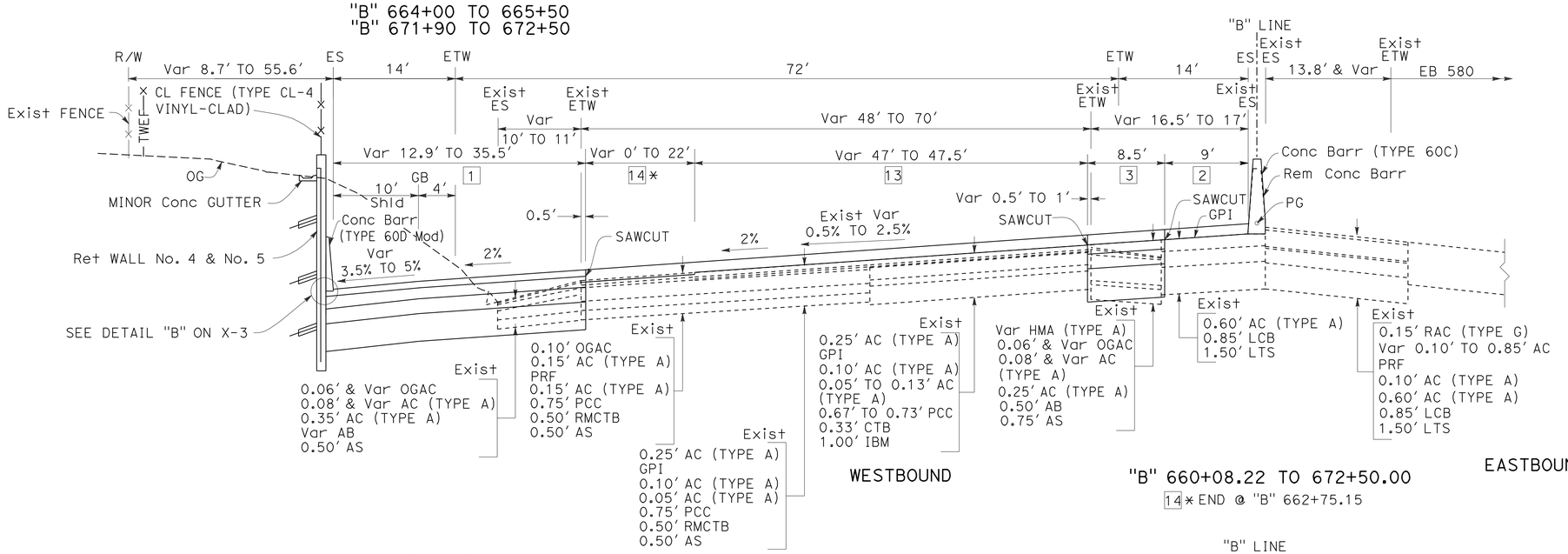

WESTBOUND

"B" 660+08.22 TO 672+50.00
14* END @ "B" 662+75.15

EASTBOUND

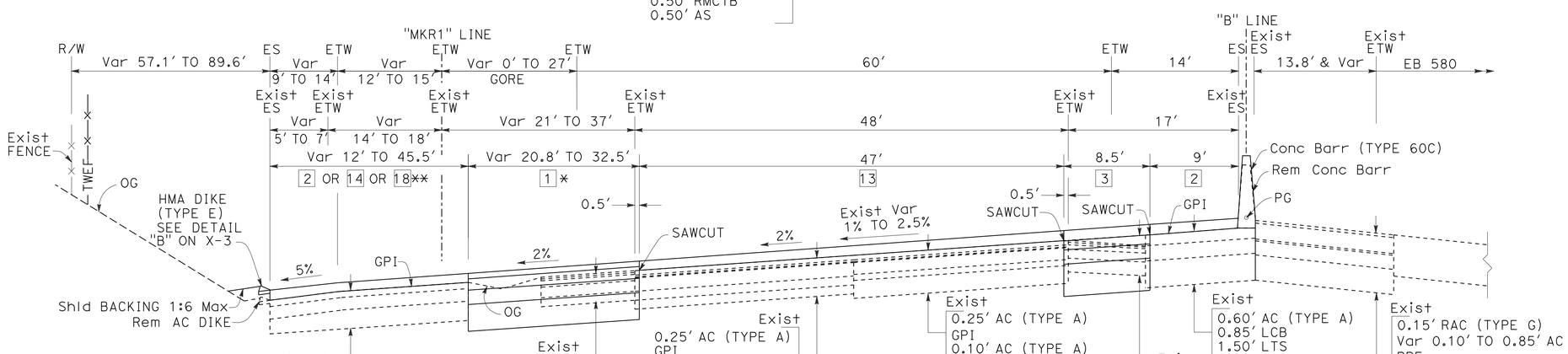

NORTH LIVERMORE WB OFF-RAMP
"MKR1" 656+90.46 TO 660+08.22
1* "MKR1" 656+90.46 TO 658+30.24
18** "MKR1" 659+36.66 TO 660+08.22

WESTBOUND
"B" 656+91.26 TO 660+08.22

FOR NOTES AND ABBREVIATIONS, SEE SHEET X-1

TYPICAL CROSS SECTIONS

NO SCALE

ROUTE 580

X-9

STATE OF CALIFORNIA - DEPARTMENT OF TRANSPORTATION

CONSULTANT FUNCTIONAL SUPERVISOR: NATALINA V. BERNARDI

CALCULATED-DESIGNED BY: INNA ASHUROV

CHECKED BY: LUIS GARCIA

REVISED BY: IA

DATE REVISED: 5/7/12

LAST REVISION 05-07-12

DATE PLOTTED => 23-MAY-2012
TIME PLOTTED => 07:06

Dist	COUNTY	ROUTE	POST MILES TOTAL PROJECT	SHEET No.	TOTAL SHEETS
04	Ala	580	R8.4/R14.6	11	853

REGISTERED CIVIL ENGINEER 5/7/12 DATE

5-14-12
PLANS APPROVAL DATE

REGISTERED PROFESSIONAL ENGINEER N.V. BERNARDI No. 45407 Exp. 9/30/12 CIVIL STATE OF CALIFORNIA

THE STATE OF CALIFORNIA OR ITS OFFICERS OR AGENTS SHALL NOT BE RESPONSIBLE FOR THE ACCURACY OR COMPLETENESS OF SCANNED COPIES OF THIS PLAN SHEET.

BKF ENGINEERS
4670 WILLOW ROAD, SUITE 250
PLEASANTON, CA. 94588

ALAMEDA CTC
1333 BROADWAY SUITE 220
OAKLAND, CA. 94612

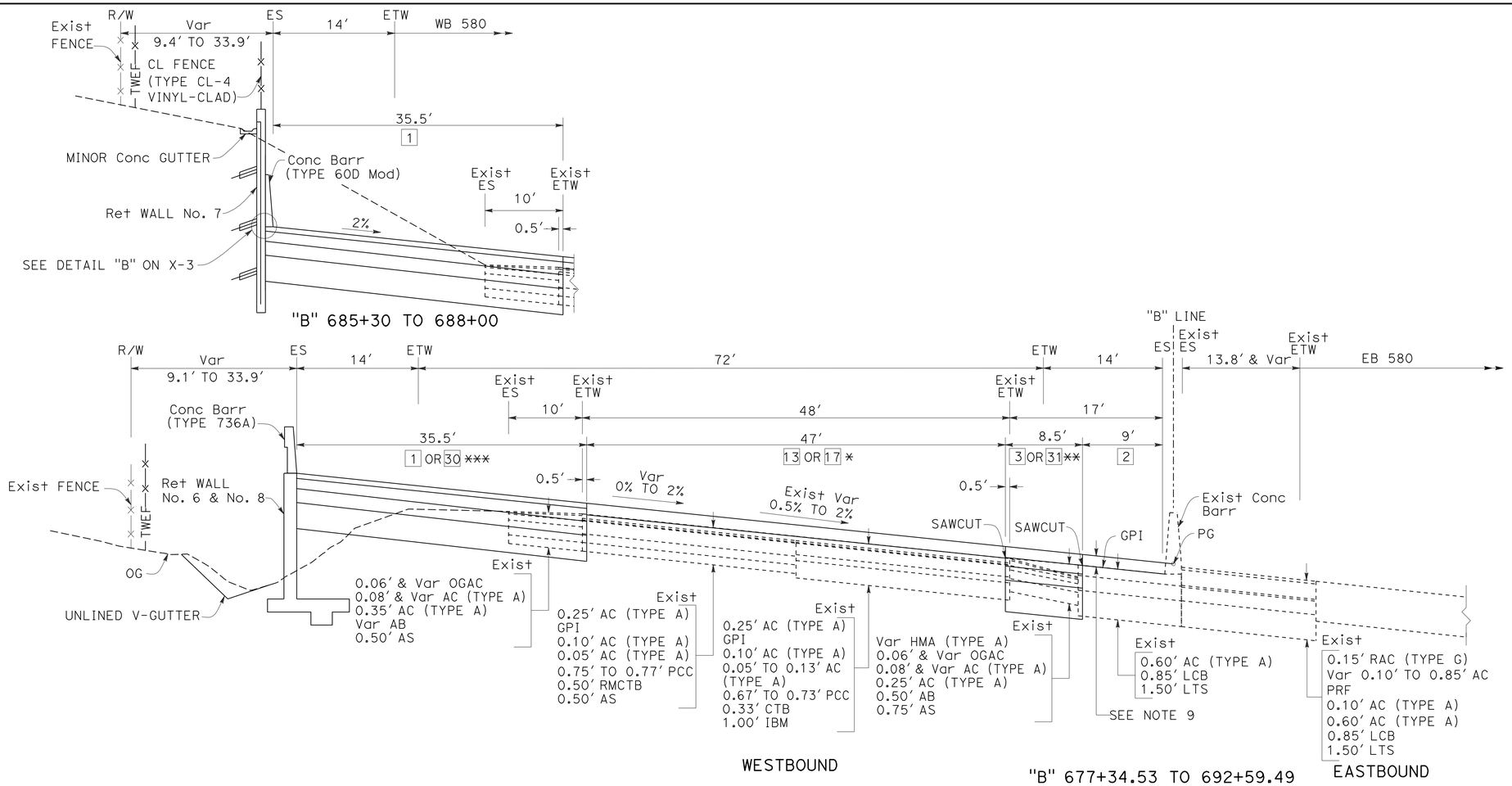

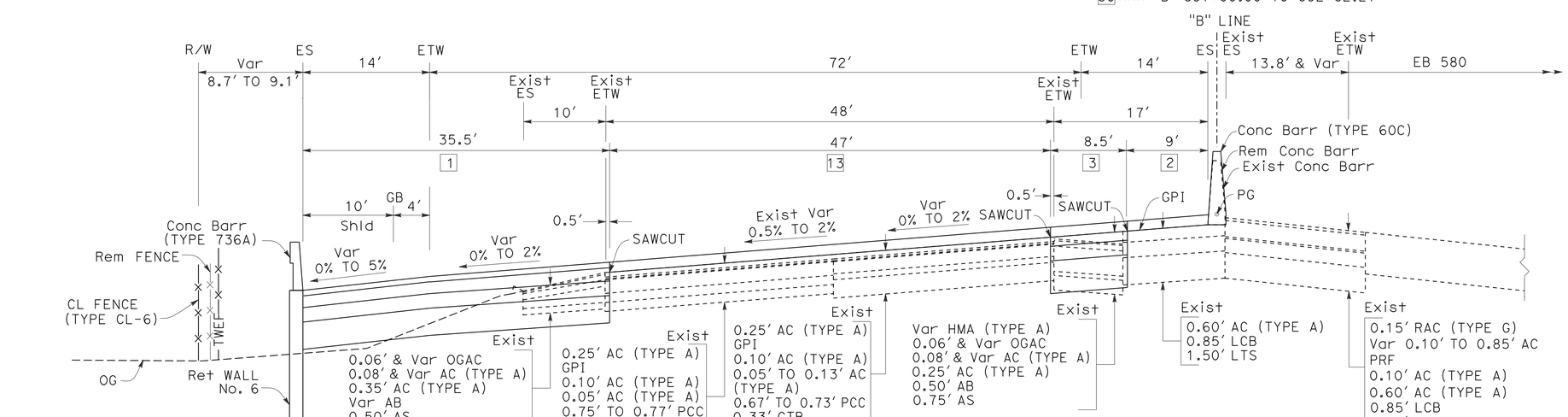

FOR NOTES AND ABBREVIATIONS, SEE SHEET X-1

ROUTE 580

TYPICAL CROSS SECTIONS

NO SCALE

X-10

STATE OF CALIFORNIA - DEPARTMENT OF TRANSPORTATION

Caltrans

CONSULTANT FUNCTIONAL SUPERVISOR: NATALINA V. BERNARDI

CALCULATED-DESIGNED BY: INNA ASHUROV

CHECKED BY: LUIS GARCIA

REVISED BY: IA

DATE REVISED: 5/7/12

LAST REVISION DATE PLOTTED => 23-MAY-2012
05-07-12 TIME PLOTTED => 07:06

Dist	COUNTY	ROUTE	POST MILES TOTAL PROJECT	SHEET No.	TOTAL SHEETS
04	Ala	580	R8.4/R14.6	12	853

REGISTERED CIVIL ENGINEER 5/7/12 DATE

5-14-12
PLANS APPROVAL DATE

REGISTERED PROFESSIONAL ENGINEER N.V. BERNARDI No. 45407 Exp. 9/30/12 CIVIL STATE OF CALIFORNIA

THE STATE OF CALIFORNIA OR ITS OFFICERS OR AGENTS SHALL NOT BE RESPONSIBLE FOR THE ACCURACY OR COMPLETENESS OF SCANNED COPIES OF THIS PLAN SHEET.

BKF ENGINEERS
4670 WILLOW ROAD, SUITE 250
PLEASANTON, CA. 94588

ALAMEDA CTC
1333 BROADWAY SUITE 220
OAKLAND, CA. 94612

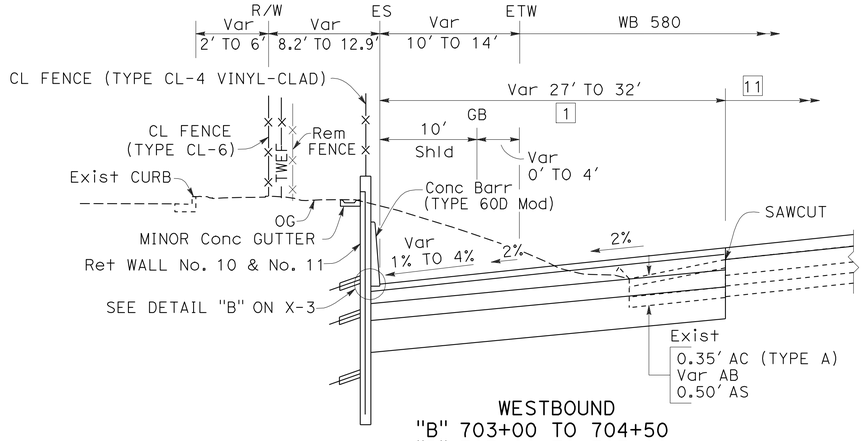

WESTBOUND
"B" 703+00 TO 704+50
"B" 707+20 TO 707+80

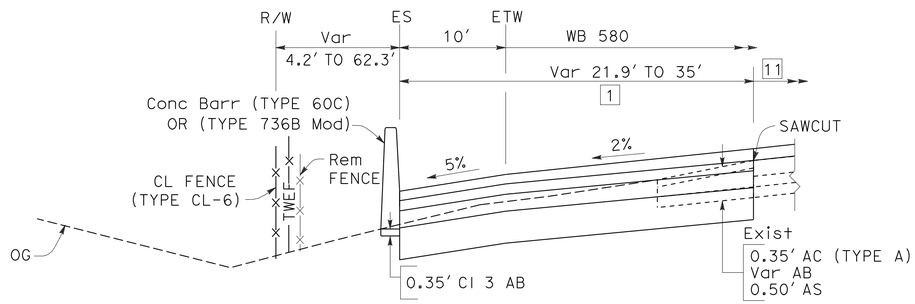

WESTBOUND
"B" 702+70 TO 703+00
"B" 707+80 TO 709+30
"B" 713+50 TO 715+50
"B" 727+00 TO 733+50

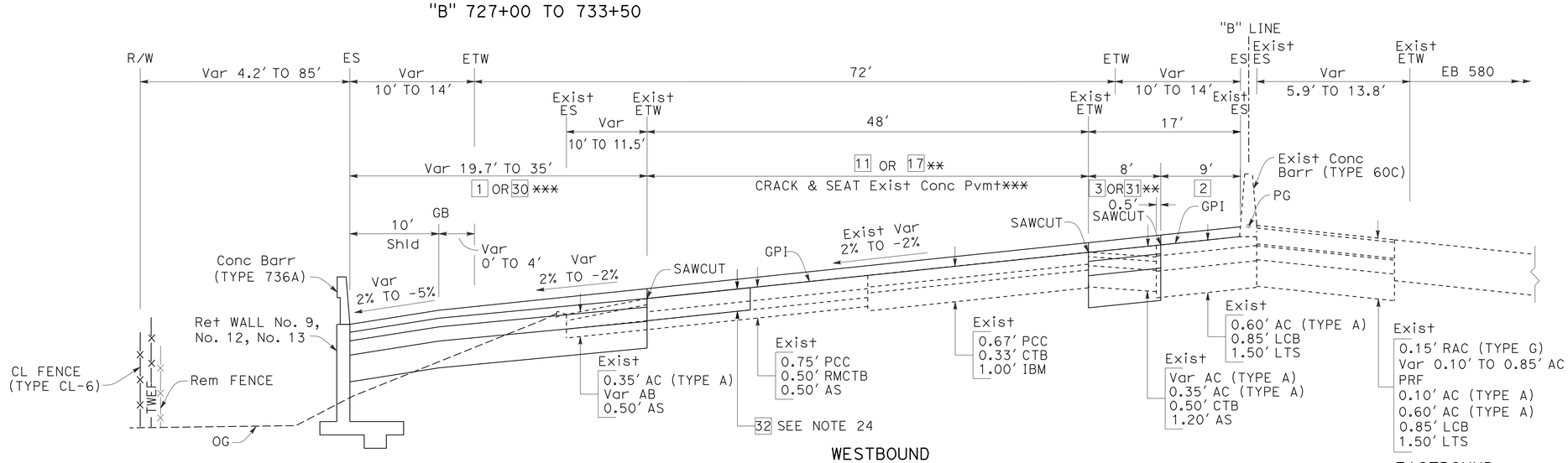

WESTBOUND

EASTBOUND

"B" 694+09.76 TO 734+16.22
31 ** & 17 ** "B" 694+09.76 TO 695+15.00
30 *** "B" 694+15.94 TO 695+15.00

FOR NOTES AND ABBREVIATIONS, SEE SHEET X-1

TYPICAL CROSS SECTIONS

NO SCALE

ROUTE 580

X-11

REVISED BY	DATE REVISED
IA	5/7/12

INNA ASHUROV — LUIS GARCIA — CALCULATED-DESIGNED BY — CHECKED BY

NATALINA V. BERNARDI — CONSULTANT FUNCTIONAL SUPERVISOR

STATE OF CALIFORNIA - DEPARTMENT OF TRANSPORTATION

Caltrans

LAST REVISION 05-07-12 | DATE PLOTTED => 23-MAY-2012 | TIME PLOTTED => 07:06

Dist	COUNTY	ROUTE	POST MILES TOTAL PROJECT	SHEET No.	TOTAL SHEETS
04	Ala	580	R8.4/R14.6	13	853

REGISTERED CIVIL ENGINEER 5/7/12 DATE

5-14-12
PLANS APPROVAL DATE

REGISTERED PROFESSIONAL ENGINEER N.V. BERNARDI No. 45407 Exp. 9/30/12 CIVIL STATE OF CALIFORNIA

THE STATE OF CALIFORNIA OR ITS OFFICERS OR AGENTS SHALL NOT BE RESPONSIBLE FOR THE ACCURACY OR COMPLETENESS OF SCANNED COPIES OF THIS PLAN SHEET.

BKF ENGINEERS
4670 WILLOW ROAD, SUITE 250
PLEASANTON, CA. 94588

ALAMEDA CTC
1333 BROADWAY SUITE 220
OAKLAND, CA. 94612

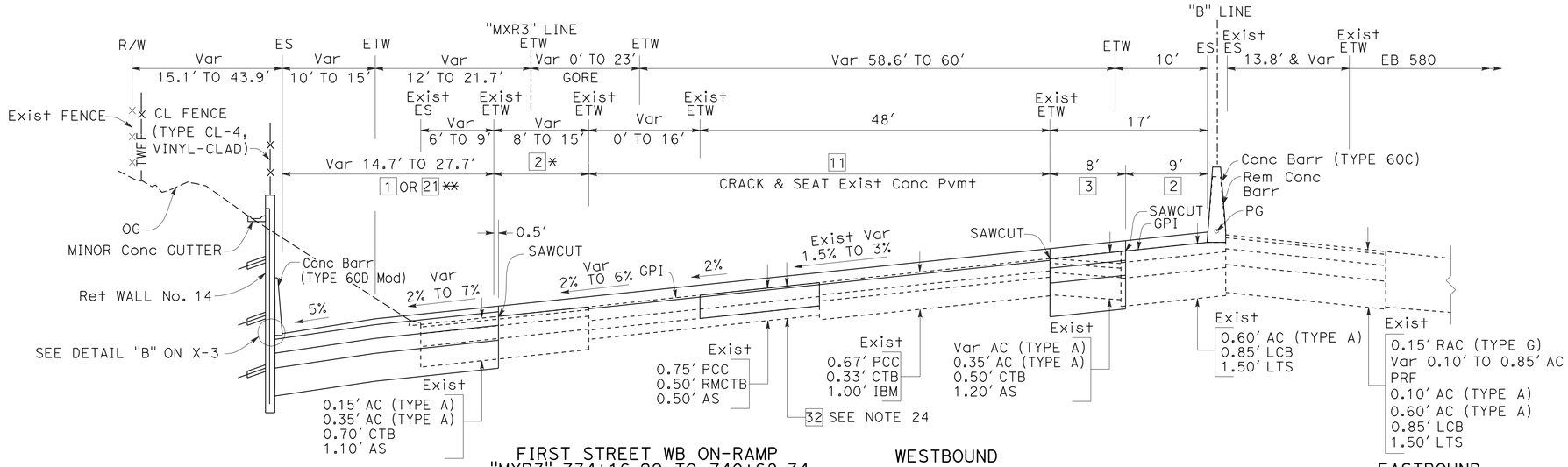

FIRST STREET WB ON-RAMP
"MXR3" 734+16.22 TO 740+68.34
21 **"MXR3" 738+44.00 TO 740+68.34

WESTBOUND

"B" 734+16.22 TO 740+75.65
2 *Beg @ "B" 732+30.74

EASTBOUND

ROUTE 580

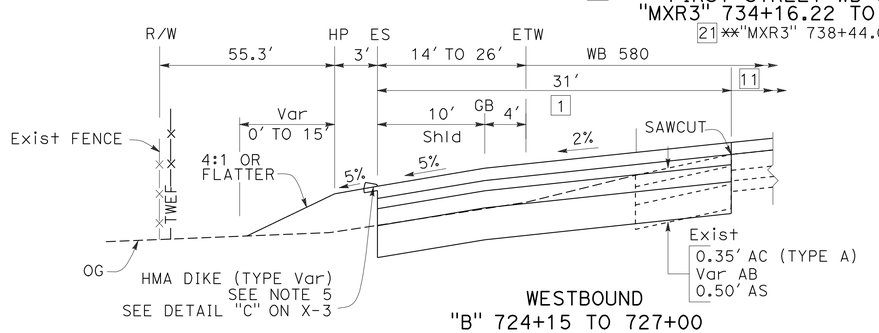

WESTBOUND
"B" 724+15 TO 727+00

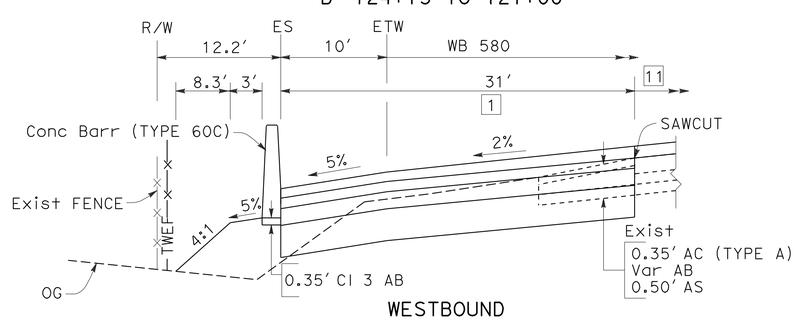

WESTBOUND
"B" 719+50 TO 724+15

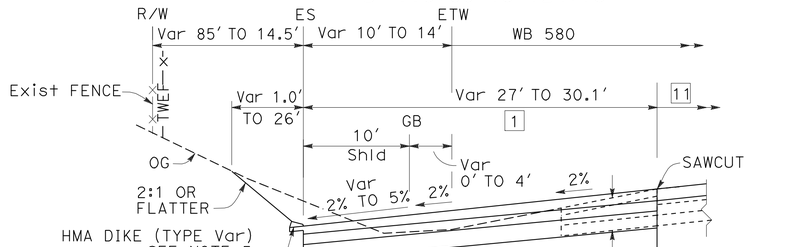

FOR NOTES AND ABBREVIATIONS, SEE SHEET X-1

WESTBOUND
"B" 704+50 TO 707+20

TYPICAL CROSS SECTIONS

NO SCALE

X-12

IA	5/7/12		
REVISED BY	DATE REVISED		
INNA ASHUROV	LUIS GARCIA		
CALCULATED-DESIGNED BY	CHECKED BY		
NATALINA V. BERNARDI			
CONSULTANT FUNCTIONAL SUPERVISOR			

STATE OF CALIFORNIA - DEPARTMENT OF TRANSPORTATION

Caltrans

LAST REVISION 05-07-12 | DATE PLOTTED => 23-MAY-2012 | TIME PLOTTED => 07:06

Dist	COUNTY	ROUTE	POST MILES TOTAL PROJECT	SHEET No.	TOTAL SHEETS
04	Ala	580	R8.4/R14.6	14	853

REGISTERED CIVIL ENGINEER 5/7/12 DATE

5-14-12
PLANS APPROVAL DATE

REGISTERED PROFESSIONAL ENGINEER N.V. BERNARDI No. 45407 Exp. 9/30/12 CIVIL STATE OF CALIFORNIA

THE STATE OF CALIFORNIA OR ITS OFFICERS OR AGENTS SHALL NOT BE RESPONSIBLE FOR THE ACCURACY OR COMPLETENESS OF SCANNED COPIES OF THIS PLAN SHEET.

BKF ENGINEERS
4670 WILLOW ROAD, SUITE 250
PLEASANTON, CA. 94588

ALAMEDA CTC
1333 BROADWAY SUITE 220
OAKLAND, CA. 94612

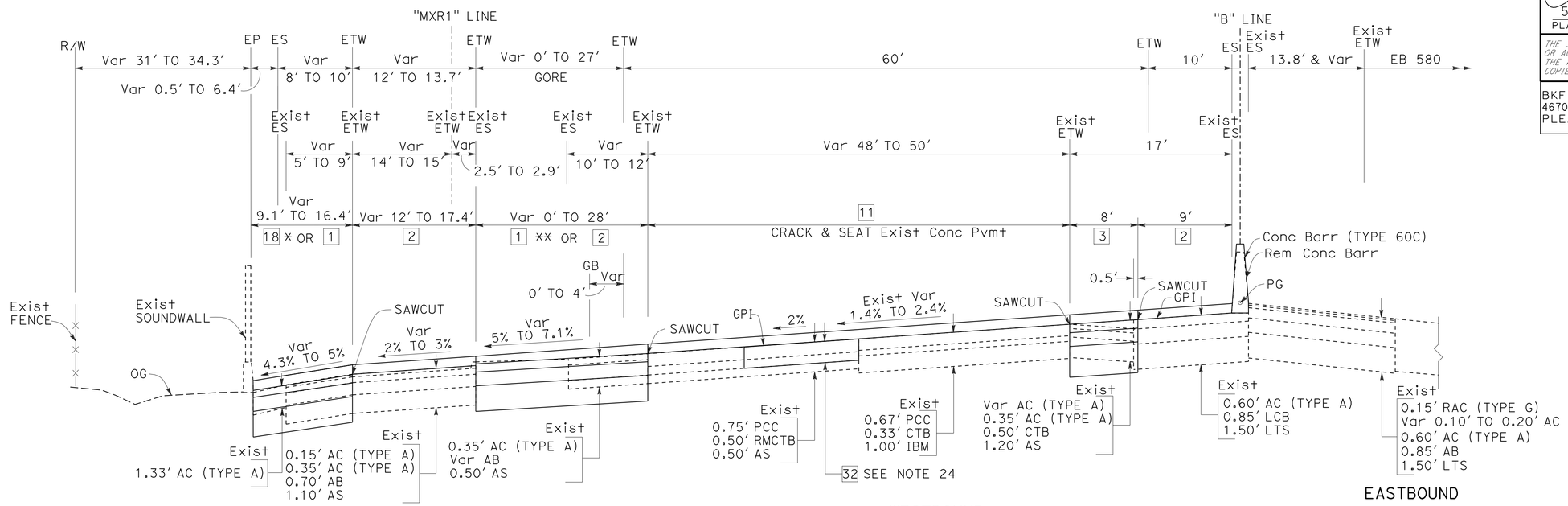

FIRST STREET WB OFF-RAMP
"MXR1" 758+66.20 TO 761+84.23
18 * "MXR1" 758+36.79 TO 761+75.49

"B" 758+62.36 TO 761+84.23
1 ** "B" 758+62.36 TO 759+35.69

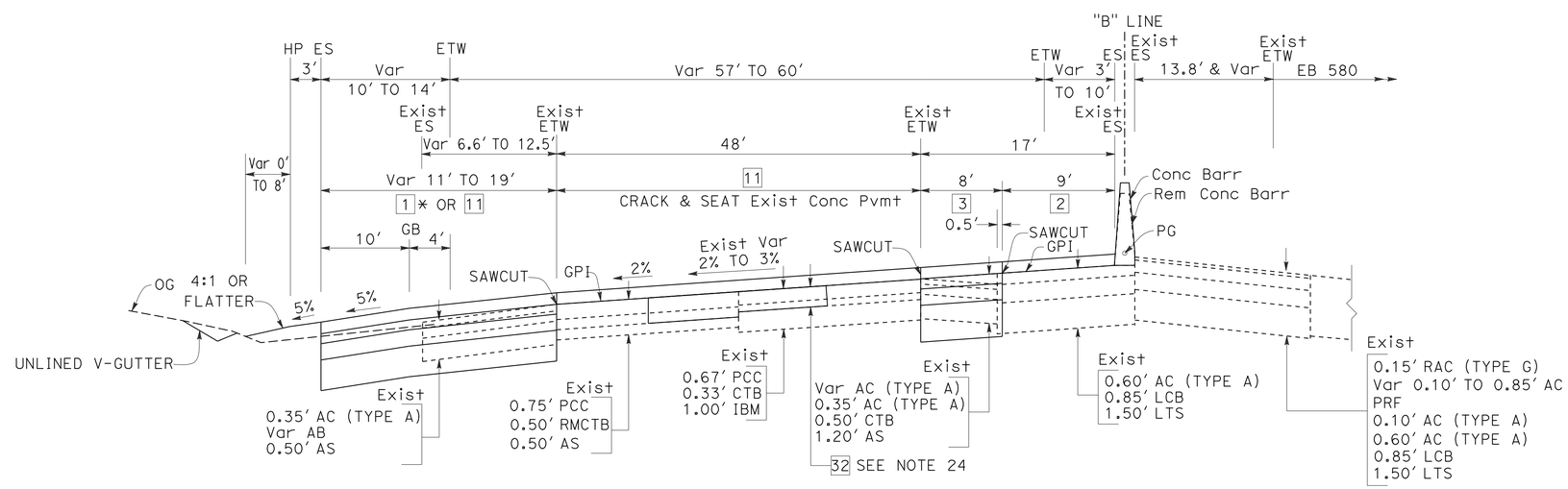

"B" 740+75.65 TO 758+62.36
1 * "B" 752+31.89 TO 758+62.36

ROUTE 580

FOR NOTES AND ABBREVIATIONS, SEE SHEET X-1

TYPICAL CROSS SECTIONS

NO SCALE

X-13

STATE OF CALIFORNIA - DEPARTMENT OF TRANSPORTATION

CONSULTANT FUNCTIONAL SUPERVISOR: NATALINA V. BERNARDI

CALCULATED-DESIGNED BY: INNA ASHUROV | REVISED BY: IA

CHECKED BY: LUIS GARCIA | DATE REVISED: 5/7/12

LAST REVISION 05-07-12 | DATE PLOTTED => 23-MAY-2012 | TIME PLOTTED => 07:07

Dist	COUNTY	ROUTE	POST MILES TOTAL PROJECT	SHEET No.	TOTAL SHEETS
04	Ala	580	R8.4/R14.6	15	853

REGISTERED CIVIL ENGINEER 5/7/12 DATE

5-14-12
PLANS APPROVAL DATE

REGISTERED PROFESSIONAL ENGINEER N.V. BERNARDI No. 45407 Exp. 9/30/12 CIVIL STATE OF CALIFORNIA

THE STATE OF CALIFORNIA OR ITS OFFICERS OR AGENTS SHALL NOT BE RESPONSIBLE FOR THE ACCURACY OR COMPLETENESS OF SCANNED COPIES OF THIS PLAN SHEET.

BKF ENGINEERS
4670 WILLOW ROAD, SUITE 250
PLEASANTON, CA. 94588

ALAMEDA CTC
1333 BROADWAY SUITE 220
OAKLAND, CA. 94612

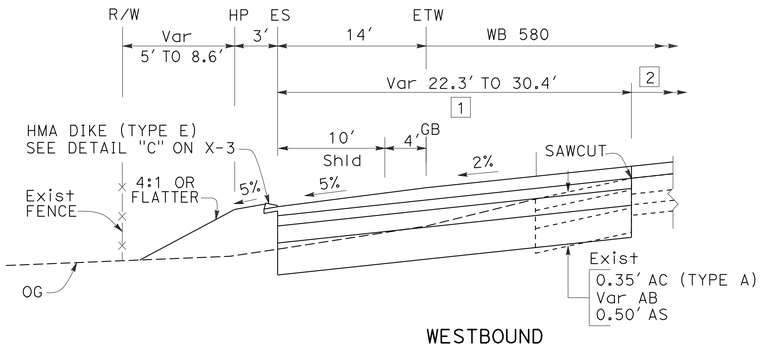

WESTBOUND
"B" 782+00 TO 787+67.08

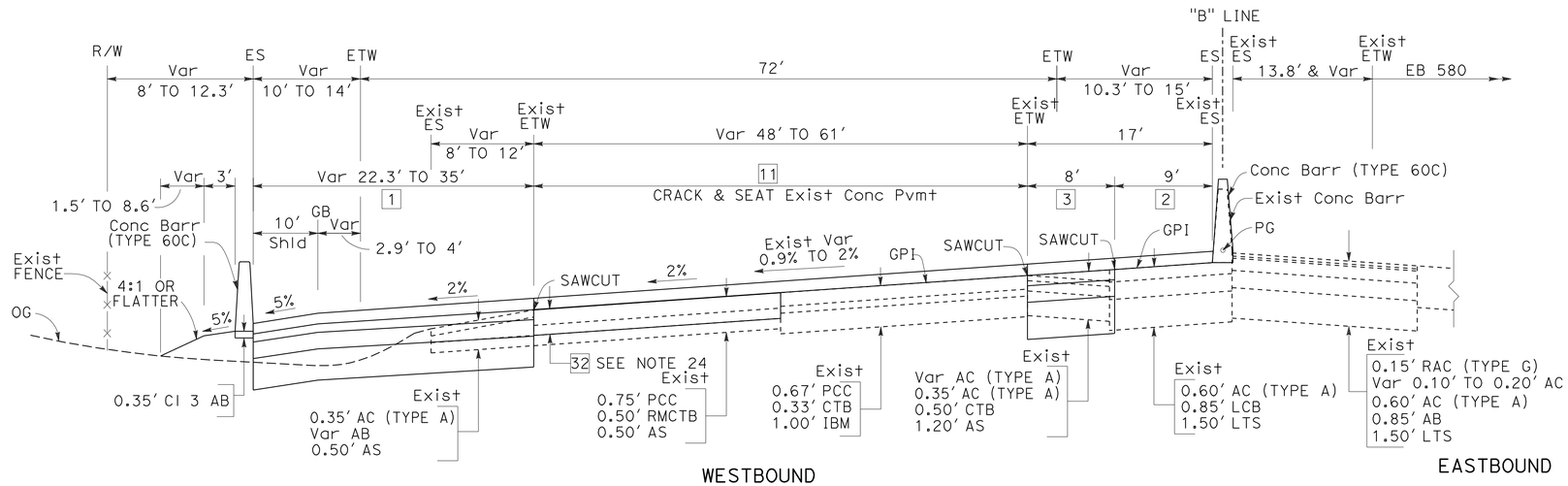

WESTBOUND
"B" 772+29 TO 787+67.08
EASTBOUND

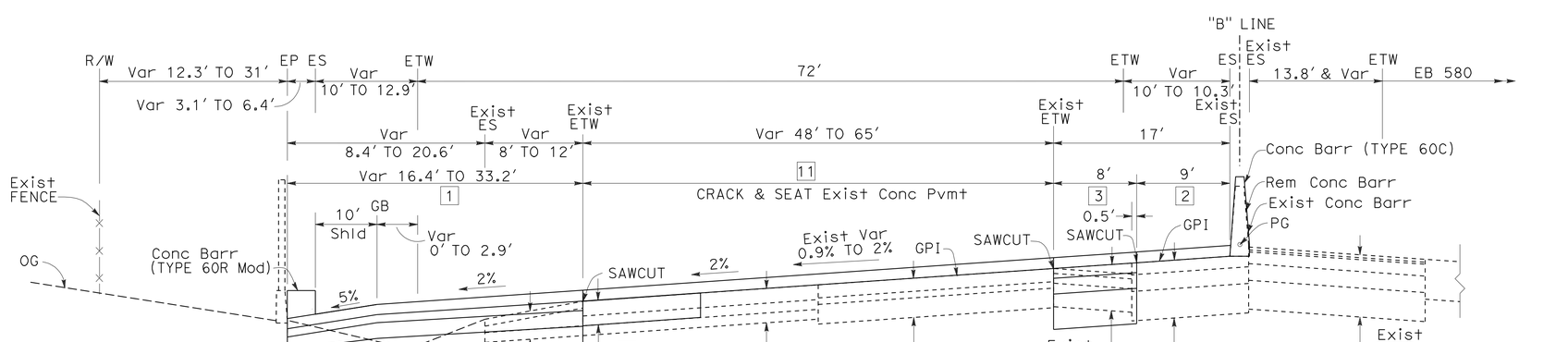

WESTBOUND
"B" 761+84.23 TO 772+29
EASTBOUND

FOR NOTES AND ABBREVIATIONS, SEE SHEET X-1

TYPICAL CROSS SECTIONS

NO SCALE

ROUTE 580

X-14

REVISED BY	DATE REVISED
IA	5/7/12

INNA ASHUROV — LUIS GARCIA

CALCULATED-DESIGNED BY — CHECKED BY

CONSULTANT FUNCTIONAL SUPERVISOR — NATALINA V. BERNARDI

STATE OF CALIFORNIA - DEPARTMENT OF TRANSPORTATION

LAST REVISION 05-07-12 | DATE PLOTTED => 23-MAY-2012 | TIME PLOTTED => 07:07

Dist	COUNTY	ROUTE	POST MILES TOTAL PROJECT	SHEET No.	TOTAL SHEETS
04	Ala	580	R8.4/R14.6	16	853

REGISTERED CIVIL ENGINEER 5/7/12 DATE

5-14-12
PLANS APPROVAL DATE

REGISTERED PROFESSIONAL ENGINEER N.V. BERNARDI No. 45407 Exp. 9/30/12 CIVIL STATE OF CALIFORNIA

THE STATE OF CALIFORNIA OR ITS OFFICERS OR AGENTS SHALL NOT BE RESPONSIBLE FOR THE ACCURACY OR COMPLETENESS OF SCANNED COPIES OF THIS PLAN SHEET.

BKF ENGINEERS
4670 WILLOW ROAD, SUITE 250
PLEASANTON, CA. 94588

ALAMEDA CTC
1333 BROADWAY SUITE 220
OAKLAND, CA. 94612

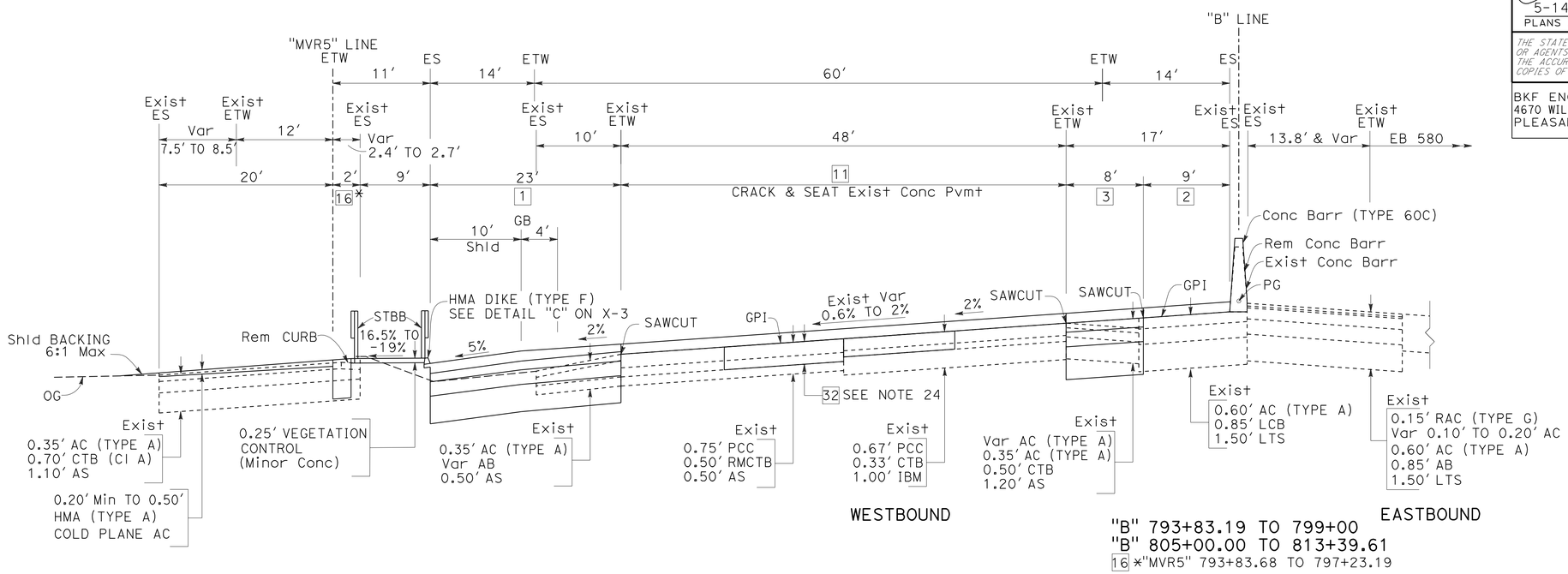

"B" 793+83.19 TO 799+00
"B" 805+00.00 TO 813+39.61
16 *"MVR5" 793+83.68 TO 797+23.19

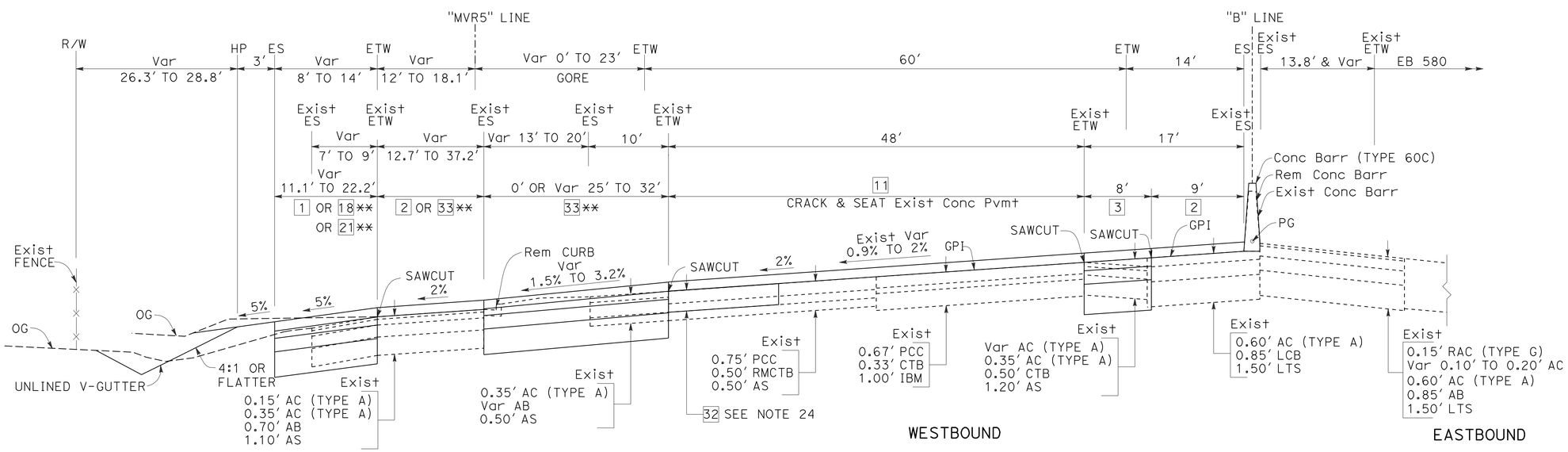

VASCO ROAD WB ON-RAMP
"MVR5" 787+67.08 TO 793+83.68
18** Beg @ "MVR5" 792+04.07
21** "MVR5" 789+13.00 TO 792+04.07

"B" 787+67.08 TO 793+83.19
33*"B" 792+00.00 TO 793+83.19

ROUTE 580

FOR NOTES AND ABBREVIATIONS, SEE SHEET X-1

TYPICAL CROSS SECTIONS

NO SCALE

X-15

STATE OF CALIFORNIA - DEPARTMENT OF TRANSPORTATION

Caltrans

CONSULTANT FUNCTIONAL SUPERVISOR: NATALINA V. BERNARDI

CALCULATED-DESIGNED BY: INNA ASHUROV

CHECKED BY: LUIS GARCIA

REVISED BY: IA

DATE REVISED: 5/7/12

LAST REVISION DATE PLOTTED => 23-MAY-2012
05-07-12 TIME PLOTTED => 07:07

Dist	COUNTY	ROUTE	POST MILES TOTAL PROJECT	SHEET No.	TOTAL SHEETS
04	Ala	580	R8.4/R14.6	17	853

REGISTERED CIVIL ENGINEER 5/7/12 DATE

5-14-12
PLANS APPROVAL DATE

REGISTERED PROFESSIONAL ENGINEER N.V. BERNARDI No. 45407 Exp. 9/30/12 CIVIL STATE OF CALIFORNIA

THE STATE OF CALIFORNIA OR ITS OFFICERS OR AGENTS SHALL NOT BE RESPONSIBLE FOR THE ACCURACY OR COMPLETENESS OF SCANNED COPIES OF THIS PLAN SHEET.

BKF ENGINEERS
4670 WILLOW ROAD, SUITE 250
PLEASANTON, CA. 94588

ALAMEDA CTC
1333 BROADWAY SUITE 220
OAKLAND, CA. 94612

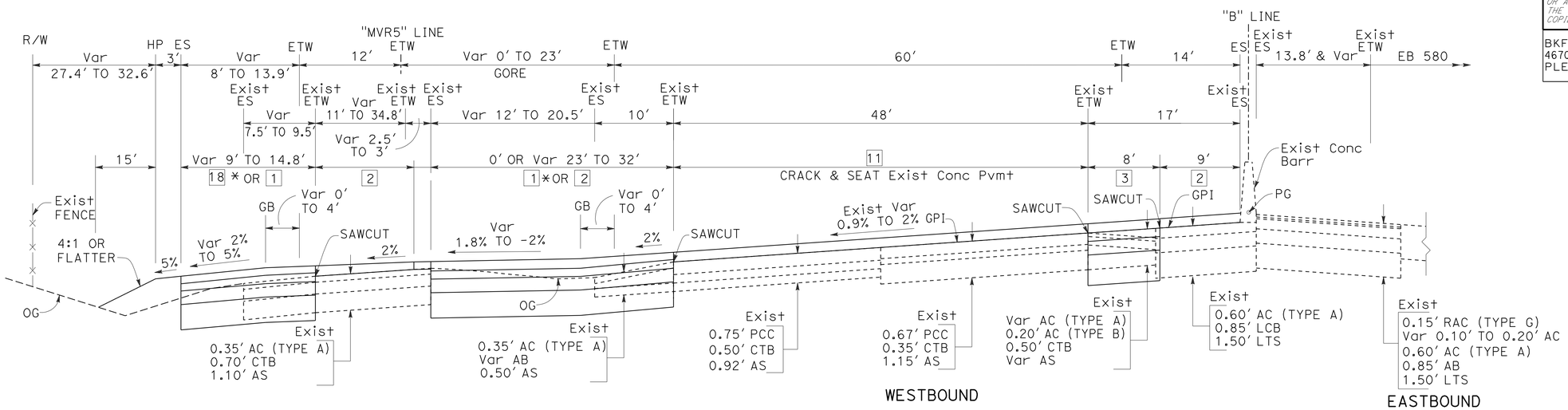

VASCO ROAD WB OFF-RAMP
"MVR5" 812+93.41 TO 816+11.26
18 * END @ "MVR5" 815+87.22

"B" 813+39.61 TO 816+09.59
1 * "B" 813+39.61 TO 814+24.48

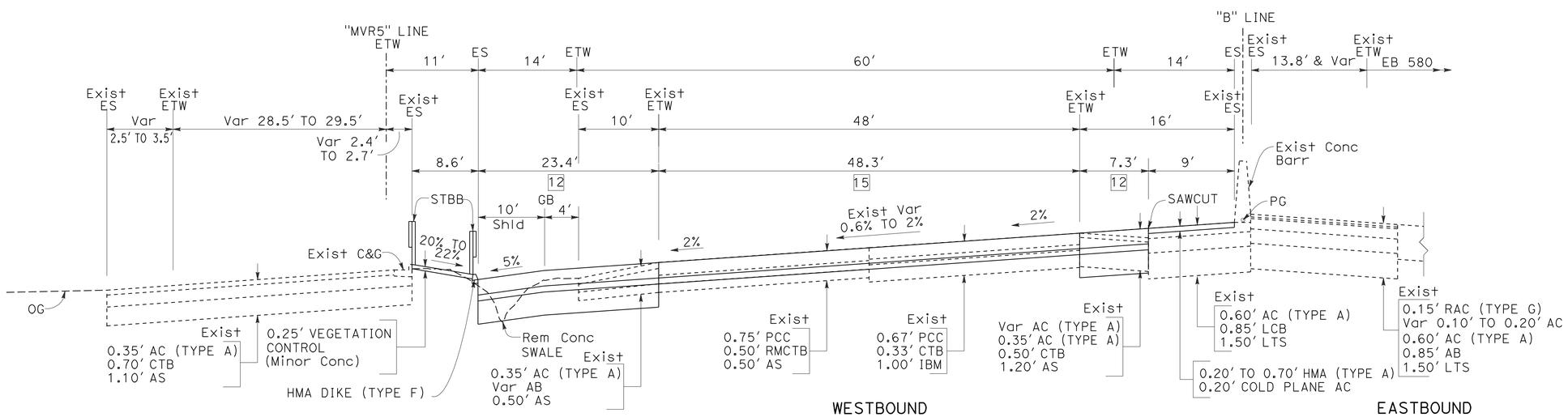

"B" 799+00.00 TO 805+00.00

ROUTE 580

TYPICAL CROSS SECTIONS

NO SCALE

FOR NOTES AND ABBREVIATIONS, SEE SHEET X-1

X-16

REVISED BY	DATE REVISED
IA	5/7/12

CALCULATED-DESIGNED BY: INNA ASHUROV
CHECKED BY: LUIS GARCIA
CONSULTANT FUNCTIONAL SUPERVISOR: NATALINA V. BERNARDI

STATE OF CALIFORNIA - DEPARTMENT OF TRANSPORTATION

LAST REVISION 05-07-12 | DATE PLOTTED => 23-MAY-2012 | TIME PLOTTED => 07:07

Dist	COUNTY	ROUTE	POST MILES TOTAL PROJECT	SHEET No.	TOTAL SHEETS
04	Ala	580	R8.4/R14.6	18	853

REGISTERED CIVIL ENGINEER 5/7/12 DATE

5-14-12
PLANS APPROVAL DATE

REGISTERED PROFESSIONAL ENGINEER N.V. BERNARDI No. 45407 Exp. 9/30/12 CIVIL STATE OF CALIFORNIA

THE STATE OF CALIFORNIA OR ITS OFFICERS OR AGENTS SHALL NOT BE RESPONSIBLE FOR THE ACCURACY OR COMPLETENESS OF SCANNED COPIES OF THIS PLAN SHEET.

BKF ENGINEERS
4670 WILLOW ROAD, SUITE 250
PLEASANTON, CA. 94588

ALAMEDA CTC
1333 BROADWAY SUITE 220
OAKLAND, CA. 94612

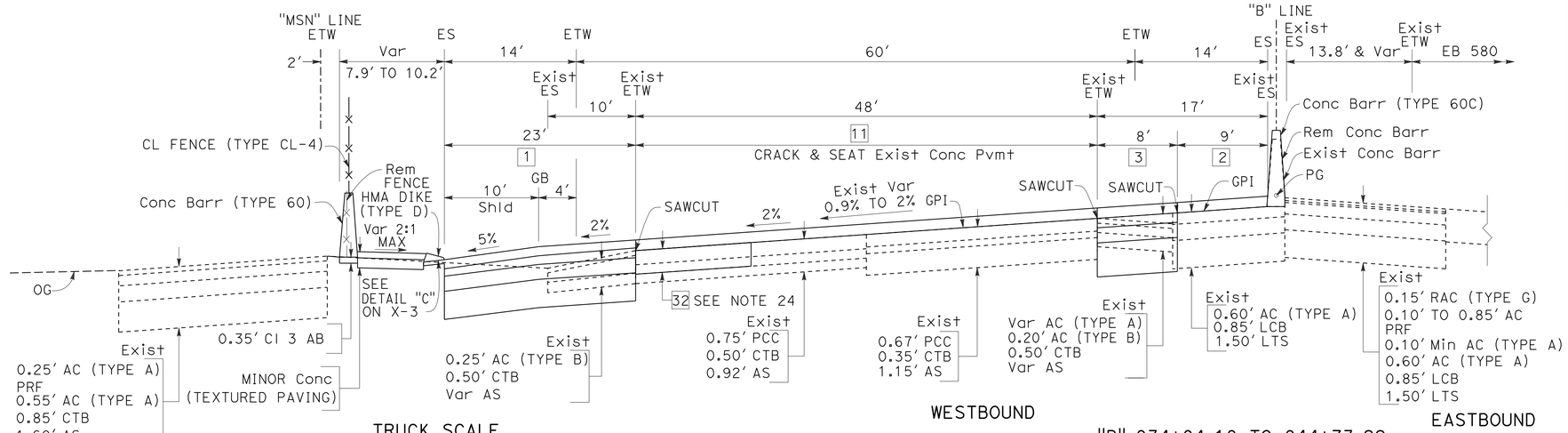

TRUCK SCALE
"MSN" 835+47.59 TO 842+60.28

"B" 834+84.18 TO 844+73.22

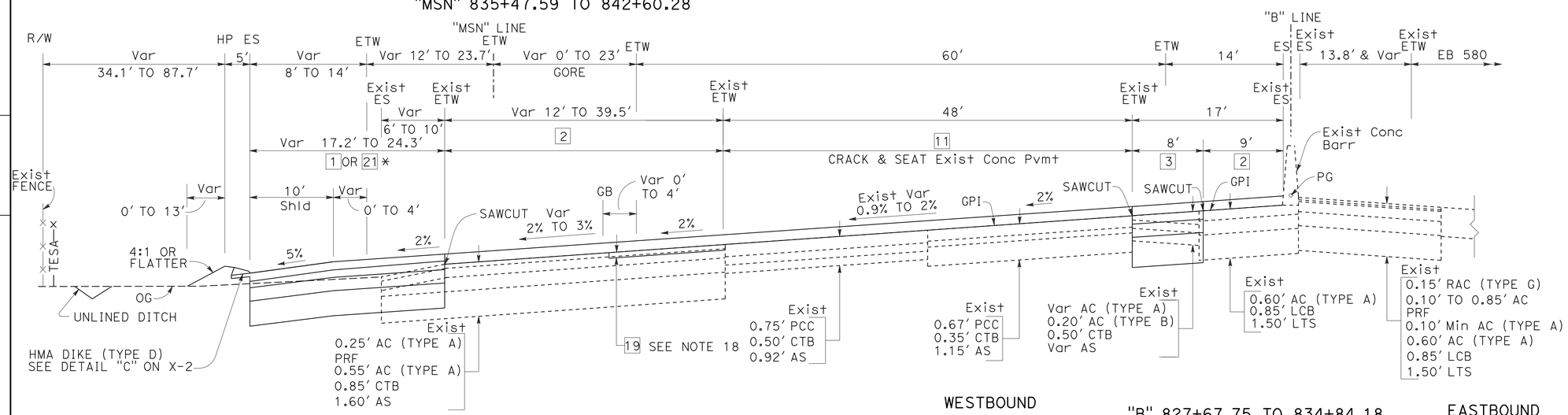

TRUCK SCALE WB ON-RAMP
"MSN" 827+67.75 TO 834+15.13
21 * Beg @ "MSN" 831+37.00

"B" 827+67.75 TO 834+84.18

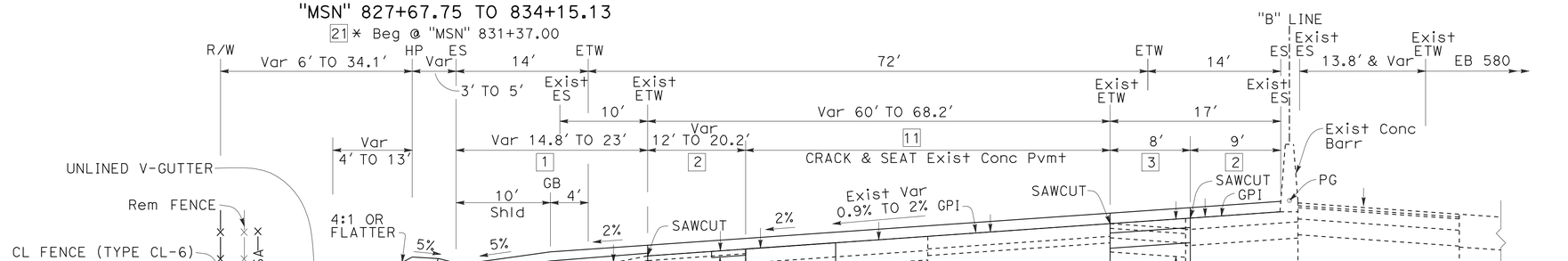

"B" 816+09.59 TO 827+67.75

FOR NOTES AND ABBREVIATIONS, SEE SHEET X-1

TYPICAL CROSS SECTIONS

NO SCALE

ROUTE 580

X-17

REVISED BY	DATE REVISED
IA	5/7/12

CALCULATED-DESIGNED BY: INNA ASHUROV
CHECKED BY: LUIS GARCIA
CONSULTANT FUNCTIONAL SUPERVISOR: NATALINA V. BERNARDI

STATE OF CALIFORNIA - DEPARTMENT OF TRANSPORTATION

LAST REVISION 05-07-12 | DATE PLOTTED => 23-MAY-2012 | TIME PLOTTED => 07:07

Dist	COUNTY	ROUTE	POST MILES TOTAL PROJECT	SHEET No.	TOTAL SHEETS
04	Ala	580	R8.4/R14.6	19	853

REGISTERED CIVIL ENGINEER 5/7/12 DATE

5-14-12
PLANS APPROVAL DATE

REGISTERED PROFESSIONAL ENGINEER N.V. BERNARDI No. 45407 Exp. 9/30/12 CIVIL STATE OF CALIFORNIA

THE STATE OF CALIFORNIA OR ITS OFFICERS OR AGENTS SHALL NOT BE RESPONSIBLE FOR THE ACCURACY OR COMPLETENESS OF SCANNED COPIES OF THIS PLAN SHEET.

BKF ENGINEERS
4670 WILLOW ROAD, SUITE 250
PLEASANTON, CA. 94588

ALAMEDA CTC
1333 BROADWAY SUITE 220
OAKLAND, CA. 94612

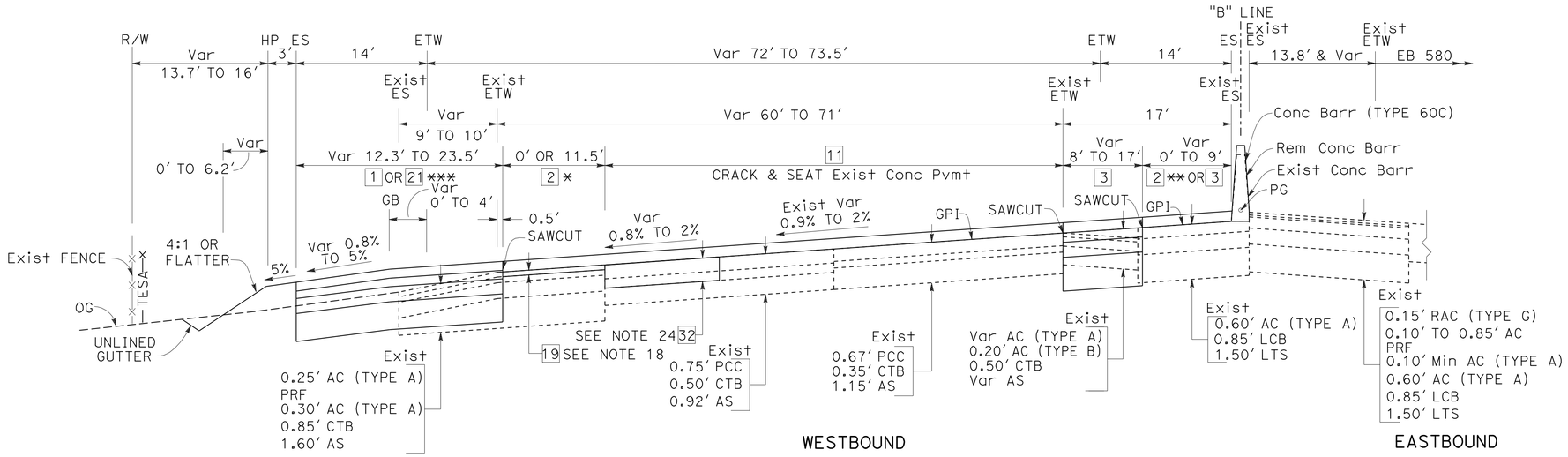

"B" 847+72.32 TO 856+52.57
2 * Beg @ "B" 851+32.86
2 ** END @ "B" 854+06.51
21 *** END @ "B" 849+00.00

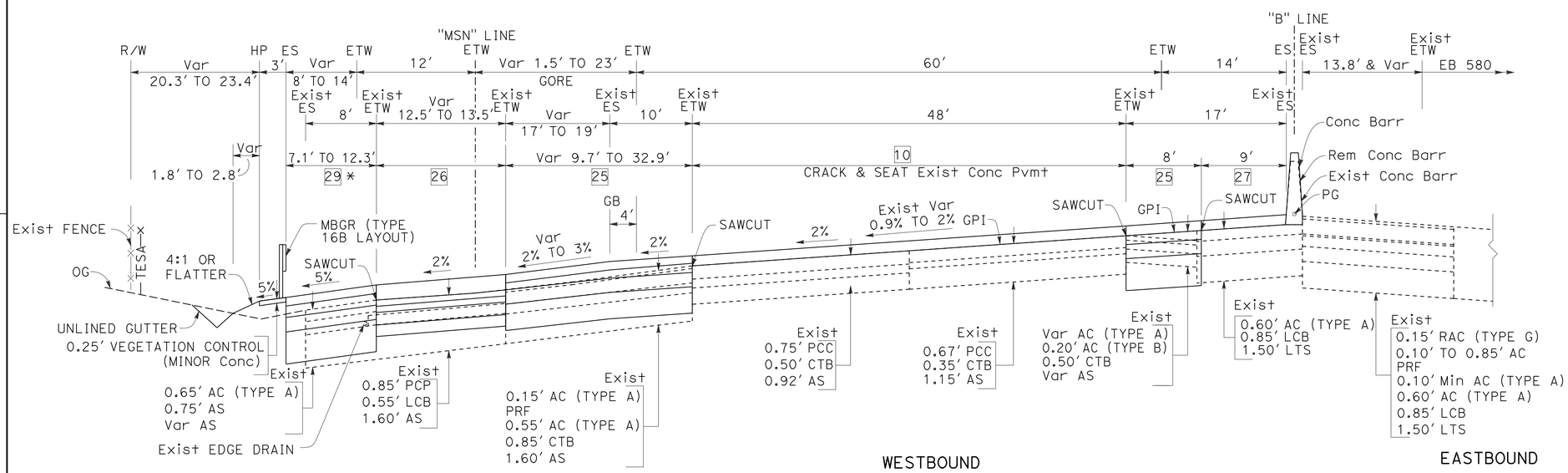

TRUCK SCALE WB OFF-RAMP
"MSN" 844+72.97 TO 847+73.00
29 * END @ "MSN" 847+85

"B" 844+73.22 TO 847+72.32

ROUTE 580

FOR NOTES AND ABBREVIATIONS, SEE SHEET X-1

TYPICAL CROSS SECTIONS

NO SCALE

X-18

REVISED BY	DATE REVISED
IA	5/7/12

INNA ASHUROV — LUIS GARCIA — CALCULATED-DESIGNED BY — CHECKED BY

NATALINA V. BERNARDI — CONSULTANT FUNCTIONAL SUPERVISOR

STATE OF CALIFORNIA - DEPARTMENT OF TRANSPORTATION

Caltrans

LAST REVISION 05-07-12 | DATE PLOTTED => 23-MAY-2012 | TIME PLOTTED => 07:07

Dist	COUNTY	ROUTE	POST MILES TOTAL PROJECT	SHEET No.	TOTAL SHEETS
04	Ala	580	R8.4/R14.6	20	853

REGISTERED CIVIL ENGINEER 5/7/12 DATE

5-14-12
PLANS APPROVAL DATE

REGISTERED PROFESSIONAL ENGINEER N.V. BERNARDI No. 45407 Exp. 9/30/12 CIVIL STATE OF CALIFORNIA

THE STATE OF CALIFORNIA OR ITS OFFICERS OR AGENTS SHALL NOT BE RESPONSIBLE FOR THE ACCURACY OR COMPLETENESS OF SCANNED COPIES OF THIS PLAN SHEET.

BKF ENGINEERS
4670 WILLOW ROAD, SUITE 250
PLEASANTON, CA. 94588

ALAMEDA CTC
1333 BROADWAY SUITE 220
OAKLAND, CA. 94612

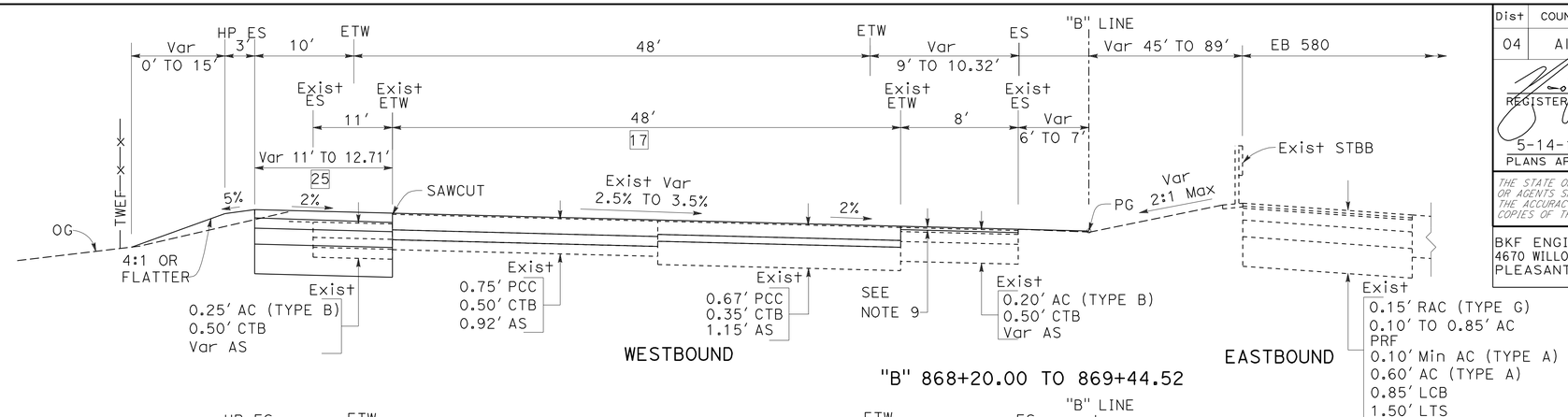

"B" 868+20.00 TO 869+44.52

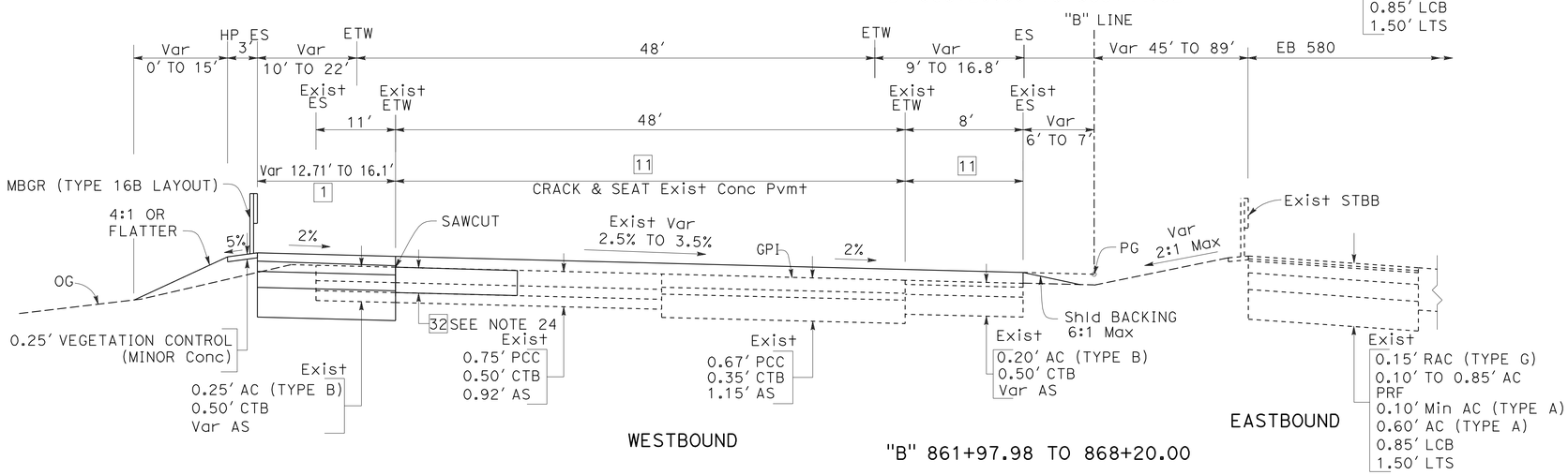

"B" 861+97.98 TO 868+20.00

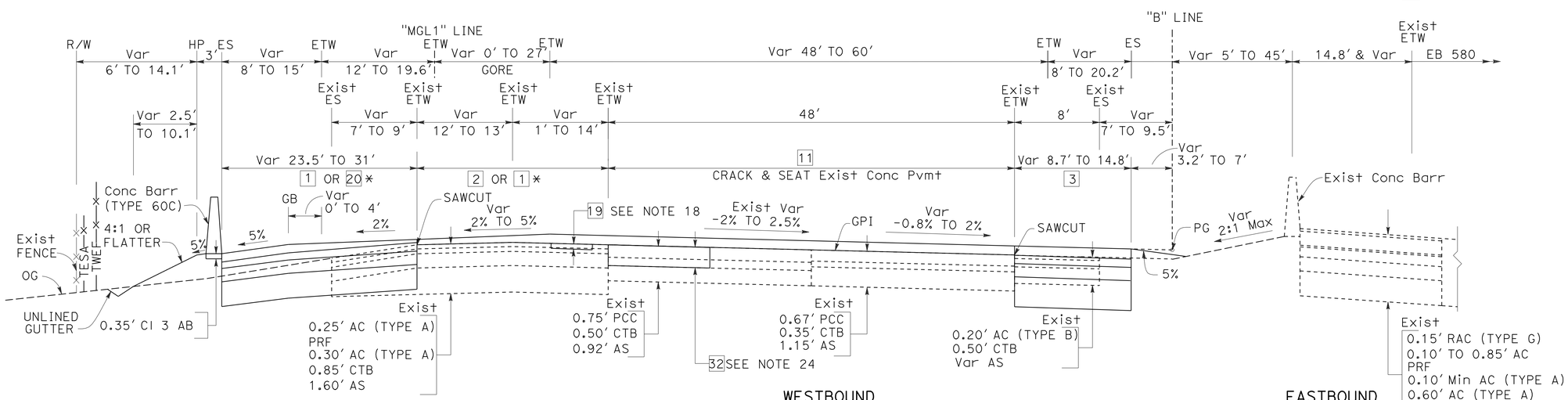

GREENVILLE ROAD WB ON-RAMP
"MGL1" 856+52.57 TO 862+03.84
20 * Beg @ "MGL1" 858+89.00

"B" 856+52.57 TO 861+97.98
1 * "B" 861+43.41 TO 861+97.98

ROUTE 580

TYPICAL CROSS SECTIONS

NO SCALE

X-19

FOR NOTES AND ABBREVIATIONS, SEE SHEET X-1

REVISED BY	DATE REVISED
IA	5/7/12

CALCULATED-DESIGNED BY: INNA ASHUROV
CHECKED BY: LUIS GARCIA
CONSULTANT FUNCTIONAL SUPERVISOR: NATALINA V. BERNARDI

STATE OF CALIFORNIA - DEPARTMENT OF TRANSPORTATION

LAST REVISION 05-07-12
DATE PLOTTED => 23-MAY-2012
TIME PLOTTED => 07:07

Dist	COUNTY	ROUTE	POST MILES TOTAL PROJECT	SHEET No.	TOTAL SHEETS
04	Ala	580	R8.4/R14.6	21	853

REGISTERED CIVIL ENGINEER 5/7/12 DATE

5-14-12
PLANS APPROVAL DATE

REGISTERED PROFESSIONAL ENGINEER N.V. BERNARDI No. 45407 Exp. 9/30/12 CIVIL STATE OF CALIFORNIA

THE STATE OF CALIFORNIA OR ITS OFFICERS OR AGENTS SHALL NOT BE RESPONSIBLE FOR THE ACCURACY OR COMPLETENESS OF SCANNED COPIES OF THIS PLAN SHEET.

BKF ENGINEERS
4670 WILLOW ROAD, SUITE 250
PLEASANTON, CA. 94588

ALAMEDA CTC
1333 BROADWAY SUITE 220
OAKLAND, CA. 94612

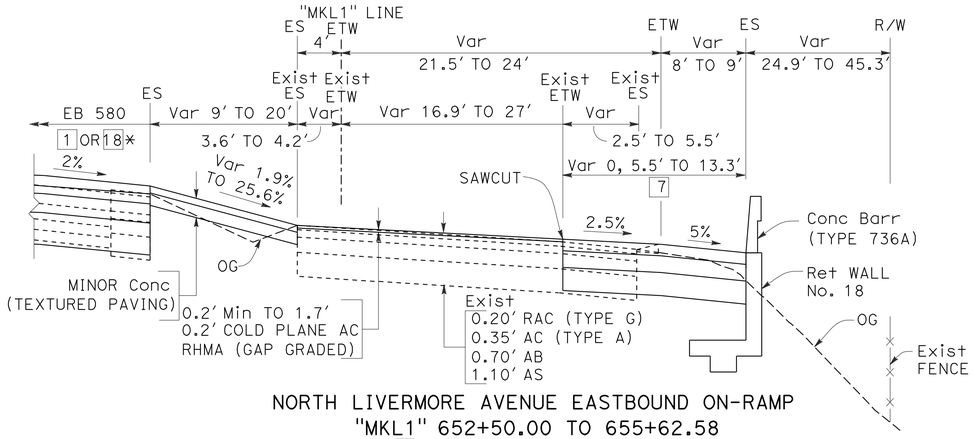

NORTH LIVERMORE AVENUE EASTBOUND ON-RAMP
"MKL1" 652+50.00 TO 655+62.58
18* Beg @ "MKL1" 654+17.01

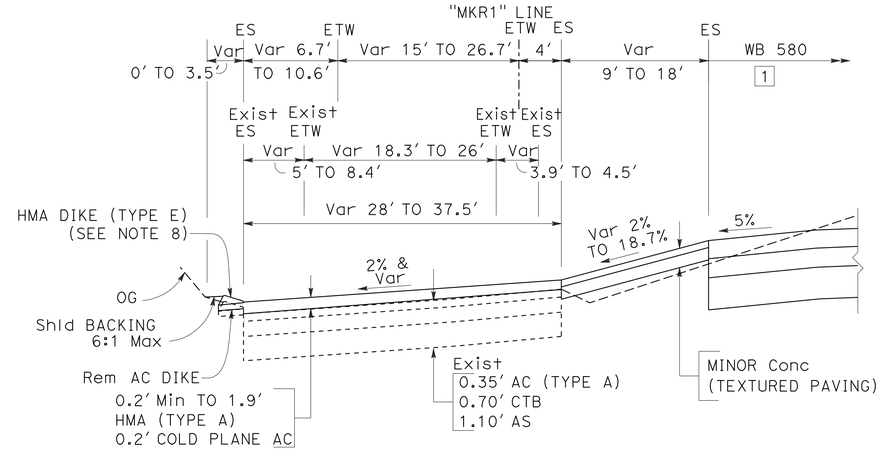

"MKR1" 655+51.21 TO 656+90.46
NORTH LIVERMORE AVENUE WESTBOUND OFF-RAMP

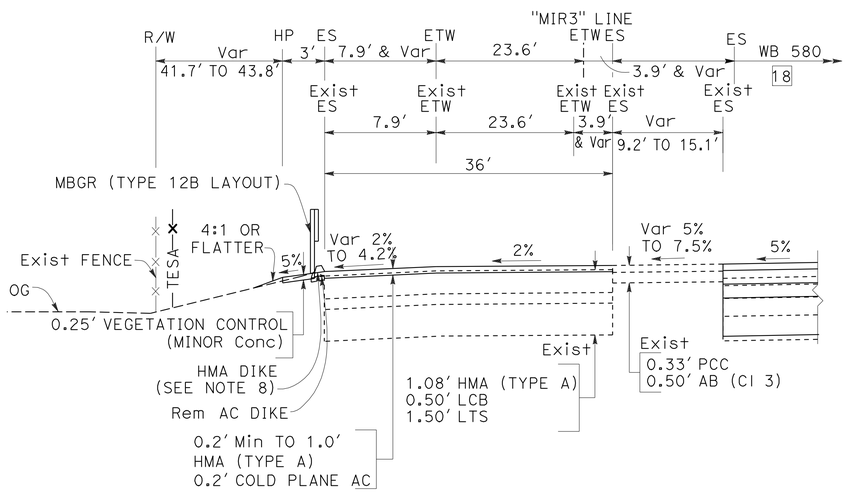

ISABEL AVENUE OFF-RAMP
"MIR3" 584+34.29 TO 585+03.39

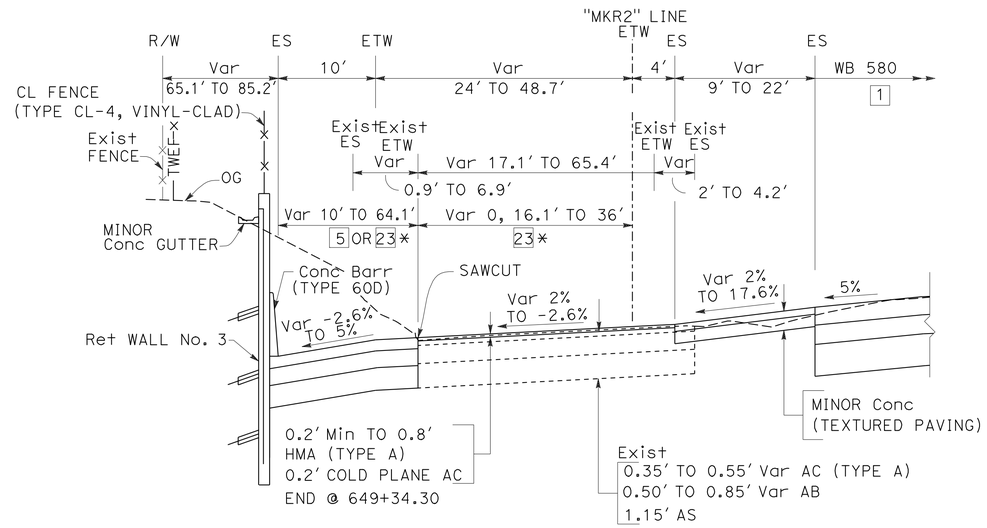

NORTH LIVERMORE AVENUE WESTBOUND ON-RAMP
"MKR2" 646+21.14 TO 650+41.74
23* "MKR2" 649+34.30 TO 650+41.74

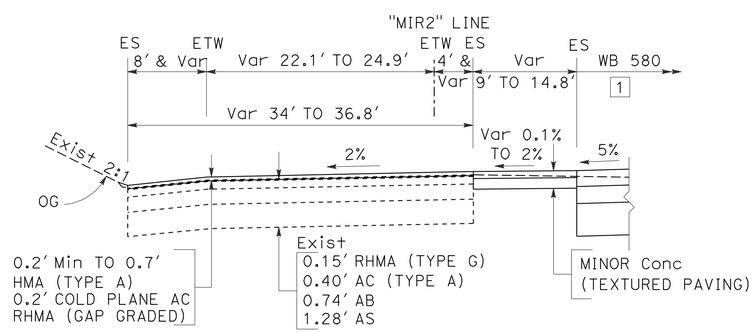

ISABEL AVENUE WESTBOUND LOOP ON-RAMP
"MIR2" 568+31.19 TO 569+14.00

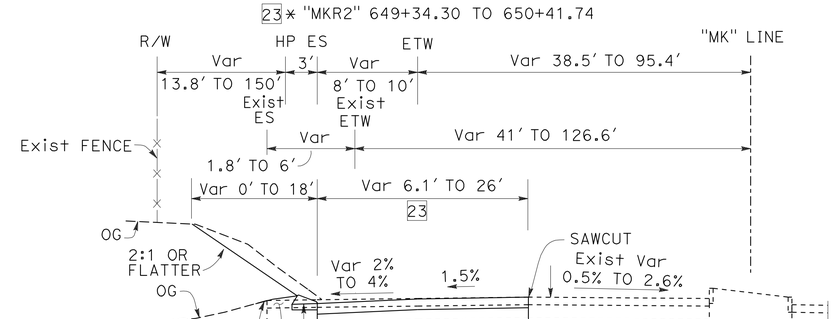

NORTH LIVERMORE AVENUE
"MK" 20+49.79 TO 23+00.00

FOR NOTES AND ABBREVIATIONS, SEE SHEET X-1

TYPICAL CROSS SECTIONS

NO SCALE

X-20

		IA	5/7/12
		REVISED BY	DATE REVISED
INNA ASHUROV	LUIS GARCIA		
CALCULATED-DESIGNED BY	CHECKED BY		
CONSULTANT FUNCTIONAL SUPERVISOR	NATALINA V. BERNARDI		

STATE OF CALIFORNIA - DEPARTMENT OF TRANSPORTATION

Caltrans

LAST REVISION 05-07-12 | DATE PLOTTED => 23-MAY-2012 | TIME PLOTTED => 07:07

Dist	COUNTY	ROUTE	POST MILES TOTAL PROJECT	SHEET No.	TOTAL SHEETS
04	Ala	580	R8.4/R14.6	22	853

REGISTERED CIVIL ENGINEER 5/7/12 DATE

5-14-12
PLANS APPROVAL DATE

REGISTERED PROFESSIONAL ENGINEER N.V. BERNARDI No. 45407 Exp. 9/30/12 CIVIL STATE OF CALIFORNIA

THE STATE OF CALIFORNIA OR ITS OFFICERS OR AGENTS SHALL NOT BE RESPONSIBLE FOR THE ACCURACY OR COMPLETENESS OF SCANNED COPIES OF THIS PLAN SHEET.

BKF ENGINEERS
4670 WILLOW ROAD, SUITE 250
PLEASANTON, CA. 94588

ALAMEDA CTC
1333 BROADWAY SUITE 220
OAKLAND, CA. 94612

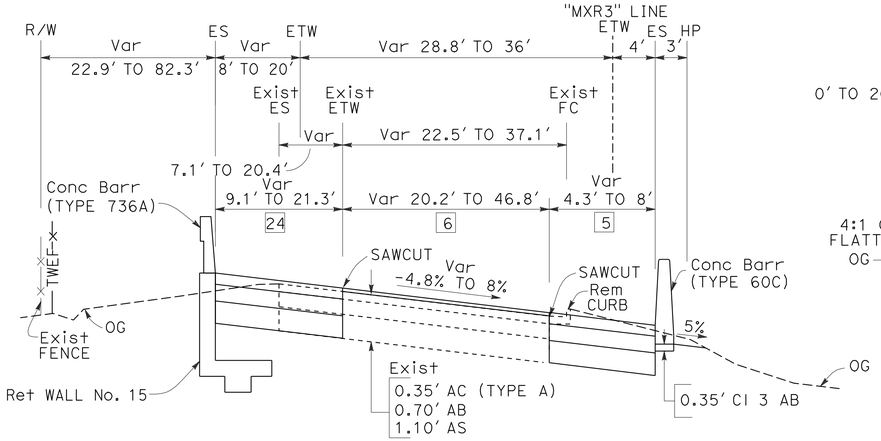

FIRST STREET WESTBOUND ON-RAMP
"MXR3" 746+06.38 TO 750+06.37

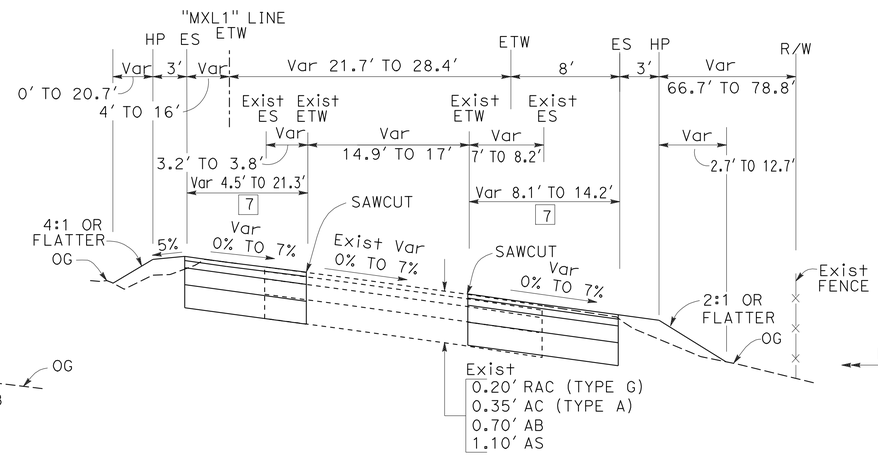

FIRST STREET EASTBOUND ON-RAMP
"MXL1" 750+49.85 TO 753+15.75

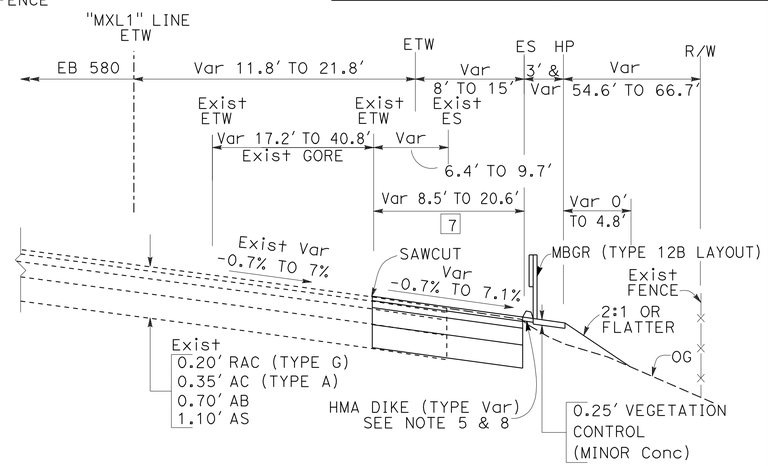

FIRST STREET EASTBOUND ON-RAMP
"MXL1" 753+15.75 TO 756+10.79

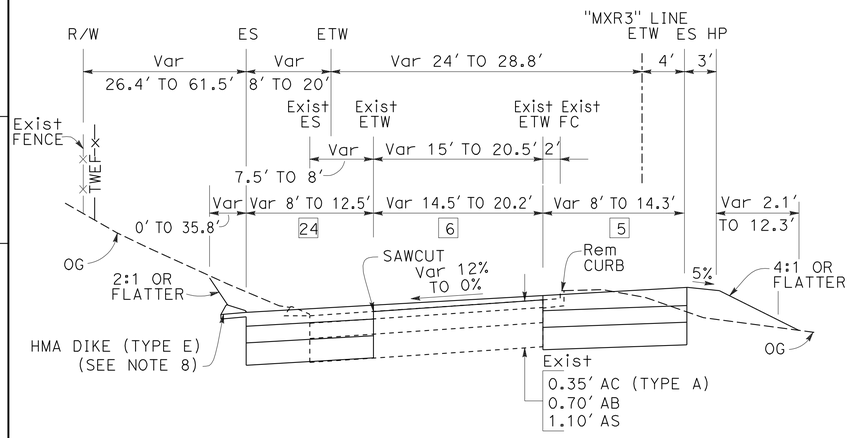

FIRST STREET WESTBOUND ON-RAMP
"MXR3" 742+75.00 TO 746+06.38

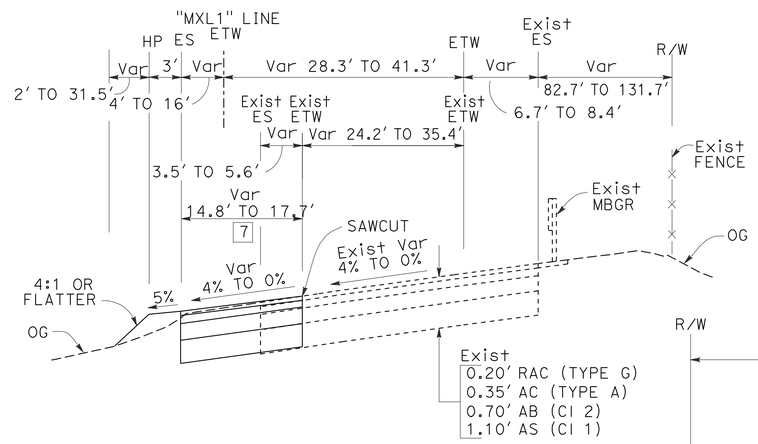

FIRST STREET EASTBOUND ON-RAMP
"MXL1" 746+50 TO 750+49.85

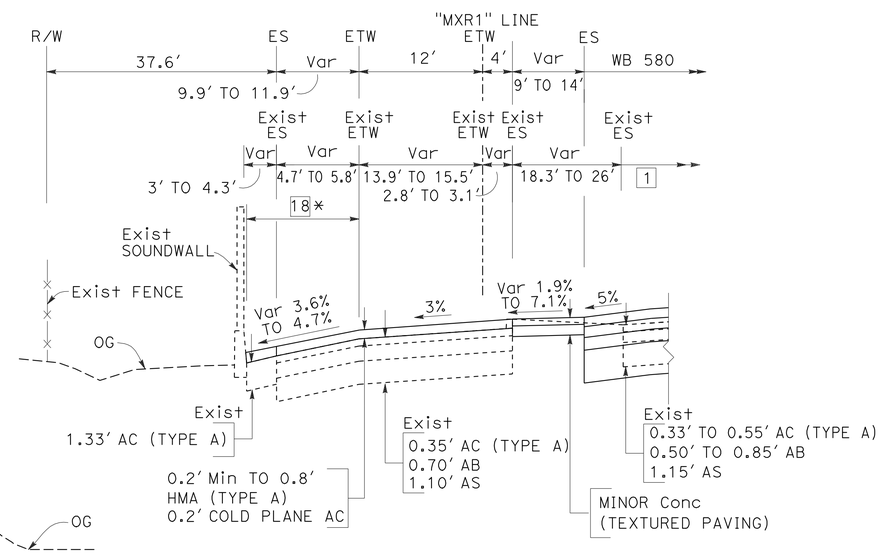

FIRST STREET WESTBOUND OFF-RAMP
"MXR1" 757+50.00 TO 758+66.20
18 * Beg @ "MXR1" 758+36.79

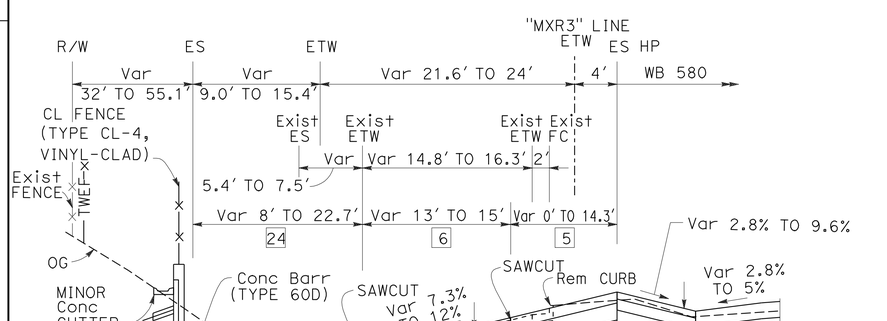

FIRST STREET WESTBOUND ON-RAMP
"MXR3" 740+68.34 TO 742+75.00

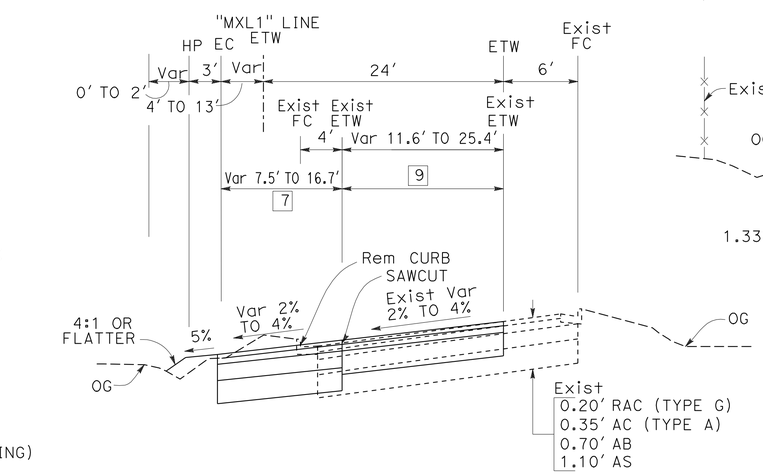

FIRST STREET EASTBOUND ON-RAMP
"MXL1" 745+50.00 TO 746+50.00

FOR NOTES AND ABBREVIATIONS, SEE SHEET X-1

TYPICAL CROSS SECTIONS

NO SCALE

X-21

REVISED BY	DATE REVISED
IA	5/7/12

CALCULATED- INNA ASHUROV
DESIGNED BY LUIS GARCIA
CHECKED BY
CONSULTANT FUNCTIONAL SUPERVISOR NATALINA V. BERNARDI

STATE OF CALIFORNIA - DEPARTMENT OF TRANSPORTATION

LAST REVISION 05-07-12 DATE PLOTTED => 23-MAY-2012 TIME PLOTTED => 07:08

Dist	COUNTY	ROUTE	POST MILES TOTAL PROJECT	SHEET No.	TOTAL SHEETS
04	Ala	580	R8.4/R14.6	23	853

REGISTERED CIVIL ENGINEER 5/7/12 DATE

5-14-12
PLANS APPROVAL DATE

REGISTERED PROFESSIONAL ENGINEER N.V. BERNARDI No. 45407 Exp. 9/30/12 CIVIL STATE OF CALIFORNIA

THE STATE OF CALIFORNIA OR ITS OFFICERS OR AGENTS SHALL NOT BE RESPONSIBLE FOR THE ACCURACY OR COMPLETENESS OF SCANNED COPIES OF THIS PLAN SHEET.

BKF ENGINEERS
4670 WILLOW ROAD, SUITE 250
PLEASANTON, CA. 94588

ALAMEDA CTC
1333 BROADWAY SUITE 220
OAKLAND, CA. 94612

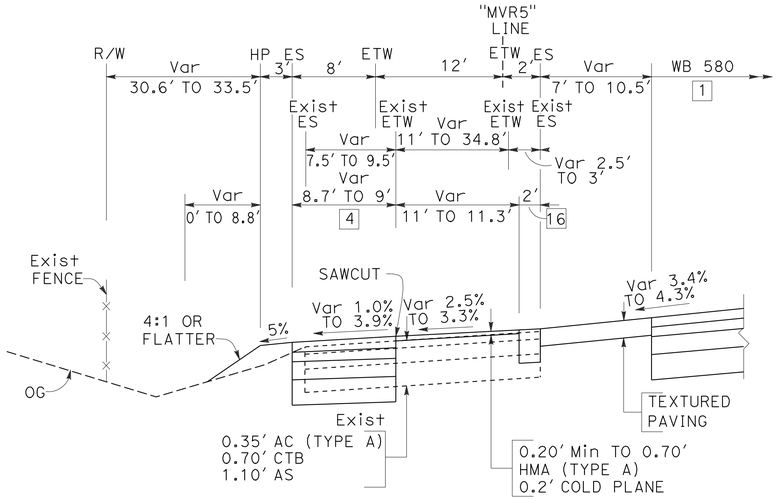

VASCO ROAD WB OFF-RAMP
"MVR5" 812+00.00 TO 812+93.41

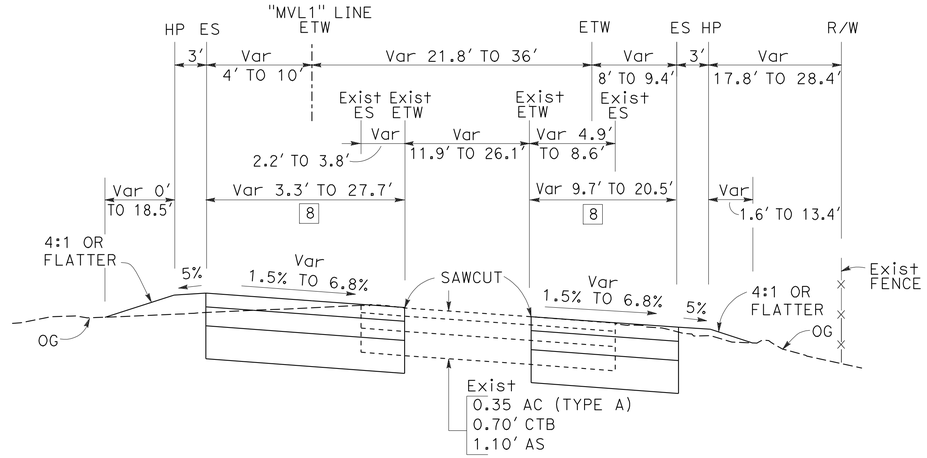

VASCO ROAD EASTBOUND ON-RAMP
"MVL1" 802+12.86 TO 810+95.93

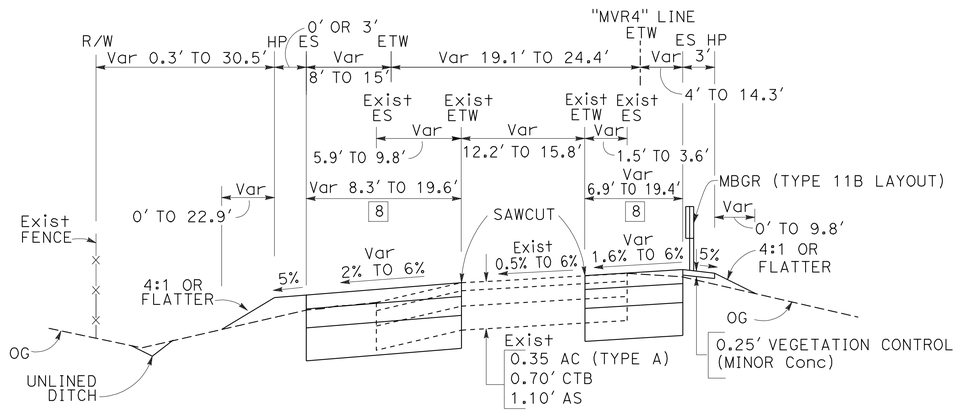

VASCO ROAD WESTBOUND ON-RAMP
"MVR4" 796+00.00 TO 806+87.00

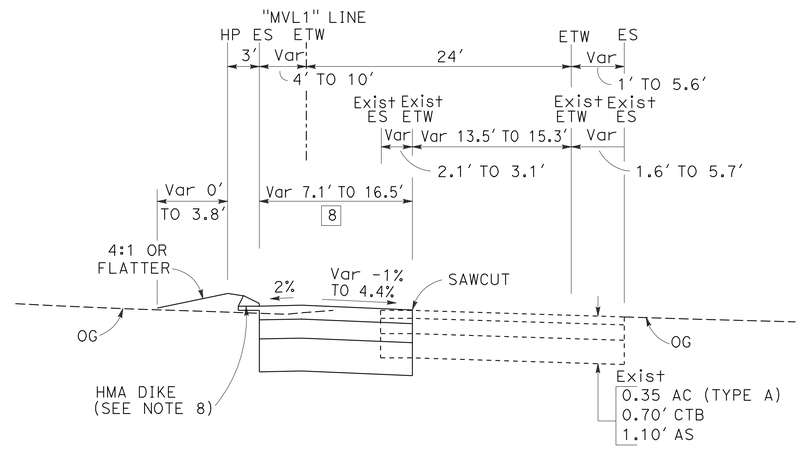

VASCO ROAD EASTBOUND ON-RAMP
"MVL1" 800+01.71 TO 802+12.86

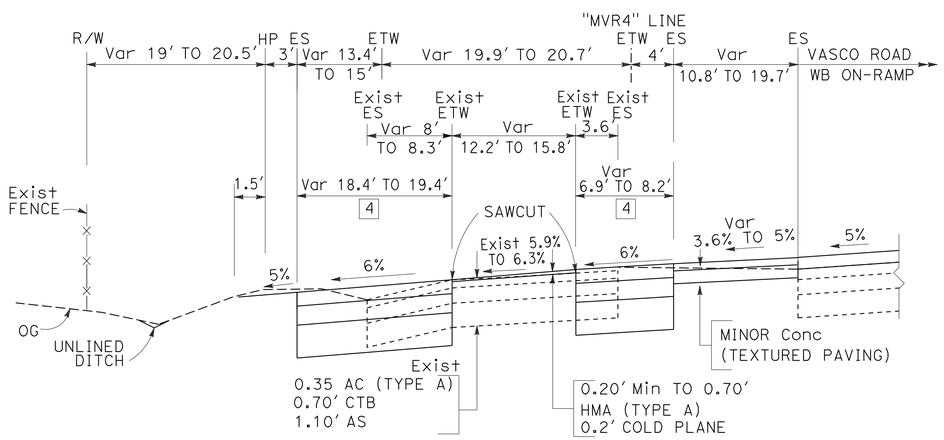

FOR NOTES AND ABBREVIATIONS, SEE SHEET X-1

VASCO ROAD WESTBOUND ON-RAMP
"MVR4" 795+71.41 TO 796+00.00

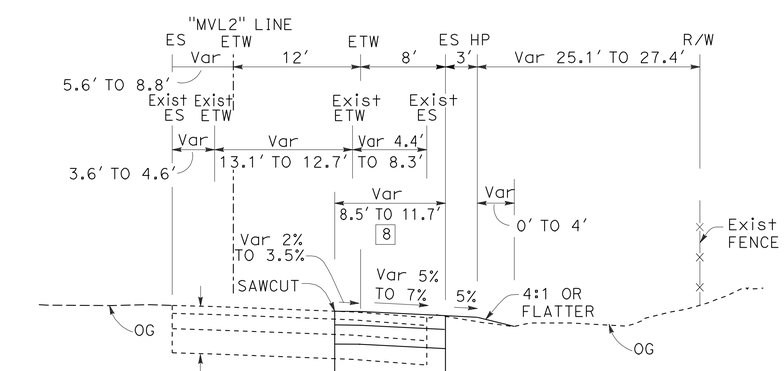

VASCO ROAD EASTBOUND ON-RAMP
"MVL2" 800+50.00 TO 802+12.86

TYPICAL CROSS SECTIONS

NO SCALE

X-22

	IA	5/7/12	
	REVISED BY	DATE REVISED	
	INNA ASHUROV	LUIS GARCIA	
	CALCULATED-DESIGNED BY	CHECKED BY	
	CONSULTANT FUNCTIONAL SUPERVISOR	NATALINA V. BERNARDI	

STATE OF CALIFORNIA - DEPARTMENT OF TRANSPORTATION

Caltrans

LAST REVISION 05-07-12 | DATE PLOTTED => 23-MAY-2012 | TIME PLOTTED => 07:08

Dist	COUNTY	ROUTE	POST MILES TOTAL PROJECT	SHEET No.	TOTAL SHEETS
04	Ala	580	R8.4/R14.6	24	853

REGISTERED CIVIL ENGINEER 5/7/12 DATE

5-14-12
PLANS APPROVAL DATE

REGISTERED PROFESSIONAL ENGINEER N.V. BERNARDI No. 45407 Exp. 9/30/12 CIVIL STATE OF CALIFORNIA

THE STATE OF CALIFORNIA OR ITS OFFICERS OR AGENTS SHALL NOT BE RESPONSIBLE FOR THE ACCURACY OR COMPLETENESS OF SCANNED COPIES OF THIS PLAN SHEET.

BKF ENGINEERS
4670 WILLOW ROAD, SUITE 250
PLEASANTON, CA. 94588

ALAMEDA CTC
1333 BROADWAY SUITE 220
OAKLAND, CA. 94612

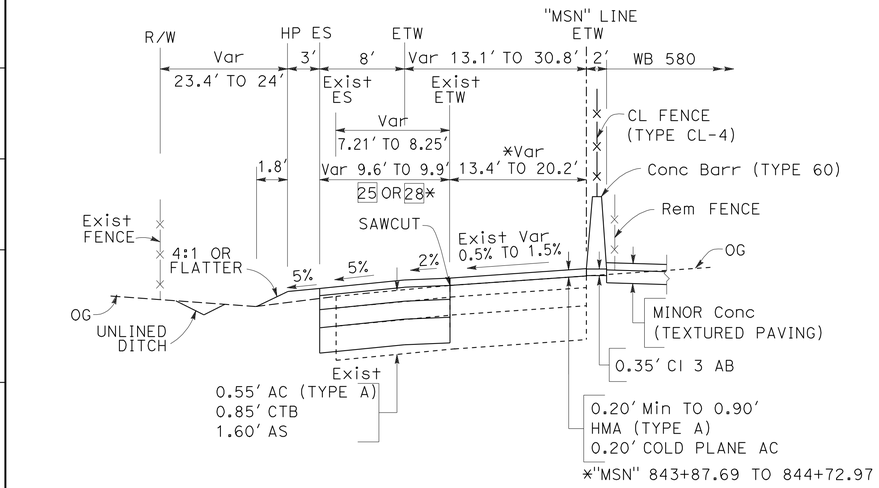

TRUCK SCALE WESTBOUND OFF-RAMP
"MSN" 842+60.28 TO 844+72.97
28* "MSN" 843+87.69 TO 844+72.97

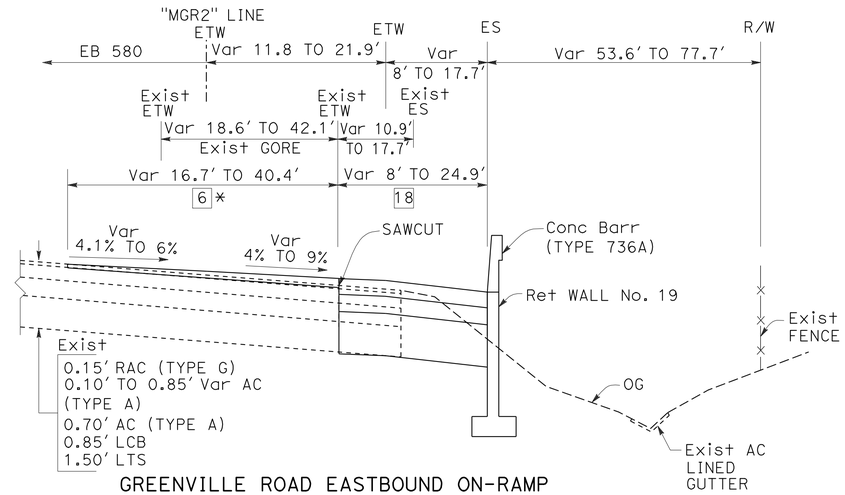

GREENVILLE ROAD EASTBOUND ON-RAMP
"MGR2" 862+63.27 TO 865+47.57
6* END @ "HE" 863+96.46

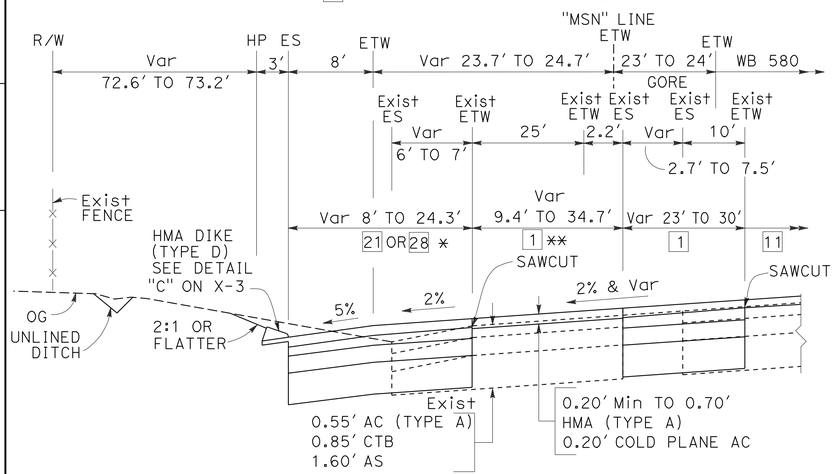

TRUCK SCALE WESTBOUND ON-RAMP
"MSN" 834+15.13 TO 835+47.59
1**"MSN" 834+15.13 TO 834+84.71
28* "MSN" 834+84.71 TO 835+47.59

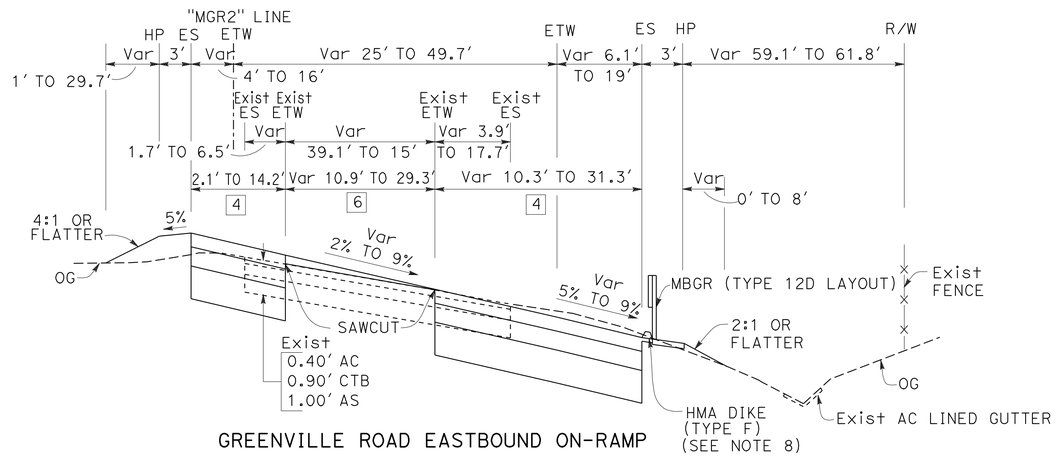

GREENVILLE ROAD EASTBOUND ON-RAMP
"MGR2" 859+00.00 TO 862+63.27

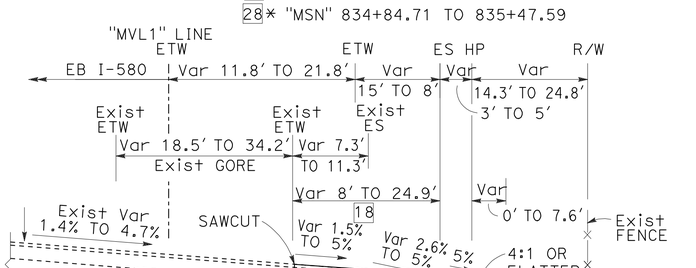

VASCO ROAD EASTBOUND ON-RAMP
"MVL1" 810+95.93 TO 813+88.93

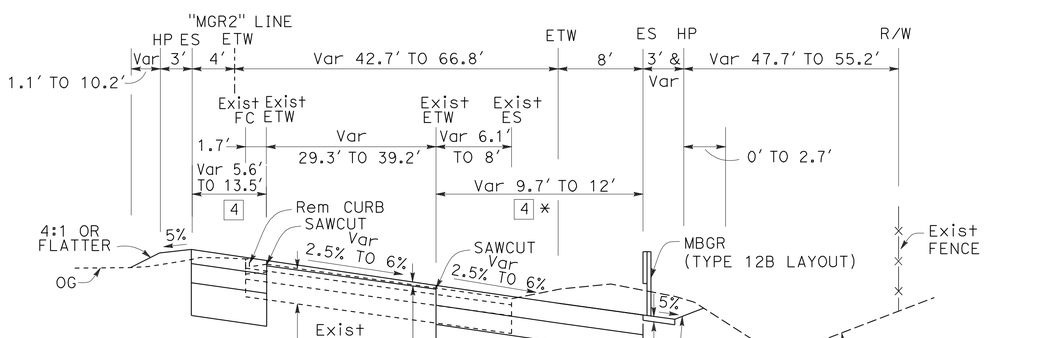

GREENVILLE ROAD EASTBOUND ON-RAMP
"MGR2" 858+20.00 TO 859+00.00
4* Beg @"MGR2" 858+71.04

FOR NOTES AND ABBREVIATIONS, SEE SHEET X-1

TYPICAL CROSS SECTIONS

NO SCALE

X-23

REVISED BY	DATE REVISED
IA	5/7/12

INNA ASHUROV — LUIS GARCIA — CALCULATED-DESIGNED BY — CHECKED BY

CONSULTANT FUNCTIONAL SUPERVISOR: NATALINA V. BERNARDI

STATE OF CALIFORNIA - DEPARTMENT OF TRANSPORTATION

Caltrans

LAST REVISION 05-07-12 — DATE PLOTTED => 23-MAY-2012 — TIME PLOTTED => 07:08

Dist	COUNTY	ROUTE	POST MILES TOTAL PROJECT	SHEET No.	TOTAL SHEETS
04	Ala	580	R8.4/R14.6	25	853

REGISTERED CIVIL ENGINEER — DATE 5/7/12

5-14-12
PLANS APPROVAL DATE

REGISTERED PROFESSIONAL ENGINEER
N.V. BERNARDI
No. 45407
Exp. 9/30/12
CIVIL
STATE OF CALIFORNIA

THE STATE OF CALIFORNIA OR ITS OFFICERS OR AGENTS SHALL NOT BE RESPONSIBLE FOR THE ACCURACY OR COMPLETENESS OF SCANNED COPIES OF THIS PLAN SHEET.

BKF ENGINEERS
4670 WILLOW ROAD, SUITE 250
PLEASANTON, CA. 94588

ALAMEDA CTC
1333 BROADWAY SUITE 220
OAKLAND, CA. 94612

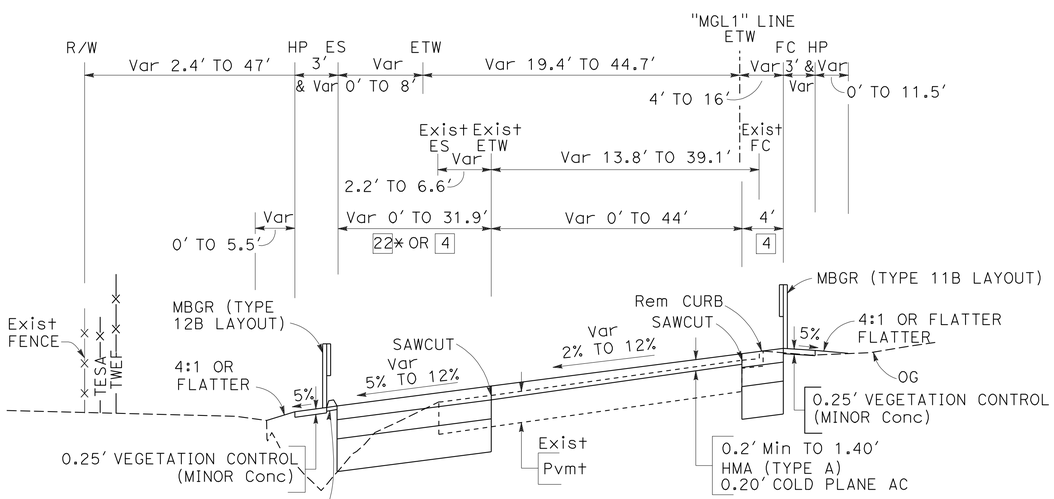

GREENVILLE ROAD WESTBOUND ON-RAMP
"MGL1" 862+03.84 TO 866+28.89
22*"MGL1" 862+03.84 TO 864+00.00

FOR NOTES AND ABBREVIATIONS, SEE SHEET X-1

TYPICAL CROSS SECTIONS

NO SCALE

X-24

REVISED BY	DATE REVISED
IA	5/7/12

INNA ASHUROV — CALCULATED-DESIGNED BY
LUIS GARCIA — CHECKED BY
NATALINA V. BERNARDI — CONSULTANT FUNCTIONAL SUPERVISOR

STATE OF CALIFORNIA - DEPARTMENT OF TRANSPORTATION

LAST REVISION 05-07-12 | DATE PLOTTED => 23-MAY-2012 | TIME PLOTTED => 07:08

Dist	COUNTY	ROUTE	POST MILES TOTAL PROJECT	SHEET No.	TOTAL SHEETS
04	Ala	580	R8.4/R14.6	26	853

REGISTERED CIVIL ENGINEER 1/18/12 DATE

5-14-12
PLANS APPROVAL DATE

REGISTERED PROFESSIONAL ENGINEER N.V. BERNARDI No. 45407 Exp. 9/30/12 CIVIL STATE OF CALIFORNIA

THE STATE OF CALIFORNIA OR ITS OFFICERS OR AGENTS SHALL NOT BE RESPONSIBLE FOR THE ACCURACY OR COMPLETENESS OF SCANNED COPIES OF THIS PLAN SHEET.

BKF ENGINEERS
4670 WILLOW ROAD, SUITE 250
PLEASANTON, CA. 94588

ALAMEDA CTC
1333 BROADWAY SUITE 220
OAKLAND, CA. 94612

NOTE:

PLAN VIEW SHEETS WPC, EC, D, U, AND S, USE THE SAME NUMBER AND ORIENTATION AS PLAN VIEW SHEETS L. ALL OTHER PLAN VIEW SHEETS AS SHOWN.

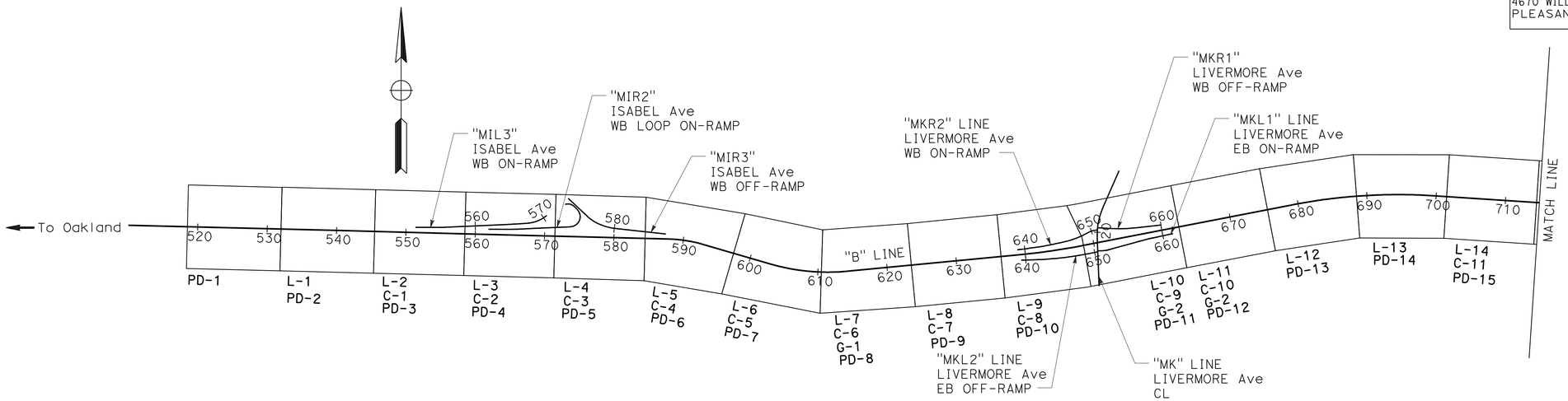

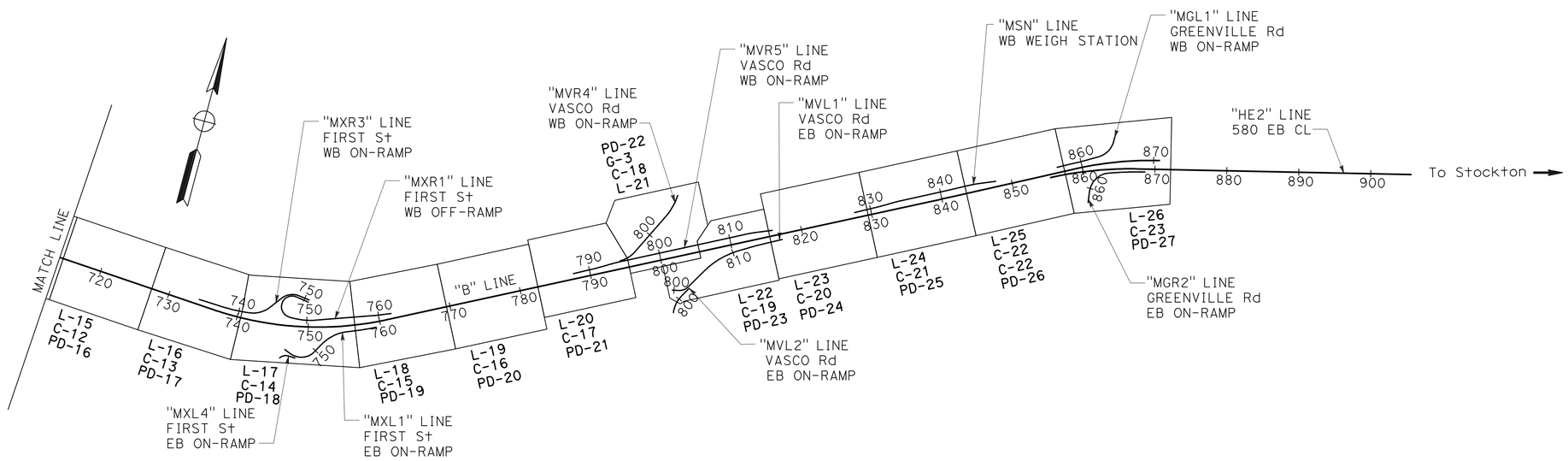

KEY MAP AND LINE INDEX

NO SCALE

K-1

REVISED BY	DATE REVISED
IA	1/18/12

INNA ASHUROV — LUIS GARCIA

CALCULATED-DESIGNED BY — CHECKED BY

CONSULTANT FUNCTIONAL SUPERVISOR: NATALINA V. BERNARDI

STATE OF CALIFORNIA - DEPARTMENT OF TRANSPORTATION

Gibbons

LAST REVISION 01-18-12 | DATE PLOTTED => 23-MAY-2012 | TIME PLOTTED => 07:08

Dist	COUNTY	ROUTE	POST MILES TOTAL PROJECT	SHEET No.	TOTAL SHEETS
04	Ala	580	R8.4/R14.6	27	853

LICENSED LAND SURVEYOR — DATE 1/18/12

5-14-12
PLANS APPROVAL DATE

PROFESSIONAL LAND SURVEYOR — DAVIS THRESH No. 6868 Exp. 9/30/12 — STATE OF CALIFORNIA

THE STATE OF CALIFORNIA OR ITS OFFICERS OR AGENTS SHALL NOT BE RESPONSIBLE FOR THE ACCURACY OR COMPLETENESS OF SCANNED COPIES OF THIS PLAN SHEET.

BKF ENGINEERS
4670 WILLOW ROAD, SUITE 250
PLEASANTON, CA. 94588

ALAMEDA CTC
1333 BROADWAY SUITE 220
OAKLAND, CA. 94612

NOTES:

1. FOR COMPLETE PROJECT CONTROL DATA, SEE THE SURVEY RECORDS ON FILE IN THE SURVEY DEPARTMENT AT THE DISTRICT OFFICE.
2. THE BASIS OF BEARINGS AND ORIGIN OF COORDINATES ARE BASED ON THE CALIFORNIA COORDINATE SYSTEM, ZONE III NAD 83 (EPOCH 2007.00) AS DETERMINED BY T Y LIN INT. WITH GPS SURVEY MEASUREMENTS AND A LEAST SQUARES ADJUSTMENTS. MULTIPLY GRID DISTANCES BY 1.00007047 TO OBTAIN GROUND LEVEL DISTANCES.
3. ELEVATION IS BASED ON NORTH AMERICAN VERTICAL DATUM OF 1988 (NAVD88).
4. ALL THE POINTS ARE FROM THE T Y LIN REPORT "SURVEY CONTROL (GPS) REPORT AERIAL & ROW MAPPING FOR I-580 TRANSIT CORRIDOR" DATED AUGUST 18, 2008.

LEGEND:

▲ FOUND CALTRANS MONUMENT AS NOTED
● FOUND MONUMENT AS NOTED

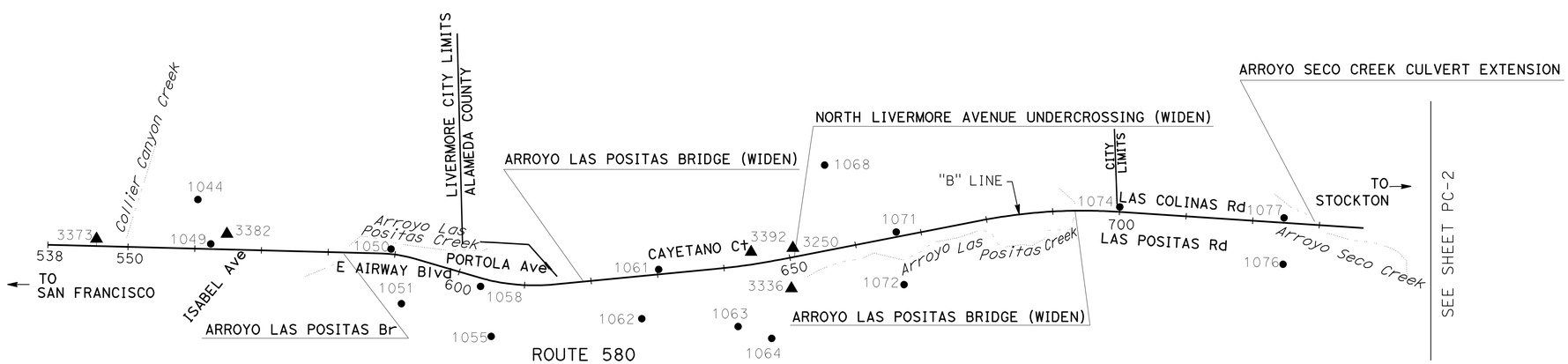

CONSTRUCTION SURVEY CONTROL DATA					
POINT #	NORTHING	EASTING	ELEVATION	DESCRIPTION	LOCATION
1044	2081030.053	6184232.556	419.04	T Y LIN MAG NAIL	"B" 560+28.17 736.32 LT
1049	2080365.148	6184425.791	419.10	T Y LIN MAG NAIL	"B" 562+38.52 76.62 LT
1050	2080288.774	6187126.395	425.07	T Y LIN MAG NAIL	"B" 589+34.69 75.73 LT
1051	2079470.618	6187281.235	426.56	T Y LIN MAG NAIL	"B" 593+00.96 700.58 RT
1055	2078979.756	6188626.431	435.09	T Y LIN MAG NAIL	"B" 606+37.07 819.42 RT
1058	2079729.030	6188467.268	437.46	T Y LIN MAG NAIL	"B" 603+64.10 120.75 RT
1061	2079982.573	6191133.508	463.73	T Y LIN MAG NAIL	"B" 630+22.75 73.07 LT
1062	2079245.540	6190882.063	444.40	T Y LIN MAG NAIL	"B" 627+01.98 636.54 RT
1063	2079127.201	6192324.500	456.07	T Y LIN MAG NAIL	"B" 641+07.23 894.79 RT
1064	2078950.036	6192827.360	454.54	T Y LIN MAG NAIL	"B" 645+37.05 1139.88 RT
1068	2081545.986	6193620.676	497.86	T Y LIN MAG NAIL	"B" 657+75.59 1262.20 LT
1071	2080544.081	6194693.589	473.45	T Y LIN MAG NAIL	"B" 666+37.12 73.62 LT
1072	2079756.202	6194809.572	472.88	T Y LIN MAG NAIL	"B" 666+00.30 721.90 RT
1074	2080919.359	6198042.119	497.26	T Y LIN MAG NAIL	"B" 700+00.15 74.42 LT
1076	2080060.621	6200486.966	512.16	T Y LIN MAG NAIL	"B" 724+96.23 621.48 RT
1077	2080756.252	6200502.253	513.97	T Y LIN MAG NAIL	"B" 724+65.68 73.65 LT

ALL THE ABOVE POINTS BASED ON T Y LIN GPS REPORT DATED 8/18/2008

CONSTRUCTION SURVEY CONTROL DATA					
POINT #	NORTHING	EASTING	ELEVATION	DESCRIPTION	LOCATION
3236	2079698.032	6193123.233	463.59	CALTRANS DISC A-446	"B" 649+33.95 456.52 RT
3250	2080304.196	6193145.358	463.62	CALTRANS DISC A-447	"B" 650+71.58 134.22 LT
3373	2080440.849	6182713.951	423.85	CALTRANS DISC ALA-62	"B" 545+25.26 107.74 LT
3382	2080514.653	6184667.149	418.68	CALTRANS DISC ALA-63	"B" 564+75.93 232.32 LT
3392	2080242.912	6192519.015	529.96	CALTRANS DISC A-448	"B" 644+37.16 185.14 LT

ALL THE ABOVE POINTS BASED ON T Y LIN GPS REPORT DATED 8/18/2008

PROJECT CONTROL

SCALE: 1" = 1000'

THIS PLAN ACCURATE FOR PROJECT CONTROL INFORMATION ONLY

PC-1

REVISED BY	DATE REVISED
JG	1/18/12

CALCULATED-DESIGNED BY: JAY GARCES — CHECKED BY: DAVIS THRESH
CONSULTANT FUNCTIONAL SUPERVISOR: DAVIS THRESH

STATE OF CALIFORNIA - DEPARTMENT OF TRANSPORTATION

LAST REVISION 01-18-12 — DATE PLOTTED => $DATE — TIME PLOTTED => $TIME

Dist	COUNTY	ROUTE	POST MILES TOTAL PROJECT	SHEET No.	TOTAL SHEETS
04	Ala	580	R8.4/R14.6	28	853

LICENSED LAND SURVEYOR — DATE 1/18/12

5-14-12
PLANS APPROVAL DATE

PROFESSIONAL LAND SURVEYOR — DAVIS THRESH No. 6868 Exp. 9/30/12 — STATE OF CALIFORNIA

THE STATE OF CALIFORNIA OR ITS OFFICERS OR AGENTS SHALL NOT BE RESPONSIBLE FOR THE ACCURACY OR COMPLETENESS OF SCANNED COPIES OF THIS PLAN SHEET.

BKF ENGINEERS
4670 WILLOW ROAD, SUITE 250
PLEASANTON, CA. 94588

ALAMEDA CTC
1333 BROADWAY SUITE 220
OAKLAND, CA. 94612

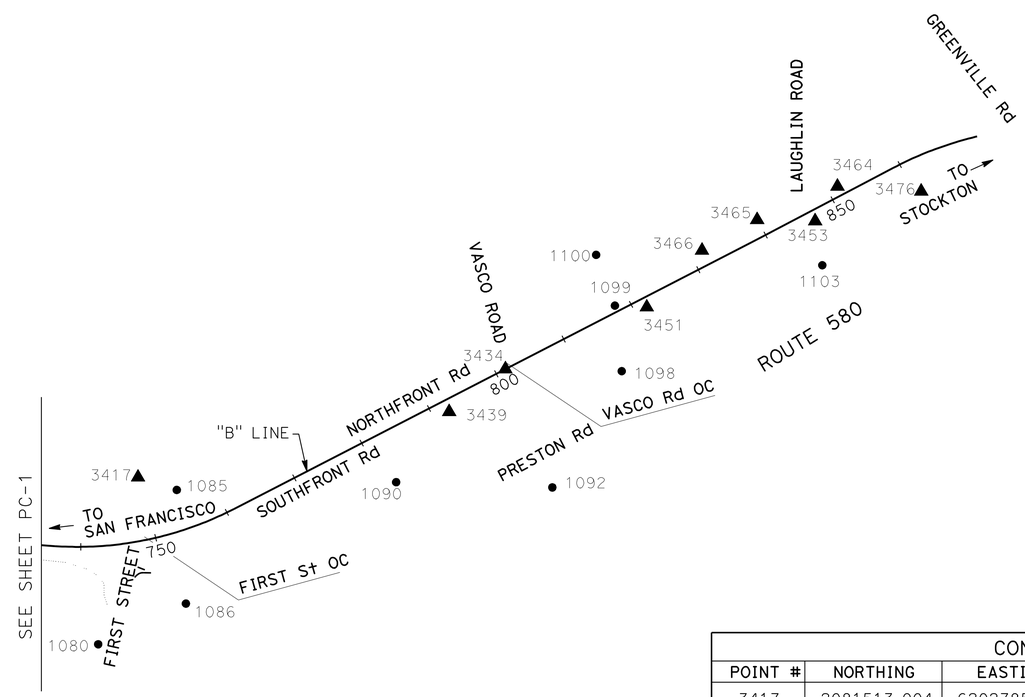

CONSTRUCTION SURVEY CONTROL DATA					
POINT #	NORTHING	EASTING	ELEVATION	DESCRIPTION	LOCATION
1080	2079308.412	6202260.161	523.01	T Y LIN MAG NAIL	"B" 741+70.80 1292.08 RT
1085	2081345.209	6203296.925	520.39	T Y LIN MAG NAIL	"B" 754+70.65 529.42 LT
1086	2079844.848	6203418.255	524.13	T Y LIN MAG NAIL	"B" 751+56.30 940.42 RT
1090	2081447.806	6206194.024	532.13	T Y LIN MAG NAIL	"B" 781+69.04 667.17 RT
1092	2081379.247	6208255.223	544.26	T Y LIN MAG NAIL	"B" 799+70.05 1671.96 RT
1098	2082914.038	6209171.669	542.55	T Y LIN MAG NAIL	"B" 814+87.56 727.17 RT
1099	2083778.682	6209081.315	539.21	T Y LIN MAG NAIL	"B" 818+03.17 82.87 LT
1100	2084448.884	6208833.865	534.06	T Y LIN MAG NAIL	"B" 818+90.07 791.99 LT
1103	2084312.325	6211819.911	555.50	T Y LIN MAG NAIL	"B" 844+76.10 701.22 RT

ALL THE ABOVE POINTS BASED ON T Y LIN GPS REPORT DATED 8/18/2008

CONSTRUCTION SURVEY CONTROL DATA					
POINT #	NORTHING	EASTING	ELEVATION	DESCRIPTION	LOCATION
3417	2081513.004	6202785.439	520.27	CALTRANS DISC A-443	"B" 749+44.89 831.34 LT
3434	2082941.846	6207635.241	560.18	CALTRANS DISC A-361	"B" 801+34.41 1.09 LT
3439	2082376.631	6206893.284	534.08	CALTRANS DISC A-360	"B" 792+16 161.64 RT
3451	2083758.983	6209502.427	541.13	CALTRANS DISC A-364	"B" 821+68.51 127.47 RT
3453	2084896.604	6211725.700	556.92	CALTRANS DISC A-366	"B" 846+64.74 140.26 RT
3464	2085354.251	6212019.510	560.80	CALTRANS DISC A-377	"B" 851+37.83 127.97 LT
3465	2084912.407	6210959.690	551.15	CALTRANS DISC A-376	"B" 839+93.36 230.11 LT
3466	2084507.854	6210231.214	546.21	CALTRANS DISC A-375	"B" 831+59.32 204.56 LT
3476	2085288.236	6213126.532	567.58	NGS DISC PID:AA3816	"B" 861+05.48 442.09 RT

ALL THE ABOVE POINTS BASED ON T Y LIN GPS REPORT DATED 8/18/2008

PROJECT CONTROL

SCALE: 1" = 1000'

FOR NOTES AND LEGEND SEE SHEET PC-1

THIS PLAN ACCURATE FOR PROJECT CONTROL INFORMATION ONLY

PC-2

REVISED BY	DATE REVISED
JG	1/18/12

JAY GARCES — CALCULATED-DESIGNED BY
DAVIS THRESH — CHECKED BY
DAVIS THRESH — CONSULTANT FUNCTIONAL SUPERVISOR

STATE OF CALIFORNIA - DEPARTMENT OF TRANSPORTATION

LAST REVISION 01-18-12 | DATE PLOTTED => $DATE | TIME PLOTTED => $TIME

Dist	COUNTY	ROUTE	POST MILES TOTAL PROJECT	SHEET No.	TOTAL SHEETS
04	Ala	580	R8.4/R14.6	29	853

REGISTERED CIVIL ENGINEER 5/7/12 DATE

5-14-12
PLANS APPROVAL DATE

REGISTERED PROFESSIONAL ENGINEER N.V. BERNARDI No. 45407 Exp. 9/30/12 CIVIL STATE OF CALIFORNIA

THE STATE OF CALIFORNIA OR ITS OFFICERS OR AGENTS SHALL NOT BE RESPONSIBLE FOR THE ACCURACY OR COMPLETENESS OF SCANNED COPIES OF THIS PLAN SHEET.

BKF ENGINEERS
4670 WILLOW ROAD, SUITE 250
PLEASANTON, CA. 94588

ALAMEDA CTC
1333 BROADWAY SUITE 220
OAKLAND, CA. 94612

FOR ACCURATE RIGHT OF WAY DATA, CONTACT RIGHT OF WAY ENGINEERING AT THE DISTRICT OFFICE.

NOTES:

1. COORDINATES, DISTANCES AND BEARINGS SHOWN ARE BASED ON CALIFORNIA COORDINATE SYSTEM OF 1983, ZONE 3, (2007.00) EPOCH DATE. MULTIPLY DISTANCE SHOWN BY 1.00007047 TO OBTAIN GROUND LEVEL DISTANCES.
2. ELEVATIONS SHOWN ARE BASED UPON NORTH AMERICAN VERTICAL DATUM OF 1988 (NAVD 88) IN FEET.
3. FOR DIKE TRANSITIONS AT TYPES AT MBGR, SEE STANDARD PLAN A77C4 AND A77E.
4. SEE CONSTRUCTION DETAIL SHEETS FOR DETAILS OF TEMPORARY FENCE (WILDLIFE EXCLUSION) AND TEMPORARY FENCE (TYPE ESA).
5. FOR PAVEMENT STRUCTURAL SECTION TYPES, SEE PAVEMENT STRUCTURAL SECTIONS TYPICAL CROSS SECTIONS SHEET X-1.
6. FOR LIMITS AND LOCATIONS OF COLD PLANE AND AC SURFACING, SEE SUMMARY OF QUANTITIES SHEETS.
7. FOR CONTOUR GRADING, SEE CONTOUR GRADING SHEETS.
8. CONTRACTOR SHALL VERIFY EXISTING FIELD CONDITIONS PRIOR TO COMMENCEMENT OF WORK.
9. FOR EXACT LOCATIONS OF REPLACEMENT PCC SLABS WITH INDIVIDUAL SLAB REPLACEMENT (RAPID STRENGTH CONCRETE), SEE SUMMARY OF QUANTITIES SHEETS.

LEGEND:

- (No.) CURVE DATA
- [No.] STRUCTURAL SECTION NUMBER
- HMA AND/OR RHMA OVERLAY
- COLD PLANE AC PAVEMENT & HMA AND/OR RHMA OVERLAY (0.20' TO 1.40')
- MINOR CONCRETE (TEXTURED PAVING)
- REMOVE BASE AND SURFACING
- x—TWEF—x TEMPORARY FENCE (WILDLIFE EXCLUSION)
- x—TESA—x TEMPORARY FENCE (TYPE ESA)
- VC VEGETATION CONTROL (MINOR CONCRETE)
- W IRRIGATION CROSSOVER

ABBREVIATIONS:

AFTS	ALTERNATIVE FLARED TERMINAL SYSTEM
AITS	ALTERNATIVE IN-LINE TERMINAL SYSTEM
Barr	BARRIER
CHP	CALIFORNIA HIGHWAY PATROL ENFORCEMENT AREA
IRR XOVER	Exist IRRIGATION CROSSOVER
TCE	TEMPORARY CONSTRUCTION EASEMENT
LSS	LIMIT OF STRUCTURAL SECTION
MVP	MAINTENANCE VEHICLE PULLOUT
PNT	POINT
w/	WITH
Rem	REMOVE
RSC	RAPID STRENGTH CONCRETE
C&G	CURB AND GUTTER

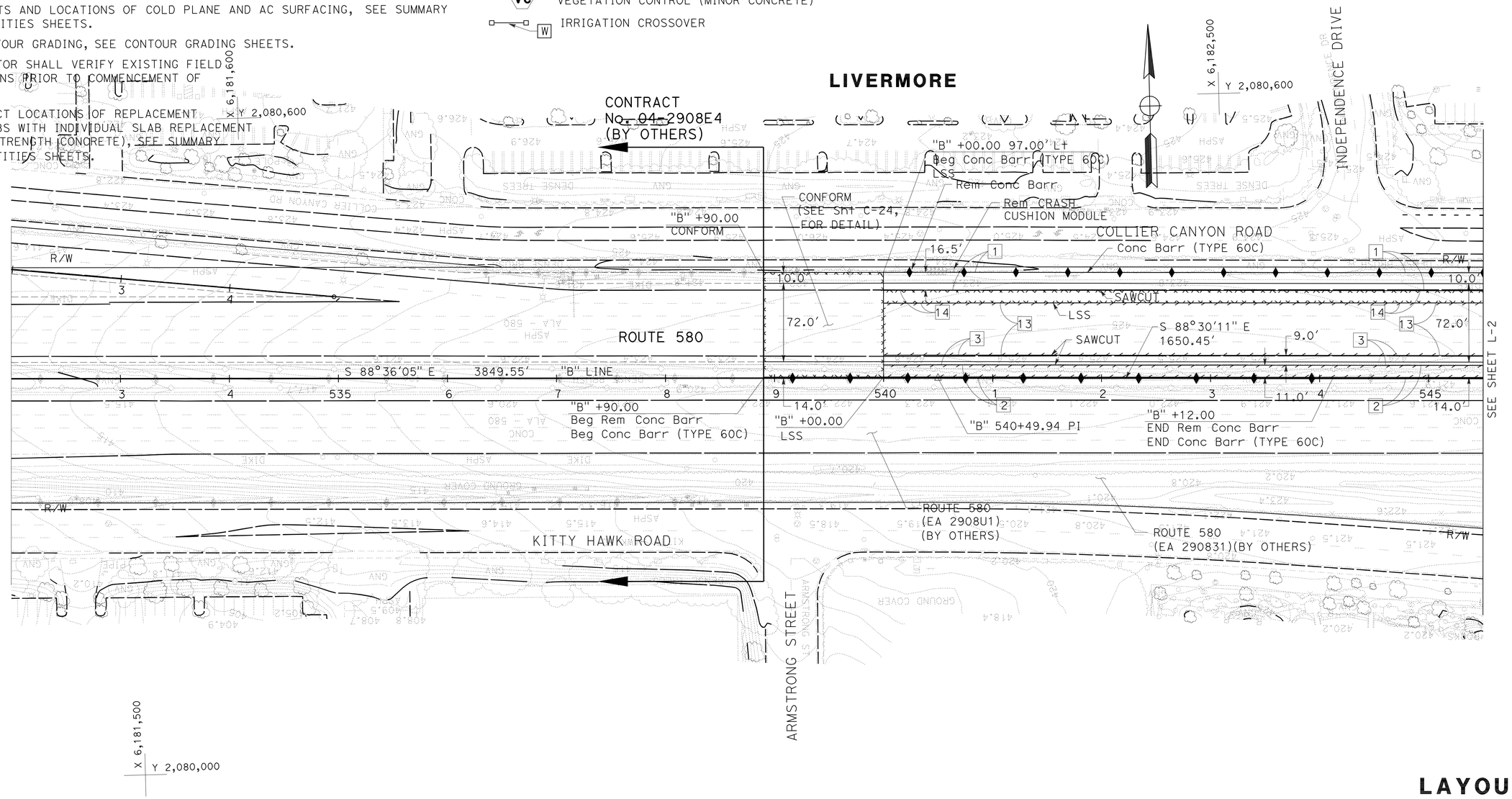

LAYOUT

SCALE: 1" = 50'

L-1

STATE OF CALIFORNIA - DEPARTMENT OF TRANSPORTATION

CONSULTANT FUNCTIONAL SUPERVISOR: NATALINA V. BERNARDI

CALCULATED-DESIGNED BY: TRAVIS CHAN — CHECKED BY: LUIS GARCIA

REVISED BY: TC — DATE REVISED: 5/7/12

LAST REVISION 05-07-12 — DATE PLOTTED => 23-MAY-2012 — TIME PLOTTED => 07:08

FOR ACCURATE RIGHT OF WAY DATA, CONTACT
RIGHT OF WAY ENGINEERING AT THE DISTRICT OFFICE.

Dist	COUNTY	ROUTE	POST MILES TOTAL PROJECT	SHEET No.	TOTAL SHEETS
04	Ala	580	R8.4/R14.6	30	853

REGISTERED CIVIL ENGINEER 5/7/12 DATE

5-14-12
PLANS APPROVAL DATE

REGISTERED PROFESSIONAL ENGINEER N.V. BERNARDI No. 45407 Exp. 9/30/12 CIVIL STATE OF CALIFORNIA

THE STATE OF CALIFORNIA OR ITS OFFICERS OR AGENTS SHALL NOT BE RESPONSIBLE FOR THE ACCURACY OR COMPLETENESS OF SCANNED COPIES OF THIS PLAN SHEET.

BKF ENGINEERS
4670 WILLOW ROAD, SUITE 250
PLEASANTON, CA. 94588

ALAMEDA CTC
1333 BROADWAY SUITE 220
OAKLAND, CA. 94612

CURVE DATA

No.	R	Δ	T	L	NORTHING	EASTING
350	3000.00′	3°11′29′	83.57′	167.10′	2083390.249	6183643.050
351	20000.00	00°19′36"	57.00′	114.00′	2060424.433	6184902.275

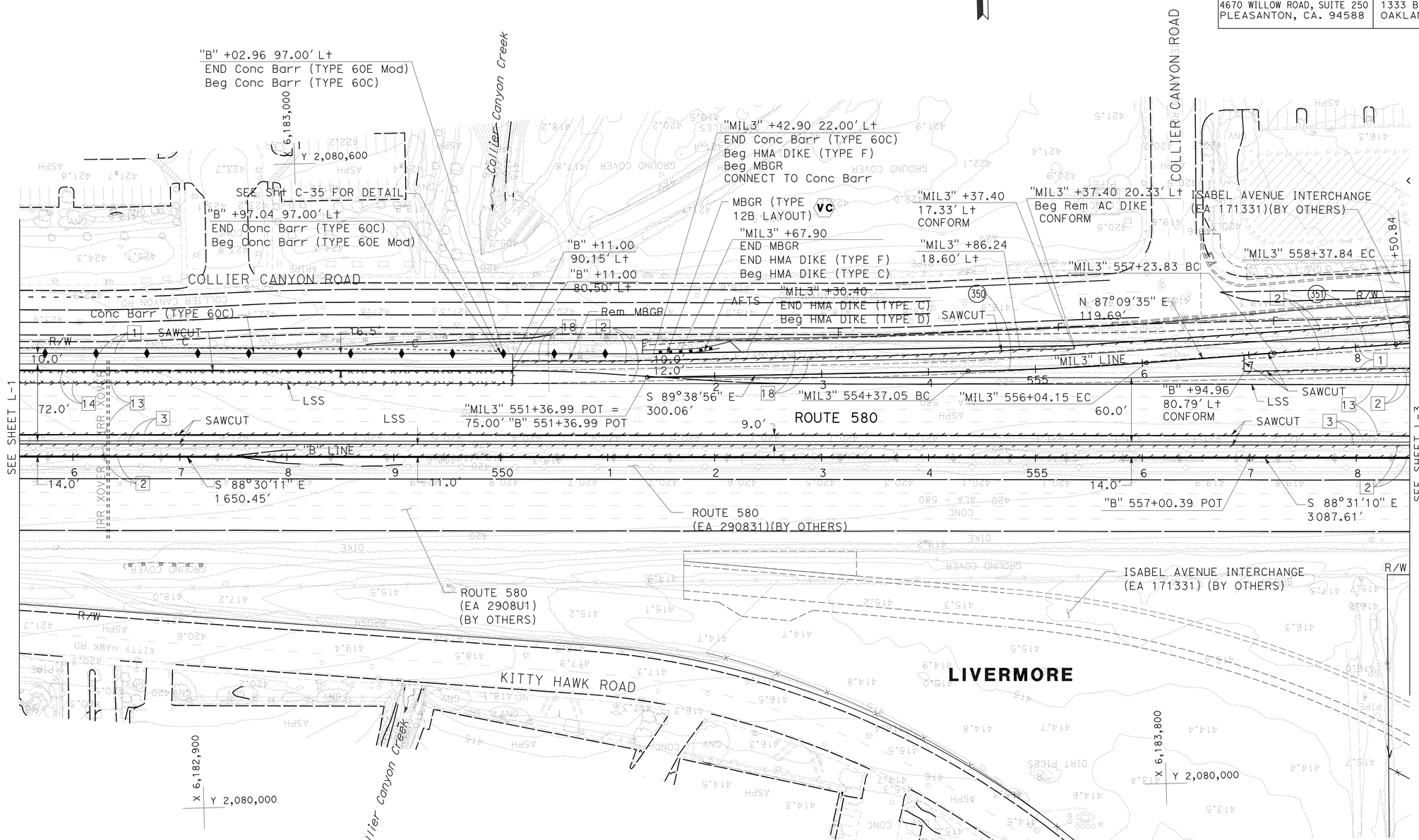

FOR NOTES, ABBREVIATIONS AND LEGEND, SEE SHEET L-1

LAYOUT
SCALE: 1" = 50′

L-2

STATE OF CALIFORNIA - DEPARTMENT OF TRANSPORTATION

CONSULTANT FUNCTIONAL SUPERVISOR: NATALINA V. BERNARDI

CALCULATED-DESIGNED BY: TRAVIS CHAN | CHECKED BY: LUIS GARCIA

REVISED BY: TC | DATE REVISED: 5/7/12

LAST REVISION 05-07-12 | DATE PLOTTED =>23-MAY-2012 | TIME PLOTTED =>07:09

FOR ACCURATE RIGHT OF WAY DATA, CONTACT
RIGHT OF WAY ENGINEERING AT THE DISTRICT OFFICE.

Dist	COUNTY	ROUTE	POST MILES TOTAL PROJECT	SHEET No.	TOTAL SHEETS
04	Ala	580	R8.4/R14.6	31	853

REGISTERED CIVIL ENGINEER 5/7/12 DATE

5-14-12
PLANS APPROVAL DATE

REGISTERED PROFESSIONAL ENGINEER N.V. BERNARDI No. 45407 Exp. 9/30/12 CIVIL STATE OF CALIFORNIA

THE STATE OF CALIFORNIA OR ITS OFFICERS OR AGENTS SHALL NOT BE RESPONSIBLE FOR THE ACCURACY OR COMPLETENESS OF SCANNED COPIES OF THIS PLAN SHEET.

BKF ENGINEERS
4670 WILLOW ROAD, SUITE 250
PLEASANTON, CA. 94588

ALAMEDA CTC
1333 BROADWAY SUITE 220
OAKLAND, CA. 94612

CURVE DATA

No.	R	Δ	T	L	NORTHING	EASTING
352	9999.98′	1°08′03"	98.98′	197.94′	2090420.656	6184158.506
353	503.94′	35°38′37"	162.01′	313.50′	2080952.553	6184899.174
354	3000.00′	3°11′29"	83.57′	167.10′	2083363.017	6184693.104
355	20000.00′	0°19′36"	57.00′	114.00′	2060394.865	6185904.829

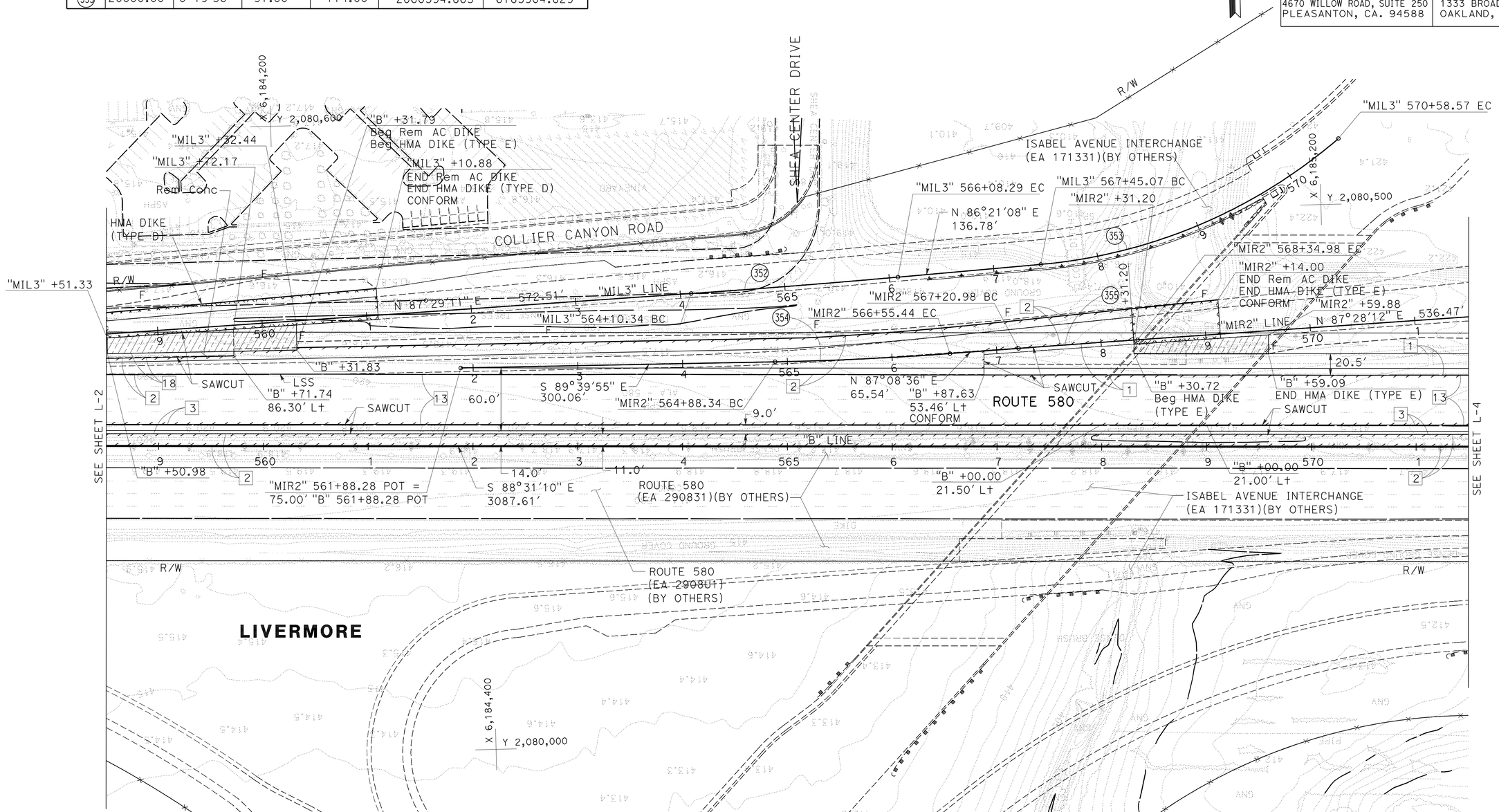

FOR NOTES, ABBREVIATIONS AND LEGEND, SEE SHEET L-1

LAYOUT
SCALE: 1" = 50′

L-3

REVISED BY	DATE REVISED	TRAVIS CHAN	5/7/12
CALCULATED-DESIGNED BY	CHECKED BY	LUIS GARCIA	
CONSULTANT FUNCTIONAL SUPERVISOR		NATALINA V. BERNARDI	

STATE OF CALIFORNIA - DEPARTMENT OF TRANSPORTATION

LAST REVISION 05-07-12 | DATE PLOTTED =>23-MAY-2012 TIME PLOTTED =>07:09

Dist	COUNTY	ROUTE	POST MILES TOTAL PROJECT	SHEET No.	TOTAL SHEETS
04	Ala	580	R8.4/R14.6	32	853

REGISTERED CIVIL ENGINEER 5/7/12 DATE

5-14-12
PLANS APPROVAL DATE

REGISTERED PROFESSIONAL ENGINEER N.V. BERNARDI No. 45407 Exp. 9/30/12 CIVIL STATE OF CALIFORNIA

THE STATE OF CALIFORNIA OR ITS OFFICERS OR AGENTS SHALL NOT BE RESPONSIBLE FOR THE ACCURACY OR COMPLETENESS OF SCANNED COPIES OF THIS PLAN SHEET.

BKF ENGINEERS
4670 WILLOW ROAD, SUITE 250
PLEASANTON, CA. 94588

ALAMEDA CTC
1333 BROADWAY SUITE 220
OAKLAND, CA. 94612

FOR ACCURATE RIGHT OF WAY DATA, CONTACT RIGHT OF WAY ENGINEERING AT THE DISTRICT OFFICE.

CURVE DATA

No.	R	Δ	T	L	NORTHING	EASTING
356	147.64′	133°55′44″	347.21	345.10	2080546.544	6185551.384
357	122.76′	64°16′12″	77.11′	137.70′	2080606.720	6185524.183
358	688.97′	37°10′54″	231.74′	447.10′	2081063.141	6186260.683
52	20074.00′	0°34′23″	100.37′	200.74′		
53	19932.00′	0°25′45″	74.66′	149.32′		

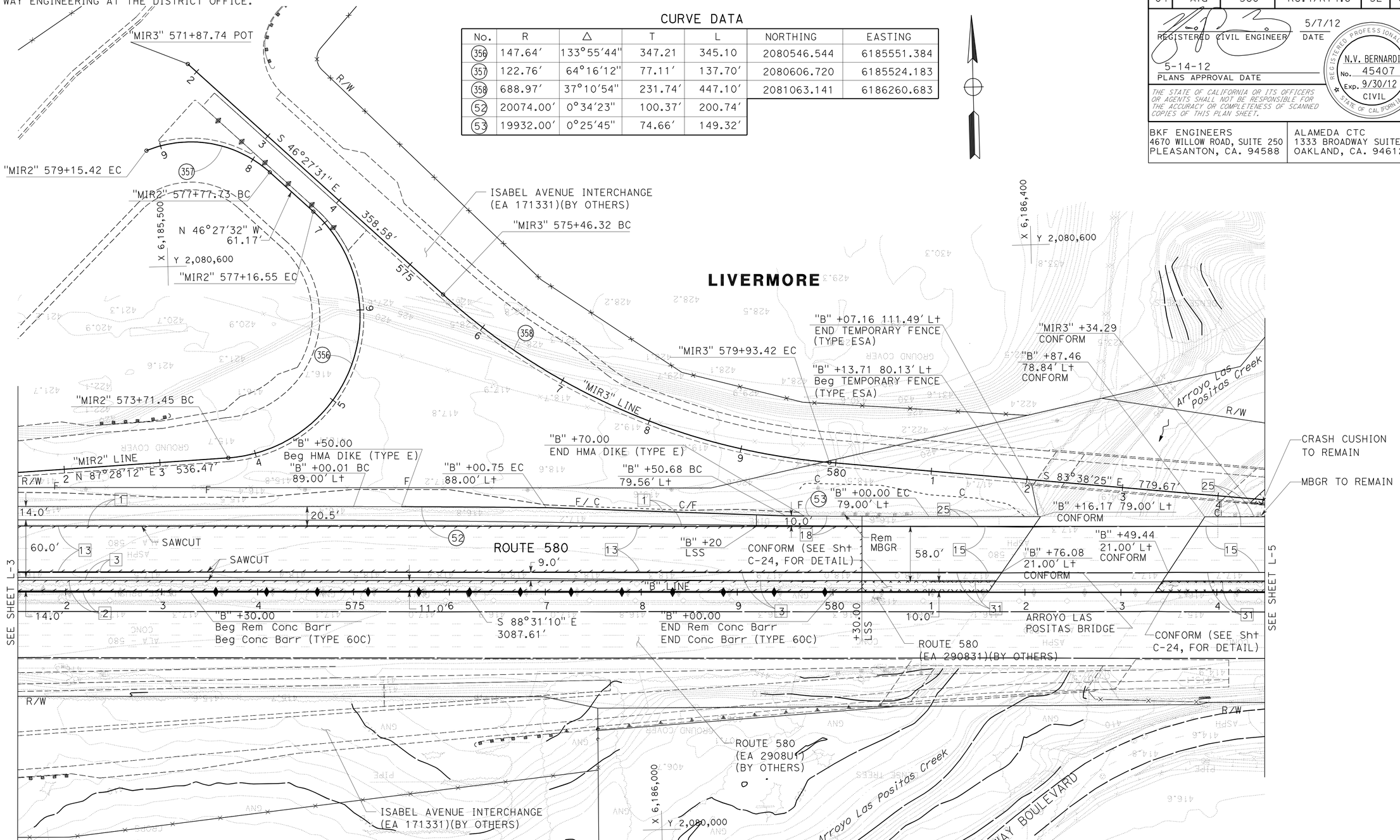

FOR NOTES, ABBREVIATIONS AND LEGEND, SEE SHEET L-1

LAYOUT

SCALE: 1" = 50′

L-4

TC	5/7/12		
REVISED BY	DATE REVISED		
TRAVIS CHAN	LUIS GARCIA		
CALCULATED-DESIGNED BY	CHECKED BY		
CONSULTANT FUNCTIONAL SUPERVISOR	NATALINA V. BERNARDI		
STATE OF CALIFORNIA - DEPARTMENT OF TRANSPORTATION			

LAST REVISION 05-07-12 | DATE PLOTTED => 23-MAY-2012 | TIME PLOTTED => 07:09

FOR ACCURATE RIGHT OF WAY DATA, CONTACT
RIGHT OF WAY ENGINEERING AT THE DISTRICT OFFICE.

CURVE DATA

No.	R	Δ	T	L	NORTHING	EASTING
1	1966.50′	14°48′26″	255.53′	508.21′	2078256.836	6186921.631
55	2186.00′	14°01′17″	268.82′	534.96′		

Dist	COUNTY	ROUTE	POST MILES TOTAL PROJECT	SHEET No.	TOTAL SHEETS
04	Ala	580	R8.4/R14.6	33	853

REGISTERED CIVIL ENGINEER 5/7/12 DATE

5-14-12
PLANS APPROVAL DATE

REGISTERED PROFESSIONAL ENGINEER N.V. BERNARDI No. 45407 Exp. 9/30/12 CIVIL STATE OF CALIFORNIA

THE STATE OF CALIFORNIA OR ITS OFFICERS OR AGENTS SHALL NOT BE RESPONSIBLE FOR THE ACCURACY OR COMPLETENESS OF SCANNED COPIES OF THIS PLAN SHEET.

BKF ENGINEERS
4670 WILLOW ROAD, SUITE 250
PLEASANTON, CA. 94588

ALAMEDA CTC
1333 BROADWAY SUITE 220
OAKLAND, CA. 94612

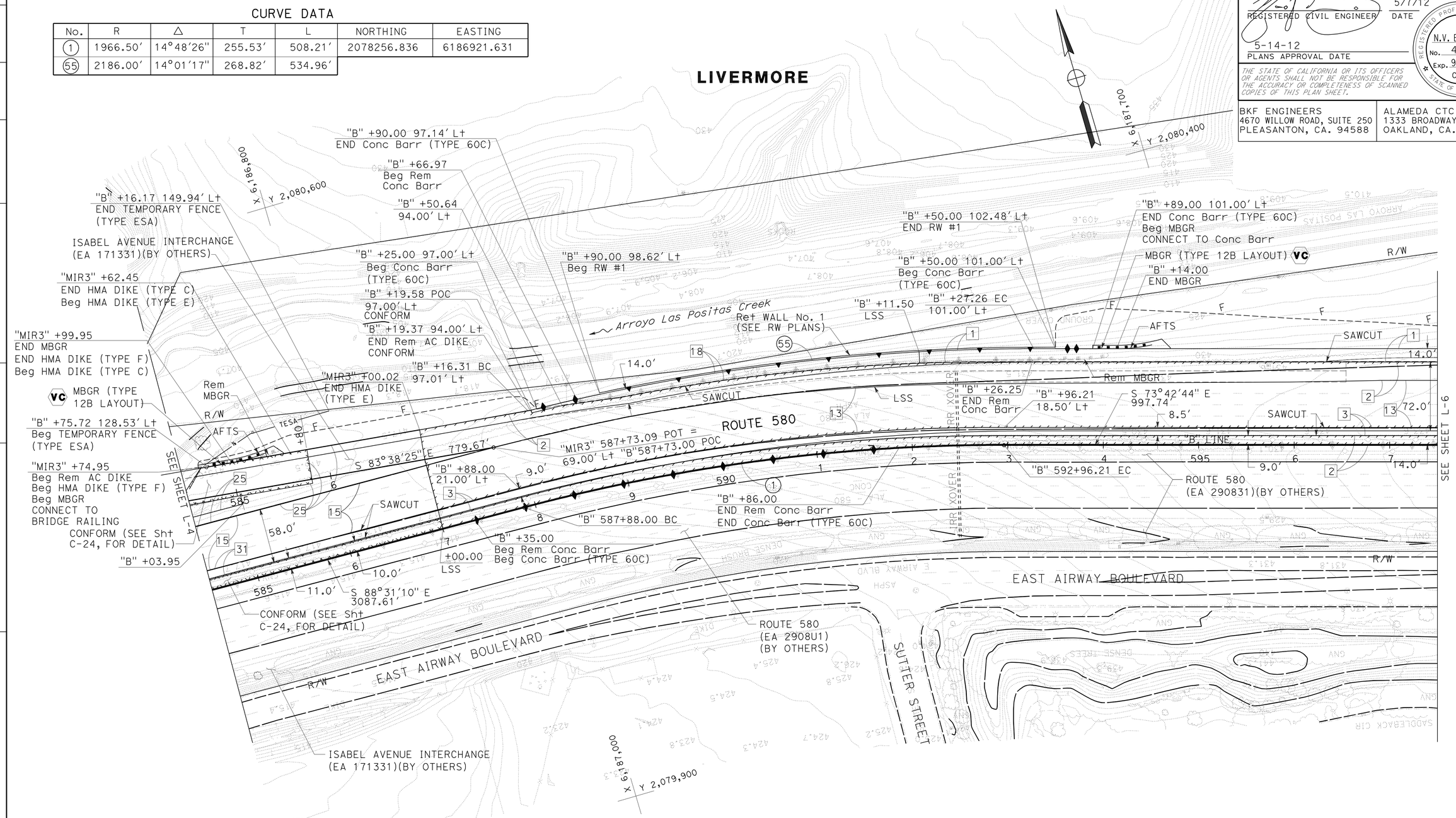

FOR NOTES, ABBREVIATIONS
AND LEGEND, SEE SHEET L-1

LAYOUT

SCALE: 1" = 50′

L-5

REVISED BY	DATE REVISED
TC	5/7/12

TRAVIS CHAN — LUIS GARCIA — CALCULATED-DESIGNED BY — CHECKED BY

CONSULTANT FUNCTIONAL SUPERVISOR: NATALINA V. BERNARDI

STATE OF CALIFORNIA - DEPARTMENT OF TRANSPORTATION

Caltrans

LAST REVISION 05-07-12 — DATE PLOTTED =>23-MAY-2012 TIME PLOTTED =>07:10

FOR ACCURATE RIGHT OF WAY DATA, CONTACT
RIGHT OF WAY ENGINEERING AT THE DISTRICT OFFICE.

Dist	COUNTY	ROUTE	POST MILES TOTAL PROJECT	SHEET No.	TOTAL SHEETS
04	Ala	580	R8.4/R14.6	34	853

REGISTERED CIVIL ENGINEER 5/7/12 DATE

5-14-12
PLANS APPROVAL DATE

REGISTERED PROFESSIONAL ENGINEER N.V. BERNARDI No. 45407 Exp. 9/30/12 CIVIL STATE OF CALIFORNIA

THE STATE OF CALIFORNIA OR ITS OFFICERS OR AGENTS SHALL NOT BE RESPONSIBLE FOR THE ACCURACY OR COMPLETENESS OF SCANNED COPIES OF THIS PLAN SHEET.

BKF ENGINEERS
4670 WILLOW ROAD, SUITE 250
PLEASANTON, CA. 94588

ALAMEDA CTC
1333 BROADWAY SUITE 220
OAKLAND, CA. 94612

CURVE DATA

No.	R	Δ	T	L	NORTHING	EASTING
2	3000.00′	21°46′29″	577.02′	1140.12′	2082744.181	6189272.234

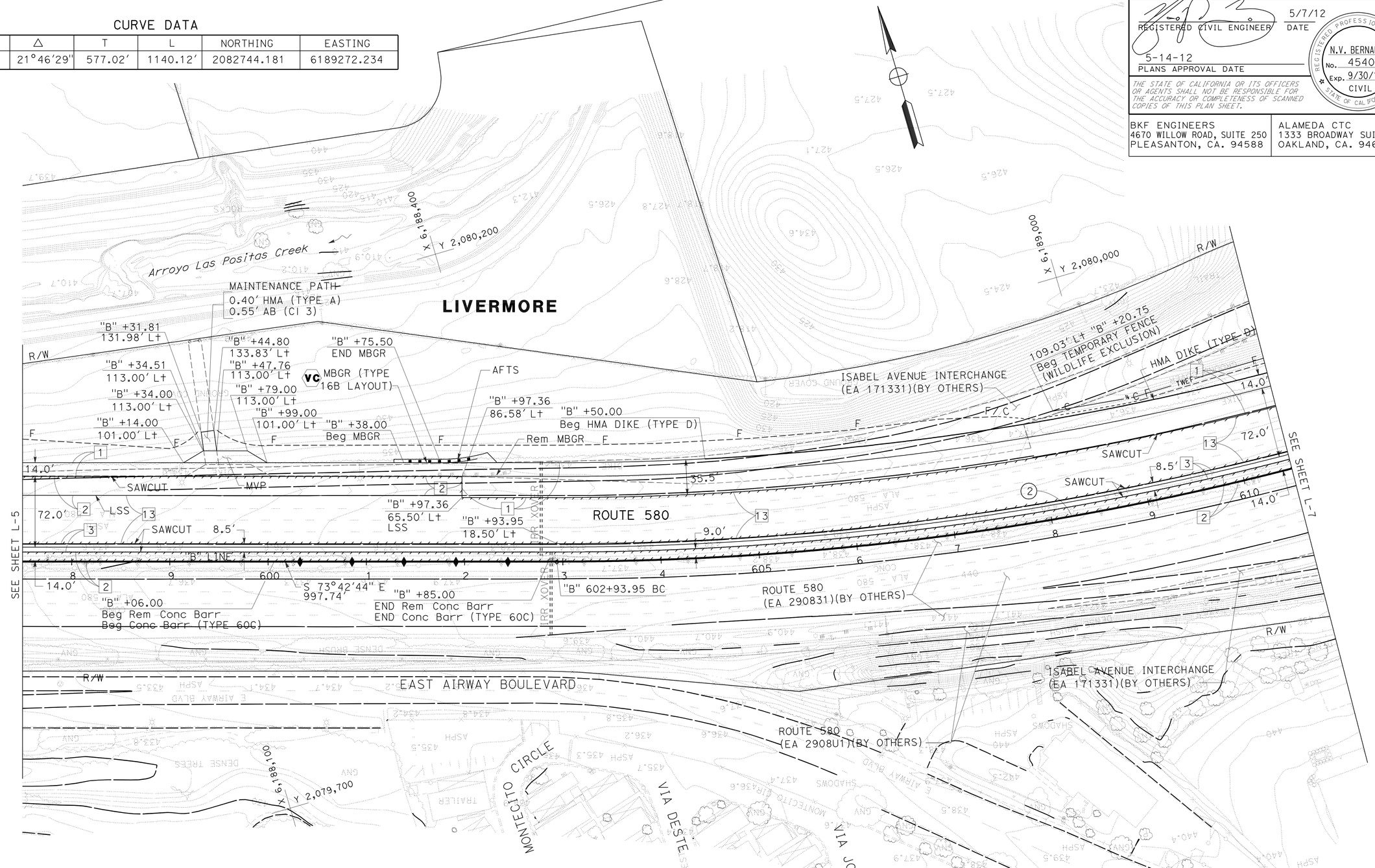

FOR NOTES, ABBREVIATIONS AND LEGEND, SEE SHEET L-1

LAYOUT
SCALE: 1" = 50′

L-6

TC	5/7/12
REVISED BY	DATE REVISED
TRAVIS CHAN	LUIS GARCIA
CALCULATED-DESIGNED BY	CHECKED BY
NATALINA V. BERNARDI	
CONSULTANT FUNCTIONAL SUPERVISOR	

STATE OF CALIFORNIA - DEPARTMENT OF TRANSPORTATION

LAST REVISION 05-07-12 | DATE PLOTTED =>23-MAY-2012 | TIME PLOTTED =>07:10

FOR ACCURATE RIGHT OF WAY DATA, CONTACT
RIGHT OF WAY ENGINEERING AT THE DISTRICT OFFICE.

Dist	COUNTY	ROUTE	POST MILES TOTAL PROJECT	SHEET No.	TOTAL SHEETS
04	Ala	580	R8.4/R14.6	35	853

REGISTERED CIVIL ENGINEER 5/7/12 DATE

5-14-12
PLANS APPROVAL DATE

REGISTERED PROFESSIONAL ENGINEER N.V. BERNARDI No. 45407 Exp. 9/30/12 CIVIL STATE OF CALIFORNIA

THE STATE OF CALIFORNIA OR ITS OFFICERS OR AGENTS SHALL NOT BE RESPONSIBLE FOR THE ACCURACY OR COMPLETENESS OF SCANNED COPIES OF THIS PLAN SHEET.

BKF ENGINEERS
4670 WILLOW ROAD, SUITE 250
PLEASANTON, CA. 94588

ALAMEDA CTC
1333 BROADWAY SUITE 220
OAKLAND, CA. 94612

CURVE DATA

No.	R	Δ	T	L	NORTHING	EASTING
2	3000.00′	21°46′29"	577.02′	1140.12′	2082744.181	6189272.234

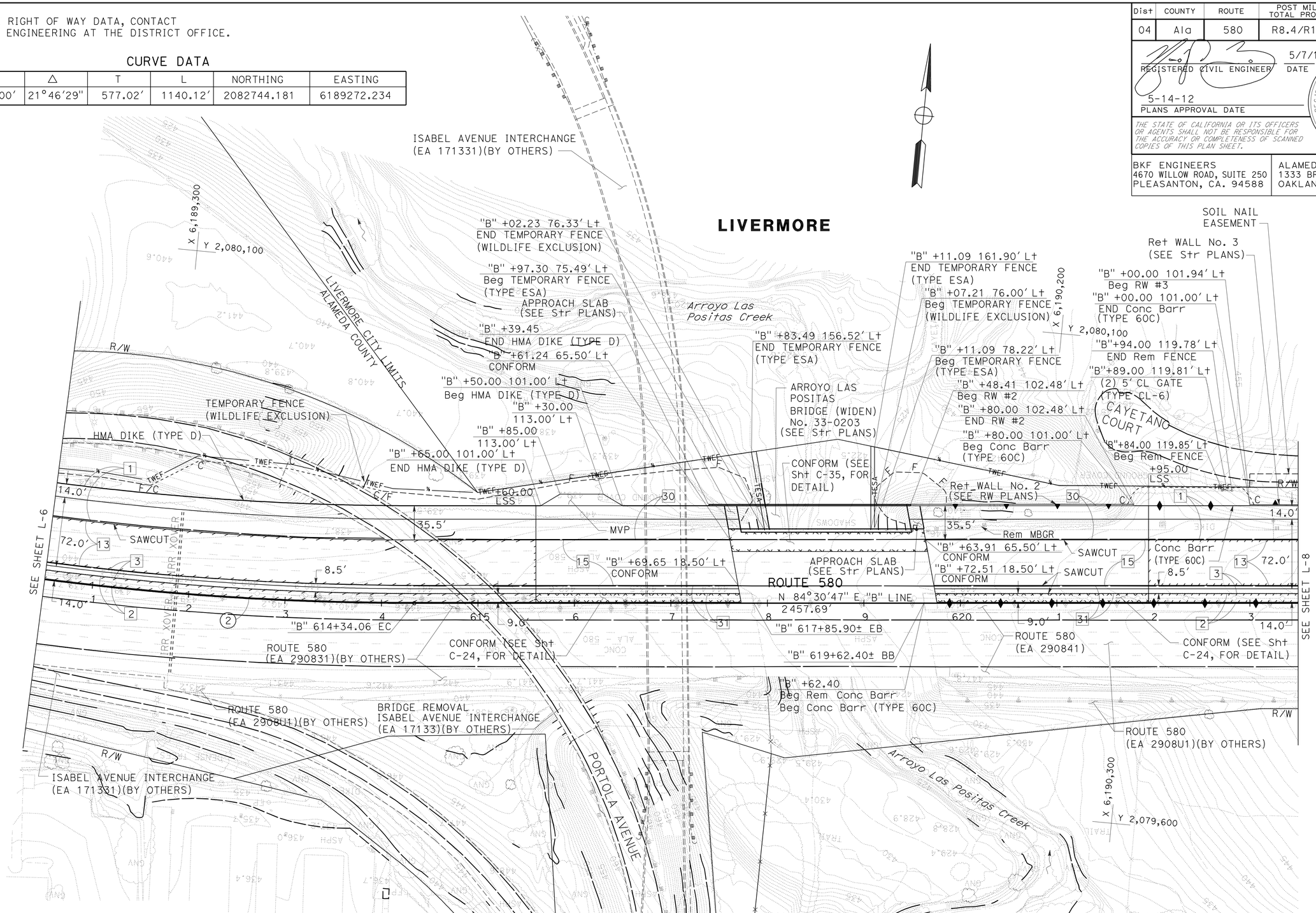

FOR NOTES, ABBREVIATIONS
AND LEGEND, SEE SHEET L-1

LAYOUT

SCALE: 1" = 50′

L-7

REVISED BY	TC
DATE REVISED	5/7/12
CALCULATED-DESIGNED BY	TRAVIS CHAN
CHECKED BY	LUIS GARCIA
CONSULTANT FUNCTIONAL SUPERVISOR	NATALINA V. BERNARDI

STATE OF CALIFORNIA - DEPARTMENT OF TRANSPORTATION

LAST REVISION 05-07-12 | DATE PLOTTED =>23-MAY-2012 | TIME PLOTTED =>07:10

FOR ACCURATE RIGHT OF WAY DATA, CONTACT
RIGHT OF WAY ENGINEERING AT THE DISTRICT OFFICE.

Dist	COUNTY	ROUTE	POST MILES TOTAL PROJECT	SHEET No.	TOTAL SHEETS
04	Ala	580	R8.4/R14.6	36	853

REGISTERED CIVIL ENGINEER 5/7/12 DATE

5-14-12
PLANS APPROVAL DATE

REGISTERED PROFESSIONAL ENGINEER
N.V. BERNARDI
No. 45407
Exp. 9/30/12
CIVIL
STATE OF CALIFORNIA

THE STATE OF CALIFORNIA OR ITS OFFICERS OR AGENTS SHALL NOT BE RESPONSIBLE FOR THE ACCURACY OR COMPLETENESS OF SCANNED COPIES OF THIS PLAN SHEET.

BKF ENGINEERS
4670 WILLOW ROAD, SUITE 250
PLEASANTON, CA. 94588

ALAMEDA CTC
1333 BROADWAY SUITE 220
OAKLAND, CA. 94612

LIVERMORE

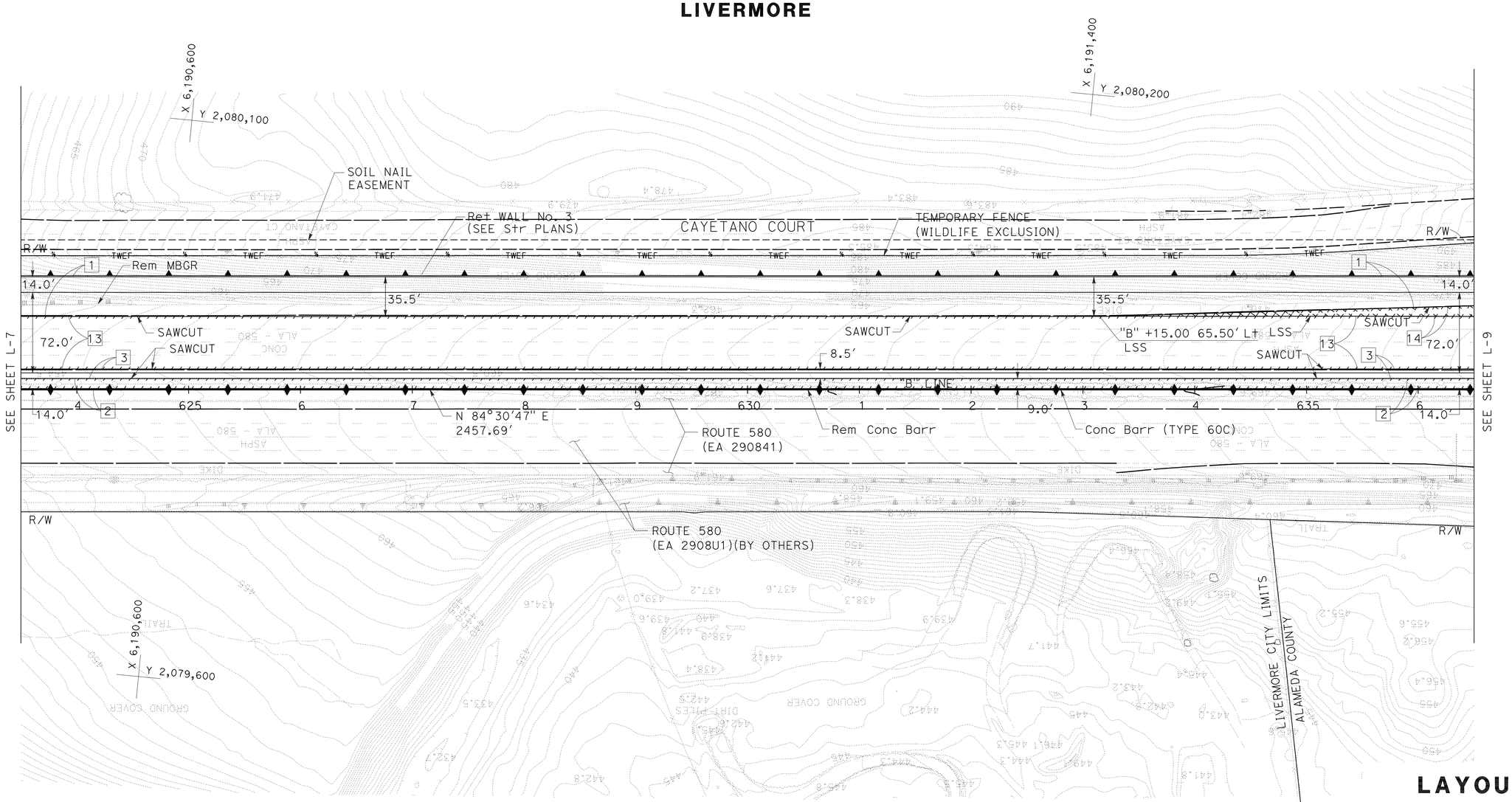

FOR NOTES, ABBREVIATIONS AND LEGEND, SEE SHEET L-1

LAYOUT
SCALE: 1" = 50'

L-8

TRAVIS CHAN	REVISED BY
5/7/12	DATE REVISED
LUIS GARCIA	CALCULATED-DESIGNED BY
	CHECKED BY
NATALINA V. BERNARDI	CONSULTANT FUNCTIONAL SUPERVISOR

STATE OF CALIFORNIA - DEPARTMENT OF TRANSPORTATION

Caltrans

LAST REVISION 05-07-12 | DATE PLOTTED => 23-MAY-2012 | TIME PLOTTED => 07:10

Dist	COUNTY	ROUTE	POST MILES TOTAL PROJECT	SHEET No.	TOTAL SHEETS
04	Ala	580	R8.4/R14.6	37	853

REGISTERED CIVIL ENGINEER 5/7/12 DATE

5-14-12
PLANS APPROVAL DATE

REGISTERED PROFESSIONAL ENGINEER N.V. BERNARDI No. 45407 Exp. 9/30/12 CIVIL STATE OF CALIFORNIA

THE STATE OF CALIFORNIA OR ITS OFFICERS OR AGENTS SHALL NOT BE RESPONSIBLE FOR THE ACCURACY OR COMPLETENESS OF SCANNED COPIES OF THIS PLAN SHEET.

BKF ENGINEERS
4670 WILLOW ROAD, SUITE 250
PLEASANTON, CA. 94588

ALAMEDA CTC
1333 BROADWAY SUITE 220
OAKLAND, CA. 94612

FOR ACCURATE RIGHT OF WAY DATA, CONTACT
RIGHT OF WAY ENGINEERING AT THE DISTRICT OFFICE.

CURVE DATA

No.	R	Δ	T	L	NORTHING	EASTING
3	10000.00′	5°32′15"	483.61′	966.46′	2089947.109	6191049.328
450	9925.00′	1°43′54"	150.00′	299.97′	2089926.150	6190851.907
451	3000.00′	3°11′29"	83.57′	167.10′	2083074.818	6191859.315
452	1250.00′	16°01′34"	175.97′	349.64′	2081397.283	6192390.797
455	9966.00′	0°11′39"	16.90′	33.79′		
456	1166.00′	1°06′27"	11.27′	22.54′		
457	690.00′	9°04′02"	54.71′	109.19′		
458	2978.00′	2°56′47"	76.58′	153.14′		
490	10000.00′	0°53′43"	78.14′	156.27′	2089917.693	6191936.027
491	5000.00′	10°57′41"	479.74′	956.55′	2084919.584	6192073.542

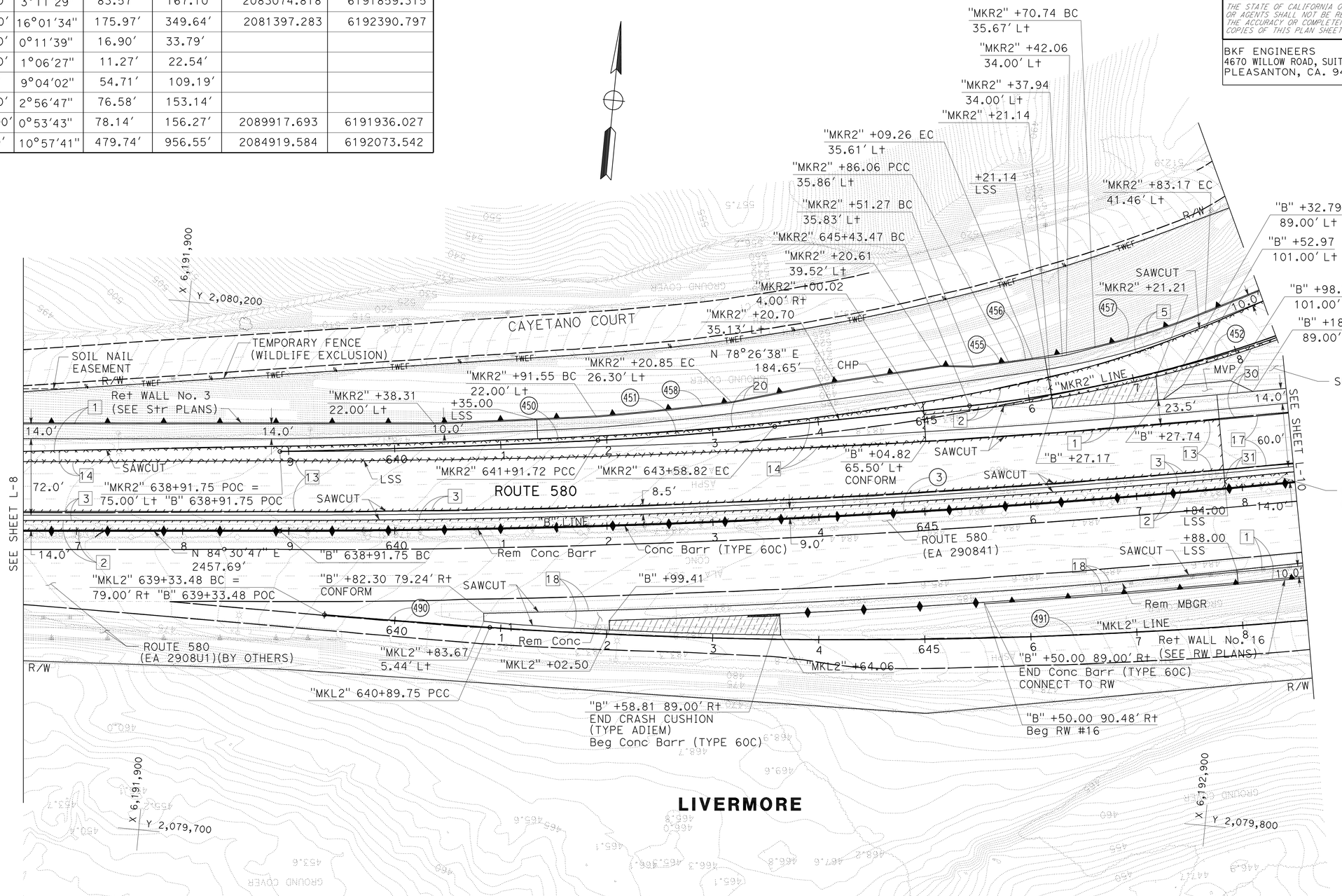

FOR NOTES, ABBREVIATIONS
AND LEGEND, SEE SHEET L-1

LAYOUT

SCALE: 1" = 50′

L-9

REVISED BY	DATE REVISED
TC	5/7/12

TRAVIS CHAN — LUIS GARCIA — CALCULATED-DESIGNED BY — CHECKED BY

CONSULTANT FUNCTIONAL SUPERVISOR — NATALINA V. BERNARDI

STATE OF CALIFORNIA - DEPARTMENT OF TRANSPORTATION

LAST REVISION 05-07-12 | DATE PLOTTED => 23-MAY-2012 | TIME PLOTTED => 07:11

Dist	COUNTY	ROUTE	POST MILES TOTAL PROJECT	SHEET No.	TOTAL SHEETS
04	Ala	580	R8.4/R14.6	38	853

REGISTERED CIVIL ENGINEER 5/7/12 DATE

5-14-12 PLANS APPROVAL DATE

REGISTERED PROFESSIONAL ENGINEER N.V. BERNARDI No. 45407 Exp. 9/30/12 CIVIL STATE OF CALIFORNIA

THE STATE OF CALIFORNIA OR ITS OFFICERS OR AGENTS SHALL NOT BE RESPONSIBLE FOR THE ACCURACY OR COMPLETENESS OF SCANNED COPIES OF THIS PLAN SHEET.

BKF ENGINEERS
4670 WILLOW ROAD, SUITE 250
PLEASANTON, CA. 94588

ALAMEDA CTC
1333 BROADWAY SUITE 220
OAKLAND, CA. 94612

FOR ACCURATE RIGHT OF WAY DATA, CONTACT RIGHT OF WAY ENGINEERING AT THE DISTRICT OFFICE.

CURVE DATA

No.	R	Δ	T	L	NORTHING	EASTING
3	10000.00′	5°32′15″	483.61′	966.46′	2089947.109	6191049.328
452	1250.00′	16°01′34″	175.97′	349.64′	2081397.283	6192390.797
453	300.00′	16°43′58″	44.12′	87.61′	2080052.007	6193163.156
459	1047.00′	6°54′00″	63.12′	126.09′		
460	1033.00′	4°31′24″	40.80′	81.55′		
462	50.00′	53°11′17″	25.03′	46.42′		
470	1000.00′	25°46′22″	228.78′	449.82′	2080280.079	6194150.830
480	2000.00′	8°59′19″	157.20′	313.76′	2082371.840	6193473.943
491	5000.00′	10°57′41″	479.74′	956.55′	2084919.584	6192073.542

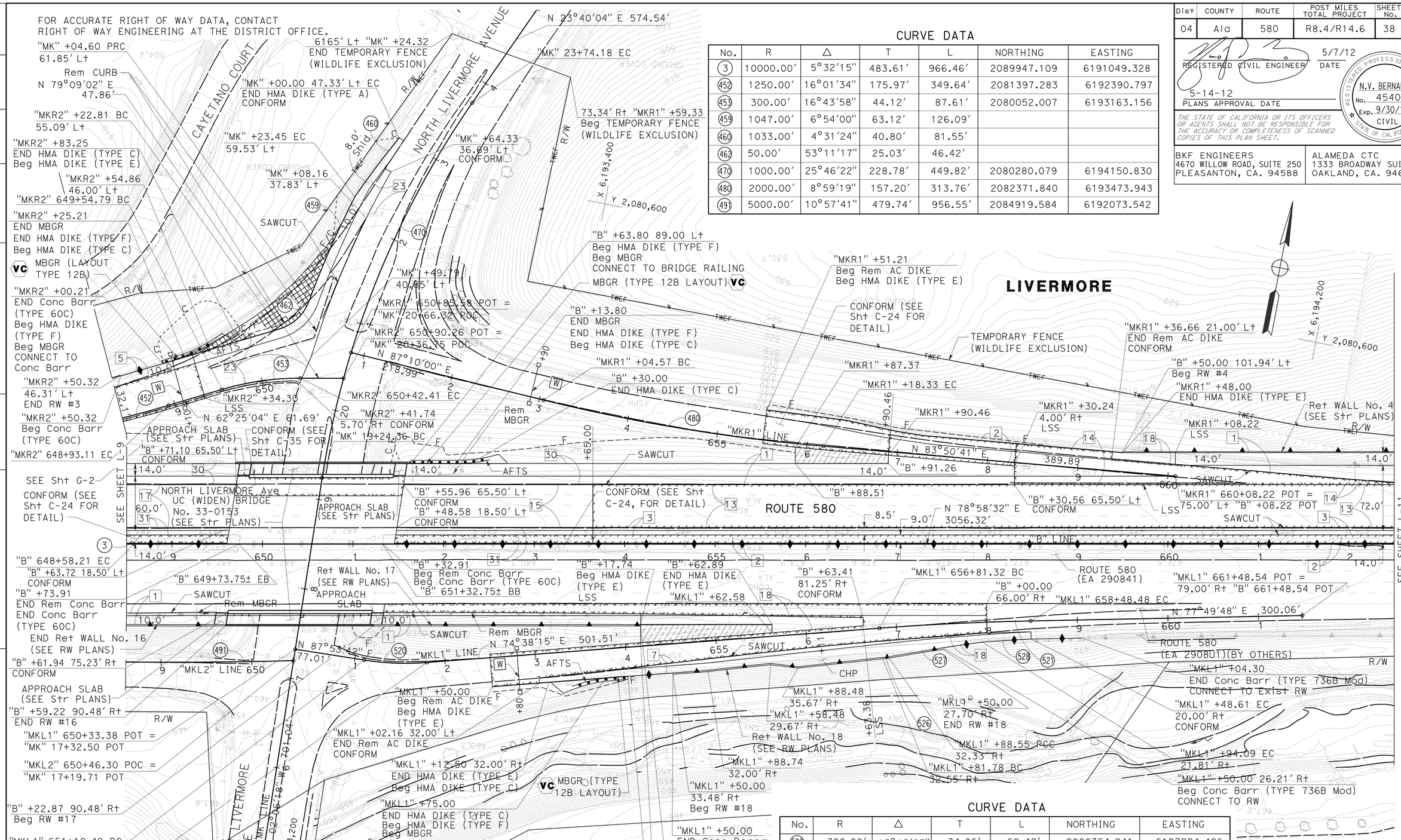

CURVE DATA

No.	R	Δ	T	L	NORTHING	EASTING
520	300.00′	13°15′27″	34.86′	69.42′	2080354.241	6193224.496
521	3000.00′	3°11′33″	83.60′	167.15′	2077305.015	6194582.337
526	2973.00′	0°07′46″	3.35′	6.71′		
527	2980.00′	2°01′15″	52.56′	105.11′		
528	2980.00′	1°02′30″	27.09′	54.17′		

LAYOUT

SCALE: 1" = 50′

FOR NOTES, ABBREVIATIONS AND LEGEND, SEE SHEET L-1

L-10

TC	5/7/12	TRAVIS CHAN	LUIS GARCIA
REVISED BY	DATE REVISED	CALCULATED-DESIGNED BY	CHECKED BY

CONSULTANT FUNCTIONAL SUPERVISOR: NATALINA V. BERNARDI

STATE OF CALIFORNIA - DEPARTMENT OF TRANSPORTATION

Gates

LAST REVISION 05-07-12 | DATE PLOTTED => 23-MAY-2012 | TIME PLOTTED => 07:11

FOR ACCURATE RIGHT OF WAY DATA, CONTACT
RIGHT OF WAY ENGINEERING AT THE DISTRICT OFFICE.

Dist	COUNTY	ROUTE	POST MILES TOTAL PROJECT	SHEET No.	TOTAL SHEETS
04	Ala	580	R8.4/R14.6	39	853

REGISTERED CIVIL ENGINEER 5/7/12 DATE

5-14-12
PLANS APPROVAL DATE

REGISTERED PROFESSIONAL ENGINEER N.V. BERNARDI No. 45407 Exp. 9/30/12 CIVIL STATE OF CALIFORNIA

THE STATE OF CALIFORNIA OR ITS OFFICERS OR AGENTS SHALL NOT BE RESPONSIBLE FOR THE ACCURACY OR COMPLETENESS OF SCANNED COPIES OF THIS PLAN SHEET.

BKF ENGINEERS
4670 WILLOW ROAD, SUITE 250
PLEASANTON, CA. 94588

ALAMEDA CTC
1333 BROADWAY SUITE 220
OAKLAND, CA. 94612

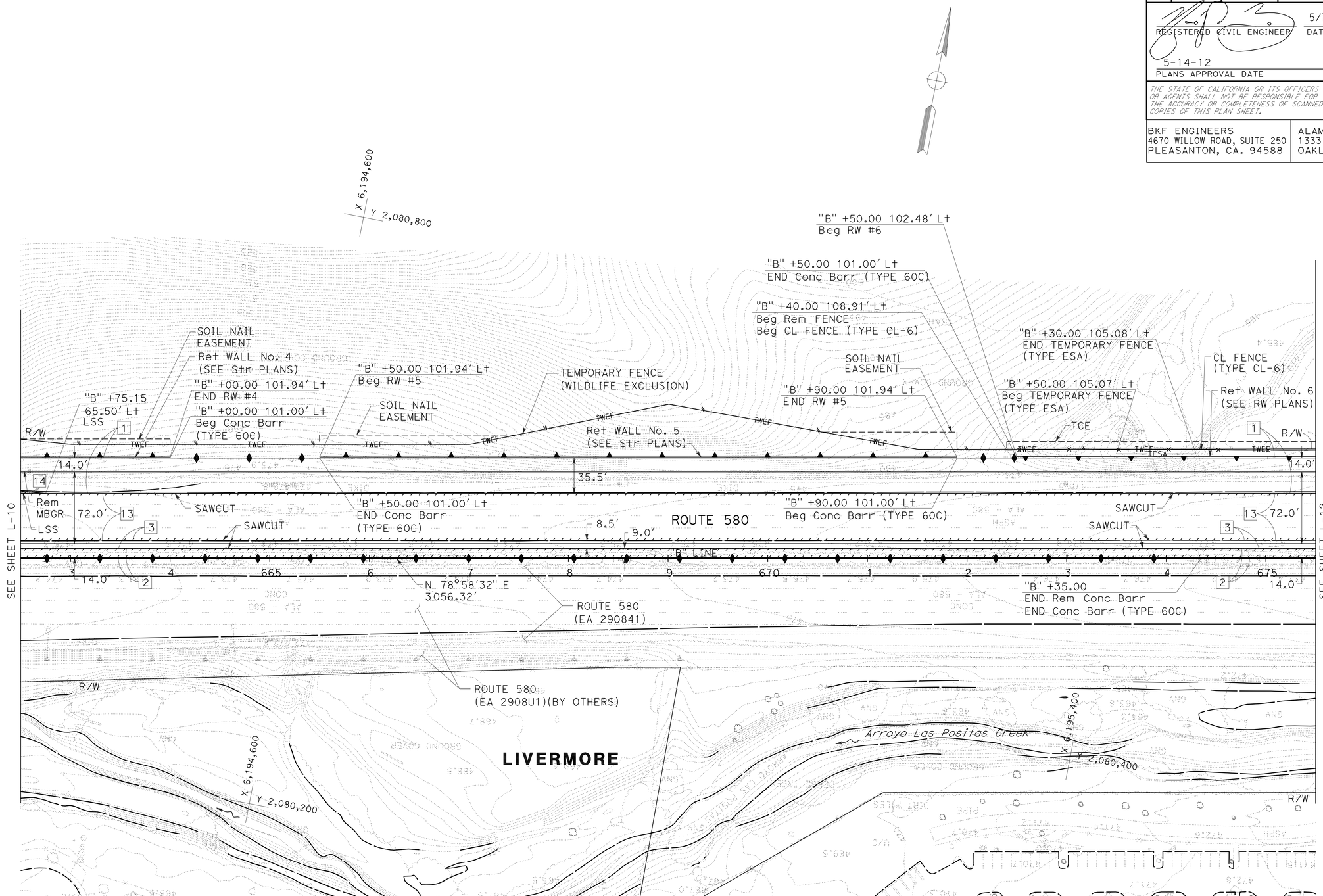

FOR NOTES, ABBREVIATIONS
AND LEGEND, SEE SHEET L-1

LAYOUT
SCALE: 1" = 50'

L-11

REVISED BY	DATE REVISED
TC	5/7/12

TRAVIS CHAN — CALCULATED-DESIGNED BY
LUIS GARCIA — CHECKED BY
NATALINA V. BERNARDI — CONSULTANT FUNCTIONAL SUPERVISOR

STATE OF CALIFORNIA - DEPARTMENT OF TRANSPORTATION
Caltrans

LAST REVISION 05-07-12 | DATE PLOTTED =>23-MAY-2012 TIME PLOTTED =>07:11

FOR ACCURATE RIGHT OF WAY DATA, CONTACT
RIGHT OF WAY ENGINEERING AT THE DISTRICT OFFICE.

CURVE DATA

No.	R	Δ	T	L	NORTHING	EASTING
4	8000.00′	14°47′59″	1039.00′	2066.43′	2072863.729	6197491.319

Dist	COUNTY	ROUTE	POST MILES TOTAL PROJECT	SHEET No.	TOTAL SHEETS
04	Ala	580	R8.4/R14.6	40	853

REGISTERED CIVIL ENGINEER 5/7/12 DATE

5-14-12
PLANS APPROVAL DATE

REGISTERED PROFESSIONAL ENGINEER N.V. BERNARDI No. 45407 Exp. 9/30/12 CIVIL STATE OF CALIFORNIA

THE STATE OF CALIFORNIA OR ITS OFFICERS OR AGENTS SHALL NOT BE RESPONSIBLE FOR THE ACCURACY OR COMPLETENESS OF SCANNED COPIES OF THIS PLAN SHEET.

BKF ENGINEERS
4670 WILLOW ROAD, SUITE 250
PLEASANTON, CA. 94588

ALAMEDA CTC
1333 BROADWAY SUITE 220
OAKLAND, CA. 94612

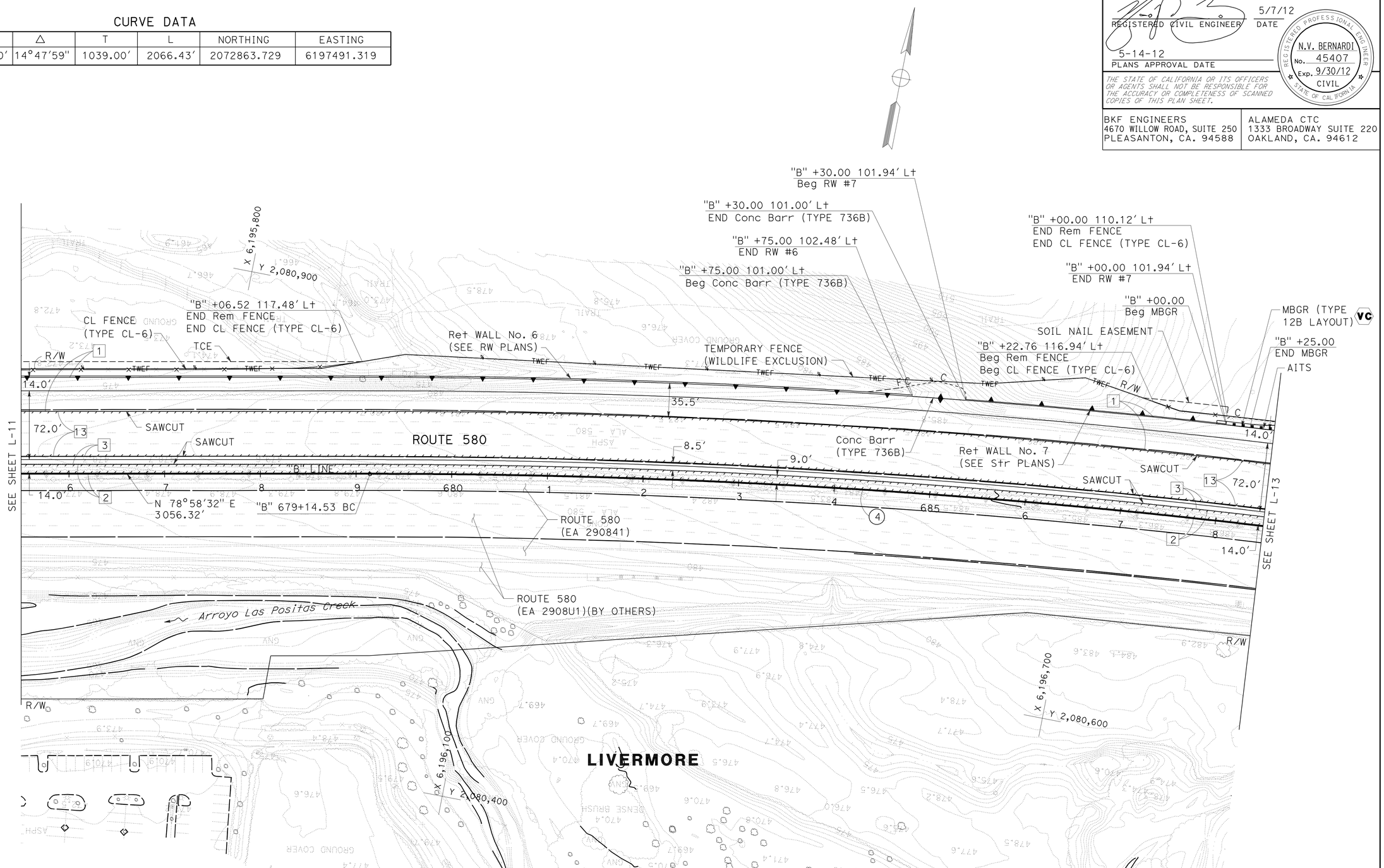

LAYOUT
SCALE: 1" = 50′

FOR NOTES, ABBREVIATIONS
AND LEGEND, SEE SHEET L-1

L-12

REVISED BY	DATE REVISED
TC	5/7/12

TRAVIS CHAN — LUIS GARCIA — CALCULATED-DESIGNED BY — CHECKED BY

CONSULTANT FUNCTIONAL SUPERVISOR: NATALINA V. BERNARDI

STATE OF CALIFORNIA - DEPARTMENT OF TRANSPORTATION

LAST REVISION 05-07-12 — DATE PLOTTED =>23-MAY-2012 TIME PLOTTED =>07:11

FOR ACCURATE RIGHT OF WAY DATA, CONTACT
RIGHT OF WAY ENGINEERING AT THE DISTRICT OFFICE.

Dist	COUNTY	ROUTE	POST MILES TOTAL PROJECT	SHEET No.	TOTAL SHEETS
04	Ala	580	R8.4/R14.6	41	853

REGISTERED CIVIL ENGINEER 5/7/12 DATE

5-14-12
PLANS APPROVAL DATE

REGISTERED PROFESSIONAL ENGINEER N.V. BERNARDI No. 45407 Exp. 9/30/12 CIVIL STATE OF CALIFORNIA

THE STATE OF CALIFORNIA OR ITS OFFICERS OR AGENTS SHALL NOT BE RESPONSIBLE FOR THE ACCURACY OR COMPLETENESS OF SCANNED COPIES OF THIS PLAN SHEET.

BKF ENGINEERS
4670 WILLOW ROAD, SUITE 250
PLEASANTON, CA. 94588

ALAMEDA CTC
1333 BROADWAY SUITE 220
OAKLAND, CA. 94612

CURVE DATA

No.	R	Δ	T	L	NORTHING	EASTING
4	8000.00′	14°47′59″	1039.00′	2066.43′	2072863.729	6197491.319
61	8101.00′	0°37′35″	44.28′	88.55′		

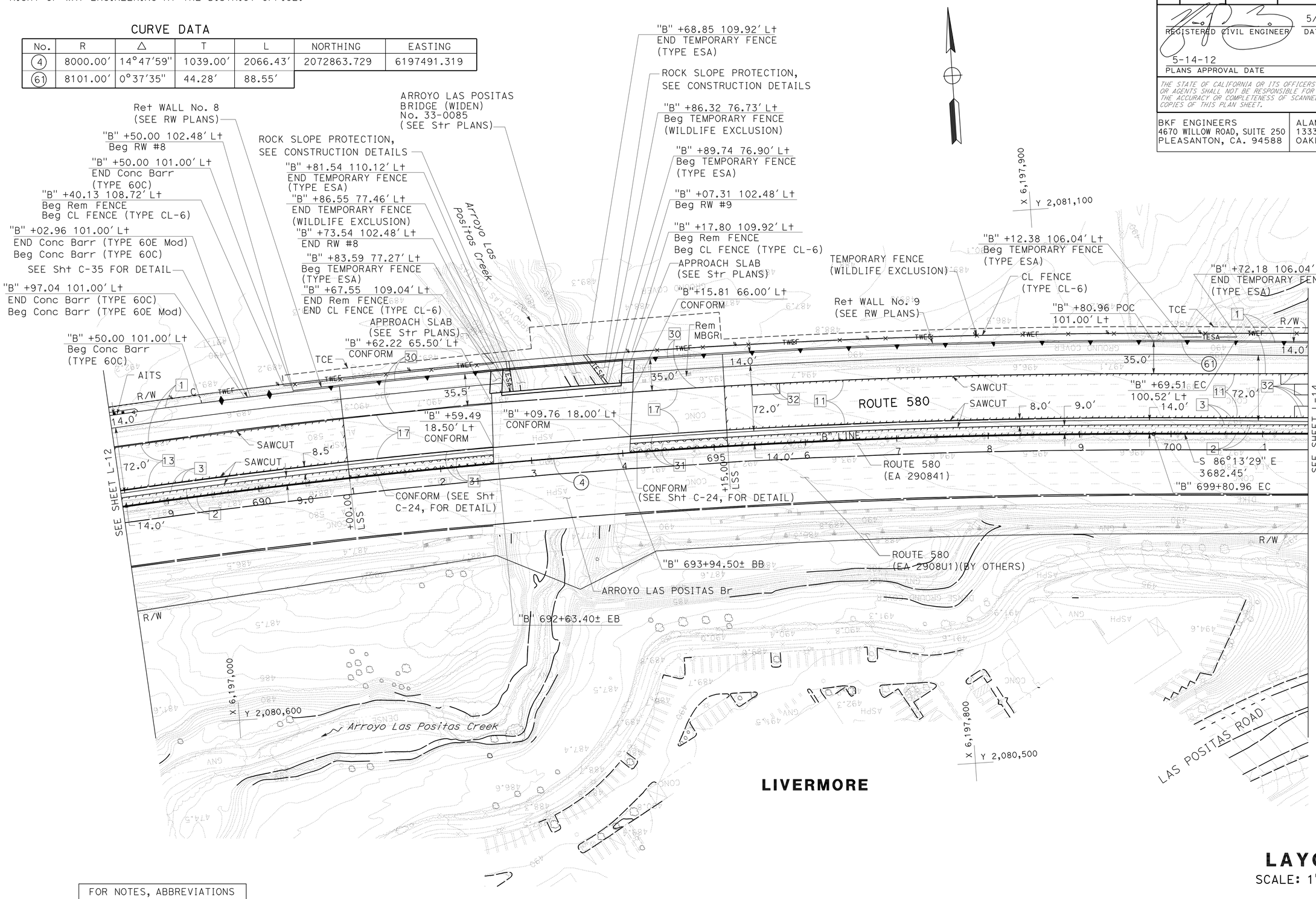

FOR NOTES, ABBREVIATIONS AND LEGEND, SEE SHEET L-1

LAYOUT

SCALE: 1" = 50′

L-13

REVISED BY	DATE REVISED
TC	5/7/12

TRAVIS CHAN — CALCULATED-DESIGNED BY
LUIS GARCIA — CHECKED BY
NATALINA V. BERNARDI — CONSULTANT FUNCTIONAL SUPERVISOR

STATE OF CALIFORNIA - DEPARTMENT OF TRANSPORTATION

LAST REVISION 05-07-12 | DATE PLOTTED => 23-MAY-2012 | TIME PLOTTED => 07:12

FOR ACCURATE RIGHT OF WAY DATA, CONTACT
RIGHT OF WAY ENGINEERING AT THE DISTRICT OFFICE.

Dist	COUNTY	ROUTE	POST MILES TOTAL PROJECT	SHEET No.	TOTAL SHEETS
04	Ala	580	R8.4/R14.6	42	853

REGISTERED CIVIL ENGINEER 5/7/12 DATE

5-14-12
PLANS APPROVAL DATE

REGISTERED PROFESSIONAL ENGINEER N.V. BERNARDI No. 45407 Exp. 9/30/12 CIVIL STATE OF CALIFORNIA

THE STATE OF CALIFORNIA OR ITS OFFICERS OR AGENTS SHALL NOT BE RESPONSIBLE FOR THE ACCURACY OR COMPLETENESS OF SCANNED COPIES OF THIS PLAN SHEET.

BKF ENGINEERS
4670 WILLOW ROAD, SUITE 250
PLEASANTON, CA. 94588

ALAMEDA CTC
1333 BROADWAY SUITE 220
OAKLAND, CA. 94612

CURVE DATA

No.	R	Δ	T	L
62	19914.00	0°23'13"	67.25'	134.50'

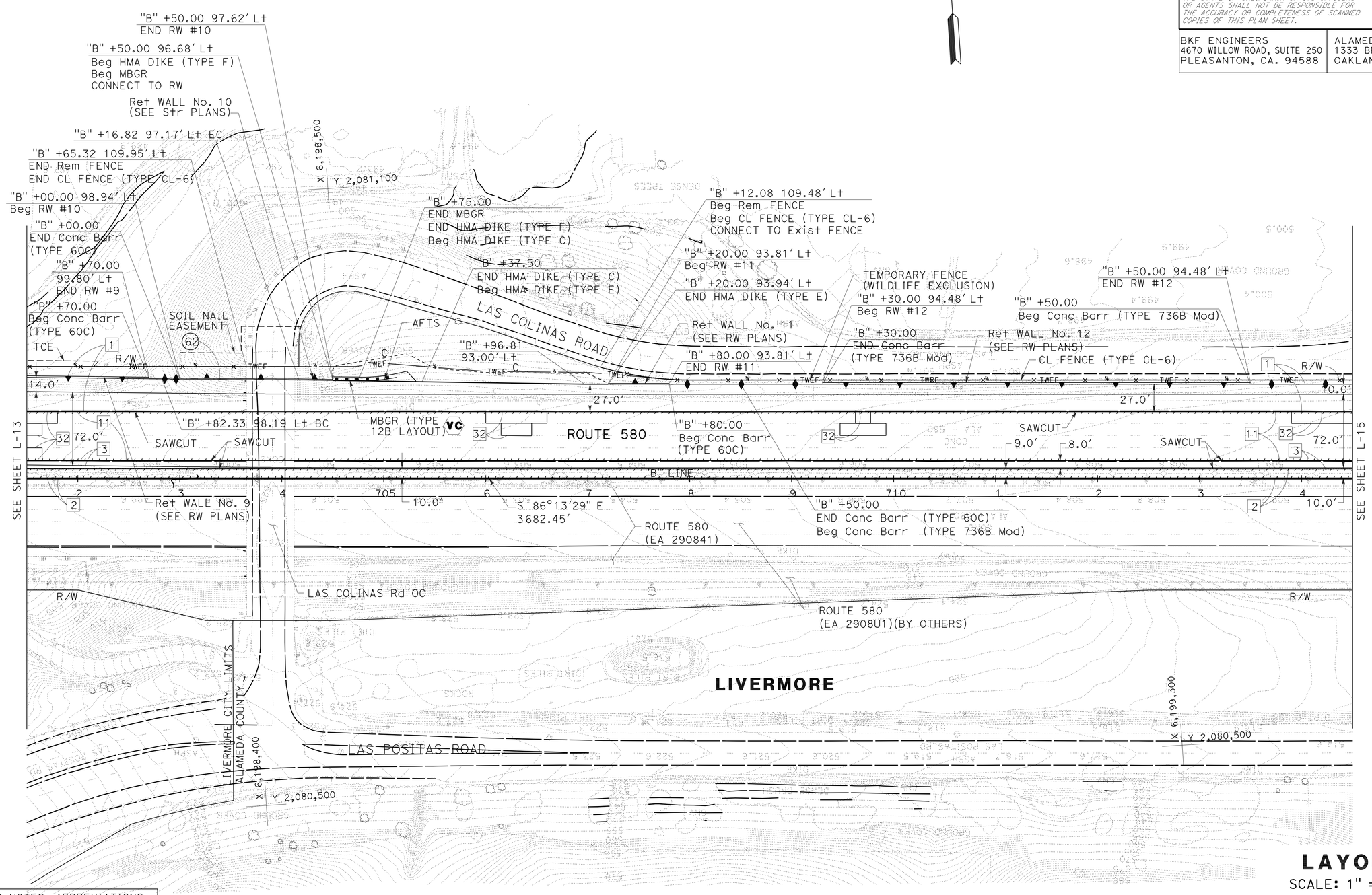

FOR NOTES, ABBREVIATIONS AND LEGEND, SEE SHEET L-1

LAYOUT
SCALE: 1" = 50'

L-14

REVISED BY	DATE REVISED
TC	5/7/12

TRAVIS CHAN — LUIS GARCIA — CALCULATED-DESIGNED BY — CHECKED BY

NATALINA V. BERNARDI — CONSULTANT FUNCTIONAL SUPERVISOR

STATE OF CALIFORNIA - DEPARTMENT OF TRANSPORTATION

LAST REVISION 05-07-12 | DATE PLOTTED => 23-MAY-2012 | TIME PLOTTED => 07:12

FOR ACCURATE RIGHT OF WAY DATA, CONTACT
RIGHT OF WAY ENGINEERING AT THE DISTRICT OFFICE.

Dist	COUNTY	ROUTE	POST MILES TOTAL PROJECT	SHEET No.	TOTAL SHEETS
04	Ala	580	R8.4/R14.6	43	853

REGISTERED CIVIL ENGINEER 5/7/12 DATE

5-14-12
PLANS APPROVAL DATE

REGISTERED PROFESSIONAL ENGINEER N.V. BERNARDI No. 45407 Exp. 9/30/12 CIVIL STATE OF CALIFORNIA

THE STATE OF CALIFORNIA OR ITS OFFICERS OR AGENTS SHALL NOT BE RESPONSIBLE FOR THE ACCURACY OR COMPLETENESS OF SCANNED COPIES OF THIS PLAN SHEET.

BKF ENGINEERS
4670 WILLOW ROAD, SUITE 250
PLEASANTON, CA. 94588

ALAMEDA CTC
1333 BROADWAY SUITE 220
OAKLAND, CA. 94612

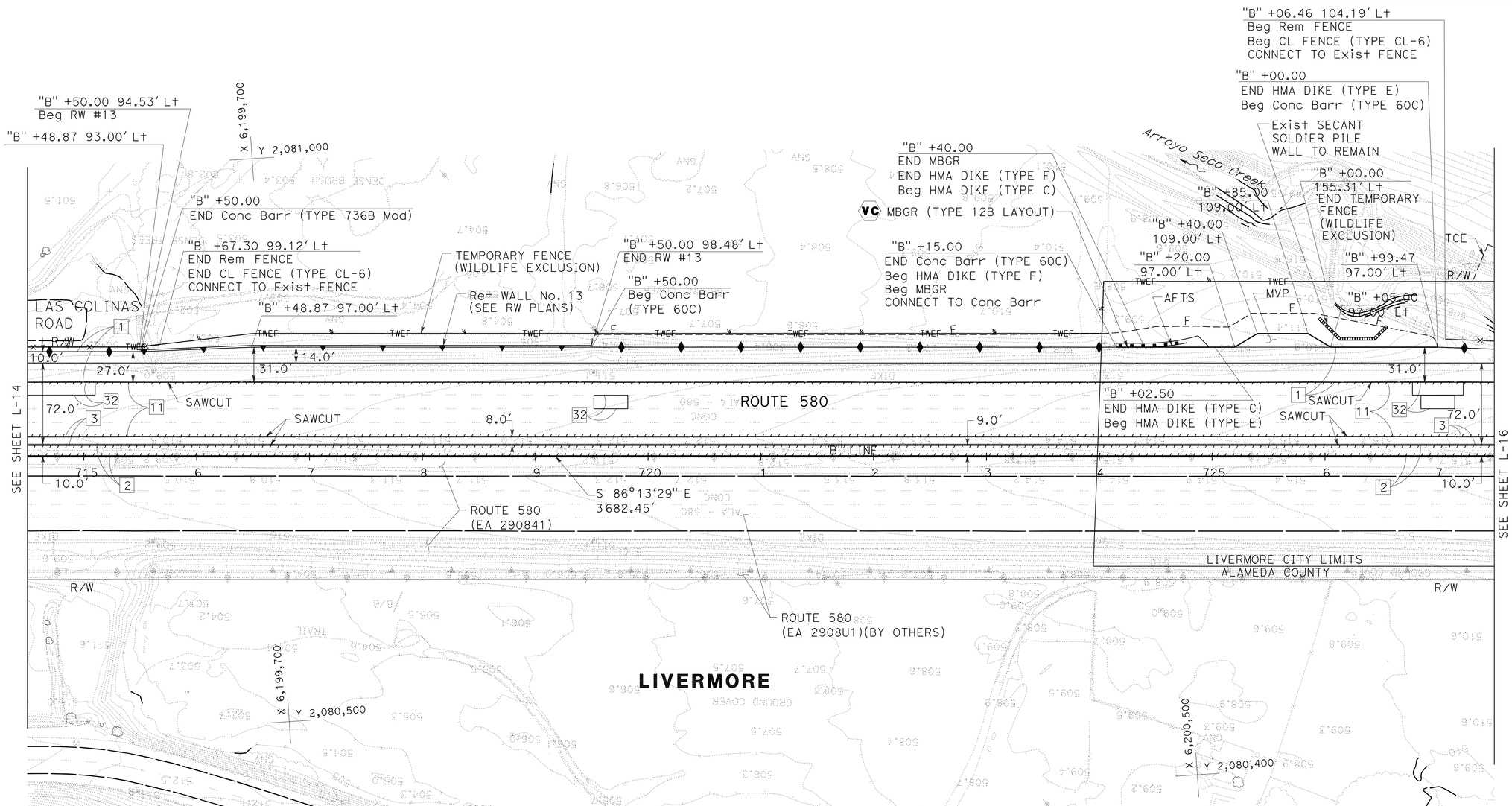

FOR NOTES, ABBREVIATIONS AND LEGEND, SEE SHEET L-1

LAYOUT

SCALE: 1" = 50'

L-15

TRAVIS CHAN	TC
LUIS GARCIA	5/7/12
REVISED BY	DATE REVISED
CALCULATED-DESIGNED BY	CHECKED BY
CONSULTANT FUNCTIONAL SUPERVISOR	
NATALINA V. BERNARDI	

STATE OF CALIFORNIA - DEPARTMENT OF TRANSPORTATION

LAST REVISION 05-07-12 | DATE PLOTTED => 23-MAY-2012 | TIME PLOTTED => 07:12

Dist	COUNTY	ROUTE	POST MILES TOTAL PROJECT	SHEET No.	TOTAL SHEETS
04	Ala	580	R8.4/R14.6	44	853

REGISTERED CIVIL ENGINEER 5/7/12 DATE

5-14-12
PLANS APPROVAL DATE

REGISTERED PROFESSIONAL ENGINEER N.V. BERNARDI No. 45407 Exp. 9/30/12 CIVIL STATE OF CALIFORNIA

THE STATE OF CALIFORNIA OR ITS OFFICERS OR AGENTS SHALL NOT BE RESPONSIBLE FOR THE ACCURACY OR COMPLETENESS OF SCANNED COPIES OF THIS PLAN SHEET.

BKF ENGINEERS
4670 WILLOW ROAD, SUITE 250
PLEASANTON, CA. 94588

ALAMEDA CTC
1333 BROADWAY SUITE 220
OAKLAND, CA. 94612

FOR ACCURATE RIGHT OF WAY DATA, CONTACT RIGHT OF WAY ENGINEERING AT THE DISTRICT OFFICE.

CURVE DATA

No.	R	Δ	T	L	NORTHING	EASTING
5	4500.00′	31°01′39"	1249.12′	2436.89′	2085094.132	6201988.837
581	3000.00′	3°11′29"	83.57′	167.10′	2083674.095	6201887.931
582	2100.00′	4°04′48"	74.80′	149.54′	2082774.138	6201896.756
585	2061.00′	2°38′07"	47.41′	94.80′		

NOTE:

EPOXY INJECT THE CRACKS ALONG THE FACE OF ABUTMENT 4. HORIZONTAL AND VERTICAL CRACKS EXTEND FROM THE BOTTOM OF ABUTMENT 4 FIELD VERIFY.

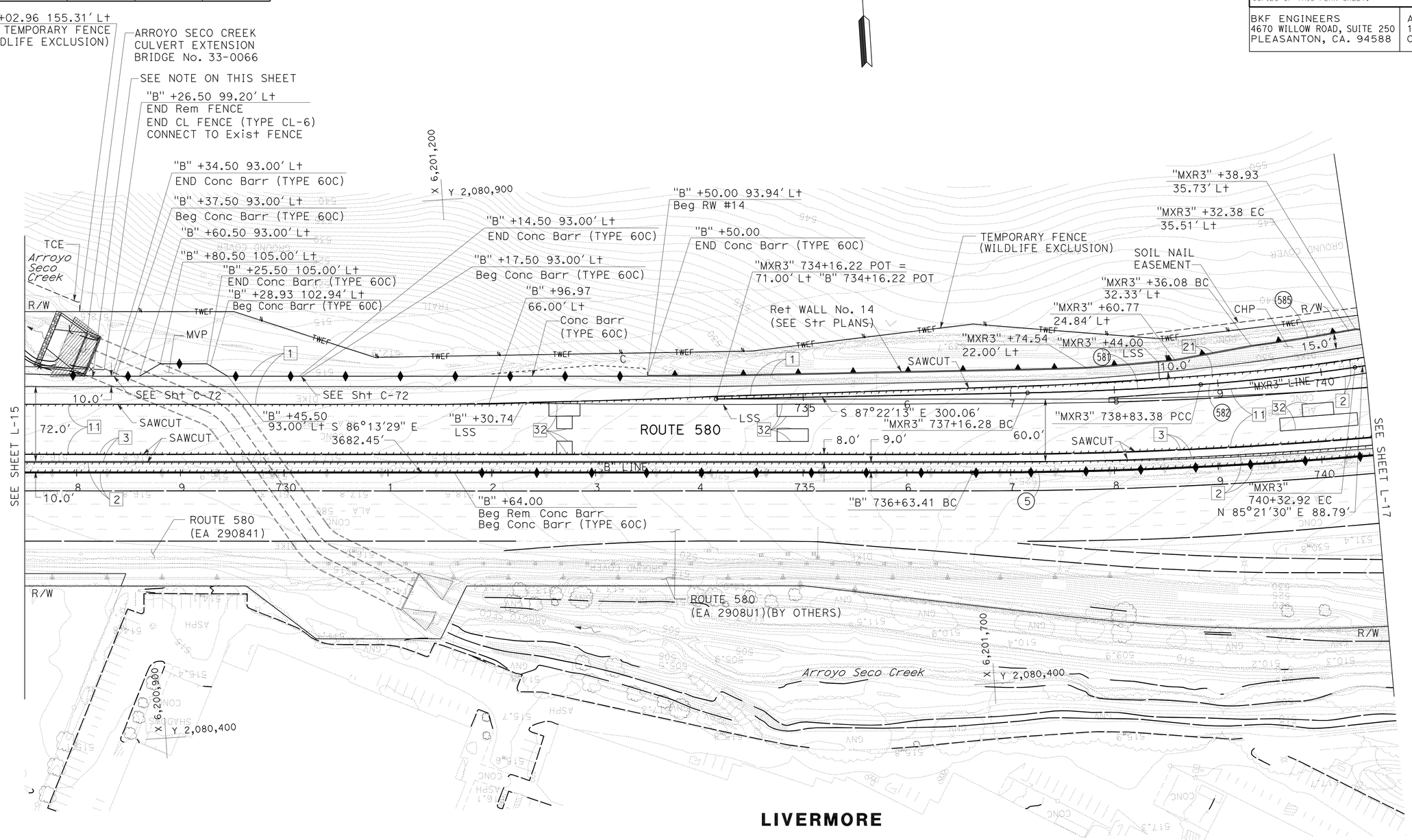

LIVERMORE

LAYOUT

SCALE: 1" = 50′

FOR NOTES, ABBREVIATIONS AND LEGEND, SEE SHEET L-1

L-16

TC	5/7/12	TRAVIS CHAN	LUIS GARCIA
REVISED BY	DATE REVISED	CALCULATED-DESIGNED BY	CHECKED BY
CONSULTANT FUNCTIONAL SUPERVISOR	NATALINA V. BERNARDI		

STATE OF CALIFORNIA - DEPARTMENT OF TRANSPORTATION

Caltrans

LAST REVISION 05-07-12 | DATE PLOTTED => 23-MAY-2012 | TIME PLOTTED => 07:12

Dist	COUNTY	ROUTE	POST MILES TOTAL PROJECT	SHEET No.	TOTAL SHEETS
04	Ala	580	R8.4/R14.6	45	853

REGISTERED CIVIL ENGINEER 5/7/12 DATE

5-14-12
PLANS APPROVAL DATE

REGISTERED PROFESSIONAL ENGINEER N.V. BERNARDI No. 45407 Exp. 9/30/12 CIVIL STATE OF CALIFORNIA

THE STATE OF CALIFORNIA OR ITS OFFICERS OR AGENTS SHALL NOT BE RESPONSIBLE FOR THE ACCURACY OR COMPLETENESS OF SCANNED COPIES OF THIS PLAN SHEET.

BKF ENGINEERS
4670 WILLOW ROAD, SUITE 250
PLEASANTON, CA. 94588

ALAMEDA CTC
1333 BROADWAY SUITE 220
OAKLAND, CA. 94612

FOR ACCURATE RIGHT OF WAY DATA, CONTACT RIGHT OF WAY ENGINEERING AT THE DISTRICT OFFICE.

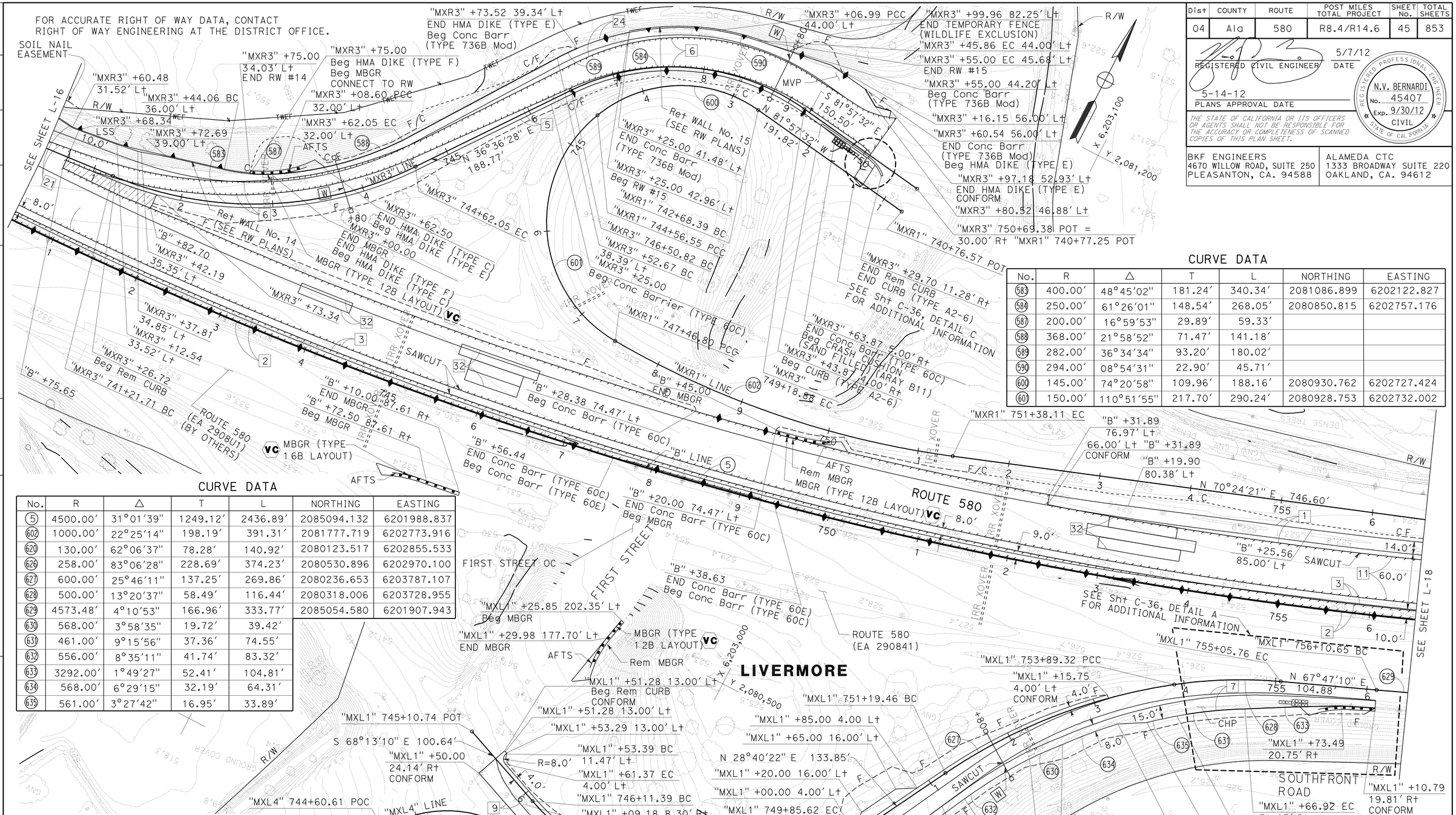

CURVE DATA

No.	R	Δ	T	L	NORTHING	EASTING
583	400.00'	48°45'02"	181.24'	340.34'	2081086.899	6202122.827
584	250.00'	61°26'01"	148.54'	268.05'	2080850.815	6202757.176
587	200.00'	16°59'53"	29.89'	59.33'		
588	368.00'	21°58'52"	71.47'	141.18'		
589	282.00'	36°34'34"	93.20'	180.02'		
590	294.00'	08°54'31"	22.90'	45.71'		
600	145.00'	74°20'58"	109.96'	188.16'	2080930.762	6202727.424
601	150.00'	110°51'55"	217.70'	290.24'	2080928.753	6202732.002

CURVE DATA

No.	R	Δ	T	L	NORTHING	EASTING
5	4500.00'	31°01'39"	1249.12'	2436.89'	2085094.132	6201988.837
602	1000.00'	22°25'14"	198.19'	391.31'	2081777.719	6202773.916
620	130.00'	62°06'37"	78.28'	140.92'	2080123.517	6202855.533
626	258.00'	83°06'28"	228.69'	374.23'	2080530.896	6202970.100
627	600.00'	25°46'11"	137.25'	269.86'	2080236.653	6203787.107
628	500.00'	13°20'37"	58.49'	116.44'	2080318.006	6203728.955
629	4573.48'	4°10'53"	166.96'	333.77'	2085054.580	6201907.943
630	568.00'	3°58'35"	19.72'	39.42'		
631	461.00'	9°15'56"	37.36'	74.55'		
632	556.00'	8°35'11"	41.74'	83.32'		
633	3292.00'	1°49'27"	52.41'	104.81'		
634	568.00'	6°29'15"	32.19'	64.31'		
635	561.00'	3°27'42"	16.95'	33.89'		

FOR NOTES, ABBREVIATIONS AND LEGEND, SEE SHEET L-1

LAYOUT
SCALE: 1" = 50'

L-17

TC	5/7/12	TRAVIS CHAN	LUIS GARCIA
REVISED BY	DATE REVISED	CALCULATED-DESIGNED BY	CHECKED BY

CONSULTANT FUNCTIONAL SUPERVISOR: NATALINA V. BERNARDI

STATE OF CALIFORNIA - DEPARTMENT OF TRANSPORTATION

Caltrans

LAST REVISION 05-07-12 | DATE PLOTTED => 23-MAY-2012 | TIME PLOTTED => 07:13

FOR ACCURATE RIGHT OF WAY DATA, CONTACT
RIGHT OF WAY ENGINEERING AT THE DISTRICT OFFICE.

Dist	COUNTY	ROUTE	POST MILES TOTAL PROJECT	SHEET No.	TOTAL SHEETS
04	Ala	580	R8.4/R14.6	46	853

REGISTERED CIVIL ENGINEER 5/7/12 DATE

5-14-12
PLANS APPROVAL DATE

REGISTERED PROFESSIONAL ENGINEER N.V. BERNARDI No. 45407 Exp. 9/30/12 CIVIL STATE OF CALIFORNIA

THE STATE OF CALIFORNIA OR ITS OFFICERS OR AGENTS SHALL NOT BE RESPONSIBLE FOR THE ACCURACY OR COMPLETENESS OF SCANNED COPIES OF THIS PLAN SHEET.

BKF ENGINEERS
4670 WILLOW ROAD, SUITE 250
PLEASANTON, CA. 94588

ALAMEDA CTC
1333 BROADWAY SUITE 220
OAKLAND, CA. 94612

CURVE DATA

No.	R	Δ	T	L	NORTHING	EASTING
5	4500.00′	31°01′39"	1249.12′	2436.89′	2085094.132	6201988.837
603	4429.00′	2°47′21"	107.82′	215.60′	2085258.530	6202327.351
629	4573.48′	4°10′53"	166.96′	333.77′	2085054.580	6201907.943
604	5200.00′	3°17′29"	149.41′	298.73′		

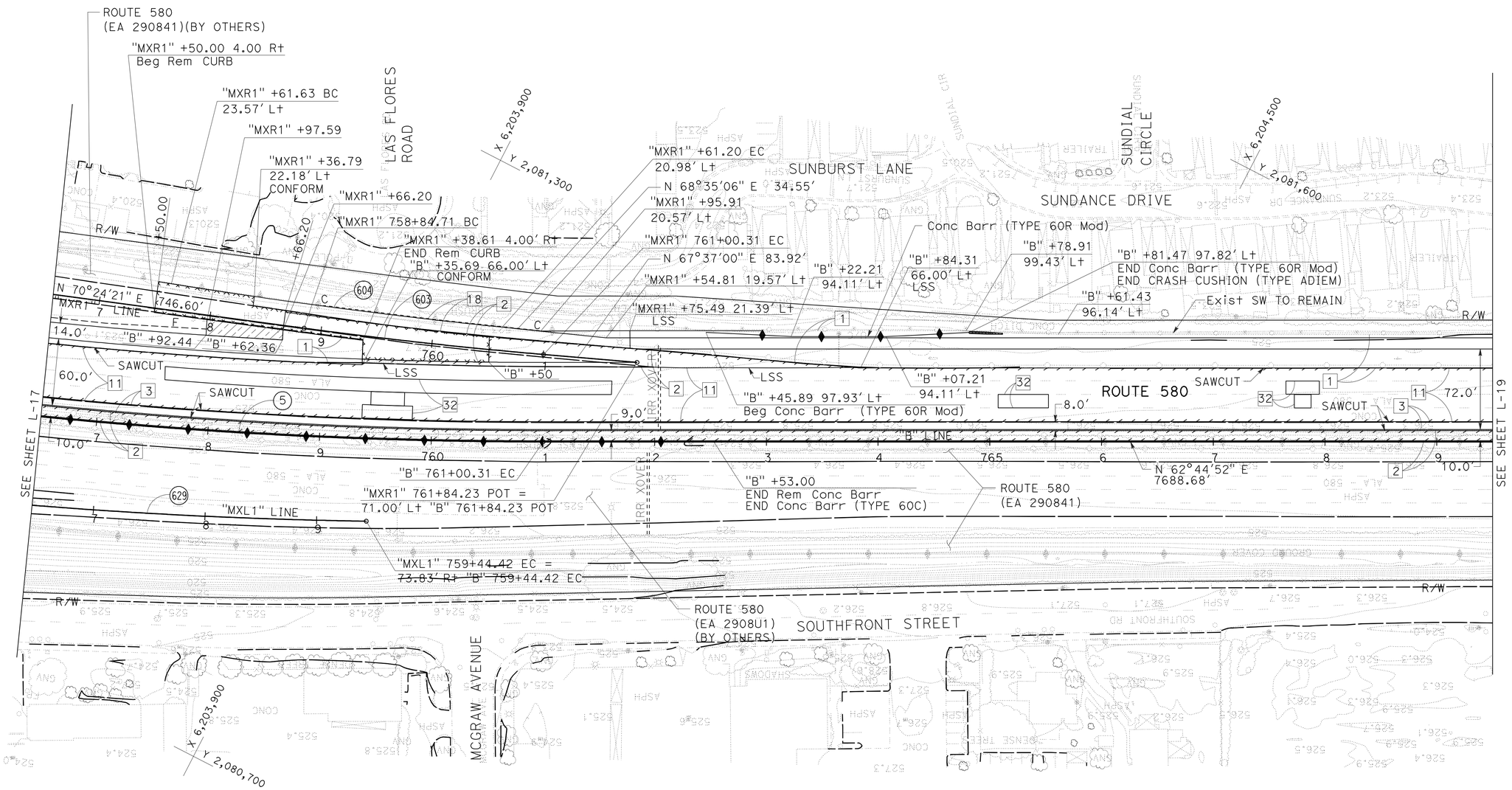

FOR NOTES, ABBREVIATIONS
AND LEGEND, SEE SHEET L-1

LAYOUT

SCALE: 1" = 50′

L-18

REVISED BY	DATE REVISED
TC	5/7/12

TRAVIS CHAN — LUIS GARCIA — CALCULATED-DESIGNED BY — CHECKED BY

SUPERVISOR NATALINA V. BERNARDI — CONSULTANT FUNCTIONAL SUPERVISOR

STATE OF CALIFORNIA - DEPARTMENT OF TRANSPORTATION

Caltrans

LAST REVISION 05-07-12 — DATE PLOTTED =>23-MAY-2012 TIME PLOTTED =>07:13

FOR ACCURATE RIGHT OF WAY DATA, CONTACT
RIGHT OF WAY ENGINEERING AT THE DISTRICT OFFICE.

Dist	COUNTY	ROUTE	POST MILES TOTAL PROJECT	SHEET No.	TOTAL SHEETS
04	Ala	580	R8.4/R14.6	47	853

REGISTERED CIVIL ENGINEER 5/7/12 DATE

5-14-12
PLANS APPROVAL DATE

REGISTERED PROFESSIONAL ENGINEER N.V. BERNARDI No. 45407 Exp. 9/30/12 CIVIL STATE OF CALIFORNIA

THE STATE OF CALIFORNIA OR ITS OFFICERS OR AGENTS SHALL NOT BE RESPONSIBLE FOR THE ACCURACY OR COMPLETENESS OF SCANNED COPIES OF THIS PLAN SHEET.

BKF ENGINEERS
4670 WILLOW ROAD, SUITE 250
PLEASANTON, CA. 94588

ALAMEDA CTC
1333 BROADWAY SUITE 220
OAKLAND, CA. 94612

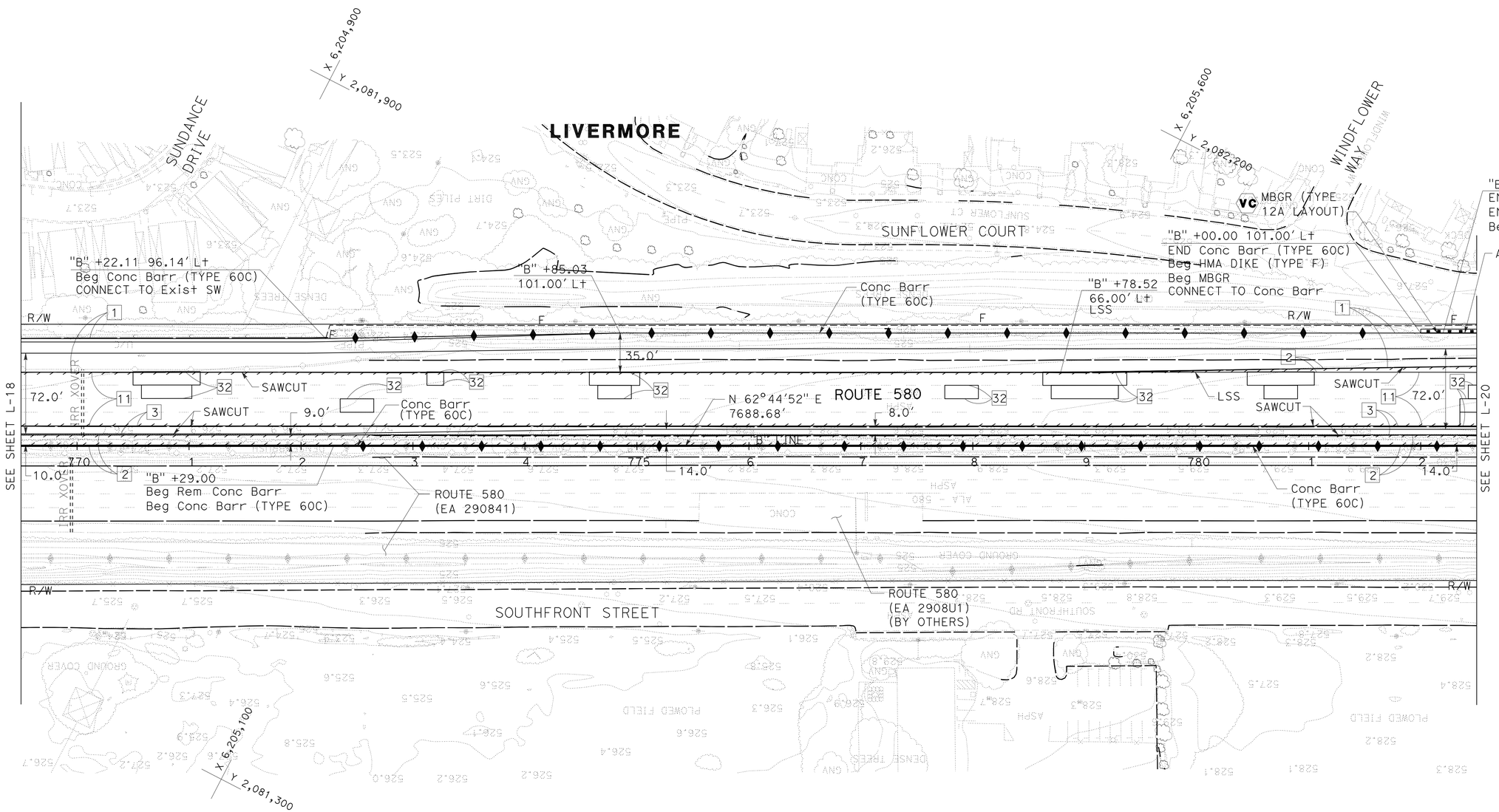

FOR NOTES, ABBREVIATIONS AND LEGEND, SEE SHEET L-1

LAYOUT

SCALE: 1" = 50'

L-19

REVISED BY	DATE REVISED
TC	5/7/12

TRAVIS CHAN — CALCULATED-DESIGNED BY
LUIS GARCIA — CHECKED BY
NATALINA V. BERNARDI — CONSULTANT FUNCTIONAL SUPERVISOR

STATE OF CALIFORNIA - DEPARTMENT OF TRANSPORTATION

LAST REVISION 05-07-12 | DATE PLOTTED =>23-MAY-2012 | TIME PLOTTED =>07:13

Dist	COUNTY	ROUTE	POST MILES TOTAL PROJECT	SHEET No.	TOTAL SHEETS
04	Ala	580	R8.4/R14.6	48	853

REGISTERED CIVIL ENGINEER 5/7/12 DATE

5-14-12
PLANS APPROVAL DATE

REGISTERED PROFESSIONAL ENGINEER N.V. BERNARDI No. 45407 Exp. 9/30/12 CIVIL STATE OF CALIFORNIA

THE STATE OF CALIFORNIA OR ITS OFFICERS OR AGENTS SHALL NOT BE RESPONSIBLE FOR THE ACCURACY OR COMPLETENESS OF SCANNED COPIES OF THIS PLAN SHEET.

BKF ENGINEERS
4670 WILLOW ROAD, SUITE 250
PLEASANTON, CA. 94588

ALAMEDA CTC
1333 BROADWAY SUITE 220
OAKLAND, CA. 94612

FOR ACCURATE RIGHT OF WAY DATA, CONTACT
RIGHT OF WAY ENGINEERING AT THE DISTRICT OFFICE.

CURVE DATA

No.	R	Δ	T	L	NORTHING	EASTING
640	3000.00′	3°11′29"	83.57′	167.10′	2085163.144	6205223.011
641	3000.00′	4°20′14"	113.60′	227.09′	2080068.941	6208393.203
647	442.00′	4°50′15"	18.67′	37.32′		
648	400.00′	14°57′42"	52.53′	104.45′		
650	400.00′	35°33′48"	128.29′	248.28′	2083074.987	6206779.068

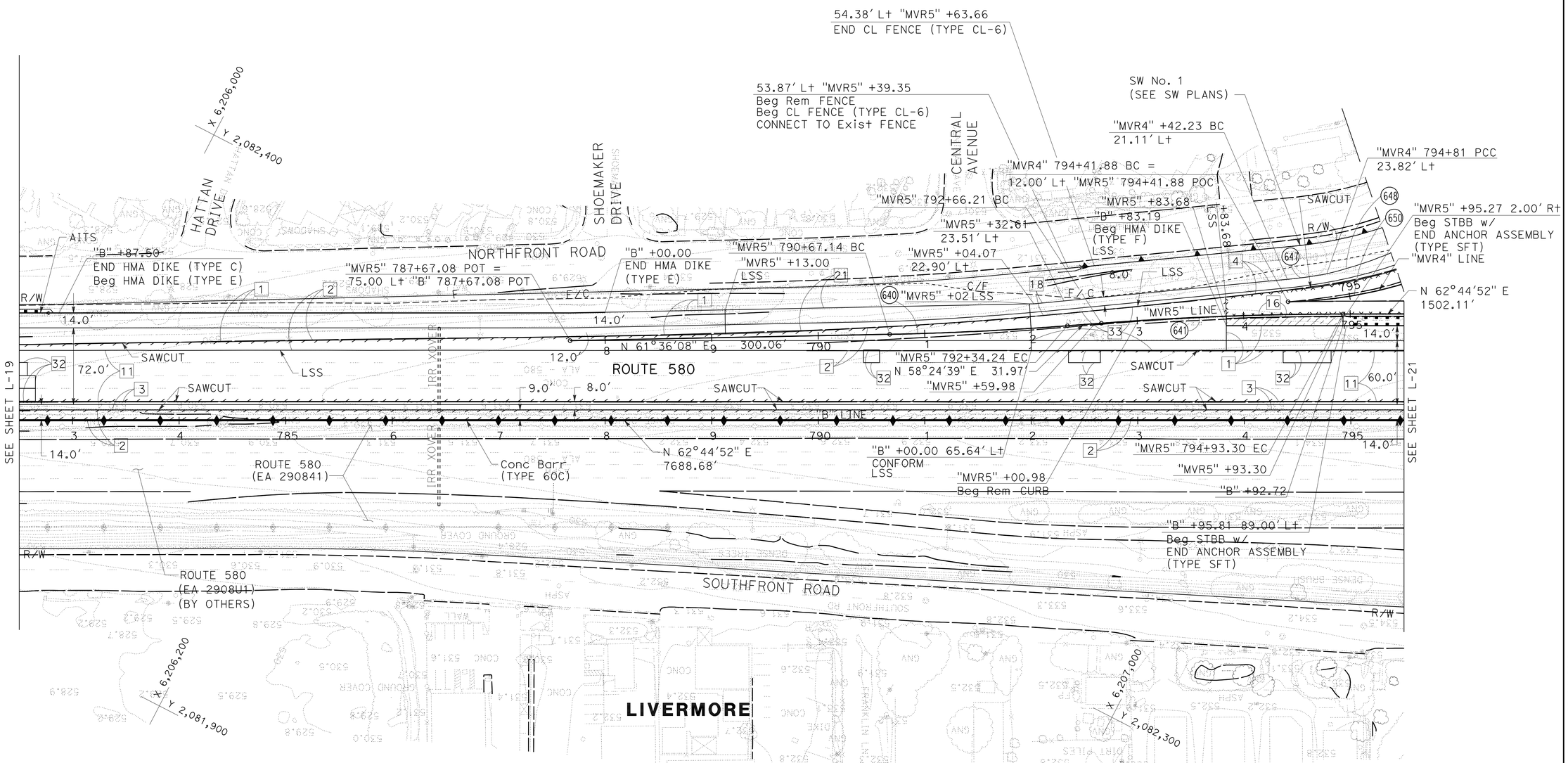

FOR NOTES, ABBREVIATIONS
AND LEGEND, SEE SHEET L-1

LAYOUT

SCALE: 1" = 50′

L-20

REVISED BY	DATE REVISED
TC	5/7/12

TRAVIS CHAN — LUIS GARCIA — CALCULATED-DESIGNED BY — CHECKED BY

CONSULTANT FUNCTIONAL SUPERVISOR — NATALINA V. BERNARDI

STATE OF CALIFORNIA - DEPARTMENT OF TRANSPORTATION

Caltrans

LAST REVISION 05-07-12 — DATE PLOTTED => 23-MAY-2012 — TIME PLOTTED => 07:14

FOR ACCURATE RIGHT OF WAY DATA, CONTACT
RIGHT OF WAY ENGINEERING AT THE DISTRICT OFFICE.

CURVE DATA

No.	R	Δ	T	L	NORTHING	EASTING
644	435.00′	13°10′17″	50.22′	100.00′		
645	154.00′	74°55′05″	117.99′	201.37′		
648	400.00′	14°57′42″	52.53′	104.45′		
650	400.00′	35°33′48″	128.29′	248.28′	2083074.987	6206779.068
651	862.00′	23°20′25″	178.04′	351.15′	2083858.319	6206649.643

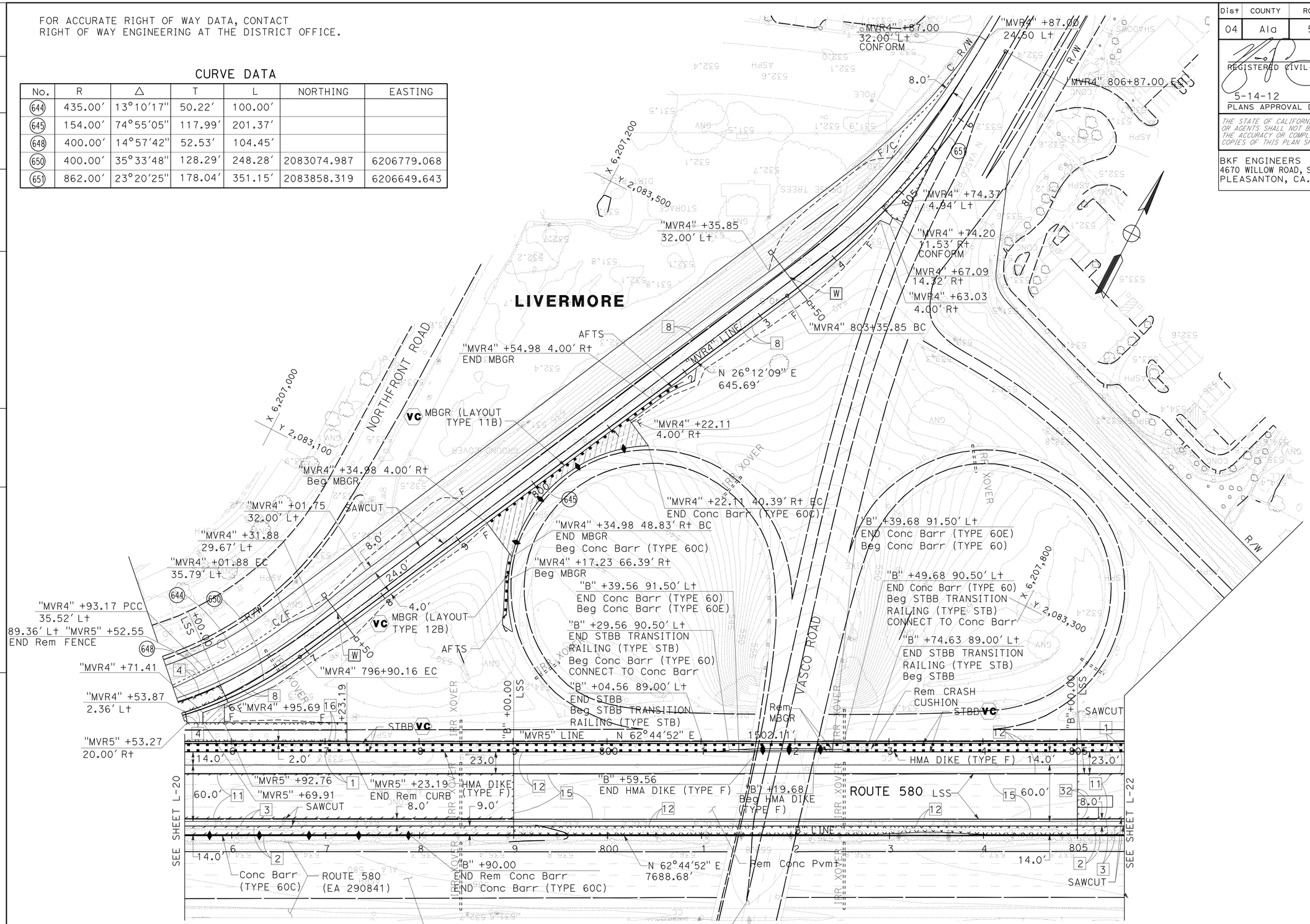

FOR NOTES, ABBREVIATIONS
AND LEGEND, SEE SHEET L-1

Dist	COUNTY	ROUTE	POST MILES TOTAL PROJECT	SHEET No.	TOTAL SHEETS
04	Ala	580	R8.4/R14.6	49	853

REGISTERED CIVIL ENGINEER 5/7/12 DATE

5-14-12
PLANS APPROVAL DATE

REGISTERED PROFESSIONAL ENGINEER
N.V. BERNARDI
No. 45407
Exp. 9/30/12
CIVIL
STATE OF CALIFORNIA

THE STATE OF CALIFORNIA OR ITS OFFICERS OR AGENTS SHALL NOT BE RESPONSIBLE FOR THE ACCURACY OR COMPLETENESS OF SCANNED COPIES OF THIS PLAN SHEET.

BKF ENGINEERS
4670 WILLOW ROAD, SUITE 250
PLEASANTON, CA. 94588

ALAMEDA CTC
1333 BROADWAY SUITE 220
OAKLAND, CA. 94612

LAYOUT
SCALE: 1" = 50′

L-21

STATE OF CALIFORNIA - DEPARTMENT OF TRANSPORTATION
Caltrans

CONSULTANT FUNCTIONAL SUPERVISOR: NATALINA V. BERNARDI
CALCULATED-DESIGNED BY: TRAVIS CHAN
CHECKED BY: LUIS GARCIA
REVISED BY: TC
DATE REVISED: 5/7/12

LAST REVISION 05-07-12
DATE PLOTTED => 23-MAY-2012
TIME PLOTTED => 07:14

FOR ACCURATE RIGHT OF WAY DATA, CONTACT
RIGHT OF WAY ENGINEERING AT THE DISTRICT OFFICE.

Dist	COUNTY	ROUTE	POST MILES TOTAL PROJECT	SHEET No.	TOTAL SHEETS
04	Ala	580	R8.4/R14.6	50	853

REGISTERED CIVIL ENGINEER 5/7/12 DATE

5-14-12
PLANS APPROVAL DATE

REGISTERED PROFESSIONAL ENGINEER N.V. BERNARDI No. 45407 Exp. 9/30/12 CIVIL STATE OF CALIFORNIA

THE STATE OF CALIFORNIA OR ITS OFFICERS OR AGENTS SHALL NOT BE RESPONSIBLE FOR THE ACCURACY OR COMPLETENESS OF SCANNED COPIES OF THIS PLAN SHEET.

BKF ENGINEERS
4670 WILLOW ROAD, SUITE 250
PLEASANTON, CA. 94588

ALAMEDA CTC
1333 BROADWAY SUITE 220
OAKLAND, CA. 94612

CURVE DATA

No.	R	Δ	T	L	NORTHING	EASTING
643	20000.00′	00°42′33"	123.77′	247.54′	2101203.769	6199196.715
644	1000.00′	05°34′41"	48.72′	97.36′	2082655.211	6209043.086
659	8.00′	86°20′49"	7.51′	12.06′		
660	180.00′	47°14′14"	78.71′	148.40′	2082712.308	6207826.002
661	1150.00′	28°25′37"	291.28′	570.57′	2082305.823	6209128.944
662	3280.83′	2°52′05"	82.13′	164.23′	2080554.223	6210349.771
663	175.00′	47°14′14"	76.52′	144.28′		
664	1118.00′	11°11′40"	109.57′	218.44′		
665	1000.00′	15°57′05"	140.11′	278.40′		
666	1118.00′	14°10′31"	139.01′	276.60′		
667	3292.00′	1°49′47"	52.57′	105.13′		
668	3292.00′	0°59′09"	28.32′	56.65′		
669	1118.00′	3°03′20"	29.82′	59.62′		

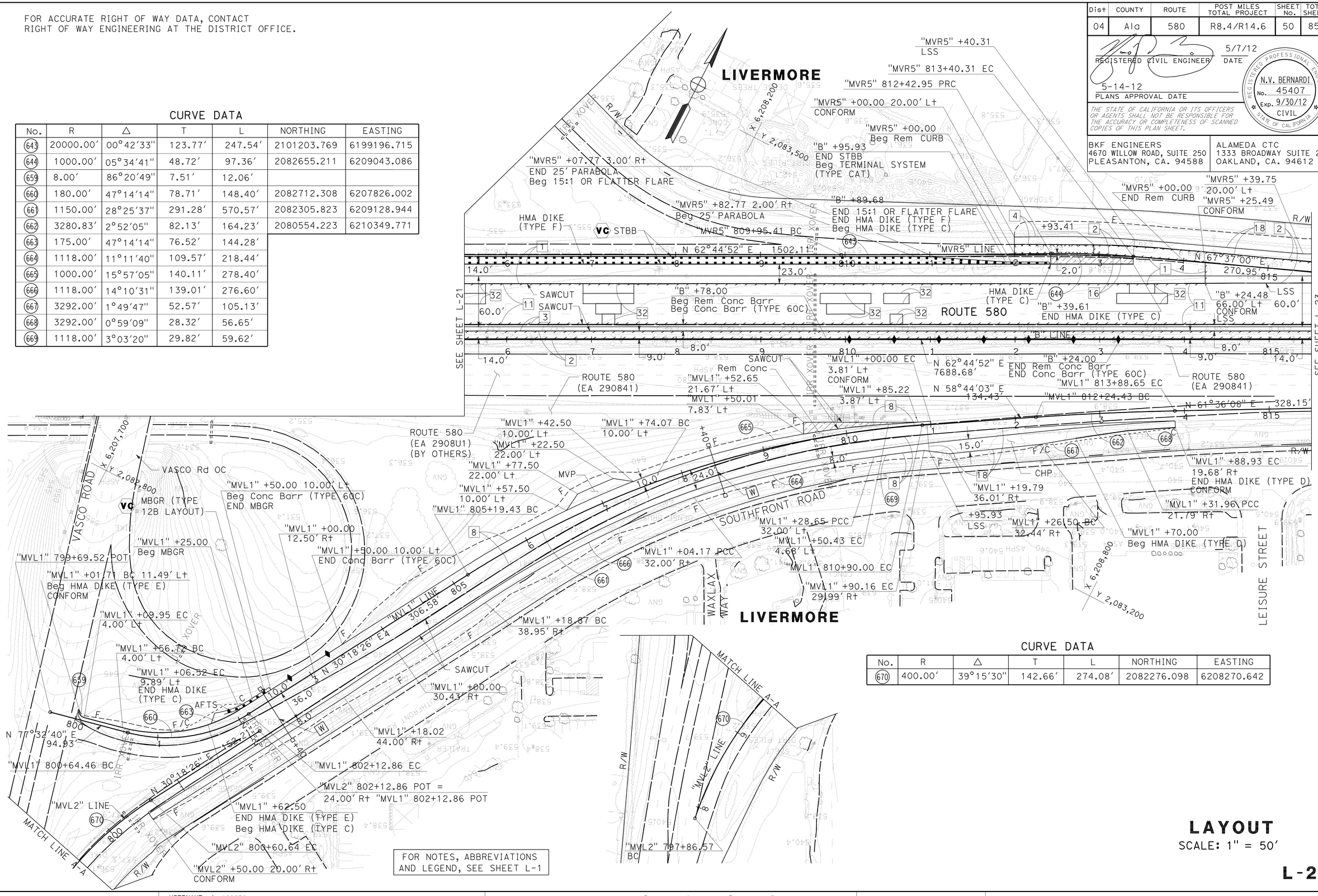

CURVE DATA

No.	R	Δ	T	L	NORTHING	EASTING
670	400.00′	39°15′30"	142.66′	274.08′	2082276.098	6208270.642

FOR NOTES, ABBREVIATIONS
AND LEGEND, SEE SHEET L-1

LAYOUT

SCALE: 1" = 50′

L-22

TC	5/7/12	REVISED BY	DATE REVISED
TRAVIS CHAN	LUIS GARCIA	CALCULATED- DESIGNED BY	CHECKED BY
CONSULTANT FUNCTIONAL SUPERVISOR	NATALINA V. BERNARDI		

STATE OF CALIFORNIA - DEPARTMENT OF TRANSPORTATION

Caltrans

LAST REVISION 05-07-12 | DATE PLOTTED =>23-MAY-2012 TIME PLOTTED =>07:15

FOR ACCURATE RIGHT OF WAY DATA, CONTACT
RIGHT OF WAY ENGINEERING AT THE DISTRICT OFFICE.

Dist	COUNTY	ROUTE	POST MILES TOTAL PROJECT	SHEET No.	TOTAL SHEETS
04	Ala	580	R8.4/R14.6	51	853

REGISTERED CIVIL ENGINEER — DATE 5/7/12

5-14-12
PLANS APPROVAL DATE

REGISTERED PROFESSIONAL ENGINEER — N.V. BERNARDI — No. 45407 — Exp. 9/30/12 — CIVIL — STATE OF CALIFORNIA

THE STATE OF CALIFORNIA OR ITS OFFICERS OR AGENTS SHALL NOT BE RESPONSIBLE FOR THE ACCURACY OR COMPLETENESS OF SCANNED COPIES OF THIS PLAN SHEET.

BKF ENGINEERS
4670 WILLOW ROAD, SUITE 250
PLEASANTON, CA. 94588

ALAMEDA CTC
1333 BROADWAY SUITE 220
OAKLAND, CA. 94612

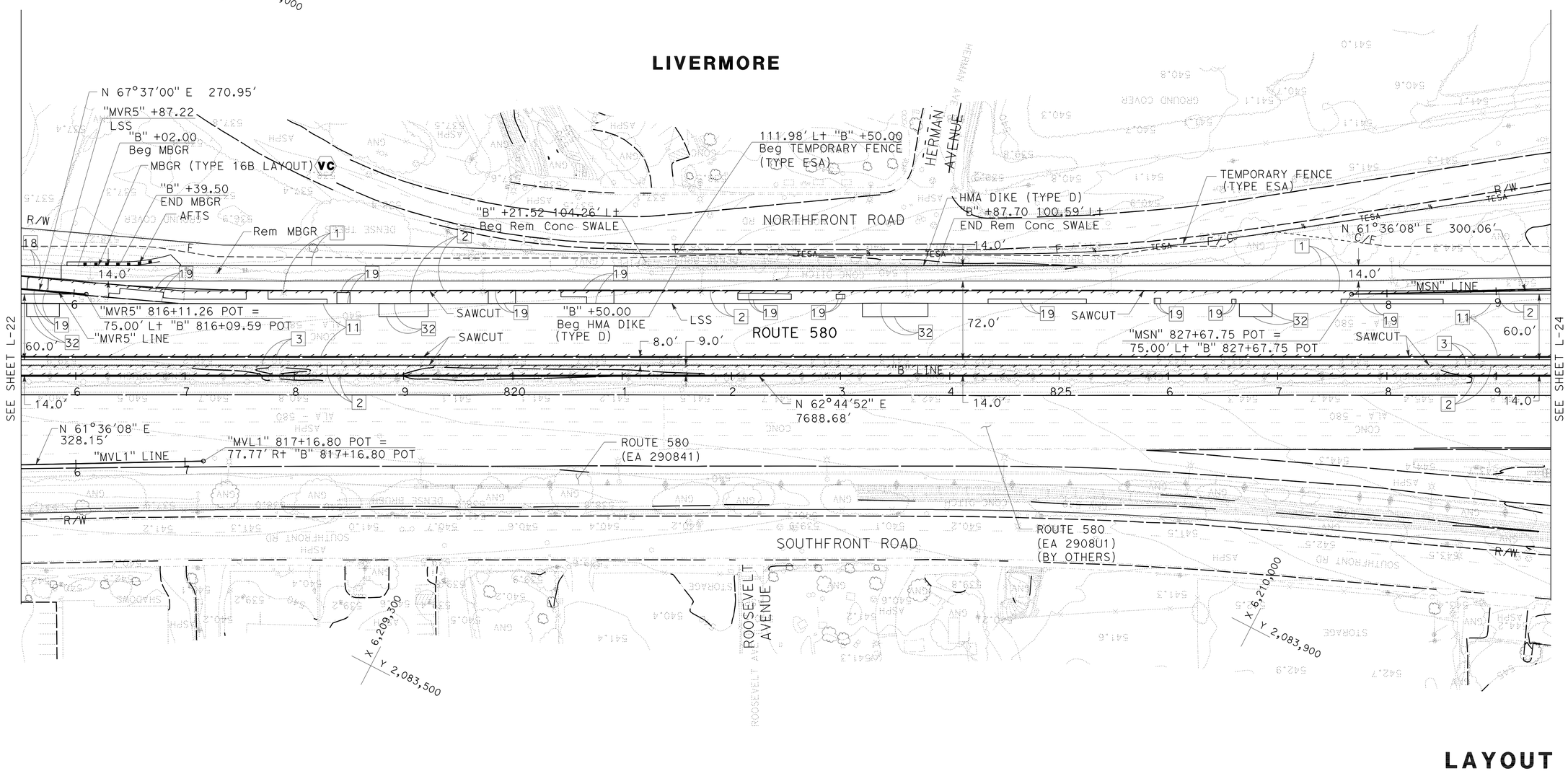

FOR NOTES, ABBREVIATIONS
AND LEGEND, SEE SHEET L-1

LAYOUT

SCALE: 1" = 50'

L-23

		TC	5/7/12
		REVISED BY	DATE REVISED
TRAVIS CHAN			
LUIS GARCIA			
CALCULATED-DESIGNED BY			
CHECKED BY			
NATALINA V. BERNARDI			
CONSULTANT FUNCTIONAL SUPERVISOR			

STATE OF CALIFORNIA - DEPARTMENT OF TRANSPORTATION

Caltrans

LAST REVISION 05-07-12 | DATE PLOTTED =>23-MAY-2012 | TIME PLOTTED =>07:15

FOR ACCURATE RIGHT OF WAY DATA, CONTACT
RIGHT OF WAY ENGINEERING AT THE DISTRICT OFFICE.

CURVE DATA

No.	R	Δ	T	L	NORTHING	EASTING
6	39968.00′	0°29′42″	172.65′	345.30′	2120145.887	6192583.026
680	3000.00′	3°11′29″	83.57′	167.10′	2086995.080	6208779.610
681	3500.00′	4°05′21″	124.95′	249.80′	2081458.218	6212184.483
682	20000.00′	0°54′15″	157.79′	315.57′	2102590.743	6201886.191
684	1192.00′	4°47′34″	49.88′	99.71′		
685	2508.00′	3°12′22″	70.19′	140.34′		
686	3532.00′	0°56′00″	28.77′	57.53′		
687	2980.00′	1°12′40″	31.49′	62.99′		
688	1020.00′	2°36′42″	23.25′	46.49′		

Dist	COUNTY	ROUTE	POST MILES TOTAL PROJECT	SHEET No.	TOTAL SHEETS
04	Ala	580	R8.4/R14.6	52	853

REGISTERED CIVIL ENGINEER 5/7/12 DATE

5-14-12
PLANS APPROVAL DATE

REGISTERED PROFESSIONAL ENGINEER N.V. BERNARDI No. 45407 Exp. 9/30/12 CIVIL STATE OF CALIFORNIA

THE STATE OF CALIFORNIA OR ITS OFFICERS OR AGENTS SHALL NOT BE RESPONSIBLE FOR THE ACCURACY OR COMPLETENESS OF SCANNED COPIES OF THIS PLAN SHEET.

BKF ENGINEERS
4670 WILLOW ROAD, SUITE 250
PLEASANTON, CA. 94588

ALAMEDA CTC
1333 BROADWAY SUITE 220
OAKLAND, CA. 94612

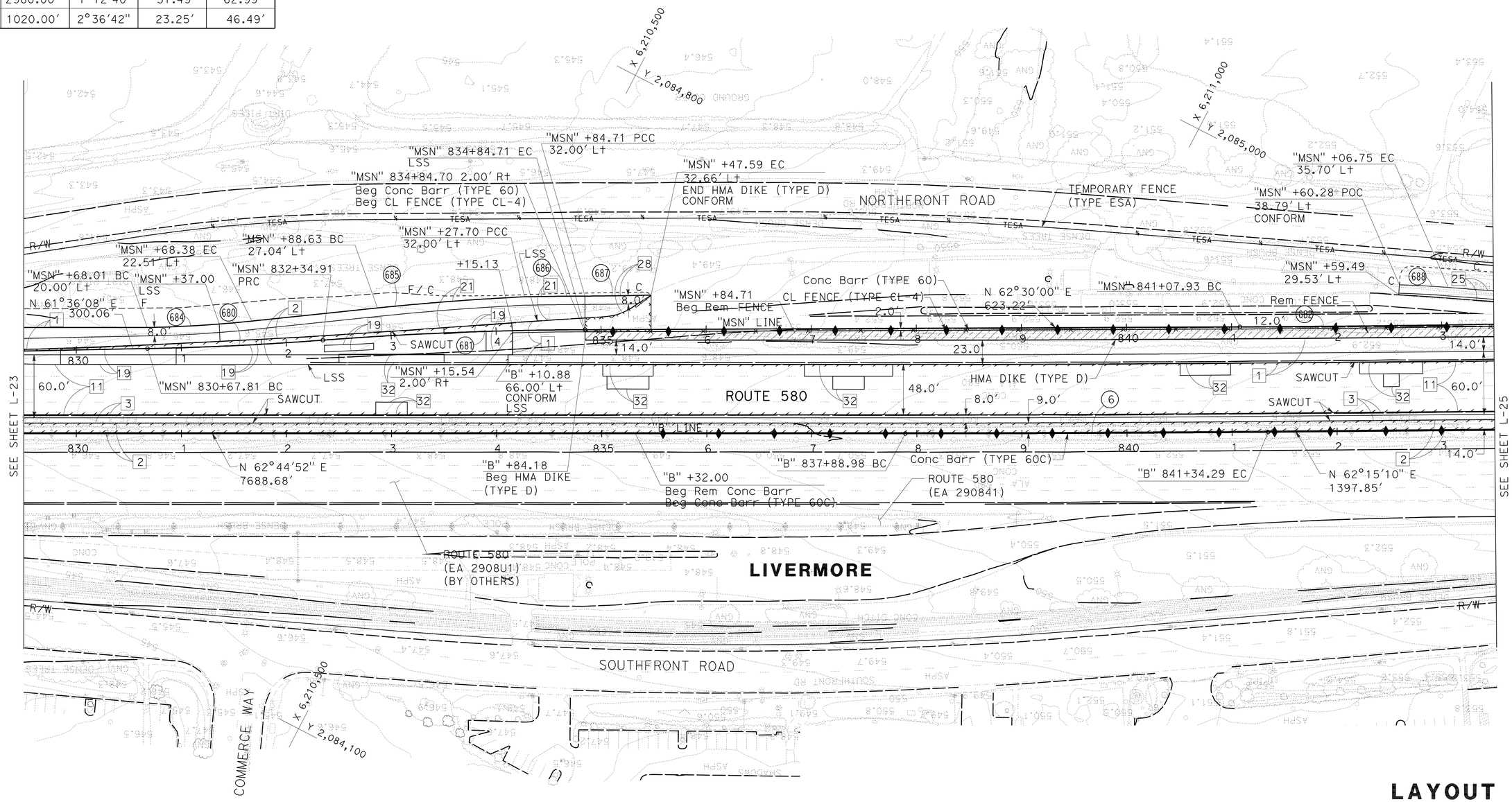

FOR NOTES, ABBREVIATIONS AND LEGEND, SEE SHEET L-1

LAYOUT

SCALE: 1" = 50′

L-24

REVISED BY	DATE REVISED
TC	5/7/12

TRAVIS CHAN — LUIS GARCIA — CALCULATED-DESIGNED BY — CHECKED BY

CONSULTANT FUNCTIONAL SUPERVISOR: NATALINA V. BERNARDI

STATE OF CALIFORNIA - DEPARTMENT OF TRANSPORTATION

LAST REVISION 05-07-12 | DATE PLOTTED => 23-MAY-2012 | TIME PLOTTED => 07:15

Dist	COUNTY	ROUTE	POST MILES TOTAL PROJECT	SHEET No.	TOTAL SHEETS
04	Ala	580	R8.4/R14.6	53	853

REGISTERED CIVIL ENGINEER 5/7/12 DATE

5-14-12
PLANS APPROVAL DATE

REGISTERED PROFESSIONAL ENGINEER N.V. BERNARDI No. 45407 Exp. 9/30/12 CIVIL STATE OF CALIFORNIA

THE STATE OF CALIFORNIA OR ITS OFFICERS OR AGENTS SHALL NOT BE RESPONSIBLE FOR THE ACCURACY OR COMPLETENESS OF SCANNED COPIES OF THIS PLAN SHEET.

BKF ENGINEERS
4670 WILLOW ROAD, SUITE 250
PLEASANTON, CA. 94588

ALAMEDA CTC
1333 BROADWAY SUITE 220
OAKLAND, CA. 94612

FOR ACCURATE RIGHT OF WAY DATA, CONTACT
RIGHT OF WAY ENGINEERING AT THE DISTRICT OFFICE.

CURVE DATA

No.	R	Δ	T	L	NORTHING	EASTING
682	20000.00′	0°54′15"	157.79′	315.57′	2102590.743	6201886.191
683	1000.00′	5°31′33"	48.26′	96.45′	2084118.829	6211875.605
700	5000.00′	13°55′27"	610.57′	1215.12′	2080962.275	6214775.500

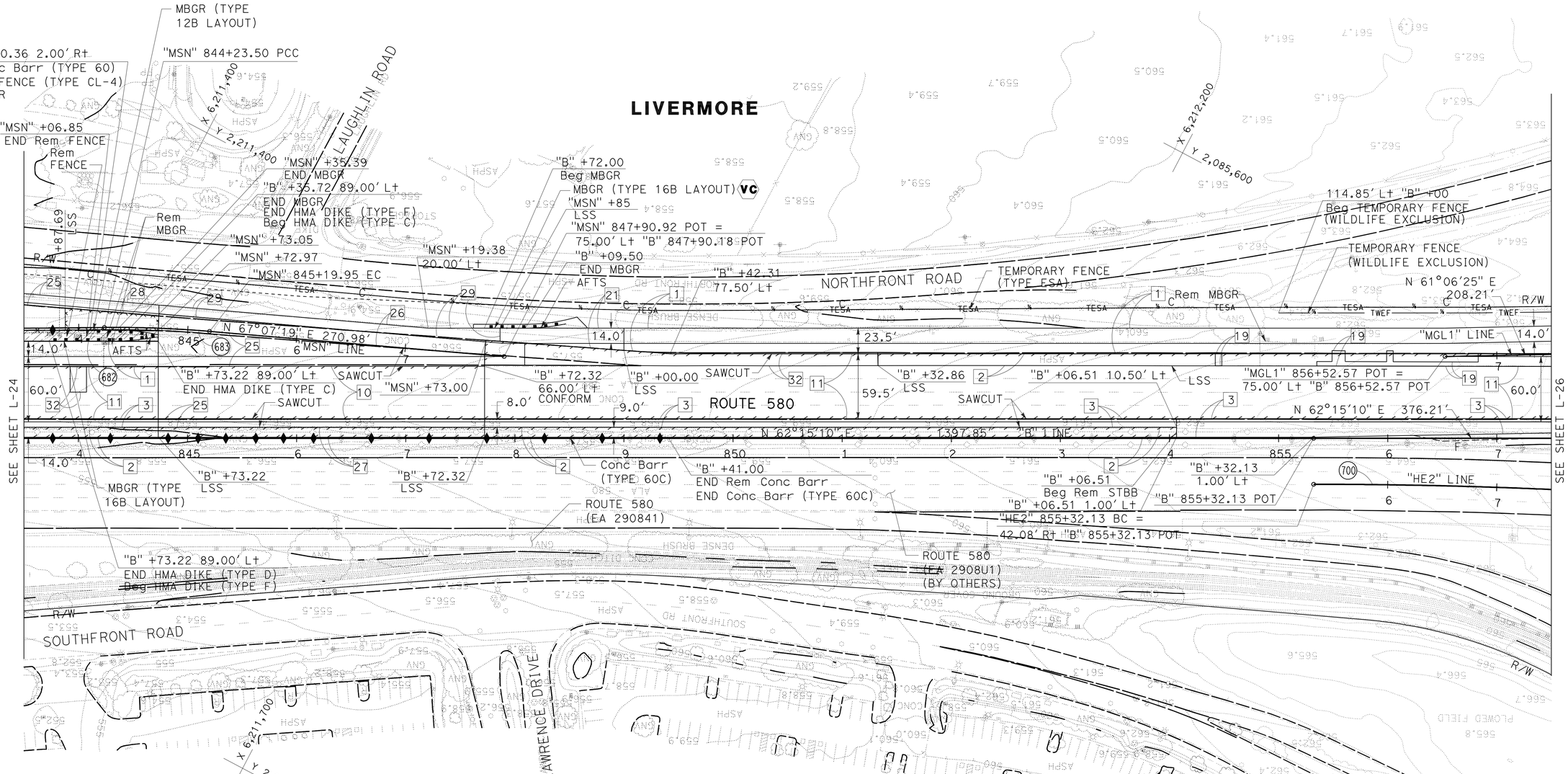

FOR NOTES, ABBREVIATIONS AND LEGEND, SEE SHEET L-1

LAYOUT

SCALE: 1" = 50′

L-25

REVISED BY	DATE REVISED
TC	5/7/12

TRAVIS CHAN — LUIS GARCIA — CALCULATED-DESIGNED BY — CHECKED BY

CONSULTANT FUNCTIONAL SUPERVISOR: NATALINA V. BERNARDI

STATE OF CALIFORNIA - DEPARTMENT OF TRANSPORTATION

Caltrans

LAST REVISION 05-07-12 — DATE PLOTTED => 23-MAY-2012 — TIME PLOTTED => 07:16

Dist	COUNTY	ROUTE	POST MILES TOTAL PROJECT	SHEET No.	TOTAL SHEETS
04	Ala	580	R8.4/R14.6	54	853

REGISTERED CIVIL ENGINEER 5/7/12 DATE

5-14-12
PLANS APPROVAL DATE

REGISTERED PROFESSIONAL ENGINEER N.V. BERNARDI No. 45407 Exp. 9/30/12 CIVIL STATE OF CALIFORNIA

THE STATE OF CALIFORNIA OR ITS OFFICERS OR AGENTS SHALL NOT BE RESPONSIBLE FOR THE ACCURACY OR COMPLETENESS OF SCANNED COPIES OF THIS PLAN SHEET.

BKF ENGINEERS
4670 WILLOW ROAD, SUITE 250
PLEASANTON, CA. 94588

ALAMEDA CTC
1333 BROADWAY SUITE 220
OAKLAND, CA. 94612

FOR ACCURATE RIGHT OF WAY DATA, CONTACT RIGHT OF WAY ENGINEERING AT THE DISTRICT OFFICE.

CURVE DATA

No.	R	Δ	T	L	NORTHING	EASTING
7	4685.00′	14°09′29″	581.81′	1157.69′	2081453.445	6214942.199
70	4692.00′	4°35′45″	188.28′	376.35′		
71	4758.00′	8°37′31″	358.81′	716.27′		

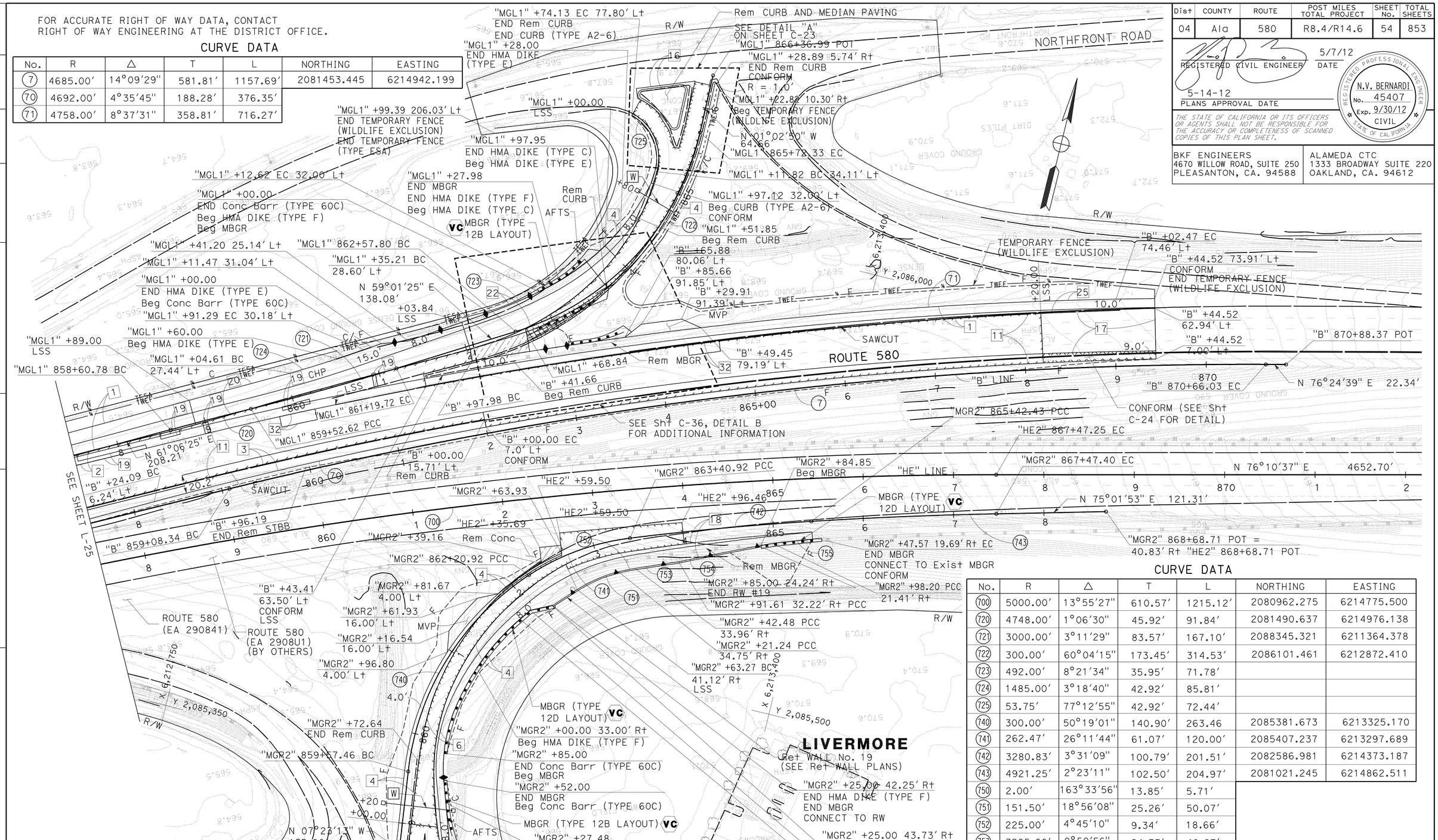

CURVE DATA

No.	R	Δ	T	L	NORTHING	EASTING
700	5000.00′	13°55′27″	610.57′	1215.12′	2080962.275	6214775.500
720	4748.00′	1°06′30″	45.92′	91.84′	2081490.637	6214976.138
721	3000.00′	3°11′29″	83.57′	167.10′	2088345.321	6211364.378
722	300.00′	60°04′15″	173.45′	314.53′	2086101.461	6212872.410
723	492.00′	8°21′34″	35.95′	71.78′		
724	1485.00′	3°18′40″	42.92′	85.81′		
725	53.75′	77°12′55″	42.92′	72.44′		
740	300.00′	50°19′01″	140.90′	263.46	2085381.673	6213325.170
741	262.47′	26°11′44″	61.07′	120.00′	2085407.237	6213297.689
742	3280.83′	3°31′09″	100.79′	201.51′	2082586.981	6214373.187
743	4921.25′	2°23′11″	102.50′	204.97′	2081021.245	6214862.511
750	2.00′	163°33′56″	13.85′	5.71′		
751	151.50′	18°56′08″	25.26′	50.07′		
752	225.00′	4°45′10″	9.34′	18.66′		
753	3285.00′	0°50′56″	24.33′	48.67′		
754	3292.00′	1°50′59″	53.14′	106.27′		
755	3292.00′	0°46′15″	22.14′	44.29′		

FOR NOTES, ABBREVIATIONS AND LEGEND, SEE SHEET L-1

LAYOUT

SCALE: 1" = 50′ **L-26**

		CALCULATED-DESIGNED BY	CHECKED BY
TC	5/7/12	REVISED BY	DATE REVISED
TRAVIS CHAN	LUIS GARCIA		
CONSULTANT FUNCTIONAL SUPERVISOR			
NATALINA V. BERNARDI			

STATE OF CALIFORNIA - DEPARTMENT OF TRANSPORTATION

LAST REVISION 05-07-12 | DATE PLOTTED =>23-MAY-2012 TIME PLOTTED =>07:16

Dist	COUNTY	ROUTE	POST MILES TOTAL PROJECT	SHEET No.	TOTAL SHEETS
04	Ala	580	R8.4/R14.6	55	853

REGISTERED CIVIL ENGINEER 1/18/12 DATE

5-14-12
PLANS APPROVAL DATE

REGISTERED PROFESSIONAL ENGINEER N.V. BERNARDI No. 45407 Exp. 9/30/12 CIVIL STATE OF CALIFORNIA

THE STATE OF CALIFORNIA OR ITS OFFICERS OR AGENTS SHALL NOT BE RESPONSIBLE FOR THE ACCURACY OR COMPLETENESS OF SCANNED COPIES OF THIS PLAN SHEET.

BKF ENGINEERS
4670 WILLOW ROAD, SUITE 250
PLEASANTON, CA. 94588

ALAMEDA CTC
1333 BROADWAY SUITE 220
OAKLAND, CA. 94612

NOTES:

1. ELEVATIONS SHOWN ARE BASED UPON NORTH AMERICAN VERTICAL DATUM OF 1988 (NAVD 88) IN FEET.
2. LOCATION OF SUPERELEVATIONS APPLIES TO GRADE BREAKS BEYOND ETW AS DEPICTED ON THE TYPICAL CROSS SECTIONS.
3. PROFILE AND SUPERELEVATION DIAGRAM FOR WEST BOUND DIRECTION ONLY.
4. SEE CONSTRUCTION DETAILS FOR PAVEMENT ELEVATIONS NOT SHOWN.

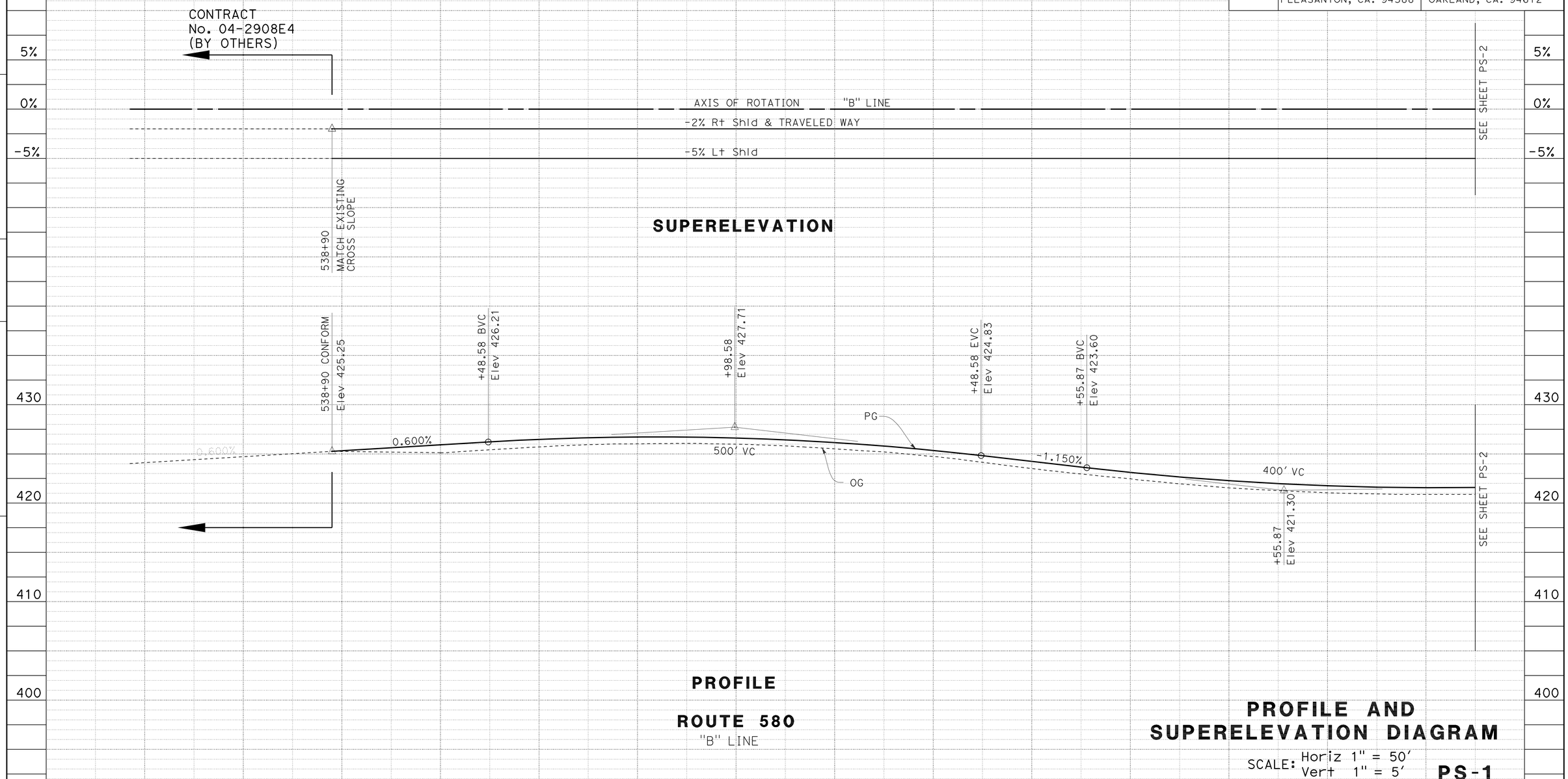

PROFILE AND SUPERELEVATION DIAGRAM

SCALE: Horiz 1" = 50'
Vert 1" = 5'

PS-1

STATION		7	8	9	540+00	1	2	3	4	545+00	6	7	8	9	550+00	TOTAL
CY	Exc							1866'								1 866
	Emb				7'											7

STATE OF CALIFORNIA - DEPARTMENT OF TRANSPORTATION

CONSULTANT FUNCTIONAL SUPERVISOR: NATALINA V. BERNARDI

CALCULATED-DESIGNED BY: TRAVIS CHAN

CHECKED BY: LUIS GARCIA

REVISED BY: TC

DATE REVISED: 1/18/12

LAST REVISION 01-18-12

DATE PLOTTED =>23-MAY-2012
TIME PLOTTED =>06:31

Dist	COUNTY	ROUTE	POST MILES TOTAL PROJECT	SHEET No.	TOTAL SHEETS
04	Ala	580	R8.4/R14.6	56	853

REGISTERED CIVIL ENGINEER 1/18/12 DATE

5-14-12
PLANS APPROVAL DATE

REGISTERED PROFESSIONAL ENGINEER N.V. BERNARDI No. 45407 Exp. 9/30/12 CIVIL STATE OF CALIFORNIA

THE STATE OF CALIFORNIA OR ITS OFFICERS OR AGENTS SHALL NOT BE RESPONSIBLE FOR THE ACCURACY OR COMPLETENESS OF SCANNED COPIES OF THIS PLAN SHEET.

BKF ENGINEERS
4670 WILLOW ROAD, SUITE 250
PLEASANTON, CA. 94588

ALAMEDA CTC
1333 BROADWAY SUITE 220
OAKLAND, CA. 94612

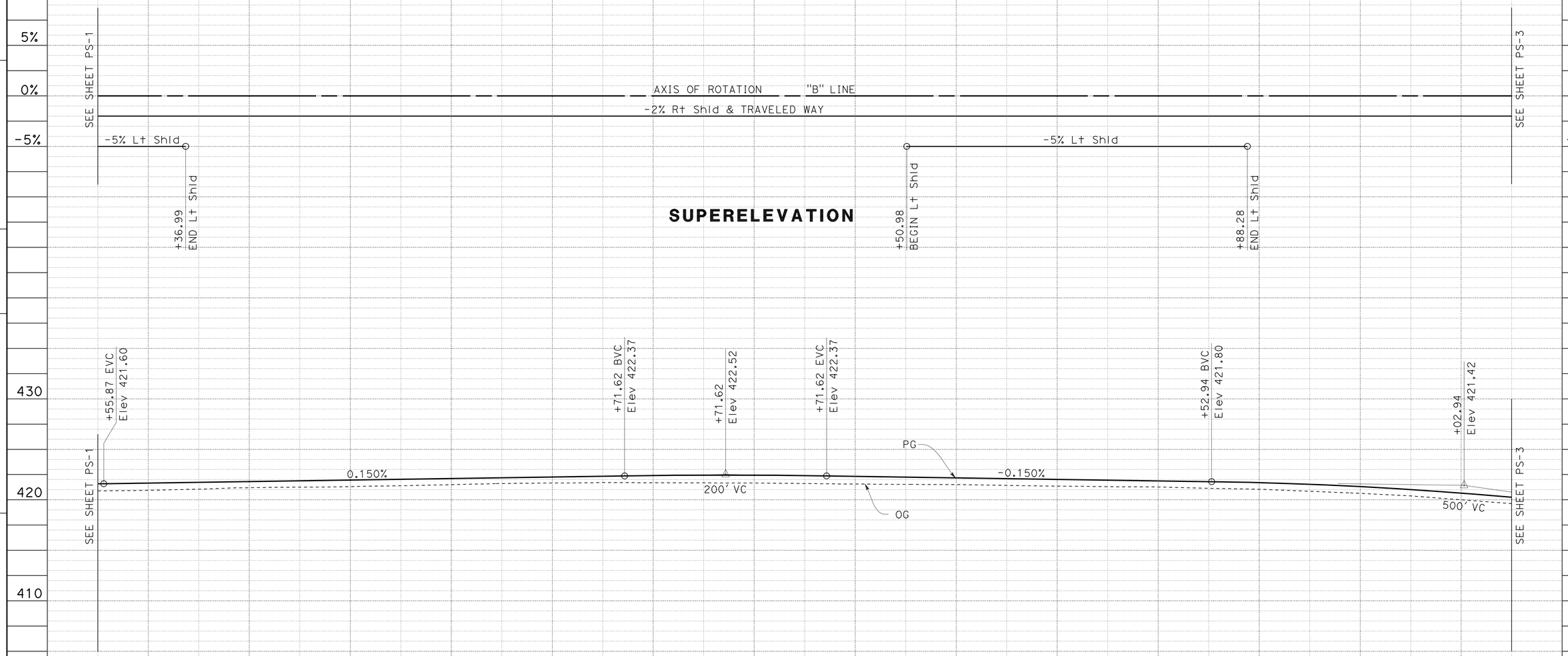

PROFILE

ROUTE 580
"B" LINE

PROFILE AND SUPERELEVATION DIAGRAM

SCALE: Horiz 1" = 50'
Vert 1" = 5'

PS-2

STATION	1	2	3	4	555+00	6	7	8	9	560+00	1	2	3	4	TOTAL
CY Exc	1934'														1 934
CY Emb		211'									60'				271

REVISED BY: TC — DATE REVISED: 1/18/12
CALCULATED-DESIGNED BY: TRAVIS CHAN — CHECKED BY: LUIS GARCIA
CONSULTANT FUNCTIONAL SUPERVISOR: NATALINA V. BERNARDI

STATE OF CALIFORNIA - DEPARTMENT OF TRANSPORTATION

LAST REVISION 01-18-12 — DATE PLOTTED => 23-MAY-2012 — TIME PLOTTED => 06:31

Dist	COUNTY	ROUTE	POST MILES TOTAL PROJECT	SHEET No.	TOTAL SHEETS
04	Ala	580	R8.4/R14.6	57	853

REGISTERED CIVIL ENGINEER 1/18/12 DATE

5-14-12
PLANS APPROVAL DATE

REGISTERED PROFESSIONAL ENGINEER N.V. BERNARDI No. 45407 Exp. 9/30/12 CIVIL STATE OF CALIFORNIA

THE STATE OF CALIFORNIA OR ITS OFFICERS OR AGENTS SHALL NOT BE RESPONSIBLE FOR THE ACCURACY OR COMPLETENESS OF SCANNED COPIES OF THIS PLAN SHEET.

BKF ENGINEERS
4670 WILLOW ROAD, SUITE 250
PLEASANTON, CA. 94588

ALAMEDA CTC
1333 BROADWAY SUITE 220
OAKLAND, CA. 94612

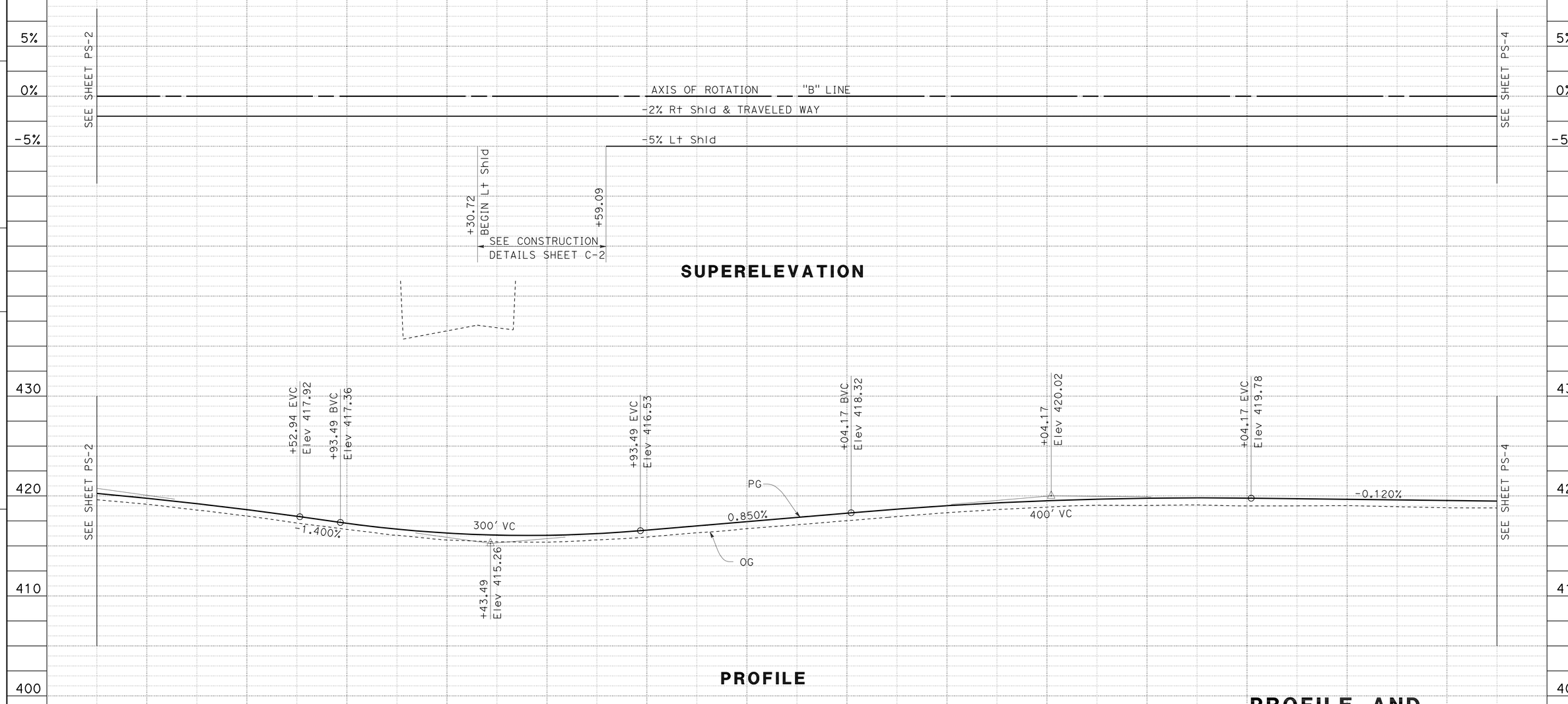

PROFILE AND SUPERELEVATION DIAGRAM

SCALE: Horiz 1" = 50'
Vert 1" = 5'

PS-3

STATION	565+00	6	7	8	9	570+00	1	2	3	4	575+00	6	7	8	TOTAL
CY Exc	2302'														2302
CY Emb	237'														237

REVISED BY	TC	TRAVIS CHAN	CALCULATED-DESIGNED BY
DATE REVISED	1/18/12	LUIS GARCIA	CHECKED BY

CONSULTANT FUNCTIONAL SUPERVISOR: NATALINA V. BERNARDI

STATE OF CALIFORNIA - DEPARTMENT OF TRANSPORTATION

Caltrans

LAST REVISION 01-18-12 | DATE PLOTTED => 23-MAY-2012 | TIME PLOTTED => 06:31

Dist	COUNTY	ROUTE	POST MILES TOTAL PROJECT	SHEET No.	TOTAL SHEETS
04	Ala	580	R8.4/R14.6	58	853

REGISTERED CIVIL ENGINEER 1/18/12 DATE

5-14-12
PLANS APPROVAL DATE

REGISTERED PROFESSIONAL ENGINEER N.V. BERNARDI No. 45407 Exp. 9/30/12 CIVIL STATE OF CALIFORNIA

THE STATE OF CALIFORNIA OR ITS OFFICERS OR AGENTS SHALL NOT BE RESPONSIBLE FOR THE ACCURACY OR COMPLETENESS OF SCANNED COPIES OF THIS PLAN SHEET.

BKF ENGINEERS
4670 WILLOW ROAD, SUITE 250
PLEASANTON, CA. 94588

ALAMEDA CTC
1333 BROADWAY SUITE 220
OAKLAND, CA. 94612

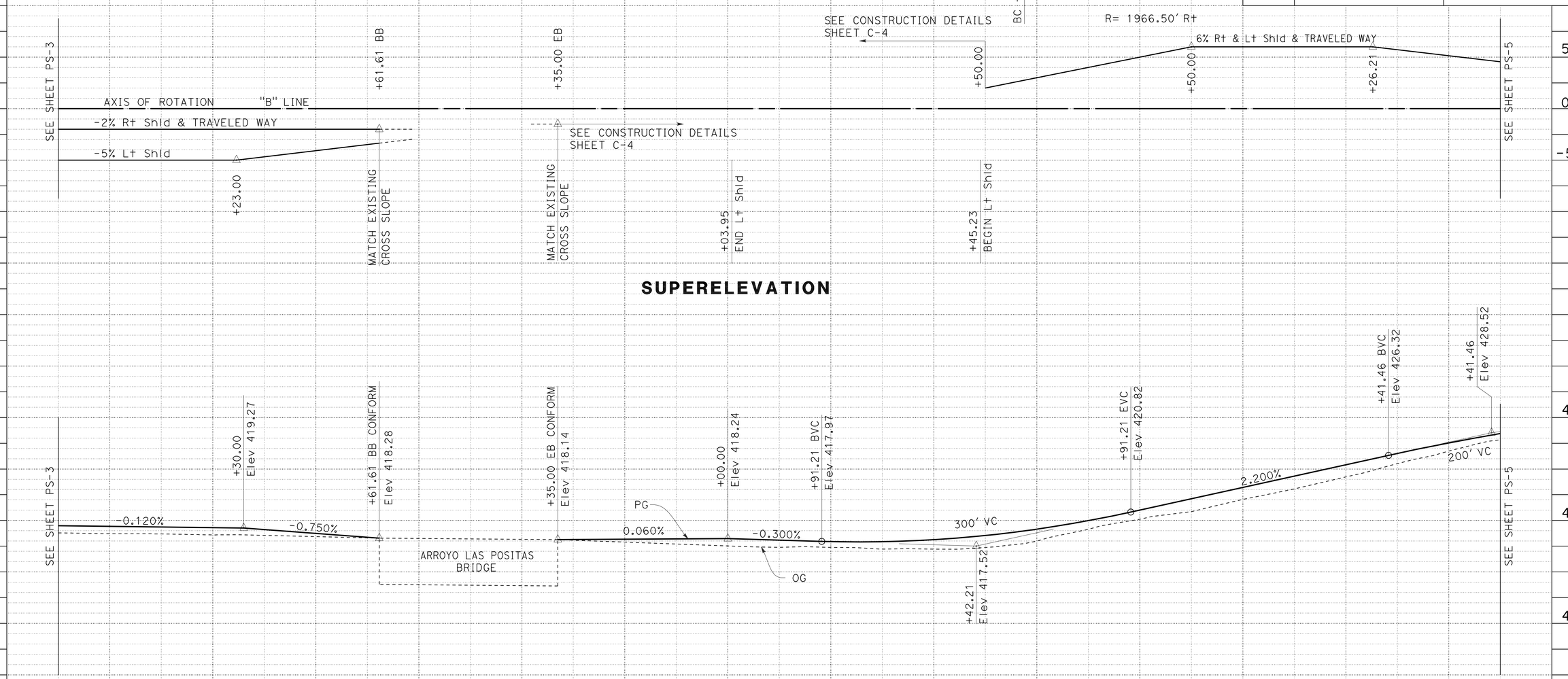

PROFILE AND SUPERELEVATION DIAGRAM

SCALE: Horiz 1" = 50'
Vert 1" = 5'

PS-4

STATION		9	580+00	1	2	3	4	585+00	6	7	8	9	590+00	1	2	TOTAL
CY	Exc		802'					1040'								1 842
	Emb		7'					69'					24'			1 00

STATE OF CALIFORNIA - DEPARTMENT OF TRANSPORTATION

CONSULTANT FUNCTIONAL SUPERVISOR: NATALINA V. BERNARDI

CALCULATED-DESIGNED BY: TRAVIS CHAN
CHECKED BY: LUIS GARCIA

REVISED BY: TC
DATE REVISED: 1/18/12

LAST REVISION 01-18-12
DATE PLOTTED =>23-MAY-2012
TIME PLOTTED =>16:31

Dist	COUNTY	ROUTE	POST MILES TOTAL PROJECT	SHEET No.	TOTAL SHEETS
04	Ala	580	R8.4/R14.6	59	853

REGISTERED CIVIL ENGINEER 1/18/12 DATE

5-14-12
PLANS APPROVAL DATE

REGISTERED PROFESSIONAL ENGINEER N.V. BERNARDI No. 45407 Exp. 9/30/12 CIVIL STATE OF CALIFORNIA

THE STATE OF CALIFORNIA OR ITS OFFICERS OR AGENTS SHALL NOT BE RESPONSIBLE FOR THE ACCURACY OR COMPLETENESS OF SCANNED COPIES OF THIS PLAN SHEET.

BKF ENGINEERS
4670 WILLOW ROAD, SUITE 250
PLEASANTON, CA. 94588

ALAMEDA CTC
1333 BROADWAY SUITE 220
OAKLAND, CA. 94612

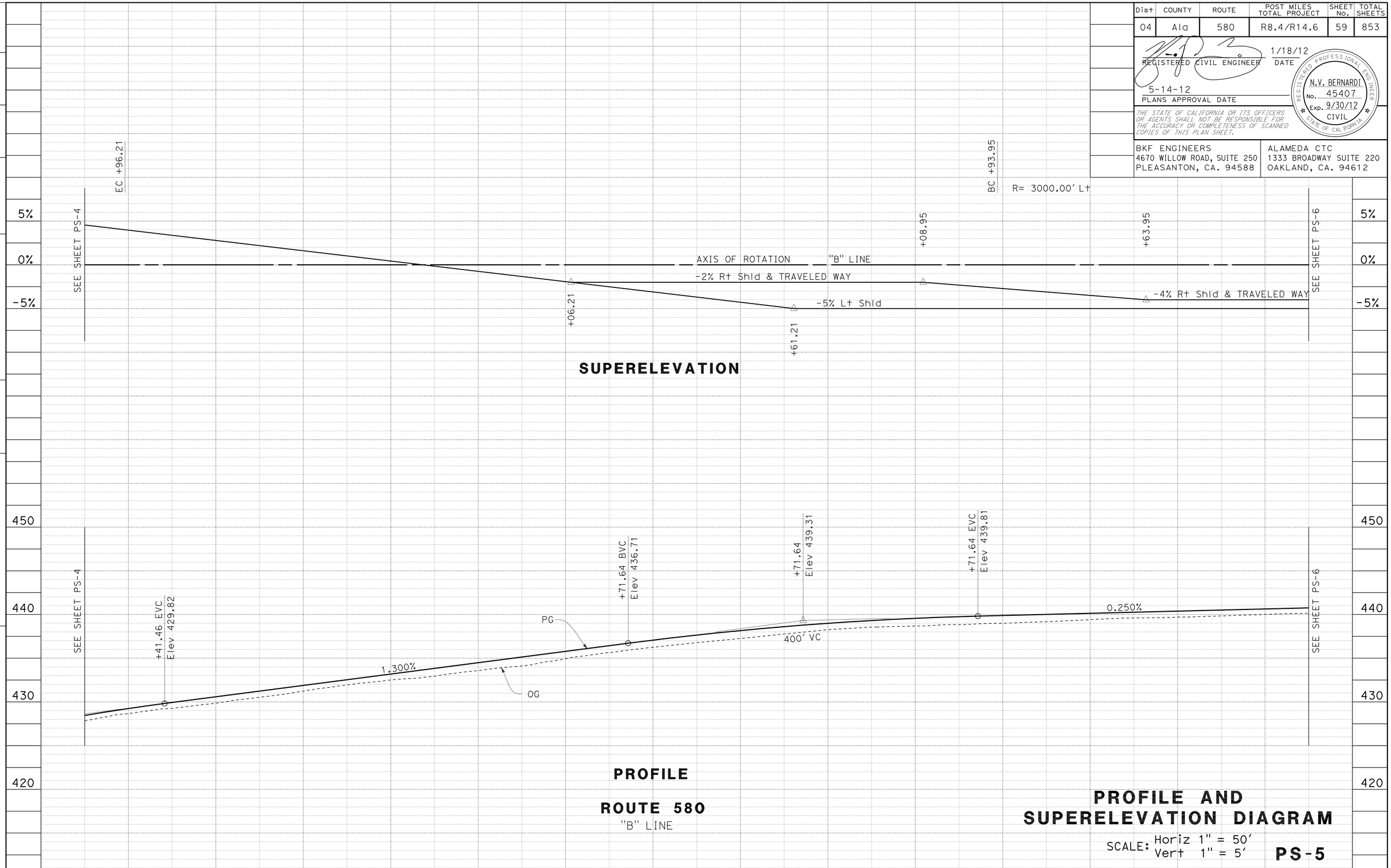

REVISED BY	DATE REVISED
TC	1/18/12

TRAVIS CHAN — LUIS GARCIA — CALCULATED-DESIGNED BY — CHECKED BY

CONSULTANT FUNCTIONAL SUPERVISOR: NATALINA V. BERNARDI

STATE OF CALIFORNIA - DEPARTMENT OF TRANSPORTATION

Caltrans

LAST REVISION 01-18-12 DATE PLOTTED =>23-MAY-2012 TIME PLOTTED =>06:31

Dist	COUNTY	ROUTE	POST MILES TOTAL PROJECT	SHEET No.	TOTAL SHEETS
04	Ala	580	R8.4/R14.6	60	853

REGISTERED CIVIL ENGINEER 1/18/12 DATE

5-14-12
PLANS APPROVAL DATE

REGISTERED PROFESSIONAL ENGINEER N.V. BERNARDI No. 45407 Exp. 9/30/12 CIVIL STATE OF CALIFORNIA

THE STATE OF CALIFORNIA OR ITS OFFICERS OR AGENTS SHALL NOT BE RESPONSIBLE FOR THE ACCURACY OR COMPLETENESS OF SCANNED COPIES OF THIS PLAN SHEET.

BKF ENGINEERS
4670 WILLOW ROAD, SUITE 250
PLEASANTON, CA. 94588

ALAMEDA CTC
1333 BROADWAY SUITE 220
OAKLAND, CA. 94612

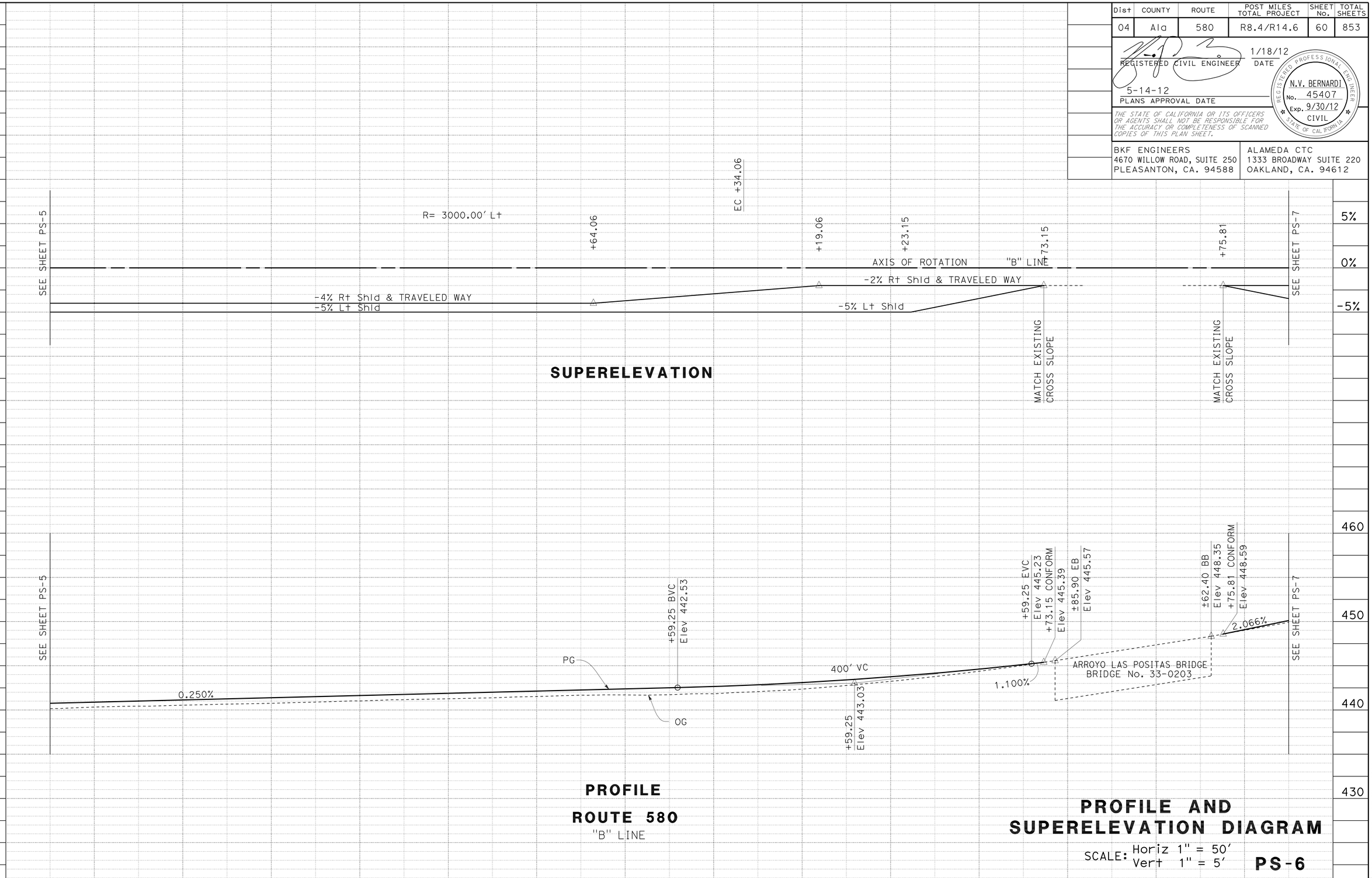

PROFILE AND SUPERELEVATION DIAGRAM

SCALE: Horiz 1" = 50'
Vert 1" = 5'

PS-6

STATION		7	8	9	610+00	1	2	3	4	615+00	6	7	8	9	620+00	TOTAL
CY	Exc	3427'													165'	3592
	Emb	926'													101'	1027

STATE OF CALIFORNIA - DEPARTMENT OF TRANSPORTATION

CONSULTANT FUNCTIONAL SUPERVISOR: NATALINA V. BERNARDI

CALCULATED-DESIGNED BY: TRAVIS CHAN

CHECKED BY: LUIS GARCIA

REVISED BY: TC

DATE REVISED: 1/18/12

LAST REVISION 01-18-12

DATE PLOTTED => 23-MAY-2012
TIME PLOTTED => 06:31

Dist	COUNTY	ROUTE	POST MILES TOTAL PROJECT	SHEET No.	TOTAL SHEETS
04	Ala	580	R8.4/R14.6	61	853

REGISTERED CIVIL ENGINEER 1/18/12 DATE

5-14-12
PLANS APPROVAL DATE

REGISTERED PROFESSIONAL ENGINEER N.V. BERNARDI No. 45407 Exp. 9/30/12 CIVIL STATE OF CALIFORNIA

THE STATE OF CALIFORNIA OR ITS OFFICERS OR AGENTS SHALL NOT BE RESPONSIBLE FOR THE ACCURACY OR COMPLETENESS OF SCANNED COPIES OF THIS PLAN SHEET.

BKF ENGINEERS
4670 WILLOW ROAD, SUITE 250
PLEASANTON, CA. 94588

ALAMEDA CTC
1333 BROADWAY SUITE 220
OAKLAND, CA. 94612

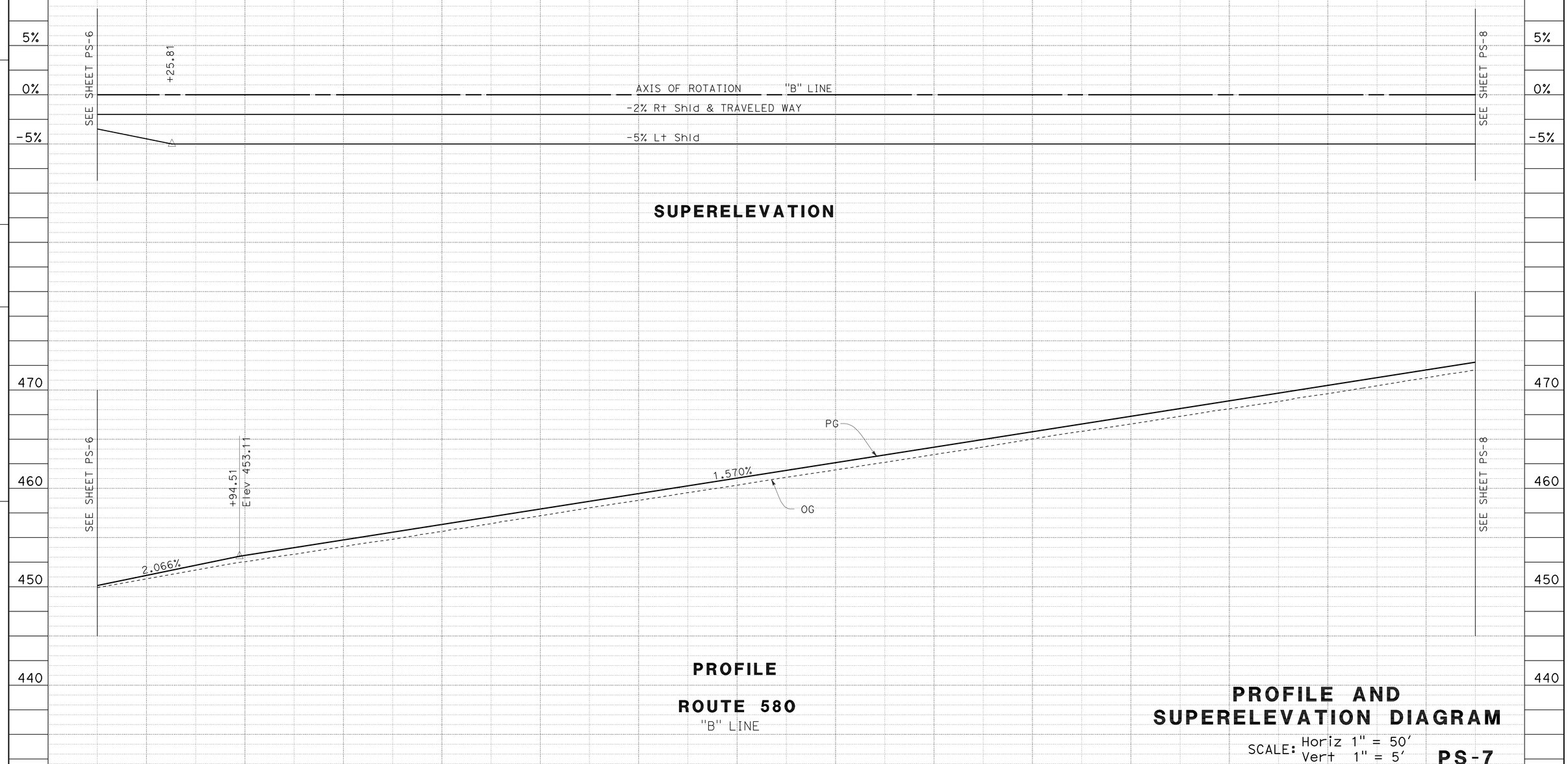

PROFILE AND SUPERELEVATION DIAGRAM

SCALE: Horiz 1" = 50′
Vert 1" = 5′

PS-7

STATION	1	2	3	4	625+00	6	7	8	9	630+00	1	2	3	4	TOTAL
CY Exc								8369′							8369
CY Emb	209′														209

REVISED BY	DATE REVISED
TC	1/18/12

TRAVIS CHAN — CALCULATED-DESIGNED BY
LUIS GARCIA — CHECKED BY
NATALINA V. BERNARDI — CONSULTANT FUNCTIONAL SUPERVISOR

STATE OF CALIFORNIA - DEPARTMENT OF TRANSPORTATION

Caltrans

LAST REVISION 01-18-12
DATE PLOTTED => 23-MAY-2012
TIME PLOTTED => 06:31

Dist	COUNTY	ROUTE	POST MILES TOTAL PROJECT	SHEET No.	TOTAL SHEETS
04	Ala	580	R8.4/R14.6	62	853

REGISTERED CIVIL ENGINEER 1/18/12 DATE

5-14-12
PLANS APPROVAL DATE

REGISTERED PROFESSIONAL ENGINEER N.V. BERNARDI No. 45407 Exp. 9/30/12 CIVIL STATE OF CALIFORNIA

THE STATE OF CALIFORNIA OR ITS OFFICERS OR AGENTS SHALL NOT BE RESPONSIBLE FOR THE ACCURACY OR COMPLETENESS OF SCANNED COPIES OF THIS PLAN SHEET.

BKF ENGINEERS
4670 WILLOW ROAD, SUITE 250
PLEASANTON, CA. 94588

ALAMEDA CTC
1333 BROADWAY SUITE 220
OAKLAND, CA. 94612

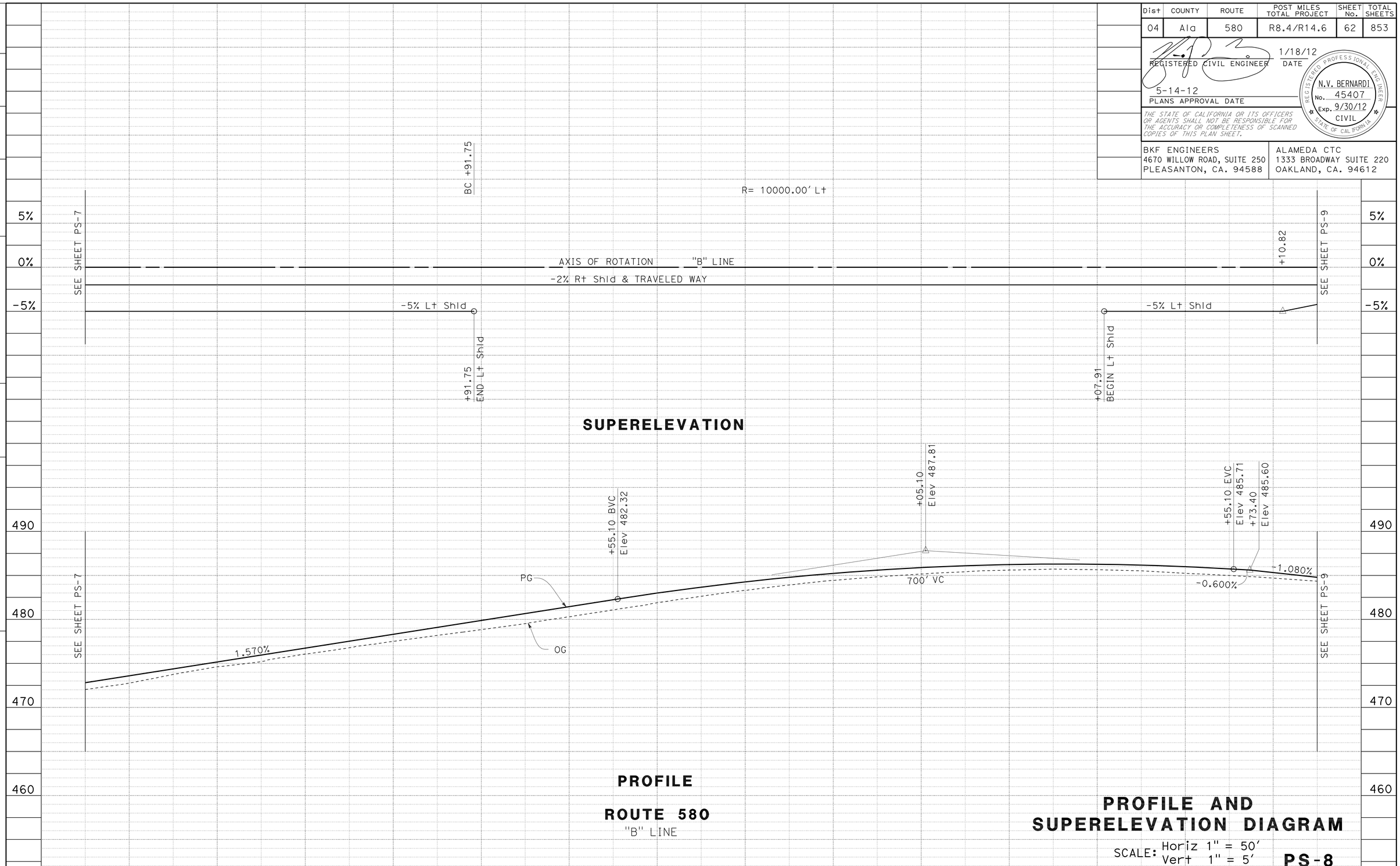

STATION		635+00	6	7	8	9	640+00	1	2	3	4	645+00	6	7	8	TOTAL
CY	Exc	5758'														5758
	Emb												349'			349

REVISED BY	TC
DATE REVISED	1/18/12
CALCULATED-DESIGNED BY	TRAVIS CHAN
CHECKED BY	LUIS GARCIA
CONSULTANT FUNCTIONAL SUPERVISOR	NATALINA V. BERNARDI

STATE OF CALIFORNIA - DEPARTMENT OF TRANSPORTATION

Caltrans

LAST REVISION 01-18-12

DATE PLOTTED =>23-MAY-2012
TIME PLOTTED =>06:31

Dist	COUNTY	ROUTE	POST MILES TOTAL PROJECT	SHEET No.	TOTAL SHEETS
04	Ala	580	R8.4/R14.6	63	853

REGISTERED CIVIL ENGINEER 1/18/12 DATE

5-14-12
PLANS APPROVAL DATE

REGISTERED PROFESSIONAL ENGINEER N.V. BERNARDI No. 45407 Exp. 9/30/12 CIVIL STATE OF CALIFORNIA

THE STATE OF CALIFORNIA OR ITS OFFICERS OR AGENTS SHALL NOT BE RESPONSIBLE FOR THE ACCURACY OR COMPLETENESS OF SCANNED COPIES OF THIS PLAN SHEET.

BKF ENGINEERS
4670 WILLOW ROAD, SUITE 250
PLEASANTON, CA. 94588

ALAMEDA CTC
1333 BROADWAY SUITE 220
OAKLAND, CA. 94612

PROFILE AND SUPERELEVATION DIAGRAM

SCALE: Horiz 1" = 50'
Vert 1" = 5'

PS-9

STATION		9	650+00	1	2	3	4	655+00	6	7	8	9	660+00	1	2	TOTAL
CY	Exc	257′					2400′									2657
	Emb	166′					309′									475

REVISED BY	DATE REVISED
TC	1/18/12

CALCULATED-DESIGNED BY: TRAVIS CHAN
CHECKED BY: LUIS GARCIA
CONSULTANT FUNCTIONAL SUPERVISOR: NATALINA V. BERNARDI

STATE OF CALIFORNIA - DEPARTMENT OF TRANSPORTATION

LAST REVISION 01-18-12
DATE PLOTTED =>23-MAY-2012
TIME PLOTTED =>16:31

Dist	COUNTY	ROUTE	POST MILES TOTAL PROJECT	SHEET No.	TOTAL SHEETS
04	Ala	580	R8.4/R14.6	64	853

REGISTERED CIVIL ENGINEER 1/18/12 DATE

5-14-12
PLANS APPROVAL DATE

REGISTERED PROFESSIONAL ENGINEER N.V. BERNARDI No. 45407 Exp. 9/30/12 CIVIL STATE OF CALIFORNIA

THE STATE OF CALIFORNIA OR ITS OFFICERS OR AGENTS SHALL NOT BE RESPONSIBLE FOR THE ACCURACY OR COMPLETENESS OF SCANNED COPIES OF THIS PLAN SHEET.

BKF ENGINEERS
4670 WILLOW ROAD, SUITE 250
PLEASANTON, CA. 94588

ALAMEDA CTC
1333 BROADWAY SUITE 220
OAKLAND, CA. 94612

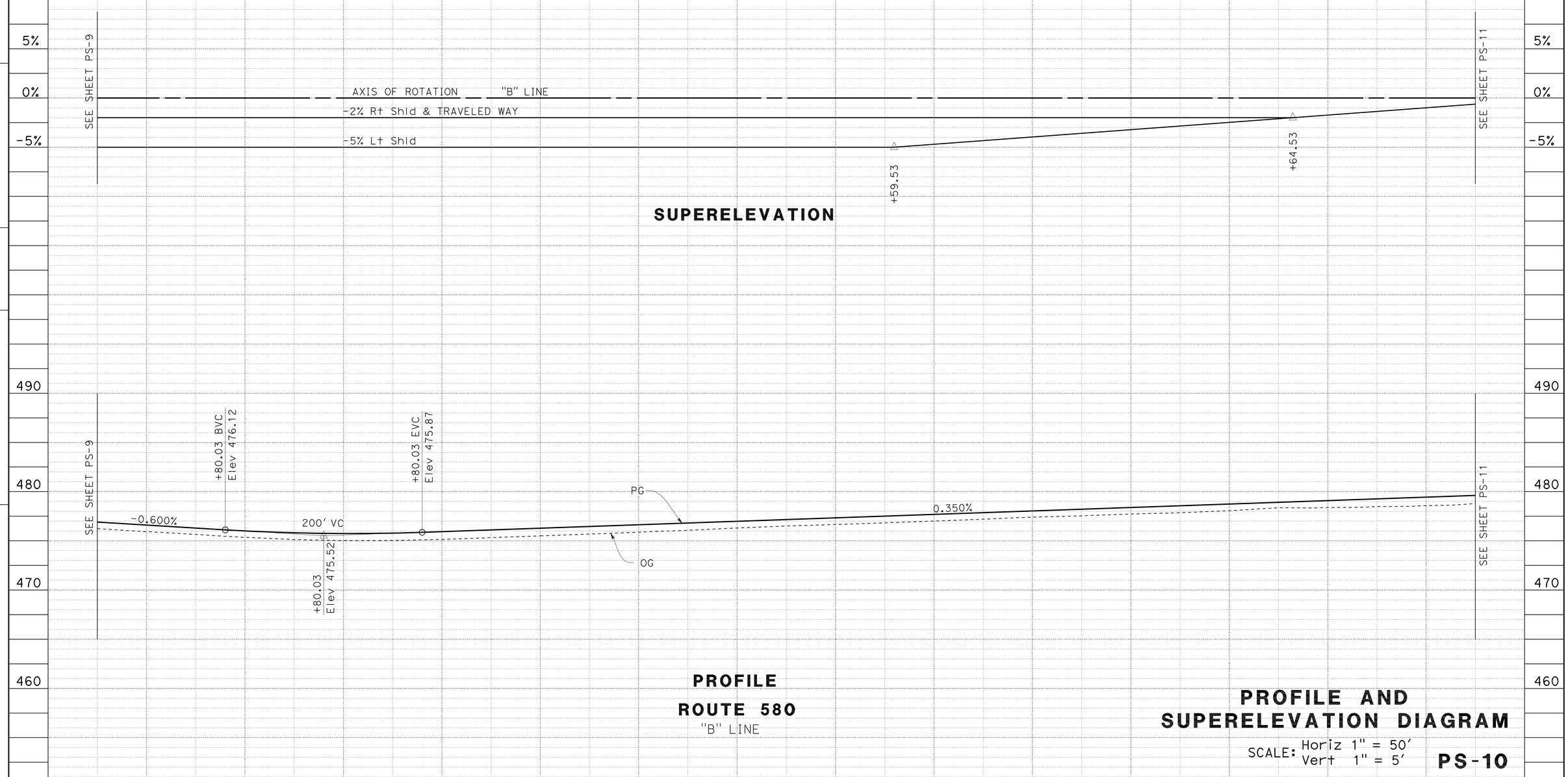

PROFILE AND SUPERELEVATION DIAGRAM

SCALE: Horiz 1" = 50'
Vert 1" = 5'

PS-10

STATION	3	4	665+00	6	7	8	9	670+00	1	2	3	4	675+00	6	TOTAL
CY Exc	5838'														5838
CY Emb										447'					447

STATE OF CALIFORNIA - DEPARTMENT OF TRANSPORTATION

CONSULTANT FUNCTIONAL SUPERVISOR: NATALINA V. BERNARDI

CALCULATED-DESIGNED BY: LUIS GARCIA

CHECKED BY: TRAVIS CHAN

REVISED BY: TC

DATE REVISED: 1/18/12

LAST REVISION DATE PLOTTED => 23-MAY-2012
01-18-12 TIME PLOTTED => 06:31

Dist	COUNTY	ROUTE	POST MILES TOTAL PROJECT	SHEET No.	TOTAL SHEETS
04	Ala	580	R8.4/R14.6	65	853

REGISTERED CIVIL ENGINEER 1/18/12 DATE

5-14-12
PLANS APPROVAL DATE

REGISTERED PROFESSIONAL ENGINEER N.V. BERNARDI No. 45407 Exp. 9/30/12 CIVIL STATE OF CALIFORNIA

THE STATE OF CALIFORNIA OR ITS OFFICERS OR AGENTS SHALL NOT BE RESPONSIBLE FOR THE ACCURACY OR COMPLETENESS OF SCANNED COPIES OF THIS PLAN SHEET.

BKF ENGINEERS
4670 WILLOW ROAD, SUITE 250
PLEASANTON, CA. 94588

ALAMEDA CTC
1333 BROADWAY SUITE 220
OAKLAND, CA. 94612

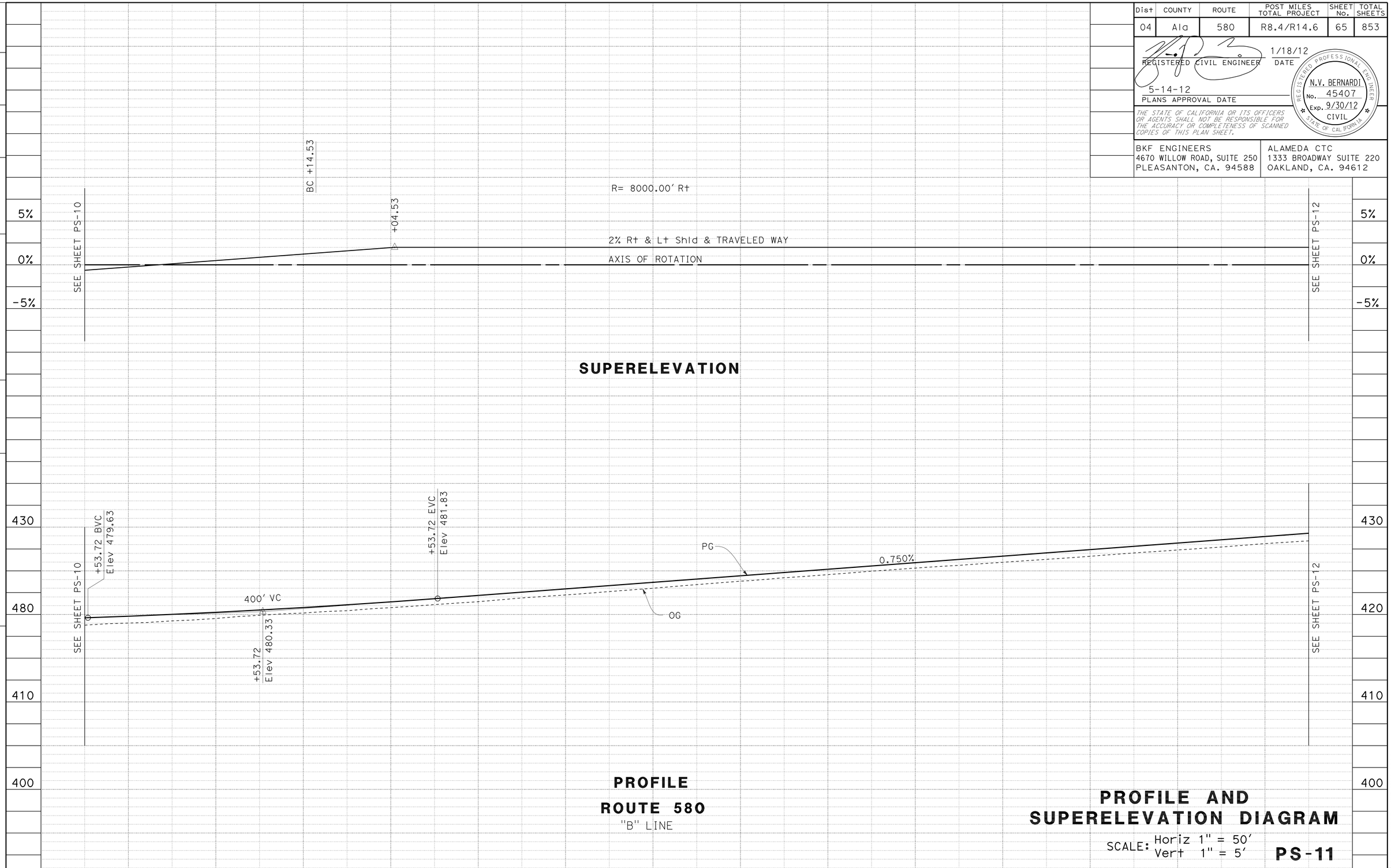

STATION	7	8	9	680+00	1	2	3	4	685+00	6	7	8	9	690+00	TOTAL
CY Exc	3536'														3536
CY Emb	1011'													6'	1017

REVISED BY	DATE REVISED
TC	1/18/12

TRAVIS CHAN — LUIS GARCIA

CALCULATED-DESIGNED BY — CHECKED BY

CONSULTANT FUNCTIONAL SUPERVISOR: NATALINA V. BERNARDI

STATE OF CALIFORNIA - DEPARTMENT OF TRANSPORTATION

Caltrans

LAST REVISION 01-18-12 | DATE PLOTTED => 23-MAY-2012 | TIME PLOTTED => 06:31

Dist	COUNTY	ROUTE	POST MILES TOTAL PROJECT	SHEET No.	TOTAL SHEETS
04	Ala	580	R8.4/R14.6	66	853

REGISTERED CIVIL ENGINEER 1/18/12 DATE

5-14-12
PLANS APPROVAL DATE

REGISTERED PROFESSIONAL ENGINEER N.V. BERNARDI No. 45407 Exp. 9/30/12 CIVIL STATE OF CALIFORNIA

THE STATE OF CALIFORNIA OR ITS OFFICERS OR AGENTS SHALL NOT BE RESPONSIBLE FOR THE ACCURACY OR COMPLETENESS OF SCANNED COPIES OF THIS PLAN SHEET.

BKF ENGINEERS
4670 WILLOW ROAD, SUITE 250
PLEASANTON, CA. 94588

ALAMEDA CTC
1333 BROADWAY SUITE 220
OAKLAND, CA. 94612

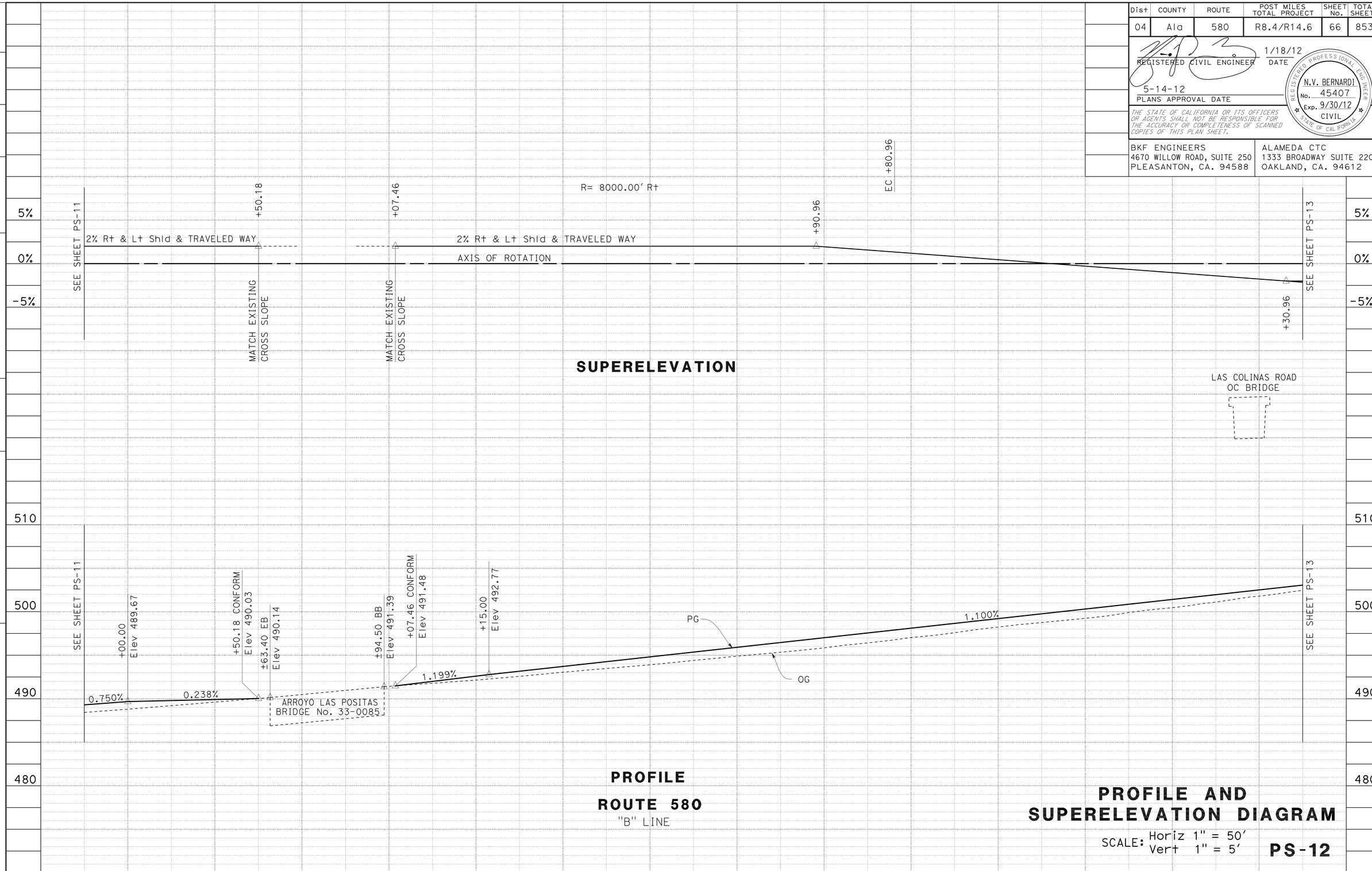

PROFILE AND SUPERELEVATION DIAGRAM

SCALE: Horiz 1" = 50'
Vert 1" = 5'

PS-12

STATION	1	2	3	4	695+00	6	7	8	9	700+00	1	2	3	4	TOTAL
CY Exc	365'							1948'							2313
CY Emb	64'							1329'							1393

STATE OF CALIFORNIA - DEPARTMENT OF TRANSPORTATION

CONSULTANT FUNCTIONAL SUPERVISOR: NATALINA V. BERNARDI

CALCULATED-DESIGNED BY: TRAVIS CHAN

CHECKED BY: LUIS GARCIA

REVISED BY: TC

DATE REVISED: 1/18/12

LAST REVISION 01-18-12

DATE PLOTTED => 23-MAY-2012
TIME PLOTTED => 06:31

Dist	COUNTY	ROUTE	POST MILES TOTAL PROJECT	SHEET No.	TOTAL SHEETS
04	Ala	580	R8.4/R14.6	67	853

REGISTERED CIVIL ENGINEER 1/18/12 DATE

5-14-12
PLANS APPROVAL DATE

REGISTERED PROFESSIONAL ENGINEER N.V. BERNARDI No. 45407 Exp. 9/30/12 CIVIL STATE OF CALIFORNIA

THE STATE OF CALIFORNIA OR ITS OFFICERS OR AGENTS SHALL NOT BE RESPONSIBLE FOR THE ACCURACY OR COMPLETENESS OF SCANNED COPIES OF THIS PLAN SHEET.

BKF ENGINEERS
4670 WILLOW ROAD, SUITE 250
PLEASANTON, CA. 94588

ALAMEDA CTC
1333 BROADWAY SUITE 220
OAKLAND, CA. 94612

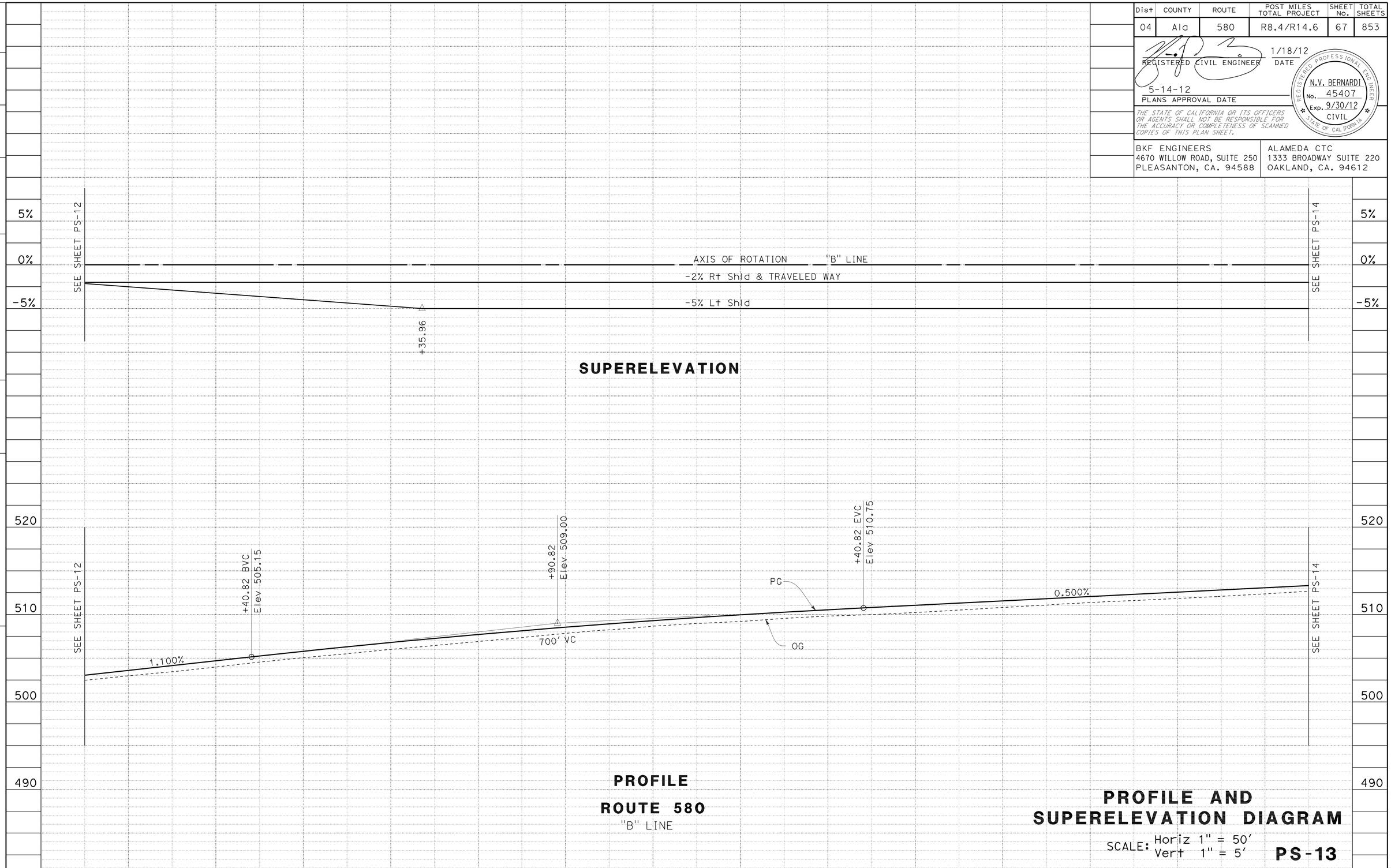

PROFILE AND SUPERELEVATION DIAGRAM

SCALE: Horiz 1" = 50'
Vert 1" = 5'

PS-13

REVISED BY	DATE REVISED
TC	1/18/12

TRAVIS CHAN — LUIS GARCIA

CALCULATED-DESIGNED BY — CHECKED BY

CONSULTANT FUNCTIONAL SUPERVISOR: NATALINA V. BERNARDI

STATE OF CALIFORNIA - DEPARTMENT OF TRANSPORTATION

Caltrans

LAST REVISION 01-18-12 DATE PLOTTED =>23-MAY-2012 TIME PLOTTED =>06:31

Dist	COUNTY	ROUTE	POST MILES TOTAL PROJECT	SHEET No.	TOTAL SHEETS
04	Ala	580	R8.4/R14.6	68	853

REGISTERED CIVIL ENGINEER 1/18/12 DATE

5-14-12
PLANS APPROVAL DATE

REGISTERED PROFESSIONAL ENGINEER N.V. BERNARDI No. 45407 Exp. 9/30/12 CIVIL STATE OF CALIFORNIA

THE STATE OF CALIFORNIA OR ITS OFFICERS OR AGENTS SHALL NOT BE RESPONSIBLE FOR THE ACCURACY OR COMPLETENESS OF SCANNED COPIES OF THIS PLAN SHEET.

BKF ENGINEERS
4670 WILLOW ROAD, SUITE 250
PLEASANTON, CA. 94588

ALAMEDA CTC
1333 BROADWAY SUITE 220
OAKLAND, CA. 94612

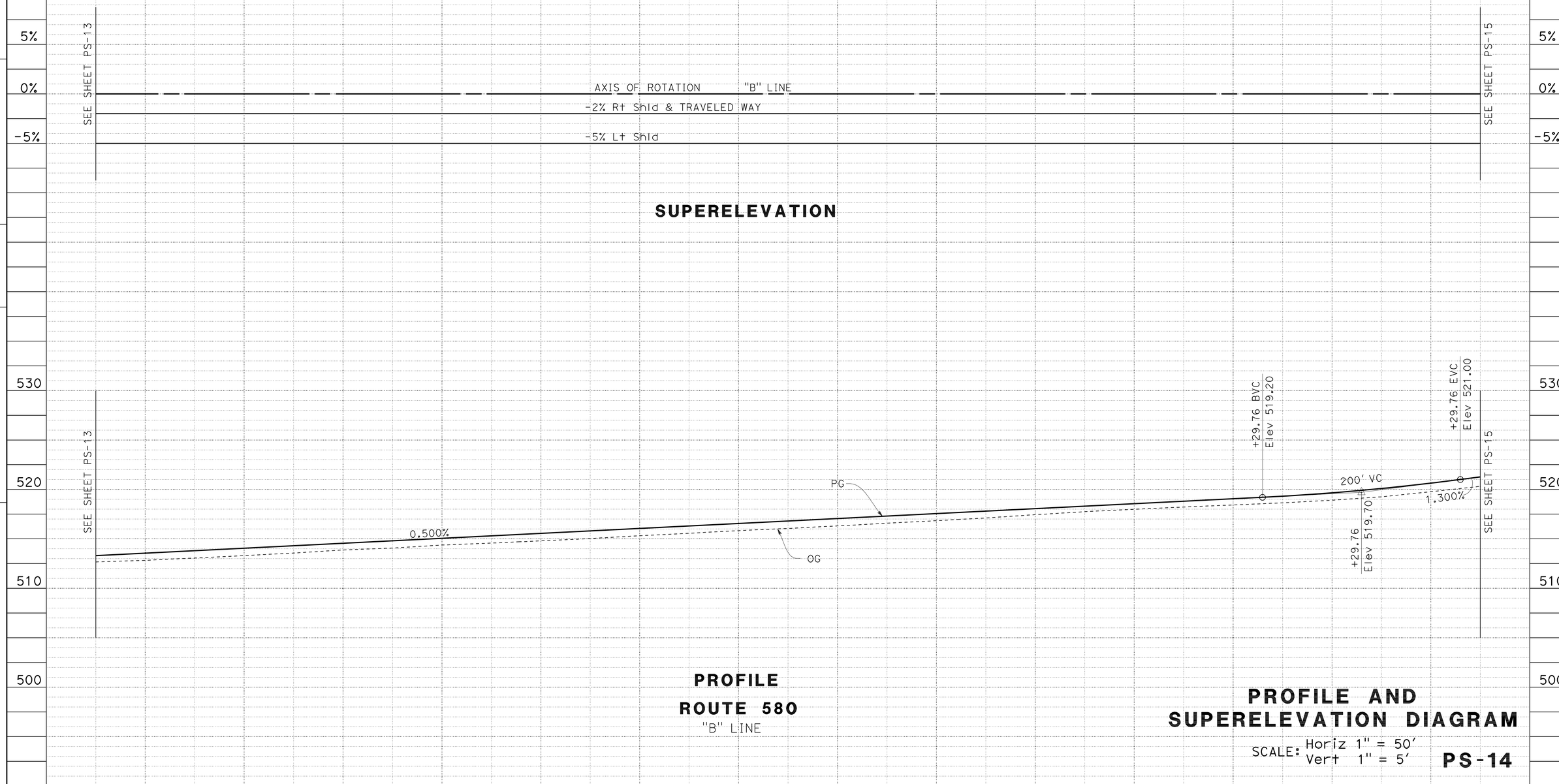

PROFILE AND SUPERELEVATION DIAGRAM

SCALE: Horiz 1" = 50'
Vert 1" = 5'

PS-14

STATION	9	720+00	1	2	3	4	725+00	6	7	8	9	730+00	1	2	TOTAL
CY Exc	2031′														2031
CY Emb	1432′							340′					7′		1 780

STATE OF CALIFORNIA - DEPARTMENT OF TRANSPORTATION

Caltrans

CONSULTANT FUNCTIONAL SUPERVISOR: NATALINA V. BERNARDI

CALCULATED-DESIGNED BY: TRAVIS CHAN

CHECKED BY: LUIS GARCIA

REVISED BY: TC

DATE REVISED: 1/18/12

LAST REVISION 01-18-12

DATE PLOTTED =>23-MAY-2012
TIME PLOTTED =>06:31

Dist	COUNTY	ROUTE	POST MILES TOTAL PROJECT	SHEET No.	TOTAL SHEETS
04	Ala	580	R8.4/R14.6	69	853

REGISTERED CIVIL ENGINEER 1/18/12 DATE

5-14-12
PLANS APPROVAL DATE

REGISTERED PROFESSIONAL ENGINEER N.V. BERNARDI No. 45407 Exp. 9/30/12 CIVIL STATE OF CALIFORNIA

THE STATE OF CALIFORNIA OR ITS OFFICERS OR AGENTS SHALL NOT BE RESPONSIBLE FOR THE ACCURACY OR COMPLETENESS OF SCANNED COPIES OF THIS PLAN SHEET.

BKF ENGINEERS
4670 WILLOW ROAD, SUITE 250
PLEASANTON, CA. 94588

ALAMEDA CTC
1333 BROADWAY SUITE 220
OAKLAND, CA. 94612

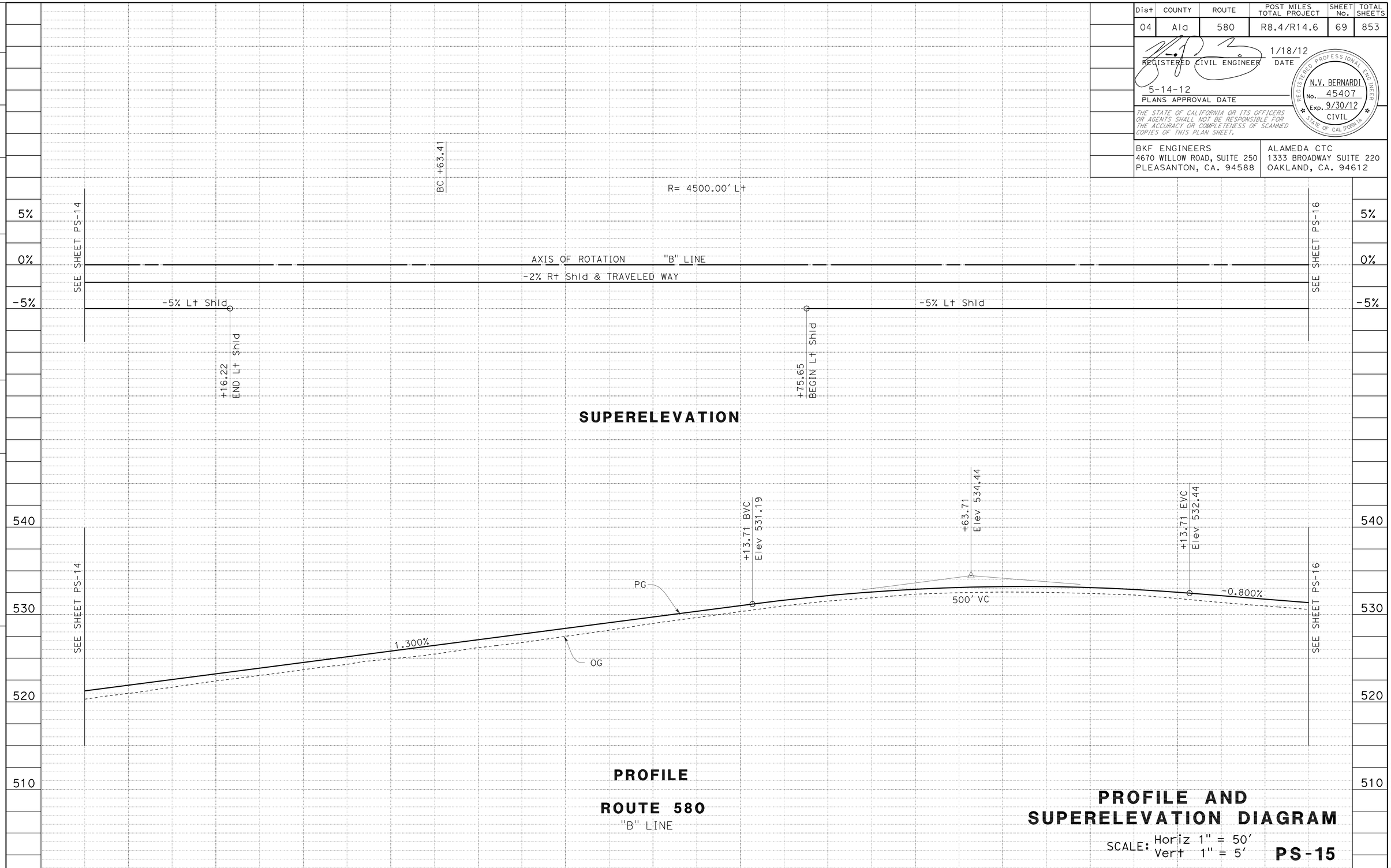

PROFILE AND SUPERELEVATION DIAGRAM

SCALE: Horiz 1" = 50'
Vert 1" = 5'

PS-15

STATE OF CALIFORNIA - DEPARTMENT OF TRANSPORTATION

CONSULTANT FUNCTIONAL SUPERVISOR: NATALINA V. BERNARDI

CALCULATED-DESIGNED BY: LUIS GARCIA

CHECKED BY: TRAVIS CHAN

REVISED BY: TC

DATE REVISED: 1/18/12

LAST REVISION 01-18-12

DATE PLOTTED =>23-MAY-2012
TIME PLOTTED =>06:31

Dist	COUNTY	ROUTE	POST MILES TOTAL PROJECT	SHEET No.	TOTAL SHEETS
04	Ala	580	R8.4/R14.6	70	853

REGISTERED CIVIL ENGINEER 1/18/12 DATE

5-14-12
PLANS APPROVAL DATE

REGISTERED PROFESSIONAL ENGINEER N.V. BERNARDI No. 45407 Exp. 9/30/12 CIVIL STATE OF CALIFORNIA

THE STATE OF CALIFORNIA OR ITS OFFICERS OR AGENTS SHALL NOT BE RESPONSIBLE FOR THE ACCURACY OR COMPLETENESS OF SCANNED COPIES OF THIS PLAN SHEET.

BKF ENGINEERS
4670 WILLOW ROAD, SUITE 250
PLEASANTON, CA. 94588

ALAMEDA CTC
1333 BROADWAY SUITE 220
OAKLAND, CA. 94612

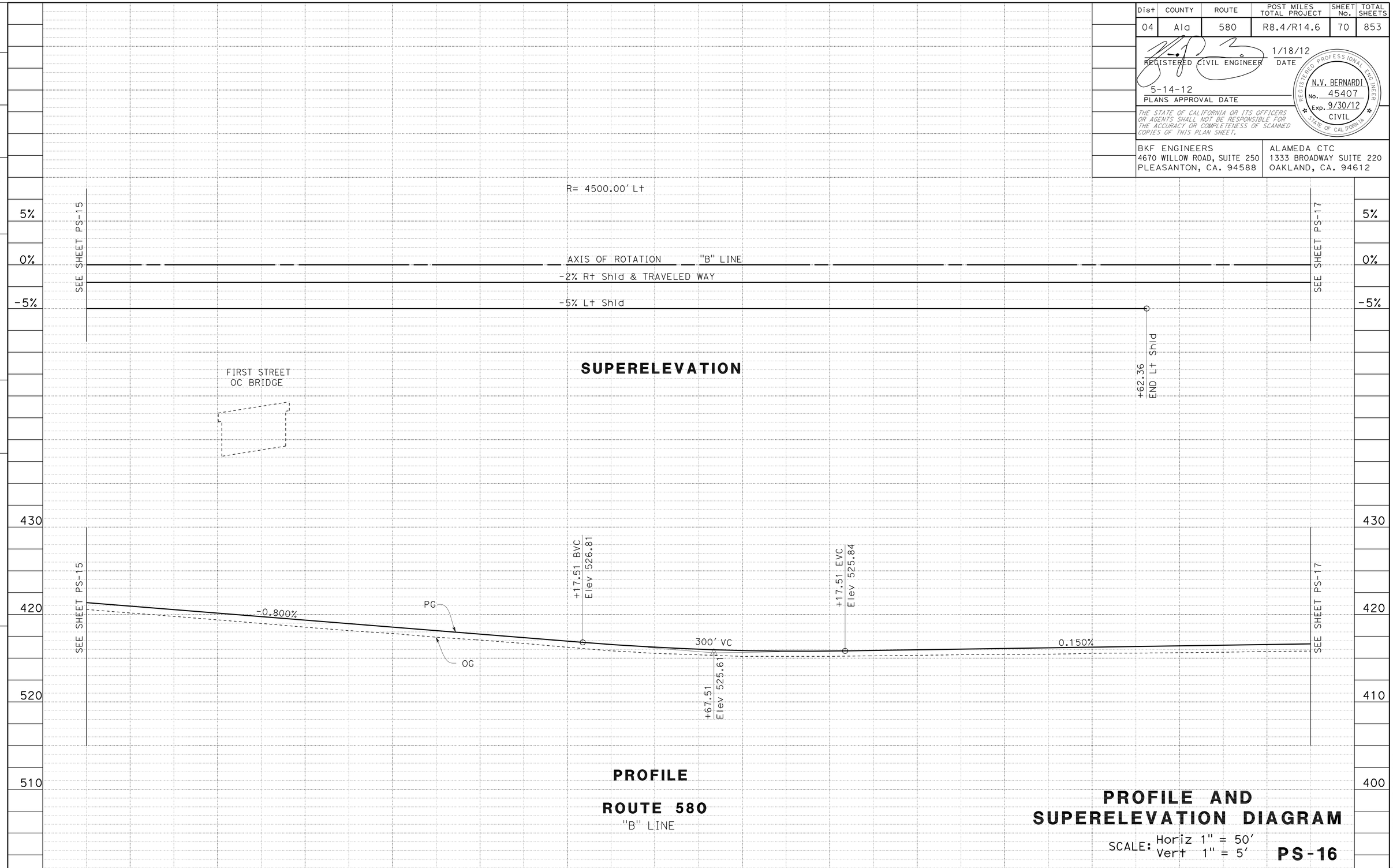

PROFILE AND SUPERELEVATION DIAGRAM

SCALE: Horiz 1" = 50'
Vert 1" = 5'

PS-16

STATION	7	8	9	750+00	1	2	3	4	755+00	6	7	8	9	760+00	TOTAL
CY Exc	1798'														1 798
CY Emb	100'														1 00

STATE OF CALIFORNIA - DEPARTMENT OF TRANSPORTATION

CONSULTANT FUNCTIONAL SUPERVISOR: NATALINA V. BERNARDI

CALCULATED-DESIGNED BY: TRAVIS CHAN

CHECKED BY: LUIS GARCIA

REVISED BY: TC

DATE REVISED: 1/18/12

LAST REVISION 01-18-12

DATE PLOTTED => 23-MAY-2012
TIME PLOTTED => 06:31

Dist	COUNTY	ROUTE	POST MILES TOTAL PROJECT	SHEET No.	TOTAL SHEETS
04	Ala	580	R8.4/R14.6	71	853

REGISTERED CIVIL ENGINEER 1/18/12 DATE

5-14-12
PLANS APPROVAL DATE

REGISTERED PROFESSIONAL ENGINEER N.V. BERNARDI No. 45407 Exp. 9/30/12 CIVIL STATE OF CALIFORNIA

THE STATE OF CALIFORNIA OR ITS OFFICERS OR AGENTS SHALL NOT BE RESPONSIBLE FOR THE ACCURACY OR COMPLETENESS OF SCANNED COPIES OF THIS PLAN SHEET.

BKF ENGINEERS
4670 WILLOW ROAD, SUITE 250
PLEASANTON, CA. 94588

ALAMEDA CTC
1333 BROADWAY SUITE 220
OAKLAND, CA. 94612

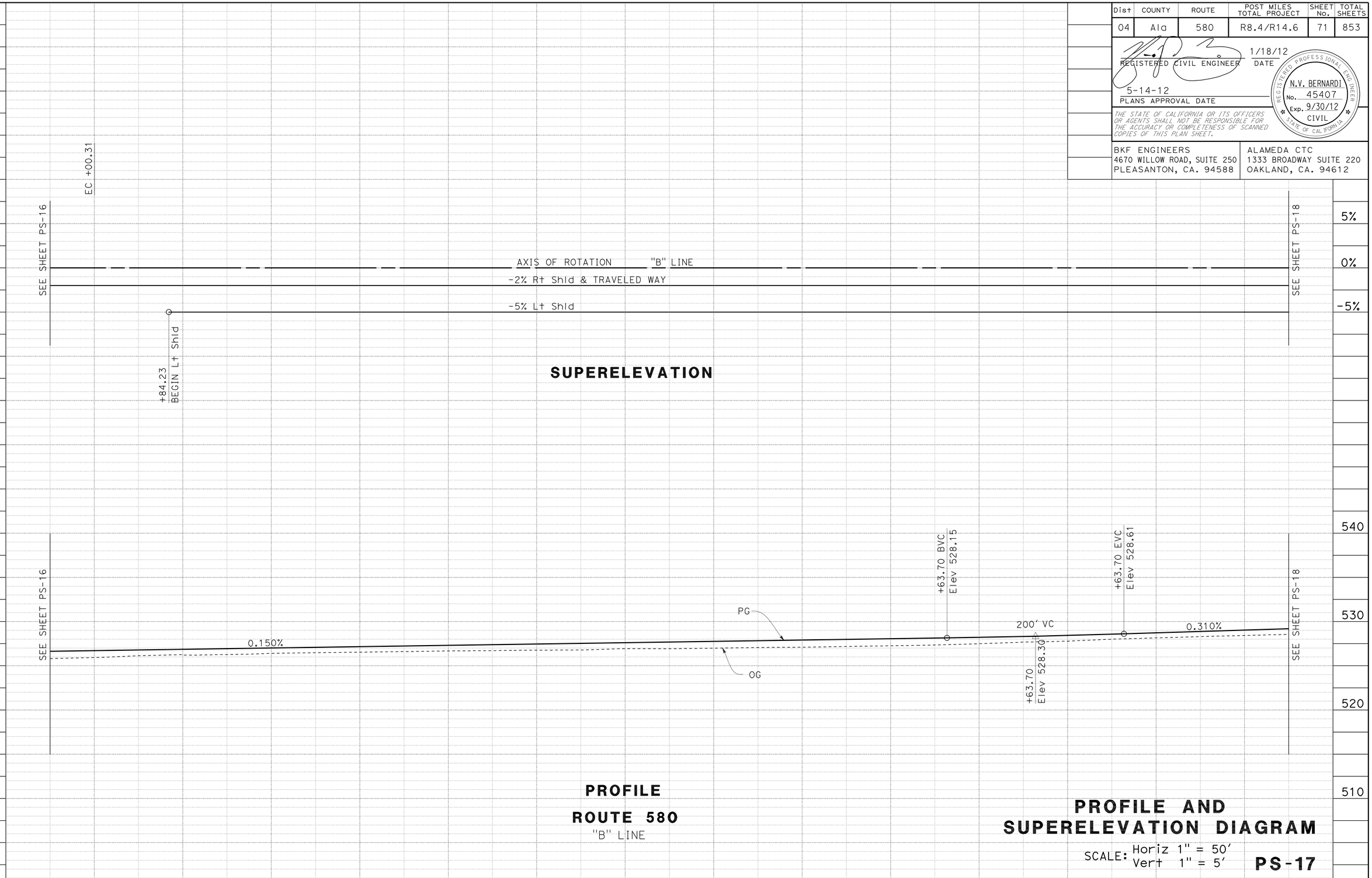

PROFILE AND SUPERELEVATION DIAGRAM

SCALE: Horiz 1" = 50'
Vert 1" = 5'

PS-17

STATION	1	2	3	4	765+00	6	7	8	9	770+00	1	2	3	4	TOTAL
CY Exc	2647'														2647
CY Emb											211'				211

STATE OF CALIFORNIA - DEPARTMENT OF TRANSPORTATION

Caltrans

CONSULTANT FUNCTIONAL SUPERVISOR: NATALINA V. BERNARDI

CALCULATED-DESIGNED BY: TRAVIS CHAN

CHECKED BY: LUIS GARCIA

REVISED BY: TC

DATE REVISED: 1/18/12

LAST REVISION 01-18-12

DATE PLOTTED => 23-MAY-2012
TIME PLOTTED => 06:31

Dist	COUNTY	ROUTE	POST MILES TOTAL PROJECT	SHEET No.	TOTAL SHEETS
04	Ala	580	R8.4/R14.6	72	853

REGISTERED CIVIL ENGINEER 1/18/12 DATE

5-14-12
PLANS APPROVAL DATE

REGISTERED PROFESSIONAL ENGINEER N.V. BERNARDI No. 45407 Exp. 9/30/12 CIVIL STATE OF CALIFORNIA

THE STATE OF CALIFORNIA OR ITS OFFICERS OR AGENTS SHALL NOT BE RESPONSIBLE FOR THE ACCURACY OR COMPLETENESS OF SCANNED COPIES OF THIS PLAN SHEET.

BKF ENGINEERS
4670 WILLOW ROAD, SUITE 250
PLEASANTON, CA. 94588

ALAMEDA CTC
1333 BROADWAY SUITE 220
OAKLAND, CA. 94612

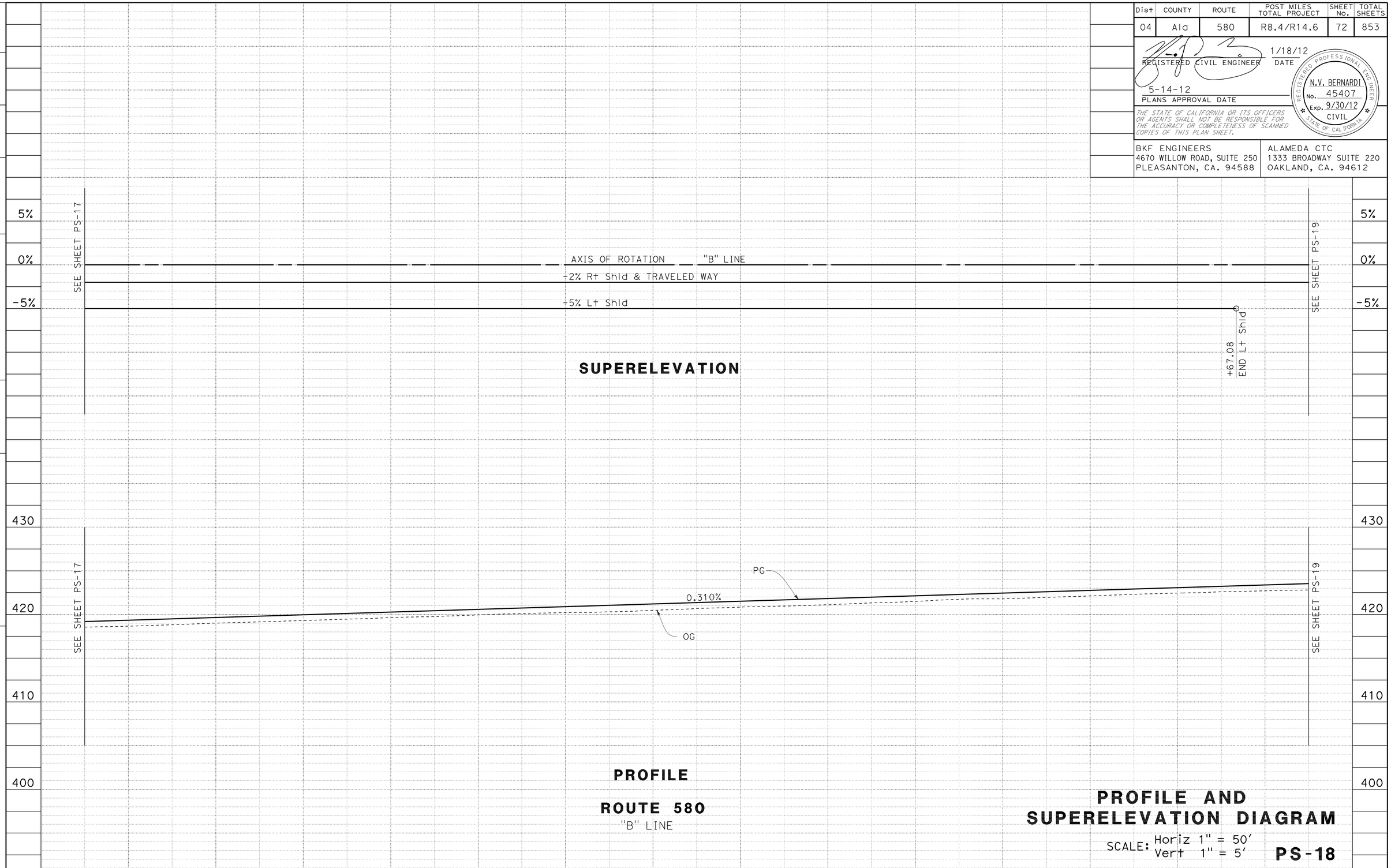

PROFILE AND SUPERELEVATION DIAGRAM

SCALE: Horiz 1" = 50'
Vert 1" = 5'

PS-18

REVISED BY	DATE REVISED
TC	1/18/12

TRAVIS CHAN — LUIS GARCIA

CALCULATED-DESIGNED BY — CHECKED BY

CONSULTANT FUNCTIONAL SUPERVISOR: NATALINA V. BERNARDI

STATE OF CALIFORNIA - DEPARTMENT OF TRANSPORTATION

Gibbons

LAST REVISION 01-18-12

DATE PLOTTED => 23-MAY-2012
TIME PLOTTED => 06:31

Dist	COUNTY	ROUTE	POST MILES TOTAL PROJECT	SHEET No.	TOTAL SHEETS
04	Ala	580	R8.4/R14.6	73	853

REGISTERED CIVIL ENGINEER 1/18/12 DATE

5-14-12
PLANS APPROVAL DATE

REGISTERED PROFESSIONAL ENGINEER N.V. BERNARDI No. 45407 Exp. 9/30/12 CIVIL STATE OF CALIFORNIA

THE STATE OF CALIFORNIA OR ITS OFFICERS OR AGENTS SHALL NOT BE RESPONSIBLE FOR THE ACCURACY OR COMPLETENESS OF SCANNED COPIES OF THIS PLAN SHEET.

BKF ENGINEERS
4670 WILLOW ROAD, SUITE 250
PLEASANTON, CA. 94588

ALAMEDA CTC
1333 BROADWAY SUITE 220
OAKLAND, CA. 94612

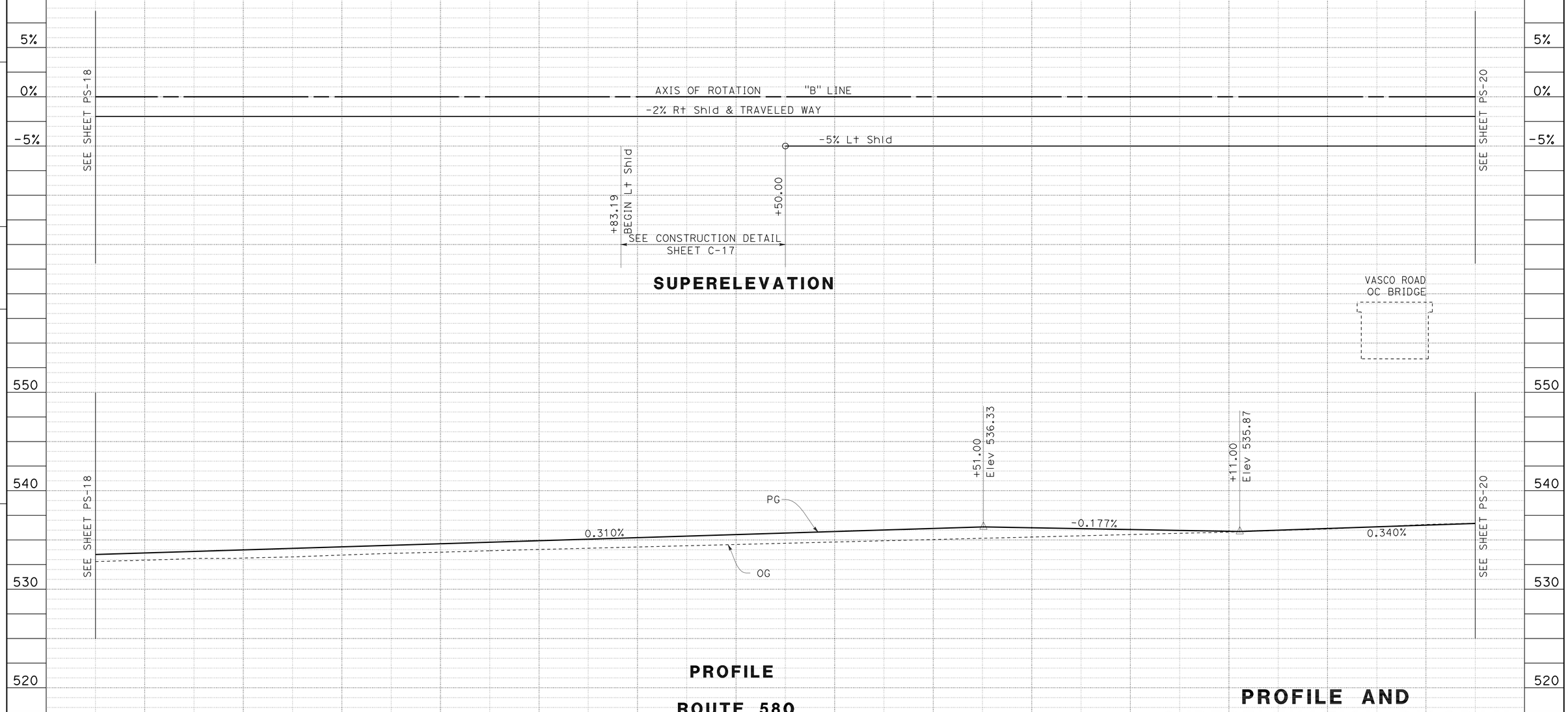

PROFILE AND SUPERELEVATION DIAGRAM

SCALE: Horiz 1" = 50′
Vert 1" = 5′

PS-19

STATION		9	790+00	1	2	3	4	795+00	6	7	8	9	800+00	1	2	TOTAL
CY	Exc	4092′														4092
	Emb	322′														322

STATE OF CALIFORNIA - DEPARTMENT OF TRANSPORTATION

CONSULTANT FUNCTIONAL SUPERVISOR: NATALINA V. BERNARDI

CALCULATED-DESIGNED BY: LUIS GARCIA

CHECKED BY: TRAVIS CHAN

REVISED BY: TC

DATE REVISED: 1/18/12

LAST REVISION 01-18-12

DATE PLOTTED => 23-MAY-2012
TIME PLOTTED => 06:31

Dist	COUNTY	ROUTE	POST MILES TOTAL PROJECT	SHEET No.	TOTAL SHEETS
04	Ala	580	R8.4/R14.6	74	853

REGISTERED CIVIL ENGINEER 1/18/12 DATE

5-14-12
PLANS APPROVAL DATE

REGISTERED PROFESSIONAL ENGINEER N.V. BERNARDI No. 45407 Exp. 9/30/12 CIVIL STATE OF CALIFORNIA

THE STATE OF CALIFORNIA OR ITS OFFICERS OR AGENTS SHALL NOT BE RESPONSIBLE FOR THE ACCURACY OR COMPLETENESS OF SCANNED COPIES OF THIS PLAN SHEET.

BKF ENGINEERS
4670 WILLOW ROAD, SUITE 250
PLEASANTON, CA. 94588

ALAMEDA CTC
1333 BROADWAY SUITE 220
OAKLAND, CA. 94612

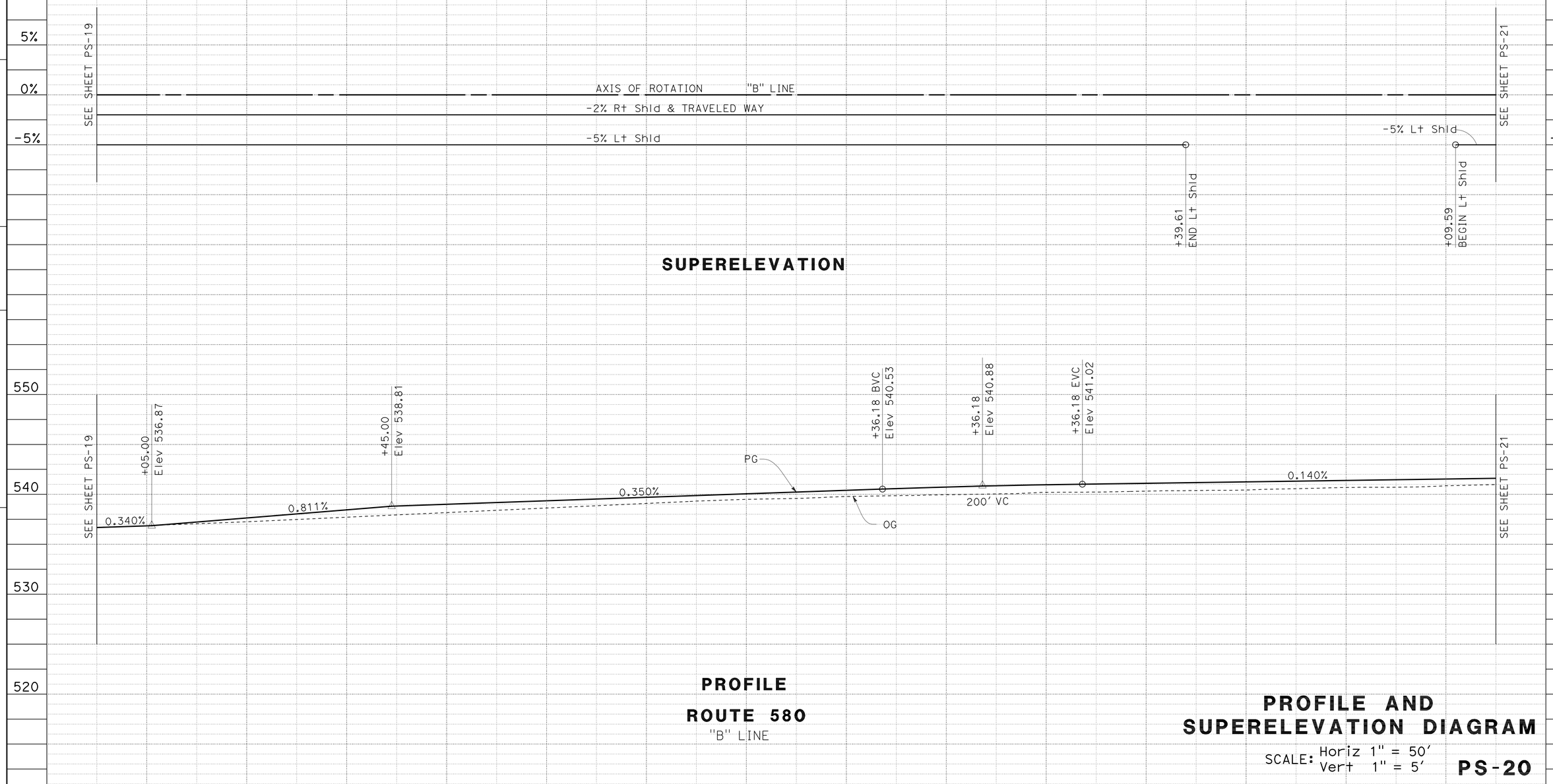

PROFILE AND SUPERELEVATION DIAGRAM

SCALE: Horiz 1" = 50'
Vert 1" = 5'

PS-20

STATION	3	4	805+00	6	7	8	9	810+00	1	2	3	4	815+00	6	TOTAL
CY Exc	3002'														3002
CY Emb			65'											6'	71

REVISED BY: TC — DATE REVISED: 1/18/12
TRAVIS CHAN — LUIS GARCIA
CALCULATED-DESIGNED BY — CHECKED BY
CONSULTANT FUNCTIONAL SUPERVISOR: NATALINA V. BERNARDI

STATE OF CALIFORNIA - DEPARTMENT OF TRANSPORTATION

LAST REVISION 01-18-12
DATE PLOTTED =>23-MAY-2012
TIME PLOTTED =>06:31

Dist	COUNTY	ROUTE	POST MILES TOTAL PROJECT	SHEET No.	TOTAL SHEETS
04	Ala	580	R8.4/R14.6	75	853

REGISTERED CIVIL ENGINEER 1/18/12 DATE

5-14-12
PLANS APPROVAL DATE

REGISTERED PROFESSIONAL ENGINEER N.V. BERNARDI No. 45407 Exp. 9/30/12 CIVIL STATE OF CALIFORNIA

THE STATE OF CALIFORNIA OR ITS OFFICERS OR AGENTS SHALL NOT BE RESPONSIBLE FOR THE ACCURACY OR COMPLETENESS OF SCANNED COPIES OF THIS PLAN SHEET.

BKF ENGINEERS
4670 WILLOW ROAD, SUITE 250
PLEASANTON, CA. 94588

ALAMEDA CTC
1333 BROADWAY SUITE 220
OAKLAND, CA. 94612

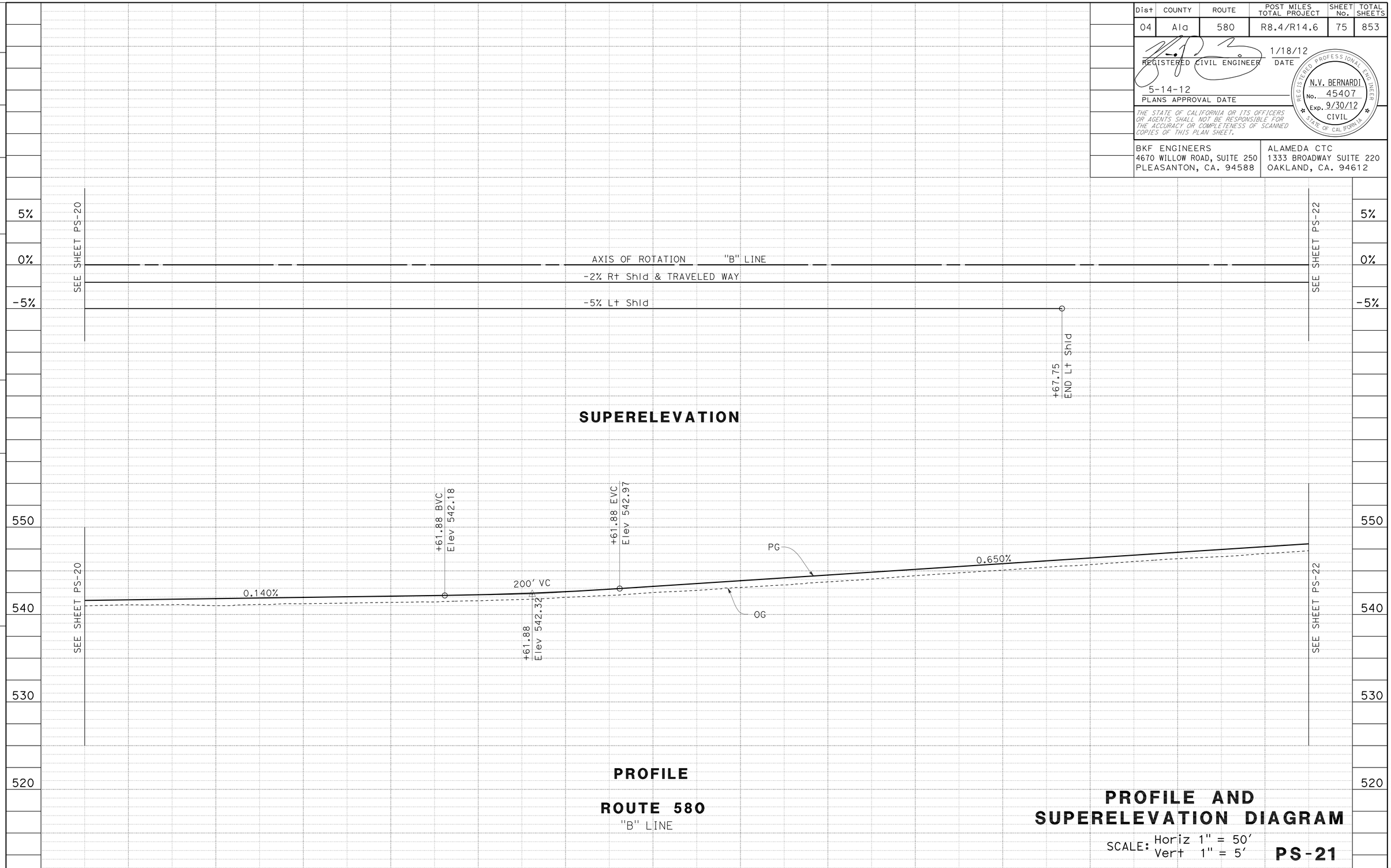

PROFILE AND SUPERELEVATION DIAGRAM

SCALE: Horiz 1" = 50'
Vert 1" = 5'

PS-21

REVISED BY	DATE REVISED
TC	1/18/12

TRAVIS CHAN
LUIS GARCIA
CALCULATED-DESIGNED BY
CHECKED BY
CONSULTANT FUNCTIONAL SUPERVISOR
NATALINA V. BERNARDI

STATE OF CALIFORNIA - DEPARTMENT OF TRANSPORTATION

Caltrans

LAST REVISION 01-18-12
DATE PLOTTED => 23-MAY-2012
TIME PLOTTED => 06:31

Dist	COUNTY	ROUTE	POST MILES TOTAL PROJECT	SHEET No.	TOTAL SHEETS
04	Ala	580	R8.4/R14.6	76	853

REGISTERED CIVIL ENGINEER 1/18/12 DATE

5-14-12
PLANS APPROVAL DATE

REGISTERED PROFESSIONAL ENGINEER N.V. BERNARDI No. 45407 Exp. 9/30/12 CIVIL STATE OF CALIFORNIA

THE STATE OF CALIFORNIA OR ITS OFFICERS OR AGENTS SHALL NOT BE RESPONSIBLE FOR THE ACCURACY OR COMPLETENESS OF SCANNED COPIES OF THIS PLAN SHEET.

BKF ENGINEERS
4670 WILLOW ROAD, SUITE 250
PLEASANTON, CA. 94588

ALAMEDA CTC
1333 BROADWAY SUITE 220
OAKLAND, CA. 94612

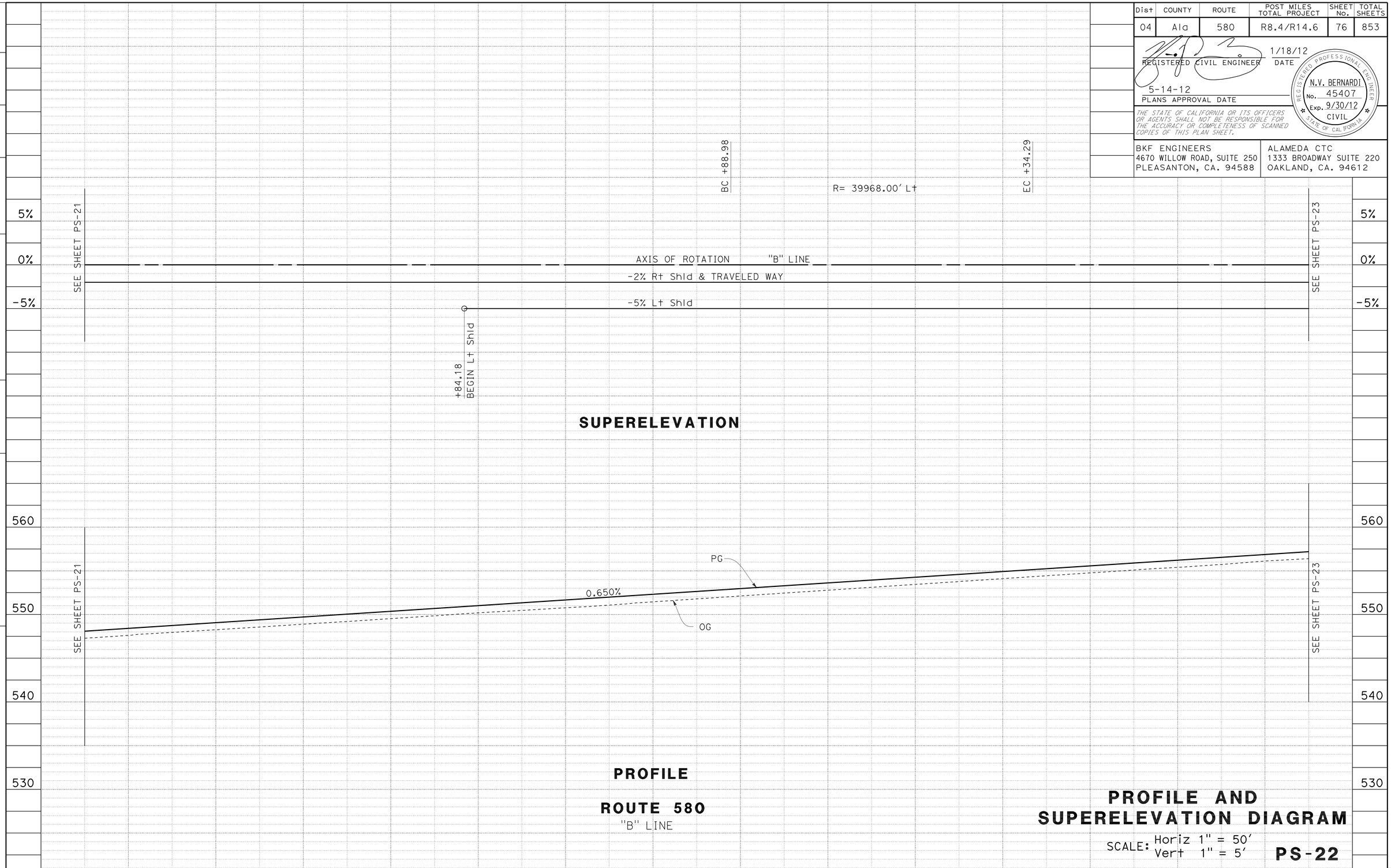

PROFILE AND SUPERELEVATION DIAGRAM

SCALE: Horiz 1" = 50'
Vert 1" = 5'

PS-22

REVISED BY	DATE REVISED
TC	1/18/12

TRAVIS CHAN
LUIS GARCIA
CALCULATED-DESIGNED BY
CHECKED BY
CONSULTANT FUNCTIONAL SUPERVISOR
NATALINA V. BERNARDI

STATE OF CALIFORNIA - DEPARTMENT OF TRANSPORTATION

Caltrans

LAST REVISION 01-18-12
DATE PLOTTED => 23-MAY-2012
TIME PLOTTED => 06:31

Dist	COUNTY	ROUTE	POST MILES TOTAL PROJECT	SHEET No.	TOTAL SHEETS
04	Ala	580	R8.4/R14.6	77	853

REGISTERED CIVIL ENGINEER 1/18/12 DATE

5-14-12
PLANS APPROVAL DATE

REGISTERED PROFESSIONAL ENGINEER N.V. BERNARDI No. 45407 Exp. 9/30/12 CIVIL STATE OF CALIFORNIA

THE STATE OF CALIFORNIA OR ITS OFFICERS OR AGENTS SHALL NOT BE RESPONSIBLE FOR THE ACCURACY OR COMPLETENESS OF SCANNED COPIES OF THIS PLAN SHEET.

BKF ENGINEERS
4670 WILLOW ROAD, SUITE 250
PLEASANTON, CA. 94588

ALAMEDA CTC
1333 BROADWAY SUITE 220
OAKLAND, CA. 94612

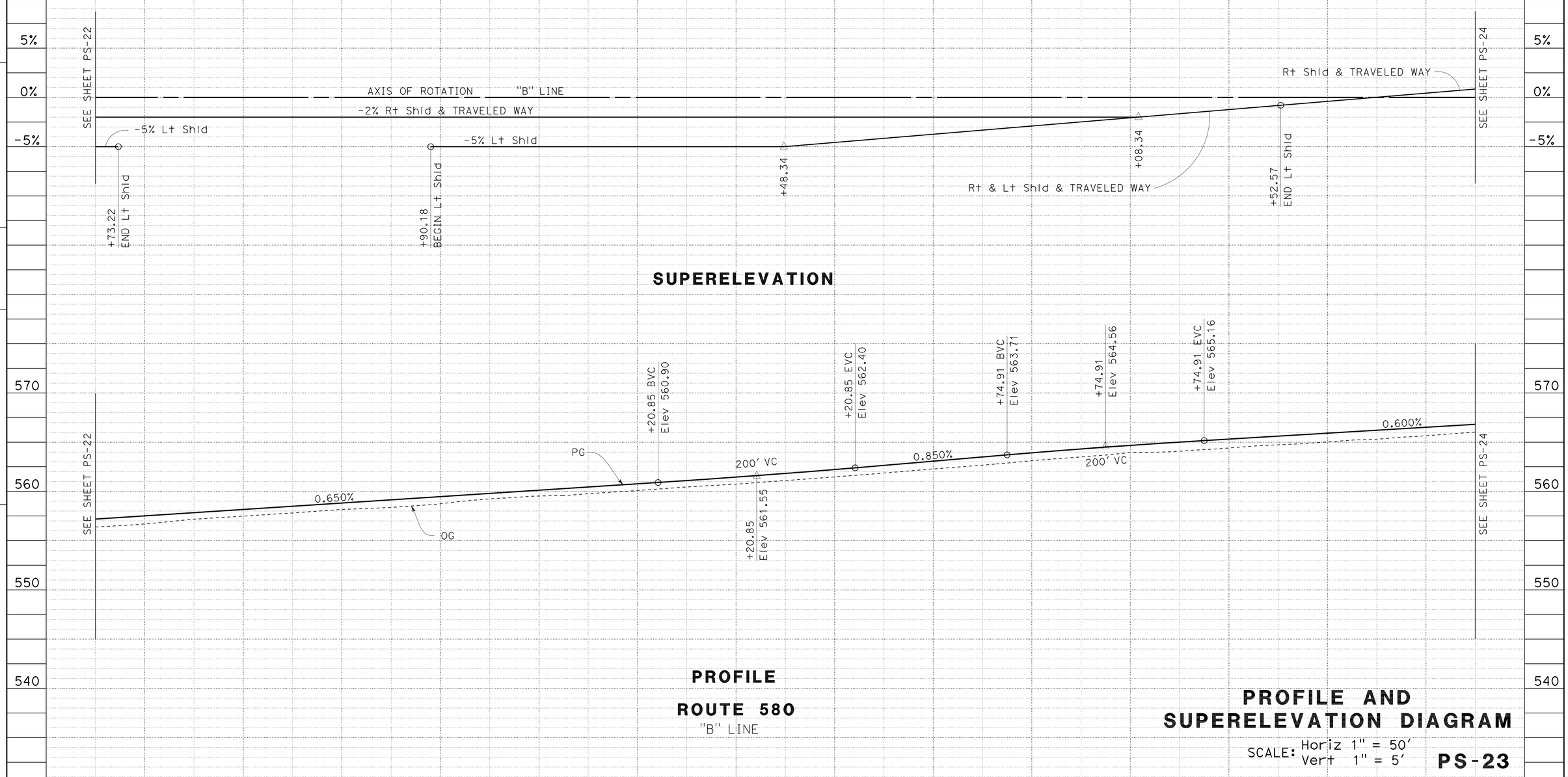

PROFILE AND SUPERELEVATION DIAGRAM

SCALE: Horiz 1" = 50'
Vert 1" = 5'

PS-23

STATION	845+00	6	7	8	9	850+00	1	2	3	4	855+00	6	7	8	TOTAL
CY Exc	2955'														2955
CY Emb	186'														186

REVISED BY	DATE REVISED
TC	1/18/12

TRAVIS CHAN — CALCULATED-DESIGNED BY
LUIS GARCIA — CHECKED BY

CONSULTANT FUNCTIONAL SUPERVISOR: NATALINA V. BERNARDI

STATE OF CALIFORNIA - DEPARTMENT OF TRANSPORTATION

Gates

LAST REVISION 01-18-12 DATE PLOTTED =>23-MAY-2012 TIME PLOTTED =>06:31

Dist	COUNTY	ROUTE	POST MILES TOTAL PROJECT	SHEET No.	TOTAL SHEETS
04	Ala	580	R8.4/R14.6	78	853

REGISTERED CIVIL ENGINEER 1/18/12 DATE

5-14-12
PLANS APPROVAL DATE

REGISTERED PROFESSIONAL ENGINEER N.V. BERNARDI No. 45407 Exp. 9/30/12 CIVIL STATE OF CALIFORNIA

THE STATE OF CALIFORNIA OR ITS OFFICERS OR AGENTS SHALL NOT BE RESPONSIBLE FOR THE ACCURACY OR COMPLETENESS OF SCANNED COPIES OF THIS PLAN SHEET.

BKF ENGINEERS
4670 WILLOW ROAD, SUITE 250
PLEASANTON, CA. 94588

ALAMEDA CTC
1333 BROADWAY SUITE 220
OAKLAND, CA. 94612

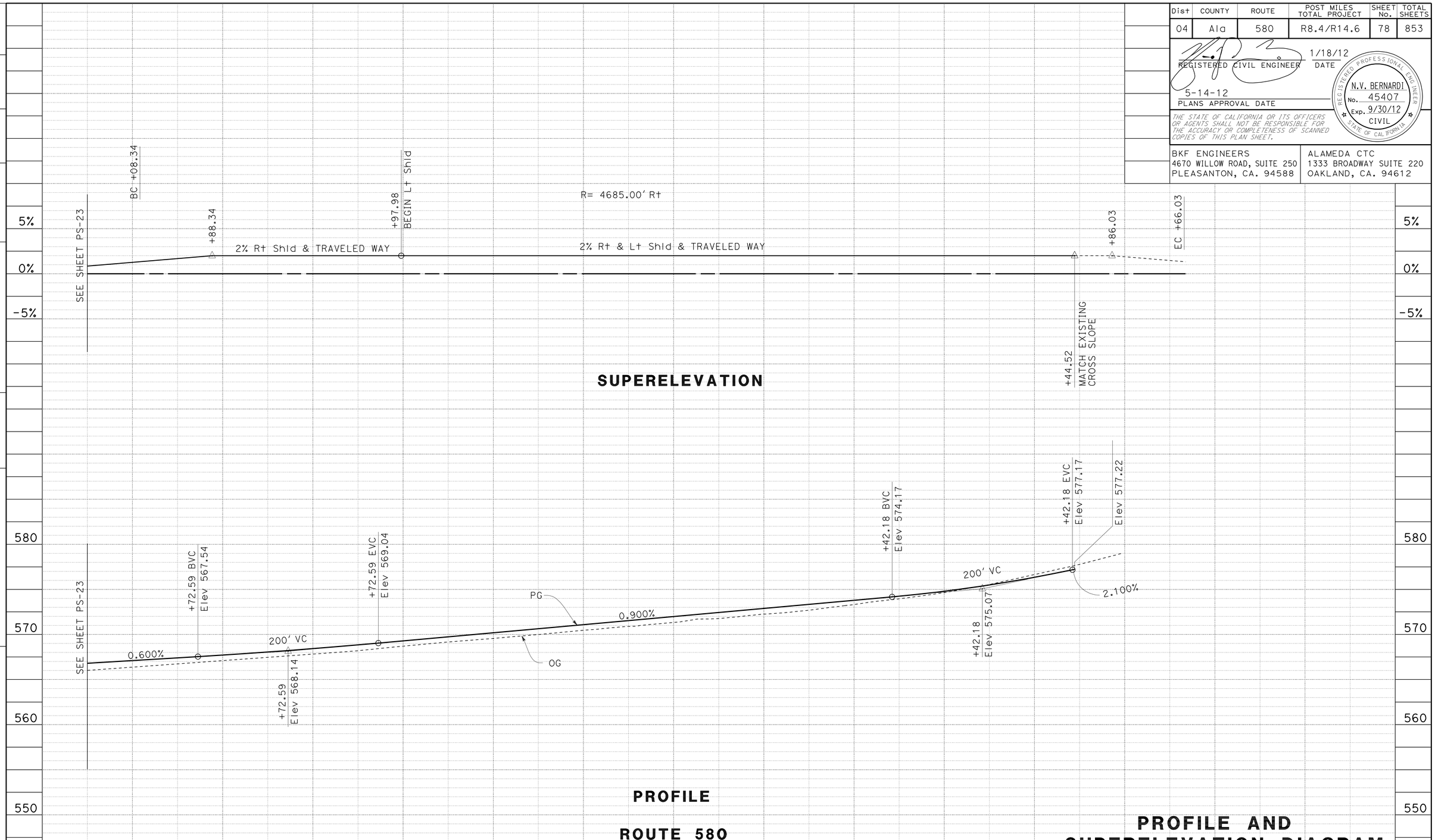

ROUTE 580
"B" LINE

PROFILE AND SUPERELEVATION DIAGRAM

SCALE: Horiz 1" = 50'
Vert 1" = 5'

PS-24

STATION		9	860+00	1	2	3	4	865+00	6	7	8	9	870+00	1	2	TOTAL
CY	Exc	1126'														1126
	Emb	926'														926

STATE OF CALIFORNIA - DEPARTMENT OF TRANSPORTATION

CONSULTANT FUNCTIONAL SUPERVISOR: NATALINA V. BERNARDI

CALCULATED-DESIGNED BY: TRAVIS CHAN
CHECKED BY: LUIS GARCIA

REVISED BY: TC
DATE REVISED: 1/18/12

LAST REVISION 01-18-12
DATE PLOTTED => 23-MAY-2012
TIME PLOTTED => 06:31

Dist	COUNTY	ROUTE	POST MILES TOTAL PROJECT	SHEET No.	TOTAL SHEETS
04	Ala	580	R8.4/R14.6	79	853

REGISTERED CIVIL ENGINEER 5/7/12 DATE

5-14-12
PLANS APPROVAL DATE

REGISTERED PROFESSIONAL ENGINEER N.V. BERNARDI No. 45407 Exp. 9/30/12 CIVIL STATE OF CALIFORNIA

THE STATE OF CALIFORNIA OR ITS OFFICERS OR AGENTS SHALL NOT BE RESPONSIBLE FOR THE ACCURACY OR COMPLETENESS OF SCANNED COPIES OF THIS PLAN SHEET.

BKF ENGINEERS
4670 WILLOW ROAD, SUITE 250
PLEASANTON, CA. 94588

ALAMEDA CTC
1333 BROADWAY SUITE 220
OAKLAND, CA. 94612

FOR ACCURATE RIGHT OF WAY DATA, CONTACT RIGHT OF WAY ENGINEERING AT THE DISTRICT OFFICE.

NOTES:

1. PAVEMENT ELEVATIONS ARE AT 50 FEET INTERVAL UNLESS OTHERWISE NOTED.
2. ELEVATIONS SHOWN ARE AT CONFORM LINE, ETW, ES, AND GRADE BREAK LINE UNLESS OTHERWISE NOTED. SEE LAYOUT SHEETS FOR ADDITIONAL INFORMATION.
3. PROPOSED PAVEMENT ELEVATIONS ARE BASED ON EXISTING SURVEY ELEVATIONS AS SHOWN. CONTRACTOR SHALL VERIFY GRADES PRIOR TO CONSTRUCTION OF INLETS, PAVEMENTS OR OTHER ITEMS CONTROLLED BY THESE GRADES. ANY DISCREPANCIES SHOULD BE BROUGHT TO THE ENGINEER'S ATTENTION IMMEDIATELY.
4. ALL ELEVATIONS ARE TIED TO THE EDGE OF THE TRAVELED WAY AND EDGE OF SHOULDER.

LEGEND:

(XXX.XX) EXISTING PAVEMENT ELEVATION
XXX.XX PROPOSED PAVEMENT ELEVATION
HMA AND/OR RHMA OVERLAY
COLD PLANE AC PAVEMENT & HMA AND/OR RHMA OVERLAY (0.20' TO 1.20')
MINOR CONCRETE (TEXTURED PAVING)
-------- GRADE BREAK

ABBREVIATIONS:

GB GRADE BREAK
HP HIGH POINT
LG LIP OF GUTTER
LP LOW POINT

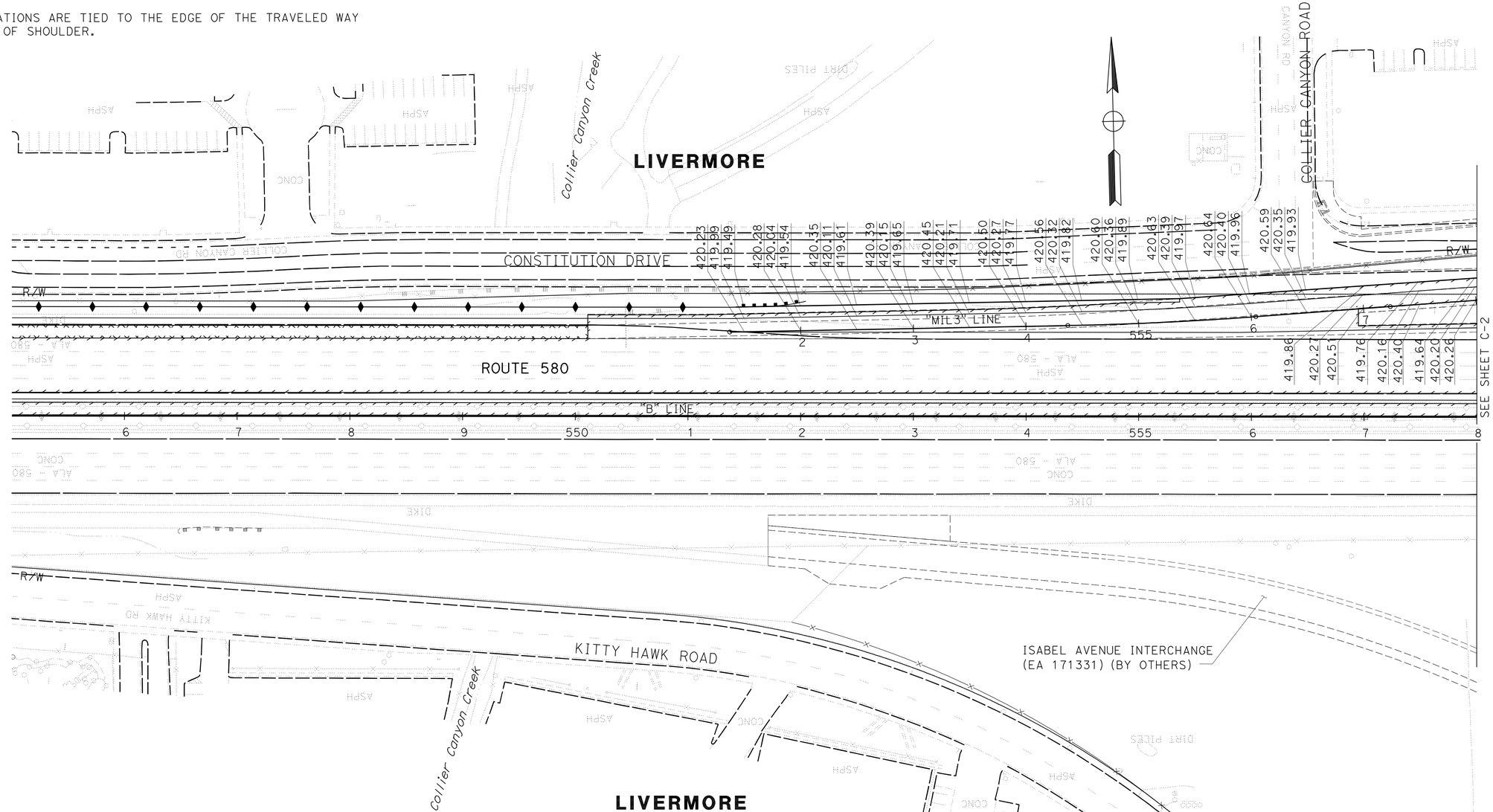

THIS PLAN ACCURATE FOR PAVEMENT ELEVATION WORK ONLY

CONSTRUCTION DETAILS
PAVEMENT ELEVATIONS PLAN
SCALE: 1" = 50'

C-1

STATE OF CALIFORNIA - DEPARTMENT OF TRANSPORTATION
CONSULTANT FUNCTIONAL SUPERVISOR: NATALINA V. BERNARDI
CALCULATED-DESIGNED BY: DAT Q. NGUYEN
CHECKED BY: LUIS GARCIA
REVISED BY: DQN
DATE REVISED: 5/7/12

LAST REVISION 05-07-12 | DATE PLOTTED => 23-MAY-2012 | TIME PLOTTED => 06:50

FOR ACCURATE RIGHT OF WAY DATA, CONTACT
RIGHT OF WAY ENGINEERING AT THE DISTRICT OFFICE.

Dist	COUNTY	ROUTE	POST MILES TOTAL PROJECT	SHEET No.	TOTAL SHEETS
04	Ala	580	R8.4/R14.6	80	853

REGISTERED CIVIL ENGINEER — DATE 5/7/12

5-14-12
PLANS APPROVAL DATE

REGISTERED PROFESSIONAL ENGINEER — N.V. BERNARDI — No. 45407 — Exp. 9/30/12 — CIVIL — STATE OF CALIFORNIA

THE STATE OF CALIFORNIA OR ITS OFFICERS OR AGENTS SHALL NOT BE RESPONSIBLE FOR THE ACCURACY OR COMPLETENESS OF SCANNED COPIES OF THIS PLAN SHEET.

BKF ENGINEERS
4670 WILLOW ROAD, SUITE 250
PLEASANTON, CA. 94588

ALAMEDA CTC
1333 BROADWAY SUITE 220
OAKLAND, CA. 94612

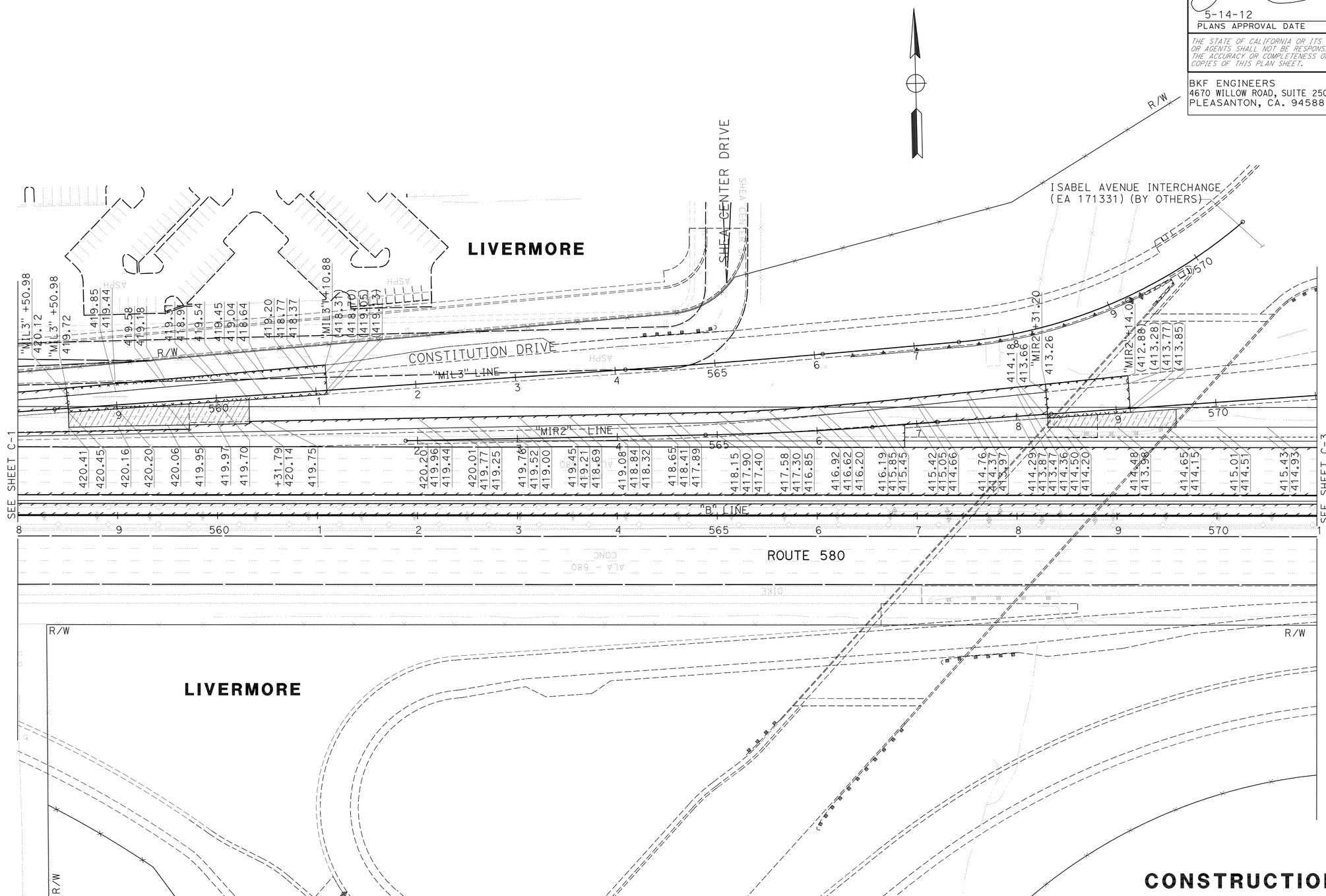

FOR NOTES, ABBREVIATIONS
AND LEGEND, SEE SHEET C-1

THIS PLAN ACCURATE FOR PAVEMENT ELEVATION WORK ONLY

CONSTRUCTION DETAILS
PAVEMENT ELEVATIONS PLAN
SCALE: 1" = 50'

C-2

DQN	5/7/12
REVISED BY	DATE REVISED
DAT Q. NGUYEN	
LUIS GARCIA	
CALCULATED-DESIGNED BY	
CHECKED BY	
CONSULTANT FUNCTIONAL SUPERVISOR	
NATALINA V. BERNARDI	

STATE OF CALIFORNIA - DEPARTMENT OF TRANSPORTATION

Caltrans

LAST REVISION 05-07-12 | DATE PLOTTED =>23-MAY-2012 | TIME PLOTTED =>06:50

FOR ACCURATE RIGHT OF WAY DATA, CONTACT
RIGHT OF WAY ENGINEERING AT THE DISTRICT OFFICE.

Dist	COUNTY	ROUTE	POST MILES TOTAL PROJECT	SHEET No.	TOTAL SHEETS
04	Ala	580	R8.4/R14.6	81	853

REGISTERED CIVIL ENGINEER 1/18/12 DATE

5-14-12
PLANS APPROVAL DATE

REGISTERED PROFESSIONAL ENGINEER
N.V. BERNARDI
No. 45407
Exp. 9/30/12
CIVIL
STATE OF CALIFORNIA

THE STATE OF CALIFORNIA OR ITS OFFICERS OR AGENTS SHALL NOT BE RESPONSIBLE FOR THE ACCURACY OR COMPLETENESS OF SCANNED COPIES OF THIS PLAN SHEET.

BKF ENGINEERS
4670 WILLOW ROAD, SUITE 250
PLEASANTON, CA. 94588

ALAMEDA CTC
1333 BROADWAY SUITE 220
OAKLAND, CA. 94612

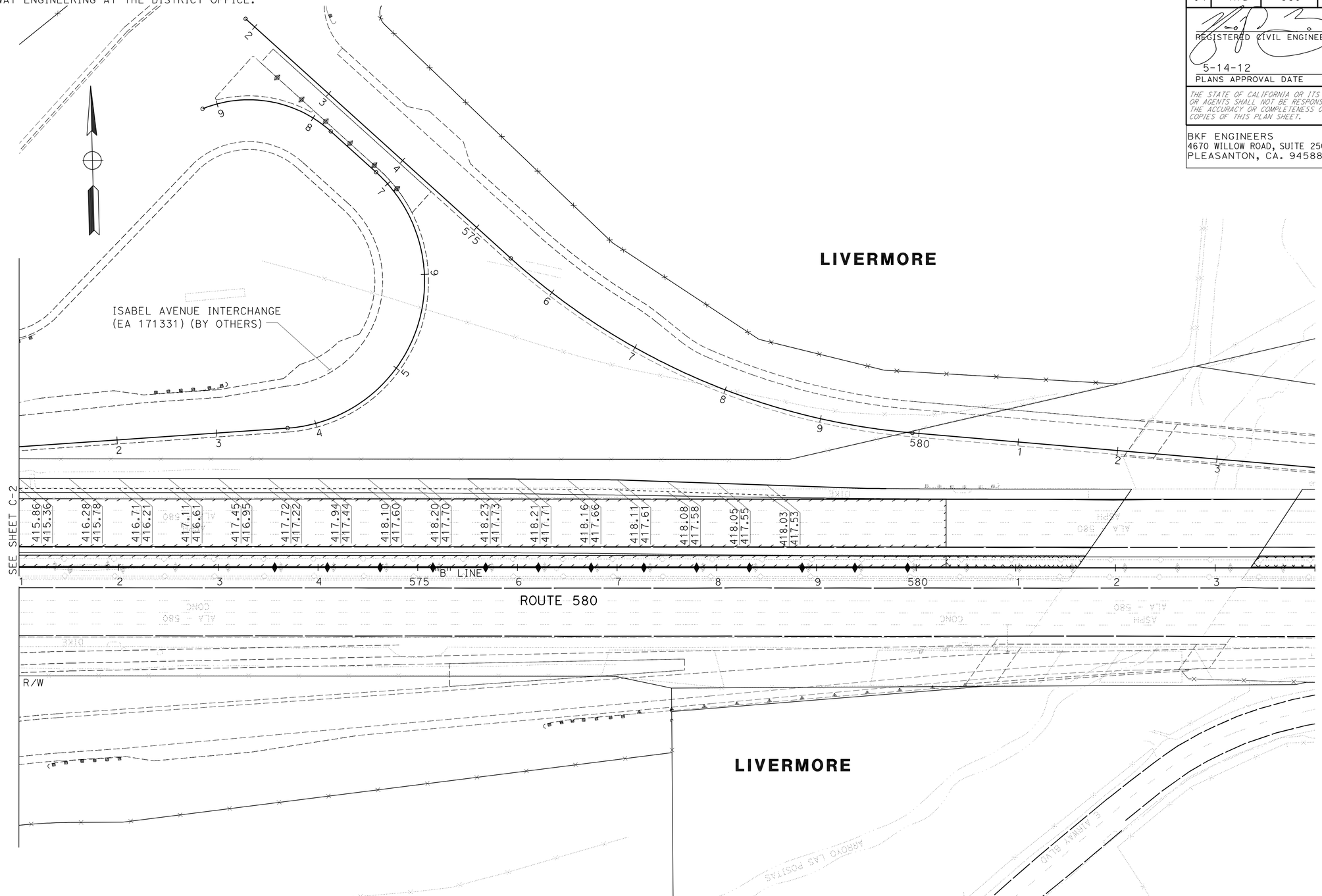

FOR NOTES, ABBREVIATIONS
AND LEGEND, SEE SHEET C-1

THIS PLAN ACCURATE FOR PAVEMENT ELEVATION WORK ONLY

CONSTRUCTION DETAILS
PAVEMENT ELEVATIONS PLAN
SCALE: 1" = 50'

C-3

REVISED BY	DATE REVISED
DQN	1/18/12

CALCULATED-DESIGNED BY: DAT Q. NGUYEN
CHECKED BY: LUIS GARCIA
CONSULTANT FUNCTIONAL SUPERVISOR: NATALINA V. BERNARDI

STATE OF CALIFORNIA - DEPARTMENT OF TRANSPORTATION
Caltrans

LAST REVISION 01-18-12
DATE PLOTTED =>23-MAY-2012
TIME PLOTTED =>06:50

FOR ACCURATE RIGHT OF WAY DATA, CONTACT
RIGHT OF WAY ENGINEERING AT THE DISTRICT OFFICE.

Dist	COUNTY	ROUTE	POST MILES TOTAL PROJECT	SHEET No.	TOTAL SHEETS
04	Ala	580	R8.4/R14.6	82	853

REGISTERED CIVIL ENGINEER 5/7/12 DATE

5-14-12
PLANS APPROVAL DATE

REGISTERED PROFESSIONAL ENGINEER
N.V. BERNARDI
No. 45407
Exp. 9/30/12
CIVIL
STATE OF CALIFORNIA

THE STATE OF CALIFORNIA OR ITS OFFICERS OR AGENTS SHALL NOT BE RESPONSIBLE FOR THE ACCURACY OR COMPLETENESS OF SCANNED COPIES OF THIS PLAN SHEET.

BKF ENGINEERS
4670 WILLOW ROAD, SUITE 250
PLEASANTON, CA. 94588

ALAMEDA CTC
1333 BROADWAY SUITE 220
OAKLAND, CA. 94612

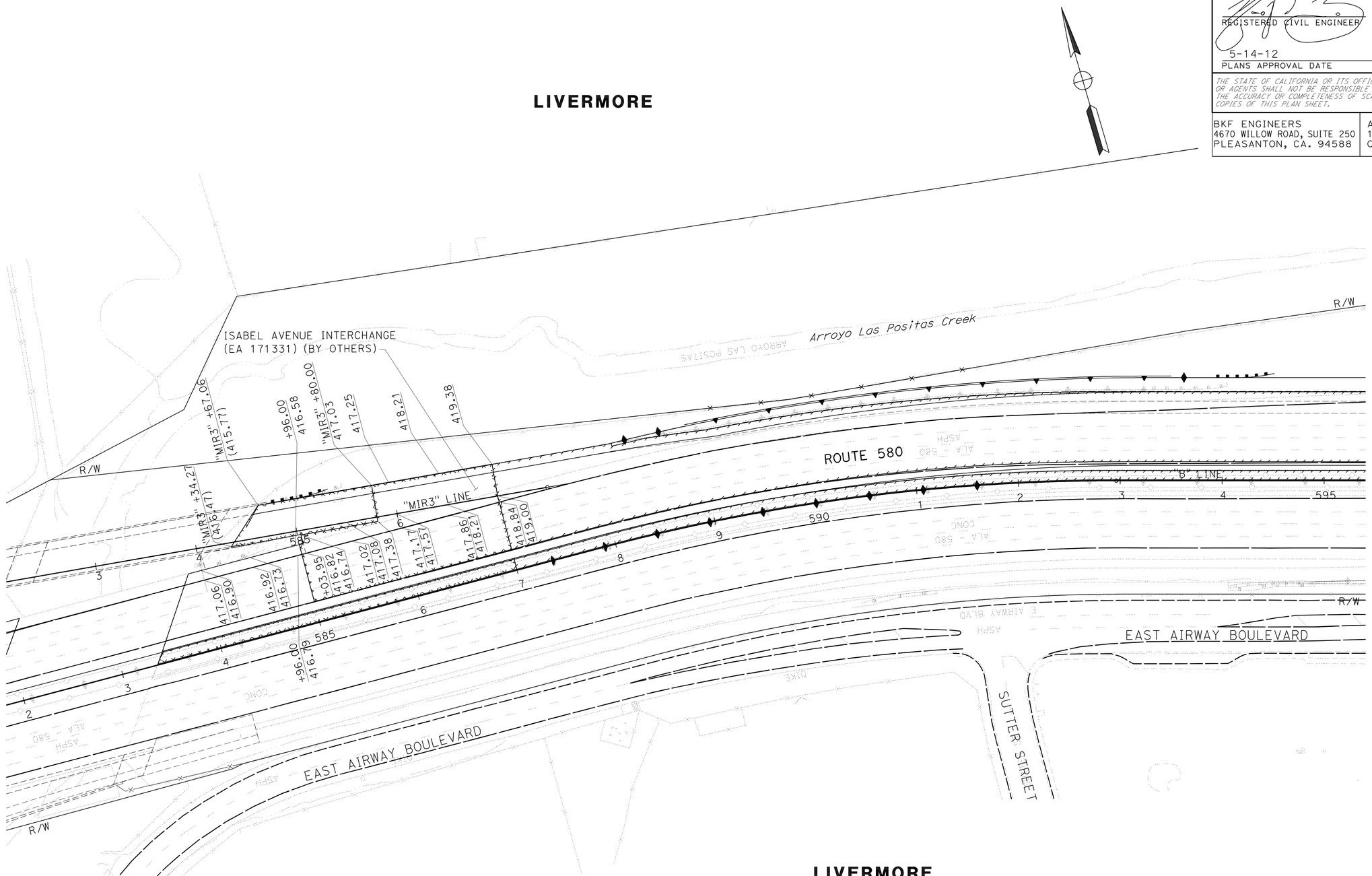

FOR NOTES, ABBREVIATIONS AND LEGEND, SEE SHEET C-1

THIS PLAN ACCURATE FOR PAVEMENT ELEVATION WORK ONLY

CONSTRUCTION DETAILS
PAVEMENT ELEVATIONS PLAN
SCALE: 1" = 50'

C-4

STATE OF CALIFORNIA - DEPARTMENT OF TRANSPORTATION
Caltrans

CONSULTANT FUNCTIONAL SUPERVISOR: NATALINA V. BERNARDI

CALCULATED-DESIGNED BY: DAT Q. NGUYEN
CHECKED BY: LUIS GARCIA

REVISED BY: DQN
DATE REVISED: 5/7/12

LAST REVISION 05-07-12
DATE PLOTTED => 23-MAY-2012
TIME PLOTTED => 06:50

FOR ACCURATE RIGHT OF WAY DATA, CONTACT
RIGHT OF WAY ENGINEERING AT THE DISTRICT OFFICE.

Dist	COUNTY	ROUTE	POST MILES TOTAL PROJECT	SHEET No.	TOTAL SHEETS
04	Ala	580	R8.4/R14.6	83	853

REGISTERED CIVIL ENGINEER 5/7/12 DATE

5-14-12
PLANS APPROVAL DATE

REGISTERED PROFESSIONAL ENGINEER
N.V. BERNARDI
No. 45407
Exp. 9/30/12
CIVIL
STATE OF CALIFORNIA

THE STATE OF CALIFORNIA OR ITS OFFICERS OR AGENTS SHALL NOT BE RESPONSIBLE FOR THE ACCURACY OR COMPLETENESS OF SCANNED COPIES OF THIS PLAN SHEET.

BKF ENGINEERS
4670 WILLOW ROAD, SUITE 250
PLEASANTON, CA. 94588

ALAMEDA CTC
1333 BROADWAY SUITE 220
OAKLAND, CA. 94612

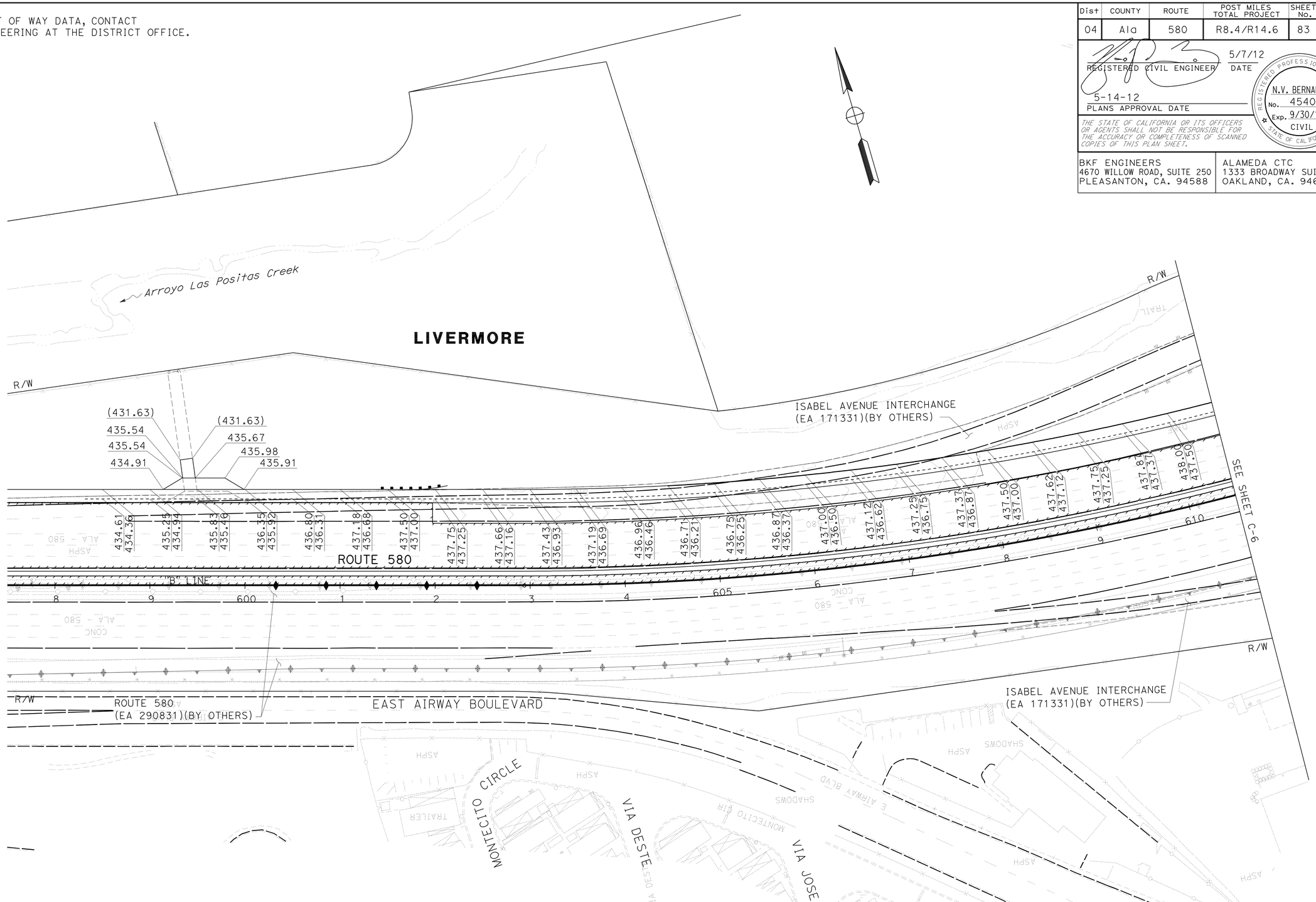

FOR NOTES, ABBREVIATIONS AND LEGEND, SEE SHEET C-1

THIS PLAN ACCURATE FOR PAVEMENT ELEVATION WORK ONLY

CONSTRUCTION DETAILS
PAVEMENT ELEVATIONS PLAN
SCALE: 1" = 50'

C-5

REVISED BY	DQN
DATE REVISED	5/7/12
CALCULATED-DESIGNED BY	DAT Q. NGUYEN
CHECKED BY	LUIS GARCIA
CONSULTANT FUNCTIONAL SUPERVISOR	NATALINA V. BERNARDI

STATE OF CALIFORNIA - DEPARTMENT OF TRANSPORTATION

Caltrans

LAST REVISION 05-07-12 | DATE PLOTTED => 23-MAY-2012 | TIME PLOTTED => 06:50

FOR ACCURATE RIGHT OF WAY DATA, CONTACT
RIGHT OF WAY ENGINEERING AT THE DISTRICT OFFICE.

Dist	COUNTY	ROUTE	POST MILES TOTAL PROJECT	SHEET No.	TOTAL SHEETS
04	Ala	580	R8.4/R14.6	84	853

REGISTERED CIVIL ENGINEER 5/7/12 DATE

5-14-12
PLANS APPROVAL DATE

REGISTERED PROFESSIONAL ENGINEER
N.V. BERNARDI
No. 45407
Exp. 9/30/12
CIVIL
STATE OF CALIFORNIA

THE STATE OF CALIFORNIA OR ITS OFFICERS OR AGENTS SHALL NOT BE RESPONSIBLE FOR THE ACCURACY OR COMPLETENESS OF SCANNED COPIES OF THIS PLAN SHEET.

BKF ENGINEERS
4670 WILLOW ROAD, SUITE 250
PLEASANTON, CA. 94588

ALAMEDA CTC
1333 BROADWAY SUITE 220
OAKLAND, CA. 94612

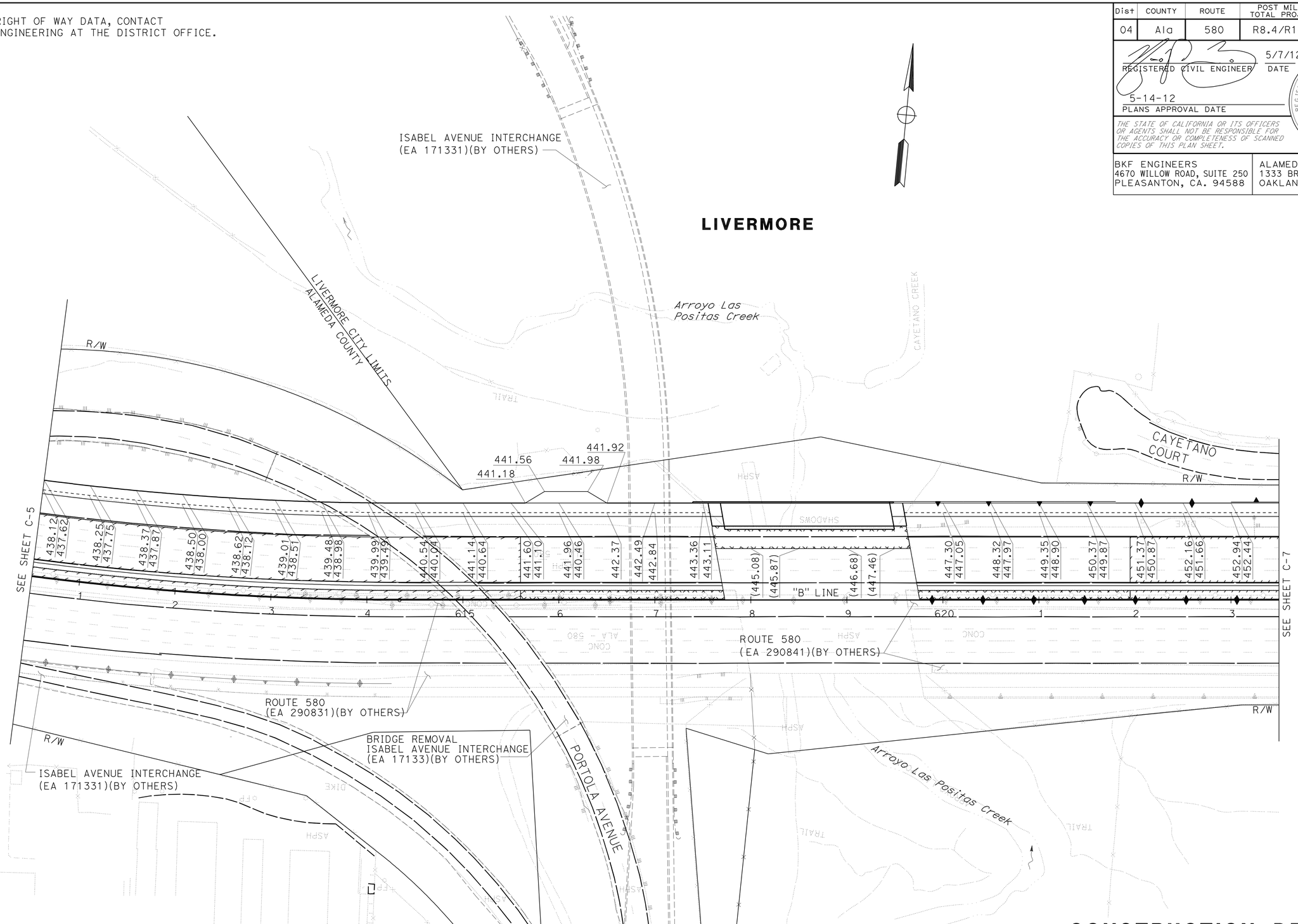

FOR NOTES, ABBREVIATIONS AND LEGEND, SEE SHEET C-1

THIS PLAN ACCURATE FOR PAVEMENT ELEVATION WORK ONLY

CONSTRUCTION DETAILS
PAVEMENT ELEVATIONS PLAN
SCALE: 1" = 50'

C-6

DAT Q. NGUYEN	DQN
LUIS GARCIA	5/7/12
REVISED BY	
DATE REVISED	
CALCULATED-DESIGNED BY	
CHECKED BY	
CONSULTANT FUNCTIONAL SUPERVISOR	
NATALINA V. BERNARDI	

STATE OF CALIFORNIA - DEPARTMENT OF TRANSPORTATION
Caltrans

LAST REVISION 05-07-12
DATE PLOTTED =>23-MAY-2012
TIME PLOTTED =>06:50

FOR ACCURATE RIGHT OF WAY DATA, CONTACT
RIGHT OF WAY ENGINEERING AT THE DISTRICT OFFICE.

Dist	COUNTY	ROUTE	POST MILES TOTAL PROJECT	SHEET No.	TOTAL SHEETS
04	Ala	580	R8.4/R14.6	85	853

REGISTERED CIVIL ENGINEER — DATE 5/7/12

5-14-12
PLANS APPROVAL DATE

REGISTERED PROFESSIONAL ENGINEER
N.V. BERNARDI
No. 45407
Exp. 9/30/12
CIVIL
STATE OF CALIFORNIA

THE STATE OF CALIFORNIA OR ITS OFFICERS OR AGENTS SHALL NOT BE RESPONSIBLE FOR THE ACCURACY OR COMPLETENESS OF SCANNED COPIES OF THIS PLAN SHEET.

BKF ENGINEERS
4670 WILLOW ROAD, SUITE 250
PLEASANTON, CA. 94588

ALAMEDA CTC
1333 BROADWAY SUITE 220
OAKLAND, CA. 94612

LIVERMORE

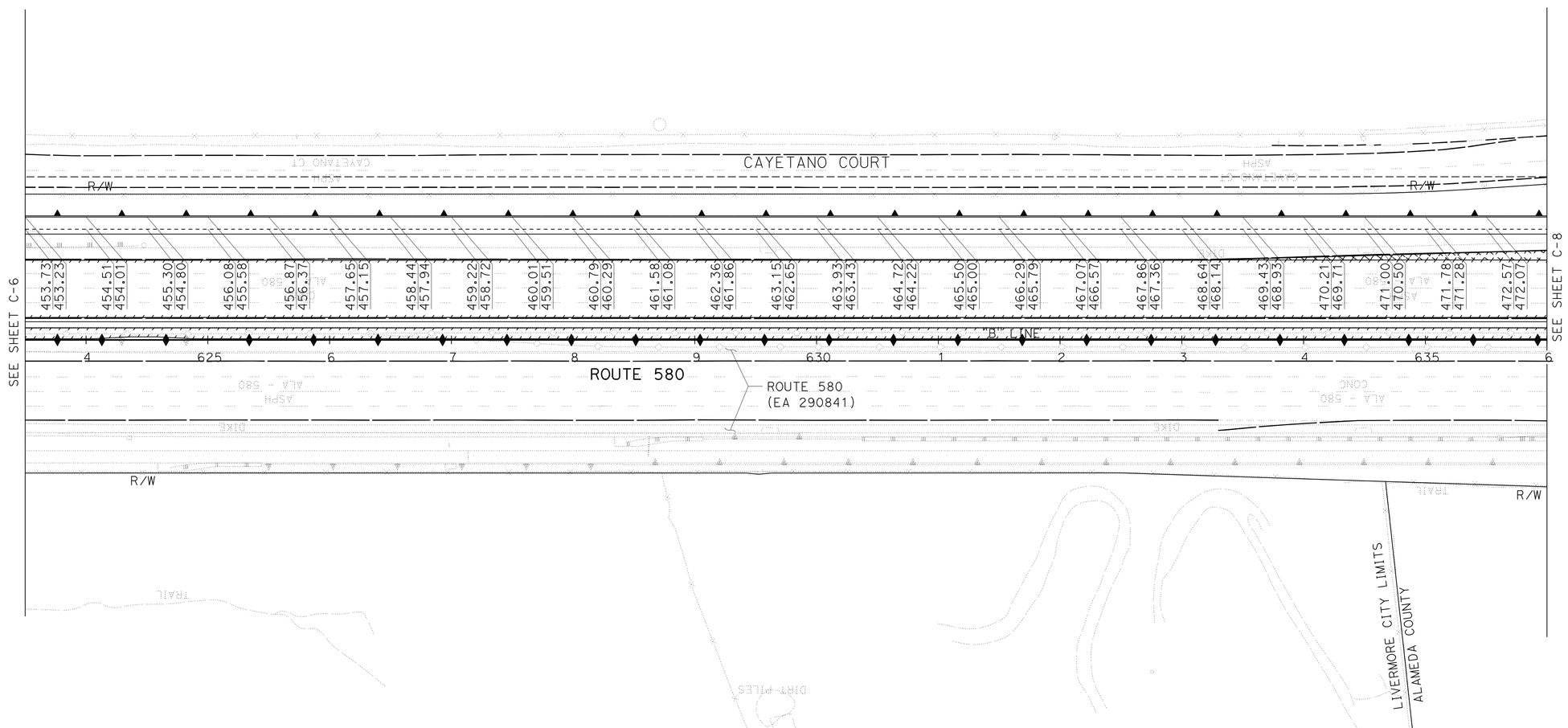

FOR NOTES, ABBREVIATIONS AND LEGEND, SEE SHEET C-1

THIS PLAN ACCURATE FOR PAVEMENT ELEVATION WORK ONLY

CONSTRUCTION DETAILS
PAVEMENT ELEVATIONS PLAN
SCALE: 1" = 50'

C-7

STATE OF CALIFORNIA - DEPARTMENT OF TRANSPORTATION

CONSULTANT FUNCTIONAL SUPERVISOR: NATALINA V. BERNARDI

CALCULATED-DESIGNED BY: DAT Q. NGUYEN
CHECKED BY: LUIS GARCIA

REVISED BY: DQN
DATE REVISED: 5/7/12

LAST REVISION 05-07-12
DATE PLOTTED => 23-MAY-2012
TIME PLOTTED => 06:50

FOR ACCURATE RIGHT OF WAY DATA, CONTACT
RIGHT OF WAY ENGINEERING AT THE DISTRICT OFFICE.

Dist	COUNTY	ROUTE	POST MILES TOTAL PROJECT	SHEET No.	TOTAL SHEETS
04	Ala	580	R8.4/R14.6	86	853

REGISTERED CIVIL ENGINEER 5/7/12 DATE

5-14-12
PLANS APPROVAL DATE

REGISTERED PROFESSIONAL ENGINEER
N.V. BERNARDI
No. 45407
Exp. 9/30/12
CIVIL
STATE OF CALIFORNIA

THE STATE OF CALIFORNIA OR ITS OFFICERS OR AGENTS SHALL NOT BE RESPONSIBLE FOR THE ACCURACY OR COMPLETENESS OF SCANNED COPIES OF THIS PLAN SHEET.

BKF ENGINEERS
4670 WILLOW ROAD, SUITE 250
PLEASANTON, CA. 94588

ALAMEDA CTC
1333 BROADWAY SUITE 220
OAKLAND, CA. 94612

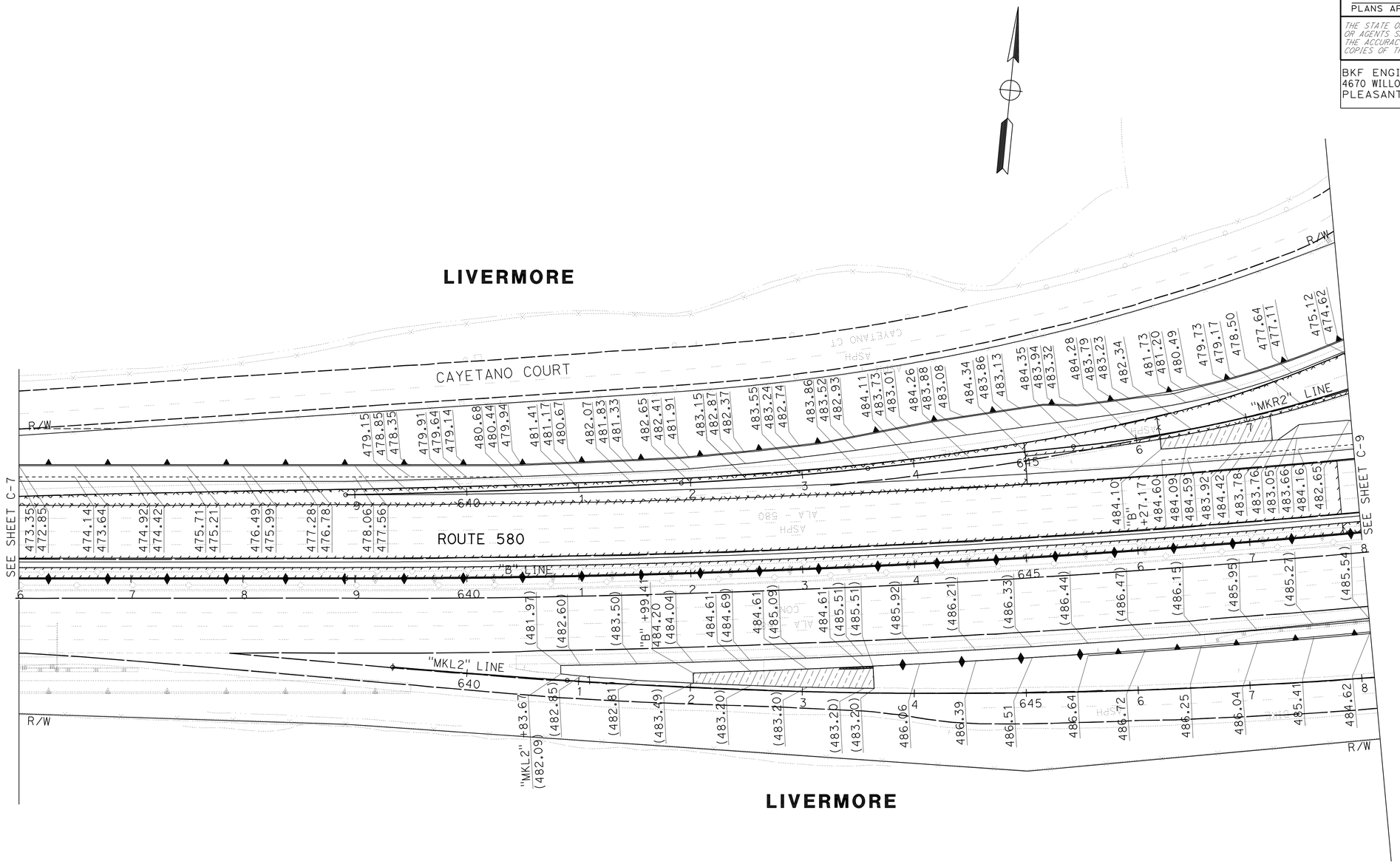

FOR NOTES, ABBREVIATIONS
AND LEGEND, SEE SHEET C-1

THIS PLAN ACCURATE FOR PAVEMENT ELEVATION WORK ONLY

CONSTRUCTION DETAILS
PAVEMENT ELEVATIONS PLAN
SCALE: 1" = 50'

C-8

STATE OF CALIFORNIA - DEPARTMENT OF TRANSPORTATION

CONSULTANT FUNCTIONAL SUPERVISOR: NATALINA V. BERNARDI

CALCULATED-DESIGNED BY: DAT Q. NGUYEN
CHECKED BY: LUIS GARCIA

REVISED BY: DQN
DATE REVISED: 5/7/12

LAST REVISION 05-07-12
DATE PLOTTED => 23-MAY-2012
TIME PLOTTED => 06:51

Dist	COUNTY	ROUTE	POST MILES TOTAL PROJECT	SHEET No.	TOTAL SHEETS
04	Ala	580	R8.4/R14.6	87	853

REGISTERED CIVIL ENGINEER 5/7/12 DATE

5-14-12
PLANS APPROVAL DATE

REGISTERED PROFESSIONAL ENGINEER N.V. BERNARDI No. 45407 Exp. 9/30/12 CIVIL STATE OF CALIFORNIA

THE STATE OF CALIFORNIA OR ITS OFFICERS OR AGENTS SHALL NOT BE RESPONSIBLE FOR THE ACCURACY OR COMPLETENESS OF SCANNED COPIES OF THIS PLAN SHEET.

BKF ENGINEERS
4670 WILLOW ROAD, SUITE 250
PLEASANTON, CA. 94588

ALAMEDA CTC
1333 BROADWAY SUITE 220
OAKLAND, CA. 94612

FOR ACCURATE RIGHT OF WAY DATA, CONTACT RIGHT OF WAY ENGINEERING AT THE DISTRICT OFFICE.

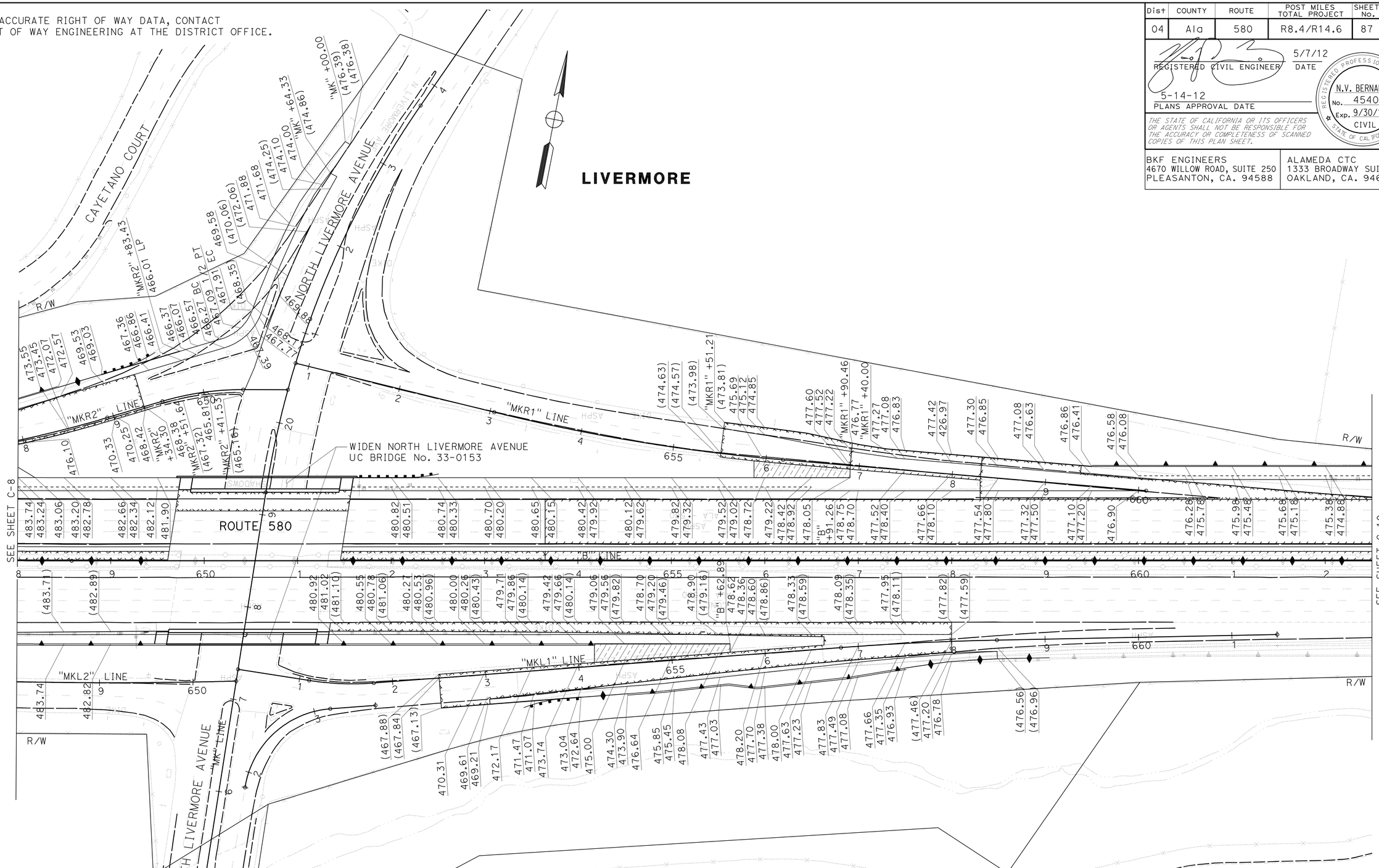

FOR NOTES, ABBREVIATIONS AND LEGEND, SEE SHEET C-1

CONSTRUCTION DETAILS
PAVEMENT ELEVATIONS PLAN
SCALE: 1" = 50'

C-9

THIS PLAN ACCURATE FOR PAVEMENT ELEVATION WORK ONLY

STATE OF CALIFORNIA - DEPARTMENT OF TRANSPORTATION	Caltrans
CONSULTANT FUNCTIONAL SUPERVISOR	NATALINA V. BERNARDI
CALCULATED-DESIGNED BY	LUIS GARCIA
CHECKED BY	DAT Q. NGUYEN
REVISED BY	DQN
DATE REVISED	5/7/12

LAST REVISION 05-07-12 | DATE PLOTTED =>23-MAY-2012 | TIME PLOTTED =>06:51

FOR ACCURATE RIGHT OF WAY DATA, CONTACT
RIGHT OF WAY ENGINEERING AT THE DISTRICT OFFICE.

Dist	COUNTY	ROUTE	POST MILES TOTAL PROJECT	SHEET No.	TOTAL SHEETS
04	Ala	580	R8.4/R14.6	88	853

REGISTERED CIVIL ENGINEER 1/18/12 DATE

5-14-12
PLANS APPROVAL DATE

REGISTERED PROFESSIONAL ENGINEER
N.V. BERNARDI
No. 45407
Exp. 9/30/12
CIVIL
STATE OF CALIFORNIA

THE STATE OF CALIFORNIA OR ITS OFFICERS OR AGENTS SHALL NOT BE RESPONSIBLE FOR THE ACCURACY OR COMPLETENESS OF SCANNED COPIES OF THIS PLAN SHEET.

BKF ENGINEERS
4670 WILLOW ROAD, SUITE 250
PLEASANTON, CA. 94588

ALAMEDA CTC
1333 BROADWAY SUITE 220
OAKLAND, CA. 94612

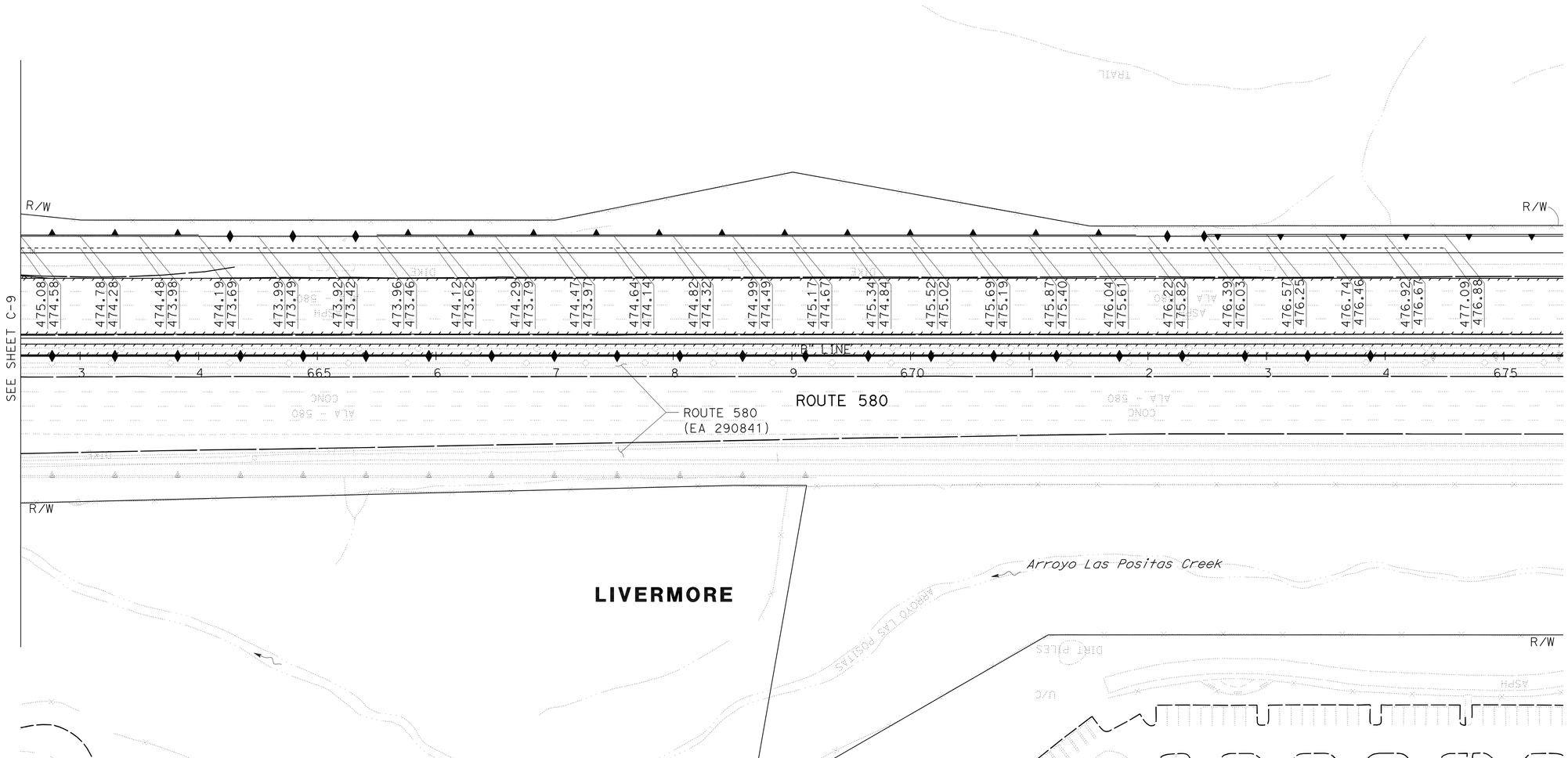

FOR NOTES, ABBREVIATIONS
AND LEGEND, SEE SHEET C-1

THIS PLAN ACCURATE FOR PAVEMENT ELEVATION WORK ONLY

CONSTRUCTION DETAILS
PAVEMENT ELEVATIONS PLAN
SCALE: 1" = 50'

C-10

REVISED BY	DQN
DATE REVISED	1/18/12
CALCULATED-DESIGNED BY	DAT Q. NGUYEN
CHECKED BY	LUIS GARCIA
CONSULTANT FUNCTIONAL SUPERVISOR	NATALINA V. BERNARDI

STATE OF CALIFORNIA - DEPARTMENT OF TRANSPORTATION

LAST REVISION 01-18-12 | DATE PLOTTED =>23-MAY-2012 | TIME PLOTTED =>06:51

FOR ACCURATE RIGHT OF WAY DATA, CONTACT
RIGHT OF WAY ENGINEERING AT THE DISTRICT OFFICE.

Dist	COUNTY	ROUTE	POST MILES TOTAL PROJECT	SHEET No.	TOTAL SHEETS
04	Ala	580	R8.4/R14.6	89	853

REGISTERED CIVIL ENGINEER 1/18/12 DATE

5-14-12
PLANS APPROVAL DATE

REGISTERED PROFESSIONAL ENGINEER
N.V. BERNARDI
No. 45407
Exp. 9/30/12
CIVIL
STATE OF CALIFORNIA

THE STATE OF CALIFORNIA OR ITS OFFICERS OR AGENTS SHALL NOT BE RESPONSIBLE FOR THE ACCURACY OR COMPLETENESS OF SCANNED COPIES OF THIS PLAN SHEET.

BKF ENGINEERS
4670 WILLOW ROAD, SUITE 250
PLEASANTON, CA. 94588

ALAMEDA CTC
1333 BROADWAY SUITE 220
OAKLAND, CA. 94612

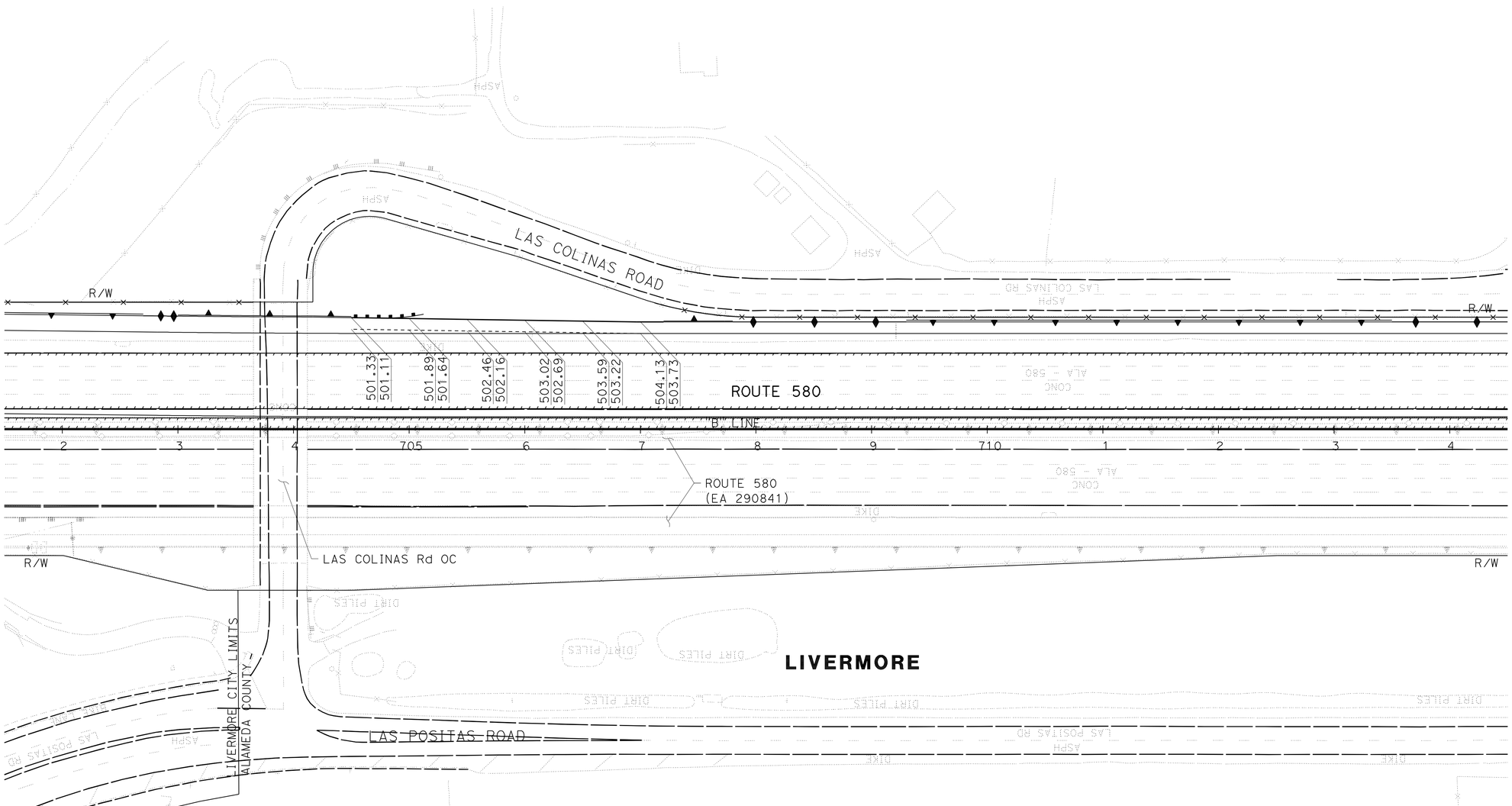

FOR NOTES, ABBREVIATIONS AND LEGEND, SEE SHEET C-1

THIS PLAN ACCURATE FOR PAVEMENT ELEVATION WORK ONLY

CONSTRUCTION DETAILS
PAVEMENT ELEVATIONS PLAN
SCALE: 1" = 50'

C-11

REVISED BY	DATE REVISED
DQN	1/18/12

DAT Q. NGUYEN
LUIS GARCIA
CALCULATED-DESIGNED BY
CHECKED BY
CONSULTANT FUNCTIONAL SUPERVISOR
NATALINA V. BERNARDI

STATE OF CALIFORNIA - DEPARTMENT OF TRANSPORTATION
Caltrans

LAST REVISION 01-18-12
DATE PLOTTED => 23-MAY-2012
TIME PLOTTED => 06:51

FOR ACCURATE RIGHT OF WAY DATA, CONTACT
RIGHT OF WAY ENGINEERING AT THE DISTRICT OFFICE.

Dist	COUNTY	ROUTE	POST MILES TOTAL PROJECT	SHEET No.	TOTAL SHEETS
04	Ala	580	R8.4/R14.6	90	853

REGISTERED CIVIL ENGINEER 1/18/12 DATE

5-14-12
PLANS APPROVAL DATE

REGISTERED PROFESSIONAL ENGINEER
N.V. BERNARDI
No. 45407
Exp. 9/30/12
CIVIL
STATE OF CALIFORNIA

THE STATE OF CALIFORNIA OR ITS OFFICERS OR AGENTS SHALL NOT BE RESPONSIBLE FOR THE ACCURACY OR COMPLETENESS OF SCANNED COPIES OF THIS PLAN SHEET.

BKF ENGINEERS
4670 WILLOW ROAD, SUITE 250
PLEASANTON, CA. 94588

ALAMEDA CTC
1333 BROADWAY SUITE 220
OAKLAND, CA. 94612

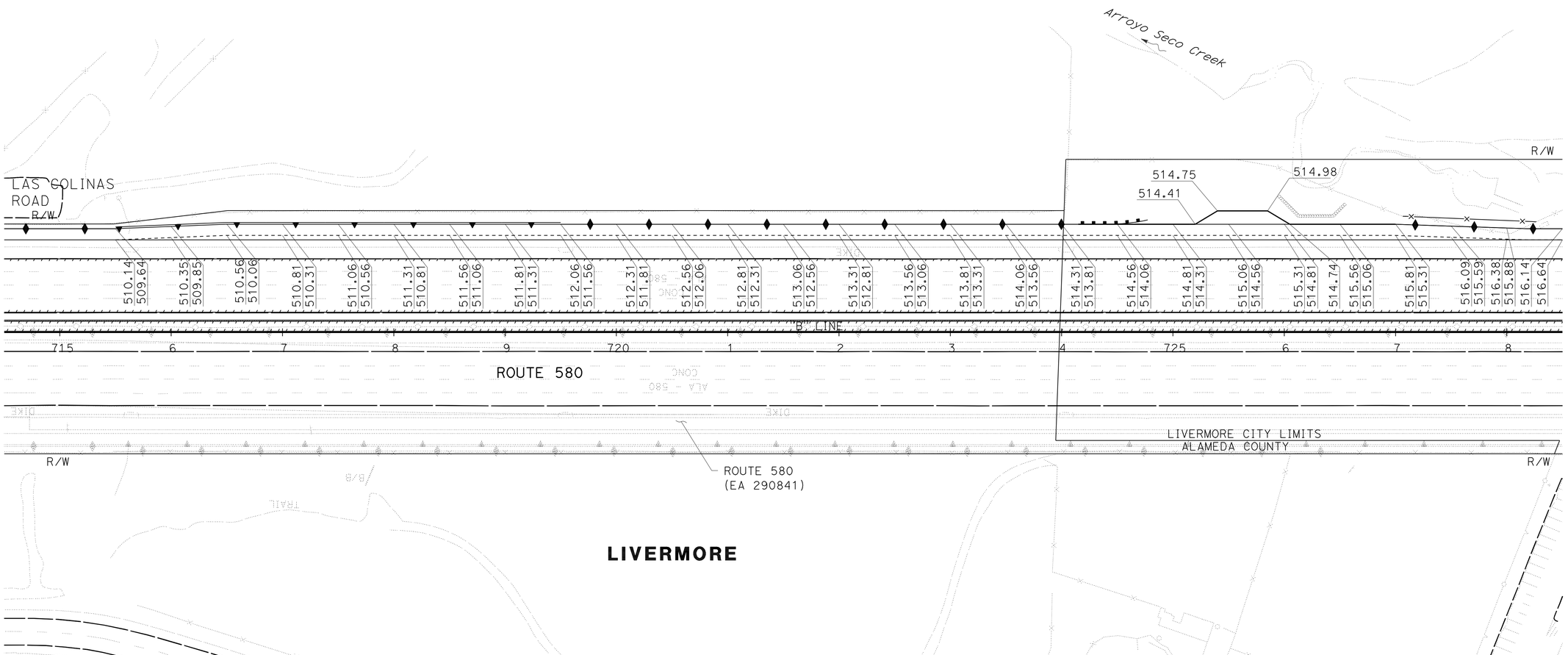

FOR NOTES, ABBREVIATIONS AND LEGEND, SEE SHEET C-1

THIS PLAN ACCURATE FOR PAVEMENT ELEVATION WORK ONLY

CONSTRUCTION DETAILS
PAVEMENT ELEVATIONS PLAN
SCALE: 1" = 50'

C-12

REVISED BY	DQN
DATE REVISED	1/18/12
CALCULATED-DESIGNED BY	DAT Q. NGUYEN
CHECKED BY	LUIS GARCIA
CONSULTANT FUNCTIONAL SUPERVISOR	NATALINA V. BERNARDI

STATE OF CALIFORNIA - DEPARTMENT OF TRANSPORTATION
Caltrans

LAST REVISION 01-18-12 | DATE PLOTTED =>23-MAY-2012 | TIME PLOTTED =>06:51

FOR ACCURATE RIGHT OF WAY DATA, CONTACT
RIGHT OF WAY ENGINEERING AT THE DISTRICT OFFICE.

Dist	COUNTY	ROUTE	POST MILES TOTAL PROJECT	SHEET No.	TOTAL SHEETS
04	Ala	580	R8.4/R14.6	91	853

REGISTERED CIVIL ENGINEER 5/7/12 DATE

5-14-12
PLANS APPROVAL DATE

REGISTERED PROFESSIONAL ENGINEER
N.V. BERNARDI
No. 45407
Exp. 9/30/12
CIVIL
STATE OF CALIFORNIA

THE STATE OF CALIFORNIA OR ITS OFFICERS OR AGENTS SHALL NOT BE RESPONSIBLE FOR THE ACCURACY OR COMPLETENESS OF SCANNED COPIES OF THIS PLAN SHEET.

BKF ENGINEERS
4670 WILLOW ROAD, SUITE 250
PLEASANTON, CA. 94588

ALAMEDA CTC
1333 BROADWAY SUITE 220
OAKLAND, CA. 94612

LIVERMORE

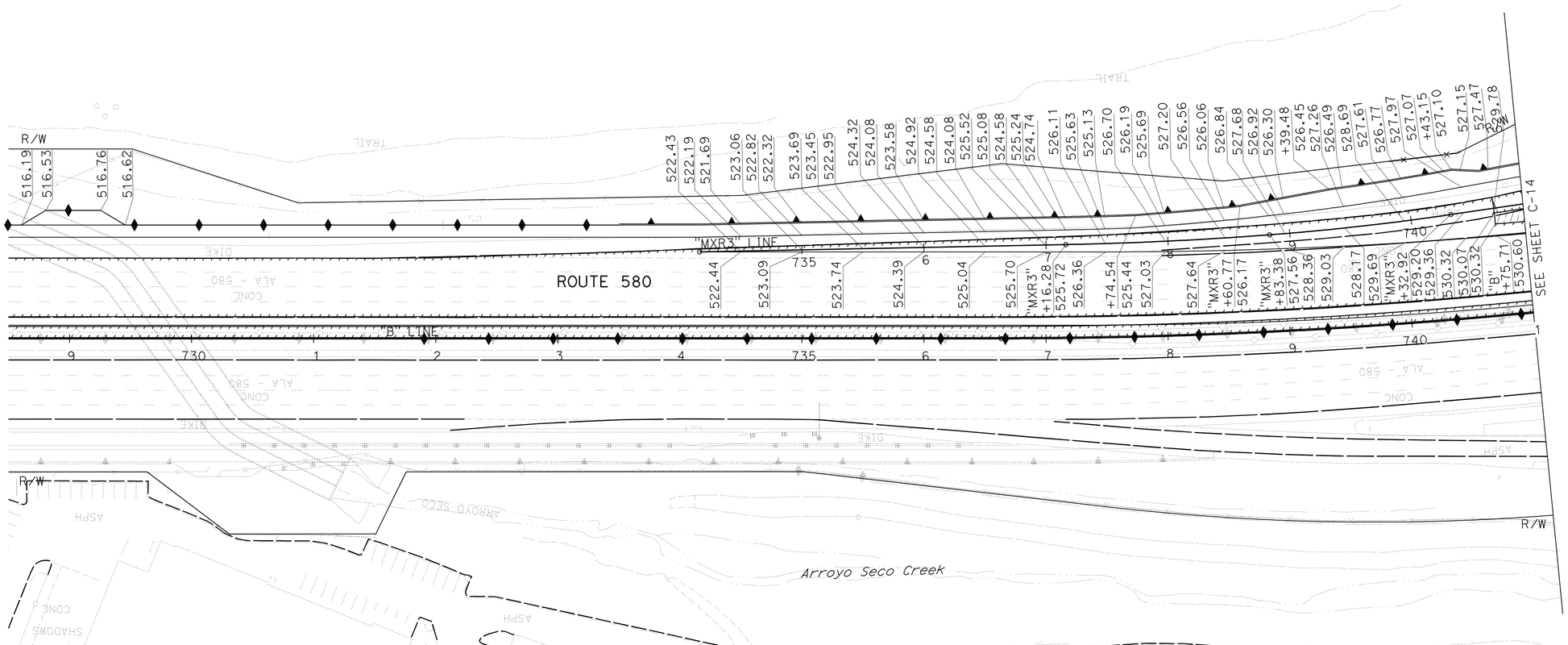

LIVERMORE

CONSTRUCTION DETAILS
PAVEMENT ELEVATIONS PLAN
SCALE: 1" = 50'

C-13

FOR NOTES, ABBREVIATIONS AND LEGEND, SEE SHEET C-1

THIS PLAN ACCURATE FOR PAVEMENT ELEVATION WORK ONLY

STATE OF CALIFORNIA - DEPARTMENT OF TRANSPORTATION

Caltrans

CONSULTANT FUNCTIONAL SUPERVISOR: NATALINA V. BERNARDI

CALCULATED-DESIGNED BY: DAT Q. NGUYEN
CHECKED BY: LUIS GARCIA

REVISED BY: DQN
DATE REVISED: 5/7/12

LAST REVISION: 05-07-12
DATE PLOTTED => 23-MAY-2012
TIME PLOTTED => 06:51

FOR ACCURATE RIGHT OF WAY DATA, CONTACT
RIGHT OF WAY ENGINEERING AT THE DISTRICT OFFICE.

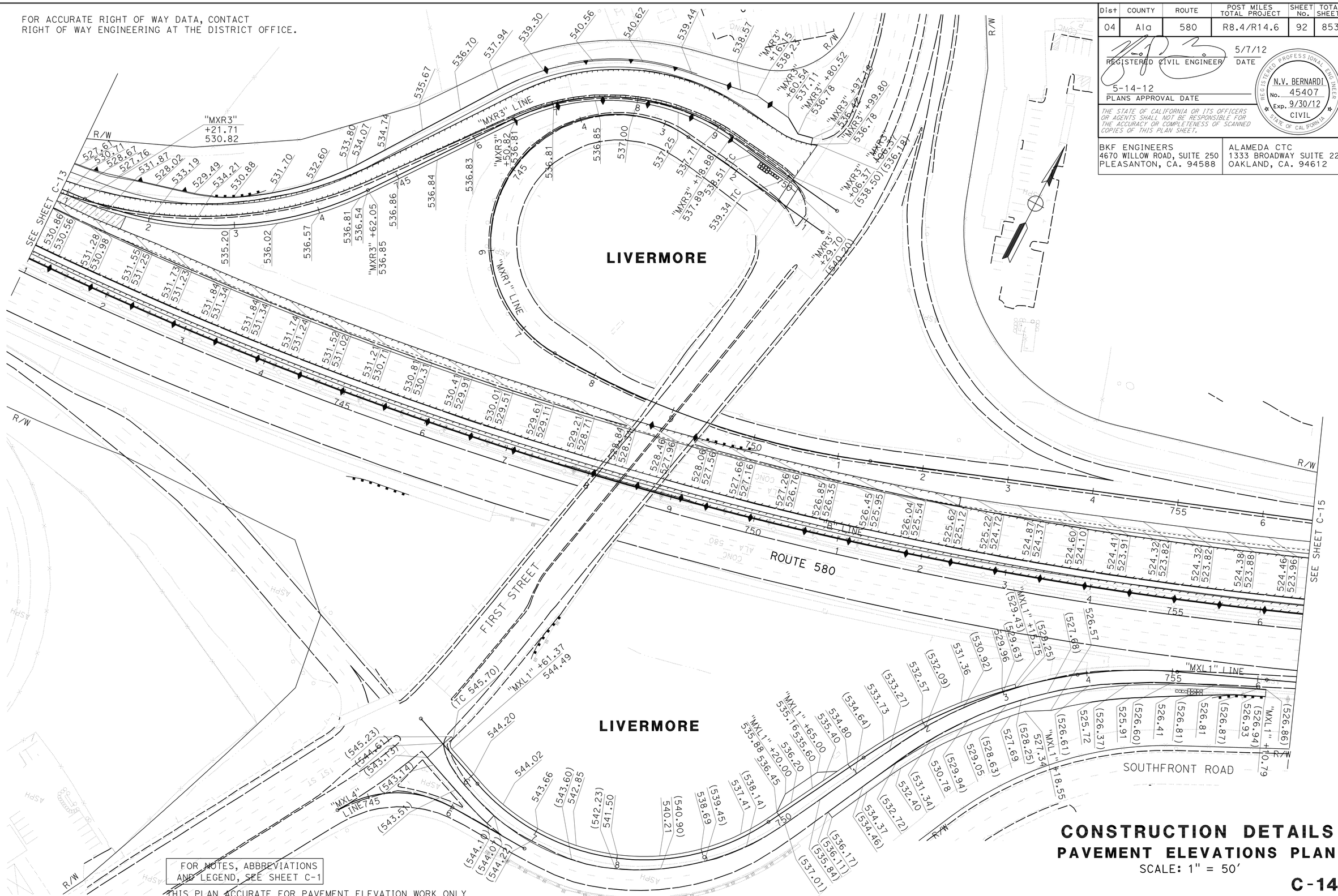

Dist	COUNTY	ROUTE	POST MILES TOTAL PROJECT	SHEET No.	TOTAL SHEETS
04	Ala	580	R8.4/R14.6	92	853

REGISTERED CIVIL ENGINEER — DATE 5/7/12

5-14-12
PLANS APPROVAL DATE

REGISTERED PROFESSIONAL ENGINEER — N.V. BERNARDI — No. 45407 — Exp. 9/30/12 — CIVIL — STATE OF CALIFORNIA

THE STATE OF CALIFORNIA OR ITS OFFICERS OR AGENTS SHALL NOT BE RESPONSIBLE FOR THE ACCURACY OR COMPLETENESS OF SCANNED COPIES OF THIS PLAN SHEET.

BKF ENGINEERS
4670 WILLOW ROAD, SUITE 250
PLEASANTON, CA. 94588

ALAMEDA CTC
1333 BROADWAY SUITE 220
OAKLAND, CA. 94612

CONSTRUCTION DETAILS
PAVEMENT ELEVATIONS PLAN
SCALE: 1" = 50'

C-14

STATE OF CALIFORNIA - DEPARTMENT OF TRANSPORTATION
Caltrans

CONSULTANT FUNCTIONAL SUPERVISOR: NATALINA V. BERNARDI
CALCULATED-DESIGNED BY: DAT Q. NGUYEN
CHECKED BY: LUIS GARCIA
REVISED BY: DQN
DATE REVISED: 5/7/12

LAST REVISION — DATE PLOTTED => 23-MAY-2012 — TIME PLOTTED => 08:51
05-07-12

BORDER LAST REVISED 7/2/2010
USERNAME => s114937
DGN FILE => 0400021248gd014.dgn
RELATIVE BORDER SCALE IS IN INCHES 0 1 2 3
UNIT 0735
PROJECT NUMBER & PHASE 04000212481

FOR ACCURATE RIGHT OF WAY DATA, CONTACT
RIGHT OF WAY ENGINEERING AT THE DISTRICT OFFICE.

Dist	COUNTY	ROUTE	POST MILES TOTAL PROJECT	SHEET No.	TOTAL SHEETS
04	Ala	580	R8.4/R14.6	93	853

REGISTERED CIVIL ENGINEER 5/7/12 DATE

5-14-12
PLANS APPROVAL DATE

REGISTERED PROFESSIONAL ENGINEER N.V. BERNARDI No. 45407 Exp. 9/30/12 CIVIL STATE OF CALIFORNIA

THE STATE OF CALIFORNIA OR ITS OFFICERS OR AGENTS SHALL NOT BE RESPONSIBLE FOR THE ACCURACY OR COMPLETENESS OF SCANNED COPIES OF THIS PLAN SHEET.

BKF ENGINEERS
4670 WILLOW ROAD, SUITE 250
PLEASANTON, CA. 94588

ALAMEDA CTC
1333 BROADWAY SUITE 220
OAKLAND, CA. 94612

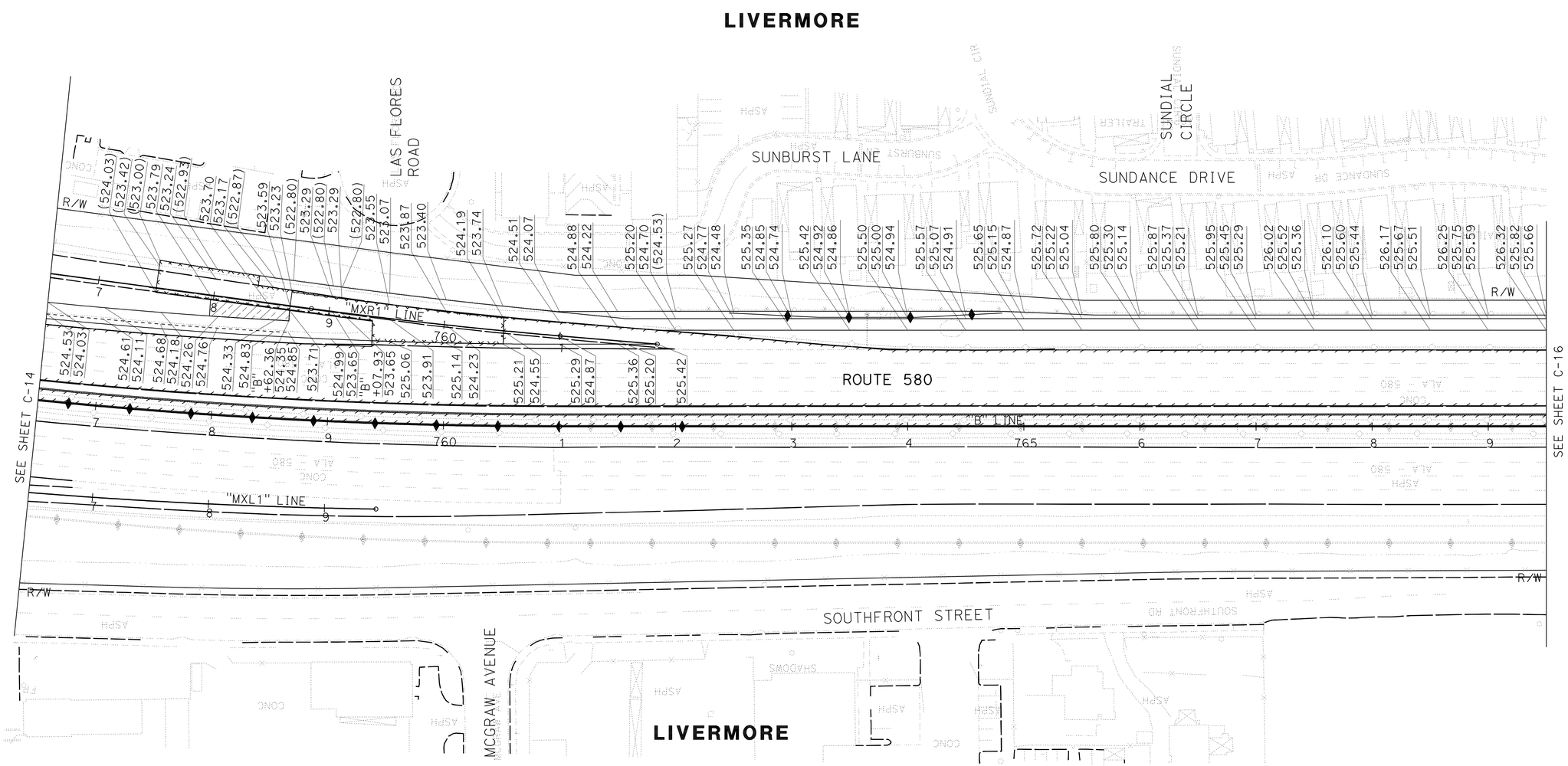

FOR NOTES, ABBREVIATIONS AND LEGEND, SEE SHEET C-1

CONSTRUCTION DETAILS
PAVEMENT ELEVATIONS PLAN
SCALE: 1" = 50'

C-15

STATE OF CALIFORNIA - DEPARTMENT OF TRANSPORTATION

CONSULTANT FUNCTIONAL SUPERVISOR: NATALINA V. BERNARDI

CALCULATED-DESIGNED BY: DAT Q. NGUYEN
CHECKED BY: LUIS GARCIA

REVISED BY: DQN
DATE REVISED: 5/7/12

LAST REVISION DATE PLOTTED =>23-MAY-2012
TIME PLOTTED =>06:52
05-07-12

FOR ACCURATE RIGHT OF WAY DATA, CONTACT
RIGHT OF WAY ENGINEERING AT THE DISTRICT OFFICE.

Dist	COUNTY	ROUTE	POST MILES TOTAL PROJECT	SHEET No.	TOTAL SHEETS
04	Ala	580	R8.4/R14.6	94	853

REGISTERED CIVIL ENGINEER 1/18/12 DATE

5-14-12
PLANS APPROVAL DATE

REGISTERED PROFESSIONAL ENGINEER
N.V. BERNARDI
No. 45407
Exp. 9/30/12
CIVIL
STATE OF CALIFORNIA

THE STATE OF CALIFORNIA OR ITS OFFICERS OR AGENTS SHALL NOT BE RESPONSIBLE FOR THE ACCURACY OR COMPLETENESS OF SCANNED COPIES OF THIS PLAN SHEET.

BKF ENGINEERS
4670 WILLOW ROAD, SUITE 250
PLEASANTON, CA. 94588

ALAMEDA CTC
1333 BROADWAY SUITE 220
OAKLAND, CA. 94612

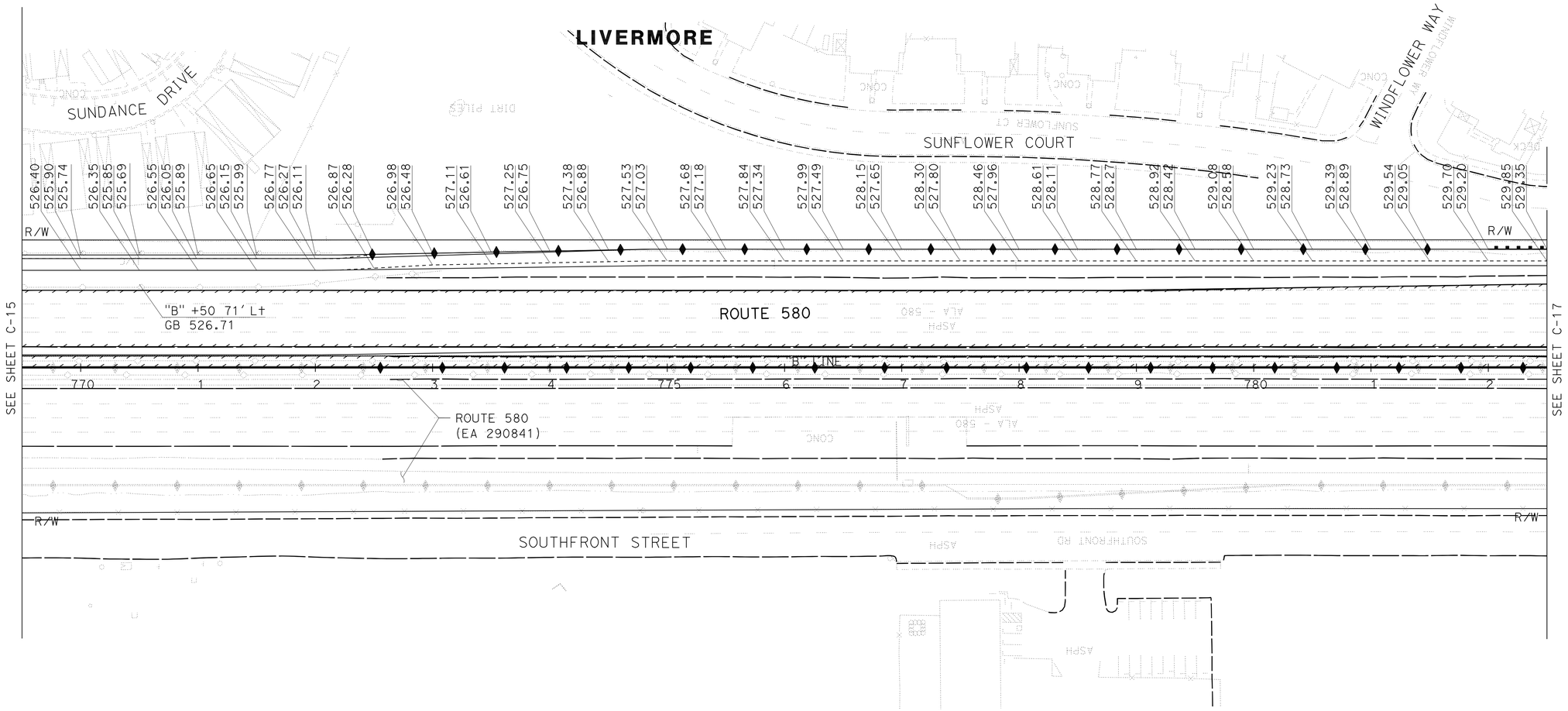

FOR NOTES, ABBREVIATIONS AND LEGEND, SEE SHEET C-1

THIS PLAN ACCURATE FOR PAVEMENT ELEVATION WORK ONLY

CONSTRUCTION DETAILS
PAVEMENT ELEVATIONS PLAN
SCALE: 1" = 50'

C-16

STATE OF CALIFORNIA - DEPARTMENT OF TRANSPORTATION

CONSULTANT FUNCTIONAL SUPERVISOR: NATALINA V. BERNARDI

CALCULATED-DESIGNED BY: DAT Q. NGUYEN
CHECKED BY: LUIS GARCIA

REVISED BY: DQN
DATE REVISED: 1/18/12

LAST REVISION 01-18-12
DATE PLOTTED => 23-MAY-2012
TIME PLOTTED => 06:52

FOR ACCURATE RIGHT OF WAY DATA, CONTACT
RIGHT OF WAY ENGINEERING AT THE DISTRICT OFFICE.

Dist	COUNTY	ROUTE	POST MILES TOTAL PROJECT	SHEET No.	TOTAL SHEETS
04	Ala	580	R8.4/R14.6	95	853

REGISTERED CIVIL ENGINEER 5/7/12 DATE

5-14-12
PLANS APPROVAL DATE

REGISTERED PROFESSIONAL ENGINEER N.V. BERNARDI No. 45407 Exp. 9/30/12 CIVIL STATE OF CALIFORNIA

THE STATE OF CALIFORNIA OR ITS OFFICERS OR AGENTS SHALL NOT BE RESPONSIBLE FOR THE ACCURACY OR COMPLETENESS OF SCANNED COPIES OF THIS PLAN SHEET.

BKF ENGINEERS
4670 WILLOW ROAD, SUITE 250
PLEASANTON, CA. 94588

ALAMEDA CTC
1333 BROADWAY SUITE 220
OAKLAND, CA. 94612

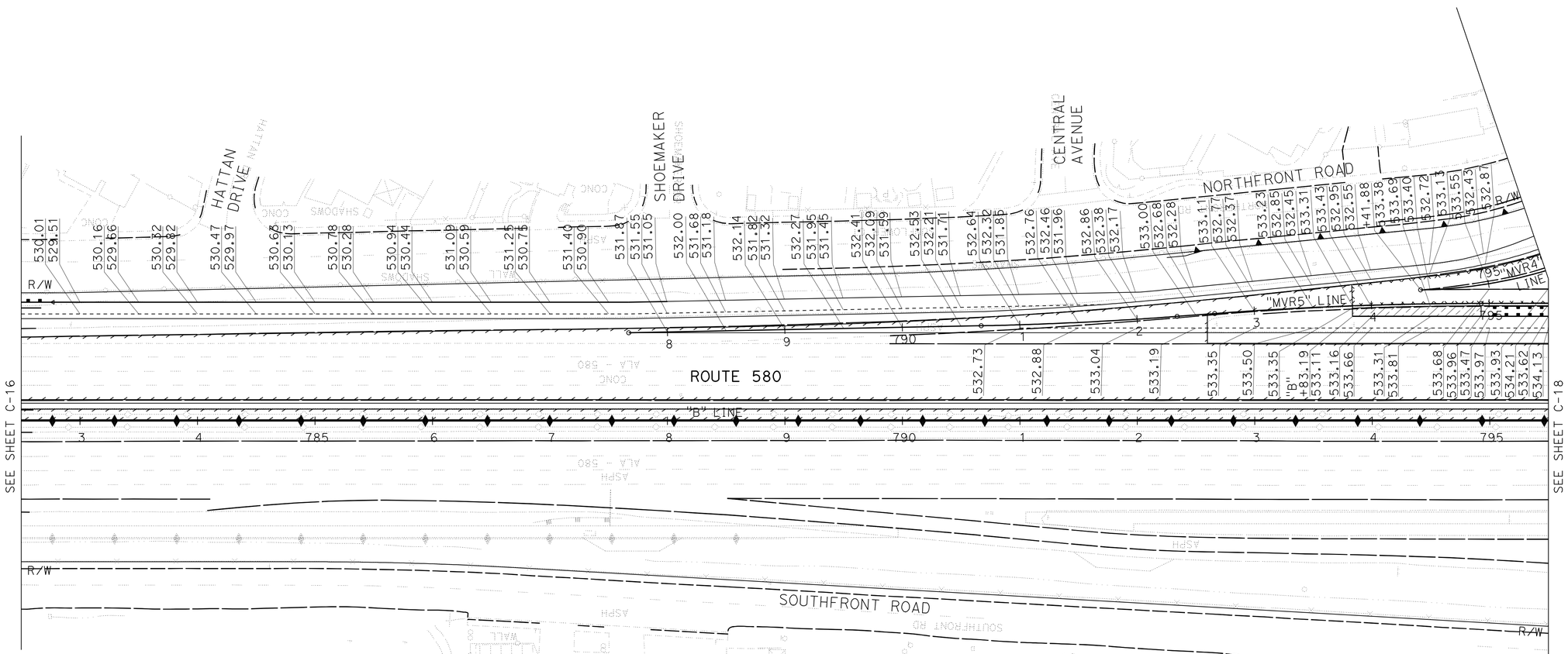

FOR NOTES, ABBREVIATIONS AND LEGEND, SEE SHEET C-1

THIS PLAN ACCURATE FOR PAVEMENT ELEVATION WORK ONLY

CONSTRUCTION DETAILS
PAVEMENT ELEVATIONS PLAN
SCALE: 1" = 50'

C-17

STATE OF CALIFORNIA - DEPARTMENT OF TRANSPORTATION

CONSULTANT FUNCTIONAL SUPERVISOR: NATALINA V. BERNARDI

CALCULATED-DESIGNED BY: DAT Q. NGUYEN
CHECKED BY: LUIS GARCIA

REVISED BY: DQN
DATE REVISED: 5/7/12

LAST REVISION 05-07-12
DATE PLOTTED =>23-MAY-2012
TIME PLOTTED =>06:52

FOR ACCURATE RIGHT OF WAY DATA, CONTACT
RIGHT OF WAY ENGINEERING AT THE DISTRICT OFFICE.

Dist	COUNTY	ROUTE	POST MILES TOTAL PROJECT	SHEET No.	TOTAL SHEETS
04	Ala	580	R8.4/R14.6	96	853

REGISTERED CIVIL ENGINEER 5/7/12 DATE

5-14-12
PLANS APPROVAL DATE

REGISTERED PROFESSIONAL ENGINEER N.V. BERNARDI No. 45407 Exp. 9/30/12 CIVIL STATE OF CALIFORNIA

THE STATE OF CALIFORNIA OR ITS OFFICERS OR AGENTS SHALL NOT BE RESPONSIBLE FOR THE ACCURACY OR COMPLETENESS OF SCANNED COPIES OF THIS PLAN SHEET.

BKF ENGINEERS
4670 WILLOW ROAD, SUITE 250
PLEASANTON, CA. 94588

ALAMEDA CTC
1333 BROADWAY SUITE 220
OAKLAND, CA. 94612

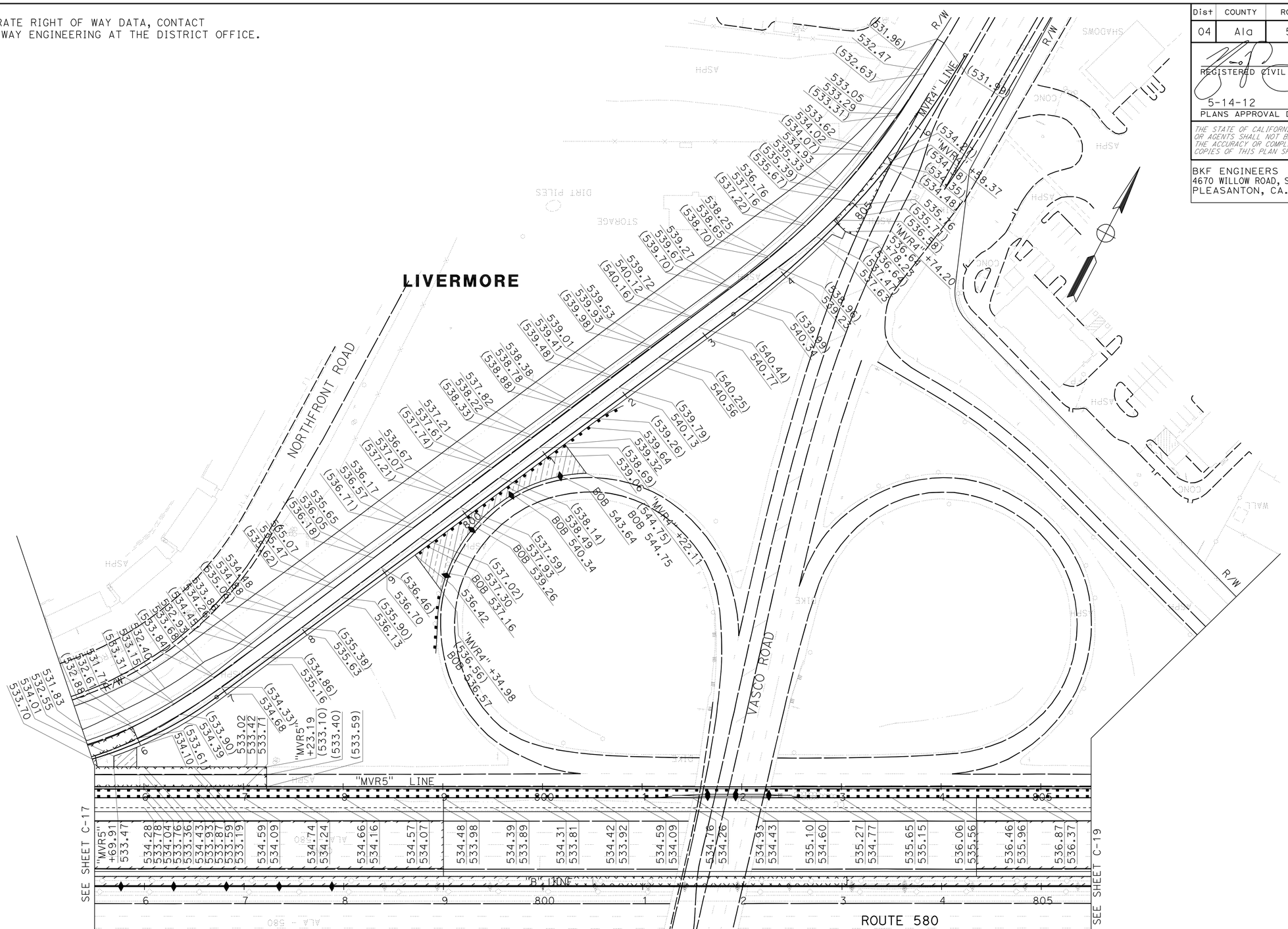

FOR NOTES, ABBREVIATIONS
AND LEGEND, SEE SHEET C-1

THIS PLAN ACCURATE FOR PAVEMENT ELEVATION WORK ONLY

CONSTRUCTION DETAILS
PAVEMENT ELEVATIONS PLAN
SCALE: 1" = 50'

C-18

STATE OF CALIFORNIA - DEPARTMENT OF TRANSPORTATION

CONSULTANT FUNCTIONAL SUPERVISOR: NATALINA V. BERNARDI

CALCULATED-DESIGNED BY: DAT Q. NGUYEN

CHECKED BY: LUIS GARCIA

REVISED BY: DQN

DATE REVISED: 5/7/12

LAST REVISION 05-07-12 | DATE PLOTTED =>23-MAY-2012 | TIME PLOTTED =>06:52

FOR ACCURATE RIGHT OF WAY DATA, CONTACT
RIGHT OF WAY ENGINEERING AT THE DISTRICT OFFICE.

Dist	COUNTY	ROUTE	POST MILES TOTAL PROJECT	SHEET No.	TOTAL SHEETS
04	Ala	580	R8.4/R14.6	97	853

REGISTERED CIVIL ENGINEER 5/7/12 DATE

5-14-12
PLANS APPROVAL DATE

REGISTERED PROFESSIONAL ENGINEER
N.V. BERNARDI
No. 45407
Exp. 9/30/12
CIVIL
STATE OF CALIFORNIA

THE STATE OF CALIFORNIA OR ITS OFFICERS OR AGENTS SHALL NOT BE RESPONSIBLE FOR THE ACCURACY OR COMPLETENESS OF SCANNED COPIES OF THIS PLAN SHEET.

BKF ENGINEERS
4670 WILLOW ROAD, SUITE 250
PLEASANTON, CA. 94588

ALAMEDA CTC
1333 BROADWAY SUITE 220
OAKLAND, CA. 94612

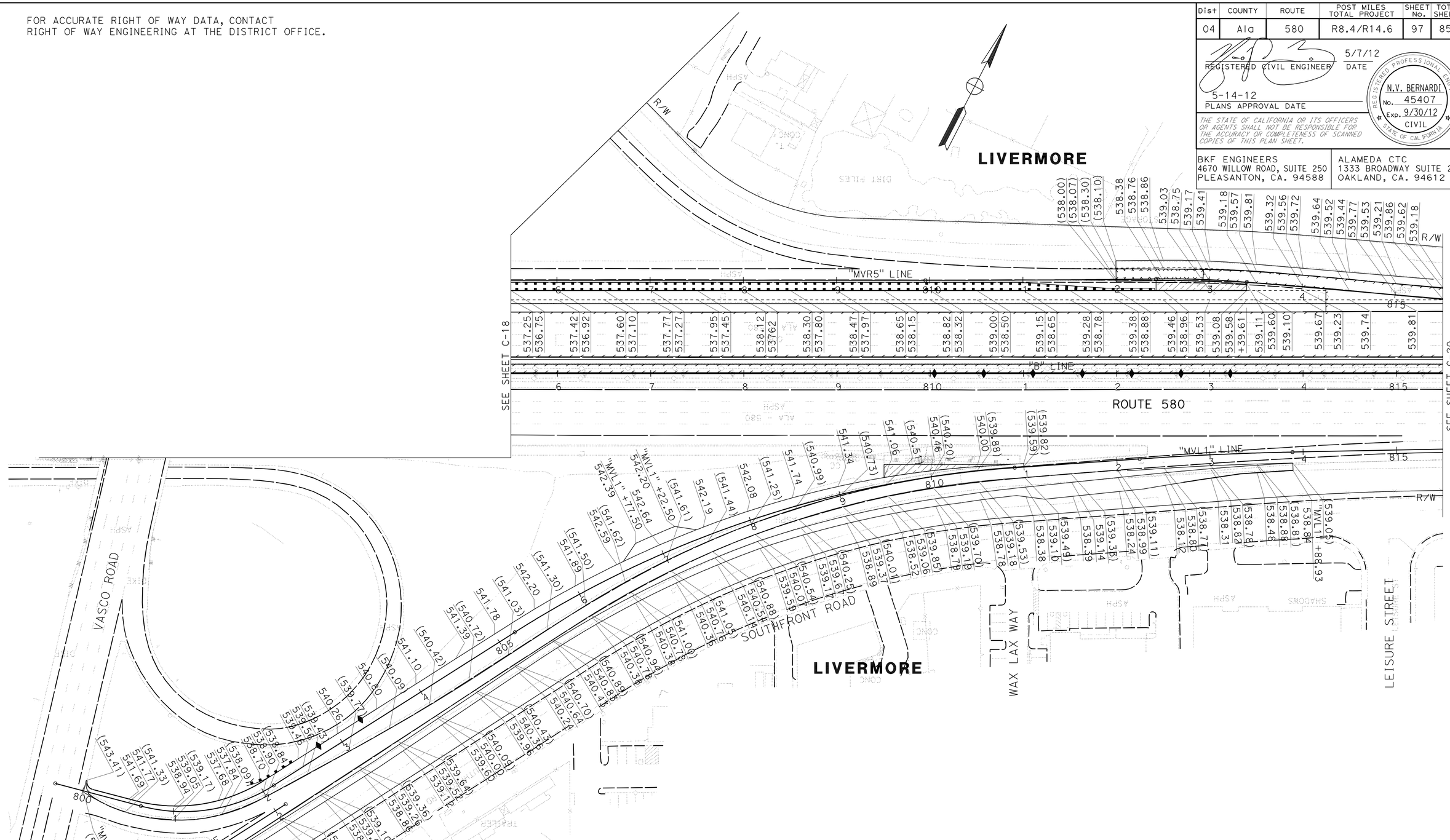

FOR NOTES, ABBREVIATIONS AND LEGEND, SEE SHEET C-1

THIS PLAN ACCURATE FOR PAVEMENT ELEVATION WORK ONLY

CONSTRUCTION DETAILS
PAVEMENT ELEVATIONS PLAN
SCALE: 1" = 50'

C-19

REVISED BY	DATE REVISED
DQN	5/7/12

DAT Q. NGUYEN — LUIS GARCIA — CALCULATED-DESIGNED BY — CHECKED BY

CONSULTANT FUNCTIONAL SUPERVISOR: NATALINA V. BERNARDI

STATE OF CALIFORNIA - DEPARTMENT OF TRANSPORTATION

Caltrans

LAST REVISION 05-07-12 | DATE PLOTTED => 23-MAY-2012 | TIME PLOTTED => 06:52

FOR ACCURATE RIGHT OF WAY DATA, CONTACT
RIGHT OF WAY ENGINEERING AT THE DISTRICT OFFICE.

Dist	COUNTY	ROUTE	POST MILES TOTAL PROJECT	SHEET No.	TOTAL SHEETS
04	Ala	580	R8.4/R14.6	98	853

REGISTERED CIVIL ENGINEER 1/18/12 DATE

5-14-12
PLANS APPROVAL DATE

REGISTERED PROFESSIONAL ENGINEER N.V. BERNARDI No. 45407 Exp. 9/30/12 CIVIL STATE OF CALIFORNIA

THE STATE OF CALIFORNIA OR ITS OFFICERS OR AGENTS SHALL NOT BE RESPONSIBLE FOR THE ACCURACY OR COMPLETENESS OF SCANNED COPIES OF THIS PLAN SHEET.

BKF ENGINEERS
4670 WILLOW ROAD, SUITE 250
PLEASANTON, CA. 94588

ALAMEDA CTC
1333 BROADWAY SUITE 220
OAKLAND, CA. 94612

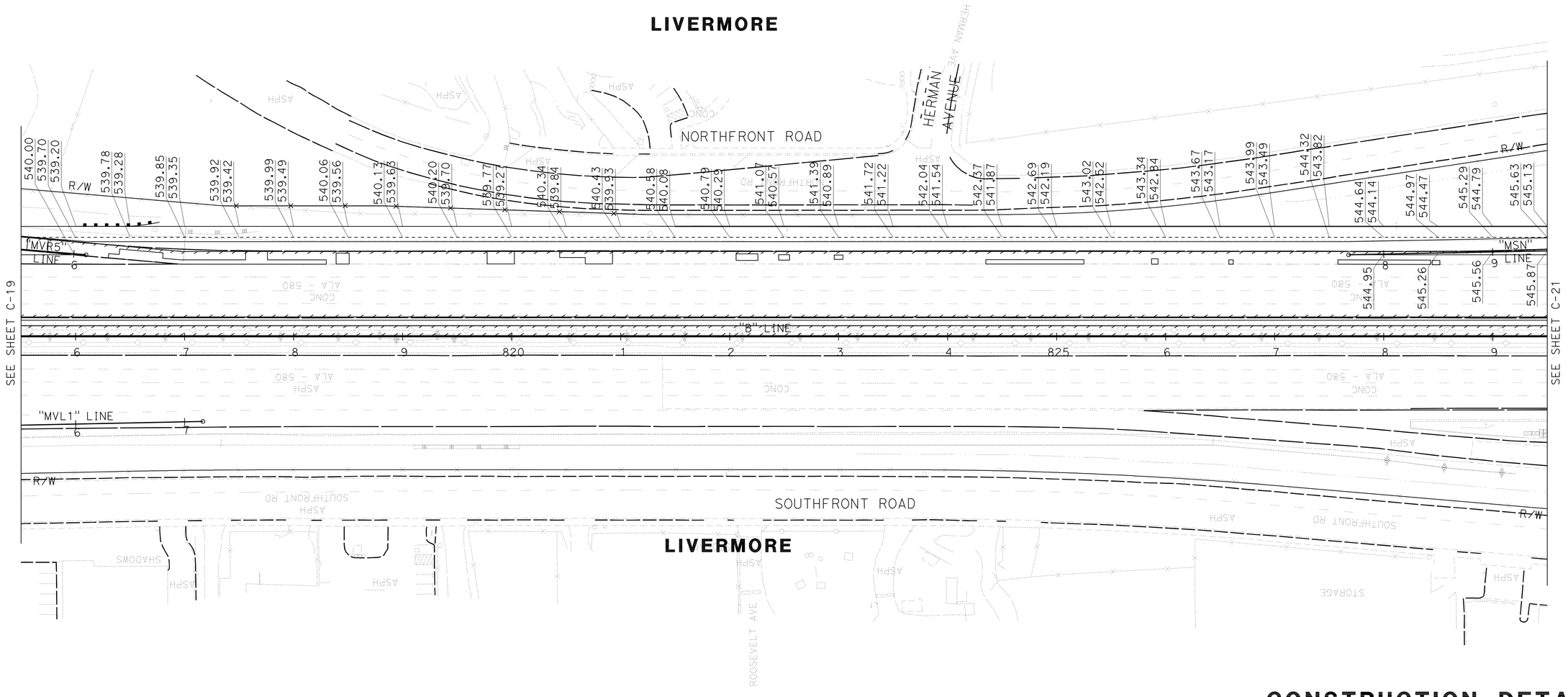

FOR NOTES, ABBREVIATIONS AND LEGEND, SEE SHEET C-1

THIS PLAN ACCURATE FOR PAVEMENT ELEVATION WORK ONLY

CONSTRUCTION DETAILS
PAVEMENT ELEVATIONS PLAN
SCALE: 1" = 50'

C-20

STATE OF CALIFORNIA - DEPARTMENT OF TRANSPORTATION	CONSULTANT FUNCTIONAL SUPERVISOR	CALCULATED-DESIGNED BY	DAT Q. NGUYEN
	NATALINA V. BERNARDI	CHECKED BY	LUIS GARCIA
		REVISED BY	DQN
		DATE REVISED	1/18/12

LAST REVISION 01-18-12 | DATE PLOTTED =>23-MAY-2012 | TIME PLOTTED =>06:52

FOR ACCURATE RIGHT OF WAY DATA, CONTACT
RIGHT OF WAY ENGINEERING AT THE DISTRICT OFFICE.

Dist	COUNTY	ROUTE	POST MILES TOTAL PROJECT	SHEET No.	TOTAL SHEETS
04	Ala	580	R8.4/R14.6	99	853

REGISTERED CIVIL ENGINEER 5/7/12 DATE

5-14-12
PLANS APPROVAL DATE

REGISTERED PROFESSIONAL ENGINEER N.V. BERNARDI No. 45407 Exp. 9/30/12 CIVIL STATE OF CALIFORNIA

THE STATE OF CALIFORNIA OR ITS OFFICERS OR AGENTS SHALL NOT BE RESPONSIBLE FOR THE ACCURACY OR COMPLETENESS OF SCANNED COPIES OF THIS PLAN SHEET.

BKF ENGINEERS
4670 WILLOW ROAD, SUITE 250
PLEASANTON, CA. 94588

ALAMEDA CTC
1333 BROADWAY SUITE 220
OAKLAND, CA. 94612

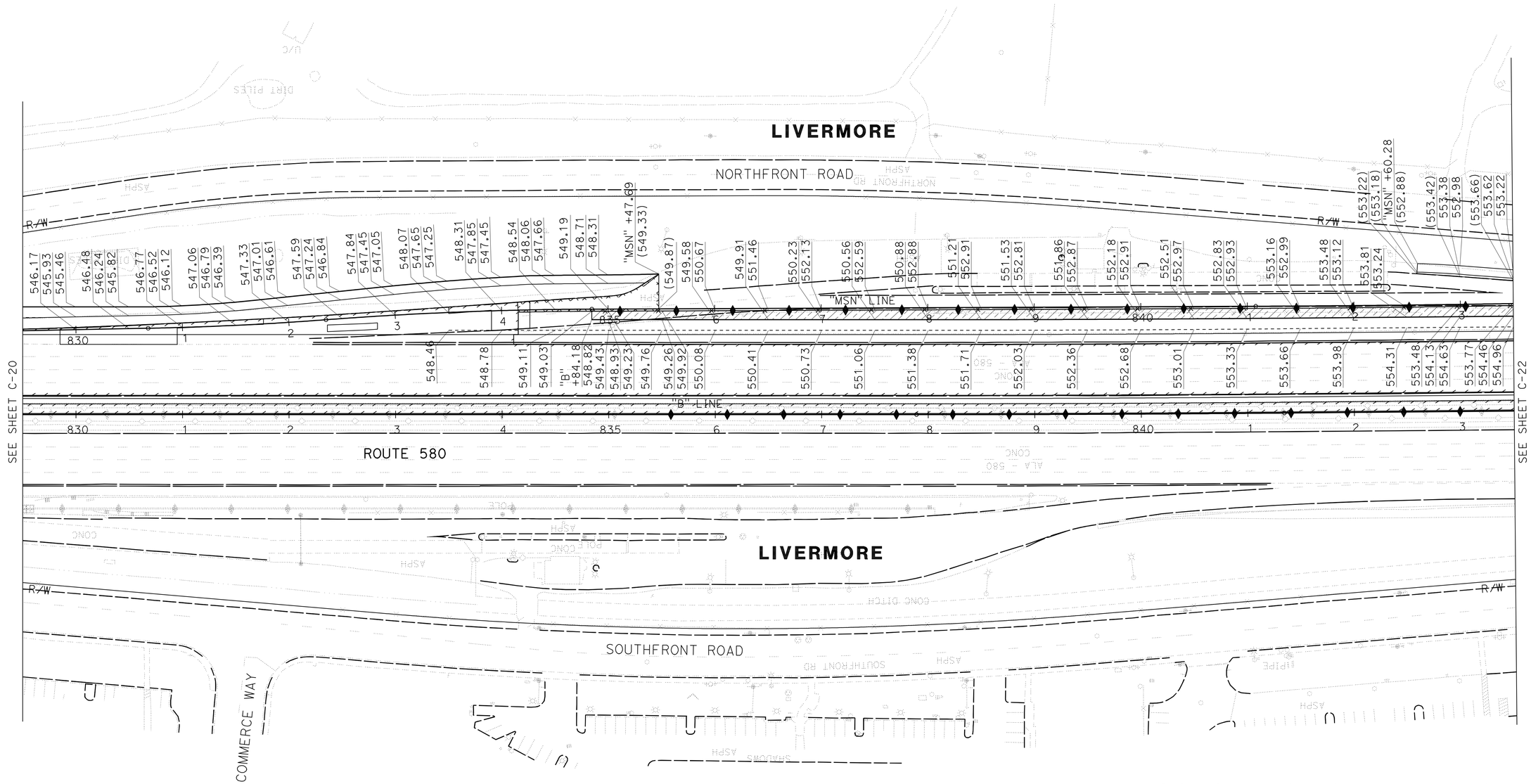

FOR NOTES, ABBREVIATIONS AND LEGEND, SEE SHEET C-1

THIS PLAN ACCURATE FOR PAVEMENT ELEVATION WORK ONLY

CONSTRUCTION DETAILS
PAVEMENT ELEVATIONS PLAN
SCALE: 1" = 50'

C-21

STATE OF CALIFORNIA - DEPARTMENT OF TRANSPORTATION

CONSULTANT FUNCTIONAL SUPERVISOR: NATALINA V. BERNARDI

CALCULATED-DESIGNED BY: DAT Q. NGUYEN — CHECKED BY: LUIS GARCIA

REVISED BY: DQN — DATE REVISED: 5/7/12

LAST REVISION 05-07-12 | DATE PLOTTED =>23-MAY-2012 | TIME PLOTTED =>06:52

FOR ACCURATE RIGHT OF WAY DATA, CONTACT
RIGHT OF WAY ENGINEERING AT THE DISTRICT OFFICE.

Dist	COUNTY	ROUTE	POST MILES TOTAL PROJECT	SHEET No.	TOTAL SHEETS
04	Ala	580	R8.4/R14.6	100	853

REGISTERED CIVIL ENGINEER 5/7/12 DATE

5-14-12
PLANS APPROVAL DATE

REGISTERED PROFESSIONAL ENGINEER N.V. BERNARDI No. 45407 Exp. 9/30/12 CIVIL STATE OF CALIFORNIA

THE STATE OF CALIFORNIA OR ITS OFFICERS OR AGENTS SHALL NOT BE RESPONSIBLE FOR THE ACCURACY OR COMPLETENESS OF SCANNED COPIES OF THIS PLAN SHEET.

BKF ENGINEERS
4670 WILLOW ROAD, SUITE 250
PLEASANTON, CA. 94588

ALAMEDA CTC
1333 BROADWAY SUITE 220
OAKLAND, CA. 94612

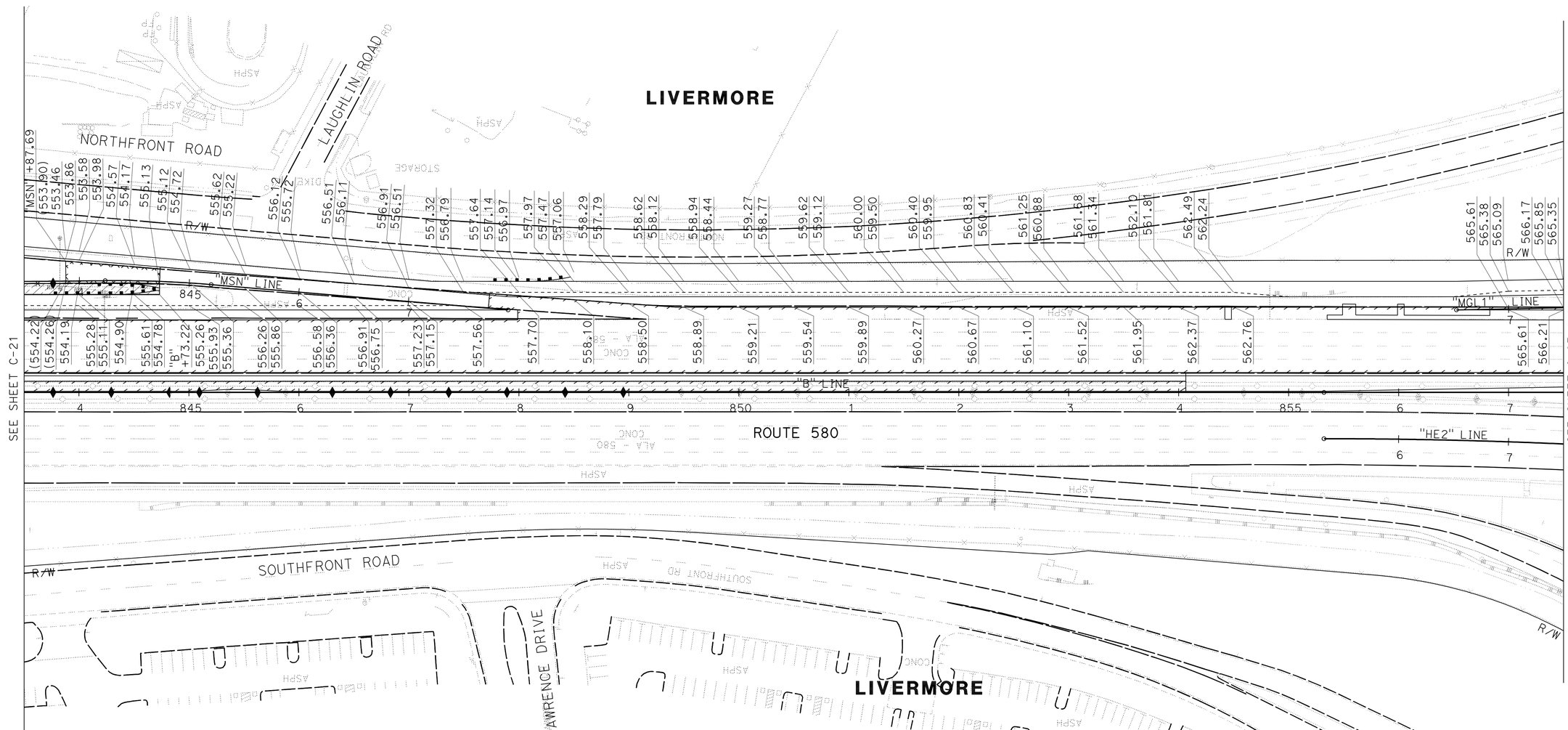

FOR NOTES, ABBREVIATIONS AND LEGEND, SEE SHEET C-1

THIS PLAN ACCURATE FOR PAVEMENT ELEVATION WORK ONLY

CONSTRUCTION DETAILS
PAVEMENT ELEVATIONS PLAN
SCALE: 1" = 50'

C-22

REVISED BY	DATE REVISED
DQN	5/7/12

CALCULATED-DESIGNED BY: DAT Q. NGUYEN
CHECKED BY: LUIS GARCIA
CONSULTANT FUNCTIONAL SUPERVISOR: NATALINA V. BERNARDI

STATE OF CALIFORNIA - DEPARTMENT OF TRANSPORTATION
Caltrans

LAST REVISION 05-07-12 DATE PLOTTED =>23-MAY-2012 TIME PLOTTED =>06:44