Dist	COUNTY	ROUTE	POST MILES TOTAL PROJECT	SHEET No.	TOTAL SHEETS
04	Ala	580	R8.4/R14.6	11	853

REGISTERED CIVIL ENGINEER 5/7/12 DATE

5-14-12
PLANS APPROVAL DATE

REGISTERED PROFESSIONAL ENGINEER N.V. BERNARDI No. 45407 Exp. 9/30/12 CIVIL STATE OF CALIFORNIA

THE STATE OF CALIFORNIA OR ITS OFFICERS OR AGENTS SHALL NOT BE RESPONSIBLE FOR THE ACCURACY OR COMPLETENESS OF SCANNED COPIES OF THIS PLAN SHEET.

BKF ENGINEERS
4670 WILLOW ROAD, SUITE 250
PLEASANTON, CA. 94588

ALAMEDA CTC
1333 BROADWAY SUITE 220
OAKLAND, CA. 94612

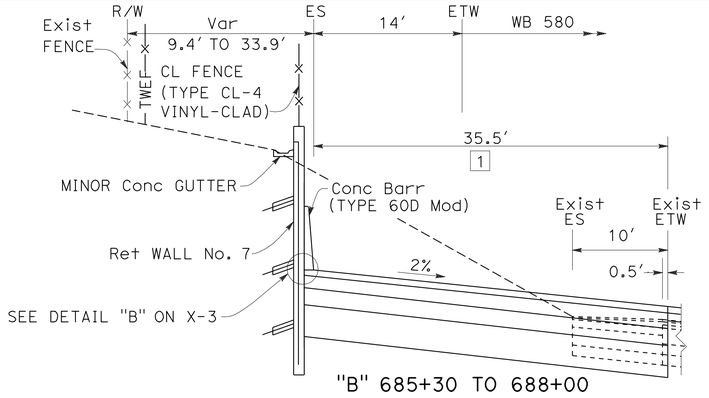

"B" 685+30 TO 688+00

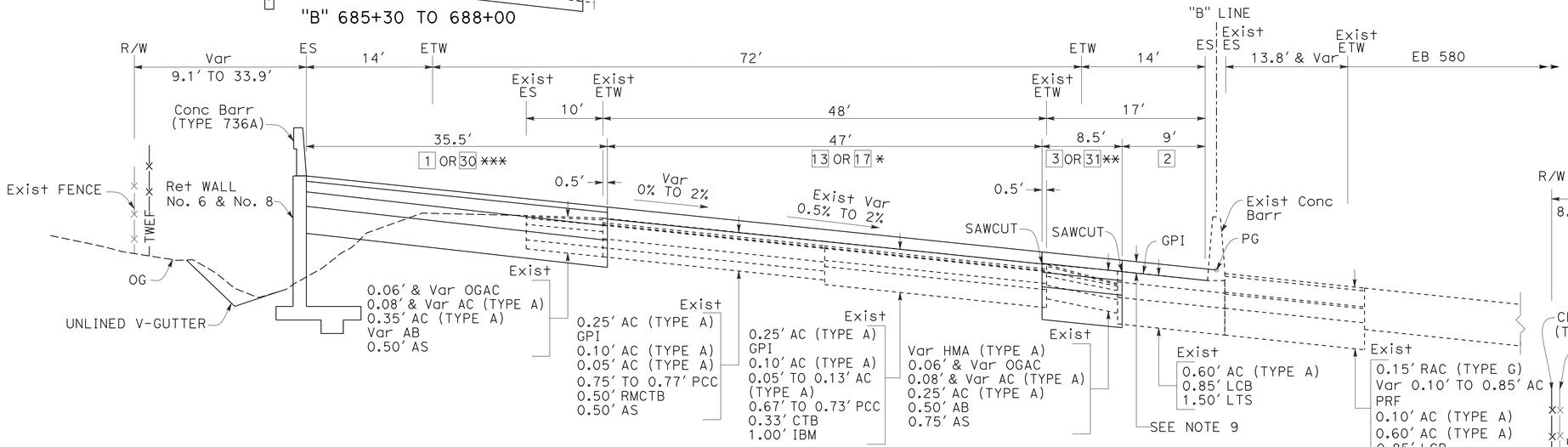

WESTBOUND

EASTBOUND

"B" 677+34.53 TO 692+59.49
31 ** & 17 * "B" 691+00.00 TO 692+59.49
30 *** "B" 691+00.00 TO 692+62.27

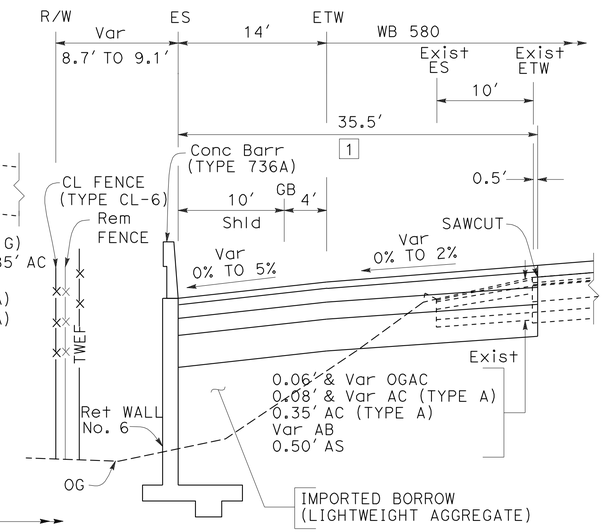

"B" 672+98 TO 674+85
"B" 677+96 TO 681+30
"B" 682+71 TO 683+67

2

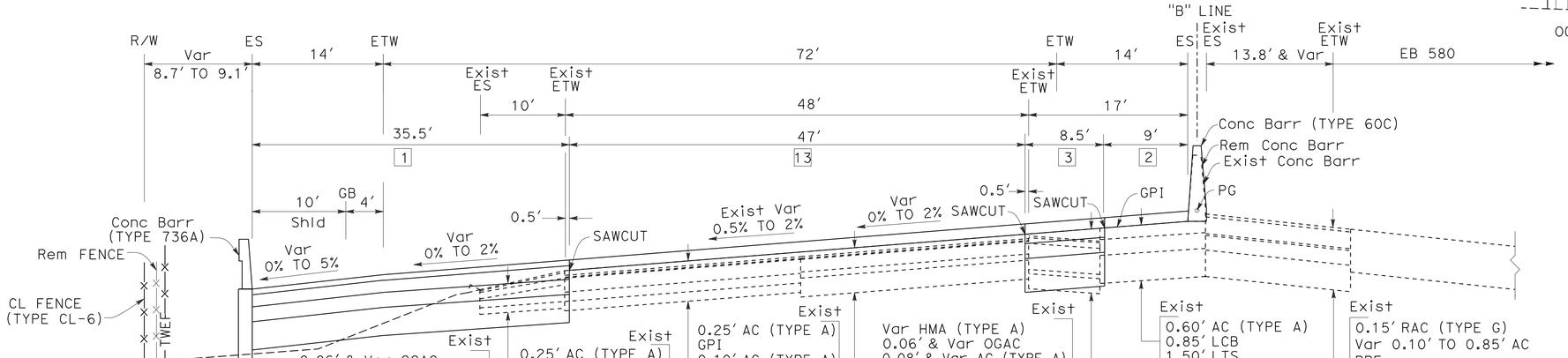

WESTBOUND

"B" 672+50.00 TO 677+34.53

EASTBOUND

FOR NOTES AND ABBREVIATIONS, SEE SHEET X-1

2 REVISED PER ADDENDUM No. 2 DATED SEPTEMBER 7, 2012

ROUTE 580

TYPICAL CROSS SECTIONS

NO SCALE

X-10

STATE OF CALIFORNIA - DEPARTMENT OF TRANSPORTATION

Caltrans

CONSULTANT FUNCTIONAL SUPERVISOR: NATALINA V. BERNARDI

CALCULATED-DESIGNED BY: INNA ASHUROV

CHECKED BY: LUIS GARCIA

REVISED BY: IA

DATE REVISED: 5/7/12

LAST REVISION 05-07-12

DATE PLOTTED => 07-SEP-2012
TIME PLOTTED => 09:28

FOR ACCURATE RIGHT OF WAY DATA, CONTACT
RIGHT OF WAY ENGINEERING AT THE DISTRICT OFFICE.

Dist	COUNTY	ROUTE	POST MILES TOTAL PROJECT	SHEET No.	TOTAL SHEETS
04	Ala	580	R8.4/R14.6	106	853

REGISTERED CIVIL ENGINEER — DATE 1/18/12

5-14-12
PLANS APPROVAL DATE

REGISTERED PROFESSIONAL ENGINEER — N.V. BERNARDI — No. 45407 — Exp. 9/30/12 — CIVIL — STATE OF CALIFORNIA

THE STATE OF CALIFORNIA OR ITS OFFICERS OR AGENTS SHALL NOT BE RESPONSIBLE FOR THE ACCURACY OR COMPLETENESS OF SCANNED COPIES OF THIS PLAN SHEET.

BKF ENGINEERS
4670 WILLOW ROAD, SUITE 250
PLEASANTON, CA. 94588

ALAMEDA CTC
1333 BROADWAY SUITE 220
OAKLAND, CA. 94612

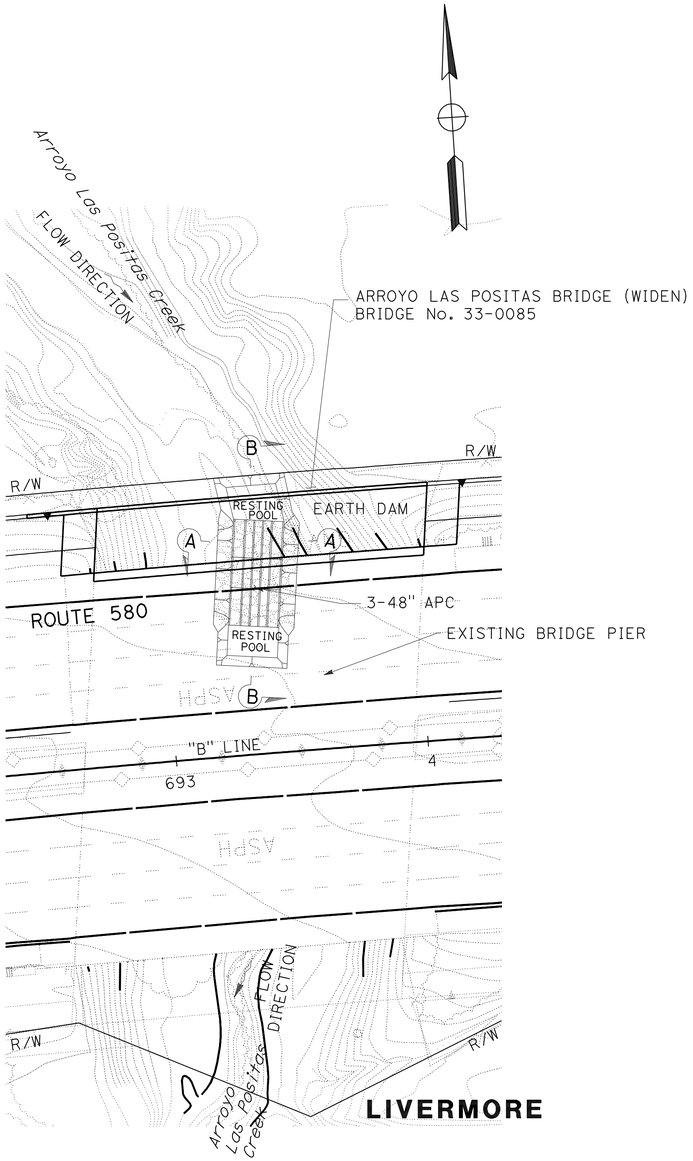

TEMPORARY CREEK DIVERSION SYSTEM
FOR ARROYO LAS POSITAS

NOTE:
NO VEHICLE ACCESS ALLOWED.

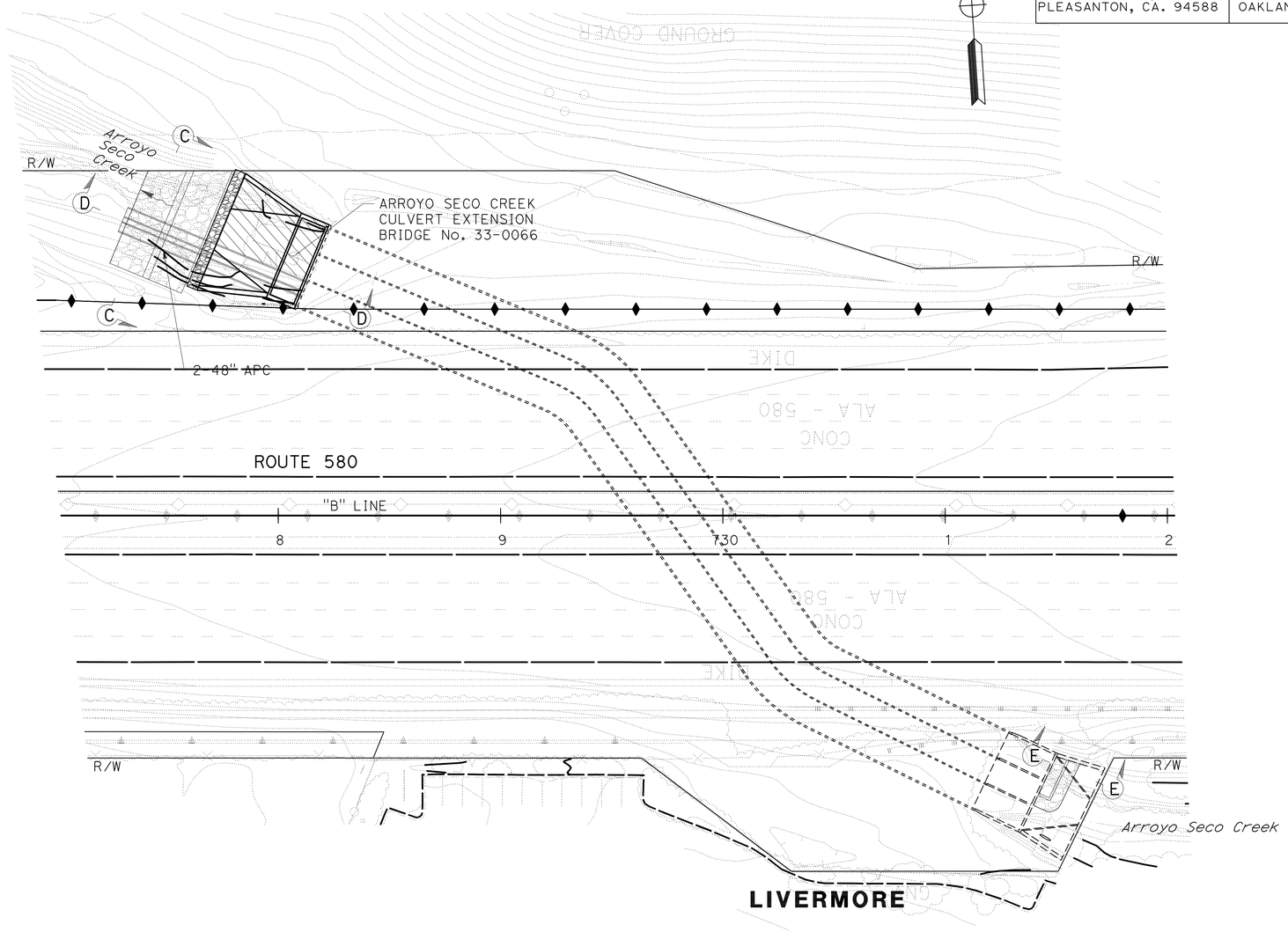

TEMPORARY CREEK DIVERSION SYSTEM - PHASE 1
FOR ARROYO SECO CREEK

LEGEND:
CONSTRUCT THIS PHASE

NOTE:
NO VEHICLE ACCESS ALLOWED.

CONSTRUCTION DETAILS
TEMPORARY CREEK DIVERSION

SCALE: 1" = 30'

C-28

2 REVISED PER ADDENDUM No. 2 DATED SEPTEMBER 7, 2012

DQN	1/18/12
REVISED BY	DATE REVISED
DAT Q. NGUYEN	LUIS GARCIA
CALCULATED-DESIGNED BY	CHECKED BY
CONSULTANT FUNCTIONAL SUPERVISOR	NATALINA V. BERNARDI

STATE OF CALIFORNIA - DEPARTMENT OF TRANSPORTATION
Caltrans

LAST REVISION 01-18-12 | DATE PLOTTED => 07-SEP-2012 | TIME PLOTTED => 10:28

Dist	COUNTY	ROUTE	POST MILES TOTAL PROJECT	SHEET No.	TOTAL SHEETS
04	Ala	580	R8.4/R14.6	141	853

REGISTERED CIVIL ENGINEER 5/7/12 DATE

5-14-12
PLANS APPROVAL DATE

REGISTERED PROFESSIONAL ENGINEER INES S. LI No. C51561 Exp.6/30/12 CIVIL STATE OF CALIFORNIA

THE STATE OF CALIFORNIA OR ITS OFFICERS OR AGENTS SHALL NOT BE RESPONSIBLE FOR THE ACCURACY OR COMPLETENESS OF SCANNED COPIES OF THIS PLAN SHEET.

BIGGS CARDOSA ASSOCIATES INC.
865 THE ALAMEDA
SAN JOSE, CALIFORNIA 95126

ALAMEDA CTC
1333 BROADWAY, SUITE 200
OAKLAND, CA 94612

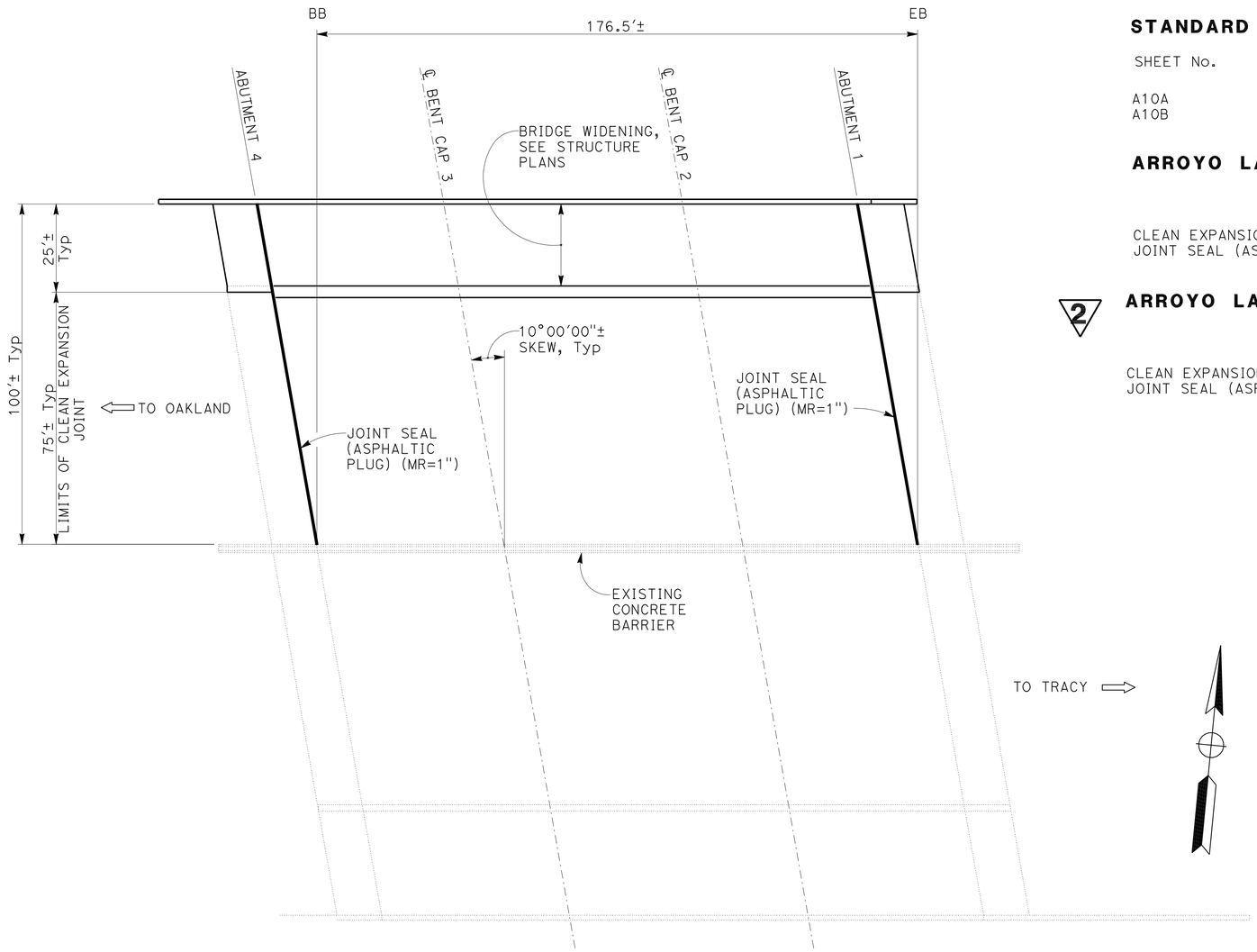

ARROYO LAS POSITAS BRIDGE

BRIDGE No. 33-0203, ROUTE 580, PM 13.13

STANDARD PLANS DATED MAY 2006

SHEET No.	TITLE
A10A	ACRONYMS AND ABBRIEVIATIONS (SHEET 1 OF 2)
A10B	ACRONYMS AND ABBRIEVIATIONS (SHEET 2 OF 2)

ARROYO LAS POSITAS BRIDGE 33-0203

QUANTITIES

CLEAN EXPANSION JOINT	153	LF
JOINT SEAL (ASPHALTIC PLUG)	203	LF

2 ARROYO LAS POSITAS BRIDGE 33-0012

QUANTITIES

CLEAN EXPANSION JOINT	193	LF
JOINT SEAL (ASPHALTIC PLUG)	193	LF

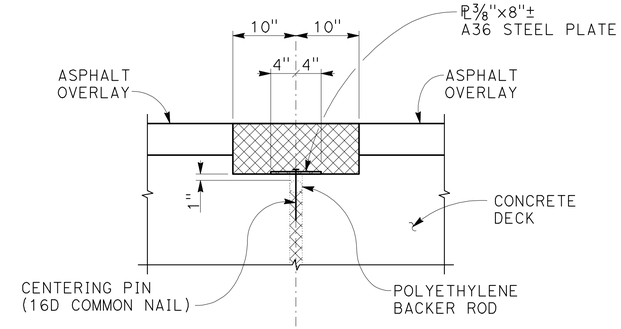

AT BRIDGE WIDENING

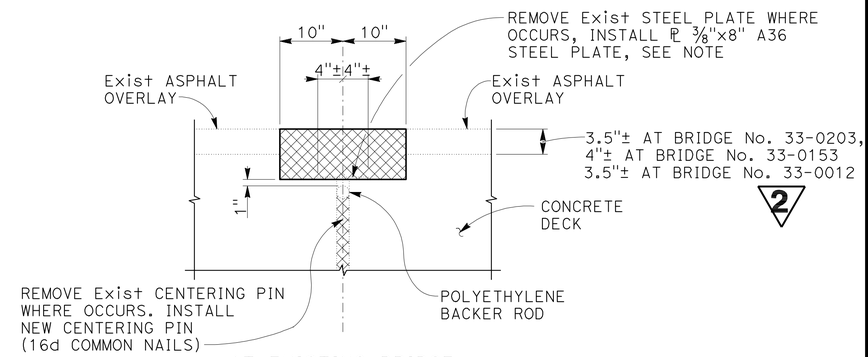

AT EXISTING BRIDGE

NOTE:
UNDAMAGED Exist STEEL PLATES MAY BE SALVAGED AND REUSED IF APPROVED BY THE ENGINEER

ASPHALTIC PLUG DETAIL

2 REVISED PER ADDENDUM No. 2 DATED SEPTEMBER 7, 2012

CONSTRUCTION DETAILS
BRIDGE REHABILITATION

NO SCALE

C-63

REVISED BY	DATE REVISED
RSR	5/7/12

RICARDO RIVAS — INES LI — CALCULATED-DESIGNED BY — CHECKED BY

CONSULTANT FUNCTIONAL SUPERVISOR: ROY M. SCHNABEL

STATE OF CALIFORNIA - DEPARTMENT OF TRANSPORTATION — Caltrans

LAST REVISION 05/07/12 — DATE PLOTTED => 07-SEP-2012 — TIME PLOTTED => 10:04

2007236 (2007236Y063)

FOR ACCURATE RIGHT OF WAY DATA, CONTACT
RIGHT OF WAY ENGINEERING AT THE DISTRICT OFFICE.

Dist	COUNTY	ROUTE	POST MILES TOTAL PROJECT	SHEET No.	TOTAL SHEETS
04	Ala	580	R8.4/R14.6	186A	853

REGISTERED CIVIL ENGINEER — DATE 8/17/12

5-14-12
PLANS APPROVAL DATE

REGISTERED PROFESSIONAL ENGINEER — N.V. BERNARDI — No. 45407 — Exp. 9/30/12 — CIVIL — STATE OF CALIFORNIA

THE STATE OF CALIFORNIA OR ITS OFFICERS OR AGENTS SHALL NOT BE RESPONSIBLE FOR THE ACCURACY OR COMPLETENESS OF SCANNED COPIES OF THIS PLAN SHEET.

BKF ENGINEERS
4670 WILLOW ROAD, SUITE 250
PLEASANTON, CA. 94588

ALAMEDA CTC
1333 BROADWAY SUITE 220
OAKLAND, CA. 94612

2

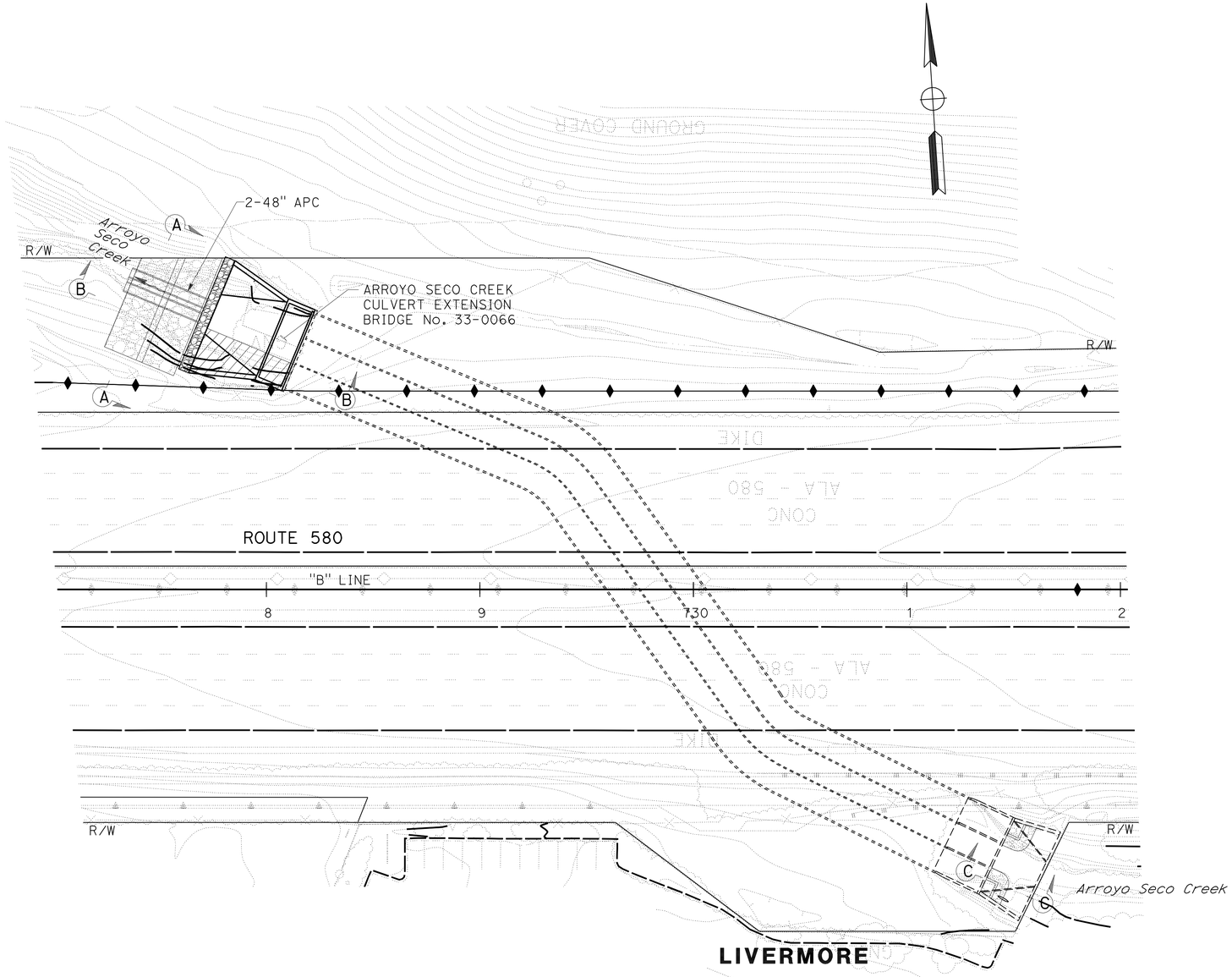

TEMPORARY CREEK DIVERSION SYSTEM - PHASE 2
FOR ARROYO SECO CREEK

LEGEND:

CONSTRUCT THIS PHASE

NOTE:

NO VEHICLE ACCESS ALLOWED.

2 **ADDED PER ADDENDUM No. 2 DATED SEPTEMBER 7, 2012**

CONSTRUCTION DETAILS
TEMPORARY CREEK DIVERSION

SCALE: 1" = 30'

C-28A

DQN	8/17/12
REVISED BY	DATE REVISED
DAT Q. NGUYEN	LUIS GARCIA
CALCULATED-DESIGNED BY	CHECKED BY
CONSULTANT FUNCTIONAL SUPERVISOR	NATALINA V. BERNARDI

STATE OF CALIFORNIA - DEPARTMENT OF TRANSPORTATION

LAST REVISION 08-17-12 | DATE PLOTTED => 07-SEP-2012 | TIME PLOTTED => 11:29

Dist	COUNTY	ROUTE	POST MILES TOTAL PROJECT	SHEET No.	TOTAL SHEETS
04	Ala	580	R8.4/R14.6	186B	853

REGISTERED CIVIL ENGINEER — DATE 8/17/12

5-14-12
PLANS APPROVAL DATE

REGISTERED PROFESSIONAL ENGINEER N.V. BERNARDI No. 45407 Exp. 9/30/12 CIVIL STATE OF CALIFORNIA

THE STATE OF CALIFORNIA OR ITS OFFICERS OR AGENTS SHALL NOT BE RESPONSIBLE FOR THE ACCURACY OR COMPLETENESS OF SCANNED COPIES OF THIS PLAN SHEET.

BKF ENGINEERS
4670 WILLOW ROAD, SUITE 250
PLEASANTON, CA. 94588

ALAMEDA CTC
1333 BROADWAY SUITE 220
OAKLAND, CA. 94612

2

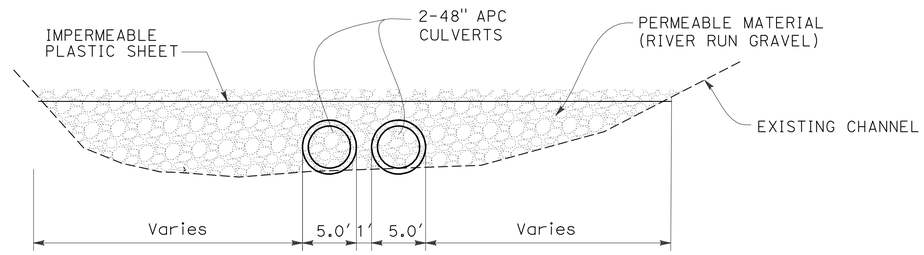

CROSS SECTION A-A

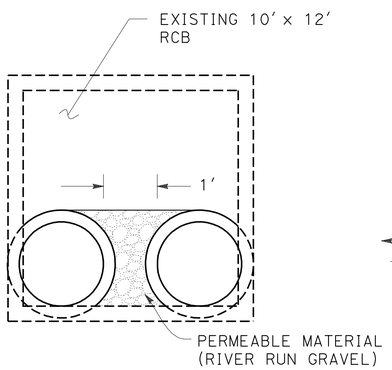

DETAIL A

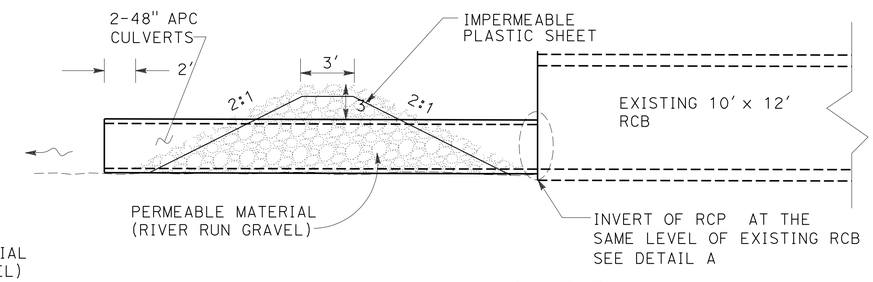

CROSS SECTION B-B

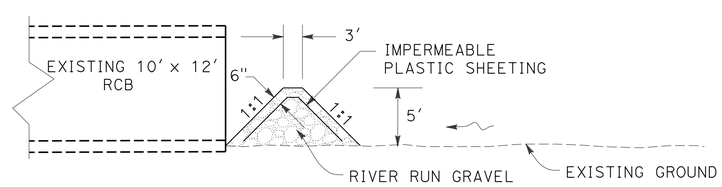

CROSS SECTION C-C

NOTE:
NO VEHICLE ACCESS ALLOWED.

2 **ADDED PER ADDENDUM No. 2 DATED SEPTEMBER 7, 2012**

CONSTRUCTION DETAILS
TEMPORARY CREEK DIVERSION

NO SCALE

C-28B

STATE OF CALIFORNIA - DEPARTMENT OF TRANSPORTATION

CONSULTANT FUNCTIONAL SUPERVISOR: NATALINA V. BERNARDI

CALCULATED-DESIGNED BY: DAT Q. NGUYEN — CHECKED BY: LUIS GARCIA

REVISED BY: DQN — DATE REVISED: 8/17/12

LAST REVISION 08-17-12 — DATE PLOTTED => 07-SEP-2012 — TIME PLOTTED => 11:29

Dist	COUNTY	ROUTE	POST MILES TOTAL PROJECT	SHEET No.	TOTAL SHEETS
04	Ala	580	R8.4/R14.6	509	853

REGISTERED CIVIL ENGINEER 5/7/12 DATE

5-14-12 PLANS APPROVAL DATE

REGISTERED PROFESSIONAL ENGINEER N.V. BERNARDI No. 45407 Exp. 9/30/12 CIVIL STATE OF CALIFORNIA

THE STATE OF CALIFORNIA OR ITS OFFICERS OR AGENTS SHALL NOT BE RESPONSIBLE FOR THE ACCURACY OR COMPLETENESS OF SCANNED COPIES OF THIS PLAN SHEET.

BKF ENGINEERS
4670 WILLOW ROAD, SUITE 250
PLEASANTON, CA. 94588

ALAMEDA CTC
1333 BROADWAY SUITE 220
OAKLAND, CA. 94612

PLACE HOT MIX ASPHALT DIKE

STATION	SIDE	HMA DIKE TYPE C	HMA DIKE TYPE D	HMA DIKE TYPE E	HMA DIKE TYPE F	HMA	RUBBERIZED HMA (GAP GRADED)
		LF	LF	LF	LF	TON	TON
"MIL3" 551+42.90 TO 551+67.90	L+				25	0.5	0.3
"MIL3" 551+67.90 TO 552+30.40	L+	63				0.8	0.6
"MIL3" 552+30.40 TO 561+10.88	L+		880			80.9	
"B" 560+31.79 TO "MIR2"569+14.00	L+			881		32.0	17.6
"B" 568+30.72 TO 569+59.09	L+			129		4.7	2.6
"B" 575+50.00 TO 579+70.00	L+			421		15.3	8.4
"MIR3" 584+74.95 TO 584+99.95	L+				25	0.7	
"MIR3" 584+99.95 TO 585+62.45	L+	63				1.1	
"MIR3" 585+62.45 TO 587+00.02	L+			138		6.5	2.8
"B" 604+50.00 TO 615+65.00	L+		1082			81.8	35.2
"B" 616+50.00 TO 617+39.45	L+		90			639	2.9
"MKR2" 649+00.21 TO 649+25.21	L+				25	0.7	
"MKR2" 649+25.21 TO 649+83.25	L+	63				1.1	
"MKR2" 649+83.25 TO "MK" 23+00.00	L+			301		14.0	6.0
"B" 651+63.80 TO 652+13.80	L+				50	1.0	0.5
"B" 652+13.80 TO 652+30.00	L+	17				0.3	0.2
"MKL1" 652+50.00 TO 653+12.50	R+			63		3.0	
"MKL1" 653+12.50 TO 653+75.00	RT	63				1.1	
"MKL1" 653+75.00 TO 654+00.00	R+				25	0.7	
"B" 654+17.74 TO 655+62.89	L+			146		5.4	2.9
"MKR1" 656+51.21 TO 659+48.00	L+			397		14.5	7.9
"B" 704+50.00 TO 704+75.00	L+				25	0.5	0.3
"B" 704+75.00 TO 705+37.50	L+	63				0.8	0.6
"B" 705+37.50 TO 707+20.00	L+			183		6.7	3.7
"B" 724+15.00 TO 724+40.00	L+				25	0.5	0.3
"B" 724+40.00 TO 725+02.50	L+	63				0.8	0.6
"B" 725+02.50 TO 727+00.00	L+			205		7.4	4.1
"MXR3" 743+75.00 TO 743+00.00	L+				24	0.6	
"MXR3" 743+00.00 TO 743+62.50	L+	58				1.1	
"MXR3" 743+62.50 TO 746+73.52	L+			307		14.2	
"MXR3" 749+60.54 TO 749+97.18	L+			40		1.9	
"MXL1" 754+00.00 TO 755+23.66	R+			118		5.6	
"MXL1" 755+23.66 TO 755+85.80	R+	63				1.1	
"MXL1" 755+85.80 TO 756+10.80	R+				25	0.7	0.3
"B" 782+00.00 TO 782+25.00	L+				25	0.5	0.3
"B" 782+25.00 TO 782+87.50	L+	63				0.8	0.6
"B" 782+87.50 TO 788+00.00	L+			513		18.7	10.2
"B" 793+83.19 TO 801+59.56	L+				777	14.3	7.8
"B" 802+19.68 TO 811+89.68	L+				970	17.9	9.7
"B" 811+89.68 TO 813+39.61	L+	150				2.0	1.5
"MVL1" 800+01.71 TO 801+62.50	L+			162		7.5	
"MVL1" 801+62.50 TO 802+06.52	L+	42				0.8	
"MVL1" 812+70.00 TO 813+88.93	R+		119			11.0	
"B" 821+50.00 TO "MSN" 835+47.69	L+		1399			105.8	45.5
"B" 834+84.18 TO 843+73.22	L+		889			67.2	28.9
"B" 843+73.22 TO 844+35.72	L+				63	1.2	0.6
"B" 844+35.72 TO 844+73.22	L+	38				0.5	0.4
"MGL1" 860+60.00 TO 861+00.00	L+			40		1.5	0.8
"MGL1" 863+00.00 TO 863+27.98	L+				25	0.7	
"MGL1" 863+27.98 TO 863+97.95	L+	63				1.1	
"MGL1" 863+97.95 TO 864+28.00	L+			27		1.3	
"MGR2" 861+00.00 TO 862+25.00	R+			113		5.3	
TOTAL		872	4459	4184	2109	573*	204*

* QUANTITY INCLUDED IN ROADWAY QUANTITIES TABLE.

REMOVE MBGR

STATION	SIDE	LENGTH
		LF
"B" 550+34.91 TO 550+97.94	L+	64
"B" 580+08.01 TO 580+81.20	L+	80
"MR3" 584+74.95 TO 585+49.28	L+	81
"B" 593+26.25 TO 594+03.33	L+	84
"B" 601+71.94 TO 602+44.97	L+	80
"B" 619+62.75 TO 620+25.03	L+	63
"B" 623+15.59 TO 624+42.87	L+	128
"B" 646+63.37 TO 649+48.60	R+	288
"B" 651+33.57 TO 653+70.44	R+	237
"B" 651+58.27 TO 652+22.69	L+	65
"B" 661+97.44 TO 662+74.29	L+	77
"B" 694+16.46 TO 694+79.73	L+	65
"B" 748+00.46 TO 748+17.15	R+	65
"B" 749+18.37 TO 749+77.65	L+	59
"B" 801+48.54 TO 802+50.71	L+	103
"B" 801+49.00 TO 802+50.93	L+	103
"B" 816+92.59 TO 817+68.58	L+	77
"B" 843+65.69 TO 844+35.34	L+	70
"B" 854+77.03 TO 855+52.32	L+	76
"B" 862+46.20 TO 863+58.31	L+	113
"MGR2" 862+57.20 TO 865+47.57	R+	286
TOTAL		2264

REMOVE SINGLE THRIE BEAM BARRIER

STATION	SIDE	LENGTH
		LF
"B" 854+06.51 TO 859+96.19	L+	590
TOTAL		590

TEMPORARY FENCE (WILDLIFE EXCLUSION) 2

STATION	SIDE	LENGTH
		LF
Var	L+	27,200
TOTAL		27,200

CRASH CUSHION (SAND FILLED)

STATION	SIDE	ARRAY B11
		EA
"MXR3" 749+63.87	L+	1
TOTAL		1

REMOVE CONCRETE

STATION	SIDE	TEXTURED PAVING	SWALE	MEDIAN PAVING	CURB RAMP	SIDEWALK	CURB	CURB AND GUTTER
		CY	CY	CY	CY	CY	LF	LF
"B" 556+94.96 TO 559+71.73	L+	61						
"B" 566+87.63 TO 568+80.42	L+	38						
"B" 640+82.30 TO 642+62.22	L+	36						
"MKR2" 649+47.20 TO "MK" 21+37.45	L+							367
"B" 655+15.62 TO 656+63.41	L+	28						
"MXR1" 741+34.18 TO "MXR3" 750+11.23	L+/R+				2	2		
"MXR3" 741+26.72 TO 750+29.70	R+							901
"MXL1" 745+51.28 TO 746+09.18	L+/R+							67
"MVR5" 793+00.98 TO 797+23.19	R+							423
"MVL1" 809+50.01 TO 810+85.22	L+	14						
"MVR5" 812+00.00 TO 814+00.00	R+							200
"B" 821+21.52 TO 823+87.70	L+		15					
"MGR2" 858+26.92 TO 859+72.64	L+/R+						122	41
"MGR2" 862+14.91 TO 862+66.60	L+	12						
"B" 862+41.66 TO "MGL1" 866+28.89	L+/R+							593
"MGL1" 864+51.85 TO 865+74.13	L+							129
"MGL1" 865+50.42 TO 866+20.49	L+			31				198
TOTAL		239					122	2919

2 REVISED PER ADDENDUM No. 2 DATED SEPTEMBER 7, 2012

SUMMARY OF QUANTITIES
Q-6

STATE OF CALIFORNIA - DEPARTMENT OF TRANSPORTATION

CONSULTANT FUNCTIONAL SUPERVISOR: NATALINA V. BERNARDI

CALCULATED-DESIGNED BY: ARMANDO LOERA — CHECKED BY: LUIS GARCIA

REVISED BY: AL — DATE REVISED: 5/7/12

LAST REVISION 05-07-12 — DATE PLOTTED => 07-SEP-2012 — TIME PLOTTED => 10:34

Dist	COUNTY	ROUTE	POST MILES TOTAL PROJECT	SHEET No.	TOTAL SHEETS
04	Ala	580	R8.4/R14.6	511	853

REGISTERED CIVIL ENGINEER 5/7/12 DATE

5-14-12
PLANS APPROVAL DATE

REGISTERED PROFESSIONAL ENGINEER N.V. BERNARDI No. 45407 Exp. 9/30/12 CIVIL STATE OF CALIFORNIA

THE STATE OF CALIFORNIA OR ITS OFFICERS OR AGENTS SHALL NOT BE RESPONSIBLE FOR THE ACCURACY OR COMPLETENESS OF SCANNED COPIES OF THIS PLAN SHEET.

BKF ENGINEERS
4670 WILLOW ROAD, SUITE 250
PLEASANTON, CA. 94588

ALAMEDA CTC
1333 BROADWAY SUITE 220
OAKLAND, CA. 94612

COLD PLANE AC PAVEMENT

STATION	SIDE	AREA
		SQYD
"B" 538+90.00 TO 550+11.23	L+	2255
"MIL3" 558+51.33 TO 561+10.88	L+/R+	776
"MIR2" 568+31.19 TO 569+14.00	L+/R+	325
"B" 580+30.00 TO 581+69.86	L+	166
"B" 583+36.30 TO 587+00.00	L+	440
"B" 585+00.00 TO "B 587+02.87	L+	1771
"MIR3" 584+35.09 TO 585+80.02	L+/R+	516
"B" 615+60.00 TO 617+72.78	L+	212
"B" 619+74.06 TO 621+95.00	L+	221
"B" 633+15.00 TO 645+04.82	L+	1917
"MKR2" 646+21.14 TO 649+44.30	L+/R+	1161
"B" 647+84.00 TO 649+62.39	L+	178
"B" 649+69.19 TO 651+54.05	L+	418
"B" 651+45.84 TO 653+65.00	L+	219
"MKL1" 651+26.44 TO 658+00.50	L+/R+	2402
"MKR1" 655+51.06 TO 656+90.46	L+/R+	534
"B" 658+30.56 TO 662+75.17	L+	1011
"B" 691+00.00 TO 692+59.02	L+	159
"B" 694+07.77 TO 695+15.00	L+	107
"MXR1" 757+50.00 TO "B" 760+50.00	L+/R+	804
"MVR5" 793+83.68 TO 797+23.19	L+	951
"B" 799+00.00 TO 805+00.00	L+	600
"MVR4" 804+74.20 TO 805+58.37	L+/R+	149
"MSN" 843+87.69 TO 844+72.97	L+/R+	156
"MGR2" 858+68.48 TO 859+00.00	R+	119
"MGL1" 862+68.84 TO 866+25.80	L+/R+	851
"B" 868+20.00 TO 869+44.52	L+	134
TOTAL		18552

VEGETATION CONTROL

STATION	SIDE	VEGETATION CONTROL (MINOR CONCRETE)
		SQYD
"B" 551+32.39 TO "MIL3" 552+24.24	L+	49
"MIR3" 584+64.95 TO 585+55.34	L+	48
"B" 593+89.00 TO 594+70.34	L+	45
"B" 601+28.00 TO 602+32.19	L+	54
"MKR2" 649+00.18 TO 649+80.57	L+	58
"B" 651+63.80 TO 652+70.14	L+	55
"MKL1" 653+15.44 TO 654+00.00	R+	58
"B" 688+00.00 TO 688+80.33	L+	32
"B" 704+49.98 TO 705+31.38	L+	45
"B" 724+15.00 TO 724+96.41	L+	45
"MXR3" 742+74.93 TO 743+63.39	L+	45
"B" 745+15.95 to 746+10.00	R+	51
"B" 749+20.00 TO 750+02.17	L+	43
"MXL1" 745+25.85 TO 745+39.99	L+	60
"MKL1" 755+29.84 TO 756+10.79	L+	43
"MVL1" 801+67.46 TO 802+50.00	L+	43
"MVR4" 798+88.38 TO 799+34.98	R+	44
"MVR4" 801+22.11 TO 802+11.87	L+	49
"B" 782+00.00 TO 782+81.34	L+	31
"B" 794+95.81 TO 801+29.56	L+	640
"MVR5" 801+40.14 TO 802+40.27	R+	66
"B" 802+49.68 TO "MVR5" 812+42.95	L+	1014
"B" 815+92.00 TO 816+96.06	L+	54
"B" 847+62.00 TO 848+66.01	L+	54
"MGR2" 858+71.04 TO 859+52.00	R+	44
"MGR2" 859+85.00 TO 862+25.00	R+	83
"MGR2" 864+85.00 TO 865+52.76	R+	26
"B" 863+04.85 TO 863+74.15	L+	46
"MGL1" 862+68.27 TO 863+71.87	R+	55
"MGL1" 863+00.00 TO 863+90.66	L+	45
TOTAL		3025

MAINTENANCE VEHICLE PULLOUT

SHEET No.	No. OF MVP (N)	HMA	CLASS 3 AB	TACK COAT
		TON	CY	TON
L-6	1	32	28	0.03
L-7	1	24	23	0.02
L-9	1	24	23	0.02
L-15	1	24	23	0.02
L-16	1	24	16	0.02
L-17	2	39	34	0.03
L-22	1	25	24	0.02
L-26	2	48	47	0.04
TOTAL	10	*240	*218	*0.20

(N) - NOT A SEPARATE PAY ITEM, FOR INFORMATION ONLY
* QUANTITY INCLUDED IN ROADWAY QUANTITIES TABLE.

SHOULDER BACKING

STATION	SIDE	WEIGHT
		TON
"B" 557+00.00 TO "B" 558+00.00	L+	2
"B" 584+50.00 TO "B" 585+00.00	L+	2
"B" 868+00.00 TO "B" 869+00.00	L+	5
TOTAL		9

2 IMPORT BORROW (LIGHTWEIGHT AGGREGATE)

STATION	
	CY
WESTBOUND	
"B" 672+98 TO 674+85	278
"B" 677+96 TO 681+30	453
"B" 682+71 TO 683+67	116
FROM RETAINING WALL QUANTITIES	1754
TOTAL	2601

PREPARE AND PAINT POST MILE MARKING ON CONCRETE BARRIER

STATION	POST MILE	SIDE	SQYD
"B" 541+88.00	14.6	L+/R+	0.286
"B" 573+56.00	14	L+/R+	0.286
"B" 578+84.00	13.9	L+/R+	0.286
"B" 589+40.00	13.7	L+/R+	0.286
"B" 621+08.00	13.1	L+/R+	0.286
"B" 626+36.00	13	L+/R+	0.286
"B" 631+64.00	12.9	L+/R+	0.286
"B" 636+92.00	12.8	L+/R+	0.286
"B" 642+20.00	12.7	L+/R+	0.286
"B" 647+48.00	12.6	L+/R+	0.286
"B" 652+76.00	12.5	L+/R+	0.286
"B" 658+04.00	12.4	L+/R+	0.286
"B" 663+32.00	12.3	L+/R+	0.286
"B" 668+60.00	12.2	L+/R+	0.286
"B" 673+88.00	12.1	L+/R+	0.286
"B" 731+96.00	11	L+/R+	0.286
"B" 737+24.00	10.9	L+/R+	0.286
"B" 742+52.00	10.8	L+/R+	0.286
"B" 747+80.00	10.7	L+/R+	0.286
"B" 753+08.00	10.6	L+/R+	0.286
"B" 758+36.00	10.5	L+/R+	0.286
"B" 774+20.00	10.2	L+/R+	0.286
"B" 779+48.00	10.1	L+/R+	0.286
"B" 784+76.00	10	L+/R+	0.286
"B" 790+04.00	9.9	L+/R+	0.286
"B" 795+32.00	9.8	L+/R+	0.286
"B" 811+16.00	9.5	L+/R+	0.286
"B" 837+56.00	9	L+/R+	0.286
"B" 842+84.00	8.9	L+/R+	0.286
"B" 848+12.00	8.8	L+/R+	0.286
TOTAL			8.58

SEAL PAVEMENT JOINT

STATION	SEAL ISOLATION JOINT	SEAL PAVEMENT JOINT
	LF	LF
FROM INDIVIDUAL SLAB REPLACEMENT PRECAST CONCRETE PANEL	3552	3732
FROM PRESTRESSED PRECAST CONCRETE PANEL	8727	13166
TOTAL	12279	16898

REMOVE PORTLAND CEMENT CONCRETE PAVEMENT

STATION	AREA
	SQYD
MSN 844+73.05 TO 847+73.00 L+	410

REMOVE CONCRETE BARRIER

STATION	SIDE	LENGTH
		LF
"B" 538+90.00 TO 544+12.00	L+/R+	522
"B" 540+00.37 TO 540+39.84	L+	40
"B" 573+30.00 TO 580+00.00	L+/R+	670
"B" 587+35.00 TO 591+86.00	L+/R+	451
"B" 588+66.97 TO 593+26.25	L+	480
"B" 600+06.02 TO 602+85.00	L+/R+	279
"B" 619+62.35 TO 649+73.91	L+/R+	3012
"B" 651+32.91 TO 674+35.00	L+/R+	2302
"B" 731+64.00 TO 762+53.00	L+/R+	3089
"MXL1" 755+37.62 TO 756+10.80	R+	74
"B" 772+29.00 TO 797+90.00	L+/R+	2561
"B" 809+78.00 TO 813+24.00	L+/R+	346
"B" 835+32.00 TO 849+41.00	L+/R+	1409
TOTAL		15235

2 REVISED PER ADDENDUM No. 2 DATED SEPTEMBER 7, 2012

SUMMARY OF QUANTITIES
Q-8

REVISED BY	AL
DATE REVISED	5/7/12
CALCULATED-DESIGNED BY	ARMANDO LOERA
CHECKED BY	LUIS GARCIA
CONSULTANT FUNCTIONAL SUPERVISOR	NATALINA V. BERNARDI

STATE OF CALIFORNIA - DEPARTMENT OF TRANSPORTATION

Caltrans

LAST REVISION 05-07-12 | DATE PLOTTED => 07-SEP-2012 | TIME PLOTTED => 10:00

Dist	COUNTY	ROUTE	POST MILES TOTAL PROJECT	SHEET No.	TOTAL SHEETS
04	Ala	580	R8.4/R14.6	513	853

REGISTERED CIVIL ENGINEER 5/7/12 DATE

5-14-12
PLANS APPROVAL DATE

REGISTERED PROFESSIONAL ENGINEER N.V. BERNARDI No. 45407 Exp. 9/30/12 CIVIL STATE OF CALIFORNIA

THE STATE OF CALIFORNIA OR ITS OFFICERS OR AGENTS SHALL NOT BE RESPONSIBLE FOR THE ACCURACY OR COMPLETENESS OF SCANNED COPIES OF THIS PLAN SHEET.

BKF ENGINEERS
4670 WILLOW ROAD, SUITE 250
PLEASANTON, CA. 94588

ALAMEDA CTC
1333 BROADWAY SUITE 220
OAKLAND, CA. 94612

INDIVIDUAL SLAB REPLACEMENT PRECAST CONCRETE PANEL

STATION	SIDE	LANE 1 SLAB (N)	LANE 2 SLAB (N)	LANE 3 SLAB (N)	LANE 4 SLAB (N)	WIDTH (N)	INDIVIDUAL SLAB REPLACEMENT PRECAST CONCRETE PANEL	LEAN CONCRETE BASE RAPID SETTING	SEAL ISOLATION JOINT	SEAL PAVEMENT JOINT	REMOVE PCC PAVEMENT (PCP)
						LF	CY	CY	LF	LF	SQYD
"B" 647+84.00 TO 649+71.10	L+	23	23	24	24	12	254	141	1136	1176	957
"B" 691+00.00 TO 692+62.27	L+	21	21	21	21	12	226	125	1008	1056	850
"B" 694+09.76 TO 695+15.00	L+	14	13	13	13	12	142	80	640	684	548
"B" 868+20.00 TO 869+44.52	L+	16	16	16	16	12	172	157	768	816	644
TOTAL		76	73	74	74		797*	443*	3552**	3732**	2999

(N) - NOT A SEPARATE PAY ITEM, FOR INFORMATION ONLY
* QUANTITY INCLUDED IN ROADWAY QUANTITIES TABLE.
* * QUANTITY INCLUDED IN TABLE ON Q-8.

REPLACE AC SURFACING

STATION	SIDE	LANE No.	LENGTH (N)	WIDTH (N)	DEPTH (N)	REPLACE AC SURFACING
			LF	LF	LF	CY
"B" 815+56.37 TO 815+74.99	L+	5	19	12	0.33	3
"B" 816+30.34 TO 818+29.99	L+	5	388	4	0.33	19
"B" 816+40.46 TO 816+80.31	L+	5	40	5	0.33	3
"B" 817+55.99 TO 817+75.62	L+	5	20	8	0.33	2
"B" 818+38.99 TO 818+50.99	L+	5	12	10	0.33	2
"B" 819+77.49 TO 820+02.49	L+	5	25	12	0.33	4
"B" 820+43.99 TO 820+67.50	L+	5	24	6	0.33	2
"B" 820+67.50 TO 820+92.49	L+	5	25	12	0.33	4
"B" 822+05.99 TO 822+54.99	L+	5	50	6	0.33	4
"B" 822+95.99 TO 823+03.99	L+	5	8	4	0.33	1
"B" 824+34.99 TO 825+24.99	L+	5	90	4	0.33	5
"B" 825+86.99 TO 825+92.99	L+	5	6	5	0.33	1
"B" 826+57.99 TO 826+61.99	L+	5	4	4	0.33	1
"B" 827+57.98 TO 828+51.49	L+	5	94	4	0.33	5
"B" 829+84.99 TO 830+94.99	L+	5	110	12	0.33	17
"B" 829+84.99 TO 831+75.99	L+	5	192	5	0.33	12
"B" 832+35.99 TO 832+82.99	L+	5	47	6	0.33	4
"B" 833+49.91 TO 834+25.99	L+	5	76	6	0.33	6
"B" 833+89.99 TO 834+25.99	L+	5	36	20	0.33	9
"B" 854+41.99 TO 854+47.99	L+	5	6	12	0.33	1
"B" 855+34.98 TO 858+29.99	L+	5	295	4	0.33	15
"B" 855+48.99 TO 855+60.99	L+	5	12	10	0.33	2
"B" 855+98.99 TO 856+04.99	L+	5	6	10	0.33	1
"B" 856+82.99 TO 857+52.99	L+	5	70	8	0.33	7
"B" 858+47.99 TO 858+69.99	L+	5	22	6	0.33	2
"B" 858+97.02 TO 859+03.02	L+	5	6	12	0.33	1
"B" 859+85.22 TO 860+16.05	L+	5	32	5	0.33	2
"B" 860+88.06 TO 860+91.99	L+	5	4	15	0.33	1
TOTAL						136

METAL BEAM GUARD RAILING

STATION	SIDE	LAYOUT (N)	MBGR (WOOD POST)	END ANCHOR ASSEMBLY (TYPE SFT)	ALTERNATIVE FLARED TERMINAL SYSTEM	ALTERNATIVE IN-LINE TERMINAL SYSTEM	TRANSITION RAILING (TYPE WB)	END CAP (TYPE A) (N)
			LF	EA	EA	EA	EA	EA
"MIL3" 551+42.90 TO 551+67.90	L+	12B			1		1	1
"MIR3" 584+74.95 TO 584+99.95	L+	12B			1		1	1
"B" 593+89.00 TO 594+14.00	L+	12B			1		1	1
"B" 601+38.00 TO 601+75.50	L+	16B	37.5	1	1			
"MKR2" 649+00.21 TO 649+25.21	L+	12B			1		1	1
"B" 651+63.80 TO 652+13.80	L+	12B	25		1		1	1
"MKL1" 653+75.00 TO 654+00.00	R+	12B			1		1	1
"B" 688+00.00 TO 688+25.00	L+	12B				1	1	1
"B" 704+50.00 TO 704+75.00	L+	12B			1		1	1
"B" 724+15.00 TO 724+40.00	L+	12B			1		1	1
"MXR3" 742+75.00 TO 743+00.00	L+	12B			1		1	1
"B" 745+72.50 TO 746+10.00	R+	16B	13		1		1	
"B" 749+20.00 TO 749+45.00	L+	12B			1		1	1
"MXL1" 745+25.85 TO 745+29.98	L+	12B			1		1	1
"MXL1" 755+85.80 TO 756+10.80	R+	12B			1		1	1
"B" 782+00.00 TO 782+25.00	L+	12A				1	1	1
"MVR4" 799+34.98 TO 801+54.98	R+	11B	225	1	1			
"MVR4" 799+17.23 TO 799+34.98	R+	12B			1		1	1
"MVL1" 802+25.00 TO 802+50.00	L+	12B			1		1	1
"B" 816+02.00 TO 816+39.50	L+	16B	37.5	1	1			
"B" 843+73.22 TO 844+35.72	L+	16B	62.5	1	1			
"MSN" 844+10.36 TO 844+35.39	L+	12B			1		1	1
"B" 847+72.00 TO 848+09.50	L+	16B	37.5	1	1			
"MGL1" 863+00.00 TO 863+27.98	L+	12B			1		1	1
"MGL1" 862+78.91 TO 863+15.91	R+	11B	37.5	1	1			
"B" 863+04.85 TO 863+29.42	L+	12B			1		1	1
"MGR2" 859+27.48 TO 859+52.00	R+	12B			1		1	1
"MGR2" 859+85.00 TO 861+25.00	R+	12D	215				1	1
"MGR2" 864+84.85 TO 865+47.57	R+	12D	37.5				1	1
TOTAL			728	6*	25	2	24	23

(N) - NOT A SEPARATE PAY ITEM, FOR INFORMATION ONLY
* ADDITIONAL QUANTITY ALSO INCLUDED IN SINGLE THRIE BEAM BARRIER TABLE.

BRIDGE REHABILITATION

BRIDGE NAME	BRIDGE NUMBER	REMOVE UNSOUND CONCRETE	RAPID SETTING CONCRETE (PATCH)	PAINT BRIDGE IDENTIFICATION	INJECT CRACK (EPOXY)	CORE CONCRETE (1")	MISC METAL (BRIDGE)	CLEAN EXPANSION JOINT	JOINT SEAL (ASPHALTIC PLUG)
		CF	CF	LS	LF	LF	LB	LF	LF
VASCO Rd OC	33-0400	-	-	1	-	-	-	-	-
FIRST St OC	33-0389	5.0	5.0	-	-	-	-	-	-
ARROYO SECO CULVERT	33-0066	-	-	-	100	-	-	-	-
NORTH LIVERMORE UC	33-0153	-	-	-	-	34	2635	152	179
ARROYO LAS POSITAS	33-0012	-	-	-	-	-	-	193	193
ARROYO LAS POSITAS	33-0203	-	-	-	-	-	-	153	203
TOTAL		5.0	5.0	1	100	34	2635	~~305~~ 498	~~382~~ 575

2 2

2 REVISED PER ADDENDUM No. 2 DATED SEPTEMBER 7, 2012

SUMMARY OF QUANTITIES
Q-10

STATE OF CALIFORNIA - DEPARTMENT OF TRANSPORTATION
Caltrans

CONSULTANT FUNCTIONAL SUPERVISOR: NATALINA V. BERNARDI
CALCULATED-DESIGNED BY: ARMANDO LOERA
CHECKED BY: LUIS GARCIA
REVISED BY: AL
DATE REVISED: 5/7/12

LAST REVISION 05-07-12 DATE PLOTTED => 07-SEP-2012 TIME PLOTTED => 10:00

FOR ACCURATE RIGHT OF WAY DATA, CONTACT
RIGHT OF WAY ENGINEERING AT THE DISTRICT OFFICE

Dist	COUNTY	ROUTE	POST MILES TOTAL PROJECT	SHEET No.	TOTAL SHEETS
04	Ala	580	R8.4/R14.6	521	853

REGISTERED CIVIL ENGINEER 01/18/12 DATE

5-14-12
PLANS APPROVAL DATE

REGISTERED PROFESSIONAL ENGINEER INES S. LI No. C51561 Exp.6/30/12 CIVIL STATE OF CALIFORNIA

THE STATE OF CALIFORNIA OR ITS OFFICERS OR AGENTS SHALL NOT BE RESPONSIBLE FOR THE ACCURACY OR COMPLETENESS OF SCANNED COPIES OF THIS PLAN SHEET.

BIGGS CARDOSA ASSOCIATES INC.
865 THE ALAMEDA
SAN JOSE, CA 95126

ALAMEDA CTC
1333 BROADWAY, SUITE 220
OAKLAND, CA 94612

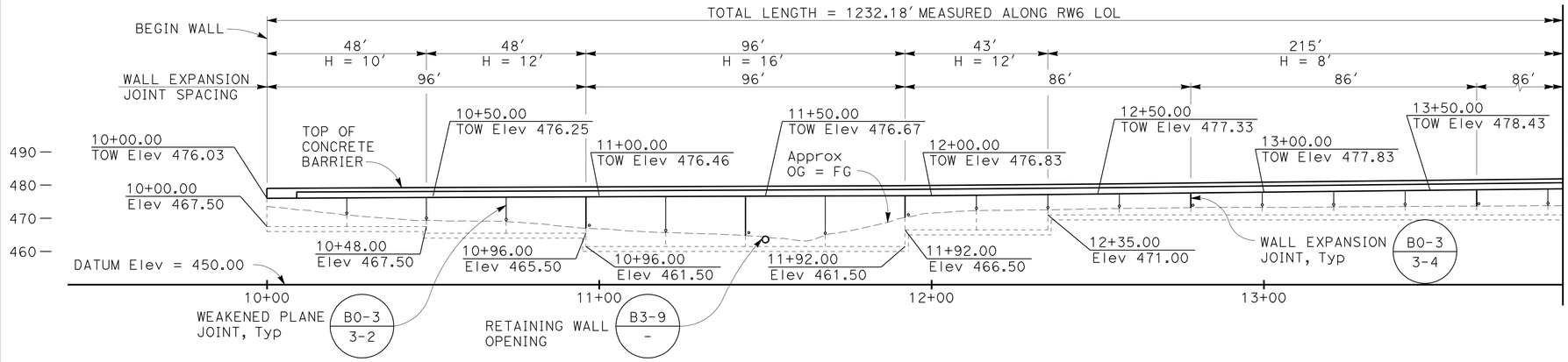

DEVELOPED MIRRORED ELEVATION

SCALE: 1" = 20'

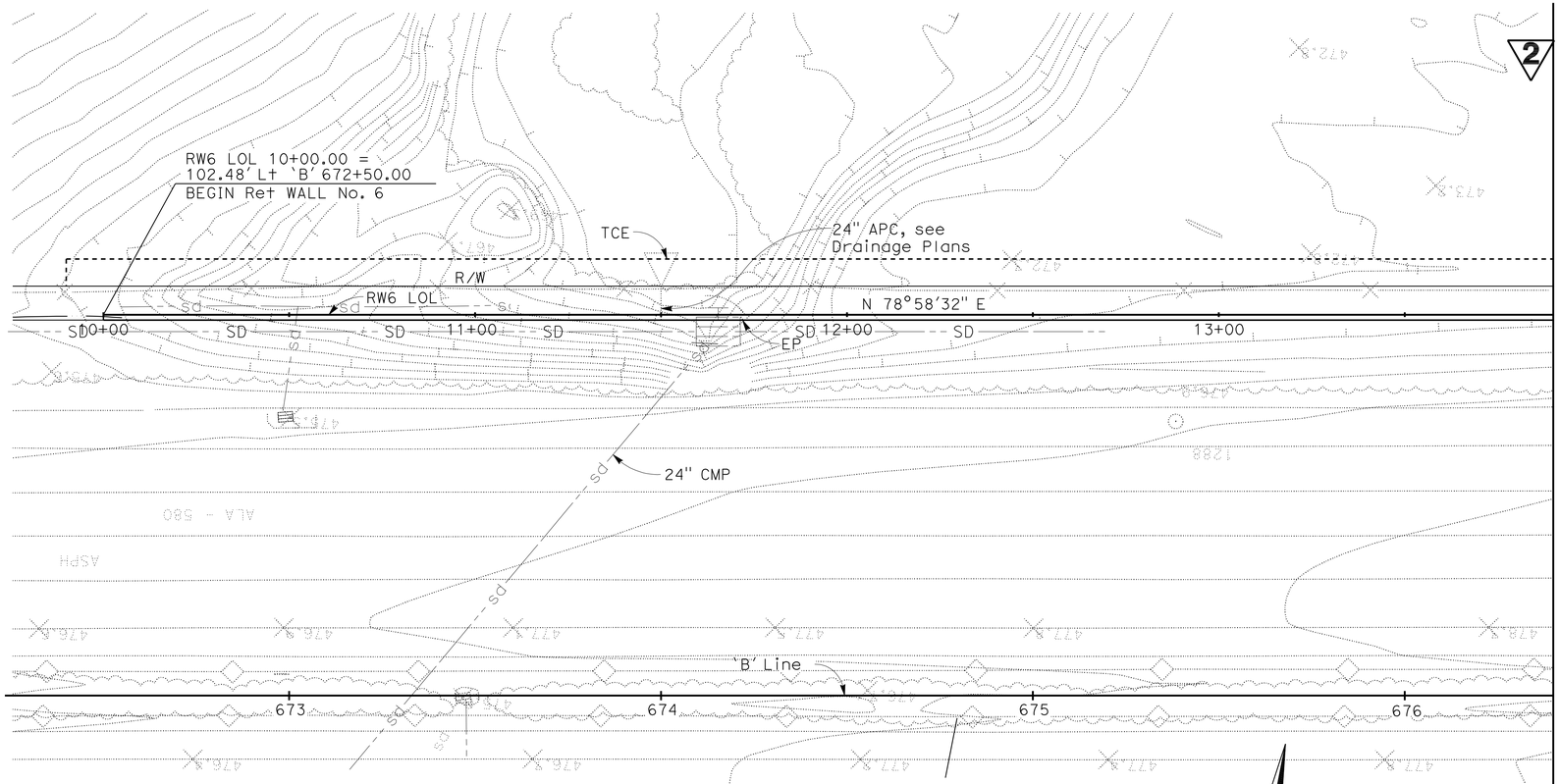

PLAN

SCALE: 1" = 20'

NOTES:

1. TOP OF WALL PROFILES ARE LINEAR BETWEEN POINTS SHOWN UNLESS NOTED OTHERWISE
2. TOP OF FOOTING IS LEVEL, Typ
3. FOR FOOTING STEP DETAIL, SEE B3-8 / -
4. FOR UTILITIES NOT SHOWN, SEE UTILITY PLANS
5. REMOVE 2' OF SOIL BELOW BOTTOM OF FOOTING AND REPLACE WITH CLASS 2 AGGREGATE BASE FOR H = 8' AND H = 18'
6. REMOVE 3' OF SOIL BELOW BOTTOM OF FOOTING AND REPLACE WITH CLASS 2 AGGREGATE BASE FOR ~~AND~~ H = 10' 2
7. BACKFILL BEHIND WALL FROM H=12' TO H=18' SHALL BE LIGHTWEIGHT FILL.

CURVE DATA ALONG RW6 LOL				
CURVE	RADIUS	LENGTH	TANGENT	DELTA
6	8102.48	567.65	283.94	04°00'51"

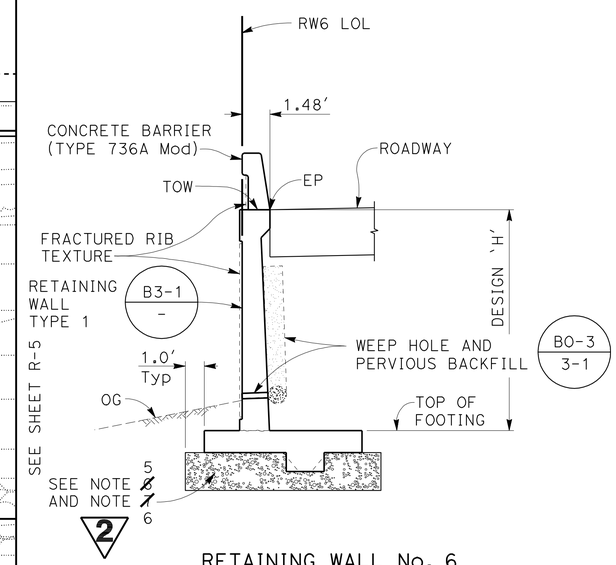

RETAINING WALL No. 6

TYPICAL SECTION

NO SCALE

2 **REVISED PER ADDENDUM No. 2 DATED SEPTEMBER 7, 2012**

THIS PLAN ACCURATE FOR RETAINING WALL WORK ONLY

RETAINING WALL No. 6 GENERAL PLAN No. 1

SCALE AS SHOWN

R-4

REVISED BY	DATE REVISED
RSR	01/18/12
RSR	11/18/11

HATEM BEDAIR — INES LI
CALCULATED-DESIGNED BY — CHECKED BY
CONSULTANT FUNCTIONAL SUPERVISOR — ROY M. SCHNABEL
STATE OF CALIFORNIA - DEPARTMENT OF TRANSPORTATION — Caltrans

LAST REVISION 01/18/12 — DATE PLOTTED => 07-SEP-2012 TIME PLOTTED => 10:55 — 2007236 (2007236:C4)

Dist	COUNTY	ROUTE	POST MILES TOTAL PROJECT	SHEET No.	TOTAL SHEETS
04	Ala	580	R8.4/R14.6	534	853

REGISTERED CIVIL ENGINEER 1/18/12 DATE

5-14-12
PLANS APPROVAL DATE

REGISTERED PROFESSIONAL ENGINEER INES S. LI No. C51561 Exp.6/30/12 CIVIL STATE OF CALIFORNIA

THE STATE OF CALIFORNIA OR ITS OFFICERS OR AGENTS SHALL NOT BE RESPONSIBLE FOR THE ACCURACY OR COMPLETENESS OF SCANNED COPIES OF THIS PLAN SHEET.

BIGGS CARDOSA ASSOCIATES INC.
865 THE ALAMEDA
SAN JOSE, CA 95126

ALAMEDA CTC
1333 BROADWAY, SUITE 220
OAKLAND, CA 94612

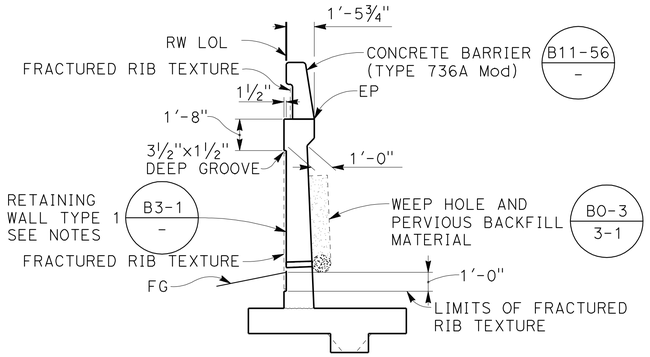

NOTES:

1. TYPE 1 RETAINING WALL SHOWN, TYPE 5 RETAINING WALL SIMILAR
2. FOR TYPE 5 RETAINING WALL DETAILS, SEE B3-7 / -

TYPICAL SECTION

2 REVISED PER ADDENDUM No. 2 DATED SEPTEMBER 7, 2012

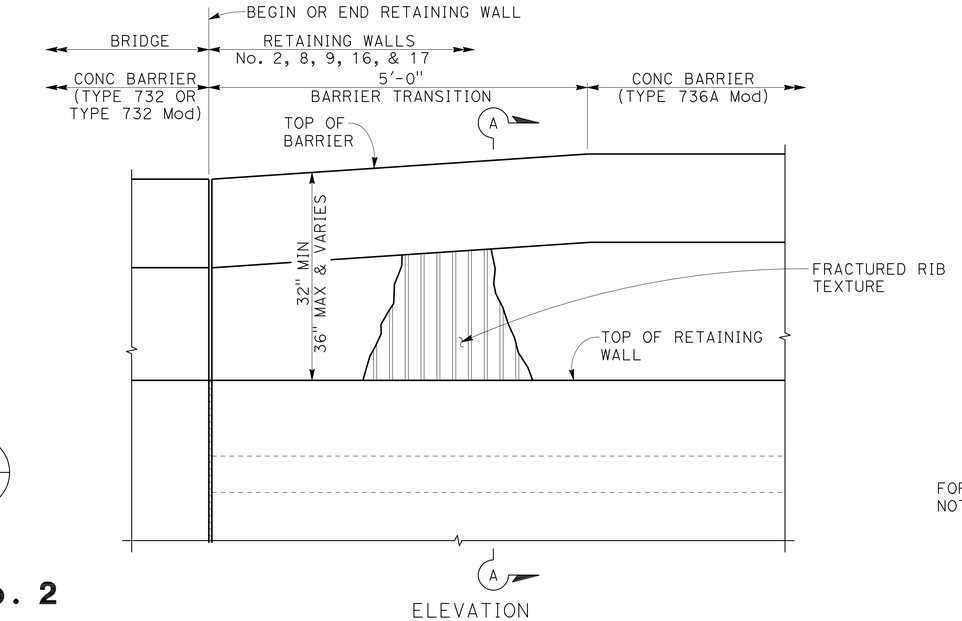

ELEVATION

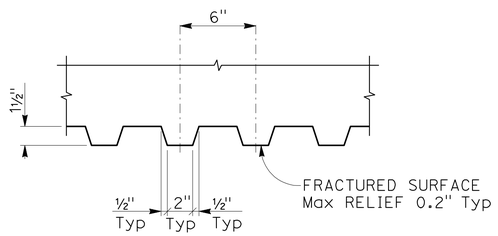

FRACTURED RIB TEXTURE DETAIL

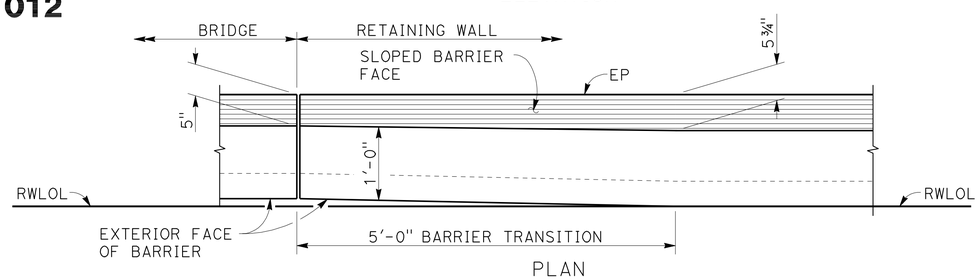

PLAN

TRANSITION BARRIER TYPE 732 OR TYPE 732 (MOD) TO TYPE 736A

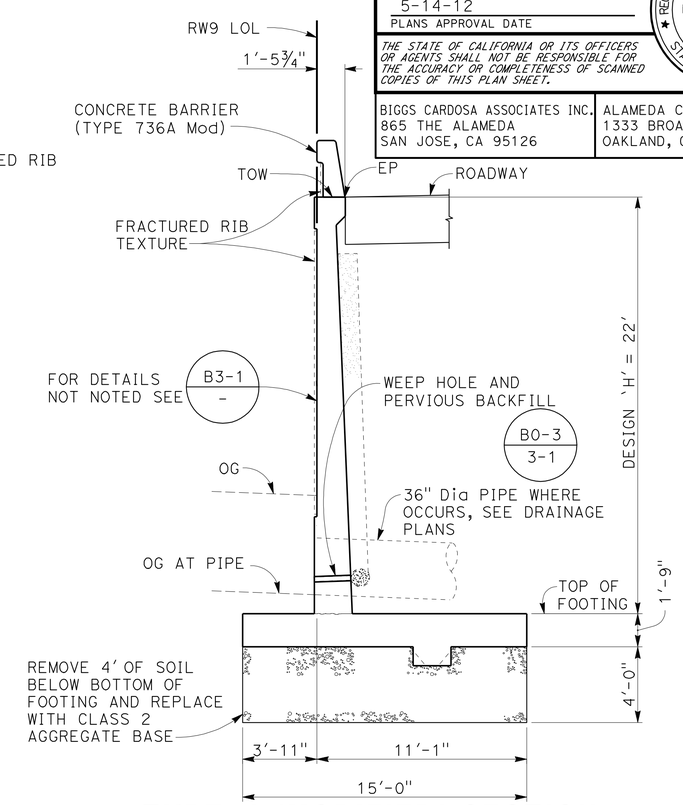

TYPE 1 (MODIFIED) SECTION AT RETAINING WALL No. 9 (H=22')

RETAINING WALL QUANTITIES

RW NO	RW TYPE	STRUCTURE EXCAVATION (RETAINING WALL)	STRUCTURE BACKFILL (RETAINING WALL)	PERVIOUS BACKFILL MATERIAL (RETAINING WALL)		STRUCTURAL CONCRETE (RETAINING WALL)	FRACTURED RIB TEXTURE	BAR REINFORCING STEEL (RETAINING WALL)	CONCRETE BARRIER (TYPE 736A Mod)
					IMPORTED BORROW (LIGHTWEIGHT AGGREGATE)				
		CY	CY	CY	CY	CY	SQ FT	LB	LF
1	1	812	908	93	—	357	4389	36,936	481
2	1	688	835	107	—	327	3116	47,046	232
6	1	2741	1232	236	1754	1132	12,513	129,371	1233
8	1	193	143	13	—	110	1460	8285	227
9	1 & 1 (MOD)	1639	2262	229	—	876	10,304	105,602	871
12	5	373	345	29	—	221	2810	19,246	420
13	1	495	407	43	—	266	3215	21,946	401
15	5	210	141	2	—	75	724	5622	154
16	5	455	412	25	—	229	2699	18,687	413
17	5	411	468	42	—	158	2053	13,201	295
18	5	473	368	17	—	201	2036	16,892	299
19	5	417	490	32	—	221	1964	25,095	243
TOTAL		8907	8011	868	1754	4173	47,283	447,929	5269

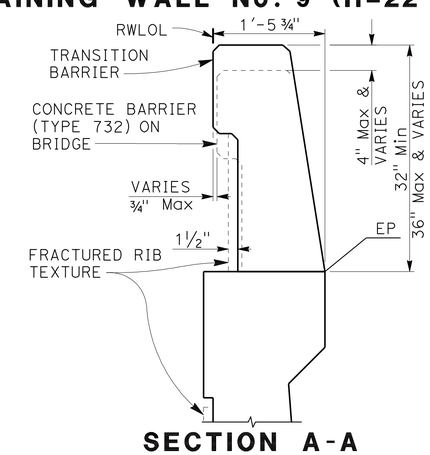

SECTION A-A

RETAINING WALL DETAILS

NO SCALE

R-17

STATE OF CALIFORNIA - DEPARTMENT OF TRANSPORTATION
Caltrans
CONSULTANT FUNCTIONAL SUPERVISOR ROY M. SCHNABEL
CALCULATED-DESIGNED BY HATEM BEDAIR CHECKED BY INES LI
REVISED BY RSR DATE REVISED 1/18/12
REVISED BY RSR DATE REVISED 11/18/11

2007236 (2007236JC17)

LAST REVISION 01/18/12 DATE PLOTTED => 07-SEP-2012 TIME PLOTTED => 11:19