FOR ACCURATE RIGHT OF WAY DATA, CONTACT
RIGHT OF WAY ENGINEERING AT THE DISTRICT OFFICE.

CURVE DATA

No.	R	Δ	T	L	N-COORDINATE	E-COORDINATE
5	2000.00′	25°51′36"	459.16′	902.69′	1839060.4774	6510848.6661
13	2010.00′	15°52′47"	280.34′	557.08′	1839070.1682	6510845.1362
35	1532.00′	25°40′05"	349.02′	686.32′	1838538.6554	6510815.8696
36	1957.50′	25°51′36"	449.41′	883.50′	1839059.7897	6510844.1327

Dist	COUNTY	ROUTE	POST MILES TOTAL PROJECT	SHEET No.	TOTAL SHEETS
04	Nap,Sol	12	2.8/3.3, 0.0/2.6	27	617

REGISTERED CIVIL ENGINEER — DATE 04/15/10

11-22-10
PLANS APPROVAL DATE

REGISTERED PROFESSIONAL ENGINEER — RICHARD K. TANAKA — No. 23233 — Exp. 12/31/11 — CIVIL — STATE OF CALIFORNIA

THE STATE OF CALIFORNIA OR ITS OFFICERS OR AGENTS SHALL NOT BE RESPONSIBLE FOR THE ACCURACY OR COMPLETENESS OF SCANNED COPIES OF THIS PLAN SHEET.

MARK THOMAS & COMPANY, INC.
1960 ZANKER ROAD
SAN JOSE, CA 95112

SOLANO TRANSPORTATION AUTHORITY
ONE HARBOR CENTER, SUITE 130
SUISUN CITY, CA 94585

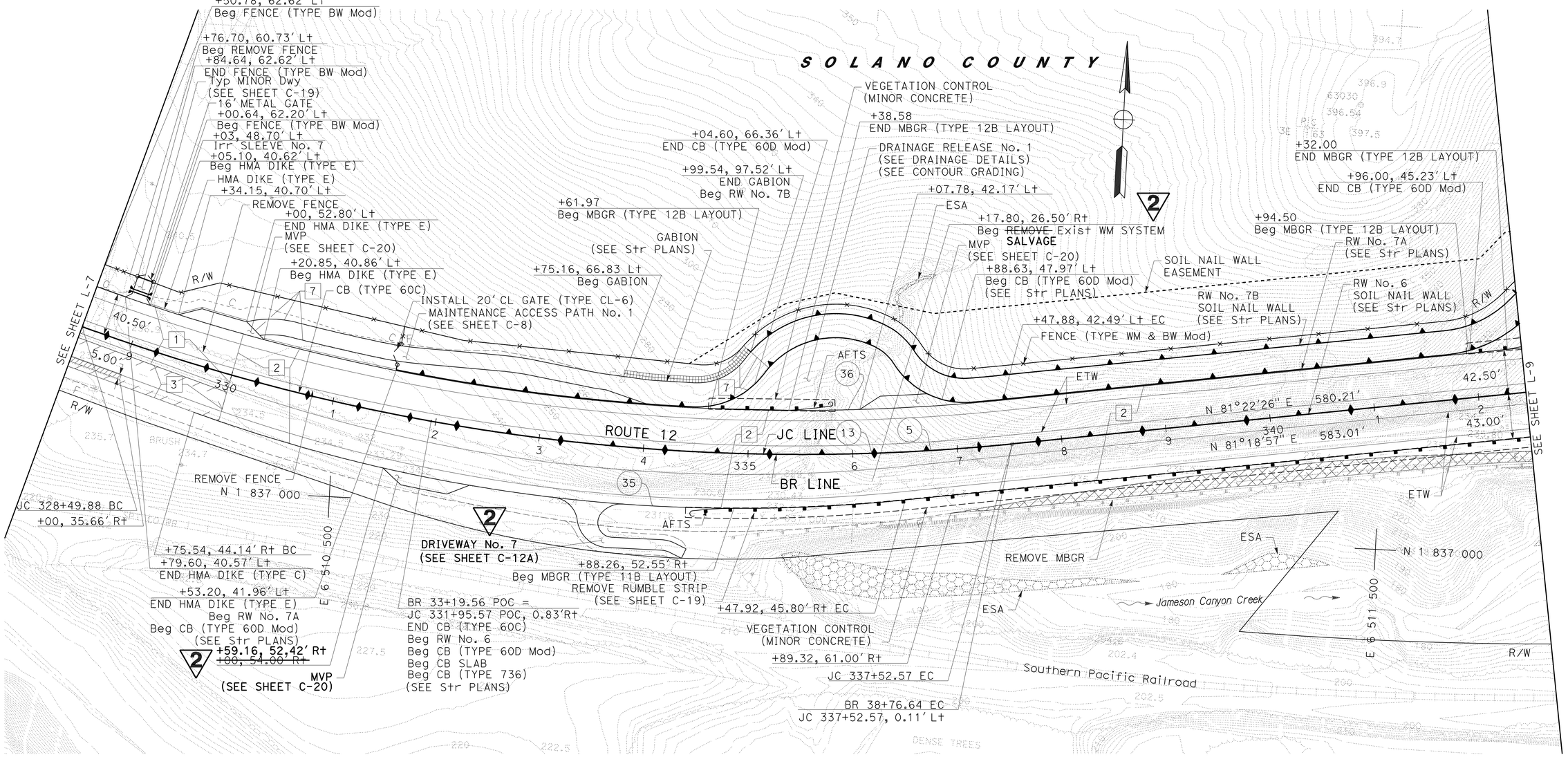

2 REVISED PER ADDENDUM No. 2 DATED NOVEMBER 28, 2011

FOR NOTES, ABBREVIATIONS AND LEGEND, SEE SHEET L-1

LAYOUT
SCALE: 1" = 50′
L-8

REVISED BY	DATE REVISED
TN	04/15/10

CALCULATED-DESIGNED BY: THANH NGUYEN
CHECKED BY: JOHN KENYON
CONSULTANT FUNCTIONAL SUPERVISOR: RICHARD TANAKA

STATE OF CALIFORNIA - DEPARTMENT OF TRANSPORTATION
Caltrans

LAST REVISION 04-15-10 | DATE PLOTTED => 28-NOV-2011 | TIME PLOTTED => 06:17

FOR ACCURATE RIGHT OF WAY DATA, CONTACT
RIGHT OF WAY ENGINEERING AT THE DISTRICT OFFICE.

Dist	COUNTY	ROUTE	POST MILES TOTAL PROJECT	SHEET No.	TOTAL SHEETS
04	Nap,Sol	12	2.8/3.3, 0.0/2.6	28	617

REGISTERED CIVIL ENGINEER 04/15/10 DATE

11-22-10
PLANS APPROVAL DATE

REGISTERED PROFESSIONAL ENGINEER RICHARD K. TANAKA No. 23233 Exp. 12/31/11 CIVIL STATE OF CALIFORNIA

THE STATE OF CALIFORNIA OR ITS OFFICERS OR AGENTS SHALL NOT BE RESPONSIBLE FOR THE ACCURACY OR COMPLETENESS OF SCANNED COPIES OF THIS PLAN SHEET.

MARK THOMAS & COMPANY, INC.
1960 ZANKER ROAD
SAN JOSE, CA 95112

SOLANO TRANSPORTATION AUTHORITY
ONE HARBOR CENTER, SUITE 130
SUISUN CITY, CA 94585

CURVE DATA

No.	R	Δ	T	L	N-COORDINATE	E-COORDINATE
6	2900.00′	08°59′27"	228.00′	455.07′	1840037.3212	6511287.3249
7	2900.00′	18°26′25"	470.74′	933.34′	1834587.3266	6513288.3131
14	2930.00′	08°48′43"	225.76′	450.62′	1840067.6500	6511282.5562
15	2900.00′	06°10′11"	156.29′	312.28′	1834585.2961	6513282.5293
40	2865.00′	18°10′33"	458.28′	908.86′	1834587.3266	6513288.3131

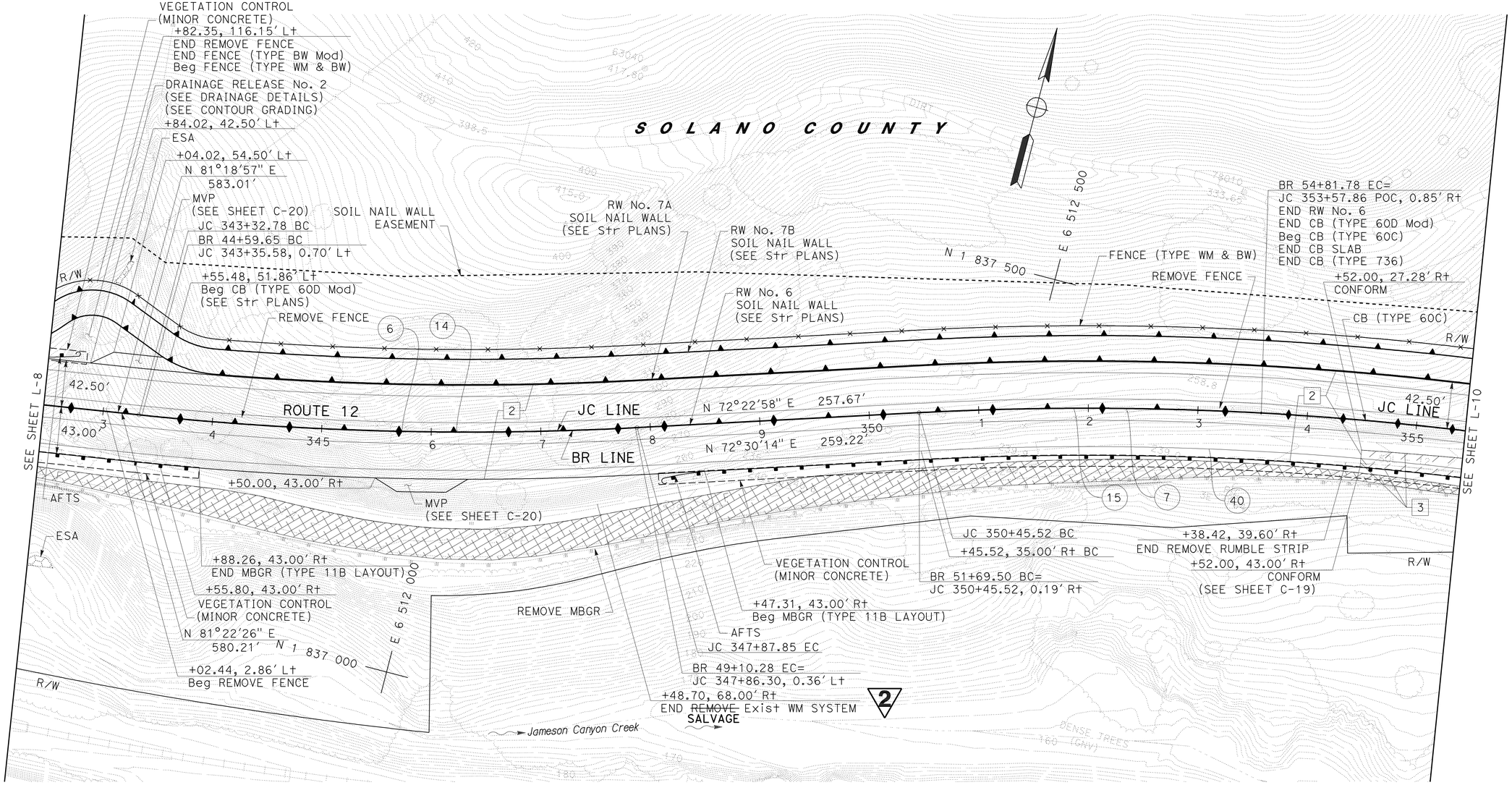

2 REVISED PER ADDENDUM No. 2 DATED NOVEMBER 28, 2011

FOR NOTES, ABBREVIATIONS AND LEGEND, SEE SHEET L-1

LAYOUT
SCALE: 1" = 50′
L-9

STATE OF CALIFORNIA - DEPARTMENT OF TRANSPORTATION
Caltrans

CONSULTANT FUNCTIONAL SUPERVISOR: RICHARD TANAKA
CALCULATED-DESIGNED BY: THANH NGUYEN
CHECKED BY: JOHN KENYON
REVISED BY: TN
DATE REVISED: 04/15/10

LAST REVISION 04-15-10 | DATE PLOTTED => 28-NOV-2011 | TIME PLOTTED => 06:18

BORDER LAST REVISED 4/11/2008 | RELATIVE BORDER SCALE IS IN INCHES 0 1 2 3 | USERNAME => s121614 | DGN FILE => 426414ea009.add | CU 04264 | EA 264141

FOR ACCURATE RIGHT OF WAY DATA, CONTACT
RIGHT OF WAY ENGINEERING AT THE DISTRICT OFFICE.

Dist	COUNTY	ROUTE	POST MILES TOTAL PROJECT	SHEET No.	TOTAL SHEETS
04	Nap,Sol	12	2.8/3.3, 0.0/2.6	52	617

REGISTERED CIVIL ENGINEER — DATE 04/15/10

11-22-10
PLANS APPROVAL DATE

REGISTERED PROFESSIONAL ENGINEER — RICHARD K. TANAKA — No. 23233 — Exp. 12/31/11 — CIVIL — STATE OF CALIFORNIA

THE STATE OF CALIFORNIA OR ITS OFFICERS OR AGENTS SHALL NOT BE RESPONSIBLE FOR THE ACCURACY OR COMPLETENESS OF SCANNED COPIES OF THIS PLAN SHEET.

MARK THOMAS & COMPANY, INC.
1960 ZANKER ROAD
SAN JOSE, CA 95112

SOLANO TRANSPORTATION AUTHORITY
ONE HARBOR CENTER, SUITE 130
SUISUN CITY, CA 94585

CURVE DATA

No.	R	Δ	T	L	N-COORDINATE	E-COORDINATE
100	90.00′	9°07′05"	7.18′	14.32′	1838006.8728	6503923.1697
101	100.00′	12°52′14"	11.28′	22.46′	6503923.1697	6504066.7572
102	2844.56′	12°28′59"	311.10′	619.74′	1840860.4179	6504518.4291
103	34.00′	28°42′16"	9.43′	18.41′	1838053.7381	6504666.0487
104	34.00′	29°49′05"	9.05′	17.69′	1838007.5640	6504720.6829
105	34.00′	47°59′52"	15.14′	28.48′	1838078.2012	6504799.1782
106	24.00′	47°59′52"	10.68′	20.11′	1838077.9785	6504792.4535

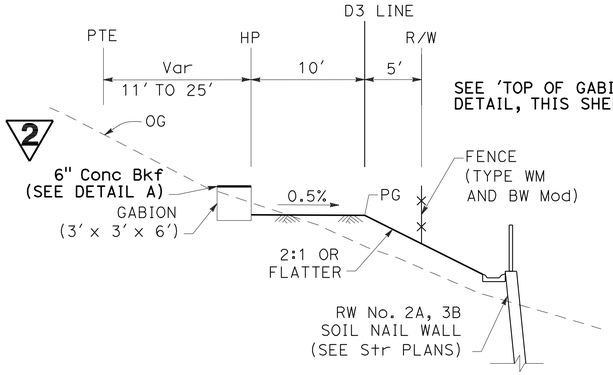

ACCESS ROAD

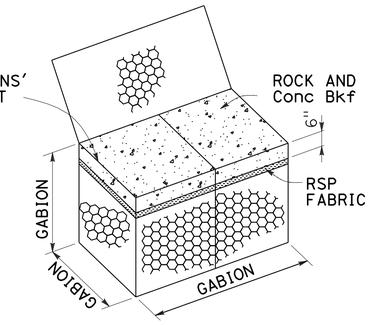

NOTE: PLACE Conc Bkf AT THE TOP OF THE TOP ROW OF GABIONS ONLY.

DETAIL A 2

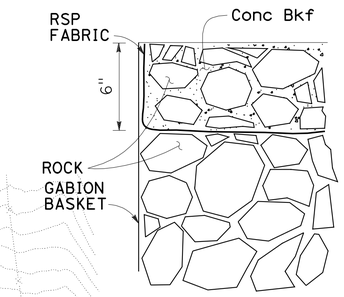

TOP OF GABIONS 2

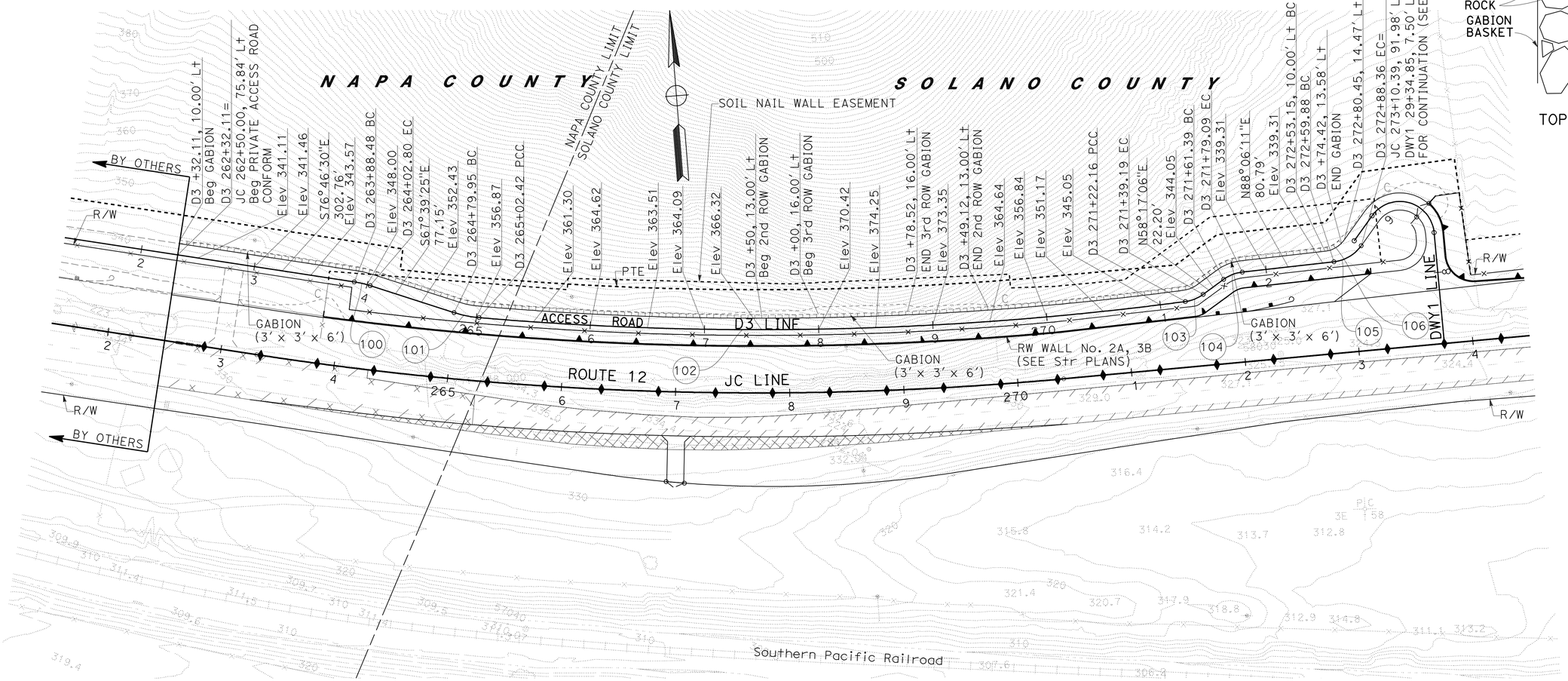

PRIVATE ACCESS ROAD

2 REVISED PER ADDENDUM No. 2 DATED NOVEMBER 28, 2011

FOR NOTES, ABBREVIATIONS AND LEGEND, SEE SHEET C-1

THIS PLAN ACCURATE FOR PAVEMENT ELEVATIONS WORK ONLY.

CONSTRUCTION DETAILS
PAVEMENT ELEVATIONS

SCALE: 1" = 50′

C-10

STATE OF CALIFORNIA - DEPARTMENT OF TRANSPORTATION
Caltrans

CONSULTANT FUNCTIONAL SUPERVISOR: RICHARD TANAKA
CALCULATED-DESIGNED BY: VICTOR LOPEZ
CHECKED BY: JOHN KENYON
REVISED BY: TN
DATE REVISED: 04/15/10

LAST REVISION 04-15-10 | DATE PLOTTED => 28-NOV-2011 | TIME PLOTTED => 06:18

BORDER LAST REVISED 4/11/2008 | RELATIVE BORDER SCALE IS IN INCHES 0 1 2 3 | USERNAME => s121614 | DGN FILE => 426414ga010.add | CU 04264 | EA 264141

FOR ACCURATE RIGHT OF WAY DATA, CONTACT
RIGHT OF WAY ENGINEERING AT THE DISTRICT OFFICE.

CURVE DATA

No.	R	Δ	T	L
130	25.00′	92°54′23"	26.30′	40.54′
131	25.00′	53°56′02"	12.72′	23.53′
132	14.00′	128°02′07"	28.73′	31.29′
133	25.00′	23°35′17"	5.22′	10.29′
134	25.00′	75°57′27"	19.52	33.14′

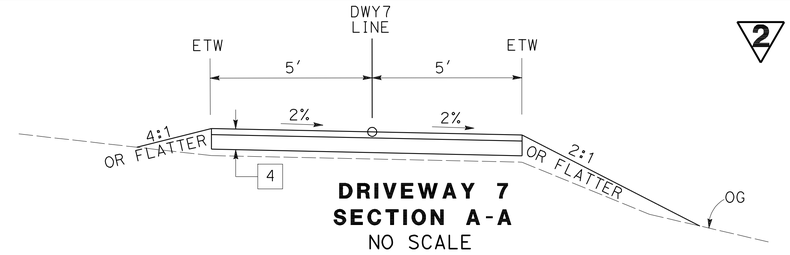

DRIVEWAY 7
SECTION A-A
NO SCALE

Dist	COUNTY	ROUTE	POST MILES TOTAL PROJECT	SHEET No.	TOTAL SHEETS
04	Nap,Sol	12	2.8/3.3, 0.0/2.6	54A	617

REGISTERED CIVIL ENGINEER — DATE 10/28/11

PLANS APPROVAL DATE

REGISTERED PROFESSIONAL ENGINEER — RICHARD K. TANAKA — No. 23233 — Exp. 12/31/11 — CIVIL — STATE OF CALIFORNIA

THE STATE OF CALIFORNIA OR ITS OFFICERS OR AGENTS SHALL NOT BE RESPONSIBLE FOR THE ACCURACY OR COMPLETENESS OF SCANNED COPIES OF THIS PLAN SHEET.

MARK THOMAS & COMPANY, INC.
1960 ZANKER ROAD
SAN JOSE, CA 95112

SOLANO TRANSPORTATION AUTHORITY
ONE HARBOR CENTER, SUITE 130
SUISUN CITY, CA 94585

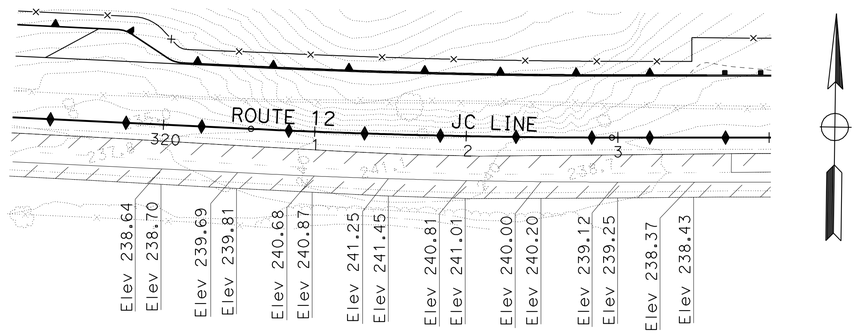

ROUTE 12
SCALE: 1"=50′

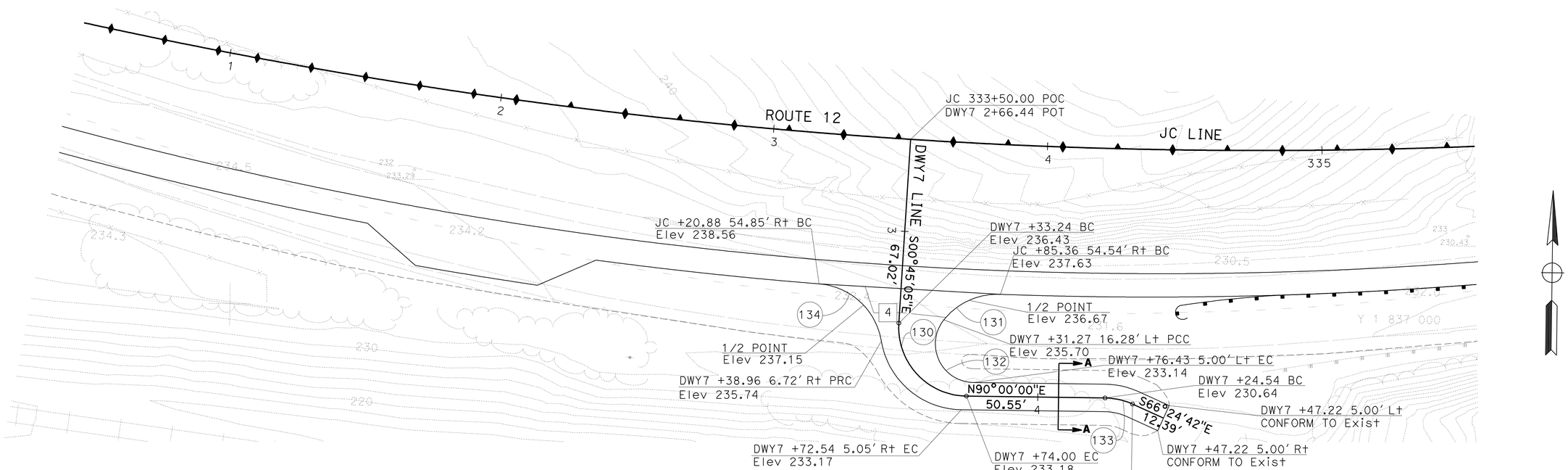

DRIVEWAY 7
SCALE: 1"=20′

2 ADDED PER ADDENDUM No. 2 DATED NOVEMBER 28, 2011

FOR NOTES, ABBREVIATIONS AND LEGEND, SEE SHEET C-1

THIS PLAN ACCURATE FOR PAVEMENT ELEVATION WORK ONLY.

CONSTRUCTION DETAILS
PAVEMENT ELEVATIONS

AS SHOWN

C-12A

REVISED BY	DATE REVISED

CALCULATED-DESIGNED BY: THANH NGUYEN
CHECKED BY: JULIE CHIU
CONSULTANT FUNCTIONAL SUPERVISOR: RICHARD TANAKA

STATE OF CALIFORNIA - DEPARTMENT OF TRANSPORTATION
Caltrans

LAST REVISION 04-15-10 — DATE PLOTTED => 28-NOV-2011 — TIME PLOTTED => 06:18

Dist	COUNTY	ROUTE	POST MILES TOTAL PROJECT	SHEET No.	TOTAL SHEETS
04	Nap,Sol	12	2.8/3.3, 0.0/2.6	59	617

REGISTERED CIVIL ENGINEER 12/22/09 DATE

11-22-10
PLANS APPROVAL DATE

REGISTERED PROFESSIONAL ENGINEER RICHARD K. TANAKA No. 23233 Exp. 12/31/11 CIVIL STATE OF CALIFORNIA

THE STATE OF CALIFORNIA OR ITS OFFICERS OR AGENTS SHALL NOT BE RESPONSIBLE FOR THE ACCURACY OR COMPLETENESS OF SCANNED COPIES OF THIS PLAN SHEET.

MARK THOMAS & COMPANY, INC.
1960 ZANKER ROAD
SAN JOSE, CA 95112

SOLANO TRANSPORTATION AUTHORITY
ONE HARBOR CENTER, SUITE 130
SUISUN CITY, CA 94585

CONCRETE BARRIER ELEVATIONS

JC LINE STATION	FINISHED GRADE BPGL	BPGT	BPGR	TYPE OF CONCRETE BARRIER
314+50	247.93	250.92	246.76	
315+00	247.28	250.28	246.19	
315+50	246.51	249.53	245.39	
316+00	245.65	248.67	244.55	
316+50	244.68	247.70	243.53	
317+00	243.62	246.64	242.38	
317+50	242.57	245.59	241.20	
318+00	241.69	244.71	239.96	
318+50	241.00	244.02	238.70	
319+00	240.52	243.54	237.89	
319+50	240.23	243.25	237.42	
320+00	240.14	243.16	~~237.99~~	238.49
320+50	240.25	243.27	~~239.12~~	239.35
321+00	240.40	243.42	~~240.12~~	240.16
321+50	240.44	243.46	~~240.31~~	240.70
322+00	240.36	243.38	~~240.11~~	240.26
322+50	240.16	243.18	~~239.47~~	239.47
323+00	239.85	242.87	~~238.48~~	238.77
323+50	239.42	242.44	~~237.70~~	238.20
324+00	238.93	241.95	237.13	
324+50	238.45	241.47	236.79	60C
325+00	237.96	240.98	236.34	
325+50	237.47	240.49	235.76	
326+00	236.99	240.01	235.07	
326+50	236.50	239.52	234.40	
327+00	236.03	239.05	233.81	
327+50	235.67	238.69	233.43	
328+00	235.42	238.45	233.26	
328+50	235.30	238.34	233.28	
329+00	235.31	238.36	233.51	
329+50	235.44	238.50	233.94	
330+00	235.71	238.77	234.41	
330+50	236.10	239.16	234.76	
331+00	236.62	239.68	234.99	
331+50	237.26	240.32	235.11	
354+00	241.42	244.38	239.01	
354+50	239.72	242.68	238.01	
355+00	238.02	240.98	236.88	
355+50	236.32	239.28	235.63	
356+00	234.62	237.58	234.26	
356+50	232.92	235.88	232.76	
357+00	231.22	234.18	231.14	60

JC LINE STATION	FINISHED GRADE BPGL	BPGT	BPGR	TYPE OF CONCRETE BARRIER
357+50	229.52	232.48	229.44	60
358+00	227.82	230.78	227.41	
358+50	226.25	229.17	226.17	
359+00	224.88	227.78	224.80	
359+50	223.72	226.60	223.66	
360+00	222.78	225.65	222.72	
360+50	222.04	224.92	221.99	
361+00	221.52	224.41	221.47	
361+50	221.21	224.12	221.16	
362+00	221.10	224.04	221.05	
362+50	221.21	224.18	221.16	
363+00	221.40	224.37	221.35	
363+50	221.59	224.56	221.54	
364+00	221.79	224.76	221.74	
364+50	221.85	224.95	221.93	60C
365+00	221.93	225.14	222.12	
365+50	221.99	225.25	222.23	
366+00	221.85	225.14	222.12	
366+50	221.45	224.80	221.77	
367+00	220.76	224.21	221.19	
367+50	219.89	223.40	220.40	
368+00	218.79	222.35	219.35	
368+50	217.41	221.07	218.07	
369+00	215.76	219.55	216.55	
369+50	214.02	217.80	214.80	
370+00	212.24	215.92	212.92	
370+50	210.36	213.91	210.91	
371+00	208.32	211.77	208.77	
371+50	206.10	209.48	206.48	
372+00	203.77	207.07	204.07	
372+50	201.24	204.53	201.53	
373+00	198.71	201.98	198.98	
373+50	196.17	199.43	196.43	
374+00	193.60	196.87	193.87	
374+50	191.07	194.32	191.32	
375+00	188.64	191.77	188.77	
375+50	186.03	189.22	186.22	
376+00	183.59	186.77	183.77	
376+50	181.39	184.68	181.68	
377+00	179.69	182.93	179.93	
377+50	178.31	181.53	178.53	
378+00	177.08	180.36	177.36	

JC LINE STATION	FINISHED GRADE BPGL	BPGT	BPGR	TYPE OF CONCRETE BARRIER
378+50	175.92	179.21	176.21	60C
379+00	174.76	178.05	175.05	
379+50	173.62	176.89	173.89	
380+00	172.27	175.71	172.71	
380+50	170.76	174.25	171.25	
381+00	169.16	172.45	169.45	
381+50	166.95	170.32	167.32	
382+00	164.45	167.85	164.85	
382+50	161.66	164.68	161.66	60

2 **REVISED PER ADDENDUM No. 2 DATED NOVEMBER 28, 2011**

FOR NOTES, ABBREVIATIONS & LEGEND, SEE SHEET C-16

CONSTRUCTION DETAILS
CONCRETE BARRIER ELEVATIONS

C-17

REVISED BY | DATE REVISED
VICTOR LOPEZ | JOHN KENYON
CALCULATED-DESIGNED BY | CHECKED BY
CONSULTANT FUNCTIONAL SUPERVISOR
RICHARD TANAKA
STATE OF CALIFORNIA - DEPARTMENT OF TRANSPORTATION
Caltrans

LAST REVISION 12-22-09 | DATE PLOTTED => 28-NOV-2011 TIME PLOTTED => 06:18

Dist	COUNTY	ROUTE	POST MILES TOTAL PROJECT	SHEET No.	TOTAL SHEETS
04	Nap,Sol	12	2.8/3.3, 0.0/2.6	62	617

REGISTERED CIVIL ENGINEER — DATE 09/30/10

11-22-10
PLANS APPROVAL DATE

REGISTERED PROFESSIONAL ENGINEER — RICHARD K. TANAKA — No. 23233 — Exp. 12/31/11 — CIVIL — STATE OF CALIFORNIA

THE STATE OF CALIFORNIA OR ITS OFFICERS OR AGENTS SHALL NOT BE RESPONSIBLE FOR THE ACCURACY OR COMPLETENESS OF SCANNED COPIES OF THIS PLAN SHEET.

MARK THOMAS & COMPANY, INC.
1960 ZANKER ROAD
SAN JOSE, CA 95112

SOLANO TRANSPORTATION AUTHORITY
ONE HARBOR CENTER, SUITE 130
SUISUN CITY, CA 94585

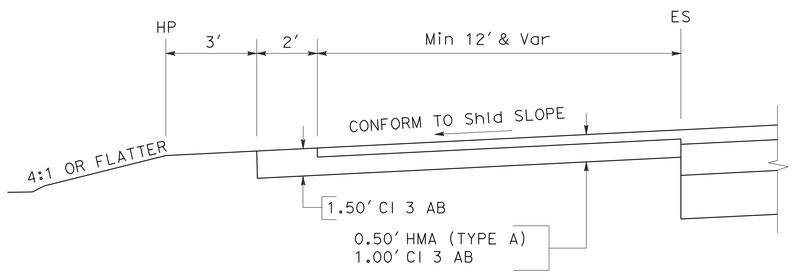

CASE A

MAINTENANCE VEHICLE PULLOUT WITHOUT DIKE DETAIL

(FOR ADDITIONAL MVP DETAILS NOT SHOWN, SEE STANDARD PLAN H9)
JC 317+50.00, 38.50′ R+
~~JC 333+00.00, 54.00′ R+~~ JC 331+59.16, 52.42′ R+
JC 336+07.78, 42.17′ L+
JC 342+84.02, 42.50′ L+
JC 345+50.00, 43.00′ R+

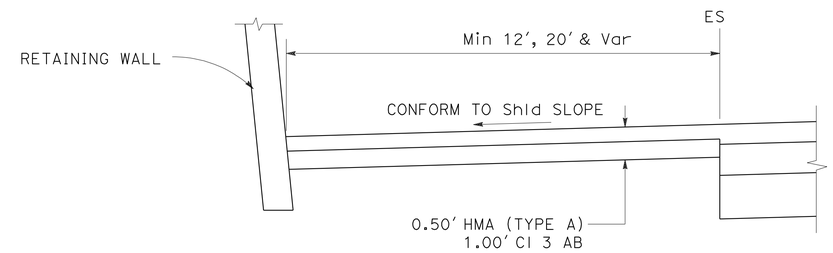

CASE C

MAINTENANCE VEHICLE PULLOUT AT RETAINING WALL

JC 358+61.40, 42.50′ L+

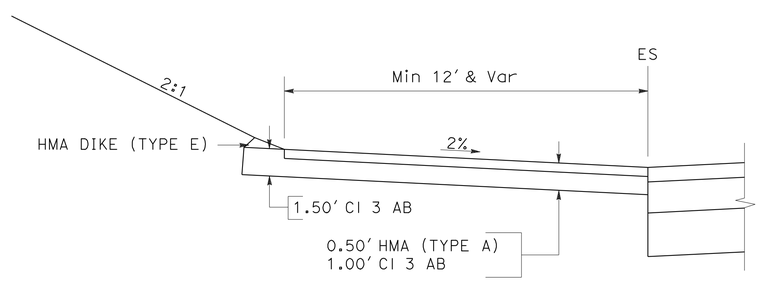

CASE B

MAINTENANCE VEHICLE PULLOUT WITH DIKE (TYPE E)

(FOR ADDITIONAL MVP DETAILS NOT SHOWN, SEE STANDARD PLAN H9)
JC 329+44.15, 40.70′ L+

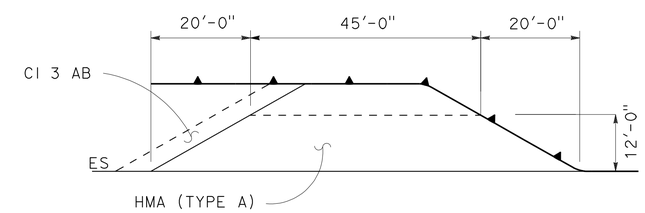

CASE C

PLAN

MAINTENANCE VEHICLE PULLOUT (MVP) AT RETAINING WALLS

(FOR ADDITIONAL MVP DETAILS NOT SHOWN, SEE STANDARD PLAN H9)

2 **REVISED PER ADDENDUM No. 2 DATED NOVEMBER 28, 2011**

CONSTRUCTION DETAILS

NO SCALE

C-20

REVISED BY	DATE REVISED
VAL	09/30/10

VICTOR LOPEZ — JOHN KENYON — CALCULATED-DESIGNED BY — CHECKED BY

CONSULTANT FUNCTIONAL SUPERVISOR: RICHARD TANAKA

STATE OF CALIFORNIA - DEPARTMENT OF TRANSPORTATION — Caltrans

LAST REVISION 09-30-10 — DATE PLOTTED => 28-NOV-2011 — TIME PLOTTED => 06:19

Dist	COUNTY	ROUTE	POST MILES TOTAL PROJECT	SHEET No.	TOTAL SHEETS
04	Nap,Sol	12	2.8/3.3, 0.0/2.6	64	617

REGISTERED CIVIL ENGINEER — DATE 12/22/09

11-22-10
PLANS APPROVAL DATE

REGISTERED PROFESSIONAL ENGINEER — RICHARD K. TANAKA — No. 23233 — Exp. 12/31/11 — CIVIL — STATE OF CALIFORNIA

THE STATE OF CALIFORNIA OR ITS OFFICERS OR AGENTS SHALL NOT BE RESPONSIBLE FOR THE ACCURACY OR COMPLETENESS OF SCANNED COPIES OF THIS PLAN SHEET.

MARK THOMAS & COMPANY, INC.
1960 ZANKER ROAD
SAN JOSE, CA 95112

SOLANO TRANSPORTATION AUTHORITY
ONE HARBOR CENTER, SUITE 130
SUISUN CITY, CA 94585

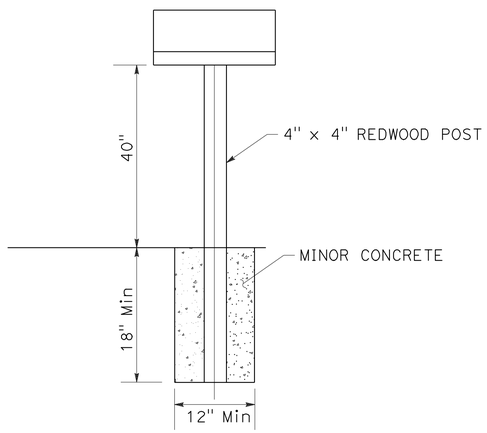

RELOCATE MAILBOX

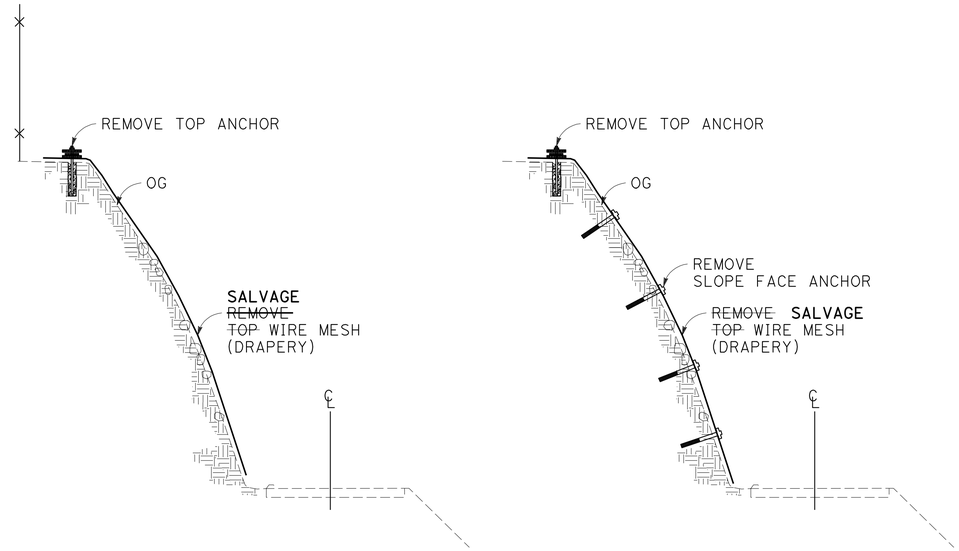

2 ~~REMOVE~~ WIRE MESH SYSTEM SALVAGE

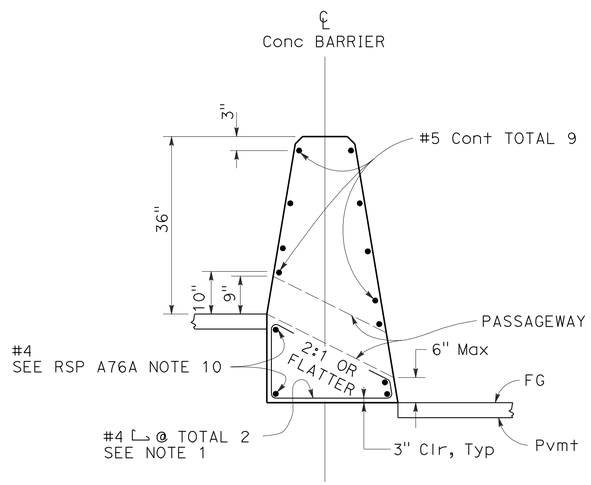

SECTION A-A

(CONCRETE BARRIER TYPE 60C SHOWN)

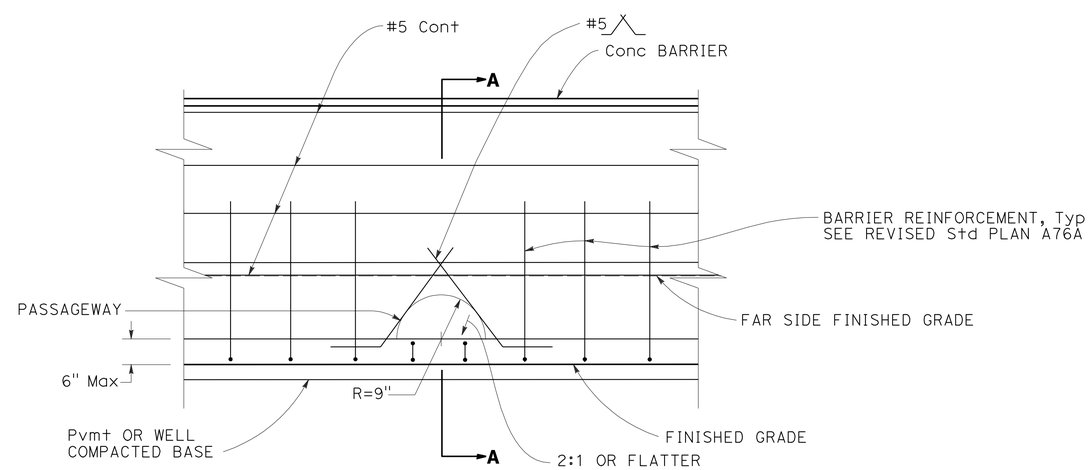

ELEVATION

NOTE:

1. FOR ROADWAY SURFACES OFFSET LESS THAN 10", NO REBARS REQUIRED.

WILDLIFE PASSAGEWAY (TYPE S Mod)
AT Conc BARRIER (TYPE 60C)

(FOR ADDITIONAL DETAILS AND NOTES NOT SHOWN, SEE REVISED STANDARD PLAN A76J)

CONSTRUCTION DETAILS

NO SCALE

2 REVISED PER ADDENDUM No. 2 DATED NOVEMBER 28, 2011

C-22

STATE OF CALIFORNIA - DEPARTMENT OF TRANSPORTATION — Caltrans

CONSULTANT FUNCTIONAL SUPERVISOR: RICHARD TANAKA

CALCULATED-DESIGNED BY: VICTOR LOPEZ — CHECKED BY: JOHN KENYON

REVISED BY — DATE REVISED

LAST REVISION 12-22-09 — DATE PLOTTED => 28-NOV-2011 — TIME PLOTTED => 06:19

FOR ACCURATE RIGHT OF WAY DATA, CONTACT
RIGHT OF WAY ENGINEERING AT THE DISTRICT OFFICE.

LEGEND:

E-FENCE (DIRECTIONAL FENCING)

ABBREVIATIONS:

WF WILDLIFE FENCE (TYPE E-FENCE)

NOTES:

1. EXACT LOCATIONS OF WILDLIFE FENCE TO BE DETERMINED BY THE ENGINEER.

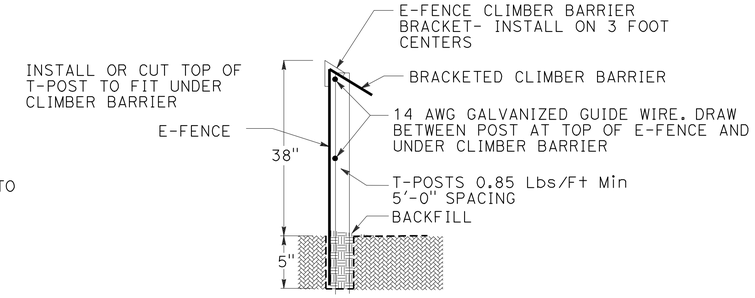

WILDLIFE FENCE (TYPE E-FENCE)

NO SCALE

Dist	COUNTY	ROUTE	POST MILES TOTAL PROJECT	SHEET No.	TOTAL SHEETS
04	Nap,Sol	12	2.8/3.3, 0.0/2.6	85A	617

REGISTERED CIVIL ENGINEER 10/31/11 DATE

PLANS APPROVAL DATE

REGISTERED PROFESSIONAL ENGINEER RICHARD K. TANAKA No. 23233 Exp. 12/31/11 CIVIL STATE OF CALIFORNIA

THE STATE OF CALIFORNIA OR ITS OFFICERS OR AGENTS SHALL NOT BE RESPONSIBLE FOR THE ACCURACY OR COMPLETENESS OF SCANNED COPIES OF THIS PLAN SHEET.

MARK THOMAS & COMPANY, INC.
1960 ZANKER ROAD
SAN JOSE, CA 95112

SOLANO TRANSPORTATION AUTHORITY
ONE HARBOR CENTER, SUITE 130
SUISUN CITY, CA 94585

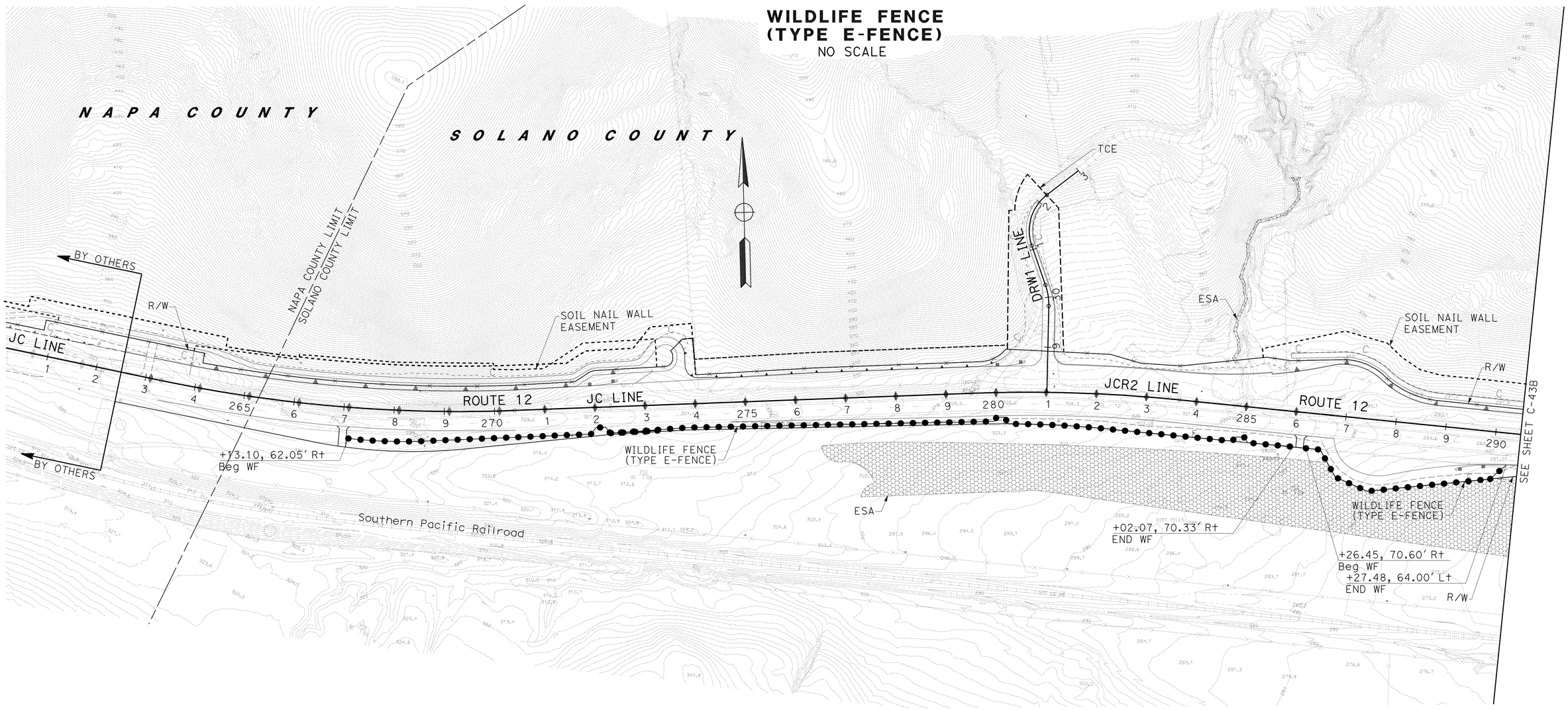

CONSTRUCTION DETAILS

WILDLIFE FENCING PLAN

SCALE: 1" = 100'

C-43A

2 ADDED PER ADDENDUM No. 2 DATED NOVEMBER 28, 2011

THIS PLAN ACCURATE FOR ENVIRONMENTAL FENCING WORK ONLY.

STATE OF CALIFORNIA - DEPARTMENT OF TRANSPORTATION

Caltrans

CONSULTANT FUNCTIONAL SUPERVISOR: RICHARD TANAKA

CALCULATED-DESIGNED BY: JULIE CHIU

CHECKED BY: JOHN KENYON

REVISED BY

DATE REVISED

LAST REVISION 10-31-11

DATE PLOTTED => 28-NOV-2011
TIME PLOTTED => 06:19

FOR ACCURATE RIGHT OF WAY DATA, CONTACT
RIGHT OF WAY ENGINEERING AT THE DISTRICT OFFICE.

2

Dist	COUNTY	ROUTE	POST MILES TOTAL PROJECT	SHEET No.	TOTAL SHEETS
04	Nap,Sol	12	2.8/3.3, 0.0/2.6	85B	617

REGISTERED CIVIL ENGINEER — DATE 10/31/11

PLANS APPROVAL DATE

REGISTERED PROFESSIONAL ENGINEER — RICHARD K. TANAKA — No. 23233 — Exp. 12/31/11 — CIVIL — STATE OF CALIFORNIA

THE STATE OF CALIFORNIA OR ITS OFFICERS OR AGENTS SHALL NOT BE RESPONSIBLE FOR THE ACCURACY OR COMPLETENESS OF SCANNED COPIES OF THIS PLAN SHEET.

MARK THOMAS & COMPANY, INC.
1960 ZANKER ROAD
SAN JOSE, CA 95112

SOLANO TRANSPORTATION AUTHORITY
ONE HARBOR CENTER, SUITE 130
SUISUN CITY, CA 94585

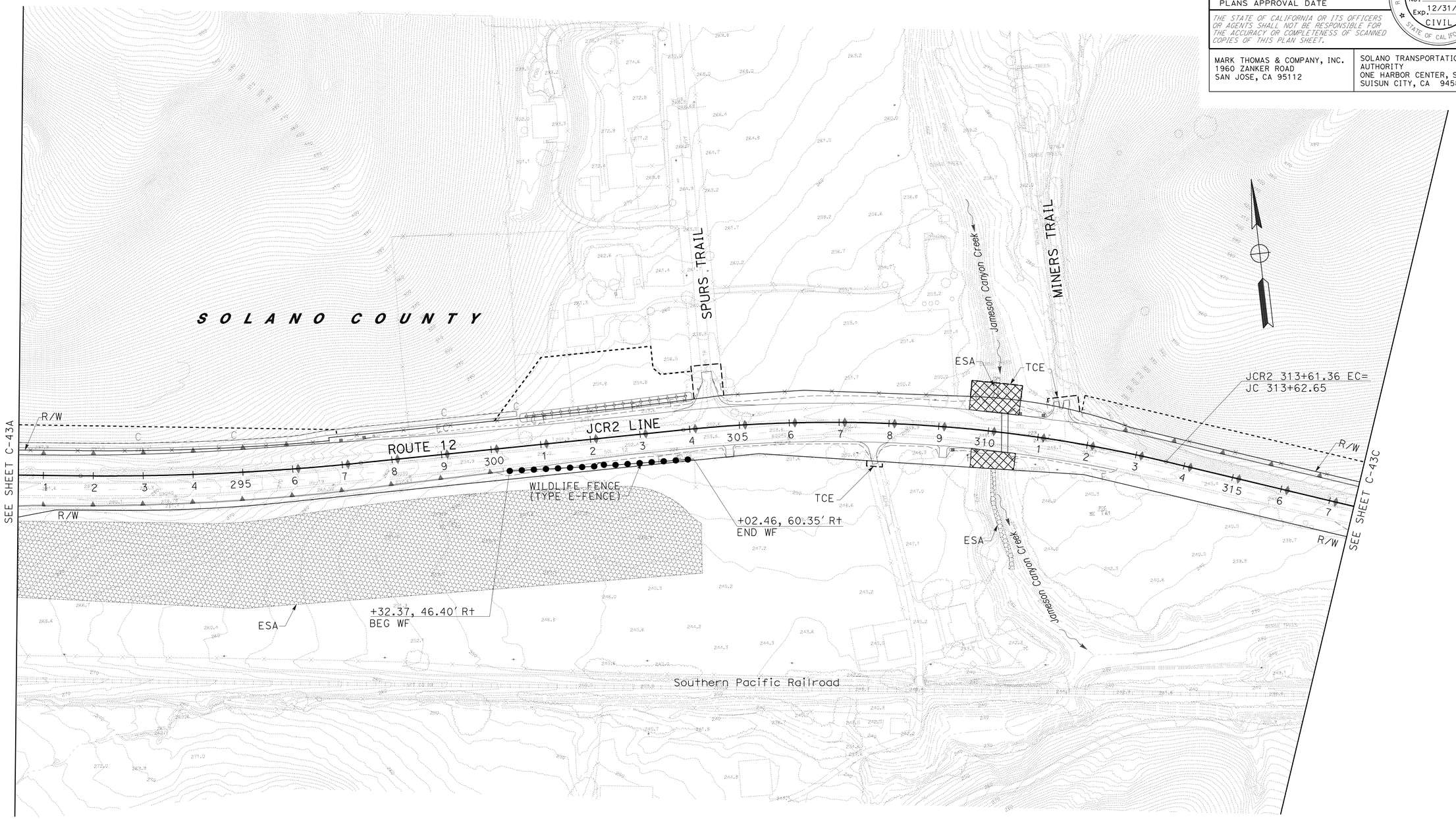

2 **ADDED PER ADDENDUM No. 2 DATED NOVEMBER 28, 2011**

FOR NOTES, ABBREVIATIONS AND LEGEND, SEE SHEET C-43A

THIS PLAN ACCURATE FOR ENVIRONMENTAL FENCING WORK ONLY.

CONSTRUCTION DETAILS

WILDLIFE FENCING PLAN

SCALE: 1" = 100'

C-43B

STATE OF CALIFORNIA - DEPARTMENT OF TRANSPORTATION

Caltrans

CONSULTANT FUNCTIONAL SUPERVISOR: RICHARD TANAKA

CALCULATED-DESIGNED BY: JULIE CHIU

CHECKED BY: JOHN KENYON

REVISED BY

DATE REVISED

LAST REVISION 10-31-11 — DATE PLOTTED => 28-NOV-2011 — TIME PLOTTED => 06:19

FOR ACCURATE RIGHT OF WAY DATA, CONTACT
RIGHT OF WAY ENGINEERING AT THE DISTRICT OFFICE.

Dist	COUNTY	ROUTE	POST MILES TOTAL PROJECT	SHEET No.	TOTAL SHEETS
04	Nap,Sol	12	2.8/3.3, 0.0/2.6	85C	617

REGISTERED CIVIL ENGINEER — DATE 10/31/11

PLANS APPROVAL DATE

REGISTERED PROFESSIONAL ENGINEER — RICHARD K. TANAKA — No. 23233 — Exp. 12/31/11 — CIVIL — STATE OF CALIFORNIA

THE STATE OF CALIFORNIA OR ITS OFFICERS OR AGENTS SHALL NOT BE RESPONSIBLE FOR THE ACCURACY OR COMPLETENESS OF SCANNED COPIES OF THIS PLAN SHEET.

MARK THOMAS & COMPANY, INC.
1960 ZANKER ROAD
SAN JOSE, CA 95112

SOLANO TRANSPORTATION AUTHORITY
ONE HARBOR CENTER, SUITE 130
SUISUN CITY, CA 94585

NOTE: THERE IS NO WILDLIFE FENCE WORK PERFORMED ON THIS SHEET (FOR INFORMATION ONLY)

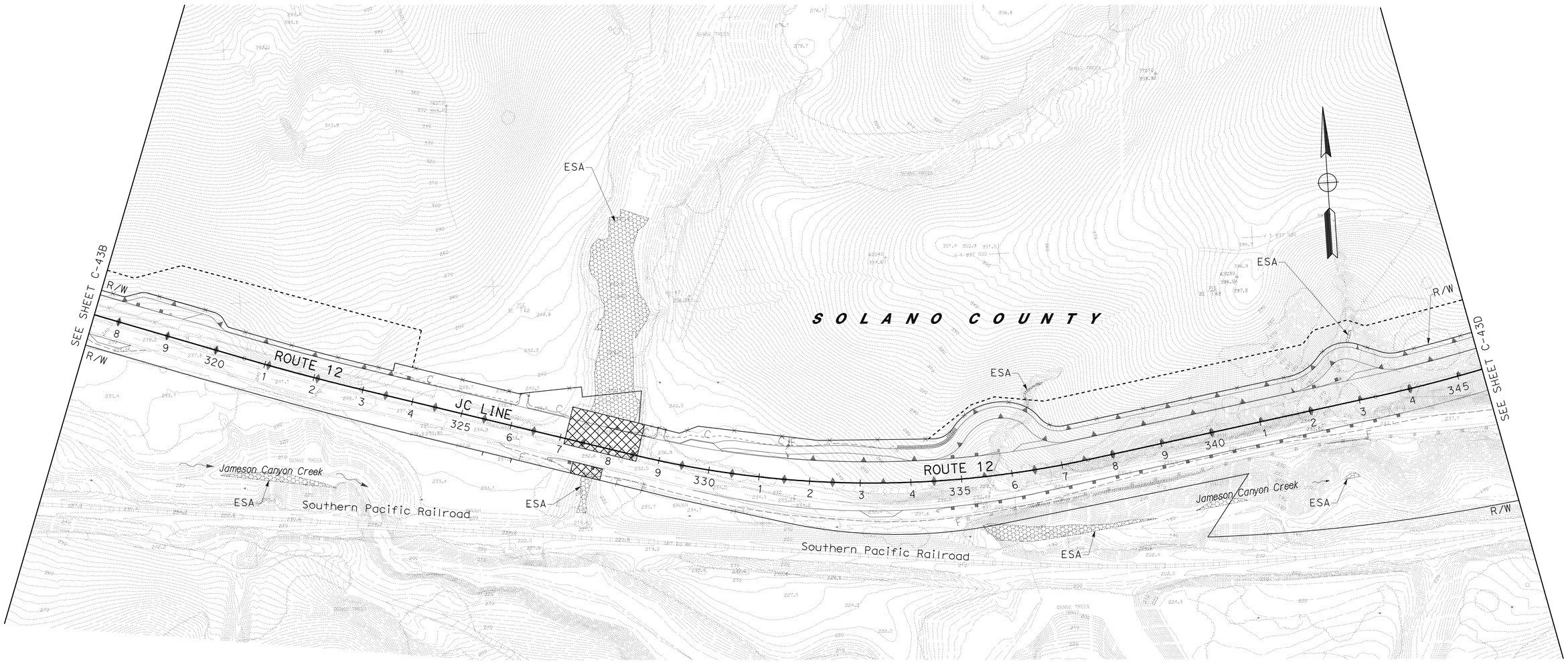

2 **ADDED PER ADDENDUM No. 2 DATED NOVEMBER 28, 2011**

FOR NOTES, ABBREVIATIONS AND LEGEND, SEE SHEET C-43A

THIS PLAN ACCURATE FOR ENVIRONMENTAL FENCING WORK ONLY.

CONSTRUCTION DETAILS
WILDLIFE FENCING PLAN

SCALE: 1" = 100'

C-43C

STATE OF CALIFORNIA - DEPARTMENT OF TRANSPORTATION — Caltrans

CONSULTANT FUNCTIONAL SUPERVISOR: RICHARD TANAKA

CALCULATED-DESIGNED BY: JULIE CHIU

CHECKED BY: JOHN KENYON

REVISED BY

DATE REVISED

LAST REVISION 10-31-11 | DATE PLOTTED => 28-NOV-2011 | TIME PLOTTED => 06:20

FOR ACCURATE RIGHT OF WAY DATA, CONTACT
RIGHT OF WAY ENGINEERING AT THE DISTRICT OFFICE.

2

Dist	COUNTY	ROUTE	POST MILES TOTAL PROJECT	SHEET No.	TOTAL SHEETS
04	Nap,Sol	12	2.8/3.3, 0.0/2.6	85D	617

REGISTERED CIVIL ENGINEER — DATE 10/31/11

PLANS APPROVAL DATE

REGISTERED PROFESSIONAL ENGINEER — RICHARD K. TANAKA — No. 23233 — Exp. 12/31/11 — CIVIL — STATE OF CALIFORNIA

THE STATE OF CALIFORNIA OR ITS OFFICERS OR AGENTS SHALL NOT BE RESPONSIBLE FOR THE ACCURACY OR COMPLETENESS OF SCANNED COPIES OF THIS PLAN SHEET.

MARK THOMAS & COMPANY, INC.
1960 ZANKER ROAD
SAN JOSE, CA 95112

SOLANO TRANSPORTATION AUTHORITY
ONE HARBOR CENTER, SUITE 130
SUISUN CITY, CA 94585

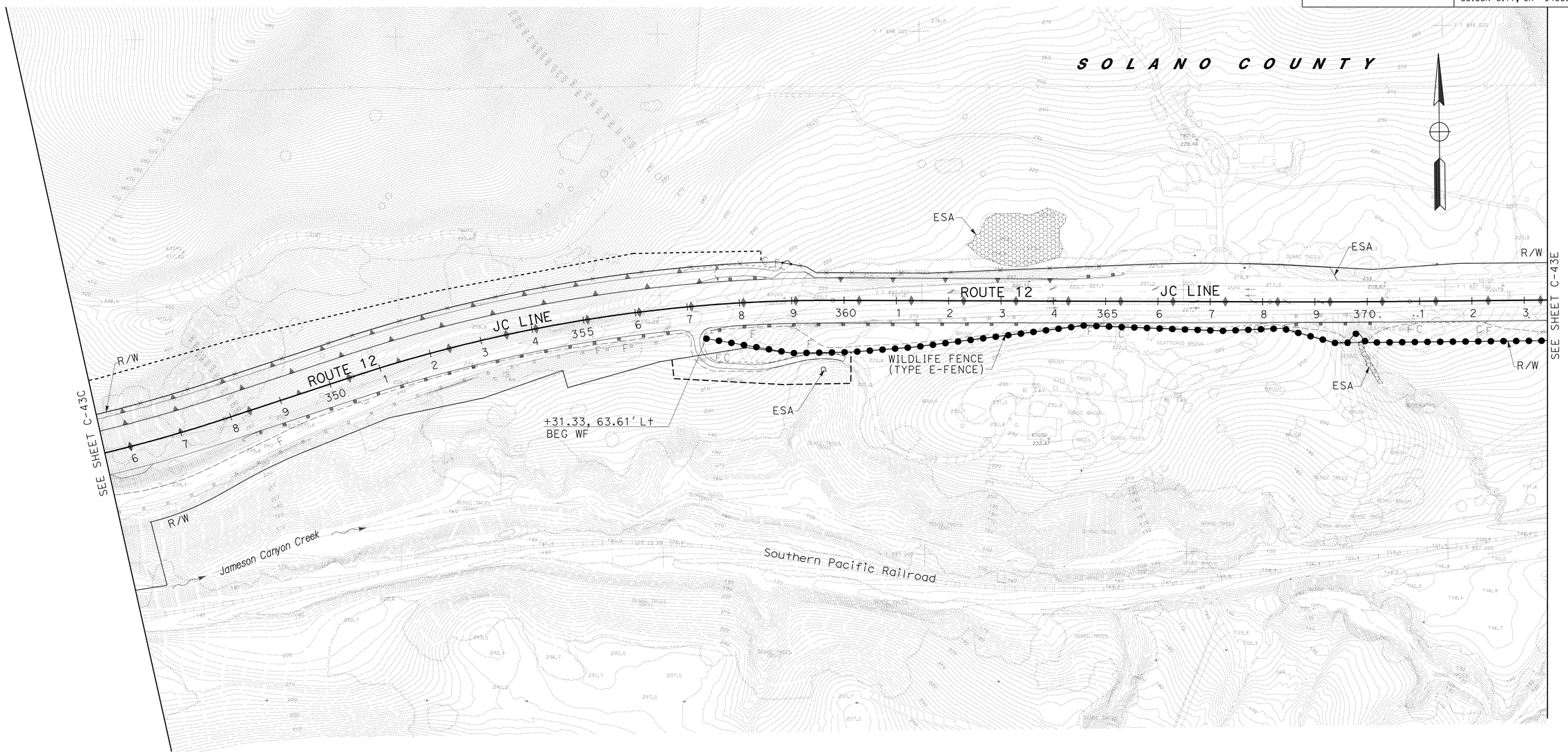

2 **ADDED PER ADDENDUM No. 2 DATED NOVEMBER 28, 2011**

FOR NOTES, ABBREVIATIONS AND LEGEND, SEE SHEET C-43A

THIS PLAN ACCURATE FOR ENVIRONMENTAL FENCING WORK ONLY.

CONSTRUCTION DETAILS

WILDLIFE FENCING PLAN

SCALE: 1" = 100'

C-43D

STATE OF CALIFORNIA - DEPARTMENT OF TRANSPORTATION
Caltrans

CONSULTANT FUNCTIONAL SUPERVISOR: RICHARD TANAKA
CALCULATED-DESIGNED BY: JULIE CHIU
CHECKED BY: JOHN KENYON
REVISED BY
DATE REVISED

LAST REVISION 10-31-11 | DATE PLOTTED => 28-NOV-2011 | TIME PLOTTED => 06:20

FOR ACCURATE RIGHT OF WAY DATA, CONTACT
RIGHT OF WAY ENGINEERING AT THE DISTRICT OFFICE.

Dist	COUNTY	ROUTE	POST MILES TOTAL PROJECT	SHEET No.	TOTAL SHEETS
04	Nap,Sol	12	2.8/3.3, 0.0/2.6	85E	617

REGISTERED CIVIL ENGINEER — DATE 10/31/11

PLANS APPROVAL DATE

REGISTERED PROFESSIONAL ENGINEER — RICHARD K. TANAKA — No. 23233 — Exp. 12/31/11 — CIVIL — STATE OF CALIFORNIA

THE STATE OF CALIFORNIA OR ITS OFFICERS OR AGENTS SHALL NOT BE RESPONSIBLE FOR THE ACCURACY OR COMPLETENESS OF SCANNED COPIES OF THIS PLAN SHEET.

MARK THOMAS & COMPANY, INC.
1960 ZANKER ROAD
SAN JOSE, CA 95112

SOLANO TRANSPORTATION AUTHORITY
ONE HARBOR CENTER, SUITE 130
SUISUN CITY, CA 94585

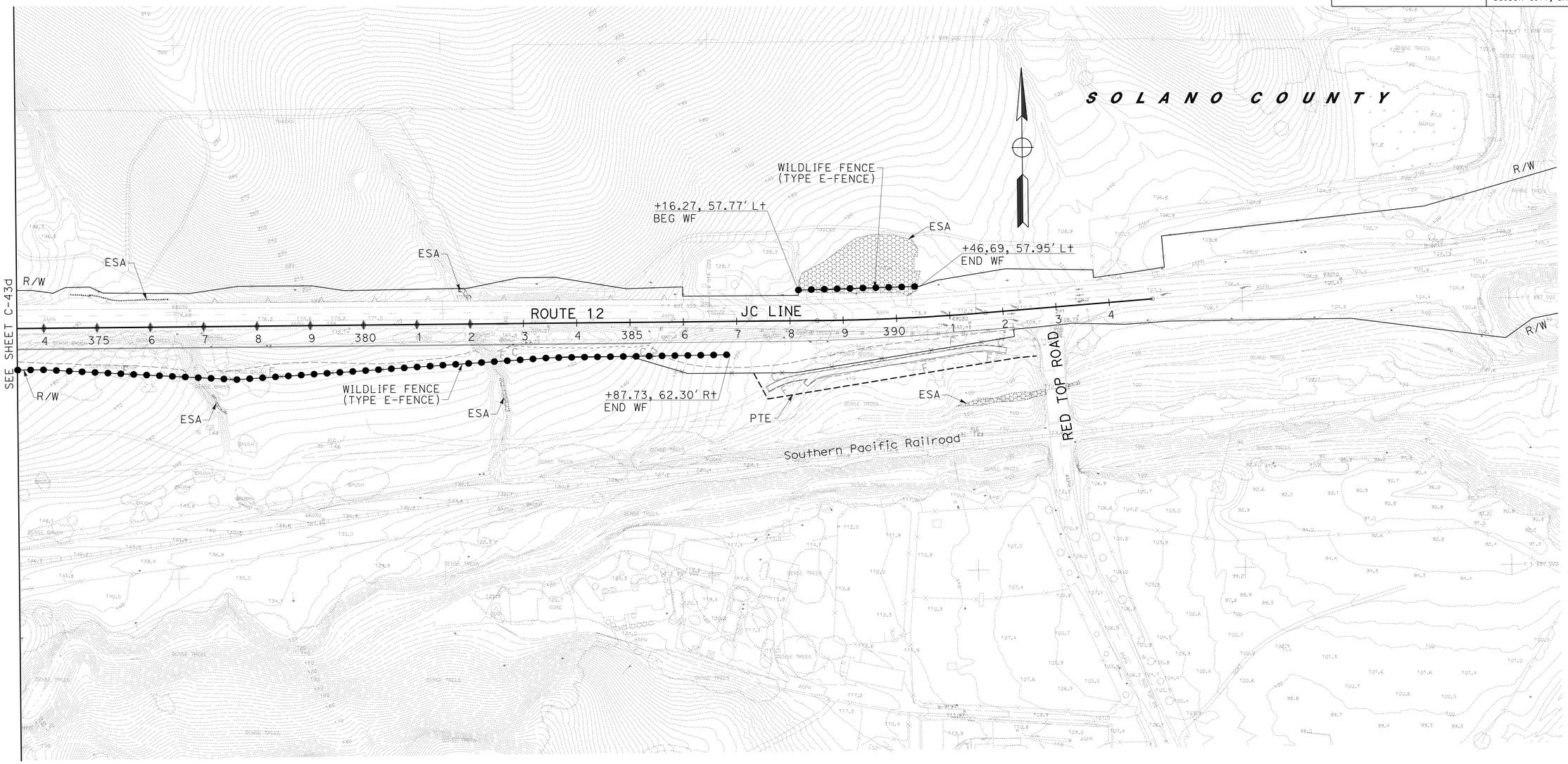

2 ADDED PER ADDENDUM No. 2 DATED NOVEMBER 28, 2011

FOR NOTES, ABBREVIATIONS AND LEGEND, SEE SHEET C-43A

THIS PLAN ACCURATE FOR ENVIRONMENTAL FENCING WORK ONLY.

CONSTRUCTION DETAILS

WILDLIFE FENCING PLAN

SCALE: 1" = 100'

C-43E

STATE OF CALIFORNIA - DEPARTMENT OF TRANSPORTATION

Caltrans

CONSULTANT FUNCTIONAL SUPERVISOR: RICHARD TANAKA

CALCULATED-DESIGNED BY: JULIE CHIU

CHECKED BY: JOHN KENYON

REVISED BY

DATE REVISED

LAST REVISION 10-31-11

DATE PLOTTED => 28-NOV-2011
TIME PLOTTED => 06:20

BORDER LAST REVISED 4/11/2008

RELATIVE BORDER SCALE IS IN INCHES 0 1 2 3

USERNAME => s121614
DGN FILE => 426414ga043E.dgn

CU 04264

EA 264141

FOR ACCURATE RIGHT OF WAY DATA, CONTACT
RIGHT OF WAY ENGINEERING AT THE DISTRICT OFFICE.

Dist	COUNTY	ROUTE	POST MILES TOTAL PROJECT	SHEET No.	TOTAL SHEETS
04	Nap,Sol	12	2.8/3.3, 0.0/2.6	93	617

REGISTERED CIVIL ENGINEER — DATE 09/30/10

11-22-10
PLANS APPROVAL DATE

REGISTERED PROFESSIONAL ENGINEER — RICHARD K. TANAKA — No. 23233 — Exp. 12/31/11 — CIVIL — STATE OF CALIFORNIA

THE STATE OF CALIFORNIA OR ITS OFFICERS OR AGENTS SHALL NOT BE RESPONSIBLE FOR THE ACCURACY OR COMPLETENESS OF SCANNED COPIES OF THIS PLAN SHEET.

MARK THOMAS & COMPANY, INC.
1960 ZANKER ROAD
SAN JOSE, CA 95112

SOLANO TRANSPORTATION AUTHORITY
ONE HARBOR CENTER, SUITE 130
SUISUN CITY, CA 94585

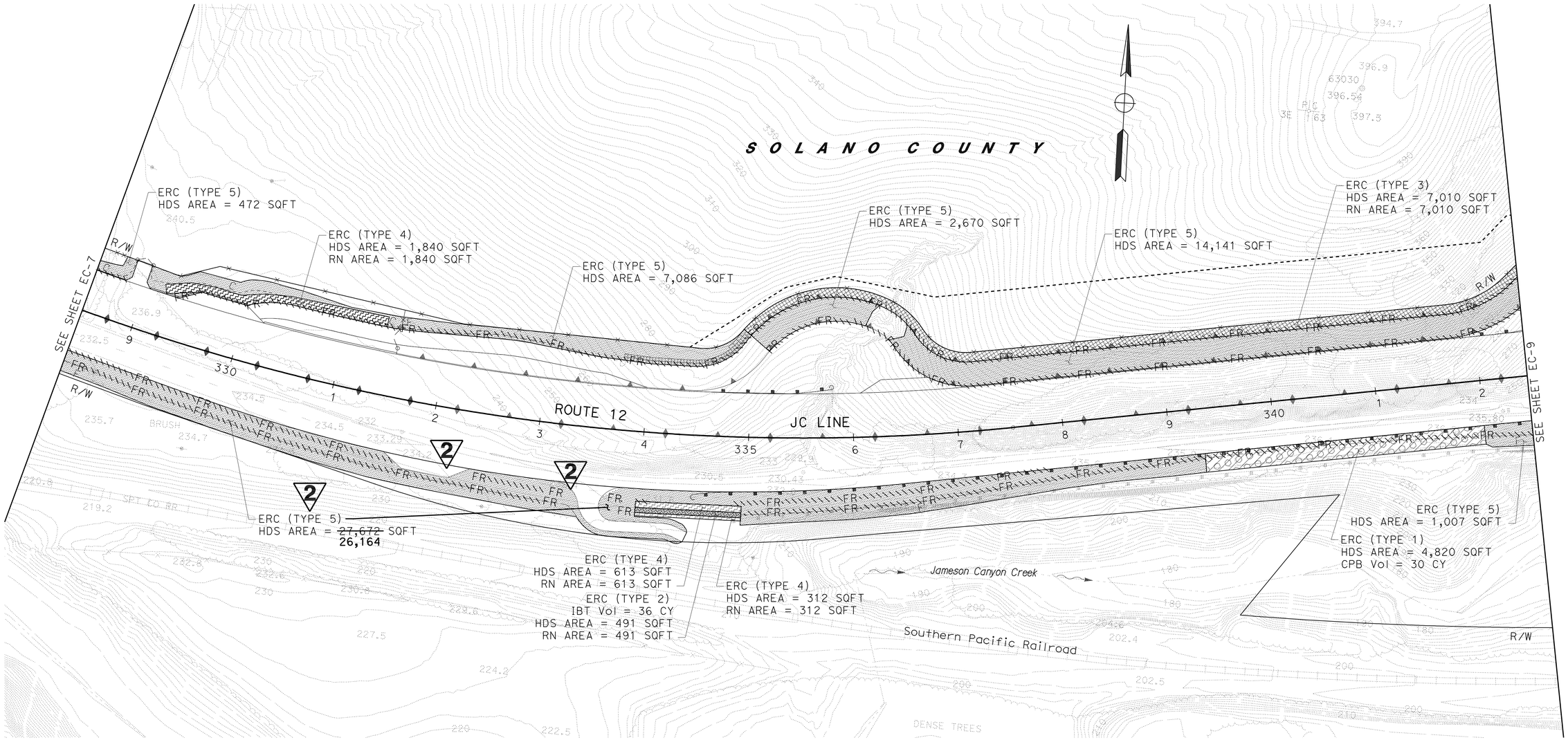

2 **REVISED PER ADDENDUM No. 2 DATED NOVEMBER 28, 2011**

FOR NOTES, ABBREVIATIONS AND LEGEND, SEE SHEET EC-1

THIS PLAN ACCURATE FOR EROSION CONTROL WORK ONLY.

EROSION CONTROL PLAN

SCALE: 1" = 50'

EC-8

STATE OF CALIFORNIA - DEPARTMENT OF TRANSPORTATION
Caltrans

CONSULTANT FUNCTIONAL SUPERVISOR: RICHARD TANAKA
CALCULATED-DESIGNED BY: THANH NGUYEN
CHECKED BY: JOHN KENYON
REVISED BY: VAL
DATE REVISED: 09/30/10

LAST REVISION 09-30-10
DATE PLOTTED => 28-NOV-2011
TIME PLOTTED => 06:21

Dist	COUNTY	ROUTE	POST MILES TOTAL PROJECT	SHEET No.	TOTAL SHEETS
04	Nap,Sol	12	2.8/3.3, 0.0/2.6	101	617

REGISTERED CIVIL ENGINEER 09/30/10 DATE

11-22-10
PLANS APPROVAL DATE

REGISTERED PROFESSIONAL ENGINEER RICHARD K. TANAKA No. 23233 Exp. 12/31/11 CIVIL STATE OF CALIFORNIA

THE STATE OF CALIFORNIA OR ITS OFFICERS OR AGENTS SHALL NOT BE RESPONSIBLE FOR THE ACCURACY OR COMPLETENESS OF SCANNED COPIES OF THIS PLAN SHEET.

MARK THOMAS & COMPANY, INC.
1960 ZANKER ROAD
SAN JOSE, CA 95112

SOLANO TRANSPORTATION AUTHORITY
ONE HARBOR CENTER, SUITE 130
SUISUN CITY, CA 94585

EROSION CONTROL (TYPE 1)

PLAN SHEET No.	EROSION CONTROL (HYDROSEED)(SQFT)	FIBER ROLLS	EROSION CONTROL (COMPOST BLANKET)
	SQFT	LF	CY
EC-1			
EC-2			
EC-3			
EC-4	9,249	515	53
EC-5	5,140	283	32
EC-6	15,076	874	93
EC-7	15,769	884	97
EC-8	4,820	266	30
EC-9	6,214	345	38
EC-10			
EC-11			
EC-12	10,675	582	66
SUBTOTAL	66,943	3749	409

EROSION CONTROL (TYPE 2)

PLAN SHEET No.	ROLLED EROSION CONTROL PRODUCT (NETTING)	EROSION CONTROL (HYDROSEED)(SQFT)	IMPORTED BIOFILTRATION TOPSOIL	PLANT (GROUP M)
	SQFT	SQFT	CY	EACH
EC-1				
EC-2				
EC-3	334	334	20	136
EC-4				
EC-5				
EC-6	685	685	46	323
EC-7	1021	1021	68	391
EC-8	491	491	36	187
EC-9	516	516	34	193
EC-10				
EC-11				
EC-12	2784	2784	190	1041
SUBTOTAL	5831	5831	394	2271

EROSION CONTROL (HYDROSEED)

PLAN SHEET No.	EROSION CONTROL (HYDROSEED)(SQFT)
	SQFT
EC-1	
EC-2	
EC-3	
EC-4	1,095
EC-5	35,486
EC-6	4,199
EC-7	3,018
EC-8	
EC-9	
EC-10	21,689
EC-11	27,092
EC-12	15,530
SUBTOTAL	108,109

EROSION CONTROL (TYPE 3)

PLAN SHEET No.	ROLLED EROSION CONTROL PRODUCT (NETTING)	EROSION CONTROL (HYDROSEED)(SQFT)	FIBER ROLLS
	SQFT	SQFT	LF
EC-1			
EC-2			
EC-3	29,300	29,300	2800
EC-4	16,372	16,372	900
EC-5	25,204	25,204	2000
EC-6	4,175	4,175	460
EC-7	6,664	6,664	740
EC-8	7,010	7,010	
EC-9	11,802	11,802	
EC-10	8,661	8,661	
EC-11			
EC-12			
SUBTOTAL	109,188	109,188	6900

EROSION CONTROL (TYPE 4)

PLAN SHEET No.	ROLLED EROSION CONTROL PRODUCT (NETTING)	EROSION CONTROL (HYDROSEED)(SQFT)
	SQFT	SQFT
EC-1		
EC-2		
EC-3	398	398
EC-4		
EC-5	1,144	1,144
EC-6	1,917	1,917
EC-7	4,662	4,662
EC-8	2,765	2,765
EC-9	928	928
EC-10		
EC-11		
EC-12	1,265	1,265
SUBTOTAL	13,079	13,079

EROSION CONTROL (TYPE 5)

PLAN SHEET No.	EROSION CONTROL (HYDROSEED)(SQFT)	FIBER ROLLS
	SQFT	LF
EC-1		
EC-2	2,306	84
EC-3	19,656	400
EC-4	51,239	3,160
EC-5	18,155	497
EC-6	17,698	820
EC-7	4,643	403
2 EC-8	~~53,048~~ 51,540	4,162
EC-9	59,232	4,920
EC-10	47,852	2,790
EC-11	46,577	3,170
EC-12	32,032	1,023
2 SUBTOTAL	~~352,438~~ 350,930	21,429

EROSION CONTROL SUMMARY TABLE

EROSION CONTROL TYPE	EROSION CONTROL (HYDROSEED)(SQFT)	ROLLED EROSION CONTROL PRODUCT (NETTING)	FIBER ROLLS	IMPORTED BIOFILTRATION TOPSOIL	EROSION CONTROL (COMPOST BLANKET)	PLANT (GROUP M)
	SQFT	SQFT	LF	CY	CY	EACH
TYPE 1	66,943		3,749		409	
TYPE 2	5,831	5,831		394		2271
TYPE 3	109,188	109,188	6,900			
TYPE 4	13,079	13,079				
2 TYPE 5	~~352,438~~ 350,930		21,429			
TYPE (HYDROSEED)	108,109					
TOTAL	~~655,588~~ 654,080	128,098	32,078	394	409	2271

EROSION CONTROL QUANTITIES

2 REVISED PER ADDENDUM No. 2 DATED NOVEMBER 28, 2011

ECQ-1

STATE OF CALIFORNIA - DEPARTMENT OF TRANSPORTATION
Caltrans

CONSULTANT FUNCTIONAL SUPERVISOR: RICHARD TANAKA
CALCULATED-DESIGNED BY: THANH NGUYEN
CHECKED BY: JOHN KENYON
REVISED BY: TN
DATE REVISED: 04/15/10
VAL 09/30/10

LAST REVISION 09-30-10
DATE PLOTTED => 28-NOV-2011
TIME PLOTTED => 06:21

FOR ACCURATE RIGHT OF WAY DATA, CONTACT
RIGHT OF WAY ENGINEERING AT THE DISTRICT OFFICE.

Dist	COUNTY	ROUTE	POST MILES TOTAL PROJECT	SHEET No.	TOTAL SHEETS
04	Nap,Sol	12	2.8/3.3, 0.0/2.6	106	617

Analette Ochoa 04/15/10
REGISTERED CIVIL ENGINEER DATE

11-22-10
PLANS APPROVAL DATE

REGISTERED PROFESSIONAL ENGINEER ANALETTE OCHOA No. 55279 Exp. 12/31/10 CIVIL STATE OF CALIFORNIA

THE STATE OF CALIFORNIA OR ITS OFFICERS OR AGENTS SHALL NOT BE RESPONSIBLE FOR THE ACCURACY OR COMPLETENESS OF SCANNED COPIES OF THIS PLAN SHEET.

WRECO
1243 ALPINE RD, SUITE 108
WALNUT CREEK, CA 94596

SOLANO TRANSPORTATION AUTHORITY
ONE HARBOR CENTER, SUITE 130
SUISUN CITY, CA 94585

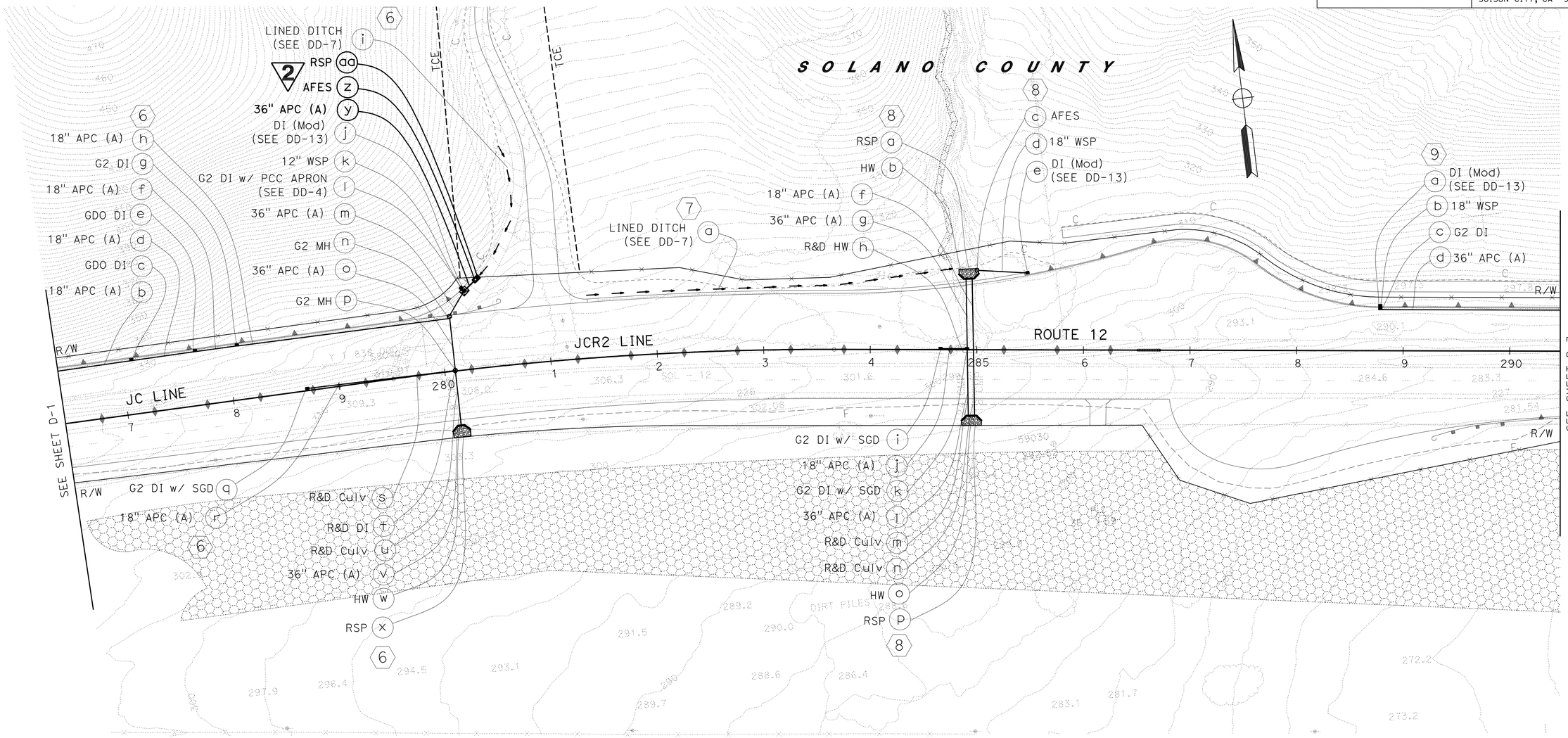

2 **REVISED PER ADDENDUM No. 2 DATED NOVEMBER 28, 2011**

FOR NOTES, ABBREVIATIONS & LEGEND, SEE SHEET D-1

THIS PLAN ACCURATE FOR DRAINAGE WORK ONLY.

DRAINAGE PLAN

SCALE: 1" = 50'

D-2

STATE OF CALIFORNIA - DEPARTMENT OF TRANSPORTATION
Caltrans

CONSULTANT FUNCTIONAL SUPERVISOR: HAN-BIN LIANG

CALCULATED-DESIGNED BY: RAJA PERIKETI
CHECKED BY: ANALETTE OCHOA

REVISED BY: VAL
DATE REVISED: 04/15/10

LAST REVISION 04-15-10 | DATE PLOTTED => 28-NOV-2011 | TIME PLOTTED => 08:21

FOR ACCURATE RIGHT OF WAY DATA, CONTACT
RIGHT OF WAY ENGINEERING AT THE DISTRICT OFFICE.

Dist	COUNTY	ROUTE	POST MILES TOTAL PROJECT	SHEET No.	TOTAL SHEETS
04	Nap,Sol	12	2.8/3.3, 0.0/2.6	110	617

REGISTERED CIVIL ENGINEER — DATE 12/22/09

11-22-10
PLANS APPROVAL DATE

REGISTERED PROFESSIONAL ENGINEER — ANALETTE OCHOA — No. 55279 — Exp. 12/31/10 — CIVIL — STATE OF CALIFORNIA

THE STATE OF CALIFORNIA OR ITS OFFICERS OR AGENTS SHALL NOT BE RESPONSIBLE FOR THE ACCURACY OR COMPLETENESS OF SCANNED COPIES OF THIS PLAN SHEET.

WRECO
1243 ALPINE RD, SUITE 108
WALNUT CREEK, CA 94596

SOLANO TRANSPORTATION AUTHORITY
ONE HARBOR CENTER, SUITE 130
SUISUN CITY, CA 94585

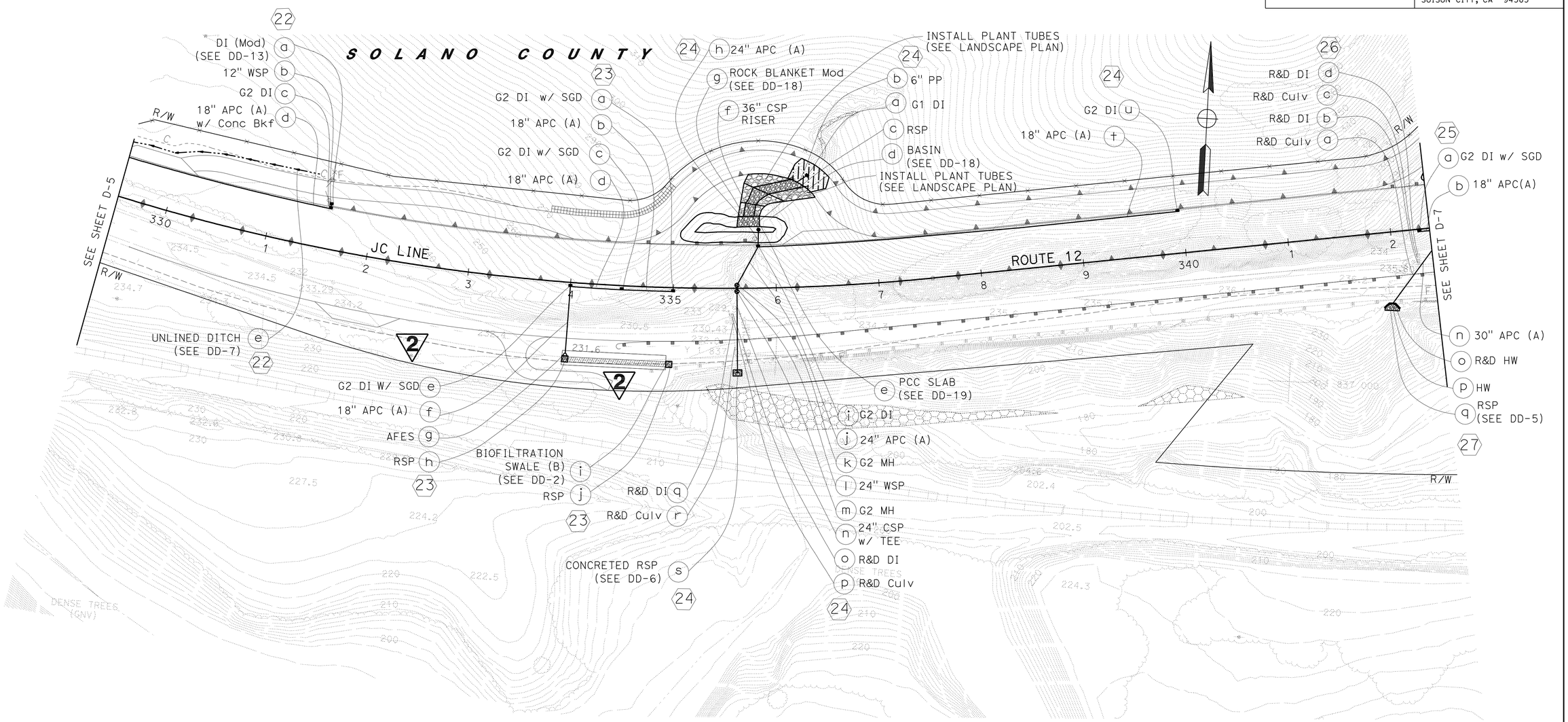

2 REVISED PER ADDENDUM No. 2 DATED NOVEMBER 28, 2011

FOR NOTES, ABBREVIATIONS & LEGEND, SEE SHEET D-1

THIS PLAN ACCURATE FOR DRAINAGE WORK ONLY.

DRAINAGE PLAN

SCALE: 1" = 50'

D-6

STATE OF CALIFORNIA - DEPARTMENT OF TRANSPORTATION

Caltrans

CONSULTANT FUNCTIONAL SUPERVISOR: HAN-BIN LIANG

CALCULATED-DESIGNED BY: ANALETTE OCHOA

CHECKED BY

REVISED BY: RAJA PERIKETI

DATE REVISED

LAST REVISION 12-22-09

DATE PLOTTED => 28-NOV-2011
TIME PLOTTED => 06:22

Dist	COUNTY	ROUTE	POST MILES TOTAL PROJECT	SHEET No.	TOTAL SHEETS
04	Nap,Sol	12	2.8/3.3, 0.0/2.6	118	617

REGISTERED CIVIL ENGINEER — DATE: 12/22/09

11-22-10
PLANS APPROVAL DATE

REGISTERED PROFESSIONAL ENGINEER — ANALETTE OCHOA — No. 55279 — Exp. 12/31/10 — CIVIL — STATE OF CALIFORNIA

THE STATE OF CALIFORNIA OR ITS OFFICERS OR AGENTS SHALL NOT BE RESPONSIBLE FOR THE ACCURACY OR COMPLETENESS OF SCANNED COPIES OF THIS PLAN SHEET.

WRECO
1243 ALPINE RD, SUITE 108
WALNUT CREEK, CA 94596

SOLANO TRANSPORTATION AUTHORITY
ONE HARBOR CENTER, SUITE 130
SUISUN CITY, CA 94585

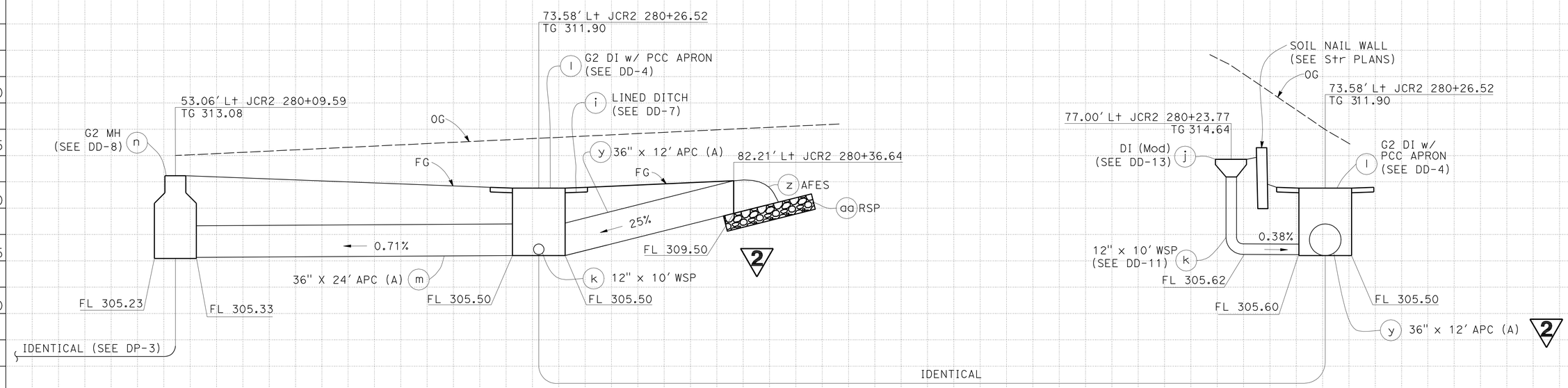

DRAINAGE SYSTEM No. 6

2 REVISED PER ADDENDUM No. 2 DATED NOVEMBER 28, 2011

DRAINAGE PROFILES

SCALE: Horiz 1" = 5'
Vert 1" = 5'

DP-4

STATION		TOTAL
CY	Exc	
	Emb	

STATE OF CALIFORNIA - DEPARTMENT OF TRANSPORTATION — Caltrans

CONSULTANT FUNCTIONAL SUPERVISOR: HAN-BIN LIANG

CALCULATED-DESIGNED BY: RAJA PERIKETI
CHECKED BY: ANALETTE OCHOA

REVISED BY: RP
DATE REVISED: 12/11/09

LAST REVISION 12-22-09 | DATE PLOTTED => 28-NOV-2011 | TIME PLOTTED => 08:22

Dist	COUNTY	ROUTE	POST MILES TOTAL PROJECT	SHEET No.	TOTAL SHEETS
04	Nap,Sol	12	2.8/3.3, 0.0/2.6	130	617

Anlette Ochoa 12/22/09
REGISTERED CIVIL ENGINEER DATE

11-22-10
PLANS APPROVAL DATE

REGISTERED PROFESSIONAL ENGINEER ANALETTE OCHOA No. 55279 Exp. 12/31/10 CIVIL STATE OF CALIFORNIA

THE STATE OF CALIFORNIA OR ITS OFFICERS OR AGENTS SHALL NOT BE RESPONSIBLE FOR THE ACCURACY OR COMPLETENESS OF SCANNED COPIES OF THIS PLAN SHEET.

WRECO
1243 ALPINE RD, SUITE 108
WALNUT CREEK, CA 94596

SOLANO TRANSPORTATION AUTHORITY
ONE HARBOR CENTER, SUITE 130
SUISUN CITY, CA 94585

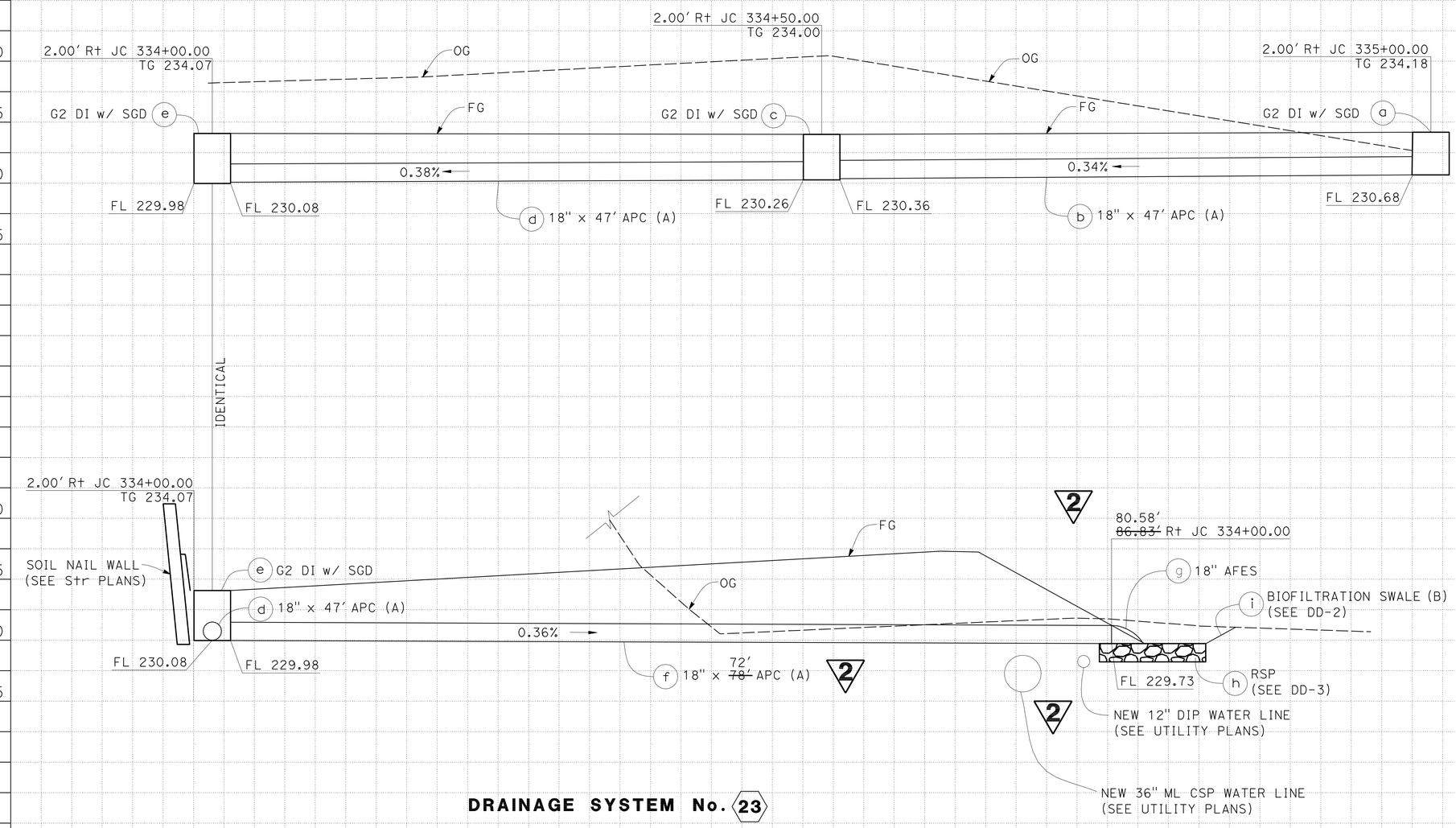

DRAINAGE SYSTEM No. 23

2 **REVISED PER ADDENDUM No. 2 DATED NOVEMBER 28, 2011**

DRAINAGE PROFILES

SCALE: Horiz 1" = 5'
Vert 1" = 5'

DP-16

STATION		TOTAL
CY	Exc	
	Emb	

STATE OF CALIFORNIA - DEPARTMENT OF TRANSPORTATION
Caltrans

CONSULTANT FUNCTIONAL SUPERVISOR: HAN-BIN LIANG
CALCULATED-DESIGNED BY: ANALETTE OCHOA
CHECKED BY: RAJA PERIKETI
REVISED BY: RP
DATE REVISED: 12/11/09

LAST REVISION 12-22-09 | DATE PLOTTED => 28-NOV-2011 | TIME PLOTTED => 08:22

Dist	COUNTY	ROUTE	POST MILES TOTAL PROJECT	SHEET No.	TOTAL SHEETS
04	Nap,Sol	12	2.8/3.3, 0.0/2.6	144	617

REGISTERED CIVIL ENGINEER — DATE: 09/30/10

11-22-10
PLANS APPROVAL DATE

REGISTERED PROFESSIONAL ENGINEER — ANALETTE OCHOA — No. 55279 — Exp. 12/31/10 — CIVIL — STATE OF CALIFORNIA

THE STATE OF CALIFORNIA OR ITS OFFICERS OR AGENTS SHALL NOT BE RESPONSIBLE FOR THE ACCURACY OR COMPLETENESS OF SCANNED COPIES OF THIS PLAN SHEET.

WRECO
1243 ALPINE RD, SUITE 108
WALNUT CREEK, CA 94596

SOLANO TRANSPORTATION AUTHORITY
ONE HARBOR CENTER, SUITE 130
SUISUN CITY, CA 94585

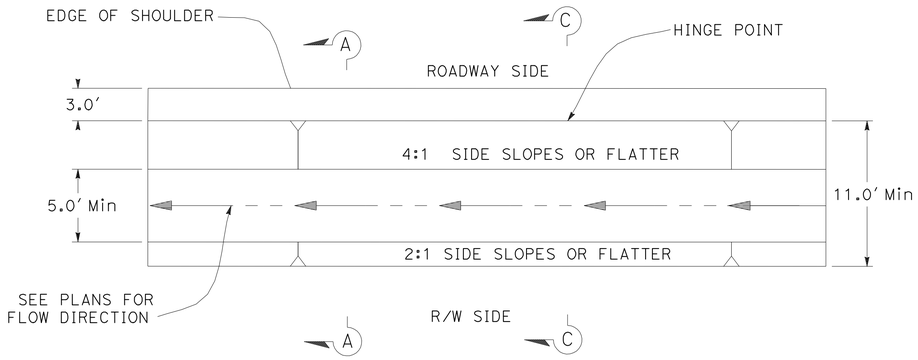

PLAN

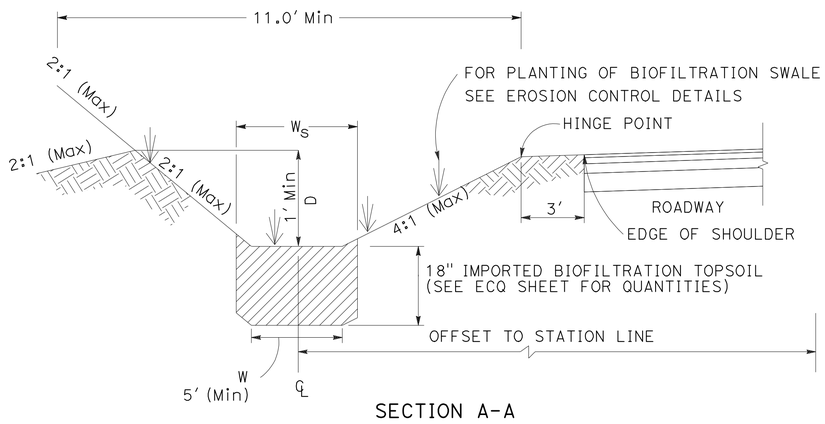

SECTION A-A

BIOFILTRATION SWALE (A)

16 k 20 g

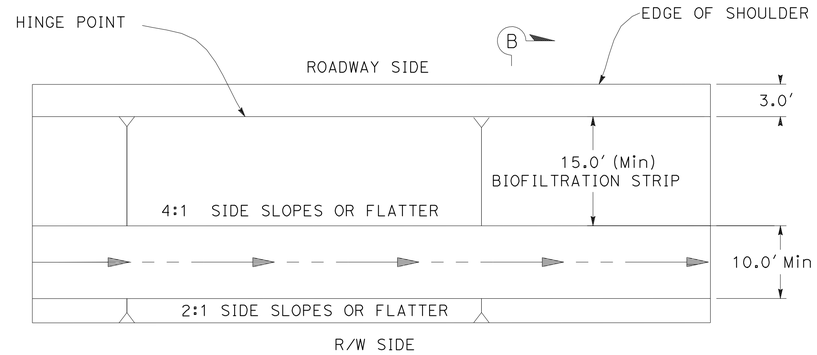

PLAN

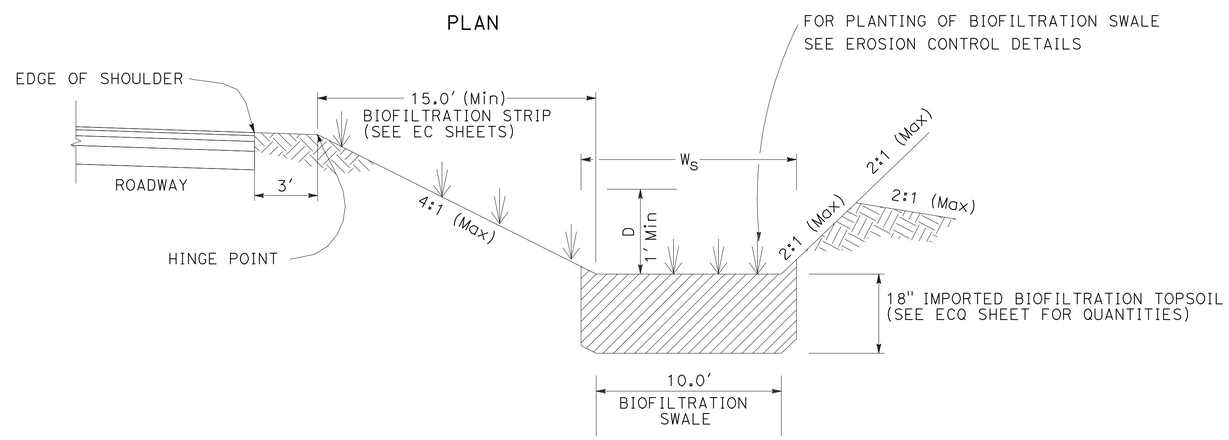

SECTION B-B

BIOFILTRATION SWALE (C)

37 l

ABBREVIATIONS:

W_S IMPORTED BIOFILTRATION TOPSOIL WIDTH

NOTE:

1. IMPORTED BIOFILTRATION TOPSOIL WIDTH SHALL BE CENTERED ON THE CENTERLINE OF THE BIOFILTRATION SWALE.

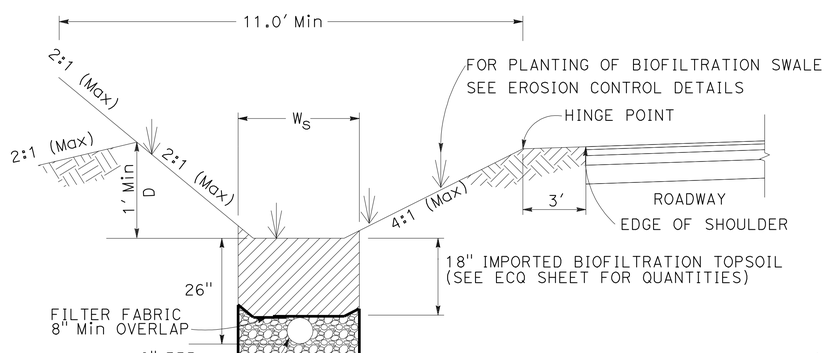

SECTION C-C

BIOFILTRATION SWALE (B)

4 c 14 g 17 c 23 i 28 a

APPROXIMATE ℄ LOCATION	BEGIN FLOWLINE (Ft)	END FLOWLINE (Ft)	WIDTH (W)(Ft)	DEPTH (D)(Ft)	TOPSOIL WIDTH (W_S)(Ft)
53.20′ Lt JC 272+00.00 TO 54.50′ Lt JC 272+67.08	326.83	325.63	5.0	1.0	6.0
70.21′ Rt JCR2 308+00.01 TO 67.50′ Rt JCR2 308+76.81	245.31	244.90	5.0	2.5	6.5
55.29′ Rt JC 314+20.12 TO 55.36′ Rt JC 314+82.08	242.50	241.57	5.0	2.0	6.0
51.00′ Lt JC 318+27.00 TO 51.50′ Lt JC 319+07.95	237.91	237.30	5.0	1.0	6.0
50.25′ Rt JC 325+46.47 TO 51.64′ Rt JC 326+69.83	232.66	232.16	5.0	3.2	6.5
2 **82.73′** ~~88.98′~~ Rt JC 333+97.10 TO **82.30′** ~~88.55′~~ Rt JC 334+94.04	**229.68** ~~229.70~~	**229.10** ~~229.20~~	5.0	1.5	7.0
80.60′ Rt JC 343+39.52 TO 89.96′ Rt JC 344+40.02	234.50	233.50	5.0	1.5	6.5
65.69′ Rt JC 386+93.52 TO 57.13′ Rt JC 389+90.79	126.00	110.22	10.0	3.2	12.0

2 **REVISED PER ADDENDUM No. 2 DATED NOVEMBER 28, 2011**

DRAINAGE DETAILS

NO SCALE

DD-2

STATE OF CALIFORNIA - DEPARTMENT OF TRANSPORTATION — Caltrans

CONSULTANT FUNCTIONAL SUPERVISOR: HAN-BIN LIANG

CALCULATED-DESIGNED BY: ANALETTE OCHOA — CHECKED BY:

REVISED BY: RAJA PERIKETI — DATE REVISED: 04/15/10

VAL 09/30/10 — TN

LAST REVISION 09-30-10 — DATE PLOTTED => 28-NOV-2011 — TIME PLOTTED => 06:22

Dist	COUNTY	ROUTE	POST MILES TOTAL PROJECT	SHEET No.	TOTAL SHEETS
04	Nap,Sol	12	2.8/3.3, 0.0/2.6	145	617

REGISTERED CIVIL ENGINEER — DATE: 09/30/10

PLANS APPROVAL DATE: 11-22-10

REGISTERED PROFESSIONAL ENGINEER — ANALETTE OCHOA — No. 55279 — Exp. 12/31/10 — CIVIL — STATE OF CALIFORNIA

THE STATE OF CALIFORNIA OR ITS OFFICERS OR AGENTS SHALL NOT BE RESPONSIBLE FOR THE ACCURACY OR COMPLETENESS OF SCANNED COPIES OF THIS PLAN SHEET.

WRECO
1243 ALPINE RD, SUITE 108
WALNUT CREEK, CA 94596

SOLANO TRANSPORTATION AUTHORITY
ONE HARBOR CENTER, SUITE 130
SUISUN CITY, CA 94585

LEGEND:

ASPHALT

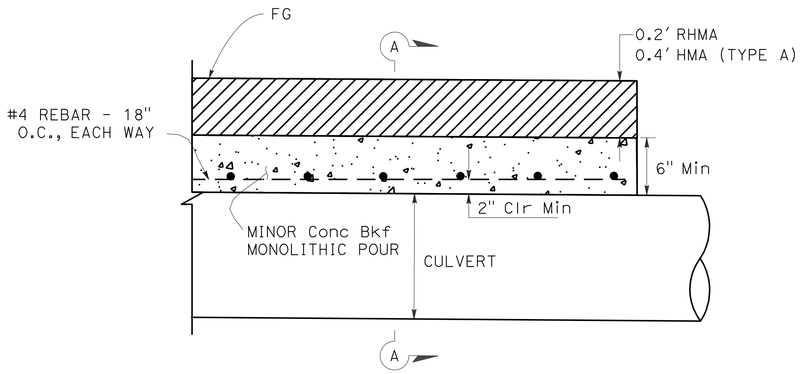

PLAN

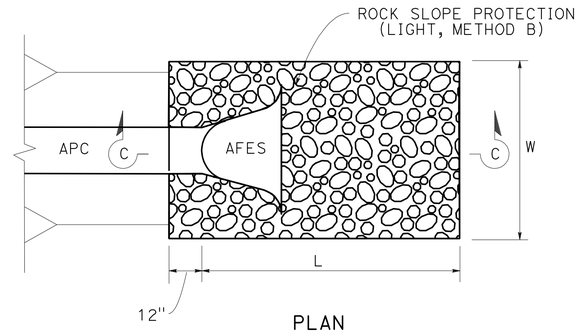

PLAN

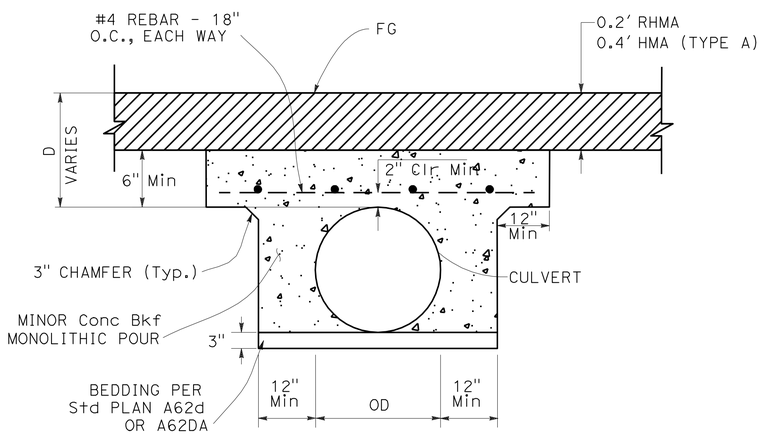

SECTION A-A

NOTE:
TO BE USED FOR PIPE WHERE D < 2.0'

CONCRETE BACKFILL DETAIL

1 f 8 g l 9 d 11 e 14 j m o q 15 e 16 b h
17 h 18 b 19 h 20 b d 21 j n 22 d 32 e h 39 c l

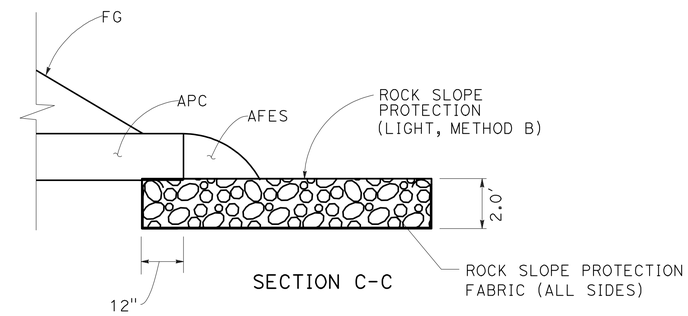

SECTION C-C

SYSTEM No.	AFES	L (Ft)	W (Ft)
15 i	12"	6	4
1 l 14 h l 15 c g 16 j 19 d f 20 f 21 n l 23 h 28 b 31 e g j	18"	7.5	4.5
37 k	24"	10	6
21 y 39 n 6 aa 2	36"	15	9
39 i	36"	20	9

ROCK SLOPE PROTECTION DETAILS

FOR AFES 18", 24" AND 36"

DRAINAGE DETAILS

NO SCALE

DD-3

2 REVISED PER ADDENDUM No. 2 DATED NOVEMBER 28, 2011

VAL	09/30/10		
VAL	04/15/10		
REVISED BY	DATE REVISED		
RAJA PERIKETI	ANALETTE OCHOA		
CALCULATED-DESIGNED BY	CHECKED BY		
CONSULTANT FUNCTIONAL SUPERVISOR	HAN-BIN LIANG		

STATE OF CALIFORNIA - DEPARTMENT OF TRANSPORTATION — Caltrans

LAST REVISION 09-30-10 | DATE PLOTTED => 28-NOV-2011 | TIME PLOTTED => 06:22

FOR ABBREVIATIONS, SEE DQ-1

2 **REVISED PER ADDENDUM No. 2 DATED NOVEMBER 28, 2011**

Dist	COUNTY	ROUTE	POST MILES TOTAL PROJECT	SHEET No.	TOTAL SHEETS
04	Nap,Sol	12	2.8/3.3, 0.0/2.6	184	617

REGISTERED CIVIL ENGINEER — DATE 10/12/10

11-22-10
PLANS APPROVAL DATE

REGISTERED PROFESSIONAL ENGINEER — ANALETTE OCHOA — No. 55279 — Exp. 12/31/10 — CIVIL — STATE OF CALIFORNIA

THE STATE OF CALIFORNIA OR ITS OFFICERS OR AGENTS SHALL NOT BE RESPONSIBLE FOR THE ACCURACY OR COMPLETENESS OF SCANNED COPIES OF THIS PLAN SHEET.

WRECO
1243 ALPINE RD, SUITE 108
WALNUT CREEK, CA 94596

SOLANO TRANSPORTATION AUTHORITY
ONE HARBOR CENTER, SUITE 130
SUISUN CITY, CA 94585

(N) NOT A SEPARATE PAY ITEM, FOR INFORMATION ONLY.

DRAINAGE QUANTITIES

DRAINAGE SYSTEM No. ⬡	DRAINAGE UNIT ◯	REMOVE CULVERT (LF)	REMOVE INLET (EA)	REMOVE HEADWALL (EA)	REMOVE MANHOLE (EA)	PLACE HMA (Misc AREA) (SQYD)	HMA (TON)	DITCH Exc (CY)	ALTERNATIVE PIPE CULVERT (A) 18" (LF)	24" (LF)	30" (LF)	36" (LF)	48" (LF)	ALTERNATIVE PIPE CULVERT (B) 18" (LF)	24" (LF)	36" (LF)	WELDED STEEL PIPE 12" (0.105" THICK) (LF)	18" (0.134" THICK) (LF)	24" (0.250" THICK) (LF)	30" (0.188" THICK) (LF)	6" PLASTIC PIPE (LF)	4" PLASTIC PIPE (LF)	3" PLASTIC PIPE (LF)	24" CSP (0.064" THICK) (LF)	36" CSP RISER (0.109" THICK) (LF)	48" CSP RISER (0.109" THICK) (LF)	ALTERNATIVE FLARED END SECTION 12" (EA)	18" (EA)	24" (EA)	36" (EA)	PIPE JOINT CLASSIFICATION (N)	MAXIMUM COVER (N) (LF)			DESCRIPTION	STATION	DRAINAGE PLAN No.	DRAINAGE SYSTEM No. ⬡	DRAINAGE UNIT ◯
6	s	55																																			R&D 18" Culvert	2.00 Lt JCR2 279+55.72 TO 2.00 Lt JCR2 280+09.85		6	s
	t		1																																		R&D DI	2.00 Lt JCR2 280+09.85			t
	u	48																																			R&D 18" Culvert	2.00 Lt JCR2 280+09.85 TO 49.39 Rt JCR2 280+10.04			u
	v											50																				SJ	3.9			36" APC (A)	2.00 Lt JCR2 280+09.85 TO 49.39 Rt JCR2 280+10.04			v
	w																																				HW	51.88 Rt JCR2 280+10.04			w
	x																																				RSP (LIGHT, METHOD B)	51.88 Rt JCR2 280+10.04			x
2	y											12																				SJ	3.4			**36" APC (A)**	**73.58 Lt JCR2 280+26.52 TO 82.21 Lt JCR2 280+36.64**			y
	z																														1					**36" AFES**	**82.21 Lt JCR2 280+36.64**			z
	aa																																			**RSP (LIGHT, METHOD B)**	**82.21 Lt JCR2 280+36.64**			aa
7	a							104.3																												LINED DITCH	59.03 Lt JCR2 281+37.60 TO 75.95 Lt JCR2 284+81.71	D-2	7	a
8	a																																			RSP (LIGHT, METHOD B)	78.20 Lt JCR2 285+01.76	D-2	8	a
	b																																			HW	65.60 Lt JCR2 284+90.89			b
	c																												1							18" AFES	78.20 Lt JCR2 285+01.76			c
	d																	48														SJ	3.5			18" WSP	78.20 Lt JCR2 285+01.76 TO 72.46 Lt JCR2 285+47.33			d
	e	67																																		DI (Mod)	72.46 Lt JCR2 285+47.33			e
	f	67							123																							SJ	4.8			18" APC (A)	65.60 Lt JCR2 284+90.89 TO 57.72 Rt JCR2 284+93.34			f
	g											62																				SJ	3.2			36" APC (A) w/ Conc Bkf	65.60 Lt JCR2 284+90.89 TO 1.00 Lt JCR2 284+90.99			g
	h			1																																R&D HW	2.00 Rt JCR2 284+90.99			h
	i																																			G2 DI w/ SGD	1.00 Lt JCR2 284+66.00			i
	j								22																							SJ	3.2			18" APC (A)	1.00 Lt JCR2 284+66.00 TO 1.00 Lt JCR2 284+90.99			j
	k																																			G2 DI w/ SGD	1.00 Lt JCR2 284+00.99			k
	l											59																				SJ	3.3			36" APC (A) w/ Conc Bkf	1.00 Lt JCR2 284+90.99 TO 57.72 Rt JCR2 284+93.34			l
	m	59																																		R&D 24" CULVERT	2.00 Rt JCR2 284+90.99 TO 57.72 Rt JCR2 284+93.34			m
	n	59																																		R&D 12" CULVERT	2.00 Rt JCR2 284+90.99 TO 57.72 Rt JCR2 284+93.34			n
	o																																			HW	57.72 Rt JCR2 284+93.34			o
	p																																			RSP (LIGHT, METHOD B)	57.72 Rt JCR2 284+93.34			p
												2 ~~171~~ 183																			2								
		355	1	1				104.3	145									48											1		1					SHEET TOTALS				

DRAINAGE QUANTITIES DQ-5

RAJA PERIKETI — REVISED BY
ANALETTE OCHOA — DATE REVISED
CALCULATED-DESIGNED BY
CHECKED BY
CONSULTANT FUNCTIONAL SUPERVISOR: HAN-BIN LIANG
STATE OF CALIFORNIA - DEPARTMENT OF TRANSPORTATION — Caltrans

TN	10/12/10
VAL	09/30/10
RP	04/15/10

LAST REVISION — DATE PLOTTED => 28-NOV-2011 — TIME PLOTTED => 06:22
10-12-10

FOR ABBREVIATIONS, SEE DQ-1

2 REVISED PER ADDENDUM No. 2 DATED NOVEMBER 28, 2011

Dist	COUNTY	ROUTE	POST MILES TOTAL PROJECT	SHEET No.	TOTAL SHEETS
04	Nap,Sol	12	2.8/3.3, 0.0/2.6	185	617

Anelette Ochoa 04/15/10
REGISTERED CIVIL ENGINEER DATE

11-22-10
PLANS APPROVAL DATE

REGISTERED PROFESSIONAL ENGINEER ANALETTE OCHOA No. 55279 Exp. 12/31/10 CIVIL STATE OF CALIFORNIA

THE STATE OF CALIFORNIA OR ITS OFFICERS OR AGENTS SHALL NOT BE RESPONSIBLE FOR THE ACCURACY OR COMPLETENESS OF SCANNED COPIES OF THIS PLAN SHEET.

WRECO
1243 ALPINE RD, SUITE 108
WALNUT CREEK, CA 94596

SOLANO TRANSPORTATION AUTHORITY
ONE HARBOR CENTER, SUITE 130
SUISUN CITY, CA 94585

(N) NOT A SEPARATE PAY ITEM, FOR INFORMATION ONLY.

DRAINAGE QUANTITIES

DRAINAGE SYSTEM No. ⬡	DRAINAGE UNIT ◯	CONCRETE COLLAR (N) EA	RSP (LIGHT, METHOD B) CY	RSP (BACKING NO.3, METHOD A) CY	CONCRETED - RSP (FACING, METHOD B) CY	RSP (1/4 TON, METHOD A MODIFIED) CY	RSP (1/4 TON, METHOD A) CY	RSP FABRIC SQYD	*STRUCTURAL CONCRETE, BOX CULVERT CY	*STRUCTURAL CONCRETE, HEADWALL CY	SAND Bkf CY	MINOR CONCRETE: BACKFILL CY	MINOR CONCRETE: MINOR STRUCTURE CY	MINOR CONCRETE: DITCH LINING CY	MINOR CONCRETE: DRAINAGE RELEASE CY	MINOR CONCRETE: Misc CONSTRUCTION CY	*CONC BARRIER (TYPE 732A) LF	*BAR REINFORCING STEEL (BOX CULVERT) LB	*BAR REINFORCING STEEL (HEADWALL) LB	Misc IRON & STEEL LB	FRAME & GRATE OR FRAME & COVER (N): TYPE 24-12 EA	FRAME & GRATE OR FRAME & COVER (N): TYPE 24-12X EA	FRAME & GRATE OR FRAME & COVER (N): TYPE 36RX EA	FRAME & GRATE OR FRAME & COVER (N): U45 MANHOLE EA	ROCK BLANKET (MODIFIED) SQYD	HEIGHT OF INLET OR MH (N) LF	DRAINAGE INLET MARKER EA	18" TEMPORARY CULVERT LF	*CABLE RAILING LF	*CLASS 3 AB CY	Temp DRAINAGE (TYPE 1) EA	WATER QUALITY WEIR EA	DESCRIPTION	STATION	DRAINAGE PLAN No.	DRAINAGE SYSTEM No. ⬡	DRAINAGE UNIT ◯
6	s																																		R&D 18" Culvert	2.00 Lt JCR2 279+55.72 TO 2.00 Lt JCR2 280+09.85		6	s
	t																																		R&D DI	2.00 Lt JCR2 280+09.85			t
	u																																		R&D 18" Culvert	2.00 Lt JCR2 280+09.85 TO 49.39 Rt JCR2 280+10.04			u
	v																																		36" APC (A)	2.00 Lt JCR2 280+09.85 TO 49.39 Rt JCR2 280+10.04			v
	w									10.98									1427										20	16				HW	51.88 Rt JCR2 280+10.04			w
	x		14.83					24.0																											RSP (LIGHT, METHOD B)	51.88 Rt JCR2 280+10.04			x
	2 y																																		**36" APC (A)**	**73.58 Lt JCR2 280+26.52 TO 82.21 Lt JCR2 280+36.64**			y
	2 z																																		**36" AFES**	**82.21 Lt JCR2 280+36.64**			z
	aa		10.00					25.7																											**RSP (LIGHT, METHOD B)**	**82.21 Lt JCR2 280+36.64**			aa
7	a													38.87																					LINED DITCH	59.03 Lt JCR2 281+37.60 TO 75.95 Lt JCR2 284+81.71	D-2	7	a
8	a		16.48					26.7																											RSP (LIGHT, METHOD B)	78.20 Lt JCR2 285+01.76	D-2	8	a
	b									11.46									1478										22	17				HW	65.60 Lt JCR2 284+90.89			b
	c																																		18" AFES	78.20 Lt JCR2 285+01.76			c
	d														0.59																				18" WSP	78.20 Lt JCR2 285+01.76 TO 72.46 Lt JCR2 285+47.33			d
	e														1.28					326	1					1								DI (Mod)	72.46 Lt JCR2 285+47.33			e
	f																																		18" APC (A)	65.60 Lt JCR2 284+90.89 TO 57.72 Rt JCR2 284+93.34			f
	g											18.11																							36" APC (A) w/ Conc Bkf	65.60 Lt JCR2 284+90.89 TO 1.00 Lt JCR2 284+90.99			g
	h																																		R&D HW	2.00 Rt JCR2 284+90.99			h
	i												1.74		1.15					239		1				5	1								G2 DI w/ SGD	1.00 Lt JCR2 284+66.00			i
	j																																		18" APC (A)	1.00 Lt JCR2 284+66.00 TO 1.00 Lt JCR2 284+90.99			j
	k												1.63		1.15					239		1				4	1								G2 DI w/ SGD	1.00 Lt JCR2 284+00.99			k
	l											17.23																							36" APC (A) w/ Conc Bkf	1.00 Lt JCR2 284+90.99 TO 57.72 Rt JCR2 284+93.34			l
	m																																		R&D 24" CULVERT	2.00 Rt JCR2 284+90.99 TO 57.72 Rt JCR2 284+93.34			m
	n																																		R&D 12" CULVERT	2.00 Rt JCR2 284+90.99 TO 57.72 Rt JCR2 284+93.34			n
	o									10.86									1271										22	17				HW	57.72 Rt JCR2 284+93.34			o
	p		16.48					26.7																											RSP (LIGHT, METHOD B)	57.72 Rt JCR2 284+93.34			p
			2 ~~47.79~~					2 ~~77.4~~																															
			57.79					103.1		33.30		35.34	3.37	38.87	4.17				4176	804	1	2				2			64	50				SHEET TOTALS				

DRAINAGE QUANTITIES DQ-6

RP	04/15/10	REVISED BY	DATE REVISED
RAJA PERIKETI	ANALETTE OCHOA	CALCULATED-DESIGNED BY	CHECKED BY
CONSULTANT FUNCTIONAL SUPERVISOR	HAN-BIN LIANG		

STATE OF CALIFORNIA - DEPARTMENT OF TRANSPORTATION
Caltrans

LAST REVISION 04-15-10 | DATE PLOTTED => 28-NOV-2011 | TIME PLOTTED => 06:22

Dist	COUNTY	ROUTE	POST MILES TOTAL PROJECT	SHEET No.	TOTAL SHEETS
04	Nap,Sol	12	2.8/3.3, 0.0/2.6	196	617

REGISTERED CIVIL ENGINEER — DATE 10/12/10

11-22-10
PLANS APPROVAL DATE

REGISTERED PROFESSIONAL ENGINEER — ANALETTE OCHOA — No. 55279 — Exp. 12/31/10 — CIVIL — STATE OF CALIFORNIA

THE STATE OF CALIFORNIA OR ITS OFFICERS OR AGENTS SHALL NOT BE RESPONSIBLE FOR THE ACCURACY OR COMPLETENESS OF SCANNED COPIES OF THIS PLAN SHEET.

WRECO
1243 ALPINE RD, SUITE 108
WALNUT CREEK, CA 94596

SOLANO TRANSPORTATION AUTHORITY
ONE HARBOR CENTER, SUITE 130
SUISUN CITY, CA 94585

FOR ABBREVIATIONS, SEE DQ-1

2 REVISED PER ADDENDUM No. 2 DATED NOVEMBER 28, 2011

(N) NOT A SEPARATE PAY ITEM, FOR INFORMATION ONLY.

DRAINAGE QUANTITIES

DRAINAGE SYSTEM No. ⬡	DRAINAGE UNIT ◯	REMOVE CULVERT (LF)	REMOVE INLET (EA)	REMOVE HEADWALL (EA)	REMOVE MANHOLE (EA)	PLACE HMA (Misc AREA) (SQYD)	HMA (TON)	DITCH Exc (CY)	ALTERNATIVE PIPE CULVERT (A) 18" (LF)	24" (LF)	30" (LF)	36" (LF)	48" (LF)	ALTERNATIVE PIPE CULVERT (B) 18" (LF)	24" (LF)	36" (LF)	WELDED STEEL PIPE 12" (0.105" THICK) (LF)	18" (0.134" THICK) (LF)	24" (0.250" THICK) (LF)	30" (0.188" THICK) (LF)	6" PLASTIC PIPE (LF)	4" PLASTIC PIPE (LF)	3" PLASTIC PIPE (LF)	24" CSP (0.064" THICK) (LF)	36" CSP RISER (0.109" THICK) (LF)	48" CSP RISER (0.109" THICK) (LF)	ALTERNATIVE FLARED END SECTION 12" (EA)	18" (EA)	24" (EA)	36" (EA)	PIPE JOINT CLASSIFICATION (N)	MAXIMUM COVER (N) (LF)			DESCRIPTION	STATION	DRAINAGE PLAN No.	DRAINAGE SYSTEM No. ⬡	DRAINAGE UNIT ◯
22	a																																				DI (Mod)	44.12 Lt JC 331+56.47	D-6	22	a
	b																5															SJ	2.5			12" WSP	44.12 Lt JC 331+56.47 TO 40.90 Lt JC 331+56.16			b
	c																																			G2 DI	40.90 Lt JC 331+56.16			c
	d								229																							SJ	1.5			18" APC (A) w/ Conc Bkf	40.90 Lt JC 331+56.16 TO 40.65 Lt JC 329+19.67			d
	e							17.9																											UNLINED DITCH	46.89 Lt JC 329+05.00 TO 69.96 Lt JC 331+38.96			e
23	a																																			G2 DI w/ SGD	2.00 R+ JC 335+00.00	D-6	23	a
	b								47																							SJ	3.1			18" APC (A)	2.00 R+ JC 335+00.00 TO 2.00 R+ JC 334+50.00			b
	c																																			G2 DI w/ SGD	2.00 R+ JC 334+50.00			c
	d								47																							SJ	3.4			18" APC (A)	2.00 R+ JC 334+50.00 TO 2.00 R+ JC 334+00.00			d
	e																																			G2 DI w/ SGD	2.00 R+ JC 334+00.00			e
	f							2	72 ~~78~~																							SJ	7.0			18" APC (A)	2.00 R+ JC 334+00.00 TO 80.58 ~~86.83~~ R+ JC 334+00.00			f
	g																												1							18" AFES	80.58 ~~86.83~~ R+ JC 334+00.00			g
	h																																			RSP (LIGHT, METHOD B) 2	80.58 ~~86.83~~ R+ JC 334+00.00			h
	i							51.2																												BIOFILTRATION SWALE (B)	82.73 ~~88.98~~ R+ JC 333+97.10 TO 82.30 ~~88.55~~ R+ JC 334+94.04			i
	j																																			RSP (LIGHT, METHOD B)	82.30 ~~88.55~~ R+ JC 334+94.04			j
24	a																																			G1 DI	108.66 Lt JC 336+34.84	D-6	24	a
	b																				12															6" PP	108.66 Lt JC 336+34.84 TO 102.04 Lt JC 336+23.96			b
	c																																			RSP (1/4 TON, METHOD A Mod)	52.31 Lt JC 335+90.01			c
	d																																			BASIN	52.31 Lt JC 335+90.01			d
	e																																			PCC SLAB	52.31 Lt JC 335+90.01			e
	f																									8										36" CSP RISER	56.82 Lt JC 335+83.70			f
	g																																			ROCK BLANKET Mod	52.13 Lt JC 335+90.01			g
	h									13																						SJ	5.8			24" APC (A)	56.82 Lt JC 335+83.70 TO 42.10 Lt JC 335+83.00			h
	i																																			G2 DI	42.10 Lt JC 335+83.00			i
	j									37																						SJ	8.3			24" APC (A)	42.10 Lt JC 335+83.00 TO 2.00 Lt JC 335+61.87			j
	k																																			G2 MH	2.00 Lt JC 335+61.87			k
	l																		10													SJ	13.0			24" WSP	2.00 Lt JC 335+61.87 TO 2.00 Lt JC 335+61.88			l
	m																																			G2 MH	2.00 R+ JC 335+61.88			m
	n																							75								SJ	7.0			24" CSP w/ TEE	2.00 R+ JC 335+61.88 TO 79.20 R+ JC 335+61.95			n
	o		1						2																											R&D DI	25.84 R+ JC 335+56.20			o
			1					69.1	395 ~~407~~	50							5		10		12			75	8			1								SHEET TOTALS				

DRAINAGE QUANTITIES DQ-17

STATE OF CALIFORNIA - DEPARTMENT OF TRANSPORTATION
Caltrans

CONSULTANT FUNCTIONAL SUPERVISOR: HAN-BIN LIANG
CALCULATED-DESIGNED BY: ANALETTE OCHOA
CHECKED BY: RAJA PERIKETI
REVISED BY: TN, VAL, RP
DATE REVISED: 10/12/10, 09/30/10, 04/15/10

LAST REVISION: 10-12-10
DATE PLOTTED => 28-NOV-2011
TIME PLOTTED => 06:22

BORDER LAST REVISED 4/11/2008
RELATIVE BORDER SCALE IS IN INCHES 0 1 2 3
USERNAME => s121614
DGN FILE => 426414id017.dgn
CU 04264
EA 264141

FOR ABBREVIATIONS, SEE DQ-1

2 **REVISED PER ADDENDUM No. 2 DATED NOVEMBER 28, 2011**

Dist	COUNTY	ROUTE	POST MILES TOTAL PROJECT	SHEET No.	TOTAL SHEETS
04	Nap,Sol	12	2.8/3.3, 0.0/2.6	197	617

REGISTERED CIVIL ENGINEER 09/30/10 DATE

11-22-10
PLANS APPROVAL DATE

REGISTERED PROFESSIONAL ENGINEER ANALETTE OCHOA No. 55279 Exp. 12/31/10 CIVIL STATE OF CALIFORNIA

THE STATE OF CALIFORNIA OR ITS OFFICERS OR AGENTS SHALL NOT BE RESPONSIBLE FOR THE ACCURACY OR COMPLETENESS OF SCANNED COPIES OF THIS PLAN SHEET.

WRECO
1243 ALPINE RD, SUITE 108
WALNUT CREEK, CA 94596

SOLANO TRANSPORTATION AUTHORITY
ONE HARBOR CENTER, SUITE 130
SUISUN CITY, CA 94585

(N) NOT A SEPARATE PAY ITEM, FOR INFORMATION ONLY.

DRAINAGE QUANTITIES

DRAINAGE SYSTEM No. ⬡	DRAINAGE UNIT ◯	CONCRETE COLLAR (N)	RSP (LIGHT, METHOD B)	RSP (BACKING NO.3, METHOD A)	CONCRETED (FACING, METHOD B) RSP	RSP (1/4 TON, METHOD A MODIFIED)	RSP (1/4 TON, METHOD A)	RSP FABRIC	*STRUCTURAL CONCRETE, BOX CULVERT	*STRUCTURAL CONCRETE, HEADWALL	SAND Bkf	MINOR CONCRETE: BACKFILL	MINOR CONCRETE: MINOR STRUCTURE	MINOR CONCRETE: DITCH LINING	MINOR CONCRETE: DRAINAGE RELEASE	MINOR CONCRETE: Misc CONSTRUCTION	*CONC BARRIER (TYPE 732A)	*BAR REINFORCING STEEL (BOX CULVERT)	*BAR REINFORCING STEEL (HEADWALL)	Misc IRON & STEEL	FRAME & GRATE OR FRAME & COVER (N): TYPE 24-12	FRAME & GRATE OR FRAME & COVER (N): TYPE 24-12X	FRAME & GRATE OR FRAME & COVER (N): TYPE 36RX	FRAME & GRATE OR FRAME & COVER (N): U45 MANHOLE	ROCK BLANKET (MODIFIED)	HEIGHT OF INLET OR MH (N)	DRAINAGE INLET MARKER	18" TEMPORARY CULVERT	*CABLE RAILING	*CLASS 3 AB	Temp DRAINAGE (TYPE 1)	WATER QUALITY WEIR	DESCRIPTION	STATION	DRAINAGE PLAN No.	DRAINAGE SYSTEM No. ⬡	DRAINAGE UNIT ◯
		EA	CY	CY	CY	CY	CY	SQYD	CY	CY	CY	CY	CY	CY	CY	CY	LF	LB	LB	LB	EA	EA	EA	EA	SQYD	LF	EA	LF	LF	CY	EA	EA					
22	a															1.28				326	1					1							DI (Mod)	44.12 Lt JC 331+56.47	D-6	22	a
	b											0.47				0.59																	12" WSP	44.12 Lt JC 331+56.47 TO 40.90 Lt JC 331+56.16			b
	c												1.06							239		1			2	1						G2 DI	40.90 Lt JC 331+56.16			c
	d											31.29																				18" APC (A) w/ Conc Bkf	40.90 Lt JC 331+56.16 TO 40.65 Lt JC 329+19.67			d
	e																															UNLINED DITCH	46.89 Lt JC 329+05.00 TO 69.96 Lt JC 331+38.96			e
23	a												1.68			1.15				239		1			4	1						G2 DI w/ SGD	2.00 Rt JC 335+00.00	D-6	23	a
	b																															18" APC (A)	2.00 Rt JC 335+00.00 TO 2.00 Rt JC 334+50.00			b
	c												1.75			1.15				239		1			4	1						G2 DI w/ SGD	2.00 Rt JC 334+50.00			c
	d																															18" APC (A)	2.00 Rt JC 334+50.00 TO 2.00 Rt JC 334+00.00			d
	e												1.87			1.15				239		1			4	1						G2 DI w/ SGD	2.00 Rt JC 334+00.00			e
	f																															18" APC (A)	2.00 Rt JC 334+00.00 TO ~~86.83~~ 80.58 Rt JC 334+00.00			f
	g																															18" AFES	~~86.83~~ 80.58 Rt JC 334+00.00			g
	h		2.50				9.1																									RSP (LIGHT, METHOD B) 2	~~86.83~~ 80.58 Rt JC 334+00.00			h
	i																															BIOFILTRATION SWALE (B)	~~88.98~~ 82.73 Rt JC 333+97.10 TO ~~88.55~~ 82.30 Rt JC 334+94.04			i
	j		7.70				12.8																									RSP (LIGHT, METHOD B)	~~88.55~~ 82.30 Rt JC 334+94.04			j
24	a												0.95							239		1			3							G1 DI	108.66 Lt JC 336+34.84	D-6	24	a
	b																															6" PP	108.66 Lt JC 336+34.84 TO 102.04 Lt JC 336+23.96			b
	c					115.6	136.4																									RSP (1/4 TON, METHOD A Mod)	52.31 Lt JC 335+90.01			c
	d																															BASIN	52.31 Lt JC 335+90.01			d
	e														14.60																	PCC SLAB	52.31 Lt JC 335+90.01			e
	f															1.15																36" CSP RISER	56.82 Lt JC 335+83.70			f
	g																							132.0								ROCK BLANKET Mod	52.13 Lt JC 335+90.01			g
	h																															24" APC (A)	56.82 Lt JC 335+83.70 TO 42.10 Lt JC 335+83.00			h
	i												2.81							239		1			8	1						G2 DI	42.10 Lt JC 335+83.00			i
	j																															24" APC (A)	42.10 Lt JC 335+83.00 TO 2.00 Lt JC 335+61.87			j
	k												4.28							435			1		10							G2 MH	2.00 Lt JC 335+61.87			k
	l															0.59																24" WSP	2.00 Lt JC 335+61.87 TO 2.00 Lt JC 335+61.88			l
	m												1.89							435			1		5							G2 MH	2.00 Rt JC 335+61.88			m
	n																															24" CSP w/ TEE	2.00 Rt JC 335+61.88 TO 79.20 Rt JC 335+61.95			n
	o																															R&D DI	25.84 Rt JC 335+56.20			o
			10.20			115.6	158.3					31.76	16.29		14.60	7.06				2630	1	6		2	132.0		5						SHEET TOTALS				

DRAINAGE QUANTITIES DQ-18

VAL	09/30/10		
RP	04/15/10	REVISED BY	DATE REVISED
RAJA PERIKETI	ANALETTE OCHOA	CALCULATED-DESIGNED BY	CHECKED BY
CONSULTANT FUNCTIONAL SUPERVISOR	HAN-BIN LIANG		

STATE OF CALIFORNIA - DEPARTMENT OF TRANSPORTATION
Caltrans

LAST REVISION 09-30-10 | DATE PLOTTED => 28-NOV-2011 | TIME PLOTTED => 06:23

Dist	COUNTY	ROUTE	POST MILES TOTAL PROJECT	SHEET No.	TOTAL SHEETS
04	Nap,Sol	12	2.8/3.3, 0.0/2.6	206	617

REGISTERED CIVIL ENGINEER — DATE 10/12/10

11-22-10
PLANS APPROVAL DATE

REGISTERED PROFESSIONAL ENGINEER — ANALETTE OCHOA — No. 55279 — Exp. 12/31/10 — CIVIL — STATE OF CALIFORNIA

THE STATE OF CALIFORNIA OR ITS OFFICERS OR AGENTS SHALL NOT BE RESPONSIBLE FOR THE ACCURACY OR COMPLETENESS OF SCANNED COPIES OF THIS PLAN SHEET.

WRECO
1243 ALPINE RD, SUITE 108
WALNUT CREEK, CA 94596

SOLANO TRANSPORTATION AUTHORITY
ONE HARBOR CENTER, SUITE 130
SUISUN CITY, CA 94585

FOR ABBREVIATIONS, SEE DQ-1

2 **REVISED PER ADDENDUM No. 2 DATED NOVEMBER 28, 2011**

(N) NOT A SEPARATE PAY ITEM, FOR INFORMATION ONLY.

DRAINAGE QUANTITIES

DRAINAGE SYSTEM No. ⬡	DRAINAGE UNIT ◯	REMOVE CULVERT (LF)	REMOVE INLET (EA)	REMOVE HEADWALL (EA)	REMOVE MANHOLE (EA)	PLACE HMA (Misc AREA) (SQYD)	HMA (TON)	DITCH Exc (CY)	ALTERNATIVE PIPE CULVERT (A) 18" (LF)	24" (LF)	30" (LF)	36" (LF)	48" (LF)	ALTERNATIVE PIPE CULVERT (B) 18" (LF)	24" (LF)	36" (LF)	WELDED STEEL PIPE 12" (0.105" THICK) (LF)	18" (0.134" THICK) (LF)	24" (0.250" THICK) (LF)	30" (0.188" THICK) (LF)	6" PLASTIC PIPE (LF)	4" PLASTIC PIPE (LF)	3" PLASTIC PIPE (LF)	24" CSP (0.064" THICK) (LF)	36" CSP RISER (0.109" THICK) (LF)	48" CSP RISER (0.109" THICK) (LF)	ALTERNATIVE FLARED END SECTION 12" (EA)	18" (EA)	24" (EA)	36" (EA)	PIPE JOINT CLASSIFICATION (N)	MAXIMUM COVER (N) (LF)			DESCRIPTION	STATION	DRAINAGE PLAN No.	DRAINAGE SYSTEM No. ⬡	DRAINAGE UNIT ◯
38	a			1																																	R&D HW	22.71 R+ JC 382+04.09	D-10	38	a
	b									46																						SJ	6.0			24" APC (A) w/ Conc COLLAR	22.50 R+ JC 382+04.09 TO 56.35 R+ JC 382+35.39			b
	c																																		HW	56.35 R+ JC 382+35.39			c
	d																																		RSP (LIGHT, METHOD B)	56.35 R+ JC 382+35.39			d
39	a			1																															R&D HW	51.28 L+ JC 390+25.91	D-10	39	a
	b																																		HW	51.28 L+ JC 390+25.91			b
	c											93																				SJ	3.0			36" APC (A) w/ Conc Bkf	51.28 L+ JC 390+25.91 TO 41.37 L+ JC 390+22.29			c
	d	10																																	R&D 24" CULVERT	51.28 L+ JC 390+25.91 TO 41.38 L+ JC 390+25.03			d
	e				1																														R&D MH	41.38 L+ JC 390+25.03			e
	f	74																																	R&D 24" CULVERT	41.38 L+ JC 390+25.03 TO 31.13 R+ JC 390+22.76			f
	g			1																															R&D HW	31.13 R+ JC 390+22.76			g
	h																															1				36" AFES	41.37 R+ JC 390+22.29			h
	i																																		RSP (LIGHT, METHOD B)	41.37 R+ JC 390+22.29			i
	j																																		RSP (LIGHT, METHOD B)	51.28 L+ JC 390+25.91			j
	k																															1				36" AFES	67.88 R+ JC 390+25.58			k
	l															17																	2.0			36" APC (B)	67.88 R+ JC 390+25.58 TO 87.47 R+ JC 390+28.23			l
	m																															1				36" AFES	87.47 R+ JC 390+28.23			m
	n																																			RSP (LIGHT, METHOD B)	87.47 R+ JC 390+28.23			n
T								1088.0																											TEMPORARY DRAINAGE		SCD	T	
		84		3	1			1088.0		46		93				17																3				SHEET TOTALS				
																																				FROM SHEET UQ-2				
																																				FROM SHEET UQ-3				
							0.78																													TO ROADWAY QUANTITIES				
		1019	9	11	1	7.20		2660.3	6088 ~~6094~~	2876	419	715 ~~703~~	25	79	265	445	32	351	10	22	43	52	50	75	19	13	1	19	1	4 ~~3~~					GRAND TOTAL				

2

DRAINAGE QUANTITIES DQ-27

TN	10/12/10	RAJA PERIKETI	ANALETTE OCHOA
VAL	09/30/10	CALCULATED-DESIGNED BY	CHECKED BY
RP	04/15/10	CONSULTANT FUNCTIONAL SUPERVISOR	HAN-BIN LIANG
REVISED BY	DATE REVISED		

STATE OF CALIFORNIA - DEPARTMENT OF TRANSPORTATION
Caltrans

LAST REVISION DATE PLOTTED => 28-NOV-2011
10-12-10 TIME PLOTTED => 06:23

FOR ABBREVIATIONS, SEE DQ-1

2 REVISED PER ADDENDUM No. 2 DATED NOVEMBER 28, 2011

Dist	COUNTY	ROUTE	POST MILES TOTAL PROJECT	SHEET No.	TOTAL SHEETS
04	Nap,Sol	12	2.8/3.3, 0.0/2.6	207	617

REGISTERED CIVIL ENGINEER — DATE: 09/30/10

11-22-10
PLANS APPROVAL DATE

REGISTERED PROFESSIONAL ENGINEER — ANALETTE OCHOA — No. 55279 — Exp. 12/31/10 — CIVIL — STATE OF CALIFORNIA

THE STATE OF CALIFORNIA OR ITS OFFICERS OR AGENTS SHALL NOT BE RESPONSIBLE FOR THE ACCURACY OR COMPLETENESS OF SCANNED COPIES OF THIS PLAN SHEET.

WRECO
1243 ALPINE RD, SUITE 108
WALNUT CREEK, CA 94596

SOLANO TRANSPORTATION AUTHORITY
ONE HARBOR CENTER, SUITE 130
SUISUN CITY, CA 94585

DRAINAGE QUANTITIES

DRAINAGE SYSTEM No.	DRAINAGE UNIT	CONCRETE COLLAR (N)	RSP (LIGHT, METHOD B)	RSP (BACKING NO.3, METHOD A)	CONCRETED (FACING, METHOD B) RSP	RSP (1/4 TON, METHOD A MODIFIED)	RSP (1/4 TON, METHOD A)	RSP FABRIC	*STRUCTURAL CONCRETE, BOX CULVERT	*STRUCTURAL CONCRETE, HEADWALL	SAND Bkf	MINOR CONCRETE: BACKFILL	MINOR CONCRETE: MINOR STRUCTURE	MINOR CONCRETE: DITCH LINING	MINOR CONCRETE: DRAINAGE RELEASE	MINOR CONCRETE: Misc CONSTRUCTION	*CONC BARRIER (TYPE 732A)	*BAR REINFORCING STEEL (BOX CULVERT)	*BAR REINFORCING STEEL (HEADWALL)	Misc IRON & STEEL	FRAME & GRATE OR FRAME & COVER (N): TYPE 24-12	FRAME & GRATE OR FRAME & COVER (N): TYPE 24-12X	FRAME & GRATE OR FRAME & COVER (N): TYPE 36RX	FRAME & GRATE OR FRAME & COVER (N): U45 MANHOLE	ROCK BLANKET (MODIFIED)	HEIGHT OF INLET OR MH (N)	DRAINAGE INLET MARKER	18" TEMPORARY CULVERT	*CABLE RAILING	*CLASS 3 AB	Temp DRAINAGE (TYPE 1)	WATER QUALITY WEIR	DESCRIPTION	STATION	DRAINAGE PLAN No.	DRAINAGE SYSTEM No.	DRAINAGE UNIT
		EA	CY	CY	CY	CY	CY	SQYD	CY	CY	CY	CY	CY	CY	CY	CY	LF	LB	LB	LB	EA	EA	EA	EA	SQYD	LF	EA	LF	LF	CY	EA	EA					
38	a																																R&D HW	22.71 R+ JC 382+04.09	D-10	38	a
	b	1										8.45																					24" APC (A) w/ Conc COLLAR	22.50 R+ JC 382+04.09 TO 56.35 R+ JC 382+35.39			b
	c									8.06									1113									16	11			HW	56.35 R+ JC 382+35.39			c
	d		8.15					12.7																									RSP (LIGHT, METHOD B)	56.35 R+ JC 382+35.39			d
39	a																																R&D HW	51.28 L+ JC 390+25.91	D-10	39	a
	b									10.89									1418									21	17			HW	51.28 L+ JC 390+25.91			b
	c											27.16																					36" APC (A) w/ Conc Bkf	51.28 L+ JC 390+25.91 TO 41.37 L+ JC 390+22.29			c
	d																																R&D 24" CULVERT	51.28 L+ JC 390+25.91 TO 41.38 L+ JC 390+25.03			d
	e																																R&D MH	41.38 L+ JC 390+25.03			e
	f																																R&D 24" CULVERT	41.38 L+ JC 390+25.03 TO 31.13 R+ JC 390+22.76			f
	g																																R&D HW	31.13 R+ JC 390+22.76			g
	h																																36" AFES	41.37 R+ JC 390+22.29			h
	i		13.33					32.9																									RSP (LIGHT, METHOD B)	41.37 R+ JC 390+22.29			i
	j		14.83					24.0																									RSP (LIGHT, METHOD B)	51.28 L+ JC 390+25.91			j
	k																																36" AFES	67.88 R+ JC 390+25.58			k
	l											4.96																					36" APC (B)	67.88 R+ JC 390+25.58 TO 87.47 R+ JC 390+28.23			l
	m																																36" AFES	87.47 R+ JC 390+28.23			m
	n		10.00					25.7																									RSP (LIGHT, METHOD B)	87.47 R+ JC 390+28.23			n
T			7.41					26.7					9.17							1673	7						311			11			TEMPORARY DRAINAGE		SCD	T	
		1	53.72					122		18.95		40.57	9.17						2531	1673	7					311	37	28	11			SHEET TOTALS				
												135.00																					FROM SHEET UQ-2				
			2					2			674																						FROM SHEET UQ-3				
																													282				TO ROADWAY QUANTITIES				
		4	334.57 ~~324.57~~	2.29	5.19	231.20	59.2	1137.4 ~~1111.7~~	743.7	168.41	674	471.74	198.64	94.53	21.50	66.65	45	6882	19842	31946	19	83	1	13	194.0		76	311	247		11	5		GRAND TOTAL				

DRAINAGE QUANTITIES DQ-28

STATE OF CALIFORNIA - DEPARTMENT OF TRANSPORTATION — Caltrans

RAJA PERIKETI	REVISED BY	RP	VAL
ANALETTE OCHOA	DATE REVISED	04/15/10	09/30/10

CALCULATED-DESIGNED BY: ANALETTE OCHOA
CHECKED BY:
CONSULTANT FUNCTIONAL SUPERVISOR: HAN-BIN LIANG

LAST REVISION 09-30-10 | DATE PLOTTED => 28-NOV-2011 | TIME PLOTTED => 06:23

FOR ACCURATE RIGHT OF WAY DATA, CONTACT
RIGHT OF WAY ENGINEERING AT THE DISTRICT OFFICE.

Dist	COUNTY	ROUTE	POST MILES TOTAL PROJECT	SHEET No.	TOTAL SHEETS
04	Nap,Sol	12	2.8/3.3, 0.0/2.6	213	617

REGISTERED CIVIL ENGINEER — DATE 12/22/09

11-22-10
PLANS APPROVAL DATE

REGISTERED PROFESSIONAL ENGINEER — ANALETTE OCHOA — No. 55279 — Exp. 12/31/10 — CIVIL — STATE OF CALIFORNIA

THE STATE OF CALIFORNIA OR ITS OFFICERS OR AGENTS SHALL NOT BE RESPONSIBLE FOR THE ACCURACY OR COMPLETENESS OF SCANNED COPIES OF THIS PLAN SHEET.

WRECO
1243 ALPINE RD, SUITE 108
WALNUT CREEK, CA 94596

SOLANO TRANSPORTATION AUTHORITY
ONE HARBOR CENTER, SUITE 130
SUISUN CITY, CA 94585

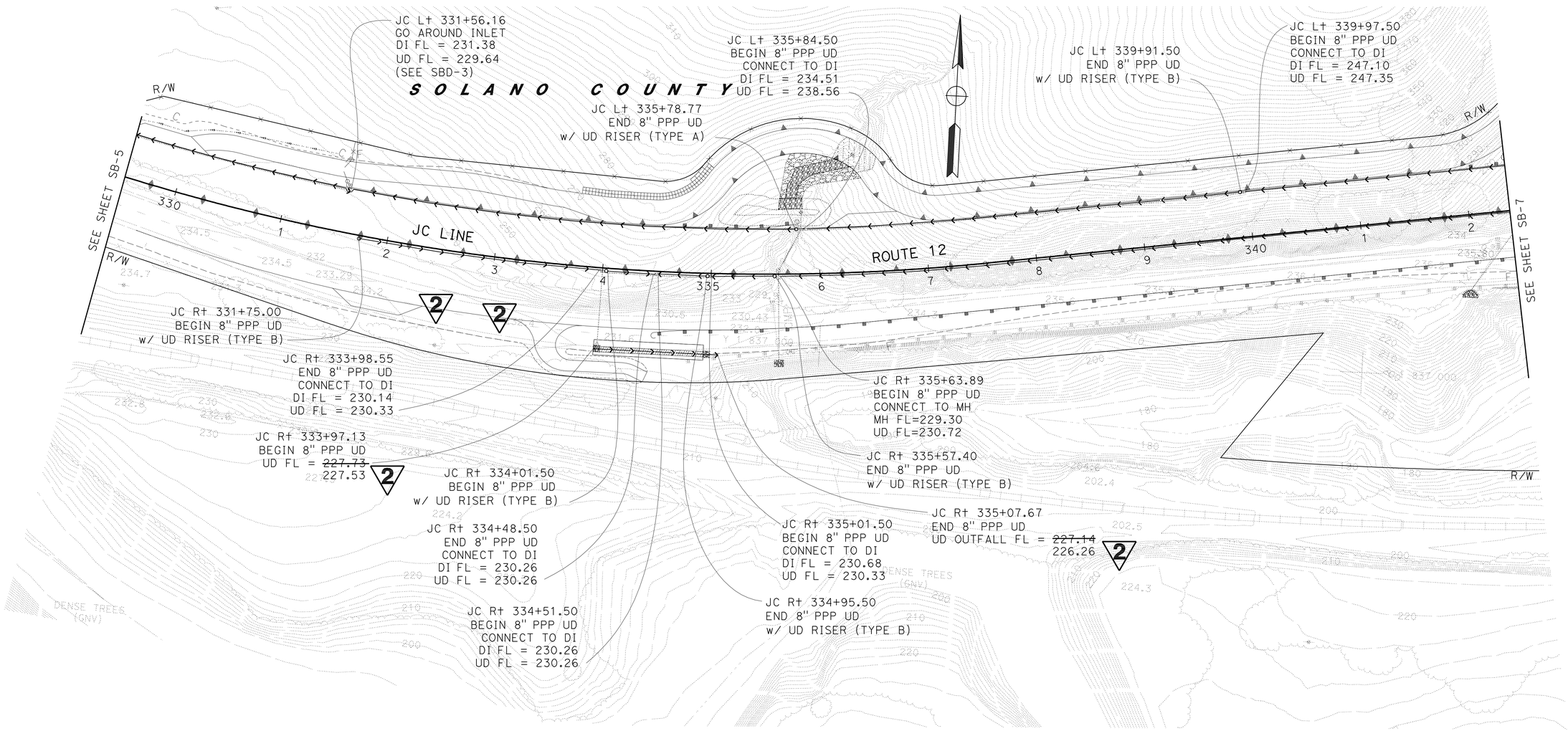

2 REVISED PER ADDENDUM No. 2 DATED NOVEMBER 28, 2011

SUBSURFACE DRAINAGE PLAN
UNDERDRAIN

SCALE: 1" = 50'

FOR NOTES, ABBREVIATIONS & LEGEND, SEE SHEET SB-1

THIS PLAN ACCURATE FOR UNDERDRAIN WORK ONLY.

SB-6

STATE OF CALIFORNIA - DEPARTMENT OF TRANSPORTATION
Caltrans

CONSULTANT FUNCTIONAL SUPERVISOR: HAN-BIN LIANG
CALCULATED-DESIGNED BY: RAJA PERIKETI
CHECKED BY: ANALETTE OCHOA
REVISED BY
DATE REVISED

LAST REVISION: DATE PLOTTED => 28-NOV-2011
12-22-09 TIME PLOTTED => 06:23

Dist	COUNTY	ROUTE	POST MILES TOTAL PROJECT	SHEET No.	TOTAL SHEETS
04	Nap,Sol	12	2.8/3.3, 0.0/2.6	342	617

REGISTERED CIVIL ENGINEER 09/30/10 DATE

11-22-10
PLANS APPROVAL DATE

REGISTERED PROFESSIONAL ENGINEER RICHARD K. TANAKA No. 23233 Exp. 12/31/11 CIVIL STATE OF CALIFORNIA

THE STATE OF CALIFORNIA OR ITS OFFICERS OR AGENTS SHALL NOT BE RESPONSIBLE FOR THE ACCURACY OR COMPLETENESS OF SCANNED COPIES OF THIS PLAN SHEET.

MARK THOMAS & COMPANY, INC.
1960 ZANKER ROAD
SAN JOSE, CA 95112

SOLANO TRANSPORTATION AUTHORITY
ONE HARBOR CENTER, SUITE 130
SUISUN CITY, CA 94585

ROADWAY QUANTITIES

STATION	HMA (TYPE A)	RUBBERIZED HOT MIX ASPHALT (GAP GRADED)	TACK COAT	CLASS 3 AGGREGATE BASE*	CLASS 4 AGGREGATE SUBBASE	LEAN CONCRETE BASE	COLD PLANE AC PAVEMENT	IMPORTED MATERIAL (SHOULDER BACKING)
	TON			CY			SQYD	TON
JC 262+50.00 TO JC 264+30.00	227	214	0.2		430	175	1012	6
JC 264+30.00 TO JC 265+25.00	148	112	0.1		280	114	308	4
JC 265+25.00 TO JC 270+75.00	966	649	0.4		1,835	746		60
JC 270+75.00 TO JC 274+70.00	733	501	0.8		1,284	522	206	43
JC 274+70.00 TO JC 279+00.00	1,606	604	0.7		1,777	722		
JCR2 279+00.00 TO JCR2 281+38.22	1,031	344	0.4		1,034	420		
JCR2 281+38.22 TO JCR2 286+50.00	1,644	684	0.2	23	1,985	1,258		
JCR2 286+50.00 TO JCR2 290+05.00	1,900	907			3,609	1,466		
JCR2 290+05.00 TO JCR2 292+00.00	616	294			1,170	475		
JCR2 292+00.00 TO JCR2 296+78.00	1,219	582			1,854	1,349		
JCR2 296+78.00 TO JCR2 300+20.00	1,242	593			2,359	958		
JCR2 300+20.00 TO JCR2 304+50.00	1,060	506			1,721	1,059		
JCR2 304+50.00 TO JCR2 312+68.00	2,782	942	1.3		4,225	2,682		
JCR2 312+68.00 TO JCR2 313+61.36	178	112	0.2		283	115	52	10
JCR2 313+61.36 TO JC 319+25.00	988	673	1.1		1,693	688	299	59
2 JC 319+25.00 TO JC 323+75.00	~~711~~ 892	530	0.4		1,350	549		61
JC 323+75.00 TO JC 326+00.00	428	280	0.2		721	293	111	8
JC 326+00.00 TO JC 330+00.00	1,899	474	2.1		1,238	503		44
JC 330+00.00 TO JC 331+97.57	506	242		52	721	391		
JC 331+97.57 TO JC 335+00.00	891	426		108	1,269	688		
JC 335+00.00 TO JC 353+57.86	4,497	2,147			6,406	3,470		
JC 353+57.86 TO JC 354+52.00	249	119			354	192		
JC 354+52.00 TO JC 359+78.00	1,350	609	1.9	42	1,173	636		19
JC 359+78.00 TO JC 364+43.01	1,449	644	1.6		807	437		
JC 364+43.01 TO JC 374+96.40	1,245	616	1.3		919	498	275	
JC 374+96.40 TO JC 382+00.00	845	404			1,204	652		
JC 382+00.00 TO JC 384+92.80	352	168			501	271		
JC 384+92.80 TO JC 386+38.65	102	52	0.1		139	75	60	
JC 386+38.65 TO JC 392+17.28	317	192	0.1		448	242	332	
2 DRIVEWAYS 1-~~6~~ 7	~~486~~ 535			~~551~~ 584				
MAINTENANCE VEHICLE PULLOUTS	191			296				
FROM HMA DIKE PAVING		45						
FROM HMA DIKE	103							
FROM MINOR DRIVEWAY DETAIL	39			47				
FROM STAGE CONSTRUCTION (SCQ-1)	559							
FROM STAGE CONSTRUCTION (SCQ-5)							316	
FROM DRAINAGE QUANTITY SHEETS	1			282				
WILDLIFE BOX CULVERT	4							
2 TOTAL	~~32,564~~ 32,794	14,665	13.1	~~1401~~ 1434	42,789	21,646	2971	314

*SEE STRUCTURE PLANS FOR ADDITIONAL QUANTITIES

REPLACE ASPHALT CONCRETE SURFACING

STATION	Loc	VOLUME CY
JC 262+50.00 TO JC 265+00.00	R+	23
JC 269+00.00 TO JC 272+00.00	R+	56
JCR2 308+65.00 TO JCR2 313+00.00	R+	40
JC 316+40.00 TO JC 319+20.00	R+	26
JC 325+20.00 TO JC 329+00.00	R+	35
TOTAL		180

REMOVE BASE AND SURFACING

STATION	Loc	VOLUME CY
JC 263+31.61 TO JC 270+40.25	R+	399
JC 336+89.32 TO JC 356+97.00	R+	3195
JC 357+30.00 TO JC 358+66.00	R+	172
TOTAL		3766

GABION

STATION	GABION* CY
D3 262+32.11 TO 272+80.45	437
TOTAL	437

*SEE STRUCTURE PLANS FOR ADDITIONAL QUANTITIES

2 REVISED PER ADDENDUM No. 2 DATED NOVEMBER 28, 2011

SUMMARY OF QUANTITIES

Q-1

STATE OF CALIFORNIA - DEPARTMENT OF TRANSPORTATION
Caltrans

CONSULTANT FUNCTIONAL SUPERVISOR: RICHARD TANAKA
CALCULATED-DESIGNED BY: THANH NGUYEN
CHECKED BY: JOHN KENYON
REVISED BY: VHL
DATE REVISED: 04/15/10 09/30/10
VAL

LAST REVISION 09-30-10
DATE PLOTTED => 28-NOV-2011
TIME PLOTTED => 06:23

Dist	COUNTY	ROUTE	POST MILES TOTAL PROJECT	SHEET No.	TOTAL SHEETS
04	Nap,Sol	12	2.8/3.3, 0.0/2.6	343	617

REGISTERED CIVIL ENGINEER 04/15/10 DATE

11-22-10
PLANS APPROVAL DATE

REGISTERED PROFESSIONAL ENGINEER RICHARD K. TANAKA No. 23233 Exp. 12/31/11 CIVIL STATE OF CALIFORNIA

THE STATE OF CALIFORNIA OR ITS OFFICERS OR AGENTS SHALL NOT BE RESPONSIBLE FOR THE ACCURACY OR COMPLETENESS OF SCANNED COPIES OF THIS PLAN SHEET.

MARK THOMAS & COMPANY, INC.
1960 ZANKER ROAD
SAN JOSE, CA 95112

SOLANO TRANSPORTATION AUTHORITY
ONE HARBOR CENTER, SUITE 130
SUISUN CITY, CA 94585

EARTHWORK SUMMARY

STATION	ROADWAY EXCAVATION	ROCK EXCAVATION (CONTROLLED BLASTING)	EMBANKMENT (N)
	CY		
JC 262+50.00 TO JC 271+50.00	19,970		14
JC 271+50.00 TO JC 279+00.00	11,641		243
JCR2 279+00.00 TO JCR2 289+50.00	16,975		3,674
JCR2 289+50.00 TO JCR2 302+50.00	11,970		3,870
JCR2 302+50.00 TO JCR2 313+50.00	3,256		2,259
JCR2 313+50.00 TO JC 326+50.00	18,090		17
JC 326+50.00 TO JC 340+50.00	73,281		3,997
JC 340+50.00 TO JC 354+50.00	151,101	10,000	545
JC 354+50.00 TO JC 368+50.00	12,760		2,520
JC 368+50.00 TO JC 382+50.00	1,612		7,695
JC 382+50.00 TO JC 393+00.00	2,230		3,163
2 DRIVEWAYS 1-~~6~~ 7	2,718		~~125~~ 253
MINOR DRIVEWAY DETAIL	20		5
D3 227+50.00 TO D3 245+97.50	1,474		15
D5 249+69.24 TO D5 272+64.58	674		16
D6 215+05.17 TO D6 226+58.64	7		28
SOUND BERM			1,120
BIOFILTRATION STRIPS			35
FROM STAGE CONSTRUCTION (SHEET SCQ-1)	254		
2 TOTAL	328,033	10,000	~~29,341~~ 29,469

(N) - NOT A SEPARATE PAY ITEM, FOR INFORMATION ONLY.

IRRIGATION SLEEVE

IRRIGATION SLEEVE No.	LOCATION		SIDE		IRRIGATION SLEEVE SIZE (6 INCH)
	LINE	STATION	L†	R†	LF
1	JC	267+12.00		x	20
2	JC	273+88.00	x		27
3	DWY2	28+75.20	x	x	43
4	JCR2	286+00.00		x	20
5	JCR2	304+75.00	x		70
6	JCR2	304+88.00		x	20
7	JCR2	309+24.00		x	20
8	JCR2	307+52.45		x	34
9	JCR2	311+83.89	x		53
10	JCR2	312+50.00		x	20
11	JC	326+00.00	x		21
12	JC	329+03.00	x		21
13	JC	357+02.75		x	20
TOTAL					389
X - DENOTES REQUIREMENT					

RELOCATE MAILBOX

STATION	Loc	RELOCATE MAILBOX
		EA
JC 280+00.00	L†	5
JC 308+00.00	R†	1
JC 311+00.00	L†	9
JC 358+00.00	R†	1
TOTAL		16

CONCRETE BARRIER

STATION	Loc	Conc BARRIER (TYPE 60)	Conc BARRIER (TYPE 60C)	REMOVE Conc BARRIER (TYPE K)	REMOVE Conc BARRIER	PREPARE AND STAIN CONCRETE*	ARCHITECTURAL SURFACE (BARRIER)	PAINT POST MILE MARKING (N)
		LF				SQFT		EA
JCR1 248+00.00 TO JCR1 250+50.00		250				2,028		2
JCR1 249+21.45 TO JCR1 250+50.00	L†			140				
JC 262+50.00 TO JC 262+60.00					10			
JC 262+50.00 TO JCR2 282+00.00			1950			15,815		8
JCR2 281+50.00 TO JCR2 286+50.00							3580	
JCR2 282+00.00 TO JCR2 286+50.00		450				3,650		2
JCR2 295+13.54 TO JCR2 300+13.54							3570	
JCR2 295+13.54 TO JCR2 310+00.00		1486				12,055		6
JCR2 310+00.00 TO JC 331+95.57			2194			17,806		10
JC 353+57.86 TO JC 357+05.00			347			2,815		2
JC 357+05.00 TO JC 364+05.00		700				5,677		4
JC 364+05.00 TO JC 382+00.00			1795			14,558		6
JC 377+50.00 TO JC 382+50.00							3900	
JC 382+00.00 TO JC 382+50.00		50				406		2
TOTAL		2936	6286	140	10	74,810	11,050	42

(N) - NOT A SEPARATE PAY ITEM, FOR INFORMATION ONLY.
*SEE STRUCTURE PLANS FOR ADDITIONAL QUANTITIES

CRASH CUSHION

STATION	CRASH CUSHION (ADIEM)	REMOVE CRASH CUSHION (ADIEM)
	EA	
JCR1 248+00.00		1
JC 262+50.00		1
JCR2 286+50.00	1	
JCR2 295+13.54	1	
JC 382+50.00	1	
TOTAL	3	2

2 SALVAGE ~~REMOVE~~ WIRE MESH SYSTEM

STATION	SALVAGE ~~REMOVE~~ WIRE MESH DRAPERY (N)	REMOVE TOP ANCHOR (N)	REMOVE SLOPE FACE ANCHOR (N)
	SQYD	EA	
JC 336+17.80 TO 347+48.70	7900	49	570
TOTAL	7900	49	570

(N) - NOT A SEPARATE PAY ITEM, FOR INFORMATION ONLY.

2 REVISED PER ADDENDUM No. 2 DATED NOVEMBER 28, 2011

SUMMARY OF QUANTITIES

Q-2

STATE OF CALIFORNIA - DEPARTMENT OF TRANSPORTATION
Caltrans

CONSULTANT FUNCTIONAL SUPERVISOR: RICHARD TANAKA
CALCULATED-DESIGNED BY: THANH NGUYEN
CHECKED BY: JOHN KENYON
REVISED BY: VHL
DATE REVISED: 04/15/10

LAST REVISION 04/15/10
DATE PLOTTED => 28-NOV-2011
TIME PLOTTED => 06:23

Dist	COUNTY	ROUTE	POST MILES TOTAL PROJECT	SHEET No.	TOTAL SHEETS
04	Nap,Sol	12	2.8/3.3, 0.0/2.6	346A	617

REGISTERED CIVIL ENGINEER 10/31/11 DATE

PLANS APPROVAL DATE

REGISTERED PROFESSIONAL ENGINEER RICHARD K. TANAKA No. 23233 Exp. 12/31/11 CIVIL STATE OF CALIFORNIA

THE STATE OF CALIFORNIA OR ITS OFFICERS OR AGENTS SHALL NOT BE RESPONSIBLE FOR THE ACCURACY OR COMPLETENESS OF SCANNED COPIES OF THIS PLAN SHEET.

MARK THOMAS & COMPANY, INC.
1960 ZANKER ROAD
SAN JOSE, CA 95112

SOLANO TRANSPORTATION AUTHORITY
ONE HARBOR CENTER, SUITE 130
SUISUN CITY, CA 94585

WILDLIFE FENCE

STATION	Loc	WILDLIFE FENCE (TYPE E-FENCE) LF
JC 267+13.10 TO JCR2 286+02.07	R†	2,114
JCR2 286+26.45 TO JCR2 290+27.48	R†	450
JCR2 330+32.37 TO JCR2 334+02.46	R†	376
JC 357+31.33 TO JC 386+87.73	R†	2,973
JC 388+16.27 TO JC 390+46.69	L†	228
TOTAL		6,141

2 ADDED PER ADDENDUM No. 2 DATED NOVEMBER 28, 2011

SUMMARY OF QUANTITIES

Q-6

STATE OF CALIFORNIA - DEPARTMENT OF TRANSPORTATION
Caltrans

CONSULTANT FUNCTIONAL SUPERVISOR: RICHARD TANAKA
CALCULATED-DESIGNED BY: THANH NGUYEN
CHECKED BY: JOHN KENYON
REVISED BY
DATE REVISED

LAST REVISION 10-31-11
DATE PLOTTED => 28-NOV-2011
TIME PLOTTED => 06:23

DIST	COUNTY	ROUTE	POST MILES TOTAL PROJECT	SHEET No	TOTAL SHEETS
04	Nap,Sol	12	2.8/3.3, 0.0/2.6	440	617

P.K. Chen 12/09/09
REGISTERED STRUCTURAL ENGINEER DATE

11-22-10
PLANS APPROVAL DATE

REGISTERED PROFESSIONAL ENGINEER PO-KANG CHEN No. S3112 Exp. 9/30/11 STRUCTURAL STATE OF CALIFORNIA

The State of California or its officers or agents shall not be responsible for the accuracy or completeness of electronic copies of this plan sheet.

SOLANO TRANSPORTATION AUTHORITY
ONE HARBOR CENTER, SUITE 130
SUISUN CITY, CA 94585

MARK THOMAS & COMPANY, INC.
1960 ZANKER ROAD
SAN JOSE, CA 95112

INDEX TO PLANS

Sht No.	TITLE
1	RETAINING WALL KEY MAP
2	RW3A, 3B & 3C - GENERAL PLAN No. 1
3	RW3A, 3B & 3C - GENERAL PLAN No. 2
4	RW3A, 3B & 3C - GENERAL PLAN No. 3
5	RW3A, 3B & 3C - GENERAL PLAN No. 4
6	RW3A, 3B & 3C - GENERAL PLAN No. 5
7	RW3A, 3B & 3C - GENERAL PLAN No. 6
8	RW3A, 3B & 3C - FOUNDATION PLAN No. 1
9	RW3A, 3B & 3C - FOUNDATION PLAN No. 2
10	RW3A, 3B & 3C - FOUNDATION PLAN No. 3
11	RW3A, 3B & 3C - FOUNDATION PLAN No. 4
12	RW3A, 3B & 3C - STRUCTURE PLAN No. 1
13	RW3A, 3B & 3C - STRUCTURE PLAN No. 2
14	RW3A, 3B & 3C - STRUCTURE PLAN No. 3
15	RW3A, 3B & 3C - STRUCTURE PLAN No. 4
16	RW3A, 3B & 3C - STRUCTURE PLAN No. 5
17	RW3A, 3B & 3C - STRUCTURE PLAN No. 6
18	RW4A & 4B - GENERAL PLAN No. 1
19	RW4A & 4B - GENERAL PLAN No. 2
20	RW4A & 4B - GENERAL PLAN No. 3
21	RW4A & 4B - GENERAL PLAN No. 4
22	RW4A & 4B - GENERAL PLAN No. 5
23	RW4A & 4B - FOUNDATION PLAN No. 1
24	RW4A & 4B - FOUNDATION PLAN No. 2
25	RW4A & 4B - FOUNDATION PLAN No. 3
26	RW4A & 4B - STRUCTURE PLAN No. 1
27	RW4A & 4B - STRUCTURE PLAN No. 2
28	RW4A & 4B - STRUCTURE PLAN No. 3
29	RW4A & 4B - STRUCTURE PLAN No. 4
30	RW5A & 5B - GENERAL PLAN No. 1
31	RW5A & 5B - GENERAL PLAN No. 2
32	RW5A & 5B - GENERAL PLAN No. 3
33	RW5A & 5B - GENERAL PLAN No. 4
34	RW5A & 5B - GENERAL PLAN No. 5
35	RW5A & 5B - FOUNDATION PLAN No. 1
36	RW5A & 5B - FOUNDATION PLAN No. 2
37	RW5A & 5B - FOUNDATION PLAN No. 3
38	RW5A & 5B - STRUCTURE PLAN No. 1
39	RW5A & 5B - STRUCTURE PLAN No. 2
40	RW5A & 5B - STRUCTURE PLAN No. 3
41	RW5A & 5B - STRUCTURE PLAN No. 4
42	RW5A & 5B - STRUCTURE PLAN No. 5
43	RW6 - GENERAL PLAN No. 1
44	RW6 - GENERAL PLAN No. 2
45	RW6 - GENERAL PLAN No. 3
46	RW6 - GENERAL PLAN No. 4
47	RW6 - GENERAL PLAN No. 5
48	RW6 - GENERAL PLAN No. 6
49	RW6 - GENERAL PLAN No. 7
50	RW6 - FOUNDATION PLAN No. 1
51	RW6 - FOUNDATION PLAN No. 2
52	RW6 - FOUNDATION PLAN No. 3
53	RW6 - FOUNDATION PLAN No. 4
54	RW6 - FOUNDATION PLAN No. 5
55	RW6 - STRUCTURE PLAN No. 1
56	RW6 - STRUCTURE PLAN No. 2
57	RW6 - STRUCTURE PLAN No. 3
58	RW6 - STRUCTURE PLAN No. 4
59	RW6 - STRUCTURE PLAN No. 5
60	RW6 - STRUCTURE PLAN No. 6
61	RW6 - STRUCTURE PLAN No. 7
62	RW6 - STRUCTURE PLAN No. 8
63	RETAINING WALL 7A & 7B KEY MAP
64	RW7A - GENERAL PLAN No. 1
65	RW7A - GENERAL PLAN No. 2
66	RW7A - GENERAL PLAN No. 3
67	RW7A - GENERAL PLAN No. 4
68	RW7A - GENERAL PLAN No. 5
69	RW7A - GENERAL PLAN No. 6
70	RW7A - GENERAL PLAN No. 7
71	RW7A - GENERAL PLAN No. 8
72	RW7A - GENERAL PLAN No. 9
73	RW7A - GENERAL PLAN No. 10
74	RW7A - FOUNDATION PLAN No. 1
75	RW7A - FOUNDATION PLAN No. 2
76	RW7A - FOUNDATION PLAN No. 3
77	RW7A - FOUNDATION PLAN No. 4
78	RW7A - FOUNDATION PLAN No. 5
79	RW7A - FOUNDATION PLAN No. 6
80	RW7A - FOUNDATION PLAN No. 7
81	RW7A - STRUCTURE PLAN No. 1
82	RW7A - STRUCTURE PLAN No. 2
83	RW7A - STRUCTURE PLAN No. 3
84	RW7A - STRUCTURE PLAN No. 4
85	RW7A - STRUCTURE PLAN No. 5
86	RW7A - STRUCTURE PLAN No. 6
87	RW7A - STRUCTURE PLAN No. 7
88	RW7A - STRUCTURE PLAN No. 8
89	RW7A - STRUCTURE PLAN No. 9
90	RW7A - STRUCTURE PLAN No. 10
91	RW7A - STRUCTURE PLAN No. 11
92	RW7B - GENERAL PLAN No. 1
93	RW7B - GENERAL PLAN No. 2
94	RW7B - GENERAL PLAN No. 3
95	RW7B - GENERAL PLAN No. 4
96	RW7B - GENERAL PLAN No. 5
97	RW7B - GENERAL PLAN No. 6
98	RW7B - GENERAL PLAN No. 7
99	RW7B - FOUNDATION PLAN No. 1
100	RW7B - FOUNDATION PLAN No. 2
101	RW7B - FOUNDATION PLAN No. 3
102	RW7B - FOUNDATION PLAN No. 4
103	RW7B - FOUNDATION PLAN No. 5
104	RW7B - STRUCTURE PLAN No. 1
105	RW7B - STRUCTURE PLAN No. 2
106	RW7B - STRUCTURE PLAN No. 3
107	RW7B - STRUCTURE PLAN No. 4
108	RW7B - STRUCTURE PLAN No. 5
109	RW7B - STRUCTURE PLAN No. 6
110	RW7B - STRUCTURE PLAN No. 7
111	RW7B - STRUCTURE PLAN No. 8
112	RW8 - GENERAL PLAN No. 1
113	RW8 - GENERAL PLAN No. 2
114	RW8 - FOUNDATION PLAN No. 1
115	RW8 - FOUNDATION PLAN No. 2
116	RW10 - GENERAL PLAN No. 1
117	RW10 - GENERAL PLAN No. 2
118	RW10 - GENERAL PLAN No. 3
119	RW10 - FOUNDATION PLAN No. 1
120	RW10 - FOUNDATION PLAN No. 2
121	RW10 - FOUNDATION PLAN No. 3
122	SOIL NAIL WALL DETAILS No. 1
123	SOIL NAIL WALL DETAILS No. 2
124	SOIL NAIL WALL DETAILS No. 3
125	SOIL NAIL WALL DETAILS No. 4
126	SOIL NAIL WALL DETAILS No. 5
127	SOIL NAIL WALL DETAILS No. 6
128	SOIL NAIL WALL DETAILS No. 7
129	SOIL NAIL WALL DETAILS No. 8
130	SOIL NAIL WALL DETAILS No. 9
131	SOIL NAIL WALL DETAILS No. 10
132	SOIL NAIL WALL DETAILS No. 11
133	SOIL NAIL WALL DETAILS No. 12
134	TIE BACK WALL DETAILS No. 1
135	TIE BACK WALL DETAILS No. 2
136	TIE BACK WALL DETAILS No. 3
137	TIE BACK WALL DETAILS No. 4
138	SOLDIER PILE & TIE BACK WALL DETAILS No. 1
139	SOLDIER PILE & TIE BACK WALL DETAILS No. 2
140	SOLDIER PILE & TIE BACK WALL DETAILS No. 3
141	SOLDIER PILE & TIE BACK WALL DETAILS No. 4
142	RETAINING WALL DETAILS No. 1
143	RETAINING WALL DETAILS No. 2
144	RETAINING WALL DETAILS No. 3
145	RETAINING WALL DETAILS No. 4
146	RETAINING WALL DETAILS No. 5
147	RETAINING WALL DETAILS No. 6
148	TUBULAR HANDRAILING (MODIFIED)
149	GABION SLOPE PROTECTION DETAILS
150	ARCHITECTURAL TREATMENT
151	ARCHITECTURAL TREATMENT DETAILS No. 1
152	ARCHITECTURAL TREATMENT DETAILS No. 2
153	SOIL LEGEND No. 1
154	SOIL LEGEND No. 2
155	SOIL LEGEND No. 3
156	LOG OF TEST BORINGS No. 1
157	LOG OF TEST BORINGS No. 2
158	LOG OF TEST BORINGS No. 3
159	LOG OF TEST BORINGS No. 4
160	LOG OF TEST BORINGS No. 5
161	LOG OF TEST BORINGS No. 6
162	LOG OF TEST BORINGS No. 7
163	LOG OF TEST BORINGS No. 8
164	LOG OF TEST BORINGS No. 9
165	LOG OF TEST BORINGS No. 10
166	LOG OF TEST BORINGS No. 11
167	LOG OF TEST BORINGS No. 12
168	LOG OF TEST BORINGS No. 13
169	LOG OF TEST BORINGS No. 14
170	LOG OF TEST BORINGS No. 15
171	LOG OF TEST BORINGS No. 16

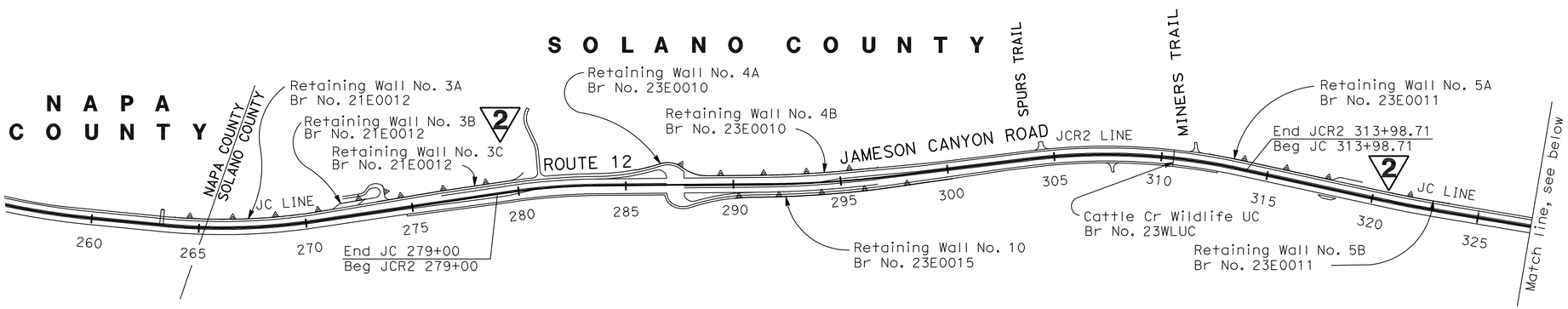

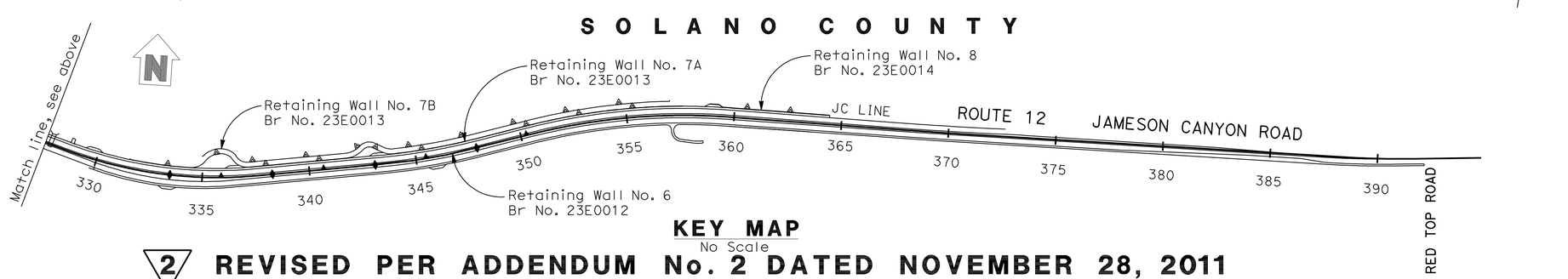

KEY MAP
No Scale

STANDARD PLANS MAY 2006

A10A	Abbreviations (Sheet 1 of 2)
A10B	Abbreviations (Sheet 2 of 2)
A10C	Symbols (Sheet 1 of 2)
A10D	Symbols (Sheet 2 of 2)
A62B	Limits of Payment for Excavation and Backfill-Bridge Surcharge and Wall
A76A	Concrete Barrier Type 60
B0-1	Bridge Details
B0-3	Bridge Details
B3-1	Retaining Wall Type 1 - H=4' THRU 30'
B3-7	Retaining Wall Type 5
B3-8	Retaining Wall Details No. 1
B3-9	Retaining Wall Details No. 2
B11-47	Cable Railing
B11-51	Tubular Hand Railing
B11-55	Concrete Barrier Type 732A
B11-56	Concrete Barrier Type 736

Standard Plan Sheet No.
Detail No.

2 REVISED PER ADDENDUM No. 2 DATED NOVEMBER 28, 2011

Tracy L Bertram
DESIGN OVERSIGHT
1-7-10
SIGN OFF DATE

	BY	CHECKED		BY	CHECKED
DESIGN	C VASQUEZ	P CHEN	LOAD FACTOR DESIGN		
DETAILS	H. MISTRY	K WONG	LAYOUT	C HII	F QUACH
QUANTITIES	K WONG	S GARAPALLY	SPECIFICATIONS	H MISTRY	PLANS AND SPECS COMPARED P CHEN

DESIGN GENERAL PLAN SHEET (ENGLISH) (REV.2/25/05)

ORIGINAL SCALE IN INCHES FOR REDUCED PLANS 0 1 2 3

PREPARED FOR THE STATE OF CALIFORNIA DEPARTMENT OF TRANSPORTATION

HARSHAD MISTRY
PROJECT ENGINEER

CU 04264
EA 264141

BRIDGE No.
POST MILES 0.0/2.6

DISREGARD PRINTS BEARING EARLIER REVISION DATES

REVISION DATES (PRELIMINARY STAGE ONLY): 3/13/09 8/05/09 11/06/09 12/09/09

SHEET 1 OF 171

SOLANO COUNTY RW KEY MAP
KEY MAP

FILE => 2XE001X-a-k01.add

USERNAME => s121614 DATE PLOTTED => 28-NOV-2011 TIME PLOTTED => 06:24

DIST	COUNTY	ROUTE	POST MILES TOTAL PROJECT	SHEET No	TOTAL SHEETS
04	Nap,Sol	12	2.8/3.3, 0.0/2.6	469	617

P.K. Chen
REGISTERED STRUCTURAL ENGINEER — 12/09/09 DATE

11-22-10
PLANS APPROVAL DATE

REGISTERED PROFESSIONAL ENGINEER — PO-KANG CHEN — No. S3112 — Exp. 9/30/11 — STRUCTURAL — STATE OF CALIFORNIA

The State of California or its officers or agents shall not be responsible for the accuracy or completeness of electronic copies of this plan sheet.

SOLANO TRANSPORTATION AUTHORITY
ONE HARBOR CENTER, SUITE 130
SUISUN CITY, CA 94585

MARK THOMAS & COMPANY, INC.
1960 ZANKER ROAD
SAN JOSE, CA 95112

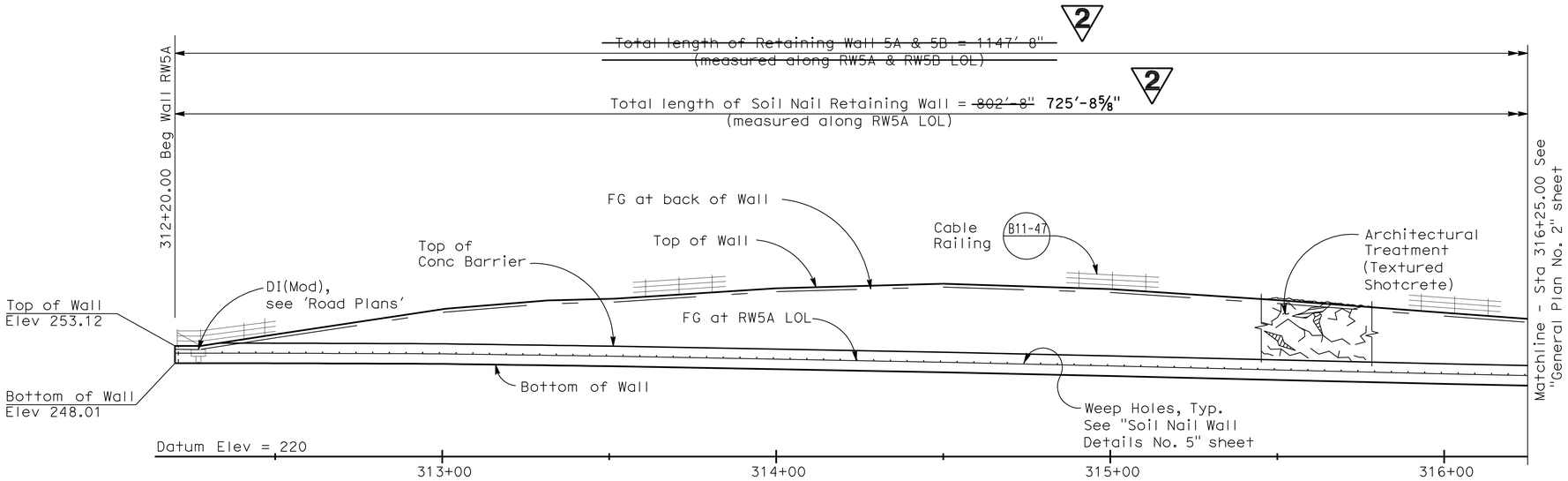

DEVELOPED ELEVATION

SCALE: 1" = 20'

Notes:

1. The Contractor shall verify all controlling field dimensions before ordering or fabricating any material.
2. For Soil Nail Wall 'General Notes' and 'Typical Section', see "General Plan No. 4" sheet.
3. For Soldier Pile Tieback Wall 'General Notes' and 'Typical Section', see "General Plan No. 5" sheet.
4. For Architectural Treatment details, see "Architectural Treatment" sheet.
5. For Utilities, see 'Road Plans'.
6. For Drainage information, see "Soil Nail Wall Details No. 5" sheet.

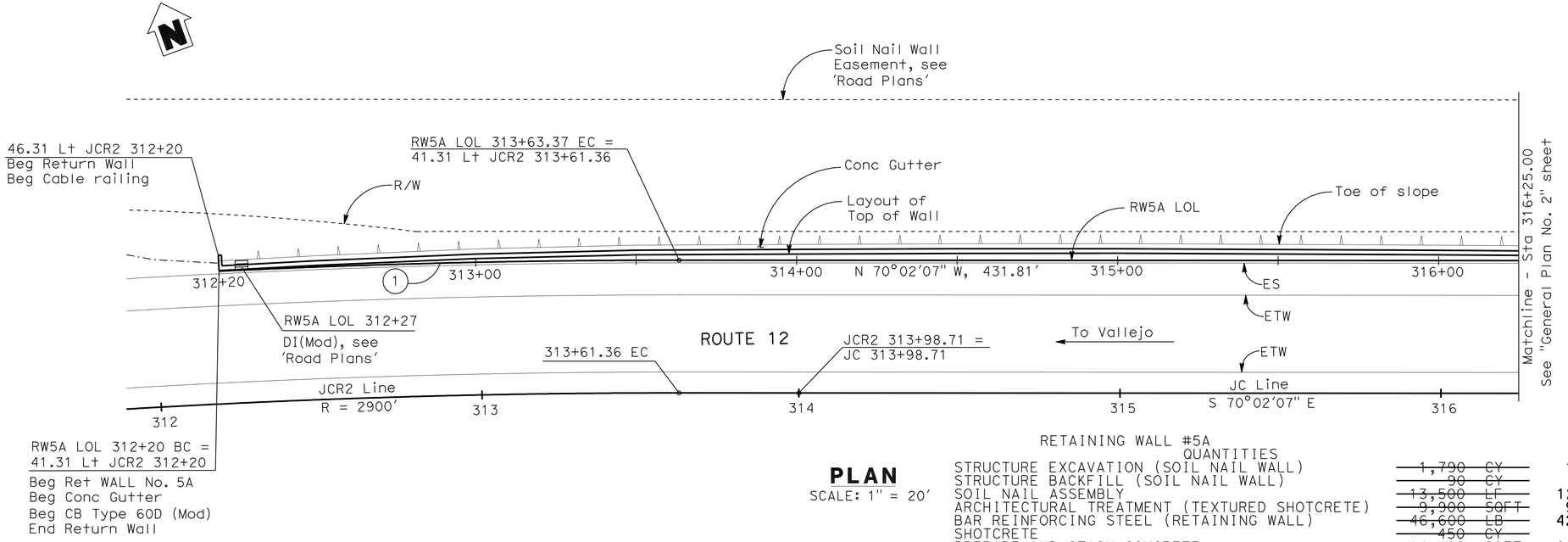

PLAN

SCALE: 1" = 20'

RETAINING WALL #5A
QUANTITIES

STRUCTURE EXCAVATION (SOIL NAIL WALL)	~~1,790 CY~~	1,630 CY
STRUCTURE BACKFILL (SOIL NAIL WALL)	~~90 CY~~	85 CY
SOIL NAIL ASSEMBLY	~~13,500 LF~~	12,900 LF
ARCHITECTURAL TREATMENT (TEXTURED SHOTCRETE)	~~9,900 SQFT~~	9,000 SQFT
BAR REINFORCING STEEL (RETAINING WALL)	~~46,600 LB~~	42,800 LB
SHOTCRETE	~~450 CY~~	410 CY
PREPARE AND STAIN CONCRETE	~~14,400 SQFT~~	12,700 SQFT
MINOR CONCRETE (GUTTER)	~~808 LF~~	726 LF
CABLE RAILING	~~808 LF~~	731 LF
CONCRETE BARRIER (TYPE 60D MODIFIED)	~~803 LF~~	580 LF

2 REVISED PER ADDENDUM No. 2 DATED NOVEMBER 28, 2011

Tracy L Bertram — DESIGN OVERSIGHT	DESIGN	BY H MISTRY	CHECKED C VASQUEZ	LOAD FACTOR DESIGN		
1-7-10 SIGN OFF DATE	DETAILS	BY H. MISTRY	CHECKED C VASQUEZ	LAYOUT	BY C HII	CHECKED F QUACH
	QUANTITIES	BY K WONG	CHECKED S GARAPALLY	SPECIFICATIONS	BY H MISTRY	PLANS AND SPECS COMPARED P CHEN

PREPARED FOR THE STATE OF CALIFORNIA DEPARTMENT OF TRANSPORTATION

HARSHAD MISTRY
PROJECT ENGINEER

BRIDGE No. 23E0011
POST MILES 0.8

RETAINING WALL No. 5A & 5B
GENERAL PLAN No. 1

DESIGN GENERAL PLAN SHEET (ENGLISH) (REV.2/25/05)

ORIGINAL SCALE IN INCHES FOR REDUCED PLANS 0 1 2 3

CU 04264
EA 264141

DISREGARD PRINTS BEARING EARLIER REVISION DATES

REVISION DATES (PRELIMINARY STAGE ONLY): ~~3/13/09~~ ~~8/05/09~~ ~~11/06/09~~ 12/09/09

SHEET 30 OF 171

FILE => 23E0011-a-gp01.add

USERNAME => s121614 DATE PLOTTED => 28-NOV-2011 TIME PLOTTED => 06:24

DIST	COUNTY	ROUTE	POST MILES TOTAL PROJECT	SHEET No	TOTAL SHEETS
04	Nap,Sol	12	2.8/3.3, 0.0/2.6	470	617

P.K. Chen 12/09/09
REGISTERED STRUCTURAL ENGINEER DATE

11-22-10
PLANS APPROVAL DATE

REGISTERED PROFESSIONAL ENGINEER PO-KANG CHEN No. S3112 Exp. 9/30/11 STRUCTURAL STATE OF CALIFORNIA

The State of California or its officers or agents shall not be responsible for the accuracy or completeness of electronic copies of this plan sheet.

SOLANO TRANSPORTATION AUTHORITY
ONE HARBOR CENTER, SUITE 130
SUISUN CITY, CA 94585

MARK THOMAS & COMPANY, INC.
1960 ZANKER ROAD
SAN JOSE, CA 95112

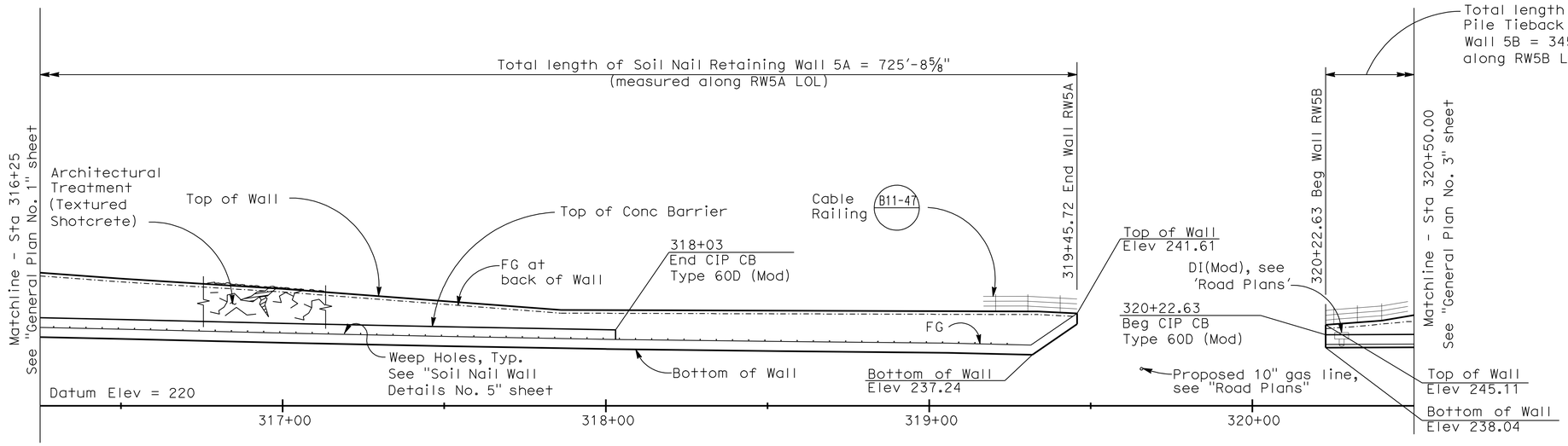

DEVELOPED ELEVATION

1" = 20'

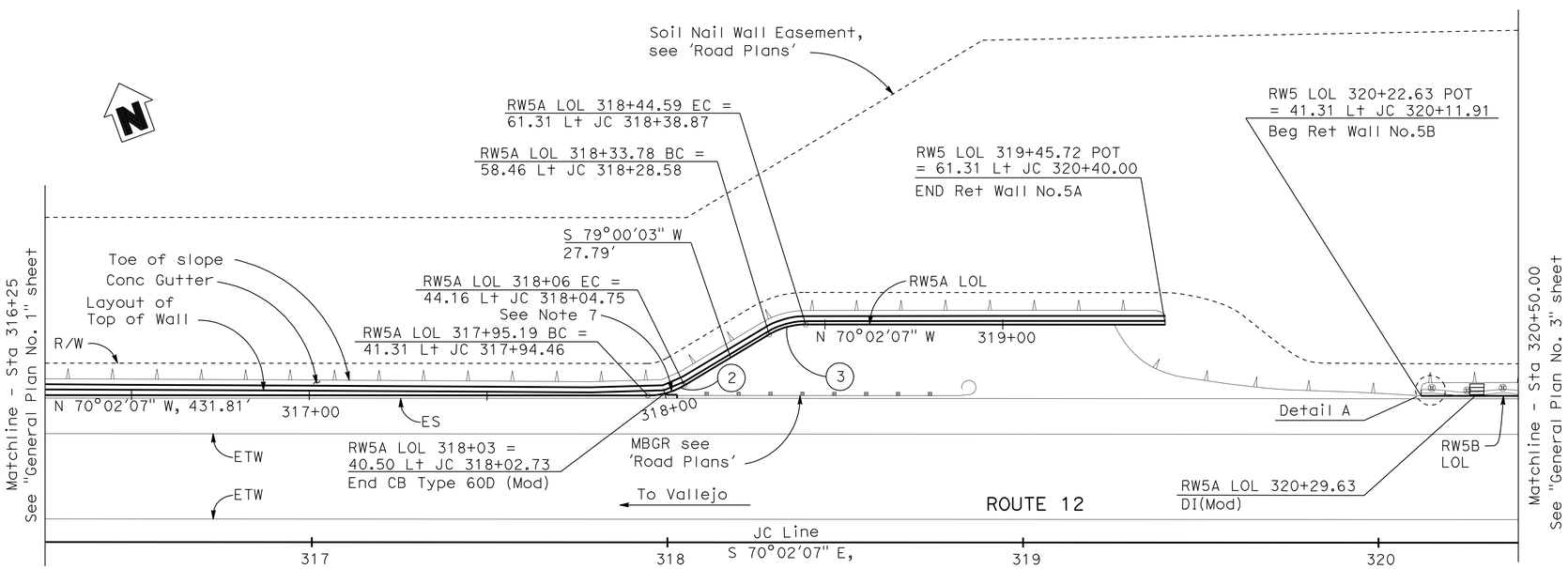

PLAN

SCALE: 1" = 20'

Notes:

1. The Contractor shall verify all controlling field dimensions before ordering or fabricating any material.
2. For Soil Nail Wall 'General Notes' and 'Typical Section', see "General Plan No. 4" sheet.
3. For Soldier Pile Tieback Wall 'General Notes' and 'Typical Section', see "General Plan No. 5" sheet.
4. For Architectural Treatment details, see "Architectural Treatment" sheet.
5. For Utilities, see 'Road Plans'.
6. For Drainage information, see "Soil Nail Wall Details No. 5" sheet.
7. At convex faces, soil nail inclination shall be adjusted to Max / Min 5° so as to avoid interference with each other. Also, the construction of Soil Nails in vicinity of convex face shall be carried out to allow adjoining Soil nail grouting to be cured before drilling for the next nail.
8. For 'Detail A', see "General Plan No. 3" sheet.

CURVE DATA

No.	R	Δ	T	L
2	20.00'	30°57'50"	5.54'	10.81'
3	20.00'	30°57'50"	5.54'	10.81'

2 REVISED PER ADDENDUM No. 2 DATED NOVEMBER 28, 2011

Tracy L Bertram
DESIGN OVERSIGHT Tracy L Bertram

1-7-10
SIGN OFF DATE

DESIGN GENERAL PLAN SHEET (ENGLISH) (REV.2/25/05)

	BY	CHECKED		BY	CHECKED
DESIGN	H MISTRY	C VASQUEZ	LOAD FACTOR DESIGN		
DETAILS	H. MISTRY	C VASQUEZ	LAYOUT	C HII	F QUACH
QUANTITIES	K WONG	S GARAPALLY	SPECIFICATIONS	H MISTRY	PLANS AND SPECS COMPARED P CHEN

PREPARED FOR THE STATE OF CALIFORNIA DEPARTMENT OF TRANSPORTATION

HARSHAD MISTRY
PROJECT ENGINEER

ORIGINAL SCALE IN INCHES FOR REDUCED PLANS 0 1 2 3

CU 04264
EA 264141

FILE => 23E0011-a-gp02.add

BRIDGE No. 23E0011
POST MILES 0.8

RETAINING WALL No. 5A & 5B
GENERAL PLAN No. 2

DISREGARD PRINTS BEARING EARLIER REVISION DATES

REVISION DATES (PRELIMINARY STAGE ONLY): ~~3/13/09~~ ~~8/05/09~~ ~~11/06/09~~ 12/09/09

SHEET 31 OF 171

USERNAME => s121614 DATE PLOTTED => 28-NOV-2011 TIME PLOTTED => 06:24

DIST	COUNTY	ROUTE	POST MILES TOTAL PROJECT	SHEET No	TOTAL SHEETS
04	Nap,Sol	12	2.8/3.3, 0.0/2.6	471	617

P.K. Chen 12/09/09
REGISTERED STRUCTURAL ENGINEER DATE

11-22-10
PLANS APPROVAL DATE

REGISTERED PROFESSIONAL ENGINEER PO-KANG CHEN No. S3112 Exp. 9/30/11 STRUCTURAL STATE OF CALIFORNIA

The State of California or its officers or agents shall not be responsible for the accuracy or completeness of electronic copies of this plan sheet.

SOLANO TRANSPORTATION AUTHORITY
ONE HARBOR CENTER, SUITE 130
SUISUN CITY, CA 94585

MARK THOMAS & COMPANY, INC.
1960 ZANKER ROAD
SAN JOSE, CA 95112

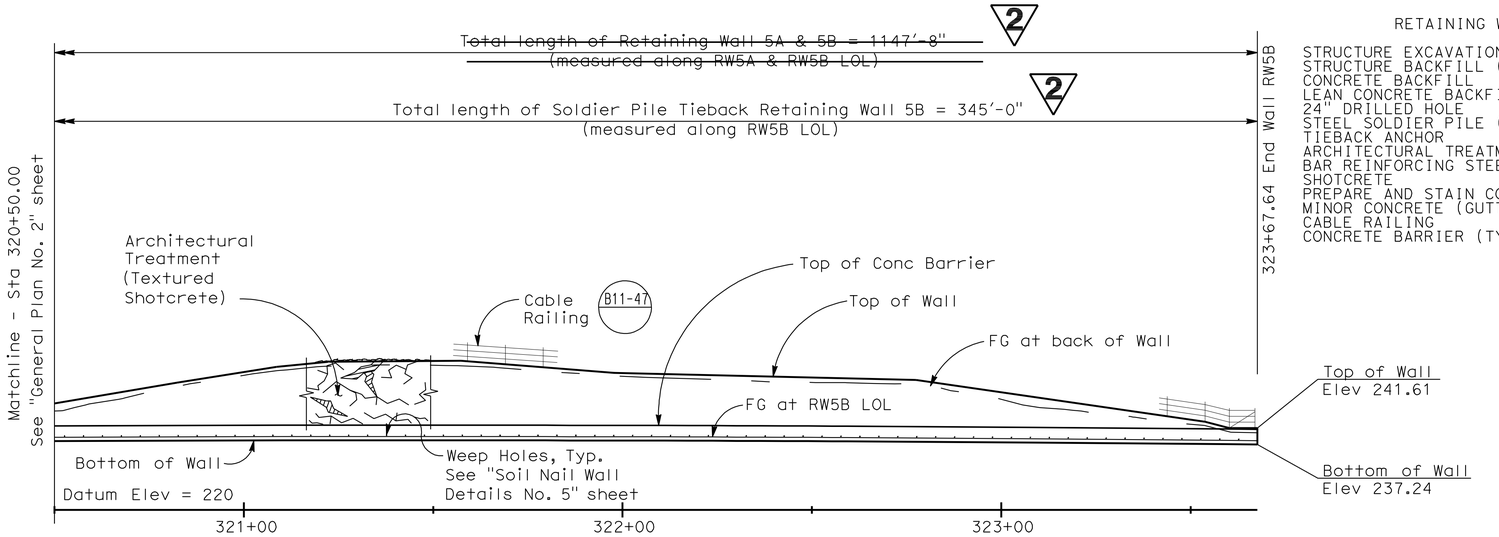

DEVELOPED ELEVATION

(Soldier Piles are not shown)
SCALE: 1" = 20'

RETAINING WALL #5B
QUANTITIES

STRUCTURE EXCAVATION (SOLDIER PILE WALL)	700	CY
STRUCTURE BACKFILL (SOLDIER PILE WALL)	15	CY
CONCRETE BACKFILL	110	CY
LEAN CONCRETE BACKFILL	60	CY
24" DRILLED HOLE	1,395	LF
STEEL SOLDIER PILE (2-MC 12X44)	1,385	LF
TIEBACK ANCHOR	90	EA
ARCHITECTURAL TREATMENT (TEXTURED SHOTCRETE)	4,900	SQFT
BAR REINFORCING STEEL (RETAINING WALL)	57,600	LB
SHOTCRETE	380	CY
PREPARE AND STAIN CONCRETE	6,630	SQFT
MINOR CONCRETE (GUTTER)	345	LF
CABLE RAILING	345	LF
CONCRETE BARRIER (TYPE 60D MODIFIED)	345	LF

Notes:

1. The Contractor shall verify all controlling field dimensions before ordering or fabricating any material.
2. For Soldier Pile Tieback Wall 'General Notes' and 'Typical Section', see "General Plan No. 5" sheet.
3. For Architectural Treatment details, see "Architectural Treatment" sheet.
4. For Utilities, see 'Road Plans'.
5. ~~For Drainage information, see "Soil Nail Wall Details No. 5" sheet.~~
5. **For Drainage information, see "Soldier Pile Tieback Wall Details No. 4" sheet.**

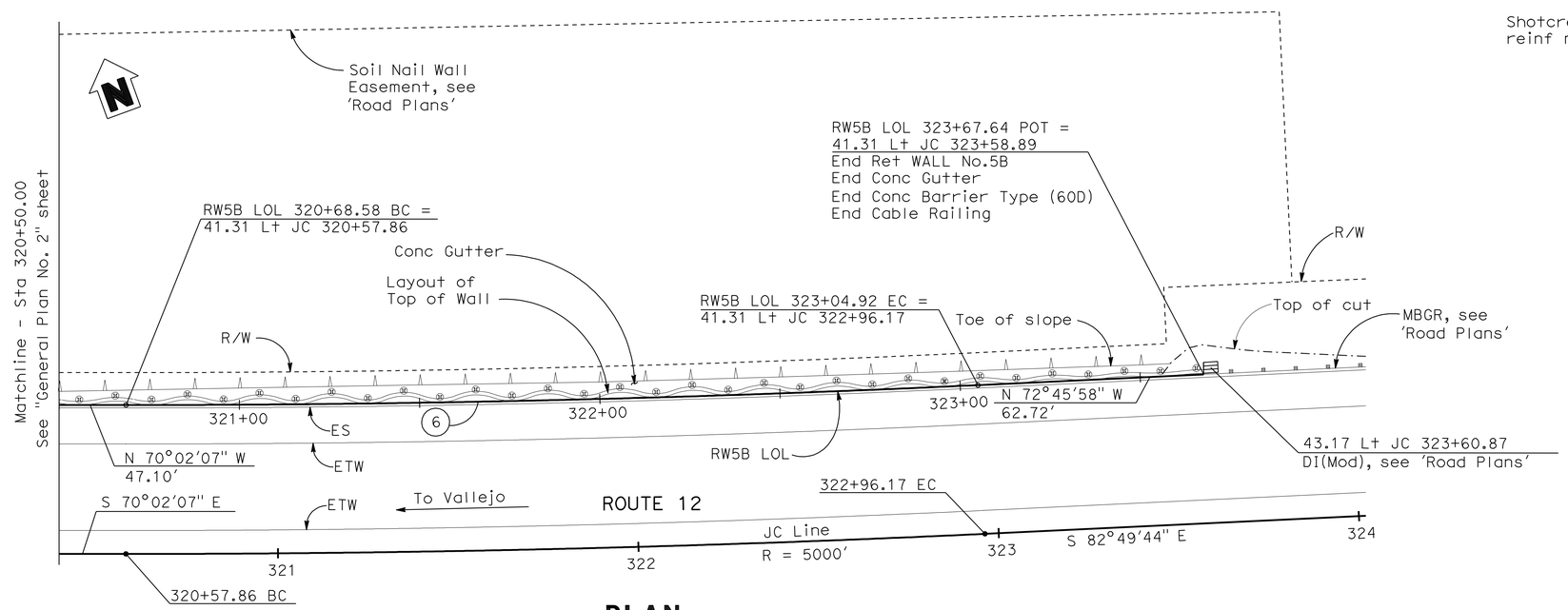

PLAN

SCALE: 1" = 20'

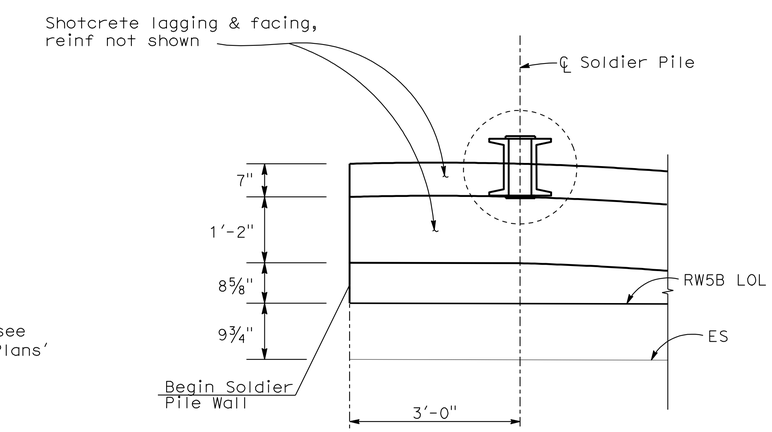

DETAIL A

SCALE: 3/4" = 1'-0"

CURVE DATA

No.	R	Δ	T	L
6	4958.69'	2°43'51"	118.19'	236.34'

REVISED PER ADDENDUM No. 2 DATED NOVEMBER 28, 2011

Tracy L Bertram DESIGN OVERSIGHT	DESIGN	BY H MISTRY	CHECKED C VASQUEZ	LOAD FACTOR DESIGN		
1-7-10 SIGN OFF DATE	DETAILS	BY H. MISTRY	CHECKED C VASQUEZ	LAYOUT	BY C HII	CHECKED F QUACH
	QUANTITIES	BY K WONG	CHECKED S GARAPALLY	SPECIFICATIONS	BY H MISTRY	PLANS AND SPECS COMPARED P CHEN

DESIGN GENERAL PLAN SHEET (ENGLISH) (REV.2/25/05)

PREPARED FOR THE STATE OF CALIFORNIA DEPARTMENT OF TRANSPORTATION

ORIGINAL SCALE IN INCHES FOR REDUCED PLANS 0 1 2 3

HARSHAD MISTRY
PROJECT ENGINEER

CU 04264
EA 264141

FILE => 23E0011-a-gp03.add

BRIDGE No. 23E0011
POST MILES 0.8

RETAINING WALL No. 5A & 5B
GENERAL PLAN No. 3

DISREGARD PRINTS BEARING EARLIER REVISION DATES

REVISION DATES (PRELIMINARY STAGE ONLY): ~~3/13/09~~ ~~8/05/09~~ ~~11/06/09~~ 12/09/09

SHEET 32 OF 171

USERNAME => s121614 DATE PLOTTED => 28-NOV-2011 TIME PLOTTED => 06:24

DIST	COUNTY	ROUTE	POST MILES TOTAL PROJECT	SHEET No	TOTAL SHEETS
04	Nap,Sol	12	2.8/3.3, 0.0/2.6	473	617

P.K. Chen 12/09/09
REGISTERED STRUCTURAL ENGINEER DATE

11-22-10
PLANS APPROVAL DATE

REGISTERED PROFESSIONAL ENGINEER PO-KANG CHEN No. S3112 Exp. 9/30/11 STRUCTURAL STATE OF CALIFORNIA

The State of California or its officers or agents shall not be responsible for the accuracy or completeness of electronic copies of this plan sheet.

SOLANO TRANSPORTATION AUTHORITY
ONE HARBOR CENTER, SUITE 130
SUISUN CITY, CA 94585

MARK THOMAS & COMPANY, INC.
1960 ZANKER ROAD
SAN JOSE, CA 95112

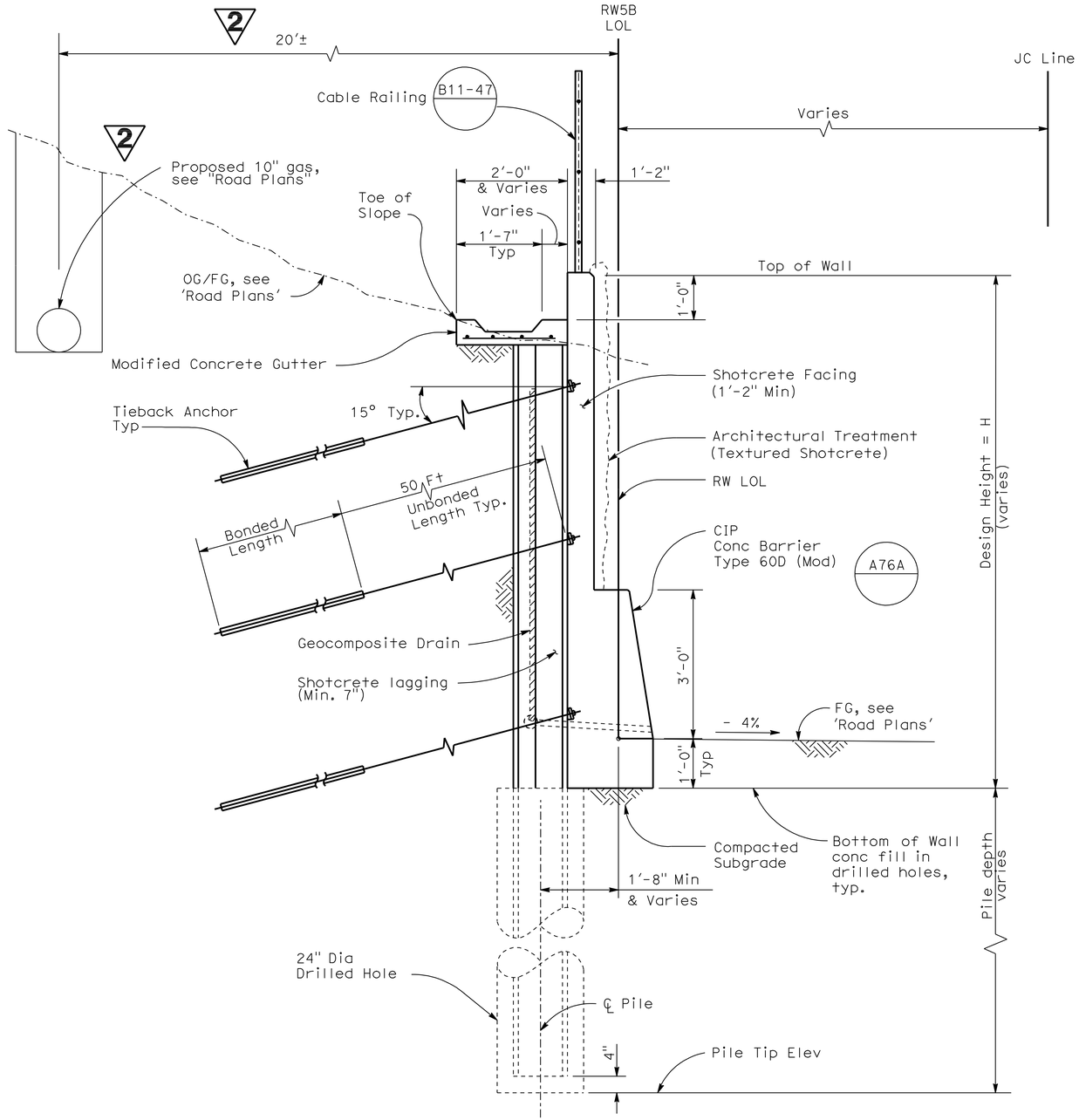

Note: For tieback layout, see 'Elevation' on "Tieback Wall Details No. 1 & 2 "sheets.

RW5B TYPICAL SECTION

SCALE: ¾" = 1'-0"

GENERAL NOTES

DESIGN: Caltrans Bridge Design Specifications September 2004 (LFD)
(1996 AASHTO with Interims and Revisions by Caltrans)

SEISMIC CRITERIA: $K_h = 0.2g$

SOIL PARAMETERS:

(For Determination of Design Lateral Earth Pressure on Wall).
$\phi = 28°$ $\gamma = 120$ pcf

REINFORCED CONCRETE:
f'c = 4000 psi (Concrete Compressive strength at 28 Days)
fy = 60000 psi (Yield Strength of Reinforcement)

STRUCTURAL STEEL:
Plates, Shapes:ASTM=A36, fs = 36 ksi
Tubes (A500) Grade B fy = 46 ksi

Notes:

1. For Drainage information, see "Soldier Pile Tieback Wall Details No. 4" sheet.
2. For Architectural Treatment, see "Soil Nail Wall Details No. 1" sheet.
3. Stain Treatment shall be apply to all exposed Wall surfaces.
4. Top of Wall Elevations shall be verified in field.

TIEBACK DESIGN NOTES

Prestressing Steel:

Bars - ASTM Designation = A722 Type II
Strands - ASTM Designation = A416
T = Design Force Per Tieback 130 kips
fpu = Minimum Tensile Strength of Prestressing Steel (Killonewton per square milimeters)

A_s (Min) = Minimum Cross Sectioned Area of Prestressing Steel in Tieback measured in square millimeters.

$$A_s(mm) = \frac{1.5\ T}{0.75\ f_{pu}}$$

2 REVISED PER ADDENDUM No. 2 DATED NOVEMBER 28, 2011

Tracy L Bertram DESIGN OVERSIGHT Tracy L Bertram 1-7-10 SIGN OFF DATE	DESIGN	BY H MISTRY	CHECKED C VASQUEZ	LOAD FACTOR DESIGN		
	DETAILS	BY H. MISTRY	CHECKED C VASQUEZ	LAYOUT	BY C HII	CHECKED F QUACH
	QUANTITIES	BY K WONG	CHECKED S GARAPALLY	SPECIFICATIONS	BY H MISTRY	PLANS AND SPECS COMPARED P CHEN

PREPARED FOR THE STATE OF CALIFORNIA DEPARTMENT OF TRANSPORTATION

HARSHAD MISTRY
PROJECT ENGINEER

BRIDGE No. 23E0011
POST MILES 0.8

RETAINING WALL No. 5A & 5B
GENERAL PLAN No. 5

DESIGN GENERAL PLAN SHEET (ENGLISH) (REV.2/25/05)

ORIGINAL SCALE IN INCHES FOR REDUCED PLANS 0 1 2 3

CU 04264
EA 264141

DISREGARD PRINTS BEARING EARLIER REVISION DATES

REVISION DATES (PRELIMINARY STAGE ONLY): ~~3/13/09~~ ~~8/05/09~~ ~~11/06/09~~ 12/09/09

SHEET 34 OF 171

FILE => 23E0011-a-gp05.add

USERNAME => s12614 DATE PLOTTED => 28-NOV-2011 TIME PLOTTED => 06:24

DIST	COUNTY	ROUTE	POST MILES TOTAL PROJECT	SHEET No	TOTAL SHEETS
04	Nap,Sol	12	2.8/3.3, 0.0/2.6	475	617

P.K. Chen 12/09/09
REGISTERED STRUCTURAL ENGINEER DATE

11-22-10
PLANS APPROVAL DATE

REGISTERED PROFESSIONAL ENGINEER PO-KANG CHEN No. S3112 Exp. 9/30/11 STRUCTURAL STATE OF CALIFORNIA

The State of California or its officers or agents shall not be responsible for the accuracy or completeness of electronic copies of this plan sheet.

SOLANO TRANSPORTATION AUTHORITY
ONE HARBOR CENTER, SUITE 130
SUISUN CITY, CA 94585

MARK THOMAS & COMPANY, INC.
1960 ZANKER ROAD
SAN JOSE, CA 95112

Notes:

1. For complete project control and monumentation data, see the survey records on file in the surveys department at the district office.
2. Contractor shall protect all existing monuments in place. if monument is damaged by contractor's operations, contractor shall replace at contractor's cost.
3. For Utilities, see 'Road plans'
4. For complete Right of Way data, contact Right of Way Engineering at District Office.

2

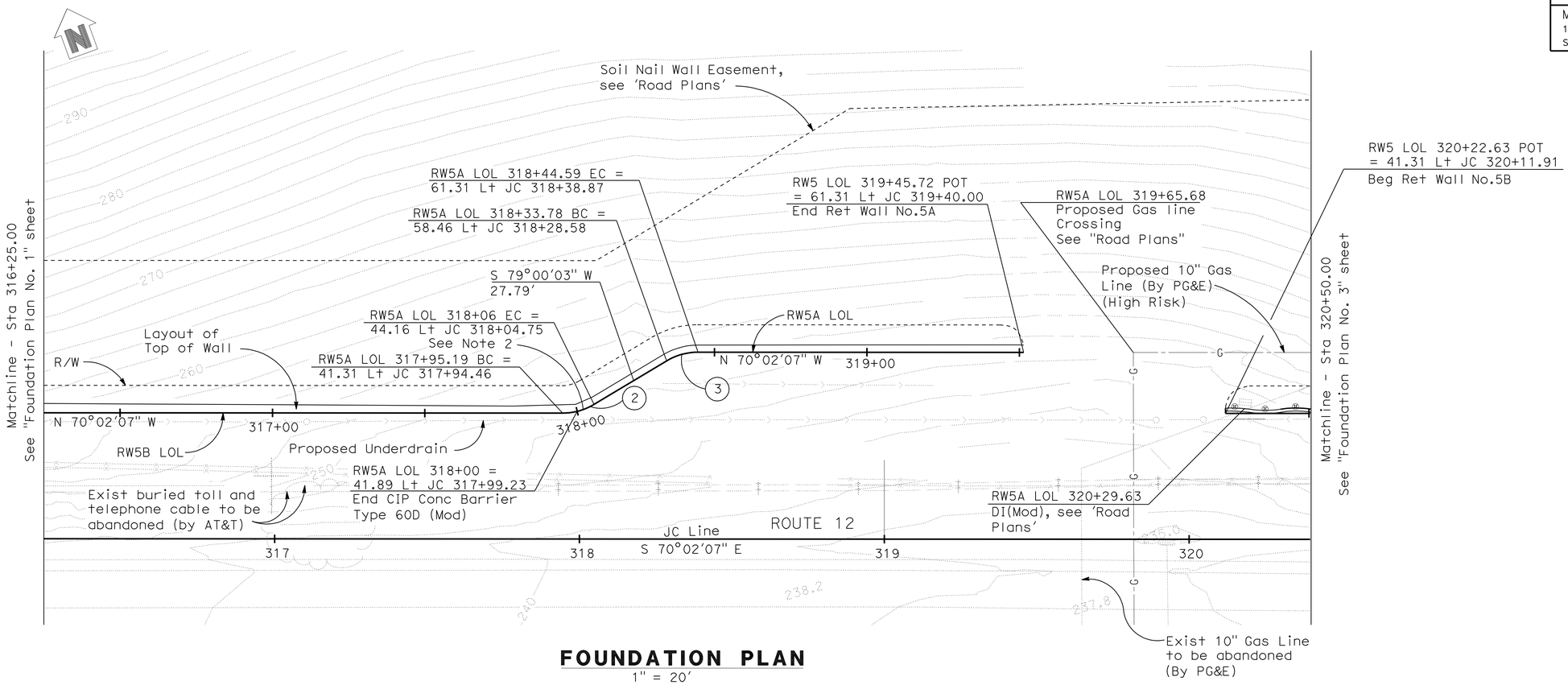

FOUNDATION PLAN
1" = 20'

CURVE DATA

No.	R	Δ	T	L
2	20.00'	30°57'50"	5.54'	10.81'
3	20.00'	30°57'50"	5.54'	10.81'

DATUM

Coordinates, bearings and distances are based on the California Coordinate System of 1983, NAVD 1988, Zone 2, CA-HPGN. Epoch 1991.35. Distances and stationing are grid distances. Distances are in feet. Supplementary information may be obtained from the district office, surveys branch or right of way engineering branch, 111 Grand Avenue, Oakland, California.

GEOTECHNICAL PROFESSIONAL 12/09/09 APPROVAL DATE

2 **REVISED PER ADDENDUM No. 2 DATED NOVEMBER 28, 2011**

DESIGN OVERSIGHT Tracy L Bertram
1-7-10
SIGN OFF DATE

SCALE: AS SHOWN	VERT.DATUM NAVD 88	HORZ.DATUM NAD 83	
PHOTOGRAMMETRY AS OF:		ALIGNMENT TIES	
SURVEYED	BY MTCo.	DRAFTED	BY
FIELD CHECKED	BY	CHECKED	BY

DESIGN	BY H MISTRY	CHECKED C VASQUEZ	
DETAILS	BY H MISTRY	CHECKED C VASQUEZ	
QUANTITIES	BY K WONG	CHECKED S GARAPALLY	

PREPARED FOR THE STATE OF CALIFORNIA DEPARTMENT OF TRANSPORTATION

HARSHAD MISTRY
PROJECT ENGINEER

BRIDGE No. 23E0011
POST MILE 0.8

RETAINING WALL No. 5A & 5B
FOUNDATION PLAN No. 2

FOUNDATION PLAN SHEET (ENGLISH) (REV. 2-25-05)

ORIGINAL SCALE IN INCHES FOR REDUCED PLANS 0 1 2 3

CU 04264
EA 264141

DISREGARD PRINTS BEARING EARLIER REVISION DATES

REVISION DATES (PRELIMINARY STAGE ONLY): ~~3/13/09~~ ~~8/05/09~~ ~~11/06/09~~ 12/09/09

SHEET 36 OF 171

FILE => 23e0011-e-fp02.add

USERNAME => s12614 DATE PLOTTED => 28-NOV-2011 TIME PLOTTED => 06:24

DIST	COUNTY	ROUTE	POST MILES TOTAL PROJECT	SHEET No	TOTAL SHEETS
04	Nap,Sol	12	2.8/3.3, 0.0/2.6	476	617

P.K. Chen 12/09/09
REGISTERED STRUCTURAL ENGINEER DATE

11-22-10
PLANS APPROVAL DATE

REGISTERED PROFESSIONAL ENGINEER PO-KANG CHEN No. S3112 Exp. 9/30/11 STRUCTURAL STATE OF CALIFORNIA

The State of California or its officers or agents shall not be responsible for the accuracy or completeness of electronic copies of this plan sheet.

SOLANO TRANSPORTATION AUTHORITY
ONE HARBOR CENTER, SUITE 130
SUISUN CITY, CA 94585

MARK THOMAS & COMPANY, INC.
1960 ZANKER ROAD
SAN JOSE, CA 95112

Notes:

1. For complete project control and monumentation data, see the survey records on file in the surveys department at the district office.
2. Contractor shall protect all existing monuments in place. if monument is damaged by contractor's operations, contractor shall replace at contractor's cost.
3. For Utilities, see 'Road plans'
4. For complete Right of Way data, contact Right of Way Engineering at District Office.

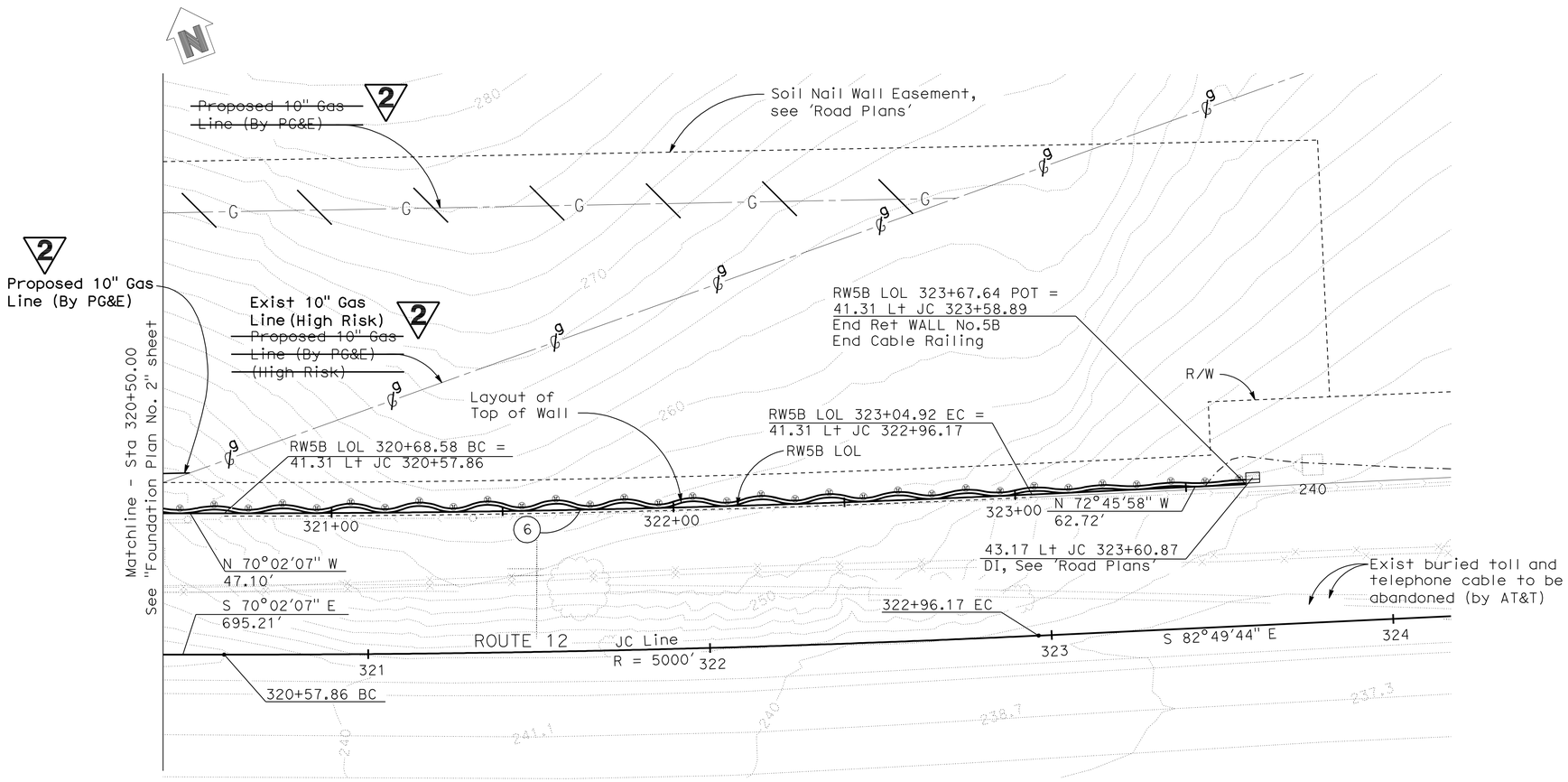

FOUNDATION PLAN
1" = 20'

CURVE DATA

No.	R	Δ	T	L
6	4958.69'	2°43'51"	118.19'	236.34'

DATUM

Coordinates, bearings and distances are based on the California Coordinate System of 1983, NAVD 1988, Zone 2, CA-HPGN. Epoch 1991.35. Distances and stationing are grid distances. Distances are in feet. Supplementary information may be obtained from the district office, surveys branch or right of way engineering branch, 111 Grand Avenue, Oakland, California.

2 REVISED PER ADDENDUM No. 2 DATED NOVEMBER 28, 2011

GEOTECHNICAL PROFESSIONAL APPROVAL DATE 12/09/09

Tracy L Bertram
DESIGN OVERSIGHT Tracy L Bertram
1-7-10
SIGN OFF DATE

SCALE: AS SHOWN	VERT.DATUM NAVD 88	HORZ.DATUM NAD 83	
PHOTOGRAMMETRY AS OF:		ALIGNMENT TIES	
SURVEYED	BY MTCo.	DRAFTED	BY
FIELD CHECKED	BY	CHECKED	BY

DESIGN	BY H MISTRY	CHECKED C VASQUEZ	
DETAILS	BY H MISTRY	CHECKED C VASQUEZ	
QUANTITIES	BY K WONG	CHECKED S GARAPALLY	

PREPARED FOR THE STATE OF CALIFORNIA DEPARTMENT OF TRANSPORTATION

HARSHAD MISTRY
PROJECT ENGINEER

BRIDGE No. 23E0011
POST MILE 0.8

RETAINING WALL No. 5A & 5B
FOUNDATION PLAN No. 3

FOUNDATION PLAN SHEET (ENGLISH) (REV. 2-25-05)

ORIGINAL SCALE IN INCHES FOR REDUCED PLANS 0 1 2 3

CU 04264
EA 264141

DISREGARD PRINTS BEARING EARLIER REVISION DATES

REVISION DATES (PRELIMINARY STAGE ONLY): ~~3/13/09~~ ~~8/05/09~~ ~~11/06/09~~ 12/09/09

SHEET 37 OF 171

FILE => 23e0011-e-fp03.add

USERNAME => s12161 4 DATE PLOTTED => 28-NOV-2011 TIME PLOTTED => 06:25

DIST	COUNTY	ROUTE	POST MILES TOTAL PROJECT	SHEET No	TOTAL SHEETS
04	Nap,Sol	12	2.8/3.3, 0.0/2.6	477	617

P.K. Chen 12/09/09
REGISTERED STRUCTURAL ENGINEER DATE

11-22-10
PLANS APPROVAL DATE

The State of California or its officers or agents shall not be responsible for the accuracy or completeness of electronic copies of this plan sheet.

REGISTERED PROFESSIONAL ENGINEER PO-KANG CHEN No. S3112 Exp. 9/30/11 STRUCTURAL STATE OF CALIFORNIA

SOLANO TRANSPORTATION AUTHORITY
ONE HARBOR CENTER, SUITE 130
SUISUN CITY, CA 94585

MARK THOMAS & COMPANY, INC.
1960 ZANKER ROAD
SAN JOSE, CA 95112

LEGEND

⊡ = Location of Soil Nail Assembly

□ = Location of Proof Soil Test Nail Assembly

SV = Vertical spacing of Soil Nail Assembly, SV = 5'-0" Max Typical
= 6'-0" Max for Bottom Row

Notes:

1. The inclination of all nails shall be 15°.
2. The exact location of the Proof Soil Test Nails to be determined by the Engineer.
3. All Soil Nail profile lines are parallel to FG at back of Wall except the bottom row which is parallel to bottom of the wall.
4. Soil Nails shall be placed normal to shotcrete surface in the plan view.
5. Test Nails can be relocated at the Engineer's discretion.
6. For Details of Architectural Treatment see "Architectural Treatment Details" sheets.
7. For Details of Wall Drainage & Drain Pipe installation, see "Soil Nail Wall Details No. 5" sheet.
8. For 'General Notes' and 'Soil/Rock Design Parameters', see "General Plan No. 4" sheet.
9. For vertical curve at top of wall slope change, see B3-8

2

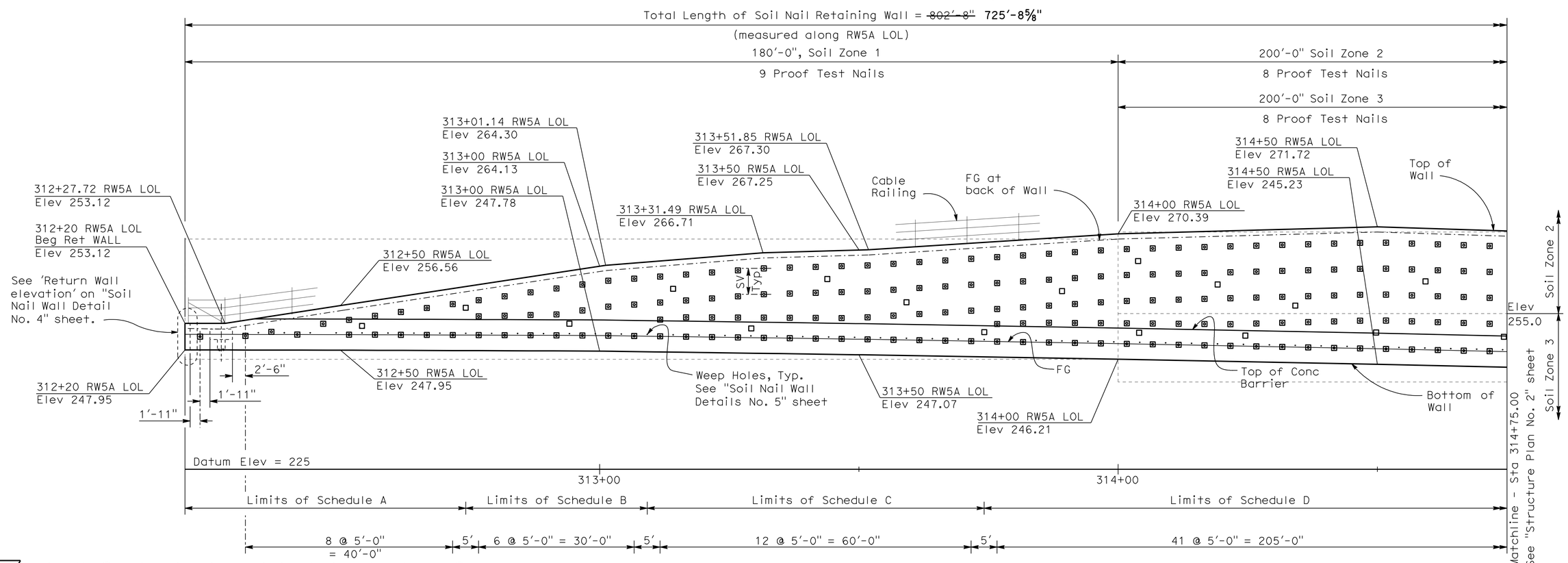

2 **REVISED PER ADDENDUM No. 2 DATED NOVEMBER 28, 2011**

DEVELOPED ELEVATION

1" = 10'

Schedule A		
Soil Nail Rebar Size	#8	
Number of Soil Nail Rows	1 & 2	
Row No. (From Top to Bottom)	1	2
Embedment Length, LE (ft)	15	15

Schedule B			
Soil Nail Rebar Size	#8		
Number of Soil Nail Rows	3		
Row No. (From Top to Bottom)	1	2	3
Embedment Length, LE (ft)	15	15	15

Schedule C				
Soil Nail Rebar Size	#8			
Number of Soil Nail Rows	4			
Row No. (From Top to Bottom)	1	2	3	4
Embedment Length, LE (ft)	28	28	20	20

Schedule D					
Soil Nail Rebar Size	#8				
Number of Soil Nail Rows	5				
Row No. (From Top to Bottom)	1	2	3	4	5
Embedment Length, LE (ft)	33	33	26	26	20

Tracy L Bertram
DESIGN OVERSIGHT Tracy L Bertram

1-7-10
SIGN OFF DATE

	BY	CHECKED
DESIGN	H MISTRY	C VASQUEZ
DETAILS	H. MISTRY	K WONG
QUANTITIES	K WONG	S GARAPALLY

PREPARED FOR THE STATE OF CALIFORNIA DEPARTMENT OF TRANSPORTATION

HARSHAD MISTRY
PROJECT ENGINEER

BRIDGE No. 23E0011
POST MILE 0.8

RETAINING WALL 5A & 5B
STRUCTURE PLAN No. 1

DESIGN DETAIL SHEET (ENGLISH) (REV. 2/25/05)
W:\SOLANO TA - 58-0151B SR 12 JAMESON CANYON\STRUCTURES\CADD\XREF\58-0151B-BORDER STRUCTURE DETAILS_22 X 34_SOLANO.DWG 9/4/2008 9:18:30 AM

ORIGINAL SCALE IN INCHES FOR REDUCED PLANS 0 1 2 3

CU 04264
EA 264141

DISREGARD PRINTS BEARING EARLIER REVISION DATES → REVISION DATES (PRELIMINARY STAGE ONLY) ~~3/13/09~~ ~~8/03/09~~ ~~11/06/09~~ 12/09/09

SHEET 38 OF 171

FILE => 23E0011-g-sp01.add

USERNAME => s121614 DATE PLOTTED => 28-NOV-2011 TIME PLOTTED => 06:25

DIST	COUNTY	ROUTE	POST MILES TOTAL PROJECT	SHEET No	TOTAL SHEETS
04	Nap,Sol	12	2.8/3.3, 0.0/2.6	478	617

P.K. Chen 12/09/09
REGISTERED STRUCTURAL ENGINEER DATE

11-22-10
PLANS APPROVAL DATE

REGISTERED PROFESSIONAL ENGINEER PO-KANG CHEN No. S3112 Exp. 9/30/11 STRUCTURAL STATE OF CALIFORNIA

The State of California or its officers or agents shall not be responsible for the accuracy or completeness of electronic copies of this plan sheet.

SOLANO TRANSPORTATION AUTHORITY
ONE HARBOR CENTER, SUITE 130
SUISUN CITY, CA 94585

MARK THOMAS & COMPANY, INC.
1960 ZANKER ROAD
SAN JOSE, CA 95112

LEGEND

⊡ = Location of Soil Nail Assembly

□ = Location of Proof Soil Test Nail Assembly

SV = Vertical spacing of Soil Nail Assembly, SV = 5'-0" Max Typical
= 6'-0" Max for Bottom Row

Notes:

1. For 'General Notes' and 'Soil/Rock Design Parameters', see "General Plan No. 4" sheet.
2. For 'Soil Nail Schedules', see "Structure Plan No. 1" sheet.

2

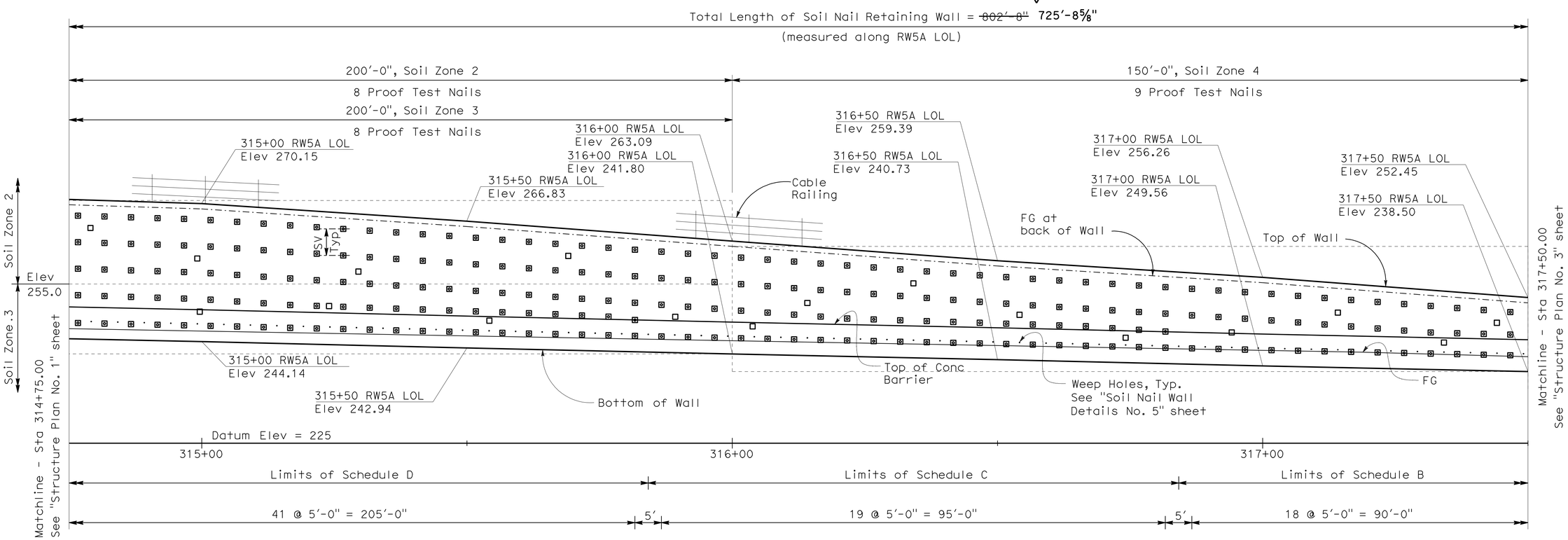

DEVELOPED ELEVATION

1" = 10'

2 **REVISED PER ADDENDUM No. 2 DATED NOVEMBER 28, 2011**

Tracy L Bertram
DESIGN OVERSIGHT Tracy L Bertram

1-7-10
SIGN OFF DATE

	BY	CHECKED
DESIGN	H MISTRY	C VASQUEZ
DETAILS	H. MISTRY	K WONG
QUANTITIES	K WONG	S GARAPALLY

PREPARED FOR THE STATE OF CALIFORNIA DEPARTMENT OF TRANSPORTATION

HARSHAD MISTRY
PROJECT ENGINEER

BRIDGE No. 23E0011
POST MILE 0.8

RETAINING WALL 5A & 5B
STRUCTURE PLAN No. 2

DESIGN DETAIL SHEET (ENGLISH) (REV. 2/25/05)
W:\SOLANO TA - 58-0151B SR 12 JAMESON CANYON\STRUCTURES\CADD\XREF\58-0151B-BORDER STRUCTURE DETAILS_22 X 34_SOLANO.DWG 9/4/2008 9:18:30 AM

ORIGINAL SCALE IN INCHES FOR REDUCED PLANS 0 1 2 3

CU 04264
EA 264141

DISREGARD PRINTS BEARING EARLIER REVISION DATES → 3/13/09 8/03/09 11/06/09 12/09/09

REVISION DATES (PRELIMINARY STAGE ONLY) | SHEET 39 | OF 171

FILE => 23E0011-g-sp02.add

USERNAME => s12161d DATE PLOTTED => 28-NOV-2011 TIME PLOTTED => 06:25

DIST	COUNTY	ROUTE	POST MILES TOTAL PROJECT	SHEET No	TOTAL SHEETS
04	Nap,Sol	12	2.8/3.3, 0.0/2.6	479	617

P.K. Chen 12/09/09
REGISTERED STRUCTURAL ENGINEER DATE

11-22-10
PLANS APPROVAL DATE

REGISTERED PROFESSIONAL ENGINEER PO-KANG CHEN No. S3112 Exp. 9/30/11 STRUCTURAL STATE OF CALIFORNIA

The State of California or its officers or agents shall not be responsible for the accuracy or completeness of electronic copies of this plan sheet.

SOLANO TRANSPORTATION AUTHORITY
ONE HARBOR CENTER, SUITE 130
SUISUN CITY, CA 94585

MARK THOMAS & COMPANY, INC.
1960 ZANKER ROAD
SAN JOSE, CA 95112

LEGEND

Soil Nail Retaining Wall

⊡ = Location of Soil Nail Assembly

□ = Location of Proof Soil Test Nail Assembly

SV = Vertical spacing of Soil Nail Assembly, SV = 5'-0" Max Typical
= 6'-0" Max for Bottom Row

Soldier Pile Tieback Retaining Wall

⊕ = Location of Tieback Anchor Assembly

Notes:

1. For 'General Notes' and 'Soil/Rock Design Parameters', see "General Plan No. 4" sheet.
2. For 'Soil Nail Schedules', see "Structure Plan No. 1" sheet.
3. For Tieback Wall types, height, pile and lagging data, see 'Table A' on "Structure Plan No. 4 & 5" sheet.

2

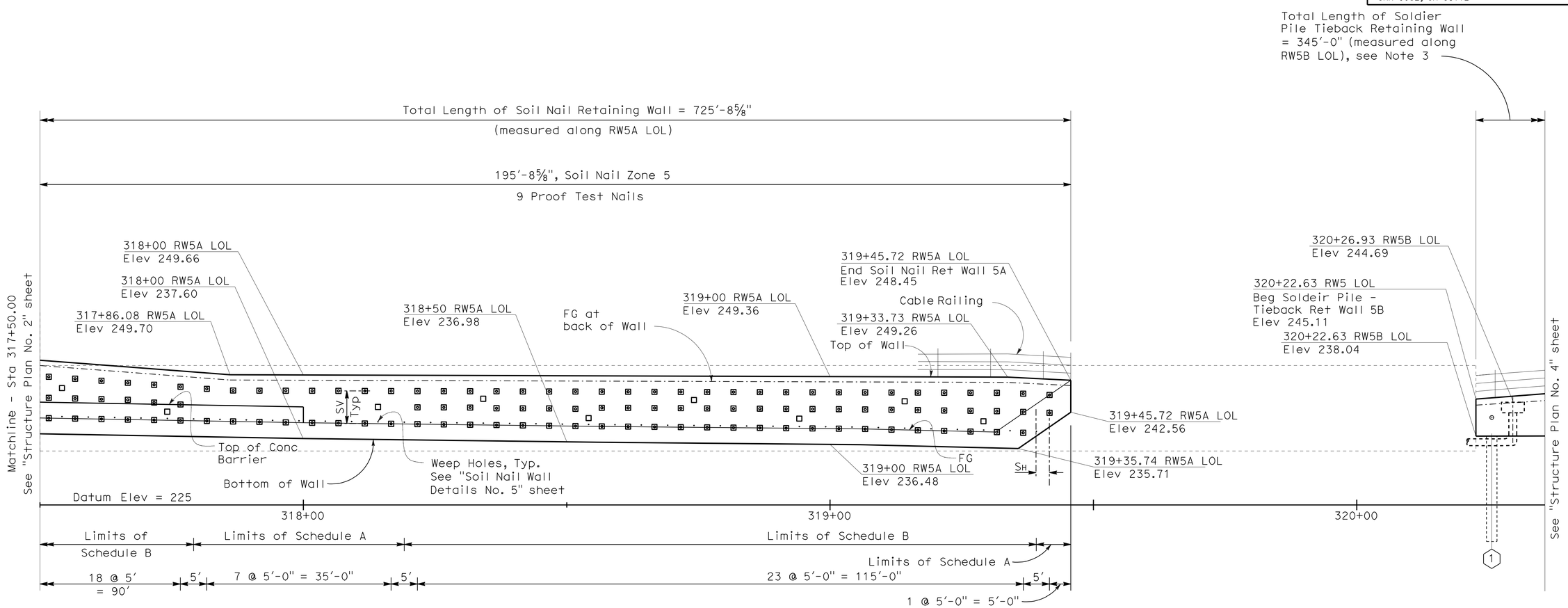

DEVELOPED ELEVATION

1" = 10'

2 **REVISED PER ADDENDUM No. 2 DATED NOVEMBER 28, 2011**

Tracy L Bertram DESIGN OVERSIGHT 1-7-10 SIGN OFF DATE	DESIGN	BY H MISTRY	CHECKED C VASQUEZ	PREPARED FOR THE STATE OF CALIFORNIA DEPARTMENT OF TRANSPORTATION	HARSHAD MISTRY PROJECT ENGINEER
	DETAILS	BY H. MISTRY	CHECKED K WONG		
	QUANTITIES	BY K WONG	CHECKED S GARAPALLY		

BRIDGE No. 23E0011 | POST MILE 0.8

RETAINING WALL 5A & 5B
STRUCTURE PLAN No. 3

DESIGN DETAIL SHEET (ENGLISH) (REV. 2/25/05)

ORIGINAL SCALE IN INCHES FOR REDUCED PLANS 0 1 2 3

CU 04264
EA 264141

DISREGARD PRINTS BEARING EARLIER REVISION DATES

REVISION DATES (PRELIMINARY STAGE ONLY): ~~3/13/09~~ ~~8/03/09~~ ~~11/06/09~~ 12/09/09

SHEET 40 OF 171

FILE => 23E0011-g-sp03.add

USERNAME => s121614 DATE PLOTTED => 28-NOV-2011 TIME PLOTTED => 06:25

DIST	COUNTY	ROUTE	POST MILES TOTAL PROJECT	SHEET No	TOTAL SHEETS
04	Nap,Sol	12	2.8/3.3, 0.0/2.6	480	617

P.K. Chen
REGISTERED STRUCTURAL ENGINEER — 12/09/09 DATE

11-22-10
PLANS APPROVAL DATE

REGISTERED PROFESSIONAL ENGINEER — PO-KANG CHEN — No. S3112 — Exp. 9/30/11 — STRUCTURAL — STATE OF CALIFORNIA

The State of California or its officers or agents shall not be responsible for the accuracy or completeness of electronic copies of this plan sheet.

2

SOLANO TRANSPORTATION AUTHORITY
ONE HARBOR CENTER, SUITE 130
SUISUN CITY, CA 94585

MARK THOMAS & COMPANY, INC.
1960 ZANKER ROAD
SAN JOSE, CA 95112

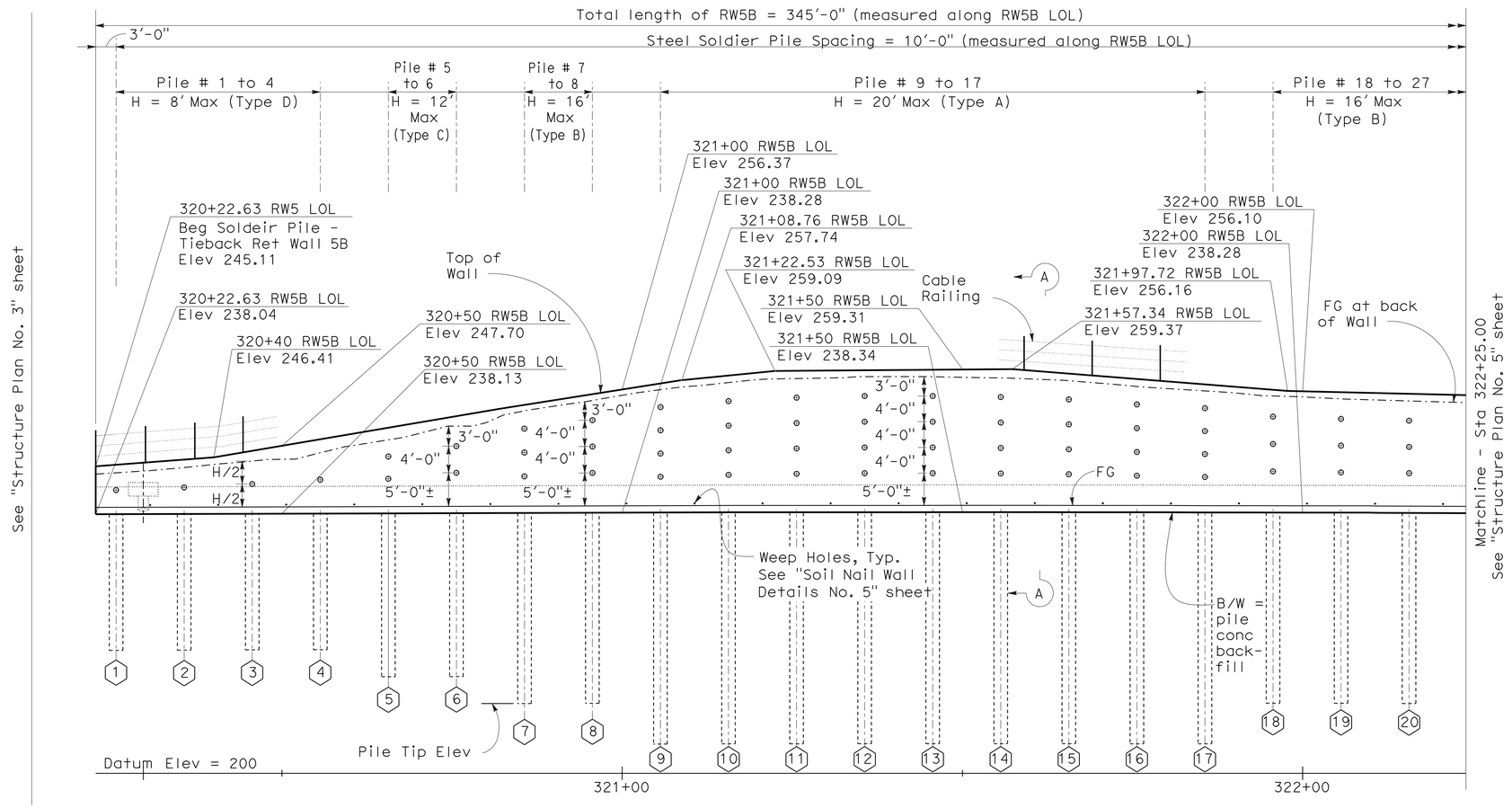

DEVELOPED ELEVATION

1" = 10'

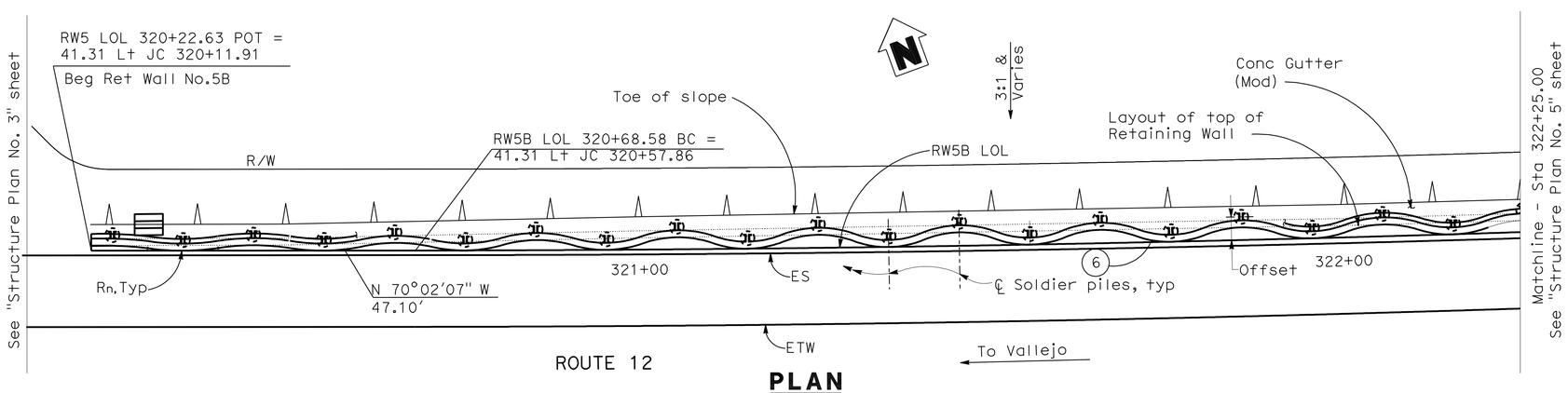

PLAN

1" = 10'

LEGEND:

⊕ Denotes Tiebacks Anchor Assembly

(17) Denotes Soldier pile number, see 'Table A'

R_n Denotes Radius of Curve of Structural finish face (all other unmarked curve lines shall be parallel)

Notes:

1. For 'Design Notes'. 'Soil/Rock Design Parameters' and 'Legend and Symbols' see "General Plan No. 4" and "General Plan No. 5"sheets.
2. For Tieback Wall layout, height, pile and lagging data, see 'Table A'.
3. For 'Section A-A', see "Soldier Pile Tieback Wall Details No. 2" sheet.

TABLE A

Pile#	T/W Elev	FG	*1 Cut Off Elev	Pile Tip	*2 Offset from RW5B LOL	*2 Layout Radii
1	245.42	239.05	238.05	218.05	2.386	R_1=54.25
2	246.44	239.08	238.08	218.08	1.667	R_2=34.08
3	247.46	239.11	238.11	218.11	2.435	R_3=32.86
4	248.62	239.15	238.14	218.14	1.667	R_4=28.40
5	250.84	239.18	238.18	214.18	2.751	R_5=23.26
6	253.06	239.21	238.21	214.21	1.667	R_6=19.89
7	255.27	239.24	238.24	210.24	3.106	R_7=17.76
8	257.16	239.27	238.27	210.27	1.667	R_8=16.11
9	258.12	239.30	238.30	204.30	3.371	R_9=15.12
10	258.34	239.32	238.32	204.32	1.667	R_{10}=14.42
11	258.57	239.32	238.32	204.32	3.516	R_{11}=13.99
12	258.80	239.33	238.33	204.33	1.667	R_{12}=13.50
13	259.02	239.34	238.34	204.34	3.582	R_{13}=13.55
14	258.77	239.35	238.35	204.35	1.667	R_{14}=13.50
15	258.14	239.34	238.34	204.34	3.566	R_{15}=13.65
16	257.52	239.32	238.32	204.32	1.667	R_{16}=13.88
17	256.90	239.31	238.31	204.31	3.469	R_{17}=14.34
18	256.27	239.29	238.29	210.29	1.667	R_{18}=14.88
19	255.84	239.27	238.27	210.27	3.357	R_{19}=15.24
20	255.57	239.24	238.24	210.24	1.667	R_{20}=15.22

*1 Bottom of Wall = Top of Conc backfill in pile
*2 For Soldier pile Tieback Wall Layout Offsets and radii locations, see "Soldier Pile Tieback Wall Details No. 1" sheet

2 **REVISED PER ADDENDUM No. 2 DATED NOVEMBER 28, 2011**

Tracy L Bertram
DESIGN OVERSIGHT — Tracy L Bertram
1-7-10
SIGN OFF DATE

DESIGN	BY H MISTRY	CHECKED C VASQUEZ	
DETAILS	BY H. MISTRY	CHECKED K WONG	
QUANTITIES	BY K WONG	CHECKED S GARAPALLY	

PREPARED FOR THE STATE OF CALIFORNIA DEPARTMENT OF TRANSPORTATION

HARSHAD MISTRY
PROJECT ENGINEER

BRIDGE No. 23E0011
POST MILE 0.8

RETAINING WALL 5A & 5B
STRUCTURE PLAN No. 4

DESIGN DETAIL SHEET (ENGLISH) (REV. 2/25/05)

ORIGINAL SCALE IN INCHES FOR REDUCED PLANS 0 1 2 3

CU 04264
EA 264141

FILE => 23E0011-g-sp04.add

DISREGARD PRINTS BEARING EARLIER REVISION DATES

REVISION DATES (PRELIMINARY STAGE ONLY): ~~3/13/09~~ ~~8/03/09~~ ~~11/06/09~~ 12/09/09

SHEET 41 OF 171

USERNAME => s121614 DATE PLOTTED => 28-NOV-2011 TIME PLOTTED => 06:25

DIST	COUNTY	ROUTE	POST MILES TOTAL PROJECT	SHEET No	TOTAL SHEETS
04	Nap,Sol	12	2.8/3.3, 0.0/2.6	611	617

P.K. Chen 12/09/09
REGISTERED STRUCTURAL ENGINEER DATE

11-22-10
PLANS APPROVAL DATE

REGISTERED PROFESSIONAL ENGINEER PO-KANG CHEN No. S3112 Exp. 9/30/11 STRUCTURAL STATE OF CALIFORNIA

The State of California or its officers or agents shall not be responsible for the accuracy or completeness of electronic copies of this plan sheet.

SOLANO TRANSPORTATION AUTHORITY
ONE HARBOR CENTER, SUITE 130
SUISUN CITY, CA 94585

MARK THOMAS & COMPANY, INC.
1960 ZANKER ROAD
SAN JOSE, CA 95112

STANDARD PLANS MAY 2006

A10A	Abbreviations (Sheet 1 of 2)
A10B	Abbreviations (Sheet 2 of 2)
A10C	Symbols (Sheet 1 of 2)
A10D	Symbols (Sheet 2 of 2)
A62B	Limits of Payment for Excavation and Backfill-Bridge Surcharge and Wall
A62E	Excavation and Backfill Cast-in-Place Reinforced Concrete Box and Arch Culverts
A85	Chain Link Fence
B0-1	Bridge Details
B0-3	Bridge Details
B3-1	Retaining Wall Type 1 - H=4' THRU 30'
B3-8	Retaining Wall Details No. 1
B3-9	Retaining Wall Details No. 2
B11-51	Tubular Hand Railing
B11-55	Concrete Barrier Type 732A
D80	Cast-in-Place Reinforced Concrete Single Box Culvert

Standard Plan Sheet No.
Detail No.

INDEX TO PLANS

Sht No.	TITLE
1	GENERAL PLAN
2	STRUCTURE PLAN
3	WALL DETAILS
4	TUBULAR HANDRAILING
5	SOIL LEGEND No. 1
6	SOIL LEGEND No. 2
7	LOG OF TEST BORINGS

LEGEND

———	Indicates new construction
-·-·-·-	Indicates existing structure
1	Concrete Barrier Type 732A
2	Tubular Handrailing (Modified)
3	Chain Link Fence (Type CL-4)
4	Concrete Barrier (Type 60C) see 'Road Plans'
5	1 ¼" Dia Gas with 4" Steel tube

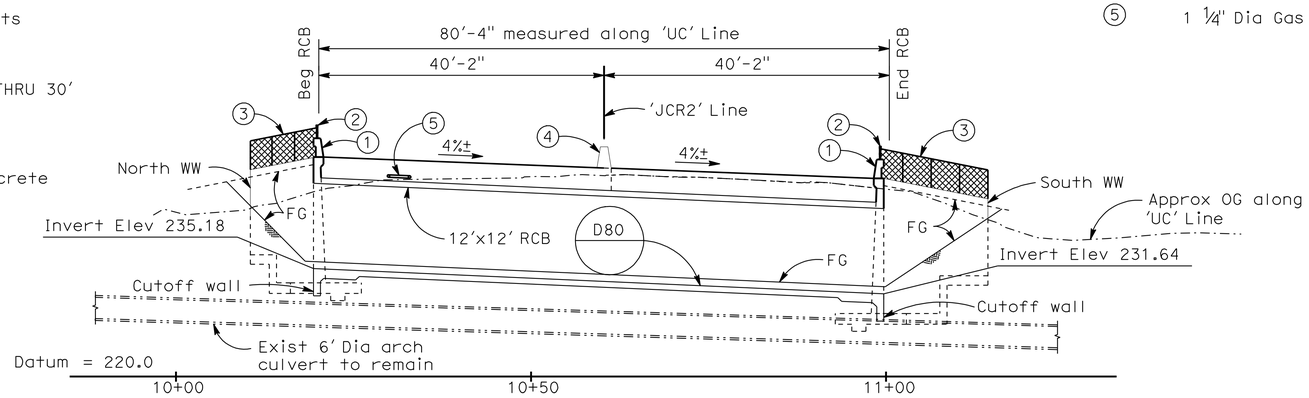

ELEVATION
3/16" = 1'-0"

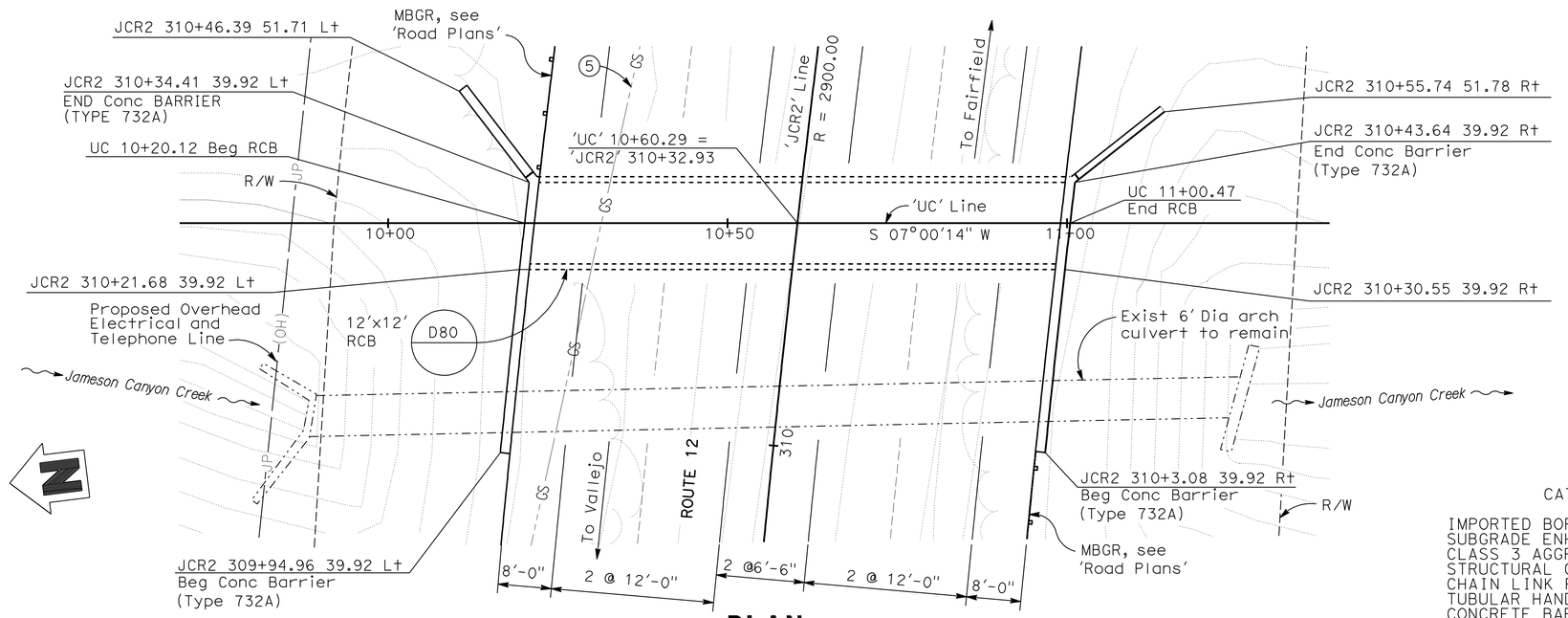

PLAN
3/16" = 1'-0"

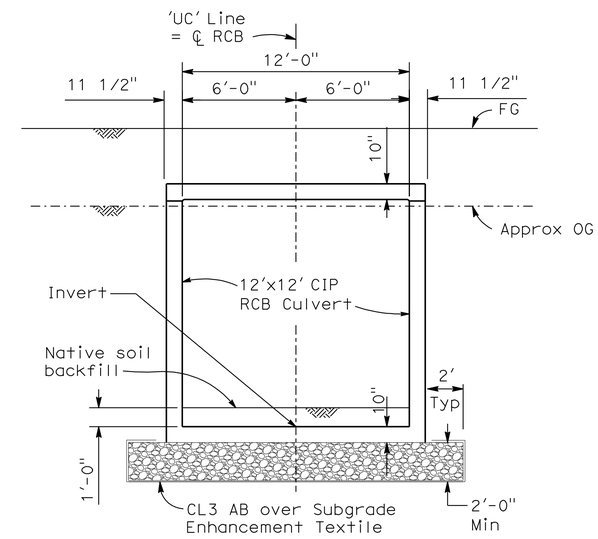

TYPICAL SECTION
1/4" = 1'-0"

CATTLE CREEK WILDLIFE UNDERCROSSING QUANTITIES	23-WLUC	
IMPORTED BORROW (LIGHTWEIGHT AGGREGATE)	450	CY
SUBGRADE ENHANCEMENT GEOTEXTILE	470	SQYD
CLASS 3 AGGREGATE BASE	280	CY
STRUCTURAL CONCRETE, BOX CULVERT	240	CY
CHAIN LINK FENCE (TYPE CL-4)	32	LF
TUBULAR HANDRAILING (MODIFIED)	82	LF
CONCRETE BARRIER (TYPE 732A)	82	LF
2 STRUCTURAL CONCRETE, HEADWALL	105	CY
BAR REINFORCING STEEL (BOX CULVERT)	9,000	LB
BAR REINFORCING STEEL (HEADWALL)	37,700	LB

Notes:
1. Contractor shall verify all controlling field dimensions before ordering or fabricating any material.
2. For utilities, see 'Road Plans'

2 REVISED PER ADDENDUM No. 2 DATED NOVEMBER 28, 2011

Tracy L. Bertram DESIGN OVERSIGHT	DESIGN	BY P. PARK	CHECKED H. MISTRY	LOAD FACTOR DESIGN	
1-7-10 SIGN OFF DATE	DETAILS	BY P. PARK	CHECKED H. MISTRY	LAYOUT BY V. LUCHESSI	CHECKED P. PARK
	QUANTITIES	BY P. PARK	CHECKED J. CHIU	SPECIFICATIONS BY H. MISTRY	PLANS AND SPECS COMPARED P. CHEN

PREPARED FOR THE STATE OF CALIFORNIA DEPARTMENT OF TRANSPORTATION

HARSHAD MISTRY
PROJECT ENGINEER

BRIDGE NO. 23 wluc
POST MILES 0.8

WILD LIFE BOX CULVERT
GENERAL PLAN

DESIGN GENERAL PLAN SHEET (ENGLISH) (REV.2/25/05)

ORIGINAL SCALE IN INCHES FOR REDUCED PLANS 0 1 2 3

CU 04264
EA 264141

DISREGARD PRINTS BEARING EARLIER REVISION DATES → 8/05/09 11/06/09 12/09/09

SHEET 1 OF 7

FILE => 23WLUC-a-gp01.add

USERNAME => s121614 DATE PLOTTED => 28-NOV-2011 TIME PLOTTED => 06:25