Dist	COUNTY	ROUTE	POST MILES TOTAL PROJECT	SHEET No.	TOTAL SHEETS
04	Son	101	0.9/3.6	601	918

REGISTERED CIVIL ENGINEER 11/17/11 DATE

4-23-12
PLANS APPROVAL DATE

REGISTERED PROFESSIONAL ENGINEER RAMSEY J. HISSEN No. C-39608 Exp. 12-31-13 CIVIL STATE OF CALIFORNIA

THE STATE OF CALIFORNIA OR ITS OFFICERS OR AGENTS SHALL NOT BE RESPONSIBLE FOR THE ACCURACY OR COMPLETENESS OF SCANNED COPIES OF THIS PLAN SHEET.

URS CORPORATION
100 W. SAN FERNANDO St
SUITE 200
SAN JOSE, CA 95113

SCTA
490 MENDOCINO AVENUE
SUITE 206
SANTA ROSA, CA 95401

NOTE:
FOR ACCURATE RIGHT OF WAY DATA, CONTACT
RIGHT OF WAY ENGINEERING AT THE DISTRICT OFFICE.

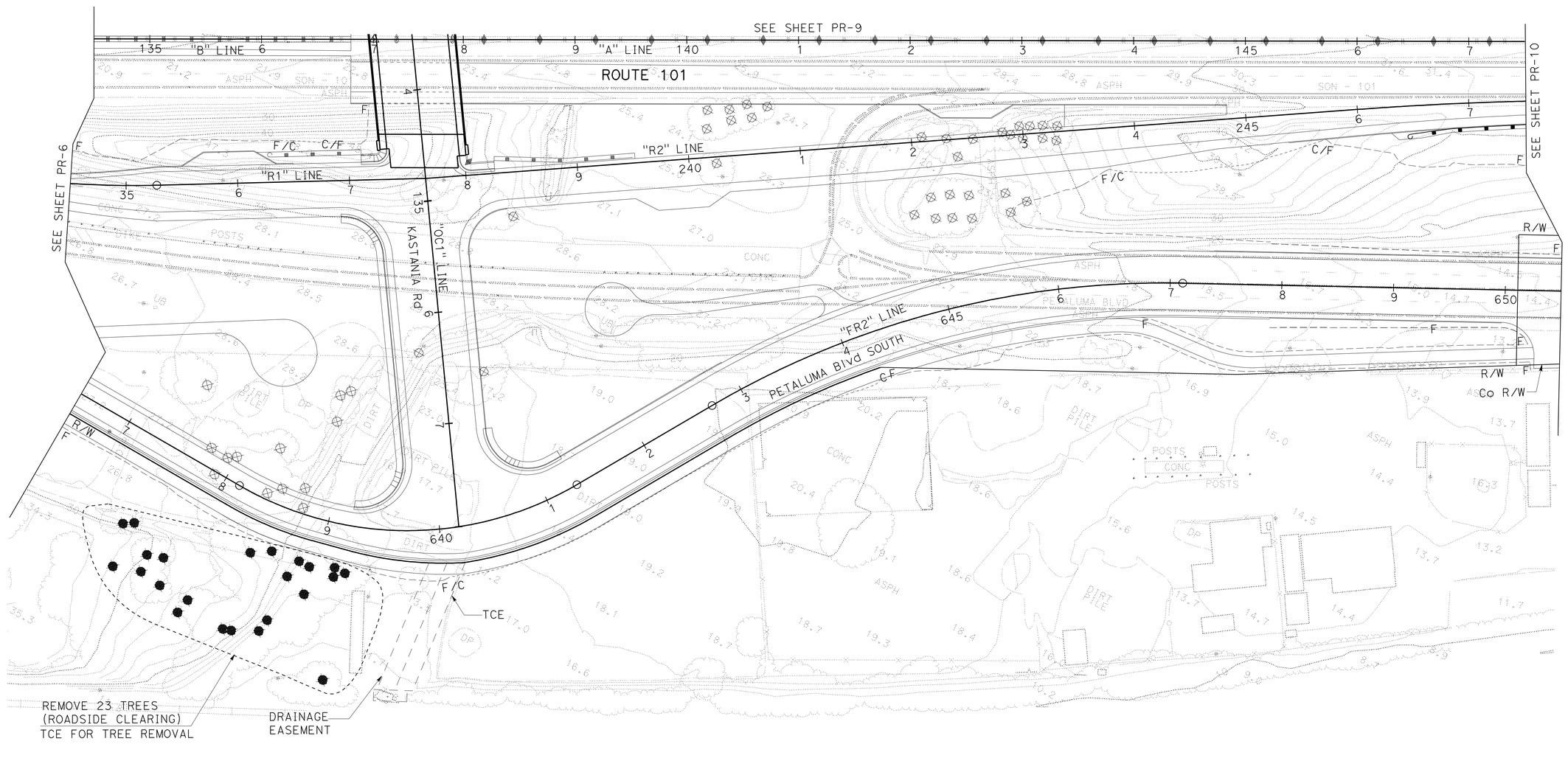

FOR NOTES AND LEGEND,
SEE SHEET PR-1

THIS PLAN ACCURATE FOR PLANT REMOVAL WORK ONLY

PLANT REMOVAL PLAN

SCALE: 1" = 50'

PR-8

STATE OF CALIFORNIA - DEPARTMENT OF TRANSPORTATION

Caltrans

CONSULTANT FUNCTIONAL SUPERVISOR: RAMSEY HISSEN

CALCULATED-DESIGNED BY: NELSON HOM
CHECKED BY: TYSON TANO

REVISED BY: NH
DATE REVISED: 03/09/12

LAST REVISION 03-09-12
DATE PLOTTED => 26-APR-2012
TIME PLOTTED => 06:58

BORDER LAST REVISED 7/2/2010
USERNAME => s109858
DGN FILE => 0412000195tf008.dgn
RELATIVE BORDER SCALE IS IN INCHES 0 1 2 3
UNIT 0714
PROJECT NUMBER & PHASE 04120001951

Dist	COUNTY	ROUTE	POST MILES TOTAL PROJECT	SHEET No.	TOTAL SHEETS
04	Son	101	0.9/3.6	602	918

REGISTERED CIVIL ENGINEER 11/17/11 DATE

4-23-12
PLANS APPROVAL DATE

REGISTERED PROFESSIONAL ENGINEER RAMSEY J. HISSEN No. C-39608 Exp. 12-31-13 CIVIL STATE OF CALIFORNIA

THE STATE OF CALIFORNIA OR ITS OFFICERS OR AGENTS SHALL NOT BE RESPONSIBLE FOR THE ACCURACY OR COMPLETENESS OF SCANNED COPIES OF THIS PLAN SHEET.

URS CORPORATION
100 W. SAN FERNANDO St
SUITE 200
SAN JOSE, CA 95113

SCTA
490 MENDOCINO AVENUE
SUITE 206
SANTA ROSA, CA 95401

NOTE:
FOR ACCURATE RIGHT OF WAY DATA, CONTACT
RIGHT OF WAY ENGINEERING AT THE DISTRICT OFFICE.

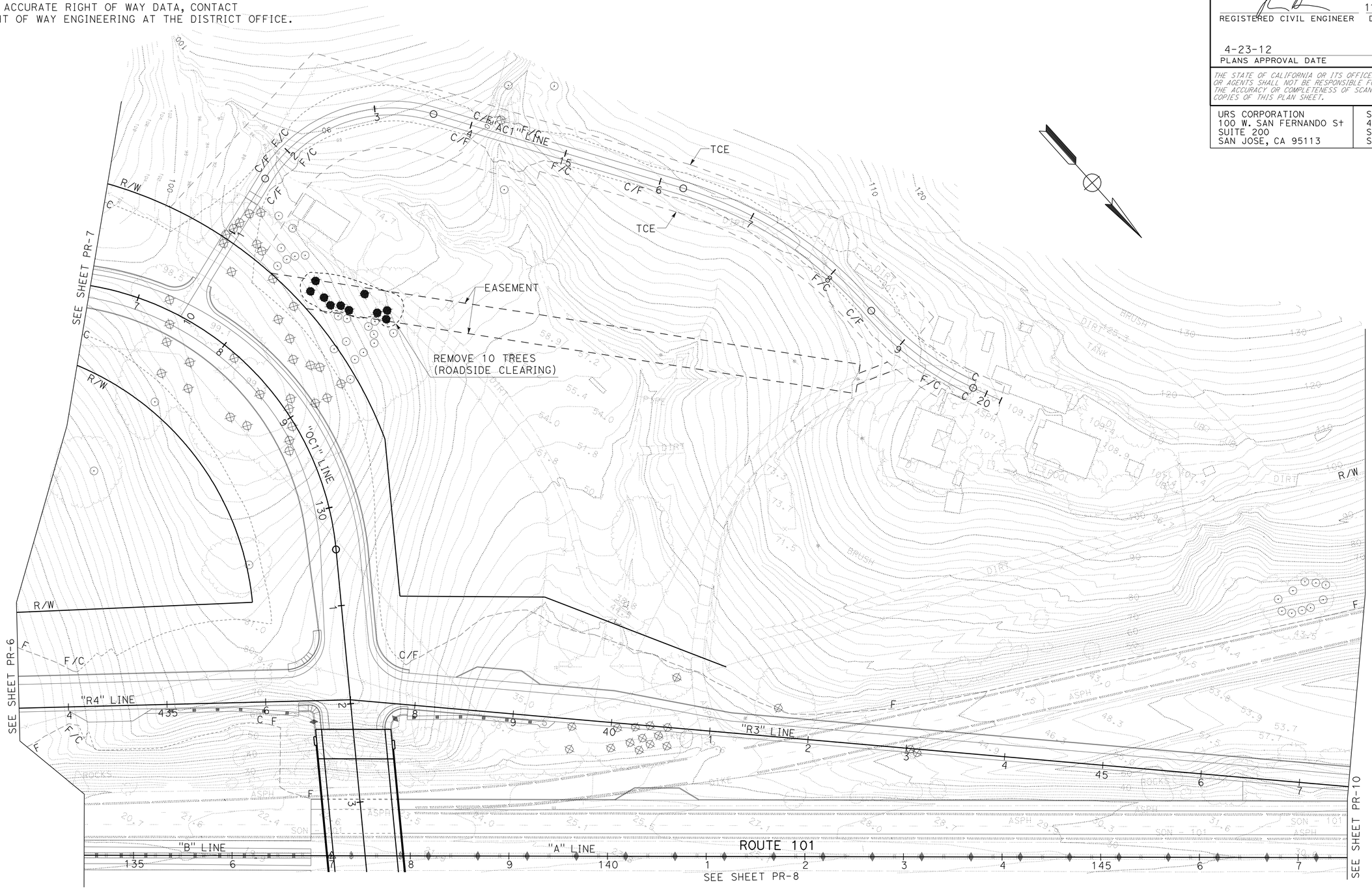

FOR NOTES AND LEGEND,
SEE SHEET PR-1

THIS PLAN ACCURATE FOR PLANT REMOVAL WORK ONLY

PLANT REMOVAL PLAN

SCALE: 1" = 50'

PR-9

STATE OF CALIFORNIA - DEPARTMENT OF TRANSPORTATION

Caltrans

CONSULTANT FUNCTIONAL SUPERVISOR: RAMSEY HISSEN

CALCULATED-DESIGNED BY: NELSON HOM

CHECKED BY: TYSON TANO

REVISED BY: NH

DATE REVISED: 03/09/12

LAST REVISION 03-09-12

DATE PLOTTED => 26-APR-2012
TIME PLOTTED => 06:58

Dist	COUNTY	ROUTE	POST MILES TOTAL PROJECT	SHEET No.	TOTAL SHEETS
04	Son	101	0.9/3.6	603	918

REGISTERED CIVIL ENGINEER 11/17/11 DATE

4-23-12
PLANS APPROVAL DATE

REGISTERED PROFESSIONAL ENGINEER
RAMSEY J. HISSEN
No. C-39608
Exp. 12-31-13
CIVIL
STATE OF CALIFORNIA

THE STATE OF CALIFORNIA OR ITS OFFICERS OR AGENTS SHALL NOT BE RESPONSIBLE FOR THE ACCURACY OR COMPLETENESS OF SCANNED COPIES OF THIS PLAN SHEET.

URS CORPORATION
100 W. SAN FERNANDO St
SUITE 200
SAN JOSE, CA 95113

SCTA
490 MENDOCINO AVENUE
SUITE 206
SANTA ROSA, CA 95401

NOTE:
FOR ACCURATE RIGHT OF WAY DATA, CONTACT
RIGHT OF WAY ENGINEERING AT THE DISTRICT OFFICE.

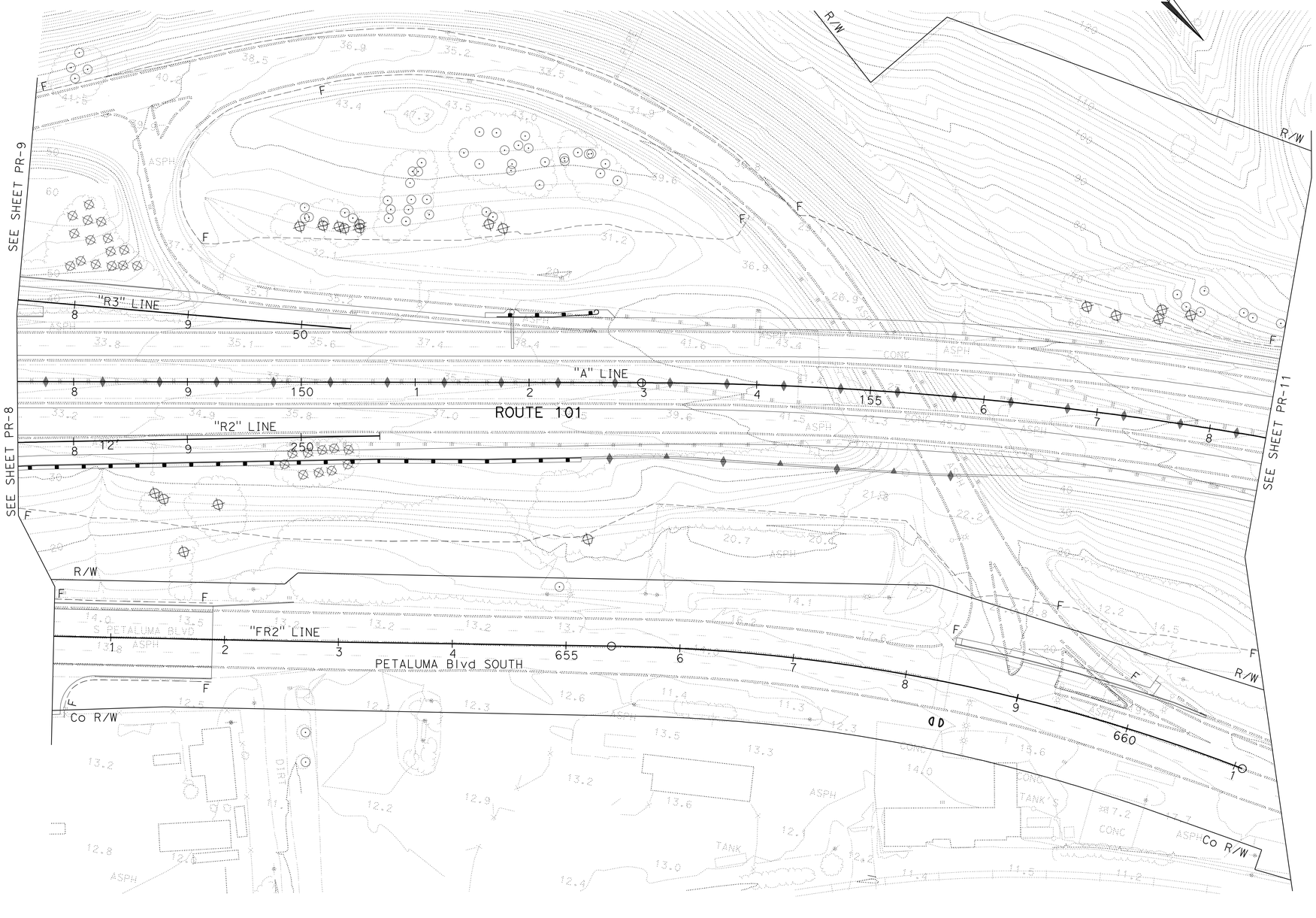

FOR NOTES AND LEGEND,
SEE SHEET PR-1

THIS PLAN ACCURATE FOR PLANT REMOVAL WORK ONLY

PLANT REMOVAL PLAN

SCALE: 1" = 50'

PR-10

STATE OF CALIFORNIA - DEPARTMENT OF TRANSPORTATION
Caltrans

CONSULTANT FUNCTIONAL SUPERVISOR: RAMSEY HISSEN
CALCULATED-DESIGNED BY: NELSON HOM
CHECKED BY: TYSON TANO
REVISED BY: NH
DATE REVISED: 03/09/12

LAST REVISION 03-09-12
DATE PLOTTED => 26-APR-2012
TIME PLOTTED => 06:58

Dist	COUNTY	ROUTE	POST MILES TOTAL PROJECT	SHEET No.	TOTAL SHEETS
04	Son	101	0.9/3.6	604	918

REGISTERED CIVIL ENGINEER 11/17/11 DATE

4-23-12
PLANS APPROVAL DATE

REGISTERED PROFESSIONAL ENGINEER RAMSEY J. HISSEN No. C-39608 Exp. 12-31-13 CIVIL STATE OF CALIFORNIA

THE STATE OF CALIFORNIA OR ITS OFFICERS OR AGENTS SHALL NOT BE RESPONSIBLE FOR THE ACCURACY OR COMPLETENESS OF SCANNED COPIES OF THIS PLAN SHEET.

URS CORPORATION
100 W. SAN FERNANDO St
SUITE 200
SAN JOSE, CA 95113

SCTA
490 MENDOCINO AVENUE
SUITE 206
SANTA ROSA, CA 95401

NOTE:
FOR ACCURATE RIGHT OF WAY DATA, CONTACT
RIGHT OF WAY ENGINEERING AT THE DISTRICT OFFICE.

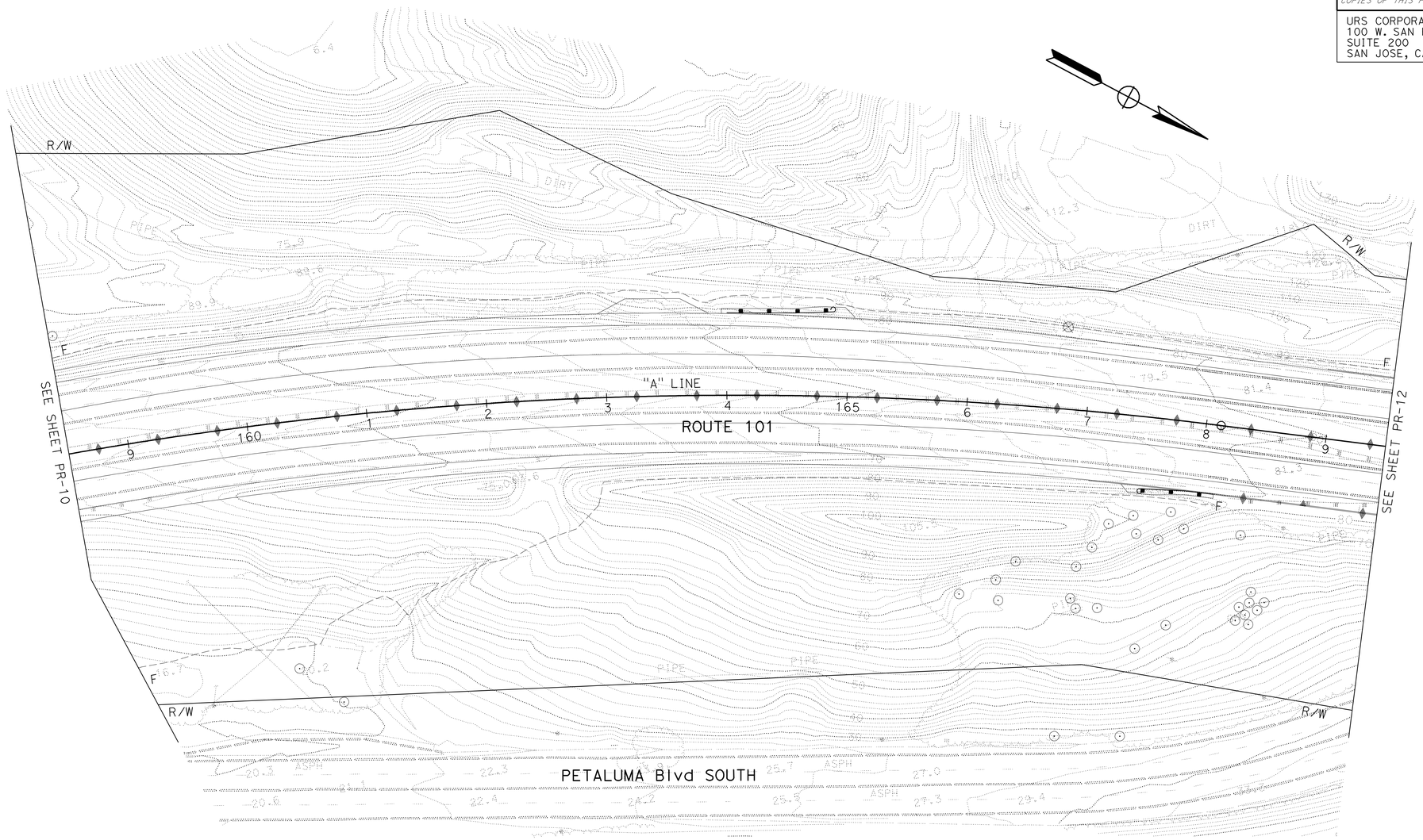

FOR NOTES AND LEGEND,
SEE SHEET PR-1

THIS PLAN ACCURATE FOR PLANT REMOVAL WORK ONLY

PLANT REMOVAL PLAN

SCALE: 1" = 50'

PR-11

STATE OF CALIFORNIA - DEPARTMENT OF TRANSPORTATION

Caltrans

CONSULTANT FUNCTIONAL SUPERVISOR: RAMSEY HISSEN

CALCULATED-DESIGNED BY: NELSON HOM

CHECKED BY: TYSON TANO

REVISED BY: NH

DATE REVISED: 03/09/12

LAST REVISION 03-09-12 | DATE PLOTTED => 26-APR-2012 | TIME PLOTTED => 06:58

BORDER LAST REVISED 7/2/2010 | USERNAME => s109858 | DGN FILE => 0412000195tf011.dgn | RELATIVE BORDER SCALE IS IN INCHES 0 1 2 3 | UNIT 0714 | PROJECT NUMBER & PHASE 04120001951

Dist	COUNTY	ROUTE	POST MILES TOTAL PROJECT	SHEET No.	TOTAL SHEETS
04	Son	101	0.9/3.6	605	918

REGISTERED CIVIL ENGINEER 11/17/11 DATE

4-23-12
PLANS APPROVAL DATE

REGISTERED PROFESSIONAL ENGINEER RAMSEY J. HISSEN No. C-39608 Exp. 12-31-13 CIVIL STATE OF CALIFORNIA

THE STATE OF CALIFORNIA OR ITS OFFICERS OR AGENTS SHALL NOT BE RESPONSIBLE FOR THE ACCURACY OR COMPLETENESS OF SCANNED COPIES OF THIS PLAN SHEET.

URS CORPORATION
100 W. SAN FERNANDO St
SUITE 200
SAN JOSE, CA 95113

SCTA
490 MENDOCINO AVENUE
SUITE 206
SANTA ROSA, CA 95401

NOTE:
FOR ACCURATE RIGHT OF WAY DATA, CONTACT
RIGHT OF WAY ENGINEERING AT THE DISTRICT OFFICE.

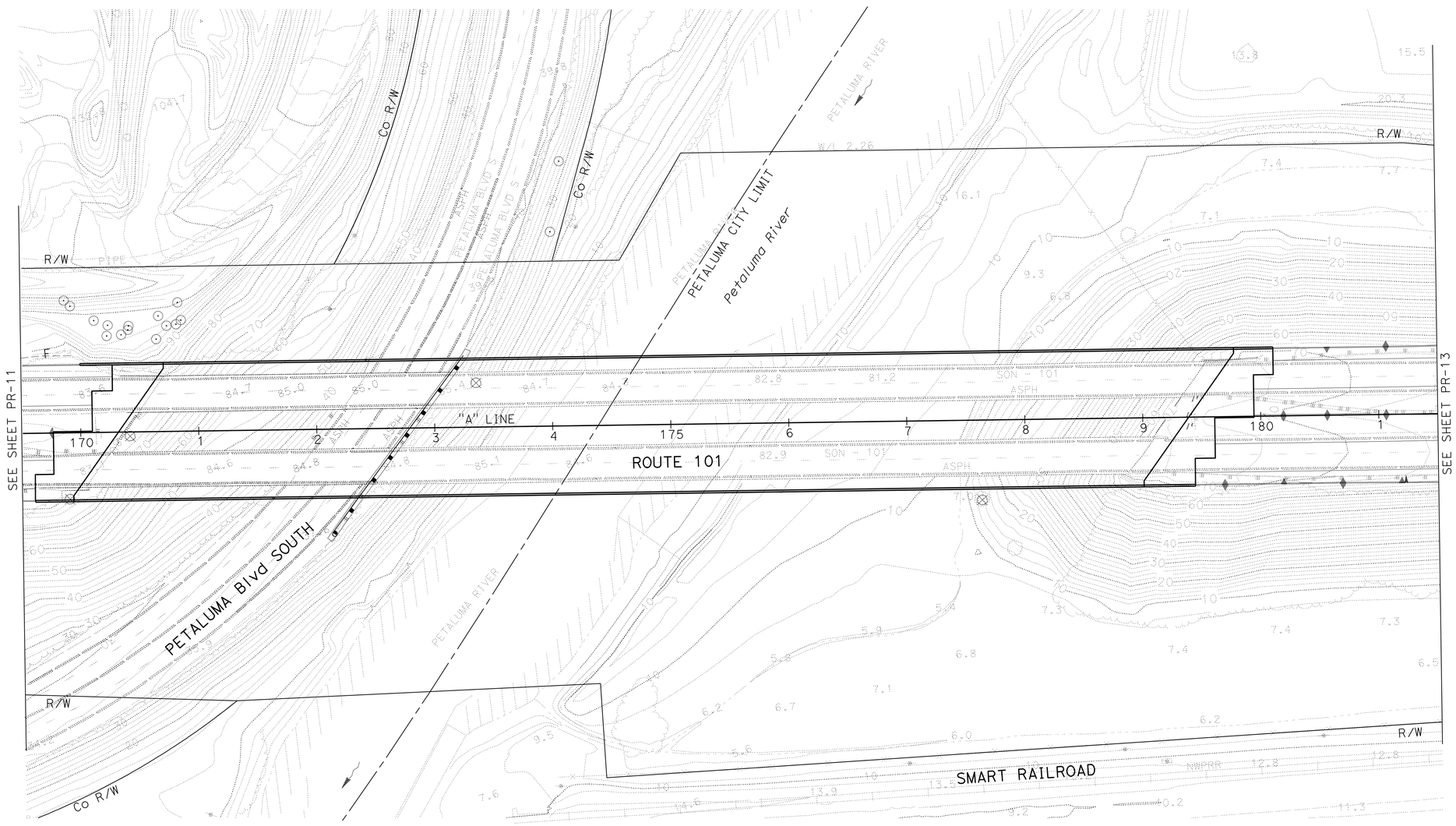

FOR NOTES AND LEGEND,
SEE SHEET PR-1

THIS PLAN ACCURATE FOR PLANT REMOVAL WORK ONLY

PLANT REMOVAL PLAN

SCALE: 1" = 50'

PR-12

STATE OF CALIFORNIA - DEPARTMENT OF TRANSPORTATION
Caltrans

CONSULTANT FUNCTIONAL SUPERVISOR: RAMSEY HISSEN

CALCULATED-DESIGNED BY: NELSON HOM
CHECKED BY: TYSON TANO

REVISED BY: NH
DATE REVISED: 03/09/12

LAST REVISION 03-09-12
DATE PLOTTED => 26-APR-2012
TIME PLOTTED => 06:58

Dist	COUNTY	ROUTE	POST MILES TOTAL PROJECT	SHEET No.	TOTAL SHEETS
04	Son	101	0.9/3.6	606	918

REGISTERED CIVIL ENGINEER 11/17/11 DATE

4-23-12
PLANS APPROVAL DATE

REGISTERED PROFESSIONAL ENGINEER RAMSEY J. HISSEN No. C-39608 Exp. 12-31-13 CIVIL STATE OF CALIFORNIA

THE STATE OF CALIFORNIA OR ITS OFFICERS OR AGENTS SHALL NOT BE RESPONSIBLE FOR THE ACCURACY OR COMPLETENESS OF SCANNED COPIES OF THIS PLAN SHEET.

URS CORPORATION
100 W. SAN FERNANDO St
SUITE 200
SAN JOSE, CA 95113

SCTA
490 MENDOCINO AVENUE
SUITE 206
SANTA ROSA, CA 95401

NOTE:
FOR ACCURATE RIGHT OF WAY DATA, CONTACT
RIGHT OF WAY ENGINEERING AT THE DISTRICT OFFICE.

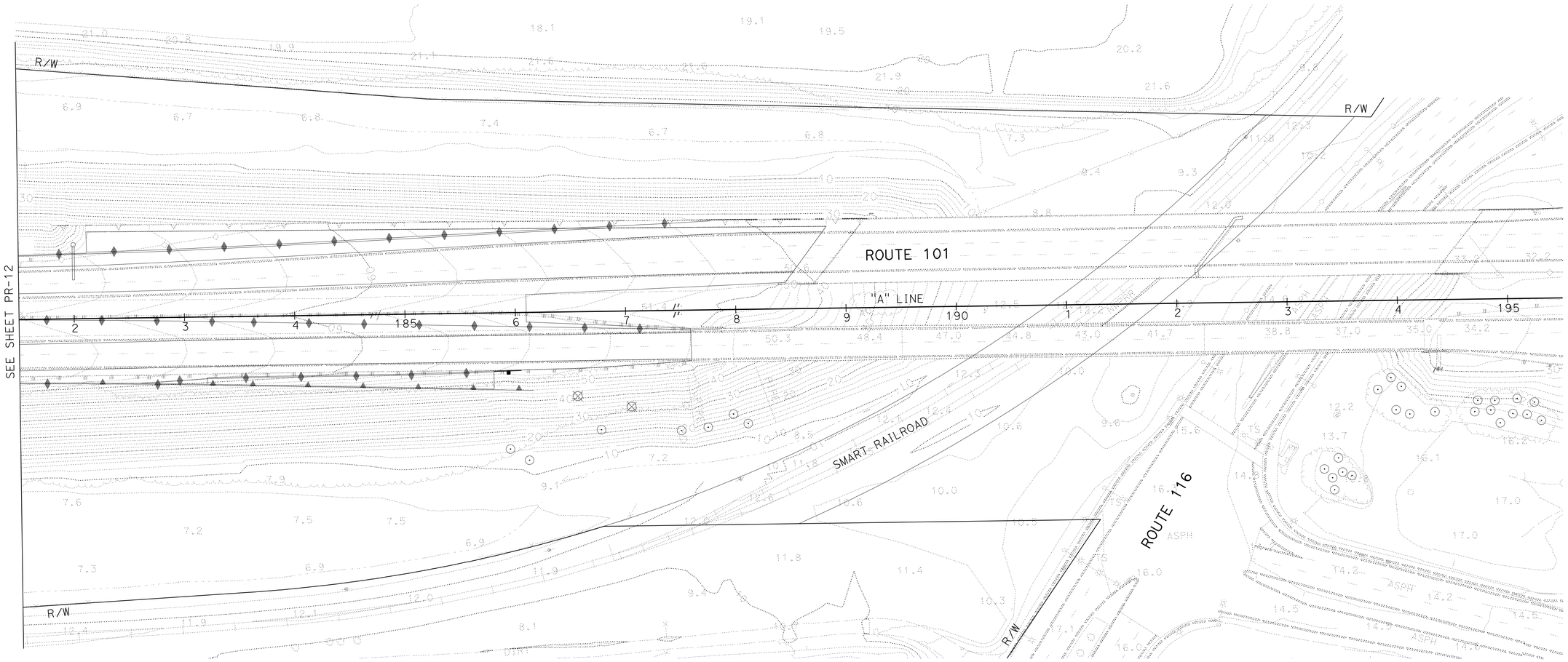

FOR NOTES AND LEGEND,
SEE SHEET PR-1

THIS PLAN ACCURATE FOR PLANT REMOVAL WORK ONLY

PLANT REMOVAL PLAN

SCALE: 1" = 50'

PR-13

REVISED BY	DATE REVISED
NH	03/09/12

CALCULATED-DESIGNED BY: NELSON HOM
CHECKED BY: TYSON TANO
CONSULTANT FUNCTIONAL SUPERVISOR: RAMSEY HISSEN

STATE OF CALIFORNIA - DEPARTMENT OF TRANSPORTATION
Caltrans

LAST REVISION 03-09-12 | DATE PLOTTED => 26-APR-2012 | TIME PLOTTED => 06:58

Dist	COUNTY	ROUTE	POST MILES TOTAL PROJECT	SHEET No.	TOTAL SHEETS
04	Son	101	0.9/3.6	607	918

REGISTERED CIVIL ENGINEER — DATE 11/17/11

4-23-12
PLANS APPROVAL DATE

REGISTERED PROFESSIONAL ENGINEER — KIN Y. CHAN No. 55391 Exp. 12/31/12 CIVIL — STATE OF CALIFORNIA

THE STATE OF CALIFORNIA OR ITS OFFICERS OR AGENTS SHALL NOT BE RESPONSIBLE FOR THE ACCURACY OR COMPLETENESS OF SCANNED COPIES OF THIS PLAN SHEET.

Y&C TRANSPORTATION CONSULTANTS, INC.
3250 RAMOS CIRCLE
SACRAMENTO, CA 95827

SCTA
490 MENDOCINO AVENUE
SUITE 206
SANTA ROSA, CA 95401

ELECTRICAL INDEX

E-1 TO E-3	ELECTRICAL INDEX, GENERAL NOTES, ABBREVIATIONS AND LEGEND
E-4 TO E-9	LIGHTING AND SIGN ILLUMINATION
E-10 & E-11	LIGHTING (COUNTY STREET)
E-12 TO E-17	TRAFFIC OPERATIONS SYSTEM
E-18 TO E-23	SIGNAL AND LIGHTING
E-24 & E-25	FLASHING BEACON AND LIGHTING
E-26 TO E-28	LIGHTING (NAVIGATION)
E-29 TO E-41	ELECTRICAL DETAILS
E-42	ELECTRICAL NOTES (STAGE CONSTRUCTION)
E-43 TO E-48	LIGHTING AND SIGN ILLUMINATION (STAGE CONSTRUCTION)
E-49 TO E-56	TRAFFIC OPERATIONS SYSTEM (STAGE CONSTRUCTION)
E-57 & E-58	SIGNAL AND LIGHTING (STAGE CONSTRUCTION)
E-59	LIGHTING (NAVIGATION) (STAGE CONSTRUCTION)
E-60 TO E-65	ELECTRICAL DETAILS (STAGE CONSTRUCTION)
E-66	ELECTRICAL DETAILS (PREFORMED INDUCTIVE LOOP)

GENERAL NOTES

1. NO ABOVE GROUND ELECTRICAL WORK SHALL BE PERFORMED ON ANY SYSTEM WITHIN THE PROJECT SITE UNTIL ALL CONTRACTOR-FURNISHED ELECTRICAL MATERIALS FOR THAT INDIVIDUAL SYSTEM HAVE BEEN TESTED AND DELIVERED TO THE CONTRACTOR.
2. THE NEUTRAL CONDUCTOR SHALL RUN FROM THE SERVICE EQUIPMENT ENCLOSURE TO THE CONTROLLER CABINET WITHOUT SPLICING TO ANY OTHER NEUTRAL CONDUCTOR.
3. THE CLEARANCE BETWEEN THE BOTTOM OF THE LOWEST CIRCUIT BREAKER AND THE BOTTOM OF THE SERVICE EQUIPMENT ENCLOSURE FOR A TYPE III-A SERIES SHALL BE 24 INCHES MINIMUM.
4. NO OVERHEAD SIGN PANEL SHALL BE INSTALLED UNTIL THE OVERHEAD SIGN LIGHTING IS COMPLETELY OPERATIONAL.
5. WHERE ONE OR MORE TRAFFIC SIGNAL DETECTOR(S) CONSIST OF A SEQUENCE OF 4 LOOPS IN A SINGLE LANE, THE FRONT LOOP CLOSEST TO THE LIMIT LINE OR CROSSWALK SHALL BE LOCATED 1 FOOT FROM THE LINE. THE SET OF 3 LOOPS OR 4 LOOPS ASSIGNED TO THE SAME LOOP DETECTOR LEAD-IN CABLE (DLC) SHALL BE CONNECTED IN SERIES FOR TRAFFIC SIGNAL SYSTEM ONLY AND NOT FOR RAMP METERING SYSTEM.
6. PULL BOXES FOR CIRCUITS LABELED "COUNTY CIRCUIT" ON THE PLANS SHALL NOT HAVE THE "CALTRANS" COVER MARKING. THE COVERS SHALL BE MARKED "COUNTY".
7. SLEEVE NUTS SHALL BE USED ON TYPE 1-B STANDARD. FOUNDATIONS FOR TYPE 1-B STANDARDS SHALL CONFORM TO THE DETAILS ON STANDARD PLANS RSP ES-7B, "ANCHOR BOLTS WITH SLEEVE NUTS", EXCEPT THAT THE BOTTOM OF THE BASE PLATE SHALL BE FLUSH WITH THE FINISHED GRADE.
8. THE CONTRACTOR SHALL REFER TO SIGN PLANS FOR SIGN DETAILS.
9. PRIOR TO ANY WORK ON TELEPHONE SERVICE POINTS, THE CONTRACTOR SHALL NOTIFY AT&T AT (707) 575-2166.
10. PRIOR TO ANY WORK ON PG&E SERVICE POINTS, THE CONTRACTOR SHALL NOTIFY PG&E AT (707) 579-6478.

ABBREVIATIONS

ACC	ANTENNA COAXIAL CABLE
ADA	AMERICANS WITH DISABILITIES ACT
AP	ACCESS POINT
APS	ACCESSIBLE PEDESTRIAN SIGNAL
AT&T	AMERICAN TELEPHONE AND TELEGRAPH COMPANY
CC	CENTER CHANNEL
CCU	CAMERA CONTROL UNIT
CM	CHANNEL MARGIN
CTID	CALTRANS IDENTIFICATION
GPRS	GENERAL PACKET RADIO SERVICE
HCC	HYBRID CAMERA CABLE
ID	IDENTIFICATION
JP	JOINT POLE
NAV	NAVIGATION
NL	NAVIGATION LIGHTING
N/C	NO CONNECTION
PDA	POWER DISTRIBUTION ASSEMBLY
PG&E	PACIFIC GAS AND ELECTRIC COMPANY
RP	REPEATER
SS	SELECTOR SWITCH
TBO	TERMINAL BLOCK O
TC	TELEPHONE CABLE (6 PAIR #22)
TELCO	TELEPHONE COMPANY
TOU	"TIME OF USE" METER SOCKET
T/R	TIP AND RING
VCC	VMS CONTROL CABLE
VEU	VIDEO ENCODER UNIT
VMS	VARIABLE MESSAGE SIGN
VSN	VEHICLE SENSOR NODE
WMVDS	WIRELESS MAGETOMETER VEHICLE DETECTION STATION
wmvds	EXISTING WIRELESS MAGNETOMETER VEHICLE DETECTION STATION

LEGEND

	RAMP METER SIGNAL, POLE-MOUNTED. SEE DETAILS ON SHEET E-32.
	MAGNETOMETER VEHICLE SENSOR NODE (VSN)
	EXISTING MAGNETOMETER VEHICLE SENSOR NODE (VSN)
C A1 — CIRCUIT No.	COUNTY STREET LIGHT - TYPE 15 STANDARD WITH BetaLED COBRA HEAD LUMINAIRE (200 W HPS EQUIVALENT) AND FULL POLE FLANGE COVER.
S B1 — CIRCUIT No.	COUNTY STREET LIGHT - HISTORIC STYLE POST-TOP WITH 90 W-49 LED ACORN LED LUMINAIRE MOUNTED ON STRUCTURE. SEE STREET LIGHT DETAILS ON SHEET E-10. SEE STRUCTURE PLAN FOR MOUNTING DETAILS.
wmvds AP	EXISTING PHOTOVOLTAIC-POWERED WIRELESS MAGNETOMETER VEHICLE DETECTION STATION ACCESS POINT
WMVDS AP	NEW OR RELOCATED PHOTOVOLTAIC-POWERED WIRELESS MAGNETOMETER VEHICLE DETECTION STATION ACCESS POINT
	AUDIBLE PEDESTRIAN SIGNAL DEVICE
	LED FLASHING PEDESTRIAN SYMBOL SIGN (BOTH SIDE)
PGE	PG&E PULL BOX PER SERVICE UTILITY REQUIREMENT
	LUMINAIRE MOUNTED ON WOOD POLE. TYPE OF EQUIPMENT AS INDICATED ON THE PLANS.
OH	NEW OVERHEAD MESSENGER WIRE
oh	EXISTING OVERHEAD MESSENGER WIRE
	NEW OVERHEAD SPAN WIRE
	EXISTING OVERHEAD SPAN WIRE

ELECTRICAL INDEX, NOTES, ABBREVIATIONS AND LEGEND

E-1

APPROVED FOR ELECTRICAL WORK ONLY

STATE OF CALIFORNIA - DEPARTMENT OF TRANSPORTATION — Caltrans

CONSULTANT FUNCTIONAL SUPERVISOR: RAMSEY HISSEN

CALCULATED-DESIGNED BY: MENG YANG — CHECKED BY: HAMID ZOLFAGHARI

REVISED BY — DATE REVISED

LAST REVISION 11-17-11 — DATE PLOTTED => 23-MAY-2012 — TIME PLOTTED => 10:38

Dist	COUNTY	ROUTE	POST MILES TOTAL PROJECT	SHEET No.	TOTAL SHEETS
04	Son	101	0.9/3.6	608	918

REGISTERED CIVIL ENGINEER — DATE 11/17/11

4-23-12
PLANS APPROVAL DATE

REGISTERED PROFESSIONAL ENGINEER — KIN Y. CHAN — No. 55391 — Exp. 12/31/12 — CIVIL — STATE OF CALIFORNIA

THE STATE OF CALIFORNIA OR ITS OFFICERS OR AGENTS SHALL NOT BE RESPONSIBLE FOR THE ACCURACY OR COMPLETENESS OF SCANNED COPIES OF THIS PLAN SHEET.

Y&C TRANSPORTATION CONSULTANTS, INC.
3250 RAMOS CIRCLE
SACRAMENTO, CA 95827

SCTA
490 MENDOCINO AVENUE
SUITE 206
SANTA ROSA, CA 95401

PROJECT NOTES (FOR SHEETS E-3 THROUGH E-27)

1. EXISTING SOLAR-POWERED SPEED DETECTOR SHALL BE REMOVED BY SPEEDINFO. CONTRACTOR SHALL NOTIFY SPEEDINFO AT (408) 446-2662 AND THE ENGINEER, 48 HOURS PRIOR TO REMOVING THE EQUIPMENT.
2. SEE SHEETS E-31 AND E-32 FOR RAMP METERING SYSTEM DETAILS.
3. INSTALL TYPE 1-B POLE WITH RAMP METER SIGNAL. SEE DETAIL "SIG" ON SHEET E-32.
4. INSTALL STATE-FURNISHED MODEL 170 CONTROLLER ASSEMBLY (MODEL 334L CABINET).
5. INSTALL GPRS WIRELESS MODEM ASSEMBLY, ANTENNA, POWER SUPPLY AND TERMINAL BLOCK IN CABINET. SEE DETAILS ON SHEET E-33.
6. INSTALL ELECTRICAL EQUIPMENT A MINIMUM OF 30' FROM EDGE OF TRAVELED WAY.
7. INSTALL TYPE 1-B POLE WITH "METER ON" SIGNAL. SEE DETAILS ON SHEET E-32.
8. INSTALL TYPE 1-B POLE WITH PEU. SEE ES-7N FOR INSTALLATION DETAILS.
9. INSTALL TYPE B TELEPHONE DEMARCATION CABINET. SEE RSP ES-3E FOR FOUNDATION DETAILS. SEE SHEETS E-34 AND E-35 FOR INSTALLATION DETAILS.
10. INSTALL STATE-FURNISHED MODEL 2070 CONTROLLER ASSEMBLY (MODEL 332 CABINET).
11. INSTALL PREFORMED INDUCTIVE DETECTOR LOOPS. SEE DETAIL ON SHEET E-66.
12. 4-SECTION VEHICLE SIGNAL HEAD. SEE DETAIL A ON SHEET E-18.
13. 2"C, 3 TC.
14. INSTALL R61-13 (Mod) (CA) SIGN TO SMA. SEE DETAIL A ON SHEET E-20.
15. INSTALL SIGNAL STANDARD ON STRUCTURE. SEE RETAINING WALL PLAN RW-8 AND RW-9 FOR FOUNDATION DETAILS.
16. INSTALL 2" CONDUIT STUB-OUT TO THE END OF THE BARRIER. CAP THE CONDUIT FOR FUTURE USE.
17. EXISTING wmvds POLE AND EQUIPMENT TO REMAIN.
18. CONTRACTOR SHALL COORDINATE WITH PG&E FOR SERVICE REMOVAL.
19. 2"C, 2#4 (240 V LIGHTING).
20. 2"C, 2#4 (240 V LIGHTING), 2#8 (240 V SIGN ILLUMINATION), 2#14 (120 V SIGN TEST SWITCH).
21. 2-2"C, MT (FOR FUTURE USE).
22. 2"C, 2#8 (240 V LIGHTING).
23. INSTALL CITY STREET LIGHT ON BARRIER. SEE BRIDGE PLAN (SHEET 18 OF 26) FOR MOUNTING DETAIL.
24. 2"C, 3#1 (SERVICE).
25. 3"C, MT, CONDUCTORS BY OTHERS. DEPTH OF CONDUIT TO MEET PG&E REQUIREMENTS. CONTRACTOR SHALL COORDINATE WITH PG&E FOR SERVICE CONNECTION.
26. 2"C, 2#4 (120 V CAMERA STATION), 8 DLC.
27. 2"C, 2#8 (240 V LIGHTING), 2#8 (240 V SIGN ILLUMINATION), 2#14 (120 V SIGN TEST SWITCH).
28. EXISTING 2"C, 2#8 (120 V CONVERT TO 240 V LIGHTING). ADD 2#4 (120 V HAR), 2#8 (240 V SIGN ILLUMINATION), 2#10 (120 V TDC), 2#14 (120 V SIGN TEST SWITCH), 3#14 (PEU).
29. EXISTING 2"C, 3#2 (SERVICE) TO REMAIN.
30. 3"C, 6#14, 1#8 (NEUTRAL), 11 DLC.
31. 3"C, 9#14, 1#8 (NEUTRAL), 13 DLC.
32. 3"C, 2#2 (120 V RM CONTROLLER), 2#10 (METER ON), 9#14, 1#8 (NEUTRAL). 3"C, 15 DLC.
33. 2"C, 2#2 (120 V RM CONTROLLER), 2#10 (METER ON), 2 DLC.
34. 2"C, MT (FOR FUTURE TELEPHONE LINE).
35. 2"C, 2#8 (120 V LIGHTING CIRCUIT No. B2).
36. 3"C, 19 DLC.
    3"C, 2#6 (120 V RM/VMS CONTROLLER), 2#8 (120 V VMS), 2#10 (METER ON), 9#14, 1#8 (NEUTRAL), 1 VCC.
37. CAMERA STATION: INSTALL INTEGRATED CAMERA UNIT ON TYPE CCTV 45 POLE. SEE ES-16A FOR POLE DETAILS. SEE SHEET E-36 THROUGH E-38 FOR INSTALLATION DETAILS.
38. 2"C, 2#8 (120 V LIGHTING CIRCUIT No. A2)
39. 2"C, MT. TELEPHONE LINE SHALL BE INSTALLED BY AT&T. THE CONTRACTOR SHALL COORDINATE WITH AT&T FOR SERVICE CONNECTION.
40. 2"C, 2#10 (120 V TDC).
41. 2"C, 2#6 (120 V RM/VMS CONTROLLER), 2#8 (120 V VMS), 2#10 (METER ON), 1 VCC, 2 DLC.
42. 2"C, 2#6 (120 V RM/VMS CONTROLLER), 2#8 (120 V VMS), 2#10 (METER ON), 1 VCC.
43. 3"C, 2#2 (120 V RM CONTROLLER), 3#4 (240 V CMS), 2#4 (120 V CAMERA STATION), 2#6 (120 V RM/VMS CONTROLLER), 2#6 (120 V CMS CONTROLLER).
44. 3"C, 2#2 (120 V RM CONTROLLER), 3#4 (240 V CMS), 2#4 (120 V CAMERA STATION), 2#4 (240 V LIGHTING), 2#6 (120 V RM/VMS CONTROLLER), 2#6 (120 V CMS CONTROLLER), 2#8 (240 V SIGN ILLUMINATION), 2#10 (120 V TDC), 2#14 (120 V SIGN TEST SWITCH), 3#14 (PEU).
45. 2"C, 2#10 (METER ON).
46. CONSTRUCT 6' X 27' X 4" PCC PAD.
47. 2"C, 2#8 (120 V LIGHTING CIRCUIT No. A1).
48. 3"C, 2#8 (240 V LIGHTING), 2#8 (240 V SIGN ILLUMINATION), 2#14 (120 V SIGN TEST SWITCH).
49. 3"C, 6#1 (SERVICE).
50. SEE DETAIL A ON SHEET E-11 FOR POLE LOCATION.
51. 2"C, 1 TC.
52. 2"C, 2#6 (120 V TRAFFIC SIGNAL), 2#8 (240 V LIGHTING), 3#14 (PEU).
53. SEE DETAIL B FOR EQUIPMENT LAYOUT ON SHEET E-20.
54. CONSTRUCT 6' X 17' X 4" PCC PAD FOR SERVICE AND CONTROLLER CABINETS. SEE DETAIL B ON SHEET E-18 FOR EQUIPMENT LAYOUT.
55. INSTALL TYPE 15-SB STANDARD. SEE DETAIL B ON SHEET E-11 FOR POLE LOCATION.
56. INSTALL PULL BOX WITH COVER MARKINGS AS PER SERVICE UTILITY REQUIREMENTS.
57. INSTALL CONDUIT IN BRIDGE SIDEWALK. SEE CALTRANS STANDARD PLAN B11-54 FOR DETAILS.
58. THE CONTRACTOR SHALL CONVERT EXISTING LIGHTING CIRCUIT FROM 120 V TO 240 V. ADD 30 A, 120 V, 1P CB FOR HAR AND 15 A, 120 V, 1P CB FOR TDC.
59. INSTALL No. 5 PULL BOX WITH COVER MARKINGS "CALTRANS/PG&E". THIS IS A PG&E TERMINATION POINT FOR CALTRANS SYSTEM.
60. 2-3"C, 2#4 (120 V CAMERA STATION).
61. INSTALL VMS ON WOOD POSTS. SEE SHEET E-41 FOR DETAILS. EXACT LOCATION SHALL BE DETERMINED IN THE FIELD BY THE ENGINEER.
62. INSTALL STREET LIGHT ON BARRIER. SEE RSP ES-6A FOR DETAILS.
63. 2"C, 2#2 (120 V RM CONTROLLER), 2#10 (METER ON).
64. SEE SHEET E-31 FOR LOOP LAYOUT DETAILS.
65. 2"C, 2#2 (120 V RM CONTROLLER), 2#8 (120 V VMS), 1 VCC.
66. 2"C, 1 SIC.
67. 2"C, 2 SIC.
68. CAMERA STATION: INSTALL STATE-FURNISHED MODEL 170 CONTROLLER UNIT IN CONTRACTOR-FURNISHED MODEL 334L CABINET. INSTALL 1 CCU, 1 VEU AND POWER STRIP. SEE SHEET E-36 FOR DETAIL.
69. 3"C, 2#4 (240 V LIGHTING).
70. 2"C, 2 TC.
71. 3"C, 3#4 (240 V CMS), 2#4 (120 V CAMERA STATION), 2#6 (120 V CMS CONTROLLER).
72. 3"C, 2#4 (120 V CAMERA STATION), 2#6 (120 V CMS CONTROLLER).
73. 3"C, INSTALL STATE-FURNISHED #4 AND #5 HARNESS CABLES.
74. CMS STATION: INSTALL STATE-FURNISHED MODEL 500 CMS (LED) SIGN PANEL. SEE SIGN PLANS FOR POLE AND FOUNDATION DETAILS. INSTALL CMS SAFETY SWITCH ON POLE ON THE SIDE AWAY FROM ONCOMING TRAFFIC.
75. 3"C, 2#6 (120 V CMS CONTROLLER).
76. 2"C, 3#8 (120 V LIGHTING CIRCUITS No. A1 AND No. A2).
77. RC VSN. SEE SPECIAL PROVISIONS FOR DETAILS.
78. 2"C, 2#8 (120 V LIGHTING CIRCUIT No. B1).
79. 2"C, 3#8 (120 V LIGHTING CIRCUITS No. B1 AND No. B2).
80. 2"C, 3#8 (120 V LIGHTING CIRCUITS No. B1 AND No. B2), 3#14 (PEU).
81. HANDHOLE OF SIGNAL POLE SHALL FACE SOUTH.
82. INSTALL SIGNAL POLE BEHIND THE BARRIER.
83. HANDHOLE OF SIGNAL POLE SHALL FACE NORTH.
84. INSTALL STATE-FURNISHED MODEL 170 CONTROLLER UNIT IN CONTRACTOR-FURNISHED MODEL 336L CABINET.
85. 2"C, 2#6 (120 V FB CONTROLLER), 2#8 (120 V LIGHTING), 3#14 (PEU).
86. INSTALL STATE-FURNISHED LED FLASHING PEDESTRIAN SYMBOL SIGN (BOTH SIDES). SEE SHEET E-25 FOR DETAILS.
87. EXISTING SERVICE CONDUIT AND CONDUCTORS TO REMAIN.
88. 2"C, 3#2 (SERVICE).
89. EXISTING 2"C, 2#8 (240 V LIGHTING).
90. 2"C, 2#8 (120 V VMS), 1 VCC.
91. INSTALL LLLD DETECTOR SENSOR UNIT FOR F1 DETECTOR LOOP.
92. RC EXISTING PULL BOX. INSTALL A NEW No. 6 PULL BOX.
93. DETECTOR LOOP SHALL BE 5-TURN.
94. 2"C, 2#4 (120 V HAR CONTROLLER).
95. 3"C, 2#4 (120 V HAR CONTROLLER).
96. INSTALL PROTECTIVE PULL BOX WITH ELECTRODE SYSTEM. SEE SHEET E-39 FOR DETAILS.
97. INSTALL HAR SYSTEM INCLUDING HAR ANTENNA POLE, LIGHTNING ARRESTOR ENCLOSURE, FOUNDATION, ELECTRODE SYSTEM, RADIO ANTENNA AND LIGHTNING ARRESTOR. SEE SHEETS E-39 AND E-40 FOR DETAILS.
98. HAR SYSTEM: INSTALL MODEL 334L CABINET.

APPROVED FOR ELECTRICAL WORK ONLY

PROJECT NOTES

E-2

STATE OF CALIFORNIA - DEPARTMENT OF TRANSPORTATION — Caltrans

CONSULTANT FUNCTIONAL SUPERVISOR: RAMSEY HISSEN

CALCULATED-DESIGNED BY: HAMID ZOLFAGHARI — CHECKED BY: MENG YANG

REVISED BY — DATE REVISED

LAST REVISION 11-17-11 — DATE PLOTTED => 30-APR-2012 — TIME PLOTTED => 13:25

Dist	COUNTY	ROUTE	POST MILES TOTAL PROJECT	SHEET No.	TOTAL SHEETS
04	Son	101	0.9/3.6	609	918

REGISTERED CIVIL ENGINEER — DATE 11/17/11

4-23-12
PLANS APPROVAL DATE

REGISTERED PROFESSIONAL ENGINEER — KIN Y. CHAN — No. 55391 — Exp. 12/31/12 — CIVIL — STATE OF CALIFORNIA

THE STATE OF CALIFORNIA OR ITS OFFICERS OR AGENTS SHALL NOT BE RESPONSIBLE FOR THE ACCURACY OR COMPLETENESS OF SCANNED COPIES OF THIS PLAN SHEET.

Y&C TRANSPORTATION CONSULTANTS, INC.
3250 RAMOS CIRCLE
SACRAMENTO, CA 95827

SCTA
490 MENDOCINO AVENUE
SUITE 206
SANTA ROSA, CA 95401

PROJECT NOTES (FOR SHEETS E-3 THROUGH E-27)

99 3"C, 2#4 (120 V CAMERA STATION).
3"C, 12 DLC.

100 3"C, 2#4 (120 V CAMERA STATION), 4 DLC.

101 2"C, 2#4 (120 V CAMERA STATION).

102 2"C, 2#4 (120 V CAMERA STATION), 2#8 (120 V NAVIGATIONAL LIGHTING), 2#10 (120 V TDC).

103 INSTALL 2" CONDUIT STUB-OUT. CAP THE CONDUIT FOR FUTURE USE.

104 EXISTING VSN TO REMAIN.

105 2"C, 2#2 (120 V RM CONTROLLER).

106 2"C, MT (FOR FUTURE TMS).

107 2"C, 2#8 (240 V SIGN ILLUMINATION/LIGHTING (FUTURE USE)).

108 2"C, 2#8 (120 V NAVIGATION LIGHTING).

109 2"C, 2#8 (120 NAVIGATION LIGHTING), 1#10(G), 1#8 SPARE.

110 INSTALL SURFACE MOUNTED TYPE 1 CONDUIT UNDER BRIDGE AT ABUTMENT 1.

111 PROVIDE EXPANSION-FITTING AT BRIDGE EXPANSION JOINT AS NEEDED.

112 PANEL A. SEE SHEET E-27 WIRING DIAGRAM.

113 INSTALL EQUIPMENT 35′ FROM ETW.

114 INSTALL 6′ X 10′ TYPE D DETECTOR LOOP. SEE DETAIL A ON SHEET E-21.

115 2"C, 3#8 (120 V LIGHTING CIRCUITS No. A1 AND No. A2), 6#14 (PEUs).

116 INSTALL DUAL PEU ON TOP OF LIGHTING POLE.

117 CMS STATION: INSTALL STATE-FURNISHED MODEL 170 CONTROLLER ASSEMBLY (MODEL 334L CABINET).

118 RC EXISTING PULL BOX. INSTALL PULL BOX AS PER UTILITY REQUIREMENT. EXACT LOCATION SHALL BE DETERMINED BY THE ENGINEER.

APPROVED FOR ELECTRICAL WORK ONLY

PROJECT NOTES
E-3

STATE OF CALIFORNIA - DEPARTMENT OF TRANSPORTATION
Caltrans

CONSULTANT FUNCTIONAL SUPERVISOR: RAMSEY HISSEN
CALCULATED-DESIGNED BY: HAMID ZOLFAGHARI
CHECKED BY: MENG YANG
REVISED BY
DATE REVISED

LAST REVISION 11-17-11
DATE PLOTTED => 30-APR-2012
TIME PLOTTED => 13:25

Dist	COUNTY	ROUTE	POST MILES TOTAL PROJECT	SHEET No.	TOTAL SHEETS
04	Son	101	0.9/3.6	610	918

REGISTERED CIVIL ENGINEER — DATE 11/17/11

4-23-12
PLANS APPROVAL DATE

REGISTERED PROFESSIONAL ENGINEER — KIN Y. CHAN — No. 55391 — Exp. 12/31/12 — CIVIL — STATE OF CALIFORNIA

THE STATE OF CALIFORNIA OR ITS OFFICERS OR AGENTS SHALL NOT BE RESPONSIBLE FOR THE ACCURACY OR COMPLETENESS OF SCANNED COPIES OF THIS PLAN SHEET.

Y&C TRANSPORTATION CONSULTANTS, INC.
3250 RAMOS CIRCLE
SACRAMENTO, CA 95827

SCTA
490 MENDOCINO AVENUE
SUITE 206
SANTA ROSA, CA 95401

NOTE:

FOR ACCURATE RIGHT OF WAY DATA, CONTACT RIGHT OF WAY ENGINEERING AT THE DISTRICT OFFICE.

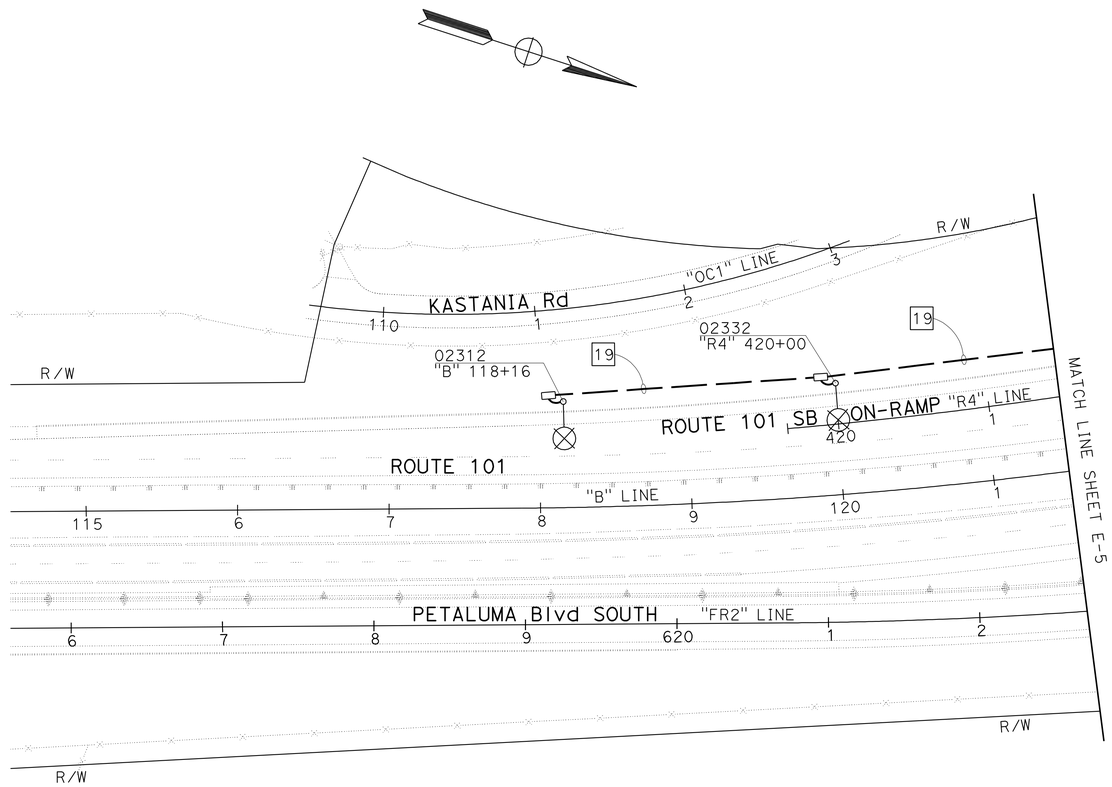

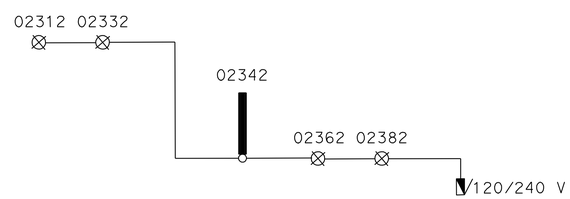

CIRCUIT DIAGRAM

CTID No. 04201010002702
NO SCALE

LIGHTING AND SIGN ILLUMINATION

SCALE: 1" = 50'

E-4

FOR NOTES, ABBREVIATIONS AND LEGEND, SEE SHEETS E-1 TO E-3

APPROVED FOR ELECTRICAL WORK ONLY

STATE OF CALIFORNIA - DEPARTMENT OF TRANSPORTATION — Caltrans

CONSULTANT FUNCTIONAL SUPERVISOR: RAMSEY HISSEN

CALCULATED-DESIGNED BY: MENG YANG — CHECKED BY: HAMID ZOLFAGHARI

REVISED BY — DATE REVISED

LAST REVISION 11-17-11 — DATE PLOTTED => 26-APR-2012 — TIME PLOTTED => 08:59

Dist	COUNTY	ROUTE	POST MILES TOTAL PROJECT	SHEET No.	TOTAL SHEETS
04	Son	101	0.9/3.6	611	918

REGISTERED CIVIL ENGINEER — DATE 11/17/11

4-23-12
PLANS APPROVAL DATE

REGISTERED PROFESSIONAL ENGINEER — KIN Y. CHAN No. 55391 Exp. 12/31/12 CIVIL — STATE OF CALIFORNIA

THE STATE OF CALIFORNIA OR ITS OFFICERS OR AGENTS SHALL NOT BE RESPONSIBLE FOR THE ACCURACY OR COMPLETENESS OF SCANNED COPIES OF THIS PLAN SHEET.

Y&C TRANSPORTATION CONSULTANTS, INC.
3250 RAMOS CIRCLE
SACRAMENTO, CA 95827

SCTA
490 MENDOCINO AVENUE
SUITE 206
SANTA ROSA, CA 95401

NOTE:

FOR ACCURATE RIGHT OF WAY DATA, CONTACT RIGHT OF WAY ENGINEERING AT THE DISTRICT OFFICE.

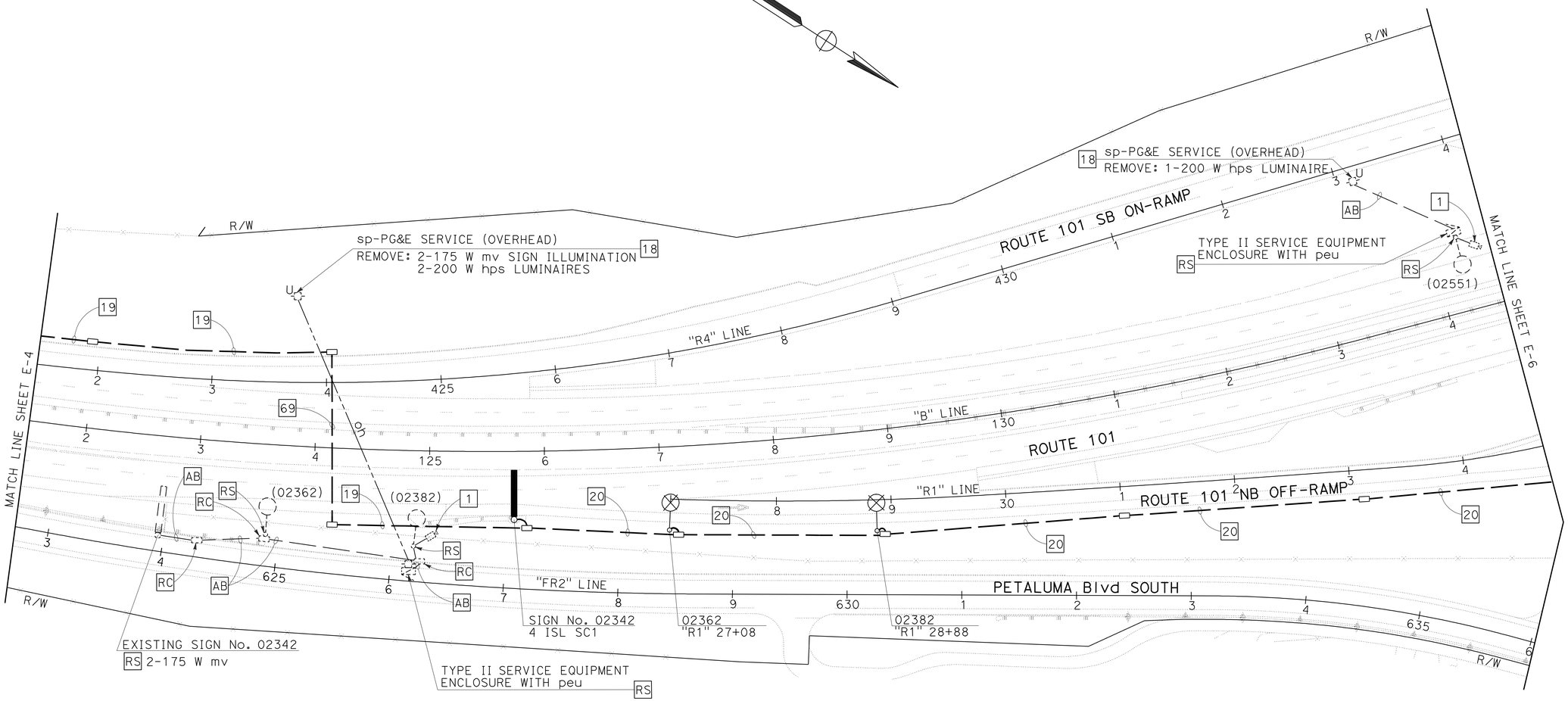

LIGHTING AND SIGN ILLUMINATION

SCALE: 1" = 50'

FOR NOTES, ABBREVIATIONS AND LEGEND, SEE SHEETS E-1 TO E-3

APPROVED FOR ELECTRICAL WORK ONLY

E-5

STATE OF CALIFORNIA - DEPARTMENT OF TRANSPORTATION
Caltrans

CONSULTANT FUNCTIONAL SUPERVISOR: RAMSEY HISSEN
CALCULATED-DESIGNED BY: MENG YANG
CHECKED BY: HAMID ZOLFAGHARI
REVISED BY
DATE REVISED

LAST REVISION 11-17-11
DATE PLOTTED => 26-APR-2012
TIME PLOTTED => 06:59

Dist	COUNTY	ROUTE	POST MILES TOTAL PROJECT	SHEET No.	TOTAL SHEETS
04	Son	101	0.9/3.6	612	918

REGISTERED CIVIL ENGINEER — DATE 11/17/11

4-23-12
PLANS APPROVAL DATE

REGISTERED PROFESSIONAL ENGINEER — KIN Y. CHAN — No. 55391 — Exp. 12/31/12 — CIVIL — STATE OF CALIFORNIA

THE STATE OF CALIFORNIA OR ITS OFFICERS OR AGENTS SHALL NOT BE RESPONSIBLE FOR THE ACCURACY OR COMPLETENESS OF SCANNED COPIES OF THIS PLAN SHEET.

Y&C TRANSPORTATION CONSULTANTS, INC.
3250 RAMOS CIRCLE
SACRAMENTO, CA 95827

SCTA
490 MENDOCINO AVENUE
SUITE 206
SANTA ROSA, CA 95401

NOTE:

FOR ACCURATE RIGHT OF WAY DATA, CONTACT RIGHT OF WAY ENGINEERING AT THE DISTRICT OFFICE.

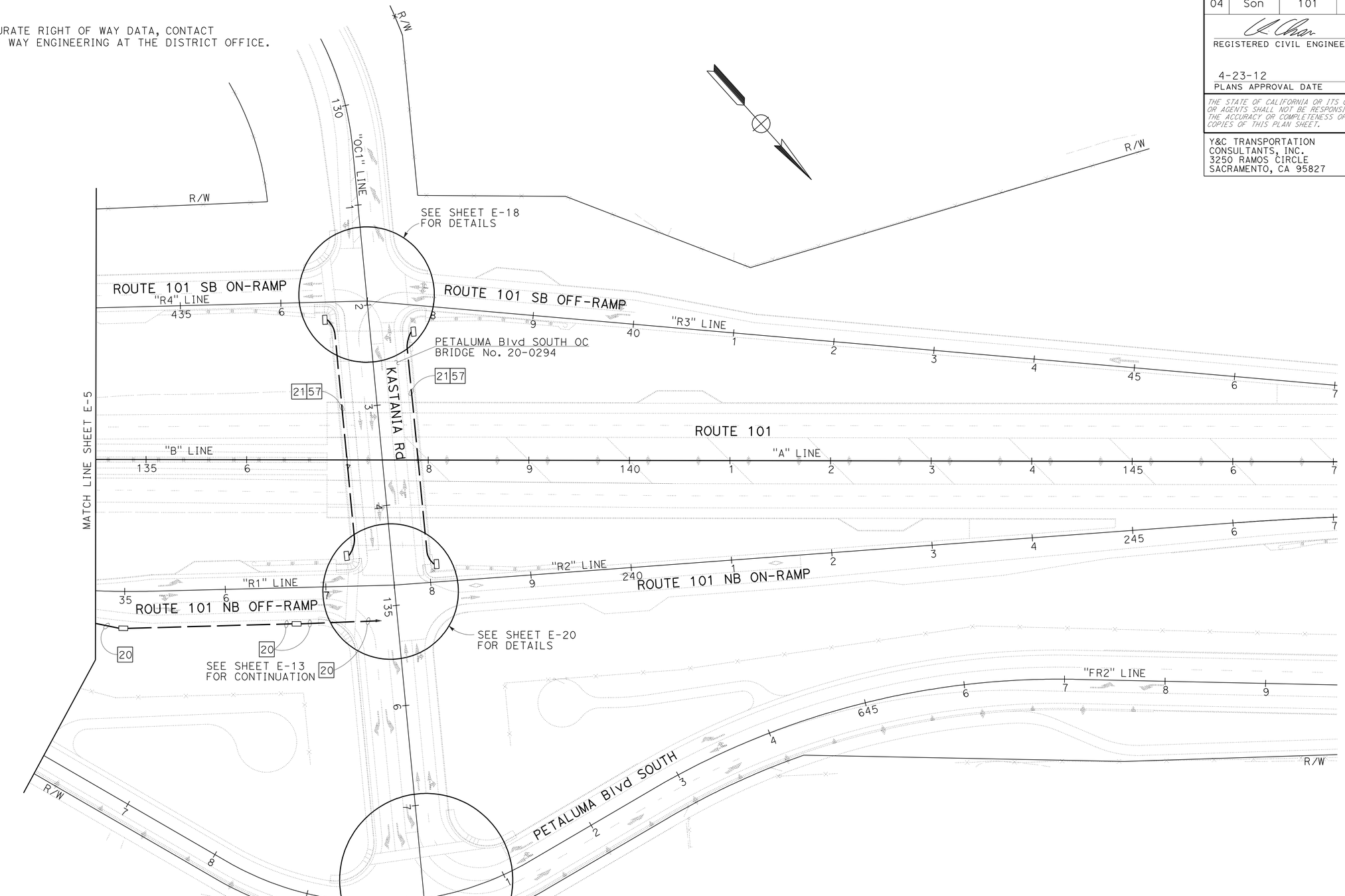

LIGHTING AND SIGN ILLUMINATION

SCALE: 1" = 50'

FOR NOTES, ABBREVIATIONS AND LEGEND, SEE SHEETS E-1 TO E-3

APPROVED FOR ELECTRICAL WORK ONLY

E-6

STATE OF CALIFORNIA - DEPARTMENT OF TRANSPORTATION — Caltrans

CONSULTANT FUNCTIONAL SUPERVISOR: RAMSEY HISSEN

CALCULATED-DESIGNED BY: HAMID ZOLFAGHARI — CHECKED BY

REVISED BY — DATE REVISED

MENG YANG

LAST REVISION 11-7-11 — DATE PLOTTED => 26-APR-2012 — TIME PLOTTED => 06:59

Dist	COUNTY	ROUTE	POST MILES TOTAL PROJECT	SHEET No.	TOTAL SHEETS
04	Son	101	0.9/3.6	613	918

REGISTERED CIVIL ENGINEER — DATE 11/17/11

4-23-12
PLANS APPROVAL DATE

REGISTERED PROFESSIONAL ENGINEER — KIN Y. CHAN No. 55391 Exp. 12/31/12 CIVIL — STATE OF CALIFORNIA

THE STATE OF CALIFORNIA OR ITS OFFICERS OR AGENTS SHALL NOT BE RESPONSIBLE FOR THE ACCURACY OR COMPLETENESS OF SCANNED COPIES OF THIS PLAN SHEET.

Y&C TRANSPORTATION CONSULTANTS, INC.
3250 RAMOS CIRCLE
SACRAMENTO, CA 95827

SCTA
490 MENDOCINO AVENUE
SUITE 206
SANTA ROSA, CA 95401

NOTE:

FOR ACCURATE RIGHT OF WAY DATA, CONTACT RIGHT OF WAY ENGINEERING AT THE DISTRICT OFFICE.

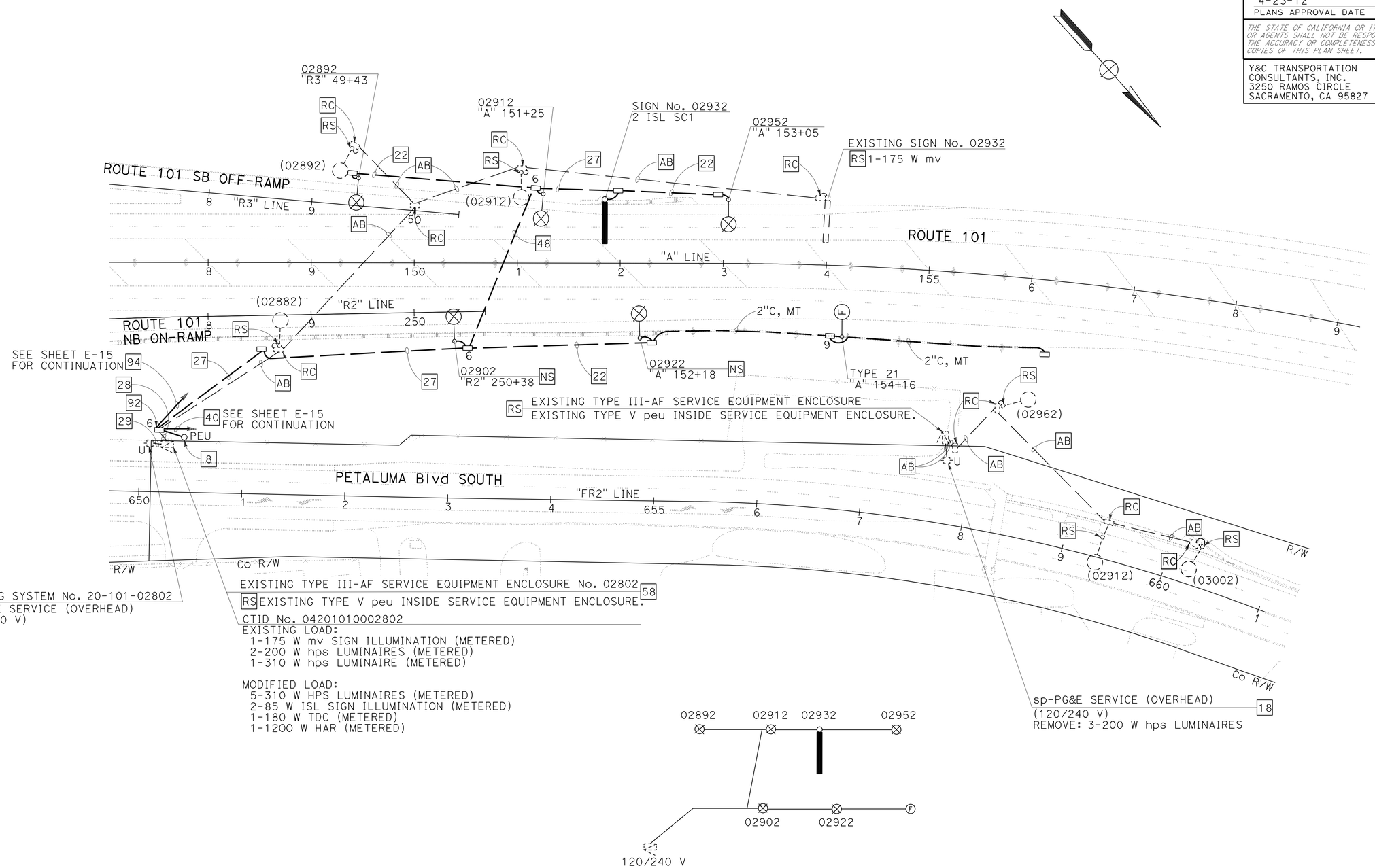

CIRCUIT DIAGRAM

EXISTING CTID No. 04201010002802
NO SCALE

FOR NOTES, ABBREVIATIONS AND LEGEND, SEE SHEETS E-1 TO E-3

APPROVED FOR ELECTRICAL WORK ONLY

LIGHTING AND SIGN ILLUMINATION

SCALE: 1" = 50'

E-7

STATE OF CALIFORNIA - DEPARTMENT OF TRANSPORTATION — Caltrans

CONSULTANT FUNCTIONAL SUPERVISOR: RAMSEY HISSEN
CALCULATED-DESIGNED BY: HAMID ZOLFAGHARI
CHECKED BY: MENG YANG
REVISED BY / DATE REVISED

LAST REVISION 11-17-11 — DATE PLOTTED => 26-APR-2012 — TIME PLOTTED => 06:59

Dist	COUNTY	ROUTE	POST MILES TOTAL PROJECT	SHEET No.	TOTAL SHEETS
04	Son	101	0.9/3.6	614	918

REGISTERED CIVIL ENGINEER — DATE 11/17/11

4-23-12
PLANS APPROVAL DATE

REGISTERED PROFESSIONAL ENGINEER — KIN Y. CHAN — No. 55391 — Exp. 12/31/12 — CIVIL — STATE OF CALIFORNIA

THE STATE OF CALIFORNIA OR ITS OFFICERS OR AGENTS SHALL NOT BE RESPONSIBLE FOR THE ACCURACY OR COMPLETENESS OF SCANNED COPIES OF THIS PLAN SHEET.

Y&C TRANSPORTATION CONSULTANTS, INC.
3250 RAMOS CIRCLE
SACRAMENTO, CA 95827

SCTA
490 MENDOCINO AVENUE
SUITE 206
SANTA ROSA, CA 95401

NOTE:

FOR ACCURATE RIGHT OF WAY DATA, CONTACT RIGHT OF WAY ENGINEERING AT THE DISTRICT OFFICE.

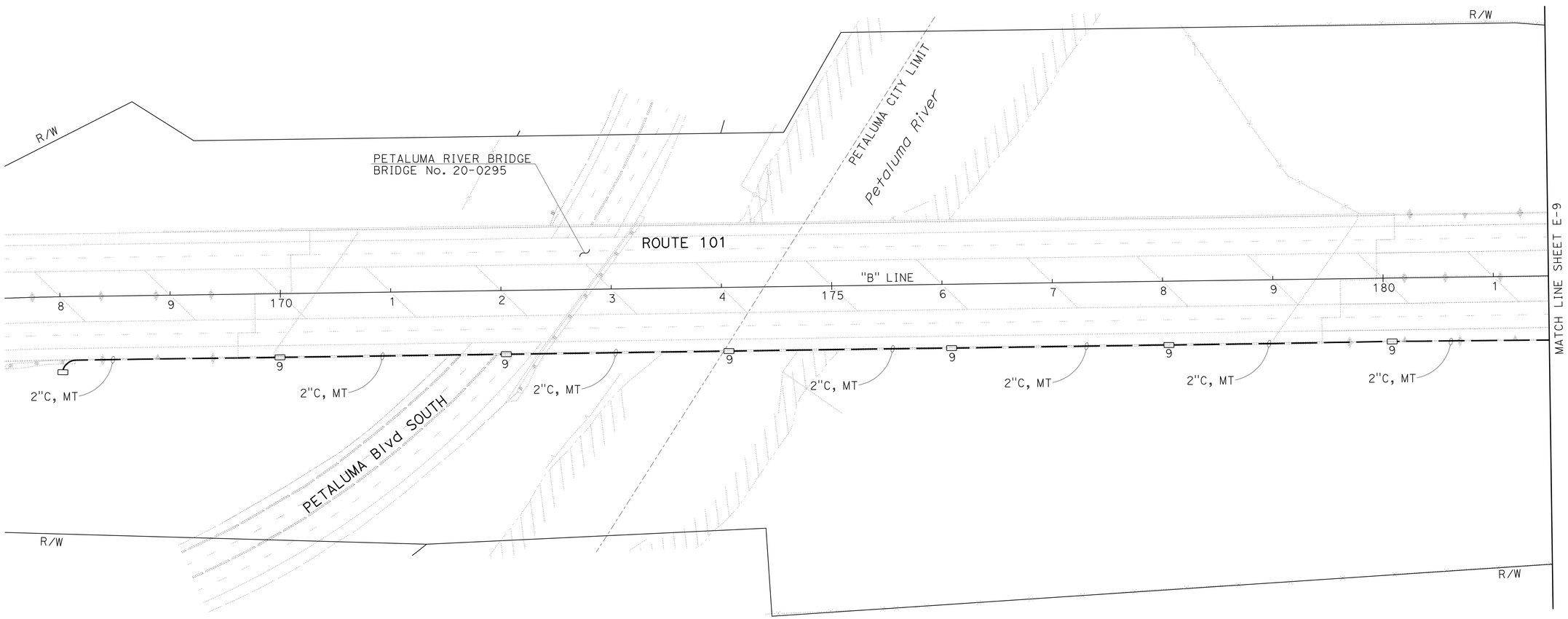

LIGHTING AND SIGN ILLUMINATION

SCALE: 1" = 50'

E-8

FOR NOTES, ABBREVIATIONS AND LEGEND, SEE SHEETS E-1 TO E-3

APPROVED FOR ELECTRICAL WORK ONLY

STATE OF CALIFORNIA - DEPARTMENT OF TRANSPORTATION

Caltrans

CONSULTANT FUNCTIONAL SUPERVISOR: RAMSEY HISSEN

CALCULATED-DESIGNED BY: MENG YANG

CHECKED BY: HAMID ZOLFAGHARI

REVISED BY

DATE REVISED

LAST REVISION 11-17-11

DATE PLOTTED => 26-APR-2012
TIME PLOTTED => 06:59

Dist	COUNTY	ROUTE	POST MILES TOTAL PROJECT	SHEET No.	TOTAL SHEETS
04	Son	101	0.9/3.6	615	918

REGISTERED CIVIL ENGINEER — DATE 11/17/11

4-23-12
PLANS APPROVAL DATE

REGISTERED PROFESSIONAL ENGINEER — KIN Y. CHAN No. 55391 Exp. 12/31/12 CIVIL — STATE OF CALIFORNIA

THE STATE OF CALIFORNIA OR ITS OFFICERS OR AGENTS SHALL NOT BE RESPONSIBLE FOR THE ACCURACY OR COMPLETENESS OF SCANNED COPIES OF THIS PLAN SHEET.

Y&C TRANSPORTATION CONSULTANTS, INC.
3250 RAMOS CIRCLE
SACRAMENTO, CA 95827

SCTA
490 MENDOCINO AVENUE
SUITE 206
SANTA ROSA, CA 95401

NOTE:

FOR ACCURATE RIGHT OF WAY DATA, CONTACT RIGHT OF WAY ENGINEERING AT THE DISTRICT OFFICE.

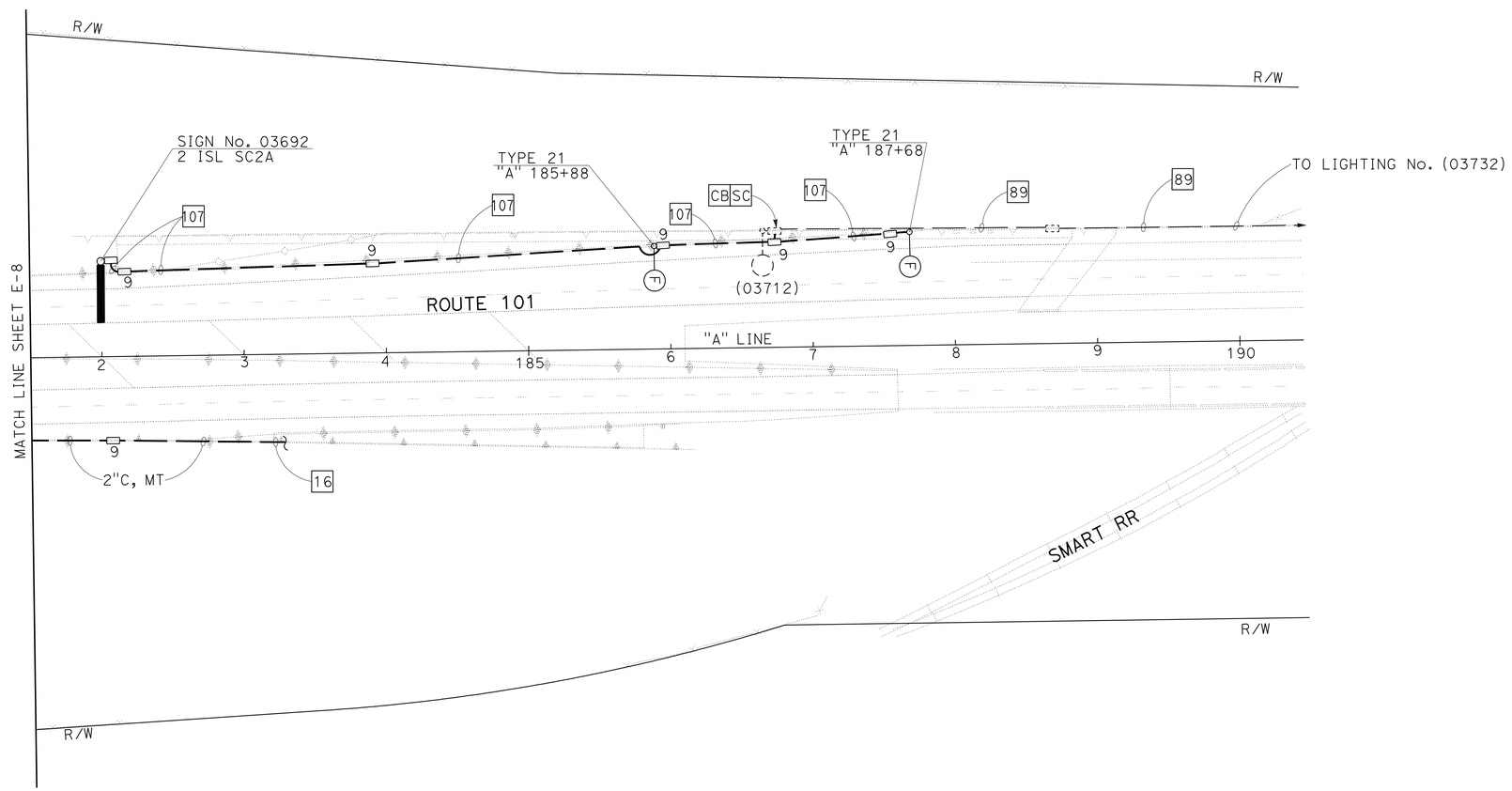

FOR NOTES, ABBREVIATIONS AND LEGEND, SEE SHEETS E-1 TO E-3

APPROVED FOR ELECTRICAL WORK ONLY

LIGHTING AND SIGN ILLUMINATION

SCALE: 1" = 50'

E-9

STATE OF CALIFORNIA - DEPARTMENT OF TRANSPORTATION
Caltrans

CONSULTANT FUNCTIONAL SUPERVISOR: RAMSEY HISSEN
CALCULATED-DESIGNED BY: MENG YANG
CHECKED BY: HAMID ZOLFAGHARI
REVISED BY
DATE REVISED

LAST REVISION 11-17-11
DATE PLOTTED => 26-APR-2012
TIME PLOTTED => 06:59

Dist	COUNTY	ROUTE	POST MILES TOTAL PROJECT	SHEET No.	TOTAL SHEETS
04	Son	101	0.9/3.6	616	918

REGISTERED CIVIL ENGINEER — DATE 11/17/11

4-23-12
PLANS APPROVAL DATE

REGISTERED PROFESSIONAL ENGINEER — KIN Y. CHAN No. 55391 Exp. 12/31/12 CIVIL — STATE OF CALIFORNIA

THE STATE OF CALIFORNIA OR ITS OFFICERS OR AGENTS SHALL NOT BE RESPONSIBLE FOR THE ACCURACY OR COMPLETENESS OF SCANNED COPIES OF THIS PLAN SHEET.

Y&C TRANSPORTATION CONSULTANTS, INC.
3250 RAMOS CIRCLE
SACRAMENTO, CA 95827

SCTA
490 MENDOCINO AVENUE
SUITE 206
SANTA ROSA, CA 95401

NOTE:

FOR ACCURATE RIGHT OF WAY DATA, CONTACT RIGHT OF WAY ENGINEERING AT THE DISTRICT OFFICE.

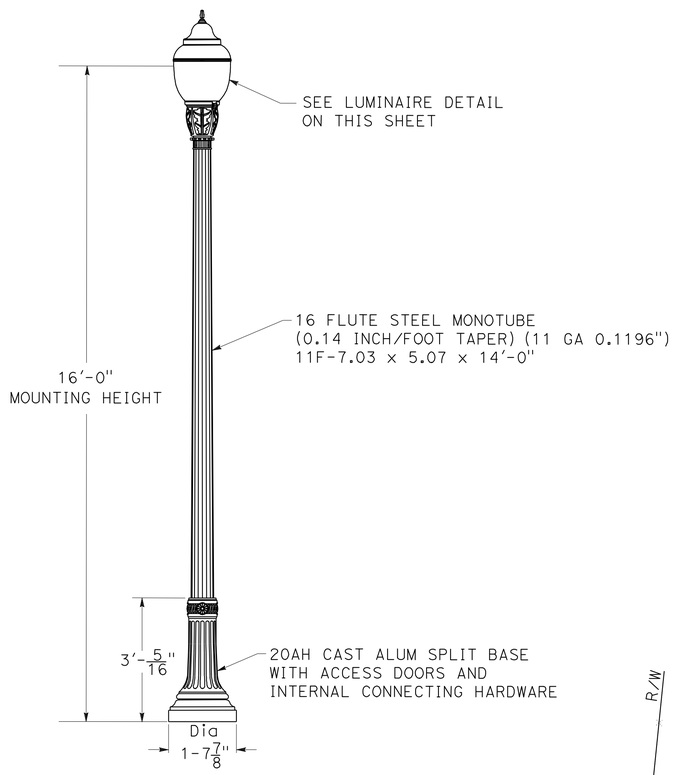

CITY OF PETALUMA STREET LIGHT DETAIL
NO SCALE

NOTES: (FOR THIS SHEET ONLY)

1. DECORATIVE STREET LIGHT MUST BE APPROVED BY THE COUNTY PRIOR TO BEING ORDERED.
2. COLOR OF POLE, BASE AND LUMINAIRE WILL BE DETERMINED BY THE COUNTY.

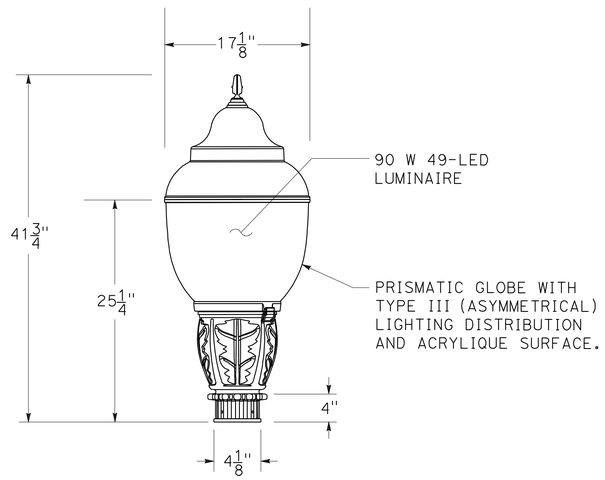

LUMINAIRE DETAIL
NO SCALE

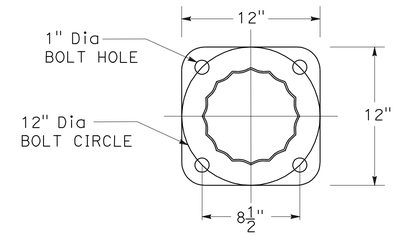

TOP VIEW ORIENTATION

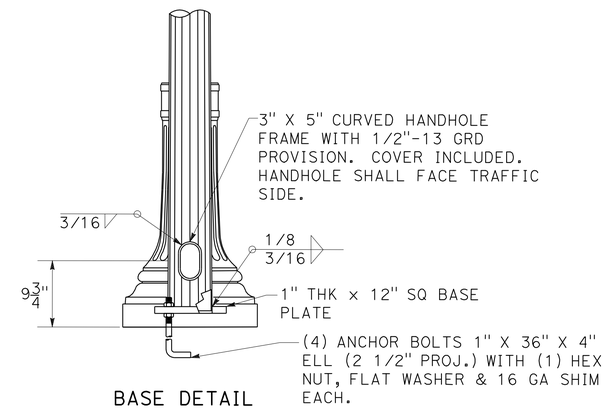

BASE DETAIL
NO SCALE

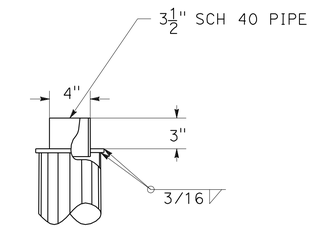

TENON DETAIL
NO SCALE

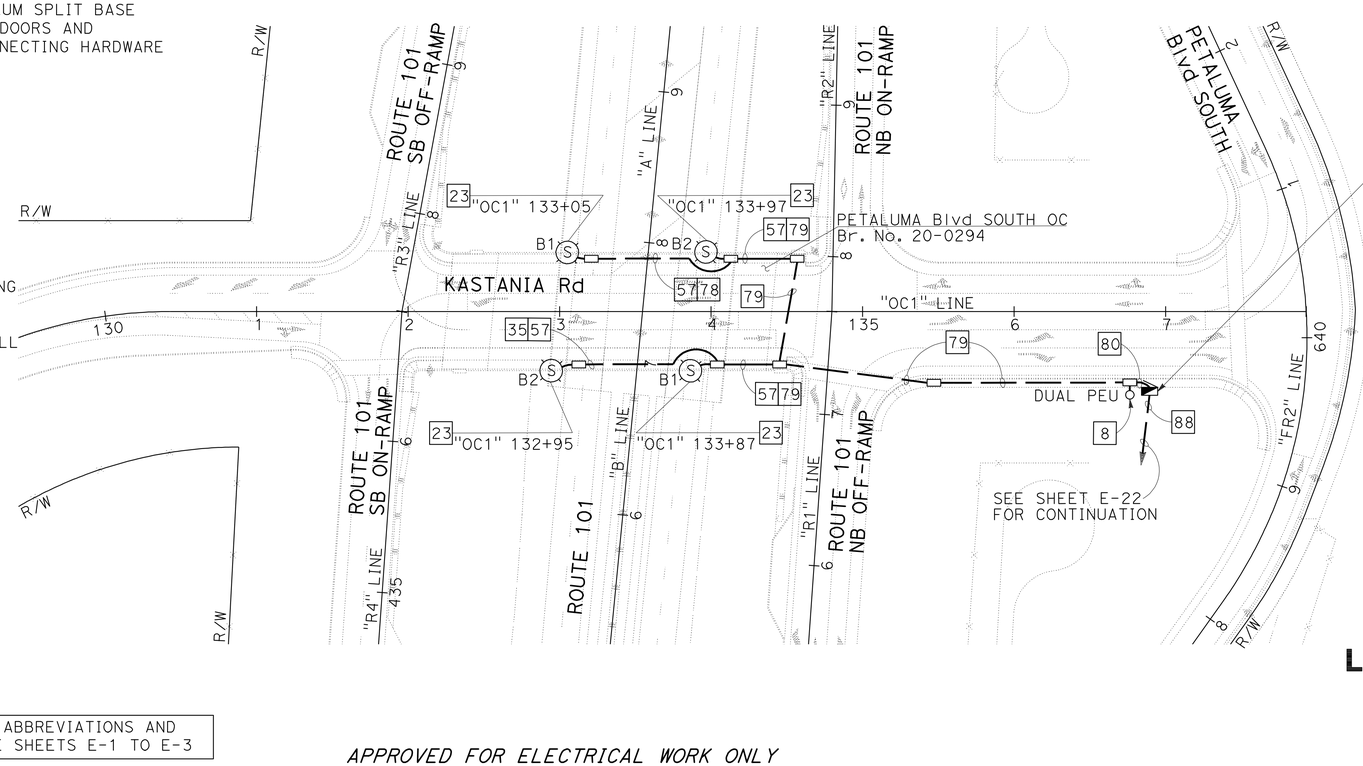

TYPE III-AF SERVICE EQUIPMENT ENCLOSURE (COUNTY)
PROVIDE EQUIPMENT ITEMS 1 THROUGH 10, 12 THROUGH 16, AND 18 THROUGH 21, PER THE WIRING DIAGRAM ON SHEET E-30. SEE RSP ES-2C AND RSP ES-2D FOR SERVICE EQUIPMENT ENCLOSURE AND BASE DETAILS. FRONT DOOR OF CABINET SHALL FACE NORTH.

LOAD: 4-90 W LED LUMINAIRES (METERED)

LIGHTING (COUNTY STREET)

SCALE: 1" = 50'

FOR NOTES, ABBREVIATIONS AND LEGEND, SEE SHEETS E-1 TO E-3

APPROVED FOR ELECTRICAL WORK ONLY

E-10

STATE OF CALIFORNIA - DEPARTMENT OF TRANSPORTATION
Caltrans

CONSULTANT FUNCTIONAL SUPERVISOR: RAMSEY HISSEN
CALCULATED-DESIGNED BY: HAMID ZOLFAGHARI
CHECKED BY: MENG YANG
REVISED BY / DATE REVISED

LAST REVISION 11-17-11
DATE PLOTTED => 26-APR-2012
TIME PLOTTED => 06:59

Dist	COUNTY	ROUTE	POST MILES TOTAL PROJECT	SHEET No.	TOTAL SHEETS
04	Son	101	0.9/3.6	617	918

REGISTERED CIVIL ENGINEER — DATE 11/17/11

4-23-12
PLANS APPROVAL DATE

REGISTERED PROFESSIONAL ENGINEER — KIN Y. CHAN — No. 55391 — Exp. 12/31/12 — CIVIL — STATE OF CALIFORNIA

THE STATE OF CALIFORNIA OR ITS OFFICERS OR AGENTS SHALL NOT BE RESPONSIBLE FOR THE ACCURACY OR COMPLETENESS OF SCANNED COPIES OF THIS PLAN SHEET.

Y&C TRANSPORTATION CONSULTANTS, INC.
3250 RAMOS CIRCLE
SACRAMENTO, CA 95827

SCTA
490 MENDOCINO AVENUE
SUITE 206
SANTA ROSA, CA 95401

NOTE:

FOR ACCURATE RIGHT OF WAY DATA, CONTACT RIGHT OF WAY ENGINEERING AT THE DISTRICT OFFICE.

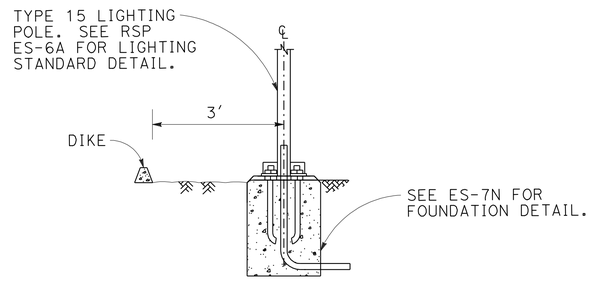

DETAIL A

POLE LOCATION WITH DIKE
NO SCALE

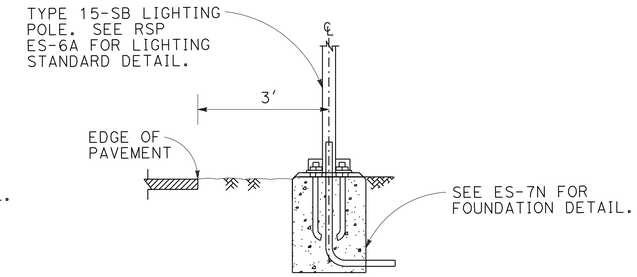

DETAIL B

POLE LOCATION WITHOUT DIKE
NO SCALE

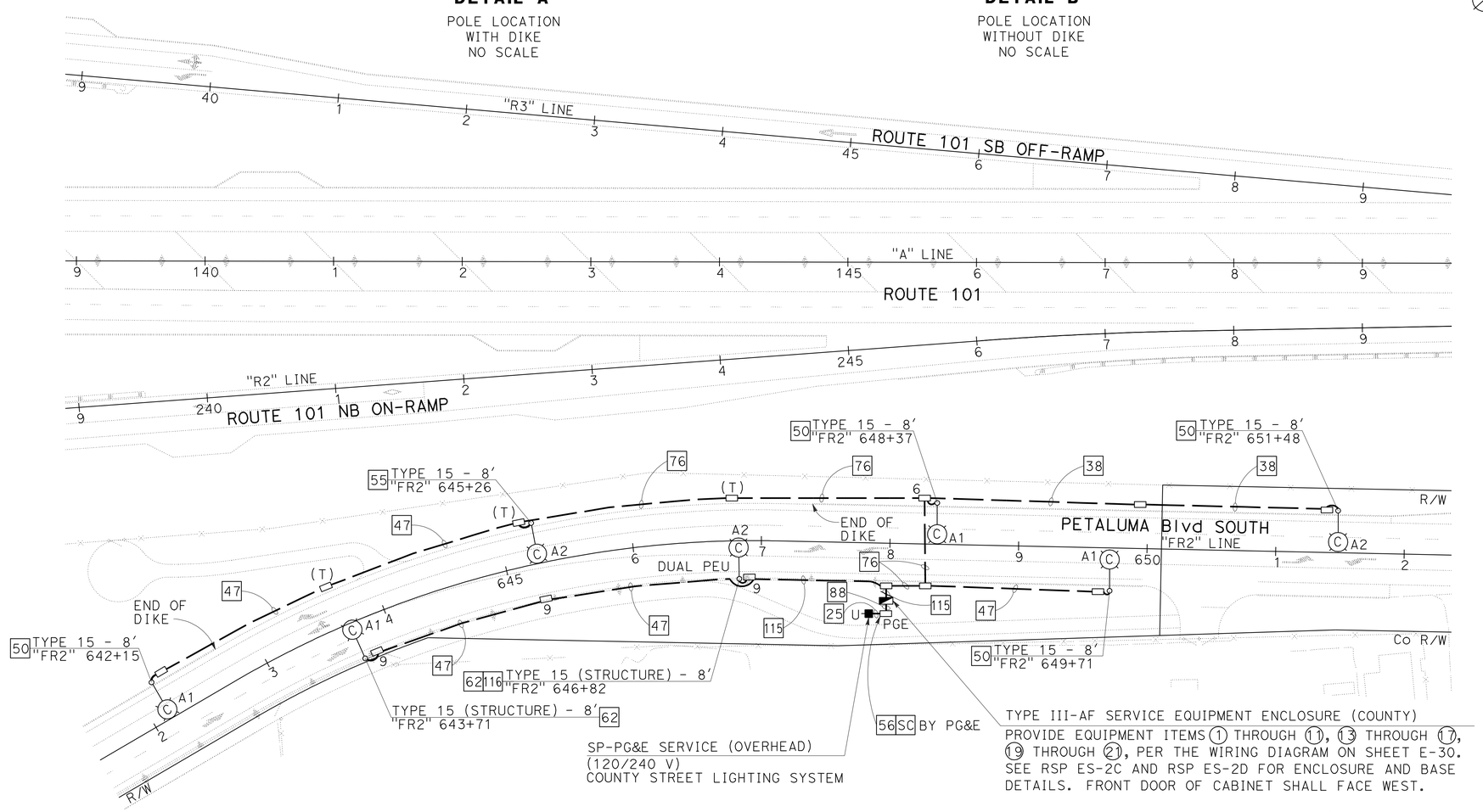

FOR NOTES, ABBREVIATIONS AND LEGEND, SEE SHEETS E-1 TO E-3

APPROVED FOR ELECTRICAL WORK ONLY

LIGHTING (COUNTY STREET)

SCALE: 1" = 50'

E-11

STATE OF CALIFORNIA - DEPARTMENT OF TRANSPORTATION — Caltrans

CONSULTANT FUNCTIONAL SUPERVISOR: RAMSEY HISSEN

CALCULATED-DESIGNED BY: MENG YANG — CHECKED BY: HAMID ZOLFAGHARI — REVISED BY — DATE REVISED

LAST REVISION 11-17-11 — DATE PLOTTED => 26-APR-2012 — TIME PLOTTED => 07:00

Dist	COUNTY	ROUTE	POST MILES TOTAL PROJECT	SHEET No.	TOTAL SHEETS
04	Son	101	0.9/3.6	618	918

REGISTERED CIVIL ENGINEER — DATE 11/17/11

4-23-12
PLANS APPROVAL DATE

REGISTERED PROFESSIONAL ENGINEER — KIN Y. CHAN No. 55391 Exp. 12/31/12 CIVIL — STATE OF CALIFORNIA

THE STATE OF CALIFORNIA OR ITS OFFICERS OR AGENTS SHALL NOT BE RESPONSIBLE FOR THE ACCURACY OR COMPLETENESS OF SCANNED COPIES OF THIS PLAN SHEET.

Y&C TRANSPORTATION CONSULTANTS, INC.
3250 RAMOS CIRCLE
SACRAMENTO, CA 95827

SCTA
490 MENDOCINO AVENUE
SUITE 206
SANTA ROSA, CA 95401

NOTE:

FOR ACCURATE RIGHT OF WAY DATA, CONTACT RIGHT OF WAY ENGINEERING AT THE DISTRICT OFFICE.

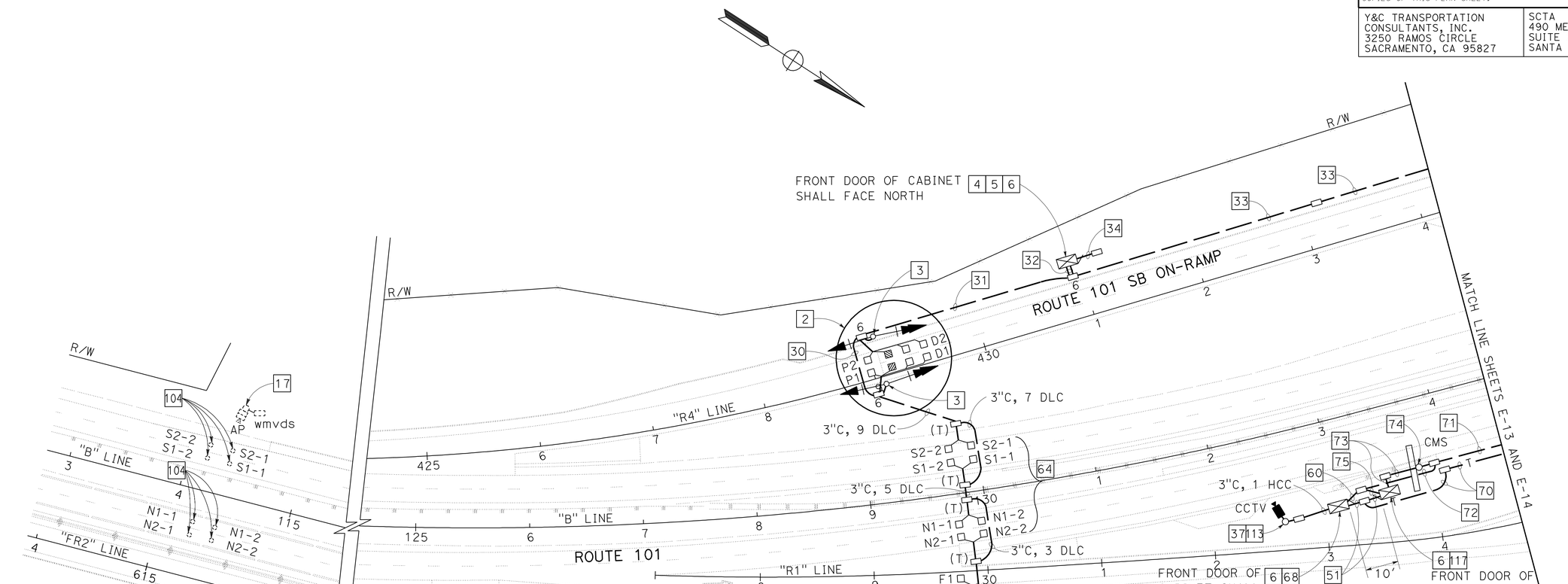

FOR NOTES, ABBREVIATIONS AND LEGEND, SEE SHEETS E-1 TO E-3

APPROVED FOR ELECTRICAL WORK ONLY

TRAFFIC OPERATIONS SYSTEM

SCALE: 1" = 50'

E-12

STATE OF CALIFORNIA - DEPARTMENT OF TRANSPORTATION — Caltrans

CONSULTANT FUNCTIONAL SUPERVISOR: RAMSEY HISSEN

CALCULATED-DESIGNED BY: HAMID ZOLFAGHARI — CHECKED BY

REVISED BY: MENG YANG — DATE REVISED

LAST REVISION 11-17-11 — DATE PLOTTED => 26-APR-2012 — TIME PLOTTED => 07:00

Dist	COUNTY	ROUTE	POST MILES TOTAL PROJECT	SHEET No.	TOTAL SHEETS
04	Son	101	0.9/3.6	619	918

REGISTERED CIVIL ENGINEER — DATE 11/17/11

4-23-12
PLANS APPROVAL DATE

REGISTERED PROFESSIONAL ENGINEER — KIN Y. CHAN No. 55391 Exp. 12/31/12 CIVIL — STATE OF CALIFORNIA

THE STATE OF CALIFORNIA OR ITS OFFICERS OR AGENTS SHALL NOT BE RESPONSIBLE FOR THE ACCURACY OR COMPLETENESS OF SCANNED COPIES OF THIS PLAN SHEET.

Y&C TRANSPORTATION CONSULTANTS, INC.
3250 RAMOS CIRCLE
SACRAMENTO, CA 95827

SCTA
490 MENDOCINO AVENUE
SUITE 206
SANTA ROSA, CA 95401

NOTE:

FOR ACCURATE RIGHT OF WAY DATA, CONTACT RIGHT OF WAY ENGINEERING AT THE DISTRICT OFFICE.

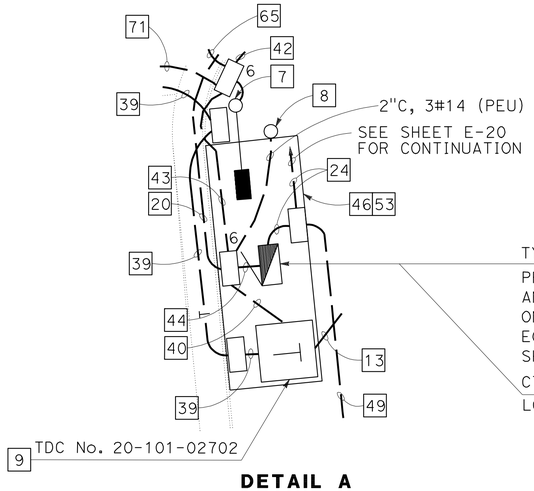

DETAIL A
SCALE: 1" = 20'

TYPE III-AF SERVICE EQUIPMENT ENCLOSURE No. 02702

PROVIDE EQUIPMENT ITEMS (1) THROUGH (14), (17), (19), (22), AND TWO (23), (24), (25), (28) AND (29), PER THE WIRING DIAGRAM ON SHEET E-29. SEE RSP ES-2C AND RSP ES-2D FOR SERVICE EQUIPMENT ENCLOSURE AND BASE DETAILS. FRONT DOOR OF CABINET SHALL FACE SOUTH.

CTID No. 04201010002702 (A-6) (TOU)

LOAD: 4-310 W HPS LUMINAIRES (METERED)
4-85 W ISL SIGN ILLUMINATION (METERED)
1-200 W IRRIGATION (METERED) (FUTURE USE)
1-1000 W RM (METERED)
1-1300 W RM/VMS (METERED)
1-180 W TDC (METERED)
1-1200 W CCTV (METERED)
1-5 kW CMS PANEL (METERED)
1-600 W CMS CONTROLLER (METERED)

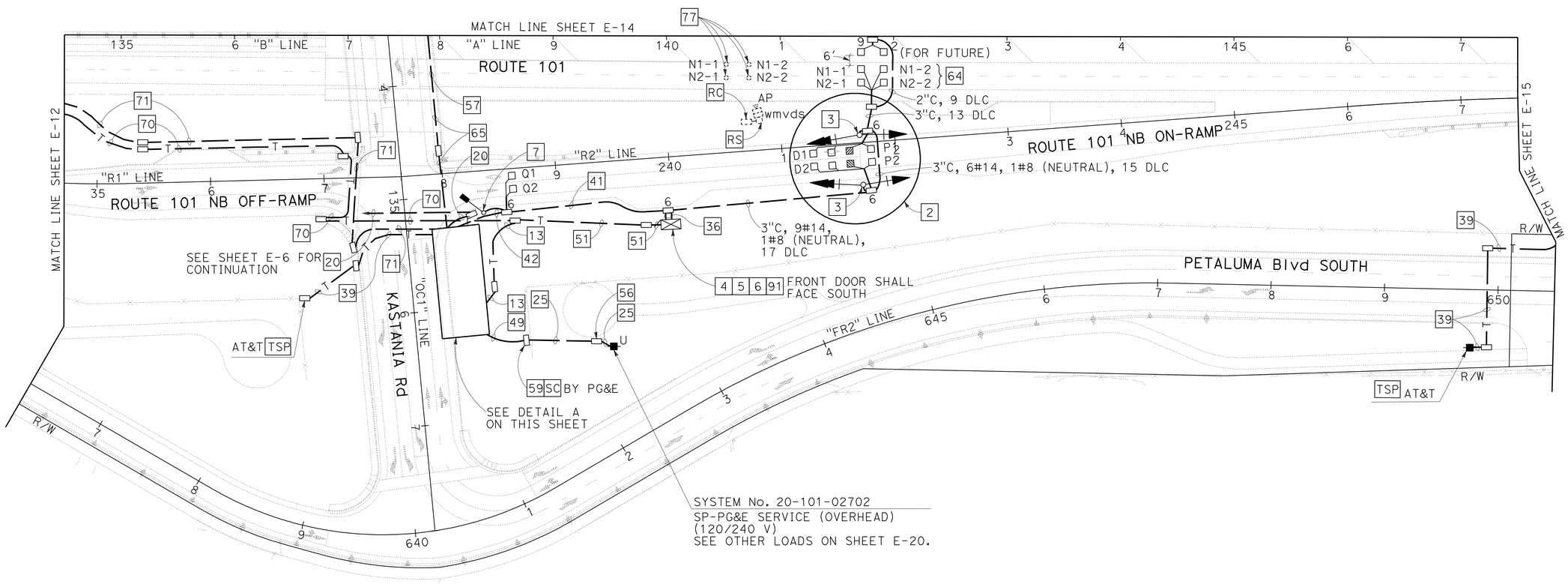

TRAFFIC OPERATIONS SYSTEM

SCALE: 1" = 50'

FOR NOTES, ABBREVIATIONS AND LEGEND, SEE SHEETS E-1 TO E-3

APPROVED FOR ELECTRICAL WORK ONLY

E-13

STATE OF CALIFORNIA - DEPARTMENT OF TRANSPORTATION — Caltrans

CONSULTANT FUNCTIONAL SUPERVISOR: RAMSEY HISSEN

CALCULATED-DESIGNED BY: MENG YANG — CHECKED BY: HAMID ZOLFAGHARI

REVISED BY — DATE REVISED

LAST REVISION 11-17-11 — DATE PLOTTED => 26-APR-2012 — TIME PLOTTED => 07:00

Dist	COUNTY	ROUTE	POST MILES TOTAL PROJECT	SHEET No.	TOTAL SHEETS
04	Son	101	0.9/3.6	620	918

REGISTERED CIVIL ENGINEER — DATE 11/17/11

4-23-12
PLANS APPROVAL DATE

REGISTERED PROFESSIONAL ENGINEER — KIN Y. CHAN No. 55391 Exp. 12/31/12 CIVIL — STATE OF CALIFORNIA

THE STATE OF CALIFORNIA OR ITS OFFICERS OR AGENTS SHALL NOT BE RESPONSIBLE FOR THE ACCURACY OR COMPLETENESS OF SCANNED COPIES OF THIS PLAN SHEET.

Y&C TRANSPORTATION CONSULTANTS, INC.
3250 RAMOS CIRCLE
SACRAMENTO, CA 95827

SCTA
490 MENDOCINO AVENUE
SUITE 206
SANTA ROSA, CA 95401

NOTE:

FOR ACCURATE RIGHT OF WAY DATA, CONTACT RIGHT OF WAY ENGINEERING AT THE DISTRICT OFFICE.

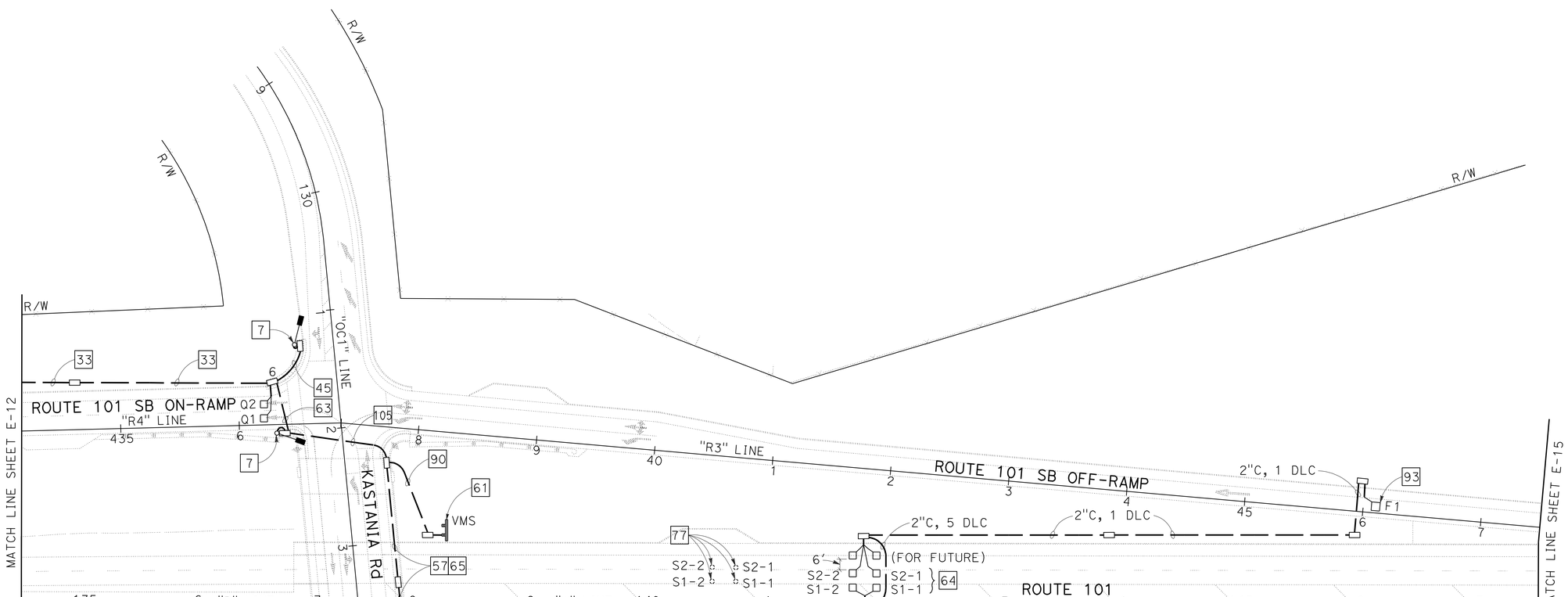

FOR NOTES, ABBREVIATIONS AND LEGEND, SEE SHEETS E-1 TO E-3

APPROVED FOR ELECTRICAL WORK ONLY

TRAFFIC OPERATIONS SYSTEM

SCALE: 1" = 50'

E-14

STATE OF CALIFORNIA - DEPARTMENT OF TRANSPORTATION
Caltrans

CONSULTANT FUNCTIONAL SUPERVISOR: RAMSEY HISSEN
CALCULATED-DESIGNED BY: MENG YANG
CHECKED BY: HAMID ZOLFAGHARI
REVISED BY
DATE REVISED

LAST REVISION 11-17-11
DATE PLOTTED => 26-APR-2012
TIME PLOTTED => 07:00

Dist	COUNTY	ROUTE	POST MILES TOTAL PROJECT	SHEET No.	TOTAL SHEETS
04	Son	101	0.9/3.6	621	918

REGISTERED CIVIL ENGINEER — DATE 11/17/11

4-23-12
PLANS APPROVAL DATE

REGISTERED PROFESSIONAL ENGINEER — KIN Y. CHAN No. 55391 Exp. 12/31/12 CIVIL — STATE OF CALIFORNIA

THE STATE OF CALIFORNIA OR ITS OFFICERS OR AGENTS SHALL NOT BE RESPONSIBLE FOR THE ACCURACY OR COMPLETENESS OF SCANNED COPIES OF THIS PLAN SHEET.

Y&C TRANSPORTATION CONSULTANTS, INC.
3250 RAMOS CIRCLE
SACRAMENTO, CA 95827

SCTA
490 MENDOCINO AVENUE
SUITE 206
SANTA ROSA, CA 95401

NOTE:

FOR ACCURATE RIGHT OF WAY DATA, CONTACT RIGHT OF WAY ENGINEERING AT THE DISTRICT OFFICE.

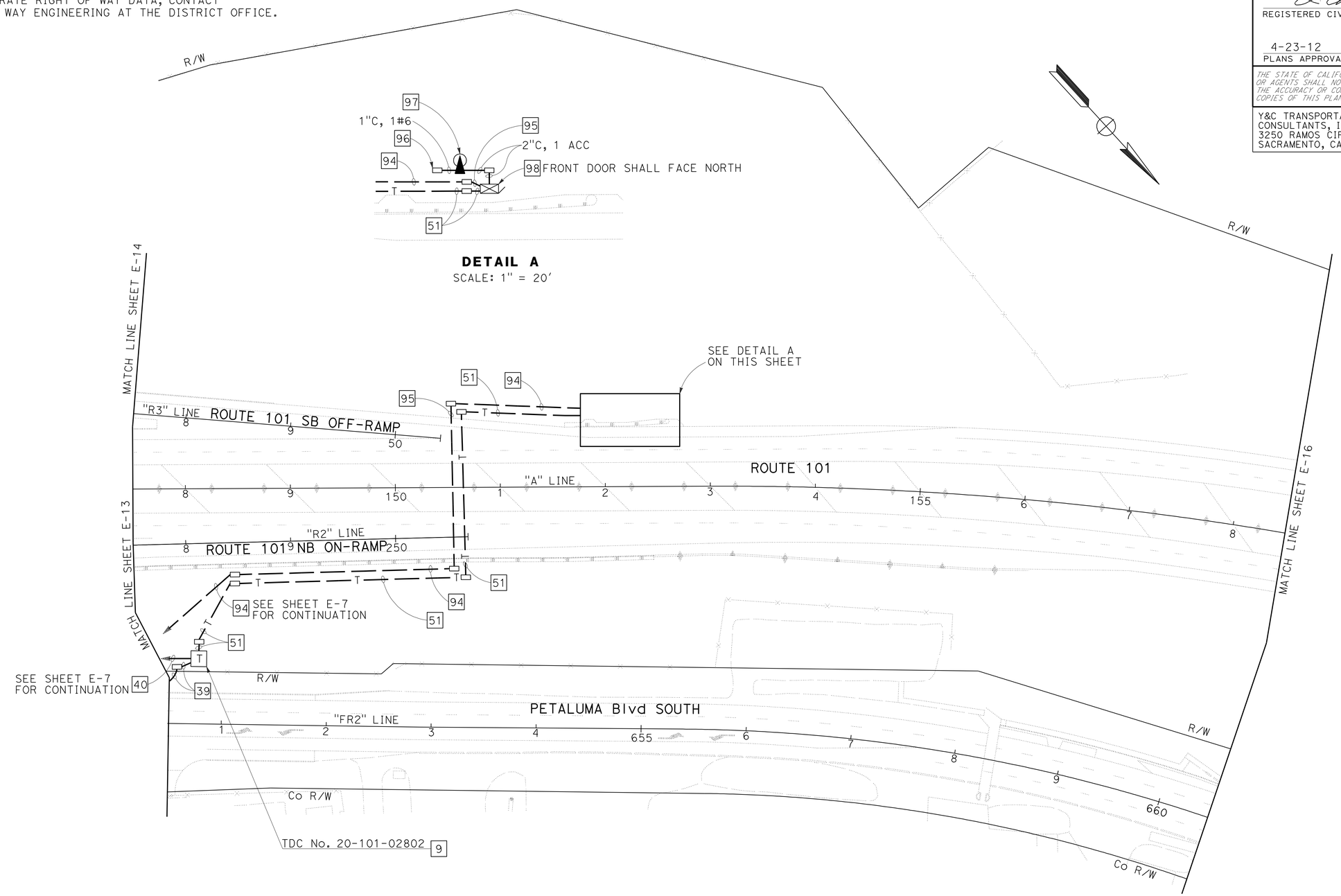

FOR NOTES, ABBREVIATIONS AND LEGEND, SEE SHEETS E-1 TO E-3

APPROVED FOR ELECTRICAL WORK ONLY

HIGHWAY ADVISORY RADIO SYSTEM
TRAFFIC OPERATIONS SYSTEM

SCALE: 1" = 50'

E-15

STATE OF CALIFORNIA - DEPARTMENT OF TRANSPORTATION
Caltrans

CONSULTANT FUNCTIONAL SUPERVISOR: RAMSEY HISSEN
CALCULATED-DESIGNED BY: MENG YANG
CHECKED BY: HAMID ZOLFAGHARI
REVISED BY
DATE REVISED

LAST REVISION 11-17-11 DATE PLOTTED => 26-APR-2012 TIME PLOTTED => 07:00

Dist	COUNTY	ROUTE	POST MILES TOTAL PROJECT	SHEET No.	TOTAL SHEETS
04	Son	101	0.9/3.6	622	918

REGISTERED CIVIL ENGINEER — DATE 11/17/11

4-23-12
PLANS APPROVAL DATE

REGISTERED PROFESSIONAL ENGINEER — KIN Y. CHAN No. 55391 Exp. 12/31/12 CIVIL — STATE OF CALIFORNIA

THE STATE OF CALIFORNIA OR ITS OFFICERS OR AGENTS SHALL NOT BE RESPONSIBLE FOR THE ACCURACY OR COMPLETENESS OF SCANNED COPIES OF THIS PLAN SHEET.

Y&C TRANSPORTATION CONSULTANTS, INC.
3250 RAMOS CIRCLE
SACRAMENTO, CA 95827

SCTA
490 MENDOCINO AVENUE
SUITE 206
SANTA ROSA, CA 95401

NOTE:

FOR ACCURATE RIGHT OF WAY DATA, CONTACT RIGHT OF WAY ENGINEERING AT THE DISTRICT OFFICE.

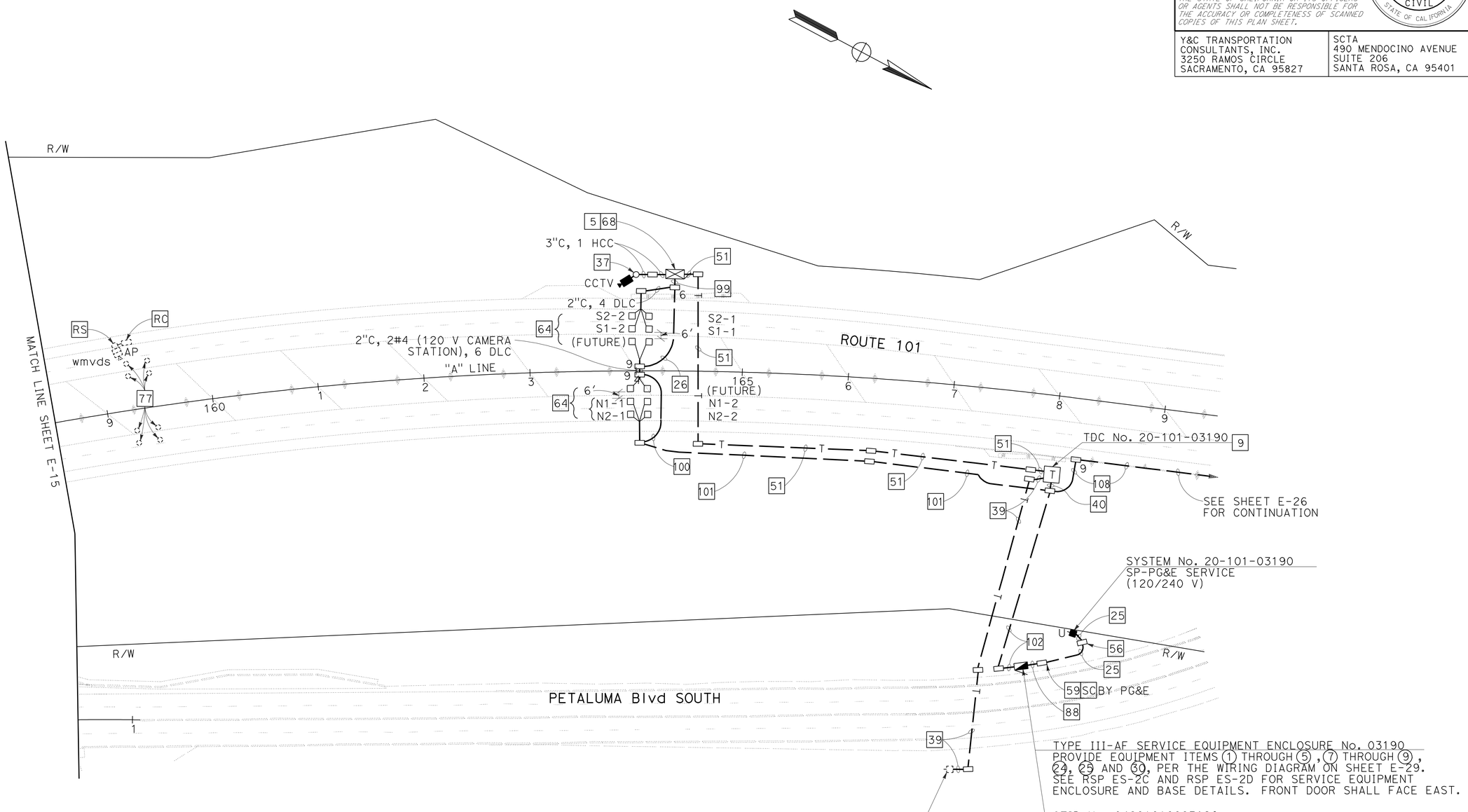

TRAFFIC OPERATIONS SYSTEM

FOR NOTES, ABBREVIATIONS AND LEGEND, SEE SHEETS E-1 TO E-3

APPROVED FOR ELECTRICAL WORK ONLY

SCALE: 1" = 50'

E-16

STATE OF CALIFORNIA - DEPARTMENT OF TRANSPORTATION — Caltrans

CONSULTANT FUNCTIONAL SUPERVISOR: RAMSEY HISSEN

CALCULATED-DESIGNED BY: MENG YANG — CHECKED BY: HAMID ZOLFAGHARI

REVISED BY — DATE REVISED

LAST REVISION 11-17-11 — DATE PLOTTED => 26-APR-2012 — TIME PLOTTED => 07:00

Dist	COUNTY	ROUTE	POST MILES TOTAL PROJECT	SHEET No.	TOTAL SHEETS
04	Son	101	0.9/3.6	623	918

REGISTERED CIVIL ENGINEER 11/17/11 DATE

4-23-12
PLANS APPROVAL DATE

REGISTERED PROFESSIONAL ENGINEER KIN Y. CHAN No. 55391 Exp. 12/31/12 CIVIL STATE OF CALIFORNIA

THE STATE OF CALIFORNIA OR ITS OFFICERS OR AGENTS SHALL NOT BE RESPONSIBLE FOR THE ACCURACY OR COMPLETENESS OF SCANNED COPIES OF THIS PLAN SHEET.

Y&C TRANSPORTATION CONSULTANTS, INC.
3250 RAMOS CIRCLE
SACRAMENTO, CA 95827

SCTA
490 MENDOCINO AVENUE
SUITE 206
SANTA ROSA, CA 95401

NOTE:

FOR ACCURATE RIGHT OF WAY DATA, CONTACT RIGHT OF WAY ENGINEERING AT THE DISTRICT OFFICE.

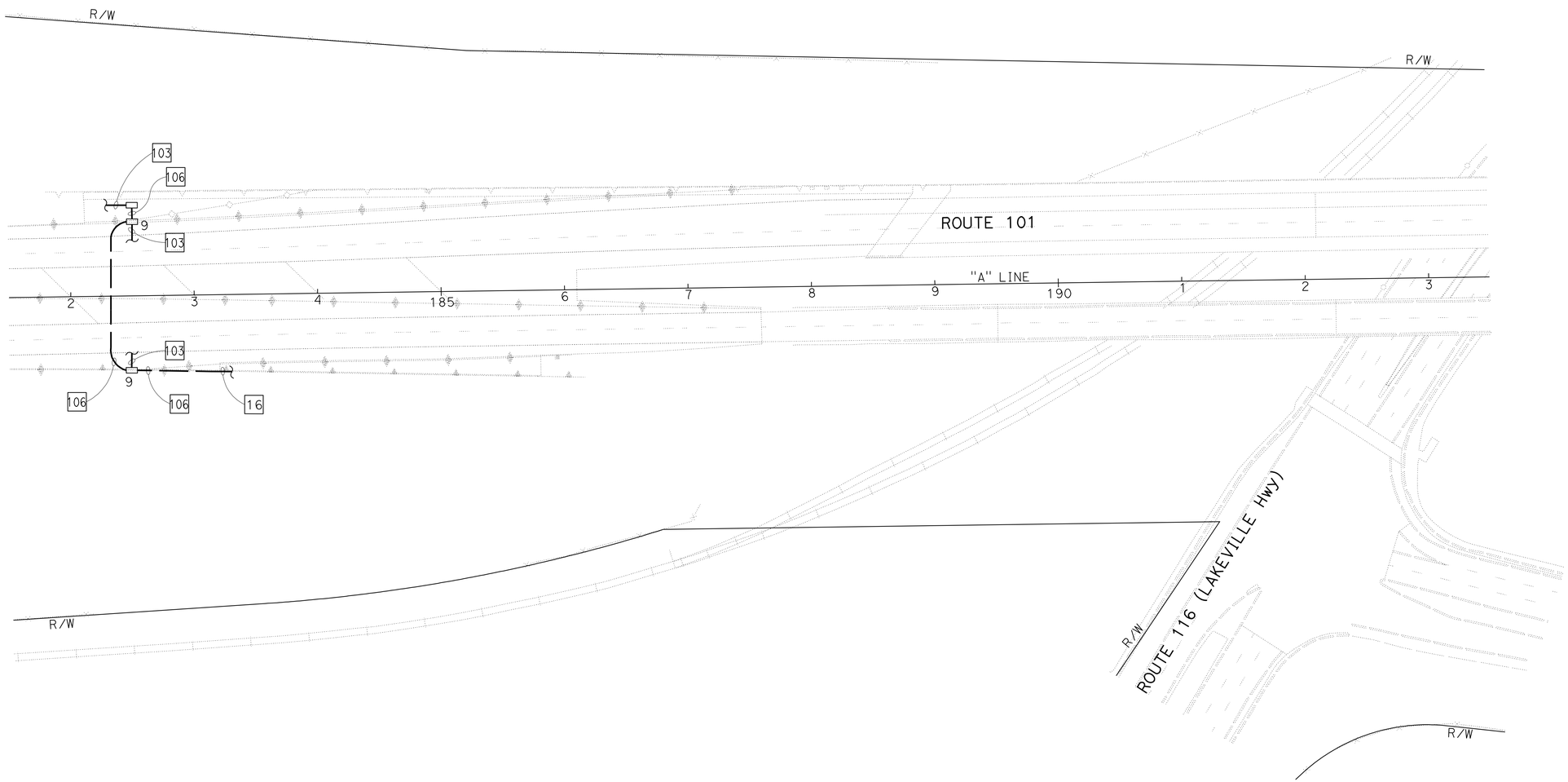

FOR NOTES, ABBREVIATIONS AND LEGEND, SEE SHEETS E-1 TO E-3

APPROVED FOR ELECTRICAL WORK ONLY

TRAFFIC OPERATIONS SYSTEM

SCALE: 1" = 50'

E-17

STATE OF CALIFORNIA - DEPARTMENT OF TRANSPORTATION
Caltrans

CONSULTANT FUNCTIONAL SUPERVISOR: RAMSEY HISSEN
CALCULATED-DESIGNED BY: MENG YANG
CHECKED BY: HAMID ZOLFAGHARI
REVISED BY
DATE REVISED

LAST REVISION 11-17-11
DATE PLOTTED => 26-APR-2012
TIME PLOTTED => 07:00

Dist	COUNTY	ROUTE	POST MILES TOTAL PROJECT	SHEET No.	TOTAL SHEETS
04	Son	101	0.9/3.6	624	918

REGISTERED CIVIL ENGINEER — DATE 11/17/11

4-23-12
PLANS APPROVAL DATE

REGISTERED PROFESSIONAL ENGINEER — KIN Y. CHAN No. 55391 Exp. 12/31/12 CIVIL — STATE OF CALIFORNIA

THE STATE OF CALIFORNIA OR ITS OFFICERS OR AGENTS SHALL NOT BE RESPONSIBLE FOR THE ACCURACY OR COMPLETENESS OF SCANNED COPIES OF THIS PLAN SHEET.

Y&C TRANSPORTATION CONSULTANTS, INC.
3250 RAMOS CIRCLE
SACRAMENTO, CA 95827

SCTA
490 MENDOCINO AVENUE
SUITE 206
SANTA ROSA, CA 95401

NOTE:

FOR ACCURATE RIGHT OF WAY DATA, CONTACT RIGHT OF WAY ENGINEERING AT THE DISTRICT OFFICE.

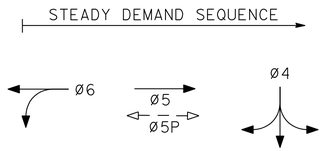

PROPOSED PHASE DIAGRAM

DETAIL A
4-SECTION HEAD
NO SCALE

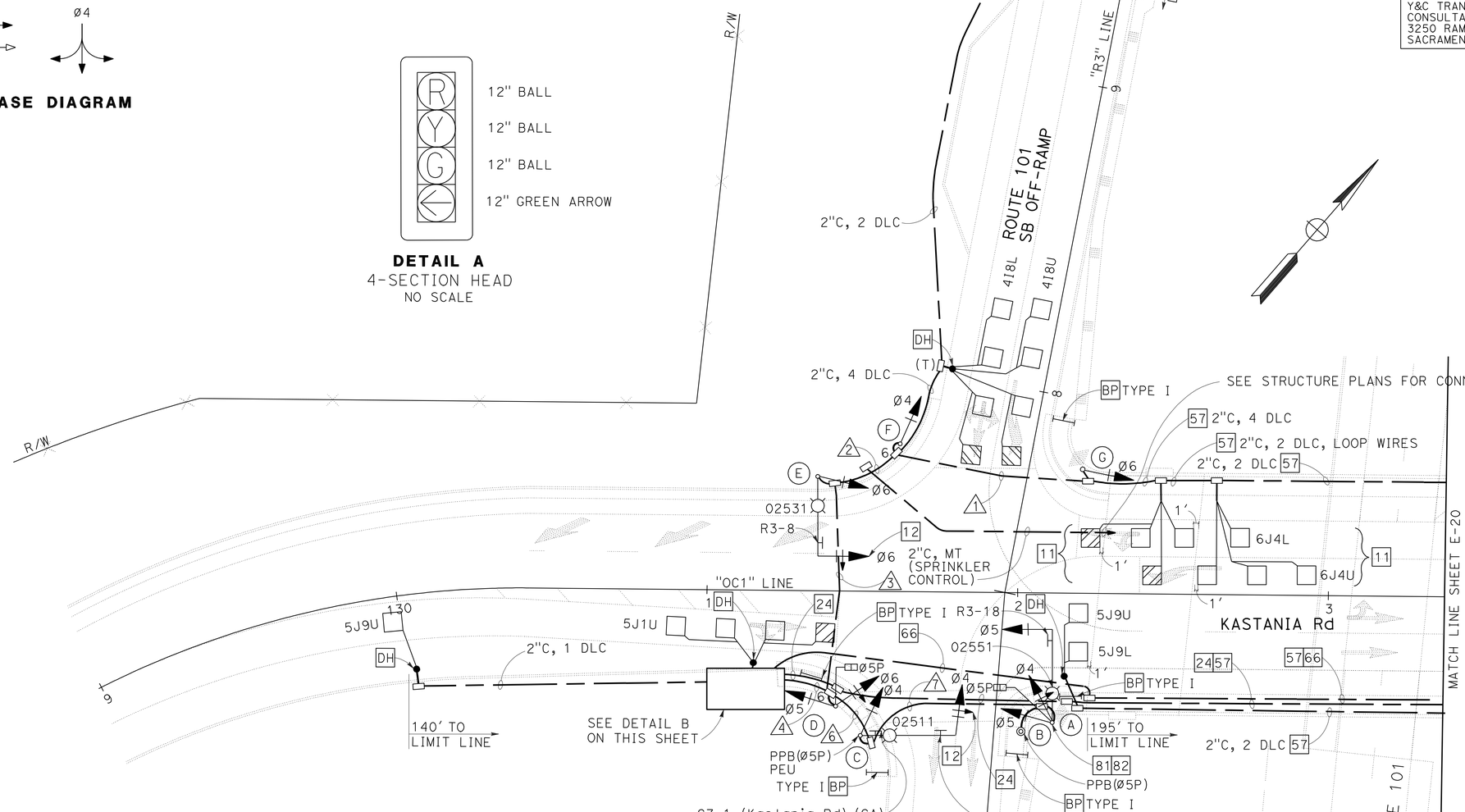

TYPE III-AF SERVICE EQUIPMENT ENCLOSURE No. 02561

PROVIDE EQUIPMENT ITEMS (1) THROUGH (14), (21) AND (22), PER THE WIRING DIAGRAM ON SHEET E-29. SEE RSP ES-2C AND RSP ES-2D FOR SERVICE EQUIPMENT ENCLOSURE AND BASE DETAILS. FRONT DOOR OF CABINET SHALL FACE NORTH.

CTID No. 04201010002561 (A-6) (TOU)

LOAD: 1-1200 W TRAFFIC SIGNAL (METERED)
3-200 W HPS LUMINAIRES (METERED)
1-100 W IRRIGATION (METERED) (FUTURE USE)

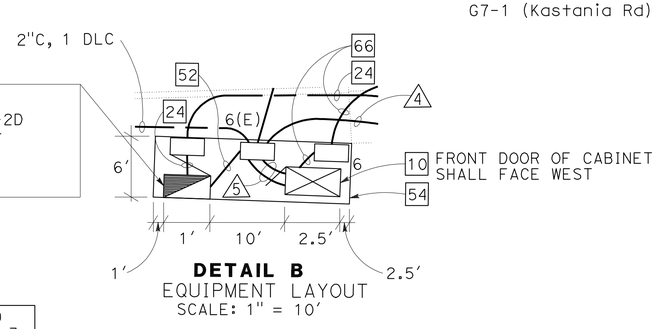

DETAIL B
EQUIPMENT LAYOUT
SCALE: 1" = 10'

FOR NOTES, ABBREVIATIONS AND LEGEND, SEE SHEETS E-1 TO E-3

APPROVED FOR ELECTRICAL WORK ONLY

2" SPRINKLER CONTROL CONDUIT SIGNAL AND LIGHTING
(LOCATION 1)

SCALE: 1" = 20'

E-18

STATE OF CALIFORNIA - DEPARTMENT OF TRANSPORTATION — Caltrans

CONSULTANT FUNCTIONAL SUPERVISOR: RAMSEY HISSEN

CALCULATED-DESIGNED BY: MENG YANG — CHECKED BY: HAMID ZOLFAGHARI

REVISED BY — DATE REVISED

LAST REVISION 11-17-11 — DATE PLOTTED => 30-APR-2012 — TIME PLOTTED => 10:04

Dist	COUNTY	ROUTE	POST MILES TOTAL PROJECT	SHEET No.	TOTAL SHEETS
04	Son	101	0.9/3.6	625	918

REGISTERED CIVIL ENGINEER — DATE 11/17/11

4-23-12
PLANS APPROVAL DATE

REGISTERED PROFESSIONAL ENGINEER — KIN Y. CHAN — No. 55391 — Exp. 12/31/12 — CIVIL — STATE OF CALIFORNIA

THE STATE OF CALIFORNIA OR ITS OFFICERS OR AGENTS SHALL NOT BE RESPONSIBLE FOR THE ACCURACY OR COMPLETENESS OF SCANNED COPIES OF THIS PLAN SHEET.

Y&C TRANSPORTATION CONSULTANTS, INC.
3250 RAMOS CIRCLE
SACRAMENTO, CA 95827

SCTA
490 MENDOCINO AVENUE
SUITE 206
SANTA ROSA, CA 95401

CONDUCTOR AND CONDUIT SCHEDULE

CONDUCTOR SCHEDULE	No. OF CONDUCTORS — CONDUIT RUN NUMBER 1	2	3	4	5	6	7
No. 14 CONDUCTORS							
Ø4		3	3	6	6	3	3
Ø5				3	3	3	3
Ø6	3	3	3	3	3		
Ø5P				2	2	2	2
PPB(Ø5P)				1	1	1	1
PPB COMMON				1	1	1	1
PHOTOELECTRIC UNIT				3		3	
SPARES	3	3	3	6	6	3	3
TOTAL No. 14	6	9	9	25	22	16	13
No. 8 CONDUCTORS							
LIGHTING (240 V)			2	2		2	2
SIGNAL NEUTRAL	1	1	1	1	1	1	1
TOTAL No. 8	1	1	3	3	1	3	3
No. 6 CONDUCTORS							
SERVICE TO CONTROLLER					2		
DETECTOR CABLES (DLC)							
416U		1	1	1	1		
416L		1	1	1	1		
418U		1	1	1	1		
418L		1	1	1	1		
5J1U					1		
5J9U					1		
6J2U	1	1	1	1	1		
6J2L	1	1	1	1	1		
6J4U	1	1	1	1	1		
6J4L	1	1	1	1	1		
TOTAL DETECTOR CABLES	4	8	8	8	10		
CONDUIT SIZE (INCHES)	3	3	3	3	2-3	3	3
NEW/EXISTING CONDUIT	N	N	N	N	N	N	N
% FILL	6	11	13	17	10	7	6

(N) = NEW
(E) = Exist

POLE AND EQUIPMENT SCHEDULE

No.	STANDARD TYPE	SMA (FEET)	LMA (FEET)	VEHICLE SIGNAL MOUNTING MAST ARM	POLE	PEDESTRIAN SIGNAL MOUNTING	PPB Ø	PPB ARROW	HPS LUMINAIRE (WATTS)	REMARKS
A	19-4-100	30	15	MAS	SV-2-TD	SP-1-T			200	IS R3-18 SIGN ON SMA. INSTALL SIGNAL POLE BEHIND THE BARRIER. HANDHOLE OF SIGNAL POLE SHALL FACE SOUTH.
B	PPB POST						5P	→		
C	19-4-100	30	15	MAS-4B	SV-1-T		5P	←	200	IS R61-32 (CA) AND G7-1 (Kastania Rd) (CA) (96" X 24") SIGNS ON SMA. INSTALL PEU ON TOP OF POLE.
D	1-B				TV-2-T	SP-1-T				
E	19-4-100	25	15	MAS-4B	SV-1-T				200	IS R3-8 SIGN ON SMA.
F	1-B				TV-1-T					
G	1-B				TV-1-T					

SIGNAL AND LIGHTING
(LOCATION 1)
(CONDUCTOR AND CONDUIT, POLE AND EQUIPMENT SCHEDULES)

APPROVED FOR ELECTRICAL WORK ONLY

E-19

REVISED BY — DATE REVISED
MENG YANG — HAMID ZOLFAGHARI
CALCULATED-DESIGNED BY — CHECKED BY
CONSULTANT FUNCTIONAL SUPERVISOR — RAMSEY HISSEN
STATE OF CALIFORNIA - DEPARTMENT OF TRANSPORTATION
Caltrans

LAST REVISION 11-17-11 — DATE PLOTTED => 26-APR-2012 — TIME PLOTTED => 07:00

Dist	COUNTY	ROUTE	POST MILES TOTAL PROJECT	SHEET No.	TOTAL SHEETS
04	Son	101	0.9/3.6	626	918

REGISTERED CIVIL ENGINEER — DATE 11/17/11

4-23-12
PLANS APPROVAL DATE

REGISTERED PROFESSIONAL ENGINEER — KIN Y. CHAN No. 55391 Exp. 12/31/12 CIVIL — STATE OF CALIFORNIA

THE STATE OF CALIFORNIA OR ITS OFFICERS OR AGENTS SHALL NOT BE RESPONSIBLE FOR THE ACCURACY OR COMPLETENESS OF SCANNED COPIES OF THIS PLAN SHEET.

Y&C TRANSPORTATION CONSULTANTS, INC.
3250 RAMOS CIRCLE
SACRAMENTO, CA 95827

SCTA
490 MENDOCINO AVENUE
SUITE 206
SANTA ROSA, CA 95401

NOTE:

FOR ACCURATE RIGHT OF WAY DATA, CONTACT RIGHT OF WAY ENGINEERING AT THE DISTRICT OFFICE.

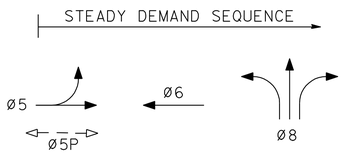

PROPOSED PHASE DIAGRAM

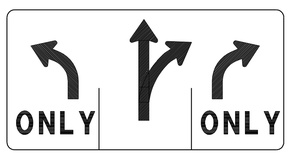

DETAIL A
R61-15 (Mod) (CA)
NO SCALE

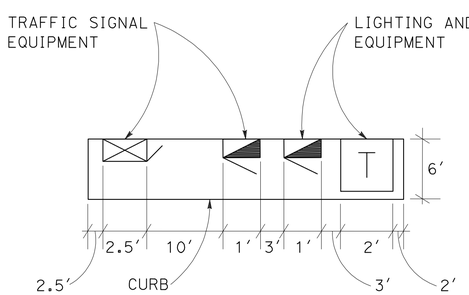

DETAIL B
EQUIPMENT LAYOUT
NO SCALE

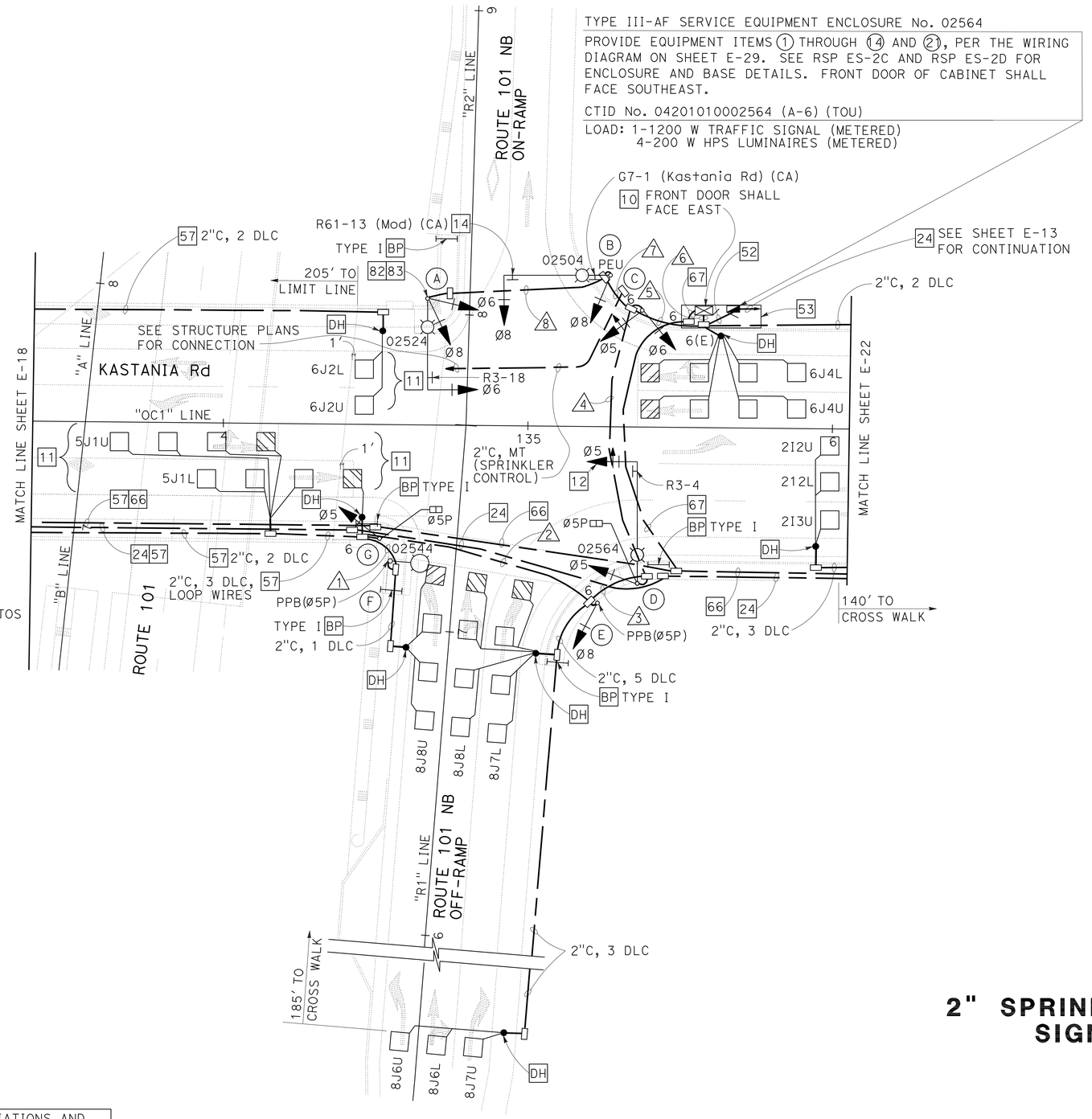

FOR NOTES, ABBREVIATIONS AND LEGEND, SEE SHEETS E-1 TO E-3

APPROVED FOR ELECTRICAL WORK ONLY

2" SPRINKLER CONTROL CONDUIT SIGNAL AND LIGHTING
(LOCATION 2)
SCALE: 1" = 20′

E-20

STATE OF CALIFORNIA - DEPARTMENT OF TRANSPORTATION — Caltrans

CONSULTANT FUNCTIONAL SUPERVISOR: RAMSEY HISSEN

CALCULATED-DESIGNED BY: MENG YANG — CHECKED BY: HAMID ZOLFAGHARI

REVISED BY — DATE REVISED

LAST REVISION 11-17-11 — DATE PLOTTED => 30-APR-2012 — TIME PLOTTED => 10:04

Dist	COUNTY	ROUTE	POST MILES TOTAL PROJECT	SHEET No.	TOTAL SHEETS
04	Son	101	0.9/3.6	627	918

REGISTERED CIVIL ENGINEER — DATE 11/17/11

4-23-12
PLANS APPROVAL DATE

REGISTERED PROFESSIONAL ENGINEER — KIN Y. CHAN — No. 55391 — Exp. 12/31/12 — CIVIL — STATE OF CALIFORNIA

THE STATE OF CALIFORNIA OR ITS OFFICERS OR AGENTS SHALL NOT BE RESPONSIBLE FOR THE ACCURACY OR COMPLETENESS OF SCANNED COPIES OF THIS PLAN SHEET.

Y&C TRANSPORTATION CONSULTANTS, INC.
3250 RAMOS CIRCLE
SACRAMENTO, CA 95827

SCTA
490 MENDOCINO AVENUE
SUITE 206
SANTA ROSA, CA 95401

CONDUCTOR AND CONDUIT SCHEDULE

CONDUCTOR SCHEDULE	No. OF CONDUCTORS — CONDUIT RUN NUMBER 1	2	3	4	5	6	7	8
No. 14 CONDUCTORS								
Ø5		3	3	3	3	3		
Ø6					3	3	3	3
Ø8			3	3	6	6	3	3
Ø5P		2	2	2	2	2		
PPB(Ø5P)	1	1	1	1	1	1		
PPB COMMON	1	1	1	1	1	1		
PHOTOELECTRIC UNIT					3		3	
SPARES	3	3	3	3	6	6	3	3
TOTAL No. 14	5	10	13	13	25	22	12	9
No. 8 CONDUCTORS								
LIGHTING	2	2	2	2	2		2	2
SIGNAL NEUTRAL		1	1	1	1	1	1	1
TOTAL No. 8	2	3	3	3	3	1	3	3
No. 6 CONDUCTORS								
SERVICE TO CONTROLLER						2		
DETECTOR CABLES (DLC)								
5J1U		1	1	1	1	1		
5J1L		1	1	1	1	1		
5J9U		1	1	1	1	1		
5J9L		1	1	1	1	1		
6J2U						1		
6J2L						1		
6J4U						1		
6J4L						1		
8J6U			1	1	1	1		
8J6L			1	1	1	1		
8J7U			1	1	1	1		
8J7L			1	1	1	1		
8J8U	1	1	1	1	1	1		
8J8L			1	1	1	1		
TOTAL DETECTOR CABLES	1	5	10	10	10	14		
CONDUIT SIZE (INCHES)	2	3	3	3	3	2-3	3	3
NEW/EXISTING CONDUIT	N	N	N	N	N	N	N	N
% FILL	9	10	16	16	19	12	6	5

(N) = NEW
(E) = Exist

POLE AND EQUIPMENT SCHEDULE

No.	STANDARD TYPE	SMA (FEET)	LMA (FEET)	VEHICLE SIGNAL MOUNTING MAST ARM	POLE	PEDESTRIAN SIGNAL MOUNTING	PPB Ø	PPB ARROW	HPS LUMINAIRE (WATTS)	REMARKS
A	19-4-100	30	15	MAS	SV-2-TD				200	IS R3-18 SIGN ON SMA. INSTALL SIGNAL POLE BEHIND THE BARRIER. HANDHOLE OF SIGNAL POLE SHALL FACE NORTH.
B	24-4-100	35	12	MAS	SV-1-T				200	IS R61-15 (Mod) (CA) AND G7-1 (Kastania Rd) (CA) (96"X24") SIGNS ON SMA. INSTALL PEU ON TOP OF POLE.
C	1-B				TV-2-T					
D	26-4-100	40	15	MAS-4B	SV-1-T	SP-1-T			200	IS R3-4 SIGN ON SMA.
E	1-B				TV-1-T		5P	→		
F	15TS		15				5P	←	200	
G	1-B				TV-1-T	SP-1-T				

SIGNAL AND LIGHTING
(LOCATION 2)
(CONDUCTOR AND CONDUIT, POLE AND EQUIPMENT SCHEDULES)

E-21

APPROVED FOR ELECTRICAL WORK ONLY

REVISED BY — DATE REVISED
MENG YANG — HAMID ZOLFAGHARI
CALCULATED-DESIGNED BY — CHECKED BY
CONSULTANT FUNCTIONAL SUPERVISOR — RAMSEY HISSEN
STATE OF CALIFORNIA - DEPARTMENT OF TRANSPORTATION — Caltrans

LAST REVISION 11-17-11 — DATE PLOTTED => 25-APR-2012 — TIME PLOTTED => 18:57

Dist	COUNTY	ROUTE	POST MILES TOTAL PROJECT	SHEET No.	TOTAL SHEETS
04	Son	101	0.9/3.6	628	918

REGISTERED CIVIL ENGINEER — DATE 11/17/11

4-23-12
PLANS APPROVAL DATE

REGISTERED PROFESSIONAL ENGINEER — KIN Y. CHAN — No. 55391 — Exp. 12/31/12 — CIVIL — STATE OF CALIFORNIA

THE STATE OF CALIFORNIA OR ITS OFFICERS OR AGENTS SHALL NOT BE RESPONSIBLE FOR THE ACCURACY OR COMPLETENESS OF SCANNED COPIES OF THIS PLAN SHEET.

Y&C TRANSPORTATION CONSULTANTS, INC.
3250 RAMOS CIRCLE
SACRAMENTO, CA 95827

SCTA
490 MENDOCINO AVENUE
SUITE 206
SANTA ROSA, CA 95401

NOTE:

FOR ACCURATE RIGHT OF WAY DATA, CONTACT RIGHT OF WAY ENGINEERING AT THE DISTRICT OFFICE.

STEADY DEMAND SEQUENCE

Ø3 — Ø4P — Ø4 — Ø2

PROPOSED PHASE DIAGRAM

EVDa = Ø2
EVDb = Ø4
EVDd = Ø3

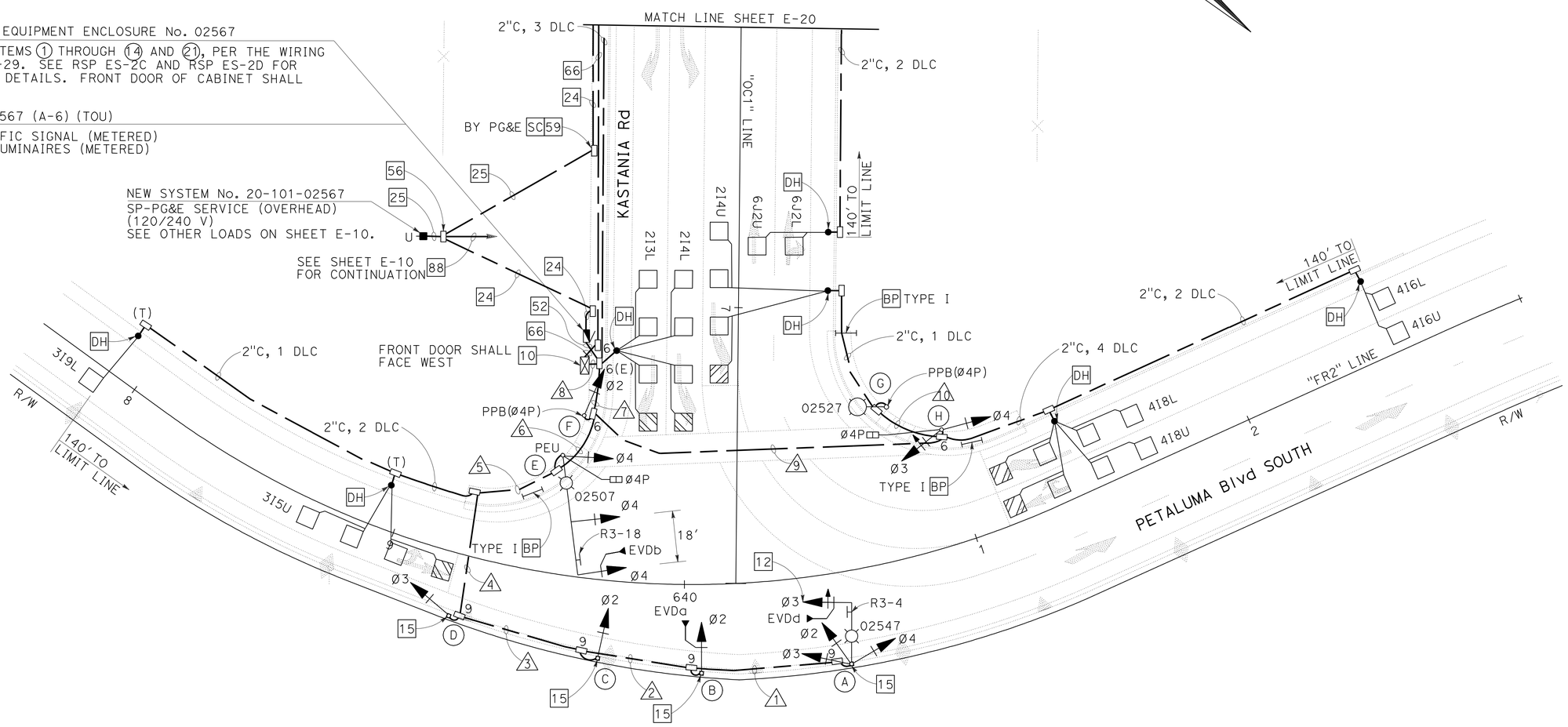

FOR NOTES, ABBREVIATIONS AND LEGEND, SEE SHEETS E-1 TO E-3

APPROVED FOR ELECTRICAL WORK ONLY

SIGNAL AND LIGHTING
(COUNTY) (LOCATION 3)
SCALE: 1" = 20'

E-22

STATE OF CALIFORNIA - DEPARTMENT OF TRANSPORTATION — Caltrans

CONSULTANT FUNCTIONAL SUPERVISOR: RAMSEY HISSEN
CALCULATED-DESIGNED BY: MENG YANG
CHECKED BY: HAMID ZOLFAGHARI
REVISED BY
DATE REVISED

LAST REVISION 11-17-11 | DATE PLOTTED => 25-APR-2012 | TIME PLOTTED => 18:57

Dist	COUNTY	ROUTE	POST MILES TOTAL PROJECT	SHEET No.	TOTAL SHEETS
04	Son	101	0.9/3.6	629	918

REGISTERED CIVIL ENGINEER — DATE 11/17/11

4-23-12
PLANS APPROVAL DATE

REGISTERED PROFESSIONAL ENGINEER — KIN Y. CHAN — No. 55391 — Exp. 12/31/12 — CIVIL — STATE OF CALIFORNIA

THE STATE OF CALIFORNIA OR ITS OFFICERS OR AGENTS SHALL NOT BE RESPONSIBLE FOR THE ACCURACY OR COMPLETENESS OF SCANNED COPIES OF THIS PLAN SHEET.

Y&C TRANSPORTATION CONSULTANTS, INC.
3250 RAMOS CIRCLE
SACRAMENTO, CA 95827

SCTA
490 MENDOCINO AVENUE
SUITE 206
SANTA ROSA, CA 95401

CONDUCTOR AND CONDUIT SCHEDULE

CONDUCTOR SCHEDULE	No. OF CONDUCTORS — CONDUIT RUN NUMBER 1	2	3	4	5	6	7	8	9	10
No. 14 CONDUCTORS										
Ø2	3	3	3	3	3	3	3	3		
Ø3	3	3	3	3	3	3	6	6	3	
Ø4	3	3	3	3	3	3	6	6	3	
Ø4P						2	4	4	2	
PPB(Ø4P)							1	1	1	1
PPB COMMON							1	1	1	1
PHOTOELECTRIC UNIT						3	3			
SPARES	3	3	3	3	3	3	6	6	3	3
TOTAL No. 14	12	12	12	12	12	17	30	27	13	5
No. 8 CONDUCTORS										
LIGHTING	2	2	2	2	2	2	2		2	2
SIGNAL NEUTRAL	1	1	1	1	1	1	1	1	1	
TOTAL No. 8	3	3	3	3	3	3	3	1	3	2
No. 6 CONDUCTORS										
SERVICE TO CONTROLLER								2		
DETECTOR CABLES (DLC)										
2I2U								1		
2I2L								1		
2I3U								1		
2I3L								1		
2I4U							1	1	1	1
2I4L								1		
3I5U					1	1	1	1		
3I9L					1	1	1	1		
4I6U							1	1	1	
4I6L							1	1	1	
4I8U							1	1	1	
4I8L							1	1	1	
TOTAL DETECTOR CABLES					2	2	7	12	5	1
EMERGENCY VEHICLE CABLES										
EVDa		1	1	1	1	1	1	1		
EVDb						1	1	1		
EVDd	1	1	1	1	1	1	1	1		
CONDUIT SIZE (INCHES)	2	2	2	2	3	3	3	2-3	3	2
NEW/EXISTING CONDUIT	N	N	N	N	N	N	N	N	N	N
% FILL	15	17	17	17	10	12	21	12	11	9

(N) = NEW
(E) = Exist

POLE AND EQUIPMENT SCHEDULE

No.	STANDARD TYPE	STANDARD SMA (FEET)	STANDARD LMA (FEET)	VEHICLE SIGNAL MOUNTING MAST ARM	VEHICLE SIGNAL MOUNTING POLE	PEDESTRIAN SIGNAL MOUNTING	PPB Ø	PPB ARROW	HPS LUMINAIRE (WATTS)	REMARKS
A	17-3-100	20	15	MAS-4B	SV-3-TC				200	IS R3-4 SIGN ON SMA. INSTALL SIGNAL STANDARD ON STRUCTURE. INSTALL EVDd ON VEHICLE SIGNAL HEAD.
B	1-B				TV-1-T					INSTALL SIGNAL STANDARD ON STRUCTURE. INSTALL EVDa ON VEHICLE SIGNAL HEAD.
C	1-B				TV-1-T					INSTALL SIGNAL STANDARD ON STRUCTURE.
D	1-B				TV-1-T					INSTALL SIGNAL STANDARD ON STRUCTURE.
E	26-4-100	40	15	MAS MAS	SV-1-T	SP-1-T			200	IS R3-18 SIGN ON SMA. INSTALL EVDb ON VEHICLE SIGNAL HEAD. INSTALL PEU ON TOP OF POLE.
F	1-B				TV-1-T		4P	→		
G	15TS		15				4P	←	200	
H	1-B				TV-2-T	SP-1-T				

SIGNAL AND LIGHTING
(COUNTY) (LOCATION 3)
(CONDUCTOR AND CONDUIT, POLE AND EQUIPMENT SCHEDULES)

E-23

APPROVED FOR ELECTRICAL WORK ONLY

REVISED BY | DATE REVISED
MENG YANG | HAMID ZOLFAGHARI
CALCULATED-DESIGNED BY | CHECKED BY
CONSULTANT FUNCTIONAL SUPERVISOR: RAMSEY HISSEN
STATE OF CALIFORNIA - DEPARTMENT OF TRANSPORTATION — Caltrans

LAST REVISION 11-17-11 | DATE PLOTTED => 25-APR-2012 | TIME PLOTTED => 18:57

Dist	COUNTY	ROUTE	POST MILES TOTAL PROJECT	SHEET No.	TOTAL SHEETS
04	Son	101	0.9/3.6	630	918

REGISTERED CIVIL ENGINEER — DATE 11/17/11

4-23-12
PLANS APPROVAL DATE

REGISTERED PROFESSIONAL ENGINEER — KIN Y. CHAN No. 55391 Exp. 12/31/12 CIVIL — STATE OF CALIFORNIA

THE STATE OF CALIFORNIA OR ITS OFFICERS OR AGENTS SHALL NOT BE RESPONSIBLE FOR THE ACCURACY OR COMPLETENESS OF SCANNED COPIES OF THIS PLAN SHEET.

Y&C TRANSPORTATION CONSULTANTS, INC.
3250 RAMOS CIRCLE
SACRAMENTO, CA 95827

SCTA
490 MENDOCINO AVENUE
SUITE 206
SANTA ROSA, CA 95401

NOTE:

FOR ACCURATE RIGHT OF WAY DATA, CONTACT RIGHT OF WAY ENGINEERING AT THE DISTRICT OFFICE.

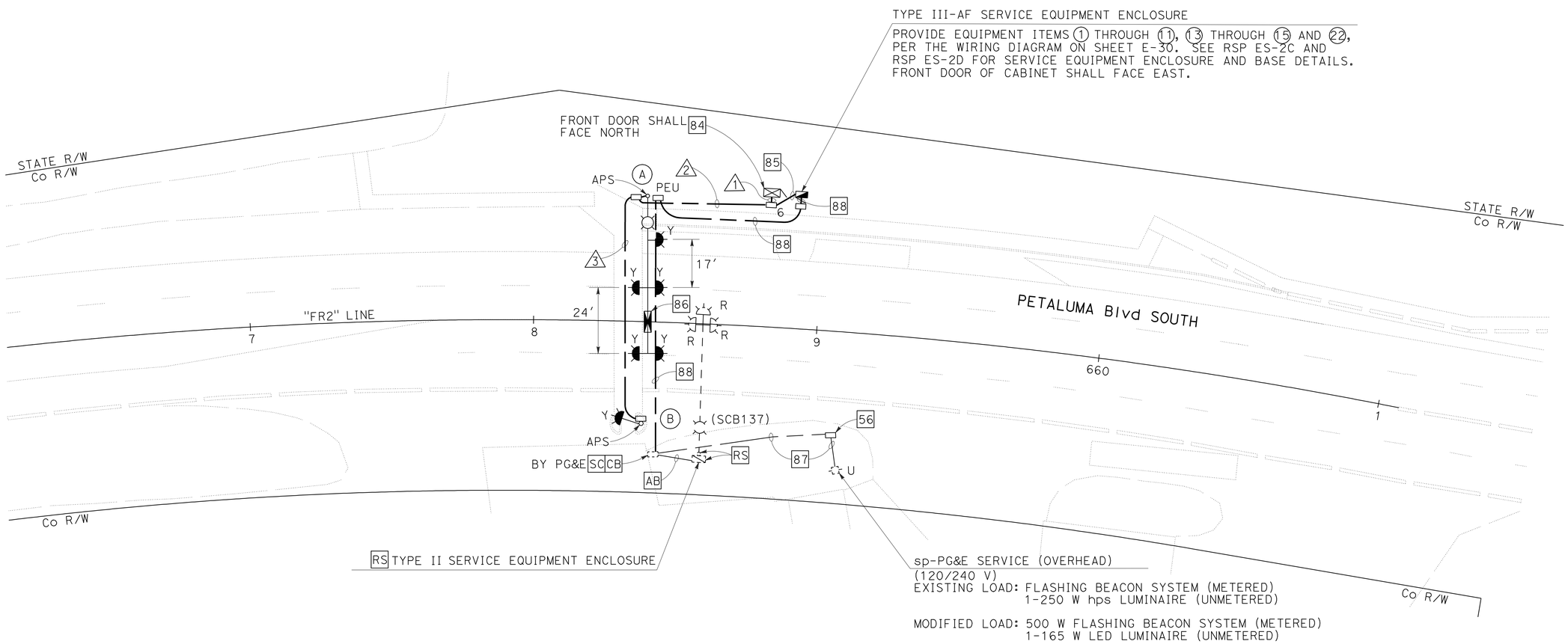

FLASHING BEACON AND LIGHTING
(COUNTY)

SCALE: 1" = 20'

FOR NOTES, ABBREVIATIONS AND LEGEND, SEE SHEETS E-1 TO E-3

APPROVED FOR ELECTRICAL WORK ONLY

E-24

STATE OF CALIFORNIA - DEPARTMENT OF TRANSPORTATION — Caltrans

CONSULTANT FUNCTIONAL SUPERVISOR: RAMSEY HISSEN

CALCULATED-DESIGNED BY: MENG YANG — CHECKED BY: HAMID ZOLFAGHARI

REVISED BY — DATE REVISED

LAST REVISION 11-17-11 — DATE PLOTTED => 25-APR-2012 — TIME PLOTTED => 18:57

Dist	COUNTY	ROUTE	POST MILES TOTAL PROJECT	SHEET No.	TOTAL SHEETS
04	Son	101	0.9/3.6	631	918

REGISTERED CIVIL ENGINEER — DATE 11/17/11

4-23-12
PLANS APPROVAL DATE

REGISTERED PROFESSIONAL ENGINEER — KIN Y. CHAN No. 55391 Exp. 12/31/12 CIVIL — STATE OF CALIFORNIA

THE STATE OF CALIFORNIA OR ITS OFFICERS OR AGENTS SHALL NOT BE RESPONSIBLE FOR THE ACCURACY OR COMPLETENESS OF SCANNED COPIES OF THIS PLAN SHEET.

Y&C TRANSPORTATION CONSULTANTS, INC.
3250 RAMOS CIRCLE
SACRAMENTO, CA 95827

SCTA
490 MENDOCINO AVENUE
SUITE 206
SANTA ROSA, CA 95401

CONDUCTOR AND CONDUIT SCHEDULE

CONDUCTOR SCHEDULE	No. OF CONDUCTORS — CONDUIT RUN NUMBER 1	2	3
No. 14 CONDUCTORS			
FLASHING BEACON	2	2	2
LED FLASHING PEDESTRIAN SYMBOL SIGN	2	2	
APS	2	2	2
PEU		3	
SPARES	3	3	3
TOTAL No. 14	9	12	7
No. 8 CONDUCTORS			
LIGHTING		2	
GROUND	1	1	1
TOTAL No. 8	1	3	1
No. 6 CONDUCTORS			
SERVICE TO CONTROLLER	2		
CONDUIT SIZE (INCHES)	3	3	3
% FILL	6	7	4

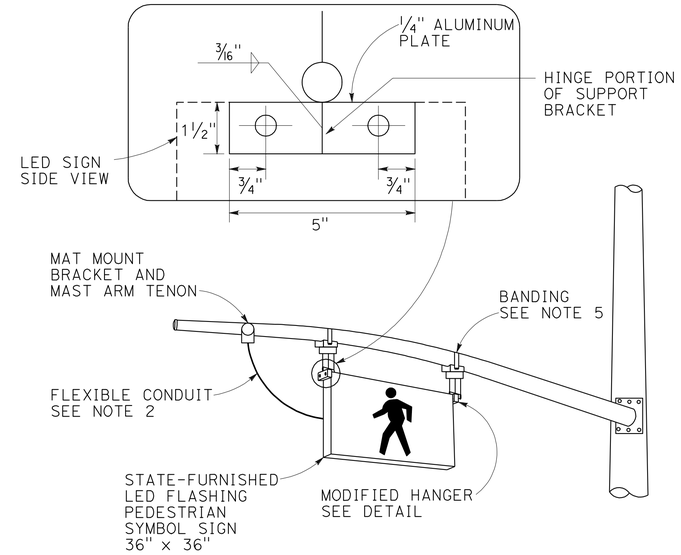

DETAIL A
FLASHING LED PEDESTRIAN SYMBOL SIGN INSTALLATION DETAIL

NOTES:

1. MODIFIED SIGN BRACKET IS BOLTED TO THE UPPER TOP SIDES OF THE LED SIGN. SEE SPECIAL PROVISIONS FOR OTHER DETAILS.
2. THE CONTRACTOR SHALL INSTALL A SECTION OF THE WATER TIGHT FLEX CONDUIT FOR ELECTRICAL LED SIGN CONDUCTORS. THE FLEX CONDUIT SHALL BE CONNECTED TO THE SIDE OF THE SIGN AND TERMINATED AT THE MAT MOUNT BRACKET LOCATED ON THE MAST ARM. THE FLEX CONDUIT SHALL BE GRAY IN COLOR AND ATTACHED WITH GALVANIZED FITTINGS.
3. LOCATION OF FLASHING LED PEDESTRIAN SYMBOL SIGN SHALL BE AS SHOWN ON THE PLANS UNLESS OTHERWISE DIRECTED BY THE ENGINEER.
4. SIGN MOUNTED BRACKET BOLTS SHALL BE 5/16" x 1" STAINLESS STEEL WITH FLAT AND LOCK WASHERS.
5. SIGN BRACKET SHALL BE HELD IN PLACE WITH DOUBLE BAND OF 3/4" HEAVY DUTY STAINLESS STEEL 0.032 STRAP.

POLE AND EQUIPMENT SCHEDULE

No.	STANDARD TYPE	SMA (FEET)	LMA (FEET)	FLASHING BEACON MOUNTING MAST ARM	POLE	APS Ø	ARROW	LED LUMINAIRE	REMARKS
A	29-5-100	55	12	5 MAT			→	BetaLED 139 W	INSTALL STATE-FURNISHED LED FLASHING PEDESTRIAN SYMBOL SIGN ON SMA. SEE DETAIL A ON THIS SHEET. INSTALL PEU ON TOP OF POLE.
B	1-B				TV-1-T		←		

APPROVED FOR ELECTRICAL WORK ONLY

FLASHING BEACON AND LIGHTING
(COUNTY)
(CONDUCTOR, POLE AND EQUIPMENT SCHEDULES)

E-25

REVISED BY | DATE REVISED
MENG YANG | HAMID ZOLFAGHARI
CALCULATED-DESIGNED BY | CHECKED BY
CONSULTANT FUNCTIONAL SUPERVISOR: RAMSEY HISSEN
STATE OF CALIFORNIA - DEPARTMENT OF TRANSPORTATION — Caltrans

LAST REVISION 11-17-11 | DATE PLOTTED => 25-APR-2012 | TIME PLOTTED => 18:57

Dist	COUNTY	ROUTE	POST MILES TOTAL PROJECT	SHEET No.	TOTAL SHEETS
04	Son	101	0.9/3.6	632	918

REGISTERED CIVIL ENGINEER — DATE 11/17/11

4-23-12
PLANS APPROVAL DATE

REGISTERED PROFESSIONAL ENGINEER — KIN Y. CHAN No. 55391 Exp. 12/31/12 CIVIL — STATE OF CALIFORNIA

THE STATE OF CALIFORNIA OR ITS OFFICERS OR AGENTS SHALL NOT BE RESPONSIBLE FOR THE ACCURACY OR COMPLETENESS OF SCANNED COPIES OF THIS PLAN SHEET.

Y&C TRANSPORTATION CONSULTANTS, INC.
3250 RAMOS CIRCLE
SACRAMENTO, CA 95827

SCTA
490 MENDOCINO AVENUE
SUITE 206
SANTA ROSA, CA 95401

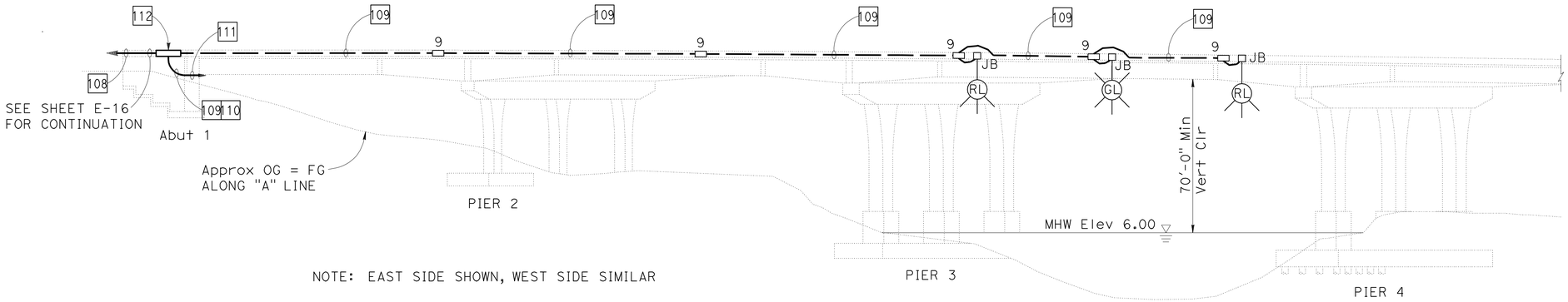

NOTE: EAST SIDE SHOWN, WEST SIDE SIMILAR

ELEVATION

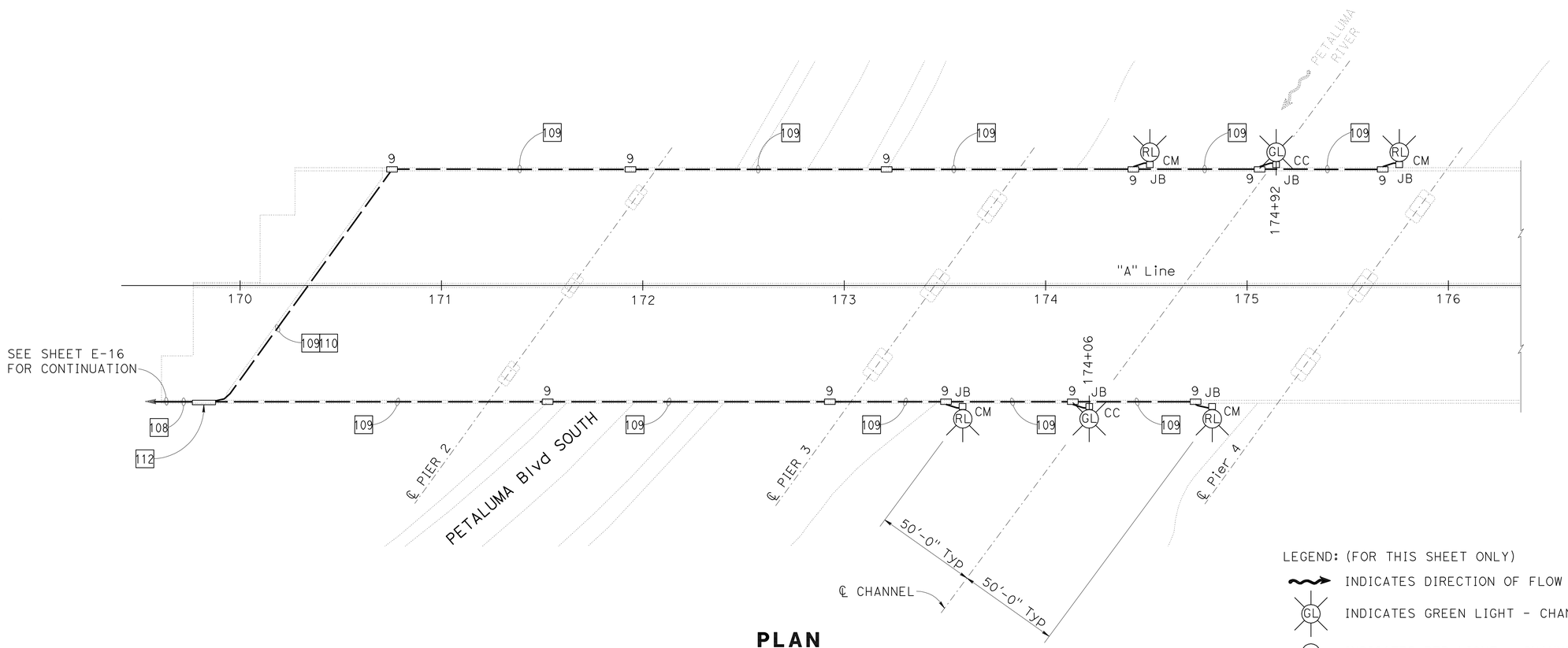

PLAN

LEGEND: (FOR THIS SHEET ONLY)

- INDICATES DIRECTION OF FLOW
- (GL) INDICATES GREEN LIGHT - CHANNEL CENTER - 360° GREEN
- (RL) INDICATES RED LIGHT - CHANNEL MARGIN - 180° RED
- JB□ INDICATES JUNCTION BOX - 8" x 8" x 6", 316 S.S. WITH FLUSH COVER, GASKETED, WATERTIGHT

LIGHTING (NAVIGATION)

SCALE: 1" = 30'

FOR NOTES AND ABBREVIATIONS, SEE SHEETS E-1 TO E-3

APPROVED FOR ELECTRICAL WORK ONLY

E-26

REVISED BY | DATE REVISED
MENG YANG | HAMID ZOLFAGHARI
CALCULATED-DESIGNED BY | CHECKED BY
CONSULTANT FUNCTIONAL SUPERVISOR | RAMSEY HISSEN

STATE OF CALIFORNIA - DEPARTMENT OF TRANSPORTATION
Caltrans

LAST REVISION 11-17-11 | DATE PLOTTED => 25-APR-2012 | TIME PLOTTED => 18:57

Dist	COUNTY	ROUTE	POST MILES TOTAL PROJECT	SHEET No.	TOTAL SHEETS
04	Son	101	0.9/3.6	633	918

REGISTERED CIVIL ENGINEER — DATE 11/17/11

4-23-12
PLANS APPROVAL DATE

REGISTERED PROFESSIONAL ENGINEER — KIN Y. CHAN No. 55391 Exp. 12/31/12 CIVIL — STATE OF CALIFORNIA

THE STATE OF CALIFORNIA OR ITS OFFICERS OR AGENTS SHALL NOT BE RESPONSIBLE FOR THE ACCURACY OR COMPLETENESS OF SCANNED COPIES OF THIS PLAN SHEET.

Y&C TRANSPORTATION CONSULTANTS, INC.
3250 RAMOS CIRCLE
SACRAMENTO, CA 95827

SCTA
490 MENDOCINO AVENUE
SUITE 206
SANTA ROSA, CA 95401

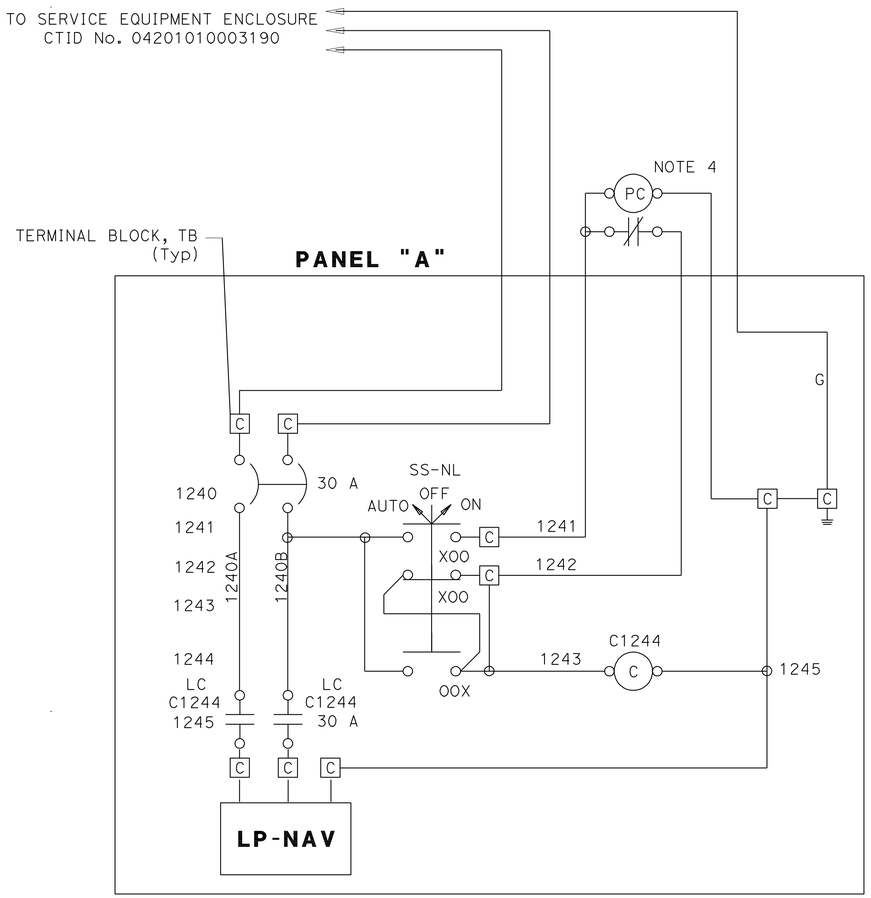

VOLTAGE: 120/240 V, 1Ø, 3-WIRE RATING: 100 A LUGS ONLY FEEDER: 1/0 AWG									**PANEL: LP-NAV**			MFGR: SQUARE D CAT#: QO612L100RB TYPE: NEMA 1		
CKT	A	POLE	DESCRIPTION	VOLTAMPERES		A	B	VOLTAMPERES		DESCRIPTION	POLE	A	CKT
1	20	1	RED LIGHTS	400		X				SPARE	1	20	2
3	20	1	GREEN LIGHTS		200		X			SPARE	1	20	4
5			SPACE			X				SPARE			6
			TOTAL	400	200	S/N				TOTAL			

BUS A	400 VA	0.6	kVA DEMAND
BUS B	200 VA	5	LINE A
		NA	MAIN TRIP
LOAD	600 VA	100	MAIN LUGS

PANEL SCHEDULE LP-NAV

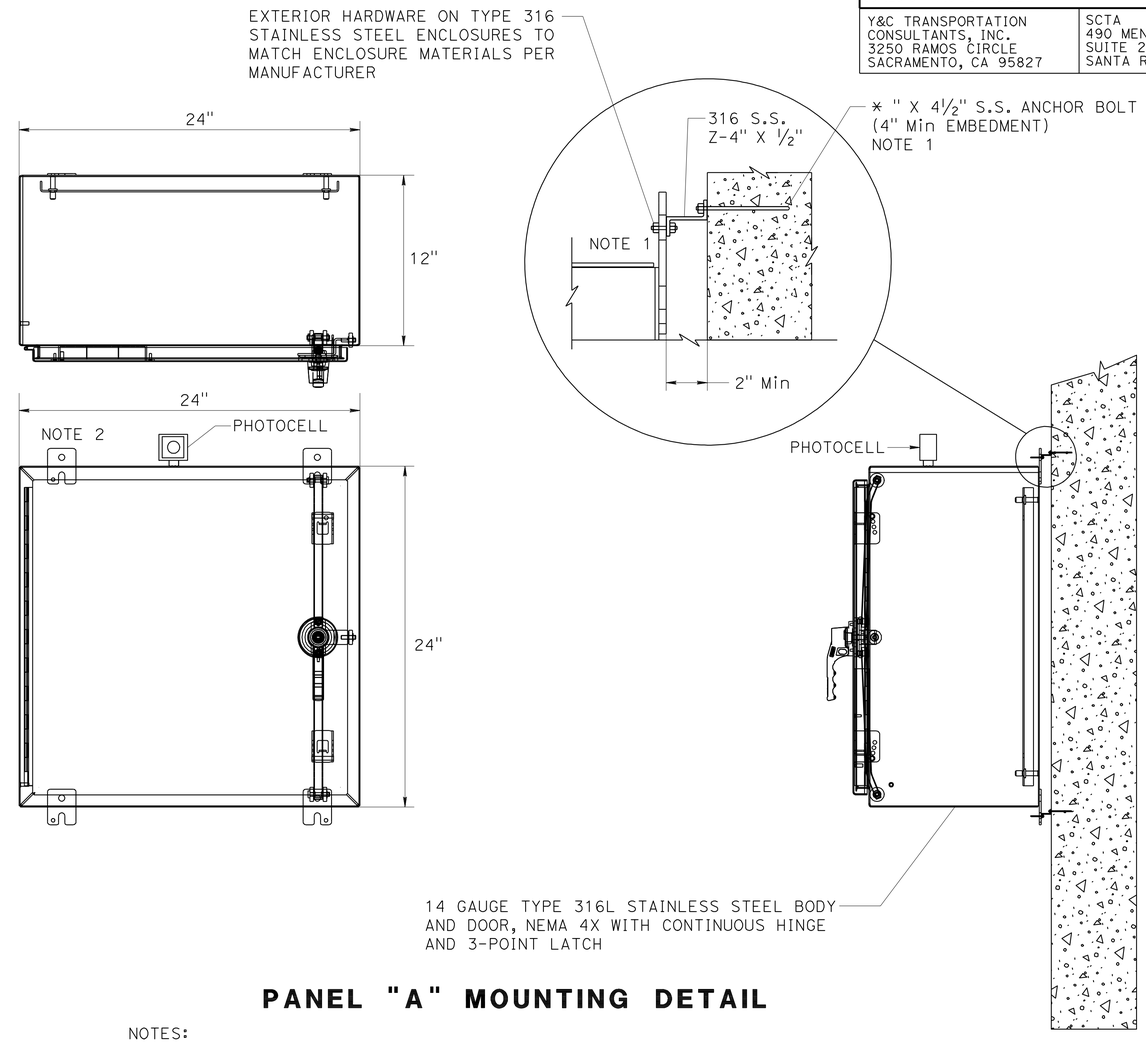

PANEL "A" MOUNTING DETAIL

NOTES:

1. ALL MOUNTING HARDWARE SHALL BE GRADE 316 STAINLESS STEEL.
2. ENCLOSURE SHALL BE 24" X 24" X 12" 316 STAINLESS STEEL NEMA 4X.
3. PROVIDE SUBMITTAL TO INCLUDE STAINLESS STEEL MOUNTING HARDWARE AND BRACKETS. PROVIDE LOCATIONS. PROVIDE SUBMITTAL FOR PANEL "A" INCLUDING ALL COMPONENTS.
4. PHOTOCELL SHALL BE MOUNTED ON THE OUTSIDE OF PANEL "A".

FOR NOTES, ABBREVIATIONS AND LEGEND, SEE SHEET E-1

APPROVED FOR ELECTRICAL WORK ONLY

LIGHTING (NAVIGATION)

NO SCALE

E-27

STATE OF CALIFORNIA - DEPARTMENT OF TRANSPORTATION
Caltrans

CONSULTANT FUNCTIONAL SUPERVISOR: RAMSEY HISSEN
CALCULATED-DESIGNED BY: HAMID ZOLFAGHARI
CHECKED BY: MENG YANG
REVISED BY
DATE REVISED

LAST REVISION 11-17-11
DATE PLOTTED => 26-APR-2012
TIME PLOTTED => 12:56

Dist	COUNTY	ROUTE	POST MILES TOTAL PROJECT	SHEET No.	TOTAL SHEETS
04	Son	101	0.9/3.6	634	918

REGISTERED CIVIL ENGINEER — DATE 11/17/11

4-23-12
PLANS APPROVAL DATE

REGISTERED PROFESSIONAL ENGINEER — KIN Y. CHAN No. 55391 Exp. 12/31/12 CIVIL — STATE OF CALIFORNIA

THE STATE OF CALIFORNIA OR ITS OFFICERS OR AGENTS SHALL NOT BE RESPONSIBLE FOR THE ACCURACY OR COMPLETENESS OF SCANNED COPIES OF THIS PLAN SHEET.

Y&C TRANSPORTATION CONSULTANTS, INC.
3250 RAMOS CIRCLE
SACRAMENTO, CA 95827

SCTA
490 MENDOCINO AVENUE
SUITE 206
SANTA ROSA, CA 95401

GENERAL NOTES:

1. COMPLY WITH CODE OF FEDERAL REGULATIONS, 33 NAVIGATION AND NAVIGABLE WATERS PART 118, BRIDGE LIGHTING AND OTHER SIGNALS. THE CONTRACTOR SHALL MAINTAIN ACTIVE NAVIGATION LIGHTING THRU DURATION OF CONSTRUCTION.
2. CC - GREEN 360° CAST ALUMINUM HOUSING LENS; 110 VOLT FIXTURES EQUIPPED WITH SHOCK RESISTANT LED LAMPS. EQUIPPED WITH A PIVOT MOUNT AND A S.S. RETRIEVAL CHAIN. HANGER STEM SHALL BE LONG ENOUGH SO THAT LANTERN IN LOWERED POSITION HANGS BELLOW BOTTOM OF GIRDER AT THE CENTER. LANTERN SHALL BE LATCHABLE IN DOWN AND UP (90°) POSITION. CENTER LIGHTS SHALL MEET U.S. COAST GUARD REQUIREMENTS FOR VISIBILITY.
3. CM - RED 180° CAST ALUMINUM HOUSING LENS; 110 VOLT FIXTURES EQUIPPED WITH SHOCK RESISTANT LED LAMPS. EQUIPPED WITH A PIVOT MOUNT AND A S.S. RETRIEVAL CHAIN. HANGER STEM SHALL BE LONG ENOUGH SO THAT LANTERN IN LOWERED POSITION HANGS BELLOW BOTTOM OF GIRDER AT THE CENTER. LANTERN SHALL BE LATCHABLE IN DOWN AND UP (90°) POSITION. CENTER LIGHTS SHALL MEET U.S. COAST GUARD REQUIREMENTS FOR VISIBILITY.
4. SHOCK RESISTANT LED LAMPS SHALL BE RATED FOR AN MTBF OF 100,000 HOURS. LED LAMPS SHALL CONSIST OF 48 INDIVIDUAL LED BEAMS ARRANGED IN FOUR TIERS. LAMP LENS SHALL BE UV POLYCARBONATE. CANDELA OUTPUT SHALL BE NOT LESS THAN 78 FOR RED (RL) AND 270 FOR GREEN (GL). LAMP SHALL HAVE AN INTEGRAL SURGE SUPPRESSOR WITH A CLAMPING VOLTAGE RATING OF NOT LESS THAN 380 V AT 2 A. THE LAMP LENS AND TIERS SHALL BE FILLED WITH A SHOCK ABSORBING MATERIAL THAT IS TYPICALLY INTERT. LAMPS SHALL HAVE BEEN TESTED FOR A MINIMUM OF SIX MONTHS IN MOVABLE BRIDGE APPLICATIONS.
5. LIGHT ATTACHMENT AND FIXTURE CONSTRUCTION SHALL BE SUITABLE FOR 100 MPH WIND.

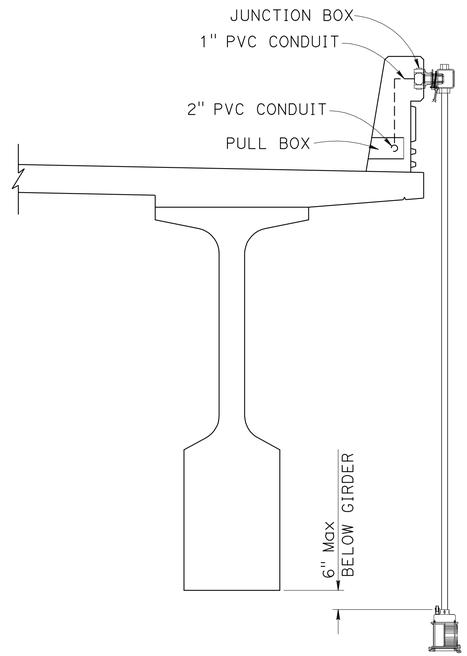

CHANNEL MARGIN LIGHT (RL) SECTION
½" = 1'-0"

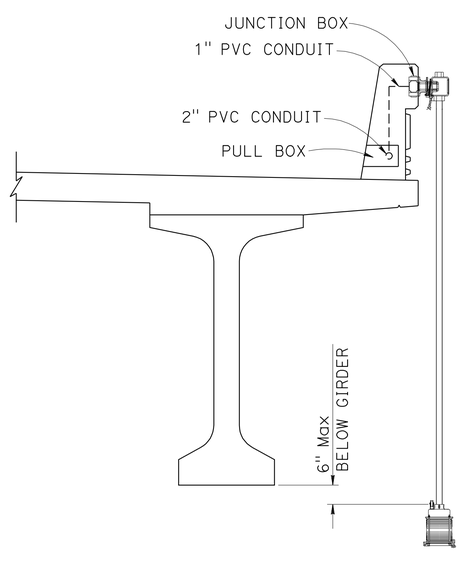

CHANNEL CENTER LIGHT (GL) SECTION
½" = 1'-0"

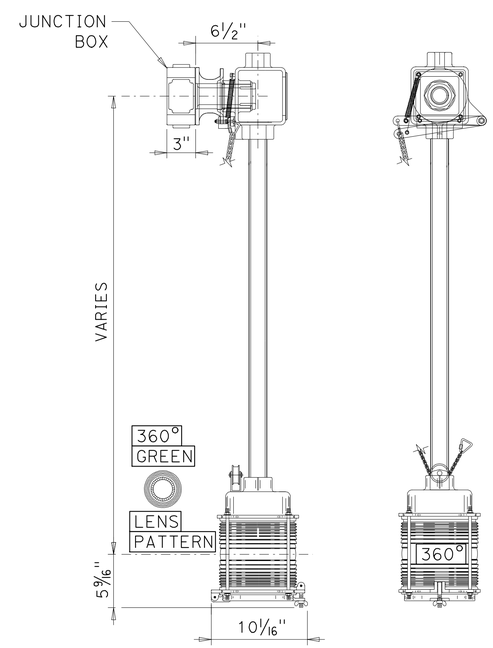

CHANNEL CENTER LIGHT (GL)
1½" = 1'-0"

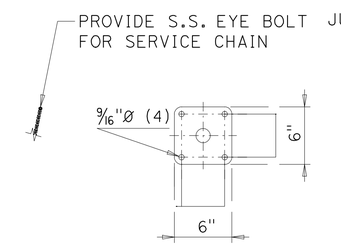

MOUNTING DETAIL

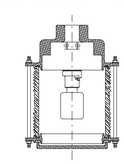

FIXTURE SECTION

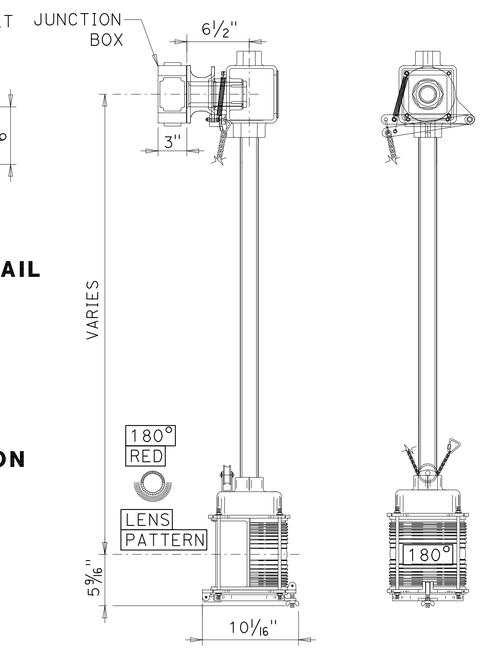

CHANNEL MARGIN LIGHT (RL)
1½" = 1'-0"

LIGHTING (NAVIGATION)
NO SCALE

FOR NOTES, ABBREVIATIONS AND LEGEND, SEE SHEET E-1

APPROVED FOR ELECTRICAL WORK ONLY

E-28

STATE OF CALIFORNIA - DEPARTMENT OF TRANSPORTATION
Caltrans

CONSULTANT FUNCTIONAL SUPERVISOR: RAMSEY HISSEN
CALCULATED-DESIGNED BY: MENG YANG
CHECKED BY: HAMID ZOLFAGHARI
REVISED BY
DATE REVISED

LAST REVISION 11-17-11
DATE PLOTTED => 25-APR-2012
TIME PLOTTED => 18:57

Dist	COUNTY	ROUTE	POST MILES TOTAL PROJECT	SHEET No.	TOTAL SHEETS
04	Son	101	0.9/3.6	635	918

REGISTERED CIVIL ENGINEER — DATE 11/17/11

4-23-12
PLANS APPROVAL DATE

REGISTERED PROFESSIONAL ENGINEER — KIN Y. CHAN No. 55391 Exp. 12/31/12 CIVIL — STATE OF CALIFORNIA

THE STATE OF CALIFORNIA OR ITS OFFICERS OR AGENTS SHALL NOT BE RESPONSIBLE FOR THE ACCURACY OR COMPLETENESS OF SCANNED COPIES OF THIS PLAN SHEET.

Y&C TRANSPORTATION CONSULTANTS, INC.
3250 RAMOS CIRCLE
SACRAMENTO, CA 95827

SCTA
490 MENDOCINO AVENUE
SUITE 206
SANTA ROSA, CA 95401

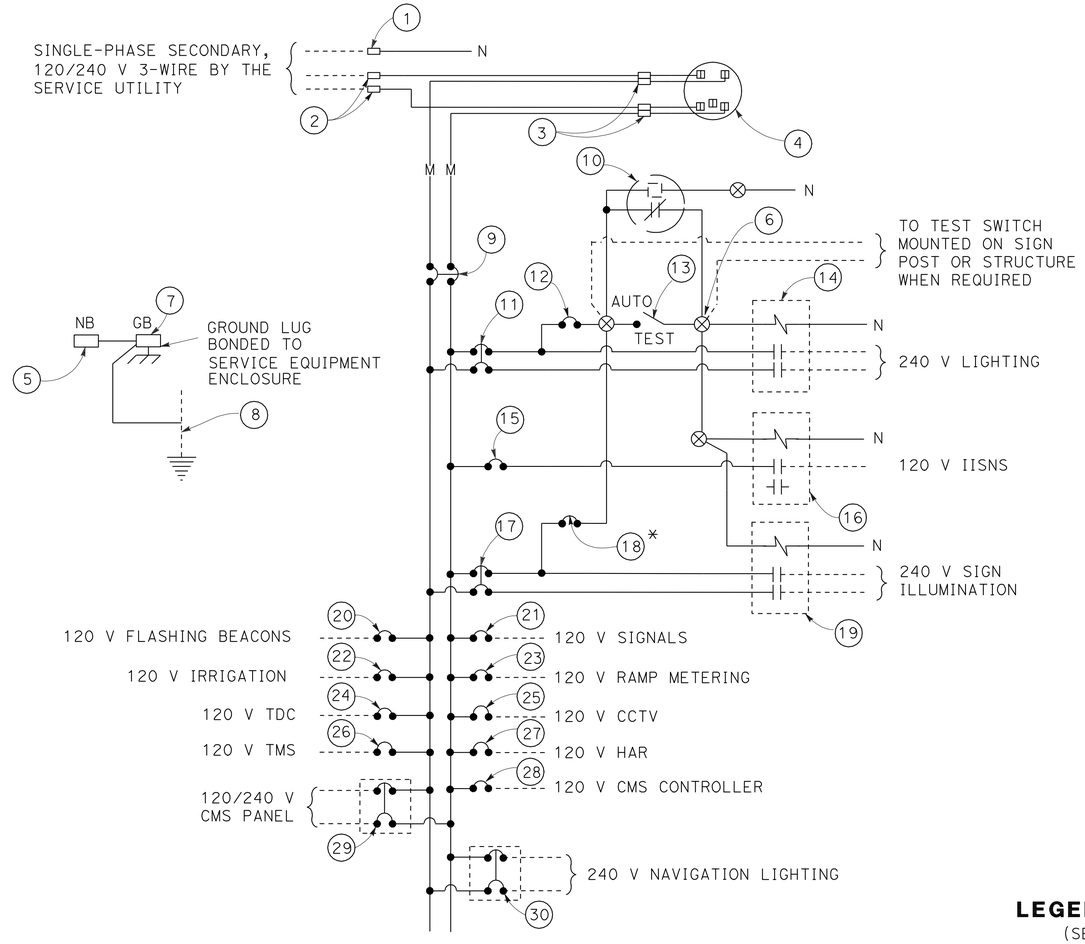

120/240 V SERVICE WIRING DIAGRAM (TYPICAL)

TYPE III-A SERVICE (120/240 V) EQUIPMENT LEGEND

ITEM No.	COMPONENT	NAME PLATE DESCRIPTION
1	NEUTRAL LUG	
2	LANDING LUG	
3	TEST BYPASS FACILITY	
4	METER SOCKET AND SUPPORT	
5	NEUTRAL BUS	
6	TERMINAL BLOCK	
7	GROUND BUS	
8	GROUNDING ELECTRODE	
9	100 A, 240 V, 2P, CB	MAIN BREAKER
10	PHOTOELECTRIC UNIT (NOTE 7)	
11	30 A, 240 V, 2P, CB	LIGHTING
12	15 A, 120 V, 1P, CB	LIGHTING CONTROL
13	15 A, 1P, TEST SWITCH	TEST SWITCH
14	30 A, 2PNO, CONTACTOR	
15	15 A, 120 V, 1P, CB	IISNS
16	30 A, 2PNO, CONTACTOR	

ITEM No.	COMPONENT	NAME PLATE DESCRIPTION
17	30 A, 240 V, 2P, CB	SIGN ILLUMINATION
18	15 A, 120 V, 1P, CB	SIGN ILLUMINATION CONTROL
19	30 A, 2PNO, CONTACTOR	
20	15 A, 120 V, 1P, CB	FLASHING BEACON
21	50 A, 120 V, 1P, CB	SIGNALS
22	20 A, 120 V, 1P, CB	IRRIGATION
23	30 A, 120 V, 1P, CB	RAMP METERING
24	15 A, 120 V, 1P, CB	TELEPHONE DEMARCATION CABINET
25	30 A, 120 V, 1P, CB	CCTV
26	30 A, 120 V, 1P, CB	TMS
27	30 A, 120 V, 1P, CB	HAR
28	30 A, 120 V, 1P, CB	CMS CONTROLLER
29	30 A, 240 V, 2P, CB	CMS PANEL
30	30 A, 240 V, 2P, CB	NAVIGATION LIGHTING

* PROVIDE ITEM 12 WHEN BOTH CIRCUITS OF SIGN ILLUMINATION AND LIGHTING ARE USED. ITEM 18 IS NOT REQUIRED.

LEGEND:
(SEE RSP ES-1A & RSP ES-1C)

NOTES: (FOR SERVICE EQUIPMENT)

1. VOLTAGE RATINGS OF SERVICE EQUIPMENT SHALL CONFORM TO THE SERVICE VOLTAGES INDICATED ON THE PLANS.
2. UNLESS OTHERWISE INDICATED ON THE PLANS, ALL SERVICE EQUIPMENT ITEMS SHALL BE PROVIDED FOR EACH SERVICE EQUIPMENT ENCLOSURE AS SHOWN.
3. ITEM No. 1 AND No. 5 SHALL BE ISOLATED FROM THE CABINET.
4. METER SOCKETS SHALL BE 5 CLIP TYPE.
5. SERVICE UTILITY WILL INSTALL THE TIME-OF-USE METER IF APPLICABLE.
6. UNLESS OTHERWISE NOTED, THE MAXIMUM NUMBER OF SINGLE-POLE CB SPACES IN THE ENCLOSURE IS FOURTEEN.
7. PHOTOELECTRIC CONTROL SHALL BE TYPE II.

APPROVED FOR ELECTRICAL WORK ONLY

ELECTRICAL DETAILS
(SERVICE EQUIPMENT AND TYPICAL WIRING DIAGRAM TYPE III-A SERIES)

NO SCALE

E-29

STATE OF CALIFORNIA - DEPARTMENT OF TRANSPORTATION
Caltrans

CONSULTANT FUNCTIONAL SUPERVISOR: RAMSEY HISSEN
CALCULATED-DESIGNED BY: MENG YANG
CHECKED BY: HAMID ZOLFAGHARI
REVISED BY / DATE REVISED

LAST REVISION 11-17-11 | DATE PLOTTED => 25-APR-2012 | TIME PLOTTED => 18:58

Dist	COUNTY	ROUTE	POST MILES TOTAL PROJECT	SHEET No.	TOTAL SHEETS
04	Son	101	0.9/3.6	636	918

REGISTERED CIVIL ENGINEER — DATE 11/17/11

4-23-12
PLANS APPROVAL DATE

REGISTERED PROFESSIONAL ENGINEER — KIN Y. CHAN No. 55391 Exp. 12/31/12 CIVIL — STATE OF CALIFORNIA

THE STATE OF CALIFORNIA OR ITS OFFICERS OR AGENTS SHALL NOT BE RESPONSIBLE FOR THE ACCURACY OR COMPLETENESS OF SCANNED COPIES OF THIS PLAN SHEET.

Y&C TRANSPORTATION CONSULTANTS, INC.
3250 RAMOS CIRCLE
SACRAMENTO, CA 95827

SCTA
490 MENDOCINO AVENUE
SUITE 206
SANTA ROSA, CA 95401

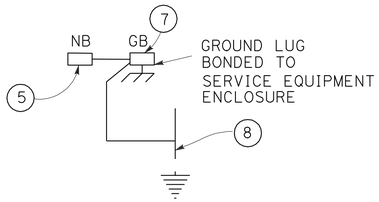

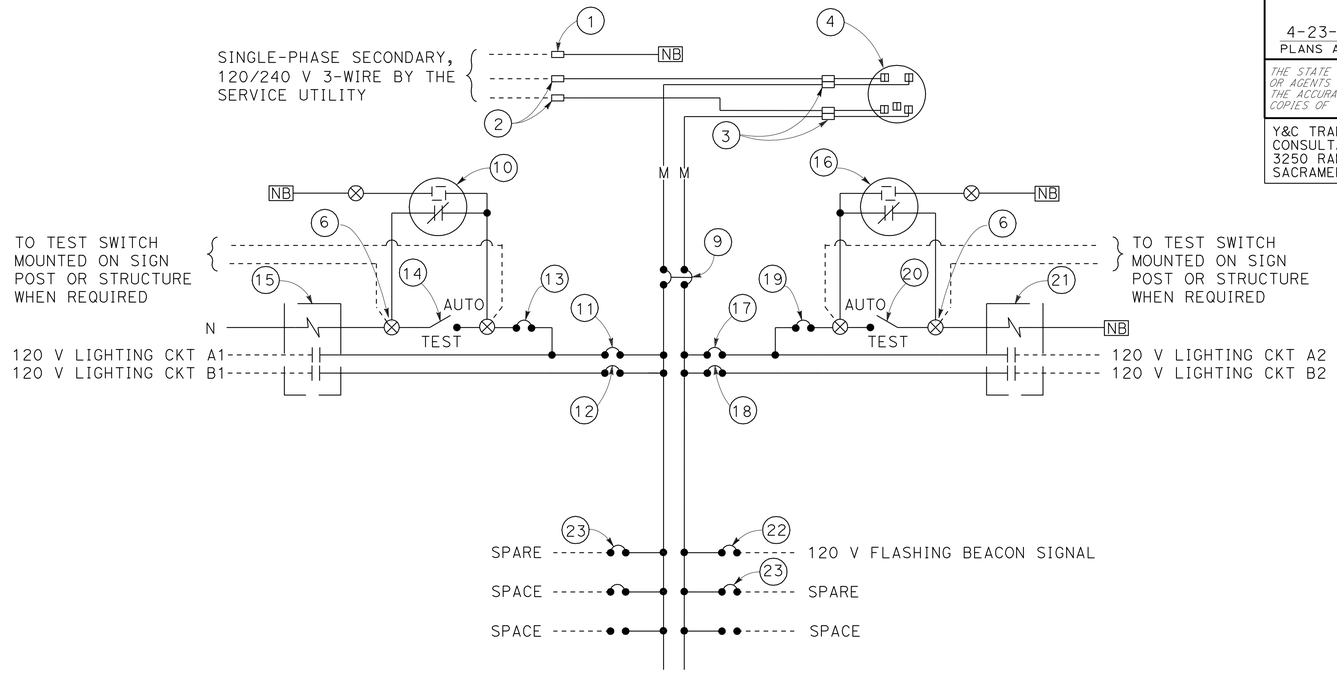

120/240 V SERVICE WIRING DIAGRAM

TYPE III-A SERVICE (120/240 V) EQUIPMENT LEGEND

ITEM No.	COMPONENT	NAME PLATE DESCRIPTION	ITEM No.	COMPONENT	NAME PLATE DESCRIPTION
1	NEUTRAL LUG		13	15 A, 120 V, 1P, CB	LIGHTING CONTROL
2	LANDING LUG		14	15 A, 1P, TEST SWITCH	LIGHTING TEST SWITCH
3	TEST BYPASS FACILITY		15	30 A, 2PNO, CONTACTOR	LIGHTING
4	METER SOCKET AND SUPPORT		16	PHOTOELECTRIC UNIT (NOTE 7)	
5	NEUTRAL BUS		17	30 A, 120 V, 1P	LIGHTING
6	TERMINAL BLOCK		18	30 A, 120 V, 1P	LIGHTING
7	GROUND BUS		19	15 A, 120 V, 1P, CB	LIGHTING CONTROL
8	GROUNDING ELECTRODE		20	15 A, 1P, TEST SWITCH	LIGHTING TEST SWITCH
9	100 A, 240 V, 2P, CB	MAIN BREAKER	21	30 A, 2PNO, CONTACTOR	LIGHTING
10	PHOTOELECTRIC UNIT (NOTE 7)		22	30 A, 120 V, 1P, CB	FLASHING BEACON SIGNAL
11	30 A, 120 V, 1P, CB	LIGHTING	23	20 A, 120 V, 1P, CB	SPARE
12	30 A, 120 V, 1P, CB	LIGHTING			

LEGEND:
(SEE RSP ES-1A & RSP ES-1C)

NOTES: (FOR SERVICE EQUIPMENT)

1. VOLTAGE RATINGS OF SERVICE EQUIPMENT SHALL CONFORM TO THE SERVICE VOLTAGE INDICATED ON THE PLANS.
2. UNLESS OTHERWISE INDICATED ON THE PLANS, ALL SERVICE EQUIPMENT ITEMS SHALL BE PROVIDED FOR EACH SERVICE EQUIPMENT ENCLOSURE AS SHOWN.
3. ITEMS No. 1 AND No. 5 SHALL BE ISOLATED FROM THE CABINET.
4. METER SOCKET SHALL BE 5 CLIP TYPE.
5. SERVICE UTILITY WILL INSTALL THE TIME-OF-USE METER IF APPLICABLE.
6. UNLESS OTHERWISE NOTED, NO MORE THAN 14 CB CAN BE INSTALLED IN THE SERVICE EQUIPMENT ENCLOSURE.
7. PHOTOELECTRIC CONTROL SHALL BE TYPE II.

ELECTRICAL DETAILS
(SERVICE EQUIPMENT AND TYPICAL WIRING DIAGRAM TYPE III-A SERIES) (COUNTY STREET)

NO SCALE

APPROVED FOR ELECTRICAL WORK ONLY

E-30

REVISED BY | DATE REVISED
MENG YANG | HAMID ZOLFAGHARI
CALCULATED-DESIGNED BY | CHECKED BY
CONSULTANT FUNCTIONAL SUPERVISOR: RAMSEY HISSEN
STATE OF CALIFORNIA - DEPARTMENT OF TRANSPORTATION — Caltrans

LAST REVISION 11-17-11 | DATE PLOTTED => 25-APR-2012 | TIME PLOTTED => 18:58

Dist	COUNTY	ROUTE	POST MILES TOTAL PROJECT	SHEET No.	TOTAL SHEETS
04	Son	101	0.9/3.6	637	918

REGISTERED CIVIL ENGINEER — DATE 11/17/11

4-23-12
PLANS APPROVAL DATE

REGISTERED PROFESSIONAL ENGINEER — KIN Y. CHAN No. 55391 Exp. 12/31/12 CIVIL — STATE OF CALIFORNIA

THE STATE OF CALIFORNIA OR ITS OFFICERS OR AGENTS SHALL NOT BE RESPONSIBLE FOR THE ACCURACY OR COMPLETENESS OF SCANNED COPIES OF THIS PLAN SHEET.

Y&C TRANSPORTATION CONSULTANTS, INC.
3250 RAMOS CIRCLE
SACRAMENTO, CA 95827

SCTA
490 MENDOCINO AVENUE
SUITE 206
SANTA ROSA, CA 95401

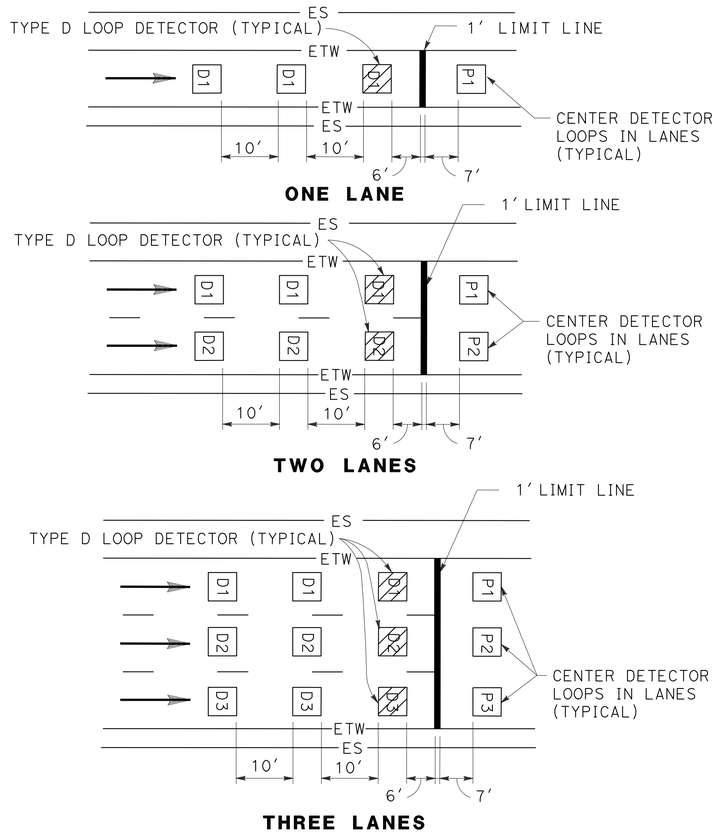

DETAIL RM
RAMP METERING STATION

RAMP METERING STATION NOTES

1. SEE RSP ES-5A, ES-5B, AND ES-13A FOR ADDITIONAL DETAILS.
2. ALL SPLICES SHALL BE TYPE "S" OR TYPE "ST" AS REQUIRED.

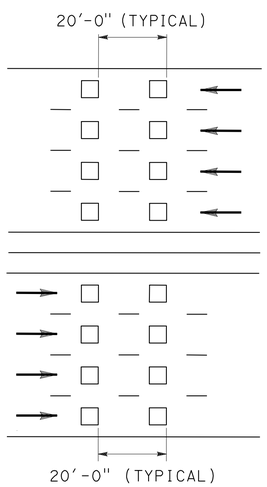

TRAFFIC MONITORING STATION NOTES

FREEWAY MAINLINE DETECTOR DESIGNATION:

- N = NORTHBOUND LANES (NB)
- S = SOUTHBOUND LANES (SB)
- E = EASTBOUND LANES (EB)
- W = WESTBOUND LANES (WB)

NUMBER OF LANES FROM LEFT WITH RESPECT TO DIRECTION OF TRAFFIC:

- 1 = FIRST LANE FROM LEFT
- 2 = SECOND LANE FROM LEFT
- 3 = THIRD LANE FROM LEFT
- 4 = FOURTH LANE FROM LEFT

NUMBER OF DETECTOR IN THE SAME LANE:

- 1 = ENTERING DETECTOR
- 2 = LEAVING DETECTOR

N 3-2

RAMP DETECTOR DESIGNATION

- D = DEMAND DETECTOR
- P = PASSAGE DETECTOR
- Q = QUEUE DETECTOR
- F = OFF-RAMP DETECTOR

1 = FIRST LANE FROM LEFT

2 = SECOND LANE FROM LEFT

D-2

DETAIL TM
TRAFFIC MONITORING STATION

TRAFFIC OPERATIONS SYSTEM
(RAMP METERING SYSTEM AND TRAFFIC MONITORING STATION DETAILS)

NO SCALE

FOR NOTES, ABBREVIATIONS AND LEGEND, SEE SHEET E-1

APPROVED FOR ELECTRICAL WORK ONLY

E-31

STATE OF CALIFORNIA - DEPARTMENT OF TRANSPORTATION — Caltrans

CONSULTANT FUNCTIONAL SUPERVISOR: RAMSEY HISSEN

CALCULATED-DESIGNED BY: MENG YANG — CHECKED BY: HAMID ZOLFAGHARI

REVISED BY — DATE REVISED

LAST REVISION 11-17-11 — DATE PLOTTED => 25-APR-2012 — TIME PLOTTED => 18:58

Dist	COUNTY	ROUTE	POST MILES TOTAL PROJECT	SHEET No.	TOTAL SHEETS
04	Son	101	0.9/3.6	638	918

REGISTERED CIVIL ENGINEER 11/17/11 DATE

4-23-12
PLANS APPROVAL DATE

REGISTERED PROFESSIONAL ENGINEER KIN Y. CHAN No. 55391 Exp. 12/31/12 CIVIL STATE OF CALIFORNIA

THE STATE OF CALIFORNIA OR ITS OFFICERS OR AGENTS SHALL NOT BE RESPONSIBLE FOR THE ACCURACY OR COMPLETENESS OF SCANNED COPIES OF THIS PLAN SHEET.

Y&C TRANSPORTATION CONSULTANTS, INC.
3250 RAMOS CIRCLE
SACRAMENTO, CA 95827

SCTA
490 MENDOCINO AVENUE
SUITE 206
SANTA ROSA, CA 95401

SIGNAL CONDUCTORS FOR RAMP METERS SHALL BE COLOR CODED AS FOLLOWS:

PHASE	BASE	STRIPE	BAND SYMBOLS
1	RE,YE,BRN	NONE	1
2	RE,YE,BRN	BLACK	2
3	RE,YE,BRN	PURPLE	3
4	RE,YE,BRN	ORANGE	4

DETAIL "CONDUCTOR COLOR CODING"

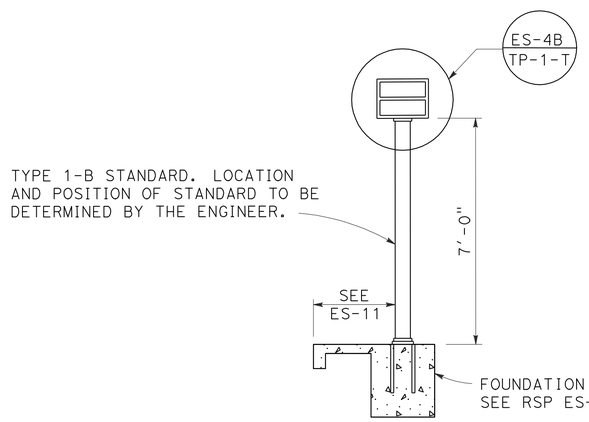

METER ON SIGN DETAIL

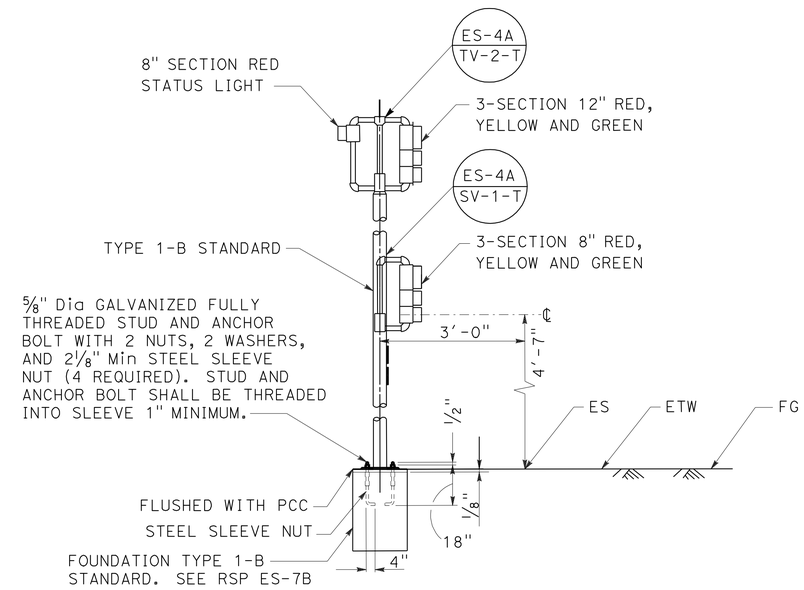

DETAIL SIG
RAMP METER SIGNAL, POLE MOUNTED

NOTE: TYPE 1-B STANDARD FOR RAMP METERING SIGNALS SHALL BE INSTALLED 3' FROM EDGE OF SHOULDER.

TRAFFIC OPERATIONS SYSTEM
(RAMP METERING SYSTEM DETAIL)

NO SCALE

FOR NOTES, ABBREVIATIONS AND LEGEND, SEE SHEET E-1

APPROVED FOR ELECTRICAL WORK ONLY

E-32

STATE OF CALIFORNIA - DEPARTMENT OF TRANSPORTATION
Caltrans

CONSULTANT FUNCTIONAL SUPERVISOR: RAMSEY HISSEN
CALCULATED-DESIGNED BY: MENG YANG
CHECKED BY: HAMID ZOLFAGHARI
REVISED BY
DATE REVISED

LAST REVISION 11-17-11 | DATE PLOTTED => 25-APR-2012 | TIME PLOTTED => 18:58

Dist	COUNTY	ROUTE	POST MILES TOTAL PROJECT	SHEET No.	TOTAL SHEETS
04	Son	101	0.9/3.6	639	918

REGISTERED CIVIL ENGINEER — DATE 11/17/11

4-23-12
PLANS APPROVAL DATE

REGISTERED PROFESSIONAL ENGINEER — KIN Y. CHAN — No. 55391 — Exp. 12/31/12 — CIVIL — STATE OF CALIFORNIA

THE STATE OF CALIFORNIA OR ITS OFFICERS OR AGENTS SHALL NOT BE RESPONSIBLE FOR THE ACCURACY OR COMPLETENESS OF SCANNED COPIES OF THIS PLAN SHEET.

Y&C TRANSPORTATION CONSULTANTS, INC.
3250 RAMOS CIRCLE
SACRAMENTO, CA 95827

SCTA
490 MENDOCINO AVENUE
SUITE 206
SANTA ROSA, CA 95401

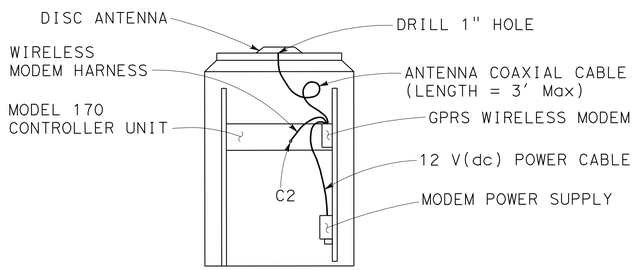

REAR VIEW OF THE MODEL 334L CONTROLLER CABINET

ONE GPRS WIRELESS MODEM AND ANTENNA INSTALLATION DETAIL

CONTRACTOR'S WORK IN THE CONTROLLER CABINET

1. PROVIDE THE GPRS MODEM AND WIRELESS MODEM HARNESS TO THE ENGINEER 30 WORKING DAYS BEFORE INSTALLATION. THE ENGINEER WILL RETURN THE PROGRAMMED MODEM, WITH PDP CONTEXT AND APN, AND C2 HARNESS WITHIN 15 WORKING DAYS.
2. DRILL 1" HOLE THROUGH THE TOP OF THE CABINET. ATTACH THE ANTENNA ON THE CABINET AS DIRECTED BY THE MANUFACTURER.
3. MOUNT THE MODEM UNIT ON THE CABINET REAR MOUNTING RAIL WITH MOUNTING BRACKET PROVIDED BY THE MANUFACTURER.
4. MOUNT THE MODEM 12 V(dc) POWER SUPPLY DIRECTLY TO CABINET.
5. CONNECT POWER CABLE TO 12 V(dc) POWER ADAPTER.
6. CONNECT THE ANTENNA COAXIAL CABLE TO THE MODEM.
7. CONNECT MODEM HARNESS BETWEEN THE MODEM AND THE MODEL 170 CONTROLLER UNIT AS SHOWN.
8. RECORD THE SERIAL NUMBER OF THE MODEM ON THE CONTRACTOR-FURNISHED CHECK LIST SHEET.

COMMUNICATION SERIAL CABLE TYPE D

1. PIN OUT DIAGRAM

AMP 201360-2-ND DE9-P

L ——— 2
K ——— 3
N ——— 5
D, H, J, M — 1,4,6,7,8,9 N/C

2. CONSTRUCT AND INSTALL COMMUNICATION CABLE. SEE SPECIAL PROVISIONS FOR CABLE TYPE AND OTHER INFORMATION.

TRAFFIC OPERATIONS SYSTEM
GENERAL PACKET RADIO SYSTEM (GPRS) WIRELESS MODEM ASSEMBLY (WIRELESS MODEM INSTALLATION DETAILS)

NO SCALE

FOR NOTES, ABBREVIATIONS AND LEGEND, SEE SHEET E-1

APPROVED FOR ELECTRICAL WORK ONLY

E-33

STATE OF CALIFORNIA - DEPARTMENT OF TRANSPORTATION — Caltrans

CONSULTANT FUNCTIONAL SUPERVISOR: RAMSEY HISSEN
CALCULATED-DESIGNED BY: MENG YANG
CHECKED BY: HAMID ZOLFAGHARI
REVISED BY
DATE REVISED

LAST REVISION 11-17-11 | DATE PLOTTED => 25-APR-2012 | TIME PLOTTED => 18:58

Dist	COUNTY	ROUTE	POST MILES TOTAL PROJECT	SHEET No.	TOTAL SHEETS
04	Son	101	0.9/3.6	640	918

REGISTERED CIVIL ENGINEER — DATE 11/17/11

4-23-12
PLANS APPROVAL DATE

REGISTERED PROFESSIONAL ENGINEER — KIN Y. CHAN No. 55391 Exp. 12/31/12 CIVIL — STATE OF CALIFORNIA

THE STATE OF CALIFORNIA OR ITS OFFICERS OR AGENTS SHALL NOT BE RESPONSIBLE FOR THE ACCURACY OR COMPLETENESS OF SCANNED COPIES OF THIS PLAN SHEET.

Y&C TRANSPORTATION CONSULTANTS, INC.
3250 RAMOS CIRCLE
SACRAMENTO, CA 95827

SCTA
490 MENDOCINO AVENUE
SUITE 206
SANTA ROSA, CA 95401

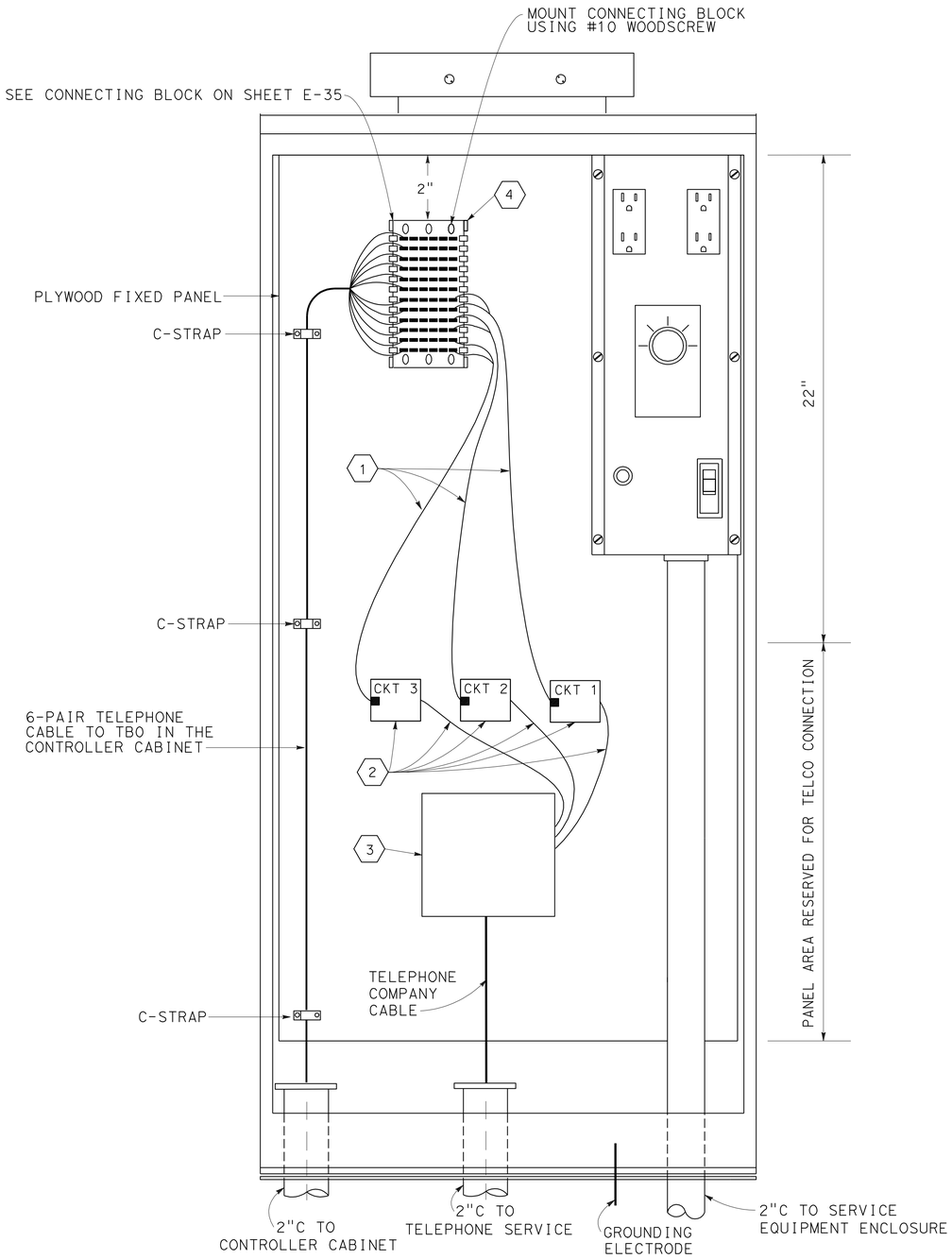

TELEPHONE DEMARCATION CABINET, TYPE B WIRING DETAIL

SEE RSP ES-3E

CONDUCTOR LIST FOR DEMARCATION CABINET

CABLE TYPE	FUNCTION	PAIR COLORS	12 ROW PUNCH BLOCK
TC	SPARE	WHITE & BLUE	ROW 1, ROW 2
TC	SPARE	WHITE & ORANGE	ROW 3, ROW 4
TC	SPARE	WHITE & GREEN	ROW 5, ROW 6
TC	CIRCUIT 1	WHITE & BROWN	ROW 7, ROW 8
TC	CIRCUIT 2	WHITE & GRAY	ROW 9, ROW 10
TC	CIRCUIT 3 (DIAL-UP: T/R PAIR)	RED & BLUE	ROW 11, ROW 12

NOTES (FOR THIS SHEET ONLY)

1. 3′ SINGLE ENDED 2-PAIR MODULAR CORD WITH 6P4C PLUG CONNECTOR. CONDUCTORS SHALL BE No. 22 AWG, SOLID.
2. SERVICE CORD AND CONNECTION BLOCK FURNISHED AND INSTALLED BY TELEPHONE COMPANY.
3. TELEPHONE COMPANY STANDARD PROTECTOR EQUIPMENT FURNISHED AND INSTALLED BY TELEPHONE COMPANY.
4. CONNECTING BLOCK SHALL BE TYPE SIEMON S66B1-6 OR EQUIVALENT.

FOR NOTES, ABBREVIATIONS AND LEGEND, SEE SHEET E-1

APPROVED FOR ELECTRICAL WORK ONLY

ELECTRICAL DETAILS
(TDC WIRING)
NO SCALE

E-34

STATE OF CALIFORNIA - DEPARTMENT OF TRANSPORTATION — Caltrans

CONSULTANT FUNCTIONAL SUPERVISOR: RAMSEY HISSEN
CALCULATED-DESIGNED BY: HAMID ZOLFAGHARI — CHECKED BY
REVISED BY: MENG YANG — DATE REVISED

LAST REVISION 11-17-11 — DATE PLOTTED => 25-APR-2012 — TIME PLOTTED => 18:58

Dist	COUNTY	ROUTE	POST MILES TOTAL PROJECT	SHEET No.	TOTAL SHEETS
04	Son	101	0.9/3.6	641	918

REGISTERED CIVIL ENGINEER — DATE 11/17/11

4-23-12
PLANS APPROVAL DATE

REGISTERED PROFESSIONAL ENGINEER — KIN Y. CHAN — No. 55391 — Exp. 12/31/12 — CIVIL — STATE OF CALIFORNIA

THE STATE OF CALIFORNIA OR ITS OFFICERS OR AGENTS SHALL NOT BE RESPONSIBLE FOR THE ACCURACY OR COMPLETENESS OF SCANNED COPIES OF THIS PLAN SHEET.

Y&C TRANSPORTATION CONSULTANTS, INC.
3250 RAMOS CIRCLE
SACRAMENTO, CA 95827

SCTA
490 MENDOCINO AVENUE
SUITE 206
SANTA ROSA, CA 95401

NOTES (FOR THIS SHEET ONLY)

1. SINGLE ENDED 2-PAIR MODULAR CORD, 3′ LONG. CONDUCTORS SHALL BE No. 22 AWG, SOLID.
2. USE PUNCH DOWN IMPACT TOOL TO TERMINAL CONDUCTORS ON THE CLIP. STRIP INSULATION 1/4" FROM THE END OF CONDUCTOR BEFORE TERMINATING TO THE CLIP.
3. TERMINATE EACH CABLE TO A COLUMN OF CLIPS AS SHOWN.
4. USE SAME TWISTED PAIR CONDUCTOR COLOR ARRANGEMENT FOR OTHER CABLES IF REQUIRED.
5. PLUG CONTACTS SHALL BE GRADE A COPPER ALLOY PLATED WITH 50 MICRO INCHES GOLD OVER NICKEL.

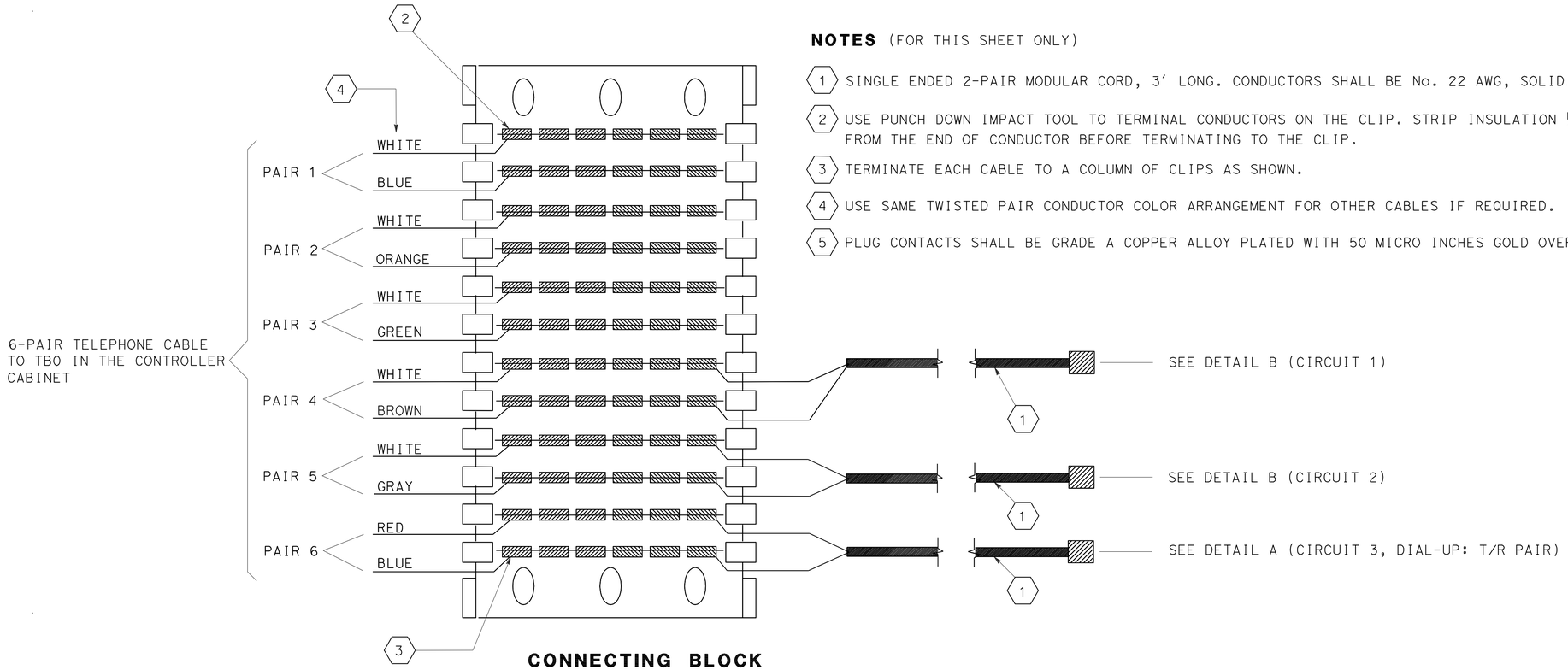

CONNECTING BLOCK

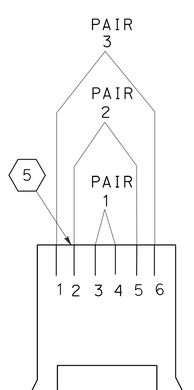

PAIR ID	PIN #	
T1	4	T/R PAIR FOR DIAL-UP CIRCUIT
R1	3	
T2	2	N/C
R2	5	
T3	6	N/C
R3	1	

DETAIL A
6P4C MODULAR PLUG

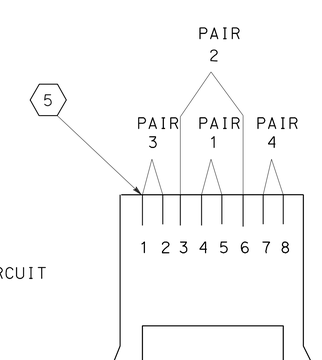

PAIR ID	PIN #	FUNCTION
T1	5	TRANSMIT AND RECEIVE PAIR
R1	4	
T2	3	N/C
R2	6	
T3	1	N/C
R3	2	
T4	7	N/C
R4	8	

DETAIL B
8P8C MODULAR PLUG

TELEPHONE DEMARCATION CABINET, TYPE B WIRING DETAIL
SEE RSP ES-3E

ELECTRICAL DETAILS
(TDC WIRING)
NO SCALE

E-35

FOR NOTES, ABBREVIATIONS AND LEGEND, SEE SHEET E-1

APPROVED FOR ELECTRICAL WORK ONLY

STATE OF CALIFORNIA - DEPARTMENT OF TRANSPORTATION
Caltrans

CONSULTANT FUNCTIONAL SUPERVISOR: RAMSEY HISSEN
CALCULATED-DESIGNED BY: HAMID ZOLFAGHARI — CHECKED BY: MENG YANG
REVISED BY — DATE REVISED

LAST REVISION 11-17-11 — DATE PLOTTED => 25-APR-2012 — TIME PLOTTED => 18:59

Dist	COUNTY	ROUTE	POST MILES TOTAL PROJECT	SHEET No.	TOTAL SHEETS
04	Son	101	0.9/3.6	642	918

REGISTERED CIVIL ENGINEER — DATE 11/17/11

4-23-12
PLANS APPROVAL DATE

REGISTERED PROFESSIONAL ENGINEER — KIN Y. CHAN — No. 55391 — Exp. 12/31/12 — CIVIL — STATE OF CALIFORNIA

THE STATE OF CALIFORNIA OR ITS OFFICERS OR AGENTS SHALL NOT BE RESPONSIBLE FOR THE ACCURACY OR COMPLETENESS OF SCANNED COPIES OF THIS PLAN SHEET.

Y&C TRANSPORTATION CONSULTANTS, INC.
3250 RAMOS CIRCLE
SACRAMENTO, CA 95827

SCTA
490 MENDOCINO AVENUE
SUITE 206
SANTA ROSA, CA 95401

8-POSITION CONNECTING BLOCK		No. 18 AWG SOLID CONDUCTOR COLOR	TBO POSITION ASSIGNMENT
CIRCUIT 1	GREEN TERMINAL	WHITE	7
	RED TERMINAL	BROWN	8
CIRCUIT 2	GREEN TERMINAL	WHITE	9
	RED TERMINAL	GRAY	10
CIRCUIT 3	GREEN TERMINAL	RED	11
	RED TERMINAL	BLUE	12

NOTES:

1. USE ONE CONNECTING BLOCK FOR EACH REQUIRED CIRCUIT FOR EACH LOCATION.

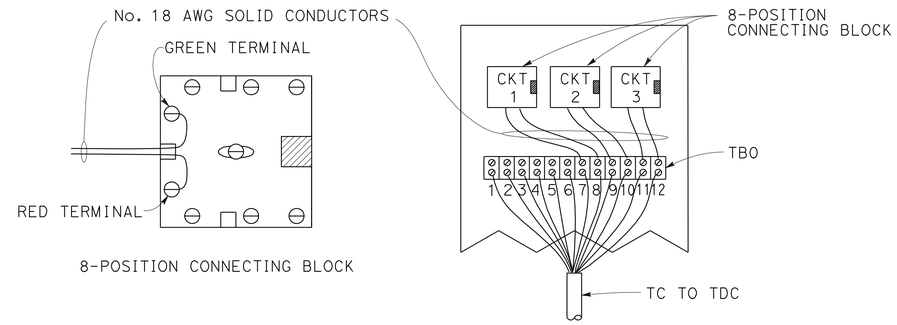

SERVICE PANEL FOR MODEL 334L CABINET

WIRING DETAIL FOR TELEPHONE CABLE INSIDE CONTROLLER CABINET

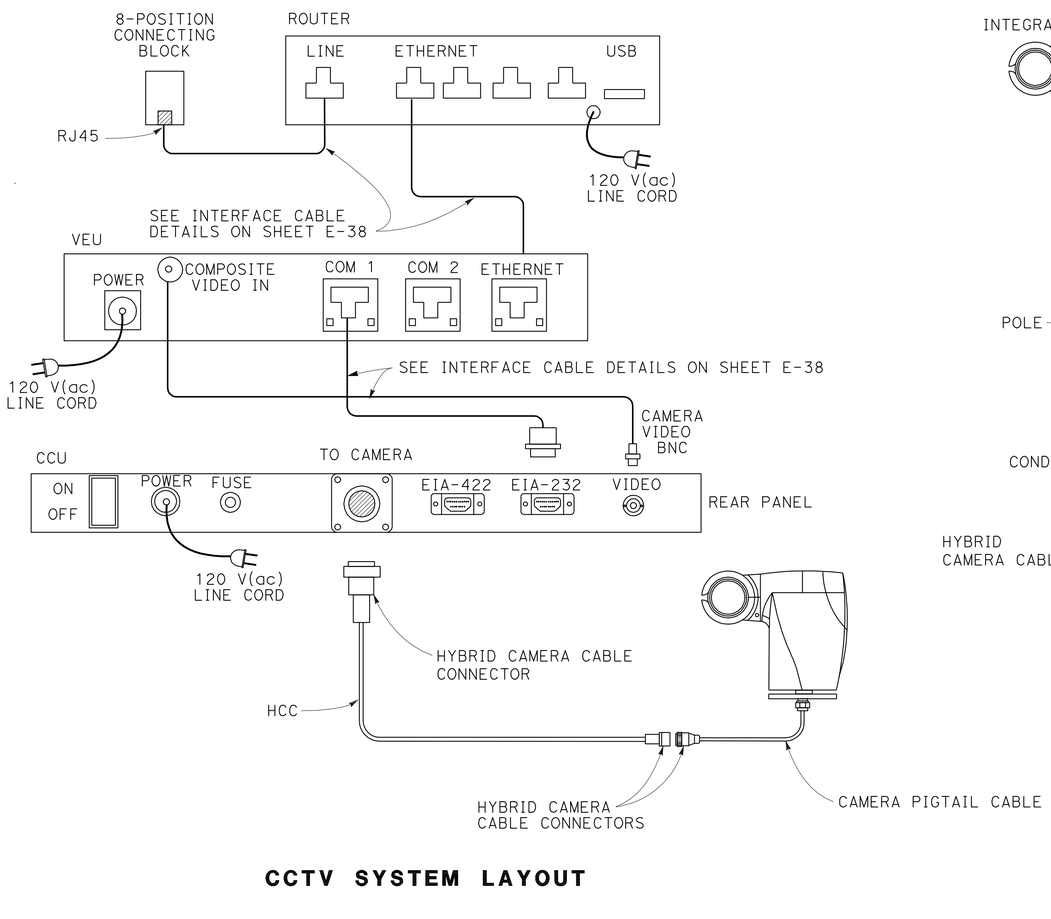

CCTV SYSTEM LAYOUT

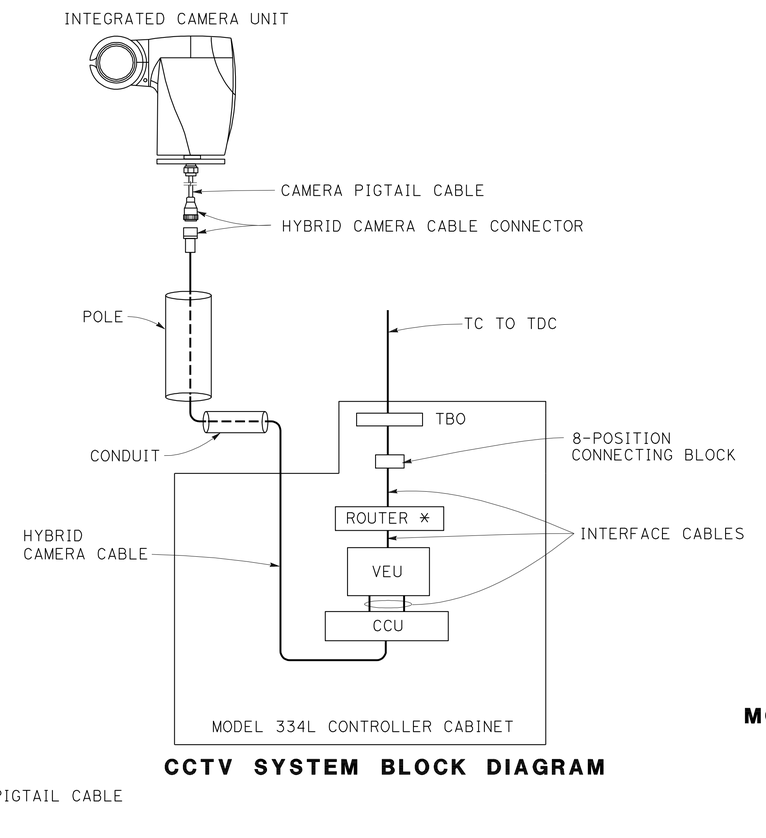

CCTV SYSTEM BLOCK DIAGRAM

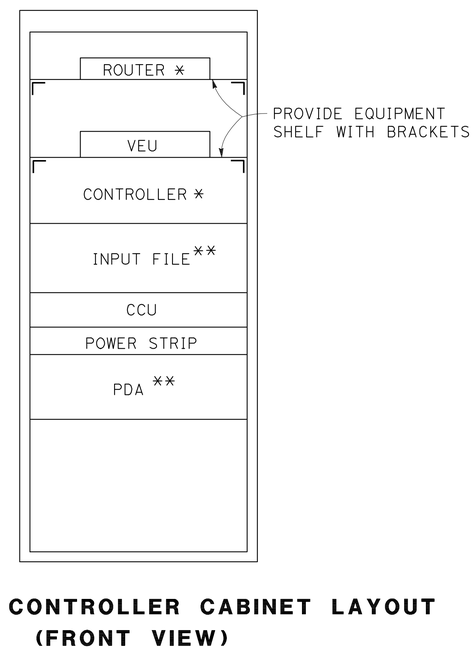

MODEL 334L CONTROLLER CABINET LAYOUT (FRONT VIEW)

* STATE-FURNISHED

** PDA AND INPUT FILE WILL BE INCLUDED ONLY WITH STATE-FURNISHED CONTROLLER CABINET.

ELECTRICAL DETAILS (CCTV WITH TELEPHONE SERVICE)

NO SCALE

E-36

FOR NOTES, ABBREVIATIONS AND LEGEND, SEE SHEET E-1

APPROVED FOR ELECTRICAL WORK ONLY

STATE OF CALIFORNIA - DEPARTMENT OF TRANSPORTATION — Caltrans

CONSULTANT FUNCTIONAL SUPERVISOR: RAMSEY HISSEN

CALCULATED-DESIGNED BY: MENG YANG — CHECKED BY: HAMID ZOLFAGHARI

REVISED BY — DATE REVISED

LAST REVISION 11-17-11 — DATE PLOTTED => 25-APR-2012 — TIME PLOTTED => 18:59

Dist	COUNTY	ROUTE	POST MILES TOTAL PROJECT	SHEET No.	TOTAL SHEETS
04	Son	101	0.9/3.6	643	918

REGISTERED CIVIL ENGINEER — DATE 11/17/11

4-23-12
PLANS APPROVAL DATE

REGISTERED PROFESSIONAL ENGINEER — KIN Y. CHAN — No. 55391 — Exp. 12/31/12 — CIVIL — STATE OF CALIFORNIA

THE STATE OF CALIFORNIA OR ITS OFFICERS OR AGENTS SHALL NOT BE RESPONSIBLE FOR THE ACCURACY OR COMPLETENESS OF SCANNED COPIES OF THIS PLAN SHEET.

Y&C TRANSPORTATION CONSULTANTS, INC.
3250 RAMOS CIRCLE
SACRAMENTO, CA 95827

SCTA
490 MENDOCINO AVENUE
SUITE 206
SANTA ROSA, CA 95401

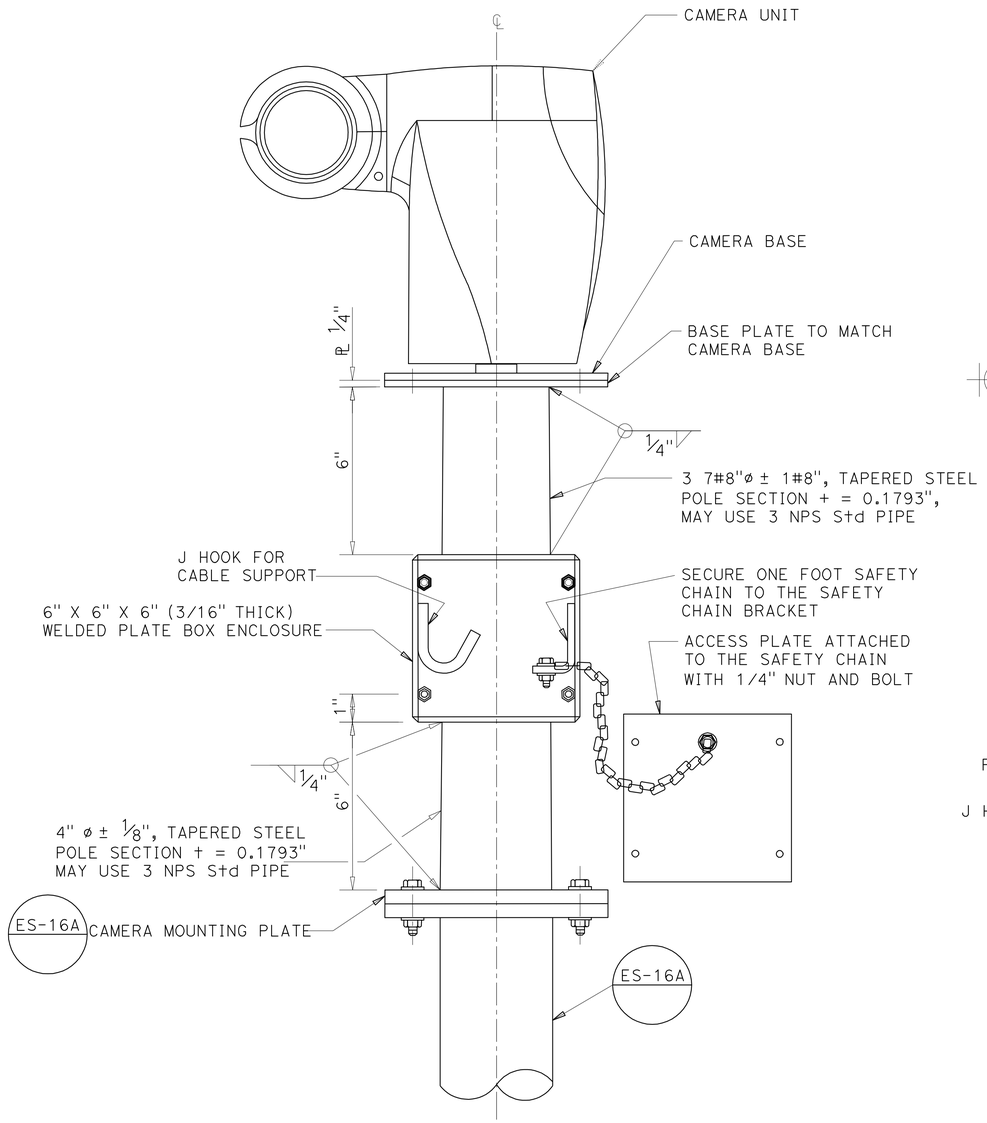

DETAIL A
CCTV POLE MOUNTING WITH ADAPTER

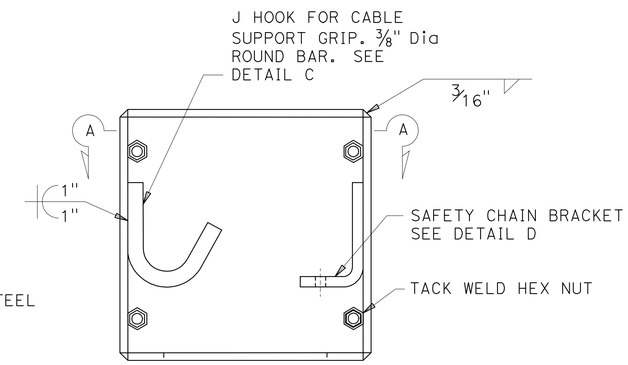

DETAIL B
BOX ENCLOSURE

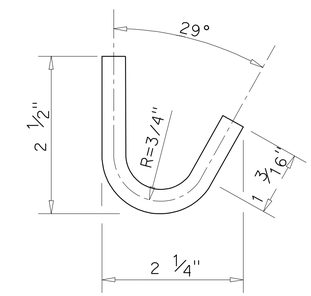

DETAIL C
J HOOK

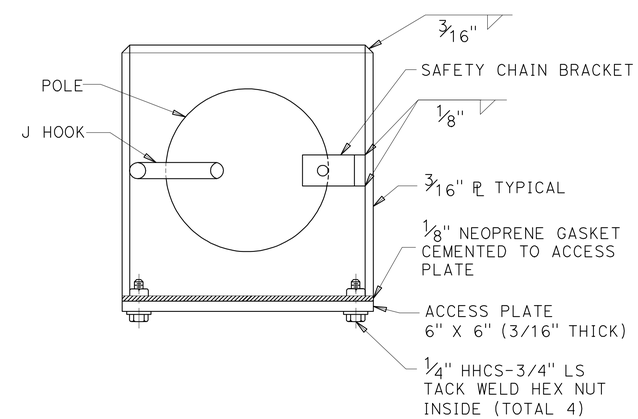

SECTION A-A

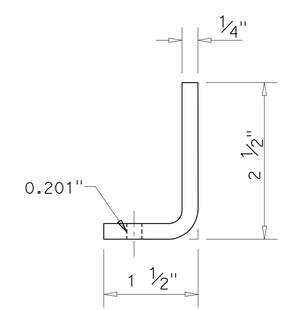

DETAIL D
SAFETY CHAIN BRACKET

FOR NOTES, ABBREVIATIONS AND LEGEND, SEE SHEET E-1

APPROVED FOR ELECTRICAL WORK ONLY

ELECTRICAL DETAILS
(CCTV MOUNTING DETAILS)
NO SCALE

E-37

REVISED BY	DATE REVISED
MENG YANG	HAMID ZOLFAGHARI

CALCULATED-DESIGNED BY — CHECKED BY

CONSULTANT FUNCTIONAL SUPERVISOR: RAMSEY HISSEN

STATE OF CALIFORNIA - DEPARTMENT OF TRANSPORTATION — Caltrans

LAST REVISION 11-17-11 — DATE PLOTTED => 25-APR-2012 — TIME PLOTTED => 18:59

Dist	COUNTY	ROUTE	POST MILES TOTAL PROJECT	SHEET No.	TOTAL SHEETS
04	Son	101	0.9/3.6	644	918

REGISTERED CIVIL ENGINEER 11/17/11 DATE

4-23-12
PLANS APPROVAL DATE

REGISTERED PROFESSIONAL ENGINEER KIN Y. CHAN No. 55391 Exp. 12/31/12 CIVIL STATE OF CALIFORNIA

THE STATE OF CALIFORNIA OR ITS OFFICERS OR AGENTS SHALL NOT BE RESPONSIBLE FOR THE ACCURACY OR COMPLETENESS OF SCANNED COPIES OF THIS PLAN SHEET.

Y&C TRANSPORTATION CONSULTANTS, INC.
3250 RAMOS CIRCLE
SACRAMENTO, CA 95827

SCTA
490 MENDOCINO AVENUE
SUITE 206
SANTA ROSA, CA 95401

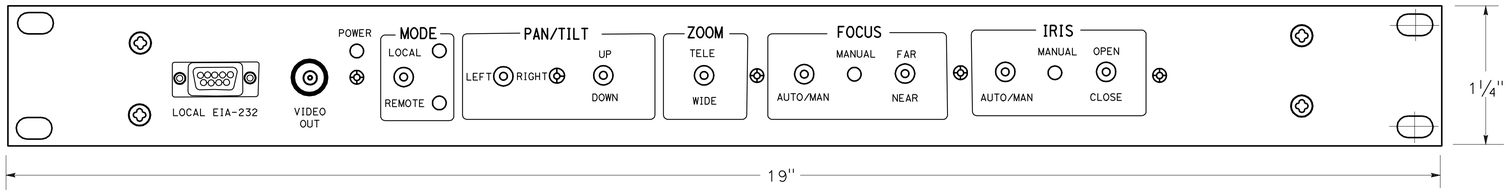

CCU FRONT PANEL LAYOUT

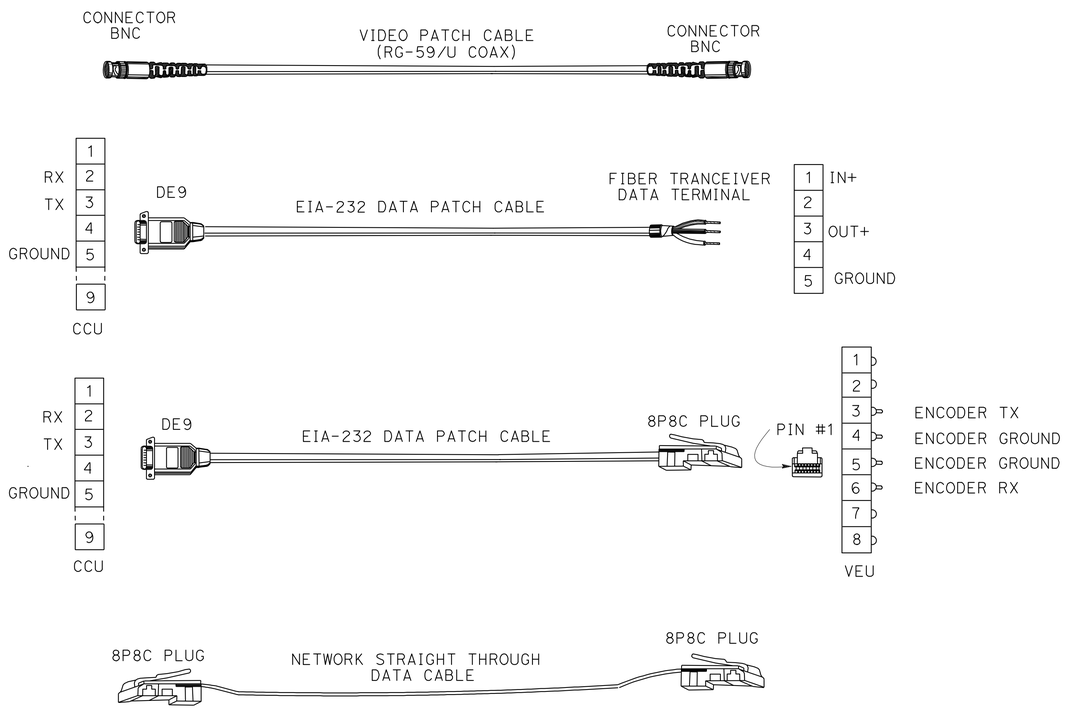

INTERFACE CABLE DETAILS

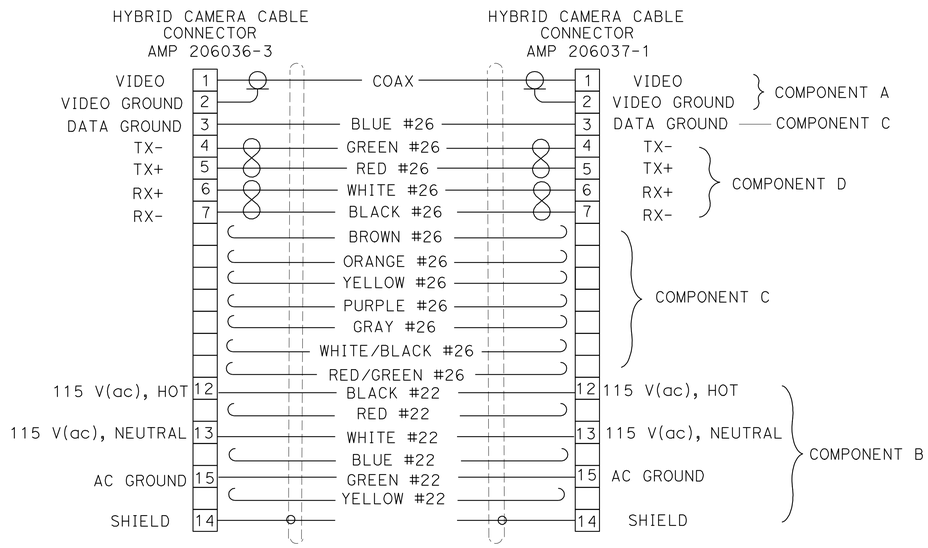

COMPONENT	CONDUCTOR	DESCRIPTION
A	COAX	75 OHM, RG-59/U TYPE, STANDARD ANALOG VIDEO CABLE, 0.242" NOMINAL DIAMETER
B	6 CONDUCTOR	#22 AWG, COPPER INSULATED CONDUCTOR, 0.048" NOMINAL DIAMETER, COLOR CODED: B1-BLACK, B2-RED, B3-GREEN, B4-WHITE, B5-BLUE, B6-YELLOW
C	8 CONDUCTOR	#26 AWG, COPPER INSULATED CONDUCTOR, 0.037" NOMINAL DIAMETER, COLOR CODED: C1-BROWN, C2-BLUE, C3-ORANGE, C4-YELLOW, C5-PURPLE, C6-GRAY, C7-WHITE/BLACK, C8-RED/GREEN
D	4 CONDUCTOR	#26 AWG, COPPER INSULATED CONDUCTOR, 0.037" NOMINAL DIAMETER, COLOR CODED: D1-BLACK & WHITE, D2-RED & GREEN

HYBRID CAMERA CABLE AND CONNECTORS DETAIL

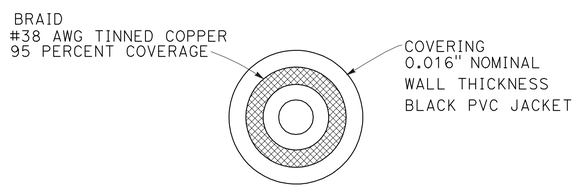

COMPONENT A

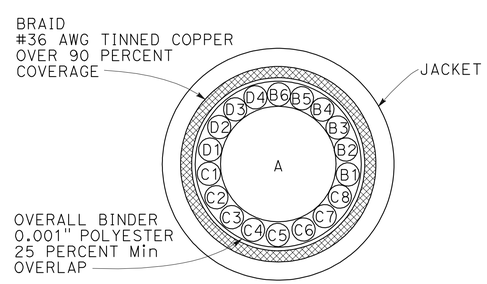

HYBRID CAMERA CABLE CROSS SECTION

ELECTRICAL DETAILS
(CCTV MOUNTING DETAILS)

NO SCALE

FOR NOTES, ABBREVIATIONS AND LEGEND, SEE SHEET E-1

APPROVED FOR ELECTRICAL WORK ONLY

E-38

STATE OF CALIFORNIA - DEPARTMENT OF TRANSPORTATION
Caltrans
CONSULTANT FUNCTIONAL SUPERVISOR: RAMSEY HISSEN
CALCULATED-DESIGNED BY: MENG YANG
CHECKED BY: HAMID ZOLFAGHARI
REVISED BY
DATE REVISED

LAST REVISION 11-17-11
DATE PLOTTED => 25-APR-2012
TIME PLOTTED => 18:59

Dist	COUNTY	ROUTE	POST MILES TOTAL PROJECT	SHEET No.	TOTAL SHEETS
04	Son	101	0.9/3.6	645	918

REGISTERED CIVIL ENGINEER — DATE 11/17/11

4-23-12
PLANS APPROVAL DATE

REGISTERED PROFESSIONAL ENGINEER — KIN Y. CHAN No. 55391 Exp. 12/31/12 CIVIL — STATE OF CALIFORNIA

THE STATE OF CALIFORNIA OR ITS OFFICERS OR AGENTS SHALL NOT BE RESPONSIBLE FOR THE ACCURACY OR COMPLETENESS OF SCANNED COPIES OF THIS PLAN SHEET.

Y&C TRANSPORTATION CONSULTANTS, INC.
3250 RAMOS CIRCLE
SACRAMENTO, CA 95827

SCTA
490 MENDOCINO AVENUE
SUITE 206
SANTA ROSA, CA 95401

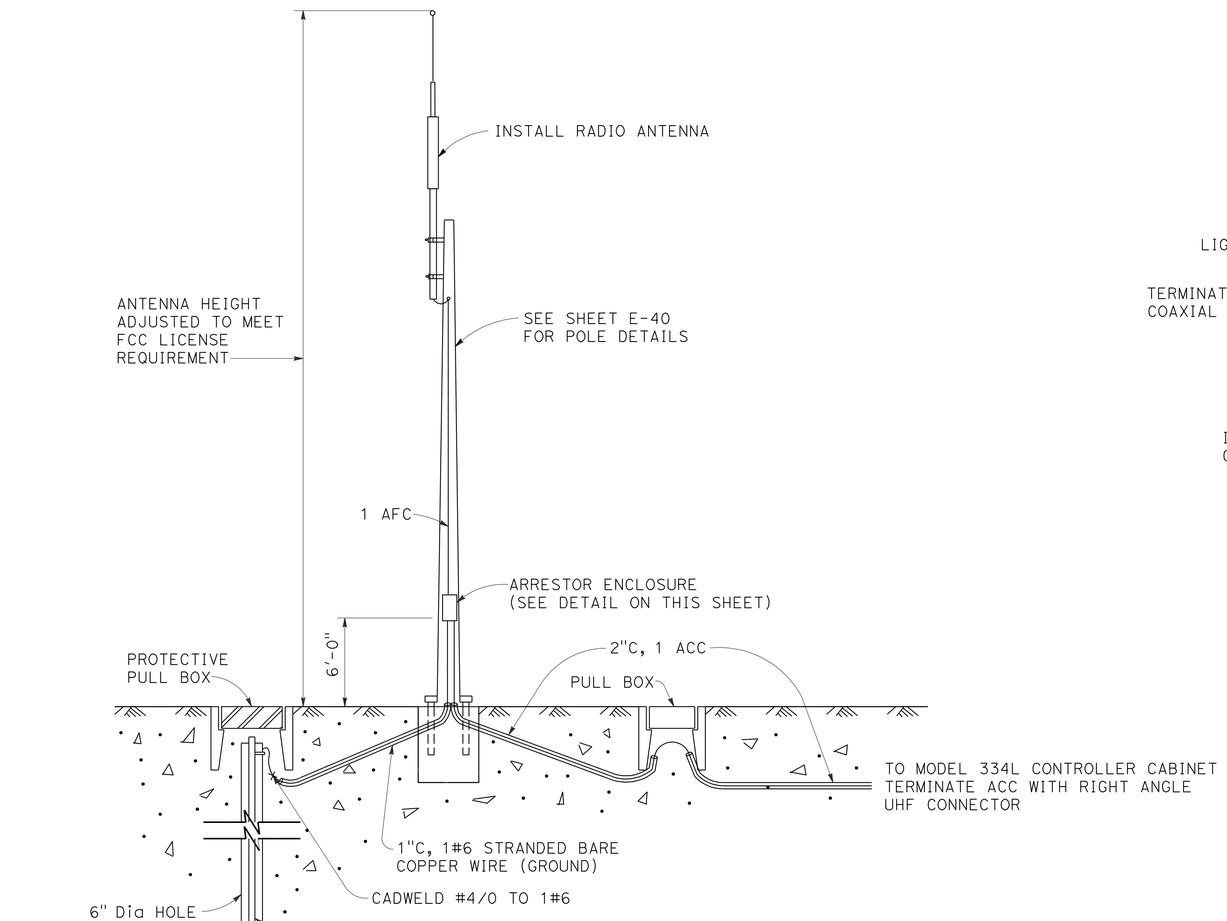

ANTENNA STATION DETAIL

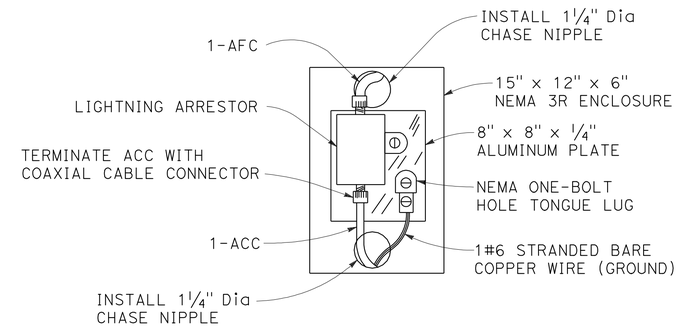

ARRESTOR ENCLOSURE DETAIL

HIGHWAY ADVISORY RADIO SYSTEM
(HAR ANTENNA, ARRESTOR ENCLOSURE)

NO SCALE

FOR NOTES, ABBREVIATIONS AND LEGEND, SEE SHEET E-1

APPROVED FOR ELECTRICAL WORK ONLY

E-39

STATE OF CALIFORNIA - DEPARTMENT OF TRANSPORTATION
Caltrans

CONSULTANT FUNCTIONAL SUPERVISOR: RAMSEY HISSEN
CALCULATED-DESIGNED BY: MENG YANG
CHECKED BY: HAMID ZOLFAGHARI
REVISED BY
DATE REVISED

LAST REVISION 11-17-11 | DATE PLOTTED => 25-APR-2012 | TIME PLOTTED => 18:59

Dist	COUNTY	ROUTE	POST MILES TOTAL PROJECT	SHEET No.	TOTAL SHEETS
04	Son	101	0.9/3.6	646	918

REGISTERED CIVIL ENGINEER — DATE 11/17/11

4-23-12
PLANS APPROVAL DATE

REGISTERED PROFESSIONAL ENGINEER — KIN Y. CHAN No. 55391 Exp. 12/31/12 CIVIL — STATE OF CALIFORNIA

THE STATE OF CALIFORNIA OR ITS OFFICERS OR AGENTS SHALL NOT BE RESPONSIBLE FOR THE ACCURACY OR COMPLETENESS OF SCANNED COPIES OF THIS PLAN SHEET.

Y&C TRANSPORTATION CONSULTANTS, INC.
3250 RAMOS CIRCLE
SACRAMENTO, CA 95827

SCTA
490 MENDOCINO AVENUE
SUITE 206
SANTA ROSA, CA 95401

FIBERGLASS POLE TYPE	POLE DATA				ANCHOR BASE		
	"A" HEIGHT	Min O.D.		WEIGHT (LBS)	THICKNESS "t"	ANCHOR BOLTS	
		BASE	TOP			SIZE	BOLT CIRCLE
21F	35'-0"	8.5"	4.9"	186	¾"	1"x 36"x 4"	11½"

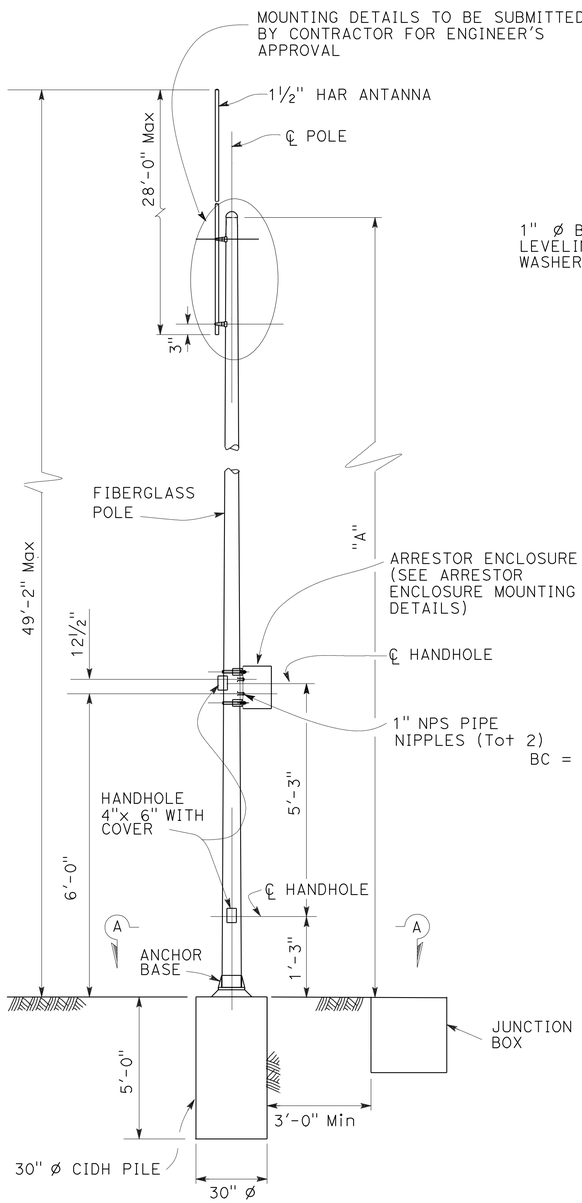

ELEVATION

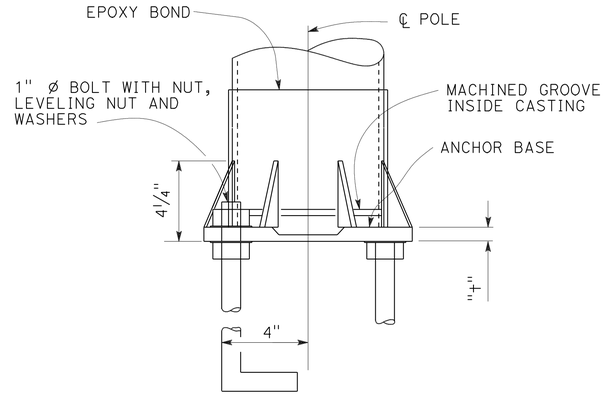

ALUMINUM ANCHOR BASE ELEVATION

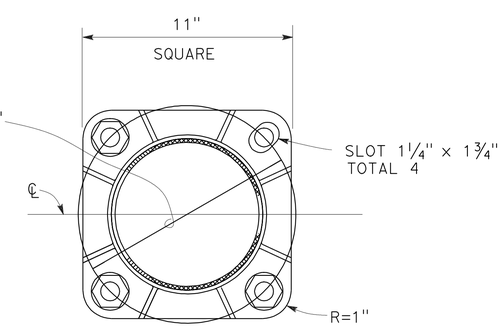

SECTION A-A

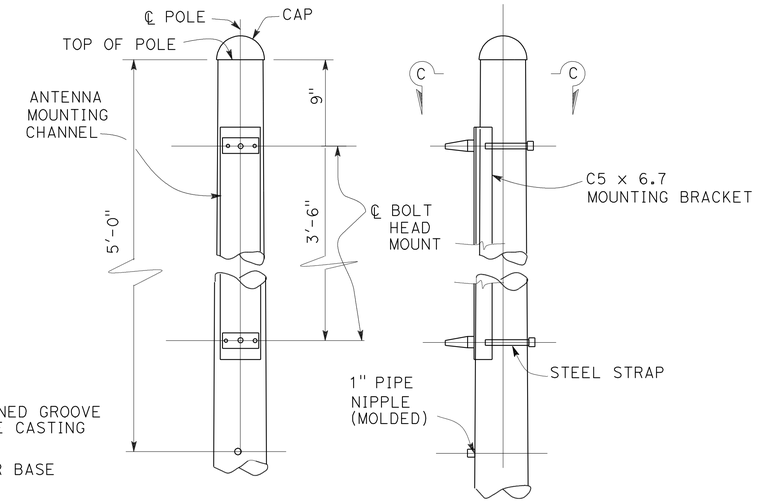

MOUNTING BRACKET DETAILS

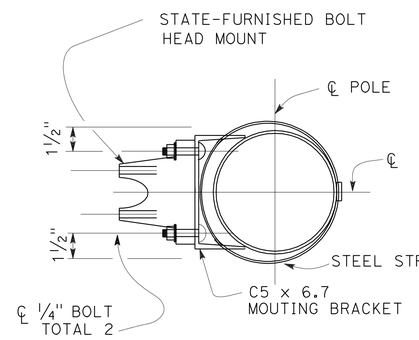

SECTION C-C

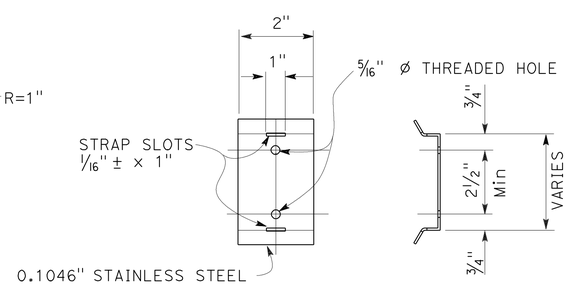

SADDLE BRACKET

GENERAL NOTES:

SPECIFICATIONS

DESIGN: AASHTO SPECIFICATIONS FOR THE DESIGN AND CONSTRUCTION OF STRUCTURAL SUPPORTS FOR HIGHWAY SIGNS, DATED 1994.

CONSTRUCTION: STANDARD SPECIFICATIONS AND THE SPECIAL PROVISIONS.

WIND LOADING: 80 mph AASHTO

NOTES:

1. THE CONTRACTOR SHALL VERIFY ALL CONTROLLING FIELD DIMENSIONS BEFORE ORDERING OR FABRICATING ANY MATERIAL.
2. DURING POLE ERECTION, THE POST SHALL BE RAKED AS NECESSARY WITH THE USE OF LEVELING NUTS TO PROVIDE A PLUMB POLE.
3. FOR LOCATIONS, SEE "ELECTRICAL PLANS".
4. HAR ANTENNA SHALL BE PLACED PLUMB.
5. ALL CONNECTION TO FIBERGLASS POLE TO BE EPOXY BOND EXCEPT WHEN NOTED OTHERWISE.

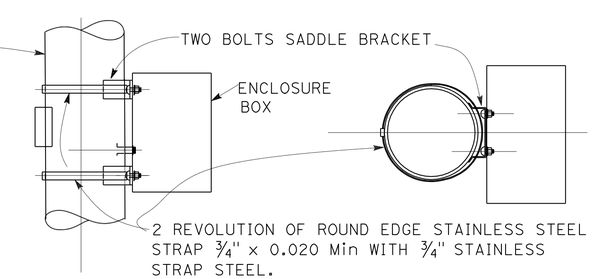

ELEVATION **PLAN VIEW**

ARRESTOR ENCLOSURE MOUNTING DETAILS

FOR NOTES, ABBREVIATIONS AND LEGEND, SEE SHEET E-1

APPROVED FOR ELECTRICAL WORK ONLY

HIGHWAY ADVISORY RADIO SYSTEM
(HAR DETAILS)
NO SCALE

E-40

STATE OF CALIFORNIA - DEPARTMENT OF TRANSPORTATION — Caltrans®

CONSULTANT FUNCTIONAL SUPERVISOR: RAMSEY HISSEN

CALCULATED-DESIGNED BY: MENG YANG — CHECKED BY: HAMID ZOLFAGHARI — REVISED BY — DATE REVISED

LAST REVISION 11-17-11 — DATE PLOTTED => 25-APR-2012 — TIME PLOTTED => 19:28

Dist	COUNTY	ROUTE	POST MILES TOTAL PROJECT	SHEET No.	TOTAL SHEETS
04	Son	101	0.9/3.6	647	918

REGISTERED CIVIL ENGINEER — DATE 11/17/11

4-23-12
PLANS APPROVAL DATE

REGISTERED PROFESSIONAL ENGINEER — KIN Y. CHAN — No. 55391 — Exp. 12/31/12 — CIVIL — STATE OF CALIFORNIA

THE STATE OF CALIFORNIA OR ITS OFFICERS OR AGENTS SHALL NOT BE RESPONSIBLE FOR THE ACCURACY OR COMPLETENESS OF SCANNED COPIES OF THIS PLAN SHEET.

Y&C TRANSPORTATION CONSULTANTS, INC.
3250 RAMOS CIRCLE
SACRAMENTO, CA 95827

SCTA
490 MENDOCINO AVENUE
SUITE 206
SANTA ROSA, CA 95401

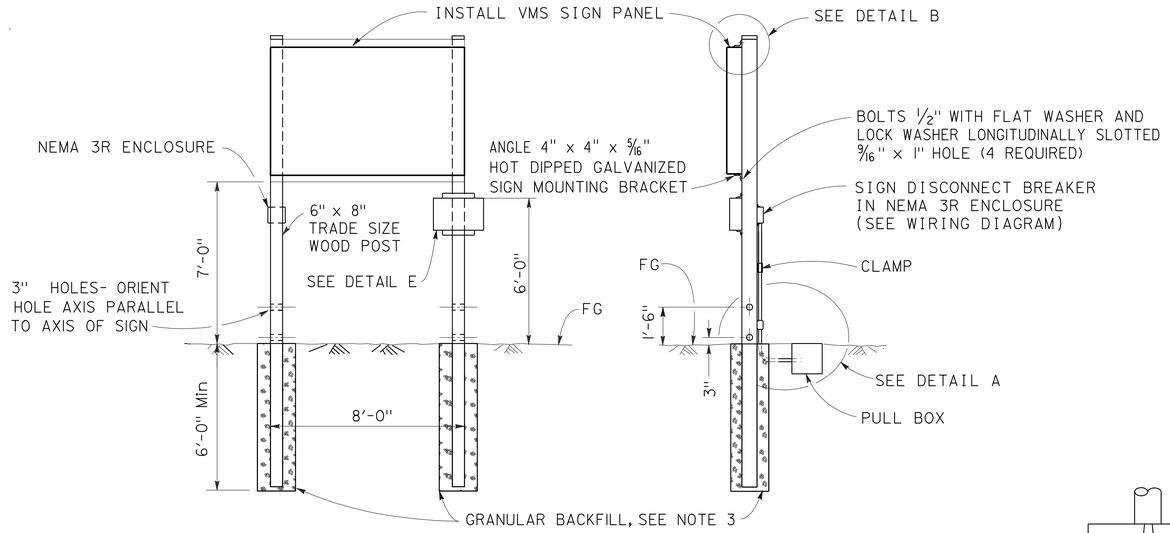

ELEVATION

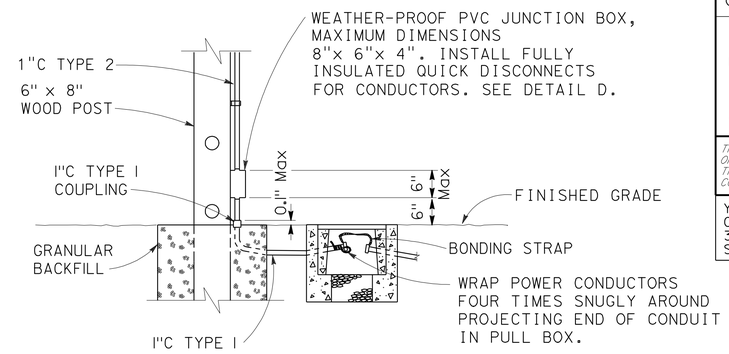

DETAIL A
CONDUIT BREAKAWAY

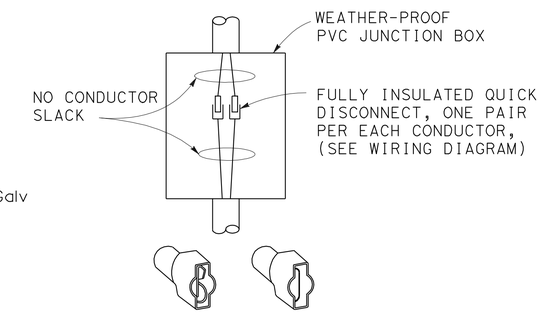

DETAIL D
DISCONNECTS FOR POWER CONDUCTORS

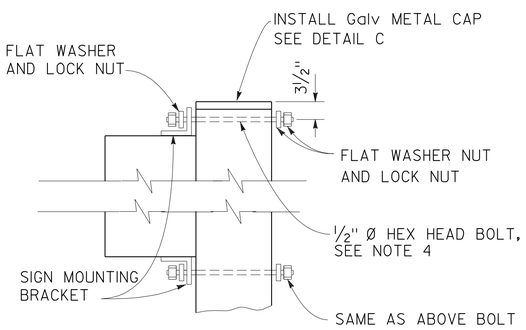

DETAIL B

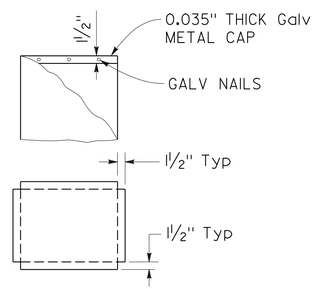

DETAIL C
Galv METAL CAP
(MATCH THE DIMENSIONS OF POST TOP)

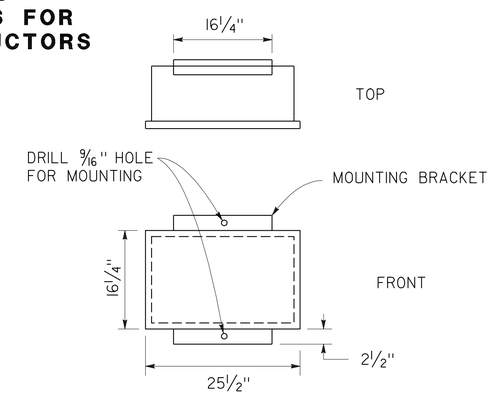

DETAIL E
SIGN CONTROLLER ASSEMBLY

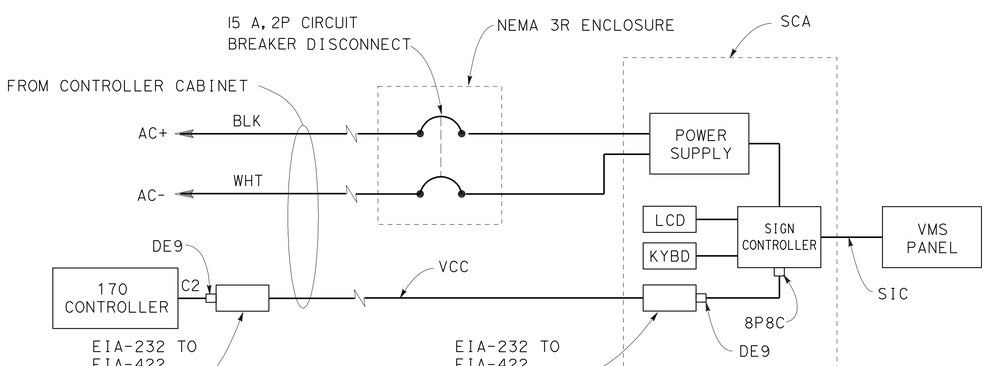

WIRING DIAGRAM

FOR NOTES, ABBREVIATIONS AND LEGEND, SEE SHEET E-1

LEGEND

SIC	SIGN INTERFACE CABLE
VMS	VARIABLE MESSAGE SIGN
VCC	VMS CONTROL CABLE
SCA	SIGN CONTROLLER ASSEMBLY
KYBD	KEYBOARD
LCD	LIQUID CRYSTAL DISPLAY

GENERAL NOTES

DESIGN:

AASHTO SPECIFICATIONS FOR STRUCTURAL SUPPORTS FOR HIGHWAY SIGNS, LUMINAIRES AND TRAFFIC SIGNALS, DATED 2001.

CONSTRUCTION:

STANDARD SPECIFICATIONS AND THE SPECIAL PROVISIONS
STATE OF CALIFORNIA DEPARTMENT OF TRANSPORTATION
DATED JULY 1999 AND MAY 2006
STANDARD PLANS
STATE OF CALIFORNIA DEPARTMENT OF TRANSPORTATION
DATED MAY 2006 AND CURRENT REVISED PLANS

LOADING:

WIND LOADING:

40 PSF APPLIED LOAD COMBINATIONS PER 3.9 AASHTO SPECIFICATIONS FOR STRUCTURAL SUPPORTS FOR HIGHWAY SIGNS, LUMINAIRES AND TRAFFIC SIGNALS, DATED 2001

STANDARD PLANS DATED MAY 2006

A10A	ACRONYMS AND ABBREVIATIONS (A-L)
A10B	ACRONYMS AND ABBREVIATIONS (M-Z)
RS1	ROADSIDE SIGNS TYPICAL INSTALLATIONS DETAIL No. 1
RS2	ROADSIDE SIGNS TYPICAL INSTALLATION DETAIL No. 2

NOTES:

1. FOR DETAILS NOT SHOWN, SEE "2006 STANDARD PLANS" AND "2006 REVISED STANDARD PLANS".
2. FOR SIGN LOCATION SEE "PROJECT PLANS".
3. DIAMETER FOR POST HOLES SHALL BE AT LEAST 2'-6"
4. REFER TO SIGN MANUFACTURER TO VERIFY BOLT HOLE LAYOUT AND LENGTH.

APPROVED FOR ELECTRICAL WORK ONLY

TRAFFIC OPERATIONS SYSTEM
(VMS WITH SIGN CONTROL ASSEMBLY DETAILS)

NO SCALE

E-41

STATE OF CALIFORNIA - DEPARTMENT OF TRANSPORTATION
Caltrans®

CONSULTANT FUNCTIONAL SUPERVISOR: RAMSEY HISSEN
CALCULATED-DESIGNED BY: MENG YANG
CHECKED BY: HAMID ZOLFAGHARI
REVISED BY / DATE REVISED

LAST REVISION 11-17-11 | DATE PLOTTED => 25-APR-2012 | TIME PLOTTED => 19:28

Dist	COUNTY	ROUTE	POST MILES TOTAL PROJECT	SHEET No.	TOTAL SHEETS
04	Son	101	0.9/3.6	648	918

REGISTERED CIVIL ENGINEER 11/17/11 DATE

4-23-12
PLANS APPROVAL DATE

REGISTERED PROFESSIONAL ENGINEER KIN Y. CHAN No. 55391 Exp. 12/31/12 CIVIL STATE OF CALIFORNIA

THE STATE OF CALIFORNIA OR ITS OFFICERS OR AGENTS SHALL NOT BE RESPONSIBLE FOR THE ACCURACY OR COMPLETENESS OF SCANNED COPIES OF THIS PLAN SHEET.

Y&C TRANSPORTATION CONSULTANTS, INC.
3250 RAMOS CIRCLE
SACRAMENTO, CA 95827

SCTA
490 MENDOCINO AVENUE
SUITE 206
SANTA ROSA, CA 95401

ELECTRICAL GENERAL NOTES: (STAGE CONSTRUCTION)

1. THE CONTRACTOR SHALL MAINTAIN PEDESTRIAN AND DRIVEWAY ACCESSES AS REQUIRED UNLESS OTHERWISE NOTED ON THE STAGE CONSTRUCTION PLANS.
2. TEMPORARY ELECTRICAL EQUIPMENT, WHEN NO LONGER REQUIRED FOR STAGE CONSTRUCTION, SHALL BE REMOVED AND SALVAGED TO CALTRANS MAINTENANCE SHOP, EXCEPT LOOP DETECTORS AND CONDUITS WHICH SHALL BE ABANDONED.
3. TEMPORARY LIGHTING SHOWN ON THESE PLANS SHALL BE INSTALLED PRIOR TO BEGINNING OF EACH STAGE OF CONSTRUCTION AND MAINTAINED IN EFFECTIVE OPERATION THROUGHOUT THAT STAGE OF CONSTRUCTION.
4. THE CONTRACTOR SHALL BE RESPONSIBLE TO PROVIDE PROTECTION FOR ALL TEMPORARY EQUIPMENT.
5. THE CONTRACTOR SHALL MAINTAIN NAVIGATION LIGHTING SYSTEM IN OPERATION DURING STAGE CONSTRUCTION.

PROJECT NOTES: (FOR STAGE CONSTRUCTION)

120 INSTALL TEMPORARY 50′ WOOD POLE WITH POLE GUY, CONDUCTORS OR CABLES, CONDUIT RISER AND OTHER EQUIPMENT AS REQUIRED. SEE SHEETS E-60 TO E-62 FOR DETAILS.

121 EXISTING SOLAR-POWERED SPEED DETECTOR TO REMAIN.

122 EXISTING 1½"C, 2#10 (120 V SIGN ILLUMINATION).

123 EXISTING TYPE II SERVICE EQUIPMENT ENCLOSURE MOUNTED ON PG&E WOOD POLE TO REMAIN.

124 THE CONTRACTOR SHALL MAINTAIN EXISTING ELECTRICAL EQUIPMENT, POLE, CONDUIT, CONDUCTOR, AND PULL BOX DURING STAGE CONSTRUCTION.

125 EXISTING 1½"C, 2#8 (240 V LIGHTING), 2#10 (120 V SIGN ILLUMINATION).

126 EXISTING TYPE III SERVICE EQUIPMENT ENCLOSURE TO REMAIN.

127 INSTALL TEMPORARY 50′ WOOD POLE WITH POLE GUY, CONDUCTORS OR CABLES, CONDUIT RISER, 310 W HPS LUMINAIRE AS SHOWN ON THE PLAN AND OTHER EQUIPMENT AS REQUIRED. SEE SHEETS E-60 TO E-62 FOR DETAILS.

128 INSTALL TETHER WIRE WITH CONDUCTORS AS INDICATED ON THE PLAN.

129 EXISTING 2"C, 2#8 (120 V LIGHTING AND SIGN ILLUMINATION).

130 EXISTING 2"C, 3#2 (SERVICE).

131 PERMANENT WORK AS PAID BY BID ITEM "SIGNAL AND LIGHTING" (LOCATION 1). SEE SHEETS E-18 AND E-19 FOR DETAILS.

132 PERMANENT WORK AS PAID BY BID ITEM "SIGNAL AND LIGHTING" (LOCATION 2). SEE SHEETS E-20 AND E-21 FOR DETAILS.

133 INSTALL PREFORMED DETECTOR LOOPS AS REQUIRED.

134 INSTALL STATE-FURNISHED MODEL 2070 CONTROLLER ASSEMBLY IN MODEL 332 CABINET.

135 2"C, 3#1 (SERVICE).

136 2"C, 2#6 (120 V TRAFFIC SIGNAL), 2#8 (240 V LIGHTING), 3#14 (PEU).

137 2"C, 2#8 (240 V LIGHTING AND SIGN ILLUMINATION).

138 INSTALL PERMANENT TRAFFIC SIGNAL POLE AND LUMINAIRE ARM FOR THIS STAGE CONSTRUCTION.

139 INSTALL PERMANENT TRAFFIC SIGNAL POLE AND/OR EQUIPMENT, UNLESS OTHERWISE NOTED ON THE PLAN.

140 2"C, 1 SIC.

141 CONSTRUCT PCC PAD.

142 INSTALL R3-18 SIGN ON SMA.

143 2"C, 2 SIC.

144 THE CONTRACTOR SHALL CHANGE EXISTING LIGHTING AND SIGN ILLUMINATION CIRCUIT FROM 120 V TO 240 V.

145 THE CONTRACTOR SHALL SWITCH EXISTING FIXTURE MULTI-TAP BALLAST TO 240 V. REPLACE EXISTING 120 V BALLAST WITH 240 V BALLAST AS NEEDED.

146 REPLACE EXISTING SC12A WITH SC1A.

147 PERMANENT WORK AS PAID BY BID ITEM "TRAFFIC OPERATIONS SYSTEM". SEE SHEET E-13 FOR DETAILS.

148 3"C, MT. DEPTH OF CONDUIT TO MEET PG&E REQUIREMENTS. THE CONTRACTOR SHALL COORDINATE WITH PG&E FOR SERVICE CONNECTION.

149 3"C, 3#1 (SERVICE).

150 PERMANENT WORK AS PAID BY BID ITEM "SIGNAL AND LIGHTING". SEE SHEET E-22 FOR DETAILS.

151 EXISTING 2"C, 2#8 (240 V SIGN ILLUMINATION).

152 EXISTING 2"C, 2#8 (240 V LIGHTING AND SIGN ILLUMINATION).

153 EXISTING 2"C, 2#8 (240 V LIGHTING).

154 2#8 (240 V LIGHTING).

155 EXISTING 2"C, 2#8 (120 V LIGHTING).

156 2#8 (120 V LIGHTING AND SIGN ILLUMINATION).

157 EXISTING 2"C, 2#8 (120 V SIGN ILLUMINATION).

158 EXISTING 2"C, 2#6 (240 V LIGHTING).

159 EXISTING 1½"C, 2#6, (240 V LIGHTING).

160 INSTALL 310 W HPS LUMINAIRE, LUMINAIRE ARM AND OTHER EQUIPMENT AS REQUIRED ON EXISTING WOOD POLE. SEE SHEETS E-60 AND E-61 FOR DETAILS.

161 REMOVE 310 W HPS LUMINAIRE AND LUMINAIRE ARM FROM EXISTING WOOD POLE.

162 RC EXISTING VSN. SEE SPECIAL PROVISIONS FOR DETAILS.

163 EXISTING WMVDS POLE AND EQUIPMENT TO REMAIN.

164 INSTALL VSN. VSN SHALL BE INSTALLED WITH SENSOR CAP. INSTALL 2 VSN PER LANE AS SHOWN. VSN SHALL BE IN THE CENTER OF THE LANE. SEE SHEET E-64 FOR DETAILS.

165 RELOCATE EXISTING wmvds POLE AND EQUIPMENT. RE-PROGRAM EXISTING AP AS REQUIRED. SEE SHEET E-63 FOR DETAILS.

166 INSTALL TEMPORARY CONNECTION. SEE "OVERHEAD DROP" DETAIL ON SHEET E-62.

167 2#8 (240 V LIGHTING AND SIGN ILLUMINATION).

168 DISCONNECT 2#8 CONDUCTORS FOR SOUTHBOUND LIGHTING DURING THIS STAGE CONSTRUCTION.

169 INSTALL TEMPORARY 50′ WOOD POLE WITH POLE GUY, CONDUCTORS OR CABLES, CONDUIT RISER, 200 W HPS LUMINAIRE AS SHOWN ON THE PLAN AND OTHER EQUIPMENT AS REQUIRED. SEE SHEETS E-60 TO E-62 FOR DETAILS.

170 INSTALL EQUIPMENT 30′ FROM ETW.

171 INSTALL TEMPORARY 50′ WOOD POLE WITH POLE GUY AND RP AS SHOWN ON THE PLAN AND OTHER EQUIPMENT AS REQUIRED. SEE SHEET E-65 FOR DETAILS.

172 THE CONTRACTOR SHALL RE-PROGRAM WMVDS AS REQUIRED.

APPROVED FOR ELECTRICAL WORK ONLY

ELECTRICAL NOTES (STAGE CONSTRUCTION)

E-42

STATE OF CALIFORNIA - DEPARTMENT OF TRANSPORTATION
Caltrans

CONSULTANT FUNCTIONAL SUPERVISOR: RAMSEY HISSEN
CALCULATED-DESIGNED BY: HAMID ZOLFAGHARI
CHECKED BY:
REVISED BY: MENG YANG
DATE REVISED:

LAST REVISION 11-17-11 DATE PLOTTED => 25-APR-2012 TIME PLOTTED => 19:28

Dist	COUNTY	ROUTE	POST MILES TOTAL PROJECT	SHEET No.	TOTAL SHEETS
04	Son	101	0.9/3.6	649	918

REGISTERED CIVIL ENGINEER — DATE 11/17/11

4-23-12
PLANS APPROVAL DATE

REGISTERED PROFESSIONAL ENGINEER — KIN Y. CHAN No. 55391 Exp. 12/31/12 CIVIL — STATE OF CALIFORNIA

THE STATE OF CALIFORNIA OR ITS OFFICERS OR AGENTS SHALL NOT BE RESPONSIBLE FOR THE ACCURACY OR COMPLETENESS OF SCANNED COPIES OF THIS PLAN SHEET.

Y&C TRANSPORTATION CONSULTANTS, INC.
3250 RAMOS CIRCLE
SACRAMENTO, CA 95827

SCTA
490 MENDOCINO AVENUE
SUITE 206
SANTA ROSA, CA 95401

NOTE:

FOR ACCURATE RIGHT OF WAY DATA, CONTACT
RIGHT OF WAY ENGINEERING AT THE DISTRICT OFFICE.

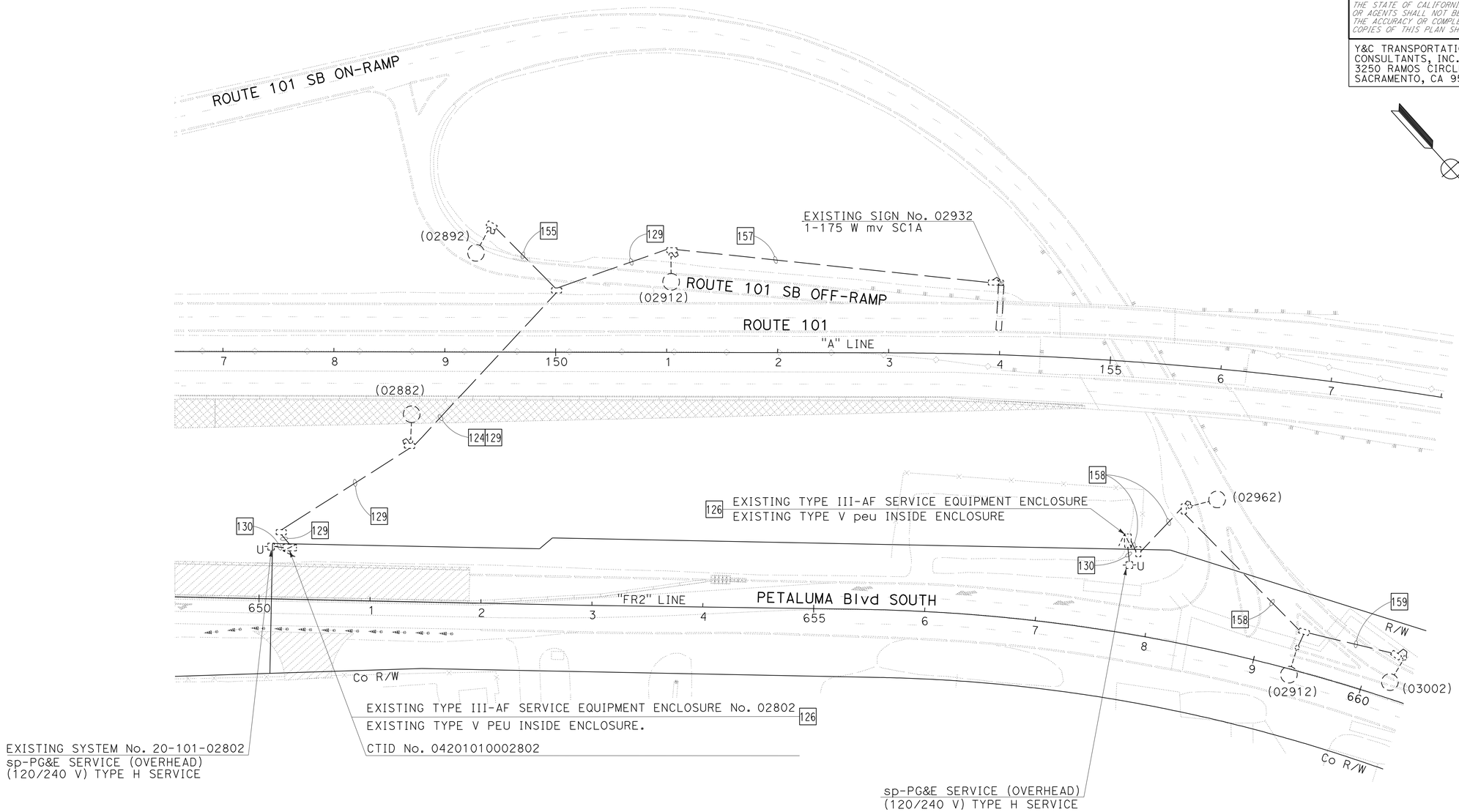

LIGHTING AND SIGN ILLUMINATION (STAGE CONSTRUCTION)

STAGE 1 - PHASE 2

SCALE: 1" = 50'

FOR ABBREVIATIONS, SEE SHEET E-1
FOR NOTES, SEE SHEET E-42

APPROVED FOR ELECTRICAL WORK ONLY

E-43

STATE OF CALIFORNIA - DEPARTMENT OF TRANSPORTATION — Caltrans

CONSULTANT FUNCTIONAL SUPERVISOR: RAMSEY HISSEN

CALCULATED-DESIGNED BY: MENG YANG — CHECKED BY: HAMID ZOLFAGHARI

REVISED BY — DATE REVISED

LAST REVISION 11-17-11 — DATE PLOTTED => 25-APR-2012 — TIME PLOTTED => 19:28

Dist	COUNTY	ROUTE	POST MILES TOTAL PROJECT	SHEET No.	TOTAL SHEETS
04	Son	101	0.9/3.6	650	918

REGISTERED CIVIL ENGINEER — DATE 11/17/11

4-23-12
PLANS APPROVAL DATE

REGISTERED PROFESSIONAL ENGINEER — KIN Y. CHAN No. 55391 Exp. 12/31/12 CIVIL — STATE OF CALIFORNIA

THE STATE OF CALIFORNIA OR ITS OFFICERS OR AGENTS SHALL NOT BE RESPONSIBLE FOR THE ACCURACY OR COMPLETENESS OF SCANNED COPIES OF THIS PLAN SHEET.

Y&C TRANSPORTATION CONSULTANTS, INC.
3250 RAMOS CIRCLE
SACRAMENTO, CA 95827

SCTA
490 MENDOCINO AVENUE
SUITE 206
SANTA ROSA, CA 95401

NOTE:

FOR ACCURATE RIGHT OF WAY DATA, CONTACT RIGHT OF WAY ENGINEERING AT THE DISTRICT OFFICE.

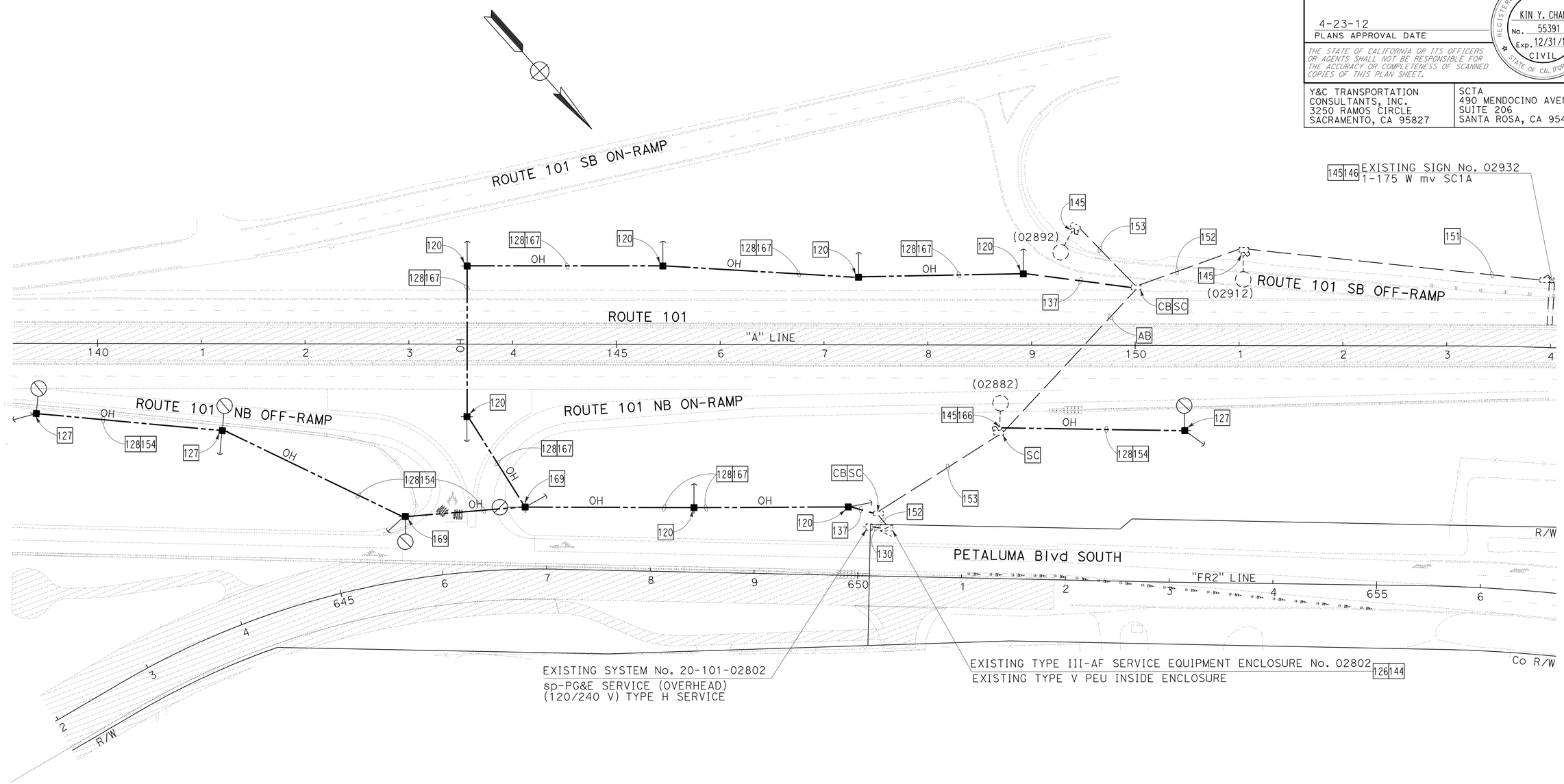

LIGHTING AND SIGN ILLUMINATION (STAGE CONSTRUCTION)

STAGES 2 & 3

SCALE: 1" = 50'

FOR ABBREVIATIONS, SEE SHEET E-1
FOR NOTES, SEE SHEET E-42

APPROVED FOR ELECTRICAL WORK ONLY

E-44

STATE OF CALIFORNIA - DEPARTMENT OF TRANSPORTATION — Caltrans

CONSULTANT FUNCTIONAL SUPERVISOR: RAMSEY HISSEN

CALCULATED-DESIGNED BY: HAMID ZOLFAGHARI — CHECKED BY: MENG YANG

REVISED BY — DATE REVISED

LAST REVISION 11-17-11 — DATE PLOTTED => 25-APR-2012 — TIME PLOTTED => 19:28

Dist	COUNTY	ROUTE	POST MILES TOTAL PROJECT	SHEET No.	TOTAL SHEETS
04	Son	101	0.9/3.6	651	918

REGISTERED CIVIL ENGINEER — DATE 11/17/11

4-23-12
PLANS APPROVAL DATE

REGISTERED PROFESSIONAL ENGINEER — KIN Y. CHAN No. 55391 Exp. 12/31/12 CIVIL — STATE OF CALIFORNIA

THE STATE OF CALIFORNIA OR ITS OFFICERS OR AGENTS SHALL NOT BE RESPONSIBLE FOR THE ACCURACY OR COMPLETENESS OF SCANNED COPIES OF THIS PLAN SHEET.

Y&C TRANSPORTATION CONSULTANTS, INC.
3250 RAMOS CIRCLE
SACRAMENTO, CA 95827

SCTA
490 MENDOCINO AVENUE
SUITE 206
SANTA ROSA, CA 95401

NOTE:

FOR ACCURATE RIGHT OF WAY DATA, CONTACT RIGHT OF WAY ENGINEERING AT THE DISTRICT OFFICE.

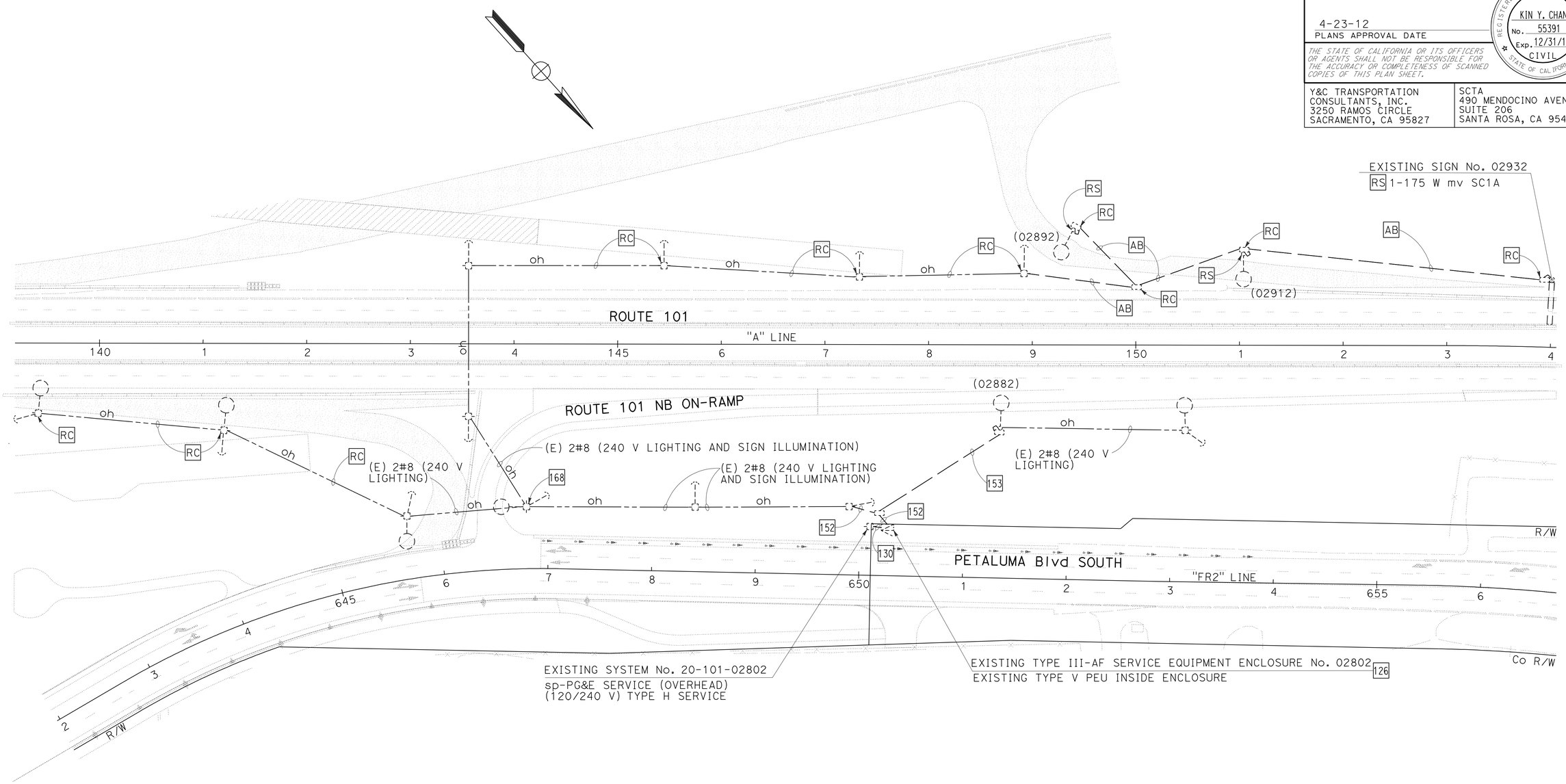

LIGHTING AND SIGN ILLUMINATION (STAGE CONSTRUCTION)

STAGES 4 & 5

SCALE: 1" = 50'

FOR ABBREVIATIONS, SEE SHEET E-1
FOR NOTES, SEE SHEET E-42

APPROVED FOR ELECTRICAL WORK ONLY

E-45

REVISED BY | DATE REVISED
MENG YANG | HAMID ZOLFAGHARI
CALCULATED-DESIGNED BY | CHECKED BY
CONSULTANT FUNCTIONAL SUPERVISOR
RAMSEY HISSEN

STATE OF CALIFORNIA - DEPARTMENT OF TRANSPORTATION
Caltrans

LAST REVISION 11-17-11 | DATE PLOTTED => 25-APR-2012 | TIME PLOTTED => 19:29

Dist	COUNTY	ROUTE	POST MILES TOTAL PROJECT	SHEET No.	TOTAL SHEETS
04	Son	101	0.9/3.6	652	918

REGISTERED CIVIL ENGINEER — DATE 11/17/11

4-23-12
PLANS APPROVAL DATE

REGISTERED PROFESSIONAL ENGINEER — KIN Y. CHAN No. 55391 Exp. 12/31/12 CIVIL — STATE OF CALIFORNIA

THE STATE OF CALIFORNIA OR ITS OFFICERS OR AGENTS SHALL NOT BE RESPONSIBLE FOR THE ACCURACY OR COMPLETENESS OF SCANNED COPIES OF THIS PLAN SHEET.

Y&C TRANSPORTATION CONSULTANTS, INC.
3250 RAMOS CIRCLE
SACRAMENTO, CA 95827

SCTA
490 MENDOCINO AVENUE
SUITE 206
SANTA ROSA, CA 95401

NOTE:

FOR ACCURATE RIGHT OF WAY DATA, CONTACT RIGHT OF WAY ENGINEERING AT THE DISTRICT OFFICE.

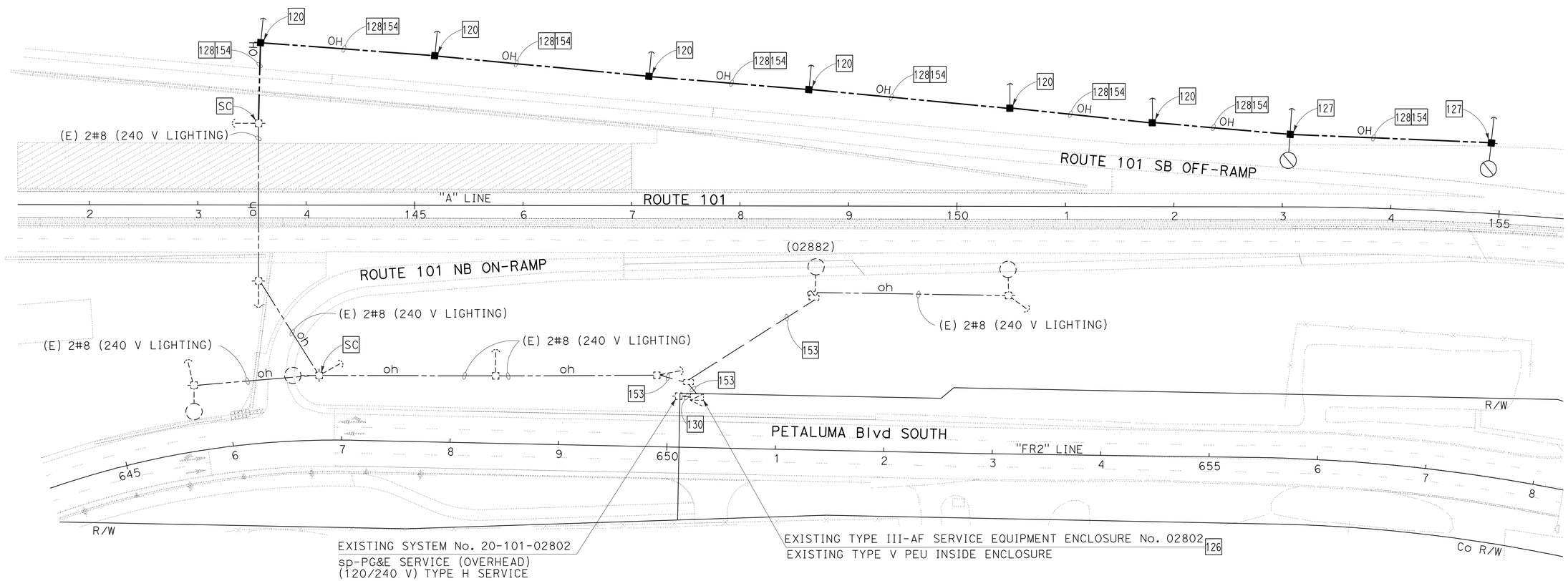

LIGHTING AND SIGN ILLUMINATION (STAGE CONSTRUCTION)

STAGE 6

SCALE: 1" = 50'

FOR ABBREVIATIONS, SEE SHEET E-1
FOR NOTES, SEE SHEET E-42

APPROVED FOR ELECTRICAL WORK ONLY

E-46

STATE OF CALIFORNIA - DEPARTMENT OF TRANSPORTATION
Caltrans

CONSULTANT FUNCTIONAL SUPERVISOR: RAMSEY HISSEN
CALCULATED-DESIGNED BY: MENG YANG
CHECKED BY: HAMID ZOLFAGHARI
REVISED BY
DATE REVISED

LAST REVISION: DATE PLOTTED => 25-APR-2012 TIME PLOTTED => 19:29
11-17-11

Dist	COUNTY	ROUTE	POST MILES TOTAL PROJECT	SHEET No.	TOTAL SHEETS
04	Son	101	0.9/3.6	653	918

REGISTERED CIVIL ENGINEER — DATE 11/17/11

4-23-12
PLANS APPROVAL DATE

REGISTERED PROFESSIONAL ENGINEER — KIN Y. CHAN No. 55391 Exp. 12/31/12 CIVIL — STATE OF CALIFORNIA

THE STATE OF CALIFORNIA OR ITS OFFICERS OR AGENTS SHALL NOT BE RESPONSIBLE FOR THE ACCURACY OR COMPLETENESS OF SCANNED COPIES OF THIS PLAN SHEET.

Y&C TRANSPORTATION CONSULTANTS, INC.
3250 RAMOS CIRCLE
SACRAMENTO, CA 95827

SCTA
490 MENDOCINO AVENUE
SUITE 206
SANTA ROSA, CA 95401

NOTE:

FOR ACCURATE RIGHT OF WAY DATA, CONTACT RIGHT OF WAY ENGINEERING AT THE DISTRICT OFFICE.

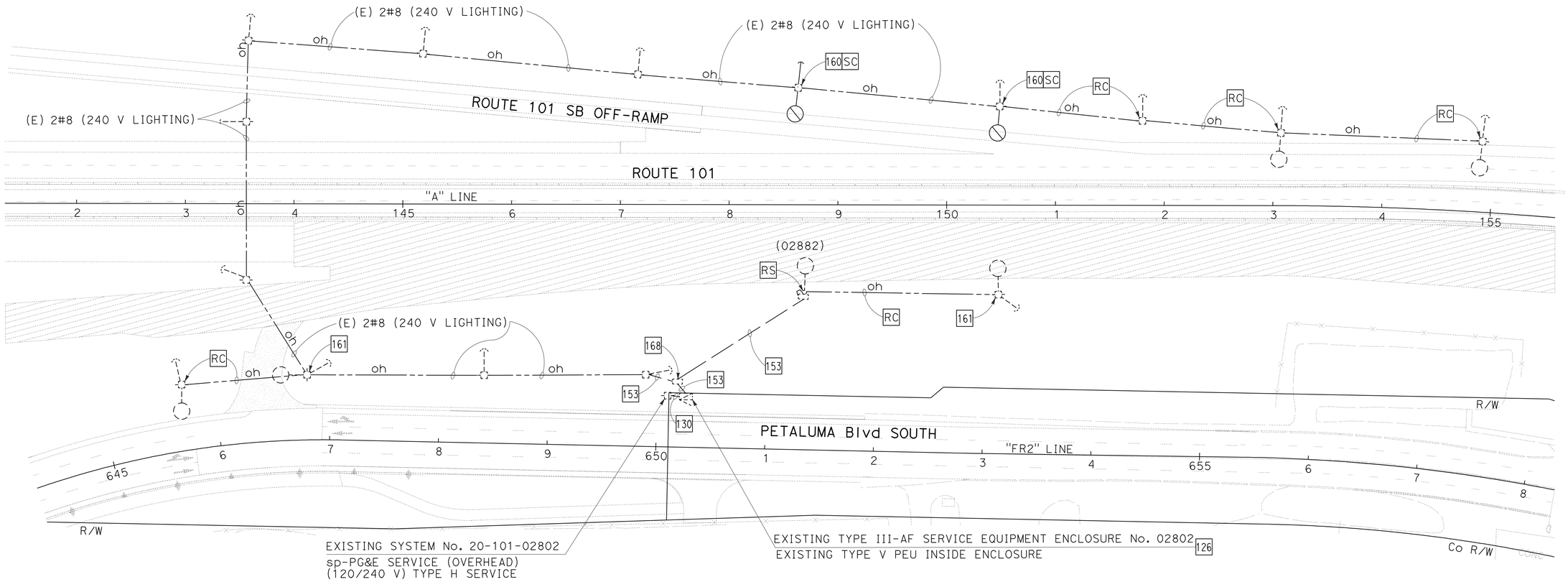

LIGHTING AND SIGN ILLUMINATION (STAGE CONSTRUCTION)

STAGE 7

SCALE: 1" = 50'

FOR ABBREVIATIONS, SEE SHEET E-1
FOR NOTES, SEE SHEET E-42

APPROVED FOR ELECTRICAL WORK ONLY

E-47

STATE OF CALIFORNIA - DEPARTMENT OF TRANSPORTATION — Caltrans

CONSULTANT FUNCTIONAL SUPERVISOR: RAMSEY HISSEN

CALCULATED-DESIGNED BY: MENG YANG — CHECKED BY: HAMID ZOLFAGHARI

REVISED BY — DATE REVISED

LAST REVISION 11-17-11 — DATE PLOTTED => 25-APR-2012 — TIME PLOTTED => 19:29

Dist	COUNTY	ROUTE	POST MILES TOTAL PROJECT	SHEET No.	TOTAL SHEETS
04	Son	101	0.9/3.6	654	918

REGISTERED CIVIL ENGINEER — DATE 11/17/11

4-23-12
PLANS APPROVAL DATE

REGISTERED PROFESSIONAL ENGINEER — KIN Y. CHAN No. 55391 Exp. 12/31/12 CIVIL — STATE OF CALIFORNIA

THE STATE OF CALIFORNIA OR ITS OFFICERS OR AGENTS SHALL NOT BE RESPONSIBLE FOR THE ACCURACY OR COMPLETENESS OF SCANNED COPIES OF THIS PLAN SHEET.

Y&C TRANSPORTATION CONSULTANTS, INC.
3250 RAMOS CIRCLE
SACRAMENTO, CA 95827

SCTA
490 MENDOCINO AVENUE
SUITE 206
SANTA ROSA, CA 95401

NOTE:

FOR ACCURATE RIGHT OF WAY DATA, CONTACT RIGHT OF WAY ENGINEERING AT THE DISTRICT OFFICE.

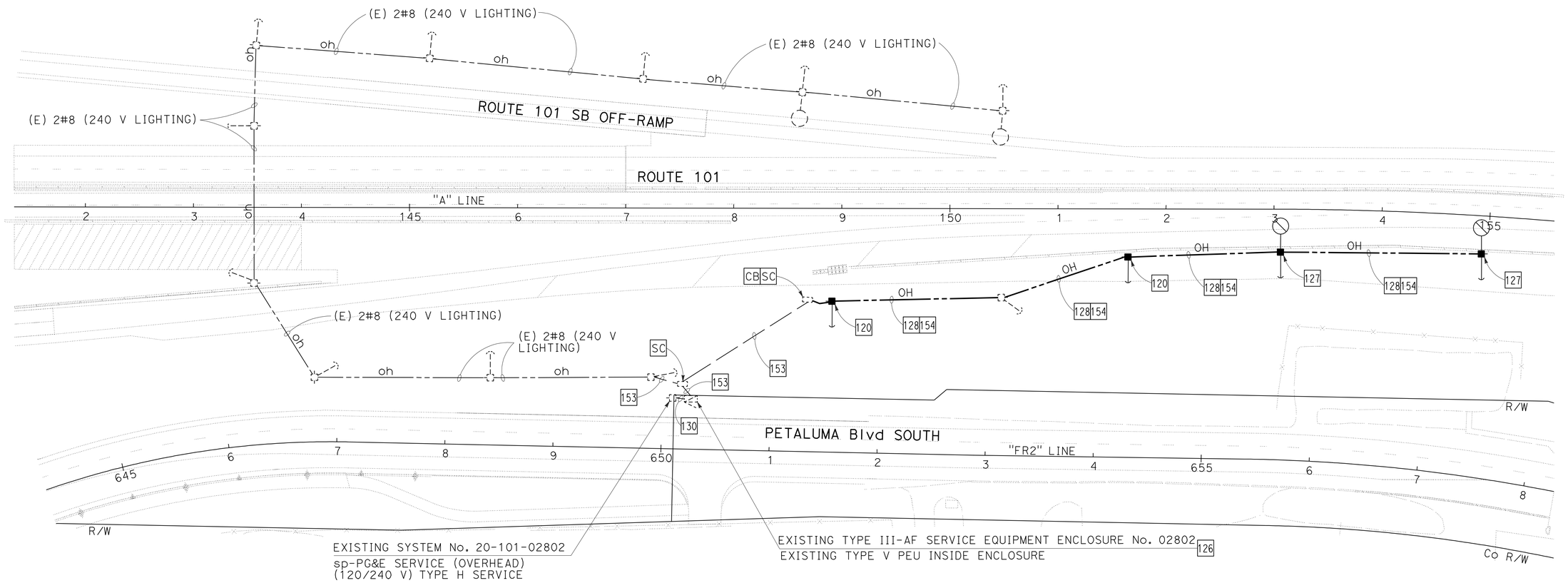

LIGHTING AND SIGN ILLUMINATION (STAGE CONSTRUCTION)

STAGE 8

SCALE: 1" = 50'

FOR ABBREVIATIONS, SEE SHEET E-1
FOR NOTES, SEE SHEET E-42

APPROVED FOR ELECTRICAL WORK ONLY

E-48

STATE OF CALIFORNIA - DEPARTMENT OF TRANSPORTATION

Caltrans

CONSULTANT FUNCTIONAL SUPERVISOR: RAMSEY HISSEN

CALCULATED-DESIGNED BY: HAMID ZOLFAGHARI — CHECKED BY: MENG YANG

REVISED BY — DATE REVISED

LAST REVISION — DATE PLOTTED => 25-APR-2012 — TIME PLOTTED => 19:29 — 11-17-11

Dist	COUNTY	ROUTE	POST MILES TOTAL PROJECT	SHEET No.	TOTAL SHEETS
04	Son	101	0.9/3.6	655	918

REGISTERED CIVIL ENGINEER — DATE 11/17/11

4-23-12
PLANS APPROVAL DATE

REGISTERED PROFESSIONAL ENGINEER — KIN Y. CHAN No. 55391 Exp. 12/31/12 CIVIL — STATE OF CALIFORNIA

THE STATE OF CALIFORNIA OR ITS OFFICERS OR AGENTS SHALL NOT BE RESPONSIBLE FOR THE ACCURACY OR COMPLETENESS OF SCANNED COPIES OF THIS PLAN SHEET.

Y&C TRANSPORTATION CONSULTANTS, INC.
3250 RAMOS CIRCLE
SACRAMENTO, CA 95827

SCTA
490 MENDOCINO AVENUE
SUITE 206
SANTA ROSA, CA 95401

NOTE:

FOR ACCURATE RIGHT OF WAY DATA, CONTACT RIGHT OF WAY ENGINEERING AT THE DISTRICT OFFICE.

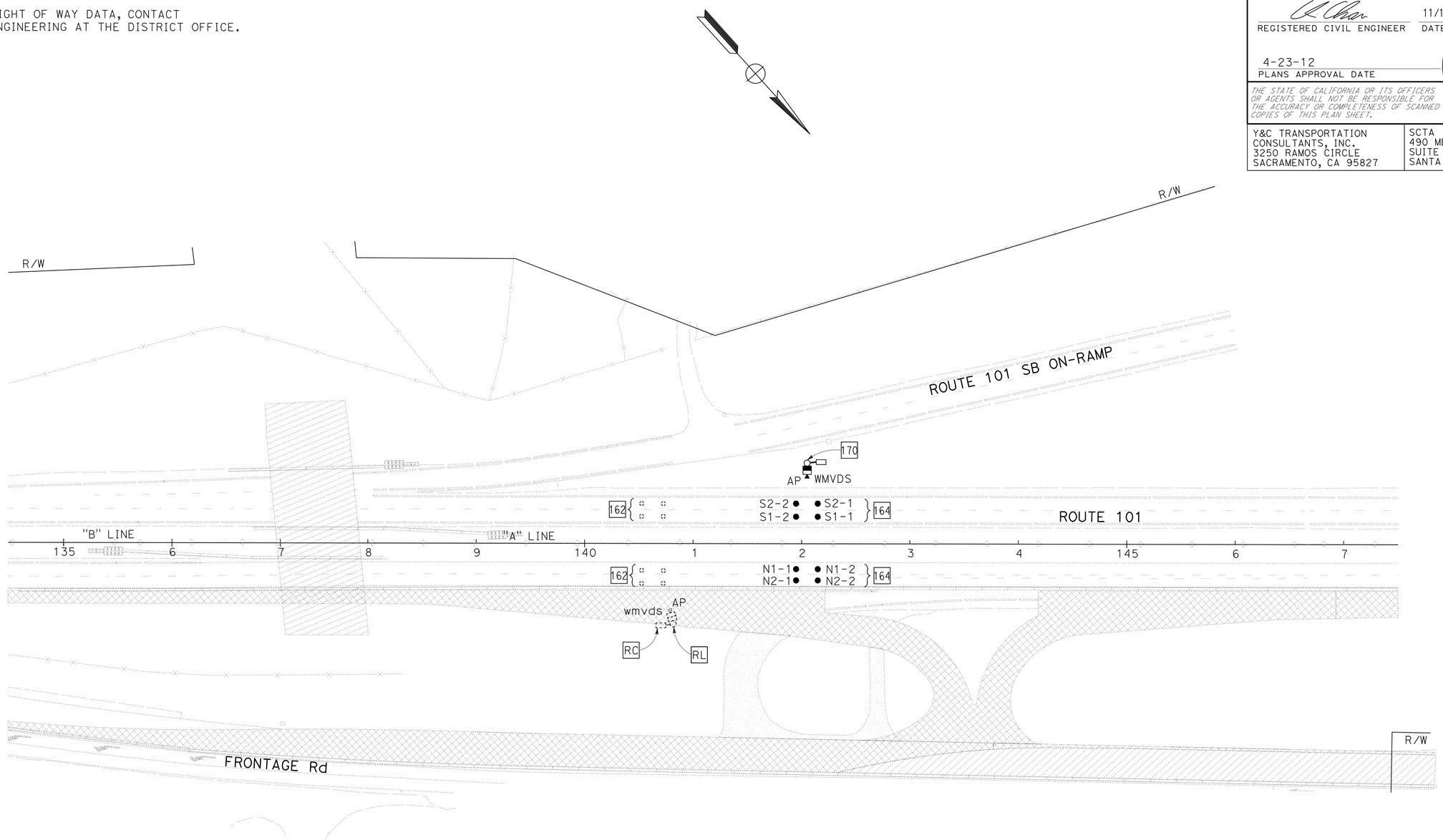

FOR ABBREVIATIONS AND LEGEND, SEE SHEET E-1. FOR NOTES, SEE SHEET E-42

APPROVED FOR ELECTRICAL WORK ONLY

TRAFFIC OPEARTIONS SYSTEM (STAGE CONSTRUCTION)

STAGE 1 - PHASE 2

SCALE: 1" = 50'

E-49

STATE OF CALIFORNIA - DEPARTMENT OF TRANSPORTATION

Caltrans

CONSULTANT FUNCTIONAL SUPERVISOR: RAMSEY HISSEN

CALCULATED-DESIGNED BY: MENG YANG

CHECKED BY: HAMID ZOLFAGHARI

REVISED BY

DATE REVISED

LAST REVISION 11-17-11

DATE PLOTTED => 25-APR-2012
TIME PLOTTED => 19:29

Dist	COUNTY	ROUTE	POST MILES TOTAL PROJECT	SHEET No.	TOTAL SHEETS
04	Son	101	0.9/3.6	656	918

REGISTERED CIVIL ENGINEER 11/17/11 DATE

4-23-12
PLANS APPROVAL DATE

REGISTERED PROFESSIONAL ENGINEER KIN Y. CHAN No. 55391 Exp. 12/31/12 CIVIL STATE OF CALIFORNIA

THE STATE OF CALIFORNIA OR ITS OFFICERS OR AGENTS SHALL NOT BE RESPONSIBLE FOR THE ACCURACY OR COMPLETENESS OF SCANNED COPIES OF THIS PLAN SHEET.

Y&C TRANSPORTATION CONSULTANTS, INC.
3250 RAMOS CIRCLE
SACRAMENTO, CA 95827

SCTA
490 MENDOCINO AVENUE
SUITE 206
SANTA ROSA, CA 95401

NOTE:

FOR ACCURATE RIGHT OF WAY DATA, CONTACT RIGHT OF WAY ENGINEERING AT THE DISTRICT OFFICE.

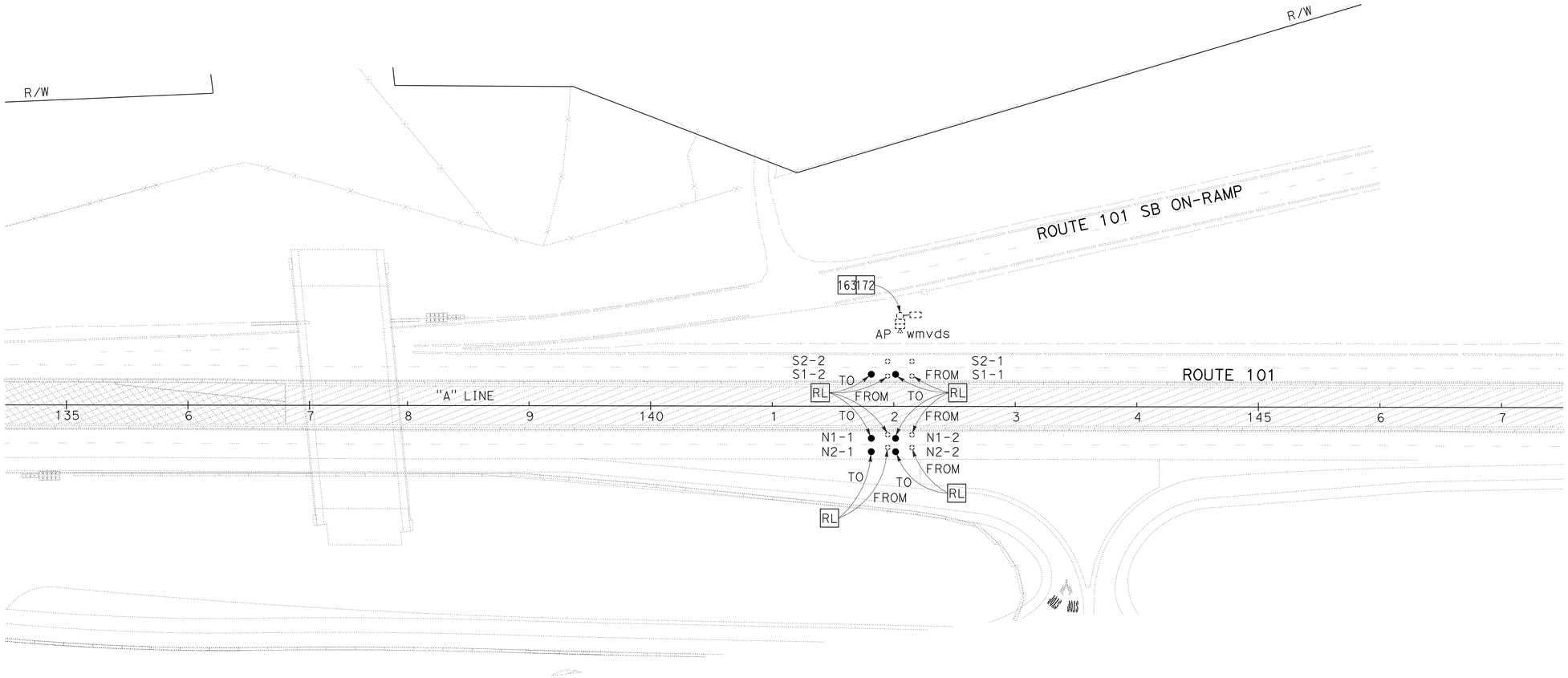

FOR ABBREVIATIONS AND LEGEND, SEE SHEET E-1. FOR NOTES, SEE SHEET E-42

APPROVED FOR ELECTRICAL WORK ONLY

TRAFFIC OPEARTIONS SYSTEM (STAGE CONSTRUCTION)

STAGES 2, 3 & 4

SCALE: 1" = 50'

E-50

STATE OF CALIFORNIA - DEPARTMENT OF TRANSPORTATION
Caltrans

CONSULTAINT FUNCTIONAL SUPERVISOR: RAMSEY HISSEN
CALCULATED-DESIGNED BY: HAMID ZOLFAGHARI
CHECKED BY: MENG YANG
REVISED BY
DATE REVISED

LAST REVISION 11-17-11
DATE PLOTTED => 25-APR-2012
TIME PLOTTED => 19:29

Dist	COUNTY	ROUTE	POST MILES TOTAL PROJECT	SHEET No.	TOTAL SHEETS
04	Son	101	0.9/3.6	657	918

REGISTERED CIVIL ENGINEER — DATE 11/17/11

4-23-12
PLANS APPROVAL DATE

REGISTERED PROFESSIONAL ENGINEER — KIN Y. CHAN No. 55391 Exp. 12/31/12 CIVIL — STATE OF CALIFORNIA

THE STATE OF CALIFORNIA OR ITS OFFICERS OR AGENTS SHALL NOT BE RESPONSIBLE FOR THE ACCURACY OR COMPLETENESS OF SCANNED COPIES OF THIS PLAN SHEET.

Y&C TRANSPORTATION CONSULTANTS, INC.
3250 RAMOS CIRCLE
SACRAMENTO, CA 95827

SCTA
490 MENDOCINO AVENUE
SUITE 206
SANTA ROSA, CA 95401

NOTE:

FOR ACCURATE RIGHT OF WAY DATA, CONTACT RIGHT OF WAY ENGINEERING AT THE DISTRICT OFFICE.

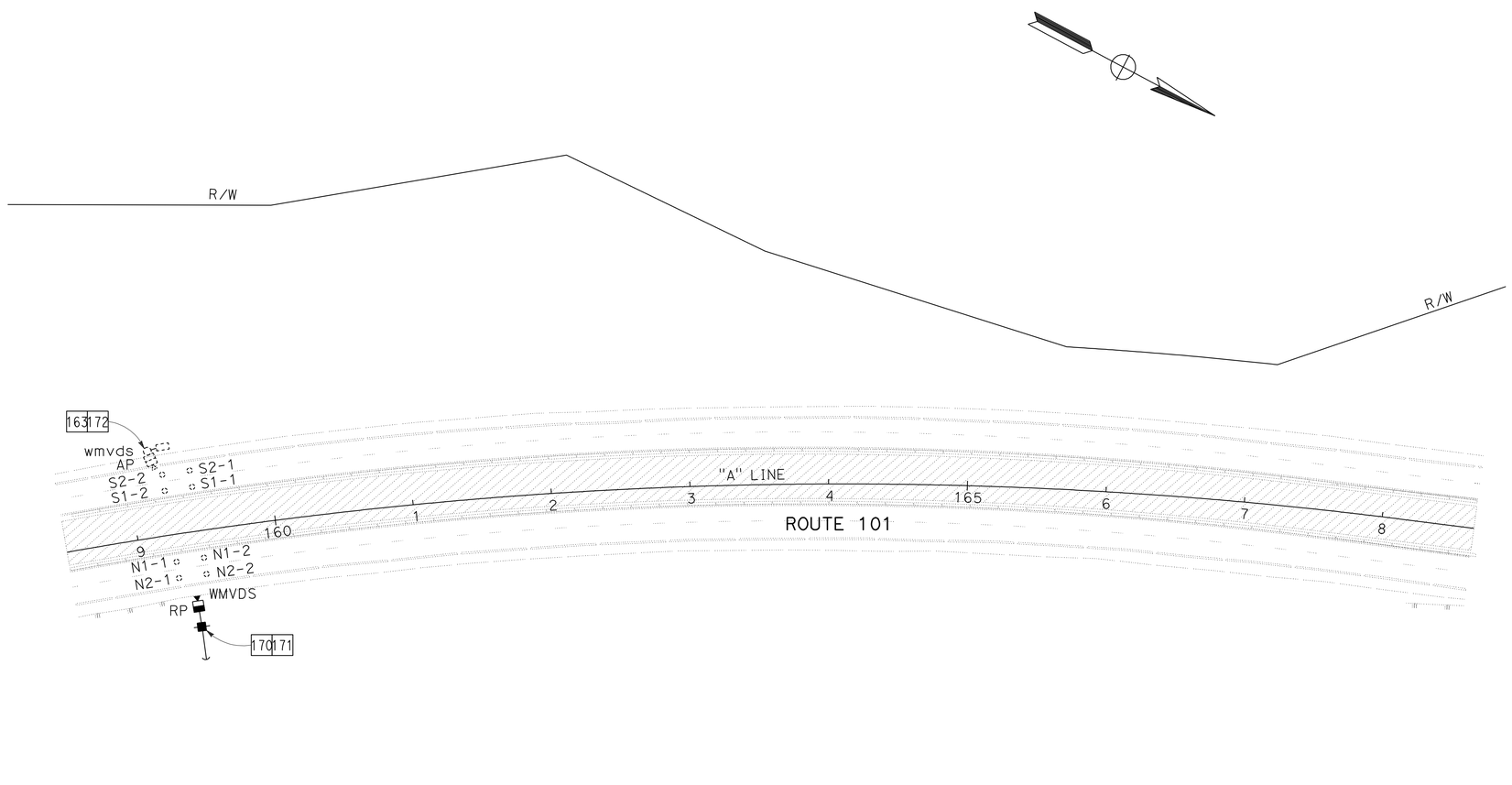

FOR ABBREVIATIONS AND LEGEND, SEE SHEET E-1. FOR NOTES, SEE SHEET E-42

APPROVED FOR ELECTRICAL WORK ONLY

TRAFFIC OPERATIONS SYSTEM (STAGE CONSTRUCTION)

STAGES 2, 3 & 4

SCALE: 1" = 50'

E-51

STATE OF CALIFORNIA - DEPARTMENT OF TRANSPORTATION — Caltrans

CONSULTANT FUNCTIONAL SUPERVISOR: RAMSEY HISSEN

CALCULATED-DESIGNED BY: MENG YANG — CHECKED BY: HAMID ZOLFAGHARI

REVISED BY — DATE REVISED

LAST REVISION 11-17-11 — DATE PLOTTED => 25-APR-2012 — TIME PLOTTED => 19:29

Dist	COUNTY	ROUTE	POST MILES TOTAL PROJECT	SHEET No.	TOTAL SHEETS
04	Son	101	0.9/3.6	658	918

REGISTERED CIVIL ENGINEER — DATE 11/17/11

4-23-12
PLANS APPROVAL DATE

REGISTERED PROFESSIONAL ENGINEER — KIN Y. CHAN No. 55391 Exp. 12/31/12 CIVIL — STATE OF CALIFORNIA

THE STATE OF CALIFORNIA OR ITS OFFICERS OR AGENTS SHALL NOT BE RESPONSIBLE FOR THE ACCURACY OR COMPLETENESS OF SCANNED COPIES OF THIS PLAN SHEET.

Y&C TRANSPORTATION CONSULTANTS, INC.
3250 RAMOS CIRCLE
SACRAMENTO, CA 95827

SCTA
490 MENDOCINO AVENUE
SUITE 206
SANTA ROSA, CA 95401

NOTE:

FOR ACCURATE RIGHT OF WAY DATA, CONTACT RIGHT OF WAY ENGINEERING AT THE DISTRICT OFFICE.

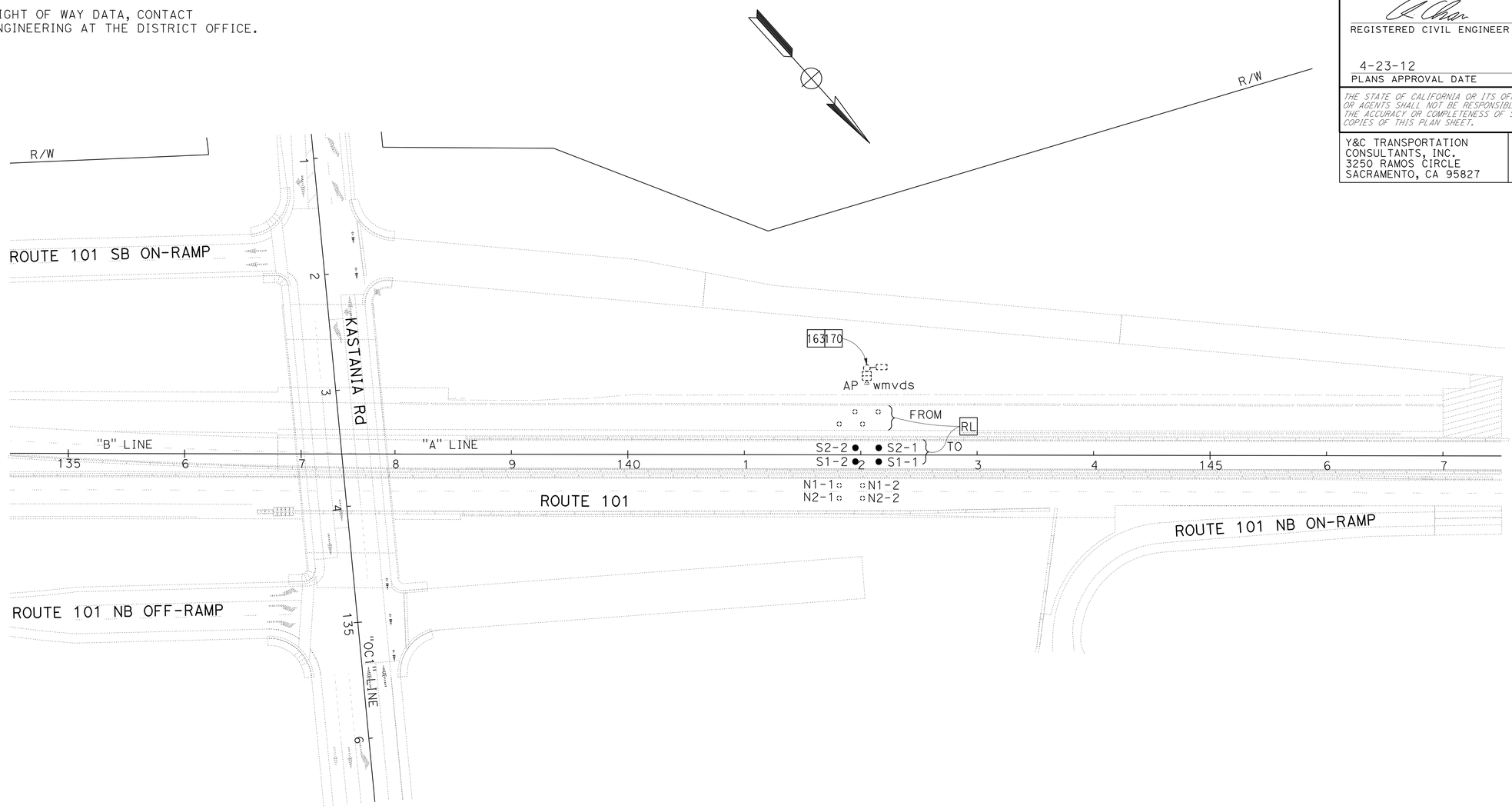

FOR ABBREVIATIONS AND LEGEND, SEE SHEET E-1. FOR NOTES, SEE SHEET E-42

APPROVED FOR ELECTRICAL WORK ONLY

TRAFFIC OPERATIONS SYSTEM (STAGE CONSTRUCTION)

STAGES 5 & 6

SCALE: 1" = 50'

E-52

STATE OF CALIFORNIA - DEPARTMENT OF TRANSPORTATION — Caltrans

CONSULTANT FUNCTIONAL SUPERVISOR: RAMSEY HISSEN

CALCULATED-DESIGNED BY: MENG YANG — CHECKED BY: HAMID ZOLFAGHARI

REVISED BY — DATE REVISED

LAST REVISION 11-17-11 — DATE PLOTTED => 25-APR-2012 — TIME PLOTTED => 19:29

Dist	COUNTY	ROUTE	POST MILES TOTAL PROJECT	SHEET No.	TOTAL SHEETS
04	Son	101	0.9/3.6	659	918

REGISTERED CIVIL ENGINEER — DATE 11/17/11

4-23-12
PLANS APPROVAL DATE

REGISTERED PROFESSIONAL ENGINEER — KIN Y. CHAN No. 55391 Exp. 12/31/12 CIVIL — STATE OF CALIFORNIA

THE STATE OF CALIFORNIA OR ITS OFFICERS OR AGENTS SHALL NOT BE RESPONSIBLE FOR THE ACCURACY OR COMPLETENESS OF SCANNED COPIES OF THIS PLAN SHEET.

Y&C TRANSPORTATION CONSULTANTS, INC.
3250 RAMOS CIRCLE
SACRAMENTO, CA 95827

SCTA
490 MENDOCINO AVENUE
SUITE 206
SANTA ROSA, CA 95401

NOTE:

FOR ACCURATE RIGHT OF WAY DATA, CONTACT RIGHT OF WAY ENGINEERING AT THE DISTRICT OFFICE.

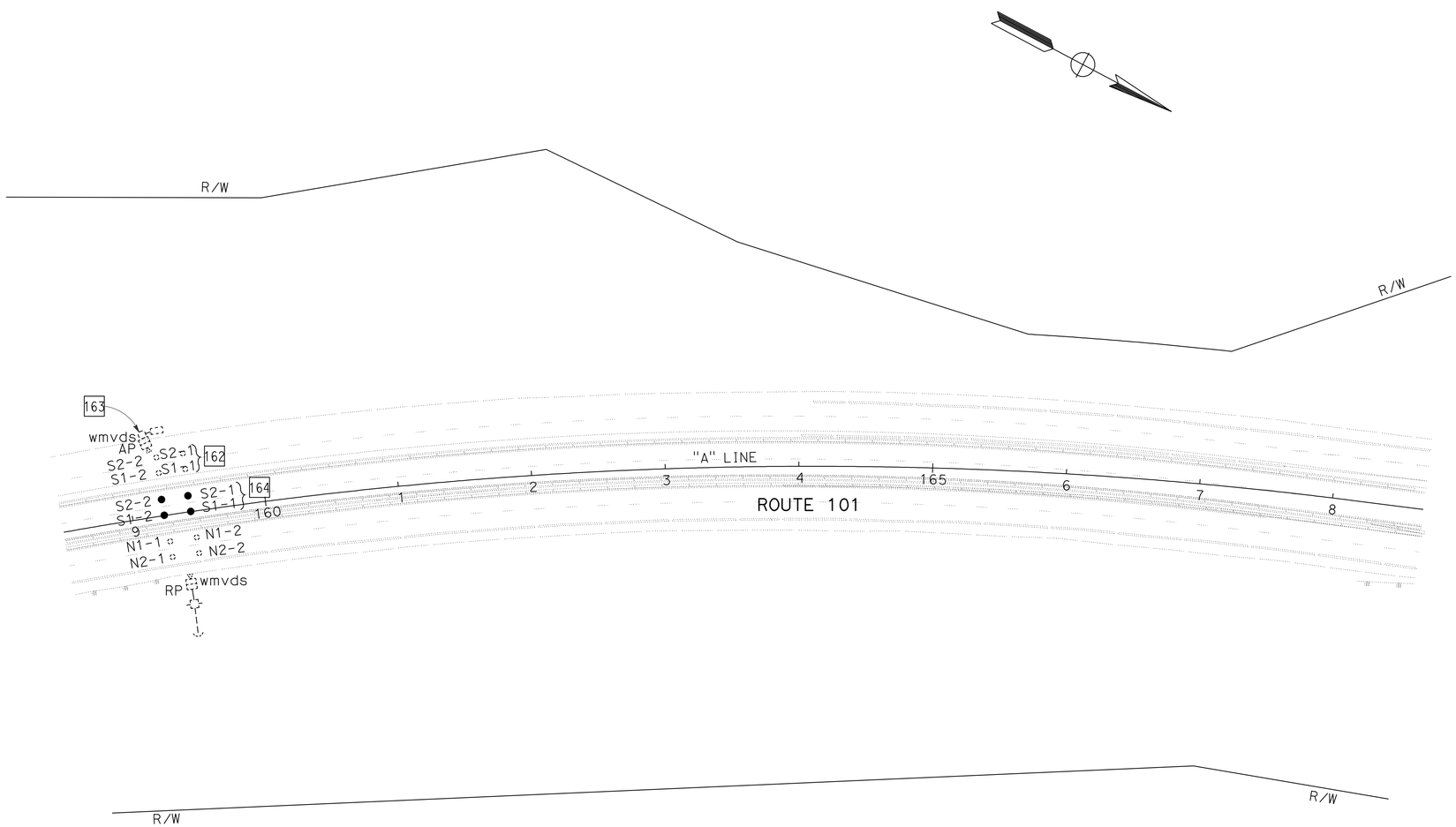

FOR ABBREVIATIONS AND LEGEND, SEE SHEET E-1. FOR NOTES, SEE SHEET E-42

APPROVED FOR ELECTRICAL WORK ONLY

TRAFFIC OPERATIONS SYSTEM (STAGE CONSTRUCTION)

STAGE 5

SCALE: 1" = 50'

E-53

STATE OF CALIFORNIA - DEPARTMENT OF TRANSPORTATION — Caltrans

CONSULTANT FUNCTIONAL SUPERVISOR: RAMSEY HISSEN

CALCULATED-DESIGNED BY: MENG YANG — CHECKED BY: HAMID ZOLFAGHARI

REVISED BY — DATE REVISED

LAST REVISION 11-17-11 — DATE PLOTTED => 25-APR-2012 — TIME PLOTTED => 19:29

Dist	COUNTY	ROUTE	POST MILES TOTAL PROJECT	SHEET No.	TOTAL SHEETS
04	Son	101	0.9/3.6	660	918

REGISTERED CIVIL ENGINEER — DATE 11/17/11

4-23-12
PLANS APPROVAL DATE

REGISTERED PROFESSIONAL ENGINEER — KIN Y. CHAN No. 55391 Exp. 12/31/12 CIVIL — STATE OF CALIFORNIA

THE STATE OF CALIFORNIA OR ITS OFFICERS OR AGENTS SHALL NOT BE RESPONSIBLE FOR THE ACCURACY OR COMPLETENESS OF SCANNED COPIES OF THIS PLAN SHEET.

Y&C TRANSPORTATION CONSULTANTS, INC.
3250 RAMOS CIRCLE
SACRAMENTO, CA 95827

SCTA
490 MENDOCINO AVENUE
SUITE 206
SANTA ROSA, CA 95401

NOTE:

FOR ACCURATE RIGHT OF WAY DATA, CONTACT RIGHT OF WAY ENGINEERING AT THE DISTRICT OFFICE.

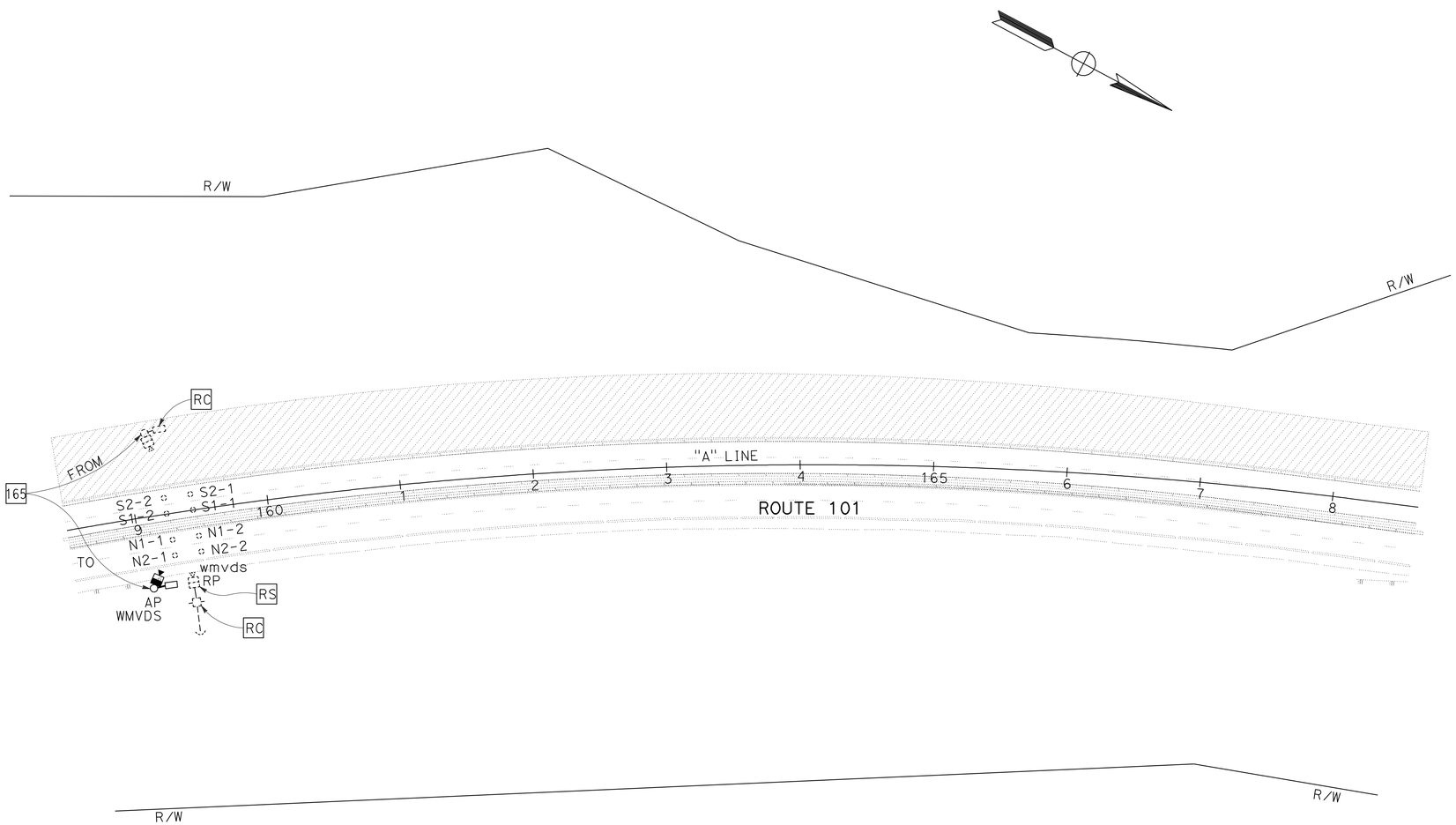

FOR ABBREVIATIONS AND LEGEND, SEE SHEET E-1. FOR NOTES, SEE SHEET E-42

APPROVED FOR ELECTRICAL WORK ONLY.

TRAFFIC OPERATIONS SYSTEM (STAGE CONSTRUCTION)

STAGE 6

SCALE: 1" = 50'

E-54

REVISED BY	DATE REVISED

CALCULATED-DESIGNED BY: MENG YANG
CHECKED BY: HAMID ZOLFAGHARI
CONSULTANT FUNCTIONAL SUPERVISOR: RAMSEY HISSEN

STATE OF CALIFORNIA - DEPARTMENT OF TRANSPORTATION
Caltrans

LAST REVISION 11-17-11
DATE PLOTTED => 25-APR-2012
TIME PLOTTED => 19:43

Dist	COUNTY	ROUTE	POST MILES TOTAL PROJECT	SHEET No.	TOTAL SHEETS
04	Son	101	0.9/3.6	661	918

REGISTERED CIVIL ENGINEER — DATE 11/17/11

4-23-12
PLANS APPROVAL DATE

REGISTERED PROFESSIONAL ENGINEER — KIN Y. CHAN No. 55391 Exp. 12/31/12 CIVIL — STATE OF CALIFORNIA

THE STATE OF CALIFORNIA OR ITS OFFICERS OR AGENTS SHALL NOT BE RESPONSIBLE FOR THE ACCURACY OR COMPLETENESS OF SCANNED COPIES OF THIS PLAN SHEET.

Y&C TRANSPORTATION CONSULTANTS, INC.
3250 RAMOS CIRCLE
SACRAMENTO, CA 95827

SCTA
490 MENDOCINO AVENUE
SUITE 206
SANTA ROSA, CA 95401

NOTE:

FOR ACCURATE RIGHT OF WAY DATA, CONTACT RIGHT OF WAY ENGINEERING AT THE DISTRICT OFFICE.

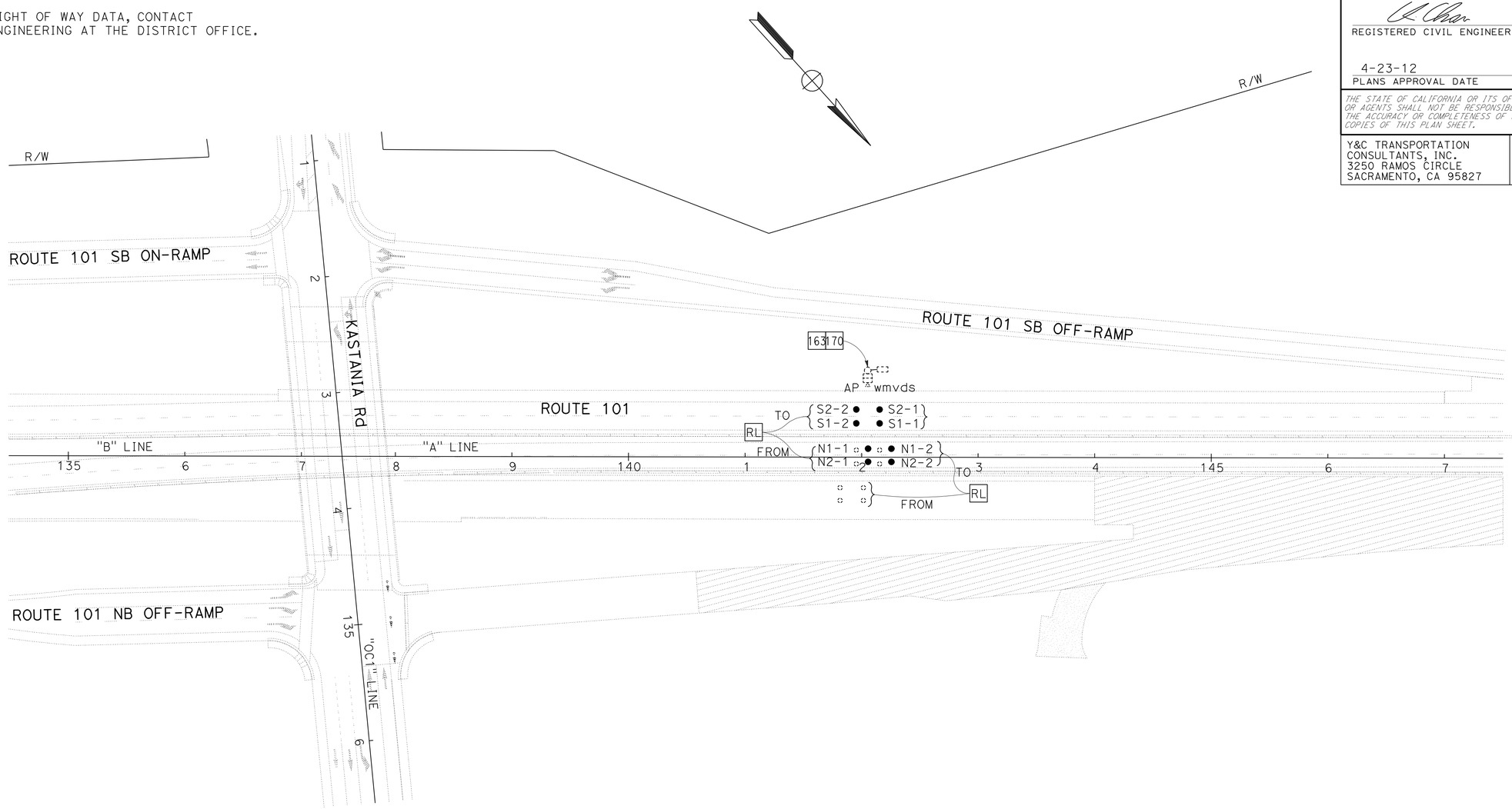

FOR ABBREVIATIONS AND LEGEND, SEE SHEET E-1. FOR NOTES, SEE SHEET E-42

APPROVED FOR ELECTRICAL WORK ONLY

TRAFFIC OPERATIONS SYSTEM (STAGE CONSTRUCTION)

STAGES 7 & 8

SCALE: 1" = 50'

E-55

STATE OF CALIFORNIA - DEPARTMENT OF TRANSPORTATION
Caltrans

CONSULTANT FUNCTIONAL SUPERVISOR: RAMSEY HISSEN
CALCULATED-DESIGNED BY: HAMID ZOLFAGHARI
CHECKED BY: MENG YANG
REVISED BY
DATE REVISED

LAST REVISION 11-17-11
DATE PLOTTED => 26-APR-2012
TIME PLOTTED => 14:41

Dist	COUNTY	ROUTE	POST MILES TOTAL PROJECT	SHEET No.	TOTAL SHEETS
04	Son	101	0.9/3.6	662	918

REGISTERED CIVIL ENGINEER — DATE 11/17/11

4-23-12
PLANS APPROVAL DATE

REGISTERED PROFESSIONAL ENGINEER — KIN Y. CHAN No. 55391 Exp. 12/31/12 CIVIL — STATE OF CALIFORNIA

THE STATE OF CALIFORNIA OR ITS OFFICERS OR AGENTS SHALL NOT BE RESPONSIBLE FOR THE ACCURACY OR COMPLETENESS OF SCANNED COPIES OF THIS PLAN SHEET.

Y&C TRANSPORTATION CONSULTANTS, INC.
3250 RAMOS CIRCLE
SACRAMENTO, CA 95827

SCTA
490 MENDOCINO AVENUE
SUITE 206
SANTA ROSA, CA 95401

NOTE:

FOR ACCURATE RIGHT OF WAY DATA, CONTACT RIGHT OF WAY ENGINEERING AT THE DISTRICT OFFICE.

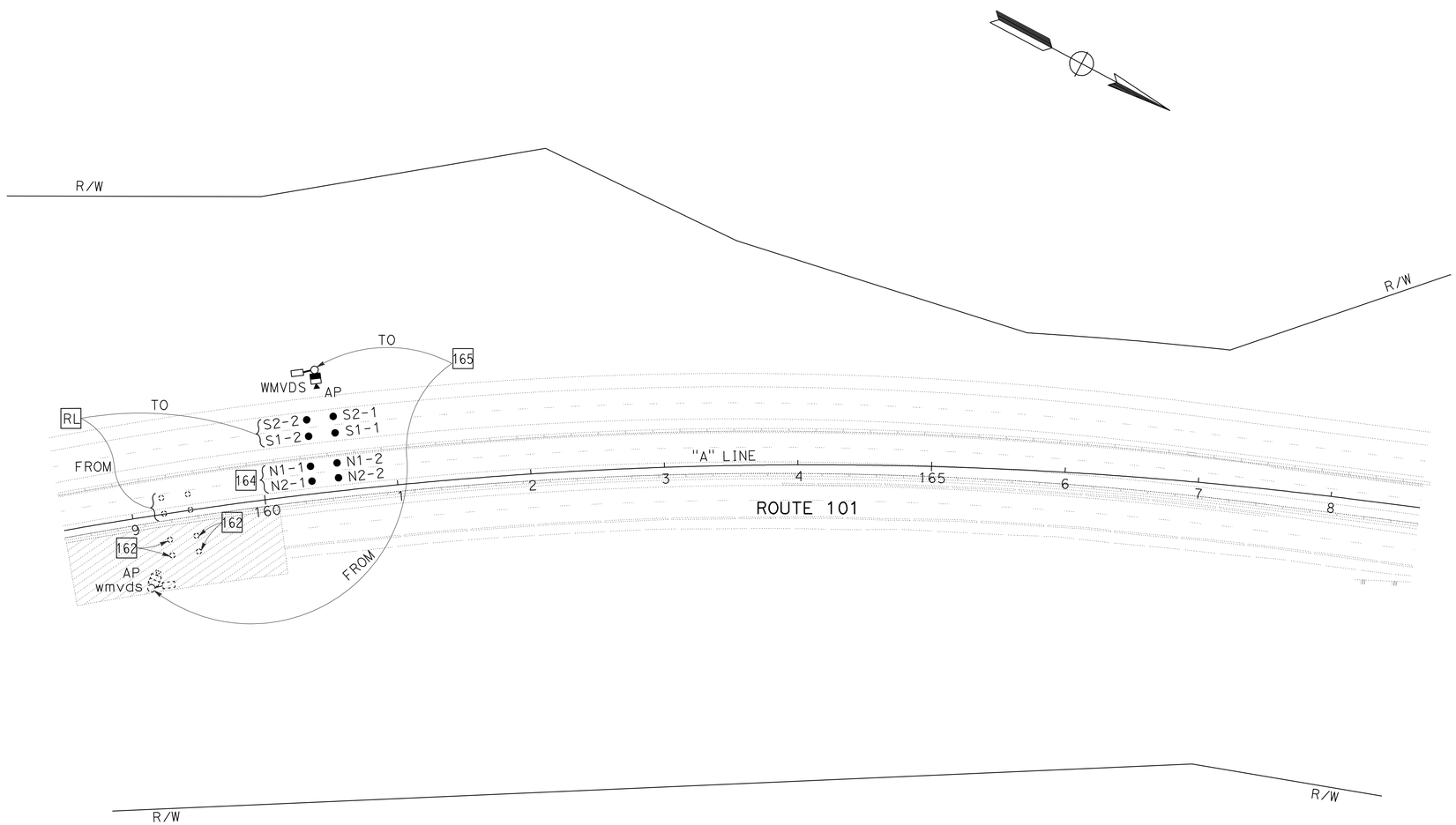

FOR ABBREVIATIONS AND LEGEND, SEE SHEET E-1. FOR NOTES, SEE SHEET E-42

APPROVED FOR ELECTRICAL WORK ONLY

TRAFFIC OPERATIONS SYSTEM (STAGE CONSTRUCTION)

STAGES 7 & 8

SCALE: 1" = 50'

E-56

STATE OF CALIFORNIA - DEPARTMENT OF TRANSPORTATION — Caltrans

CONSULTANT FUNCTIONAL SUPERVISOR: RAMSEY HISSEN

CALCULATED-DESIGNED BY: MENG YANG — CHECKED BY: HAMID ZOLFAGHARI

REVISED BY — DATE REVISED

LAST REVISION 11-17-11 — DATE PLOTTED => 26-APR-2012 — TIME PLOTTED => 14:41

Dist	COUNTY	ROUTE	POST MILES TOTAL PROJECT	SHEET No.	TOTAL SHEETS
04	Son	101	0.9/3.6	663	918

REGISTERED CIVIL ENGINEER — DATE 11/17/11

4-23-12
PLANS APPROVAL DATE

REGISTERED PROFESSIONAL ENGINEER — KIN Y. CHAN No. 55391 Exp. 12/31/12 CIVIL — STATE OF CALIFORNIA

THE STATE OF CALIFORNIA OR ITS OFFICERS OR AGENTS SHALL NOT BE RESPONSIBLE FOR THE ACCURACY OR COMPLETENESS OF SCANNED COPIES OF THIS PLAN SHEET.

Y&C TRANSPORTATION CONSULTANTS, INC.
3250 RAMOS CIRCLE
SACRAMENTO, CA 95827

SCTA
490 MENDOCINO AVENUE
SUITE 206
SANTA ROSA, CA 95401

NOTES:

1. FOR ACCURATE RIGHT OF WAY DATA, CONTACT RIGHT OF WAY ENGINEERING AT THE DISTRICT OFFICE.
2. FOR POLE AND EQUIPMENT SCHEDULE, SEE SHEET E-19.

CONDUCTOR AND CONDUIT SCHEDULE

CONDUCTOR SCHEDULE	No. OF CONDUCTORS — CONDUIT RUN NUMBER 1	2	3	4	5	6	7
No. 14 CONDUCTORS							
Ø5				3	3	3	3
Ø6	3	3	3	3	3		
Ø5P				2	2	2	2
PPB(Ø5P)				1	1	1	1
PPB COMMON				1	1	1	1
PEU				3		3	
SPARE	3	3	3	6	6	3	3
TOTAL No. 14	6	6	6	19	16	13	10
No. 8 CONDUCTORS							
LIGHTING (240 V)			2	2		2	2
SIGNAL NEUTRAL	1	1	1	1	1	1	1
TOTAL No. 8	1	1	3	3	1	3	3
No. 6 CONDUCTORS							
SERVICE TO CONTROLLER					2		
DETECTOR CABLES (DLC)							
5J1U					1		
5J9U					1		
6J2U	1	1	1	1	1		
6J2L	1	1	1	1	1		
6J4U	1	1	1	1	1		
6J4L	1	1	1	1	1		
TOTAL DETECTOR CABLES	4	4	4	4	6		
CONDUIT SIZE (INCHES)	3	3	3	3	2-3	3	3

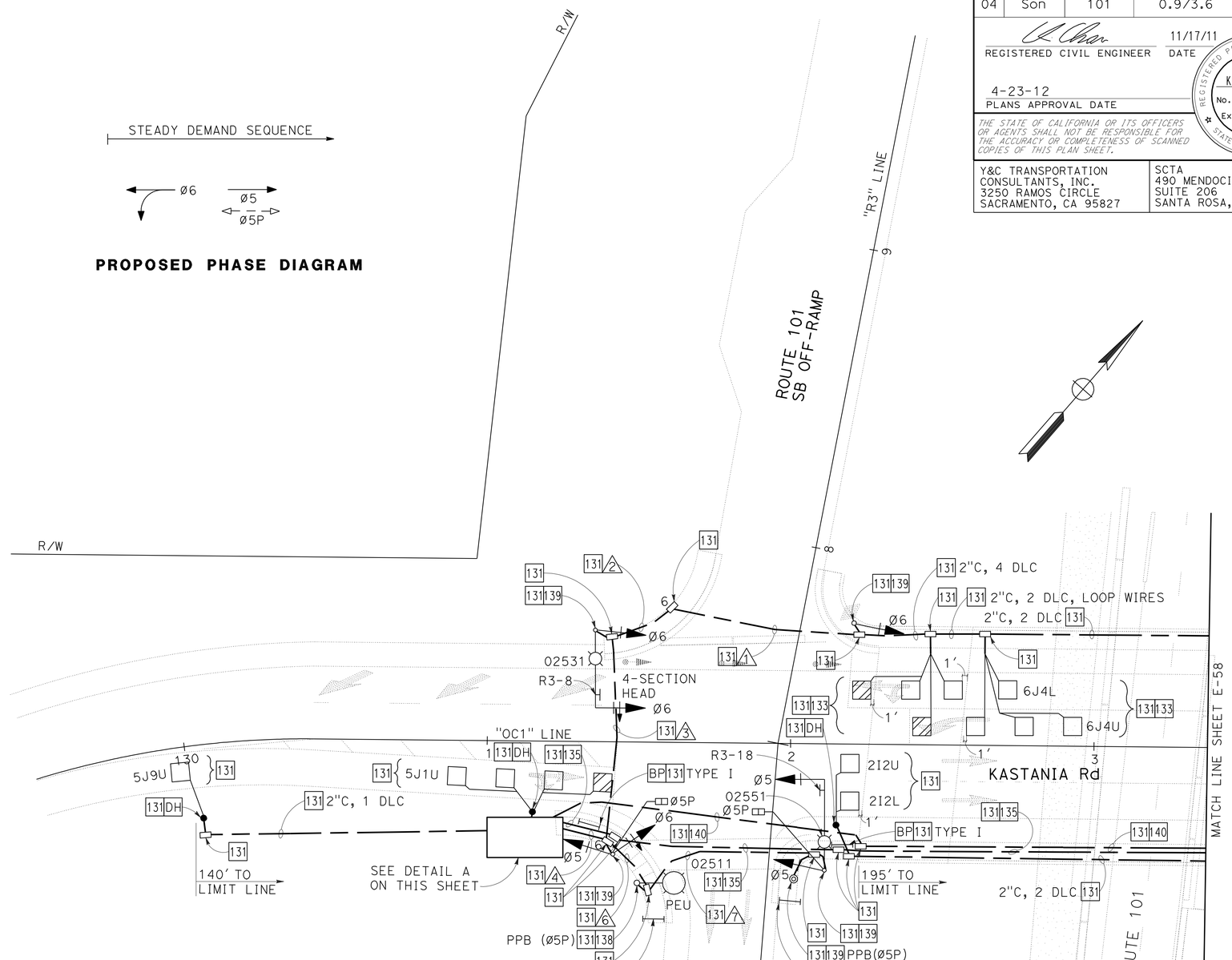

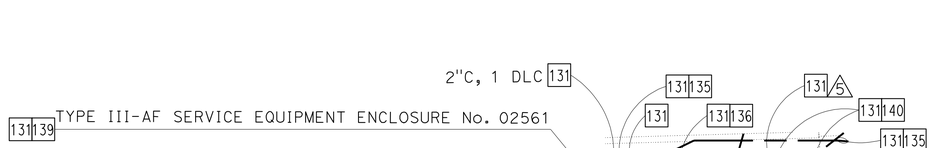

DETAIL A
SCALE: 1" = 10'

SIGNAL AND LIGHTING
(LOCATION 1)
STAGE 4
SCALE: 1" = 20'

FOR ABBREVIATIONS AND LEGEND, SEE SHEET E-1. FOR NOTES, SEE SHEET E-42

APPROVED FOR ELECTRICAL WORK ONLY

E-57

REVISED BY	DATE REVISED
MENG YANG	HAMID ZOLFAGHARI

CALCULATED-DESIGNED BY — CHECKED BY
CONSULTANT FUNCTIONAL SUPERVISOR — RAMSEY HISSEN

STATE OF CALIFORNIA - DEPARTMENT OF TRANSPORTATION — Caltrans

LAST REVISION 11-17-11 — DATE PLOTTED => 26-APR-2012 — TIME PLOTTED => 14:42

Dist	COUNTY	ROUTE	POST MILES TOTAL PROJECT	SHEET No.	TOTAL SHEETS
04	Son	101	0.9/3.6	664	918

REGISTERED CIVIL ENGINEER — DATE 11/17/11

4-23-12
PLANS APPROVAL DATE

REGISTERED PROFESSIONAL ENGINEER — KIN Y. CHAN No. 55391 Exp. 12/31/12 CIVIL — STATE OF CALIFORNIA

THE STATE OF CALIFORNIA OR ITS OFFICERS OR AGENTS SHALL NOT BE RESPONSIBLE FOR THE ACCURACY OR COMPLETENESS OF SCANNED COPIES OF THIS PLAN SHEET.

Y&C TRANSPORTATION CONSULTANTS, INC.
3250 RAMOS CIRCLE
SACRAMENTO, CA 95827

SCTA
490 MENDOCINO AVENUE
SUITE 206
SANTA ROSA, CA 95401

NOTES:

1. FOR ACCURATE RIGHT OF WAY DATA, CONTACT RIGHT OF WAY ENGINEERING AT THE DISTRICT OFFICE.
2. FOR POLE AND EQUIPMENT SCHEDULE, SEE SHEET E-21.

CONDUCTOR AND CONDUIT SCHEDULE

CONDUCTOR SCHEDULE	No. OF CONDUCTORS — CONDUIT RUN NUMBER 1	2	3	4	5	6	7	8
No. 14 CONDUCTORS								
Ø2		3	3	3	3	3		
Ø6					3	3	3	3
Ø8			3	3	6	6	3	3
Ø2P		2	2	2	2	2		
PPB(Ø2P)	1	1	1	1	1	1		
PPB COMMON	1	1	1	1	1	1		
PEU					3		3	
SPARE	3	3	3	3	6	6	3	3
TOTAL No. 14	5	10	13	13	25	22	12	9
No. 8 CONDUCTORS								
LIGHTING	2	2	2	2	2		2	2
SIGNAL NEUTRAL		1	1	1	1	1	1	1
TOTAL No. 8	2	3	3	3	3	1	3	3
No. 6 CONDUCTORS								
SERVICE TO CONTROLLER						2		
DETECTOR CABLES (DLC)								
2I2U		1	1	1	1	1		
2I2L		1	1	1	1	1		
2I4U		1	1	1	1	1		
2I4L		1	1	1	1	1		
6J2U						1		
6J2L						1		
6J4U						1		
6J4L						1		
8J6U			1	1	1	1		
8J6L			1	1	1	1		
8J7U			1	1	1	1		
8J7L			1	1	1	1		
8J8U	1	1	1	1	1	1		
8J8L			1	1	1	1		
TOTAL DETECTOR CABLES	1	5	10	10	10	14		
CONDUIT SIZE (INCHES)	2	3	3	3	3	2-3	3	3

PROPOSED PHASE DIAGRAM

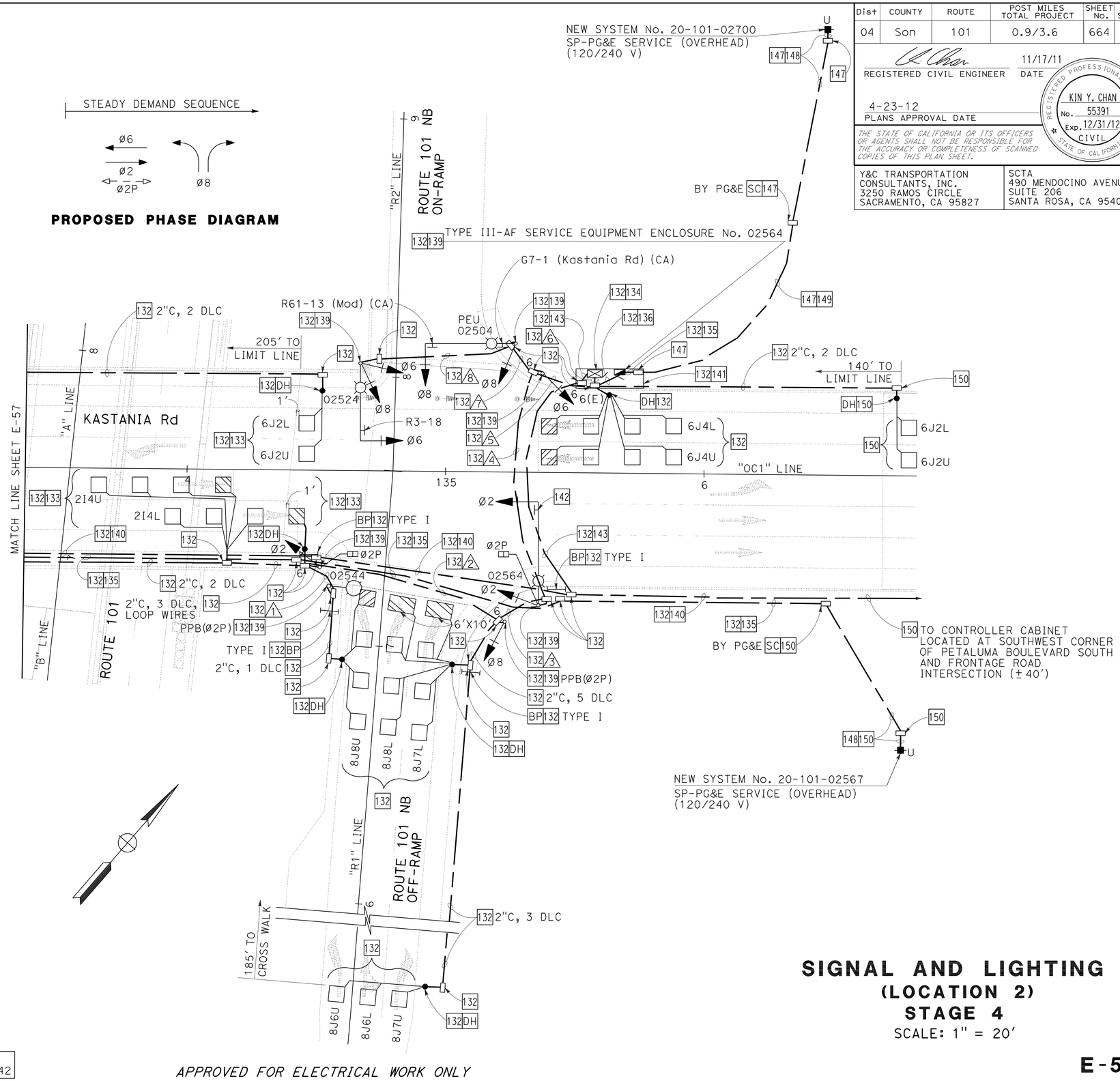

FOR ABBREVIATIONS AND LEGEND, SEE SHEET E-1. FOR NOTES, SEE SHEET E-42

APPROVED FOR ELECTRICAL WORK ONLY

SIGNAL AND LIGHTING
(LOCATION 2)
STAGE 4
SCALE: 1" = 20'

E-58

STATE OF CALIFORNIA - DEPARTMENT OF TRANSPORTATION — Caltrans

CONSULTANT FUNCTIONAL SUPERVISOR: RAMSEY HISSEN
CALCULATED-DESIGNED BY: MENG YANG
CHECKED BY: HAMID ZOLFAGHARI
REVISED BY / DATE REVISED

LAST REVISION 11-17-11 — DATE PLOTTED => 26-APR-2012 — TIME PLOTTED => 14:42

Dist	COUNTY	ROUTE	POST MILES TOTAL PROJECT	SHEET No.	TOTAL SHEETS
04	Son	101	0.9/3.6	665	918

REGISTERED CIVIL ENGINEER — DATE 10/4/11

4-23-12
PLANS APPROVAL DATE

REGISTERED PROFESSIONAL ENGINEER — KIN Y. CHAN — No. 55391 — Exp. 12/31/12 — CIVIL — STATE OF CALIFORNIA

THE STATE OF CALIFORNIA OR ITS OFFICERS OR AGENTS SHALL NOT BE RESPONSIBLE FOR THE ACCURACY OR COMPLETENESS OF SCANNED COPIES OF THIS PLAN SHEET.

Y&C TRANSPORTATION CONSULTANTS, INC.
3250 RAMOS CIRCLE
SACRAMENTO, CA 95827

SCTA
490 MENDOCINO AVENUE
SUITE 206
SANTA ROSA, CA 95401

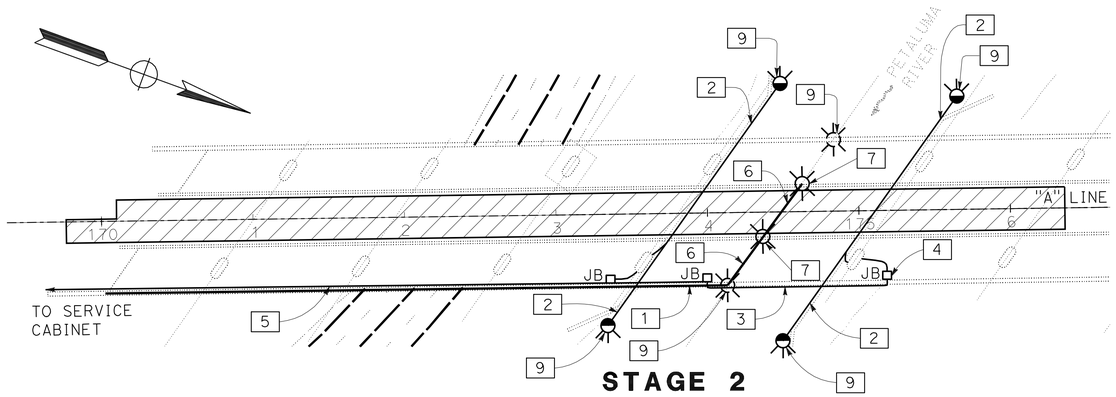

STAGE 2

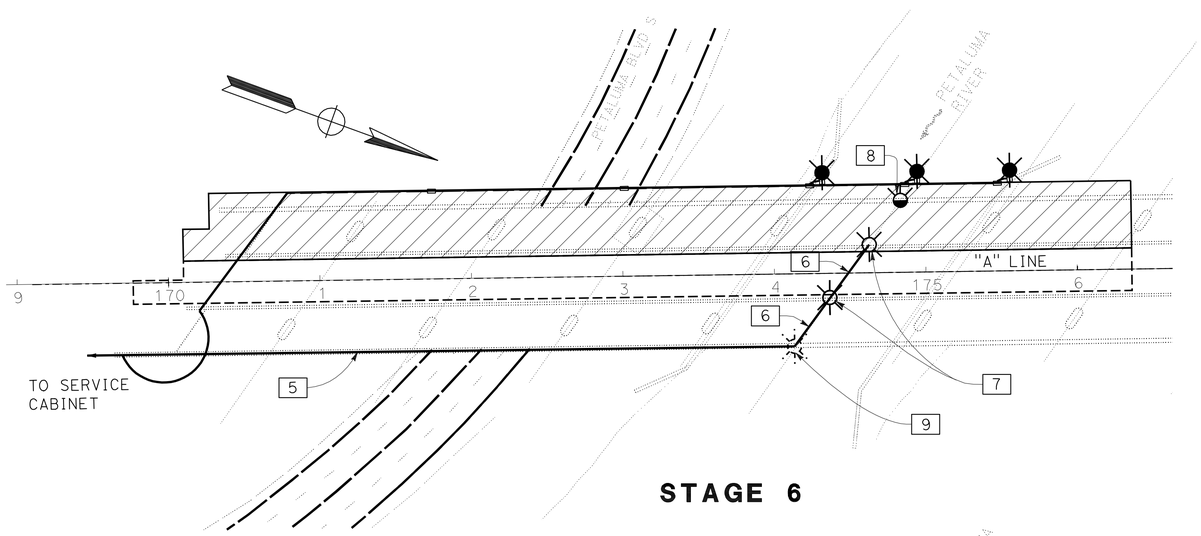

STAGE 6

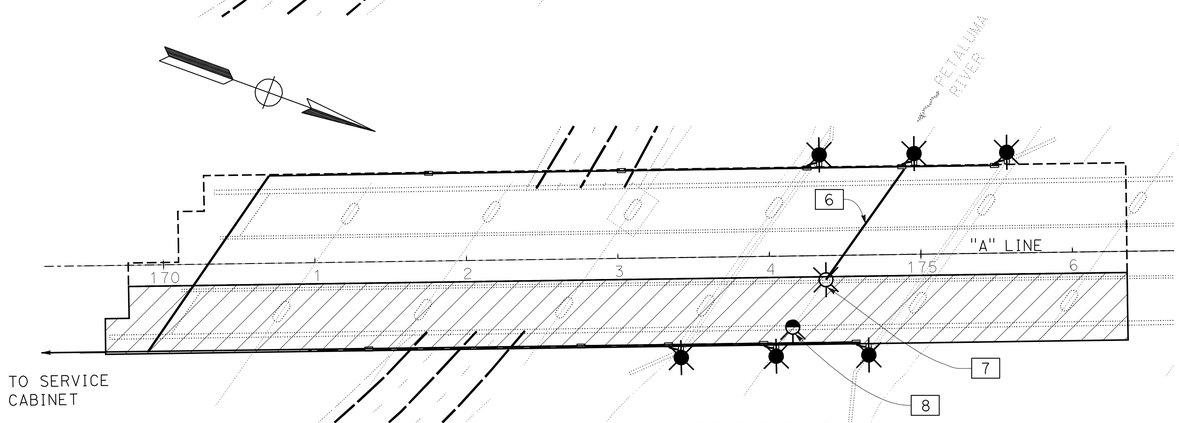

STAGE 8

FOR NOTES AND ABBREVIATIONS, SEE SHEETS E-1 TO E-3

LEGEND: (FOR THIS SHEET ONLY)

- INDICATES DIRECTION OF FLOW
- PERMANANT LIGHT (SEE SHEET E-26)
- EXISTING LIGHT ON BRIDGE FENDER
- JB□ INDICATES JUNCTION BOX
- TEMPORARY LIGHT
- Existing LIGHT
- STAGE CONSTRUCTION

NOTES: (FOR THIS SHEET ONLY)

1. EXISTING ½" C, 2#12 IN CURB SECTION TO REMAIN.
2. EXISTING ¾" C, 2#12 IN UPPER WALE TO REMAIN.
3. EXISTING ¾" C, 2#12 IN CURB SECTION TO REMAIN.
4. EXISTING ¾" C, 2#12 TO REMAIN.
5. EXISTING 1" C, 2#8 TO REMAIN.
6. INSTALL ½" C, 2#12 (120 V, NAVIGATION LIGHTING).
7. TEMPORARY NAVIGATION LIGHTING. SEE SPECIAL PROVISIONS FOR DETAIL.
8. REMOVE AND SALVAGE EXISTING NAVIGATION LIGHTING.
9. EXISTING NAVIGATION LIGHTING TO REMAIN OPERATION DURING CONSTRUCTION PHASE.

LIGHTING (NAVIGATION) (STAGE CONSTRUCTION)

SCALE: 1" = 50'

APPROVED FOR ELECTRICAL WORK ONLY

E-59

REVISED BY	DATE REVISED
NH	10-7-11

MENG YANG — CALCULATED-DESIGNED BY
HAMID ZOLFAGHARI — CHECKED BY
RAMSEY HISSEN — CONSULTANT FUNCTIONAL SUPERVISOR

STATE OF CALIFORNIA - DEPARTMENT OF TRANSPORTATION — Caltrans

LAST REVISION 07-29-11 — DATE PLOTTED => 26-APR-2012 — TIME PLOTTED => 14:42

NOTE:
THE CONTRACTOR SHALL VERIFY ALL CONTROLLING FIELD DIMENSIONS BEFORE ORDERING OR FABRICATING ANY MATERIAL.

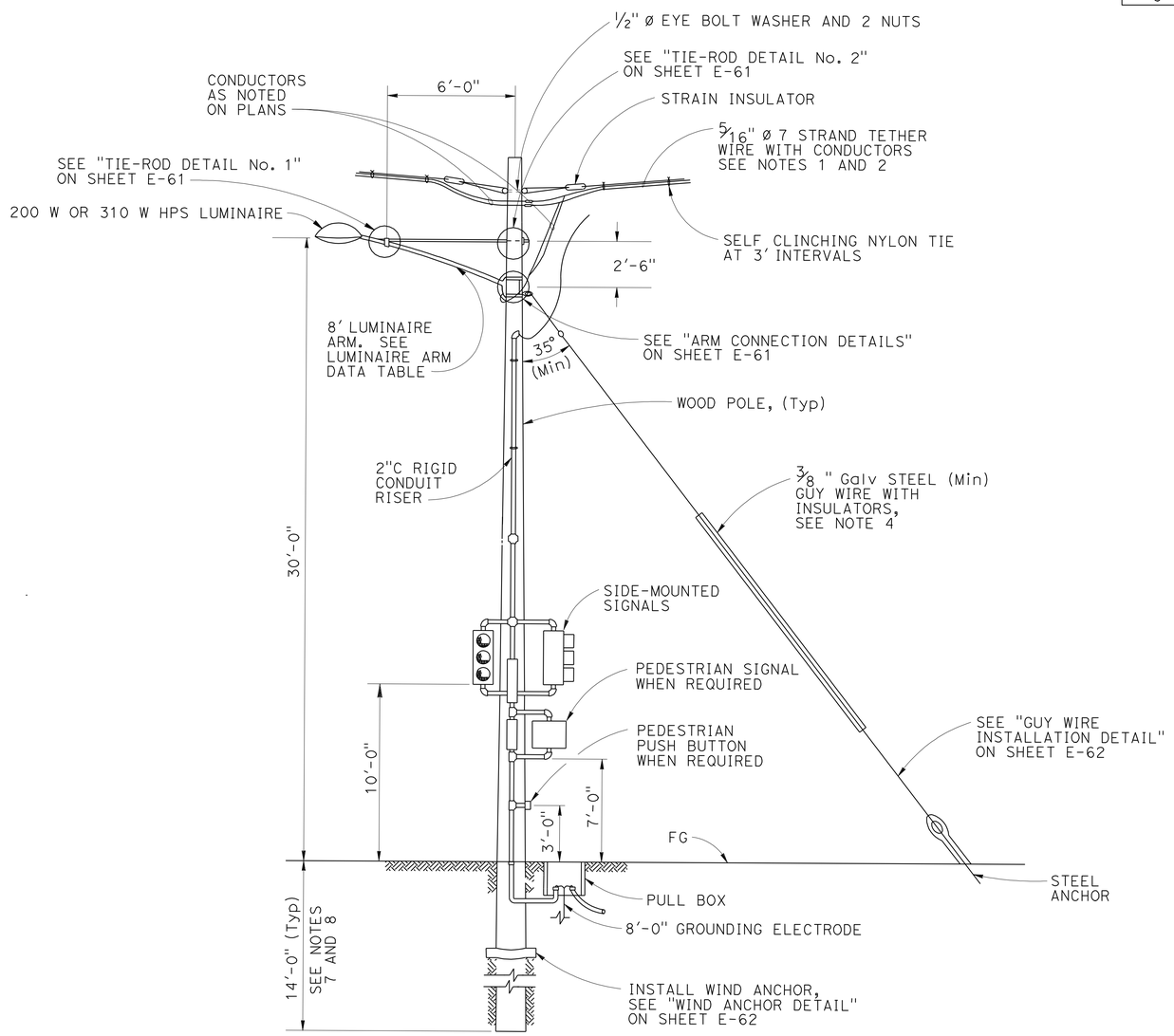

TYPICAL WOOD POLE SUPPORT WITH TRAFFIC SIGNAL AND LUMINAIRE MOUNTINGS

LUMINAIRE ARM DATA			
M PROJECTED LENGTH	N RISE	Min OD AT POLE	THICKNESS
8'-0"	2'-6" ±	3 1/2"	0.1196"

GENERAL NOTES:

SPECIFICATIONS

1. AASHTO STANDARD SPECIFICATIONS FOR STRUCTURAL SUPPORTS FOR HIGHWAY SIGNS, LUMINAIRES AND TRAFFIC SIGNALS DATED 2001.
2. GENERAL ORDER No. 95 OF PUBLIC UTILITIES COMMISSION.
3. NATIONAL ELECTRICAL SAFETY CODE.
4. CALTRANS STANDARD SPECIFICATIONS MAY 2006.

LOADING

WIND LOADINGS: 85 MPH.

UNIT STRESSES

TIMBER POLES: Fb = 1850 psi TAPERED TREATED ROUND POLE
Fv = 110 psi ASTM D2899 STANDARD
E = 1500 x 10^3 psi

TREATMENT

TO CONFORM WITH SECTION 86 STANDARD SPECIFICATIONS.

NOTES:

1. ALL OVERHEAD CABLES SHALL BE INSTALLED WITH 20'-0" MINIMUM OVERHEAD CLEARANCE.
2. CONDUCTORS SHALL BE SUSPENDED FROM SPAN-WIRE AS FOLLOWS: A) MAIN RUN 5/16" SPAN-WIRE WITH A MAXIMUM OF 4.5 PERCENT SAG. NO SPARE CONDUCTORS ALLOWED EXCEPT AS NOTED.
3. OVERHEAD LINE CONSTRUCTION NOT SPECIFICALLY COVERED HERE SHALL CONFORM WITH THE PROVISIONS OF GENERAL ORDER No. 95 OF PUBLIC UTILITIES COMMISION.
4. WOOD POLES SHALL BE STABILIZED USING GUY WIRES, BREAST BLOCKS OR RAKES AT EACH DEAD END, CORNER, OH DROP OR LINE DEVIATION MORE THAN 15° FROM STRAIGHT LINE. THE DIRECTION OF THE GUY SHALL COUNTERACT THE RESULTANT OF UNBALANCED FORCES APPLIED TO POLE. WHERE SPACE OR CONFLICT PREVENT GUY INSTALLATION, A DIAGONAL BRACE SHALL BE USED. THE BRACE SHALL BE WOOD AND SHALL BE CONNECTED TO THE POLE BY MEANS TO SATISFY STRUCTURAL AND ELECTRICAL REQUIREMENTS. THE DIRECTION OF THE BRACE SHALL COUNTERACT THE RESULTANT OF UNBALANCED HORIZONTAL FORCE OF 2000 POUNDS (Min) APPLIED TO THE POLE.
5. GUY WIRE SHALL BE ATTACHED TO POLE AS NEARLY AS PRACTICAL TO THE CENTER OF CONDUCTORS LOAD, OR 3'-0" Max FROM THE TOP OTHERWISE, SEE NOTE 4.
6. ALL ATTACHMENTS SHALL BE MOUNTED WITH STAINLESS STEEL STRAPS OR OTHER MANUFACTURERS METHODS WITHOUT DRILLING HOLES IN POLE, EXCEPT AS SHOWN. DRILLING THROUGH POLE WILL REQUIRE THE ENGINEER'S APPROVAL.
7. FOUNDATION DESIGN IS BASED ON AASHTO 2001 ARTICLE 13.6 BROMS' APPROXIMATE PROCEDURE ASSUMING A COHESSIONLESS MATERIAL. THE ANGLE OF INTERNAL FRICTION USED IS 30° AND UNIT WEIGHT OF SOIL USED IS 120 lb/FT^3. THE CONTRACTOR TO VERIFY ACTUAL SOIL CONDITION.
8. IF POLE IS LOCATED ON A 2:1 OR STEEPER SLOPE, ADD 2' EXTRA FOR EMBEDMENT.
9. SEE SHEETS E-61 AND E-62 FOR DETAILS.
10. FOR DETAILS NOT SHOWN, SEE "2006 STANDARD PLANS" AND "2006 REVISED STANDARD PLANS".
11. ALL TEMPORARY POLES SUPPORT OH CONDUCTORS. ATTACH LUMINAIRE ARM OR COMBINATION OF ATTACHMENTS AS SPECIFIED AT LOCATIONS WHERE INDICATED ON ELECTRICAL SHEETS.
12. ATTACHMENTS SHOWN ON POLE APPLY AS NOTED ON PLANS.
13. WOOD POLES AND UTILITY GRADE WIRES SHALL CONFORM TO CALTRANS STANDARD SPECIFICATIONS MAY 2006.

Dist	COUNTY	ROUTE	POST MILES TOTAL PROJECT	SHEET No.	TOTAL SHEETS
04	Son	101	0.9/3.6	666	918

REGISTERED CIVIL ENGINEER — DATE 11/17/11
4-23-12
PLANS APPROVAL DATE

REGISTERED PROFESSIONAL ENGINEER — KIN Y. CHAN No. 55391 Exp. 12/31/12 CIVIL — STATE OF CALIFORNIA

THE STATE OF CALIFORNIA OR ITS OFFICERS OR AGENTS SHALL NOT BE RESPONSIBLE FOR THE ACCURACY OR COMPLETENESS OF SCANNED COPIES OF THIS PLAN SHEET.

Y&C TRANSPORTATION CONSULTANTS, INC.
3250 RAMOS CIRCLE
SACRAMENTO, CA 95827

SCTA
490 MENDOCINO AVENUE
SUITE 206
SANTA ROSA, CA 95401

LIGHTING AND SIGN ILLUMINATION (STAGE CONSTRUCTION)
(ELECTRICAL DETAILS)

NO SCALE

E-60

FOR ABBREVIATIONS AND LEGEND, SEE SHEET E-1. FOR NOTES, SEE SHEET E-42

APPROVED FOR ELECTRICAL WORK ONLY

STATE OF CALIFORNIA - DEPARTMENT OF TRANSPORTATION
Caltrans
CONSULTANT FUNCTIONAL SUPERVISOR: RAMSEY HISSEN
CALCULATED-DESIGNED BY: MENG YANG
CHECKED BY: HAMID ZOLFAGHARI
REVISED BY
DATE REVISED

LAST REVISION 11-17-11 DATE PLOTTED => 26-APR-2012 TIME PLOTTED => 14:42

Dist	COUNTY	ROUTE	POST MILES TOTAL PROJECT	SHEET No.	TOTAL SHEETS
04	Son	101	0.9/3.6	667	918

REGISTERED CIVIL ENGINEER — DATE 11/17/11

4-23-12
PLANS APPROVAL DATE

REGISTERED PROFESSIONAL ENGINEER — KIN Y. CHAN No. 55391 Exp. 12/31/12 CIVIL — STATE OF CALIFORNIA

THE STATE OF CALIFORNIA OR ITS OFFICERS OR AGENTS SHALL NOT BE RESPONSIBLE FOR THE ACCURACY OR COMPLETENESS OF SCANNED COPIES OF THIS PLAN SHEET.

Y&C TRANSPORTATION CONSULTANTS, INC.
3250 RAMOS CIRCLE
SACRAMENTO, CA 95827

SCTA
490 MENDOCINO AVENUE
SUITE 206
SANTA ROSA, CA 95401

NOTES:

1. ALL HARDWARE AND STEEL SHALL BE GALVANIZED AFTER FABRICATION.
2. ARM BASE CONNECTION DETAILS SHALL BE IN COMPLIANCE WITH STANDARD PLANS DETAIL SHEET ES-6D WITH NOTED MODIFICATIONS.
3. 2000 lb Min CAPACITY STRAP SYSTEM SHALL BE USED FOR TOP AND BOTTOM OF PLATE.
4. THE CONTRACTOR TO VERIFY POLE DIMENSIONS AT TIE-ROD ATTACHMENT HEIGHT. FABRICATE 8" FLAT BAR WITH "L" DIMENSION TO MAINTAIN AN OPEN GAP BETWEEN ENCASEMENT IN FINISHED INSTALLATION.

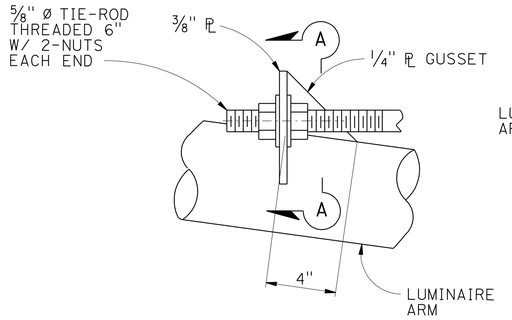

ELEVATION

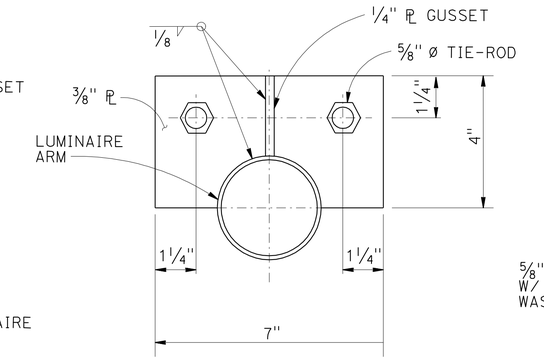

SECTION A-A

TIE-ROD DETAIL No. 1

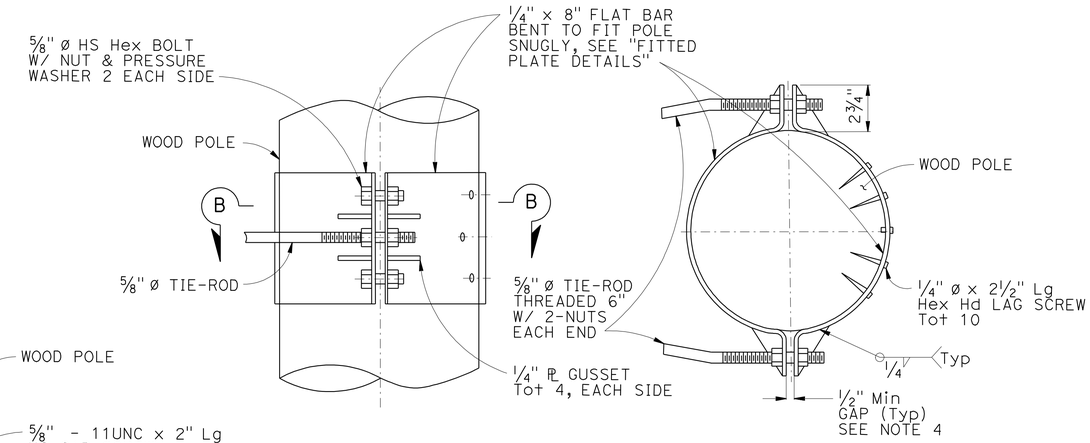

ELEVATION **SECTION B-B**

TIE-ROD DETAIL No. 2

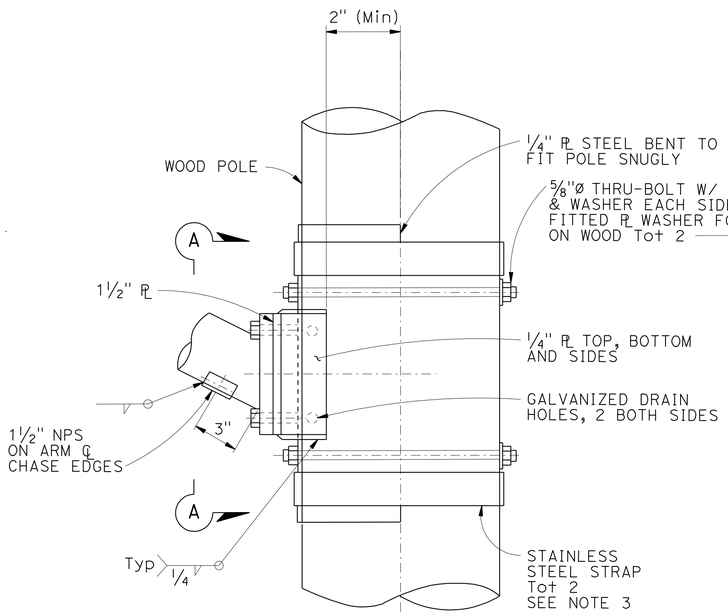

ELEVATION

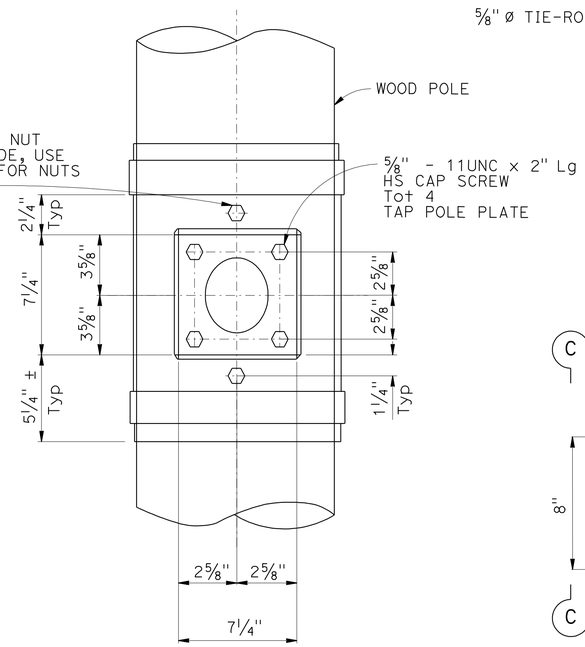

VIEW A-A

ARM CONNECTION DETAILS

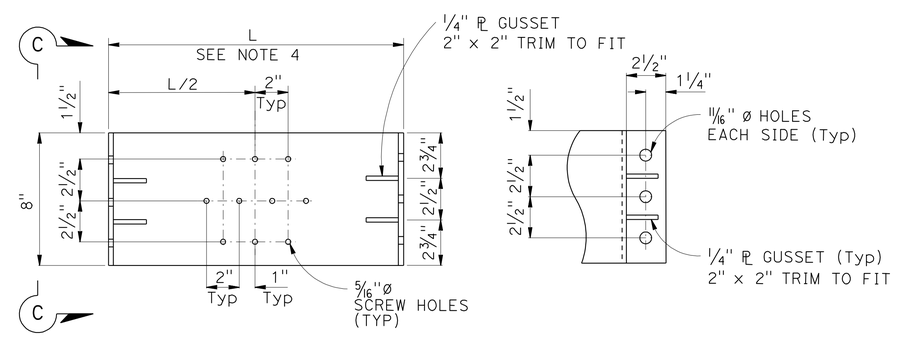

ELEVATION **SECTION C-C**

FITTED PLATE DETAILS

NOTE: 2 REQUIRED (1 W/ SCREW HOLES, 1 WITHOUT)

NOTE:
THE CONTRACTOR SHALL VERIFY ALL CONTROLLING FIELD DIMENSIONS BEFORE ORDERING OR FABRICATING ANY MATERIAL.

FOR ABBREVIATIONS AND LEGEND, SEE SHEET E-1. FOR NOTES, SEE SHEET E-42

APPROVED FOR ELECTRICAL WORK ONLY

LIGHTING AND SIGN ILLUMINATION (STAGE CONSTRUCTION)

(ELECTRICAL DETAILS)

NO SCALE

E-61

REVISED BY	DATE REVISED
MENG YANG	HAMID ZOLFAGHARI
CALCULATED-DESIGNED BY	CHECKED BY
CONSULTANT FUNCTIONAL SUPERVISOR	RAMSEY HISSEN

STATE OF CALIFORNIA - DEPARTMENT OF TRANSPORTATION — Caltrans

LAST REVISION 11-17-11 | DATE PLOTTED => 26-APR-2012 | TIME PLOTTED => 05:56

Dist	COUNTY	ROUTE	POST MILES TOTAL PROJECT	SHEET No.	TOTAL SHEETS
04	Son	101	0.9/3.6	668	918

REGISTERED CIVIL ENGINEER — DATE 11/17/11

4-23-12
PLANS APPROVAL DATE

REGISTERED PROFESSIONAL ENGINEER — KIN Y. CHAN — No. 55391 — Exp. 12/31/12 — CIVIL — STATE OF CALIFORNIA

THE STATE OF CALIFORNIA OR ITS OFFICERS OR AGENTS SHALL NOT BE RESPONSIBLE FOR THE ACCURACY OR COMPLETENESS OF SCANNED COPIES OF THIS PLAN SHEET.

Y&C TRANSPORTATION CONSULTANTS, INC.
3250 RAMOS CIRCLE
SACRAMENTO, CA 95827

SCTA
490 MENDOCINO AVENUE
SUITE 206
SANTA ROSA, CA 95401

NOTE:
THE CONTRACTOR SHALL VERIFY ALL CONTROLLING FIELD DIMENSIONS BEFORE ORDERING OR FABRICATING ANY MATERIAL.

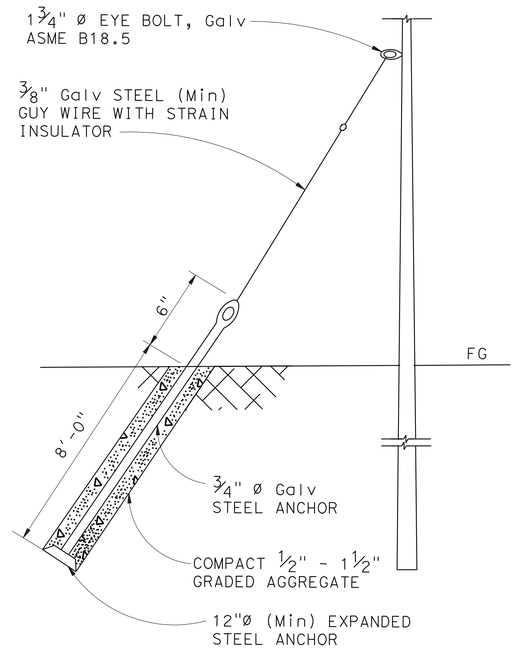

GUY WIRE INSTALLATION DETAIL

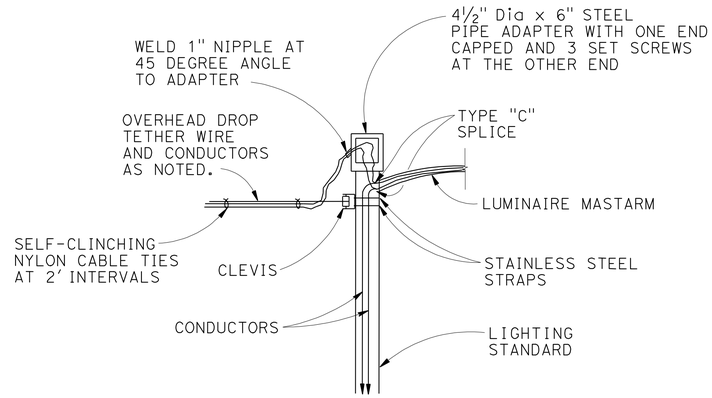

TYPICAL OVERHEAD DROP INSTALLATION DETAIL

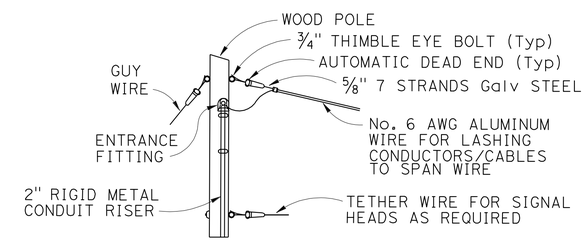

WIRE ATTACHMENT FOR WOOD POLE DETAIL

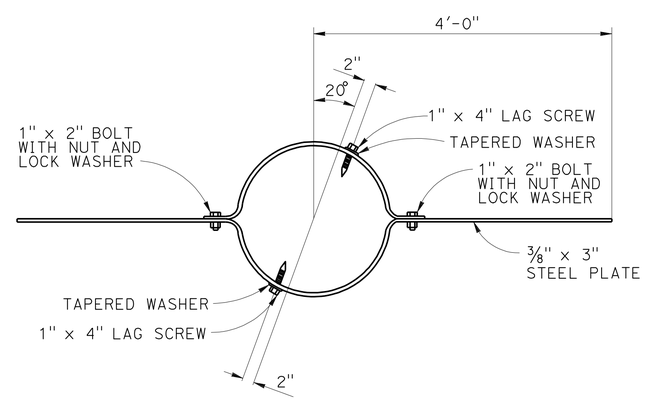

WIND ANCHOR DETAIL
TO BE INSTALLED PERPENDICULAR TO MAST ARM AND 2'-0" MINIMUM BELOW GRADE

FOR ABBREVIATIONS AND LEGEND, SEE SHEET E-1. FOR NOTES, SEE SHEET E-42

APPROVED FOR ELECTRICAL WORK ONLY

LIGHTING AND SIGN ILLUMINATION (STAGE CONSTRUCTION)
(ELECTRICAL DETAILS)
NO SCALE

E-62

STATE OF CALIFORNIA - DEPARTMENT OF TRANSPORTATION — Caltrans®
CONSULTANT FUNCTIONAL SUPERVISOR: RAMSEY HISSEN
CALCULATED-DESIGNED BY: MENG YANG — CHECKED BY: HAMID ZOLFAGHARI
REVISED BY — DATE REVISED

LAST REVISION 11-17-11 — DATE PLOTTED => 26-APR-2012 — TIME PLOTTED => 05:56

Dist	COUNTY	ROUTE	POST MILES TOTAL PROJECT	SHEET No.	TOTAL SHEETS
04	Son	101	0.9/3.6	669	918

REGISTERED CIVIL ENGINEER — DATE 11/17/11

4-23-12
PLANS APPROVAL DATE

REGISTERED PROFESSIONAL ENGINEER — KIN Y. CHAN — No. 55391 — Exp. 12/31/12 — CIVIL — STATE OF CALIFORNIA

THE STATE OF CALIFORNIA OR ITS OFFICERS OR AGENTS SHALL NOT BE RESPONSIBLE FOR THE ACCURACY OR COMPLETENESS OF SCANNED COPIES OF THIS PLAN SHEET.

Y&C TRANSPORTATION CONSULTANTS, INC.
3250 RAMOS CIRCLE
SACRAMENTO, CA 95827

SCTA
490 MENDOCINO AVENUE
SUITE 206
SANTA ROSA, CA 95401

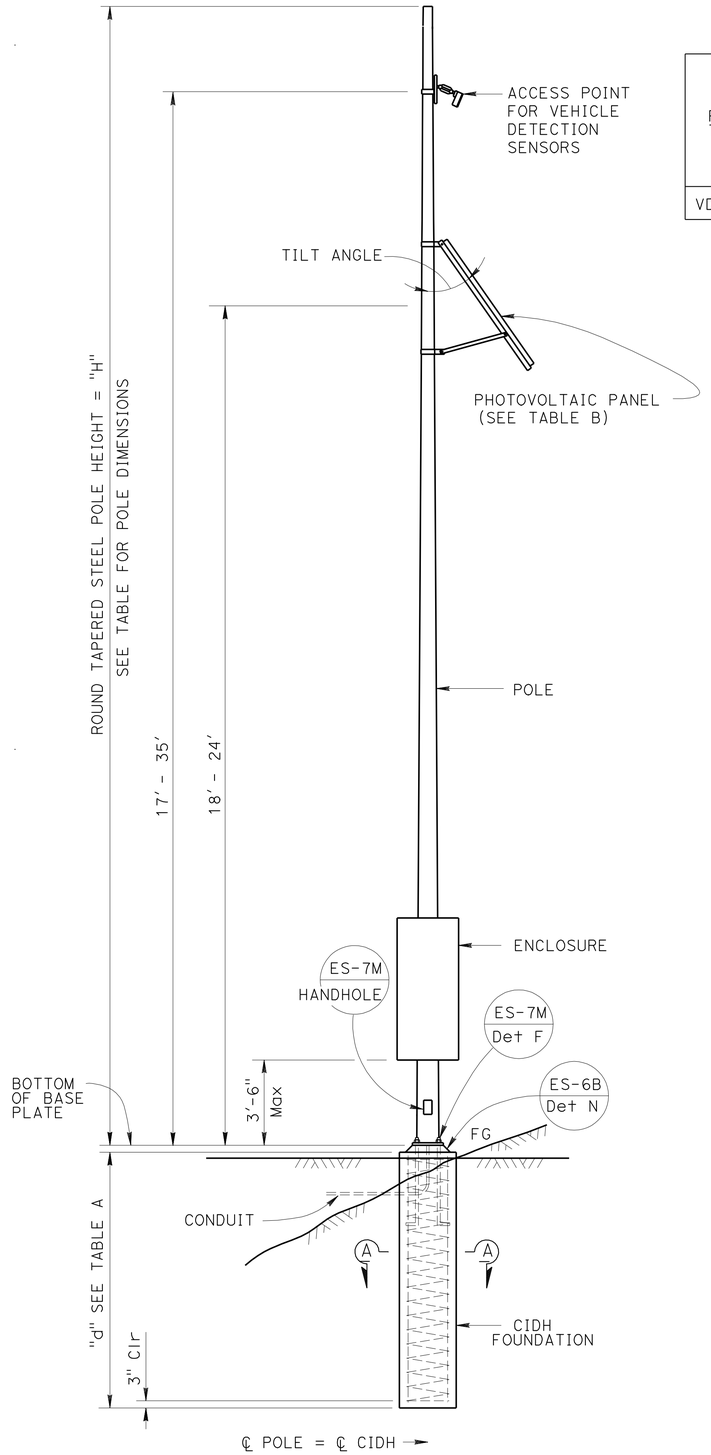

ELEVATION

FOR ABBREVIATIONS AND LEGEND, SEE SHEET E-1. FOR NOTES, SEE SHEET E-42

TABLE A

POLE TYPE	POLE DATA				BASE PLATE DATA				"d" 2'-0" Ø CIDH PILE		STRUCTURAL STEEL LBS PLUS 3.5 PERCENT GALVANIZING
	HEIGHT "H"	Min OD		THICKNESS	"C"	THICKNESS	ANCHOR BOLTS				
		BASE	TOP				SIZE	BC = BOLT CIRCLE	LEVEL GROUND	SLOPING GROUND	
VDS 40	40'	9⅜"	3⅞"	0.1793"	1'-1"	1"	1¼" X 3'-0 X 4"	1'-1"	7' - 0"		650

TABLE B

PHOTOVOLTAIC PANEL LIMITS	
PANEL SIZE	TILT ANGLE
16 SQFT Max	40° Min

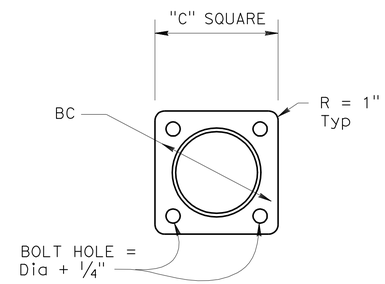

BASE PLATE
SCALE 1½"= 1'

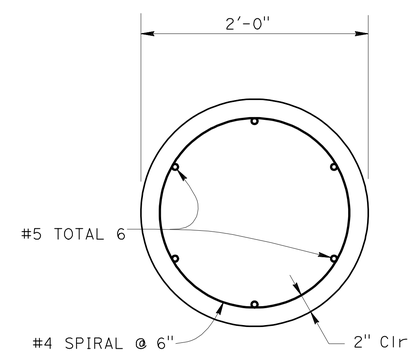

SECTION A-A
SCALE 1½"= 1'

SPECIFICATIONS:

DESIGN : AASHTO STANDARD SPECIFICATIONS FOR STRUCTURAL SUPPORTS FOR HIGHWAY SIGNS, LUMINAIRES AND TRAFFIC SIGNALS DATED 2001.

LOADING:

WIND LOADINGS : 100 MPH

UNIT STRESSES

STRUCTURAL STEEL : fy = 48,000 Psi TAPERED STEEL TUBE
fy = 36,000 Psi UNLESS OTHERWISE NOTED.

ANCHOR BOLTS = A307

REINFORCED CONCRETE : f'c = 3,600 Psi
fy = 60,000 Psi

NOTES:

1. ALL STEEL SHALL BE GALVANIZED AFTER FABRICATION.
2. DURING POLE ERECTION THE POST SHALL BE RAKED AS NECESSARY WITH THE USE OF LEVELING NUTS TO PROVIDE A PLUMB POLE AXIS.
3. THE CONTRACTOR SHALL VERIFY ALL CONTROLLING FIELD DIMENSIONS BEFORE ORDERING OR FABRICATING ANY MATERIAL.

TRAFFIC OPERATIONS SYSTEM (STAGE CONSTRUCTION)
(WIRELESS MAGNETOMETER VEHICLE DETECTION SYSTEM)
(POLE DETAIL)

NO SCALE

E-63

APPROVED FOR ELECTRICAL WORK ONLY

STATE OF CALIFORNIA - DEPARTMENT OF TRANSPORTATION — Caltrans

CONSULTANT FUNCTIONAL SUPERVISOR: RAMSEY HISSEN
CALCULATED-DESIGNED BY: HAMID ZOLFAGHARI — REVISED BY: MENG YANG
CHECKED BY — DATE REVISED

LAST REVISION 11-17-11 — DATE PLOTTED => 26-APR-2012 — TIME PLOTTED => 05:56

Dist	COUNTY	ROUTE	POST MILES TOTAL PROJECT	SHEET No.	TOTAL SHEETS
04	Son	101	0.9/3.6	670	918

REGISTERED CIVIL ENGINEER — DATE 11/17/11

4-23-12
PLANS APPROVAL DATE

REGISTERED PROFESSIONAL ENGINEER — KIN Y. CHAN No. 55391 Exp. 12/31/12 CIVIL — STATE OF CALIFORNIA

THE STATE OF CALIFORNIA OR ITS OFFICERS OR AGENTS SHALL NOT BE RESPONSIBLE FOR THE ACCURACY OR COMPLETENESS OF SCANNED COPIES OF THIS PLAN SHEET.

Y&C TRANSPORTATION CONSULTANTS, INC.
3250 RAMOS CIRCLE
SACRAMENTO, CA 95827

SCTA
490 MENDOCINO AVENUE
SUITE 206
SANTA ROSA, CA 95401

VEHICLE SENSOR NODE INSTALLATION PROCEDURE

1. PRIOR TO INSTALLATION, IDENTIFY VEHICLE SENSOR NODE'S ID, LANE NUMBER, AND LOCATION IN LANE.
2. MAKE SURE THE VEHICLE SENSOR NODE INSTALLS FLAT IN THE CORED HOLED AND IS NOT TILTED.
3. USE THE HEAT-GUN OR HOT COMPRESSED AIR TO DRY THE INSIDE OF THE CORED HOLE. THERE MUST BE ABSOLUTELY NO MOISTURE ON THE APPLIED SURFACE.
4. FILL THE HOLE ABOUT 1/4 FULL OF THE SEALANT.
5. PLACE VEHICLE SENSOR NODE IN THE HOLE WITH ARROW POINTING IN THE DIRECTION OF TRAFFIC. THE SEALANT SHOULD STILL HAVE WORK TIME, SO THE VEHICLE SENSOR NODE CAN BE ROTATED TO THE CORRECT ORIENTATION. PUSH VEHICLE SENSOR NODE DOWN SO IT LAYS FLAT ON THE BOTTOM OF THE HOLE.
6. FILL THE HOLE WITH THE REMAINING SEALANT TO COVER THE VEHICLE SENSOR NODE. LEVEL SEALANT WITH THE SURFACE OF THE ROAD.
7. AFTER THE FIRST APPLICATION, DO NOT LET THE SEALANT SIT FOR MORE THAN 30 SECONDS BEFORE THE NEXT APPLICATION.
8. DEPENDING ON AMBIENT TEMPERATURE AND HUMIDITY, SEALANT DRYING TIME WILL VARY FROM 5 MINUTES TO 15 MINUTES. VERIFY HARDNESS OF SEALANT BEFORE REOPENING THE LANE FOR TRAFFIC.
9. RECORD DISTANCES BETWEEN EACH VEHICLE SENSOR NODE PAIR.

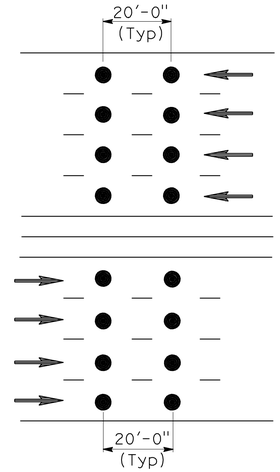

DETAIL "TM"

WMVDS NOTES

FREEWAY MAINLINE DETECTOR DESIGNATION:

N=NORTHBOUND LANES (NB)
S=SOUTHBOUND LANES (SB)
E=EASTBOUND LANES (EB)
W=WESTBOUND LANES (WB)

NUMBER OF LANES FROM LEFT WITH RESPECT TO DIRECTION OF TRAFFIC:

1=FIRST LANE FROM LEFT
2=SECOND LANE FROM LEFT
3=THIRD LANE FROM LEFT
4=FOURTH LANE FROM LEFT

NUMBER OF VSN IN THE SAME LANE:

1=ENTERING DETECTOR
2=LEAVING DETECTOR

N 3-2

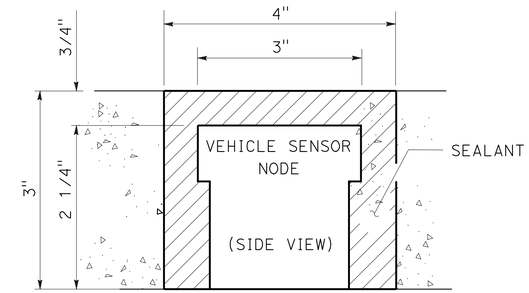

DETAIL B

VEHICLE SENSOR NODE INSTALLED IN ROADWAY

LEGEND

DIRECTION OF TRAFFIC

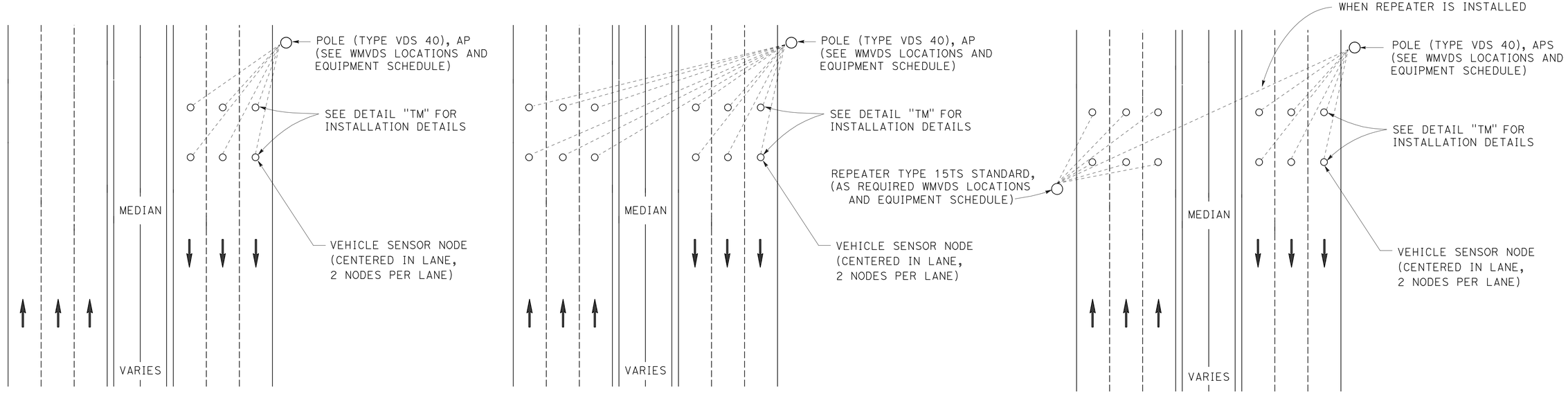

TYPE I **TYPE II** **TYPE III**

DETAIL A

VEHICLE SENSOR NODE PLACEMENT DETAIL

FOR ABBREVIATIONS AND LEGEND, SEE SHEET E-1. FOR NOTES, SEE SHEET E-42

APPROVED FOR ELECTRICAL WORK ONLY

TRAFFIC OPERATIONS SYSTEM (STAGE CONSTRUCTION)
(WIRELESS MAGNETOMETER VEHICLE DETECTION STATION)

NO SCALE

E-64

STATE OF CALIFORNIA - DEPARTMENT OF TRANSPORTATION — Caltrans

CONSULTANT FUNCTIONAL SUPERVISOR: RAMSEY HISSEN
CALCULATED-DESIGNED BY: MENG YANG
CHECKED BY: HAMID ZOLFAGHARI
REVISED BY / DATE REVISED

LAST REVISION 11-17-11 — DATE PLOTTED => 26-APR-2012 — TIME PLOTTED => 09:56

Dist	COUNTY	ROUTE	POST MILES TOTAL PROJECT	SHEET No.	TOTAL SHEETS
04	Son	101	0.9/3.6	671	918

REGISTERED CIVIL ENGINEER — DATE 11/17/11

4-23-12
PLANS APPROVAL DATE

REGISTERED PROFESSIONAL ENGINEER — KIN Y. CHAN — No. 55391 — Exp. 12/31/12 — CIVIL — STATE OF CALIFORNIA

THE STATE OF CALIFORNIA OR ITS OFFICERS OR AGENTS SHALL NOT BE RESPONSIBLE FOR THE ACCURACY OR COMPLETENESS OF SCANNED COPIES OF THIS PLAN SHEET.

Y&C TRANSPORTATION CONSULTANTS, INC.
3250 RAMOS CIRCLE
SACRAMENTO, CA 95827

SCTA
490 MENDOCINO AVENUE
SUITE 206
SANTA ROSA, CA 95401

NOTE:
THE CONTRACTOR SHALL VERIFY ALL CONTROLLING FIELD DIMENSIONS BEFORE ORDERING OR FABRICATING ANY MATERIAL.

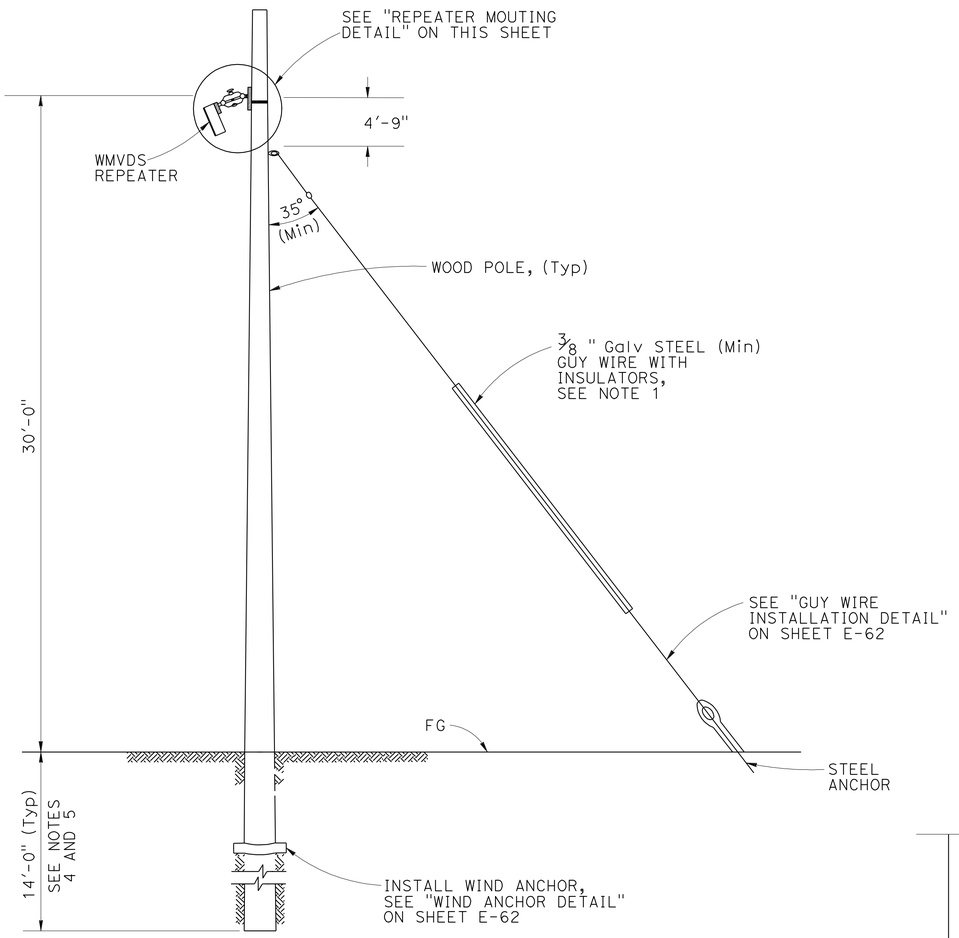

TYPICAL WOOD POLE SUPPORT WITH WMVDS REPEATER MOUNTING

GENERAL NOTES:

SPECIFICATIONS

1. AASHTO STANDARD SPECIFICATIONS FOR STRUCTURAL SUPPORTS FOR HIGHWAY SIGNS, LUMINAIRES AND TRAFFIC SIGNALS DATED 2001.
2. GENERAL ORDER No. 95 OF PUBLIC UTILITIES COMMISSION.
3. NATIONAL ELECTRICAL SAFETY CODE.
4. CALTRANS STANDARD SPECIFICATIONS MAY 2006.

LOADING

WIND LOADINGS: 85 MPH.

UNIT STRESSES

TIMBER POLES: Fb = 1850 psi TAPERED TREATED ROUND POLE
Fv = 110 psi ASTM D2899 STANDARD
E = 1500 x 10^3 psi

TREATMENT

TO CONFORM WITH SECTION 86 STANDARD SPECIFICATIONS.

NOTES:

1. WOOD POLES SHALL BE STABILIZED USING GUY WIRES, BREAST BLOCKS OR RAKES AT EACH DEAD END, CORNER, OH DROP OR LINE DEVIATION MORE THAN 15 FROM STRAIGHT LINE. THE DIRECTION OF THE GUY SHALL COUNTERACT THE RESULTANT OF UNBALANCED FORCES APPLIED TO POLE. WHERE SPACE OR CONFLICT PREVENT GUY INSTALLATION, A DIAGONAL BRACE SHALL BE USED. THE BRACE SHALL BE WOOD AND SHALL BE CONNECTED TO THE POLE BY MEANS TO SATISFY STRUCTURAL AND ELECTRICAL REQUIREMENTS. THE DIRECTION OF THE BRACE SHALL COUNTERACT THE RESULTANT OF UNBALANCED HORIZONTAL FORCE OF 2000 POUNDS (Min) APPLIED TO THE POLE.
2. GUY WIRE SHALL BE ATTACHED TO POLE AS NEARLY AS PRACTICAL TO THE CENTER OF CONDUCTORS LOAD, OR 3'-0" Max OTHERWISE, SEE NOTE 1.
3. ALL ATTACHMENTS SHALL BE MOUNTED WITH STAINLESS STEEL STRAPS OR OTHER MANUFACTURER'S METHODS WITHOUT DRILLING HOLES IN POLE, EXCEPT AS SHOWN. DRILLING THROUGH POLE WILL REQUIRE THE ENGINEER'S APPROVAL.
4. FOUNDATION DESIGN IS BASED ON AASHTO 2001 ARTICLE 13.6 BROMS' APPROXIMATE PROCEDURE ASSUMING A COHESSIONLESS MATERIAL. THE ANGLE OF INTERNAL FRICTION USED IS 30° AND UNIT WEIGHT OF SOIL USED IS 120 Lb/FT^3. THE CONTRACTOR TO VERIFY ACTUAL SOIL CONDITION.
5. IF POLE IS LOCATED ON A 2:1 OR STEEPER SLOPE, ADD 2' EXTRA FOR EMBEDMENT.
6. FOR DETAILS NOT SHOWN, SEE "2006 STANDARD PLANS" AND "2006 REVISED STANDARD PLANS".
7. ATTACHMENTS SHOWN ON POLE APPLY AS NOTED ON PLANS.
8. WOOD POLES AND UTILITY GRADE WIRES SHALL CONFORM TO CALTRANS STANDARD SPECIFICATIONS MAY 2006.

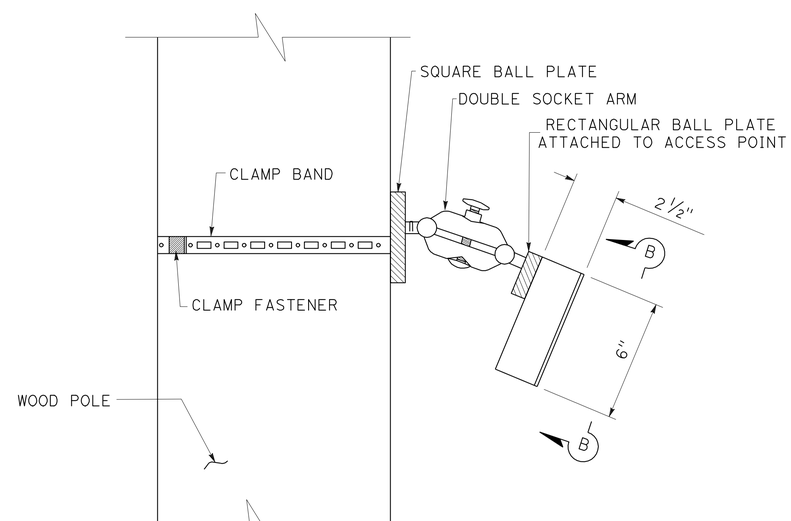

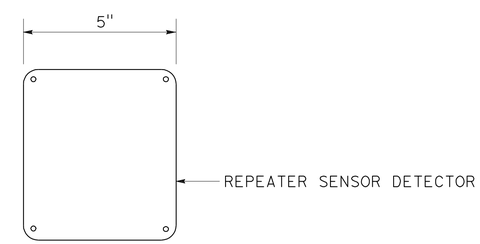

SECTION B-B

REPEATER MOUNTING DETAIL

TRAFFIC OPERATIONS SYSTEM (STAGE CONSTRUCTION)
(WIRELESS MAGNETOMETER VEHICLE DETECTION SYSTEM)

NO SCALE

FOR ABBREVIATIONS, SEE SHEET E-1
FOR NOTES AND LEGEND, SEE SHEET E-42

APPROVED FOR ELECTRICAL WORK ONLY

E-65

STATE OF CALIFORNIA - DEPARTMENT OF TRANSPORTATION
Caltrans

CONSULTANT FUNCTIONAL SUPERVISOR: RAMSEY HISSEN
CALCULATED-DESIGNED BY: MENG YANG
CHECKED BY: HAMID ZOLFAGHARI
REVISED BY
DATE REVISED

LAST REVISION 11-17-11 | DATE PLOTTED => 26-APR-2012 | TIME PLOTTED => 05:56

Dist	COUNTY	ROUTE	POST MILES TOTAL PROJECT	SHEET No.	TOTAL SHEETS
04	Son	101	0.9/3.6	672	918

REGISTERED CIVIL ENGINEER — DATE 3/9/12

4-23-12
PLANS APPROVAL DATE

REGISTERED PROFESSIONAL ENGINEER — KIN Y. CHAN No. 55391 Exp. 12/31/12 CIVIL — STATE OF CALIFORNIA

THE STATE OF CALIFORNIA OR ITS OFFICERS OR AGENTS SHALL NOT BE RESPONSIBLE FOR THE ACCURACY OR COMPLETENESS OF SCANNED COPIES OF THIS PLAN SHEET.

Y&C TRANSPORTATION CONSULTANTS, INC.
3250 RAMOS CIRCLE
SACRAMENTO, CA 95827

SCTA
490 MENDOCINO AVENUE
SUITE 206
SANTA ROSA, CA 95401

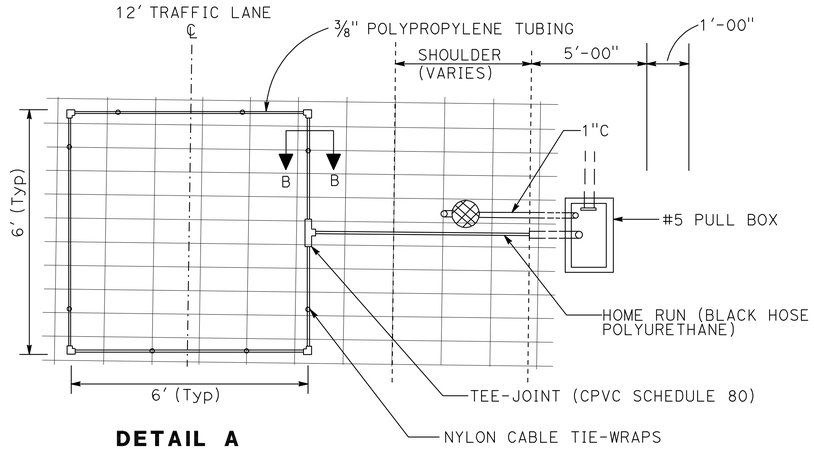

DETAIL A
TYPE A PREFORMED INDUCTIVE LOOP

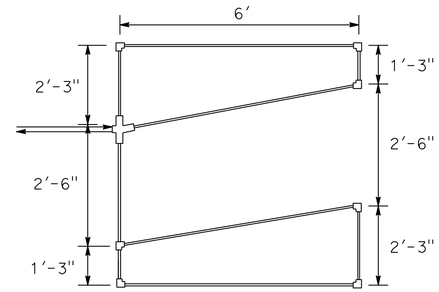

DETAIL B
TYPE D PREFORMED INDUCTIVE LOOP

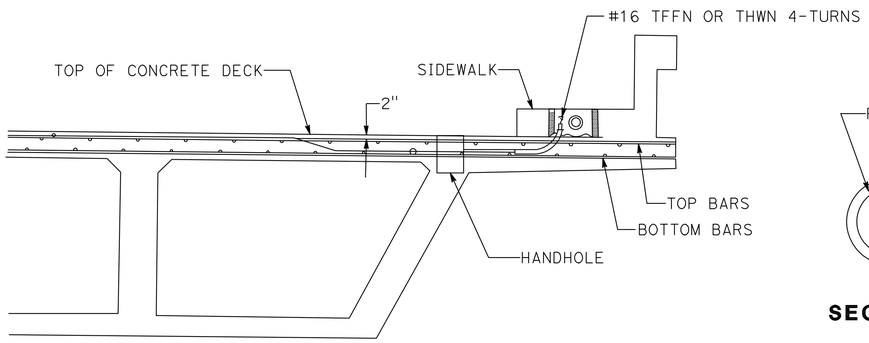

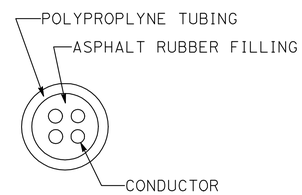

SECTION B-B

INSTALLATION DETAILS OF PREFORMED INDUCTIVE LOOP ON NEW STRUCTURE (TYPICAL)

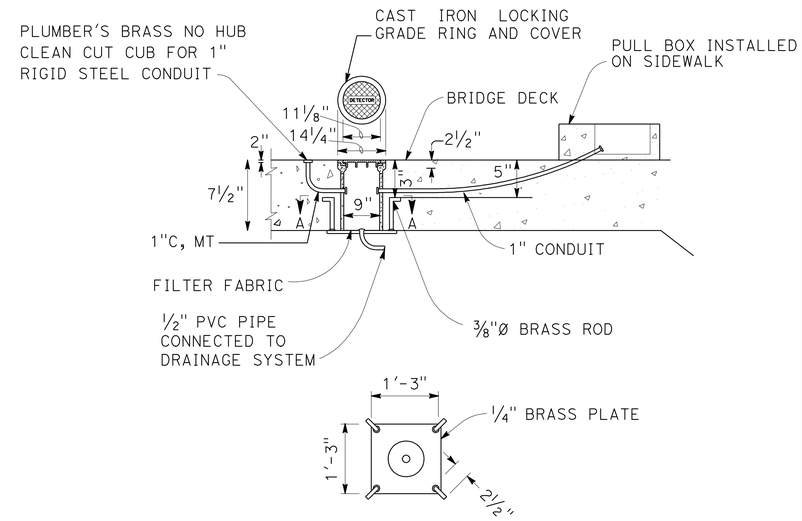

SECTION A-A

DETECTOR HANDHOLE ON BRIDGE DECK

NOTES:

1. CAST IRON COVER SHALL BE DESIGNED FOR HEAVY TRAFFIC LOADS AND SHALL BE SECURED BY HOLD DOWN SCREWS.
2. ALL PIPE OPENINGS SHALL BE SEALED WITH APPROVED COMPOUND.
3. THE LOCATION OF THE HANDHOLE SHALL BE DETERMINED BY FIELD ENGINEER.

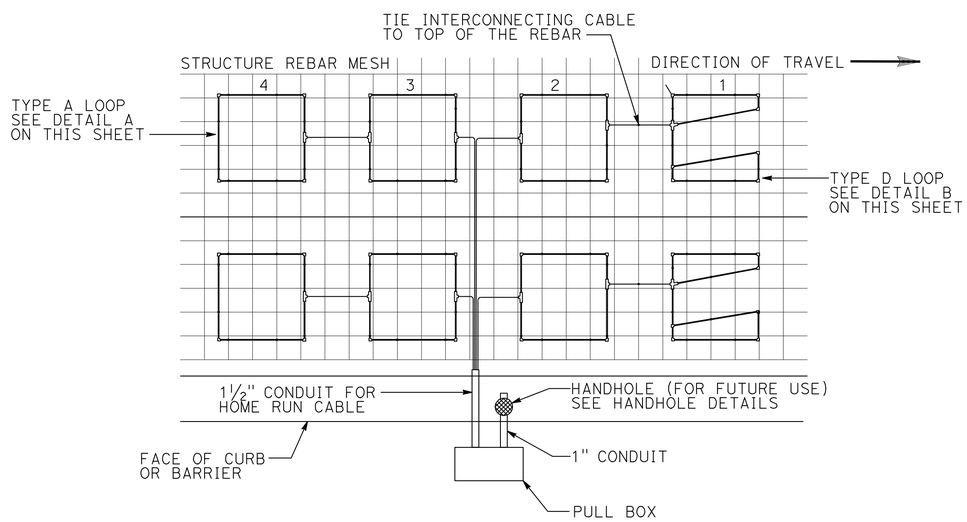

PREFORMED INDUCTIVE LOOP INSTALLATION DETAILS

NOTES:

1. LOOP 1 IS IN SERIES WITH LOOP 2. LOOP 3 IS IN SERIES WITH LOOP 4.
2. INSTALL EXPANSION AND CONTRACTION JOINTS IN LOOP AND HOME RUNS.
3. TIE PREFORMED INDUCTIVE LOOPS TO REBAR WITH NYLON TIE WRAPS.

FOR NOTES, ABBREVIATIONS AND LEGEND, SEE SHEET E-1

APPROVED FOR ELECTRICAL WORK ONLY

ELECTRICAL DETAILS
(PREFORMED INDUCTIVE LOOP)
NO SCALE

E-66

REVISED BY	DATE REVISED
MENG YANG	HAMID ZOLFAGHARI
CALCULATED-DESIGNED BY	CHECKED BY
CONSULTANT FUNCTIONAL SUPERVISOR	RAMSEY HISSEN

STATE OF CALIFORNIA - DEPARTMENT OF TRANSPORTATION — Caltrans

LAST REVISION 03-09-12 | DATE PLOTTED => 26-APR-2012 | TIME PLOTTED => 05:56

DIST	COUNTY	ROUTE	POST MILES TOTAL PROJECT	SHEET NO.	TOTAL SHEETS
04	Son	101	0.9/3.6	673	918

REGISTERED CIVIL ENGINEER

November 17, 2006
PLANS APPROVAL DATE

REGISTERED PROFESSIONAL ENGINEER Dallas Forester No. C37765 Exp. 12-31-06 CIVIL STATE OF CALIFORNIA

The State of California or its officers or agents shall not be responsible for the accuracy or completeness of electronic copies of this plan sheet.

To accompany plans dated 4-23-12

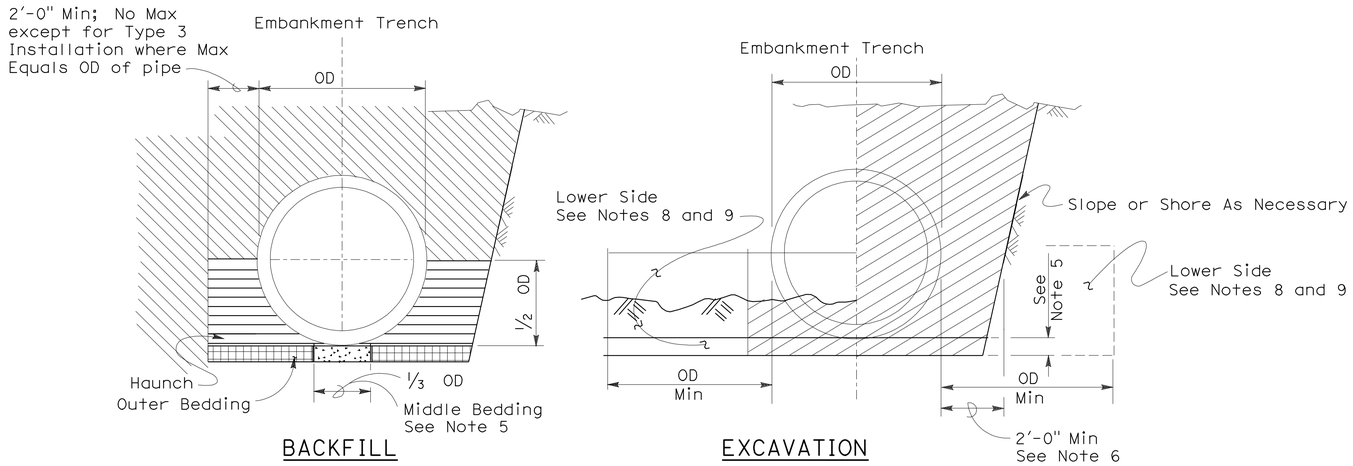

Roadway Embankment

Structure Backfill (Culvert) See Note 6

Structure Backfill (Culvert) See Note 6

Loose Backfill

Excavation Structure (Culvert)

TYPE 1 INSTALLATION:

The haunch and outer bedding shall be compacted to a minimum 90 percent relative compaction. In addition, the minimum sand equivalent in these areas shall be 30 and the maximum percentage passing the 75 μm sieve size shall be 12.

TYPE 2 INSTALLATION:

The haunch and outer bedding shall be compacted to a minimum 90 percent relative compaction. In addition, the minimum sand equivalent in these areas shall be 25.

TYPE 3 INSTALLATION:

The haunch and outer bedding shall be compacted to a minimum 85 percent relative compaction. 90 percent relative compaction will be required where the fill over the pipe is less than 4'-0" or 1/2 OD.

INSTALLATION TYPE 1

MINIMUM CLASS AND D-LOAD	COVER	
	108" Dia AND SMALLER	OVER 108" Dia
Class II 1000D	14.9'	12.9'
Class III 1350D	15.0' - 20.9'	13.0' - 18.9'
Class III Special 1700D	21.0' - 26.9'	19.0' - 24.9'
Class IV 2000D	27.0' - 31.9'	25.0' - 29.9'
Class IV Special 2500D	32.0' - 40.9'	30.0' - 38.9'
Class V 3000D	41.0' - 49.9'	39.0' - 46.9'
Class V Special 3600D	50.0' - 59.0'	47.0' - 58.0'

INSTALLATION TYPE 2

MINIMUM CLASS AND D-LOAD	COVER
Class II 1000D	9.9'
Class III 1350D	10.0'- 14.9'
Class III Special 1700D	15.0' - 19.9'
Class IV 2000D	20.0' - 24.9'
Class IV Special 2500D	25.0' - 31.9'
Class V 3000D	32.0' - 38.9'
Class V Special 3600D	39.0' - 47.0'

INSTALLATION TYPE 3

MINIMUM CLASS AND D-LOAD	COVER	
	48" Dia AND SMALLER	OVER 48" Dia
Class II 1000D	7.9'	5.9'
Class III 1350D	8.0' - 10.9'	6.0' - 8.9'
Class III Special 1700D	11.0' - 14.9'	9.0' - 12.9'
Class IV 2000D	15.0' - 17.9'	13.0' - 15.9'
Class IV Special 2500D	18.0' - 21.9'	16.0' - 19.9'
Class V 3000D	22.0' - 26.9'	20.0' - 24.9'
Class V Special 3600D	30.0' - 33.0'	25.0' - 31.0'

NOTES:

1. Unless otherwise shown on the plans or specified in the special provision, the Contractor shall have the option of selecting the class of RCP and the type of installation to be used, provided the height of cover does not exceed the value shown for the RCP selected.
   Example: 24" RCP culvert with maximum cover of 19'-0" the options are:
   a) Class III or stronger with Installation Type 1.
   b) Class III Special or stronger with Installation Type 2.
   c) Class IV Special or stronger with Installation Type 3.
   Cover is defined as the maximum vertical distance from top of the pipe to finished grade within the length of any given culvert.
2. The class of RCP and Installation Type selected shall be the same throughout the length of any given culvert.
3. The "length of any culvert" is defined as the culvert between:
   a) Successive drainage structure (inlets, junction boxes, headwalls, etc.).
   b) A drainage structure and the inlet or outlet end of the culvert.
   c) The inlet and outlet end of the culvert when there are no intervening drainage structures.
4. Oval and arch shaped RCP shall not be used.
5. 1/25 OD Min, not less than 3".
6. Slurry cement backfill may be substituted for backfill in the outer bedding and haunch areas. If slurry is used the outer and middle beddings shall be omitted. Prior to installation the soil under the middle 1/3 of the outside diameter of the pipe shall be softened by scarifying or other means to a minimum depth of 1/25 OD, but not less than 3". Where slurry cement backfill is used clear distance to trench wall may be reduced as set forth in Section 19-3.062 of the Standard Specifications.
7. Backfill shall be placed full width of excavation except where dimensions are shown for backfill width or thickness. Dimensions shown are minimums.
8. Lower side shall be suitable material as determined by the Engineer. Otherwise it shall be considered unsuitable as set forth in Section 19-2.02 of the Standard Specifications. See Note 9.
9. Where the pipe is placed in a trench, if the trench walls are sloped at 5 vertical to 1 horizontal or steeper for at least 90 percent of the trench height or up to not less than 12" from the grading plane, the firmness of the soil in the lower side need not be considered.
10. Non-reinforced precast concrete pipe sizes 3'-0" or smaller may be placed under installation Types 1, 2 or 3.

STATE OF CALIFORNIA
DEPARTMENT OF TRANSPORTATION

EXCAVATION AND BACKFILL CONCRETE PIPE CULVERTS

NO SCALE

RSP A62DA DATED NOVEMBER 17, 2006 SUPERSEDES STANDARD PLAN A62DA DATED MAY 1, 2006 - PAGE 20 OF THE STANDARD PLANS BOOK DATED MAY 2006.

REVISED STANDARD PLAN RSP A62DA

2006 REVISED STANDARD PLAN RSP A62DA

10-26-06

DIST	COUNTY	ROUTE	POST MILES TOTAL PROJECT	SHEET NO.	TOTAL SHEETS
04	Son	101	0.9/3.6	674	918

Randell D. Hiatt
REGISTERED CIVIL ENGINEER

June 6, 2008
PLANS APPROVAL DATE

REGISTERED PROFESSIONAL ENGINEER
Randell D. Hiatt
No. C50200
Exp. 6-30-09
CIVIL
STATE OF CALIFORNIA

The State of California or its officers or agents shall not be responsible for the accuracy or completeness of electronic copies of this plan sheet.

To accompany plans dated 4-23-12

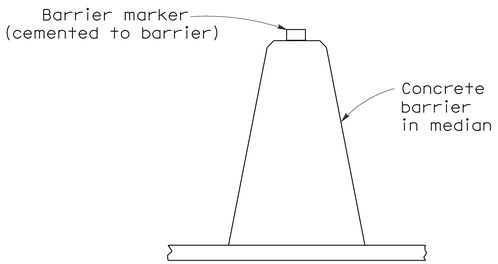

CONCRETE BARRIER TYPE 60 DELINEATION

See Notes 7 and 8

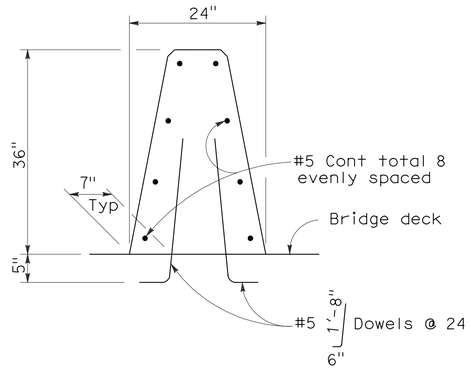

CONCRETE BARRIER TYPE 60A

Details similar to Type 60 except as noted.

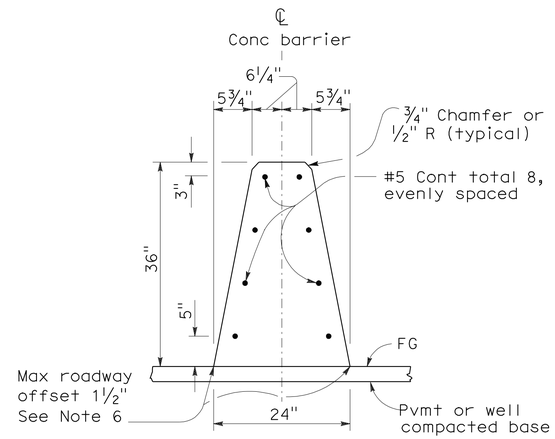

CONCRETE BARRIER TYPE 60

NOTES:

1. See Standard Plan A76B for details of Concrete Barrier Type 60 end anchors, connection to structures and transitions to Concrete Barrier Type 50 and Concrete Barrier Type 60S.
2. See Standard Plan A76C for Concrete Barrier Type 60 transitions at bridge column and sign pedestals.
3. Where glare screen is required on Concrete Barrier Type 60, use Concrete Barrier Type 60G.
4. Where the concrete barrier is added to the face of existing concrete structure, match existing weep holes.
5. Expansion joints in concrete barrier shall be located at all deck, pavement and principal wall joints. Expansion joint filler material shall be the same size as joint or ½" minimum.
6. Where roadway offset is greater than 1½", see Concrete Barrier Type 60C.
7. Barrier delineation to be used when required by the Special Provisions.
8. Spacing of barrier markers to match spacing of raised pavement markers on the adjacent median edgeline pavement delineation.
9. Reinforcing stirrup not required for roadway offsets less than 1'-0".
10. For roadway surfaces offset greater than 1½" to 3", no rebars required. For roadway surfaces offset greater than 3" to 8" use two #4 rebars at 3" above the lower roadway surface. For roadway surfaces offset greater than 8" to 12", use two #4 rebars at 3" above the lower roadway surface and two #4 rebars at 8" above the lower roadway surface. For roadway surfaces offset greater than 12" to 36", use two #4 rebars at 3" above the lower roadway surface and two #4 rebars at every 8" increment vertical spacing above the first two #4 rebars.

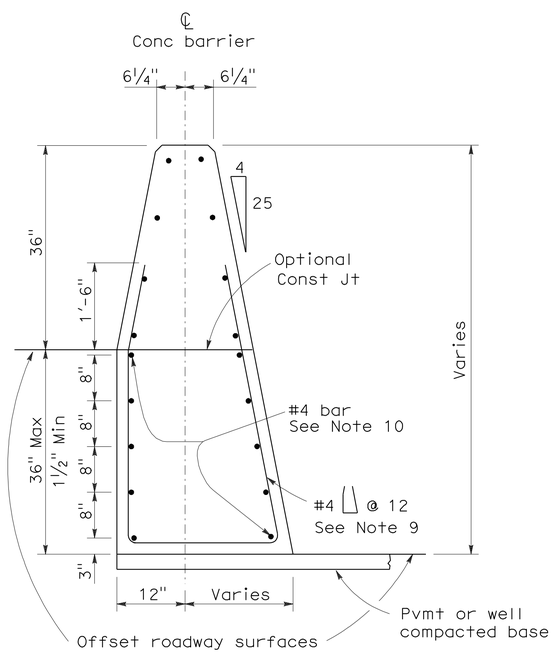

CONCRETE BARRIER TYPE 60C

Details similar to Type 60 except as noted.
Concrete barrier end anchor when necessary.
36" roadway surfaces offset shown.

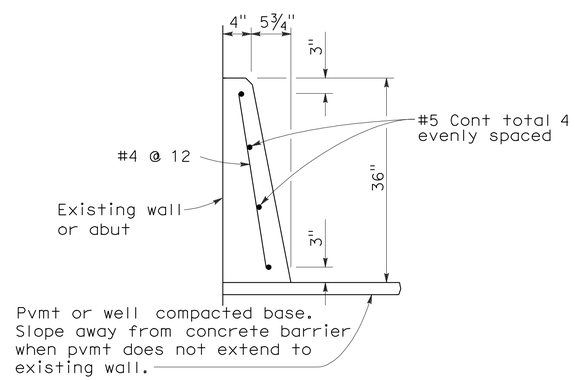

CONCRETE BARRIER TYPE 60D

STATE OF CALIFORNIA
DEPARTMENT OF TRANSPORTATION

CONCRETE BARRIER TYPE 60

NO SCALE

RSP A76A DATED JUNE 6, 2008 SUPERSEDES STANDARD PLAN A76A
DATED MAY 1, 2006 - PAGE 29 OF THE STANDARD PLANS BOOK DATED MAY 2006.

REVISED STANDARD PLAN RSP A76A

2006 REVISED STANDARD PLAN RSP A76A

5-21-08

Dist	COUNTY	ROUTE	POST MILES TOTAL PROJECT	SHEET No.	TOTAL SHEETS
04	Son	101	0.9/3.6	675	918

Randell D. Hiatt
REGISTERED CIVIL ENGINEER

May 20, 2011
PLANS APPROVAL DATE

REGISTERED PROFESSIONAL ENGINEER
Randell D. Hiatt
No. C50200
Exp. 6-30-11
CIVIL
STATE OF CALIFORNIA

The State of California or its officers or agents shall not be responsible for the accuracy or completeness of electronic copies of this plan sheet.

To accompany plans dated 4-23-12

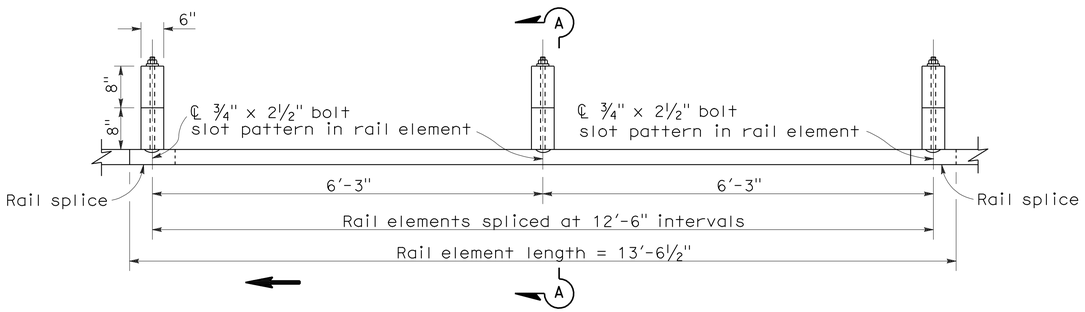

PLAN

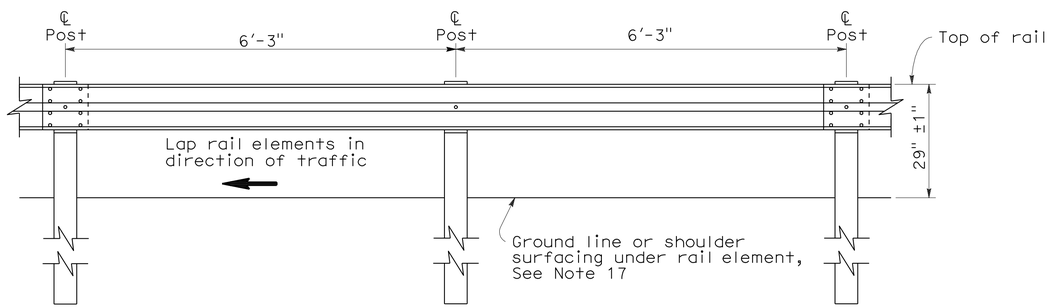

ELEVATION

METAL BEAM GUARD RAILING WITH WOOD POST AND BLOCKS

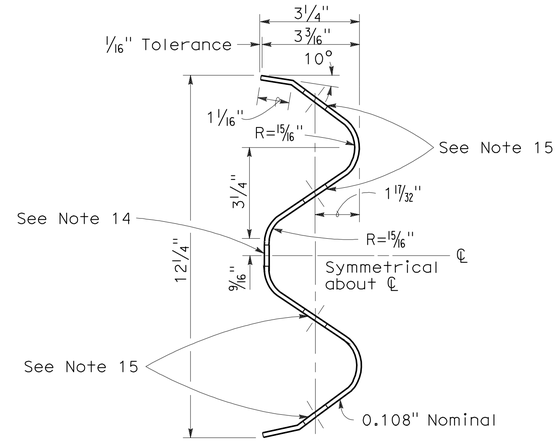

SECTION THRU RAIL ELEMENT

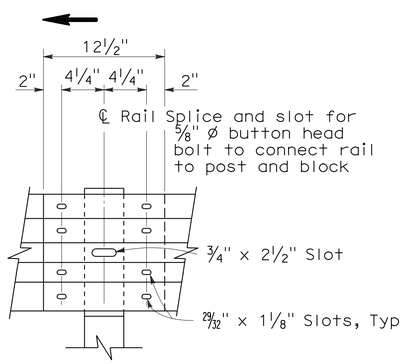

ELEVATION

RAIL ELEMENT SPLICE DETAIL

a) Connect the over lapped end of the rail elements with ⅝" ø x 1⅜" button head oval shoulder splice bolts inserted into the 29⁄32" x 1⅛" slots and bolted together with ⅝" ø recessed hex nuts. Recess of hex nut points toward rail element. A total of 8 bolts and nuts are to be used at each rail splice connection.

b) The ends of the rail elements are to be overlapped in the direction of traffic (see details).

c) Where end cap is to be attached to the end of a rail element, a total of 4 of the above described splice bolts and nuts are to be used.

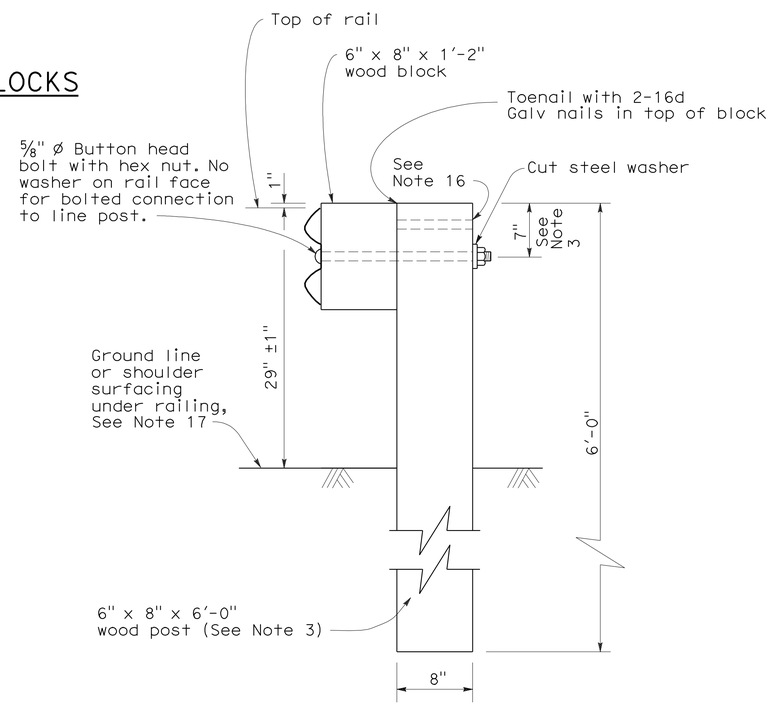

SECTION A-A

TYPICAL WOOD LINE POST INSTALLATION

See Note 4

NOTES:

1. For details of steel post installations, see Standard Plan A77A2.
2. For details of standard hardware used to construct guard railing, see Standard Plan A77B1.
3. For details of wood posts and wood blocks used to construct guard railing, see Standard Plan A77C1.
4. For additional installation details, see Standard Plan A77C3.
5. Guard railing post spacing to be 6'-3" center to center, except as otherwise noted.
6. For guard railing typical layouts, see the A77E, A77F and A77G Series of Standard Plans.
7. For terminal system end treatment details, see the A77L Series of Standard Plans. To connect railing to terminal system end treatment, transition the top of railing height at a ratio of 120:1 to terminal system end treatment height plus one 12'-6" standard railing section at the transitioned height for a horizontal connection to the end treatment.
8. For guard railing end anchor details, see Standard Plans A77H1 and A77I2.
9. For details of guard railing transition to bridge railing, see Standard Plan A77J4.
10. For additional details of guard railing connection to bridge railings, see Standard Plans A77J1, A77J2 and A77K1.
11. For guard railing connection details to abutments and walls, see Standard Plan A77J3.
12. Direction of adjacent traffic indicated by ➡.
13. For typical guard railing delineation and dike positioning details, see Standard Plan A77C4.
14. Slotted hole for bolted connection of rail element to block and post. See "Section Thru Rail Element".
15. Slotted holes for splice bolts to overlap ends of rail element. See "Section Thru Rail Element".
16. Additional hole in uppermost portion of line post is for potential future adjustments of railing height. See Standard Plan A77C1.
17. Install posts in soil.

STATE OF CALIFORNIA
DEPARTMENT OF TRANSPORTATION

METAL BEAM GUARD RAILING STANDARD RAILING SECTION (WOOD POST WITH WOOD BLOCK)

NO SCALE

RSP A77A1 DATED MAY 20, 2011 SUPERSEDES STANDARD PLAN A77A1 DATED MAY 1, 2006 - PAGE 41 OF THE STANDARD PLANS BOOK DATED MAY 2006.

REVISED STANDARD PLAN RSP A77A1

2006 REVISED STANDARD PLAN RSP A77A1

3-10-11

Dist	COUNTY	ROUTE	POST MILES TOTAL PROJECT	SHEET No.	TOTAL SHEETS
04	Son	101	0.9/3.6	676	918

Randell D. Hiatt
REGISTERED CIVIL ENGINEER

May 20, 2011
PLANS APPROVAL DATE

REGISTERED PROFESSIONAL ENGINEER
Randell D. Hiatt
No. C50200
Exp. 6-30-11
CIVIL
STATE OF CALIFORNIA

The State of California or its officers or agents shall not be responsible for the accuracy or completeness of electronic copies of this plan sheet.

To accompany plans dated 4-23-12

NOTES:

1. When necessary to place dike in front of face of guard railing, only Type C dike may be used. For dike details, see Standard Plan A87B.
2. For standard railing post embedment, see Standard Plans A77C3.
3. Guard railing delineation to be used where shown on the Project Plans.
4. When dike or curb is placed under guard railing, the maximum height of the dike or curb shall be 4". Mountable dike should not be used. For dike and curb details, see Standard Plans A87A and A87B.
5. For details of typical distance between the face of rail and hinge point, see Standard Plan A77C3.
6. For steel line posts, use ¼ - 20 self-tapping screws in 0.22" diameter holes or ¼" bolts in 9/32" diameter holes.

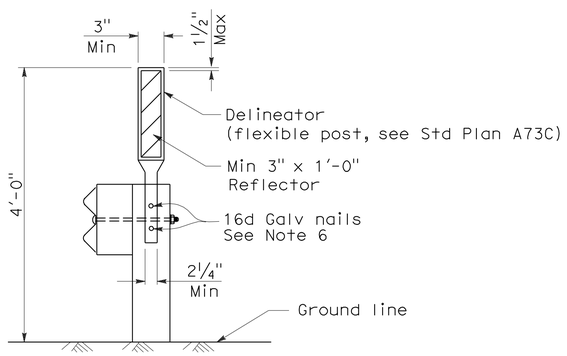

GUARD RAILING DELINEATION

See Note 3

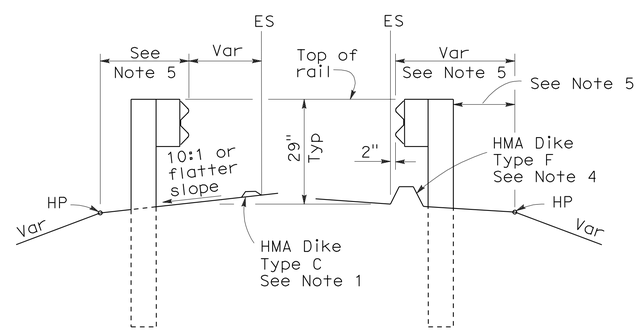

DIKE POSITIONING

See Note 1

STATE OF CALIFORNIA
DEPARTMENT OF TRANSPORTATION

METAL BEAM GUARD RAILING TYPICAL RAILING DELINEATION AND DIKE POSITIONING DETAILS

NO SCALE

RSP A77C4 DATED MAY 20, 2011 SUPERSEDES RSP A77C4 DATED JUNE 6, 2008 AND STANDARD PLAN A77C4 DATED MAY 1, 2006 - PAGE 47 OF THE STANDARD PLANS BOOK DATED MAY 2006.

REVISED STANDARD PLAN RSP A77C4

2006 REVISED STANDARD PLAN RSP A77C4

3-10-11

DIST	COUNTY	ROUTE	POST MILES TOTAL PROJECT	SHEET NO.	TOTAL SHEETS
04	Son	101	0.9/3.6	677	918

Randell D. Hiatt
REGISTERED CIVIL ENGINEER

October 20, 2006
PLANS APPROVAL DATE

REGISTERED PROFESSIONAL ENGINEER
Randell D. Hiatt
No. C50200
Exp. 6-30-07
CIVIL
STATE OF CALIFORNIA

The State of California or its officers or agents shall not be responsible for the accuracy or completeness of electronic copies of this plan sheet.

To accompany plans dated 4-23-12

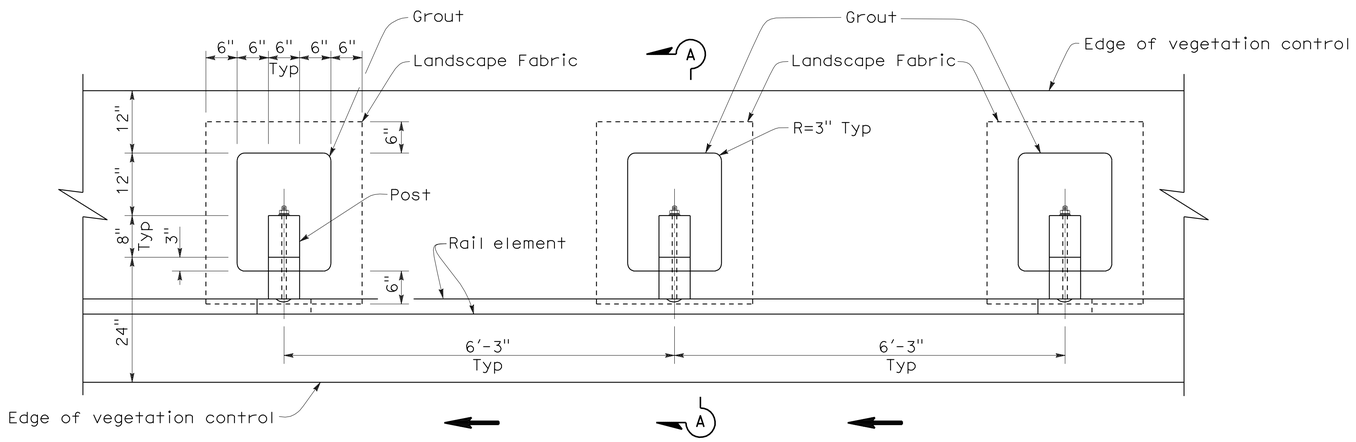

PLAN

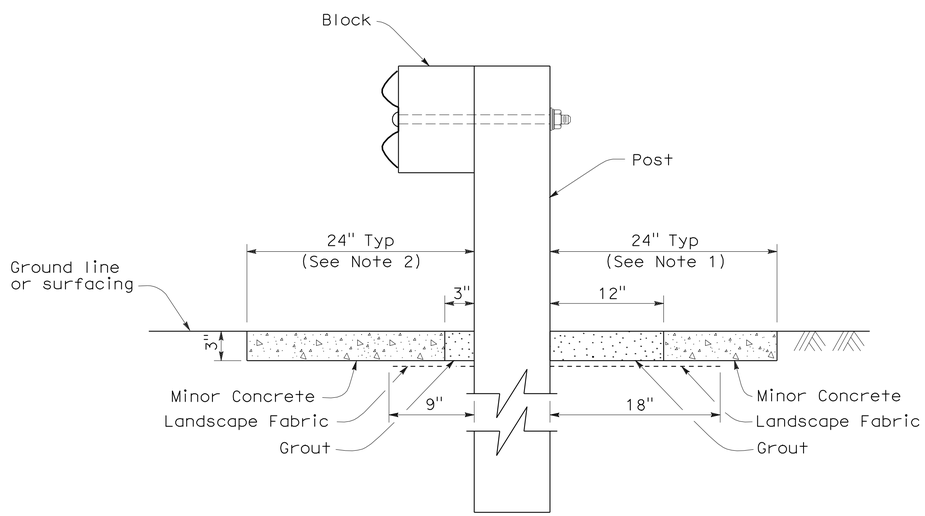

SECTION A-A

NOTES:

1. Where the distance between back of post and hinge point is less than 24", vegetation control to be constructed flush with the back edge of the post.
2. Where dike is constructed under railing, construct vegetation control to back edge of dike. Where paved shoulder is constructed within 24" in front of the post, construct vegetation control to the edge of paved shoulder.
3. Direction of adjacent traffic indicated by ← .

STATE OF CALIFORNIA
DEPARTMENT OF TRANSPORTATION

METAL BEAM GUARD RAILING TYPICAL VEGETATION CONTROL STANDARD RAILING SECTION

NO SCALE

NSP A77C5 DATED OCTOBER 20, 2006 SUPPLEMENTS THE STANDARD PLANS BOOK DATED MAY 2006.

NEW STANDARD PLAN NSP A77C5

2006 NEW STANDARD PLAN NSP A77C5

DIST	COUNTY	ROUTE	POST MILES TOTAL PROJECT	SHEET NO.	TOTAL SHEETS
04	Son	101	0.9/3.6	678	918

Randell D. Hiatt
REGISTERED CIVIL ENGINEER

October 20, 2006
PLANS APPROVAL DATE

REGISTERED PROFESSIONAL ENGINEER
Randell D. Hiatt
No. C50200
Exp. 6-30-07
CIVIL
STATE OF CALIFORNIA

The State of California or its officers or agents shall not be responsible for the accuracy or completeness of electronic copies of this plan sheet.

To accompany plans dated 4-23-12

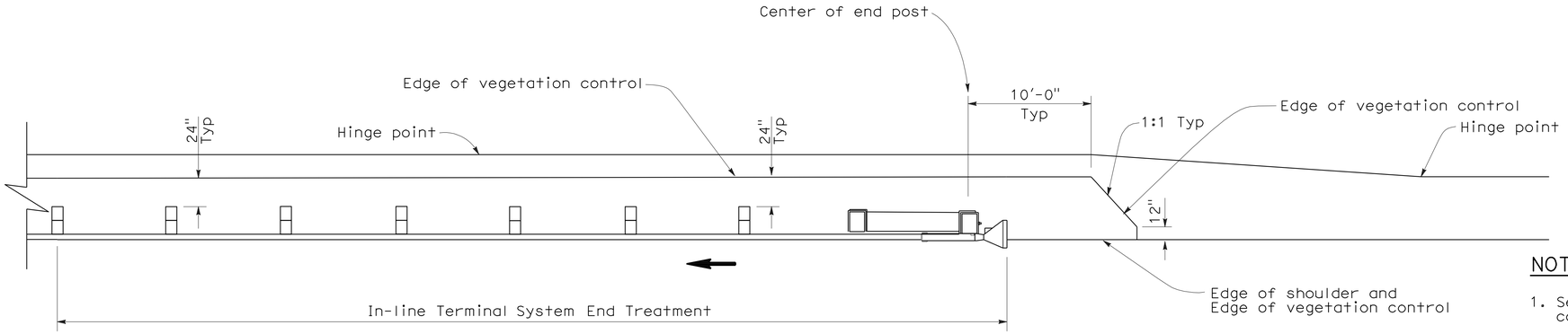

PLAN

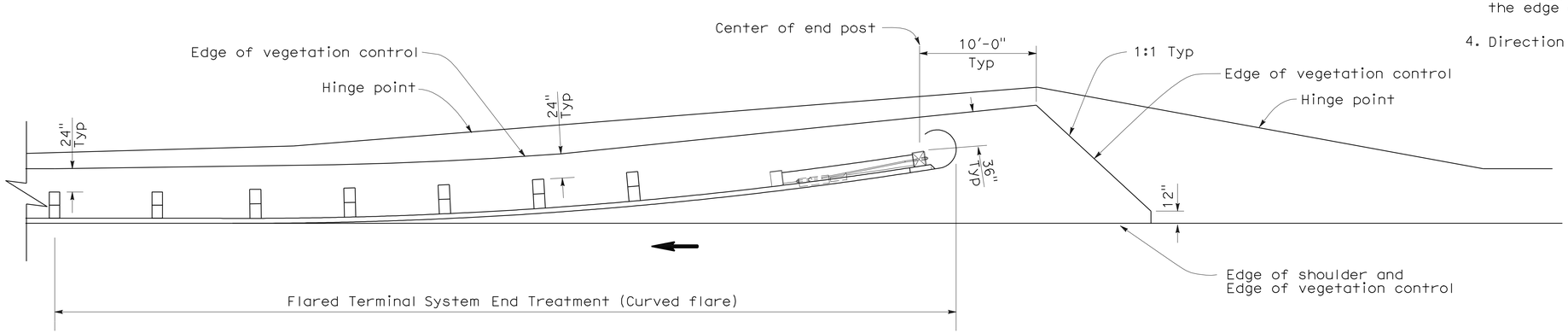

PLAN

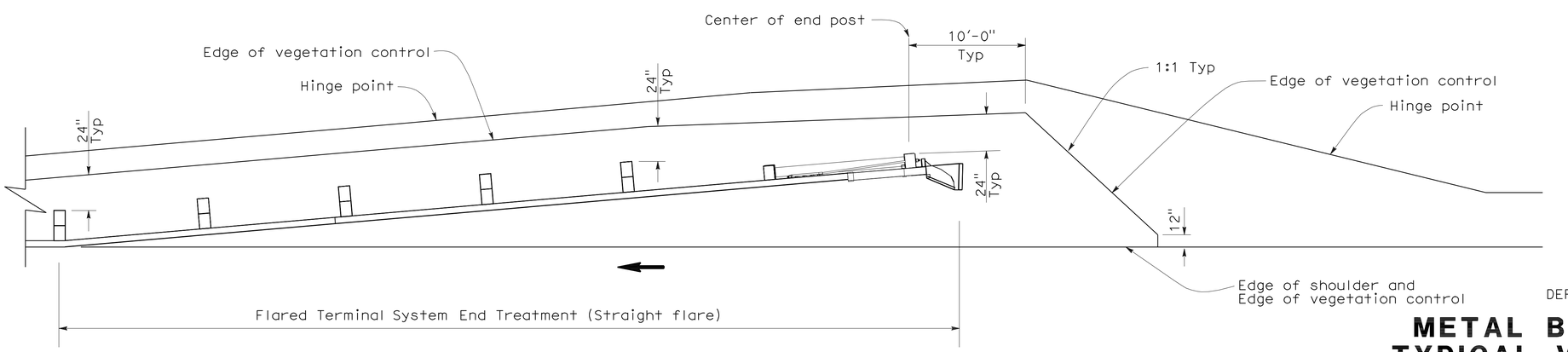

PLAN

NOTES:

1. See New Standard Plan NSP A77C5 for additional vegetation control details.
2. Where the distance between back of post and hinge point is less than 24", vegetation control to be constructed flush with the back edge of the post.
3. Where dike is constructed under railing, construct vegetation control to back edge of dike. Where paved shoulder is constructed within 24" in front of the post, construct vegetation control to the edge of paved shoulder.
4. Direction of adjacent traffic indicated by ←.

STATE OF CALIFORNIA
DEPARTMENT OF TRANSPORTATION

METAL BEAM GUARD RAILING TYPICAL VEGETATION CONTROL FOR TERMINAL SYSTEM END TREATMENTS

NO SCALE

NSP A77C6 DATED OCTOBER 20, 2006 SUPPLEMENTS THE STANDARD PLANS BOOK DATED MAY 2006.

NEW STANDARD PLAN NSP A77C6

2006 NEW STANDARD PLAN NSP A77C6

7-17-06

DIST	COUNTY	ROUTE	POST MILES TOTAL PROJECT	SHEET NO.	TOTAL SHEETS
04	Son	101	0.9/3.6	679	918

Randell D. Hiatt
REGISTERED CIVIL ENGINEER

October 20, 2006
PLANS APPROVAL DATE

REGISTERED PROFESSIONAL ENGINEER
Randell D. Hiatt
No. C50200
Exp. 6-30-07
CIVIL
STATE OF CALIFORNIA

The State of California or its officers or agents shall not be responsible for the accuracy or completeness of electronic copies of this plan sheet.

To accompany plans dated 4-23-12

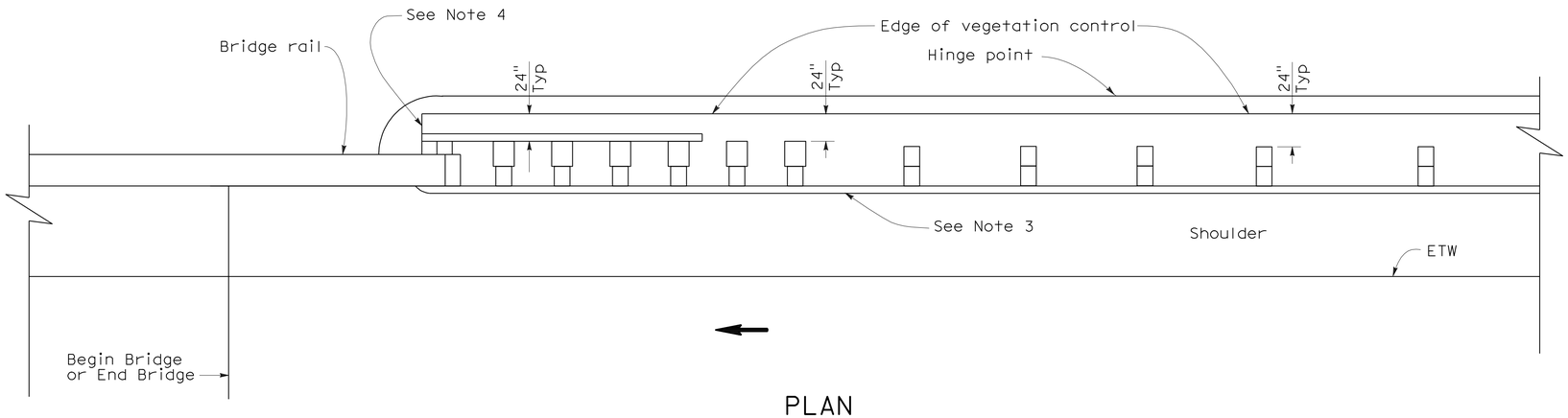

PLAN

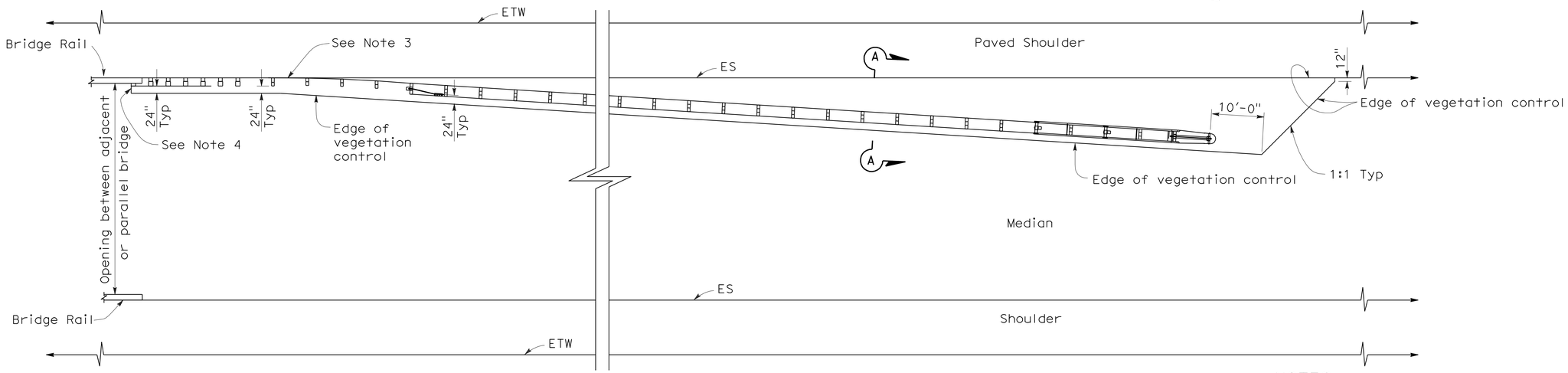

PLAN

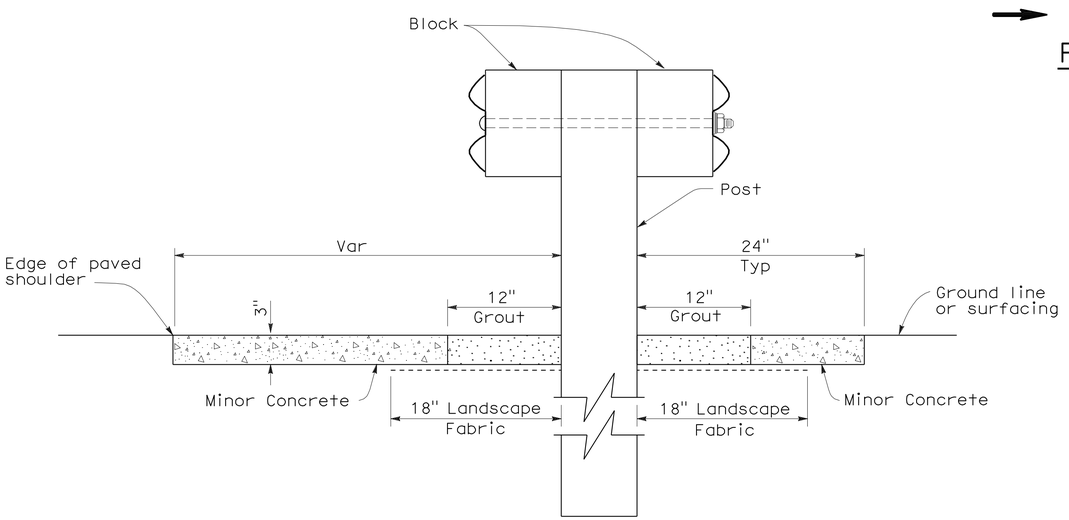

SECTION A-A

NOTES:

1. See New Standard Plan NSP A77C5 for additional vegetation control details.
2. Where the distance between back of post and hinge point is less than 24", vegetation control to be constructed flush with the back edge of the post.
3. Where dike is constructed under railing, construct vegetation control to back edge of dike. Where paved shoulder is constructed within 24" in front of the post, construct vegetation control to the edge of paved shoulder.
4. End vegetation control at end of backside rail element.
5. Direction of adjacent traffic indicated by ←.

STATE OF CALIFORNIA
DEPARTMENT OF TRANSPORTATION

METAL BEAM GUARD RAILING TYPICAL VEGETATION CONTROL AT STRUCTURE APPROACH AND DEPARTURE

NO SCALE

NSP A77C7 DATED OCTOBER 20, 2006 SUPPLEMENTS THE STANDARD PLANS BOOK DATED MAY 2006.

NEW STANDARD PLAN NSP A77C7

2006 NEW STANDARD PLAN NSP A77C7

7-17-06

DIST	COUNTY	ROUTE	POST MILES TOTAL PROJECT	SHEET NO.	TOTAL SHEETS
04	Son	101	0.9/3.6	680	918

Randell D. Hiatt
REGISTERED CIVIL ENGINEER

October 20, 2006
PLANS APPROVAL DATE

REGISTERED PROFESSIONAL ENGINEER
Randell D. Hiatt
No. C50200
Exp. 6-30-07
CIVIL
STATE OF CALIFORNIA

The State of California or its officers or agents shall not be responsible for the accuracy or completeness of electronic copies of this plan sheet.

To accompany plans dated 4-23-12

NOTES:

1. See New Standard Plan NSP A77C5 for additional vegetation control details.
2. Where the distance between back of post and hinge point is less than 24", vegetation control to be constructed flush with the back edge of the post.
3. Where dike is constructed under railing, construct vegetation control to back edge of dike. Where paved shoulder is constructed within 24" in front of the post, construct vegetation control to the edge of paved shoulder.
4. Direction of adjacent traffic indicated by ←.

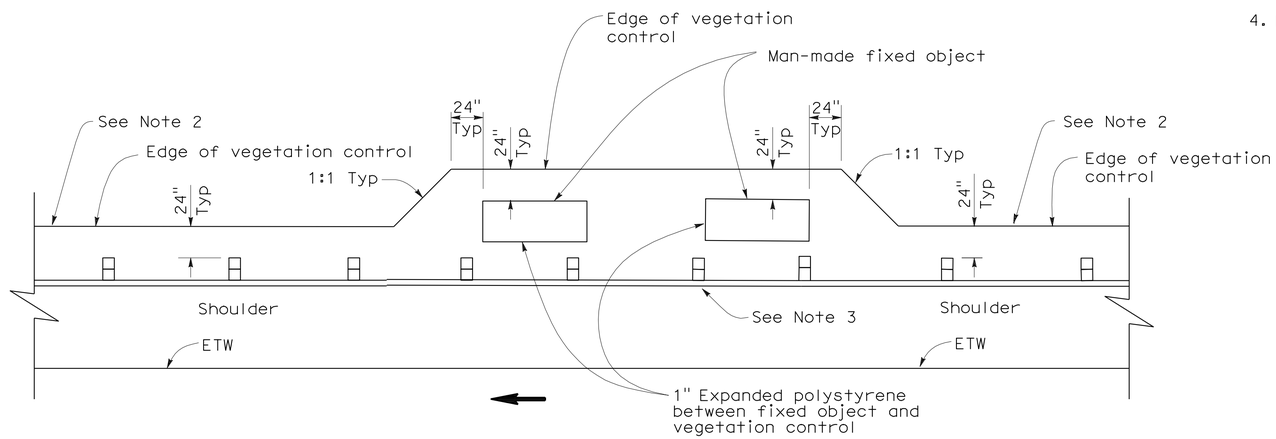

PLAN

FIXED OBJECT(S) ON SHOULDER

STATE OF CALIFORNIA
DEPARTMENT OF TRANSPORTATION

METAL BEAM GUARD RAILING TYPICAL VEGETATION CONTROL AT FIXED OBJECT

NO SCALE

NSP A77C8 DATED OCTOBER 20, 2006 SUPPLEMENTS THE STANDARD PLANS BOOK DATED MAY 2006.

NEW STANDARD PLAN NSP A77C8

2006 NEW STANDARD PLAN NSP A77C8

7-17-06

DIST	COUNTY	ROUTE	POST MILES TOTAL PROJECT	SHEET NO.	TOTAL SHEETS
04	Son	101	0.9/3.6	681	918

Randell D. Hiatt
REGISTERED CIVIL ENGINEER

October 20, 2006
PLANS APPROVAL DATE

REGISTERED PROFESSIONAL ENGINEER
Randell D. Hiatt
No. C50200
Exp. 6-30-07
CIVIL
STATE OF CALIFORNIA

The State of California or its officers or agents shall not be responsible for the accuracy or completeness of electronic copies of this plan sheet.

To accompany plans dated 4-23-12

NOTES:

1. See New Standard Plan NSP A77C5 for additional vegetation control details.
2. Where dike is constructed under railing, construct vegetation control to back edge of dike. Where paved shoulder is constructed within 24" in front of the post, construct vegetation control to the edge of paved shoulder.
3. Direction of adjacent traffic indicated by ← .

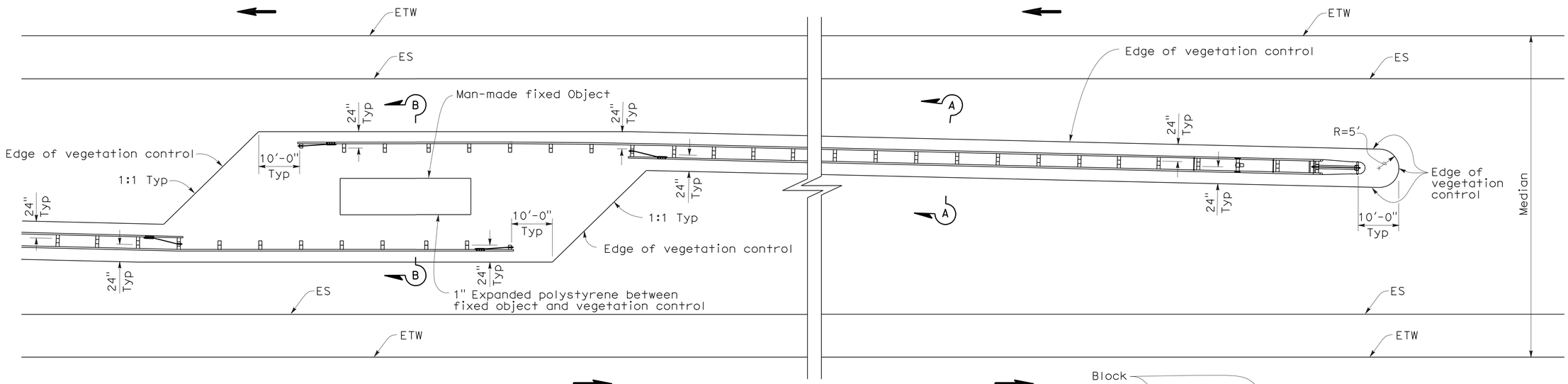

PLAN

FIXED OBJECT(S) IN MEDIAN

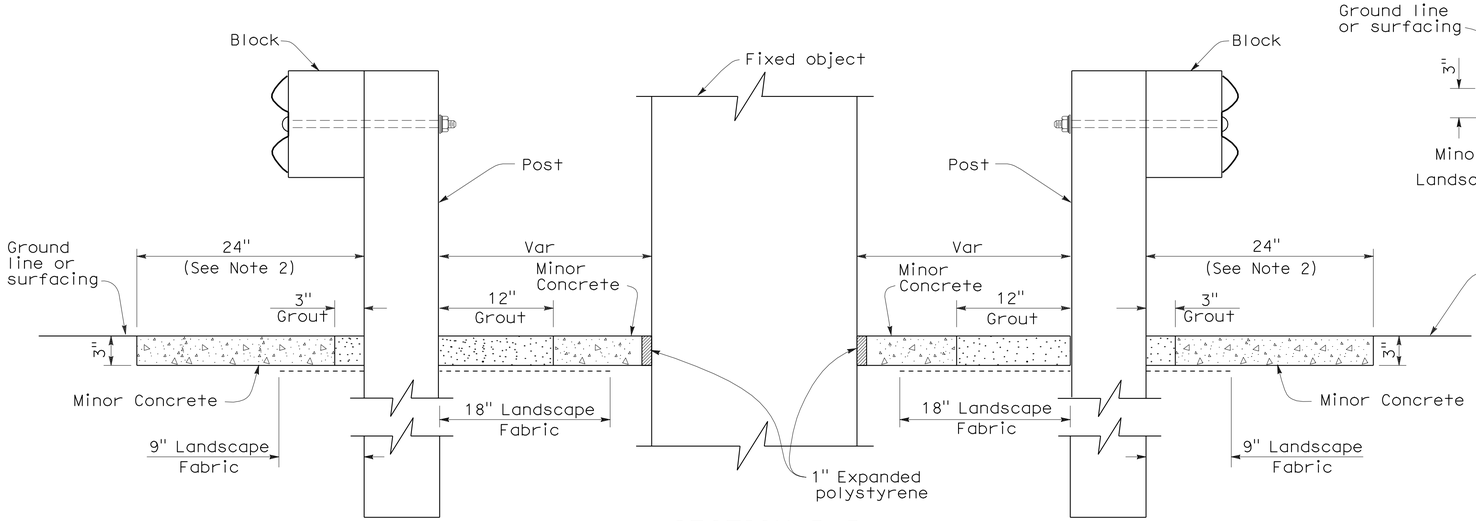

SECTION B-B

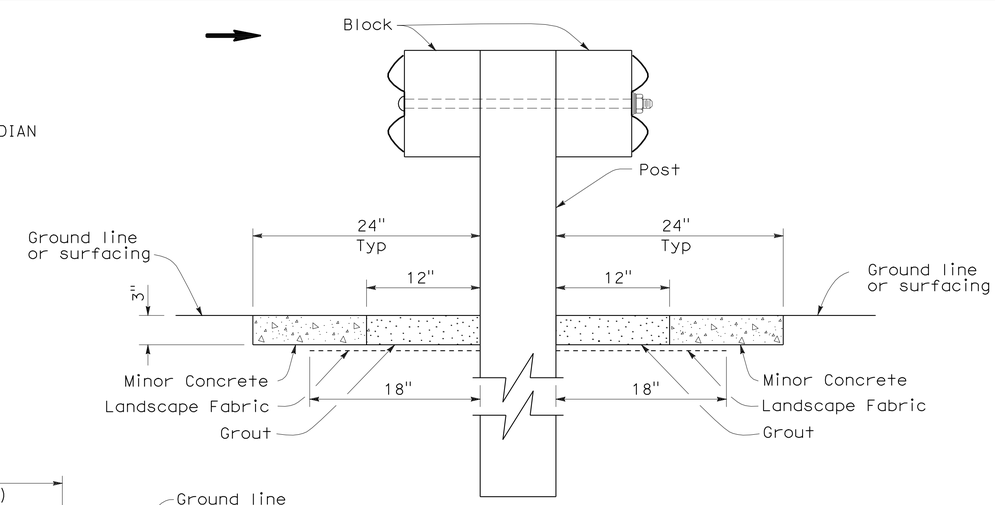

SECTION A-A

STATE OF CALIFORNIA
DEPARTMENT OF TRANSPORTATION

METAL BEAM GUARD RAILING TYPICAL VEGETATION CONTROL AT FIXED OBJECT

NO SCALE

NSP A77C9 DATED OCTOBER 20, 2006 SUPPLEMENTS THE STANDARD PLANS BOOK DATED MAY 2006.

NEW STANDARD PLAN NSP A77C9

2006 NEW STANDARD PLAN NSP A77C9

7-17-06

DIST	COUNTY	ROUTE	POST MILES TOTAL PROJECT	SHEET NO.	TOTAL SHEETS
04	Son	101	0.9/3.6	682	918

Randell D. Hiatt
REGISTERED CIVIL ENGINEER

October 20, 2006
PLANS APPROVAL DATE

REGISTERED PROFESSIONAL ENGINEER
Randell D. Hiatt
No. C50200
Exp. 6-30-07
CIVIL
STATE OF CALIFORNIA

The State of California or its officers or agents shall not be responsible for the accuracy or completeness of electronic copies of this plan sheet.

To accompany plans dated 4-23-12

NOTES:

1. See New Standard Plan NSP A77C5 for additional vegetation control details.
2. Where dike is constructed under railing, construct vegetation control to back edge of dike. Where paved shoulder is constructed within 24" in front of the post, construct vegetation control to the edge of paved shoulder.
3. Direction of adjacent traffic indicated by ←.

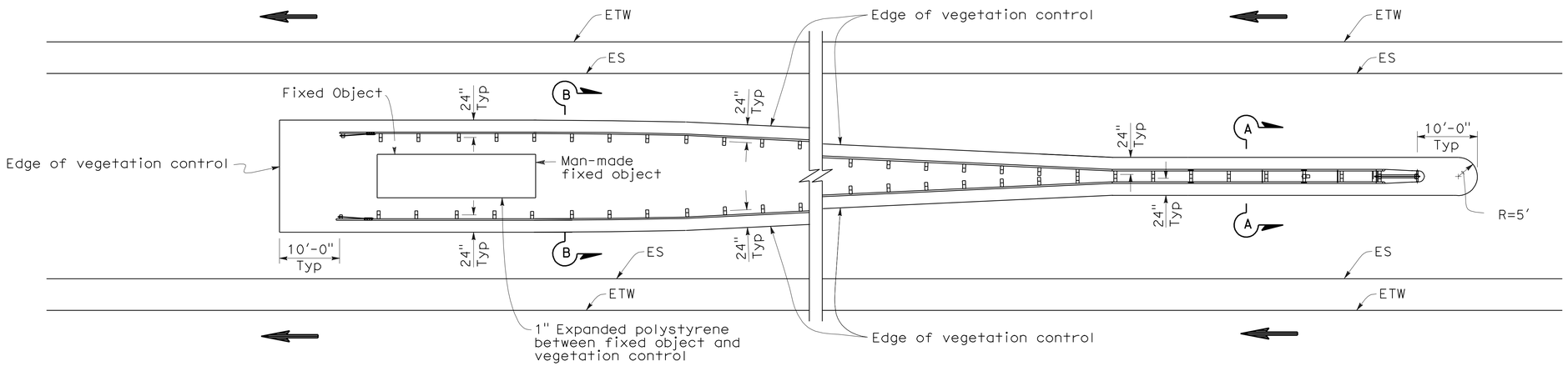

PLAN

FIXED OBJECT(S) BETWEEN SEPARATE ROADBEDS
(ONE-WAY TRAFFIC)

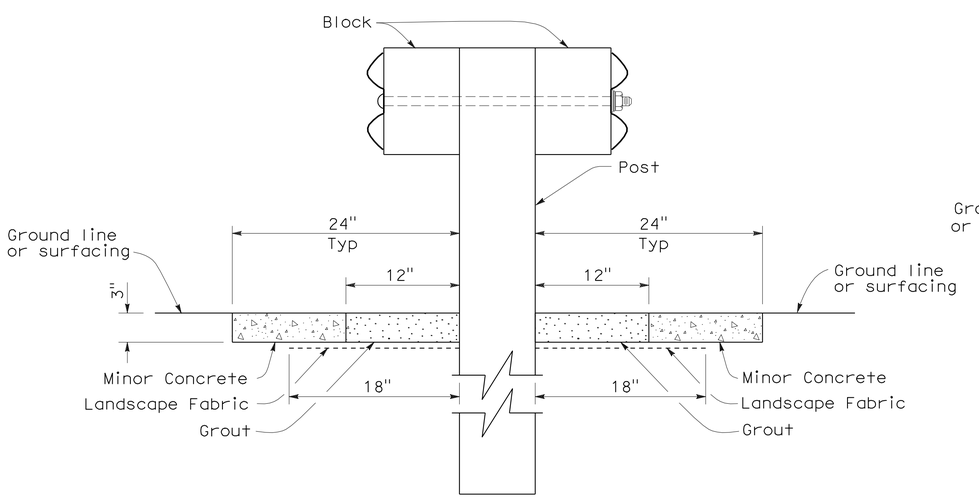

SECTION A-A

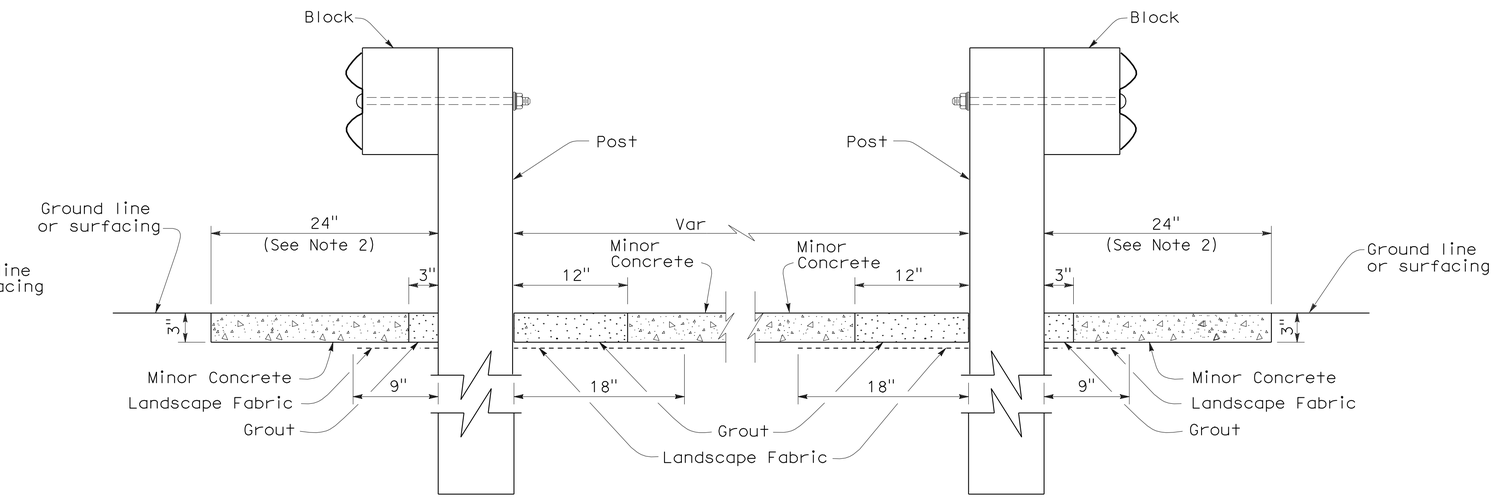

SECTION B-B

STATE OF CALIFORNIA
DEPARTMENT OF TRANSPORTATION

METAL BEAM GUARD RAILING TYPICAL VEGETATION CONTROL AT FIXED OBJECT

NO SCALE

NSP A77C10 DATED OCTOBER 20, 2006 SUPPLEMENTS THE STANDARD PLANS BOOK DATED MAY 2006.

NEW STANDARD PLAN NSP A77C10

2006 NEW STANDARD PLAN NSP A77C10

7-17-06

DIST	COUNTY	ROUTE	POST MILES TOTAL PROJECT	SHEET NO.	TOTAL SHEETS
04	Son	101	0.9/3.6	683	918

Randell D. Hiatt
REGISTERED CIVIL ENGINEER

June 6, 2008
PLANS APPROVAL DATE

REGISTERED PROFESSIONAL ENGINEER
Randell D. Hiatt
No. C50200
Exp. 6-30-09
CIVIL
STATE OF CALIFORNIA

The State of California or its officers or agents shall not be responsible for the accuracy or completeness of electronic copies of this plan sheet.

To accompany plans dated 4-23-12

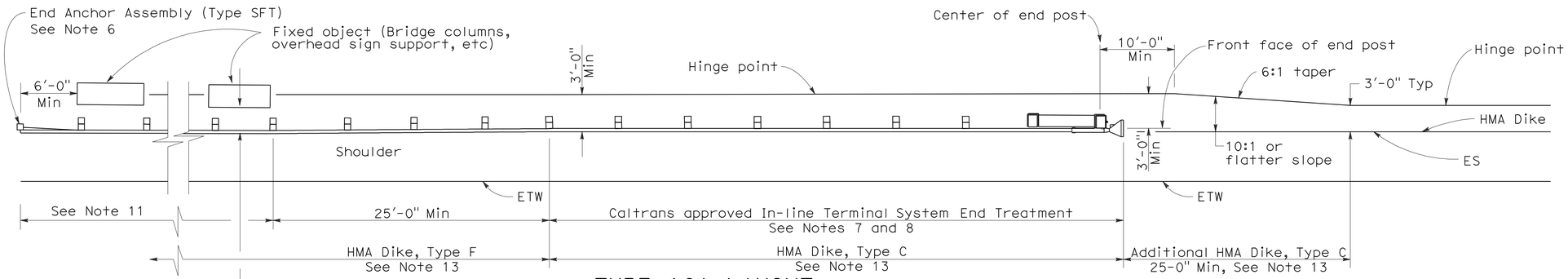

TYPE 16A LAYOUT

(GUARD RAILING INSTALLATION AT ROADSIDE FIXED OBJECT OR OBJECTS WITH AN IN-LINE END TREATMENT AT TRAFFIC APPROACH END OF RAILING)
See Notes 12 and 13

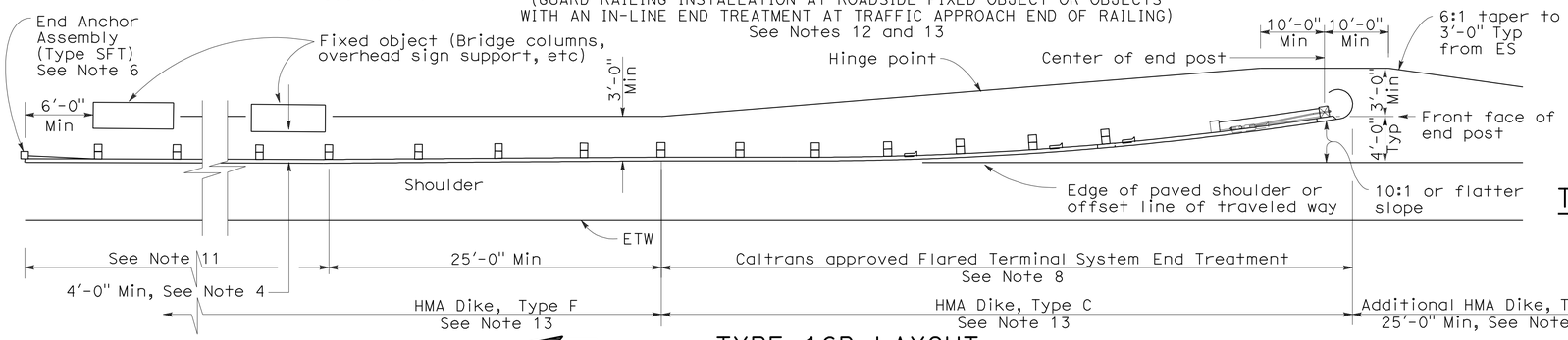

TYPE 16B LAYOUT

(GUARD RAILING INSTALLATION AT ROADSIDE FIXED OBJECT OR OBJECTS WITH A FLARED END TREATMENT AT TRAFFIC APPROACH END OF RAILING)
See Notes 12 and 13

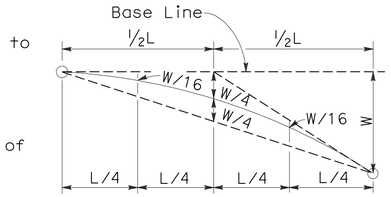

TYPOICAL PARABOLIC LAYOUT

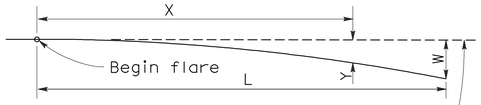

Base Line (Edge of paved shoulder or offset line of edge of traveled way)

$$Y = \frac{WX^2}{L^2}$$

Y = Offset from base line
W = Maximum offset
X = Distance along base line
L = Length of flare

PARABOLIC FLARE OFFSETS

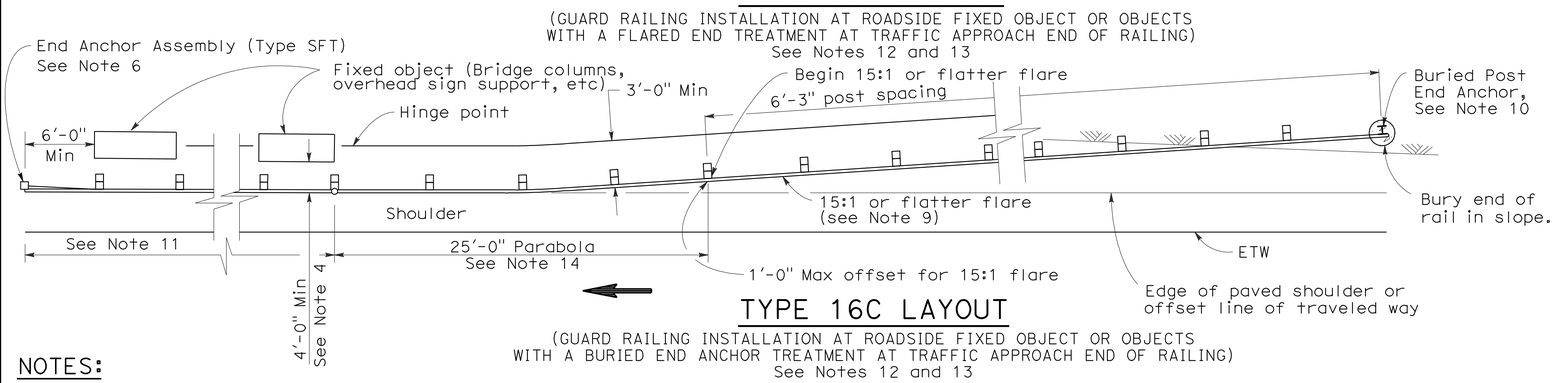

TYPE 16C LAYOUT

(GUARD RAILING INSTALLATION AT ROADSIDE FIXED OBJECT OR OBJECTS WITH A BURIED END ANCHOR TREATMENT AT TRAFFIC APPROACH END OF RAILING)
See Notes 12 and 13

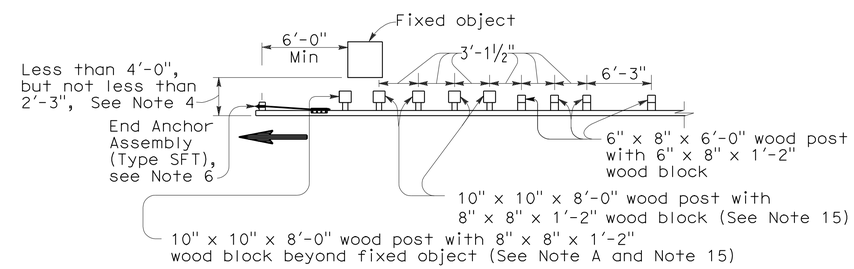

NOTE A: For a series of fixed objects (bridge columns, overhead sign supports, etc.) additional 10" x 10" x 8'-0" wood post with 8" x 8" x 1'-2" wood blocks at 3'-1½" center to center spacing are to be used between fixed objects.

STRENGTHENED RAILING SECTIONS FOR FIXED OBJECT

Use strengthened railing sections with Types 16A, 16B or 16C Layouts where minimum clearance between the face of the guard railing and fixed object(s) is less than 4'-0", but not less than 2'-3". See Note 4

NOTES:

1. Line post, blocks and hardware to be used are shown on Revised Standard Plans A77A1, A77A2, A77B1, A77C1 and A77C2.
2. Guard railing post spacing to be 6'-3" center to center, except as otherwise noted.
3. Except as noted, line posts are 6" x 8" x 6'-0" wood with 6" x 8" x 1'-2" wood blocks. W6 x 9 steel posts, 6'-0" in length, with 6" x 8" x 1'-2" notched wood blocks or notched recycled plastic blocks may be used for 6" x 8" x 6'-0" wood line posts with 6" x 8" x 1'-2" wood blocks where applicable and when specified.
4. A 4'-0" minimum clearance is required between the face of the railing and the face of a fixed object located directly behind standard guard railing sections with post spacing of 6'-3". Construct guard railing as shown in the detail "Strengthened Railing Sections for Fixed Objects" on this plan, where the clearance between the face of the railing and the face of a fixed object is less than 4'-0", but not less than 2'-3". Where the clearance is less than 2'-3", a concrete wall or barrier should be constructed to shield the fixed object(s).
5. Direction of adjacent traffic indicated by ⟶.
6. For End Anchor Assembly (Type SFT) details, see Standard Plan A77H1.
7. In-line Terminal System End Treatments are used where site conditions will not accommodate a flared end treatment.
8. The type of terminal system to be used will be shown on the Project Plans.
9. The 15:1 or flatter flare used with Type 16C Layout is based on the edge of the paved shoulder or offset line of edge of the traveled way. The length of guard railing within the 15:1 or flatter flare is based on site conditions and should be a length equal to multiples of 12'-6".
10. For details of the Buried Post End Anchor used with Type 16C Layout, see Standard Plan A77I2.
11. As site conditions dictate, construct additional guard railing to shield fixed object(s). Additional guard railing length equal to multiples of 12'-6". Post spacing at 6'-3" except as specified in Note 4.
12. Layout Types 16A, 16B or 16C are typically used where guard railing is recommended to shield roadside fixed object(s) and a crashworthy end treatment is required for only one direction of traffic.
13. Where placement of dike is required with guard railing, see Revised Standard Plan RSP A77C4 for dike positioning details.
14. For typical flare offsets for 25'-0" length parabola with maximum offset of 1'-0", see Revised Standard Plan RSP A77E1.
15. W6 x 15 steel post, 8'-0" in length, with 8" x 8" x 1'-2" notched wood block or notched recycled plastic blocks may be used in place of the 10" x 10" x 8'-0" wood post with 8" x 8" x 1'-2" wood block shown in the "Strengthened Railing Sections Detail".

STATE OF CALIFORNIA
DEPARTMENT OF TRANSPORTATION

METAL BEAM GUARD RAILING TYPICAL LAYOUTS FOR ROADSIDE FIXED OBJECTS

NO SCALE

RSP A77G3 DATED JUNE 6, 2008 SUPERSEDES STANDARD PLAN A77G3 DATED MAY 1, 2006 - PAGE 61 OF THE STANDARD PLANS BOOK DATED MAY 2006.

REVISED STANDARD PLAN RSP A77G3

2006 REVISED STANDARD PLAN RSP A77G3

12-10-07

Dist	COUNTY	ROUTE	POST MILES TOTAL PROJECT	SHEET No.	TOTAL SHEETS
04	Son	101	0.9/3.6	684	918

Randell D. Hiatt
REGISTERED CIVIL ENGINEER

May 20, 2011
PLANS APPROVAL DATE

REGISTERED PROFESSIONAL ENGINEER
Randell D. Hiatt
No. C50200
Exp. 6-30-11
CIVIL
STATE OF CALIFORNIA

The State of California or its officers or agents shall not be responsible for the accuracy or completeness of electronic copies of this plan sheet.

To accompany plans dated 4-23-12

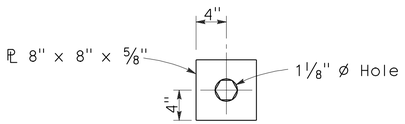

DETAIL A
CABLE CONNECTION
END PLATE

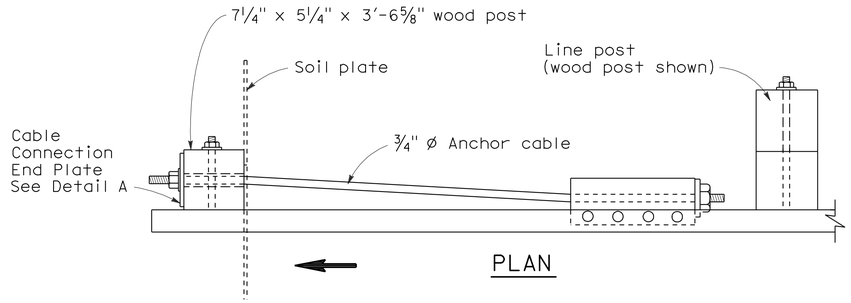

PLAN

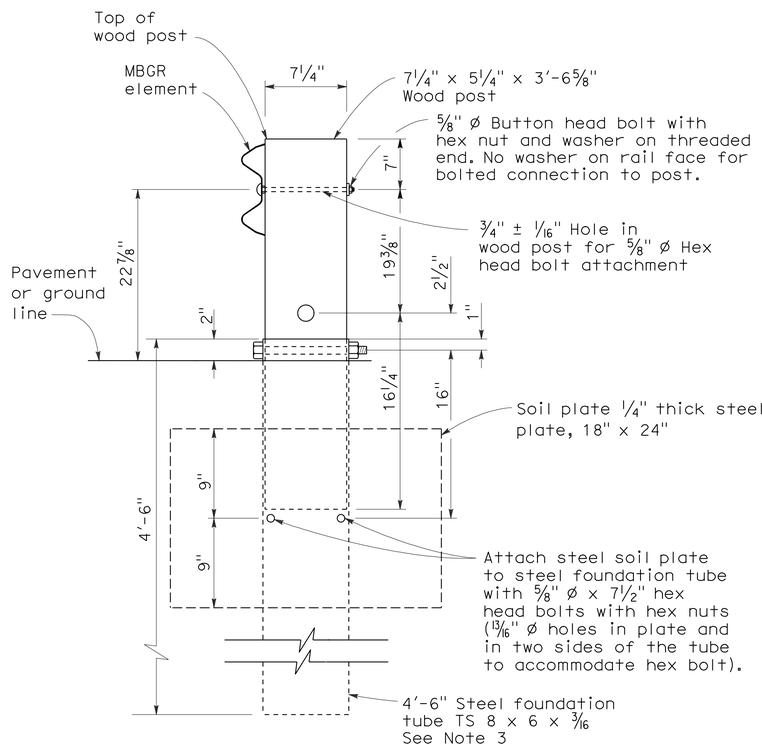

SECTION A-A

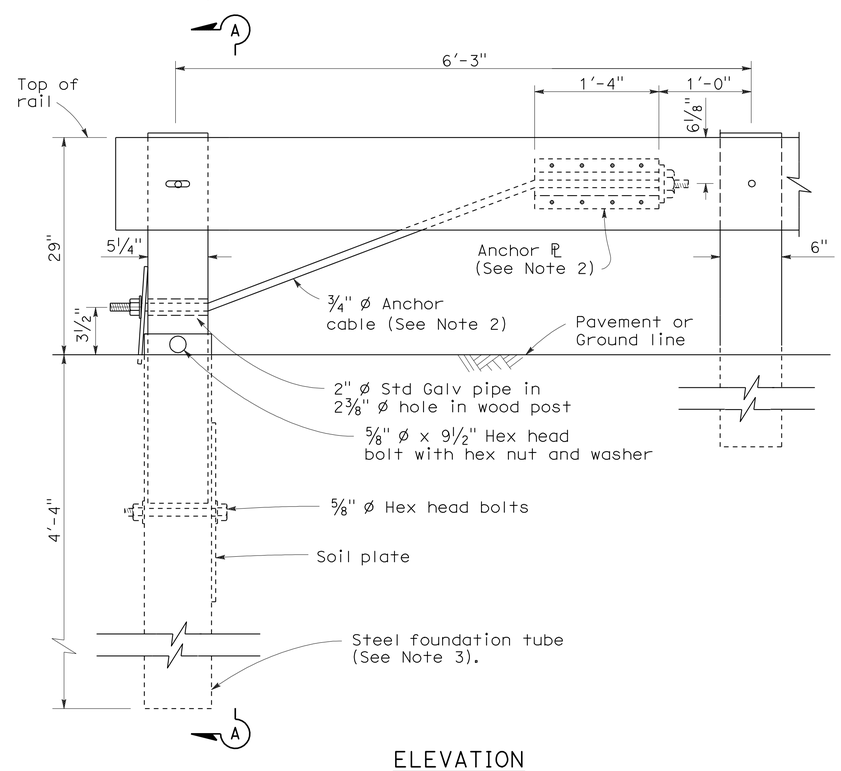

ELEVATION
END ANCHOR
ASSEMBLY (TYPE SFT)
See Note 1

NOTES:

1. See the A77E, A77F and A77G series of Standard Plans for typical use of End Anchor Assembly (Type SFT).
2. For details of the anchor plate and 3/4" cable, see Standard Plan A77H3.
3. A 6'-0" length steel foundation tube, TS 8 x 6 x 3/16, without a soil plate, may be furnished and installed in place of the 4'-6" length steel foundation tube and soil plate shown. Minimum embedment of the 6'-0" length tube shall be 5'-9". A 5/8" Ø hex head bolt and nut shall be installed in the hole in the 6'-0" length tube to keep the wood post from dropping into the tube.
4. Direction of traffic indicated by ⟹.
5. Install line post, steel foundation tube and soil plate in soil.

STATE OF CALIFORNIA
DEPARTMENT OF TRANSPORTATION

METAL RAILING END ANCHOR ASSEMBLY (TYPE SFT)

NO SCALE

RSP A77H1 DATED MAY 20, 2011 SUPERSEDES STANDARD PLAN A77H1
DATED MAY 1, 2006 - PAGE 67 OF THE STANDARD PLANS BOOK DATED MAY 2006.

REVISED STANDARD PLAN RSP A77H1

2006 REVISED STANDARD PLAN RSP A77H1

2-10-07

Dist	COUNTY	ROUTE	POST MILES TOTAL PROJECT	SHEET No.	TOTAL SHEETS
04	Son	101	0.9/3.6	685	918

Randell D. Hiatt
REGISTERED CIVIL ENGINEER

May 20, 2011
PLANS APPROVAL DATE

REGISTERED PROFESSIONAL ENGINEER
Randell D. Hiatt
No. C50200
Exp. 6-30-11
CIVIL
STATE OF CALIFORNIA

The State of California or its officers or agents shall not be responsible for the accuracy or completeness of electronic copies of this plan sheet.

To accompany plans dated 4-23-12

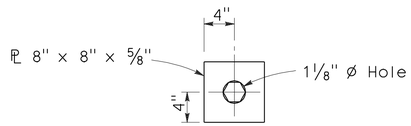

DETAIL A
CABLE CONNECTION
END PLATE

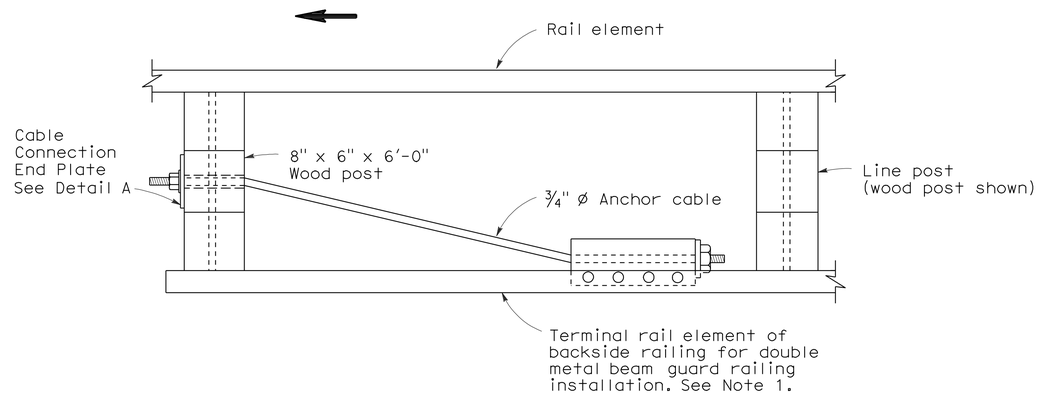

PLAN

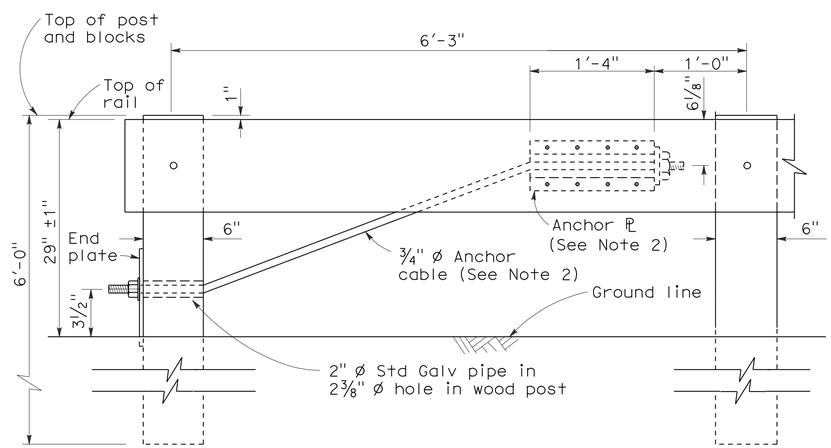

ELEVATION
RAIL TENSIONING
ASSEMBLY
See Note 1

NOTES:

1. See Standard Plan A77F3 and Standard Plan A77G1 for typical use of rail tensioning assembly.
2. For details of the anchor plate and 3/4" cable, see Standard Plan A77H3.
3. Direction of traffic indicated by ⟶.

STATE OF CALIFORNIA
DEPARTMENT OF TRANSPORTATION

METAL RAILING
RAIL TENSIONING ASSEMBLY

NO SCALE

RSP A77H2 DATED MAY 20, 2011 SUPERSEDES STANDARD PLAN A77H2
DATED MAY 1, 2006 - PAGE 68 OF THE STANDARD PLANS BOOK DATED MAY 2006.

REVISED STANDARD PLAN RSP A77H2

2006 REVISED STANDARD PLAN RSP A77H2

3-10-11

Dist	COUNTY	ROUTE	POST MILES TOTAL PROJECT	SHEET No.	TOTAL SHEETS
04	Son	101	0.9/3.6	686	918

Randell D. Hiatt
REGISTERED CIVIL ENGINEER

May 20, 2011
PLANS APPROVAL DATE

REGISTERED PROFESSIONAL ENGINEER
Randell D. Hiatt
No. C50200
Exp. 6-30-11
CIVIL
STATE OF CALIFORNIA

The State of California or its officers or agents shall not be responsible for the accuracy or completeness of electronic copies of this plan sheet.

To accompany plans dated 4-23-12

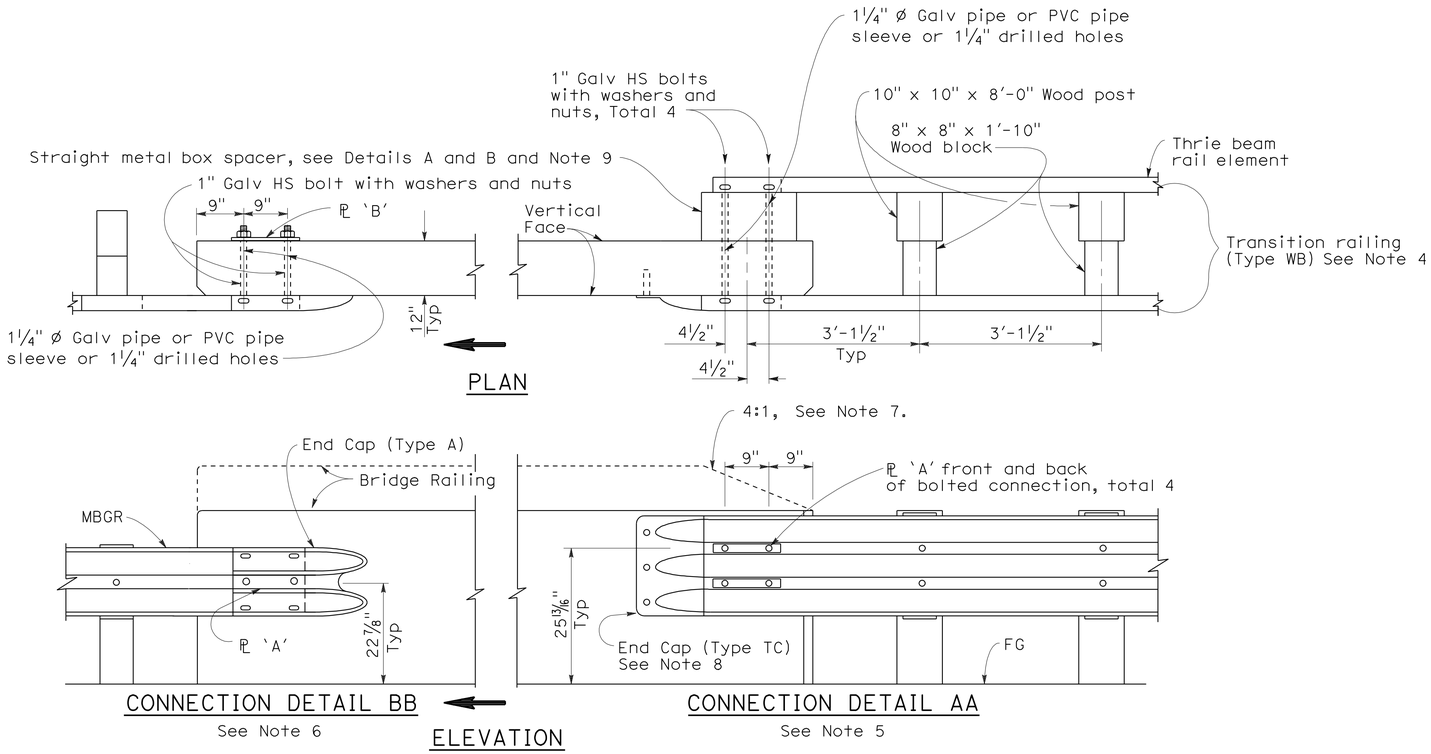

GUARD RAILING CONNECTION TO BRIDGE RAILING WITHOUT SIDEWALK

NOTES:

1. See Revised Standard Plan RSP A77J2 for additional connection details to bridges without sidewalks.
2. Additional details of posts, blocks and hardware are shown on Standard Plan A77B1, A77C1 and A77C2.
3. Direction of adjacent traffic indicated by ➡.
4. For additional details of Transition Railing (Type WB), see Standard Plan A77J4. Transition Railing (Type WB) transitions the 12 gage w-beam standard railing section of guard railing to a heavier gage nested thrie beam railing section which is connected to the concrete bridge railing.
5. For typical use of Connection Detail AA, see Layout Types 12A and 12B on Revised Standard Plan RSP A77F1, Layout Types 12C and 12D on Standard Plan A77F2, and Layout Type 12E on Revised Standard Plan RSP A77F3.
6. For typical use of Connection Detail BB, see Layout Type 12D (structure departure railing connection) on Standard Plan A77F2 and Layout Type 12DD on Standard Plan A77F5.
7. Where the height of the bridge railing exceeds the height of the thrie beam railing by more than 1" at Connection Detail AA, taper the top of the end of the bridge railing at 4:1 to match the top elevation of the thrie beam rail.
8. For details of End Cap (Type TC), see Standard Plan A77J4.
9. See Standard Plan A77J4 for additional details regarding depth dimension for straight metal box spacer.

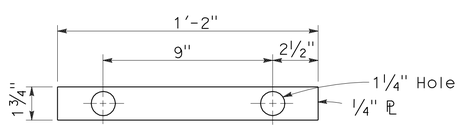

PLATE 'A'

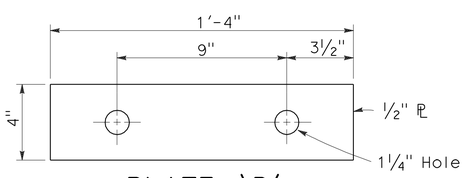

PLATE 'B'
(For backside of connection BB)

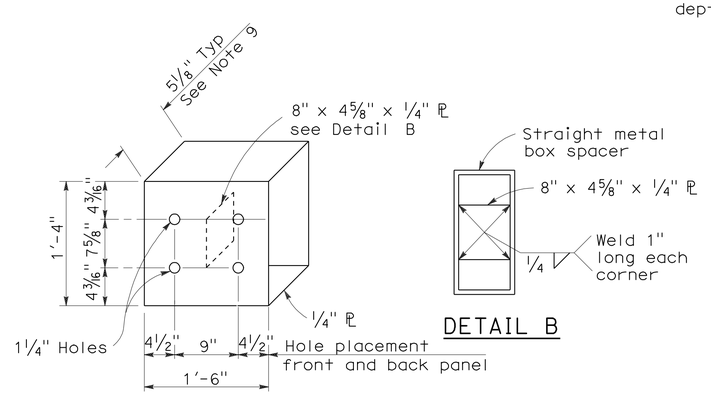

DETAIL B

DETAIL A

STRAIGHT METAL BOX SPACER

STATE OF CALIFORNIA
DEPARTMENT OF TRANSPORTATION

METAL BEAM GUARD RAILING CONNECTIONS TO BRIDGE RAILINGS WITHOUT SIDEWALKS DETAILS No.1

NO SCALE

RSP A77J1 DATED MAY 20, 2011 SUPERSEDES RSP A77J1 DATED JUNE 6, 2008 AND STANDARD PLAN A77J1 DATED MAY 1, 2006 - PAGE 72 OF THE STANDARD PLANS BOOK DATED MAY 2006.

REVISED STANDARD PLAN RSP A77J1

2006 REVISED STANDARD PLAN RSP A77J1

3-10-11

DIST	COUNTY	ROUTE	POST MILES TOTAL PROJECT	SHEET NO.	TOTAL SHEETS
04	Son	101	0.9/3.6	687	918

Randell D. Hiatt
REGISTERED CIVIL ENGINEER

June 6, 2008
PLANS APPROVAL DATE

REGISTERED PROFESSIONAL ENGINEER
Randell D. Hiatt
No. C50200
Exp. 6-30-09
CIVIL
STATE OF CALIFORNIA

The State of California or its officers or agents shall not be responsible for the accuracy or completeness of electronic copies of this plan sheet.

To accompany plans dated 4-23-12

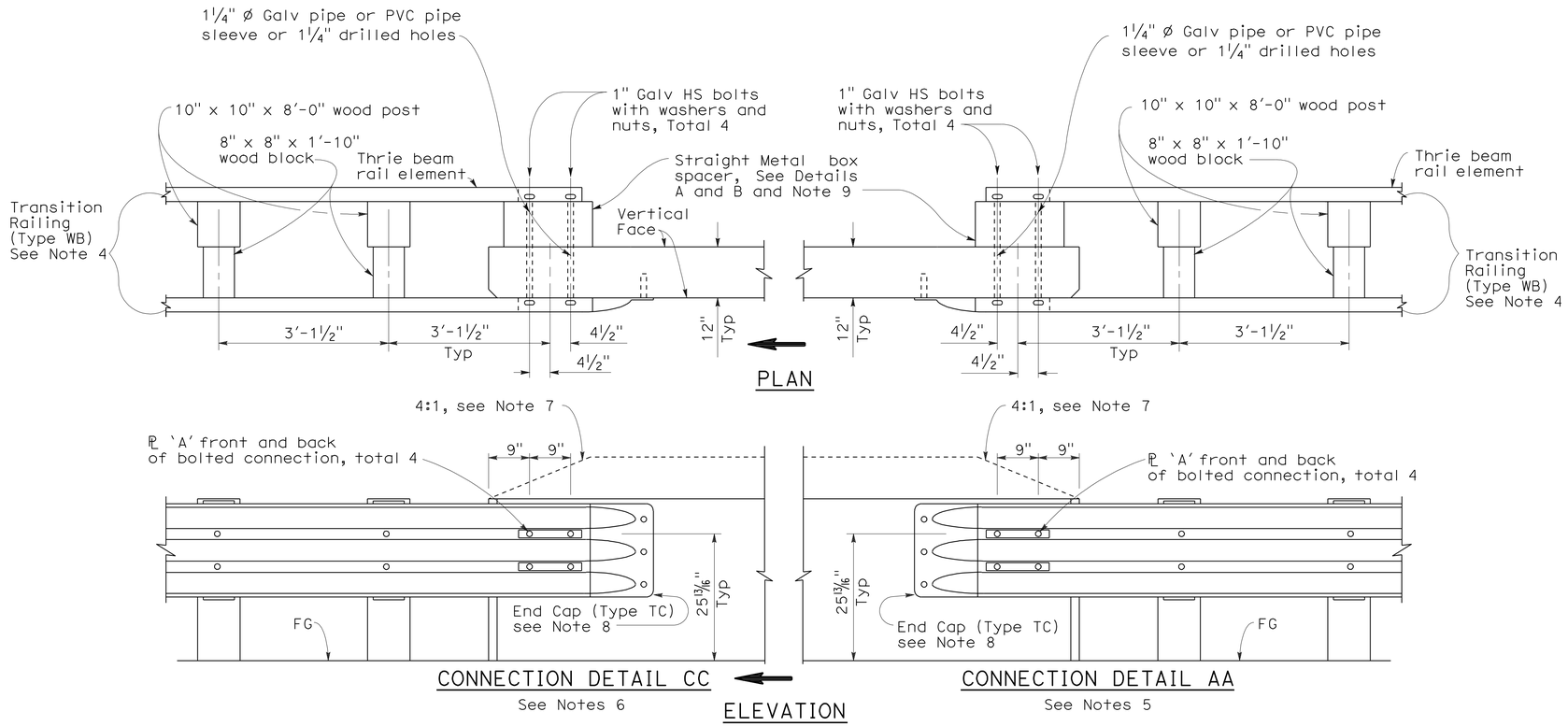

GUARD RAILING CONNECTION TO BRIDGE RAILING WITHOUT SIDEWALK

NOTES:

1. See Revised Standard Plan RSP A77J1 for additional connection details to bridges without sidewalks.
2. Additional details of posts, blocks and hardware are shown on Standard Plan A77B1, A77C1 and A77C2.
3. Direction of adjacent traffic indicated by ⟹.
4. For additional details of Transition Railing (Type WB), see Standard Plan A77J4. Transition Railing (Type WB) transitions the 12 gage w-beam standard railing section of guard railing to a heavier gage nested thrie beam railing section which is connected to the concrete bridge railing.
5. For typical use of Connection Detail AA, see Layout Types 12A and 12B on Revised Standard Plan RSP A77F1, Layout Types 12C and 12D on Standard Plan A77F2, and Layout Type 12E on Revised Standard Plan RSP A77F3.
6. For typical use of Connection Detail CC, see Layout Types 12AA and 12BB on Standard Plan A77F4 and Layout Type 12CC on Standard Plan A77F5.
7. Where the height of the bridge railing exceeds the height of the thrie beam railing by more than 1" at Connection Detail AA and connection Detail CC, taper the top of the end of the bridge railing at 4:1 to match the top elevation of the thrie beam railing.
8. For details of End Cap (Type TC), see Standard Plans A77J4.
9. See Standard Plans A77J4 for additional details regarding depth dimension for straight metal box spacer.

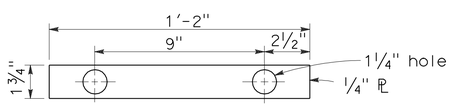

PLATE 'A'

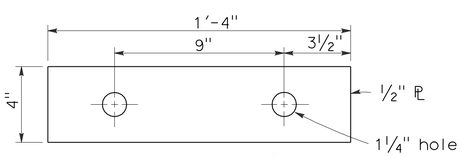

PLATE 'B'
(For backside of connection BB)

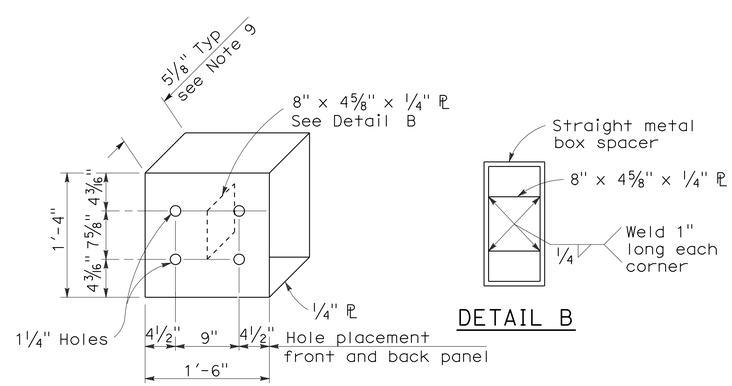

DETAIL A

DETAIL B

STRAIGHT METAL BOX SPACER

STATE OF CALIFORNIA
DEPARTMENT OF TRANSPORTATION

METAL BEAM GUARD RAILING CONNECTIONS TO BRIDGE RAILINGS WITHOUT SIDEWALKS DETAILS No.2

NO SCALE

RSP A77J2 DATED JUNE 6, 2008 SUPERSEDES STANDARD PLAN A77J2
DATED MAY 1, 2006 - PAGE 73 OF THE STANDARD PLANS BOOK DATED MAY 2006.

REVISED STANDARD PLAN RSP A77J2

2006 REVISED STANDARD PLAN RSP A77J2

12-10-07

Dist	COUNTY	ROUTE	POST MILES TOTAL PROJECT	SHEET No.	TOTAL SHEETS
04	Son	101	0.9/3.6	688	918

Randell D. Hiatt
REGISTERED CIVIL ENGINEER

May 20, 2011
PLANS APPROVAL DATE

REGISTERED PROFESSIONAL ENGINEER Randell D. Hiatt No. C50200 Exp. 6-30-11 CIVIL STATE OF CALIFORNIA

To accompany plans dated 4-23-12

The State of California or its officers or agents shall not be responsible for the accuracy or completeness of electronic copies of this plan sheet.

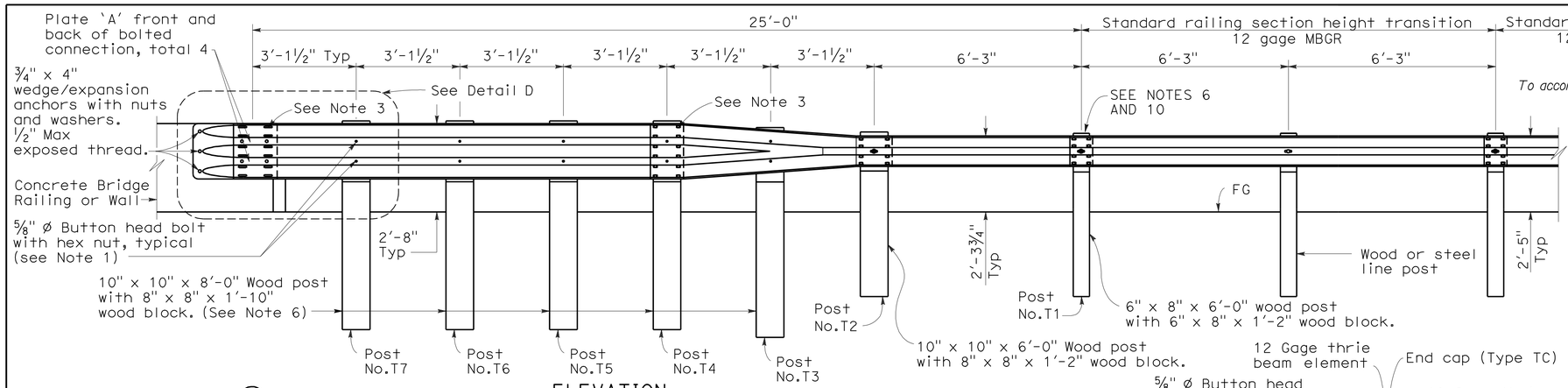

ELEVATION

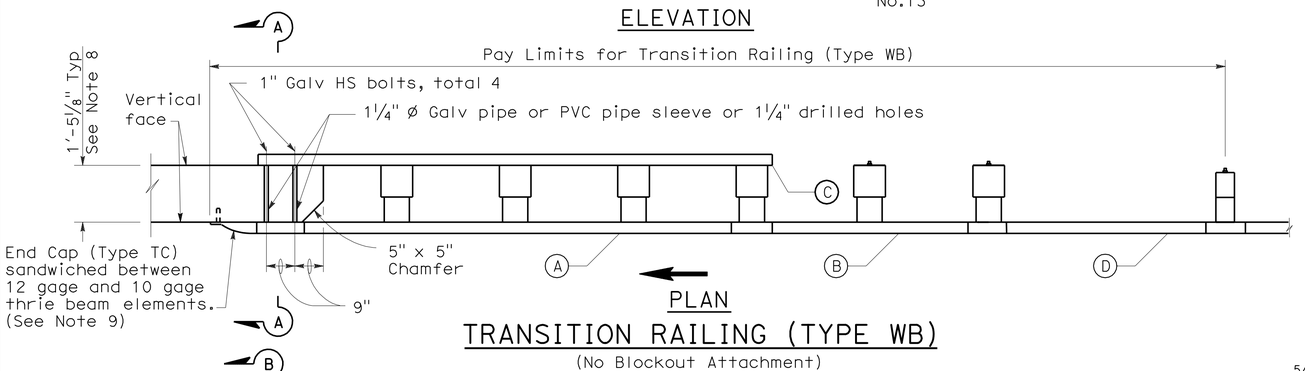

PLAN

TRANSITION RAILING (TYPE WB)

(No Blockout Attachment)

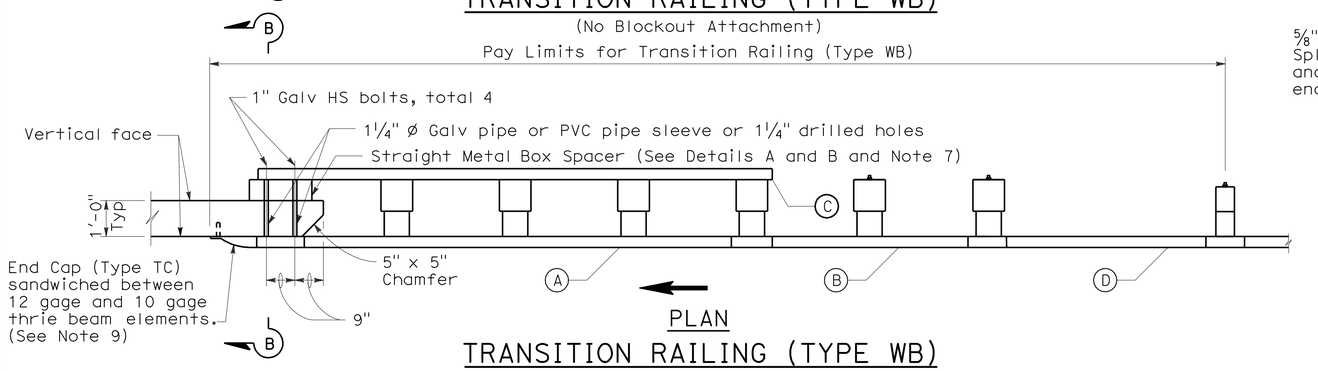

PLAN

TRANSITION RAILING (TYPE WB)

(Blockout Attachment)

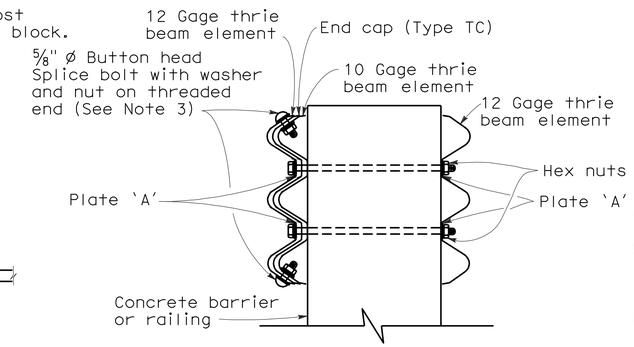

SECTION A-A

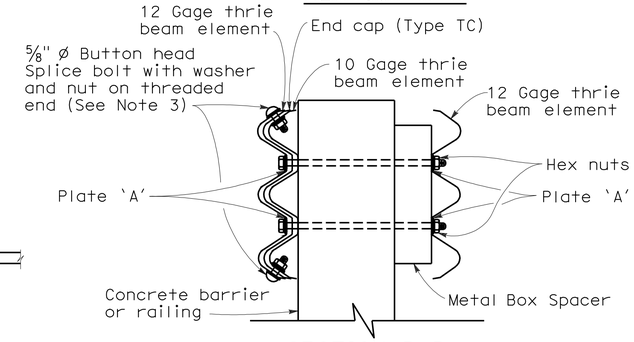

SECTION B-B

NOTES:

1. Use ⅝" ø Button head bolts and hex nuts for connections to posts. No washer on rail face for bolted connections to post.
2. The nested rail elements, end cap, and 'W' beam to thrie beam element may be spliced together prior to bolting the elements to the wood post and concrete barrier or railing.
3. Exterior splice bolt holes for rail element splices at Post No. T4 and the connection to the concrete barrier or railing shall be the standard 29/32" x 1⅛" slot size. Interior splice bolt holes at these locations may be increased up to 1¼" ø. Only the top 2 and the bottom 2 splice bolts with washers and nuts are required for rail splices at Post No. T4 and the connection to the concrete barrier or railing.
4. Direction of adjacent traffic indicated by ➡.
5. The top elevation of Posts No. T2 through No. T7 shall not project more than 1" above the top elevation of the rail element.
6. Typically, the railing connected to Transition Railing (Type WB) will be either standard railing section of metal beam guard railing with height transition ratio of 120:1 or an approved Caltrans end treatment attached to Post No. T1.
7. The depth of the metal box spacer varies from the 5⅛" to 1½" and is dependent on the width of the concrete railing or wall. The combined dimension for the depth of the metal box spacer plus the width of railing or wall is typically 17⅛". Where the space between the backside of the concrete railing or wall and the rear thrie beam element is less than 1½", metal plates similar to Plate 'A' are to be used as spacers.
8. Where the width of the concrete railing or wall is greater than 17⅛", wood blocks are to be used to fill the space created between the backside of Posts No. T4 through No. T7 and the rear thrie beam element. These wood blocks shall be 8" in width and 1'-2" in length. The dimension between the front thrie beam element and the rear thrie beam element is to match the width of the concrete railing or wall.
9. End cap may be installed over 12 gage and 10 gage thrie beam elements where transition railing is installed on the departure end of bridge railing.
10. Conform standard railing section height to 2'-3¾" at Post No. T1 using height transition ratio of 120:1.

LEGEND

(A) Nested thrie beam elements (one 12 gage element nested over one 10 gage element).

(B) One 10 gage "W" beam to thrie beam element.

(C) One 12 gage thrie beam element.

(D) One 10 gage "W" beam rail element (7'-3½" length)

10 gage = 0.135" thick

12 gage = 0.108" thick

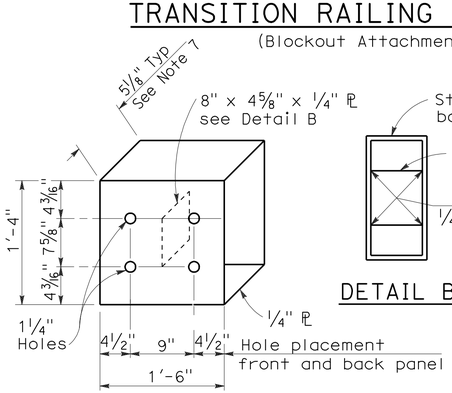

DETAIL A

STRAIGHT METAL BOX SPACER

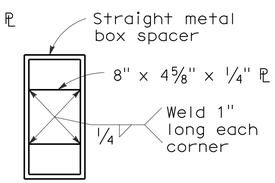

DETAIL B

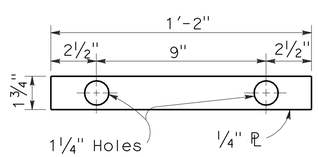

DETAIL C

PLATE 'A'

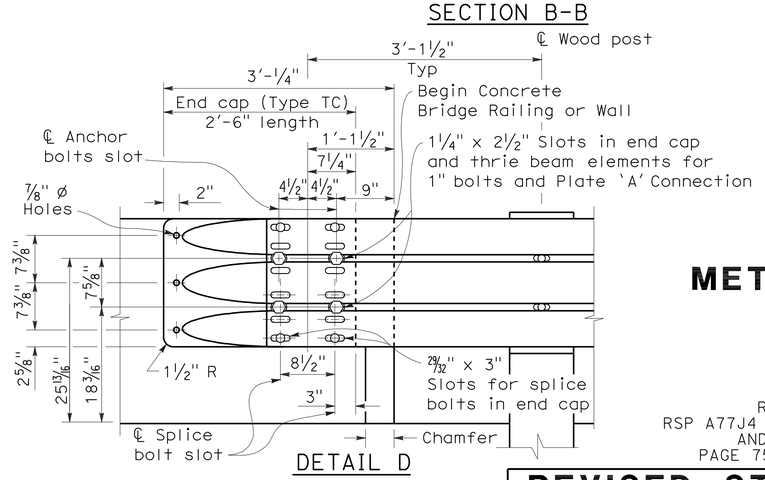

DETAIL D

STATE OF CALIFORNIA
DEPARTMENT OF TRANSPORTATION

METAL BEAM GUARD RAILING TRANSITION RAILING (TYPE WB)

NO SCALE

RSP A77J4 DATED MAY 20, 2011 SUPERSEDES
RSP A77J4 DATED JUNE 5, 2009, RSP A77J4 DATED JUNE 6, 2008
AND STANDARD PLAN A77J4 DATED MAY 1, 2006 -
PAGE 75 OF THE STANDARD PLANS BOOK DATED MAY 2006.

REVISED STANDARD PLAN RSP A77J4

2006 REVISED STANDARD PLAN RSP A77J4

5-14-09

DIST	COUNTY	ROUTE	POST MILES TOTAL PROJECT	SHEET No.	TOTAL SHEETS
04	Son	101	0.9/3.6	689	918

Randell D. Hiatt
REGISTERED CIVIL ENGINEER

June 6, 2008
PLANS APPROVAL DATE

REGISTERED PROFESSIONAL ENGINEER
Randell D. Hiatt
No. C50200
Exp. 6-30-09
CIVIL
STATE OF CALIFORNIA

The State of California or its officers or agents shall not be responsible for the accuracy or completeness of electronic copies of this plan sheet.

To accompany plans dated 4-23-12

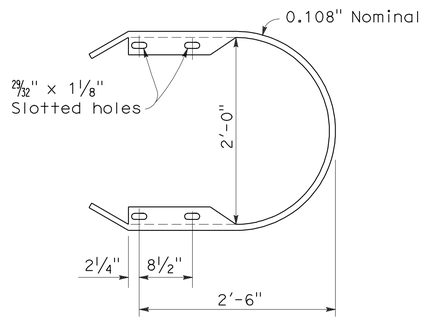

RETURN CAP
(TYPE TA)

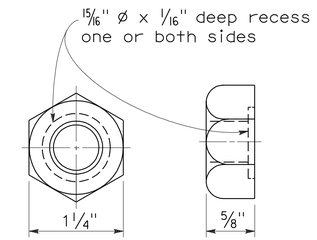

5/8" ø RECESS NUT

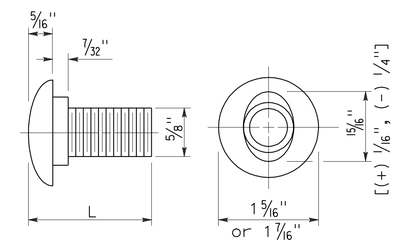

5/8" ø BUTTON HEAD BOLT

L	THREAD LENGTH
1 1/4"	full thread length
2"	full thread length
9 1/2"	4" Min thread length
18"	4" Min thread length

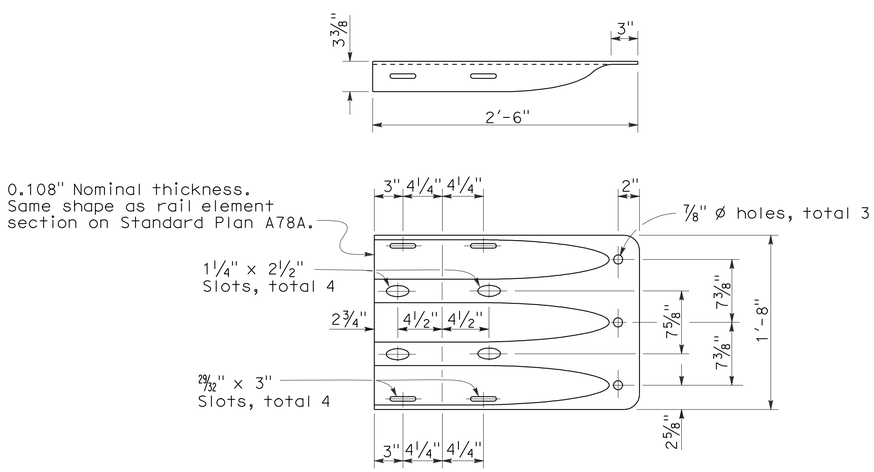

END CAP
(TYPE TC)

STATE OF CALIFORNIA
DEPARTMENT OF TRANSPORTATION

THRIE BEAM BARRIER STANDARD HARDWARE DETAILS

NO SCALE

RSP A78C1 DATED JUNE 6, 2008 SUPERSEDES STANDARD PLAN A78C1
DATED MAY 1, 2006 - PAGE 85 OF THE STANDARD PLANS BOOK DATED MAY 2006.

REVISED STANDARD PLAN RSP A78C1

2006 REVISED STANDARD PLAN RSP A78C1

4-21-08

DIST	COUNTY	ROUTE	POST MILES TOTAL PROJECT	SHEET NO.	TOTAL SHEETS
04	Son	101	0.9/3.6	690	918

Randell D. Hiatt
REGISTERED CIVIL ENGINEER

October 20, 2006
PLANS APPROVAL DATE

REGISTERED PROFESSIONAL ENGINEER
Randell D. Hiatt
No. C50200
Exp. 6-30-07
CIVIL
STATE OF CALIFORNIA

The State of California or its officers or agents shall not be responsible for the accuracy or completeness of electronic copies of this plan sheet.

To accompany plans dated 4-23-12

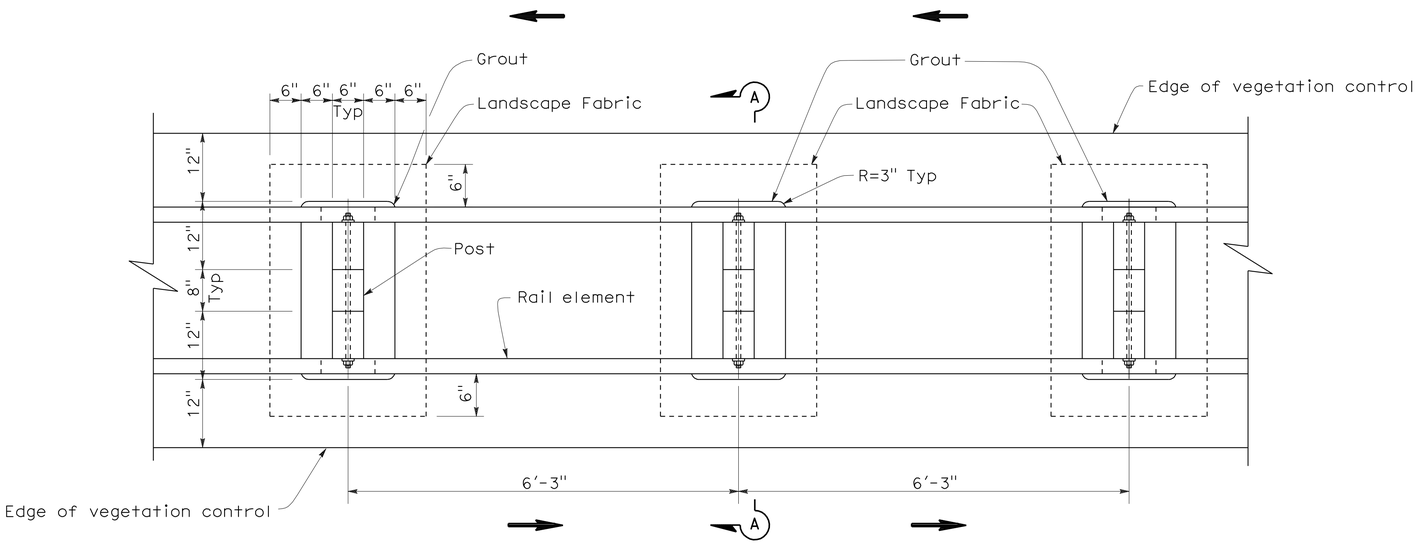

PLAN

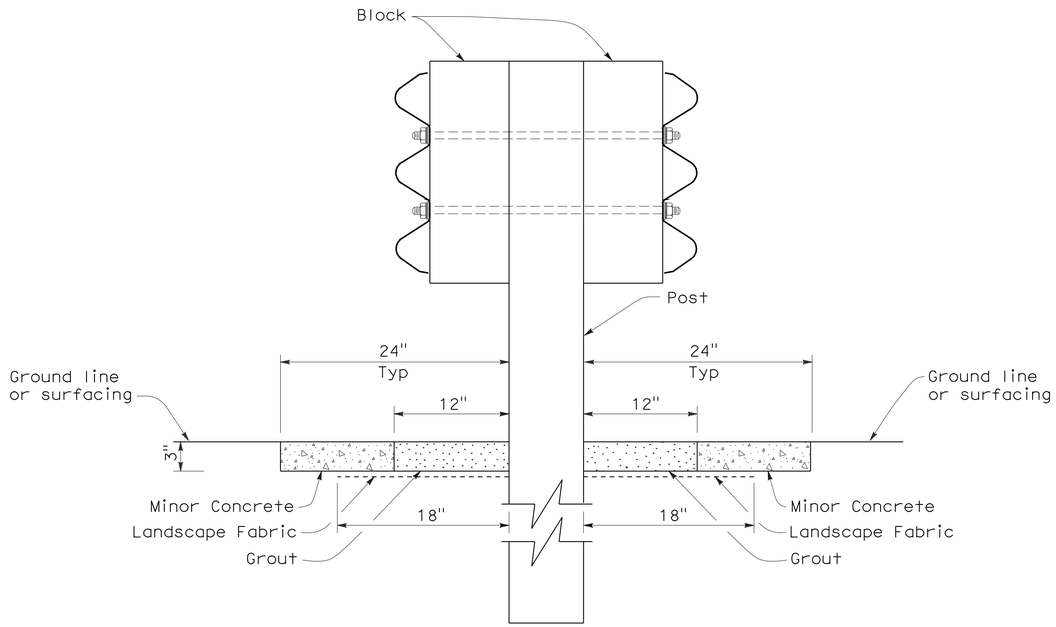

SECTION A-A

NOTE:

1. Direction of adjacent traffic indicated by ⟶.

STATE OF CALIFORNIA
DEPARTMENT OF TRANSPORTATION

DOUBLE THRIE BEAM BARRIER TYPICAL VEGETATION CONTROL STANDARD BARRIER RAILING SECTION

NO SCALE

NSP A78C4 DATED OCTOBER 20, 2006 SUPPLEMENTS THE STANDARD PLANS BOOK DATED MAY 2006.

NEW STANDARD PLAN NSP A78C4

2006 NEW STANDARD PLAN NSP A78C4

7-17-06

DIST	COUNTY	ROUTE	POST MILES TOTAL PROJECT	SHEET NO.	TOTAL SHEETS
04	Son	101	0.9/3.6	691	918

Randell D. Hiatt
REGISTERED CIVIL ENGINEER

June 6, 2008
PLANS APPROVAL DATE

REGISTERED PROFESSIONAL ENGINEER
Randell D. Hiatt
No. C50200
Exp. 6-30-09
CIVIL
STATE OF CALIFORNIA

The State of California or its officers or agents shall not be responsible for the accuracy or completeness of electronic copies of this plan sheet.

To accompany plans dated 4-23-12

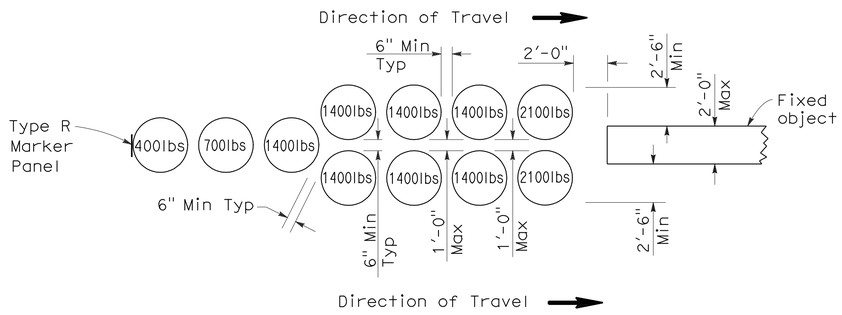

ARRAY 'U11'

Approach speed less than 45 mph

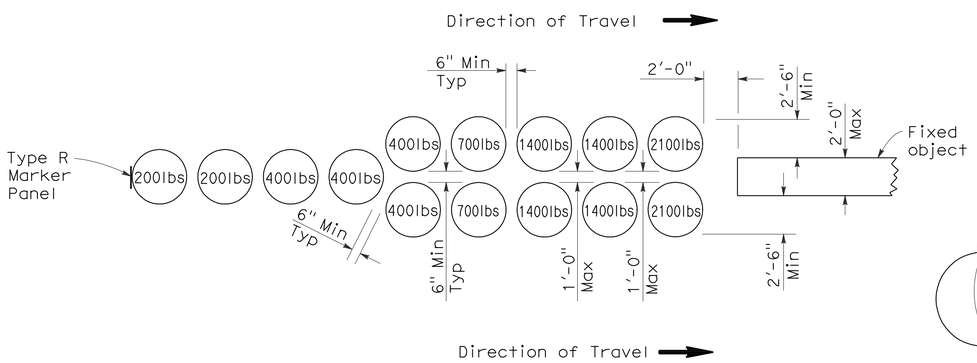

ARRAY 'U14'

Approach speed 45 mph or more

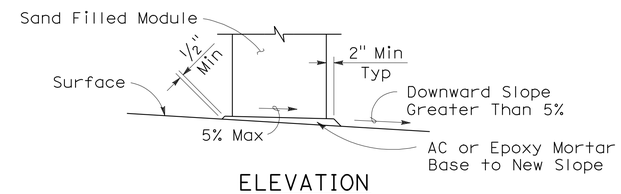

ELEVATION

SLOPED SEAT DETAIL

(See Note 4)

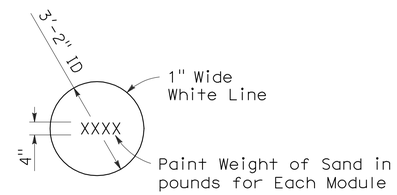

PAINTING DETAIL

(See Note 5)

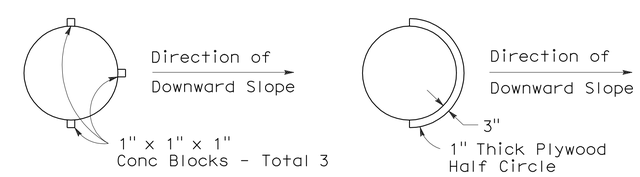

ALTERNATIVE 1

ALTERNATIVE 2

PLAN

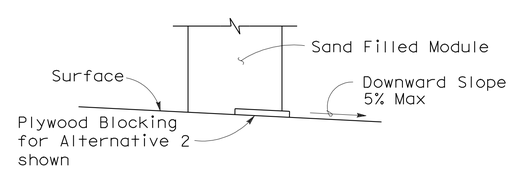

ELEVATION

BRIDGE DECK MODULE BLOCKING DETAILS

(See Note 6)

NOTES:

1. (XXX) Indicates module location and mass of sand in pounds for each module. Module spacing is based on the greater diameter of the modules.
2. All sand weights are nominal.
3. Each module is to contain amount of sand indicated, supported according to the manufacturer's instructions.
4. Modules shall be placed on asphalt concrete, epoxy mortar or concrete surface. Modules to be placed on surfacing with greater than 5% downward slope shall be seated as shown.
5. Mass of sand and outline of each module shall be painted on the surface at each module location.
6. Module blocking, epoxied to the deck surface, is required for all modules placed on bridge decks. Two acceptable alternatives are shown. Other alternatives recommended by the manufacturer and approved by the Engineer will be accepted.
7. Place the top of the Type R marker panel 1" below the module lid.
8. Approach speeds indicated conform to NCHRP Report criteria.

STATE OF CALIFORNIA
DEPARTMENT OF TRANSPORTATION

CRASH CUSHION, SAND FILLED (UNIDIRECTIONAL)

NO SCALE

RSP A81A DATED JUNE 6, 2008 SUPERSEDES STANDARD PLAN A81A DATED MAY 1, 2006 - PAGE 99 OF THE STANDARD PLANS BOOK DATED MAY 2006.

REVISED STANDARD PLAN RSP A81A

2006 REVISED STANDARD PLAN RSP A81A

5-15-08

DIST	COUNTY	ROUTE	POST MILES TOTAL PROJECT	SHEET NO.	TOTAL SHEETS
04	Son	101	0.9/3.6	692	918

Glenn DeCou
REGISTERED CIVIL ENGINEER

June 5, 2009
PLANS APPROVAL DATE

REGISTERED PROFESSIONAL ENGINEER
Glenn DeCou
No. C34547
Exp. 9-30-09
CIVIL
STATE OF CALIFORNIA

The State of California or its officers or agents shall not be responsible for the accuracy or completeness of electronic copies of this plan sheet.

To accompany plans dated 4-23-12

2006 REVISED STANDARD PLAN RSP A85

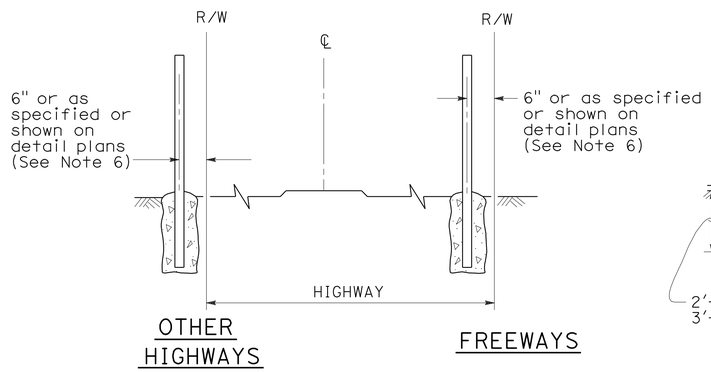

FENCE LOCATION

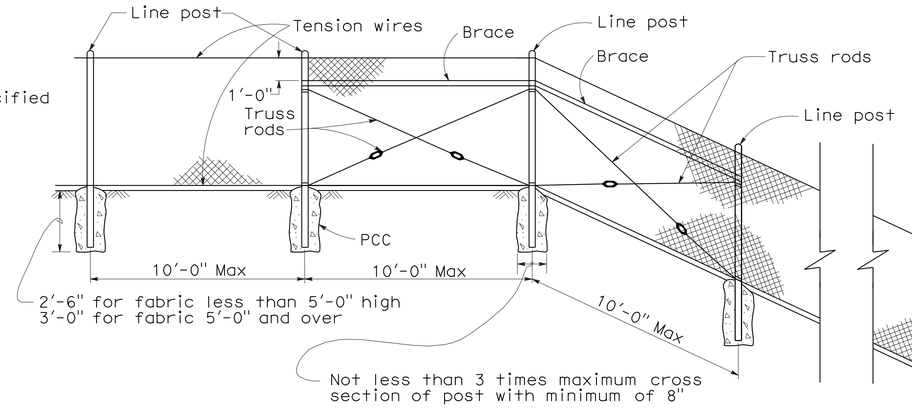

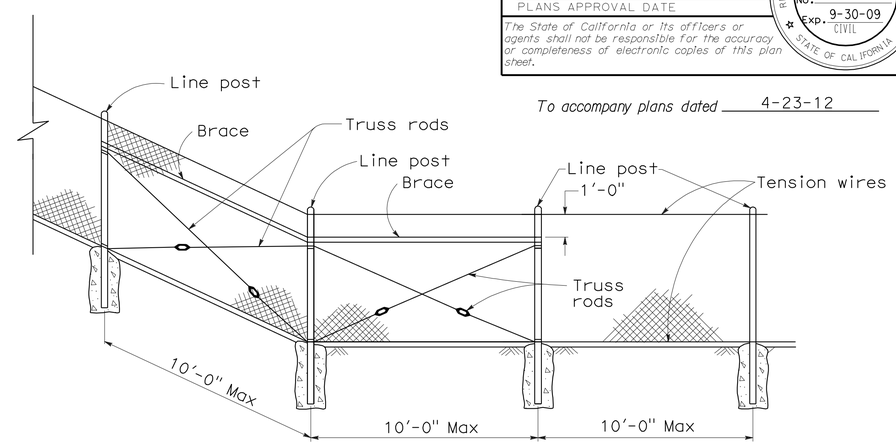

CHAIN LINK FENCE ON SHARP BREAK IN GRADE

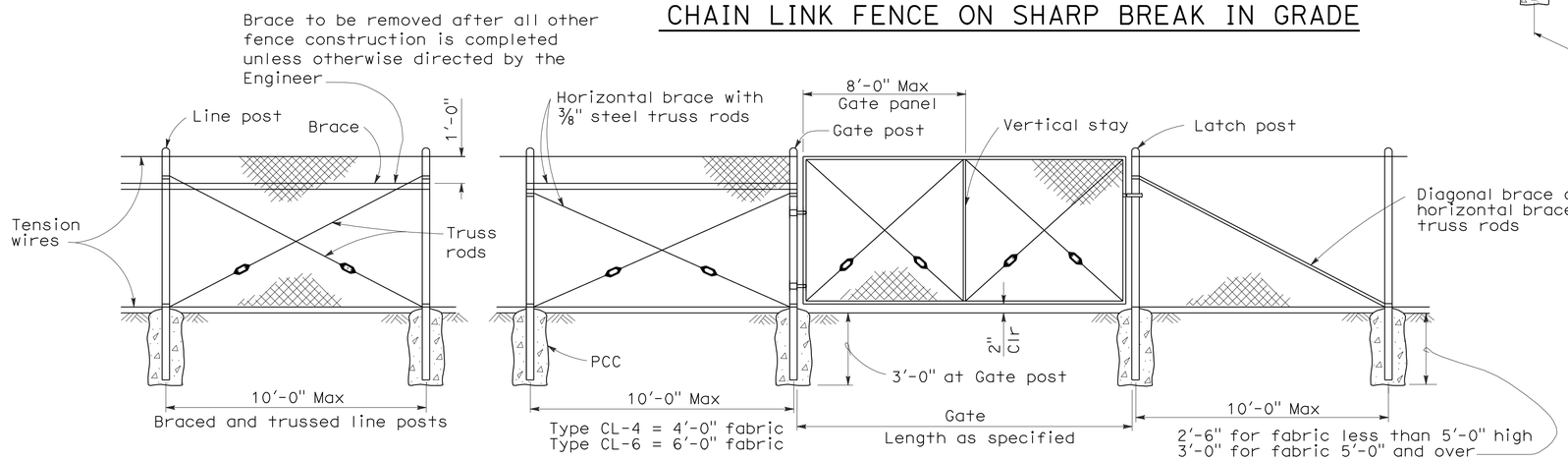

CHAIN LINK GATE INSTALLATION

GATE POST			
FENCE HEIGHT	GATE WIDTHS	NOMINAL ID	WEIGHT PER FOOT
6'-0" and Less	Up thru 6'-0"	2½"	4.95 LB
	Over 6'-0" thru 12'-0"	4"	10.79 LB
	Over 12'-0" thru 18'-0"	5"	14.62 LB
	Over 18'-0" to 24'-0" Max	6"	18.97 LB
Over 6'-0"	Up thru 6'-0"	3"	7.58 LB
	Over 6'-0" thru 12'-0"	5"	14.62 LB
	Over 12'-0" thru 18'-0"	6"	18.97 LB
	Over 18'-0" to 24'-0" Max	8"	28.55 LB

Above post dimensions and weights are minimums. Larger sizes may be used on approval of the Engineer.

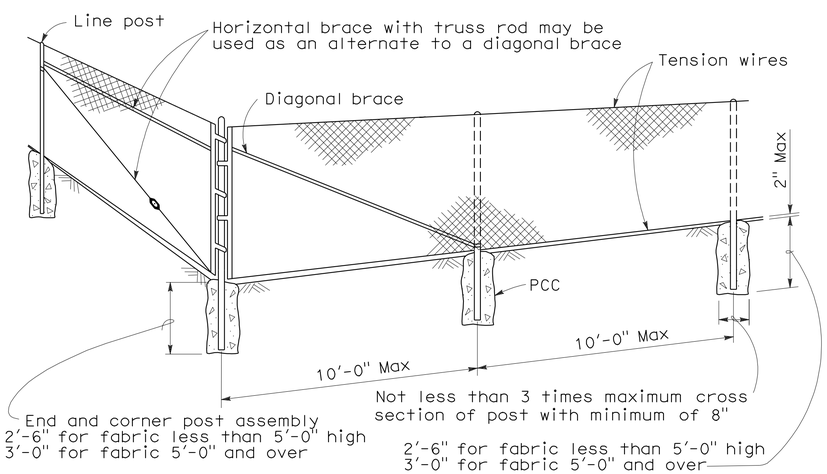

CORNER POST

NOTES:

1. The below table shows examples of post and brace sections which may comply with the Specifications.
2. Sections shown in the tables must also comply with the strength requirements and other provisions of the Specifications.
3. Other sections which comply with the strength requirements and other provisions of the Specifications may be used on approval of the Engineer.
4. Options exercised shall be uniform on any one project.
5. Dimensions shown are nominal.
6. Offset to be 2'-0" at monument locations, measured at right angles to R/W lines. Taper to achieve offset to be at least 20'-0" long.

TYPICAL MEMBER DIMENSIONS (See Notes)											
FENCE HEIGHT	LINE POSTS			END, LATCH & CORNER POSTS				BRACES			
	ROUND ID	H	ROLL FORMED	ROUND ID	ROLL FORMED			ROUND ID	H	ROLL FORMED	
6' & less	1½"	1⅞" × 1⅝"	1⅞" × 1⅝"	2"	3½" × 3½"	2" × 1¾"		1¼"	1½" × 1 5/16"	1⅝" × 1¼"	1¾" × 1¼"
Over 6'	2"	2¼" × 2"	2" × 1¾"	2½"	3½" × 3½"	2½" × 2½"		1¼"	1½" × 1 5/16"	1⅝" × 1¼"	1¾" × 1¼"

STATE OF CALIFORNIA
DEPARTMENT OF TRANSPORTATION

CHAIN LINK FENCE

NO SCALE

RSP A85 DATED JUNE 5, 2009 SUPERSEDES STANDARD PLAN A85
DATED MAY 1, 2006 - PAGE 111 OF THE STANDARD PLANS BOOK DATED MAY 2006.

REVISED STANDARD PLAN RSP A85

5-7-09

DIST	COUNTY	ROUTE	POST MILES TOTAL PROJECT	SHEET NO.	TOTAL SHEETS
04	Son	101	0.9/3.6	693	918

REGISTERED CIVIL ENGINEER

June 5, 2009
PLANS APPROVAL DATE

REGISTERED PROFESSIONAL ENGINEER Glenn DeCou No. C34547 Exp. 9-30-09 CIVIL STATE OF CALIFORNIA

The State of California or its officers or agents shall not be responsible for the accuracy or completeness of electronic copies of this plan sheet.

To accompany plans dated 4-23-12

NOTES:

1. H is 2'-6" for fabric less than 5'-0" high. H is 3'-0" for fabric 5'-0" and over.
2. T is not less than 3 times maximum cross section of post with minimum of 8".
3. Arms with barbed wire to be used where shown on plans.
4. See Revised Standard Plan RSP A85 for Chain Link Fencing dimensions.
5. Reinforcing must comply with ASTM A 706.
6. See Detail A on New Standard Plan NSP A86B for connection at headwall.

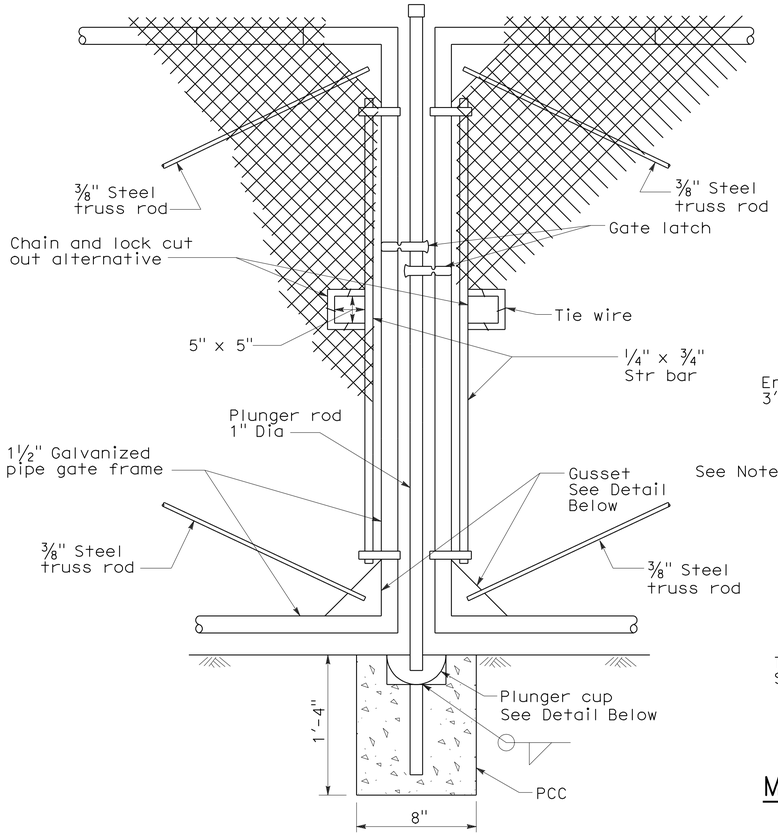

TYPICAL DOUBLE GATE REMOVABLE CENTER POST

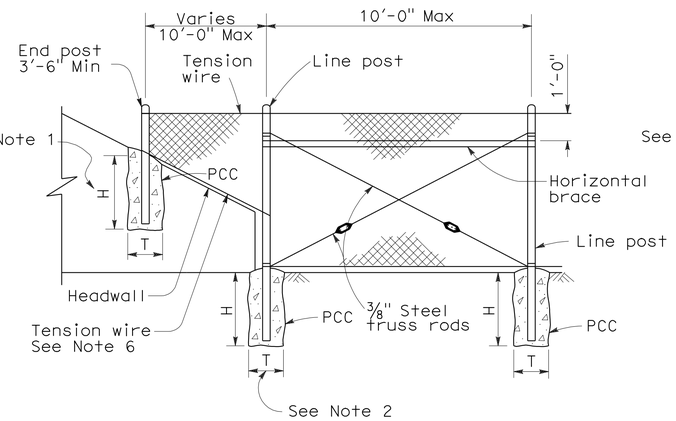

METHOD OF TYING FENCE TO HEADWALL

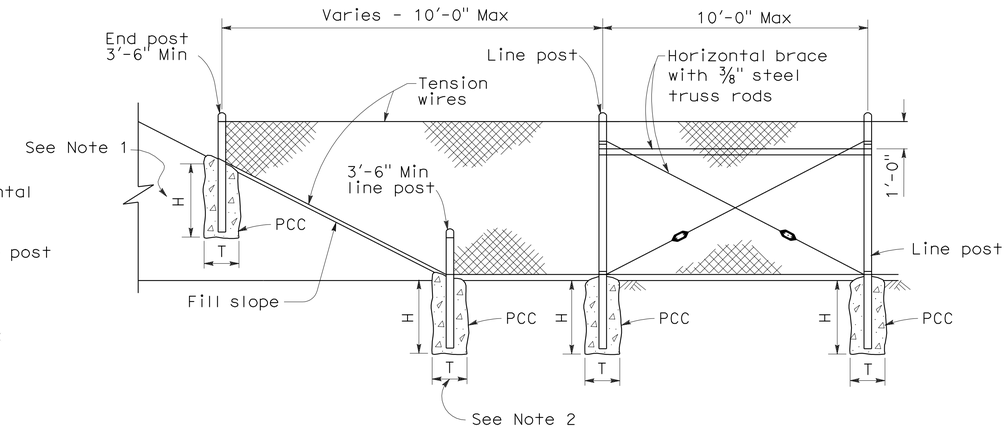

METHOD OF ERECTING FENCE FOR FILL SLOPE

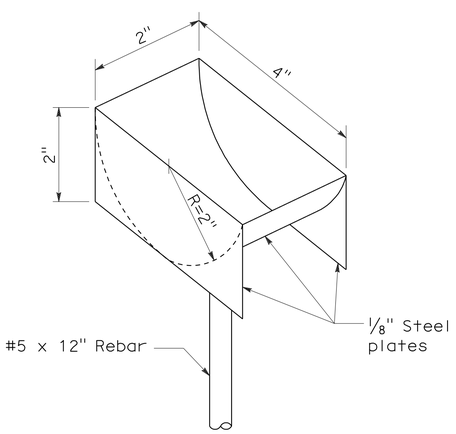

PLUNGER CUP DETAIL

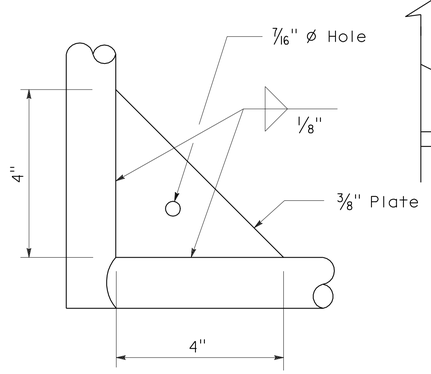

GUSSET DETAIL

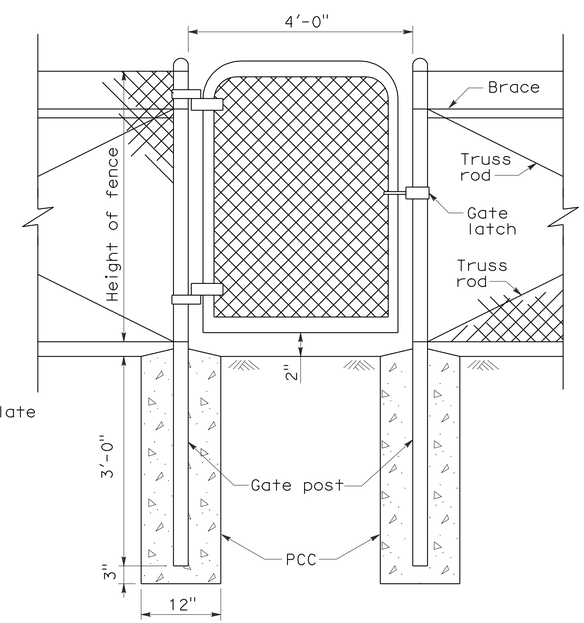

WALK GATE

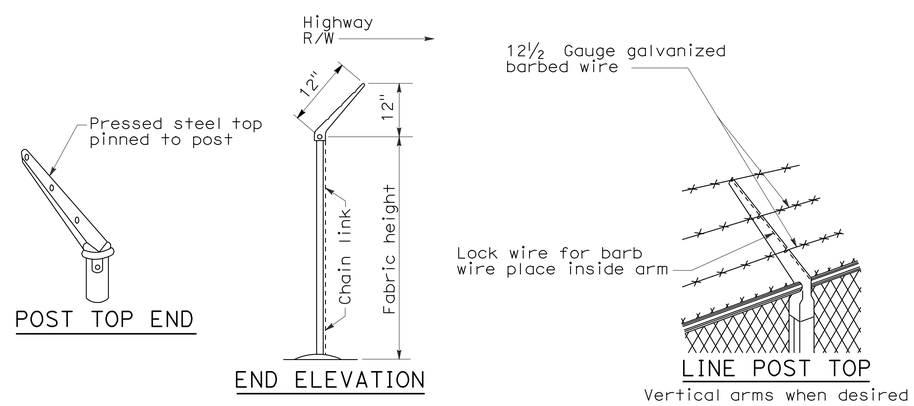

POST TOP END

END ELEVATION

LINE POST TOP
Vertical arms when desired

BARBED WIRE POST TOP
See Note 3

STATE OF CALIFORNIA
DEPARTMENT OF TRANSPORTATION

CHAIN LINK FENCE DETAILS

NO SCALE

NSP A85A DATED JUNE 5, 2009 SUPPLEMENTS THE STANDARD PLANS BOOK DATED MAY 2006.

NEW STANDARD PLAN NSP A85A

2006 NEW STANDARD PLAN NSP A85A

5-7-09

DIST	COUNTY	ROUTE	POST MILES TOTAL PROJECT	SHEET NO.	TOTAL SHEETS
04	Son	101	0.9/3.6	694	918

REGISTERED CIVIL ENGINEER

June 5, 2009
PLANS APPROVAL DATE

REGISTERED PROFESSIONAL ENGINEER Glenn DeCou No. C34547 Exp. 9-30-09 CIVIL STATE OF CALIFORNIA

The State of California or its officers or agents shall not be responsible for the accuracy or completeness of electronic copies of this plan sheet.

To accompany plans dated 4-23-12

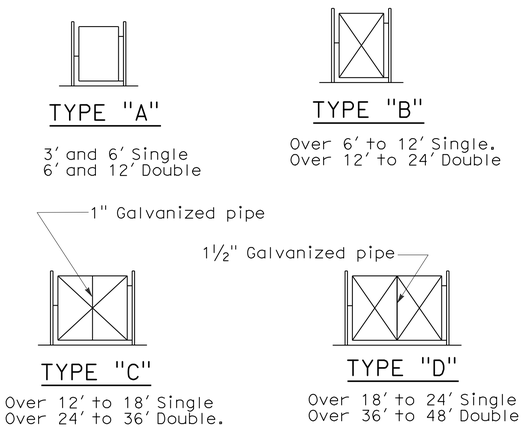

TYPICAL FRAMEWORK SHOWING NUMBER OF BAYS IN GATE

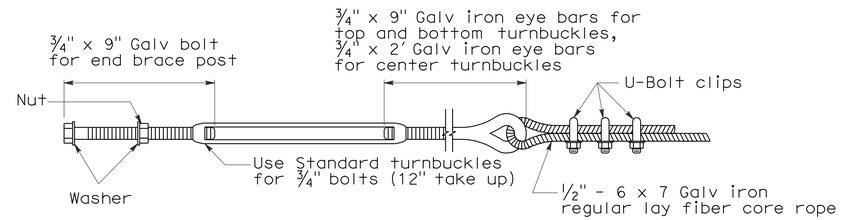

TURNBUCKLE A

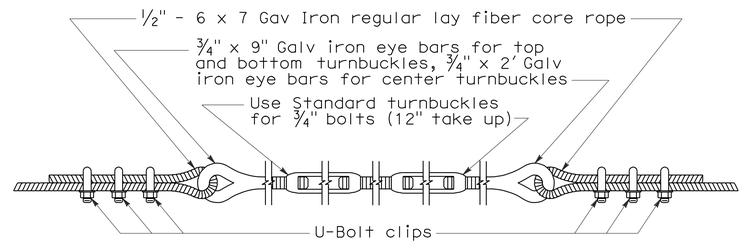

TURNBUCKLE B

NOTES:

1. All material for abutment connection to be galvanized.
2. The chain link fabric shall be replaced by barbed wire strands at 12" maximum centers between the double posts.
3. When the width of the culvert makes it necessary to anchor a post to the top of the culvert, a cast iron shoe or other device approved by the Engineer shall be used.
4. Fencing over stream and around headwall may also use Barbed Wire or Wire Mesh fencing with either wood post or steel post installation.
5. See Revised Standard Plan RSP A85 for Chain Link fence dimensions. See Standard Plan A86 for Barbed Wire and Wire Mesh fence dimensions and for wood post and steel post installation.

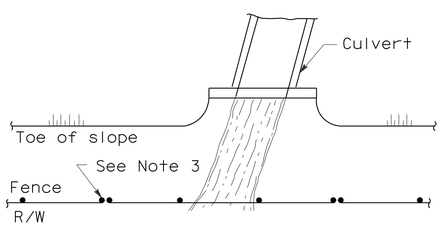

PLAN

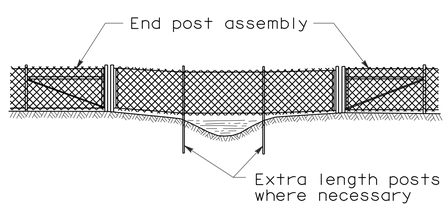

ELEVATION

INSTALLATION OVER STREAM

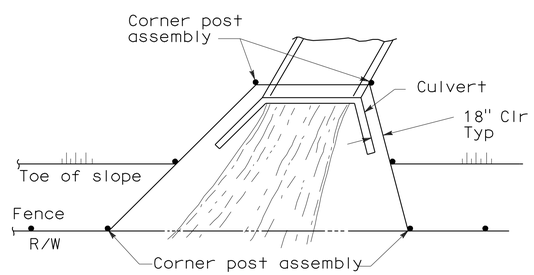

PLAN

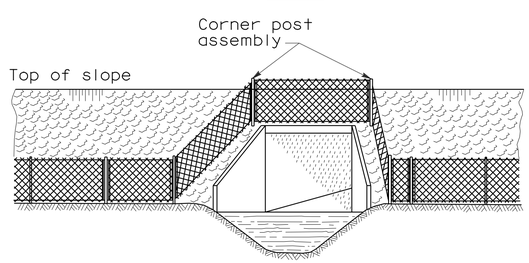

ELEVATION

INSTALLATION AROUND HEADWALL

See Note 4

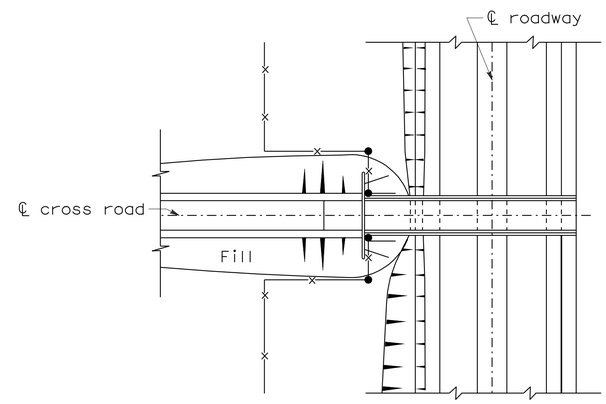

PLAN OF ROADWAY - UNDERPASS

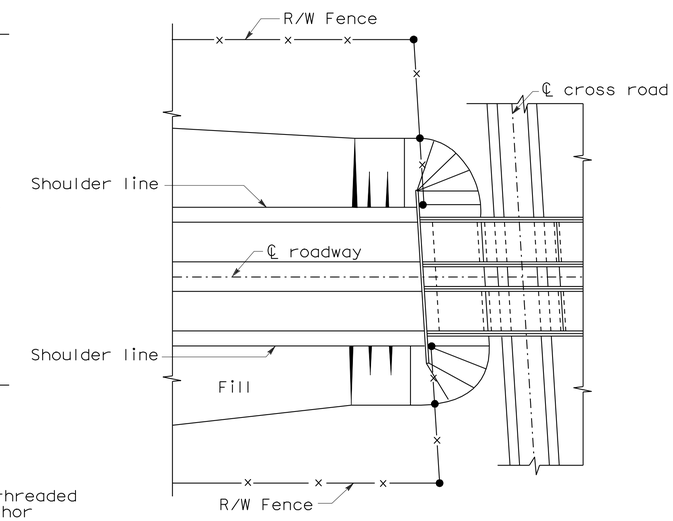

PLAN OF ROADWAY - OVERPASS

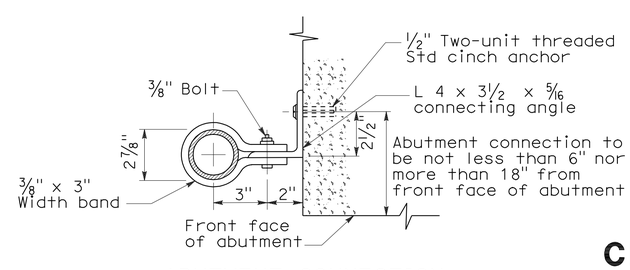

ABUTMENT CONNECTION

TYPICAL INSTALLATION AT BRIDGES

STATE OF CALIFORNIA
DEPARTMENT OF TRANSPORTATION

CHAIN LINK FENCE DETAILS

NO SCALE

NSP A85B DATED JUNE 5, 2009 SUPPLEMENTS THE STANDARD PLANS BOOK DATED MAY 2006.

NEW STANDARD PLAN NSP A85B

2006 NEW STANDARD PLAN NSP A85B

5-12-09

DIST	COUNTY	ROUTE	POST MILES TOTAL PROJECT	SHEET NO.	TOTAL SHEETS
04	Son	101	0.9/3.6	695	918

REGISTERED CIVIL ENGINEER

November 17, 2006
PLANS APPROVAL DATE

REGISTERED PROFESSIONAL ENGINEER
Michael Janzen
No. 44788
Exp. 03-31-08
CIVIL
STATE OF CALIFORNIA

The State of California or its officers or agents shall not be responsible for the accuracy or completeness of electronic copies of this plan sheet.

To accompany plans dated 4-23-12

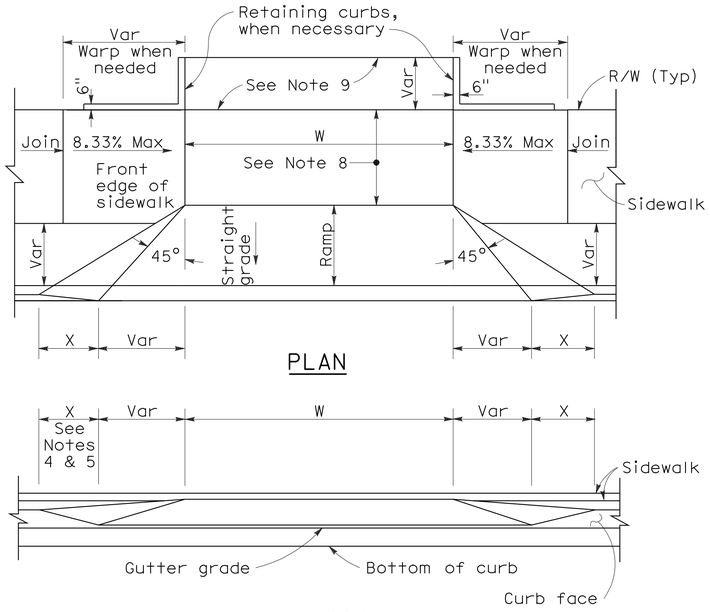

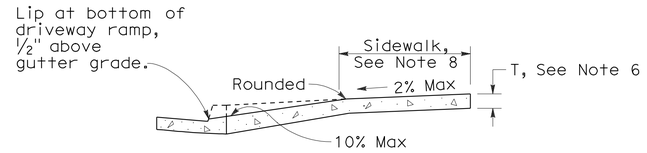

CASE A

Typical driveway, sidewalk not depressed

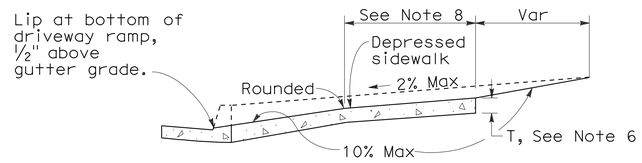

CASE B

Driveway with depressed sidewalk

SECTIONS

DRIVEWAYS

TYPE A1 CURBS

See Table A

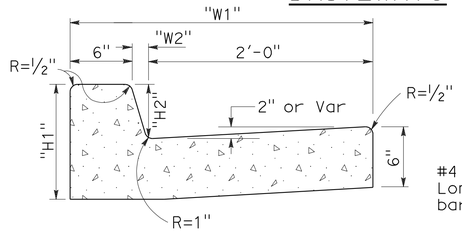

TYPE A2 CURBS

See Table A

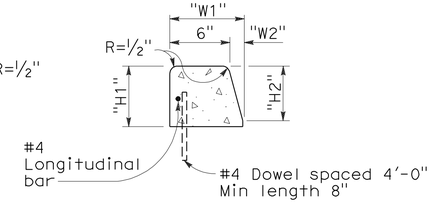

TYPE A3 CURBS

Superimposed on existing pavement
See Table A

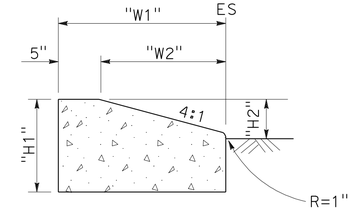

TYPE D CURBS

See Table A

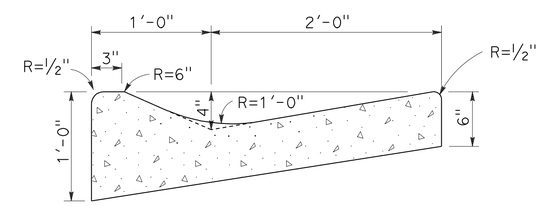

TYPE E CURB

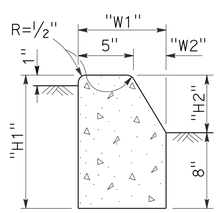

TYPE B1 CURBS

See Table A

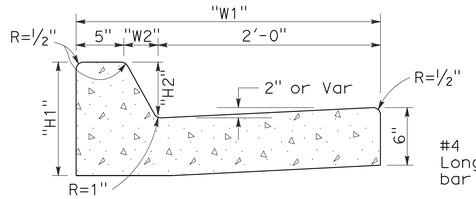

TYPE B2 CURBS

See Table A

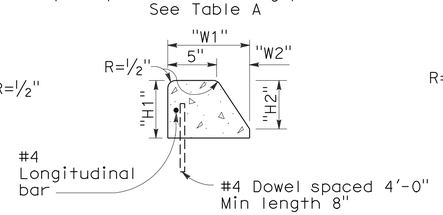

TYPE B3 CURBS

Superimposed on existing pavement
See Table A

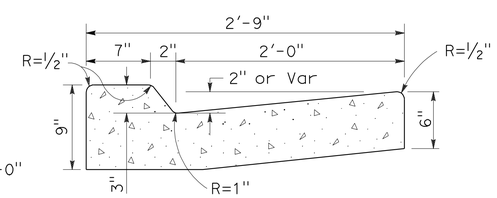

TYPE B4 CURBS

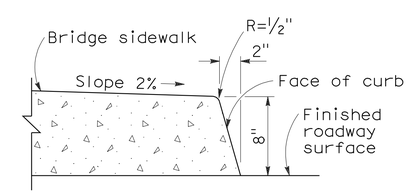

TYPE H CURB

On Bridges

CURBS

CURB QUANTITIES

TYPE	CUBIC YARDS PER LINEAR FOOT
A1-6	0.02585
A1-8	0.03084
A2-6	0.05903
A2-8	0.06379
A3-6	0.01036
A3-8	0.01435
B1-4	0.02185
B1-6	0.02930
B2-4	0.05515
B2-6	0.06171
B3-4	0.00641
B3-6	0.01074
B4	0.05709
D-4	0.04083
D-6	0.06804
E	0.06661

TABLE A

CURB TYPE	DIMENSIONS "H1"	"H2"	"W1"	"W2"
A1-6	1'-2"	6"	7½"	1½"
A1-8	1'-4"	8"	8"	2"
A2-6	1'-0"	6"	2'-7½"	1½"
A2-8	1'-2"	8"	2'-8"	2"
A3-6	6"	5"	7¼"	1¼"
A3-8	8"	7"	7¾"	1¾"
B1-4	1'-0"	4"	7½"	2½"
B1-6	1'-2"	6"	9"	4"
B2-4	10"	4"	2'-7½"	2½"
B2-6	1'-0"	6"	2'-9"	4"
B3-4	4"	3"	7"	2"
B3-6	6"	5"	8½"	3½"
D-4	10"	4"	1'-6"	1'-1"
D-6	1'-0"	6"	2'-2"	1'-8"

NOTES:

1. Case A driveway section typically applies.
2. Use Case B driveway section when ramp slopes would exceed 10% in Case A.
3. Use Case B driveway section when sidewalk cross slope would exceed 2% in Case A.
4. X=3'-0" except for curb heights over 10" where 4:1 slopes shall be used on curb slope.
5. X is a variable when sidewalk is located where wheelchairs may traverse the surface. Slopes shall not exceed 8.33%.
6. Sidewalk and ramp thickness "T" at driveway shall be 4" for residental and 6" for commercial.
7. Difference in slope of the driveway ramp and the slope of a line between the gutter and a point on the roadway 5'-0" from gutter line shall not exceed 15%. Reduce driveway ramp slope, not gutter slope, where required.
8. Minimum width of clear passageway for sidewalk shall be 4'-0".
9. Retaining curbs and acquisition of construction easement may be necessary for narrow sidewalks or curb heights in excess of 6".
10. Across the pedestrian route at curb ramp locations, the gutter pan slope shall not exceed 1" of depth for each 2'-0" of width.

STATE OF CALIFORNIA
DEPARTMENT OF TRANSPORTATION

CURBS AND DRIVEWAYS

NO SCALE

RSP A87A DATED NOVEMBER 17, 2006 SUPERSEDES STANDARD PLAN A87A DATED MAY 1, 2006 - PAGE 113 OF THE STANDARD PLANS BOOK DATED MAY 2006.

REVISED STANDARD PLAN RSP A87A

2006 REVISED STANDARD PLAN RSP A87A

10-25-06

DIST	COUNTY	ROUTE	POST MILES TOTAL PROJECT	SHEET NO.	TOTAL SHEETS
04	Son	101	0.9/3.6	696	918

REGISTERED CIVIL ENGINEER

September 1, 2006
PLANS APPROVAL DATE

REGISTERED PROFESSIONAL ENGINEER — Hector David Cordova — No. C41957 — Exp. 3-31-08 — CIVIL — STATE OF CALIFORNIA

The State of California or its officers or agents shall not be responsible for the accuracy or completeness of electronic copies of this plan sheet.

To accompany plans dated 4-23-12

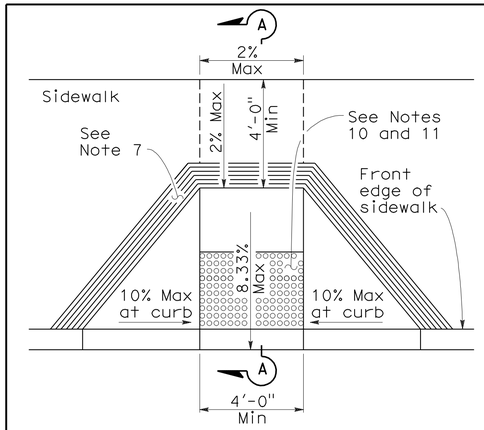

CASE A

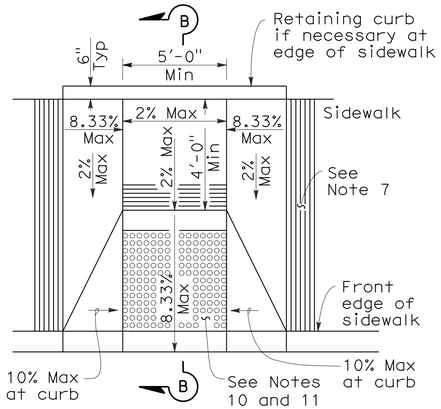

CASE B

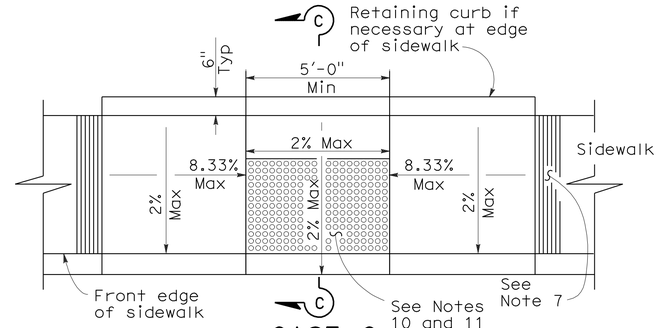

CASE C

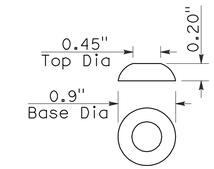

RAISED TRUNCATED DOME

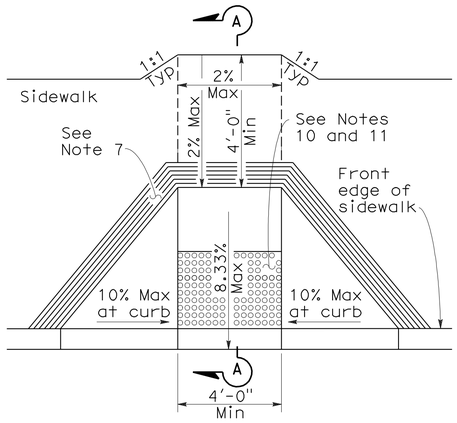

CASE D

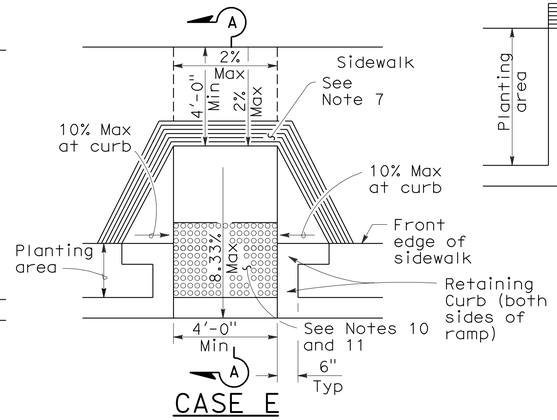

CASE E

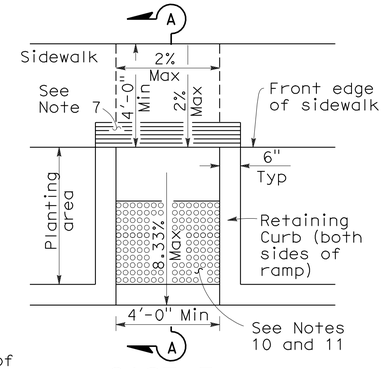

CASE F

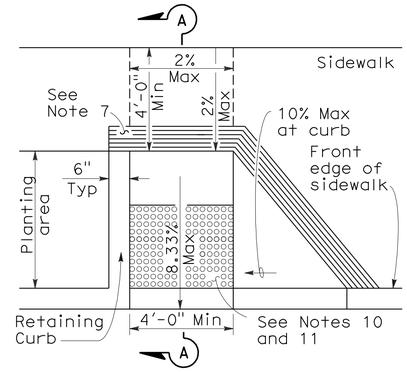

CASE G

See Note 4

SECTION A-A

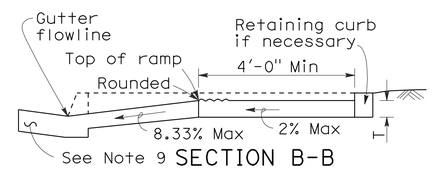

SECTION B-B

Depress entire sidewalk as required

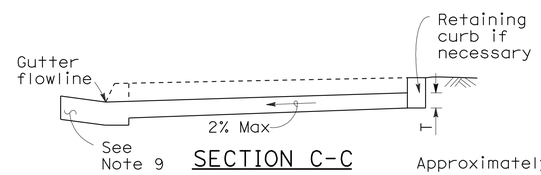

SECTION C-C

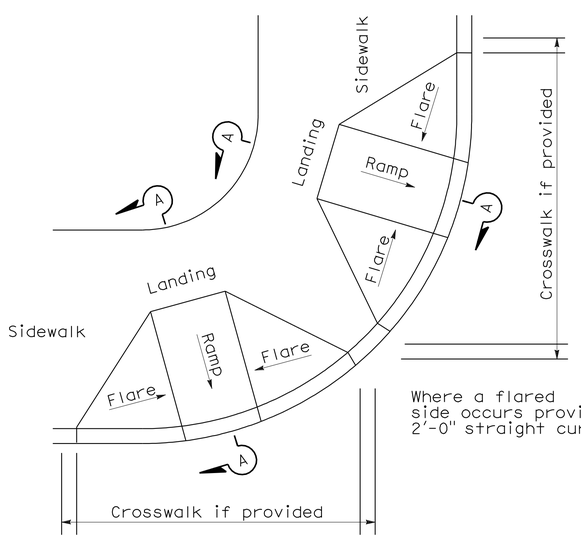

DETAIL A

TYPICAL TWO-RAMP CORNER INSTALLATION

See Note 1

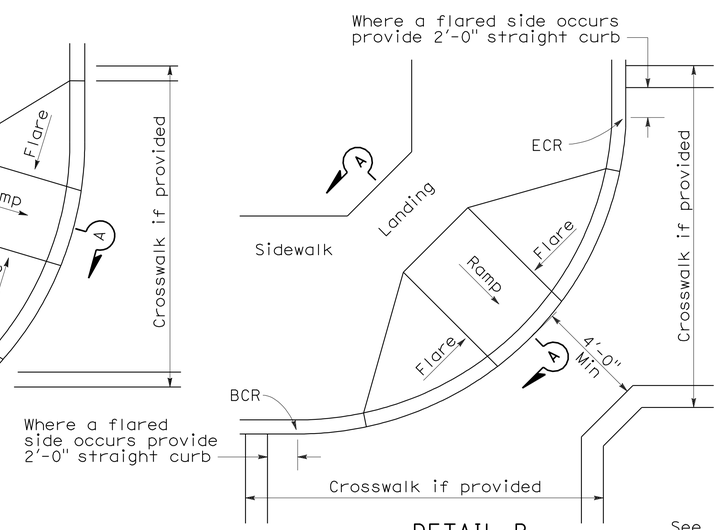

DETAIL B

TYPICAL ONE-RAMP CORNER INSTALLATION

See Notes 1 and 3

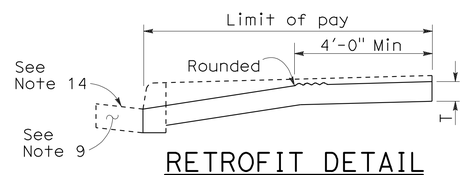

RETROFIT DETAIL

Existing curb and sidewalk

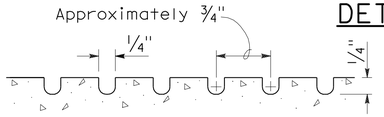

GROOVING DETAIL

NOTES:

1. As site conditions dictate, Case A through Case G curb ramps may be used for corner installations similar to those shown in Detail A and Detail B. The case of curb ramps used in Detail A do not have to be the same. Case A through Case G curb ramps also may be used at mid block locations, as site conditions dictate.
2. If distance from curb to back of sidewalk is too short to accommodate ramp and 4'-0" platform (landing) as shown in Case A, the sidewalk may be depressed longitudinally as in Case B, or C or may be widened as in Case D.
3. When ramp is located in center of curb return, crosswalk configuration must be similar to that shown for Detail B.
4. As site conditions dictate, the retaining curb side and the flared side of the Case G ramp shall be constructed in reversed position.
5. If located on a curve, the sides of the ramp need not be parallel, but the minimum width of the ramp shall be 4'-0".
6. Side slope of ramp flares vary uniformly from a maximum of 10% at curb to conform with longitudinal sidewalk slope adjacent to top of the ramp, except in Case C and Case F.
7. The curb ramp shall be outlined, as shown, with a 1'-0" wide border with 1/4" grooves approximately 3/4" on center. See grooving detail.
8. Transitions from ramps and landing to walks, gutters or streets shall be flush and free of abrupt changes.
9. Maximum slopes of adjoining gutters, the road surface immediately adjacent to the curb ramp or accessible route shall not exceed 5 percent within 4'-0" of the top and bottom of the curb ramp.
10. Curb ramps shall have a detectable warning surface that extends the full width and 3'-0" depth of the ramp. Detectable Warning Surfaces shall conform to the details on this plan and the requirements in the Special Provisions.
11. The edge of the detectable warning surface nearest the street shall be between 6" and 8" from the gutter flowline.
12. Sidewalk and ramp thickness, "T", shall be 3½" minimum.
13. Utility pull boxes, manholes, vaults and all other utility facilities within the boundaries of the curb ramp will be relocated or adjusted to grade by the owner prior to, or in conjunction with, curb ramp construction.
14. For retrofit conditions, removal and replacement of curb apron will be at the Contractor's option, unless otherwise shown on project plans.

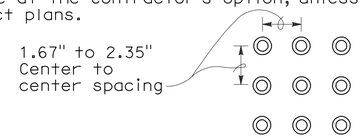

RAISED TRUNCATED DOME PATTERN (IN-LINE)

DETECTABLE WARNING SURFACE

See Note 10

STATE OF CALIFORNIA
DEPARTMENT OF TRANSPORTATION

CURB RAMP DETAILS

NO SCALE

RSP A88A DATED SEPTEMBER 1, 2006 SUPERSEDES STANDARD PLAN A88A DATED MAY 1, 2006 - PAGE 115 OF THE STANDARD PLANS BOOK DATED MAY 2006.

REVISED STANDARD PLAN RSP A88A

2006 REVISED STANDARD PLAN RSP A88A

8-3-06

DIST	COUNTY	ROUTE	POST MILES TOTAL PROJECT	SHEET NO.	TOTAL SHEETS
04	Son	101	0.9/3.6	697	918

William K. Farnbach
REGISTERED CIVIL ENGINEER

May 15, 2009
PLANS APPROVAL DATE

REGISTERED PROFESSIONAL ENGINEER
William K. Farnbach
No. C49042
Exp. 9-30-10
CIVIL
STATE OF CALIFORNIA

The State of California or its officers or agents shall not be responsible for the accuracy or completeness of electronic copies of this plan sheet.

To accompany plans dated 4-23-12

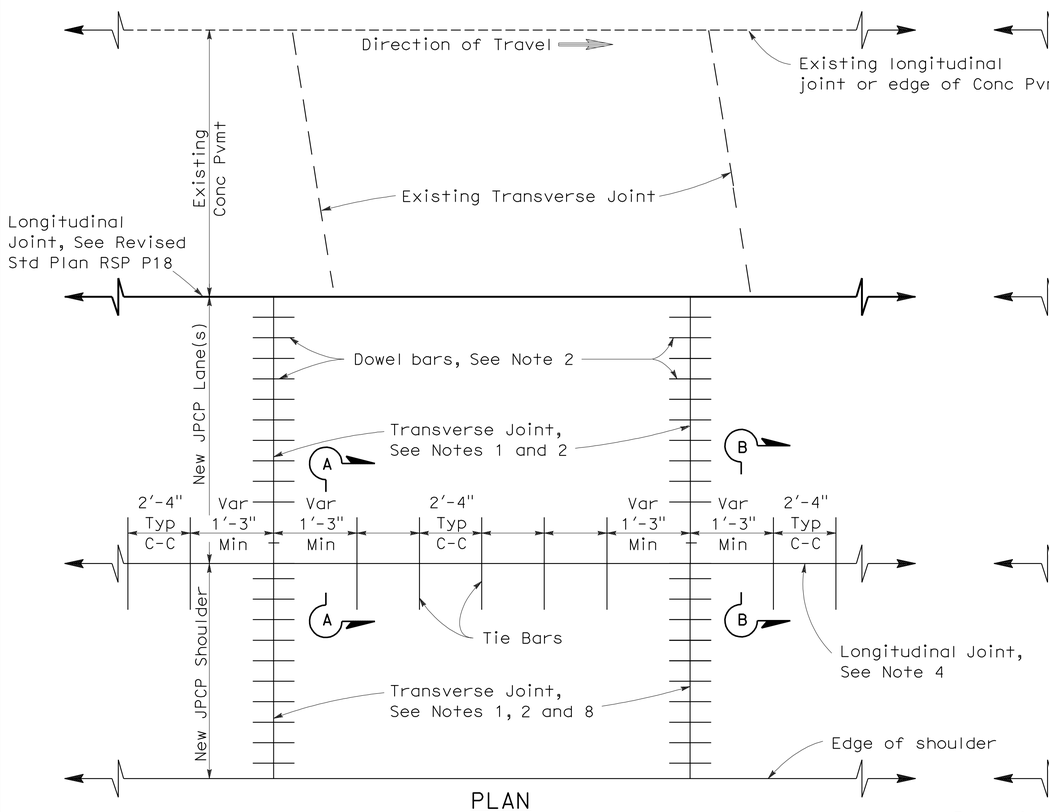

PLAN

LANE/SHOULDER ADDITION OR RECONSTRUCTION

See Notes 6 and 7

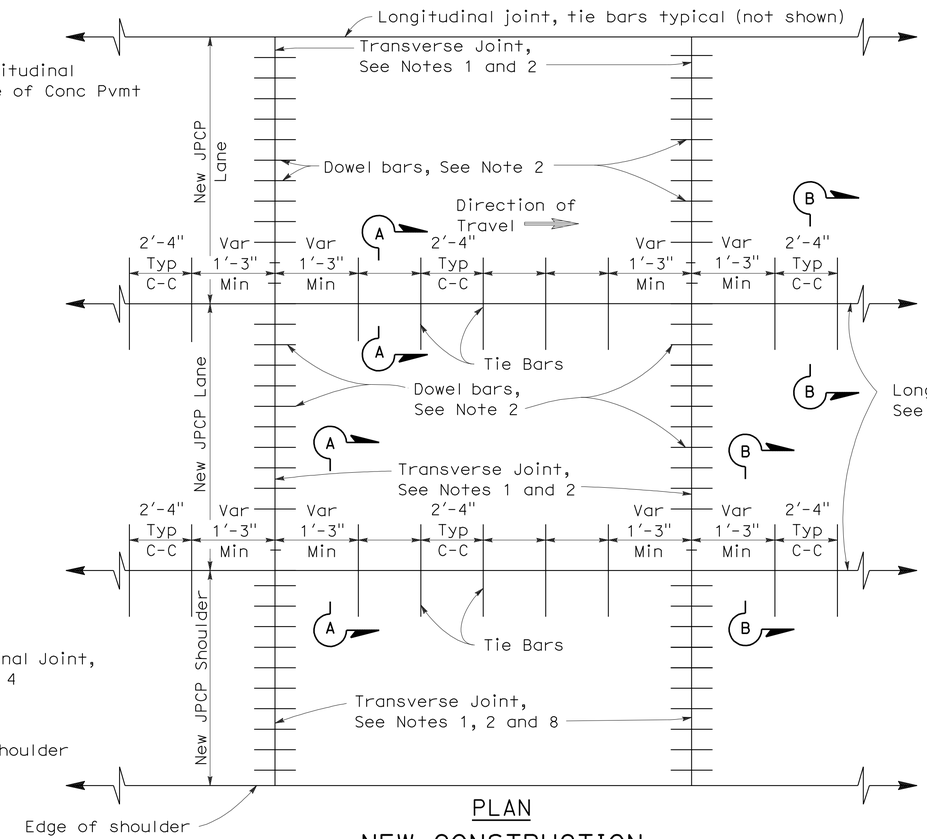

PLAN

NEW CONSTRUCTION

See Notes 6 and 7

NOTES:

1. Transverse joints shall be constructed at right angles to the longitudinal pavement joints in new jointed plain concrete pavement and spaced at successive repeated intervals of 12', 15', 13' and 14'.
2. For transverse joint and dowel bar details not shown, See Revised Standard Plan RSP P10.
3. Construct longitudinal contraction joints as shown in Section A-A when more than one lane or shoulder widths are placed at one time. If constructing one lane at a time, use longitudinal construction joint, as shown in Section B-B.
4. For additional longitudinal joint details, see Revised Standard Plan RSP P18.
5. If fresh concrete is placed adjacent to existing concrete, the top corner of the new hardened concrete does not need to be rounded to the 1/4" radius as shown.
6. Joint spacing patterns do not apply to intersections.
7. Details can also apply to inside widening.
8. Dowel bars may be omitted from shoulders when the shoulder cross slope is not the same as the adjacent traffic lane.

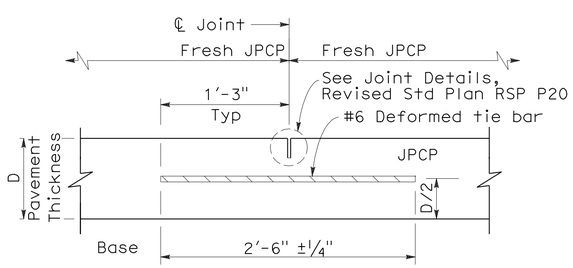

SECTION A-A

LONGITUDINAL CONTRACTION JOINT

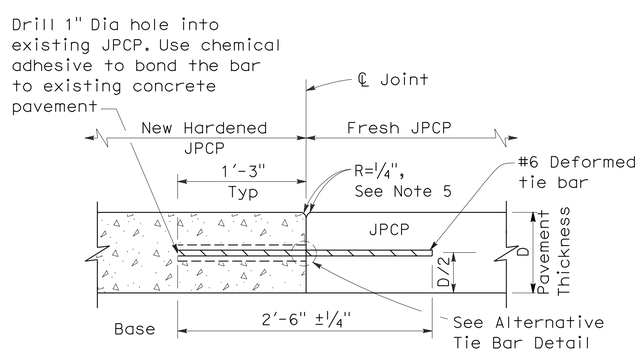

SECTION B-B

LONGITUDINAL CONSTRUCTION JOINT

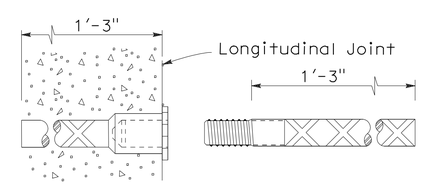

ALTERNATIVE TIE BAR SPLICE DETAIL

(Splice Coupler)

TIE BAR DETAILS

STATE OF CALIFORNIA
DEPARTMENT OF TRANSPORTATION

JOINTED PLAIN CONCRETE PAVEMENT

NO SCALE

RSP P1 DATED MAY 15, 2009 SUPERSEDES STANDARD PLAN P1
DATED MAY 1, 2006 - PAGE 119 OF THE STANDARD PLANS BOOK DATED MAY 2006.

REVISED STANDARD PLAN RSP P1

2006 REVISED STANDARD PLAN RSP P1

5-8-09

DIST	COUNTY	ROUTE	POST MILES TOTAL PROJECT	SHEET NO.	TOTAL SHEETS
04	Son	101	0.9/3.6	698	918

REGISTERED CIVIL ENGINEER

April 20, 2012
PLANS APPROVAL DATE

REGISTERED PROFESSIONAL ENGINEER — William K. Farnbach — No. C49042 — Exp. 9-30-12 — CIVIL — STATE OF CALIFORNIA

The State of California or its officers or agents shall not be responsible for the accuracy or completeness of electronic copies of this plan sheet.

To accompany plans dated 4-23-12

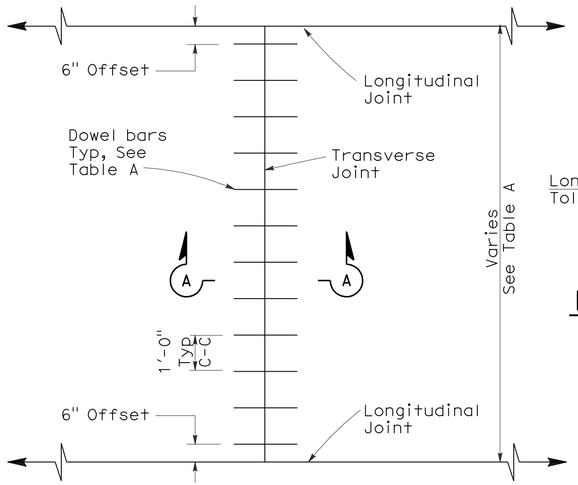

TRANSVERSE JOINT DOWEL BAR LAYOUT

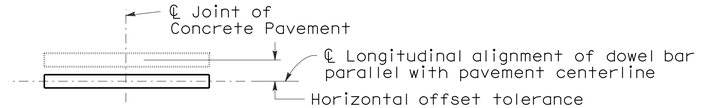

PLAN

HORIZONTAL OFFSET TOLERANCE

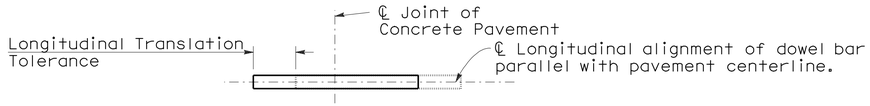

PLAN

LONGITUDINAL TRANSLATION TOLERANCE

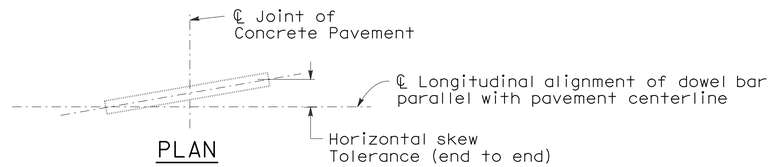

PLAN

HORIZONTAL SKEW TOLERANCE

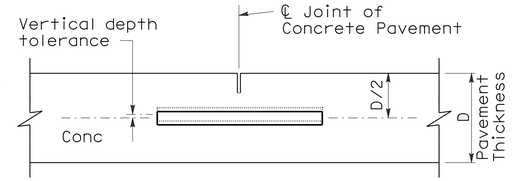

ELEVATION

VERTICAL DEPTH TOLERANCE

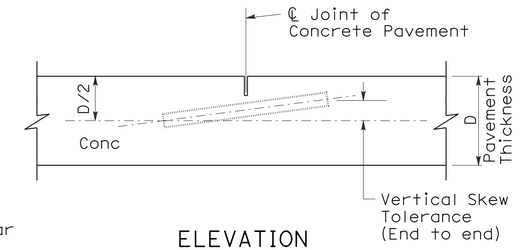

ELEVATION

VERTICAL SKEW TOLERANCE

NOTES:

1. See Revised Standard Plan RSP P1 for typical dowel bar placement and locations.
2. 1½" Dia dowel bars are to be used with a pavement thickness, D, equal to or greater than 0.70 feet. For pavement thickness, D, less than 0.70 feet, use 1¼" Dia dowel bars.
3. For widths not shown, see Project Plans.
4. If fresh concrete pavement is placed adjacent to existing concrete pavement, the top corner of the existing concrete pavement does not need to be rounded to the ¼" radius, as shown.
5. May also use ¾" Dia dowel bars 2'-4" ± ¼" in length. Center the length of dowel bars at the centerline of longitudinal joint.

TABLE A (See Note 3)

Dowel Bar Transverse Spacing Table	
Width between Longitudinal Joints	Number of Dowels between Longitudinal Joints
14'-0"	14
13'-0"	13
12'-0"	12
11'-0"	11
10'-0"	10
8'-0"	8
5'-0"	5
4'-0"	4

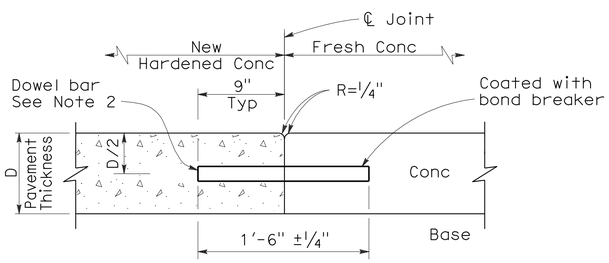

SECTION A-A

TRANSVERSE CONSTRUCTION JOINT DETAIL

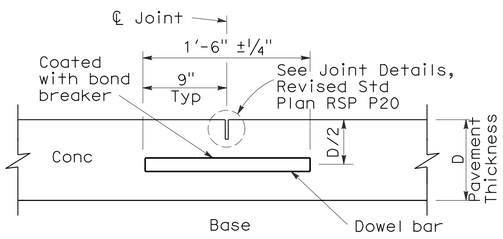

TRANSVERSE CONTRACTION JOINT

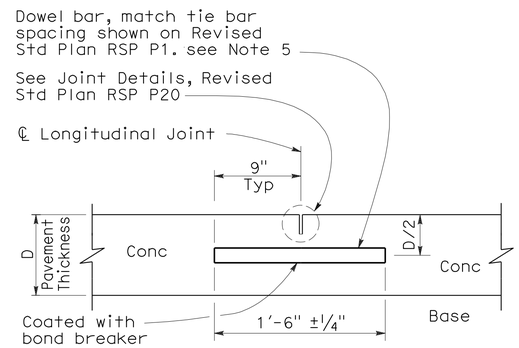

LONGITUDINAL CONTRACTION JOINT WITH DOWEL BARS

See Revised Std Plan RSP P18

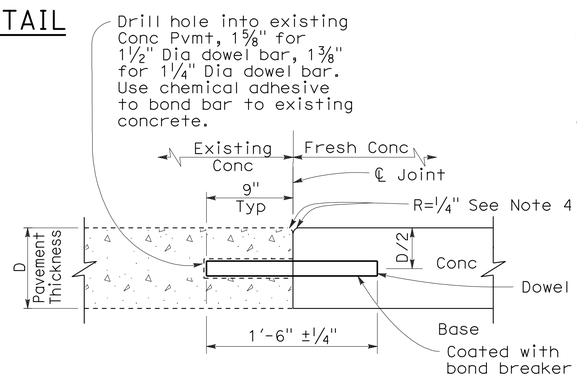

TRANSVERSE CONSTRUCTION JOINT FOR EXISTING CONCRETE PAVEMENT

Drill and bond locations

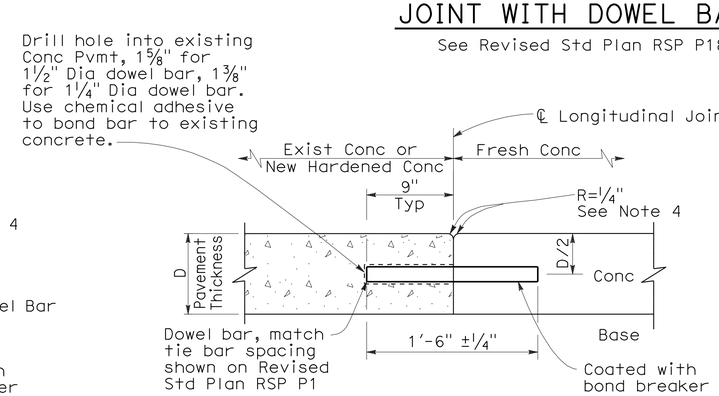

LONGITUDINAL CONSTRUCTION JOINT WITH DOWEL BARS

See Revised Std Plan RSP P18

STATE OF CALIFORNIA
DEPARTMENT OF TRANSPORTATION

CONCRETE PAVEMENT-DOWEL BAR DETAILS

NO SCALE

RSP P10 DATED APRIL 20, 2012 SUPERSEDES RSP P10 DATED MAY 15, 2009 AND STANDARD PLAN P10 DATED MAY 1, 2006 - PAGE 124 OF THE STANDARD PLANS BOOK DATED MAY 2006.

REVISED STANDARD PLAN RSP P10

2006 REVISED STANDARD PLAN RSP P10

2-22-12

DIST	COUNTY	ROUTE	POST MILES TOTAL PROJECT	SHEET NO.	TOTAL SHEETS
04	Son	101	0.9/3.6	699	918

Robert B Schott
LICENSED LANDSCAPE ARCHITECT

April 3, 2009
PLANS APPROVAL DATE

The State of California or its officers or agents shall not be responsible for the accuracy or completeness of electronic copies of this plan sheet.

LICENSED LANDSCAPE ARCHITECT — Robert B. Schott — Signature — 11-30-10 Renewal Date — 2-25-09 Date — STATE OF CALIFORNIA

To accompany plans dated 4-23-12

2006 NEW STANDARD PLAN NSP D71

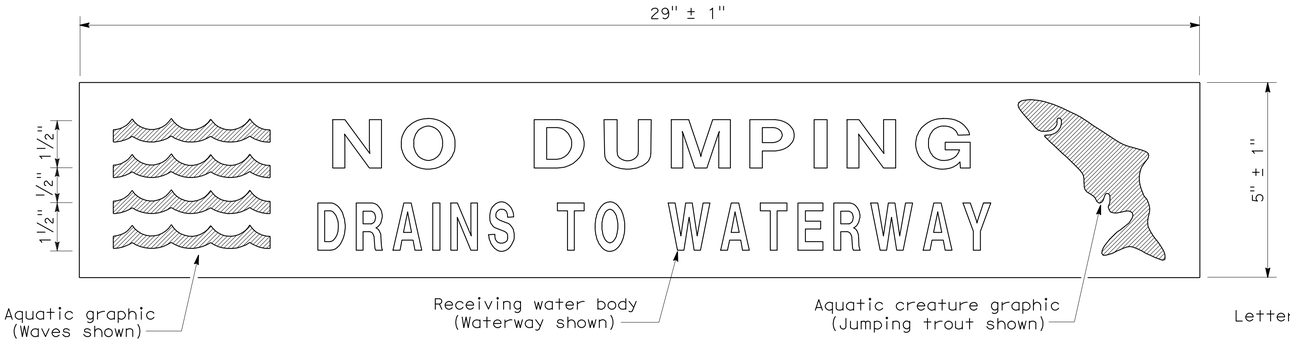

PLAN
DRAINAGE INLET MARKER
(PREFABRICATED THERMOPLASTIC)

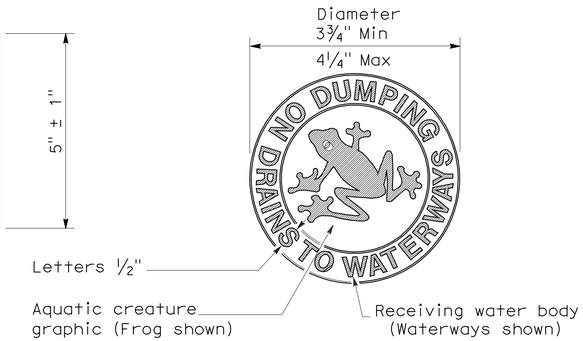

PLAN
DRAINAGE INLET MARKER
(MEDALLION)

PLAN
DRAINAGE INLET MARKER
(STAMPED CONCRETE IMPRINT)

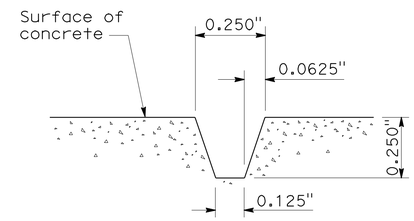

SECTION A-A
STAMPED CONCRETE
IMPRINT DETAIL

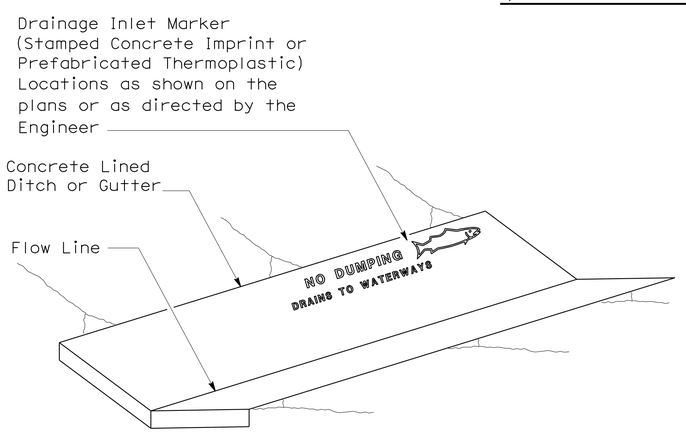

PERSPECTIVE
DRAINAGE INLET MARKER ON
CONCRETE LINED DITCH

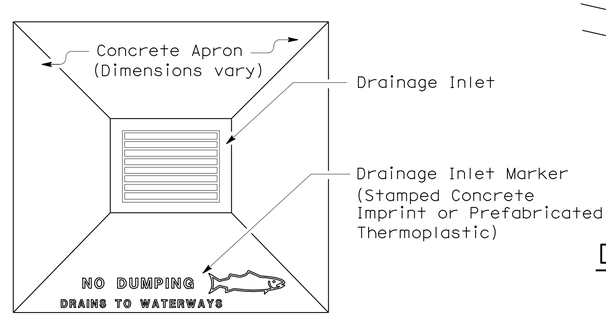

PLAN
DRAINAGE INLET MARKER ON
DRAINAGE INLET APRON

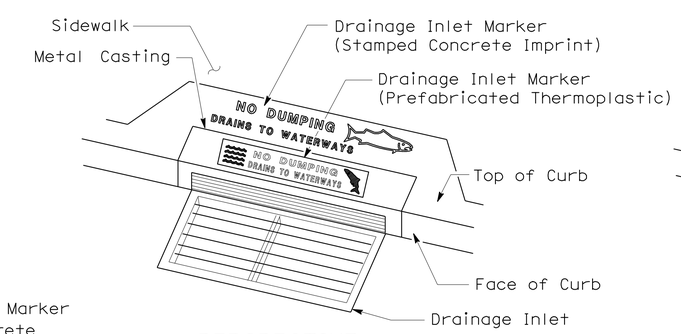

PERSPECTIVE
DRAINAGE INLET MARKER ON
DRAINAGE INLET

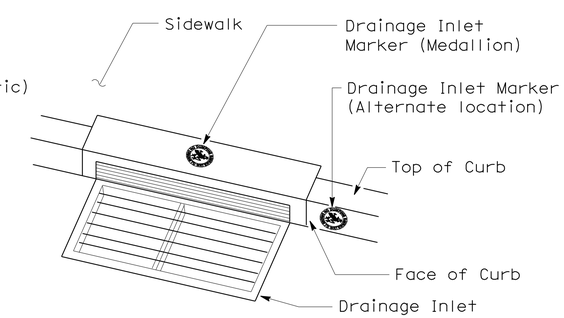

PERSPECTIVE
DRAINAGE INLET MARKER (MEDALLION)
ON DRAINAGE INLET

STATE OF CALIFORNIA
DEPARTMENT OF TRANSPORTATION

DRAINAGE INLET MARKERS

NO SCALE

NSP D71 DATED APRIL 3, 2009 SUPPLEMENTS
THE STANDARD PLANS BOOK DATED MAY 2006.

NEW STANDARD PLAN NSP D71

7-24-08

DIST	COUNTY	ROUTE	POST MILES TOTAL PROJECT	SHEET NO.	TOTAL SHEETS
04	Son	101	0.9/3.6	700	918

REGISTERED CIVIL ENGINEER

June 5, 2009
PLANS APPROVAL DATE

REGISTERED PROFESSIONAL ENGINEER Glenn DeCou No. C34547 Exp. 9-30-09 CIVIL STATE OF CALIFORNIA

The State of California or its officers or agents shall not be responsible for the accuracy or completeness of electronic copies of this plan sheet.

To accompany plans dated 4-23-12

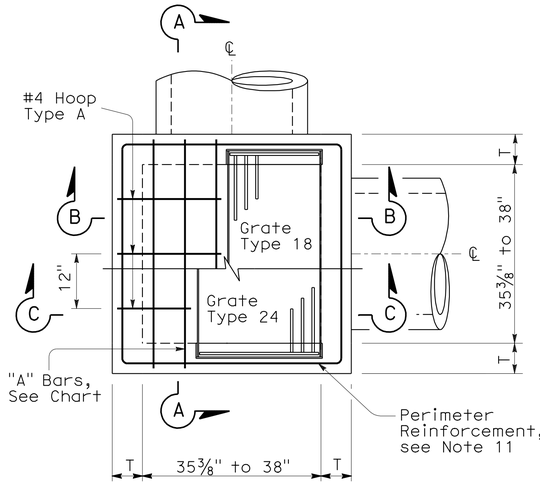

STANDARD TYPE G2 OR G4

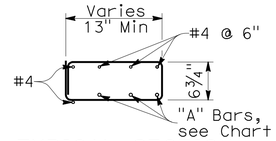

TYPICAL SECTION
(HOOP TYPE A)

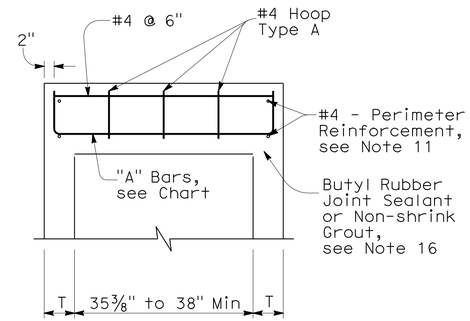

SECTION A-A

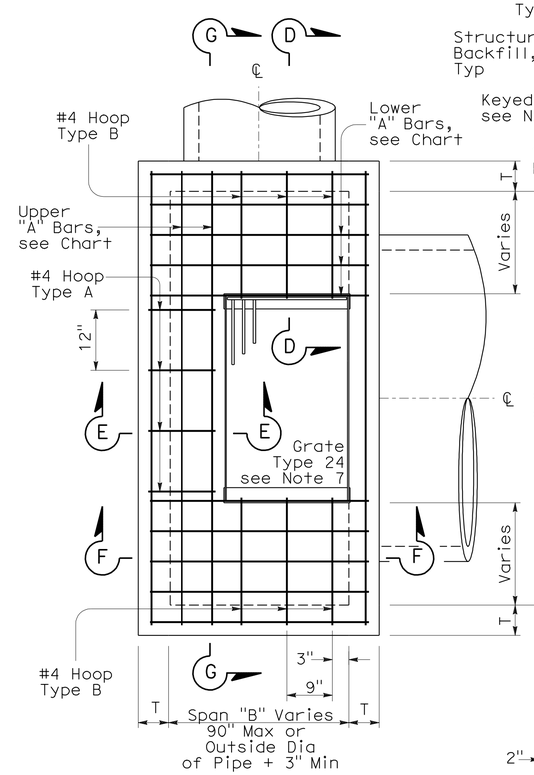

EXPANDED TYPE G2 OR G4
(Top Rebar Not Shown)

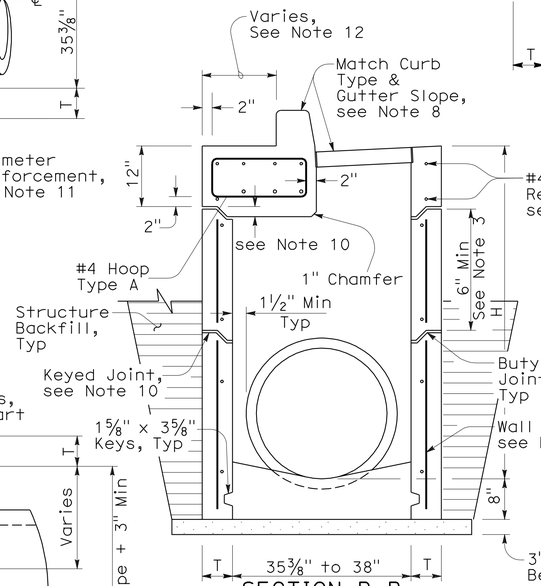

SECTION B-B
(with G4 Top)

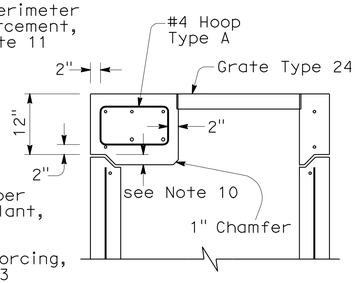

SECTION C-C
(with G2 Top)

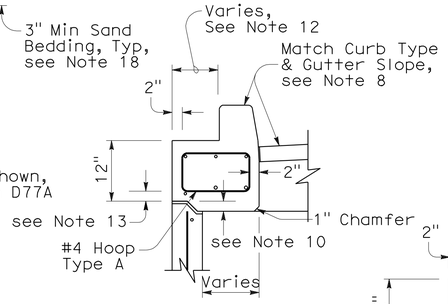

SECTION E-E
(with G4 Top)

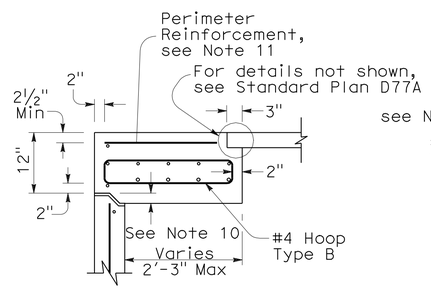

SECTION D-D

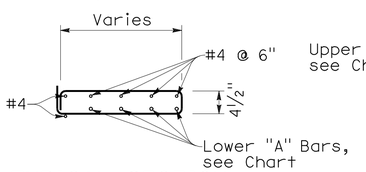

TYPICAL SECTION
(HOOP TYPE B)

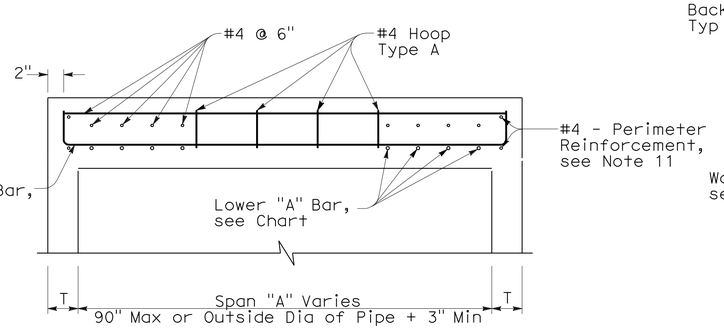

SECTION G-G

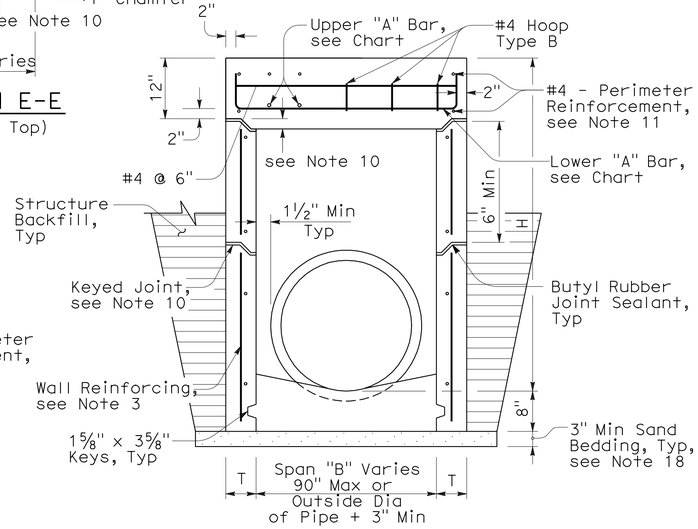

SECTION F-F
(with G2 Top)

NOTES:

1. "H" is the difference in elevation between the outlet pipe flow line and the normal gutter grade line undepressed.
2. For "T" wall thickness: T=6" when "H" is 8' or less. T=8" when "H" is over 8'.
3. Wall reinforcing not required when "H" is 8' or less and the unsupported width or length is 6'-0" or less. Reinforce wall exceeding these limits with #4 bars @ 1'-6" ± centers placed 2" clear to the inside of inlet unless otherwise shown. Short independent wall sections or height adjustment rings 6" to 24" high must have a minimum of two #4 horizontal bars.
4. Seal pre-cast inlets connection openings between wall and pipe with non-shrink grout or resilient connectors as specified in the Special Provisions.
5. Steps - None required where "H" is less than 2'-6". Where "H" is 2'-6" or more, install steps with lowest rung 1'-0" above the floor and highest rung not more than 6" below bottom of lid. The distance between steps must not exceed 1'-0" and be uniform throughout the length of the wall. Place steps in the wall without an opening. Steps inserts may be substituted for the bar steps. Step inserts must comply with State Industrial Safety Requirements. See Standard Plan D74C for step details.
6. Pipe(s) can be placed in any wall.
7. Set inlet so that grate bars are parallel to direction of principal surface flow.
8. Type G4 inlet can use Grate Type 18 or 24. Type G2 inlet uses Grate Type 24. See Revised Standard Plan RSP D77A and Standard Plan D77B for grate and frame details and weights of miscellaneous Iron and Steel.
9. G4 inlet details are the same as the G2 with the addition of a curb and sloped grate that matches the adjacent curb and gutter depression. See Standard Plans D78A & D78B for gutter and inlet depresssion details. See Revised Standard Plan RSP A87A & Standard Plan A87B for Curb and Dike Details.
10. Provide pre-cast inlets with separate top sections for final grade adjustment under Standard Specifcation Section 51-1.02. Provide keyed joints between the top and wall and multiple wall sections. Joint design may vary but must be 1" to 3" in depth.
11. Perimeter reinforcement serves as a rigid frame to position and attach the required structural reinforcement and may be tack welded at outer corners when using ASTM A706 weldable bars.
12. This dimension will vary with different grates, curbs types, box width and wall thickness.
13. 2" unless inlet is expanded in the Span "A" direction, then clearance is 2" plus the diameter of the lower "A" bar.
14. Place "A" Bars at an angle so hooked ends will maintain 2" clear coverage.
15. Refer to Standard Plan D73, Table A for concrete quantities.
16. Non-shrink grout can be used for upper most joint to facilitate final top grade adjustment.
17. Slope inlet floors 4:1 towards the outlet pipe. Pre-cast inlets may have monolithic sloped floors, flat floors, or no floors in which case a sloped floor must be cast in the field. Inlet floors do not require reinforcing.
18. Extend sand bedding under all structure backfill.

TOP REINFORCEMENT CHART

Span	"A" Bars	Required steel area per foot (in^2/ft)
Under 38" with Type 24 Grate	#5 @ 7" C-C 2-#5 Min	0.525
Under 38" with Type 18 Grate	#5 @ 7" C-C 3-#5 Min	0.525
38"-60"	#5 @ 6" C-C	0.621
61"-72"	#5 @ 5" C-C	0.744
73"-90"	#6 @ 6" C-C	0.811

STATE OF CALIFORNIA
DEPARTMENT OF TRANSPORTATION

DRAINAGE INLETS (PRECAST)

NO SCALE

NSP D73A DATED JUNE 5, 2009 SUPPLEMENTS THE STANDARD PLANS BOOK DATED MAY 2006.

NEW STANDARD PLAN NSP D73A

2006 NEW STANDARD PLAN NSP D73A

3-16-09