DIST	COUNTY	ROUTE	POST MILES TOTAL PROJECT	SHEET No	TOTAL SHEETS
04	Mrn	101	18.6/R22.3	501	542

REGISTERED CIVIL ENGINEER 03-08-10 DATE

8-9-10
PLANS APPROVAL DATE

The State of California or its officers or agents shall not be responsible for the accuracy or completeness of electronic copies of this plan sheet.

REGISTERED PROFESSIONAL ENGINEER Keng Mun Low No. C49361 Exp. 09-30-10 CIVIL STATE OF CALIFORNIA

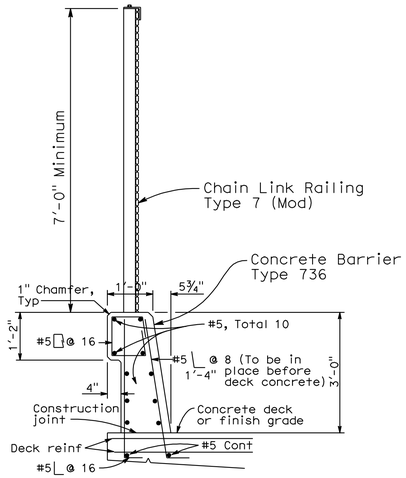

TYPICAL SECTION

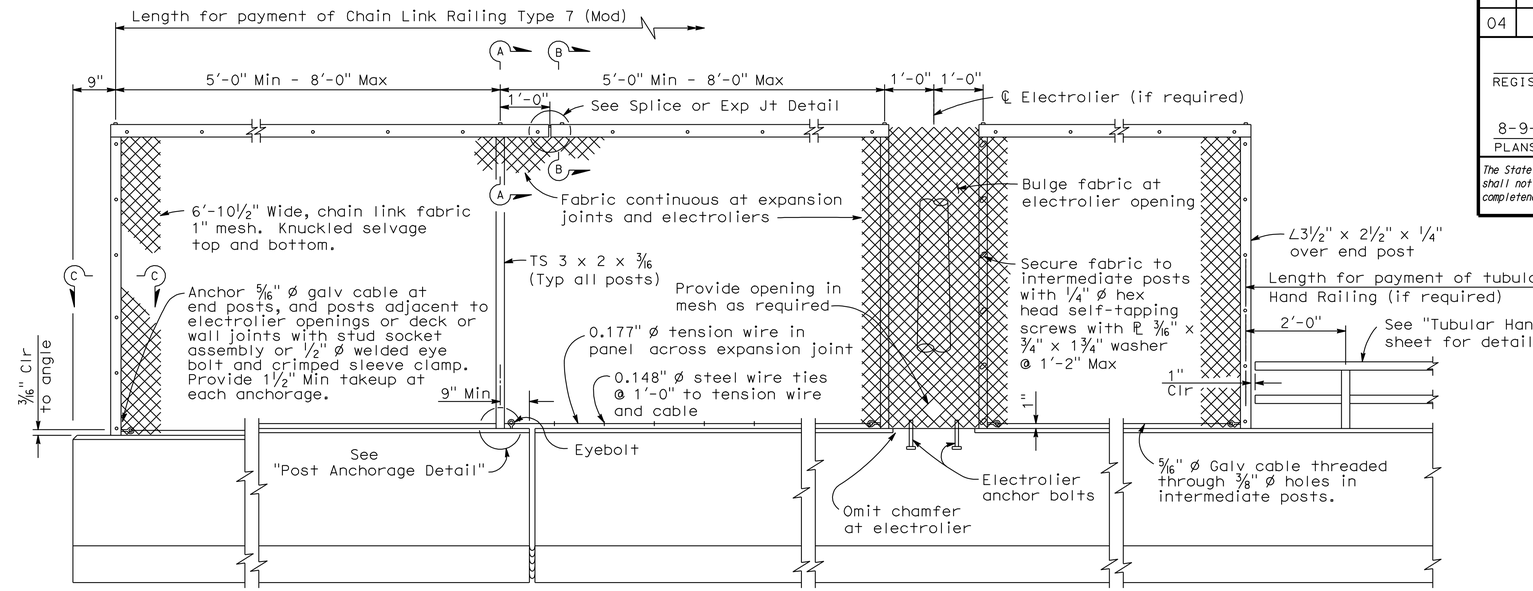

END POST **DECK OR WALL JOINT** **ELECTROLIER** **TUBULAR HAND RAILING**

ELEVATION

NOTE:

This special detail supercedes "ELEVATION" on Sheet No. B11-52, page 270 of the Standard Plans dated May 2006.

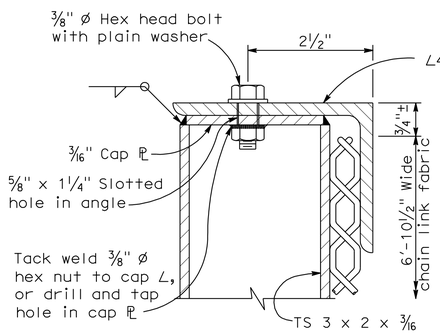

SECTION A-A

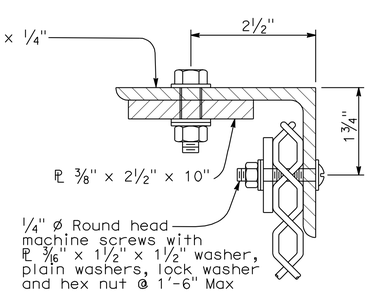

SECTION B-B

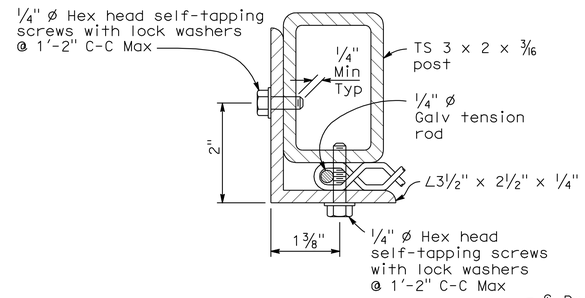

SECTION C-C

NOTES:

1. Railing assembly except chain link fabric to be galvanized after fabrication.
2. Posts shall be vertical.
3. Railing shall conform to horizontal and vertical alignment. When railing is placed on a curved horizontal alignment with radius of 148'-0" or less, thread the 5/16" ø cable through 3/8" ø welded eye rods embedded 4" into the top of the concrete parapet and equally spaced to limit the midordinate distance between the 5/16" ø cable and the curve to 1" maximum. Horizontal angle shall be bent to conform to horizontal alignment if radius is 148'-0" or less and may be on 10'-0" chords if radius is over 148'-0"
4. Horizontal angle shall be continuous over not less than two intermediate posts, except that a shorter length is permitted at expansion joints, electroliers and other rail discontinuities.
5. When rail is on slope, place fabric parallel to slope.
6. Alternative details may be submitted by Contractor for Engineer's approval.
7. For details and reinforcement not shown see Standard Plan B11-56.
8. See Project Plans for limits of Chain Link Railing Type 7.
9. Provide thimbles at all cable loops.
10. Expansion joint same dimension as expansion joint in deck or wall. Increase slotted hole length and splice bar length correspondingly.

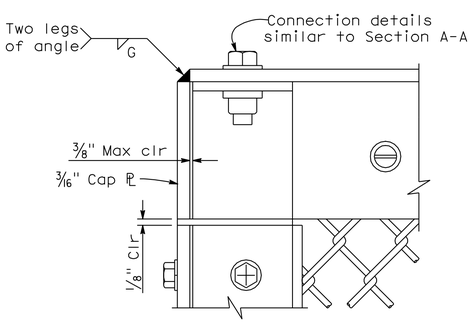

END POST ELEVATION

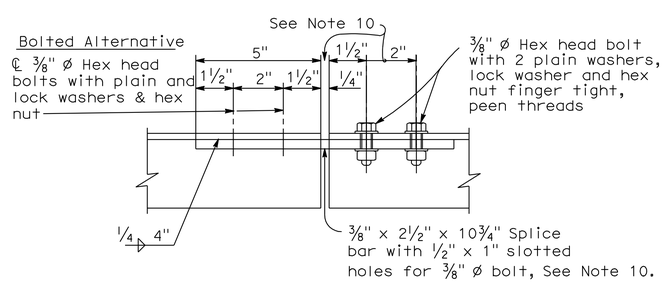

SPLICE OR EXPANSION JOINT DETAIL

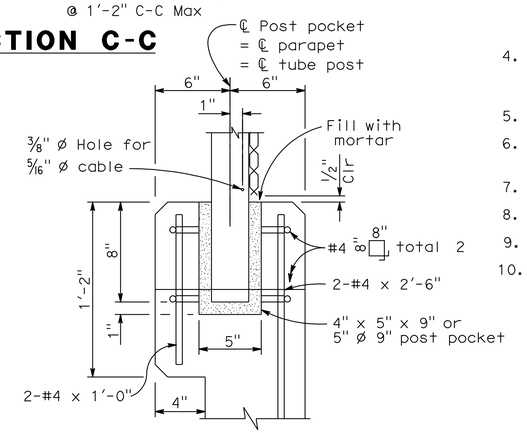

POST ANCHORAGE DETAIL

	BY	CHECKED
DESIGN	Keng Mun Low	Nora Kyo
DETAILS	Carlo Cancino	Nora Kyo
QUANTITIES	Nora Kyo	Rangina Amir

STATE OF CALIFORNIA DEPARTMENT OF TRANSPORTATION

DIVISION OF ENGINEERING SERVICES STRUCTURE DESIGN DESIGN BRANCH 8

BRIDGE NO. 27-0090R/L
POST MILE R20.88

FRANKLIN AVE. OVERHEAD (WIDEN)
CHAIN LINK RAILING TYPE 7 (MODIFIED)

STRUCTURES DESIGN DETAIL SHEET (ENGLISH) (REV. 10/25/05)

ORIGINAL SCALE IN INCHES FOR REDUCED PLANS 0 1 2 3

CU 04
EA 264061

DISREGARD PRINTS BEARING EARLIER REVISION DATES 06-08-09 03-02-10 03-08-10

REVISION DATES

SHEET 58 OF 67

FILE => 27-0090rl-x-clink.dgn

USERNAME => friehard DATE PLOTTED => 16-AUG-2010 TIME PLOTTED => 13:57

DIST	COUNTY	ROUTE	POST MILES TOTAL PROJECT	SHEET No	TOTAL SHEETS
04	Mrn	101	18.6/R22.3	502	542

REGISTERED CIVIL ENGINEER 03-08-10 DATE

8-9-10
PLANS APPROVAL DATE

REGISTERED PROFESSIONAL ENGINEER
Keng Mun Low
No. C49361
Exp. 09-30-10
CIVIL
STATE OF CALIFORNIA

The State of California or its officers or agents shall not be responsible for the accuracy or completeness of electronic copies of this plan sheet.

LEGEND:

- Indicates Existing Structure
- Indicates New Construction
- Indicates Concrete Removal
- Indicates New Slope Paving

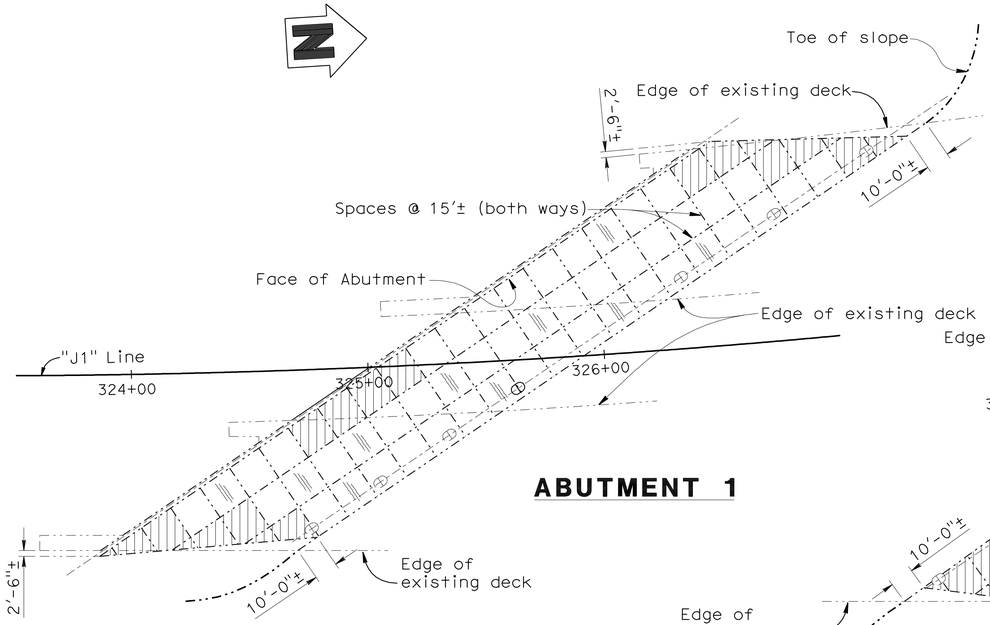

ABUTMENT 1

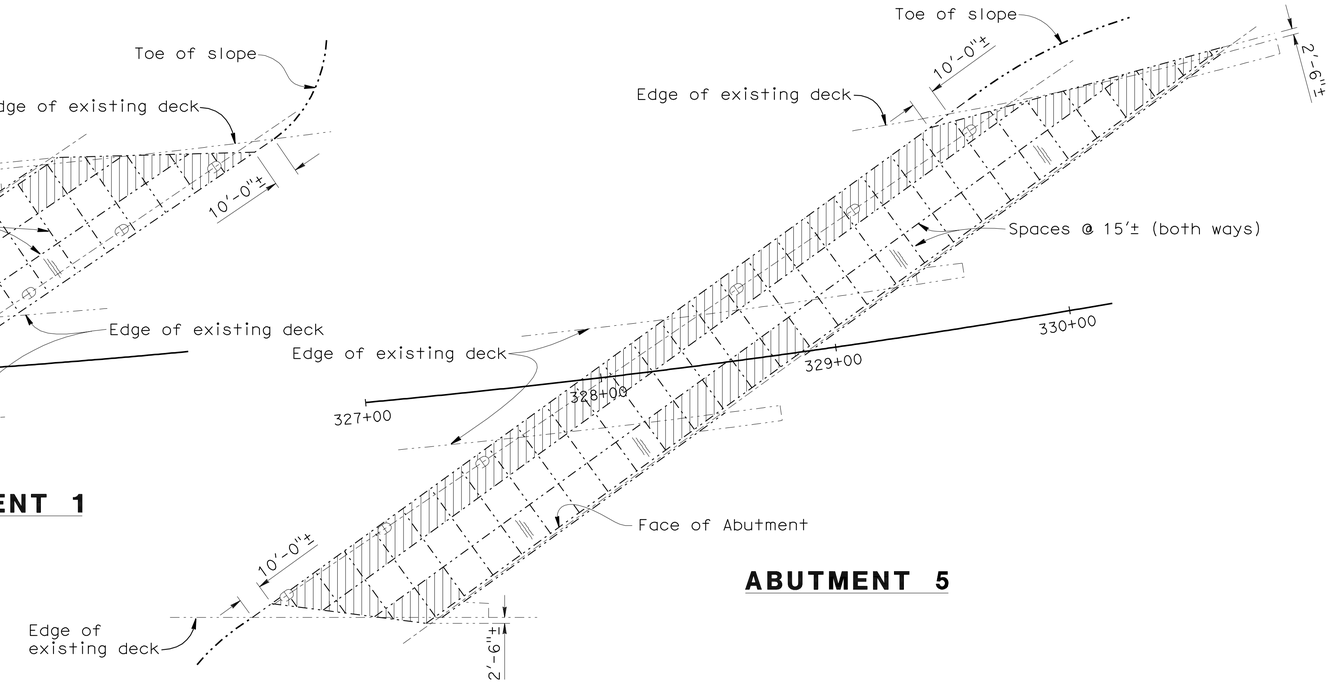

ABUTMENT 5

PART PLAN - SLOPE PAVING REMOVAL

No Scale

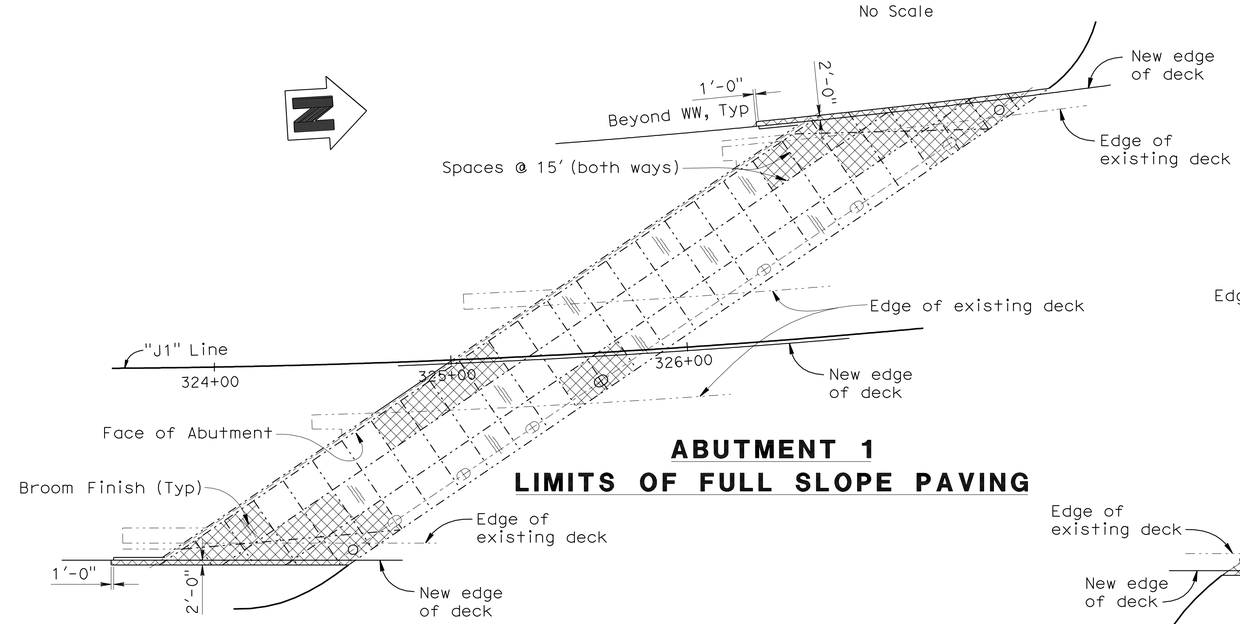

ABUTMENT 1
LIMITS OF FULL SLOPE PAVING

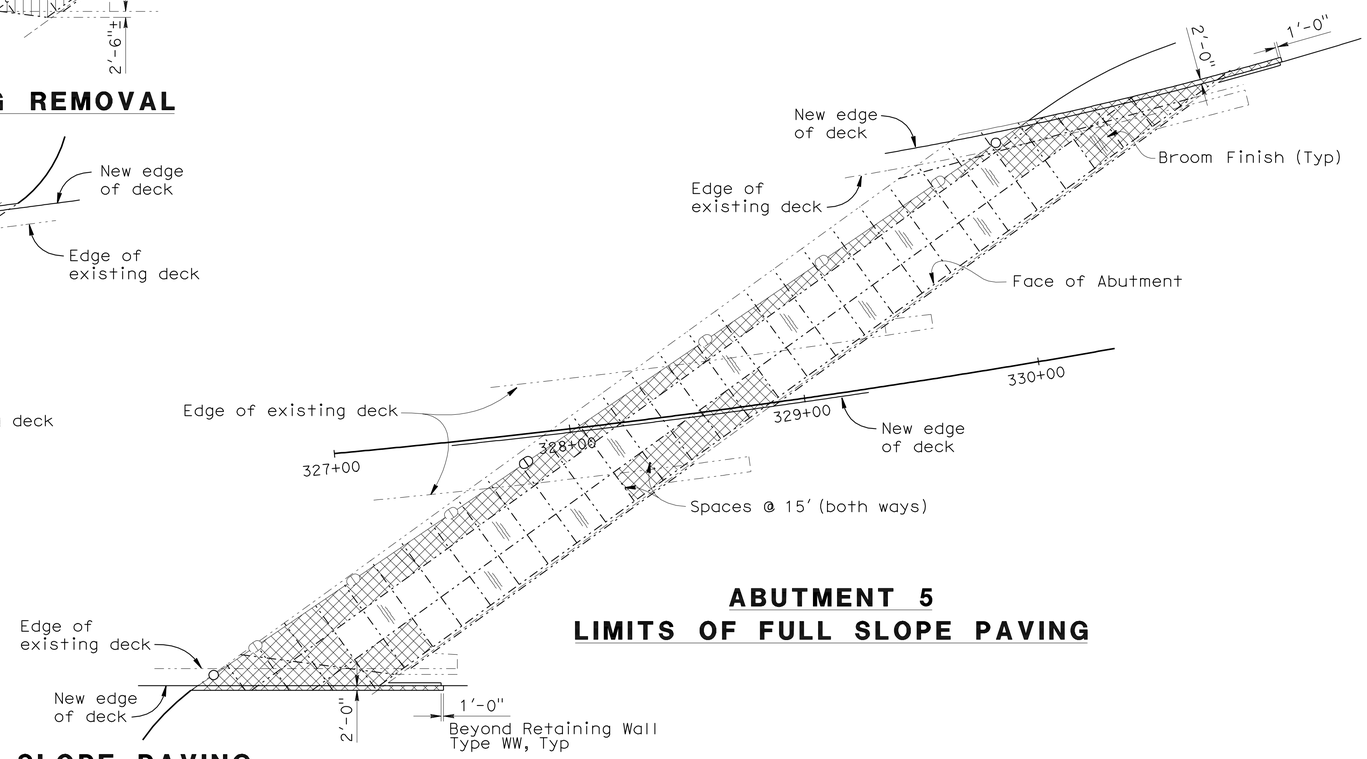

ABUTMENT 5
LIMITS OF FULL SLOPE PAVING

NOTE:

The contractor shall verify all controlling field dimensions before ordering or fabricating any material.

PART PLAN - NEW SLOPE PAVING

No Scale

	BY	CHECKED
DESIGN	Randip Bains	Keng Mun Low
DETAILS	Carlo Cancino	Keng Mun Low
QUANTITIES	Carlo Cancino	Keng Mun Low

STATE OF CALIFORNIA
DEPARTMENT OF TRANSPORTATION

DIVISION OF ENGINEERING SERVICES
STRUCTURE DESIGN
DESIGN BRANCH 8

BRIDGE NO. 27-0090R/L
POST MILE R20.88

FRANKLIN AVE. OVERHEAD (WIDEN)
SLOPE PAVING DETAILS

STRUCTURES DESIGN DETAIL SHEET (ENGLISH) (REV. 10/25/05)

ORIGINAL SCALE IN INCHES FOR REDUCED PLANS 0 1 2 3

CU 04
EA 264061

DISREGARD PRINTS BEARING EARLIER REVISION DATES

REVISION DATES: 12-24-09 01-05-10 03-02-10 03-14-10

SHEET 59 OF 67

FILE => 27-0090rl-y-slopepav.dgn

USERNAME => trlenard DATE PLOTTED => 16-AUG-2010 TIME PLOTTED => 13:57

DIST	COUNTY	ROUTE	KILOMETER POST TOTAL PROJECT	SHEET No	TOTAL SHEETS
04	Mrn	101	18.6/R22.3	503	542

REGISTERED CIVIL ENGINEER 03-08-10 DATE

8-9-10
PLANS APPROVAL DATE

REGISTERED PROFESSIONAL ENGINEER
Keng Mun Low
No. C49361
Exp. 09-30-10
CIVIL
STATE OF CALIFORNIA

The State of California or its officers or agents shall not be responsible for the accuracy or completeness of electronic copies of this plan sheet.

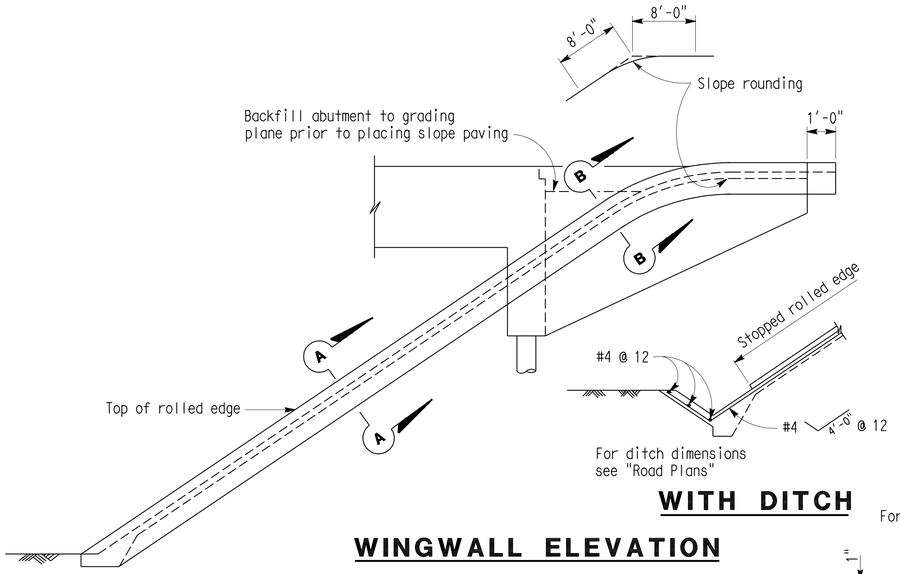

WITH DITCH

WINGWALL ELEVATION

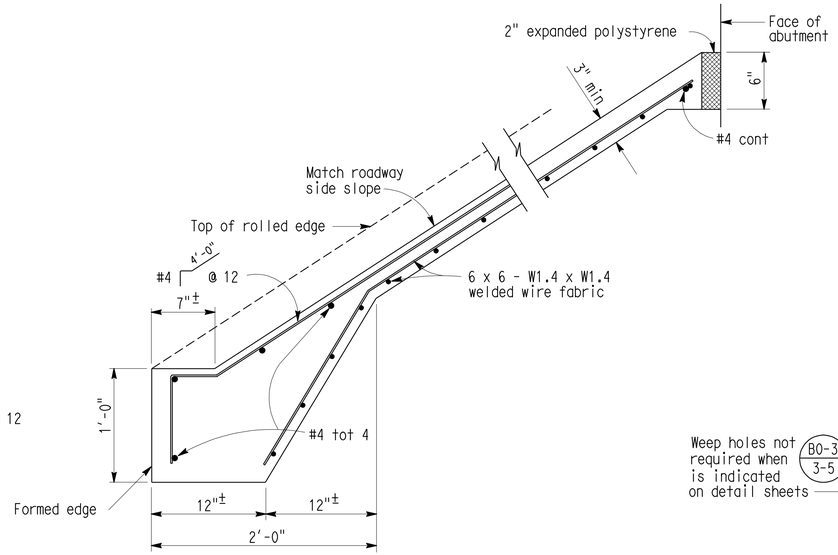

TYPICAL SECTION - CONCRETE PAVING

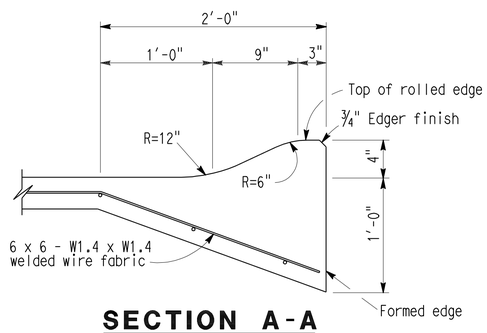

SECTION A-A

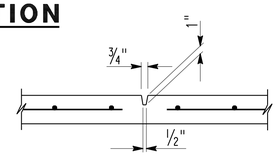

PREFORMED GROOVE

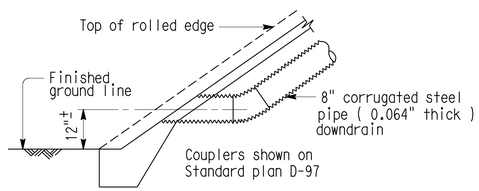

TYPICAL - NO CURB

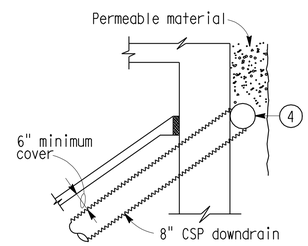

TYPICAL - DRAIN CONNECTION

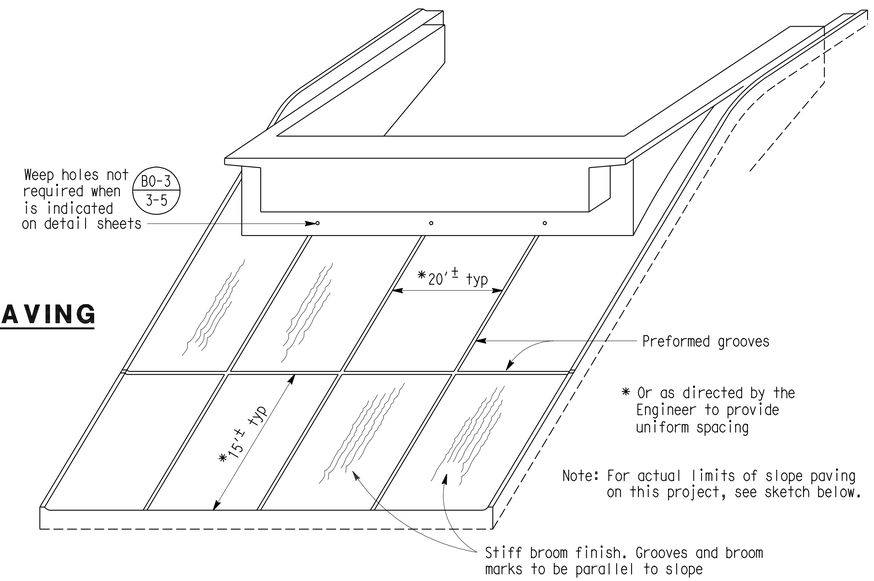

* Or as directed by the Engineer to provide uniform spacing

Note: For actual limits of slope paving on this project, see sketch below.

PICTORIAL VIEW OF TYPICAL INSTALLATION

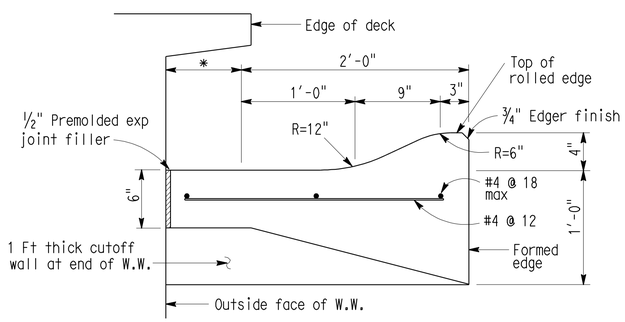

SECTION B-B

* This dimension becomes zero when edge of deck is at outside face of W.W.

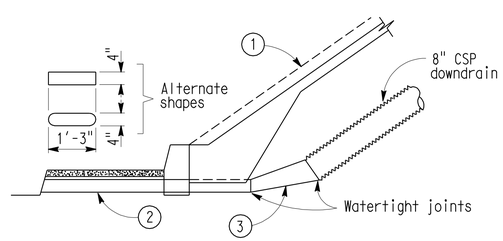

TYPICAL - WITH SIDEWALK

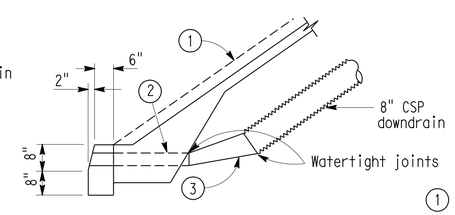

TYPICAL - WITH CURB

DRAINAGE DETAILS

Note: Drainage details are only applicable when is indicated on detail sheets. B0-3 / 3-5

LIMITS OF SLOPE PAVING & DRAINAGE LAYOUT

1. Top of rolled edge
2. Conduit: 0.064" galv corrugated steel or 0.109" smooth galv steel
3. Taper: { 0.064" galv corrugated steel or 0.109" smooth galv steel
4. 8" perforated steel pipe (0.064" thick) underdrain behind abutment. Connect to downdrain as shown on limits of Slope Paving & Drainage layout.

STANDARD DRAWING				
RELEASE DATE	DESIGN	BY	CHECKED	RELEASED BY
	DETAILS	BY D. Wooten	CHECKED	Susan Hida
FILE NO. xs4-210	SUBMITTED	BY Dan Adams	DRAWING DATE 6/07	OFFICE CHIEF

DS OSD 2147A (CADD) (REV. 4/07)

ORIGINAL SCALE IN INCHES FOR REDUCED PLANS 0 1 2 3

STATE OF CALIFORNIA
DEPARTMENT OF TRANSPORTATION

DIVISION OF ENGINEERING SERVICES

CU 04
EA 264061

BRIDGE NO. 27-0090R/L
POST MILE R20.88

FRANKLIN AVE. OVERHEAD (WIDEN)

SLOPE PAVING - FULL SLOPE

DISREGARD PRINTS BEARING EARLIER REVISION DATES →

REVISION DATES

SHEET 60 OF 67

USERNAME => trlenard

DATE PLOTTED => 16-AUG-2010 TIME PLOTTED => 13:57

27-0090rl-y-xs4-210

DIST	COUNTY	ROUTE	POST MILES TOTAL PROJECT	SHEET No	TOTAL SHEETS
04	Mrn	101	18.6/R22.3	504	542

John C. Moore 03-08-10
REGISTERED CIVIL ENGINEER DATE

8-9-10
PLANS APPROVAL DATE

REGISTERED PROFESSIONAL ENGINEER John C. Moore No. 61792 Exp. 6-30-11 CIVIL STATE OF CALIFORNIA

The State of California or its officers or agents shall not be responsible for the accuracy or completeness of electronic copies of this plan sheet.

BENCH MARK

PRHV25 Elev. 49.5′

NOTE: This LOTB sheet was prepared in accordance with the Caltrans Soil & Rock Logging, Classification, and Presentation Manual (June 2007).

*NR: Not Recorded.

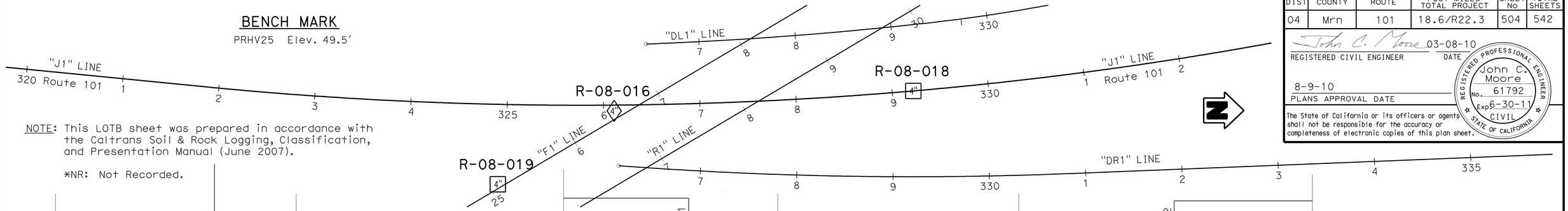

PLAN

1"=50′

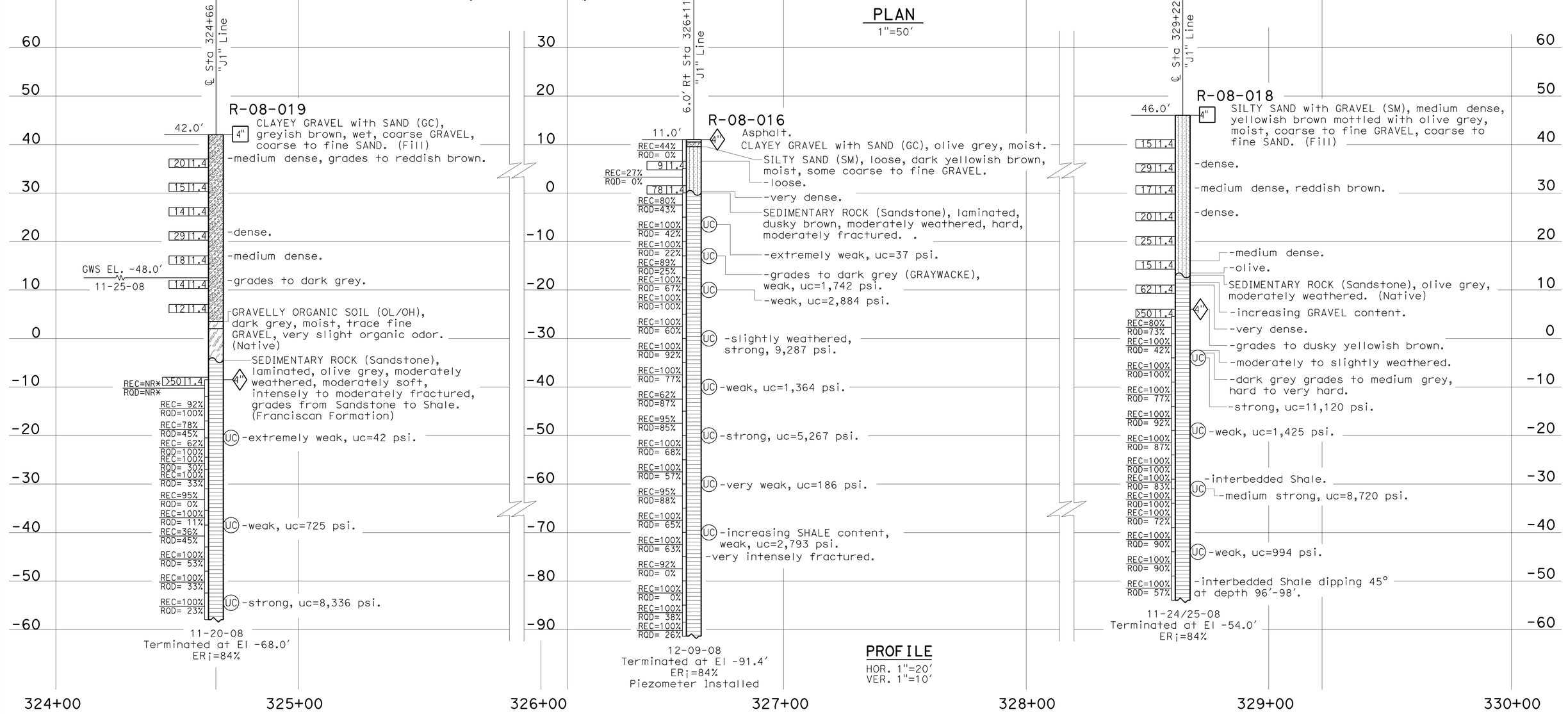

PROFILE

HOR. 1"=20′
VER. 1"=10′

ENGINEERING SERVICES	GEOTECHNICAL SERVICES	STATE OF CALIFORNIA DEPARTMENT OF TRANSPORTATION	DIVISION OF ENGINEERING SERVICES OFFICE OF GEOTECHNICAL DESIGN BRANCH 8	BRIDGE NO. 27-0090 R/L	FRANKLIN AVE. OVERHEAD (WIDEN)
FUNCTIONAL SUPERVISOR	DRAWN BY: M. Reynolds	FIELD INVESTIGATION BY:		POST MILES R20.88	LOG OF TEST BORINGS 1 OF 7
NAME: M. Momenzadeh	CHECKED BY: C. Risden	J. Moore			

OGS CIVIL LOG OF TEST BORINGS SHEET

ORIGINAL SCALE IN INCHES FOR REDUCED PLANS 0 1 2 3

CU 04
EA 264061

DISREGARD PRINTS BEARING EARLIER REVISION DATES

REVISION DATES

SHEET 61 OF 67

FILE => 27-0090ri-z-ltb01.dgn

USERNAME => friehard DATE PLOTTED => 16-AUG-2010 TIME PLOTTED => 13:57

DIST	COUNTY	ROUTE	POST MILES TOTAL PROJECT	SHEET No	TOTAL SHEETS
04	Mrn	101	18.6/R22.3	505	542

REGISTERED CIVIL ENGINEER — 03-08-10 DATE

8-9-10
PLANS APPROVAL DATE

REGISTERED PROFESSIONAL ENGINEER — John C. Moore No. 61792 Exp. 6-30-11 CIVIL — STATE OF CALIFORNIA

The State of California or its officers or agents shall not be responsible for the accuracy or completeness of electronic copies of this plan sheet.

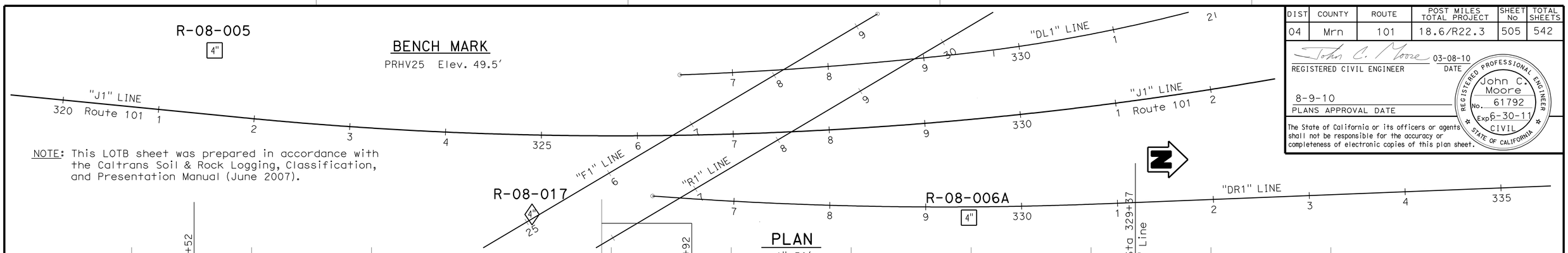

NOTE: This LOTB sheet was prepared in accordance with the Caltrans Soil & Rock Logging, Classification, and Presentation Manual (June 2007).

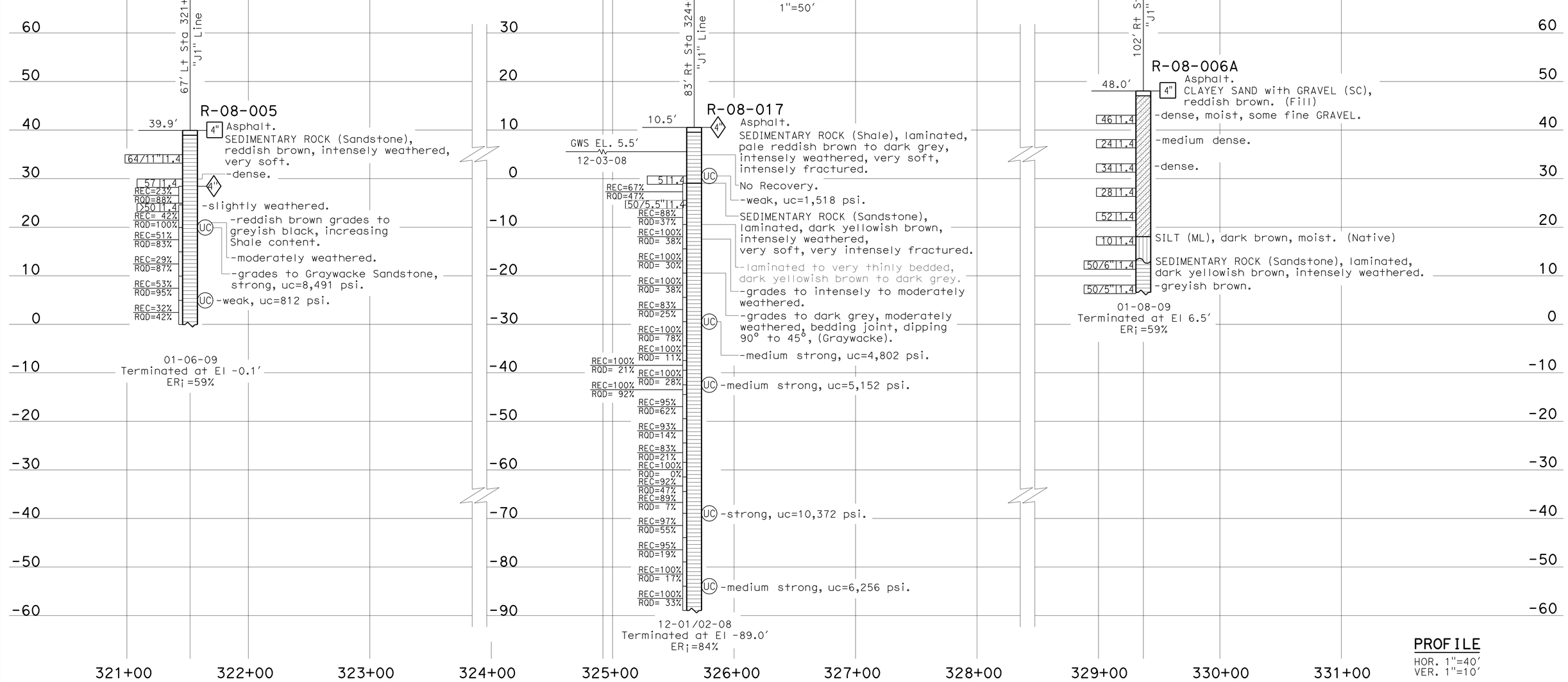

ENGINEERING SERVICES	GEOTECHNICAL SERVICES	STATE OF CALIFORNIA DEPARTMENT OF TRANSPORTATION	DIVISION OF ENGINEERING SERVICES OFFICE OF GEOTECHNICAL DESIGN BRANCH 8	BRIDGE NO. 27-0090 R/L	FRANKLIN AVE. OVERHEAD (WIDEN)
FUNCTIONAL SUPERVISOR NAME: M. Momenzadeh	DRAWN BY: M. Reynolds; CHECKED BY: C. Risden	FIELD INVESTIGATION BY: J. Moore		POST MILES R20.88	LOG OF TEST BORINGS 2 OF 7

OGS CIVIL LOG OF TEST BORINGS SHEET

ORIGINAL SCALE IN INCHES FOR REDUCED PLANS 0 1 2 3

CU 04
EA 264061

DISREGARD PRINTS BEARING EARLIER REVISION DATES

REVISION DATES

SHEET 62 OF 67

FILE => 27-0090ri-z-ltb02.dgn

USERNAME => friehard DATE PLOTTED => 16-AUG-2010 TIME PLOTTED => 13:57

DIST	COUNTY	ROUTE	POST MILES TOTAL PROJECT	SHEET No	TOTAL SHEETS
04	Mrn	101	18.6/R22.3	506	542

REGISTERED CIVIL ENGINEER — 03-08-10 DATE

8-9-10
PLANS APPROVAL DATE

REGISTERED PROFESSIONAL ENGINEER — John C. Moore — No. 61792 — Exp. 6-30-11 — CIVIL — STATE OF CALIFORNIA

The State of California or its officers or agents shall not be responsible for the accuracy or completeness of electronic copies of this plan sheet.

BENCH MARK
PRHV25 Elev. 49.5′

NOTE: This LOTB sheet was prepared in accordance with the Caltrans Soil & Rock Logging, Classification, and Presentation Manual (June 2007).

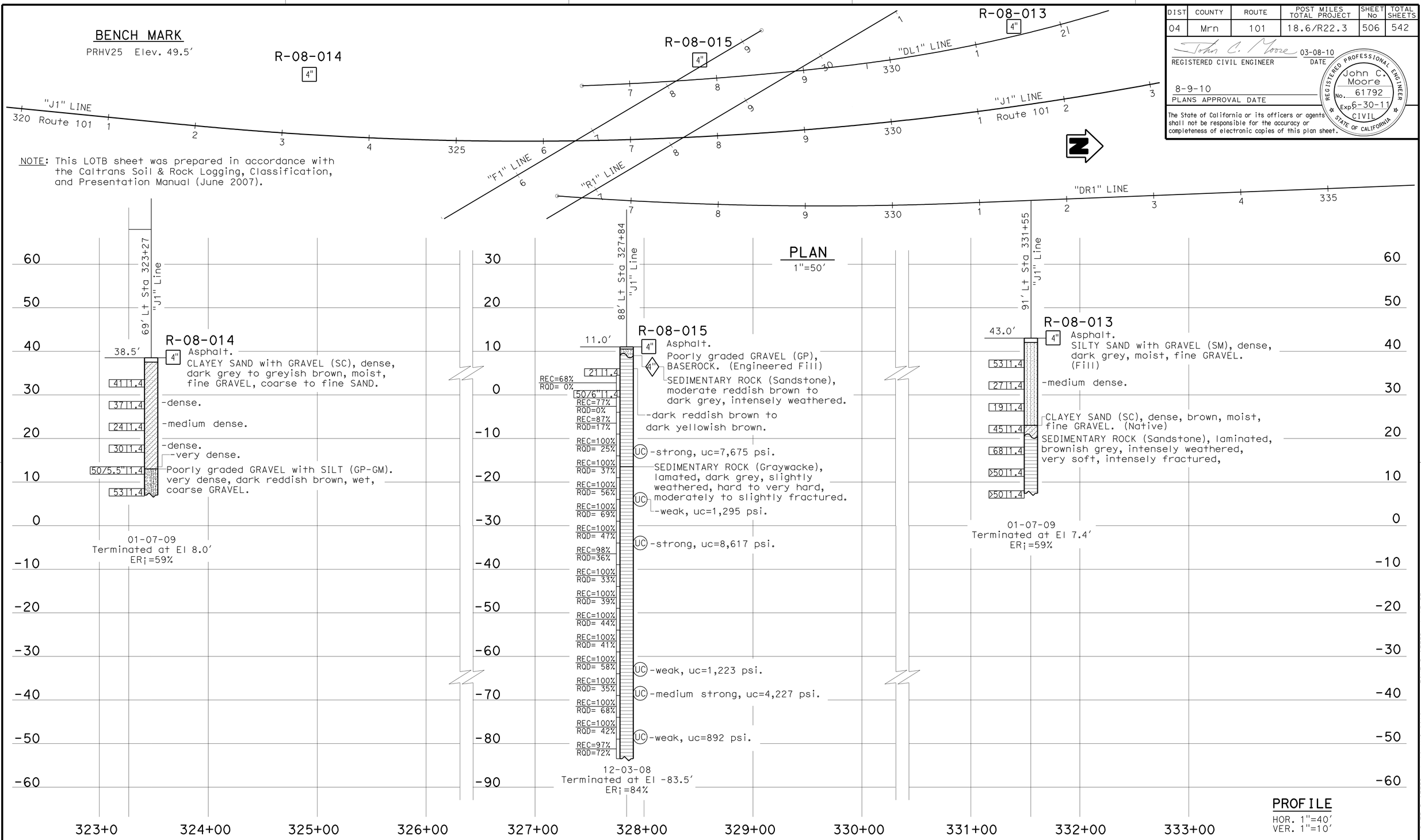

ENGINEERING SERVICES	GEOTECHNICAL SERVICES	STATE OF CALIFORNIA DEPARTMENT OF TRANSPORTATION	DIVISION OF ENGINEERING SERVICES OFFICE OF GEOTECHNICAL DESIGN BRANCH 8	BRIDGE NO. 27-0090 R/L	FRANKLIN AVE. OVERHEAD (WIDEN)
FUNCTIONAL SUPERVISOR	DRAWN BY: M. Reynolds	FIELD INVESTIGATION BY: J. Moore		POST MILES R20.88	LOG OF TEST BORINGS 3 OF 7
NAME: M. Momenzadeh	CHECKED BY: C. Risden				

OGS CIVIL LOG OF TEST BORINGS SHEET

ORIGINAL SCALE IN INCHES FOR REDUCED PLANS 0 1 2 3

CU 04
EA 264061

DISREGARD PRINTS BEARING EARLIER REVISION DATES

REVISION DATES

SHEET 63 OF 67

FILE => 27-0090ri-z-ltb03.dgn

USERNAME => rtrenford DATE PLOTTED => 16-AUG-2010 TIME PLOTTED => 13:57

DIST	COUNTY	ROUTE	POST MILES TOTAL PROJECT	SHEET No	TOTAL SHEETS
04	Mrn	101	18.6/R22.3	507	542

John C. Moore 03-08-10
REGISTERED CIVIL ENGINEER DATE

8-9-10
PLANS APPROVAL DATE

REGISTERED PROFESSIONAL ENGINEER John C. Moore No. 61792 Exp. 6-30-11 CIVIL STATE OF CALIFORNIA

The State of California or its officers or agents shall not be responsible for the accuracy or completeness of electronic copies of this plan sheet.

REFERENCE: CALTRANS SOIL & ROCK LOGGING, CLASSIFICATION, AND PRESENTATION MANUAL (JUNE 2007)

CEMENTATION

Description	Criteria
Weak	Crumbles or breaks with handling or little finger pressure.
Moderate	Crumbles or breaks with considerable finger pressure.
Strong	Will not crumble or break with finger pressure.

CONSISTENCY OF COHESIVE SOILS

Description	Unconfined Compressive Strength (tsf)	Pocket Penetrometer Measurement (tsf)	Torvane Measurement (tsf)	Field Approximation
Very Soft	< 0.25	< 0.25	< 0.12	Easily penetrated several inches by fist
Soft	0.25 to 0.50	0.25 to 0.50	0.12 to 0.25	Easily penetrated several inches by thumb
Medium Stiff	0.50 to 1.0	0.50 to 1.0	0.25 to 0.50	Penetrated several inches by thumb with moderate effort
Stiff	1 to 2	1 to 2	0.50 to 1.0	Readily indented by thumb but penetrated only with great effort
Very Stiff	2 to 4	2 to 4	1.0 to 2.0	Readily indented by thumbnail
Hard	> 4.0	> 4.0	> 2.0	Indented by thumbnail with difficulty

BOREHOLE IDENTIFICATION

Symbol	Hole Type	Description
Size	A	Auger Boring
Size	R P	Rotary drilled boring Rotary percussion boring (air)
Size	R	Rotary drilled diamond core
Size	HD HA	Hand driven (1-inch soil tube) Hand Auger
●	D	Dynamic Cone Penetration Boring
▲	CPT	Cone Penetration Test (ASTM D 5778-95)
⬚	O	Other

Note: Size in inches.

PLASTICITY OF FINE-GRAINED SOILS

Description	Criteria
Nonplastic	A 1/8-inch thread cannot be rolled at any water content.
Low	The thread can barely be rolled and the lump cannot be formed when drier than the plastic limit.
Medium	The thread is easy to roll and not much time is required to reach the plastic limit. The thread cannot be rerolled after reaching the plastic limit. The lump crumbles when drier than the plastic limit.
High	It takes considerable time rolling and kneading to reach the plastic limit. The thread can be rerolled several times after reaching the plastic limit. The lump can be formed without crumbling when drier than the plastic limit.

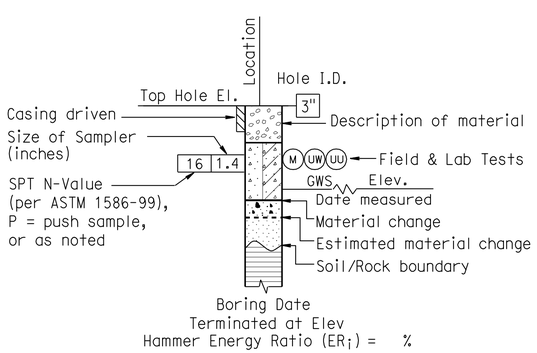

ROTARY BORING

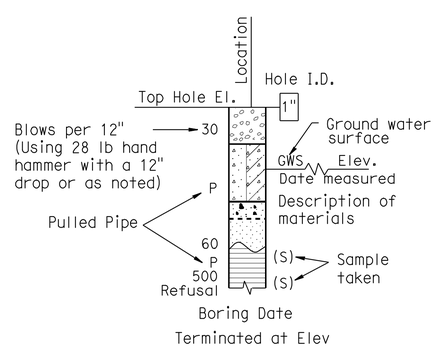

HAND BORING

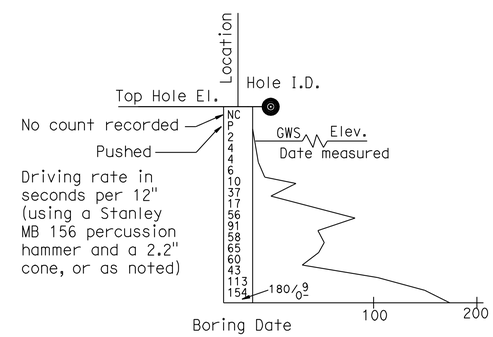

DYNAMIC CONE PENETRATION BORING

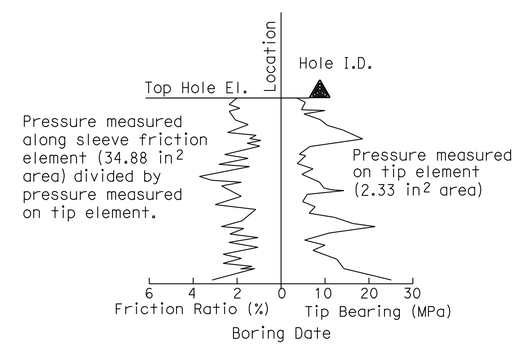

CONE PENETRATION TEST (CPT) SOUNDING

ENGINEERING SERVICES		GEOTECHNICAL SERVICES	STATE OF CALIFORNIA DEPARTMENT OF TRANSPORTATION	DIVISION OF ENGINEERING SERVICES OFFICE OF GEOTECHNICAL DESIGN BRANCH 8	BRIDGE NO. 27-0090 R/L	SOIL LEGEND
FUNCTIONAL SUPERVISOR	PREPARED BY M. Reynolds				POST MILE R20.88	LOG OF TEST BORINGS 4 of 7
NAME: M. Momenzadeh	CHECKED BY C. Risden	J. Moore				

GS LOTB SOIL LEGEND

ORIGINAL SCALE IN INCHES FOR REDUCED PLANS 0 1 2 3

CU 04
EA 264061

DISREGARD PRINTS BEARING EARLIER REVISION DATES

REVISION DATES

SHEET 64 OF 67

FILE => 27-0090rl-z-ltb04.dgn

USERNAME => tlenard DATE PLOTTED => 16-AUG-2010 TIME PLOTTED => 13:58

DIST	COUNTY	ROUTE	POST MILES TOTAL PROJECT	SHEET No	TOTAL SHEETS
04	Mrn	101	18.6/R22.3	508	542

John C. Moore 03-08-10
REGISTERED CIVIL ENGINEER DATE

8-9-10
PLANS APPROVAL DATE

REGISTERED PROFESSIONAL ENGINEER John C. Moore No. 61792 Exp. 6-30-11 CIVIL STATE OF CALIFORNIA

The State of California or its officers or agents shall not be responsible for the accuracy or completeness of electronic copies of this plan sheet.

REFERENCE: CALTRANS SOIL & ROCK LOGGING, CLASSIFICATION, AND PRESENTATION MANUAL (JUNE 2007)

GROUP SYMBOLS AND NAMES

Graphic/Symbol	Group Names
GW	Well-graded GRAVEL Well-graded GRAVEL with SAND
GP	Poorly graded GRAVEL Poorly graded GRAVEL with SAND
GW-GM	Well-graded GRAVEL with SILT Well-graded GRAVEL with SILT and SAND
GW-GC	Well-graded GRAVEL with CLAY (or SILTY CLAY) Well-graded GRAVEL with CLAY and SAND (or SILTY CLAY and SAND)
GP-GM	Poorly graded GRAVEL with SILT Poorly graded GRAVEL with SILT and SAND
GP-GC	Poorly graded GRAVEL with CLAY (or SILTY CLAY) Poorly graded GRAVEL with CLAY and SAND (or SILTY CLAY and SAND)
GM	SILTY GRAVEL SILTY GRAVEL with SAND
GC	CLAYEY GRAVEL CLAYEY GRAVEL with SAND
GC-GM	SILTY, CLAYEY GRAVEL SILTY, CLAYEY GRAVEL with SAND
SW	Well-graded SAND Well-graded SAND with GRAVEL
SP	Poorly graded SAND Poorly graded SAND with GRAVEL
SW-SM	Well-graded SAND with SILT Well-graded SAND with SILT and GRAVEL
SW-SC	Well-graded SAND with CLAY (or SILTY CLAY) Well-graded SAND with CLAY and GRAVEL (or SILTY CLAY and GRAVEL)
SP-SM	Poorly graded SAND with SILT Poorly graded SAND with SILT and GRAVEL
SP-SC	Poorly graded SAND with CLAY (or SILTY CLAY) Poorly graded SAND with CLAY and GRAVEL (or SILTY CLAY and GRAVEL)
SM	SILTY SAND SILTY SAND with GRAVEL
SC	CLAYEY SAND CLAYEY SAND with GRAVEL
SC-SM	SILTY, CLAYEY SAND SILTY, CLAYEY SAND with GRAVEL
PT	PEAT
	COBBLES COBBLES and BOULDERS BOULDERS

Graphic/Symbol	Group Names
CL	Lean CLAY Lean CLAY with SAND Lean CLAY with GRAVEL SANDY lean CLAY SANDY lean CLAY with GRAVEL GRAVELLY lean CLAY GRAVELLY lean CLAY with SAND
CL-ML	SILTY CLAY SILTY CLAY with SAND SILTY CLAY with GRAVEL SANDY SILTY CLAY SANDY SILTY CLAY with GRAVEL GRAVELLY SILTY CLAY GRAVELLY SILTY CLAY with SAND
ML	SILT SILT with SAND SILT with GRAVEL SANDY SILT SANDY SILT with GRAVEL GRAVELLY SILT GRAVELLY SILT with SAND
OL	ORGANIC lean CLAY ORGANIC lean CLAY with SAND ORGANIC lean CLAY with GRAVEL SANDY ORGANIC lean CLAY SANDY ORGANIC lean CLAY with GRAVEL GRAVELLY ORGANIC lean CLAY GRAVELLY ORGANIC lean CLAY with SAND
OL	ORGANIC SILT ORGANIC SILT with SAND ORGANIC SILT with GRAVEL SANDY ORGANIC SILT SANDY ORGANIC SILT with GRAVEL GRAVELLY ORGANIC SILT GRAVELLY ORGANIC SILT with SAND
CH	Fat CLAY Fat CLAY with SAND Fat CLAY with GRAVEL SANDY fat CLAY SANDY fat CLAY with GRAVEL GRAVELLY fat CLAY GRAVELLY fat CLAY with SAND
MH	Elastic SILT Elastic SILT with SAND Elastic SILT with GRAVEL SANDY elastic SILT SANDY elastic SILT with GRAVEL GRAVELLY elastic SILT GRAVELLY elastic SILT with SAND
OH	ORGANIC fat CLAY ORGANIC fat CLAY with SAND ORGANIC fat CLAY with GRAVEL SANDY ORGANIC fat CLAY SANDY ORGANIC fat CLAY with GRAVEL GRAVELLY ORGANIC fat CLAY GRAVELLY ORGANIC fat CLAY with SAND
OH	ORGANIC elastic SILT ORGANIC elastic SILT with SAND ORGANIC elastic SILT with GRAVEL SANDY ORGANIC elastic SILT SANDY ORGANIC elastic SILT with GRAVEL GRAVELLY ORGANIC elastic SILT GRAVELLY ORGANIC elastic SILT with SAND
OL/OH	ORGANIC SOIL ORGANIC SOIL with SAND ORGANIC SOIL with GRAVEL SANDY ORGANIC SOIL SANDY ORGANIC SOIL with GRAVEL GRAVELLY ORGANIC SOIL GRAVELLY ORGANIC SOIL with SAND

FIELD AND LABORATORY TESTING

- (C) Consolidation (ASTM D 2435)
- (CL) Collapse Potential (ASTM D 5333)
- (CP) Compaction Curve (CTM 216)
- (CR) Corrosivity Testing (CTM 643, CTM 422, CTM 417)
- (CU) Consolidated Undrained Triaxial (ASTM D 4767)
- (DS) Direct Shear (ASTM D 3080)
- (EI) Expansion Index (ASTM D 4829)
- (M) Moisture Content (ASTM D 2216)
- (OC) Organic Content-% (ASTM D 2974)
- (P) Permeability (CTM 220)
- (PA) Particle Size Analysis (ASTM D 422)
- (PI) Plasticity Index (AASHTO T 90) Liquid Limit (AASHTO T 89)
- (PL) Point Load Index (ASTM D 5731)
- (PM) Pressure Meter
- (PP) Pocket Penetrometer
- (R) R-Value (CTM 301)
- (SE) Sand Equivalent (CTM 217)
- (SG) Specific Gravity (AASHTO T 100)
- (SL) Shrinkage Limit (ASTM D 427)
- (SW) Swell Potential (ASTM D 4546)
- (TV) Pocket Torvane
- (UC) Unconfined Compression-Soil (ASTM D 2166) Unconfined Compression-Rock (ASTM D 2938)
- (UU) Unconsolidated Undrained Triaxial (ASTM D 2850)
- (UW) Unit Weight (ASTM D 4767)
- (VS) Vane Shear (AASHTO T 223)

APPARENT DENSITY OF COHESIONLESS SOILS

Description	SPT N_{60} (Blows / 12 inches)
Very loose	0 - 4
Loose	5 - 10
Medium Dense	11 - 30
Dense	31 - 50
Very Dense	> 50

MOISTURE

Description	Criteria
Dry	Absence of moisture, dusty, dry to the touch
Moist	Damp but no visible water
Wet	Visible free water, usually soil is below water table

PERCENT OR PROPORTION OF SOILS

Description	Criteria
Trace	Particles are present but estimated to be less than 5%
Few	5 to 10%
Little	15 to 25%
Some	30 to 45%
Mostly	50 to 100%

PARTICLE SIZE

Description		Size
Boulder		> 12"
Cobble		3" to 12"
Gravel	Coarse	3/4" to 3"
	Fine	No. 4 to 3/4"
Sand	Coarse	No. 10 to No. 4
	Medium	No. 40 to No. 10
	Fine	No. 200 to No. 40

ENGINEERING SERVICES		GEOTECHNICAL SERVICES
FUNCTIONAL SUPERVISOR	PREPARED BY M. Reynolds	
NAME: M. Momenzadeh	CHECKED BY C. Risden	J. Moore

STATE OF CALIFORNIA DEPARTMENT OF TRANSPORTATION

DIVISION OF ENGINEERING SERVICES OFFICE OF GEOTECHNICAL DESIGN BRANCH 8

BRIDGE NO. 27-0090 R/L
POST MILE R20.88

SOIL LEGEND
LOG OF TEST BORINGS 5 of 7

GS LOTB SOIL LEGEND

ORIGINAL SCALE IN INCHES FOR REDUCED PLANS 0 1 2 3

CU 04
EA 264061

DISREGARD PRINTS BEARING EARLIER REVISION DATES

REVISION DATES

SHEET 65 OF 67

FILE => 27-0090rl-z-ltb05.dgn

USERNAME => trlenard DATE PLOTTED => 16-AUG-2010 TIME PLOTTED => 13:58

REFERENCE: CALTRANS SOIL & ROCK LOGGING, CLASSIFICATION, AND PRESENTATION MANUAL (JUNE 2007)

DIST	COUNTY	ROUTE	POST MILES TOTAL PROJECT	SHEET No	TOTAL SHEETS
04	Mrn	101	18.6/R22.3	509	542

REGISTERED CIVIL ENGINEER — DATE 03-08-10

8-9-10
PLANS APPROVAL DATE

REGISTERED PROFESSIONAL ENGINEER — John C. Moore — No. 61792 — Exp. 6-30-11 — CIVIL — STATE OF CALIFORNIA

The State of California or its officers or agents shall not be responsible for the accuracy or completeness of electronic copies of this plan sheet.

PERCENT CORE RECOVERY (REC) & ROCK QUALITY DESIGNATION (RQD)

$$REC = \frac{\sum \text{Length of the recovered core pieces (inches)}}{\text{Total length of core run (inches)}} \times 100\%$$

$$RQD = \frac{\sum \text{Length of intact core pieces} \geq 4''}{\text{Total length of core run (inches)}} \times 100\%$$

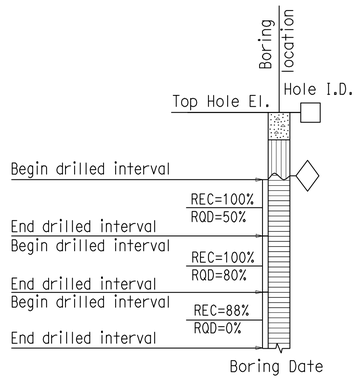

RELATIVE STRENGTH OF INTACT ROCK

Term	Uniaxial Compressive Strength (PSI)
Extremely Strong	> 30,000
Very Strong	14,500 - 30,000
Strong	7,000 - 14,500
Medium Strong	3,500 - 7,000
Weak	700 - 3,500
Very Weak	150 - 700
Extremely Weak	< 150

BEDDING SPACING

Description	Thickness / Spacing
Massive	Greater than 10 ft
Very thickly bedded	3 to 10 ft
Thickly bedded	1 to 3 ft
Moderately bedded	3-5/8" to 1 ft
Thinly bedded	1-1/4" to 3-5/8"
Very thinly bedded	3/8" to 1-1/4"
Laminated	Less than 3/8"

LEGEND OF ROCK MATERIALS

- IGNEOUS ROCK
- SEDIMENTARY ROCK
- METAMORPHIC ROCK

ROCK HARDNESS

Description	Criteria
Extremely Hard	Specimen cannot be scratched with a pocket knife or sharp pick; can only be chipped with repeated heavy hammer blows.
Very Hard	Specimen cannot be scratched with a pocket knife or sharp pick. Breaks with repeated heavy hammer blows.
Hard	Specimen can be scratched with a pocket knife or sharp pick with difficulty (heavy pressure). Heavy hammer blows required to break specimen.
Moderately Hard	Specimen can be scratched with pocket knife or sharp pick with light or moderate pressure. Core breaks with moderate hammer pressure.
Moderately Soft	Specimen can be grooved 1/6" deep with a pocket knife or sharp pick with moderate or heavy pressure. Breaks with light hammer blow or heavy manual pressure.
Soft	Specimen can be grooved or gouged easily by a pocket knife or sharp pick with light pressure, can be scratched with fingernail. Breaks with light to moderate manual pressure.
Very Soft	Specimen can be readily indented, grooved or gouged with fingernail, or carved with a pocket knife. Breaks with light manual pressure.

FRACTURE DENSITY

Description	Observed Fracture Density
Unfractured	No fractures.
Very slightly fractured	Lengths greater than 3 feet.
Slightly fractured	Lengths from 1 to 3 feet with few lengths less than 1 foot or greater than 3 feet.
Moderately fractured	Lengths mostly in 4" to 1 foot range with most lengths about 8"
Intensely fractured	Lengths average from 1 to 4" with scattered fragmented intervals with lengths less than 4"
Very intensely fractured	Mostly chips and fragments with a few scattered short core lengths.

Combination descriptors (such as "Very intensely to intensely fractured") are used where equal distribution of both fracture density characteristics is present over a significant interval or exposure, or where characteristics are "in between" the descriptor definitions. Only two adjacent descriptors may be combined.

WEATHERING DESCRIPTORS FOR INTACT ROCK

Description	Diagnostic features					General Characteristics
	Chemical Weathering-Discoloration and/or oxidation		Mechanical Weathering-Grain boundary conditions (disaggregation) primarily for granitics and some coarse-grained sediments	Texture and Solutioning		
	Body of Rock	Fracture Surfaces		Texture	Solutioning	
Fresh	No discoloration, not oxidized.	No discoloration or oxidation.	No separation, intact (tight).	No change.	No solutioning.	Hammer rings when crystalline rocks are struck.
Slightly Weathered	Discoloration or oxidation is limited to surface of, or short distance from, fractures; some feldspar crystals are dull.	Minor to complete discoloration or oxidation of most surfaces.	No visible separation, intact (tight).	Preserved.	Minor leaching of some soluble minerals may be noted.	Hammer rings when crystalline rocks are struck. Body of rock not weakened.
Moderately Weathered	Discoloration or oxidation extends from fractures usually throughout; Fe-Mg minerals are "rusty," feldspar crystals are "cloudy."	All fracture surfaces are discolored or oxidized.	Partial separation of boundaries visible.	Generally preserved.	Soluble minerals may be mostly leached.	Hammer does not ring when rock is struck. Body of rock is slightly weakened.
Intensely Weathered	Discoloration or oxidation throughout; all feldspars and Fe-Mg minerals are altered to clay to some extent; or chemical alteration produces in-situ disaggregation, see grain boundary conditions.	All fracture surfaces are discolored or oxidized, surfaces friable.	Partial separation, rock is friable; in semiarid conditions granitics are disaggregated.	Texture altered by chemical disintegration (hydration, argillation).	Leaching of soluble minerals may be complete.	Dull sound when struck with hammer, usually can be broken with moderate to heavy manual pressure or by light hammer blow without reference to planes of weakness such as incipient or hairline fractures, or veinlets. Rock is significantly weakened.
Decomposed	Discolored or oxidized throughout, but resistant minerals such as quartz may be unaltered; all feldspars and Fe-Mg minerals are completely altered to clay.		Complete separation of grain boundaries (disaggregated).	Resembles a soil, partial or complete remnant rock structure may be preserved; leaching of soluble minerals usually complete.		Can be granulated by hand. Resistant minerals such as quartz may be present as "stringers" or "dikes."

Combination descriptors (such as "slightly weathered to fresh") are permissible where equal distribution of both weathering characteristics is present over significant intervals or where characteristics present are "in between" the diagnostic feature. However, combination descriptors should not be used where significant, identifiable zones can be delineated. Only two adjacent descriptors may be combined. "Very intensely weathered" is the combination descriptor for "intensely weathered to decomposed."

ENGINEERING SERVICES		GEOTECHNICAL SERVICES
FUNCTIONAL SUPERVISOR	PREPARED BY M. Reynolds	FIELD INVESTIGATION BY:
NAME: M. Momenzadeh	CHECKED BY C. Risden	J. Moore

STATE OF CALIFORNIA DEPARTMENT OF TRANSPORTATION

DIVISION OF ENGINEERING SERVICES OFFICE OF GEOTECHNICAL DESIGN BRANCH 8

BRIDGE NO. 27-0090 R/L
POST MILE R20.88

ROCK LEGEND
LOG OF TEST BORINGS 6 of 7

GS LOTB ROCK LEGEND

ORIGINAL SCALE IN INCHES FOR REDUCED PLANS 0 1 2 3

CU 04
EA 264061

DISREGARD PRINTS BEARING EARLIER REVISION DATES

REVISION DATES

SHEET 66 OF 67

FILE => 27-0090r1-z-ltb06.dgn

USERNAME => trlenard DATE PLOTTED => 16-AUG-2010 TIME PLOTTED => 13:58

DIST.	COUNTY	ROUTE	POST MILES—TOTAL PROJECT	SHEET NO.	TOTAL SHEETS
04	Mrn	101	18.2/23.3	232	312

DESIGN SECTION SUPERVISOR R. E. Hawkins REGISTERED CIVIL ENGINEER No. 9188

DATE APPROVED November 8, 1971

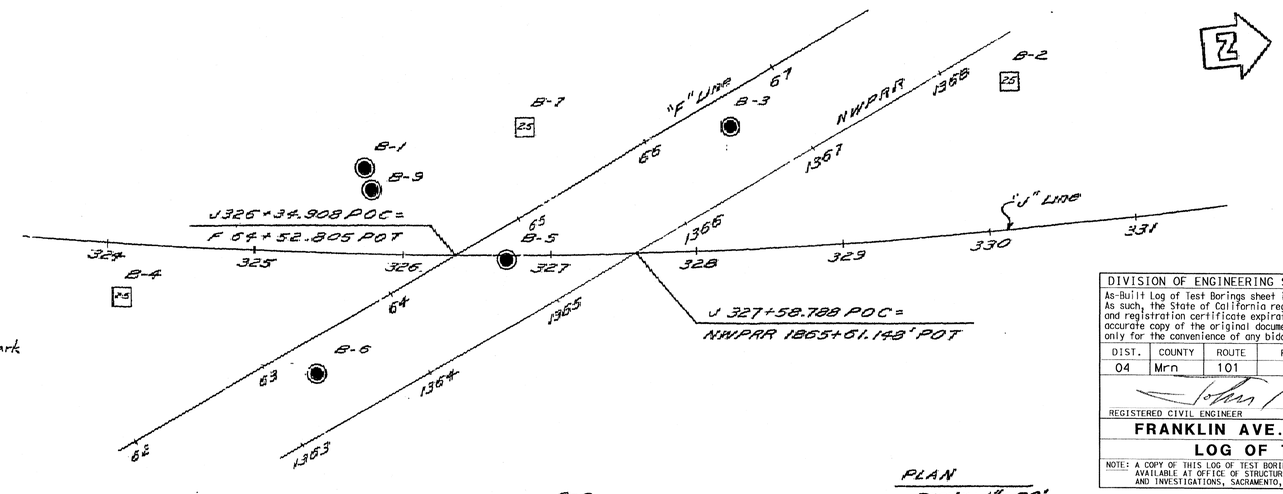

PLAN
Scale: 1" = 50'

DIVISION OF ENGINEERING SERVICES - GEOTECHNICAL SERVICES

As-Built Log of Test Borings sheet is considered an informational document only. As such, the State of California registration seal with signature, license number and registration certificate expiration date confirm that this is a true and accurate copy of the original document. This drawing is available and presented only for the convenience of any bidder, contractor or other interested party.

DIST.	COUNTY	ROUTE	POST MILE-TOTAL PROJECT	Sheet No.	Total Sheets
04	Mrn	101	18.6/R22.3	510	542

REGISTERED CIVIL ENGINEER John Moore DATE 2/8/10

REGISTERED PROFESSIONAL ENGINEER John Moore No. C61792 Exp. 6-30-11 CIVIL STATE OF CALIFORNIA

FRANKLIN AVE. OVERHEAD (WIDEN)

LOG OF TEST BORINGS 7 OF 7

NOTE: A COPY OF THIS LOG OF TEST BORINGS IS AVAILABLE AT OFFICE OF STRUCTURE MAINTENANCE AND INVESTIGATIONS, SACRAMENTO, CALIFORNIA

CU: 04 EA: 264061

BRIDGE No. 27-0090R/L

Sheet 67 of 67

TO ACCOMPANY PLANS DATED 8-9-10

AS BUILT None 4-5-76
CORRECTIONS BY C.S. Foster
CONTRACT NO. 04-120373
DATE 10-27-75

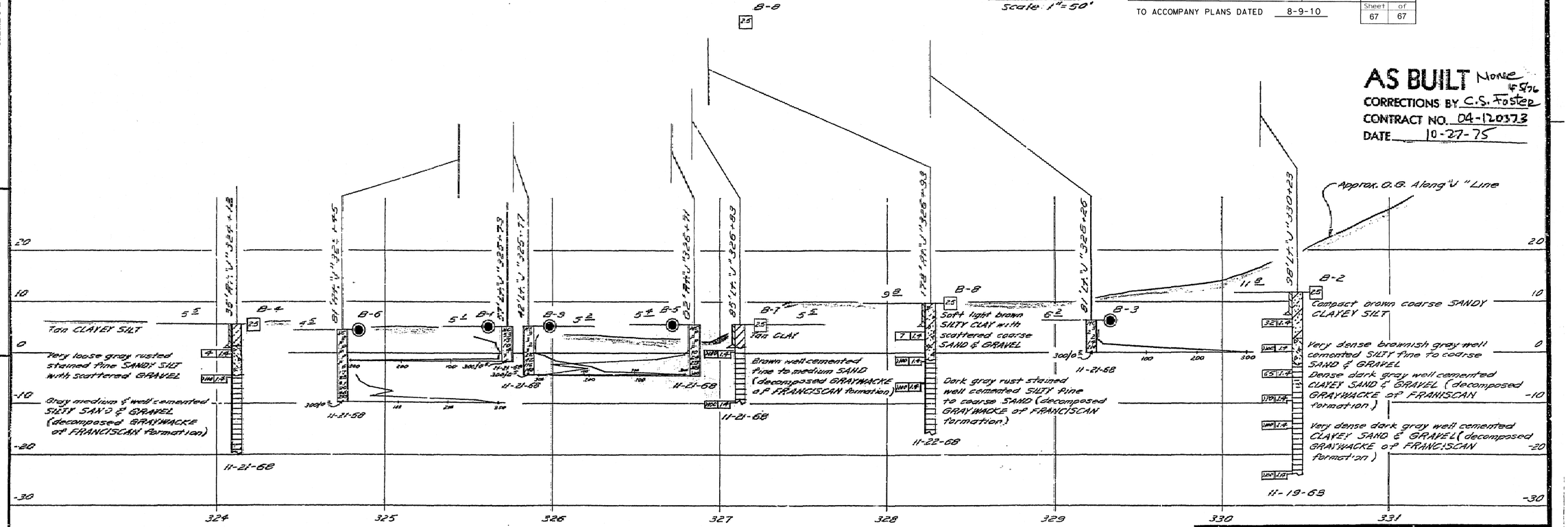

PROFILE
Scale: Horz. 1" = 30'
Vert. 1" = 10'

NO GROUND WATER ENCOUNTERED DURING THIS INVESTIGATION BY BRIDGE DEPT. GEOLOGY SECTION
DATE Nov. 1968

AS BUILT PLANS
Contract No. 04-120374
Date Completed
Document No. 4600 Sheet 8

STATE OF CALIFORNIA
TRANSPORTATION AGENCY
DEPARTMENT OF PUBLIC WORKS
DIVISION OF HIGHWAYS

FRANKLIN AVENUE OVERHEAD

LOG OF TEST BORINGS

BRIDGE NO.	POST MILE	DRAWING NO.	SHEET	OF
27-90 R/L	21.0		16	16

WO 120371
CU 04213
PR 2790-2

REVISION DATES (PRELIMINARY STAGE ONLY)

Disregard prints bearing earlier revision dates

LEGEND OF BORING OPERATIONS

PENETROMETER
2½" CORE PENETROMETER
SAMPLER BORING (DRY)
ROTARY BORING (WET)
AUGER BORING (DRY)
JET BORING
CORE BORING
TEST PIT

LEGEND OF EARTH MATERIALS

GRAVEL
SAND
SILT
CLAY
SANDY CLAY OR CLAYEY SAND
SANDY SILT OR SILTY SAND
SILTY CLAY OR CLAYEY SILT
PEAT AND ORGANIC MATTER
FILL MATERIAL
IGNEOUS ROCK
SEDIMENTARY ROCK
METAMORPHIC ROCK

CLASSIFICATION OF MATERIAL BASED ON STANDARD GRADE SIZE LIMITS

DIAGRAM SHOWING THE BASIS FOR ESTIMATING OF GRADE SIZE COMPOSITION USED IN LETTER SELECTION OF CLASS NAMES.
IF GRAVEL IS PRESENT IN APPRECIABLE QUANTITY THE TERMS "SILTY CLAY" MAY BE ADDED TO THE CLASS NAME. USE "GRAVELLY SAND" THE TERMS "COARSE", "MEDIUM" AND "FINE" REFERS TO THE SIZE OF SAND, SILT AND GRAVEL WITHIN THE STANDARD GRADE SIZE LIMITS.

NOTE: Classification of earth material as shown on this sheet is based upon field inspection and is not to be construed to imply mechanical analysis.

FIELD STUDY
DRAWN
CHECKED
Approval Recommended by

BRIDGE DEPARTMENT
ENGINEERING GEOLOGY SECTION

32

F - www.fastio.com

FILENAME => 27-0090r1-z-1tb07.tif

DIST	COUNTY	ROUTE	POST MILES TOTAL PROJECT	SHEET No	TOTAL SHEETS
04	Mrn	101	18.6/R22.3	511	542

REGISTERED CIVIL ENGINEER 03-08-10 DATE

8-9-10
PLANS APPROVAL DATE

REGISTERED PROFESSIONAL ENGINEER Keng Mun Low No. C49361 Exp. 09-30-10 CIVIL STATE OF CALIFORNIA

The State of California or its officers or agents shall not be responsible for the accuracy or completeness of electronic copies of this plan sheet.

PROFILE GRADE - TOP OF RETAINING WALL RW2

No scale

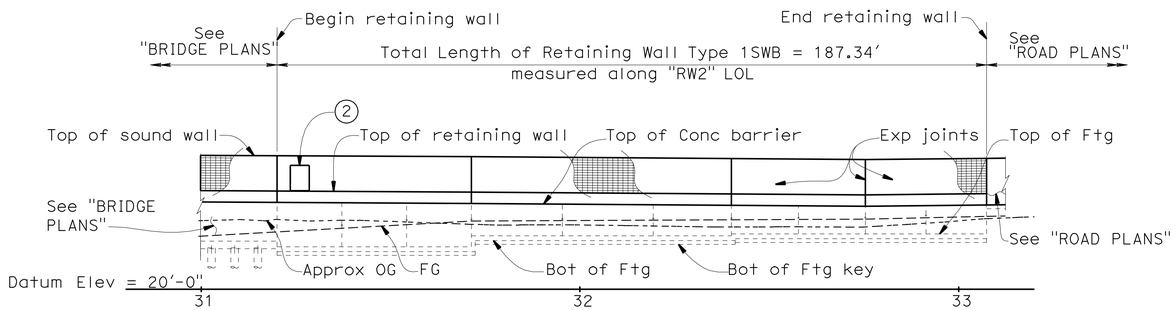

DEVELOPED ELEVATION 1

1" = 20′-0"

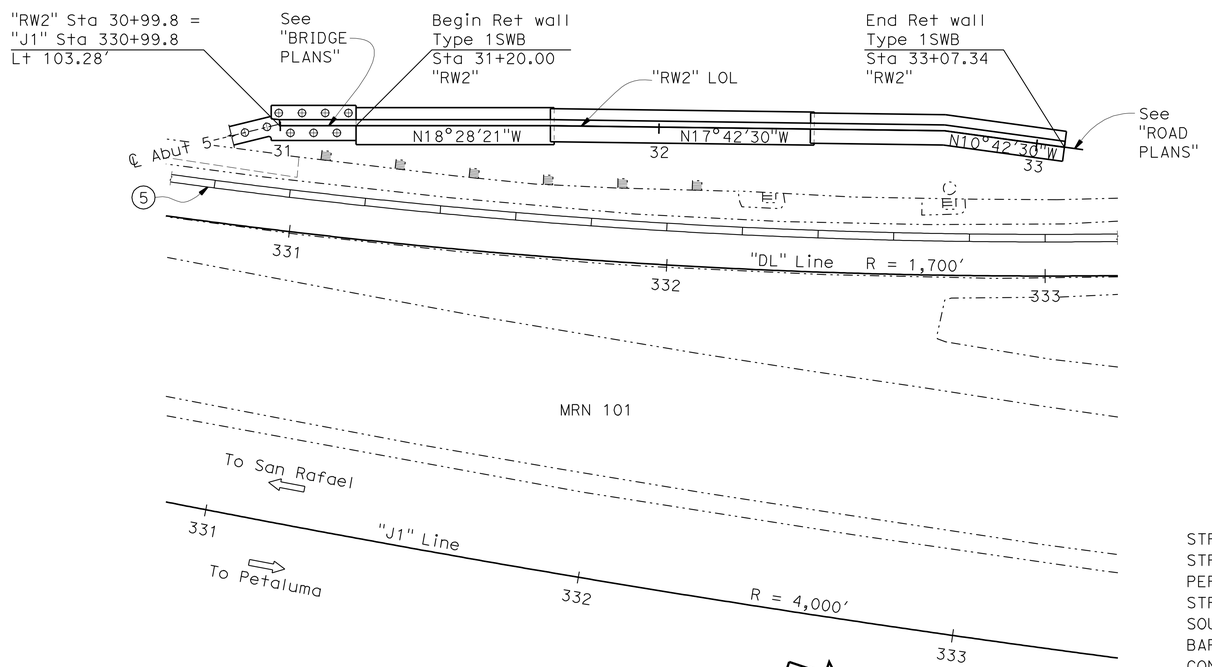

PLAN

1" = 20′-0"

NOTES:

1. For expansion joint, weakened planes and drainage details, see B0-3 and B3-8.
2. 5′-0" Access Gate, see B15-12 and B15-13.
3. See "ROAD PLANS".
4. See "ROAD PLANS" for Architectural Treatment.
5. See "ROAD PLANS" for Temporary railing (Type K).

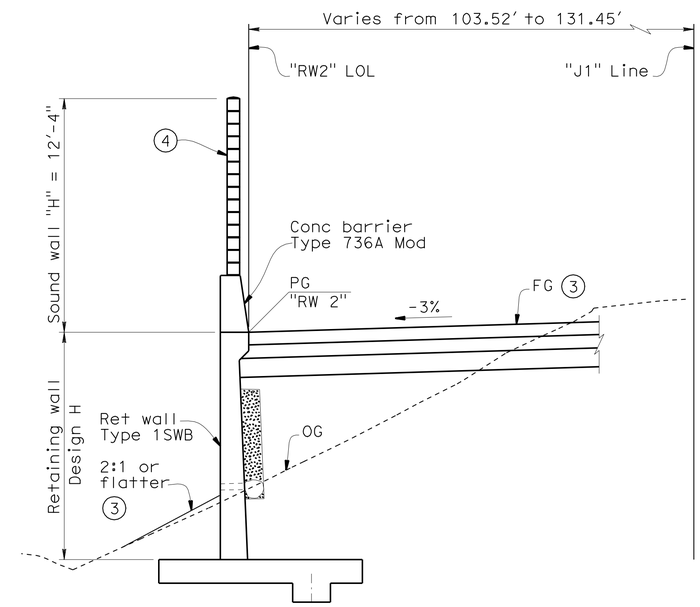

TYPICAL SECTION 1

1/4" = 1′-0"

QUANTITIES

STRUCTURE EXCAVATION (RETAINING WALL)	380	CY
STRUCTURE BACKFILL (RETAINING WALL)	360	CY
PERVIOUS BACKFILL MATERIAL (RETAINING WALL)	11	CY
STRUCTURAL CONCRETE, RETAINING WALL	175	CY
SOUND WALL (MASONRY BLOCK)	1,750	SQFT
BAR REINFORCING STEEL (RETAINING WALL)	12,500	LB
CONCRETE BARRIER (TYPE 736 MODIFIED)	188	LF

Brian Mori
DESIGN ENGINEER

	BY	CHECKED			
DESIGN	Robert Roman	Keng Mun Low	LOAD FACTOR DESIGN		
DETAILS	T. Kusumi/C. Cancino	Keng Mun Low	LAYOUT	Keng Mun Low	Robert Roman
QUANTITIES	T. Kusumi	C. Cancino	SPECIFICATIONS	Todd Geerts	PLANS AND SPECS COMPARED Todd Geerts

ORIGINAL SCALE IN INCHES FOR REDUCED PLANS 0 1 2 3

STATE OF CALIFORNIA
DEPARTMENT OF TRANSPORTATION

DIVISION OF ENGINEERING SERVICES
STRUCTURE DESIGN
DESIGN BRANCH 8

CU 04
EA 264061

BRIDGE NO. 27E0027
POST MILE 21.0

RETAINING / SOUND WALL RW2
GENERAL PLAN

DISREGARD PRINTS BEARING EARLIER REVISION DATES

REVISION DATES: 06-16-09 09-21-09 10-22-09 11-16-09 01-14-10 02-25-10 03-02-10 03-11-10

SHEET 1 OF 11

STRUCTURES DESIGN GENERAL PLAN SHEET (ENGLISH) (REV.07-24-06)

FILE => 27e-0027-rw2-a-gp01.dgn

USERNAME => trlenard DATE PLOTTED => 16-AUG-2010 TIME PLOTTED => 14:02

DIST	COUNTY	ROUTE	POST MILES TOTAL PROJECT	SHEET No	TOTAL SHEETS
04	Mrn	101	18.6/R22.3	512	542

REGISTERED CIVIL ENGINEER 03-08-10 DATE

8-9-10
PLANS APPROVAL DATE

REGISTERED PROFESSIONAL ENGINEER
Keng Mun Low
No. C49361
Exp. 09-30-10
CIVIL
STATE OF CALIFORNIA

The State of California or its officers or agents shall not be responsible for the accuracy or completeness of electronic copies of this plan sheet.

INDEX TO PLANS

SHEET NO.	TITLE
1	GENERAL PLAN
2	INDEX TO PLANS
3	STRUCTURE PLANS NO. 1
4	FOUNDATION PLAN NO. 1
5	RETAINING WALL TYPE 1SWB
6	SOUND WALL - MASONRY BLOCK WITH BARRIER ON RETAINING WALL DETAILS NO. 1
7	SOUND WALL - MASONRY BLOCK WITH BARRIER ON RETAINING WALL DETAILS NO. 2
8	LOG OF TEST BORINGS 1 OF 4
9	LOG OF TEST BORINGS 2 OF 4
10	LOG OF TEST BORINGS 3 OF 4
11	LOG OF TEST BORINGS 4 OF 4

STANDARD PLANS DATED MAY 2006

PLAN NO.	TITLE
A10A	ACRONYMS AND ABBREVIATIONS (A-L)
A10B	ACRONYMS AND ABBREVIATIONS (M-Z)
A62B	LIMITS OF PAYMENT FOR EXCAVATION AND BACKFILL - BRIDGE SURCHARGE AND WALL
A85	CHAIN LINK FENCE (Mod)
B0-3	BRIDGE DETAILS
B3-8	RETAINING WALL DETAILS NO. 1
B3-9	RETAINING WALL DETAILS NO. 2
B15-9	SOUNDWALL MASONRY BLOCK MISCELLANEOUS DETAILS
B15-12	SOUNDWALL MASONRY BLOCK ON BARRIER 5'-0" ACCESS GATE DETAILS (1)
B15-13	SOUNDWALL MASONRY BLOCK ON BARRIER 5'-0" ACCESS GATE DETAILS (2)

STANDARD PLAN SHEET NO.

DETAIL NO.

GENERAL NOTES
LOAD FACTOR DESIGN

DESIGN: Caltrans Bridge Design Specifications - April 2000 (LFD) (1996 AASHTO with Interms and Revisions by Caltrans)

REINFORCED CONCRETE: f_y = 60 ksi (Yield strength of reinforcement)
f_c' = 3,600 psi

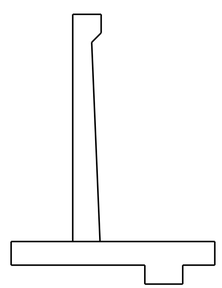

Structural concrete, Retaining wall

CONCRETE STRENGTH AND TYPE LIMITS

No Scale

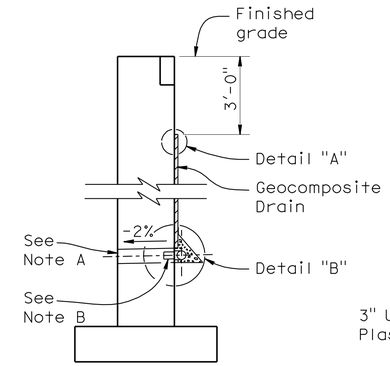

WALL SECTION

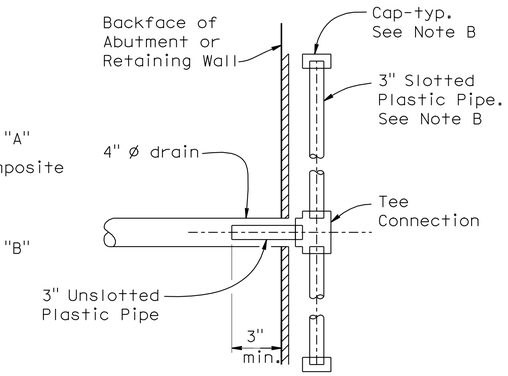

SECTION B-B

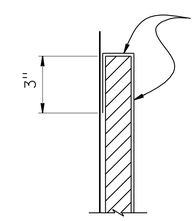

DETAIL "A"

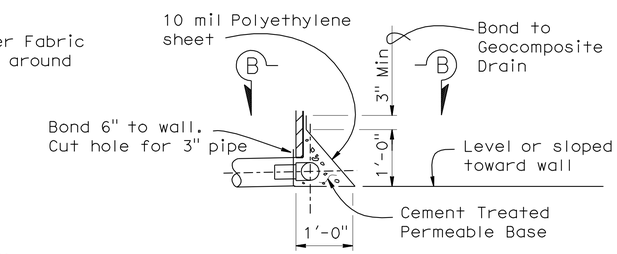

DETAIL "B"

WEEP HOLE AND GEOCOMPOSITE DRAIN

No scale

ALTERNATIVE TO BRIDGE DETAIL B0-3 / 3-1

NOTES:

A. 4" ø drains at intermediate sag points and at 25' max center to center (9' c-c for Type 3 and 9'-3" c-c for Type 4 retaining walls).
For walls adjacent to sidewalks or curbs, provide 4" plastic pipe under the sidewalk to discharge through curb face.
Exposed wall drains shall be located 3"± above finished grade.

B. Geocomposite drain, cement treated permeable base, and 3" slotted plastic pipe continuous behind retaining wall or abutment. Cap ends of pipe. Provide "Tee" connection at each 4" ø drain.

C. Connect the low end of plastic pipe to the main outlet pipe as applicable.

	BY	CHECKED
DESIGN	Robert Roman	Keng Mun Low
DETAILS	T. Kusumi/C. Cancino	Keng Mun Low
QUANTITIES	T. Kusumi	C. Cancino

STATE OF CALIFORNIA
DEPARTMENT OF TRANSPORTATION

DIVISION OF ENGINEERING SERVICES
STRUCTURE DESIGN
DESIGN BRANCH 8

BRIDGE NO. 27E0027
POST MILE 21.0

RETAINING / SOUND WALL RW2
INDEX TO PLANS

STRUCTURES DESIGN DETAIL SHEET (ENGLISH) (REV. 10/25/05)

ORIGINAL SCALE IN INCHES FOR REDUCED PLANS 0 1 2 3

CU 04
EA 264061

DISREGARD PRINTS BEARING EARLIER REVISION DATES

REVISION DATES: 06-11-09 09-21-09 10-22-09 01-14-10 02-23-10 03-15-10

SHEET 2 OF 11

FILE => 27e-0027-rw2-b-itp.dgn

USERNAME => trlenard DATE PLOTTED => 16-AUG-2010 TIME PLOTTED => 14:02

DIST	COUNTY	ROUTE	POST MILES TOTAL PROJECT	SHEET No	TOTAL SHEETS
04	Mrn	101	18.6/R22.3	513	542

REGISTERED CIVIL ENGINEER 03-08-10 DATE

8-9-10
PLANS APPROVAL DATE

REGISTERED PROFESSIONAL ENGINEER
Keng Mun Low
No. C49361
Exp. 09-30-10
CIVIL
STATE OF CALIFORNIA

The State of California or its officers or agents shall not be responsible for the accuracy or completeness of electronic copies of this plan sheet.

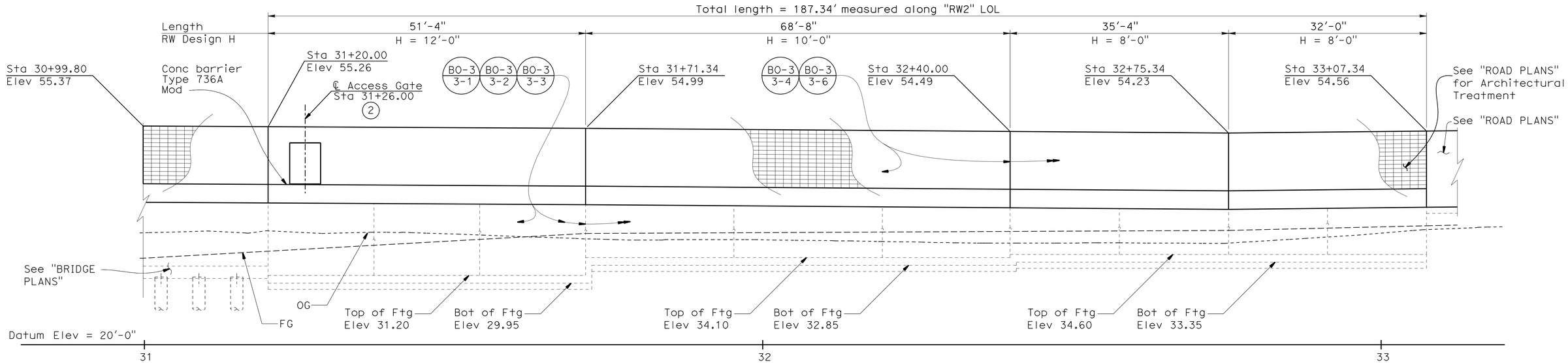

DEVELOPED ELEVATION

1/8" = 1'-0"

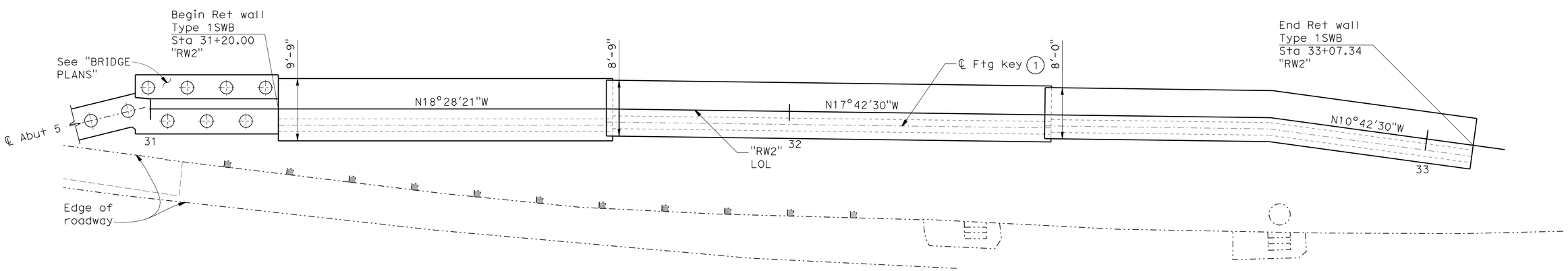

PLAN

1/8" = 1'-0"

NOTES:

1. For details of footing key, see "RETAINING WALL TYPE 1SWB" sheet.
2. 5'-0" Access Gate, see B15-12 and B15-13.

DESIGN	BY Robert Roman	CHECKED Keng Mun Low	
DETAILS	BY T. Kusumi/C. Cancino	CHECKED Keng Mun Low	
QUANTITIES	BY T. Kusumi	CHECKED C. Cancino	

STATE OF CALIFORNIA
DEPARTMENT OF TRANSPORTATION

DIVISION OF ENGINEERING SERVICES
STRUCTURE DESIGN
DESIGN BRANCH 8

BRIDGE NO. 27E0027
POST MILE 21.0

RETAINING / SOUND WALL RW2
STRUCTURE PLANS NO. 1

STRUCTURES DESIGN DETAIL SHEET (ENGLISH) (REV. 10/25/05)

ORIGINAL SCALE IN INCHES FOR REDUCED PLANS 0 1 2 3

CU 04
EA 264061

DISREGARD PRINTS BEARING EARLIER REVISION DATES

REVISION DATES: 06-11-09 09-21-09 10-22-09 11-30-09 01-14-10

SHEET 3 OF 11

FILE => 27e-0027-rw2-c-sp01.dgn

USERNAME => trlenard DATE PLOTTED => 16-AUG-2010 TIME PLOTTED => 14:02

DIST	COUNTY	ROUTE	POST MILES TOTAL PROJECT	SHEET No	TOTAL SHEETS
04	Mrn	101	18.6/R22.3	514	542

REGISTERED CIVIL ENGINEER — DATE 03-08-10

8-9-10
PLANS APPROVAL DATE

REGISTERED PROFESSIONAL ENGINEER — Keng Mun Low — No. C49361 — Exp. 09-30-10 — CIVIL — STATE OF CALIFORNIA

The State of California or its officers or agents shall not be responsible for the accuracy or completeness of electronic copies of this plan sheet.

CURVE DATA

No.	R	Δ	T	L
Ⓐ	1666.00	8°31′46″	124.23	248.01
Ⓑ	3937.00	4°21′48″	149.98	299.82
Ⓒ	1700.00	20°40′30″	310.09	613.44
Ⓓ	4000.00	20°50′55″	735.89	1455.51

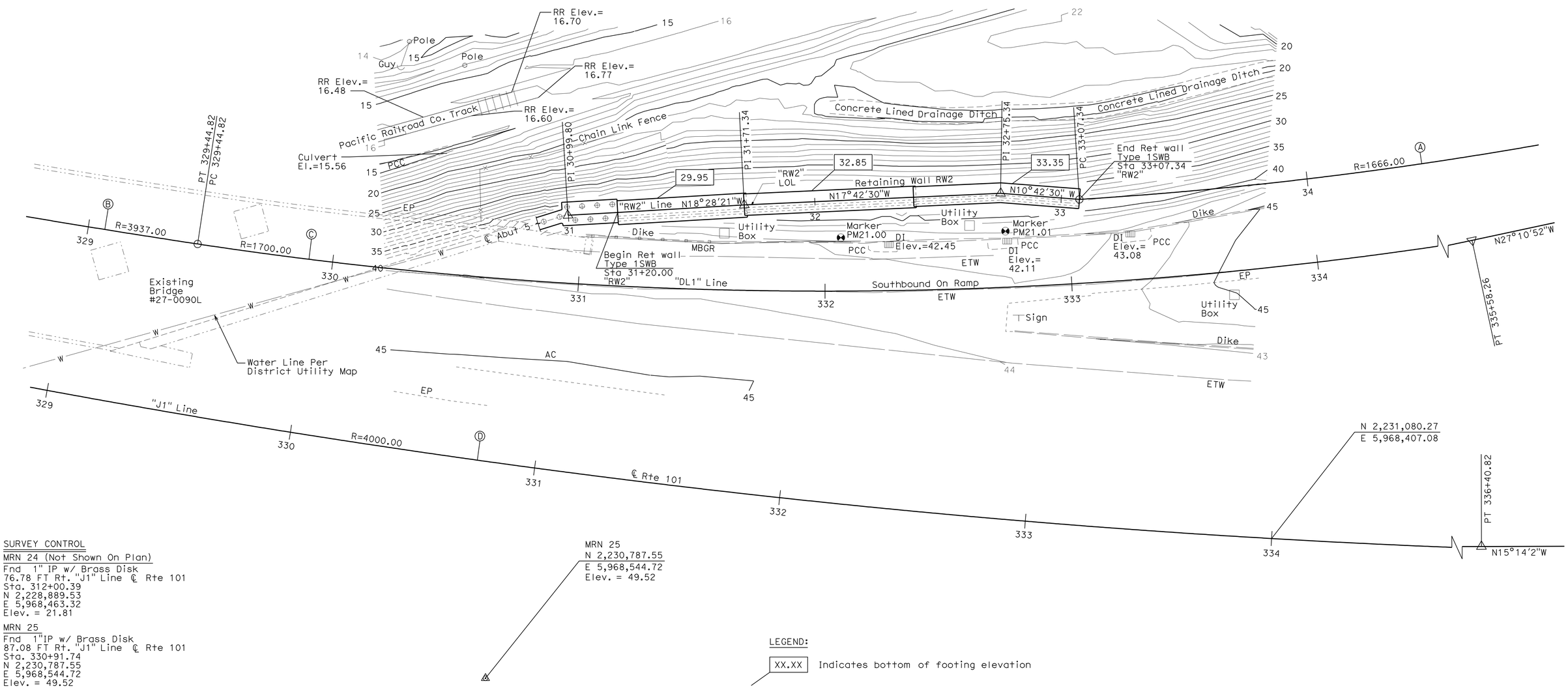

SURVEY CONTROL

MRN 24 (Not Shown On Plan)
Fnd 1" IP w/ Brass Disk
76.78 FT Rt. "J1" Line ℄ Rte 101
Sta. 312+00.39
N 2,228,889.53
E 5,968,463.32
Elev. = 21.81

MRN 25
Fnd 1"IP w/ Brass Disk
87.08 FT Rt. "J1" Line ℄ Rte 101
Sta. 330+91.74
N 2,230,787.55
E 5,968,544.72
Elev. = 49.52

MRN 25
N 2,230,787.55
E 5,968,544.72
Elev. = 49.52

LEGEND:

XX.XX — Indicates bottom of footing elevation

PRELIMINARY INVESTIGATION SECTION

SCALE	VERT.DATUM NAVD88	PHOTOGRAMMETRY AS OF: X		
1"=20′	HORZ.DATUM NAD83 (1991.35)	SURVEYED BY District/T.Gillett	CHECKED BY T.Gillett	08/2009
ALIGNMENT TIES Dist. Traverse Sheet		DRAFTED BY T.Zoinikova 08/2009	CHECKED BY J.Pallares	08/2009

	BY	CHECKED
DESIGN	Keng Mun Low	Robert Roman
DETAILS	Carlo Cancino	Robert Roman
QUANTITIES	Tomoko Kusumi	Carlo Cancino

STATE OF CALIFORNIA
DEPARTMENT OF TRANSPORTATION

DIVISION OF ENGINEERING SERVICES
STRUCTURE DESIGN
DESIGN BRANCH 08

BRIDGE NO. 27E0027
POST MILE 21.0

RETAINING / SOUNDWALL RW2
FOUNDATION PLAN

STRUCTURES FOUNDATION PLAN SHEET (ENGLISH) (REV. 10/25/05)

ORIGINAL SCALE IN INCHES FOR REDUCED PLANS 0 1 2 3

CU 04
EA 264061

DISREGARD PRINTS BEARING EARLIER REVISION DATES

REVISION DATES: 09-01-09 | 09-22-09 | 10-22-09 | 11-30-09 | 01-14-10

SHEET 4 OF 11

FILE => 27e-0027-rw2-d-fp101.dgn

USERNAME => rfrenford DATE PLOTTED => 16-AUG-2010 TIME PLOTTED => 14:02

DIST.	COUNTY	ROUTE	POST MILES TOTAL PROJECT	SHEET NO.	TOTAL SHEETS
04	Mrn	101	18.6/R22.3	515	542

REGISTERED CIVIL ENGINEER 03-08-10 DATE

8-9-10
PLANS APPROVAL DATE

REGISTERED PROFESSIONAL ENGINEER Keng Mun Low No. C49361 Exp. 09-30-10 CIVIL STATE OF CALIFORNIA

The State of California or its officers or agents shall not be responsible for the accuracy or completeness of electronic copies of this plan sheet.

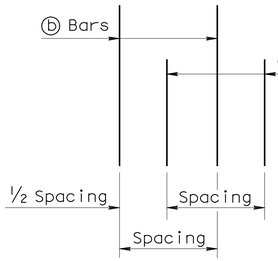

DETAIL B

No Scale

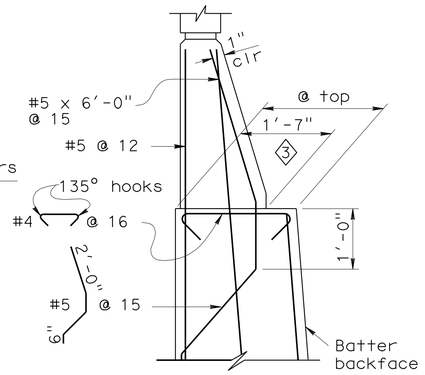

DETAIL A WITHOUT HAUNCH

No Scale

GENERAL NOTES

1. For soundwall and retaining wall architectural finish or texture, see details elsewhere in project plans.
2. For details not shown and drainage notes, see B3-8
3. Footing cover, 1'-6" minimum.
4. Limit of no splicing rebars = 3 times the bottom thickness of the stem.
5. Placement of reinforcements :
   - ⓑ & ⓒ bars are spliced together.
   - * ⓐ & ⓑ bars are bundled together.
   - ** Alternate ⓐ & ⓑ bars are shown in "Detail B".
   - Cont = Continuous.
6. For Soundwall & Barrier reinforcement, see "Soundwall Masonry Block on Barriers" sheets in Standard Plans.

TABLE 1: TABLE OF REINFORCING STEEL DIMENSIONS AND DATA

	Stem With Haunch													
Design H	6'	8'	10'	12'	14'	16'	18'	20'	22'	24'	26'	28'	30'	32'
W	7'-9"	8'-0"	8'-9"	9'-9"	10'-9"	12'-0"	13'-0"	14'-3"	15'-3"	16'-6"	18'-6"	19'-9"	21'-3"	22'-6"
C	2'-9"	2'-9"	3'-0"	3'-3"	3'-6"	4'-0"	4'-3"	4'-9"	5'-0"	5'-6"	6'-3"	6'-9"	7'-3"	7'-9"
B	5'-0"	5'-3"	5'-9"	6'-6"	7'-3"	8'-0"	8'-9"	9'-6"	10'-3"	11'-0"	12'-3"	13'-0"	14'-0"	14'-9"
F Spread footing	1'-3"	1'-3"	1'-3"	1'-3"	1'-3"	1'-6"	1'-6"	1'-9"	2'-0"	2'-3"	2'-9"	3'-0"	3'-3"	3'-9"
Batter	0	½ :12	½ :12	½ :12	½ :12	½ :12	½ :12	½ :12	½ :12	:12	¾ :12	:12	1 :12	1 :12
Stem thickn. @ Haunch	1'-0"	1'-0"	1'-0"	1'-0"	1'-0"	1'-0"	1'-0"	1'-0"	1'-0"	1'-0"	1'-0"	1'-0"	1'-0"	1'-0"
ⓐ Bars				#6 @18**	#7 @18**	#8 @18**	#9 @18**	#10 @18**	#8 @ 9*	#8 @ 9*	#7 @ 6*	#10@12**	#9 @ 9*	#11@12**
X				Cont	Cont	Cont	Cont	Cont	Cont	Cont	Cont	Cont	Cont	Cont
Y				8'-0"	6'-6"	7'-6"	8'-6"	9'-6"	9'-6"	11'-0"	11'-6"	13'-0"	14'-0"	15'-6"
ⓑ Bars	#5 @12	#5 @12	#5 @ 9	#6 @18**	#7 @18**	#8 @18**	#9 @18**	#10 @18**	#8 @ 9*	#8 @ 9*	#7 @ 6*	#10@12**	#9 @ 9*	#11@12**
X	Cont	Cont	Cont	Cont	Cont	Cont	Cont	Cont	Cont	5'-6"	6'-6"	7'-0"	8'-0"	8'-6"
Y	Cont	Cont	Cont	Cont	10'-6"	13'-0"	15'-0"	17'-6"	19'-6"	21'-0"	18'-6"	19'-0"	25'-6"	23'-6"
ⓒ Bars					#6 @18	#6 @18	#6 @18	#6 @18	#6 @18	#6 @18	#6 @12	#7 @12	#7 @18	#7 @12
ⓓ Bars	#5 @12	#5 @12	#5 @12	#5 @ 9	#6 @ 9	#6 @ 9	#6 @ 6	#8 @ 9	#8 @ 9	#8 @ 9	#7 @ 6	#7 @ 6	#9 @ 9	#9 @ 9
4 Ultimate Bearing Capacity Req'd ksf	4.6	5.5	6.1	6.6	7.3	8.1	9.0	9.9	11.3	12.2	12.5	13.4	14.1	15.4

TABLE 2: TABLE OF REINFORCING STEEL DIMENSIONS AND DATA

	Stem With Haunch						Stem Without Haunch						
Design H	8'	10'	12'	14'	16'	18'	20'	22'	24'	26'	28'	30'	32'
W	8'-0"	8'-6"	9'-3"	10'-3"	11'-3"	13'-0"	13'-9"	16'-0"	16'-6"	18'-6"	20'-0"	20'-6"	21'-9"
C	2'-9"	2'-9"	3'-0"	3'-6"	3'-9"	4'-3"	4'-6"	5'-3"	5'-6"	6'-3"	6'-9"	6'-9"	7'-6"
B	5'-3"	5'-9"	6'-3"	6'-9"	7'-6"	8'-9"	9'-3"	10'-9"	11'-0"	12'-3"	13'-3"	13'-9"	14'-3"
F Spread footing	1'-3"	1'-3"	1'-3"	1'-3"	1'-6"	1'-6"	1'-9"	2'-0"	2'-3"	2'-9"	3'-0"	3'-3"	3'-6"
Batter	0	0	0	0	0	0	0	0	0	¼ :12	½ :12	½ :12	½ :12
Stem thickn. @ Haunch	1'-0"	1'-0"	1'-0"	1'-0"	1'-3"	1'-3"							
Stem thickn. @ top							1'-6"	2'-0"	2'-0"	2'-0"	2'-0"	2'-0"	2'-0"
ⓐ Bars			#6 @12**	#5 @ 6*	#9 @18**	#9 @12**	#9 @12**	#9 @12**	#7 @ 6*	#7 @ 6*	#7 @ 6*	#9 @ 9*	#11@12**
X			Cont	Cont	Cont	Cont	Cont	Cont	Cont	Cont	Cont	Cont	Cont
Y			5'-6"	5'-6"	8'-6"	8'-6"	8'-6"	8'-6"	9'-6"	11'-0"	12'-6"	13'-6"	14'-6"
ⓑ Bars	#5 @ 9	#6 @ 9	#6 @12**	#5 @ 6*	#9 @18**	#9 @12**	#9 @12**	#9 @12**	#7 @ 6*	#7 @ 6*	#7 @ 6*	#9 @ 9*	#11@12**
X	Cont	Cont	Cont	Cont	Cont	Cont	Cont	Cont	5'-6"	6'-0"	7'-6"	7'-6"	8'-0"
Y	Cont	Cont	Cont	Cont	11'-6"	11'-6"	12'-0"	12'-0"	17'-6"	20'-0"	21'-6"	24'-0"	24'-0"
ⓒ Bars					#7 @18	#7 @12	#7 @12	#7 @12	#6 @ 12	#6 @ 12	#6 @12	#7 @18	#7 @12
ⓓ Bars	#5 @12	#5 @ 9	#5 @9	#6 @9	#6 @ 9	#9 @12	#9 @12	#7 @#7	6 @ 6	#7 @ 6	#7 @ 6	#9 @ 9	#9 @ 9
Ultimate Bearing Capacity Req'd k/sf	5.5	6.5	7.3	7.6	9.0	9.0	10.6	10.5	12.2	12.6	13.3	15.4	16.0

5

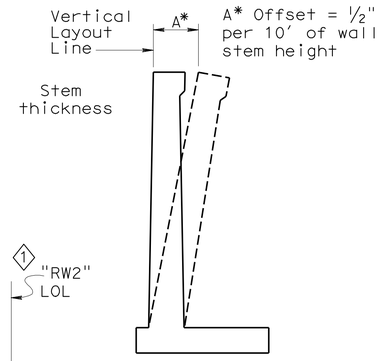

WALL OFFSET

No Scale

Values for offsetting forms to be determined by the Engineer.

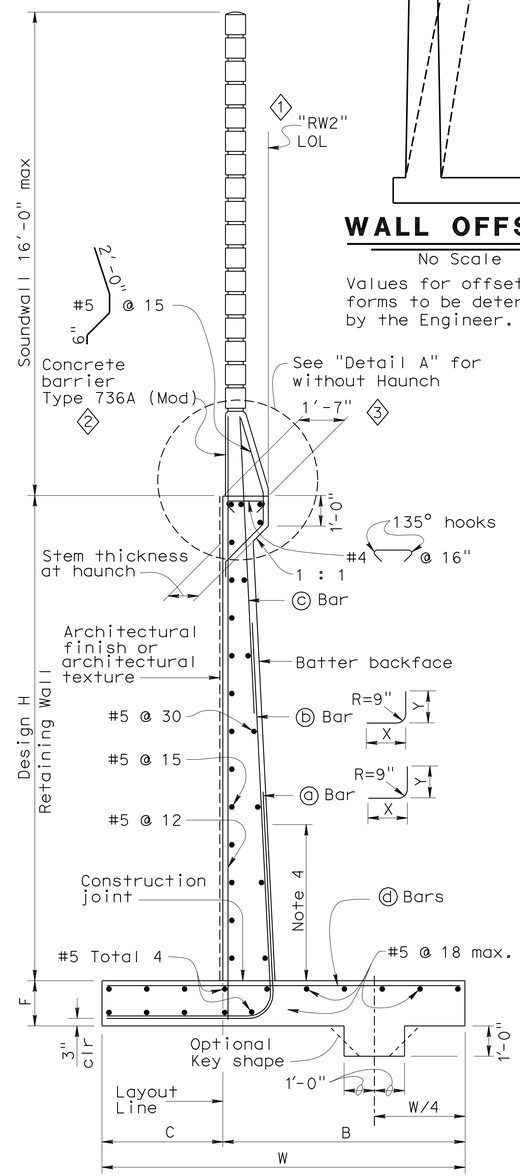

SPREAD FOOTING SECTION

No Scale

DESIGN DATA

DESIGN: Load Factor Design (LFD)

CONCRETE: Reinforced Concrete, f'c = 3600 psi
fy = 60,000 psi

LOADING CASE:
Level ground with 240 psf surcharge and 16' Soundwall

Seismic Load = 0.3 Dead Load
Wind Load = 30 psf
Dead Load of Soundwall = 1414 lb/ft
Dead Load of Barrier = 372 lb/ft

SEISMIC LOAD: SOIL
Kh = 0.3g
Kv = 0.0
Kae : Mononobe-Okabe Method

SOIL: Ø = 34° γ = 120 pcf
Equivalent fluid pressure:
= 36 pcf for determination of toe pressure
= 27 pcf for determination of heel pressure

EXTERNAL STABILITY:
Group 1 : D + E + SC
Group 2 : D + E + SC + W
Group 3 : D + PYM

INTERNAL STABILITY (LFD):
Group A : βD + 1.7E + 1.7SC
Group B : βD + 1.7E + 1.3W
Group C (stem) : 1.0D + 1.0E + 1.0EQD + 1.0EQE
Group C (footing) : D + PYM

Where : β = 1.0 or 1.3 whichever controls design
D = Dead Load
E = Lateral Earth Pressure
SC = Surcharge
W = Wind load
EQD = Seismic Dead Load
EQE = Seismic Lateral Earth Pressure
PYM = Probable Yield Moment (1.3 x Nominal Yield Moment of Stem)

SPECIAL DETAILS

STANDARD DRAWING

FILE NO. xs14-220e

APPROVED BY G. WANG RESPONSIBLE TECHNICAL SPECIALIST
APPROVAL DATE 5-19-08

RELEASED BY ROBERTO LACALLE RESPONSIBLE OFFICE CHIEF
RELEASE DATE 5-19-08

1 Added "RW2" LOL
2 Changes barrier to Type 736A (Mod)
3 Revised top of wall dimension
4 Revised unit of measurement
5 Deleted Table

STATE OF CALIFORNIA DEPARTMENT OF TRANSPORTATION

DIVISION OF ENGINEERING SERVICES

BRIDGE NO. 27E0027
POST MILE 21.0

RETAINING / SOUND WALL RW2

RETAINING WALL TYPE 1SWB

DS OSD 2147A (ENGLISH STANDARD DRAWING "XS" BORDER REV. 01/11/08)

ORIGINAL SCALE IN INCHES FOR REDUCED PLANS 0 1 2 3

CU 04
EA 264061

DISREGARD PRINTS BEARING EARLIER REVISION DATES

REVISION DATES (PRELIMINARY STAGE ONLY) 6-12-09 9-21-09 10-26-09 01-14-10

SHEET 5 OF 11

FILE => 27e-0027-rw2-g-dt01.dgn

USERNAME => trlenard DATE PLOTTED => 16-AUG-2010 TIME PLOTTED => 14:02

DIST.	COUNTY	ROUTE	POST MILES TOTAL PROJECT	SHEET NO.	TOTAL SHEETS
04	Mrn	101	18.6/R22.3	516	542

REGISTERED CIVIL ENGINEER 03-08-10 DATE

8-9-10
PLANS APPROVAL DATE

REGISTERED PROFESSIONAL ENGINEER Keng Mun Low No. C49361 Exp. 09-30-10 CIVIL STATE OF CALIFORNIA

The State of California or its officers or agents shall not be responsible for the accuracy or completeness of electronic copies of this plan sheet.

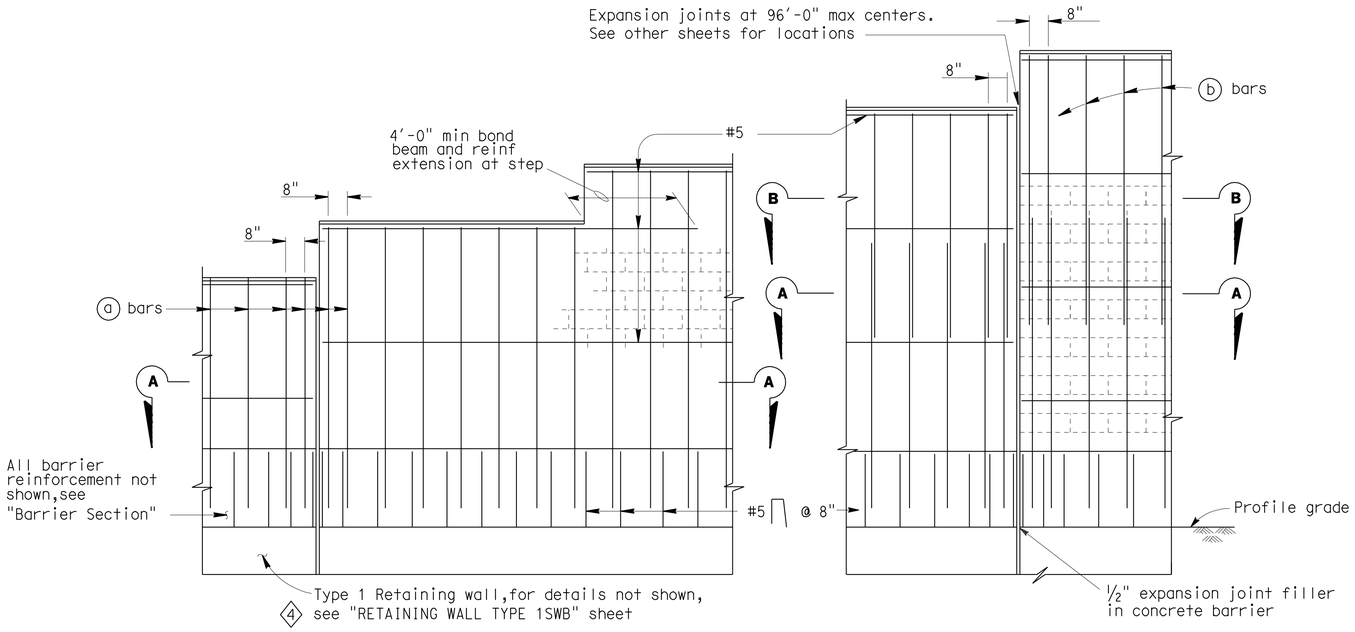

PART ELEVATIONS

SOUNDWALL REINFORCEMENT TABLE

Maximum H	(a) bars @ 1'-4" max	(b) bars @ 1'-4" max	"y"	f'm (ksi) 3	Compressive Strength of CMU (ksi) 3	Maximum H
6'-4"	# 4	———	———	1.5	1.9	6'-4"
8'-4"	# 4	———	———	1.5	1.9	8'-4"
10'-4"	# 4	———	———	1.5	1.9	10'-4"
12'-4"	# 5	# 4	5'-0"	1.5	1.9	12'-4"
14'-4"	# 6	# 4	7'-0"	1.5	1.9	14'-4"
16'-4"	# 6	# 4	9'-0"	2.5	3.7	16'-4"

Note I : For details not shown, see "SOUNDWALL WITH BARRIER ON RETAINING WALL - MASONRY BLOCK -- DETAILS NO.2" sheet.

Note II : Slope ground at traffic side of barrier to drain. Maximum slope ±10%.

1 Note III : ~~See "SOUNDWALL MASONRY BLOCK - MISCELLANEOUS DETAILS" sheet for other details.~~

Note III : See B15-9 for other details.

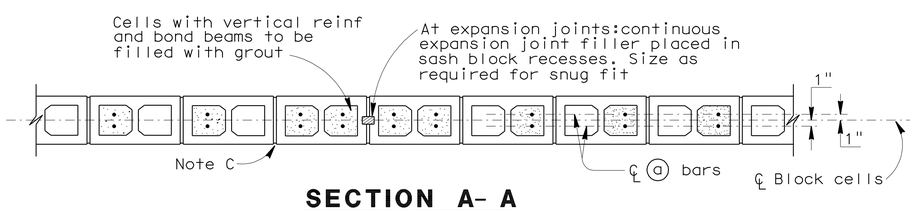

SECTION A- A

For details not shown, see other details

H=6'-4" THRU H=10'-4"

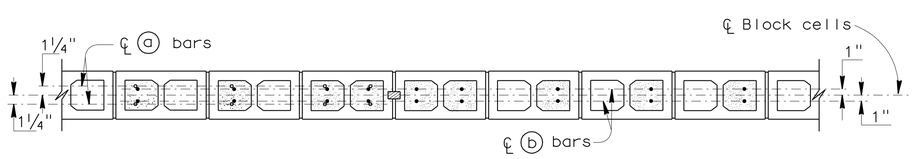

SECTION A- A

SECTION B- B

For details not shown, see other details

H=12'-4" THRU H=16'-4"

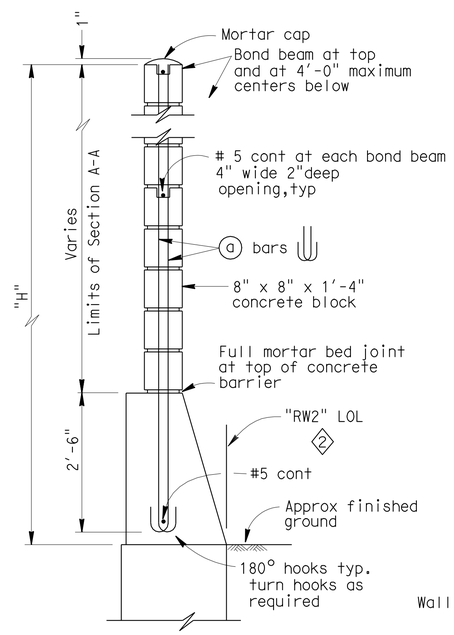

H=6'-4" THRU H=10'-4"

For details not shown, see H=12'-4" thru H=16'-4"

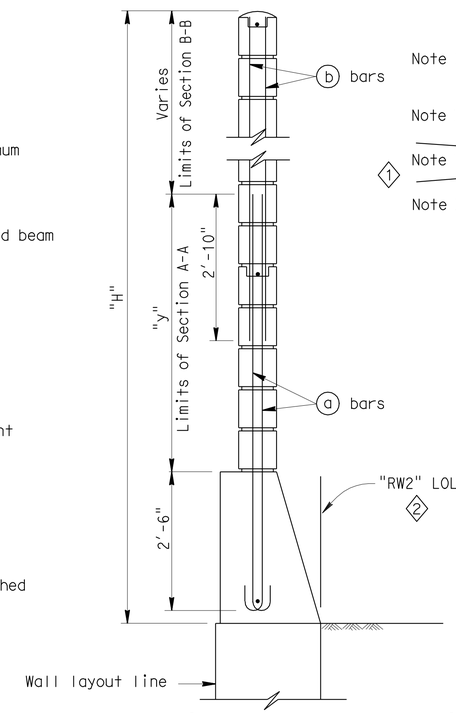

H=12'-4" THRU H=16'-4"

For details not shown, see H=6'-4" thru H=10'-4"

TYPICAL SECTIONS

GENERAL NOTES

Note A: For type of block and joint finish, see other sheets.

Note B: When blocks are laid in stacked bond, ladder type, galvanized joint reinforcement shall be provided. A minimum of 0.07"-0.14" wire continuous at 4'-0" maximum to be used. Locate reinforcement in joints that are at the approximate midpoint between bond beams.

Note C: Horizontal joints shall be tooled concave or may be weathered.
Vertical joints shall be tooled concave or may be raked.

Note D: For intermediate wall heights that are between the "H's" given. Use the tabular information for the next higher "H".

Note E: Masonry strengths are listed in "SOUNDWALL REINFORCEMENT TABLE".

Note F: Concrete to be used for the barrier shall contain not less than 590 pounds of cementitious material per cubic yard.

SPECIAL DETAILS

RETAINING / SOUND WALL RW2

SOUNDWALL - MASONRY BLOCK WITH BARRIER ON RETAINING WALL

DETAILS NO. 1

STANDARD DRAWING

FILE NO. xs15-130-1e

APPROVED BY T SATTER — RESPONSIBLE TECHNICAL SPECIALIST
APPROVAL DATE 2-13-09

RELEASED BY ROBERTO LACALLE — RESPONSIBLE OFFICE CHIEF
RELEASE DATE 2-13-09

1 Revised Note
2 Added "RW2" LOL
3 Changed unit of measurement to lower case
4 Revised Note

STATE OF CALIFORNIA
DEPARTMENT OF TRANSPORTATION

DIVISION OF ENGINEERING SERVICES

BRIDGE NO. 27E0027
POST MILE 21.0

DS OSD 2147A (ENGLISH STANDARD DRAWING "XS" BORDER REV. 01/11/08)

ORIGINAL SCALE IN INCHES FOR REDUCED PLANS 0 1 2 3

CU 04
EA 264061

DISREGARD PRINTS BEARING EARLIER REVISION DATES

REVISION DATES (PRELIMINARY STAGE ONLY) 06-16-09 09-22-09 10-22-09 01-14-10 03-08-10 03-15-10

SHEET 6 OF 11

FILE => 27e-0027-rw2-q-swdt01.dgn

USERNAME => friehard DATE PLOTTED => 16-AUG-2010 TIME PLOTTED => 14:02

DIST.	COUNTY	ROUTE	POST MILES TOTAL PROJECT	SHEET NO.	TOTAL SHEETS
04	Mrn	101	18.6/R22.3	517	542

REGISTERED CIVIL ENGINEER 03-08-10 DATE

8-9-10
PLANS APPROVAL DATE

REGISTERED PROFESSIONAL ENGINEER Keng Mun Low No. C49361 Exp. 09-30-10 CIVIL STATE OF CALIFORNIA

The State of California or its officers or agents shall not be responsible for the accuracy or completeness of electronic copies of this plan sheet.

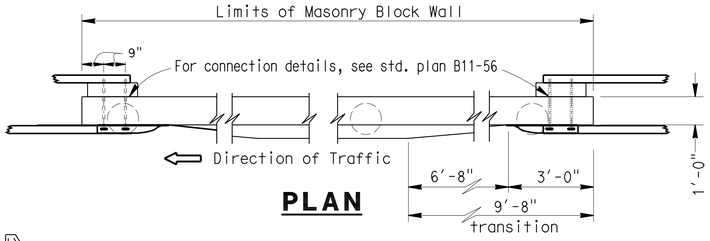

PLAN

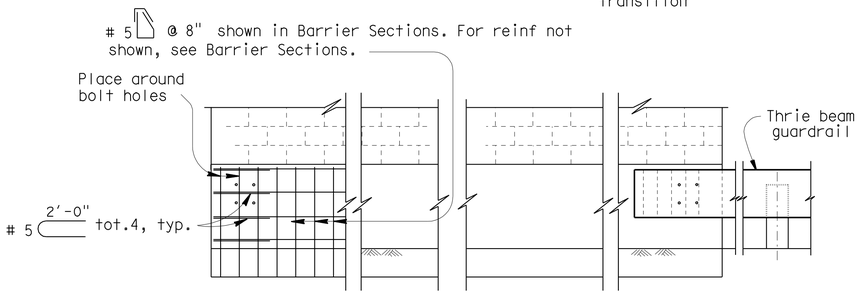

ELEVATION

METAL BEAM GUARDRAIL ANCHORAGE

For details not shown, see std. plan B11-56.

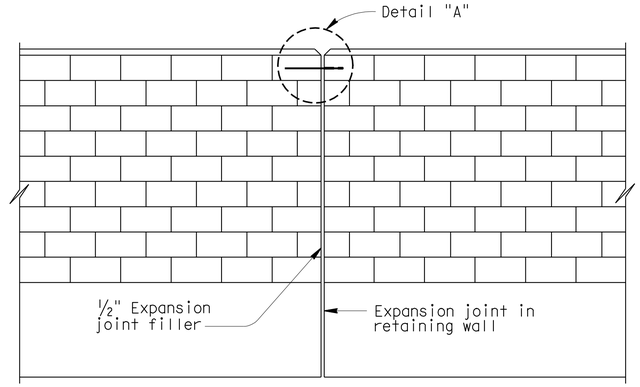

ALIGNMENT KEY DETAIL

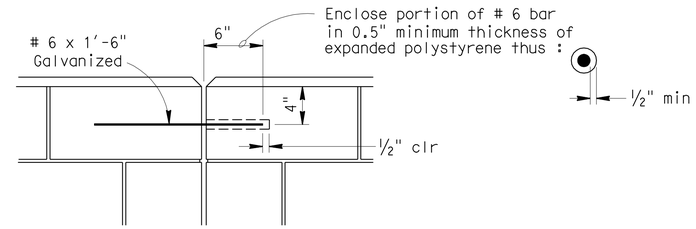

DETAIL A

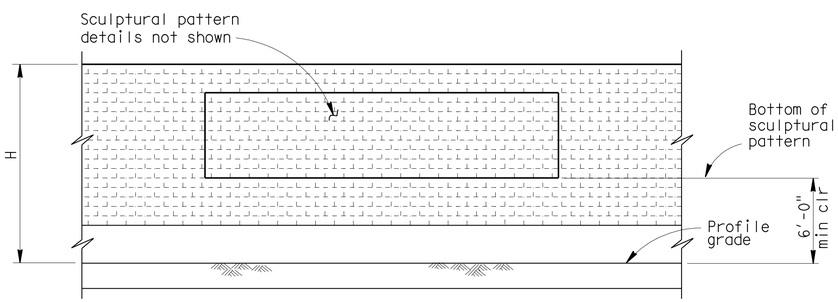

CLEARANCE DETAIL

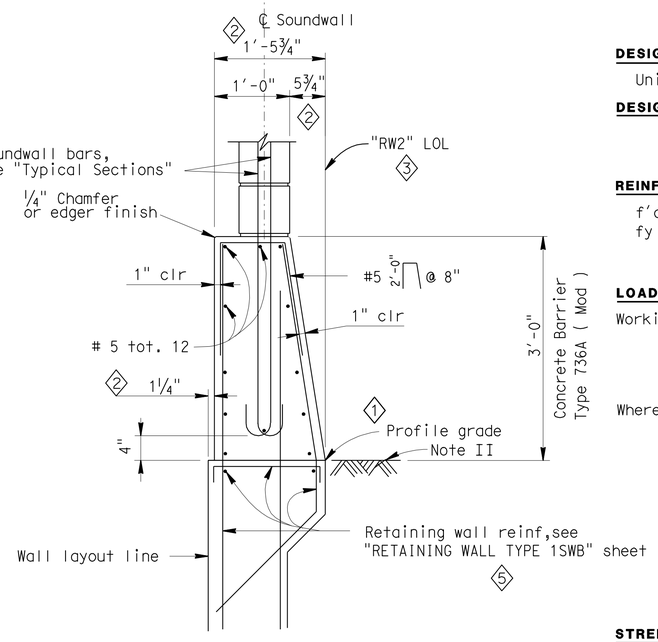

BARRIER SECTION

NOTES:

I : For details not shown, see "RETAINING WALL WITH SOUNDWALL" sheets.

II : Slope ground at traffic side of barrier to drain. Maximum slope ±10%. See Standard Plan B11-56, Note D.

DESIGN NOTES

DESIGN

Uniform Building Code, 1997 Edition and the Bridge Design Specifications.

DESIGN WIND LOAD

33 psf (4)

DESIGN SEISMIC LOAD

0.57 Dead load

REINFORCED CONCRETE

f'c = 3250 psi (4)
fy = 60 ksi (4)

CONCRETE MASONRY

REGULAR STRENGTH	HIGH STRENGTH	
f'm = 1500 psi (4)	f'm = 2000 psi (4)	f'm = 2500 psi (4)
fb = 1500 psi (4)	fb = 660 psi (4)	fb = 830 psi (4)
fs = 24.0 ksi (4)	fs = 24.0 ksi (4)	fs = 24000 psi (4)
n = 25.8	n = 19.3	n = 15.5

LOAD FACTORS AND LOAD COMBINATIONS

Working Stress Design (WSD) Percentage of unit stress

Group 1: D + E + SC 100%
Group 2: D + W + SC + E 100%
Group 3: D + 0.71 EQD + E 100%

Where:

D = Dead load
E = Lateral earth pressure
SC = Live load surcharge
W = Wind load
EQD = Seismic dead load

Load Factor Design (LFD)

Group A: βD +1.7 E + 1.7 SC
Group B: βD +1.7 E + 1.3 W
Group C: βD +1.3 E + 1.0 EQE
Group D: βD +1.3 E + 1.0 EQD
Group E: βD +1.1 E + 0.85 (EQE + EQD)

Where : β = 0.9 or 1.2, whichever controls in design
D = Dead load
E = Lateral earth pressure
SC = Live load surcharge
W = Wind load
EQD = Seismic dead load
EQE = Seismic earth load

STRENGTH REDUCTION FACTORS, Ø

Reinforced concrete:
For flexure ---------- Ø=0.90
For shear ---------- Ø=0.85

Concrete masonry:
For flexure ---------- Ø=0.80
For shear ---------- Ø=0.60

Foundations :

See "RETAINING WALL WITH SOUNDWALL" sheets.

SPECIAL DETAILS

RETAINING / SOUND WALL RW2

SOUNDWALL - MASONRY BLOCK WITH BARRIER ON RETAINING WALL

DETAILS NO. 2

STANDARD DRAWING

FILE NO. xs15-130-2e

APPROVED BY T SATTER (RESPONSIBLE TECHNICAL SPECIALIST) APPROVAL DATE 4-15-08

RELEASED BY ROBERTO LACALLE (RESPONSIBLE OFFICE CHIEF) RELEASE DATE 4-15-08

(1) Move PG arrow
(2) Revised barrier dimensions
(3) Added "RW2" LOL
(4) Change unit of measurement to lower case
(5) Revised Note

STATE OF CALIFORNIA DEPARTMENT OF TRANSPORTATION

DIVISION OF ENGINEERING SERVICES

BRIDGE NO. 27E0027
POST MILE 21.0

CU 04
EA 264061

DISREGARD PRINTS BEARING EARLIER REVISION DATES

REVISION DATES (PRELIMINARY STAGE ONLY) 06-10-09 09-22-09 10-22-09 01-14-10 03-08-10 03-15-10

SHEET 7 OF 11

DS OSD 2147A (ENGLISH STANDARD DRAWING "XS" BORDER REV. 01/11/08)

ORIGINAL SCALE IN INCHES FOR REDUCED PLANS 0 1 2 3

FILE => 27e-0027-rw2-q-swdt02.dgn

USERNAME => rtleonard DATE PLOTTED => 16-AUG-2010 TIME PLOTTED => 14:05

DIST	COUNTY	ROUTE	POST MILES TOTAL PROJECT	SHEET No	TOTAL SHEETS
04	Mrn	101	18.6/R22.3	518	542

REGISTERED CIVIL ENGINEER — DATE 03-08-10

PLANS APPROVAL DATE 8-9-10

REGISTERED PROFESSIONAL ENGINEER — John C. Moore — No. 61792 — Exp. 6-30-11 — CIVIL — STATE OF CALIFORNIA

The State of California or its officers or agents shall not be responsible for the accuracy or completeness of electronic copies of this plan sheet.

NOTE: This LOTB sheet was prepared in accordance with the Caltrans Soil & Rock Logging, Classification, and Presentation Manual (June 2007).

BENCH MARK

PRHV25 Elev. 49.5′

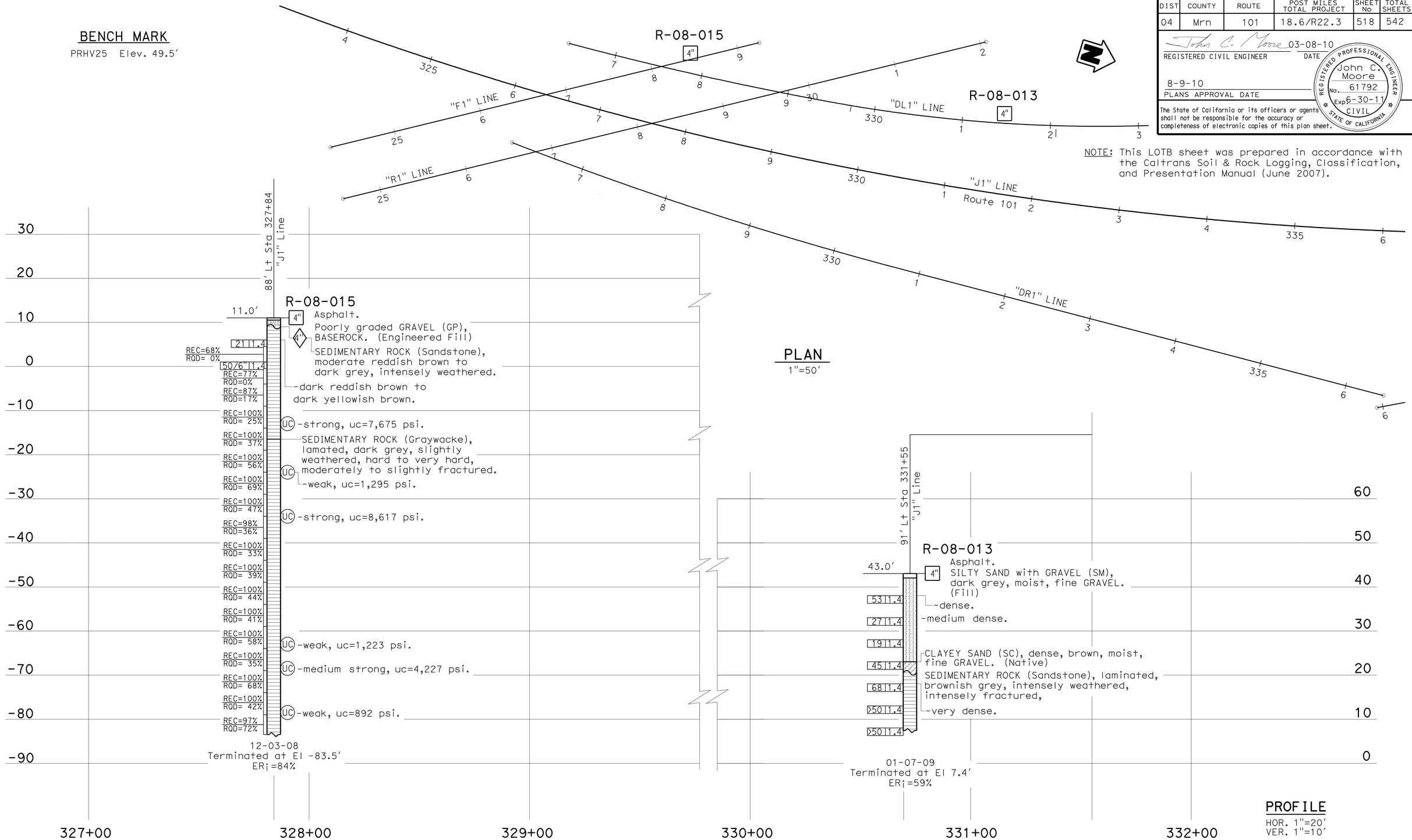

ENGINEERING SERVICES		GEOTECHNICAL SERVICES	STATE OF CALIFORNIA DEPARTMENT OF TRANSPORTATION	DIVISION OF ENGINEERING SERVICES OFFICE OF GEOTECHNICAL DESIGN BRANCH 8	BRIDGE NO. 27E0027 POST MILES 21.0	RETAINING / SOUND WALL RW2
FUNCTIONAL SUPERVISOR NAME: M. Momenzadeh	DRAWN BY: M. Reynolds CHECKED BY: C. Risden	FIELD INVESTIGATION BY: J. Moore				LOG OF TEST BORINGS 1 OF 4

OGS CIVIL LOG OF TEST BORINGS SHEET

ORIGINAL SCALE IN INCHES FOR REDUCED PLANS 0 1 2 3

CU 04
EA 264061

DISREGARD PRINTS BEARING EARLIER REVISION DATES 03-15-10

REVISION DATES

SHEET 8 OF 11

FILE => 27e-0027-rw2-z-ltb01.dgn

USERNAME => trlenard DATE PLOTTED => 16-AUG-2010 TIME PLOTTED => 14:03

REGISTERED CIVIL ENGINEER — DATE 03-08-10

PLANS APPROVAL DATE 8-9-10

REGISTERED PROFESSIONAL ENGINEER — John C. Moore — No. 61792 — Exp. 6-30-11 — CIVIL — STATE OF CALIFORNIA

The State of California or its officers or agents shall not be responsible for the accuracy or completeness of electronic copies of this plan sheet.

REFERENCE: CALTRANS SOIL & ROCK LOGGING, CLASSIFICATION, AND PRESENTATION MANUAL (JUNE 2007)

CEMENTATION

Description	Criteria
Weak	Crumbles or breaks with handling or little finger pressure.
Moderate	Crumbles or breaks with considerable finger pressure.
Strong	Will not crumble or break with finger pressure.

CONSISTENCY OF COHESIVE SOILS

Description	Unconfined Compressive Strength (tsf)	Pocket Penetrometer Measurement (tsf)	Torvane Measurement (tsf)	Field Approximation
Very Soft	< 0.25	< 0.25	< 0.12	Easily penetrated several inches by fist
Soft	0.25 to 0.50	0.25 to 0.50	0.12 to 0.25	Easily penetrated several inches by thumb
Medium Stiff	0.50 to 1.0	0.50 to 1.0	0.25 to 0.50	Penetrated several inches by thumb with moderate effort
Stiff	1 to 2	1 to 2	0.50 to 1.0	Readily indented by thumb but penetrated only with great effort
Very Stiff	2 to 4	2 to 4	1.0 to 2.0	Readily indented by thumbnail
Hard	> 4.0	> 4.0	> 2.0	Indented by thumbnail with difficulty

BOREHOLE IDENTIFICATION

Symbol	Hole Type	Description
Size	A	Auger Boring
Size	R P	Rotary drilled boring Rotary percussion boring (air)
Size	R	Rotary drilled diamond core
Size	HD HA	Hand driven (1-inch soil tube) Hand Auger
●	D	Dynamic Cone Penetration Boring
▲	CPT	Cone Penetration Test (ASTM D 5778-95)
⬚	O	Other

Note: Size in inches.

PLASTICITY OF FINE-GRAINED SOILS

Description	Criteria
Nonplastic	A 1/8-inch thread cannot be rolled at any water content.
Low	The thread can barely be rolled and the lump cannot be formed when drier than the plastic limit.
Medium	The thread is easy to roll and not much time is required to reach the plastic limit. The thread cannot be rerolled after reaching the plastic limit. The lump crumbles when drier than the plastic limit.
High	It takes considerable time rolling and kneading to reach the plastic limit. The thread can be rerolled several times after reaching the plastic limit. The lump can be formed without crumbling when drier than the plastic limit.

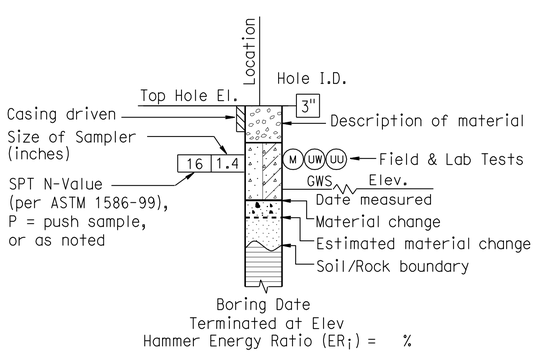

ROTARY BORING

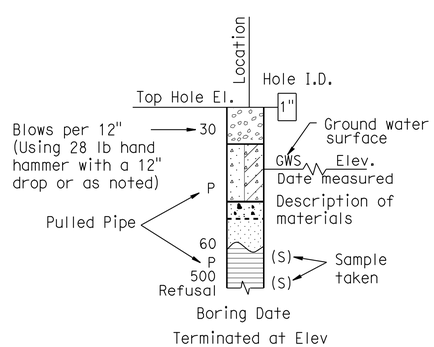

HAND BORING

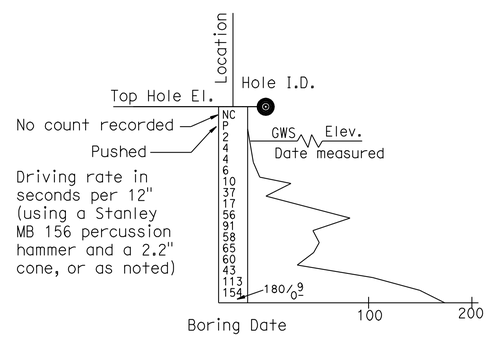

DYNAMIC CONE PENETRATION BORING

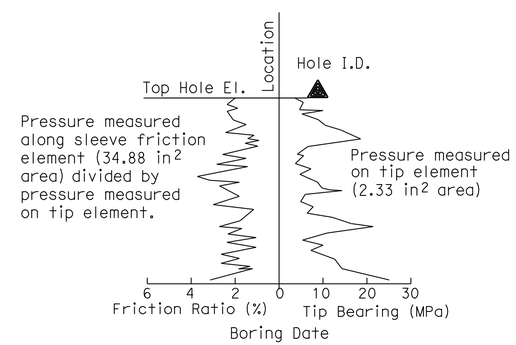

CONE PENETRATION TEST (CPT) SOUNDING

ENGINEERING SERVICES		GEOTECHNICAL SERVICES	STATE OF CALIFORNIA DEPARTMENT OF TRANSPORTATION	DIVISION OF ENGINEERING SERVICES OFFICE OF GEOTECHNICAL DESIGN BRANCH 8	BRIDGE NO. 27E0027 / POST MILE 21.0	SOIL LEGEND / LOG OF TEST BORINGS 2 OF 4
FUNCTIONAL SUPERVISOR	PREPARED BY M. Reynolds					
NAME: M. Momenzadeh	CHECKED BY C. Risden	J. Moore				

GS LOTB SOIL LEGEND

ORIGINAL SCALE IN INCHES FOR REDUCED PLANS 0 1 2 3

CU 04
EA 264061

DISREGARD PRINTS BEARING EARLIER REVISION DATES → 03-15-10

REVISION DATES — SHEET 9 OF 11

FILE => 27e-0027-rw2-z-ltb02.dgn

USERNAME => tlienard DATE PLOTTED => 16-AUG-2010 TIME PLOTTED => 14:03

REFERENCE: CALTRANS SOIL & ROCK LOGGING, CLASSIFICATION, AND PRESENTATION MANUAL (JUNE 2007)

DIST	COUNTY	ROUTE	POST MILES TOTAL PROJECT	SHEET No	TOTAL SHEETS
04	Mrn	101	18.6/R22.3	520	542

John C. Moore 03-08-10
REGISTERED CIVIL ENGINEER DATE

8-9-10
PLANS APPROVAL DATE

REGISTERED PROFESSIONAL ENGINEER John C. Moore No. 61792 Exp. 6-30-11 CIVIL STATE OF CALIFORNIA

The State of California or its officers or agents shall not be responsible for the accuracy or completeness of electronic copies of this plan sheet.

GROUP SYMBOLS AND NAMES

Graphic/Symbol	Group Names
GW	Well-graded GRAVEL Well-graded GRAVEL with SAND
GP	Poorly graded GRAVEL Poorly graded GRAVEL with SAND
GW-GM	Well-graded GRAVEL with SILT Well-graded GRAVEL with SILT and SAND
GW-GC	Well-graded GRAVEL with CLAY (or SILTY CLAY) Well-graded GRAVEL with CLAY and SAND (or SILTY CLAY and SAND)
GP-GM	Poorly graded GRAVEL with SILT Poorly graded GRAVEL with SILT and SAND
GP-GC	Poorly graded GRAVEL with CLAY (or SILTY CLAY) Poorly graded GRAVEL with CLAY and SAND (or SILTY CLAY and SAND)
GM	SILTY GRAVEL SILTY GRAVEL with SAND
GC	CLAYEY GRAVEL CLAYEY GRAVEL with SAND
GC-GM	SILTY, CLAYEY GRAVEL SILTY, CLAYEY GRAVEL with SAND
SW	Well-graded SAND Well-graded SAND with GRAVEL
SP	Poorly graded SAND Poorly graded SAND with GRAVEL
SW-SM	Well-graded SAND with SILT Well-graded SAND with SILT and GRAVEL
SW-SC	Well-graded SAND with CLAY (or SILTY CLAY) Well-graded SAND with CLAY and GRAVEL (or SILTY CLAY and GRAVEL)
SP-SM	Poorly graded SAND with SILT Poorly graded SAND with SILT and GRAVEL
SP-SC	Poorly graded SAND with CLAY (or SILTY CLAY) Poorly graded SAND with CLAY and GRAVEL (or SILTY CLAY and GRAVEL)
SM	SILTY SAND SILTY SAND with GRAVEL
SC	CLAYEY SAND CLAYEY SAND with GRAVEL
SC-SM	SILTY, CLAYEY SAND SILTY, CLAYEY SAND with GRAVEL
PT	PEAT
	COBBLES COBBLES and BOULDERS BOULDERS

Graphic/Symbol	Group Names
CL	Lean CLAY Lean CLAY with SAND Lean CLAY with GRAVEL SANDY lean CLAY SANDY lean CLAY with GRAVEL GRAVELLY lean CLAY GRAVELLY lean CLAY with SAND
CL-ML	SILTY CLAY SILTY CLAY with SAND SILTY CLAY with GRAVEL SANDY SILTY CLAY SANDY SILTY CLAY with GRAVEL GRAVELLY SILTY CLAY GRAVELLY SILTY CLAY with SAND
ML	SILT SILT with SAND SILT with GRAVEL SANDY SILT SANDY SILT with GRAVEL GRAVELLY SILT GRAVELLY SILT with SAND
OL	ORGANIC lean CLAY ORGANIC lean CLAY with SAND ORGANIC lean CLAY with GRAVEL SANDY ORGANIC lean CLAY SANDY ORGANIC lean CLAY with GRAVEL GRAVELLY ORGANIC lean CLAY GRAVELLY ORGANIC lean CLAY with SAND
OL	ORGANIC SILT ORGANIC SILT with SAND ORGANIC SILT with GRAVEL SANDY ORGANIC SILT SANDY ORGANIC SILT with GRAVEL GRAVELLY ORGANIC SILT GRAVELLY ORGANIC SILT with SAND
CH	Fat CLAY Fat CLAY with SAND Fat CLAY with GRAVEL SANDY fat CLAY SANDY fat CLAY with GRAVEL GRAVELLY fat CLAY GRAVELLY fat CLAY with SAND
MH	Elastic SILT Elastic SILT with SAND Elastic SILT with GRAVEL SANDY elastic SILT SANDY elastic SILT with GRAVEL GRAVELLY elastic SILT GRAVELLY elastic SILT with SAND
OH	ORGANIC fat CLAY ORGANIC fat CLAY with SAND ORGANIC fat CLAY with GRAVEL SANDY ORGANIC fat CLAY SANDY ORGANIC fat CLAY with GRAVEL GRAVELLY ORGANIC fat CLAY GRAVELLY ORGANIC fat CLAY with SAND
OH	ORGANIC elastic SILT ORGANIC elastic SILT with SAND ORGANIC elastic SILT with GRAVEL SANDY ORGANIC elastic SILT SANDY ORGANIC elastic SILT with GRAVEL GRAVELLY ORGANIC elastic SILT GRAVELLY ORGANIC elastic SILT with SAND
OL/OH	ORGANIC SOIL ORGANIC SOIL with SAND ORGANIC SOIL with GRAVEL SANDY ORGANIC SOIL SANDY ORGANIC SOIL with GRAVEL GRAVELLY ORGANIC SOIL GRAVELLY ORGANIC SOIL with SAND

FIELD AND LABORATORY TESTING

- (C) Consolidation (ASTM D 2435)
- (CL) Collapse Potential (ASTM D 5333)
- (CP) Compaction Curve (CTM 216)
- (CR) Corrosivity Testing (CTM 643, CTM 422, CTM 417)
- (CU) Consolidated Undrained Triaxial (ASTM D 4767)
- (DS) Direct Shear (ASTM D 3080)
- (EI) Expansion Index (ASTM D 4829)
- (M) Moisture Content (ASTM D 2216)
- (OC) Organic Content-% (ASTM D 2974)
- (P) Permeability (CTM 220)
- (PA) Particle Size Analysis (ASTM D 422)
- (PI) Plasticity Index (AASHTO T 90) Liquid Limit (AASHTO T 89)
- (PL) Point Load Index (ASTM D 5731)
- (PM) Pressure Meter
- (PP) Pocket Penetrometer
- (R) R-Value (CTM 301)
- (SE) Sand Equivalent (CTM 217)
- (SG) Specific Gravity (AASHTO T 100)
- (SL) Shrinkage Limit (ASTM D 427)
- (SW) Swell Potential (ASTM D 4546)
- (TV) Pocket Torvane
- (UC) Unconfined Compression-Soil (ASTM D 2166) Unconfined Compression-Rock (ASTM D 2938)
- (UU) Unconsolidated Undrained Triaxial (ASTM D 2850)
- (UW) Unit Weight (ASTM D 4767)
- (VS) Vane Shear (AASHTO T 223)

APPARENT DENSITY OF COHESIONLESS SOILS

Description	SPT N_{60} (Blows / 12 inches)
Very loose	0 - 4
Loose	5 - 10
Medium Dense	11 - 30
Dense	31 - 50
Very Dense	> 50

MOISTURE

Description	Criteria
Dry	Absence of moisture, dusty, dry to the touch
Moist	Damp but no visible water
Wet	Visible free water, usually soil is below water table

PERCENT OR PROPORTION OF SOILS

Description	Criteria
Trace	Particles are present but estimated to be less than 5%
Few	5 to 10%
Little	15 to 25%
Some	30 to 45%
Mostly	50 to 100%

PARTICLE SIZE

Description		Size
Boulder		> 12"
Cobble		3" to 12"
Gravel	Coarse	3/4" to 3"
	Fine	No. 4 to 3/4"
Sand	Coarse	No. 10 to No. 4
	Medium	No. 40 to No. 10
	Fine	No. 200 to No. 40

ENGINEERING SERVICES		GEOTECHNICAL SERVICES
FUNCTIONAL SUPERVISOR	PREPARED BY M. Reynolds	
NAME: M. Momenzadeh	CHECKED BY C. Risden	J. Moore

STATE OF CALIFORNIA DEPARTMENT OF TRANSPORTATION

DIVISION OF ENGINEERING SERVICES OFFICE OF GEOTECHNICAL DESIGN BRANCH 8

BRIDGE NO. 27E0027
POST MILE 21.0

SOIL LEGEND
LOG OF TEST BORINGS 3 OF 4

GS LOTB SOIL LEGEND

ORIGINAL SCALE IN INCHES FOR REDUCED PLANS 0 1 2 3

CU 04
EA 264061

DISREGARD PRINTS BEARING EARLIER REVISION DATES 03-15-10

REVISION DATES

SHEET 10 OF 11

FILE => 27e-0027-rw2-z-1tb03.dgn

USERNAME => trlenard DATE PLOTTED => 16-AUG-2010 TIME PLOTTED => 14:03

REFERENCE: CALTRANS SOIL & ROCK LOGGING, CLASSIFICATION, AND PRESENTATION MANUAL (JUNE 2007)

DIST	COUNTY	ROUTE	POST MILES TOTAL PROJECT	SHEET No	TOTAL SHEETS
04	Mrn	101	18.6/R22.3	521	542

REGISTERED CIVIL ENGINEER — DATE 03-08-10

8-9-10
PLANS APPROVAL DATE

REGISTERED PROFESSIONAL ENGINEER — John C. Moore — No. 61792 — Exp. 6-30-11 — CIVIL — STATE OF CALIFORNIA

The State of California or its officers or agents shall not be responsible for the accuracy or completeness of electronic copies of this plan sheet.

PERCENT CORE RECOVERY (REC) & ROCK QUALITY DESIGNATION (RQD)

$$REC = \frac{\sum \text{Length of the recovered core pieces (inches)}}{\text{Total length of core run (inches)}} \times 100\%$$

$$RQD = \frac{\sum \text{Length of intact core pieces} \geq 4''}{\text{Total length of core run (inches)}} \times 100\%$$

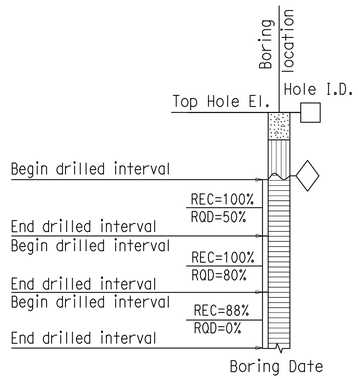

RELATIVE STRENGTH OF INTACT ROCK

Term	Uniaxial Compressive Strength (PSI)
Extremely Strong	> 30,000
Very Strong	14,500 - 30,000
Strong	7,000 - 14,500
Medium Strong	3,500 - 7,000
Weak	700 - 3,500
Very Weak	150 - 700
Extremely Weak	< 150

BEDDING SPACING

Description	Thickness / Spacing
Massive	Greater than 10 ft
Very thickly bedded	3 to 10 ft
Thickly bedded	1 to 3 ft
Moderately bedded	3-5/8" to 1 ft
Thinly bedded	1-1/4" to 3-5/8"
Very thinly bedded	3/8" to 1-1/4"
Laminated	Less than 3/8"

LEGEND OF ROCK MATERIALS

- IGNEOUS ROCK
- SEDIMENTARY ROCK
- METAMORPHIC ROCK

ROCK HARDNESS

Description	Criteria
Extremely Hard	Specimen cannot be scratched with a pocket knife or sharp pick; can only be chipped with repeated heavy hammer blows.
Very Hard	Specimen cannot be scratched with a pocket knife or sharp pick. Breaks with repeated heavy hammer blows.
Hard	Specimen can be scratched with a pocket knife or sharp pick with difficulty (heavy pressure). Heavy hammer blows required to break specimen.
Moderately Hard	Specimen can be scratched with pocket knife or sharp pick with light or moderate pressure. Core breaks with moderate hammer pressure.
Moderately Soft	Specimen can be grooved 1/6" deep with a pocket knife or sharp pick with moderate or heavy pressure. Breaks with light hammer blow or heavy manual pressure.
Soft	Specimen can be grooved or gouged easily by a pocket knife or sharp pick with light pressure, can be scratched with fingernail. Breaks with light to moderate manual pressure.
Very Soft	Specimen can be readily indented, grooved or gouged with fingernail, or carved with a pocket knife. Breaks with light manual pressure.

FRACTURE DENSITY

Description	Observed Fracture Density
Unfractured	No fractures.
Very slightly fractured	Lengths greater than 3 feet.
Slightly fractured	Lengths from 1 to 3 feet with few lengths less than 1 foot or greater than 3 feet.
Moderately fractured	Lengths mostly in 4" to 1 foot range with most lengths about 8"
Intensely fractured	Lengths average from 1 to 4" with scattered fragmented intervals with lengths less than 4"
Very intensely fractured	Mostly chips and fragments with a few scattered short core lengths.

Combination descriptors (such as "Very intensely to intensely fractured") are used where equal distribution of both fracture density characteristics is present over a significant interval or exposure, or where characteristics are "in between" the descriptor definitions. Only two adjacent descriptors may be combined.

WEATHERING DESCRIPTORS FOR INTACT ROCK

Description	Diagnostic features					General Characteristics
	Chemical Weathering-Discoloration and/or oxidation		Mechanical Weathering-Grain boundary conditions (disaggregation) primarily for granitics and some coarse-grained sediments	Texture and Solutioning		
	Body of Rock	Fracture Surfaces		Texture	Solutioning	
Fresh	No discoloration, not oxidized.	No discoloration or oxidation.	No separation, intact (tight).	No change.	No solutioning.	Hammer rings when crystalline rocks are struck.
Slightly Weathered	Discoloration or oxidation is limited to surface of, or short distance from, fractures; some feldspar crystals are dull.	Minor to complete discoloration or oxidation of most surfaces.	No visible separation, intact (tight).	Preserved.	Minor leaching of some soluble minerals may be noted.	Hammer rings when crystalline rocks are struck. Body of rock not weakened.
Moderately Weathered	Discoloration or oxidation extends from fractures usually throughout; Fe-Mg minerals are "rusty," feldspar crystals are "cloudy."	All fracture surfaces are discolored or oxidized.	Partial separation of boundaries visible.	Generally preserved.	Soluble minerals may be mostly leached.	Hammer does not ring when rock is struck. Body of rock is slightly weakened.
Intensely Weathered	Discoloration or oxidation throughout; all feldspars and Fe-Mg minerals are altered to clay to some extent; or chemical alteration produces in-situ disaggregation, see grain boundary conditions.	All fracture surfaces are discolored or oxidized, surfaces friable.	Partial separation, rock is friable; in semiarid conditions granitics are disaggregated.	Texture altered by chemical disintegration (hydration, argillation).	Leaching of soluble minerals may be complete.	Dull sound when struck with hammer, usually can be broken with moderate to heavy manual pressure or by light hammer blow without reference to planes of weakness such as incipient or hairline fractures, or veinlets. Rock is significantly weakened.
Decomposed	Discolored or oxidized throughout, but resistant minerals such as quartz may be unaltered; all feldspars and Fe-Mg minerals are completely altered to clay.		Complete separation of grain boundaries (disaggregated).	Resembles a soil, partial or complete remnant rock structure may be preserved; leaching of soluble minerals usually complete.		Can be granulated by hand. Resistant minerals such as quartz may be present as "stringers" or "dikes."

Combination descriptors (such as "slightly weathered to fresh") are permissible where equal distribution of both weathering characteristics is present over significant intervals or where characteristics present are "in between" the diagnostic feature. However, combination descriptors should not be used where significant, identifiable zones can be delineated. Only two adjacent descriptors may be combined. "Very intensely weathered" is the combination descriptor for "intensely weathered to decomposed."

ENGINEERING SERVICES		GEOTECHNICAL SERVICES
FUNCTIONAL SUPERVISOR	PREPARED BY M. Reynolds	FIELD INVESTIGATION BY:
NAME: M. Momenzadeh	CHECKED BY C. Risden	J. Moore

STATE OF CALIFORNIA
DEPARTMENT OF TRANSPORTATION

DIVISION OF ENGINEERING SERVICES
OFFICE OF GEOTECHNICAL
DESIGN BRANCH 8

BRIDGE NO. 27E0027
POST MILE 21.0

ROCK LEGEND
LOG OF TEST BORINGS 4 OF 4

GS LOTB ROCK LEGEND

ORIGINAL SCALE IN INCHES FOR REDUCED PLANS 0 1 2 3

CU 04
EA 264061

DISREGARD PRINTS BEARING EARLIER REVISION DATES → 03-15-10

REVISION DATES

SHEET 11 OF 11

FILE => 27e-0027-rw2-z-ltb04.dgn

USERNAME => trlenard DATE PLOTTED => 16-AUG-2010 TIME PLOTTED => 14:03

DIST	COUNTY	ROUTE	POST MILES TOTAL PROJECT	SHEET No	TOTAL SHEETS
04	Mrn	101	18.6/R22.3	522	542

REGISTERED CIVIL ENGINEER — DATE 03-08-10

8-9-10
PLANS APPROVAL DATE

REGISTERED PROFESSIONAL ENGINEER — Keng Mun Low — No. C49361 — Exp. 09-30-10 — CIVIL — STATE OF CALIFORNIA

The State of California or its officers or agents shall not be responsible for the accuracy or completeness of electronic copies of this plan sheet.

NOTES:

1. Reconstruct and new slope paving, portion.
2. Remove existing barrier and overhang.
3. Concrete Barrier Type 736
4. Temporary Railing (Type K), see "ROAD PLANS."
5. Match existing cross slope.
6. Closure pour, 2′-3¾″± and varies. See "FALSEWORK RELEASE" note in "INDEX TO PLANS" sheet.
7. Remove existing MBGR, see "ROAD PLANS."
8. 2 - 2″ Dia conduits for fiber optic lines, see "ELECTRICAL PLANS."

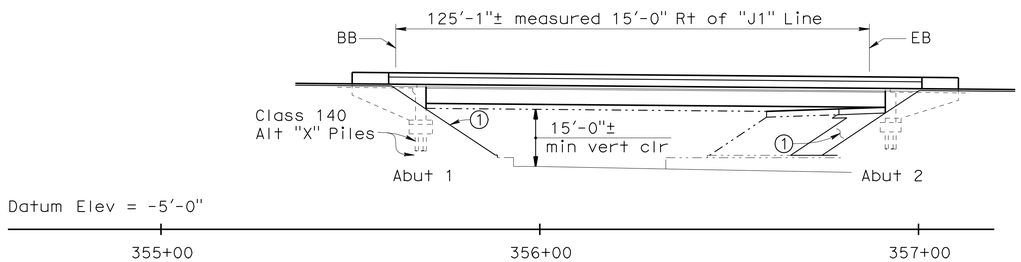

MIRRORED ELEVATION

1 " = 20′-0″

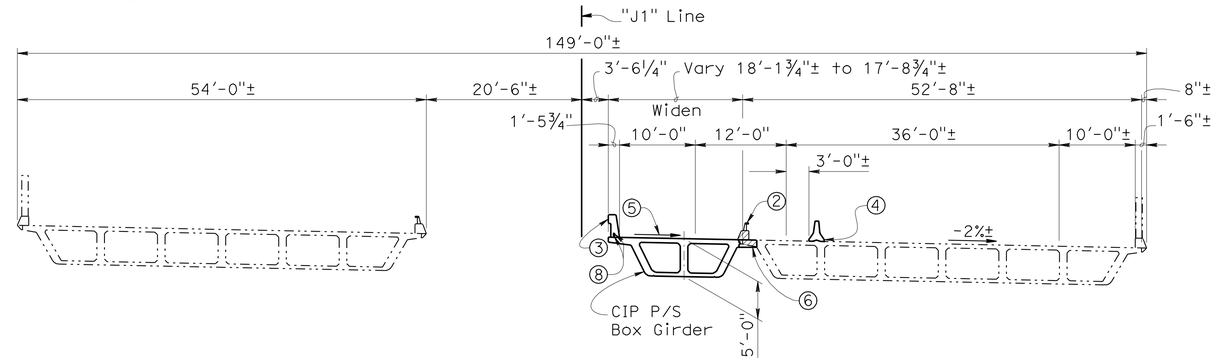

TYPICAL SECTION

1 " = 10′-0″

LEGEND:

- Indicates existing structure
- Indicates new construction
- Indicates Point of Minimum Vertical Clearance
- Indicates removal of existing concrete and bridge railing

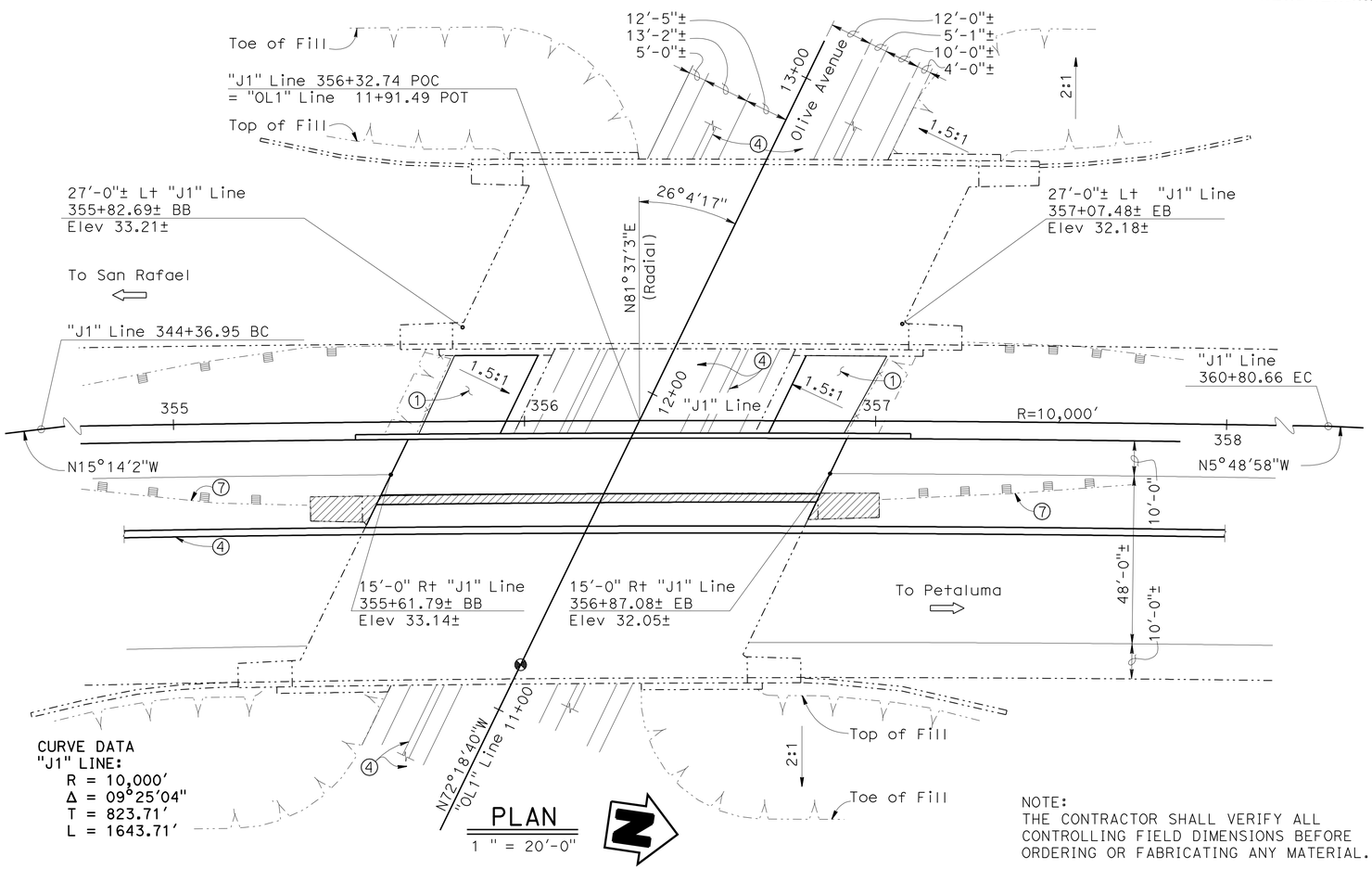

CURVE DATA
"J1" LINE:
R = 10,000′
Δ = 09°25′04″
T = 823.71′
L = 1643.71′

PLAN

1 " = 20′-0″

NOTE:
THE CONTRACTOR SHALL VERIFY ALL CONTROLLING FIELD DIMENSIONS BEFORE ORDERING OR FABRICATING ANY MATERIAL.

QUANTITIES

SALVAGE METAL BRIDGE RAILING	163	LF
BRIDGE REMOVAL (PORTION), LOCATION C	LUMP	SUM
STRUCTURE EXCAVATION (BRIDGE)	175	CY
STRUCTURE BACKFILL (BRIDGE)	117	CY
FURNISH PILING (CLASS 140)(ALTERNATIVE X)	813	LF
DRIVE PILE (CLASS 140)(ALTERNATIVE X)	12	EA
PRESTRESSING CAST-IN-PLACE CONCRETE	LUMP	SUM
STRUCTURAL CONCRETE, BRIDGE FOOTING	29	CY
STRUCTURAL CONCRETE, BRIDGE	201	CY
DRILL AND BOND DOWEL	21	LF
JACKING SUPERSTRUCTURE	LUMP	SUM
BAR REINFORCING STEEL (BRIDGE)	63,000	LB
8″ PERFORATED STEEL PIPE UNDERDRAIN (.064″ THICK)	48	LF
8″ CORRUGATED STEEL PIPE DOWNDRAIN (.064″ THICK)	53	LF
SLOPE PAVING (CONCRETE)(CONCRETE PAVER)	2,100	SQFT
CONCRETE BARRIER (TYPE 736)	163	LF

ALL DIMENSIONS ARE IN FEET UNLESS OTHERWISE SHOWN

Brian Mori
DESIGN ENGINEER

	BY	CHECKED
DESIGN	R. Amir	A. Menke
DETAILS	T. Kusumi	R. Amir
QUANTITIES	T. Kusumi	M. Beall

LOAD & RESISTANCE FACTOR DESIGN — LIVE LOADING: "HL93 W/`LOW-BOY' AND PERMIT DESIGN VEHICLE"

	BY	CHECKED
LAYOUT	K. M. Low	R. Amir
SPECIFICATIONS	Todd Geerts	PLANS AND SPECS COMPARED Todd Geerts

STATE OF CALIFORNIA
DEPARTMENT OF TRANSPORTATION

DIVISION OF ENGINEERING SERVICES
STRUCTURE DESIGN
DESIGN BRANCH 8

BRIDGE NO. 27-0092R
POST MILE R21.47

OLIVE AVENUE UC (WIDEN)
GENERAL PLAN

ORIGINAL SCALE IN INCHES FOR REDUCED PLANS 0 1 2 3

CU 04
EA 264061

DISREGARD PRINTS BEARING EARLIER REVISION DATES

REVISION DATES: 01-14-10 02-12-10 02-22-10 02-26-10 03-08-10 03-11-10 03-15-10 10-28-09 12-15-09

SHEET 1 OF 21

USERNAME => trlenard DATE PLOTTED => 16-AUG-2010 TIME PLOTTED => 13:29

STRUCTURES DESIGN GENERAL PLAN SHEET (ENGLISH) (REV.07-24-06)

FILE => 27-0092r-a-gp01.dgn

DIST	COUNTY	ROUTE	POST MILES TOTAL PROJECT	SHEET No	TOTAL SHEETS
04	Mrn	101	18.6/R22.3	523	542

REGISTERED CIVIL ENGINEER 03-08-10 DATE

8-9-10
PLANS APPROVAL DATE

REGISTERED PROFESSIONAL ENGINEER Keng Mun Low No. C49361 Exp. 09-30-10 CIVIL STATE OF CALIFORNIA

The State of California or its officers or agents shall not be responsible for the accuracy or completeness of electronic copies of this plan sheet.

INDEX TO PLANS

SHEET NO.	TITLE
1	GENERAL PLAN
2	INDEX TO PLANS
3	FOUNDATION PLAN
4	ABUTMENT 1 LAYOUT
5	ABUTMENT 2 LAYOUT
6	ABUTMENT DETAILS NO. 1
7	ABUTMENT DETAILS NO. 2
8	ABUTMENT DETAILS NO. 3
9	ABUTMENT DETAILS NO. 4
10	TYPICAL SECTION
11	GIRDER LAYOUT
12	LONGITUDINAL SECTION
13	ADDITIONAL GIRDER REINFORCEMENT
14	RIGHT BRIDGE CONSTRUCTION SEQUENCE
15	RIGHT BRIDGE SLOPE PAVING DETAILS NO. 1
16	RIGHT BRIDGE SLOPE PAVING DETAILS NO. 2
17	LOG OF TEST BORINGS 1 OF 5
18	LOG OF TEST BORINGS 2 OF 5
19	LOG OF TEST BORINGS 3 OF 5
20	LOG OF TEST BORINGS 4 OF 5
21	LOG OF TEST BORINGS 5 OF 5

STANDARD PLANS DATED MAY 2006

PLAN NO.	PLAN TITLE
A10A	ACRONYMS AND ABBREVIATIONS (SHEET 1 OF 2)
A10B	ACRONYMS AND ABBREVIATIONS (SHEET 2 OF 2)
A10C	SYMBOLS (SHEET 1 OF 2)
A10D	SYMBOLS (SHEET 2 OF 2)
A62C	LIMITS OF PAYMENT FOR EXCAVATION AND BACKFILL BRIDGE
B0-1	BRIDGE DETAILS
B0-3	BRIDGE DETAILS
B0-5	BRIDGE DETAILS
B0-13	BRIDGE DETAILS
B2-5	PILE DETAILS CLASS 90 AND CLASS 140
B7-1	BOX GIRDER DETAILS
B8-5	CAST-IN-PLACE PRESTRESSED GIRDER DETAILS
B11-56	CONCRETE BARRIER TYPE 736

STANDARD PLAN SHEET NO.

DETAIL NO.

GENERAL NOTES
LOAD AND RESISTANCE FACTOR DESIGN

DESIGN: AASHTO LRFD Bridge Design Specifications, 4th edition and the Caltrans Amendments, preface dated Dec 2009

SEISMIC DESIGN: CALTRANS SEISMIC DESIGN CRITERIA (SDC) Version 1.4 June 2006

DEAD LOAD: Includes 35 psf for future wearing surface

LIVE LOADING: "HL93 and permit design load"

SEISMIC LOADING: SDC ARS Curve for Soil Profile D (M = 7.0±0.25) (Peak Rock Acceleration = 0.3 g)

REINFORCED CONCRETE: f_y = 60 ksi, f'_c = 3.6 ksi, n = 8

PRESTRESSED CONCRETE: See "Prestressing Notes" on "GIRDER LAYOUT" sheet

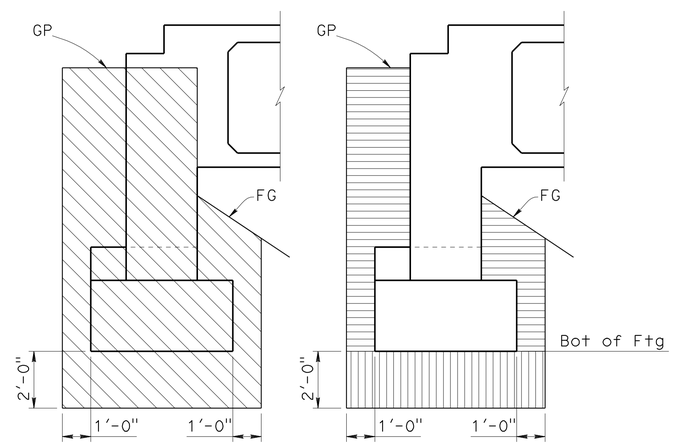

EXCAVATION BACKFILL

Structure Excavation
Structure Backfill
¾" inch Max Class 2 Aggregate Base compacted to 95% relative compaction

STRUCTURE EXCAVATION / BACKFILL LIMITS OF PAYMENT

No scale

FALSEWORK RELEASE

Alternative 1:

Falsework shall be released as soon as permitted by the specifications. Deck closure pour shall not be placed sooner than 60 days after the falsework has been released.

Alternative 2:

Falsework shall not be released less than 28 days after the last concrete has been placed. Deck closure pour shall not be placed sooner than 14 days after the falsework has been released.

When Falsework Release Alternative 2 is used, camber values are 0.75 times those shown.

PILE DATA TABLE

Location	Pile Type	Nominal Resistance (kips)		Design Tip Elevations (ft)	Specified Tip Elevation (ft)	Nominal Driving Resistance (kips)
		Compression	Tension			
Abut 1	Class 140 Alt "X"	280	0	-47 (a) -11 (b)	-47	280
Abut 2	Class 140 Alt "X"	280	0	-47 (a) -27 (b)	-47	280

Note:
1. Design tip elevations for Abutments are controlled by:
   (a) Compression
   (b) Settlement

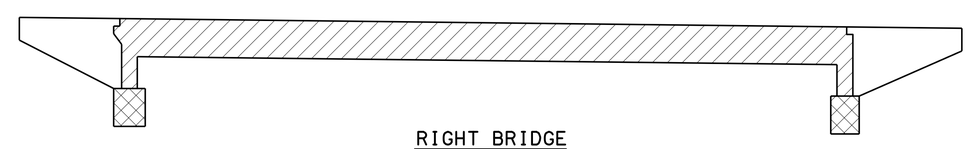

RIGHT BRIDGE

Structural Concrete, Bridge (6500 psi)
Structural Concrete, Bridge Footing
Structural Concrete, Bridge

CONCRETE STRENGTH AND TYPE LIMITS

No scale

NOTE:
THE CONTRACTOR SHALL VERIFY ALL CONTROLLING FIELD DIMENSIONS BEFORE ORDERING OR FABRICATING ANY MATERIAL.

	BY	CHECKED
DESIGN	R. Amir	A. Menke
DETAILS	T. Kusumi/C. Cancino	R. Amir
QUANTITIES	T. Kusumi	M. Beall

STATE OF CALIFORNIA DEPARTMENT OF TRANSPORTATION

DIVISION OF ENGINEERING SERVICES STRUCTURE DESIGN DESIGN BRANCH 8

BRIDGE NO. 27-0092R
POST MILE R21.47

OLIVE AVENUE UC (WIDEN)
INDEX TO PLANS

STRUCTURES DESIGN DETAIL SHEET (ENGLISH) (REV. 10/25/05)

ORIGINAL SCALE IN INCHES FOR REDUCED PLANS 0 1 2 3

CU 04
EA 264061

DISREGARD PRINTS BEARING EARLIER REVISION DATES

REVISION DATES: 03-03-10 03-11-10 03-15-10 10-28-09 11-12-09 11-30-09 01-14-10 01-18-10 02-23-10

SHEET 2 OF 21

FILE => 27-0092r-a-itp.dgn

USERNAME => trlenord DATE PLOTTED => 16-AUG-2010 TIME PLOTTED => 13:29

DIST	COUNTY	ROUTE	POST MILES TOTAL PROJECT	SHEET No	TOTAL SHEETS
04	Mrn	101	18.6/R22.3	524	542

REGISTERED CIVIL ENGINEER 03-08-10 DATE

8-9-10
PLANS APPROVAL DATE

REGISTERED PROFESSIONAL ENGINEER Keng Mun Low No. C49361 Exp. 09-30-10 CIVIL STATE OF CALIFORNIA

The State of California or its officers or agents shall not be responsible for the accuracy or completeness of electronic copies of this plan sheet.

CURVE DATA

No.	R	Δ	T	L
Ⓐ	10000.00	9°25'04"	823.71	1643.71

Notes:

1. Elec Line, Fiber Optic Line, Tele Line, Water Line, Gas Line, Sewer Line Per Dist. Map
2. All Dia. of Tree on construction class

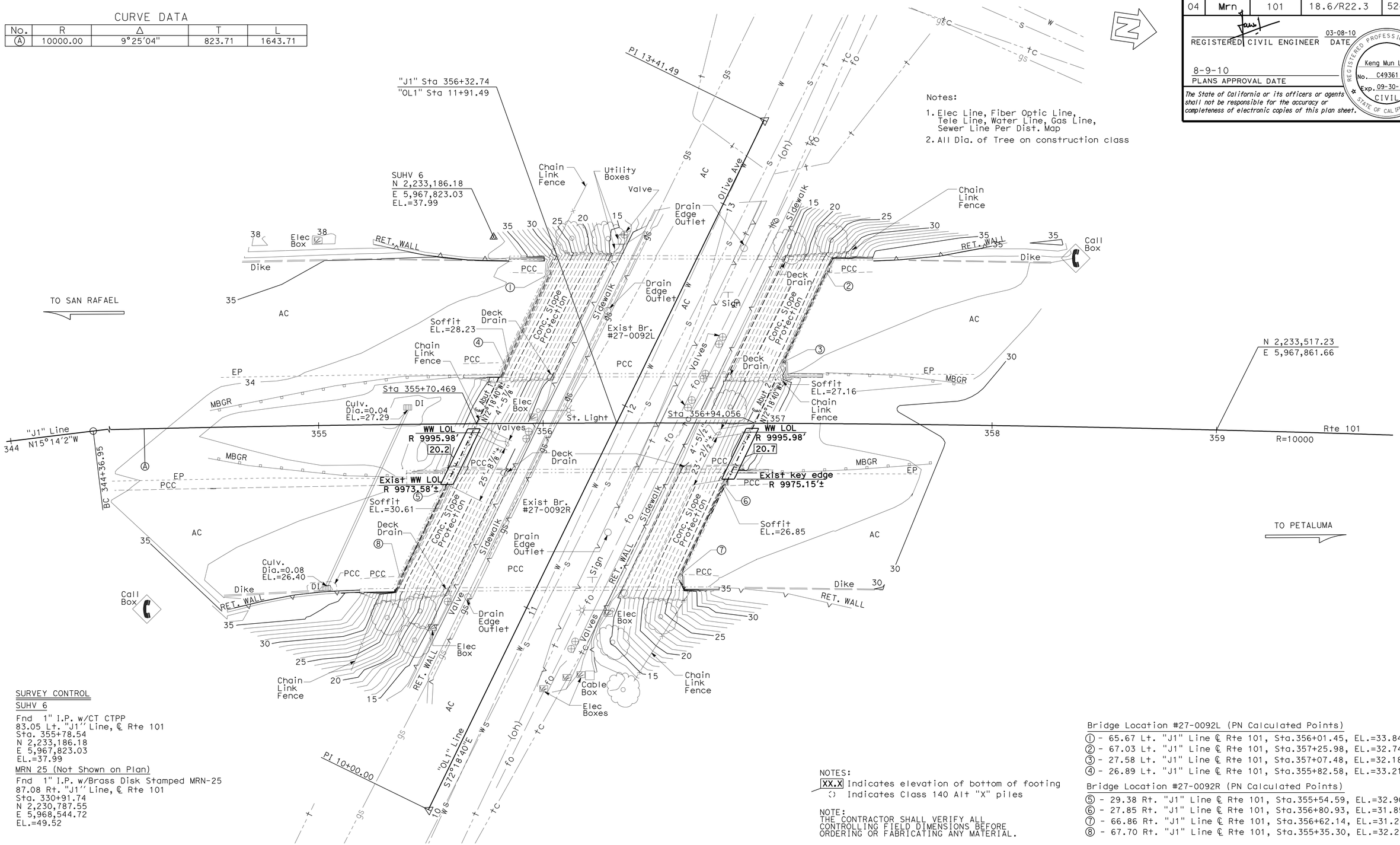

SURVEY CONTROL

SUHV 6

Fnd 1" I.P. w/CT CTPP
83.05 Lt. "J1" Line, ℄ Rte 101
Sta. 355+78.54
N 2,233,186.18
E 5,967,823.03
EL.=37.99

MRN 25 (Not Shown on Plan)

Fnd 1" I.P. w/Brass Disk Stamped MRN-25
87.08 Rt. "J1" Line, ℄ Rte 101
Sta. 330+91.74
N 2,230,787.55
E 5,968,544.72
EL.=49.52

NOTES:

XX.X Indicates elevation of bottom of footing
() Indicates Class 140 Alt "X" piles

NOTE:
THE CONTRACTOR SHALL VERIFY ALL CONTROLLING FIELD DIMENSIONS BEFORE ORDERING OR FABRICATING ANY MATERIAL.

Bridge Location #27-0092L (PN Calculated Points)

① - 65.67 Lt. "J1" Line ℄ Rte 101, Sta.356+01.45, EL.=33.84±
② - 67.03 Lt. "J1" Line ℄ Rte 101, Sta.357+25.98, EL.=32.74±
③ - 27.58 Lt. "J1" Line ℄ Rte 101, Sta.357+07.48, EL.=32.18±
④ - 26.89 Lt. "J1" Line ℄ Rte 101, Sta.355+82.58, EL.=33.21±

Bridge Location #27-0092R (PN Calculated Points)

⑤ - 29.38 Rt. "J1" Line ℄ Rte 101, Sta.355+54.59, EL.=32.90±
⑥ - 27.85 Rt. "J1" Line ℄ Rte 101, Sta.356+80.93, EL.=31.85±
⑦ - 66.86 Rt. "J1" Line ℄ Rte 101, Sta.356+62.14, EL.=31.24±
⑧ - 67.70 Rt. "J1" Line ℄ Rte 101, Sta.355+35.30, EL.=32.27±

PRELIMINARY INVESTIGATION SECTION

SCALE	VERT.DATUM NAVD 88	PHOTOGRAMMETRY AS OF: X		
1"=20'	HORZ.DATUM NAD 83 (1991.35)	SURVEYED BY District	CHECKED	BY Tom Gillet 11/2008
ALIGNMENT TIES Dist. Traverse Sheet		DRAFTED BY Sharon Zheng 11/2008	CHECKED	BY T.Zolnikova 11/2008

	BY	CHECKED
DESIGN	R. Amir	A. Menke
DETAILS	T. Kusumi	R. Amir
QUANTITIES	T. Kusumi	M. Beall

STATE OF CALIFORNIA
DEPARTMENT OF TRANSPORTATION

DIVISION OF ENGINEERING SERVICES
STRUCTURE DESIGN
DESIGN BRANCH 8

BRIDGE NO. 27-0092R/L
POST MILE 21.47

OLIVE AVE UC BRIDGE (WIDEN)
FOUNDATION PLAN

STRUCTURES FOUNDATION PLAN SHEET (ENGLISH) (REV. 10/25/05)

ORIGINAL SCALE IN INCHES FOR REDUCED PLANS 0 1 2 3

CU 04
EA 264061

DISREGARD PRINTS BEARING EARLIER REVISION DATES

REVISION DATES: 12/18/08 01/13/09 02/02/09 05/05/09 06/01/09 10/26/09 03-15-10

SHEET 3 OF 21

FILE => 27-0092r-e-fp101.dgn

USERNAME => friehard DATE PLOTTED => 16-AUG-2010 TIME PLOTTED => 13:23

DIST	COUNTY	ROUTE	POST MILES TOTAL PROJECT	SHEET No	TOTAL SHEETS
04	Mrn	101	18.6/R22.3	525	542

REGISTERED CIVIL ENGINEER 03-08-10 DATE

8-9-10
PLANS APPROVAL DATE

REGISTERED PROFESSIONAL ENGINEER Keng Mun Low No. C49361 Exp. 09-30-10 CIVIL STATE OF CALIFORNIA

The State of California or its officers or agents shall not be responsible for the accuracy or completeness of electronic copies of this plan sheet.

LEGENDS:
- Indicates existing Class 140 piles
- Indicates new Class 140 Alt "X" piles
- Indicates existing structure
- Indicates new construction
- Indicates bearing pad
- Indicates limits of remove Exist Conc and Reinf to depth of 1'-0"
- Indicates limits of remove Exist Conc and Reinf to depth of 3'-0"

NOTES:
1. Bottom of prestress blockout shall be located above top surface of bottom slab and shall be located within (2'-6") abutment stem width.
2. Slope paving not shown.
3. For "SECTION B-B" and "SECTION E-E", see "ABUTMENT DETAILS NO. 2" sheet.
4. For "SECTION X-X", see "ABUTMENT DETAILS NO. 4" sheet.
5. For abutment and wingwall corner details, see "CORNER DETAIL FOR SKEW OVER 20°" (B0-1)
6. Place key after stressing is completed.
7. Extend Abutment horizontal reinforcement into abutment closure pour and lap-splice to closure pour reinforcement.
8. Backfill front and back of Abut after stressing is completed. Wingwall not to be placed until structure has been prestressed.

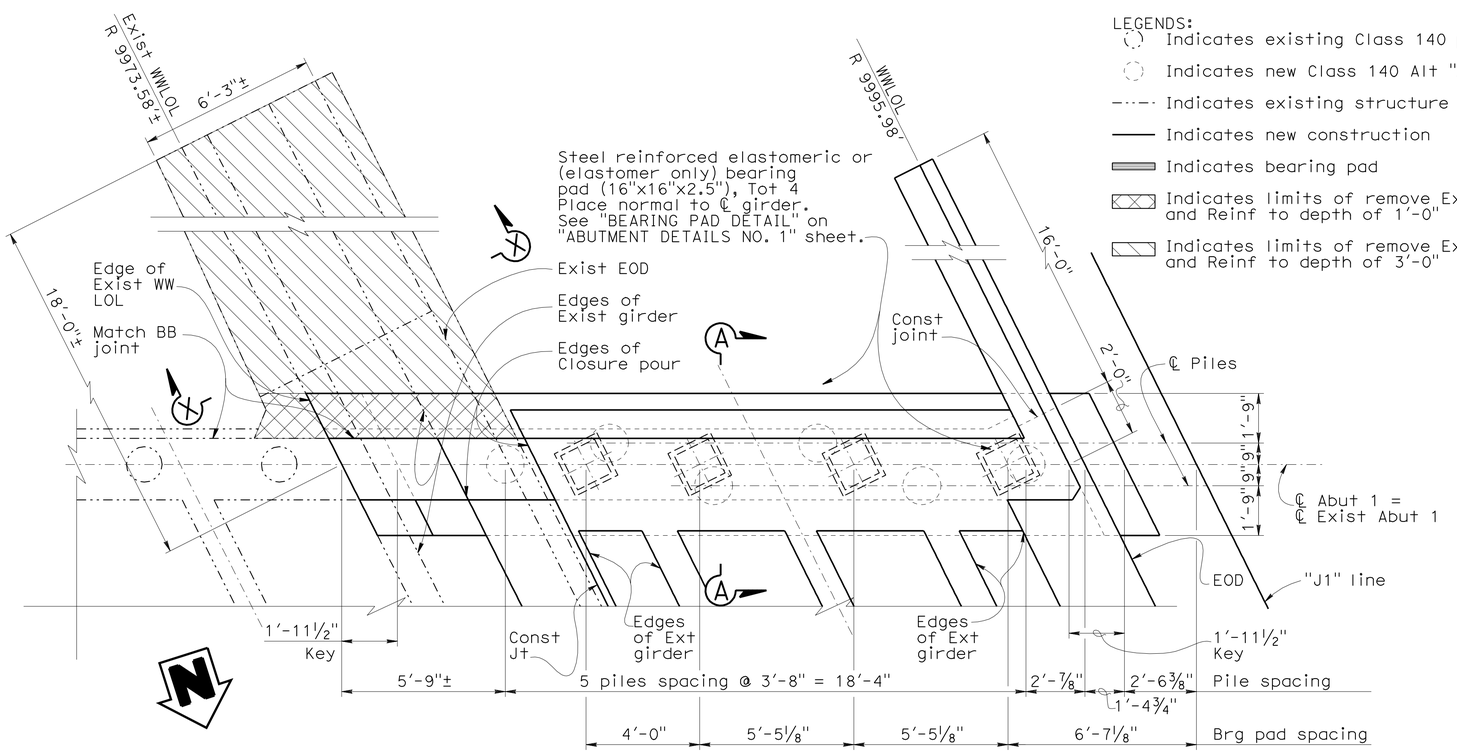

PLAN
⅜" = 1'-0"

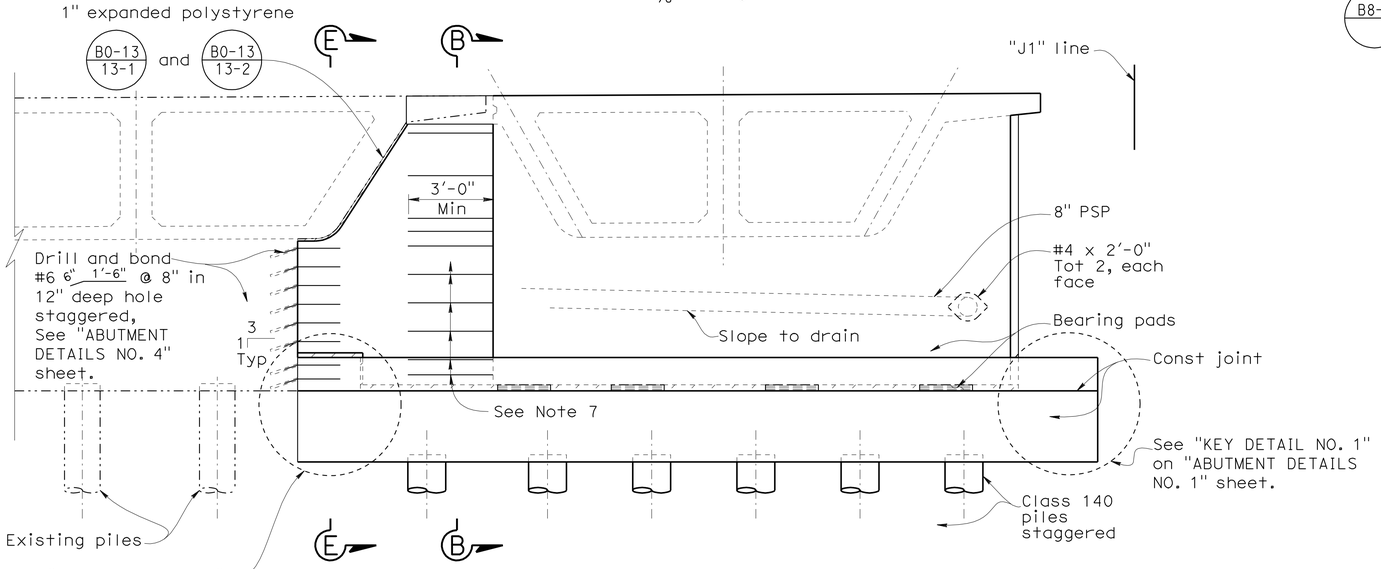

ELEVATION
⅜" = 1'-0"

Note:
Barrier not shown for clarity.

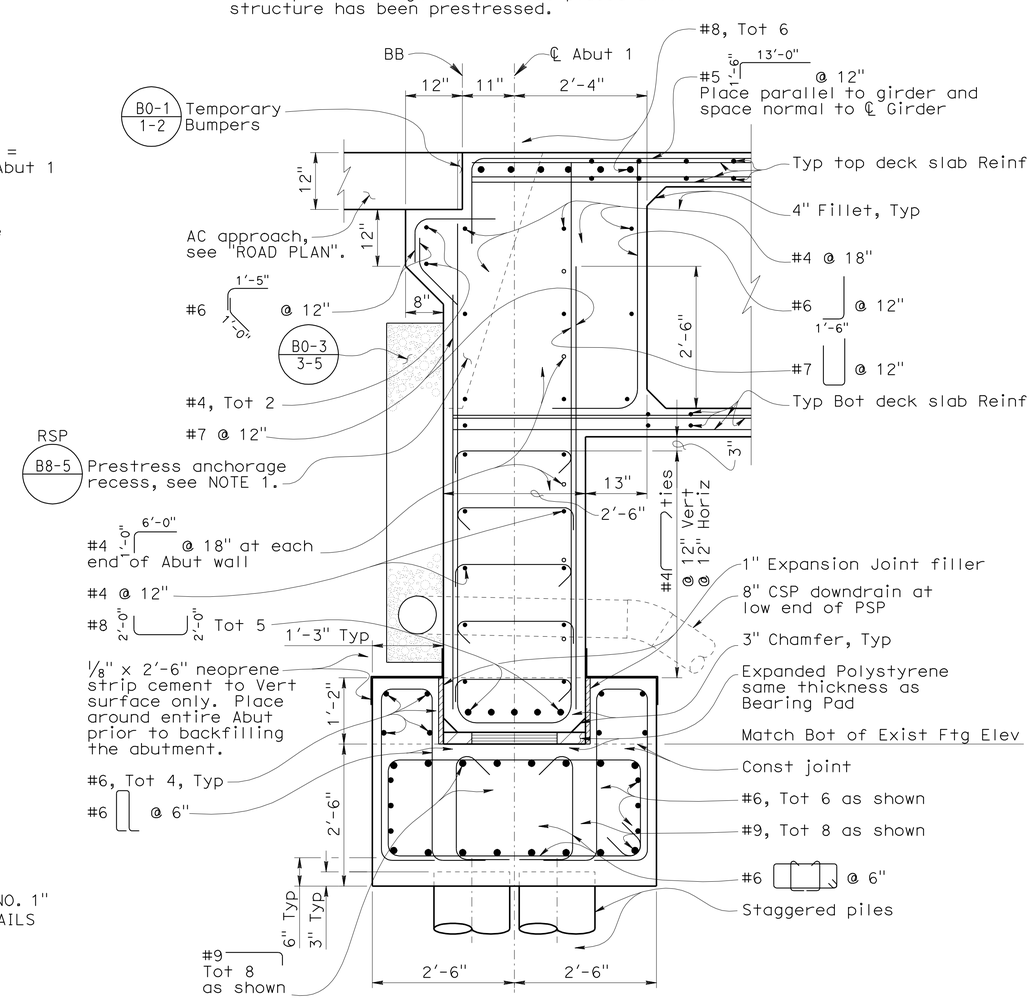

SECTION A-A
¾" = 1'-0"

NOTE:
THE CONTRACTOR SHALL VERIFY ALL CONTROLLING FIELD DIMENSIONS BEFORE ORDERING OR FABRICATING ANY MATERIAL.

	BY	CHECKED
DESIGN	R. Amir	A. Menke
DETAILS	T. Kusumi/C. Cancino	R. Amir
QUANTITIES	T. Kusumi	M. Beall

STATE OF CALIFORNIA DEPARTMENT OF TRANSPORTATION

DIVISION OF ENGINEERING SERVICES STRUCTURE DESIGN DESIGN BRANCH 8

BRIDGE NO. 27-0092R
POST MILE R21.47

OLIVE AVENUE UC (WIDEN)
ABUTMENT 1 LAYOUT

STRUCTURES DESIGN DETAIL SHEET (ENGLISH) (REV. 10/25/05)

ORIGINAL SCALE IN INCHES FOR REDUCED PLANS 0 1 2 3

CU 04
EA 264061

DISREGARD PRINTS BEARING EARLIER REVISION DATES

REVISION DATES: 10-05-09 10-28-09 11-30-09 01-14-10 01-16-10 02-17-10 03-15-10 08-28-09 09-04-09

SHEET 4 OF 21

FILE => 27-0092r-f-a01_lo1.dgn

USERNAME => friehard DATE PLOTTED => 16-AUG-2010 TIME PLOTTED => 13:30

DIST	COUNTY	ROUTE	POST MILES TOTAL PROJECT	SHEET No	TOTAL SHEETS
04	Mrn	101	18.6/R22.3	526	542

REGISTERED CIVIL ENGINEER 03-08-10 DATE

8-9-10
PLANS APPROVAL DATE

The State of California or its officers or agents shall not be responsible for the accuracy or completeness of electronic copies of this plan sheet.

REGISTERED PROFESSIONAL ENGINEER Keng Mun Low No. C49361 Exp. 09-30-10 CIVIL STATE OF CALIFORNIA

LEGENDS:
- Indicates existing Class 140 piles
- Indicates new Class 140 Alt "X" piles
- Indicates existing structure
- Indicates new construction
- Indicates bearing pad
- Indicates limits of remove Exist Conc and Reinf to depth of 1'-0"
- Indicates limits of remove Exist Conc and Reinf to depth of 3'-0"

NOTES:
1. Bottom of blockout shall be located above top surface of bottom slab and shall be located within (2'-6") abutment stem width.
2. Fold neoprene into joint to allow for bridge movement. Place neoprene around entire abutment.
3. Slope paving not shown.
4. For "SECTION D-D", see "ABUTMENT DETAILS NO. 2" sheet.
5. For "SECTION F-F", and "SECTION G-G", "SECTION Y-Y", see "ABUTMENT DETAILS NO. 3" sheet.
6. For "SECTION X-X", see "ABUTMENT DETAILS NO. 4" sheet.
7. Place key after stressing is completed.
8. Extend Abutment horizontal reinforcement into abutment closure pour and lap-splice to closure pour reinforcement.
9. Backfill front and back of Abut after stressing is completed. Wingwall not to be placed until structure has been prestressed.

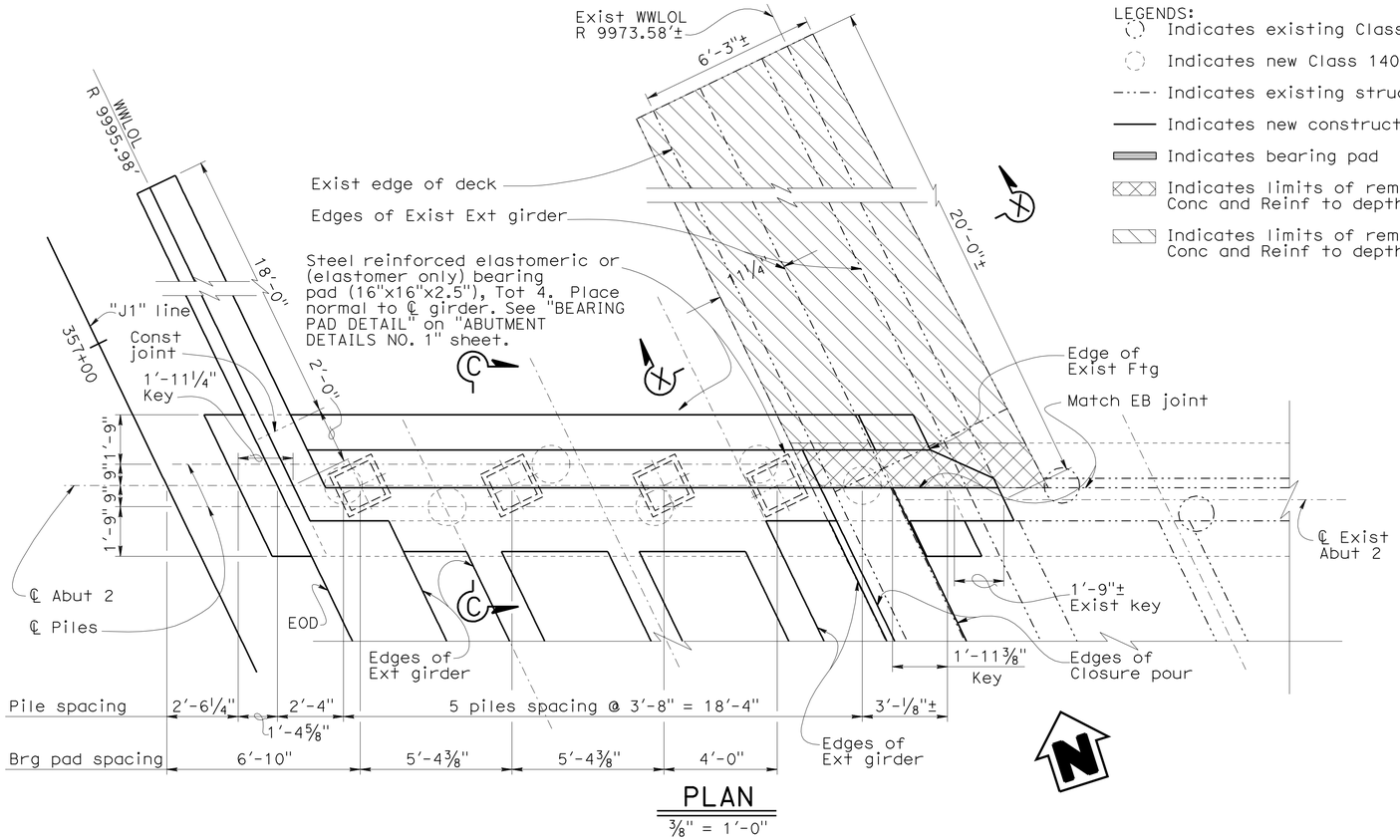

PLAN
⅜" = 1'-0"

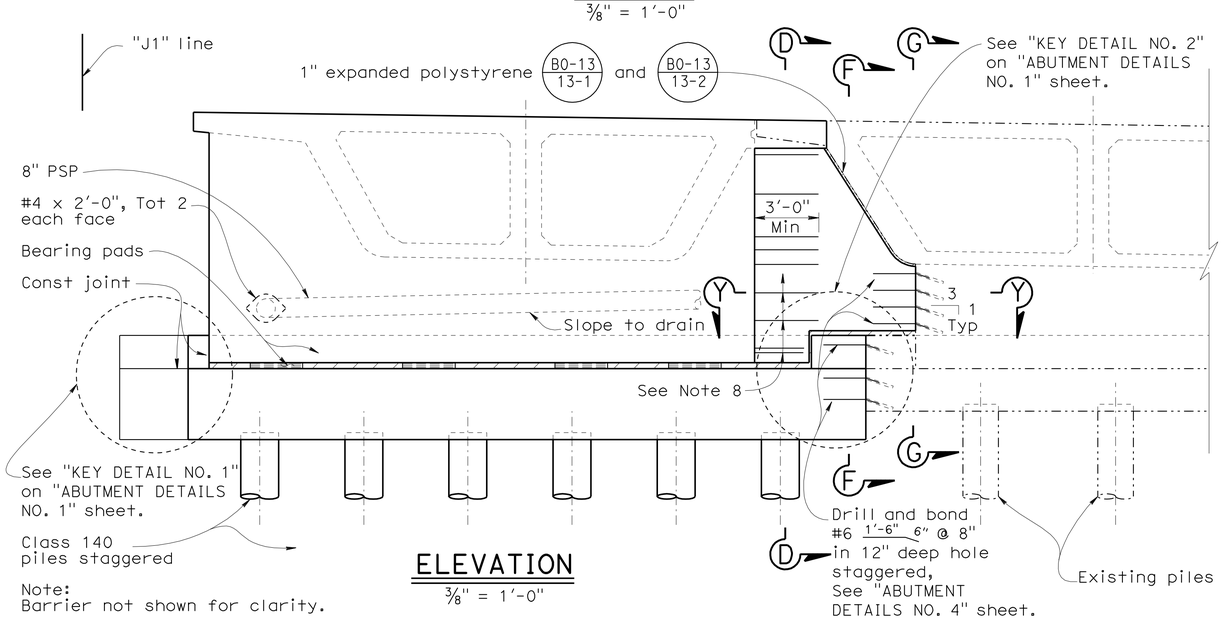

Note:
Barrier not shown for clarity.

ELEVATION
⅜" = 1'-0"

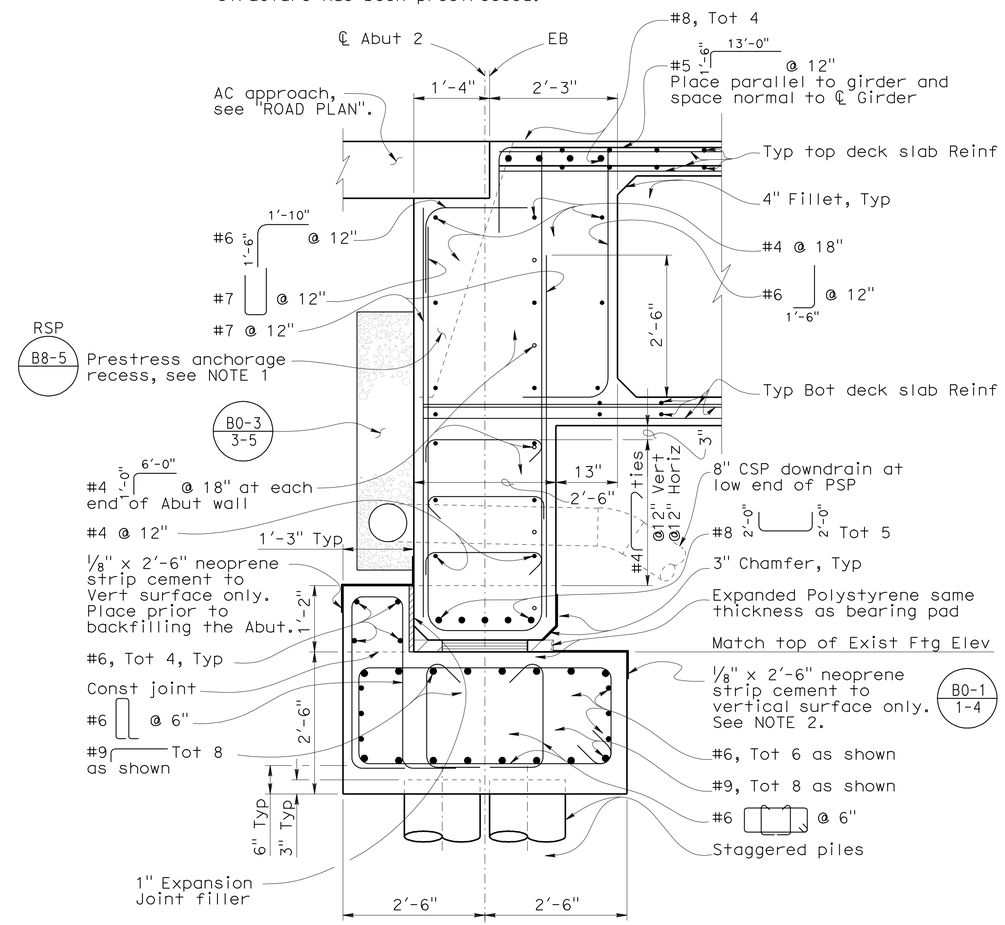

SECTION C-C
¾" = 1'-0"

NOTE:
THE CONTRACTOR SHALL VERIFY ALL CONTROLLING FIELD DIMENSIONS BEFORE ORDERING OR FABRICATING ANY MATERIAL.

	BY	CHECKED
DESIGN	R. Amir	A. Menke
DETAILS	T. Kusumi/C. Cancino	R. Amir
QUANTITIES	T. Kusumi	M. Beall

STATE OF CALIFORNIA
DEPARTMENT OF TRANSPORTATION

DIVISION OF ENGINEERING SERVICES
STRUCTURE DESIGN
DESIGN BRANCH 8

BRIDGE NO. 27-0092R
POST MILE R21.47

OLIVE AVENUE UC (WIDEN)
ABUTMENT 2 LAYOUT

STRUCTURES DESIGN DETAIL SHEET (ENGLISH) (REV. 10/25/05)

ORIGINAL SCALE IN INCHES FOR REDUCED PLANS 0 1 2 3

CU 04
EA 264061

DISREGARD PRINTS BEARING EARLIER REVISION DATES

REVISION DATES: 10-05-09 10-28-09 11-30-09 12-24-09 01-14-10 01-16-10 02-11-10 03-15-10 09-08-09

SHEET 5 OF 21

FILE => 27-0092r-f-a02_lo1.dgn

USERNAME => trlenard DATE PLOTTED => 16-AUG-2010 TIME PLOTTED => 13:30

DIST	COUNTY	ROUTE	POST MILES TOTAL PROJECT	SHEET No	TOTAL SHEETS
04	Mrn	101	18.6/R22.3	527	542

REGISTERED CIVIL ENGINEER — DATE 03-08-10

8-9-10
PLANS APPROVAL DATE

REGISTERED PROFESSIONAL ENGINEER — Keng Mun Low — No. C49361 — Exp. 09-30-10 — CIVIL — STATE OF CALIFORNIA

The State of California or its officers or agents shall not be responsible for the accuracy or completeness of electronic copies of this plan sheet.

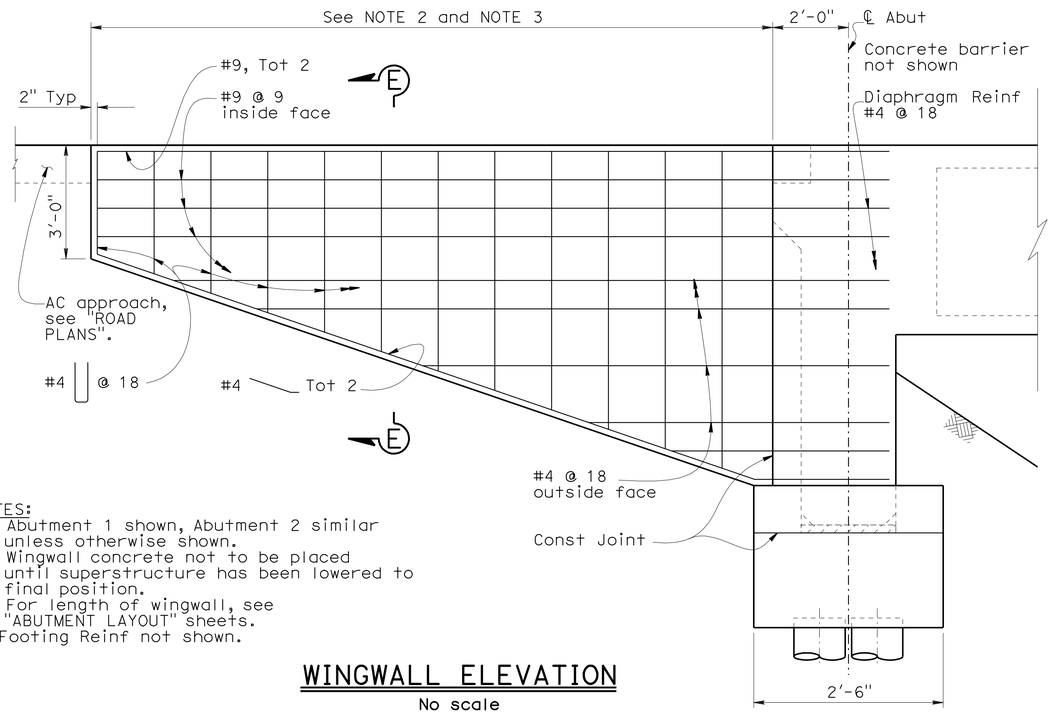

NOTES:
1. Abutment 1 shown, Abutment 2 similar unless otherwise shown.
2. Wingwall concrete not to be placed until superstructure has been lowered to final position.
3. For length of wingwall, see "ABUTMENT LAYOUT" sheets.
4. Footing Reinf not shown.

WINGWALL ELEVATION
No scale

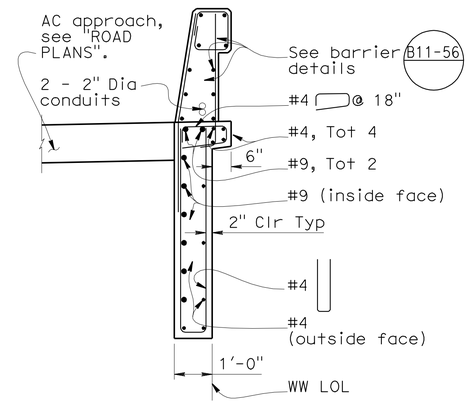

Note:
Slope paving not shown

SECTION E-E
B0-1
½" = 1'-0"

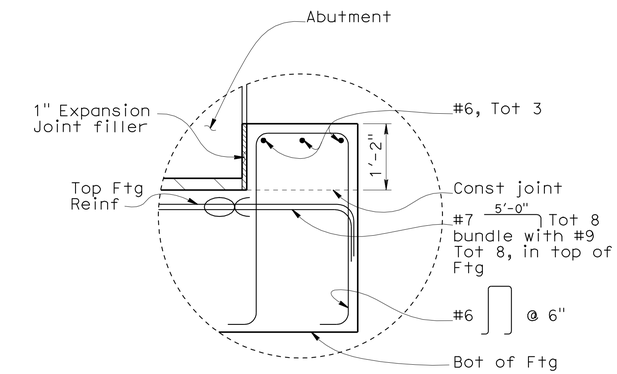

KEY DETAIL NO. 1
¾" = 1'-0"

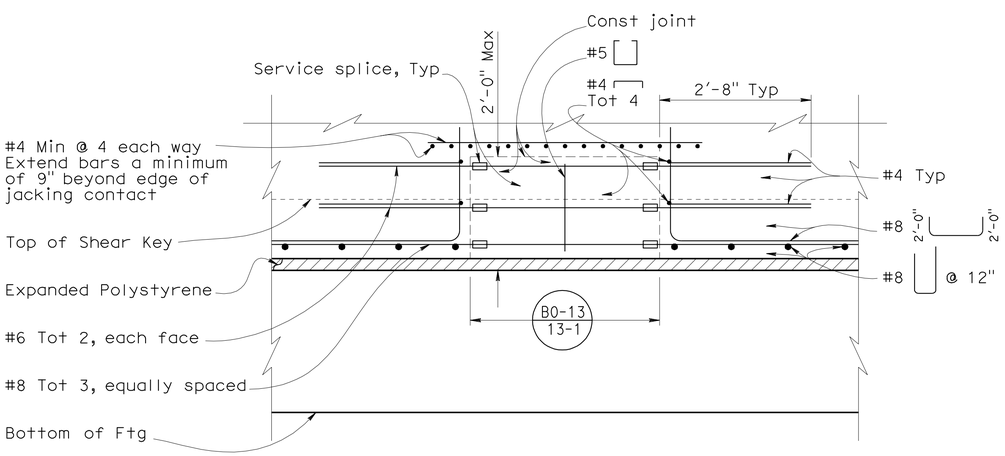

LEGEND:
☐ Service splice

JACKING RECESS - ELEVATION
¾" = 1'-0"

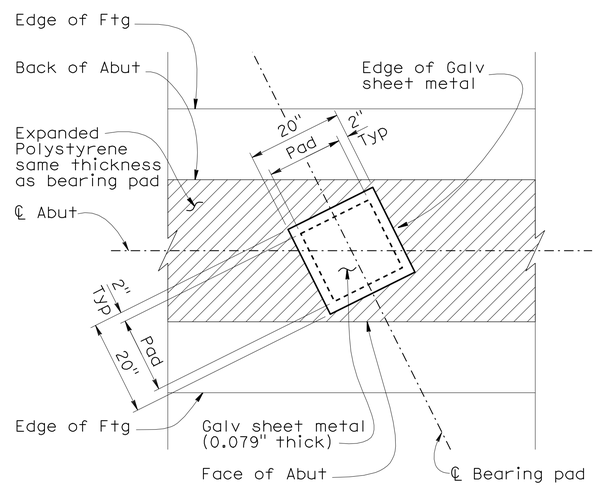

Notes:
1. Coat top of bearing pad with silicone grease prior to placing sheet metal
2. Pads to be level and fully bearing after lowering superstructure

BEARING PAD DETAIL
¾" = 1'-0"

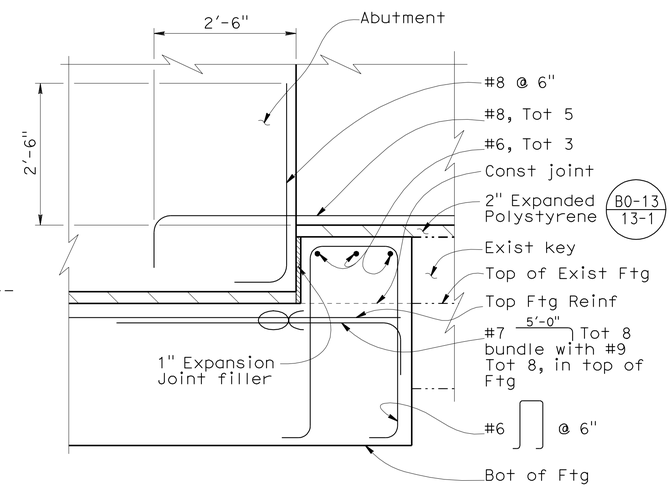

KEY DETAIL NO. 2
¾" = 1'-0"

NOTE:
THE CONTRACTOR SHALL VERIFY ALL CONTROLLING FIELD DIMENSIONS BEFORE ORDERING OR FABRICATING ANY MATERIAL.

	BY	CHECKED
DESIGN	R. Amir	A. Menke
DETAILS	T. Kusumi/C. Cancino	R. Amir
QUANTITIES	T. Kusumi	M. Beall

STATE OF CALIFORNIA
DEPARTMENT OF TRANSPORTATION

DIVISION OF ENGINEERING SERVICES
STRUCTURE DESIGN
DESIGN BRANCH 8

BRIDGE NO. 27-0092R
POST MILE R21.47

OLIVE AVENUE UC (WIDEN)
ABUTMENT DETAILS NO. 1

STRUCTURES DESIGN DETAIL SHEET (ENGLISH) (REV. 10/25/05)

ORIGINAL SCALE IN INCHES FOR REDUCED PLANS 0 1 2 3

CU 04
EA 264061

DISREGARD PRINTS BEARING EARLIER REVISION DATES

REVISION DATES: 01-14-10 03-15-10 05-15-09 05-28-09 06-22-09 08-26-09 10-28-09 12-15-09 01-14-10

SHEET 6 OF 21

FILE => 27-0092r-f-a02dt01.dgn

USERNAME => friehard DATE PLOTTED => 16-AUG-2010 TIME PLOTTED => 13:30

DIST	COUNTY	ROUTE	POST MILES TOTAL PROJECT	SHEET No	TOTAL SHEETS
04	Mrn	101	18.6/R22.3	528	542

REGISTERED CIVIL ENGINEER 03-08-10 DATE

8-9-10
PLANS APPROVAL DATE

REGISTERED PROFESSIONAL ENGINEER Keng Mun Low No. C49361 Exp. 09-30-10 CIVIL STATE OF CALIFORNIA

The State of California or its officers or agents shall not be responsible for the accuracy or completeness of electronic copies of this plan sheet.

LEGENDS:

—·—·— Indicates existing structure

——— Indicates new construction

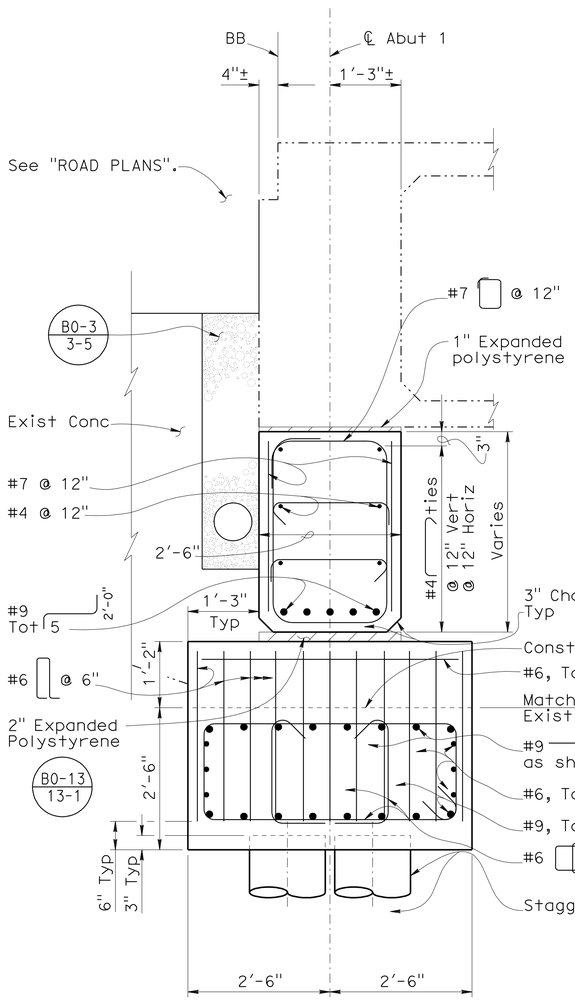

SECTION E-E

3/4" = 1'-0"

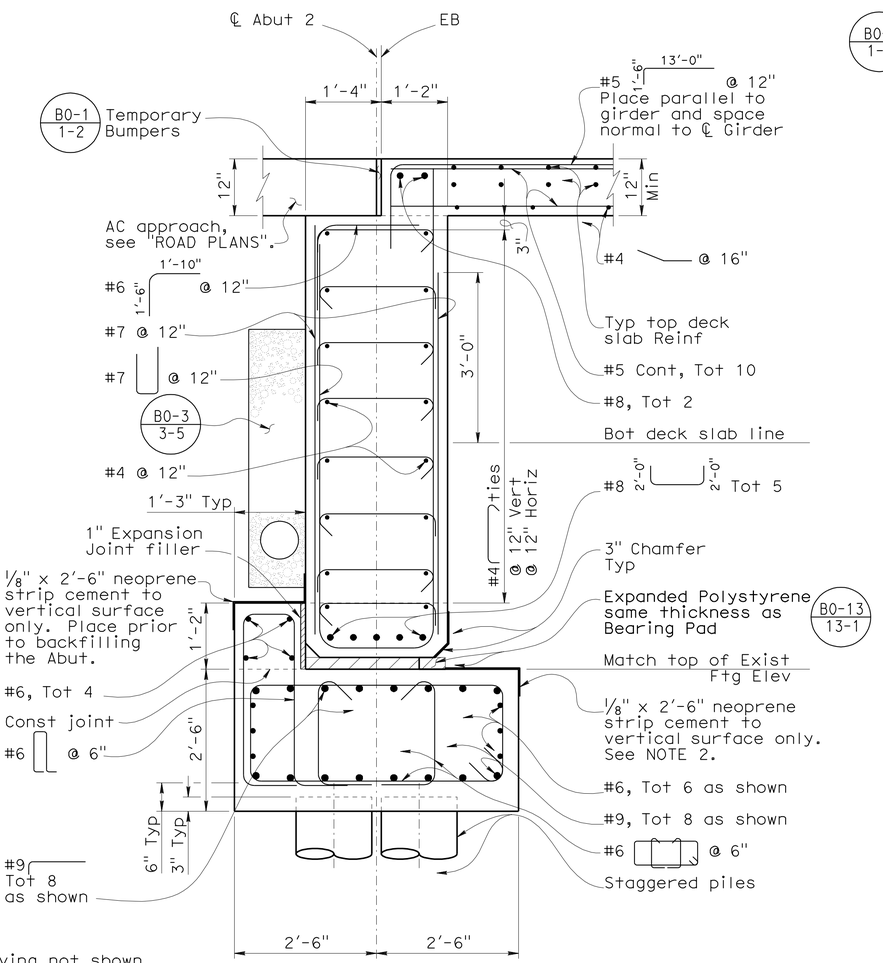

SECTION D-D

3/4" = 1'-0"

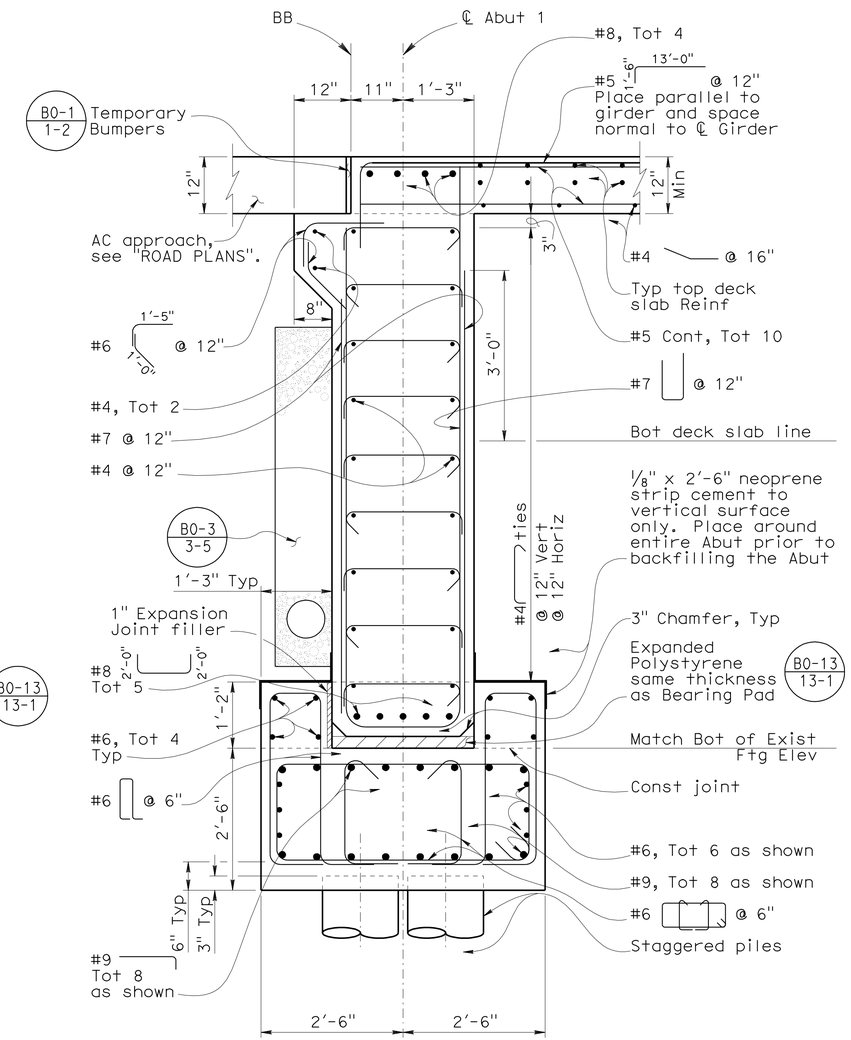

SECTION B-B

3/4" = 1'-0"

NOTES:
1. Slope paving not shown
2. Fold neoprene into joint to allow for bridge movement. Place neoprene around entire abutment.

NOTE:
THE CONTRACTOR SHALL VERIFY ALL CONTROLLING FIELD DIMENSIONS BEFORE ORDERING OR FABRICATING ANY MATERIAL.

	BY	CHECKED
DESIGN	R. Amir	A. Menke
DETAILS	T. Kusumi/C. Cancino	R. Amir
QUANTITIES	T. Kusumi	M. Beall

STATE OF CALIFORNIA
DEPARTMENT OF TRANSPORTATION

DIVISION OF ENGINEERING SERVICES
STRUCTURE DESIGN
DESIGN BRANCH 8

BRIDGE NO. 27-0092R
POST MILE R21.47

OLIVE AVENUE UC (WIDEN)
ABUTMENT DETAILS NO. 2

STRUCTURES DESIGN DETAIL SHEET (ENGLISH) (REV. 10/25/05)

ORIGINAL SCALE IN INCHES FOR REDUCED PLANS 0 1 2 3

CU 04
EA 264061

DISREGARD PRINTS BEARING EARLIER REVISION DATES

REVISION DATES: 01-14-10 01-16-10 01-26-10 03-15-10 08-24-09 09-09-09 10-05-09 10-28-09 11-30-09

SHEET 7 OF 21

FILE => 27-0092r-f-a02dt02.dgn

USERNAME => tfrlenord DATE PLOTTED => 16-AUG-2010 TIME PLOTTED => 13:30

DIST	COUNTY	ROUTE	POST MILES TOTAL PROJECT	SHEET No	TOTAL SHEETS
04	Mrn	101	18.6/R22.3	529	542

REGISTERED CIVIL ENGINEER 03-08-10 DATE

8-9-10
PLANS APPROVAL DATE

REGISTERED PROFESSIONAL ENGINEER
Keng Mun Low
No. C49361
Exp. 09-30-10
CIVIL
STATE OF CALIFORNIA

The State of California or its officers or agents shall not be responsible for the accuracy or completeness of electronic copies of this plan sheet.

LEGENDS:

-·-·- Indicates existing structure

—— Indicates new construction

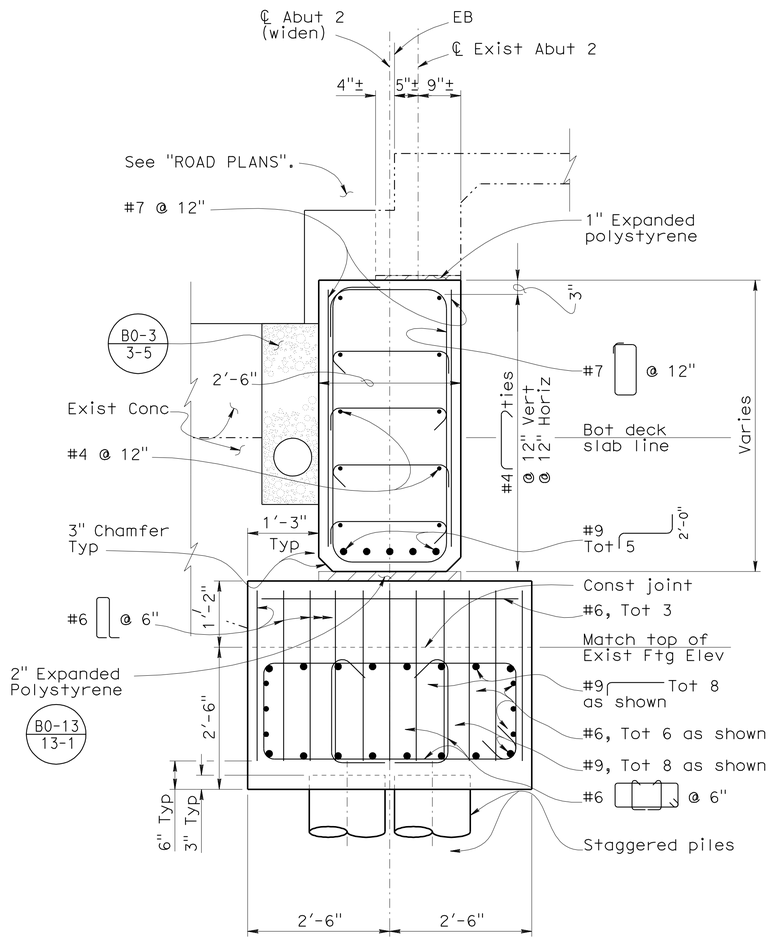

SECTION F-F

¾" = 1'-0"

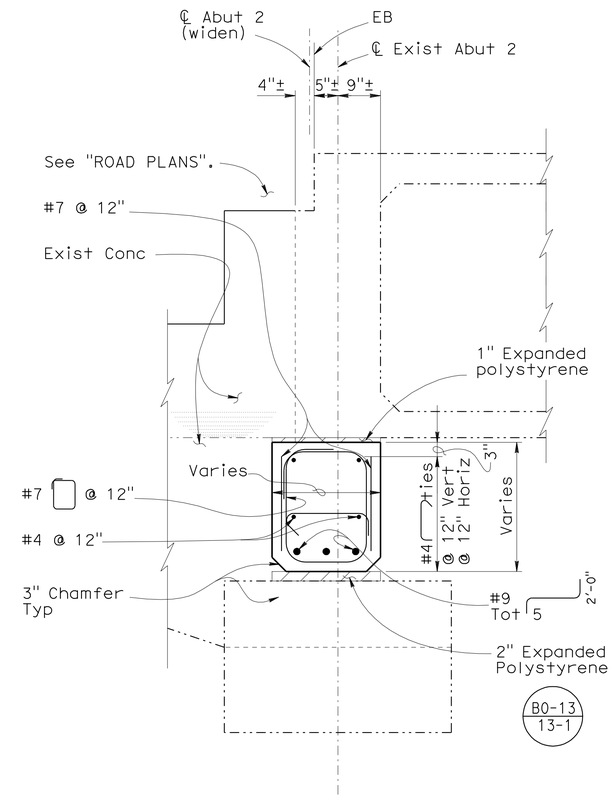

SECTION G-G

¾" = 1'-0"

NOTES:
1. Slope paving not shown
2. Exist piles not shown

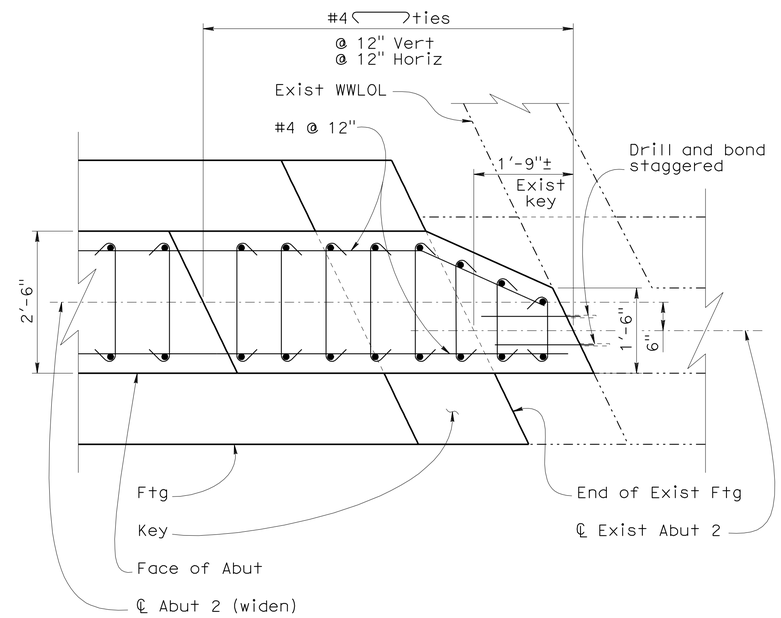

SECTION Y-Y

¾" = 1'-0"

NOTE:
THE CONTRACTOR SHALL VERIFY ALL CONTROLLING FIELD DIMENSIONS BEFORE ORDERING OR FABRICATING ANY MATERIAL.

	BY	CHECKED
DESIGN	R. Amir	A. Menke
DETAILS	T. Kusumi/C. Cancino	R. Amir
QUANTITIES	T. Kusumi	M. Beall

STATE OF CALIFORNIA
DEPARTMENT OF TRANSPORTATION

DIVISION OF ENGINEERING SERVICES
STRUCTURE DESIGN
DESIGN BRANCH 8

BRIDGE NO. 27-0092R
POST MILE R21.47

OLIVE AVENUE UC (WIDEN)
ABUTMENT DETAILS NO. 3

STRUCTURES DESIGN DETAIL SHEET (ENGLISH) (REV. 10/25/05)

ORIGINAL SCALE IN INCHES FOR REDUCED PLANS 0 1 2 3

CU 04
EA 264061

DISREGARD PRINTS BEARING EARLIER REVISION DATES

REVISION DATES: 01-16-10 01-26-10 03-15-10 06-22-09 09-09-09 10-05-09 10-28-09 11-30-09 01-14-10

SHEET 8 OF 21

FILE => 27-0092r-f-a02dt03.dgn

USERNAME => Trienard DATE PLOTTED => 16-AUG-2010 TIME PLOTTED => 13:30

DIST	COUNTY	ROUTE	POST MILES TOTAL PROJECT	SHEET No	TOTAL SHEETS
04	Mrn	101	18.6/R22.3	530	542

REGISTERED CIVIL ENGINEER 03-08-10 DATE

8-9-10
PLANS APPROVAL DATE

REGISTERED PROFESSIONAL ENGINEER
Keng Mun Low
No. C49361
Exp. 09-30-10
CIVIL
STATE OF CALIFORNIA

The State of California or its officers or agents shall not be responsible for the accuracy or completeness of electronic copies of this plan sheet.

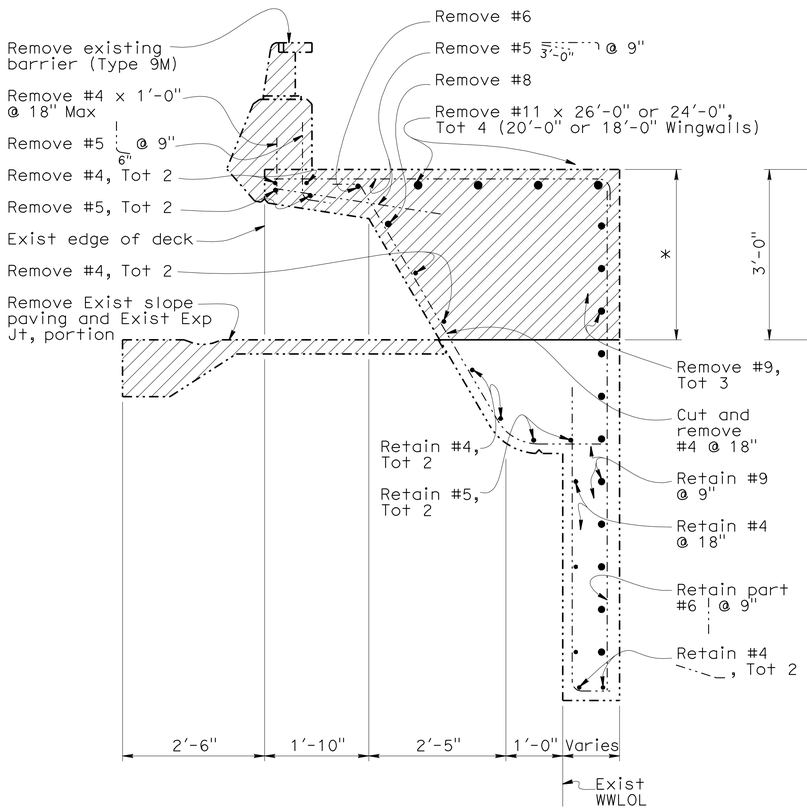

EXISTING

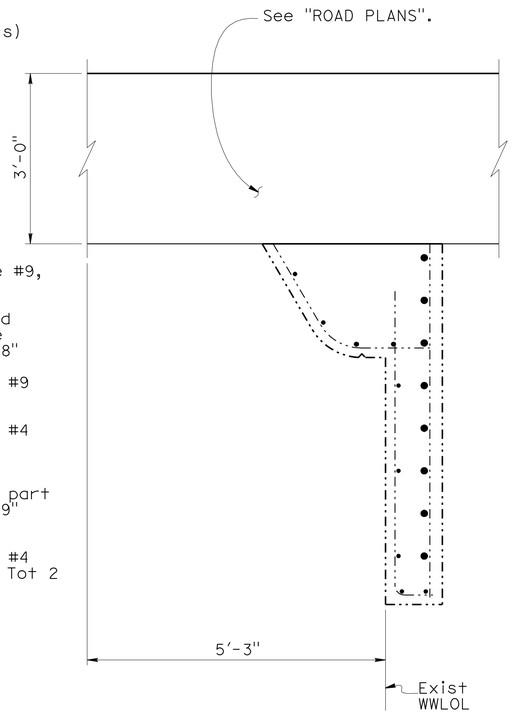

RECONSTRUCTION

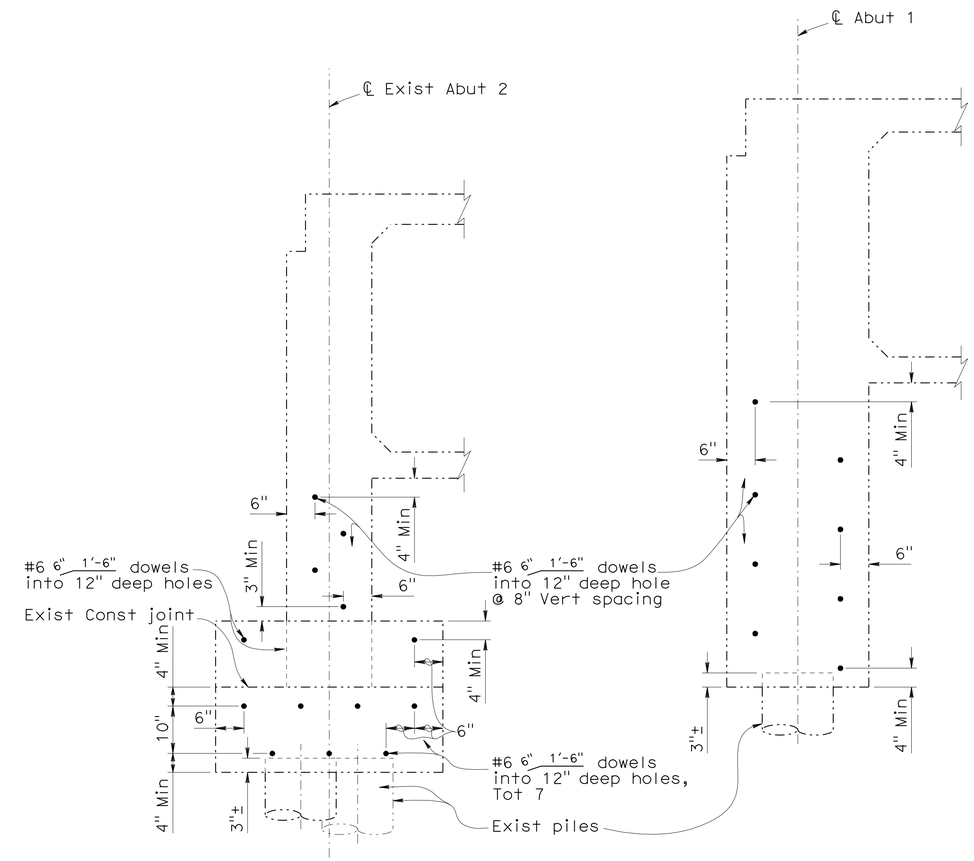

NOTE:
Exist Reinf not shown.

LEGENDS: Apply to this sheet only.

Indicates limits of remove existing concrete and Type (9M) barrier. Place new AC Approach. (See "ROADWAY PLANS".)

Indicates existing structure

Indicates new construction

* Indicates dimension of removal of concrete and reinforcement for 3'-0" depth only.

SECTION X-X

3/4" = 1'-0"

ABUTMENT 2 DRILL AND BOND PATTERN

3/4" = 1'-0"

ABUTMENT 1 DRILL AND BOND PATTERN

3/4" = 1'-0"

NOTE:
THE CONTRACTOR SHALL VERIFY ALL CONTROLLING FIELD DIMENSIONS BEFORE ORDERING OR FABRICATING ANY MATERIAL.

	BY	CHECKED
DESIGN	R. Amir	A. Menke
DETAILS	T. Kusumi	R. Amir
QUANTITIES	T. Kusumi	M. Beall

STATE OF CALIFORNIA
DEPARTMENT OF TRANSPORTATION

DIVISION OF ENGINEERING SERVICES
STRUCTURE DESIGN
DESIGN BRANCH 8

BRIDGE NO. 27-0092R
POST MILE R21.47

OLIVE AVENUE UC (WIDEN)
ABUTMENT DETAILS NO. 4

STRUCTURES DESIGN DETAIL SHEET (ENGLISH) (REV. 10/25/05)

ORIGINAL SCALE IN INCHES FOR REDUCED PLANS 0 1 2 3

CU 04
EA 264061

DISREGARD PRINTS BEARING EARLIER REVISION DATES

REVISION DATES: 11-15-08, 05-05-09, 06-01-09, 10-26-09, 11-30-09, 01-14-10, 02-12-10, 03-15-10

SHEET 9 OF 21

FILE => 27-0092r-f-a02dt04.dgn

USERNAME => trlenard DATE PLOTTED => 16-AUG-2010 TIME PLOTTED => 13:30

DIST	COUNTY	ROUTE	POST MILES TOTAL PROJECT	SHEET No	TOTAL SHEETS
04	Mrn	101	18.6/R22.3	531	542

REGISTERED CIVIL ENGINEER 03-08-10 DATE

8-9-10
PLANS APPROVAL DATE

The State of California or its officers or agents shall not be responsible for the accuracy or completeness of electronic copies of this plan sheet.

REGISTERED PROFESSIONAL ENGINEER Keng Mun Low No. C49361 Exp. 09-30-10 CIVIL STATE OF CALIFORNIA

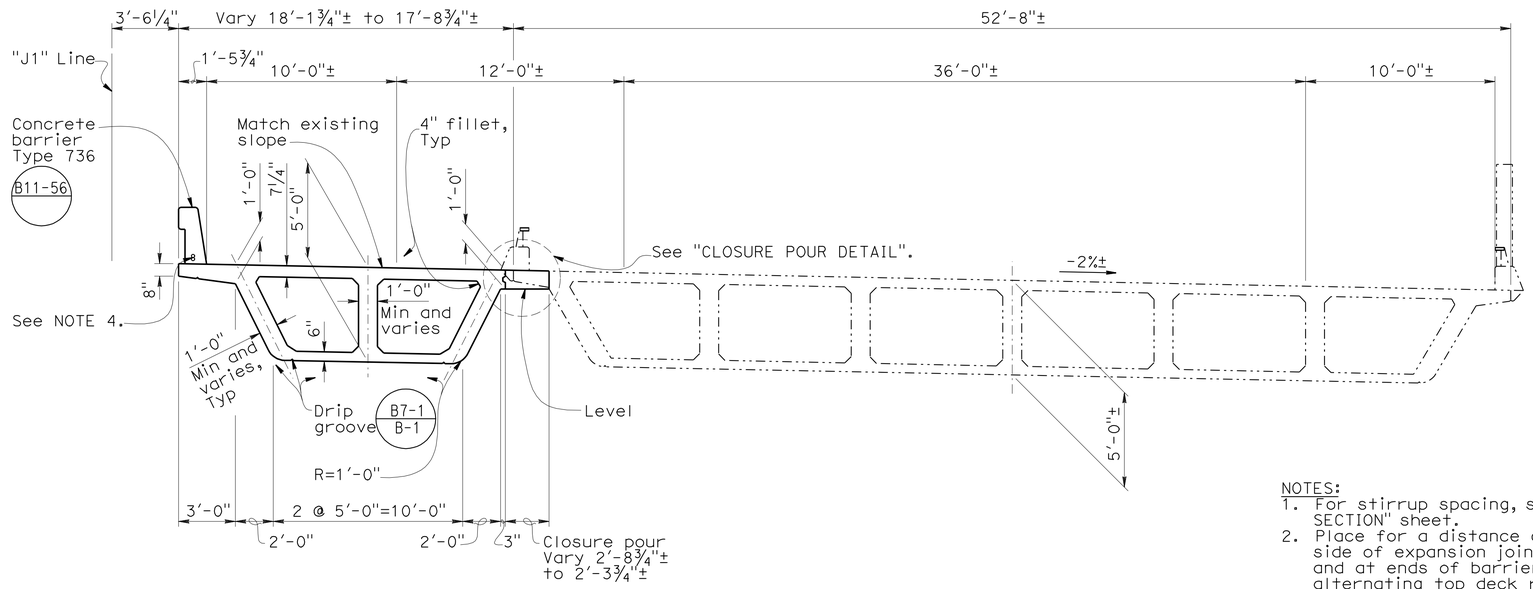

TYPICAL SECTION

¼" = 1'-0"

(See NOTE 3.)

NOTES:
1. For stirrup spacing, see "LONGITUDINAL SECTION" sheet.
2. Place for a distance of 5'-0" each side of expansion joint in barrier rail and at ends of barrier rail. Bundle with alternating top deck reinforcing bar in overhang.
3. Left bridge not shown.
4. 2 - 2" Dia conduits for fiber optic lines, see "ELECTRICAL PLANS."

LEGENDS:

Indicates bridge removal (portion)

Indicates existing structure

Indicates new construction

o Denotes additional reinforcement, see "ADDITIONAL GIRDER REINFORCEMENT" sheet.

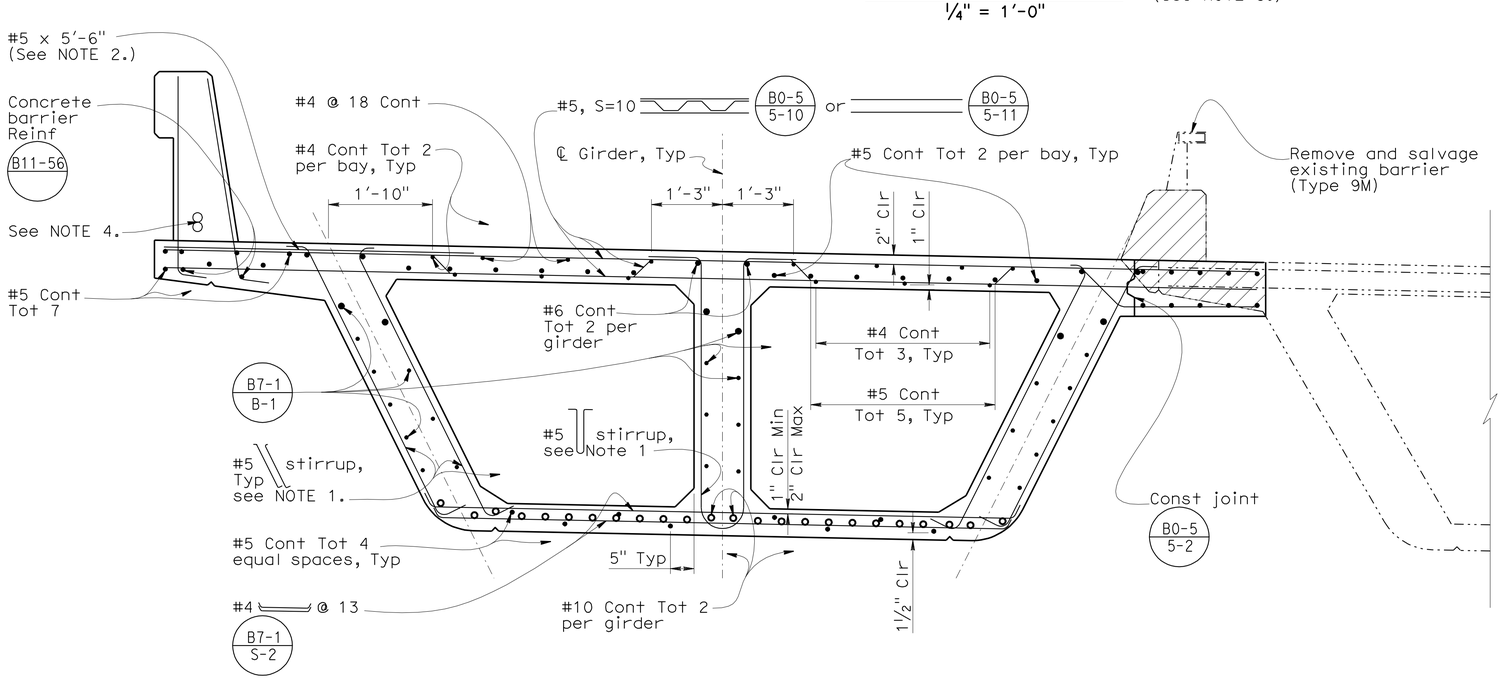

TYPICAL SECTION - RIGHT BRIDGE

¾" = 1'-0"

B0-5 B7-1 B8-5

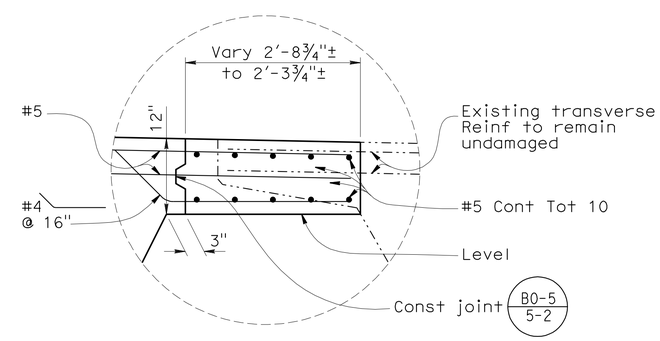

CLOSURE POUR DETAIL

1 " = 1'-0"

NOTE:
THE CONTRACTOR SHALL VERIFY ALL CONTROLLING FIELD DIMENSIONS BEFORE ORDERING OR FABRICATING ANY MATERIAL.

	BY	CHECKED
DESIGN	R. Amir	A. Menke
DETAILS	T. Kusumi	R. Amir
QUANTITIES	T. Kusumi	M. Beall

STATE OF CALIFORNIA
DEPARTMENT OF TRANSPORTATION

DIVISION OF ENGINEERING SERVICES
STRUCTURE DESIGN
DESIGN BRANCH 8

BRIDGE NO. 27-0092R
POST MILE R21.47

OLIVE AVENUE UC (WIDEN)
TYPICAL SECTION

STRUCTURES DESIGN DETAIL SHEET (ENGLISH) (REV. 10/25/05)

ORIGINAL SCALE IN INCHES FOR REDUCED PLANS 0 1 2 3

CU 04
EA 264061

DISREGARD PRINTS BEARING EARLIER REVISION DATES

REVISION DATES: 07-15-08 08-27-08 11-03-08 01-28-09 05-05-09 10-26-09 12-15-09 12-24-09 01-14-10 03-15-10

SHEET 10 OF 21

FILE => 27-0092r-k-ts01.dgn

USERNAME => friehard DATE PLOTTED => 16-AUG-2010 TIME PLOTTED => 13:30

DIST	COUNTY	ROUTE	POST MILES TOTAL PROJECT	SHEET No	TOTAL SHEETS
04	Mrn	101	18.6/R22.3	532	542

REGISTERED CIVIL ENGINEER 03-08-10 DATE

8-9-10
PLANS APPROVAL DATE

REGISTERED PROFESSIONAL ENGINEER
Keng Mun Low
No. C49361
Exp. 09-30-10
CIVIL
STATE OF CALIFORNIA

The State of California or its officers or agents shall not be responsible for the accuracy or completeness of electronic copies of this plan sheet.

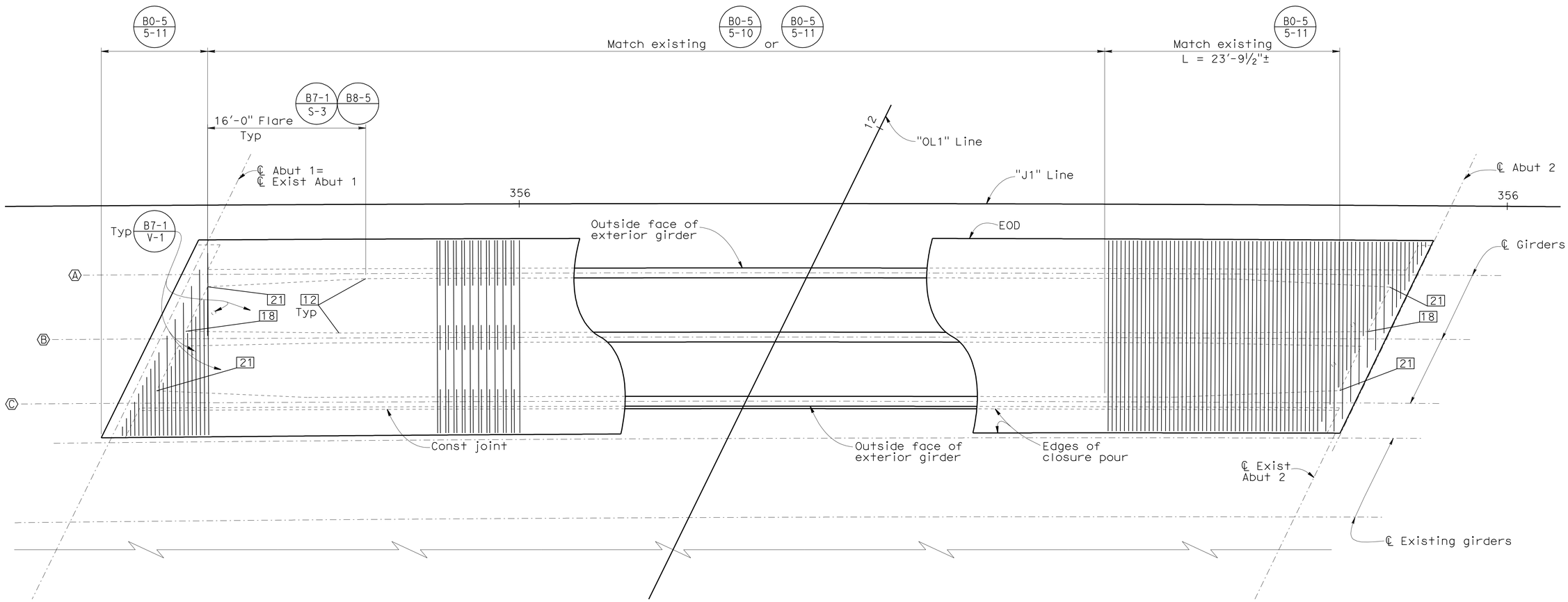

GIRDER LAYOUT

3/16" = 1'-0"

NOTES:

1. Extend alternate top bar 18" into diaphragm. Stop remaining Reinf 3" from face of diaphragm.
2. Ⓐ Indicates girder identification
3. ▭ Indicates girder stem width in inches
4. Flare length measured from face of end diaphragm.

NOTE:
THE CONTRACTOR SHALL VERIFY ALL CONTROLLING FIELD DIMENSIONS BEFORE ORDERING OR FABRICATING ANY MATERIAL.

	BY	CHECKED
DESIGN	R. Amir	A. Menke
DETAILS	T. Kusumi	R. Amir
QUANTITIES	T. Kusumi	M. Beall

STATE OF CALIFORNIA
DEPARTMENT OF TRANSPORTATION

DIVISION OF ENGINEERING SERVICES
STRUCTURE DESIGN
DESIGN BRANCH 8

BRIDGE NO. 27-0092R
POST MILE R21.47

OLIVE AVENUE UC (WIDEN)
GIRDER LAYOUT

STRUCTURES DESIGN DETAIL SHEET (ENGLISH) (REV. 10/25/05)

ORIGINAL SCALE IN INCHES FOR REDUCED PLANS 0 1 2 3

CU 04
EA 264061

DISREGARD PRINTS BEARING EARLIER REVISION DATES

REVISION DATES: 08-08-08 11-05-08 05-05-09 10-28-09 01-14-10 03-15-10

SHEET 11 OF 21

FILE => 27-0092r-l-g_la01.dgn

USERNAME => trlenord DATE PLOTTED => 16-AUG-2010 TIME PLOTTED => 13:30

DIST	COUNTY	ROUTE	POST MILES TOTAL PROJECT	SHEET No	TOTAL SHEETS
04	Mrn	101	18.6/R22.3	533	542

REGISTERED CIVIL ENGINEER 03-08-10 DATE

8-9-10
PLANS APPROVAL DATE

REGISTERED PROFESSIONAL ENGINEER
Keng Mun Low
No. C49361
Exp. 09-30-10
CIVIL
STATE OF CALIFORNIA

The State of California or its officers or agents shall not be responsible for the accuracy or completeness of electronic copies of this plan sheet.

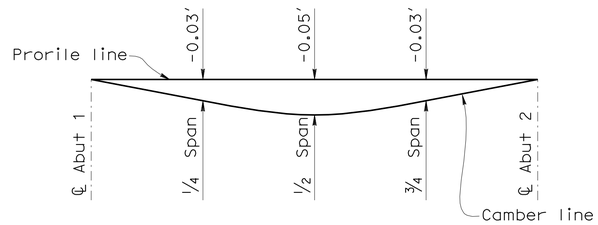

CAMBER DIAGRAM

No scale

Does not include allowance for falsework settlement

PRESTRESSING NOTES

270 ksi Low Relaxation Strands:

P_{jack} = 6500 kips

Anchor Set = 3/8 in

Total Number of Girders = 3

Distribution of prestress force (P_{jack}) between girders shall not exceed the ratio of 3:2.
Maximum final force variation between girders shall not exceed 725 kips.
Concrete: f'_c = 6.5 ksi @ 28 days

f'_{ci} = 3.5 ksi @ time of stressing

Contractor shall submit elongation calculations based on initial stress at

☒ = 0.958 times jacking stress.

One end stressing shall be performed from either end.

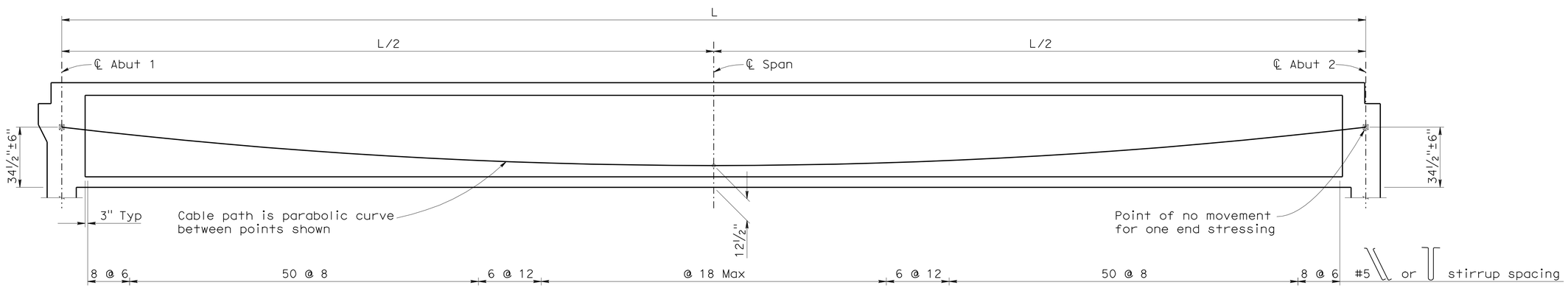

LONGITUDINAL SECTION

No scale

B0-5 | B7-1 S-3 | B8-5 RSP

NOTE:
THE CONTRACTOR SHALL VERIFY ALL CONTROLLING FIELD DIMENSIONS BEFORE ORDERING OR FABRICATING ANY MATERIAL.

	BY	CHECKED
DESIGN	R. Amir	A. Menke
DETAILS	T. Kusumi	R. Amir
QUANTITIES	T. Kusumi	M. Beall

STATE OF CALIFORNIA
DEPARTMENT OF TRANSPORTATION

DIVISION OF ENGINEERING SERVICES
STRUCTURE DESIGN
DESIGN BRANCH 8

BRIDGE NO. 27-0092R
POST MILE R21.47

OLIVE AVENUE UC (WIDEN)
LONGITUDINAL SECTION

STRUCTURES DESIGN DETAIL SHEET (ENGLISH) (REV. 10/25/05)

ORIGINAL SCALE IN INCHES FOR REDUCED PLANS 0 1 2 3

CU 04
EA 264061

DISREGARD PRINTS BEARING EARLIER REVISION DATES

REVISION DATES: 08-06-08 | 10-06-08 | 11-03-08 | 05-06-09 | 06-01-09 | 07-31-09 | 10-28-09 | 01-14-10 | 03-03-10 | 03-15-10

SHEET 12 OF 21

FILE => 27-0092r-m-lsec.dgn

USERNAME => trlenard DATE PLOTTED => 16-AUG-2010 TIME PLOTTED => 13:30

DIST	COUNTY	ROUTE	POST MILES TOTAL PROJECT	SHEET No	TOTAL SHEETS
04	Mrn	101	18.6/R22.3	534	542

REGISTERED CIVIL ENGINEER 03-08-10 DATE

8-9-10
PLANS APPROVAL DATE

REGISTERED PROFESSIONAL ENGINEER
Keng Mun Low
No. C49361
Exp. 09-30-10
CIVIL
STATE OF CALIFORNIA

The State of California or its officers or agents shall not be responsible for the accuracy or completeness of electronic copies of this plan sheet.

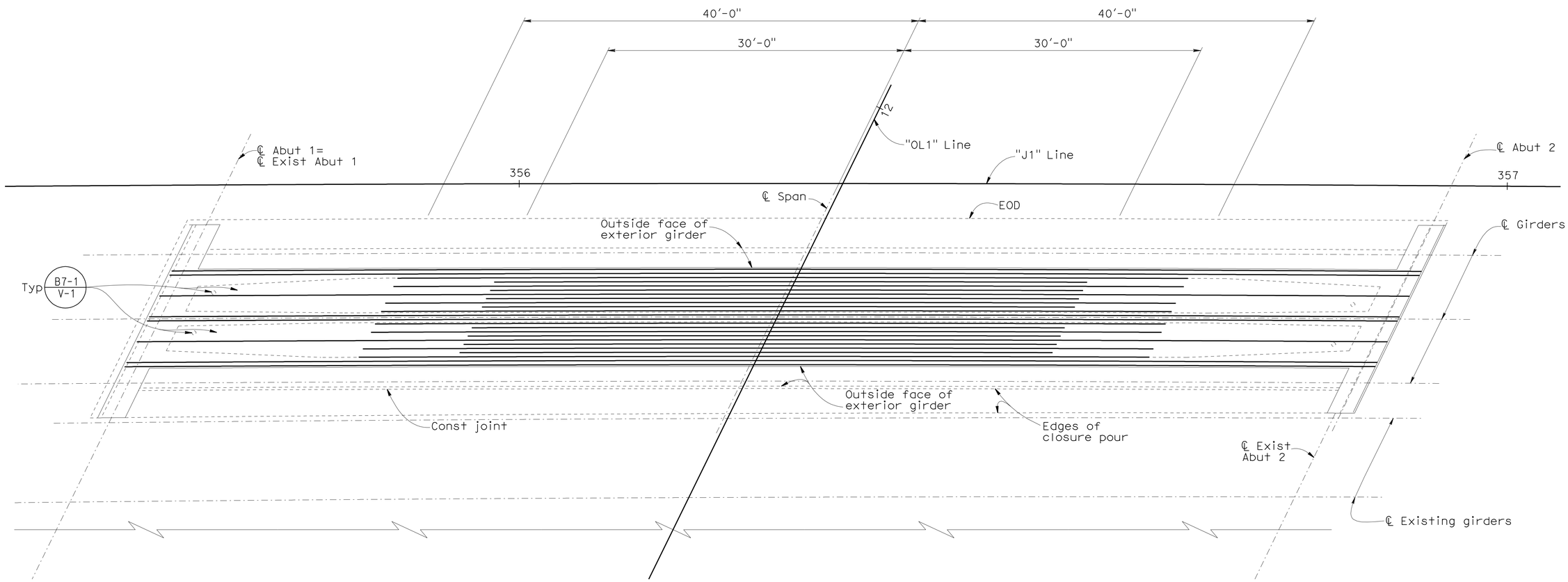

BOTTOM REINFORCEMENT

3/16" = 1'-0"

NOTES:
1. No splices allowed.
2. All bars shall be #10.
3. All bars shall be evenly spaced between girders.

NOTE:
THE CONTRACTOR SHALL VERIFY ALL CONTROLLING FIELD DIMENSIONS BEFORE ORDERING OR FABRICATING ANY MATERIAL.

	BY	CHECKED
DESIGN	R. Amir	A. Menke
DETAILS	T. Kusumi	R. Amir
QUANTITIES	T. Kusumi	M. Beall

STATE OF CALIFORNIA
DEPARTMENT OF TRANSPORTATION

DIVISION OF ENGINEERING SERVICES
STRUCTURE DESIGN
DESIGN BRANCH 8

BRIDGE NO. 27-0092R
POST MILE R21.47

OLIVE AVENUE UC (WIDEN)
ADDITIONAL GIRDER REINFORCEMENT

STRUCTURES DESIGN DETAIL SHEET (ENGLISH) (REV. 10/25/05)

ORIGINAL SCALE IN INCHES FOR REDUCED PLANS 0 1 2 3

CU 04
EA 264061

DISREGARD PRINTS BEARING EARLIER REVISION DATES

REVISION DATES: 08-06-08, 11-03-08, 05-05-09, 10-26-09, 03-15-10

SHEET 13 OF 21

FILE => 27-0092r-o-gbot01.dgn

USERNAME => friehard DATE PLOTTED => 16-AUG-2010 TIME PLOTTED => 13:30

DIST	COUNTY	ROUTE	POST MILES TOTAL PROJECT	SHEET No	TOTAL SHEETS
04	Mrn	101	18.6/R22.3	535	542

REGISTERED CIVIL ENGINEER 03-08-10 DATE

8-9-10
PLANS APPROVAL DATE

REGISTERED PROFESSIONAL ENGINEER Keng Mun Low No. C49361 Exp. 09-30-10 CIVIL STATE OF CALIFORNIA

The State of California or its officers or agents shall not be responsible for the accuracy or completeness of electronic copies of this plan sheet.

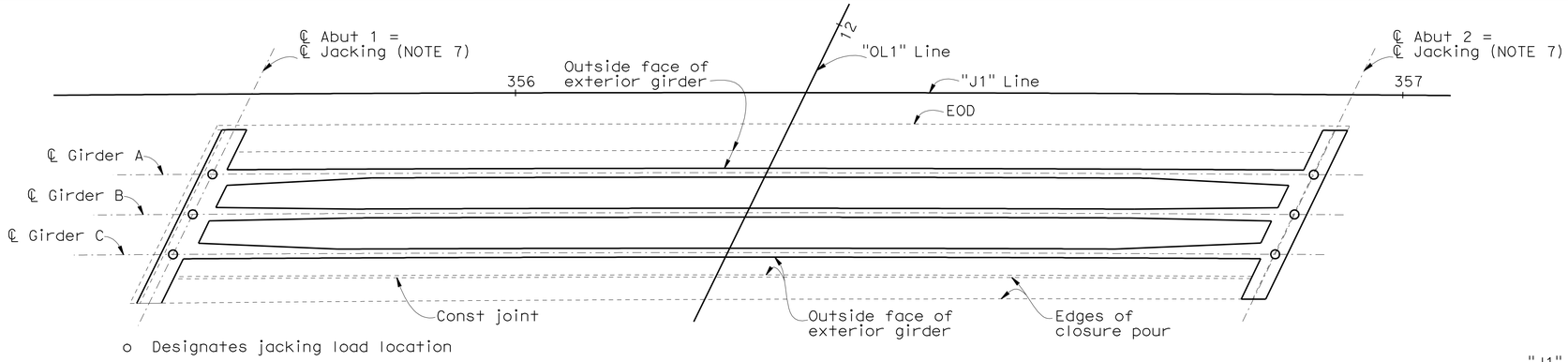

JACKING LOADS - PLAN

1/8" = 1'-0"

ESTIMATED JACKING LOADS (kip)

℄ Jacking Location	℄ Girder A	℄ Girder B	℄ Girder C
Abut 1	205	138	138
Abut 2	138	138	205

NOTES:

1. Estimated jacking loads at locations shown include an estimation of load distribution based on skewed supports.
2. Estimated jacking loads include unfactored dead load only.
3. The Contractor shall verify the actual total load at each ℄ Jacking location before lowering the structure. The CG of the actual jacking loads shall correspond to the CG of the estimated jacking loads at each ℄ Jacking location.
4. The structure shall be lowered simultaneously at each jacking location. The relative displacement between jacks shall not exceed 1/4".
5. The Contractor shall design the lowering system and submit shop drawings for approval.
6. Jacking recesses at Abutments are shown for illustration only. Actual sizes and locations to be determined by the Contractor and subject to the approval of the Engineer.
7. A minimum of three jacks shall be used at each ℄ Jacking location.
8. Piles are not shown.
9. Not all reinforcements are shown.
10. See "ABUTMENT 1 LAYOUT" sheet.
11. See "ABUTMENT 2 LAYOUT" sheet.

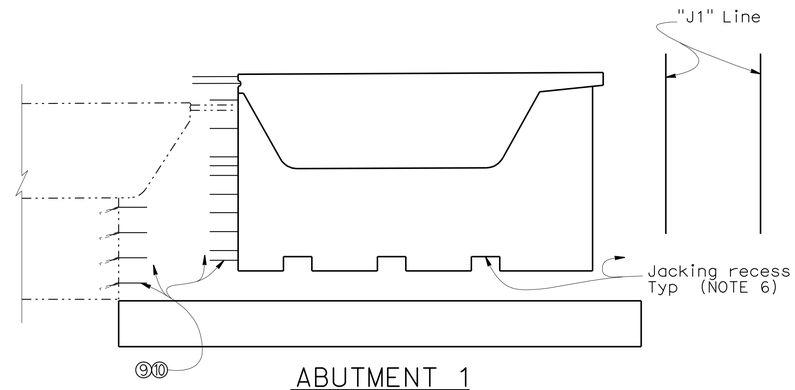

ABUTMENT 1

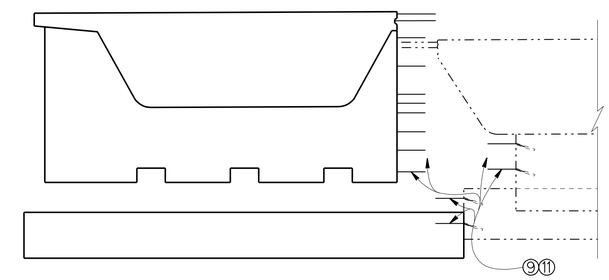

ABUTMENT 2

SUPERSTRUCTURE IN RAISED POSITION

No scale

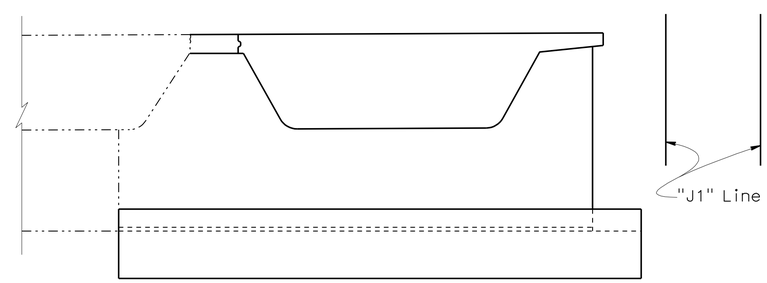

ABUTMENT 1

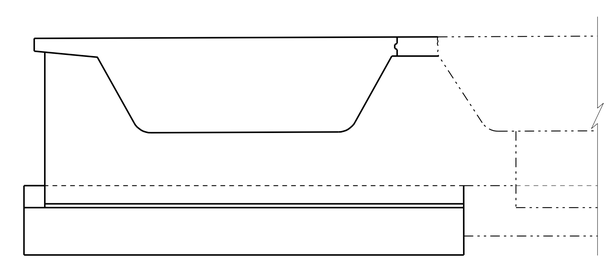

ABUTMENT 2

SUPERSTRUCTURE IN FINAL POSITION

No scale

CONSTRUCTION SEQUENCE:

1. Cast Superstructure in raised position.
2. Stress, grout tendons and cast prestress blockouts.
3. Provide temporary vertical and lateral support and remove falsework.
4. Install jacks and lower Superstructure.
5. Construct Wingwalls and Concrete Barrier on Bridge.
6. Construct Deck and Abutment closure pour.
7. Cast Abutment Shear Keys.

Note:
The construction sequence may be modified as approved by the Engineer.

NOTE:
THE CONTRACTOR SHALL VERIFY ALL CONTROLLING FIELD DIMENSIONS BEFORE ORDERING OR FABRICATING ANY MATERIAL.

	BY	CHECKED
DESIGN	R. Amir	A. Menke
DETAILS	T. Kusumi	R. Amir
QUANTITIES	T. Kusumi	M. Beall

STATE OF CALIFORNIA
DEPARTMENT OF TRANSPORTATION

DIVISION OF ENGINEERING SERVICES
STRUCTURE DESIGN
DESIGN BRANCH 8

BRIDGE NO. 27-0092R
POST MILE R21.47

OLIVE AVENUE UC (WIDEN)
RIGHT BRIDGE CONSTRUCTION SEQUENCE

STRUCTURES DESIGN DETAIL SHEET (ENGLISH) (REV. 10/25/05)

ORIGINAL SCALE IN INCHES FOR REDUCED PLANS 0 1 2 3

CU 04
EA 264061

DISREGARD PRINTS BEARING EARLIER REVISION DATES

REVISION DATES: 10-26-08 11-25-08 11-18-08 05-05-09 10-28-09 03-15-10

SHEET 14 OF 21

FILE => 27-0092r-r-rconstseq01.dgn

USERNAME => trlenard DATE PLOTTED => 16-AUG-2010 TIME PLOTTED => 13:30

DIST	COUNTY	ROUTE	POST MILES TOTAL PROJECT	SHEET No	TOTAL SHEETS
04	Mrn	101	18.6/R22.3	536	542

REGISTERED CIVIL ENGINEER 03-08-10 DATE

8-9-10
PLANS APPROVAL DATE

REGISTERED PROFESSIONAL ENGINEER
Keng Mun Low
No. C49361
Exp. 09-30-10
CIVIL
STATE OF CALIFORNIA

The State of California or its officers or agents shall not be responsible for the accuracy or completeness of electronic copies of this plan sheet.

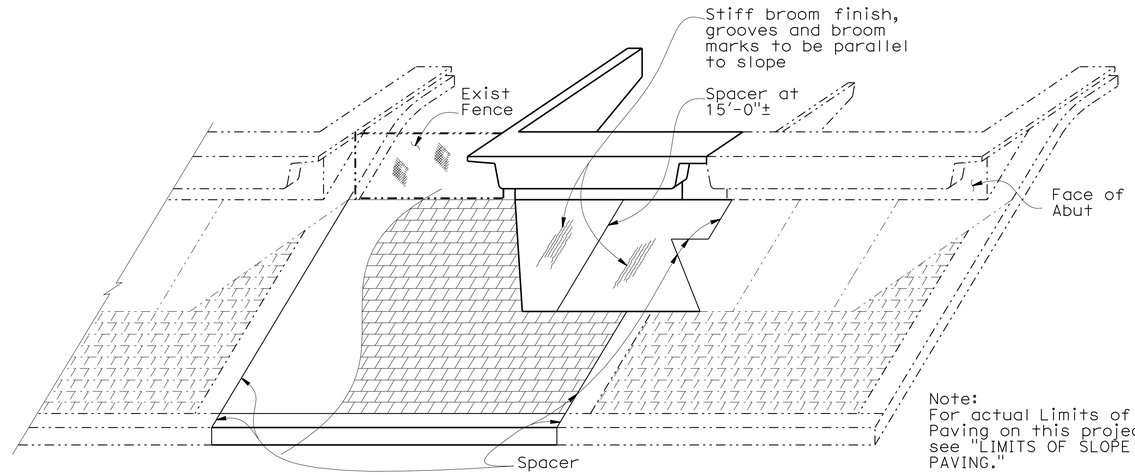

Note:
For actual Limits of Slope Paving on this project, see "LIMITS OF SLOPE PAVING."

PICTORIAL VIEW OF TYPICAL INSTALLATION

No Scale

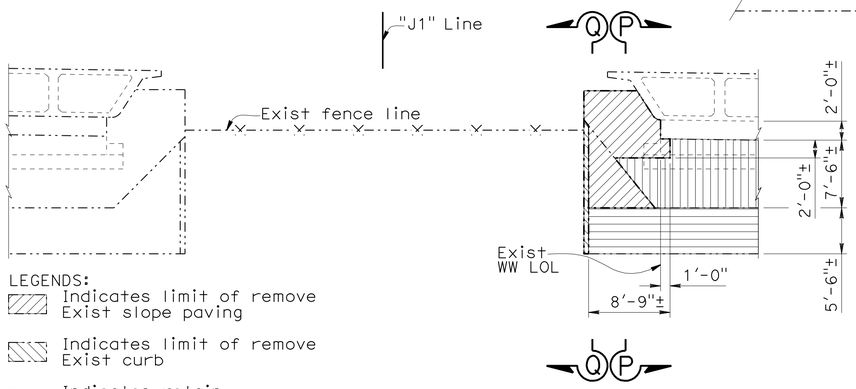

LEGENDS:
- Indicates limit of remove Exist slope paving
- Indicates limit of remove Exist curb
- Indicates retain Exist paving
- Indicates retain Exist Conc paver (6"x6") blocks

EXISTING

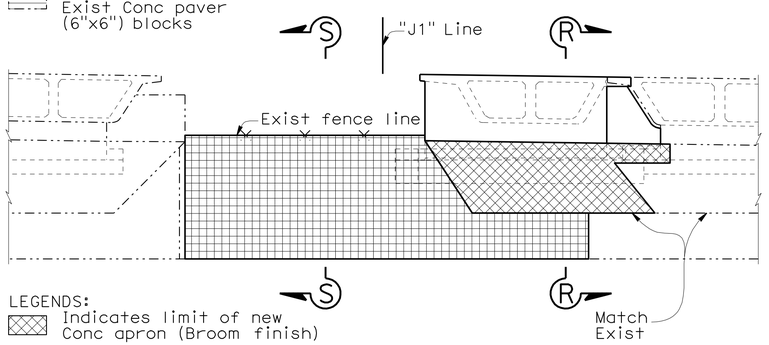

LEGENDS:
- Indicates limit of new Conc apron (Broom finish)
- Indicates limit of new Conc paver (6"x6") blocks

RECONSTRUCTION

ELEVATION VIEW OF INSTALLATION

No scale

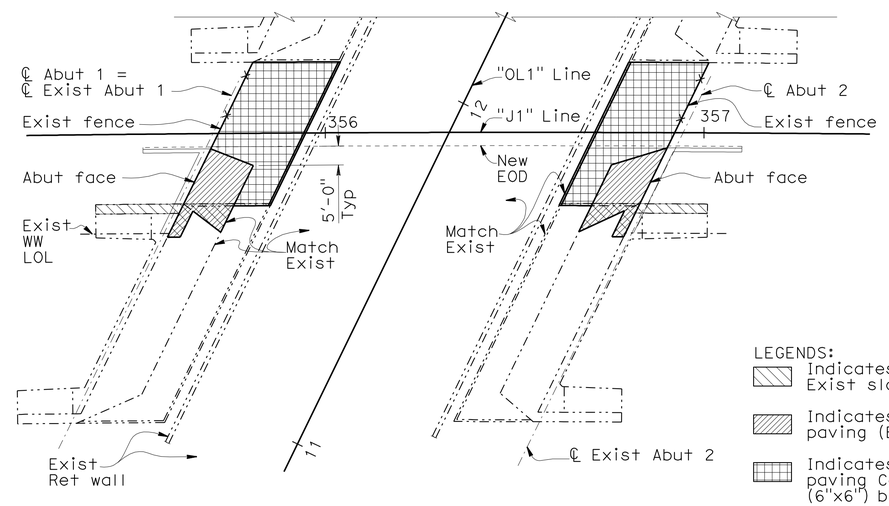

LEGENDS:
- Indicates remove Exist slope paving
- Indicates new slope paving (Broom finish)
- Indicates new slope paving Conc paver (6"x6") blocks

LIMITS OF SLOPE PAVING

No Scale

NOTE:
THE CONTRACTOR SHALL VERIFY ALL CONTROLLING FIELD DIMENSIONS BEFORE ORDERING OR FABRICATING ANY MATERIAL.

	BY	CHECKED
DESIGN	R. Amir	A. Menke
DETAILS	T. Kusumi	R. Amir
QUANTITIES	T. Kusumi	M. Beall

STATE OF CALIFORNIA
DEPARTMENT OF TRANSPORTATION

DIVISION OF ENGINEERING SERVICES
STRUCTURE DESIGN
DESIGN BRANCH 8

BRIDGE NO. 27-0092R
POST MILE R21.47

OLIVE AVENUE UC (WIDEN)
RIGHT BRIDGE SLOPE PAVING DETAILS NO.1

STRUCTURES DESIGN DETAIL SHEET (ENGLISH) (REV. 10/25/05)

ORIGINAL SCALE IN INCHES FOR REDUCED PLANS 0 1 2 3

CU 04
EA 264061

DISREGARD PRINTS BEARING EARLIER REVISION DATES

REVISION DATES: 05-15-09, 05-28-09, 06-01-09, 10-26-09, 12-30-09, 01-14-10, 03-11-10, 03-15-10

SHEET 15 OF 21

FILE => 27-0092r-u-slope01.dgn

USERNAME => rfleonard DATE PLOTTED => 16-AUG-2010 TIME PLOTTED => 13:30

DIST	COUNTY	ROUTE	POST MILES TOTAL PROJECT	SHEET No	TOTAL SHEETS
04	Mrn	101	18.6/R22.3	537	542

REGISTERED CIVIL ENGINEER 03-08-10 DATE

8-9-10
PLANS APPROVAL DATE

REGISTERED PROFESSIONAL ENGINEER Keng Mun Low No. C49361 Exp. 09-30-10 CIVIL STATE OF CALIFORNIA

The State of California or its officers or agents shall not be responsible for the accuracy or completeness of electronic copies of this plan sheet.

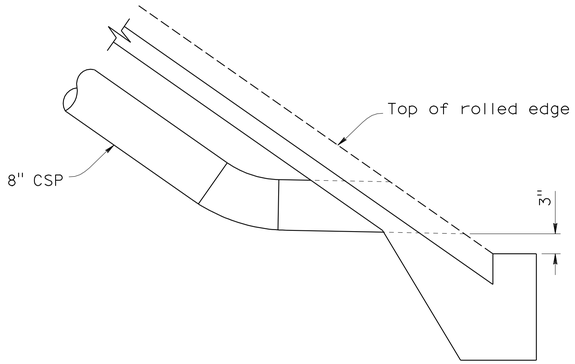

DRAINAGE DETAIL

No Scale

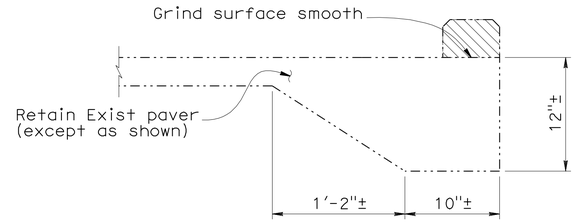

LEGENDS:
Indicates remove Exist curb (L=23'±)

SECTION T-T

No scale

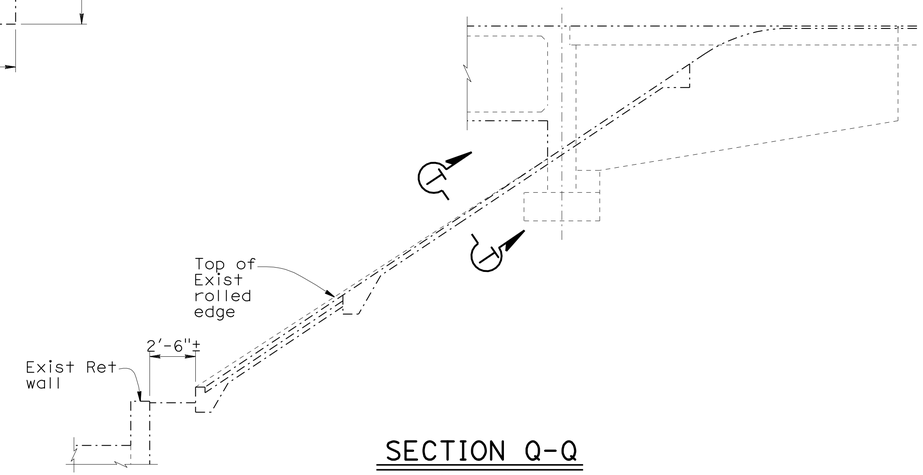

SECTION Q-Q

No scale

NOTES:
1. Conc barrier not shown.
2. Piles not shown.
3. Conc paver shall be gray color.

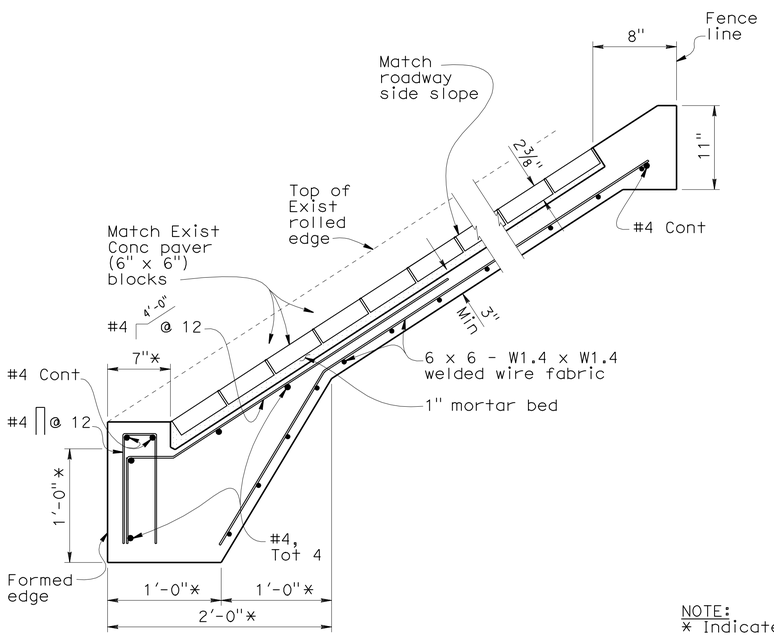

SECTION S-S

No scale

NOTE:
* Indicates match Exist

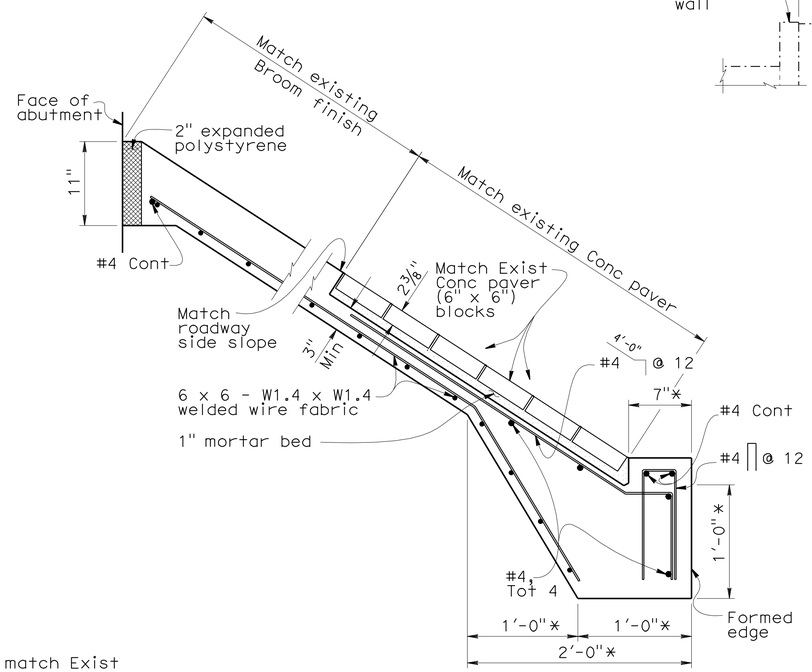

SECTION R-R

No scale

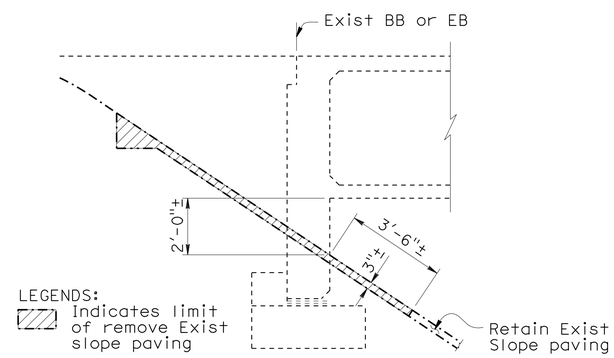

LEGENDS:
Indicates limit of remove Exist slope paving

SECTION P-P

No scale

NOTE:
THE CONTRACTOR SHALL VERIFY ALL CONTROLLING FIELD DIMENSIONS BEFORE ORDERING OR FABRICATING ANY MATERIAL.

	BY	CHECKED
DESIGN	R. Amir	A. Menke
DETAILS	T. Kusumi	R. Amir
QUANTITIES	T. Kusumi	M. Beall

STATE OF CALIFORNIA
DEPARTMENT OF TRANSPORTATION

DIVISION OF ENGINEERING SERVICES
STRUCTURE DESIGN
DESIGN BRANCH 8

BRIDGE NO. 27-0092R
POST MILE R21.47

OLIVE AVENUE UC (WIDEN)
RIGHT BRIDGE SLOPE PAVING DETAILS NO. 2

STRUCTURES DESIGN DETAIL SHEET (ENGLISH) (REV. 10/25/05)

ORIGINAL SCALE IN INCHES FOR REDUCED PLANS 0 1 2 3

CU 04
EA 264061

DISREGARD PRINTS BEARING EARLIER REVISION DATES

REVISION DATES: 12-30-09 01-14-10 02-17-10 03-03-10 03-15-10

SHEET 16 OF 21

FILE => 27-0092r-u-slope02.dgn

USERNAME => Trenard DATE PLOTTED => 16-AUG-2010 TIME PLOTTED => 13:31

DIST	COUNTY	ROUTE	POST MILES TOTAL PROJECT	SHEET No	TOTAL SHEETS
04	Mrn	101	18.6/R22.3	538	542

REGISTERED CIVIL ENGINEER — DATE 03-08-10

8-9-10
PLANS APPROVAL DATE

REGISTERED PROFESSIONAL ENGINEER — John C. Moore No. 61792 Exp. 6-30-11 CIVIL — STATE OF CALIFORNIA

The State of California or its officers or agents shall not be responsible for the accuracy or completeness of electronic copies of this plan sheet.

BENCH MARK

PRHV29 Elev. 37.6′

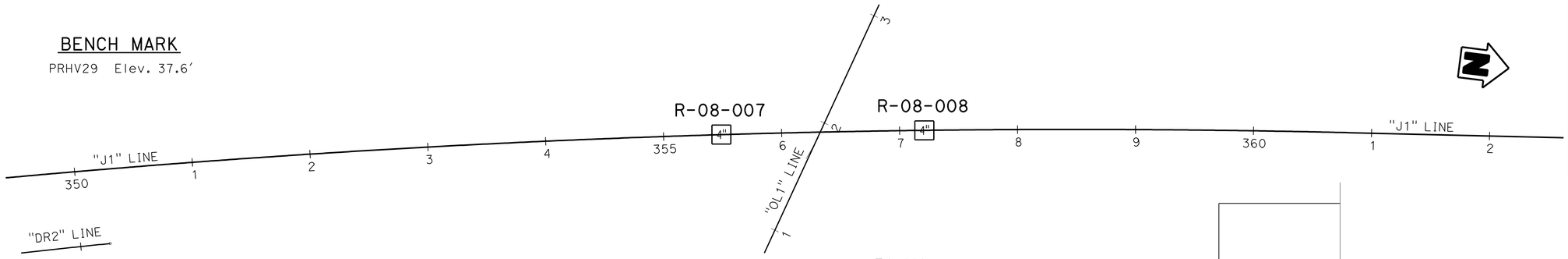

PLAN

1"=50′

PROFILE

HOR. 1"=10′
VER. 1"=10′

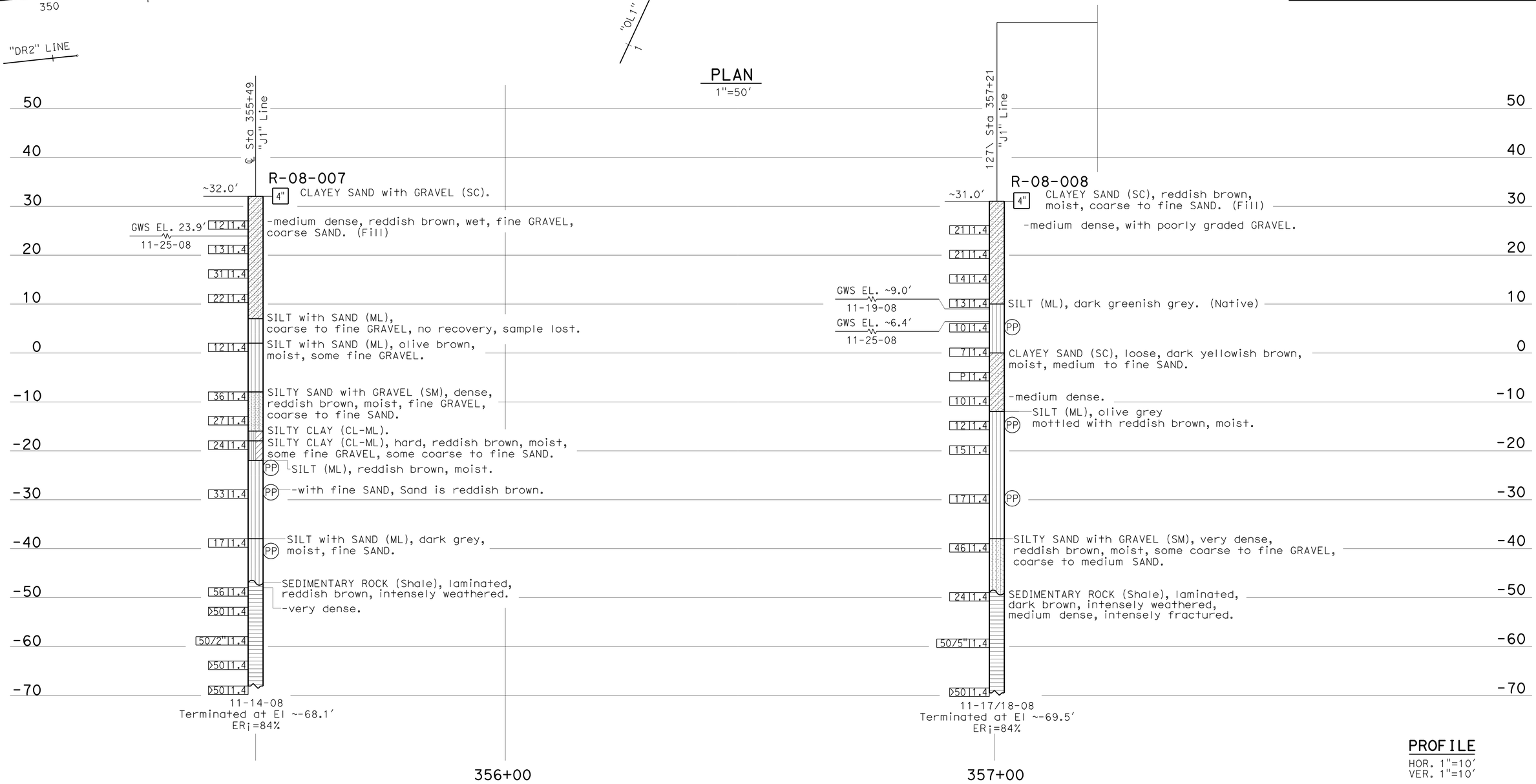

ENGINEERING SERVICES	GEOTECHNICAL SERVICES	STATE OF CALIFORNIA DEPARTMENT OF TRANSPORTATION	DIVISION OF ENGINEERING SERVICES OFFICE OF GEOTECHNICAL DESIGN BRANCH 8	BRIDGE NO. 27-0092R / POST MILES R21.47	OLIVE AVENUE UC (WIDEN) LOG OF TEST BORINGS 1 OF 5
FUNCTIONAL SUPERVISOR NAME: M. Momenzadeh	DRAWN BY: M. Reynolds / CHECKED BY: C. Risden	FIELD INVESTIGATION BY: J. Moore			

OGS CIVIL LOG OF TEST BORINGS SHEET — ORIGINAL SCALE IN INCHES FOR REDUCED PLANS 0 1 2 3 — CU 04 EA 264061 — DISREGARD PRINTS BEARING EARLIER REVISION DATES 03-15-08 — REVISION DATES — SHEET 17 OF 21

FILE => 27-0092r-z-lltb01.dgn

USERNAME => trlehard DATE PLOTTED => 16-AUG-2010 TIME PLOTTED => 13:31

DIST	COUNTY	ROUTE	POST MILES TOTAL PROJECT	SHEET No	TOTAL SHEETS
04	Mrn	101	18.6/R22.3	539	542

REGISTERED CIVIL ENGINEER — DATE 03-08-10

8-9-10
PLANS APPROVAL DATE

REGISTERED PROFESSIONAL ENGINEER — John C. Moore — No. 61792 — Exp. 6-30-11 — CIVIL — STATE OF CALIFORNIA

The State of California or its officers or agents shall not be responsible for the accuracy or completeness of electronic copies of this plan sheet.

REFERENCE: CALTRANS SOIL & ROCK LOGGING, CLASSIFICATION, AND PRESENTATION MANUAL (JUNE 2007)

CEMENTATION

Description	Criteria
Weak	Crumbles or breaks with handling or little finger pressure.
Moderate	Crumbles or breaks with considerable finger pressure.
Strong	Will not crumble or break with finger pressure.

CONSISTENCY OF COHESIVE SOILS

Description	Unconfined Compressive Strength (tsf)	Pocket Penetrometer Measurement (tsf)	Torvane Measurement (tsf)	Field Approximation
Very Soft	< 0.25	< 0.25	< 0.12	Easily penetrated several inches by fist
Soft	0.25 to 0.50	0.25 to 0.50	0.12 to 0.25	Easily penetrated several inches by thumb
Medium Stiff	0.50 to 1.0	0.50 to 1.0	0.25 to 0.50	Penetrated several inches by thumb with moderate effort
Stiff	1 to 2	1 to 2	0.50 to 1.0	Readily indented by thumb but penetrated only with great effort
Very Stiff	2 to 4	2 to 4	1.0 to 2.0	Readily indented by thumbnail
Hard	> 4.0	> 4.0	> 2.0	Indented by thumbnail with difficulty

BOREHOLE IDENTIFICATION

Symbol	Hole Type	Description
Size	A	Auger Boring
Size	R P	Rotary drilled boring Rotary percussion boring (air)
Size	R	Rotary drilled diamond core
Size	HD HA	Hand driven (1-inch soil tube) Hand Auger
●	D	Dynamic Cone Penetration Boring
▲	CPT	Cone Penetration Test (ASTM D 5778-95)
⬚	O	Other

Note: Size in inches.

PLASTICITY OF FINE-GRAINED SOILS

Description	Criteria
Nonplastic	A 1/8-inch thread cannot be rolled at any water content.
Low	The thread can barely be rolled and the lump cannot be formed when drier than the plastic limit.
Medium	The thread is easy to roll and not much time is required to reach the plastic limit. The thread cannot be rerolled after reaching the plastic limit. The lump crumbles when drier than the plastic limit.
High	It takes considerable time rolling and kneading to reach the plastic limit. The thread can be rerolled several times after reaching the plastic limit. The lump can be formed without crumbling when drier than the plastic limit.

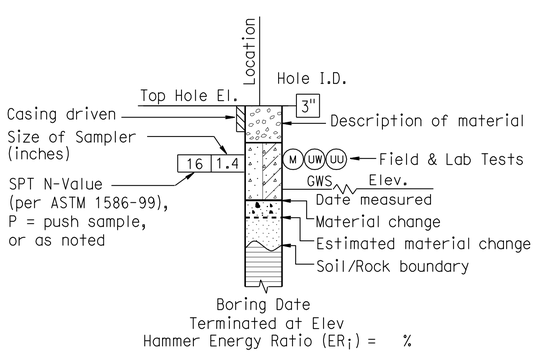

ROTARY BORING

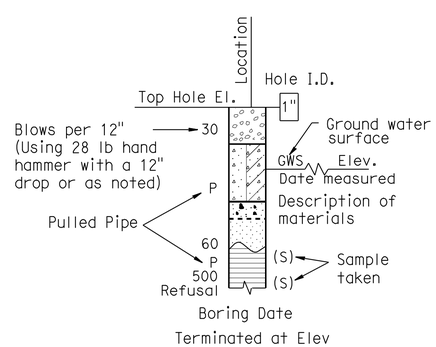

HAND BORING

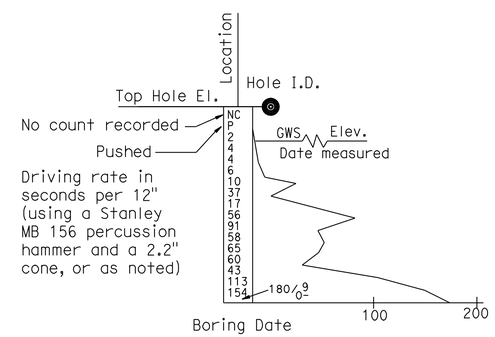

DYNAMIC CONE PENETRATION BORING

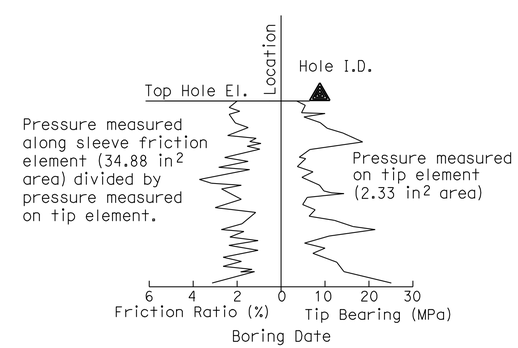

CONE PENETRATION TEST (CPT) SOUNDING

ENGINEERING SERVICES		GEOTECHNICAL SERVICES	STATE OF CALIFORNIA DEPARTMENT OF TRANSPORTATION	DIVISION OF ENGINEERING SERVICES OFFICE OF GEOTECHNICAL DESIGN BRANCH 8	BRIDGE NO. 27-0092R / POST MILE R21.47	SOIL LEGEND / LOG OF TEST BORINGS 2 of 5
FUNCTIONAL SUPERVISOR	PREPARED BY M. Reynolds					
NAME: M. Momenzadeh	CHECKED BY C. Risden	J. Moore				

GS LOTB SOIL LEGEND

ORIGINAL SCALE IN INCHES FOR REDUCED PLANS 0 1 2 3

CU 04
EA 264061

DISREGARD PRINTS BEARING EARLIER REVISION DATES → 03-15-10

REVISION DATES

SHEET 18 OF 21

FILE => 27-0092r-z-ltb02.dgn

USERNAME => tlenard DATE PLOTTED => 16-AUG-2010 TIME PLOTTED => 13:31

REFERENCE: CALTRANS SOIL & ROCK LOGGING, CLASSIFICATION, AND PRESENTATION MANUAL (JUNE 2007)

DIST	COUNTY	ROUTE	POST MILES TOTAL PROJECT	SHEET No	TOTAL SHEETS
04	Mrn	101	18.6/R22.3	540	542

REGISTERED CIVIL ENGINEER — DATE 03-08-10

8-9-10
PLANS APPROVAL DATE

REGISTERED PROFESSIONAL ENGINEER — John C. Moore — No. 61792 — Exp. 6-30-11 — CIVIL — STATE OF CALIFORNIA

The State of California or its officers or agents shall not be responsible for the accuracy or completeness of electronic copies of this plan sheet.

GROUP SYMBOLS AND NAMES

Graphic/Symbol	Group Names
GW	Well-graded GRAVEL Well-graded GRAVEL with SAND
GP	Poorly graded GRAVEL Poorly graded GRAVEL with SAND
GW-GM	Well-graded GRAVEL with SILT Well-graded GRAVEL with SILT and SAND
GW-GC	Well-graded GRAVEL with CLAY (or SILTY CLAY) Well-graded GRAVEL with CLAY and SAND (or SILTY CLAY and SAND)
GP-GM	Poorly graded GRAVEL with SILT Poorly graded GRAVEL with SILT and SAND
GP-GC	Poorly graded GRAVEL with CLAY (or SILTY CLAY) Poorly graded GRAVEL with CLAY and SAND (or SILTY CLAY and SAND)
GM	SILTY GRAVEL SILTY GRAVEL with SAND
GC	CLAYEY GRAVEL CLAYEY GRAVEL with SAND
GC-GM	SILTY, CLAYEY GRAVEL SILTY, CLAYEY GRAVEL with SAND
SW	Well-graded SAND Well-graded SAND with GRAVEL
SP	Poorly graded SAND Poorly graded SAND with GRAVEL
SW-SM	Well-graded SAND with SILT Well-graded SAND with SILT and GRAVEL
SW-SC	Well-graded SAND with CLAY (or SILTY CLAY) Well-graded SAND with CLAY and GRAVEL (or SILTY CLAY and GRAVEL)
SP-SM	Poorly graded SAND with SILT Poorly graded SAND with SILT and GRAVEL
SP-SC	Poorly graded SAND with CLAY (or SILTY CLAY) Poorly graded SAND with CLAY and GRAVEL (or SILTY CLAY and GRAVEL)
SM	SILTY SAND SILTY SAND with GRAVEL
SC	CLAYEY SAND CLAYEY SAND with GRAVEL
SC-SM	SILTY, CLAYEY SAND SILTY, CLAYEY SAND with GRAVEL
PT	PEAT
	COBBLES COBBLES and BOULDERS BOULDERS

Graphic/Symbol	Group Names
CL	Lean CLAY Lean CLAY with SAND Lean CLAY with GRAVEL SANDY lean CLAY SANDY lean CLAY with GRAVEL GRAVELLY lean CLAY GRAVELLY lean CLAY with SAND
CL-ML	SILTY CLAY SILTY CLAY with SAND SILTY CLAY with GRAVEL SANDY SILTY CLAY SANDY SILTY CLAY with GRAVEL GRAVELLY SILTY CLAY GRAVELLY SILTY CLAY with SAND
ML	SILT SILT with SAND SILT with GRAVEL SANDY SILT SANDY SILT with GRAVEL GRAVELLY SILT GRAVELLY SILT with SAND
OL	ORGANIC lean CLAY ORGANIC lean CLAY with SAND ORGANIC lean CLAY with GRAVEL SANDY ORGANIC lean CLAY SANDY ORGANIC lean CLAY with GRAVEL GRAVELLY ORGANIC lean CLAY GRAVELLY ORGANIC lean CLAY with SAND
OL	ORGANIC SILT ORGANIC SILT with SAND ORGANIC SILT with GRAVEL SANDY ORGANIC SILT SANDY ORGANIC SILT with GRAVEL GRAVELLY ORGANIC SILT GRAVELLY ORGANIC SILT with SAND
CH	Fat CLAY Fat CLAY with SAND Fat CLAY with GRAVEL SANDY fat CLAY SANDY fat CLAY with GRAVEL GRAVELLY fat CLAY GRAVELLY fat CLAY with SAND
MH	Elastic SILT Elastic SILT with SAND Elastic SILT with GRAVEL SANDY elastic SILT SANDY elastic SILT with GRAVEL GRAVELLY elastic SILT GRAVELLY elastic SILT with SAND
OH	ORGANIC fat CLAY ORGANIC fat CLAY with SAND ORGANIC fat CLAY with GRAVEL SANDY ORGANIC fat CLAY SANDY ORGANIC fat CLAY with GRAVEL GRAVELLY ORGANIC fat CLAY GRAVELLY ORGANIC fat CLAY with SAND
OH	ORGANIC elastic SILT ORGANIC elastic SILT with SAND ORGANIC elastic SILT with GRAVEL SANDY ORGANIC elastic SILT SANDY ORGANIC elastic SILT with GRAVEL GRAVELLY ORGANIC elastic SILT GRAVELLY ORGANIC elastic SILT with SAND
OL/OH	ORGANIC SOIL ORGANIC SOIL with SAND ORGANIC SOIL with GRAVEL SANDY ORGANIC SOIL SANDY ORGANIC SOIL with GRAVEL GRAVELLY ORGANIC SOIL GRAVELLY ORGANIC SOIL with SAND

FIELD AND LABORATORY TESTING

- (C) Consolidation (ASTM D 2435)
- (CL) Collapse Potential (ASTM D 5333)
- (CP) Compaction Curve (CTM 216)
- (CR) Corrosivity Testing (CTM 643, CTM 422, CTM 417)
- (CU) Consolidated Undrained Triaxial (ASTM D 4767)
- (DS) Direct Shear (ASTM D 3080)
- (EI) Expansion Index (ASTM D 4829)
- (M) Moisture Content (ASTM D 2216)
- (OC) Organic Content-% (ASTM D 2974)
- (P) Permeability (CTM 220)
- (PA) Particle Size Analysis (ASTM D 422)
- (PI) Plasticity Index (AASHTO T 90) Liquid Limit (AASHTO T 89)
- (PL) Point Load Index (ASTM D 5731)
- (PM) Pressure Meter
- (PP) Pocket Penetrometer
- (R) R-Value (CTM 301)
- (SE) Sand Equivalent (CTM 217)
- (SG) Specific Gravity (AASHTO T 100)
- (SL) Shrinkage Limit (ASTM D 427)
- (SW) Swell Potential (ASTM D 4546)
- (TV) Pocket Torvane
- (UC) Unconfined Compression-Soil (ASTM D 2166) Unconfined Compression-Rock (ASTM D 2938)
- (UU) Unconsolidated Undrained Triaxial (ASTM D 2850)
- (UW) Unit Weight (ASTM D 4767)
- (VS) Vane Shear (AASHTO T 223)

APPARENT DENSITY OF COHESIONLESS SOILS

Description	SPT N_{60} (Blows / 12 inches)
Very loose	0 - 4
Loose	5 - 10
Medium Dense	11 - 30
Dense	31 - 50
Very Dense	> 50

MOISTURE

Description	Criteria
Dry	Absence of moisture, dusty, dry to the touch
Moist	Damp but no visible water
Wet	Visible free water, usually soil is below water table

PERCENT OR PROPORTION OF SOILS

Description	Criteria
Trace	Particles are present but estimated to be less than 5%
Few	5 to 10%
Little	15 to 25%
Some	30 to 45%
Mostly	50 to 100%

PARTICLE SIZE

Description		Size
Boulder		> 12"
Cobble		3" to 12"
Gravel	Coarse	3/4" to 3"
	Fine	No. 4 to 3/4"
Sand	Coarse	No. 10 to No. 4
	Medium	No. 40 to No. 10
	Fine	No. 200 to No. 40

ENGINEERING SERVICES		GEOTECHNICAL SERVICES
FUNCTIONAL SUPERVISOR	PREPARED BY M. Reynolds	
NAME: M. Momenzadeh	CHECKED BY C. Risden	J. Moore

STATE OF CALIFORNIA DEPARTMENT OF TRANSPORTATION

DIVISION OF ENGINEERING SERVICES OFFICE OF GEOTECHNICAL DESIGN BRANCH 8

BRIDGE NO. 27-0092R
POST MILE R21.47

SOIL LEGEND
LOG OF TEST BORINGS 3 of 5

GS LOTB SOIL LEGEND

ORIGINAL SCALE IN INCHES FOR REDUCED PLANS 0 1 2 3

CU 04
EA 264061

DISREGARD PRINTS BEARING EARLIER REVISION DATES 03-15-10

REVISION DATES

SHEET 19 OF 21

FILE => 27-0092r-z-1tb03.dgn

USERNAME => trlenard DATE PLOTTED => 16-AUG-2010 TIME PLOTTED => 13:31

REFERENCE: CALTRANS SOIL & ROCK LOGGING, CLASSIFICATION, AND PRESENTATION MANUAL (JUNE 2007)

DIST	COUNTY	ROUTE	POST MILES TOTAL PROJECT	SHEET No	TOTAL SHEETS
04	Mrn	101	18.6/R22.3	541	542

REGISTERED CIVIL ENGINEER — DATE 03-08-10

8-9-10
PLANS APPROVAL DATE

REGISTERED PROFESSIONAL ENGINEER — John C. Moore — No. 61792 — Exp. 6-30-11 — CIVIL — STATE OF CALIFORNIA

The State of California or its officers or agents shall not be responsible for the accuracy or completeness of electronic copies of this plan sheet.

PERCENT CORE RECOVERY (REC) & ROCK QUALITY DESIGNATION (RQD)

$$REC = \frac{\sum \text{Length of the recovered core pieces (inches)}}{\text{Total length of core run (inches)}} \times 100\%$$

$$RQD = \frac{\sum \text{Length of intact core pieces} \geq 4''}{\text{Total length of core run (inches)}} \times 100\%$$

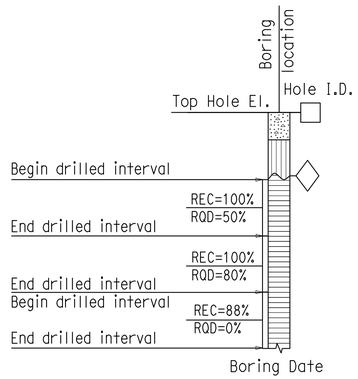

RELATIVE STRENGTH OF INTACT ROCK

Term	Uniaxial Compressive Strength (PSI)
Extremely Strong	> 30,000
Very Strong	14,500 - 30,000
Strong	7,000 - 14,500
Medium Strong	3,500 - 7,000
Weak	700 - 3,500
Very Weak	150 - 700
Extremely Weak	< 150

BEDDING SPACING

Description	Thickness / Spacing
Massive	Greater than 10 ft
Very thickly bedded	3 to 10 ft
Thickly bedded	1 to 3 ft
Moderately bedded	3-5/8" to 1 ft
Thinly bedded	1-1/4" to 3-5/8"
Very thinly bedded	3/8" to 1-1/4"
Laminated	Less than 3/8"

LEGEND OF ROCK MATERIALS

- IGNEOUS ROCK
- SEDIMENTARY ROCK
- METAMORPHIC ROCK

ROCK HARDNESS

Description	Criteria
Extremely Hard	Specimen cannot be scratched with a pocket knife or sharp pick; can only be chipped with repeated heavy hammer blows.
Very Hard	Specimen cannot be scratched with a pocket knife or sharp pick. Breaks with repeated heavy hammer blows.
Hard	Specimen can be scratched with a pocket knife or sharp pick with difficulty (heavy pressure). Heavy hammer blows required to break specimen.
Moderately Hard	Specimen can be scratched with pocket knife or sharp pick with light or moderate pressure. Core breaks with moderate hammer pressure.
Moderately Soft	Specimen can be grooved 1/6" deep with a pocket knife or sharp pick with moderate or heavy pressure. Breaks with light hammer blow or heavy manual pressure.
Soft	Specimen can be grooved or gouged easily by a pocket knife or sharp pick with light pressure, can be scratched with fingernail. Breaks with light to moderate manual pressure.
Very Soft	Specimen can be readily indented, grooved or gouged with fingernail, or carved with a pocket knife. Breaks with light manual pressure.

FRACTURE DENSITY

Description	Observed Fracture Density
Unfractured	No fractures.
Very slightly fractured	Lengths greater than 3 feet.
Slightly fractured	Lengths from 1 to 3 feet with few lengths less than 1 foot or greater than 3 feet.
Moderately fractured	Lengths mostly in 4" to 1 foot range with most lengths about 8"
Intensely fractured	Lengths average from 1 to 4" with scattered fragmented intervals with lengths less than 4"
Very intensely fractured	Mostly chips and fragments with a few scattered short core lengths.

Combination descriptors (such as "Very intensely to intensely fractured") are used where equal distribution of both fracture density characteristics is present over a significant interval or exposure, or where characteristics are "in between" the descriptor definitions. Only two adjacent descriptors may be combined.

WEATHERING DESCRIPTORS FOR INTACT ROCK

Description	Diagnostic features					General Characteristics
	Chemical Weathering-Discoloration and/or oxidation		Mechanical Weathering-Grain boundary conditions (disaggregation) primarily for granitics and some coarse-grained sediments	Texture and Solutioning		
	Body of Rock	Fracture Surfaces		Texture	Solutioning	
Fresh	No discoloration, not oxidized.	No discoloration or oxidation.	No separation, intact (tight).	No change.	No solutioning.	Hammer rings when crystalline rocks are struck.
Slightly Weathered	Discoloration or oxidation is limited to surface of, or short distance from, fractures; some feldspar crystals are dull.	Minor to complete discoloration or oxidation of most surfaces.	No visible separation, intact (tight).	Preserved.	Minor leaching of some soluble minerals may be noted.	Hammer rings when crystalline rocks are struck. Body of rock not weakened.
Moderately Weathered	Discoloration or oxidation extends from fractures usually throughout; Fe-Mg minerals are "rusty," feldspar crystals are "cloudy."	All fracture surfaces are discolored or oxidized.	Partial separation of boundaries visible.	Generally preserved.	Soluble minerals may be mostly leached.	Hammer does not ring when rock is struck. Body of rock is slightly weakened.
Intensely Weathered	Discoloration or oxidation throughout; all feldspars and Fe-Mg minerals are altered to clay to some extent; or chemical alteration produces in-situ disaggregation, see grain boundary conditions.	All fracture surfaces are discolored or oxidized, surfaces friable.	Partial separation, rock is friable; in semiarid conditions granitics are disaggregated.	Texture altered by chemical disintegration (hydration, argillation).	Leaching of soluble minerals may be complete.	Dull sound when struck with hammer, usually can be broken with moderate to heavy manual pressure or by light hammer blow without reference to planes of weakness such as incipient or hairline fractures, or veinlets. Rock is significantly weakened.
Decomposed	Discolored or oxidized throughout, but resistant minerals such as quartz may be unaltered; all feldspars and Fe-Mg minerals are completely altered to clay.		Complete separation of grain boundaries (disaggregated).	Resembles a soil, partial or complete remnant rock structure may be preserved; leaching of soluble minerals usually complete.		Can be granulated by hand. Resistant minerals such as quartz may be present as "stringers" or "dikes."

Combination descriptors (such as "slightly weathered to fresh") are permissible where equal distribution of both weathering characteristics is present over significant intervals or where characteristics present are "in between" the diagnostic feature. However, combination descriptors should not be used where significant, identifiable zones can be delineated. Only two adjacent descriptors may be combined. "Very intensely weathered" is the combination descriptor for "intensely weathered to decomposed."

ENGINEERING SERVICES		GEOTECHNICAL SERVICES
FUNCTIONAL SUPERVISOR	PREPARED BY M. Reynolds	FIELD INVESTIGATION BY:
NAME: M. Momenzadeh	CHECKED BY C. Risden	J. Moore

STATE OF CALIFORNIA DEPARTMENT OF TRANSPORTATION

DIVISION OF ENGINEERING SERVICES OFFICE OF GEOTECHNICAL DESIGN BRANCH 8

BRIDGE NO. 27-0092R
POST MILE R21.47

ROCK LEGEND
LOG OF TEST BORINGS

GS LOTB ROCK LEGEND

ORIGINAL SCALE IN INCHES FOR REDUCED PLANS 0 1 2 3

CU 04
EA 264061

DISREGARD PRINTS BEARING EARLIER REVISION DATES 03-15-10

REVISION DATES

SHEET 20 OF 21

FILE => 27-0092r-z-1tb04.dgn

USERNAME => trlenard DATE PLOTTED => 16-AUG-2010 TIME PLOTTED => 13:31

DIST.	COUNTY	ROUTE	POST MILES—TOTAL PROJECT	SHEET NO.	TOTAL SHEETS
04	Mrn	101	18.2/23.3	267	3/12

DESIGN SECTION SUPERVISOR — REGISTERED CIVIL ENGINEER NO. 9169

DATE APPROVED November 8, 1971

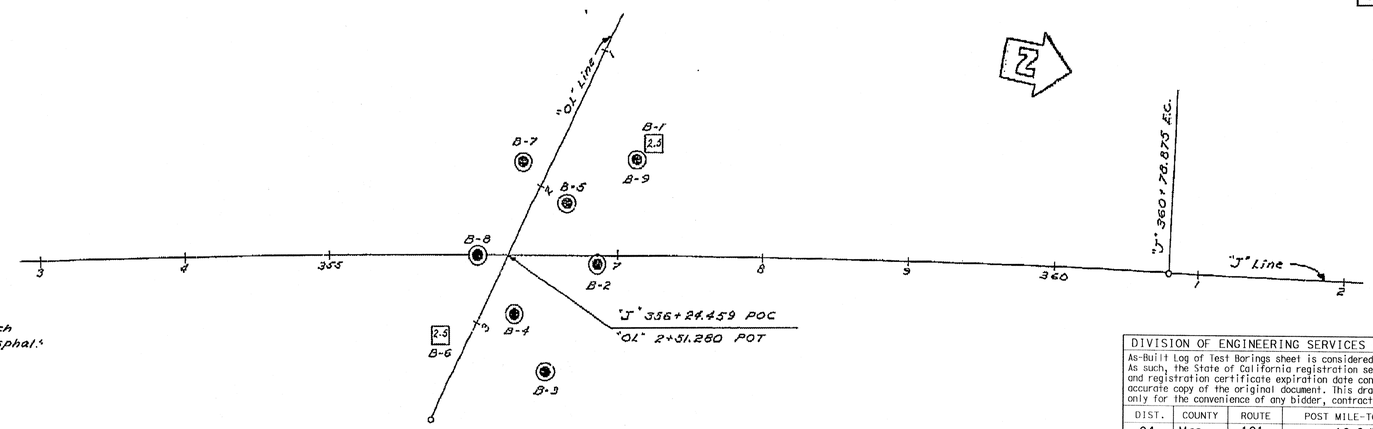

BM #P7 Pt.13
Fd RR Spike with punch mark set flush with asphalt S. edge of Olive Ave. 615' Lt. "J" 356+95±
Elev. 11.69

PLAN
1"=50'

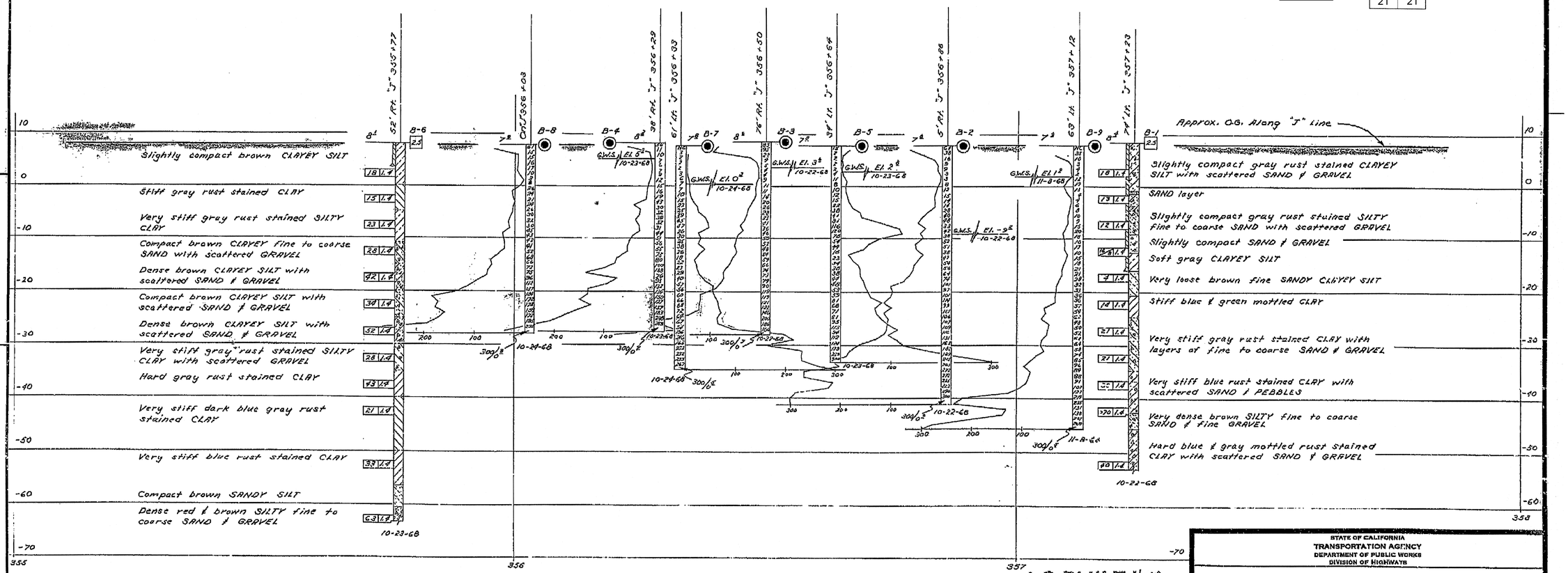

PROFILE
1"=10'

LEGEND OF BORING OPERATIONS

PENETROMETER — 2½" CONE PENETROMETER — SAMPLER BORING (DRY) — ROTARY BORING (WET) — AUGER BORING (DRY) — JET BORING — CORE BORING — TEST PIT

LEGEND OF EARTH MATERIALS

GRAVEL — SAND — SILT — CLAY — SANDY CLAY OR CLAYEY SAND — SANDY SILT OR SILTY SAND — SILTY CLAY OR CLAYEY SILT — PEAT AND ORGANIC MATTER — FILL MATERIAL — IGNEOUS ROCK — SEDIMENTARY ROCK — METAMORPHIC ROCK

CLASSIFICATION OF MATERIAL BASED ON STANDARD GRADE SIZE LIMITS

DIAGRAM SHOWING THE BASIS FOR ESTIMATES OF GRADE SIZE DISTRIBUTION USED IN DETERMINATION OF CLASS NAMES.
IT SHOULD BE REMEMBERED THAT APPROXIMATE THE TERMS "GRAVELLY" MAY BE ADDED TO THE CLASS NAME, VIZ. "GRAVELLY SAND". THE TERMS "GRAVELLY" AND "SANDY" ARE USED WHEN USED TO DESCRIBE SAND, SILT AND GRAVEL, REFER TO THE ABOVE GRADE SIZE LIMITS.

NOTE: Classification of earth material as shown on this sheet is based upon field inspection and is not to be construed to imply mechanical analysis.

FIELD STUDY — DRAWN — CHECKED — Approval Recommended by

BRIDGE DEPARTMENT
ENGINEERING GEOLOGY SECTION

267

DIVISION OF ENGINEERING SERVICES - GEOTECHNICAL SERVICES

As-Built Log of Test Borings sheet is considered an informational document only. As such, the State of California registration seal with signature, license number and registration certificate expiration date confirm that this is a true and accurate copy of the original document. This drawing is available and presented only for the convenience of any bidder, contractor or other interested party.

DIST.	COUNTY	ROUTE	POST MILE-TOTAL PROJECT	Sheet No.	Total Sheets
04	Mrn	101	18.6/R22.3	542	542

REGISTERED CIVIL ENGINEER — DATE 3/8/10

REGISTERED PROFESSIONAL ENGINEER — John Moore — No. C61792 — Exp. 6-30-11 — CIVIL — STATE OF CALIFORNIA

OLIVE AVENUE UC (WIDEN)

LOG OF TEST BORINGS

5 OF 5

NOTE: A COPY OF THIS LOG OF TEST BORINGS IS AVAILABLE AT OFFICE OF STRUCTURE MAINTENANCE AND INVESTIGATIONS, SACRAMENTO, CALIFORNIA

CU: 04
EA: 264061

BRIDGE No. 27-0092R

Sheet 21 of 21

TO ACCOMPANY PLANS DATED 8-9-10

MICROFILMED

AS BUILT PLANS
Contract No. 04-120374
Date Completed —
Document No. 4000 81148

AS BUILT None
CORRECTIONS BY C.S. Foster
CONTRACT NO. 04-120373
DATE 10-27-75

STATE OF CALIFORNIA
TRANSPORTATION AGENCY
DEPARTMENT OF PUBLIC WORKS
DIVISION OF HIGHWAYS

OLIVE AVE U.C.

LOG OF TEST BORINGS

BRIDGE NO.	POST MILE	DRAWING NO.	SHEET	OF
27-92 R/L	21.5		12	12

REVISION DATES (PRELIMINARY STAGE ONLY)

WO 120371
CU 04219 PR-2792-2

Disregard prints bearing earlier revision dates

FILENAME => 27-0092r-z-ltb05.tif