Dist	COUNTY	ROUTE	POST MILES TOTAL PROJECT	SHEET No.	TOTAL SHEETS
04	Mrn	101	18.6/R22.3	101	542

REGISTERED CIVIL ENGINEER 03-15-10 DATE

8-9-10
PLANS APPROVAL DATE

REGISTERED PROFESSIONAL ENGINEER ROBERT J. NIXON No. C69123 Exp. 6-30-10 CIVIL STATE OF CALIFORNIA

THE STATE OF CALIFORNIA OR ITS OFFICERS OR AGENTS SHALL NOT BE RESPONSIBLE FOR THE ACCURACY OR COMPLETENESS OF SCANNED COPIES OF THIS PLAN SHEET.

NOTES:

1. UNLESS SHOWN OTHERWISE, ALL DRAINAGE INLET GRATES SHALL BE DEPRESSED 0.1′ FROM THE ADJACENT GUTTER FLOW LINE.
2. CONTROL POINT FOR PLACEMENT OF DRAINAGE INLET SHALL BE THE CENTER-CENTER OF DI OR CENTER DI AT GFL. SEE SPECIFIC PROFILE FOR DETAILS AND DD-3 SHEET.
3. ALL DRAINAGE INLETS WITH SIDE OPENING AT MEDIAN BARRIER REQUIRE SPECIAL CONSTRUCTION\SURVEY CONTROL. SIDE OPENING OF DRAINAGE INLET SHALL NOT PROTRUDE BEYOND THE FINISHED FACE OF THE CONCRETE BARRIER, SEE DD-3 SHEET.
4. CONTRACTOR SHALL REMOVE ALL DELETERIOUS MATERIAL FROM CULV AND DRAINAGE INLET BEFORE COMPLETION OF "CAP INLET" CONSTRUCTION. CAP INLET CONSTRUCTION SHALL NOT ADVERSELY IMPACT THE DRAINAGE CHARACTERISTIC OF THE EXISTING CULVERT AND THE ULTIMATE OUTFALL.
5. UNLESS OTHERWISE NOTED, ABANDON ALL EDGE DRAIN OUTLETS AND VENTS WITH CONNECTION TO DRAINAGE INLETS.
6. CONCRETE BENCHING REQUIRED AT ALL NEW AND MODIFIED DRAINAGE INLETS, SEE DD-1, DD-3 SHEETS.
7. DOWNDRAIN ANCHOR ASSEMBLY SHOWN APPROXIMATE. EXACT LOCATION TO BE DETERMINED BY THE ENGINEER.
8. ALL LOC. OF IMPACTED DI'S REMOVE CONC. APRON. PAID FOR SEPERATELY IN QUANTITIES.
9. APRON SHALL BE CONC, BUILT ACCORDING TO STANDARD PLANS WITH A DEPTH OF 0.5′. SEE DD-5, DD-6 SHEETS.
10. SALVAGE GRATE ON EXISTING DRAINAGE INLETS. SEE QUANTITY SHEETS.
11. REMOVE CONCRETE APRON ON ALL IMPACTED DRAINAGE INLETS. PAID FOR SEPERATE IN QUANTITIES.

LEGEND

- CONNECT TO EXISTING DRAINAGE INLET, SEE DD-4 SHT
- CONCRETE COLLAR, SEE DD-1 SHT
- EXISTING CULVERT
- PROPOSED CULVERT
- # SEE LAYOUT SHEETS FOR HMA DIKE LIMITS

ABBREVIATIONS

OSRCP	OVAL SHAPED REINFORCED CONCRETE PIPE
VP	VERTICAL PIPE
GFL	GUTTER FLOW LINE

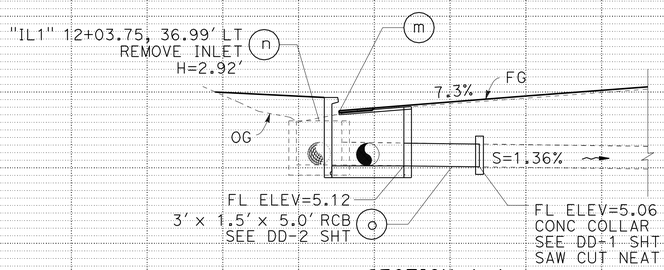

SECTION A-A

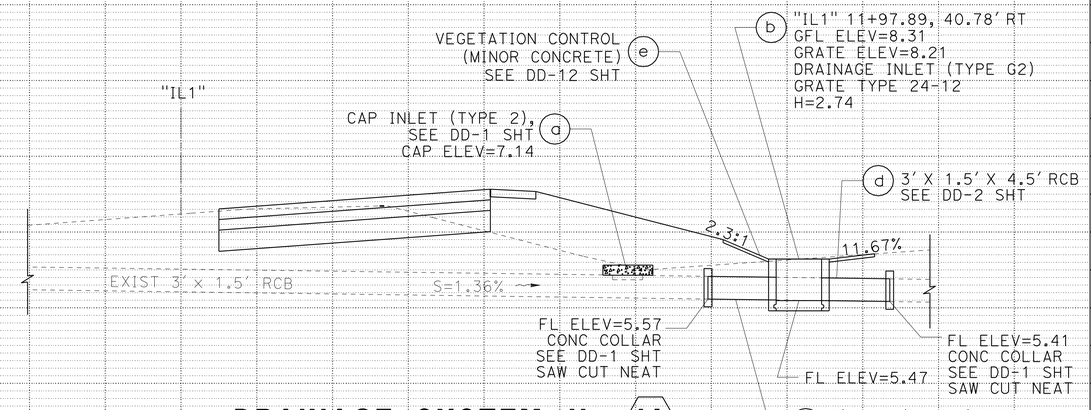

DRAINAGE SYSTEM No. 1A

"IL1" 11+97.89, 40.78′ RT, "IL1" 12+01.43, 29.48′ RT

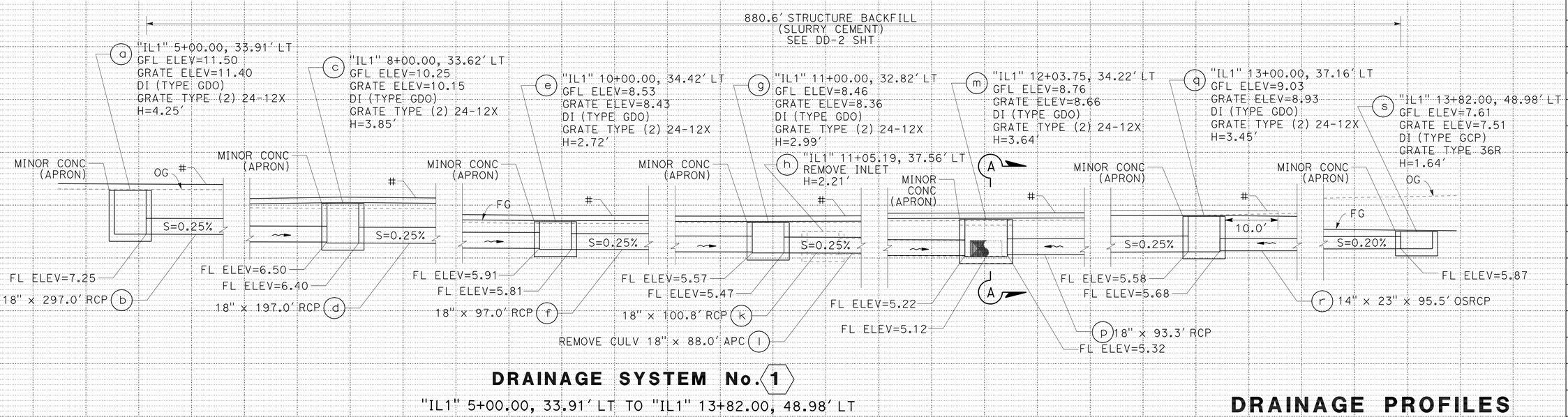

DRAINAGE SYSTEM No. 1

"IL1" 5+00.00, 33.91′ LT TO "IL1" 13+82.00, 48.98′ LT

DRAINAGE PROFILES

SCALE: 1" = 5′ HORIZ
1" = 5′ VERT

DP-1

REVISED BY | DATE REVISED
TRAVIS GURNEY | CHRIS GAIDO
CALCULATED-DESIGNED BY | CHECKED BY
FUNCTIONAL SUPERVISOR
JOHN L. MARTIN

STATE OF CALIFORNIA - DEPARTMENT OF TRANSPORTATION
Caltrans DESIGN

P:\proj2\04\26406\design\DCCR\426406ib001.dgn

LAST REVISION 03-15-10 | DATE PLOTTED => 16-AUG-2010 | TIME PLOTTED => 10:29

Dist	COUNTY	ROUTE	POST MILES TOTAL PROJECT	SHEET No.	TOTAL SHEETS
04	Mrn	101	18.6/R22.3	102	542

REGISTERED CIVIL ENGINEER 03-15-10 DATE

8-9-10
PLANS APPROVAL DATE

REGISTERED PROFESSIONAL ENGINEER ROBERT J. NIXON No. C69123 Exp. 6-30-10 CIVIL STATE OF CALIFORNIA

THE STATE OF CALIFORNIA OR ITS OFFICERS OR AGENTS SHALL NOT BE RESPONSIBLE FOR THE ACCURACY OR COMPLETENESS OF SCANNED COPIES OF THIS PLAN SHEET.

NOTES:

1. SEE STANDARD PLAN D89 FOR REINFORCEMENT DETAILS.
2. DRILL AND BOND #4 BARS WITH MINIMUM 6" EMBEDMENT AT 8" SPACING.
3. STRUCTURE BACKFILL (SLURRY CEMENT) TO BE PLACED BETWEEN NB OUTSIDE EP AND SB S NOVATO BLVD EXIT RAMP EP.
4. ANCHOR ENDS OF 54" RCP PRIOR TO BACKFILLING TO PREVENT FLOATING.
5. USE CL2 AB TO STABILIZE TRENCH SUBGRADE AS NECESSARY

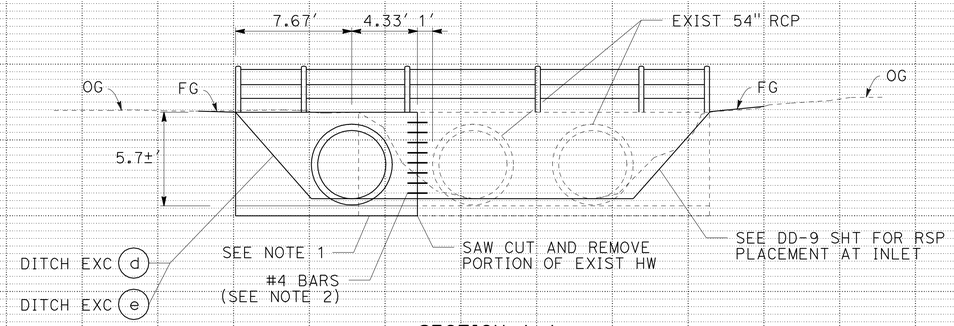

SECTION A-A

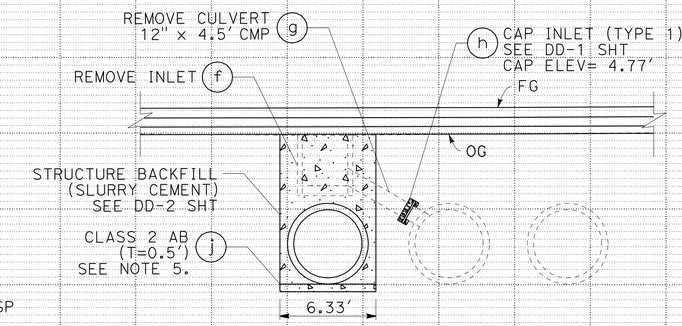

SECTION B-B

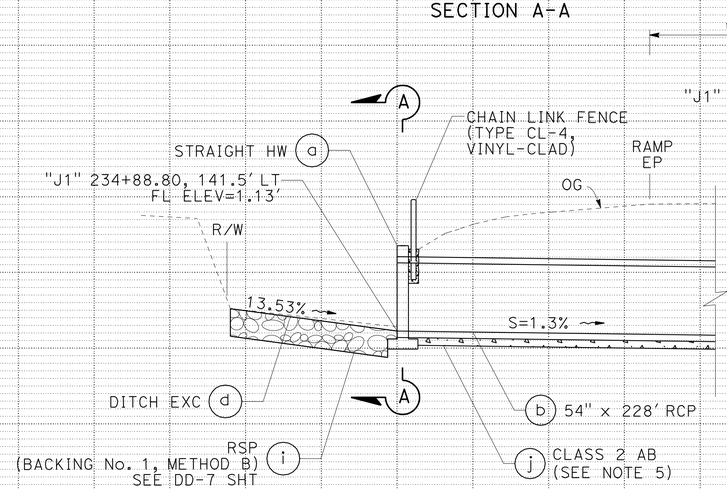

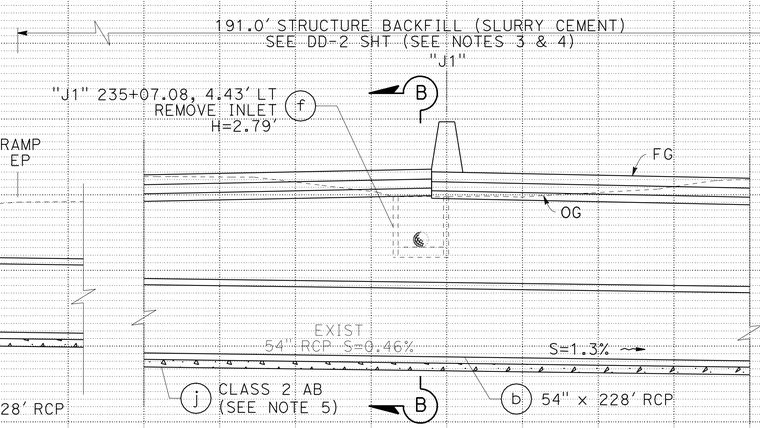

DRAINAGE SYSTEM No. 2

"J1" 234+88, 141.5' LT - "J1" 234+88, 105.0' RT

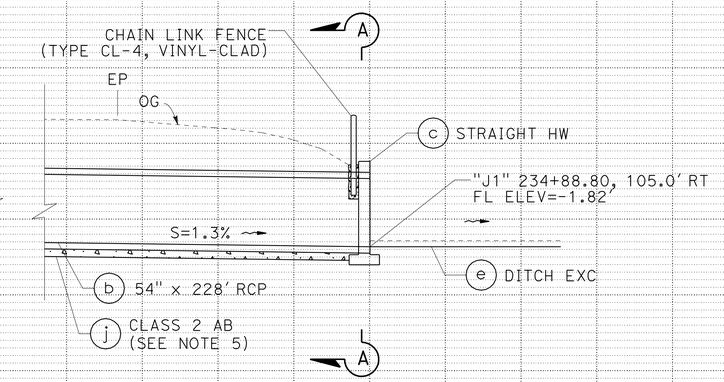

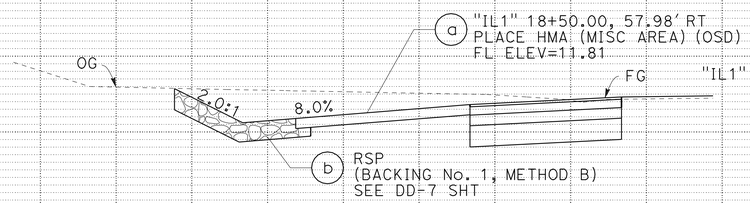

DRAINAGE SYSTEM No. 1B

"IL1" 18+50.00, 57.98' LT

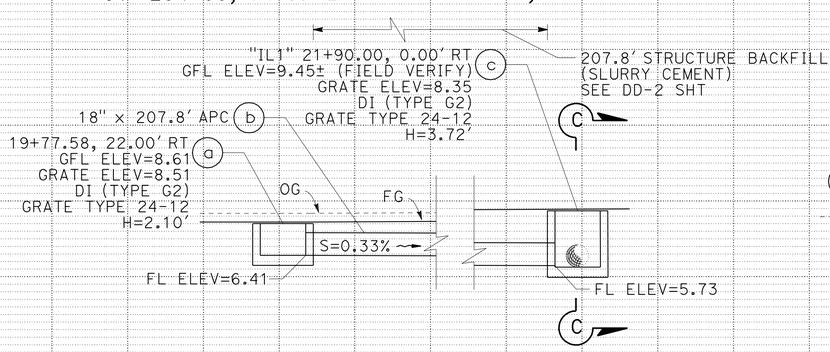

DRAINAGE SYSTEM No. 1C

"IL1" 19+77.58, 22.00' RT TO 22+02.76, 9.89' RT

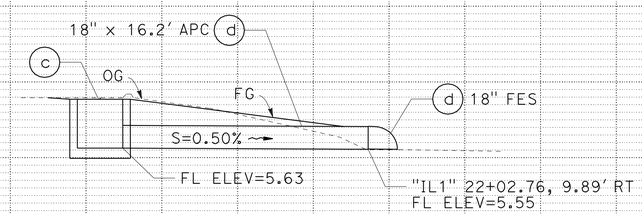

SECTION C-C

DRAINAGE PROFILES

SCALE: 1" = 5' HORIZ
1" = 5' VERT

DP-2

REVISED BY | DATE REVISED
TOBY CRAWFORD | CHRIS GAIDO
CALCULATED-DESIGNED BY | CHECKED BY
FUNCTIONAL SUPERVISOR: JOHN L. MARTIN

STATE OF CALIFORNIA - DEPARTMENT OF TRANSPORTATION
Caltrans DESIGN

P:\proj2\04\26406\design\ps&e\426406ib002.dgn

LAST REVISION 03-15-10 | DATE PLOTTED => 16-AUG-2010 | TIME PLOTTED => 10:29

Dist	COUNTY	ROUTE	POST MILES TOTAL PROJECT	SHEET No.	TOTAL SHEETS
04	Mrn	101	18.6/R22.3	103	542

REGISTERED CIVIL ENGINEER 03-15-10 DATE

8-9-10
PLANS APPROVAL DATE

REGISTERED PROFESSIONAL ENGINEER ROBERT J. NIXON No. C69123 Exp. 6-30-10 CIVIL STATE OF CALIFORNIA

THE STATE OF CALIFORNIA OR ITS OFFICERS OR AGENTS SHALL NOT BE RESPONSIBLE FOR THE ACCURACY OR COMPLETENESS OF SCANNED COPIES OF THIS PLAN SHEET.

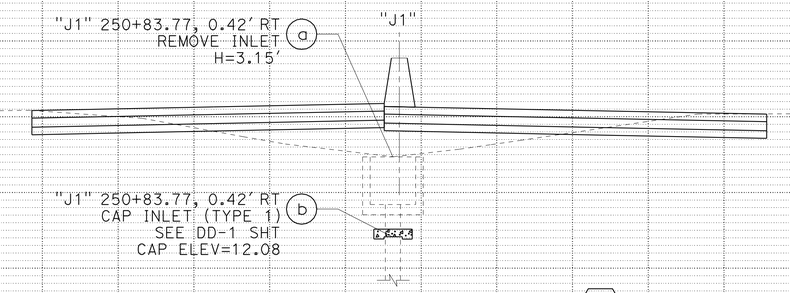

DRAINAGE SYSTEM No. 4

"J1" 250+83.77, 0.42' LT

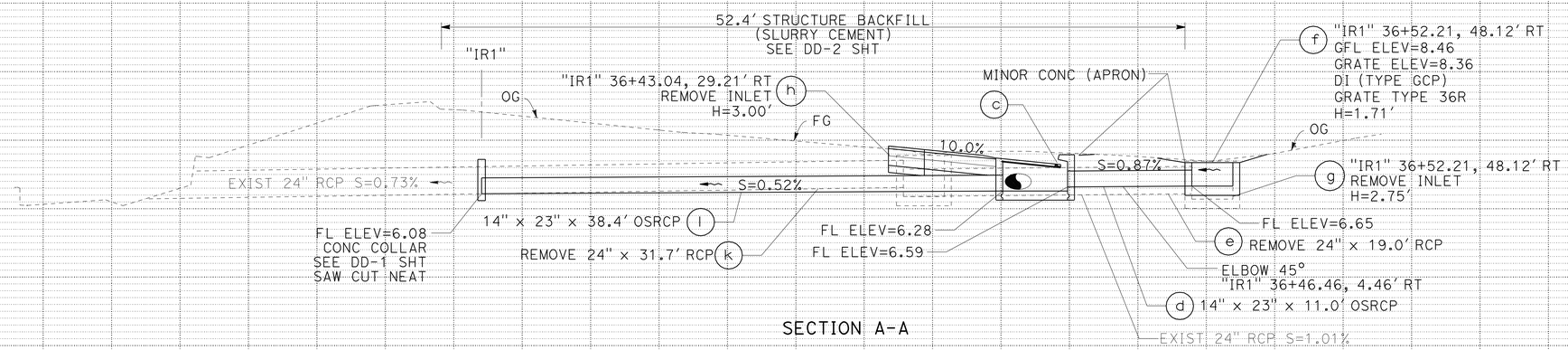

SECTION A-A

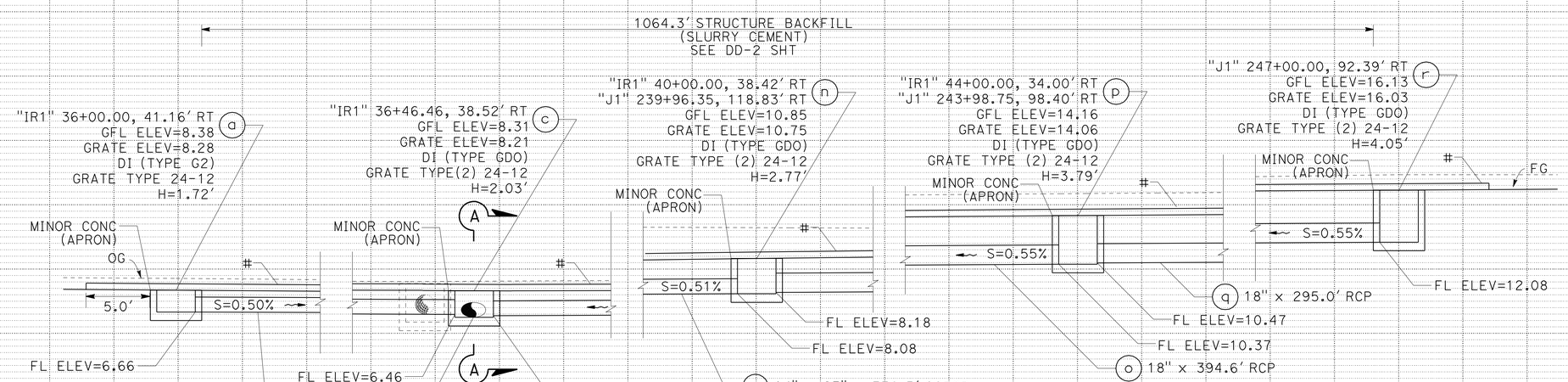

DRAINAGE SYSTEM No. 3

"IR1" 36+00.00, 41.16' RT, "J1" 247+00.00, 92.39' RT

DRAINAGE PROFILES

SCALE: 1" = 5' HORIZ
1" = 5' VERT

DP-3

REVISED BY | DATE REVISED
TRAVIS GURNEY | CHRIS GAIDO
CALCULATED-DESIGNED BY | CHECKED BY
FUNCTIONAL SUPERVISOR: JOHN L. MARTIN

STATE OF CALIFORNIA - DEPARTMENT OF TRANSPORTATION
Caltrans DESIGN

P:\proj2\04\26406\design\DCCR\426406ib003.dgn

LAST REVISION 12-14-09 | DATE PLOTTED => 16-AUG-2010 | TIME PLOTTED => 10:30

Dist	COUNTY	ROUTE	POST MILES TOTAL PROJECT	SHEET No.	TOTAL SHEETS
04	Mrn	101	18.6/R22.3	104	542

REGISTERED CIVIL ENGINEER 03-15-10 DATE

8-9-10
PLANS APPROVAL DATE

REGISTERED PROFESSIONAL ENGINEER ROBERT J. NIXON No. C69123 Exp. 6-30-10 CIVIL STATE OF CALIFORNIA

THE STATE OF CALIFORNIA OR ITS OFFICERS OR AGENTS SHALL NOT BE RESPONSIBLE FOR THE ACCURACY OR COMPLETENESS OF SCANNED COPIES OF THIS PLAN SHEET.

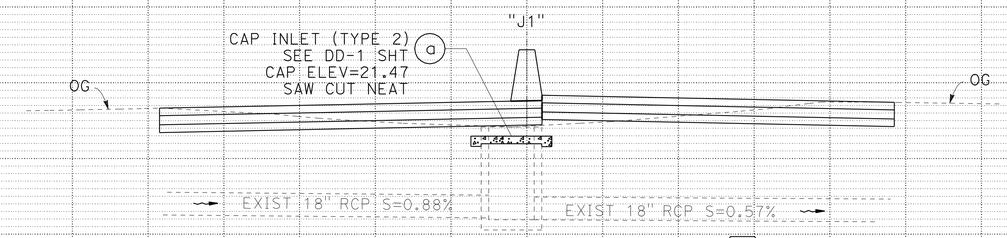

DRAINAGE SYSTEM No. 7

"J1" 255+49.33, 1.02' LT

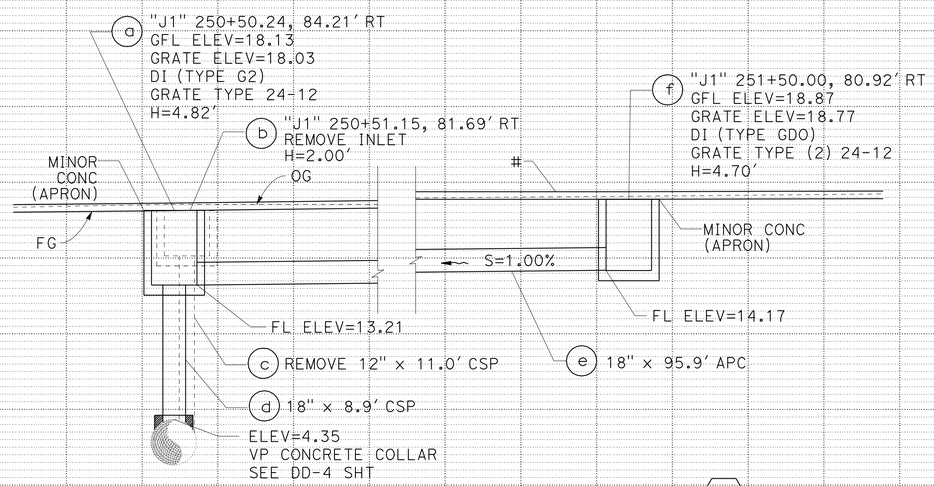

DRAINAGE SYSTEM No. 6

"J1" 250+50.24, 84.21' RT TO "J1" 251+50.00, 80.92' RT

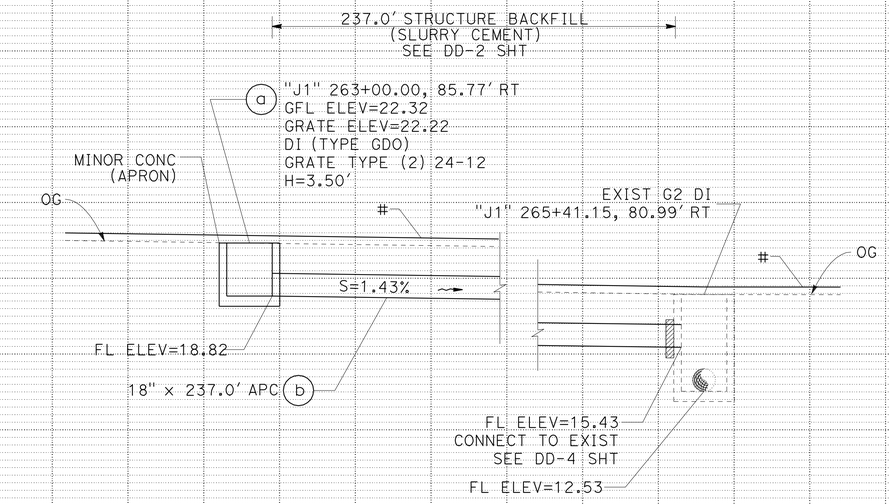

DRAINAGE SYSTEM No. 9

"J1" 263+00.00, 81.02' RT TO "J1" 265+41.15, 80.99' RT

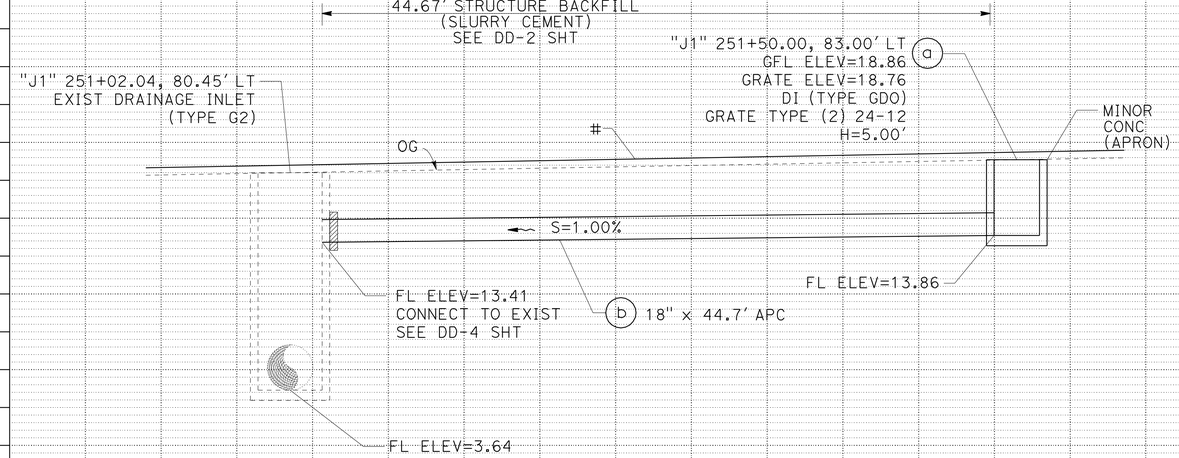

DRAINAGE SYSTEM No. 5

"J1" 251+02.04 80.45' LT TO "J1" 251+50.00, 83.00' LT

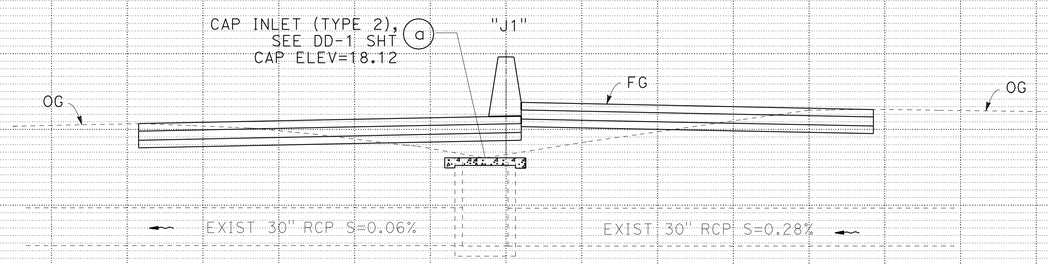

DRAINAGE SYSTEM No. 8

"J1" 265+36.22, 1.37' LT

DRAINAGE PROFILES

SCALE: 1" = 5' HORIZ
1" = 5' VERT

DP-4

REVISED BY | DATE REVISED
TRAVIS GURNEY | CHRIS GAIDO
CALCULATED-DESIGNED BY | CHECKED BY
FUNCTIONAL SUPERVISOR | JOHN L. MARTIN

STATE OF CALIFORNIA - DEPARTMENT OF TRANSPORTATION
Caltrans DESIGN

P:\proj2\04\26406\design\DCCR\426406ib004.dgn

LAST REVISION DATE PLOTTED => 16-AUG-2010
03-15-10 TIME PLOTTED => 10:30

Dist	COUNTY	ROUTE	POST MILES TOTAL PROJECT	SHEET No.	TOTAL SHEETS
04	Mrn	101	18.6/R22.3	105	542

REGISTERED CIVIL ENGINEER 03-15-10 DATE

8-9-10
PLANS APPROVAL DATE

REGISTERED PROFESSIONAL ENGINEER ROBERT J. NIXON No. C69123 Exp. 6-30-10 CIVIL STATE OF CALIFORNIA

THE STATE OF CALIFORNIA OR ITS OFFICERS OR AGENTS SHALL NOT BE RESPONSIBLE FOR THE ACCURACY OR COMPLETENESS OF SCANNED COPIES OF THIS PLAN SHEET.

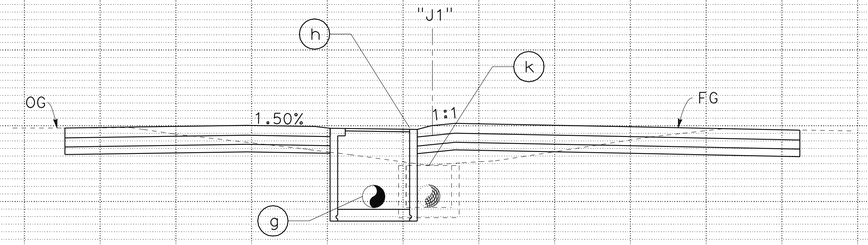

SECTION C-C

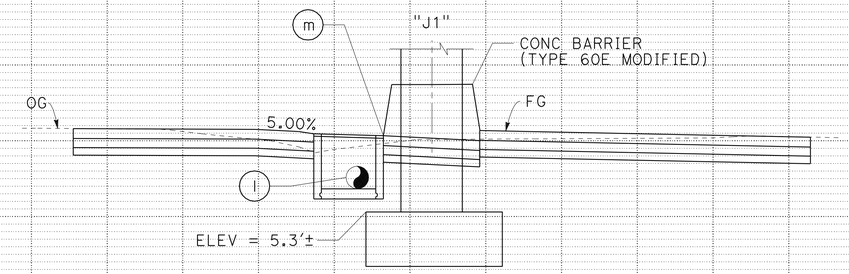

SECTION D-D

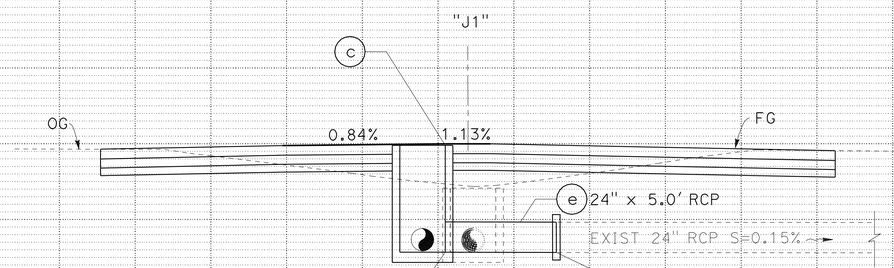

SECTION B-B

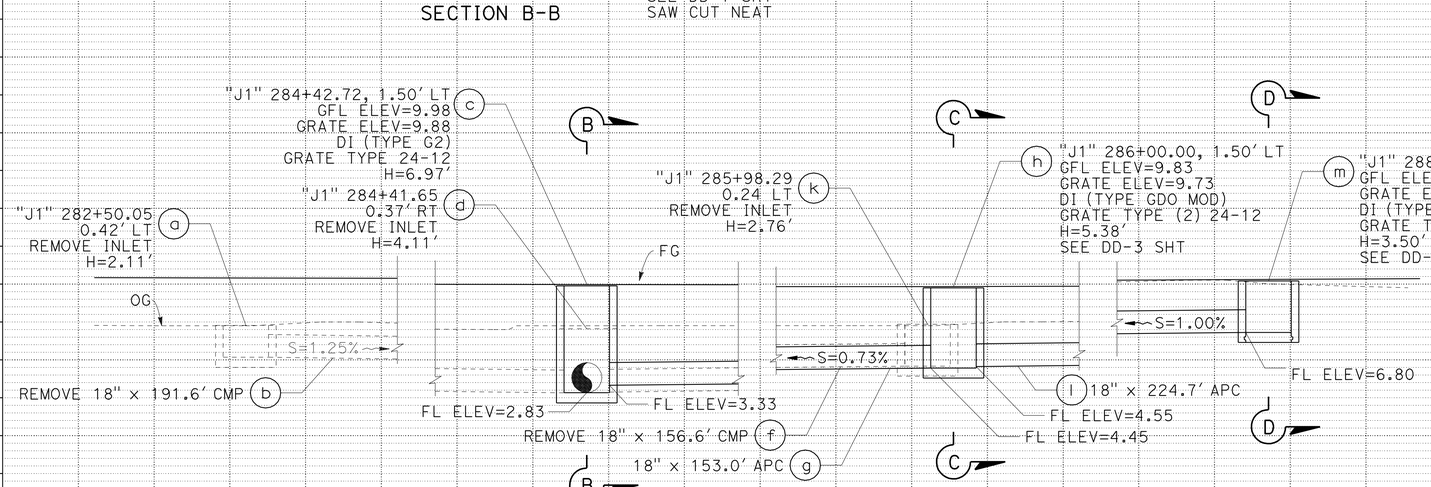

DRAINAGE SYSTEM No. 11

"J1" 282+50.05, 0.42' LT TO 288+27.68, 3.09' LT

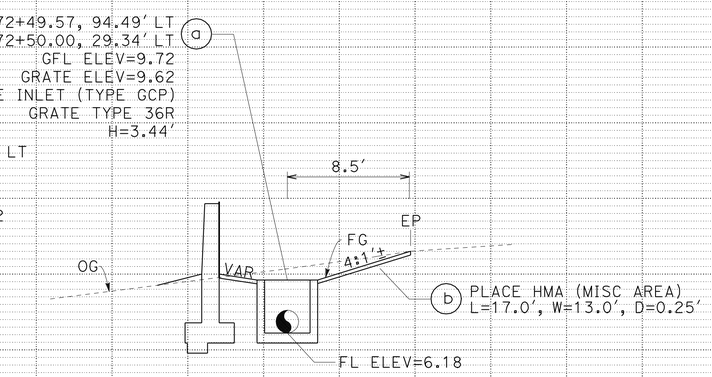

SECTION A-A

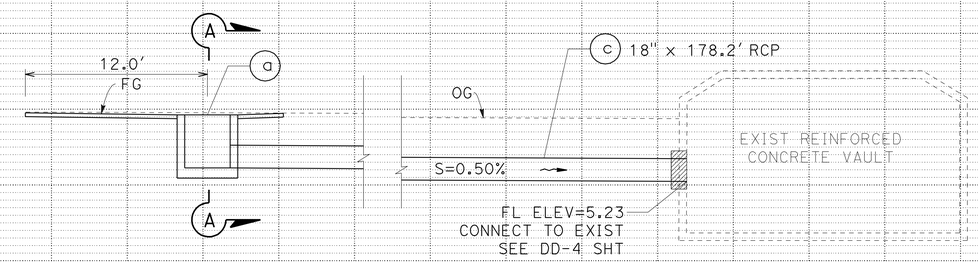

DRAINAGE SYSTEM No. 10A

"J1" 272+49.57, 94.49' LT TO 274+27.79, 121.41' LT

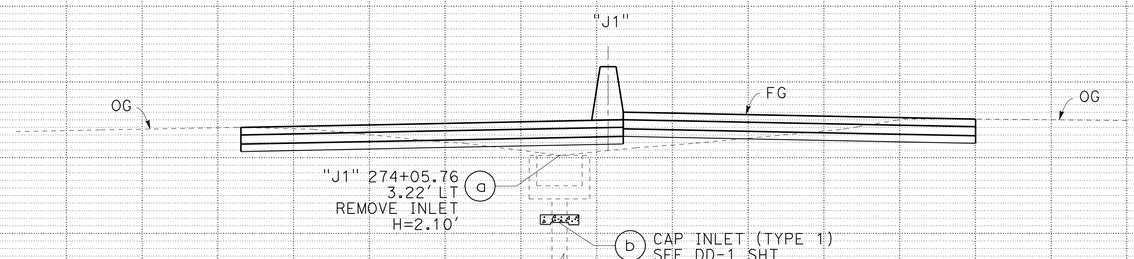

DRAINAGE SYSTEM No. 10

"J1" 274+05.76, 3.22' LT

DRAINAGE PROFILES

SCALE: 1" = 5' HORIZ
1" = 5' VERT

DP-5

STATE OF CALIFORNIA - DEPARTMENT OF TRANSPORTATION
Caltrans DESIGN

FUNCTIONAL SUPERVISOR: JOHN L. MARTIN
CALCULATED-DESIGNED BY: SCOTT GREGORY
CHECKED BY: CHRIS GAIDO
REVISED BY / DATE REVISED

P:\proj2\04\26406\design\DCCR\426406ib005.dgn

LAST REVISION DATE PLOTTED => 16-AUG-2010
03-15-10 TIME PLOTTED => 10:30

Dist	COUNTY	ROUTE	POST MILES TOTAL PROJECT	SHEET No.	TOTAL SHEETS
04	Mrn	101	18.6/R22.3	106	542

REGISTERED CIVIL ENGINEER 03-15-10 DATE

8-9-10
PLANS APPROVAL DATE

REGISTERED PROFESSIONAL ENGINEER ROBERT J. NIXON No. C69123 Exp. 6-30-10 CIVIL STATE OF CALIFORNIA

THE STATE OF CALIFORNIA OR ITS OFFICERS OR AGENTS SHALL NOT BE RESPONSIBLE FOR THE ACCURACY OR COMPLETENESS OF SCANNED COPIES OF THIS PLAN SHEET.

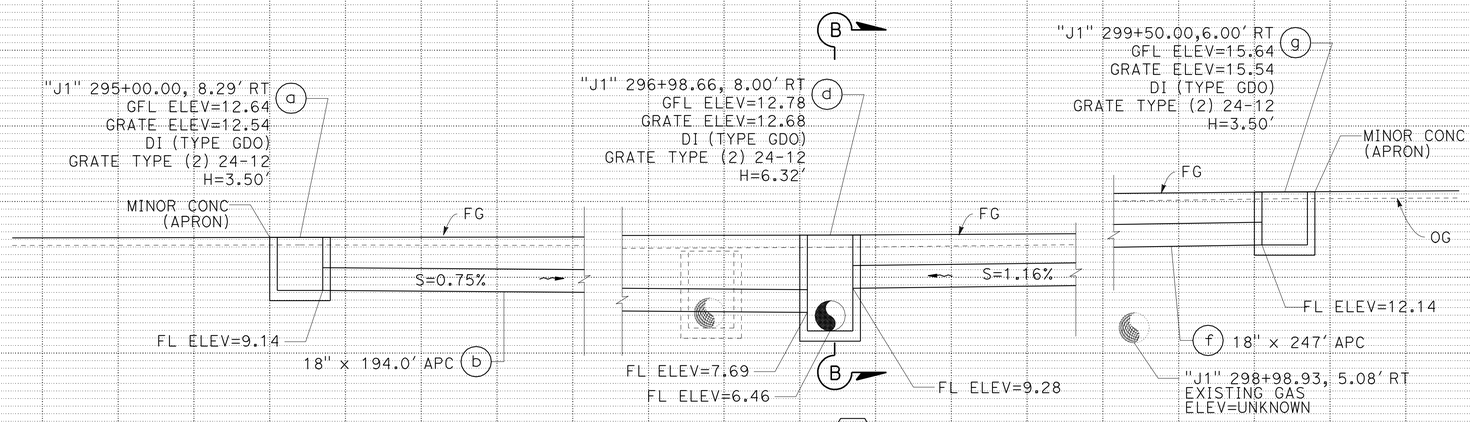

DRAINAGE SYSTEM No. 13

"J1" 295+00.00, 8.29' RT TO "J1" 299+50.00 6.00' RT

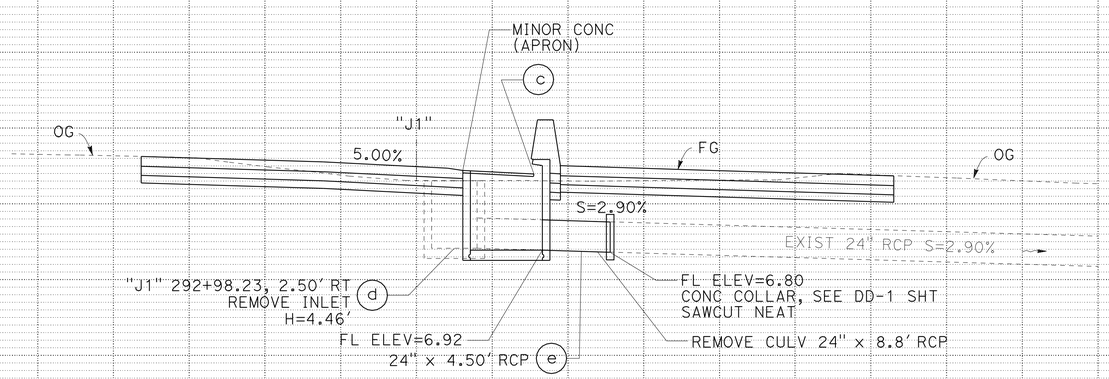

SECTION A-A

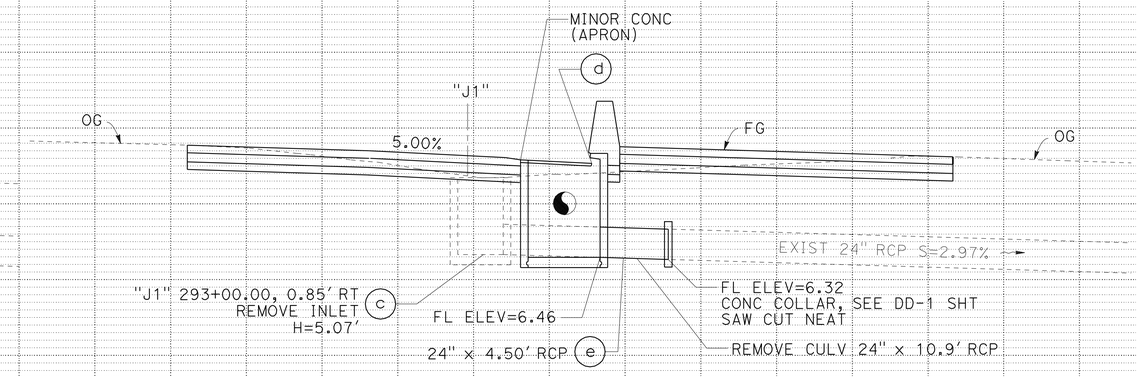

SECTION B-B

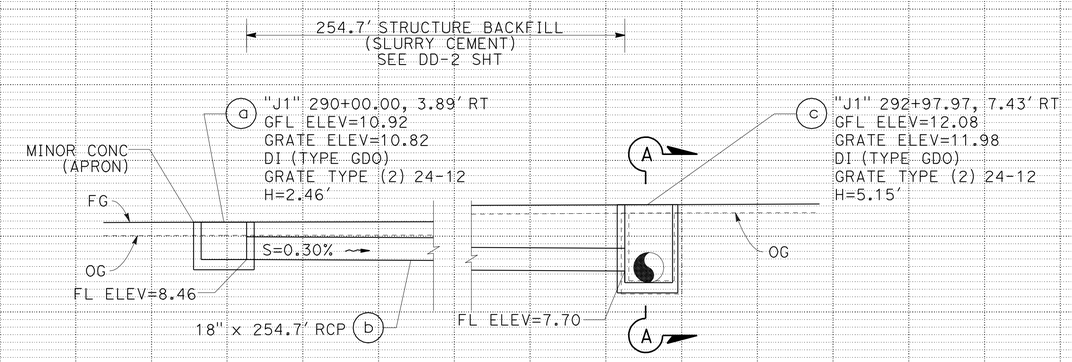

DRAINAGE SYSTEM No. 12

"J1" 290+00.00, 3.89' RT TO "J1" 292+98.23, 2.50' RT

DRAINAGE PROFILES

SCALE: 1" = 5' HORIZ
1" = 5' VERT

DP-6

REVISED BY | DATE REVISED
JOLENA ASTIN | CHRIS GAIDO
CALCULATED-DESIGNED BY | CHECKED BY
FUNCTIONAL SUPERVISOR: JOHN L. MARTIN

STATE OF CALIFORNIA - DEPARTMENT OF TRANSPORTATION
Caltrans **DESIGN**

P:\proj2\04\26406\design\DCCR\426406ib006.dgn

LAST REVISION 03-15-10 | DATE PLOTTED => 16-AUG-2010 | TIME PLOTTED => 10:24

Dist	COUNTY	ROUTE	POST MILES TOTAL PROJECT	SHEET No.	TOTAL SHEETS
04	Mrn	101	18.6/R22.3	107	542

REGISTERED CIVIL ENGINEER 03-15-10 DATE

8-9-10
PLANS APPROVAL DATE

REGISTERED PROFESSIONAL ENGINEER ROBERT J. NIXON No. C69123 Exp. 6-30-10 CIVIL STATE OF CALIFORNIA

THE STATE OF CALIFORNIA OR ITS OFFICERS OR AGENTS SHALL NOT BE RESPONSIBLE FOR THE ACCURACY OR COMPLETENESS OF SCANNED COPIES OF THIS PLAN SHEET.

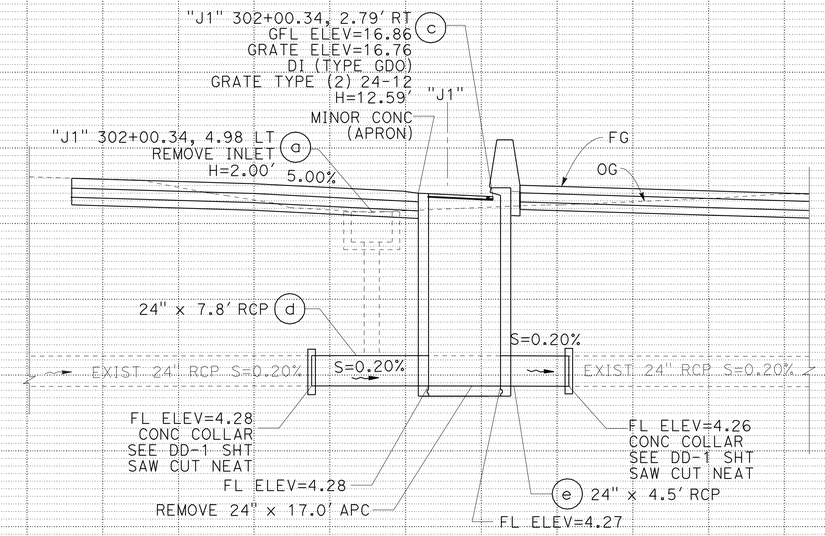

DRAINAGE SYSTEM No. 15A

"J1" 302+00.34, 2.79' RT

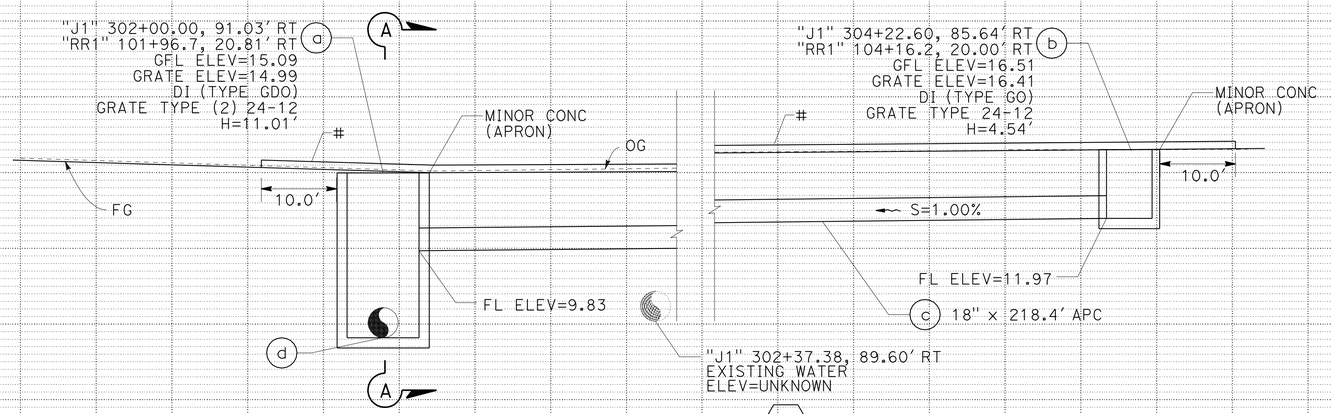

DRAINAGE SYSTEM No. 15

"J1" 302+00.00, 2.79' RT TO "J1" 304+22.6, 85.64' RT
"RR1 101+96.7, 20.81' RT TO "RR1" 104+16.2, 20.00' RT

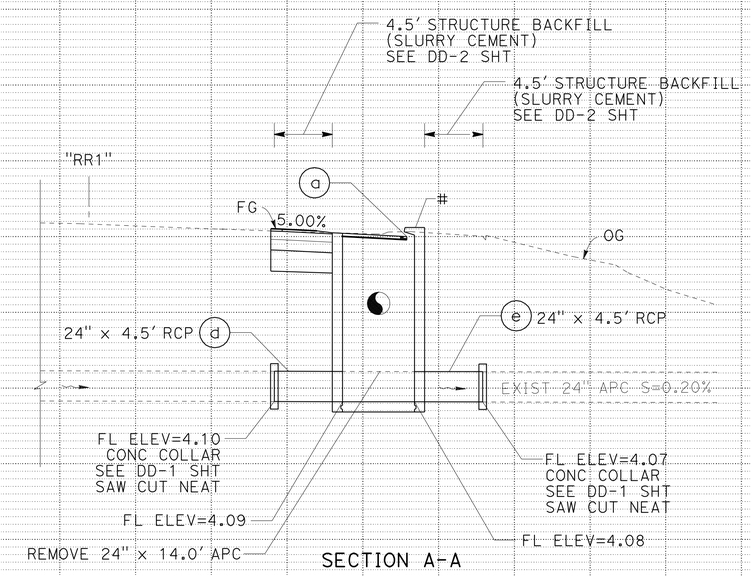

SECTION A-A

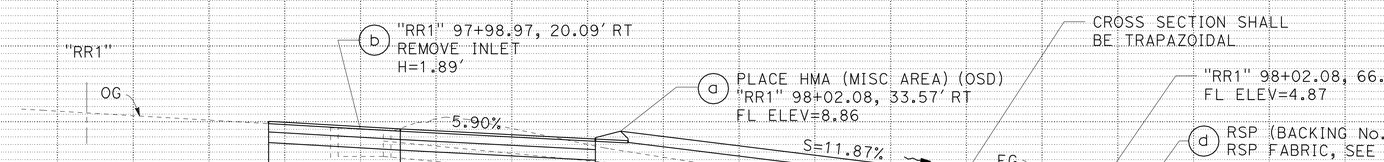

DRAINAGE SYSTEM No. 14

"RR1" 98+02.08, 33.57' RT

DRAINAGE PROFILES

SCALE: 1" = 5' HORIZ
1" = 5' VERT

DP-7

REVISED BY	DATE REVISED
SCOTT GREGORY	CHRIS GAIDO
CALCULATED-DESIGNED BY	CHECKED BY
FUNCTIONAL SUPERVISOR	JOHN L. MARTIN

STATE OF CALIFORNIA - DEPARTMENT OF TRANSPORTATION
Caltrans DESIGN

P:\proj2\04\264061\design\DCCR\426406ib007.dgn

LAST REVISION 03-15-10 | DATE PLOTTED => 16-AUG-2010 | TIME PLOTTED => 10:25

Dist	COUNTY	ROUTE	POST MILES TOTAL PROJECT	SHEET No.	TOTAL SHEETS
04	Mrn	101	18.6/R22.3	108	542

REGISTERED CIVIL ENGINEER 03-15-10 DATE

8-9-10
PLANS APPROVAL DATE

REGISTERED PROFESSIONAL ENGINEER ROBERT J. NIXON No. C69123 Exp. 6-30-10 CIVIL STATE OF CALIFORNIA

THE STATE OF CALIFORNIA OR ITS OFFICERS OR AGENTS SHALL NOT BE RESPONSIBLE FOR THE ACCURACY OR COMPLETENESS OF SCANNED COPIES OF THIS PLAN SHEET.

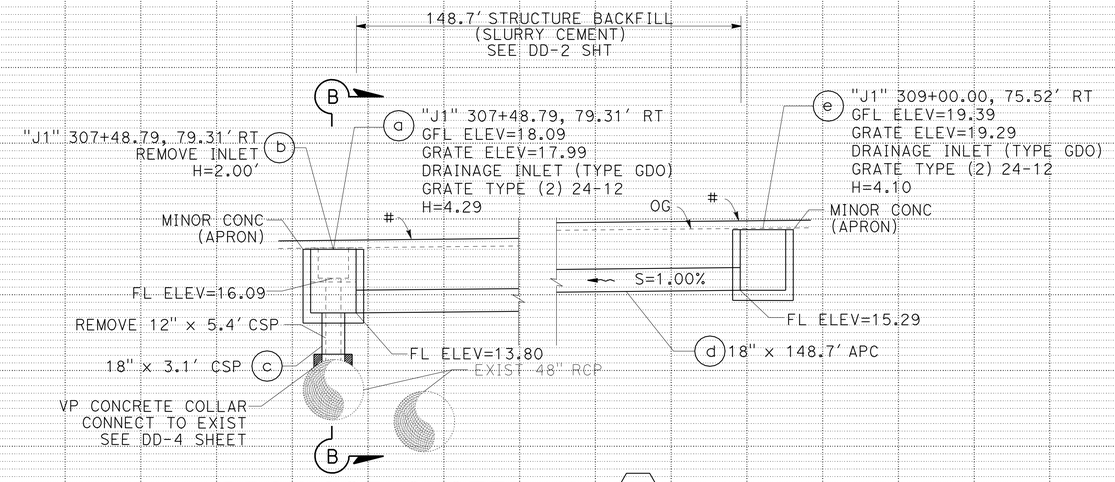

DRAINAGE SYSTEM No. 17

"J1" 307+48.79, 79.31' RT TO 309+00.00, 75.52' RT

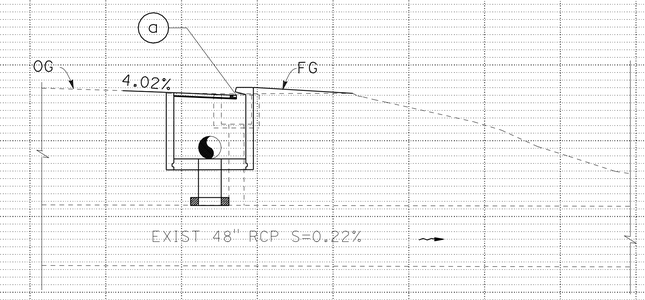

SECTION B-B

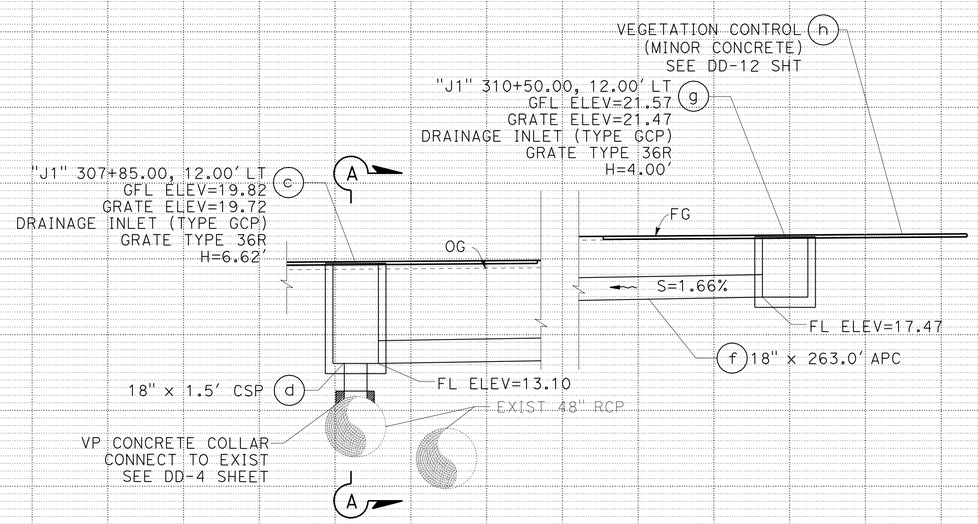

DRAINAGE SYSTEM No. 16

"J1" 307+85.00, 12.00' LT TO 310+50.00, 12.00' LT

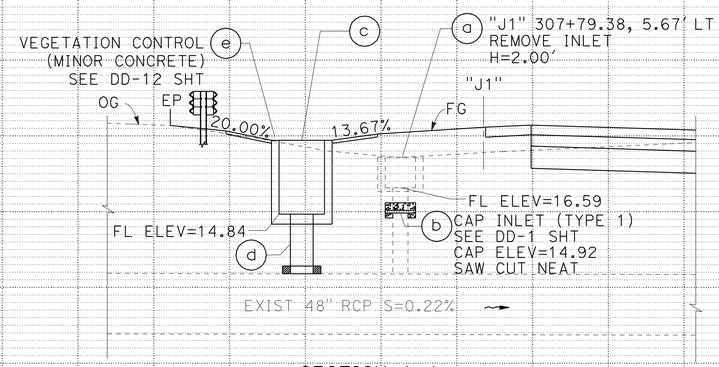

SECTION A-A

DRAINAGE PROFILES

SCALE: 1" = 5' HORIZ
1" = 5' VERT

DP-8

REVISED BY | DATE REVISED
SCOTT GREGORY | CHRIS GAIDO
CALCULATED-DESIGNED BY | CHECKED BY
FUNCTIONAL SUPERVISOR
JOHN L. MARTIN

STATE OF CALIFORNIA - DEPARTMENT OF TRANSPORTATION
Caltrans DESIGN

P:\proj2\04\26406\design\ps&e\426406ib008.dgn

LAST REVISION DATE PLOTTED => 08-FEB-2011
03-15-10 TIME PLOTTED => 11:17

Dist	COUNTY	ROUTE	POST MILES TOTAL PROJECT	SHEET No.	TOTAL SHEETS
04	Mrn	101	18.6/R22.3	109	542

REGISTERED CIVIL ENGINEER 03-15-10 DATE

8-9-10
PLANS APPROVAL DATE

REGISTERED PROFESSIONAL ENGINEER ROBERT J. NIXON No. C69123 Exp. 6-30-10 CIVIL STATE OF CALIFORNIA

THE STATE OF CALIFORNIA OR ITS OFFICERS OR AGENTS SHALL NOT BE RESPONSIBLE FOR THE ACCURACY OR COMPLETENESS OF SCANNED COPIES OF THIS PLAN SHEET.

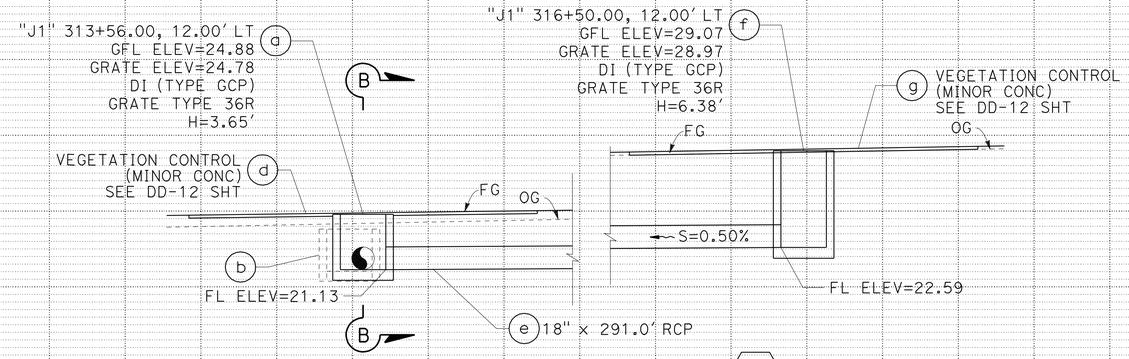

DRAINAGE SYSTEM No. 19

"J1" 313+56.00, 12.00' LT TO 316+50.00, 12.00' LT

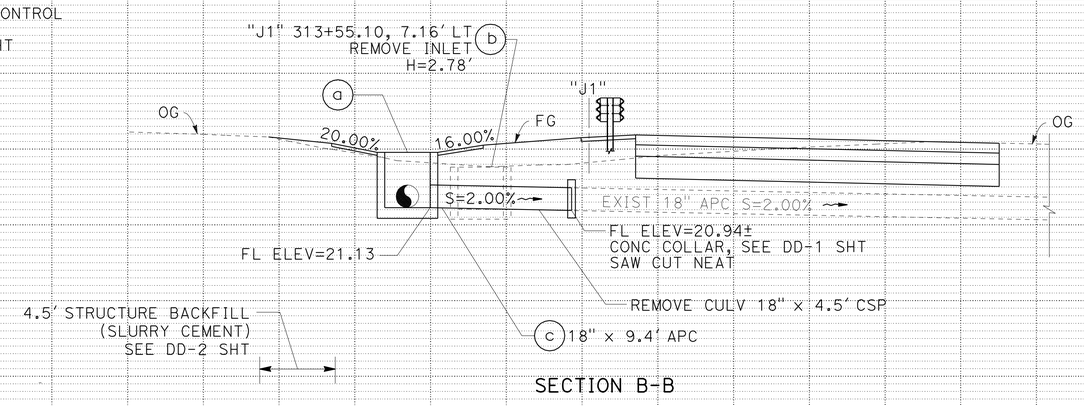

SECTION B-B

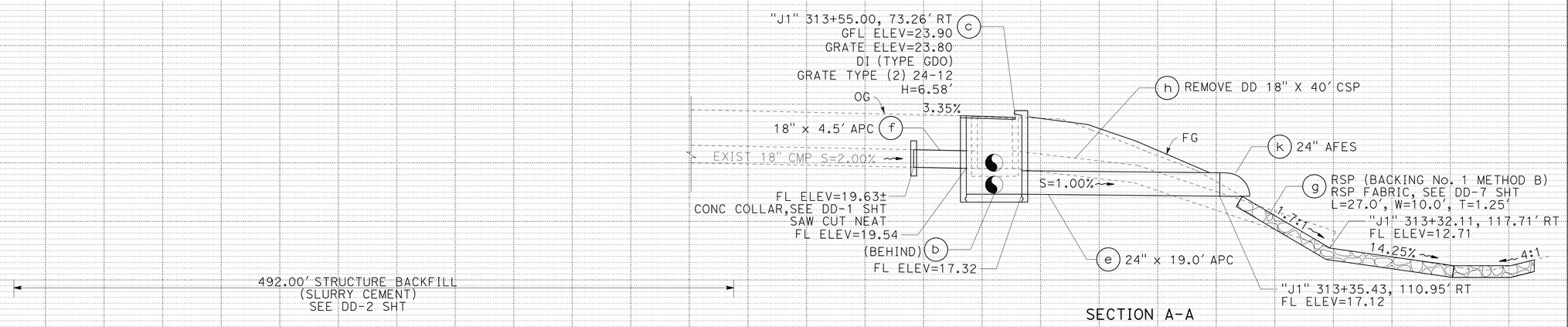

SECTION A-A

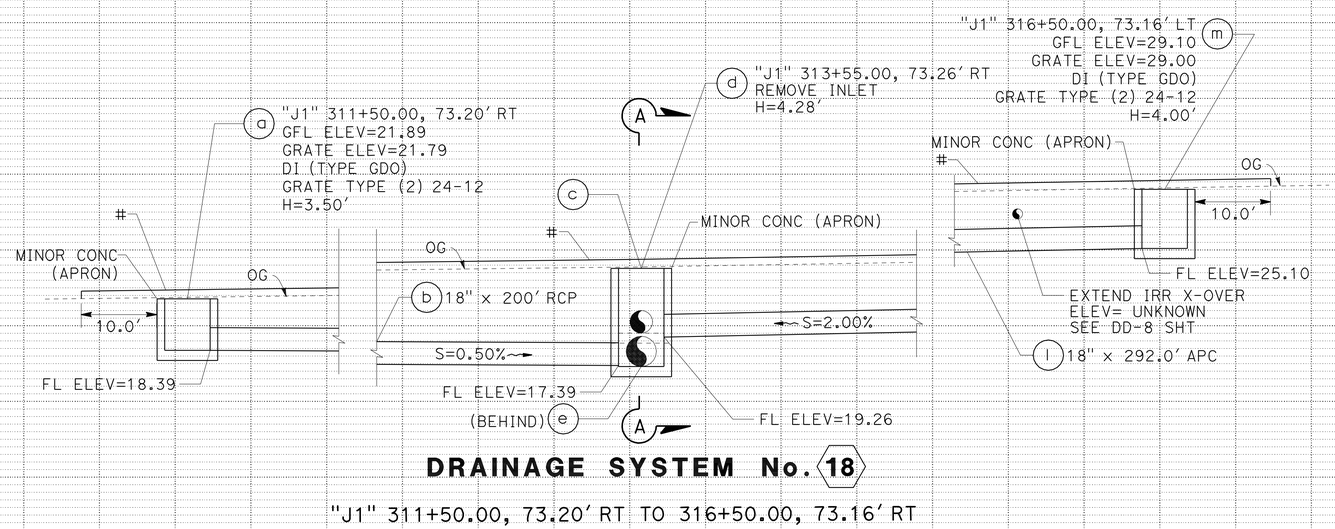

DRAINAGE SYSTEM No. 18

"J1" 311+50.00, 73.20' RT TO 316+50.00, 73.16' RT

DRAINAGE PROFILES

SCALE: 1" = 5' HORIZ
1" = 5' VERT

DP-9

REVISED BY | DATE REVISED
SCOTT GREGORY | CHRIS GAIDO
CALCULATED-DESIGNED BY | CHECKED BY
FUNCTIONAL SUPERVISOR: JOHN L. MARTIN

STATE OF CALIFORNIA - DEPARTMENT OF TRANSPORTATION
Caltrans DESIGN

P:\proj2\04\26406\design\ps&e\426406ib009.dgn

LAST REVISION 03-15-10 | DATE PLOTTED => 16-AUG-2010 | TIME PLOTTED => 10:25

Dist	COUNTY	ROUTE	POST MILES TOTAL PROJECT	SHEET No.	TOTAL SHEETS
04	Mrn	101	18.6/R22.3	110	542

REGISTERED CIVIL ENGINEER 03-15-10 DATE

8-9-10
PLANS APPROVAL DATE

REGISTERED PROFESSIONAL ENGINEER ROBERT J. NIXON No. C69123 Exp. 6-30-10 CIVIL STATE OF CALIFORNIA

THE STATE OF CALIFORNIA OR ITS OFFICERS OR AGENTS SHALL NOT BE RESPONSIBLE FOR THE ACCURACY OR COMPLETENESS OF SCANNED COPIES OF THIS PLAN SHEET.

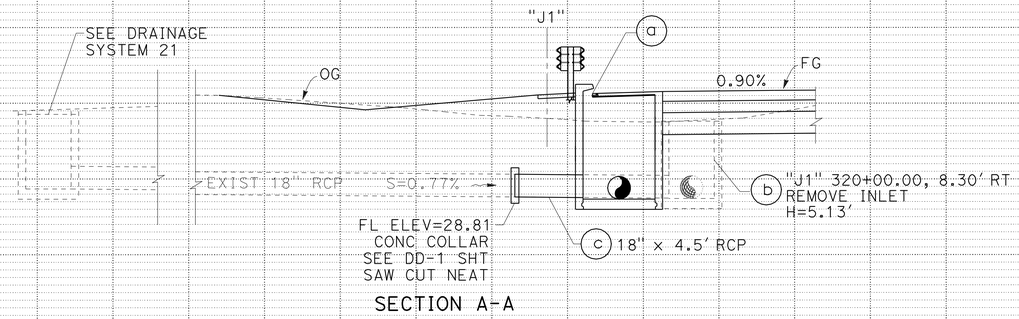

SECTION A-A

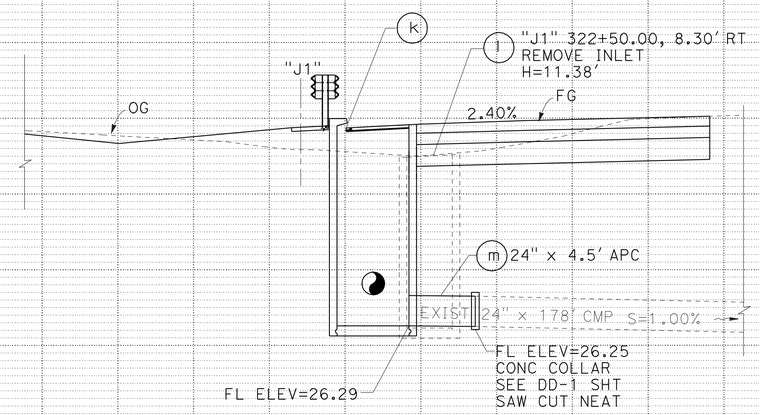

SECTION B-B

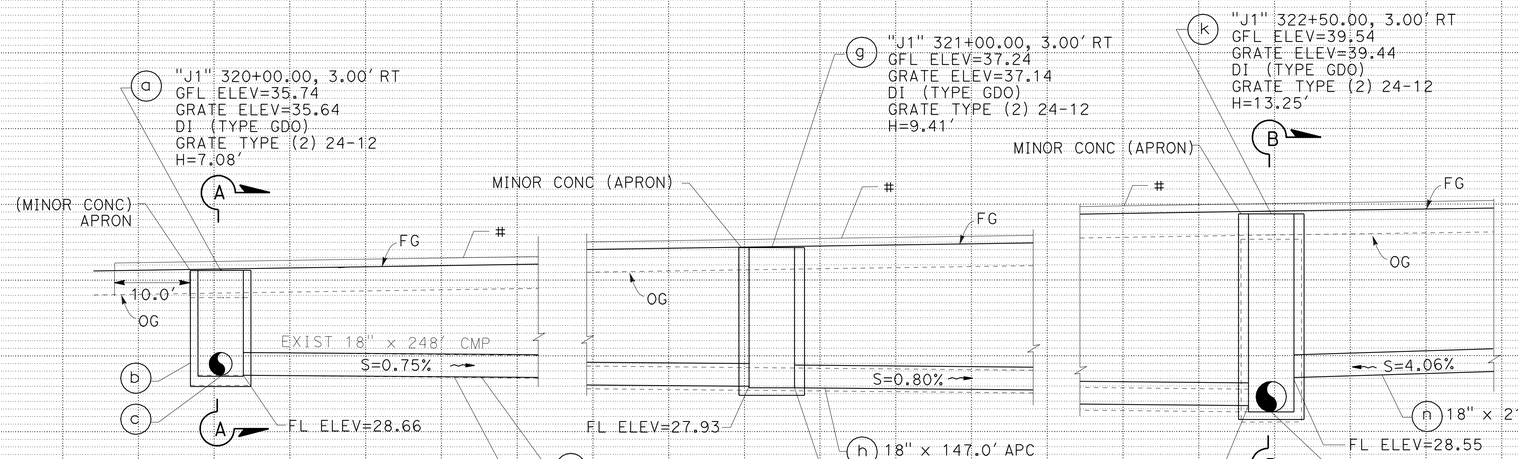

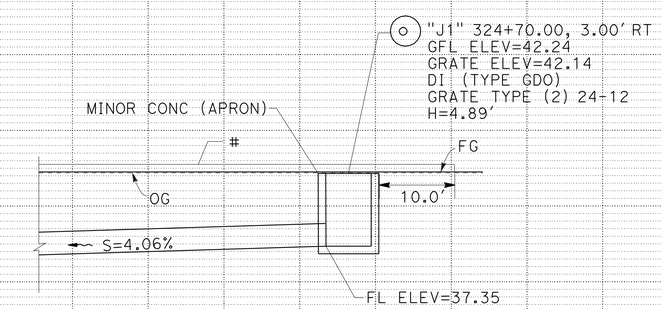

DRAINAGE SYSTEM No. 20

"J1"320+00.00, 3.00' RT TO "J1"324+70.00, 3.00' RT

DRAINAGE PROFILES

SCALE: 1" = 5' HORIZ
1" = 5' VERT

DP-10

REVISED BY | DATE REVISED
SCOTT GREGORY | CHRIS GAIDO
CALCULATED-DESIGNED BY | CHECKED BY
FUNCTIONAL SUPERVISOR: JOHN L. MARTIN

STATE OF CALIFORNIA - DEPARTMENT OF TRANSPORTATION
Caltrans DESIGN

P:\proj2\04\26406\design\DCCR\426406ib010.dgn

LAST REVISION 03-15-10 | DATE PLOTTED => 16-AUG-2010 | TIME PLOTTED => 10:25

Dist	COUNTY	ROUTE	POST MILES TOTAL PROJECT	SHEET No.	TOTAL SHEETS
04	Mrn	101	18.6/R22.3	111	542

REGISTERED CIVIL ENGINEER 03-15-10 DATE

8-9-10
PLANS APPROVAL DATE

REGISTERED PROFESSIONAL ENGINEER ROBERT J. NIXON No. C69123 Exp. 6-30-10 CIVIL STATE OF CALIFORNIA

THE STATE OF CALIFORNIA OR ITS OFFICERS OR AGENTS SHALL NOT BE RESPONSIBLE FOR THE ACCURACY OR COMPLETENESS OF SCANNED COPIES OF THIS PLAN SHEET.

NOTE:

1. SURVEY CONTROL FOR PLACEMENT OF DI'S AT SOUNDWALL SHALL BE AT CENTERLINE OF THE DI AT OUTSIDE FACE OF DI. SEE DD-5 SHT

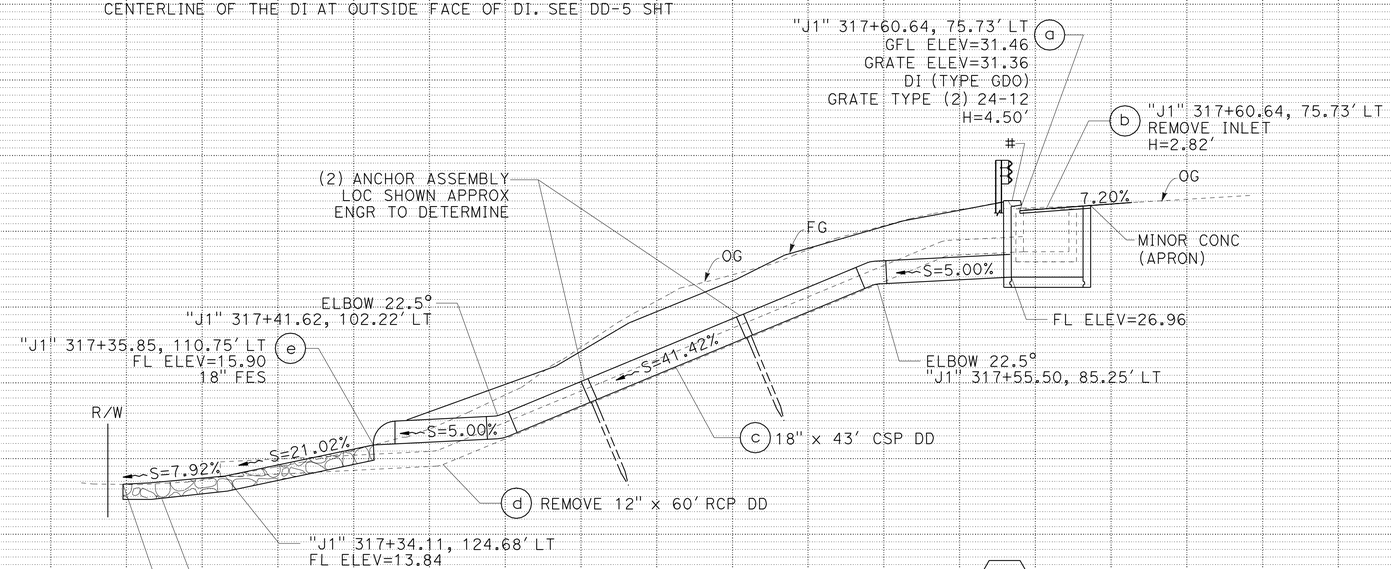

DRAINAGE SYSTEM No. 21A

"J1" 317+60.64, 75.73' LT

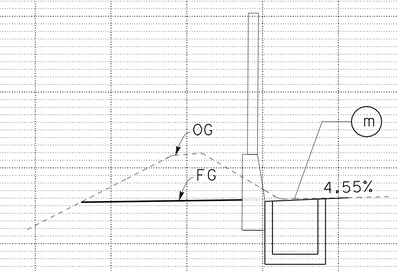

SECTION B-B

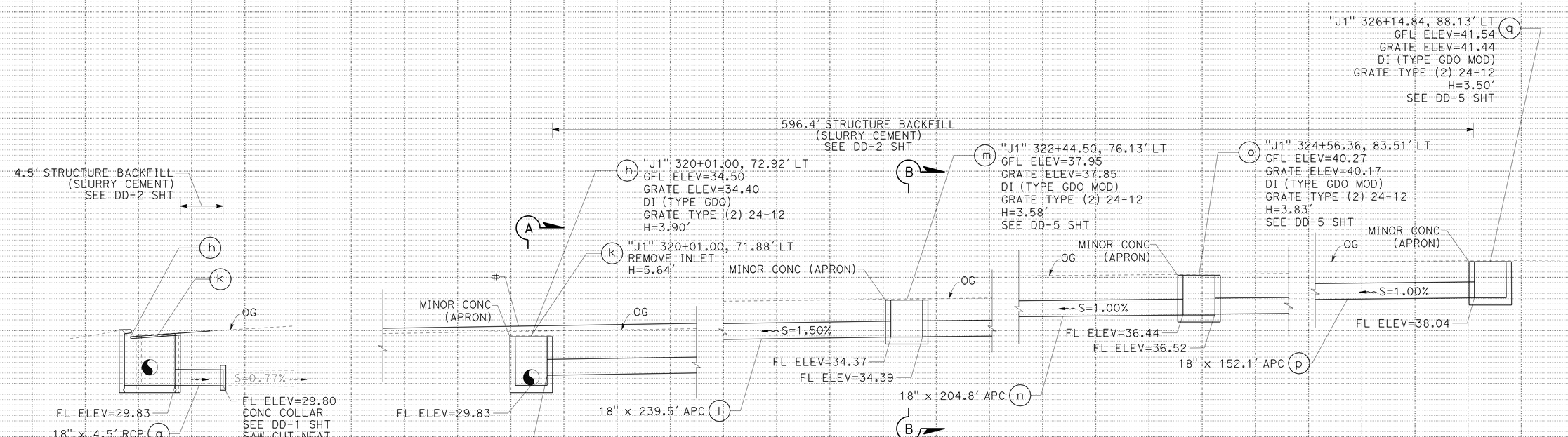

SECTION A-A

DRAINAGE SYSTEM No. 21

"J1" 317+60.64, 75.73' LT TO 326+14.84, 88.13' LT

DRAINAGE PROFILES

SCALE: 1" = 5' HORIZ
1" = 5' VERT

DP-11

REVISED BY | DATE REVISED
SCOTT GREGORY | CHRIS GAIDO
CALCULATED-DESIGNED BY | CHECKED BY
FUNCTIONAL SUPERVISOR: JOHN L. MARTIN

STATE OF CALIFORNIA - DEPARTMENT OF TRANSPORTATION
Caltrans
DESIGN

P:\proj2\04\26406\design\DCCR\426406ib011.dgn

LAST REVISION | DATE PLOTTED => 16-AUG-2010
03-15-10 | TIME PLOTTED => 10:25

Dist	COUNTY	ROUTE	POST MILES TOTAL PROJECT	SHEET No.	TOTAL SHEETS
04	Mrn	101	18.6/R22.3	112	542

REGISTERED CIVIL ENGINEER 03-15-10 DATE

8-9-10
PLANS APPROVAL DATE

REGISTERED PROFESSIONAL ENGINEER ROBERT J. NIXON No. C69123 Exp. 6-30-10 CIVIL STATE OF CALIFORNIA

THE STATE OF CALIFORNIA OR ITS OFFICERS OR AGENTS SHALL NOT BE RESPONSIBLE FOR THE ACCURACY OR COMPLETENESS OF SCANNED COPIES OF THIS PLAN SHEET.

NOTE:

1. SURVEY CONTROL FOR PLACEMENT OF DI'S AT SOUNDWALL SHALL BE AT CENTERLINE OF THE DI AT OUTSIDE FACE OF DI. SEE DD-5 SHT

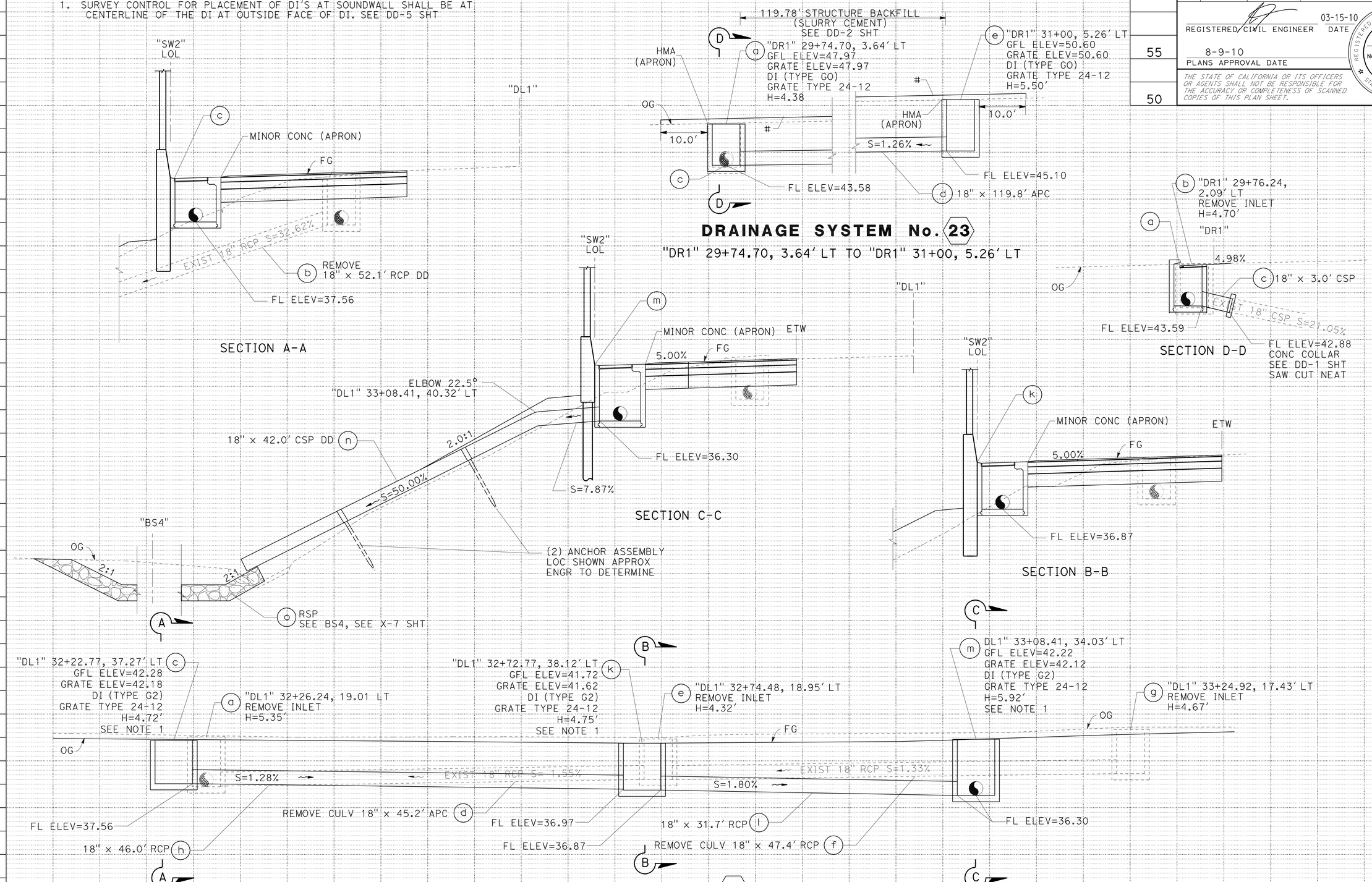

DRAINAGE PROFILES

SCALE: 1" = 5' HORIZ
1" = 5' VERT

DP-12

REVISED BY | DATE REVISED
TRAVIS GURNEY | CHRIS GAIDO
CALCULATED-DESIGNED BY | CHECKED BY
FUNCTIONAL SUPERVISOR: JOHN L. MARTIN

STATE OF CALIFORNIA - DEPARTMENT OF TRANSPORTATION
Caltrans DESIGN

P:\proj2\04\26406\design\DCCR\426406ib012.dgn

LAST REVISION 03-15-10 | DATE PLOTTED => 16-AUG-2010 | TIME PLOTTED => 10:25

Dist	COUNTY	ROUTE	POST MILES TOTAL PROJECT	SHEET No.	TOTAL SHEETS
04	Mrn	101	18.6/R22.3	113	542

REGISTERED CIVIL ENGINEER 03-15-10 DATE

8-9-10
PLANS APPROVAL DATE

REGISTERED PROFESSIONAL ENGINEER ROBERT J. NIXON No. C69123 Exp. 6-30-10 CIVIL STATE OF CALIFORNIA

THE STATE OF CALIFORNIA OR ITS OFFICERS OR AGENTS SHALL NOT BE RESPONSIBLE FOR THE ACCURACY OR COMPLETENESS OF SCANNED COPIES OF THIS PLAN SHEET.

NOTE:

1. SURVEY CONTROL FOR PLACEMENT OF DI'S AT SOUNDWALL SHALL BE AT CENTERLINE OF THE DI AT OUTSIDE FACE OF DI. SEE DD-5 SHT

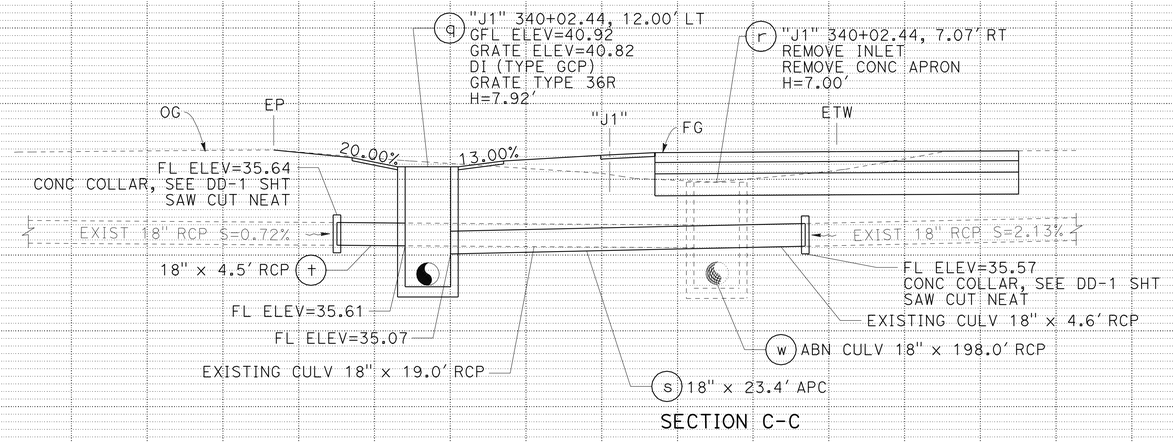

SECTION C-C

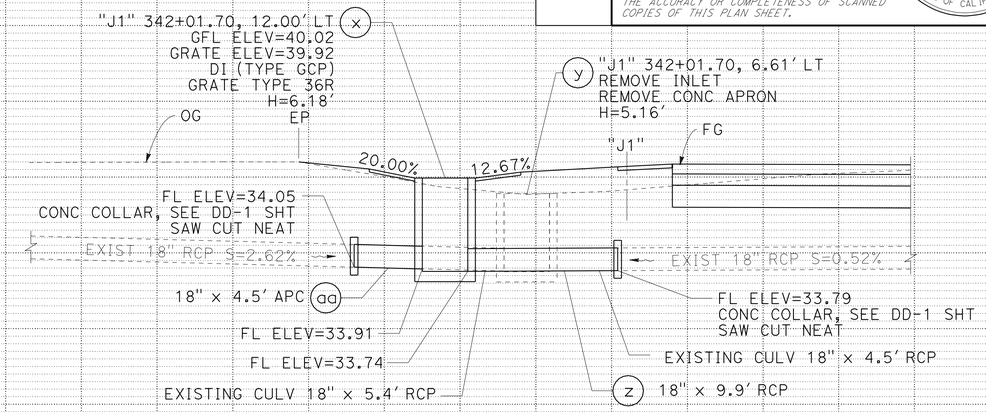

SECTION D-D

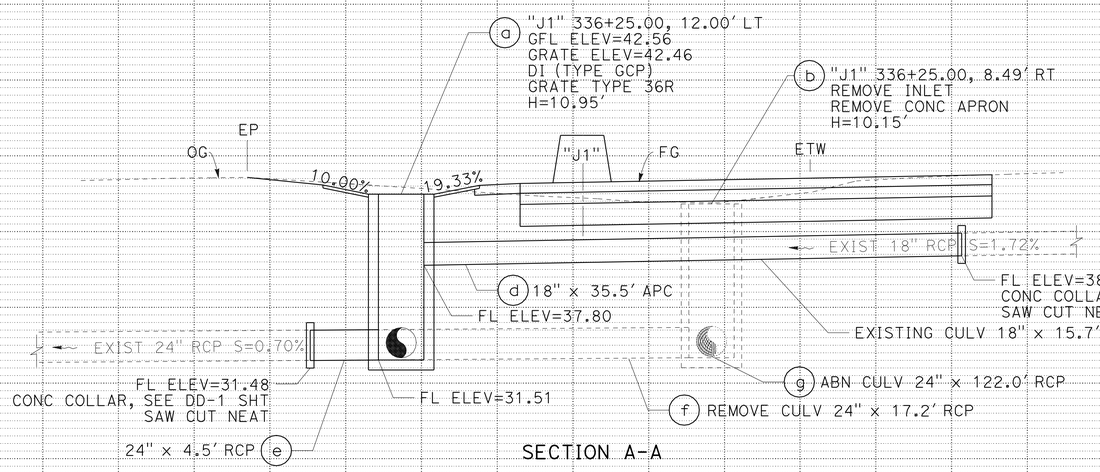

SECTION A-A

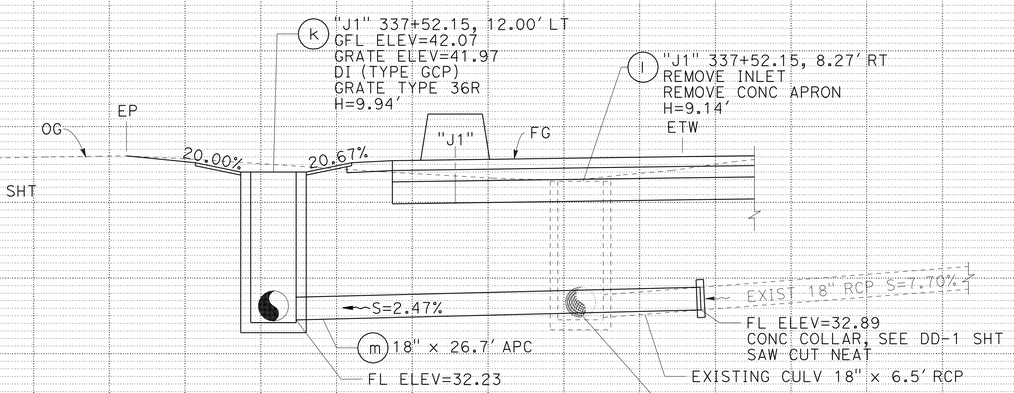

SECTION B-B

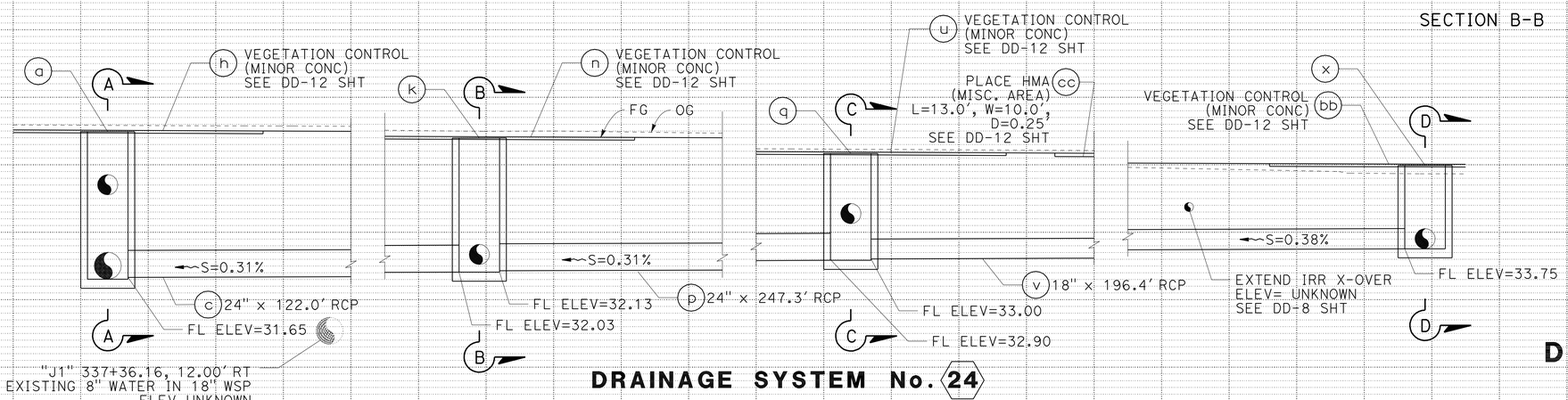

DRAINAGE SYSTEM No. 24

"A1"336+25.00, 12.00' LT TO 342+01.70, 12.00' LT

DRAINAGE PROFILES

SCALE: 1" = 5' HORIZ
1" = 5' VERT

DP-13

STATE OF CALIFORNIA - DEPARTMENT OF TRANSPORTATION
Caltrans DESIGN

FUNCTIONAL SUPERVISOR: JOHN L. MARTIN
CALCULATED-DESIGNED BY: TRAVIS GURNEY/ SCOTT GREGORY
CHECKED BY: CHRIS GAIDO
REVISED BY / DATE REVISED

P:\proj2\04\26406\design\DCCR\426406ib013.dgn

LAST REVISION DATE PLOTTED => 16-AUG-2010
03-15-10 TIME PLOTTED => 10:25

BORDER LAST REVISED 4/11/2008 | RELATIVE BORDER SCALE IS IN INCHES 0 1 2 3 | USERNAME => trmnguye | DGN FILE => 426406ib013.dgn | CU 03 240 | EA 264061

Dist	COUNTY	ROUTE	POST MILES TOTAL PROJECT	SHEET No.	TOTAL SHEETS
04	Mrn	101	18.6/R22.3	114	542

REGISTERED CIVIL ENGINEER 03-15-10 DATE

8-9-10
PLANS APPROVAL DATE

REGISTERED PROFESSIONAL ENGINEER ROBERT J. NIXON No. C69123 Exp. 6-30-10 CIVIL STATE OF CALIFORNIA

THE STATE OF CALIFORNIA OR ITS OFFICERS OR AGENTS SHALL NOT BE RESPONSIBLE FOR THE ACCURACY OR COMPLETENESS OF SCANNED COPIES OF THIS PLAN SHEET.

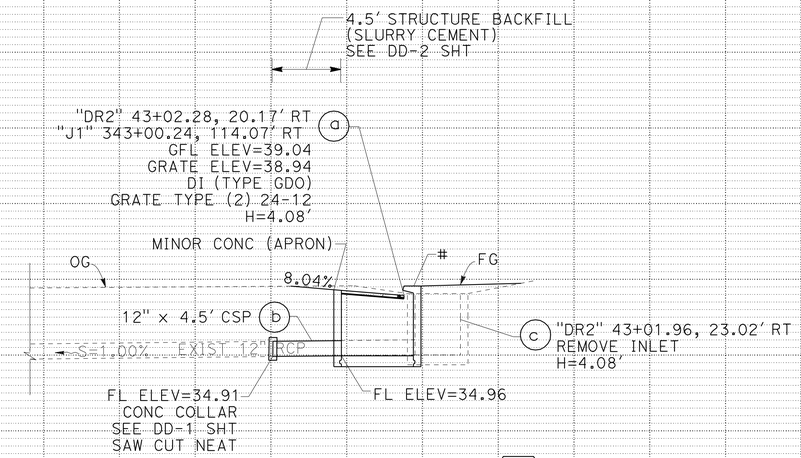

DRAINAGE SYSTEM No. 26
"DR2"43+02.28, 20.17' RT
"J1"343+00.24, 114.07' RT

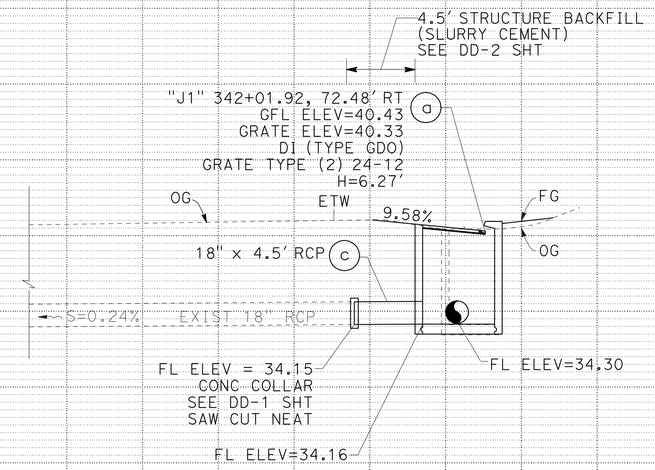

SECTION A-A

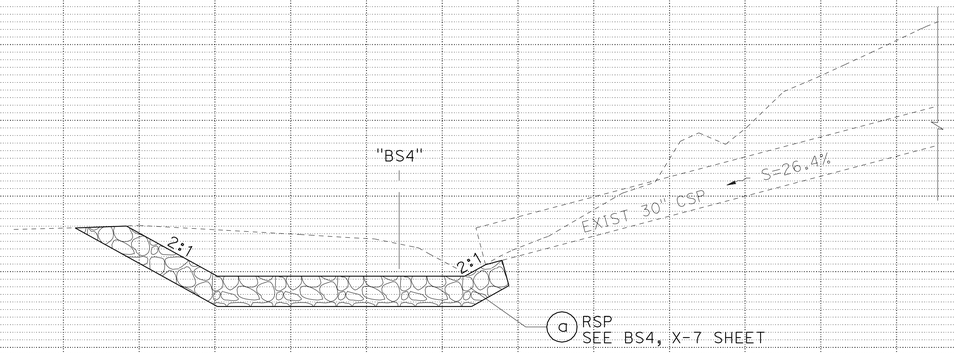

DRAINAGE SYSTEM No. 24A
"DL1"35+81.59, 112.84' LT
"J1" 335+70.07, 259.37' LT

NOTE: CONTROL POINT IS AT "BS4"

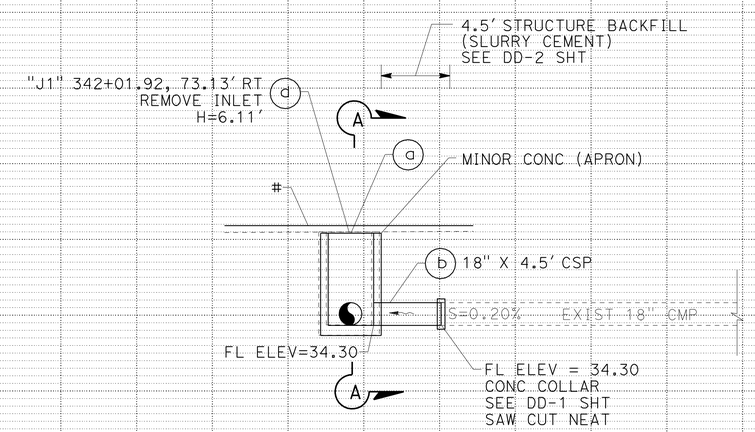

DRAINAGE SYSTEM No. 25
"J1"342+01.92, 72.48' RT

DRAINAGE PROFILES

SCALE: 1" = 5' HORIZ
1" = 5' VERT

DP-14

REVISED BY | DATE REVISED
TRAVIS GURNEY | CHRIS GAIDO
CALCULATED-DESIGNED BY | CHECKED BY
FUNCTIONAL SUPERVISOR | JOHN L. MARTIN

STATE OF CALIFORNIA - DEPARTMENT OF TRANSPORTATION
Caltrans DESIGN

P:\proj2\04\26406\design\ps&e\426406ib014.dgn

LAST REVISION 03-15-10 | DATE PLOTTED => 16-AUG-2010 | TIME PLOTTED => 10:25

Dist	COUNTY	ROUTE	POST MILES TOTAL PROJECT	SHEET No.	TOTAL SHEETS
04	Mrn	101	18.6/R22.3	115	542

REGISTERED CIVIL ENGINEER 03-15-10 DATE

8-9-10
PLANS APPROVAL DATE

REGISTERED PROFESSIONAL ENGINEER ROBERT J. NIXON No. C69123 Exp. 6-30-10 CIVIL STATE OF CALIFORNIA

THE STATE OF CALIFORNIA OR ITS OFFICERS OR AGENTS SHALL NOT BE RESPONSIBLE FOR THE ACCURACY OR COMPLETENESS OF SCANNED COPIES OF THIS PLAN SHEET.

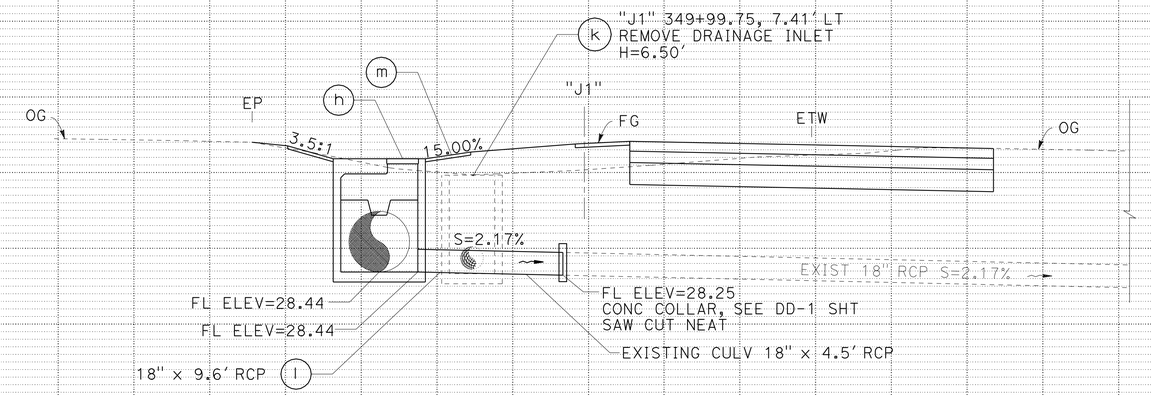

SECTION B-B

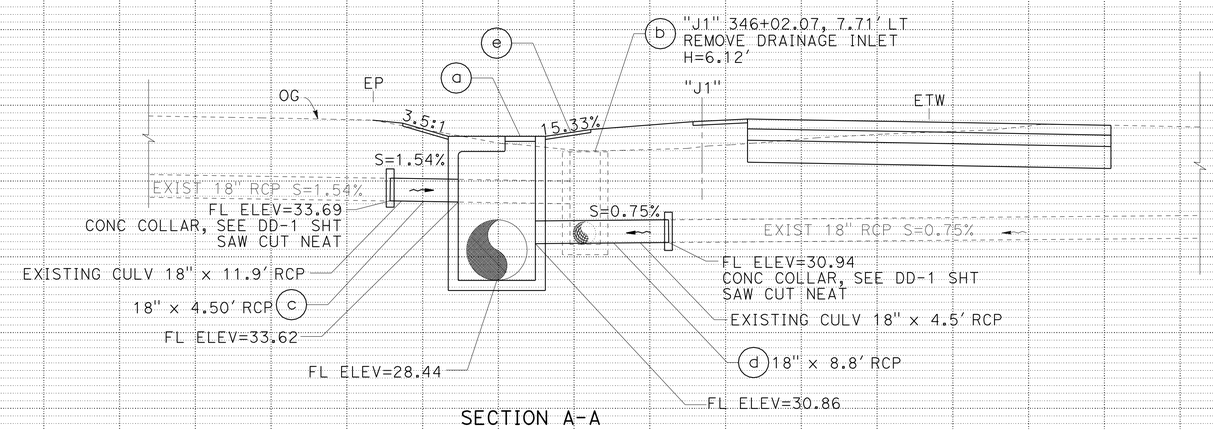

SECTION A-A

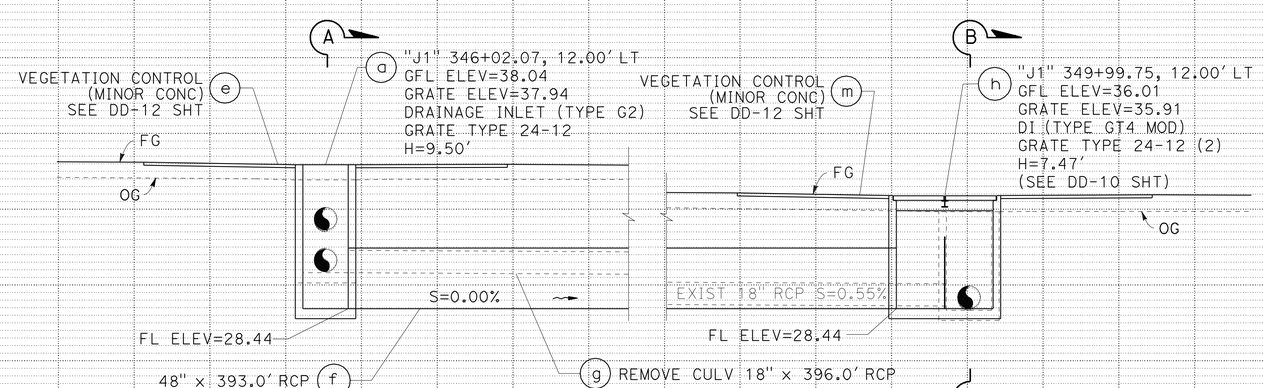

DRAINAGE SYSTEM No. 27
DETENTION STORAGE
"J1" 346+02.07, 12.00' LT - "J1" 349+99.75, 12.00' LT

DRAINAGE PROFILES
SCALE: 1" = 5' HORIZ
1" = 5' VERT

DP-15

REVISED BY | DATE REVISED
TRAVIS GURNEY | CHRIS GAIDO
CALCULATED-DESIGNED BY | CHECKED BY
FUNCTIONAL SUPERVISOR: JOHN L. MARTIN

STATE OF CALIFORNIA - DEPARTMENT OF TRANSPORTATION
Caltrans DESIGN

P:\proj2\04\26406\design\ps&e\426406ib015.dgn

LAST REVISION 03-15-10 | DATE PLOTTED => 16-AUG-2010 | TIME PLOTTED => 10:26

Dist	COUNTY	ROUTE	POST MILES TOTAL PROJECT	SHEET No.	TOTAL SHEETS
04	Mrn	101	18.6/R22.3	116	542

REGISTERED CIVIL ENGINEER 03-15-10 DATE

8-9-10
PLANS APPROVAL DATE

REGISTERED PROFESSIONAL ENGINEER ROBERT J. NIXON No. C69123 Exp. 6-30-10 CIVIL STATE OF CALIFORNIA

THE STATE OF CALIFORNIA OR ITS OFFICERS OR AGENTS SHALL NOT BE RESPONSIBLE FOR THE ACCURACY OR COMPLETENESS OF SCANNED COPIES OF THIS PLAN SHEET.

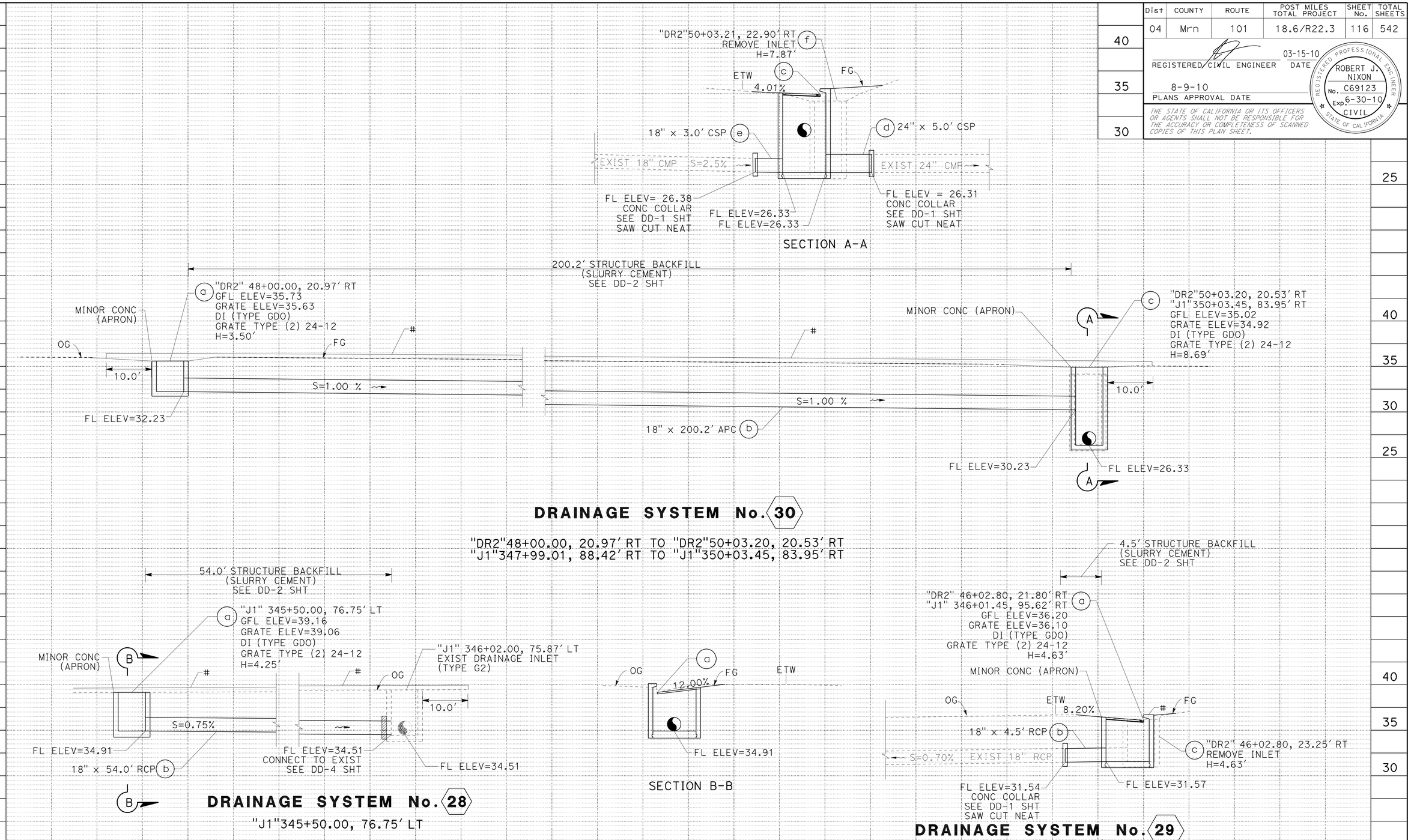

DRAINAGE PROFILES

SCALE: 1" = 5' HORIZ
1" = 5' VERT

DP-16

REVISED BY | DATE REVISED
TRAVIS GURNEY | CHRIS GAIDO
CALCULATED-DESIGNED BY | CHECKED BY
FUNCTIONAL SUPERVISOR: JOHN L. MARTIN

STATE OF CALIFORNIA - DEPARTMENT OF TRANSPORTATION
Caltrans DESIGN

P:\proj2\04\26406\design\DCCR\426406ib016.dgn

LAST REVISION 03-15-10 | DATE PLOTTED => 16-AUG-2010 | TIME PLOTTED => 10:26

Dist	COUNTY	ROUTE	POST MILES TOTAL PROJECT	SHEET No.	TOTAL SHEETS
04	Mrn	101	18.6/R22.3	117	542

REGISTERED CIVIL ENGINEER 03-15-10 DATE

8-9-10
PLANS APPROVAL DATE

REGISTERED PROFESSIONAL ENGINEER ROBERT J. NIXON No. C69123 Exp. 6-30-10 CIVIL STATE OF CALIFORNIA

THE STATE OF CALIFORNIA OR ITS OFFICERS OR AGENTS SHALL NOT BE RESPONSIBLE FOR THE ACCURACY OR COMPLETENESS OF SCANNED COPIES OF THIS PLAN SHEET.

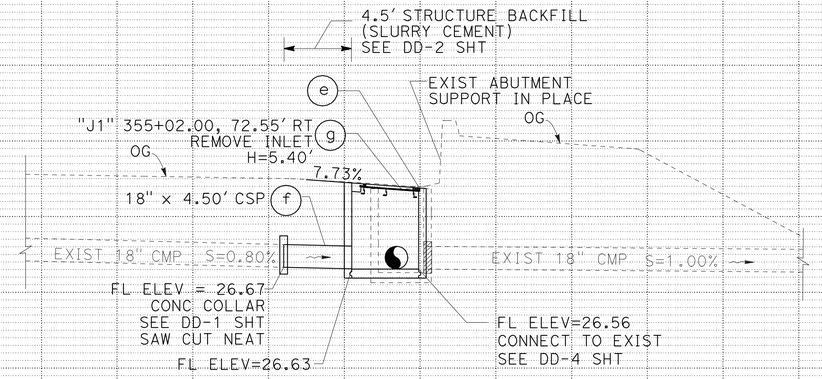

SECTION B-B

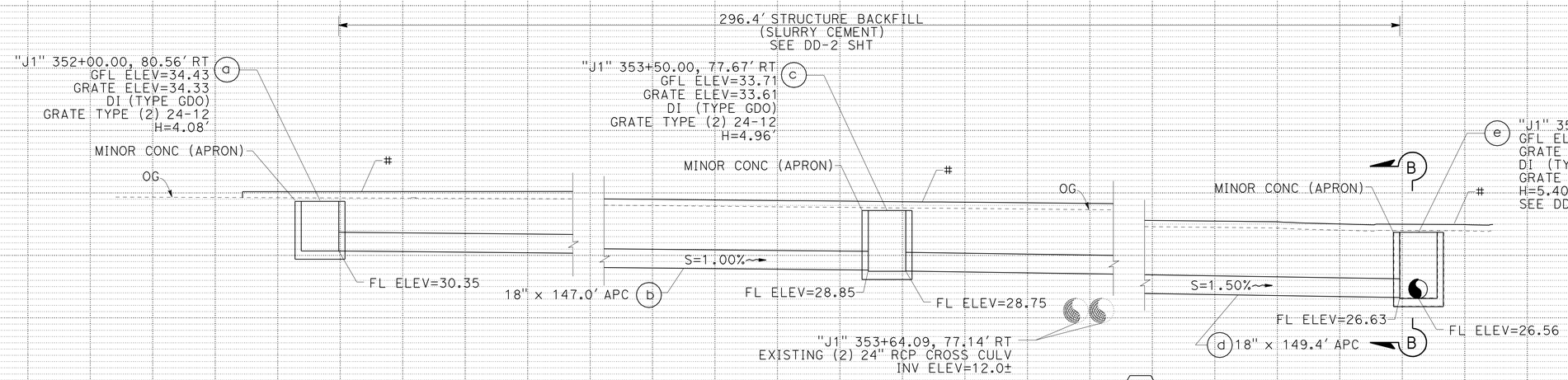

DRAINAGE SYSTEM No. 32

"J1"352+00.00, 80.56' RT TO "J1"355+02.43, 73.54' RT

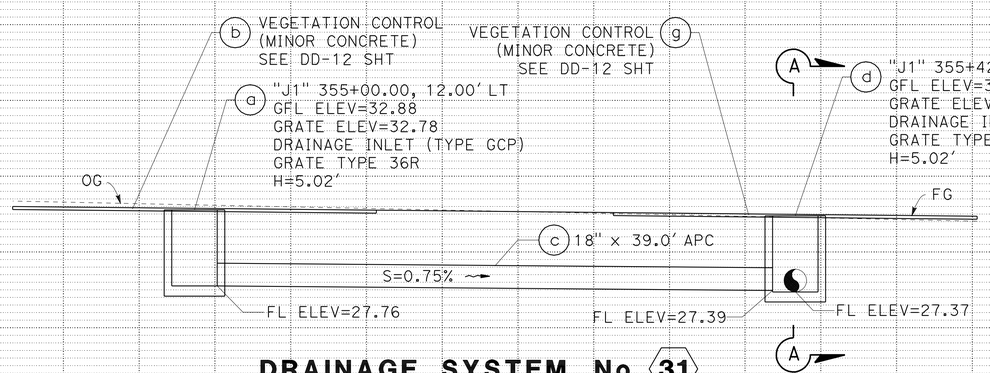

DRAINAGE SYSTEM No. 31

"J1" 355+00.00, 12.00' LT TO "J1"355+42.00, 12.00' LT

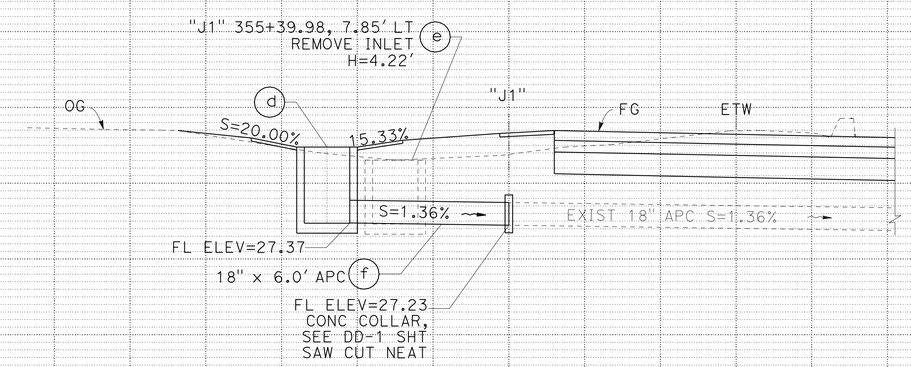

SECTION A-A

DRAINAGE PROFILES

SCALE: 1" = 5' HORIZ
1" = 5' VERT

DP-17

REVISED BY | DATE REVISED
TRAVIS GURNEY | CHRIS GAIDO
CALCULATED-DESIGNED BY | CHECKED BY
FUNCTIONAL SUPERVISOR: JOHN L. MARTIN

STATE OF CALIFORNIA - DEPARTMENT OF TRANSPORTATION
Caltrans DESIGN

P:\proj2\04\26406\design\ps&e\426406ib017.dgn

LAST REVISION 03-15-10 | DATE PLOTTED => 16-AUG-2010 | TIME PLOTTED => 10:26

Dist	COUNTY	ROUTE	POST MILES TOTAL PROJECT	SHEET No.	TOTAL SHEETS
04	Mrn	101	18.6/R22.3	118	542

REGISTERED CIVIL ENGINEER 03-15-10 DATE

8-9-10
PLANS APPROVAL DATE

REGISTERED PROFESSIONAL ENGINEER ROBERT J. NIXON No. C69123 Exp. 6-30-10 CIVIL STATE OF CALIFORNIA

THE STATE OF CALIFORNIA OR ITS OFFICERS OR AGENTS SHALL NOT BE RESPONSIBLE FOR THE ACCURACY OR COMPLETENESS OF SCANNED COPIES OF THIS PLAN SHEET.

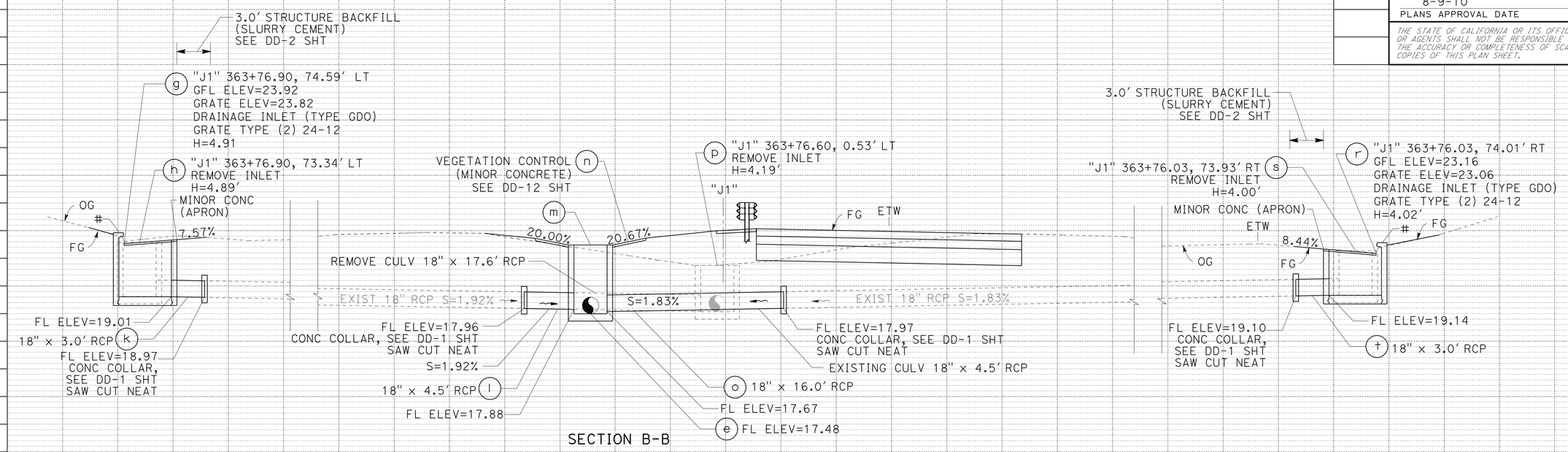

DRAINAGE SYSTEM No. 33

"J1" 360+99.21, 12.00' LT TO "J1" 363+76.60, 12.00' LT

DRAINAGE PROFILES

SCALE: 1" = 5' HORIZ
1" = 5' VERT

DP-18

REVISED BY | DATE REVISED
TRAVIS GURNEY | CHRIS GAIDO
CALCULATED-DESIGNED BY | CHECKED BY
FUNCTIONAL SUPERVISOR: JOHN L. MARTIN

STATE OF CALIFORNIA - DEPARTMENT OF TRANSPORTATION
Caltrans
DESIGN

P:\proj2\04\26406\design\ps&e\426406ib018.dgn

LAST REVISION 03-15-10 | DATE PLOTTED => 16-AUG-2010 | TIME PLOTTED => 10:26

BORDER LAST REVISED 4/11/2008 | RELATIVE BORDER SCALE IS IN INCHES 0 1 2 3 | USERNAME => trmnguye | DGN FILE => 426406ib018.dgn | CU 03 240 | EA 264061

Dist	COUNTY	ROUTE	POST MILES TOTAL PROJECT	SHEET No.	TOTAL SHEETS
04	Mrn	101	18.6/R22.3	119	542

REGISTERED CIVIL ENGINEER 03-15-10 DATE

8-9-10
PLANS APPROVAL DATE

REGISTERED PROFESSIONAL ENGINEER ROBERT J. NIXON No. C69123 Exp. 6-30-10 CIVIL STATE OF CALIFORNIA

THE STATE OF CALIFORNIA OR ITS OFFICERS OR AGENTS SHALL NOT BE RESPONSIBLE FOR THE ACCURACY OR COMPLETENESS OF SCANNED COPIES OF THIS PLAN SHEET.

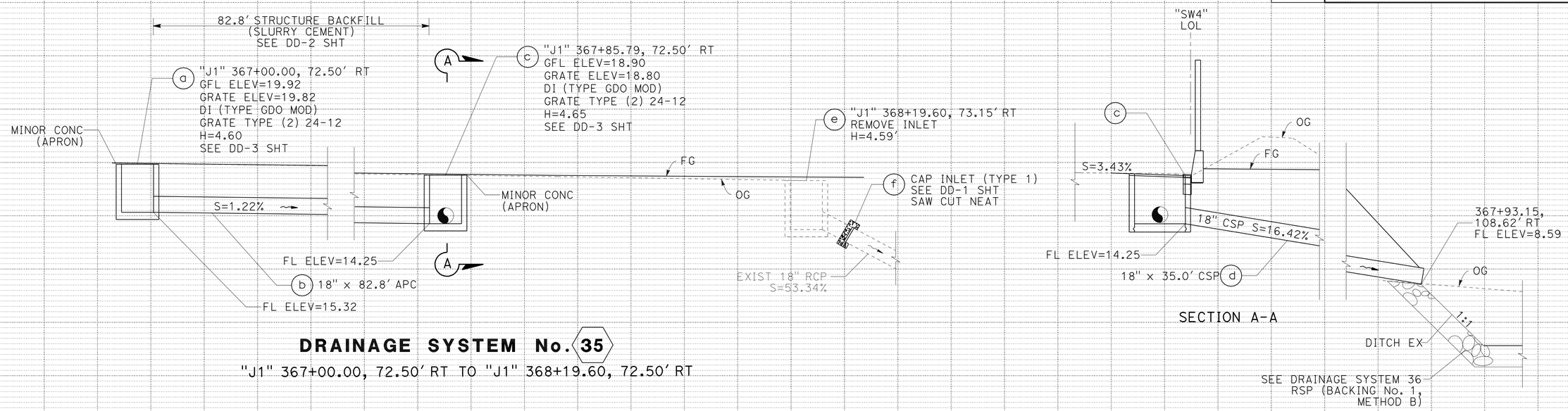

DRAINAGE SYSTEM No. 35

"J1" 367+00.00, 72.50' RT TO "J1" 368+19.60, 72.50' RT

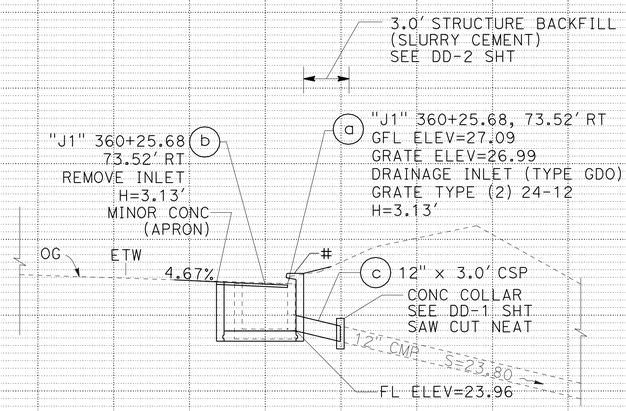

DRAINAGE SYSTEM No. 34

"J1" 360+25.68, 73.52' RT

DRAINAGE PROFILES

SCALE: 1" = 5' HORIZ
1" = 5' VERT

DP-19

REVISED BY | DATE REVISED
TRAVIS GURNEY | CHRIS GAIDO
CALCULATED-DESIGNED BY | CHECKED BY
FUNCTIONAL SUPERVISOR: JOHN L. MARTIN

STATE OF CALIFORNIA - DEPARTMENT OF TRANSPORTATION
Caltrans DESIGN

P:\proj2\04\26406\design\DCCR\426406ib019.dgn

LAST REVISION 03-15-10 | DATE PLOTTED => 16-AUG-2010 | TIME PLOTTED => 10:26

Dist	COUNTY	ROUTE	POST MILES TOTAL PROJECT	SHEET No.	TOTAL SHEETS
04	Mrn	101	18.6/R22.3	120	542

REGISTERED CIVIL ENGINEER 03-15-10 DATE

8-9-10
PLANS APPROVAL DATE

REGISTERED PROFESSIONAL ENGINEER ROBERT J. NIXON No. C69123 Exp. 6-30-10 CIVIL STATE OF CALIFORNIA

THE STATE OF CALIFORNIA OR ITS OFFICERS OR AGENTS SHALL NOT BE RESPONSIBLE FOR THE ACCURACY OR COMPLETENESS OF SCANNED COPIES OF THIS PLAN SHEET.

NOTES:

1. SEE STANDARD PLAN D89 FOR REINFORCEMENT DETAILS.
2. DRILL AND BOND #4 BARS WITH MINIMUM 6" EMBEDMENT AT 8" SPACING.

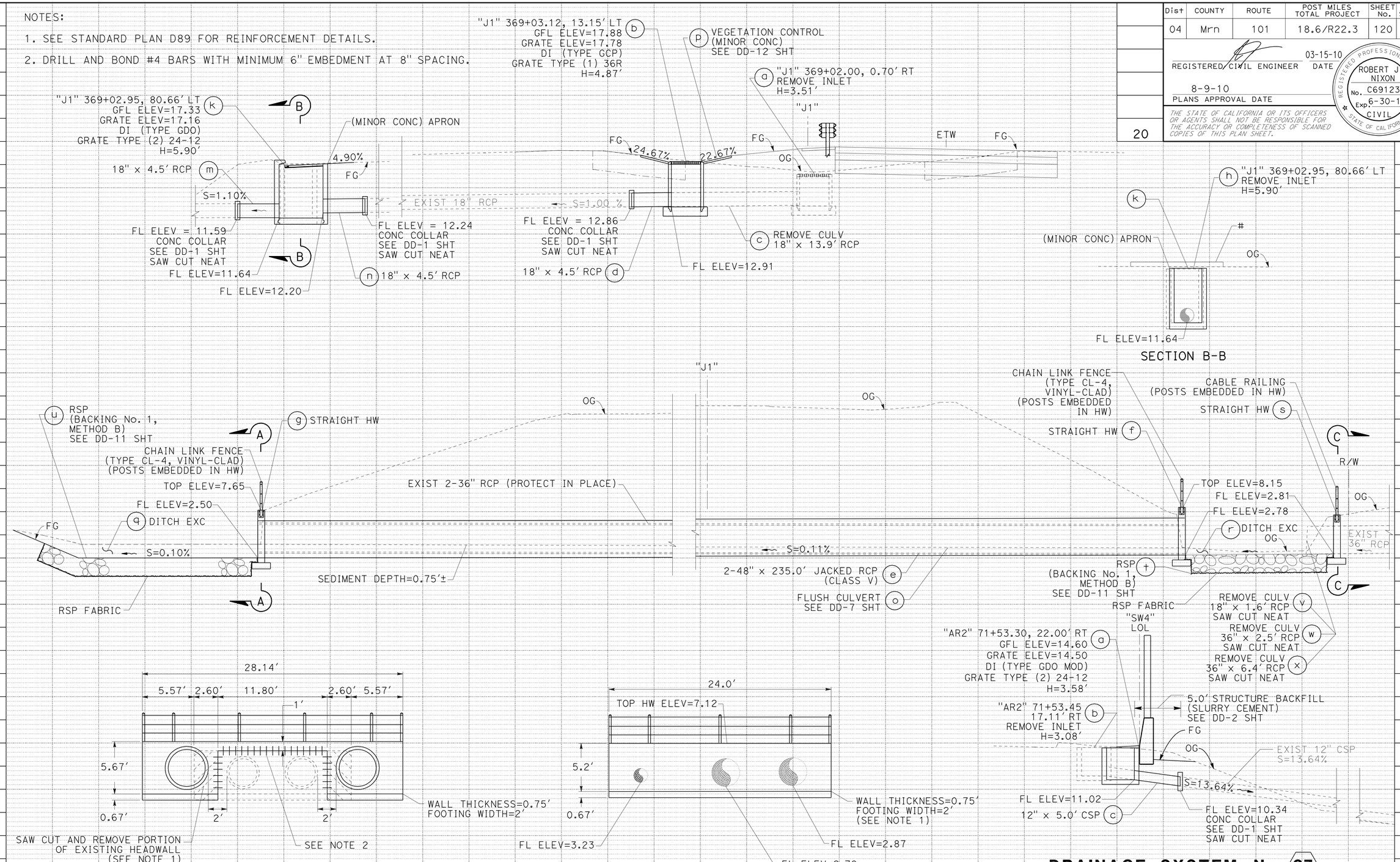

DRAINAGE SYSTEM No. 36

"J1"368+11.27, 104.0' RT TO "J1"369+00.00, 112.0' LT

DRAINAGE SYSTEM No. 37

"AR2" 71+53.30, 22.00' RT

DRAINAGE PROFILES

SCALE: 1" = 5' HORIZ
1" = 5' VERT

DP-20

REVISED BY	DATE REVISED

TOBY CRAWFORD — CHRIS GAIDO — CALCULATED-DESIGNED BY — CHECKED BY

FUNCTIONAL SUPERVISOR: JOHN L. MARTIN

STATE OF CALIFORNIA - DEPARTMENT OF TRANSPORTATION — DESIGN

Caltrans

P:\proj2\04\26406\design\ps&e\426406ib020.dgn

LAST REVISION 03-15-10 — DATE PLOTTED => 16-AUG-2010 — TIME PLOTTED => 10:26

Dist	COUNTY	ROUTE	POST MILES TOTAL PROJECT	SHEET No.	TOTAL SHEETS
04	Mrn	101	18.6/R22.3	121	542

REGISTERED CIVIL ENGINEER 03-15-10 DATE

8-9-10
PLANS APPROVAL DATE

REGISTERED PROFESSIONAL ENGINEER ROBERT J. NIXON No. C69123 Exp. 6-30-10 CIVIL STATE OF CALIFORNIA

THE STATE OF CALIFORNIA OR ITS OFFICERS OR AGENTS SHALL NOT BE RESPONSIBLE FOR THE ACCURACY OR COMPLETENESS OF SCANNED COPIES OF THIS PLAN SHEET.

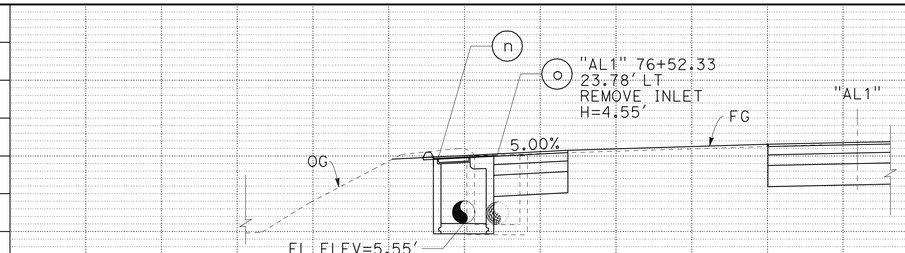

SECTION C-C

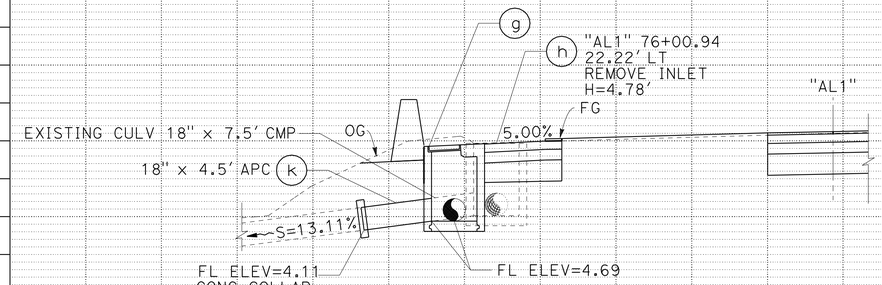

SECTION B-B

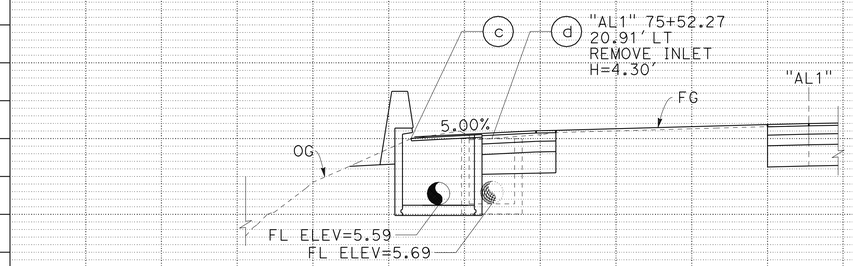

SECTION A-A

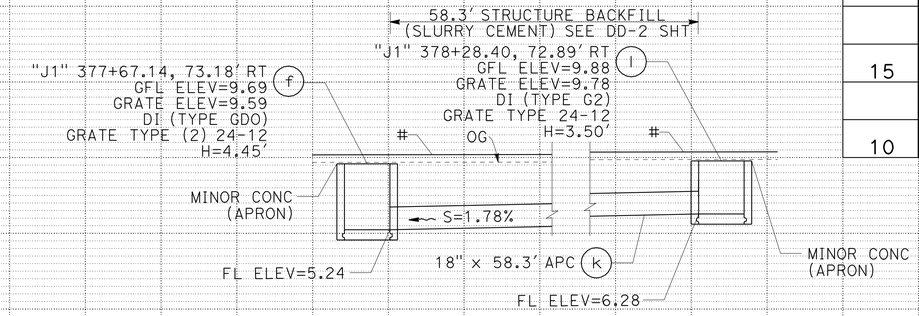

SECTION D-D

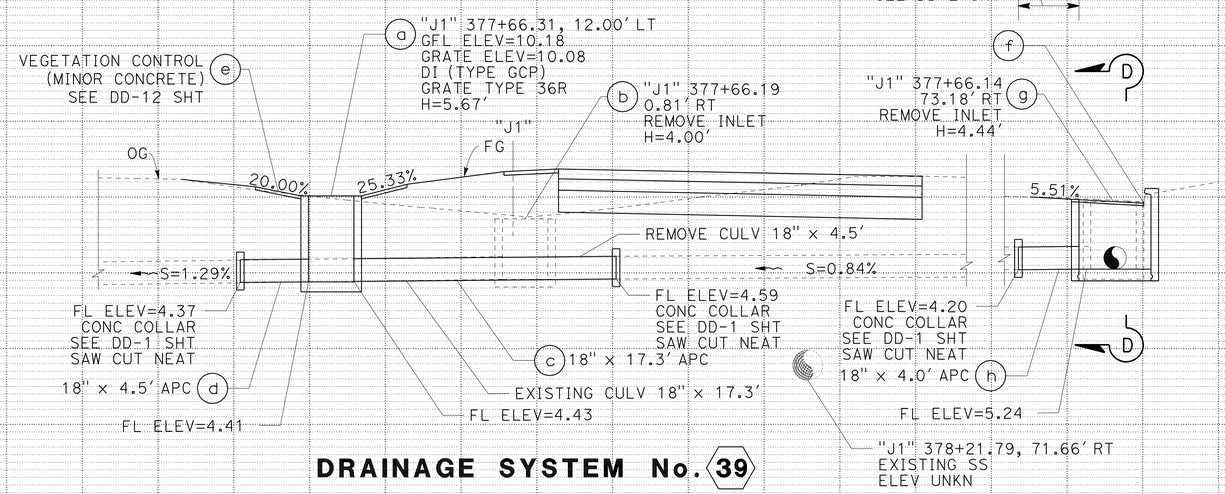

DRAINAGE SYSTEM No. 39

"J1"377+66.31, 12.00' LT

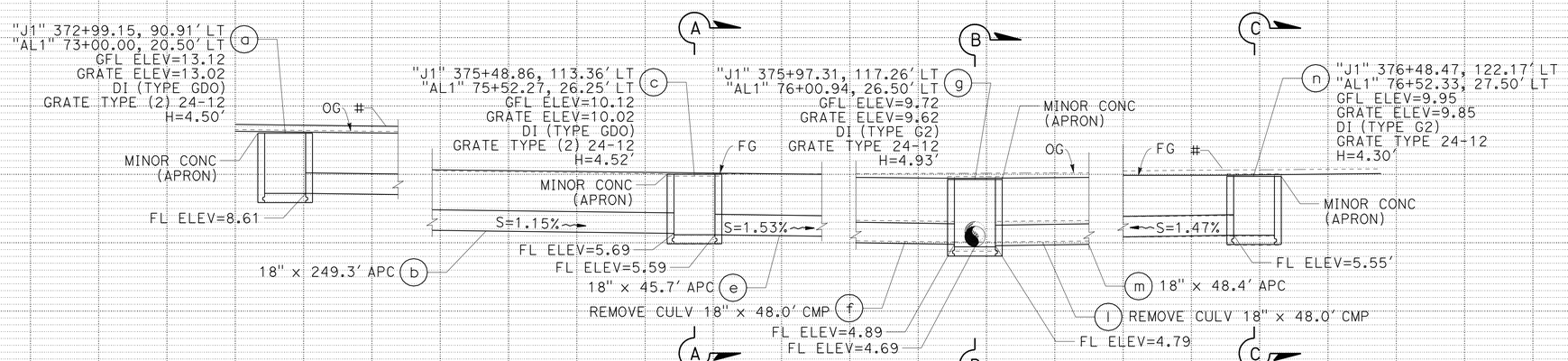

DRAINAGE SYSTEM No. 38

"J1" 372+99.15, 91.41' LT TO 376+48.47, 122.67' LT
"AL1" 73+00.00, 21.00' LT TO 76+52.33, 28.00' LT

DRAINAGE PROFILES

SCALE: 1" = 5' HORIZ
1" = 5' VERT

DP-21

REVISED BY | DATE REVISED
TRAVIS GURNEY/ SCOTT GREGORY | CHRIS GAIDO
CALCULATED-DESIGNED BY | CHECKED BY
FUNCTIONAL SUPERVISOR | JOHN L. MARTIN

STATE OF CALIFORNIA - DEPARTMENT OF TRANSPORTATION
Caltrans
DESIGN

P:\proj2\04\26406\design\ps&e\426406ib021.dgn

LAST REVISION 03-15-10 | DATE PLOTTED => 16-AUG-2010 | TIME PLOTTED => 10:26

Dist	COUNTY	ROUTE	POST MILES TOTAL PROJECT	SHEET No.	TOTAL SHEETS
04	Mrn	101	18.6/R22.3	122	542

REGISTERED CIVIL ENGINEER 03-15-10 DATE

8-9-10
PLANS APPROVAL DATE

REGISTERED PROFESSIONAL ENGINEER ROBERT J. NIXON No. C69123 Exp. 6-30-10 CIVIL STATE OF CALIFORNIA

THE STATE OF CALIFORNIA OR ITS OFFICERS OR AGENTS SHALL NOT BE RESPONSIBLE FOR THE ACCURACY OR COMPLETENESS OF SCANNED COPIES OF THIS PLAN SHEET.

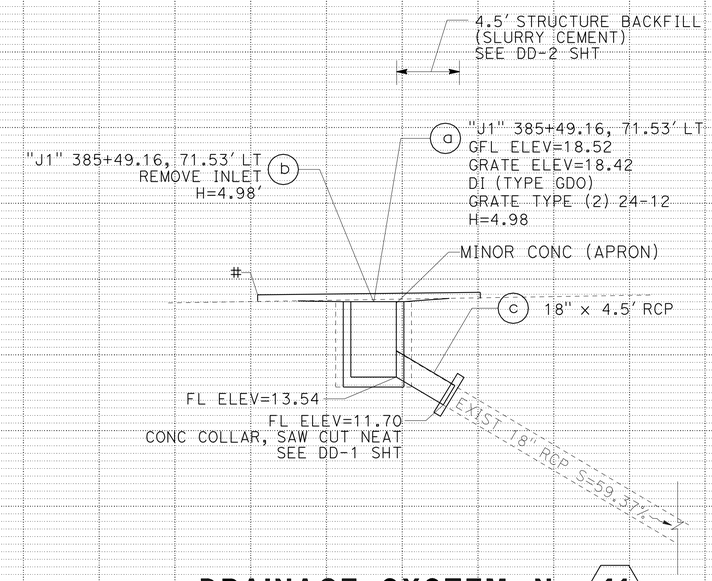

DRAINAGE SYSTEM No. 41

"J1"385+49.16, 71.53' LT

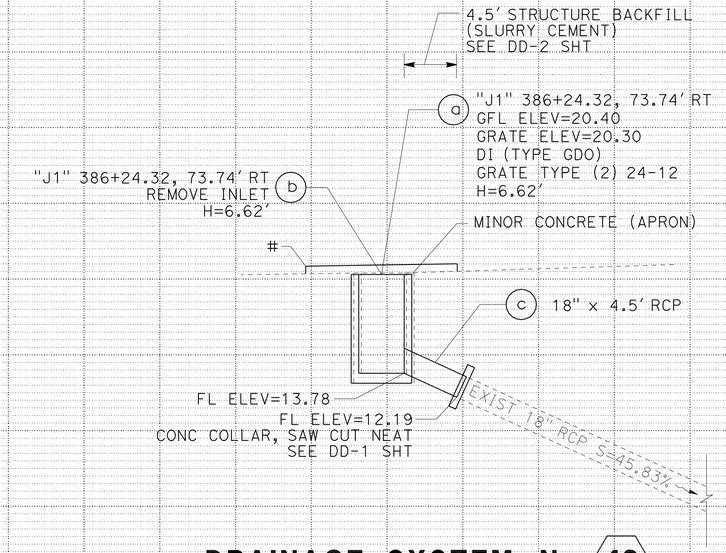

DRAINAGE SYSTEM No. 42

"J1"386+24.32, 73.74' RT

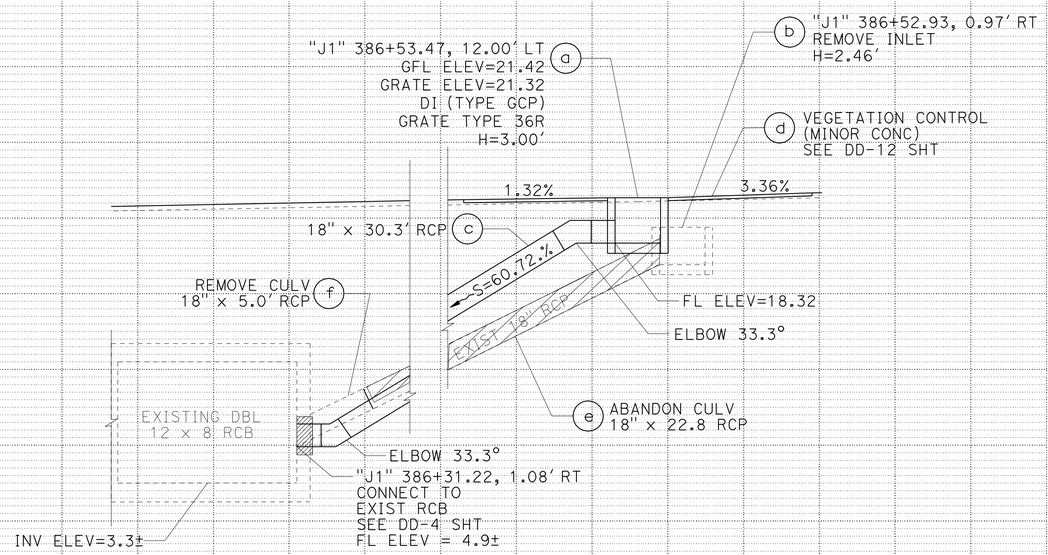

DRAINAGE SYSTEM No. 40

"J1"386+53.47, 12.00' LT

DRAINAGE PROFILES

SCALE: 1" = 5' HORIZ
1" = 5' VERT

DP-22

REVISED BY | DATE REVISED

SCOTT GREGORY | CHRIS GAIDO

CALCULATED-DESIGNED BY | CHECKED BY

FUNCTIONAL SUPERVISOR: JOHN L. MARTIN

STATE OF CALIFORNIA - DEPARTMENT OF TRANSPORTATION
Caltrans DESIGN

P:\proj2\04\26406\design\ps&e\426406ib022.dgn

LAST REVISION 03-15-10 | DATE PLOTTED => 16-AUG-2010 | TIME PLOTTED => 10:26

Dist	COUNTY	ROUTE	POST MILES TOTAL PROJECT	SHEET No.	TOTAL SHEETS
04	Mrn	101	18.6/R22.3	123	542

REGISTERED CIVIL ENGINEER 03-15-10 DATE

8-9-10
PLANS APPROVAL DATE

REGISTERED PROFESSIONAL ENGINEER ROBERT J. NIXON No. C69123 Exp. 6-30-10 CIVIL STATE OF CALIFORNIA

THE STATE OF CALIFORNIA OR ITS OFFICERS OR AGENTS SHALL NOT BE RESPONSIBLE FOR THE ACCURACY OR COMPLETENESS OF SCANNED COPIES OF THIS PLAN SHEET.

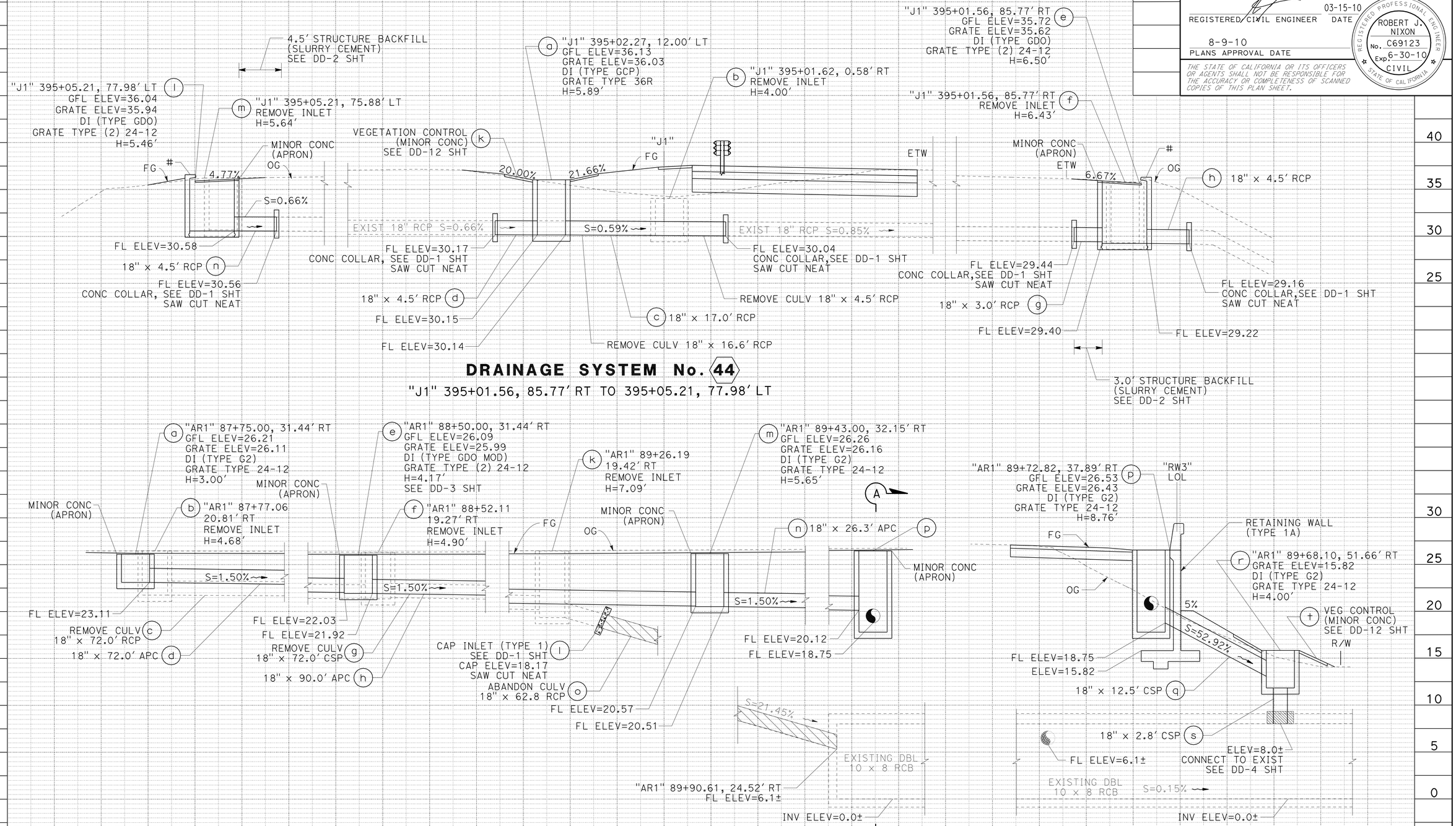

DRAINAGE SYSTEM No. 44

"J1" 395+01.56, 85.77' RT TO 395+05.21, 77.98' LT

DRAINAGE SYSTEM No. 43

"AR1" 87+75.00, 31.44' RT TO 89+72.82', 37.89' RT
"J1" 397+83.25, 155.08' RT TO 399+79.76, 130.80' RT

DRAINAGE PROFILES

SCALE: 1" = 5' HORIZ
1" = 5' VERT

DP-23

REVISED BY | DATE REVISED
TRAVIS GURNEY | CHRIS GAIDO
CALCULATED-DESIGNED BY | CHECKED BY
FUNCTIONAL SUPERVISOR: JOHN L. MARTIN

STATE OF CALIFORNIA - DEPARTMENT OF TRANSPORTATION
Caltrans DESIGN

P:\proj2\04\26406\design\DCCR\426406ib023.dgn

LAST REVISION 03-15-10 | DATE PLOTTED => 16-AUG-2010 | TIME PLOTTED => 10:27

Dist	COUNTY	ROUTE	POST MILES TOTAL PROJECT	SHEET No.	TOTAL SHEETS
04	Mrn	101	18.6/R22.3	124	542

REGISTERED CIVIL ENGINEER 03-15-10 DATE

8-9-10
PLANS APPROVAL DATE

REGISTERED PROFESSIONAL ENGINEER ROBERT J. NIXON No. C69123 Exp. 6-30-10 CIVIL STATE OF CALIFORNIA

THE STATE OF CALIFORNIA OR ITS OFFICERS OR AGENTS SHALL NOT BE RESPONSIBLE FOR THE ACCURACY OR COMPLETENESS OF SCANNED COPIES OF THIS PLAN SHEET.

NOTE: SEE ECD-1 FOR BS DETAILS

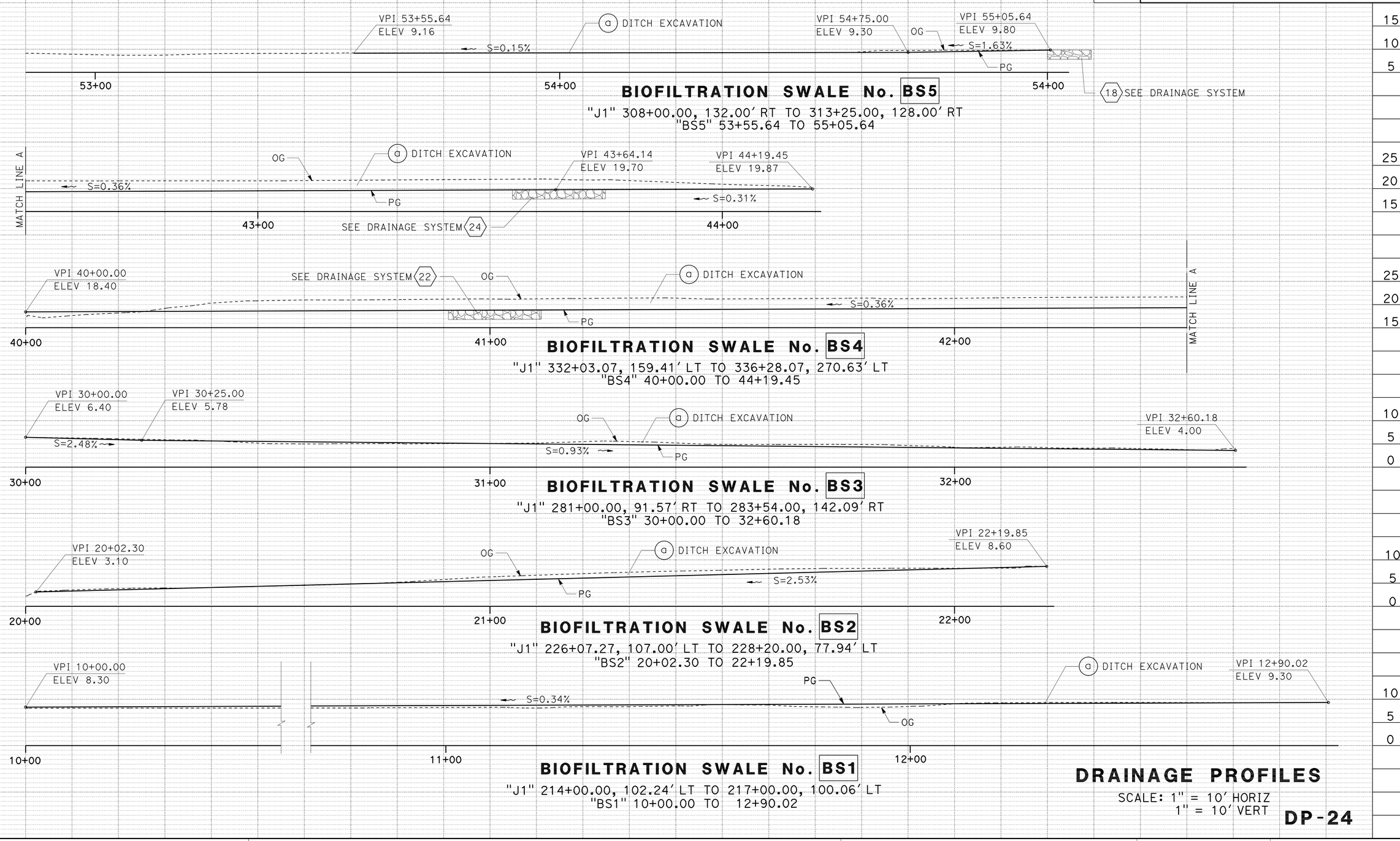

DRAINAGE PROFILES

SCALE: 1" = 10' HORIZ
1" = 10' VERT

DP-24

REVISED BY | DATE REVISED
TED SCHULTZ, ROBERT J. NIXON | JOHN L. MARTIN
CALCULATED-DESIGNED BY | CHECKED BY
FUNCTIONAL SUPERVISOR | JOHN L. MARTIN

STATE OF CALIFORNIA - DEPARTMENT OF TRANSPORTATION
Caltrans DESIGN

P:\proj2\04\26406\design\DCCR\426406ib024.dgn

LAST REVISION 03-15-10 | DATE PLOTTED => 16-AUG-2010 | TIME PLOTTED => 10:27

BORDER LAST REVISED 4/11/2008 | RELATIVE BORDER SCALE IS IN INCHES 0 1 2 3 | USERNAME => trmnguye | DGN FILE => 426406ib024.dgn | CU 03 240 | EA 264061

Dist	COUNTY	ROUTE	POST MILES TOTAL PROJECT	SHEET No.	TOTAL SHEETS
04	Mrn	101	18.6/R22.3	125	542

REGISTERED CIVIL ENGINEER 03-15-10 DATE

8-9-10
PLANS APPROVAL DATE

REGISTERED PROFESSIONAL ENGINEER ROBERT J. NIXON No. C69123 Exp. 6-30-10 CIVIL STATE OF CALIFORNIA

THE STATE OF CALIFORNIA OR ITS OFFICERS OR AGENTS SHALL NOT BE RESPONSIBLE FOR THE ACCURACY OR COMPLETENESS OF SCANNED COPIES OF THIS PLAN SHEET.

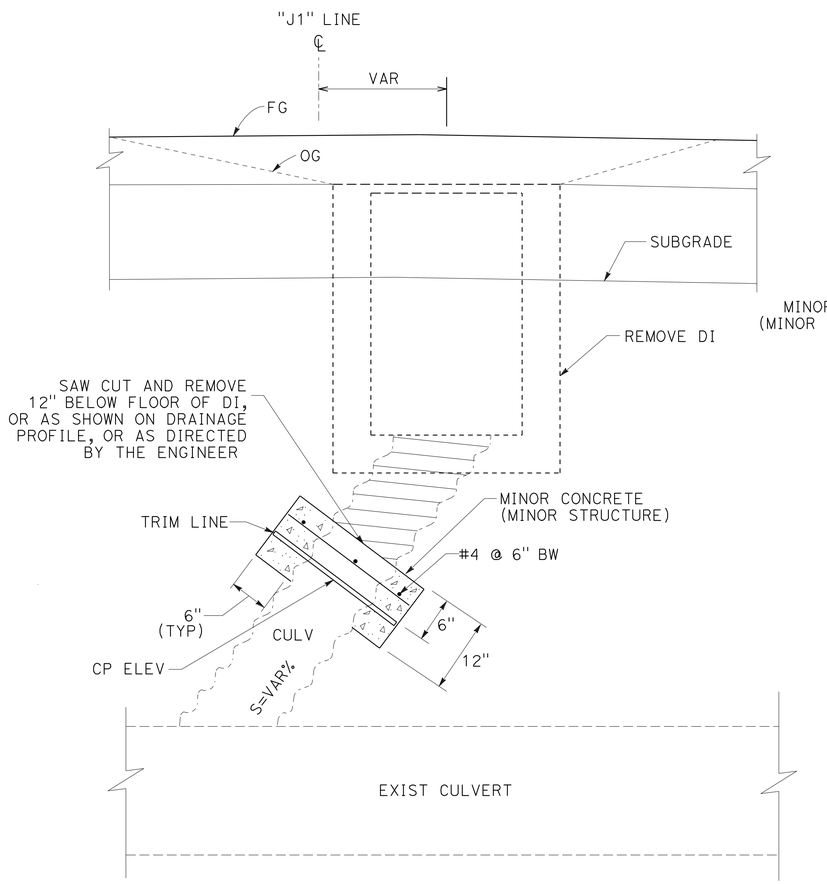

CAP INLET (TYPE 1) DETAIL

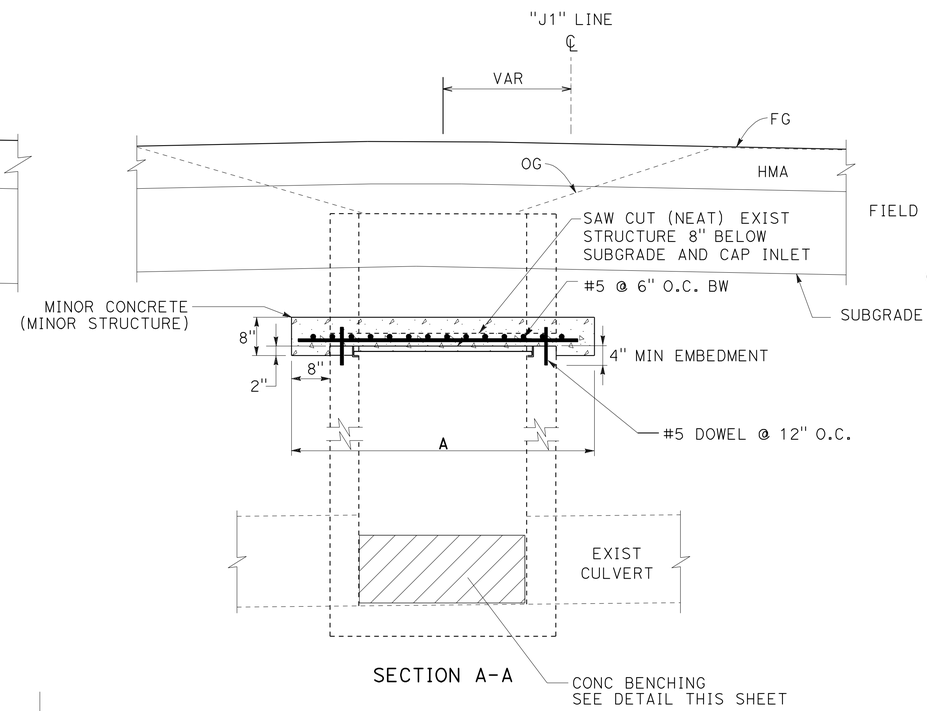

SECTION A-A

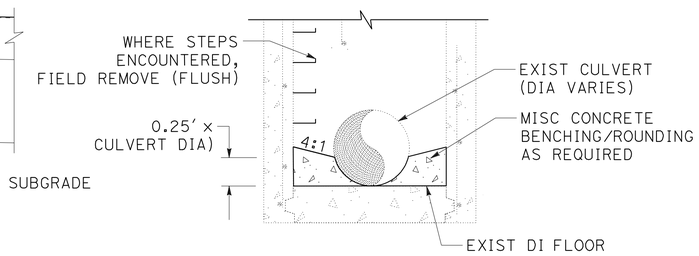

BENCHING DETAIL

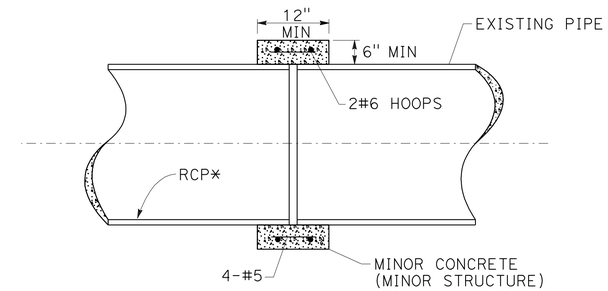

CONCRETE COLLAR DETAIL

* USE STANDARD COUPLING BAND FOR CSP.

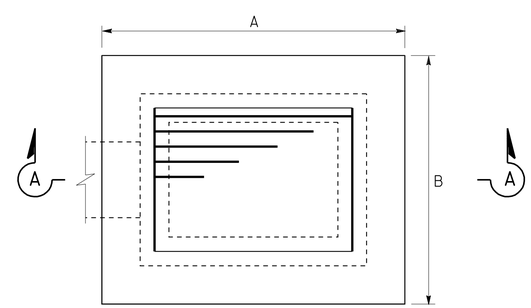

PLAN

CAP INLET (TYPE 2) DETAIL

CAP INLET (TYPE 1)

DRAINAGE SYSTEM No.	STATION	SLOPE %	PIPE DESCRIPTION
2 h	"J1" 235+07.08	S=57.38%	12" CMP
4 b	"J1" 250+83.77	S=VERT	12" CMP
10 b	"J1" 274+05.76	S=VERT	12" CMP
16 b	"J1" 307+79.38	S=VERT	12" CMP
35 f	"J1" 368+79.60	S=53.34%	18" RCP
43 l	"AR1" 89+26.19	S=29.04%	18" RCP

CAP INLET (TYPE 2)

DRAINAGE SYSTEM No.	STATION	DIMENSION "A"	DIMENSION "B"
1A a	"IL1" 11+97.89	5'-6"	4'-4"
7 a	"J1" 255+49.33	5'-6"	4'-4"
8 a	"J1" 265+36.22	5'-6"	4'-4"

1o 1Ac 1Ad 3l 11e 12e 13e 15Ad 15Ae 15d 15e 18f 19c
20c 20m 21g 23c 24d 24e 24m 24s 24t 24z 24aa 25b 25c
26b 27c 27d 27l 29b 30d 30e 31f 32f 33c 33k 33l 33o
33t 34c 36d 36m 36n 37c 38k 39c 39d 39h 41c 42c 43l
44c 44d 44g 44h 44n

DRAINAGE DETAILS

NO SCALE

DD-1

REVISED BY | DATE REVISED
TRAVIS GURNEY | CHRIS GAIDO
CALCULATED-DESIGNED BY | CHECKED BY
FUNCTIONAL SUPERVISOR | JOHN L. MARTIN

STATE OF CALIFORNIA - DEPARTMENT OF TRANSPORTATION
Caltrans DESIGN

P:\proj2\04\26406\design\DCCR\426406ic001.dgn

LAST REVISION 03-15-10 | DATE PLOTTED => 16-AUG-2010 | TIME PLOTTED => 10:46

BORDER LAST REVISED 4/11/2008 | RELATIVE BORDER SCALE IS IN INCHES 0 1 2 3 | USERNAME => trmnguye | DGN FILE => 426406ic001.dgn | CU 03 240 | EA 264061

Dist	COUNTY	ROUTE	POST MILES TOTAL PROJECT	SHEET No.	TOTAL SHEETS
04	Mrn	101	18.6/R22.3	126	542

REGISTERED CIVIL ENGINEER 03-15-10 DATE

8-9-10
PLANS APPROVAL DATE

REGISTERED PROFESSIONAL ENGINEER ROBERT J. NIXON No. C69123 Exp. 6-30-10 CIVIL STATE OF CALIFORNIA

THE STATE OF CALIFORNIA OR ITS OFFICERS OR AGENTS SHALL NOT BE RESPONSIBLE FOR THE ACCURACY OR COMPLETENESS OF SCANNED COPIES OF THIS PLAN SHEET.

NOTES:

1. QUANTITIES ARE APPROXIMATE AND FOR DESIGN PURPOSES ONLY.
2. PERMISSIBLE TO ELIMINATE THE 180° HOOKS ON EVERY OTHER BAR.
3. FOR DESIGN AND DETAILS NOT SHOWN, SEE STANDARD PLAN D82.

STRUCTURE BACKFILL (SLURRY CEMENT) AND HMA

DRAINAGE SYSTEM No.	FROM STATION	TO STATION	LENGTH (LF)	DIMENSION (FT) "A"	"B"	"C"
1ⓑ	"IL1" 5+00.00	"IL1" 8+00.00	297.0	2.83	3.40	0.5
1ⓓ	"IL1" 8+00.00	"IL1" 10+00.00	197.0	2.83	2.63	0.5
1ⓕ	"IL1" 10+00.00	"IL1" 11+00.00	97.0	2.83	2.21	0.5
1ⓚ	"IL1" 11+00.00	"IL1" 12+03.75	100.8	2.83	2.67	0.5
1ⓟ	"IL1" 12+03.75	"IL1" 13+00.00	93.3	2.83	2.84	0.5
1ⓡ	"IL1" 13+00.00	"IL1" 13+82.00	95.5	3.25	1.95	0.5*
1Cⓒ	"IL1" 19+77.58	"IL1" 22+90.00	207.8	2.83	2.50	0.5
2ⓑ	"J1" 234+88.00	"J1" 234+88.00	191	6.33	9.73	0.5
3ⓑ	"IR1" 36+00.00	"IR1" 36+47.07	39.0	3.25	1.28	0.5
3ⓓ	"IR1" 36+46.46	"IR1" 36+52.21	11.0	3.25	1.48	0.5
3ⓘ	"IR1" 36+28.42	"IR1" 36+43.04	40.0	3.25	2.35	0.5
3ⓜ	"IR1" 36+46.46	"IR1" 40+00.00	336.5	3.25	1.85	0.5
3ⓞ	"IR1" 40+00.00	"IR1" 44+00.00	394.6	2.83	2.77	0.5
3ⓠ	"J1" 243+98.75	"J1" 247+00.00	394.6	2.83	3.43	0.5
5ⓑ	"J1" 251+02.04	"J1" 251+50.00	44.7	2.83	4.29	0.5
9ⓑ	"J1" 263+00.00	"J1" 265+41.15	237.0	2.83	4.95	0.5
10Aⓒ	"J1" 272+49.57	"J1" 274+27.79	178.2	2.83	3.32	0.5
12ⓑ	"J1" 290+00.00	"J1" 292+97.97	254.7	2.83	2.92	0.5
15ⓓ	"J1" 302+00.00	"J1" 302+00.00	4.5	3.33	10.76	0.5
15ⓔ	"J1" 302+00.00	"J1" 302+00.00	4.5	3.33	10.47	0.5
17ⓓ	"J1" 307+48.79	"J1" 309+00.00	148.7	2.83	3.60	0.5
18ⓑ	"J1" 311+50.00	"J1" 313+55.00	200.0	2.83	4.41	0.5
18ⓕ	"J1" 313+55.00	"J1" 313+55.00	4.5	2.83	3.98	0.5
18ⓘ	"J1" 316+50.00	"J1" 316+50.00	292.0	2.83	3.72	0.5
21ⓖ	"J1" 320+01.00	"J1" 320+01.00	4.5	3.33	3.56	0.5
21ⓘ	"J1" 320+01.00	"J1" 322+44.50	239.5	2.83	3.05	0.5
21ⓝ	"J1" 322+44.50	"J1" 324+56.36	204.8	2.83	3.10	0.5
21ⓟ	"J1" 324+56.36	"J1" 326+14.84	152.1	2.83	3.03	0.5
23ⓓ	"DR1" 29+76.24	"DR1" 31+00.00	119.8	2.83	4.44	0.5
25ⓑ	"J1" 342+01.92	"J1" 342+01.92	4.5	2.83	5.65	0.5
25ⓒ	"J1" 342+01.92	"J1" 342+01.92	4.5	2.83	6.22	0.5
26ⓑ	"DR2" 43+01.84	"DR2" 43+01.84	4.5	2.0	3.97	0.5
28ⓑ	"J1" 345+50.00	"J1" 346+02.00	54.0	2.83	4.09	0.5
29ⓑ	"J1" 346+01.45	"J1" 346+01.45	4.5	2.83	4.53	0.5
30ⓑ	"DR2" 48+00.00	"DR2" 50+03.20	200.2	2.83	6.34	0.5
32ⓑ	"J1" 352+00.00	"J1" 353+00.00	147.0	2.83	3.87	0.5
32ⓓ	"J1" 353+00.00	"J1" 355+02.43	149.4	2.83	4.54	0.5
32ⓕ	"J1" 355+02.00	"J1" 355+02.00	4.5	2.83	4.25	0.5
33ⓚ	"J1" 363+76.90	"J1" 363+76.90	3.0	2.83	4.78	0.5
33ⓣ	"J1" 363+76.03	"J1" 363+76.03	3.0	2.83	3.81	0.5
34ⓒ	"J1" 360+25.68	"J1" 360+25.68	3.0	2.33	3.94	0.5
35ⓑ	"J1" 367+00.00	"J1" 367+85.79	82.8	2.83	4.02	0.5
37ⓒ	"AR2" 71+53.30	"AR2" 71+53.30	5.0	2.33	2.69	0.5
39ⓗ	"J1" 377+66.14	"J1" 377+66.14	4.0	2.83	4.21	0.5
39ⓚ	"J1" 377+67.14	"J1" 378+28.40	58.3	2.83	3.43	0.5
41ⓒ	"J1" 385+48.90	"J1" 385+48.90	4.5	2.83	5.51	0.5
42ⓒ	"J1" 386+24.32	"J1" 386+24.32	4.5	2.83	7.30	0.5
44ⓖ	"J1" 395+01.56	"J1" 395+01.56	3.0	2.83	6.09	0.5
44ⓝ	"J1" 395+05.21	"J1" 395+05.21	4.5	2.83	6.32	0.5

* NO HMA USE NATIVE MATERIAL TO FG

SPAN			3′
HEIGHT			1.5′
MAXIMUM EARTH COVER			10′
CONC	ROOF	T_1	7"
CONC	WALLS	T_2	6"
CONC	INVERT	T_3	6"
REINF	SPACING		7"
REINF	"a"	SIZE BAR	#6
REINF	"e"	SIZE BAR	#4
QUANTITIES	CONCRETE	CF/LF	5.6
QUANTITIES	REINFORCEMENT	LB/LF	36

"d" BARS, FOR EARTH COVERS UP TO AND INCLUDING 10′-0"	
SPAN (S)	3′
NUMBER	7

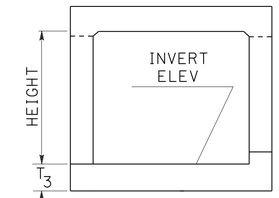

FLAT INVERT

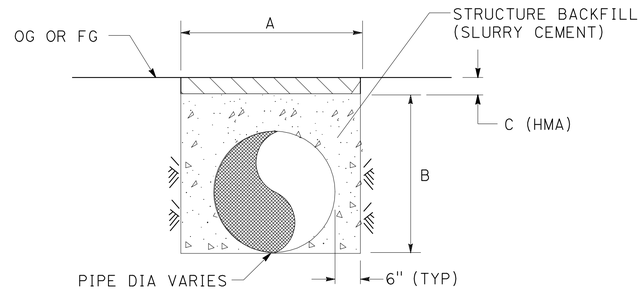

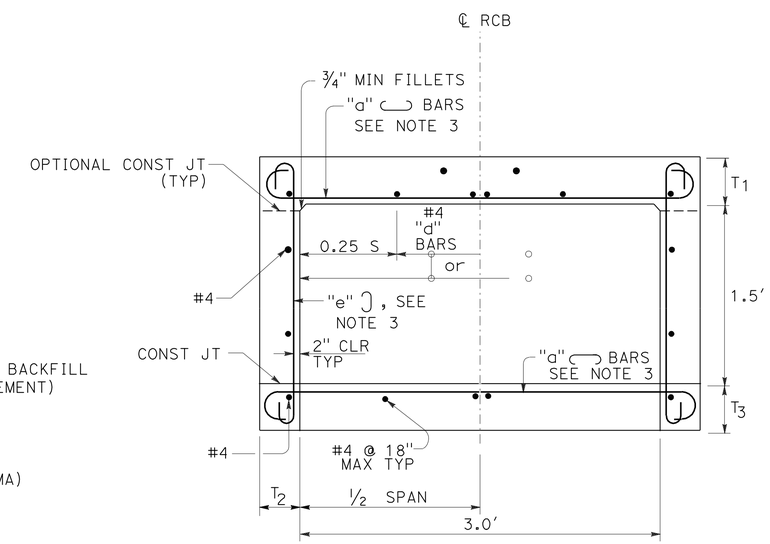

TYPICAL SECTION
3.0′ x 1.5′ RCB

DRAINAGE DETAILS
NO SCALE

DD-2

STATE OF CALIFORNIA - DEPARTMENT OF TRANSPORTATION
Caltrans DESIGN

FUNCTIONAL SUPERVISOR: JOHN L. MARTIN
CALCULATED-DESIGNED BY: TRAVIS GURNEY
CHECKED BY: CHRIS GAIDO
REVISED BY / DATE REVISED

P:\proj2\04\264061\design\DCCR\426406ic002.dgn

LAST REVISION 03-11-10 | DATE PLOTTED => 16-AUG-2010 | TIME PLOTTED => 10:27

Dist	COUNTY	ROUTE	POST MILES TOTAL PROJECT	SHEET No.	TOTAL SHEETS
04	Mrn	101	18.6/R22.3	127	542

REGISTERED CIVIL ENGINEER 03-15-10 DATE

8-9-10
PLANS APPROVAL DATE

REGISTERED PROFESSIONAL ENGINEER ROBERT J. NIXON No. C69123 Exp. 6-30-10 CIVIL STATE OF CALIFORNIA

THE STATE OF CALIFORNIA OR ITS OFFICERS OR AGENTS SHALL NOT BE RESPONSIBLE FOR THE ACCURACY OR COMPLETENESS OF SCANNED COPIES OF THIS PLAN SHEET.

NOTES:

1. PARTIAL DI REINFORCEMENT REQUIREMENTS SHOWN. FURTHER REINFORCEMENT DETAIL FOR TYPE GDO (MOD) DI, SEE STANDARD PLAN FOR TYPE GDO DI.
2. WALL "A" OF DI TYPE GDO (MOD) SHALL BE POSITIONED ADJACENT TO SOUNDWALL OR RETAINING WALL. APPLY STANDARD TEMPERED HARDBOARD BOARD-FILLER BETWEEN THE TWO CONCRETE SURFACES. SEE BOARD-FILLER REQUIREMENTS IN THE STANDARD SPECIFICATIONS.
3. CONCRETE BENCHING REQUIRED AT ALL DI TYPE GDO (MOD). FINISHED FLOWLINE SHALL CONFORM TO THE DIMENSIONS SHOWN AND PROVIDE FOR TO A CONSTANT GRADE BETWEEN THE DESIGN FLOWLINES SHOWN ON THE APPROPRIATE DRAINAGE PROFILE SHEET.

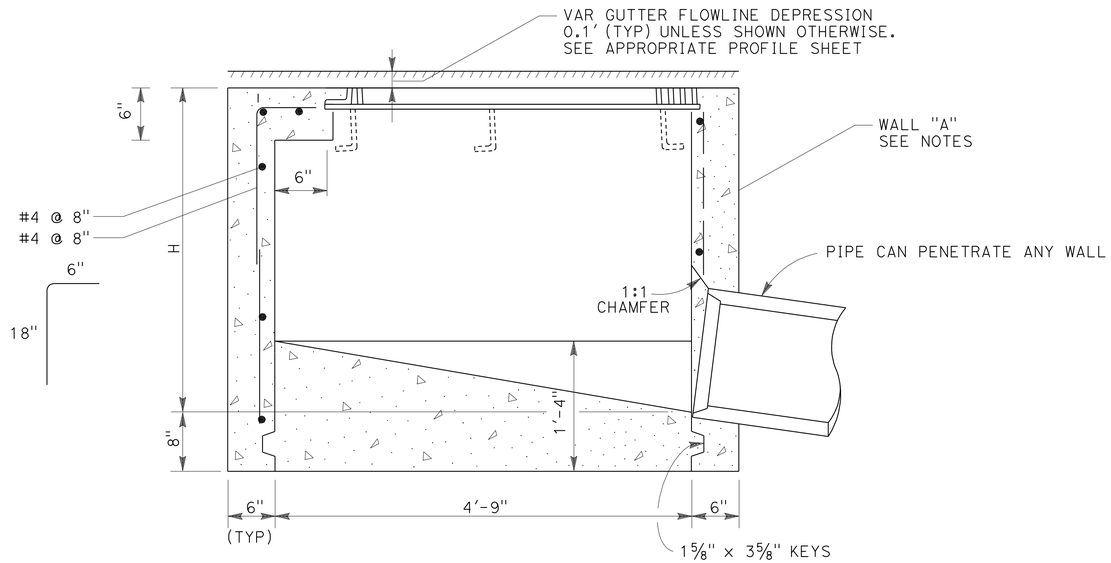

SECTION A-A

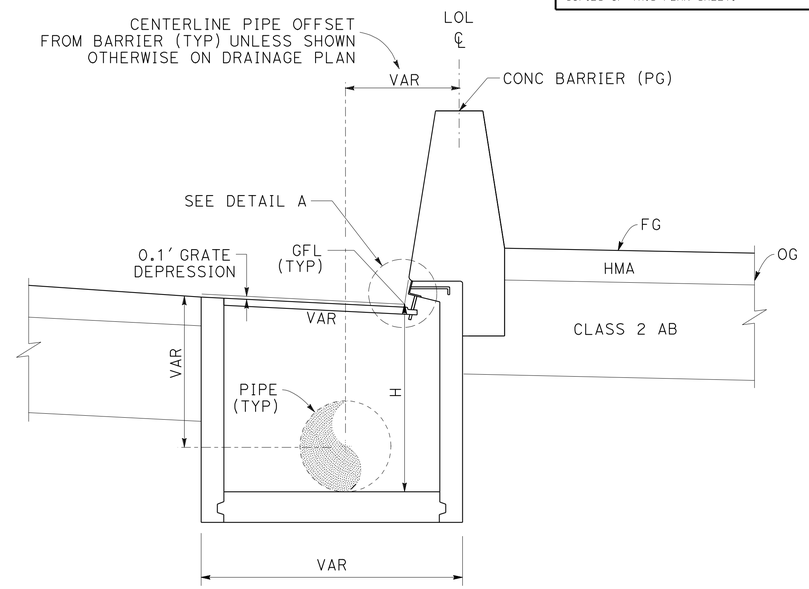

DI AND PIPELINE OFFSET FROM MEDIAN BARRIER

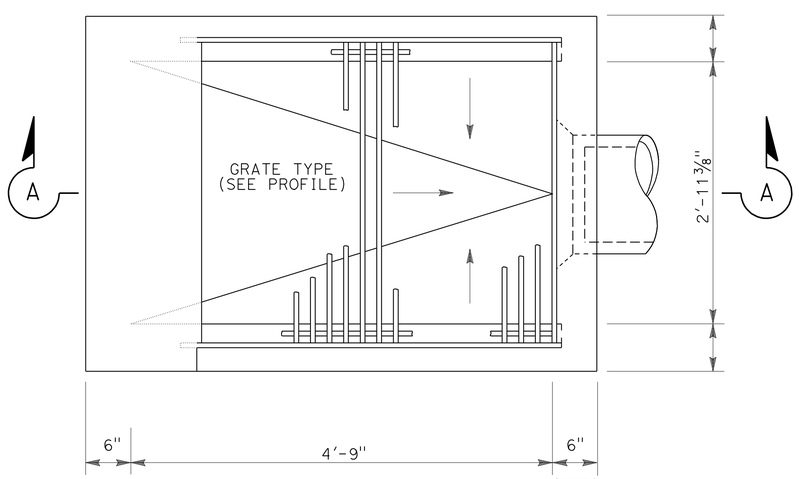

PLAN

TYPE GDO (MOD)

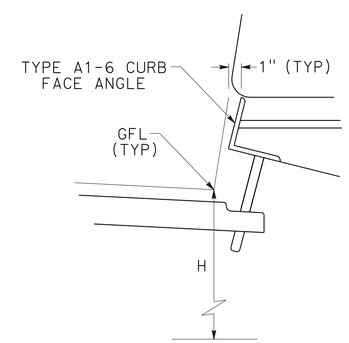

DETAIL A

DRAINAGE DETAILS

NO SCALE

DD-3

REVISED BY	DATE REVISED

CALCULATED-DESIGNED BY	CHECKED BY
TRAVIS GURNEY	CHRIS GAIDO

FUNCTIONAL SUPERVISOR: JOHN L. MARTIN

STATE OF CALIFORNIA - DEPARTMENT OF TRANSPORTATION

Caltrans **DESIGN**

P:\proj2\04\26406\design\ps&e\426406ic003.dgn

LAST REVISION 03-11-10 | DATE PLOTTED => 16-AUG-2010 | TIME PLOTTED => 10:27

Dist	COUNTY	ROUTE	POST MILES TOTAL PROJECT	SHEET No.	TOTAL SHEETS
04	Mrn	101	18.6/R22.3	128	542

REGISTERED CIVIL ENGINEER 03-15-10 DATE

8-9-10
PLANS APPROVAL DATE

REGISTERED PROFESSIONAL ENGINEER ROBERT J. NIXON No. C69123 Exp. 6-30-10 CIVIL STATE OF CALIFORNIA

THE STATE OF CALIFORNIA OR ITS OFFICERS OR AGENTS SHALL NOT BE RESPONSIBLE FOR THE ACCURACY OR COMPLETENESS OF SCANNED COPIES OF THIS PLAN SHEET.

NOTES:

1. FIRST PIPE JOINT OR FLEXIBLE COUPLING SHALL BE NO GREATER THAN 3' FROM OUTSIDE FACE OF STRUCTURE. ALLOWANCE FOR DIFFERENTIAL SETTLING BETWEEN STRUCTURE AND PIPELINE (CULVERT)
2. MODIFY EXIST CULVERT PIPE, FIELD CUT TO MIN, ID OF NEW VERT PIPE
3. (N) IS A NON PAY ITEM

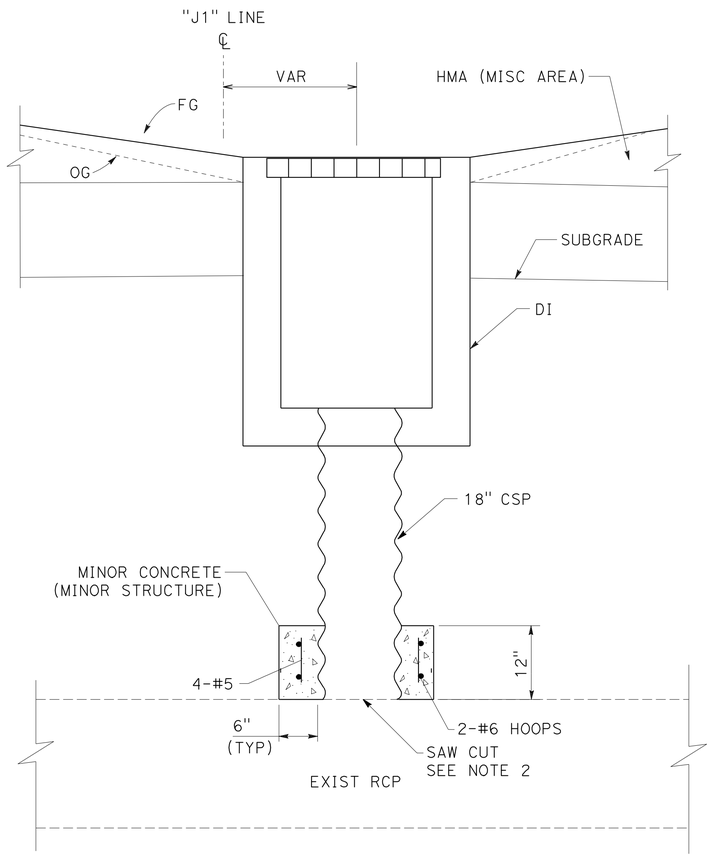

VP CONCRETE COLLAR

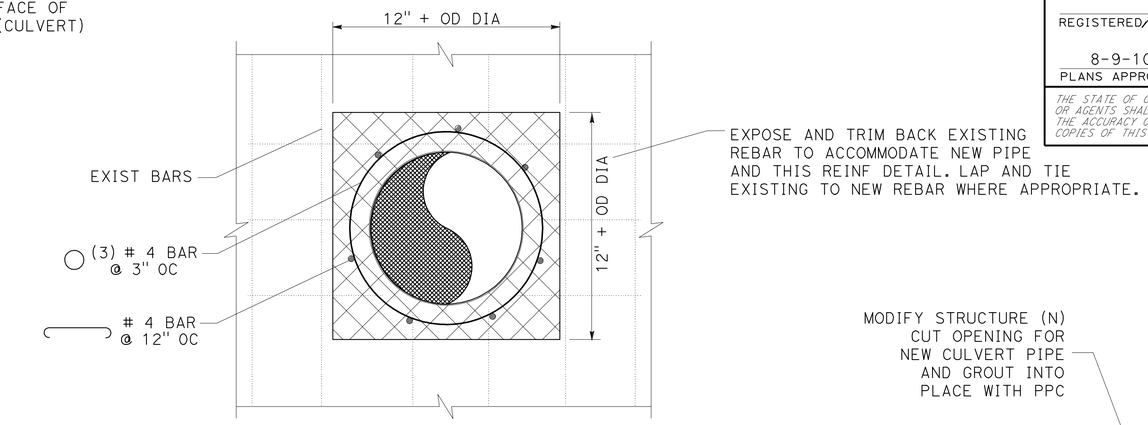

SECTION A-A

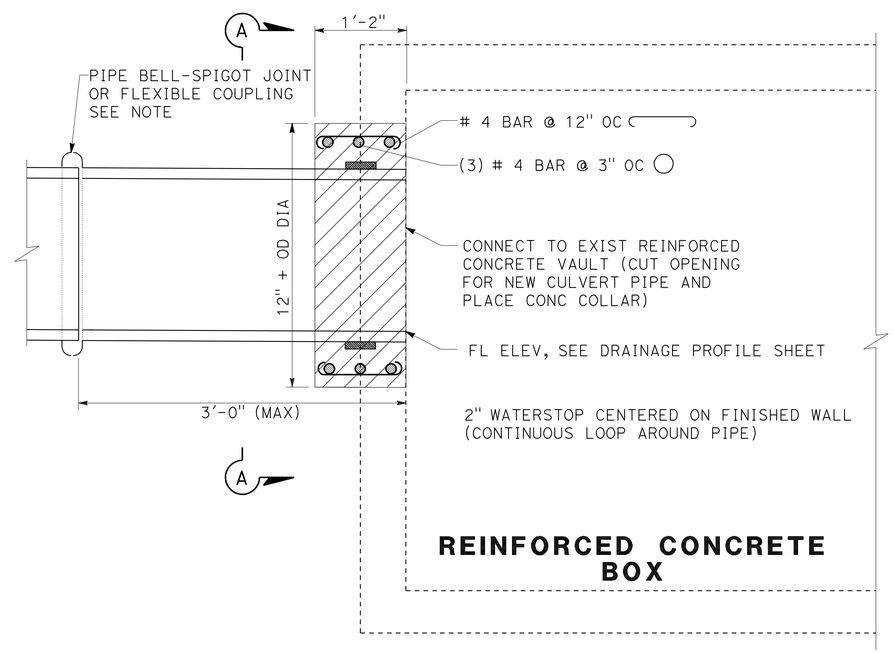

REINFORCED CONCRETE BOX

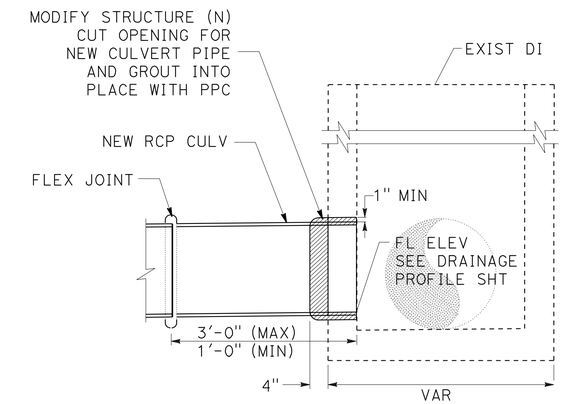

CONNECT TO EXIST INLET

DRAINAGE SYSTEM No.	STATION	STRUCTURE
5 b	"J1" 251+02.04	TYPE G2 DI
9 b	"J1" 265+41.15	TYPE G2 DI
28 b	"J1" 346+02.00	TYPE G2 DI
32 e	"J1" 355+02.43	TYPE GDO MOD DI

VP CONCRETE COLLAR

DRAINAGE SYSTEM No.	STATION	STRUCTURE
6 d	"J1" 250+50.24, 84.21' RT	36" RCP
16 d	"J1" 307+85.00, 12.00' LT	48" RCP
17 c	"J1" 307+48.79, 79.31' RT	48" RCP

PIPE CONNECTION REINFORCED CONCRETE BOX

DRAINAGE SYSTEM No.	STATION	PIPE DIA (IN)
10A c	"J1" 274+27.79	18"
40 c	"J1" 386+28.00	18"
43 s	"AR1" 89+68.10	18"

DRAINAGE DETAILS

NO SCALE

DD-4

REVISED BY | DATE REVISED
TRAVIS GURNEY | CHRIS GAIDO
CALCULATED-DESIGNED BY | CHECKED BY
FUNCTIONAL SUPERVISOR | JOHN L. MARTIN

STATE OF CALIFORNIA - DEPARTMENT OF TRANSPORTATION
Caltrans DESIGN

P:\proj2\04\26406\design\DCCR\426406ic004.dgn

LAST REVISION 03-11-10 | DATE PLOTTED => 16-AUG-2010 | TIME PLOTTED => 10:27

Dist	COUNTY	ROUTE	POST MILES TOTAL PROJECT	SHEET No.	TOTAL SHEETS
04	Mrn	101	18.6/R22.3	129	542

REGISTERED CIVIL ENGINEER 03-15-10 DATE

8-9-10
PLANS APPROVAL DATE

REGISTERED PROFESSIONAL ENGINEER ROBERT J. NIXON No. C69123 Exp. 6-30-10 CIVIL STATE OF CALIFORNIA

THE STATE OF CALIFORNIA OR ITS OFFICERS OR AGENTS SHALL NOT BE RESPONSIBLE FOR THE ACCURACY OR COMPLETENESS OF SCANNED COPIES OF THIS PLAN SHEET.

NOTES:

1. W = WIDTH OF DEPRESSED APRON. DEPRESSED APRONS SHALL BE 4'-0" UNLESS INDICATED OTHERWISE.
   D = INLET DEPRESSION. THE INLET DEPRESSION SHALL BE 1¼" UNLESS INDICATED OTHERWISE.
   DH = DIKE HEIGHT
   → = STRAIGHT GRADE, DOWNWARD SLOPE
   ⇝ = DIRECTION OF FLOW
2. APRON SHALL BE PORTLAND CEMENT AND SHALL BE 0.5' IN THICKNESS.
3. APPLY STANDARD TEMPERED HARDBOARD-FILLER BETWEEN THE TWO CONCRETE SURFACES. SEE BOARD-FILLER REQUIREMENTS IN THE STANDARD SPECIFICATIONS.

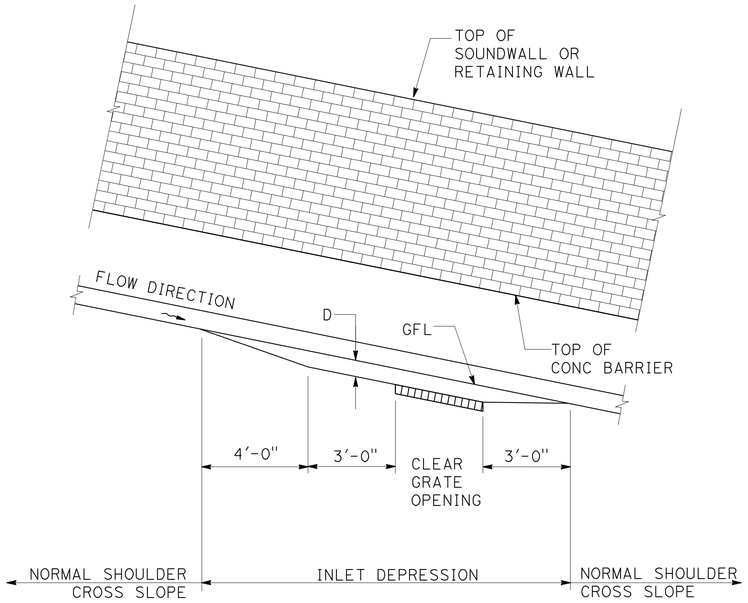

PROFILE

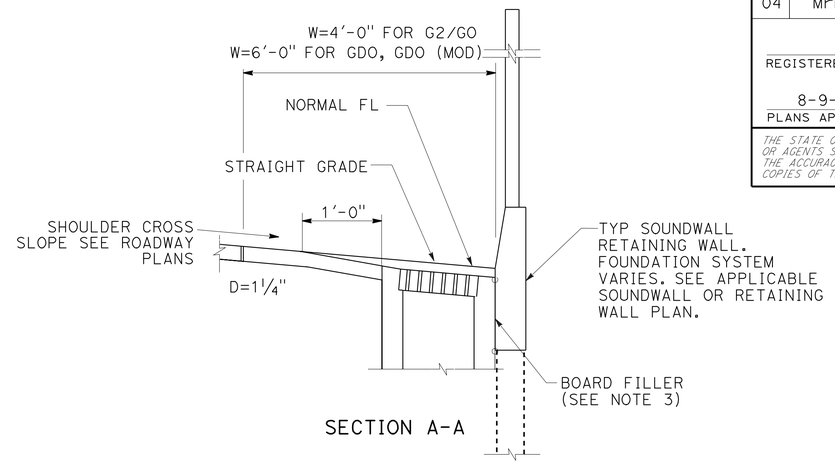

SECTION A-A

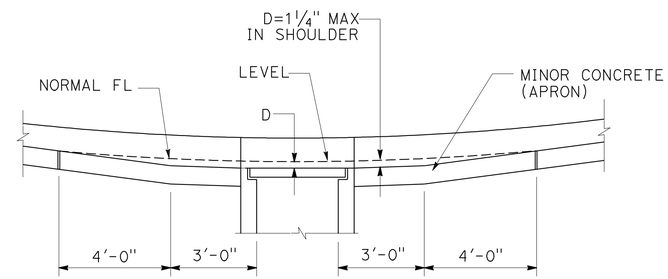

SECTION B-B

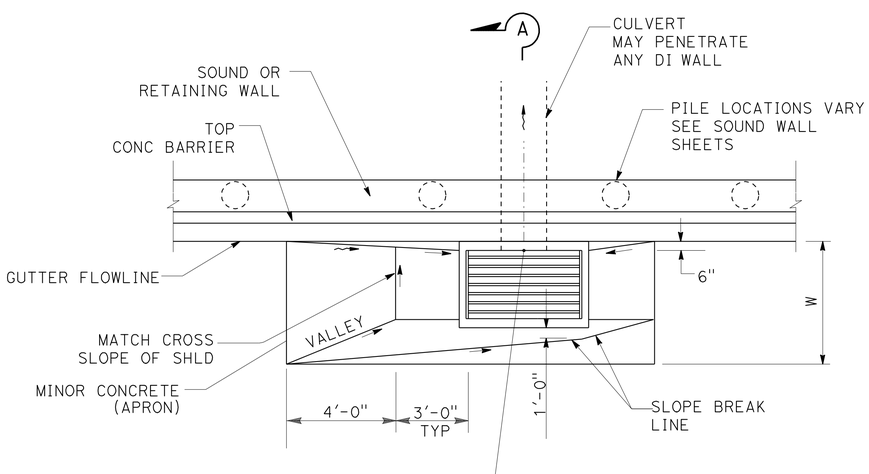

PLAN

DRAINAGE INLET ON-GRADE

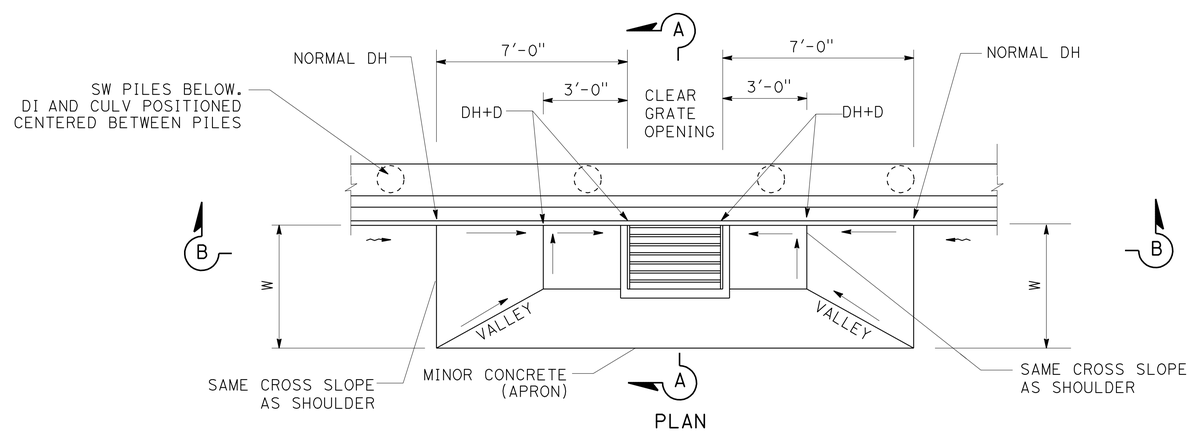

PLAN

DRAINAGE INLET AT SAG LOCATION

SPECIAL INLET DEPRESSIONS
HMA SHOULDERS AGAINST
SOUNDWALL AND RETAINING WALL

DRAINAGE DETAILS

NO SCALE

DD-5

REVISED BY | DATE REVISED
TRAVIS GURNEY | CHRIS GAIDO
CALCULATED-DESIGNED BY | CHECKED BY
FUNCTIONAL SUPERVISOR: JOHN L. MARTIN

STATE OF CALIFORNIA - DEPARTMENT OF TRANSPORTATION
Caltrans DESIGN

P:\proj2\04\26406\design\ps&e\426406ic005.dgn

LAST REVISION 03-11-10 | DATE PLOTTED => 16-AUG-2010 | TIME PLOTTED => 10:27

BORDER LAST REVISED 4/11/2008 | RELATIVE BORDER SCALE IS IN INCHES 0 1 2 3 | USERNAME => trmnguye | DGN FILE => 426406ic005.dgn | CU 03 240 | EA 264061

Dist	COUNTY	ROUTE	POST MILES TOTAL PROJECT	SHEET No.	TOTAL SHEETS
04	Mrn	101	18.6/R22.3	130	542

REGISTERED CIVIL ENGINEER 03-15-10 DATE

8-9-10
PLANS APPROVAL DATE

REGISTERED PROFESSIONAL ENGINEER ROBERT J. NIXON No. C69123 Exp. 6-30-10 CIVIL STATE OF CALIFORNIA

THE STATE OF CALIFORNIA OR ITS OFFICERS OR AGENTS SHALL NOT BE RESPONSIBLE FOR THE ACCURACY OR COMPLETENESS OF SCANNED COPIES OF THIS PLAN SHEET.

NOTES:

1. W = WIDTH OF DEPRESSED APRON. DEPRESSED APRONS SHALL BE 4'-0" FOR GO AND G2, 6'-0" FOR GDO UNLESS INDICATED OTHERWISE.
   D = INLET DEPRESSION. THE INLET DEPRESSION SHALL BE 1¼" UNLESS INDICATED OTHERWISE.
   DH = DIKE HEIGHT SHALL BE 0.5' UNLESS INDICATED OTHERWISE.
   → = STRAIGHT GRADE, DOWNWARD SLOPE.
   ⇝ = DIRECTION OF FLOW.
2. APRON SHALL BE PORTLAND CEMENT AND SHALL BE 0.5' IN THICKNESS.
3. APPLY STANDARD TEMPERED HARDBOARD-FILLER BETWEEN THE TWO CONCRETE SURFACES. SEE BOARD-FILLER REQUIREMENTS IN THE STANDARD SPECIFICATIONS.
4. ESTABLISH CURB OPENING HEIGHT OF TYPE GO OR GDO AT MIDPOINT OF GRATE.
5. SEE STANDARD PLANS P45 AND P46 FOR ISOLATION JOINT DETAILS
6. DETAIL ONLY VALID FOR NEW DRAINAGE INLETS IN EXISTING SHLD

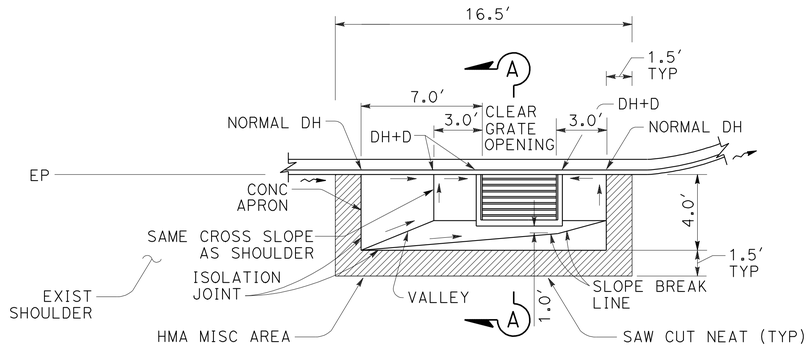

PLAN

TYPE GO AND G2 INLETS ON GRADE

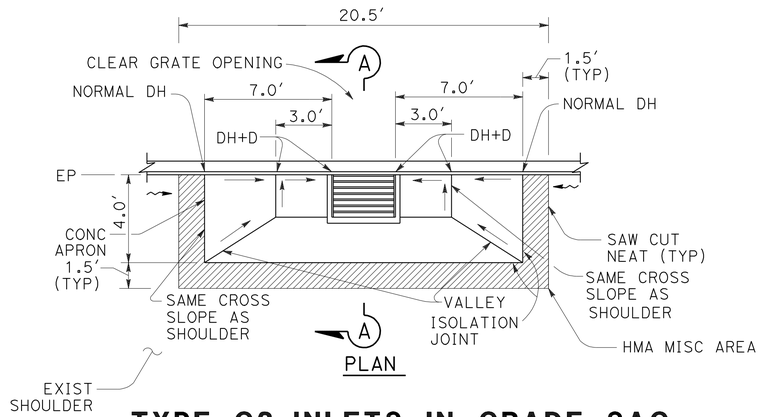

PLAN

TYPE G2 INLETS IN GRADE SAG

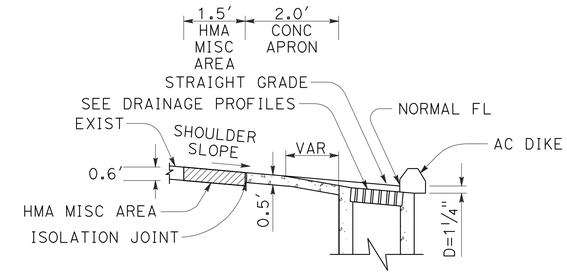

SECTION A-A

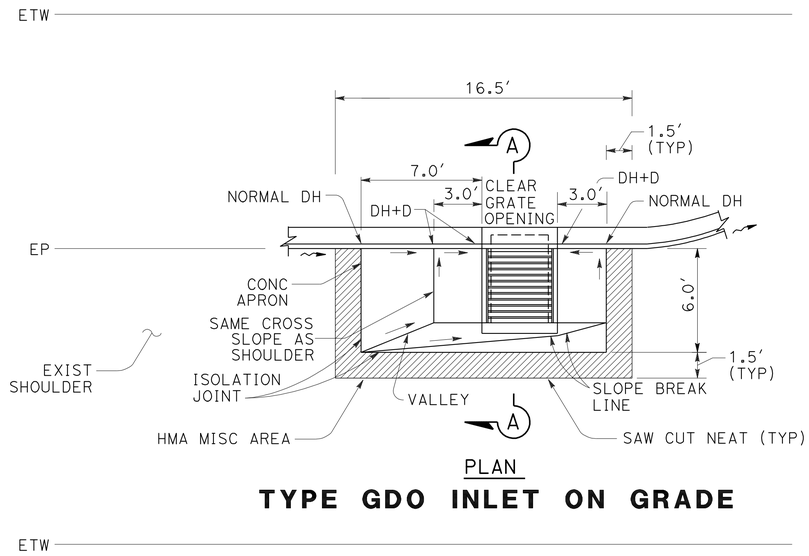

PLAN

TYPE GDO INLET ON GRADE

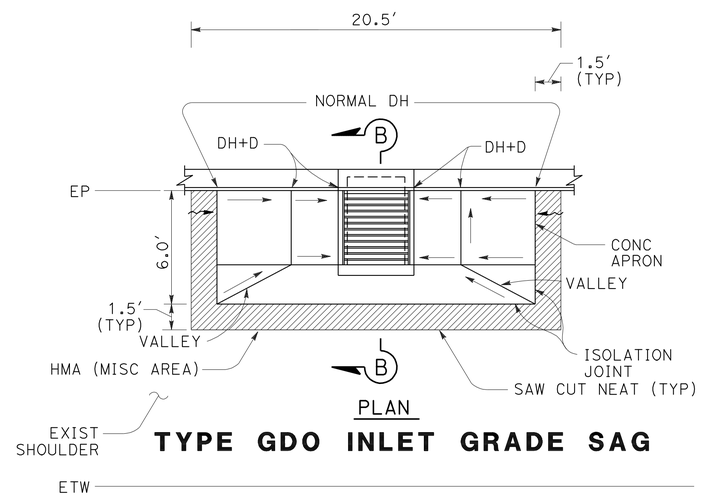

PLAN

TYPE GDO INLET GRADE SAG

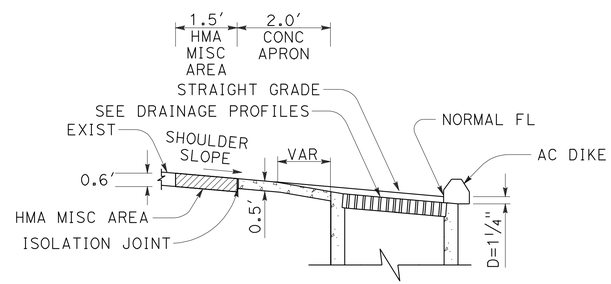

SECTION B-B

CONCRETE APRON AT SHOULDER

DRAINAGE DETAILS

NO SCALE

DD-6

REVISED BY	DATE REVISED

CALCULATED-DESIGNED BY	CHECKED BY
TRAVIS GURNEY	CHRIS GAIDO

FUNCTIONAL SUPERVISOR: JOHN L. MARTIN

STATE OF CALIFORNIA - DEPARTMENT OF TRANSPORTATION
Caltrans
DESIGN

P:\proj2\04\26406\design\ps&e\426406ic006.dgn

LAST REVISION | DATE PLOTTED => 16-AUG-2010 | TIME PLOTTED => 10:27
03-11-10

Dist	COUNTY	ROUTE	POST MILES TOTAL PROJECT	SHEET No.	TOTAL SHEETS
04	Mrn	101	18.6/R22.3	131	542

REGISTERED CIVIL ENGINEER 03-15-10 DATE

8-9-10
PLANS APPROVAL DATE

REGISTERED PROFESSIONAL ENGINEER ROBERT J. NIXON No. C69123 Exp. 6-30-10 CIVIL STATE OF CALIFORNIA

THE STATE OF CALIFORNIA OR ITS OFFICERS OR AGENTS SHALL NOT BE RESPONSIBLE FOR THE ACCURACY OR COMPLETENESS OF SCANNED COPIES OF THIS PLAN SHEET.

NOTE:
1. ALL RSP WILL BE BACKING No. 1, METHOD B

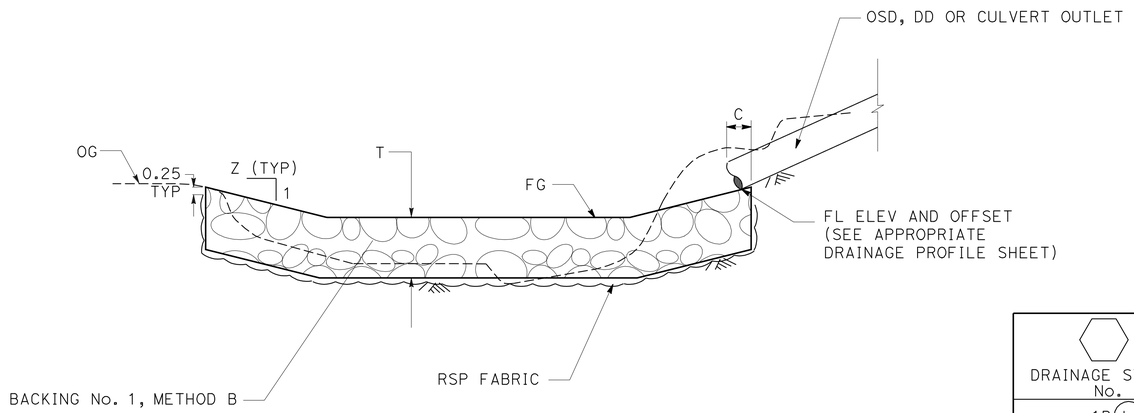

SECTION A-A

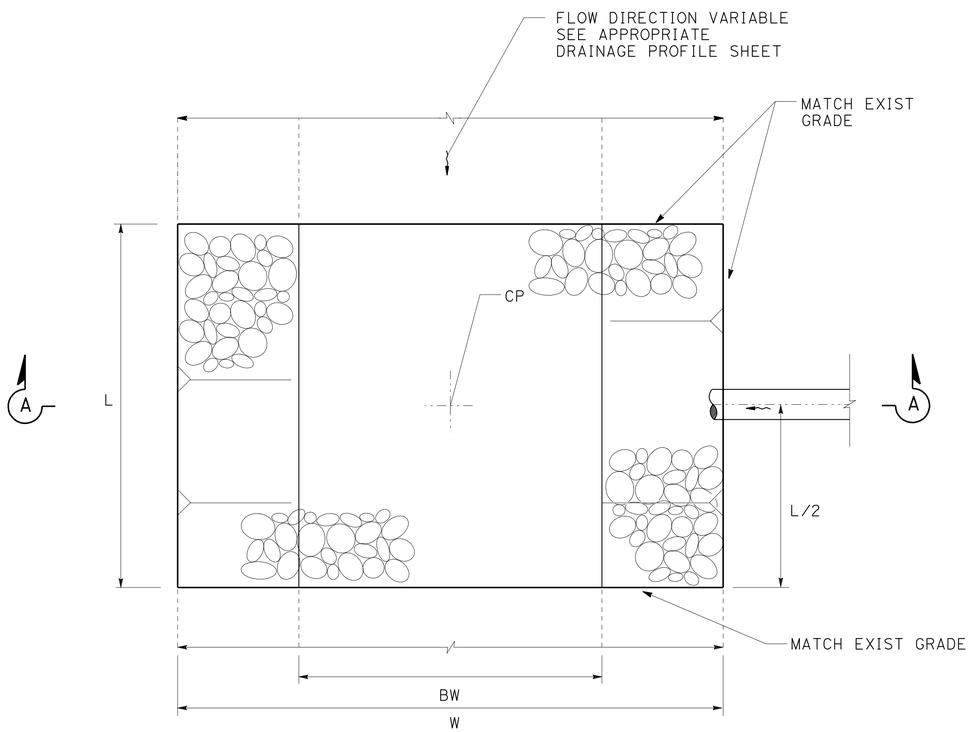

PLAN

ROCK SLOPE PROTECTION

ROCK SLOPE PROTECTION LOCATION AND VARIABLES

DRAINAGE SYSTEM No.	CP STATION & OFFSET	VARIABLE "L" FT	"W" FT	"BW" FT	"T" FT	"C" FT	"Z" RATIO	NOTES
1B (b)	"IL1" 18+43.69, 72.65′ RT	8	9	0	1.25	1.0	2-13*	FG ELEV TO CONFORM WITH EXIST
2 (i)	"J1" 234+96.75, 145.50′ RT	10.5	38.5	21.5	1.80	0.0	1-2*	FG ELEV TO CONFORM WITH EXIST
14 (d)	"J1" 298+02.67, 179.01′ RT	10	10	7	1.25	1.0	2*	FG ELEV TO CONFORM WITH EXIST
18 (g)	"J1" 313+28.79, 124.98′ RT	27	10	0	1.25	1.0	2-4*	FG ELEV TO CONFORM WITH EXIST
21A (f)	"J1" 317+34.11, 124.68′ LT	15	10	0	1.25	1.0	4-13*	FG ELEV TO CONFORM WITH EXIST
22 (o)	"DL1" 33+06.41, 86.66′ LT	20	35.6	16	2.00	1.0	2*	FG ELEV TO CONFORM WITH EXIST, SEE X-7 SHT
24 (a)	"DL1" 35+81.59, 120.18′ LT	20	30.3	16	2.00	1.0	2*	FG ELEV TO CONFORM WITH EXIST, SEE X-7 SHT

* SEE SLOPES ON DRAINAGE PROFILE SHEETS

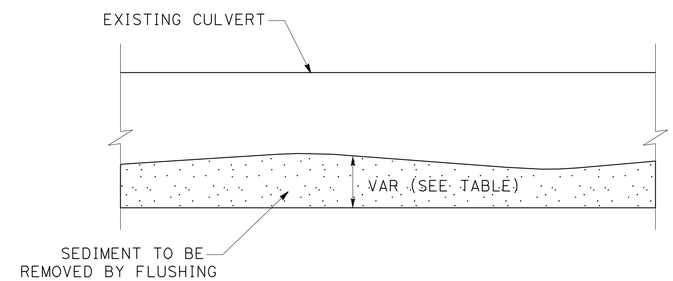

FLUSH EXISTING CULVERT DETAIL

DRAINAGE SYSTEM No.	PIPE LOCATION	PIPE DIA	LENGTH	APPROXIMATE SEDIMENTATION DEPTH	(N) VOLUME (CU FT)
36 (o)	"A1" 369+02	36"	506′	9"	698

DRAINAGE DETAILS
NO SCALE

DD-7

REVISED BY | DATE REVISED
TRAVIS GURNEY | CHRIS GAIDO
CALCULATED-DESIGNED BY | CHECKED BY
FUNCTIONAL SUPERVISOR | JOHN L. MARTIN
STATE OF CALIFORNIA - DEPARTMENT OF TRANSPORTATION
Caltrans DESIGN
P:\proj2\04\26406\design\DCCR\426406ic007.dgn

LAST REVISION 03-11-10 | DATE PLOTTED => 16-AUG-2010 | TIME PLOTTED => 10:28

Dist	COUNTY	ROUTE	POST MILES TOTAL PROJECT	SHEET No.	TOTAL SHEETS
04	Mrn	101	18.6/R22.3	132	542

REGISTERED CIVIL ENGINEER 03-15-10 DATE

8-9-10
PLANS APPROVAL DATE

REGISTERED PROFESSIONAL ENGINEER ROBERT J. NIXON No. C69123 Exp. 6-30-10 CIVIL STATE OF CALIFORNIA

THE STATE OF CALIFORNIA OR ITS OFFICERS OR AGENTS SHALL NOT BE RESPONSIBLE FOR THE ACCURACY OR COMPLETENESS OF SCANNED COPIES OF THIS PLAN SHEET.

NOTES:

1. ACP (ASBESTOS CEMENT PIPE) REQUIRES SPECIAL HANDLING, CUTTING AND DISPOSAL. SEE STANDARD SPECIAL PROVISIONS.
2. COORDINATE WITH ENGINEER TO DETERMINE EXACT FIELD LOCATION FOR ALL MOUNT CULVERT MARKERS.
3. MANY IRRIGATION CROSSOVERS DO NOT HAVE ACTIVE WATER SUPPLY OR ELECTRICAL CONDUIT.
4. ALL IDENTIFIED NON-ACTIVE IRRIGATION SHALL BE EXTENDED WITH APPROPRIATE CONDUIT AND CHECKED FOR APPROPRIATE CONDUIT AND CHECKED FOR CLEAR PASSAGE ACROSS ROADWAY BEFORE CAPPING/SEALING.

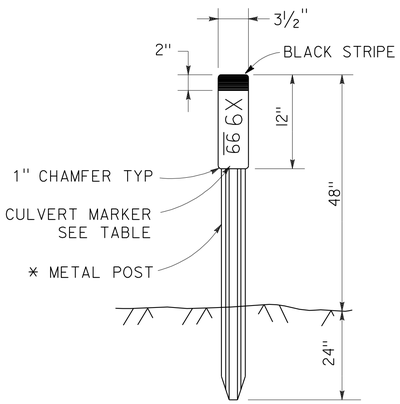

* SEE STANDARD PLAN A73B
FOR METAL POST DETAILS

CULVERT MARKER

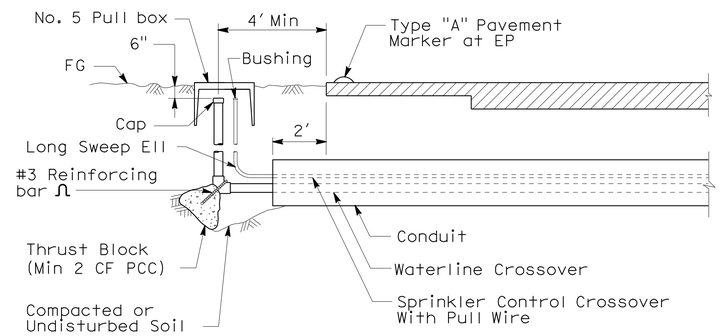

SECTION

IRRIGATION CROSSOVER

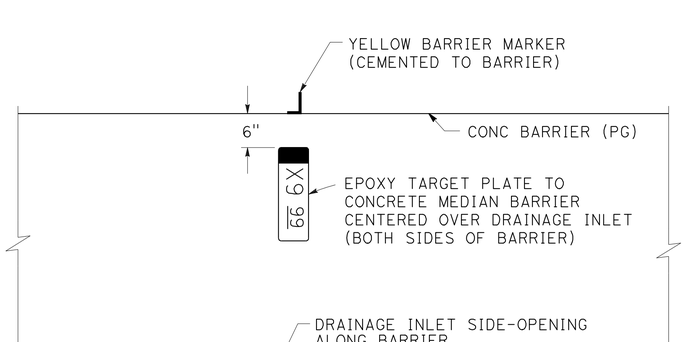

CULVERT MARKER BARRIER MOUNTED

DRAINAGE DETAILS
NO SCALE

DD-8

REVISED BY	DATE REVISED

CALCULATED-DESIGNED BY	CHECKED BY
TRAVIS GURNEY	CHRIS GAIDO

FUNCTIONAL SUPERVISOR: JOHN L. MARTIN

STATE OF CALIFORNIA - DEPARTMENT OF TRANSPORTATION
Caltrans DESIGN

P:\proj2\04\264061_plans\pse\resubmit 08-09-10\426406ic008.dgn

LAST REVISION 03-11-10 | DATE PLOTTED => 16-AUG-2010 | TIME PLOTTED => 10:28

Dist	COUNTY	ROUTE	POST MILES TOTAL PROJECT	SHEET No.	TOTAL SHEETS
04	Mrn	101	18.6/R22.3	133	542

REGISTERED CIVIL ENGINEER 03-15-10 DATE

8-9-10
PLANS APPROVAL DATE

REGISTERED PROFESSIONAL ENGINEER ROBERT J. NIXON No. C69123 Exp. 6-30-10 CIVIL STATE OF CALIFORNIA

THE STATE OF CALIFORNIA OR ITS OFFICERS OR AGENTS SHALL NOT BE RESPONSIBLE FOR THE ACCURACY OR COMPLETENESS OF SCANNED COPIES OF THIS PLAN SHEET.

NOTES:

1. CONTRACTOR SHALL ANTICIPATE SIGNIFICANT DEWATERING OPERATIONS DURING CONSTRUCTION OF DRAINAGE SYSTEM No. 2.
2. HEADWALL CONTROL POINTS (STA AND OFFSET) AT THE OUTSIDE FACE OF WALL.
3. LIMITS OF RSP ARE APPROXIMATE; THE ENGINEER SHALL VERIFY LIMITS PRIOR TO PLACEMENT.

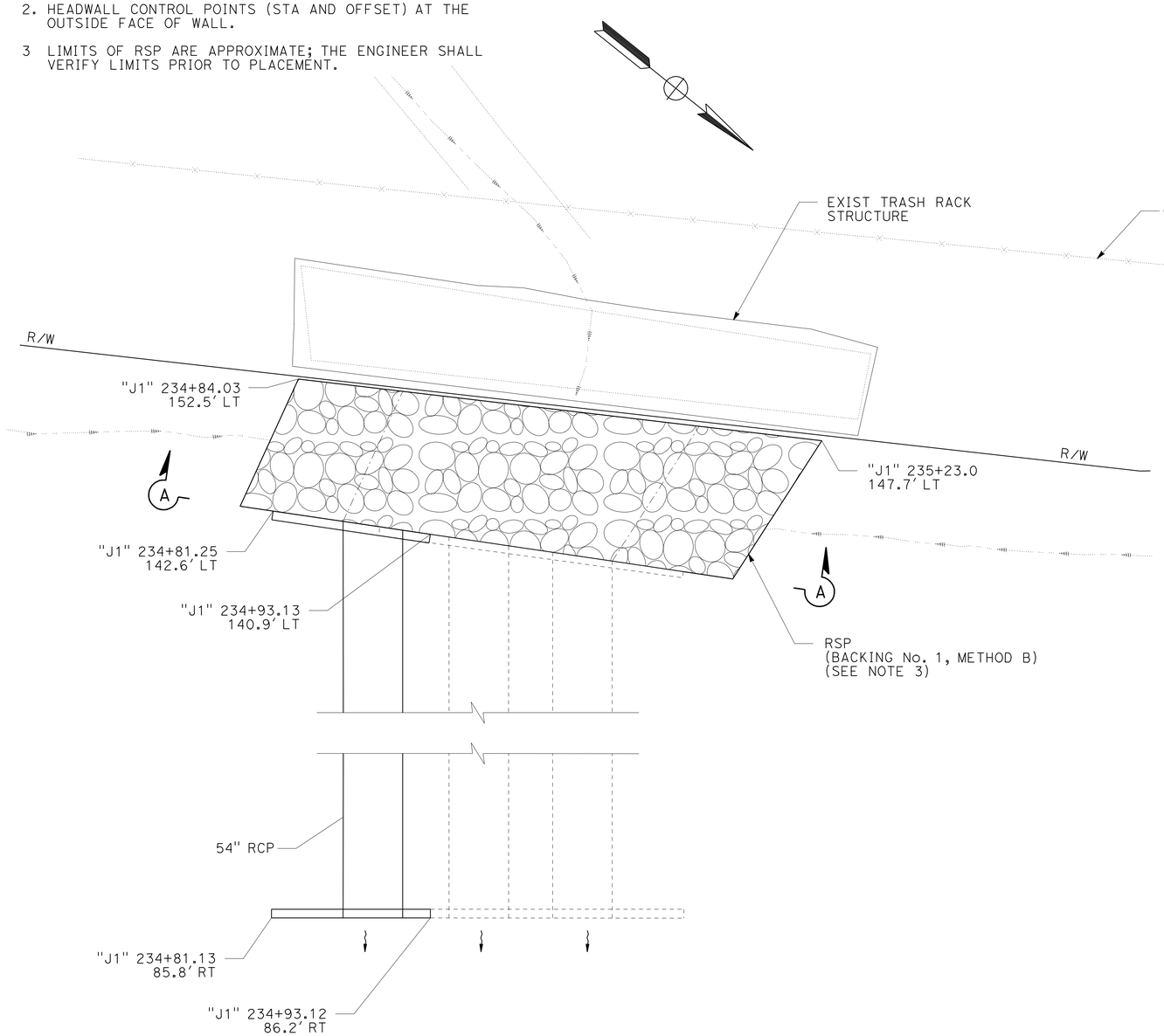

PLAN

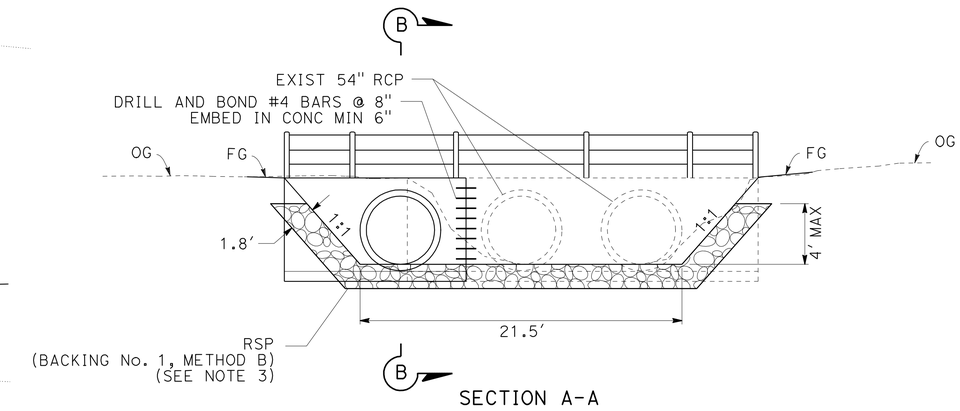

SECTION A-A

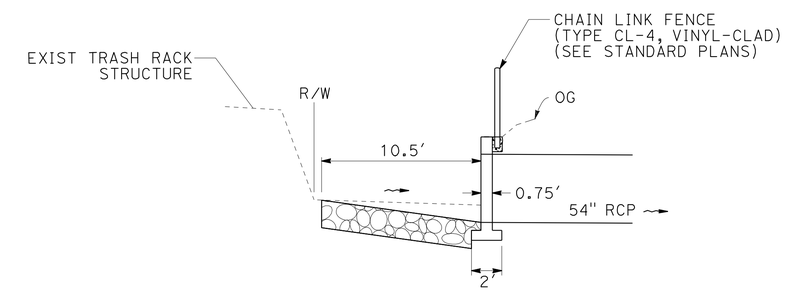

SECTION B-B

DRAINAGE SYSTEM No. 2

"J1" 234+88, 141.5' LT TO "J1" 234+88, 105.0' RT

DRAINAGE DETAILS

NO SCALE

DD-9

REVISED BY	DATE REVISED
TOBY CRAWFORD	CHRIS GAIDO
CALCULATED-DESIGNED BY	CHECKED BY
FUNCTIONAL SUPERVISOR	JOHN L. MARTIN

STATE OF CALIFORNIA - DEPARTMENT OF TRANSPORTATION
Caltrans DESIGN

P:\proj2\04\26406\design\ps&e\426406ic009.dgn

LAST REVISION 03-11-10 | DATE PLOTTED => 16-AUG-2010 TIME PLOTTED => 10:28

Dist	COUNTY	ROUTE	POST MILES TOTAL PROJECT	SHEET No.	TOTAL SHEETS
04	Mrn	101	18.6/R22.3	134	542

REGISTERED CIVIL ENGINEER 03-15-10 DATE

8-9-10
PLANS APPROVAL DATE

REGISTERED PROFESSIONAL ENGINEER ROBERT J. NIXON No. C69123 Exp. 6-30-10 CIVIL STATE OF CALIFORNIA

THE STATE OF CALIFORNIA OR ITS OFFICERS OR AGENTS SHALL NOT BE RESPONSIBLE FOR THE ACCURACY OR COMPLETENESS OF SCANNED COPIES OF THIS PLAN SHEET.

NOTES:

1. PARTIAL DI REINFORCEMENT REQUIREMENTS SHOWN. FOR ADDITIONAL TYPE GT4 (MOD) REINFORCEMENT DETAIL, SEE STANDARD PLAN D74A.
2. FOR DETAILS NOT SHOWN, REFER TO STANDARD PLANS.
3. PLACE #4 BARS AT 8" SPACING A MINIMUM LENGTH OF 1'-9" INTO WALL. BEND BARS A MINIMUM OF 4" INTO SIDE WALL (SEE SECTION B-B).

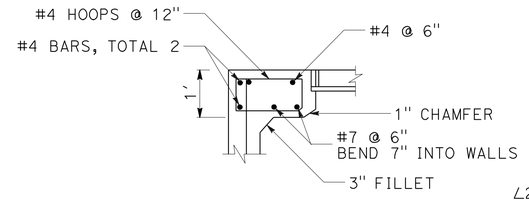

DETAIL B

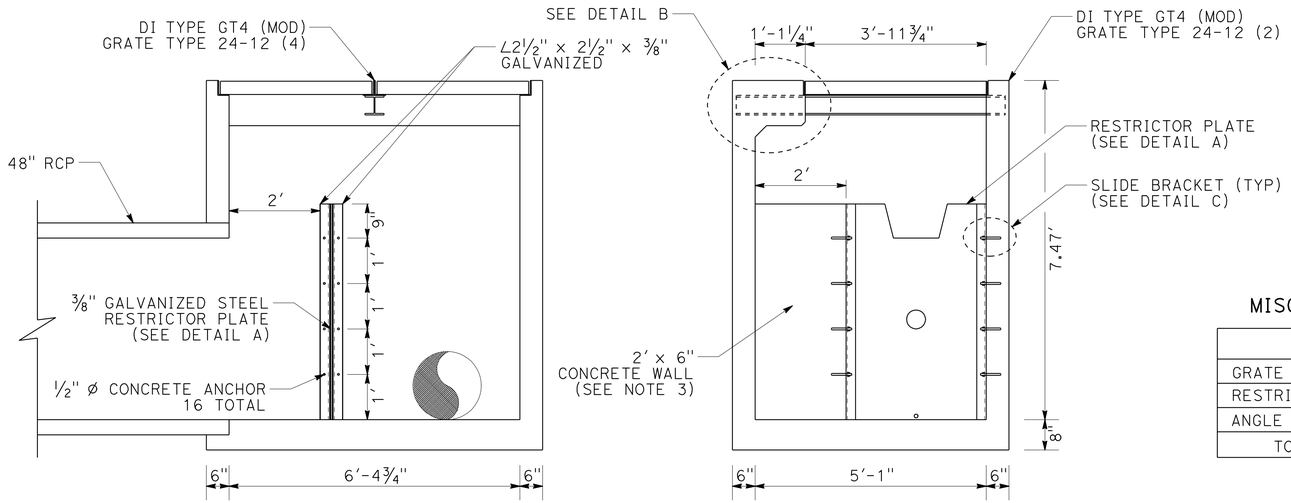

SECTION A-A

SECTION B-B

MISC. IRON AND STEEL

ITEM	QTY LB
GRATE TYPE 24-12 (4)	1304
RESTRICTOR PLATE	205
ANGLE IRON ∠2½" x 2½" x ⅜"	112
TOTAL (LB)	1621

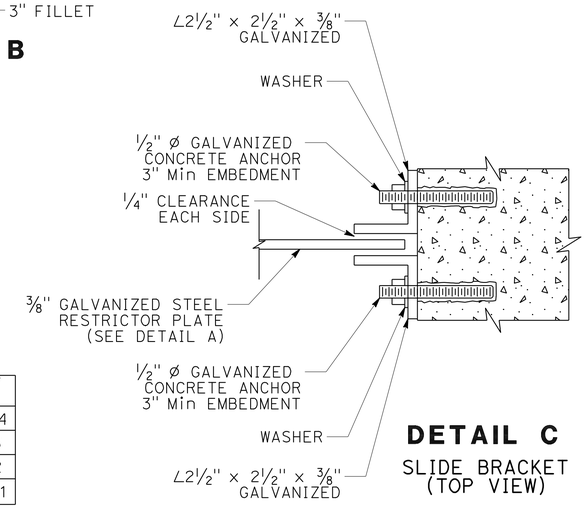

DETAIL C

SLIDE BRACKET
(TOP VIEW)

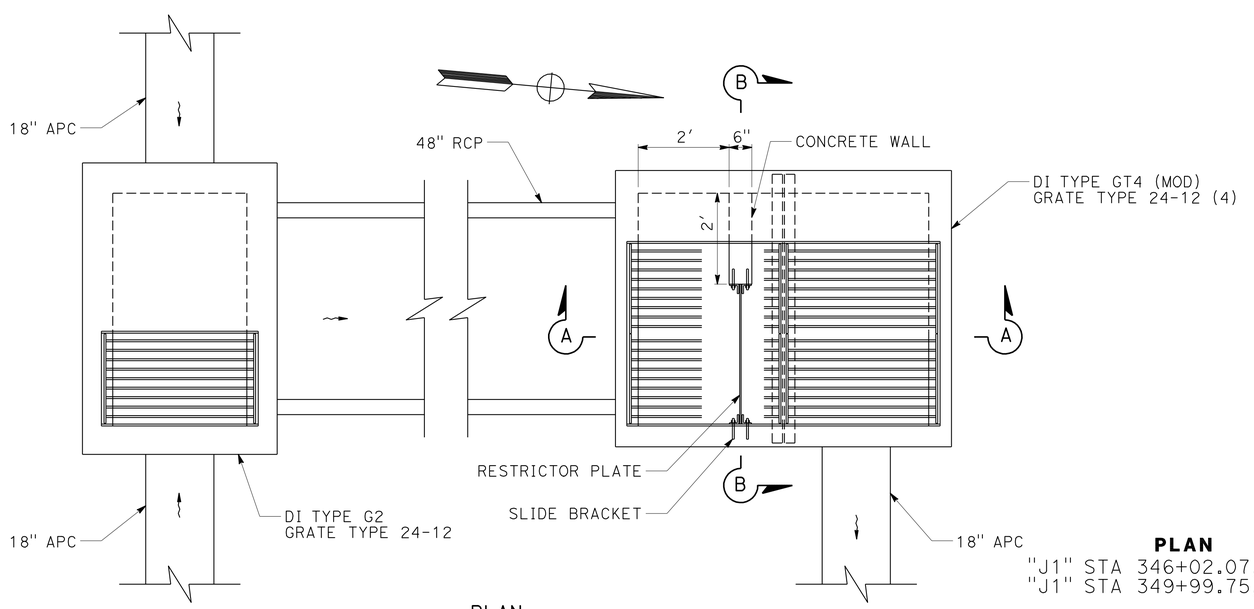

PLAN

PLAN
"J1" STA 346+02.07, 12' LT
"J1" STA 349+99.75, 12' LT

DRAINAGE SYSTEM No. 27
DETENTION STORAGE

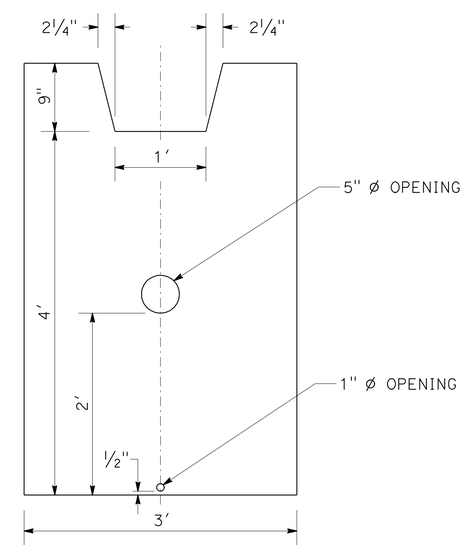

DETAIL A
RESTRICTOR PLATE
(FRONT ELEVATION)

DRAINAGE DETAILS
NO SCALE
DD-10

REVISED BY	DATE REVISED
TOBY CRAWFORD	CHRIS GAIDO
CALCULATED-DESIGNED BY	CHECKED BY
FUNCTIONAL SUPERVISOR	JOHN L. MARTIN

STATE OF CALIFORNIA - DEPARTMENT OF TRANSPORTATION
Caltrans **DESIGN**

P:\proj2\04\26406\design\DCCR\426406ic010.dgn

LAST REVISION 03-11-10 | DATE PLOTTED => 16-AUG-2010 | TIME PLOTTED => 10:28

Dist	COUNTY	ROUTE	POST MILES TOTAL PROJECT	SHEET No.	TOTAL SHEETS
04	Mrn	101	18.6/R22.3	135	542

REGISTERED CIVIL ENGINEER 03-15-10 DATE

8-9-10
PLANS APPROVAL DATE

REGISTERED PROFESSIONAL ENGINEER ROBERT J. NIXON No. C69123 Exp. 6-30-10 CIVIL STATE OF CALIFORNIA

THE STATE OF CALIFORNIA OR ITS OFFICERS OR AGENTS SHALL NOT BE RESPONSIBLE FOR THE ACCURACY OR COMPLETENESS OF SCANNED COPIES OF THIS PLAN SHEET.

NOTES:

1. CONTRACTOR SHALL ANTICIPATE SIGNIFICANT DEWATERING OPERATIONS DURING CONSTRUCTION OF DRAINAGE SYSTEM No. 36.
2. HEADWALL CONTROL POINTS (STA AND OFFSET) AT THE OUTSIDE FACE OF WALL.
3. LIMITS OF RSP ARE APPROXIMATE. THE ENGINEER SHALL VERIFY LIMITS PRIOR TO PLACEMENT.

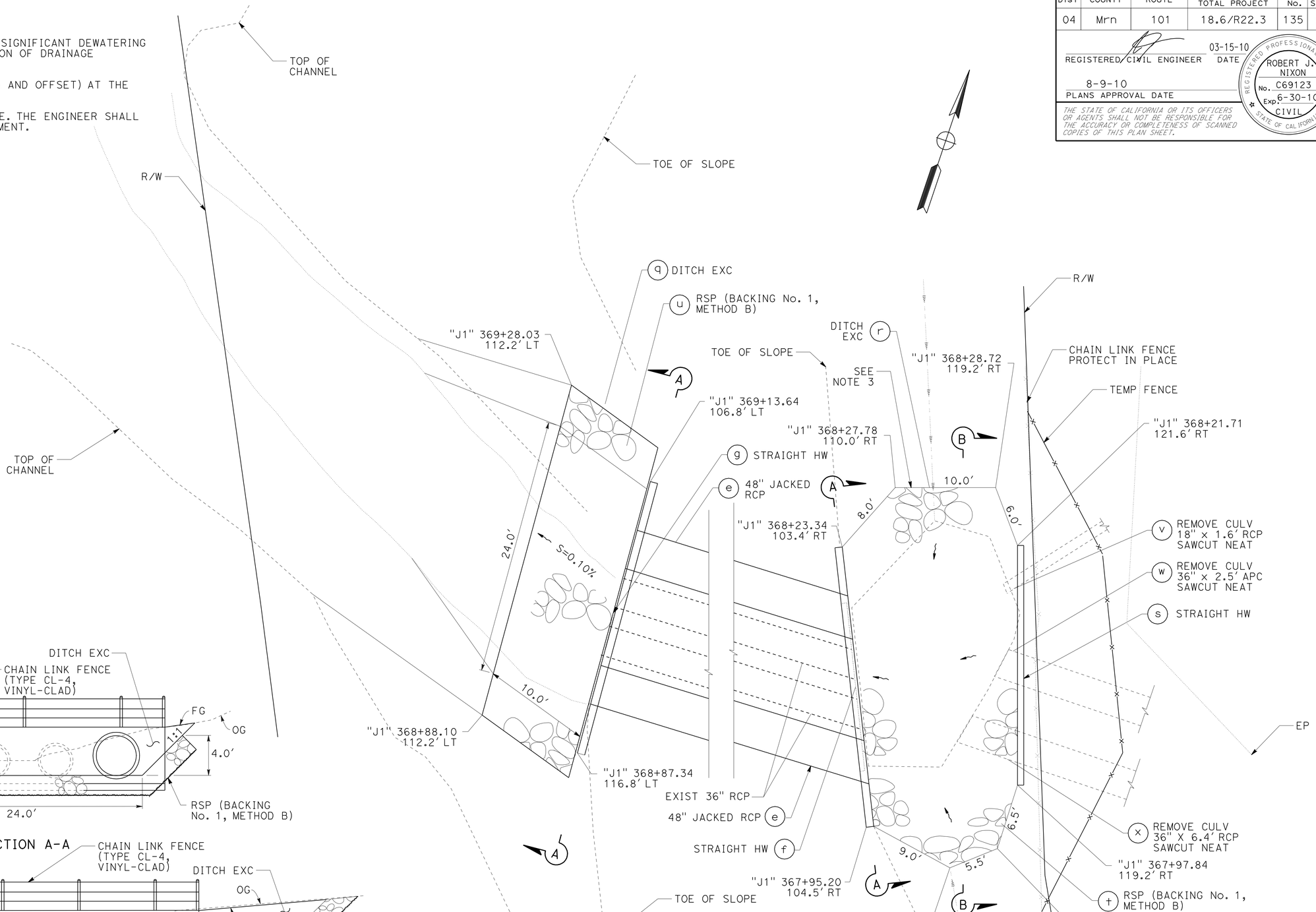

PLAN
"J1" STA 369+00.70, 111.28' LT
"J1" STA 368+10.70, 103.90.' RT
DRAINAGE SYSTEM No. 36

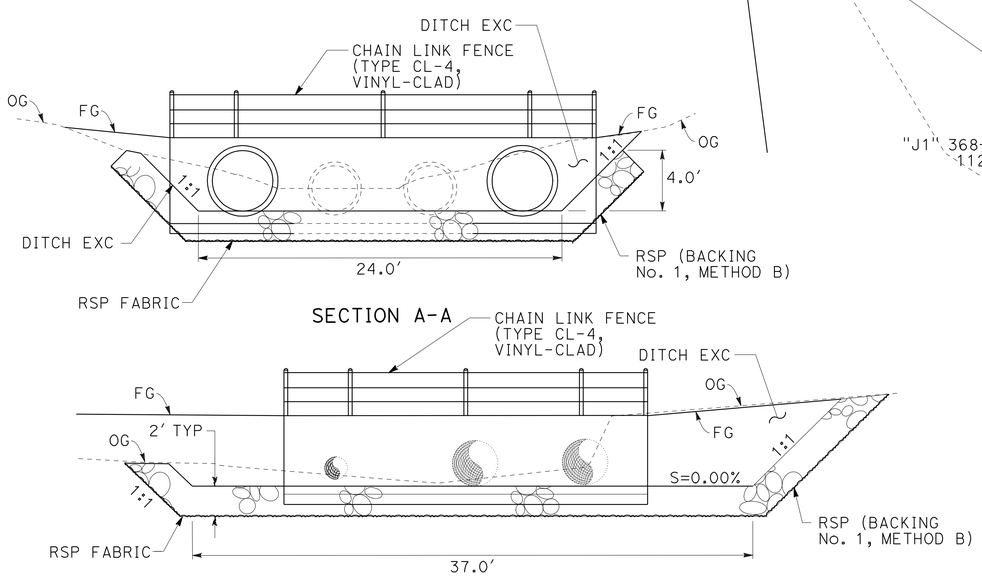

DRAINAGE DETAILS
NO SCALE
DD-11

REVISED BY	DATE REVISED
TOBY CRAWFORD	CHRIS GAIDO

CALCULATED-DESIGNED BY / CHECKED BY

FUNCTIONAL SUPERVISOR: JOHN L. MARTIN

STATE OF CALIFORNIA - DEPARTMENT OF TRANSPORTATION
Caltrans **DESIGN**

P:\proj2\04\26406\design\ps&e\426406ic011.dgn

LAST REVISION 03-11-10 | DATE PLOTTED => 16-AUG-2010 | TIME PLOTTED => 10:28

Dist	COUNTY	ROUTE	POST MILES TOTAL PROJECT	SHEET No.	TOTAL SHEETS
04	Mrn	101	18.6/R22.3	136	542

REGISTERED CIVIL ENGINEER 03-15-10 DATE

8-9-10
PLANS APPROVAL DATE

REGISTERED PROFESSIONAL ENGINEER ROBERT J. NIXON No. C69123 Exp. 6-30-10 CIVIL STATE OF CALIFORNIA

THE STATE OF CALIFORNIA OR ITS OFFICERS OR AGENTS SHALL NOT BE RESPONSIBLE FOR THE ACCURACY OR COMPLETENESS OF SCANNED COPIES OF THIS PLAN SHEET.

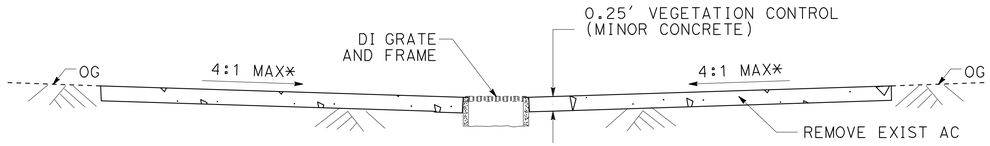

SECTION A-A

* OR AS SHOWN ON DRAINAGE PROFILES

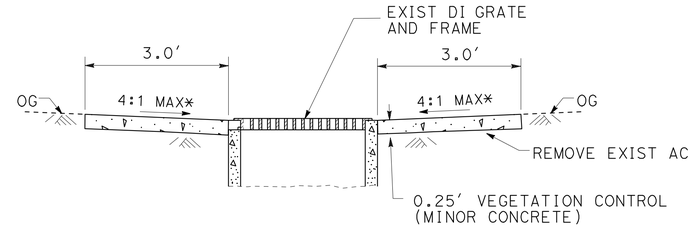

SECTION B-B

* OR AS SHOWN ON DRAINAGE PROFILES

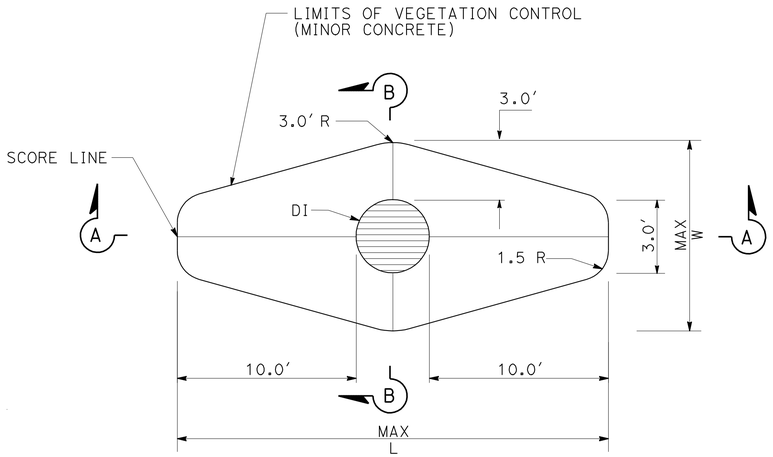

DRAINAGE INLET DETAIL 2

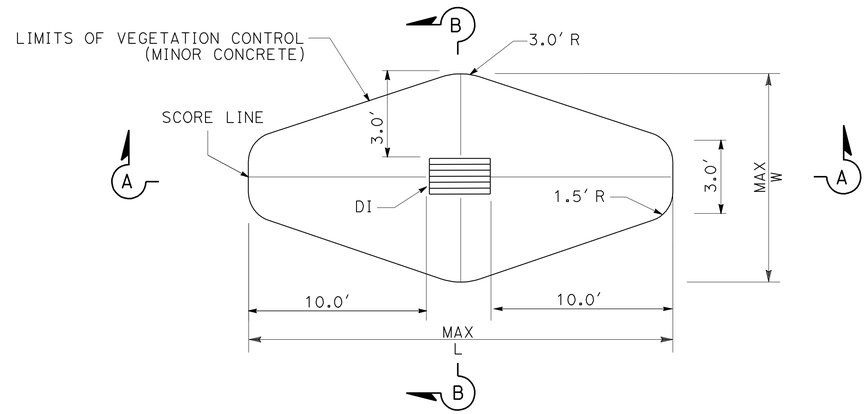

DRAINAGE INLET DETAIL 1

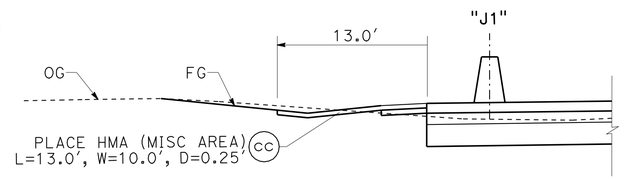

SECTION C-C

DRAINAGE SYSTEM No.-UNIT	STATION	DI TYPE	GRATE	MAX L	MAX W	AREA (SQYD)
16 e	"J1" 307+85.00	GCP	36R	23.0'	9.5'	16.6
16 h	"J1" 310+50.00	GCP	36R	23.0'	9.5'	16.6
19 d	"J1" 313+56.00	GCP	36R	23.0'	9.5'	16.6
19 g	"J1" 316+50.00	GCP	36R	23.0'	9.5'	16.6
24 h	"J1" 336+27.27	GCP	36R	23.0'	9.5'	16.6
24 n	"J1" 337+51.77	GCP	36R	23.0'	9.5'	16.6
24 u	"J1" 340+02.16	GCP	36R	23.0'	9.5'	16.6
24 bb	"J1" 342+01.70	GCP	36R	23.0'	9.5'	16.6
31 b	"J1" 355+00.00	GCP	36R	23.0'	9.5'	16.6
31 g	"J1" 355+42.00	GCP	36R	23.0'	9.5'	16.6
33 d	"J1" 360+99.21	GCP	36R	23.0'	9.5'	16.6
33 n	"J1" 363+76.60	GCP	36R	23.0'	9.5'	16.6
36 p	"J1" 369+03.12	GCP	36R	23.0'	9.5'	16.6
39 e	"J1" 377+66.31	GCP	36R	23.0'	9.5'	16.6
40 d	"J1" 386+50.00	GCP	36R	23.0'	9.5'	16.6
44 k	"J1" 395+02.27	GCP	36R	23.0'	9.5'	16.6

DRAINAGE SYSTEM NO.-UNIT	STATION	DI TYPE	GRATE	MAX L	MAX W	AREA (SQYD)
1A e	"IL1" 11+97.89	G2	24-12	23.0'	9.5'	16.6
27 e	"J1" 346+02.07	G2	24-12	23.0'	9.5'	16.6
27 m	"J1" 349+99.75	GT4	(2) 24-12	28.0	9.5'	20.2
43 r	"AR1" 89+68.10	G2	24-12	23.0	9.5	16.6

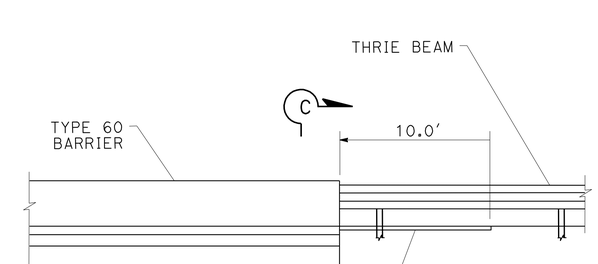

PLACE HMA (MISC AREA)

DRAINAGE SYSTEM No. 24 CC

"J1"337+86.40, 2.60' LT TO "J1"337+86.40, 14.00' LT

VEGETATION CONTROL (MINOR CONCRETE) AND DRAINAGE INLETS

DRAINAGE DETAILS

NO SCALE

DD-12

REVISED BY | DATE REVISED
TRAVIS GURNEY | CHRIS GAIDO
CALCULATED-DESIGNED BY | CHECKED BY
FUNCTIONAL SUPERVISOR: JOHN L. MARTIN

STATE OF CALIFORNIA - DEPARTMENT OF TRANSPORTATION
Caltrans DESIGN

P:\proj2\04\26406\design\DCCR\426406ic012.dgn

LAST REVISION 03-11-10 | DATE PLOTTED => 16-AUG-2010 | TIME PLOTTED => 10:28

Dist	COUNTY	ROUTE	POST MILES TOTAL PROJECT	SHEET No.	TOTAL SHEETS
04	Mrn	101	18.6/R22.3	137	542

REGISTERED CIVIL ENGINEER 03-15-10 DATE

8-9-10
PLANS APPROVAL DATE

REGISTERED PROFESSIONAL ENGINEER ROBERT J. NIXON No. C69123 Exp. 6-30-10 CIVIL STATE OF CALIFORNIA

THE STATE OF CALIFORNIA OR ITS OFFICERS OR AGENTS SHALL NOT BE RESPONSIBLE FOR THE ACCURACY OR COMPLETENESS OF SCANNED COPIES OF THIS PLAN SHEET.

NOTES:

1. (N) NOT A SEPARATE PAY ITEM, FOR INFORMATION ONLY.
2. ALL CULVERT PIPES SHALL HAVE POSITIVE WATERTIGHT JOINTS, EXCEPT WHERE EXPLICITLY STATED ON THE DRAINAGE PROFILES

LEGEND

1. "T" = WALL THICKNESS (INCHES) REQUIRED BEFORE APPLICATION OF COATING/LINING REQUIREMENT
2. REINFORCED CONCRETE PIPE, CLASS II OR BETTER MEETING THE GENERAL PIPE JOINT REQUIREMENTS FOR THIS PROJECT
3. APPLY COATING/LINING TREATMENT TO BOTH INTERIOR AND EXTERIOR OF CULVERT PIPE IN ACCORDANCE WITH SPECIFICATIONS

ABBREVIATIONS

PA POLYMERIZED ASPHALT COATING AND LINING
CAP CORRUGATED ALUMINUM PIPE
CASP CORRUGATED ALUMINIZED STEEL PIPE

ALTERNATIVE PIPE CULVERT
ALLOWABLE PIPE MATERIAL AND PROTECTION

DESIGNATION	RCP[2]	CSP (TYPE 1)		CSP (TYPE 2)		CAP	CASP	PP
		T[1] (IN)	COATING LINING[3]	T[1] (IN)	COATING LINING[3]	T[1] (IN)	T[1] (IN)	TYPE
12" APC	NO	0.135	NONE	0.109	PA	0.06	0.064	S
18" APC	YES	0.135	NONE	0.109	PA	0.06	0.064	S
24" APC	YES	0.168	NONE	0.109	PA	0.06	0.064	S

DRAINAGE QUANTITIES

DRAINAGE PROFILE SHEET No.	DRAINAGE SYSTEM No.	DRAINAGE UNIT No.	ABANDON CULVERT	REMOVE CULVERT	REMOVE INLET	REMOVE DOWNDRAIN	REMOVE CONCRETE	CAP INLET	STRUCTURE BACKFILL (SLURRY CEMENT)	SAND BACKFILL	DITCH EXCAVATION	CLEANING AND INSPECTING PIPE	CLASS 2 AGGREGATE BASE	HOT MIX ASPHALT	PLACE HOT MIX ASPHALT (MISC. AREA)	MINOR CONCRETE (MINOR STRUCTURE)	DRAINAGE SYSTEM No.	DRAINAGE UNIT No.	ALIGNMENT		DESCRIPTION
			EA	EA	EA	EA	CY	EA	CY	CY	CY	EA	CY	TON	SQYD	CY				STATION	
DP-1	1	a												2.1	4.8	2.0	1	a	IL1	5+00.00	TYPE GDO DI, W\(2) GRATE TYPE 24-12X
DP-1	1	b							76.7								1	b	IL1	5+00.00	18" x 297.0' RCP
DP-1	1	c												2.1	4.8	1.9	1	c	IL1	8+00.00	TYPE GDO DI, W\(2) GRATE TYPE 24-12X
DP-1	1	d							35.0								1	d	IL1	8+00.00	18" x 197.0' RCP
DP-1	1	e												2.1	4.8	1.6	1	e	IL1	10+00.00	TYPE GDO DI, W\(2) GRATE TYPE 24-12X
DP-1	1	f							12.8								1	f	IL1	10+00.00	18" x 97' RCP
DP-1	1	g												2.1	4.8	1.6	1	g	IL1	11+00.00	TYPE GDO DI, W\(2) GRATE TYPE 24-12X
DP-1	1	h			1		1.3										1	h	IL1	11+05.19	REMOVE INLET (TYPE G1)(H=2.21')
DP-1	1	k							18.2								1	k	IL1	11+00.00	18" x 100.8' RCP
DP-1	1	l		1													1	l	IL1	11+05.19	REMOVE 18" x 88' APC
DP-1	1	m												2.3	5.4	1.8	1	m	IL1	12+03.75	TYPE GDO DI, W\(2) GRATE TYPE 24-12X
DP-1	1	n			1		1.9										1	n	IL1	12+03.75	REMOVE INLET (TYPE GO)(H=2.92')
DP-1	1	o														1.3	1	o	IL1	12+03.75	3' x 1.5' x 5.0' RCB, CONCRETE COLLAR
DP-1	1	p							18.5								1	p	IL1	12+03.75	18" x 93.3' RCP
DP-1	1	q												2.1	4.8	1.8	1	q	IL1	13+00.00	TYPE GDO DI, W\(2) GRATE TYPE 24-12X
DP-1	1	r							12.9								1	r	IL1	13+00.00	14" x 23" x 95.5' OSRCP
DP-1	1	s												3.4	7.8	0.7	1	s	IL1	13+82.00	TYPE GCP DI, W\(1) GRATE TYPE 36R
DP-1	1A	a						1								0.4	1A	a	IL1	12+01.43	CAP INLET, SALVAGE GRATE
DP-1	1A	b														1.3	1A	b	IL1	11+97.89	TYPE G2 DI, W(1) GRATE TYPE 24-12
DP-1	1A	c														1.2	1A	c	IL1	11+97.89	3' x 1.5' x 4.5' RCB, CONCRETE COLLAR
DP-1	1A	d														1.2	1A	d	IL1	11+97.89	3' x 1.5' x 4.5' RCB, CONCRETE COLLAR
DP-1	1A	e															1A	e	IL1	11+97.89	VEGETATION CONTROL (MINOR CONCRETE)
DP-1	1B	a												1.2	6.0		1B	a	IL1	18+44.85	PLACE HMA (MISC AREA) (OSD)
DP-1	1B	b															1B	b	IL1	18+44.85	RSP (8'x9') BACKING No. 1, RSP FABRIC
DP-1	1C	a														1.3	1C	a	IL1	19+77.58	TYPE G2 DI, W(1) GRATE TYPE 24-12
DP-1	1C	b							41.9					11.3	16.2		1C	b	IL1	19+77.58	18" x 207.8' APC
DP-1	1C	c														1.5	1C	c	IL1	22+90.00	TYPE G2 DI, W(1) GRATE TYPE 24-12
DP-1	1C	d															1C	d	IL1	22+90.00	18" x 16.2' APC
DP-1	1C	e															1C	e	IL1	22+90.00	18" FLARED END SECTION
DP-2	2	a														2.7	2	a	J1	234+88.80	STRAIGHT HEADWALL, CHAIN LINK RAILING
DP-2	2	b							278.0								2	b	J1	234+88.80	54" x 228' RCP
DP-2	2	c														2.7	2	c	J1	234+88.80	STRAIGHT HEADWALL, CHAIN LINK RAILING
DP-2	2	d									18						2	d	J1	234+88.80	DITCH EXC
SHEET SUB TOTAL				1	2		3.2	1	494.0		18			28.7	59.4	25.0					

DRAINAGE QUANTITIES
DQ-1

REVISED BY | DATE REVISED
JOLENA ASTIN/TRAVIS GURNEY SCOTT GREGORY | CHRIS GAIDO
CALCULATED-DESIGNED BY | CHECKED BY
FUNCTIONAL SUPERVISOR | JOHN L. MARTIN

STATE OF CALIFORNIA - DEPARTMENT OF TRANSPORTATION
Caltrans DESIGN

P:\proj2\04\26406\design\DCCR\426406id001.dgn

LAST REVISION 03-15-10 | DATE PLOTTED => 16-AUG-2010 | TIME PLOTTED => 10:28

Dist	COUNTY	ROUTE	POST MILES TOTAL PROJECT	SHEET No.	TOTAL SHEETS
04	Mrn	101	18.6/R22.3	138	542

REGISTERED CIVIL ENGINEER 03-15-10 DATE

8-9-10
PLANS APPROVAL DATE

REGISTERED PROFESSIONAL ENGINEER ROBERT J. NIXON No. C69123 Exp. 6-30-10 CIVIL STATE OF CALIFORNIA

THE STATE OF CALIFORNIA OR ITS OFFICERS OR AGENTS SHALL NOT BE RESPONSIBLE FOR THE ACCURACY OR COMPLETENESS OF SCANNED COPIES OF THIS PLAN SHEET.

DRAINAGE QUANTITIES

DRAINAGE PROFILE SHEET No.	DRAINAGE SYSTEM No.	DRAINAGE UNIT No.	MINOR CONCRETE (APRON)	MINOR CONCRETE (HEADWALL)	18" ALTERNATIVE PIPE CULVERT	24" ALTERNATIVE PIPE CULVERT	48" REINFORCED CONCRETE PIPE (CLASS II)	54" REINFORCED CONCRETE PIPE	18" REINFORCED CONCRETE PIPE (CLASS II, RUBBER GASKET JOINT)	24" REINFORCED CONCRETE PIPE (CLASS II, RUBBER GASKET JOINT)	14"x23" OVAL SHAPED REINFORCED CONCRETE PIPE(CLASS III, RUBBER GASKET JOINT)	12" CORRUGATED STEEL PIPE (.168" THICK)	18" CORRUGATED STEEL PIPE (.168" THICK)	24" CORRUGATED STEEL PIPE (.168" THICK)	18" CORRUGATED STEEL PIPE DOWNDRAIN (.168" THICK)	12" ANCHOR ASSEMBLY	JACKED 48" REINFORCED CONCRETE PIPE (CLASS V)	DRAINAGE SYSTEM No.	DRAINAGE UNIT No.	ALIGNMENT	STATION	DESCRIPTION
			CY	CY	LF	LF	LF	LF	LF	LF	LF	LF	LF	LF	LF	EA	LF					
DP-1	1	a	1.2															1	a	IL1	5+00.00	TYPE GDO DI, W\(2) GRATE TYPE 24-12X
DP-1	1	b							297.0									1	b	IL1	5+00.00	18" x 297.0' RCP
DP-1	1	c	1.2															1	c	IL1	8+00.00	TYPE GDO DI, W\(2) GRATE TYPE 24-12X
DP-1	1	d							197.0									1	d	IL1	8+00.00	18" x 197.0' RCP
DP-1	1	e	1.2															1	e	IL1	10+00.00	TYPE GDO DI, W\(2) GRATE TYPE 24-12X
DP-1	1	f							97.0									1	f	IL1	10+00.00	18" x 97' RCP
DP-1	1	g	1.2															1	g	IL1	11+00.00	TYPE GDO DI, W\(2) GRATE TYPE 24-12X
DP-1	1	h																1	h	IL1	11+05.19	REMOVE INLET (TYPE G1)(H=2.21')
DP-1	1	k							100.8									1	k	IL1	11+00.00	18" x 100.8' RCP
DP-1	1	l																1	l	IL1	11+05.19	REMOVE 18" x 88' APC
DP-1	1	m	1.7															1	m	IL1	12+03.75	TYPE GDO DI, W\(2) GRATE TYPE 24-12X
DP-1	1	n																1	n	IL1	12+03.75	REMOVE INLET (TYPE GO)(H=2.92')
DP-1	1	o																1	o	IL1	12+03.75	3' x 1.5' x 5.0' RCB, CONCRETE COLLAR
DP-1	1	p							93.3									1	p	IL1	12+03.75	18" x 93.3' RCP
DP-1	1	q	1.2															1	q	IL1	13+00.00	TYPE GDO DI, W\(2) GRATE TYPE 24-12X
DP-1	1	r									95.5							1	r	IL1	13+00.00	14" x 23" x 95.5' OSRCP
DP-1	1	s	2.4															1	s	IL1	13+82.00	TYPE GCP DI, W\(1) GRATE TYPE 36R
DP-1	1A	a																1A	a	IL1	12+01.43	CAP INLET, SALVAGE GRATE
DP-1	1A	b																1A	b	IL1	11+97.89	TYPE G2 DI, W(1) GRATE TYPE 24-12
DP-1	1A	c																1A	c	IL1	11+97.89	3' x 1.5' x 4.5' RCB, CONCRETE COLLAR
DP-1	1A	d																1A	d	IL1	11+97.89	3' x 1.5' x 4.5' RCB, CONCRETE COLLAR
DP-1	1A	e																1A	e	IL1	11+97.89	VEGETATION CONTROL (MINOR CONCRETE)
DP-1	1B	a																1B	a	IL1	18+44.85	PLACE HMA (MISC AREA) (OSD)
DP-1	1B	b																1B	b	IL1	18+44.85	RSP (8'x9') BACKING No. 1, RSP FABRIC
DP-1	1C	a	1.1															1C	a	IL1	19+77.58	TYPE G2 DI, W(1) GRATE TYPE 24-12
DP-1	1C	b			207.8													1C	b	IL1	19+77.58	18" x 207.8' APC
DP-1	1C	c	1.1															1C	c	IL1	22+90.00	TYPE G2 DI, W(1) GRATE TYPE 24-12
DP-1	1C	d			16.2													1C	d	IL1	22+90.00	18" x 16.2' APC
DP-1	1C	e																1C	e	IL1	22+90.00	18" FLARED END SECTION
DP-2	2	a																2	a	J1	234+88.80	STRAIGHT HEADWALL, CHAIN LINK RAILING
DP-2	2	b						228										2	b	J1	234+88.80	54" x 228' RCP
DP-2	2	c																2	c	J1	234+88.80	STRAIGHT HEADWALL, CHAIN LINK RAILING
DP-2	2	d																2	d	J1	234+88.80	DITCH EXC
SHEET SUB TOTAL			12.3		224.0			228	785.1		95.5											

DRAINAGE QUANTITIES
DQ-2

REVISED BY | DATE REVISED
JOLENA ASTIN/TRAVIS GURNEY SCOTT GREGORY | CHRIS GAIDO
CALCULATED-DESIGNED BY | CHECKED BY
FUNCTIONAL SUPERVISOR | JOHN L. MARTIN

STATE OF CALIFORNIA - DEPARTMENT OF TRANSPORTATION
Caltrans DESIGN

P:\proj2\04\26406\design\DCCR\426406id002.dgn

LAST REVISION 03-15-10 | DATE PLOTTED => 16-AUG-2010 TIME PLOTTED => 10:28

Dist	COUNTY	ROUTE	POST MILES TOTAL PROJECT	SHEET No.	TOTAL SHEETS
04	Mrn	101	18.6/R22.3	139	542

REGISTERED CIVIL ENGINEER 03-15-10 DATE

8-9-10
PLANS APPROVAL DATE

REGISTERED PROFESSIONAL ENGINEER ROBERT J. NIXON No. C69123 Exp. 6-30-10 CIVIL STATE OF CALIFORNIA

THE STATE OF CALIFORNIA OR ITS OFFICERS OR AGENTS SHALL NOT BE RESPONSIBLE FOR THE ACCURACY OR COMPLETENESS OF SCANNED COPIES OF THIS PLAN SHEET.

DRAINAGE QUANTITIES

DRAINAGE PROFILE SHEET No.	DRAINAGE SYSTEM No.	DRAINAGE UNIT No.	24" ALTERNATIVE FLARED END SECTION	18" STEEL FLARED END SECTION	36" PRECAST CONCRETE PIPE INLET	CHAIN LINK FENCE (TYPE CL-4, VINYL-CLAD)	ROCK SLOPE PROTECTION (BACKING NO.1, METHOD B)		ROCK SLOPE PROTECTION FABRIC	MISC. IRON AND STEEL	MARKER (CULVERT)	MARKER (CULVERT, BARRIER MOUNTED)	VEGETATION CONTROL (MINOR CONCRETE)	CONNECT TO EXIST (N)	SALVAGE GRATE (N)	DI HEIGHT (N)	MAX COVER (N)	DRAINAGE SYSTEM No.	DRAINAGE UNIT No.	ALIGNMENT	STATION	DESCRIPTION
			EA	EA	LF	LF	CY		SQYD	LB	EA	EA	SQYD	EA	EA	FT	FT					
DP-1	1	a								473	1					4.25		1	a	IL1	5+00.00	TYPE GDO DI, W\(2) GRATE TYPE 24-12X
DP-1	1	b															3.2	1	b	IL1	5+00.00	18" x 297.0' RCP
DP-1	1	c								473	1					3.85		1	c	IL1	8+00.00	TYPE GDO DI, W\(2) GRATE TYPE 24-12X
DP-1	1	d															2.7	1	d	IL1	8+00.00	18" x 197.0' RCP
DP-1	1	e								473	1					2.72		1	e	IL1	10+00.00	TYPE GDO DI, W\(2) GRATE TYPE 24-12X
DP-1	1	f															1.4	1	f	IL1	10+00.00	18" x 97' RCP
DP-1	1	g								473	1					2.99		1	g	IL1	11+00.00	TYPE GDO DI, W\(2) GRATE TYPE 24-12X
DP-1	1	h													1	2.21		1	h	IL1	11+05.19	REMOVE INLET (TYPE G1)(H=2.21')
DP-1	1	k															1.6	1	k	IL1	11+00.00	18" x 100.8' RCP
DP-1	1	l															1.6	1	l	IL1	11+05.19	REMOVE 18" x 88' APC
DP-1	1	m								473	1					3.64		1	m	IL1	12+03.75	TYPE GDO DI, W\(2) GRATE TYPE 24-12X
DP-1	1	n													1	2.92		1	n	IL1	12+03.75	REMOVE INLET (TYPE GO)(H=2.92')
DP-1	1	o								288				1			2.1	1	o	IL1	12+03.75	3' x 1.5' x 5.0' RCB, CONCRETE COLLAR
DP-1	1	p															2.1	1	p	IL1	12+03.75	18" x 93.3' RCP
DP-1	1	q								473	1					3.45		1	q	IL1	13+00.00	TYPE GDO DI, W\(2) GRATE TYPE 24-12X
DP-1	1	r															2.1	1	r	IL1	13+00.00	14" x 23" x 95.5' OSRCP
DP-1	1	s			2.1					236	1					1.64		1	s	IL1	13+82.00	TYPE GCP DI, W\(1) GRATE TYPE 36R
DP-1	1A	a													1			1A	a	IL1	12+01.43	CAP INLET, SALVAGE GRATE
DP-1	1A	b								326	1			2		2.74		1A	b	IL1	11+97.89	TYPE G2 DI, W(1) GRATE TYPE 24-12
DP-1	1A	c								216				1			1.2	1A	c	IL1	11+97.89	3' x 1.5' x 4.5' RCB, CONCRETE COLLAR
DP-1	1A	d								216				1			1.2	1A	d	IL1	11+97.89	3' x 1.5' x 4.5' RCB, CONCRETE COLLAR
DP-1	1A	e											16.6					1A	e	IL1	11+97.89	VEGETATION CONTROL (MINOR CONCRETE)
DP-1	1B	a																1B	a	IL1	18+44.85	PLACE HMA (MISC AREA) (OSD)
DP-1	1B	b					3.3		13.4									1B	b	IL1	18+44.85	RSP (8'x9') BACKING No. 1, RSP FABRIC
DP-1	1C	a								326	1					2.10		1C	a	IL1	19+77.58	TYPE G2 DI, W(1) GRATE TYPE 24-12
DP-1	1C	b															2.5	1C	b	IL1	19+77.58	18" x 207.8' APC
DP-1	1C	c								326	1					3.72		1C	c	IL1	22+90.00	TYPE G2 DI, W(1) GRATE TYPE 24-12
DP-1	1C	d															2.0	1C	d	IL1	22+90.00	18" x 16.2' APC
DP-1	1C	e		1														1C	e	IL1	22+90.00	18" FLARED END SECTION
DP-2	2	a				31.0												2	a	J1	234+88.80	STRAIGHT HEADWALL, CHAIN LINK RAILING
DP-2	2	b									2						12.4	2	b	J1	234+88.80	54" x 228' RCP
DP-2	2	c				31.0												2	c	J1	234+88.80	STRAIGHT HEADWALL, CHAIN LINK RAILING
DP-2	2	d																2	d	J1	234+88.80	DITCH EXCV
SHEET SUB TOTAL				1	2.1	62.0	3.3		13.4	4772	12		16.6	5	3							

DRAINAGE QUANTITIES
DQ-3

STATE OF CALIFORNIA - DEPARTMENT OF TRANSPORTATION
Caltrans DESIGN

FUNCTIONAL SUPERVISOR: JOHN L. MARTIN
CALCULATED-DESIGNED BY: JOLENA ASTIN/TRAVIS GURNEY SCOTT GREGORY
CHECKED BY: CHRIS GAIDO
REVISED BY
DATE REVISED

P:\proj2\04\26406\design\DCCRX426406id003.dgn

LAST REVISION 03-15-10
DATE PLOTTED => 16-AUG-2010
TIME PLOTTED => 10:29

Dist	COUNTY	ROUTE	POST MILES TOTAL PROJECT	SHEET No.	TOTAL SHEETS
04	Mrn	101	18.6/R22.3	140	542

REGISTERED CIVIL ENGINEER 03-15-10 DATE

8-9-10
PLANS APPROVAL DATE

REGISTERED PROFESSIONAL ENGINEER ROBERT J. NIXON No. C69123 Exp. 6-30-10 CIVIL STATE OF CALIFORNIA

THE STATE OF CALIFORNIA OR ITS OFFICERS OR AGENTS SHALL NOT BE RESPONSIBLE FOR THE ACCURACY OR COMPLETENESS OF SCANNED COPIES OF THIS PLAN SHEET.

DRAINAGE QUANTITIES

DRAINAGE PROFILE SHEET No.	DRAINAGE SYSTEM No.	DRAINAGE UNIT No.	ABANDON CULVERT	REMOVE CULVERT	REMOVE INLET	REMOVE DOWNDRAIN	REMOVE CONCRETE	CAP INLET	STRUCTURE BACKFILL (SLURRY CEMENT)	SAND BACKFILL	DITCH EXCAVATION	CLEANING AND INSPECTING PIPE	CLASS 2 AGGREGATE BASE	HOT MIX ASPHALT	PLACE HOT MIX ASPHALT (MISCELLANEOUS AREA)	MINOR CONCRETE (MINOR STRUCTURE)	DRAINAGE SYSTEM No.	DRAINAGE UNIT No.	ALIGNMENT	STATION	DESCRIPTION
			EA	EA	EA	EA	CY	EA	CY	CY	CY	EA	CY	TON	SQYD	CY					
DP-2	2	e									18						2	e	J1	234+88.80	DITCH EXCV
DP-2	2	f			1		1.0										2	f	J1	235+07.08	REMOVE INLET (TYPE GCP) (H=2.79′)
DP-2	2	g		1													2	g	J1	234+88.80	REMOVE 12" x 4.5′ CMP
DP-2	2	h						1								0.1	2	h	J1	234+88.80	CAP INLET 12" CMP
DP-2	2	i															2	i	J1	234+88.80	RSP (BACKING No. 1, METHOD B)
DP-2	2	j											27				2	j	J1	234+88.80	CLASS 2 AGGREGATE BASE
DP-3	3	a												1.8	4.1	1.3	3	a	IR1	36+00.00	TYPE G2 DI, W\(1) GRATE TYPE 24-12
DP-3	3	b							2.1								3	b	IR1	36+00.00	18" x 39.0′ OSRCP & CONC BACKFILL
DP-3	3	c												2.3	5.4	1.6	3	c	IR1	36+46.46	TYPE GDO DI, W\(2) GRATE TYPE 24-12
DP-3	3	d							0.9					1.4	2.0		3	d	IR1	36+52.21	14" x 23" x 11.0′ OSRCP, 45° ELBOW
DP-3	3	e		1													3	e	IR1	36+52.21	REMOVE 24" x 19.0′ RCP
DP-3	3	f												3.4	3.9	0.7	3	f	IR1	36+52.21	TYPE GCP DI, W\(1) GRATE TYPE 36R
DP-3	3	g			1		2.0										3	g	IR1	36+52.21	REMOVE INLET (TYPE GCP) (H=2.75′)
DP-3	3	h			1		1.5										3	h	IR1	36+43.04	REMOVE INLET (TYPE G2) (H=3.00′)
DP-3	3	k		1													3	k	IR1	36+43.04	REMOVE 24" x 31.7′ RCP
DP-3	3	l							11.7					5.2	7.4	0.2	3	l	IR1	36+46.46	14" x 23" x 38.4′ OSRCP & CONC BACKFILL
DP-3	3	m							41.4								3	m	IR1	40+00.00	14" x 23" x 336.5′ OSRCP & CONC BACKFILL
DP-3	3	n												2.1	4.8	1.6	3	n	IR1	40+00.00	TYPE GDO DI, W\(2) GRATE TYPE 24-12
DP-3	3	o							76.1					43.2	61.9		3	o	IR1	40+00.00	18" x 394.6′ RCP & CONC BACKFILL
DP-3	3	p												2.1	4.8	1.9	3	p	IR1	44+00.00	TYPE GDO DI, W\(2) GRATE TYPE 24-12
DP-3	3	q							76.8								3	q	IR1	44+00.00	18" x 295.5′ RCP
DP-3	3	r														2.0	3	r	J1	247+00.00	TYPE GDO DI, W\(2) GRATE TYPE 24-12
DP-3	4	a			1		1.0										4	a	J1	250+83.77	REMOVE INLET (TYPE G1) (H=3.15′)
DP-3	4	b						1								1.2	4	b	J1	250+83.77	CAP INLET (TYPE G1), CAP ELEV=12.08
DP-4	5	a												2.1	4.8	2.3	5	a	J1	251+50.00	TYPE GDO DI, W\(2) GRATE TYPE 24-12
DP-4	5	b							33.5					10.4	14.9	0.2	5	b	J1	251+50.00	18" x 44.67′ APC, CONNECT TO EXIST
DP-4	6	a												2.1	4.8	1.8	6	a	J1	250+50.24	TYPE G2 DI, W\(1) GRATE TYPE 24-12
SHEET SUB TOTAL				3	4		5.5	2	242.5		18		27	76.1	118.8	14.9					

DRAINAGE QUANTITIES

DQ-4

REVISED BY | DATE REVISED

JOLENA ASTIN/TRAVIS GURNEY SCOTT GREGORY | CHRIS GAIDO

CALCULATED-DESIGNED BY | CHECKED BY

FUNCTIONAL SUPERVISOR | JOHN L. MARTIN

STATE OF CALIFORNIA - DEPARTMENT OF TRANSPORTATION | DESIGN

P:\proj2\04\26406\design\DCCR\426406id004.dgn

LAST REVISION 03-15-10 | DATE PLOTTED => 16-AUG-2010 | TIME PLOTTED => 10:29

Dist	COUNTY	ROUTE	POST MILES TOTAL PROJECT	SHEET No.	TOTAL SHEETS
04	Mrn	101	18.6/R22.3	141	542

REGISTERED CIVIL ENGINEER 03-15-10 DATE

8-9-10
PLANS APPROVAL DATE

REGISTERED PROFESSIONAL ENGINEER ROBERT J. NIXON No. C69123 Exp. 6-30-10 CIVIL STATE OF CALIFORNIA

THE STATE OF CALIFORNIA OR ITS OFFICERS OR AGENTS SHALL NOT BE RESPONSIBLE FOR THE ACCURACY OR COMPLETENESS OF SCANNED COPIES OF THIS PLAN SHEET.

DRAINAGE QUANTITIES

DRAINAGE PROFILE SHEET No.	DRAINAGE SYSTEM No. ⬡	DRAINAGE UNIT No. ◯	MINOR CONCRETE (APRON)	MINOR CONCRETE (HEADWALL)	18" ALTERNATIVE PIPE CULVERT	24" ALTERNATIVE PIPE CULVERT	48" REINFORCED CONCRETE PIPE (CLASS II)	54" REINFORCED CONCRETE PIPE	18" REINFORCED CONCRETE PIPE (CLASS II, RUBBER GASKET JOINT)	24" REINFORCED CONCRETE PIPE (CLASS II, RUBBER GASKET JOINT)	14"x23" OVAL SHAPED REINFORCED CONCRETE PIPE(CLASS III, RUBBER GASKET JOINT)	12" CORRUGATED STEEL PIPE (.168" THICK)	18" CORRUGATED STEEL PIPE (.168" THICK)	24" CORRUGATED STEEL PIPE (.168" THICK)	18" CORRUGATED STEEL PIPE DOWNDRAIN (.168" THICK)	12" ANCHOR ASSEMBLY	JACKED 48" REINFORCED CONCRETE PIPE (CLASS V)	DRAINAGE SYSTEM No. ⬡	DRAINAGE UNIT No. ◯	ALIGNMENT	STATION	DESCRIPTION
			CY	CY	LF	LF	LF	LF	LF	LF	LF	LF	LF	LF	LF	EA	LF					
DP-2	2	e																2	e	J1	234+88.80	DITCH EXCV
DP-2	2	f																2	f	J1	235+07.08	REMOVE INLET (TYPE GCP) (H=2.79′)
DP-2	2	g																2	g	J1	234+88.80	REMOVE 12" x 4.5′ CMP
DP-2	2	h																2	h	J1	234+88.80	CAP INLET 12" CMP
DP-2	2	i																2	i	J1	234+88.80	RSP (BACKING No. 1, METHOD B)
DP-2	2	j																2	j	J1	234+88.80	CLASS 2 AGGREGATE BASE
DP-3	3	a	0.8															3	a	IR1	36+00.00	TYPE G2 DI, W\(1) GRATE TYPE 24-12
DP-3	3	b									39.0							3	b	IR1	36+00.00	18" x 39.0′ OSRCP & CONC BACKFILL
DP-3	3	c	1.7															3	c	IR1	36+46.46	TYPE GDO DI, W\(2) GRATE TYPE 24-12
DP-3	3	d									11.0							3	d	IR1	36+52.21	14" x 23" x 11.0′ OSRCP, 45° ELBOW
DP-3	3	e																3	e	IR1	36+52.21	REMOVE 24" x 19.0′ RCP
DP-3	3	f	2.4															3	f	IR1	36+52.21	TYPE GCP DI, W\(1) GRATE TYPE 36R
DP-3	3	g																3	g	IR1	36+52.21	REMOVE INLET (TYPE GCP) (H=2.75′)
DP-3	3	h																3	h	IR1	36+43.04	REMOVE INLET (TYPE G2) (H=3.00′)
DP-3	3	k																3	k	IR1	36+43.04	REMOVE 24" x 31.7′ RCP
DP-3	3	l									38.4							3	l	IR1	36+46.46	14" x 23" x 38.4′ OSRCP & CONC BACKFILL
DP-3	3	m									336.5							3	m	IR1	40+00.00	14" x 23" x 336.5′ OSRCP & CONC BACKFILL
DP-3	3	n	1.2															3	n	IR1	40+00.00	TYPE GDO DI, W\(2) GRATE TYPE 24-12
DP-3	3	o							394.6									3	o	IR1	40+00.00	18" x 394.6′ RCP & CONC BACKFILL
DP-3	3	p	1.2															3	p	IR1	44+00.00	TYPE GDO DI, W\(2) GRATE TYPE 24-12
DP-3	3	q							295.0									3	q	IR1	44+00.00	18" x 295.5′ RCP
DP-3	3	r	1.2															3	r	J1	247+00.00	TYPE GDO DI, W\(2) GRATE TYPE 24-12
DP-3	4	a																4	a	J1	250+83.77	REMOVE INLET (TYPE G1) (H=3.15′)
DP-3	4	b																4	b	J1	250+83.77	CAP INLET (TYPE G1), CAP ELEV=12.08
DP-4	5	a	1.2															5	a	J1	251+50.00	TYPE GDO DI, W\(2) GRATE TYPE 24-12
DP-4	5	b			44.7													5	b	J1	251+50.00	18" x 44.67′ APC, CONNECT TO Exist
DP-4	6	a	1.1															6	a	J1	250+50.24	TYPE G2 DI, W\(1) GRATE TYPE 24-12
SHEET SUB TOTAL			10.8		44.7				689.6		424.9											

DRAINAGE QUANTITIES

DQ-5

CALCULATED-DESIGNED BY JOLENA ASTIN/TRAVIS GURNEY SCOTT GREGORY
CHECKED BY CHRIS GAIDO
FUNCTIONAL SUPERVISOR JOHN L. MARTIN
REVISED BY
DATE REVISED

STATE OF CALIFORNIA - DEPARTMENT OF TRANSPORTATION
Caltrans DESIGN

P:\proj2\04\26406\design\DCCR\426406id005.dgn

LAST REVISION 03-15-10
DATE PLOTTED => 16-AUG-2010
TIME PLOTTED => 11:25

Dist	COUNTY	ROUTE	POST MILES TOTAL PROJECT	SHEET No.	TOTAL SHEETS
04	Mrn	101	18.6/R22.3	142	542

REGISTERED CIVIL ENGINEER 03-15-10 DATE

8-9-10
PLANS APPROVAL DATE

REGISTERED PROFESSIONAL ENGINEER ROBERT J. NIXON No. C69123 Exp. 6-30-10 CIVIL STATE OF CALIFORNIA

THE STATE OF CALIFORNIA OR ITS OFFICERS OR AGENTS SHALL NOT BE RESPONSIBLE FOR THE ACCURACY OR COMPLETENESS OF SCANNED COPIES OF THIS PLAN SHEET.

DRAINAGE QUANTITIES

DRAINAGE PROFILE SHEET No.	DRAINAGE SYSTEM No.	DRAINAGE UNIT No.	24" ALTERNATIVE FLARED END SECTION	18" STEEL FLARED END SECTION	36" PRECAST CONCRETE PIPE INLET	CHAIN LINK FENCE (TYPE CL-4, VINYL-CLAD)	ROCK SLOPE PROTECTION (BACKING No. 1, METHOD B)	ROCK SLOPE PROTECTION FABRIC	MISC. IRON AND STEEL	MARKER (CULVERT)	MARKER (CULVERT, BARRIER MOUNTED)	VEGETATION CONTROL (MINOR CONCRETE)	CONNECT TO Exist (N)	SALVAGE GRATE (N)	DI HEIGHT (N)	Max COVER (N)	DRAINAGE SYSTEM No.	DRAINAGE UNIT No.	ALIGNMENT	STATION	DESCRIPTION
			EA	EA	LF	LF	CY	SQYD	LB	EA	EA	SQYD	EA	EA	FT	FT					
DP-2	2	e															2	e	J1	234+88.80	DITCH EXCV
DP-2	2	f												1	2.79		2	f	J1	235+07.08	REMOVE INLET (TYPE GCP) (H=2.79′)
DP-2	2	g														4.8	2	g	J1	234+88.80	REMOVE 12" x 4.5′ CMP
DP-2	2	h															2	h	J1	234+88.80	CAP INLET 12" CMP
DP-2	2	i					23.0	35.6									2	i	J1	234+88.80	RSP (BACKING No. 1, METHOD B)
DP-2	2	j															2	j	J1	234+88.80	CLASS 2 AGGREGATE BASE
DP-3	3	a							326	1					1.72		3	a	IR1	36+00.00	TYPE G2 DI, W\(1) GRATE TYPE 24-12
DP-3	3	b														0.8	3	b	IR1	36+00.00	18" x 39.0′ OSRCP & CONC BACKFILL
DP-3	3	c							634	1					2.03		3	c	IR1	36+46.46	TYPE GDO DI, W\(2) GRATE TYPE 24-12
DP-3	3	d														0.2	3	d	IR1	36+53.21	14" x 23" x 11.0′ OSRCP, 45° ELBOW
DP-3	3	e														0.2	3	e	IR1	36+53.21	REMOVE 24" x 19.0′ RCP
DP-3	3	f			2.2				236	1					1.71		3	f	IR1	36+53.21	TYPE GCP DI, W\(1) GRATE TYPE 36R
DP-3	3	g												1	2.75		3	g	IR1	36+53.21	REMOVE INLET (TYPE GCP) (H=2.75′)
DP-3	3	h												1	3.00		3	h	IR1	36+43.04	REMOVE INLET (TYPE G2) (H=3.00′)
DP-3	3	k														0.2	3	k	IR1	36+43.04	REMOVE 24" x 31.7′ RCP
DP-3	3	l											1			1.1	3	l	IR1	36+46.46	14" x 23" x 38.4′ OSRCP & CONC BACKFILL
DP-3	3	m														1.3	3	m	IR1	40+00.00	14" x 23" x 336.5′ OSRCP & CONC BACKFILL
DP-3	3	n							634	1					2.77		3	n	IR1	40+00.00	TYPE GDO DI, W\(2) GRATE TYPE 24-12
DP-3	3	o														2.4	3	o	IR1	40+00.00	18" x 394.6′ RCP & CONC BACKFILL
DP-3	3	p							634	1					3.79		3	p	IR1	44+00.00	TYPE GDO DI, W\(2) GRATE TYPE 24-12
DP-3	3	q														3.0	3	q	IR1	44+00.00	18" x 295.5′ RCP
DP-3	3	r							634	1					4.05		3	r	J1	247+00.00	TYPE GDO DI, W\(2) GRATE TYPE 24-12
DP-3	4	a												1	3.15		4	a	J1	250+83.77	REMOVE INLET (TYPE G1) (H=3.15′)
DP-3	4	b															4	b	J1	250+83.77	CAP INLET (TYPE G1), CAP ELEV=12.08
DP-4	5	a							634	1					5.00		5	a	J1	251+50.00	TYPE GDO DI, W\(2) GRATE TYPE 24-12
DP-4	5	b											1			3.5	5	b	J1	251+50.00	18" x 44.67′ APC, CONNECT TO Exist
DP-4	6	a							326	1					4.82		6	a	J1	250+50.24	TYPE G2 DI, W\(1) GRATE TYPE 24-12
SHEET SUB TOTAL					2.2		23.0	35.6	4058	8			2	4							

DRAINAGE QUANTITIES

DQ-6

REVISED BY	DATE REVISED

CALCULATED-DESIGNED BY	JOLENA ASTIN/TRAVIS GURNEY SCOTT GREGORY
CHECKED BY	CHRIS GAIDO
FUNCTIONAL SUPERVISOR	JOHN L. MARTIN

STATE OF CALIFORNIA - DEPARTMENT OF TRANSPORTATION
Caltrans DESIGN

P:\proj2\04\26406\design\DCCR\426406id006.dgn

LAST REVISION 03-15-10 | DATE PLOTTED => 16-AUG-2010 TIME PLOTTED => 11:26

Dist	COUNTY	ROUTE	POST MILES TOTAL PROJECT	SHEET No.	TOTAL SHEETS
04	Mrn	101	18.6/R22.3	143	542

REGISTERED CIVIL ENGINEER 03-15-10 DATE

8-9-10
PLANS APPROVAL DATE

REGISTERED PROFESSIONAL ENGINEER ROBERT J. NIXON No. C69123 Exp. 6-30-10 CIVIL STATE OF CALIFORNIA

THE STATE OF CALIFORNIA OR ITS OFFICERS OR AGENTS SHALL NOT BE RESPONSIBLE FOR THE ACCURACY OR COMPLETENESS OF SCANNED COPIES OF THIS PLAN SHEET.

DRAINAGE QUANTITIES

DRAINAGE PROFILE SHEET No.	DRAINAGE SYSTEM No.	DRAINAGE UNIT No.	ABANDON CULVERT	REMOVE CULVERT	REMOVE INLET	REMOVE DOWNDRAIN	REMOVE CONCRETE	CAP INLET	STRUCTURE BACKFILL (SLURRY CEMENT)	SAND BACKFILL	DITCH EXCAVATION	CLEANING AND INSPECTING PIPE	CLASS 2 AGGREGATE BASE	HOT MIX ASPHALT	PLACE HOT MIX ASPHALT (MISCELLANEOUS AREA)	MINOR CONCRETE (MINOR STRUCTURE)	DRAINAGE SYSTEM No.	DRAINAGE UNIT No.	ALIGNMENT	STATION	DESCRIPTION
			EA	EA	EA	EA	CY	EA	CY	CY	CY	EA	CY	TON	SQYD	CY					
DP-4	6	b			1		1.7										6	b	J1	250+51.15	REMOVE INLET (TYPE G1) (H=2.00′)
DP-4	6	c		1													6	c	J1	250+51.15	REMOVE 12" x 11′ CSP
DP-4	6	d														0.2	6	d	J1	250+51.15	18" x 8.86′ CSP, CONNECT TO Exist
DP-4	6	e							33.6					10.4	14.9		6	e	J1	250+51.15	18" x 95.86′ APC
DP-4	6	f												2.1	4.8	2.2	6	f	J1	251+50.00	TYPE GDO DI, W\(2) GRATE TYPE 24-12
DP-4	7	a						1								1.2	7	a	J1	255+49.33	CAP INLET (TYPE G2), CAP ELEV=21.47
DP-4	8	a						1								1.2	8	a	J1	265+36.22	CAP INLET (TYPE G1), CAP ELEV=18.12
DP-4	9	a												2.1	4.8	1.8	9	a	J1	263+00.00	TYPE GDO DI, W\(2) GRATE TYPE 24-12
DP-4	9	b							99.4					25.9	37.1	0.2	9	b	J1	263+00.00	18" x 237.0′ APC, CONNECT TO Exist
DP-5	10	a			1		1.0										10	a	J1	274+05.76	REMOVE INLET (TYPE G1) (H=2.10′)
DP-5	10	b						1								1.2	10	b	J1	274+05.76	CAP INLET (TYPE G1), CAP ELEV=5.73
DP-5	10A	a														0.7	10A	a	J1	275+49.57	TYPE GCP DI, W\(1) GRATE TYPE 36R
DP-5	10A	b												4.3	24.6		10A	b	J1	275+49.57	PLACE HMA (MISC AREA) L=17′,W=13′,D=0.25′
DP-5	10A	c														0.2	10A	c	J1	275+49.57	18" x 178.2′ RCP
DP-5	11	a			1		1.0										11	a	J1	282+50.05	REMOVE INLET (TYPE G1) (H=2.11′)
DP-5	11	b		1													11	b	J1	282+50.05	REMOVE 18" x 191.6′ CMP
DP-5	11	c												2.1	4.8	2.3	11	c	J1	284+42.72	TYPE G2 DI, W/(1) GRATE TYPE 24-12
DP-5	11	d			1		1.0										11	d	J1	284+41.65	REMOVE INLET (TYPE G2) (H=4.11′)
DP-5	11	e														0.2	11	e	J1	284+42.72	24" x 5.0′ RCP CONNECT TO Exist
DP-5	11	f		1													11	f	J1	284+41.65	REMOVE 18" x 156.6′ CMP
DP-5	11	g															11	g	J1	284+42.72	18" x 153.0′ APC
DP-5	11	h												2.1	4.8	2.4	11	h	J1	286+00.00	TYPE GDO MOD W/(2) GRATE TYPE 24-12
DP-5	11	k			1		1.0										11	k	J1	285+98.29	REMOVE INLET (TYPE G1) (H=2.76′)
DP-5	11	l															11	l	J1	286+00.00	18" x 224.7′ APC
DP-5	11	m												2.1	4.8	1.8	11	m	J1	288+27.68	TYPE GDO MOD DI, W/(2) GRATE TYPE 24-12
DP-6	12	a												2.1	4.8	1.6	12	a	J1	290+00.00	TYPE GDO DI, W/ (2) GRATE TYPE 24-12
SHEET SUB TOTAL				3	5		5.7	3	133.0					53.2	105.4	17.2					

DRAINAGE QUANTITIES

DQ-7

REVISED BY | DATE REVISED
JOLENA ASTIN/TRAVIS GURNEY SCOTT GREGORY | CHRIS GAIDO
CALCULATED-DESIGNED BY | CHECKED BY
FUNCTIONAL SUPERVISOR | JOHN L. MARTIN

STATE OF CALIFORNIA - DEPARTMENT OF TRANSPORTATION
Caltrans DESIGN

P:\proj2\04\26406\design\DCCR\426406id007.dgn

LAST REVISION 03-15-10 | DATE PLOTTED => 16-AUG-2010 TIME PLOTTED => 11:26

Dist	COUNTY	ROUTE	POST MILES TOTAL PROJECT	SHEET No.	TOTAL SHEETS
04	Mrn	101	18.6/R22.3	144	542

REGISTERED CIVIL ENGINEER 03-15-10 DATE

8-9-10
PLANS APPROVAL DATE

REGISTERED PROFESSIONAL ENGINEER ROBERT J. NIXON No. C69123 Exp. 6-30-10 CIVIL STATE OF CALIFORNIA

THE STATE OF CALIFORNIA OR ITS OFFICERS OR AGENTS SHALL NOT BE RESPONSIBLE FOR THE ACCURACY OR COMPLETENESS OF SCANNED COPIES OF THIS PLAN SHEET.

DRAINAGE QUANTITIES

DRAINAGE PROFILE SHEET No.	DRAINAGE SYSTEM No.	DRAINAGE UNIT No.	MINOR CONCRETE (APRON)	MINOR CONCRETE (HEADWALL)	18" ALTERNATIVE PIPE CULVERT	24" ALTERNATIVE PIPE CULVERT	48" REINFORCED CONCRETE PIPE (CLASS II)	54" REINFORCED CONCRETE PIPE	18" REINFORCED CONCRETE PIPE (CLASS II, RUBBER GASKET JOINT)	24" REINFORCED CONCRETE PIPE (CLASS II, RUBBER GASKET JOINT)	14"x23" OVAL SHAPED REINFORCED CONCRETE PIPE(CLASS III, RUBBER GASKET JOINT)	12" CORRUGATED STEEL PIPE (.168" THICK)	18" CORRUGATED STEEL PIPE (.168" THICK)	24" CORRUGATED STEEL PIPE (.168" THICK)	18" CORRUGATED STEEL PIPE DOWNDRAIN (.168" THICK)	12" ANCHOR ASSEMBLY	JACKED 48" REINFORCED CONCRETE PIPE (CLASS V)	DRAINAGE SYSTEM No.	DRAINAGE UNIT No.	ALIGNMENT	STATION	DESCRIPTION
			CY	CY	LF	LF	LF	LF	LF	LF	LF	LF	LF	LF	LF	EA	LF					
DP-4	6	b																6	b	J1	250+51.15	REMOVE INLET (TYPE G1) (H=2.00')
DP-4	6	c																6	c	J1	250+51.15	REMOVE 12" x 11' CSP
DP-4	6	d											8.9					6	d	J1	250+51.15	18" x 8.86' CSP, CONNECT TO Exist
DP-4	6	e			95.9													6	e	J1	250+51.15	18" x 95.86' APC
DP-4	6	f	1.2															6	f	J1	251+50.00	TYPE GDO DI, W\(2) GRATE TYPE 24-12
DP-4	7	a																7	a	J1	255+49.33	CAP INLET (TYPE G2), CAP ELEV=21.47
DP-4	8	a																8	a	J1	265+36.22	CAP INLET (TYPE G1), CAP ELEV=18.12
DP-4	9	a	1.2															9	a	J1	263+00.00	TYPE GDO DI, W\(2) GRATE TYPE 24-12
DP-4	9	b			237.0													9	b	J1	263+00.00	18" x 237.0' APC, CONNECT TO Exist
DP-5	10	a																10	a	J1	274+05.76	REMOVE INLET (TYPE G1) (H=2.10')
DP-5	10	b																10	b	J1	274+05.76	CAP INLET (TYPE G1), CAP ELEV=5.73
DP-5	10A	a																10A	a	J1	275+49.57	TYPE GCP DI, W\(1) GRATE TYPE 36R
DP-5	10A	b																10A	b	J1	275+49.57	PLACE HMA (MISC AREA) L=17',W=13',D=0.25'
DP-5	10A	c							178.2									10A	c	J1	275+49.57	18" x 178.2' RCP
DP-5	11	a																11	a	J1	282+50.05	REMOVE INLET (TYPE G1) (H=2.11')
DP-5	11	b																11	b	J1	282+50.05	REMOVE 18" x 191.6' CMP
DP-5	11	c	1.1															11	c	J1	284+42.72	TYPE G2 DI, W/(1) GRATE TYPE 24-12
DP-5	11	d																11	d	J1	284+41.65	REMOVE INLET (TYPE G2) (H=4.11')
DP-5	11	e								5.0								11	e	J1	284+42.72	24" x 5.0' RCP CONNECT TO Exist
DP-5	11	f																11	f	J1	284+41.65	REMOVE 18" x 156.6' CMP
DP-5	11	g			153.0													11	g	J1	284+42.72	18" x 153.0' APC
DP-5	11	h	1.2															11	h	J1	286+00.00	TYPE GDO MOD W/(2) GRATE TYPE 24-12
DP-5	11	k																11	k	J1	285+98.29	REMOVE INLET (TYPE G1) (H=2.76')
DP-5	11	l			224.7													11	l	J1	286+00.00	18" x 224.7' APC
DP-5	11	m	1.2															11	m	J1	288+27.68	TYPE GDO MOD DI, W/(2) GRATE TYPE 24-12
DP-6	12	a	1.2															12	a	J1	290+00.00	TYPE GDO DI, W/ (2) GRATE TYPE 24-12
SHEET SUB TOTAL			7.1		710.6				178.2	5.0			8.9									

DRAINAGE QUANTITIES

DQ-8

REVISED BY | DATE REVISED
JOLENA ASTIN/TRAVIS GURNEY / SCOTT GREGORY | CHRIS GAIDO
CALCULATED-DESIGNED BY | CHECKED BY
FUNCTIONAL SUPERVISOR: JOHN L. MARTIN

STATE OF CALIFORNIA - DEPARTMENT OF TRANSPORTATION
Caltrans **DESIGN**

P:\proj2\04\26406\design\DCCR\426406id008.dgn

LAST REVISION 03-15-10 | DATE PLOTTED => 16-AUG-2010 | TIME PLOTTED => 11:26

Dist	COUNTY	ROUTE	POST MILES TOTAL PROJECT	SHEET No.	TOTAL SHEETS
04	Mrn	101	18.6/R22.3	145	542

REGISTERED CIVIL ENGINEER 03-15-10 DATE

8-9-10
PLANS APPROVAL DATE

REGISTERED PROFESSIONAL ENGINEER ROBERT J. NIXON No. C69123 Exp. 6-30-10 CIVIL STATE OF CALIFORNIA

THE STATE OF CALIFORNIA OR ITS OFFICERS OR AGENTS SHALL NOT BE RESPONSIBLE FOR THE ACCURACY OR COMPLETENESS OF SCANNED COPIES OF THIS PLAN SHEET.

DRAINAGE QUANTITIES

DRAINAGE PROFILE SHEET No.	DRAINAGE SYSTEM No.	DRAINAGE UNIT No.	24" ALTERNATIVE FLARED END SECTION	18" STEEL FLARED END SECTION	36" PRECAST CONCRETE PIPE INLET	CHAIN LINK FENCE (TYPE CL-4, VINYL-CLAD)	ROCK SLOPE PROTECTION (BACKING No. 1, METHOD B)	ROCK SLOPE PROTECTION FABRIC	MISC. IRON AND STEEL	MARKER (CULVERT)	MARKER (CULVERT, BARRIER MOUNTED)	VEGETATION CONTROL (MINOR CONCRETE)	CONNECT TO Exist (N)	SALVAGE GRATE (N)	DI HEIGHT (N)	Max COVER (N)	DRAINAGE SYSTEM No.	DRAINAGE UNIT No.	ALIGNMENT	STATION	DESCRIPTION
			EA	EA	LF	LF	CY	SQYD	LB	EA	EA	SQYD	EA	EA	FT	FT					
DP-4	6	b												1	2.00		6	b	J1	250+51.15	REMOVE INLET (TYPE G1) (H=2.00′)
DP-4	6	c														14.2	6	c	J1	250+51.15	REMOVE 12" x 11′ CSP
DP-4	6	d											1			13.8	6	d	J1	250+51.15	18" x 8.86′ CSP, CONNECT TO Exist
DP-4	6	e														3.4	6	e	J1	250+51.15	18" x 95.86′ APC
DP-4	6	f							634	1					4.70		6	f	J1	251+50.00	TYPE GDO DI, W\(2) GRATE TYPE 24-12
DP-4	7	a															7	a	J1	255+49.33	CAP INLET (TYPE G2), CAP ELEV=21.47
DP-4	8	a															8	a	J1	265+36.22	CAP INLET (TYPE G1), CAP ELEV=18.12
DP-4	9	a							634	1					3.50		9	a	J1	263+00.00	TYPE GDO DI, W\(2) GRATE TYPE 24-12
DP-4	9	b											1			2.0	9	b	J1	263+00.00	18" x 237.0′ APC, CONNECT TO Exist
DP-5	10	a												1	2.10		10	a	J1	274+05.76	REMOVE INLET (TYPE G1) (H=2.10′)
DP-5	10	b															10	b	J1	274+05.76	CAP INLET (TYPE G1), CAP ELEV=5.73
DP-5	10A	a			3.9				236						3.44		10A	a	J1	275+49.57	TYPE GCP DI, W\(1) GRATE TYPE 36R
DP-5	10A	b															10A	b	J1	275+49.57	PLACE HMA (MISC AREA) L=17′,W=13′,D=0.25′
DP-5	10A	c														2.6	10A	c	J1	275+49.57	18" x 178.2′ RCP
DP-5	11	a												1	2.11		11	a	J1	282+50.05	REMOVE INLET (TYPE G1) (H=2.11′)
DP-5	11	b														2.6	11	b	J1	282+50.05	REMOVE 18" x 191.6′ CMP
DP-5	11	c							326	1					6.97		11	c	J1	284+42.72	TYPE G2 DI, W/(1) GRATE TYPE 24-12
DP-5	11	d												1	4.11		11	d	J1	284+41.65	REMOVE INLET (TYPE G2) (H=4.11′)
DP-5	11	e											1			2.1	11	e	J1	284+42.72	24" x 5.0′ RCP CONNECT TO Exist
DP-5	11	f														2.1	11	f	J1	284+41.65	REMOVE 18" x 156.6′ CMP
DP-5	11	g														2.1	11	g	J1	284+42.72	18" x 153.0′ APC
DP-5	11	h							634	1					5.38		11	h	J1	286+00.00	TYPE GDO MOD W/(2) GRATE TYPE 24-12
DP-5	11	k												1	2.76		11	k	J1	285+98.29	REMOVE INLET (TYPE G1) (H=2.76′)
DP-5	11	l														2.4	11	l	J1	286+00.00	18" x 224.7′ APC
DP-5	11	m							634		1				3.50		11	m	J1	288+27.68	TYPE GDO MOD DI, W/(2) GRATE TYPE 24-12
DP-6	12	a							634		1				2.46		12	a	J1	290+00.00	TYPE GDO DI, W/ (2) GRATE TYPE 24-12
SHEET SUB TOTAL					3.9				3732	4	2		3	5							

REVISED BY | DATE REVISED

JOLENA ASTIN/TRAVIS GURNEY SCOTT GREGORY | CHRIS GAIDO

CALCULATED-DESIGNED BY | CHECKED BY

FUNCTIONAL SUPERVISOR | JOHN L. MARTIN

STATE OF CALIFORNIA - DEPARTMENT OF TRANSPORTATION

Caltrans DESIGN

P:\proj2\04\26406\design\DCCR\426406id009.dgn

DRAINAGE QUANTITIES

DQ-9

LAST REVISION 03-15-10 | DATE PLOTTED => 16-AUG-2010 TIME PLOTTED => 11:26

Dist	COUNTY	ROUTE	POST MILES TOTAL PROJECT	SHEET No.	TOTAL SHEETS
04	Mrn	101	18.6/R22.3	146	542

REGISTERED CIVIL ENGINEER 03-15-10 DATE

8-9-10
PLANS APPROVAL DATE

REGISTERED PROFESSIONAL ENGINEER ROBERT J. NIXON No. C69123 Exp. 6-30-10 CIVIL STATE OF CALIFORNIA

THE STATE OF CALIFORNIA OR ITS OFFICERS OR AGENTS SHALL NOT BE RESPONSIBLE FOR THE ACCURACY OR COMPLETENESS OF SCANNED COPIES OF THIS PLAN SHEET.

DRAINAGE QUANTITIES

DRAINAGE PROFILE SHEET No.	DRAINAGE SYSTEM No.	DRAINAGE UNIT No.	ABANDON CULVERT	REMOVE CULVERT	REMOVE INLET	REMOVE DOWNDRAIN	REMOVE CONCRETE	CAP INLET	STRUCTURE BACKFILL (SLURRY CEMENT)	SAND BACKFILL	DITCH EXCAVATION	CLEANING AND INSPECTING PIPE	CLASS 2 AGGREGATE BASE	HOT MIX ASPHALT	PLACE HOT MIX ASPHALT (MISCELLANEOUS AREA)	MINOR CONCRETE (MINOR STRUCTURE)	DRAINAGE SYSTEM No.	DRAINAGE UNIT No.	ALIGNMENT	STATION	DESCRIPTION
			EA	EA	EA	EA	CY	EA	CY	CY	CY	EA	CY	TON	SQYD	CY					
DP-6	12	b							53.0					27.8	39.9		12	b	J1	290+00.00	18" x 254.7' RCP
DP-6	12	c												2.3	5.4	2.3	12	c	J1	292+97.97	TYPE GDO DI, W/ (2) GRATE TYPE 24-12
DP-6	12	d			1		1.0										12	d	J1	292+98.23	REMOVE INLET (TYPE G1) (H=4.46')
DP-6	12	e														0.2	12	e	J1	292+97.97	24" x 4.5' RCP, CONCRETE COLLAR
DP-6	13	a												2.1	4.8	1.8	13	a	J1	295+00.00	TYPE GDO DI, W/ (2) GRATE TYPE 24-12
DP-6	13	b															13	b	J1	295+00.00	18" x 194.0' APC
DP-6	13	c			1		1.0										13	c	J1	296+98.66	REMOVE INLET (TYPE G2) (H=5.07')
DP-6	13	d												2.3	5.4	2.7	13	d	J1	296+98.66	TYPE GDO DI, W/ (2) GRATE TYPE 24-12
DP-6	13	e														0.2	13	e	J1	296+98.66	24" x 4.5' RCP, CONCRETE COLLAR
DP-6	13	f															13	f	J1	296+98.66	18" x 247.0' APC
DP-6	13	g												2.1	4.8	1.8	13	g	J1	299+50.00	TYPE GDO DI, W/ (2) GRATE TYPE 24-12
DP-7	14	a												2.1	10.1		14	a	RR1	98+02.08	PLACE HMA (MISC AREA) (OSD)
DP-7	14	b			1		1.7										14	b	RR1	97+98.97	REMOVE INLET (TYPE G1) (H=1.89')
DP-7	14	c		1													14	c	RR1	97+98.97	REMOVE 12" x 46.0' CMP
DP-7	14	d															14	d	RR1	98+02.08	RSP (10'x10') BACKING No. 1, RSP FABRIC
DP-7	15A	a			1		1.0										15A	a	J1	302+00.34	REMOVE INLET (TYPE G1) (H=2.00')
DP-7	15A	c												2.3	5.4	6.4	15A	c	J1	302+00.34	TYPE GDO DI, W/ (2) GRATE TYPE 24-12
DP-7	15A	d														0.2	15A	d	J1	302+00.34	24" x 7.8' RCP, CONCRETE COLLAR
DP-7	15A	e														0.2	15A	e	J1	302+00.34	24" x 4.5' RCP, CONCRETE COLLAR
DP-7	15	a												2.3	5.4	5.7	15	a	J1	302+00.00	TYPE GDO DI, W/ (2) GRATE TYPE 24-12
DP-7	15	b												1.8	4.1	1.6	15	b	J1	304+22.60	TYPE GO DI, W/ (1) GRATE TYPE 24-12
DP-7	15	c															15	c	J1	302+00.00	18" x 218.4' APC
DP-7	15	d							4.7					0.5	0.7	0.2	15	d	J1	302+00.00	24" x 4.5' RCP, CONCRETE COLLAR
DP-7	15	e							4.5					0.5	0.7	0.2	15	e	J1	302+00.00	24" x 4.5' RCP, CONCRETE COLLAR
DP-8	16	a			1		1.0										16	a	J1	307+79.38	REMOVE INLET (TYPE G1) (H=2.00')
SHEET SUB TOTAL				1	5		5.7		62.2					46.1	86.7	23.5					

REVISED BY | DATE REVISED

JOLENA ASTIN/TRAVIS GURNEY
SCOTT GREGORY
CALCULATED-DESIGNED BY

CHRIS GAIDO
CHECKED BY

FUNCTIONAL SUPERVISOR

JOHN L. MARTIN

STATE OF CALIFORNIA - DEPARTMENT OF TRANSPORTATION
Caltrans
DESIGN

P:\proj2\04\26406\design\DCCR\426406id010.dgn

DRAINAGE QUANTITIES

DQ-10

LAST REVISION 03-15-10 | DATE PLOTTED => 16-AUG-2010 TIME PLOTTED => 11:26

Dist	COUNTY	ROUTE	POST MILES TOTAL PROJECT	SHEET No.	TOTAL SHEETS
04	Mrn	101	18.6/R22.3	147	542

REGISTERED CIVIL ENGINEER 03-15-10 DATE

8-9-10
PLANS APPROVAL DATE

REGISTERED PROFESSIONAL ENGINEER ROBERT J. NIXON No. C69123 Exp. 6-30-10 CIVIL STATE OF CALIFORNIA

THE STATE OF CALIFORNIA OR ITS OFFICERS OR AGENTS SHALL NOT BE RESPONSIBLE FOR THE ACCURACY OR COMPLETENESS OF SCANNED COPIES OF THIS PLAN SHEET.

DRAINAGE QUANTITIES

DRAINAGE PROFILE SHEET No.	DRAINAGE SYSTEM No.	DRAINAGE UNIT No.	MINOR CONCRETE (APRON)	MINOR CONCRETE (HEADWALL)	18" ALTERNATIVE PIPE CULVERT	24" ALTERNATIVE PIPE CULVERT	48" REINFORCED CONCRETE PIPE (CLASS II)	54" REINFORCED CONCRETE PIPE	18" REINFORCED CONCRETE PIPE (CLASS II, RUBBER GASKET JOINT)	24" REINFORCED CONCRETE PIPE (CLASS II, RUBBER GASKET JOINT)	14"x23" OVAL SHAPED REINFORCED CONCRETE PIPE(CLASS III, RUBBER GASKET JOINT)	12" CORRUGATED STEEL PIPE (.168" THICK)	18" CORRUGATED STEEL PIPE (.168" THICK)	24" CORRUGATED STEEL PIPE (.168" THICK)	18" CORRUGATED STEEL PIPE DOWNDRAIN (.168" THICK)	12" ANCHOR ASSEMBLY	JACKED 48" REINFORCED CONCRETE PIPE (CLASS V)	DRAINAGE SYSTEM No.	DRAINAGE UNIT No.	ALIGNMENT	STATION	DESCRIPTION
			CY	CY	LF	LF	LF	LF	LF	LF	LF	LF	LF	LF	LF	EA	LF					
DP-6	12	b							254.7									12	b	J1	290+00.00	18" x 254.7' RCP
DP-6	12	c	1.7															12	c	J1	292+97.97	TYPE GDO DI, W/ (2) GRATE TYPE 24-12
DP-6	12	d																12	d	J1	292+98.23	REMOVE INLET (TYPE G1) (H=4.46')
DP-6	12	e								4.5								12	e	J1	292+97.97	24" x 4.5' RCP, CONCRETE COLLAR
DP-6	13	a	1.2															13	a	J1	295+00.00	TYPE GDO DI, W/ (2) GRATE TYPE 24-12
DP-6	13	b			194.0													13	b	J1	295+00.00	18" x 194.0' APC
DP-6	13	c																13	c	J1	296+98.66	REMOVE INLET (TYPE G2) (H=5.07')
DP-6	13	d	1.7															13	d	J1	296+98.66	TYPE GDO DI, W/ (2) GRATE TYPE 24-12
DP-6	13	e								4.5								13	e	J1	296+98.66	24" x 4.5' RCP, CONCRETE COLLAR
DP-6	13	f			247.0													13	f	J1	296+98.66	18" x 247.0' APC
DP-6	13	g	1.2															13	g	J1	299+50.00	TYPE GDO DI, W/ (2) GRATE TYPE 24-12
DP-7	14	a																14	a	RR1	98+02.08	PLACE HMA (MISC AREA) (OSD)
DP-7	14	b																14	b	RR1	97+98.97	REMOVE INLET (TYPE G1) (H=1.89')
DP-7	14	c																14	c	RR1	97+98.97	REMOVE 12" x 46.0' CMP
DP-7	14	d																14	d	RR1	98+02.08	RSP (10'x10') BACKING No. 1, RSP FABRIC
DP-7	15A	a																15A	a	J1	302+00.34	REMOVE INLET (TYPE G1) (H=2.00')
DP-7	15A	c	1.7															15A	c	J1	302+00.34	TYPE GDO DI, W/ (2) GRATE TYPE 24-12
DP-7	15A	d								7.8								15A	d	J1	302+00.34	24" x 7.8' RCP, CONCRETE COLLAR
DP-7	15A	e								4.5								15A	e	J1	302+00.34	24" x 4.5' RCP, CONCRETE COLLAR
DP-7	15	a	1.7															15	a	J1	302+00.00	TYPE GDO DI, W/ (2) GRATE TYPE 24-12
DP-7	15	b	0.9															15	b	J1	304+22.60	TYPE GO DI, W/ (1) GRATE TYPE 24-12
DP-7	15	c			218.4													15	c	J1	302+00.00	18" x 218.4' APC
DP-7	15	d								4.5								15	d	J1	302+00.00	24" x 4.5' RCP, CONCRETE COLLAR
DP-7	15	e								4.5								15	e	J1	302+00.00	24" x 4.5' RCP, CONCRETE COLLAR
DP-8	16	a																16	a	J1	307+79.38	REMOVE INLET (TYPE G1) (H=2.00')
SHEET SUB TOTAL			10.1		659.4				254.7	30.3												

DRAINAGE QUANTITIES

DQ-11

REVISED BY | DATE REVISED

JOLENA ASTIN/TRAVIS GURNEY SCOTT GREGORY | CHRIS GAIDO

CALCULATED-DESIGNED BY | CHECKED BY

FUNCTIONAL SUPERVISOR | JOHN L. MARTIN

STATE OF CALIFORNIA - DEPARTMENT OF TRANSPORTATION

Caltrans DESIGN

P:\proj2\04\26406\design\DCCR\426406id011.dgn

LAST REVISION 03-15-10 | DATE PLOTTED => 16-AUG-2010 TIME PLOTTED => 11:26

Dist	COUNTY	ROUTE	POST MILES TOTAL PROJECT	SHEET No.	TOTAL SHEETS
04	Mrn	101	18.6/R22.3	148	542

REGISTERED CIVIL ENGINEER 03-15-10 DATE

8-9-10
PLANS APPROVAL DATE

REGISTERED PROFESSIONAL ENGINEER ROBERT J. NIXON No. C69123 Exp. 6-30-10 CIVIL STATE OF CALIFORNIA

THE STATE OF CALIFORNIA OR ITS OFFICERS OR AGENTS SHALL NOT BE RESPONSIBLE FOR THE ACCURACY OR COMPLETENESS OF SCANNED COPIES OF THIS PLAN SHEET.

DRAINAGE QUANTITIES

DRAINAGE PROFILE SHEET No.	DRAINAGE SYSTEM No. ⬡	DRAINAGE UNIT No. ◯	24" ALTERNATIVE FLARED END SECTION	18" STEEL FLARED END SECTION	36" PRECAST CONCRETE PIPE INLET	CHAIN LINK FENCE (TYPE CL-4, VINYL-CLAD)	ROCK SLOPE PROTECTION (BACKING No. 1, METHOD B)	ROCK SLOPE PROTECTION FABRIC	MISC. IRON AND STEEL	MARKER (CULVERT)	MARKER (CULVERT, BARRIER MOUNTED)	VEGETATION CONTROL (MINOR CONCRETE)	CONNECT TO Exist (N)	SALVAGE GRATE (N)	DI HEIGHT (N)	Max COVER (N)	DRAINAGE SYSTEM No. ⬡	DRAINAGE UNIT No. ◯	ALIGNMENT	STATION	DESCRIPTION
			EA	EA	LF	LF	CY	SQYD	LB	EA	EA	SQYD	EA	EA	FT	FT					
DP-6	12	b														3.6	12	b	J1	290+00.00	18" x 254.7' RCP
DP-6	12	c							634		1				5.15		12	c	J1	292+97.97	TYPE GDO DI, W/ (2) GRATE TYPE 24-12
DP-6	12	d												1	4.46		12	d	J1	292+98.23	REMOVE INLET (TYPE G1) (H=4.46')
DP-6	12	e											1			3.6	12	e	J1	292+97.97	24" x 4.5' RCP, CONCRETE COLLAR
DP-6	13	a							634		1				3.50		13	a	J1	295+00.00	TYPE GDO DI, W/ (2) GRATE TYPE 24-12
DP-6	13	b														3.7	13	b	J1	295+00.00	18" x 194.0' APC
DP-6	13	c												1	5.07		13	c	J1	296+98.66	REMOVE INLET (TYPE G2) (H=5.07')
DP-6	13	d							634		1				6.32		13	d	J1	296+98.66	TYPE GDO DI, W/ (2) GRATE TYPE 24-12
DP-6	13	e											1			4.8	13	e	J1	296+98.66	24" x 4.5' RCP, CONCRETE COLLAR
DP-6	13	f														2.0	13	f	J1	296+98.66	18" x 247.0' APC
DP-6	13	g							634		1				3.50		13	g	J1	299+50.00	TYPE GDO DI, W/ (2) GRATE TYPE 24-12
DP-7	14	a								1							14	a	RR1	98+02.08	PLACE HMA (MISC AREA) (OSD)
DP-7	14	b												1	1.89		14	b	RR1	97+98.97	REMOVE INLET (TYPE G1) (H=1.89')
DP-7	14	c														2.0	14	c	RR1	97+98.97	REMOVE 12" x 46.0' CMP
DP-7	14	d					4.6	17.4									14	d	RR1	98+02.08	RSP (10'x10') BACKING No. 1, RSP FABRIC
DP-7	15A	a												1	2.00		15A	a	J1	302+00.34	REMOVE INLET (TYPE G1) (H=2.00')
DP-7	15A	c							634		1				12.59		15A	c	J1	302+00.34	TYPE GDO DI, W/ (2) GRATE TYPE 24-12
DP-7	15A	d											1			11.1	15A	d	J1	302+00.34	24" x 7.8' RCP, CONCRETE COLLAR
DP-7	15A	e											1			11.1	15A	e	J1	302+00.34	24" x 4.5' RCP, CONCRETE COLLAR
DP-7	15	a							634	1					11.01		15	a	J1	302+00.00	TYPE GDO DI, W/ (2) GRATE TYPE 24-12
DP-7	15	b							326	1					4.54		15	b	J1	304+22.60	TYPE GO DI, W/ (1) GRATE TYPE 24-12
DP-7	15	c														3.8	15	c	J1	302+00.00	18" x 218.4' APC
DP-7	15	d											1			8.9	15	d	J1	302+00.00	24" x 4.5' RCP, CONCRETE COLLAR
DP-7	15	e											1			8.9	15	e	J1	302+00.00	24" x 4.5' RCP, CONCRETE COLLAR
DP-8	16	a												1	2.00		16	a	J1	307+79.38	REMOVE INLET (TYPE G1) (H=2.00')
SHEET SUB TOTAL							4.6	17.4	4130	3	5		6	5							

REVISED BY | DATE REVISED

JOLENA ASTIN/TRAVIS GURNEY
SCOTT GREGORY
CALCULATED-DESIGNED BY

CHRIS GAIDO
CHECKED BY

FUNCTIONAL SUPERVISOR

JOHN L. MARTIN

STATE OF CALIFORNIA - DEPARTMENT OF TRANSPORTATION
Caltrans DESIGN

P:\proj2\04\26406\design\DCCR\426406id012.dgn

DRAINAGE QUANTITIES

DQ-12

LAST REVISION 03-15-10 | DATE PLOTTED => 16-AUG-2010 TIME PLOTTED => 11:26

Dist	COUNTY	ROUTE	POST MILES TOTAL PROJECT	SHEET No.	TOTAL SHEETS
04	Mrn	101	18.6/R22.3	149	542

REGISTERED CIVIL ENGINEER 03-15-10 DATE

8-9-10
PLANS APPROVAL DATE

REGISTERED PROFESSIONAL ENGINEER ROBERT J. NIXON No. C69123 Exp. 6-30-10 CIVIL STATE OF CALIFORNIA

THE STATE OF CALIFORNIA OR ITS OFFICERS OR AGENTS SHALL NOT BE RESPONSIBLE FOR THE ACCURACY OR COMPLETENESS OF SCANNED COPIES OF THIS PLAN SHEET.

DRAINAGE QUANTITIES

DRAINAGE PROFILE SHEET No.	DRAINAGE SYSTEM No.	DRAINAGE UNIT No.	ABANDON CULVERT	REMOVE CULVERT	REMOVE INLET	REMOVE DOWNDRAIN	REMOVE CONCRETE	CAP INLET	STRUCTURE BACKFILL (SLURRY CEMENT)	SAND BACKFILL	DITCH EXCAVATION	CLEANING AND INSPECTING PIPE	CLASS 2 AGGREGATE BASE	HOT MIX ASPHALT	PLACE HOT MIX ASPHALT (MISCELLANEOUS AREA)	MINOR CONCRETE (MINOR STRUCTURE)	DRAINAGE SYSTEM No.	DRAINAGE UNIT No.	ALIGNMENT	STATION	DESCRIPTION
			EA	EA	EA	EA	CY	EA	CY	CY	CY	EA	CY	TON	SQYD	CY					
DP-8	16	b						1								0.1	16	b	J1	307+79.38	CAP INLET (TYPE G1), CAP ELEV=14.92
DP-8	16	c														0.7	16	c	J1	307+85.00	TYPE GCP DI, W/ (1) GRATE TYPE 36R
DP-8	16	d														0.2	16	d	J1	307+85.00	18" x 1.5' CSP, CONNECT TO Exist
DP-8	16	e															16	e	J1	307+85.00	VEGETATION CONTROL (MINOR CONCRETE)
DP-8	16	f															16	f	J1	307+85.00	18" x 263.0' APC
DP-8	16	g														0.7	16	g	J1	310+50.00	TYPE GCP DI, W/ (1) GRATE TYPE 36R
DP-8	16	h															16	h	J1	310+50.00	VEGETATION CONTROL (MINOR CONCRETE)
DP-8	17	a												2.3	5.4	2.0	17	a	J1	307+48.79	TYPE GDO DI, W/ (2) GRATE TYPE 24-12
DP-8	17	b			1		1.7										17	b	J1	307+48.79	REMOVE INLET (TYPE G1) (H=2.00')
DP-8	17	c														0.2	17	c	J1	307+48.79	18" x 3.1' CSP, CONNECT TO Exist
DP-8	17	d							41.3					16.2	23.2		17	d	J1	307+48.79	18" x 148.7' APC
DP-8	17	e												2.1	4.8	2.0	17	e	J1	309+00.00	TYPE GDO DI, W/ (2) GRATE TYPE 24-12
DP-9	18	a												2.1	4.8	1.8	18	a	J1	311+50.00	TYPE GDO DI, W/ (2) GRATE TYPE 24-12
DP-9	18	b							72.6					21.8	31.3		18	b	J1	311+50.00	18" x 200.0' RCP
DP-9	18	c												2.3	5.4	2.8	18	c	J1	313+55.00	TYPE GDO DI, W/ (2) GRATE TYPE 24-12
DP-9	18	d			1		2.0										18	d	J1	313+55.00	REMOVE INLET (TYPE G2) (H=4.28')
DP-9	18	e															18	e	J1	313+55.00	24" x 19.0' APC
DP-9	18	f							1.3					0.4	0.6	0.2	18	f	J1	313+55.00	18" x 4.5' APC, CONCRETE COLLAR
DP-9	18	g															18	g	J1	313+55.00	RSP (10'x27') BACKING No. 1, RSP FABRIC
DP-9	18	h				1											18	h	J1	313+55.00	REMOVE DD 18" x 40.0' CSP
DP-9	18	k															18	k	J1	313+55.00	24" ALTERNATIVE FLARED END SECTION
DP-9	18	l							85.1					31.9	45.8		18	l	J1	313+55.00	18" x 292.0' APC
DP-9	18	m												2.1	4.8	1.8	18	m	J1	316+50.00	TYPE GDO DI, W/ (2) GRATE TYPE 24-12
DP-9	19	a														0.7	19	a	J1	313+56.00	TYPE GCP DI, W/ (1) GRATE TYPE 36R
DP-9	19	b			1		1.0										19	b	J1	313+55.10	REMOVE INLET (TYPE G1) (H=2.78')
DP-9	19	c														0.2	19	c	J1	313+55.10	18" x 9.4' APC CONCRETE COLLAR
DP-9	19	d															19	d	J1	313+56.00	VEGETATION CONTROL (MINOR CONCRETE)
SHEET SUB TOTAL					3	1	4.7	1	200.3					81.2	126.1	13.4					

DRAINAGE QUANTITIES

DQ-13

REVISED BY | DATE REVISED
JOLENA ASTIN/TRAVIS GURNEY SCOTT GREGORY | CHRIS GAIDO
CALCULATED-DESIGNED BY | CHECKED BY
FUNCTIONAL SUPERVISOR
JOHN L. MARTIN

Caltrans DESIGN
STATE OF CALIFORNIA - DEPARTMENT OF TRANSPORTATION

P:\proj2\04\26406\design\ps&e\426406id013.dgn

LAST REVISION 03-15-10 | DATE PLOTTED => 16-AUG-2010 TIME PLOTTED => 11:26

Dist	COUNTY	ROUTE	POST MILES TOTAL PROJECT	SHEET No.	TOTAL SHEETS
04	Mrn	101	18.6/R22.3	150	542

REGISTERED CIVIL ENGINEER 03-15-10 DATE

8-9-10
PLANS APPROVAL DATE

REGISTERED PROFESSIONAL ENGINEER ROBERT J. NIXON No. C69123 Exp. 6-30-10 CIVIL STATE OF CALIFORNIA

THE STATE OF CALIFORNIA OR ITS OFFICERS OR AGENTS SHALL NOT BE RESPONSIBLE FOR THE ACCURACY OR COMPLETENESS OF SCANNED COPIES OF THIS PLAN SHEET.

DRAINAGE QUANTITIES

DRAINAGE PROFILE SHEET No.	DRAINAGE SYSTEM No.	DRAINAGE UNIT No.	MINOR CONCRETE (APRON)	MINOR CONCRETE (HEADWALL)	18" ALTERNATIVE PIPE CULVERT	24" ALTERNATIVE PIPE CULVERT	48" REINFORCED CONCRETE PIPE (CLASS II)	54" REINFORCED CONCRETE PIPE	18" REINFORCED CONCRETE PIPE (CLASS II, RUBBER GASKET JOINT)	24" REINFORCED CONCRETE PIPE (CLASS II, RUBBER GASKET JOINT)	14"x23" OVAL SHAPED REINFORCED CONCRETE PIPE(CLASS III, RUBBER GASKET JOINT)	12" CORRUGATED STEEL PIPE (.168" THICK)	18" CORRUGATED STEEL PIPE (.168" THICK)	24" CORRUGATED STEEL PIPE (.168" THICK)	18" CORRUGATED STEEL PIPE DOWNDRAIN (.168" THICK)	12" ANCHOR ASSEMBLY	JACKED 48" REINFORCED CONCRETE PIPE (CLASS V)	DRAINAGE SYSTEM No.	DRAINAGE UNIT No.	ALIGNMENT	STATION	DESCRIPTION
			CY	CY	LF	LF	LF	LF	LF	LF	LF	LF	LF	LF	LF	EA	LF					
DP-8	16	b																16	b	J1	307+79.38	CAP INLET (TYPE G1), CAP ELEV=14.92
DP-8	16	c																16	c	J1	307+85.00	TYPE GCP DI, W/ (1) GRATE TYPE 36R
DP-8	16	d											2.0					16	d	J1	307+85.00	18" x 1.5' CSP, CONNECT TO Exist
DP-8	16	e																16	e	J1	307+85.00	VEGETATION CONTROL (MINOR CONCRETE)
DP-8	16	f			263.0													16	f	J1	307+85.00	18" x 263.0' APC
DP-8	16	g																16	g	J1	310+50.00	TYPE GCP DI, W/ (1) GRATE TYPE 36R
DP-8	16	h																16	h	J1	310+50.00	VEGETATION CONTROL (MINOR CONCRETE)
DP-8	17	a	1.7															17	a	J1	307+48.79	TYPE GDO DI, W/ (2) GRATE TYPE 24-12
DP-8	17	b																17	b	J1	307+48.79	REMOVE INLET (TYPE G1) (H=2.00')
DP-8	17	c											3.0					17	c	J1	307+48.79	18" x 3.1' CSP, CONNECT TO Exist
DP-8	17	d			148.7													17	d	J1	307+48.79	18" x 148.7' APC
DP-8	17	e	1.2															17	e	J1	309+00.00	TYPE GDO DI, W/ (2) GRATE TYPE 24-12
DP-9	18	a	1.2															18	a	J1	311+50.00	TYPE GDO DI, W/ (2) GRATE TYPE 24-12
DP-9	18	b							200.0									18	b	J1	311+50.00	18" x 200.0' RCP
DP-9	18	c	1.7															18	c	J1	313+55.00	TYPE GDO DI, W/ (2) GRATE TYPE 24-12
DP-9	18	d																18	d	J1	313+55.00	REMOVE INLET (TYPE G2) (H=4.28')
DP-9	18	e				19												18	e	J1	313+55.00	24" x 19.0' APC
DP-9	18	f			4.5													18	f	J1	313+55.00	18" x 4.5' APC, CONCRETE COLLAR
DP-9	18	g																18	g	J1	313+55.00	RSP (10'x27') BACKING No. 1, RSP FABRIC
DP-9	18	h																18	h	J1	313+55.00	REMOVE DD 18" x 40.0' CSP
DP-9	18	k																18	k	J1	313+55.00	24" ALTERNATIVE FLARED END SECTION
DP-9	18	l			292.0													18	l	J1	313+55.00	18" x 292.0' APC
DP-9	18	m	1.2															18	m	J1	316+50.00	TYPE GDO DI, W/ (2) GRATE TYPE 24-12
DP-9	19	a																19	a	J1	313+56.00	TYPE GCP DI, W/ (1) GRATE TYPE 36R
DP-9	19	b																19	b	J1	313+55.10	REMOVE INLET (TYPE G1) (H=2.78')
DP-9	19	c			9.4													19	c	J1	313+55.10	18" x 9.4' APC CONCRETE COLLAR
DP-9	19	d																19	d	J1	313+56.00	VEGETATION CONTROL (MINOR CONCRETE)
SHEET SUB TOTAL			7.00		717.6	19			200.0				5.0									

DRAINAGE QUANTITIES

DQ-14

REVISED BY | DATE REVISED
JOLENA ASTIN/TRAVIS GURNEY / SCOTT GREGORY | CHRIS GAIDO
CALCULATED-DESIGNED BY | CHECKED BY
FUNCTIONAL SUPERVISOR | JOHN L. MARTIN

STATE OF CALIFORNIA - DEPARTMENT OF TRANSPORTATION
Caltrans DESIGN

P:\proj2\04\26406\design\ps&e\426406id014.dgn

LAST REVISION 03-15-10 | DATE PLOTTED => 16-AUG-2010 | TIME PLOTTED => 11:26

Dist	COUNTY	ROUTE	POST MILES TOTAL PROJECT	SHEET No.	TOTAL SHEETS
04	Mrn	101	18.6/R22.3	151	542

REGISTERED CIVIL ENGINEER 03-15-10 DATE

8-9-10
PLANS APPROVAL DATE

REGISTERED PROFESSIONAL ENGINEER ROBERT J. NIXON No. C69123 Exp. 6-30-10 CIVIL STATE OF CALIFORNIA

THE STATE OF CALIFORNIA OR ITS OFFICERS OR AGENTS SHALL NOT BE RESPONSIBLE FOR THE ACCURACY OR COMPLETENESS OF SCANNED COPIES OF THIS PLAN SHEET.

DRAINAGE QUANTITIES

DRAINAGE PROFILE SHEET No.	DRAINAGE SYSTEM No. ⬡	DRAINAGE UNIT No. ◯	24" ALTERNATIVE FLARED END SECTION	18" STEEL FLARED END SECTION	36" PRECAST CONCRETE PIPE INLET	CHAIN LINK FENCE (TYPE CL-4, VINYL-CLAD)	ROCK SLOPE PROTECTION (BACKING No. 1, METHOD B)	ROCK SLOPE PROTECTION FABRIC	MISC. IRON AND STEEL	MARKER (CULVERT)	MARKER (CULVERT, BARRIER MOUNTED)	VEGETATION CONTROL (MINOR CONCRETE)	CONNECT TO Exist (N)	SALVAGE GRATE (N)	DI HEIGHT (N)	Max COVER (N)	DRAINAGE SYSTEM No. ⬡	DRAINAGE UNIT No. ◯	ALIGNMENT	STATION	DESCRIPTION
			EA	EA	LF	LF	CY	SQYD	LB	EA	EA	SQYD	EA	EA	FT	FT					
DP-8	16	b															16	b	J1	307+79.38	CAP INLET (TYPE G1), CAP ELEV=14.92
DP-8	16	c			7.1				236	1					6.62		16	c	J1	307+85.00	TYPE GCP DI, W/ (1) GRATE TYPE 36R
DP-8	16	d											1			8.8	16	d	J1	307+85.00	18" x 1.5' CSP, CONNECT TO Exist
DP-8	16	e										16.6					16	e	J1	307+85.00	VEGETATION CONTROL (MINOR CONCRETE)
DP-8	16	f														3.4	16	f	J1	307+85.00	18" x 263.0' APC
DP-8	16	g			4.5				236	1					4.00		16	g	J1	310+50.00	TYPE GCP DI, W/ (1) GRATE TYPE 36R
DP-8	16	h										16.6					16	h	J1	310+50.00	VEGETATION CONTROL (MINOR CONCRETE)
DP-8	17	a							634	1					4.29		17	a	J1	307+48.79	TYPE GDO DI, W/ (2) GRATE TYPE 24-12
DP-8	17	b												1	2.00		17	b	J1	307+48.79	REMOVE INLET (TYPE G1) (H=2.00')
DP-8	17	c											1			5.1	17	c	J1	307+48.79	18" x 3.1' CSP, CONNECT TO Exist
DP-8	17	d														2.7	17	d	J1	307+48.79	18" x 148.7' APC
DP-8	17	e							634	1					4.10		17	e	J1	309+00.00	TYPE GDO DI, W/ (2) GRATE TYPE 24-12
DP-9	18	a							634	1					3.50		18	a	J1	311+50.00	TYPE GDO DI, W/ (2) GRATE TYPE 24-12
DP-9	18	b														2.8	18	b	J1	311+50.00	18" x 200.0' RCP
DP-9	18	c							634	1					6.58		18	c	J1	313+55.00	TYPE GDO DI, W/ (2) GRATE TYPE 24-12
DP-9	18	d												1	4.28		18	d	J1	313+55.00	REMOVE INLET (TYPE G2) (H=4.28')
DP-9	18	e														4.6	18	e	J1	313+55.00	24" x 19.0' APC
DP-9	18	f											1			2.8	18	f	J1	313+55.00	18" x 4.5' APC, CONCRETE COLLAR
DP-9	18	g					12.5	41.0									18	g	J1	313+55.00	RSP (10'x27') BACKING No. 1, RSP FABRIC
DP-9	18	h														2.8	18	h	J1	313+55.00	REMOVE DD 18" x 40.0' CSP
DP-9	18	k	1														18	k	J1	313+55.00	24" ALTERNATIVE FLARED END SECTION
DP-9	18	l														2.5	18	l	J1	313+55.00	18" x 292.0' APC
DP-9	18	m							634	1					4.00		18	m	J1	316+50.00	TYPE GDO DI, W/ (2) GRATE TYPE 24-12
DP-9	19	a			4.2				236	1					3.65		19	a	J1	313+56.00	TYPE GCP DI, W/ (1) GRATE TYPE 36R
DP-9	19	b												1	2.78		19	b	J1	313+55.10	REMOVE INLET (TYPE G1) (H=2.78')
DP-9	19	c											1			3.3	19	c	J1	313+55.10	18" x 9.4' APC CONCRETE COLLAR
DP-9	19	d										16.6					19	d	J1	313+56.00	VEGETATION CONTROL (MINOR CONCRETE)
SHEET SUB TOTAL			1		15.8		12.5	41.0	3878	8		49.8	4	3							

DRAINAGE QUANTITIES

DQ-15

REVISED BY | DATE REVISED
JOLENA ASTIN/TRAVIS GURNEY SCOTT GREGORY | CHRIS GAIDO
CALCULATED-DESIGNED BY | CHECKED BY
FUNCTIONAL SUPERVISOR
JOHN L. MARTIN

STATE OF CALIFORNIA - DEPARTMENT OF TRANSPORTATION
Caltrans DESIGN

P:\proj2\04\26406\design\ps&e\426406id015.dgn

LAST REVISION 03-15-10 | DATE PLOTTED => 16-AUG-2010 TIME PLOTTED => 11:26

Dist	COUNTY	ROUTE	POST MILES TOTAL PROJECT	SHEET No.	TOTAL SHEETS
04	Mrn	101	18.6/R22.3	152	542

REGISTERED CIVIL ENGINEER 03-15-10 DATE

8-9-10
PLANS APPROVAL DATE

REGISTERED PROFESSIONAL ENGINEER ROBERT J. NIXON No. C69123 Exp. 6-30-10 CIVIL STATE OF CALIFORNIA

THE STATE OF CALIFORNIA OR ITS OFFICERS OR AGENTS SHALL NOT BE RESPONSIBLE FOR THE ACCURACY OR COMPLETENESS OF SCANNED COPIES OF THIS PLAN SHEET.

DRAINAGE QUANTITIES

DRAINAGE PROFILE SHEET No.	DRAINAGE SYSTEM No.	DRAINAGE UNIT No.	ABANDON CULVERT	REMOVE CULVERT	REMOVE INLET	REMOVE DOWNDRAIN	REMOVE CONCRETE	CAP INLET	STRUCTURE BACKFILL (SLURRY CEMENT)	SAND BACKFILL	DITCH EXCAVATION	CLEANING AND INSPECTING PIPE	CLASS 2 AGGREGATE BASE	HOT MIX ASPHALT	PLACE HOT MIX ASPHALT (MISCELLANEOUS AREA)	MINOR CONCRETE (MINOR STRUCTURE)	DRAINAGE SYSTEM No.	DRAINAGE UNIT No.	ALIGNMENT	STATION	DESCRIPTION
			EA	EA	EA	EA	CY	EA	CY	CY	CY	EA	CY	TON	SQYD	CY					
DP-9	19	e															19	e	J1	313+56.00	18" x 291.0' RCP
DP-9	19	f														0.7	19	f	J1	316+50.00	TYPE GCP DI, W/ (1) GRATE TYPE 36R
DP-9	19	g															19	g	J1	316+50.00	VEGETATION CONTROL (MINOR CONCRETE)
DP-10	20	a												2.1	4.8	2.9	20	a	J1	320+00.00	TYPE GDO DI, W/ (2) GRATE TYPE 24-12
DP-10	20	b			1		1.0										20	b	J1	320+00.00	REMOVE INLET (TYPE G1) (H=5.13')
DP-10	20	c														0.2	20	c	J1	320+00.00	18" x 4.5' RCP, CONC COLLAR
DP-10	20	e															20	e	J1	320+00.00	18" x 97.0' APC
DP-10	20	f		1													20	f	J1	320+00.00	REMOVE 18" x 248.0' CMP CULVERT
DP-10	20	g												2.1	4.8	5.0	20	g	J1	321+00.00	TYPE GDO DI, W/ (2) GRATE TYPE 24-12
DP-10	20	h															20	h	J1	321+00.00	18" x 147.0' APC
DP-10	20	k												2.1	4.8	6.7	20	k	J1	322+50.00	TYPE GDO DI, W/ (2) GRATE TYPE 24-12
DP-10	20	l			1		1.0										20	l	J1	322+50.00	REMOVE INLET (TYPE G1) (H=11.38')
DP-10	20	m															20	m	J1	322+50.00	24" x 4.5' APC
DP-10	20	n															20	n	J1	322+50.00	18" x 217.0' APC
DP-10	20	o												2.1	4.8	2.2	20	o	J1	322+70.00	TYPE GDO DI, W/ (2) GRATE TYPE 24-12
DP-11	21A	a												2.3	5.4	2.1	21A	a	J1	317+60.64	TYPE GDO DI, W/ (2) GRATE TYPE 24-12
DP-11	21A	b			1		1.7										21A	b	J1	317+60.64	REMOVE INLET (TYPE G1) (H=2.82')
DP-11	21A	c															21A	c	J1	317+60.64	18" x 43.0' CSP DD, (2) ANCHOR ASSEMBLY
DP-11	21A	d				1											21A	d	J1	317+60.64	REMOVE 12" x 60' RCP DD
DP-11	21A	e															21A	e	J1	317+60.64	18" STEEL FLARED END SECTION
DP-11	21A	f															21A	f	J1	317+60.64	RSP (17'x10') BACKING No. 1, RSP FABRIC
DP-11	21	g							1.3					0.6	0.8	0.2	21	g	J1	320+01.00	18" x 4.5' RCP, CONC COLLAR
DP-11	21	h												2.1	4.8	1.9	21	h	J1	320+01.00	TYPE GDO DI, W/ (2) GRATE TYPE 24-12
DP-11	21	k			1		2.0										21	k	J1	320+01.00	REMOVE INLET (TYPE G2) (H=5.64')
DP-11	21	l							53.0					26.2	37.5		21	l	J1	320+01.00	18" x 239.5' APC
DP-11	21	m												2.1	4.8	1.8	21	m	J1	322+44.50	TYPE GDO MOD DI, W/ (2) GRATE TYPE 24-12
DP-11	21	n							46.3					22.3	32.0		21	n	J1	322+44.50	18" x 204.8' APC
SHEET SUB TOTAL				1	4	1	5.7		100.6					64.0	104.5	23.7					

DRAINAGE QUANTITIES

DQ-16

REVISED BY | DATE REVISED
JOLENA ASTIN/TRAVIS GURNEY SCOTT GREGORY | CHRIS GAIDO
CALCULATED-DESIGNED BY | CHECKED BY
FUNCTIONAL SUPERVISOR
JOHN L. MARTIN

STATE OF CALIFORNIA - DEPARTMENT OF TRANSPORTATION
Caltrans DESIGN

P:\proj2\04\26406\design\DCCR\426406id016.dgn

LAST REVISION 03-15-10 | DATE PLOTTED => 16-AUG-2010 TIME PLOTTED => 11:12

Dist	COUNTY	ROUTE	POST MILES TOTAL PROJECT	SHEET No.	TOTAL SHEETS
04	Mrn	101	18.6/R22.3	153	542

REGISTERED CIVIL ENGINEER 03-15-10 DATE

8-9-10
PLANS APPROVAL DATE

REGISTERED PROFESSIONAL ENGINEER ROBERT J. NIXON No. C69123 Exp. 6-30-10 CIVIL STATE OF CALIFORNIA

THE STATE OF CALIFORNIA OR ITS OFFICERS OR AGENTS SHALL NOT BE RESPONSIBLE FOR THE ACCURACY OR COMPLETENESS OF SCANNED COPIES OF THIS PLAN SHEET.

DRAINAGE QUANTITIES

DRAINAGE PROFILE SHEET No.	DRAINAGE SYSTEM No.	DRAINAGE UNIT No.	MINOR CONCRETE (APRON)	MINOR CONCRETE (HEADWALL)	18" ALTERNATIVE PIPE CULVERT	24" ALTERNATIVE PIPE CULVERT	48" REINFORCED CONCRETE PIPE (CLASS II)	54" REINFORCED CONCRETE PIPE	18" REINFORCED CONCRETE PIPE (CLASS II, RUBBER GASKET JOINT)	24" REINFORCED CONCRETE PIPE (CLASS II, RUBBER GASKET JOINT)	14"x23" OVAL SHAPED REINFORCED CONCRETE PIPE(CLASS III, RUBBER GASKET JOINT)	12" CORRUGATED STEEL PIPE (.168" THICK)	18" CORRUGATED STEEL PIPE (.168" THICK)	24" CORRUGATED STEEL PIPE (.168" THICK)	18" CORRUGATED STEEL PIPE DOWNDRAIN (.168" THICK)	12" ANCHOR ASSEMBLY	JACKED 48" REINFORCED CONCRETE PIPE (CLASS V)	DRAINAGE SYSTEM No.	DRAINAGE UNIT No.	ALIGNMENT	DESCRIPTION
			CY	CY	LF	LF	LF	LF	LF	LF	LF	LF	LF	LF	LF	EA	LF				STATION
DP-9	19	e							291.0									19	e	J1	313+56.00	18" x 291.0' RCP
DP-9	19	f																19	f	J1	316+50.00	TYPE GCP DI, W/ (1) GRATE TYPE 36R
DP-9	19	g																19	g	J1	316+50.00	VEGETATION CONTROL (MINOR CONCRETE)
DP-10	20	a	1.2															20	a	J1	320+00.00	TYPE GDO DI, W/ (2) GRATE TYPE 24-12
DP-10	20	b																20	b	J1	320+00.00	REMOVE INLET (TYPE G1) (H=5.13')
DP-10	20	c							4.5									20	c	J1	320+00.00	18" x 4.5' RCP, CONC COLLAR
DP-10	20	e			97.0													20	e	J1	320+00.00	18" x 97.0' APC
DP-10	20	f																20	f	J1	320+00.00	REMOVE 18" x 248.0' CMP CULVERT
DP-10	20	g	1.2															20	g	J1	321+00.00	TYPE GDO DI, W/ (2) GRATE TYPE 24-12
DP-10	20	h			147.0													20	h	J1	321+00.00	18" x 147.0' APC
DP-10	20	k	1.7															20	k	J1	322+50.00	TYPE GDO DI, W/ (2) GRATE TYPE 24-12
DP-10	20	l																20	l	J1	322+50.00	REMOVE INLET (TYPE G1) (H=11.38')
DP-10	20	m				4.5												20	m	J1	322+50.00	24" x 4.5' APC
DP-10	20	n			217.0													20	n	J1	322+50.00	18" x 217.0' APC
DP-10	20	o	1.2															20	o	J1	322+70.00	TYPE GDO DI, W/ (2) GRATE TYPE 24-12
DP-11	21A	a	1.7															21A	a	J1	317+60.64	TYPE GDO DI, W/ (2) GRATE TYPE 24-12
DP-11	21A	b																21A	b	J1	317+60.64	REMOVE INLET (TYPE G1) (H=2.82')
DP-11	21A	c													43	2		21A	c	J1	317+60.64	18" x 43.0' CSP DD, (2) ANCHOR ASSEMBLY
DP-11	21A	d																21A	d	J1	317+60.64	REMOVE 12" x 60' RCP DD
DP-11	21A	e																21A	e	J1	317+60.64	18" STEEL FLARED END SECTION
DP-11	21A	f																21A	f	J1	317+60.64	RSP (17'x10') BACKING No. 1, RSP FABRIC
DP-11	21	g							4.5									21	g	J1	317+01.00	18" x 4.5' RCP, CONC COLLAR
DP-11	21	h	1.2															21	h	J1	320+01.00	TYPE GDO DI, W/ (2) GRATE TYPE 24-12
DP-11	21	k																21	k	J1	320+01.00	REMOVE INLET (TYPE G2) (H=5.64')
DP-11	21	l			239.5													21	l	J1	320+01.00	18" x 239.5' APC
DP-11	21	m	1.2															21	m	J1	322+44.50	TYPE GDO MOD DI, W/ (2) GRATE TYPE 24-12
DP-11	21	n			204.8													21	n	J1	322+44.50	18" x 204.8' APC
SHEET SUB TOTAL			9.4		905.3	4.5			300.0						43	2						

DRAINAGE QUANTITIES

DQ-17

REVISED BY | DATE REVISED
JOLENA ASTIN/TRAVIS GURNEY SCOTT GREGORY | CHRIS GAIDO
CALCULATED-DESIGNED BY | CHECKED BY
FUNCTIONAL SUPERVISOR | JOHN L. MARTIN

STATE OF CALIFORNIA - DEPARTMENT OF TRANSPORTATION
Caltrans DESIGN

P:\proj2\04\26406\design\DCCR\426406id017.dgn

LAST REVISION 03-15-10 | DATE PLOTTED => 16-AUG-2010 TIME PLOTTED => 11:12

Dist	COUNTY	ROUTE	POST MILES TOTAL PROJECT	SHEET No.	TOTAL SHEETS
04	Mrn	101	18.6/R22.3	154	542

REGISTERED CIVIL ENGINEER 03-15-10 DATE

8-9-10
PLANS APPROVAL DATE

REGISTERED PROFESSIONAL ENGINEER ROBERT J. NIXON No. C69123 Exp. 6-30-10 CIVIL STATE OF CALIFORNIA

THE STATE OF CALIFORNIA OR ITS OFFICERS OR AGENTS SHALL NOT BE RESPONSIBLE FOR THE ACCURACY OR COMPLETENESS OF SCANNED COPIES OF THIS PLAN SHEET.

DRAINAGE QUANTITIES

DRAINAGE PROFILE SHEET No.	DRAINAGE SYSTEM No.	DRAINAGE UNIT No.	24" ALTERNATIVE FLARED END SECTION	18" STEEL FLARED END SECTION	36" PRECAST CONCRETE PIPE INLET	CHAIN LINK FENCE (TYPE CL-4, VINYL-CLAD)	ROCK SLOPE PROTECTION (BACKING No.1, METHOD B)	ROCK SLOPE PROTECTION FABRIC	MISC. IRON AND STEEL	MARKER (CULVERT)	MARKER (CULVERT, BARRIER MOUNTED)	VEGETATION CONTROL (MINOR CONCRETE)	CONNECT TO EXIST (N)	SALVAGE GRATE (N)	DI HEIGHT (N)	MAX COVER (N)	DRAINAGE SYSTEM No.	DRAINAGE UNIT No.	ALIGNMENT	STATION	DESCRIPTION
			EA	EA	LF	LF	CY	SQYD	LB	EA	EA	SQYD	EA	EA	FT	FT					
DP-9	19	e														4.9	19	e	J1	313+56.00	18" x 291.0' RCP
DP-9	19	f			6.9				236	1					6.38		19	f	J1	316+50.00	TYPE GCP DI, W/ (1) GRATE TYPE 36R
DP-9	19	g										16.6					19	g	J1	316+50.00	VEGETATION CONTROL (MINOR CONCRETE)
DP-10	20	a							634	1					5.00		20	a	J1	320+00.00	TYPE GDO DI, W/ (2) GRATE TYPE 24-12
DP-10	20	b												1	5.13		20	b	J1	320+00.00	REMOVE INLET (TYPE G1) (H=5.13')
DP-10	20	c											1			5.6	20	c	J1	320+00.00	18" x 4.5' RCP, CONC COLLAR
DP-10	20	A														7.9	20	e	J1	320+00.00	18" x 97.0' APC
DP-10	20	f														11.5	20	f	J1	320+00.00	REMOVE 18" x 248.0' CMP CULVERT
DP-10	20	g							634	1					7.60		20	g	J1	321+00.00	TYPE GDO DI, W/ (2) GRATE TYPE 24-12
DP-10	20	h														14.7	20	h	J1	321+00.00	18" x 147.0' APC
DP-10	20	k							634	1					13.25		20	k	J1	322+50.00	TYPE GDO DI, W/ (2) GRATE TYPE 24-12
DP-10	20	l												1	11.40		20	l	J1	322+50.00	REMOVE INLET (TYPE G1) (H=11.38')
DP-10	20	m											1			11.4	20	m	J1	322+50.00	24" x 4.5' APC
DP-10	20	n														9.7	20	n	J1	322+50.00	18" x 217.0' APC
DP-10	20	o							634	1					4.89		20	o	J1	322+70.00	TYPE GDO DI, W/ (2) GRATE TYPE 24-12
DP-11	21A	a							634	1					4.50		21A	a	J1	317+60.64	TYPE GDO DI, W/ (2) GRATE TYPE 24-12
DP-11	21A	b												1	2.82		21A	b	J1	317+60.64	REMOVE INLET (TYPE G1) (H=2.82')
DP-11	21A	c														3.2	21A	c	J1	317+60.64	18" x 43.0' CSP DD, (2) ANCHOR ASSEMBLY
DP-11	21A	d														3.8	21A	d	J1	317+60.64	REMOVE 12" x 60' RCP DD
DP-11	21A	e		1													21A	e	J1	317+60.64	18" STEEL FLARED END SECTION
DP-11	21A	f					7.9	27.1									21A	f	J1	317+60.64	RSP (17'x10') BACKING No. 1, RSP FABRIC
DP-11	21	g											1			2.4	21	g	J1	317+01.00	18" x 4.5' RCP, CONC COLLAR
DP-11	21	h							634	1					3.90		21	h	J1	320+01.00	TYPE GDO DI, W/ (2) GRATE TYPE 24-12
DP-11	21	k												1	5.64		21	k	J1	320+01.00	REMOVE INLET (TYPE G2) (H=5.64')
DP-11	21	l														4.1	21	l	J1	320+01.00	18" x 239.5' APC
DP-11	21	m							634		1				3.58		21	m	J1	322+44.50	TYPE GDO MOD DI, W/ (2) GRATE TYPE 24-12
DP-11	21	n														2.3	21	n	J1	322+44.50	18" x 204.8' APC
SHEET SUB TOTAL				1	6.9		7.9	27.1	4674	7	1	16.6	3	4							

DRAINAGE QUANTITIES

DQ-18

REVISED BY | DATE REVISED
JOLENA ASTIN/TRAVIS GURNEY SCOTT GREGORY | CHRIS GAIDO
CALCULATED-DESIGNED BY | CHECKED BY
FUNCTIONAL SUPERVISOR | JOHN L. MARTIN

STATE OF CALIFORNIA - DEPARTMENT OF TRANSPORTATION
Caltrans DESIGN

P:\proj2\04\26406\design\DCCR\426406id018.dgn

LAST REVISION 03-15-10 | DATE PLOTTED => 16-AUG-2010 TIME PLOTTED => 11:13

Dist	COUNTY	ROUTE	POST MILES TOTAL PROJECT	SHEET No.	TOTAL SHEETS
04	Mrn	101	18.6/R22.3	155	542

REGISTERED CIVIL ENGINEER 03-15-10 DATE

8-9-10
PLANS APPROVAL DATE

REGISTERED PROFESSIONAL ENGINEER ROBERT J. NIXON No. C69123 Exp. 6-30-10 CIVIL STATE OF CALIFORNIA

THE STATE OF CALIFORNIA OR ITS OFFICERS OR AGENTS SHALL NOT BE RESPONSIBLE FOR THE ACCURACY OR COMPLETENESS OF SCANNED COPIES OF THIS PLAN SHEET.

DRAINAGE QUANTITIES

DRAINAGE PROFILE SHEET No.	DRAINAGE SYSTEM No. ⬡	DRAINAGE UNIT No. ◯	ABANDON CULVERT	REMOVE CULVERT	REMOVE INLET	REMOVE DOWNDRAIN	REMOVE CONCRETE	CAP INLET	STRUCTURE BACKFILL (SLURRY CEMENT)	SAND BACKFILL	DITCH EXCAVATION	CLEANING AND INSPECTING PIPE	CLASS 2 AGGREGATE BASE	HOT MIX ASPHALT	PLACE HOT MIX ASPHALT (MISCELLANEOUS AREA)	MINOR CONCRETE (MINOR STRUCTURE)	DRAINAGE SYSTEM No. ⬡	DRAINAGE UNIT No. ◯	ALIGNMENT	STATION	DESCRIPTION
			EA	EA	EA	EA	CY	EA	CY	CY	CY	EA	CY	TON	SQYD	CY				STATION	
DP-11	21	o												2.1	4.8	1.9	21	o	J1	324+56.36	TYPE GDO MOD DI, W/ (2) GRATE TYPE 24-12
DP-11	21	p							33.4					16.7	23.9		21	p	J1	324+56.36	18" x 152.1' APC
DP-11	21	q												2.1	4.8	1.8	21	q	J1	326+14.84	TYPE GDO MOD DI, W/ (2) GRATE TYPE 24-12
DP-12	22	a			1		2.0										22	a	DL1	32+26.24	REMOVE INLET (TYPE G2) (H=5.35')
DP-12	22	b				1											22	b	DL1	32+26.24	REMOVE DD 18" x 52.1' RCP
DP-12	22	c												1.8	4.1	1.7	22	c	DL1	32+22.77	TYPE G2 DI, W/ (1) GRATE TYPE 24-12
DP-12	22	d		1													22	d	DL1	32+26.24	REMOVE 18" x 45.2' APC
DP-12	22	e			1		1.5										22	e	DL1	32+74.48	REMOVE INLET (TYPE G2) (H=4.32')
DP-12	22	f		1													22	f	DL1	32+74.48	REMOVE 18" x 47.4' RCP
DP-12	22	g			1		1.5										22	g	DL1	33+24.92	REMOVE INLET (TYPE G2) (H=4.67')
DP-12	22	h															22	h	DL1	32+22.77	18" x 46.0' RCP
DP-12	22	k												1.8	4.1	1.8	22	k	DL1	32+72.77	TYPE G2 DI, W/ (1) GRATE TYPE 24-12
DP-12	22	l															22	l	DL1	32+72.77	18" x 31.7' RCP
DP-12	22	m												2.1	4.8	2.1	22	m	DL1	33+08.41	TYPE G2 DI, W/ (1) GRATE TYPE 24-12
DP-12	22	n															22	n	DL1	33+08.41	18" x 42.0' CSP DD, (2) ANCHOR ASSEMBLY,22.5° ELBOW
DP-12	22	o															22	o	DL1	33+08.41	RSP (35.6'x20') BACKING No. 1, RSP FABRIC
DP-12	23	a												2.4	6.5	1.6	23	a	DR1	29+76.24	TYPE GO DI, W/ (1) GRATE TYPE 24-12, HMA APRON
DP-12	23	b			1		2.0										23	b	DR1	29+76.24	REMOVE INLET (TYPE G2) (H=4.70')
DP-12	23	c														0.2	23	c	DR1	29+76.24	18" x 3.0' CSP, CONCRETE COLLAR
DP-12	23	d							43.7					13.0	18.7		23	d	DR1	29+76.24	18" x 119.8' APC
DP-12	23	e												1.7	4.8	1.9	23	e	DR1	31+00.00	TYPE GO DI, W/ (1) GRATE TYPE 24-12, HMA APRON
DP-13	24	a														0.7	24	a	J1	336+25.00	TYPE GCP DI,W/ (1) GRATE TYPE 36R
DP-13	24	b			1		1.0										24	b	J1	336+25.00	REMOVE INLET (TYPE G2) (H=10.21')
DP-13	24	c															24	c	J1	336+25.00	24" x 122.0' RCP
DP-13	24	d														0.2	24	d	J1	336+25.00	18" x 35.5' APC, CONC COLLAR
DP-13	24	e														0.2	24	e	J1	336+25.00	24" x 4.5' RCP, CONC COLLAR
DP-13	24	f		1													24	f	J1	336+25.00	REMOVE 24" x 17.2' RCP
SHEET SUB TOTAL				3	5	1	8.0		77.1					43.7	76.5	14.1					

DRAINAGE QUANTITIES

DQ-19

REVISED BY | DATE REVISED
JOLENA ASTIN/TRAVIS GURNEY SCOTT GREGORY | CHRIS GAIDO
CALCULATED-DESIGNED BY | CHECKED BY
FUNCTIONAL SUPERVISOR
JOHN L. MARTIN

STATE OF CALIFORNIA - DEPARTMENT OF TRANSPORTATION
Caltrans DESIGN

P:\proj2\04\26406\design\ps&e\426406id019.dgn

LAST REVISION 03-15-10 | DATE PLOTTED => 16-AUG-2010 TIME PLOTTED => 11:13

Dist	COUNTY	ROUTE	POST MILES TOTAL PROJECT	SHEET No.	TOTAL SHEETS
04	Mrn	101	18.6/R22.3	156	542

REGISTERED CIVIL ENGINEER 03-15-10 DATE

8-9-10
PLANS APPROVAL DATE

REGISTERED PROFESSIONAL ENGINEER ROBERT J. NIXON No. C69123 Exp. 6-30-10 CIVIL STATE OF CALIFORNIA

THE STATE OF CALIFORNIA OR ITS OFFICERS OR AGENTS SHALL NOT BE RESPONSIBLE FOR THE ACCURACY OR COMPLETENESS OF SCANNED COPIES OF THIS PLAN SHEET.

DRAINAGE QUANTITIES

DRAINAGE PROFILE SHEET No.	DRAINAGE SYSTEM No.	DRAINAGE UNIT No.	MINOR CONCRETE (APRON)	MINOR CONCRETE (HEADWALL)	18" ALTERNATIVE PIPE CULVERT	24" ALTERNATIVE PIPE CULVERT	48" REINFORCED CONCRETE PIPE (CLASS II)	54" REINFORCED CONCRETE PIPE	18" REINFORCED CONCRETE PIPE (CLASS II, RUBBER GASKET JOINT)	24" REINFORCED CONCRETE PIPE (CLASS II, RUBBER GASKET JOINT)	14"x23" OVAL SHAPED REINFORCED CONCRETE PIPE(CLASS III, RUBBER GASKET JOINT)	12" CORRUGATED STEEL PIPE (.168" THICK)	18" CORRUGATED STEEL PIPE (.168" THICK)	24" CORRUGATED STEEL PIPE (.168" THICK)	18" CORRUGATED STEEL PIPE DOWNDRAIN (.168" THICK)	12" ANCHOR ASSEMBLY	JACKED 48" REINFORCED CONCRETE PIPE (CLASS V)	DRAINAGE SYSTEM No.	DRAINAGE UNIT No.	ALIGNMENT	STATION	DESCRIPTION
			CY	CY	LF	LF	LF	LF	LF	LF	LF	LF	LF	LF	LF	EA	LF					
DP-11	21	o	1.2															21	o	J1	324+56.36	TYPE GDO MOD DI, W/ (2) GRATE TYPE 24-12
DP-11	21	p			152.1													21	p	J1	324+56.36	18" x 152.1′ APC
DP-11	21	q	1.2															21	q	J1	326+14.84	TYPE GDO MOD DI, W/ (2) GRATE TYPE 24-12
DP-12	22	a																22	a	DL1	32+26.24	REMOVE INLET (TYPE G2) (H=5.35′)
DP-12	22	b																22	b	DL1	32+26.24	REMOVE DD 18" x 52.1′ RCP
DP-12	22	c	0.8															22	c	DL1	32+22.77	TYPE G2 DI, W/ (1) GRATE TYPE 24-12
DP-12	22	d																22	d	DL1	32+26.24	REMOVE 18" x 45.2′ APC
DP-12	22	e																22	e	DL1	32+74.48	REMOVE INLET (TYPE G2) (H=4.32′)
DP-12	22	f																22	f	DL1	32+74.48	REMOVE 18" x 47.4′ RCP
DP-12	22	g																22	g	DL1	33+24.92	REMOVE INLET (TYPE G2) (H=4.67′)
DP-12	22	h							46.0									22	h	DL1	32+22.77	18" x 46.0′ RCP
DP-12	22	k	0.8															22	k	DL1	32+72.77	TYPE G2 DI, W/ (1) GRATE TYPE 24-12
DP-12	22	l							31.7									22	l	DL1	32+72.77	18" x 31.7′ RCP
DP-12	22	m	1.1															22	m	DL1	33+08.41	TYPE G2 DI, W/ (1) GRATE TYPE 24-12
DP-12	22	n													42	2		22	n	DL1	33+08.41	18" x 42.0′ CSP DD, (2) ANCHOR ASSEMBLY,22.5° ELBOW
DP-12	22	o																22	o	DL1	33+08.41	RSP (35.6′x20′) BACKING No. 1, RSP FABRIC
DP-12	23	a																23	a	DR1	29+76.24	TYPE GO DI, W/ (1) GRATE TYPE 24-12, HMA APRON
DP-12	23	b																23	b	DR1	29+76.24	REMOVE INLET (TYPE G2) (H=4.70′)
DP-12	23	c											3.0					23	c	DR1	29+76.24	18" x 3.0′ CSP, CONCRETE COLLAR
DP-12	23	d			119.8													23	d	DR1	29+76.24	18" x 119.8′ APC
DP-12	23	e																23	e	DR1	31+00.00	TYPE GO DI, W/ (1) GRATE TYPE 24-12, HMA APRON
DP-13	24	a																24	a	J1	336+25.00	TYPE GCP DI,W/ (1) GRATE TYPE 36R
DP-13	24	b																24	b	J1	336+25.00	REMOVE INLET (TYPE G2) (H=10.21′)
DP-13	24	c								122.0								24	c	J1	336+25.00	24" x 122.0′ RCP
DP-13	24	d			35.5													24	d	J1	336+25.00	18" x 35.5′ APC, CONC COLLAR
DP-13	24	e								4.5								24	e	J1	336+25.00	24" x 4.5′ RCP, CONC COLLAR
DP-13	24	f																24	f	J1	336+25.00	REMOVE 24" x 17.2′ RCP
SHEET SUB TOTAL			5.1		307.4				77.7	126.5			3.0		42	2						

DRAINAGE QUANTITIES

DQ-20

REVISED BY | DATE REVISED
JOLENA ASTIN/TRAVIS GURNEY SCOTT GREGORY | CHRIS GAIDO
CALCULATED-DESIGNED BY | CHECKED BY
FUNCTIONAL SUPERVISOR
JOHN L. MARTIN

STATE OF CALIFORNIA - DEPARTMENT OF TRANSPORTATION
Caltrans DESIGN

P:\proj2\04\26406\design\ps&e\426406id020.dgn

LAST REVISION 03-15-10 | DATE PLOTTED => 16-AUG-2010 TIME PLOTTED => 11:13

Dist	COUNTY	ROUTE	POST MILES TOTAL PROJECT	SHEET No.	TOTAL SHEETS
04	Mrn	101	18.6/R22.3	157	542

REGISTERED CIVIL ENGINEER 03-15-10 DATE

8-9-10
PLANS APPROVAL DATE

REGISTERED PROFESSIONAL ENGINEER ROBERT J. NIXON No. C69123 Exp. 6-30-10 CIVIL STATE OF CALIFORNIA

THE STATE OF CALIFORNIA OR ITS OFFICERS OR AGENTS SHALL NOT BE RESPONSIBLE FOR THE ACCURACY OR COMPLETENESS OF SCANNED COPIES OF THIS PLAN SHEET.

DRAINAGE QUANTITIES

DRAINAGE PROFILE SHEET No.	DRAINAGE SYSTEM No. ⬡	DRAINAGE UNIT No. ○	24" ALTERNATIVE FLARED END SECTION	18" STEEL FLARED END SECTION	36" PRECAST CONCRETE PIPE INLET	CHAIN LINK FENCE (TYPE CL-4, VINYL-CLAD)	ROCK SLOPE PROTECTION (BACKING No.1, METHOD B)	ROCK SLOPE PROTECTION FABRIC	MISC. IRON AND STEEL	MARKER (CULVERT)	MARKER (CULVERT, BARRIER MOUNTED)	VEGETATION CONTROL (MINOR CONCRETE)	CONNECT TO EXIST (N)	SALVAGE GRATE (N)	DI HEIGHT (N)	MAX COVER (N)	DRAINAGE SYSTEM No. ⬡	DRAINAGE UNIT No. ○	ALIGNMENT	STATION	DESCRIPTION
			EA	EA	LF	LF	CY	SQYD	LB	EA	EA	SQYD	EA	EA	FT	FT					
DP-11	21	o							634		1				3.83		21	o	J1	324+56.36	TYPE GDO MOD DI, W/ (2) GRATE TYPE 24-12
DP-11	21	p														2.3	21	p	J1	324+56.36	18" x 152.1' APC
DP-11	21	q							634		1				3.50		21	q	J1	326+14.84	TYPE GDO MOD DI, W/ (2) GRATE TYPE 24-12
DP-12	22	a												1	5.35		22	a	DL1	32+26.24	REMOVE INLET (TYPE G2) (H=5.35')
DP-12	22	b														4.2	22	b	DL1	32+26.24	REMOVE DD 18" x 52.1' RCP
DP-12	22	c							326	1					4.72		22	c	DL1	32+22.77	TYPE G2 DI, W/ (1) GRATE TYPE 24-12
DP-12	22	d														3.9	22	d	DL1	32+26.24	REMOVE 18" x 45.2' APC
DP-12	22	e												1	4.32		22	e	DL1	32+74.48	REMOVE INLET (TYPE G2) (H=4.32')
DP-12	22	f														3.2	22	f	DL1	32+74.48	REMOVE 18" x 47.4' RCP
DP-12	22	g												1	4.67		22	g	DL1	33+24.92	REMOVE INLET (TYPE G2) (H=4.67')
DP-12	22	h														3.5	22	h	DL1	32+22.77	18" x 46.0' RCP
DP-12	22	k							326	1					4.75		22	k	DL1	32+72.77	TYPE G2 DI, W/ (1) GRATE TYPE 24-12
DP-12	22	l														4.5	22	l	DL1	32+72.77	18" x 31.7' RCP
DP-12	22	m							326	1					5.92		22	m	DL1	33+08.41	TYPE G2 DI, W/ (1) GRATE TYPE 24-12
DP-12	22	n														1.0	22	n	DL1	33+08.41	18" x 42.0' CSP DD, (2) ANCHOR ASSEMBLY,22.5° ELBOW
DP-12	22	o					52.7	79.1									22	o	DL1	33+08.41	RSP (35.6'x20') BACKING No. 1, RSP FABRIC
DP-12	23	a							326	1					4.38		23	a	DR1	29+76.24	TYPE GO DI, W/ (1) GRATE TYPE 24-12, HMA APRON
DP-12	23	b												1	4.70		23	b	DR1	29+76.24	REMOVE INLET (TYPE G2) (H=4.70')
DP-12	23	c											1			4.2	23	c	DR1	29+76.24	18" x 3.0' CSP, CONCRETE COLLAR
DP-12	23	d														4.0	23	d	DR1	29+76.24	18" x 119.8' APC
DP-12	23	e							326	1					5.50		23	e	DR1	31+00.00	TYPE GO DI, W/ (1) GRATE TYPE 24-12, HMA APRON
DP-13	24	a			11.5				236		1				10.95		24	a	J1	336+25.00	TYPE GCP DI,W/ (1) GRATE TYPE 36R
DP-13	24	b												1	10.15		24	b	J1	336+25.00	REMOVE INLET (TYPE G2) (H=10.21')
DP-13	24	c														8.9	24	c	J1	336+25.00	24" x 122.0' RCP
DP-13	24	d											1			3.3	24	d	J1	336+25.00	18" x 35.5' APC, CONC COLLAR
DP-13	24	e											1			8.9	24	e	J1	336+25.00	24" x 4.5' RCP, CONC COLLAR
DP-13	24	f														8.9	24	f	J1	336+25.00	REMOVE 24" x 17.2' RCP
SHEET SUB TOTAL					11.5		52.7	79.1	3134	5	3		3	5							

DRAINAGE QUANTITIES

DQ-21

STATE OF CALIFORNIA - DEPARTMENT OF TRANSPORTATION
Caltrans DESIGN

FUNCTIONAL SUPERVISOR: JOHN L. MARTIN
CALCULATED-DESIGNED BY: JOLENA ASTIN/TRAVIS GURNEY SCOTT GREGORY
CHECKED BY: CHRIS GAIDO
REVISED BY
DATE REVISED

P:\proj2\04\26406\design\ps&e\426406id021.dgn

LAST REVISION 03-15-10 | DATE PLOTTED => 16-AUG-2010 TIME PLOTTED => 11:13

Dist	COUNTY	ROUTE	POST MILES TOTAL PROJECT	SHEET No.	TOTAL SHEETS
04	Mrn	101	18.6/R22.3	158	542

REGISTERED CIVIL ENGINEER 03-15-10 DATE

8-9-10
PLANS APPROVAL DATE

REGISTERED PROFESSIONAL ENGINEER ROBERT J. NIXON No. C69123 Exp. 6-30-10 CIVIL STATE OF CALIFORNIA

THE STATE OF CALIFORNIA OR ITS OFFICERS OR AGENTS SHALL NOT BE RESPONSIBLE FOR THE ACCURACY OR COMPLETENESS OF SCANNED COPIES OF THIS PLAN SHEET.

DRAINAGE QUANTITIES

DRAINAGE PROFILE SHEET No.	DRAINAGE SYSTEM No.	DRAINAGE UNIT No.	ABANDON CULVERT	REMOVE CULVERT	REMOVE INLET	REMOVE DOWNDRAIN	REMOVE CONCRETE	CAP INLET	STRUCTURE BACKFILL (SLURRY CEMENT)	SAND BACKFILL	DITCH EXCAVATION	CLEANING AND INSPECTING PIPE	CLASS 2 AGGREGATE BASE	HOT MIX ASPHALT	PLACE HOT MIX ASPHALT (MISCELLANEOUS AREA)	MINOR CONCRETE (MINOR STRUCTURE)	DRAINAGE SYSTEM No.	DRAINAGE UNIT No.	ALIGNMENT	STATION	DESCRIPTION
			EA	EA	EA	EA	CY	EA	CY	CY	CY	EA	CY	TON	SQYD	CY					
DP-13	24	g	1							14.2							24	g	J1	336+25.00	ABN CULV 24" x 122.0' RCP, SAND BACKFILL
DP-13	24	h															24	h	J1	336+25.00	VEGETATION CONTROL (MINOR CONCRETE)
DP-13	24	k														0.7	24	k	J1	337+52.15	TYPE GCP DI,W/ (1) GRATE TYPE 36R
DP-13	24	l			1		1.0										24	l	J1	337+52.15	REMOVE INLET (TYPE G2) (H=9.00')
DP-13	24	m														0.2	24	m	J1	337+52.15	18" x 26.7' APC , CONC COLLAR
DP-13	24	n															24	n	J1	337+52.15	VEGETATION CONTROL (MINOR CONCRETE)
DP-13	24	o	1							16.2							24	o	J1	337+52.15	ABN CULV 18" x 248.0' RCP, SAND BACKFILL
DP-13	24	p															24	p	J1	337+52.15	24" x 247.3' RCP
DP-13	24	q														0.7	24	q	J1	340+02.44	TYPE GCP DI,W/ (1) GRATE TYPE 36R
DP-13	24	r			1		1.0										24	r	J1	340+02.44	REMOVE INLET (TYPE G2) (H=7.00')
DP-13	24	s														0.2	24	s	J1	340+02.44	18" x 23.4' APC, CONC COLLAR
DP-13	24	t														0.2	24	t	J1	340+02.44	18" x 4.5' RCP, CONC COLLAR
DP-13	24	u															24	u	J1	340+02.44	VEGETATION CONTROL (MINOR CONCRETE)
DP-13	24	v															24	v	J1	340+02.44	18" x 196.4' RCP
DP-13	24	w	1							13.0							24	w	J1	340+02.44	ABN CULV 18" x 198.0' RCP, SAND BACKFILL
DP-13	24	x														0.7	24	x	J1	342+01.70	TYPE GCP DI,W/ (1) GRATE TYPE 36R
DP-13	24	y			1		1.0										24	y	J1	342+01.70	REMOVE INLET (TYPE G2) (H=5.16')
DP-13	24	z														0.2	24	z	J1	342+01.70	18" x 9.9' RCP, CONC COLLAR
DP-13	24	aa														0.2	24	aa	J1	342+01.70	18" x 4.5' APC, CONC COLLAR
DP-13	24	bb															24	bb	J1	342+01.70	VEGETATION CONTROL (MINOR CONCRETE)
DP-13	24	cc												2.5	14.4		24	cc	J1	337+86.40	PLACE HMA (MISC. AREA) (L=13.0', W=10.0', D=0.25')
DP-14	24A	a															24A	a	DL1	35+81.59	RSP (30.3'x20') BACKING No. 1, RSP FABRIC
DP-14	25	a												2.3	5.4	2.6	25	a	J1	342+01.00	TYPE GDO DI, W\(2) GRATE TYPE 24-12
DP-14	25	b							2.0					0.4	0.6	0.2	25	b	J1	342+01.00	18" x 4.5' CSP, CONC COLLAR
DP-14	25	c							2.2					0.4	0.6	0.2	25	c	J1	342+01.00	18" x 4.5' RCP, CONC COLLAR
DP-14	25	d			1		1.5										25	d	J1	342+01.00	REMOVE INLET (TYPE G2) (H=6.11')
DP-14	26	a												2.1	4.8	2.0	26	a	DR2	43+01.00	TYPE GDO DI, W\(2) GRATE TYPE 24-12
DP-14	26	b							1.2					0.4	0.5	0.1	26	b	DR2	43+01.00	12" x 4.5' CSP, CONC COLLAR
DP-14	26	c			1		1.7										26	c	DR2	43+01.00	REMOVE INLET (TYPE G1) (H=4.08')
SHEET SUB TOTAL			3		5		6.2		5.4	43.4				8.1	26.3	8.2					

DRAINAGE QUANTITIES
DQ-22

REVISED BY | DATE REVISED
JOLENA ASTIN/TRAVIS GURNEY SCOTT GREGORY | CHRIS GAIDO
CALCULATED-DESIGNED BY | CHECKED BY
FUNCTIONAL SUPERVISOR
JOHN L. MARTIN

STATE OF CALIFORNIA - DEPARTMENT OF TRANSPORTATION
Caltrans DESIGN

P:\proj2\04\26406\design\DCCR\426406id022.dgn

LAST REVISION 03-15-10 | DATE PLOTTED => 16-AUG-2010 TIME PLOTTED => 11:13

Dist	COUNTY	ROUTE	POST MILES TOTAL PROJECT	SHEET No.	TOTAL SHEETS
04	Mrn	101	18.6/R22.3	159	542

REGISTERED CIVIL ENGINEER 03-15-10 DATE

8-9-10
PLANS APPROVAL DATE

REGISTERED PROFESSIONAL ENGINEER ROBERT J. NIXON No. C69123 Exp. 6-30-10 CIVIL STATE OF CALIFORNIA

THE STATE OF CALIFORNIA OR ITS OFFICERS OR AGENTS SHALL NOT BE RESPONSIBLE FOR THE ACCURACY OR COMPLETENESS OF SCANNED COPIES OF THIS PLAN SHEET.

DRAINAGE QUANTITIES

DRAINAGE PROFILE SHEET No.	DRAINAGE SYSTEM No.	DRAINAGE UNIT No.	MINOR CONCRETE (APRON)	MINOR CONCRETE (HEADWALL)	18" ALTERNATIVE PIPE CULVERT	24" ALTERNATIVE PIPE CULVERT	48" REINFORCED CONCRETE PIPE (CLASS II)	54" REINFORCED CONCRETE PIPE	18" REINFORCED CONCRETE PIPE (CLASS II, RUBBER GASKET JOINT)	24" REINFORCED CONCRETE PIPE (CLASS II, RUBBER GASKET JOINT)	14"x23" OVAL SHAPED REINFORCED CONCRETE PIPE(CLASS III, RUBBER GASKET JOINT)	12" CORRUGATED STEEL PIPE (.168" THICK)	18" CORRUGATED STEEL PIPE (.168" THICK)	24" CORRUGATED STEEL PIPE (.168" THICK)	18" CORRUGATED STEEL PIPE DOWNDRAIN (.168" THICK)	12" ANCHOR ASSEMBLY	JACKED 48" REINFORCED CONCRETE PIPE (CLASS V)	DRAINAGE SYSTEM No.	DRAINAGE UNIT No.	ALIGNMENT	STATION	DESCRIPTION
			CY	CY	LF	LF	LF	LF	LF	LF	LF	LF	LF	LF	LF	EA	LF					
DP-13	24	g																24	g	J1	336+25.00	ABN CULV 24" x 122.0' RCP, SAND BACKFILL
DP-13	24	h																24	h	J1	336+25.00	VEGETATION CONTROL (MINOR CONCRETE)
DP-13	24	k																24	k	J1	337+52.15	TYPE GCP DI,W/ (1) GRATE TYPE 36R
DP-13	24	l																24	l	J1	337+52.15	REMOVE INLET (TYPE G2) (H=9.00')
DP-13	24	m			26.7													24	m	J1	337+52.15	18" x 26.7' APC , CONC COLLAR
DP-13	24	n																24	n	J1	337+52.15	VEGETATION CONTROL (MINOR CONCRETE)
DP-13	24	o																24	o	J1	337+52.15	ABN CULV 18" x 248.0' RCP, SAND BACKFILL
DP-13	24	p								247.3								24	p	J1	337+52.15	24" x 247.3' RCP
DP-13	24	q																24	q	J1	340+02.44	TYPE GCP DI,W/ (1) GRATE TYPE 36R
DP-13	24	r																24	r	J1	340+02.44	REMOVE INLET (TYPE G2) (H=7.00')
DP-13	24	s			23.4													24	s	J1	340+02.44	18" x 23.4' APC, CONC COLLAR
DP-13	24	t							4.5									24	t	J1	340+02.44	18" x 4.5' RCP, CONC COLLAR
DP-13	24	u																24	u	J1	340+02.44	VEGETATION CONTROL (MINOR CONCRETE)
DP-13	24	v							196.4									24	v	J1	340+02.44	18" x 196.4' RCP
DP-13	24	w																24	w	J1	340+02.44	ABN CULV 18" x 198.0' RCP, SAND BACKFILL
DP-13	24	x																24	x	J1	342+01.70	TYPE GCP DI,W/ (1) GRATE TYPE 36R
DP-13	24	y																24	y	J1	342+01.70	REMOVE INLET (TYPE G2) (H=5.16')
DP-13	24	z							9.9									24	z	J1	342+01.70	18" x 9.9' RCP, CONC COLLAR
DP-13	24	aa			4.5													24	aa	J1	342+01.70	18" x 4.5' APC, CONC COLLAR
DP-13	24	bb																24	bb	J1	342+01.70	VEGETATION CONTROL (MINOR CONCRETE)
DP-13	24	cc																24	cc	J1	337+86.40	PLACE HMA (MISC. AREA) (L=13.0, W=10.0', D=0.25')
DP-14	24A	a																24A	a	DL1	35+81.59	RSP (30.3'x20') BACKING No. 1, RSP FABRIC
DP-14	25	a	1.7															25	a	J1	342+01.00	TYPE GDO DI, W\(2) GRATE TYPE 24-12
DP-14	25	b											4.5					25	b	J1	342+01.00	18" x 4.5' CSP, CONC COLLAR
DP-14	25	c							4.5									25	c	J1	342+01.00	18" x 4.5' RCP, CONC COLLAR
DP-14	25	d																25	d	J1	342+01.00	REMOVE INLET (TYPE G2) (H=6.11')
DP-14	26	a	1.7															26	a	DR2	43+01.00	TYPE GDO DI, W\(2) GRATE TYPE 24-12
DP-14	26	b										4.5						26	b	DR2	43+01.00	12" x 4.5' CSP, CONC COLLAR
DP-14	26	c																26	c	DR2	43+01.00	REMOVE INLET (TYPE G1) (H=4.08')
SHEET SUB TOTAL			3.4		54.6				215.3	247.3		4.5	4.5									

DRAINAGE QUANTITIES
DQ-23

REVISED BY | DATE REVISED
JOLENA ASTIN/TRAVIS GURNEY / SCOTT GREGORY | CHRIS GAIDO
CALCULATED-DESIGNED BY | CHECKED BY
FUNCTIONAL SUPERVISOR: JOHN L. MARTIN

STATE OF CALIFORNIA - DEPARTMENT OF TRANSPORTATION
Caltrans DESIGN

P:\proj2\04\26406\design\DCCR\426406id023.dgn

LAST REVISION | DATE PLOTTED => 16-AUG-2010
03-15-10 | TIME PLOTTED => 11:13

Dist	COUNTY	ROUTE	POST MILES TOTAL PROJECT	SHEET No.	TOTAL SHEETS
04	Mrn	101	18.6/R22.3	160	542

REGISTERED CIVIL ENGINEER 03-15-10 DATE

8-9-10
PLANS APPROVAL DATE

REGISTERED PROFESSIONAL ENGINEER ROBERT J. NIXON No. C69123 Exp. 6-30-10 CIVIL STATE OF CALIFORNIA

THE STATE OF CALIFORNIA OR ITS OFFICERS OR AGENTS SHALL NOT BE RESPONSIBLE FOR THE ACCURACY OR COMPLETENESS OF SCANNED COPIES OF THIS PLAN SHEET.

DRAINAGE QUANTITIES

DRAINAGE PROFILE SHEET No.	DRAINAGE SYSTEM No. ⬡	DRAINAGE UNIT No. ◯	24" ALTERNATIVE FLARED END SECTION	18" STEEL FLARED END SECTION	36" PRECAST CONCRETE PIPE INLET	CHAIN LINK FENCE (TYPE CL-4, VINYL-CLAD)	ROCK SLOPE PROTECTION (BACKING No.1, METHOD B)	ROCK SLOPE PROTECTION FABRIC	MISC. IRON AND STEEL	MARKER (CULVERT)	MARKER (CULVERT, BARRIER MOUNTED)	VEGETATION CONTROL (MINOR CONCRETE)	CONNECT TO EXIST (N)	SALVAGE GRATE (N)	DI HEIGHT (N)	MAX COVER (N)	DRAINAGE SYSTEM No. ⬡	DRAINAGE UNIT No. ◯	ALIGNMENT		DESCRIPTION
			EA	EA	LF	LF	CY	SQYD	LB	EA	EA	SQYD	EA	EA	FT	FT				STATION	
DP-13	24	g														8.2	24	g	J1	336+25.00	ABN CULV 24" x 122.0' RCP, SAND BACKFILL
DP-13	24	h										16.6					24	h	J1	336+25.00	VEGETATION CONTROL (MINOR CONCRETE)
DP-13	24	k			10.4				236		1				9.94		24	k	J1	337+52.15	TYPE GCP DI,W/ (1) GRATE TYPE 36R
DP-13	24	l												1	9.14		24	l	J1	337+52.15	REMOVE INLET (TYPE G2) (H=9.00')
DP-13	24	m											1			8.4	24	m	J1	337+52.15	18" x 26.7' APC , CONC COLLAR
DP-13	24	n										16.6					24	n	J1	337+52.15	VEGETATION CONTROL (MINOR CONCRETE)
DP-13	24	o														7.6	24	o	J1	337+52.15	ABN CULV 18" x 248.0' RCP, SAND BACKFILL
DP-13	24	p														7.9	24	p	J1	337+52.15	24" x 247.3' RCP
DP-13	24	q			8.4				236	1					7.92		24	q	J1	340+02.44	TYPE GCP DI,W/ (1) GRATE TYPE 36R
DP-13	24	r												1	7.00		24	r	J1	340+02.44	REMOVE INLET (TYPE G2) (H=7.00')
DP-13	24	s											1			4.4	24	s	J1	340+02.44	18" x 23.4' APC, CONC COLLAR
DP-13	24	t											1			3.8	24	t	J1	340+02.44	18" x 4.5' RCP, CONC COLLAR
DP-13	24	u										16.6					24	u	J1	340+02.44	VEGETATION CONTROL (MINOR CONCRETE)
DP-13	24	v														6.4	24	v	J1	340+02.44	18" x 196.4' RCP
DP-13	24	w														5.5	24	w	J1	340+02.44	ABN CULV 18" x 198.0' RCP, SAND BACKFILL
DP-13	24	x			6.7				236	1					6.18		24	x	J1	342+01.70	TYPE GCP DI,W/ (1) GRATE TYPE 36R
DP-13	24	y												1	5.16		24	y	J1	342+01.70	REMOVE INLET (TYPE G2) (H=5.16')
DP-13	24	z											1			4.7	24	z	J1	342+01.70	18" x 9.9' RCP, CONC COLLAR
DP-13	24	aa											1			4.7	24	aa	J1	342+01.70	18" x 4.5' APC, CONC COLLAR
DP-13	24	bb										16.6					24	bb	J1	342+01.70	VEGETATION CONTROL (MINOR CONCRETE)
DP-13	24	cc															24	cc	J1	337+86.40	PLACE HMA (MISC. AREA) (L=13.0, W=10.0', D=0.25')
DP-14	24A	a					11.2	67.3									24A	a	DL1	35+81.59	RSP (30.3'x20') BACKING No. 1, RSP FABRIC
DP-14	25	a							634	1					6.27		25	a	J1	342+01.00	TYPE GDO DI, W\(2) GRATE TYPE 24-12
DP-14	25	b											1			4.7	25	b	J1	342+01.00	18" x 4.5' CSP, CONC COLLAR
DP-14	25	c											1			4.7	25	c	J1	342+01.00	18" x 4.5' RCP, CONC COLLAR
DP-14	25	d												1	6.10		25	d	J1	342+01.00	REMOVE INLET (TYPE G2) (H=6.11')
DP-14	26	a							634	1					4.08		26	a	DR2	43+01.00	TYPE GDO DI, W\(2) GRATE TYPE 24-12
DP-14	26	b											1			3.5	26	b	DR2	43+01.00	12" x 4.5' CSP, CONC COLLAR
DP-14	26	c												1	4.10		26	c	DR2	43+01.00	REMOVE INLET (TYPE G1) (H=4.08')
SHEET SUB TOTAL					25.5		11.2	67.3	1976	4	1	66.4	8	5							

DRAINAGE QUANTITIES
DQ-24

REVISED BY | DATE REVISED
JOLENA ASTIN/TRAVIS GURNEY, SCOTT GREGORY | CHRIS GAIDO
CALCULATED-DESIGNED BY | CHECKED BY
FUNCTIONAL SUPERVISOR: JOHN L. MARTIN

STATE OF CALIFORNIA - DEPARTMENT OF TRANSPORTATION
Caltrans DESIGN

P:\proj2\04\26406\design\DCCR\426406id024.dgn

LAST REVISION | DATE PLOTTED => 16-AUG-2010
03-15-10 | TIME PLOTTED => 11:13

Dist	COUNTY	ROUTE	POST MILES TOTAL PROJECT	SHEET No.	TOTAL SHEETS
04	Mrn	101	18.6/R22.3	161	542

REGISTERED CIVIL ENGINEER 03-15-10 DATE

8-9-10
PLANS APPROVAL DATE

REGISTERED PROFESSIONAL ENGINEER ROBERT J. NIXON No. C69123 Exp. 6-30-10 CIVIL STATE OF CALIFORNIA

THE STATE OF CALIFORNIA OR ITS OFFICERS OR AGENTS SHALL NOT BE RESPONSIBLE FOR THE ACCURACY OR COMPLETENESS OF SCANNED COPIES OF THIS PLAN SHEET.

DRAINAGE QUANTITIES

DRAINAGE PROFILE SHEET No.	DRAINAGE SYSTEM No.	DRAINAGE UNIT No.	ABANDON CULVERT	REMOVE CULVERT	REMOVE INLET	REMOVE DOWNDRAIN	REMOVE CONCRETE	CAP INLET	STRUCTURE BACKFILL (SLURRY CEMENT)	SAND BACKFILL	DITCH EXCAVATION	CLEANING AND INSPECTING PIPE	CLASS 2 AGGREGATE BASE	HOT MIX ASPHALT	PLACE HOT MIX ASPHALT (MISCELLANEOUS AREA)	MINOR CONCRETE (MINOR STRUCTURE)	DRAINAGE SYSTEM No.	DRAINAGE UNIT No.	ALIGNMENT	STATION	DESCRIPTION
			EA	EA	EA	EA	CY	EA	CY	CY	CY	EA	CY	TON	SQYD	CY					
DP-15	27	a														4.0	27	a	J1	346+02.07	TYPE G2 DI, W/(1) GRATE TYPE 24-12
DP-15	27	b			1		1.0										27	b	J1	346+02.07	REMOVE INLET (TYPE G2) (H=6.12′)
DP-15	27	c														0.2	27	c	J1	346+02.07	18" x 4.5′ RCP, CONC COLLAR
DP-15	27	d														0.2	27	d	J1	346+02.07	18" x 8.8′ RCP, CONC COLLAR
DP-15	27	e															27	e	J1	346+02.07	VEGETATION CONTROL (MINOR CONCRETE)
DP-15	27	f															27	f	J1	346+02.07	48" x 393.0′ RCP
DP-15	27	g		1													27	g	J1	346+02.07	REMOVE 18" x 396.0′ RCP
DP-15	27	h														5.3	27	h	J1	349+99.75	TYPE GT4 MOD W/(2) GRATE TYPE 24-12
DP-15	27	k			1		1.0										27	k	J1	349+99.75	REMOVE INLET (TYPE G2) (H=6.50′)
DP-15	27	l														0.2	27	l	J1	349+99.75	18" x 9.6′ RCP, CONC COLLAR
DP-15	27	m															27	m	J1	349+99.75	VEGETATION CONTROL (MINOR CONCRETE)
DP-16	28	a												2.1	4.8	2.0	28	a	J1	345+50.00	TYPE GDO DI, W\(2) GRATE TYPE 24-12
DP-16	28	b							17.5					5.8	8.3	0.2	28	b	J1	345+50.00	18" x 54′ RCP CONNECT TO EXIST
DP-16	29	a												2.1	4.8	2.1	29	a	DR2	44+02.00	TYPE GDO DI, W\(2) GRATE TYPE 24-12
DP-16	29	b							1.5					0.4	0.6	0.2	29	b	DR2	46+02.00	18" x 4.5′ RCP, CONC COLLAR
DP-16	29	c			1		2.0										29	c	DR2	46+02.00	REMOVE INLET (TYPE G2) (H=4.63′)
DP-16	30	a												2.1	4.8	1.8	30	a	DR2	48+00.00	TYPE GDO DI, W\(2) GRATE TYPE 24-12
DP-16	30	b							113.6					22.0	31.5		30	b	DR2	48+00.00	18" x 200.2′ APC
DP-16	30	c												2.3	5.4	3.2	30	c	DR2	50+03.00	TYPE GDO DI, W\(2) GRATE TYPE 24-12
DP-16	30	d														0.2	30	d	DR2	50+03.00	24" x 5.0′ CSP, CONC COLLAR
DP-16	30	e														0.2	30	e	DR2	50+03.00	18" x 3.0′ CSP, CONC COLLAR
DP-16	30	f			1		2.0										30	f	DR2	50+03.00	REMOVE INLET (TYPE G2) (H=7.87′)
DP-17	31	a														0.7	31	a	J1	355+00.00	TYPE GCP DI,W/ (1) GRATE TYPE 36R
DP-17	31	b															31	b	J1	355+00.00	VEGETATION CONTROL (MINOR CONCRETE)
DP-17	31	c															31	c	J1	355+00.00	18" x 39.0′ APC
DP-17	31	d														0.7	31	d	J1	355+42.00	TYPE GCP DI,W/ (1) GRATE TYPE 36R
DP-17	31	e			1		1.0										31	e	J1	355+39.98	REMOVE INLET (TYPE G2) (H=4.22′)
SHEET SUB TOTAL				1	5		7.0		132.6					36.8	60.2	21.2					

DRAINAGE QUANTITIES

DQ-25

STATE OF CALIFORNIA - DEPARTMENT OF TRANSPORTATION
Caltrans DESIGN

FUNCTIONAL SUPERVISOR: JOHN L. MARTIN
CALCULATED-DESIGNED BY: JOLENA ASTIN/TRAVIS GURNEY SCOTT GREGORY
CHECKED BY: CHRIS GAIDO
REVISED BY
DATE REVISED

P:\proj2\04\26406\design\DCCR\426406id025.dgn

LAST REVISION 03-15-10 | DATE PLOTTED => 08-FEB-2011 TIME PLOTTED => 11:20

Dist	COUNTY	ROUTE	POST MILES TOTAL PROJECT	SHEET No.	TOTAL SHEETS
04	Mrn	101	18.6/R22.3	162	542

REGISTERED CIVIL ENGINEER 03-15-10 DATE

8-9-10
PLANS APPROVAL DATE

REGISTERED PROFESSIONAL ENGINEER ROBERT J. NIXON No. C69123 Exp. 6-30-10 CIVIL STATE OF CALIFORNIA

THE STATE OF CALIFORNIA OR ITS OFFICERS OR AGENTS SHALL NOT BE RESPONSIBLE FOR THE ACCURACY OR COMPLETENESS OF SCANNED COPIES OF THIS PLAN SHEET.

DRAINAGE QUANTITIES

DRAINAGE PROFILE SHEET No.	DRAINAGE SYSTEM No.	DRAINAGE UNIT No.	MINOR CONCRETE (APRON)	MINOR CONCRETE (HEADWALL)	18" ALTERNATIVE PIPE CULVERT	24" ALTERNATIVE PIPE CULVERT	48" REINFORCED CONCRETE PIPE (CLASS II)	54" REINFORCED CONCRETE PIPE	18" REINFORCED CONCRETE PIPE (CLASS II, RUBBER GASKET JOINT)	24" REINFORCED CONCRETE PIPE (CLASS II, RUBBER GASKET JOINT)	14"X23" OVAL SHAPED REINFORCED CONCRETE PIPE(CLASS III, RUBBER GASKET JOINT)	12" CORRUGATED STEEL PIPE (.168" THICK)	18" CORRUGATED STEEL PIPE (.168" THICK)	24" CORRUGATED STEEL PIPE (.168" THICK)	18" CORRUGATED STEEL PIPE DOWNDRAIN (.168" THICK)	12" ANCHOR ASSEMBLY	JACKED 48" REINFORCED CONCRETE PIPE (CLASS V)	DRAINAGE SYSTEM No.	DRAINAGE UNIT No.	ALIGNMENT	STATION	DESCRIPTION
			CY	CY	LF	LF	LF	LF	LF	LF	LF	LF	LF	LF	LF	EA	LF					
DP-15	27	a																27	a	J1	346+02.07	TYPE G2 DI, W/(1) GRATE TYPE 24-12
DP-15	27	b																27	b	J1	346+02.07	REMOVE INLET (TYPE G2) (H=6.12′)
DP-15	27	c							4.5									27	c	J1	346+02.07	18" x 4.5′ RCP, CONC COLLAR
DP-15	27	d							8.8									27	d	J1	346+02.07	18" x 8.8′ RCP, CONC COLLAR
DP-15	27	e																27	e	J1	346+02.07	VEGETATION CONTROL (MINOR CONCRETE)
DP-15	27	f					393.0											27	f	J1	346+02.07	48" x 393.0′ RCP
DP-15	27	g																27	g	J1	346+02.07	REMOVE 18" x 396.0′ RCP
DP-15	27	h																27	h	J1	349+99.75	TYPE GT4 MOD W/(2) GRATE TYPE 24-12
DP-15	27	k																27	k	J1	349+99.75	REMOVE INLET (TYPE G2) (H=6.50′)
DP-15	27	l							9.6									27	l	J1	349+99.75	18" x 9.6′ RCP, CONC COLLAR
DP-15	27	m																27	m	J1	349+99.75	VEGETATION CONTROL (MINOR CONCRETE)
DP-16	28	a	1.2															28	a	J1	345+50.00	TYPE GDO DI, W\(2) GRATE TYPE 24-12
DP-16	28	b							54.0									28	b	J1	345+50.00	18" x 54′ RCP, CONNECT TO EXIST
DP-16	29	a	1.7															29	a	DR2	44+02.00	TYPE GDO DI, W\(2) GRATE TYPE 24-12
DP-16	29	b							4.5									29	b	DR2	46+02.00	18" x 4.5′ RCP, CONC COLLAR
DP-16	29	c																29	c	DR2	46+02.00	REMOVE INLET (TYPE G2) (H=4.63′)
DP-16	30	a	1.2															30	a	DR2	48+00.00	TYPE GDO DI, W\(2) GRATE TYPE 24-12
DP-16	30	b			200.2													30	b	DR2	48+00.00	18" x 200.2′ APC
DP-16	30	c	1.7															30	c	DR2	50+03.00	TYPE GDO DI, W\(2) GRATE TYPE 24-12
DP-16	30	d												5.0				30	d	DR2	50+03.00	24" x 5.0′ CSP, CONC COLLAR
DP-16	30	e											3.0					30	e	DR2	50+03.00	18" x 3.0′ CSP, CONC COLLAR
DP-16	30	f																30	f	DR2	50+03.00	REMOVE INLET (TYPE G2) (H=7.87′)
DP-17	31	a																31	a	J1	355+00.00	TYPE GCP DI,W/ (1) GRATE TYPE 36R
DP-17	31	b																31	b	J1	355+00.00	VEGETATION CONTROL (MINOR CONCRETE)
DP-17	31	c			39.0													31	c	J1	355+00.00	18" x 39.0′ APC
DP-17	31	d																31	d	J1	355+42.00	TYPE GCP DI,W/ (1) GRATE TYPE 36R
DP-17	31	e																31	e	J1	355+39.98	REMOVE INLET (TYPE G2) (H=4.22′)
SHEET SUB TOTAL			5.8		239.2		393.0		81.4				3.0	5.0								

DRAINAGE QUANTITIES

DQ-26

REVISED BY | DATE REVISED
JOLENA ASTIN/TRAVIS GURNEY SCOTT GREGORY | CHRIS GAIDO
CALCULATED-DESIGNED BY | CHECKED BY
FUNCTIONAL SUPERVISOR
JOHN L. MARTIN

STATE OF CALIFORNIA - DEPARTMENT OF TRANSPORTATION
Caltrans DESIGN

P:\proj2\04\26406\design\ps&e\426406id026.dgn

LAST REVISION 03-15-10 | DATE PLOTTED => 16-AUG-2010 TIME PLOTTED => 11:13

Dist	COUNTY	ROUTE	POST MILES TOTAL PROJECT	SHEET No.	TOTAL SHEETS
04	Mrn	101	18.6/R22.3	163	542

REGISTERED CIVIL ENGINEER 03-15-10 DATE

8-9-10
PLANS APPROVAL DATE

REGISTERED PROFESSIONAL ENGINEER ROBERT J. NIXON No. C69123 Exp. 6-30-10 CIVIL STATE OF CALIFORNIA

THE STATE OF CALIFORNIA OR ITS OFFICERS OR AGENTS SHALL NOT BE RESPONSIBLE FOR THE ACCURACY OR COMPLETENESS OF SCANNED COPIES OF THIS PLAN SHEET.

DRAINAGE QUANTITIES

DRAINAGE PROFILE SHEET No.	DRAINAGE SYSTEM No. ⬡	DRAINAGE UNIT No. ◯	24" ALTERNATIVE FLARED END SECTION	18" STEEL FLARED END SECTION	36" PRECAST CONCRETE PIPE INLET	CHAIN LINK FENCE (TYPE CL-4, VINYL-CLAD)	ROCK SLOPE PROTECTION (BACKING No.1, METHOD B)	ROCK SLOPE PROTECTION FABRIC	MISC. IRON AND STEEL	MARKER (CULVERT)	MARKER (CULVERT, BARRIER MOUNTED)	VEGETATION CONTROL (MINOR CONCRETE)	CONNECT TO EXIST (N)	SALVAGE GRATE (N)	DI HEIGHT (N)	MAX COVER (N)	DRAINAGE SYSTEM No. ⬡	DRAINAGE UNIT No. ◯	ALIGNMENT	STATION	DESCRIPTION
			EA	EA	LF	LF	CY	SQYD	LB	EA	EA	SQYD	EA	EA	FT	FT					
DP-15	27	a							326	1					9.50		27	a	J1	346+02.07	TYPE G2 DI, W/(1) GRATE TYPE 24-12
DP-15	27	b												1	6.12		27	b	J1	346+02.07	REMOVE INLET (TYPE G2) (H=6.12′)
DP-15	27	c											1			3.8	27	c	J1	346+02.07	18" x 4.5′ RCP, CONC COLLAR
DP-15	27	d											1			4.7	27	d	J1	346+02.07	18" x 8.8′ RCP, CONC COLLAR
DP-15	27	e										16.6					27	e	J1	346+02.07	VEGETATION CONTROL (MINOR CONCRETE)
DP-15	27	f														4.5	27	f	J1	346+02.07	48" x 393.0′ RCP
DP-15	27	g														4.9	27	g	J1	346+02.07	REMOVE 18" x 396.0′ RCP
DP-15	27	h							1621	1					7.47		27	h	J1	349+99.75	TYPE GT4 MOD W/(2) GRATE TYPE 24-12
DP-15	27	k												1	6.50		27	k	J1	349+99.75	REMOVE INLET (TYPE G2) (H=6.50′)
DP-15	27	l											1			5.4	27	l	J1	349+99.75	18" x 9.6′ RCP, CONC COLLAR
DP-15	27	m										20.2					27	m	J1	349+99.75	VEGETATION CONTROL (MINOR CONCRETE)
DP-16	28	a							634	1					4.25		28	a	J1	345+50.00	TYPE GDO DI, W\(2) GRATE TYPE 24-12
DP-16	28	b											1				28	b	J1	345+50.00	18" x 54′ RCP, CONNECT TO EXIST
DP-16	29	a							634	1					4.63		29	a	DR2	44+02.00	TYPE GDO DI, W\(2) GRATE TYPE 24-12
DP-16	29	b											1			3.7	29	b	DR2	46+02.00	18" x 4.5′ RCP, CONC COLLAR
DP-16	29	c												1	4.60		29	c	DR2	46+02.00	REMOVE INLET (TYPE G2) (H=4.63′)
DP-16	30	a							634	1					3.50		30	a	DR2	48+00.00	TYPE GDO DI, W\(2) GRATE TYPE 24-12
DP-16	30	b														3.3	30	b	DR2	48+00.00	18" x 200.2′ APC
DP-16	30	c							634	1					8.69		30	c	DR2	50+03.00	TYPE GDO DI, W\(2) GRATE TYPE 24-12
DP-16	30	d											1			6.5	30	d	DR2	50+03.00	24" x 5.0′ CSP, CONC COLLAR
DP-16	30	e											1			7.7	30	e	DR2	50+03.00	18" x 3.0′ CSP, CONC COLLAR
DP-16	30	f												1	7.90		30	f	DR2	50+03.00	REMOVE INLET (TYPE G2) (H=7.87′)
DP-17	31	a			5.5				236	1					5.02		31	a	J1	355+00.00	TYPE GCP DI,W/ (1) GRATE TYPE 36R
DP-17	31	b										16.6					31	b	J1	355+00.00	VEGETATION CONTROL (MINOR CONCRETE)
DP-17	31	c														3.5	31	c	J1	355+00.00	18" x 39.0′ APC
DP-17	31	d			5.5				236	1					5.02		31	d	J1	355+42.00	TYPE GCP DI,W/ (1) GRATE TYPE 36R
DP-17	31	e												1	4.22		31	e	J1	355+39.98	REMOVE INLET (TYPE G2) (H=4.22′)
SHEET SUB TOTAL					11.0				4955	8		53.4	7	5							

DRAINAGE QUANTITIES

DQ-27

REVISED BY | DATE REVISED
JOLENA ASTIN/TRAVIS GURNEY SCOTT GREGORY | CHRIS GAIDO
CALCULATED-DESIGNED BY | CHECKED BY
FUNCTIONAL SUPERVISOR | JOHN L. MARTIN

STATE OF CALIFORNIA - DEPARTMENT OF TRANSPORTATION
Caltrans DESIGN

P:\proj2\04\26406\design\DCCR\426406id027.dgn

LAST REVISION 03-15-10 | DATE PLOTTED => 16-AUG-2010 TIME PLOTTED => 11:13

Dist	COUNTY	ROUTE	POST MILES TOTAL PROJECT	SHEET No.	TOTAL SHEETS
04	Mrn	101	18.6/R22.3	164	542

REGISTERED CIVIL ENGINEER 03-15-10 DATE

8-9-10
PLANS APPROVAL DATE

REGISTERED PROFESSIONAL ENGINEER ROBERT J. NIXON No. C69123 Exp. 6-30-10 CIVIL STATE OF CALIFORNIA

THE STATE OF CALIFORNIA OR ITS OFFICERS OR AGENTS SHALL NOT BE RESPONSIBLE FOR THE ACCURACY OR COMPLETENESS OF SCANNED COPIES OF THIS PLAN SHEET.

DRAINAGE QUANTITIES

DRAINAGE PROFILE SHEET NO.	DRAINAGE SYSTEM NO.	DRAINAGE UNIT NO.	ABANDON CULVERT	REMOVE CULVERT	REMOVE INLET	REMOVE DOWNDRAIN	REMOVE CONCRETE	CAP INLET	STRUCTURE BACKFILL (SLURRY CEMENT)	SAND BACKFILL	DITCH EXCAVATION	CLEANING AND INSPECTING PIPE	CLASS 2 AGGREGATE BASE	HOT MIX ASPHALT	PLACE HOT MIX ASPHALT (MISCELLANEOUS AREA)	MINOR CONCRETE (MINOR STRUCTURE)	DRAINAGE SYSTEM NO.	DRAINAGE UNIT NO.	ALIGNMENT	STATION	DESCRIPTION
			EA	EA	EA	EA	CY	EA	CY	CY	CY	EA	CY	TON	SQYD	CY					
DP-17	31	f														0.2	31	f	J1	355+42.00	18" x 6.0' APC, CONC COLLAR
DP-17	31	g															31	g	J1	355+42.00	VEGETATION CONTROL (MINOR CONCRETE)
DP-17	32	a												2.1	4.8	2.0	32	a	J1	352+00.00	TYPE GDO DI, W\(2) GRATE TYPE 24-12
DP-17	32	b							45.1					16.0	23.0		32	b	J1	352+00.00	18" x 147.0' APC
DP-17	32	c												2.1	4.8	2.2	32	c	J1	353+50.00	TYPE GDO DI, W\(2) GRATE TYPE 24-12
DP-17	32	d							56.2					16.3	23.3		32	d	J1	353+50.00	18" x 149.4' APC
DP-17	32	e												2.3	5.4	2.6	32	e	J1	355+02.00	TYPE GDO (MOD) DI, W\(2) GRATE TYPE 24-12
DP-17	32	f							1.6					0.5	0.7	0.2	32	f	J1	355+02.00	18" x 4.5' CSP, CONC COLLAR
DP-17	32	g			1		2.0										32	g	J1	355+02.00	REMOVE INLET (TYPE G2) (H=5.40')
DP-18	33	a														0.7	33	a	J1	360+99.21	TYPE GCP DI,W/ (1) GRATE TYPE 36R
DP-18	33	b			1		1.0										33	b	J1	361+02.04	REMOVE INLET (TYPE G2) (H=9.69')
DP-18	33	c														0.2	33	c	J1	360+99.21	24" x 4.5' RCP, CONC COLLAR
DP-18	33	d															33	d	J1	360+99.21	VEGETATION CONTROL (MINOR CONCRETE)
DP-18	33	e															33	e	J1	360+99.21	18" x 274.4' RCP
DP-18	33	f		1													33	f	J1	360+99.21	REMOVE 18" x 272.0' RCP
DP-18	33	g												2.1	4.8	2.3	33	g	J1	363+76.90	TYPE GDO DI, W/ (2) GRATE TYPE 24-12
DP-18	33	h			1		2.0										33	h	J1	363+76.90	REMOVE INLET (TYPE G2) (H=4.89')
DP-18	33	k							1.0					0.3	0.4	0.2	33	k	J1	363+76.90	18" x 3.0' RCP, CONC COLLAR
DP-18	33	l														0.2	33	l	J1	363+76.60	18" x 4.5' RCP, CONC COLLAR
DP-18	33	m														0.7	33	m	J1	363+76.60	TYPE GCP DI,W/ (1) GRATE TYPE 36R
DP-18	33	n															33	n	J1	363+76.60	VEGETATION CONTROL (MINOR CONCRETE)
DP-18	33	o														0.2	33	o	J1	363+76.60	18" x 16.0' RCP, CONC COLLAR
DP-18	33	p			1		1.0										33	p	J1	363+76.60	REMOVE INLET (TYPE G2) (H=4.19')
DP-18	33	r														1.9	33	r	J1	363+76.03	TYPE GDO DI, W/ (2) GRATE TYPE 24-12
DP-18	33	s			1		2.0										33	s	J1	363+76.03	REMOVE INLET (TYPE G2) (H=4.00')
DP-18	33	t							0.8					0.3	0.4	0.2	33	t	J1	363+76.03	18" x 3.0' RCP, CONC COLLAR
SHEET SUB TOTAL				1	5		8.0		104.7					42.0	67.6	13.8					

DRAINAGE QUANTITIES

DQ-28

REVISED BY | DATE REVISED

JOLENA ASTIN/TRAVIS GURNEY SCOTT GREGORY | CHRIS GAIDO

CALCULATED-DESIGNED BY | CHECKED BY

FUNCTIONAL SUPERVISOR | JOHN L. MARTIN

STATE OF CALIFORNIA - DEPARTMENT OF TRANSPORTATION

Caltrans DESIGN

P:\proj2\04\26406\design\ps&e\426406id028.dgn

LAST REVISION 03-15-10 | DATE PLOTTED => 08-FEB-2011 TIME PLOTTED => 11:21

Dist	COUNTY	ROUTE	POST MILES TOTAL PROJECT	SHEET No.	TOTAL SHEETS
04	Mrn	101	18.6/R22.3	165	542

REGISTERED CIVIL ENGINEER 03-15-10 DATE

8-9-10
PLANS APPROVAL DATE

REGISTERED PROFESSIONAL ENGINEER ROBERT J. NIXON No. C69123 Exp. 6-30-10 CIVIL STATE OF CALIFORNIA

THE STATE OF CALIFORNIA OR ITS OFFICERS OR AGENTS SHALL NOT BE RESPONSIBLE FOR THE ACCURACY OR COMPLETENESS OF SCANNED COPIES OF THIS PLAN SHEET.

DRAINAGE QUANTITIES

DRAINAGE PROFILE SHEET No.	DRAINAGE SYSTEM No.	DRAINAGE UNIT No.	MINOR CONCRETE (APRON)	MINOR CONCRETE (HEADWALL)	18" ALTERNATIVE PIPE CULVERT	24" ALTERNATIVE PIPE CULVERT	48" REINFORCED CONCRETE PIPE (CLASS II)	54" REINFORCED CONCRETE PIPE	18" REINFORCED CONCRETE PIPE (CLASS II, RUBBER GASKET JOINT)	24" REINFORCED CONCRETE PIPE (CLASS II, RUBBER GASKET JOINT)	14"x23" OVAL SHAPED REINFORCED CONCRETE PIPE(CLASS III, RUBBER GASKET JOINT)	12" CORRUGATED STEEL PIPE (.168" THICK)	18" CORRUGATED STEEL PIPE (.168" THICK)	24" CORRUGATED STEEL PIPE (.168" THICK)	18" CORRUGATED STEEL PIPE DOWNDRAIN (.168" THICK)	12" ANCHOR ASSEMBLY	JACKED 48" REINFORCED CONCRETE PIPE (CLASS V)	DRAINAGE SYSTEM No.	DRAINAGE UNIT No.	ALIGNMENT	STATION	DESCRIPTION
			CY	CY	LF	LF	LF	LF	LF	LF	LF	LF	LF	LF	LF	EA	LF					
DP-17	31	f			6.0													31	f	J1	355+42.00	18" x 6.0' APC, CONC COLLAR
DP-17	31	g																31	g	J1	355+42.00	VEGETATION CONTROL (MINOR CONCRETE)
DP-17	32	a	1.2															32	a	J1	352+00.00	TYPE GDO DI, W\(2) GRATE TYPE 24-12
DP-17	32	b			147.0													32	b	J1	352+00.00	18" x 147.0' APC
DP-17	32	c	1.2															32	c	J1	353+50.00	TYPE GDO DI, W\(2) GRATE TYPE 24-12
DP-17	32	d			149.4													32	d	J1	353+50.00	18" x 149.4' APC
DP-17	32	e	1.7															32	e	J1	355+02.00	TYPE GDO (MOD) DI, W\(2) GRATE TYPE 24-12
DP-17	32	f											4.5					32	f	J1	355+02.00	18" x 4.5' CSP, CONC COLLAR
DP-17	32	g																32	g	J1	355+02.00	REMOVE INLET (TYPE G2) (H=5.40')
DP-18	33	a																33	a	J1	360+99.21	TYPE GCP DI,W/ (1) GRATE TYPE 36R
DP-18	33	b																33	b	J1	361+02.04	REMOVE INLET (TYPE G2) (H=9.69')
DP-18	33	c								4.5								33	c	J1	360+99.21	24" x 4.5' RCP, CONC COLLAR
DP-18	33	d																33	d	J1	360+99.21	VEGETATION CONTROL (MINOR CONCRETE)
DP-18	33	e							274.4									33	e	J1	360+99.21	18" x 274.4' RCP
DP-18	33	f																33	f	J1	360+99.21	REMOVE 18" x 272.0' RCP
DP-18	33	g	1.2															33	g	J1	363+76.90	TYPE GDO DI, W/ (2) GRATE TYPE 24-12
DP-18	33	h																33	h	J1	363+76.90	REMOVE INLET (TYPE G2) (H=4.89')
DP-18	33	k							3.0									33	k	J1	363+76.90	18" x 3.0' RCP, CONC COLLAR
DP-18	33	l							4.5									33	l	J1	363+76.60	18" x 4.5' RCP, CONC COLLAR
DP-18	33	m																33	m	J1	363+76.60	TYPE GCP DI,W/ (1) GRATE TYPE 36R
DP-18	33	n																33	n	J1	363+76.60	VEGETATION CONTROL (MINOR CONCRETE)
DP-18	33	o							16.0									33	o	J1	363+76.60	18" x 16.0' RCP, CONC COLLAR
DP-18	33	p																33	p	J1	363+76.60	REMOVE INLET (TYPE G2) (H=4.19')
DP-18	33	r																33	r	J1	363+76.03	TYPE GDO DI, W/ (2) GRATE TYPE 24-12
DP-18	33	s																33	s	J1	363+76.03	REMOVE INLET (TYPE G2) (H=4.00')
DP-18	33	t							3.0									33	t	J1	363+76.03	18" x 3.0' RCP, CONC COLLAR
SHEET SUB TOTAL			5.3		302.4				300.9	4.5			4.5									

DRAINAGE QUANTITIES

DQ-29

JOLENA ASTIN/TRAVIS GURNEY
SCOTT GREGORY
REVISED BY
DATE REVISED

CHRIS GAIDO
CALCULATED-DESIGNED BY
CHECKED BY

JOHN L. MARTIN
FUNCTIONAL SUPERVISOR

STATE OF CALIFORNIA - DEPARTMENT OF TRANSPORTATION
Caltrans
DESIGN

P:\proj2\04\26406\design\ps&e\426406id029.dgn

LAST REVISION 03-15-10 | DATE PLOTTED => 16-AUG-2010 | TIME PLOTTED => 08:45

Dist	COUNTY	ROUTE	POST MILES TOTAL PROJECT	SHEET No.	TOTAL SHEETS
04	Mrn	101	18.6/R22.3	166	542

REGISTERED CIVIL ENGINEER 03-15-10 DATE

8-9-10
PLANS APPROVAL DATE

REGISTERED PROFESSIONAL ENGINEER ROBERT J. NIXON No. C69123 Exp. 6-30-10 CIVIL STATE OF CALIFORNIA

THE STATE OF CALIFORNIA OR ITS OFFICERS OR AGENTS SHALL NOT BE RESPONSIBLE FOR THE ACCURACY OR COMPLETENESS OF SCANNED COPIES OF THIS PLAN SHEET.

DRAINAGE QUANTITIES

DRAINAGE PROFILE SHEET No.	DRAINAGE SYSTEM No.	DRAINAGE UNIT No.	24" ALTERNATIVE FLARED END SECTION	18" STEEL FLARED END SECTION	36" PRECAST CONCRETE PIPE INLET	CHAIN LINK FENCE (TYPE CL-4, VINYL-CLAD)	ROCK SLOPE PROTECTION (BACKING NO.1, METHOD B)	ROCK SLOPE PROTECTION FABRIC	MISC. IRON AND STEEL	MARKER (CULVERT)	MARKER (CULVERT, BARRIER MOUNTED)	VEGETATION CONTROL (MINOR CONCRETE)	CONNECT TO EXIST (N)	SALVAGE GRATE (N)	DI HEIGHT (N)	MAX COVER (N)	DRAINAGE SYSTEM No.	DRAINAGE UNIT No.	ALIGNMENT	STATION	DESCRIPTION
			EA	EA	LF	LF	CY	SQYD	LB	EA	EA	SQYD	EA	EA	FT	FT					
DP-17	31	f											1			3.5	31	f	J1	355+42.00	18" x 6.0' APC, CONC COLLAR
DP-17	31	g										16.6					31	g	J1	355+42.00	VEGETATION CONTROL (MINOR CONCRETE)
DP-17	32	a							634	1					4.08		32	a	J1	352+00.00	TYPE GDO DI, W\(2) GRATE TYPE 24-12
DP-17	32	b														3.3	32	b	J1	352+00.00	18" x 147.0' APC
DP-17	32	c							634	1					4.96		32	c	J1	353+50.00	TYPE GDO DI, W\(2) GRATE TYPE 24-12
DP-17	32	d														3.8	32	d	J1	353+50.00	18" x 149.4' APC
DP-17	32	e							634	1			1		5.40		32	e	J1	355+02.00	TYPE GDO (MOD) DI, W\(2) GRATE TYPE 24-12
DP-17	32	f											1			3.8	32	f	J1	355+02.00	18" x 4.5' CSP, CONC COLLAR
DP-17	32	g												1		5.4	32	g	J1	355+02.00	REMOVE INLET (TYPE G2) (H=5.40')
DP-18	33	a			11.8				236	1					11.25		33	a	J1	360+99.21	TYPE GCP DI,W/ (1) GRATE TYPE 36R
DP-18	33	b												1	9.69		33	b	J1	361+02.04	REMOVE INLET (TYPE G2) (H=9.69')
DP-18	33	c											1			9.3	33	c	J1	360+99.21	24" x 4.5' RCP, CONC COLLAR
DP-18	33	d										16.6					33	d	J1	360+99.21	VEGETATION CONTROL (MINOR CONCRETE)
DP-18	33	e														9.8	33	e	J1	360+99.21	18" x 274.4' RCP
DP-18	33	f														9.8	33	f	J1	360+99.21	REMOVE 18" x 272.0' RCP
DP-18	33	g							634	1					4.91		33	g	J1	363+76.90	TYPE GDO DI, W/ (2) GRATE TYPE 24-12
DP-18	33	h												1	4.89		33	h	J1	363+76.90	REMOVE INLET (TYPE G2) (H=4.89')
DP-18	33	k											1			3.5	33	k	J1	363+76.90	18" x 3.0' RCP, CONC COLLAR
DP-18	33	l											1			4.7	33	l	J1	363+76.60	18" x 4.5' RCP, CONC COLLAR
DP-18	33	m			6.7				236	1					6.24		33	m	J1	363+76.60	TYPE GCP DI,W/ (1) GRATE TYPE 36R
DP-18	33	n										16.6					33	n	J1	363+76.60	VEGETATION CONTROL (MINOR CONCRETE)
DP-18	33	o											1			4.7	33	o	J1	363+76.60	18" x 16.0' RCP, CONC COLLAR
DP-18	33	p												1	4.19		33	p	J1	363+76.60	REMOVE INLET (TYPE G2) (H=4.19')
DP-18	33	r							634	1					4.02		33	r	J1	363+76.03	TYPE GDO DI, W/ (2) GRATE TYPE 24-12
DP-18	33	s												1	4.00		33	s	J1	363+76.03	REMOVE INLET (TYPE G2) (H=4.00')
DP-18	33	t											1			2.3	33	t	J1	363+76.03	18" x 3.0' RCP, CONC COLLAR
SHEET SUB TOTAL					18.5				3642	7		49.8	8	5							

DRAINAGE QUANTITIES

DQ-30

REVISED BY | DATE REVISED
JOLENA ASTIN/TRAVIS GURNEY SCOTT GREGORY | CHRIS GAIDO
CALCULATED-DESIGNED BY | CHECKED BY
FUNCTIONAL SUPERVISOR
JOHN L. MARTIN

STATE OF CALIFORNIA - DEPARTMENT OF TRANSPORTATION
Caltrans DESIGN

P:\proj2\04\26406\design\ps&e\426406id030.dgn

LAST REVISION 03-15-10 | DATE PLOTTED => 16-AUG-2010 TIME PLOTTED => 08:46

Dist	COUNTY	ROUTE	POST MILES TOTAL PROJECT	SHEET No.	TOTAL SHEETS
04	Mrn	101	18.6/R22.3	167	542

REGISTERED CIVIL ENGINEER 03-15-10 DATE

8-9-10
PLANS APPROVAL DATE

REGISTERED PROFESSIONAL ENGINEER ROBERT J. NIXON No. C69123 Exp. 6-30-10 CIVIL STATE OF CALIFORNIA

THE STATE OF CALIFORNIA OR ITS OFFICERS OR AGENTS SHALL NOT BE RESPONSIBLE FOR THE ACCURACY OR COMPLETENESS OF SCANNED COPIES OF THIS PLAN SHEET.

DRAINAGE QUANTITIES

DRAINAGE PROFILE SHEET No.	DRAINAGE SYSTEM No.	DRAINAGE UNIT No.	ABANDON CULVERT	REMOVE CULVERT	REMOVE INLET	REMOVE DOWNDRAIN	REMOVE CONCRETE	CAP INLET	STRUCTURE BACKFILL (SLURRY CEMENT)	SAND BACKFILL	DITCH EXCAVATION	CLEANING AND INSPECTING PIPE	CLASS 2 AGGREGATE BASE	HOT MIX ASPHALT	PLACE HOT MIX ASPHALT (MISCELLANEOUS AREA)	MINOR CONCRETE (MINOR STRUCTURE)	DRAINAGE SYSTEM No.	DRAINAGE UNIT No.	ALIGNMENT	STATION	DESCRIPTION
			EA	EA	EA	EA	CY	EA	CY	CY	CY	EA	CY	TON	SQYD	CY					
DP-19	34	a												2.1	4.8	1.7	34	a	J1	360+25.68	TYPE GDO DI, W/ (2) GRATE TYPE 24-12
DP-19	34	b			1		1.7										34	b	J1	360+25.68	REMOVE INLET (TYPE G1) (H=3.13′)
DP-19	34	c							0.7					0.2	0.3	0.1	34	c	J1	360+25.68	12" x 3.0′ CSP, CONC COLLAR
DP-19	35	a												2.1	4.8	2.1	35	a	J1	367+00.00	TYPE GDO MOD DI, W/ (2) GRATE TYPE 24-12
DP-19	35	b							26.5					9.0	12.9		35	b	J1	367+00.00	18" x 82.8′ APC
DP-19	35	c												2.3	5.4	2.2	35	c	J1	367+85.79	TYPE GDO MOD DI, W/ (2) GRATE TYPE 24-12
DP-19	35	d															35	d	J1	367+85.79	18" x 35.0′ CSP
DP-19	35	e			1		2.0										35	e	J1	368+19.60	REMOVE INLET (TYPE G2) (H=4.59′)
DP-19	35	f						1								0.2	35	f	J1	368+19.60	CAP INLET 18" RCP
DP-20	36	a			1		1.0										36	a	J1	369+02.00	REMOVE INLET (TYPE GCP) (H=3.51′)
DP-20	36	b														0.7	36	b	J1	369+03.12	TYPE GCP DI, W/(1) GRATE TYPE 36R
DP-20	36	c		1													36	c	J1	369+02.00	REMOVE 18" x 13.9′ RCP
DP-20	36	d														0.2	36	d	J1	369+02.00	18" x 4.5′ RCP, CONC COLLAR
DP-20	36	e															36	e	J1	369+00.00	JACKED 2-48" REINFORCED CONC PIPE (CLASS V)
DP-20	36	f														0.9	36	f	J1	369+00.00	STRAIGHT HEADWALL, CHAIN LINK RAILING
DP-20	36	g														0.9	36	g	J1	369+00.00	STRAIGHT HEADWALL, CHAIN LINK RAILING
DP-20	36	h			1		2.0										36	h	J1	369+02.00	REMOVE INLET (TYPE G2) (H=5.90′)
DP-20	36	k												2.3	5.4	2.6	36	k	J1	369+02.95	TYPE GDO DI, W\(2) GRATE TYPE 24-12
DP-20	36	m														0.2	36	m	J1	369+02.00	18" x 4.5′ RCP, CONC COLLAR
DP-20	36	n														0.2	36	n	J1	369+02.00	18" x 4.5′ RCP, CONC COLLAR
DP-20	36	o										2					36	o	J1	369+02.00	FLUSH CULVERT, 2-36" x 235′ RCP
DP-20	36	p															36	p	J1	369+02.00	VEGETATION CONTROL (MINOR CONCRETE)
DP-20	36	q									200						36	q	J1	369+02.00	DITCH EXC (OUTLET)
DP-20	36	r									30						36	r	J1	369+02.00	DITCH EXC (INLET)
DP-20	36	s															36	s	J1	368+10.00	STRAIGHT HEADWALL, CHAIN LINK RAILING
DP-20	36	t															36	t	J1	369+02.00	RSP (BACKING NO.1, METHOD B)
SHEET SUB TOTAL				1	4		6.7	1	27.2		230	2		18.0	33.6	12.0					

DRAINAGE QUANTITIES

DQ-31

STATE OF CALIFORNIA - DEPARTMENT OF TRANSPORTATION
Caltrans DESIGN

FUNCTIONAL SUPERVISOR: JOHN L. MARTIN
CALCULATED-DESIGNED BY: JOLENA ASTIN/TRAVIS GURNEY SCOTT GREGORY
CHECKED BY: CHRIS GAIDO
REVISED BY
DATE REVISED

P:\proj2\04\26406\design\DCCR\426406id031.dgn

LAST REVISION 03-15-10 | DATE PLOTTED => 16-AUG-2010 TIME PLOTTED => 08:46

Dist	COUNTY	ROUTE	POST MILES TOTAL PROJECT	SHEET No.	TOTAL SHEETS
04	Mrn	101	18.6/R22.3	168	542

REGISTERED CIVIL ENGINEER 03-15-10 DATE

8-9-10
PLANS APPROVAL DATE

REGISTERED PROFESSIONAL ENGINEER ROBERT J. NIXON No. C69123 Exp. 6-30-10 CIVIL STATE OF CALIFORNIA

THE STATE OF CALIFORNIA OR ITS OFFICERS OR AGENTS SHALL NOT BE RESPONSIBLE FOR THE ACCURACY OR COMPLETENESS OF SCANNED COPIES OF THIS PLAN SHEET.

DRAINAGE QUANTITIES

DRAINAGE PROFILE SHEET No.	DRAINAGE SYSTEM No.	DRAINAGE UNIT No.	MINOR CONCRETE (APRON)	MINOR CONCRETE (HEADWALL)	18" ALTERNATIVE PIPE CULVERT	24" ALTERNATIVE PIPE CULVERT	48" REINFORCED CONCRETE PIPE (CLASS II)	54" REINFORCED CONCRETE PIPE	18" REINFORCED CONCRETE PIPE (CLASS II, RUBBER GASKET JOINT)	24" REINFORCED CONCRETE PIPE (CLASS II, RUBBER GASKET JOINT)	14"x23" OVAL SHAPED REINFORCED CONCRETE PIPE(CLASS III, RUBBER GASKET JOINT)	12" CORRUGATED STEEL PIPE (.168" THICK)	18" CORRUGATED STEEL PIPE (.168" THICK)	24" CORRUGATED STEEL PIPE (.168" THICK)	18" CORRUGATED STEEL PIPE DOWNDRAIN (.168" THICK)	12" ANCHOR ASSEMBLY	JACKED 48" REINFORCED CONCRETE PIPE (CLASS V)	DRAINAGE SYSTEM No.	DRAINAGE UNIT No.	ALIGNMENT	STATION	DESCRIPTION
			CY	CY	LF	LF	LF	LF	LF	LF	LF	LF	LF	LF	LF	EA	LF					
DP-19	34	a	1.7															34	a	J1	360+25.68	TYPE GDO DI, W/ (2) GRATE TYPE 24-12
DP-19	34	b																34	b	J1	360+25.68	REMOVE INLET (TYPE G1) (H=3.13′)
DP-19	34	c										3.0						34	c	J1	360+25.68	12" x 3.0′ CSP, CONC COLLAR
DP-19	35	a	1.2															35	a	J1	367+00.00	TYPE GDO MOD DI, W/ (2) GRATE TYPE 24-12
DP-19	35	b			82.8													35	b	J1	367+00.00	18" x 82.8′ APC
DP-19	35	c	1.7															35	c	J1	367+85.79	TYPE GDO MOD DI, W/ (2) GRATE TYPE 24-12
DP-19	35	d											35.0					35	d	J1	367+85.79	18" x 35.0′ CSP
DP-19	35	e																35	e	J1	368+19.60	REMOVE INLET (TYPE G2) (H=4.59′)
DP-19	35	f																35	f	J1	368+19.60	CAP INLET 18" RCP
DP-20	36	a																36	a	J1	369+02.00	REMOVE INLET (TYPE GCP) (H=3.51′)
DP-20	36	b																36	b	J1	369+03.12	TYPE GCP DI, W/(1) GRATE TYPE 36R
DP-20	36	c																36	c	J1	369+02.00	REMOVE 18" x 13.9′ RCP
DP-20	36	d							4.5									36	d	J1	369+02.00	18" x 4.5′ RCP, CONC COLLAR
DP-20	36	e															470	36	e	J1	369+00.00	JACKED 2-48" REINFORCED CONC PIPE (CLASS V)
DP-20	36	f		3.3														36	f	J1	369+00.00	STRAIGHT HEADWALL, CHAIN LINK RAILING
DP-20	36	g		3.3														36	g	J1	369+00.00	STRAIGHT HEADWALL, CHAIN LINK RAILING
DP-20	36	h																36	h	J1	369+02.00	REMOVE INLET (TYPE G2) (H=5.90′)
DP-20	36	k	1.7															36	k	J1	369+02.95	TYPE GDO DI, W\(2) GRATE TYPE 24-12
DP-20	36	m							4.5									36	m	J1	369+02.00	18" x 4.5′ RCP, CONC COLLAR
DP-20	36	n							4.5									36	n	J1	369+02.00	18" x 4.5′ RCP, CONC COLLAR
DP-20	36	o																36	o	J1	369+02.00	FLUSH CULVERT, 2-36" x 235′ RCP
DP-20	36	p																36	p	J1	369+02.00	MINOR CONC,VEGETATION CONTROL
DP-20	36	q																36	q	J1	369+02.00	DITCH EXC (OUTLET)
DP-20	36	r																36	r	J1	369+02.00	DITCH EXC (INLET)
DP-20	36	s		4.3														36	s	J1	368+10.00	STRAIGHT HEADWALL, CHAIN LINK RAILING
DP-20	36	t																36	t	J1	369+02.00	RSP (BACKING NO.1, METHOD B)
SHEET SUB TOTAL			6.3	10.9	82.8				13.5			3.0	35.0				470					

DRAINAGE QUANTITIES

DQ-32

REVISED BY | DATE REVISED
JOLENA ASTIN/TRAVIS GURNEY | SCOTT GREGORY
CALCULATED-DESIGNED BY | CHECKED BY
CHRIS GAIDO
FUNCTIONAL SUPERVISOR
JOHN L. MARTIN

STATE OF CALIFORNIA - DEPARTMENT OF TRANSPORTATION
Caltrans DESIGN

P:\proj2\04\26406\design\DCCR\426406id032.dgn

LAST REVISION 03-15-10 | DATE PLOTTED => 16-AUG-2010 TIME PLOTTED => 08:46

Dist	COUNTY	ROUTE	POST MILES TOTAL PROJECT	SHEET No.	TOTAL SHEETS
04	Mrn	101	18.6/R22.3	169	542

REGISTERED CIVIL ENGINEER 03-15-10 DATE

8-9-10
PLANS APPROVAL DATE

REGISTERED PROFESSIONAL ENGINEER ROBERT J. NIXON No. C69123 Exp. 6-30-10 CIVIL STATE OF CALIFORNIA

THE STATE OF CALIFORNIA OR ITS OFFICERS OR AGENTS SHALL NOT BE RESPONSIBLE FOR THE ACCURACY OR COMPLETENESS OF SCANNED COPIES OF THIS PLAN SHEET.

DRAINAGE QUANTITIES

DRAINAGE PROFILE SHEET No.	DRAINAGE SYSTEM No.	DRAINAGE UNIT No.	24" ALTERNATIVE FLARED END SECTION	18" STEEL FLARED END SECTION	36" PRECAST CONCRETE PIPE INLET	CHAIN LINK FENCE (TYPE CL-4, VINYL-CLAD)	ROCK SLOPE PROTECTION (BACKING NO.1, METHOD B)	ROCK SLOPE PROTECTION FABRIC	MISC. IRON AND STEEL	MARKER (CULVERT)	MARKER (CULVERT, BARRIER MOUNTED)	VEGETATION CONTROL (MINOR CONCRETE)	CONNECT TO EXIST (N)	SALVAGE GRATE (N)	DI HEIGHT (N)	MAX COVER (N)	DRAINAGE SYSTEM No.	DRAINAGE UNIT No.	ALIGNMENT	STATION	DESCRIPTION
			EA	EA	LF	LF	CY	SQYD	LB	EA	EA	SQYD	EA	EA	FT	FT					
DP-19	34	a							634	1					3.13		34	a	J1	360+25.68	TYPE GDO DI, W/ (2) GRATE TYPE 24-12
DP-19	34	b												1	3.13		34	b	J1	360+25.68	REMOVE INLET (TYPE G1) (H=3.13′)
DP-19	34	c											1			4.2	34	c	J1	360+25.68	12" x 3.0′ CSP, CONC COLLAR
DP-19	35	a							634	1					4.60		35	a	J1	367+00.00	TYPE GDO MOD DI, W/ (2) GRATE TYPE 24-12
DP-19	35	b														3.1	35	b	J1	367+00.00	18" x 82.8′ APC
DP-19	35	c							634	1					4.65		35	c	J1	367+85.79	TYPE GDO MOD DI, W/ (2) GRATE TYPE 24-12
DP-19	35	d														7.5	35	d	J1	367+85.79	18" x 35.0′ CSP
DP-19	35	e												1	4.59		35	e	J1	368+19.60	REMOVE INLET (TYPE G2) (H=4.59′)
DP-19	35	f															35	f	J1	368+19.60	CAP INLET 18" RCP
DP-20	36	a												1	3.51		36	a	J1	369+02.00	REMOVE INLET (TYPE GCP) (H=3.51′)
DP-20	36	b			5.4				236	1					4.87		36	b	J1	369+03.12	TYPE GCP DI, W/(1) GRATE TYPE 36R
DP-20	36	c														4.1	36	c	J1	369+02.00	REMOVE 18" x 13.9′ RCP
DP-20	36	d											1			3.8	36	d	J1	369+02.00	18" x 4.5′ RCP, CONC COLLAR
DP-20	36	e								2						12.5	36	e	J1	369+00.00	JACKED 2-48" REINFORCED CONC PIPE (CLASS V)
DP-20	36	f				28.1											36	f	J1	369+00.00	STRAIGHT HEADWALL, CHAIN LINK RAILING
DP-20	36	g				24.0											36	g	J1	369+00.00	STRAIGHT HEADWALL, CHAIN LINK RAILING
DP-20	36	h												1	5.90		36	h	J1	369+02.00	REMOVE INLET (TYPE G2) (H=5.90′)
DP-20	36	k							634	1					5.90		36	k	J1	369+02.95	TYPE GDO DI, W\(2) GRATE TYPE 24-12
DP-20	36	m											1			4.5	36	m	J1	369+02.00	18" x 4.5′ RCP, CONC COLLAR
DP-20	36	n											1			4.5	36	n	J1	369+02.00	18" x 4.5′ RCP, CONC COLLAR
DP-20	36	o															36	o	J1	369+02.00	FLUSH CULVERT, 2-36" x 235′ RCP
DP-20	36	p										16.6					36	p	J1	369+02.00	MINOR CONC,VEGETATION CONTROL
DP-20	36	q															36	q	J1	369+02.00	DITCH EXC (OUTLET)
DP-20	36	r															36	r	J1	369+02.00	DITCH EXC (INLET)
DP-20	36	s				28.1											36	s	J1	368+10.00	STRAIGHT HEADWALL, CHAIN LINK RAILING
DP-20	36	t					60.4	87.3									36	t	J1	369+02.00	RSP (BACKING NO.1, METHOD B)
SHEET SUB TOTAL					5.4	80.2	60.4	87.3	2772	7		16.6	4	4							

DRAINAGE QUANTITIES

DQ-33

REVISED BY | DATE REVISED

JOLENA ASTIN/TRAVIS GURNEY
SCOTT GREGORY

CALCULATED-DESIGNED BY | CHECKED BY

CHRIS GAIDO

FUNCTIONAL SUPERVISOR

JOHN L. MARTIN

STATE OF CALIFORNIA - DEPARTMENT OF TRANSPORTATION

Caltrans DESIGN

P:\proj2\04\26406\design\DCCR\426406id033.dgn

LAST REVISION 03-15-10 | DATE PLOTTED => 16-AUG-2010 TIME PLOTTED => 08:46

Dist	COUNTY	ROUTE	POST MILES TOTAL PROJECT	SHEET No.	TOTAL SHEETS
04	Mrn	101	18.6/R22.3	170	542

REGISTERED CIVIL ENGINEER 03-15-10 DATE

8-9-10
PLANS APPROVAL DATE

REGISTERED PROFESSIONAL ENGINEER ROBERT J. NIXON No. C69123 Exp. 6-30-10 CIVIL STATE OF CALIFORNIA

THE STATE OF CALIFORNIA OR ITS OFFICERS OR AGENTS SHALL NOT BE RESPONSIBLE FOR THE ACCURACY OR COMPLETENESS OF SCANNED COPIES OF THIS PLAN SHEET.

DRAINAGE QUANTITIES

DRAINAGE PROFILE SHEET No.	DRAINAGE SYSTEM No. ⬡	DRAINAGE UNIT No. ○	ABANDON CULVERT	REMOVE CULVERT	REMOVE INLET	REMOVE DOWNDRAIN	REMOVE CONCRETE	CAP INLET	STRUCTURE BACKFILL (SLURRY CEMENT)	SAND BACKFILL	DITCH EXCAVATION	CLEANING AND INSPECTING PIPE	CLASS 2 AGGREGATE BASE	HOT MIX ASPHALT	PLACE HOT MIX ASPHALT (MISCELLANEOUS AREA)	MINOR CONCRETE (MINOR STRUCTURE)	DRAINAGE SYSTEM No. ⬡	DRAINAGE UNIT No. ○	ALIGNMENT	STATION	DESCRIPTION
			EA	EA	EA	EA	CY	EA	CY	CY	CY	EA	CY	TON	SQYD	CY					
DP-20	36	u															36	u	J1	368+10.00	RSP (BACKING NO.1, METHOD B)
DP-20	36	v		1													36	v	J1	368+10.00	REMOVE 18" x 1.6' RCP
DP-20	36	w		1													36	w	J1	368+10.00	REMOVE 36" x 2.5' RCP
DP-20	36	x		1													36	x	J1	368+10.00	REMOVE 36" x 6.4' RCP
DP-20	37	a												2.3	5.4	1.8	37	a	AR2	71+53.30	TYPE GDO MOD W/(2) GRATE TYPE 24-12
DP-20	37	b			1		1.7										37	b	AR2	71+53.45	REMOVE INLET (TYPE G1) (H=3.08')
DP-20	37	c							0.8					0.4	0.6	0.2	37	c	AR2	71+53.30	12" x 5.0' CSP CONNECT TO EXIST
DP-21	38	a												2.1	4.8	2.1	38	a	AL1	73+00.00	TYPE GDO DI, W/(2) GRATE TYPE 24-12
DP-21	38	b															38	b	AL1	73+00.00	18" x 249.3' APC
DP-21	38	c												2.1	4.8	2.1	38	c	AL1	75+52.27	TYPE GDO DI, W/(2) GRATE TYPE 24-12
DP-21	38	d			1		1.5										38	d	AL1	75+52.27	REMOVE INLET (TYPE G2) (H=4.30')
DP-21	38	e															38	e	AL1	75+52.27	18" x 45.7' APC
DP-21	38	f		1													38	f	AL1	75+52.27	REMOVE 18" x 48' CMP
DP-21	38	g												2.1	4.8	1.8	38	g	AL1	76+00.94	TYPE G2 DI, W/(1) GRATE TYPE 24-12
DP-21	38	h			1		2.0										38	h	AL1	76+00.94	REMOVE INLET (TYPE GOM) (H=4.78')
DP-21	38	k														0.2	38	k	AL1	76+00.94	18" x 4.5' APC CONNECT TO EXIST
DP-21	38	l		1													38	l	AL1	76+00.94	REMOVE 18" x 48.0' CMP
DP-21	38	m															38	m	AL1	76+00.94	18" x 48.4' APC
DP-21	38	n												1.8	4.1	1.6	38	n	AL1	76+52.33	TYPE G2 DI, W/(1) GRATE TYPE 24-12
DP-21	38	o			1		1.5										38	o	AL1	76+52.33	REMOVE INLET (TYPE G2) (H=4.55')
DP-21	39	a														0.7	39	a	J1	377+66.31	TYPE GCP DI, W/(1) GRATE TYPE 36R
DP-21	39	b			1		1.0										39	b	J1	377+66.19	REMOVE INLET (TYPE GMP) (H=4.00')
DP-21	39	c														0.2	39	c	J1	377+66.31	18" x 17.3' APC CONNECT TO EXIST
DP-21	39	d														0.2	39	d	J1	377+66.31	18" x 4.5' APC CONNECT TO EXIST
DP-21	39	e															39	e	J1	377+66.31	VEGETATION CONTROL (MINOR CONCRETE)
DP-21	39	f												2.1	4.8	2.1	39	f	J1	377+67.14	TYPE GDO DI, W/(2) GRATE TYPE 24-12
SHEET SUB TOTAL				5	5		7.7		0.8					12.9	29.3	13.0					

REVISED BY | DATE REVISED

JOLENA ASTIN/TRAVIS GURNEY
SCOTT GREGORY
CALCULATED-DESIGNED BY

CHRIS GAIDO
CHECKED BY

FUNCTIONAL SUPERVISOR
JOHN L. MARTIN

STATE OF CALIFORNIA - DEPARTMENT OF TRANSPORTATION
Caltrans
DESIGN

P:\proj2\04\26406\design\ps&e\426406id034.dgn

DRAINAGE QUANTITIES

DQ-34

LAST REVISION 03-15-10 | DATE PLOTTED => 16-AUG-2010 TIME PLOTTED => 08:46

Dist	COUNTY	ROUTE	POST MILES TOTAL PROJECT	SHEET No.	TOTAL SHEETS
04	Mrn	101	18.6/R22.3	171	542

REGISTERED CIVIL ENGINEER 03-15-10 DATE

8-9-10
PLANS APPROVAL DATE

REGISTERED PROFESSIONAL ENGINEER ROBERT J. NIXON No. C69123 Exp. 6-30-10 CIVIL STATE OF CALIFORNIA

THE STATE OF CALIFORNIA OR ITS OFFICERS OR AGENTS SHALL NOT BE RESPONSIBLE FOR THE ACCURACY OR COMPLETENESS OF SCANNED COPIES OF THIS PLAN SHEET.

DRAINAGE QUANTITIES

DRAINAGE PROFILE SHEET No.	DRAINAGE SYSTEM No.	DRAINAGE UNIT No.	MINOR CONCRETE (APRON)	MINOR CONCRETE (HEADWALL)	18" ALTERNATIVE PIPE CULVERT	24" ALTERNATIVE PIPE CULVERT	48" REINFORCED CONCRETE PIPE (CLASS II)	54" REINFORCED CONCRETE PIPE	18" REINFORCED CONCRETE PIPE (CLASS II, RUBBER GASKET JOINT)	24" REINFORCED CONCRETE PIPE (CLASS II, RUBBER GASKET JOINT)	14"x23" OVAL SHAPED REINFORCED CONCRETE PIPE(CLASS III, RUBBER GASKET JOINT)	12" CORRUGATED STEEL PIPE (.168" THICK)	18" CORRUGATED STEEL PIPE (.168" THICK)	24" CORRUGATED STEEL PIPE (.168" THICK)	18" CORRUGATED STEEL PIPE DOWNDRAIN (.168" THICK)	12" ANCHOR ASSEMBLY	JACKED 48" REINFORCED CONCRETE PIPE (CLASS V)	DRAINAGE SYSTEM No.	DRAINAGE UNIT No.	ALIGNMENT	STATION	DESCRIPTION
			CY	CY	LF	LF	LF	LF	LF	LF	LF	LF	LF	LF	LF	EA	LF					
DP-20	36	u																36	u	J1	368+10.00	RSP (BACKING NO.1, METHOD B)
DP-20	36	v																36	v	J1	368+10.00	REMOVE 18" x 1.6' RCP
DP-20	36	w																36	w	J1	368+10.00	REMOVE 36" x 2.5' RCP
DP-20	36	x																36	x	J1	368+10.00	REMOVE 36" x 6.4' RCP
DP-20	37	a	1.7															37	a	AR2	71+53.30	TYPE GDO MOD W/(2) GRATE TYPE 24-12
DP-20	37	b																37	b	AR2	71+53.45	REMOVE INLET (TYPE G1) (H=3.08')
DP-20	37	c										5.0						37	c	AR2	71+53.30	12" x 5.0' CSP CONNECT TO EXIST
DP-21	38	a	1.2															38	a	AL1	73+00.00	TYPE GDO DI, W/(2) GRATE TYPE 24-12
DP-21	38	b			249.3													38	b	AL1	73+00.00	18" x 249.3' APC
DP-21	38	c	1.2															38	c	AL1	75+52.27	TYPE GDO DI, W/(2) GRATE TYPE 24-12
DP-21	38	d																38	d	AL1	75+52.27	REMOVE INLET (TYPE G2) (H=4.30')
DP-21	38	e			45.7													38	e	AL1	75+52.27	18" x 45.7' APC
DP-21	38	f																38	f	AL1	75+52.27	REMOVE 18" x 48' CMP
DP-21	38	g	1.1															38	g	AL1	76+00.94	TYPE G2 DI, W/(1) GRATE TYPE 24-12
DP-21	38	h																38	h	AL1	76+00.94	REMOVE INLET (TYPE GOM) (H=4.78')
DP-21	38	k			4.5													38	k	AL1	76+00.94	18" x 4.5' APC CONNECT TO EXIST
DP-21	38	l																38	l	AL1	76+00.94	REMOVE 18" x 48.0' CMP
DP-21	38	m			48.4													38	m	AL1	76+00.94	18" x 48.4' APC
DP-21	38	n	0.8															38	n	AL1	76+52.33	TYPE G2 DI, W/(1) GRATE TYPE 24-12
DP-21	38	o																38	o	AL1	76+52.33	REMOVE INLET (TYPE G2) (H=4.55')
DP-21	39	a																39	a	J1	377+66.31	TYPE GCP DI, W/(1) GRATE TYPE 36R
DP-21	39	b																39	b	J1	377+66.19	REMOVE INLET (TYPE GMP) (H=4.00')
DP-21	39	c			17.3													39	c	J1	377+66.31	18" x 17.3' APC CONNECT TO EXIST
DP-21	39	d			4.5													39	d	J1	377+66.31	18" x 4.5' APC CONNECT TO EXIST
DP-21	39	e																39	e	J1	377+66.31	VEGETATION CONTROL (MINOR CONCRETE)
DP-21	39	f	1.2															39	f	J1	377+67.14	TYPE GDO DI, W/(2) GRATE TYPE 24-12
SHEET SUB TOTAL			7.2		369.7							5.0										

DRAINAGE QUANTITIES

DQ-35

REVISED BY | DATE REVISED
JOLENA ASTIN/TRAVIS GURNEY SCOTT GREGORY | CHRIS GAIDO
CALCULATED-DESIGNED BY | CHECKED BY
FUNCTIONAL SUPERVISOR
JOHN L. MARTIN

STATE OF CALIFORNIA - DEPARTMENT OF TRANSPORTATION
Caltrans DESIGN

P:\proj2\04\26406\design\ps&e\426406id035.dgn

LAST REVISION 03-15-10 | DATE PLOTTED => 16-AUG-2010 TIME PLOTTED => 08:46

Dist	COUNTY	ROUTE	POST MILES TOTAL PROJECT	SHEET No.	TOTAL SHEETS
04	Mrn	101	18.6/R22.3	172	542

REGISTERED CIVIL ENGINEER 03-15-10 DATE

8-9-10
PLANS APPROVAL DATE

REGISTERED PROFESSIONAL ENGINEER ROBERT J. NIXON No. C69123 Exp. 6-30-10 CIVIL STATE OF CALIFORNIA

THE STATE OF CALIFORNIA OR ITS OFFICERS OR AGENTS SHALL NOT BE RESPONSIBLE FOR THE ACCURACY OR COMPLETENESS OF SCANNED COPIES OF THIS PLAN SHEET.

DRAINAGE QUANTITIES

DRAINAGE PROFILE SHEET No.	DRAINAGE SYSTEM No.	DRAINAGE UNIT No.	24" ALTERNATIVE FLARED END SECTION	18" STEEL FLARED END SECTION	36" PRECAST CONCRETE PIPE INLET	CHAIN LINK FENCE (TYPE CL-4, VINYL-CLAD)	ROCK SLOPE PROTECTION (BACKING NO.1, METHOD B)	ROCK SLOPE PROTECTION FABRIC	MISC. IRON AND STEEL	MARKER (CULVERT)	MARKER (CULVERT, BARRIER MOUNTED)	VEGETATION CONTROL (MINOR CONCRETE)	CONNECT TO EXIST (N)	SALVAGE GRATE (N)	DI HEIGHT (N)	MAX COVER (N)	DRAINAGE SYSTEM No.	DRAINAGE UNIT No.	ALIGNMENT	STATION	DESCRIPTION
			EA	EA	LF	LF	CY	SQYD	LB	EA	EA	SQYD	EA	EA	FT	FT				STATION	
DP-20	36	u					66.7	148.8									36	u	J1	368+10.00	RSP (BACKING NO.1, METHOD B)
DP-20	36	v														1.0	36	v	J1	368+10.00	REMOVE 18" x 1.6' RCP
DP-20	36	w														1.0	36	w	J1	368+10.00	REMOVE 36" x 2.5' RCP
DP-20	36	x														1.0	36	x	J1	368+10.00	REMOVE 36" x 6.4' RCP
DP-20	37	a							634	1					3.58		37	a	AR2	71+53.30	TYPE GDO MOD W/(2) GRATE TYPE 24-12
DP-20	37	b												1	3.08		37	b	AR2	71+53.45	REMOVE INLET (TYPE G1) (H=3.08')
DP-20	37	c											1			4.3	37	c	AR2	71+53.30	12" x 5.0' CSP CONNECT TO EXIST
DP-21	38	a							634	1					4.50		38	a	AL1	73+00.00	TYPE GDO DI, W/(2) GRATE TYPE 24-12
DP-21	38	b														3.0	38	b	AL1	73+00.00	18" x 249.3' APC
DP-21	38	c							634	1					4.52		38	c	AL1	75+52.27	TYPE GDO DI, W/(2) GRATE TYPE 24-12
DP-21	38	d												1	4.30		38	d	AL1	75+52.27	REMOVE INLET (TYPE G2) (H=4.30')
DP-21	38	e														3.5	38	e	AL1	75+52.27	18" x 45.7' APC
DP-21	38	f														3.5	38	f	AL1	75+52.27	REMOVE 18" x 48' CMP
DP-21	38	g							326	1					4.93		38	g	AL1	76+00.94	TYPE G2 DI, W/(1) GRATE TYPE 24-12
DP-21	38	h												1	4.78		38	h	AL1	76+00.94	REMOVE INLET (TYPE GOM) (H=4.78')
DP-21	38	k											1			4.1	38	k	AL1	76+00.94	18" x 4.5' APC CONNECT TO EXIST
DP-21	38	l														3.5	38	l	AL1	76+00.94	REMOVE 18" x 48.0' CMP
DP-21	38	m														3.5	38	m	AL1	76+00.94	18" x 48.4' APC
DP-21	38	n							326	1					4.30		38	n	AL1	76+52.33	TYPE G2 DI, W/(1) GRATE TYPE 24-12
DP-21	38	o												1	4.55		38	o	AL1	76+52.33	REMOVE INLET (TYPE G2) (H=4.55')
DP-21	39	a			6.2				236	1					5.67		39	a	J1	377+66.31	TYPE GCP DI, W/(1) GRATE TYPE 36R
DP-21	39	b												1	4.00		39	b	J1	377+66.19	REMOVE INLET (TYPE GMP) (H=4.00')
DP-21	39	c											1			4.3	39	c	J1	377+66.31	18" x 17.3' APC CONNECT TO EXIST
DP-21	39	d											1			4.3	39	d	J1	377+66.31	18" x 4.5' APC CONNECT TO EXIST
DP-21	39	e										16.6					39	e	J1	377+66.31	VEGETATION CONTROL (MINOR CONCRETE)
DP-21	39	f							634	1					4.45		39	f	J1	377+67.14	TYPE GDO DI, W/(2) GRATE TYPE 24-12
SHEET SUB TOTAL					6.2		66.7	148.8	3424	7		16.6	4	5							

DRAINAGE QUANTITIES

DQ-36

REVISED BY | DATE REVISED
JOLENA ASTIN/TRAVIS GURNEY, SCOTT GREGORY | CHRIS GAIDO
CALCULATED-DESIGNED BY | CHECKED BY
FUNCTIONAL SUPERVISOR: JOHN L. MARTIN

STATE OF CALIFORNIA - DEPARTMENT OF TRANSPORTATION
Caltrans DESIGN

P:\proj2\04\26406\design\ps&e\426406id036.dgn

LAST REVISION 03-15-10 | DATE PLOTTED => 16-AUG-2010 | TIME PLOTTED => 08:46

Dist	COUNTY	ROUTE	POST MILES TOTAL PROJECT	SHEET No.	TOTAL SHEETS
04	Mrn	101	18.6/R22.3	173	542

REGISTERED CIVIL ENGINEER 03-15-10 DATE

8-9-10
PLANS APPROVAL DATE

REGISTERED PROFESSIONAL ENGINEER ROBERT J. NIXON No. C69123 Exp. 6-30-10 CIVIL STATE OF CALIFORNIA

THE STATE OF CALIFORNIA OR ITS OFFICERS OR AGENTS SHALL NOT BE RESPONSIBLE FOR THE ACCURACY OR COMPLETENESS OF SCANNED COPIES OF THIS PLAN SHEET.

DRAINAGE QUANTITIES

DRAINAGE PROFILE SHEET No.	DRAINAGE SYSTEM No.	DRAINAGE UNIT No.	ABANDON CULVERT	REMOVE CULVERT	REMOVE INLET	REMOVE DOWNDRAIN	REMOVE CONCRETE	CAP INLET	STRUCTURE BACKFILL (SLURRY CEMENT)	SAND BACKFILL	DITCH EXCAVATION	CLEANING AND INSPECTING PIPE	CLASS 2 AGGREGATE BASE	HOT MIX ASPHALT	PLACE HOT MIX ASPHALT (MISCELLANEOUS AREA)	MINOR CONCRETE (MINOR STRUCTURE)	DRAINAGE SYSTEM No.	DRAINAGE UNIT No.	ALIGNMENT	STATION	DESCRIPTION
			EA	EA	EA	EA	CY	EA	CY	CY	CY	EA	CY	TON	SQYD	CY					
DP-21	39	g			1		2.0										39	g	J1	377+66.14	REMOVE INLET (TYPE GOM) (H=4.44′)
DP-21	39	h							1.2					0.4	0.6	0.2	39	h	J1	377+66.14	18" x 4.0′ APC CONNECT TO EXIST
DP-21	39	k							15.0					6.3	9.0		39	k	J1	377+67.14	18" x 58.3′ APC
DP-21	39	l												1.8	4.1	1.4	39	l	J1	378+28.40	TYPE G2 DI, W/(1) GRATE TYPE 24-12
DP-22	40	a														0.7	40	a	J1	386+53.47	TYPE GCP DI, W/(1) GRATE TYPE 36R
DP-22	40	b			1		2.0										40	b	J1	386+52.93	REMOVE INLET (TYPE GMP) (H=2.46′)
DP-22	40	c														0.2	40	c	J1	386+53.47	18" x 30.3′ RCP CONNECT TO EXIST RCB
DP-22	40	d															40	d	J1	386+53.47	VEGETATION CONTROL (MINOR CONCRETE)
DP-22	40	e	1							1.5							40	e	J1	386+53.47	ABN CULV 18" x 22.8′ RCP, SAND BACKFILL
DP-22	40	f		1													40	f	J1	386+53.47	REMOVE 18" x 5.0′ RCP
DP-22	41	a												2.3	5.4	2.3	41	a	J1	385+49.16	TYPE GDO DI, W/(2) GRATE TYPE 24-12
DP-22	41	b			1		2.0										41	b	J1	385+49.16	REMOVE INLET (TYPE G2) (H=4.98′)
DP-22	41	c							1.9					0.4	0.6	0.2	41	c	J1	385+49.16	18" x 4.5′ RCP CONNECT TO EXIST
DP-22	42	a												2.3	5.4	2.8	42	a	J1	386+24.32	TYPE GDO DI, W/(2) GRATE TYPE 24-12
DP-22	42	b			1		2.0										42	b	J1	386+24.32	REMOVE INLET (TYPE G2) (H=6.62′)
DP-22	42	c							2.7					0.4	0.6	0.2	42	c	J1	386+24.32	18" x 4.5′ RCP CONNECT TO EXIST
DP-23	43	a												1.8	4.1	1.3	43	a	AR1	87+75.00	TYPE G2 DI, W/(1) GRATE TYPE 24-12
DP-23	43	b			1		1.5										43	b	AR1	87+77.06	REMOVE INLET (TYPE G2) (H=4.68′)
DP-23	43	c		1													43	c	AR1	87+77.06	REMOVE 18" x 72.0′ RCP
DP-23	43	d															43	d	AR1	87+75.00	18" x 72.0 APC
DP-23	43	e												2.1	4.8	2.0	43	e	AR1	88+50.00	TYPE GDO MOD W/(2) GRATE TYPE 24-12
DP-23	43	f			1		1.5										43	f	AR1	88+52.11	REMOVE INLET (TYPE GOM) (H=4.90′)
DP-23	43	g		1													43	g	AR1	88+52.11	REMOVE 18" x 72.0′ CSP
DP-23	43	h															43	h	AR1	88+50.00	18" x 90.0′ APC
DP-23	43	k			1		2.0										43	k	AR1	89+26.19	REMOVE INLET (TYPE G2) (H=7.09′)
DP-23	43	l						1								0.2	43	l	AR1	89+26.19	CAP INLET (18" CSP), CAP ELEV=18.17
DP-23	43	m												2.1	4.8	2.0	43	m	AR1	89+43.00	TYPE G2 DI, W/(1) GRATE TYPE 24-12
DP-23	43	n															43	n	AR1	89+43.00	18" x 26.3′ APC
DP-23	43	o	1							4.1							43	o	AR1	89+43.00	ABN CULV 18" x 62.8′ RCP, SAND BACKFILL
SHEET SUB TOTAL			2	3	7		13.0	2	20.8	5.6				19.9	39.4	13.5					

DRAINAGE QUANTITIES

DQ-37

REVISED BY | DATE REVISED
JOLENA ASTIN/TRAVIS GURNEY SCOTT GREGORY | CHRIS GAIDO
CALCULATED-DESIGNED BY | CHECKED BY
FUNCTIONAL SUPERVISOR | JOHN L. MARTIN

STATE OF CALIFORNIA - DEPARTMENT OF TRANSPORTATION
Caltrans DESIGN

P:\proj2\04\26406\design\DCCR\426406id037.dgn

LAST REVISION 03-15-10 | DATE PLOTTED => 16-AUG-2010 | TIME PLOTTED => 08:46

Dist	COUNTY	ROUTE	POST MILES TOTAL PROJECT	SHEET No.	TOTAL SHEETS
04	Mrn	101	18.6/R22.3	174	542

REGISTERED CIVIL ENGINEER 03-15-10 DATE

8-9-10
PLANS APPROVAL DATE

REGISTERED PROFESSIONAL ENGINEER ROBERT J. NIXON No. C69123 Exp. 6-30-10 CIVIL STATE OF CALIFORNIA

THE STATE OF CALIFORNIA OR ITS OFFICERS OR AGENTS SHALL NOT BE RESPONSIBLE FOR THE ACCURACY OR COMPLETENESS OF SCANNED COPIES OF THIS PLAN SHEET.

DRAINAGE QUANTITIES

DRAINAGE PROFILE SHEET No.	DRAINAGE SYSTEM No.	DRAINAGE UNIT No.	MINOR CONCRETE (APRON)	MINOR CONCRETE (HEADWALL)	18" ALTERNATIVE PIPE CULVERT	24" ALTERNATIVE PIPE CULVERT	48" REINFORCED CONCRETE PIPE (CLASS II)	54" REINFORCED CONCRETE PIPE	18" REINFORCED CONCRETE PIPE (CLASS II, RUBBER GASKET JOINT)	24" REINFORCED CONCRETE PIPE (CLASS II, RUBBER GASKET JOINT)	14"x23" OVAL SHAPED REINFORCED CONCRETE PIPE(CLASS III, RUBBER GASKET JOINT)	12" CORRUGATED STEEL PIPE (.168" THICK)	18" CORRUGATED STEEL PIPE (.168" THICK)	24" CORRUGATED STEEL PIPE (.168" THICK)	18" CORRUGATED STEEL PIPE DOWNDRAIN (.168" THICK)	12" ANCHOR ASSEMBLY	JACKED 48" REINFORCED CONCRETE PIPE (CLASS V)	DRAINAGE SYSTEM No.	DRAINAGE UNIT No.	ALIGNMENT	STATION	DESCRIPTION
			CY	CY	LF	LF	LF	LF	LF	LF	LF	LF	LF	LF	LF	EA	LF					
DP-21	39	g																39	g	J1	377+66.14	REMOVE INLET (TYPE GOM) (H=4.44′)
DP-21	39	h			4.0													39	h	J1	377+66.14	18" x 4.0′ APC CONNECT TO EXIST
DP-21	39	k			58.3													39	k	J1	377+67.14	18" x 58.3′ APC
DP-21	39	l	0.8															39	l	J1	378+28.40	TYPE G2 DI, W/(1) GRATE TYPE 24-12
DP-22	40	a																40	a	J1	386+53.47	TYPE GCP DI, W/(1) GRATE TYPE 36R
DP-22	40	b																40	b	J1	386+52.93	REMOVE INLET (TYPE GMP) (H=2.46′)
DP-22	40	c							30.3									40	c	J1	386+53.47	18" x 30.3′ RCP CONNECT TO EXIST RCB
DP-22	40	d																40	d	J1	386+53.47	VEGETATION CONTROL (MINOR CONCRETE)
DP-22	40	e																40	e	J1	386+53.47	ABN CULV 18" x 22.8′ RCP, SAND BACKFILL
DP-22	40	f																40	f	J1	386+53.47	REMOVE 18" x 5.0′ RCP
DP-22	41	a	1.7															41	a	J1	385+49.16	TYPE GDO DI, W/(2) GRATE TYPE 24-12
DP-22	41	b																41	b	J1	385+49.16	REMOVE INLET (TYPE G2) (H=4.98′)
DP-22	41	c							4.5									41	c	J1	385+49.16	18" x 4.5′ RCP CONNECT TO EXIST
DP-22	42	a	1.7															42	a	J1	386+24.32	TYPE GDO DI, W/(2) GRATE TYPE 24-12
DP-22	42	b																42	b	J1	386+24.32	REMOVE INLET (TYPE G2) (H=6.62′)
DP-22	42	c							4.5									42	c	J1	386+24.32	18" x 4.5′ RCP CONNECT TO EXIST
DP-23	43	a	0.8															43	a	AR1	87+75.00	TYPE G2 DI, W/(1) GRATE TYPE 24-12
DP-23	43	b																43	b	AR1	87+77.06	REMOVE INLET (TYPE G2) (H=4.68′)
DP-23	43	c																43	c	AR1	87+77.06	REMOVE 18" x 72.0′ RCP
DP-23	43	d			72.0													43	d	AR1	87+75.00	18" x 72.0 APC
DP-23	43	e	1.2															43	e	AR1	88+50.00	TYPE GDO MOD W/(2) GRATE TYPE 24-12
DP-23	43	f																43	f	AR1	88+52.11	REMOVE INLET (TYPE GOM) (H=4.90′)
DP-23	43	g																43	g	AR1	88+52.11	REMOVE 18" x 72.0′ CSP
DP-23	43	h			90.0													43	h	AR1	88+50.00	18" x 90.0′ APC
DP-23	43	k																43	k	AR1	89+26.19	REMOVE INLET (TYPE G2) (H=7.09′)
DP-23	43	l																43	l	AR1	89+26.19	CAP INLET (18" CSP), CAP ELEV=18.17
DP-23	43	m	1.1															43	m	AR1	89+43.00	TYPE G2 DI, W/(1) GRATE TYPE 24-12
DP-23	43	n			26.3													43	n	AR1	89+43.00	18" x 26.3′ APC
DP-23	43	o																43	o	AR1	89+43.00	ABN CULV 18" x 62.8′ RCP, SAND BACKFILL
SHEET SUB TOTAL			7.3		250.6				39.3													

DRAINAGE QUANTITIES

DQ-38

REVISED BY | DATE REVISED
JOLENA ASTIN/TRAVIS GURNEY / SCOTT GREGORY | CHRIS GAIDO
CALCULATED-DESIGNED BY | CHECKED BY
FUNCTIONAL SUPERVISOR: JOHN L. MARTIN

STATE OF CALIFORNIA - DEPARTMENT OF TRANSPORTATION
Caltrans DESIGN

P:\proj2\04\26406\design\DCCR\426406id038.dgn

LAST REVISION 03-15-10 | DATE PLOTTED => 16-AUG-2010 | TIME PLOTTED => 08:47

Dist	COUNTY	ROUTE	POST MILES TOTAL PROJECT	SHEET No.	TOTAL SHEETS
04	Mrn	101	18.6/R22.3	175	542

REGISTERED CIVIL ENGINEER 03-15-10 DATE

8-9-10
PLANS APPROVAL DATE

REGISTERED PROFESSIONAL ENGINEER ROBERT J. NIXON No. C69123 Exp. 6-30-10 CIVIL STATE OF CALIFORNIA

THE STATE OF CALIFORNIA OR ITS OFFICERS OR AGENTS SHALL NOT BE RESPONSIBLE FOR THE ACCURACY OR COMPLETENESS OF SCANNED COPIES OF THIS PLAN SHEET.

DRAINAGE QUANTITIES

DRAINAGE PROFILE SHEET No.	DRAINAGE SYSTEM No.	DRAINAGE UNIT No.	24" ALTERNATIVE FLARED END SECTION	18" STEEL FLARED END SECTION	36" PRECAST CONCRETE PIPE INLET	CHAIN LINK FENCE (TYPE CL-4, VINYL-CLAD)	ROCK SLOPE PROTECTION (BACKING NO.1, METHOD B)	ROCK SLOPE PROTECTION FABRIC	MISC. IRON AND STEEL	MARKER (CULVERT)	MARKER (CULVERT, BARRIER MOUNTED)	VEGETATION CONTROL (MINOR CONCRETE)	CONNECT TO EXIST (N)	SALVAGE GRATE (N)	DI HEIGHT (N)	MAX COVER (N)	DRAINAGE SYSTEM No.	DRAINAGE UNIT No.	ALIGNMENT	STATION	DESCRIPTION
			EA	EA	LF	LF	CY	SQYD	LB	EA	EA	SQYD	EA	EA	FT	FT					
DP-21	39	g												1	4.44		39	g	J1	377+66.14	REMOVE INLET (TYPE GOM) (H=4.44′)
DP-21	39	h											1			4.0	39	h	J1	377+66.14	18" x 4.0′ APC CONNECT TO EXIST
DP-21	39	k														3.0	39	k	J1	377+67.14	18" x 58.3′ APC
DP-21	39	l							326	1					3.50		39	l	J1	378+28.40	TYPE G2 DI, W/(1) GRATE TYPE 24-12
DP-22	40	a			3.5				236	1					3.00		40	a	J1	386+53.47	TYPE GCP DI, W/(1) GRATE TYPE 36R
DP-22	40	b												1	2.46		40	b	J1	386+52.93	REMOVE INLET (TYPE GMP) (H=2.46′)
DP-22	40	c														18.1	40	c	J1	386+53.47	18" x 30.3′ RCP CONNECT TO EXIST RCB
DP-22	40	d										16.6					40	d	J1	386+53.47	VEGETATION CONTROL (MINOR CONCRETE)
DP-22	40	e															40	e	J1	386+53.47	ABN CULV 18" x 22.8′ RCP, SAND BACKFILL
DP-22	40	f															40	f	J1	386+53.47	REMOVE 18" x 5.0′ RCP
DP-22	41	a							634	1					4.98		41	a	J1	385+49.16	TYPE GDO DI, W/(2) GRATE TYPE 24-12
DP-22	41	b												1	4.98		41	b	J1	385+49.16	REMOVE INLET (TYPE G2) (H=4.98′)
DP-22	41	c											1			9.1	41	c	J1	385+49.16	18" x 4.5′ RCP CONNECT TO EXIST
DP-22	42	a							634	1					6.62		42	a	J1	386+24.32	TYPE GDO DI, W/(2) GRATE TYPE 24-12
DP-22	42	b												1	6.62		42	b	J1	386+24.32	REMOVE INLET (TYPE G2) (H=6.62′)
DP-22	42	c											1			8.2	42	c	J1	386+24.32	18" x 4.5′ RCP CONNECT TO EXIST
DP-23	43	a							326	1					3.00		43	a	AR1	87+75.00	TYPE G2 DI, W/(1) GRATE TYPE 24-12
DP-23	43	b												1	4.68		43	b	AR1	87+77.06	REMOVE INLET (TYPE G2) (H=4.68′)
DP-23	43	c														3.2	43	c	AR1	87+77.06	REMOVE 18" x 72.0′ RCP
DP-23	43	d														2.6	43	d	AR1	87+75.00	18" x 72.0 APC
DP-23	43	e							634	1					4.17		43	e	AR1	88+50.00	TYPE GDO MOD W/(2) GRATE TYPE 24-12
DP-23	43	f												1	4.90		43	f	AR1	88+52.11	REMOVE INLET (TYPE GOM) (H=4.90′)
DP-23	43	g														5.6	43	g	AR1	88+52.11	REMOVE 18" x 72.0′ CSP
DP-23	43	h														4.2	43	h	AR1	88+50.00	18" x 90.0′ APC
DP-23	43	k												1	7.09		43	k	AR1	89+26.19	REMOVE INLET (TYPE G2) (H=7.09′)
DP-23	43	l															43	l	AR1	89+26.19	CAP INLET (18" CSP), CAP ELEV=18.17
DP-23	43	m							326	1					5.65		43	m	AR1	89+43.00	TYPE G2 DI, W/(1) GRATE TYPE 24-12
DP-23	43	n														4.64	43	n	AR1	89+43.00	18" x 26.3′ APC
DP-23	43	o															43	o	AR1	89+43.00	ABN CULV 18" x 62.8′ RCP, SAND BACKFILL
SHEET SUB TOTAL					3.5				3116	7		16.6	3	7							

DRAINAGE QUANTITIES

DQ-39

CALCULATED-DESIGNED BY JOLENA ASTIN/TRAVIS GURNEY SCOTT GREGORY
CHECKED BY CHRIS GAIDO
REVISED BY
DATE REVISED
FUNCTIONAL SUPERVISOR JOHN L. MARTIN

STATE OF CALIFORNIA - DEPARTMENT OF TRANSPORTATION
Caltrans DESIGN

P:\proj2\04\26406\design\DCCR\426406id039.dgn

LAST REVISION 03-15-10 DATE PLOTTED => 16-AUG-2010 TIME PLOTTED => 08:47

Dist	COUNTY	ROUTE	POST MILES TOTAL PROJECT	SHEET No.	TOTAL SHEETS
04	Mrn	101	18.6/R22.3	176	542

REGISTERED CIVIL ENGINEER 03-15-10 DATE

8-9-10
PLANS APPROVAL DATE

REGISTERED PROFESSIONAL ENGINEER ROBERT J. NIXON No. C69123 Exp. 6-30-10 CIVIL STATE OF CALIFORNIA

THE STATE OF CALIFORNIA OR ITS OFFICERS OR AGENTS SHALL NOT BE RESPONSIBLE FOR THE ACCURACY OR COMPLETENESS OF SCANNED COPIES OF THIS PLAN SHEET.

DRAINAGE QUANTITIES

DRAINAGE PROFILE SHEET No.	DRAINAGE SYSTEM No.	DRAINAGE UNIT No.	ABANDON CULVERT	REMOVE CULVERT	REMOVE INLET	REMOVE DOWNDRAIN	REMOVE CONCRETE	CAP INLET	STRUCTURE BACKFILL (SLURRY CEMENT)	SAND BACKFILL	DITCH EXCAVATION	CLEANING AND INSPECTING PIPE	CLASS 2 AGGREGATE BASE	HOT MIX ASPHALT	PLACE HOT MIX ASPHALT (MISCELLANEOUS AREA)	MINOR CONCRETE (MINOR STRUCTURE)	DRAINAGE SYSTEM No.	DRAINAGE UNIT No.	ALIGNMENT	STATION	DESCRIPTION
			EA	EA	EA	EA	CY	EA	CY	CY	CY	EA	CY	TON	SQYD	CY				STATION	
DP-23	43	p												2.1	4.8	3.8	43	p	AR1	89+72.82	TYPE G2 DI, W/(1) GRATE TYPE 24-12
DP-23	43	q															43	q	AR1	89+72.82	18" x 12.5' CSP
DP-23	43	r														1.6	43	r	AR1	89+68.10	TYPE G2 DI, W/(1) GRATE TYPE 24-12
DP-23	43	s														0.2	43	s	AR1	89+68.10	18" x 2.8' CSP, CONNECT TO EXIST
DP-23	43	t															43	t	AR1	89+68.10	VEGETATION CONTROL (MINOR CONCRETE)
DP-23	44	a														0.7	44	a	J1	395+02.27	TYPE GCP DI, W/(1) GRATE TYPE 36R
DP-23	44	b			1		1.0										44	b	J1	395+01.62	REMOVE INLET (TYPE GMP) (H=4.00')
DP-23	44	c														0.2	44	c	J1	395+02.27	18" x 17.0' RCP CONNECT TO EXIST
DP-23	44	d														0.2	44	d	J1	395+02.27	18" x 4.5' RCP, CONNECT TO EXIST
DP-23	44	e												2.3	5.4	2.8	44	e	J1	395+01.56	TYPE GDO DI, W/(2) GRATE TYPE 24-12
DP-23	44	f			1		2.0										44	f	J1	395+01.56	REMOVE INLET (TYPE G2) (H=6.43')
DP-23	44	g							1.4					0.3	0.4	0.2	44	g	J1	395+01.56	18" x 3.0' RCP, CONNECT TO EXIST
DP-23	44	h														0.2	44	h	J1	395+01.56	18" x 4.5' RCP, CONNECT TO EXIST
DP-23	44	k															44	k	J1	395+02.27	VEGETATION CONTROL (MINOR CONCRETE)
DP-23	44	l												2.3	5.4	2.4	44	l	J1	395+05.21	TYPE GDO DI, W/(2) GRATE TYPE 24-12
DP-23	44	m			1		2.0										44	m	J1	395+05.21	REMOVE INLET (TYPE G2) (H=5.64')
DP-23	44	n							2.3					0.4	0.6	0.2	44	n	J1	395+05.21	18" x 4.5' RCP, CONNECT TO EXIST
DP-24	BS1	a									14						BS1	a	J1	214+00.00	BIOFILTRATION SWALE DITCH EXC
DP-24	BS2	a									44						BS2	a	J1	226+07.27	BIOFILTRATION SWALE DITCH EXC
DP-24	BS3	a									44						BS3	a	J1	281+00.00	BIOFILTRATION SWALE DITCH EXC
DP-24	BS4	a									#						BS4	a	J1	332+03.07	BIOFILTRATION SWALE DITCH EXC
DP-24	BS5	a									27						BS5	a	J1	308+00.00	BIOFILTRATION SWALE DITCH EXC
SHEET SUB TOTAL					3		5.0		3.7		129			7.4	16.6	12.5					

SEE ROADWAY QUANTITIES

DRAINAGE QUANTITIES

DQ-40

REVISED BY | DATE REVISED
JOLENA ASTIN/TRAVIS GURNEY SCOTT GREGORY | CHRIS GAIDO
CALCULATED-DESIGNED BY | CHECKED BY
FUNCTIONAL SUPERVISOR | JOHN L. MARTIN

STATE OF CALIFORNIA - DEPARTMENT OF TRANSPORTATION
Caltrans DESIGN

P:\proj2\04\26406\design\DCCR\426406id040.dgn

LAST REVISION 03-15-10 | DATE PLOTTED => 16-AUG-2010 TIME PLOTTED => 08:47

Dist	COUNTY	ROUTE	POST MILES TOTAL PROJECT	SHEET No.	TOTAL SHEETS
04	Mrn	101	18.6/R22.3	177	542

REGISTERED CIVIL ENGINEER 03-15-10 DATE

8-9-10
PLANS APPROVAL DATE

REGISTERED PROFESSIONAL ENGINEER ROBERT J. NIXON No. C69123 Exp. 6-30-10 CIVIL STATE OF CALIFORNIA

THE STATE OF CALIFORNIA OR ITS OFFICERS OR AGENTS SHALL NOT BE RESPONSIBLE FOR THE ACCURACY OR COMPLETENESS OF SCANNED COPIES OF THIS PLAN SHEET.

DRAINAGE QUANTITIES

DRAINAGE PROFILE SHEET No.	DRAINAGE SYSTEM No. ⬡	DRAINAGE UNIT No. ○	MINOR CONCRETE (APRON)	MINOR CONCRETE (HEADWALL)	18" ALTERNATIVE PIPE CULVERT	24" ALTERNATIVE PIPE CULVERT	48" REINFORCED CONCRETE PIPE (CLASS II)	54" REINFORCED CONCRETE PIPE	18" REINFORCED CONCRETE PIPE (CLASS II, RUBBER GASKET JOINT)	24" REINFORCED CONCRETE PIPE (CLASS II, RUBBER GASKET JOINT)	14"X23" OVAL SHAPED REINFORCED CONCRETE PIPE(CLASS III, RUBBER GASKET JOINT)	12" CORRUGATED STEEL PIPE (.168" THICK)	18" CORRUGATED STEEL PIPE (.168" THICK)	24" CORRUGATED STEEL PIPE (.168" THICK)	18" CORRUGATED STEEL PIPE DOWNDRAIN (.168" THICK)	12" ANCHOR ASSEMBLY	JACKED 48" REINFORCED CONCRETE PIPE (CLASS V)	DRAINAGE SYSTEM No. ⬡	DRAINAGE UNIT No. ○	ALIGNMENT	STATION	DESCRIPTION
			CY	CY	LF	LF	LF	LF	LF	LF	LF	LF	LF	LF	LF	EA	LF					
DP-23	43	p	1.1															43	p	AR1	89+72.82	TYPE G2 DI, W/(1) GRATE TYPE 24-12
DP-23	43	q											12.5					43	q	AR1	89+72.82	18" x 12.5' CSP
DP-23	43	r																43	r	AR1	89+68.10	TYPE G2 DI, W/(1) GRATE TYPE 24-12
DP-23	43	s											2.8					43	s	AR1	89+68.10	18" x 2.8' CSP, CONNECT TO EXIST
DP-23	43	t																43	t	AR1	89+68.10	VEGETATION CONTROL (MINOR CONCRETE)
DP-23	44	a																44	a	J1	395+02.27	TYPE GCP DI, W/(1) GRATE TYPE 36R
DP-23	44	b																44	b	J1	395+01.62	REMOVE INLET (TYPE GMP) (H=4.00')
DP-23	44	c							17.0									44	c	J1	395+02.27	18" x 17.0' RCP, CONNECT TO EXIST
DP-23	44	d							4.5									44	d	J1	395+02.27	18" x 4.5' RCP, CONNECT TO EXIST
DP-23	44	e	1.7															44	e	J1	395+01.56	TYPE GDO DI, W/(2) GRATE TYPE 24-12
DP-23	44	f																44	f	J1	395+01.56	REMOVE INLET (TYPE G2) (H=6.43')
DP-23	44	g							3.0									44	g	J1	395+01.56	18" x 3.0' RCP, CONNECT TO EXIST
DP-23	44	h							4.5									44	h	J1	395+01.56	18" x 4.5' RCP, CONNECT TO EXIST
DP-23	44	k																44	k	J1	395+02.27	VEGETATION CONTROL (MINOR CONCRETE)
DP-23	44	l	1.2															44	l	J1	395+05.21	TYPE GDO DI, W/(2) GRATE TYPE 24-12
DP-23	44	m																44	m	J1	395+05.21	REMOVE INLET (TYPE G2) (H=5.64')
DP-23	44	n							4.5									44	n	J1	395+05.21	18" x 4.5' RCP, CONNECT TO EXIST
DP-24	BS1	a																BS1	a	J1	214+00.00	BIOFILTRATION SWALE DITCH EXC
DP-24	BS2	a																BS2	a	J1	226+07.27	BIOFILTRATION SWALE DITCH EXC
DP-24	BS3	a																BS3	a	J1	281+00.00	BIOFILTRATION SWALE DITCH EXC
DP-24	BS4	a																BS4	a	J1	332+03.07	BIOFILTRATION SWALE DITCH EXC
DP-24	BS5	a																BS5	a	J1	308+00.00	BIOFILTRATION SWALE DITCH EXC
SHEET SUB TOTAL			4.0						33.5				15.3									

DRAINAGE QUANTITIES

DQ-41

JOLENA ASTIN/TRAVIS GURNEY SCOTT GREGORY — CALCULATED-DESIGNED BY
CHRIS GAIDO — CHECKED BY
REVISED BY — DATE REVISED
FUNCTIONAL SUPERVISOR: JOHN L. MARTIN

STATE OF CALIFORNIA - DEPARTMENT OF TRANSPORTATION
Caltrans DESIGN

P:\proj2\04\26406\design\DCCR\426406id041.dgn

LAST REVISION 03-15-10 | DATE PLOTTED => 16-AUG-2010 | TIME PLOTTED => 08:47

Dist	COUNTY	ROUTE	POST MILES TOTAL PROJECT	SHEET No.	TOTAL SHEETS
04	Mrn	101	18.6/R22.3	178	542

REGISTERED CIVIL ENGINEER 03-15-10 DATE

8-9-10
PLANS APPROVAL DATE

REGISTERED PROFESSIONAL ENGINEER ROBERT J. NIXON No. C69123 Exp. 6-30-10 CIVIL STATE OF CALIFORNIA

THE STATE OF CALIFORNIA OR ITS OFFICERS OR AGENTS SHALL NOT BE RESPONSIBLE FOR THE ACCURACY OR COMPLETENESS OF SCANNED COPIES OF THIS PLAN SHEET.

DRAINAGE QUANTITIES

DRAINAGE PROFILE SHEET No.	DRAINAGE SYSTEM No.	DRAINAGE UNIT No.	24" ALTERNATIVE FLARED END SECTION	18" STEEL FLARED END SECTION	36" PRECAST CONCRETE PIPE INLET	CHAIN LINK FENCE (TYPE CL-4, VINYL-CLAD)	ROCK SLOPE PROTECTION (BACKING NO.1, METHOD B)	ROCK SLOPE PROTECTION FABRIC	MISC. IRON AND STEEL	MARKER (CULVERT)	MARKER (CULVERT, BARRIER MOUNTED)	VEGETATION CONTROL (MINOR CONCRETE)	CONNECT TO EXIST (N)	SALVAGE GRATE (N)	DI HEIGHT (N)	MAX COVER (N)	DRAINAGE SYSTEM No.	DRAINAGE UNIT No.	ALIGNMENT	STATION	DESCRIPTION
			EA	EA	LF	LF	CY	SQYD	LB	EA	EA	SQYD	EA	EA	FT	FT					
DP-23	43	p							326	1					8.76		43	p	AR1	89+72.82	TYPE G2 DI, W/(1) GRATE TYPE 24-12
DP-23	43	q														1.1	43	q	AR1	89+72.82	18" x 12.5' CSP
DP-23	43	r							326	1					4.00		43	r	AR1	89+68.10	TYPE G2 DI, W/(1) GRATE TYPE 24-12
DP-23	43	s											1			6.3	43	s	AR1	89+68.10	18" x 2.8' CSP, CONNECT TO EXIST
DP-23	43	t										16.6					43	t	AR1	89+68.10	VEGETATION CONTROL (MINOR CONCRETE)
DP-23	44	a			6.4				236	1					5.89		44	a	J1	395+02.27	TYPE GCP DI, W/(1) GRATE TYPE 36R
DP-23	44	b												1	4.00		44	b	J1	395+01.62	REMOVE INLET (TYPE GMP) (H=4.00')
DP-23	44	c											1			4.5	44	c	J1	395+02.27	18" x 17.0' RCP, CONNECT TO EXIST
DP-23	44	d											1			4.5	44	d	J1	395+02.27	18" x 4.5' RCP, CONNECT TO EXIST
DP-23	44	e							634	1					6.50		44	e	J1	395+01.56	TYPE GDO DI, W/(2) GRATE TYPE 24-12
DP-23	44	f												1	6.43		44	f	J1	395+01.56	REMOVE INLET (TYPE G2) (H=6.43')
DP-23	44	g											1			5.1	44	g	J1	395+01.56	18" x 3.0' RCP, CONNECT TO EXIST
DP-23	44	h											1			5.1	44	h	J1	395+01.56	18" x 4.5' RCP, CONNECT TO EXIST
DP-23	44	k										16.6					44	k	J1	395+02.27	VEGETATION CONTROL (MINOR CONCRETE)
DP-23	44	l							634	1					5.46		44	l	J1	395+05.21	TYPE GDO DI, W/(2) GRATE TYPE 24-12
DP-23	44	m												1	5.64		44	m	J1	395+05.21	REMOVE INLET (TYPE G2) (H=5.64')
DP-23	44	n											1			4.1	44	n	J1	395+05.21	18" x 4.5' RCP, CONNECT TO EXIST
DP-24	BS1	a															BS1	a	J1	214+00.00	BIOFILTRATION SWALE DITCH EXC
DP-24	BS2	a															BS2	a	J1	226+07.27	BIOFILTRATION SWALE DITCH EXC
DP-24	BS3	a															BS3	a	J1	281+00.00	BIOFILTRATION SWALE DITCH EXC
DP-24	BS4	a															BS4	a	J1	332+03.07	BIOFILTRATION SWALE DITCH EXC
DP-24	BS5	a															BS5	a	J1	308+00.00	BIOFILTRATION SWALE DITCH EXC
SHEET SHEET SUB TOTAL					6.4				2156	5		33.2	6	3							

DRAINAGE QUANTITIES

DQ-42

REVISED BY | DATE REVISED
JOLENA ASTIN/TRAVIS GURNEY SCOTT GREGORY | CHRIS GAIDO
CALCULATED-DESIGNED BY | CHECKED BY
FUNCTIONAL SUPERVISOR
JOHN L. MARTIN

STATE OF CALIFORNIA - DEPARTMENT OF TRANSPORTATION
Caltrans DESIGN

P:\proj2\04\26406\design\DCCR\426406id042.dgn

LAST REVISION 03-15-10 | DATE PLOTTED => 16-AUG-2010 TIME PLOTTED => 08:47

Dist	COUNTY	ROUTE	POST MILES TOTAL PROJECT	SHEET No.	TOTAL SHEETS
04	Mrn	101	18.6/R22.3	179	542

REGISTERED CIVIL ENGINEER 03-15-10 DATE

8-9-10
PLANS APPROVAL DATE

REGISTERED PROFESSIONAL ENGINEER ROBERT J. NIXON No. C69123 Exp. 6-30-10 CIVIL STATE OF CALIFORNIA

THE STATE OF CALIFORNIA OR ITS OFFICERS OR AGENTS SHALL NOT BE RESPONSIBLE FOR THE ACCURACY OR COMPLETENESS OF SCANNED COPIES OF THIS PLAN SHEET.

DRAINAGE SUMMARY

	ABANDON CULVERT	REMOVE CULVERT	REMOVE INLET	REMOVE DOWNDRAIN	REMOVE CONCRETE	CAP INLET	STRUCTURE BACKFILL (SLURRY CEMENT)	SAND BACKFILL	DITCH EXCAVATION	CLEANING AND INSPECTING PIPE	CLASS 2 AGGREGATE BASE	HOT MIX ASPHALT	PLACE HOT MIX ASPHALT (MISCELLANEOUS AREA)	MINOR CONCRETE (MINOR STRUCTURE)
	EA	EA	EA	EA	CY	EA	CY	CY	CY	EA	CY	TON	SQYD	CY
DRAIN QTY SUBTOTAL, SHT DQ-1		1	2		3.2	1	494.0		18			28.7	59.4	25.0
DRAIN QTY SUBTOTAL, SHT DQ-4		3	4		5.5	2	242.5		18		27	76.1	118.8	14.9
DRAIN QTY SUBTOTAL, SHT DQ-7		3	5		5.7	3	133.0					53.2	105.4	17.2
DRAIN QTY SUBTOTAL, SHT DQ-10		1	5		5.7		62.2					46.1	86.7	23.5
DRAIN QTY SUBTOTAL, SHT DQ-13			3	1	4.7	1	200.3					81.2	126.1	13.4
DRAIN QTY SUBTOTAL, SHT DQ-16		1	4	1	5.7		100.6					64.0	104.5	23.7
DRAIN QTY SUBTOTAL, SHT DQ-19		3	5	1	8.0		77.1					43.7	76.5	14.1
DRAIN QTY SUBTOTAL, SHT DQ-22	3		5		6.2		5.4	43.4				8.1	26.3	8.2
DRAIN QTY SUBTOTAL, SHT DQ-25		1	5		7.0		132.6					36.8	60.2	21.2
DRAIN QTY SUBTOTAL, SHT DQ-28		1	5		8.0		104.7					42.0	67.6	13.8
DRAIN QTY SUBTOTAL, SHT DQ-31		1	4		6.7	1	27.2		230	2		18.0	33.6	12.0
DRAIN QTY SUBTOTAL, SHT DQ-34		5	5		7.7		0.8					12.9	29.3	13.0
DRAIN QTY SUBTOTAL, SHT DQ-37	2	3	7		13.0	1	20.8	5.6				19.9	39.4	13.5
DRAIN QTY SUBTOTAL, SHT DQ-40			3		5.0		3.7		129			7.4	16.6	12.5
TOTAL DQ SHEETS	5	23	62	3	92.1*	9	1604.9	49.0	395	2	27*	538.1*	950.4*	226.0

* ADDITIONAL QUANTITIES SHOWN ELSEWHERE, SEE SHEET Q-4 FOR TOTAL QUANTITY.

DRAINAGE SUMMARY

	MINOR CONCRETE (APRON)	MINOR CONCRETE (HEADWALL)	18" ALTERNATIVE PIPE CULVERT	24" ALTERNATIVE PIPE CULVERT	48" REINFORCED CONCRETE PIPE (CLASS II)	54" REINFORCED CONCRETE PIPE	18" REINFORCED CONCRETE PIPE (CLASS II, RUBBER GASKET JOINT)	24" REINFORCED CONCRETE PIPE (CLASS II, RUBBER GASKET JOINT)	14"x23" OVAL SHAPED REINFORCEDCONCRETE PIPE(CLASS III, RUBBER GASKET JOINT)	12" CORRUGATED STEEL PIPE (.168" THICK)	18" CORRUGATED STEEL PIPE (.168" THICK)	24" CORRUGATED STEEL PIPE (.168" THICK)	18" CORRUGATED STEEL PIPE DOWNDRAIN (.168 THICK)	12" ANCHOR ASSEMBLY	JACKED 48" REINFORCED CONCRETE PIPE (CLASS V)
	CY	CY	LF	LF	LF	LF	LF	LF	LF	LF	LF	LF	LF	EA	LF
DRAIN QTY SUBTOTAL, SHT DQ-2	12.3		224.0			228	785.1		95.5						
DRAIN QTY SUBTOTAL, SHT DQ-5	10.8		44.7				689.6		424.9						
DRAIN QTY SUBTOTAL, SHT DQ-8	7.1		710.6				178.2	5.0			9				
DRAIN QTY SUBTOTAL, SHT DQ-11	10.1		659.4				254.7	30.3							
DRAIN QTY SUBTOTAL, SHT DQ-14	7.0		717.6	19.0			200.0				5				
DRAIN QTY SUBTOTAL, SHT DQ-17	9.4		905.3	4.5			300.0						43	2	
DRAIN QTY SUBTOTAL, SHT DQ-20	5.1		307.4				77.7	126.5			3		42	2	
DRAIN QTY SUBTOTAL, SHT DQ-23	3.4		54.6				215.3	247.3		4.5	4.5				
DRAIN QTY SUBTOTAL, SHT DQ-26	5.8		239.2		393		81.4				3	5			
DRAIN QTY SUBTOTAL, SHT DQ-29	5.3		302.4				300.9	4.5			5				
DRAIN QTY SUBTOTAL, SHT DQ-32	6.3	10.9	82.8				13.5			3	35				470
DRAIN QTY SUBTOTAL, SHT DQ-35	7.2		369.7							5					
DRAIN QTY SUBTOTAL, SHT DQ-38	7.3		250.6				39.3								
DRAIN QTY SUBTOTAL, SHT DQ-41	4.0						33.5				15.3				
TOTAL DQ SHEETS	101.1	10.9	4868.3	23.5	393	228	3169.2	413.6	520.4	12.5	79.8	5	85	4	470

DRAINAGE QUANTITIES

DQ-43

REVISED BY	DATE REVISED

JOLENA ASTIN/TRAVIS GURNEY
SCOTT GREGORY
CALCULATED-DESIGNED BY

CHRIS GAIDO
CHECKED BY

FUNCTIONAL SUPERVISOR
JOHN L. MARTIN

STATE OF CALIFORNIA - DEPARTMENT OF TRANSPORTATION
Caltrans DESIGN

P:\proj2\04\26406\design\DCCR\426406id043.dgn

LAST REVISION 03-15-10
DATE PLOTTED => 16-AUG-2010
TIME PLOTTED => 08:47

Dist	COUNTY	ROUTE	POST MILES TOTAL PROJECT	SHEET No.	TOTAL SHEETS
04	Mrn	101	18.6/R22.3	180	542

REGISTERED CIVIL ENGINEER 03-15-10 DATE

8-9-10
PLANS APPROVAL DATE

REGISTERED PROFESSIONAL ENGINEER ROBERT J. NIXON No. C69123 Exp. 6-30-10 CIVIL STATE OF CALIFORNIA

THE STATE OF CALIFORNIA OR ITS OFFICERS OR AGENTS SHALL NOT BE RESPONSIBLE FOR THE ACCURACY OR COMPLETENESS OF SCANNED COPIES OF THIS PLAN SHEET.

DRAINAGE SUMMARY

	24" ALTERNATIVE FLARED END SECTION	18" STEEL FLARED END SECTION	36" PRECAST CONCRETE PIPE INLET	CHAIN LINK FENCE (TYPE CL-4, VINYL-CLAD)	ROCK SLOPE PROTECTION (BACKING NO.1, METHOD B)	ROCK SLOPE PROTECTION FABRIC	MISCELLANEOUS IRON AND STEEL	MARKER (CULVERT)	MARKER (CULVERT, BARRIER MOUNTED)	VEGETATION CONTROL (MINOR CONCRETE)	CONNECT TO EXIST (N)	SALVAGE GRATE (N)
	EA	EA	LF	LF	CY	SQYD	LB	EA	EA	SQYD	EA	EA
DRAIN QTY SUBTOTAL, SHT DQ-3		1	2.1	62.0	3.3	13.4	4772	12		16.6	5	3
DRAIN QTY SUBTOTAL, SHT DQ-6			2.2		23.0	35.6	4058	8			2	4
DRAIN QTY SUBTOTAL, SHT DQ-9			3.9				3732	4	2		3	5
DRAIN QTY SUBTOTAL, SHT DQ-12					4.6	17.4	4130	3	5		6	5
DRAIN QTY SUBTOTAL, SHT DQ-15	1		15.8		12.5	41.0	3878	8		49.8	4	3
DRAIN QTY SUBTOTAL, SHT DQ-18		1	6.9		7.9	27.1	4674	7	1	16.6	3	4
DRAIN QTY SUBTOTAL, SHT DQ-21			11.5		52.7	79.1	3134	5	3		3	5
DRAIN QTY SUBTOTAL, SHT DQ-24			25.5		11.2	67.3	1976	4	1	66.4	8	5
DRAIN QTY SUBTOTAL, SHT DQ-27			11.0				4955	8		53.4	7	5
DRAIN QTY SUBTOTAL, SHT DQ-30			18.5				3642	7		49.8	8	5
DRAIN QTY SUBTOTAL, SHT DQ-33			5.4	80.2	60.4	87.3	2772	7		16.6	4	4
DRAIN QTY SUBTOTAL, SHT DQ-36			6.2		66.7	148.8	3424	7		16.6	4	5
DRAIN QTY SUBTOTAL, SHT DQ-39			3.5				3116	7		16.6	3	7
DRAIN QTY SUBTOTAL, SHT DQ-42			6.4				2156	5		33.2	6	3
TOTAL DQ SHEETS	1	2	118.9	142.2	242.3	517.0	50419	93	12	335.6*	66	63

* ADDITIONAL QUANTITIES SHOWN ELSEWHERE, SEE SHEET Q-4 FOR TOTAL QUANTITY.

EXTEND IRRIGATION CROSSOVERS

LOCATION		SIDE			EXTEND CONDUIT	CB	OL	(N) WATER LINE CROSSOVER SIZE (INCH)	(N) SPRINKLER CONTROL CROSSOVER SIZE (INCH)
LINE	STATION	LEFT	MEDIAN	RIGHT	SIZE (INCH) 8" LENGTH (LF)				
"J1"	296+20		X		31	X		3	1
"J1"	316+20		X		33	X		3	1
"J1"	316+20			X	9	X		3	1
"J1"	333+70		X		35	X		3	1
"J1"	341+80		X		37	X		3	1
"J1"	350+80		X		25	X		3	1
"J1"	363+80		X		40	X		3	1
"J1"	371+80		X		31	X		3	1
"J1"	379+80		X		33	X		3	1
"J1"	388+80		X		26	X		3	1
TOTAL					300				

(N) - NOT A SEPARATE PAY ITEM FOR INFORMATION ONLY
X - DENOTES REQUIREMENT
CB - COUPLING BAND
OL - OVERLAP

IRRIGATION CROSSOVERS

LOCATION		SIDE		CONDUIT TYPE WSP	(N) WATER LINE CROSSOVER SIZE (INCH)	(N) SPRINKLER CONTROL CROSSOVER SIZE (INCH)
LINE	STATION	L†	R†	SIZE (INCH) 8" (0.25" THICK) LENGTH (LF)		
"IR1"	36+75.0			50	3	1
"DL1"	36+44.9			50	3	1
"DR1"	32+85.5			50	3	1
"DR2"	39+23.6			50	3	1
"AL1"	81+52.9			50	3	1
"AR2"	77+48.7			50	3	1
"AR1"	84+26.1			50	3	1
TOTAL				350		

(N) - NOT A SEPARATE PAY ITEM FOR INFORMATION ONLY
X - DENOTES REQUIREMENT

CONDUIT TYPE:

(Applicable when circled below and shown under the 'CONDUIT TYPE' column heading)

1 BITUMINOUS COATED CORRUGATED STEEL PIPE (0.064 INCH THICK)
2 CORRUGATED STEEL PIPE (0.064 INCH THICK)
3 CORRUGATED HIGH DENSITY POLYETHYLENE PIPE
4 ALTERNATIVE CONDUIT
5 WELDED STEEL PIPE

BIOSWALE TABLE

BIOSWALE LIMITS		LT/RT	DITCH EXC
			CY
"J1" 212+00.00	"J1" 218+00.00	LT	80
"J1" 220+00.00	"J1" 226+30.00	LT	80
"J1" 256+75.00	"J1" 262+75.00	RT	80
"J1" 262+65.00	"J1" 270+10.00	LT	90
"J1" 265+60.00	"J1" 270+30.00	RT	65
"J1" 280+00.00	"J1" 287+50.00	LT	90
"J1" 292+00.00	"J1" 297+00.00	RT	65
"IL1" 13+80.00	"IL1" 14+40.00	LT	#
"IL1" 15+55.00	"J1" 18+40.00	LT	#
"RR1" 91+00.00	"RR1" 98+00.00	RT	#
TOTAL			550*

SEE ROADWAY QUANTITIES

ABANDON IRRIGATION CROSSOVERS

LOCATION		SIDE			CONDUIT	ABANDON IRRIGATION CROSSOVER
LINE	STATION	LEFT	MEDIAN	RIGHT	SIZE (INCH)	EA
"J1"	277+20		X		8	1
"J1"	287+20		X		8	1
"DL1"	33+60	X			8	1
"AL1"	79+80	X			8	1
"AR1"	88+70			X	8	1
TOTAL						5

(N) - NOT A SEPARATE PAY ITEM FOR INFORMATION ONLY
X - DENOTES REQUIREMENT

DRAINAGE QUANTITIES

DQ-44

REVISED BY | DATE REVISED
JOLENA ASTIN/TRAVIS GURNEY SCOTT GREGORY | CHRIS GAIDO
CALCULATED-DESIGNED BY | CHECKED BY
FUNCTIONAL SUPERVISOR | JOHN L. MARTIN

STATE OF CALIFORNIA - DEPARTMENT OF TRANSPORTATION
Caltrans DESIGN

P:\proj2\04\26406_plans\pse\resubmit 08-09-10\426406id044.dgn

LAST REVISION 03-15-10 | DATE PLOTTED => 16-AUG-2010 TIME PLOTTED => 08:47

Dist	COUNTY	ROUTE	POST MILES TOTAL PROJECT	SHEET No.	TOTAL SHEETS
04	Mrn	101	18.6/R22.3	181	542

REGISTERED CIVIL ENGINEER 03-15-10 DATE

8-9-10
PLANS APPROVAL DATE

REGISTERED PROFESSIONAL ENGINEER ROBERT J. NIXON No. C69123 Exp. 6-30-10 CIVIL STATE OF CALIFORNIA

THE STATE OF CALIFORNIA OR ITS OFFICERS OR AGENTS SHALL NOT BE RESPONSIBLE FOR THE ACCURACY OR COMPLETENESS OF SCANNED COPIES OF THIS PLAN SHEET.

MARKER (CULVERT)

DRAINAGE SYSTEM No. AND UNIT No.	ALIGNMENT	STATION	POSTMILE	LEFT	MEDIAN	RIGHT	MARKER CULVERT	MARKER CULVERT BARRIER MOUNTED
							EA	EA
1a	"J1"	205+00	18.61	X			1	
1c	"J1"	208+00	18.66	X			1	
1e	"J1"	209+95	18.70	X			1	
1g	"J1"	210+93	18.72	X			1	
1m	"J1"	211+93	18.74	X			1	
1q	"J1"	212+86	18.76	X			1	
1s	"J1"	213+55	18.77	X			1	
1Ab	"J1"	212+14	18.74	X			1	
1Ca	"J1"	219+69	18.89	X			1	
1Cc	"J1"	221+70	18.92	X			1	
2b	"J1"	234+88	19.17	X			1	
2b	"J1"	234+88	19.17			X	1	
3a	"J1"	236+30	19.20			X	1	
3c	"J1"	236+67	19.21			X	1	
3f	"J1"	236+67	19.21			X	1	
3n	"J1"	239+96	19.27			X	1	
3p	"J1"	243+99	19.35			X	1	
3r	"J1"	247+00	19.41			X	1	
5a	"J1"	251+50	19.49	X			1	
6a	"J1"	250+50	19.47			X	1	
6f	"J1"	251+50	19.49			X	1	
9a	"J1"	263+00	19.71			X	1	
9d	"J1"	267+00	19.79			X	1	
11c	"J1"	284+43	20.12		X		1	
11h	"J1"	286+00	20.15		X		1	
11m	"J1"	288+28	20.19		X			1
12a	"J1"	290+00	20.22		X			1
12c	"J1"	292+98	20.28		X			1
13a	"J1"	295+00	20.32		X			1
13d	"J1"	296+99	20.36		X			1
13g	"J1"	299+50	20.40		X			1
14a	"J1"	298+00	20.38			X	1	
15Ac	"J1"	302+00	20.45		X			1
15a	"J1"	302+00	20.45			X	1	
15b	"J1"	304+23	20.49			X	1	
16c	"J1"	307+85	20.56		X		1	
16g	"J1"	310+50	20.61		X		1	
17a	"J1"	307+49	20.56			X	1	
17e	"J1"	309+00	20.58			X	1	
18a	"J1"	311+50	20.63			X	1	
18c	"J1"	313+55	20.67			X	1	
18m	"J1"	316+50	20.73			X	1	
19a	"J1"	313+56	20.67		X		1	
19f	"J1"	316+50	20.73		X		1	
20a	"J1"	320+00	20.79		X		1	
20g	"J1"	321+00	20.81		X		1	
20k	"J1"	322+50	20.84		X		1	
20o	"J1"	324+70	20.88		X		1	
21a	"J1"	317+61	20.75	X			1	
21h	"J1"	320+01	20.79	X			1	
21m	"J1"	322+45	20.84	X				1
21o	"J1"	324+56	20.88	X				1
21q	"J1"	326+15	20.91	X				1
						SUBTOTAL	43	10

MARKER (CULVERT)

DRAINAGE SYSTEM No. AND UNIT No.	ALIGNMENT	STATION	POSTMILE	LEFT	MEDIAN	RIGHT	MARKER CULVERT	MARKER CULVERT BARRIER MOUNTED
							EA	EA
22c	"J1"	332+28	21.03	X			1	
22k	"J1"	332+76	21.04	X			1	
22m	"J1"	333+17	21.04	X			1	
23a	"J1"	329+68	20.98			X	1	
23e	"J1"	330+88	21.00			X	1	
24a	"J1"	336+25	21.10		X			1
24k	"J1"	337+52	21.13		X			1
24q	"J1"	340+02	21.17		X		1	
24x	"J1"	342+02	21.21		X		1	
25a	"J1"	342+02	21.21			X	1	
26a	"J1"	343+00	21.23			X	1	
27a	"J1"	346+02	21.29		X		1	
27h	"J1"	350+00	21.36		X		1	
28a	"J1"	345+50	21.28	X			1	
29a	"J1"	346+01	21.29			X	1	
30a	"J1"	347+97	21.33			X	1	
30c	"J1"	350+03	21.37			X	1	
31a	"J1"	355+00	21.46		X		1	
31d	"J1"	355+42	21.47		X		1	
32a	"J1"	352+00	21.40			X	1	
32c	"J1"	353+50	21.43			X	1	
32e	"J1"	355+02	21.46			X	1	
33a	"J1"	360+99	21.57		X		1	
33g	"J1"	363+77	21.63	X			1	
33m	"J1"	363+77	21.63		X		1	
33r	"J1"	363+76	21.63			X	1	
34a	"J1"	360+26	21.56			X	1	
35a	"J1"	367+00	21.69			X	1	
35c	"J1"	367+86	21.70			X	1	
36b	"J1"	369+03	21.73		X		1	
36e	"J1"	368+10	21.71			X	1	
36e	"J1"	369+00	21.73	X			1	
36k	"J1"	369+03	21.73	X			1	
37a	"J1"	371+51	21.77			X	1	
38a	"J1"	372+99	21.80	X			1	
38c	"J1"	375+49	21.85	X			1	
38g	"J1"	375+97	21.86	X			1	
38n	"J1"	376+48	21.87	X			1	
39a	"J1"	377+66	21.89		X		1	
39f	"J1"	377+67	21.89			X	1	
39l	"J1"	378+28	21.90			X	1	
40a	"J1"	386+50	22.06		X		1	
41a	"J1"	385+47	22.04	X			1	
42a	"J1"	386+24	22.05			X	1	
43a	"J1"	387+83	22.08			X	1	
43e	"J1"	388+57	22.10			X	1	
43m	"J1"	389+49	22.12			X	1	
43p	"J1"	389+80	22.12			X	1	
43s	"J1"	389+77	22.12			X	1	
44a	"J1"	395+02	22.22		X		1	
44e	"J1"	395+02	22.22			X	1	
44l	"J1"	395+05	22.22	X			1	
						SUBTOTAL	50	2
						GRAND TOTAL	93	12

MISCELLANEOUS DRAINAGE QUANTITIES

DQ-45

REVISED BY | DATE REVISED
SCOTT GREGORY | CHRIS GAIDO
CALCULATED-DESIGNED BY | CHECKED BY
FUNCTIONAL SUPERVISOR
JOHN L. MARTIN

STATE OF CALIFORNIA - DEPARTMENT OF TRANSPORTATION
Caltrans DESIGN

P:\proj2\04\26406\design\DCCR\426406id045.dgn

LAST REVISION 03-15-10 | DATE PLOTTED => 16-AUG-2010 | TIME PLOTTED => 08:47

Dist	COUNTY	ROUTE	POST MILES TOTAL PROJECT	SHEET No.	TOTAL SHEETS
04	Mrn	101	18.6/R22.3	182	542

REGISTERED CIVIL ENGINEER 03-15-10 DATE

8-9-10
PLANS APPROVAL DATE

REGISTERED PROFESSIONAL ENGINEER
ROBERT J. NIXON
No. C69123
Exp. 6-30-10
CIVIL
STATE OF CALIFORNIA

THE STATE OF CALIFORNIA OR ITS OFFICERS OR AGENTS SHALL NOT BE RESPONSIBLE FOR THE ACCURACY OR COMPLETENESS OF SCANNED COPIES OF THIS PLAN SHEET.

NOTES:

1. ALL UTILITY ELEVATIONS SHOWN REFER TO THE CROWN OF CONDUIT OR PIPE, UNLESS OTHERWISE INDICATED.
2. THE UTILITY DEPTH SHOWN IS MEASURED FROM OG TO CROWN OF CONDUIT OR PIPE.
3. SEE DRAINAGE PLANS FOR LOCATION OF STORM DRAIN SYSTEMS.
4. FOR COMPLETE RIGHT OF WAY DATA, SEE RIGHT OF WAY RECORD MAPS AT THE DISTRICT OFFICE.
5. SIZE AND VOLTAGE SHOWN ON THE PLANS WHERE KNOWN, BASED ON AVAILABLE INFORMATION.
6. WHERE POTHOLE LOCATIONS WERE NOT DETERMINED, THE UTILITY LOCATION IS APPROXIMATED BASED ON OWNERS FACILITY PLANS.
7. POTHOLED TO 9′ DEPTH, UNABLE TO LOCATE UTILITY.

LEGEND:

—— - e ——— ——— -(oh)-	EXISTING ELETRICAL CONDUIT OH (PG&E)
—— - e ——— ——— - e —	EXISTING ELECTRICAL CONDUIT (PG&E)
—— - g ——— - ——— - g —	EXISTING NATURAL GAS (PG&E)
—— - - tc ——— ——— - - tc -	EXISTING TELEMETER CABLE LINE (AT&T)
—— - - t ——— ——— - - t —	EXISTING TELEPHONE LINE (AT&T AND VERIZON)
- —— w —— —— —— w —	EXISTING WATER LINE (NORTH MARIN WATER DISTRICT AND MARIN MUNICIPAL WATER DISTRICT)
—— - - s ——— - - ——— - - s —	EXISTING SEWER LINE (NOVATO SANITARY DISTRICT)
—— fo —— —— —— fo —	EXISTING FIBER OPTIC CABLE (AT&T)

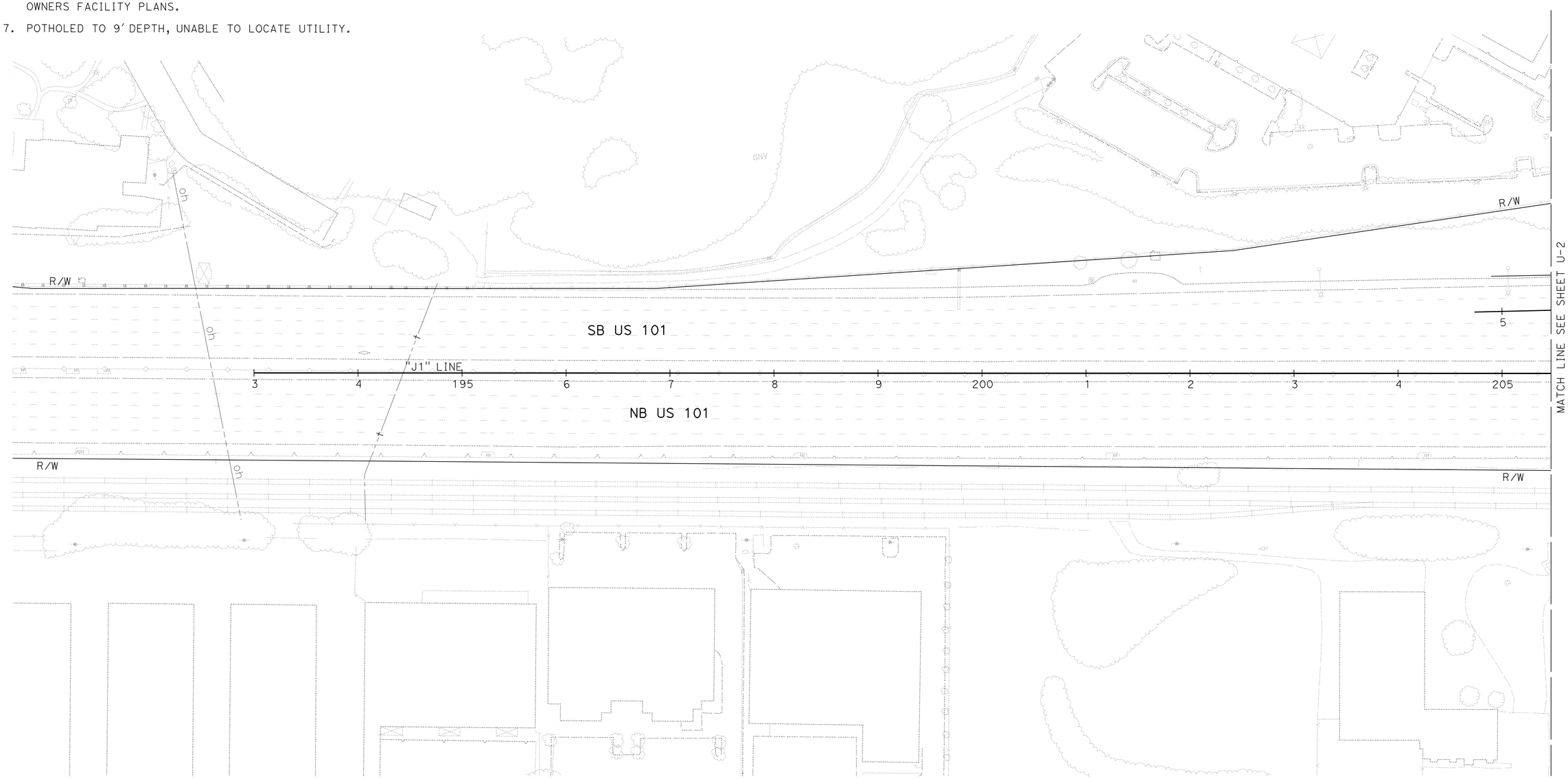

THIS PLAN ACCURATE FOR UTILITY INFORMATION ONLY.

UTILITY PLAN
SCALE: 1" = 50′

U-1

REVISED BY	DATE REVISED

CALCULATED-DESIGNED BY: JIM RASMUSSEN
CHECKED BY: ROBERT J. NIXON
FUNCTIONAL SUPERVISOR: JOHN L. MARTIN

STATE OF CALIFORNIA - DEPARTMENT OF TRANSPORTATION
Caltrans
DESIGN

P:\proj2\04\26406\design\ps&e\426406ka001.dgn

LAST REVISION 02-11-10
DATE PLOTTED => 16-AUG-2010
TIME PLOTTED => 11:06

Dist	COUNTY	ROUTE	POST MILES TOTAL PROJECT	SHEET No.	TOTAL SHEETS
04	Mrn	101	18.6/R22.3	183	542

REGISTERED CIVIL ENGINEER 03-15-10 DATE

8-9-10
PLANS APPROVAL DATE

REGISTERED PROFESSIONAL ENGINEER ROBERT J. NIXON No. C69123 Exp. 6-30-10 CIVIL STATE OF CALIFORNIA

THE STATE OF CALIFORNIA OR ITS OFFICERS OR AGENTS SHALL NOT BE RESPONSIBLE FOR THE ACCURACY OR COMPLETENESS OF SCANNED COPIES OF THIS PLAN SHEET.

NOTE:

1. FOR COMPLETE RIGHT OF WAY AND ACCURATE ACCESS DATA, SEE RIGHT OF WAY RECORD MAPS AT DISTRICT OFFICE.

POTHOLE LOCATION TABLE

⟨X⟩	UTILITY	"J1" LINE STATION	OFFSET	GROUND ELEVATION	DEPTH
1	SEWER	218+57.76	93.2 LT	12.2	11.5'

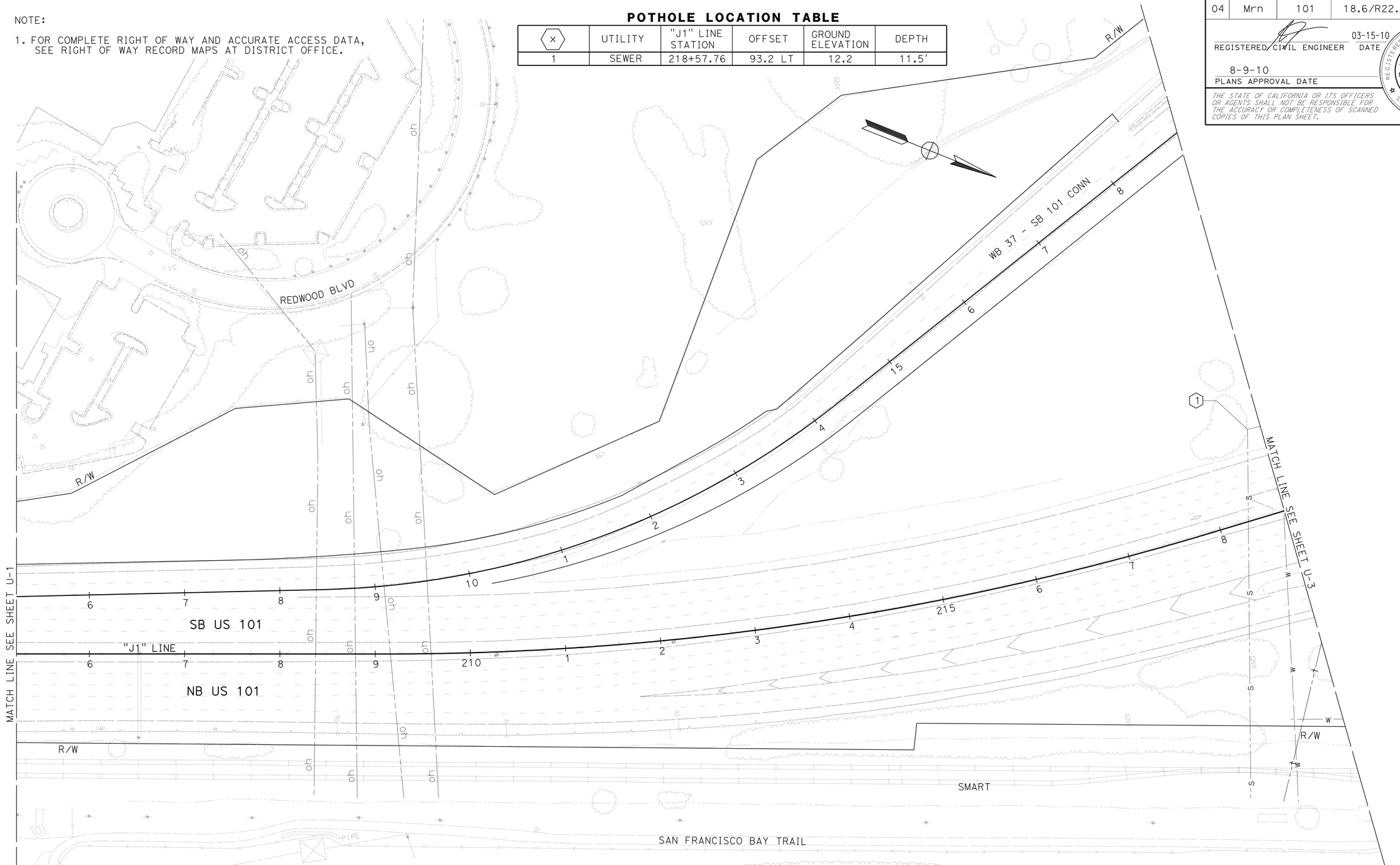

UTILITY PLAN

SCALE: 1" = 50'

U-2

THIS PLAN ACCURATE FOR UTILITY INFORMATION ONLY.

REVISED BY | DATE REVISED
JIM RASMUSSEN | ROBERT J. NIXON
CALCULATED-DESIGNED BY | CHECKED BY
FUNCTIONAL SUPERVISOR: JOHN L. MARTIN

STATE OF CALIFORNIA - DEPARTMENT OF TRANSPORTATION
Caltrans DESIGN

P:\proj2\04\26406\design\ps&e\426406ka002.dgn

LAST REVISION | DATE PLOTTED => 16-AUG-2010 | TIME PLOTTED => 11:06
02-16-10

NOTE:

1. FOR COMPLETE RIGHT OF WAY AND ACCURATE ACCESS DATA, SEE RIGHT OF WAY RECORD MAPS AT DISTRICT OFFICE.

Dist	COUNTY	ROUTE	POST MILES TOTAL PROJECT	SHEET No.	TOTAL SHEETS
04	Mrn	101	18.6/R22.3	184	542

REGISTERED CIVIL ENGINEER 03-15-10 DATE

8-9-10
PLANS APPROVAL DATE

REGISTERED PROFESSIONAL ENGINEER ROBERT J. NIXON No. C69123 Exp. 6-30-10 CIVIL STATE OF CALIFORNIA

THE STATE OF CALIFORNIA OR ITS OFFICERS OR AGENTS SHALL NOT BE RESPONSIBLE FOR THE ACCURACY OR COMPLETENESS OF SCANNED COPIES OF THIS PLAN SHEET.

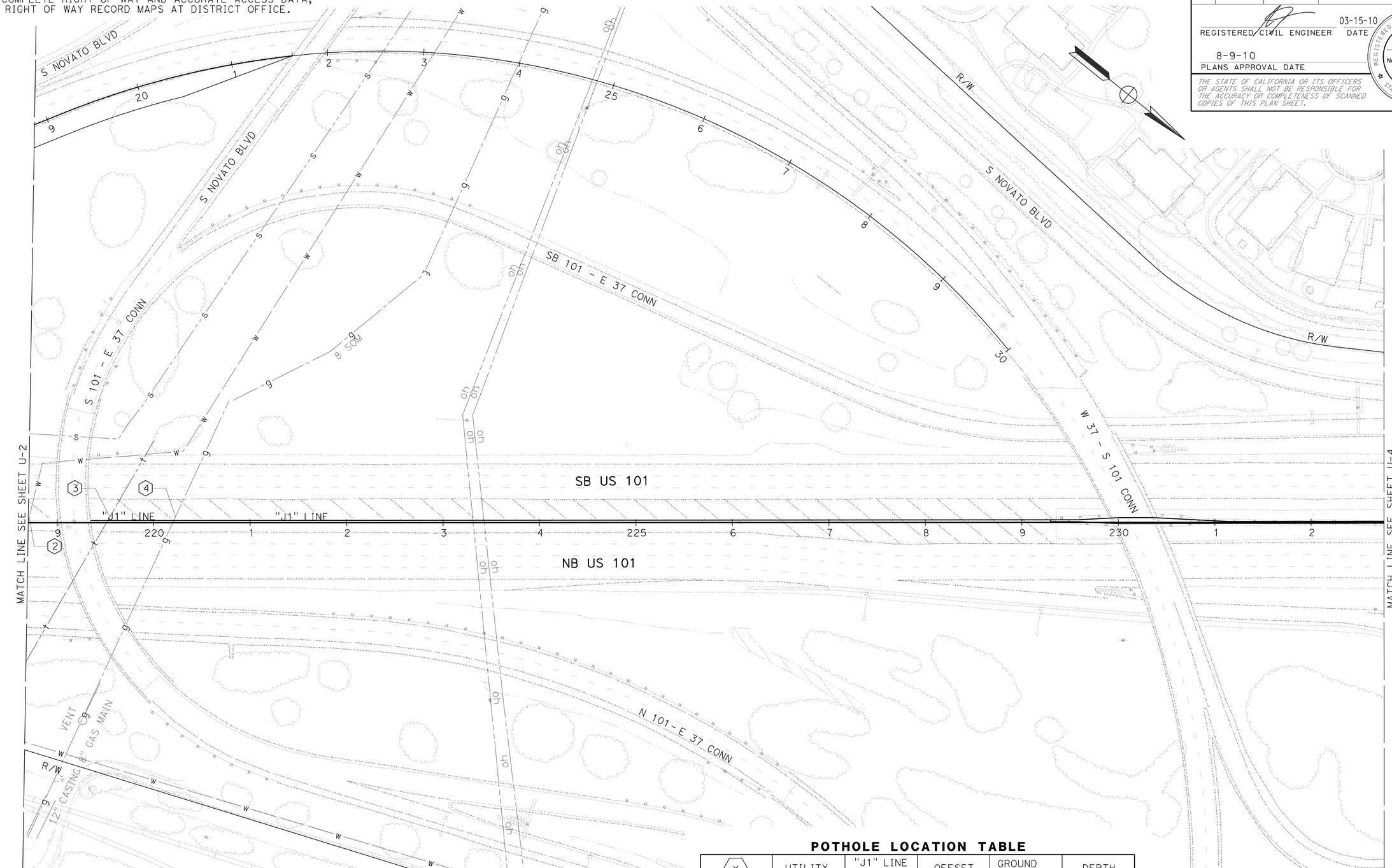

THIS PLAN ACCURATE FOR UTILITY INFORMATION ONLY.

POTHOLE LOCATION TABLE

(X)	UTILITY	"J1" LINE STATION	OFFSET	GROUND ELEVATION	DEPTH
2	WATER	218+71.1	6.6 LT	11.7	SEE NOTE 7
3	TELEPHONE	219+54.5	6.4 LT	11.7	7.6′
4	GAS	220+22.6	6.4 LT	11.6	7.8′

UTILITY PLAN

SCALE: 1" = 50′

U-3

REVISED BY | DATE REVISED

JIM RASMUSSEN | ROBERT J. NIXON

CALCULATED-DESIGNED BY | CHECKED BY

FUNCTIONAL SUPERVISOR: JOHN L. MARTIN

STATE OF CALIFORNIA - DEPARTMENT OF TRANSPORTATION

Caltrans **DESIGN**

P:\proj2\04\26406\design\ps&e\426406ka003.dgn

LAST REVISION 02-16-10 | DATE PLOTTED => 16-AUG-2010 | TIME PLOTTED => 11:06

NOTE:

1. FOR COMPLETE RIGHT OF WAY AND ACCURATE ACCESS DATA, SEE RIGHT OF WAY RECORD MAPS AT DISTRICT OFFICE.

POTHOLE LOCATION TABLE

⊗	UTILITY	"J1" LINE STATION	OFFSET	GROUND ELEVATION	DEPTH
5	WATER	237+94.58	124.2 RT	10.1	6.1′
6	WATER	237+89.2	6.6 RT	11.6	SEE NOTE 7
7	WATER	239+10.66	106.5 RT	11.0	SEE NOTE 7
8	WATER	239+19.86	6.4 LT	12.7	3.8′

Dist	COUNTY	ROUTE	POST MILES TOTAL PROJECT	SHEET No.	TOTAL SHEETS
04	Mrn	101	18.6/R22.3	185	542

REGISTERED CIVIL ENGINEER 03-15-10 DATE

8-9-10
PLANS APPROVAL DATE

REGISTERED PROFESSIONAL ENGINEER ROBERT J. NIXON No. C69123 Exp. 6-30-10 CIVIL STATE OF CALIFORNIA

THE STATE OF CALIFORNIA OR ITS OFFICERS OR AGENTS SHALL NOT BE RESPONSIBLE FOR THE ACCURACY OR COMPLETENESS OF SCANNED COPIES OF THIS PLAN SHEET.

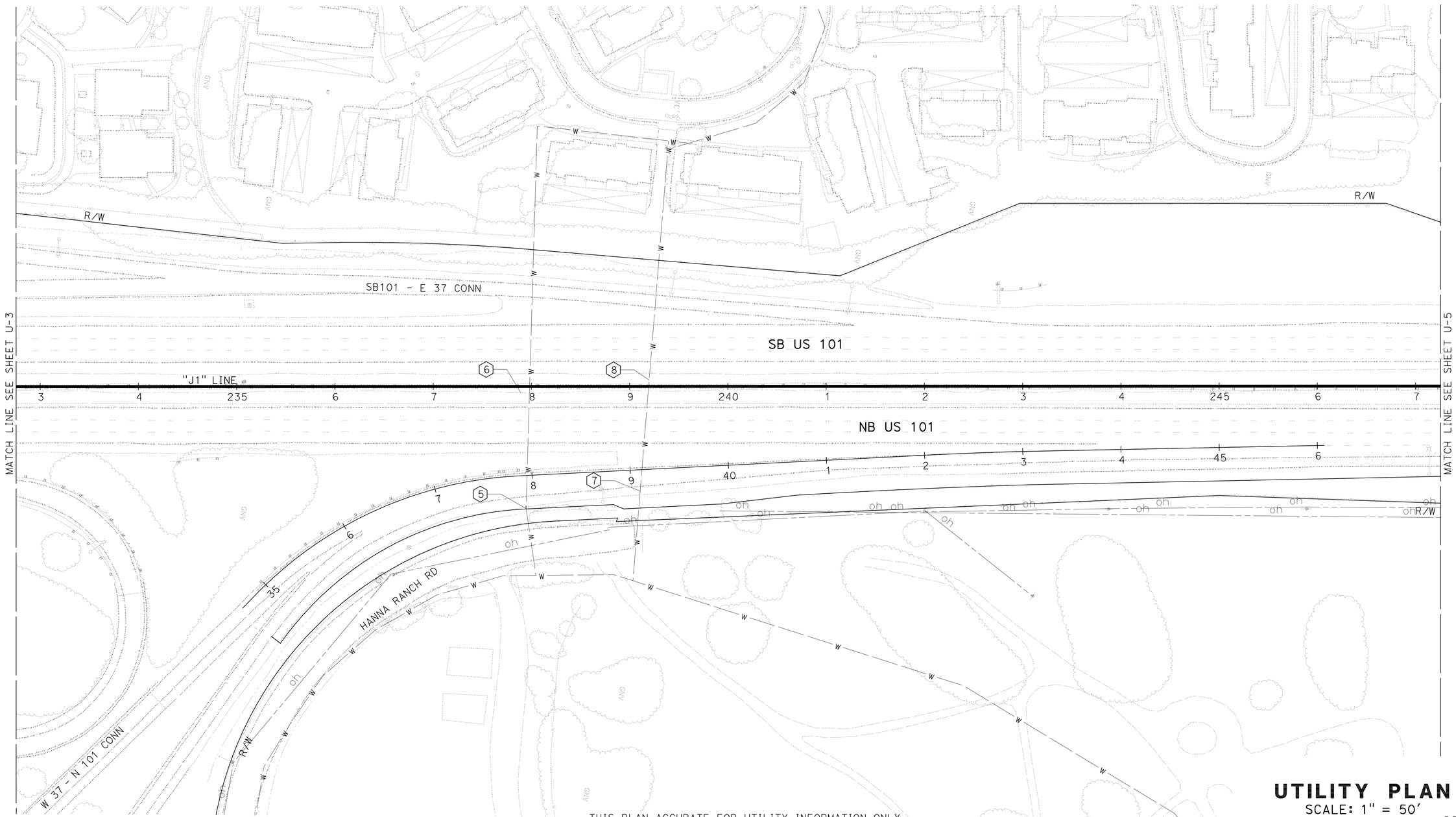

THIS PLAN ACCURATE FOR UTILITY INFORMATION ONLY.

UTILITY PLAN
SCALE: 1" = 50′

U-4

REVISED BY | DATE REVISED

JIM RASMUSSEN | ROBERT J. NIXON

CALCULATED-DESIGNED BY | CHECKED BY

FUNCTIONAL SUPERVISOR: JOHN L. MARTIN

STATE OF CALIFORNIA - DEPARTMENT OF TRANSPORTATION

Caltrans DESIGN

P:\proj2\04\26406\design\ps&e\426406ka004.dgn

LAST REVISION 02-11-10 | DATE PLOTTED => 16-AUG-2010 | TIME PLOTTED => 11:07

Dist	COUNTY	ROUTE	POST MILES TOTAL PROJECT	SHEET No.	TOTAL SHEETS
04	Mrn	101	18.6/R22.3	186	542

REGISTERED CIVIL ENGINEER 03-15-10 DATE

8-9-10
PLANS APPROVAL DATE

REGISTERED PROFESSIONAL ENGINEER ROBERT J. NIXON No. C69123 Exp. 6-30-10 CIVIL STATE OF CALIFORNIA

THE STATE OF CALIFORNIA OR ITS OFFICERS OR AGENTS SHALL NOT BE RESPONSIBLE FOR THE ACCURACY OR COMPLETENESS OF SCANNED COPIES OF THIS PLAN SHEET.

NOTE:

1. FOR COMPLETE RIGHT OF WAY AND ACCURATE ACCESS DATA, SEE RIGHT OF WAY RECORD MAPS AT DISTRICT OFFICE.

THIS PLAN ACCURATE FOR UTILITY INFORMATION ONLY.

UTILITY PLAN

SCALE: 1" = 50'

U-5

REVISED BY	DATE REVISED

JIM RASMUSSEN — CALCULATED-DESIGNED BY
ROBERT J. NIXON — CHECKED BY
JOHN L. MARTIN — FUNCTIONAL SUPERVISOR

STATE OF CALIFORNIA - DEPARTMENT OF TRANSPORTATION
Caltrans DESIGN

P:\proj2\04\26406\design\ps&e\426406ka005.dgn

LAST REVISION 01-28-10
DATE PLOTTED => 16-AUG-2010
TIME PLOTTED => 11:07

Dist	COUNTY	ROUTE	POST MILES TOTAL PROJECT	SHEET No.	TOTAL SHEETS
04	Mrn	101	18.6/R22.3	187	542

REGISTERED CIVIL ENGINEER 03-15-10 DATE

8-9-10
PLANS APPROVAL DATE

REGISTERED PROFESSIONAL ENGINEER ROBERT J. NIXON No. C69123 Exp. 6-30-10 CIVIL STATE OF CALIFORNIA

THE STATE OF CALIFORNIA OR ITS OFFICERS OR AGENTS SHALL NOT BE RESPONSIBLE FOR THE ACCURACY OR COMPLETENESS OF SCANNED COPIES OF THIS PLAN SHEET.

NOTE:

1. FOR COMPLETE RIGHT OF WAY AND ACCURATE ACCESS DATA, SEE RIGHT OF WAY RECORD MAPS AT DISTRICT OFFICE.

POTHOLE LOCATION TABLE

(×)	UTILITY	"J1" LINE STATION	OFFSET	GROUND ELEVATION	DEPTH
9	ELECT	271+70.1	3.8 LT	12.7	4.9′
10	ELECT	271+71.5	99.3 LT	10.8	4.8′
11	TELE	272+00.1	5.1 LT	12.4	7.2′
12	TELE	272+02.3	99.6 RT	10.4	8.2′

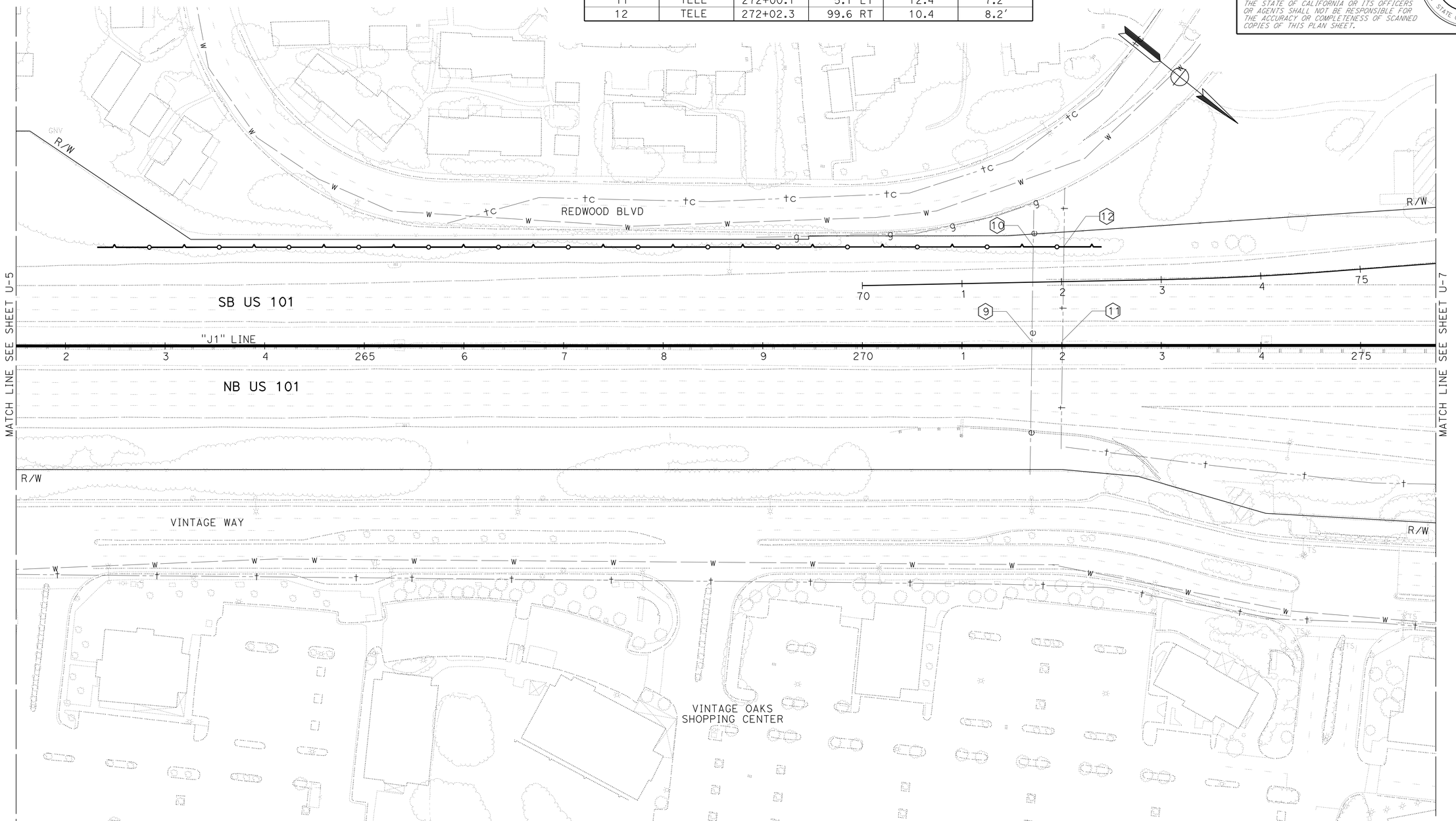

THIS PLAN ACCURATE FOR UTILITY INFORMATION ONLY.

UTILITY PLAN

SCALE: 1" = 50′

U-6

REVISED BY	DATE REVISED
JIM RASMUSSEN	ROBERT J. NIXON
CALCULATED-DESIGNED BY	CHECKED BY
FUNCTIONAL SUPERVISOR	JOHN L. MARTIN

STATE OF CALIFORNIA - DEPARTMENT OF TRANSPORTATION

Caltrans DESIGN

P:\proj2\04\26406\design\ps&e\426406ka006.dgn

LAST REVISION 02-16-10 | DATE PLOTTED => 16-AUG-2010 | TIME PLOTTED => 11:07

Dist	COUNTY	ROUTE	POST MILES TOTAL PROJECT	SHEET No.	TOTAL SHEETS
04	Mrn	101	18.6/R22.3	188	542

REGISTERED CIVIL ENGINEER 03-15-10 DATE

8-9-10
PLANS APPROVAL DATE

REGISTERED PROFESSIONAL ENGINEER
ROBERT J. NIXON
No. C69123
Exp. 6-30-10
CIVIL
STATE OF CALIFORNIA

THE STATE OF CALIFORNIA OR ITS OFFICERS OR AGENTS SHALL NOT BE RESPONSIBLE FOR THE ACCURACY OR COMPLETENESS OF SCANNED COPIES OF THIS PLAN SHEET.

NOTE:

1. FOR COMPLETE RIGHT OF WAY AND ACCURATE ACCESS DATA, SEE RIGHT OF WAY RECORD MAPS AT DISTRICT OFFICE.

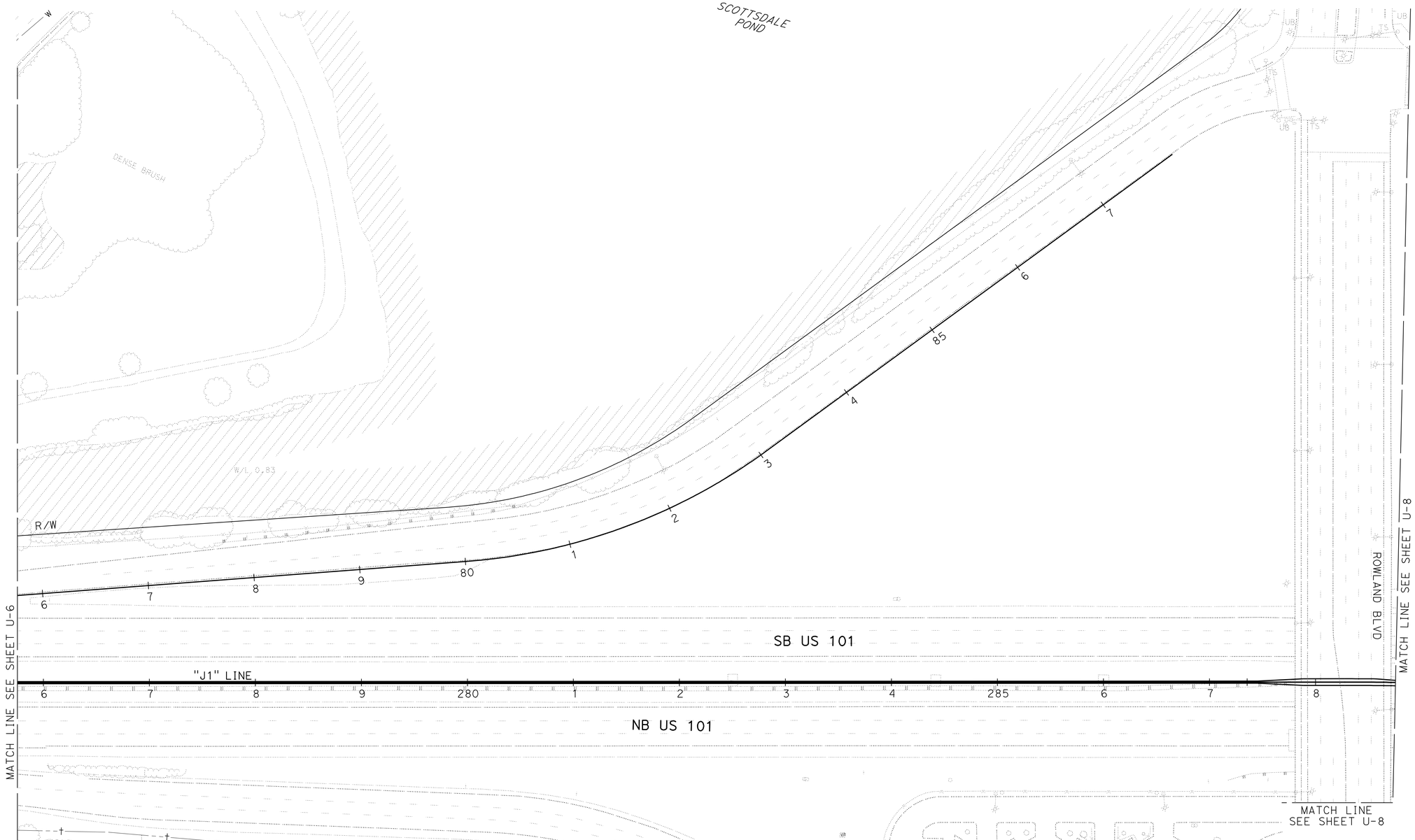

THIS PLAN ACCURATE FOR UTILITY INFORMATION ONLY.

UTILITY PLAN

SCALE: 1" = 50'

U-7

REVISED BY | DATE REVISED

JIM RASMUSSEN | ROBERT J. NIXON

CALCULATED-DESIGNED BY | CHECKED BY

FUNCTIONAL SUPERVISOR: JOHN L. MARTIN

STATE OF CALIFORNIA - DEPARTMENT OF TRANSPORTATION

Caltrans DESIGN

P:\proj2\04\26406\design\ps&e\426406ka007.dgn

LAST REVISION 01-28-10 | DATE PLOTTED => 16-AUG-2010 | TIME PLOTTED => 11:07

BORDER LAST REVISED 4/11/2008

RELATIVE BORDER SCALE IS IN INCHES 0 1 2 3

USERNAME => trmartin
DGN FILE => 426406ka007.dgn

CU 03 240

EA 264061

Dist	COUNTY	ROUTE	POST MILES TOTAL PROJECT	SHEET No.	TOTAL SHEETS
04	Mrn	101	18.6/R22.3	189	542

REGISTERED CIVIL ENGINEER 03-15-10 DATE

8-9-10
PLANS APPROVAL DATE

REGISTERED PROFESSIONAL ENGINEER ROBERT J. NIXON No. C69123 Exp. 6-30-10 CIVIL STATE OF CALIFORNIA

THE STATE OF CALIFORNIA OR ITS OFFICERS OR AGENTS SHALL NOT BE RESPONSIBLE FOR THE ACCURACY OR COMPLETENESS OF SCANNED COPIES OF THIS PLAN SHEET.

NOTE:

1. FOR COMPLETE RIGHT OF WAY AND ACCURATE ACCESS DATA, SEE RIGHT OF WAY RECORD MAPS AT DISTRICT OFFICE.

POTHOLE LOCATION TABLE

⟨X⟩	UTILITY	"J1" LINE STATION	OFFSET	GROUND ELEVATION	DEPTH
13	GAS	299+82.29	0.7 LT	15.1	SEE NOTE 7
14	ELECT	300+64.48	1.2 RT	15.3	SEE NOTE 7

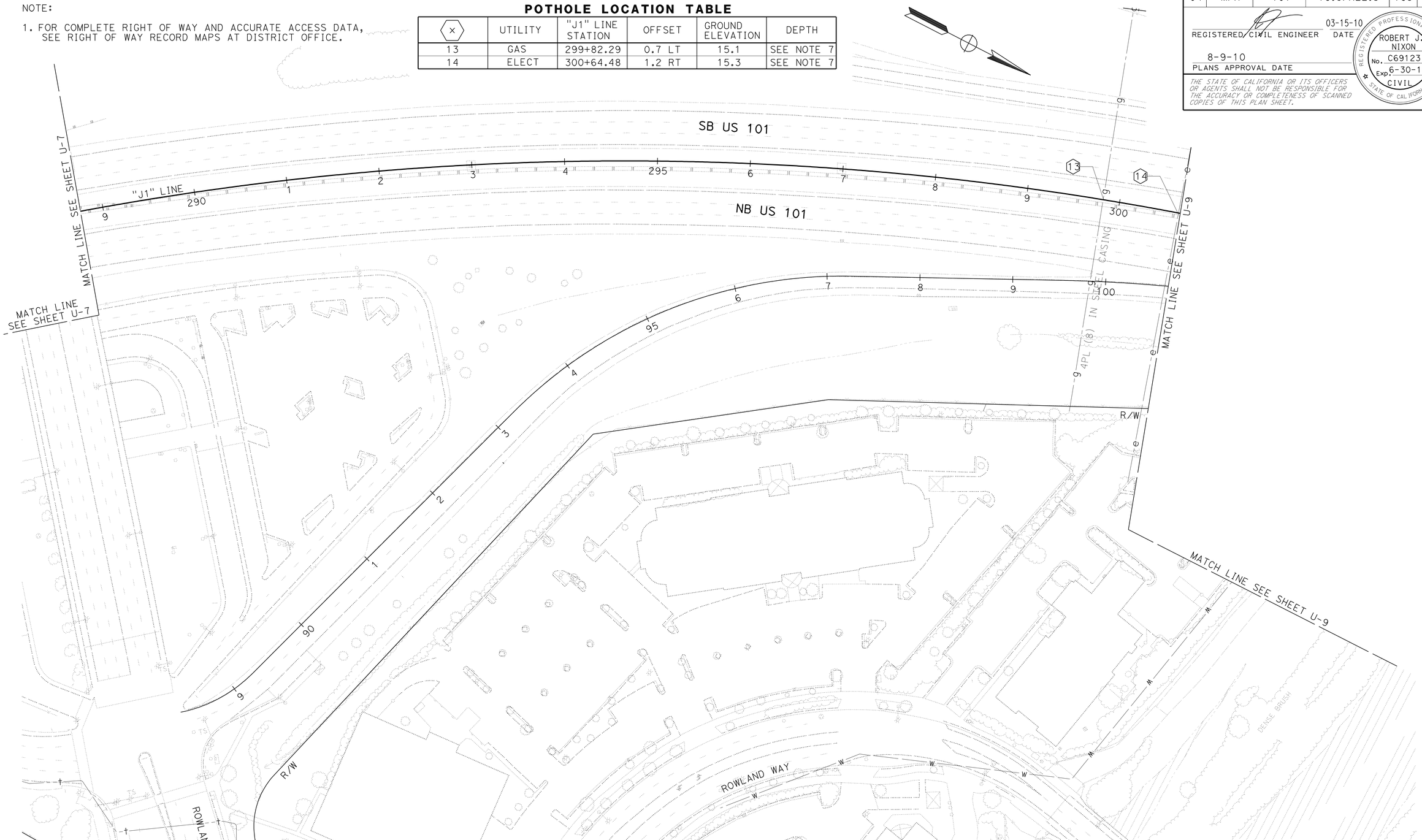

THIS PLAN ACCURATE FOR UTILITY INFORMATION ONLY.

UTILITY PLAN

SCALE: 1" = 50'

U-8

REVISED BY | DATE REVISED

JIM RASMUSSEN | ROBERT J. NIXON

CALCULATED-DESIGNED BY | CHECKED BY

FUNCTIONAL SUPERVISOR: JOHN L. MARTIN

STATE OF CALIFORNIA - DEPARTMENT OF TRANSPORTATION

Caltrans **DESIGN**

P:\proj2\04\26406\design\DCCR\426406ka008.dgn

LAST REVISION 02-16-10 | DATE PLOTTED => 16-AUG-2010 | TIME PLOTTED => 11:07

BORDER LAST REVISED 4/11/2008 | RELATIVE BORDER SCALE IS IN INCHES 0 1 2 3 | USERNAME => trmartin | DGN FILE => 426406ka008.dgn | CU 03 240 | EA 264061

Dist	COUNTY	ROUTE	POST MILES TOTAL PROJECT	SHEET No.	TOTAL SHEETS
04	Mrn	101	18.6/R22.3	190	542

REGISTERED CIVIL ENGINEER 03-15-10 DATE

8-9-10
PLANS APPROVAL DATE

REGISTERED PROFESSIONAL ENGINEER ROBERT J. NIXON No. C69123 Exp. 6-30-10 CIVIL STATE OF CALIFORNIA

THE STATE OF CALIFORNIA OR ITS OFFICERS OR AGENTS SHALL NOT BE RESPONSIBLE FOR THE ACCURACY OR COMPLETENESS OF SCANNED COPIES OF THIS PLAN SHEET.

NOTE:

1. FOR COMPLETE RIGHT OF WAY AND ACCURATE ACCESS DATA, SEE RIGHT OF WAY RECORD MAPS AT DISTRICT OFFICE.

POTHOLE LOCATION TABLE

(X)	UTILITY	"J1" LINE STATION	OFFSET	GROUND ELEVATION	DEPTH
15	WATER	300+64.48	92.3 RT	15.1	SEE NOTE 7
16	WATER	302+11.3	4.0 LT	15.8	SEE NOTE 7

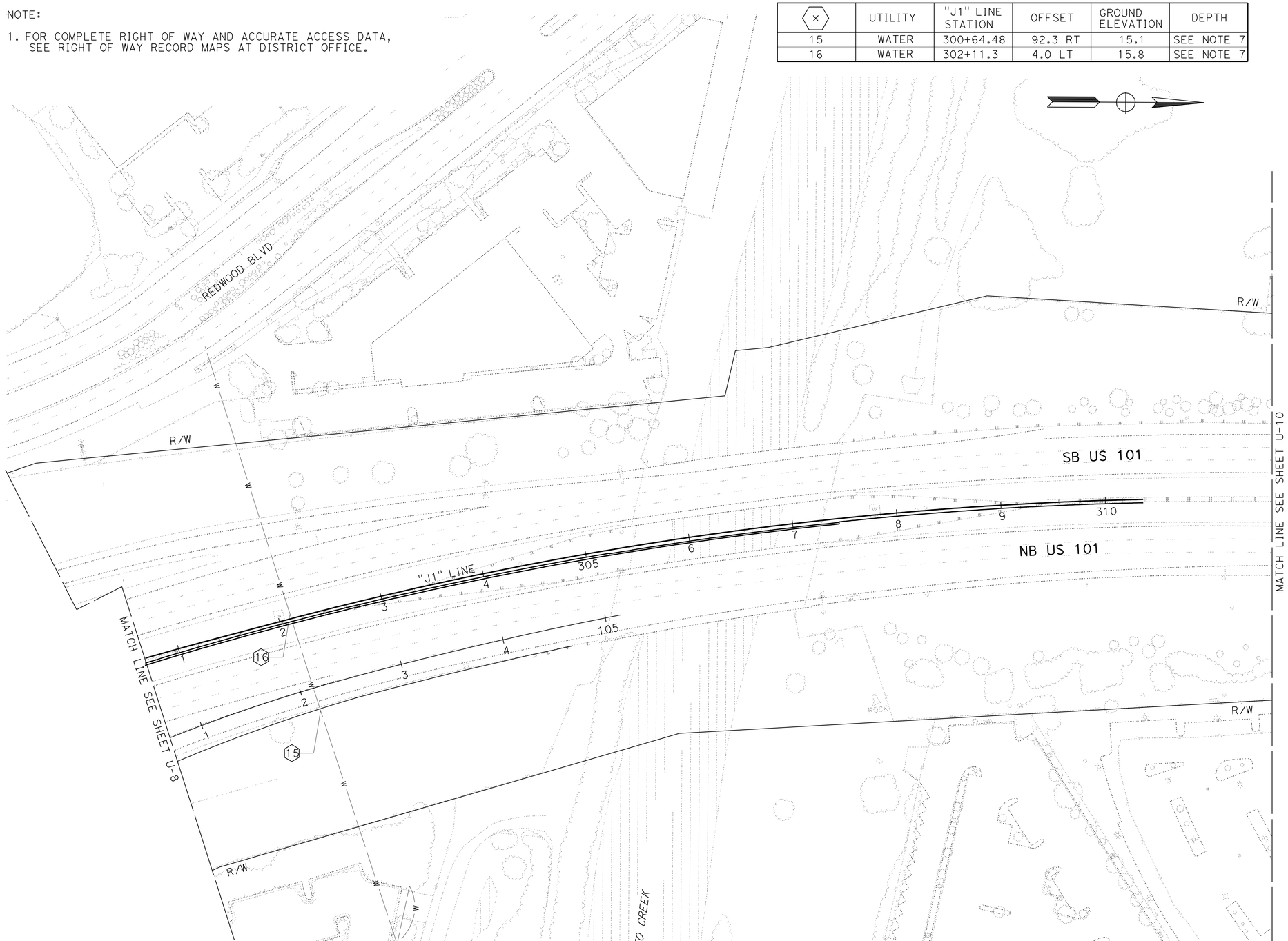

THIS PLAN ACCURATE FOR UTILITY INFORMATION ONLY.

UTILITY PLAN

SCALE: 1" = 50'

U-9

STATE OF CALIFORNIA - DEPARTMENT OF TRANSPORTATION

Caltrans DESIGN

FUNCTIONAL SUPERVISOR: JOHN L. MARTIN

CALCULATED-DESIGNED BY: JIM RASMUSSEN

CHECKED BY: ROBERT J. NIXON

REVISED BY

DATE REVISED

P:\proj2\04\26406\design\ps&e\426406ka009.dgn

LAST REVISION 02-16-10

DATE PLOTTED => 16-AUG-2010

TIME PLOTTED => 11:07

BORDER LAST REVISED 4/11/2008

RELATIVE BORDER SCALE IS IN INCHES 0 1 2 3

USERNAME => trmartin

DGN FILE => 426406ka009.dgn

CU 03 240

EA 264061

NOTE:

1. FOR COMPLETE RIGHT OF WAY AND ACCURATE ACCESS DATA, SEE RIGHT OF WAY RECORD MAPS AT DISTRICT OFFICE.

POTHOLE LOCATION TABLE

X	UTILITY	"J1" LINE STATION	OFFSET	GROUND ELEVATION	DEPTH
17	SEWER	316+79.4	4.6 LT	28.9	SEE NOTE 7
18	SEWER	316+94.1	5.2 LT	29.1	SEE NOTE 7
19	WATER	324+89.1	96.4 RT	9.9	6.9
20	ELECT	324+91.7	89.7 RT	10.1	6.9
21	GAS	324+80.1	83.1 RT	10.5	6.3
22	SEWER	324+93.5	70.7 RT	10.6	1.7
23	FIBER	324+99.5	102.4 RT	9.7	5.0
24	GAS	325+16.1	94.3 RT	9.8	5.6
25	WATER	325+18.1	92.4 RT	9.8	5.8

Dist	COUNTY	ROUTE	POST MILES TOTAL PROJECT	SHEET No.	TOTAL SHEETS
04	Mrn	101	18.6/R22.3	191	542

REGISTERED CIVIL ENGINEER 03-15-10 DATE

8-9-10
PLANS APPROVAL DATE

REGISTERED PROFESSIONAL ENGINEER ROBERT J. NIXON No. C69123 Exp. 6-30-10 CIVIL STATE OF CALIFORNIA

THE STATE OF CALIFORNIA OR ITS OFFICERS OR AGENTS SHALL NOT BE RESPONSIBLE FOR THE ACCURACY OR COMPLETENESS OF SCANNED COPIES OF THIS PLAN SHEET.

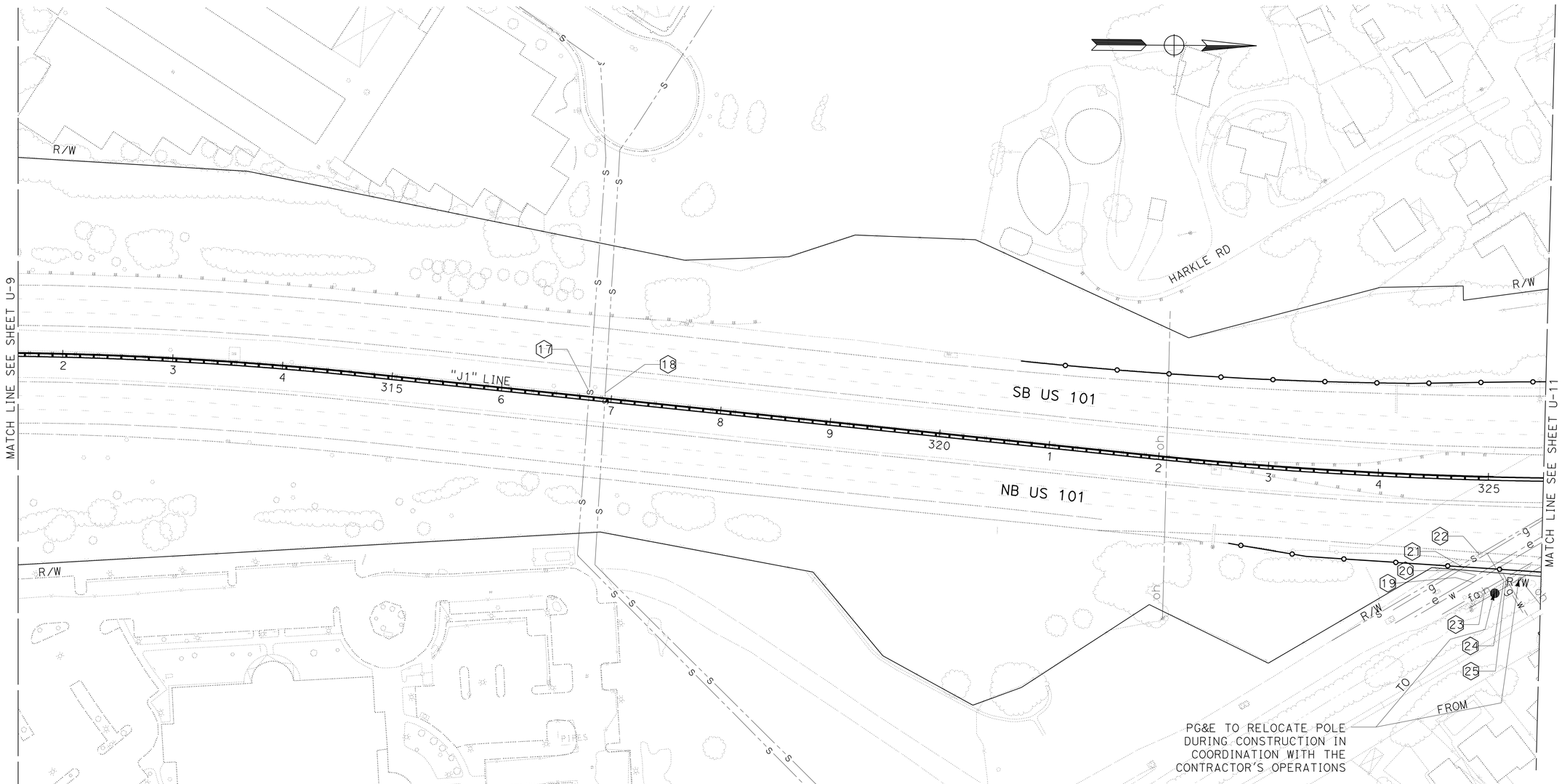

THIS PLAN ACCURATE FOR UTILITY INFORMATION ONLY.

UTILITY PLAN

SCALE: 1" = 50'

U-10

REVISED BY | DATE REVISED

JIM RASMUSSEN | ROBERT J. NIXON

CALCULATED-DESIGNED BY | CHECKED BY

FUNCTIONAL SUPERVISOR: JOHN L. MARTIN

STATE OF CALIFORNIA - DEPARTMENT OF TRANSPORTATION

Caltrans DESIGN

P:\proj2\04\26406\design\DCCR\426406ka010.dgn

LAST REVISION | DATE PLOTTED => 16-AUG-2010 | TIME PLOTTED => 11:07

02-16-10

BORDER LAST REVISED 4/11/2008 | RELATIVE BORDER SCALE IS IN INCHES 0 1 2 3 | USERNAME => trmartin | DGN FILE => 426406ka010.dgn | CU 03 240 | EA 264061

Dist	COUNTY	ROUTE	POST MILES TOTAL PROJECT	SHEET No.	TOTAL SHEETS
04	Mrn	101	18.6/R22.3	192	542

REGISTERED CIVIL ENGINEER 03-15-10 DATE

8-9-10
PLANS APPROVAL DATE

REGISTERED PROFESSIONAL ENGINEER ROBERT J. NIXON No. C69123 Exp. 6-30-10 CIVIL STATE OF CALIFORNIA

THE STATE OF CALIFORNIA OR ITS OFFICERS OR AGENTS SHALL NOT BE RESPONSIBLE FOR THE ACCURACY OR COMPLETENESS OF SCANNED COPIES OF THIS PLAN SHEET.

NOTE:

1. FOR COMPLETE RIGHT OF WAY AND ACCURATE ACCESS DATA, SEE RIGHT OF WAY RECORD MAPS AT DISTRICT OFFICE.

POTHOLE LOCATION TABLE

⟨X⟩	UTILITY	STATION	OFFSET	GROUND ELEVATION	DEPTH
26	GAS	327+94.0	101.6 LT	10.90	6.88
27	SEWER	328+12.3	109.8 LT	10.99	2.49
28	ELECT	328+26.2	101.1 LT	10.86	9.03
29	WATER	328+41.7	103.0 LT	10.79	7.79
30	FIBER	328+62.0	97.6 LT	10.47	5.05

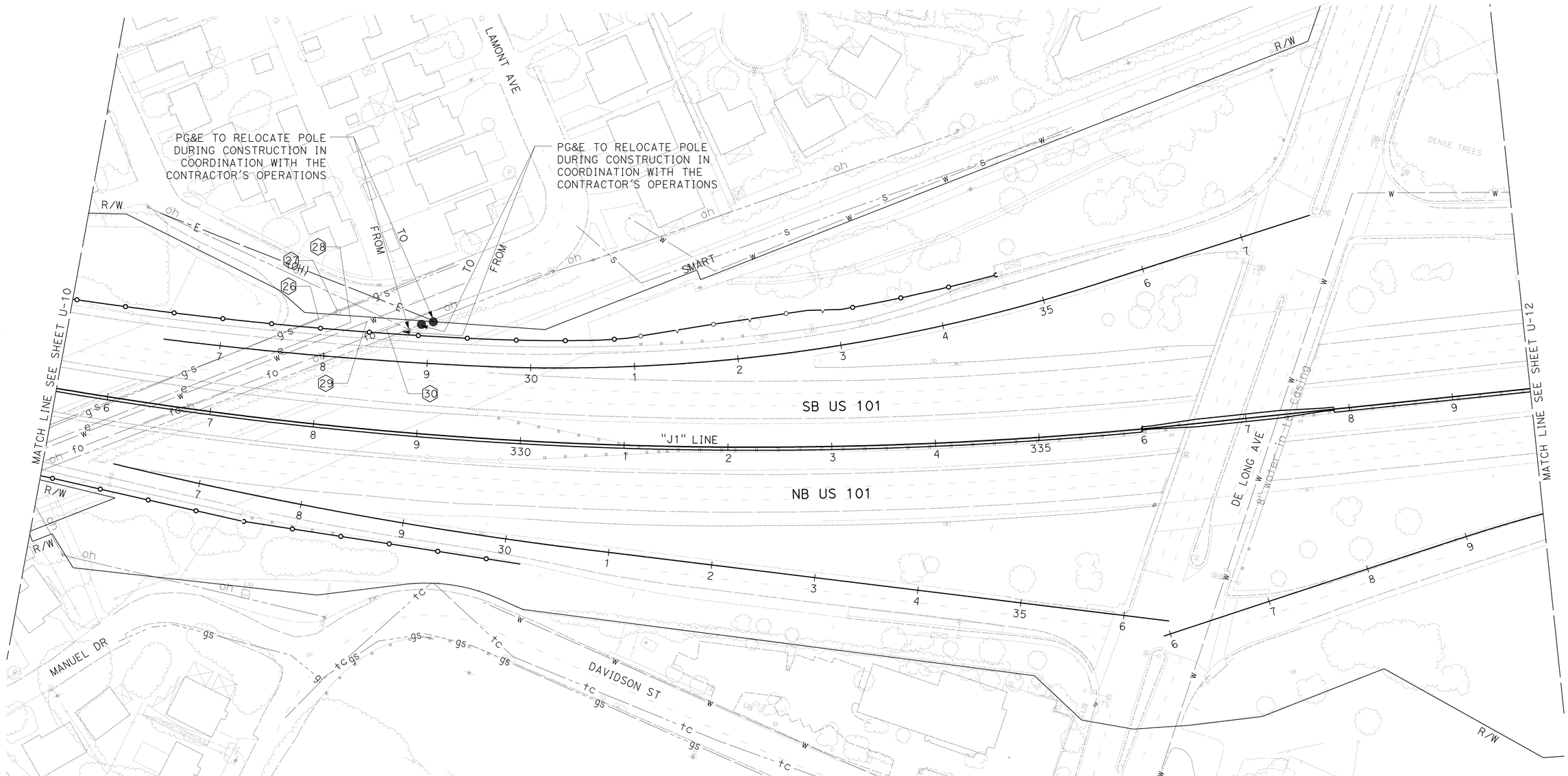

THIS PLAN ACCURATE FOR UTILITY INFORMATION ONLY.

UTILITY PLAN

SCALE: 1" = 50'

U-11

REVISED BY | DATE REVISED

JIM RASMUSSEN | ROBERT J. NIXON

CALCULATED-DESIGNED BY | CHECKED BY

FUNCTIONAL SUPERVISOR: JOHN L. MARTIN

STATE OF CALIFORNIA - DEPARTMENT OF TRANSPORTATION

Caltrans DESIGN

P:\proj2\04\26406\design\ps&e\426406ka011.dgn

LAST REVISION 02-11-10 | DATE PLOTTED => 16-AUG-2010 | TIME PLOTTED => 11:07

BORDER LAST REVISED 4/11/2008 | RELATIVE BORDER SCALE IS IN INCHES 0 1 2 3 | USERNAME => trmartin | DGN FILE => 426406ka011.dgn | CU 03 240 | EA 264061

Dist	COUNTY	ROUTE	POST MILES TOTAL PROJECT	SHEET No.	TOTAL SHEETS
04	Mrn	101	18.6/R22.3	193	542

REGISTERED CIVIL ENGINEER 03-15-10 DATE

8-9-10
PLANS APPROVAL DATE

REGISTERED PROFESSIONAL ENGINEER ROBERT J. NIXON No. C69123 Exp. 6-30-10 CIVIL STATE OF CALIFORNIA

THE STATE OF CALIFORNIA OR ITS OFFICERS OR AGENTS SHALL NOT BE RESPONSIBLE FOR THE ACCURACY OR COMPLETENESS OF SCANNED COPIES OF THIS PLAN SHEET.

NOTE:

1. FOR COMPLETE RIGHT OF WAY AND ACCURATE ACCESS DATA, SEE RIGHT OF WAY RECORD MAPS AT DISTRICT OFFICE.

POTHOLE LOCATION TABLE

X	UTILITY	"J1" LINE STATION	OFFSET	GROUND ELEVATION	DEPTH
31	SEWER	352+35.7	2.1' LT	34.1	SEE NOTE 7

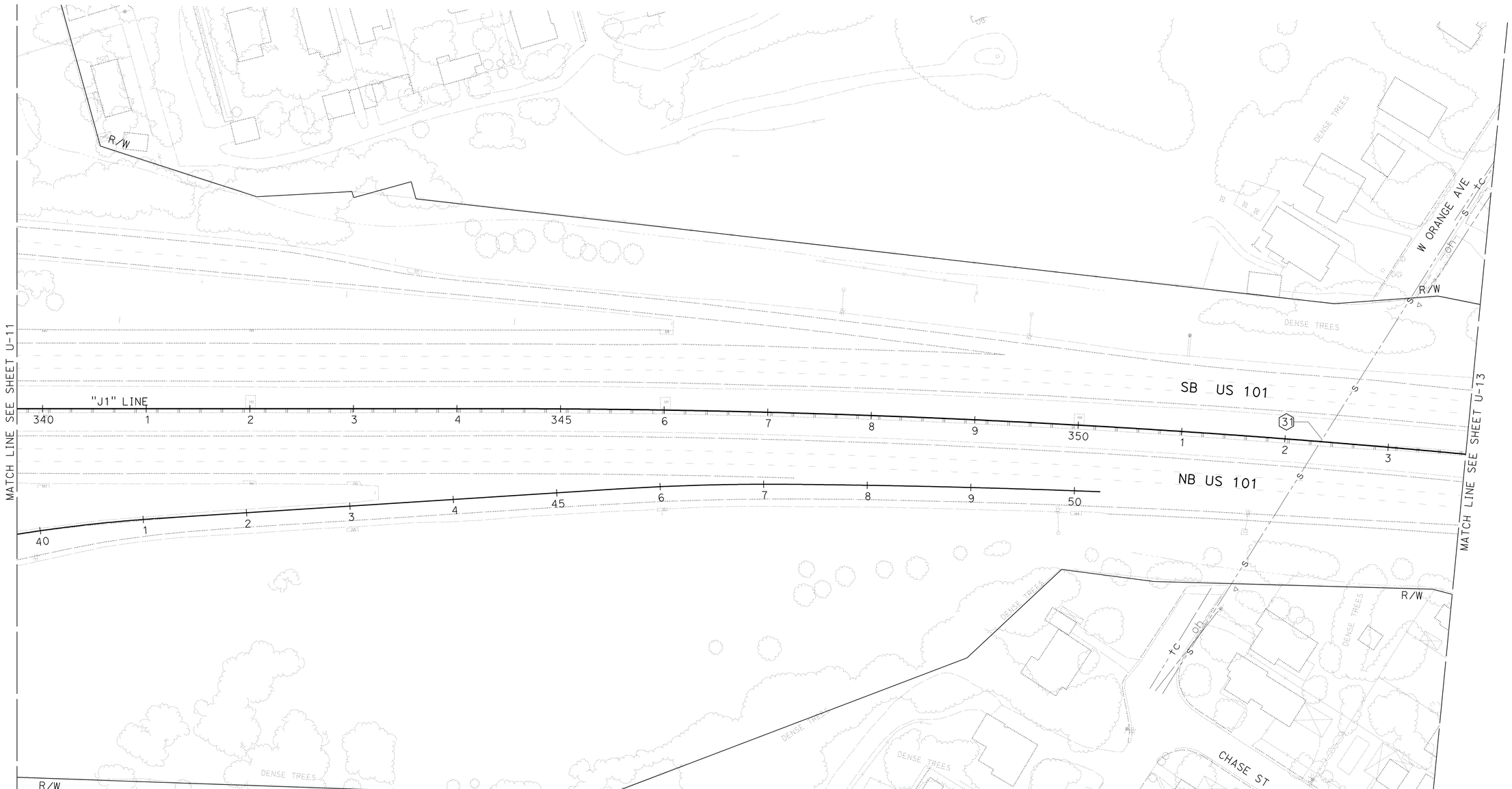

THIS PLAN ACCURATE FOR UTILITY INFORMATION ONLY.

UTILITY PLAN

SCALE: 1" = 50'

U-12

STATE OF CALIFORNIA - DEPARTMENT OF TRANSPORTATION
Caltrans DESIGN

FUNCTIONAL SUPERVISOR: JOHN L. MARTIN
CALCULATED-DESIGNED BY: JIM RASMUSSEN
CHECKED BY: ROBERT J. NIXON
REVISED BY
DATE REVISED

P:\proj2\04\426406\design\DCCR\426406ka012.dgn

LAST REVISION 02-16-10 | DATE PLOTTED => 16-AUG-2010 | TIME PLOTTED => 11:08

Dist	COUNTY	ROUTE	POST MILES TOTAL PROJECT	SHEET No.	TOTAL SHEETS
04	Mrn	101	18.6/R22.3	194	542

REGISTERED CIVIL ENGINEER 03-15-10 DATE

8-9-10
PLANS APPROVAL DATE

REGISTERED PROFESSIONAL ENGINEER ROBERT J. NIXON No. C69123 Exp. 6-30-10 CIVIL STATE OF CALIFORNIA

THE STATE OF CALIFORNIA OR ITS OFFICERS OR AGENTS SHALL NOT BE RESPONSIBLE FOR THE ACCURACY OR COMPLETENESS OF SCANNED COPIES OF THIS PLAN SHEET.

NOTE:

1. FOR COMPLETE RIGHT OF WAY AND ACCURATE ACCESS DATA, SEE RIGHT OF WAY RECORD MAPS AT DISTRICT OFFICE.

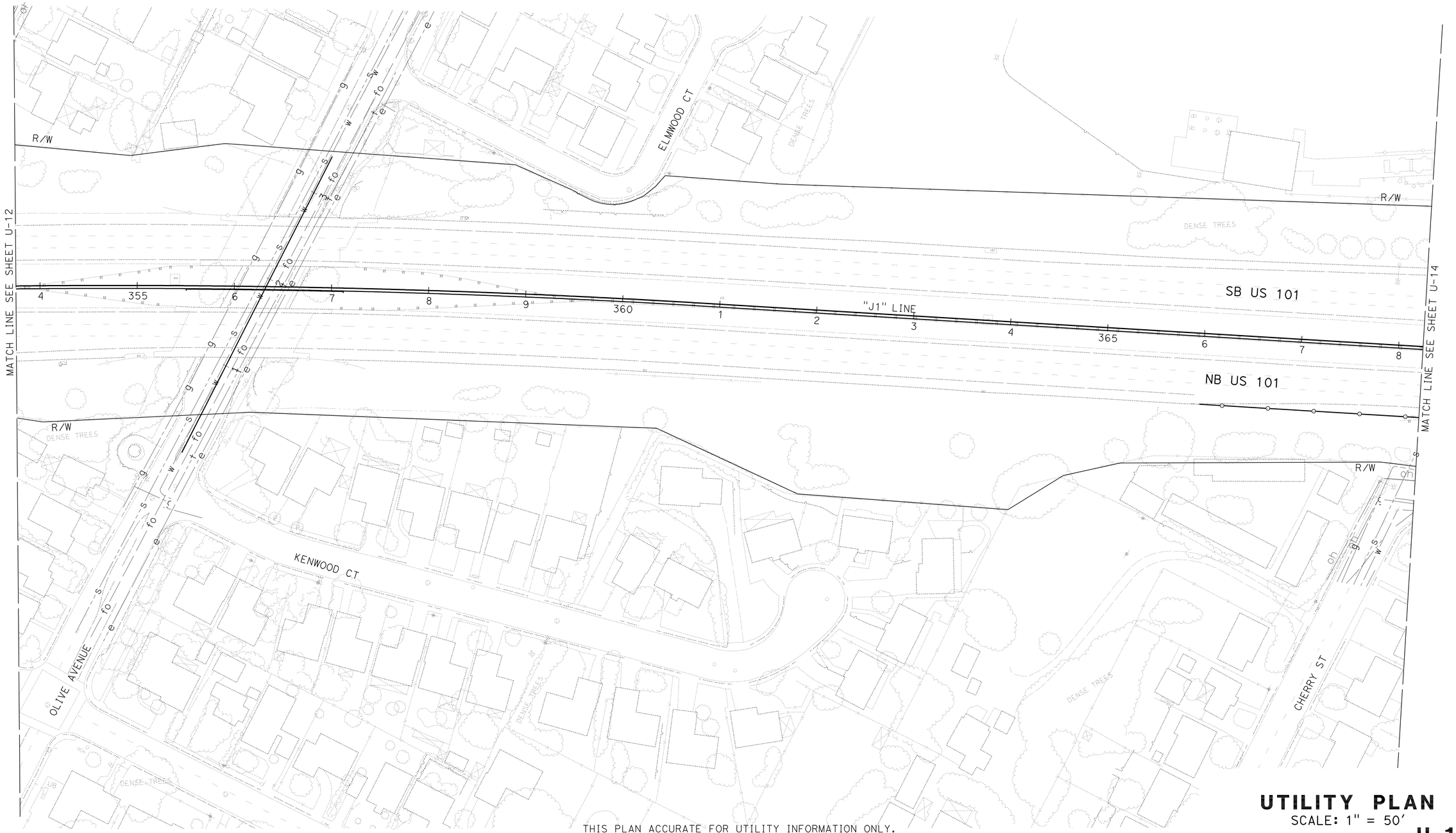

THIS PLAN ACCURATE FOR UTILITY INFORMATION ONLY.

UTILITY PLAN

SCALE: 1" = 50'

U-13

REVISED BY | DATE REVISED
JIM RASMUSSEN | ROBERT J. NIXON
CALCULATED-DESIGNED BY | CHECKED BY
FUNCTIONAL SUPERVISOR
JOHN L. MARTIN

STATE OF CALIFORNIA - DEPARTMENT OF TRANSPORTATION
Caltrans DESIGN

P:\proj2\04\26406\design\ps&e\426406ka013.dgn

LAST REVISION 01-29-10 | DATE PLOTTED => 16-AUG-2010 TIME PLOTTED => 11:08

Dist	COUNTY	ROUTE	POST MILES TOTAL PROJECT	SHEET No.	TOTAL SHEETS
04	Mrn	101	18.6/R22.3	195	542

REGISTERED CIVIL ENGINEER 03-15-10 DATE

8-9-10
PLANS APPROVAL DATE

REGISTERED PROFESSIONAL ENGINEER ROBERT J. NIXON No. C69123 Exp. 6-30-10 CIVIL STATE OF CALIFORNIA

THE STATE OF CALIFORNIA OR ITS OFFICERS OR AGENTS SHALL NOT BE RESPONSIBLE FOR THE ACCURACY OR COMPLETENESS OF SCANNED COPIES OF THIS PLAN SHEET.

NOTE:

1. FOR COMPLETE RIGHT OF WAY AND ACCURATE ACCESS DATA, SEE RIGHT OF WAY RECORD MAPS AT DISTRICT OFFICE.

POTHOLE LOCATION TABLE

⟨X⟩	UTILITY	"J1" LINE STATION	OFFSET	GROUND ELEVATION	DEPTH
32	SEWER	368+34.8	83.6 RT	17.5	SEE NOTE 7
33	SEWER	368+69.5	2.2 LT	17.1	SEE NOTE 7
34	SEWER	378+31.8	3.1 LT	9.2	SEE NOTE 7
35	FIBER	378+51.2	4.0 LT	9.4	6′
36	WATER	378+61.6	0.6 LT	9.2	3.9
37	GAS	378+62.9	1.8 LT	9.2	SEE NOTE 7
38	ELECT	378+68.6	4.8 LT	9.4	4.8′

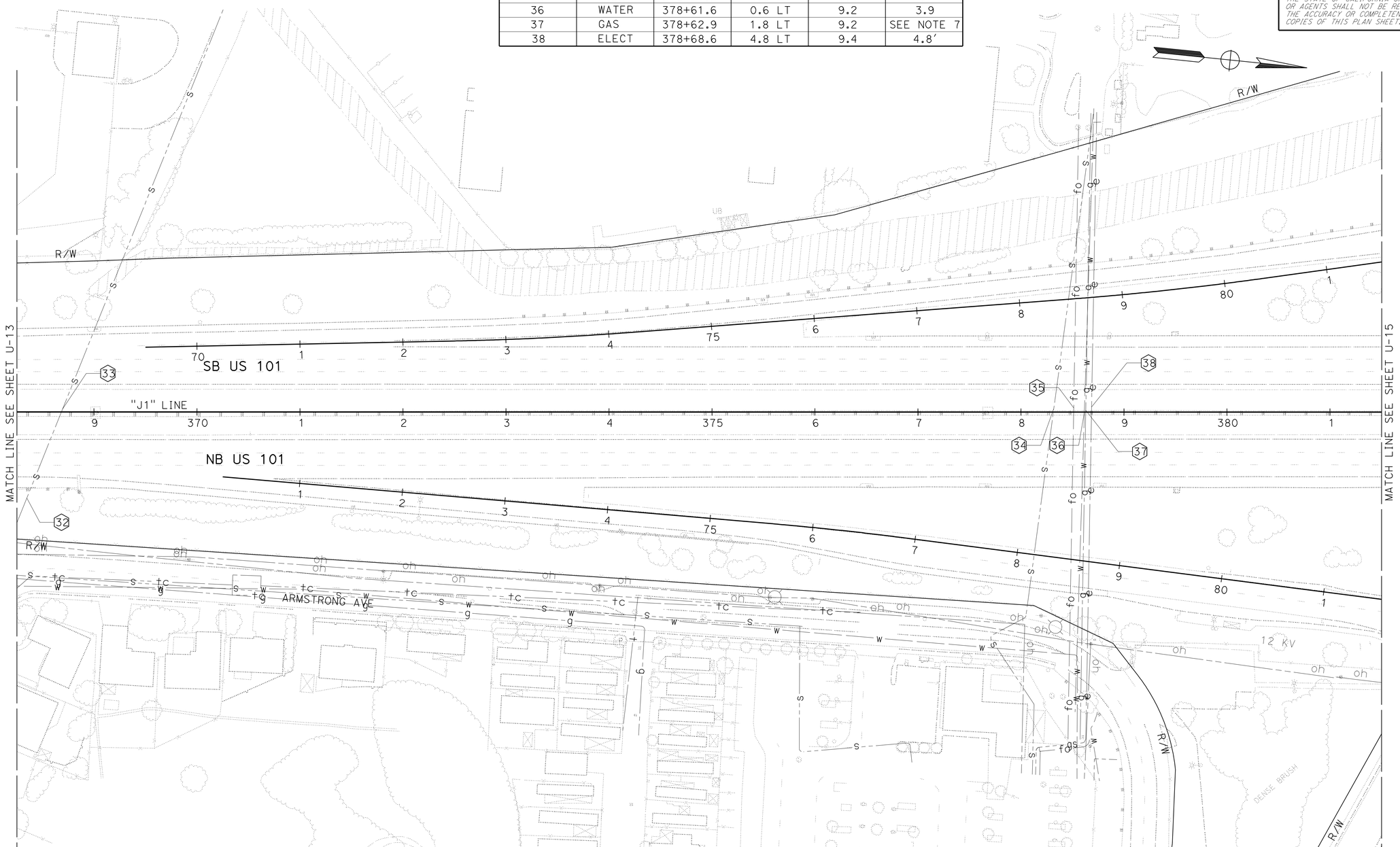

THIS PLAN ACCURATE FOR UTILITY INFORMATION ONLY.

UTILITY PLAN

SCALE: 1" = 50′

U-14

REVISED BY | DATE REVISED

JIM RASMUSSEN | ROBERT J. NIXON

CALCULATED-DESIGNED BY | CHECKED BY

FUNCTIONAL SUPERVISOR: JOHN L. MARTIN

STATE OF CALIFORNIA - DEPARTMENT OF TRANSPORTATION

Caltrans DESIGN

P:\proj2\04\26406\design\DCCR\426406ka014.dgn

LAST REVISION 02-16-10 | DATE PLOTTED => 16-AUG-2010 | TIME PLOTTED => 11:08

Dist	COUNTY	ROUTE	POST MILES TOTAL PROJECT	SHEET No.	TOTAL SHEETS
04	Mrn	101	18.6/R22.3	196	542

REGISTERED CIVIL ENGINEER 03-15-10 DATE

8-9-10
PLANS APPROVAL DATE

REGISTERED PROFESSIONAL ENGINEER ROBERT J. NIXON No. C69123 Exp. 6-30-10 CIVIL STATE OF CALIFORNIA

THE STATE OF CALIFORNIA OR ITS OFFICERS OR AGENTS SHALL NOT BE RESPONSIBLE FOR THE ACCURACY OR COMPLETENESS OF SCANNED COPIES OF THIS PLAN SHEET.

NOTE:

1. FOR COMPLETE RIGHT OF WAY AND ACCURATE ACCESS DATA, SEE RIGHT OF WAY RECORD MAPS AT DISTRICT OFFICE.

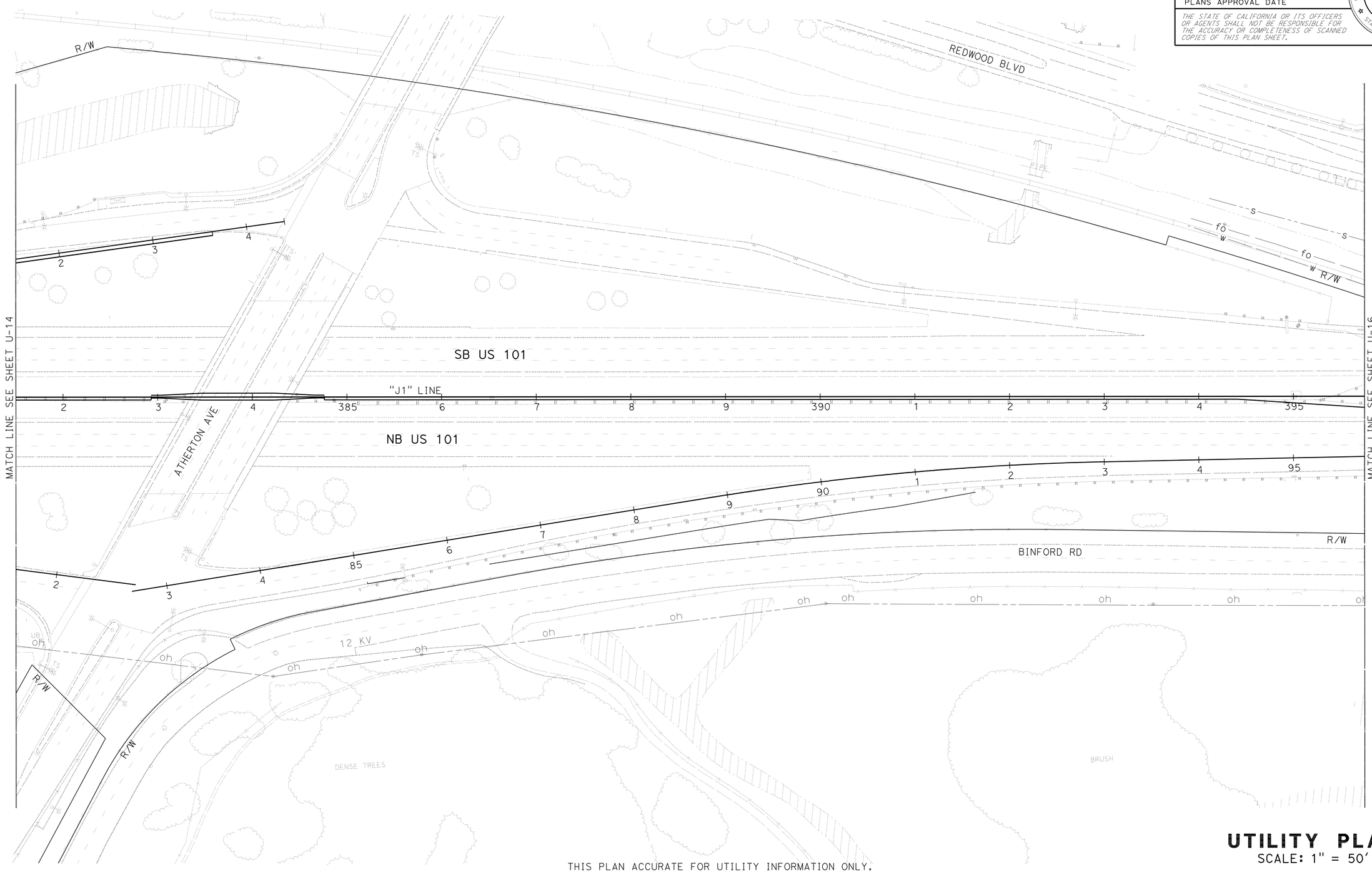

THIS PLAN ACCURATE FOR UTILITY INFORMATION ONLY.

UTILITY PLAN

SCALE: 1" = 50'

U-15

REVISED BY	DATE REVISED

CALCULATED-DESIGNED BY: JIM RASMUSSEN
CHECKED BY: ROBERT J. NIXON
FUNCTIONAL SUPERVISOR: JOHN L. MARTIN

STATE OF CALIFORNIA - DEPARTMENT OF TRANSPORTATION
Caltrans
DESIGN

P:\proj2\04\26406\design\ps&e\426406ka015.dgn

LAST REVISION 02-16-10
DATE PLOTTED => 16-AUG-2010
TIME PLOTTED => 11:08

Dist	COUNTY	ROUTE	POST MILES TOTAL PROJECT	SHEET No.	TOTAL SHEETS
04	Mrn	101	18.6/R22.3	197	542

REGISTERED CIVIL ENGINEER 03-15-10 DATE

8-9-10
PLANS APPROVAL DATE

REGISTERED PROFESSIONAL ENGINEER
ROBERT J. NIXON
No. C69123
Exp. 6-30-10
CIVIL
STATE OF CALIFORNIA

THE STATE OF CALIFORNIA OR ITS OFFICERS OR AGENTS SHALL NOT BE RESPONSIBLE FOR THE ACCURACY OR COMPLETENESS OF SCANNED COPIES OF THIS PLAN SHEET.

NOTE:

1. FOR COMPLETE RIGHT OF WAY AND ACCURATE ACCESS DATA, SEE RIGHT OF WAY RECORD MAPS AT DISTRICT OFFICE.

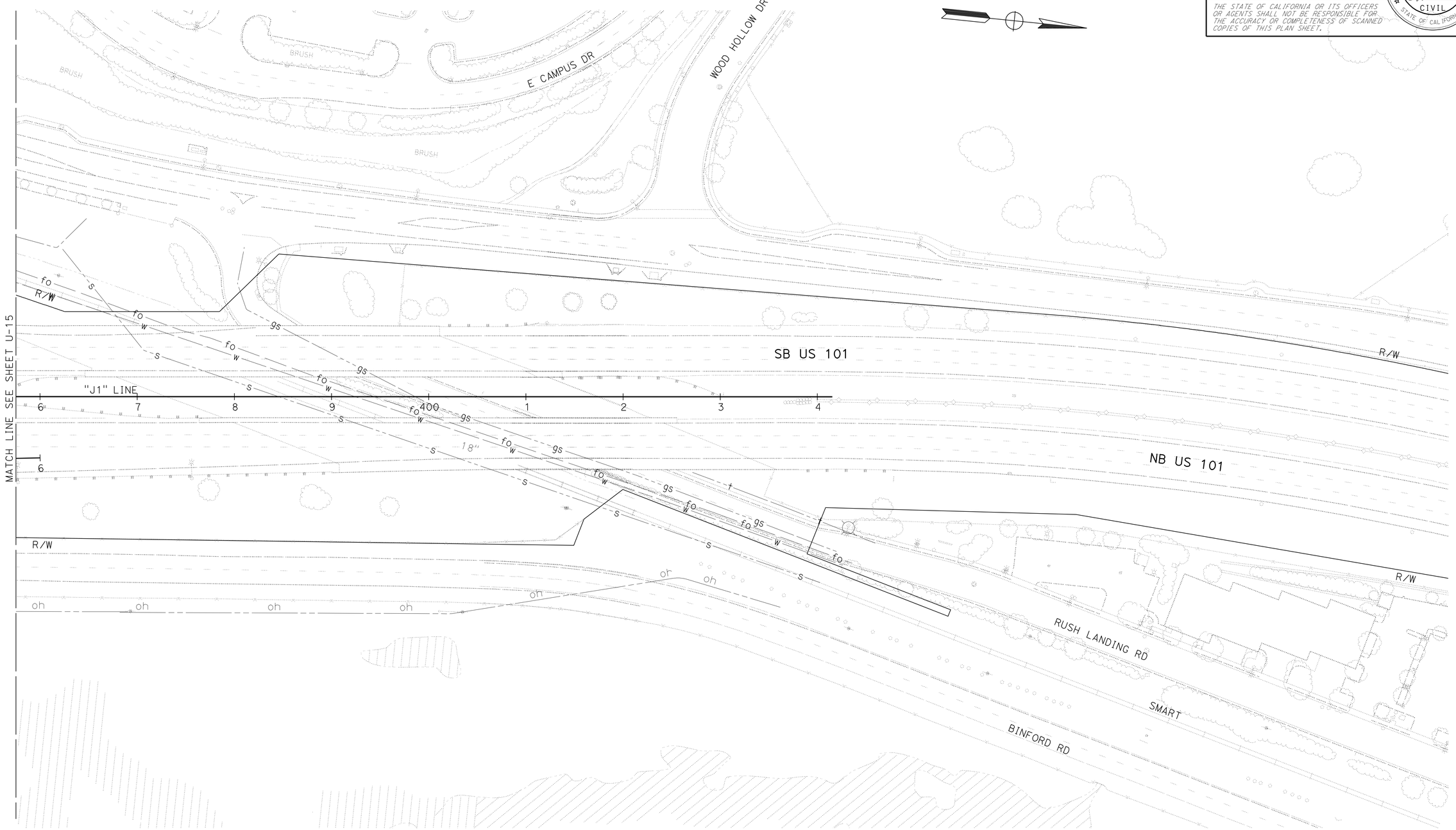

THIS PLAN ACCURATE FOR UTILITY INFORMATION ONLY.

UTILITY PLAN

SCALE: 1" = 50'

U-16

REVISED BY | DATE REVISED
JIM RASMUSSEN | ROBERT J. NIXON
CALCULATED-DESIGNED BY | CHECKED BY
FUNCTIONAL SUPERVISOR
JOHN L. MARTIN

STATE OF CALIFORNIA - DEPARTMENT OF TRANSPORTATION
Caltrans
DESIGN

P:\proj2\04\26406\design\ps&e\426406ka016.dgn

LAST REVISION 02-11-10
DATE PLOTTED => 16-AUG-2010
TIME PLOTTED => 11:08

BORDER LAST REVISED 4/11/2008
RELATIVE BORDER SCALE IS IN INCHES 0 1 2 3
USERNAME => trmartin
DGN FILE => 426406ka016.dgn
CU 03 240
EA 264061

Dist	COUNTY	ROUTE	POST MILES TOTAL PROJECT	SHEET No.	TOTAL SHEETS
04	Mrn	101	18.6/R22.3	198	542

REGISTERED CIVIL ENGINEER 03-15-10 DATE

8-9-10
PLANS APPROVAL DATE

REGISTERED PROFESSIONAL ENGINEER ROBERT J. NIXON No. C69123 Exp. 6-30-10 CIVIL STATE OF CALIFORNIA

THE STATE OF CALIFORNIA OR ITS OFFICERS OR AGENTS SHALL NOT BE RESPONSIBLE FOR THE ACCURACY OR COMPLETENESS OF SCANNED COPIES OF THIS PLAN SHEET.

NOTES:

1. EXACT SIGN LOCATIONS TO BE DETERMINED BY THE ENGINEER.
2. CALIFORNIA SIGN CODES ARE DESIGNATED BY (CA), OTHERWISE, FEDERAL MUTCD SIGN CODES ARE SHOWN.
3. CONSTRUCTION AREA SIGNS, EXCEPT THE FUNDING IDENTIFICATION SIGN, SHALL HAVE A BLACK LEGEND WITH AN ORANGE BACKGROUND

STATIONARY MOUNTED CONSTRUCTION AREA SIGNS

SIGN TYPE	CODE	PANEL SIZE	MESSAGE	NUMBER OF POST AND SIZE	NUMBER OF SIGNS
A	W20-1	48" X 48"	"ROAD WORK AHEAD"	1 - 6" X 6"	10
B	G20-2	48" X 24"	"END ROAD WORK"	1 - 4" X 6"	12
C	W20-1 C23B (CA)	48" X 48" 48" X 48"	"ROAD WORK AHEAD" "FREEWAY WIDENING"	2 - 4" X 6"	4
D	C40(MOD) (CA)	96" X 60"	TRAFFIC FINES DOUBLED IN WORK ZONES	2 - 6" X 6"	2
E	SPECIAL	132" X 108"	FUNDING IDENTIFICATION	2 - 6" X 6"	2

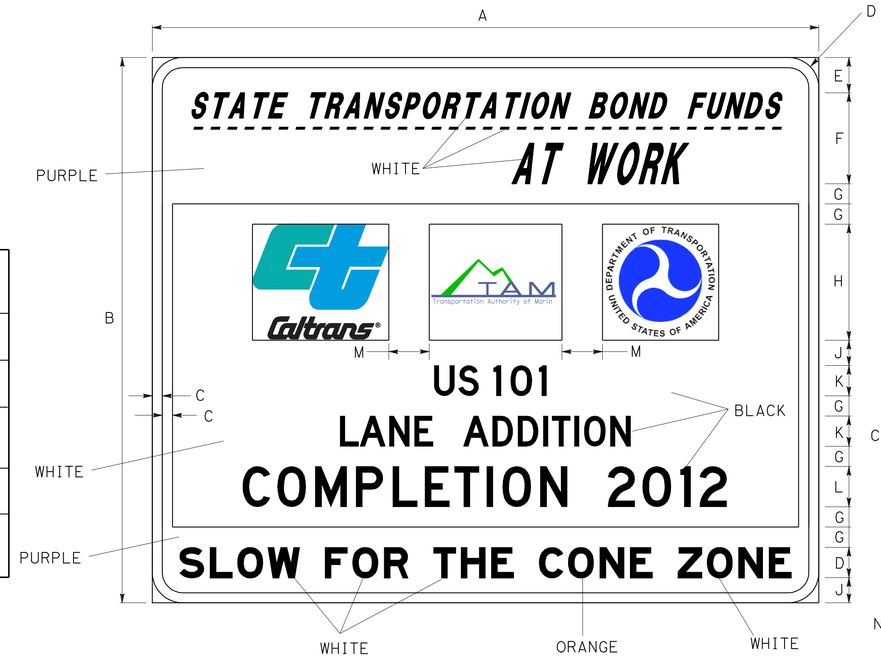

ALL DIMENSIONS IN INCHES

A	B	C	D	E	F	G	H	J	K	L	M
132	108	2	6	7	18	4	23 Max.	5	6D	8D	8

COLORS: BORDER - WHITE
LEGEND - BLACK, WHITE, ORANGE
BACKGROUND - PURPLE (PANTONE #520) AND WHITE
CT LOGO - GREEN (PANTONE #326) AND BLUE (PANTONE #299)
TAM LOGO - WHITE, BLUE AND GREEN
FHWA LOGO - BLACK AND BLUE

NOTE: ALL COLORS EXCEPT BLACK ARE TO BE RETROREFLECTIVE (ASTM TYPE II)

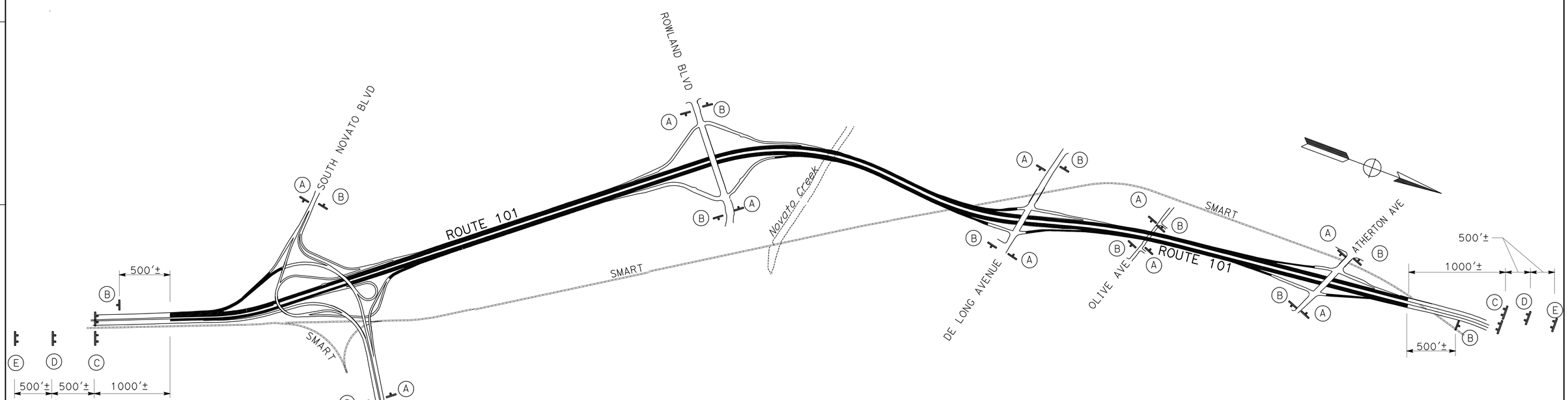

THIS PLAN ACCURATE FOR CONSTRUCTION AREA SIGN WORK ONLY.

CONSTRUCTION AREA SIGNS

NO SCALE

CS-1

REVISED BY | DATE REVISED
CALCULATED-DESIGNED BY | CHECKED BY
FUNCTIONAL SUPERVISOR: JOHN L. MARTIN

STATE OF CALIFORNIA - DEPARTMENT OF TRANSPORTATION
Caltrans DESIGN

P:\proj2\04\26406\design\ps&e\4264061a001.dgn

LAST REVISION 03-09-10 | DATE PLOTTED => 16-AUG-2010 | TIME PLOTTED => 11:08

Dist	COUNTY	ROUTE	POST MILES TOTAL PROJECT	SHEET No.	TOTAL SHEETS
04	Mrn	101	18.6/R22.3	199	542

REGISTERED CIVIL ENGINEER 03-15-10 DATE

8-9-10
PLANS APPROVAL DATE

REGISTERED PROFESSIONAL ENGINEER ROBERT J. NIXON No. C69123 Exp. 6-30-10 CIVIL STATE OF CALIFORNIA

THE STATE OF CALIFORNIA OR ITS OFFICERS OR AGENTS SHALL NOT BE RESPONSIBLE FOR THE ACCURACY OR COMPLETENESS OF SCANNED COPIES OF THIS PLAN SHEET.

NOTES:
1. FOR COMPLETE RIGHT OF WAY AND ACCURATE ACCESS DATA, SEE RIGHT OF WAY RECORD MAPS AT DISTRICT OFFICE.
2. EXACT LOCATION OF ALL SIGNS TO BE DETERMINED BY THE ENGINEER.
3. CALIFORNIA SIGN CODES ARE DESIGNATED BY (CA), OTHERWISE FEDERAL SIGN CODES ARE SHOWN.
4. THE LOCATIONS SHOWN FOR THE TRUCK ACCESS OPENINGS ARE APPROXIMATE. THE ACTUAL LOCATIONS AND WIDTHS OF THE TRUCK ACCESS OPENINGS WILL BE DETERMINED BY THE CONTRACTOR AND APPROVED BY THE ENGINEER.
5. THE LOCATIONS SHOWN FOR REMOVAL OF THE MEDIAN TRAFFIC STRIPE (DETAIL 25) ARE APPROXIMATE. REMOVE TRAFFIC STRIPE OUTSIDE OF EXCAVATION LIMITS.

LEGEND:

- WORK AREA
- TEMPORARY RAILING (TYPE K)
- TEMP — TEMPORARY PAVEMENT DELINEATION DETAIL NUMBER
- CHANGE IN TRAFFIC STRIPE
- TEMPORARY CRASH CUSHION ARRAY TS14
- ALTERNATIVE TEMPORARY CRASH CUSHION ELEMENT
- CHANNELIZER (SURFACE MOUNTED)
- DIRECTION OF TRAFFIC
- CONSTRUCTION AREA SIGN
- TYPE III BARRICADE WITH SIGN
- REMOVE STRIPE — REMOVE THERMOPLASTIC TRAFFIC STRIPE
- SMART — SONOMA MARIN AREA RAIL TRANSIT RAILROAD

STAGE 1 CONSTRUCTION

WIDEN NOVATO CREEK BRIDGE AND OLIVE AVE UC

WIDEN FRANKLIN OH INSIDE RIGHT BRIDGE AND OUTSIDE LEFT BRIDGE. CONSTRUCT WALLS SW2A AND SW2B

CONSTRUCT WALL RW1

WIDEN INSIDE US 101 ("J1" LINE)

WIDEN OUTSIDE WB37-SB101 CONN ("IL1" LINE) WITH TEMPORARY CLOSURE OF S. NOVATO BLVD ON-RAMP TO SB 101. WIDEN INSIDE WB37-SB101 CONN ("IL1" LINE) WITH TRAFFIC CONTROL

WIDEN OUTSIDE DELONG AVE SB 101 ON-RAMP ("DL1" LINE)

WIDEN OUTSIDE ATHERTON AVE SB 101 ON-RAMP ("AL1" LINE)

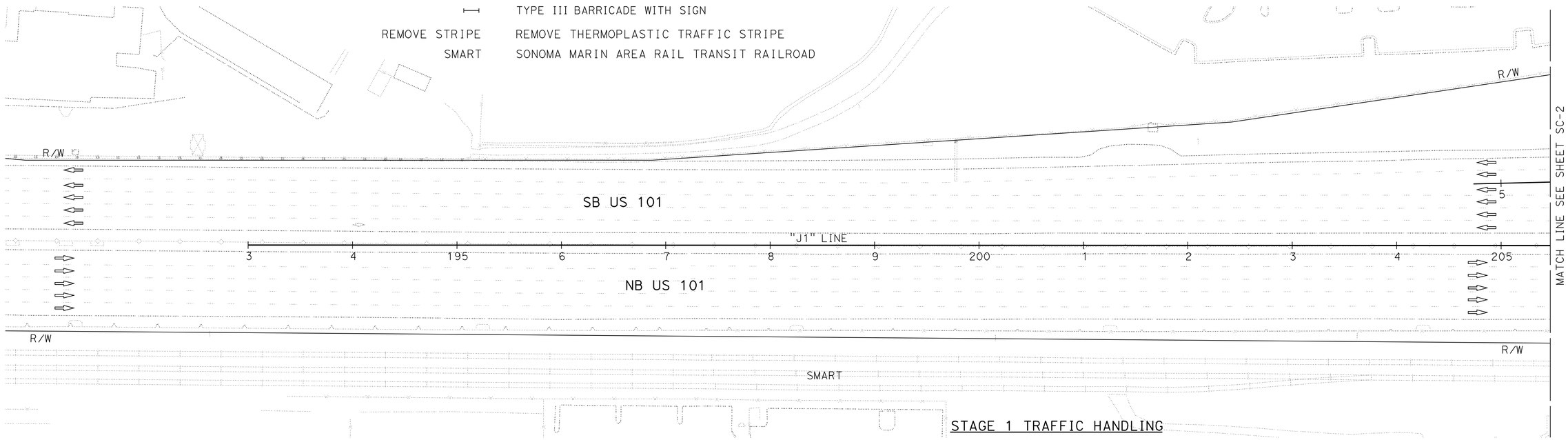

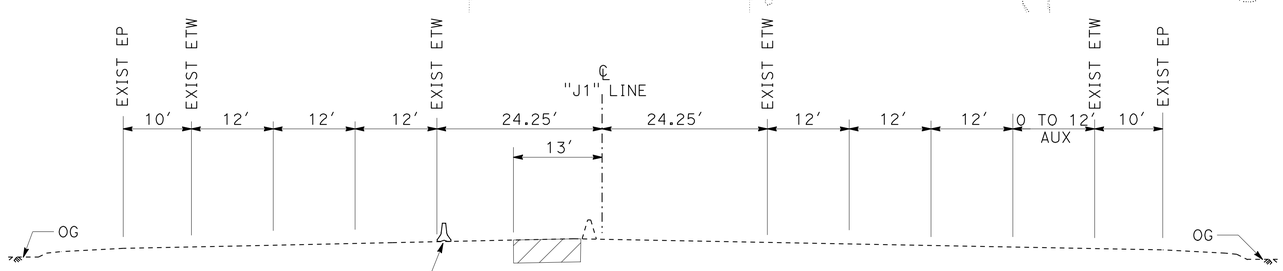

TYPICAL SECTION
STA "J1" 218+00 TO 229+00
NO SCALE

STAGE 1 TRAFFIC HANDLING

US 101 ("J1" LINE):
SHIFT NB TRAFFIC TO OUTSIDE STA "J1" 223+72 TO 400+25

SHIFT SB TRAFFIC TO OUTSIDE STA "J1" 226+00 TO 312+00, 323+75 TO 332+75, AND 367+25 TO 375+25

WB37-SB101 CONNECTOR ("IL1" LINE):
SHIFT TRAFFIC TO OUTSIDE

DE LONG AVE SB ON-RAMP ("DL1" LINE):
SHIFT RAMP TRAFFIC TO INSIDE

ATHERTON AVE SB ON-RAMP ("AL1" LINE):
SHIFT RAMP TRAFFIC TO INSIDE

OTHER ON-RAMPS AND OFF-RAMPS:
SAME AS EXISTING

OLIVE AVE ("OL1" LINE):
SHIFT TRAFFIC TO INSIDE

THIS PLAN ACCURATE FOR STAGE CONSTRUCTION AND TRAFFIC HANDLING WORK ONLY.

(STAGE 1) STAGE CONSTRUCTION AND TRAFFIC HANDLING PLAN

SCALE: 1" = 50′

SC-1

REVISED BY | DATE REVISED
JOHN A. TRIGG | JOHN L. MARTIN
CALCULATED-DESIGNED BY | CHECKED BY
FUNCTIONAL SUPERVISOR: JOHN L. MARTIN

STATE OF CALIFORNIA - DEPARTMENT OF TRANSPORTATION
Caltrans DESIGN

P:\proj2\04\26406\design\DCCR\426406ma001.dgn

LAST REVISION 05-11-10 | DATE PLOTTED => 16-AUG-2010 | TIME PLOTTED => 11:08

Dist	COUNTY	ROUTE	POST MILES TOTAL PROJECT	SHEET No.	TOTAL SHEETS
04	Mrn	101	18.6/R22.3	200	542

REGISTERED CIVIL ENGINEER 03-15-10 DATE

8-9-10
PLANS APPROVAL DATE

REGISTERED PROFESSIONAL ENGINEER ROBERT J. NIXON No. C69123 Exp. 6-30-10 CIVIL STATE OF CALIFORNIA

THE STATE OF CALIFORNIA OR ITS OFFICERS OR AGENTS SHALL NOT BE RESPONSIBLE FOR THE ACCURACY OR COMPLETENESS OF SCANNED COPIES OF THIS PLAN SHEET.

NOTE:

1. FOR COMPLETE RIGHT OF WAY AND ACCURATE ACCESS DATA, SEE RIGHT OF WAY RECORD MAPS AT DISTRICT OFFICE.

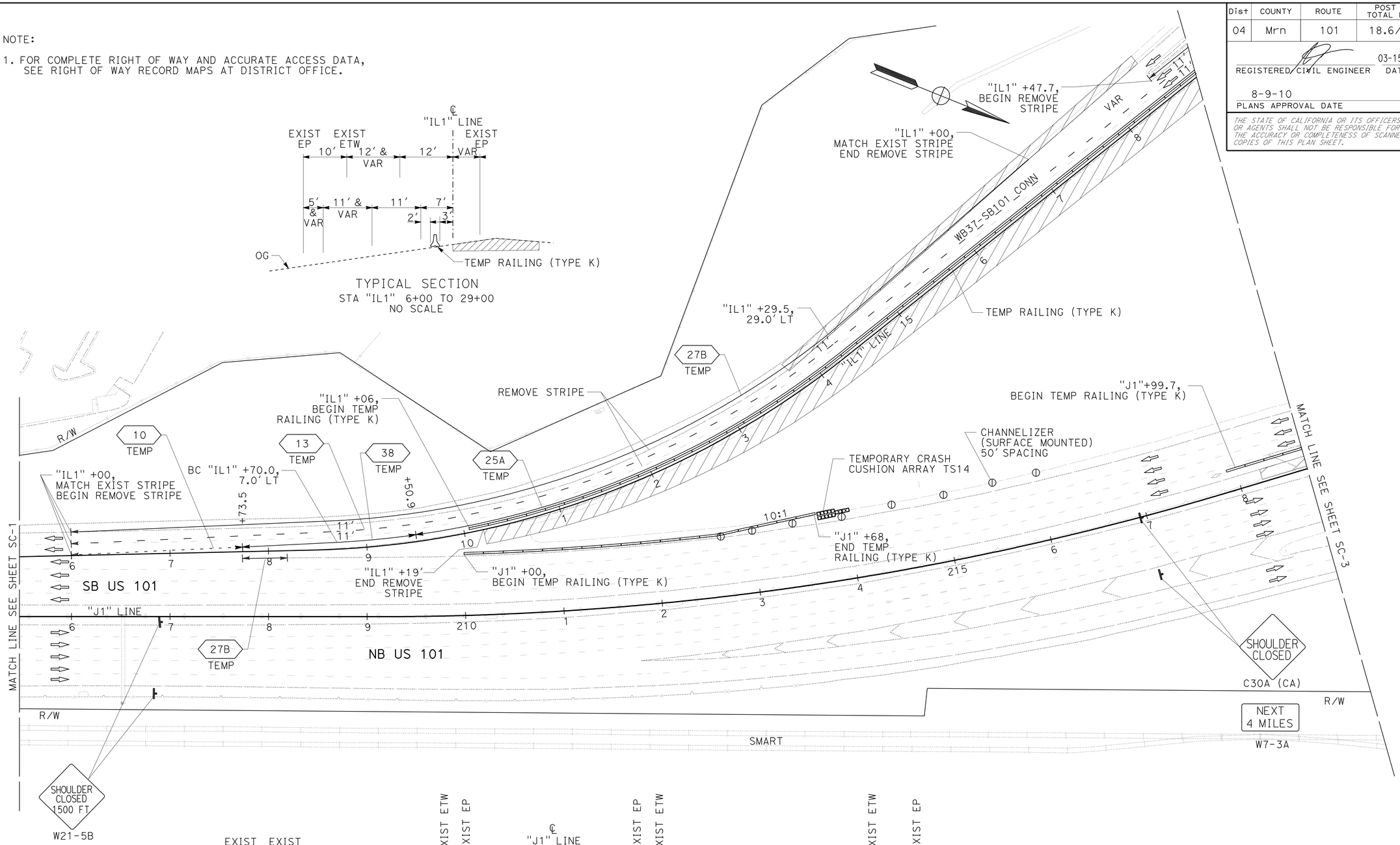

THIS PLAN ACCURATE FOR STAGE CONSTRUCTION AND TRAFFIC HANDLING WORK ONLY.

(STAGE 1)

STAGE CONSTRUCTION AND TRAFFIC HANDLING PLAN

SCALE: 1" = 50′

SC-2

REVISED BY	DATE REVISED
JOHN A. TRIGG	JOHN L MARTIN

CALCULATED-DESIGNED BY / CHECKED BY

FUNCTIONAL SUPERVISOR: JOHN L. MARTIN

STATE OF CALIFORNIA - DEPARTMENT OF TRANSPORTATION

Caltrans DESIGN

P:\proj2\04\26406\design\ps&e\426406ma002.dgn

LAST REVISION 05-11-10 | DATE PLOTTED => 16-AUG-2010 | TIME PLOTTED => 11:09

BORDER LAST REVISED 4/11/2008

RELATIVE BORDER SCALE IS IN INCHES 0 1 2 3

USERNAME => trmartin
DGN FILE => 426406ma002.dgn

CU 03 240

EA 264061