Dist	COUNTY	ROUTE	POST MILES TOTAL PROJECT	SHEET No.	TOTAL SHEETS
04	Mrn	101	18.6/R22.3	1	542

STATE OF CALIFORNIA

DEPARTMENT OF TRANSPORTATION

PROJECT PLANS FOR CONSTRUCTION ON

STATE HIGHWAY

IN MARIN COUNTY
IN AND NEAR NOVATO
FROM ROUTE 37 TO ATHERTON AVENUE

TO BE SUPPLEMENTED BY STANDARD PLANS DATED MAY 2006

INDEX OF PLANS

SHEET No.	DESCRIPTION
1	TITLE AND LOCATION MAP
2-10	TYPICAL CROSS SECTIONS
11-12	KEY MAP AND LINE INDEX
13	PROJECT CONTROL PLAN
14-29	LAYOUTS
30-51	PROFILES AND SUPERELEVATION DIAGRAM
52-63	CONSTRUCTION DETAILS
64	TEMPORARY WATER POLLUTION CONTROL QUANTITIES
65-85	EROSION CONTROL PLANS, DETAILS AND QUANTITIES
86-181	DRAINAGE PLANS, PROFILES, DETAILS AND QUANTITIES
182-197	UTILITY PLANS
198	CONSTRUCTION AREA SIGNS
199-228	STAGE CONSTRUCTION AND TRAFFIC HANDLING PLANS DETAILS AND QUANTITIES
229-240	DETOUR PLANS (BRIDGE REMOVAL)
241-262	PAVEMENT DELINEATION AND SIGN PLANS, DETAILS AND QUANTITIES
263-277	SIGN DETAILS AND QUANTITIES
278-281	SUMMARY OF QUANTITIES
282-284	RETAINING WALL PLANS
285-306	SOUND WALL PLANS
307-308	PLANTING PLANS
309-339	ELECTRICAL PLANS
340-406	REVISED AND NEW STANDARD PLANS

STRUCTURE PLANS

407-425	RETAINING/SOUND WALL RW1, Br No. 27E0026
426-443	NOVATO CREEK BRIDGE (WIDEN), Br No. 27-0089R
444-510	FRANKLIN Ave OVERHEAD (WIDEN), Br No. 27-0090R/L
511-521	RETAINING/SOUND WALL RW2, Br No. 27E0027
522-542	OLIVE AVENUE UC (WIDEN), Br No. 27-0092R

THE STANDARD PLANS LIST APPLICABLE TO THIS CONTRACT IS INCLUDED IN THE NOTICE TO BIDDERS AND SPECIAL PROVISIONS BOOK.

LOCATION MAP

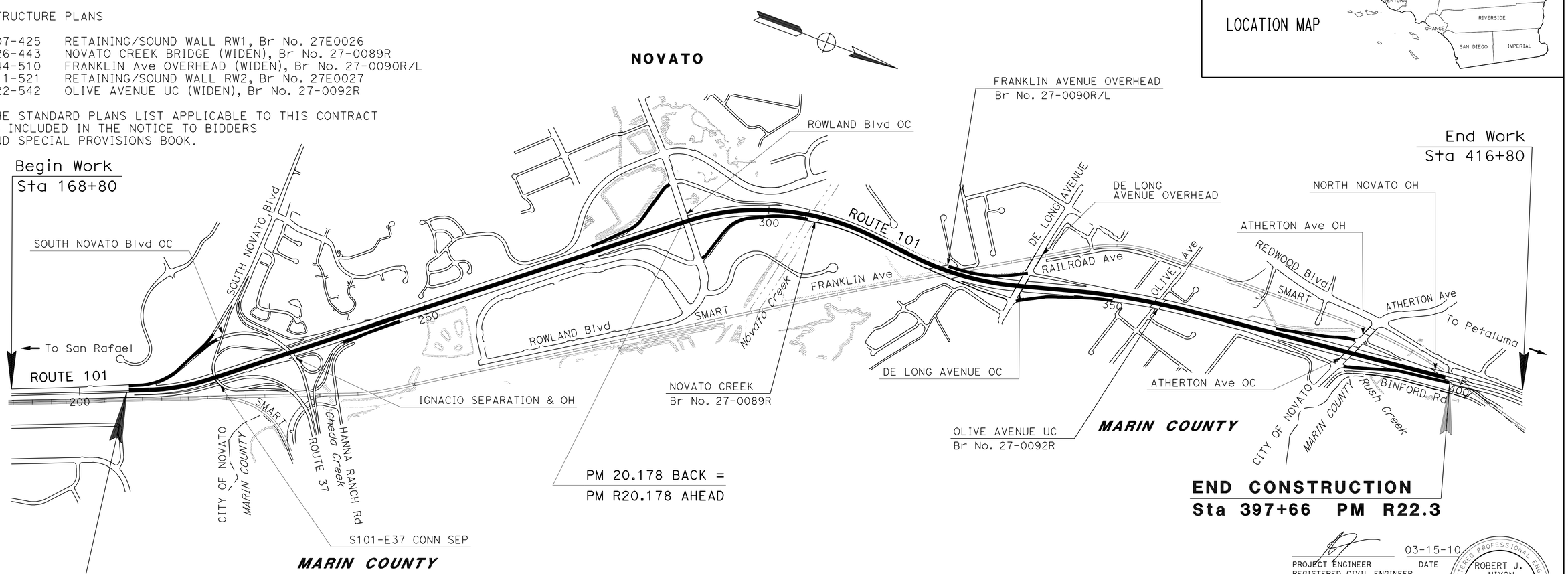

NO SCALE

PROJECT ENGINEER
REGISTERED CIVIL ENGINEER

03-15-10
DATE

REGISTERED PROFESSIONAL ENGINEER
ROBERT J. NIXON
No. C69123
Exp. 6-30-10
CIVIL
STATE OF CALIFORNIA

August 9, 2010
PLANS APPROVAL DATE

THE STATE OF CALIFORNIA OR ITS OFFICERS OR AGENTS SHALL NOT BE RESPONSIBLE FOR THE ACCURACY OR COMPLETENESS OF SCANNED COPIES OF THIS PLAN SHEET.

THE CONTRACTOR SHALL POSSESS THE CLASS (OR CLASSES) OF LICENSE AS SPECIFIED IN THE "NOTICE TO BIDDERS."

PROJECT MANAGER: WAJAHAT NYAZ
DESIGN ENGINEER: JOHN L. MARTIN

CONTRACT No.	04-264064
PROJECT ID	0400000732

LAST REVISION 03-15-10 | DATE PLOTTED => 02-SEP-2010 | TIME PLOTTED => 11:07

Dist	COUNTY	ROUTE	POST MILES TOTAL PROJECT	SHEET No.	TOTAL SHEETS
04	Mrn	101	18.6/R22.3	2	542

REGISTERED CIVIL ENGINEER 03-15-10 DATE

8-9-10
PLANS APPROVAL DATE

REGISTERED PROFESSIONAL ENGINEER ROBERT J. NIXON No. C69123 Exp. 6-30-10 CIVIL STATE OF CALIFORNIA

THE STATE OF CALIFORNIA OR ITS OFFICERS OR AGENTS SHALL NOT BE RESPONSIBLE FOR THE ACCURACY OR COMPLETENESS OF SCANNED COPIES OF THIS PLAN SHEET.

NOTES:

1. DIMENSIONS OF THE PAVEMENT STRUCTURES (STRUCTURAL SECTIONS) ARE SUBJECT TO TOLERANCES SPECIFIED IN THE STANDARD SPECIFICATIONS.
2. SUPERLEVATION AS SHOWN OR AS DIRECTED BY THE ENGINEER.
3. FOR BARRIER AND HMA DIKE LOCATIONS, SEE LAYOUT SHEETS.
4. SEAL ALL CRACKS 1/4" OR WIDER, AND REMOVE AND REPLACE FAILED EXISTING AC PAVEMENT PRIOR TO SPECIFIED OVERLAYS.
5. HMA-O OVERLAY WILL BE PLACED OVER THE ENTIRE MAINLINE TRAVELED WAY AND 3' OUTSIDE THE ETW ON THE SHOULDERS.

ABBREVIATIONS

HMA	HOT MIXED ASPHALT
HMA-O	HOT MIXED ASPHALT (OPEN GRADED)
RHMA-G	RUBBERIZED HOT MIXED ASPHALT (GAP GRADED)
CTB	CEMENT TREATED BASE
LCB	LEAN CONCRETE BASE
CL 4 AS	CLASS 4 AGGREGATE SUBBASE
CL 2 AB	CLASS 2 AGGREGATE BASE
RAC-G	RUBBERIZED ASPHALT CONCRETE (GAP GRADED)
LL	LANE LINE
SC	SAW CUT
SUPER	SUPERELEVATION
CS	CHIP SEAL
SM	SUITABLE MATERIAL

LEGEND

E-# EXIST STRUCTRUAL SECTION

DESIGN DESIGNATION (ROUTE 101)

ADT (2009)	120,564	D	57%
ADT (2035)	138,112	T	4.4%
DHV	13,172	V	70 mph
ESAL	28,779,000	TI_{40}	13.5

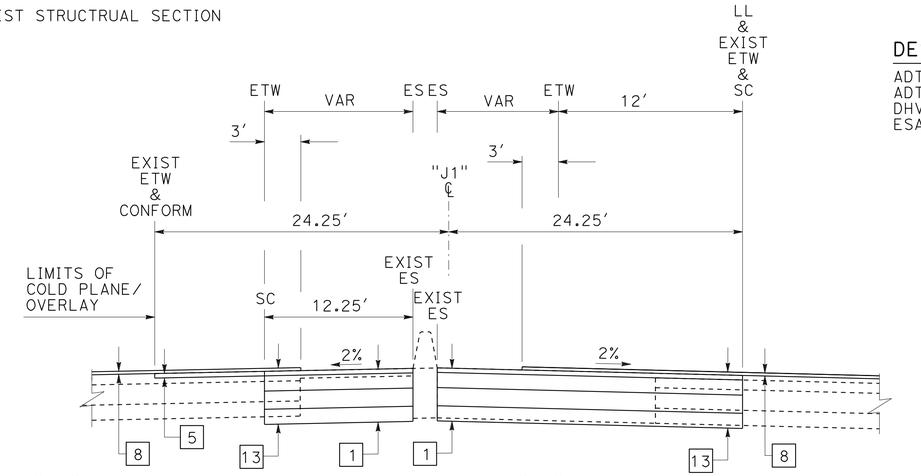

STA "J1" 225+00.00 TO 229+30.00, LT STA "J1" 229+00.00 TO 229+30.00, RT

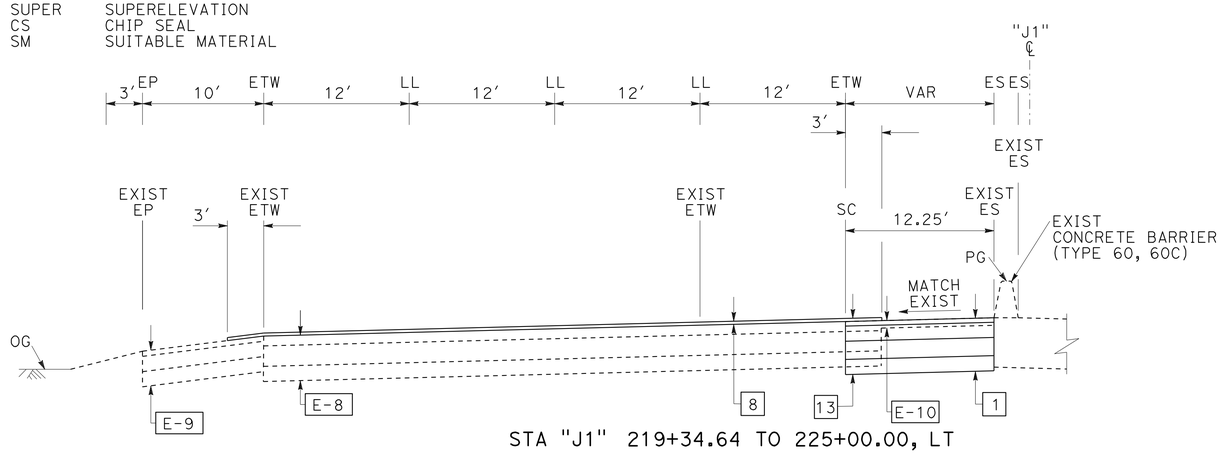

STA "J1" 219+34.64 TO 225+00.00, LT

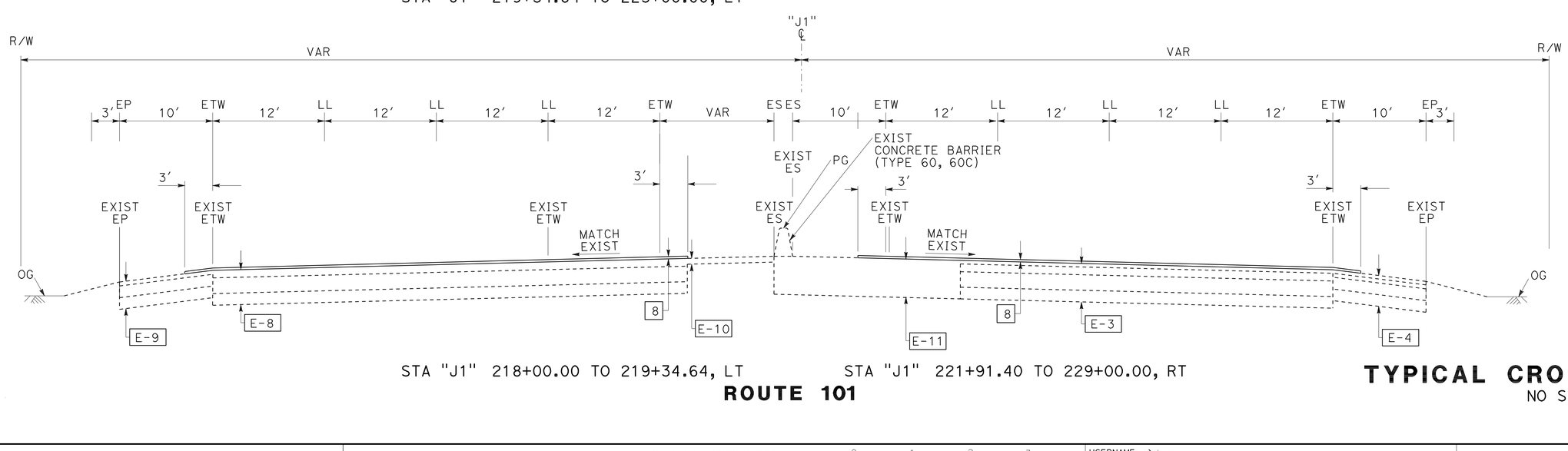

STA "J1" 218+00.00 TO 219+34.64, LT STA "J1" 221+91.40 TO 229+00.00, RT

ROUTE 101

1: 0.15' RHMA-G; 0.50' HMA; 0.60' LCB; 0.50' CL 4 AS

2: 0.15' RHMA-G; 0.50' HMA; 0.75' LCB; 1.45' CL 4 AS

3: 0.15' RHMA-G; 0.55' HMA; 0.70' LCB; 1.40' CL 4 AS

4: 0.15' RHMA-G

5: 0.10' HMA-O; 0.15' TO 0.35' & VAR RHMA-G

6: 0.15' TO 0.30' & VAR RHMA-G

7: 0.70' REPLACE CONCRETE PAVEMENT (RAPID STRENGTH CONCRETE); 0.50' CL 2 AB

8: 0.10' HMA-O

9: 0.10' HMA-O; 0.15' RHMA-G; 0.55' HMA; 0.70' LCB; 1.40' CL 4 AS

10: 0.10' HMA-O; 0.15' RHMA-G

11: 0.50' HMA; 0.50' CL 4 AS

12: 0.10 HMA-O; 0.15' RHMA-G; 0.50' HMA; 0.75' LCB; 1.45' CL 4 AS

13: 0.10 HMA-O; 0.15' RHMA-G; 0.50' HMA; 0.60' LCB; 0.50' CL 4 AS

E-1: 0.25 AC (TYPE A); 0.50' AC; 0.90' CTB; 1.1' CL 4 AS

E-2: 0.17' AC; 0.50' CTB; 0.50' SM

E-3: 0.15' RAC-G; 0.33' AC; 0.67' CTB; 0.50' SM

E-4: 0.15' RAC-G; 0.17' AC; 0.50' CTB; 0.50' SM

E-5: 0.15' RAC-G; 0.40' AC; 0.80' CTB; 1.30' AS

E-6: 0.15' RAC-G; 0.50' AC; 0.90' CTB; 1.10' AS

E-7: 0.15' RAC-G; 0.25' TO 0.40' AC; 0.80' AB; 1.30' AS

E-8: ASPHALT RUBBER CS; 0.33' AC; 0.67' CTB; 0.50' SM

E-9: ASPHALT RUBBER CS; 0.17' AC; 0.50' CTB; 0.50' SM

E-10: 0.25' AC

E-11: 1.65' AC

E-12: 0.35' AC; 0.75' CTB; 0.80' AS

TYPICAL CROSS SECTIONS

NO SCALE

X-1

REVISED BY	DATE REVISED
ROBERT J. NIXON	JOHN L. MARTIN
CALCULATED-DESIGNED BY	CHECKED BY
FUNCTIONAL SUPERVISOR	JOHN L. MARTIN

STATE OF CALIFORNIA - DEPARTMENT OF TRANSPORTATION

Caltrans **DESIGN**

P:\proj2\04\26406\design\ps&e\426406ca001.dgn

LAST REVISION 03-15-10 | DATE PLOTTED => 16-AUG-2010 | TIME PLOTTED => 07:14

Dist	COUNTY	ROUTE	POST MILES TOTAL PROJECT	SHEET No.	TOTAL SHEETS
04	Mrn	101	18.6/R22.3	3	542

REGISTERED CIVIL ENGINEER 03-15-10 DATE

8-9-10
PLANS APPROVAL DATE

REGISTERED PROFESSIONAL ENGINEER ROBERT J. NIXON No. C69123 Exp. 6-30-10 CIVIL STATE OF CALIFORNIA

THE STATE OF CALIFORNIA OR ITS OFFICERS OR AGENTS SHALL NOT BE RESPONSIBLE FOR THE ACCURACY OR COMPLETENESS OF SCANNED COPIES OF THIS PLAN SHEET.

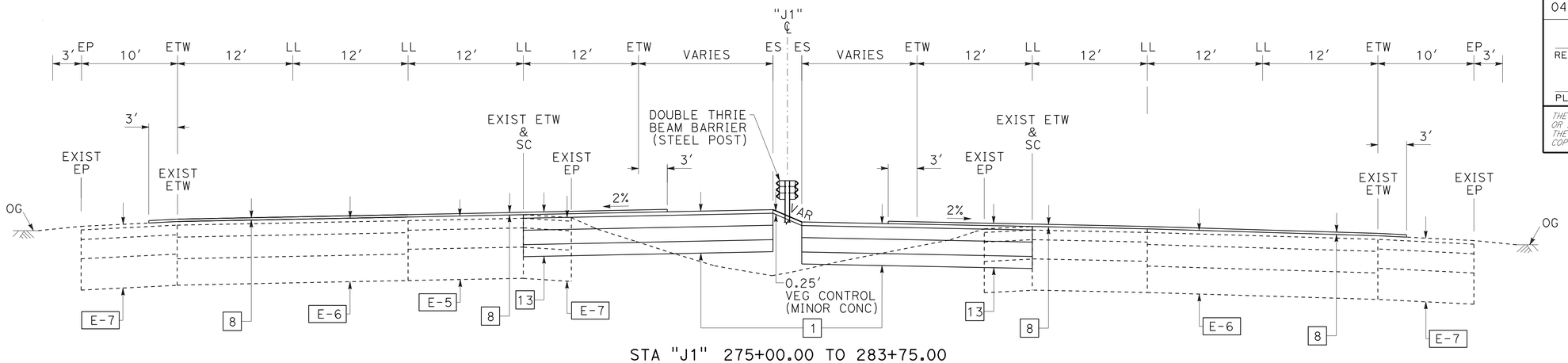

STA "J1" 275+00.00 TO 283+75.00

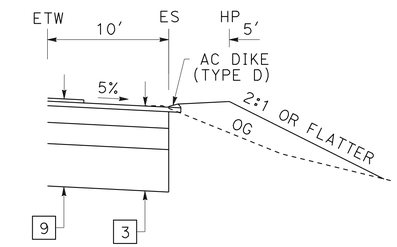

STA "J1" 249+00.00 TO 252+37.07 RT

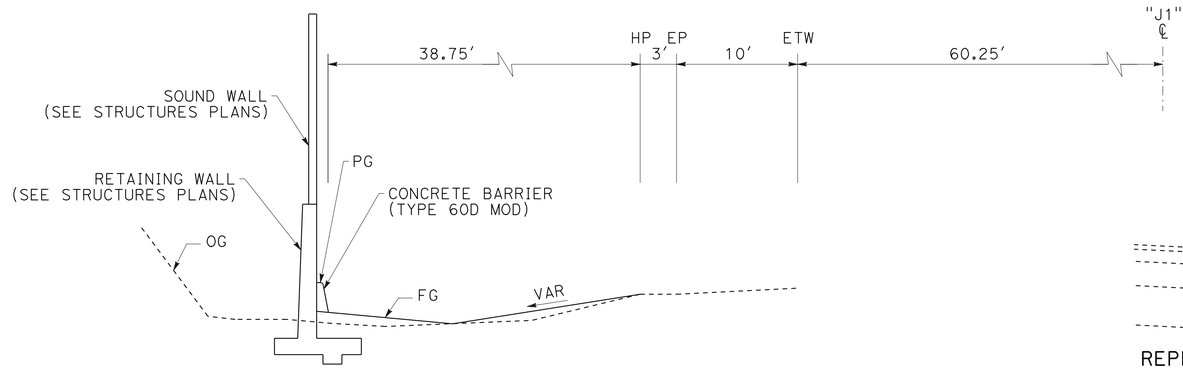

STA "J1" 262+32.00 TO 272+40.00 LT

SOUNDWALL ON RETAINING WALL

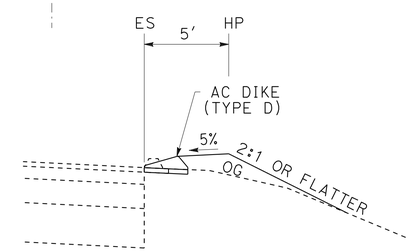

REPLACE EXISTING DIKE

SEE LAYOUT SHEETS FOR LOCATIONS

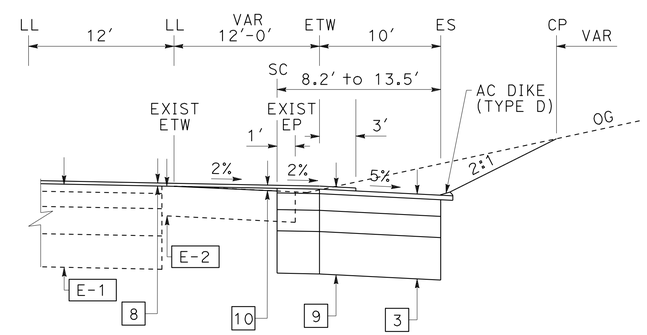

STA "J1" 246+07.07 TO 249+00.00, RT

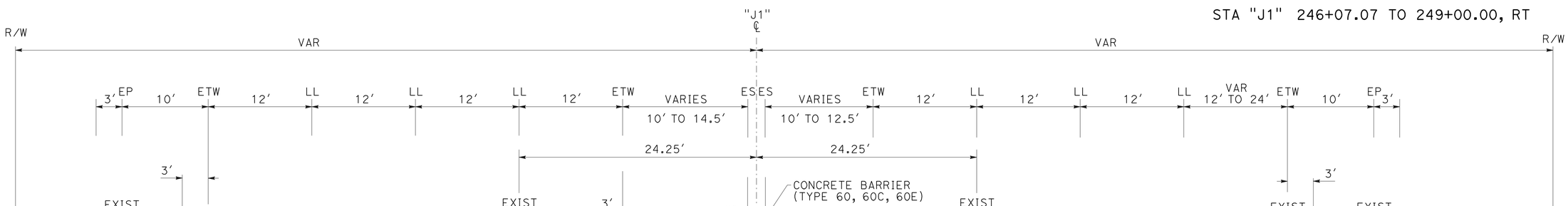

STA "J1" 229+30.00 TO 275+00.00

ROUTE 101

TYPICAL CROSS SECTIONS

NO SCALE

X-2

REVISED BY	DATE REVISED
ROBERT J. NIXON	JOHN L. MARTIN
CALCULATED-DESIGNED BY	CHECKED BY
FUNCTIONAL SUPERVISOR	JOHN L. MARTIN

STATE OF CALIFORNIA - DEPARTMENT OF TRANSPORTATION

Caltrans **DESIGN**

p:\proj2\04\26406\design\DCCR\426406ca002.dgn

LAST REVISION 03-15-10 | DATE PLOTTED => 16-AUG-2010 TIME PLOTTED => 07:15

Dist	COUNTY	ROUTE	POST MILES TOTAL PROJECT	SHEET No.	TOTAL SHEETS
04	Mrn	101	18.6/R22.3	4	542

REGISTERED CIVIL ENGINEER 03-15-10 DATE

8-9-10
PLANS APPROVAL DATE

REGISTERED PROFESSIONAL ENGINEER ROBERT J. NIXON No. C69123 Exp. 6-30-10 CIVIL STATE OF CALIFORNIA

THE STATE OF CALIFORNIA OR ITS OFFICERS OR AGENTS SHALL NOT BE RESPONSIBLE FOR THE ACCURACY OR COMPLETENESS OF SCANNED COPIES OF THIS PLAN SHEET.

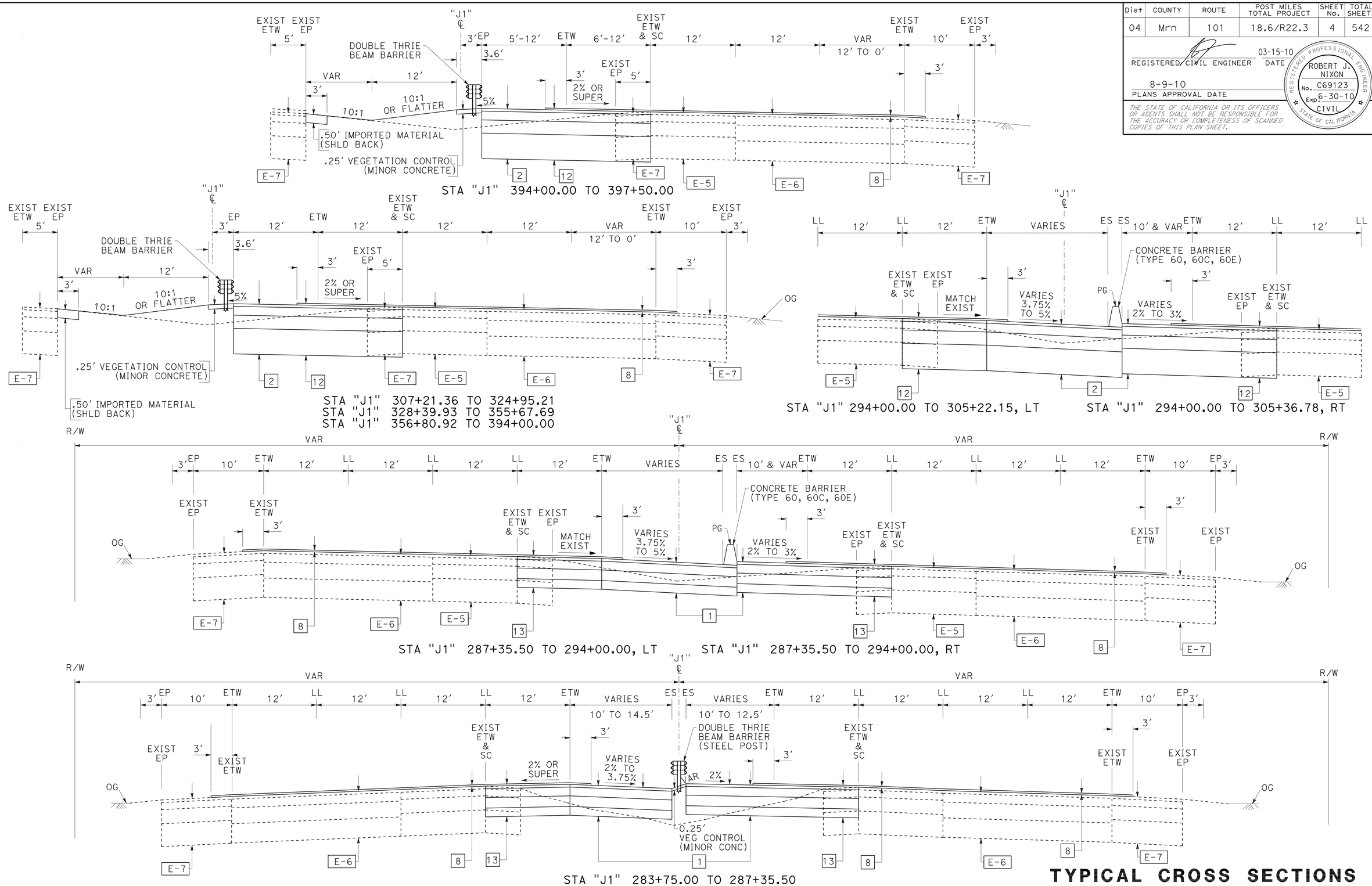

TYPICAL CROSS SECTIONS

NO SCALE

ROUTE 101

X-3

REVISED BY | DATE REVISED

ROBERT J. NIXON | JOHN L. MARTIN

CALCULATED-DESIGNED BY | CHECKED BY

FUNCTIONAL SUPERVISOR: JOHN L. MARTIN

STATE OF CALIFORNIA - DEPARTMENT OF TRANSPORTATION

Caltrans **DESIGN**

p:\proj2\04\26406\design\DCCR\426406ca003.dgn

LAST REVISION | DATE PLOTTED => 16-AUG-2010 | TIME PLOTTED => 07:15

03-15-10

BORDER LAST REVISED 4/11/2008

RELATIVE BORDER SCALE IS IN INCHES 0 1 2 3

USERNAME => trmnguye
DGN FILE => 426406ca003.dgn

CU 03 240

EA 264061

Dist	COUNTY	ROUTE	POST MILES TOTAL PROJECT	SHEET No.	TOTAL SHEETS
04	Mrn	101	18.6/R22.3	5	542

REGISTERED CIVIL ENGINEER 03-15-10 DATE

8-9-10
PLANS APPROVAL DATE

REGISTERED PROFESSIONAL ENGINEER ROBERT J. NIXON No. C69123 Exp. 6-30-10 CIVIL STATE OF CALIFORNIA

THE STATE OF CALIFORNIA OR ITS OFFICERS OR AGENTS SHALL NOT BE RESPONSIBLE FOR THE ACCURACY OR COMPLETENESS OF SCANNED COPIES OF THIS PLAN SHEET.

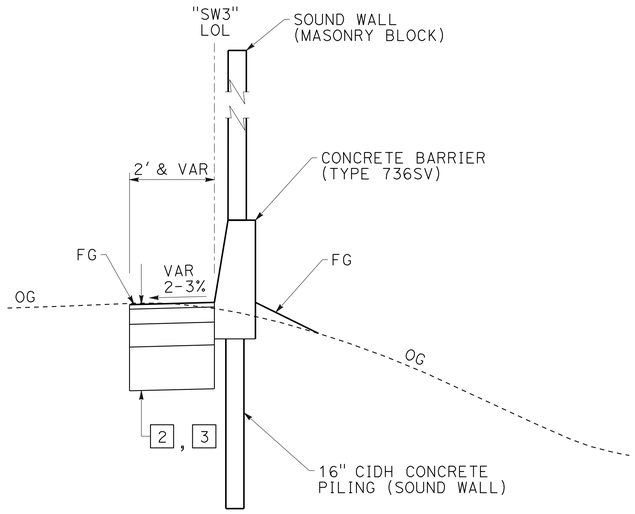

STA "J1" 322+69.28 TO 330+06.48
STA "J1" 365+98.66 TO 371+73.59

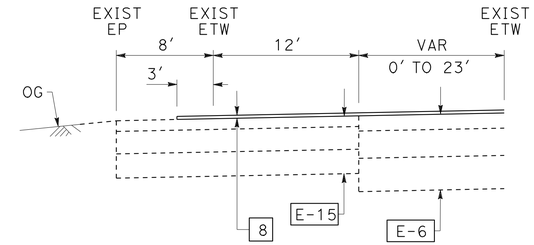

SB OFF-RAMP GORE
STA "J1" LT 238+63.03 TO 243+44.03
STA "J1" LT 301+60.41 TO 305+43.93

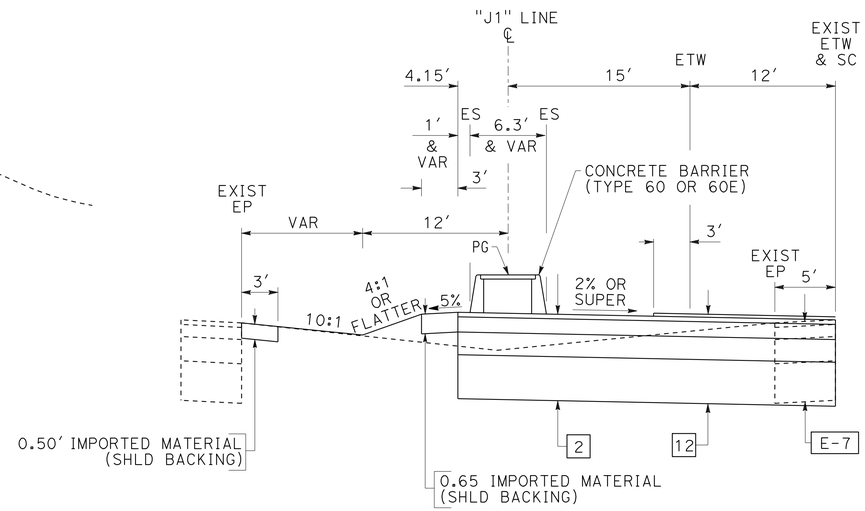

STA "J1" 335+98.00 TO 337+86.40
STA "J1" 382+92.00 TO 384+77.00

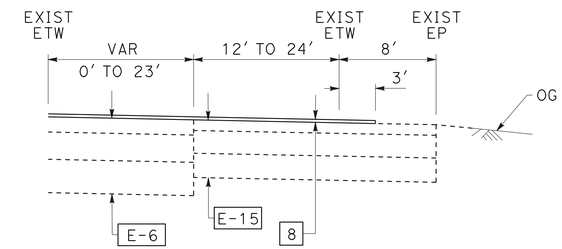

NB OFF-RAMP GORE
STA "J1" RT 271+00.00 TO 275+47.75
STA "J1" RT 327+63.61 TO 328+63.83
STA "J1" RT 368+86.66 TO 372+94.68

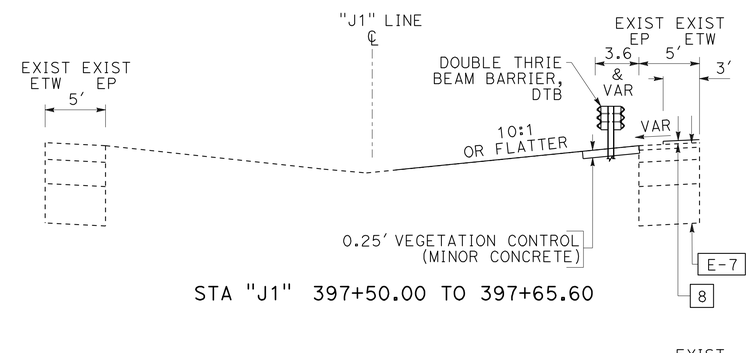

STA "J1" 397+50.00 TO 397+65.60

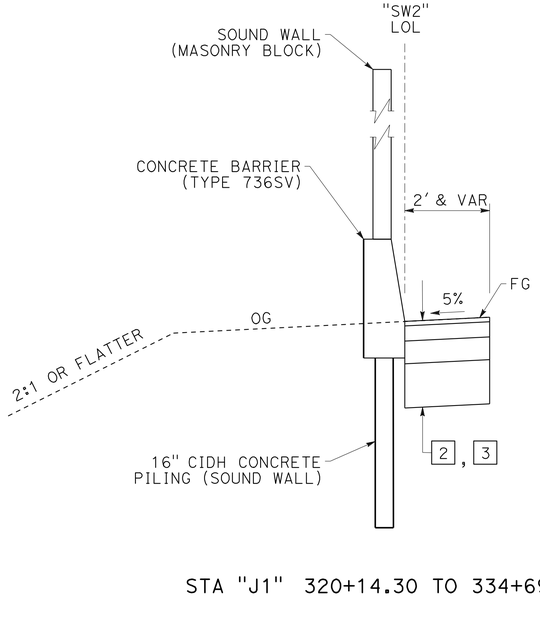

STA "J1" 320+14.30 TO 334+69.30

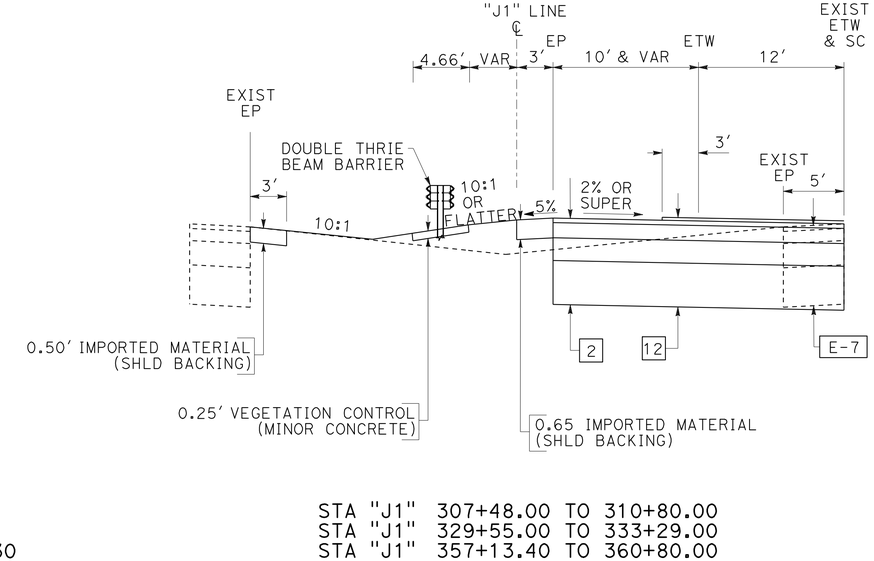

STA "J1" 307+48.00 TO 310+80.00
STA "J1" 329+55.00 TO 333+29.00
STA "J1" 357+13.40 TO 360+80.00

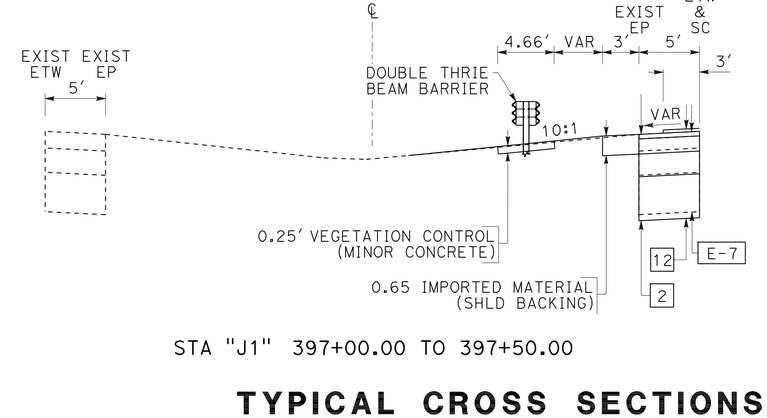

STA "J1" 397+00.00 TO 397+50.00

ROUTE 101

TYPICAL CROSS SECTIONS

NO SCALE

X-4

REVISED BY	DATE REVISED
ROBERT J. NIXON	JOHN L. MARTIN
CALCULATED-DESIGNED BY	CHECKED BY
FUNCTIONAL SUPERVISOR	JOHN L. MARTIN

STATE OF CALIFORNIA - DEPARTMENT OF TRANSPORTATION
Caltrans DESIGN

P:\proj2\04\26406\design\ps&e\426406ca004.dgn

LAST REVISION 03-15-10 | DATE PLOTTED => 16-AUG-2010 | TIME PLOTTED => 07:15

Dist	COUNTY	ROUTE	POST MILES TOTAL PROJECT	SHEET No.	TOTAL SHEETS
04	Mrn	101	18.6/R22.3	6	542

REGISTERED CIVIL ENGINEER 03-15-10 DATE

8-9-10
PLANS APPROVAL DATE

REGISTERED PROFESSIONAL ENGINEER ROBERT J. NIXON No. C69123 Exp. 6-30-10 CIVIL STATE OF CALIFORNIA

THE STATE OF CALIFORNIA OR ITS OFFICERS OR AGENTS SHALL NOT BE RESPONSIBLE FOR THE ACCURACY OR COMPLETENESS OF SCANNED COPIES OF THIS PLAN SHEET.

3 STA "IR1" 34+67.83 TO 46+07.07

9 STA "IR1" 36+40.10 TO 46+07.07

4 STA "IR1" 34+67.83 TO 36+40.10

10 STA "IR1" 36+40.10 TO 46+07.07

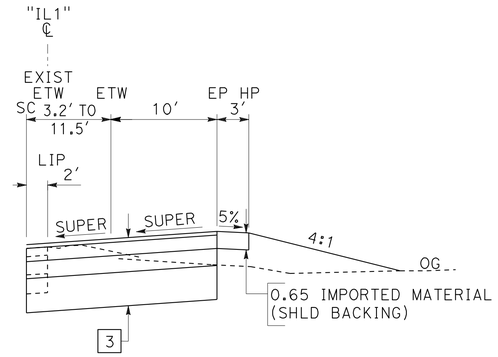

STA "IL1" 14+37.38 TO 18+00.00

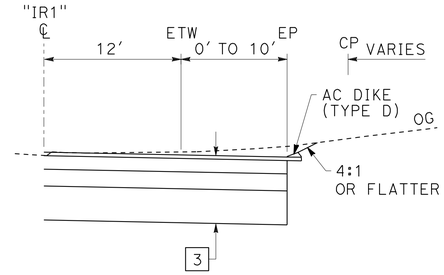

STA "IL1" 18+00.00 TO 21+63.50

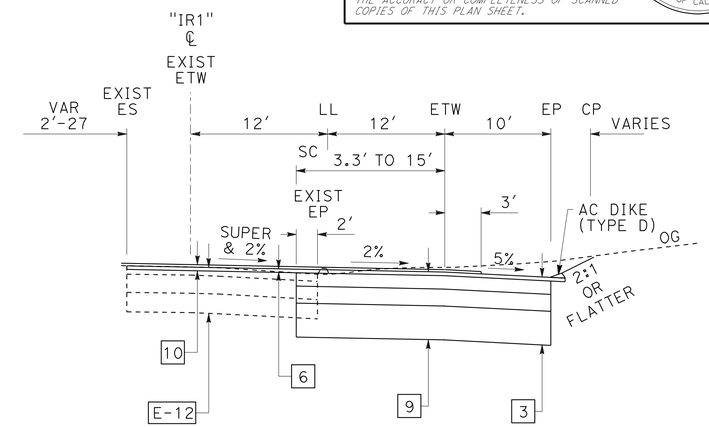

STA "IR1" 41+00.00 TO 46+07.07

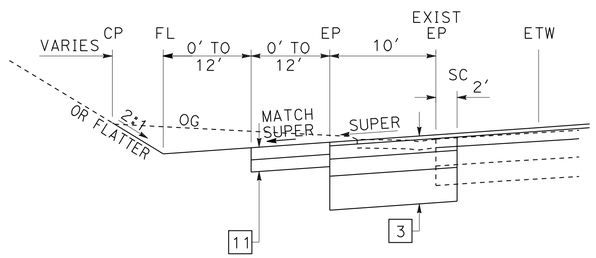

STA "IL1" 14+50.00 TO 15+35.00

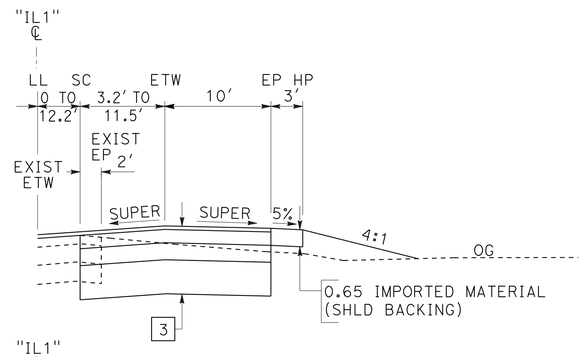

STA "IL1" 10+30.78 TO 12+28.35

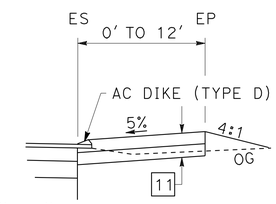

STA "IR1" 37+08.00 TO 38+02.00

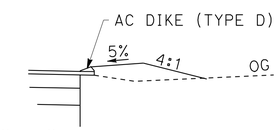

STA "IR1" 34+67.38 TO 36+50.00

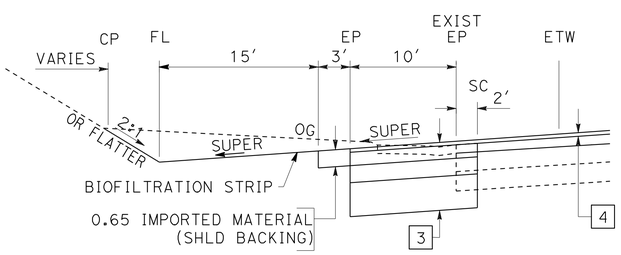

STA "IL1" 13+82.00 TO 18+44.91

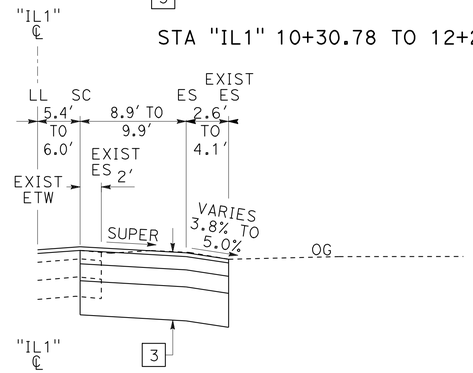

STA "IL1" 10+20.78 TO 10+30.78

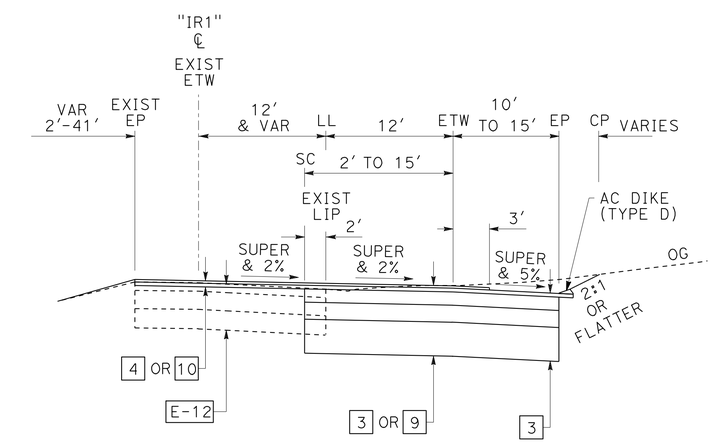

STA "IR1" 34+67.83 TO 41+00

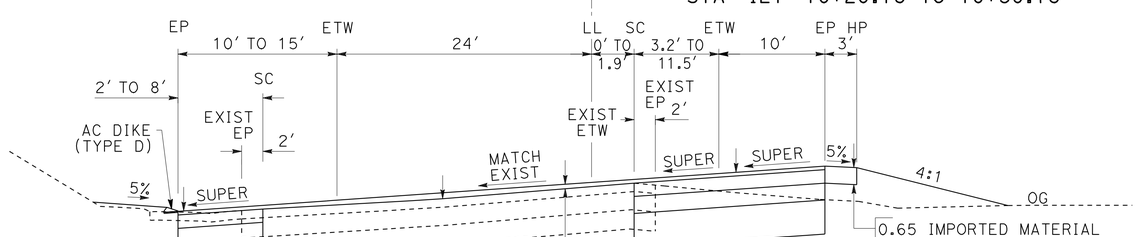

STA "IL1" 4+73.50 TO 13+82.00, LT

STA "IL1" 12+28.35 TO 14+37.38, RT

WB37 SB101 CONNECTOR

WB37-NB101 CONNECTOR
S. NOVATO BLVD ON-RAMP

TYPICAL CROSS SECTIONS

NO SCALE

X-5

STATE OF CALIFORNIA - DEPARTMENT OF TRANSPORTATION
Caltrans **DESIGN**

ROBERT J. NIXON — REVISED BY
JOHN L. MARTIN — DATE REVISED
CALCULATED-DESIGNED BY
CHECKED BY
FUNCTIONAL SUPERVISOR JOHN L. MARTIN

\\Sv02s01\CAD\PSESubmit\04-264061\426406ca005.dgn

LAST REVISION 03-15-10 | DATE PLOTTED => 16-AUG-2010 | TIME PLOTTED => 07:15

BORDER LAST REVISED 4/11/2008 | RELATIVE BORDER SCALE IS IN INCHES 0 1 2 3 | USERNAME => trmnguye | DGN FILE => 426406ca005.dgn | CU 03 240 | EA 264061

Dist	COUNTY	ROUTE	POST MILES TOTAL PROJECT	SHEET No.	TOTAL SHEETS
04	Mrn	101	18.6/R22.3	7	542

REGISTERED CIVIL ENGINEER 03-15-10 DATE

8-9-10
PLANS APPROVAL DATE

REGISTERED PROFESSIONAL ENGINEER ROBERT J. NIXON No. C69123 Exp. 6-30-10 CIVIL STATE OF CALIFORNIA

THE STATE OF CALIFORNIA OR ITS OFFICERS OR AGENTS SHALL NOT BE RESPONSIBLE FOR THE ACCURACY OR COMPLETENESS OF SCANNED COPIES OF THIS PLAN SHEET.

4 STA "RR1" 97+92.08 TO 99+85.53

10 STA "RR1" 99+85.53 TO 105+04.95

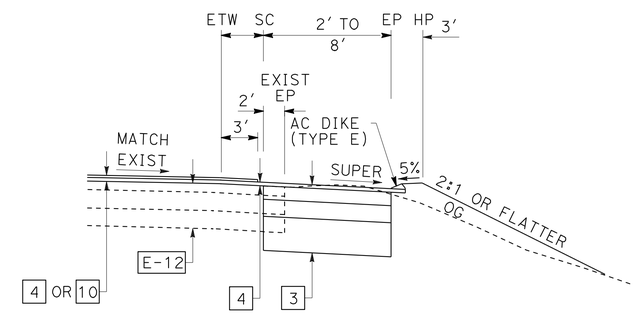

STA "RR1" 97+92.08 TO 104+63.75

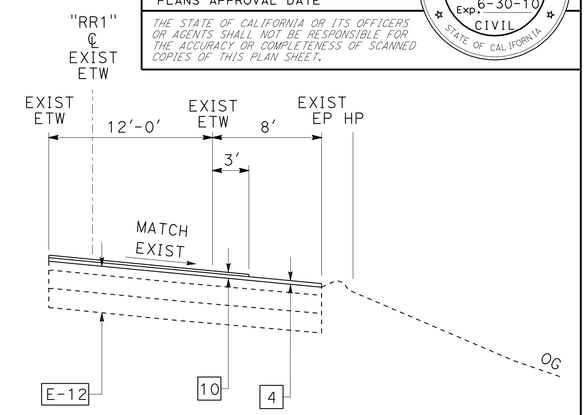

STA "RR1" 104+63.75 to 105+04.95

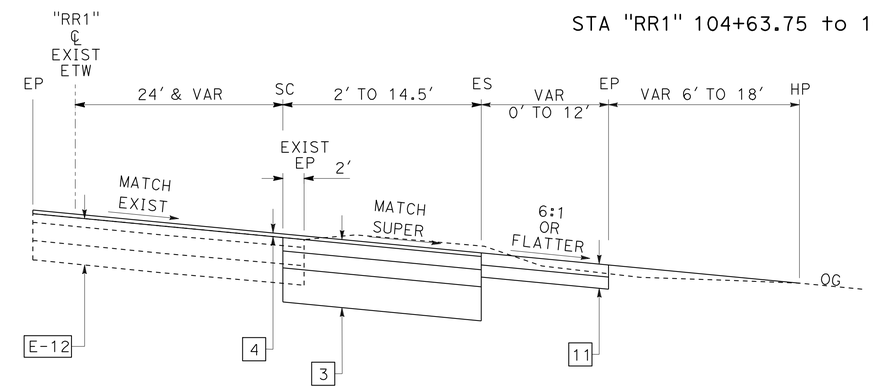

STA "RR1" 95+00.00 TO 95+85.00

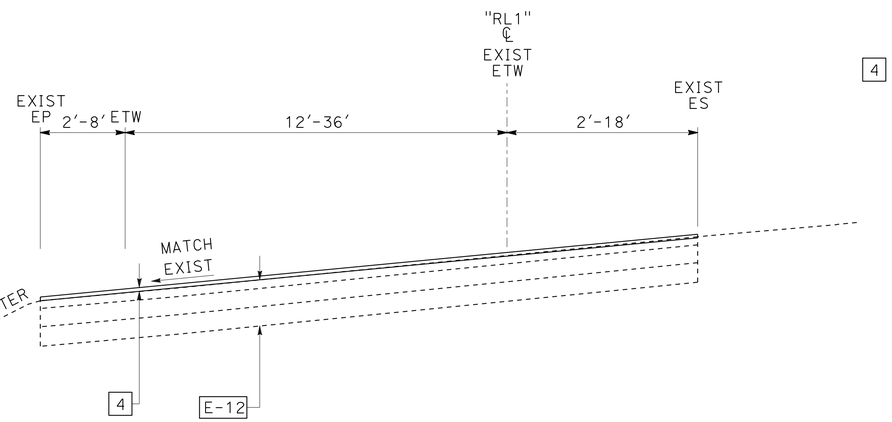

STA "RL1" 75+88.94 TO 80+25.95

ROWLAND BLVD SB ON-RAMP

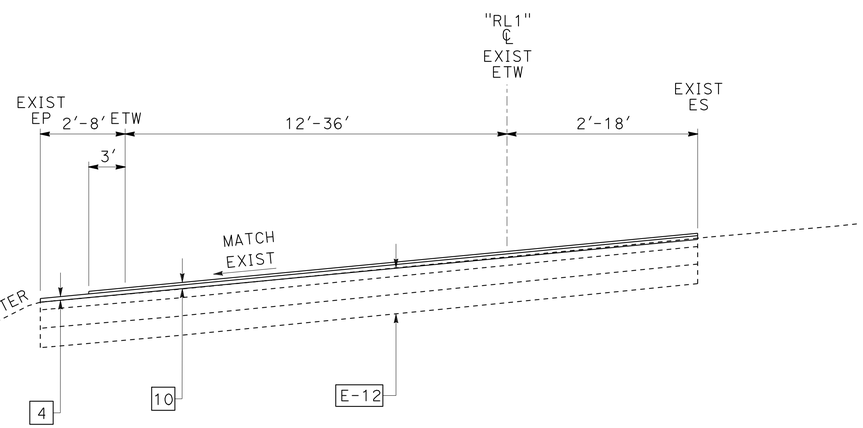

STA "RL1" 70+00.00 TO 75+88.94

ROWLAND BLVD SB ON-RAMP

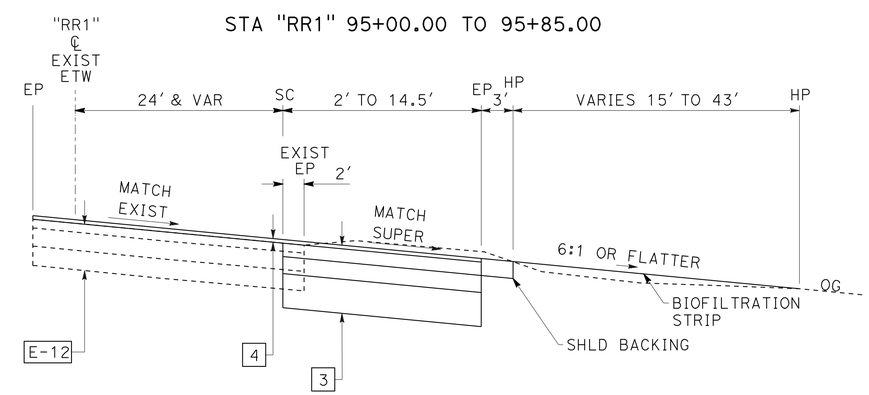

STA "RR1" 92+76.84 TO 95+00.00
STA "RR1" 95+85.00 TO 97+92.08

ROWLAND BLVD NB ON-RAMP

TYPICAL CROSS SECTIONS

NO SCALE

X-6

REVISED BY | DATE REVISED
ROBERT J. NIXON | JOHN L. MARTIN
CALCULATED-DESIGNED BY | CHECKED BY
FUNCTIONAL SUPERVISOR: JOHN L. MARTIN

STATE OF CALIFORNIA - DEPARTMENT OF TRANSPORTATION
Caltrans **DESIGN**

P:\proj2\04\26406\design\ps&e\426406ca006.dgn

LAST REVISION | DATE PLOTTED => 16-AUG-2010
03-15-10 | TIME PLOTTED => 07:15

Dist	COUNTY	ROUTE	POST MILES TOTAL PROJECT	SHEET No.	TOTAL SHEETS
04	Mrn	101	18.6/R22.3	8	542

REGISTERED CIVIL ENGINEER 03-15-10 DATE

8-9-10
PLANS APPROVAL DATE

REGISTERED PROFESSIONAL ENGINEER ROBERT J. NIXON No. C69123 Exp. 6-30-10 CIVIL STATE OF CALIFORNIA

THE STATE OF CALIFORNIA OR ITS OFFICERS OR AGENTS SHALL NOT BE RESPONSIBLE FOR THE ACCURACY OR COMPLETENESS OF SCANNED COPIES OF THIS PLAN SHEET.

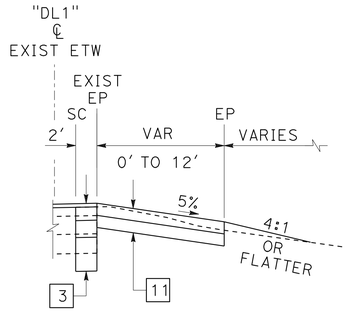

STA "DL1" 34+00.00 TO 34+85.00

4 STA "DR2" 43+80.18 TO 44+26.59
STA "DR2" 44+26.59 TO 50+25.00

10 STA "DR2" 44+26.59 TO 50+25.00

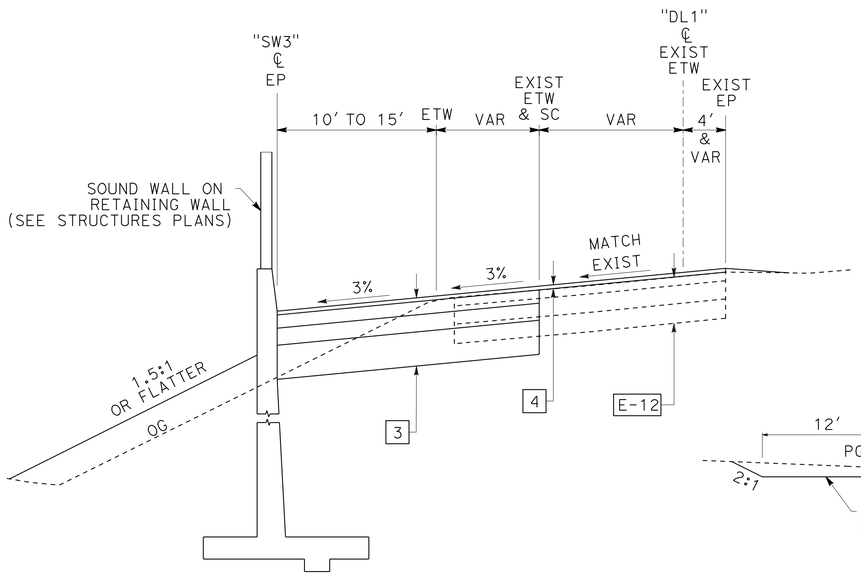

STA "DL1" 30+53.17 TO 33+05.19

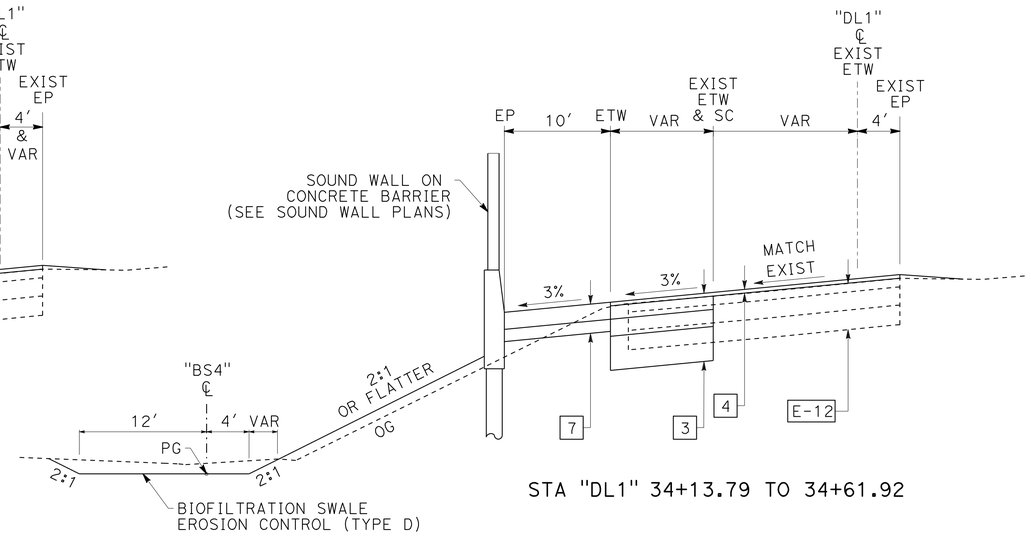

STA "DL1" 34+13.79 TO 34+61.92

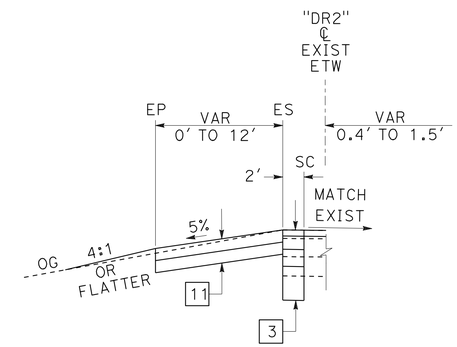

STA "DR2" 41+15.00 TO 42+00.00

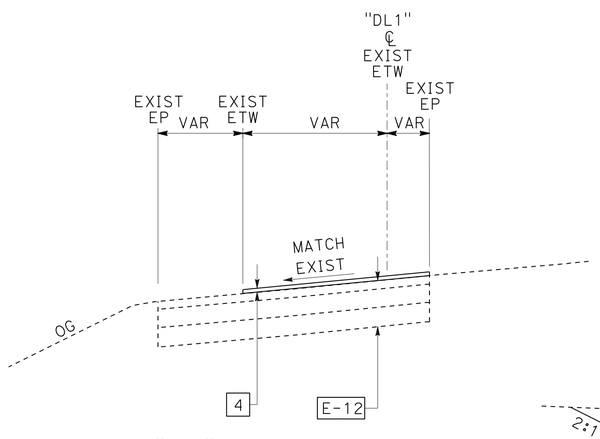

STA "DL1" 30+06.01 TO 30+53.17

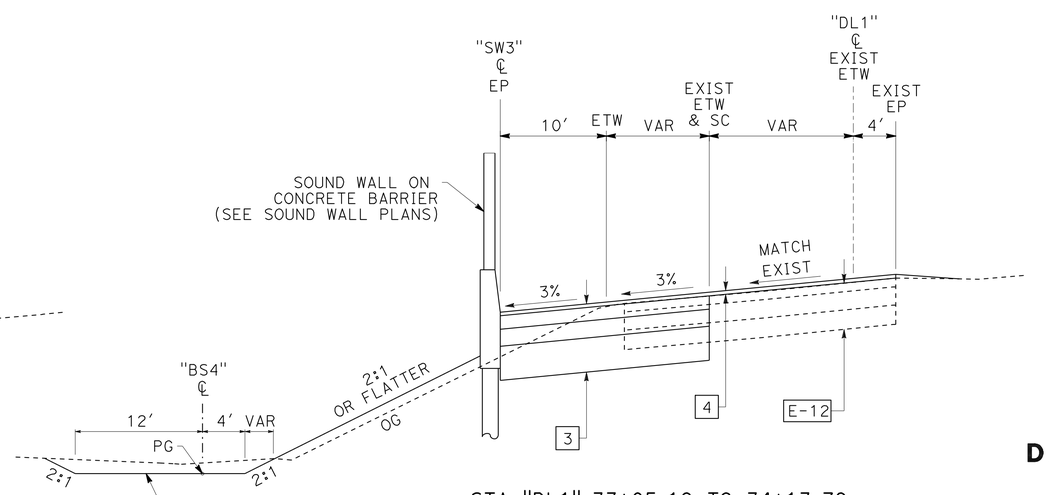

STA "DL1" 33+05.19 TO 34+13.79

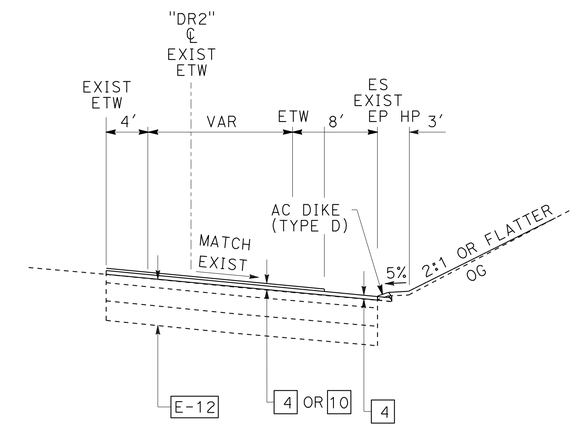

STA "DR2" 43+50.18 TO 50+25.00

DELONG AVE NB ON-RAMP

DELONG AVE SB ON-RAMP

TYPICAL CROSS SECTIONS

NO SCALE

X-7

REVISED BY	DATE REVISED
ROBERT J. NIXON	JOHN L. MARTIN
CALCULATED-DESIGNED BY	CHECKED BY
FUNCTIONAL SUPERVISOR	JOHN L. MARTIN

STATE OF CALIFORNIA - DEPARTMENT OF TRANSPORTATION
Caltrans
DESIGN

P:\proj2\04\26406\design\ps&e\426406ca007.dgn

LAST REVISION 03-15-10 | DATE PLOTTED => 16-AUG-2010 | TIME PLOTTED => 07:15

Dist	COUNTY	ROUTE	POST MILES TOTAL PROJECT	SHEET No.	TOTAL SHEETS
04	Mrn	101	18.6/R22.3	9	542

REGISTERED CIVIL ENGINEER 03-15-10 DATE

8-9-10
PLANS APPROVAL DATE

REGISTERED PROFESSIONAL ENGINEER ROBERT J. NIXON No. C69123 Exp. 6-30-10 CIVIL STATE OF CALIFORNIA

THE STATE OF CALIFORNIA OR ITS OFFICERS OR AGENTS SHALL NOT BE RESPONSIBLE FOR THE ACCURACY OR COMPLETENESS OF SCANNED COPIES OF THIS PLAN SHEET.

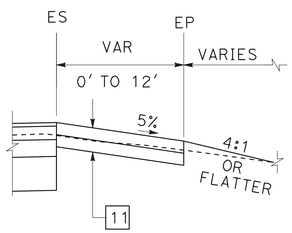

STA "AL1" 77+15.00 TO 78+00.00

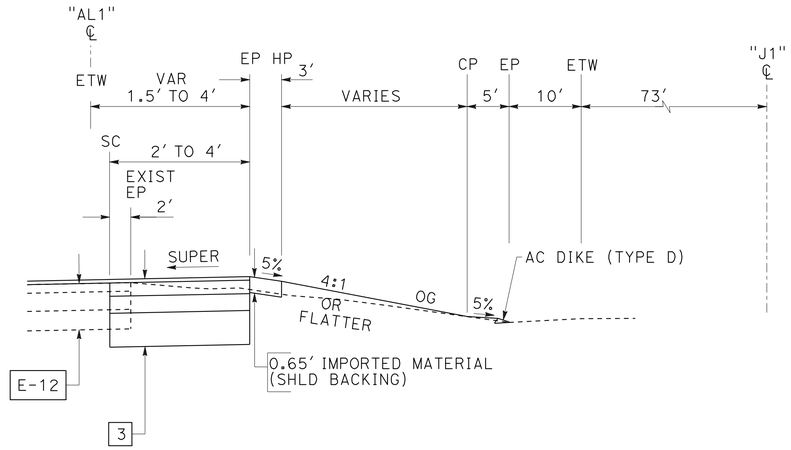

STA "AL1" 77+50.00 TO 83+63.54

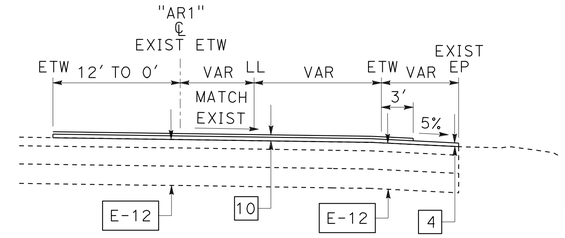

STA "AR1" 92+80.67 TO 96+00.00

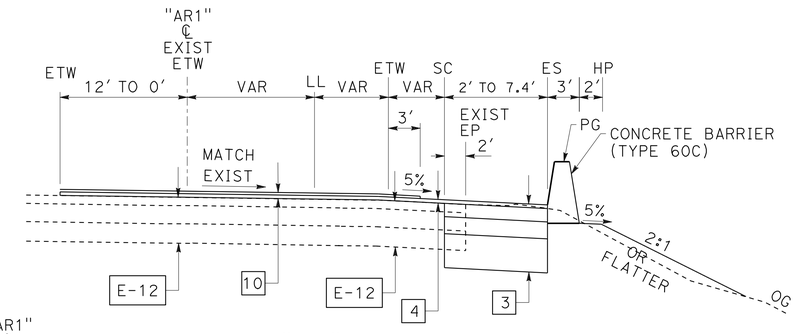

STA "AR1" 91+62.46 TO 92+80.67

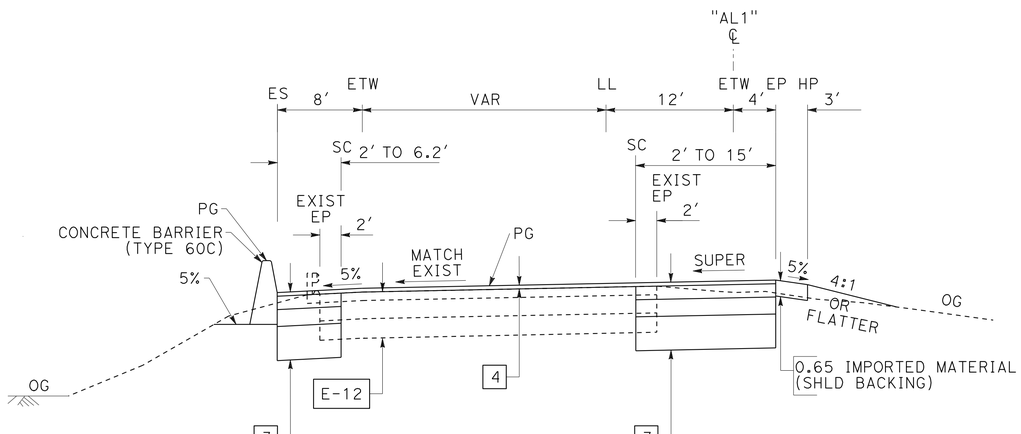

STA "AL1" 72+41.24 TO 78+58.78, LT

STA "AL1" 75+88.72 TO 77+50.00, RT

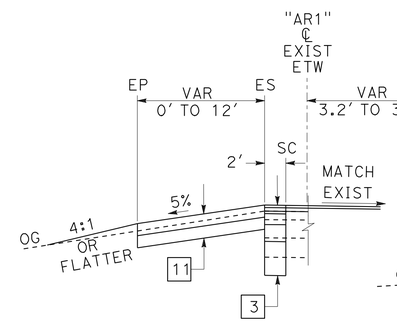

STA "AR1" 87+10.00 TO 87+95.00

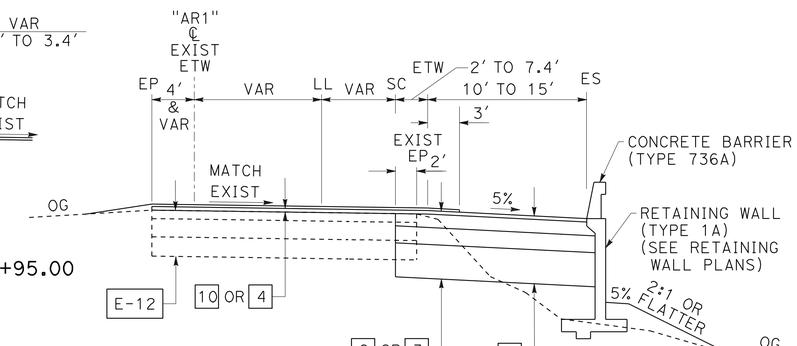

STA "AR1" 86+40.00 TO 91+62.46

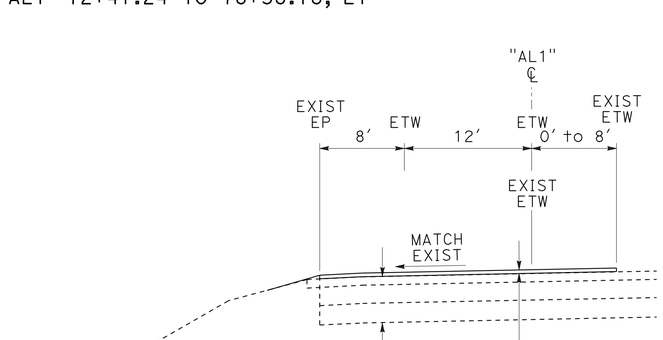

STA "AL1" 69+50.00 TO 72+41.24

ATHERTON AVE SB ON-RAMP

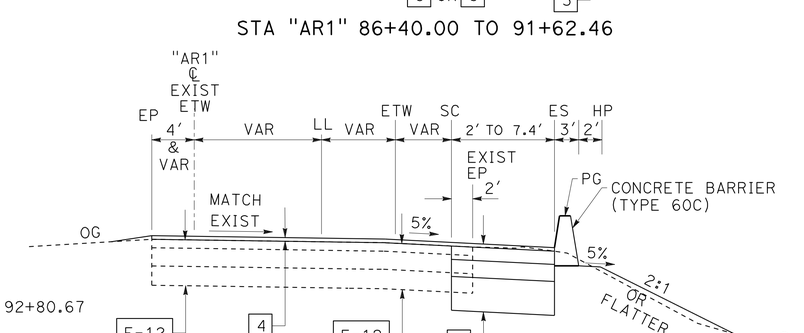

STA "AR1" 85+09.85 TO 86+40.00

3 STA "AR1" 85+09.85 TO 92+80.67

9 STA "AR1" 90+35.30 TO 92+80.67

4 STA "AR1" 85+09.85 TO 90+35.30
STA "AR1" 92+80.67 TO 96+00.00

10 STA "AR1" 90+35.30 TO 96+00.00

ATHERTON NB ON-RAMP

TYPICAL CROSS SECTION

NO SCALE

X-8

REVISED BY | DATE REVISED
ROBERT J. NIXON | JOHN L. MARTIN
CALCULATED-DESIGNED BY | CHECKED BY
FUNCTIONAL SUPERVISOR: JOHN L. MARTIN

STATE OF CALIFORNIA - DEPARTMENT OF TRANSPORTATION
Caltrans **DESIGN**

P:\proj2\04\26406\design\ps&e\426406ca008.dgn

LAST REVISION 03-15-10 | DATE PLOTTED => 16-AUG-2010 | TIME PLOTTED => 07:15

BORDER LAST REVISED 4/11/2008 | RELATIVE BORDER SCALE IS IN INCHES 0 1 2 3 | USERNAME => trmnguye | DGN FILE => 426406ca008.dgn | CU 03 240 | EA 264061

Dist	COUNTY	ROUTE	POST MILES TOTAL PROJECT	SHEET No.	TOTAL SHEETS
04	Mrn	101	18.6/R22.3	10	542

REGISTERED CIVIL ENGINEER 03-15-10 DATE

8-9-10
PLANS APPROVAL DATE

REGISTERED PROFESSIONAL ENGINEER ROBERT J. NIXON No. C69123 Exp. 6-30-10 CIVIL STATE OF CALIFORNIA

THE STATE OF CALIFORNIA OR ITS OFFICERS OR AGENTS SHALL NOT BE RESPONSIBLE FOR THE ACCURACY OR COMPLETENESS OF SCANNED COPIES OF THIS PLAN SHEET.

NOTE:
1. FOR TYPICAL SECTIONS OF BIOFILTRATION STRIPS ALONG THE "IL1" LINE AND "RR1" LINE, SEE SHEETS X-5 AND X-6, RESPECTIVELY. FOR TYPICAL SECTION OF BIOFILTRATION SWALE ALONG "DL1" LINE, SEE SHEET X-7.

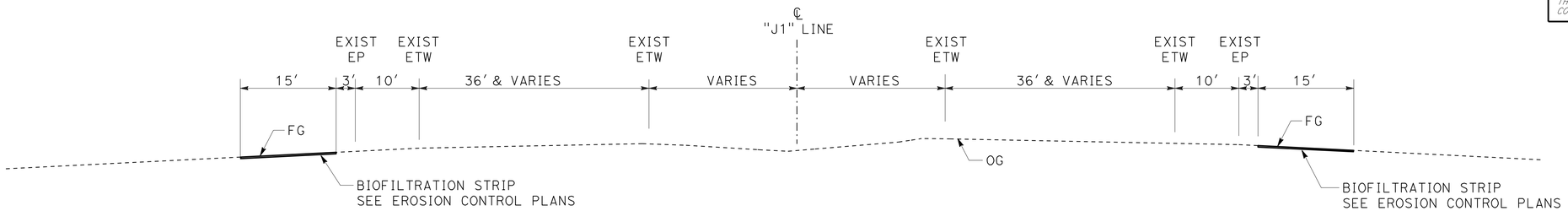

STA "J1" 220+00 TO 226+30 LEFT
STA "J1" 262+65 TO 270+10 LEFT
STA "J1" 280+00 TO 287+50 LEFT

STA "J1" 256+75 TO 262+75 RIGHT
STA "J1" 265+60 TO 270+30 RIGHT
STA "J1" 292+00 TO 297+00 RIGHT

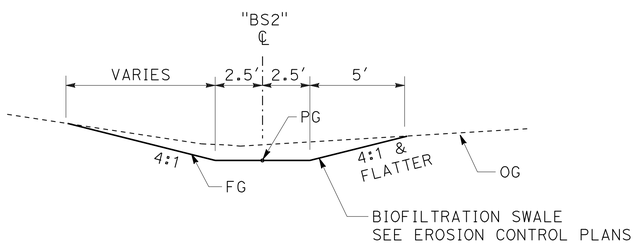

STA "BS2" 20+00.00 TO 22+19.85

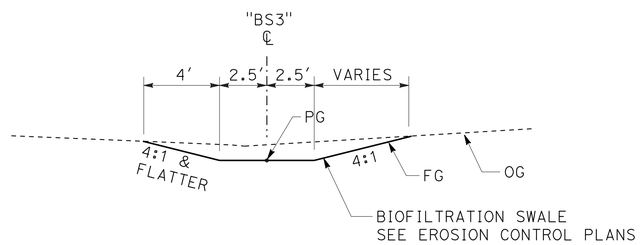

STA "BS3" 30+00.00 TO 32+60.18

LOCATION	DITCH EXCAVATION	ROADWAY EXCAVATION
STA "J1" 212+00 TO 218+00 LEFT	X	
STA "J1" 220+00 TO 226+30 LEFT	X	
STA "J1" 256+75 TO 262+75 RIGHT	X	
STA "J1" 262+65 TO 270+10 LEFT	X	
STA "J1" 265+60 TO 270+30 RIGHT	X	
STA "J1" 280+00 TO 287+50 LEFT	X	
STA "J1" 292+00 TO 297+00 RIGHT	X	
STA "IL1" 13+80 TO 14+40 LEFT		X
STA "IL1" 15+35 TO 18+40 LEFT		X
STA "RR1" 91+00 TO 98+00 RIGHT		X
STA "BS1" 10+00.00 TO 12+90.02	X	
STA "BS2" 20+00.00 TO 22+19.85	X	
STA "BS3" 30+00.00 TO 32+60.18	X	
STA "BS4" 40+00.00 TO 44+19.45		X
STA "BS5" 53+55.64 TO 55+05.64	X	

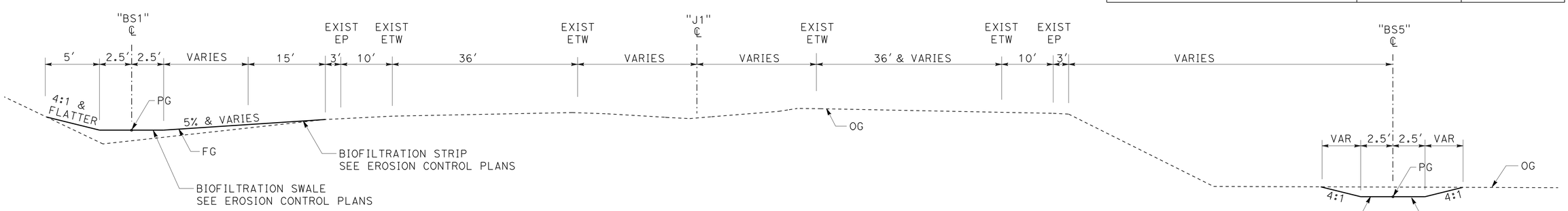

STA "BS1" 10+00.00 TO 12+90.02

STA "J1" 212+00 TO 218+00 LEFT

STA "BS5" 53+55.64 TO 55+05.64

BIOFILTRATION SWALE AND BIOFILTRATION STRIP TYPICAL SECTIONS

TYPICAL CROSS SECTION
NO SCALE

X-9

REVISED BY | DATE REVISED
TED SCHULTZ, ROBERT J. NIXON | JOHN L. MARTIN
CALCULATED-DESIGNED BY | CHECKED BY
FUNCTIONAL SUPERVISOR | JOHN L. MARTIN

STATE OF CALIFORNIA - DEPARTMENT OF TRANSPORTATION
Caltrans DESIGN

p:\proj2\04\26406\design\DCCR\426406ca009.dgn

LAST REVISION 03-15-10 | DATE PLOTTED => 16-AUG-2010 | TIME PLOTTED => 07:15

Dist	COUNTY	ROUTE	POST MILES TOTAL PROJECT	SHEET No.	TOTAL SHEETS
04	Mrn	101	18.6/R22.3	11	542

REGISTERED CIVIL ENGINEER 03-15-10 DATE

8-9-10
PLANS APPROVAL DATE

REGISTERED PROFESSIONAL ENGINEER ROBERT J. NIXON No. C69123 Exp. 6-30-10 CIVIL STATE OF CALIFORNIA

THE STATE OF CALIFORNIA OR ITS OFFICERS OR AGENTS SHALL NOT BE RESPONSIBLE FOR THE ACCURACY OR COMPLETENESS OF SCANNED COPIES OF THIS PLAN SHEET.

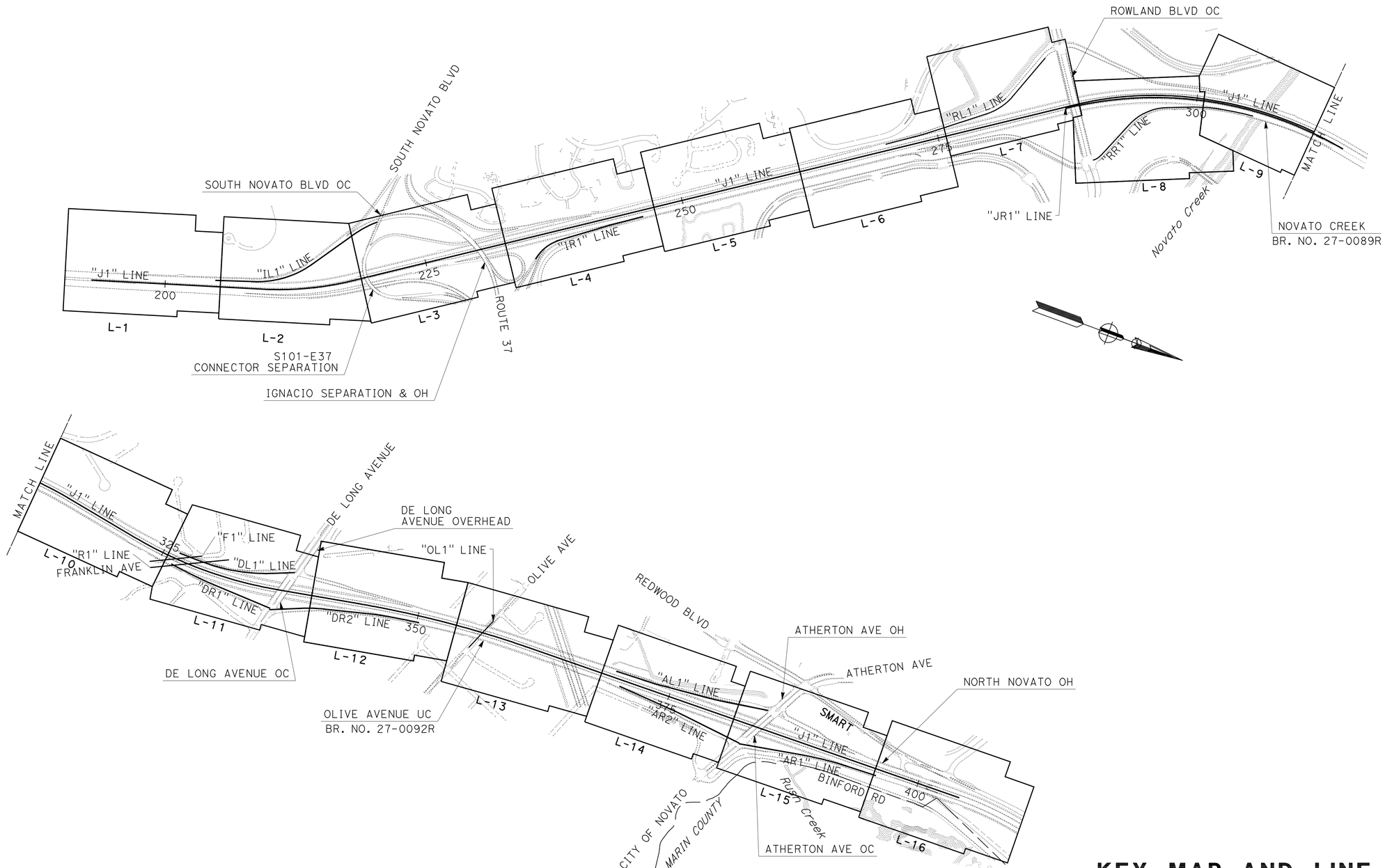

KEY MAP AND LINE INDEX

NO SCALE

K-1

REVISED BY	DATE REVISED
ROBERT J. NIXON	
JOHN L. MARTIN	
CALCULATED-DESIGNED BY	
CHECKED BY	
FUNCTIONAL SUPERVISOR	
JOHN L. MARTIN	

STATE OF CALIFORNIA - DEPARTMENT OF TRANSPORTATION
Caltrans DESIGN

P:\proj2\04\26406\design\ps&e\426406da001.dgn

LAST REVISION 09-24-09 | DATE PLOTTED => 08-FEB-2011 TIME PLOTTED => 11:01

Dist	COUNTY	ROUTE	POST MILES TOTAL PROJECT	SHEET No.	TOTAL SHEETS
04	Mrn	101	18.6/R22.3	12	542

LICENSED LANDSCAPE ARCHITECT

8-9-10
PLANS APPROVAL DATE

LICENSED LANDSCAPE ARCHITECT
Laurie J. Smith No. 4088
Signature
8-31-10
Renewal Date
Date
STATE OF CALIFORNIA

THE STATE OF CALIFORNIA OR ITS OFFICERS OR AGENTS SHALL NOT BE RESPONSIBLE FOR THE ACCURACY OR COMPLETENESS OF SCANNED COPIES OF THIS PLAN SHEET.

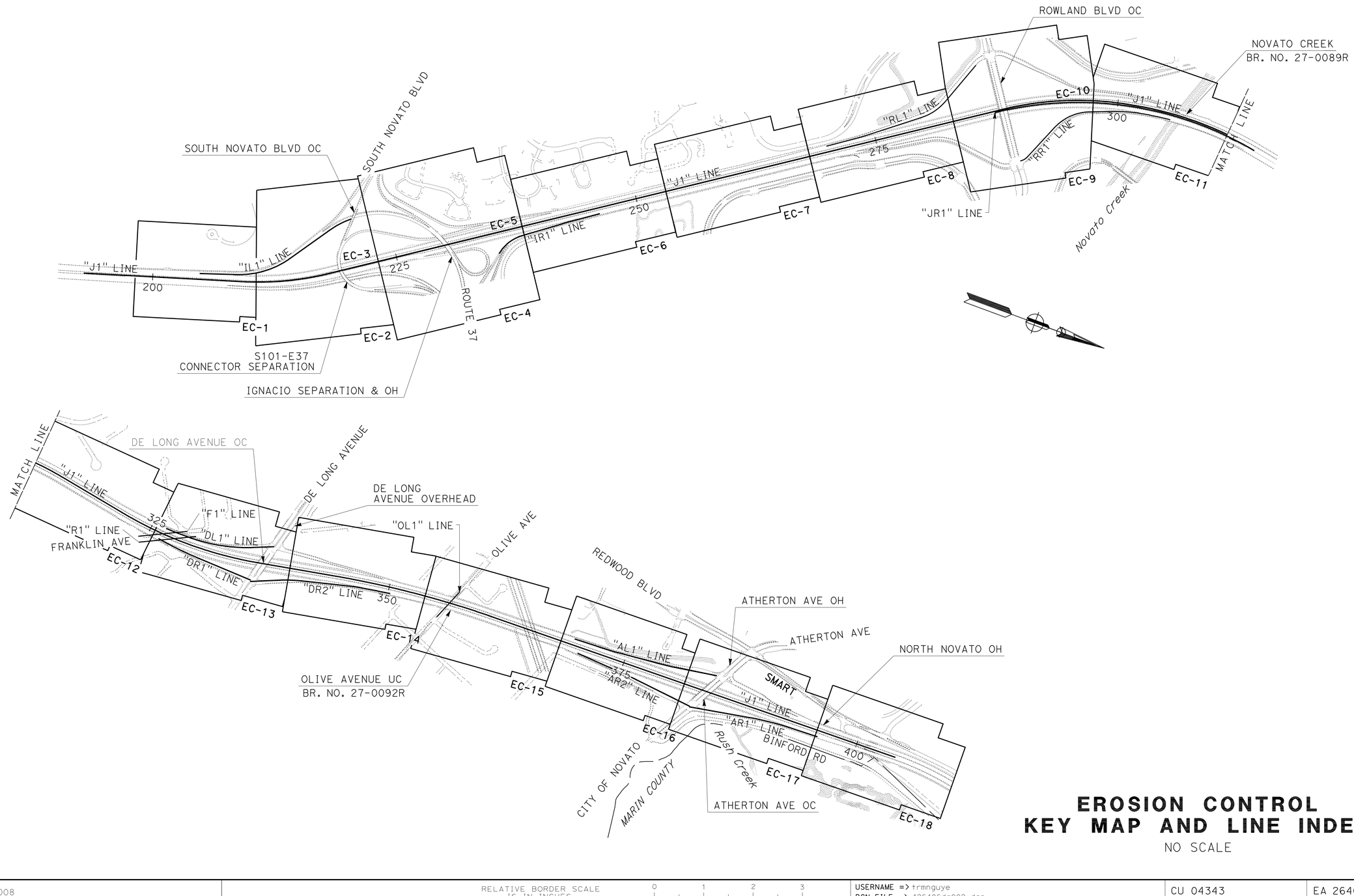

EROSION CONTROL KEY MAP AND LINE INDEX

NO SCALE

ECK-1

REVISED BY	DATE REVISED

CALCULATED-DESIGNED BY	CHECKED BY
LAURIE J. SMITH	ALEX MCDONALD

SENIOR LANDSCAPE ARCHITECT: DAVID W. YAM

STATE OF CALIFORNIA - DEPARTMENT OF TRANSPORTATION
Caltrans®
WATER QUALITY

LAST REVISION 03-11-10
DATE PLOTTED => 16-AUG-2010
TIME PLOTTED => 07:15

Dist	COUNTY	ROUTE	POST MILES TOTAL PROJECT	SHEET No.	TOTAL SHEETS
04	Mrn	101	18.6/R22.3	13	542

REGISTERED CIVIL ENGINEER 03-15-10 DATE

8-9-10
PLANS APPROVAL DATE

REGISTERED PROFESSIONAL ENGINEER ROBERT J. NIXON No. C69123 Exp. 6-30-10 CIVIL STATE OF CALIFORNIA

THE STATE OF CALIFORNIA OR ITS OFFICERS OR AGENTS SHALL NOT BE RESPONSIBLE FOR THE ACCURACY OR COMPLETENESS OF SCANNED COPIES OF THIS PLAN SHEET.

NOTE:

1. ELEVATIONS SHOWN ARE REFERENCED TO THE NORTH AMERICAN VERTICAL DATUM 1929

STATION	OFFSET	ELEVATION	CONTROL POINT NUMBER	DESCRIPTION
J1 195+33.666	-89.819	22.694	SUHV3078	AERIAL TARGET
J1 200+25.007	76.9	16.460	SUHV3081	AERIAL TARGET
J1 200+98.613	466.707	14.505	SUHV3082	AERIAL TARGET
J1 207+49.458	76.126	12.421	SUHV3084	AERIAL TARGET
J1 213+84.354	102.81	16.014	PMHV22	1" IP W/BRASS DISK
J1 214+68.332	98.075	15.673	SUHV3088	AERIAL TARGET
J1 218+91.959	-609.639	16.279	SUHV3087	AERIAL TARGET
J1 225+93.769	-909.068	14.222	SUHV3089	AERIAL TARGET
J1 226+07.032	613.416	10.177	SUHV3096	AERIAL TARGET
J1 227+03.274	466.795	6.709	SUHV900	PK & SHINER SHINER
J1 229+22.840	509.882	7.841	SUHV901	SPIKE
J1 229+56.458	-156.45	36.237	SUHV3094	AERIAL TARGET
J1 244+84.628	360.123	28.094	SUHV3103	AERIAL TARGET
J1 245+03.037	-671.417	29.232	SUHV3099	AERIAL TARGET
J1 246+68.167	83.041	16.526	PMHV124	1" IP W/PLASTIC PLUG
J1 262+40.211	83.406	23.104	PMHV25	1" IP W/PLASTIC PLUG
J1 264+59.452	659.371	10.646	SUHV3116	AERIAL TARGET
J1 265+98.166	739.597	10.502	SUHV3117	AERIAL TARGET
J1 267+09.728	-622.152	68.327	SUHV3112	AERIAL TARGET
J1 272+72.303	163.067	12.487	SUHV3118	AERIAL TARGET
J1 274+48.299	116.389	9.272	SUHV919	SPIKE
J1 278+22.921	79.963	7.244	PRHV26	1" IP W/PLASTIC PLUG
J1 279+07.379	148.752	6.440	SUHV920	SPIKE
J1 279+84.408	-105.159	8.881	SUHV3121	AERIAL TARGET
J1 283+64.970	96.564	5.085	PMHV202	1" IP W/PLASTIC PLUG
J1 286+08.538	131.369	6.716	PHHV11072	"X" PK & SHINER
J1 286+96.087	205.802	7.530	SUHV942	PK & SHINER
J1 287+58.206	629.975	8.609	PHHV11073	PK & SHINER
J1 288+22.688	-588.833	9.662	PHHV3123	PK & SHINER
J1 289+31.594	100.08	9.035	SUHV943	SPIKE
J1 294+77.512	90.155	9.577	PMHV27	1" IP W/PLASTIC PLUG
J1 295+85.721	886.312	11.378	SUHV3132	AERIAL TARGET
J1 297+45.845	535.545	11.696	SUHV3131	AERIAL TARGET
J1 302+47.726	765.597	22.959	SUHV3135	AERIAL TARGET
J1 304+54.310	-508.787	14.508	SUHV3134	AERIAL TARGET
J1 312+00.392	76.782	21.808	PMHV24	1" IP W/BRASS DISK
J1 330+91.735	87.083	49.521	PRHV25	1" IP W/BRASS DISK
J1 342+71.431	73.611	40.102	PMHV28	1" IP W/PLASTIC PLUG
J1 353+00.364	86.608	37.684	PRHV29	1" IP W/PLASTIC PLUG
J1 364+90.812	-129.74	28.451	SUHV983	SPIKE
J1 365+20.803	814.229	15.440	SUHV3161	AERIAL TARGET
J1 367+53.347	68.791	19.334	SUHV3162	AERIAL TARGET
J1 368+53.366	75.302	17.976	PRHV30	1" IP W/PLASTIC PLUG
J1 369+84.567	-368.45	10.715	SUHV3163	AERIAL TARGET
J1 374+72.260	68.562	11.604	SUHV3164	AERIAL TARGET
J1 378+84.719	824.033	34.048	SUHV3166	AERIAL TARGET
J1 378+94.369	-236.641	9.022	SUHV974	SPIKE
J1 381+93.923	68.434	13.123	SUHV3167	AERIAL TARGET
J1 382+49.341	-68.502	13.871	SUHV3168	AERIAL TARGET
J1 385+27.217	74.761	18.615	PMHV31	1" IP W/PLASTIC PLUG
J1 388+59.711	-489.696	34.360	SUHV3169	AERIAL TARGET
J1 388+62.218	526.245	28.563	SUHV3170	AERIAL TARGET
J1 389+19.663	69.743	26.581	SUHV3171	AERIAL TARGET
J1 393+07.313	93.397	32.923	SUHV972	HUB
J1 396+38.179	80.118	37.785	SUHV3172	AERIAL TARGET
J1 403+93.513	69.263	40.600	SUHV3173	AERIAL TARGET

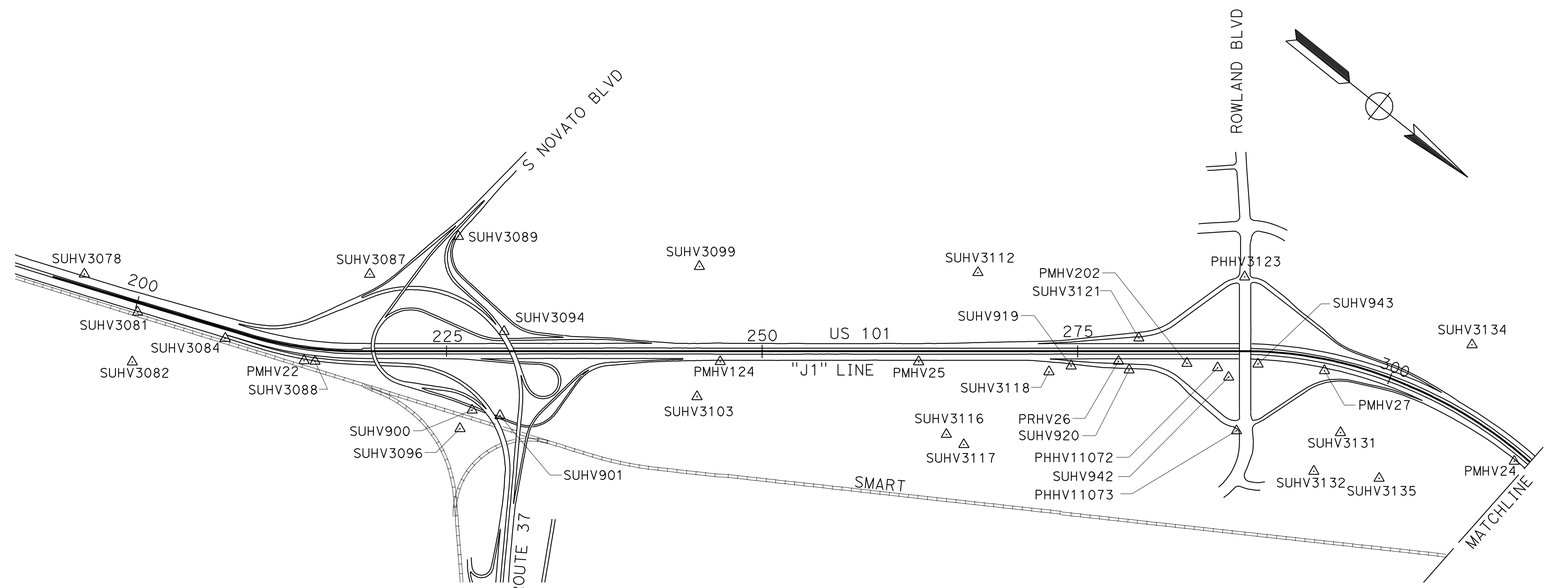

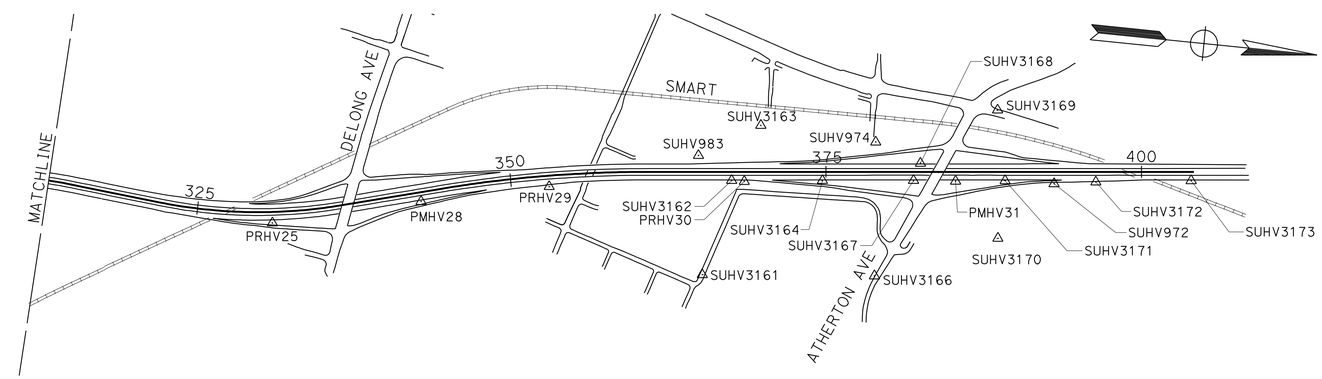

PROJECT CONTROL

SCALE: 1" = 600'

PC-1

REVISED BY | DATE REVISED

ROBERT J. NIXON | JOHN L. MARTIN

CALCULATED-DESIGNED BY | CHECKED BY

FUNCTIONAL SUPERVISOR: JOHN L. MARTIN

STATE OF CALIFORNIA - DEPARTMENT OF TRANSPORTATION

Caltrans **DESIGN**

P:\proj2\04\26406\design\ps&e\426406dc001.dgn

LAST REVISION 12-10-09 | DATE PLOTTED => 16-AUG-2010 | TIME PLOTTED => 07:16

BORDER LAST REVISED 4/11/2008 | RELATIVE BORDER SCALE IS IN INCHES 0 1 2 3 | USERNAME => trmnguye | DGN FILE => 426406dc001.dgn | CU 03 240 | EA 264061

Dist	COUNTY	ROUTE	POST MILES TOTAL PROJECT	SHEET No.	TOTAL SHEETS
04	Mrn	101	18.6/R22.3	14	542

REGISTERED CIVIL ENGINEER 03-15-10 DATE

8-9-10
PLANS APPROVAL DATE

REGISTERED PROFESSIONAL ENGINEER ROBERT J. NIXON No. C69123 Exp. 6-30-10 CIVIL STATE OF CALIFORNIA

THE STATE OF CALIFORNIA OR ITS OFFICERS OR AGENTS SHALL NOT BE RESPONSIBLE FOR THE ACCURACY OR COMPLETENESS OF SCANNED COPIES OF THIS PLAN SHEET.

NOTES:

1. FOR COMPLETE RIGHT OF WAY AND ACCURATE ACCESS DATA, SEE RIGHT OF WAY RECORD MAPS AT DISTRICT OFFICE.
2. OFFSETS TO THE MEDIAN CONCRETE BARRIER ARE MEASURED TO THE CENTERLINE OF BARRIER. OFFSETS TO CONCRETE BARRIERS ALONG THE OUTSIDE ARE MEASURED TO THE FACE OF BARRIER AT PAVEMENT FINISHED GRADE.
3. FOR "JR1" LINE DETAILS SEE SHEET C-3.
4. FOR DETAILS ON MODIFIED CONCRETE BARRIERS SEE SHEET C-2.
5. FOR PAVEMENT CONFORM AND COLD PLANE DETAILS SEE SHEET C-5.
6. DIKE TRANSITION SEE SHEET C-5.
7. FOR DITCH EXCAVATION LIMITS SEE DRAINAGE PLAN SHEETS.
8. FOR LIMITS OF TEMP FENCE (TYPE ESA), SEE EROSION CONTROL SHEETS.
9. LIMITS OF HMA-O OVERLAY IN THE MEDIAN NOT SHOWN ON LAYOUTS FOR CLARITY. FOR LIMITS OF HMA-O OVERLAY SEE TYPICAL CROSS SECTIONS SHEETS.
10. FOR ADDITIONAL MBGR LOCATIONS SEE SHEET C-10.

LEGEND

- NEW STRUCTURAL SECTION
- STRUCTURE WIDENING
- RHMA-G OVERLAY
- HMA-O OVERLAY
- VARIABLE DEPTH HMA OVERLAY
- NO. STRUCTURAL SECTION
- CONTRASTING SURFACE TREATMENT
- RUMBLE STRIP

ABBREVIATIONS

SMART	"SONOMA MARIN AREA RAIL TRANSIT" RAILROAD
TYPE 60	CONCRETE BARRIER (TYPE 60 MODIFIED)
TYPE 60C	CONCRETE BARRIER (TPE 60C MODIFIED)
TYPE 60E	CONCRETE BARRIER (TYPE 60E MODIFIED)
TYPE 736	CONCRETE BARRIER (TYPE 736 MODIFIED)
THRIE BEAM	DOUBLE THRIE BEAM BARRIER
THRIE BEAM STEEL	DOUBLE THRIE BEAM BARRIER (STEEL POST)
TYPE DTB	DOUBLE THRIE BEAM BARRIER TRANSITION RAILING (TYPE DTB)
VEG CONTROL	VEGETATION CONTROL (MINOR CONCRETE)
AFTS	ALTERNATIVE FLARED TERMINAL SYSTEM
AITS	ALTERNATIVE INLINE TERMINAL SYSTEM

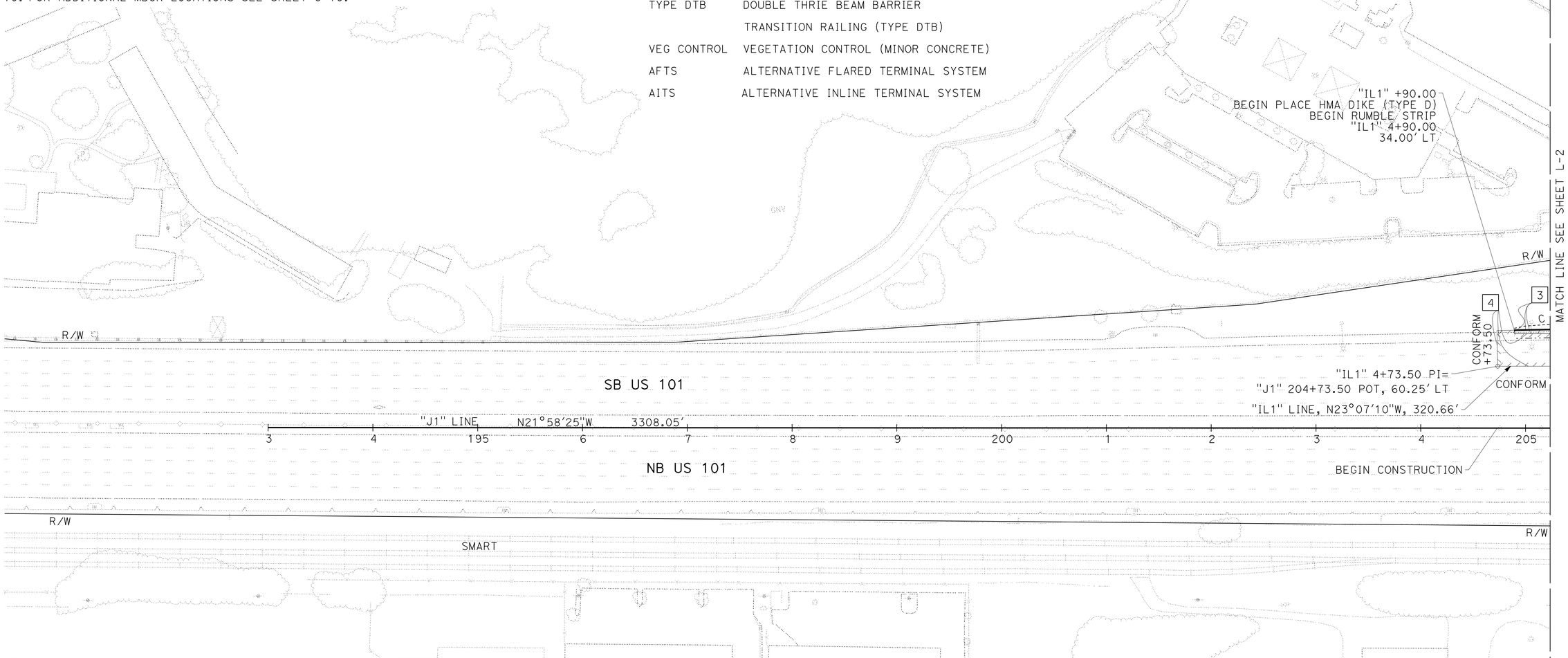

LAYOUT
SCALE: 1" = 50'

L-1

REVISED BY | DATE REVISED
ROBERT J. NIXON | JOHN L. MARTIN
CALCULATED-DESIGNED BY | CHECKED BY
FUNCTIONAL SUPERVISOR: JOHN L. MARTIN

STATE OF CALIFORNIA - DEPARTMENT OF TRANSPORTATION
Caltrans **DESIGN**

P:\proj2\04\26406\design\DCCR\426406ea001.dgn

LAST REVISION 03-15-10 | DATE PLOTTED => 16-AUG-2010 | TIME PLOTTED => 13:42

Dist	COUNTY	ROUTE	POST MILES TOTAL PROJECT	SHEET No.	TOTAL SHEETS
04	Mrn	101	18.6/R22.3	15	542

REGISTERED CIVIL ENGINEER 03-15-10 DATE

8-9-10
PLANS APPROVAL DATE

REGISTERED PROFESSIONAL ENGINEER ROBERT J. NIXON No. C69123 Exp. 6-30-10 CIVIL STATE OF CALIFORNIA

THE STATE OF CALIFORNIA OR ITS OFFICERS OR AGENTS SHALL NOT BE RESPONSIBLE FOR THE ACCURACY OR COMPLETENESS OF SCANNED COPIES OF THIS PLAN SHEET.

NOTE:

1. FOR COMPLETE RIGHT OF WAY AND ACCURATE ACCESS DATA, SEE RIGHT OF WAY RECORD MAPS AT DISTRICT OFFICE.

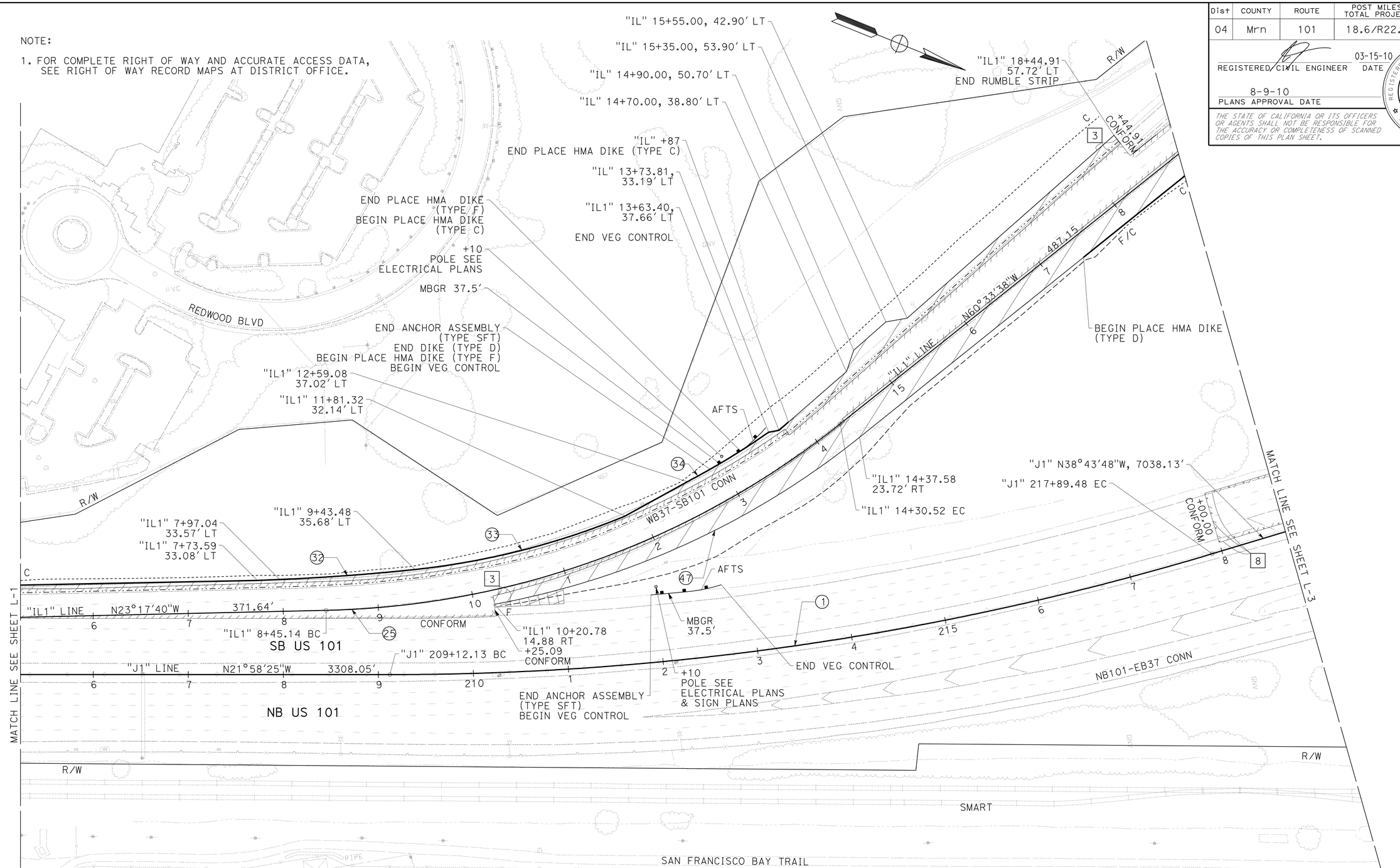

CURVE DATA

○	R	Δ	T	L
1	3000.00'	16°45'22"	441.83'	877.35'
25	900.00'	37°15'59"	303.46'	585.38'
32	2189.00'	3°43'55"	71.30'	142.55'
33	804.00'	16°19'15"	115.29'	229.02'
34	799.00'	7°10'17"	50.07'	100.00'
47	860.00'	33°55'01"	509.09'	262.25'

LAYOUT
SCALE: 1" = 50'

L-2

REVISED BY | DATE REVISED
ROBERT J. NIXON | JOHN L. MARTIN
CALCULATED-DESIGNED BY | CHECKED BY
FUNCTIONAL SUPERVISOR: JOHN L. MARTIN

STATE OF CALIFORNIA - DEPARTMENT OF TRANSPORTATION
Caltrans DESIGN

P:\proj2\04\26406\design\DCCR\426406ea002.dgn

LAST REVISION 03-15-10 | DATE PLOTTED => 16-AUG-2010 | TIME PLOTTED => 13:42

BORDER LAST REVISED 4/11/2008 | RELATIVE BORDER SCALE IS IN INCHES 0 1 2 3 | USERNAME => trlenard | DGN FILE => 426406ea002.dgn | CU 03 240 | EA 264061

Dist	COUNTY	ROUTE	POST MILES TOTAL PROJECT	SHEET No.	TOTAL SHEETS
04	Mrn	101	18.6/R22.3	16	542

REGISTERED CIVIL ENGINEER 03-15-10 DATE

8-9-10
PLANS APPROVAL DATE

REGISTERED PROFESSIONAL ENGINEER ROBERT J. NIXON No. C69123 Exp. 6-30-10 CIVIL STATE OF CALIFORNIA

THE STATE OF CALIFORNIA OR ITS OFFICERS OR AGENTS SHALL NOT BE RESPONSIBLE FOR THE ACCURACY OR COMPLETENESS OF SCANNED COPIES OF THIS PLAN SHEET.

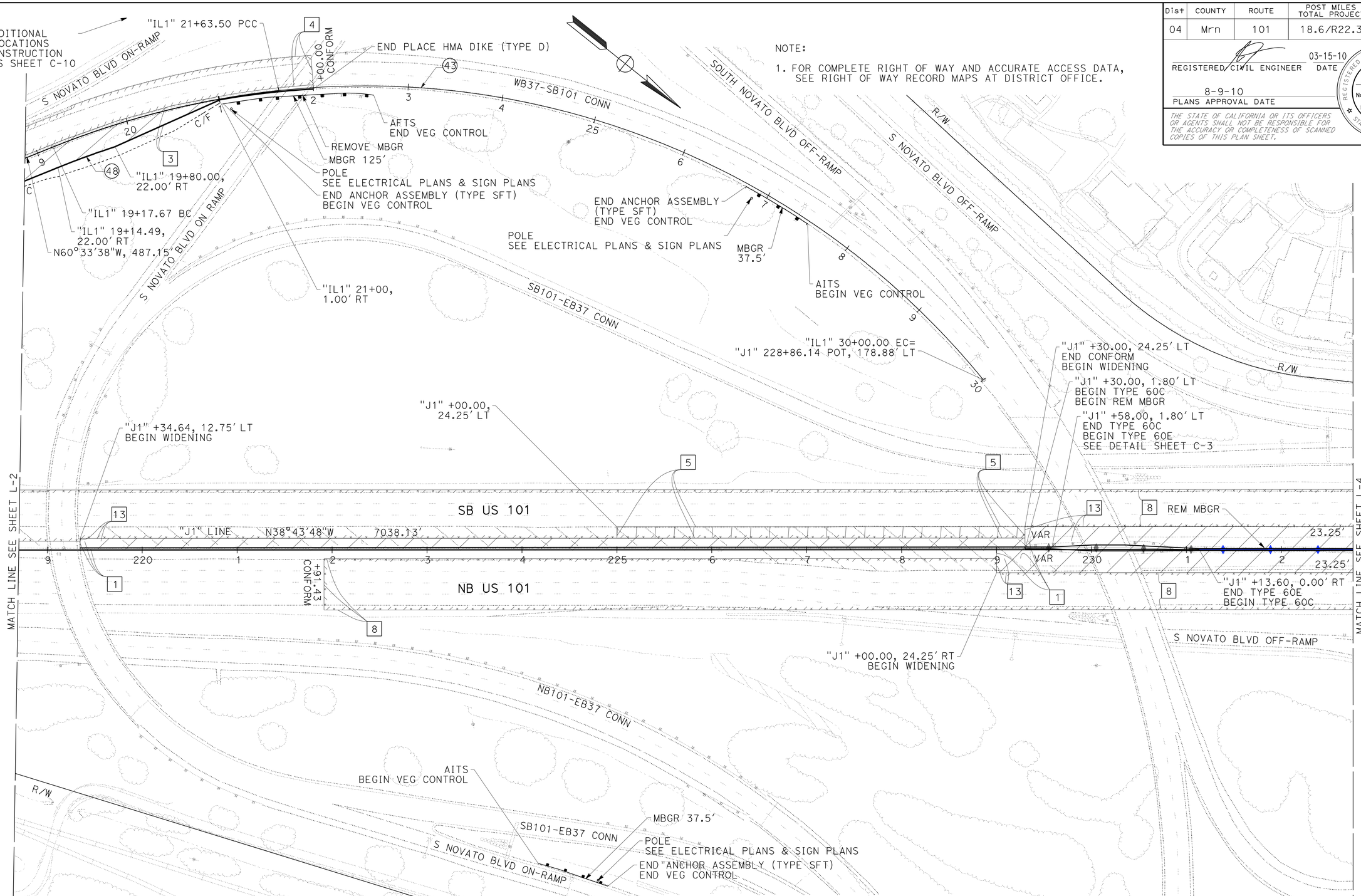

NOTE:

1. FOR COMPLETE RIGHT OF WAY AND ACCURATE ACCESS DATA, SEE RIGHT OF WAY RECORD MAPS AT DISTRICT OFFICE.

CURVE DATA

○	R	Δ	T	L
26	900.00'	15°39'01"	123.69'	245.83'
43	840.00'	57°03'25"	456.62'	836.50'
48	878.00'	04°10'07"	31.95'	63.88'

FOR ADDITIONAL MBGR LOCATIONS SEE CONSTRUCTION DETAILS SHEET C-10

LAYOUT

SCALE: 1" = 50'

L-3

REVISED BY | DATE REVISED
ROBERT J. NIXON | JOHN L. MARTIN
CALCULATED-DESIGNED BY | CHECKED BY
FUNCTIONAL SUPERVISOR: JOHN L. MARTIN

STATE OF CALIFORNIA - DEPARTMENT OF TRANSPORTATION
Caltrans DESIGN

P:\proj2\04\26406\design\ps&e\426406ea003.dgn

LAST REVISION | DATE PLOTTED => 16-AUG-2010 | TIME PLOTTED => 13:43
03-15-10

BORDER LAST REVISED 4/11/2008 | RELATIVE BORDER SCALE IS IN INCHES 0 1 2 3 | USERNAME => trlenard | DGN FILE => 426406ea003.dgn | CU 03 240 | EA 264061

Dist	COUNTY	ROUTE	POST MILES TOTAL PROJECT	SHEET No.	TOTAL SHEETS
04	Mrn	101	18.6/R22.3	17	542

REGISTERED CIVIL ENGINEER 03-15-10 DATE

8-9-10
PLANS APPROVAL DATE

REGISTERED PROFESSIONAL ENGINEER ROBERT J. NIXON No. C69123 Exp. 6-30-10 CIVIL STATE OF CALIFORNIA

THE STATE OF CALIFORNIA OR ITS OFFICERS OR AGENTS SHALL NOT BE RESPONSIBLE FOR THE ACCURACY OR COMPLETENESS OF SCANNED COPIES OF THIS PLAN SHEET.

NOTE:

1. FOR COMPLETE RIGHT OF WAY AND ACCURATE ACCESS DATA, SEE RIGHT OF WAY RECORD MAPS AT DISTRICT OFFICE.

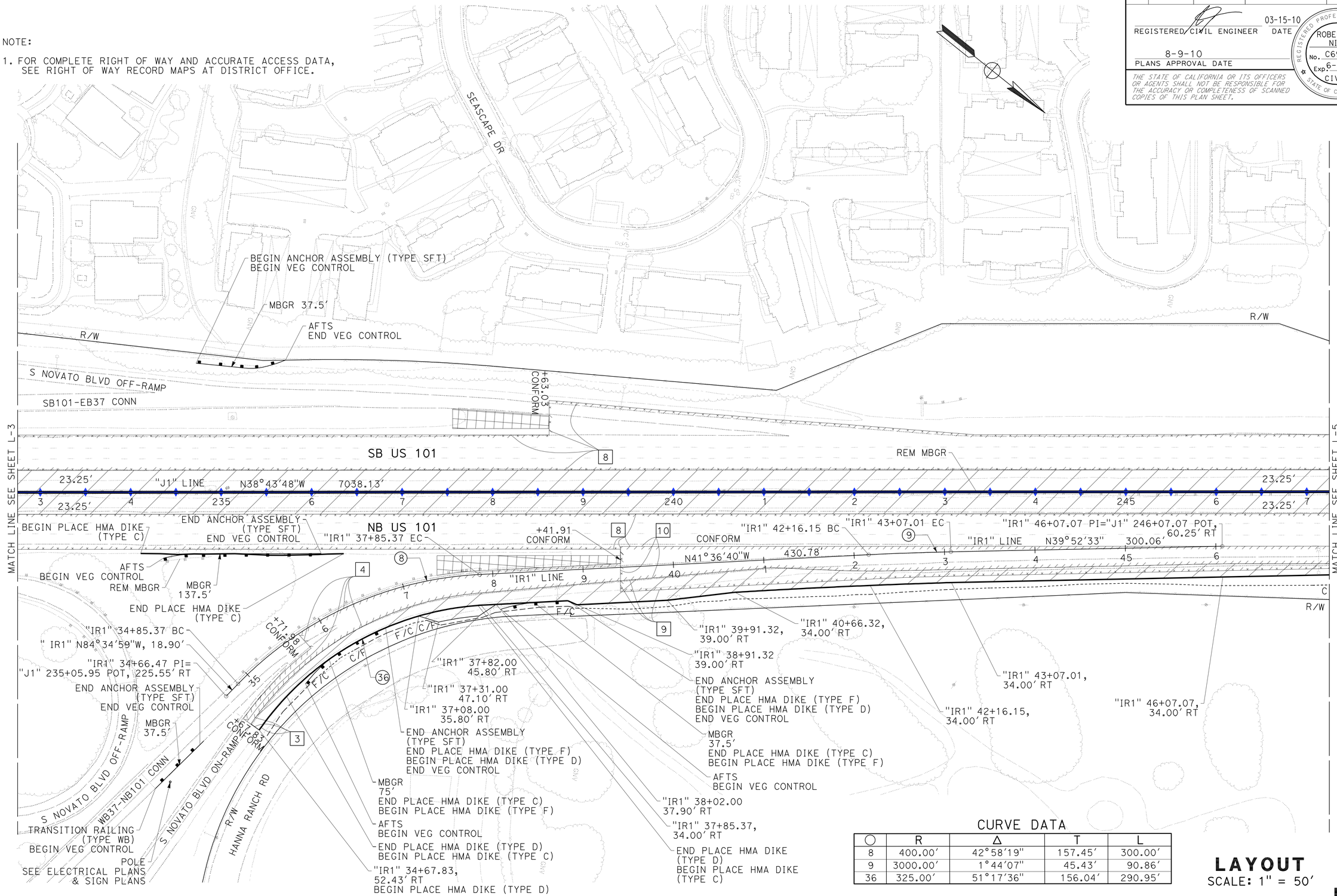

CURVE DATA

○	R	Δ	T	L
8	400.00'	42°58'19"	157.45'	300.00'
9	3000.00'	1°44'07"	45.43'	90.86'
36	325.00'	51°17'36"	156.04'	290.95'

LAYOUT
SCALE: 1" = 50'

L-4

REVISED BY | DATE REVISED
ROBERT J. NIXON | JOHN L. MARTIN
CALCULATED-DESIGNED BY | CHECKED BY
FUNCTIONAL SUPERVISOR: JOHN L. MARTIN

STATE OF CALIFORNIA - DEPARTMENT OF TRANSPORTATION
Caltrans DESIGN

P:\proj2\04\26406\design\DCCR\426406ea004.dgn

LAST REVISION 03-15-10 | DATE PLOTTED => 16-AUG-2010 | TIME PLOTTED => 13:43

Dist	COUNTY	ROUTE	POST MILES TOTAL PROJECT	SHEET No.	TOTAL SHEETS
04	Mrn	101	18.6/R22.3	18	542

REGISTERED CIVIL ENGINEER 03-15-10 DATE

8-9-10
PLANS APPROVAL DATE

REGISTERED PROFESSIONAL ENGINEER ROBERT J. NIXON No. C69123 Exp. 6-30-10 CIVIL STATE OF CALIFORNIA

THE STATE OF CALIFORNIA OR ITS OFFICERS OR AGENTS SHALL NOT BE RESPONSIBLE FOR THE ACCURACY OR COMPLETENESS OF SCANNED COPIES OF THIS PLAN SHEET.

NOTE:

1. FOR COMPLETE RIGHT OF WAY AND ACCURATE ACCESS DATA, SEE RIGHT OF WAY RECORD MAPS AT DISTRICT OFFICE.

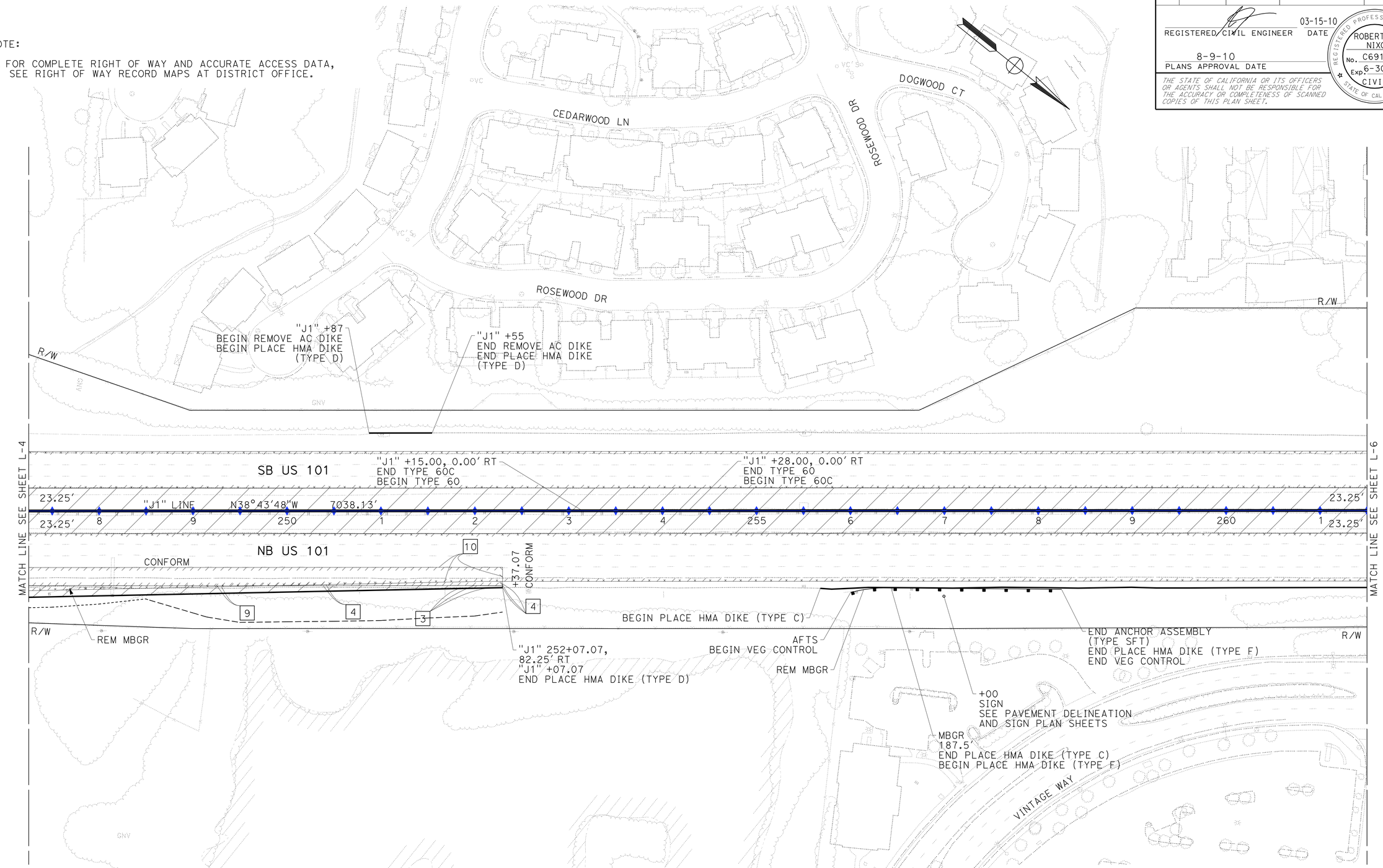

LAYOUT
SCALE: 1" = 50'

L-5

REVISED BY	DATE REVISED
ROBERT J. NIXON	
JOHN L. MARTIN	

CALCULATED-DESIGNED BY
CHECKED BY

FUNCTIONAL SUPERVISOR
JOHN L. MARTIN

STATE OF CALIFORNIA - DEPARTMENT OF TRANSPORTATION
Caltrans
DESIGN

P:\proj2\04\26406\design\ps&e\426406ea005.dgn

LAST REVISION 03-15-10 | DATE PLOTTED => 16-AUG-2010 | TIME PLOTTED => 13:43

Dist	COUNTY	ROUTE	POST MILES TOTAL PROJECT	SHEET No.	TOTAL SHEETS
04	Mrn	101	18.6/R22.3	19	542

REGISTERED CIVIL ENGINEER 03-15-10 DATE

8-9-10
PLANS APPROVAL DATE

REGISTERED PROFESSIONAL ENGINEER ROBERT J. NIXON No. C69123 Exp. 6-30-10 CIVIL STATE OF CALIFORNIA

THE STATE OF CALIFORNIA OR ITS OFFICERS OR AGENTS SHALL NOT BE RESPONSIBLE FOR THE ACCURACY OR COMPLETENESS OF SCANNED COPIES OF THIS PLAN SHEET.

NOTE:

1. FOR COMPLETE RIGHT OF WAY AND ACCURATE ACCESS DATA, SEE RIGHT OF WAY RECORD MAPS AT DISTRICT OFFICE.

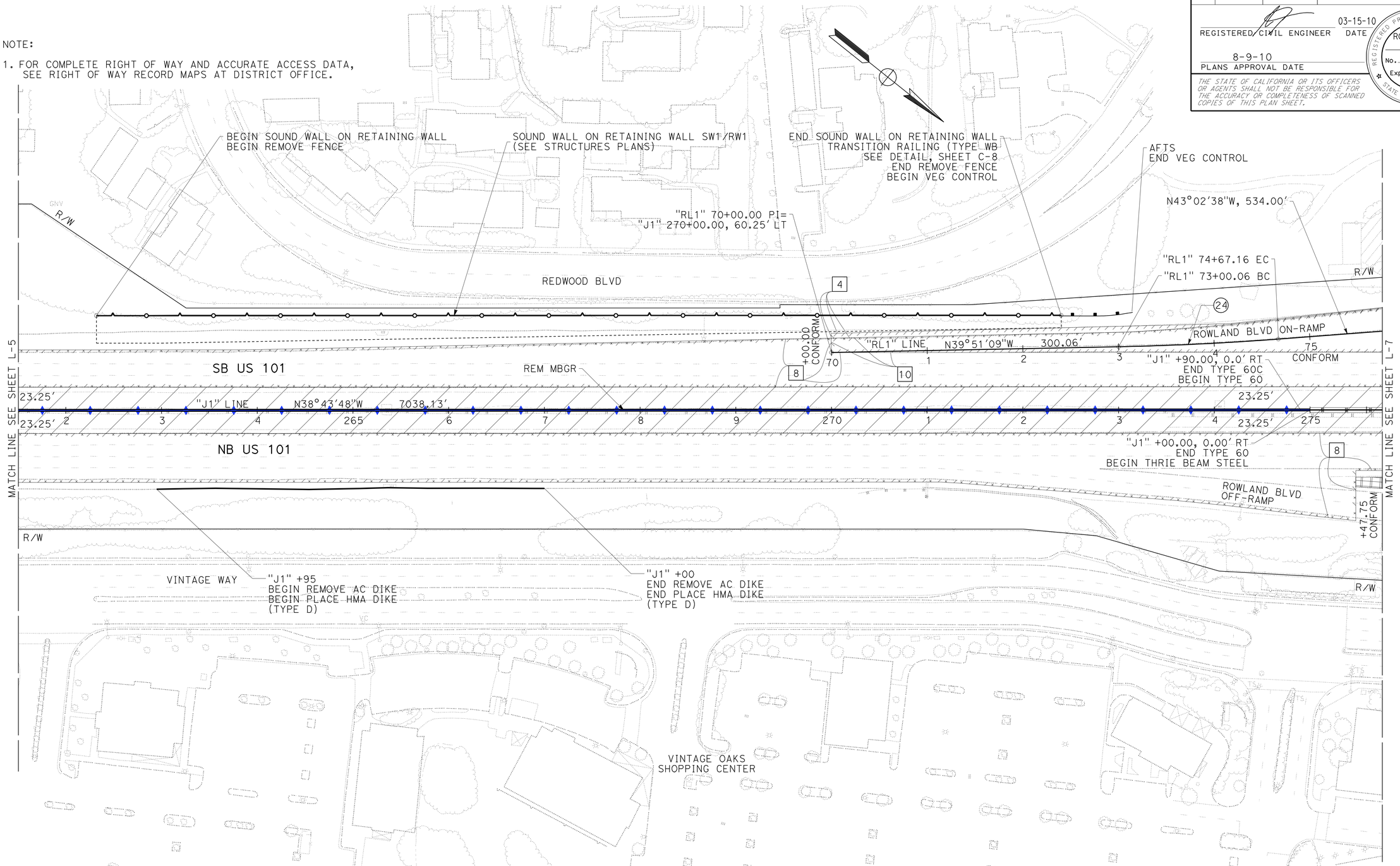

CURVE DATA

○	R	Δ	T	L
24	3000'	3°11'29"	83.57'	167.10'

LAYOUT
SCALE: 1" = 50'

L-6

REVISED BY | DATE REVISED
ROBERT J. NIXON | JOHN L. MARTIN
CALCULATED-DESIGNED BY | CHECKED BY
FUNCTIONAL SUPERVISOR: JOHN L. MARTIN

STATE OF CALIFORNIA - DEPARTMENT OF TRANSPORTATION
Caltrans **DESIGN**

p:\proj2\04\26406\design\DCCR\426406ea006.dgn

LAST REVISION | DATE PLOTTED => 16-AUG-2010
03-15-10 | TIME PLOTTED => 13:43

Dist	COUNTY	ROUTE	POST MILES TOTAL PROJECT	SHEET No.	TOTAL SHEETS
04	Mrn	101	18.6/R22.3	20	542

REGISTERED CIVIL ENGINEER 03-15-10 DATE

8-9-10
PLANS APPROVAL DATE

REGISTERED PROFESSIONAL ENGINEER ROBERT J. NIXON No. C69123 Exp. 6-30-10 CIVIL STATE OF CALIFORNIA

THE STATE OF CALIFORNIA OR ITS OFFICERS OR AGENTS SHALL NOT BE RESPONSIBLE FOR THE ACCURACY OR COMPLETENESS OF SCANNED COPIES OF THIS PLAN SHEET.

NOTE:

1. FOR COMPLETE RIGHT OF WAY AND ACCURATE ACCESS DATA, SEE RIGHT OF WAY RECORD MAPS AT DISTRICT OFFICE.

CURVE DATA

○	R	Δ	T	L
2	3194.92′	23°30′24″	664.73′	1310.77′
23	550.00′	31°51′03″	156.94′	305.75′
27	3537.00′	28°54′20″	911.62′	1784.41′
44	3488.00′	28°39′06″	890.76′	1744.24′

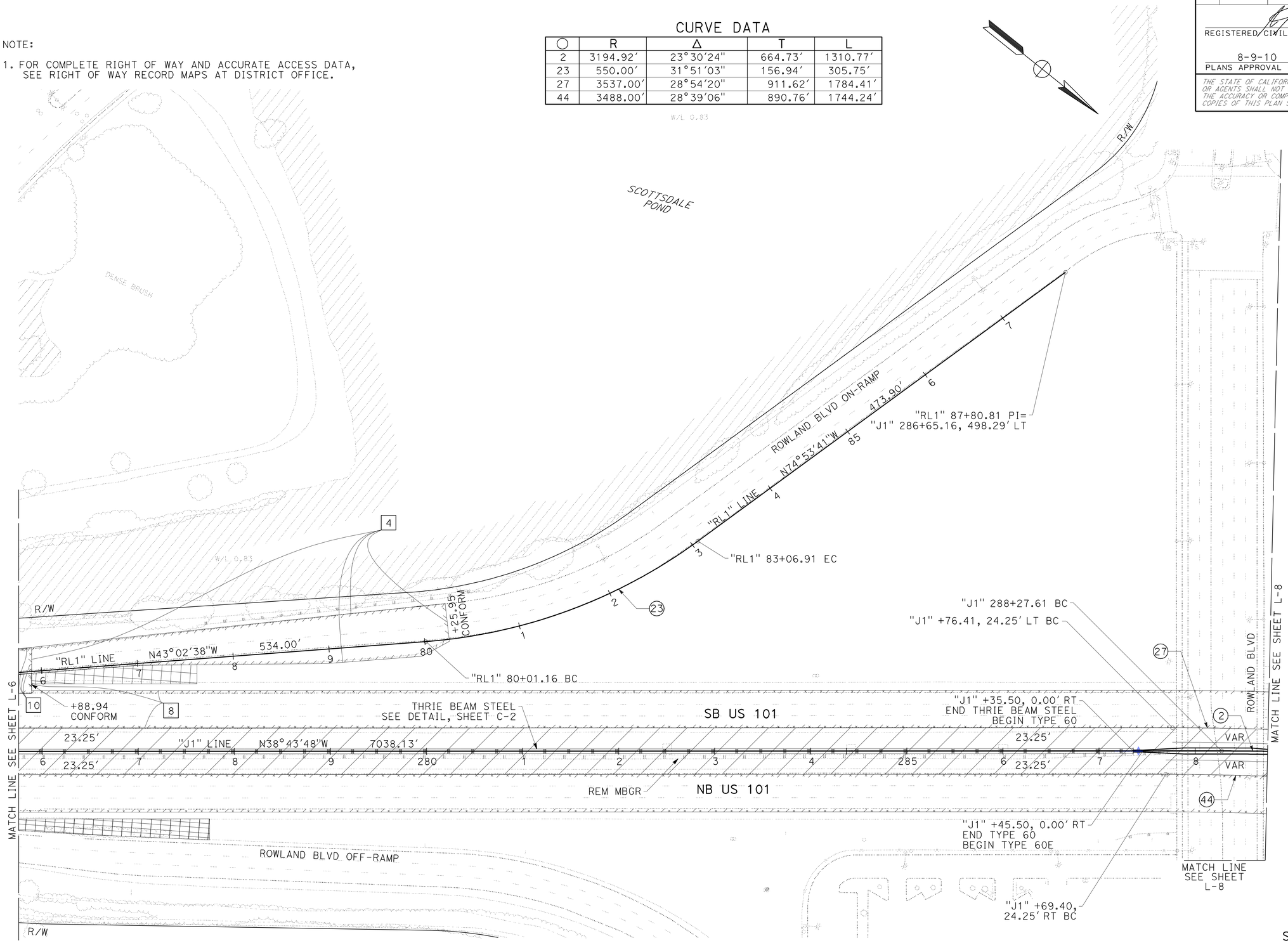

LAYOUT
SCALE: 1" = 50′

L-7

REVISED BY	DATE REVISED
ROBERT J. NIXON	JOHN L. MARTIN

CALCULATED-DESIGNED BY
CHECKED BY

FUNCTIONAL SUPERVISOR
JOHN L. MARTIN

STATE OF CALIFORNIA - DEPARTMENT OF TRANSPORTATION
Caltrans **DESIGN**

p:\proj2\04\26406\design\DCCR\426406ea007.dgn

LAST REVISION 03-15-10
DATE PLOTTED => 16-AUG-2010
TIME PLOTTED => 13:43

Dist	COUNTY	ROUTE	POST MILES TOTAL PROJECT	SHEET No.	TOTAL SHEETS
04	Mrn	101	18.6/R22.3	21	542

REGISTERED CIVIL ENGINEER 03-15-10 DATE

8-9-10
PLANS APPROVAL DATE

REGISTERED PROFESSIONAL ENGINEER ROBERT J. NIXON No. C69123 Exp. 6-30-10 CIVIL STATE OF CALIFORNIA

THE STATE OF CALIFORNIA OR ITS OFFICERS OR AGENTS SHALL NOT BE RESPONSIBLE FOR THE ACCURACY OR COMPLETENESS OF SCANNED COPIES OF THIS PLAN SHEET.

NOTE:

1. FOR COMPLETE RIGHT OF WAY AND ACCURATE ACCESS DATA, SEE RIGHT OF WAY RECORD MAPS AT DISTRICT OFFICE.

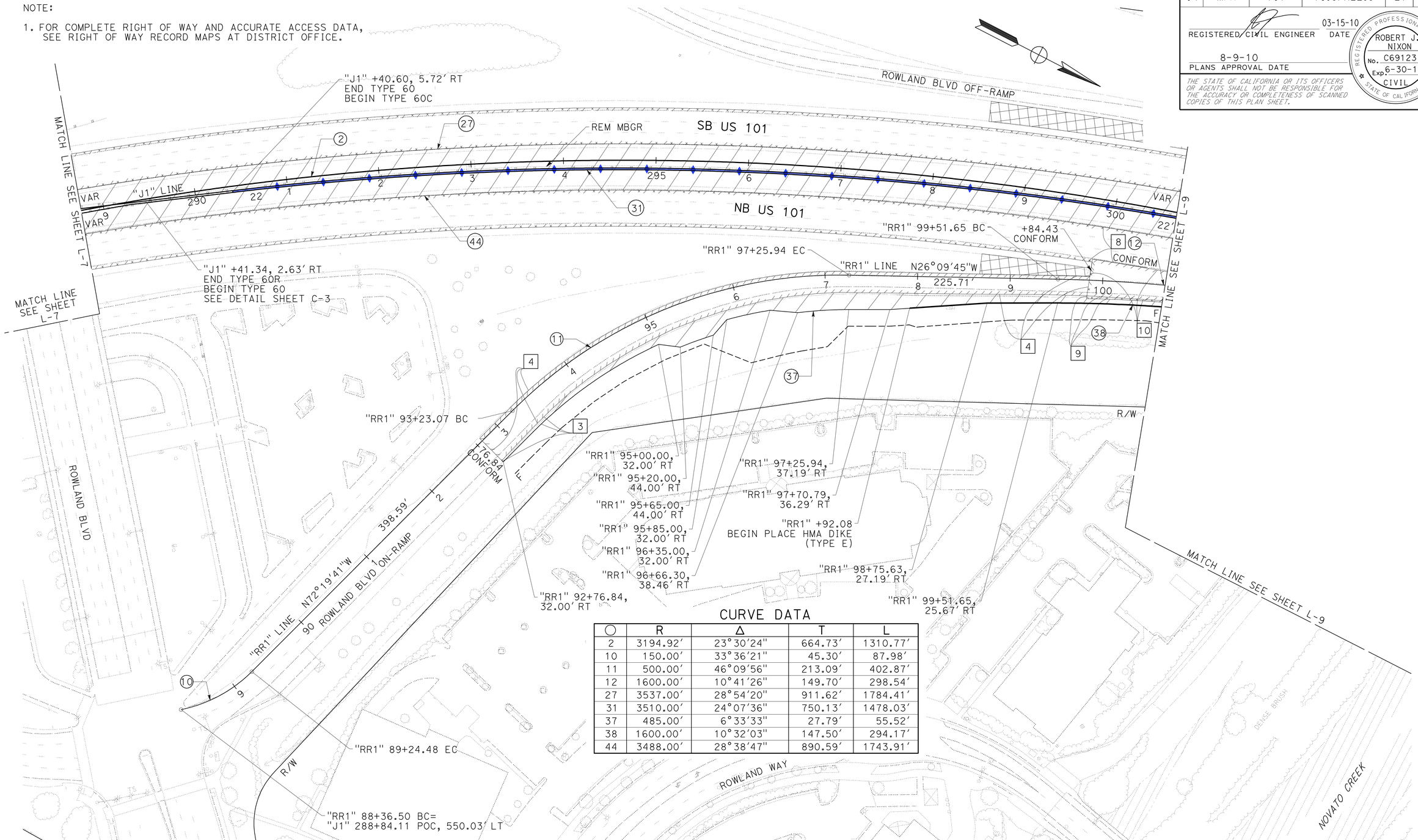

CURVE DATA

○	R	Δ	T	L
2	3194.92'	23°30'24"	664.73'	1310.77'
10	150.00'	33°36'21"	45.30'	87.98'
11	500.00'	46°09'56"	213.09'	402.87'
12	1600.00'	10°41'26"	149.70'	298.54'
27	3537.00'	28°54'20"	911.62'	1784.41'
31	3510.00'	24°07'36"	750.13'	1478.03'
37	485.00'	6°33'33"	27.79'	55.52'
38	1600.00'	10°32'03"	147.50'	294.17'
44	3488.00'	28°38'47"	890.59'	1743.91'

LAYOUT
SCALE: 1" = 50'

L-8

REVISED BY | DATE REVISED
ROBERT J. NIXON | JOHN L. MARTIN
CALCULATED-DESIGNED BY | CHECKED BY
FUNCTIONAL SUPERVISOR: JOHN L. MARTIN

STATE OF CALIFORNIA - DEPARTMENT OF TRANSPORTATION
Caltrans DESIGN

P:\proj2\04\26406\design\DCCR\426406ea008.dgn

LAST REVISION 03-15-10 | DATE PLOTTED => 16-AUG-2010 | TIME PLOTTED => 13:43

BORDER LAST REVISED 4/11/2008 | RELATIVE BORDER SCALE IS IN INCHES 0 1 2 3 | USERNAME => trlenard | DGN FILE => 426406ea008.dgn | CU 03 240 | EA 264061

Dist	COUNTY	ROUTE	POST MILES TOTAL PROJECT	SHEET No.	TOTAL SHEETS
04	Mrn	101	18.6/R22.3	22	542

REGISTERED CIVIL ENGINEER 03-15-10 DATE

8-9-10
PLANS APPROVAL DATE

REGISTERED PROFESSIONAL ENGINEER ROBERT J. NIXON No. C69123 Exp. 6-30-10 CIVIL STATE OF CALIFORNIA

THE STATE OF CALIFORNIA OR ITS OFFICERS OR AGENTS SHALL NOT BE RESPONSIBLE FOR THE ACCURACY OR COMPLETENESS OF SCANNED COPIES OF THIS PLAN SHEET.

NOTE:

1. FOR COMPLETE RIGHT OF WAY AND ACCURATE ACCESS DATA, SEE RIGHT OF WAY RECORD MAPS AT DISTRICT OFFICE.

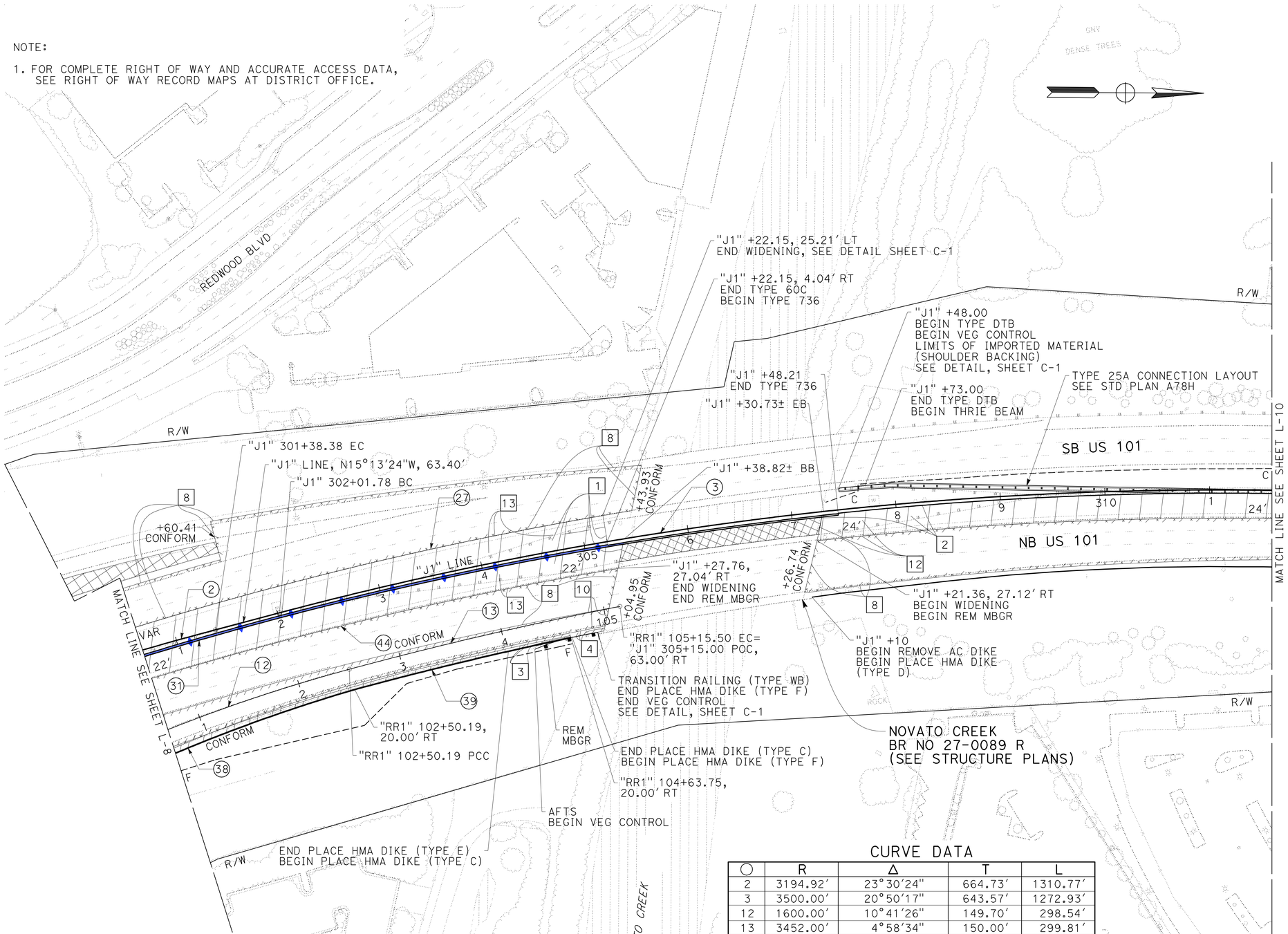

CURVE DATA

○	R	Δ	T	L
2	3194.92'	23°30'24"	664.73'	1310.77'
3	3500.00'	20°50'17"	643.57'	1272.93'
12	1600.00'	10°41'26"	149.70'	298.54'
13	3452.00'	4°58'34"	150.00'	299.81'
27	3537.00'	28°54'20"	911.62'	1784.41'
31	3510.00'	24°07'36"	750.13'	1478.03'
38	1599.99'	10°32'03"	147.50'	294.17'
39	3683.24'	3°18'06"	106.16'	212.26'
44	3488.00'	28°39'06"	890.76'	1744.24'

LAYOUT
SCALE: 1" = 50'

L-9

REVISED BY | DATE REVISED
ROBERT J. NIXON | JOHN L. MARTIN
CALCULATED-DESIGNED BY | CHECKED BY
FUNCTIONAL SUPERVISOR: JOHN L. MARTIN

STATE OF CALIFORNIA - DEPARTMENT OF TRANSPORTATION
Caltrans **DESIGN**

P:\proj2\04\26406\design\ps&e\426406ea009.dgn

LAST REVISION 03-15-10 | DATE PLOTTED => 16-AUG-2010 | TIME PLOTTED => 13:43

Dist	COUNTY	ROUTE	POST MILES TOTAL PROJECT	SHEET No.	TOTAL SHEETS
04	Mrn	101	18.6/R22.3	23	542

REGISTERED CIVIL ENGINEER 03-15-10 DATE

8-9-10
PLANS APPROVAL DATE

REGISTERED PROFESSIONAL ENGINEER ROBERT J. NIXON No. C69123 Exp. 6-30-10 CIVIL STATE OF CALIFORNIA

THE STATE OF CALIFORNIA OR ITS OFFICERS OR AGENTS SHALL NOT BE RESPONSIBLE FOR THE ACCURACY OR COMPLETENESS OF SCANNED COPIES OF THIS PLAN SHEET.

NOTE:

1. FOR COMPLETE RIGHT OF WAY AND ACCURATE ACCESS DATA, SEE RIGHT OF WAY RECORD MAPS AT DISTRICT OFFICE.

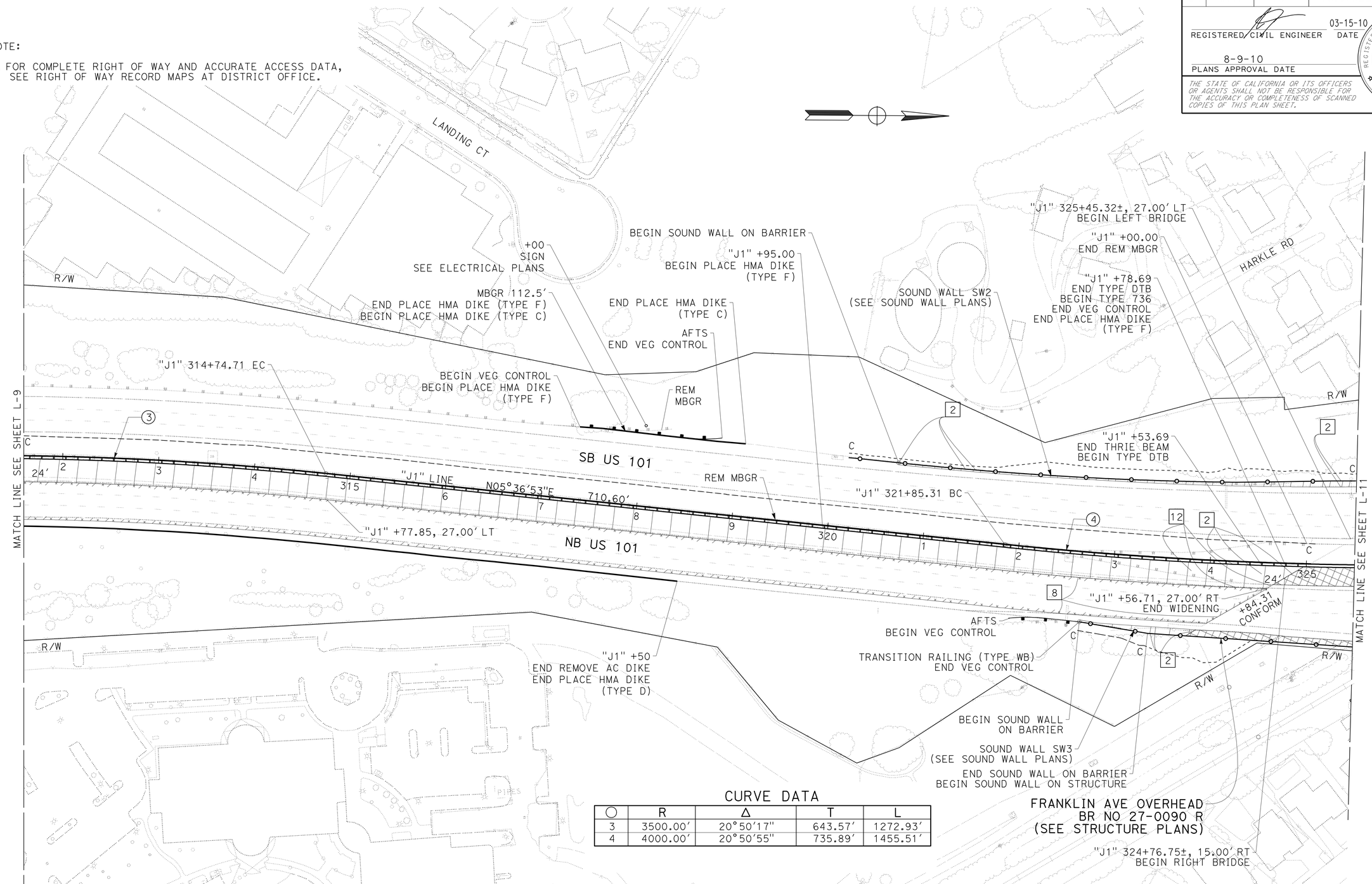

CURVE DATA

○	R	Δ	T	L
3	3500.00'	20°50'17"	643.57'	1272.93'
4	4000.00'	20°50'55"	735.89'	1455.51'

LAYOUT

SCALE: 1" = 50'

L-10

REVISED BY | DATE REVISED
ROBERT J. NIXON | JOHN L. MARTIN
CALCULATED-DESIGNED BY | CHECKED BY
FUNCTIONAL SUPERVISOR: JOHN L. MARTIN

STATE OF CALIFORNIA - DEPARTMENT OF TRANSPORTATION
Caltrans DESIGN

P:\proj2\04\26406\design\ps&e\426406ea010.dgn

LAST REVISION 03-11-10 | DATE PLOTTED => 16-AUG-2010 | TIME PLOTTED => 13:43

BORDER LAST REVISED 4/11/2008 | RELATIVE BORDER SCALE IS IN INCHES 0 1 2 3 | USERNAME => trienard | DGN FILE => 426406ea010.dgn | CU 03 240 | EA 264061

Dist	COUNTY	ROUTE	POST MILES TOTAL PROJECT	SHEET No.	TOTAL SHEETS
04	Mrn	101	18.6/R22.3	24	542

REGISTERED CIVIL ENGINEER 03-15-10 DATE

8-9-10
PLANS APPROVAL DATE

REGISTERED PROFESSIONAL ENGINEER ROBERT J. NIXON No. C69123 Exp. 6-30-10 CIVIL STATE OF CALIFORNIA

THE STATE OF CALIFORNIA OR ITS OFFICERS OR AGENTS SHALL NOT BE RESPONSIBLE FOR THE ACCURACY OR COMPLETENESS OF SCANNED COPIES OF THIS PLAN SHEET.

NOTE:

1. FOR COMPLETE RIGHT OF WAY AND ACCURATE ACCESS DATA, SEE RIGHT OF WAY RECORD MAPS AT DISTRICT OFFICE.

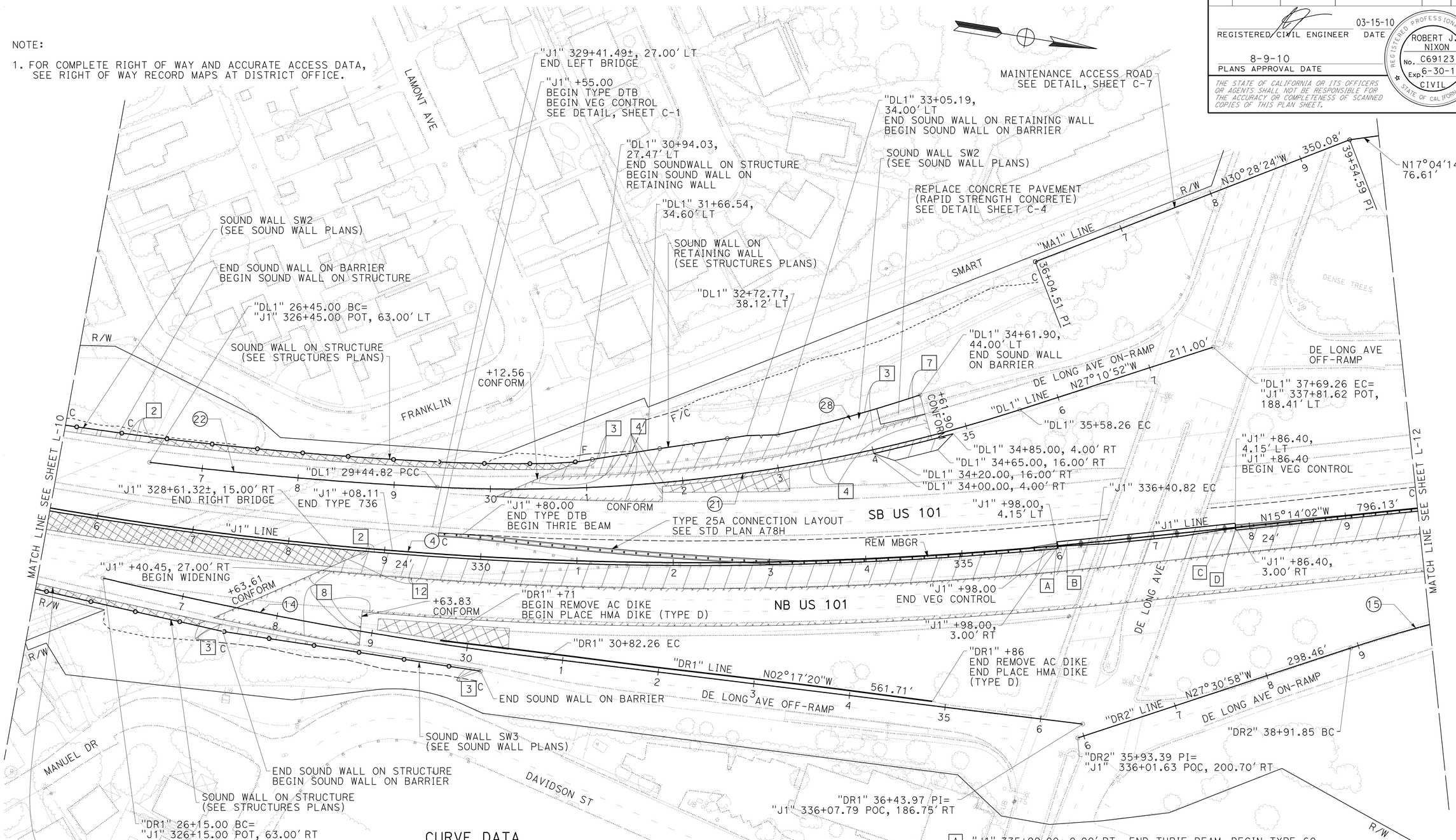

CURVE DATA

○	R	Δ	T	L
4	4000.00'	20°50'55"	735.89'	1455.51'
14	4063.00'	6°35'21"	233.89'	467.26'
15	1500.00'	8°37'17"	113.07'	225.71'
21	1700.00'	20°40'30"	310.09'	613.44'
22	3937.00'	4°21'48"	149.98'	299.82'
28	1666.00'	5°16'37"	76.77'	153.44'

A	"J1" 335+99.00, 0.00' RT	END THRIE BEAM, BEGIN TYPE 60
B	"J1" 336+09.00, 0.00' RT	END TYPE 60, BEGIN TYPE 60E
C	"J1" 337+75.40, 0.00' RT	END TYPE 60E, BEGIN TYPE 60
D	"J1" 337+85.40, 0.00' RT	END TYPE 60, BEGIN THRIE BEAM

LAYOUT

SCALE: 1" = 50'

L-11

REVISED BY	DATE REVISED
ROBERT J. NIXON	
JOHN L. MARTIN	
CALCULATED-DESIGNED BY	CHECKED BY
FUNCTIONAL SUPERVISOR	
JOHN L. MARTIN	

STATE OF CALIFORNIA - DEPARTMENT OF TRANSPORTATION

Caltrans DESIGN

p:\proj2\04\26406\design\DCCR\426406ea011.dgn

LAST REVISION 03-15-10 | DATE PLOTTED => 16-AUG-2010 | TIME PLOTTED => 13:43

Dist	COUNTY	ROUTE	POST MILES TOTAL PROJECT	SHEET No.	TOTAL SHEETS
04	Mrn	101	18.6/R22.3	25	542

REGISTERED CIVIL ENGINEER 03-15-10 DATE

8-9-10
PLANS APPROVAL DATE

REGISTERED PROFESSIONAL ENGINEER ROBERT J. NIXON No. C69123 Exp. 6-30-10 CIVIL STATE OF CALIFORNIA

THE STATE OF CALIFORNIA OR ITS OFFICERS OR AGENTS SHALL NOT BE RESPONSIBLE FOR THE ACCURACY OR COMPLETENESS OF SCANNED COPIES OF THIS PLAN SHEET.

NOTE:

1. FOR COMPLETE RIGHT OF WAY AND ACCURATE ACCESS DATA, SEE RIGHT OF WAY RECORD MAPS AT DISTRICT OFFICE.

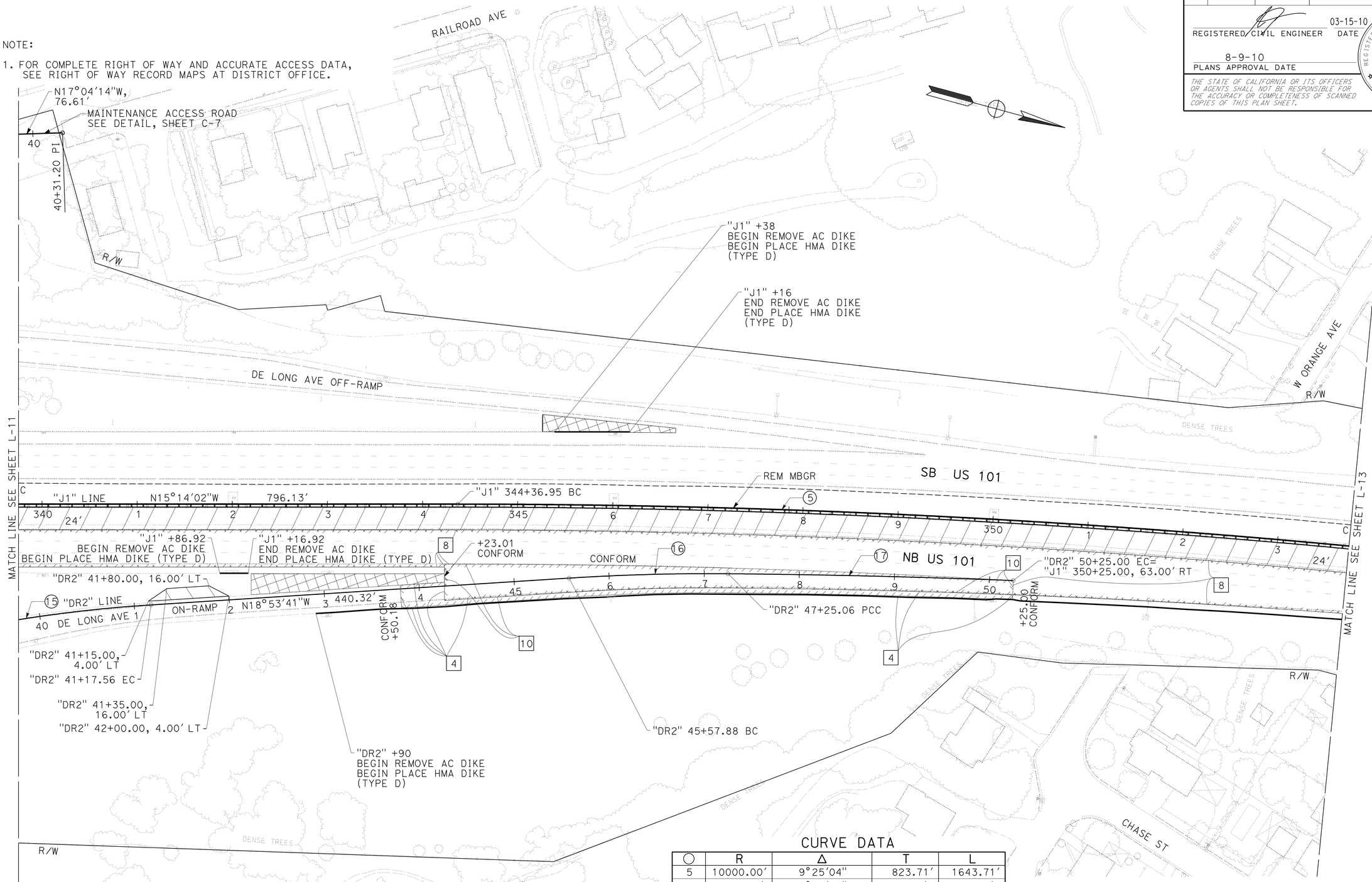

CURVE DATA

○	R	Δ	T	L
5	10000.00'	9°25'04"	823.71'	1643.71'
15	1500.00'	8°37'17"	113.07'	225.71'
16	2300.00'	4°09'53"	83.63'	167.18'
17	9937.00'	1°43'46"	149.98'	299.94'

LAYOUT
SCALE: 1" = 50'

L-12

REVISED BY | DATE REVISED
ROBERT J. NIXON | JOHN L. MARTIN
CALCULATED-DESIGNED BY | CHECKED BY
FUNCTIONAL SUPERVISOR: JOHN L. MARTIN

STATE OF CALIFORNIA - DEPARTMENT OF TRANSPORTATION
Caltrans **DESIGN**

p:\proj2\04\26406\design\DCCR\426406ea012.dgn

LAST REVISION 03-15-10 | DATE PLOTTED => 16-AUG-2010 | TIME PLOTTED => 13:43

Dist	COUNTY	ROUTE	POST MILES TOTAL PROJECT	SHEET No.	TOTAL SHEETS
04	Mrn	101	18.6/R22.3	26	542

REGISTERED CIVIL ENGINEER 03-15-10 DATE

8-9-10
PLANS APPROVAL DATE

REGISTERED PROFESSIONAL ENGINEER ROBERT J. NIXON No. C69123 Exp. 6-30-10 CIVIL STATE OF CALIFORNIA

THE STATE OF CALIFORNIA OR ITS OFFICERS OR AGENTS SHALL NOT BE RESPONSIBLE FOR THE ACCURACY OR COMPLETENESS OF SCANNED COPIES OF THIS PLAN SHEET.

NOTE:

1. FOR COMPLETE RIGHT OF WAY AND ACCURATE ACCESS DATA, SEE RIGHT OF WAY RECORD MAPS AT DISTRICT OFFICE.

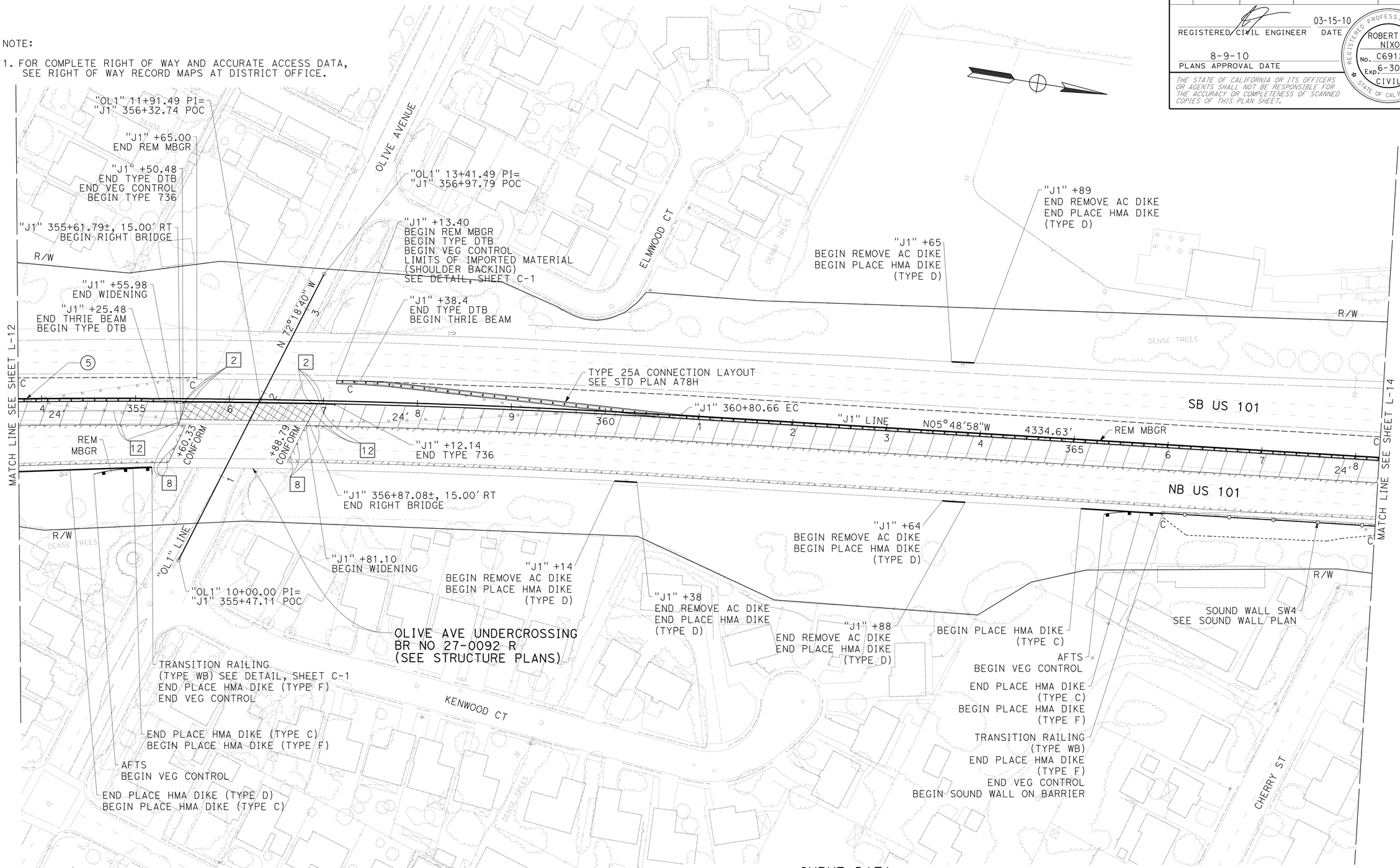

CURVE DATA

○	R	Δ	T	L
5	10000.00'	9°25'04"	823.71'	1643.71'

LAYOUT
SCALE: 1" = 50'

L-13

REVISED BY	DATE REVISED
ROBERT J. NIXON	JOHN L. MARTIN
CALCULATED-DESIGNED BY	CHECKED BY
FUNCTIONAL SUPERVISOR	JOHN L. MARTIN

STATE OF CALIFORNIA - DEPARTMENT OF TRANSPORTATION
Caltrans **DESIGN**

P:\proj2\04\26406\design\ps&e\426406ea013.dgn

LAST REVISION 03-15-10 | DATE PLOTTED => 16-AUG-2010 | TIME PLOTTED => 13:44

Dist	COUNTY	ROUTE	POST MILES TOTAL PROJECT	SHEET No.	TOTAL SHEETS
04	Mrn	101	18.6/R22.3	27	542

REGISTERED CIVIL ENGINEER 03-15-10 DATE

8-9-10
PLANS APPROVAL DATE

REGISTERED PROFESSIONAL ENGINEER ROBERT J. NIXON No. C69123 Exp. 6-30-10 CIVIL STATE OF CALIFORNIA

THE STATE OF CALIFORNIA OR ITS OFFICERS OR AGENTS SHALL NOT BE RESPONSIBLE FOR THE ACCURACY OR COMPLETENESS OF SCANNED COPIES OF THIS PLAN SHEET.

NOTE:

1. FOR COMPLETE RIGHT OF WAY AND ACCURATE ACCESS DATA, SEE RIGHT OF WAY RECORD MAPS AT DISTRICT OFFICE.

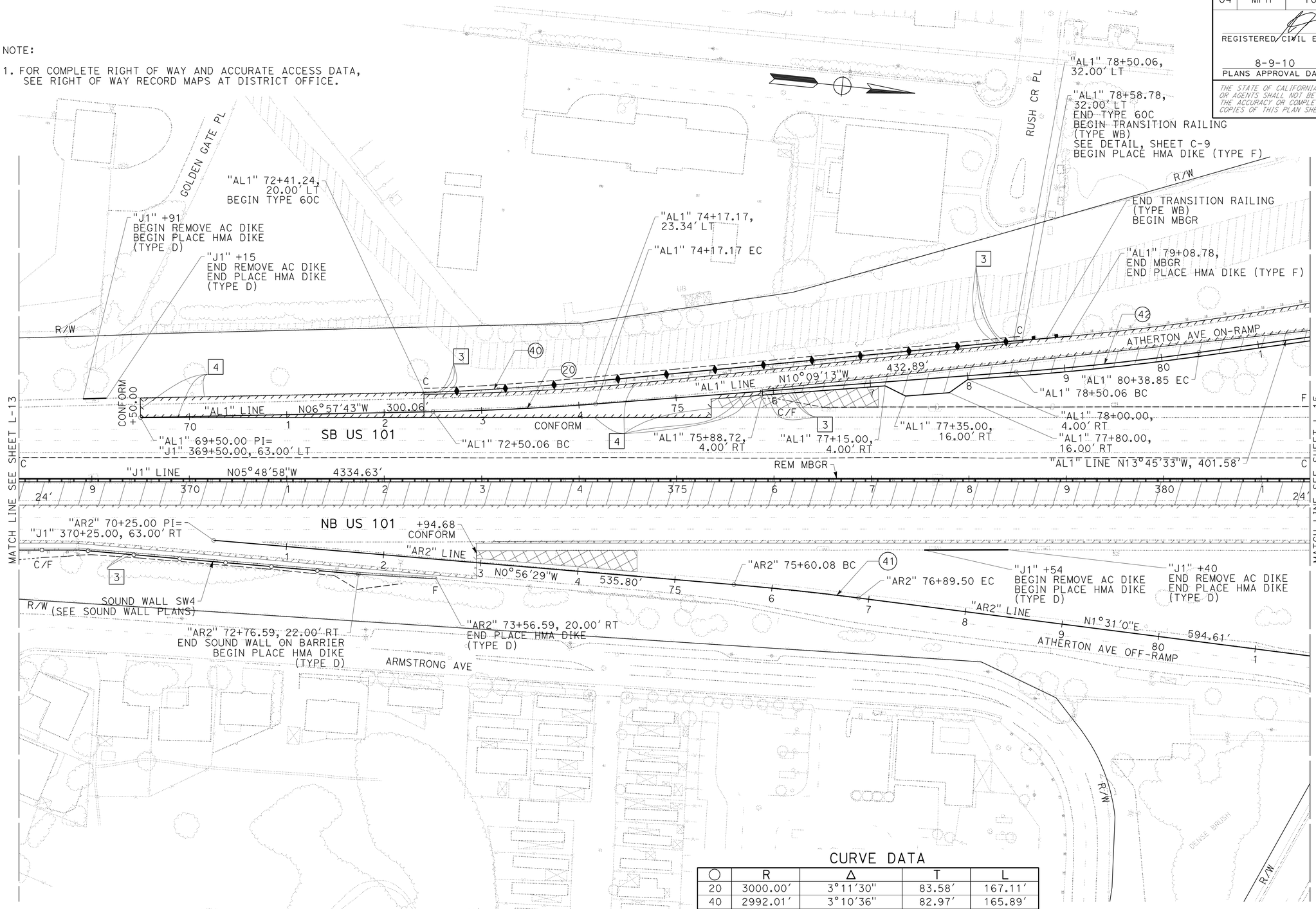

CURVE DATA

○	R	Δ	T	L
20	3000.00'	3°11'30"	83.58'	167.11'
40	2992.01'	3°10'36"	82.97'	165.89'
41	3000.00'	2°27'29"	64.36'	128.70'
42	3000.00'	3°36'20"	94.42'	188.79'

LAYOUT
SCALE: 1" = 50'

L-14

REVISED BY | DATE REVISED
ROBERT J. NIXON | JOHN L. MARTIN
CALCULATED-DESIGNED BY | CHECKED BY
FUNCTIONAL SUPERVISOR
JOHN L. MARTIN

STATE OF CALIFORNIA - DEPARTMENT OF TRANSPORTATION
Caltrans **DESIGN**

p:\proj2\04\26406\design\DCCR\426406ea014.dgn

LAST REVISION 03-15-10 | DATE PLOTTED => 16-AUG-2010 TIME PLOTTED => 13:44

Dist	COUNTY	ROUTE	POST MILES TOTAL PROJECT	SHEET No.	TOTAL SHEETS
04	Mrn	101	18.6/R22.3	28	542

REGISTERED CIVIL ENGINEER 03-15-10 DATE

8-9-10
PLANS APPROVAL DATE

REGISTERED PROFESSIONAL ENGINEER ROBERT J. NIXON No. C69123 Exp 6-30-10 CIVIL STATE OF CALIFORNIA

THE STATE OF CALIFORNIA OR ITS OFFICERS OR AGENTS SHALL NOT BE RESPONSIBLE FOR THE ACCURACY OR COMPLETENESS OF SCANNED COPIES OF THIS PLAN SHEET.

NOTE:

1. FOR COMPLETE RIGHT OF WAY AND ACCURATE ACCESS DATA, SEE RIGHT OF WAY RECORD MAPS AT DISTRICT OFFICE.

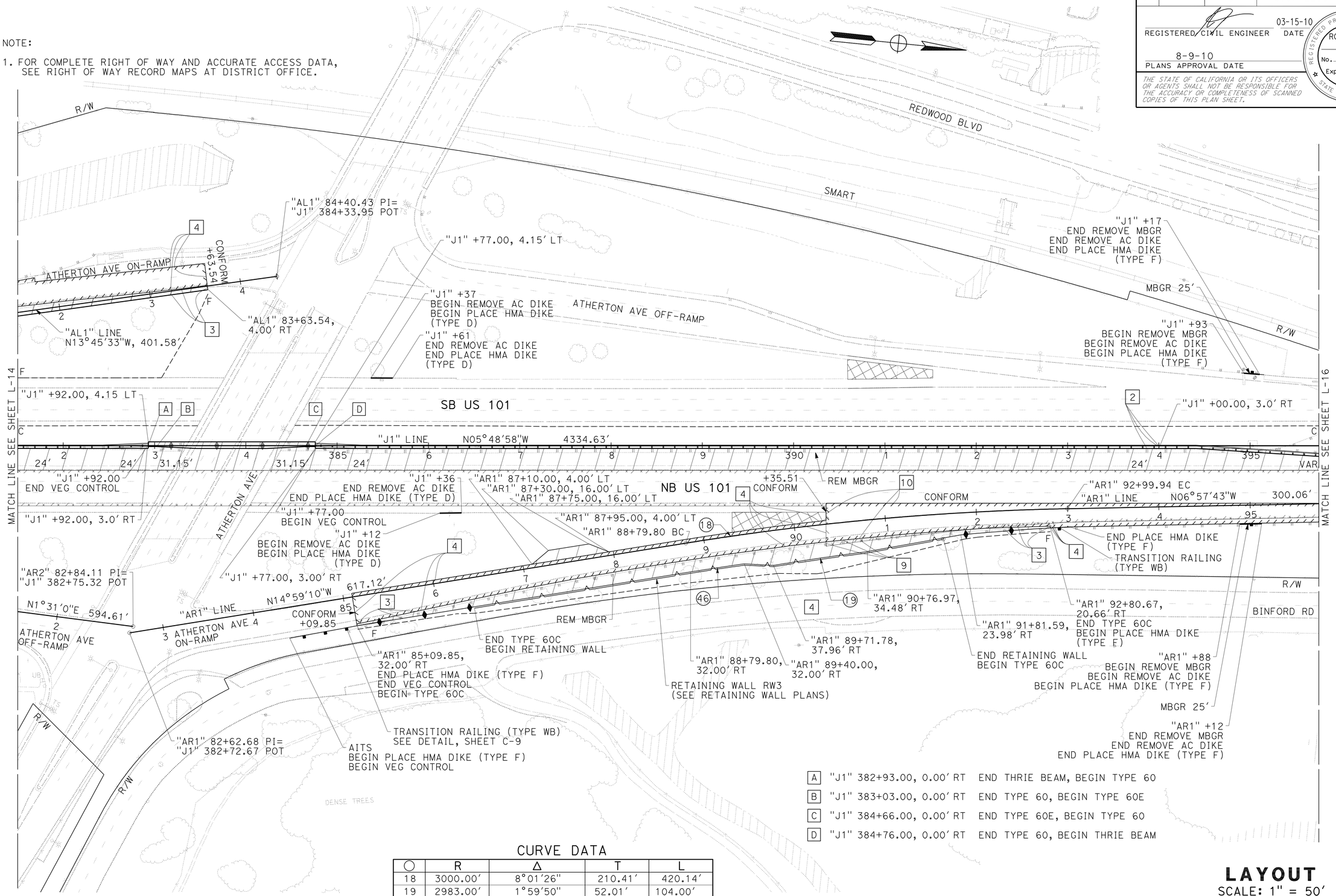

CURVE DATA

○	R	Δ	T	L
18	3000.00'	8°01'26"	210.41'	420.14'
19	2983.00'	1°59'50"	52.01'	104.00'
46	2968.00'	1°08'59"	29.78'	59.56'

LAYOUT

SCALE: 1" = 50'

L-15

REVISED BY | DATE REVISED
ROBERT J. NIXON | JOHN L. MARTIN
CALCULATED-DESIGNED BY | CHECKED BY
FUNCTIONAL SUPERVISOR | JOHN L. MARTIN
STATE OF CALIFORNIA - DEPARTMENT OF TRANSPORTATION
Caltrans DESIGN

P:\proj2\04\26406\design\DCCR\426406ea015.dgn

LAST REVISION 03-15-10 | DATE PLOTTED => 16-AUG-2010 | TIME PLOTTED => 13:44

Dist	COUNTY	ROUTE	POST MILES TOTAL PROJECT	SHEET No.	TOTAL SHEETS
04	Mrn	101	18.6/R22.3	29	542

REGISTERED CIVIL ENGINEER 03-15-10 DATE

8-9-10
PLANS APPROVAL DATE

REGISTERED PROFESSIONAL ENGINEER ROBERT J. NIXON No. C69123 Exp. 6-30-10 CIVIL STATE OF CALIFORNIA

THE STATE OF CALIFORNIA OR ITS OFFICERS OR AGENTS SHALL NOT BE RESPONSIBLE FOR THE ACCURACY OR COMPLETENESS OF SCANNED COPIES OF THIS PLAN SHEET.

NOTE:

1. FOR COMPLETE RIGHT OF WAY AND ACCURATE ACCESS DATA, SEE RIGHT OF WAY RECORD MAPS AT DISTRICT OFFICE.

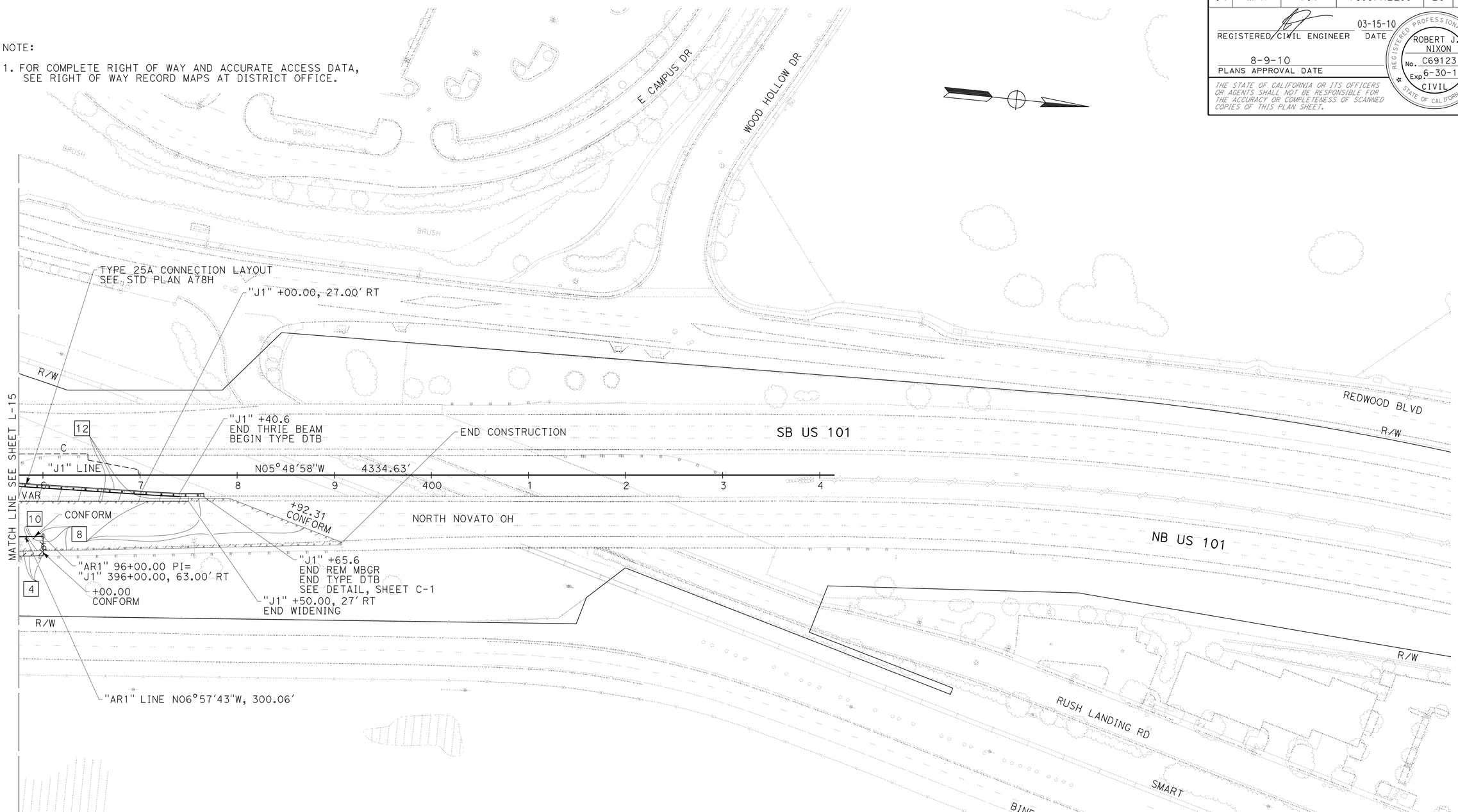

LAYOUT
SCALE: 1" = 50'

L-16

REVISED BY	DATE REVISED
ROBERT J. NIXON	
JOHN L. MARTIN	

CALCULATED-DESIGNED BY
CHECKED BY

FUNCTIONAL SUPERVISOR
JOHN L. MARTIN

STATE OF CALIFORNIA - DEPARTMENT OF TRANSPORTATION
Caltrans **DESIGN**

p:\proj2\04\26406\design\DCCR\426406ea016.dgn

LAST REVISION DATE PLOTTED => 16-AUG-2010
03-15-10 TIME PLOTTED => 13:44

Dist	COUNTY	ROUTE	POST MILES TOTAL PROJECT	SHEET No.	TOTAL SHEETS
04	Mrn	101	18.6/R22.3	30	542

REGISTERED CIVIL ENGINEER 03-15-10 DATE

8-9-10
PLANS APPROVAL DATE

REGISTERED PROFESSIONAL ENGINEER ROBERT J. NIXON No. C69123 Exp. 6-30-10 CIVIL STATE OF CALIFORNIA

THE STATE OF CALIFORNIA OR ITS OFFICERS OR AGENTS SHALL NOT BE RESPONSIBLE FOR THE ACCURACY OR COMPLETENESS OF SCANNED COPIES OF THIS PLAN SHEET.

NOTE:

EMBANKMENT VOLUMES SHOWN
HAVE NOT BEEN ADJUSTED FOR SHRINK/SWELL.

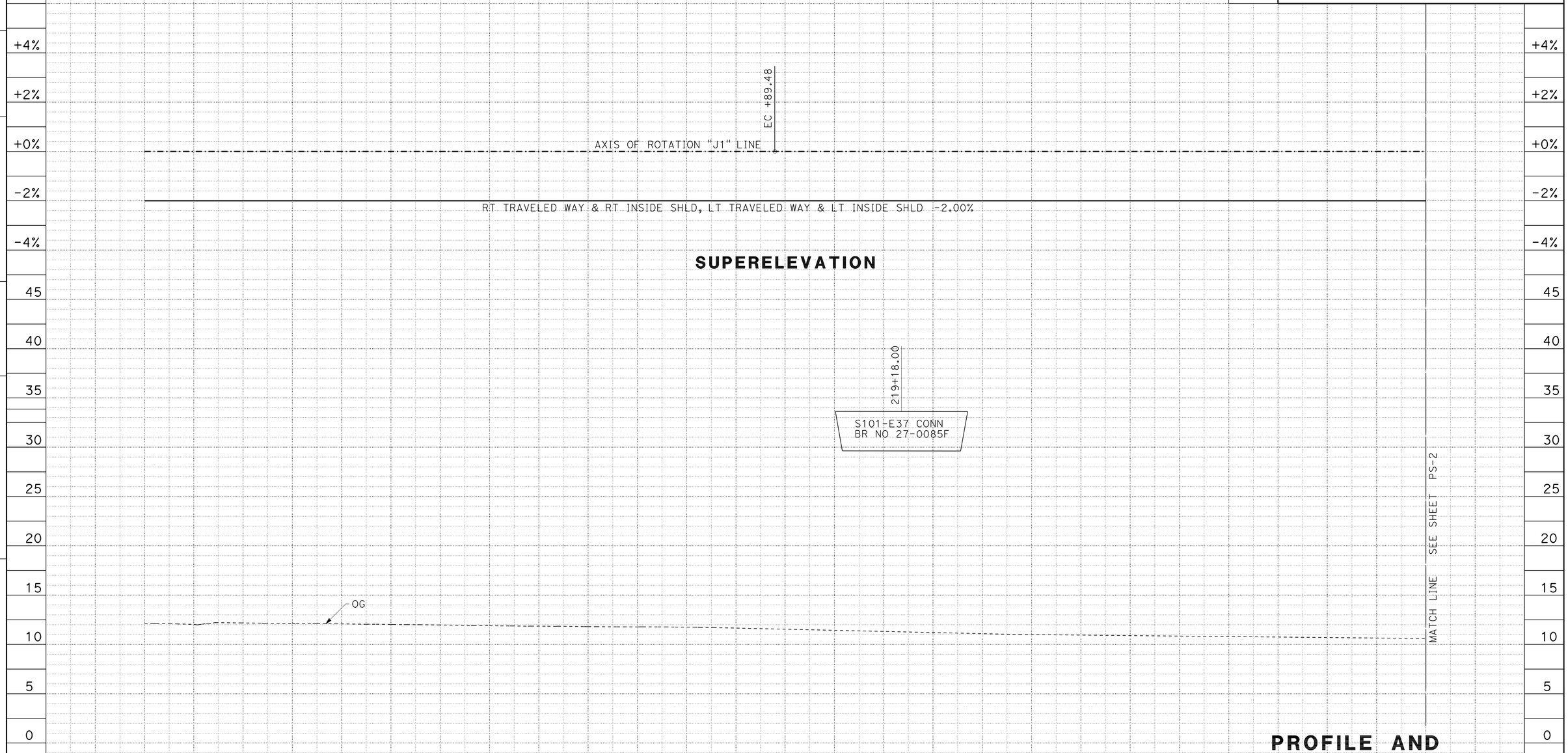

CY	ROADWAY EXC (ADL)	0	0	0	0
	ROADWAY EXC	34	148	119	301
	EMBANKMENT	0	0	0	0

SHEET TOTAL

PROFILE AND SUPERELEVATION DIAGRAM

SCALE: 1"=50' HORIZ
1"=5' VERT

PS-1

REVISED BY | DATE REVISED
ROBERT J. NIXON | SCOTT GREGORY
CALCULATED-DESIGNED BY | CHECKED BY
FUNCTIONAL SUPERVISOR
JOHN L. MARTIN

STATE OF CALIFORNIA - DEPARTMENT OF TRANSPORTATION
Caltrans
DESIGN

P:\proj2\04\26406\design\ps&e\426406fb001.dgn

LAST REVISION 03-15-10 | DATE PLOTTED => 16-AUG-2010 | TIME PLOTTED => 13:44

BORDER LAST REVISED 4/11/2008

RELATIVE BORDER SCALE IS IN INCHES 0 1 2 3

USERNAME => trlenard
DGN FILE => 426406fb001.dgn

CU 03 240

EA 264061

Dist	COUNTY	ROUTE	POST MILES TOTAL PROJECT	SHEET No.	TOTAL SHEETS
04	Mrn	101	18.6/R22.3	31	542

REGISTERED CIVIL ENGINEER 03-15-10 DATE

8-9-10
PLANS APPROVAL DATE

REGISTERED PROFESSIONAL ENGINEER ROBERT J. NIXON No. C69123 Exp. 6-30-10 CIVIL STATE OF CALIFORNIA

THE STATE OF CALIFORNIA OR ITS OFFICERS OR AGENTS SHALL NOT BE RESPONSIBLE FOR THE ACCURACY OR COMPLETENESS OF SCANNED COPIES OF THIS PLAN SHEET.

REVISED BY | DATE REVISED
ROBERT J. NIXON | SCOTT GREGORY
CALCULATED-DESIGNED BY | CHECKED BY
FUNCTIONAL SUPERVISOR
JOHN L. MARTIN

STATE OF CALIFORNIA - DEPARTMENT OF TRANSPORTATION
Caltrans DESIGN

P:\proj2\04\26406\design\DCCR\426406fb002.dgn

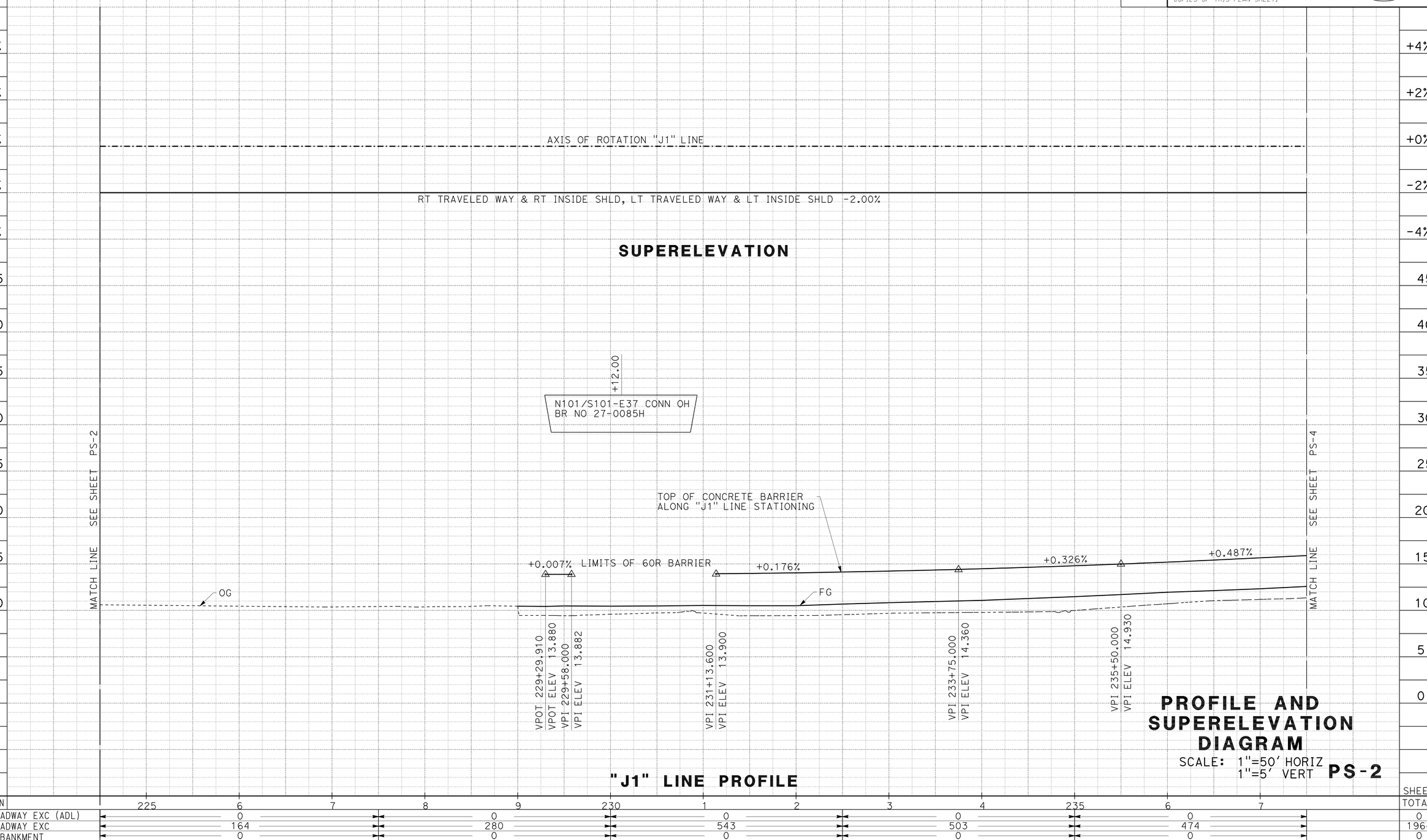

PROFILE AND SUPERELEVATION DIAGRAM

SCALE: 1"=50' HORIZ
1"=5' VERT

PS-2

LAST REVISION 03-15-10
DATE PLOTTED => 16-AUG-2010
TIME PLOTTED => 13:44

BORDER LAST REVISED 4/11/2008

RELATIVE BORDER SCALE IS IN INCHES 0 1 2 3

USERNAME => trlenard
DGN FILE => 426406fb002.dgn

CU 03 240

EA 264061

Dist	COUNTY	ROUTE	POST MILES TOTAL PROJECT	SHEET No.	TOTAL SHEETS
04	Mrn	101	18.6/R22.3	32	542

REGISTERED CIVIL ENGINEER 03-15-10 DATE

8-9-10
PLANS APPROVAL DATE

REGISTERED PROFESSIONAL ENGINEER ROBERT J. NIXON No. C69123 Exp. 6-30-10 CIVIL STATE OF CALIFORNIA

THE STATE OF CALIFORNIA OR ITS OFFICERS OR AGENTS SHALL NOT BE RESPONSIBLE FOR THE ACCURACY OR COMPLETENESS OF SCANNED COPIES OF THIS PLAN SHEET.

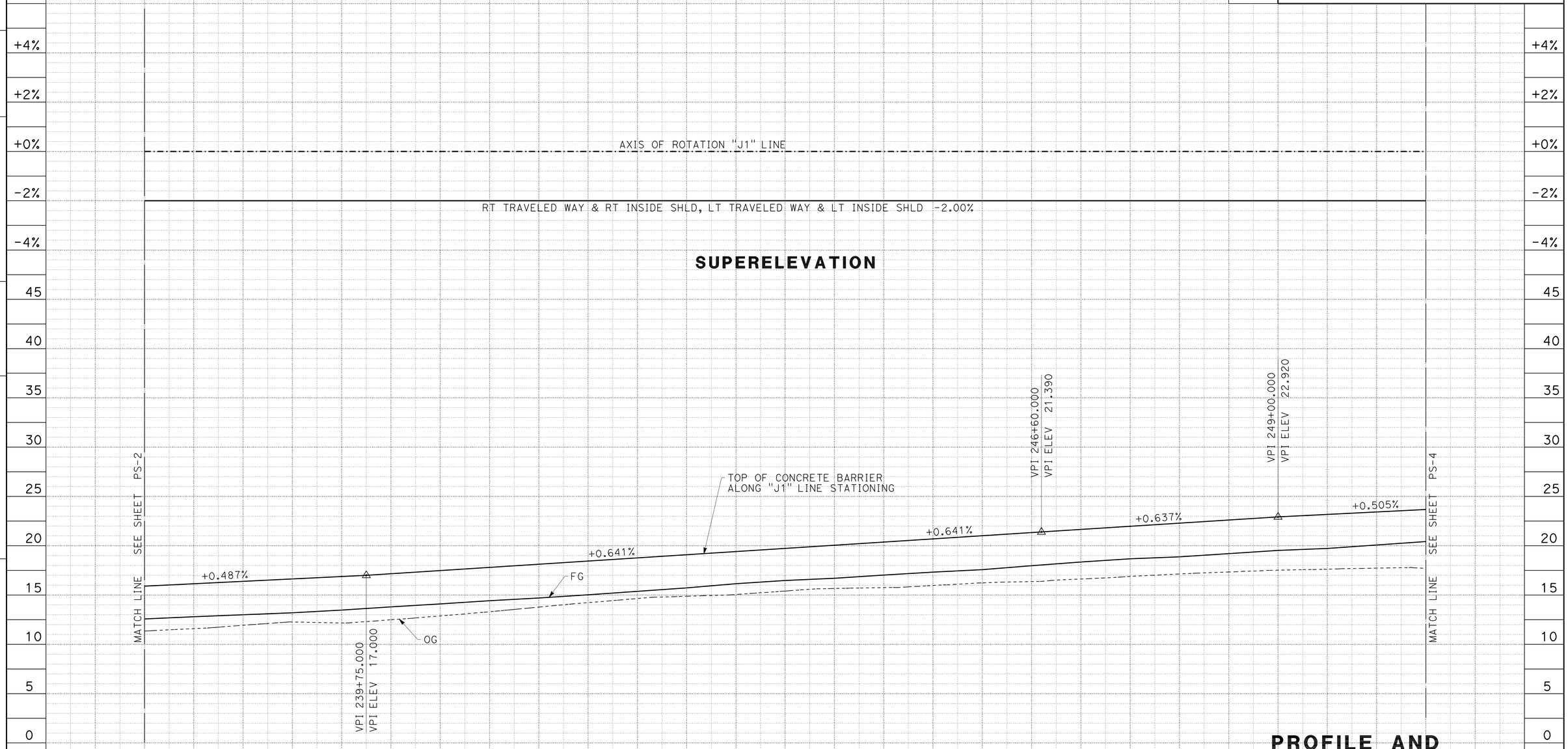

"J1" LINE PROFILE

STATION		8	9	240	1	2	3	4	245	6	7	8	9	250	SHEET TOTAL
CY	ROADWAY EXC (ADL)	0			0			0		0			0		0
	ROADWAY EXC	468			468			470		402			415		2223
	EMBANKMENT	0			0			0		4			35		39

PROFILE AND SUPERELEVATION DIAGRAM

SCALE: 1"=50' HORIZ
1"=5' VERT

PS-3

REVISED BY | DATE REVISED

ROBERT J. NIXON | SCOTT GREGORY

CALCULATED-DESIGNED BY | CHECKED BY

FUNCTIONAL SUPERVISOR: JOHN L. MARTIN

STATE OF CALIFORNIA - DEPARTMENT OF TRANSPORTATION

Caltrans **DESIGN**

P:\proj2\04\26406\design\ps&e\426406fb003.dgn

LAST REVISION 03-15-10 | DATE PLOTTED => 16-AUG-2010 | TIME PLOTTED => 13:44

BORDER LAST REVISED 4/11/2008 | RELATIVE BORDER SCALE IS IN INCHES 0 1 2 3 | USERNAME => trlenard | DGN FILE => 426406fb003.dgn | CU 03 240 | EA 264061

Dist	COUNTY	ROUTE	POST MILES TOTAL PROJECT	SHEET No.	TOTAL SHEETS
04	Mrn	101	18.6/R22.3	33	542

REGISTERED CIVIL ENGINEER 03-15-10 DATE

8-9-10
PLANS APPROVAL DATE

REGISTERED PROFESSIONAL ENGINEER ROBERT J. NIXON No. C69123 Exp. 6-30-10 CIVIL STATE OF CALIFORNIA

THE STATE OF CALIFORNIA OR ITS OFFICERS OR AGENTS SHALL NOT BE RESPONSIBLE FOR THE ACCURACY OR COMPLETENESS OF SCANNED COPIES OF THIS PLAN SHEET.

REVISED BY | DATE REVISED
ROBERT J. NIXON | SCOTT GREGORY
CALCULATED-DESIGNED BY | CHECKED BY
FUNCTIONAL SUPERVISOR: JOHN L. MARTIN

STATE OF CALIFORNIA - DEPARTMENT OF TRANSPORTATION
Caltrans DESIGN

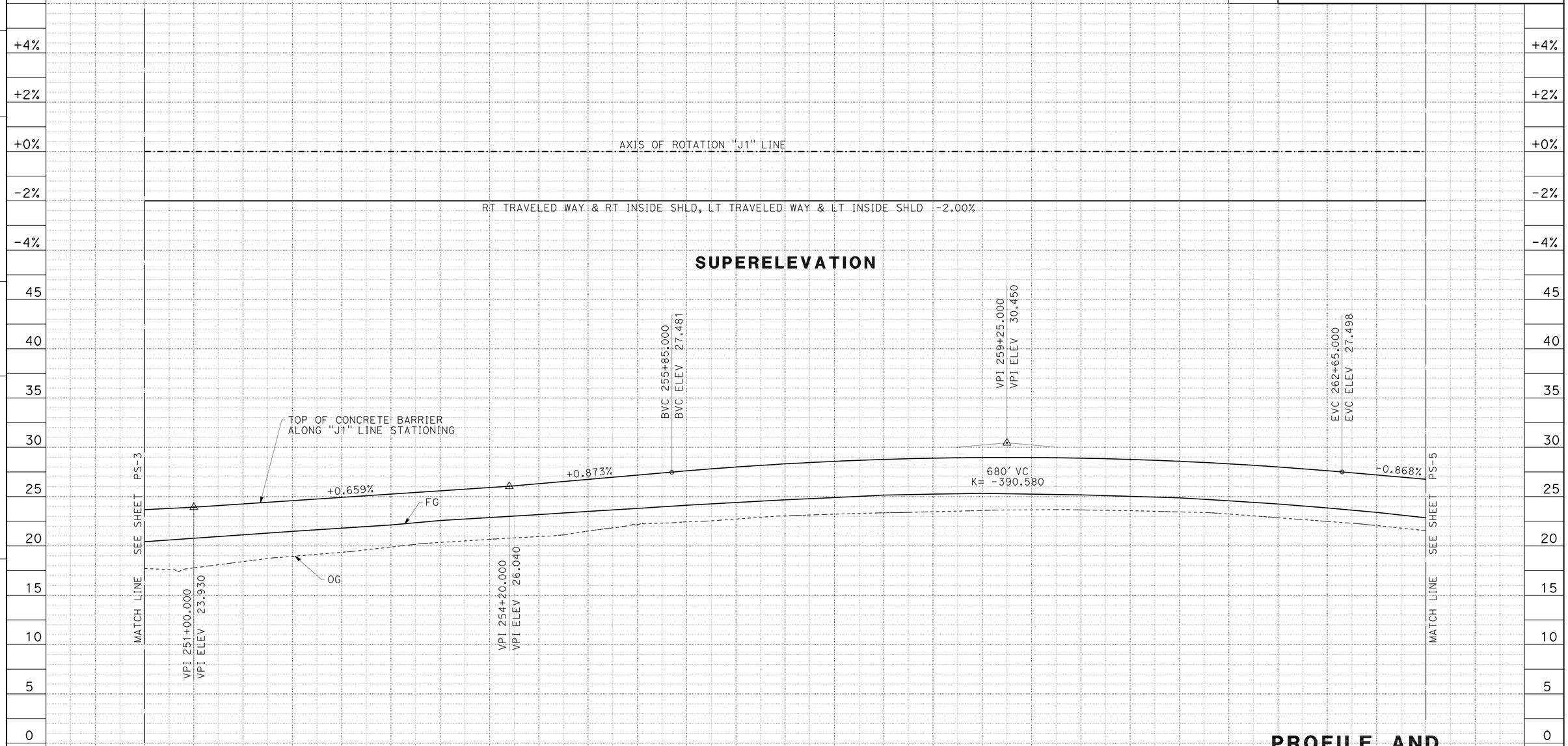

"J1" LINE PROFILE

PROFILE AND SUPERELEVATION DIAGRAM

SCALE: 1"=50' HORIZ
1"=5' VERT

PS-4

STATION		1	2	3	4	255	6	7	8	9	260	1	2	3	SHEET TOTAL
CY	ROADWAY EXC (ADL)	0			0		0			0			0		0
	ROADWAY EXC	239			344		358			349			565		1855
	EMBANKMENT	73			37		7			14			8		139

P:\proj2\04\26406\design\ps&e\426406fb004.dgn

LAST REVISION 03-15-10 | DATE PLOTTED => 16-AUG-2010 | TIME PLOTTED => 13:44

Dist	COUNTY	ROUTE	POST MILES TOTAL PROJECT	SHEET No.	TOTAL SHEETS
04	Mrn	101	18.6/R22.3	34	542

REGISTERED CIVIL ENGINEER 03-15-10 DATE

8-9-10
PLANS APPROVAL DATE

REGISTERED PROFESSIONAL ENGINEER ROBERT J. NIXON No. C69123 Exp. 6-30-10 CIVIL STATE OF CALIFORNIA

THE STATE OF CALIFORNIA OR ITS OFFICERS OR AGENTS SHALL NOT BE RESPONSIBLE FOR THE ACCURACY OR COMPLETENESS OF SCANNED COPIES OF THIS PLAN SHEET.

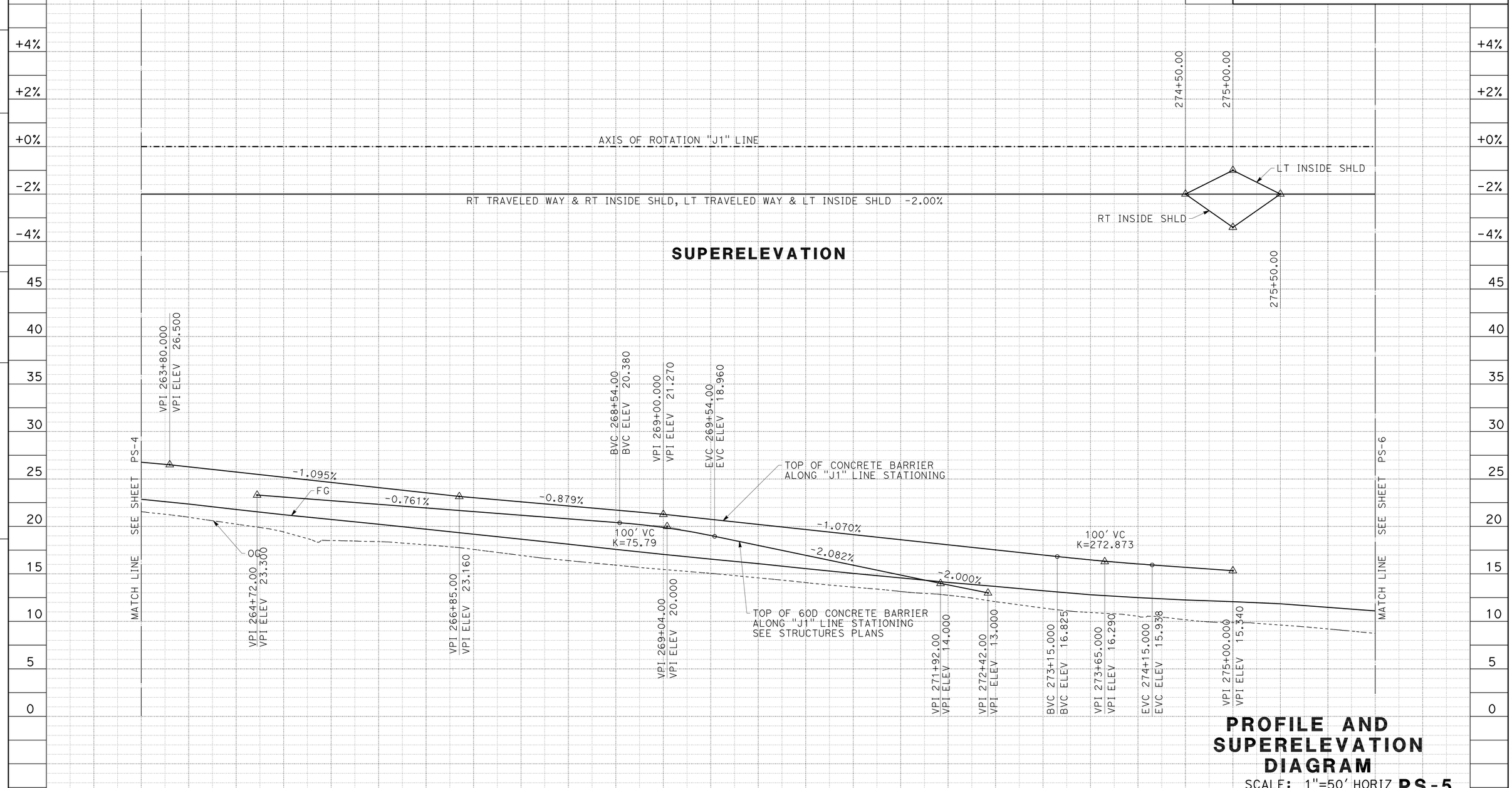

PROFILE AND SUPERELEVATION DIAGRAM

SCALE: 1"=50' HORIZ
1"=5' VERT

PS-5

STATION		4	265	6	7	8	9	270	1	2	3	4	275	6	SHEET TOTAL
	ROADWAY EXC (ADL)	0	0	0	0	0	0	0	0	0	0	0	0	0	0
CY	ROADWAY EXC	222	339	348	363	324	201								1798
	EMBANKMENT	10	36	30	16	33	44								169

REVISED BY | DATE REVISED
ROBERT J. NIXON | SCOTT GREGORY
CALCULATED-DESIGNED BY | CHECKED BY
FUNCTIONAL SUPERVISOR
JOHN L. MARTIN

STATE OF CALIFORNIA - DEPARTMENT OF TRANSPORTATION
Caltrans
DESIGN

p:\proj2\04\26406\design\DCCR\426406fb005.dgn

LAST REVISION 03-15-10 | DATE PLOTTED => 16-AUG-2010 | TIME PLOTTED => 08:24

Dist	COUNTY	ROUTE	POST MILES TOTAL PROJECT	SHEET No.	TOTAL SHEETS
04	Mrn	101	18.6/R22.3	35	542

REGISTERED CIVIL ENGINEER 03-15-10 DATE

8-9-10
PLANS APPROVAL DATE

REGISTERED PROFESSIONAL ENGINEER ROBERT J. NIXON No. C69123 Exp. 6-30-10 CIVIL STATE OF CALIFORNIA

THE STATE OF CALIFORNIA OR ITS OFFICERS OR AGENTS SHALL NOT BE RESPONSIBLE FOR THE ACCURACY OR COMPLETENESS OF SCANNED COPIES OF THIS PLAN SHEET.

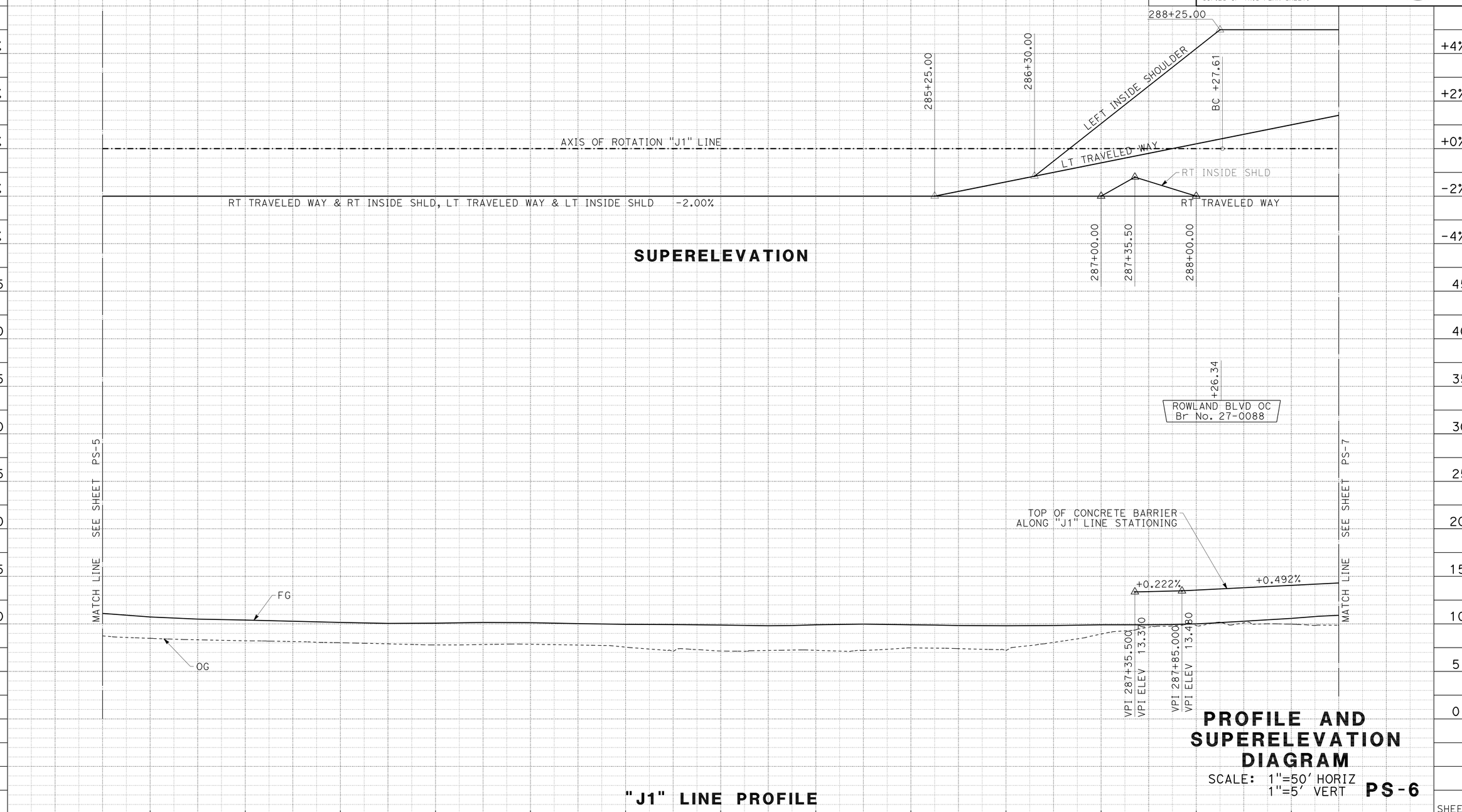

PROFILE AND SUPERELEVATION DIAGRAM

SCALE: 1"=50' HORIZ
1"=5' VERT

PS-6

"J1" LINE PROFILE

REVISED BY | DATE REVISED
ROBERT J. NIXON | SCOTT GREGORY
CALCULATED-DESIGNED BY | CHECKED BY
FUNCTIONAL SUPERVISOR
JOHN L. MARTIN

STATE OF CALIFORNIA - DEPARTMENT OF TRANSPORTATION
Caltrans
DESIGN

p:\proj2\04\26406\design\DCCR\426406fb006.dgn

LAST REVISION 03-15-10 | DATE PLOTTED => 16-AUG-2010 | TIME PLOTTED => 08:24

Dist	COUNTY	ROUTE	POST MILES TOTAL PROJECT	SHEET No.	TOTAL SHEETS
04	Mrn	101	18.6/R22.3	36	542

REGISTERED CIVIL ENGINEER 03-15-10 DATE

8-9-10
PLANS APPROVAL DATE

REGISTERED PROFESSIONAL ENGINEER ROBERT J. NIXON No. C69123 Exp. 6-30-10 CIVIL STATE OF CALIFORNIA

THE STATE OF CALIFORNIA OR ITS OFFICERS OR AGENTS SHALL NOT BE RESPONSIBLE FOR THE ACCURACY OR COMPLETENESS OF SCANNED COPIES OF THIS PLAN SHEET.

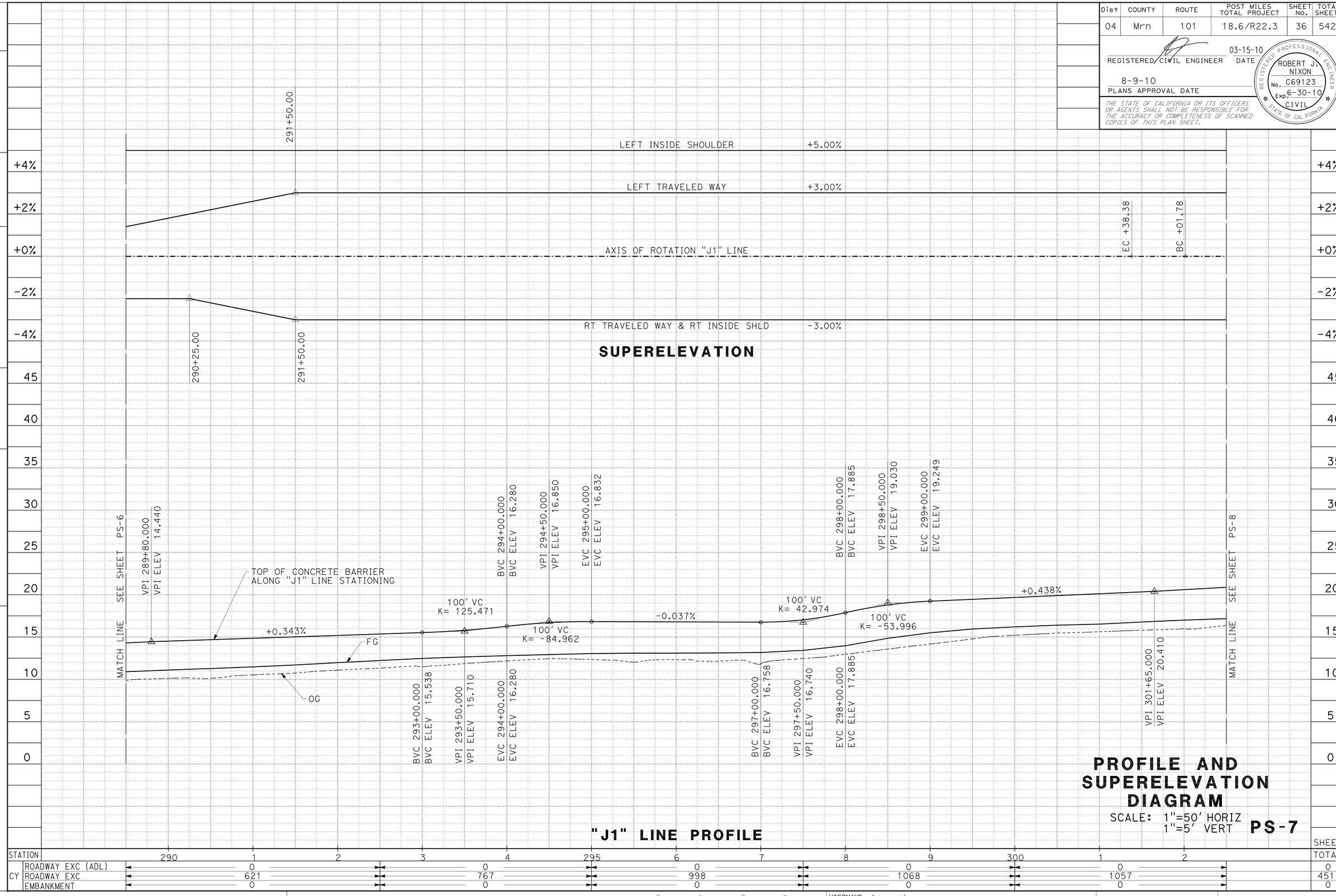

PROFILE AND SUPERELEVATION DIAGRAM

SCALE: 1"=50' HORIZ
1"=5' VERT

PS-7

REVISED BY	DATE REVISED
ROBERT J. NIXON	SCOTT GREGORY

CALCULATED-DESIGNED BY	CHECKED BY

FUNCTIONAL SUPERVISOR: JOHN L. MARTIN

STATE OF CALIFORNIA - DEPARTMENT OF TRANSPORTATION
Caltrans
DESIGN

P:\proj2\04\26406\design\ps&e\426406fb007.dgn

LAST REVISION 03-15-10 | DATE PLOTTED => 16-AUG-2010 | TIME PLOTTED => 08:24

Dist	COUNTY	ROUTE	POST MILES TOTAL PROJECT	SHEET No.	TOTAL SHEETS
04	Mrn	101	18.6/R22.3	37	542

REGISTERED CIVIL ENGINEER 03-15-10 DATE

8-9-10
PLANS APPROVAL DATE

REGISTERED PROFESSIONAL ENGINEER ROBERT J. NIXON No. C69123 Exp. 6-30-10 CIVIL STATE OF CALIFORNIA

THE STATE OF CALIFORNIA OR ITS OFFICERS OR AGENTS SHALL NOT BE RESPONSIBLE FOR THE ACCURACY OR COMPLETENESS OF SCANNED COPIES OF THIS PLAN SHEET.

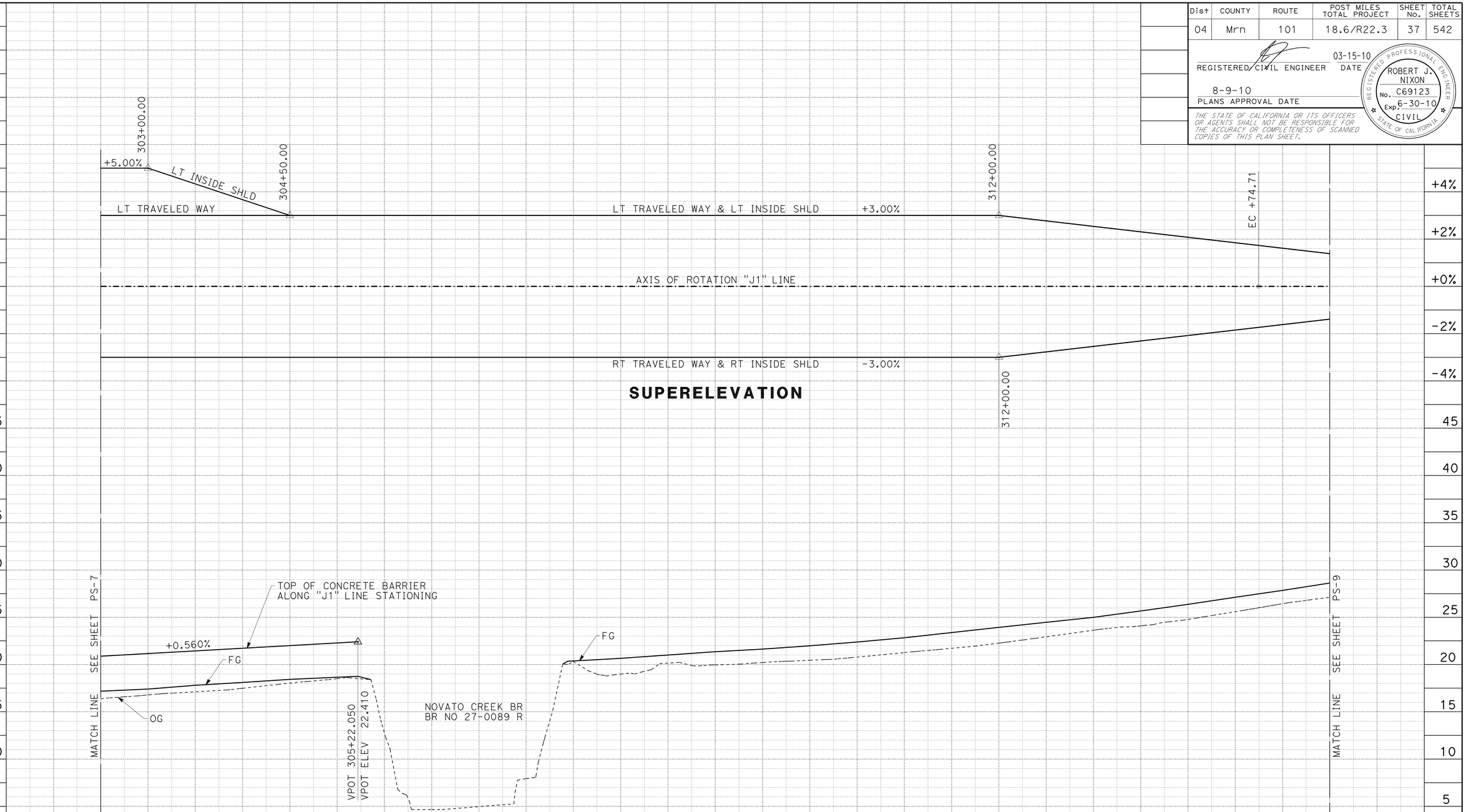

PROFILE AND SUPERELEVATION DIAGRAM

SCALE: 1"=50' HORIZ
1"=5' VERT

PS-8

"J1" LINE PROFILE

STATION	3	4	305	6	7	8	9	310	1	2	3	4	315	SHEET TOTAL
CY ROADWAY EXC (ADL)	0					0			0			0		0
CY ROADWAY EXC	1310					545			498			608		2961
CY EMBANKMENT	0					129			180			218		527

REVISED BY | DATE REVISED
ROBERT J. NIXON | SCOTT GREGORY
CALCULATED-DESIGNED BY | CHECKED BY
FUNCTIONAL SUPERVISOR: JOHN L. MARTIN

STATE OF CALIFORNIA - DEPARTMENT OF TRANSPORTATION
Caltrans DESIGN

P:\proj2\04\26406\design\ps&e\426406fb008.dgn

LAST REVISION 03-15-10 | DATE PLOTTED => 16-AUG-2010 | TIME PLOTTED => 08:24

Dist	COUNTY	ROUTE	POST MILES TOTAL PROJECT	SHEET No.	TOTAL SHEETS
04	Mrn	101	18.6/R22.3	38	542

REGISTERED CIVIL ENGINEER 03-15-10 DATE

8-9-10
PLANS APPROVAL DATE

REGISTERED PROFESSIONAL ENGINEER ROBERT J. NIXON No. C69123 Exp. 6-30-10 CIVIL STATE OF CALIFORNIA

THE STATE OF CALIFORNIA OR ITS OFFICERS OR AGENTS SHALL NOT BE RESPONSIBLE FOR THE ACCURACY OR COMPLETENESS OF SCANNED COPIES OF THIS PLAN SHEET.

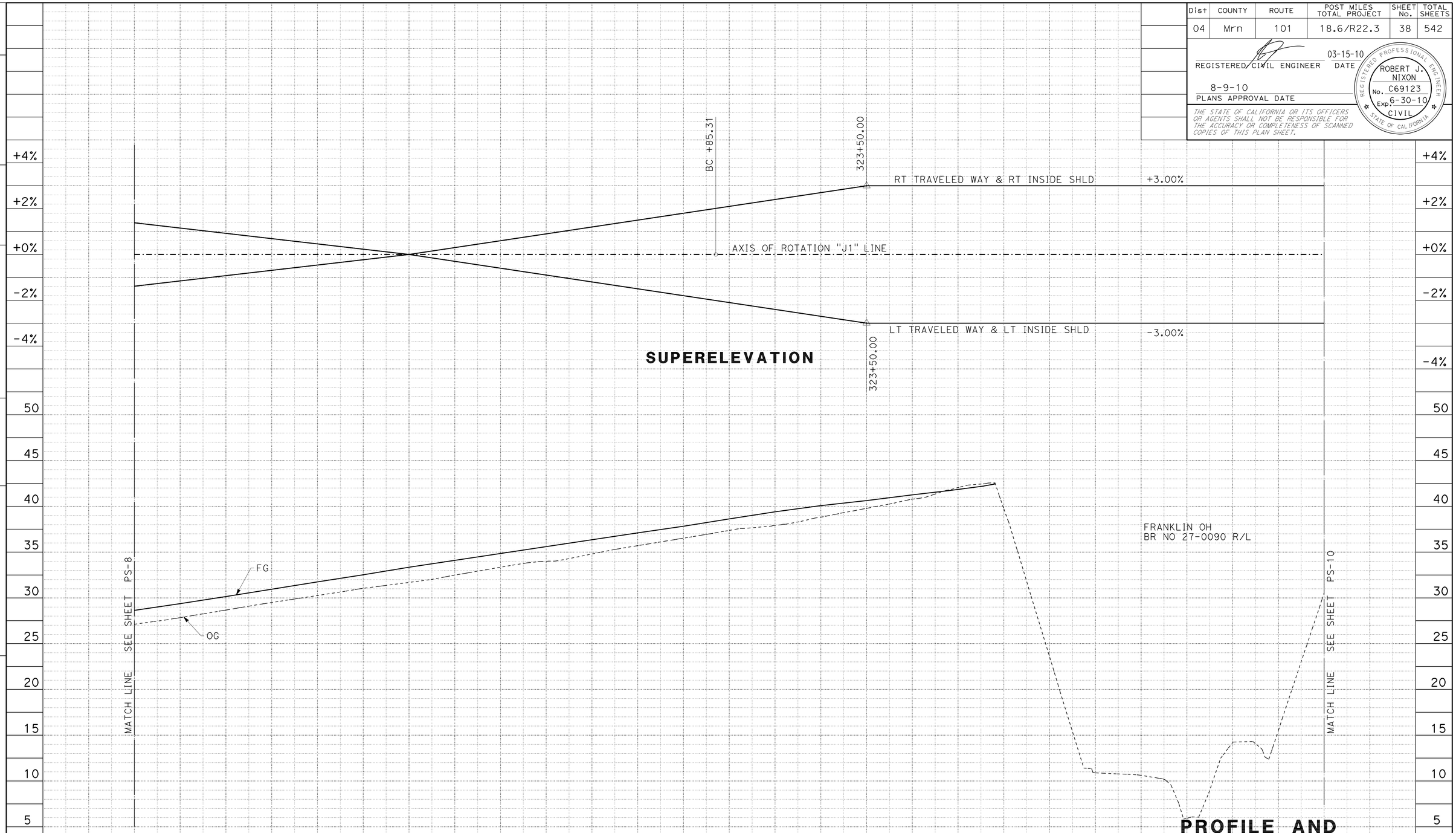

"J1" LINE PROFILE

PROFILE AND SUPERELEVATION DIAGRAM

SCALE: 1"=50' HORIZ
1"=5' VERT

PS-9

CY						SHEET TOTAL
	ROADWAY EXC (ADL)	0	0	0	0	0
	ROADWAY EXC	394	463	431	497	1785
	EMBANKMENT	129	126	99	39	393

REVISED BY | DATE REVISED
ROBERT J. NIXON | SCOTT GREGORY
CALCULATED-DESIGNED BY | CHECKED BY
FUNCTIONAL SUPERVISOR: JOHN L. MARTIN

STATE OF CALIFORNIA - DEPARTMENT OF TRANSPORTATION
Caltrans **DESIGN**

P:\proj2\04\26406\design\ps&e\426406fb009.dgn

LAST REVISION 03-15-10 | DATE PLOTTED => 16-AUG-2010 | TIME PLOTTED => 08:24

BORDER LAST REVISED 4/11/2008 | RELATIVE BORDER SCALE IS IN INCHES 0 1 2 3 | USERNAME => trmartin | DGN FILE => 426406fb009.dgn | CU 03 240 | EA 264061

Dist	COUNTY	ROUTE	POST MILES TOTAL PROJECT	SHEET No.	TOTAL SHEETS
04	Mrn	101	18.6/R22.3	39	542

REGISTERED CIVIL ENGINEER 03-15-10 DATE

8-9-10
PLANS APPROVAL DATE

REGISTERED PROFESSIONAL ENGINEER ROBERT J. NIXON No. C69123 Exp. 6-30-10 CIVIL STATE OF CALIFORNIA

THE STATE OF CALIFORNIA OR ITS OFFICERS OR AGENTS SHALL NOT BE RESPONSIBLE FOR THE ACCURACY OR COMPLETENESS OF SCANNED COPIES OF THIS PLAN SHEET.

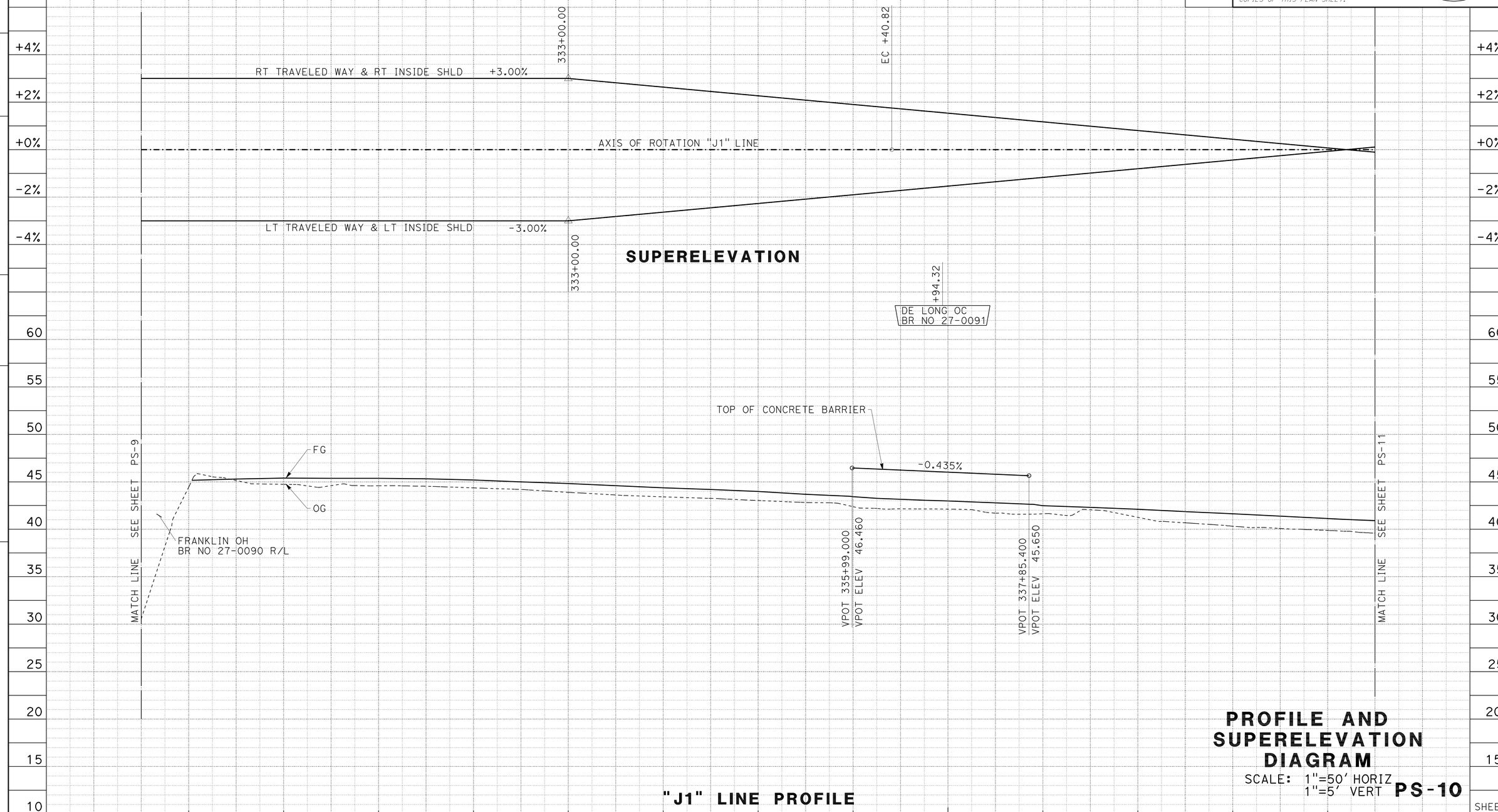

PROFILE AND SUPERELEVATION DIAGRAM

SCALE: 1"=50' HORIZ
1"=5' VERT

PS-10

REVISED BY | DATE REVISED
ROBERT J. NIXON | SCOTT GREGORY
CALCULATED-DESIGNED BY | CHECKED BY
FUNCTIONAL SUPERVISOR
JOHN L. MARTIN

STATE OF CALIFORNIA - DEPARTMENT OF TRANSPORTATION
Caltrans
DESIGN

P:\proj2\04\26406\design\ps&e\426406fb010.dgn

LAST REVISION 03-15-10 | DATE PLOTTED => 16-AUG-2010 | TIME PLOTTED => 08:24

Dist	COUNTY	ROUTE	POST MILES TOTAL PROJECT	SHEET No.	TOTAL SHEETS
04	Mrn	101	18.6/R22.3	40	542

REGISTERED CIVIL ENGINEER 03-15-10 DATE

8-9-10
PLANS APPROVAL DATE

REGISTERED PROFESSIONAL ENGINEER ROBERT J. NIXON No. C69123 Exp. 6-30-10 CIVIL STATE OF CALIFORNIA

THE STATE OF CALIFORNIA OR ITS OFFICERS OR AGENTS SHALL NOT BE RESPONSIBLE FOR THE ACCURACY OR COMPLETENESS OF SCANNED COPIES OF THIS PLAN SHEET.

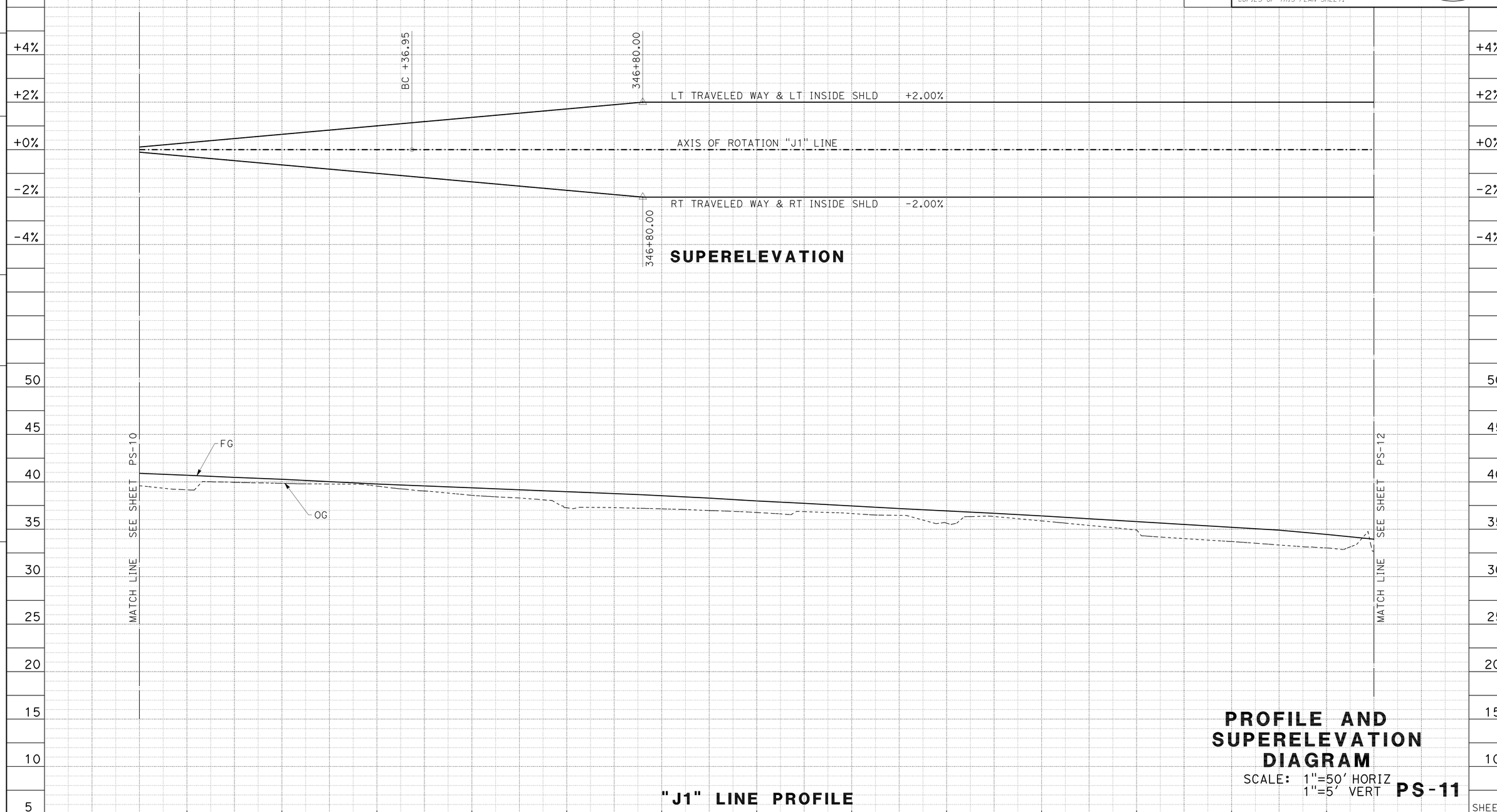

PROFILE AND SUPERELEVATION DIAGRAM

SCALE: 1"=50' HORIZ
1"=5' VERT

PS-11

REVISED BY | DATE REVISED
ROBERT J. NIXON | SCOTT GREGORY
CALCULATED-DESIGNED BY | CHECKED BY
FUNCTIONAL SUPERVISOR
JOHN L. MARTIN

STATE OF CALIFORNIA - DEPARTMENT OF TRANSPORTATION
Caltrans
DESIGN

P:\proj2\04\26406\design\ps&e\426406fb011.dgn

LAST REVISION 03-15-10 | DATE PLOTTED => 16-AUG-2010 | TIME PLOTTED => 08:24

BORDER LAST REVISED 4/11/2008

RELATIVE BORDER SCALE IS IN INCHES 0 1 2 3

USERNAME => trmartin
DGN FILE => 426406fb011.dgn

CU 03 240

EA 264061

Dist	COUNTY	ROUTE	POST MILES TOTAL PROJECT	SHEET No.	TOTAL SHEETS
04	Mrn	101	18.6/R22.3	41	542

REGISTERED CIVIL ENGINEER 03-15-10 DATE

8-9-10
PLANS APPROVAL DATE

REGISTERED PROFESSIONAL ENGINEER
ROBERT J. NIXON
No. C69123
Exp. 6-30-10
CIVIL
STATE OF CALIFORNIA

THE STATE OF CALIFORNIA OR ITS OFFICERS OR AGENTS SHALL NOT BE RESPONSIBLE FOR THE ACCURACY OR COMPLETENESS OF SCANNED COPIES OF THIS PLAN SHEET.

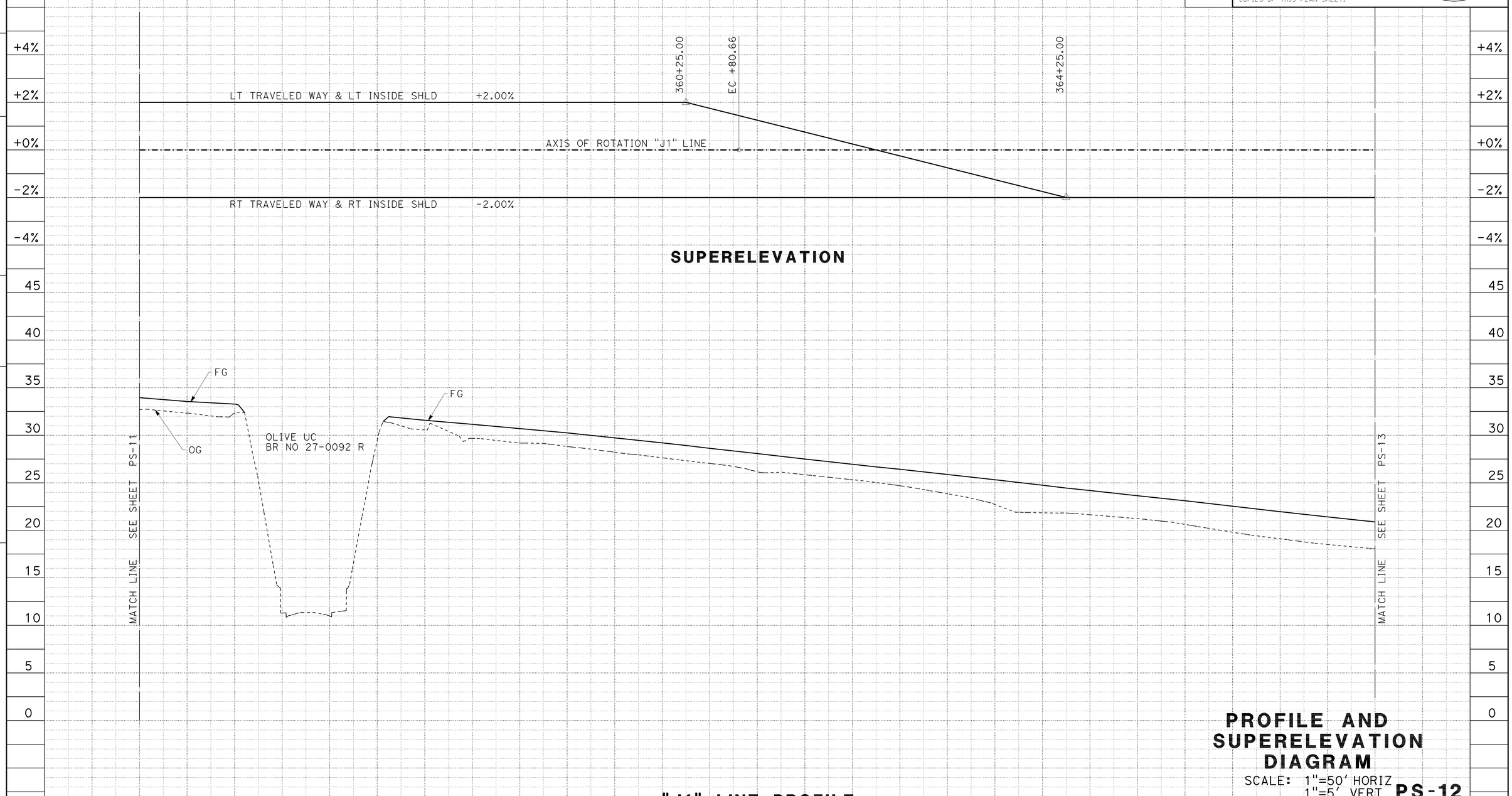

PROFILE AND SUPERELEVATION DIAGRAM

SCALE: 1"=50' HORIZ
1"=5' VERT

PS-12

STATION	355	6	7	8	9	360	1	2	3	4	365	6	7	SHEET TOTAL
CY ROADWAY EXC (ADL)	0		0	0		0			0			0		0
CY ROADWAY EXC	228		120	495		491			426			377		2137
CY EMBANKMENT	49		13	146		201			243			257		909

REVISED BY | DATE REVISED
ROBERT J. NIXON | SCOTT GREGORY
CALCULATED-DESIGNED BY | CHECKED BY
FUNCTIONAL SUPERVISOR: JOHN L. MARTIN

STATE OF CALIFORNIA - DEPARTMENT OF TRANSPORTATION
Caltrans **DESIGN**

P:\proj2\04\26406\design\ps&e\426406fb012.dgn

LAST REVISION 03-15-10 | DATE PLOTTED => 16-AUG-2010 | TIME PLOTTED => 08:24

Dist	COUNTY	ROUTE	POST MILES TOTAL PROJECT	SHEET No.	TOTAL SHEETS
04	Mrn	101	18.6/R22.3	42	542

REGISTERED CIVIL ENGINEER 03-15-10 DATE

8-9-10
PLANS APPROVAL DATE

REGISTERED PROFESSIONAL ENGINEER ROBERT J. NIXON No. C69123 Exp. 6-30-10 CIVIL STATE OF CALIFORNIA

THE STATE OF CALIFORNIA OR ITS OFFICERS OR AGENTS SHALL NOT BE RESPONSIBLE FOR THE ACCURACY OR COMPLETENESS OF SCANNED COPIES OF THIS PLAN SHEET.

REVISED BY | DATE REVISED
ROBERT J. NIXON | SCOTT GREGORY
CALCULATED-DESIGNED BY | CHECKED BY
FUNCTIONAL SUPERVISOR: JOHN L. MARTIN

STATE OF CALIFORNIA - DEPARTMENT OF TRANSPORTATION
Caltrans **DESIGN**

P:\proj2\04\26406\design\ps&e\426406fb013.dgn

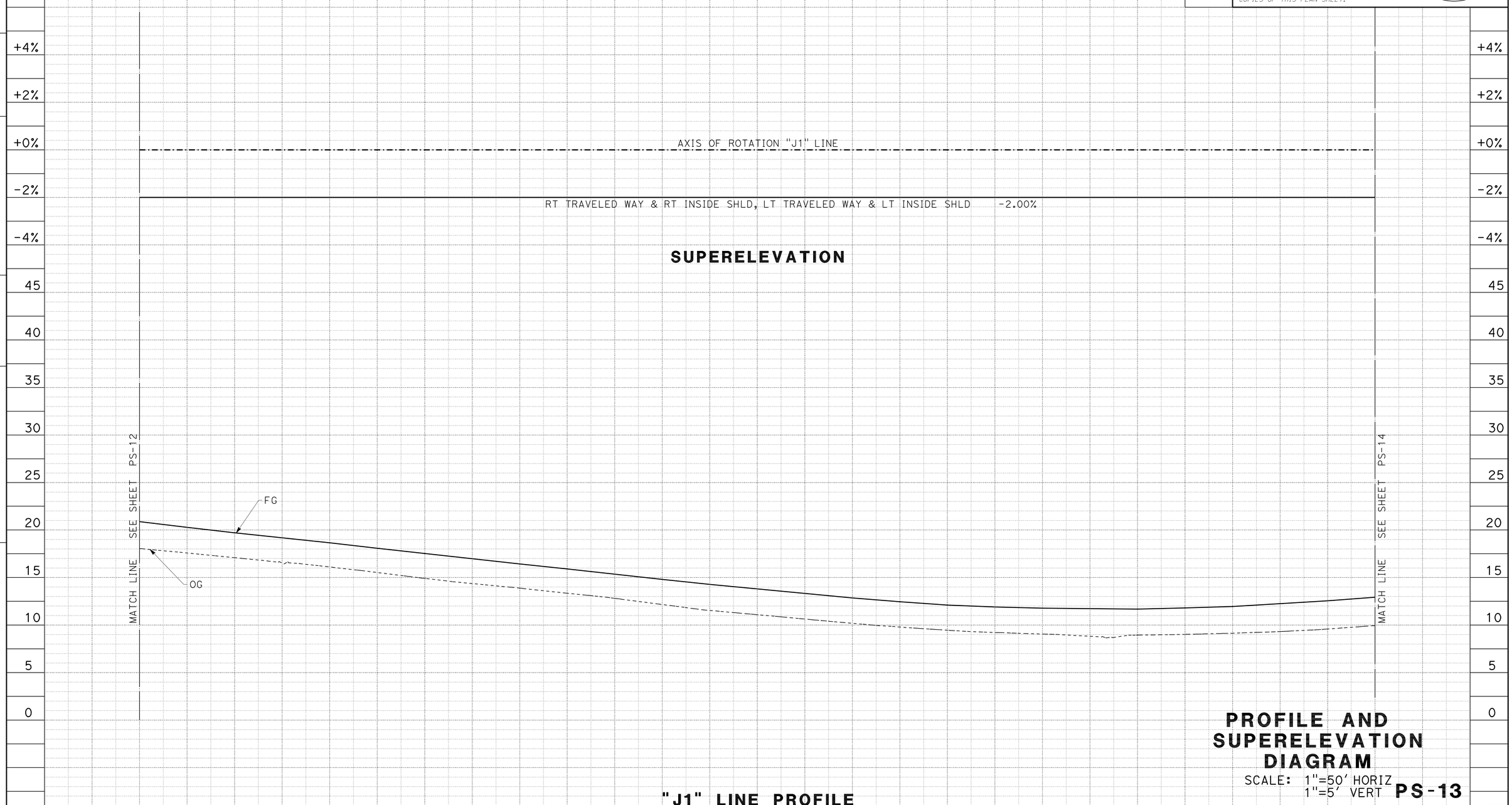

"J1" LINE PROFILE

PROFILE AND SUPERELEVATION DIAGRAM

SCALE: 1"=50' HORIZ
1"=5' VERT

PS-13

LAST REVISION 03-15-10 | DATE PLOTTED => 16-AUG-2010 | TIME PLOTTED => 08:24

Dist	COUNTY	ROUTE	POST MILES TOTAL PROJECT	SHEET No.	TOTAL SHEETS
04	Mrn	101	18.6/R22.3	43	542

REGISTERED CIVIL ENGINEER 03-15-10 DATE

8-9-10
PLANS APPROVAL DATE

REGISTERED PROFESSIONAL ENGINEER ROBERT J. NIXON No. C69123 Exp. 6-30-10 CIVIL STATE OF CALIFORNIA

THE STATE OF CALIFORNIA OR ITS OFFICERS OR AGENTS SHALL NOT BE RESPONSIBLE FOR THE ACCURACY OR COMPLETENESS OF SCANNED COPIES OF THIS PLAN SHEET.

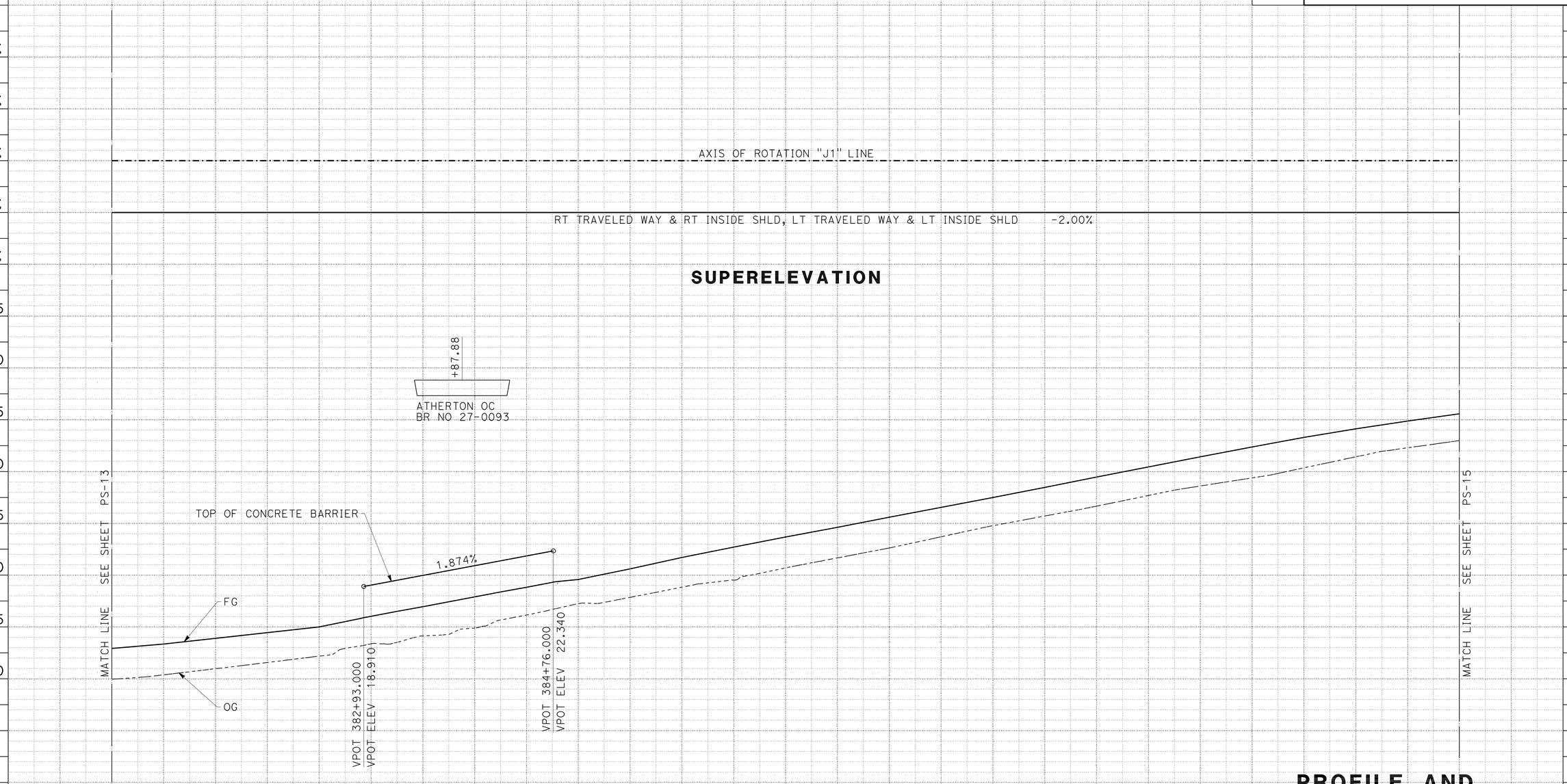

PROFILE AND SUPERELEVATION DIAGRAM

SCALE: 1"=50' HORIZ
1"=5' VERT

PS-14

STATION		1	2	3	4	385	6	7	8	9	390	1	2	3	SHEET TOTAL
CY	ROADWAY EXC (ADL)	0		0		0		0		0		0			0
	ROADWAY EXC	258		355		344		366		472					1,795
	EMBANKMENT	220		144		255		233		336					1188

REVISED BY | DATE REVISED
ROBERT J. NIXON | SCOTT GREGORY
CALCULATED-DESIGNED BY | CHECKED BY
FUNCTIONAL SUPERVISOR: JOHN L. MARTIN

STATE OF CALIFORNIA - DEPARTMENT OF TRANSPORTATION
Caltrans DESIGN

P:\proj2\04\26406\design\ps&e\426406fb014.dgn

LAST REVISION 03-15-10 | DATE PLOTTED => 16-AUG-2010 | TIME PLOTTED => 08:25

BORDER LAST REVISED 4/11/2008 | RELATIVE BORDER SCALE IS IN INCHES 0 1 2 3 | USERNAME => trmartin | DGN FILE => 426406fb014.dgn | CU 03 240 | EA 264061

Dist	COUNTY	ROUTE	POST MILES TOTAL PROJECT	SHEET No.	TOTAL SHEETS
04	Mrn	101	18.6/R22.3	44	542

REGISTERED CIVIL ENGINEER 03-15-10 DATE

8-9-10
PLANS APPROVAL DATE

REGISTERED PROFESSIONAL ENGINEER ROBERT J. NIXON No. C69123 Exp. 6-30-10 CIVIL STATE OF CALIFORNIA

THE STATE OF CALIFORNIA OR ITS OFFICERS OR AGENTS SHALL NOT BE RESPONSIBLE FOR THE ACCURACY OR COMPLETENESS OF SCANNED COPIES OF THIS PLAN SHEET.

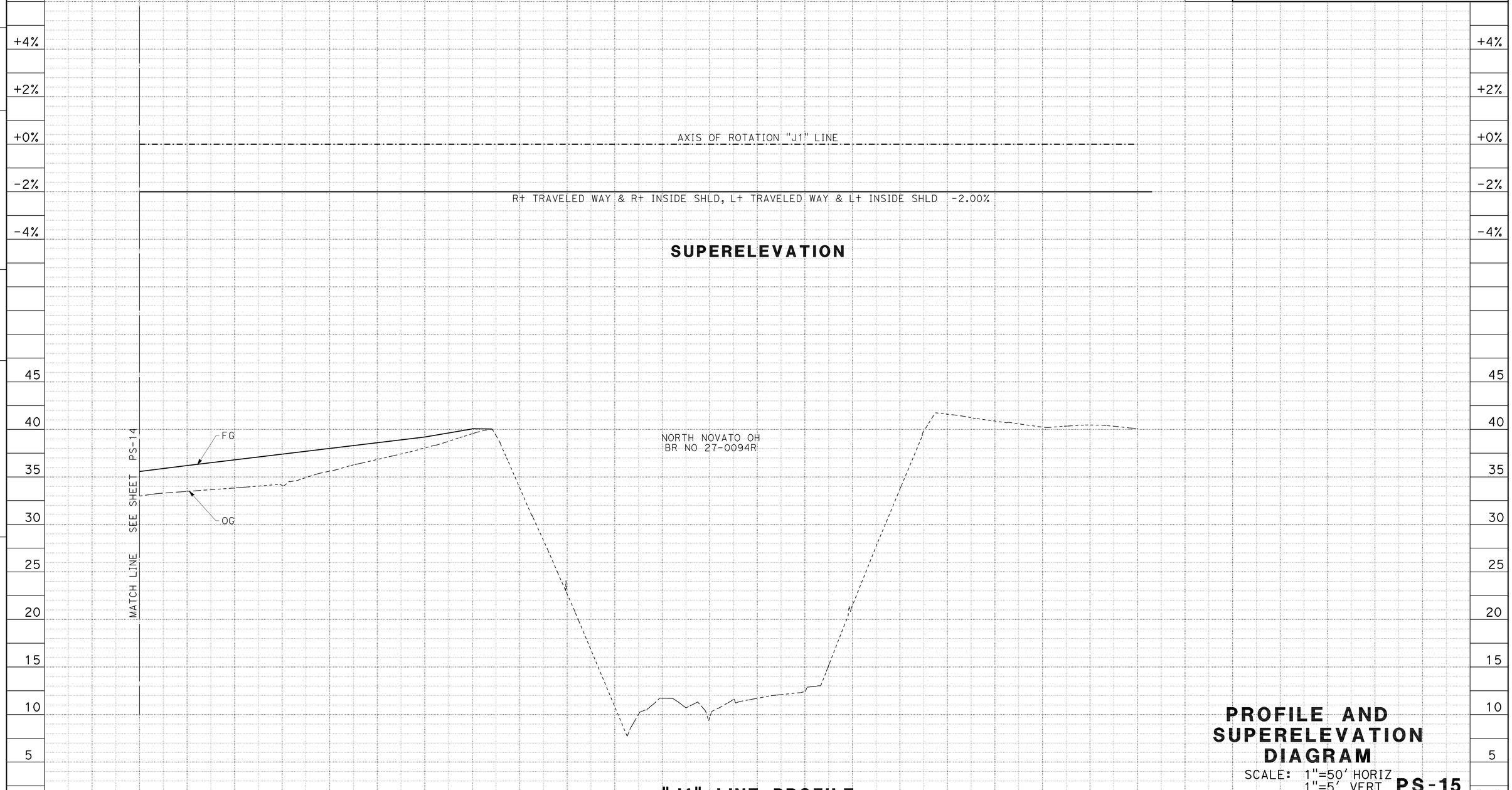

PROFILE AND SUPERELEVATION DIAGRAM

SCALE: 1"=50' HORIZ
1"=5' VERT

PS-15

REVISED BY	DATE REVISED
ROBERT J. NIXON	SCOTT GREGORY
CALCULATED-DESIGNED BY	CHECKED BY
FUNCTIONAL SUPERVISOR	JOHN L. MARTIN

STATE OF CALIFORNIA - DEPARTMENT OF TRANSPORTATION
Caltrans DESIGN

p:\proj2\04\26406\design\DCCR\426406fb015.dgn

LAST REVISION 03-15-10 | DATE PLOTTED => 16-AUG-2010 | TIME PLOTTED => 08:25

Dist	COUNTY	ROUTE	POST MILES TOTAL PROJECT	SHEET No.	TOTAL SHEETS
04	Mrn	101	18.6/R22.3	45	542

REGISTERED CIVIL ENGINEER 03-15-10 DATE

8-9-10
PLANS APPROVAL DATE

REGISTERED PROFESSIONAL ENGINEER ROBERT J. NIXON No. C69123 Exp. 6-30-10 CIVIL STATE OF CALIFORNIA

THE STATE OF CALIFORNIA OR ITS OFFICERS OR AGENTS SHALL NOT BE RESPONSIBLE FOR THE ACCURACY OR COMPLETENESS OF SCANNED COPIES OF THIS PLAN SHEET.

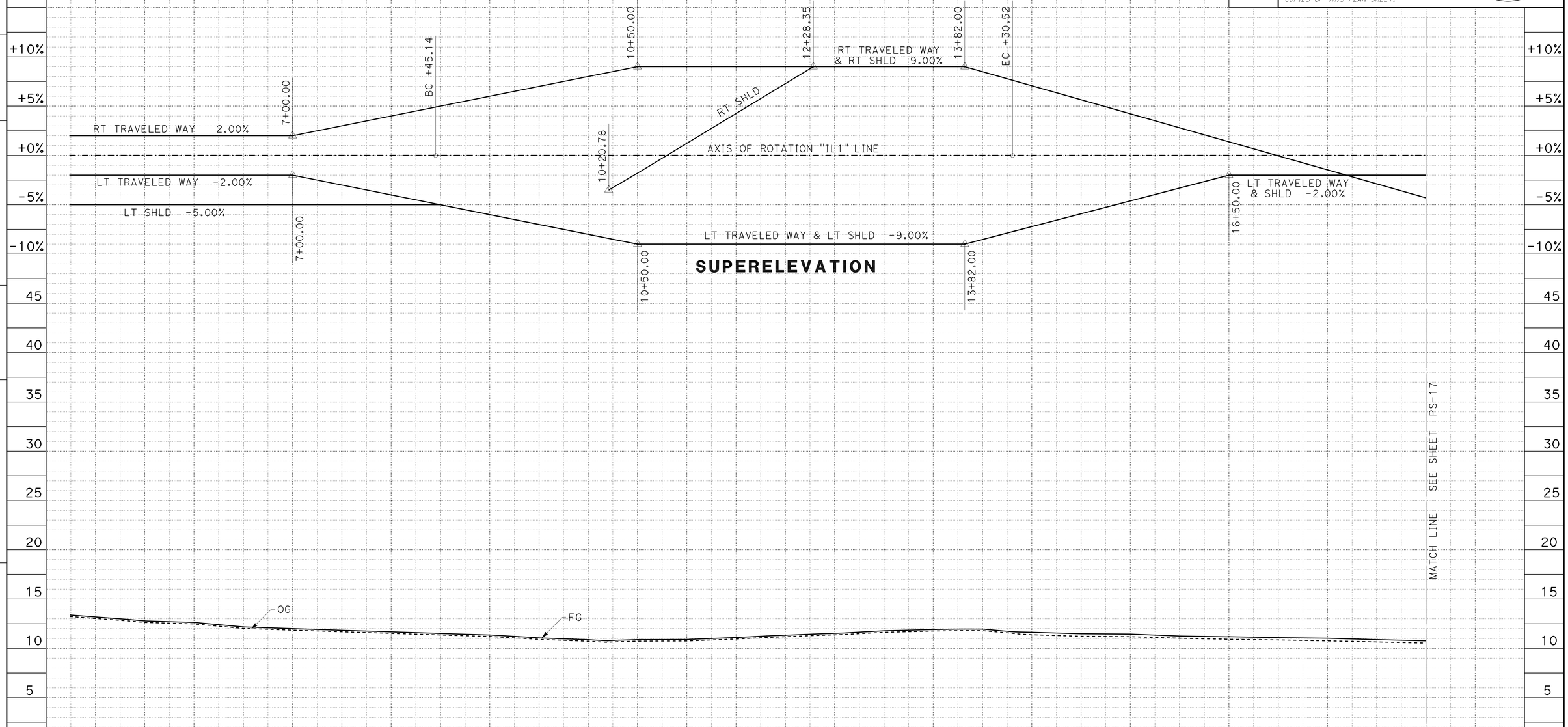

CY									SHEET TOTAL
	ROADWAY EXC (ADL)	0	0	0	0	0	0	0	0
	ROADWAY EXC	86	109	291	298	982	940		2,706
	EMBANKMENT	22	21	151	337	188	25		744

PROFILE AND SUPERELEVATION DIAGRAM

SCALE: 1"=50' HORIZ
1"=5' VERT

PS-16

REVISED BY | DATE REVISED
ROBERT J. NIXON | SCOTT GREGORY
CALCULATED-DESIGNED BY | CHECKED BY
FUNCTIONAL SUPERVISOR
JOHN L. MARTIN

STATE OF CALIFORNIA - DEPARTMENT OF TRANSPORTATION
Caltrans
DESIGN

P:\proj2\04\26406\design\ps&e\426406fb016.dgn

LAST REVISION 03-15-10 | DATE PLOTTED => 16-AUG-2010 | TIME PLOTTED => 08:25

BORDER LAST REVISED 4/11/2008 | RELATIVE BORDER SCALE IS IN INCHES 0 1 2 3 | USERNAME => trmartin | DGN FILE => 426406fb016.dgn | CU 03 240 | EA 264061

Dist	COUNTY	ROUTE	POST MILES TOTAL PROJECT	SHEET No.	TOTAL SHEETS
04	Mrn	101	18.6/R22.3	46	542

REGISTERED CIVIL ENGINEER 03-15-10 DATE

8-9-10
PLANS APPROVAL DATE

REGISTERED PROFESSIONAL ENGINEER ROBERT J. NIXON No. C69123 Exp. 6-30-10 CIVIL STATE OF CALIFORNIA

THE STATE OF CALIFORNIA OR ITS OFFICERS OR AGENTS SHALL NOT BE RESPONSIBLE FOR THE ACCURACY OR COMPLETENESS OF SCANNED COPIES OF THIS PLAN SHEET.

REVISED BY | DATE REVISED
ROBERT J. NIXON | SCOTT GREGORY
CALCULATED-DESIGNED BY | CHECKED BY
FUNCTIONAL SUPERVISOR: JOHN L. MARTIN

STATE OF CALIFORNIA - DEPARTMENT OF TRANSPORTATION
Caltrans DESIGN

P:\proj2\04\26406\design\ps&e\426406fb017.dgn

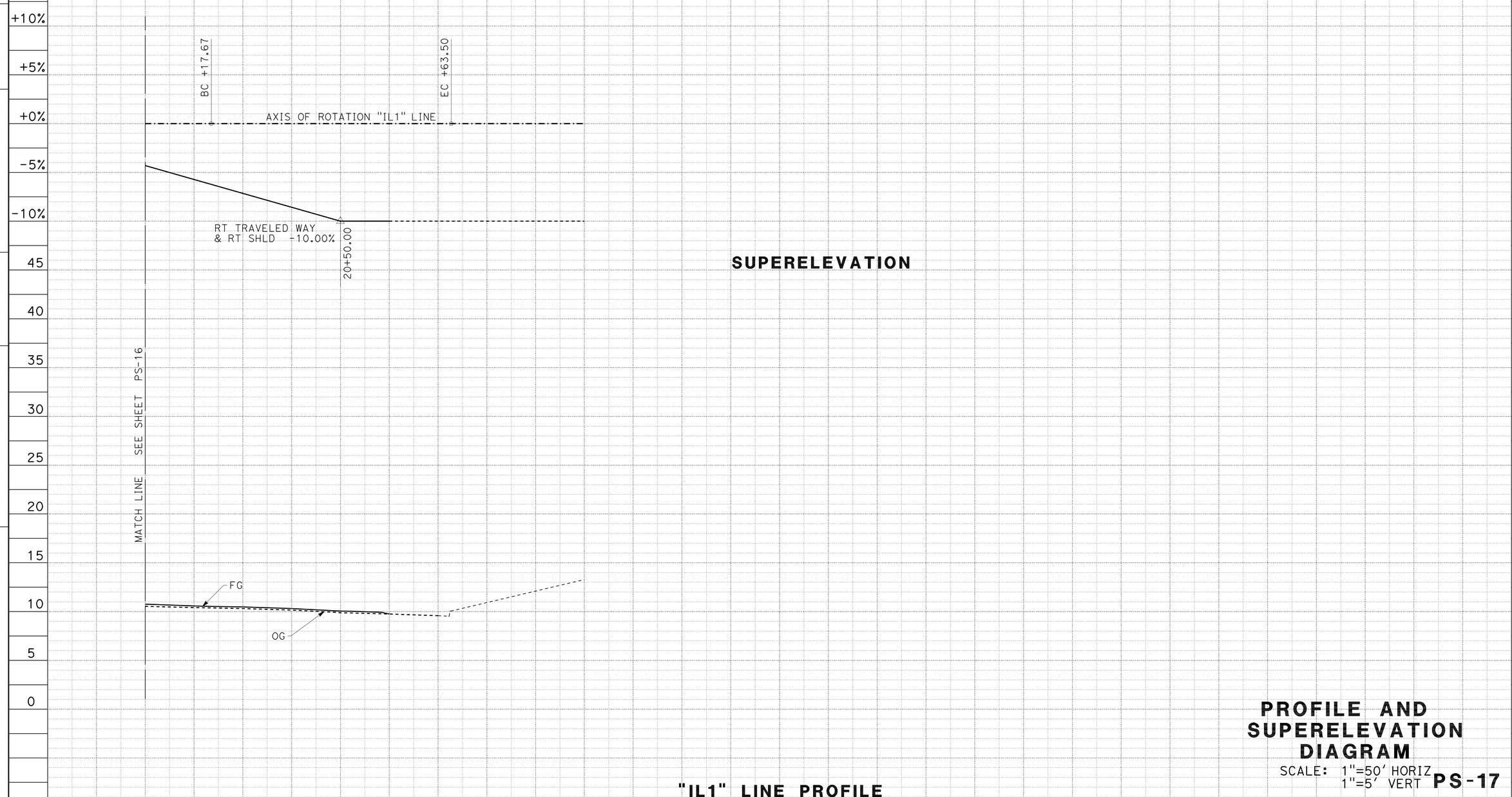

SUPERELEVATION

"IL1" LINE PROFILE

				SHEET TOTAL	"IL1" LINE TOTAL
CY	ROADWAY EXC (ADL)	0	0	0	0
	ROADWAY EXC	796	450	1246	3,952
	EMBANKMENT	0	1	1	745

PROFILE AND SUPERELEVATION DIAGRAM

SCALE: 1"=50' HORIZ
1"=5' VERT

PS-17

LAST REVISION 03-15-10 | DATE PLOTTED => 16-AUG-2010 | TIME PLOTTED => 08:25

Dist	COUNTY	ROUTE	POST MILES TOTAL PROJECT	SHEET No.	TOTAL SHEETS
04	Mrn	101	18.6/R22.3	47	542

REGISTERED CIVIL ENGINEER 03-15-10 DATE

8-9-10
PLANS APPROVAL DATE

REGISTERED PROFESSIONAL ENGINEER ROBERT J. NIXON No. C69123 Exp. 6-30-10 CIVIL STATE OF CALIFORNIA

THE STATE OF CALIFORNIA OR ITS OFFICERS OR AGENTS SHALL NOT BE RESPONSIBLE FOR THE ACCURACY OR COMPLETENESS OF SCANNED COPIES OF THIS PLAN SHEET.

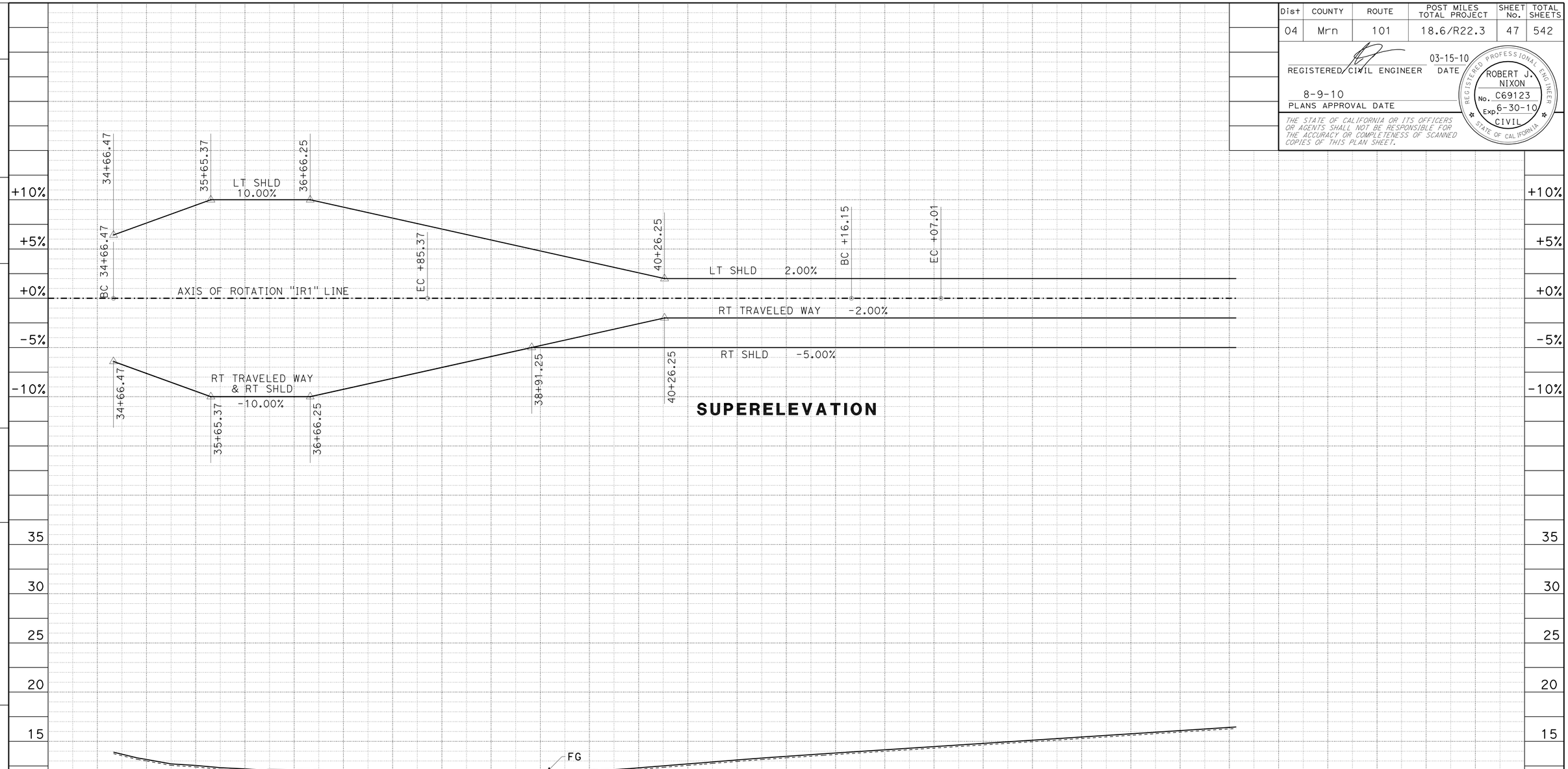

PROFILE AND SUPERELEVATION DIAGRAM

SCALE: 1"=50' HORIZ
1"=5' VERT

PS-18

STATION	35	6	7	8	9	40	1	2	3	4	45	6 "J1"	7	"J1"	SHEET TOTAL	"IR1" LINE TOTAL
ROADWAY EXC (ADL)	0		0		0		0		0		0	246+07	0	252+00	0	0
CY ROADWAY EXC	327		355		700		522		409		0		668		3201	3,201
EMBANKMENT	7		5		0		0		0		220		0		12	12

REVISED BY | DATE REVISED
ROBERT J. NIXON | SCOTT GREGORY
CALCULATED-DESIGNED BY | CHECKED BY
FUNCTIONAL SUPERVISOR: JOHN L. MARTIN

STATE OF CALIFORNIA - DEPARTMENT OF TRANSPORTATION
Caltrans DESIGN

P:\proj2\04\26406\design\ps&e\426406fb018.dgn

LAST REVISION 03-15-10 | DATE PLOTTED => 16-AUG-2010 | TIME PLOTTED => 08:25

Dist	COUNTY	ROUTE	POST MILES TOTAL PROJECT	SHEET No.	TOTAL SHEETS
04	Mrn	101	18.6/R22.3	48	542

REGISTERED CIVIL ENGINEER 03-15-10 DATE

8-9-10
PLANS APPROVAL DATE

REGISTERED PROFESSIONAL ENGINEER ROBERT J. NIXON No. C69123 Exp. 6-30-10 CIVIL STATE OF CALIFORNIA

THE STATE OF CALIFORNIA OR ITS OFFICERS OR AGENTS SHALL NOT BE RESPONSIBLE FOR THE ACCURACY OR COMPLETENESS OF SCANNED COPIES OF THIS PLAN SHEET.

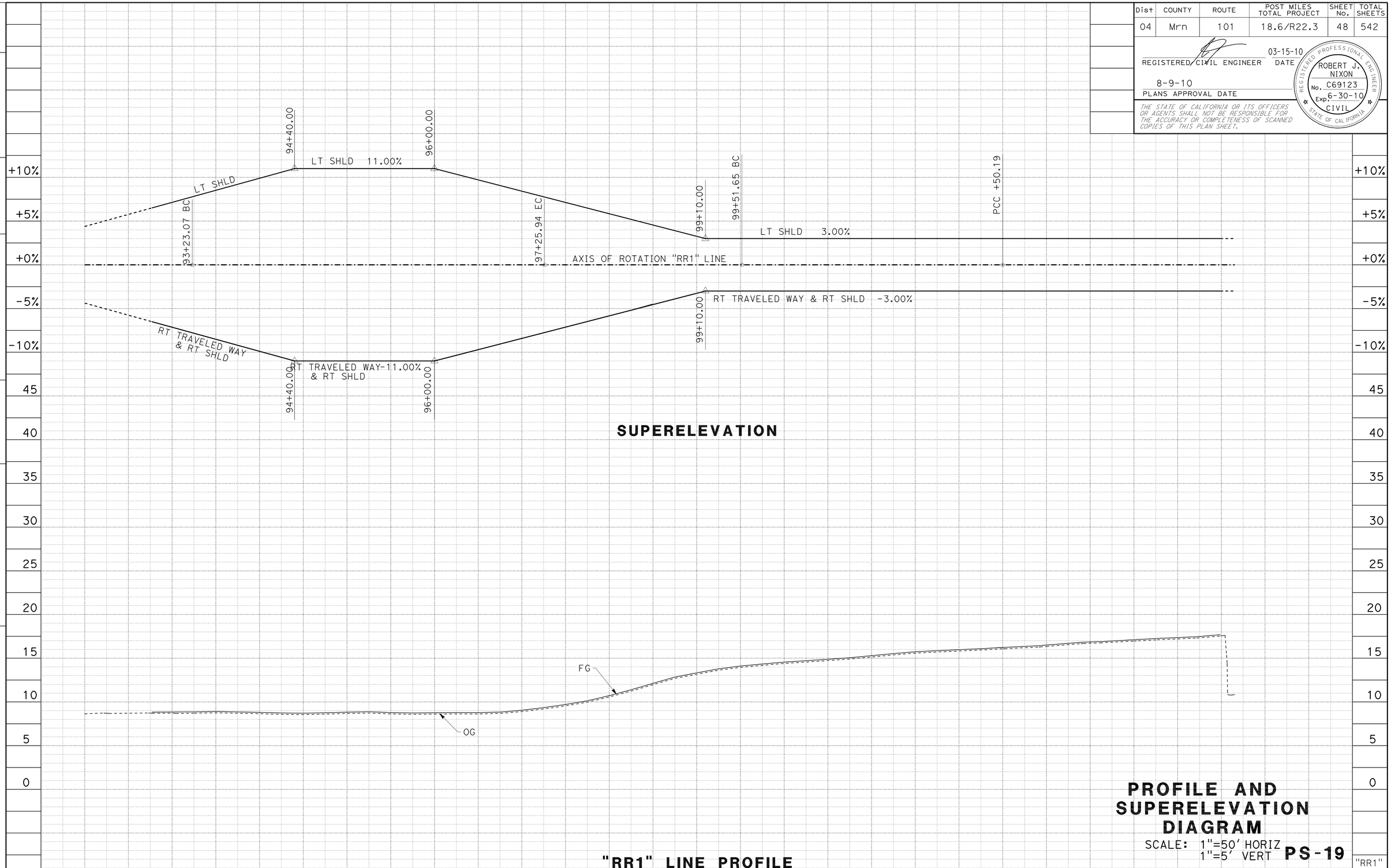

PROFILE AND SUPERELEVATION DIAGRAM

SCALE: 1"=50' HORIZ
1"=5' VERT

PS-19

REVISED BY	DATE REVISED
JAMES RASMUSSEN	SCOTT GREGORY
CALCULATED-DESIGNED BY	CHECKED BY
FUNCTIONAL SUPERVISOR	JOHN L. MARTIN

STATE OF CALIFORNIA - DEPARTMENT OF TRANSPORTATION
Caltrans
DESIGN

P:\proj2\04\26406\design\ps&e\426406fb019.dgn

LAST REVISION 03-15-10 | DATE PLOTTED => 16-AUG-2010 | TIME PLOTTED => 08:25

Dist	COUNTY	ROUTE	POST MILES TOTAL PROJECT	SHEET No.	TOTAL SHEETS
04	Mrn	101	18.6/R22.3	49	542

REGISTERED CIVIL ENGINEER 03-15-10 DATE

8-9-10
PLANS APPROVAL DATE

REGISTERED PROFESSIONAL ENGINEER ROBERT J. NIXON No. C69123 Exp. 6-30-10 CIVIL STATE OF CALIFORNIA

THE STATE OF CALIFORNIA OR ITS OFFICERS OR AGENTS SHALL NOT BE RESPONSIBLE FOR THE ACCURACY OR COMPLETENESS OF SCANNED COPIES OF THIS PLAN SHEET.

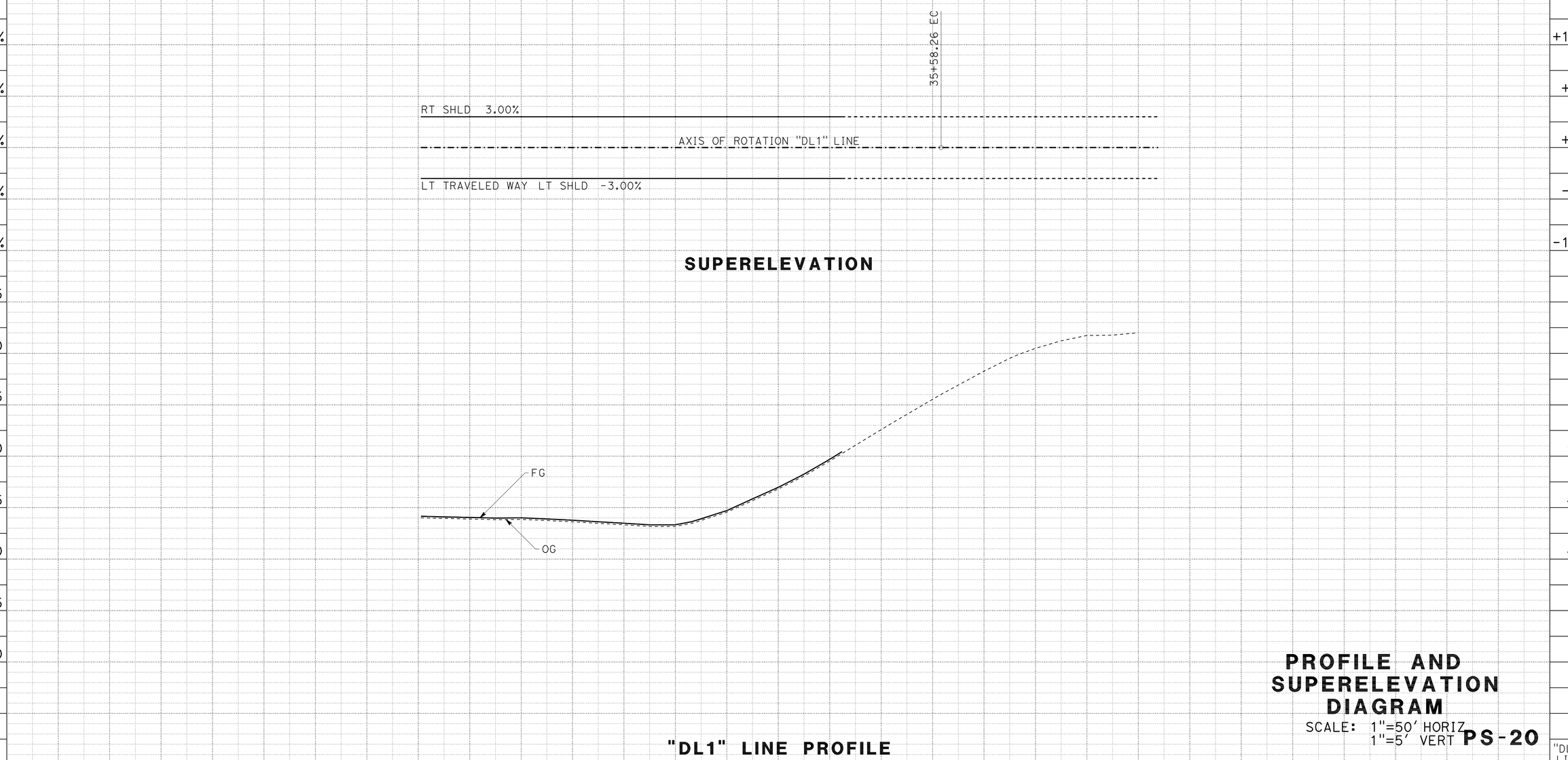

PROFILE AND SUPERELEVATION DIAGRAM

SCALE: 1"=50' HORIZ
1"=5' VERT **PS-20**

		"DL1" LINE	SHEET TOTAL	TOTAL
	ROADWAY EXC (ADL)	0	0	0
CY	ROADWAY EXC	334	182	516	516
	EMBANKMENT	275	575	850	850

REVISED BY | DATE REVISED
ROBERT J. NIXON | SCOTT GREGORY
CALCULATED-DESIGNED BY | CHECKED BY
FUNCTIONAL SUPERVISOR: JOHN L. MARTIN

STATE OF CALIFORNIA - DEPARTMENT OF TRANSPORTATION
Caltrans DESIGN

P:\proj2\04\26406\design\DCCR\426406fb020.dgn

LAST REVISION 03-15-10 | DATE PLOTTED => 16-AUG-2010 | TIME PLOTTED => 08:25

Dist	COUNTY	ROUTE	POST MILES TOTAL PROJECT	SHEET No.	TOTAL SHEETS
04	Mrn	101	18.6/R22.3	50	542

REGISTERED CIVIL ENGINEER 03-15-10 DATE

8-9-10
PLANS APPROVAL DATE

REGISTERED PROFESSIONAL ENGINEER ROBERT J. NIXON No. C69123 Exp. 6-30-10 CIVIL STATE OF CALIFORNIA

THE STATE OF CALIFORNIA OR ITS OFFICERS OR AGENTS SHALL NOT BE RESPONSIBLE FOR THE ACCURACY OR COMPLETENESS OF SCANNED COPIES OF THIS PLAN SHEET.

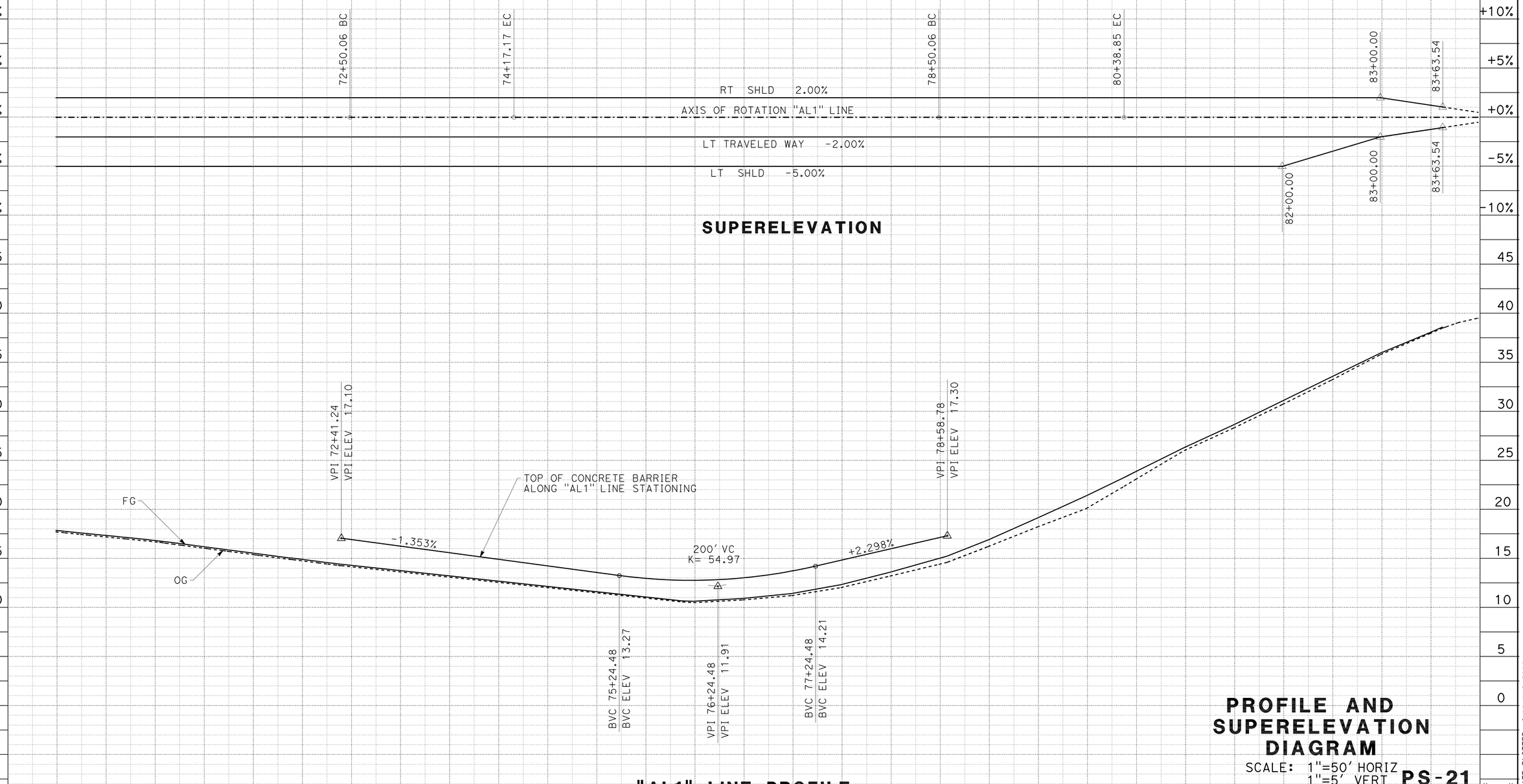

PROFILE AND SUPERELEVATION DIAGRAM

SCALE: 1"=50' HORIZ
1"=5' VERT **PS-21**

STATION	70	1	2	3	4	75	6	7	8	9	80	1	2	3	SHEET TOTAL	"AL1" LINE TOTAL
CY ROADWAY EXC (ADL)				0		0		0		0		0		0	0	0
CY ROADWAY EXC				72		164		300		281		222		154	1,193	1,193
CY EMBANKMENT				0		0		5		142		346		130	623	623

REVISED BY | DATE REVISED
ROBERT J. NIXON | SCOTT GREGORY
CALCULATED-DESIGNED BY | CHECKED BY
FUNCTIONAL SUPERVISOR: JOHN L. MARTIN

STATE OF CALIFORNIA - DEPARTMENT OF TRANSPORTATION
Caltrans **DESIGN**

P:\proj2\04\26406\design\ps&e\426406fb021.dgn

DATE PLOTTED => 16-AUG-2010
TIME PLOTTED => 08:38
LAST REVISION 03-15-10

Dist	COUNTY	ROUTE	POST MILES TOTAL PROJECT	SHEET No.	TOTAL SHEETS
04	Mrn	101	18.6/R22.3	51	542

REGISTERED CIVIL ENGINEER 03-15-10 DATE

8-9-10
PLANS APPROVAL DATE

REGISTERED PROFESSIONAL ENGINEER ROBERT J. NIXON No. C69123 Exp. 6-30-10 CIVIL STATE OF CALIFORNIA

THE STATE OF CALIFORNIA OR ITS OFFICERS OR AGENTS SHALL NOT BE RESPONSIBLE FOR THE ACCURACY OR COMPLETENESS OF SCANNED COPIES OF THIS PLAN SHEET.

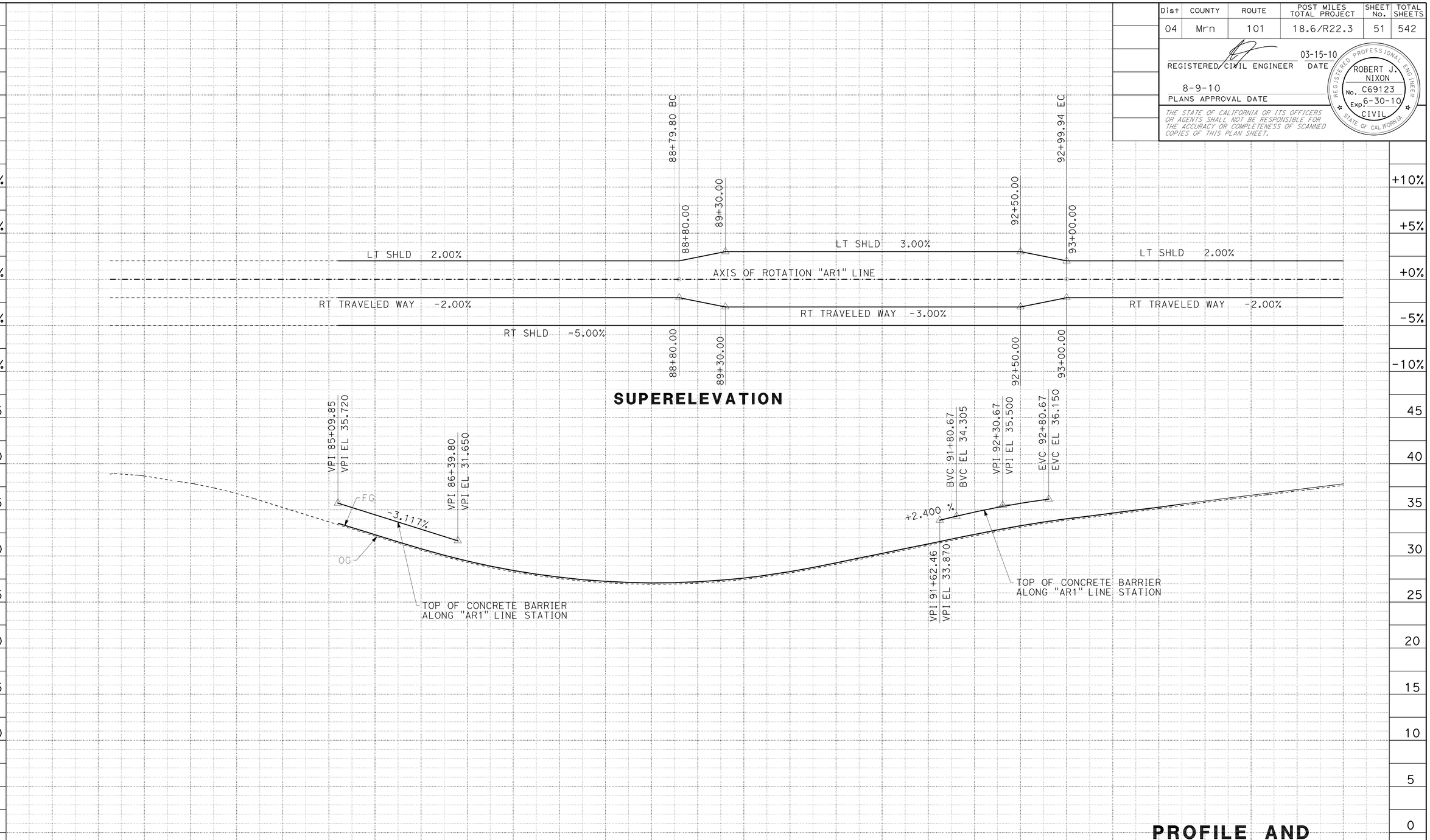

PROFILE AND SUPERELEVATION DIAGRAM

SCALE: 1"=50' HORIZ
1"=5' VERT

PS-22

STATION	2	3	4	85	6	7	8	9	90	1	2	3	4	95	6	SHEET TOTAL	"AR1" LINE TOTAL
CY ROADWAY EXC (ADL)				0			0			0						0	0
CY ROADWAY EXC					144			189			202					535	535
CY EMBANKMENT				1			10			4						15	15

REVISED BY	DATE REVISED
ROBERT J. NIXON	SCOTT GREGORY

CALCULATED-DESIGNED BY	CHECKED BY

FUNCTIONAL SUPERVISOR: JOHN L. MARTIN

STATE OF CALIFORNIA - DEPARTMENT OF TRANSPORTATION
Caltrans DESIGN

P:\proj2\04\26406\design\ps&e\426406fb022.dgn

LAST REVISION 03-15-10 | DATE PLOTTED => 16-AUG-2010 | TIME PLOTTED => 08:38

BORDER LAST REVISED 4/11/2008 | RELATIVE BORDER SCALE IS IN INCHES 0 1 2 3 | USERNAME => trmartin | DGN FILE => 426406fb022.dgn | CU 03 240 | EA 264061

Dist	COUNTY	ROUTE	POST MILES TOTAL PROJECT	SHEET No.	TOTAL SHEETS
04	Mrn	101	18.6/R22.3	52	542

REGISTERED CIVIL ENGINEER 03-15-10 DATE

8-9-10
PLANS APPROVAL DATE

REGISTERED PROFESSIONAL ENGINEER ROBERT J. NIXON No. C69123 Exp. 6-30-10 CIVIL STATE OF CALIFORNIA

THE STATE OF CALIFORNIA OR ITS OFFICERS OR AGENTS SHALL NOT BE RESPONSIBLE FOR THE ACCURACY OR COMPLETENESS OF SCANNED COPIES OF THIS PLAN SHEET.

NOTES:

1. FOR DETAILS NOT SHOWN, SEE STANDARD PLANS.
2. DEPENDENT DIMENSIONS WILL BE VERIFIED IN THE FIELD BEFORE FABRICATING ANY END CONNECTION TO CONFORM WITH EXISTING PAVED CONDITIONS.
3. WHEN END SECTION IS CALLED FOR, MODIFY TYPICAL TERMINAL SECTION TO FIT. SEE DETAIL E.
4. ALL PLATES AND BOLTS ARE GALVANIZED.
5. CUT AND REMOVE THAT PORTION OF TYPE 9M AND BRIDGE APPROACH GUARD RAIL AS REQUIRED.
6. EXTERIOR SPLICE BOLT HOLES SHALL BE THE STANDARD 7/8" X 1 1/8" SLOT SIZE FOR RAIL SPLICES AT POST # T4 AND THE CONNECTION TO THE CONCRETE BARRIER OR RAILING. INTERIOR SPLICE BOLT HOLES MAY BE INCREASED UP TO 1 1/4" DIA. WASHERS SHALL BE USED WITH SPLICE BOLTS ON BACK SIDE OF RAIL ELEMENT AT POST # T4 AND CONNECTION TO THE CONCRETE BARRIER OR RAILING.
7. TAPER THE TOP OF THE END OF THE BRIDGE RAILING AT 4:1 TO MATCH THE TOP ELEVATION OF THE THRIE BEAM RAIL ELEMENT.

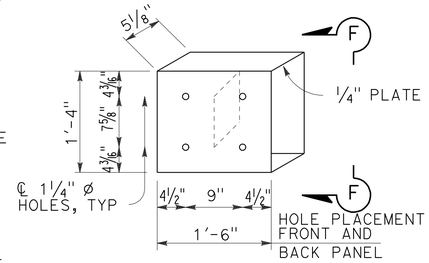

DETAIL E

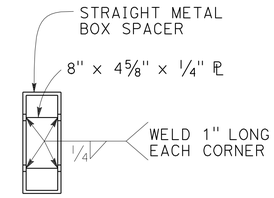

VIEW F-F

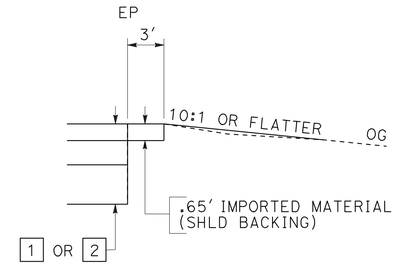

SECTION B-B

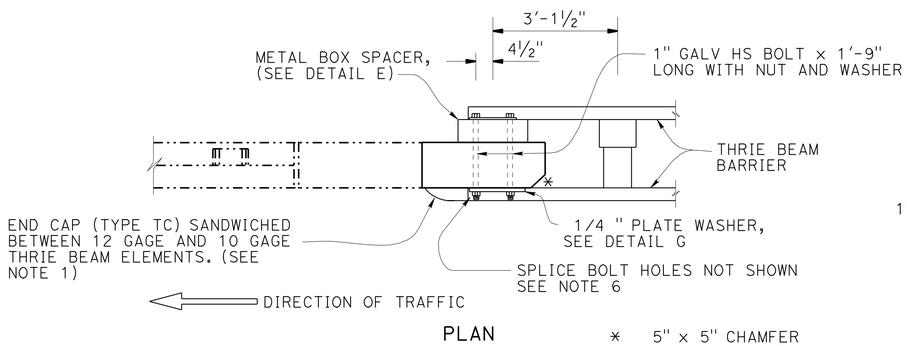

PLAN

* 5" x 5" CHAMFER

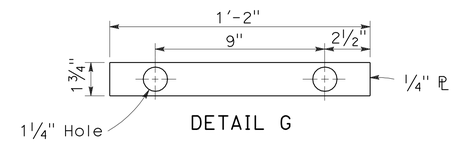

DETAIL G

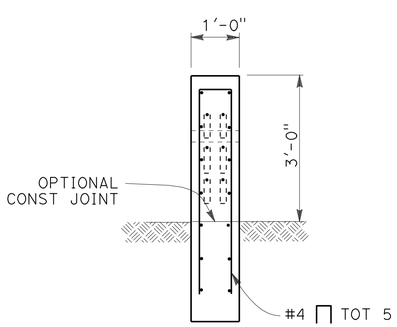

SECTION A-A

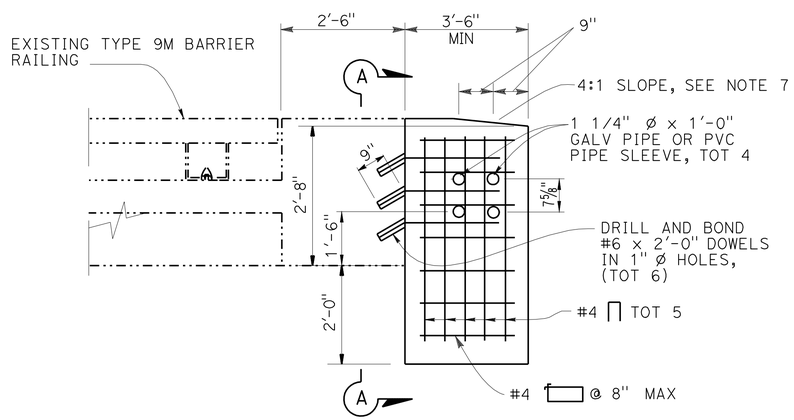

ELEVATION

TYPE 1

CONCRETE BRIDGE RAIL TRANSITION

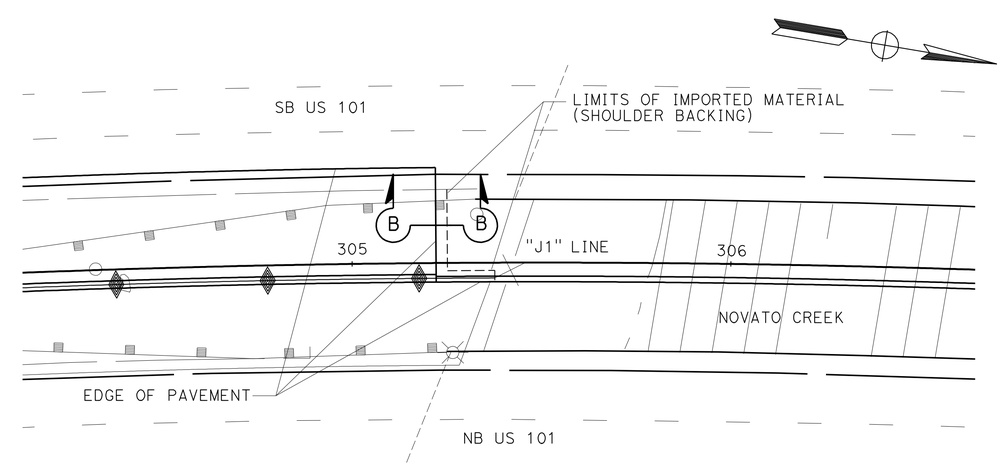

LIMITS OF IMPORTED MATERIAL (SHOULDER BACKING)

CONSTRUCTION DETAILS

NO SCALE

C-1

REVISED BY | DATE REVISED

ROBERT J. NIXON | JOHN L. MARTIN

CALCULATED-DESIGNED BY | CHECKED BY

FUNCTIONAL SUPERVISOR: JOHN L. MARTIN

STATE OF CALIFORNIA - DEPARTMENT OF TRANSPORTATION

Caltrans DESIGN

P:\proj2\04\26406\design\DCCR\426406ga001.dgn

LAST REVISION 03-15-10 | DATE PLOTTED => 16-AUG-2010 | TIME PLOTTED => 08:25

BORDER LAST REVISED 4/11/2008 | RELATIVE BORDER SCALE IS IN INCHES 0 1 2 3 | USERNAME => trmartin | DGN FILE => 426406ga001.dgn | CU 03 240 | EA 264061

Dist	COUNTY	ROUTE	POST MILES TOTAL PROJECT	SHEET No.	TOTAL SHEETS
04	Mrn	101	18.6/R22.3	53	542

REGISTERED CIVIL ENGINEER 03-15-10 DATE

8-9-10
PLANS APPROVAL DATE

REGISTERED PROFESSIONAL ENGINEER ROBERT J. NIXON No. C69123 Exp. 6-30-10 CIVIL STATE OF CALIFORNIA

THE STATE OF CALIFORNIA OR ITS OFFICERS OR AGENTS SHALL NOT BE RESPONSIBLE FOR THE ACCURACY OR COMPLETENESS OF SCANNED COPIES OF THIS PLAN SHEET.

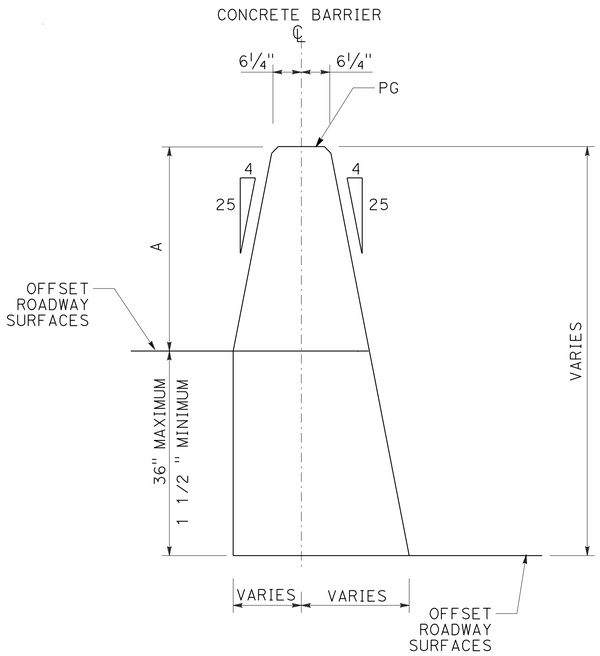

CONCRETE BARRIER (TYPE 60C MODIFIED)

(FOR DETAILS NOT SHOWN SEE REVISED STANDARD PLAN A76A)

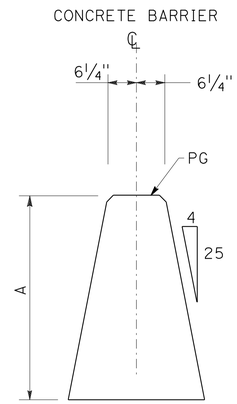

CONCRETE BARRIER (TYPE 60 MODIFIED)

(FOR DETAILS NOT SHOWN SEE REVISED STANDARD PLAN A76A, AND STANDARD PLAN A76B)

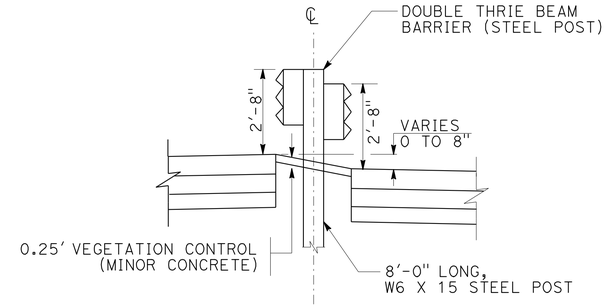

DOUBLE THRIE BEAM BARRIER DETAIL

STA "J1" 275+00 TO 287+35.5
(FOR DETAILS NOT SHOWN, SEE STD PLANS)

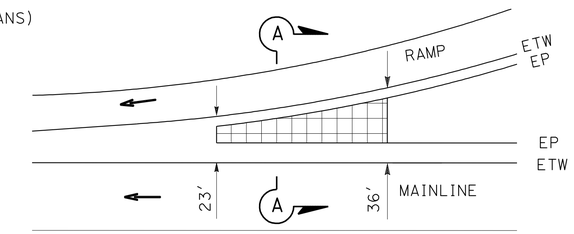

ENTRANCE RAMP

TYPICAL LAYOUT CONTRASTING SURFACE TREATMENT

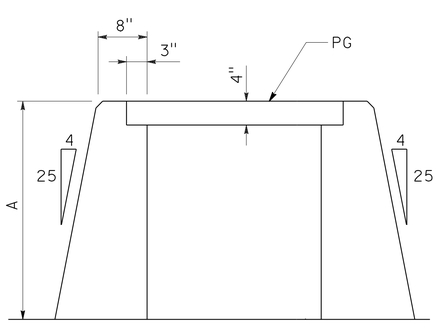

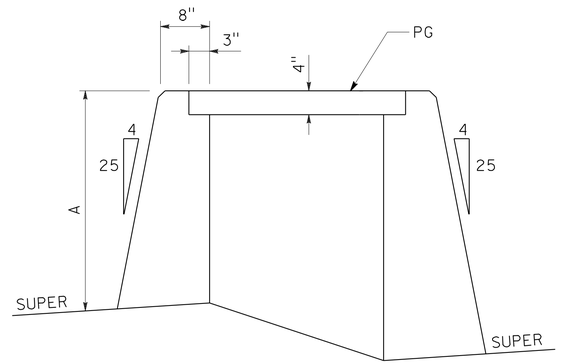

CONCRETE BARRIER (TYPE 60E MODIFIED)

(FOR DETAILS NOT SHOWN SEE STANDARD PLAN A76C)

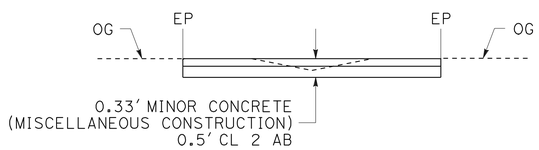

SECTION A-A

DIMENSION TABLE

LOCATION	A	CONCRETE BARRIER ITEM
"J1" 229+30.0 TO 275+00.0	VARIES 35.25" TO 37.9"	60 MODIFIED, 60C MODIFIED OR 60E MODIFIED
"J1" 287+35.5 TO 305+22.2	VARIES 35.25" TO 38.25"	60 MODIFIED, 60C MODIFIED OR 60E MODIFIED
"J1" 335+99.0 TO 337+85.4	VARIES 35.8" TO 36.5"	60 MODIFIED OR 60E MODIFIED
"J1" 382+93.0 TO 384+76.0	VARIES 36.0" TO 37.0"	60 MODIFIED OR 60E MODIFIED
"AR1" 85+09.9 TO 86+40.0	36"	60C MODIFIED
"AR1" 91+62.5 TO 92+80.7	36"	60C MODIFIED
"AL1" 72+41.2 TO 78+58.8	VARIES 35.25" TO 36.75"	60C MODIFIED
"J1" 262+32 TO 272+40	36"	60D MODIFIED

NOTE:
1. DIMENSION "A" (THE MINIMUM BARRIER HEIGHT) IS SHOWN ON THE LEFT. THE MINIMUM HEIGHT MAY OCCUR ON THE RIGHT.
2. SEE PROFILE SHEETS FOR TOP OF BARRIER PROFILE.

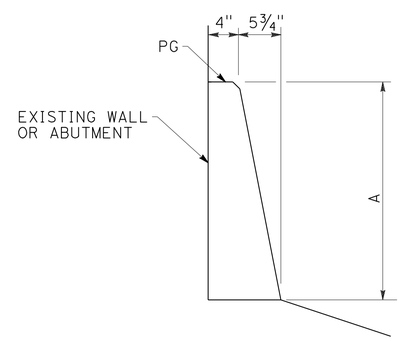

CONCRETE BARRIER (TYPE 60D MODIFIED)

(FOR DETAILS NOT SHOWN SEE REVISED STANDARD PLAN A76A)

CONSTRUCTION DETAILS

NO SCALE

C-2

REVISED BY | DATE REVISED
ROBERT J. NIXON | JOHN L. MARTIN
CALCULATED-DESIGNED BY | CHECKED BY
FUNCTIONAL SUPERVISOR: JOHN L. MARTIN

STATE OF CALIFORNIA - DEPARTMENT OF TRANSPORTATION
Caltrans DESIGN

P:\proj2\04\26406\design\DCCR\426406ga002.dgn

LAST REVISION | DATE PLOTTED => 16-AUG-2010 | TIME PLOTTED => 08:25
03-15-10

Dist	COUNTY	ROUTE	POST MILES TOTAL PROJECT	SHEET No.	TOTAL SHEETS
04	Mrn	101	18.6/R22.3	54	542

REGISTERED CIVIL ENGINEER 03-15-10 DATE

8-9-10
PLANS APPROVAL DATE

REGISTERED PROFESSIONAL ENGINEER ROBERT J. NIXON No. C69123 Exp. 6-30-10 CIVIL STATE OF CALIFORNIA

THE STATE OF CALIFORNIA OR ITS OFFICERS OR AGENTS SHALL NOT BE RESPONSIBLE FOR THE ACCURACY OR COMPLETENESS OF SCANNED COPIES OF THIS PLAN SHEET.

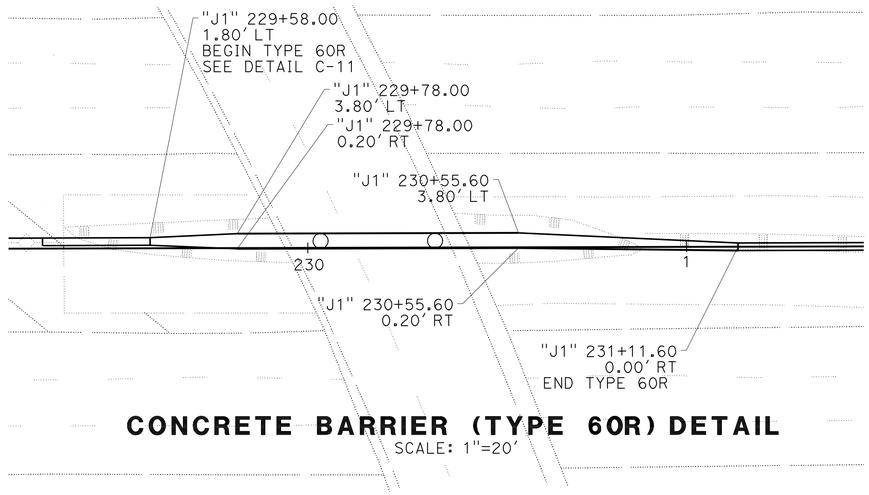

CONCRETE BARRIER (TYPE 60R) DETAIL
SCALE: 1"=20'

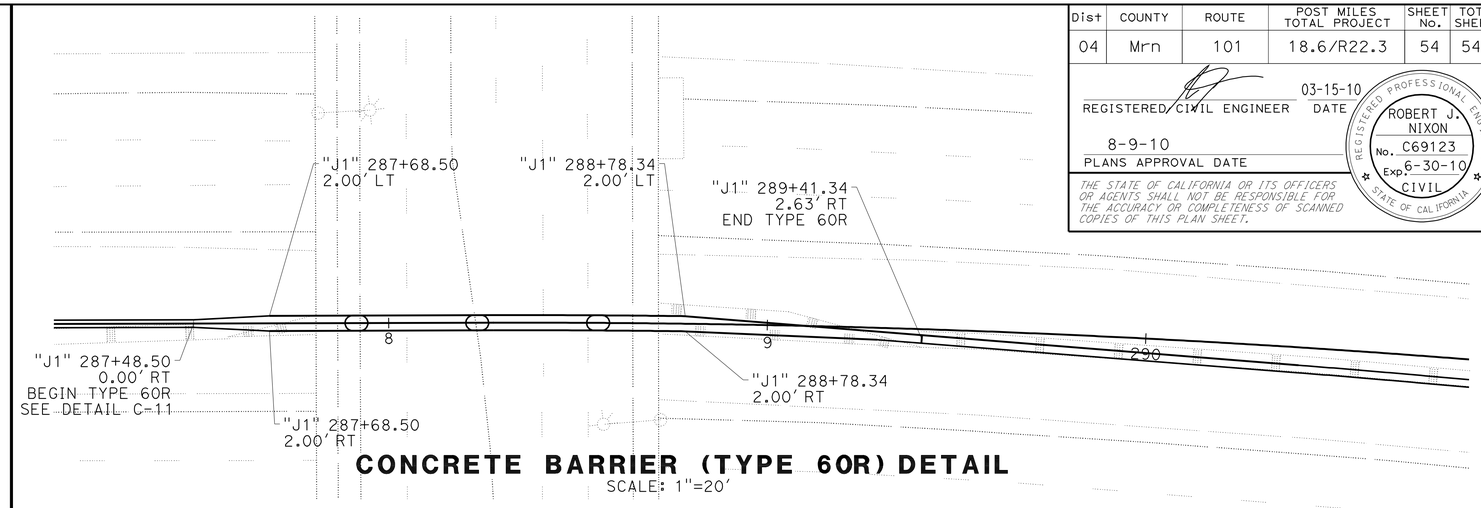

CONCRETE BARRIER (TYPE 60R) DETAIL
SCALE: 1"=20'

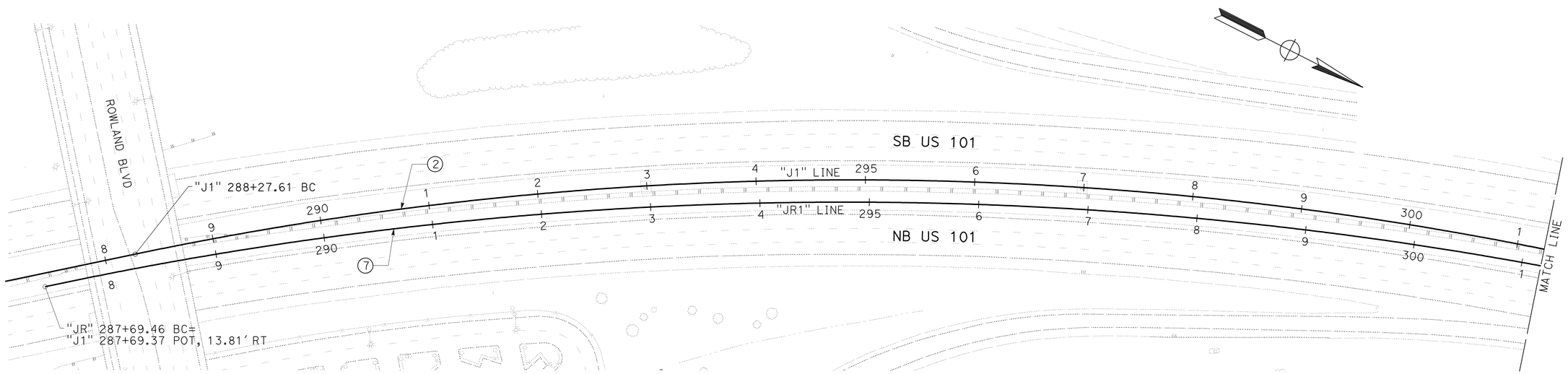

"JR1" LINE DETAIL
SCALE: 1"=50'

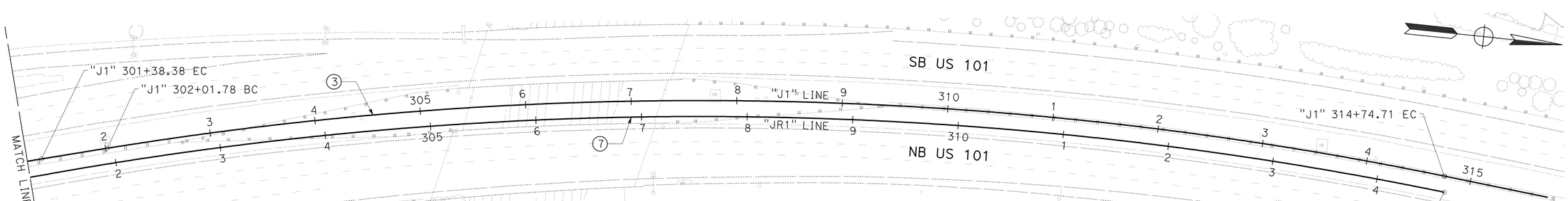

CURVE DATA

O	R	Δ	T	L
2	3194.92'	23°30'24"	664.73'	1310.77'
3	3500.00'	20°50'17"	643.57'	1272.93'
7	3500.00'	44°35'39"	1435.25'	2724.10'

CONSTRUCTION DETAILS
SCALE AS SHOWN

C-3

REVISED BY | DATE REVISED
ROBERT J. NIXON | JOHN L. MARTIN
CALCULATED-DESIGNED BY | CHECKED BY
FUNCTIONAL SUPERVISOR: JOHN L. MARTIN

STATE OF CALIFORNIA - DEPARTMENT OF TRANSPORTATION
Caltrans **DESIGN**

P:\proj2\04\26406\design\DCCR\426406ga003.dgn

LAST REVISION 03-15-10 | DATE PLOTTED => 16-AUG-2010 | TIME PLOTTED => 08:26

BORDER LAST REVISED 4/11/2008 | RELATIVE BORDER SCALE IS IN INCHES 0 1 2 3 | USERNAME => trmartin | DGN FILE => 426406ga003.dgn | CU 03 240 | EA 264061

Dist	COUNTY	ROUTE	POST MILES TOTAL PROJECT	SHEET No.	TOTAL SHEETS
04	Mrn	101	18.6/R22.3	55	542

REGISTERED CIVIL ENGINEER 03-15-10 DATE

8-9-10
PLANS APPROVAL DATE

REGISTERED PROFESSIONAL ENGINEER ROBERT J. NIXON No. C69123 Exp. 6-30-10 CIVIL STATE OF CALIFORNIA

THE STATE OF CALIFORNIA OR ITS OFFICERS OR AGENTS SHALL NOT BE RESPONSIBLE FOR THE ACCURACY OR COMPLETENESS OF SCANNED COPIES OF THIS PLAN SHEET.

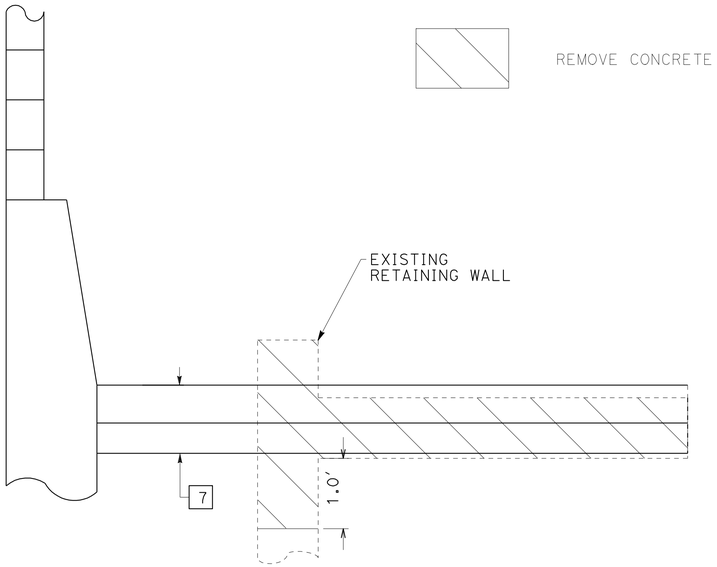

SECTION A-A

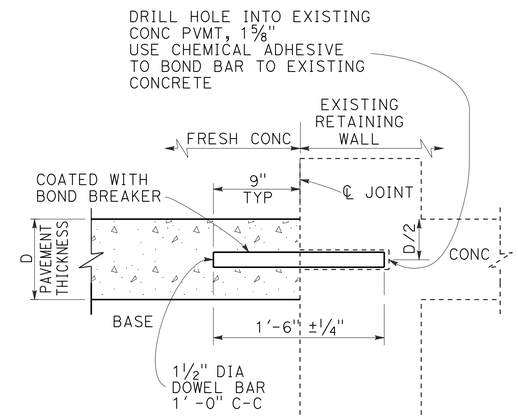

SECTION B-B

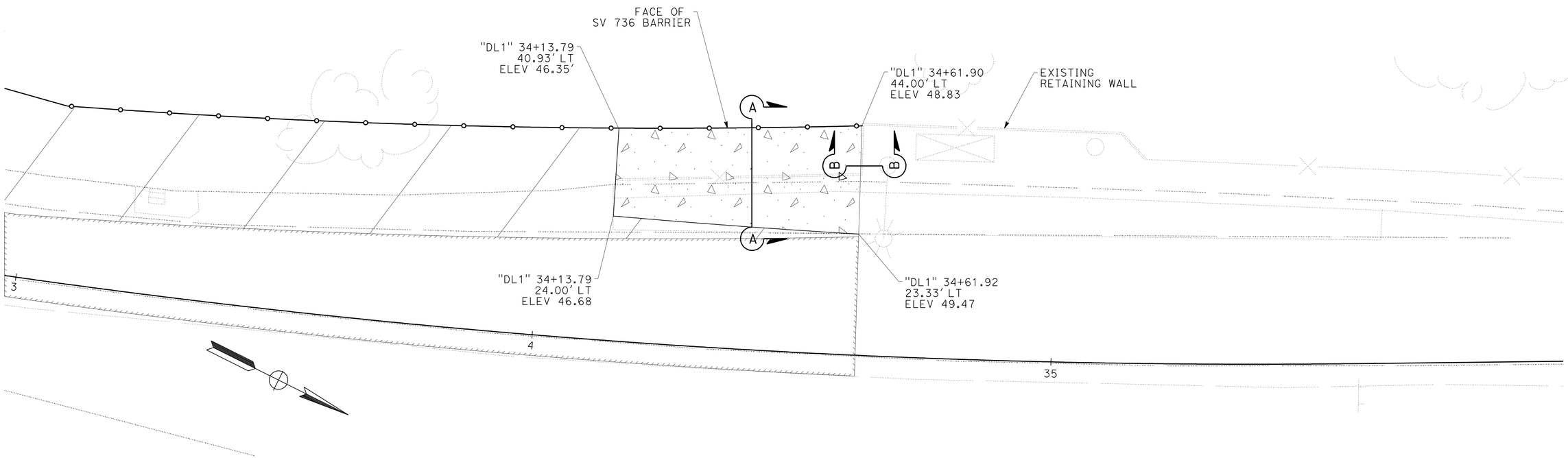

DL1 CONCRETE PAVEMENT DETAIL
SCALE: 1" = 10'

CONSTRUCTION DETAILS
SCALE AS SHOWN

C-4

REVISED BY | DATE REVISED
ROBERT J. NIXON | JOHN L. MARTIN
CALCULATED-DESIGNED BY | CHECKED BY
FUNCTIONAL SUPERVISOR
JOHN L. MARTIN

STATE OF CALIFORNIA - DEPARTMENT OF TRANSPORTATION
Caltrans DESIGN

P:\proj2\04\26406\design\DCCR\426406ga004.dgn

LAST REVISION 03-15-10 | DATE PLOTTED => 16-AUG-2010 TIME PLOTTED => 10:21

Dist	COUNTY	ROUTE	POST MILES TOTAL PROJECT	SHEET No.	TOTAL SHEETS
04	Mrn	101	18.6/R22.3	56	542

REGISTERED CIVIL ENGINEER 03-15-10 DATE

8-9-10
PLANS APPROVAL DATE

REGISTERED PROFESSIONAL ENGINEER ROBERT J. NIXON No. C69123 Exp. 6-30-10 CIVIL STATE OF CALIFORNIA

THE STATE OF CALIFORNIA OR ITS OFFICERS OR AGENTS SHALL NOT BE RESPONSIBLE FOR THE ACCURACY OR COMPLETENESS OF SCANNED COPIES OF THIS PLAN SHEET.

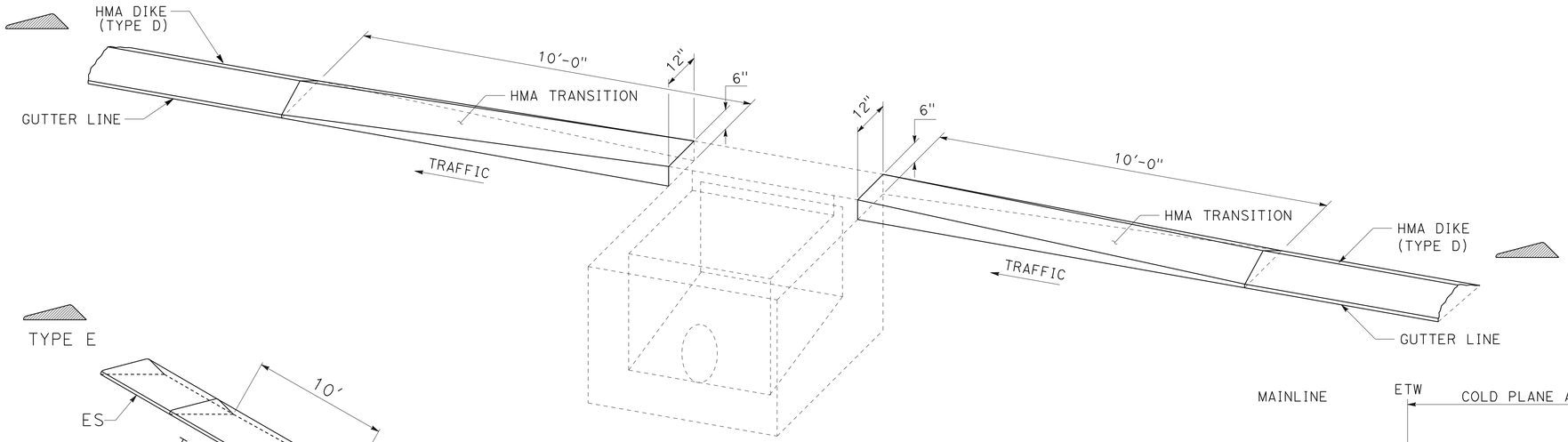

TRANSITION HMA DIKE (TYPE D) OR (TYPE E) TO DI OR OVERSIDE DRAIN TAPERED INLET

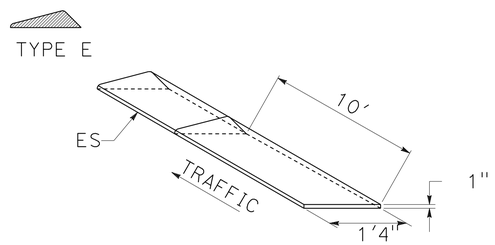

HMA DIKE (TYPE E)

HMA DIKE APPROACH TRANSITION

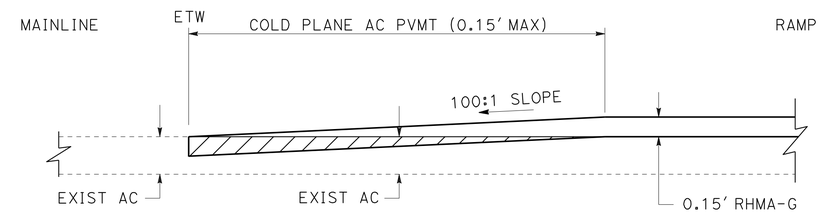

TRANSVERSE

PAVEMENT CONFORM

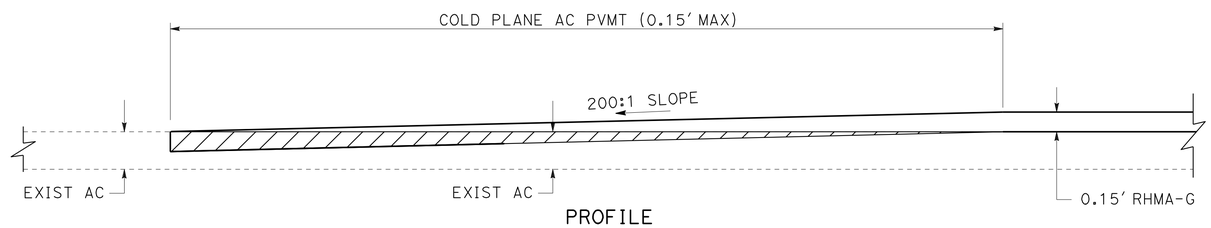

PROFILE

PAVEMENT CONFORM

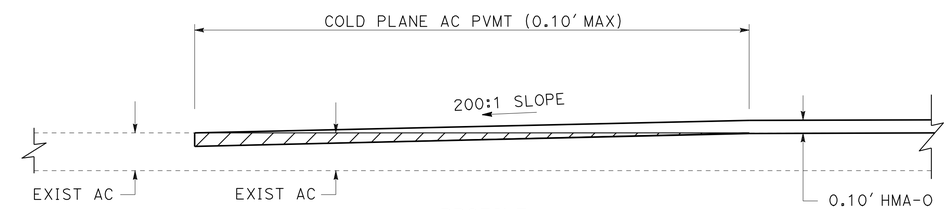

PROFILE

PAVEMENT CONFORM

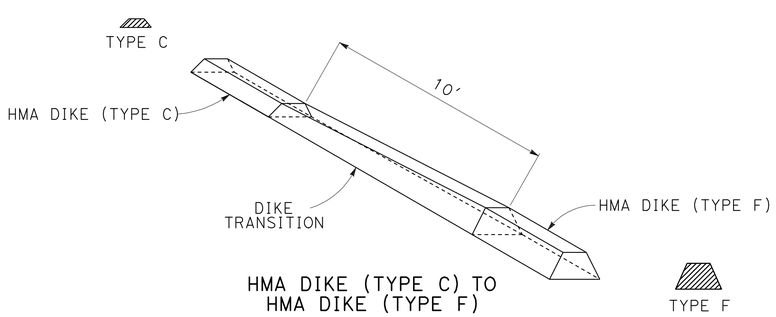

HMA DIKE (TYPE C) TO HMA DIKE (TYPE F)

HMA DIKE TRANSITION

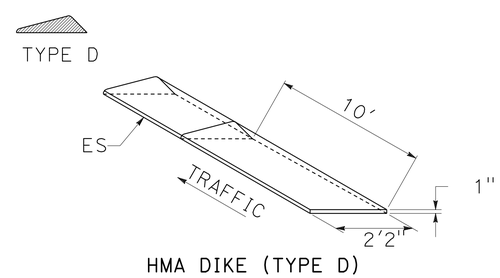

HMA DIKE (TYPE D)

HMA DIKE APPROACH TRANSITION

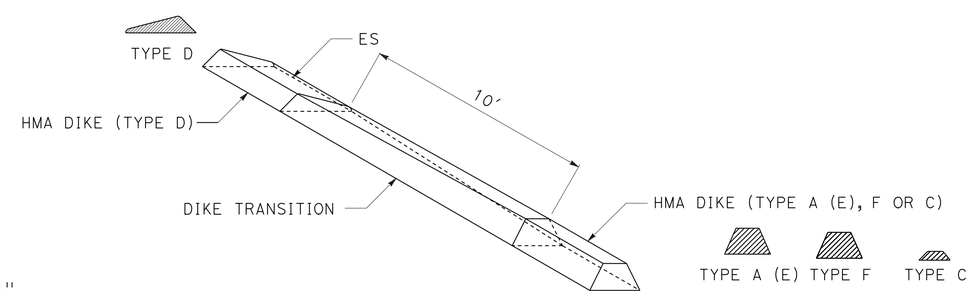

HMA DIKE (TYPE D) TO HMA DIKE (TYPE A (E), F OR C)

HMA DIKE TRANSITION

CONSTRUCTION DETAILS

NO SCALE

C-5

REVISED BY | DATE REVISED
ROBERT J. NIXON | JOHN L. MARTIN
CALCULATED-DESIGNED BY | CHECKED BY
FUNCTIONAL SUPERVISOR: JOHN L. MARTIN

STATE OF CALIFORNIA - DEPARTMENT OF TRANSPORTATION
Caltrans **DESIGN**

\\Sv02s01\CAD\PSESubmit\04-264061\426406ga005.dgn

LAST REVISION 03-15-10 | DATE PLOTTED => 16-AUG-2010 | TIME PLOTTED => 10:21

Dist	COUNTY	ROUTE	POST MILES TOTAL PROJECT	SHEET No.	TOTAL SHEETS
04	Mrn	101	18.6/R22.3	57	542

REGISTERED CIVIL ENGINEER 03-15-10 DATE

8-9-10
PLANS APPROVAL DATE

REGISTERED PROFESSIONAL ENGINEER ROBERT J. NIXON No. C69123 Exp. 6-30-10 CIVIL STATE OF CALIFORNIA

THE STATE OF CALIFORNIA OR ITS OFFICERS OR AGENTS SHALL NOT BE RESPONSIBLE FOR THE ACCURACY OR COMPLETENESS OF SCANNED COPIES OF THIS PLAN SHEET.

NOTE:

1. FOR COMPLETE RIGHT OF WAY AND ACCURATE ACCESS DATA, SEE RIGHT OF WAY RECORD MAPS AT DISTRICT OFFICE.

LEGEND

ARCHAEOLOGICAL MONITORING AREA

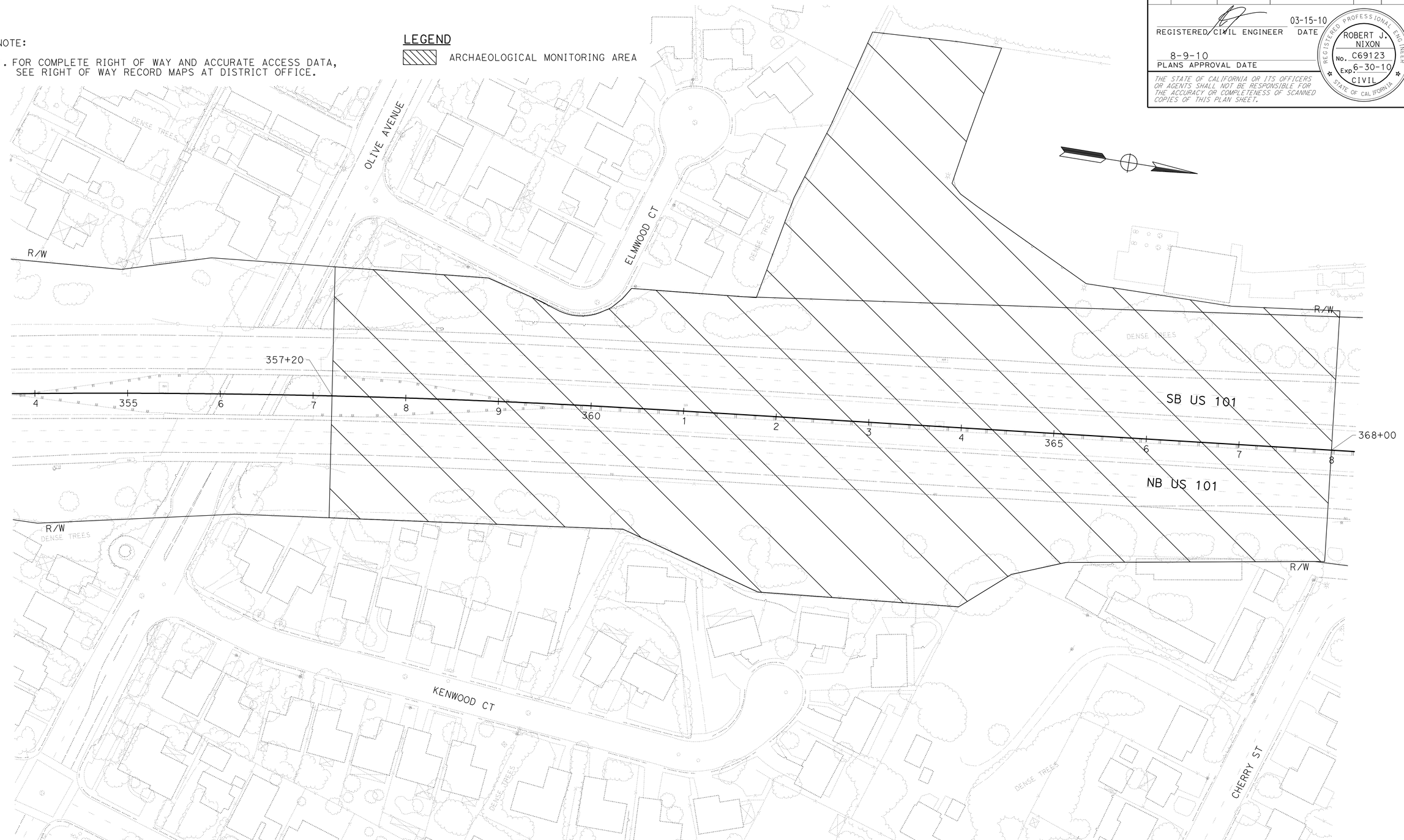

CONSTRUCTION DETAILS

SCALE: 1" = 50'

C-6

REVISED BY | DATE REVISED

ROBERT J. NIXON | JOHN L. MARTIN

CALCULATED-DESIGNED BY | CHECKED BY

FUNCTIONAL SUPERVISOR: JOHN L. MARTIN

STATE OF CALIFORNIA - DEPARTMENT OF TRANSPORTATION

Caltrans DESIGN

P:\proj2\04\26406\design\ps&e\426406ga006.dgn

LAST REVISION | DATE PLOTTED => 16-AUG-2010 | TIME PLOTTED => 10:21

03-15-10

BORDER LAST REVISED 4/11/2008 | RELATIVE BORDER SCALE IS IN INCHES 0 1 2 3 | USERNAME => trpierce | DGN FILE => 426406ga006.dgn | CU 03 240 | EA 264061

Dist	COUNTY	ROUTE	POST MILES TOTAL PROJECT	SHEET No.	TOTAL SHEETS
04	Mrn	101	18.6/R22.3	58	542

REGISTERED CIVIL ENGINEER DATE 03-15-10

8-9-10
PLANS APPROVAL DATE

REGISTERED PROFESSIONAL ENGINEER ROBERT J. NIXON No. C69123 Exp. 6-30-10 CIVIL STATE OF CALIFORNIA

THE STATE OF CALIFORNIA OR ITS OFFICERS OR AGENTS SHALL NOT BE RESPONSIBLE FOR THE ACCURACY OR COMPLETENESS OF SCANNED COPIES OF THIS PLAN SHEET.

NOTE:

1. FOR COMPLETE RIGHT OF WAY AND ACCURATE ACCESS DATA, SEE RIGHT OF WAY RECORD MAPS AT DISTRICT OFFICE.

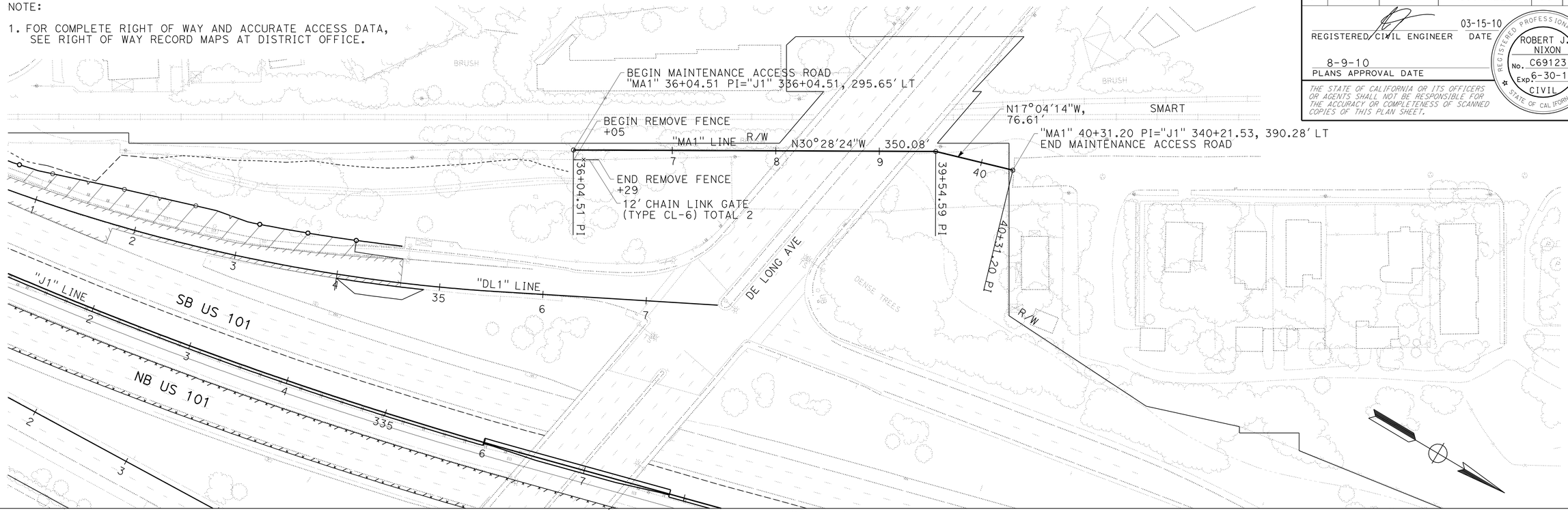

SCALE: 1" = 50'

MAINTENANCE ACCESSLAYOUT

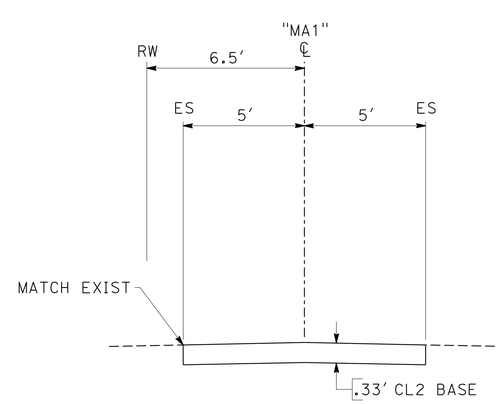

NO SCALE

MAINTENANCE ACCESS TYPICAL SECTION

CONSTRUCTION DETAILS

C-7

REVISED BY | DATE REVISED

ROBERT J. NIXON | JOHN L. MARTIN

CALCULATED-DESIGNED BY | CHECKED BY

FUNCTIONAL SUPERVISOR: JOHN L. MARTIN

STATE OF CALIFORNIA - DEPARTMENT OF TRANSPORTATION

Caltrans DESIGN

P:\proj2\04\26406\design\DCCR\426406ga007.dgn

LAST REVISION 03-15-10 | DATE PLOTTED => 16-AUG-2010 | TIME PLOTTED => 10:22

DIST	COUNTY	ROUTE	POST MILES TOTAL PROJECT	SHEET NO.	TOTAL SHEETS
04	Mrn	101	18.6/R22.3	59	542

REGISTERED CIVIL ENGINEER 03-15-10 DATE

8-9-10
PLANS APPROVAL DATE

REGISTERED PROFESSIONAL ENGINEER ROBERT J. NIXON No. C69123 EXP 6-30-10 CIVIL STATE OF CALIFORNIA

THE STATE OF CALIFORNIA OR ITS OFFICERS OR AGENTS SHALL NOT BE RESPONSIBLE FOR THE ACCURACY OR COMPLETENESS OF SCANNED COPIES OF THIS PLAN SHEET.

NOTES:

1. ADDITIONAL DETAILS OF POSTS, BLOCKS AND HARDWARE ARE SHOWN ON STANDARD PLANS A77B1, A77C1 AND A77C2.
2. DIRECTION OF ADJACENT TRAFFIC INDICATED BY ➡.
3. FOR ADDITIONAL DETAILS OF TRANSITION RAILING (TYPE WB), SEE STANDARD PLAN A77J4 TRANSITION RAILING (TYPE WB) TRANSITIONS THE 12 GAGE W-BEAM STANDARD RAILING SECTION OF GUARD RAILING TO A HEAVIER GAGE NESTED THRIE BEAM RAILING SECTION WHICH IS CONNECTED TO THE CONCRETE ANCHOR BLOCK.
4. FOR TYPICAL USE OF CONNECTION DETAILS DD, SEE LAYOUT TYPES 12A AND 12B ON STANDARD PLAN A77F1 AND LAYOUT TYPES 12C AND 12D ON STANDARD PLAN A77F2.

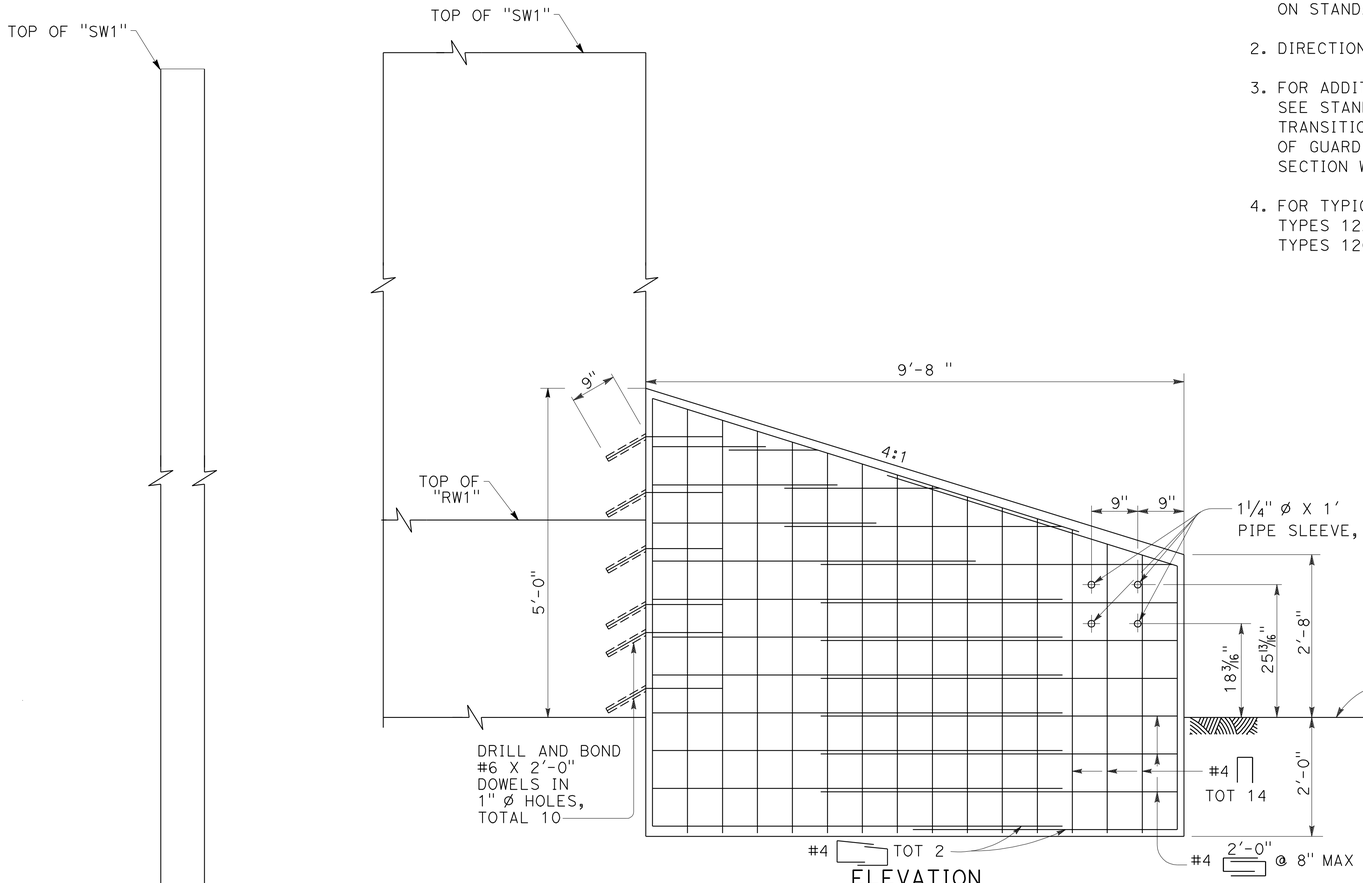

ELEVATION

ANCHOR BLOCK FOR TRANSITION RAILING CONNECTION

DETAIL C

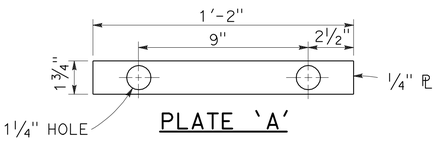

PLATE 'A'

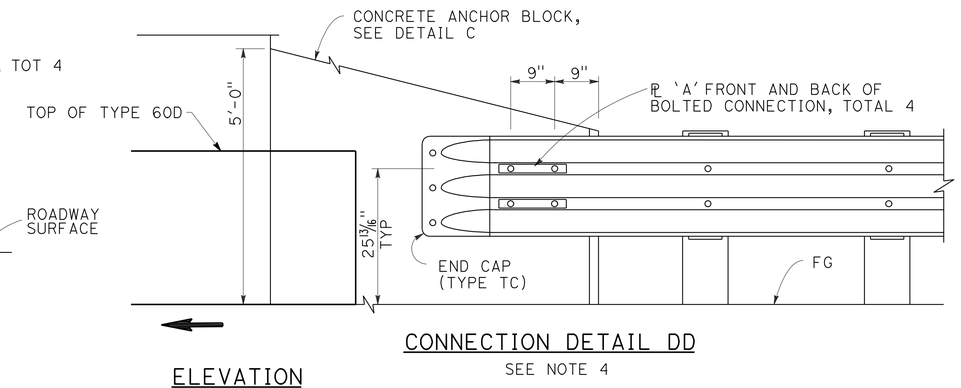

ELEVATION

CONNECTION DETAIL DD

SEE NOTE 4

GUARD RAILING CONNECTION TO ABUTMENT OR WALL

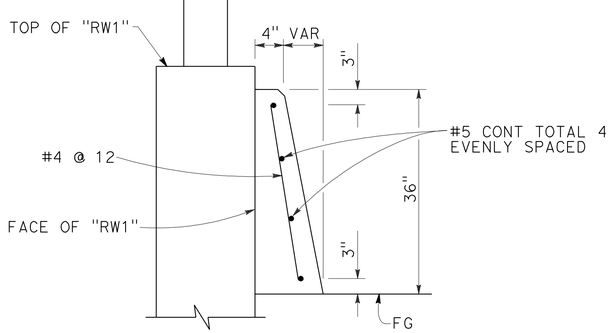

SECTION E-E

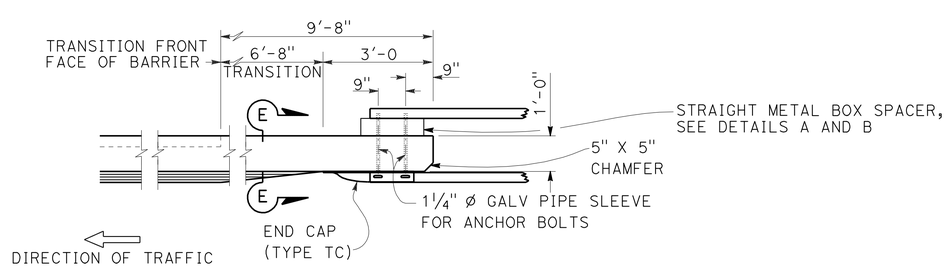

PLAN TYPE 60D

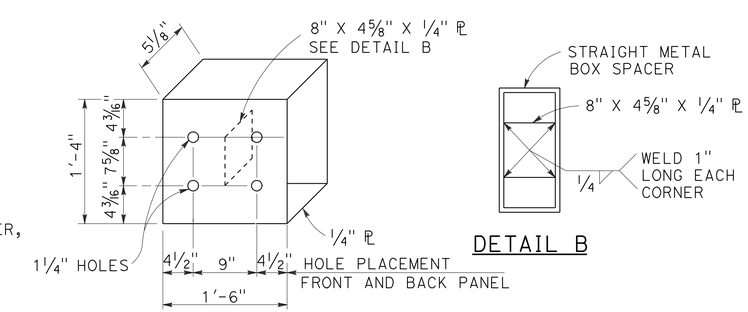

DETAIL B

DETAIL A

STRAIGHT METAL BOX SPACER

CONSTRUCTION DETAILS

NO SCALE

C-8

SW/RW1

REVISED BY	DATE REVISED
ROBERT J. NIXON	
JOHN L. MARTIN	

CALCULATED-DESIGNED BY / CHECKED BY

FUNCTIONAL SUPERVISOR: JOHN L. MARTIN

STATE OF CALIFORNIA - DEPARTMENT OF TRANSPORTATION

Caltrans DESIGN

P:\proj2\04\26406\design\DCCR\426406ga008.dgn

LAST REVISION 03-15-10 | DATE PLOTTED => 16-AUG-2010 | TIME PLOTTED => 10:22

DIST	COUNTY	ROUTE	POST MILES TOTAL PROJECT	SHEET NO.	TOTAL SHEETS
04	Mrn	101	18.6/R22.3	60	542

REGISTERED CIVIL ENGINEER 03-15-10 DATE

8-9-10
PLANS APPROVAL DATE

REGISTERED PROFESSIONAL ENGINEER ROBERT J. NIXON No. C69123 EXP 6-30-10 CIVIL STATE OF CALIFORNIA

THE STATE OF CALIFORNIA OR ITS OFFICERS OR AGENTS SHALL NOT BE RESPONSIBLE FOR THE ACCURACY OR COMPLETENESS OF SCANNED COPIES OF THIS PLAN SHEET.

NOTES:

1. ADDITIONAL DETAILS OF POSTS, BLOCKS AND HARDWARE ARE SHOWN ON STANDARD PLANS A77B1, A77C1 AND A77C2.
2. DIRECTION OF ADJACENT TRAFFIC INDICATED BY ⟶.
3. FOR ADDITIONAL DETAILS OF TRANSITION RAILING (TYPE WB), SEE STANDARD PLAN A77J4 TRANSITION RAILING (TYPE WB) TRANSITIONS THE 12 GAGE W-BEAM STANDARD RAILING SECTION OF GUARD RAILING TO A HEAVIER GAGE NESTED THRIE BEAM RAILING SECTION WHICH IS CONNECTED TO THE CONCRETE ANCHOR BLOCK.
4. FOR TYPICAL USE OF CONNECTION DETAILS DD, SEE LAYOUT TYPES 12A AND 12B ON STANDARD PLAN A77F1 AND LAYOUT TYPES 12C AND 12D ON STANDARD PLAN A77F2
5. FOR DETAILS OF CONCRETE BARRIER TYPE 60, SEE REVISED STANDARD PLAN A76A. .

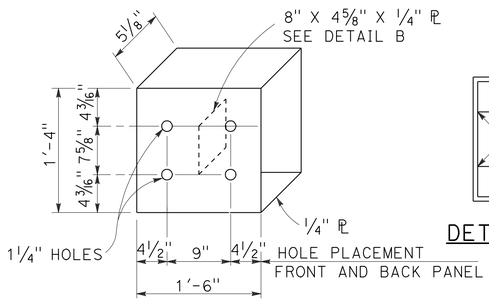

DETAIL A

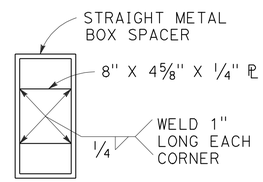

DETAIL B

STRAIGHT METAL BOX SPACER

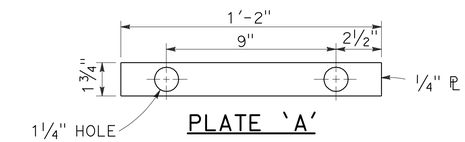

PLATE 'A'

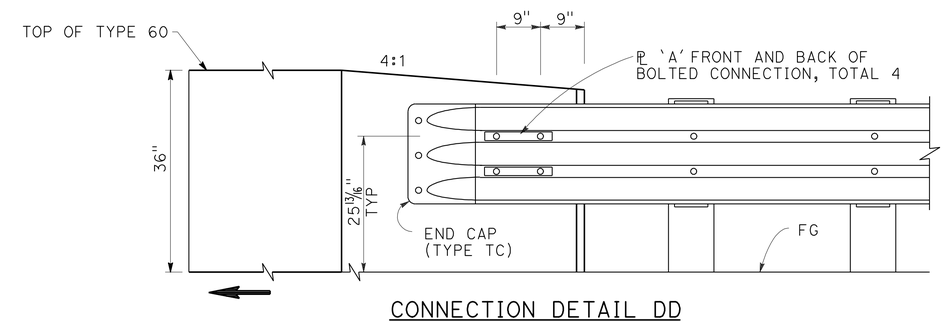

CONNECTION DETAIL DD
SEE NOTE 4

ELEVATION

GUARD RAILING CONNECTION TO ABUTMENT OR WALL

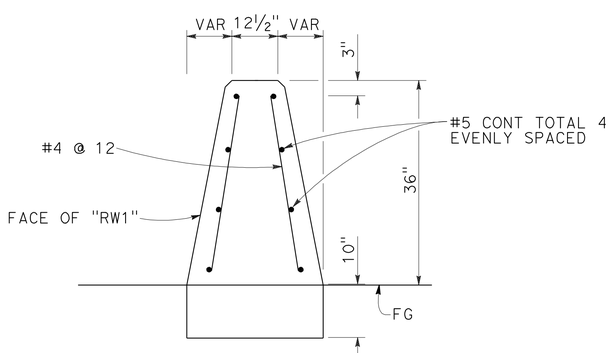

SECTION E-E

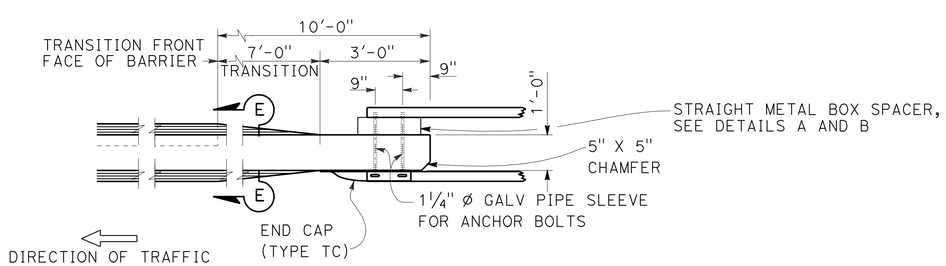

PLAN TYPE 60

METAL BEAM GUARD RAILING TRANSITION RAILING (TYPE WB) CONNECTION TO CONCRETE BARRIER

CONSTRUCTION DETAILS

NO SCALE

C-9

REVISED BY	DATE REVISED
ROBERT J. NIXON	JOHN L. MARTIN

CALCULATED-DESIGNED BY | CHECKED BY

FUNCTIONAL SUPERVISOR: JOHN L. MARTIN

STATE OF CALIFORNIA - DEPARTMENT OF TRANSPORTATION
Caltrans DESIGN

P:\proj2\04\26406\design\DCCR\426406ga009.dgn

LAST REVISION 03-15-10 | DATE PLOTTED => 16-AUG-2010 | TIME PLOTTED => 10:22

Dist	COUNTY	ROUTE	POST MILES TOTAL PROJECT	SHEET No.	TOTAL SHEETS
04	Mrn	101	18.6/R22.3	61	542

REGISTERED CIVIL ENGINEER 03-15-10 DATE

8-9-10
PLANS APPROVAL DATE

REGISTERED PROFESSIONAL ENGINEER ROBERT J. NIXON No. C69123 Exp. 6-30-10 CIVIL STATE OF CALIFORNIA

THE STATE OF CALIFORNIA OR ITS OFFICERS OR AGENTS SHALL NOT BE RESPONSIBLE FOR THE ACCURACY OR COMPLETENESS OF SCANNED COPIES OF THIS PLAN SHEET.

NOTE:

1. FOR COMPLETE RIGHT OF WAY AND ACCURATE ACCESS DATA, SEE RIGHT OF WAY RECORD MAPS AT DISTRICT OFFICE.

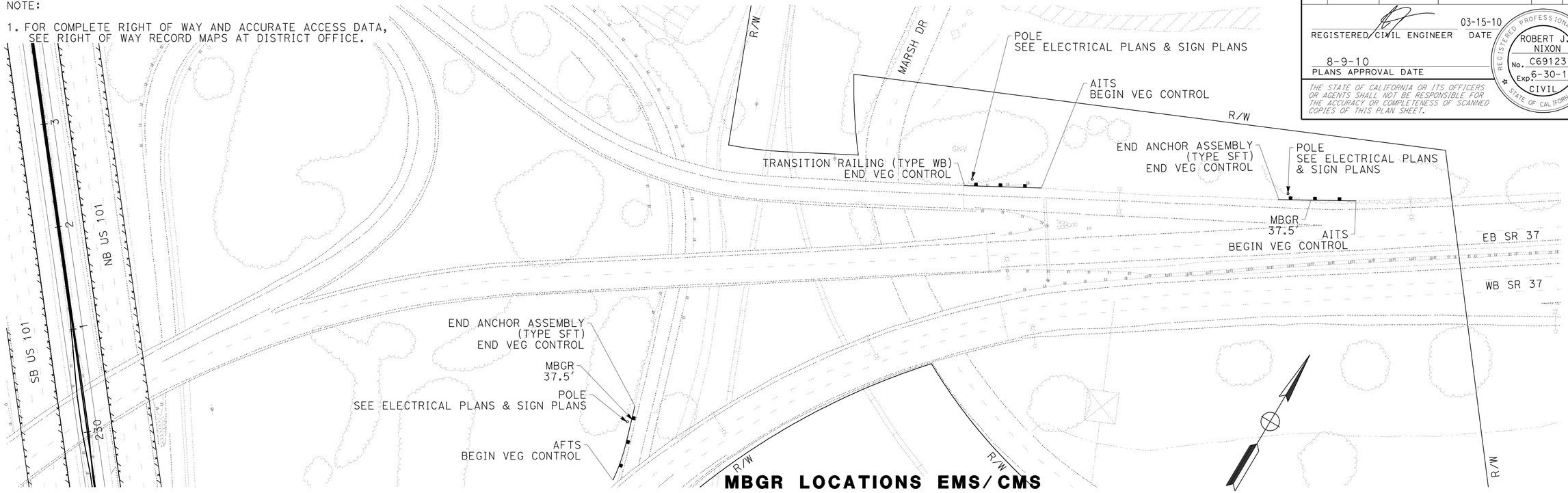

MBGR LOCATIONS EMS/CMS

SCALE: 1" = 50'

MBGR LOCATIONS EMS/CMS

SCALE: 1" = 50'

CONSTRUCTION DETAILS

C-10

REVISED BY | DATE REVISED

ROBERT J. NIXON | JOHN L. MARTIN

CALCULATED-DESIGNED BY | CHECKED BY

FUNCTIONAL SUPERVISOR: JOHN L. MARTIN

STATE OF CALIFORNIA - DEPARTMENT OF TRANSPORTATION

Caltrans DESIGN

P:\proj2\04\26406\design\UCCR\426406ga010.dgn

LAST REVISION 03-15-10 | DATE PLOTTED => 16-AUG-2010 | TIME PLOTTED => 10:22

BORDER LAST REVISED 4/11/2008 | RELATIVE BORDER SCALE IS IN INCHES 0 1 2 3 | USERNAME => trpierce | DGN FILE => 426406ga010.dgn | CU 03 240 | EA 264061

Dist	COUNTY	ROUTE	POST MILES TOTAL PROJECT	SHEET No.	TOTAL SHEETS
04	Mrn	101	18.6/R22.3	62	542

REGISTERED CIVIL ENGINEER 03-15-10 DATE

8-9-10
PLANS APPROVAL DATE

REGISTERED PROFESSIONAL ENGINEER ROBERT J. NIXON No. C69123 Exp. 6-30-10 CIVIL STATE OF CALIFORNIA

THE STATE OF CALIFORNIA OR ITS OFFICERS OR AGENTS SHALL NOT BE RESPONSIBLE FOR THE ACCURACY OR COMPLETENESS OF SCANNED COPIES OF THIS PLAN SHEET.

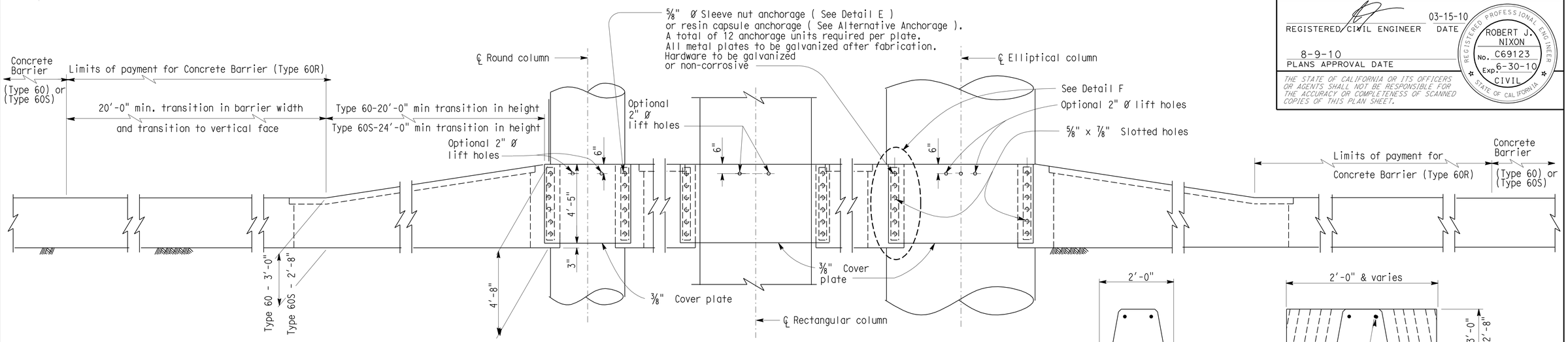

ELEVATION

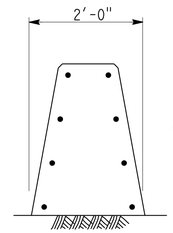

SECTION A-A

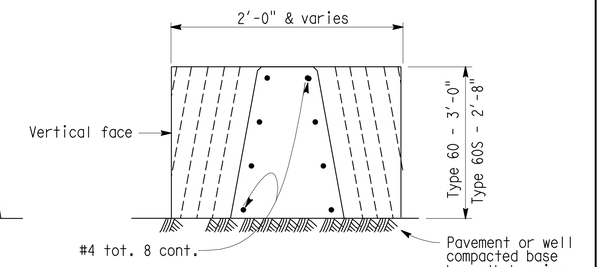

SECTION B-B

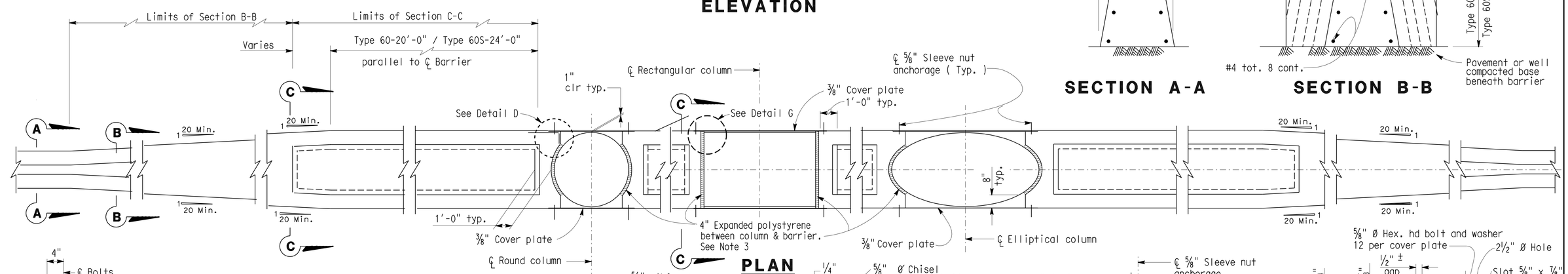

PLAN

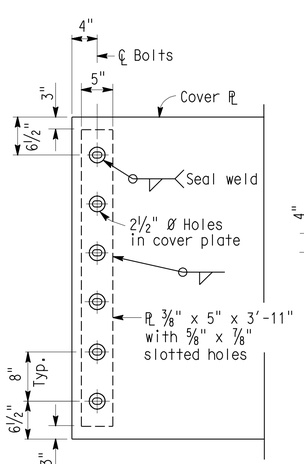

DETAIL F

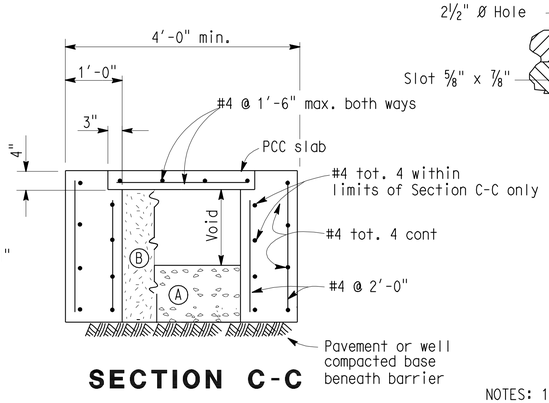

SECTION C-C

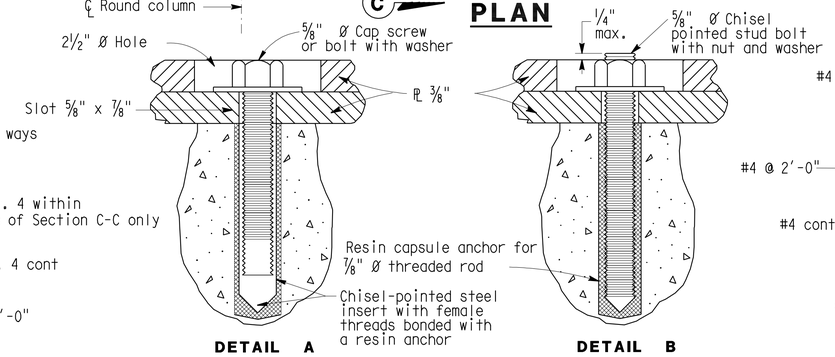

ALTERNATIVE ANCHORAGE

NOTES: 1) Resin capsule anchorage is subject to approval of the Engineer. Installation procedures shall comply with manufacturer's instructions.

2) Detail B similar to Detail A except for anchorage devices.

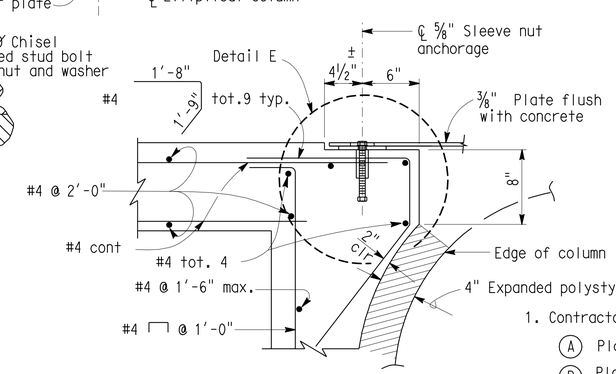

DETAIL D

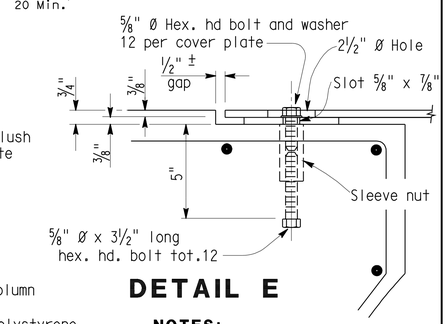

DETAIL E

NOTES:

1. Contractor options for fill between barrier walls.
   - (A) Place 2'-0" PCC at base between barrier walls.
   - (B) Place granular material from base to bottom of 4" cap.
2. Forming material for 4" cap may remain in place.
3. Enclose column with 4" expanded polystyrene at locations where concrete or cement treated base encases the column.
4. For Detail G, see Sheet C-12.

CONCRETE BARRIER (TYPE 60R)

CONSTRUCTION DETAILS

NO SCALE

C-11

REVISED BY | DATE REVISED
CALCULATED-DESIGNED BY | CHECKED BY
FUNCTIONAL SUPERVISOR: JOHN L. MARTIN

STATE OF CALIFORNIA - DEPARTMENT OF TRANSPORTATION
Caltrans DESIGN

P:\proj2\04\26406\design\DCCR\426406ga011.dgn

LAST REVISION 03-15-10 | DATE PLOTTED => 08-FEB-2011 | TIME PLOTTED => 11:09

Dist	COUNTY	ROUTE	POST MILES TOTAL PROJECT	SHEET No.	TOTAL SHEETS
04	Mrn	101	18.6/R22.3	63	542

REGISTERED CIVIL ENGINEER 03-15-10 DATE

8-9-10
PLANS APPROVAL DATE

REGISTERED PROFESSIONAL ENGINEER ROBERT J. NIXON No. C69123 Exp. 6-30-10 CIVIL STATE OF CALIFORNIA

THE STATE OF CALIFORNIA OR ITS OFFICERS OR AGENTS SHALL NOT BE RESPONSIBLE FOR THE ACCURACY OR COMPLETENESS OF SCANNED COPIES OF THIS PLAN SHEET.

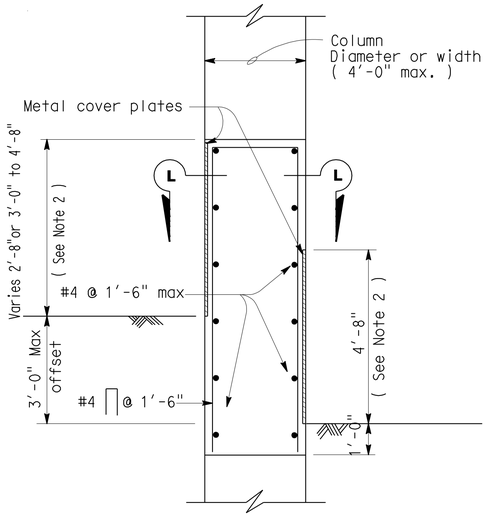

TYPICAL SECTION

Roadway offset 3'-0" or less
Column width less than 4'-0"

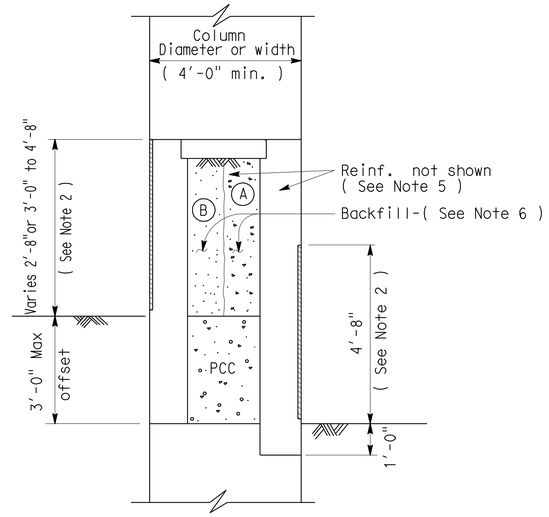

TYPICAL SECTION

Roadway offset 3'-0" or less
Column width less than 4'-0"

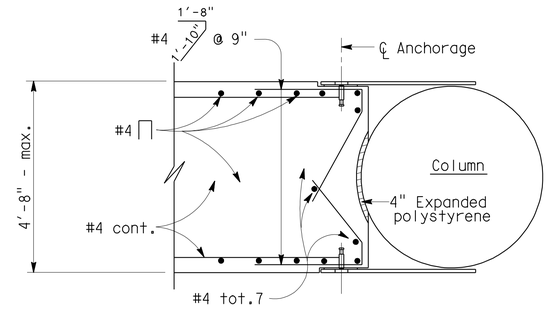

SECTION L-L

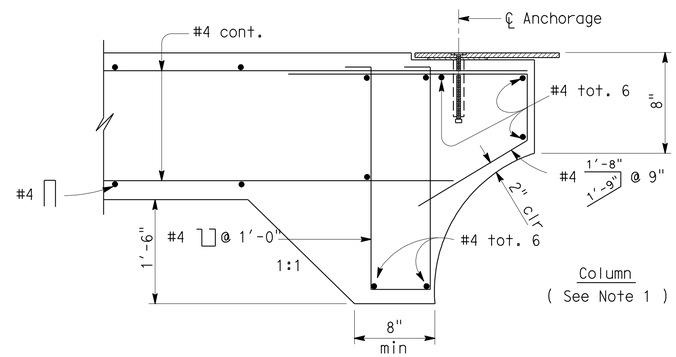

SECTION M-M

NOTES:

1. These details are to be combined with "Concrete Barrier (Type 60R)" on Sheet C-12. Details not indicated are similar to the details shown elsewhere on said sheet.
2. Metal plate details at columns shown on Concrete Barrier (Type 60R) on Sheet C-11.
3. For Retaining Wall Type 1A details, see Standard Plans.
4. Extend retaining wall footing dimension "B" to satisfy column width as indicated.
5. Extend reinforcement as shown in Section C-C on Concrete Barrier (Type 60R) on Sheet C-11.
6. Contractor options for fill between barrier walls:
   - (A) Place PCC between barrier walls, may be placed monolithic.
   - (B) Place granular material from base to bottom of concrete cap.

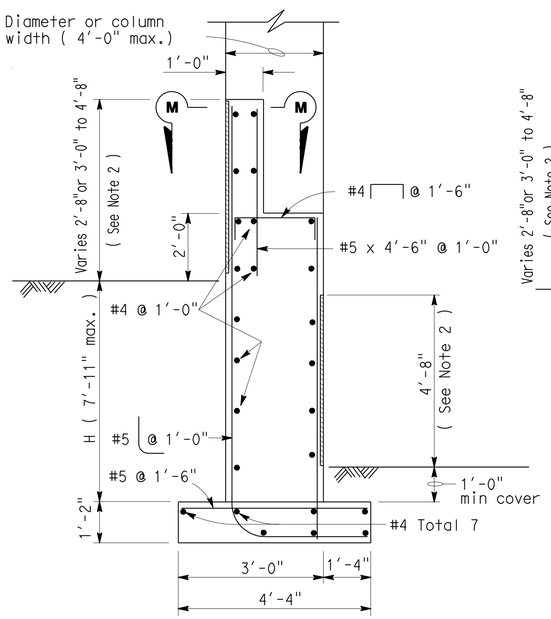

TYPICAL SECTION

Roadway offsets greater than 3'-0"
Column widths 4'-4" or less

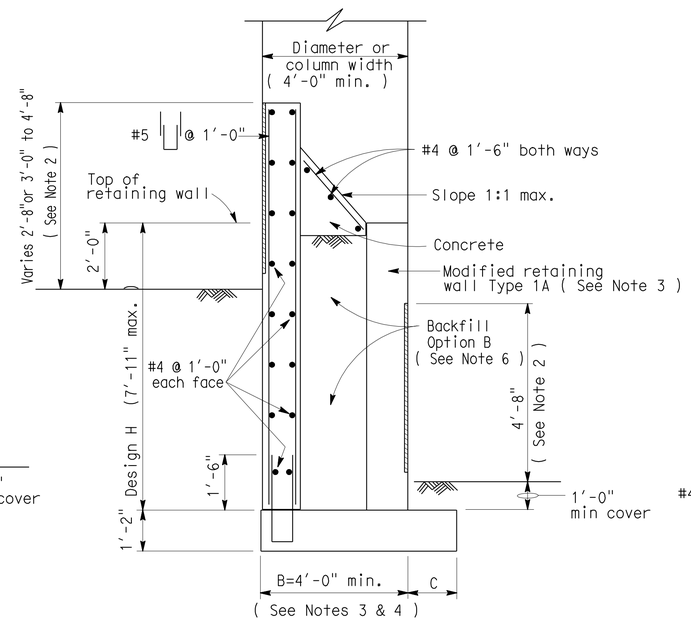

TYPICAL SECTION

Roadway offsets greater than 3'-0"
Column widths greater than 4'-0"

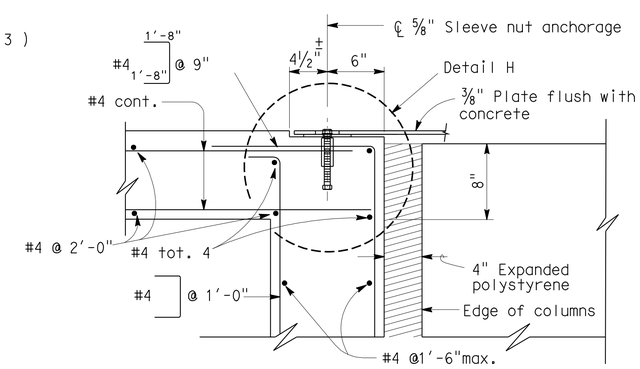

DETAIL G

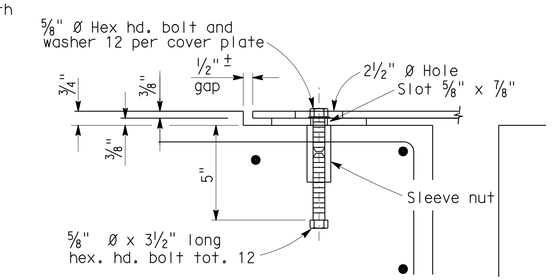

DETAIL H

CONCRETE BARRIER (TYPE 60R)

CONSTRUCTION DETAILS

NO SCALE

C-12

STATE OF CALIFORNIA - DEPARTMENT OF TRANSPORTATION
DESIGN
FUNCTIONAL SUPERVISOR: JOHN L. MARTIN
CALCULATED-DESIGNED BY
CHECKED BY
REVISED BY
DATE REVISED
P:\proj2\04\26406\design\DCCR\426406ga012.dgn

LAST REVISION 03-15-10
DATE PLOTTED => 16-AUG-2010
TIME PLOTTED => 10:22

Dist	COUNTY	ROUTE	POST MILES TOTAL PROJECT	SHEET No.	TOTAL SHEETS
04	Mrn	101	18.6/R22.3	64	542

REGISTERED CIVIL ENGINEER 03-15-10 DATE

8-9-10
PLANS APPROVAL DATE

REGISTERED PROFESSIONAL ENGINEER ROBERT J. NIXON No. C69123 Exp. 6-30-10 CIVIL STATE OF CALIFORNIA

THE STATE OF CALIFORNIA OR ITS OFFICERS OR AGENTS SHALL NOT BE RESPONSIBLE FOR THE ACCURACY OR COMPLETENESS OF SCANNED COPIES OF THIS PLAN SHEET.

TEMPORARY WATER POLLUTION CONTROL QUANTITIES

ITEM	UNIT	QUANTITY
TEMPORARY SILT FENCE	LF	7430
TEMPORARY CONSTRUCTION ENTRANCE	EA	19
TEMPORARY COVER	SQYD	15,000
TEMPORARY CHECK DAM	LF	1820
MOVE-IN/MOVE-OUT (TEMPORARY EROSION CONTROL)	EA	6
TEMPORARY DRAINAGE INLET PROTECTION	EA	162
TEMPORARY HYDRAULIC MULCH (BONDED FIBER MATRIX)	SQYD	6370
TEMPORARY SOIL BINDER	SQYD	300,000

TEMPORARY FENCE (TYPE ESA)

STATION	SHEET	LF
"J1" 221+00 TO 237+00, RIGHT	EC-2, EC-4	3720
"J1" 222+00 TO 228+50, LEFT	EC-3, EC-5	2269
"J1" 235+00 TO 243+00, LEFT	EC-5, EC-6	746
"J1" 273+00 TO 288+00, RIGHT	EC-8, EC-9	1592
"J1" 275+00 TO 297+50, LEFT	EC-8, EC-10	4637
"J1" 289+00 TO 304+00, RIGHT	EC-9, EC-11	1511
"J1" 305+00 TO 309+00, LEFT & RIGHT	EC-11	862
"J1" 307+65 TO 312+00, RIGHT	EC-11, EC-12	887
"J1" 308+50 TO 316+00, LEFT	EC-11, EC-12	816
"J1" 369+00 TO 393+00, LEFT	EC-16, EC-17	2113
	TOTAL	19,153

TEMPORARY WATER POLLUTION CONTROL QUANTITIES

WPCQ-1

REVISED BY | DATE REVISED
J A TRIGG | JOHN L. MARTIN
CALCULATED-DESIGNED BY | CHECKED BY
FUNCTIONAL SUPERVISOR
JOHN L. MARTIN

STATE OF CALIFORNIA - DEPARTMENT OF TRANSPORTATION
Caltrans DESIGN

P:\proj2\04\26406\design\DCCR\426406gd001.dgn

LAST REVISION 06-14-10 | DATE PLOTTED => 16-AUG-2010 | TIME PLOTTED => 10:23

NOTES:

1. FOR COMPLETE RIGHT OF WAY AND ACCURATE ACCESS DATA, SEE RIGHT OF WAY RECORD MAPS AT DISTRICT OFFICE.
2. FOR BIOFILTRATION SWALE AND BIOFILTRATION STRIP DETAILS, SEE SHEET EROSION CONTROL DETAILS

Dist	COUNTY	ROUTE	POST MILES TOTAL PROJECT	SHEET No.	TOTAL SHEETS
04	Mrn	101	18.6/R22.3	65	542

LICENSED LANDSCAPE ARCHITECT

8-9-10
PLANS APPROVAL DATE

LICENSED LANDSCAPE ARCHITECT
Laurie J. Smith No. 4088
Signature
8-31-10
Renewal Date
Date
STATE OF CALIFORNIA

THE STATE OF CALIFORNIA OR ITS OFFICERS OR AGENTS SHALL NOT BE RESPONSIBLE FOR THE ACCURACY OR COMPLETENESS OF SCANNED COPIES OF THIS PLAN SHEET.

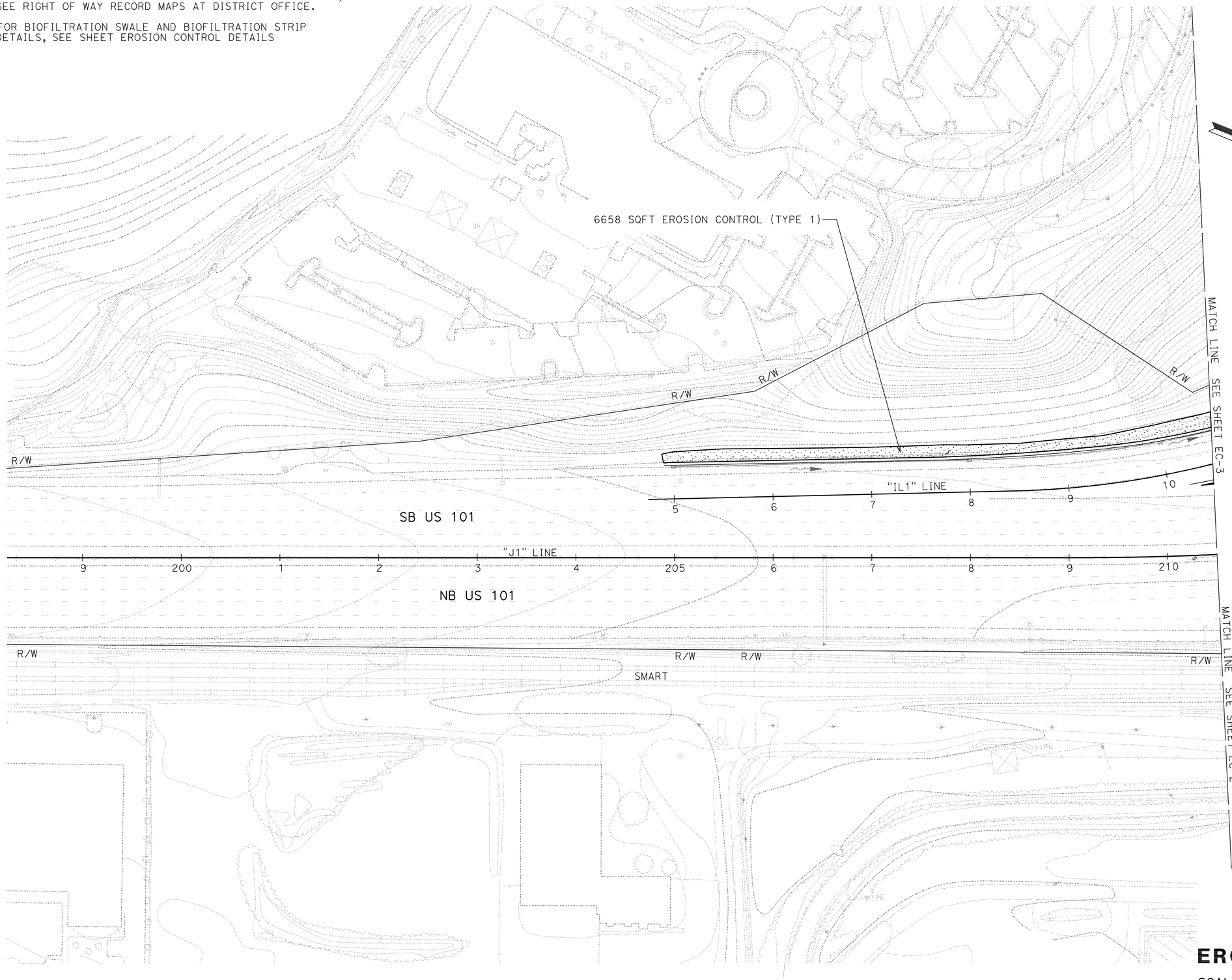

LEGEND

ENVIRONMENTALLY SENSITIVE AREA. NO CONTRACTOR ACCESS PERMITTED

TFESA — TEMPORARY FENCE (TYPE ESA) (FOR TFESA QUANTITIES SEE SHEET WPCQ-1)

EROSION CONTROL (TYPE 1)

EROSION CONTROL (COMPOST BLANKET)

EROSION CONTROL (HYDROSEED) (SEED TYPE 2)

EROSION CONTROL (TYPE 2)

COMPOST, INCORPORATE

EROSION CONTROL (HYDROSEED) (SEED TYPE 2)

EROSION CONTROL (TYPE 3)

COMPOST, INCORPORATE

EROSION CONTROL (HYDROSEED) (SEED TYPE 1)

LINER PLANTS (PLANT GROUP M)

EROSION CONTROL (TYPE 4)

ROLLED EROSION CONTROL PRODUCT (NETTING)

EROSION CONTROL (COMPOST BLANKET)

EROSION CONTROL (HYDROSEED) (SEED TYPE 2)

\\\\ FR \\\\\ FIBER ROLLS

EROSION CONTROL PLAN

SCALE: 1" = 50'

EC-1

THIS PLAN IS ACCURATE FOR EROSION CONTROL WORK ONLY.

STATE OF CALIFORNIA - DEPARTMENT OF TRANSPORTATION
Caltrans® WATER QUALITY

SENIOR LANDSCAPE ARCHITECT: DAVID W. YAM

CALCULATED-DESIGNED BY: LAURIE J. SMITH
CHECKED BY: ALEX MCDONALD

REVISED BY
DATE REVISED

LAST REVISION 03-11-10
DATE PLOTTED => 16-AUG-2010
TIME PLOTTED => 10:23

NOTE:

FOR ACCURATE RIGHT OF WAY AND ACCESS DATA,
CONTACT RIGHT OF WAY ENGINEERING AT THE DISTRICT OFFICE.

Dist	COUNTY	ROUTE	POST MILES TOTAL PROJECT	SHEET No.	TOTAL SHEETS
04	Mrn	101	18.6/R22.3	66	542

LICENSED LANDSCAPE ARCHITECT

8-9-10
PLANS APPROVAL DATE

LICENSED LANDSCAPE ARCHITECT
Laurie J. Smith No. 4096
Signature
8-31-10
Renewal Date
Date
STATE OF CALIFORNIA

THE STATE OF CALIFORNIA OR ITS OFFICERS OR AGENTS SHALL NOT BE RESPONSIBLE FOR THE ACCURACY OR COMPLETENESS OF SCANNED COPIES OF THIS PLAN SHEET.

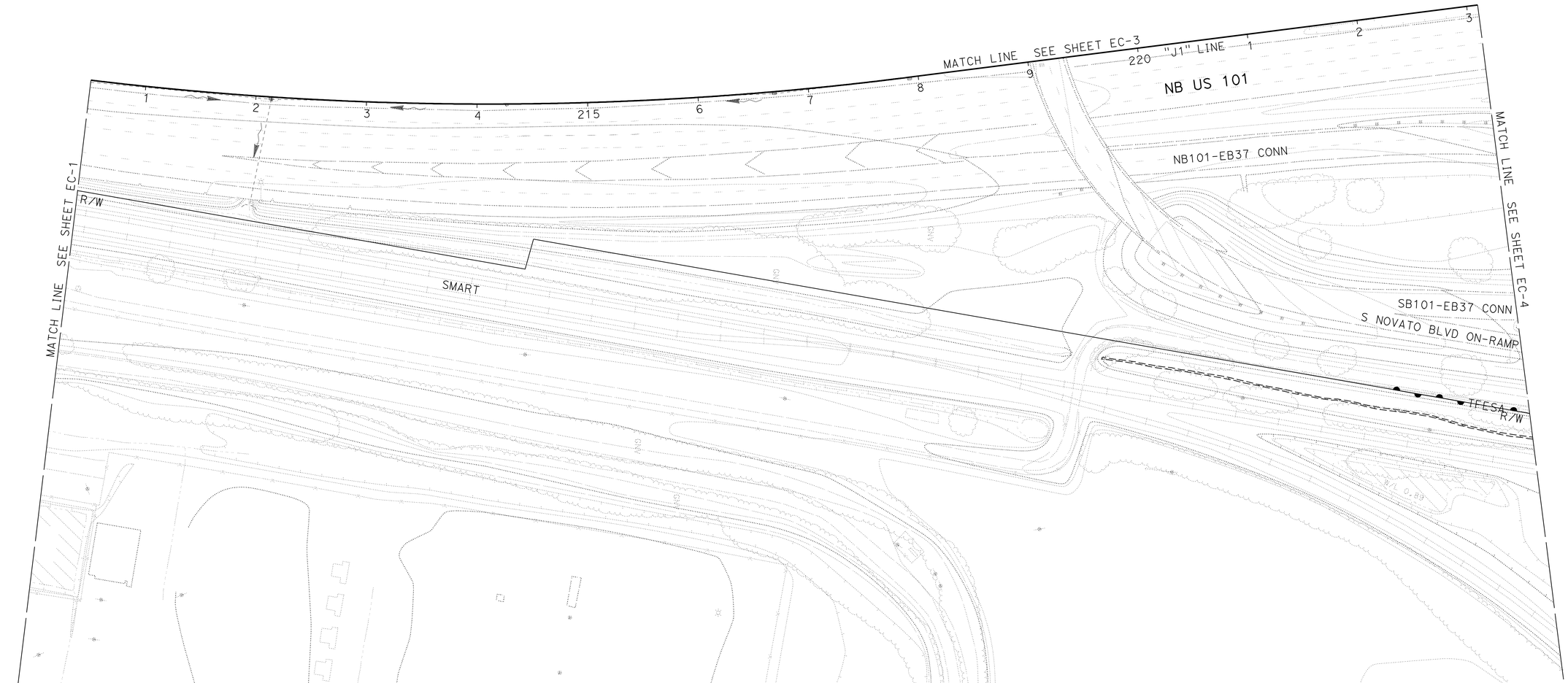

THIS PLAN IS ACCURATE FOR EROSION CONTROL WORK ONLY.

EROSION CONTROL PLAN

SCALE: 1" = 50'

EC-2

STATE OF CALIFORNIA - DEPARTMENT OF TRANSPORTATION
Caltrans
WATER QUALITY

SENIOR LANDSCAPE ARCHITECT: DAVID W. YAM

CALCULATED-DESIGNED BY: LAURIE J. SMITH
CHECKED BY: ALEX MCDONALD

REVISED BY
DATE REVISED

LAST REVISION 03-05-10 | DATE PLOTTED => 16-AUG-2010 | TIME PLOTTED => 10:23

NOTE:

FOR ACCURATE RIGHT OF WAY AND ACCESS DATA,
CONTACT RIGHT OF WAY ENGINEERING AT THE DISTRICT OFFICE.

Dist	COUNTY	ROUTE	POST MILES TOTAL PROJECT	SHEET No.	TOTAL SHEETS
04	Mrn	101	18.6/R22.3	67	542

LICENSED LANDSCAPE ARCHITECT

8-9-10
PLANS APPROVAL DATE

LICENSED LANDSCAPE ARCHITECT
Laurie J. Smith No. 4088
Signature
8-31-10
Renewal Date
Date
STATE OF CALIFORNIA

THE STATE OF CALIFORNIA OR ITS OFFICERS OR AGENTS SHALL NOT BE RESPONSIBLE FOR THE ACCURACY OR COMPLETENESS OF SCANNED COPIES OF THIS PLAN SHEET.

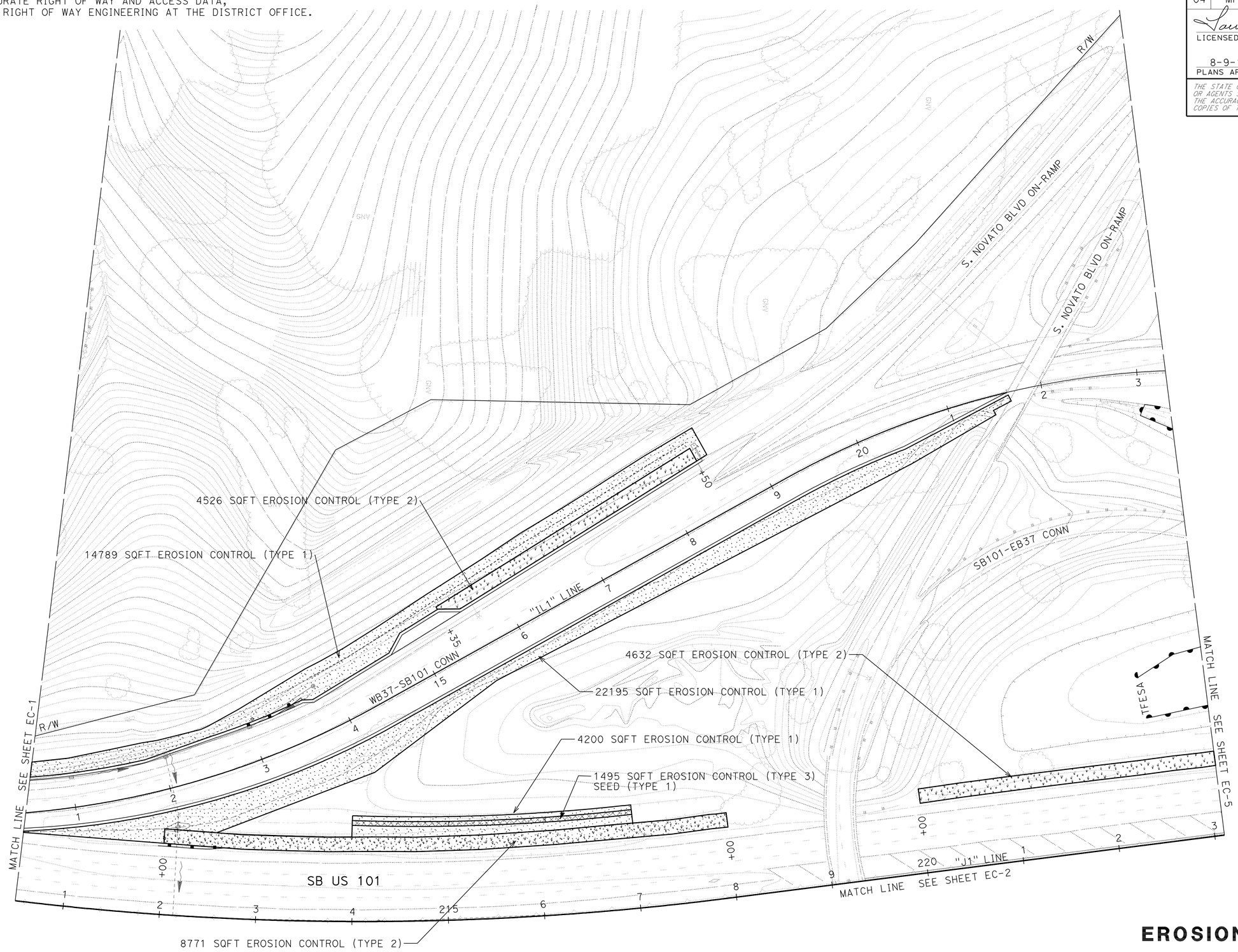

THIS PLAN IS ACCURATE FOR EROSION CONTROL WORK ONLY.

EROSION CONTROL PLAN

SCALE: 1" = 50'

EC-3

STATE OF CALIFORNIA - DEPARTMENT OF TRANSPORTATION
Caltrans®
WATER QUALITY

SENIOR LANDSCAPE ARCHITECT: DAVID W. YAM

CALCULATED-DESIGNED BY: LAURIE J. SMITH
CHECKED BY: ALEX MCDONALD

REVISED BY
DATE REVISED

LAST REVISION 06-14-10
DATE PLOTTED => 16-AUG-2010
TIME PLOTTED => 10:23

NOTE:

FOR ACCURATE RIGHT OF WAY AND ACCESS DATA,
CONTACT RIGHT OF WAY ENGINEERING AT THE DISTRICT OFFICE.

Dist	COUNTY	ROUTE	POST MILES TOTAL PROJECT	SHEET No.	TOTAL SHEETS
04	Mrn	101	18.6/R22.3	68	542

LICENSED LANDSCAPE ARCHITECT

8-9-10
PLANS APPROVAL DATE

LICENSED LANDSCAPE ARCHITECT
Laurie J. Smith No. 4088
Signature
8-31-10
Renewal Date
Date
STATE OF CALIFORNIA

THE STATE OF CALIFORNIA OR ITS OFFICERS OR AGENTS SHALL NOT BE RESPONSIBLE FOR THE ACCURACY OR COMPLETENESS OF SCANNED COPIES OF THIS PLAN SHEET.

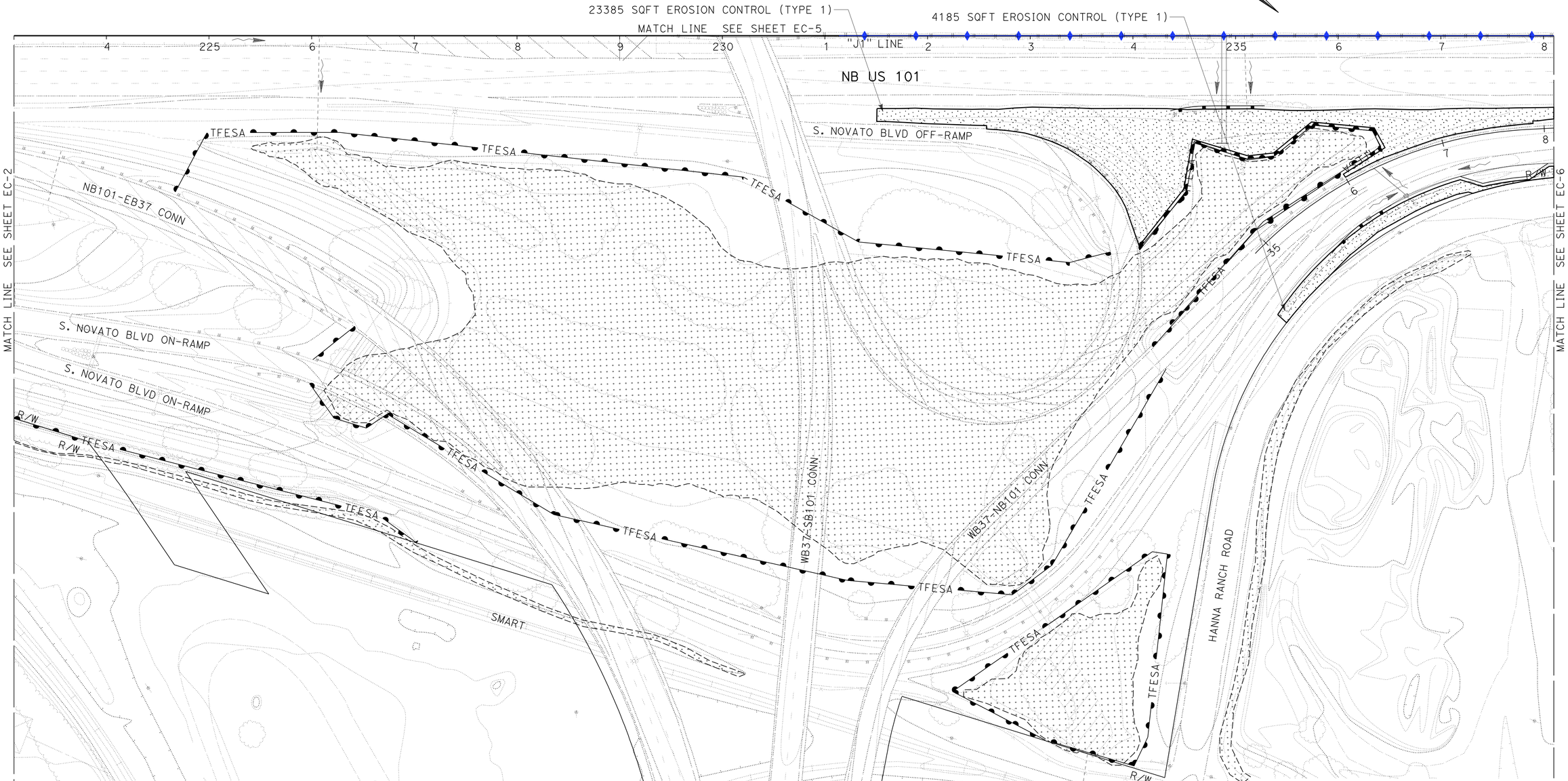

THIS PLAN IS ACCURATE FOR EROSION CONTROL WORK ONLY.

EROSION CONTROL PLAN

SCALE: 1" = 50'

EC-4

STATE OF CALIFORNIA - DEPARTMENT OF TRANSPORTATION
Caltrans®
WATER QUALITY

SENIOR LANDSCAPE ARCHITECT: DAVID W. YAM

CALCULATED-DESIGNED BY: LAURIE J. SMITH
CHECKED BY: ALEX MCDONALD

REVISED BY
DATE REVISED

LAST REVISION 03-05-10
DATE PLOTTED => 16-AUG-2010
TIME PLOTTED => 10:23

NOTE:

FOR ACCURATE RIGHT OF WAY AND ACCESS DATA,
CONTACT RIGHT OF WAY ENGINEERING AT THE DISTRICT OFFICE.

Dist	COUNTY	ROUTE	POST MILES TOTAL PROJECT	SHEET No.	TOTAL SHEETS
04	Mrn	101	18.6/R22.3	69	542

LICENSED LANDSCAPE ARCHITECT

8-9-10
PLANS APPROVAL DATE

LICENSED LANDSCAPE ARCHITECT
Laurie J. Smith No. 4098
Signature
8-31-10
Renewal Date
Date
STATE OF CALIFORNIA

THE STATE OF CALIFORNIA OR ITS OFFICERS OR AGENTS SHALL NOT BE RESPONSIBLE FOR THE ACCURACY OR COMPLETENESS OF SCANNED COPIES OF THIS PLAN SHEET.

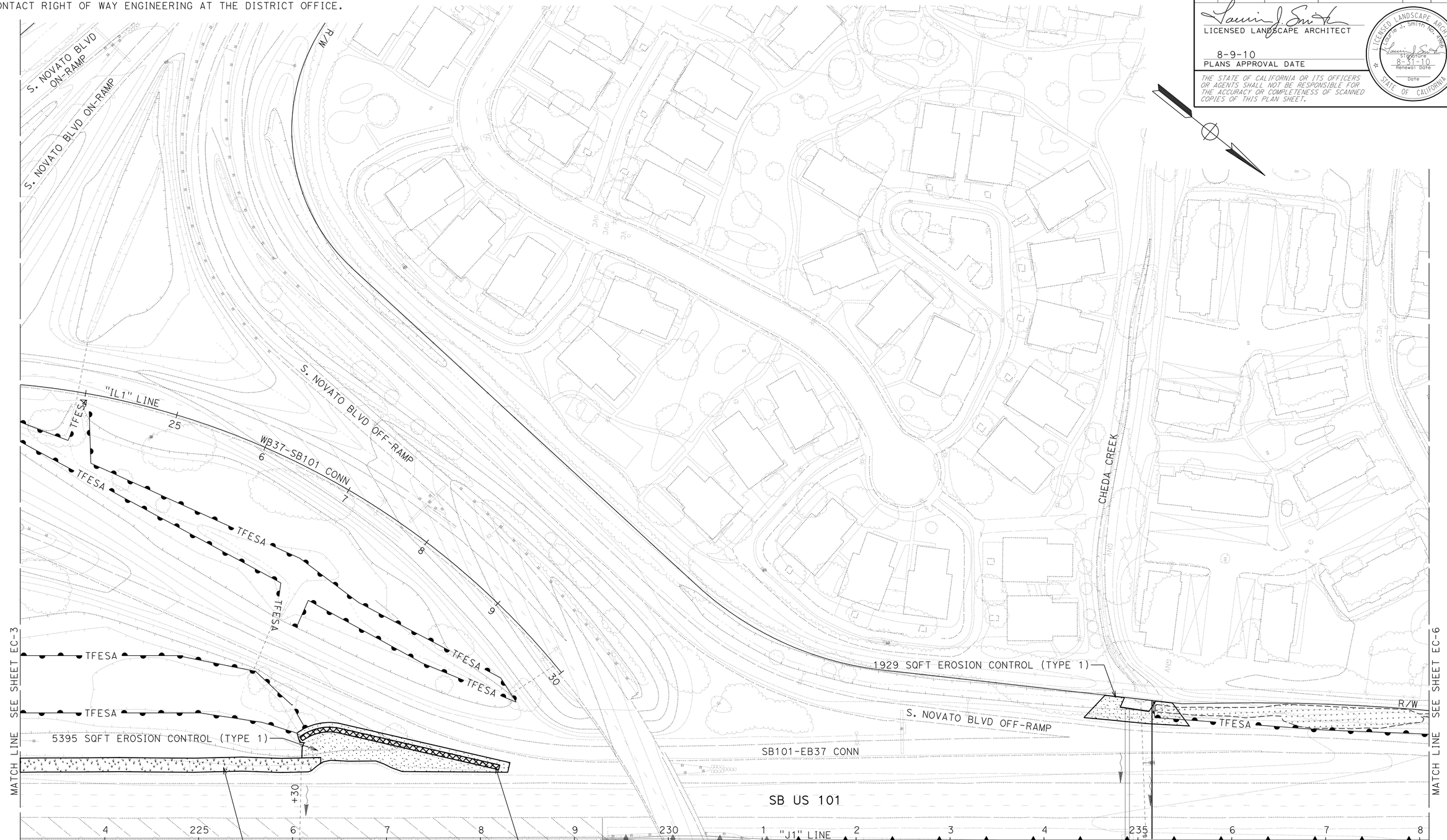

THIS PLAN IS ACCURATE FOR EROSION CONTROL WORK ONLY.

EROSION CONTROL PLAN

SCALE: 1" = 50'

EC-5

STATE OF CALIFORNIA - DEPARTMENT OF TRANSPORTATION
Caltrans®
WATER QUALITY

SENIOR LANDSCAPE ARCHITECT: DAVID W. YAM
CALCULATED-DESIGNED BY: LAURIE J. SMITH
CHECKED BY: ALEX MCDONALD
REVISED BY
DATE REVISED

LAST REVISION 06-14-10
DATE PLOTTED => 16-AUG-2010
TIME PLOTTED => 0141

NOTE:

FOR ACCURATE RIGHT OF WAY AND ACCESS DATA,
CONTACT RIGHT OF WAY ENGINEERING AT THE DISTRICT OFFICE.

Dist	COUNTY	ROUTE	POST MILES TOTAL PROJECT	SHEET No.	TOTAL SHEETS
04	Mrn	101	18.6/R22.3	70	542

LICENSED LANDSCAPE ARCHITECT

8-9-10
PLANS APPROVAL DATE

LICENSED LANDSCAPE ARCHITECT
Laurie J. Smith No. 4088
Signature
8-31-10
Renewal Date
Date
STATE OF CALIFORNIA

THE STATE OF CALIFORNIA OR ITS OFFICERS OR AGENTS SHALL NOT BE RESPONSIBLE FOR THE ACCURACY OR COMPLETENESS OF SCANNED COPIES OF THIS PLAN SHEET.

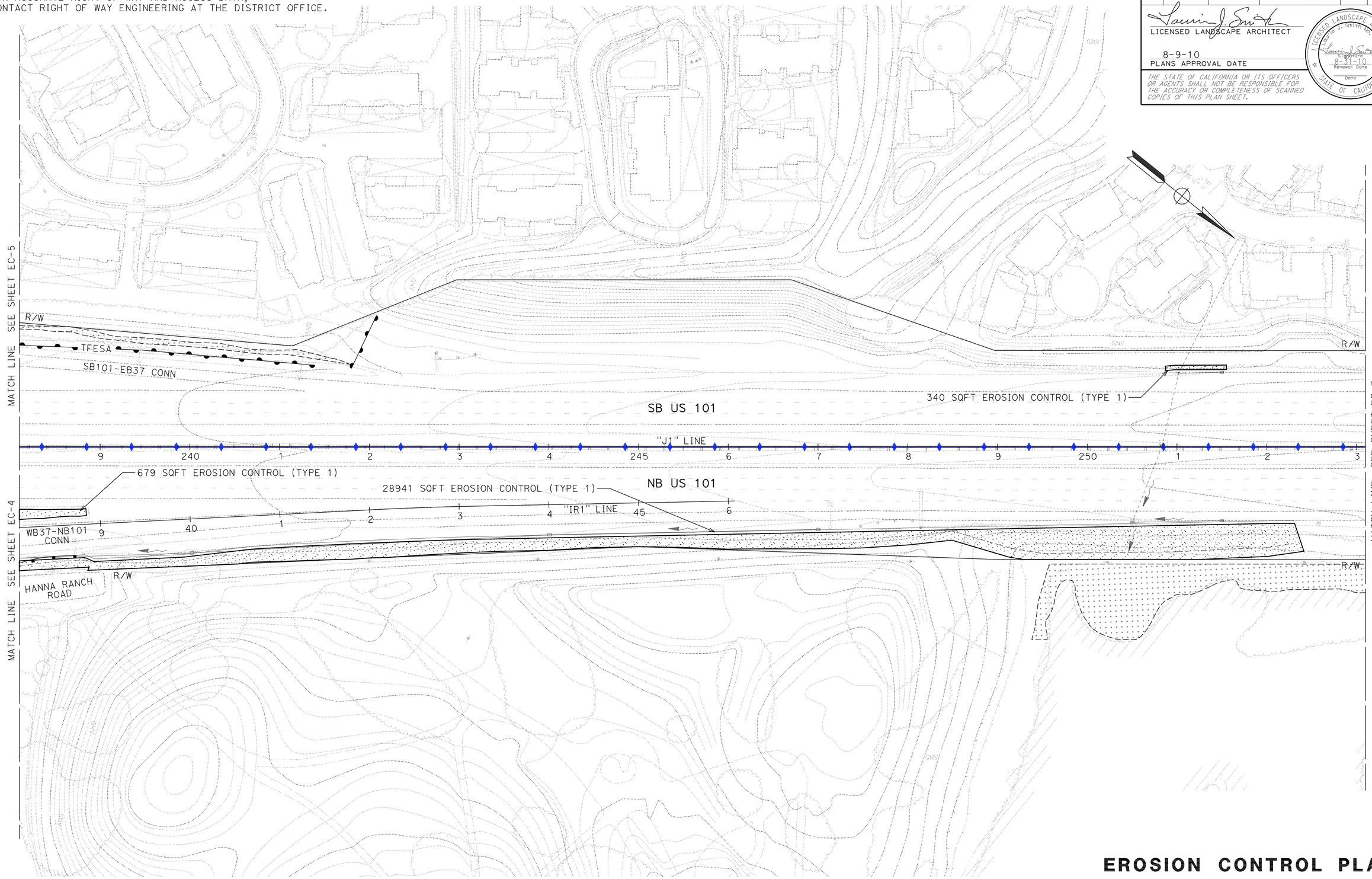

EROSION CONTROL PLAN

SCALE: 1" = 50'

EC-6

THIS PLAN IS ACCURATE FOR EROSION CONTROL WORK ONLY.

STATE OF CALIFORNIA - DEPARTMENT OF TRANSPORTATION
Caltrans®
WATER QUALITY

SENIOR LANDSCAPE ARCHITECT
DAVID W. YAM

CALCULATED-DESIGNED BY
LAURIE J. SMITH

CHECKED BY
ALEX MCDONALD

REVISED BY
DATE REVISED

LAST REVISION 03-11-10
DATE PLOTTED => 16-AUG-2010
TIME PLOTTED => 10:24

NOTE:

FOR ACCURATE RIGHT OF WAY AND ACCESS DATA,
CONTACT RIGHT OF WAY ENGINEERING AT THE DISTRICT OFFICE.

Dist	COUNTY	ROUTE	POST MILES TOTAL PROJECT	SHEET No.	TOTAL SHEETS
04	Mrn	101	18.6/R22.3	71	542

LICENSED LANDSCAPE ARCHITECT

8-9-10
PLANS APPROVAL DATE

THE STATE OF CALIFORNIA OR ITS OFFICERS OR AGENTS SHALL NOT BE RESPONSIBLE FOR THE ACCURACY OR COMPLETENESS OF SCANNED COPIES OF THIS PLAN SHEET.

LICENSED LANDSCAPE ARCHITECT
Laurie J. Smith No. 4088
Signature
8-31-10
Renewal Date
Date
STATE OF CALIFORNIA

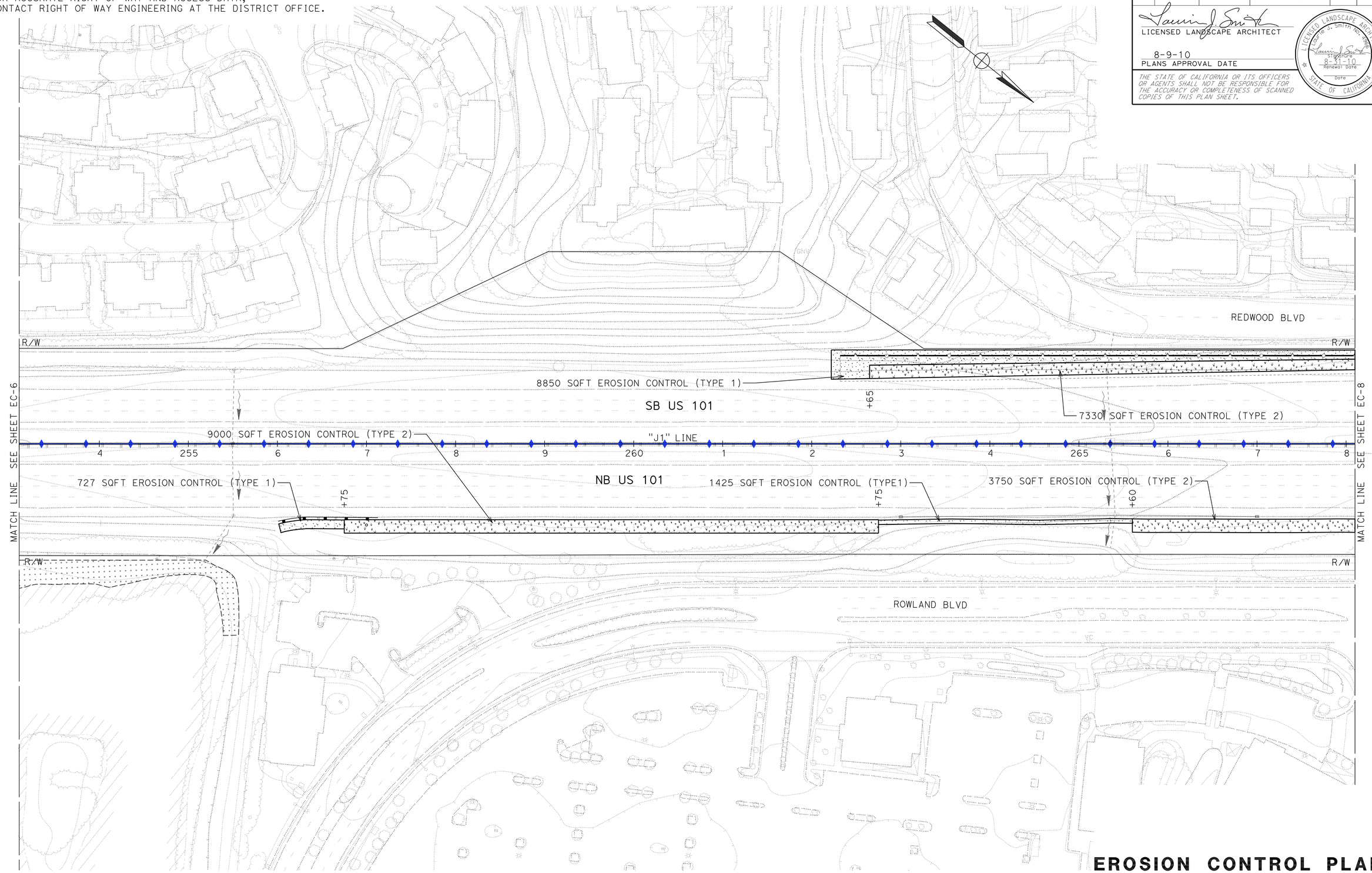

THIS PLAN IS ACCURATE FOR EROSION CONTROL WORK ONLY.

EROSION CONTROL PLAN

SCALE: 1" = 50'

EC-7

STATE OF CALIFORNIA - DEPARTMENT OF TRANSPORTATION

Caltrans®

WATER QUALITY

SENIOR LANDSCAPE ARCHITECT
DAVID W. YAM

CALCULATED-DESIGNED BY
LAURIE J. SMITH

CHECKED BY
ALEX MCDONALD

REVISED BY

DATE REVISED

LAST REVISION 03-11-10
DATE PLOTTED => 16-AUG-2010
TIME PLOTTED => 10:24

NOTE:

FOR ACCURATE RIGHT OF WAY AND ACCESS DATA,
CONTACT RIGHT OF WAY ENGINEERING AT THE DISTRICT OFFICE.

Dist	COUNTY	ROUTE	POST MILES TOTAL PROJECT	SHEET No.	TOTAL SHEETS
04	Mrn	101	18.6/R22.3	72	542

LICENSED LANDSCAPE ARCHITECT

8-9-10
PLANS APPROVAL DATE

LICENSED LANDSCAPE ARCHITECT
Laurie J. Smith No. 4088
Signature
8-31-10
Renewal Date
Date
STATE OF CALIFORNIA

THE STATE OF CALIFORNIA OR ITS OFFICERS OR AGENTS SHALL NOT BE RESPONSIBLE FOR THE ACCURACY OR COMPLETENESS OF SCANNED COPIES OF THIS PLAN SHEET.

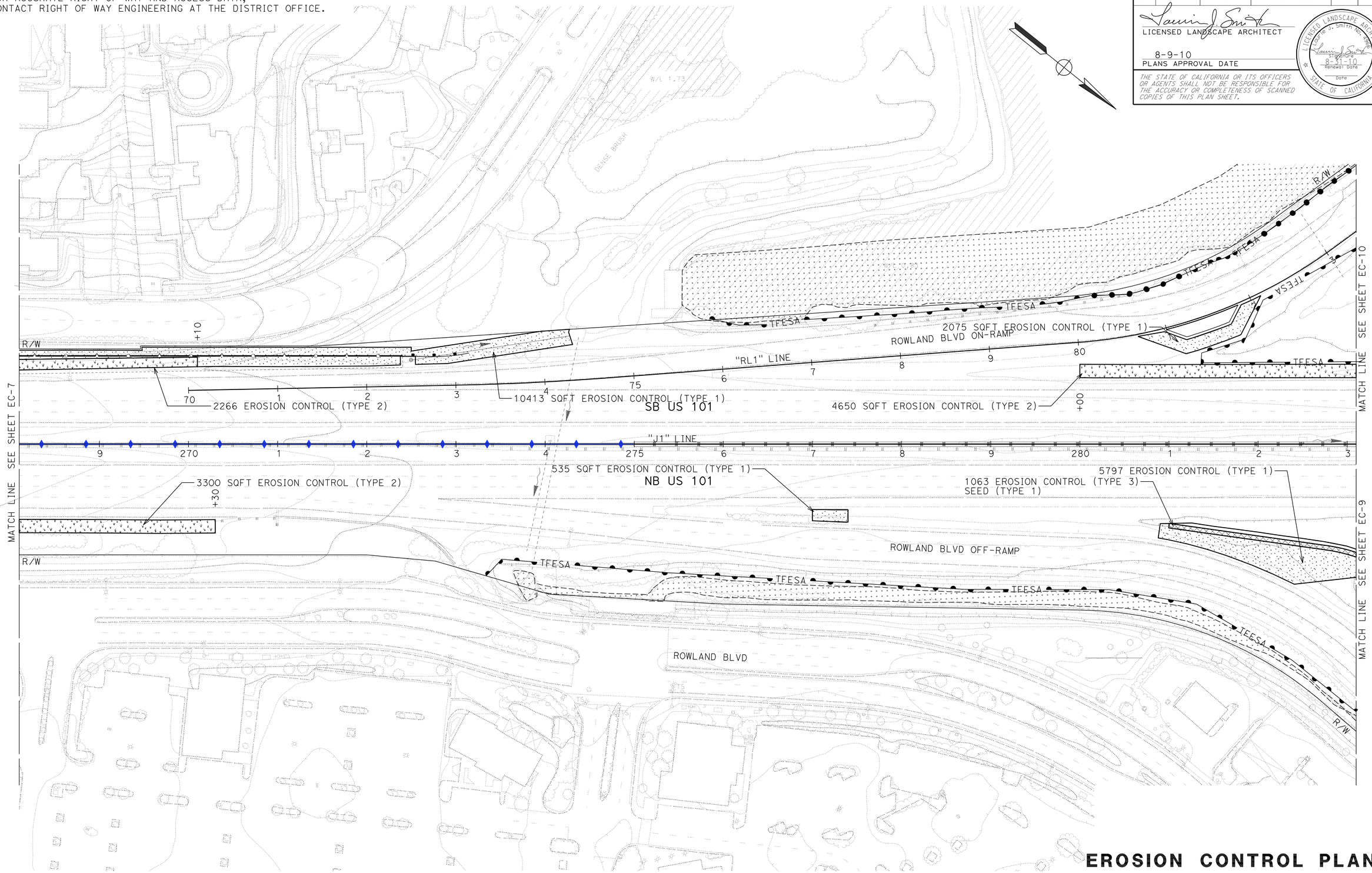

THIS PLAN IS ACCURATE FOR EROSION CONTROL WORK ONLY.

EROSION CONTROL PLAN

SCALE: 1" = 50'

EC-8

STATE OF CALIFORNIA - DEPARTMENT OF TRANSPORTATION
Caltrans
WATER QUALITY

SENIOR LANDSCAPE ARCHITECT
DAVID W. YAM

CALCULATED-DESIGNED BY
LAURIE J. SMITH

CHECKED BY
ALEX MCDONALD

REVISED BY
DATE REVISED

LAST REVISION 03-05-10
DATE PLOTTED => 16-AUG-2010
TIME PLOTTED => 0:24

NOTE:

FOR ACCURATE RIGHT OF WAY AND ACCESS DATA,
CONTACT RIGHT OF WAY ENGINEERING AT THE DISTRICT OFFICE.

Dist	COUNTY	ROUTE	POST MILES TOTAL PROJECT	SHEET No.	TOTAL SHEETS
04	Mrn	101	18.6/R22.3	73	542

LICENSED LANDSCAPE ARCHITECT

8-9-10
PLANS APPROVAL DATE

LICENSED LANDSCAPE ARCHITECT
Laurie J. Smith No. 4088
Signature
8-31-10
Renewal Date
Date
STATE OF CALIFORNIA

THE STATE OF CALIFORNIA OR ITS OFFICERS OR AGENTS SHALL NOT BE RESPONSIBLE FOR THE ACCURACY OR COMPLETENESS OF SCANNED COPIES OF THIS PLAN SHEET.

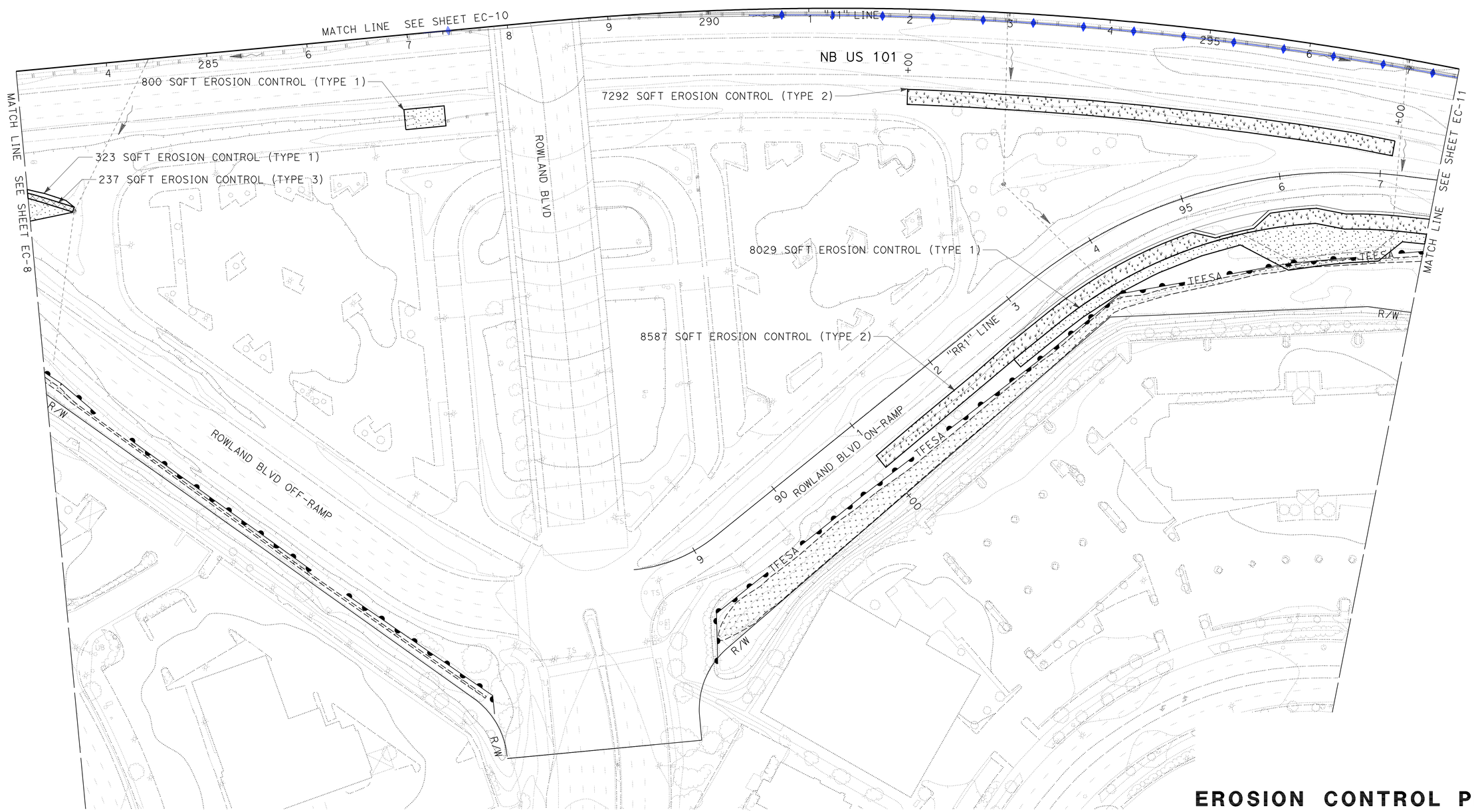

THIS PLAN IS ACCURATE FOR EROSION CONTROL WORK ONLY.

EROSION CONTROL PLAN

SCALE: 1" = 50'

EC-9

STATE OF CALIFORNIA - DEPARTMENT OF TRANSPORTATION
Caltrans®
WATER QUALITY

SENIOR LANDSCAPE ARCHITECT: DAVID W. YAM

CALCULATED-DESIGNED BY: LAURIE J. SMITH
CHECKED BY: ALEX MCDONALD

REVISED BY
DATE REVISED

LAST REVISION 06-14-10
DATE PLOTTED => 16-AUG-2010
TIME PLOTTED => 10:25

NOTE:

FOR ACCURATE RIGHT OF WAY AND ACCESS DATA,
CONTACT RIGHT OF WAY ENGINEERING AT THE DISTRICT OFFICE.

Dist	COUNTY	ROUTE	POST MILES TOTAL PROJECT	SHEET No.	TOTAL SHEETS
04	Mrn	101	18.6/R22.3	74	542

LICENSED LANDSCAPE ARCHITECT

8-9-10
PLANS APPROVAL DATE

LICENSED LANDSCAPE ARCHITECT
Laurie J. Smith No. 4088
Signature
8-31-10
Renewal Date
Date
STATE OF CALIFORNIA

THE STATE OF CALIFORNIA OR ITS OFFICERS OR AGENTS SHALL NOT BE RESPONSIBLE FOR THE ACCURACY OR COMPLETENESS OF SCANNED COPIES OF THIS PLAN SHEET.

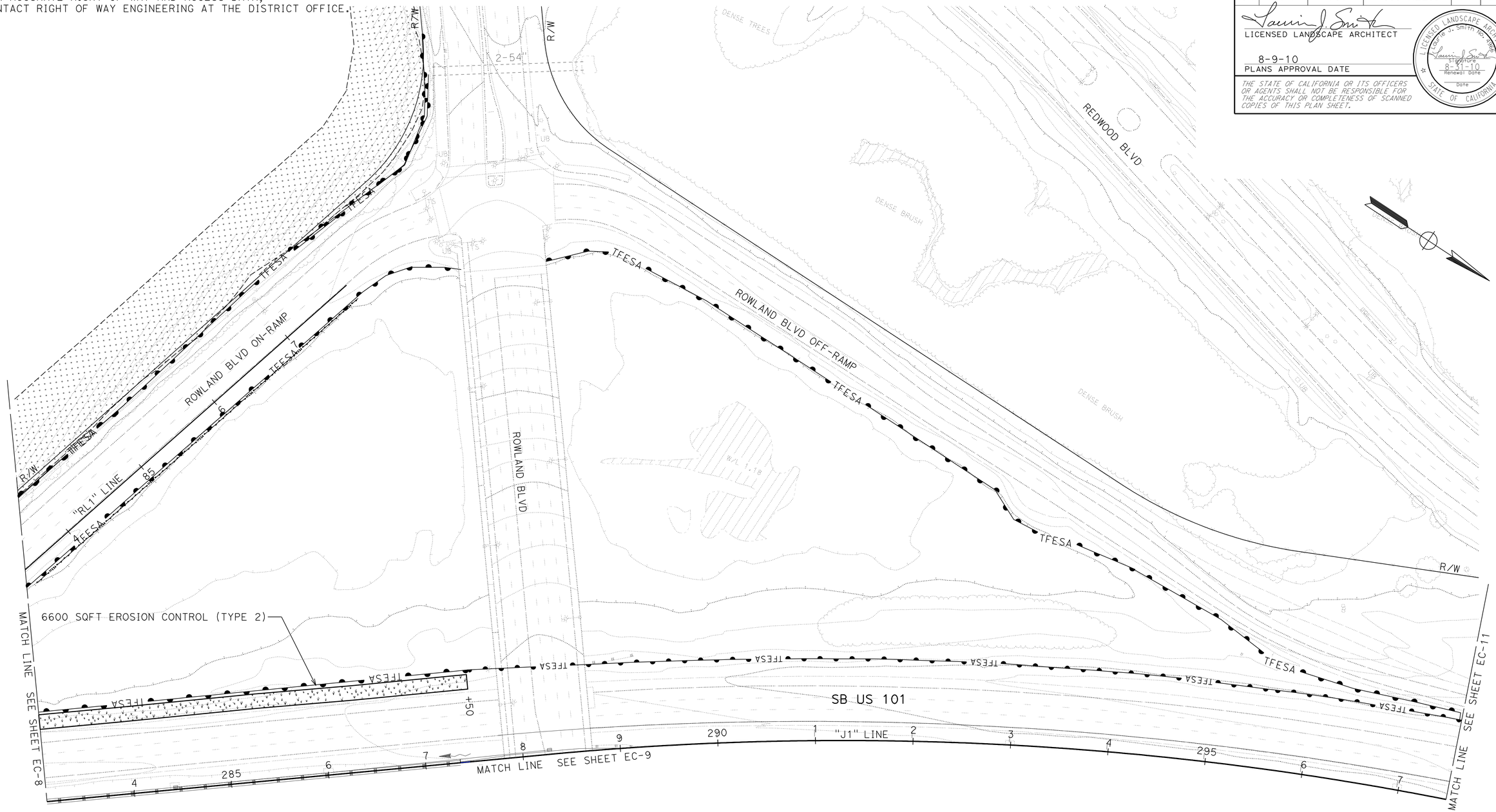

THIS PLAN IS ACCURATE FOR EROSION CONTROL WORK ONLY.

EROSION CONTROL PLAN

SCALE: 1" = 50'

EC-10

STATE OF CALIFORNIA - DEPARTMENT OF TRANSPORTATION
Caltrans®
WATER QUALITY

SENIOR LANDSCAPE ARCHITECT: DAVID W. YAM

CALCULATED-DESIGNED BY: LAURIE J. SMITH
CHECKED BY: ALEX MCDONALD

REVISED BY
DATE REVISED

LAST REVISION 03-11-10
DATE PLOTTED => 16-AUG-2010
TIME PLOTTED => 10:25

NOTE:

FOR ACCURATE RIGHT OF WAY AND ACCESS DATA,
CONTACT RIGHT OF WAY ENGINEERING AT THE DISTRICT OFFICE.

Dist	COUNTY	ROUTE	POST MILES TOTAL PROJECT	SHEET No.	TOTAL SHEETS
04	Mrn	101	18.6/R22.3	75	542

LICENSED LANDSCAPE ARCHITECT

8-9-10
PLANS APPROVAL DATE

LICENSED LANDSCAPE ARCHITECT
Laurie J. Smith No. 4088
Signature
8-31-10
Renewal Date
Date
STATE OF CALIFORNIA

THE STATE OF CALIFORNIA OR ITS OFFICERS OR AGENTS SHALL NOT BE RESPONSIBLE FOR THE ACCURACY OR COMPLETENESS OF SCANNED COPIES OF THIS PLAN SHEET.

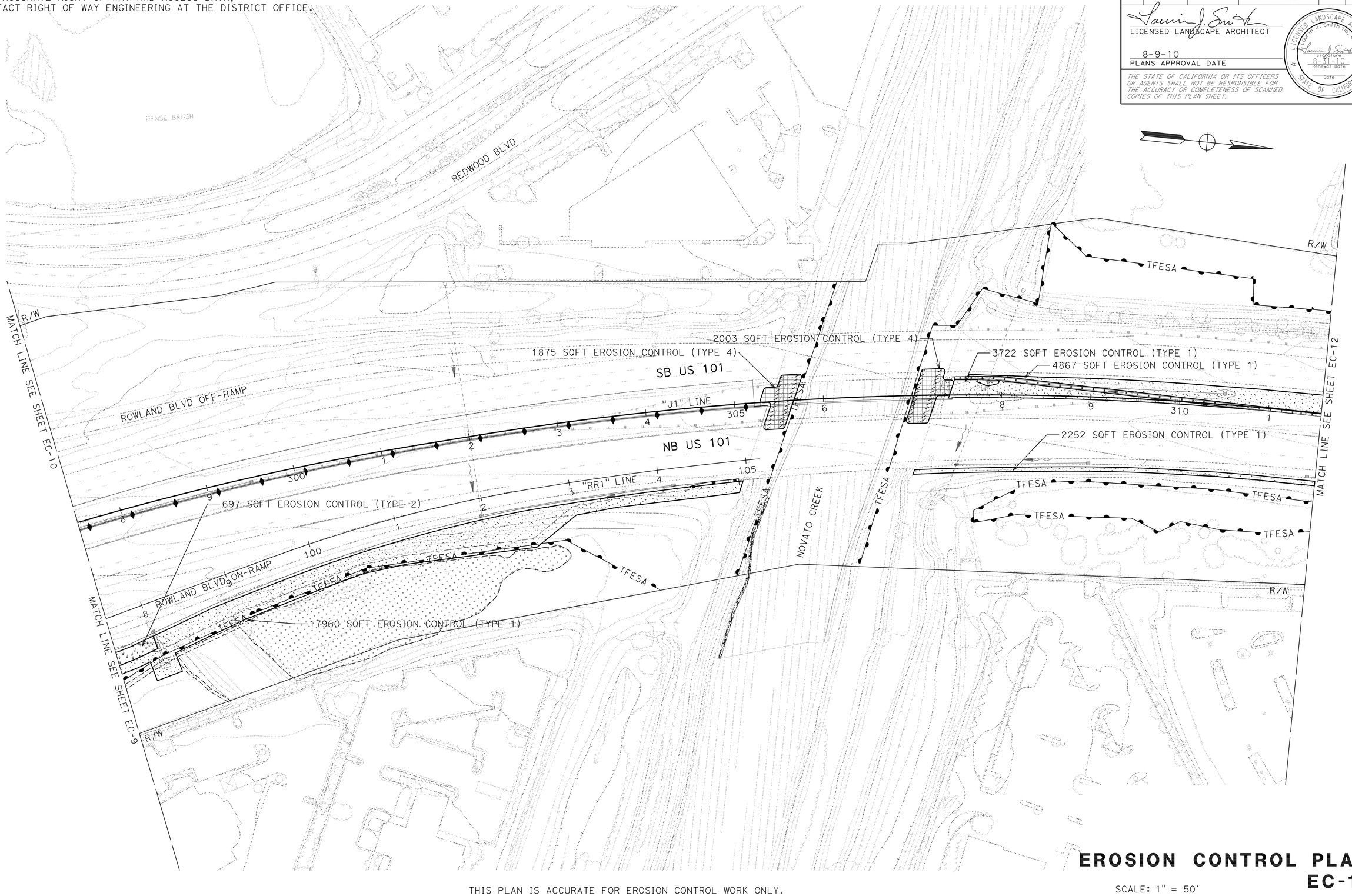

THIS PLAN IS ACCURATE FOR EROSION CONTROL WORK ONLY.

EROSION CONTROL PLAN EC-11

SCALE: 1" = 50'

STATE OF CALIFORNIA - DEPARTMENT OF TRANSPORTATION
Caltrans®
WATER QUALITY

SENIOR LANDSCAPE ARCHITECT: DAVID W. YAM
CALCULATED-DESIGNED BY: LAURIE J. SMITH
CHECKED BY: ALEX MCDONALD
REVISED BY
DATE REVISED

LAST REVISION 06-14-10
DATE PLOTTED => 16-AUG-2010
TIME PLOTTED => 10:56

NOTE:

FOR ACCURATE RIGHT OF WAY AND ACCESS DATA,
CONTACT RIGHT OF WAY ENGINEERING AT THE DISTRICT OFFICE.

Dist	COUNTY	ROUTE	POST MILES TOTAL PROJECT	SHEET No.	TOTAL SHEETS
04	Mrn	101	18.6/R22.3	76	542

LICENSED LANDSCAPE ARCHITECT

8-9-10
PLANS APPROVAL DATE

LICENSED LANDSCAPE ARCHITECT
Laurie J. Smith No. 4098
Signature
8-31-10
Renewal Date
Date
STATE OF CALIFORNIA

THE STATE OF CALIFORNIA OR ITS OFFICERS OR AGENTS SHALL NOT BE RESPONSIBLE FOR THE ACCURACY OR COMPLETENESS OF SCANNED COPIES OF THIS PLAN SHEET.

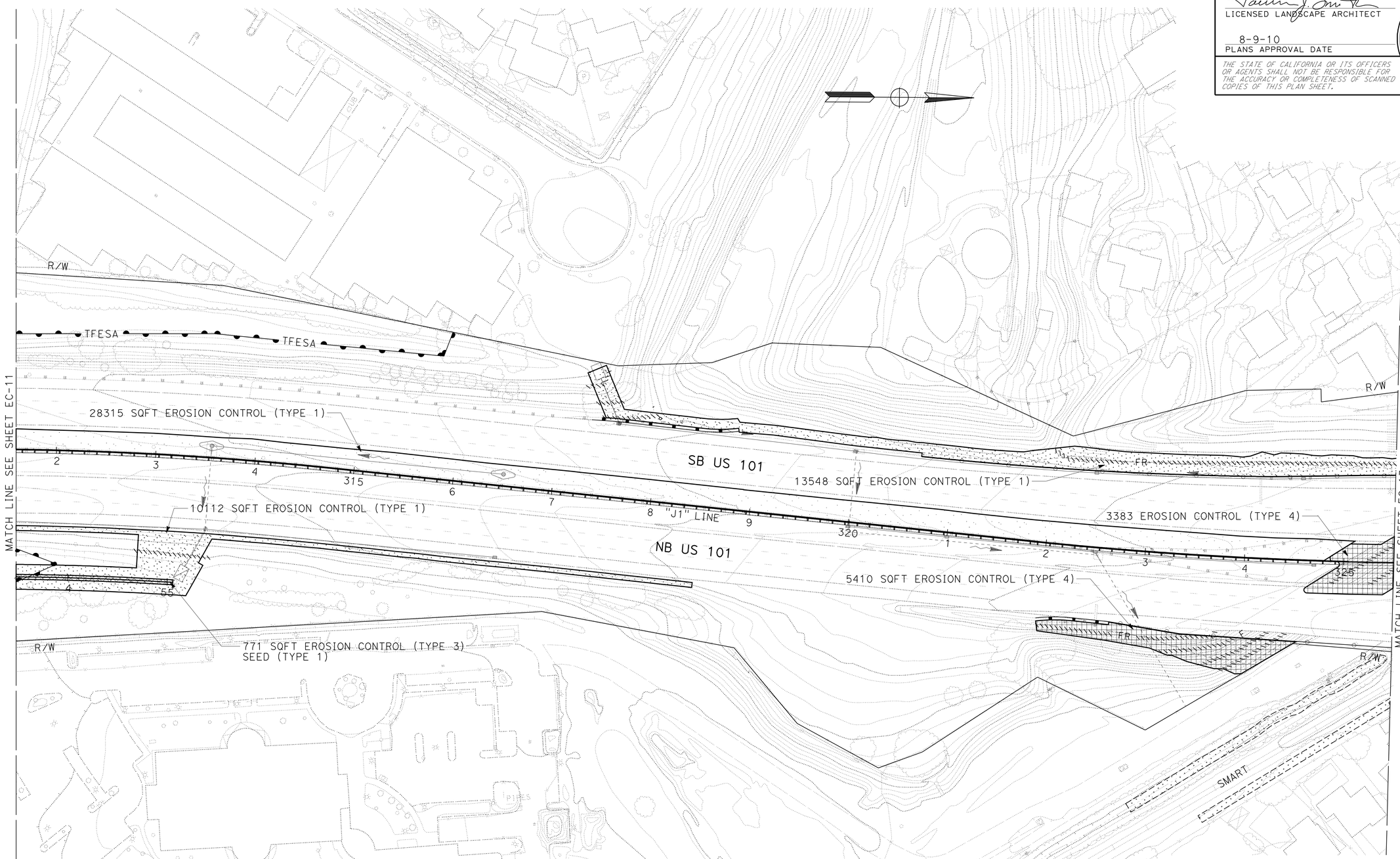

THIS PLAN IS ACCURATE FOR EROSION CONTROL WORK ONLY.

EROSION CONTROL PLAN

SCALE: 1" = 50'

EC-12

STATE OF CALIFORNIA - DEPARTMENT OF TRANSPORTATION
Caltrans®
WATER QUALITY

SENIOR LANDSCAPE ARCHITECT
DAVID W. YAM

CALCULATED-DESIGNED BY
LAURIE J. SMITH

CHECKED BY
ALEX MCDONALD

REVISED BY

DATE REVISED

LAST REVISION 06-14-10
DATE PLOTTED => 16-AUG-2010
TIME PLOTTED => 10:25

NOTE:

FOR ACCURATE RIGHT OF WAY AND ACCESS DATA,
CONTACT RIGHT OF WAY ENGINEERING AT THE DISTRICT OFFICE.

Dist	COUNTY	ROUTE	POST MILES TOTAL PROJECT	SHEET No.	TOTAL SHEETS
04	Mrn	101	18.6/R22.3	77	542

LICENSED LANDSCAPE ARCHITECT

8-9-10
PLANS APPROVAL DATE

LICENSED LANDSCAPE ARCHITECT
Laurie J. Smith No. 4088
Signature
8-31-10
Renewal Date
Date
STATE OF CALIFORNIA

THE STATE OF CALIFORNIA OR ITS OFFICERS OR AGENTS SHALL NOT BE RESPONSIBLE FOR THE ACCURACY OR COMPLETENESS OF SCANNED COPIES OF THIS PLAN SHEET.

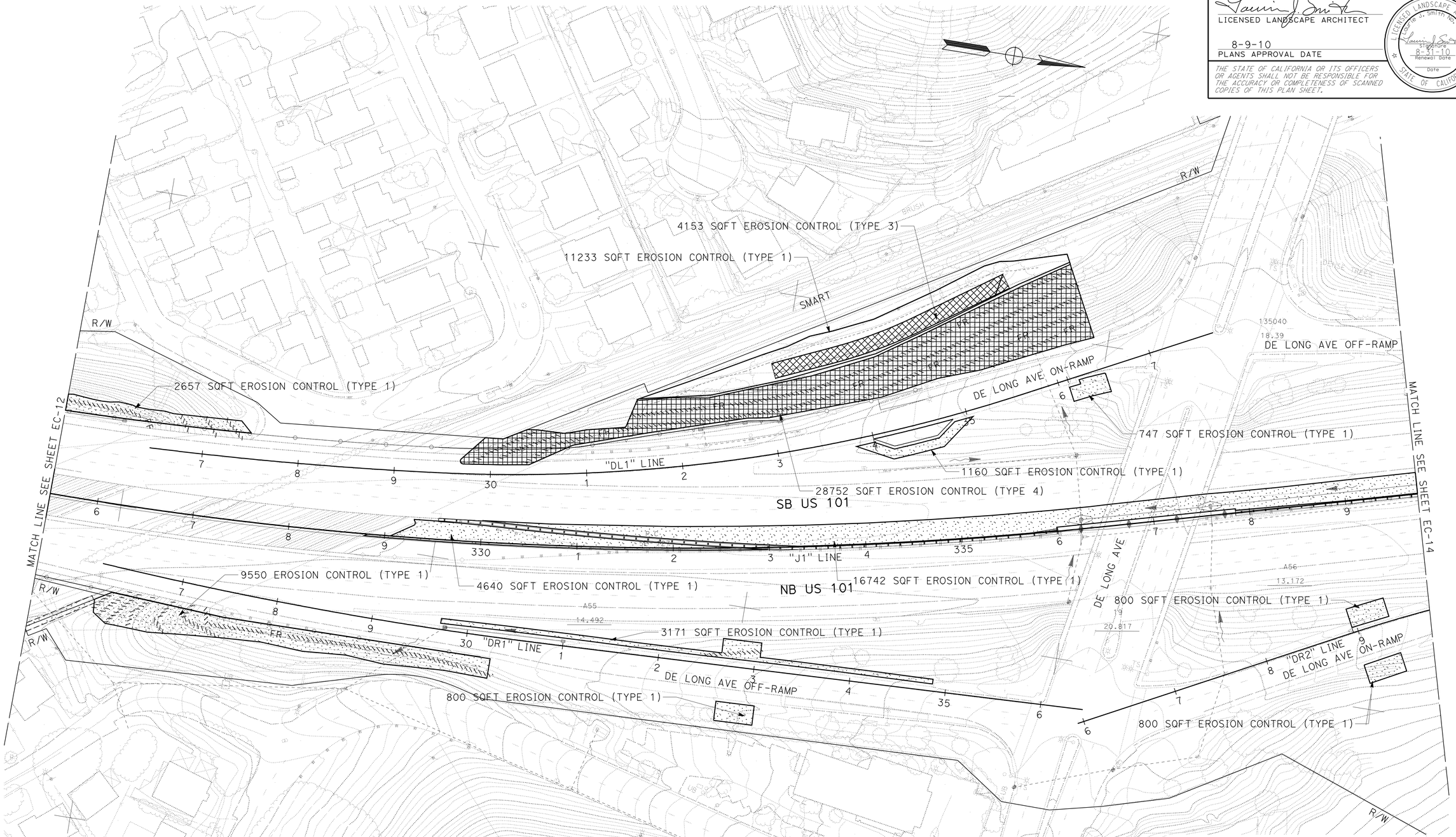

EROSION CONTROL PLAN

SCALE: 1" = 50'

EC-13

THIS PLAN IS ACCURATE FOR EROSION CONTROL WORK ONLY.

REVISED BY	DATE REVISED

CALCULATED-DESIGNED BY	CHECKED BY
LAURIE J. SMITH	ALEX MCDONALD

SENIOR LANDSCAPE ARCHITECT
DAVID W. YAM

STATE OF CALIFORNIA - DEPARTMENT OF TRANSPORTATION
Caltrans®
WATER QUALITY

LAST REVISION 03-05-10
DATE PLOTTED => 16-AUG-2010
TIME PLOTTED => 10:26

NOTE:

FOR ACCURATE RIGHT OF WAY AND ACCESS DATA,
CONTACT RIGHT OF WAY ENGINEERING AT THE DISTRICT OFFICE.

Dist	COUNTY	ROUTE	POST MILES TOTAL PROJECT	SHEET No.	TOTAL SHEETS
04	Mrn	101	18.6/R22.3	78	542

LICENSED LANDSCAPE ARCHITECT

8-9-10
PLANS APPROVAL DATE

LICENSED LANDSCAPE ARCHITECT
Laurie J. Smith No. 4088
Signature
8-31-10
Renewal Date
Date
STATE OF CALIFORNIA

THE STATE OF CALIFORNIA OR ITS OFFICERS OR AGENTS SHALL NOT BE RESPONSIBLE FOR THE ACCURACY OR COMPLETENESS OF SCANNED COPIES OF THIS PLAN SHEET.

THIS PLAN IS ACCURATE FOR EROSION CONTROL WORK ONLY.

EROSION CONTROL PLAN

SCALE: 1" = 50'

EC-14

REVISED BY	DATE REVISED

CALCULATED-DESIGNED BY	CHECKED BY
LAURIE J. SMITH	ALEX MCDONALD

SENIOR LANDSCAPE ARCHITECT
DAVID W. YAM

STATE OF CALIFORNIA - DEPARTMENT OF TRANSPORTATION
Caltrans®
WATER QUALITY

LAST REVISION 03-11-10
DATE PLOTTED => 16-AUG-2010
TIME PLOTTED => 10:26

NOTE:

FOR ACCURATE RIGHT OF WAY AND ACCESS DATA,
CONTACT RIGHT OF WAY ENGINEERING AT THE DISTRICT OFFICE.

Dist	COUNTY	ROUTE	POST MILES TOTAL PROJECT	SHEET No.	TOTAL SHEETS
04	Mrn	101	18.6/R22.3	79	542

LICENSED LANDSCAPE ARCHITECT

8-9-10
PLANS APPROVAL DATE

LICENSED LANDSCAPE ARCHITECT
Laurie J. Smith No. 4098
Signature
8-31-10
Renewal Date
Date
STATE OF CALIFORNIA

THE STATE OF CALIFORNIA OR ITS OFFICERS OR AGENTS SHALL NOT BE RESPONSIBLE FOR THE ACCURACY OR COMPLETENESS OF SCANNED COPIES OF THIS PLAN SHEET.

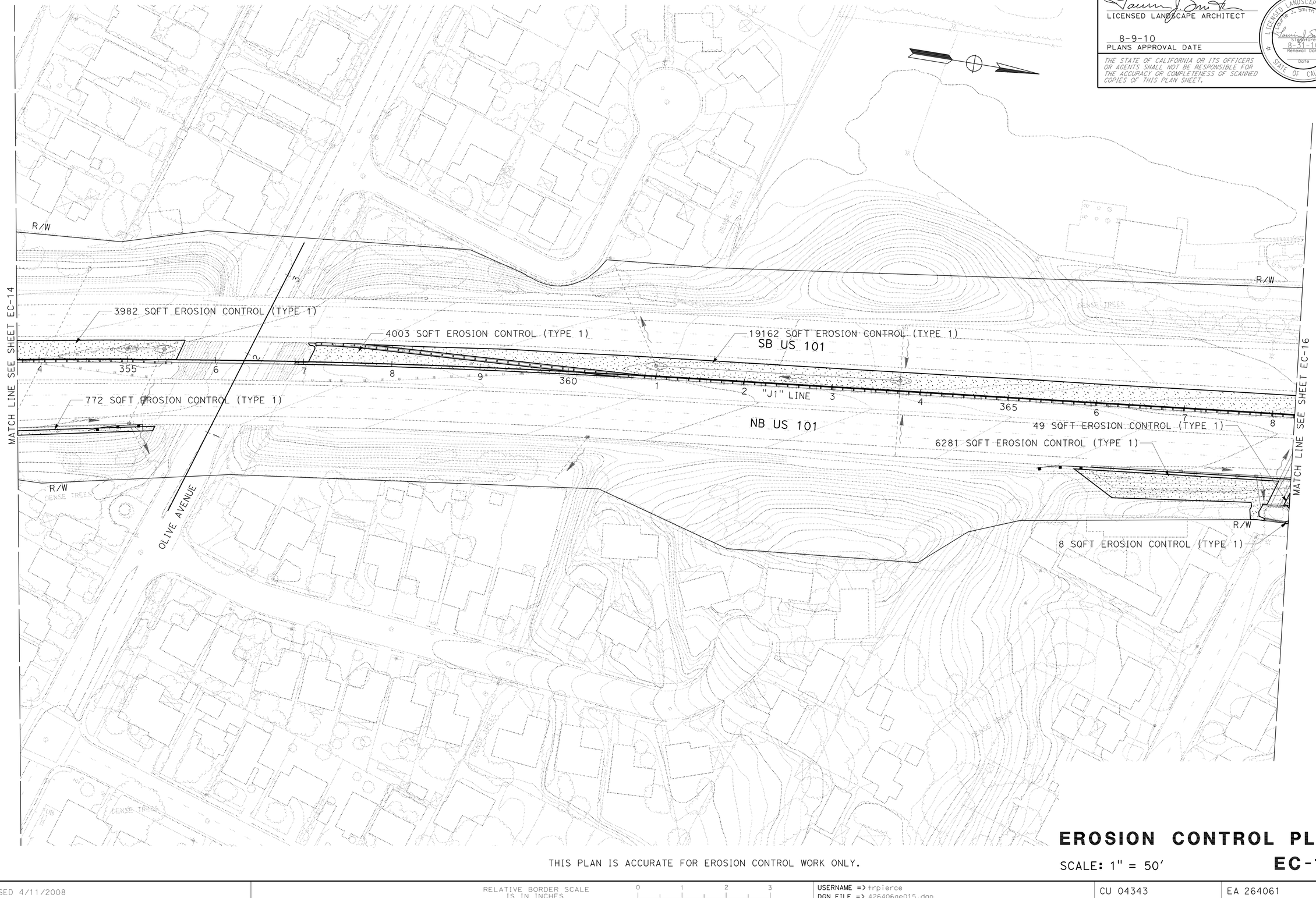

THIS PLAN IS ACCURATE FOR EROSION CONTROL WORK ONLY.

EROSION CONTROL PLAN

SCALE: 1" = 50'

EC-15

STATE OF CALIFORNIA - DEPARTMENT OF TRANSPORTATION
Caltrans®
WATER QUALITY

SENIOR LANDSCAPE ARCHITECT
DAVID W. YAM

CALCULATED-DESIGNED BY
LAURIE J. SMITH

CHECKED BY
ALEX MCDONALD

REVISED BY
DATE REVISED

LAST REVISION 03-12-10
DATE PLOTTED => 16-AUG-2010
TIME PLOTTED => 0:26

NOTE:

FOR ACCURATE RIGHT OF WAY AND ACCESS DATA,
CONTACT RIGHT OF WAY ENGINEERING AT THE DISTRICT OFFICE.

Dist	COUNTY	ROUTE	POST MILES TOTAL PROJECT	SHEET No.	TOTAL SHEETS
04	Mrn	101	18.6/R22.3	80	542

LICENSED LANDSCAPE ARCHITECT

8-9-10
PLANS APPROVAL DATE

LICENSED LANDSCAPE ARCHITECT
Laurie J. Smith No. 4088
Signature
8-31-10
Renewal Date
Date
STATE OF CALIFORNIA

THE STATE OF CALIFORNIA OR ITS OFFICERS OR AGENTS SHALL NOT BE RESPONSIBLE FOR THE ACCURACY OR COMPLETENESS OF SCANNED COPIES OF THIS PLAN SHEET.

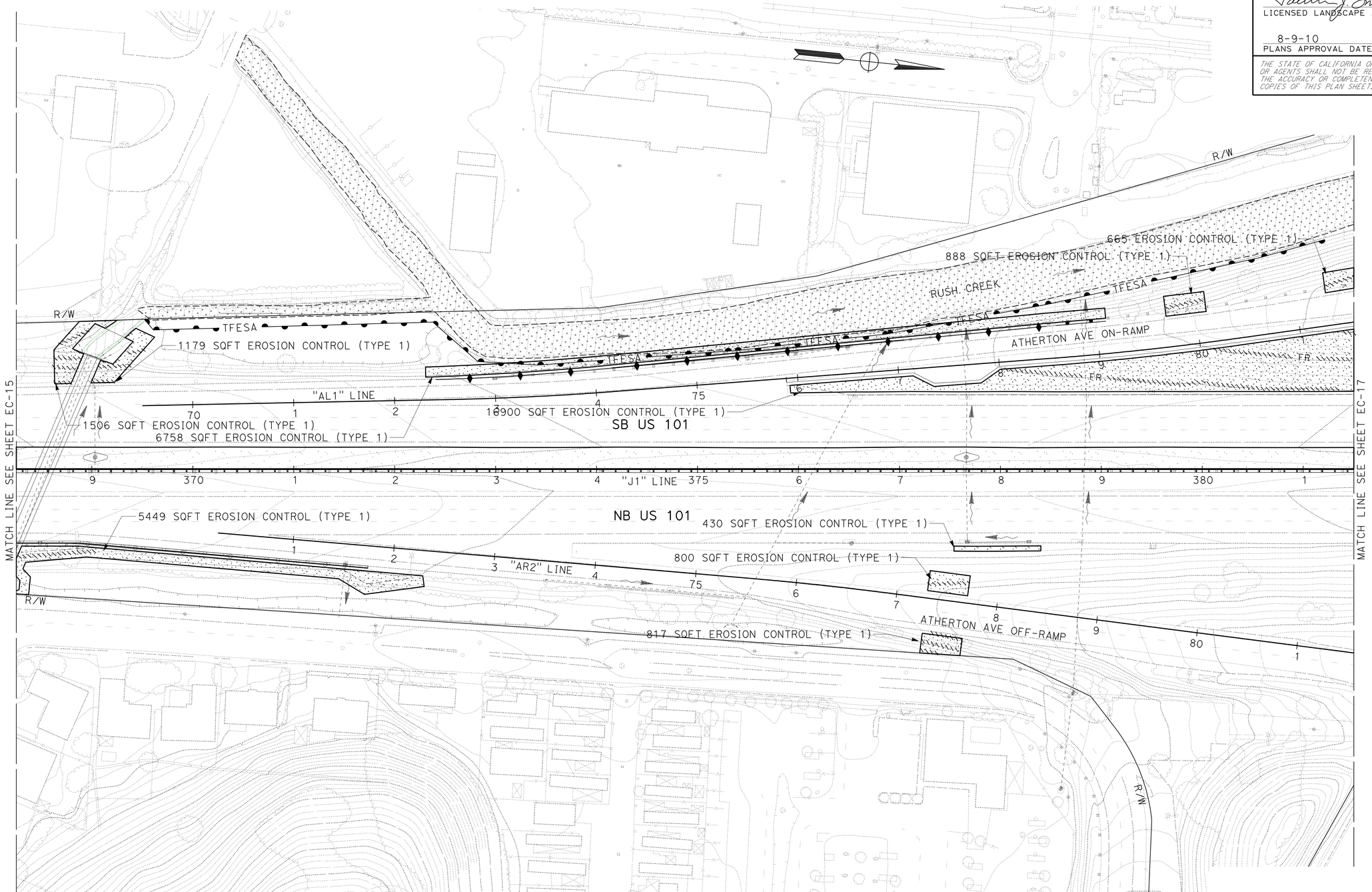

THIS PLAN IS ACCURATE FOR EROSION CONTROL WORK ONLY.

EROSION CONTROL PLAN
SCALE: 1" = 50'

EC-16

STATE OF CALIFORNIA - DEPARTMENT OF TRANSPORTATION
Caltrans
WATER QUALITY

SENIOR LANDSCAPE ARCHITECT: DAVID W. YAM

CALCULATED-DESIGNED BY: LAURIE J. SMITH
CHECKED BY: ALEX MCDONALD

REVISED BY
DATE REVISED

LAST REVISION 03-05-10
DATE PLOTTED => 16-AUG-2010
TIME PLOTTED => 10:26

NOTE:

FOR ACCURATE RIGHT OF WAY AND ACCESS DATA,
CONTACT RIGHT OF WAY ENGINEERING AT THE DISTRICT OFFICE.

Dist	COUNTY	ROUTE	POST MILES TOTAL PROJECT	SHEET No.	TOTAL SHEETS
04	Mrn	101	18.6/R22.3	81	542

LICENSED LANDSCAPE ARCHITECT

8-9-10
PLANS APPROVAL DATE

LICENSED LANDSCAPE ARCHITECT
Laurie J. Smith No. 4086
Signature
8-31-10
Renewal Date
Date
STATE OF CALIFORNIA

THE STATE OF CALIFORNIA OR ITS OFFICERS OR AGENTS SHALL NOT BE RESPONSIBLE FOR THE ACCURACY OR COMPLETENESS OF SCANNED COPIES OF THIS PLAN SHEET.

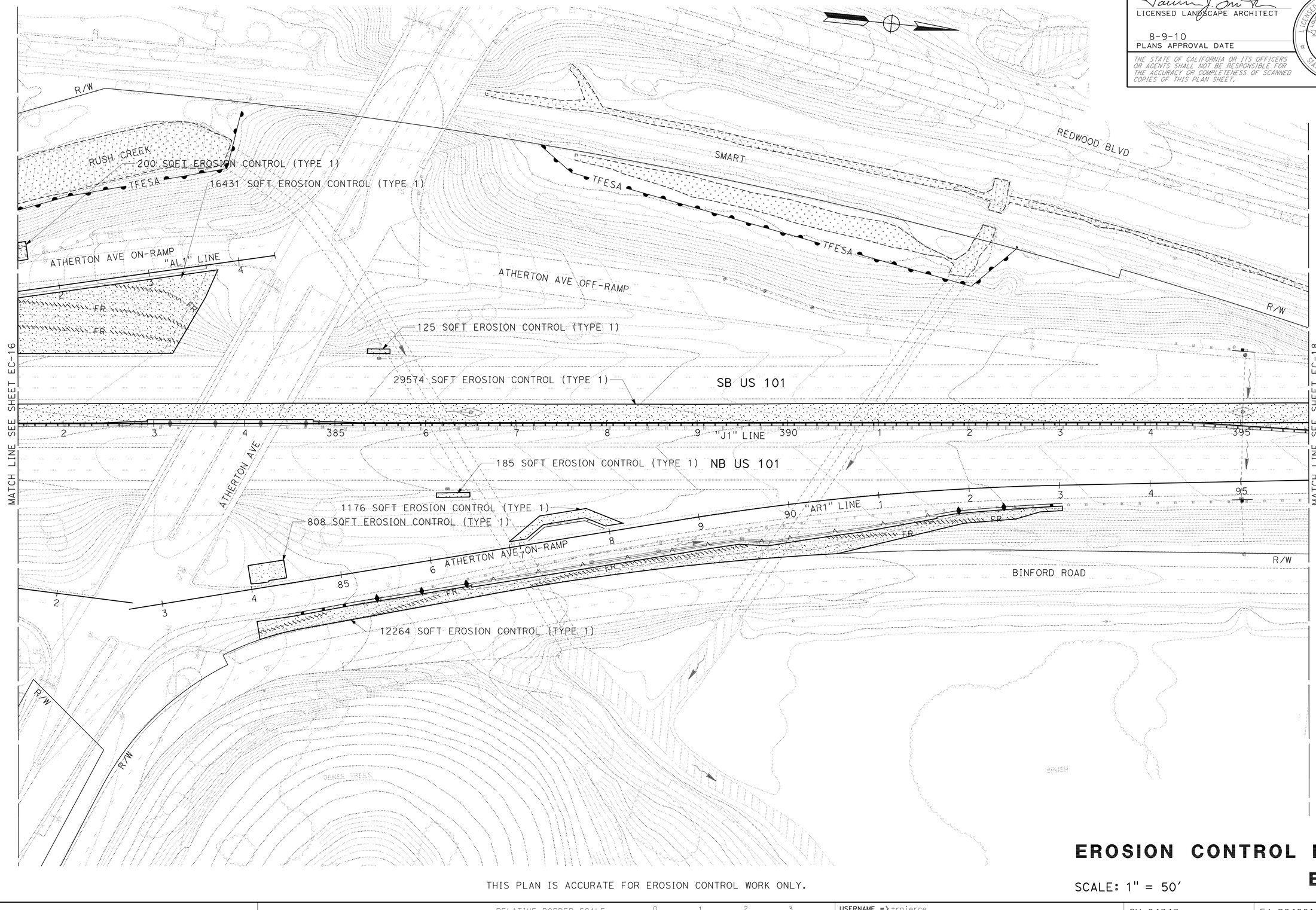

THIS PLAN IS ACCURATE FOR EROSION CONTROL WORK ONLY.

EROSION CONTROL PLAN

SCALE: 1" = 50'

EC-17

STATE OF CALIFORNIA - DEPARTMENT OF TRANSPORTATION
Caltrans®
WATER QUALITY

SENIOR LANDSCAPE ARCHITECT: DAVID W. YAM

CALCULATED-DESIGNED BY: LAURIE J. SMITH
CHECKED BY: ALEX MCDONALD

REVISED BY
DATE REVISED

LAST REVISION 03-05-10
DATE PLOTTED => 16-AUG-2010
TIME PLOTTED => 10:27

NOTE:

FOR ACCURATE RIGHT OF WAY AND ACCESS DATA,
CONTACT RIGHT OF WAY ENGINEERING AT THE DISTRICT OFFICE.

Dist	COUNTY	ROUTE	POST MILES TOTAL PROJECT	SHEET No.	TOTAL SHEETS
04	Mrn	101	18.6/R22.3	82	542

LICENSED LANDSCAPE ARCHITECT

8-9-10
PLANS APPROVAL DATE

LICENSED LANDSCAPE ARCHITECT
Laurie J. Smith No. 4088
Signature
8-31-10
Renewal Date
Date
STATE OF CALIFORNIA

THE STATE OF CALIFORNIA OR ITS OFFICERS OR AGENTS SHALL NOT BE RESPONSIBLE FOR THE ACCURACY OR COMPLETENESS OF SCANNED COPIES OF THIS PLAN SHEET.

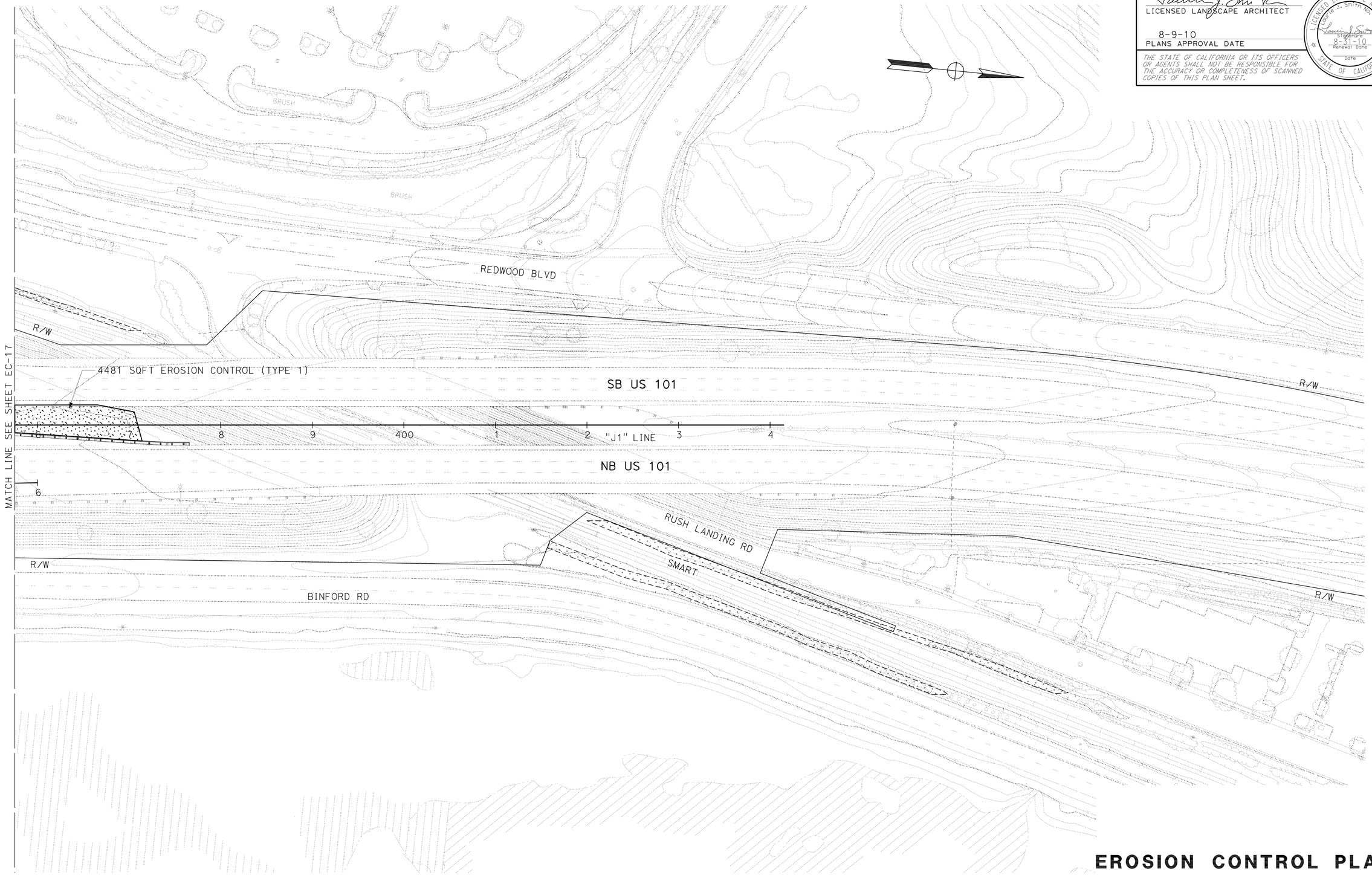

THIS PLAN IS ACCURATE FOR EROSION CONTROL WORK ONLY.

EROSION CONTROL PLAN

SCALE: 1" = 50'

EC-18

STATE OF CALIFORNIA - DEPARTMENT OF TRANSPORTATION
Caltrans®
WATER QUALITY

SENIOR LANDSCAPE ARCHITECT
DAVID W. YAM

CALCULATED-DESIGNED BY
CHECKED BY

REVISED BY
DATE REVISED

LAURIE J. SMITH
ALEX MCDONALD

LAST REVISION 03-12-10
DATE PLOTTED => 16-AUG-2010
TIME PLOTTED => 10:27

Dist	COUNTY	ROUTE	POST MILES TOTAL PROJECT	SHEET No.	TOTAL SHEETS
04	Mrn	101	18.6/R22.3	83	542

LICENSED LANDSCAPE ARCHITECT

8-9-10
PLANS APPROVAL DATE

LICENSED LANDSCAPE ARCHITECT
Laurie J. Smith No. 4088
Signature
8-31-10
Renewal Date
Date
STATE OF CALIFORNIA

THE STATE OF CALIFORNIA OR ITS OFFICERS OR AGENTS SHALL NOT BE RESPONSIBLE FOR THE ACCURACY OR COMPLETENESS OF SCANNED COPIES OF THIS PLAN SHEET.

PLANT LIST AND PLANTING SPECIFICATIONS

PLANT GROUP	PLANT No	SYMBOL	BOTANICAL NAME	COMMON NAME	SIZE	QUANTITY EACH
M	1		ELYMUS GLAUCUS, 'BERKELEY'	BLUE WILD RYE, BERKELEY	LINER	692
	2		HORDEUM BRACHYANTHERUM	MEADOW BARLEY	LINER	692

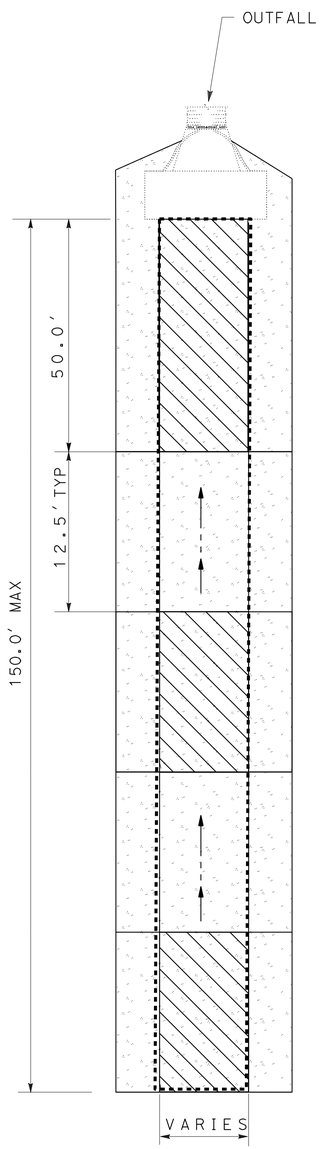

PLAN

BIOFILTRATION SWALE TYP

LEGEND

COMPOST, INCORPORATE

LINER PLANTING

EROSION CONTROL (HYDROSEED)

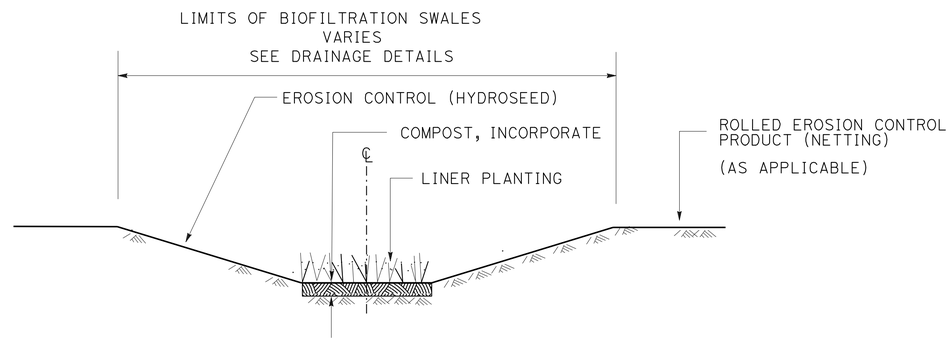

SECTION

BIOFILTRATION SWALE TYP

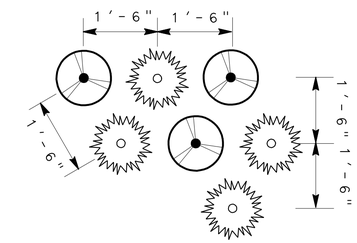

LINER PLANTS (pLANT GROUP M) SPACING

TYPICAL LINER PLANT SPACING

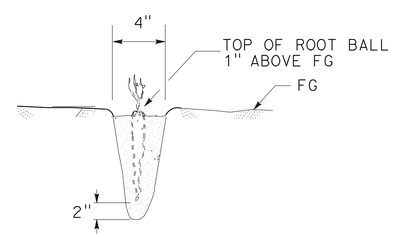

SECTION

PLANT BASIN (LINER)

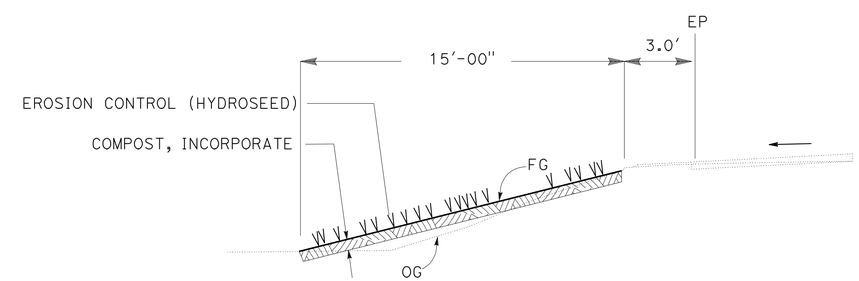

SECTION

BIOFILTRATION STRIP TYP

EROSION CONTROL DETAIL

NO SCALE

ECD-1

STATE OF CALIFORNIA - DEPARTMENT OF TRANSPORTATION
Caltrans
WATER QUALITY
SENIOR LANDSCAPE ARCHITECT: DAVID W. YAM
CALCULATED-DESIGNED BY: LAURIE J SMITH
CHECKED BY: ALEX MC DONALD
REVISED BY
DATE REVISED

LAST REVISION 03-12-10
DATE PLOTTED => 16-AUG-2010
TIME PLOTTED => 10:59

Dist	COUNTY	ROUTE	POST MILES TOTAL PROJECT	SHEET No.	TOTAL SHEETS
04	Mrn	101	18.6/R22.3	84	542

LICENSED LANDSCAPE ARCHITECT

8-9-10
PLANS APPROVAL DATE

LICENSED LANDSCAPE ARCHITECT
Laurie J. Smith No. 4368
Signature
8-31-10
Renewal Date
Date
STATE OF CALIFORNIA

THE STATE OF CALIFORNIA OR ITS OFFICERS OR AGENTS SHALL NOT BE RESPONSIBLE FOR THE ACCURACY OR COMPLETENESS OF SCANNED COPIES OF THIS PLAN SHEET.

EROSION CONTROL QUANTITIES

SHEET NO.	LOCATION (BEGIN STA)	EROSION CONTROL TYPE	LINER PLANTS (PLANT GROUP M) EA	COMPOST, INCORPORATE SQYD	EROSION CONTROL (COMPOST BLANKET) CY	EROSION CONTROL (HYDROSEED) SQFT	ROLLED EROSION CONTROL PRODUCT (NETTING) SQFT	FIBER ROLLS LF
EC-1	IL1 LINE 4+88 L	1	-	-	11	6659	-	-
EC-3	IL1 LINE 14+48 L	1	-	-	23	14789	-	-
-	IL1 LINE 14+48 R	1	-	-	41	22195	-	-
-	IL1 LINE 15+35 L	2	-	503	-	4526	-	-
-	J1 LINE 212+00 L	2	-	975	-	8771	-	-
-	J1 LINE 214+00 L	1	-	-	7	4200	-	-
-	J1 LINE 214+00 L	3	192	166	-	1494	-	-
-	J1 LINE 220+00 L	2	-	515	-	4632	-	-
EC-4	J1 LINE 231+51 R	1	-	-	36	23385	-	-
-	J1 LINE 235+41 R	1	-	-	6.5	4185	-	-
EC-5	J1 LINE 223+10 L	2	-	527	-	4747	-	-
-	J1 LINE 226+07 L	3	192	121	-	1087	-	-
-	J1 LINE 226+07 L	1	-	-	8.5	5395	-	-
	J1 LINE 234+49 L	1	-	-	3	1929	-	-
EC-6	J1 LINE 238+10 112'.8 L	1	-	-	1	679	-	-
-	J1 LINE 238+10 112'.8 L	1	-	-	45	28941	-	-
EC-7	J1 LINE 256+00 R	1	-	-	1	727	-	-
-	J1 LINE 256+75 R	2	-	1000	-	9000	-	-
-	J1 LINE 262+23 L	1	-	-	14	8850	-	-
-	J1 LINE 262+65 L	2	-	814	-	7330	-	-
-	J1 LINE 262+73 R	1	-	-	2	1425	-	-
-	J1 LINE 265+60 L	2	-	817	-	7350	-	-
EC-8	J1 LINE 268+10 L	2	-	252	-	2266	-	-
-	J1 LINE 268+10 R	2	-	367		3300	-	
-	J1 LINE 268+10 L	1	-	-	16	10413		-
-	J1 LINE 281+00 R	3	192	118	-	1063	-	-
-	J1 LINE 280+00 L	2	-	517	-	4650	-	-
-	J1 LINE 277+00 R	1	-	1	-	535	-	-
-	J1 LINE 280+90 R	1	-	18	-	5797	-	-
	SUB TOTAL		576	6711	215	200320	-	-

EROSION CONTROL QUANTITIES

ITEM	EA
MOVE-IN, MOVE- OUT EROSION CONTROL	12
TOTAL	12

EROSION CONTROL QUANTITIES

	LOCATION (STA)	EROSION CONTROL TYPE	LINER PLANTS (PLANT GROUP M) EA	COMPOST, INCORPORATE SQYD	EROSION CONTROL (COMPOST BLANKET) CY	EROSION CONTROL (HYDROSEED) SQFT	ROLLED EROSION CONTROL PRODUCT (BLANKET) SQFT	FIBER ROLLS LF
EC-9	J1 LINE 283+10 R	1	-	-	0.5	322	-	-
-	J1 LINE 283+10 R	3	-	26	-	237	-	-
-	J1 LINE 286+90 R	-	-	-	1.5	800	-	-
-	J1 LINE 292+00 R	2	-	810	-	7292	-	-
-	RR 1 LINE 91+00 R	2	-	954	-	8587	-	-
-	RR 1 LINE 92+65 R	1	-	-	12.5	8029	-	-
EC-10	J1 LINE 283+10 L	2	-	733	-	6600	-	-
EC-11	RR 1 LINE 97+57 R	2	-	77	-	697	-	-
-	RR 1 LINE 97+57 R	1	-	-	28	17960	-	-
-	J1 LINE 305+29 L	4	-	-	3	1875	1875	125
-	J1 LINE 307+00 L	4	-	-	3	2003	2003	126
-	J1 LINE 307+39 R	1	-	-	3.5	2252	-	-
-	J1 LINE 307+82 L	1	-	-	6	3722	-	-
-	J1 LINE 307+67 L	1	-	-	7.5	4867	-	-
EC-12	J1 LINE 311+60 L	1	-	-	44	28315	-	-
-	J1 LINE 311+60 R	1	-	-	15	10112	-	78
-	J1 LINE 311+60 R	3	-	86	-	771	-	-
-	J1 LINE 317+25 L	1	-	-	21	13548	-	472
-	J1 LINE 322+00 R	4	-	-	8.5	5410	5410	1156
-	J1 LINE 325+00 M	4	-	-	5	3383	3383	160
	SUBTOTAL		192	2967	159.0	126782	12671	2117

EROSION CONTROL QUANTITIES

ECQ-1

STATE OF CALIFORNIA - DEPARTMENT OF TRANSPORTATION
Caltrans®
WATER QUALITY

SENIOR LANDSCAPE ARCHITECT: DAVID W YAM

CALCULATED-DESIGNED BY: LAURIE J SMITH
CHECKED BY: ALEX MC DONALD

REVISED BY
DATE REVISED

LAST REVISION 06-14-10
DATE PLOTTED => 16-AUG-2010
TIME PLOTTED => 10:27

Dist	COUNTY	ROUTE	POST MILES TOTAL PROJECT	SHEET No.	TOTAL SHEETS
04	Mrn	101	18.6/R22.3	85	542

LICENSED LANDSCAPE ARCHITECT

8-9-10
PLANS APPROVAL DATE

LICENSED LANDSCAPE ARCHITECT Laurie J. Smith No. 2586 Signature 8-31-10 Renewal Date Date STATE OF CALIFORNIA

THE STATE OF CALIFORNIA OR ITS OFFICERS OR AGENTS SHALL NOT BE RESPONSIBLE FOR THE ACCURACY OR COMPLETENESS OF SCANNED COPIES OF THIS PLAN SHEET.

EROSION CONTROL QUANTITIES

SHEET NO.	LOCATION BEGIN STA	EROSION CONTROL TYPE	LINER PLANTS (PLANT GROUP M) EA	COMPOST, INCORPORATE SQYD	EROSION CONTROL (COMPOST BLANKET) CY	EROSION CONTROL (HYDROSEED) SQFT	ROLLED EROSION CONTROL PRODUCT (BLANKET) SQFT	FIBER ROLLS LF
EC-13	J1 LINE 325+50 L	1	-	-	4	2657	-	165
	DR 1 LINE 26+00 R	1	-	-	15	9550	-	589
	J1 LINE 328+78 R	1	-	-	7	4640	-	-
	J1 LINE 330+00 L	1	-	-	25	16742	-	-
	DL 1 LINE 29+67 L	4	-	-	44	28752	28752	1765
	DR 1 LINE 29+70 R	1	-	-	4.5	3171	-	61
	DR 1 LINE 32+65 R	1	-	-	1.5	800	-	-
	DL 1 LINE 31+60 L	1	-	-	16	10447	-	-
	DL 1 LINE 33+80 R	1	-	-	2	1160	-	-
	DL 1 LINE 36+10 R	1	-	-	1	747	-	-
	DR 1 LINE 32+00 L	3	615	461	-	4153	-	-
	DR 2 LINE 8+94 L	1	-	-	1.5	800	-	-
	DR 2 LINE 8+94 R	1	-	-	1.5	800	-	-
EC-14	J1 LINE 339+75 L	1	-	-	46	29507	-	-
	DR 2 LINE 41+79 R	1	-	-	10	6490	-	-
	DR 2 LINE 41+90 L	1	-	-	0.3	155	-	-
	J1 LINE 345+37 L	1	-	-	0.5	385	-	-
EC-15	J1 LINE 353+75 L	1	-	-	6	3982	-	-
	J1 LINE 353+75 R	1	-	-	1	772	-	-
	J1 LINE 356+90 L	1	-	-	6	4003	-	-
	J1 LINE 356+90 L	1	-	-	30	19162	-	-
	J1 LINE 365+80 R	1	-	-	10	6281	-	-
	J1 LINE 368+18 R	1	-	-	0.1	49	-	-
	J1 LINE 368+18 R	1	-	-	0.1	8	-	-
EC-16	J1 LINE 368+25 R	1	-	-	8.5	5449	-	88
	J1 LINE 368+25 L	1	-	-	43	28085	-	-
	J1 LINE 368+63 R	1	-	-	4	1506	-	109
	J1 LINE 369+00 R	1	-	-	2	1179	-	78
	AL 1 LINE 72+30 L	1	-	-	10	6758	-	-
	SUB TOTAL		615	461	300.5	198190	28752	2855

EROSION CONTROL QUANTITIES

	LOCATION STA	EROSION CONTROL TYPE	LINER PLANTS (PLANT GROUP M) EA	COMPOST, INCORPORATE SQYD	EROSION CONTROL (COMPOST BLANKET) CY	EROSION CONTROL (HYDROSEED) SQFT	ROLLED EROSION CONTROL PRODUCT (NETTING) SQFT	FIBER ROLLS LF
	AL 1 LINE 75+88 R	1	-	-	26	16900	-	484
	AR 2 LINE 77+29 L	1	-	-	1	800	-	42
	AR 2 LINE 77+29 R	1	-	-	1	817	-	94
	J1 LINE 377+54 R	1	-	-	0.7	430	-	-
	AL 1 LINE 79+68 L	1	-	-	1.5	888	-	40
	AL 1 LINE 81+30 L	1	-	-	1	665	-	31
EC-17	J1 LINE 381+50 L	1	-	-	46	29574	-	-
	AL 1 LINE 81+60 R	1	-	-	25	16341	-	472
	AL 1 LINE 81+60 L	1	-	-	0.5	200	-	12
	AR 1 LINE 84+00 L	1	-	-	1	808	-	-
	AR 1 LINE 84+00 R	1	-	-	19	12264	-	655
	AR 1 LINE 86+17 L	1	-	-	0.3	185	-	-
	AR 1 LINE 86+88 R	1	-	-	2	1176	-	-
	J1 LINE 385+36 L	1	-	-	0.3	125	-	-
EC-18	J1 LINE 395 +50 L	1	-	-	7	4481	-	-
	SUBTOTAL		-	-	132.3	85310	-	1830
	TOTAL		1383	10139	806.8	610602	41423	6802

EROSION CONTROL QUANTITIES

ECQ-2

STATE OF CALIFORNIA - DEPARTMENT OF TRANSPORTATION
Caltrans®
WATER QUALITY

SENIOR LANDSCAPE ARCHITECT: DAVID W YAM
CALCULATED-DESIGNED BY: LAURIE J SMITH
CHECKED BY: ALEX MC DONALD
REVISED BY
DATE REVISED

LAST REVISION 06-14-10
DATE PLOTTED => 16-AUG-2010
TIME PLOTTED => 10:28

Dist	COUNTY	ROUTE	POST MILES TOTAL PROJECT	SHEET No.	TOTAL SHEETS
04	Mrn	101	18.6/R22.3	86	542

REGISTERED CIVIL ENGINEER 03-15-10 DATE

8-9-10
PLANS APPROVAL DATE

REGISTERED PROFESSIONAL ENGINEER ROBERT J. NIXON No. C69123 Exp. 6-30-10 CIVIL STATE OF CALIFORNIA

THE STATE OF CALIFORNIA OR ITS OFFICERS OR AGENTS SHALL NOT BE RESPONSIBLE FOR THE ACCURACY OR COMPLETENESS OF SCANNED COPIES OF THIS PLAN SHEET.

NOTES:

1. FOR COMPLETE RIGHT OF WAY AND ACCURATE ACCESS DATA, SEE RIGHT OF WAY RECORD MAPS AT DISTRICT OFFICE.
2. ROADWAY ITEMS SUCH AS BARRIER, MBGR, THRIE BEAM BARRIER NOT SHOWN FOR CLARITY. SEE ROADWAY PLANS.
3. SEE UTILITY PLANS FOR LOCATION, SIZE AND VOLTAGE OF UTILITIES
4. HMA DIKE LOCATIONS SHOWN ON LAYOUT SHEETS
5. CAP IRRIGATION CROSSOVERS SHOWN ARE APPROXIMATE. ENGINEER TO FIELD VERIFY.
6. FOR CULVERT MARKER DETAILS, SEE SHEET DD-8

LEGEND

- DRAINAGE SYSTEM NO.
- BS — BIOFILTRATION SWALE NO. SEE EROSION CONTROL AND TYPICAL SECTION SHEETS FOR DETAILS
- DRAINAGE UNIT NO.
- IRRIGATION CROSSOVER
- EXTEND IRR — EXTEND IRRIGATION CROSSOVER SEE DRAINAGE DETAIL SHT DD-8
- CAP IRR — CAP IRRIGATION CROSSOVER ABANDON PIPELINE/CROSS OVER (CUT AND CAP)
- NEW IRR — NEW IRRIGATION CROSSOVER SEE STANDARD PLANS H9
- BIOFILTRATION SWALE
- BIOFILTRATION STRIP

ABBREVIATIONS

OSRCP	OVAL SHAPED REINFORCED CONCRETE PIPE
BW	BOTH WAYS
O.C.	ON CENTER

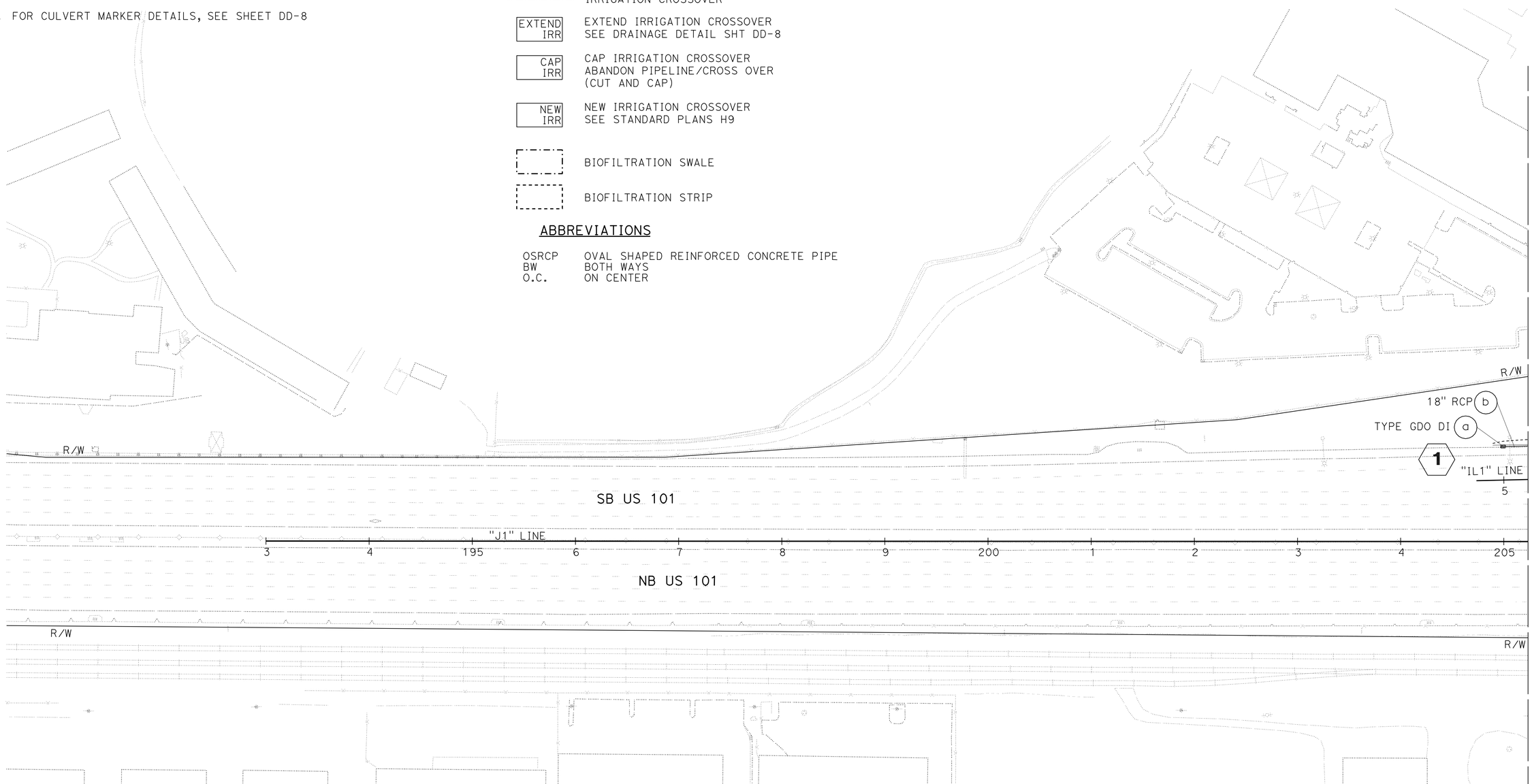

THIS PLAN ACCURATE FOR DRAINAGE WORK ONLY.

DRAINAGE PLAN

SCALE: 1" = 50'

D-1

REVISED BY | DATE REVISED

TRAVIS GURNEY | CHRIS GAIDO

CALCULATED-DESIGNED BY | CHECKED BY

FUNCTIONAL SUPERVISOR: JOHN L. MARTIN

STATE OF CALIFORNIA - DEPARTMENT OF TRANSPORTATION

Caltrans DESIGN

P:\proj2\04\26406\design\ps&e\426406ia001.dgn

LAST REVISION 03-15-10 | DATE PLOTTED => 16-AUG-2010 TIME PLOTTED => 10:28

Dist	COUNTY	ROUTE	POST MILES TOTAL PROJECT	SHEET No.	TOTAL SHEETS
04	Mrn	101	18.6/R22.3	87	542

REGISTERED CIVIL ENGINEER 03-15-10 DATE

8-9-10
PLANS APPROVAL DATE

REGISTERED PROFESSIONAL ENGINEER ROBERT J. NIXON No. C69123 Exp. 6-30-10 CIVIL STATE OF CALIFORNIA

THE STATE OF CALIFORNIA OR ITS OFFICERS OR AGENTS SHALL NOT BE RESPONSIBLE FOR THE ACCURACY OR COMPLETENESS OF SCANNED COPIES OF THIS PLAN SHEET.

NOTE:

1. FOR COMPLETE RIGHT OF WAY AND ACCURATE ACCESS DATA, SEE RIGHT OF WAY RECORD MAPS AT DISTRICT OFFICE.
2. FOR ADDITONAL DETAILS AND QUANTITIES FOR ALL EROSION CONTROL PERMANENT BMP'S, SEE EROSION CONTROL SHEETS.

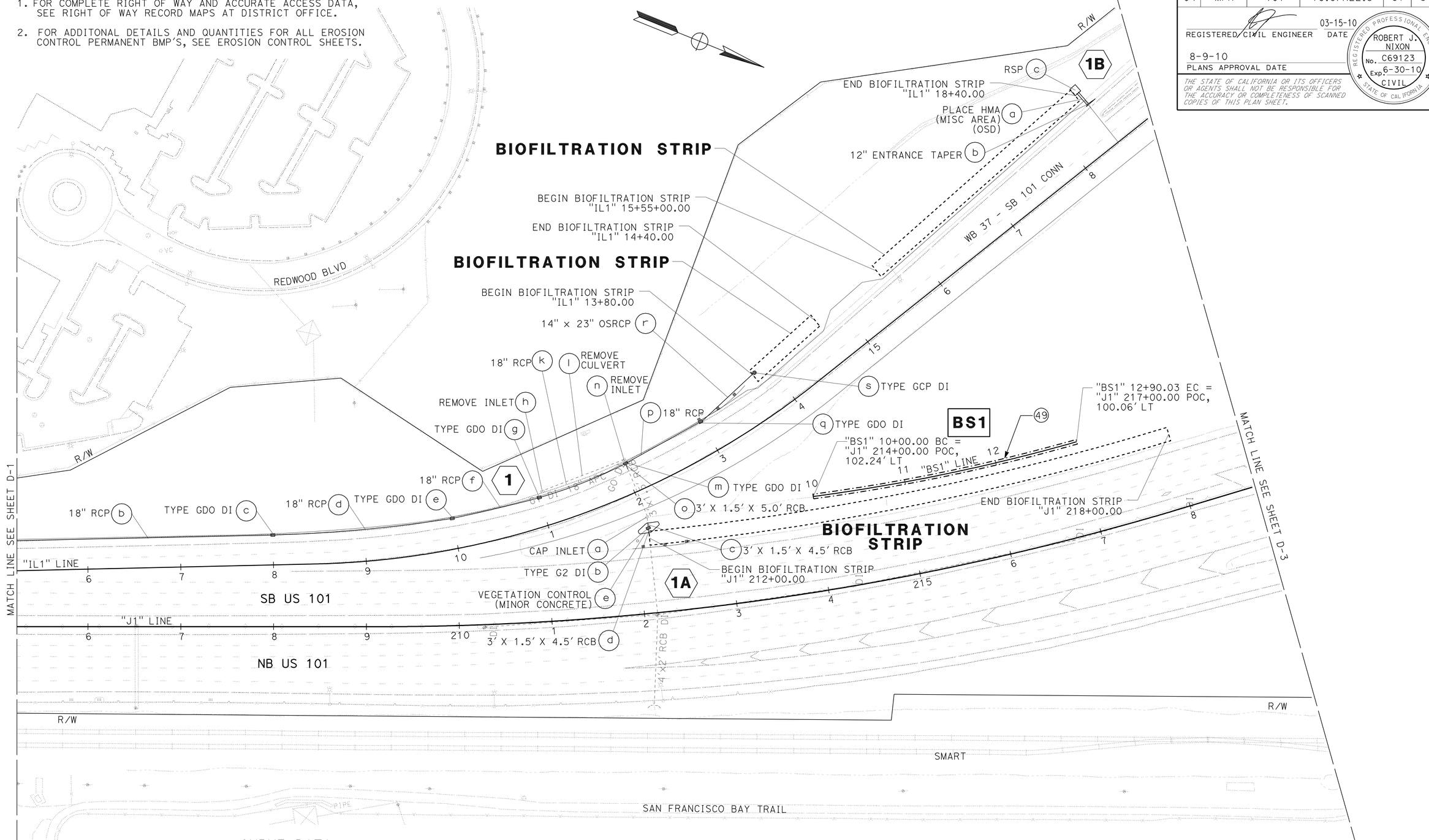

CURVE DATA

No.	O	R	Δ	T	L
	(49)	2000.00'	8°18'31"	145.27'	290.03'

THIS PLAN ACCURATE FOR DRAINAGE WORK ONLY.

DRAINAGE PLAN

SCALE: 1" = 50'

D-2

REVISED BY	DATE REVISED
TRAVIS GURNEY	CHRIS GAIDO

CALCULATED-DESIGNED BY / CHECKED BY

FUNCTIONAL SUPERVISOR: JOHN L. MARTIN

STATE OF CALIFORNIA - DEPARTMENT OF TRANSPORTATION

Caltrans DESIGN

C:\Documents and Settings\trmikesl.ENT\Desktop\426406ia002.dgn

LAST REVISION 03-15-10 | DATE PLOTTED => 16-AUG-2010 | TIME PLOTTED => 14:22

Dist	COUNTY	ROUTE	POST MILES TOTAL PROJECT	SHEET No.	TOTAL SHEETS
04	Mrn	101	18.6/R22.3	88	542

REGISTERED CIVIL ENGINEER 03-15-10 DATE

8-9-10
PLANS APPROVAL DATE

REGISTERED PROFESSIONAL ENGINEER ROBERT J. NIXON No. C69123 Exp. 6-30-10 CIVIL STATE OF CALIFORNIA

THE STATE OF CALIFORNIA OR ITS OFFICERS OR AGENTS SHALL NOT BE RESPONSIBLE FOR THE ACCURACY OR COMPLETENESS OF SCANNED COPIES OF THIS PLAN SHEET.

NOTE:

1. FOR COMPLETE RIGHT OF WAY AND ACCURATE ACCESS DATA, SEE RIGHT OF WAY RECORD MAPS AT DISTRICT OFFICE.

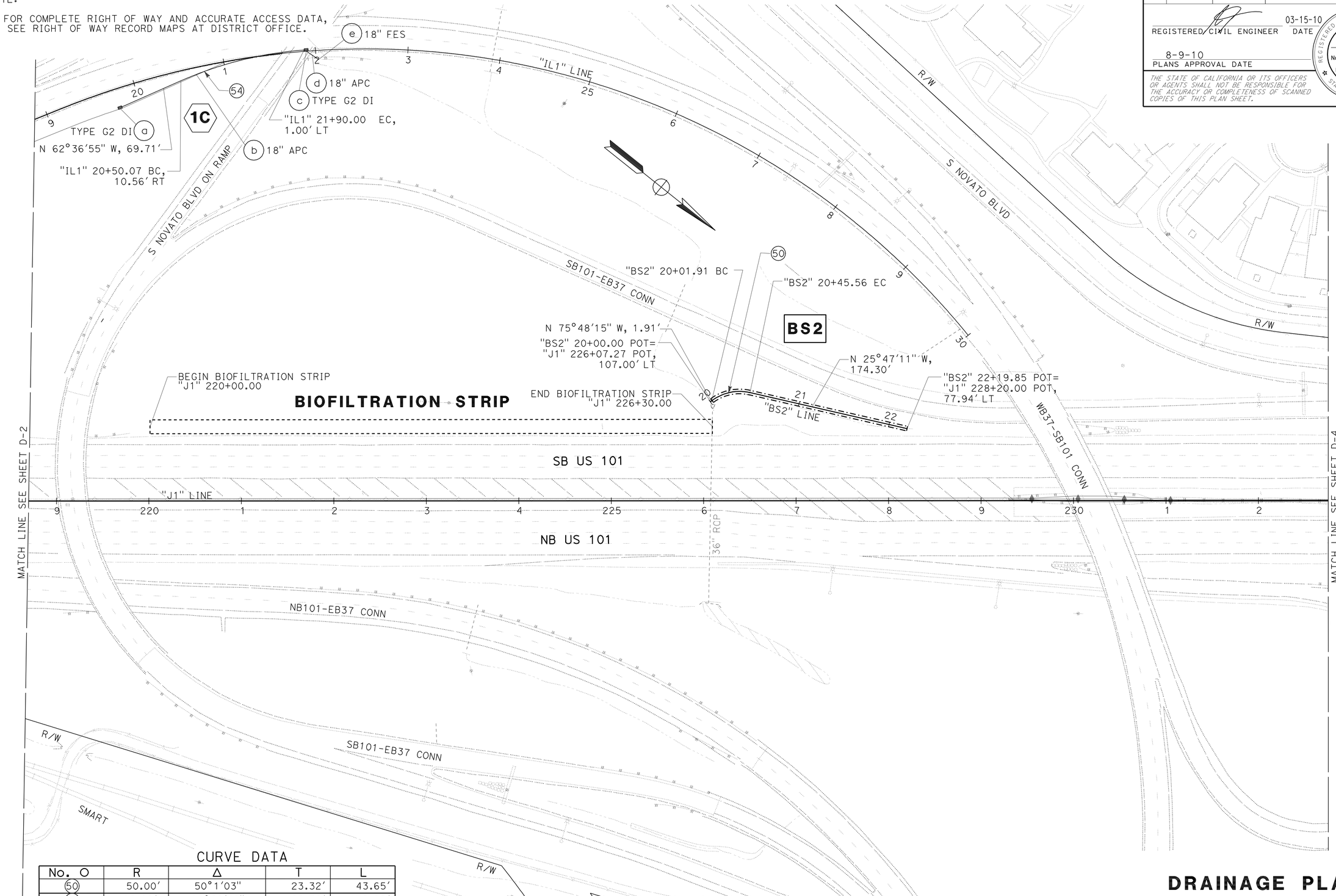

CURVE DATA

No. O	R	Δ	T	L
50	50.00'	50°1'03"	23.32'	43.65'
54	406.00'	19°28'42"	69.70'	138.06'

THIS PLAN ACCURATE FOR DRAINAGE WORK ONLY.

DRAINAGE PLAN

SCALE: 1" = 50'

D-3

REVISED BY	DATE REVISED
TRAVIS GURNEY	CHRIS GAIDO
CALCULATED-DESIGNED BY	CHECKED BY
FUNCTIONAL SUPERVISOR	JOHN L. MARTIN

STATE OF CALIFORNIA - DEPARTMENT OF TRANSPORTATION
Caltrans DESIGN

P:\proj2\04\26406\design\ps&e\426406ia003.dgn

LAST REVISION 03-15-10 | DATE PLOTTED => 16-AUG-2010 | TIME PLOTTED => 10:28

Dist	COUNTY	ROUTE	POST MILES TOTAL PROJECT	SHEET No.	TOTAL SHEETS
04	Mrn	101	18.6/R22.3	89	542

REGISTERED CIVIL ENGINEER 03-15-10 DATE

8-9-10
PLANS APPROVAL DATE

REGISTERED PROFESSIONAL ENGINEER ROBERT J. NIXON No. C69123 Exp. 6-30-10 CIVIL STATE OF CALIFORNIA

THE STATE OF CALIFORNIA OR ITS OFFICERS OR AGENTS SHALL NOT BE RESPONSIBLE FOR THE ACCURACY OR COMPLETENESS OF SCANNED COPIES OF THIS PLAN SHEET.

NOTE:

1. FOR COMPLETE RIGHT OF WAY AND ACCURATE ACCESS DATA, SEE RIGHT OF WAY RECORD MAPS AT DISTRICT OFFICE.

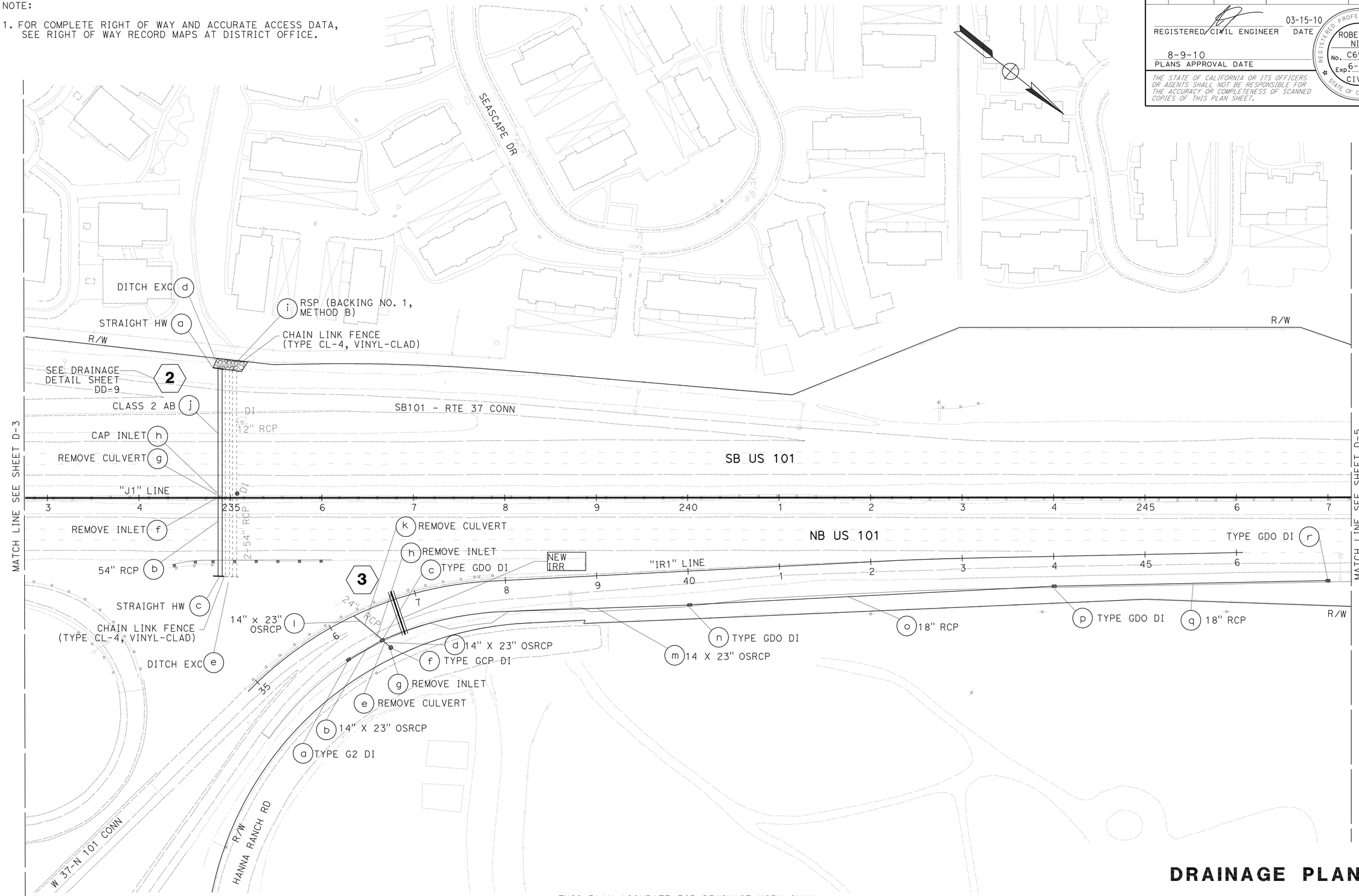

THIS PLAN ACCURATE FOR DRAINAGE WORK ONLY.

DRAINAGE PLAN

SCALE: 1" = 50'

D-4

STATE OF CALIFORNIA - DEPARTMENT OF TRANSPORTATION
Caltrans DESIGN

FUNCTIONAL SUPERVISOR: JOHN L. MARTIN
CALCULATED-DESIGNED BY: JOLENA ASTIN/TOBY CRAWFORD
CHECKED BY: CHRIS GAIDO
REVISED BY
DATE REVISED

P:\proj2\04\26406\design\DCCR\426406ia004.dgn

LAST REVISION 03-15-10
DATE PLOTTED => 16-AUG-2010
TIME PLOTTED => 10:28

Dist	COUNTY	ROUTE	POST MILES TOTAL PROJECT	SHEET No.	TOTAL SHEETS
04	Mrn	101	18.6/R22.3	90	542

REGISTERED CIVIL ENGINEER 03-15-10 DATE

8-9-10
PLANS APPROVAL DATE

REGISTERED PROFESSIONAL ENGINEER ROBERT J. NIXON No. C69123 Exp. 6-30-10 CIVIL STATE OF CALIFORNIA

THE STATE OF CALIFORNIA OR ITS OFFICERS OR AGENTS SHALL NOT BE RESPONSIBLE FOR THE ACCURACY OR COMPLETENESS OF SCANNED COPIES OF THIS PLAN SHEET.

NOTE:

1. FOR COMPLETE RIGHT OF WAY AND ACCURATE ACCESS DATA, SEE RIGHT OF WAY RECORD MAPS AT DISTRICT OFFICE.

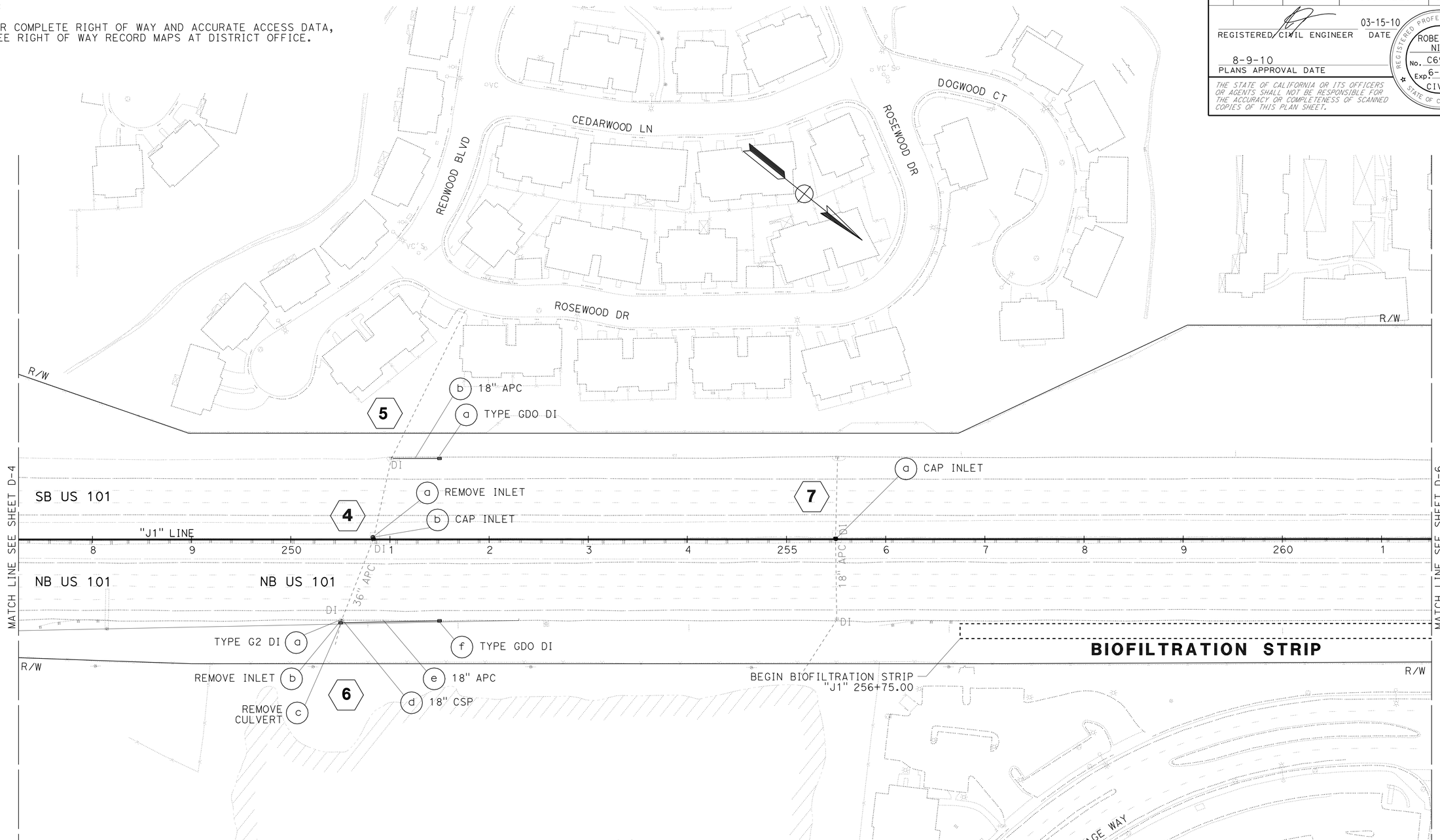

THIS PLAN ACCURATE FOR DRAINAGE WORK ONLY.

DRAINAGE PLAN

SCALE: 1" = 50'

D-5

REVISED BY	DATE REVISED
JOLENA ASTIN	CHRIS GAIDO
CALCULATED-DESIGNED BY	CHECKED BY
FUNCTIONAL SUPERVISOR	JOHN L. MARTIN

STATE OF CALIFORNIA - DEPARTMENT OF TRANSPORTATION
Caltrans DESIGN

P:\proj\04\26406\design\ps&e\426406ia005.dgn

LAST REVISION 03-15-10 | DATE PLOTTED => 16-AUG-2010 | TIME PLOTTED => 10:28

Dist	COUNTY	ROUTE	POST MILES TOTAL PROJECT	SHEET No.	TOTAL SHEETS
04	Mrn	101	18.6/R22.3	91	542

REGISTERED CIVIL ENGINEER 03-15-10 DATE

8-9-10
PLANS APPROVAL DATE

REGISTERED PROFESSIONAL ENGINEER ROBERT J. NIXON No. C69123 Exp. 6-30-10 CIVIL STATE OF CALIFORNIA

THE STATE OF CALIFORNIA OR ITS OFFICERS OR AGENTS SHALL NOT BE RESPONSIBLE FOR THE ACCURACY OR COMPLETENESS OF SCANNED COPIES OF THIS PLAN SHEET.

NOTE:

1. FOR COMPLETE RIGHT OF WAY AND ACCURATE ACCESS DATA, SEE RIGHT OF WAY RECORD MAPS AT DISTRICT OFFICE.

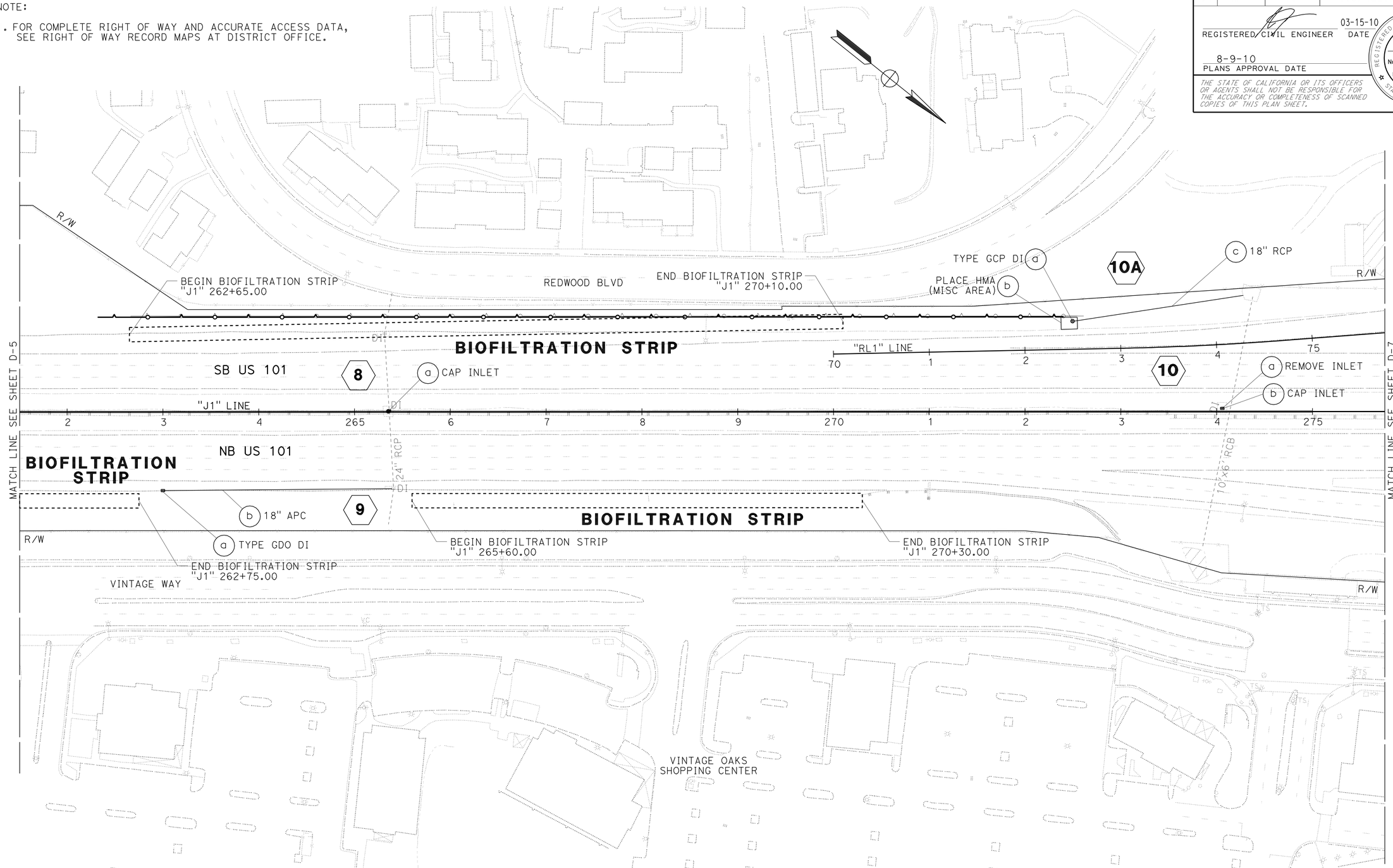

THIS PLAN ACCURATE FOR DRAINAGE WORK ONLY.

DRAINAGE PLAN

SCALE: 1" = 50'

D-6

REVISED BY	DATE REVISED
TRAVIS GURNEY	CHRIS GAIDO
CALCULATED-DESIGNED BY	CHECKED BY
FUNCTIONAL SUPERVISOR	JOHN L. MARTIN

STATE OF CALIFORNIA - DEPARTMENT OF TRANSPORTATION
Caltrans DESIGN

P:\proj2\04\264061\design\DCCR\426406ia006.dgn

LAST REVISION 03-15-10 | DATE PLOTTED => 16-AUG-2010 | TIME PLOTTED => 10:28

Dist	COUNTY	ROUTE	POST MILES TOTAL PROJECT	SHEET No.	TOTAL SHEETS
04	Mrn	101	18.6/R22.3	92	542

REGISTERED CIVIL ENGINEER 03-15-10 DATE

8-9-10
PLANS APPROVAL DATE

REGISTERED PROFESSIONAL ENGINEER ROBERT J. NIXON No. C69123 Exp. 6-30-10 CIVIL STATE OF CALIFORNIA

THE STATE OF CALIFORNIA OR ITS OFFICERS OR AGENTS SHALL NOT BE RESPONSIBLE FOR THE ACCURACY OR COMPLETENESS OF SCANNED COPIES OF THIS PLAN SHEET.

NOTE:

1. FOR COMPLETE RIGHT OF WAY AND ACCURATE ACCESS DATA, SEE RIGHT OF WAY RECORD MAPS AT DISTRICT OFFICE.

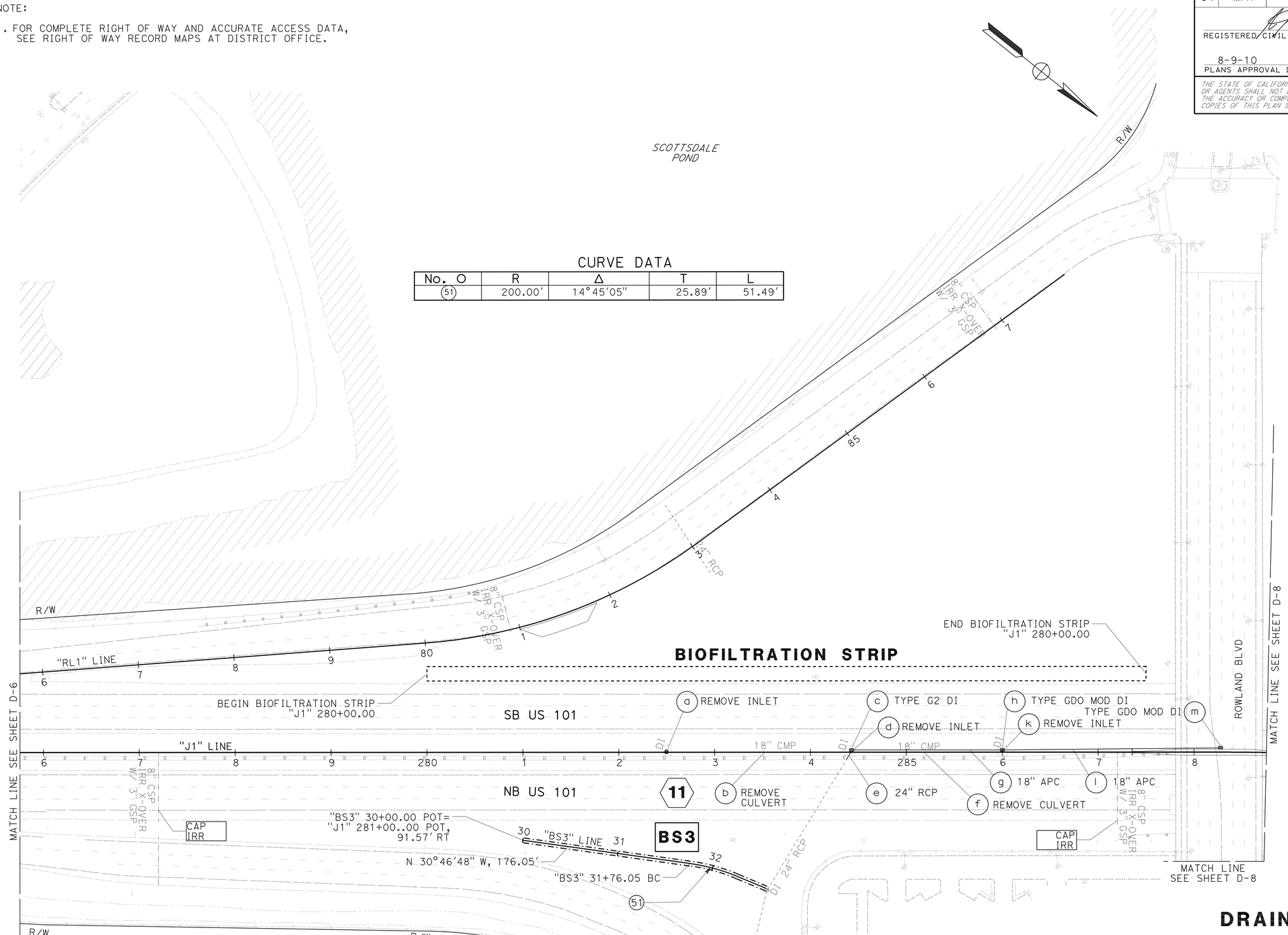

CURVE DATA

No. O	R	Δ	T	L
51	200.00′	14°45′05″	25.89′	51.49′

DRAINAGE PLAN

SCALE: 1" = 50′

D-7

REVISED BY	DATE REVISED

CALCULATED-DESIGNED BY	TRAVIS GURNEY
CHECKED BY	CHRIS GAIDO

FUNCTIONAL SUPERVISOR: JOHN L. MARTIN

STATE OF CALIFORNIA - DEPARTMENT OF TRANSPORTATION

Caltrans DESIGN

P:\proj2\04\26406\design\DCCR\426406ia007.dgn

LAST REVISION 03-15-10 | DATE PLOTTED => 16-AUG-2010 | TIME PLOTTED => 10:28

Dist	COUNTY	ROUTE	POST MILES TOTAL PROJECT	SHEET No.	TOTAL SHEETS
04	Mrn	101	18.6/R22.3	93	542

REGISTERED CIVIL ENGINEER 03-15-10 DATE

8-9-10
PLANS APPROVAL DATE

REGISTERED PROFESSIONAL ENGINEER ROBERT J. NIXON No. C69123 Exp. 6-30-10 CIVIL STATE OF CALIFORNIA

THE STATE OF CALIFORNIA OR ITS OFFICERS OR AGENTS SHALL NOT BE RESPONSIBLE FOR THE ACCURACY OR COMPLETENESS OF SCANNED COPIES OF THIS PLAN SHEET.

NOTE:

1. FOR COMPLETE RIGHT OF WAY AND ACCURATE ACCESS DATA, SEE RIGHT OF WAY RECORD MAPS AT DISTRICT OFFICE.

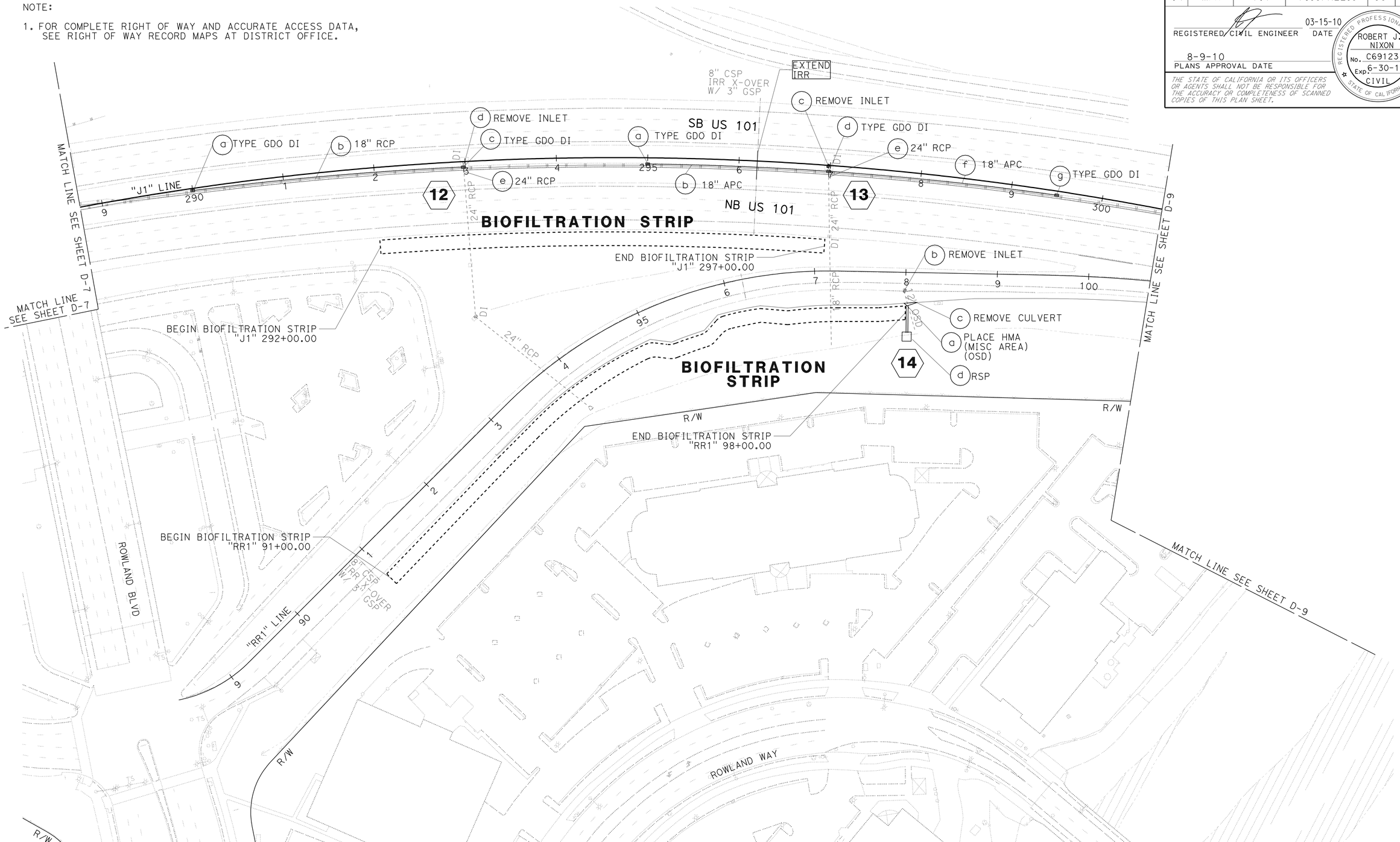

THIS PLAN ACCURATE FOR DRAINAGE WORK ONLY.

DRAINAGE PLAN

SCALE: 1" = 50'

D-8

REVISED BY	DATE REVISED
TRAVIS GURNEY	CHRIS GAIDO
CALCULATED-DESIGNED BY	CHECKED BY
FUNCTIONAL SUPERVISOR	JOHN L. MARTIN

STATE OF CALIFORNIA - DEPARTMENT OF TRANSPORTATION
Caltrans DESIGN

P:\proj2\04\26406\design\ps&e\426406ia008.dgn

LAST REVISION 03-15-10 | DATE PLOTTED => 16-AUG-2010 | TIME PLOTTED => 10:28

Dist	COUNTY	ROUTE	POST MILES TOTAL PROJECT	SHEET No.	TOTAL SHEETS
04	Mrn	101	18.6/R22.3	94	542

REGISTERED CIVIL ENGINEER 03-15-10 DATE

8-9-10
PLANS APPROVAL DATE

REGISTERED PROFESSIONAL ENGINEER ROBERT J. NIXON No. C69123 Exp. 6-30-10 CIVIL STATE OF CALIFORNIA

THE STATE OF CALIFORNIA OR ITS OFFICERS OR AGENTS SHALL NOT BE RESPONSIBLE FOR THE ACCURACY OR COMPLETENESS OF SCANNED COPIES OF THIS PLAN SHEET.

NOTE:

1. FOR COMPLETE RIGHT OF WAY AND ACCURATE ACCESS DATA, SEE RIGHT OF WAY RECORD MAPS AT DISTRICT OFFICE.

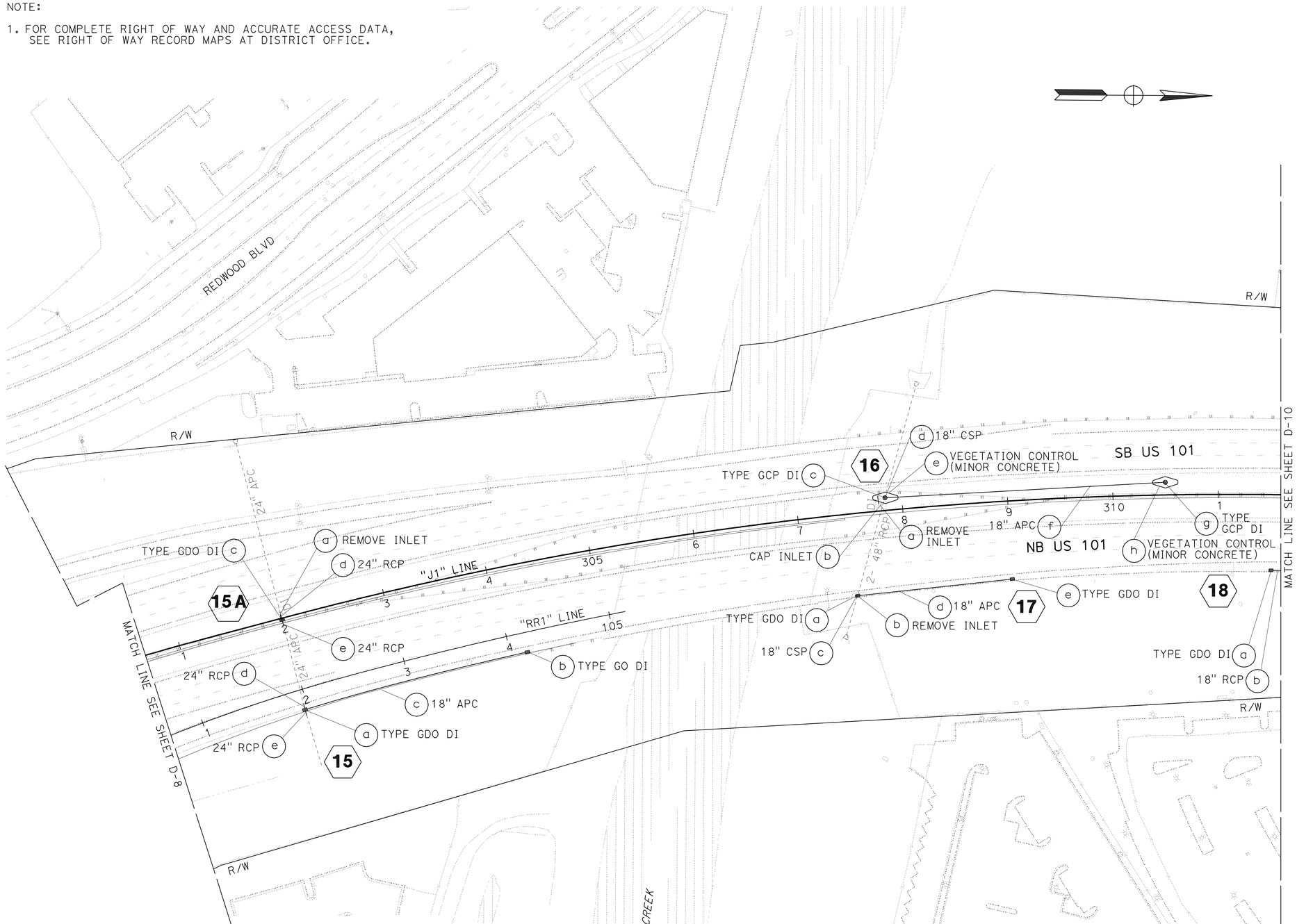

THIS PLAN ACCURATE FOR DRAINAGE WORK ONLY.

DRAINAGE PLAN

SCALE: 1" = 50'

D-9

REVISED BY	DATE REVISED
TRAVIS GURNEY	CHRIS GAIDO
CALCULATED-DESIGNED BY	CHECKED BY

FUNCTIONAL SUPERVISOR: JOHN L. MARTIN

STATE OF CALIFORNIA - DEPARTMENT OF TRANSPORTATION

Caltrans DESIGN

P:\proj2\04\26406\design\DCCR\426406ia009.dgn

LAST REVISION 03-15-10 | DATE PLOTTED => 16-AUG-2010 | TIME PLOTTED => 10:28

Dist	COUNTY	ROUTE	POST MILES TOTAL PROJECT	SHEET No.	TOTAL SHEETS
04	Mrn	101	18.6/R22.3	95	542

REGISTERED CIVIL ENGINEER 03-15-10 DATE

8-9-10
PLANS APPROVAL DATE

REGISTERED PROFESSIONAL ENGINEER ROBERT J. NIXON No. C69123 Exp. 6-30-10 CIVIL STATE OF CALIFORNIA

THE STATE OF CALIFORNIA OR ITS OFFICERS OR AGENTS SHALL NOT BE RESPONSIBLE FOR THE ACCURACY OR COMPLETENESS OF SCANNED COPIES OF THIS PLAN SHEET.

NOTE:

1. FOR COMPLETE RIGHT OF WAY AND ACCURATE ACCESS DATA, SEE RIGHT OF WAY RECORD MAPS AT DISTRICT OFFICE.

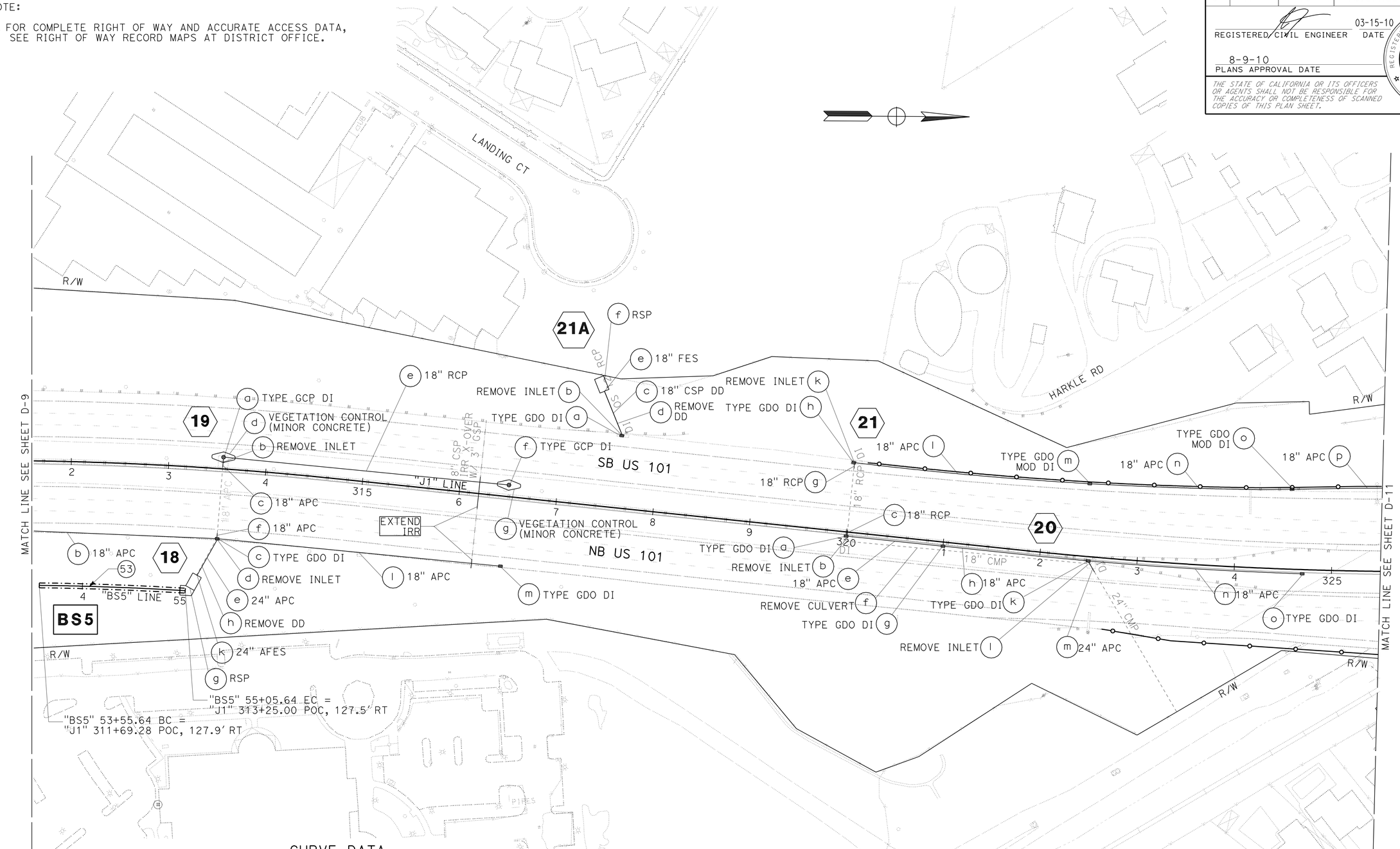

CURVE DATA

No.	R	Δ	T	L
53	3000.00'	2°58'29"	77.90'	155.76'

THIS PLAN ACCURATE FOR DRAINAGE WORK ONLY.

DRAINAGE PLAN

SCALE: 1" = 50'

D-10

REVISED BY	DATE REVISED
TRAVIS GURNEY	CHRIS GAIDO

CALCULATED-DESIGNED BY / CHECKED BY

FUNCTIONAL SUPERVISOR: JOHN L. MARTIN

STATE OF CALIFORNIA - DEPARTMENT OF TRANSPORTATION

Caltrans DESIGN

P:\proj2\04\264061\design\DCCR\426406ia010.dgn

LAST REVISION DATE PLOTTED => 16-AUG-2010 TIME PLOTTED => 10:29

03-15-10

BORDER LAST REVISED 4/11/2008 | RELATIVE BORDER SCALE IS IN INCHES 0 1 2 3 | USERNAME => trpierce DGN FILE => 426406ia010.dgn | CU 03 240 | EA 264061

Dist	COUNTY	ROUTE	POST MILES TOTAL PROJECT	SHEET No.	TOTAL SHEETS
04	Mrn	101	18.6/R22.3	96	542

REGISTERED CIVIL ENGINEER 03-15-10 DATE

8-9-10
PLANS APPROVAL DATE

REGISTERED PROFESSIONAL ENGINEER ROBERT J. NIXON No. C69123 Exp. 6-30-10 CIVIL STATE OF CALIFORNIA

THE STATE OF CALIFORNIA OR ITS OFFICERS OR AGENTS SHALL NOT BE RESPONSIBLE FOR THE ACCURACY OR COMPLETENESS OF SCANNED COPIES OF THIS PLAN SHEET.

NOTE:

1. FOR COMPLETE RIGHT OF WAY AND ACCURATE ACCESS DATA, SEE RIGHT OF WAY RECORD MAPS AT DISTRICT OFFICE.

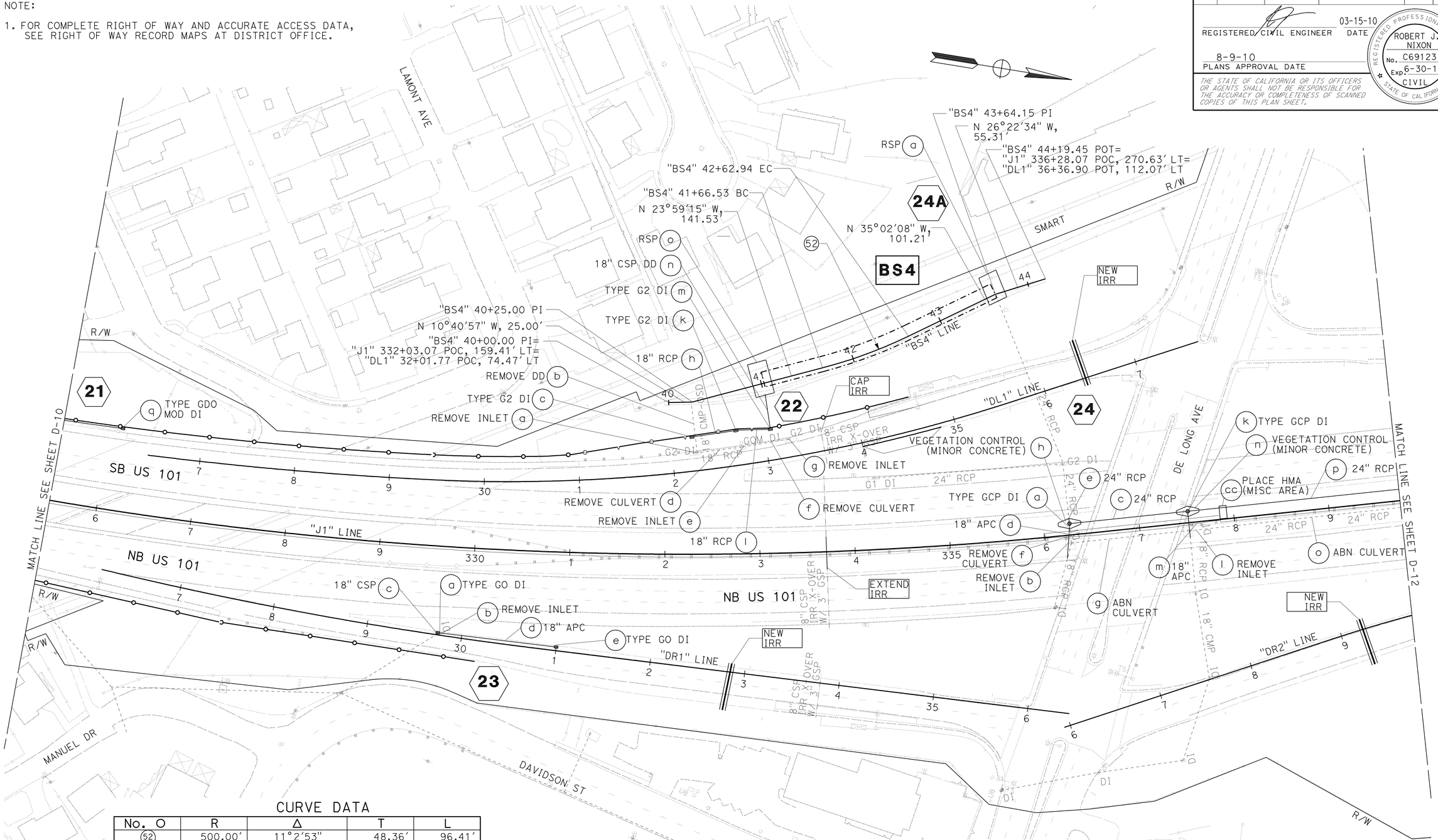

CURVE DATA

No. O	R	Δ	T	L
52	500.00'	11°2'53"	48.36'	96.41'

THIS PLAN ACCURATE FOR DRAINAGE WORK ONLY.

DRAINAGE PLAN

SCALE: 1" = 50'

D-11

REVISED BY	DATE REVISED
JOLENA ASTIN/SCOTT GREGORY	CHRIS GAIDO
CALCULATED-DESIGNED BY	CHECKED BY
FUNCTIONAL SUPERVISOR	JOHN L. MARTIN

STATE OF CALIFORNIA - DEPARTMENT OF TRANSPORTATION
Caltrans DESIGN

P:\proj2\04\26406\design\DCCR\426406ia011.dgn

LAST REVISION 03-15-10 | DATE PLOTTED => 16-AUG-2010 | TIME PLOTTED => 10:29

Dist	COUNTY	ROUTE	POST MILES TOTAL PROJECT	SHEET No.	TOTAL SHEETS
04	Mrn	101	18.6/R22.3	97	542

REGISTERED CIVIL ENGINEER 03-15-10 DATE

8-9-10
PLANS APPROVAL DATE

REGISTERED PROFESSIONAL ENGINEER ROBERT J. NIXON No. C69123 Exp. 6-30-10 CIVIL STATE OF CALIFORNIA

THE STATE OF CALIFORNIA OR ITS OFFICERS OR AGENTS SHALL NOT BE RESPONSIBLE FOR THE ACCURACY OR COMPLETENESS OF SCANNED COPIES OF THIS PLAN SHEET.

NOTE:

1. FOR COMPLETE RIGHT OF WAY AND ACCURATE ACCESS DATA, SEE RIGHT OF WAY RECORD MAPS AT DISTRICT OFFICE.

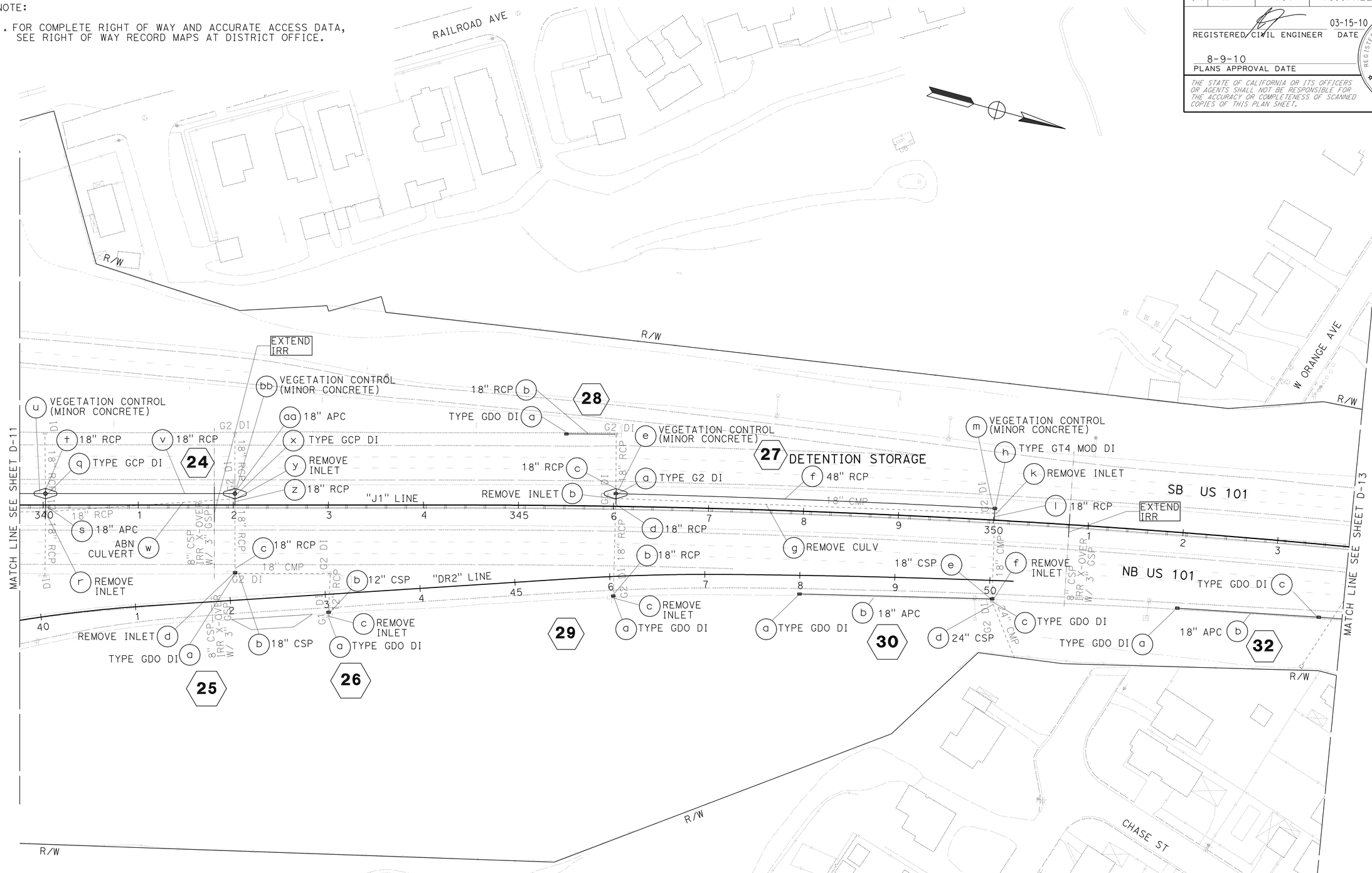

DRAINAGE PLAN

SCALE: 1" = 50'

SCALE: 1" = 50'

D-12

STATE OF CALIFORNIA - DEPARTMENT OF TRANSPORTATION

Caltrans DESIGN

FUNCTIONAL SUPERVISOR: JOHN L. MARTIN

CALCULATED-DESIGNED BY: TRAVIS GURNEY

CHECKED BY: CHRIS GAIDO

REVISED BY / DATE REVISED

P:\proj2\04\26406\design\ps&e\426406ia012.dgn

LAST REVISION: DATE PLOTTED => 16-AUG-2010 TIME PLOTTED => 10:29 03-15-10

Dist	COUNTY	ROUTE	POST MILES TOTAL PROJECT	SHEET No.	TOTAL SHEETS
04	Mrn	101	18.6/R22.3	98	542

REGISTERED CIVIL ENGINEER 03-15-10 DATE

8-9-10
PLANS APPROVAL DATE

REGISTERED PROFESSIONAL ENGINEER ROBERT J. NIXON No. C69123 Exp. 6-30-10 CIVIL STATE OF CALIFORNIA

THE STATE OF CALIFORNIA OR ITS OFFICERS OR AGENTS SHALL NOT BE RESPONSIBLE FOR THE ACCURACY OR COMPLETENESS OF SCANNED COPIES OF THIS PLAN SHEET.

NOTE:

1. FOR COMPLETE RIGHT OF WAY AND ACCURATE ACCESS DATA, SEE RIGHT OF WAY RECORD MAPS AT DISTRICT OFFICE.

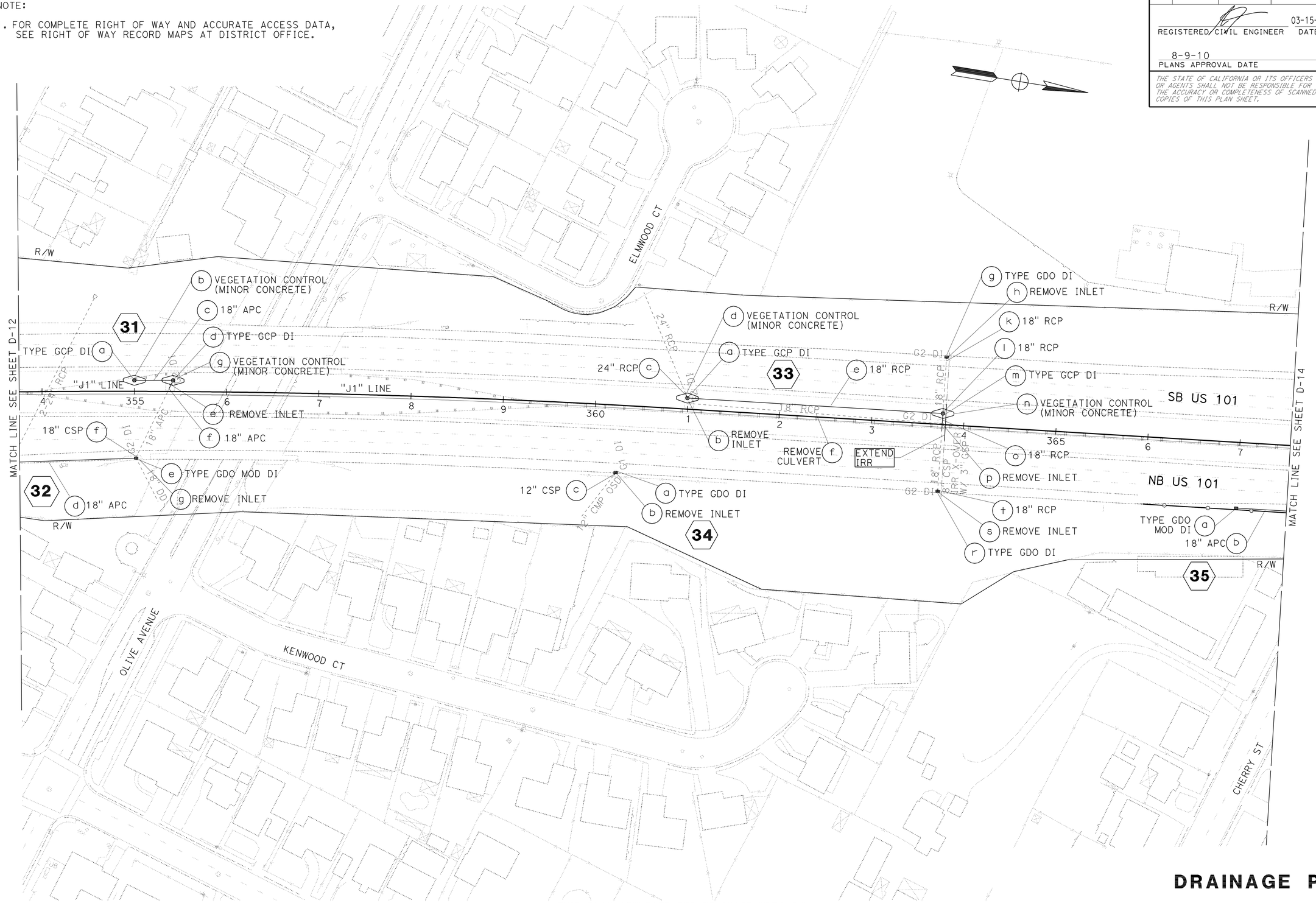

THIS PLAN ACCURATE FOR DRAINAGE WORK ONLY.

DRAINAGE PLAN

SCALE: 1" = 50'

D-13

REVISED BY	DATE REVISED
TRAVIS GURNEY	CHRIS GAIDO
CALCULATED-DESIGNED BY	CHECKED BY
FUNCTIONAL SUPERVISOR	JOHN L. MARTIN

STATE OF CALIFORNIA - DEPARTMENT OF TRANSPORTATION

Caltrans **DESIGN**

P:\proj2\04\26406\design\ps&e\426406ia013.dgn

LAST REVISION 03-15-10 | DATE PLOTTED => 16-AUG-2010 | TIME PLOTTED => 10:29

Dist	COUNTY	ROUTE	POST MILES TOTAL PROJECT	SHEET No.	TOTAL SHEETS
04	Mrn	101	18.6/R22.3	99	542

REGISTERED CIVIL ENGINEER 03-15-10 DATE

8-9-10
PLANS APPROVAL DATE

REGISTERED PROFESSIONAL ENGINEER ROBERT J. NIXON No. C69123 Exp. 6-30-10 CIVIL STATE OF CALIFORNIA

THE STATE OF CALIFORNIA OR ITS OFFICERS OR AGENTS SHALL NOT BE RESPONSIBLE FOR THE ACCURACY OR COMPLETENESS OF SCANNED COPIES OF THIS PLAN SHEET.

NOTE:

1. FOR COMPLETE RIGHT OF WAY AND ACCURATE ACCESS DATA, SEE RIGHT OF WAY RECORD MAPS AT DISTRICT OFFICE.
2. FOR ALL PAY ITEMS SEE DD-11 SHT

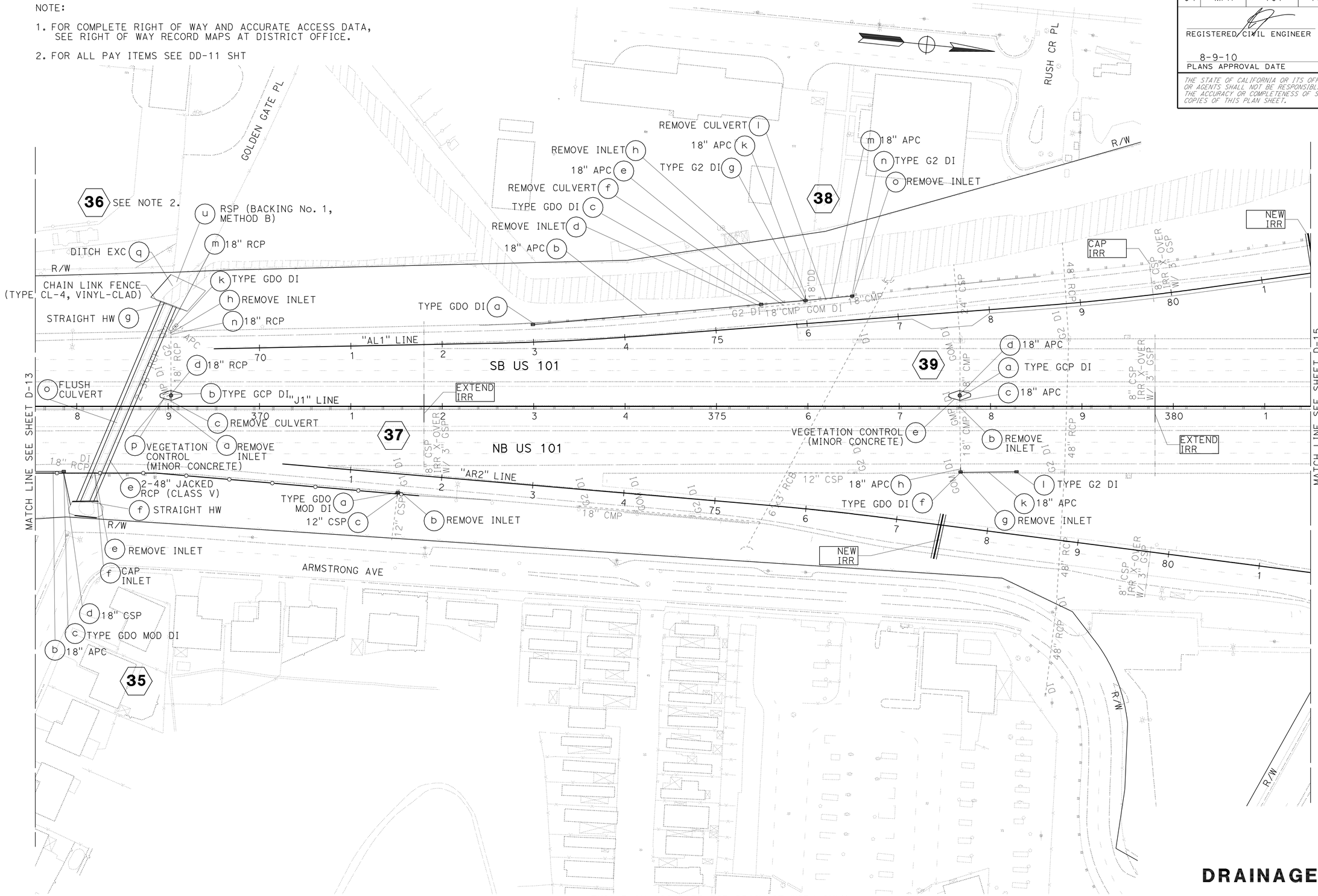

THIS PLAN ACCURATE FOR DRAINAGE WORK ONLY.

DRAINAGE PLAN

SCALE: 1" = 50'

D-14

REVISED BY	DATE REVISED

CALCULATED-DESIGNED BY: T. CRAWFORD / T. GURNEY
CHECKED BY: CHRIS GAIDO
FUNCTIONAL SUPERVISOR: JOHN L. MARTIN

STATE OF CALIFORNIA - DEPARTMENT OF TRANSPORTATION
Caltrans
DESIGN

P:\proj2\04\26406\design\DCCR\426406ig014.dgn

LAST REVISION 03-15-10
DATE PLOTTED => 16-AUG-2010
TIME PLOTTED => 10:29

Dist	COUNTY	ROUTE	POST MILES TOTAL PROJECT	SHEET No.	TOTAL SHEETS
04	Mrn	101	18.6/R22.3	100	542

REGISTERED CIVIL ENGINEER 03-15-10 DATE

8-9-10
PLANS APPROVAL DATE

REGISTERED PROFESSIONAL ENGINEER ROBERT J. NIXON No. C69123 Exp. 6-30-10 CIVIL STATE OF CALIFORNIA

THE STATE OF CALIFORNIA OR ITS OFFICERS OR AGENTS SHALL NOT BE RESPONSIBLE FOR THE ACCURACY OR COMPLETENESS OF SCANNED COPIES OF THIS PLAN SHEET.

NOTE:

1. FOR COMPLETE RIGHT OF WAY AND ACCURATE ACCESS DATA, SEE RIGHT OF WAY RECORD MAPS AT DISTRICT OFFICE.

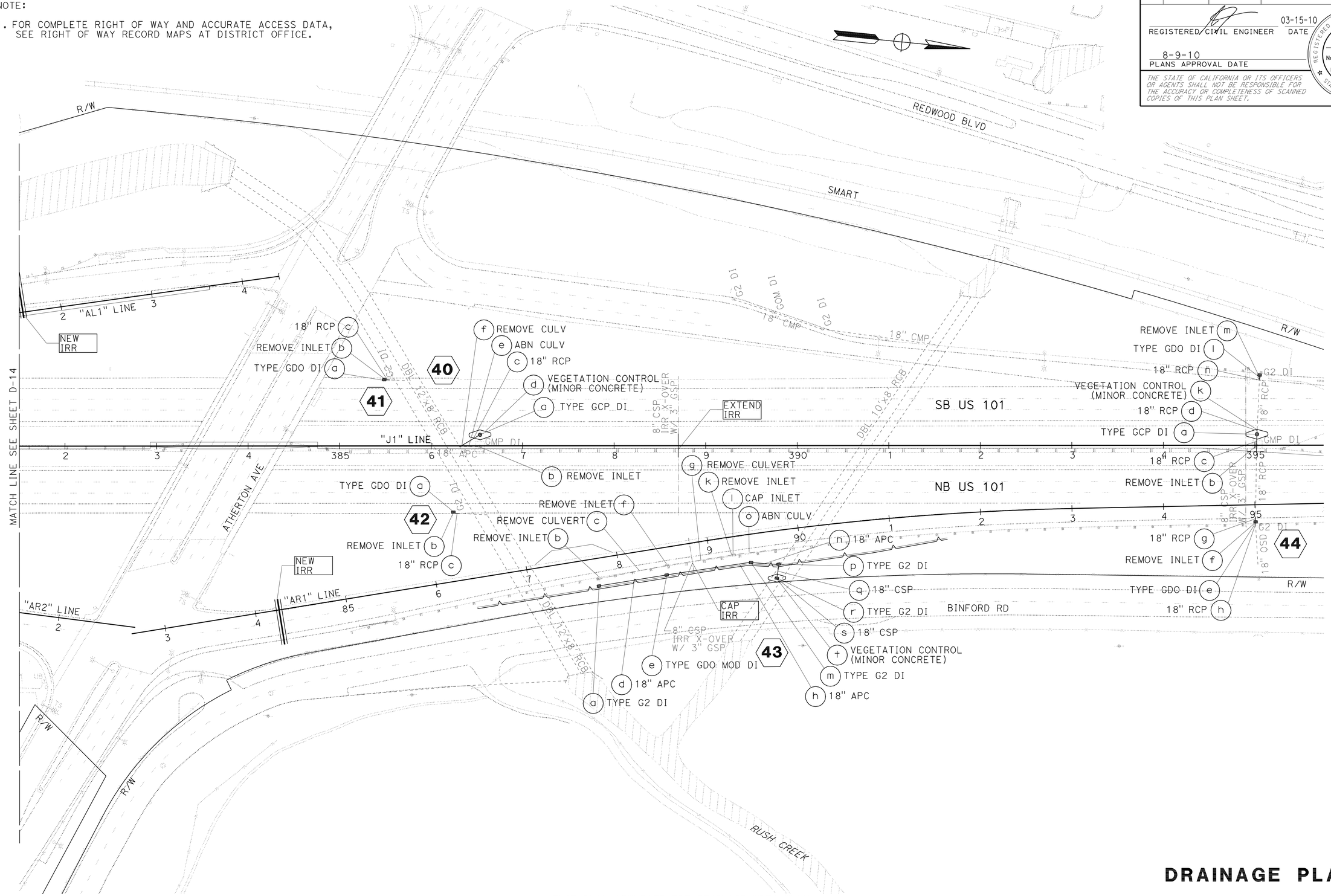

THIS PLAN ACCURATE FOR DRAINAGE WORK ONLY.

DRAINAGE PLAN

SCALE: 1" = 50'

D-15

REVISED BY	DATE REVISED
TRAVIS GURNEY	CHRIS GAIDO
CALCULATED-DESIGNED BY	CHECKED BY
FUNCTIONAL SUPERVISOR	JOHN L. MARTIN

STATE OF CALIFORNIA - DEPARTMENT OF TRANSPORTATION

Caltrans DESIGN

P:\proj2\04\26406\design\DCCR\426406ia015.dgn

LAST REVISION 03-15-10 | DATE PLOTTED => 16-AUG-2010 | TIME PLOTTED => 10:29