Dist	COUNTY	ROUTE	POST MILES TOTAL PROJECT	SHEET No.	TOTAL SHEETS
04	Mrn	101	18.6/R22.3	5	542

REGISTERED CIVIL ENGINEER 03-15-10 DATE

8-9-10
PLANS APPROVAL DATE

REGISTERED PROFESSIONAL ENGINEER ROBERT J. NIXON No. C69123 Exp. 6-30-10 CIVIL STATE OF CALIFORNIA

THE STATE OF CALIFORNIA OR ITS OFFICERS OR AGENTS SHALL NOT BE RESPONSIBLE FOR THE ACCURACY OR COMPLETENESS OF SCANNED COPIES OF THIS PLAN SHEET.

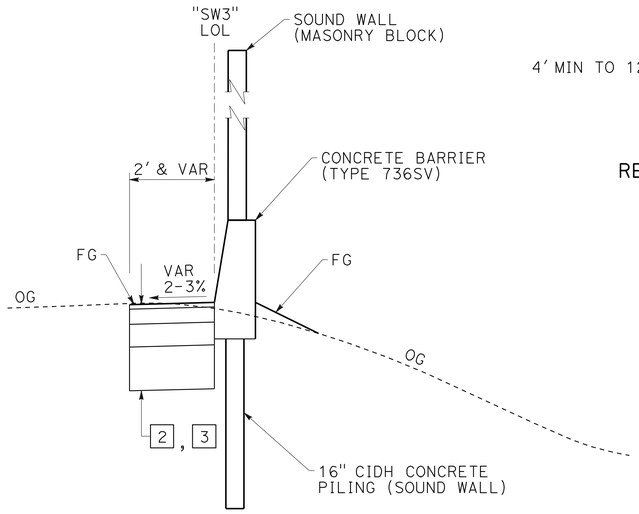

STA "J1" 322+69.28 TO 330+06.48
STA "J1" 365+98.66 TO 371+73.59

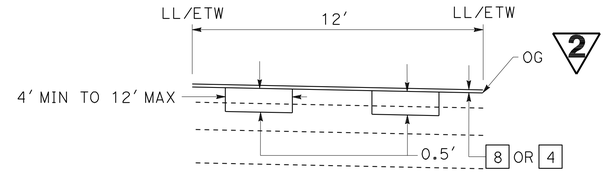

REPLACE ASPHALT CONCRETE SURFACING
LOCATIONS DETERMINED BY THE ENGINEER
ALL LANES BOTH DIRECTIONS INCLUDING RAMPS

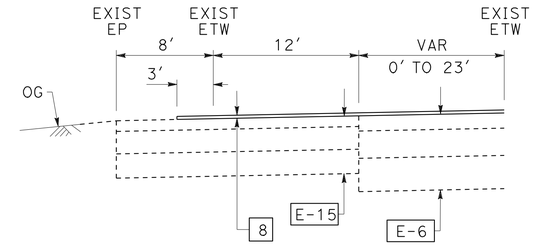

SB OFF-RAMP GORE
STA "J1" LT 238+63.03 TO 243+44.03
STA "J1" LT 301+60.41 TO 305+43.93

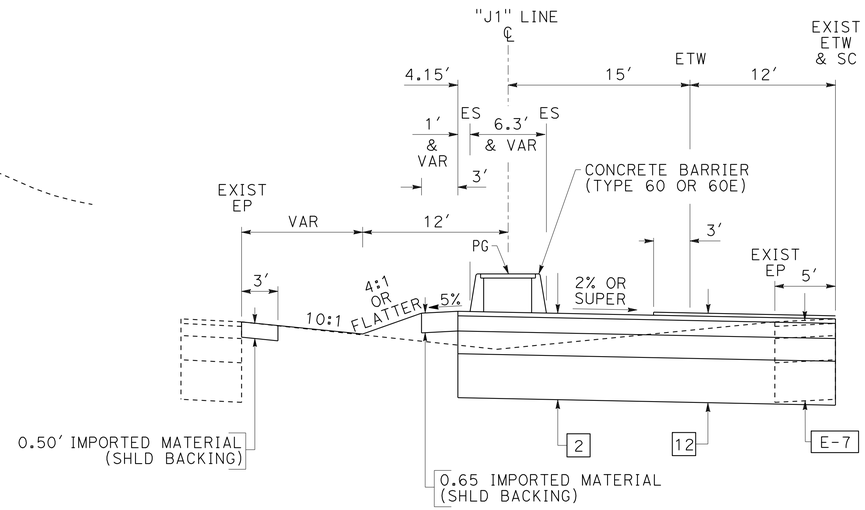

STA "J1" 335+98.00 TO 337+86.40
STA "J1" 382+92.00 TO 384+77.00

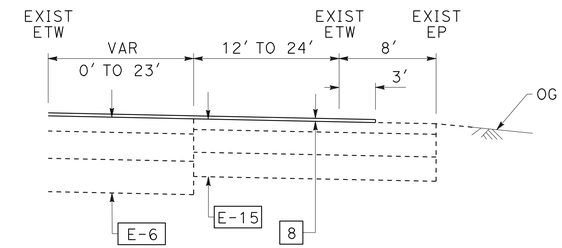

NB OFF-RAMP GORE
STA "J1" RT 271+00.00 TO 275+47.75
STA "J1" RT 327+63.61 TO 328+63.83
STA "J1" RT 368+86.66 TO 372+94.68

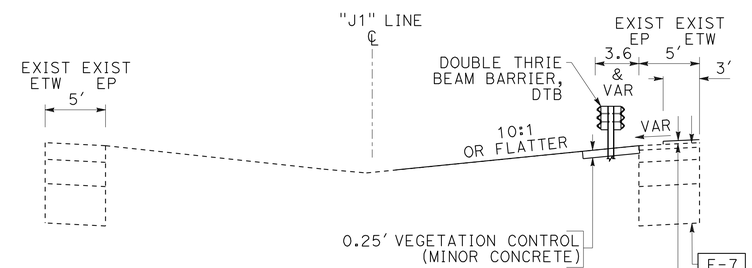

STA "J1" 397+50.00 TO 397+65.60

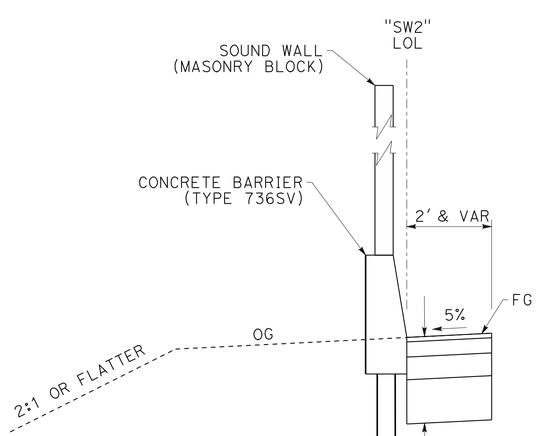

STA "J1" 320+14.30 TO 334+69.30

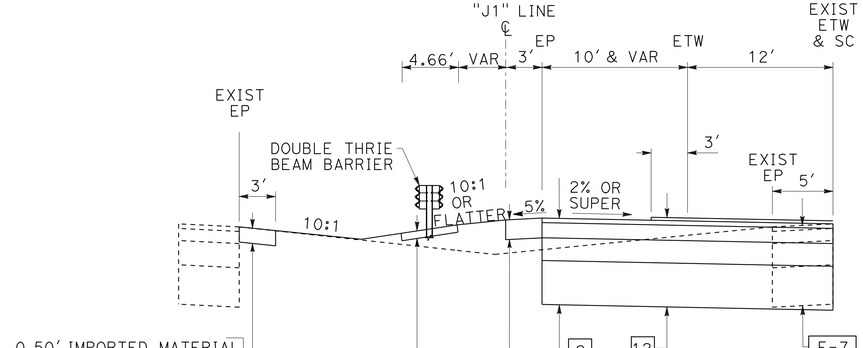

STA "J1" 307+48.00 TO 310+80.00
STA "J1" 329+55.00 TO 333+29.00
STA "J1" 357+13.40 TO 360+80.00

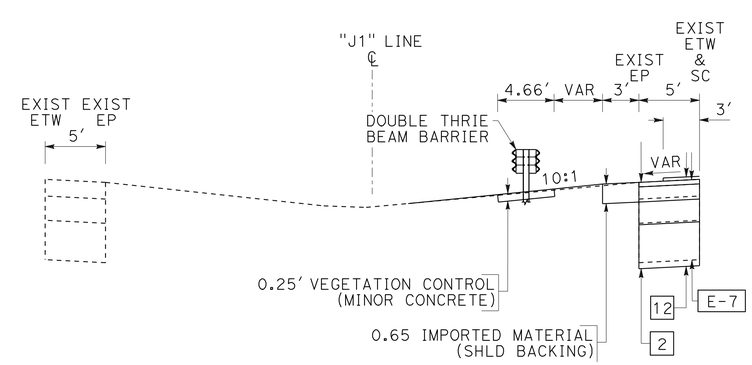

STA "J1" 397+00.00 TO 397+50.00

ROUTE 101

2 REVISED PER ADDENDUM No. 2 DATED APRIL 12, 2011

TYPICAL CROSS SECTIONS
NO SCALE

X-4

REVISED BY | DATE REVISED
ROBERT J. NIXON | JOHN L. MARTIN
CALCULATED-DESIGNED BY | CHECKED BY
FUNCTIONAL SUPERVISOR: JOHN L. MARTIN
STATE OF CALIFORNIA - DEPARTMENT OF TRANSPORTATION
Caltrans DESIGN

LAST REVISION 03-15-10 | DATE PLOTTED => 12-APR-2011 | TIME PLOTTED => 10:24

V:\ProjectPlans\PSEWorking\d4\04-264061-add2_4-11-11\426406ca004.add