DIST	COUNTY	ROUTE	KILOMETER POST TOTAL PROJECT	SHEET No	TOTAL SHEETS
04	Son	101	7.3/8.3	301	320

REGISTERED CIVIL ENGINEER 05-03-10 DATE

5-31-11
PLANS APPROVAL DATE

The State of California or its officers or agents shall not be responsible for the accuracy or completeness of electronic copies of this plan sheet.

REGISTERED PROFESSIONAL ENGINEER KENG MUN LOW No. C49361 Exp. 9-30-10 CIVIL STATE OF CALIFORNIA

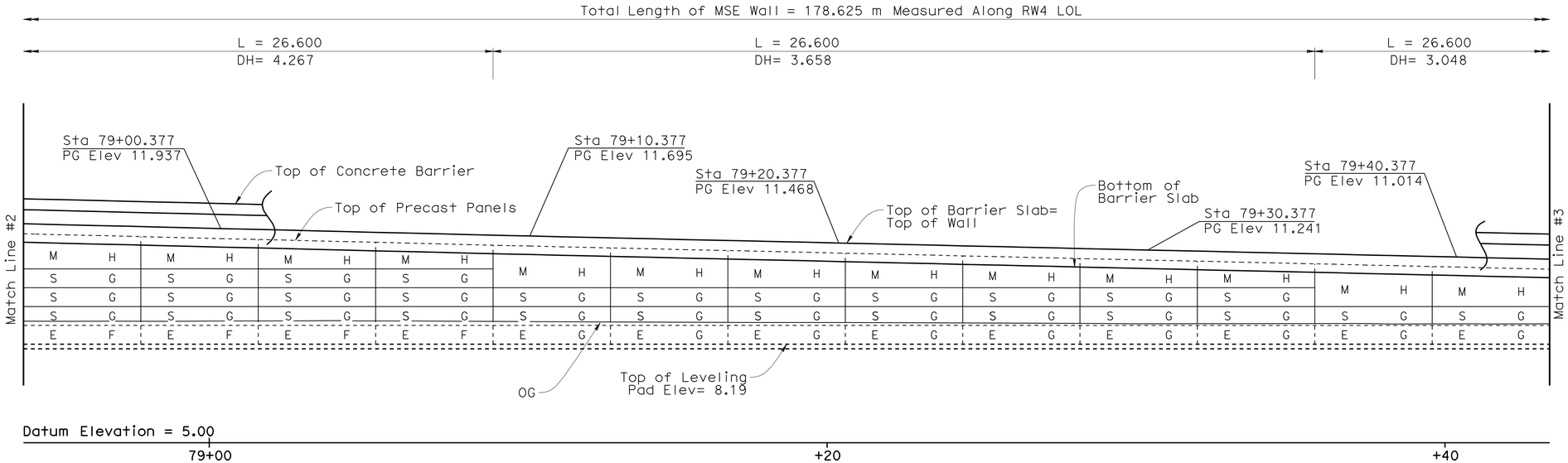

PART DEVELOPED MIRRORED ELEVATION
1:80

LEGEND:
DH= MSE Wall Design Height
L = Length of Wall Segment

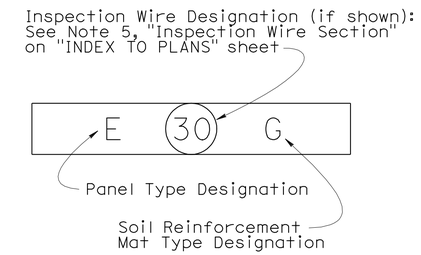

PANEL LEGEND DETAIL
No Scale

NOTE:
1. For details of Panel Type Designation M, S and E, see "MSE DETAILS NO. 4" sheet.

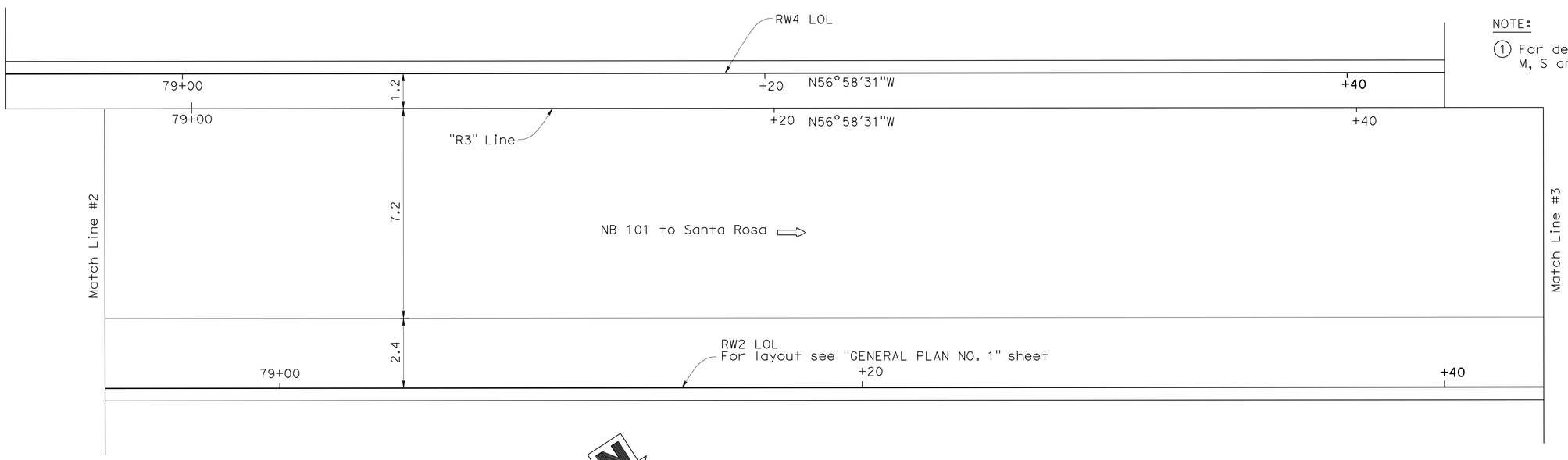

PART PLAN
1:80

DESIGN	BY A.L. Hough / K M Low	CHECKED David Romero	STATE OF CALIFORNIA DEPARTMENT OF TRANSPORTATION	DIVISION OF ENGINEERING SERVICES STRUCTURE DESIGN DESIGN BRANCH 8	BRIDGE NO. 20E0017 R/L
DETAILS	BY E.Hallstrom/C.Cancino	CHECKED David Romero			KILOMETER POST 7.68
QUANTITIES	BY K M Low / C. Cancino	CHECKED Tomoko Kusumi			

RETAINING WALL NO. 2 & 4
RW4 STRUCTURE PLAN NO. 3

Caltrans Metric

ALL DIMENSIONS ARE IN METERS UNLESS OTHERWISE SHOWN

ORIGINAL SCALE IN MILLIMETERS FOR REDUCED PLANS 0 10 20 30 40 50 60 70 80 90 100

CU 04
EA 264041

DISREGARD PRINTS BEARING EARLIER REVISION DATES

REVISION DATES 5-03-06 7-17-06 2-22-06 10-31-06 11-30-06 08-31-09 11-15-09 01-03-10

SHEET 10 OF 29

FILE => 20e0017rl-d-rw4-sp3.dgn

STRUCTURES DESIGN DETAIL SHEET (METRIC) (REV.03-17-04)

USERNAME => trlenard DATE PLOTTED => 31-MAY-2011 TIME PLOTTED => 11:26

DIST	COUNTY	ROUTE	KILOMETER POST TOTAL PROJECT	SHEET No	TOTAL SHEETS
04	Son	101	7.3/8.3	302	320

REGISTERED CIVIL ENGINEER — DATE 05-03-10

5-31-11
PLANS APPROVAL DATE

REGISTERED PROFESSIONAL ENGINEER — KENG MUN LOW — No. C49361 — Exp. 9-30-10 — CIVIL — STATE OF CALIFORNIA

The State of California or its officers or agents shall not be responsible for the accuracy or completeness of electronic copies of this plan sheet.

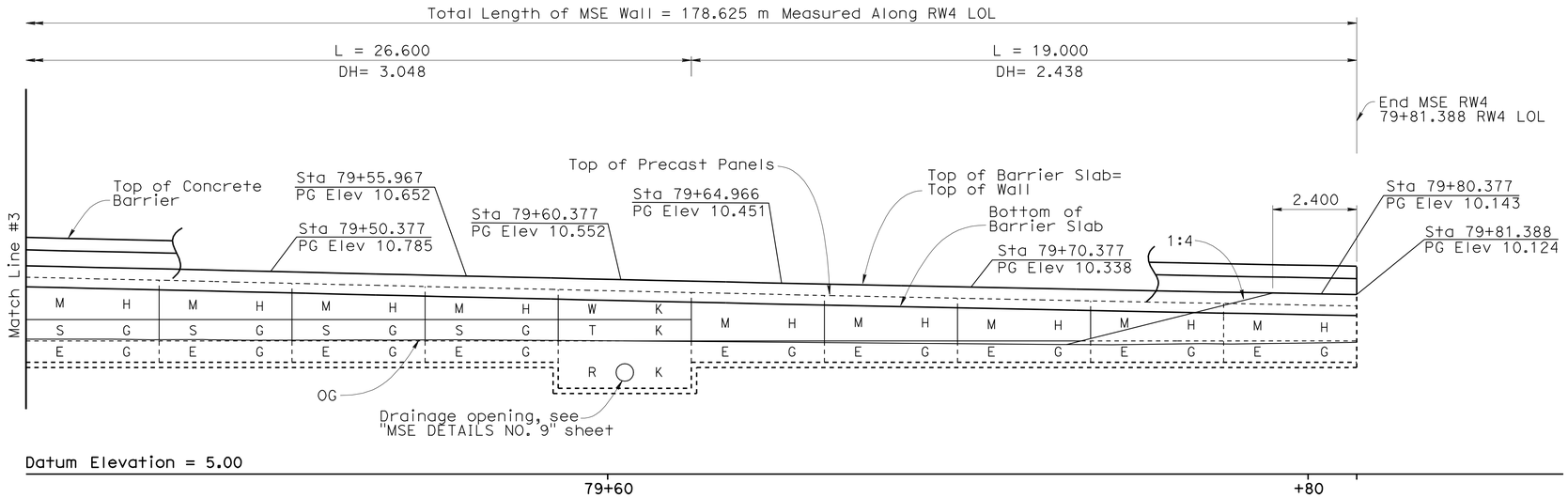

PART DEVELOPED MIRRORED ELEVATION
1:80

LEGEND:

DH= MSE Wall Design Height
L = Length of Wall Segment

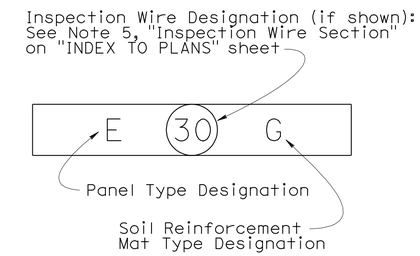

PANEL LEGEND DETAIL
No Scale

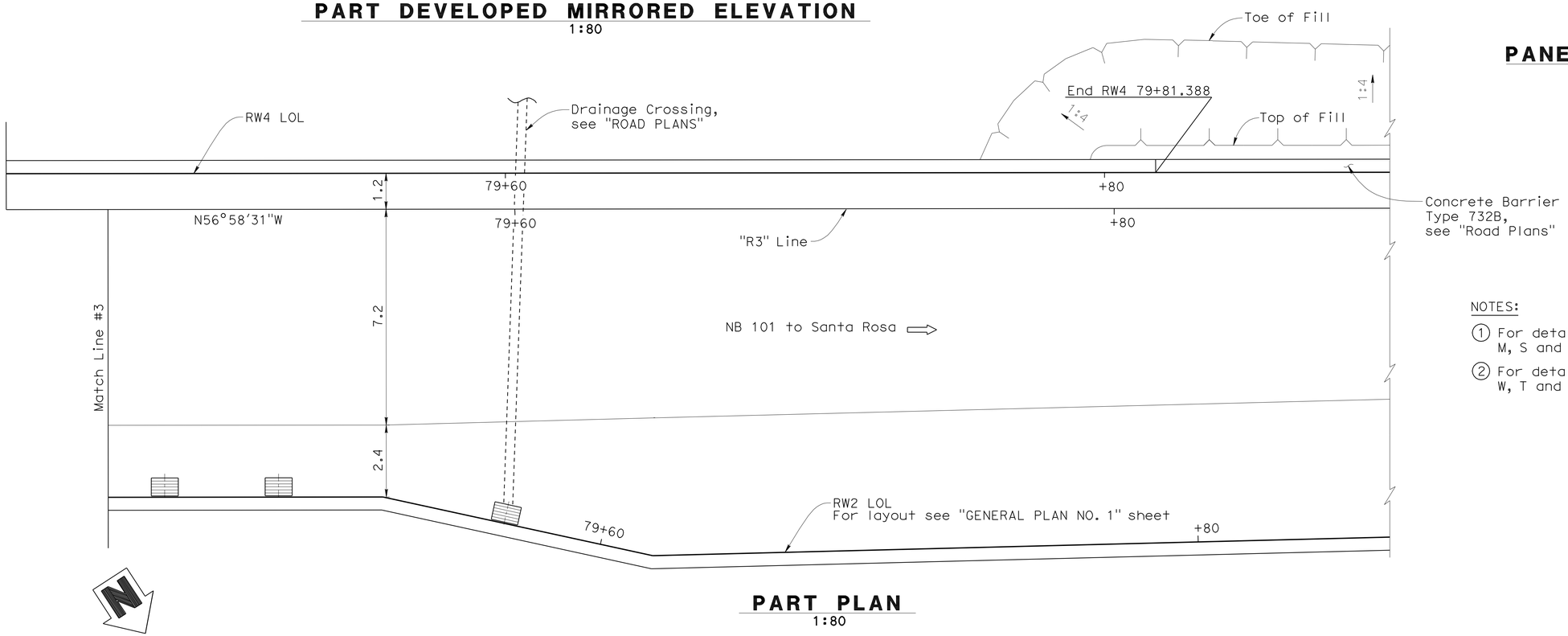

PART PLAN
1:80

NOTES:

1. For details of Panel Type Designation M, S and E, see "MSE DETAILS NO. 4" sheet.
2. For details of Panel Type Designation W, T and R, see "MSE DETAILS NO. 9" sheet.

	BY	CHECKED
DESIGN	A.L. Hough / K M Low	David Romero
DETAILS	E.Hallstrom/C.Cancino	David Romero
QUANTITIES	K M Low / C. Cancino	Tomoko Kusumi

STATE OF CALIFORNIA
DEPARTMENT OF TRANSPORTATION

DIVISION OF ENGINEERING SERVICES
STRUCTURE DESIGN
DESIGN BRANCH 8

BRIDGE NO. 20E0017 R/L
KILOMETER POST 7.68

RETAINING WALL NO. 2 & 4
RW4 STRUCTURE PLAN NO. 4

Caltrans Metric

ALL DIMENSIONS ARE IN METERS UNLESS OTHERWISE SHOWN

ORIGINAL SCALE IN MILLIMETERS FOR REDUCED PLANS 0 10 20 30 40 50 60 70 80 90 100

CU 04
EA 264041

DISREGARD PRINTS BEARING EARLIER REVISION DATES

REVISION DATES: 01-03-10 04-12-10 10-31-06 11-30-06 12-14-06 08-19-09 08-31-09 11-25-09 12-29-09

SHEET 11 OF 29

FILE => 20e0017rl-d-rw4-sp4.dgn

STRUCTURES DESIGN DETAIL SHEET (METRIC) (REV.03-17-04)

USERNAME => trlenard DATE PLOTTED => 31-MAY-2011 TIME PLOTTED => 11:26

DIST	COUNTY	ROUTE	KILOMETER POST TOTAL PROJECT	SHEET No	TOTAL SHEETS
04	Son	101	7.3/8.3	303	320

REGISTERED CIVIL ENGINEER 05-03-10 DATE

5-31-11
PLANS APPROVAL DATE

REGISTERED PROFESSIONAL ENGINEER KENG MUN LOW No. C49361 Exp. 9-30-10 CIVIL STATE OF CALIFORNIA

The State of California or its officers or agents shall not be responsible for the accuracy or completeness of electronic copies of this plan sheet.

Caltrans Metric

BRIDGE LOCATION (Br #20-0246)
① - 11.336 Lt "EW1" LINE, Sta 14+50.692, Elev= 15.799 ±
② - 16.469 Rt "EW1" LINE, Sta 14+53.128, Elev= 16.305 ±

SURVEY CONTROL

SUHV823
51.013 m Lt "EW1" LINE
Sta 14+64.859
N 696057.682
E 1813757.868
Elev= 8.682

SUHV828
0.233 m Rt "EW1" LINE
Sta 14+67.064
N 696030.787
E 1813801.543
Elev= 15.754

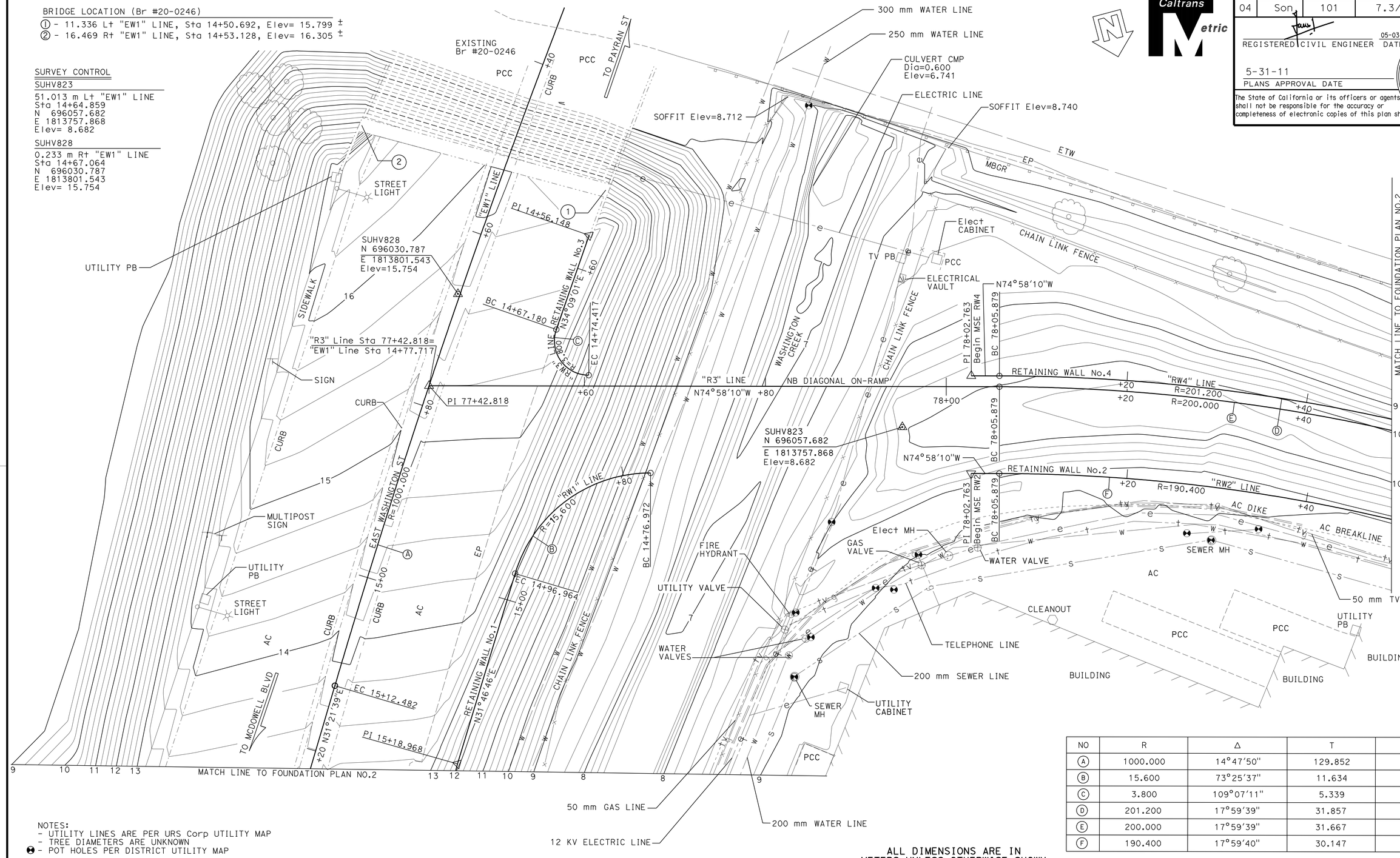

NO	R	Δ	T	L
Ⓐ	1000.000	14°47'50"	129.852	258.259
Ⓑ	15.600	73°25'37"	11.634	19.992
Ⓒ	3.800	109°07'11"	5.339	7.237
Ⓓ	201.200	17°59'39"	31.857	63.188
Ⓔ	200.000	17°59'39"	31.667	62.812
Ⓕ	190.400	17°59'40"	30.147	59.798

NOTES:
- UTILITY LINES ARE PER URS Corp UTILITY MAP
- TREE DIAMETERS ARE UNKNOWN
- POT HOLES PER DISTRICT UTILITY MAP

ALL DIMENSIONS ARE IN METERS UNLESS OTHERWISE SHOWN

PRELIMINARY INVESTIGATION SECTION

SCALE	VERT. DATUM NAVD 88	PHOTOGRAMMETRY AS OF:			
1:200	HORZ. DATUM NAD83 (1991.35)	SURVEYED	BY DISTRICT / URS Corp	CHECKED	BY C. FASSETT 01/2010
ALIGNMENT TIES DIST. TRAVERSE SHEET		DRAFTED	BY J. MARTINEZ 01/2010	CHECKED	BY C. FASSETT 01/2010

	BY	CHECKED
DESIGN	Keng Mun Low	David Romero
DETAILS	Carlo Cancino	David Romero
QUANTITIES	K M Low / C. Cancino	Tomoko Kusumi

STATE OF CALIFORNIA DEPARTMENT OF TRANSPORTATION

DIVISION OF ENGINEERING SERVICES STRUCTURE DESIGN
DESIGN BRANCH 08

BRIDGE NO. 20E0017R/L
KILOMETER POST 7.68

RETAINING WALL NO.2 & 4
FOUNDATION PLAN NO.1

STRUCTURES FOUNDATION PLAN SHEET (METRIC) (REV.10-27-05)

ORIGINAL SCALE IN MILLIMETERS FOR REDUCED PLANS 0 10 20 30 40 50 60 70 80 90 100

CU 04
EA 264041

DISREGARD PRINTS BEARING EARLIER REVISION DATES

REVISION DATES (PRELIMINARY STAGE ONLY) 7/18/06 10/03/06 9/05/09 01/09/10 01/09/10

SHEET 12 OF 29

FILE => 20e0017rl-e-fp01.dgn

USERNAME => friehard DATE PLOTTED => 31-MAY-2011 TIME PLOTTED => 11:26

DIST	COUNTY	ROUTE	KILOMETER POST TOTAL PROJECT	SHEET No	TOTAL SHEETS
04	Son	101	7.3/8.3	304	320

REGISTERED CIVIL ENGINEER 05-03-10 DATE

5-31-11
PLANS APPROVAL DATE

The State of California or its officers or agents shall not be responsible for the accuracy or completeness of electronic copies of this plan sheet.

REGISTERED PROFESSIONAL ENGINEER KENG MUN LOW No. C49361 Exp. 9-30-10 CIVIL STATE OF CALIFORNIA

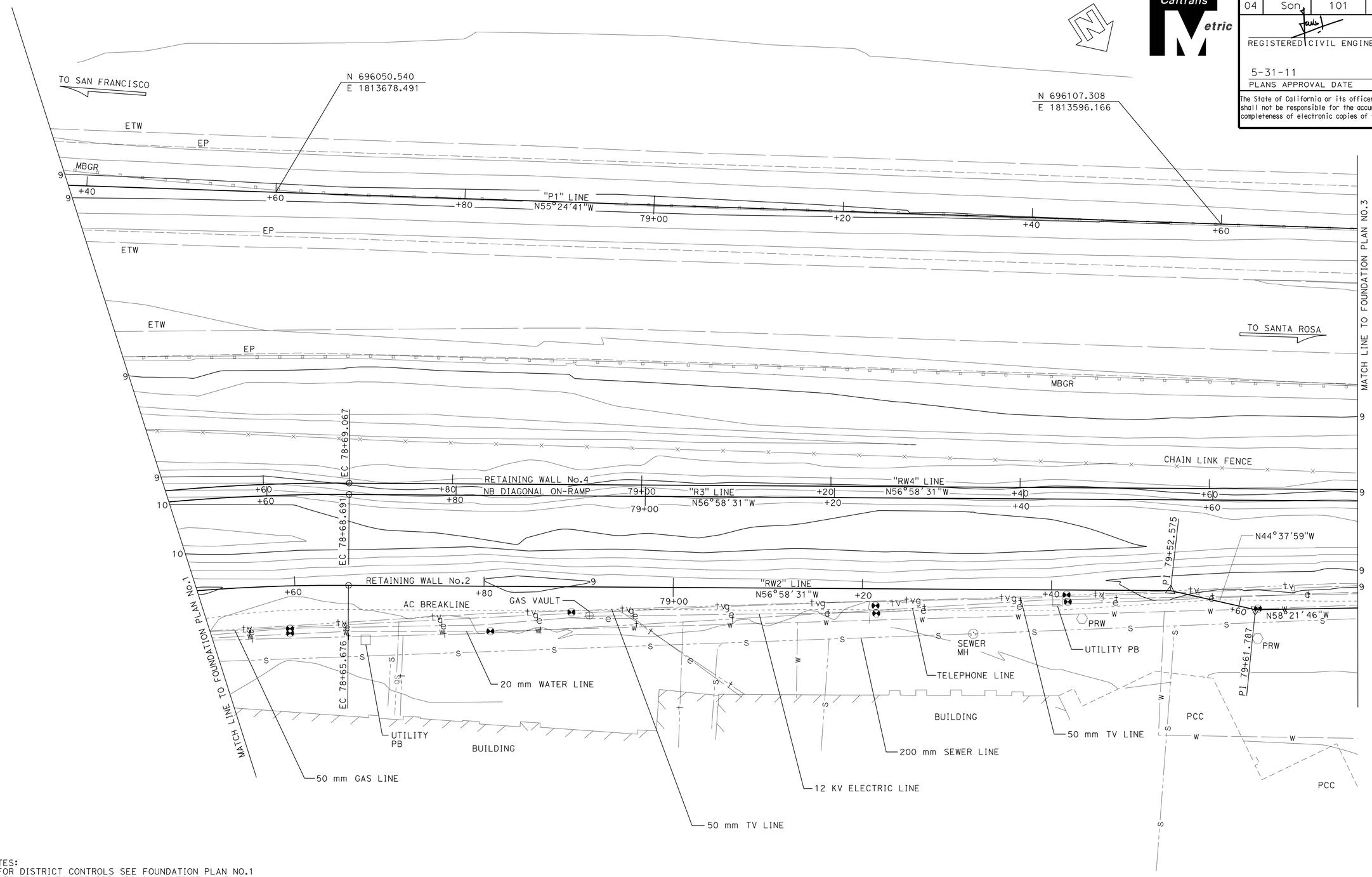

NOTES:
- FOR DISTRICT CONTROLS SEE FOUNDATION PLAN NO.1
- UTILITY LINES ARE PER URS Corp UTILITY MAP
- POT HOLES PER DISTRICT UTILITY PLAN

ALL DIMENSIONS ARE IN METERS UNLESS OTHERWISE SHOWN

PRELIMINARY INVESTIGATION SECTION

SCALE 1:200	VERT. DATUM NAVD 88	PHOTOGRAMMETRY AS OF:			
	HORZ. DATUM NAD83 (1991.35)	SURVEYED	BY DISTRICT / URS Corp	CHECKED	BY C. FASSETT 01/2010
ALIGNMENT TIES DIST. TRAVERSE SHEET		DRAFTED	BY J. MARTINEZ 01/2010	CHECKED	BY C. FASSETT 01/2010

DESIGN	BY Keng Mun Low	CHECKED David Romero
DETAILS	BY Carlo Cancino	CHECKED David Romero
QUANTITIES	BY K M Low / C. Cancino	CHECKED Tomoko Kusumi

STATE OF CALIFORNIA
DEPARTMENT OF TRANSPORTATION

DIVISION OF ENGINEERING SERVICES
STRUCTURE DESIGN
DESIGN BRANCH 08

BRIDGE NO. 20E0017R/L
KILOMETER POST 7.68

RETAINING WALL NO.2 & 4
FOUNDATION PLAN NO.2

STRUCTURES FOUNDATION PLAN SHEET (METRIC) (REV.10-27-05)

ORIGINAL SCALE IN MILLIMETERS FOR REDUCED PLANS 0 10 20 30 40 50 60 70 80 90 100

CU 04
EA 264000

DISREGARD PRINTS BEARING EARLIER REVISION DATES

REVISION DATES (PRELIMINARY STAGE ONLY) 7/10/2006 10/03/06 09/09/09 01/07/10 01/09/10

SHEET 13 OF 29

FILE => 20e0017rl-e-fp02.dgn

USERNAME => trlenard DATE PLOTTED => 31-MAY-2011 TIME PLOTTED => 11:26

DIST	COUNTY	ROUTE	KILOMETER POST TOTAL PROJECT	SHEET No	TOTAL SHEETS
04	Son	101	7.3/8.3	305	320

REGISTERED CIVIL ENGINEER 05-03-10 DATE

5-31-11
PLANS APPROVAL DATE

REGISTERED PROFESSIONAL ENGINEER KENG MUN LOW No. C49361 Exp. 9-30-10 CIVIL STATE OF CALIFORNIA

The State of California or its officers or agents shall not be responsible for the accuracy or completeness of electronic copies of this plan sheet.

Caltrans Metric

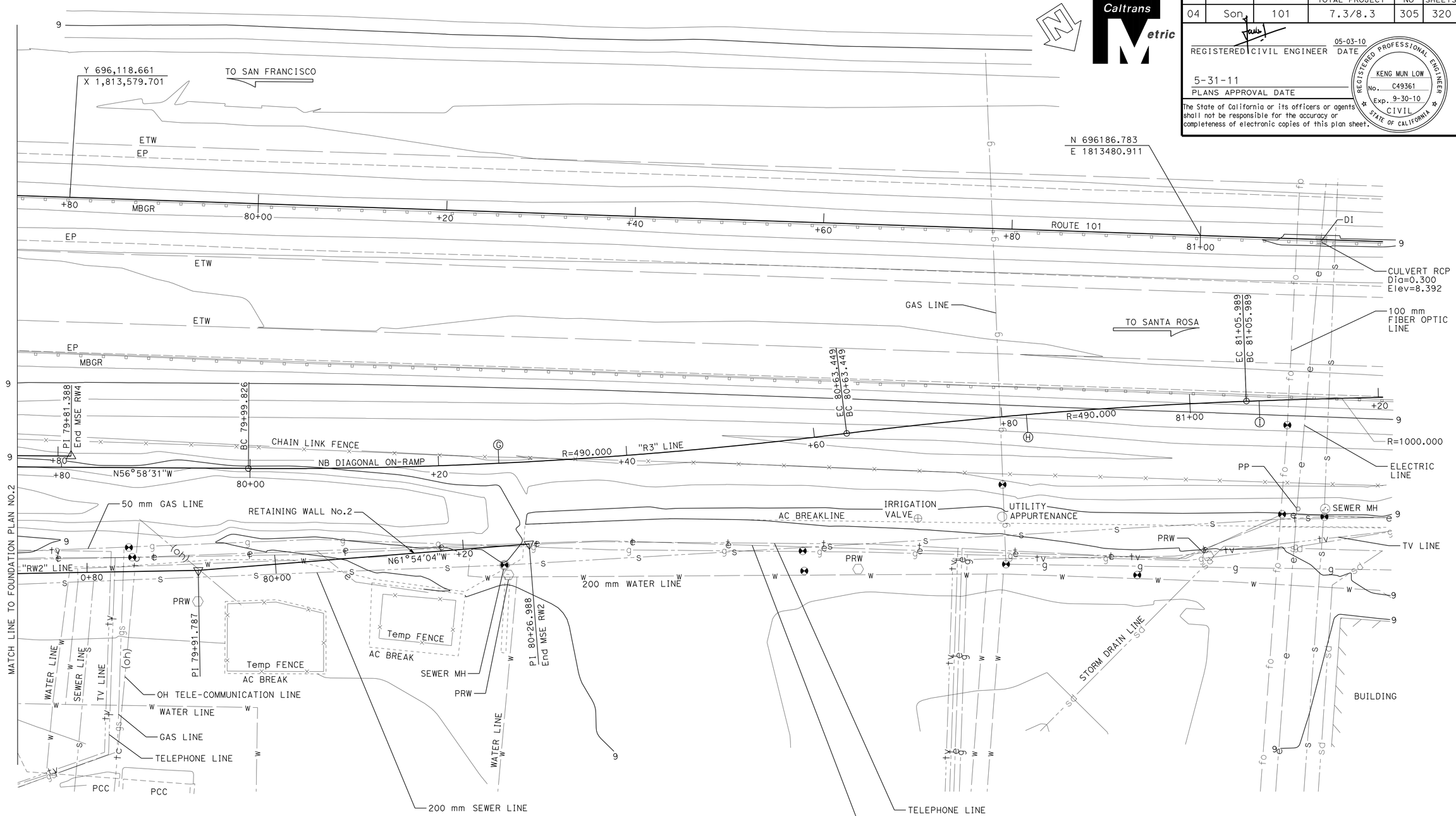

CURVE DATA

No.	R	Δ	T	L
G	490.000	7°26'22"	31.856	63.623
H	490.000	4°58'27"	21.283	42.540
I	10000.000	2°51'52"	25.003	49.995

NOTES:
- FOR DISTRICT CONTROLS SEE FOUNDATION PLAN NO.1
- UTILITY LINES ARE PER URS Corp UTILITY MAP
- POT HOLES PER DISTRICT UTILITY MAP

ALL DIMENSIONS ARE IN METERS UNLESS OTHERWISE SHOWN

PRELIMINARY INVESTIGATION SECTION

SCALE 1:200	VERT. DATUM NAVD 88	PHOTOGRAMMETRY AS OF:			
	HORZ. DATUM NAD83 (1991.35)	SURVEYED	BY DISTRICT / URS Corp	CHECKED BY C. FASSETT	01/2010
ALIGNMENT TIES DIST. TRAVERSE SHEET		DRAFTED	BY J. MARTINEZ 01/2010	CHECKED BY C. FASSETT	01/2010

	BY	CHECKED
DESIGN	Keng Mun Low	David Romero
DETAILS	Carlo Cancino	David Romero
QUANTITIES	K M Low / C. Cancino	Tomoko Kusumi

STATE OF CALIFORNIA
DEPARTMENT OF TRANSPORTATION

DIVISION OF ENGINEERING SERVICES
STRUCTURE DESIGN
DESIGN BRANCH 08

BRIDGE NO. 20E0017R/L
KILOMETER POST 7.68

RETAINING WALL NO.2 & 4
FOUNDATION PLAN NO.3

STRUCTURES FOUNDATION PLAN SHEET (METRIC) (REV.10-27-05)

ORIGINAL SCALE IN MILLIMETERS FOR REDUCED PLANS 0 10 20 30 40 50 60 70 80 90 100

CU 04
EA 264000

DISREGARD PRINTS BEARING EARLIER REVISION DATES

REVISION DATES (PRELIMINARY STAGE ONLY) 7/10/2006 10/13/2006 09/24/08 01/05/10 01/11/10

SHEET 14 OF 29

FILE => 20e0017rl-e-fp03.dgn

USERNAME => trlenard DATE PLOTTED => 31-MAY-2011 TIME PLOTTED => 11:26

DIST	COUNTY	ROUTE	KILOMETER POST TOTAL PROJECT	SHEET No	TOTAL SHEETS
04	Son	101	7.3/8.3	306	320

REGISTERED CIVIL ENGINEER 05-03-10 DATE

5-31-11
PLANS APPROVAL DATE

REGISTERED PROFESSIONAL ENGINEER
KENG MUN LOW
No. C49361
Exp. 9-30-10
CIVIL
STATE OF CALIFORNIA

The State of California or its officers or agents shall not be responsible for the accuracy or completeness of electronic copies of this plan sheet.

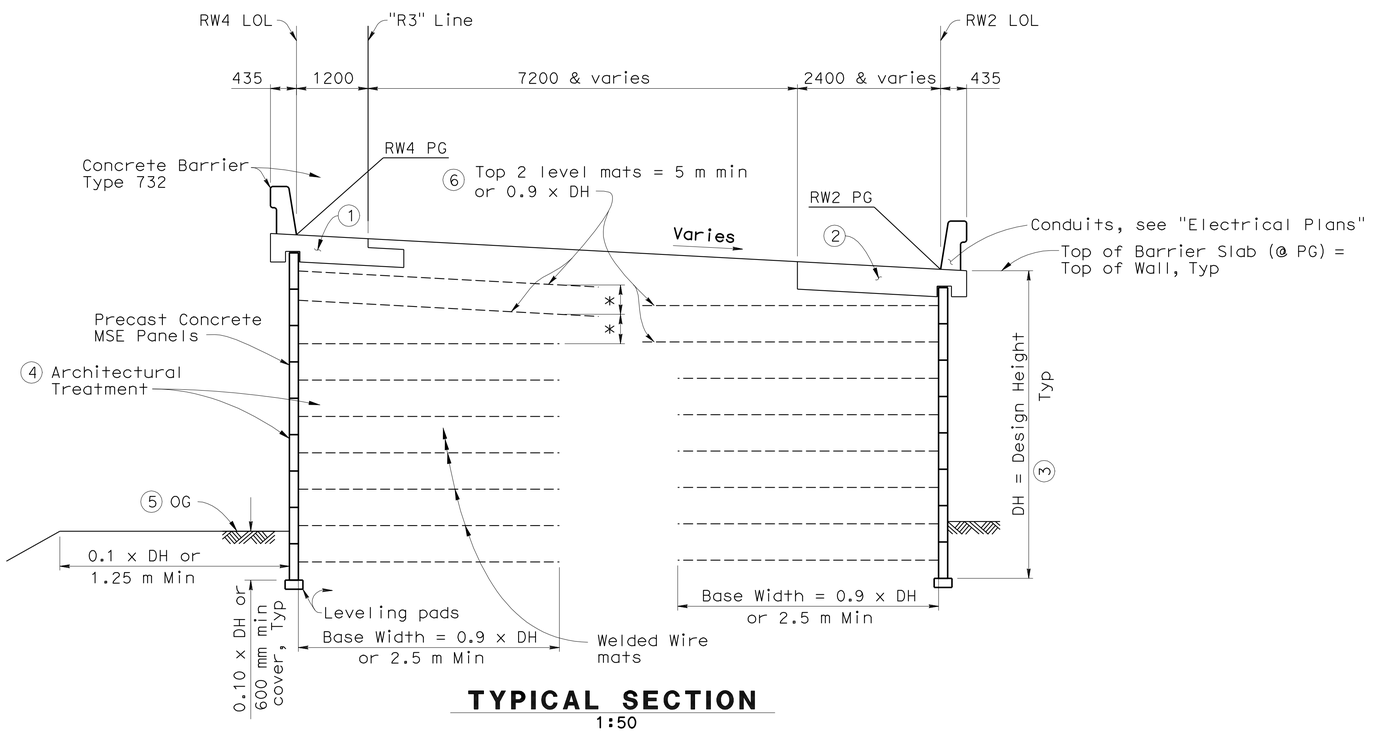

TYPICAL SECTION
1:50

Notes:

1. See "MSE DETAILS NO. 5" sheet
2. See "MSE DETAILS NO. 6" sheet
3. See "STRUCTURE PLAN...." sheets
4. For Details, see "INDEX TO PLANS" sheet
5. Finish Grade = Original Grade except additional fill shall be provided for minimum cover
6. Angle top 2 level wire mats to avoid roadway structural section

* Equal distance

Caltrans Metric

	BY	CHECKED
DESIGN	A.L. Hough / K M Low	David Romero
DETAILS	E.Hallstrom/C.Cancino	David Romero
QUANTITIES	K M Low / C. Cancino	Tomoko Kusumi

STATE OF CALIFORNIA
DEPARTMENT OF TRANSPORTATION

DIVISION OF ENGINEERING SERVICES
STRUCTURE DESIGN
DESIGN BRANCH 8

BRIDGE NO. 20E0017 R/L
KILOMETER POST 7.68

RETAINING WALL NO. 2 & 4
MSE DETAILS NO. 1

ALL DIMENSIONS ARE IN MILLIMETERS UNLESS OTHERWISE SHOWN

ORIGINAL SCALE IN MILLIMETERS FOR REDUCED PLANS 0 10 20 30 40 50 60 70 80 90 100

CU 04
EA 264041

DISREGARD PRINTS BEARING EARLIER REVISION DATES

REVISION DATES: 5-11-06 7-17-06 10-13-06 10-31-06 11-30-06 08-31-09 09-09-09 11-30-09 01-08-10 05-06-10

SHEET 15 OF 29

FILE => 20e0017r1-f-msed01.dgn

STRUCTURES DESIGN DETAIL SHEET (METRIC) (REV.03-17-04)

USERNAME => friehard DATE PLOTTED => 31-MAY-2011 TIME PLOTTED => 11:26

DIST	COUNTY	ROUTE	KILOMETER POST TOTAL PROJECT	SHEET No	TOTAL SHEETS
04	Son	101	7.3/8.3	307	320

REGISTERED CIVIL ENGINEER 05-03-10 DATE

5-31-11
PLANS APPROVAL DATE

REGISTERED PROFESSIONAL ENGINEER
KENG MUN LOW
No. C49361
Exp. 9-30-10
CIVIL
STATE OF CALIFORNIA

The State of California or its officers or agents shall not be responsible for the accuracy or completeness of electronic copies of this plan sheet.

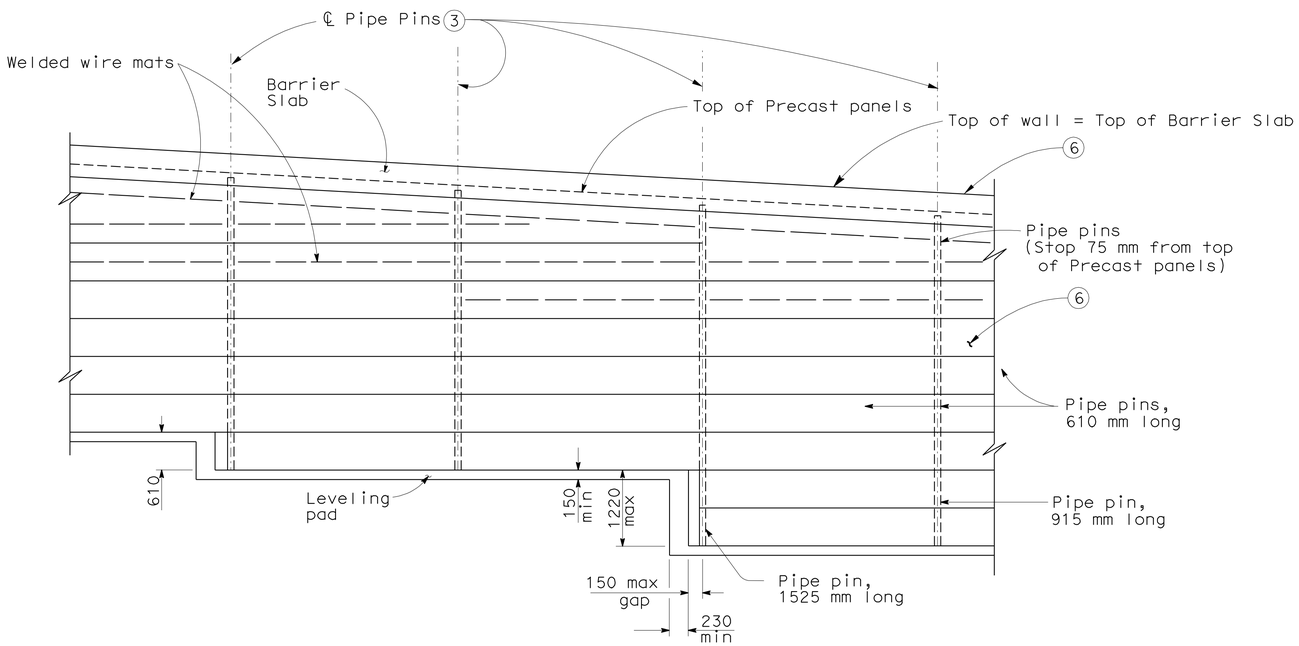

ELEVATION
No Scale

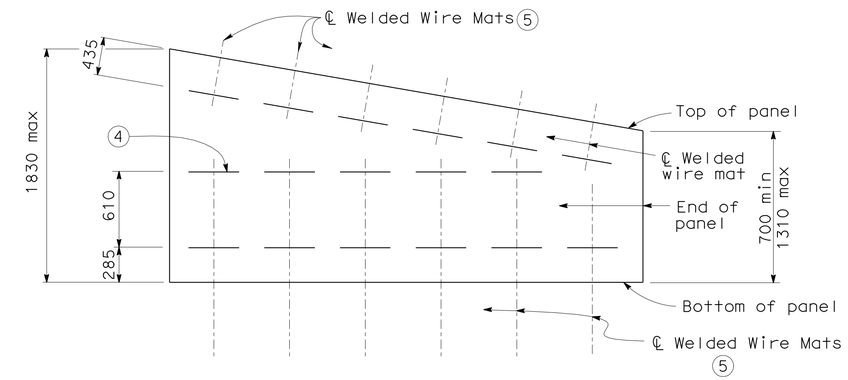

DETAIL C
No Scale

Notes:

1. All Welded Wire Mats not shown.
2. For typical location of welded wire mats in top panel, see "Detail C".
3. Pipe Pins to be galvanized afer fabrication.
4. Omit welded wire mats within lower levels that would be closer than 150 mm from a mat located in the level parallel to the top of the panel.
5. See "MW70 Plan" on "MSE DETAILS NO. 3" sheet for MW70 Welded Wire Mats. See "MW100 Welded Wire Mat Detail" on "MSE DETAILS NO. 8" sheet for MW100 Welded Wire Mats.
6. Architectural Treatment and Barrier not shown

Caltrans Metric

	BY	CHECKED
DESIGN	A.L. Hough / K M Low	David Romero
DETAILS	E.Hallstrom/C.Cancino	David Romero
QUANTITIES	K M Low / C. Cancino	Tomoko Kusumi

STATE OF CALIFORNIA
DEPARTMENT OF TRANSPORTATION

DIVISION OF ENGINEERING SERVICES
STRUCTURE DESIGN
DESIGN BRANCH 8

BRIDGE NO. 20E0017 R/L
KILOMETER POST 7.68

RETAINING WALL NO. 2 & 4
MSE DETAILS NO. 2

ALL DIMENSIONS ARE IN MILLIMETERS UNLESS OTHERWISE SHOWN

ORIGINAL SCALE IN MILLIMETERS FOR REDUCED PLANS 0 10 20 30 40 50 60 70 80 90 100

CU 04
EA 264041

DISREGARD PRINTS BEARING EARLIER REVISION DATES

REVISION DATES: 5-11-06 7-17-06 10-13-06 10-31-06 11-30-06 08-31-09

SHEET 16 OF 29

FILE => 20e0017rl-f-msed02.dgn

STRUCTURES DESIGN DETAIL SHEET (METRIC) (REV.03-17-04)

USERNAME => trlenard DATE PLOTTED => 31-MAY-2011 TIME PLOTTED => 11:26

DIST	COUNTY	ROUTE	KILOMETER POST TOTAL PROJECT	SHEET No	TOTAL SHEETS
04	Son	101	7.3/8.3	308	320

REGISTERED CIVIL ENGINEER 05-03-10 DATE

5-31-11
PLANS APPROVAL DATE

REGISTERED PROFESSIONAL ENGINEER KENG MUN LOW No. C49361 Exp. 9-30-10 CIVIL STATE OF CALIFORNIA

The State of California or its officers or agents shall not be responsible for the accuracy or completeness of electronic copies of this plan sheet.

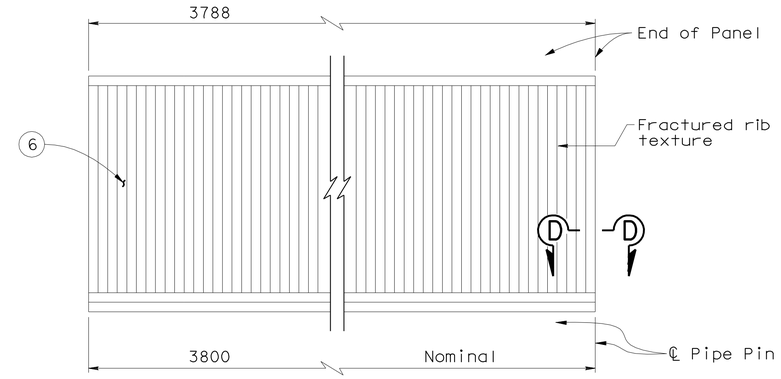

PANEL ELEVATION
No Scale

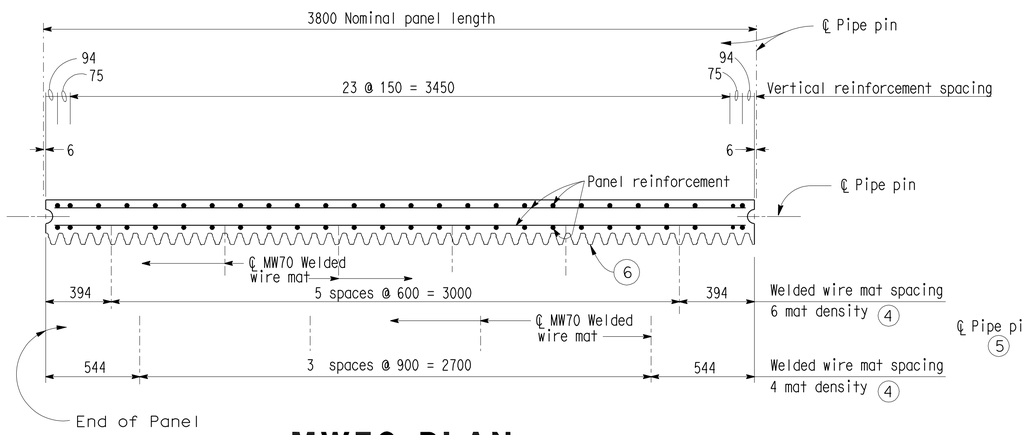

MW70 PLAN
1:10

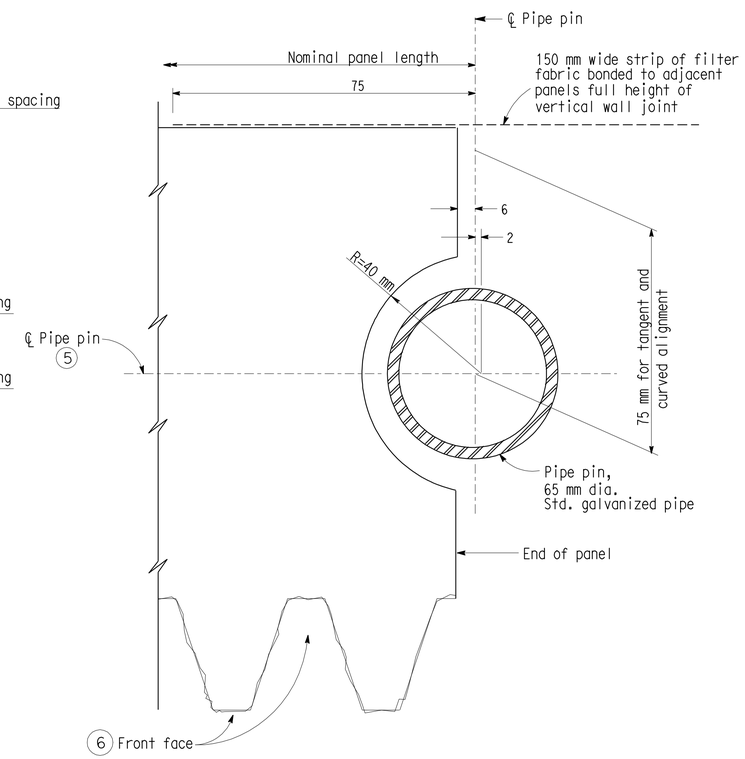

SECTION D-D
1:1

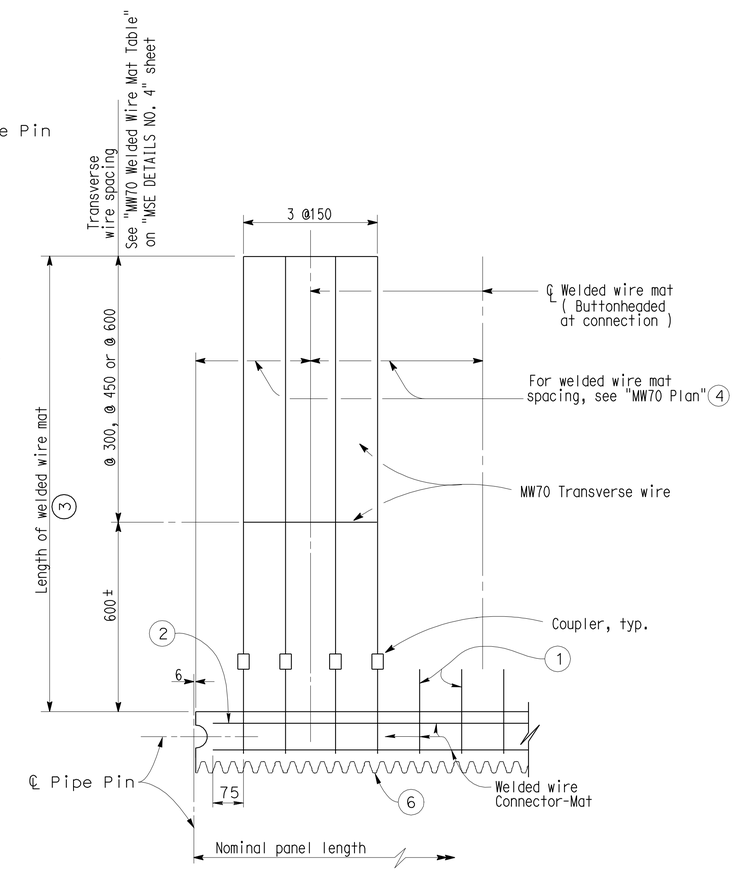

MW70 WELDED WIRE MAT DETAIL
1:10

Notes:

1. Unused buttonheaded Connector-Mat wires may be bent down at rear face of panel after concrete has sufficient strength to prevent spalling concrete or they may be cut back to provide 32 mm concrete cover.
2. Bend these wires to provide a minimum of 32 mm cover to end of Connector-Mat
3. Length equals "Base Width" of wall, except it shall not be less than 5.0 m for top level of mats for the top panels when a concrete barrier is used. For "Base Width", see "Typical Section" on "MSE DETAILS NO. 1" sheet.
4. Also see "Detail C" on "MSE DETAILS NO. 2" sheet and "MW70 Welded Wire Mat Table" on "MSE DETAILS NO. 4" sheet
5. See "Elevation" on "MSE DETAILS NO. 2" sheet
6. For Architectural Treatment details, see "INDEX TO PLANS" sheet.

Caltrans Metric

	BY	CHECKED
DESIGN	A.L. Hough / K M Low	David Romero
DETAILS	E.Hallstrom/C.Cancino	David Romero
QUANTITIES	K M Low / C. Cancino	Tomoko Kusumi

STATE OF CALIFORNIA
DEPARTMENT OF TRANSPORTATION

DIVISION OF ENGINEERING SERVICES
STRUCTURE DESIGN
DESIGN BRANCH 8

BRIDGE NO. 20E0017 R/L
KILOMETER POST 7.68

RETAINING WALL NO. 2 & 4
MSE DETAILS NO. 3

ALL DIMENSIONS ARE IN MILLIMETERS UNLESS OTHERWISE SHOWN

ORIGINAL SCALE IN MILLIMETERS FOR REDUCED PLANS 0 10 20 30 40 50 60 70 80 90 100

CU 04
EA 264041

DISREGARD PRINTS BEARING EARLIER REVISION DATES

REVISION DATES: 5-11-06 7-12-06 10-12-06 10-31-06 11-30-06 06-07-10

SHEET 17 OF 29

FILE => 20e0017rl-f-msed03.dgn

STRUCTURES DESIGN DETAIL SHEET (METRIC) (REV.03-17-04)

USERNAME => trlenard DATE PLOTTED => 31-MAY-2011 TIME PLOTTED => 11:27

DIST	COUNTY	ROUTE	KILOMETER POST TOTAL PROJECT	SHEET No	TOTAL SHEETS
04	Son	101	7.3/8.3	309	320

REGISTERED CIVIL ENGINEER 05-03-10 DATE

5-31-11
PLANS APPROVAL DATE

REGISTERED PROFESSIONAL ENGINEER KENG MUN LOW No. C49361 Exp. 9-30-10 CIVIL STATE OF CALIFORNIA

The State of California or its officers or agents shall not be responsible for the accuracy or completeness of electronic copies of this plan sheet.

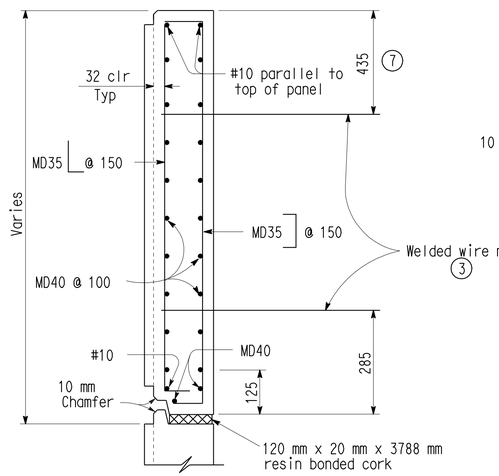

TOP PANEL (M)5

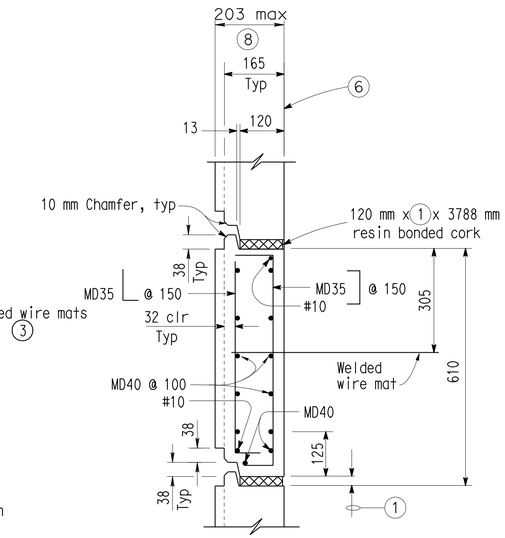

INTERMEDIATE PANEL (S)5

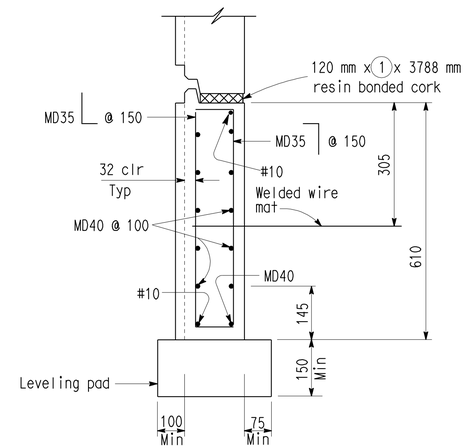

BOTTOM PANEL (E)5

MW70 PANEL SECTIONS

No Scale

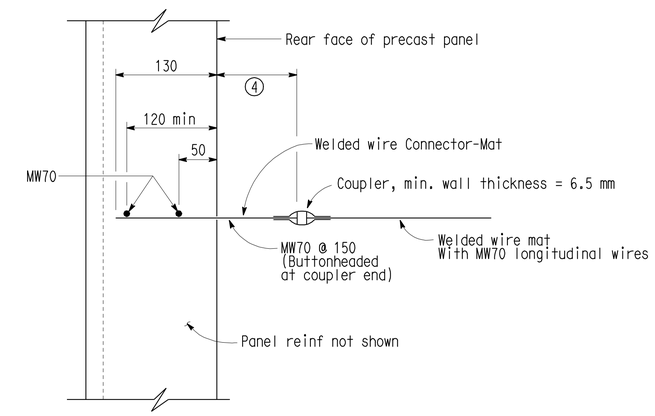

MW70 WELDED WIRE CONNECTOR-MAT DETAIL

No Scale

Notes:

1. For joints ≤ 6.09 m below top of wall, 20 mm
   For joints > 6.09 m below top of wall, 25 mm
2. Except for #10 bars, reinforcement may be fabricated as welded wire fabric.
3. Number of levels of welded mats in top panel varies. See MSE DETAILS NO. 2" sheet and "STRUCTURE PLAN...." sheets.
4. Distance as required to permit coupler to be swaged.
5. For Welded Wire Mat details not shown, see "Panel Legend Detail" on "STRUCTURE PLAN...." sheets.
6. Panels to be cast straight along their length.
7. Measured normal to top of panel
8. For Architectural Treatment details, see "INDEX TO PLANS" sheet
9. See "MW70 Plan" on "MSE DETAILS NO. 3" sheet and "Detail C" on "MSE DETAILS NO. 2" sheet
10. See "MW70 Welded Wire Mat Detail" on "MSE DETAILS NO. 3" sheet

MW70 Welded Wire Mat Table

Mat Type	9 Mat Density x Wire Size	10 Transverse Wire Spacing
A	4 × MW70	600
B	4 × MW70	450
C	4 × MW70	300
F	6 × MW70	600
G	6 × MW70	450
H	6 × MW70	300

Caltrans Metric

	BY	CHECKED
DESIGN	A.L. Hough / K M Low	David Romero
DETAILS	E.Hallstrom/C.Cancino	David Romero
QUANTITIES	K M Low / C. Cancino	Tomoko Kusumi

STATE OF CALIFORNIA DEPARTMENT OF TRANSPORTATION

DIVISION OF ENGINEERING SERVICES STRUCTURE DESIGN DESIGN BRANCH 8

BRIDGE NO. 20E0017 R/L
KILOMETER POST 7.68

RETAINING WALL NO. 2 & 4
MSE DETAILS NO. 4

ALL DIMENSIONS ARE IN MILLIMETERS UNLESS OTHERWISE SHOWN

ORIGINAL SCALE IN MILLIMETERS FOR REDUCED PLANS 0 10 20 30 40 50 60 70 80 90 100

CU 04
EA 264041

DISREGARD PRINTS BEARING EARLIER REVISION DATES

REVISION DATES: 5-11-06 7-17-06 7-18-06 10-17-06 10-31-06 11-30-06 08-31-09 06-09-10

SHEET 18 OF 29

FILE => 20e0017ri-f-msed04.dgn

STRUCTURES DESIGN DETAIL SHEET (METRIC) (REV.03-17-04)

USERNAME => rfrienard DATE PLOTTED => 31-MAY-2011 TIME PLOTTED => 11:27

DIST	COUNTY	ROUTE	KILOMETER POST TOTAL PROJECT	SHEET No	TOTAL SHEETS
04	Son	101	7.3/8.3	310	320

REGISTERED CIVIL ENGINEER 05-03-10 DATE

5-31-11
PLANS APPROVAL DATE

REGISTERED PROFESSIONAL ENGINEER KENG MUN LOW No. C49361 Exp. 9-30-10 CIVIL STATE OF CALIFORNIA

The State of California or its officers or agents shall not be responsible for the accuracy or completeness of electronic copies of this plan sheet.

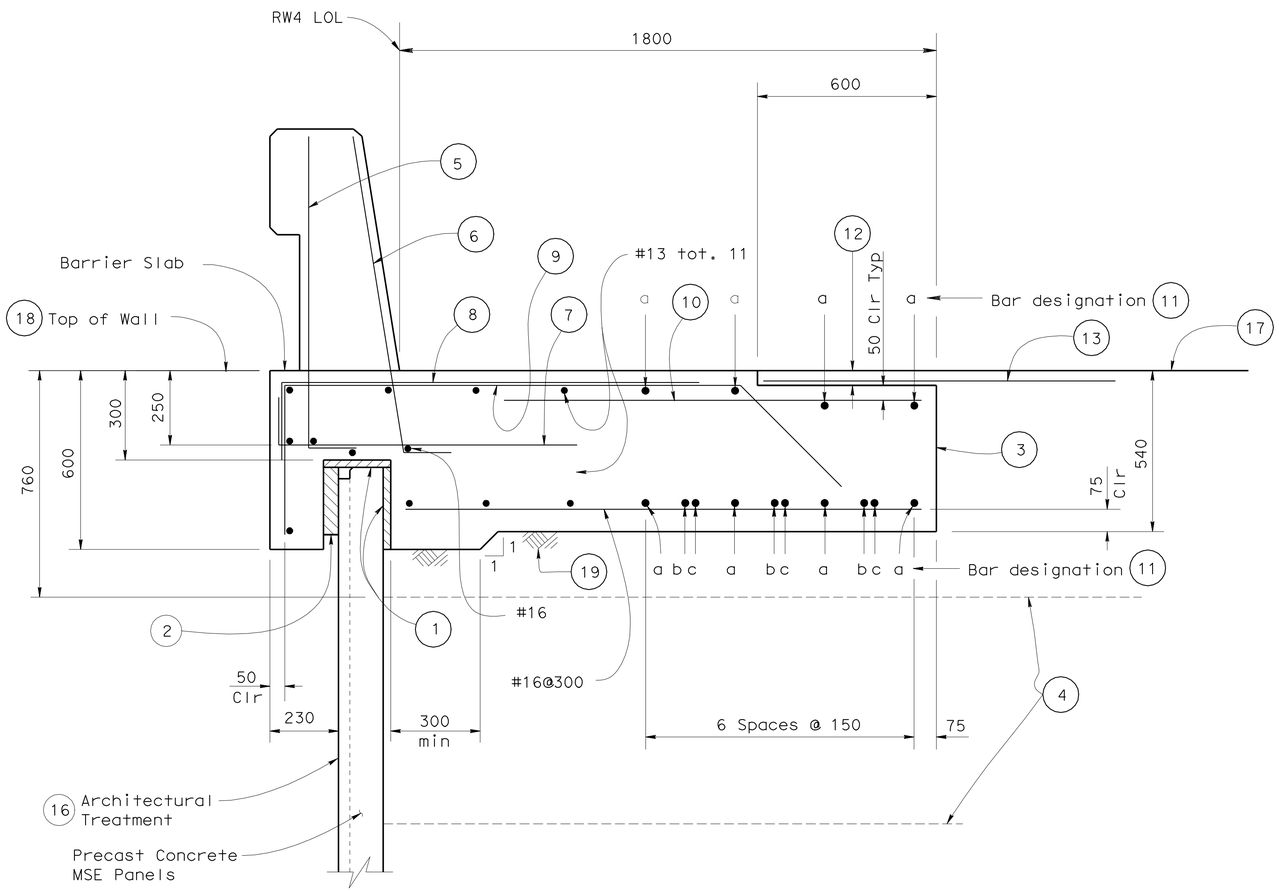

SECTION AT TOP OF MSE RW4

1:10

Notes:

1. 25 mm Expanded polystyrene.
2. 50 mm Expanded polystyrene. Recess Expanded polystyrene 50 mm into barrier slab.
3. Paint Binder - see "Road Plans"
4. Welded Wire Mats.
5. #16 L 160 @ 400 (To be in place prior to barrier slab concrete).
6. #16 L 160 @ 200 (To be in place prior to barrier slab concrete).
7. #16 160 L 1000 @ 300.
8. #16 1400 @300 bundled with 9 bars.
9. #16 1400 1 400 1 @ 300
10. #16 X 1400 @ 300
11. "a" bar = #19 continuous.
    "b" bar = #19 X 18 m
    "c" bar = #19 X 15 m
    Place "b" and "c" bars at beginning and end of barrier slab.
12. AC Overlay on barrier slab, match Roadway AC thickness.
13. 1200 mm wide pavement reinforcing fabric, see "Road Plans"
14. Not all barrier reinforcement shown, see B11-55
15. No expansion joints in concrete barrier or barrier slab within limits of MSE wall.
16. For Architectural Treatment see "INDEX TO PLANS" sheet.
17. Finished Surface, see "Road Plans"
18. See "Typical Section" on MSE DETAILS NO. 1" sheet.
19. Refer to "Road Plans" for base material.

Caltrans Metric

	BY	CHECKED
DESIGN	A.L. Hough / K M Low	David Romero
DETAILS	E.Hallstrom/C.Cancino	David Romero
QUANTITIES	K M Low / C. Cancino	Tomoko Kusumi

STATE OF CALIFORNIA DEPARTMENT OF TRANSPORTATION

DIVISION OF ENGINEERING SERVICES STRUCTURE DESIGN DESIGN BRANCH 8

BRIDGE NO. 20E0017 R/L
KILOMETER POST 7.68

RETAINING WALL NO. 2 & 4
MSE DETAILS NO. 5

ALL DIMENSIONS ARE IN MILLIMETERS UNLESS OTHERWISE SHOWN

ORIGINAL SCALE IN MILLIMETERS FOR REDUCED PLANS 0 10 20 30 40 50 60 70 80 90 100

CU 04
EA 264041

DISREGARD PRINTS BEARING EARLIER REVISION DATES

REVISION DATES: 5-11-06 7-17-06 10-13-06 10-31-06 11-30-06 06-09-10

SHEET 19 OF 29

FILE => 20e0017ri-f-msed05.dgn

STRUCTURES DESIGN DETAIL SHEET (METRIC) (REV.03-17-04)

USERNAME => trleonard DATE PLOTTED => 31-MAY-2011 TIME PLOTTED => 11:27

DIST	COUNTY	ROUTE	KILOMETER POST TOTAL PROJECT	SHEET No	TOTAL SHEETS
04	Son	101	7.3/8.3	311	320

REGISTERED CIVIL ENGINEER 05-03-10 DATE

5-31-11
PLANS APPROVAL DATE

REGISTERED PROFESSIONAL ENGINEER KENG MUN LOW No. C49361 Exp. 9-30-10 CIVIL STATE OF CALIFORNIA

The State of California or its officers or agents shall not be responsible for the accuracy or completeness of electronic copies of this plan sheet.

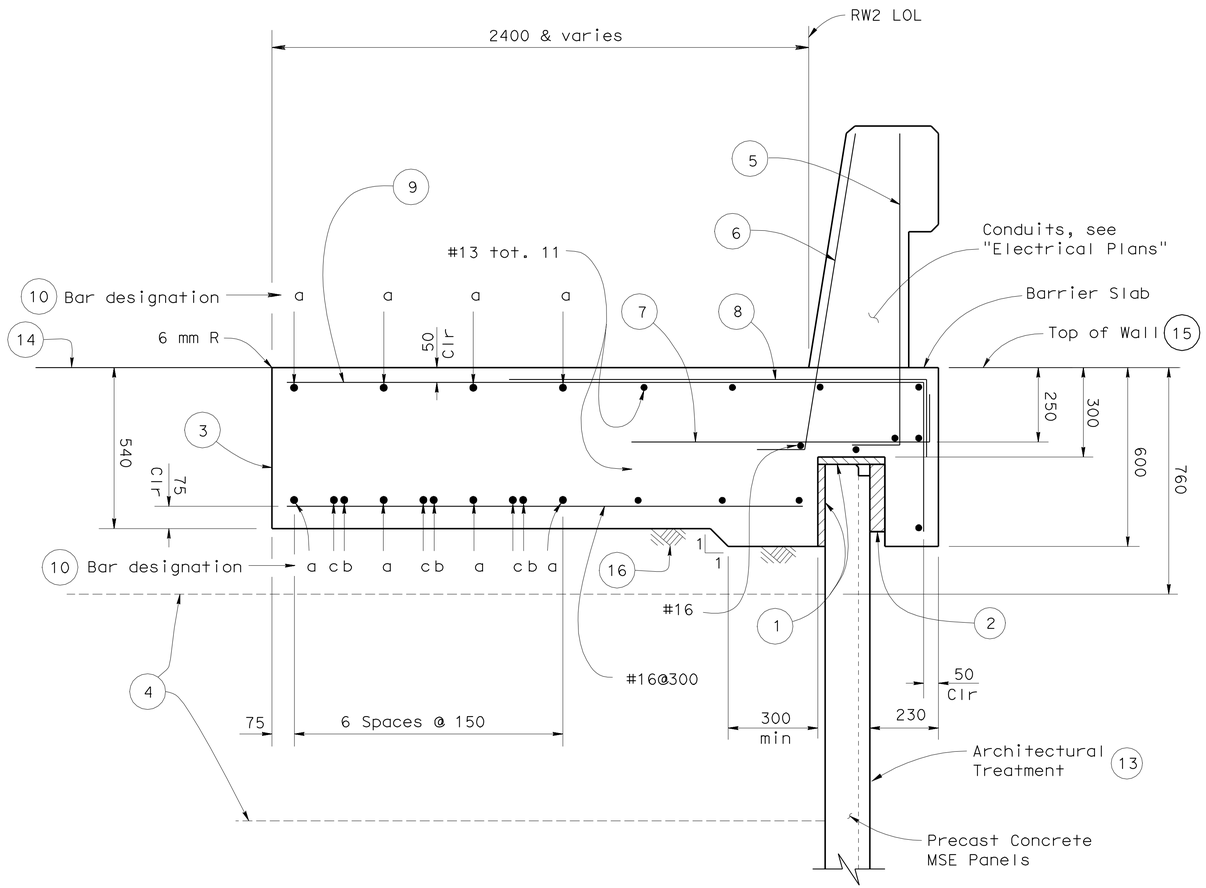

SECTION AT TOP OF MSE RW2

1:10

Notes:

1. 25 mm Expanded polystyrene.
2. 50 mm Expanded polystyrene. Recess Expanded polystyrene 50 mm into barrier slab.
3. Paint Binder - see "Road Plans"
4. Welded Wire Mats.
5. #16 ⌋160 @ 400 (To be in place prior to barrier slab concrete).
6. #16 ⌋160 @ 200 (To be in place prior to barrier slab concrete).
7. #16 ⌋1600 091 @ 300.
8. #16 2000 ⌉ @300 bundled with (9) bars.
9. #16 ⌉ @ 300
10. "a" bar = #19 continuous.
    "b" bar = #19 X 18 m
    "c" bar = #19 X 15 m
    Place "b" and "c" bars at beginning and end of barrier slab.
11. Not all barrier reinforcement shown, see B11-55
12. No expansion joints in concrete barrier or barrier slab within limits of MSE wall.
13. For Architectural Treatment see "INDEX TO PLANS" sheet.
14. Finished Surface, See "Road Plans"
15. See "Typical Section" on "MSE DETAILS NO. 1" sheet.
16. Refer to "Road Plans" fo base material.

Caltrans Metric

	BY	CHECKED
DESIGN	A.L. Hough / K M Low	David Romero
DETAILS	E.Hallstrom/C.Cancino	David Romero
QUANTITIES	K M Low / C. Cancino	Tomoko Kusumi

STATE OF CALIFORNIA
DEPARTMENT OF TRANSPORTATION

DIVISION OF ENGINEERING SERVICES
STRUCTURE DESIGN
DESIGN BRANCH 8

BRIDGE NO. 20E0017 R/L
KILOMETER POST 7.68

RETAINING WALL NO. 2 & 4
MSE DETAILS NO. 6

ALL DIMENSIONS ARE IN MILLIMETERS UNLESS OTHERWISE SHOWN

ORIGINAL SCALE IN MILLIMETERS FOR REDUCED PLANS 0 10 20 30 40 50 60 70 80 90 100

CU 04
EA 264041

DISREGARD PRINTS BEARING EARLIER REVISION DATES

REVISION DATES: 5-11-06 7-17-06 10-13-06 10-31-06 11-30-06 01-08-10 06-09-10

SHEET 20 OF 29

FILE => 20e0017ri-f-msed06.dgn

STRUCTURES DESIGN DETAIL SHEET (METRIC) (REV.03-17-04)

USERNAME => rriehard DATE PLOTTED => 31-MAY-2011 TIME PLOTTED => 11:27

DIST.	COUNTY	ROUTE	KILOMETER POST TOTAL PROJECT	SHEET NO.	TOTAL SHEETS
04	Son	101	7.3/8.3	312	320

REGISTERED ENGINEER - CIVIL 05-03-10

5-31-11
PLANS APPROVAL DATE

REGISTERED PROFESSIONAL ENGINEER KENG MUN LOW No. C49361 Exp. 9-30-10 CIVIL STATE OF CALIFORNIA

The State of California or its officers or agents shall not be responsible for the accuracy or completeness of electronic copies of this plan sheet.

Caltrans Metric

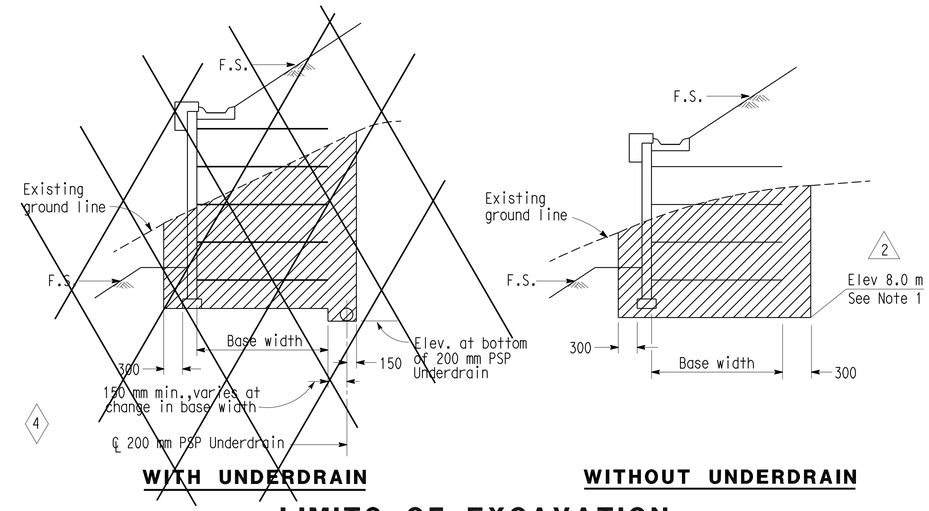

WITH UNDERDRAIN

WITHOUT UNDERDRAIN

LIMITS OF EXCAVATION

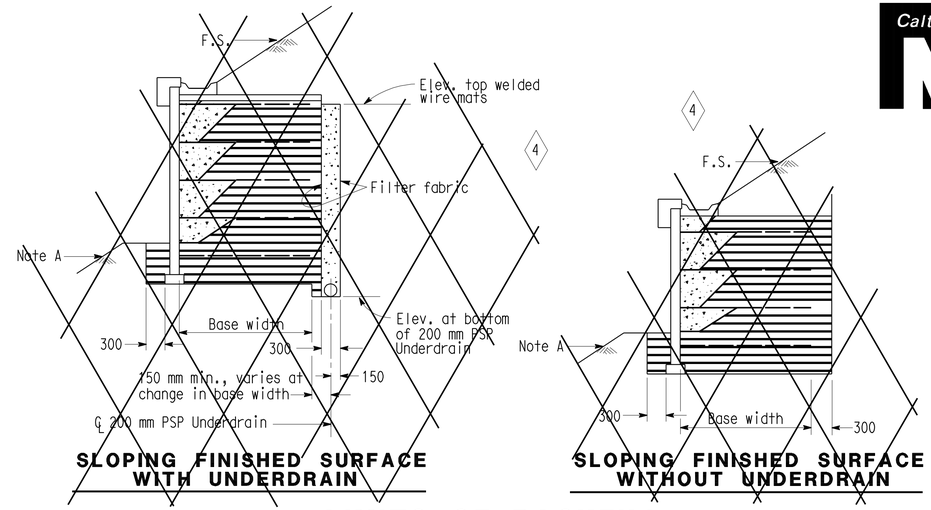

SLOPING FINISHED SURFACE WITH UNDERDRAIN

SLOPING FINISHED SURFACE WITHOUT UNDERDRAIN

LIMITS OF BACKFILL

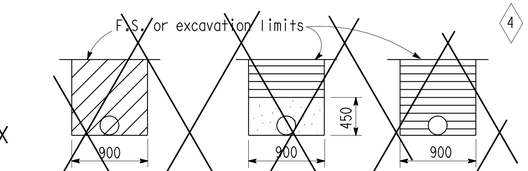

EXCAVATION

OUTLET PIPE

CLEANOUT PIPE

BACKFILL

OUTLET OR CLEANOUT PIPE FOR UNDERDRAIN

3 NOTE:
1. Controlling elevation is the bottom of leveling pad elevation or 8.0 m, whichever is lower.

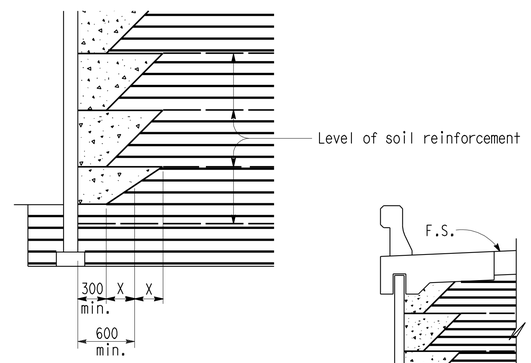

LIMITS OF PERMEABLE MATERIAL

ABBREVIATIONS

O.G.	Original ground
F.S.	Planned finished surface
G.P.	Planned grading plane

LEGEND

	Limits of structure excavation
	Limits of structure backfill
	Limits of permeable material

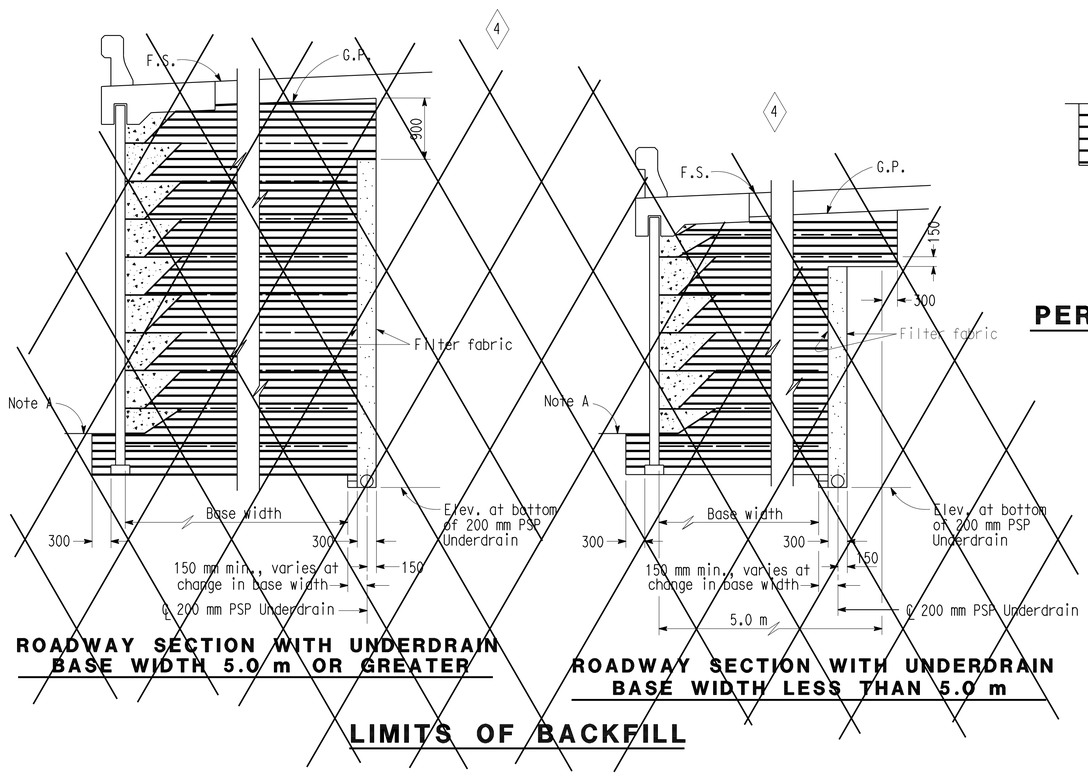

ROADWAY SECTION WITH UNDERDRAIN BASE WIDTH 5.0 m OR GREATER

ROADWAY SECTION WITH UNDERDRAIN BASE WIDTH LESS THAN 5.0 m

LIMITS OF BACKFILL

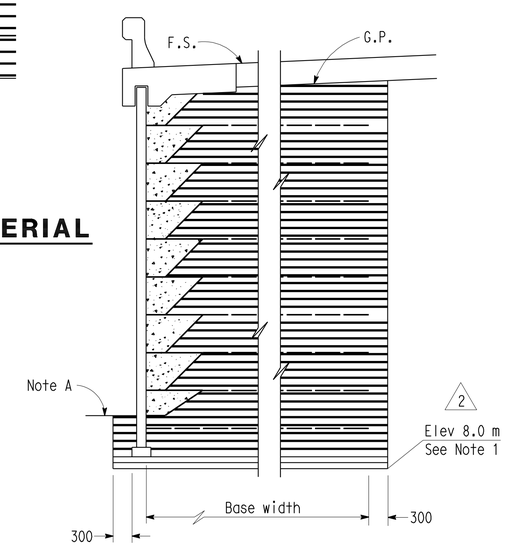

ROADWAY SECTION WITHOUT UNDERDRAIN BASE WIDTH 5.0 m OR GREATER

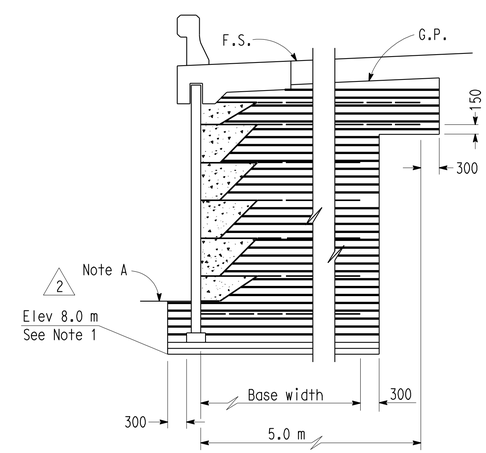

ROADWAY SECTION WITHOUT UNDERDRAIN BASE WIDTH LESS THAN 5.0 m

LIMITS OF BACKFILL

Note A:
Limits to F.S. except to G.P. when in a roadway section.

"SPECIAL DETAILS"

NO SCALE
ALL DIMENSIONS ARE IN MILLIMETERS UNLESS OTHERWISE SHOWN

STANDARD DRAWING				
RELEASE DATE Revised	DESIGN	BY J.C. MOESE	CHECKED S.D. WIMAN	RELEASED BY
FILE NO. xs13-010-7	DETAILS	BY R. YEE	CHECKED S.D. WIMAN	OFFICE CHIEF
	SUBMITTED	BY	DRAWING DATE 3/98	

1 Changed Sheet Name
2 Revised Details
3 Added Note 1
4 Does Not Apply

STATE OF CALIFORNIA
DEPARTMENT OF TRANSPORTATION

DIVISION OF ENGINEERING SERVICES
STRUCTURE DESIGN
DESIGN BRANCH 8

BRIDGE NO. 20E0017 R/L
KILOMETER POST 7.68

RETAINING WALL NO. 2 & 4
1 MSE DETAILS NO. 7

DS OSD 2147A (METRIC) (REV. 2/25/97)

ORIGINAL SCALE IN MILLIMETERS FOR REDUCED PLANS 0 10 20 30 40 50 60 70 80 90 100

CU 04
EA 264041

DISREGARD PRINTS BEARING EARLIER REVISION DATES

REVISION DATES (PRELIMINARY STAGE ONLY) 5-11-06 7-17-06 9-10-09

SHEET 21 OF 29

USERNAME => trlenard

DATE PLOTTED => 31-MAY-2011 TIME PLOTTED => 11:27

20e0017rl-f-msed07

DIST	COUNTY	ROUTE	KILOMETER POST TOTAL PROJECT	SHEET No	TOTAL SHEETS
04	Son	101	7.3/8.3	313	320

REGISTERED CIVIL ENGINEER 05-03-10 DATE

5-31-11
PLANS APPROVAL DATE

REGISTERED PROFESSIONAL ENGINEER KENG MUN LOW No. C49361 Exp. 9-30-10 CIVIL STATE OF CALIFORNIA

The State of California or its officers or agents shall not be responsible for the accuracy or completeness of electronic copies of this plan sheet.

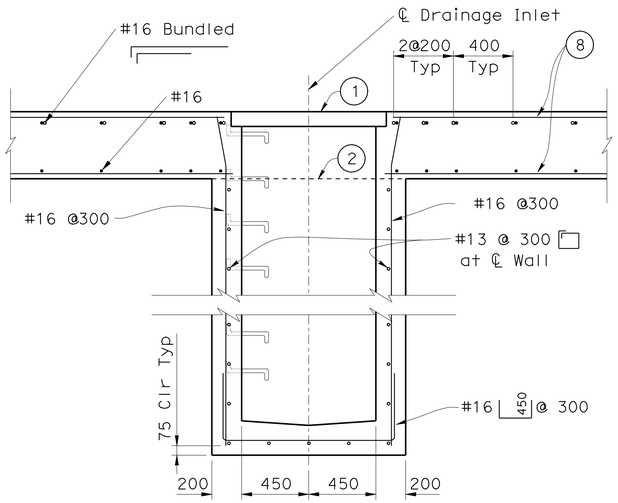

MSE WALL DRAIN SECTION H-H
1:20

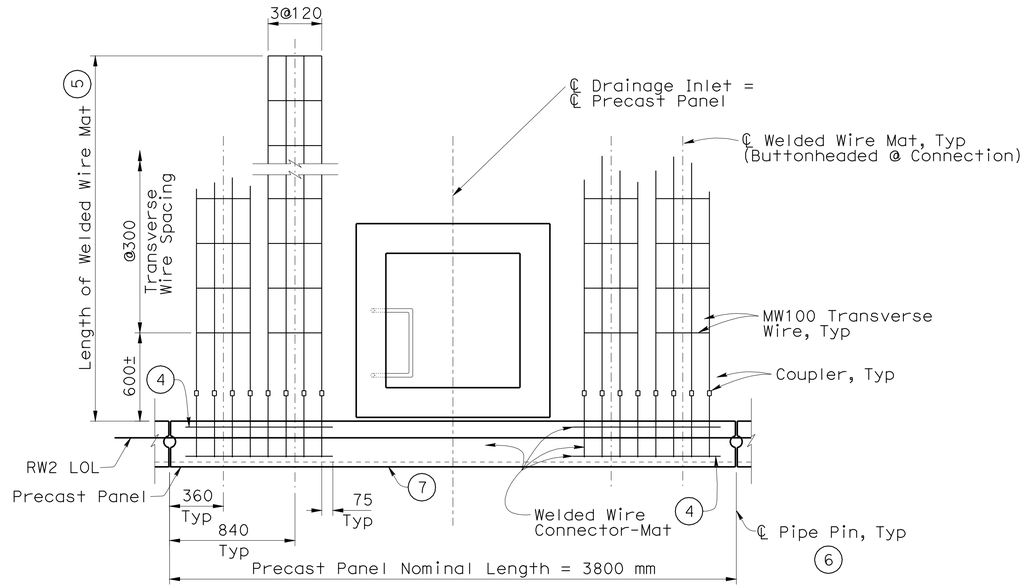

(SECTION J-J)
MW100 WELDED WIRE MAT DETAIL
1:20

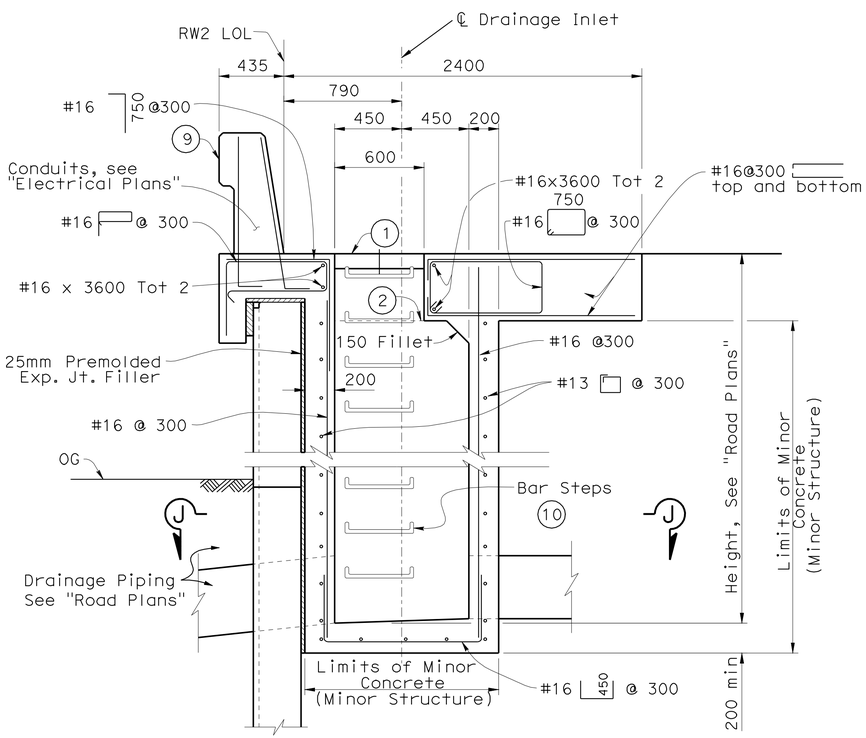

MSE WALL DRAIN SECTION G-G
1:20

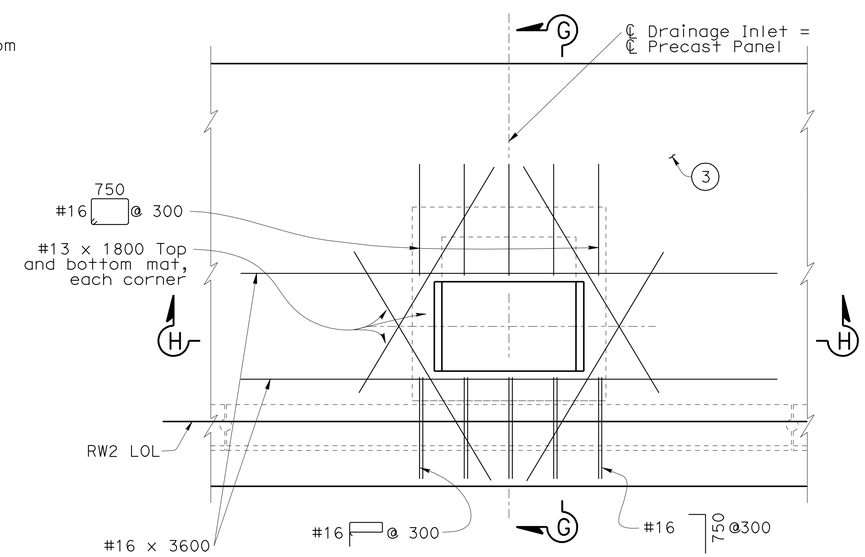

MSE WALL DRAIN PLAN
1:20

NOTES:

1. Frame and Grate, see "Road Plans".
2. Optional Construction Joint.
3. Typical RW2 Barrier Slab Reinforcement not shown.
4. Bend these wires to provide a minimum of 32 mm cover to end of Connector-Mat.
5. Length equals "Base Width" of wall, except it shall not be less than 5.0 m for top level of mats for the top panels when a concrete barrier is used. For "Base Width", see "Typical Section" on "MSE DETAILS NO. 1" sheet.
6. See "Elevation" on "MSE DETAILS NO. 2" sheet and "Section D-D" on MSE DETAILS NO. 3" sheet.
7. For Architectural Treatment details, see "INDEX TO PLANS" sheet.
8. See "MSE DETAILS NO. 6" sheet.
9. All barrier reinforcement not shown.
10. Install steps with lowest rung 300 mm above the floor and highest rung not more than 150 mm below top of inlet. The distance between steps shall not exceed 300 mm and shall be uniform throughout the length of the wall. Place steps in the wall without an opening. Steps inserts may be substituted for the bar steps. Step inserts shall comply with State Industrial Safety requirements. See Standard Plan D74C for step details.

Caltrans Metric

	BY	CHECKED
DESIGN	A.L. Hough	David Romero
DETAILS	E.Hallstrom/C.Cancino	David Romero
QUANTITIES	K M Low / C. Cancino	Tomoko Kusumi

STATE OF CALIFORNIA
DEPARTMENT OF TRANSPORTATION

DIVISION OF ENGINEERING SERVICES
STRUCTURE DESIGN
DESIGN BRANCH 8

BRIDGE NO. 20E0017 R/L
KILOMETER POST 7.68

RETAINING WALL NO. 2 & 4
MSE DETAILS NO. 8

ALL DIMENSIONS ARE IN MILLIMETERS UNLESS OTHERWISE SHOWN

ORIGINAL SCALE IN MILLIMETERS FOR REDUCED PLANS 0 10 20 30 40 50 60 70 80 90 100

CU 04
EA 264041

DISREGARD PRINTS BEARING EARLIER REVISION DATES

REVISION DATES: 5-11-06 10-13-06 10-18-06 11-30-06 12-14-09 01-04-10 04-12-10 05-06-10 06-09-10

SHEET 22 OF 29

FILE => 20e0017rl-f-msed08.dgn

STRUCTURES DESIGN DETAIL SHEET (METRIC) (REV.03-17-04)

USERNAME => trlenard DATE PLOTTED => 31-MAY-2011 TIME PLOTTED => 11:27

DIST	COUNTY	ROUTE	KILOMETER POST TOTAL PROJECT	SHEET No	TOTAL SHEETS
04	Son	101	7.3/8.3	314	320

REGISTERED CIVIL ENGINEER 05-03-10 DATE

5-31-11
PLANS APPROVAL DATE

REGISTERED PROFESSIONAL ENGINEER KENG MUN LOW No. C49361 Exp. 9-30-10 CIVIL STATE OF CALIFORNIA

The State of California or its officers or agents shall not be responsible for the accuracy or completeness of electronic copies of this plan sheet.

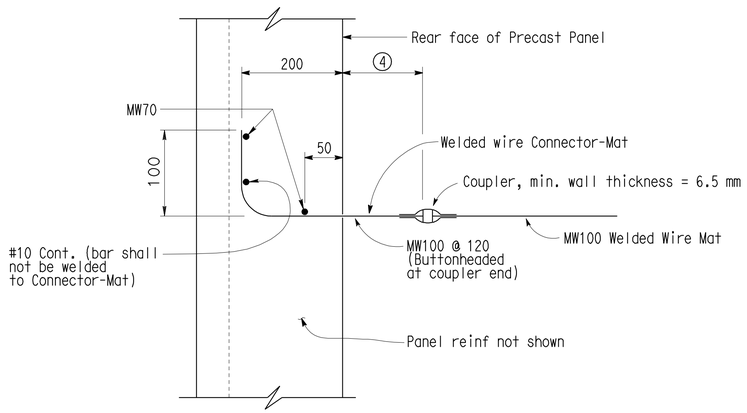

MW100 WELDED WIRE CONNECTOR-MAT DETAIL

No Scale

Notes:

1. For joints ≤ 6.09 m below top of wall, 20 mm
   For joints > 6.09 m below top of wall, 25 mm
2. Measured normal to top of panel
3. Number of levels of welded mats in top panel varies. See "MSE DETAILS NO. 2" sheet and "STRUCTURE PLAN...." sheets.
4. Distance as required to permit coupler to be swaged.
5. For Welded Wire Mat details not shown, see "Panel Legend Detail" on "STRUCTURE PLAN...." sheets.
6. Panels to be cast straight along their length.
7. For Architectural Treatment details, see "INDEX TO PLANS" sheet
8. See "MW100 Welded Wire Mat Detail" on "MSE DETAILS NO. 8" sheet
9. Expanded polystyrene banded around drainage pipe
10. Trowel morter smooth against face of precast panel
11. Three levels of welded wire mat required.

MW100 Welded Wire Mat Table		
Mat Type	8 Mat Density x Wire Size	Transverse Wire Spacing
K	4 x MW100	300

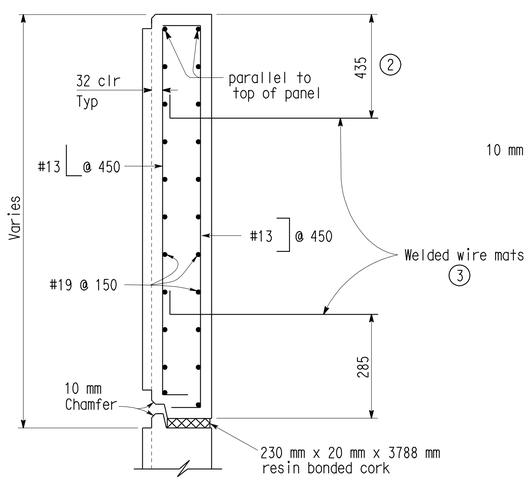

TOP PANEL (W)5

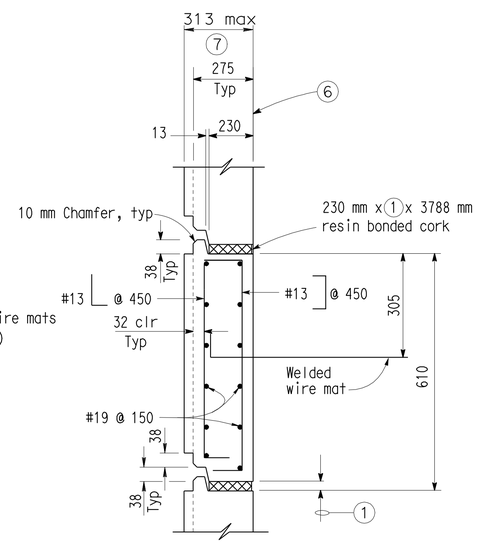

INTERMEDIATE PANEL (T)5

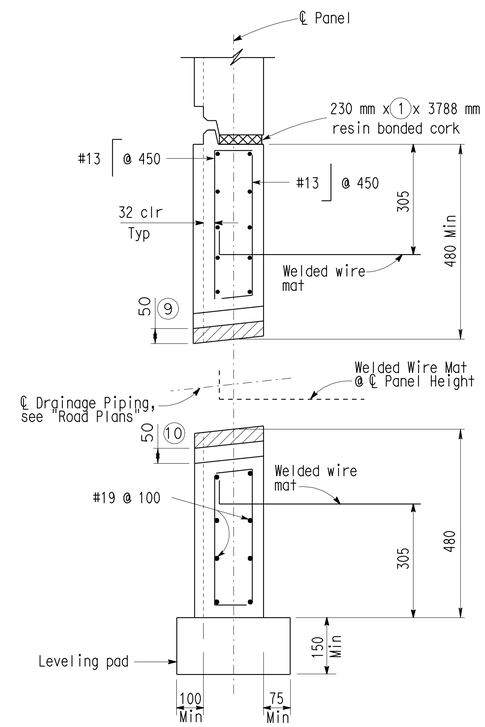

BOTTOM PANEL (R)5 11

MW100 PANEL SECTIONS

No Scale

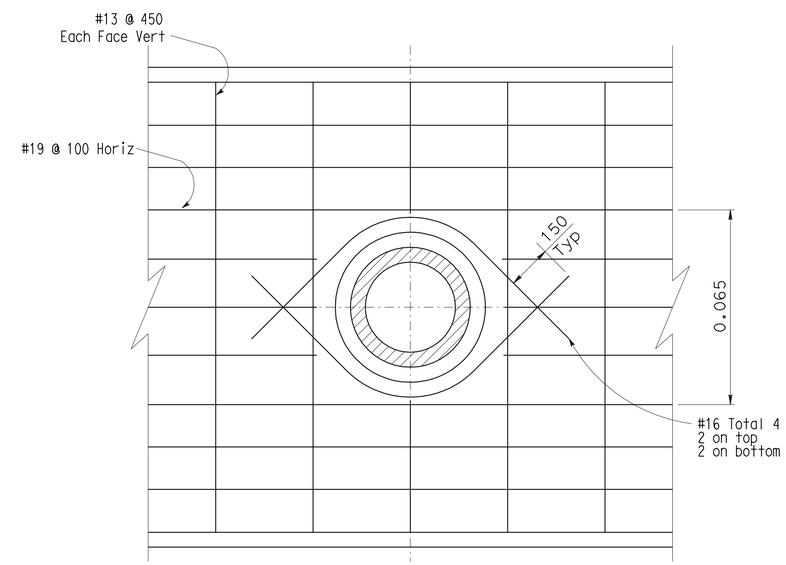

BOTTOM PANEL ELEVATION

No Scale

DESIGN	BY A.L. Hough	CHECKED David Romero	
DETAILS	BY E.Hallstrom/C.Cancino	CHECKED David Romero	
QUANTITIES	BY K M Low / C. Cancino	CHECKED Tomoko Kusumi	

STATE OF CALIFORNIA DEPARTMENT OF TRANSPORTATION

DIVISION OF ENGINEERING SERVICES STRUCTURE DESIGN DESIGN BRANCH 8

BRIDGE NO. 20E0017 R/L
KILOMETER POST 7.68

RETAINING WALL NO. 2 & 4
MSE DETAILS NO. 9

ALL DIMENSIONS ARE IN MILLIMETERS UNLESS OTHERWISE SHOWN

ORIGINAL SCALE IN MILLIMETERS FOR REDUCED PLANS 0 10 20 30 40 50 60 70 80 90 100

CU 04
EA 264041

DISREGARD PRINTS BEARING EARLIER REVISION DATES

REVISION DATES 10-12-06 10-31-06 11-30-06 12-11-06 08-31-09 06-09-10

SHEET 23 OF 29

FILE => 20e0017rl-f-msed09.dgn

STRUCTURES DESIGN DETAIL SHEET (METRIC) (REV.03-17-04)

USERNAME => trlenard DATE PLOTTED => 31-MAY-2011 TIME PLOTTED => 11:27

DIST	COUNTY	ROUTE	KILOMETER POST TOTAL PROJECT	SHEET No	TOTAL SHEETS
04	Son	101	7.3/8.3	315	320

REGISTERED CIVIL ENGINEER 05-03-10 DATE

5-31-11
PLANS APPROVAL DATE

REGISTERED PROFESSIONAL ENGINEER
KENG MUN LOW
No. C49361
Exp. 9-30-10
CIVIL
STATE OF CALIFORNIA

The State of California or its officers or agents shall not be responsible for the accuracy or completeness of electronic copies of this plan sheet.

SCHEDULE OF SURVEY HUBS

No.	Station	Offset (m)
1	"R3" 78+04	4.6 Rt
2	"R3" 78+10	0.6 Lt
3	"R3" 78+10	9.0 Rt
3A	"R3" 78+10	*
4	"R3" 78+25	4.6 Rt
5	"R3" 78+40	0.6 Lt
6	"R3" 78+40	9.0 Rt
7	"R3" 78+55	4.6 Rt
8	"R3" 78+70	0.6 Lt
9	"R3" 78+70	9.0 Rt
9A	"R3" 78+70	*
10	"R3" 78+85	4.6 Rt
11	"R3" 79+00	0.6 Lt
12	"R3" 79+00	9.0 Rt
13	"R3" 79+15	4.6 Rt

No.	Station	Offset (m)
14	"R3" 79+30	0.6 Lt
15	"R3" 79+30	9.0 Rt
15A	"R3" 79+30	*
16	"R3" 79+45	4.6 Rt
17	"R3" 79+60	0.6 Lt
18	"R3" 79+65	10.96 Rt
19	"R3" 79+75	5.5 Rt
20	"R3" 79+90	0.6 Lt
21	"R3" 79+90	10.35 Rt
21A	"R3" 79+90	*
22	"R3" 80+05	4.8 Rt
23	"R3" 80+20	0.6 Lt
24	"R3" 80+20	8.44 Rt
25	"R3" 80+30.5	4.5 Rt
25A	"R3" 80+30.5	*

* Place survey hubs 900 mm from face of MSE Wall RW2

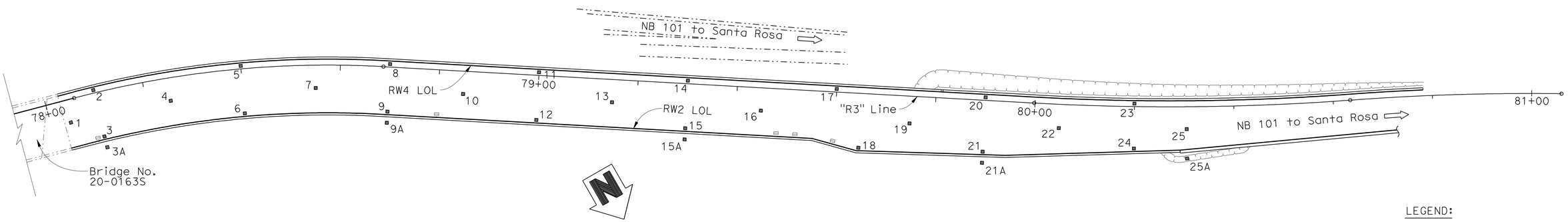

PLAN
1:400

LEGEND:
- Drainage Inlets
- Survey Hub

Caltrans Metric

ALL DIMENSIONS ARE IN MILLIMETERS UNLESS OTHERWISE SHOWN

ORIGINAL SCALE IN MILLIMETERS FOR REDUCED PLANS 0 10 20 30 40 50 60 70 80 90 100

	BY	CHECKED
DESIGN	Keng Mun Low	David Romero
DETAILS	Carlo Cancino	David Romero
QUANTITIES	K M Low / C. Cancino	Tomoko Kusumi

STATE OF CALIFORNIA
DEPARTMENT OF TRANSPORTATION

DIVISION OF ENGINEERING SERVICES
STRUCTURE DESIGN
DESIGN BRANCH 8

CU 04
EA 264041

BRIDGE NO. 20E0017 R/L
KILOMETER POST 7.68

RETAINING WALL NO. 2 & 4
MISCELLANEOUS DETAILS

DISREGARD PRINTS BEARING EARLIER REVISION DATES

REVISION DATES

SHEET 24 OF 29

FILE => 20e0017rl-g-mse_miscdet.dgn

STRUCTURES DESIGN DETAIL SHEET (METRIC) (REV.03-17-04)

USERNAME => trienard DATE PLOTTED => 31-MAY-2011 TIME PLOTTED => 11:27

DIST.	COUNTY	ROUTE	KILOMETER POSTS TOTAL PROJECT	SHEET NO.	TOTAL SHEETS
04	Son	101	7.3/8.3	316	320

Caltrans Metric

W. Nyaz 02-01-10
REGISTERED ENGINEER - CIVIL

5-31-11
PLANS APPROVAL DATE

REGISTERED PROFESSIONAL ENGINEER W. Nyaz No. 53519 Exp. 6-30-11 CIVIL STATE OF CALIFORNIA

The State of California or its officers or agents shall not be responsible for the accuracy or completeness of electronic copies of this plan sheet.

All Dimensions are in Meters unless otherwise shown

(FOR BORING LOCATION SEE PLAN, LOTB SHEET 2 OF 5)

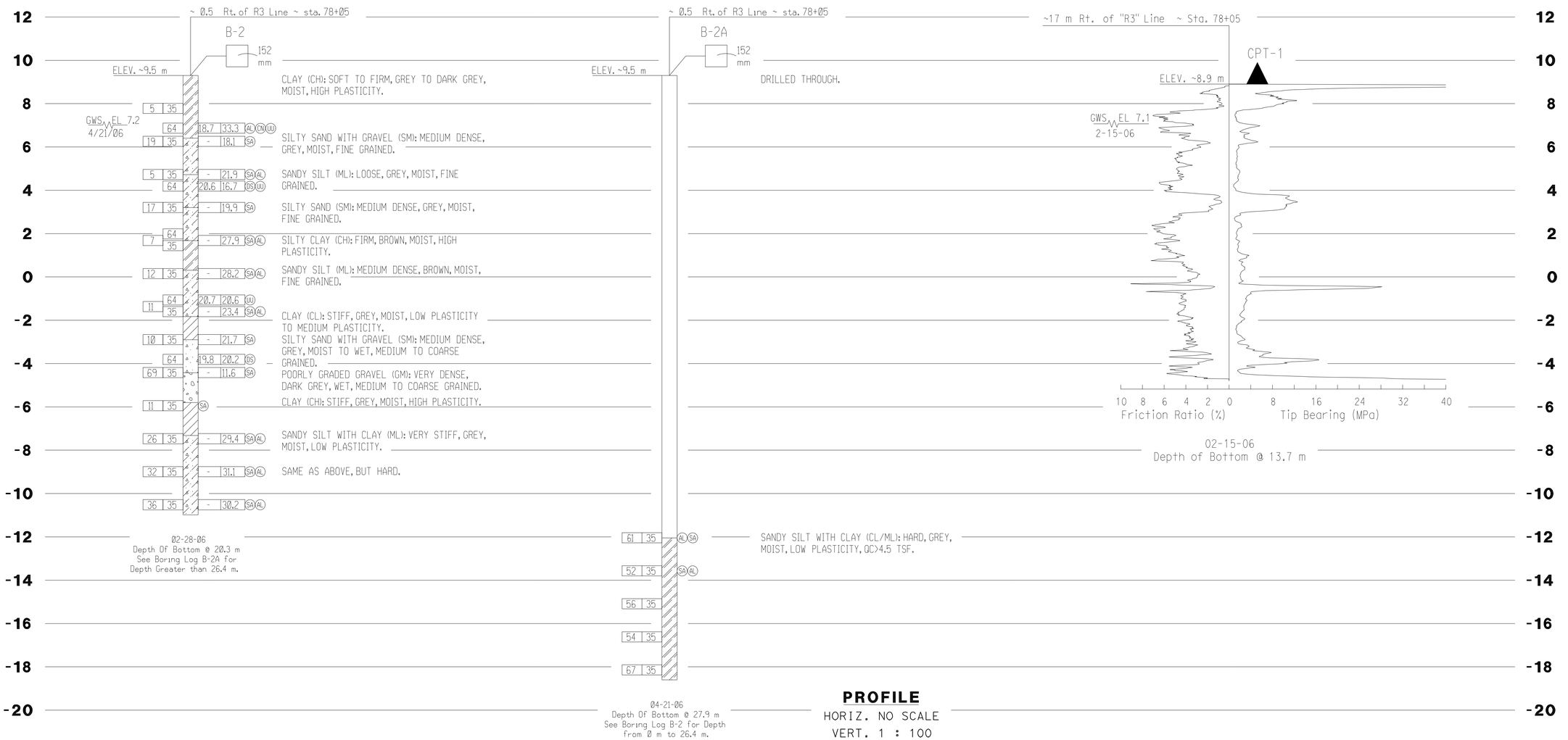

PROFILE
HORIZ. NO SCALE
VERT. 1 : 100

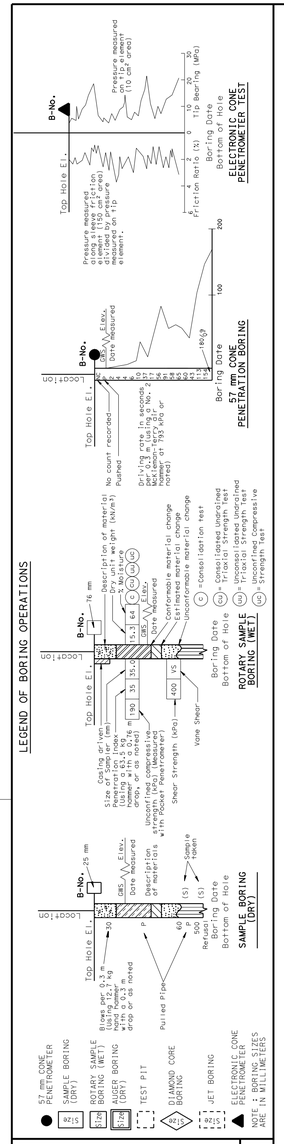

LEGEND OF EARTH MATERIALS

GRAVEL, SAND, SILT, CLAY, SANDY CLAY or CLAYEY SAND, SANDY SILT or SILTY SAND, SILTY CLAY, CLAYEY SILT, PEAT and/or ORGANIC MATTER, FILL MATERIAL, IGNEOUS ROCK, SEDIMENTARY ROCK, METAMORPHIC ROCK

CONSISTENCY CLASSIFICATION FOR SOILS
According to the Standard Penetration Test

SPT N-Value (Blows/ 0.3 m)	Granular	SPT N-Value (Blows/ 0.3 m)	Cohesive
0-4	Very Loose	<2	Very Soft
5-10	Loose	2-4	Soft
11-30	Medium Dense	5-8	Firm
31-50	Dense	9-15	Stiff
>50	Very Dense	16-30	Very Stiff
		>31	Hard

NOTE: Classification of earth material as shown on this sheet is based upon field inspection and is not to be construed to imply mechanical analysis.

DIVISION OF ENGINEERING SERVICES	
DRAWN BY	M. REYNOLDS, GINT files: 04/06
CHECKED BY	W. NYAZ

FIELD INVESTIGATION BY: T. NGUYEN

STATE OF CALIFORNIA DEPARTMENT OF TRANSPORTATION

GEOTECHNICAL SERVICES OFFICE OF GEOTECHNICAL DESIGN - WEST

CU 04239
EA 264041

BRIDGE NO. 20E0017R/L
KILOMETER POST 7.68

RETAINING WALL NO. 2 & 4
LOG OF TEST BORINGS 1 of 5

DISREGARD PRINTS BEARING EARLIER REVISION DATES
REVISION DATES (PRELIMINARY STAGE ONLY) 08-18-09 09-04-09 01-26-10
SHEET 25 OF 29

(Rev 01/02)

ORIGINAL SCALE IN MILLIMETERS FOR REDUCED PLANS 0 10 20 30 40 50 60 70 80 90 100

DATE PLOTTED => 31-MAY-2011
TIME PLOTTED => 11:28

USERNAME => trlenard
DGN FILE => 20e0017rl-g-rw2&4-426400g01.dgn

DIST.	COUNTY	ROUTE	KILOMETER POSTS TOTAL PROJECT	SHEET NO.	TOTAL SHEETS
04	Son	101	7.3/8.3	317	320

Caltrans Metric

W. Nyaz 02-01-10
REGISTERED ENGINEER - CIVIL

5-31-11
PLANS APPROVAL DATE

REGISTERED PROFESSIONAL ENGINEER W. Nyaz No. 53519 Exp. 6-30-11 CIVIL STATE OF CALIFORNIA

The State of California or its officers or agents shall not be responsible for the accuracy or completeness of electronic copies of this plan sheet.

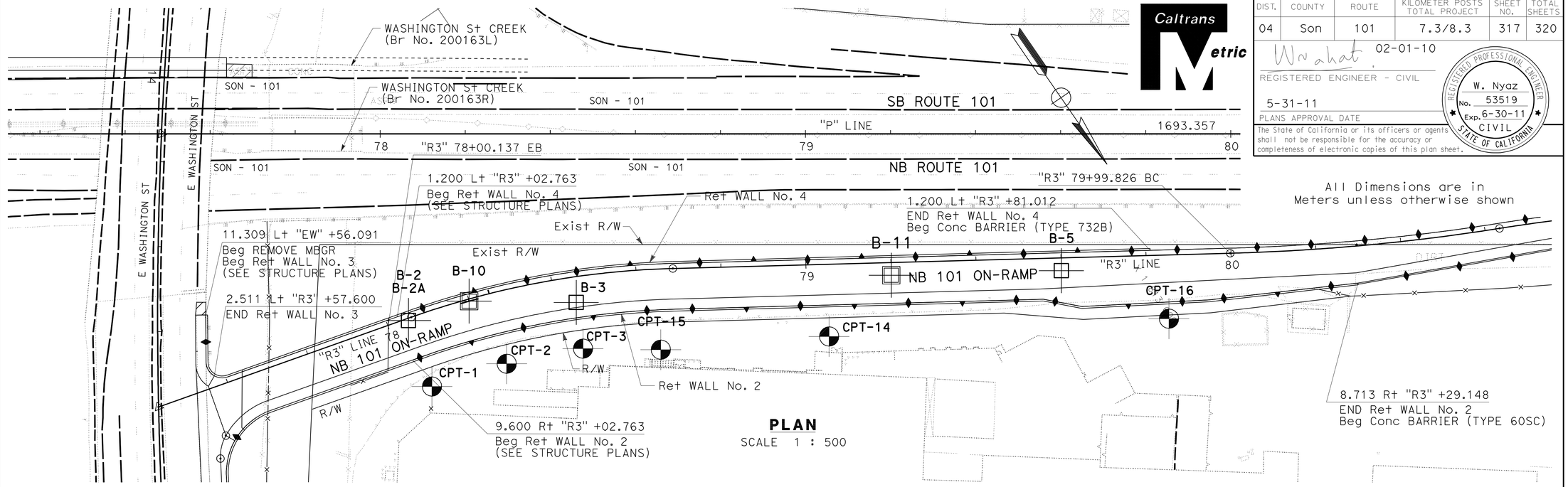

PLAN
SCALE 1 : 500

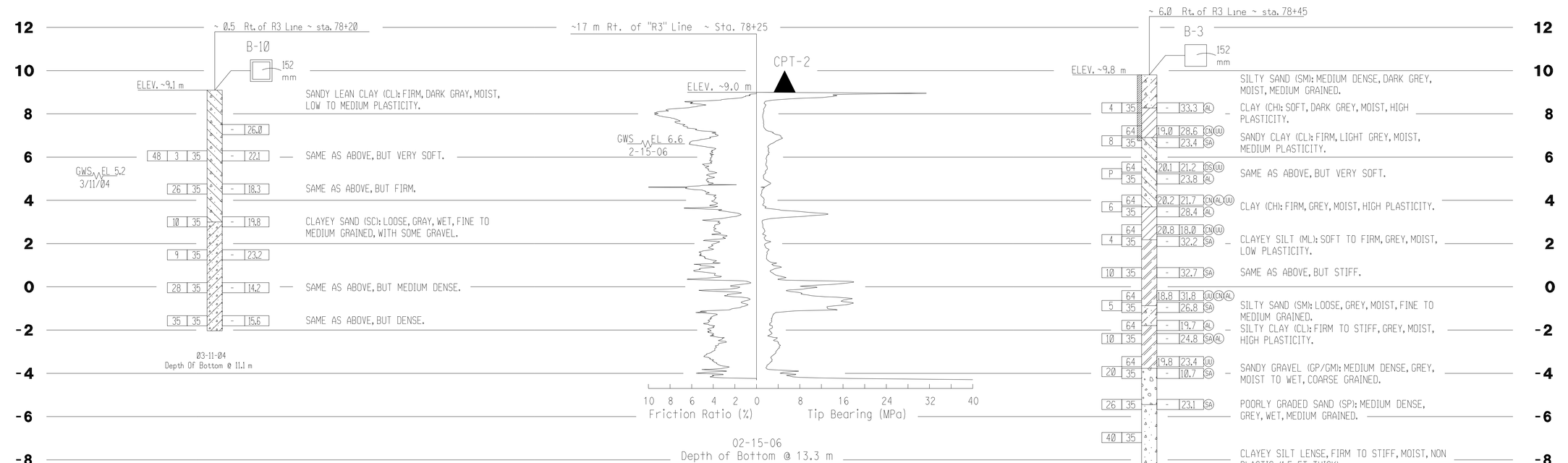

PROFILE
HORIZ. NO SCALE
VERT. 1 : 100

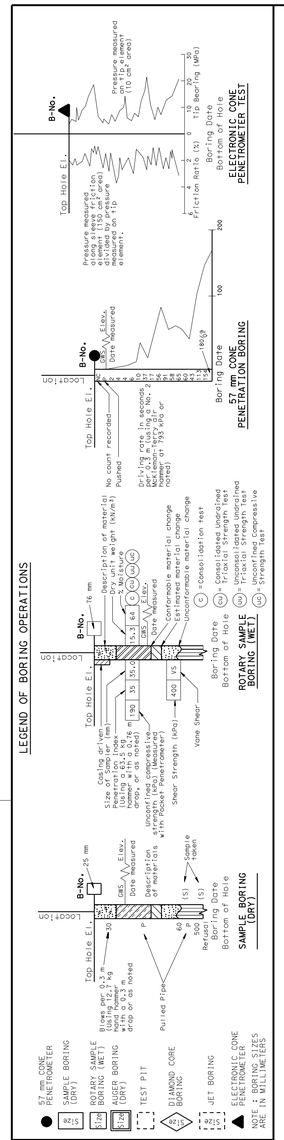

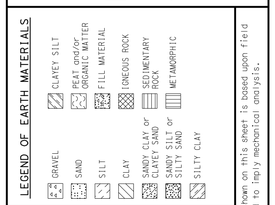

CONSISTENCY CLASSIFICATION FOR SOILS
According to the Standard Penetration Test

SPT N-Value (Blows/ 0.3 m)	Granular	SPT N-Value (Blows/ 0.3 m)	Cohesive
0-4	Very Loose	<2	Very Soft
5-10	Loose	2-4	Soft
11-30	Medium Dense	5-8	Firm
31-50	Dense	9-15	Stiff
>50	Very Dense	16-30	Very Stiff
		>31	Hard

NOTE: Classification of earth material as shown on this sheet is based upon field inspection and is not to be construed to imply mechanical analysis.

DIVISION OF ENGINEERING SERVICES	
DRAWN BY	M. REYNOLDS, GINT files: 04/06
CHECKED BY	W. NYAZ

FIELD INVESTIGATION BY: T. NGUYEN

STATE OF CALIFORNIA DEPARTMENT OF TRANSPORTATION

GEOTECHNICAL SERVICES OFFICE OF GEOTECHNICAL DESIGN - WEST

CU 04239
EA 264041

BRIDGE NO. 20E0017R/L
KILOMETER POST 7.68

RETAINING WALL NO. 2 & 4
LOG OF TEST BORINGS 2 of 5

DISREGARD PRINTS BEARING EARLIER REVISION DATES

REVISION DATES (PRELIMINARY STAGE ONLY): 08-18-09 09-04-09 12-04-09 12-31-09 01-26-10 01-28-10

SHEET 26 OF 29

(Rev 01/02)

ORIGINAL SCALE IN MILLIMETERS FOR REDUCED PLANS 0 10 20 30 40 50 60 70 80 90 100

DATE PLOTTED => 31-MAY-2011
TIME PLOTTED => 11:28

USERNAME => trlenard
DGN FILE => 20e0017rl-g-rw2&4-426400q02.dgn

DIST.	COUNTY	ROUTE	KILOMETER POSTS TOTAL PROJECT	SHEET NO.	TOTAL SHEETS
04	Son	101	7.3/8.3	318	320

Caltrans Metric

W. Nyaz 02-01-10
REGISTERED ENGINEER - CIVIL

5-31-11
PLANS APPROVAL DATE

REGISTERED PROFESSIONAL ENGINEER W. Nyaz No. 53519 Exp. 6-30-11 CIVIL STATE OF CALIFORNIA

The State of California or its officers or agents shall not be responsible for the accuracy or completeness of electronic copies of this plan sheet.

All Dimensions are in Meters unless otherwise shown

LEGEND OF BORING OPERATIONS

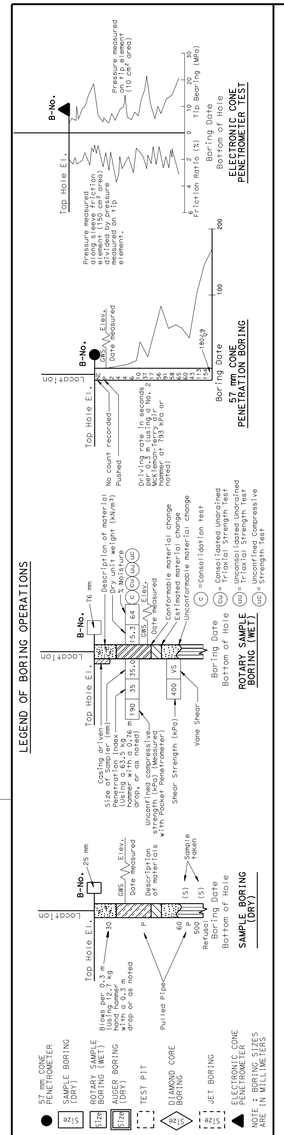

LEGEND OF EARTH MATERIALS

GRAVEL · SAND · SILT · CLAY · SANDY CLAY or CLAYEY SAND · SILTY SAND or SILTY CLAY · CLAYEY SILT · PEAT and/or ORGANIC MATTER · FILL MATERIAL · IGNEOUS ROCK · SEDIMENTARY ROCK · METAMORPHIC ROCK

CONSISTENCY CLASSIFICATION FOR SOILS

According to the Standard Penetration Test

SPT N-Value (Blows/ 0.3 m)	Granular	SPT N-Value (Blows/ 0.3 m)	Cohesive
0-4	Very Loose	<2	Very Soft
5-10	Loose	2-4	Soft
11-30	Medium Dense	5-8	Firm
31-50	Dense	9-15	Stiff
>50	Very Dense	16-30	Very Stiff
		>31	Hard

NOTE: Classification of earth material as shown on this sheet is based upon field inspection and is not to be construed to imply mechanical analysis.

(FOR BORING LOCATION SEE PLAN, LOTB SHEET 2 OF 5)

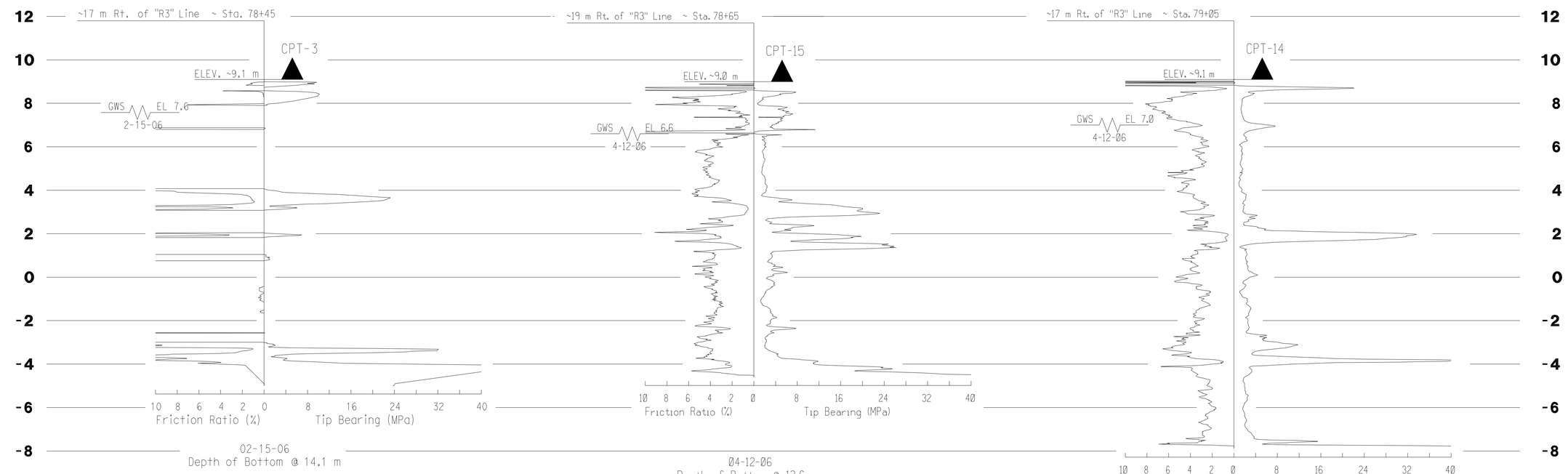

PROFILE
HORIZ. NO SCALE
VERT. 1 : 100

DIVISION OF ENGINEERING SERVICES	
DRAWN BY	M. REYNOLDS, GINT files: 04/06
CHECKED BY	W. NYAZ

FIELD INVESTIGATION BY: T. NGUYEN

STATE OF CALIFORNIA DEPARTMENT OF TRANSPORTATION

GEOTECHNICAL SERVICES OFFICE OF GEOTECHNICAL DESIGN - WEST

BRIDGE NO. 20E0017R/L
KILOMETER POST 7.68

RETAINING WALL NO. 2 & 4
LOG OF TEST BORINGS 3 of 5

(Rev 01/02)

ORIGINAL SCALE IN MILLIMETERS FOR REDUCED PLANS 0 10 20 30 40 50 60 70 80 90 100

CU 04239
EA 264041

DISREGARD PRINTS BEARING EARLIER REVISION DATES

REVISION DATES (PRELIMINARY STAGE ONLY): 08-18-09 09-04-09 12-04-09 12-31-09 01-26-10 01-28-10

SHEET 27 OF 29

USERNAME => trlenard
DGN FILE => 20e0017rl-g-rw2&4-426400q03.dgn

DATE PLOTTED => 31-MAY-2011
TIME PLOTTED => 11:28

DIST.	COUNTY	ROUTE	KILOMETER POSTS TOTAL PROJECT	SHEET NO.	TOTAL SHEETS
04	Son	101	7.3/8.3	319	320

Caltrans Metric

W. Nyaz 02-01-10
REGISTERED ENGINEER - CIVIL

5-31-11
PLANS APPROVAL DATE

REGISTERED PROFESSIONAL ENGINEER
W. Nyaz
No. 53519
Exp. 6-30-11
CIVIL
STATE OF CALIFORNIA

The State of California or its officers or agents shall not be responsible for the accuracy or completeness of electronic copies of this plan sheet.

All Dimensions are in Meters unless otherwise shown

(FOR BORING LOCATION SEE PLAN, LOTB SHEET 2 OF 5)

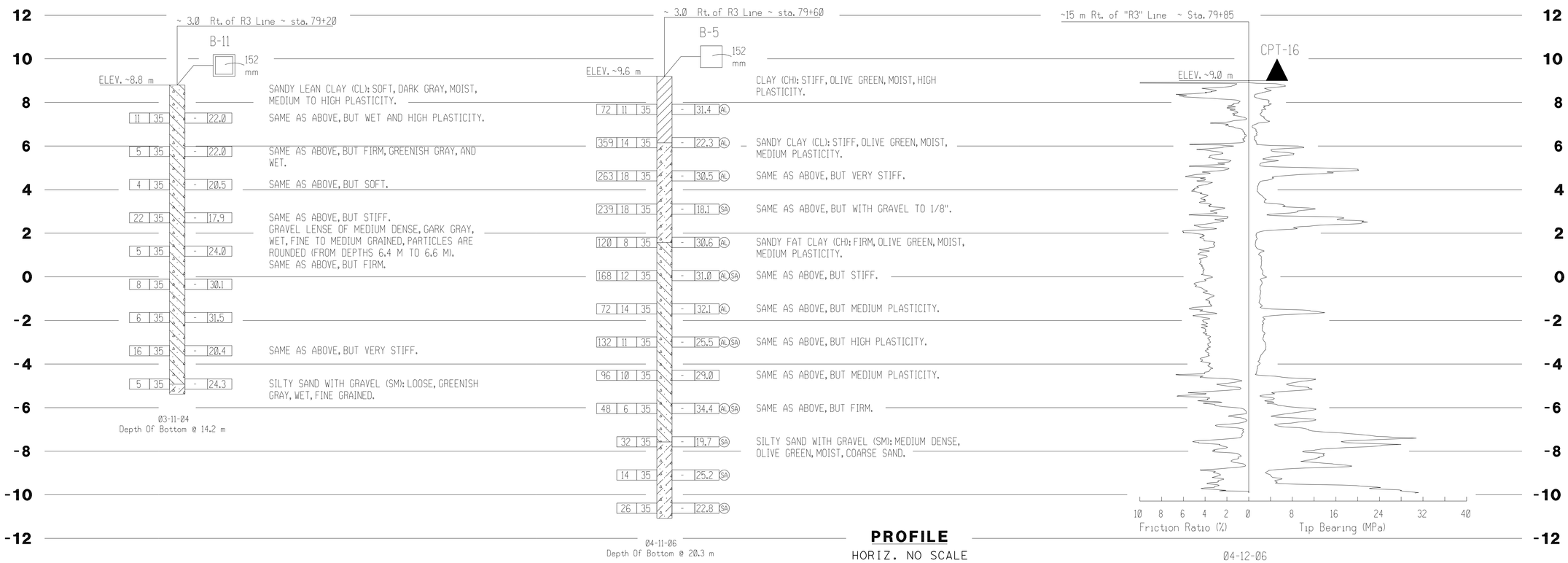

PROFILE
HORIZ. NO SCALE
VERT. 1 : 100

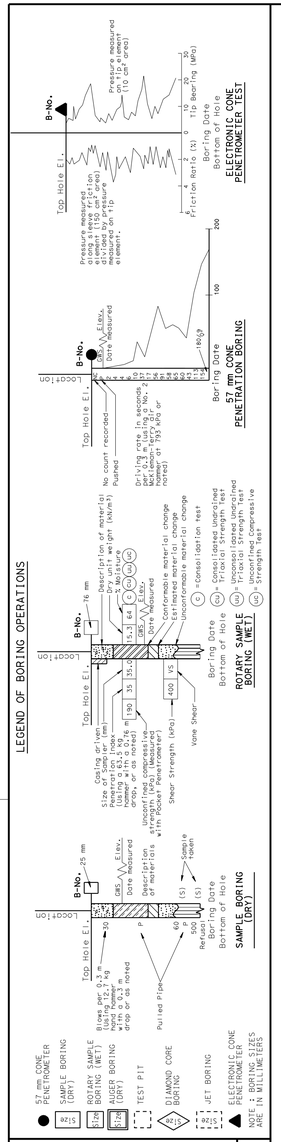

LEGEND OF EARTH MATERIALS

GRAVEL, SAND, SILT, CLAY, SANDY CLAY or CLAYEY SAND, SILTY SAND or SANDY SILT, SILTY CLAY, CLAYEY SILT, PEAT and/or ORGANIC MATTER, FILL MATERIAL, IGNEOUS ROCK, SEDIMENTARY ROCK, METAMORPHIC ROCK

CONSISTENCY CLASSIFICATION FOR SOILS

According to the Standard Penetration Test

SPT N-Value (Blows/ 0.3 m)	Granular	SPT N-Value (Blows/ 0.3 m)	Cohesive
0-4	Very Loose	<2	Very Soft
5-10	Loose	2-4	Soft
11-30	Medium Dense	5-8	Firm
31-50	Dense	9-15	Stiff
>50	Very Dense	16-30	Very Stiff
		>31	Hard

NOTE: Classification of earth material as shown on this sheet is based upon field inspection and is not to be construed to imply mechanical analysis.

DIVISION OF ENGINEERING SERVICES	
DRAWN BY	M. REYNOLDS, GINT files: 04/06
CHECKED BY	W. NYAZ

FIELD INVESTIGATION BY: T. NGUYEN

STATE OF CALIFORNIA
DEPARTMENT OF TRANSPORTATION

GEOTECHNICAL SERVICES
OFFICE OF GEOTECHNICAL DESIGN - WEST

CU 04239
EA 264041

BRIDGE NO. 20E0017R/L
KILOMETER POST 7.68

RETAINING WALL NO. 2 & 4
LOG OF TEST BORINGS 4 of 5

DISREGARD PRINTS BEARING EARLIER REVISION DATES
REVISION DATES (PRELIMINARY STAGE ONLY): 08-18-09 09-08-09 01-26-10

SHEET 28 OF 29

(Rev 01/02)

ORIGINAL SCALE IN MILLIMETERS FOR REDUCED PLANS 0 10 20 30 40 50 60 70 80 90 100

DATE PLOTTED => 31-MAY-2011
TIME PLOTTED => 11:28

USERNAME => trlenard
DGN FILE => 20e0017rl-g-rw2&4-426400q04.dgn

DIST.	COUNTY	ROUTE	KILOMETER POSTS TOTAL PROJECT	SHEET NO.	TOTAL SHEETS
04	SON	101	6.4/8.6		

W. Nyaz 08-22-06
REGISTERED ENGINEER CIVIL

PLANS APPROVAL DATE

REGISTERED PROFESSIONAL ENGINEER W. Nyaz No. 53519 Exp. 6-30-07 CIVIL STATE OF CALIFORNIA

The State of California or its officers or agents shall not be responsible for the accuracy or completeness of electronic copies of this plan sheet.

Caltrans now has a web site! To get to the web site, go to: http://www.dot.ca.gov

Caltrans Metric

All Dimensions are in Meters unless otherwise shown

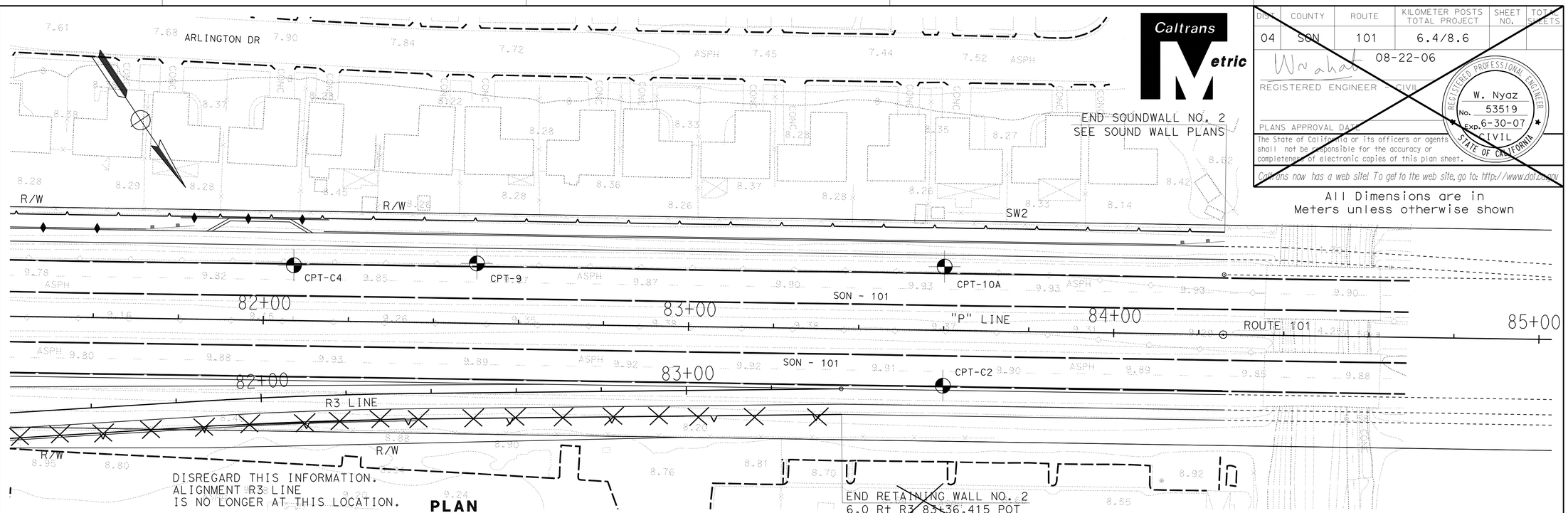

PLAN
SCALE 1 : 500

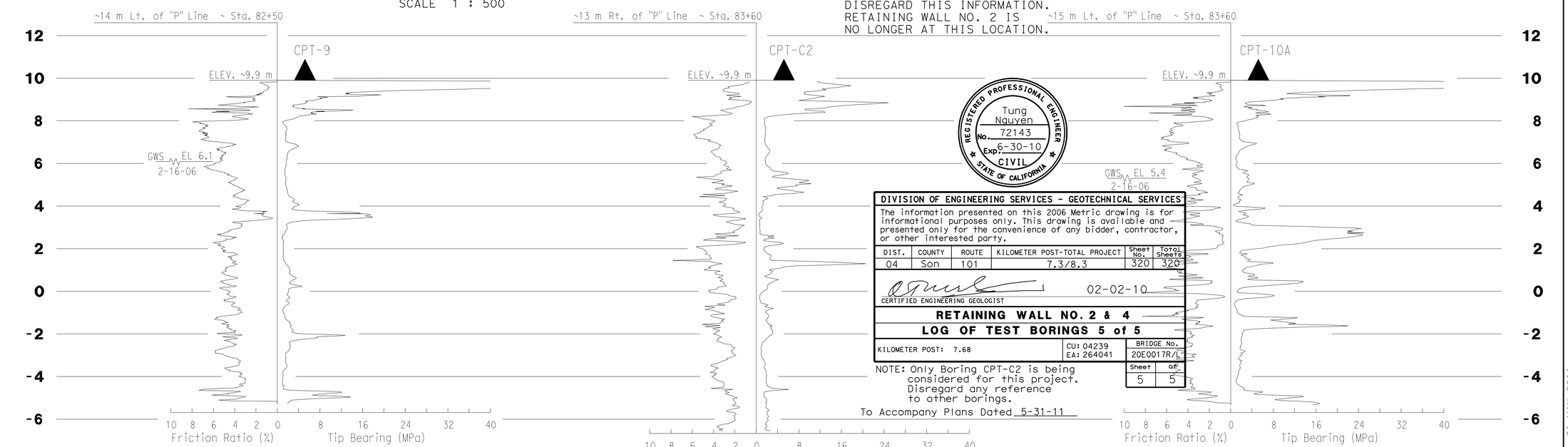

PROFILE
HORIZ. NO SCALE
VERT. 1 : 100

REGISTERED PROFESSIONAL ENGINEER Tung Nguyen No. 72143 Exp. 6-30-10 CIVIL STATE OF CALIFORNIA

DIVISION OF ENGINEERING SERVICES - GEOTECHNICAL SERVICES

The information presented on this 2006 Metric drawing is for informational purposes only. This drawing is available and presented only for the convenience of any bidder, contractor, or other interested party.

DIST.	COUNTY	ROUTE	KILOMETER POST-TOTAL PROJECT	Sheet No.	Total Sheets
04	Son	101	7.3/8.3	320	320

02-02-10
CERTIFIED ENGINEERING GEOLOGIST

RETAINING WALL NO. 2 & 4
LOG OF TEST BORINGS 5 of 5

KILOMETER POST: 7.68
CU: 04239
EA: 264041
BRIDGE No. 20E0017R/L
Sheet 5 of 5

NOTE: Only Boring CPT-C2 is being considered for this project. Disregard any reference to other borings.

To Accompany Plans Dated 5-31-11

LEGEND OF BORING OPERATIONS

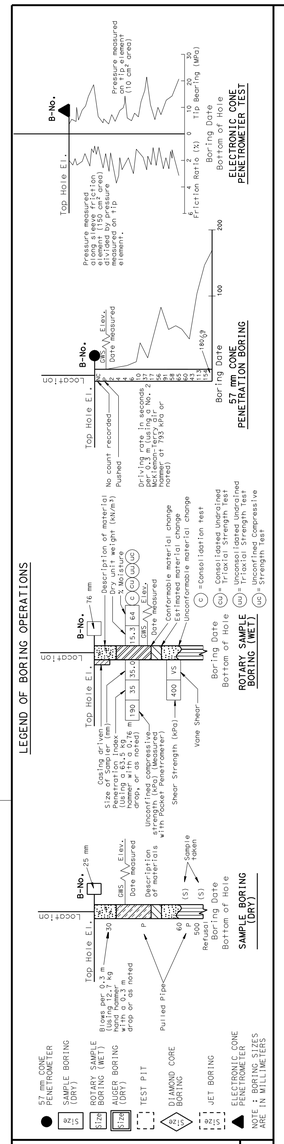

LEGEND OF EARTH MATERIALS

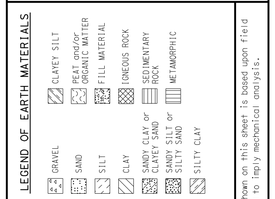

CONSISTENCY CLASSIFICATION FOR SOILS

According to the Standard Penetration Test

SPT N-Value (Blows/ 0.3 m)	Granular	SPT N-Value (Blows/ 0.3 m)	Cohesive
0-4	Very Loose	<2	Very Soft
5-10	Loose	2-4	Soft
11-30	Medium Dense	5-8	Firm
31-50	Dense	9-15	Stiff
>50	Very Dense	16-30	Very Stiff
		>31	Hard

NOTE: Classification of earth material as shown on this sheet is based upon field inspection and is not to be construed to imply mechanical analysis.

DIVISION OF ENGINEERING SERVICES	
DRAWN BY	M. REYNOLDS, GINT files: 04/06
CHECKED BY	W. NYAZ

FIELD INVESTIGATION BY: T. NGUYEN

STATE OF CALIFORNIA
DEPARTMENT OF TRANSPORTATION

GEOTECHNICAL SERVICES
OFFICE OF GEOTECHNICAL DESIGN - WEST

CU 04239
EA 264000

BRIDGE NO.
KILOMETER POST

SOUND WALL 2
LOG OF TEST BORINGS 5 of 5

DISREGARD PRINTS BEARING EARLIER REVISION DATES

REVISION DATES (PRELIMINARY STAGE ONLY): 03-06-09 02-26-09 02-26-09 01-26-10 01-28-10

SHEET 29 OF 29

(Rev 01/02)

ORIGINAL SCALE IN MILLIMETERS FOR REDUCED PLANS 0 10 20 30 40 50 60 70 80 90 100

USERNAME => trlenard
DGN FILE => 20e0017rl-g-rw2&4-426400q05.dgn

DATE PLOTTED => 31-MAY-2011
TIME PLOTTED => 11:28