DIST	COUNTY	ROUTE	KILOMETER POST TOTAL PROJECT	SHEET No	TOTAL SHEETS
04	CC	80	15.3/21.9	396	492

Evan M. Franciliso 2-27-09
REGISTERED CIVIL ENGINEER DATE

6-29-09
PLANS APPROVAL DATE

REGISTERED PROFESSIONAL ENGINEER
EVAN FRANCILISO
No. C66343
Exp. 06-30-10
CIVIL
STATE OF CALIFORNIA

The State of California or its officers or agents shall not be responsible for the accuracy or completeness of electronic copies of this plan sheet.

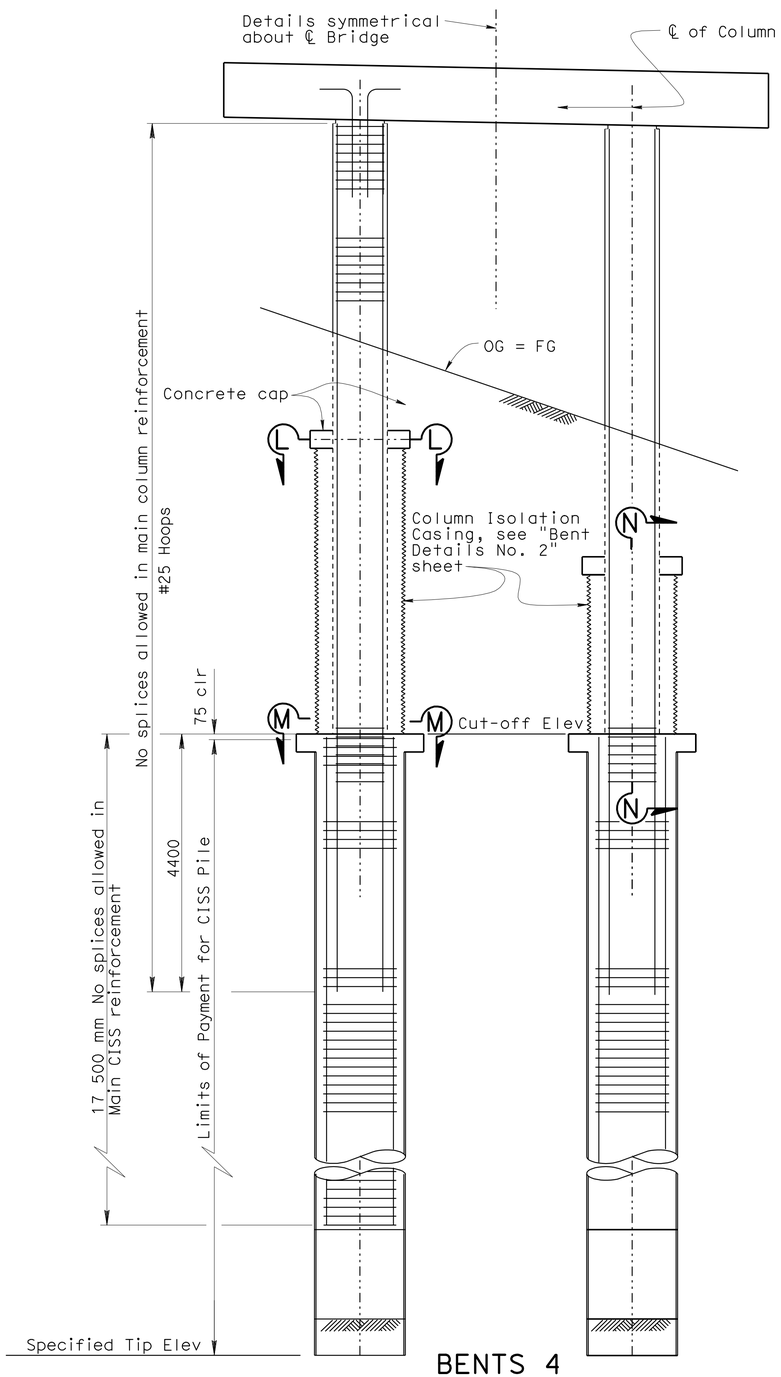

BENTS 4
ELEVATION
1:50

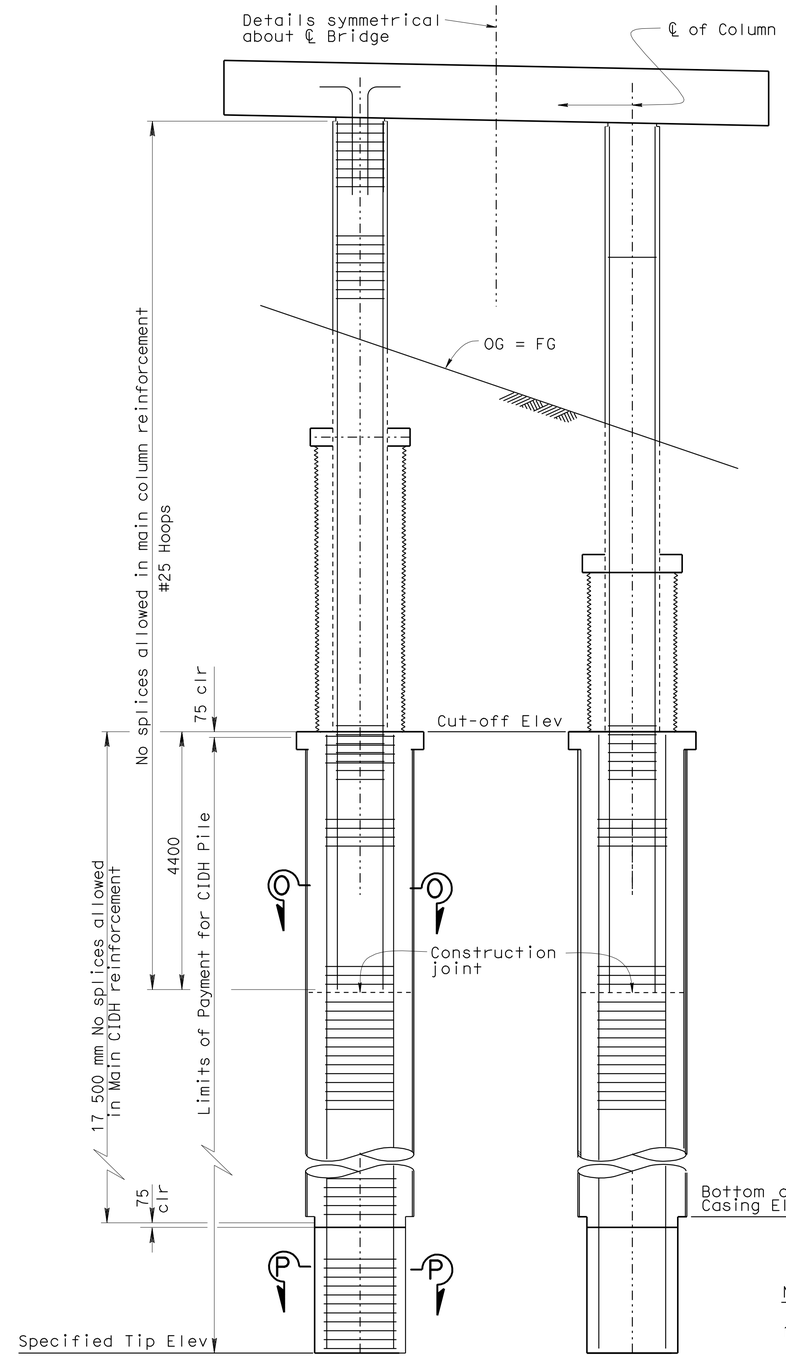

BENT 5 & 6
ELEVATION
1:50

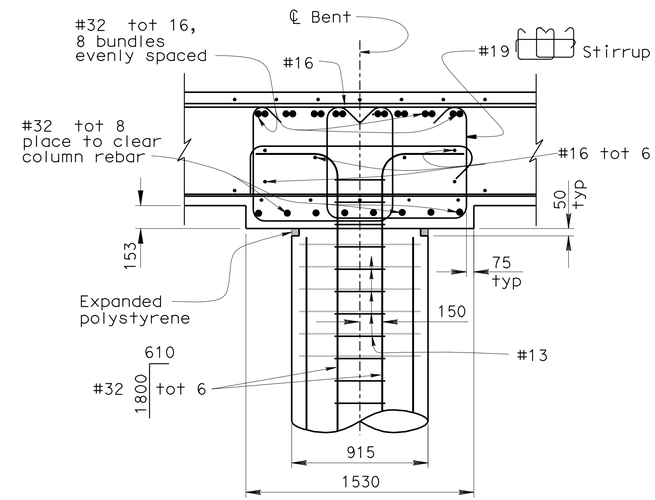

NOTES:

1. Bent cap stirrup placed parallel to PS ducts 50 mm clear, Typ.

SECTION J-J
1:20

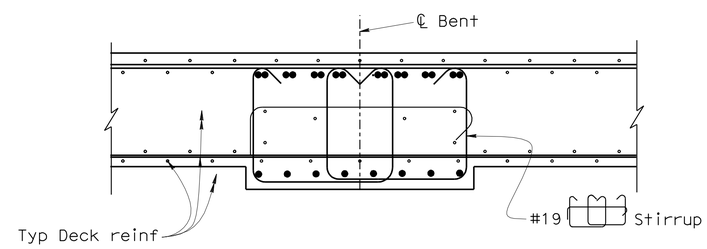

Note:
For Details and reinforcement not shown, see "Bent Layout" and "Typical Section" sheet

SECTION K-K
1:20

Notes:

1. For Sections L-L, M-M, N-N, O-O and P-P, see "Bent Details No. 2" sheet
2. All hoops are "Ultimate Butt Spliced"

Caltrans Metric

3 REVISED PER ADDENDUM No. 3 DATED SEPTEMBER 29, 2009

	BY	CHECKED
DESIGN	J. RAILEY	E. FRANCILISO
DETAILS	ND TAPALLA	E. FRANCILISO
QUANTITIES	J. RAILEY	E. FRANCILISO

STATE OF CALIFORNIA
DEPARTMENT OF TRANSPORTATION

DIVISION OF ENGINEERING SERVICES
STRUCTURE DESIGN
DESIGN BRANCH 9

BRIDGE NO. 28-0151S
KILOMETER POST 17.2

WILLOW AVENUE UNDERCROSSING (OFF-RAMP)
BENT DETAILS NO. 1

ALL DIMENSIONS ARE IN MILLIMETERS UNLESS OTHERWISE SHOWN

ORIGINAL SCALE IN MILLIMETERS FOR REDUCED PLANS 0 10 20 30 40 50 60 70 80 90 100

CU 04
EA 263721

DISREGARD PRINTS BEARING EARLIER REVISION DATES
REVISION DATES: 09-22-08 01-15-09 01-16-09

SHEET 10 OF 19

FILE => 28-0151_s-h-btdt1.add

STRUCTURES DESIGN DETAIL SHEET (METRIC) (REV.03-17-04)

USERNAME => tmikesl DATE PLOTTED => 29-SEP-2009 TIME PLOTTED => 09:07

DIST	COUNTY	ROUTE	KILOMETER POST TOTAL PROJECT	SHEET No	TOTAL SHEETS
04	CC	80	15.3/21.9	403	492

Evan M. Franciliso 2-27-09
REGISTERED CIVIL ENGINEER DATE

6-29-09
PLANS APPROVAL DATE

REGISTERED PROFESSIONAL ENGINEER EVAN FRANCILISO No. C66343 Exp. 06-30-10 CIVIL STATE OF CALIFORNIA

The State of California or its officers or agents shall not be responsible for the accuracy or completeness of electronic copies of this plan sheet.

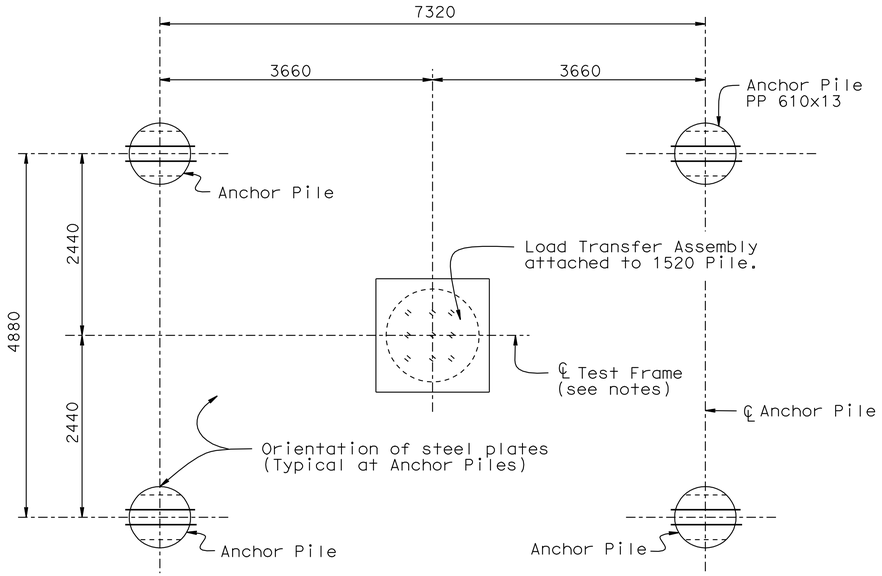

PLAN

NO SCALE

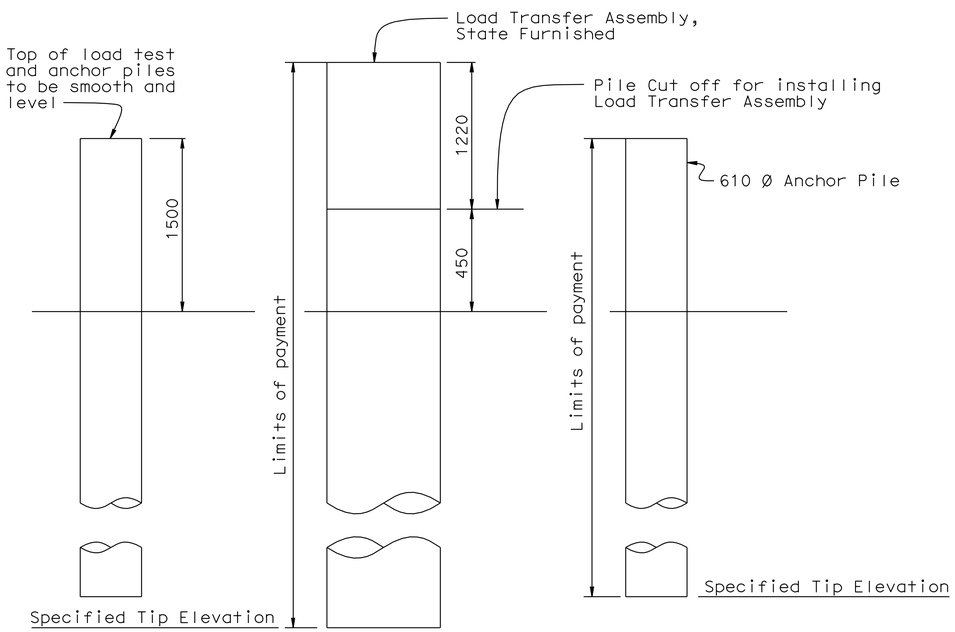

ANCHOR PILE **LOAD TEST PILE** **ANCHOR PILE**

LOAD TEST PILE GROUP

NO SCALE

ANCHOR PILE DATA TABLE

Location	Pile Type	Nominal Resistance (kN) Compression	Nominal Resistance (kN) Tension	Design Tip Elevation	Specified Tip Elevation	Steel Shell Nominal Driving Resistance Required (kN)
Bent 3	PP 610x13	4740	1780	-12.46	-12.46	4740

Notes:

1. Design tip elevations are controlled by tension
2. The nominal driving resistance required is equal to the nominal resistance needed to support the factored load plus driving resistance from the unsuitable penetrated soil layers (very soft, liquefiable, etc.), if any, which do not contribute to the design resistance

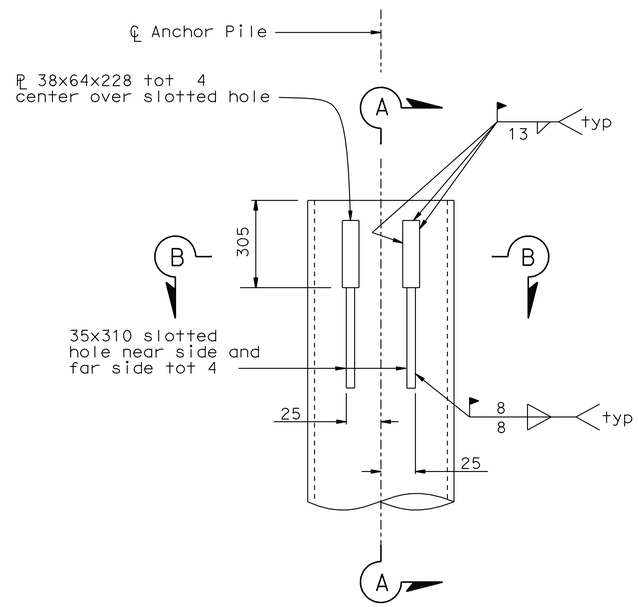

ANCHOR PILE DETAIL

NO SCALE

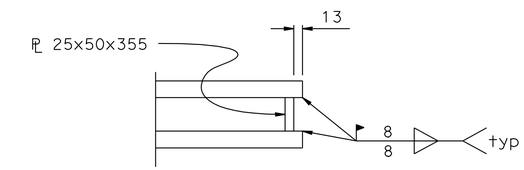

SECTION C-C

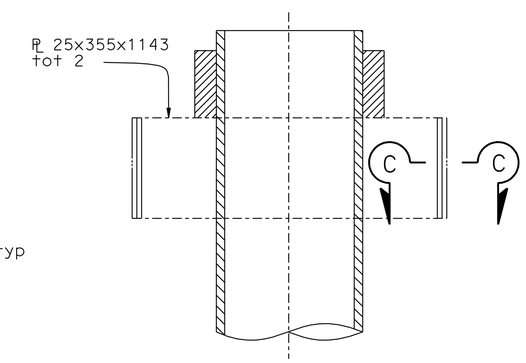

SECTION A-A

NO SCALE

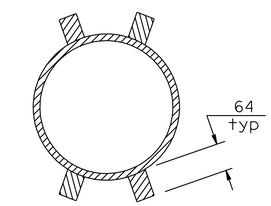

SECTION B-B

NO SCALE

NOTES: 3

1. ~~No Pile cleanout reinforcing steel concrete fill required for test pile.~~ Pile cleanout, reinforcing steel and concrete fill are required for test pile.
2. Welding and steel fobrication costs associated with connecting Load Transfer Assembly to 1520 Pile shall be paid for as extra work.
3. Alignment of slots and 64 Plates shall permit a Plate 355x1143 to pass thru pile. Slots are to be cut after piles are driven.
4. For Anchor Piles location, see "Foundation Plan" sheet.

Caltrans Metric

3 REVISED PER ADDENDUM No. 3 DATED SEPTEMBER 29, 2009

	BY	CHECKED
DESIGN	J. RAILEY	E. FRANCILISO
DETAILS	ND TAPALLA	E. FRANCILISO
QUANTITIES	J. RAILEY	E. FRANCILISO

STATE OF CALIFORNIA DEPARTMENT OF TRANSPORTATION

DIVISION OF ENGINEERING SERVICES STRUCTURE DESIGN DESIGN BRANCH 9

BRIDGE NO. 28-0151S
KILOMETER POST 17.2

WILLOW AVENUE UNDERCROSSING (OFF-RAMP)

LOAD TEST PILE DETAILS

ALL DIMENSIONS ARE IN MILLIMETERS UNLESS OTHERWISE SHOWN

ORIGINAL SCALE IN MILLIMETERS FOR REDUCED PLANS 0 10 20 30 40 50 60 70 80 90 100

CU 04
EA 263721

DISREGARD PRINTS BEARING EARLIER REVISION DATES 02-17-09

REVISION DATES

SHEET 17 OF 19

FILE => 28-0151_s-y-ltpdet01.add

STRUCTURES DESIGN DETAIL SHEET (METRIC) (REV.03-17-04)

USERNAME => tmikesl DATE PLOTTED => 29-SEP-2009 TIME PLOTTED => 09:08