Dist	COUNTY	ROUTE	POST MILES TOTAL PROJECT	SHEET No.	TOTAL SHEETS
04	Ala	680	4.8/5.2	1	66

INDEX OF PLANS

SHEET No.	DESCRIPTION
1	TITLE AND LOCATION MAP
2-3	LAYOUTS
4-7	CONSTRUCTION DETAILS
8-9	WATER POLLUTION CONTROL PLANS
10	TEMPORARY WATER POLLUTION CONTROL DETAILS
11	WATER POLLUTION CONTROL QUANTITIES
12-16	EROSION CONTROL PLANS, DETAILS AND QUANTITIES
17-27	DRAINAGE PLANS, PROFILES, DETAILS AND QUANTITIES
28-32	SANITARY SEWER PLANS, PROFILES, DETAILS AND QUANTITIES
33	CONSTRUCTION AREA SIGNS
34	SUMMARY OF QUANTITIES
35-39	LOG OF TEST BORING
40	PLANT LIST PLANS
41-42	PLANTING PLANS
43-44	IRRIGATION REMOVAL PLANS
45-46	LANDSCAPE DETAILS
47-48	IRRIGATION QUANTITIES
49-66	REVISED AND NEW STANDARD PLANS

THE STANDARD PLANS LIST APPLICABLE TO THIS CONTRACT IS INCLUDED IN THE NOTICE TO BIDDERS AND SPECIAL PROVISIONS BOOK.

STATE OF CALIFORNIA

DEPARTMENT OF TRANSPORTATION

PROJECT PLANS FOR CONSTRUCTION ADJACENT TO

STATE HIGHWAY

IN ALAMEDA COUNTY
IN FREMONT
FROM 0.5 MILE NORTH OF AUTO MALL PARKWAY OVERCROSSING TO 0.3 MILE SOUTH OF WASHINGTON BOULEVARD OVERCROSSING

TO BE SUPPLEMENTED BY STANDARD PLANS DATED MAY 2006

LOCATION MAP

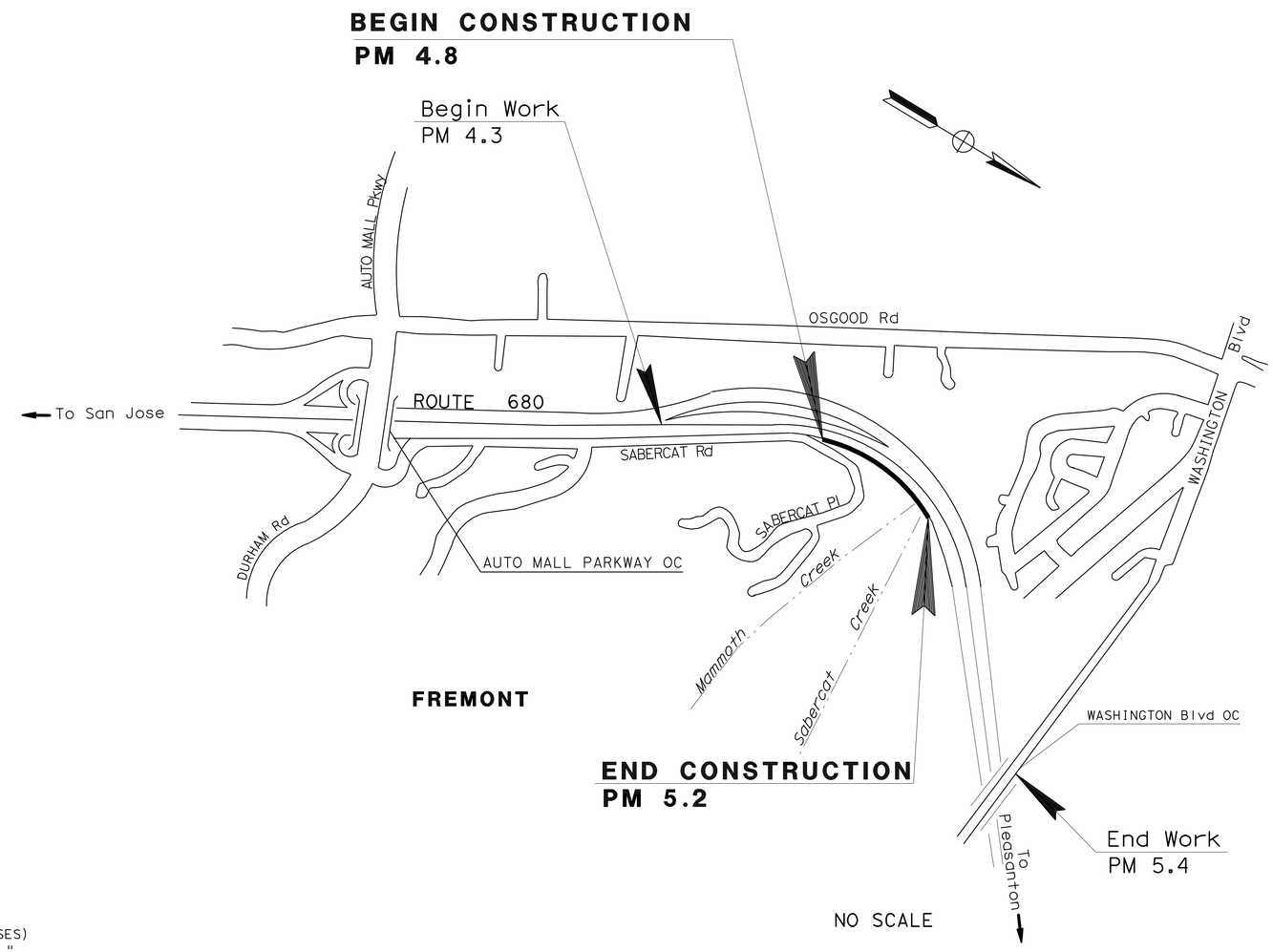

UNION SANITARY DISTRICT
PLAN CHECK

- ☒ Approved (Except as noted in red)
- ☐ Reviewed (Revise and resubmit ___ sets of plans)
- ☐ Reviewed (No further action needed)
- ☐ Add Sanitary Sewer Notes _____
- ☐ Submit C.C. & R.'s
- ☐ Submit Tract Map (2 copies)
- ☐ Annexation Required

Plan Check Robin Ashenhurst Date 7/24/09

REGISTERED PROFESSIONAL ENGINEER ROLLIE R. ARBOLANTE No. C65556 Exp. 9/30/09 CIVIL STATE OF CALIFORNIA

LICENSED LANDSCAPE ARCHITECT

November 16, 2009
PLANS APPROVAL DATE

LICENSED LANDSCAPE ARCHITECT Scott Bottari No. 2437 Signature 04-30-11 Renewal Date Date STATE OF CALIFORNIA

THE STATE OF CALIFORNIA OR ITS OFFICERS OR AGENTS SHALL NOT BE RESPONSIBLE FOR THE ACCURACY OR COMPLETENESS OF SCANNED COPIES OF THIS PLAN SHEET.

PROJECT MANAGER: EMILY LANDIN-LOWE

SENIOR LANDSCAPE ARCHITECT: BRYAN WALKER

THE CONTRACTOR SHALL POSSESS THE CLASS (OR CLASSES) OF LICENSE AS SPECIFIED IN THE "NOTICE TO BIDDERS."

CONTRACT No. 04-253764

LAST REVISION 6-01-09

DATE PLOTTED => 19-NOV-2009
TIME PLOTTED => 11:28

Dist	COUNTY	ROUTE	POST MILES TOTAL PROJECT	SHEET No.	TOTAL SHEETS
04	Ala	680	4.8/5.2	2	66

Ulysses Hillard 7/20/09
REGISTERED CIVIL ENGINEER DATE

11-16-09
PLANS APPROVAL DATE

REGISTERED PROFESSIONAL ENGINEER ULYSSES HILLARD No. C 64873 Exp. 6/30/11 CIVIL STATE OF CALIFORNIA

THE STATE OF CALIFORNIA OR ITS OFFICERS OR AGENTS SHALL NOT BE RESPONSIBLE FOR THE ACCURACY OR COMPLETENESS OF SCANNED COPIES OF THIS PLAN SHEET.

WRECO
1814 FRANKLIN STREET
SUITE 608
OAKLAND, CA 94612

CALTRANS
111 GRAND AVENUE
OAKLAND, CA 94612

NOTES:

1. FOR COMPLETE RIGHT OF WAY AND ACCURATE ACCESS DATA, SEE RIGHT OF WAY RECORD MAPS AT THE DISTRICT OFFICE.
2. COORDINATE VALUES SHOWN ARE CCS 83, ZONE 3.
3. SEE CONSTRUCTION DETAILS, SHEETS C-1 THROUGH C-4, FOR INFORMATION NOT SHOWN ON THIS SHEET.
4. WELL LOCATIONS APPROXIMATE. CONTRACTOR TO DETERMINE WELL LOCATIONS IN FIELD PRIOR TO CONSTRUCTION.
5. WELLS FOUND TO BE OUTSIDE GRADING LIMIT TO BE PROTECTED IN PLACE AND WELLS FOUND TO BE INSIDE GRADING LIMIT TO BE ABANDONED.

LEGEND:

- TFESA — TEMPORARY FENCE (TYPE ESA)
- CABLE RAILING
- ENVIRONMENTALLY SENSITIVE AREA (ESA)

ABBREVIATIONS:

- USD — UNION SANITARY DISTRICT
- ESA — ENVIRONMENTALLY SENSITIVE AREA

CURVE DATA

No.	R	Δ	T	L	N-COORDINATE	E-COORDINATE
1	280.00	15°14'24"	37.46	74.48	2017191.66	6142435.79
2	280.00	7°25'09"	18.15	36.26	2017397.77	6142454.53
3	200.00	24°49'01"	44.00	86.83	2017544.75	6142487.42

ALL DIMENSIONS ARE IN FEET UNLESS OTHERWISE SHOWN

LAYOUT

SCALE: 1'' = 50'

L-1

STATE OF CALIFORNIA - DEPARTMENT OF TRANSPORTATION
Caltrans

CONSULTANT FUNCTIONAL SUPERVISOR: HAN-BIN LIANG
CALCULATED-DESIGNED BY: TERENCE XIAO
CHECKED BY: ULYSSES HILLARD
REVISED BY
DATE REVISED

LAST REVISION 11-10-09 | DATE PLOTTED => 19-NOV-2009 | TIME PLOTTED => 11:10

Dist	COUNTY	ROUTE	POST MILES TOTAL PROJECT	SHEET No.	TOTAL SHEETS
04	Ala	680	4.8/5.2	3	66

Ulysses Hillard 7/20/09
REGISTERED CIVIL ENGINEER DATE

11-16-09
PLANS APPROVAL DATE

REGISTERED PROFESSIONAL ENGINEER ULYSSES HILLARD No. C 64873 Exp. 6/30/11 CIVIL STATE OF CALIFORNIA

THE STATE OF CALIFORNIA OR ITS OFFICERS OR AGENTS SHALL NOT BE RESPONSIBLE FOR THE ACCURACY OR COMPLETENESS OF SCANNED COPIES OF THIS PLAN SHEET.

WRECO
1814 FRANKLIN STREET
SUITE 608
OAKLAND, CA 94612

CALTRANS
111 GRAND AVENUE
OAKLAND, CA 94612

FOR COMPLETE RIGHT OF WAY AND ACCURATE ACCESS DATA, SEE RIGHT OF WAY RECORD MAPS AT THE DISTRICT OFFICE

CURVE DATA

No.	R	Δ	T	L	N-COORDINATE	E-COORDINATE
4	200.00	20°15'46"	35.74	70.73	2017643.44	6142562.95
5	300.00	15°27'13"	40.70	80.91	2017994.73	6142671.47
6	1633.63	11°45'55"	168.32	335.46	2018170.78	6142784.15
7	350	48°45'55"	158.64	297.89	2017844.58	6142571.53

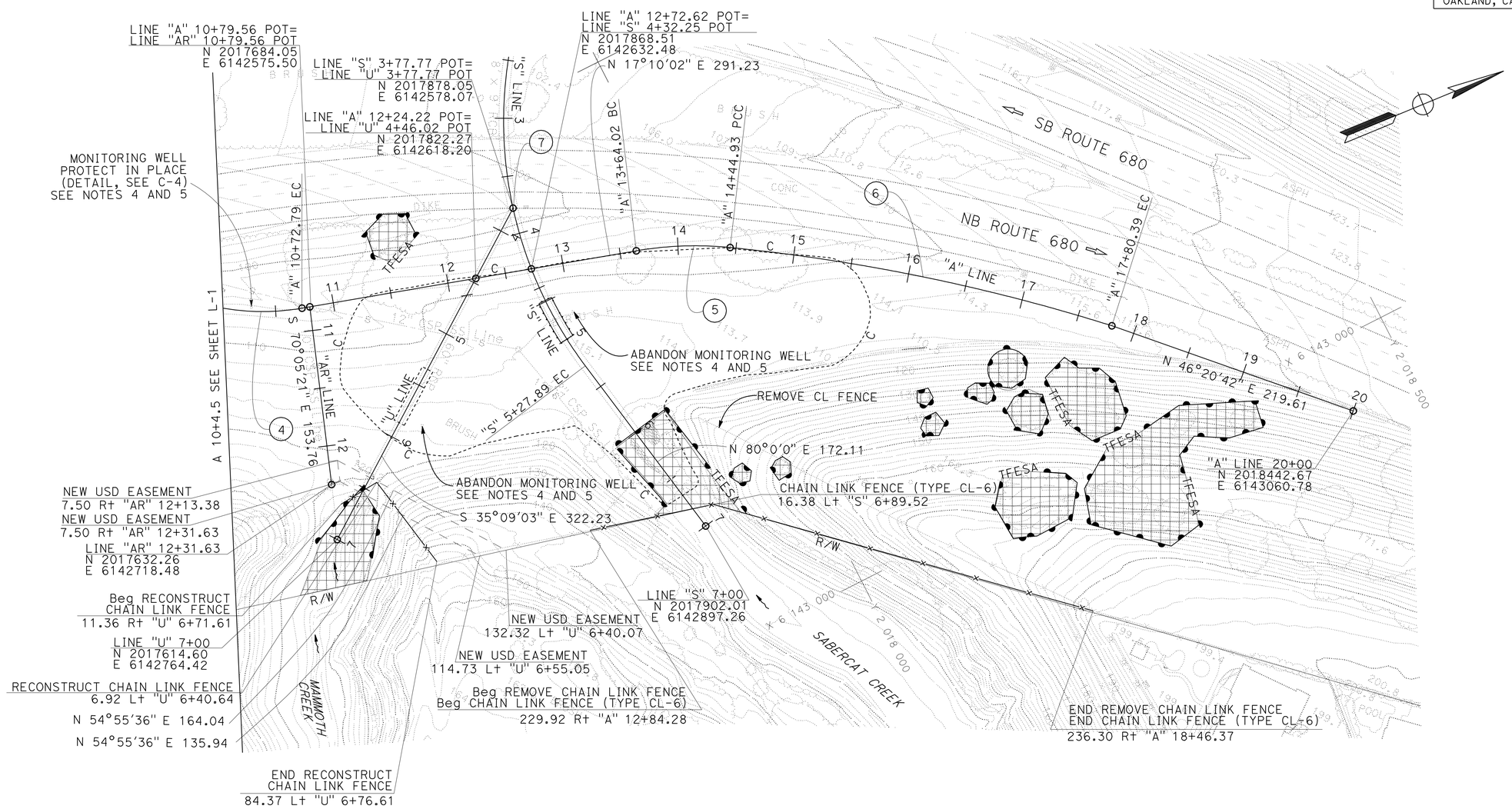

ALL DIMENSIONS ARE IN FEET UNLESS OTHERWISE SHOWN

LAYOUT

SCALE: 1'' = 50'

L-2

STATE OF CALIFORNIA - DEPARTMENT OF TRANSPORTATION

Caltrans

CONSULTANT FUNCTIONAL SUPERVISOR: HAN-BIN LIANG

CALCULATED-DESIGNED BY: TERENCE XIAO

CHECKED BY: ULYSSES HILLARD

REVISED BY / DATE REVISED

LAST REVISION 11-10-09 | DATE PLOTTED => 19-NOV-2009 | TIME PLOTTED => 11:10

Dist	COUNTY	ROUTE	POST MILES TOTAL PROJECT	SHEET No.	TOTAL SHEETS
04	Ala	680	4.8/5.2	4	66

Ulysses Hillard 7/20/09
REGISTERED CIVIL ENGINEER DATE

11-16-09
PLANS APPROVAL DATE

REGISTERED PROFESSIONAL ENGINEER
ULYSSES HILLARD
No. C 64873
Exp. 6/30/11
CIVIL
STATE OF CALIFORNIA

THE STATE OF CALIFORNIA OR ITS OFFICERS OR AGENTS SHALL NOT BE RESPONSIBLE FOR THE ACCURACY OR COMPLETENESS OF SCANNED COPIES OF THIS PLAN SHEET.

WRECO
1814 FRANKLIN STREET
SUITE 608
OAKLAND, CA 94612

CALTRANS
111 GRAND AVENUE
OAKLAND, CA 94612

NOTE:

FOR COMPLETE RIGHT OF WAY AND ACCURATE ACCESS DATA, SEE RIGHT OF WAY RECORD MAPS AT DISTRICT OFFICE.

LEGEND:

ENVIRONMENTALLY SENSITIVE AREA (ESA)
CABLE RAILING
CHAIN LINK GATE

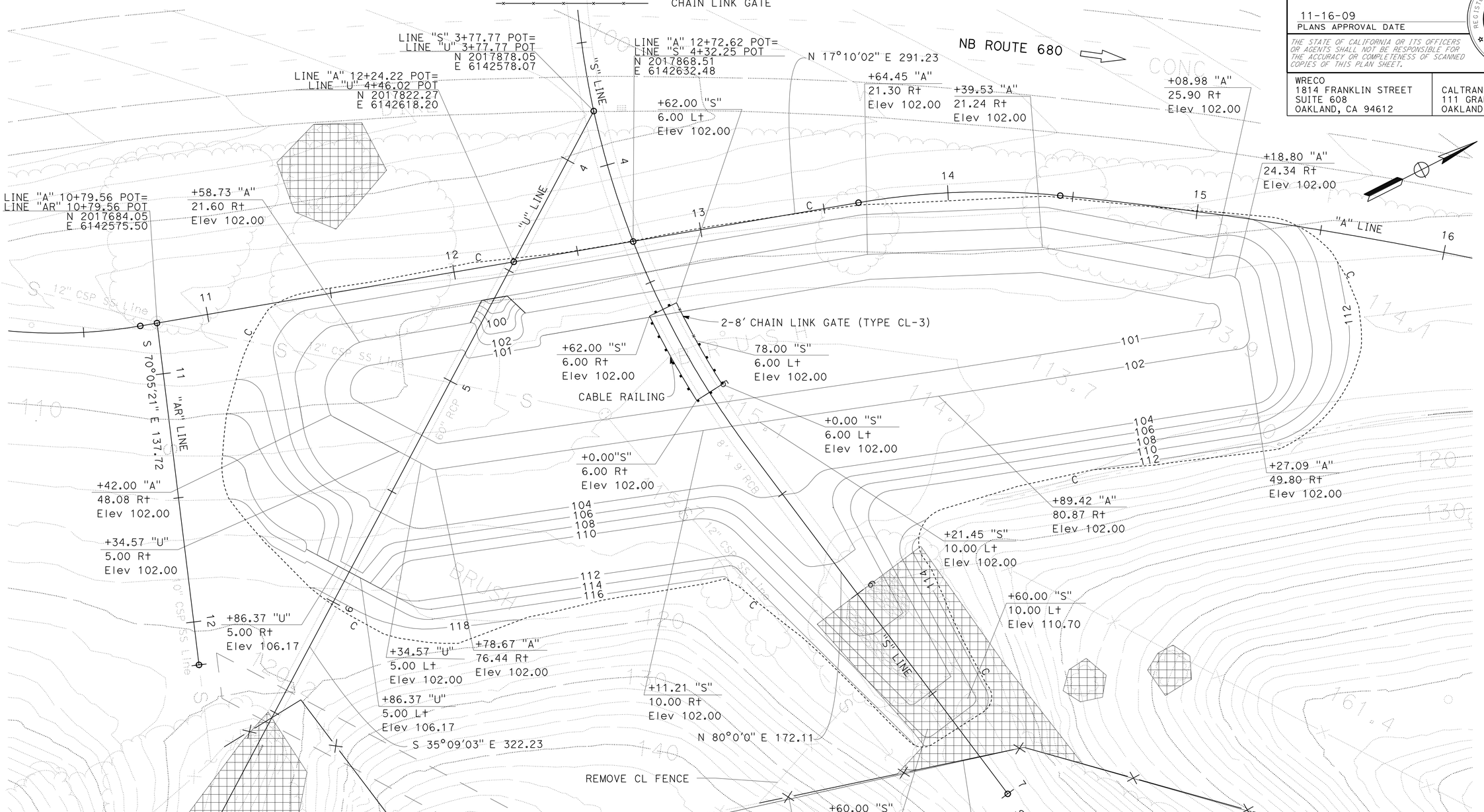

ALL DIMENSIONS ARE IN FEET UNLESS OTHERWISE SHOWN

CONSTRUCTION DETAILS

SCALE 1'' = 20'

C-1

STATE OF CALIFORNIA - DEPARTMENT OF TRANSPORTATION
Caltrans

CONSULTANT FUNCTIONAL SUPERVISOR: HAN-BIN LIANG
CALCULATED-DESIGNED BY: ULYSSES HILLARD
CHECKED BY: TERENCE XIAO
REVISED BY
DATE REVISED

LAST REVISION 11-10-09 DATE PLOTTED => 19-NOV-2009 TIME PLOTTED => 11:10

Dist	COUNTY	ROUTE	POST MILES TOTAL PROJECT	SHEET No.	TOTAL SHEETS
04	Ala	680	4.8/5.2	5	66

Ulysses Hillard 7/20/09
REGISTERED CIVIL ENGINEER DATE

11-16-09
PLANS APPROVAL DATE

REGISTERED PROFESSIONAL ENGINEER
ULYSSES HILLARD
No. C 64873
Exp. 6/30/11
CIVIL
STATE OF CALIFORNIA

THE STATE OF CALIFORNIA OR ITS OFFICERS OR AGENTS SHALL NOT BE RESPONSIBLE FOR THE ACCURACY OR COMPLETENESS OF SCANNED COPIES OF THIS PLAN SHEET.

WRECO
1814 FRANKLIN STREET
SUITE 608
OAKLAND, CA 94612

CALTRANS
111 GRAND AVENUE
OAKLAND, CA 94612

NOTE:

FOR COMPLETE RIGHT OF WAY AND ACCURATE ACCESS DATA, SEE RIGHT OF WAY RECORD MAPS AT DISTRICT OFFICE.

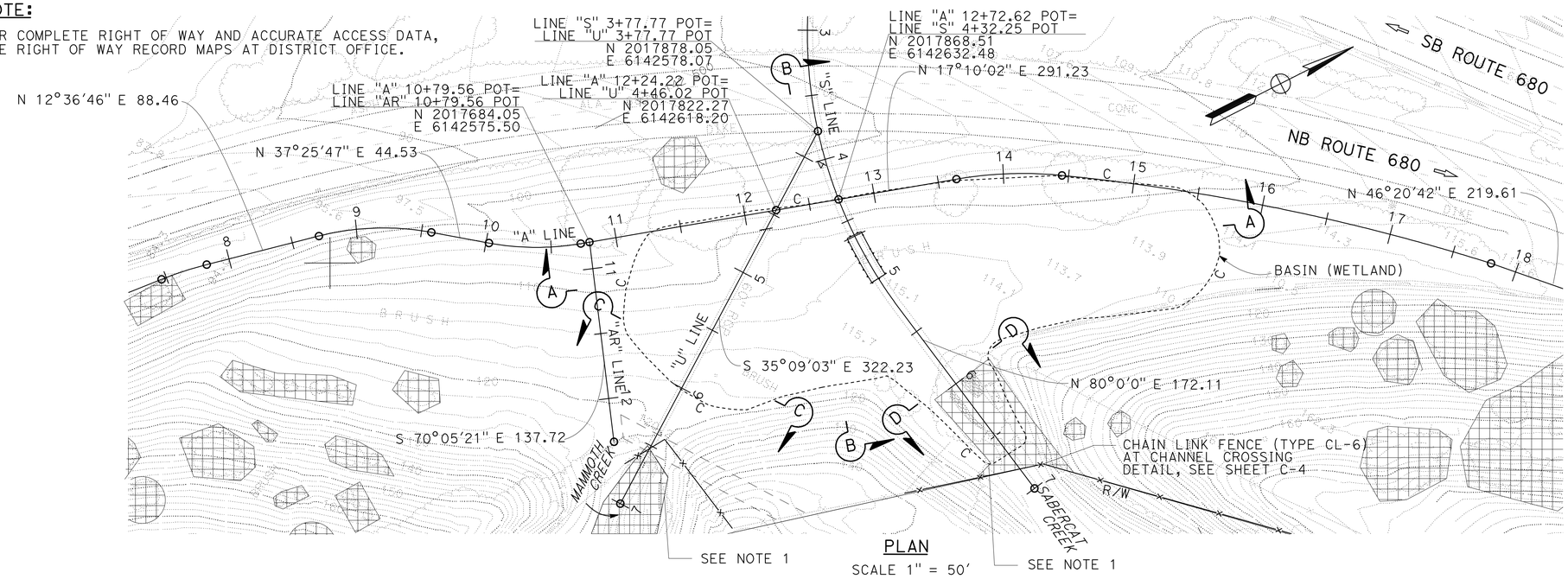

PLAN
SCALE 1" = 50'

NOTES:

SEE SHEET C-3 FOR SECTION C-C AND SECTION D-D.

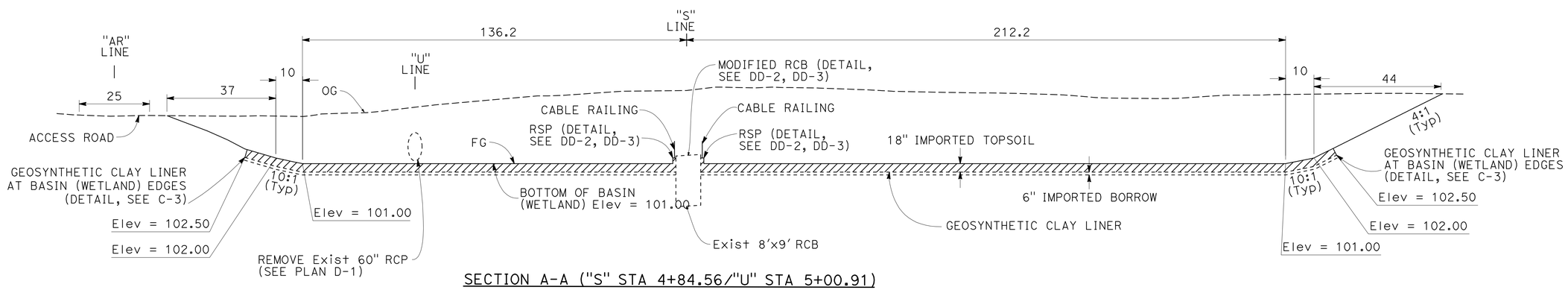

SECTION A-A ("S" STA 4+84.56/"U" STA 5+00.91)
NO SCALE

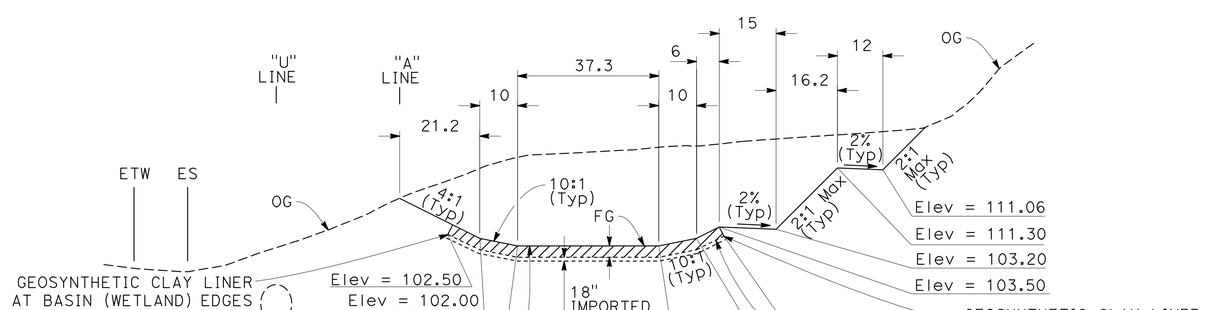

SECTION B-B ("A" STA 12+50)
NO SCALE

ALL DIMENSIONS ARE IN FEET UNLESS OTHERWISE SHOWN

CONSTRUCTION DETAILS

SCALE AS SHOWN

C-2

STATE OF CALIFORNIA - DEPARTMENT OF TRANSPORTATION
Caltrans

CONSULTANT FUNCTIONAL SUPERVISOR: HAN-BIN LIANG
CALCULATED-DESIGNED BY: TERENCE XIAO
CHECKED BY: ULYSSES HILLARD
REVISED BY
DATE REVISED

LAST REVISION 11-10-09
DATE PLOTTED => 19-NOV-2009
TIME PLOTTED => 11:11

Dist	COUNTY	ROUTE	POST MILES TOTAL PROJECT	SHEET No.	TOTAL SHEETS
04	Ala	680	4.8/5.2	6	66

Ulysses Hillard 7/20/09
REGISTERED CIVIL ENGINEER DATE

11-16-09
PLANS APPROVAL DATE

REGISTERED PROFESSIONAL ENGINEER
ULYSSES HILLARD
No. C 64873
Exp. 6/30/11
CIVIL
STATE OF CALIFORNIA

THE STATE OF CALIFORNIA OR ITS OFFICERS OR AGENTS SHALL NOT BE RESPONSIBLE FOR THE ACCURACY OR COMPLETENESS OF SCANNED COPIES OF THIS PLAN SHEET.

WRECO
1814 FRANKLIN STREET
SUITE 608
OAKLAND, CA 94612

CALTRANS
111 GRAND AVENUE
OAKLAND, CA 94612

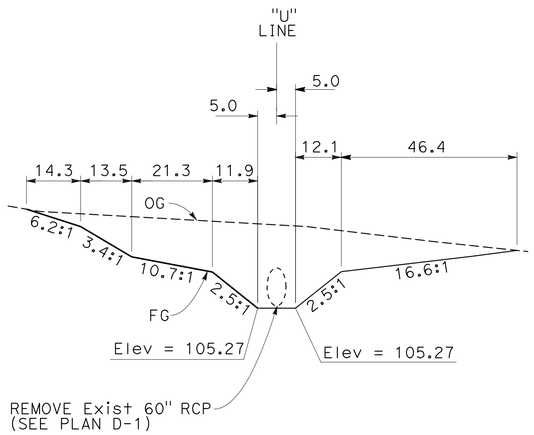

SECTION C-C ("U" STA 5+75)
NO SCALE

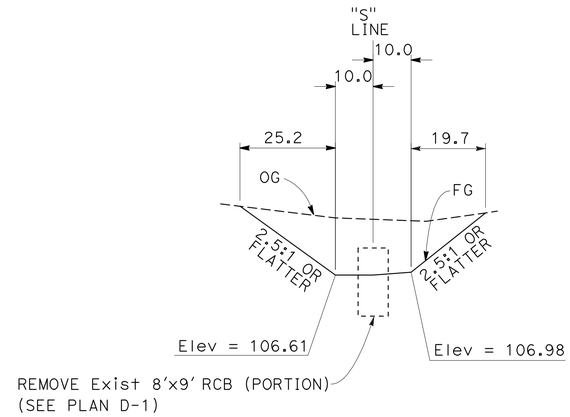

SECTION D-D ("S" STA 5+95)
NO SCALE

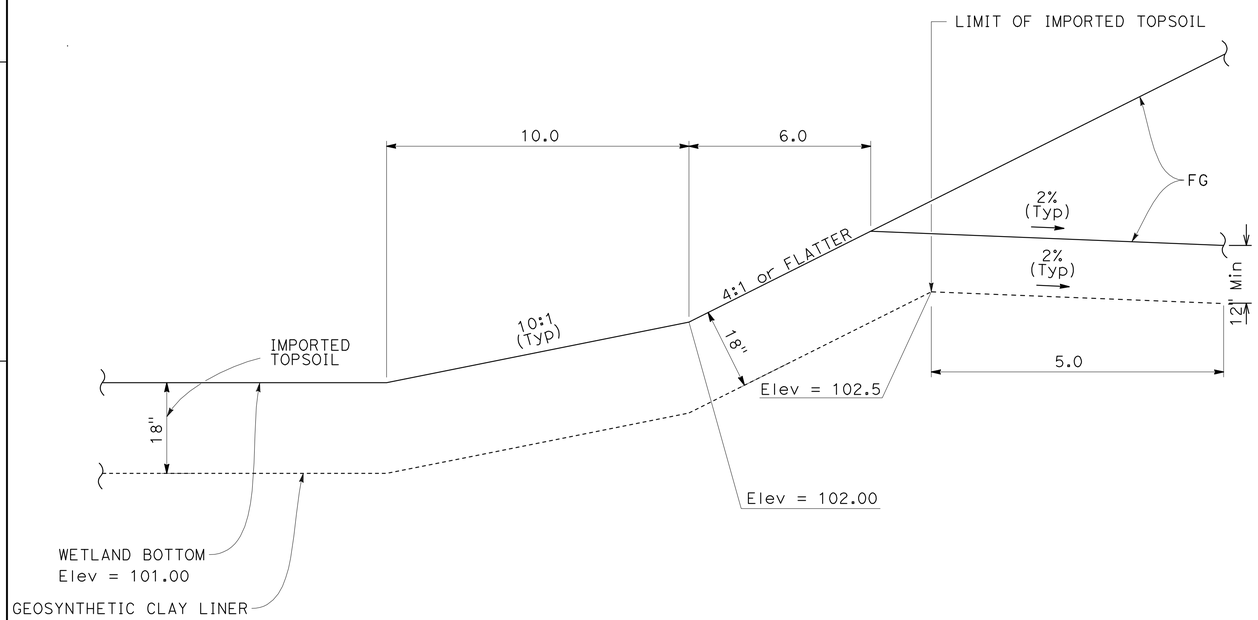

GEOSYNTHETIC CLAY LINER AT WETLAND EDGES
NO SCALE

ALL DIMENSIONS ARE IN FEET UNLESS OTHERWISE SHOWN

CONSTRUCTION DETAILS

SCALE AS SHOWN

C-3

STATE OF CALIFORNIA - DEPARTMENT OF TRANSPORTATION
Caltrans

CONSULTANT FUNCTIONAL SUPERVISOR: HAN-BIN LIANG
CALCULATED-DESIGNED BY: TERENCE XIAO
CHECKED BY: ULYSSES HILLARD
REVISED BY
DATE REVISED

LAST REVISION 00-00-00
DATE PLOTTED => 19-NOV-2009
TIME PLOTTED => 11:11

Dist	COUNTY	ROUTE	POST MILES TOTAL PROJECT	SHEET No.	TOTAL SHEETS
04	Ala	680	4.8/5.2	7	66

Ulysses Hillard 7/20/09
REGISTERED CIVIL ENGINEER DATE

11-16-09
PLANS APPROVAL DATE

REGISTERED PROFESSIONAL ENGINEER
ULYSSES HILLARD
No. C 64873
Exp. 6/30/11
CIVIL
STATE OF CALIFORNIA

THE STATE OF CALIFORNIA OR ITS OFFICERS OR AGENTS SHALL NOT BE RESPONSIBLE FOR THE ACCURACY OR COMPLETENESS OF SCANNED COPIES OF THIS PLAN SHEET.

WRECO
1814 FRANKLIN STREET
SUITE 608
OAKLAND, CA 94612

CALTRANS
111 GRAND AVENUE
OAKLAND, CA 94612

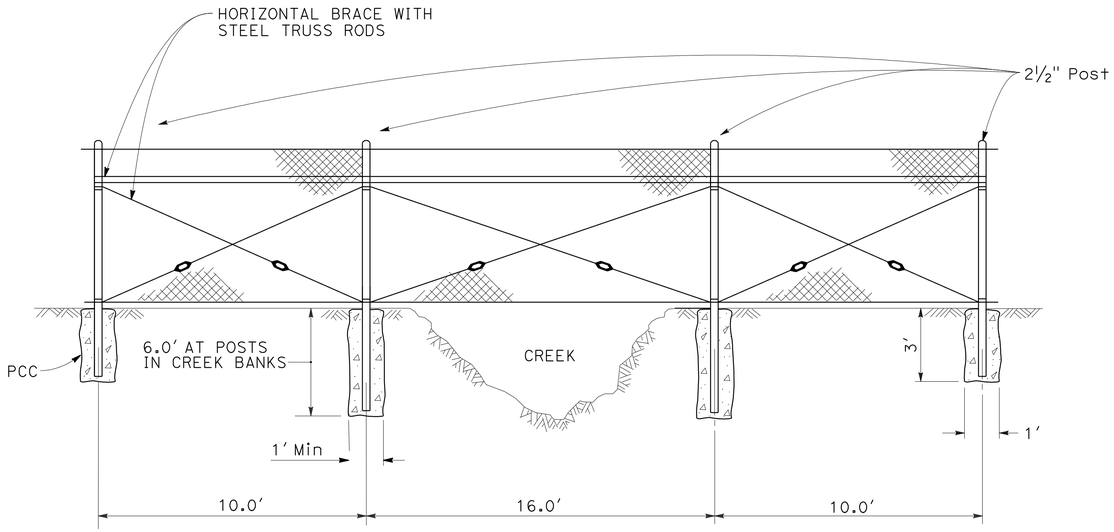

ELEVATION

CHAIN LINK FENCE (TYPE CL-6)
AT CHANNEL CROSSING

NOTE:

FOR CHAIN LINK FENCE DIMENSIONS NOT SHOWN, SEE STANDARD PLAN RSP A85.

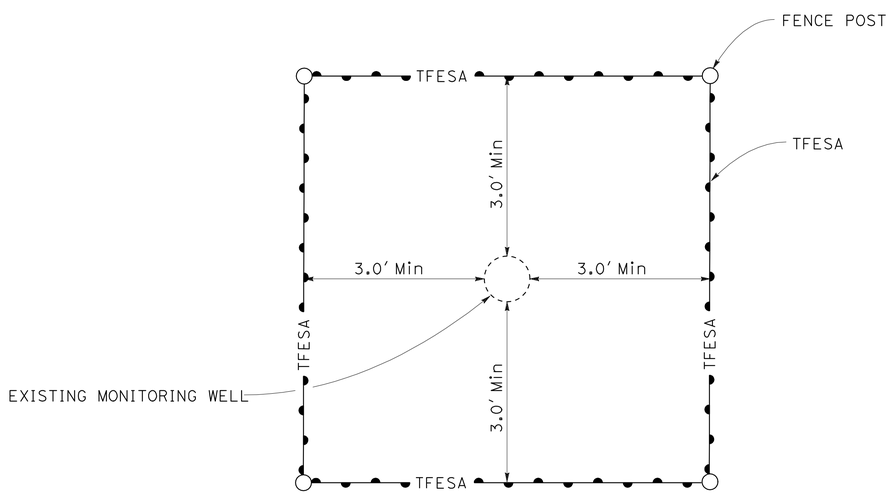

PLAN

EXISTING MONITORING WELL - PROTECT IN PLACE

CONSTRUCTION DETAILS

NO SCALE

C-4

REVISED BY | DATE REVISED

TERENCE XIAO | ULYSSES HILLARD

CALCULATED-DESIGNED BY | CHECKED BY

CONSULTANT FUNCTIONAL SUPERVISOR

HAN-BIN LIANG

STATE OF CALIFORNIA - DEPARTMENT OF TRANSPORTATION

Caltrans

LAST REVISION 00-00-00 | DATE PLOTTED => 19-NOV-2009 | TIME PLOTTED => 11:11

Dist	COUNTY	ROUTE	POST MILES TOTAL PROJECT	SHEET No.	TOTAL SHEETS
04	Ala	680	4.8/5.2	8	66

Ulysses Hillard 7/20/09
REGISTERED CIVIL ENGINEER DATE

11-16-09
PLANS APPROVAL DATE

REGISTERED PROFESSIONAL ENGINEER
ULYSSES HILLARD
No. C 64873
Exp. 6/30/11
CIVIL
STATE OF CALIFORNIA

THE STATE OF CALIFORNIA OR ITS OFFICERS OR AGENTS SHALL NOT BE RESPONSIBLE FOR THE ACCURACY OR COMPLETENESS OF SCANNED COPIES OF THIS PLAN SHEET.

WRECO
1814 FRANKLIN STREET
SUITE 608
OAKLAND, CA 94612

CALTRANS
111 GRAND AVENUE
OAKLAND, CA 94612

NOTE:

FOR COMPLETE RIGHT OF WAY AND ACCURATE ACCESS DATA, SEE RIGHT OF WAY RECORD MAPS AT DISTRICT OFFICE.

LEGEND

- FR — TEMPORARY FIBER ROLL (TFR)
- TSF — TEMPORARY SILT FENCE (TSF)
- TEMPORARY CONSTRUCTION ENTRANCE (TCE)
- TCWB — TEMPORARY CONCRETE WASHOUT BIN (TCWB)
- TEMPORARY DRAINAGE INLET PROTECTION (TDIP)
- ENVIRONMENTALLY SENSITIVE AREA (ESA)
- TFESA — TEMPORARY FENCE (TYPE ESA) (TFESA)

WATER POLLUTION CONTROL PLAN

SCALE: 1"=50'

THIS PLAN ACCURATE FOR TEMPORARY WATER POLLUTION CONTROL WORK ONLY.

WPC-1

REVISED BY	DATE REVISED

TERENCE XIAO — CALCULATED-DESIGNED BY
ULYSSES HILLARD — CHECKED BY
HAN-BIN LIANG — CONSULTANT FUNCTIONAL SUPERVISOR

STATE OF CALIFORNIA - DEPARTMENT OF TRANSPORTATION
Caltrans

LAST REVISION 11-10-09
DATE PLOTTED => 19-NOV-2009
TIME PLOTTED => 1234

Dist	COUNTY	ROUTE	POST MILES TOTAL PROJECT	SHEET No.	TOTAL SHEETS
04	Ala	680	4.8/5.2	9	66

Ulysses Hillard 7/20/09
REGISTERED CIVIL ENGINEER DATE

11-16-09
PLANS APPROVAL DATE

REGISTERED PROFESSIONAL ENGINEER
ULYSSES HILLARD
No. C 64873
Exp. 6/30/11
CIVIL
STATE OF CALIFORNIA

THE STATE OF CALIFORNIA OR ITS OFFICERS OR AGENTS SHALL NOT BE RESPONSIBLE FOR THE ACCURACY OR COMPLETENESS OF SCANNED COPIES OF THIS PLAN SHEET.

WRECO
1814 FRANKLIN STREET
SUITE 608
OAKLAND, CA 94612

CALTRANS
111 GRAND AVENUE
OAKLAND, CA 94612

NOTE:

FOR COMPLETE RIGHT OF WAY AND ACCURATE ACCESS DATA, SEE RIGHT OF WAY RECORD MAPS AT DISTRICT OFFICE.

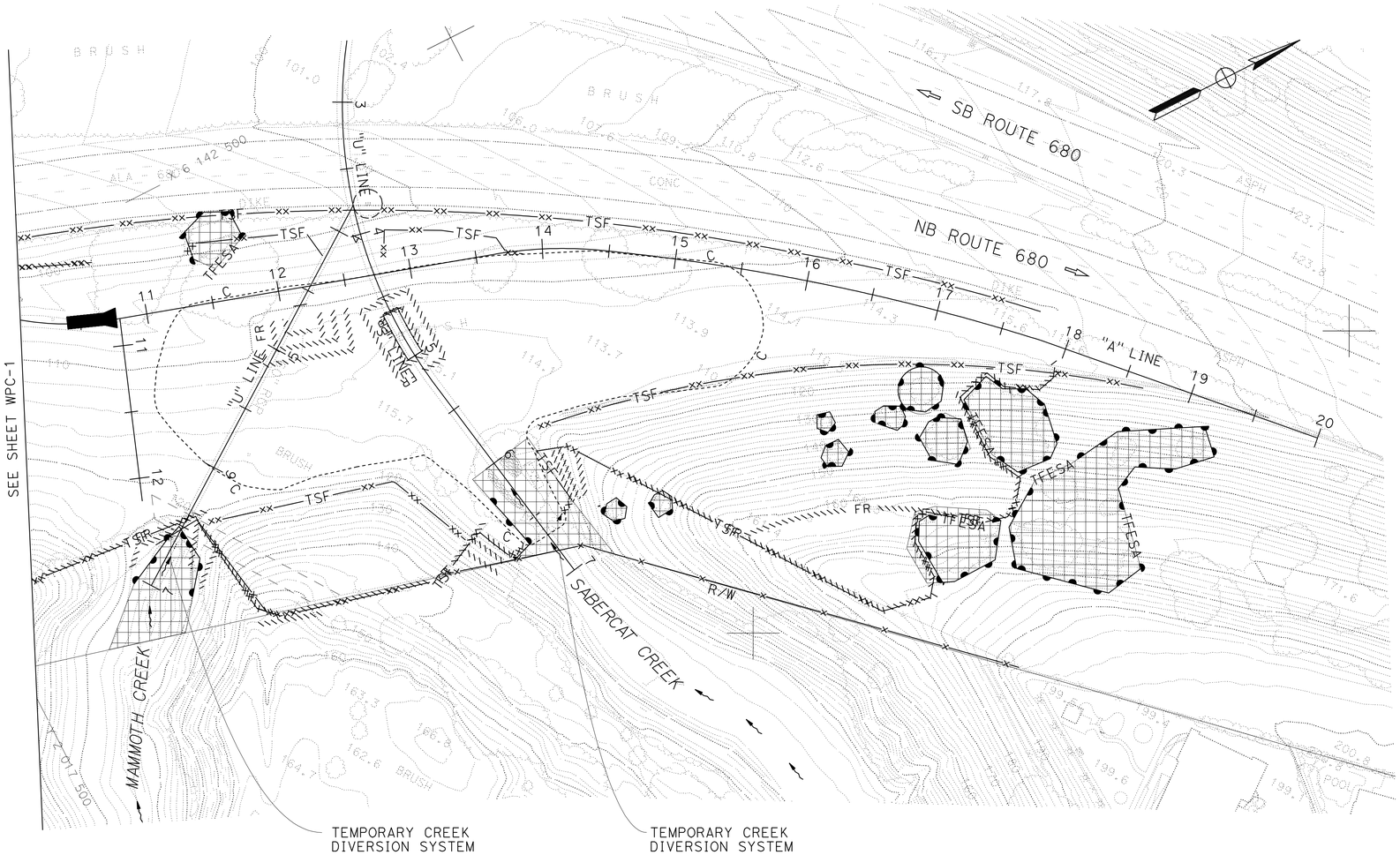

WATER POLLUTION CONTROL PLAN

SCALE: 1"=50'

THIS PLAN ACCURATE FOR TEMPORARY WATER POLLUTION CONTROL WORK ONLY.

WPC-2

STATE OF CALIFORNIA - DEPARTMENT OF TRANSPORTATION
Caltrans

CONSULTANT FUNCTIONAL SUPERVISOR: HAN-BIN LIANG
CALCULATED-DESIGNED BY: TERENCE XIAO
CHECKED BY: ULYSSES HILLARD
REVISED BY
DATE REVISED

LAST REVISION 11-06-09
DATE PLOTTED => 19-NOV-2009
TIME PLOTTED => 12:34

Dist	COUNTY	ROUTE	POST MILES TOTAL PROJECT	SHEET No.	TOTAL SHEETS
04	Ala	680	4.8/5.2	10	66

Ulysses Hillard 10/26/09
REGISTERED CIVIL ENGINEER DATE

11-16-09
PLANS APPROVAL DATE

REGISTERED PROFESSIONAL ENGINEER
ULYSSES HILLARD
No. C 64873
Exp. 6/30/11
CIVIL
STATE OF CALIFORNIA

THE STATE OF CALIFORNIA OR ITS OFFICERS OR AGENTS SHALL NOT BE RESPONSIBLE FOR THE ACCURACY OR COMPLETENESS OF SCANNED COPIES OF THIS PLAN SHEET.

WRECO
1814 FRANKLIN STREET
SUITE 608
OAKLAND, CA 94612

CALTRANS
111 GRAND AVENUE
OAKLAND, CA 94612

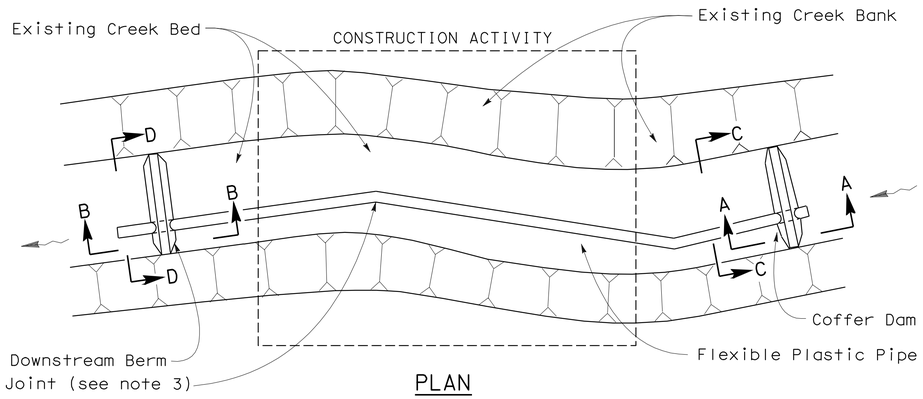

PLAN

TEMPORARY CREEK DIVERSION SYSTEM SCHEMATIC

NOTES

1. Exact length and location of the plastic pipe to be determined in the field by the Engineer.
2. Gravel-filled bag anchors to be placed at intermediate locations as determined by Engineer.
3. Use flexible pipe or rigid pipe with water tight joints as necessary to follow creek alignment.

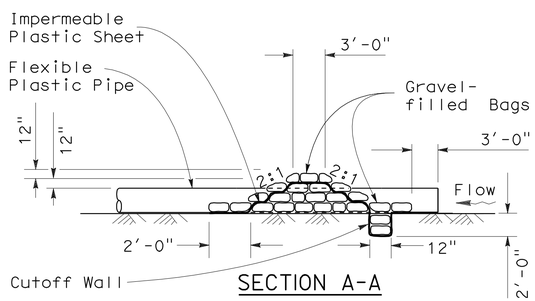

SECTION A-A

COFFER DAM

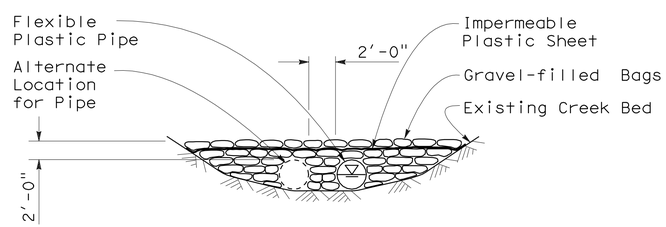

SECTION C-C

COFFER DAM

HYDROLOGIC SUMMARY

CREEK NAME	CONSTRUCTION WINDOW	MAXIMUM SLOPE (Percent)	AVERAGE FLOW (ft^3/s)	PEAK FLOW (ft^3/s)	PIPE Diam. (inches)
SABERCAT CREEK	4/15 - 10/15	7.3	3.0	1,500	36
MAMMOTH CREEK	4/15 - 10/15	11.4	0.5	520	24

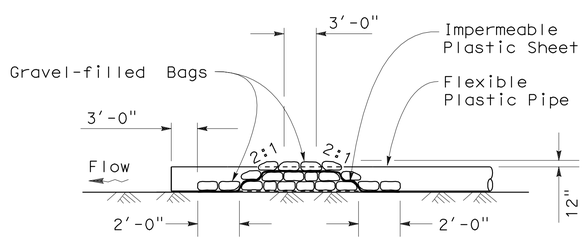

SECTION B-B

DOWNSTREAM BERM

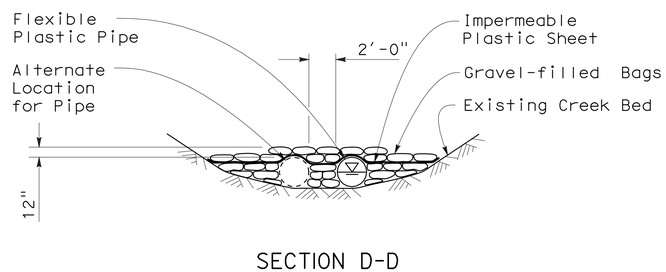

SECTION D-D

DOWNSTREAM BERM

TEMPORARY WATER POLLUTION CONTROL DETAILS (TEMPORARY CREEK DIVERSION SYSTEM)

NO SCALE

WPCD-1

REVISED BY | DATE REVISED
TERENCE XIAO | ULYSSES HILLARD
CALCULATED-DESIGNED BY | CHECKED BY
CONSULTANT FUNCTIONAL SUPERVISOR
HAN-BIN LIANG
STATE OF CALIFORNIA - DEPARTMENT OF TRANSPORTATION
Caltrans

LAST REVISION 11-10-09 | DATE PLOTTED => 19-NOV-2009 | TIME PLOTTED => 11:11

Dist	COUNTY	ROUTE	POST MILES TOTAL PROJECT	SHEET No.	TOTAL SHEETS
04	Ala	680	4.8/5.2	11	66

Ulysses Hillard 7/20/09
REGISTERED CIVIL ENGINEER DATE

11-16-09
PLANS APPROVAL DATE

REGISTERED PROFESSIONAL ENGINEER
ULYSSES HILLARD
No. C 64873
Exp. 6/30/11
CIVIL
STATE OF CALIFORNIA

THE STATE OF CALIFORNIA OR ITS OFFICERS OR AGENTS SHALL NOT BE RESPONSIBLE FOR THE ACCURACY OR COMPLETENESS OF SCANNED COPIES OF THIS PLAN SHEET.

WRECO
1814 FRANKLIN STREET
SUITE 608
OAKLAND, CA 94612

CALTRANS
111 GRAND AVENUE
OAKLAND, CA 94612

TEMPORARY WATER POLLUTION CONTROL QUANTITIES

SHEET	TEMPORARY DRAINAGE INLET PROTECTION	TEMPORARY SILT FENCE	TEMPORARY COVER	TEMPORARY CONSTRUCTION ENTRANCE	TEMPORARY FIBER ROLL	TEMPORARY CONCRETE WASHOUT BIN	TEMPORARY CREEK DIVERSION
	EA	LF	SQYD	EA	LF	EA	EA
WPC-1	4	2481.9	—	1	2005.1	1	—
WPC-2	1	2994.7	351.4	1	2206.5	—	2
TOTAL	5	5476.6	351.4	2	4211.6	1	2

WATER POLLUTION CONTROL QUANTITIES

NO SCALE

WPCQ-1

STATE OF CALIFORNIA - DEPARTMENT OF TRANSPORTATION
Caltrans

CONSULTANT FUNCTIONAL SUPERVISOR: HAN-BIN LIANG
CALCULATED-DESIGNED BY: TERENCE XIAO
CHECKED BY: ULYSSES HILLARD
REVISED BY
DATE REVISED

LAST REVISION 00-00-00
DATE PLOTTED => 19-NOV-2009
TIME PLOTTED => 11:11

FOR COMPLETE RIGHT OF WAY AND ACCURATE ACCESS DATA, SEE RIGHT OF WAY RECORD MAPS AT DISTRICT OFFICE.

Dist	COUNTY	ROUTE	POST MILES TOTAL PROJECT	SHEET No.	TOTAL SHEETS
04	Ala	680	4.8/5.2	12	66

LICENSED LANDSCAPE ARCHITECT

11-16-09
PLANS APPROVAL DATE

LICENSED LANDSCAPE ARCHITECT — SALLY BANG No. 5080 — Signature — 11-30-11 Renewal Date — Date — STATE OF CALIFORNIA

THE STATE OF CALIFORNIA OR ITS OFFICERS OR AGENTS SHALL NOT BE RESPONSIBLE FOR THE ACCURACY OR COMPLETENESS OF SCANNED COPIES OF THIS PLAN SHEET.

NOTE:

1. EXACT LIMITS OF WORK OR DEPLOYMENT OF EROSION CONTROL MATERIALS SHALL BE DETERMINED BY THE ENGINEER.
2. SEE LAYOUT PLANS FOR LOCATIONS OF ENVIRONMENTALLY SENSITIVE AREA (ESA) AND TEMPORARY FENCE (TYPE ESA).

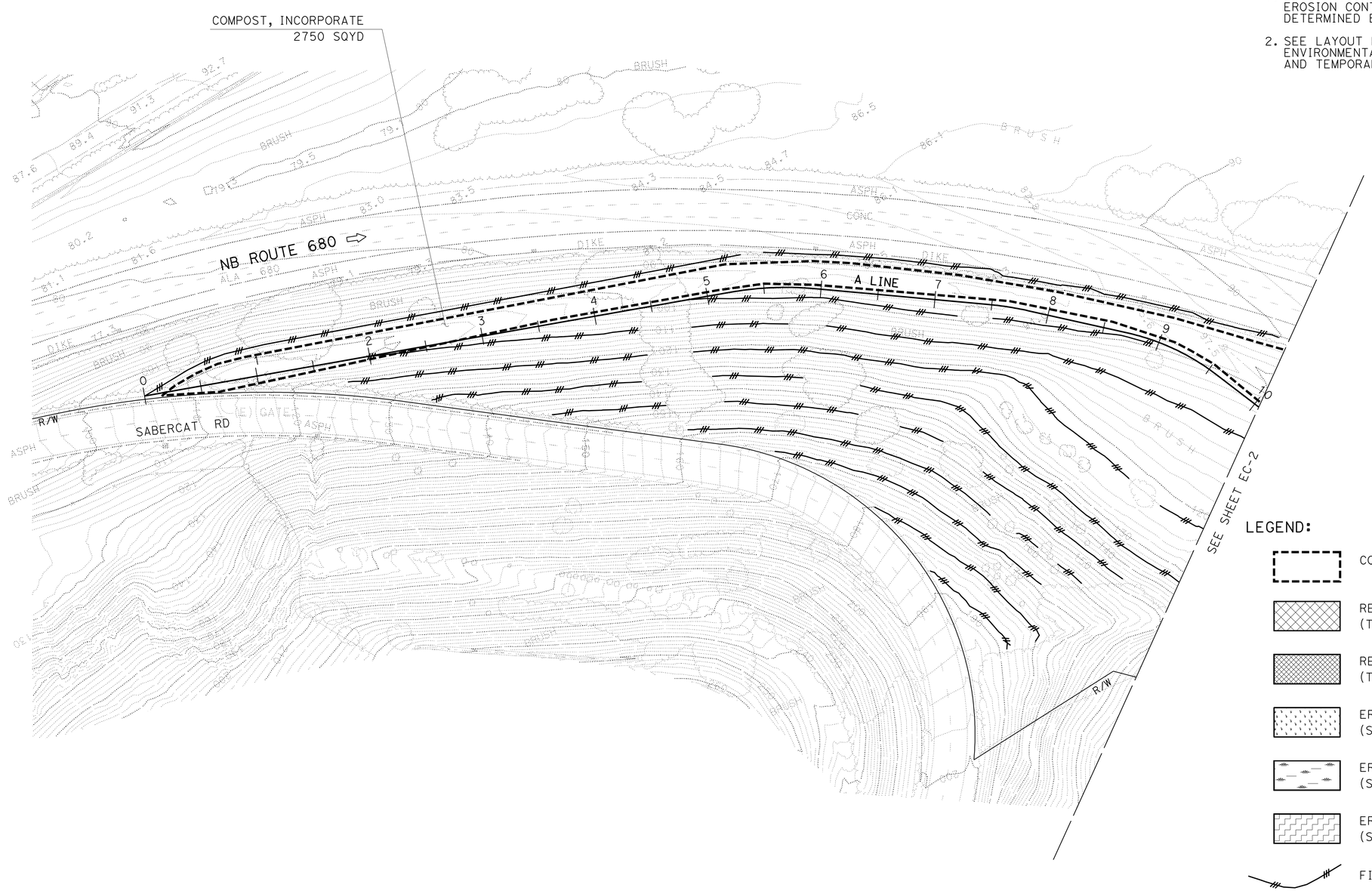

LEGEND:

- COMPOST, INCORPORATE
- RECP (NETTING) (TYPE A)
- RECP (NETTING) (TYPE C)
- EROSION CONTROL (HYDROSEED) (SEED MIX TYPE 1)
- EROSION CONTORL (HYDROSEED) (SEED MIX TYPE 2)
- EROSION CONTROL (HYDROSEED) (SEED MIX TYPE 3)
- FIBER ROLL

THIS PLAN ACCURATE FOR EROSION CONTROL WORK ONLY.

EROSION CONTROL PLAN

SCALE 1''=50'

EC-1

REVISED BY	DATE REVISED

CALCULATED-DESIGNED BY	CHECKED BY
ANGELA KWAN	SALLY BANG

SENIOR LANDSCAPE ARCHITECT: DAVID W. YAM

STATE OF CALIFORNIA - DEPARTMENT OF TRANSPORTATION

Caltrans®

WATER QUALITY

LAST REVISION 08-10-09

DATE PLOTTED => 19-NOV-2009
TIME PLOTTED => 11:12

Dist	COUNTY	ROUTE	POST MILES TOTAL PROJECT	SHEET No.	TOTAL SHEETS
04	Ala	680	4.8/5.2	13	66

LICENSED LANDSCAPE ARCHITECT

11-16-09
PLANS APPROVAL DATE

LICENSED LANDSCAPE ARCHITECT — SALLY BANG No. 5262 — Signature — 11-30-11 Renewal Date — Date — STATE OF CALIFORNIA

THE STATE OF CALIFORNIA OR ITS OFFICERS OR AGENTS SHALL NOT BE RESPONSIBLE FOR THE ACCURACY OR COMPLETENESS OF SCANNED COPIES OF THIS PLAN SHEET.

FOR COMPLETE RIGHT OF WAY AND ACCURATE ACCESS DATA, SEE RIGHT OF WAY RECORD MAPS AT DISTRICT OFFICE.

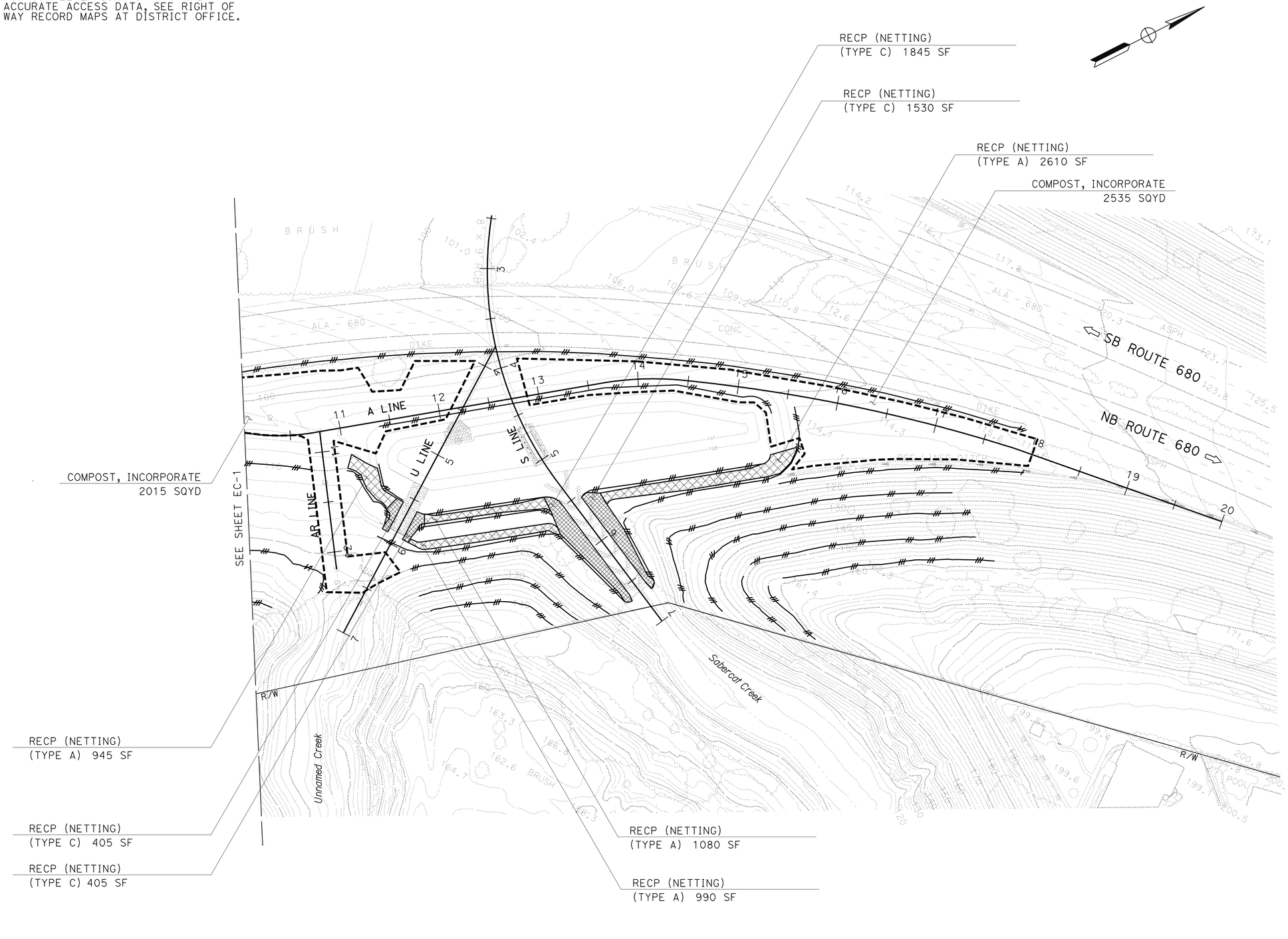

THIS PLAN ACCURATE FOR EROSION CONTROL WORK ONLY.

EROSION CONTROL PLAN

SCALE 1''=50'

EC-2

STATE OF CALIFORNIA - DEPARTMENT OF TRANSPORTATION
Caltrans®
WATER QUALITY

SENIOR LANDSCAPE ARCHITECT: DAVID W. YAM
CALCULATED-DESIGNED BY: SALLY BANG
CHECKED BY: ANGELA KWAN
REVISED BY
DATE REVISED

LAST REVISION: 08-10-09
DATE PLOTTED => 19-NOV-2009
TIME PLOTTED => 12:35

FOR COMPLETE RIGHT OF WAY AND ACCURATE ACCESS DATA, SEE RIGHT OF WAY RECORD MAPS AT DISTRICT OFFICE.

Dist	COUNTY	ROUTE	POST MILES TOTAL PROJECT	SHEET No.	TOTAL SHEETS
04	Ala	680	4.8/5.2	14	66

LICENSED LANDSCAPE ARCHITECT

11-16-09
PLANS APPROVAL DATE

LICENSED LANDSCAPE ARCHITECT
SALLY BANG No. 5080
Signature
11-30-11
Renewal Date
Date
STATE OF CALIFORNIA

THE STATE OF CALIFORNIA OR ITS OFFICERS OR AGENTS SHALL NOT BE RESPONSIBLE FOR THE ACCURACY OR COMPLETENESS OF SCANNED COPIES OF THIS PLAN SHEET.

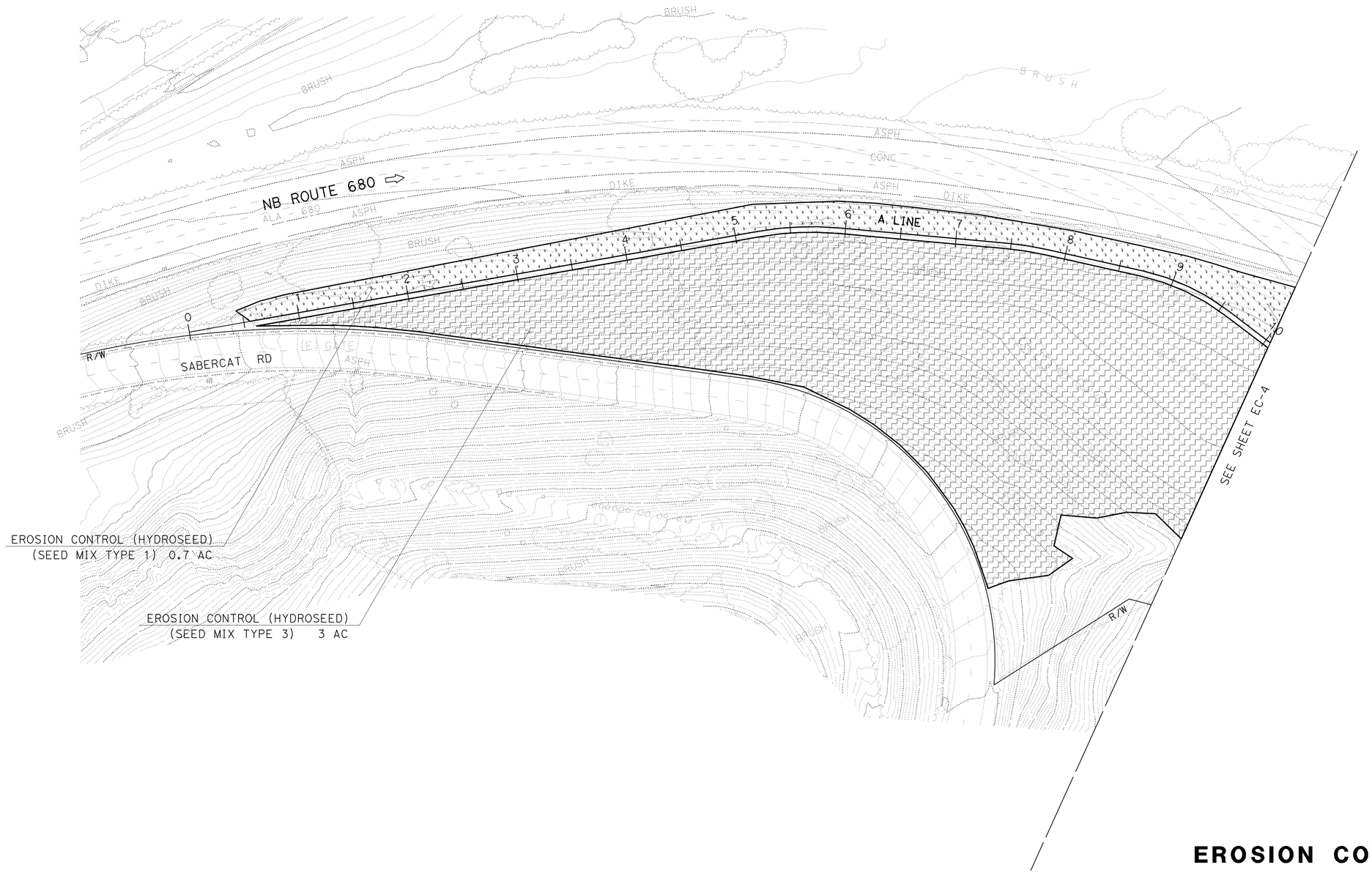

THIS PLAN ACCURATE FOR EROSION CONTROL WORK ONLY.

EROSION CONTROL PLAN

SCALE 1''=50'

EC-3

STATE OF CALIFORNIA - DEPARTMENT OF TRANSPORTATION

Caltrans®

WATER QUALITY

SENIOR LANDSCAPE ARCHITECT: DAVID W. YAM

CALCULATED-DESIGNED BY: ANGELA KWAN

CHECKED BY: SALLY BANG

REVISED BY

DATE REVISED

LAST REVISION 08-10-09

DATE PLOTTED => 19-NOV-2009
TIME PLOTTED => 11:12

Dist	COUNTY	ROUTE	POST MILES TOTAL PROJECT	SHEET No.	TOTAL SHEETS
04	Ala	680	4.8/5.2	15	66

LICENSED LANDSCAPE ARCHITECT

11-16-09
PLANS APPROVAL DATE

LICENSED LANDSCAPE ARCHITECT
SALLY BANG No. 5080
Signature
11-30-11
Renewal Date
Date
STATE OF CALIFORNIA

THE STATE OF CALIFORNIA OR ITS OFFICERS OR AGENTS SHALL NOT BE RESPONSIBLE FOR THE ACCURACY OR COMPLETENESS OF SCANNED COPIES OF THIS PLAN SHEET.

FOR COMPLETE RIGHT OF WAY AND ACCURATE ACCESS DATA, SEE RIGHT OF WAY RECORD MAPS AT DISTRICT OFFICE.

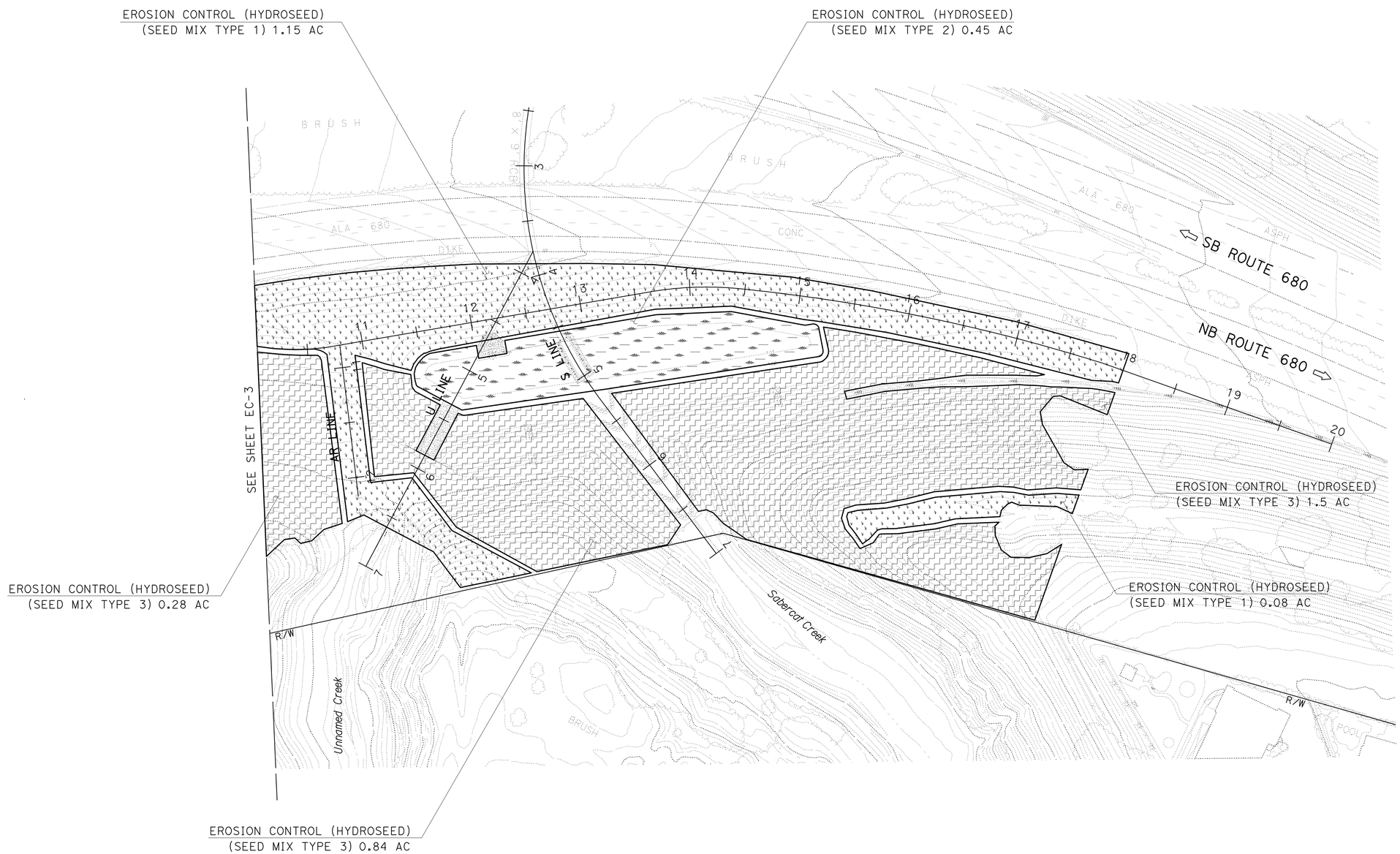

THIS PLAN ACCURATE FOR EROSION CONTROL WORK ONLY.

EROSION CONTROL PLAN

SCALE 1''=50'

EC-4

REVISED BY	
DATE REVISED	
ANGELA KWAN	
SALLY BANG	
CALCULATED-DESIGNED BY	
CHECKED BY	
SENIOR LANDSCAPE ARCHITECT	
DAVID W. YAM	

STATE OF CALIFORNIA - DEPARTMENT OF TRANSPORTATION
Caltrans®
WATER QUALITY

LAST REVISION 08-10-09
DATE PLOTTED => 19-NOV-2009
TIME PLOTTED => 12:35

Dist	COUNTY	ROUTE	POST MILES TOTAL PROJECT	SHEET No.	TOTAL SHEETS
04	Ala	680	4.8/5.2	16	66

LICENSED LANDSCAPE ARCHITECT

11-16-09
PLANS APPROVAL DATE

LICENSED LANDSCAPE ARCHITECT
SALLY BANG No. 5080
Signature
11-30-11
Renewal Date
Date
STATE OF CALIFORNIA

THE STATE OF CALIFORNIA OR ITS OFFICERS OR AGENTS SHALL NOT BE RESPONSIBLE FOR THE ACCURACY OR COMPLETENESS OF SCANNED COPIES OF THIS PLAN SHEET.

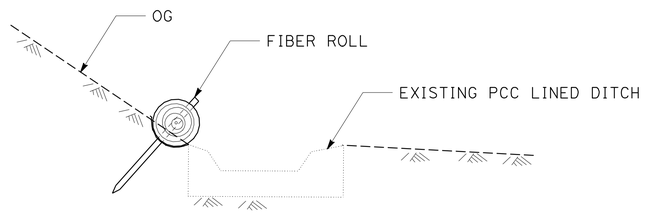

FIBER ROLL AT PCC LINED DITCH

EROSION CONTROL QUANTITIES

SHEET NO.	COMPOST INCORPORATE	RECP (NETTING) (TYPE A)	RECP (NETTING) (TYPE C)	EROSION CONTROL (HYDROSEED) (SEED MIX TYPE 1)	EROSION CONTROL (HYDROSEED) (SEED MIX TYPE 2)	EROSION CONTROL (HYDROSEED) (SEED MIX TYPE 3)	FIBER ROLLS
	SQYD	SF	SF	AC	AC	AC	LF
EC-1	2,750	-	-	-	-	-	4,760
EC-2	4,550	5625	4185	-	-	-	4,830
EC-3	-	-	-	0.7	-	3	-
EC-4	-	-	-	1.23	0.45	2.62	-
SUBTOTAL	7,300	5625	4185	1.93	0.45	5.62	9,590
TOTAL	7,300	9810		8			9,590

EROSION CONTROL DETAILS AND QUANTITIES

NO SCALE

ECD-1

STATE OF CALIFORNIA - DEPARTMENT OF TRANSPORTATION
Caltrans®
WATER QUALITY

SENIOR LANDSCAPE ARCHITECT: DAVID W. YAM

CALCULATED-DESIGNED BY: ANGELA KWAN
CHECKED BY: SALLY BANG

REVISED BY
DATE REVISED

LAST REVISION 08-10-09
DATE PLOTTED => 19-NOV-2009
TIME PLOTTED => 11:12

Dist	COUNTY	ROUTE	POST MILES TOTAL PROJECT	SHEET No.	TOTAL SHEETS
04	Ala	680	4.8/5.2	17	66

Ulysses Hillard 7/20/09
REGISTERED CIVIL ENGINEER DATE

11-16-09
PLANS APPROVAL DATE

REGISTERED PROFESSIONAL ENGINEER
ULYSSES HILLARD
No. C 64873
Exp. 6/30/11
CIVIL
STATE OF CALIFORNIA

THE STATE OF CALIFORNIA OR ITS OFFICERS OR AGENTS SHALL NOT BE RESPONSIBLE FOR THE ACCURACY OR COMPLETENESS OF SCANNED COPIES OF THIS PLAN SHEET.

WRECO
1814 FRANKLIN STREET
SUITE 608
OAKLAND, CA 94612

CALTRANS
111 GRAND AVENUE
OAKLAND, CA 94612

LEGEND:

- 2 — DRAINAGE SYSTEM No.
- d — DRAINAGE ITEM No.
- RSP
- BOULDER CROSS VANE
- ENVIRONMENTALLY SENSITIVE AREA

NOTES:

1. FOR COMPLETE RIGHT OF WAY AND ACCURATE ACCESS DATA, SEE RIGHT OF WAY RECORD MAPS AT DISTRICT OFFICE.
2. FOR UTILITIES NOT SHOWN ON THIS SHEET, SEE LAYOUT SHEETS.

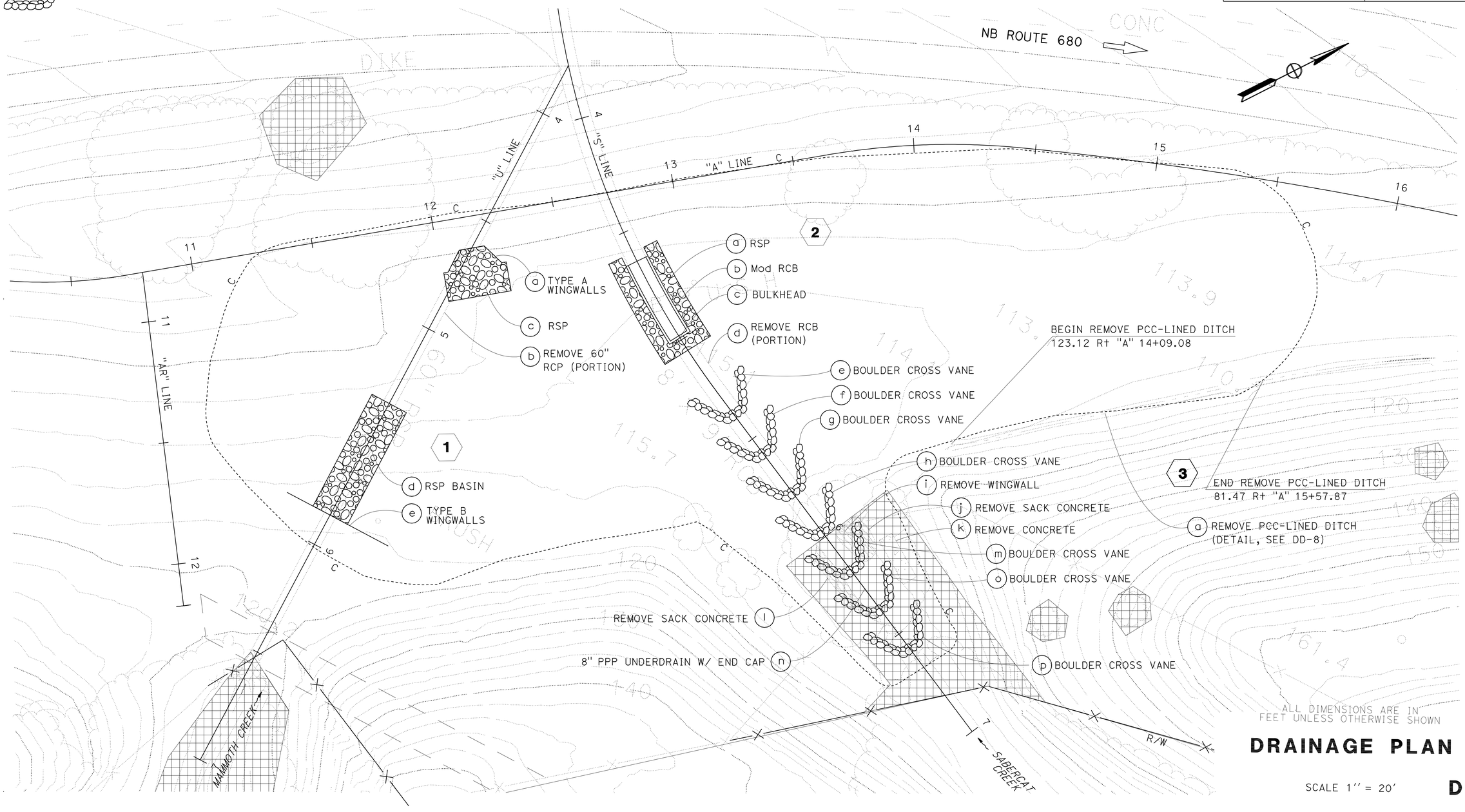

ALL DIMENSIONS ARE IN FEET UNLESS OTHERWISE SHOWN

DRAINAGE PLAN

SCALE 1'' = 20'

D-1

THIS PLAN ACCURATE FOR DRAINAGE WORK ONLY.

STATE OF CALIFORNIA - DEPARTMENT OF TRANSPORTATION
Caltrans

CONSULTANT FUNCTIONAL SUPERVISOR: HAN-BIN LIANG
CALCULATED-DESIGNED BY: TERENCE XIAO
CHECKED BY: ULYSSES HILLARD
REVISED BY
DATE REVISED

LAST REVISION: DATE PLOTTED => 19-NOV-2009
11-10-09 TIME PLOTTED => 11:13

Dist	COUNTY	ROUTE	POST MILES TOTAL PROJECT	SHEET No.	TOTAL SHEETS
04	Ala	680	4.8/5.2	18	66

Ulysses Hillard 7/20/09
REGISTERED CIVIL ENGINEER DATE

11-16-09
PLANS APPROVAL DATE

REGISTERED PROFESSIONAL ENGINEER ULYSSES HILLARD No. C 64873 Exp. 6/30/11 CIVIL STATE OF CALIFORNIA

THE STATE OF CALIFORNIA OR ITS OFFICERS OR AGENTS SHALL NOT BE RESPONSIBLE FOR THE ACCURACY OR COMPLETENESS OF SCANNED COPIES OF THIS PLAN SHEET.

WRECO
1814 FRANKLIN STREET
SUITE 608
OAKLAND, CA 94612

CALTRANS
111 GRAND AVENUE
OAKLAND, CA 94612

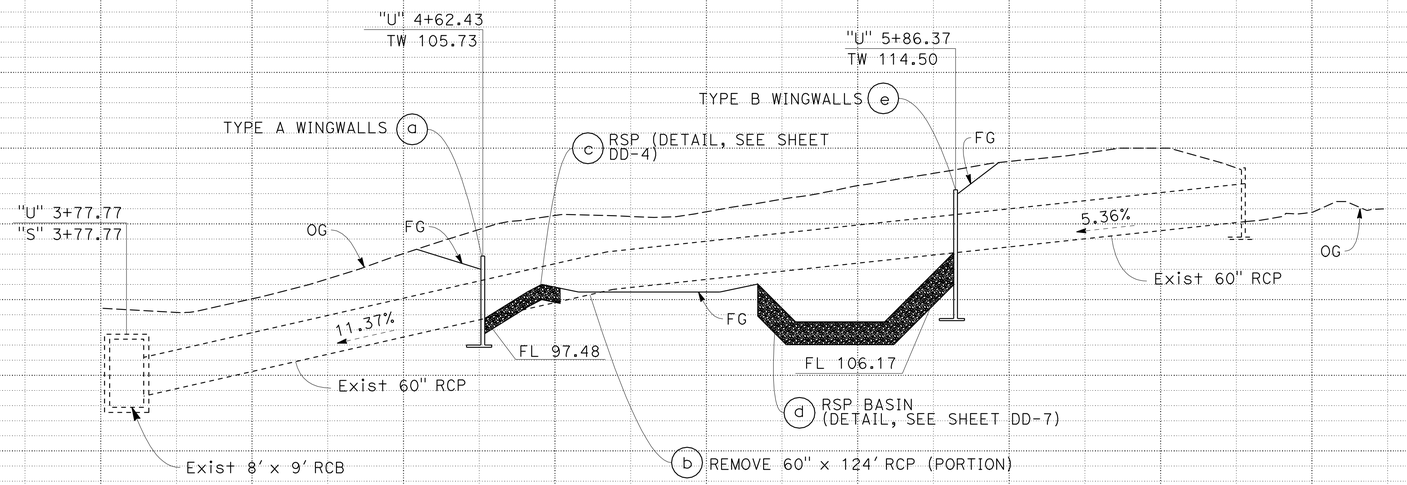

DRAINAGE SYSTEM No. 1

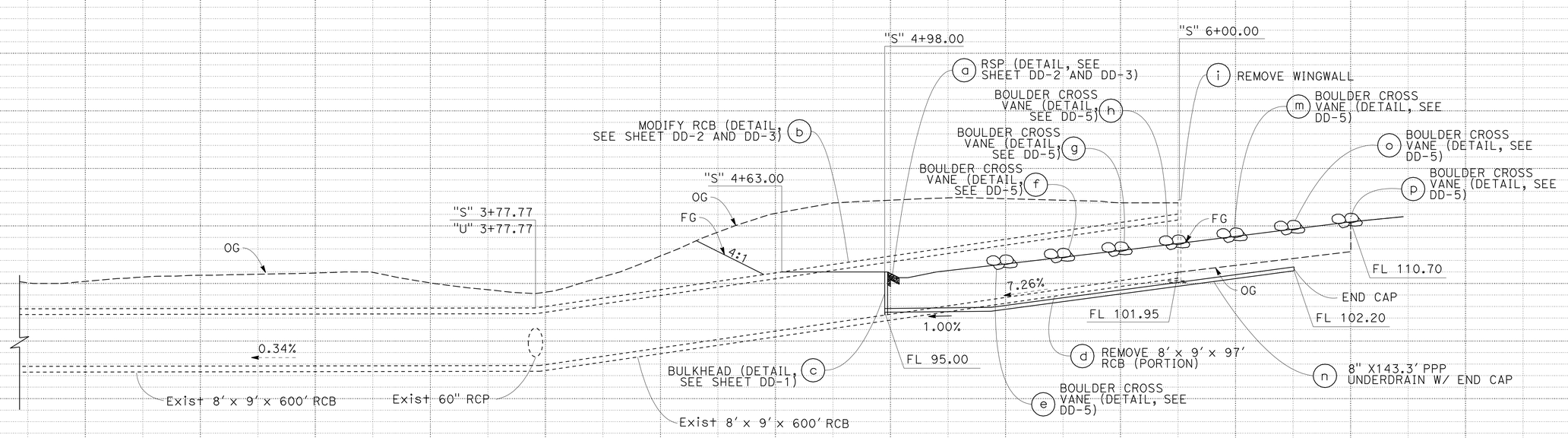

DRAINAGE SYSTEM No. 2

DRAINAGE PROFILE

SCALE Horiz 1:20
Vert 1:10

THIS PLAN ACCURATE FOR DRAINAGE WORK ONLY.

DP-1

STATION		TOTAL
CY	Exc	
	Emb	

REVISED BY | DATE REVISED
TERENCE XIAO | ULYSSES HILLARD
CALCULATED-DESIGNED BY | CHECKED BY
CONSULTANT FUNCTIONAL SUPERVISOR
HAN-BIN LIANG
STATE OF CALIFORNIA - DEPARTMENT OF TRANSPORTATION
Caltrans

LAST REVISION 00-00-00 | DATE PLOTTED => 19-NOV-2009 | TIME PLOTTED => 11:13

Dist	COUNTY	ROUTE	POST MILES TOTAL PROJECT	SHEET No.	TOTAL SHEETS
04	Ala	680	4.8/5.2	19	66

Ulysses Hillard 7/20/09
REGISTERED CIVIL ENGINEER DATE

11-16-09
PLANS APPROVAL DATE

REGISTERED PROFESSIONAL ENGINEER
ULYSSES HILLARD
No. C 64873
Exp. 6/30/11
CIVIL
STATE OF CALIFORNIA

THE STATE OF CALIFORNIA OR ITS OFFICERS OR AGENTS SHALL NOT BE RESPONSIBLE FOR THE ACCURACY OR COMPLETENESS OF SCANNED COPIES OF THIS PLAN SHEET.

WRECO
1814 FRANKLIN STREET
SUITE 608
OAKLAND, CA 94612

CALTRANS
111 GRAND AVENUE
OAKLAND, CA 94612

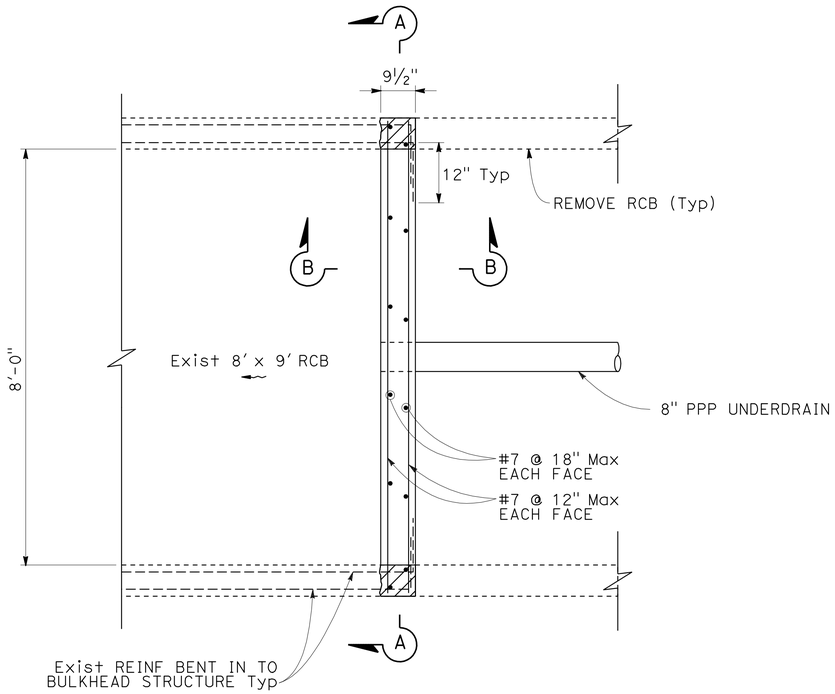

PLAN

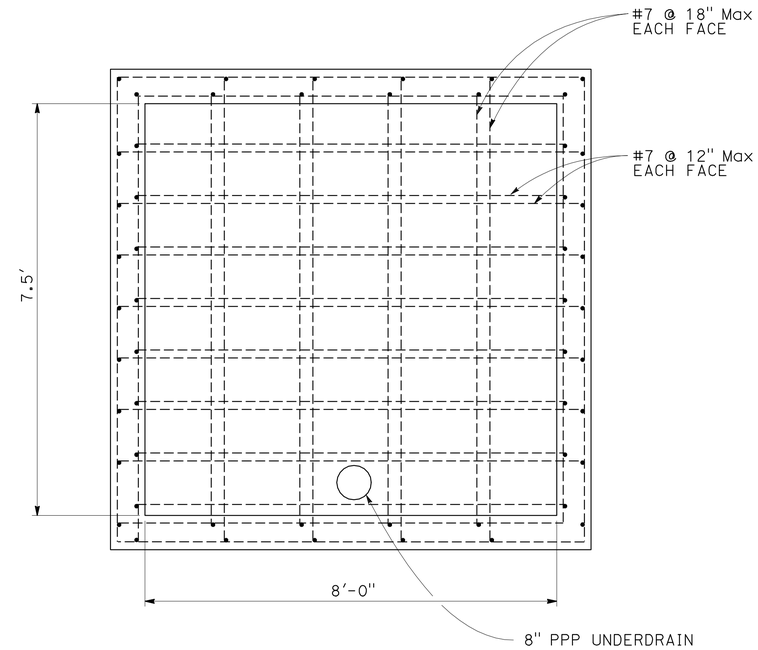

SECTION A-A

BULKHEAD

2 C

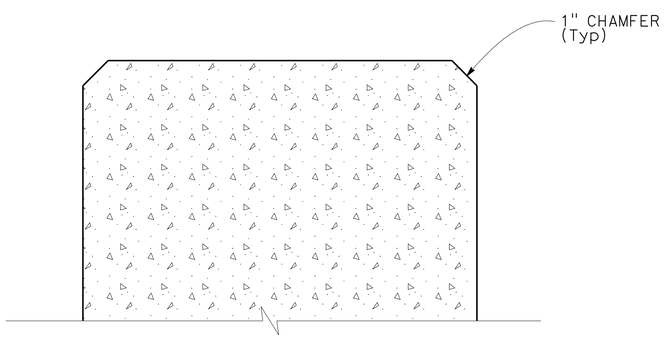

SECTION B-B

DRAINAGE DETAILS

NO SCALE

DD-1

STATE OF CALIFORNIA - DEPARTMENT OF TRANSPORTATION
Caltrans

CONSULTANT FUNCTIONAL SUPERVISOR: HAN-BIN LIANG
CALCULATED-DESIGNED BY: TERENCE XIAO
CHECKED BY: ULYSSES HILLARD
REVISED BY
DATE REVISED

LAST REVISION 00-00-00
DATE PLOTTED => 19-NOV-2009
TIME PLOTTED => 11:13

Dist	COUNTY	ROUTE	POST MILES TOTAL PROJECT	SHEET No.	TOTAL SHEETS
04	Ala	680	4.8/5.2	20	66

Ulysses Hillard 7/20/09
REGISTERED CIVIL ENGINEER DATE

11-16-09
PLANS APPROVAL DATE

REGISTERED PROFESSIONAL ENGINEER ULYSSES HILLARD No. C 64873 Exp. 6/30/11 CIVIL STATE OF CALIFORNIA

THE STATE OF CALIFORNIA OR ITS OFFICERS OR AGENTS SHALL NOT BE RESPONSIBLE FOR THE ACCURACY OR COMPLETENESS OF SCANNED COPIES OF THIS PLAN SHEET.

WRECO
1814 FRANKLIN STREET
SUITE 608
OAKLAND, CA 94612

CALTRANS
111 GRAND AVENUE
OAKLAND, CA 94612

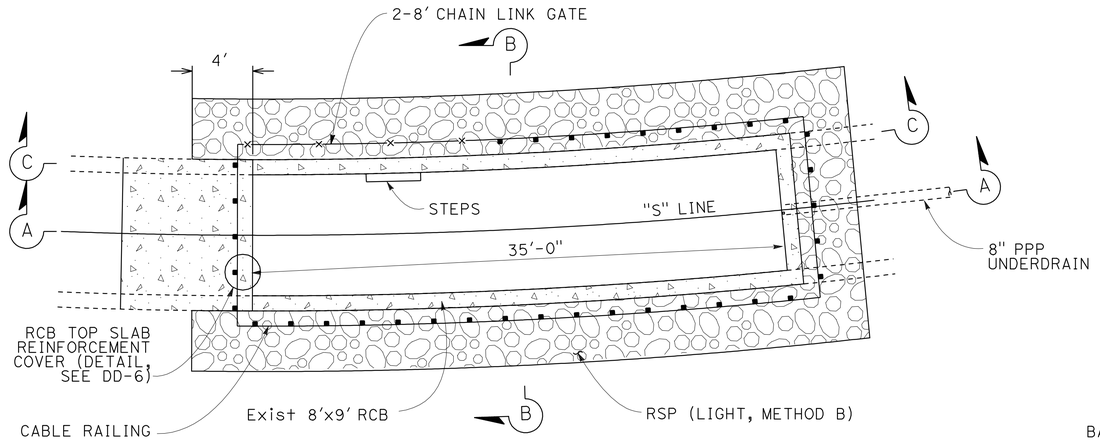

PLAN

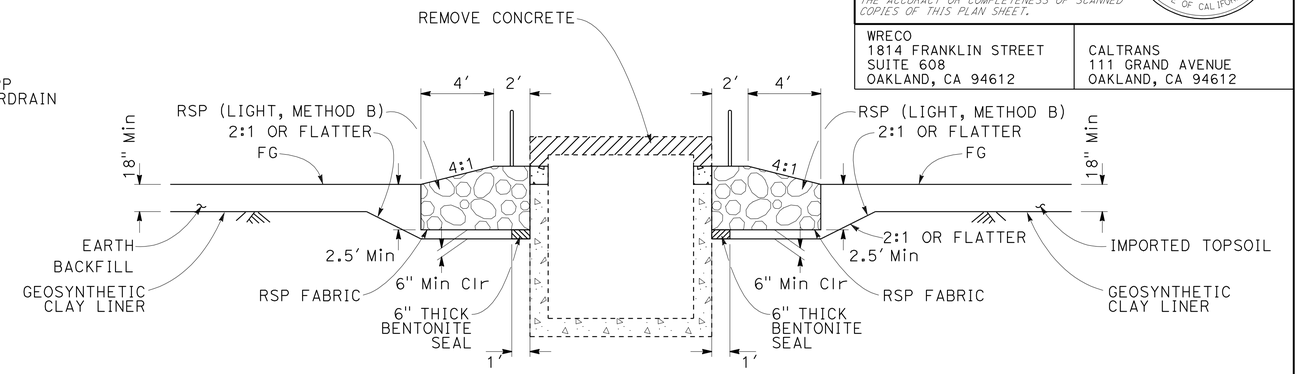

SECTION B-B

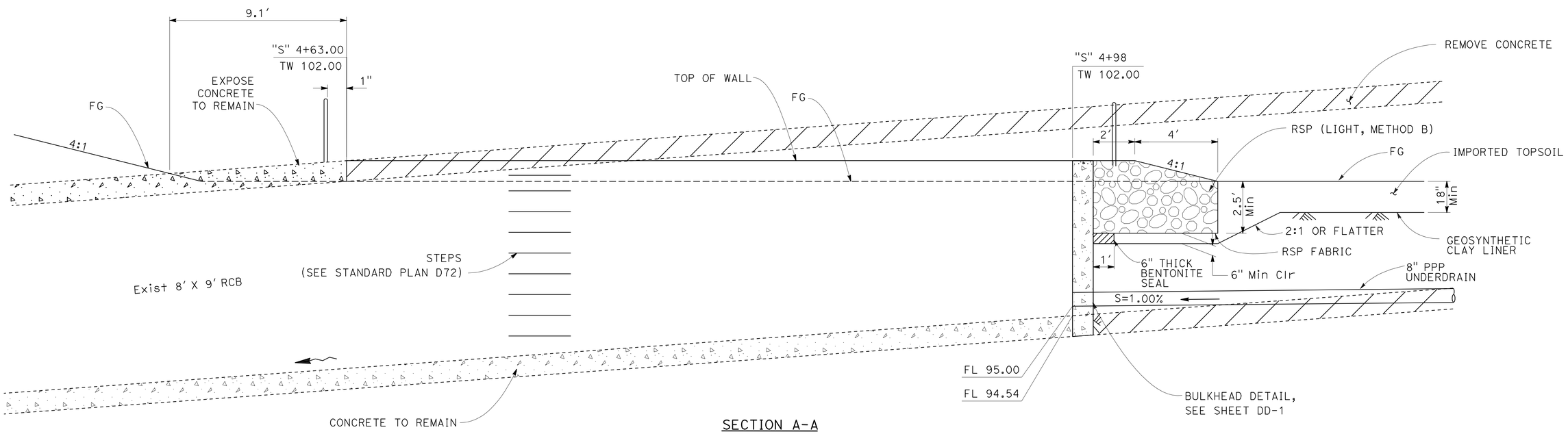

SECTION A-A

MOD RCB (RCB INLET) / RSP AT RCB INLET

2 a b

NOTES:

1. RSP FABRIC TO BE PLACED ON ALL SIDES EXCEPT FOR TOP SIDE OF ALL RSP.
2. FILL VOIDS IN ALL RSP WITH NATIVE SOIL.
3. BENTONITE SEAL SHOULD BE AT LEAST 6" THICK AND SHOULD SEAL AT LEAST 1' OF GEOSYNTHETIC CLAY LINE AWAY FROM THE RCB WALLS
4. SPACE BETWEEN RSP AND GEOSYNTHETIC CLAY LINER SHOULD BE AT LEAST 6" EVERYWHERE.
5. REFER TO CONSTRUCTION DETAILS SHEETS FOR FENCE LOCATION AND DETAIL.

DRAINAGE DETAILS

NO SCALE

DD-2

STATE OF CALIFORNIA - DEPARTMENT OF TRANSPORTATION
Caltrans

CONSULTANT FUNCTIONAL SUPERVISOR: HAN-BIN LIANG
CALCULATED-DESIGNED BY: TERENCE XIAO
CHECKED BY: ULYSSES HILLARD
REVISED BY
DATE REVISED

LAST REVISION 00-00-00
DATE PLOTTED => 19-NOV-2009
TIME PLOTTED => 11:13

Dist	COUNTY	ROUTE	POST MILES TOTAL PROJECT	SHEET No.	TOTAL SHEETS
04	Ala	680	4.8/5.2	21	66

Ulysses Hillard 7/20/09
REGISTERED CIVIL ENGINEER DATE

11-16-09
PLANS APPROVAL DATE

REGISTERED PROFESSIONAL ENGINEER
ULYSSES HILLARD
No. C 64873
Exp. 6/30/11
CIVIL
STATE OF CALIFORNIA

THE STATE OF CALIFORNIA OR ITS OFFICERS OR AGENTS SHALL NOT BE RESPONSIBLE FOR THE ACCURACY OR COMPLETENESS OF SCANNED COPIES OF THIS PLAN SHEET.

WRECO
1814 FRANKLIN STREET
SUITE 608
OAKLAND, CA 94612

CALTRANS
111 GRAND AVENUE
OAKLAND, CA 94612

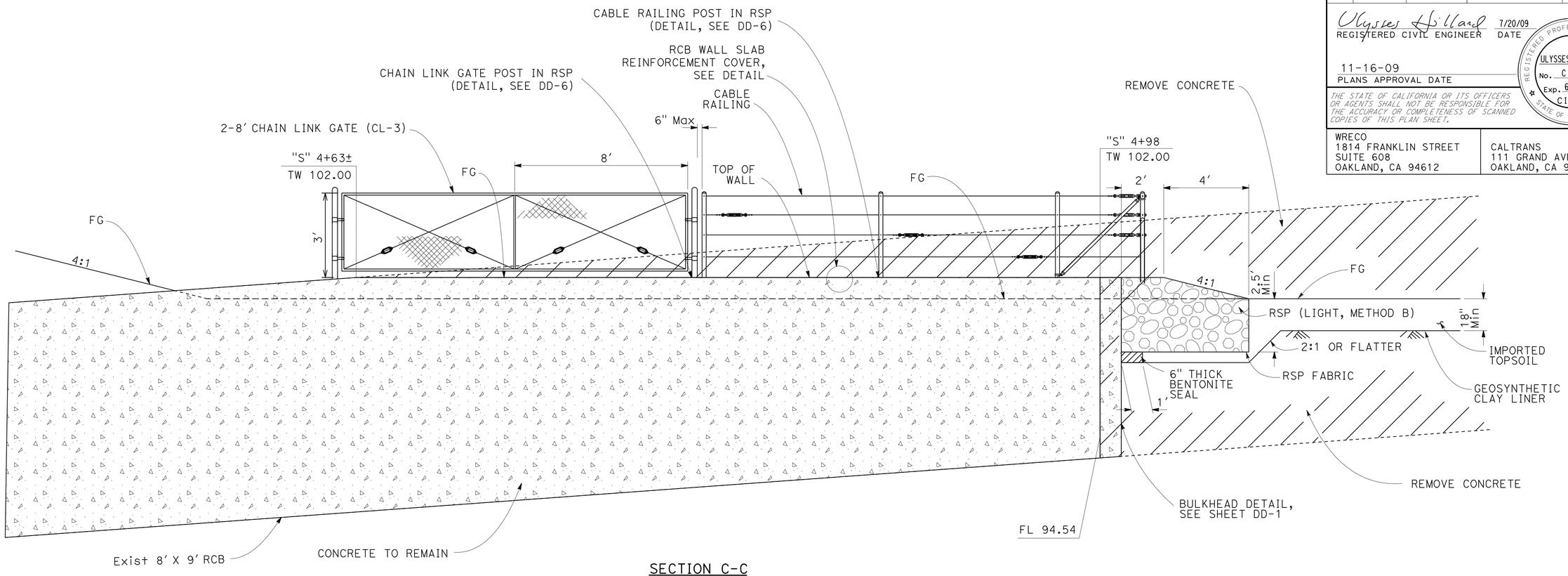

SECTION C-C

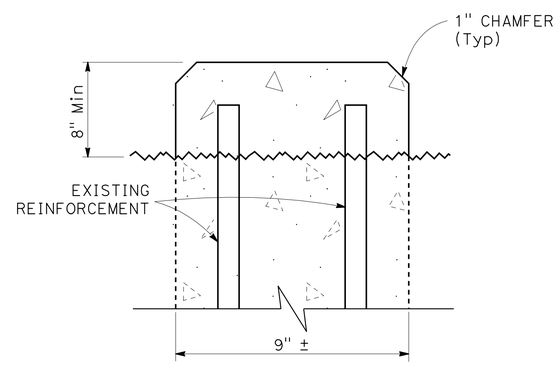

SECTION D-D

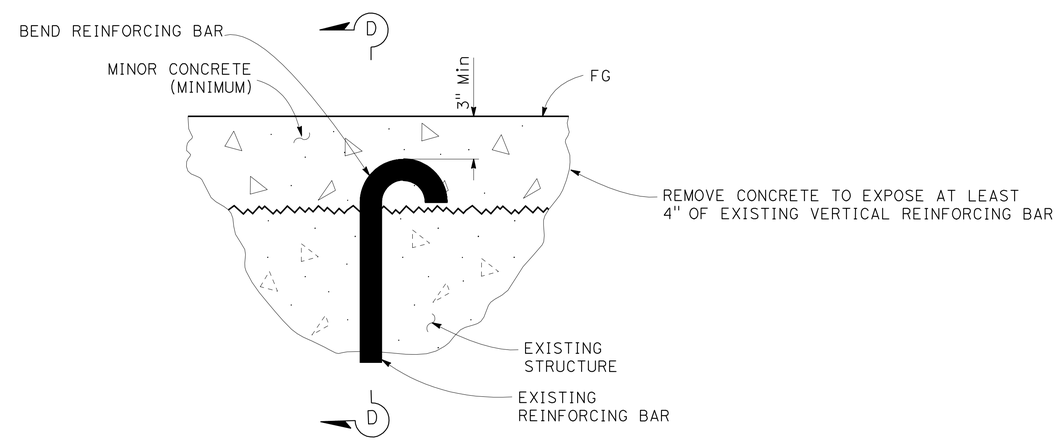

RCB WALL SLAB REINFORCEMENT COVER

MOD RCB (RCB INLET) / RSP AT RCB INLET

2 a b

NOTES:
1. FOR CHAIN LINK GATE DETAIL NOT SHOWN, SEE STANDARD PLAN A85
2. FOR CABLE RAILING DETAIL NOT SHOWN, SEE STANDARD PLAN B11-47

DRAINAGE DETAILS

NO SCALE

DD-3

STATE OF CALIFORNIA - DEPARTMENT OF TRANSPORTATION
Caltrans

CONSULTANT FUNCTIONAL SUPERVISOR: HAN-BIN LIANG
CALCULATED-DESIGNED BY: TERENCE XIAO
CHECKED BY: ULYSSES HILLARD
REVISED BY
DATE REVISED

LAST REVISION 00-00-00
DATE PLOTTED => 19-NOV-2009
TIME PLOTTED => 11:13

Dist	COUNTY	ROUTE	POST MILES TOTAL PROJECT	SHEET No.	TOTAL SHEETS
04	Ala	680	4.8/5.2	22	66

Ulysses Hillard 7/20/09
REGISTERED CIVIL ENGINEER DATE

11-16-09
PLANS APPROVAL DATE

REGISTERED PROFESSIONAL ENGINEER
ULYSSES HILLARD
No. C 64873
Exp. 6/30/11
CIVIL
STATE OF CALIFORNIA

THE STATE OF CALIFORNIA OR ITS OFFICERS OR AGENTS SHALL NOT BE RESPONSIBLE FOR THE ACCURACY OR COMPLETENESS OF SCANNED COPIES OF THIS PLAN SHEET.

WRECO
1814 FRANKLIN STREET
SUITE 608
OAKLAND, CA 94612

CALTRANS
111 GRAND AVENUE
OAKLAND, CA 94612

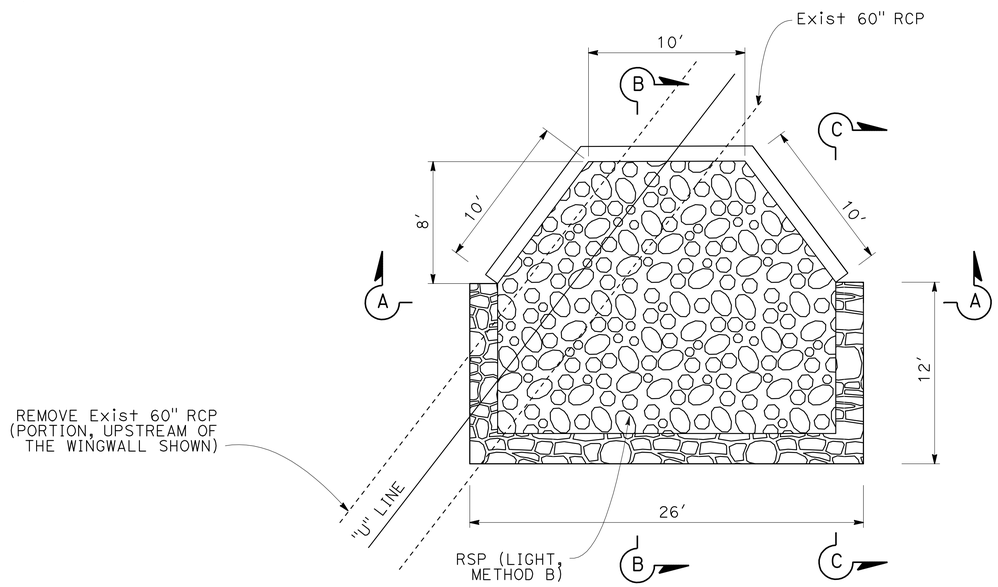

PLAN

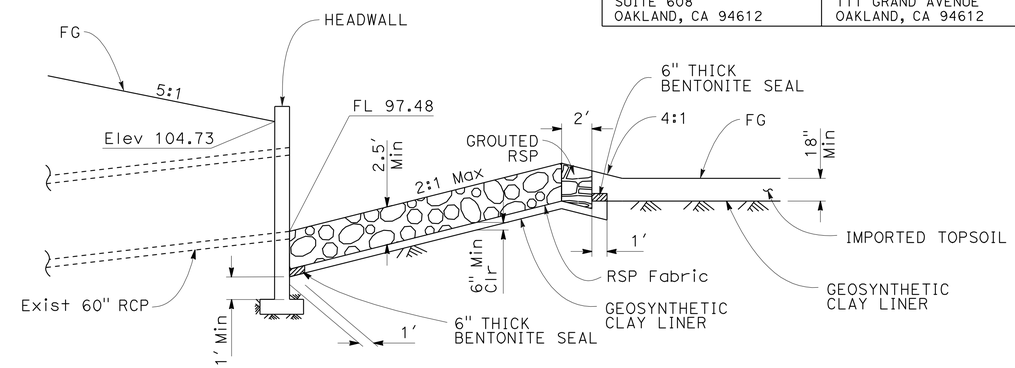

SECTION B-B

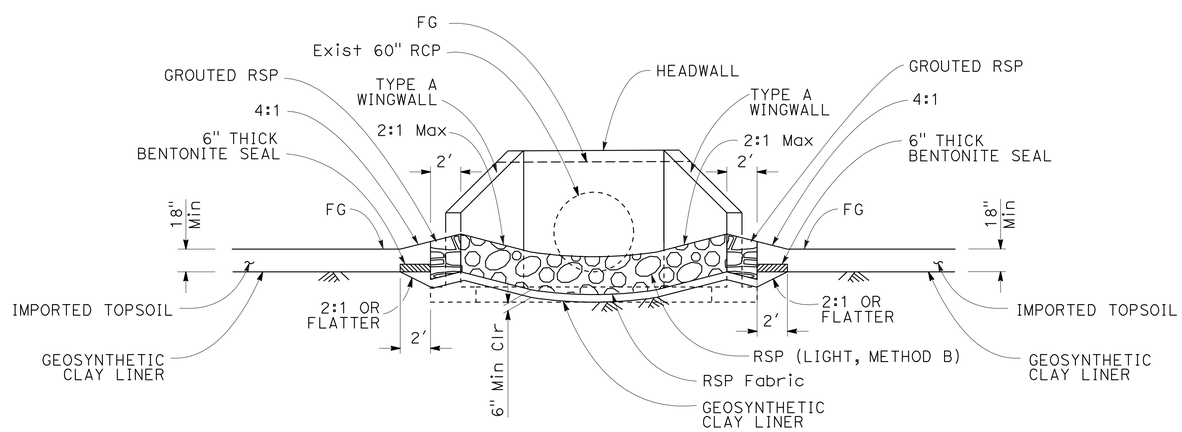

SECTION A-A

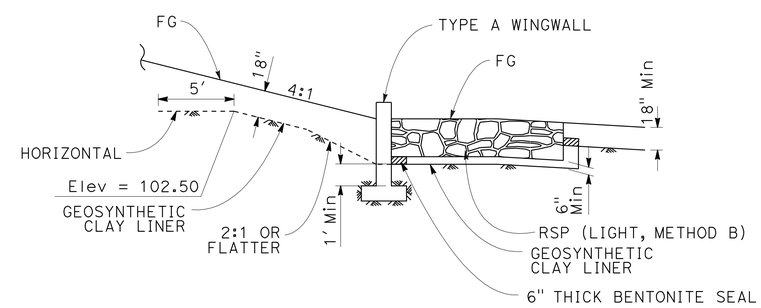

SECTION C-C

RSP AT WINGWALL INLET

1 C

NOTES:

1. RSP FABRIC TO BE PLACED ON ALL SIDES EXCEPT FOR TOP SIDE OF ALL RSP.
2. FILL VOIDS IN ALL RSP WITH NATIVE SOIL.
3. SPACE BETWEEN RSP AND GEOSYNTHETIC CLAY LINER SHOULD BE AT LEAST 6" EVERYWHERE.
4. FOR HEADWALL AND WINGWALL DETAILS NOT SHOWN, SEE STANDARD PLANS D90.

DRAINAGE DETAILS

NO SCALE

DD-4

REVISED BY | DATE REVISED
TERENCE XIAO | ULYSSES HILLARD
CALCULATED-DESIGNED BY | CHECKED BY
CONSULTANT FUNCTIONAL SUPERVISOR | HAN-BIN LIANG
STATE OF CALIFORNIA - DEPARTMENT OF TRANSPORTATION
Caltrans

LAST REVISION 00-00-00 | DATE PLOTTED => 19-NOV-2009 | TIME PLOTTED => 11:13

Dist	COUNTY	ROUTE	POST MILES TOTAL PROJECT	SHEET No.	TOTAL SHEETS
04	Ala	680	4.8/5.2	23	66

Ulysses Hillard 7/20/09
REGISTERED CIVIL ENGINEER DATE

11-16-09
PLANS APPROVAL DATE

REGISTERED PROFESSIONAL ENGINEER
ULYSSES HILLARD
No. C 64873
Exp. 6/30/11
CIVIL
STATE OF CALIFORNIA

THE STATE OF CALIFORNIA OR ITS OFFICERS OR AGENTS SHALL NOT BE RESPONSIBLE FOR THE ACCURACY OR COMPLETENESS OF SCANNED COPIES OF THIS PLAN SHEET.

WRECO
1814 FRANKLIN STREET
SUITE 608
OAKLAND, CA 94612

CALTRANS
111 GRAND AVENUE
OAKLAND, CA 94612

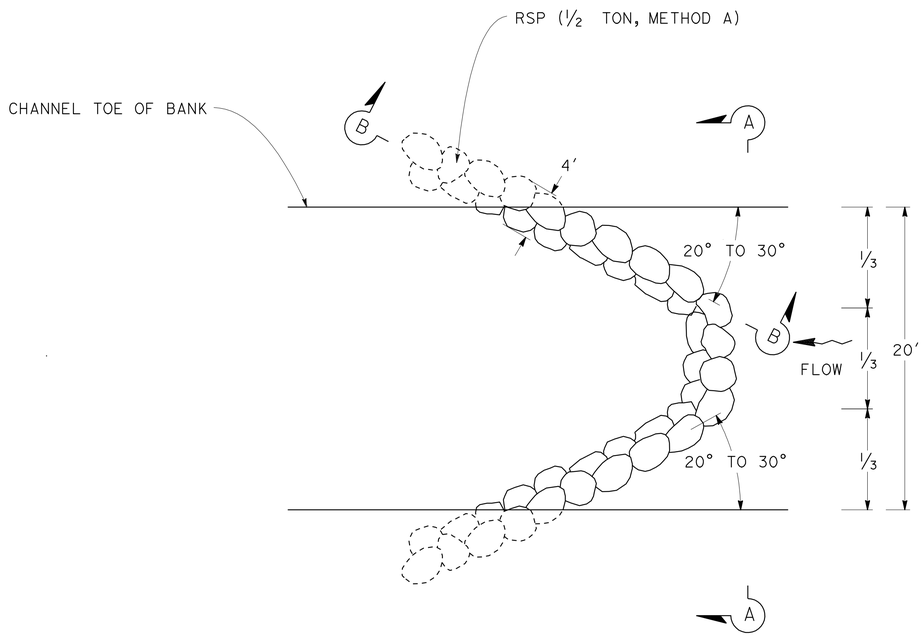

PLAN

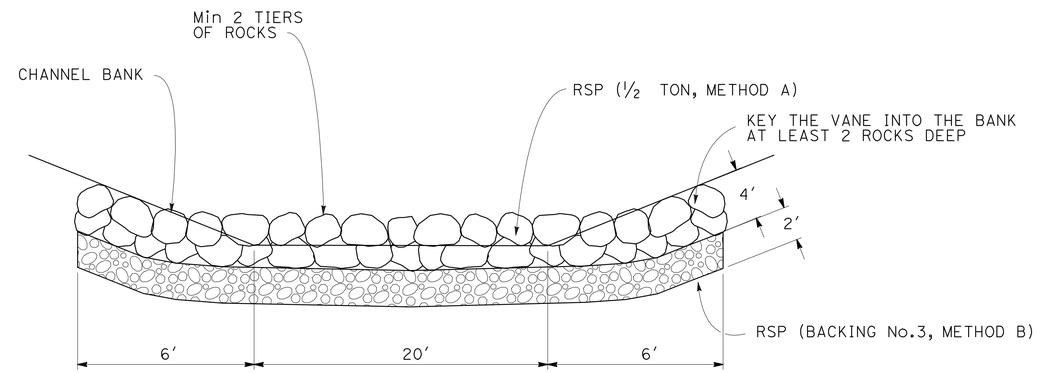

SECTION A-A

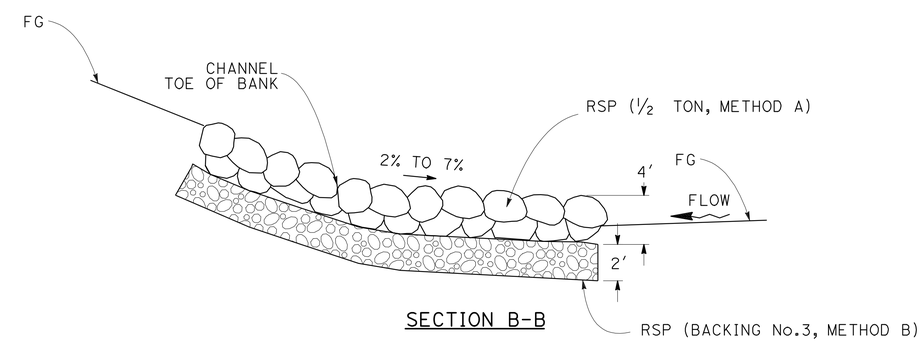

SECTION B-B

BOULDER CROSS VANE (SABERCAT CREEK)

2 e f g h m o p

NOTES:

1. RSP FABRIC TO BE PLACED ON ALL SIDES EXCEPT FOR TOP SIDE OF ALL RSP. SEE SHEET DD-4 FOR REFERENCE.
2. BOULDER CROSS VANES TO BE PLACED 20′ APART ALONG "S" LINE AT STATIONS 6+60, 6+40, 6+20, 6+00, 5+80, 5+60, 5+40, MEASURED FROM THE MOST UPSTREAM ROCK.

DRAINAGE DETAILS

NO SCALE

DD-5

STATE OF CALIFORNIA - DEPARTMENT OF TRANSPORTATION
Caltrans

CONSULTANT FUNCTIONAL SUPERVISOR: HAN-BIN LIANG
CALCULATED-DESIGNED BY: TERENCE XIAO
CHECKED BY: ULYSSES HILLARD
REVISED BY
DATE REVISED

LAST REVISION: 00-00-00
DATE PLOTTED => 19-NOV-2009
TIME PLOTTED => 11:13

Dist	COUNTY	ROUTE	POST MILES TOTAL PROJECT	SHEET No.	TOTAL SHEETS
04	Ala	680	4.8/5.2	24	66

Ulysses Hillard 7/20/09
REGISTERED CIVIL ENGINEER DATE

11-16-09
PLANS APPROVAL DATE

REGISTERED PROFESSIONAL ENGINEER ULYSSES HILLARD No. C 64873 Exp. 6/30/11 CIVIL STATE OF CALIFORNIA

THE STATE OF CALIFORNIA OR ITS OFFICERS OR AGENTS SHALL NOT BE RESPONSIBLE FOR THE ACCURACY OR COMPLETENESS OF SCANNED COPIES OF THIS PLAN SHEET.

WRECO
1814 FRANKLIN STREET
SUITE 608
OAKLAND, CA 94612

CALTRANS
111 GRAND AVENUE
OAKLAND, CA 94612

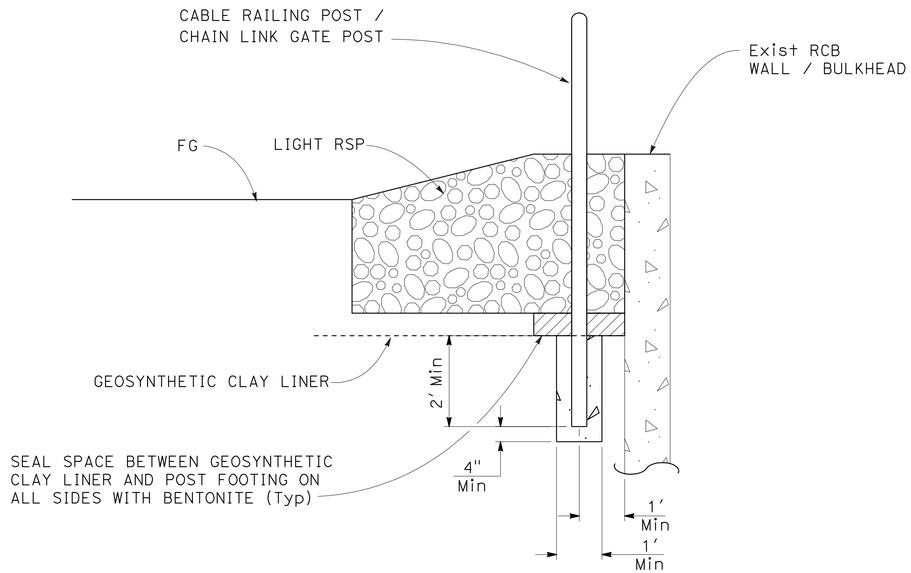

CABLE RAILING POST AND CHAIN LINK GATE POST IN RSP

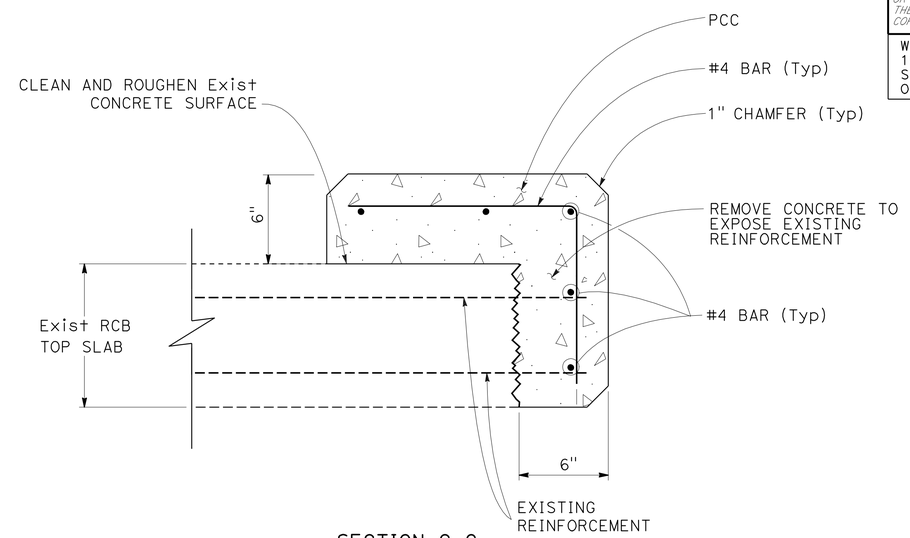

SECTION C-C

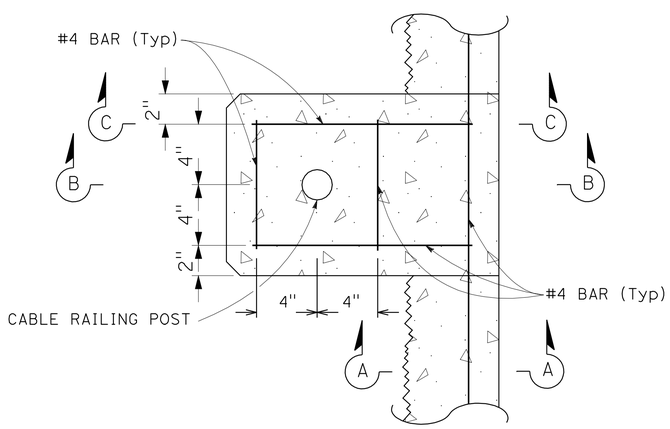

PLAN

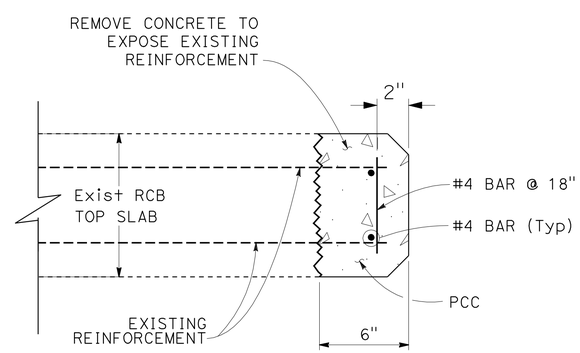

SECTION A-A

RCB TOP SLAB REINFORCEMENT COVER

2 b

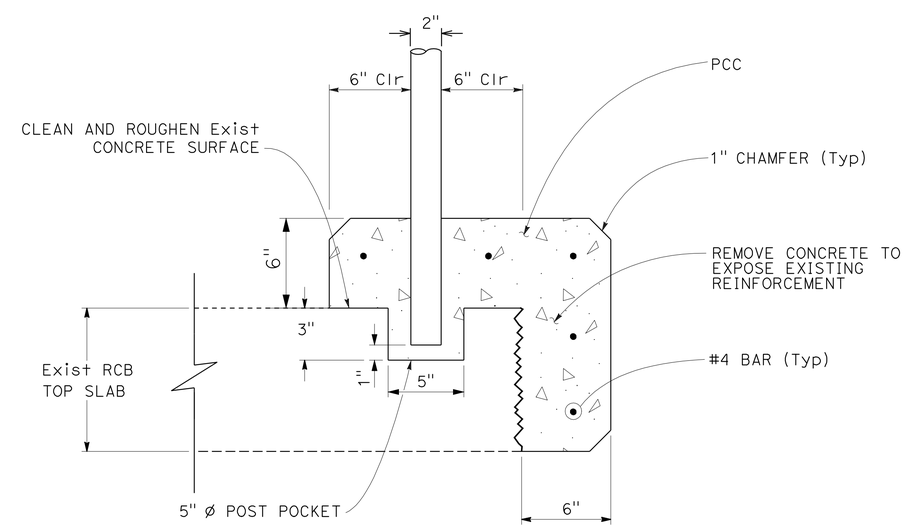

SECTION B-B

DRAINAGE DETAILS

NO SCALE

DD-6

STATE OF CALIFORNIA - DEPARTMENT OF TRANSPORTATION
Caltrans

CONSULTANT FUNCTIONAL SUPERVISOR: HAN-BIN LIANG
CALCULATED-DESIGNED BY: ULYSSES HILLARD
CHECKED BY: TERENCE XIAO
REVISED BY
DATE REVISED

LAST REVISION 11-10-09
DATE PLOTTED => 19-NOV-2009
TIME PLOTTED => 11:14

Dist	COUNTY	ROUTE	POST MILES TOTAL PROJECT	SHEET No.	TOTAL SHEETS
04	Ala	680	4.8/5.2	25	66

Ulysses Hillard 7/20/09
REGISTERED CIVIL ENGINEER DATE

11-16-09
PLANS APPROVAL DATE

REGISTERED PROFESSIONAL ENGINEER ULYSSES HILLARD No. C 64873 Exp. 6/30/11 CIVIL STATE OF CALIFORNIA

THE STATE OF CALIFORNIA OR ITS OFFICERS OR AGENTS SHALL NOT BE RESPONSIBLE FOR THE ACCURACY OR COMPLETENESS OF SCANNED COPIES OF THIS PLAN SHEET.

WRECO
1814 FRANKLIN STREET
SUITE 608
OAKLAND, CA 94612

CALTRANS
111 GRAND AVENUE
OAKLAND, CA 94612

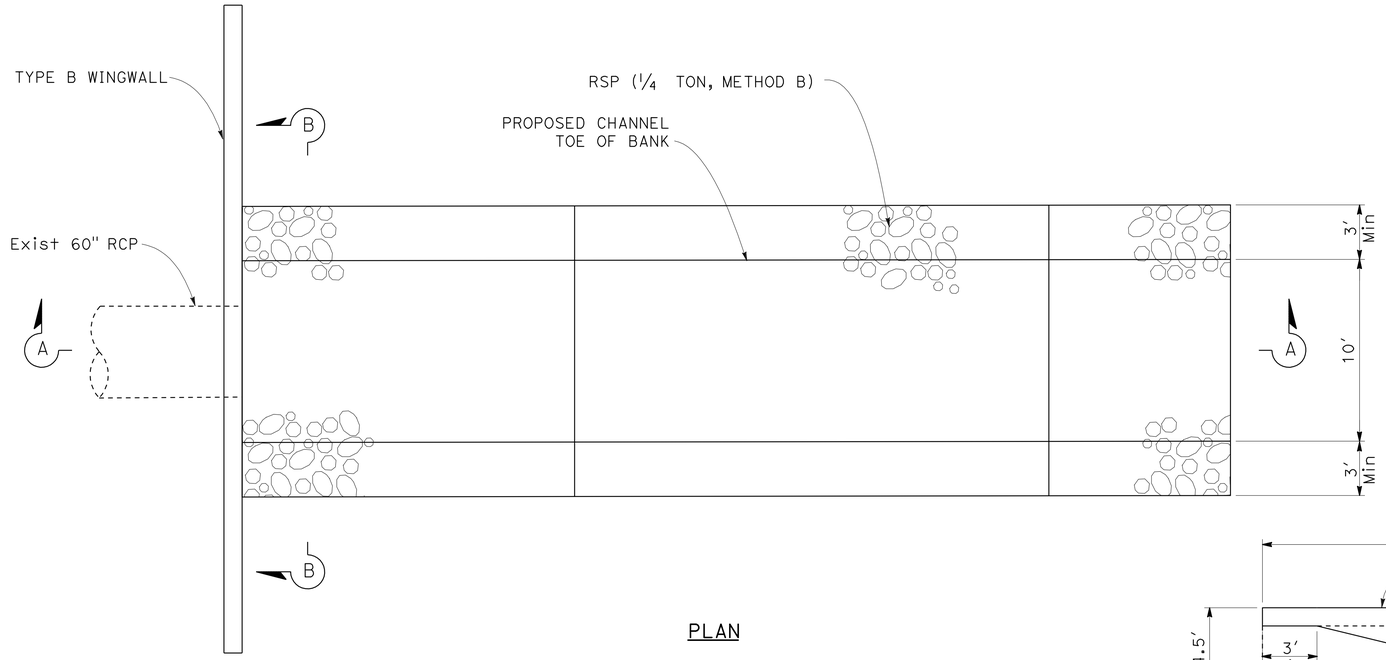

PLAN

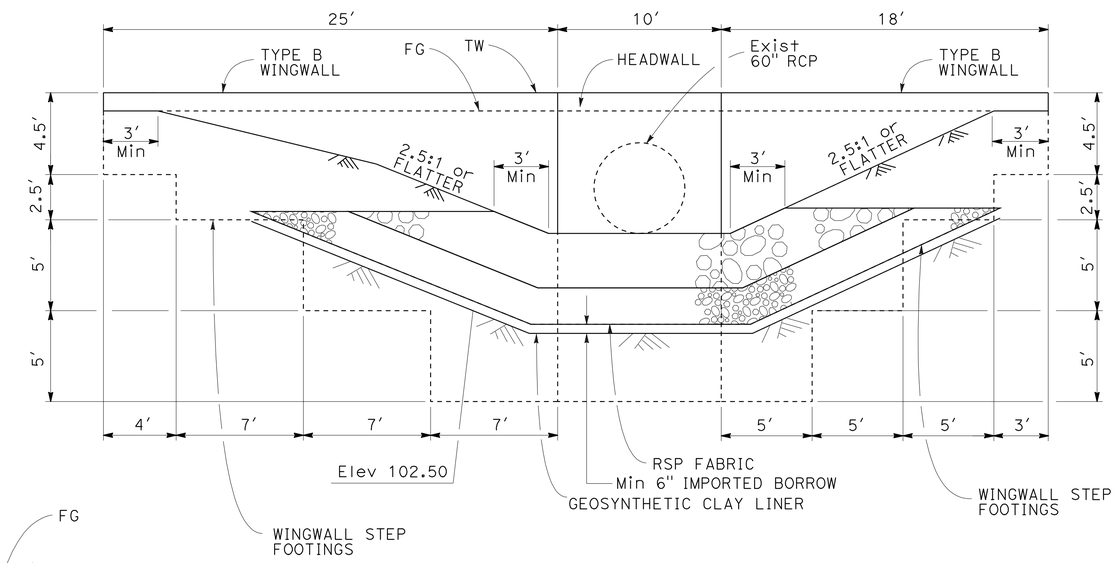

SECTION B-B

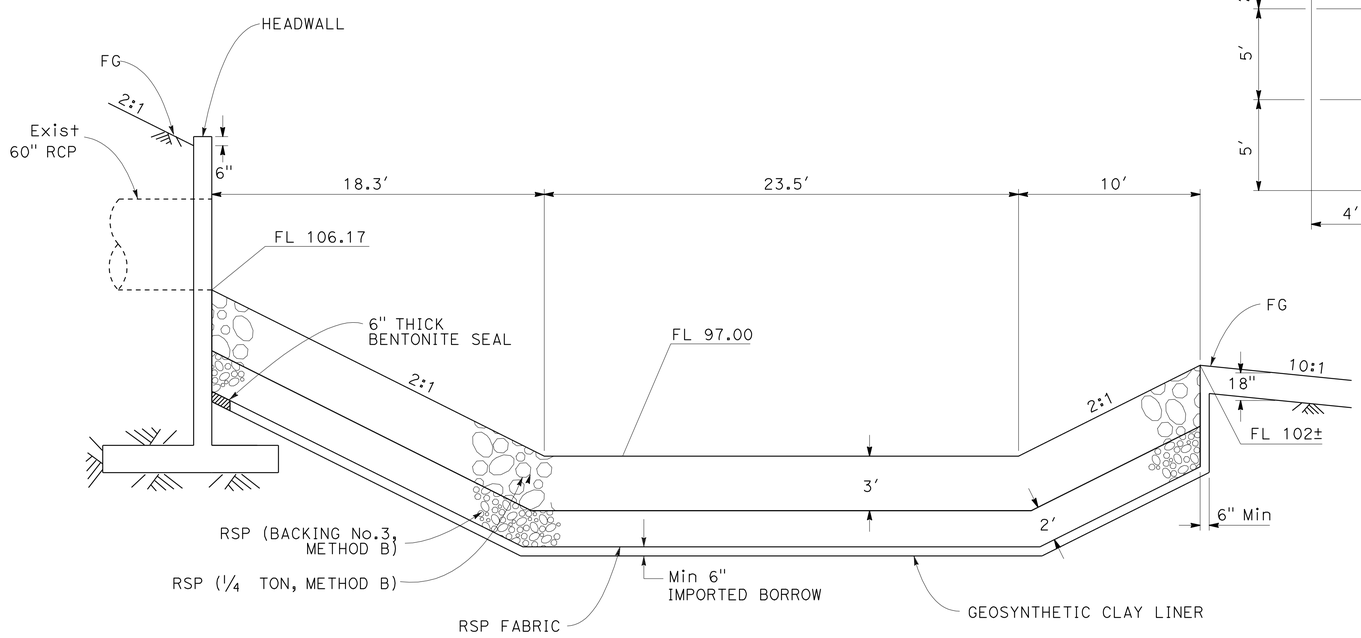

SECTION A-A

NOTES:

1. RSP FABRIC TO BE PLACED ON ALL SIDES EXCEPT FOR TOP SIDE OF ALL RSP PADS.
2. FILL VOIDS IN ALL RSP PADS WITH NATIVE SOIL.
3. PLACE MINIMUM 6" IMPORTED BORROW BETWEEN RSP AND GEOSYNTHETIC CLAY LINER IN ALL LOCATIONS.
4. FOR HEADWALL AND WINGWALL DETAILS NOT SHOWN, SEE STANDARD PLANS D90.

RSP BASIN

1 d

DRAINAGE DETAILS

NO SCALE

DD-7

STATE OF CALIFORNIA - DEPARTMENT OF TRANSPORTATION
Caltrans

CONSULTANT FUNCTIONAL SUPERVISOR: HAN-BIN LIANG
CALCULATED-DESIGNED BY: TERENCE XIAO
CHECKED BY: ULYSSES HILLARD
REVISED BY
DATE REVISED

LAST REVISION 00-00-00
DATE PLOTTED => 19-NOV-2009
TIME PLOTTED => 11:14

Dist	COUNTY	ROUTE	POST MILES TOTAL PROJECT	SHEET No.	TOTAL SHEETS
04	Ala	680	4.8/5.2	26	66

Ulysses Hillard 7/20/09
REGISTERED CIVIL ENGINEER DATE

11-16-09
PLANS APPROVAL DATE

REGISTERED PROFESSIONAL ENGINEER
ULYSSES HILLARD
No. C 64873
Exp. 6/30/11
CIVIL
STATE OF CALIFORNIA

THE STATE OF CALIFORNIA OR ITS OFFICERS OR AGENTS SHALL NOT BE RESPONSIBLE FOR THE ACCURACY OR COMPLETENESS OF SCANNED COPIES OF THIS PLAN SHEET.

WRECO
1814 FRANKLIN STREET
SUITE 608
OAKLAND, CA 94612

CALTRANS
111 GRAND AVENUE
OAKLAND, CA 94612

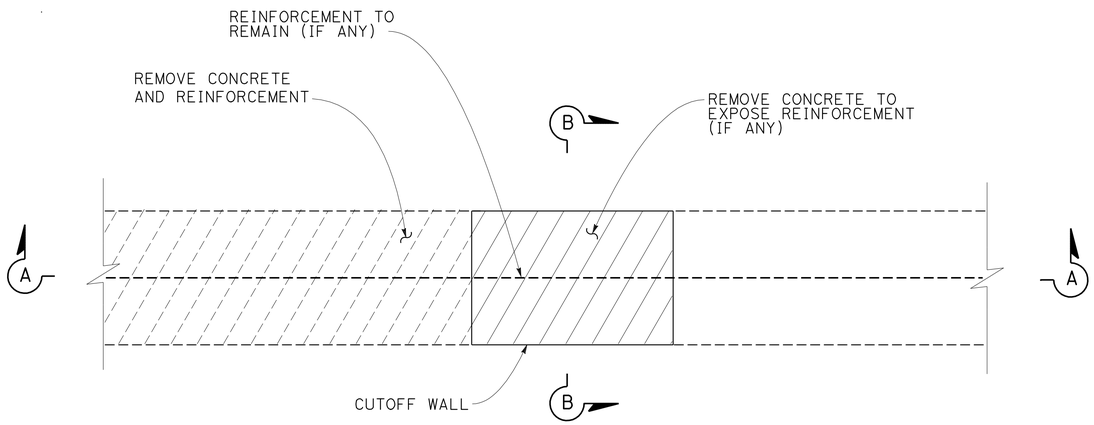

PLAN

NOTE:

1. IF REINFORCEMENT DOES NOT EXIST WITHIN THE EXISTING PCC DITCH, THE CONCRETE REMOVAL WORK TO EXPOSE REINFORCEMENT IS NOT NECESSARY.

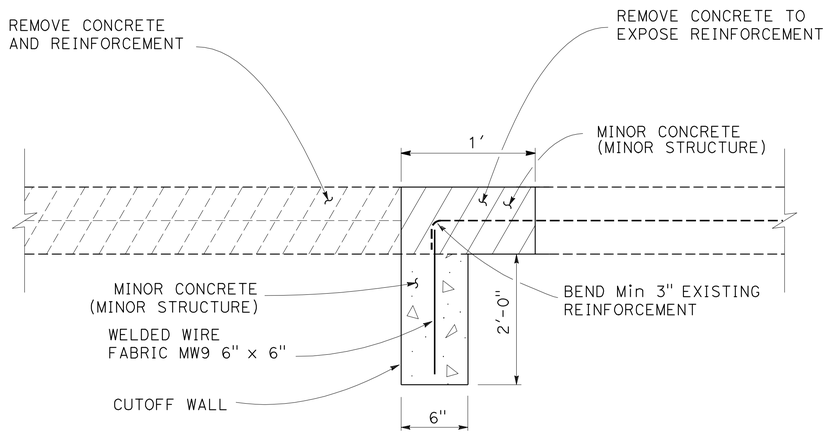

SECTION A-A

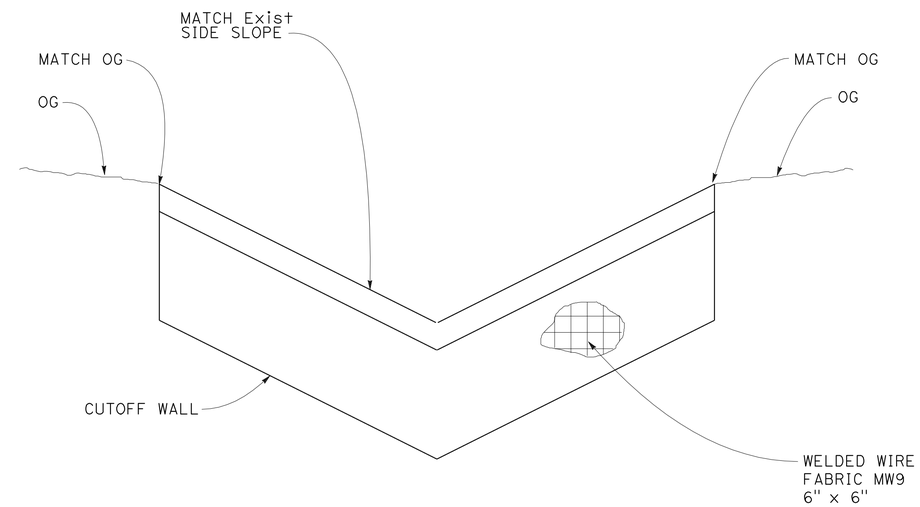

SECTION B-B

REMOVE PCC-LINED DITCH PORTION

3 a

DRAINAGE DETAILS

NO SCALE

DD-8

STATE OF CALIFORNIA - DEPARTMENT OF TRANSPORTATION
Caltrans

CONSULTANT FUNCTIONAL SUPERVISOR: HAN-BIN LIANG
CALCULATED-DESIGNED BY: TERENCE XIAO
CHECKED BY: ULYSSES HILLARD
REVISED BY
DATE REVISED

LAST REVISION 00-00-00
DATE PLOTTED => 19-NOV-2009
TIME PLOTTED => 11:14

Dist	COUNTY	ROUTE	POST MILES TOTAL PROJECT	SHEET No.	TOTAL SHEETS
04	Ala	680	4.8/5.2	27	66

Ulysses Hillard 7/20/09
REGISTERED CIVIL ENGINEER DATE

11-16-09
PLANS APPROVAL DATE

REGISTERED PROFESSIONAL ENGINEER
ULYSSES HILLARD
No. C 64873
Exp. 6/30/11
CIVIL
STATE OF CALIFORNIA

THE STATE OF CALIFORNIA OR ITS OFFICERS OR AGENTS SHALL NOT BE RESPONSIBLE FOR THE ACCURACY OR COMPLETENESS OF SCANNED COPIES OF THIS PLAN SHEET.

WRECO
1814 FRANKLIN STREET
SUITE 608
OAKLAND, CA 94612

CALTRANS
111 GRAND AVENUE
OAKLAND, CA 94612

DRAINAGE QUANTITIES

DRAINAGE SYSTEM No.	DRAINAGE UNIT No.	REMOVE CULVERT	REMOVE WINGWALL	REMOVE CONCRETE	ROCK SLOPE PROTECTION (BACKING No. 3, METHOD B)	ROCK SLOPE PROTECTION (LIGHT, METHOD B)	ROCK SLOPE PROTECTION (1/4 TON, METHOD B)	ROCK SLOPE PROTECTION (1/2 TON, METHOD A)	ROCK SLOPE PROTECTION FABRIC	BAR REINFORCING STEEL	CLASS 2 CONCRETE (WINGWALL)	MINOR CONCRETE (MINOR STRUCTURE)	8" PPP UD	DESCRIPTION	STATION	DRAINAGE PLAN SHEET No.	DRAINAGE SYSTEM No.	DRAINAGE UNIT No.
		LF	EA	CY	CY	CY	CY	CY	SQYD	LB	CY	CY	LF					
1	a									2060	19.72			TYPE A WINGWALLS	Ctr "U" 4+62.43	D-1	1	a
	b	124												REMOVE 60" RCP (PORTION)	Ctr "U" 4+62.43 TO Ctr "U" 5+86.35			b
	c					38.89			68.89					RSP (LIGHT, METHOD B)	Ctr "U" 4+62.43			c
	d				147.07		144.02		450.11					RSP BASIN	Ctr "U" 5+86.35			d
	e									6691	64.16			TYPE B WINGWALLS	Ctr "U" 5+86.37			e
2	a					70.37			138.67					RSP (LIGHT, METHOD B)	Ctr "S" 4+59.00 TO Ctr "S" 4+98.00	D-1	2	a
	b			15.65								1.99		MODIFY RCB	Ctr "S" 4+63.00 TO Ctr "S" 4+98.00			b
	c									679		2.79		BULKHEAD	Ctr "S" 4+98.00			c
	d			145.56										REMOVE RCB (PORTION)	Ctr "S" 4+98.00 TO Ctr "S" 6+00.00			d
	e				8.52			17.04	89.44					BOULDER CROSS VANE	Ctr "S" 5+40.00			e
	f				8.52			17.04	89.44					BOULDER CROSS VANE	Ctr "S" 5+60.00			f
	g				8.52			17.04	89.44					BOULDER CROSS VANE	Ctr "S" 5+80.00			g
	h				8.52			17.04	89.44					BOULDER CROSS VANE	Ctr "S" 6+00.00			h
	i		1											REMOVE WINGWALL	Ctr "S" 6+00.00			i
	j			22.70										REMOVE SACK CONCRETE	10.00 Lt "S" 6+10.00			j
	k			15.40										REMOVE CONCRETE	18.00 Lt "S" 6+25.00			k
	l			55.60										REMOVE SACK CONCRETE	7.00 Rt "S" 6+20.00			l
	m				8.52			17.04	89.44					BOULDER CROSS VANE	Ctr "S" 6+20.00			m
	n												143.3	8" PPP UNDERDRAIN w/ END CAP	Ctr "S" 4+98.00 TO Ctr "S" 6+40.00			n
	o				8.52			17.04	89.44					BOULDER CROSS VANE	Ctr "S" 6+40.00			o
	p				8.52			17.04	89.44					BOULDER CROSS VANE	Ctr "S" 6+60.00			p
3	a			6.42								0.20		REMOVE PCC-LINED DITCH (PORTION)	123.12 Rt "A" 14+09.08 to 81.47 Rt "A" 15+57.87	D-1	3	a
TOTAL		124	1	261.33	206.71	109.26	144.02	119.28	1283.75	9430	83.88	4.98	143.3	TOTAL				

REVISED BY | DATE REVISED
TERENCE XIAO | ULYSSES HILLARD
CALCULATED-DESIGNED BY | CHECKED BY
CONSULTANT FUNCTIONAL SUPERVISOR: HAN-BIN LIANG
STATE OF CALIFORNIA - DEPARTMENT OF TRANSPORTATION
Caltrans

LAST REVISION | DATE PLOTTED => 19-NOV-2009
00-00-00 | TIME PLOTTED => 11:14

Dist	COUNTY	ROUTE	POST MILES TOTAL PROJECT	SHEET No.	TOTAL SHEETS
04	Ala	680	4.8/5.2	28	66

Ulysses Hillard 7/20/09
REGISTERED CIVIL ENGINEER DATE

11-16-09
PLANS APPROVAL DATE

REGISTERED PROFESSIONAL ENGINEER ULYSSES HILLARD No. C 64873 Exp. 6/30/11 CIVIL STATE OF CALIFORNIA

THE STATE OF CALIFORNIA OR ITS OFFICERS OR AGENTS SHALL NOT BE RESPONSIBLE FOR THE ACCURACY OR COMPLETENESS OF SCANNED COPIES OF THIS PLAN SHEET.

WRECO
1814 FRANKLIN STREET
SUITE 608
OAKLAND, CA 94612

CALTRANS
111 GRAND AVENUE
OAKLAND, CA 94612

NOTE:

FOR COMPLETE RIGHT OF WAY AND ACCURATE ACCESS DATA, SEE RIGHT OF WAY RECORD MAPS AT DISTRICT OFFICE.

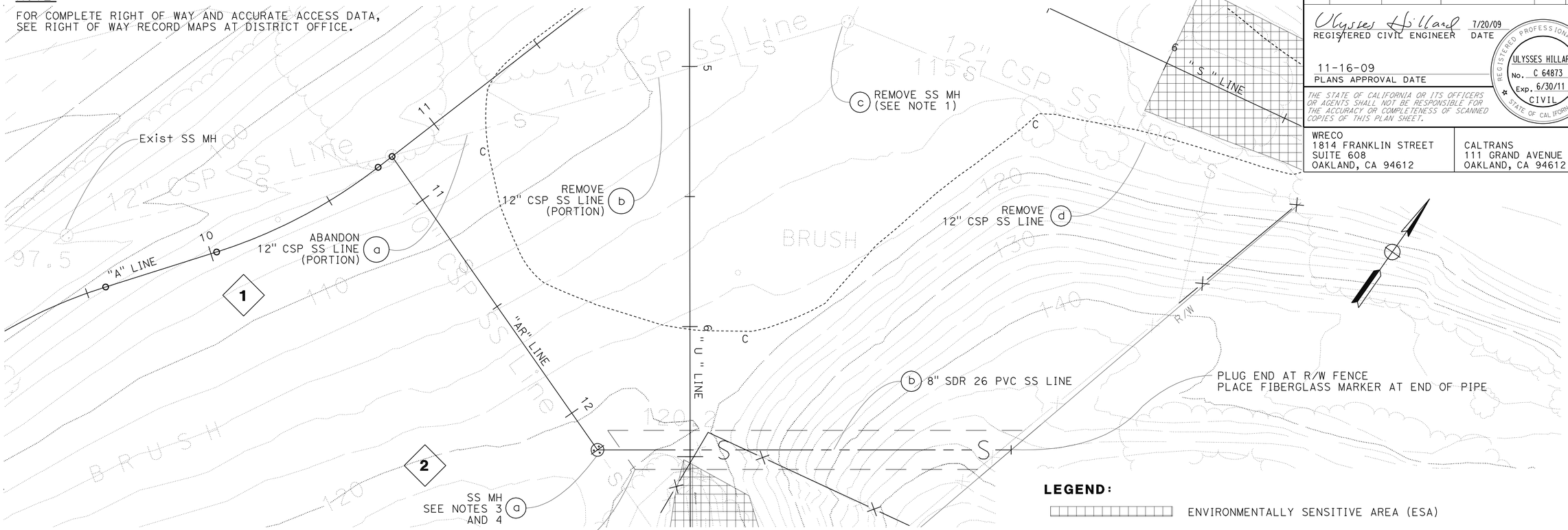

SANITARY SEWER PLAN

SCALE 1'' = 20'

LEGEND:

ENVIRONMENTALLY SENSITIVE AREA (ESA)

ABBREVIATIONS:

USD	UNION SANITARY DISTRICT
SS	SANITARY SEWER
SDR	STANDARD DIMENSION RATIO
CSP	CORRUGATED STEEL PIPE

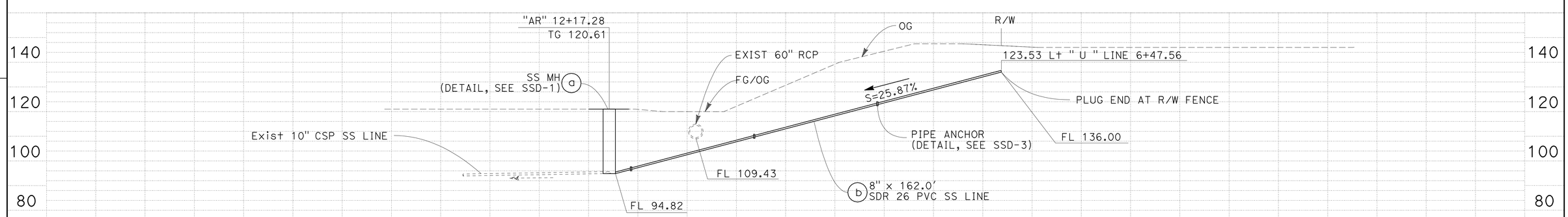

SANITARY SEWER SYSTEM No. 2

PROFILE

SCALE 1'' = 20'

SANITARY SEWER PLAN AND PROFILE

SCALE: AS SHOWN

THIS PLAN ACCURATE FOR SANITARY SEWER WORK ONLY.

SS-1

STATE OF CALIFORNIA - DEPARTMENT OF TRANSPORTATION
Caltrans

CONSULTANT FUNCTIONAL SUPERVISOR: HAN-BIN LIANG
CALCULATED-DESIGNED BY: TERENCE XIAO
CHECKED BY: ULYSSES HILLARD
REVISED BY
DATE REVISED

LAST REVISION 11-10-09
DATE PLOTTED => 19-NOV-2009
TIME PLOTTED => 11:14

Dist	COUNTY	ROUTE	POST MILES TOTAL PROJECT	SHEET No.	TOTAL SHEETS
04	Ala	680	4.8/5.2	29	66

Ulysses Hillard 7/20/09
REGISTERED CIVIL ENGINEER DATE

11-16-09
PLANS APPROVAL DATE

REGISTERED PROFESSIONAL ENGINEER ULYSSES HILLARD No. C 64873 Exp. 6/30/11 CIVIL STATE OF CALIFORNIA

THE STATE OF CALIFORNIA OR ITS OFFICERS OR AGENTS SHALL NOT BE RESPONSIBLE FOR THE ACCURACY OR COMPLETENESS OF SCANNED COPIES OF THIS PLAN SHEET.

WRECO
1814 FRANKLIN STREET
SUITE 608
OAKLAND, CA 94612

CALTRANS
111 GRAND AVENUE
OAKLAND, CA 94612

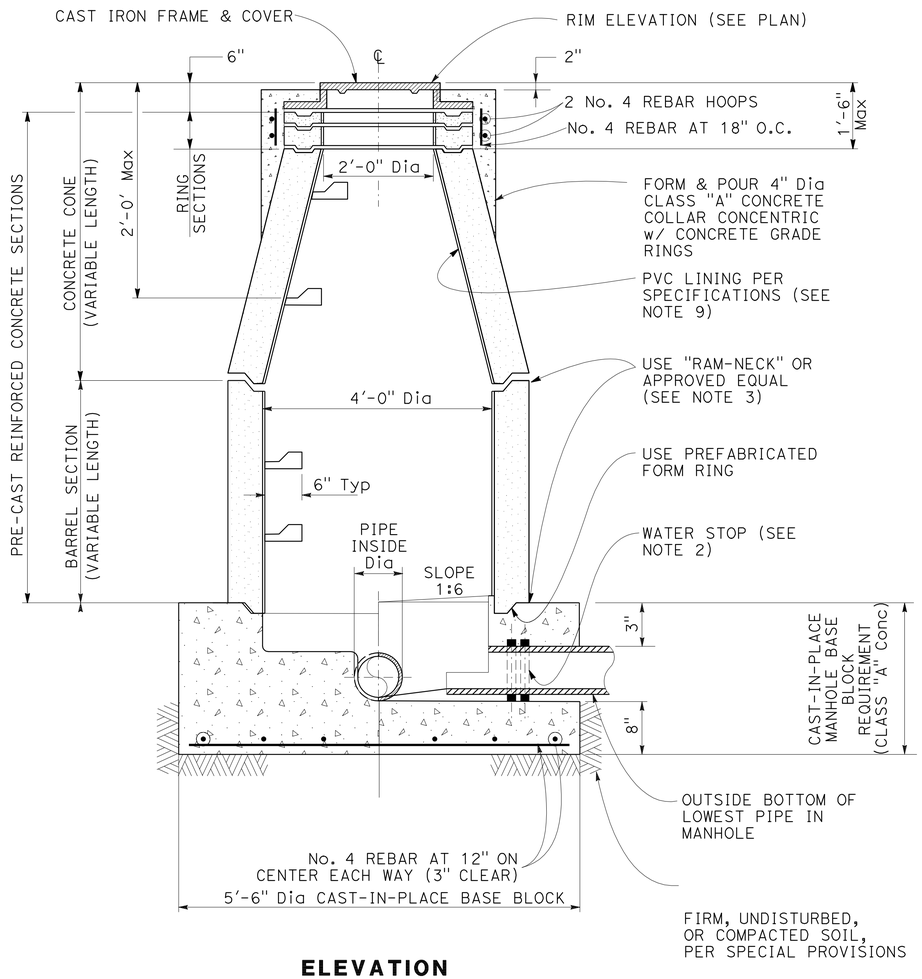

ELEVATION
NOT TO SCALE

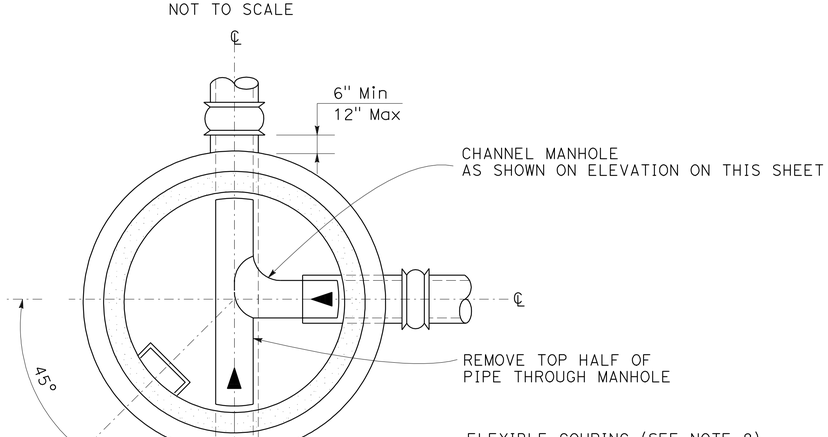

PLAN
NOT TO SCALE

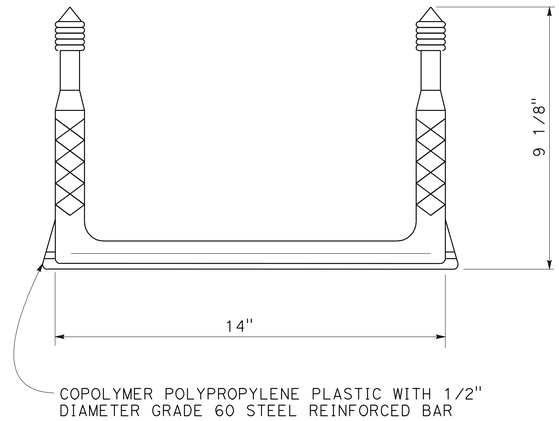

MANHOLE STEPS

NOTES:

1. ALL MATERIALS SHALL BE USED ONLY AFTER APPROVAL BY UNION SANITARY DISTRICT.
2. FLEXIBLE PIPE ONLY - AN APPROVED WATER STOP, SUCH AS TWO O-RINGS OR A BANDED RUBBER COUPLING, SHALL BE INSTALLED ON ALL FLEXIBLE PIPE ENTERING OR LEAVING A MANHOLE AND CENTERED UNDER THE MANHOLE WALL AS SHOWN.
3. INSTALL "RAM-NECK" OR APPROVED EQUAL BETWEEN EACH JOINT OF THE CONE AND BARREL SECTIONS TO MAKE A FLEXIBLE WATER-TIGHT JOINT. AFTER JOINT IS MADE, TRIM JOINT SMOOTH ON THE INSIDE OF MANHOLE.
4. ALL STEPS SHALL BE INSTALLED IN PRE-CAST SECTIONS BY MANUFACTURER AND SPACED 10"-15" APART.
5. PRE-CAST SECTIONS SHALL BE INSTALLED SO THAT STEPS ARE ALIGNED VERTICALLY AND AS SHOWN IN THE PLAN SECTION.
6. IF THE DISTANCE FROM THE MANHOLE RIM TO THE TOP OF THE BASE BLOCK IS LESS THAN 4'-0", ORDER PRE-CAST SECTIONS WITHOUT STEPS.
7. CEMENT MORTAR SHALL BE USED BETWEEN ALL GRADE RINGS.
8. FLEXIBLE COUPLING NOT REQUIRED FOR FLEXIBLE PIPE OR IF MANHOLE IS INSTALLED OVER EXISTING SANITARY SEWER.
9. PVC LINE STANDARD MANHOLES WHERE REQUIRED BY THE ENGINEER.

SANITARY SEWER DETAILS

NO SCALE

SSD-1

STATE OF CALIFORNIA - DEPARTMENT OF TRANSPORTATION
Caltrans

CONSULTANT FUNCTIONAL SUPERVISOR: HAN-BIN LIANG
CALCULATED-DESIGNED BY: ULYSSES HILLARD
CHECKED BY: TERENCE XIAO
REVISED BY
DATE REVISED

LAST REVISION 00-00-00
DATE PLOTTED => 19-NOV-2009
TIME PLOTTED => 11:14

Dist	COUNTY	ROUTE	POST MILES TOTAL PROJECT	SHEET No.	TOTAL SHEETS
04	Ala	680	4.8/5.2	30	66

Ulysses Hillard 7/20/09
REGISTERED CIVIL ENGINEER DATE

11-16-09
PLANS APPROVAL DATE

REGISTERED PROFESSIONAL ENGINEER
ULYSSES HILLARD
No. C 64873
Exp. 6/30/11
CIVIL
STATE OF CALIFORNIA

THE STATE OF CALIFORNIA OR ITS OFFICERS OR AGENTS SHALL NOT BE RESPONSIBLE FOR THE ACCURACY OR COMPLETENESS OF SCANNED COPIES OF THIS PLAN SHEET.

WRECO
1814 FRANKLIN STREET
SUITE 608
OAKLAND, CA 94612

CALTRANS
111 GRAND AVENUE
OAKLAND, CA 94612

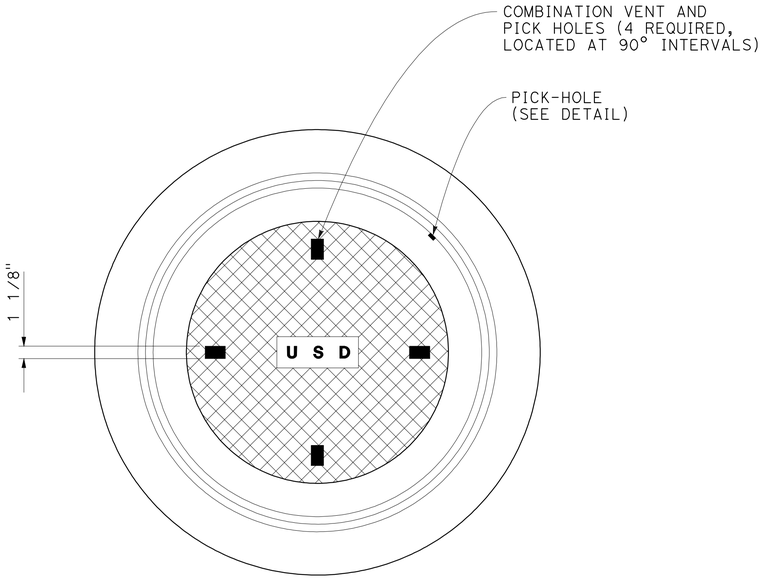

PLAN
NOT TO SCALE

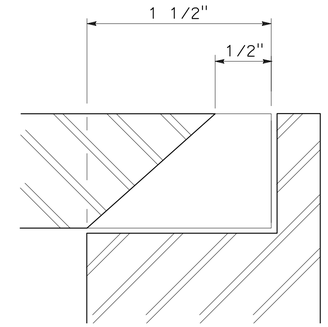

ELEVATION

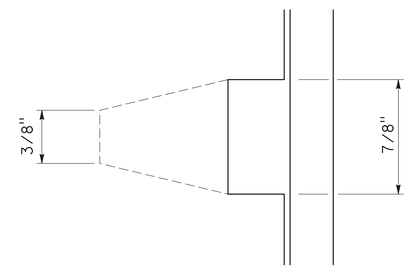

PLAN

PICK HOLE DETAIL
NOT TO SCALE

NOTES:

1. MINOR MODIFICATIONS IN ABOVE DIMENSIONS AND MANUFACTURING CONFIGURATIONS ARE PERMISSIBLE SUBJECT TO UNION SANITARY DISTRICT APPROVAL.
2. CAST IRON FOR FRAME AND COVER SHALL BE CLASS 30 MINIMUM AS PER ASTM A-48.
3. RAISED LETTERS 1/4" HIGH TO BE CAST IN CENTER OF MANHOLE COVER.
4. BEFORE LEAVING THE FOUNDRY, THE FRAME AND COVER SHALL BE PAINTED OR DIPPED IN ASPHALT PAINT.
5. MANHOLE FRAME AND COVER SHALL BE APPROVED BY UNION SANITARY DISTRICT.
6. FRAME AND COVER BEARING SURFACES SHALL BE MACHINED TO ASSURE CLOSE, QUIET FIT.

PIPE COVER LIMITATION TABLE

MATERIAL	TYPE AND MINIMUM CLASS	COVER IN FEET Min - Max **
MAIN SEWERS IN PUBLIC UTILITY & USD EASEMENTS & PUBLIC RIGHTS OF WAY		
8" - LARGER PVC	SOLID WALL (CLASS SDR 26)	3.0 - 30

** WHEN MAXIMUM COVER IS EXCEEDED, APPROVAL BY USD OF SPECIAL BEDDING REQUIREMENT IS NECESSARY.

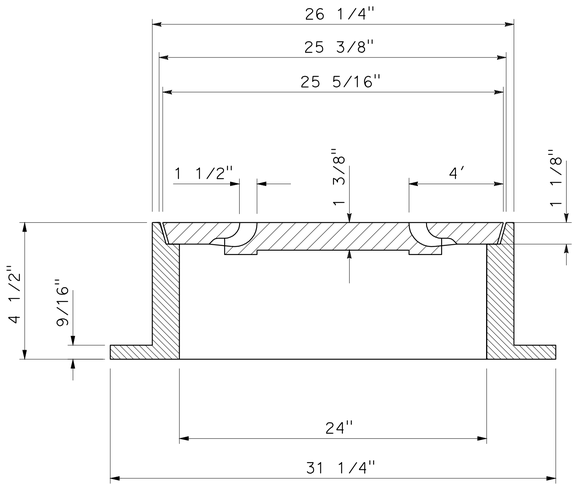

ELEVATION
NOT TO SCALE

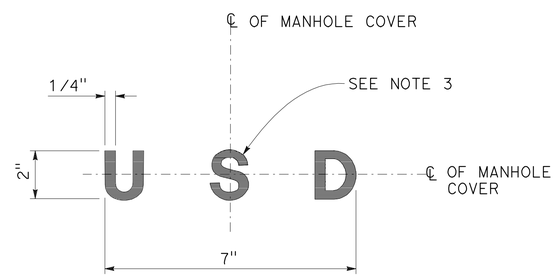

LETTERING DETAIL

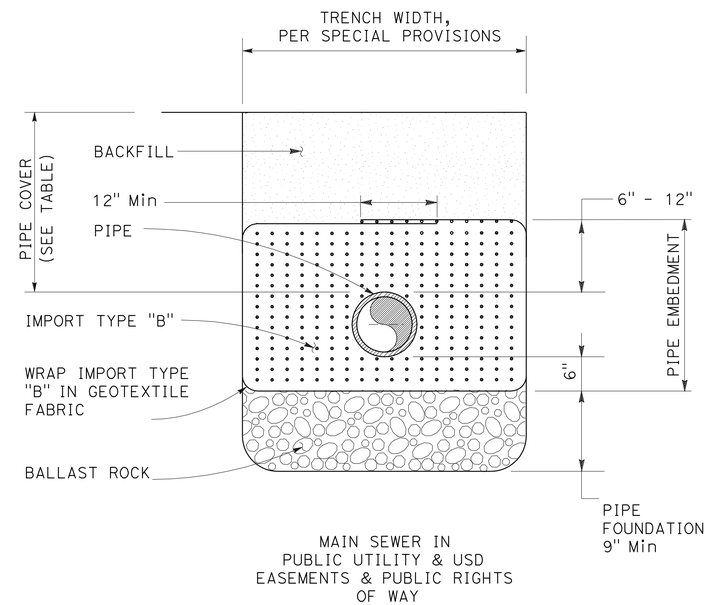

PIPE BACKFILL DETAIL
NOT TO SCALE

SANITARY SEWER DETAILS
NO SCALE

SSD-2

STATE OF CALIFORNIA - DEPARTMENT OF TRANSPORTATION
Caltrans
CONSULTANT FUNCTIONAL SUPERVISOR: HAN-BIN LIANG
CALCULATED-DESIGNED BY: ULYSSES HILLARD
CHECKED BY: TERENCE XIAO
REVISED BY
DATE REVISED

LAST REVISION 00-00-00
DATE PLOTTED => 19-NOV-2009
TIME PLOTTED => 11:14

Dist	COUNTY	ROUTE	POST MILES TOTAL PROJECT	SHEET No.	TOTAL SHEETS
04	Ala	680	4.8/5.2	31	66

Ulysses Hillard 7/20/09
REGISTERED CIVIL ENGINEER DATE

11-16-09
PLANS APPROVAL DATE

REGISTERED PROFESSIONAL ENGINEER
ULYSSES HILLARD
No. C 64873
Exp. 6/30/11
CIVIL
STATE OF CALIFORNIA

THE STATE OF CALIFORNIA OR ITS OFFICERS OR AGENTS SHALL NOT BE RESPONSIBLE FOR THE ACCURACY OR COMPLETENESS OF SCANNED COPIES OF THIS PLAN SHEET.

WRECO
1814 FRANKLIN STREET
SUITE 608
OAKLAND, CA 94612

CALTRANS
111 GRAND AVENUE
OAKLAND, CA 94612

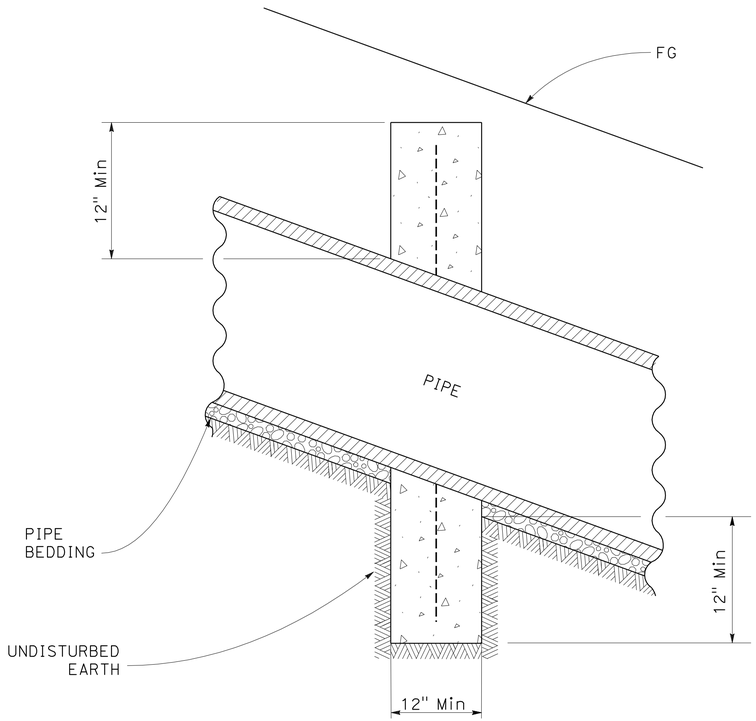

SECTION B-B

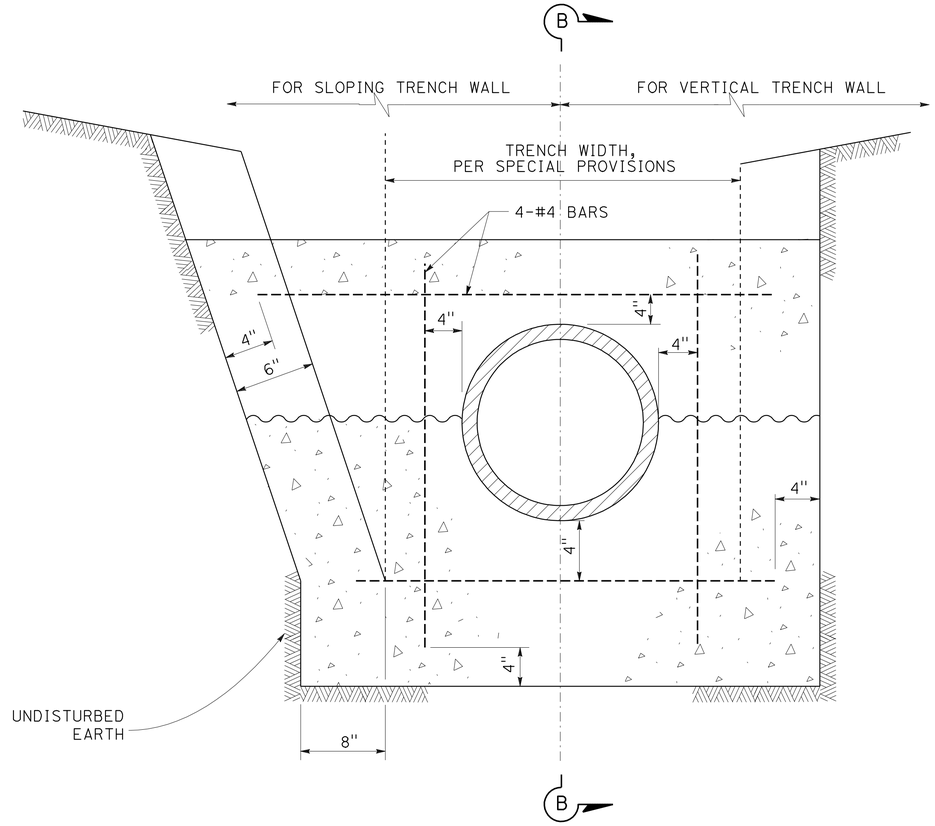

SECTION A-A

NOTES:

1. ANCHORS SHALL BE CLASS A CONCRETE.
2. SPACING OF ANCHORS FOR PIPE SLOPES BETWEEN VALUES SHOWN IN TABLE "A" MAY BE PROPORTIONED.

TABLE A

PIPE SLOPE (%) Y:1 (100)	L DISTANCE (Max)	Z DISTANCE (Max)
25% - 33%	50'-0"	25'-0"

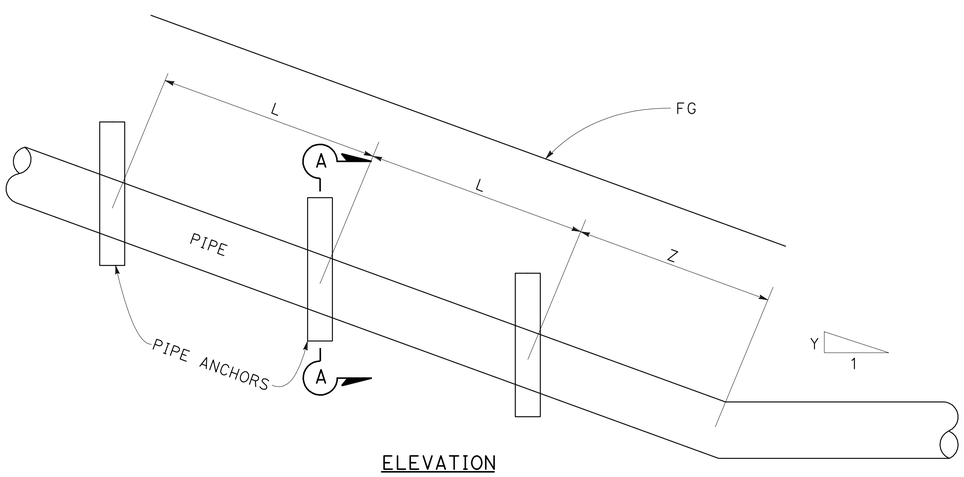

ELEVATION

PIPE ANCHORS

SANITARY SEWER DETAILS

NO SCALE

SSD-3

REVISED BY	DATE REVISED

TERENCE XIAO — ULYSSES HILLARD
CALCULATED-DESIGNED BY — CHECKED BY
CONSULTANT FUNCTIONAL SUPERVISOR: HAN-BIN LIANG

STATE OF CALIFORNIA - DEPARTMENT OF TRANSPORTATION
Caltrans

LAST REVISION 00-00-00 | DATE PLOTTED => 19-NOV-2009 | TIME PLOTTED => 11:14

Dist	COUNTY	ROUTE	POST MILES TOTAL PROJECT	SHEET No.	TOTAL SHEETS
04	Ala	680	4.8/5.2	32	66

Ulysses Hillard 7/20/09
REGISTERED CIVIL ENGINEER DATE

11-16-09
PLANS APPROVAL DATE

REGISTERED PROFESSIONAL ENGINEER
ULYSSES HILLARD
No. C 64873
Exp. 6/30/11
CIVIL
STATE OF CALIFORNIA

THE STATE OF CALIFORNIA OR ITS OFFICERS OR AGENTS SHALL NOT BE RESPONSIBLE FOR THE ACCURACY OR COMPLETENESS OF SCANNED COPIES OF THIS PLAN SHEET.

WRECO
1814 FRANKLIN STREET
SUITE 608
OAKLAND, CA 94612

CALTRANS
111 GRAND AVENUE
OAKLAND, CA 94612

Abbreviations:
SS Sanitary Sewer
CSP Corrugated Steel Pipe
PVC Polyvinyl Choride

SANITARY SEWER QUANTITIES

SHEET	SALVAGE SS MH FRAME AND COVER (N)	ABANDON 12" CSP SS LINE	REMOVE 12" CSP SS LINE	REMOVE SS MANHOLE	SS MANHOLE	8" SDR 26 PVC SS LINE	PIPE ANCHOR (N)
	EA	LF	LF	EA	EA	LF	EA
SS-1	1	35.4	322.5	1	1	162.0	3
TOTAL	1	35.4	322.5	1	1	162.0	3

[N] NOT A SEPARATE PAY ITEM, FOR INFORMATION ONLY

SANITARY SEWER QUANTITIES

NO SCALE

SSQ-1

STATE OF CALIFORNIA - DEPARTMENT OF TRANSPORTATION
Caltrans

CONSULTANT FUNCTIONAL SUPERVISOR: HAN-BIN LIANG
CALCULATED-DESIGNED BY: TERENCE XIAO
CHECKED BY: ULYSSES HILLARD
REVISED BY
DATE REVISED

LAST REVISION 00-00-00
DATE PLOTTED => 19-NOV-2009
TIME PLOTTED => 11:15

Dist	COUNTY	ROUTE	POST MILES TOTAL PROJECT	SHEET No.	TOTAL SHEETS
04	Ala	680	4.8/5.2	33	66

Florante P. Perez 6-02-09
REGISTERED CIVIL ENGINEER DATE

11-16-09
PLANS APPROVAL DATE

REGISTERED PROFESSIONAL ENGINEER
F.P. Perez
No. 41030
Exp. 3-31-11
CIVIL
STATE OF CALIFORNIA

THE STATE OF CALIFORNIA OR ITS OFFICERS OR AGENTS SHALL NOT BE RESPONSIBLE FOR THE ACCURACY OR COMPLETENESS OF ELECTRONIC COPIES OF THIS PLAN SHEET.

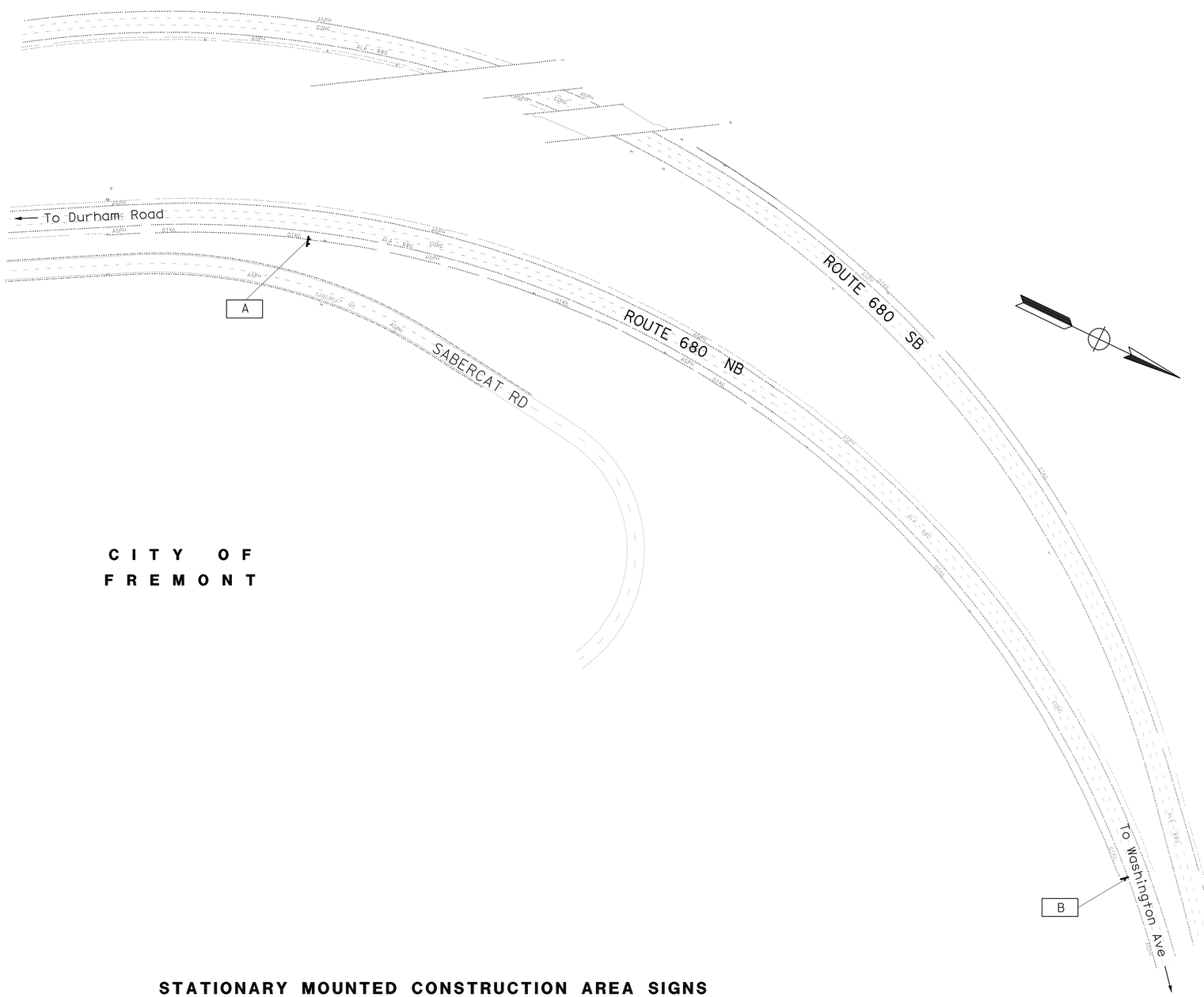

CITY OF FREMONT

STATIONARY MOUNTED CONSTRUCTION AREA SIGNS

SIGN	CODE	MESSAGE	PANEL SIZE (inch x inch)	No. OF POSTS & SIZE (EA-inch x inch)	No.of Signs	REMARKS
A	W20-1	ROAD WORK AHEAD	60'' x 60''	2 - 4'' x 6''	1	
B	G20-2	END ROAD WORK	36'' x 18''	1 - 4'' x 4''	1	

NOTES:

1. LOCATION OF CONSTRUCTION AREA SIGNS SHOWN ARE APPROXIMATE, EXACT LOCATION TO BE DETERMINED BY THE ENGINEER.

LEGEND:

CONSTRUCTION AREA SIGN LETTER

CONSTRUCTION AREA SIGNS

NO SCALE

This Plan Accurate for Construction Area Sign Work Only

CS-1

STATE OF CALIFORNIA - DEPARTMENT OF TRANSPORTATION
Caltrans

FUNCTIONAL SUPERVISOR: LOURDES DAVID
CALCULATED-DESIGNED BY: Ramon N.Cruz
CHECKED BY: Flor Perez
REVISED BY
DATE REVISED

LAST REVISION 12-08-08
DATE PLOTTED => 19-NOV-2009
TIME PLOTTED => 11:15

Dist	COUNTY	ROUTE	POST MILES TOTAL PROJECT	SHEET No.	TOTAL SHEETS
04	Ala	680	4.8/5.2	34	66

Ulysses Hillard 7/20/09
REGISTERED CIVIL ENGINEER DATE

11-16-09
PLANS APPROVAL DATE

REGISTERED PROFESSIONAL ENGINEER
ULYSSES HILLARD
No. C 64873
Exp. 6/30/11
CIVIL
STATE OF CALIFORNIA

THE STATE OF CALIFORNIA OR ITS OFFICERS OR AGENTS SHALL NOT BE RESPONSIBLE FOR THE ACCURACY OR COMPLETENESS OF SCANNED COPIES OF THIS PLAN SHEET.

WRECO
1814 FRANKLIN STREET
SUITE 608
OAKLAND, CA 94612

CALTRANS
111 GRAND AVENUE
OAKLAND, CA 94612

ABANDON MONITORING WELL

SHEET	QUANTITY
	EA
L-2	2
TOTAL	2

ROADWAY EXCAVATION

SHEET	LOCATION	QUANTITY
		CY
C-1	"A" 10+94.90 R+ TO "A" 15+73.62 R+	16,932
	TOTAL	16,932

GEOSYNTHETIC CLAY LINER

SHEET	LOCATION	QUANTITY
		SQYD
C-2	"A" 11+33.96 R+ TO "A" 15+30.72 R+	2,841
	TOTAL	2,841

CHAIN LINK FENCE (TYPE CL-6)

SHEET	LOCATION	QUANTITY
		LF
L-2	"A" 12+84.28 R+ TO "A" 18+46.37 R+	447
	TOTAL	447

RECONSTRUCT CHAIN LINK FENCE

SHEET	LOCATION	QUANTITY
		LF
L-2	"U" 6+71.61 R+ TO "U" 6+76.61 L+	121
	TOTAL	121

REMOVE CHAIN LINK FENCE

SHEET	LOCATION	QUANTITY
		LF
L-2	"U" 6+71.61 R+ TO "U" 6+76.61 L+	552
	TOTAL	552

CABLE RAILING

SHEET	LOCATION	QUANTITY
		LF
C-2	"S" 4+62.00 L+ TO "S" 4+62.00 R+	13
C-2	"S" 4+62.00 R+ TO "S" 5+00.00 R+	38
C-2	"S" 5+00.00 R+ TO "S" 5+00.00 L+	13
C-2	"S" 4+78.00 L+ TO "S" 5+00.00 L+	22
	TOTAL	86

8 FOOT CHAIN LINK GATE (TYPE CL-3)

SHEET	LOCATION	QUANTITY
		EA
C-1	"S" 4+70.09 L+	2
	TOTAL	2

IMPORTED TOPSOIL

SHEET		LOCATION	QUANTITY
			CY
C-2	IMPORTED TOPSOIL	"A" 11+41.00 R+ TO "A" 15+15.00 R+	1,420
		TOTAL	1,420

IMPORTED BORROW

SHEET		LOCATION	QUANTITY
			CY
C-2	IMPORTED BORROW	"A" 11+41.00 R+ TO "A" 15+15.00 R+	353
		TOTAL	353

TEMPORARY FENCE (TYPE ESA)

SHEET	QUANTITY
	LF
C-1	3331
C-2	2204
TOTAL	5535

SUMMARY OF QUANTITIES

NO SCALE

Q-1

STATE OF CALIFORNIA - DEPARTMENT OF TRANSPORTATION
Caltrans
CONSULTANT FUNCTIONAL SUPERVISOR: HAN-BIN LIANG
CALCULATED-DESIGNED BY: TERENCE XIAO
CHECKED BY: ULYSSES HILLARD
REVISED BY
DATE REVISED

LAST REVISION 00-00-00
DATE PLOTTED => 19-NOV-2009
TIME PLOTTED => 11:15

REFERENCE: CALTRANS SOIL & ROCK LOGGING, CLASSIFICATION, AND PRESENTATION MANUAL (JUNE 2007)

DIST	COUNTY	ROUTE	POST MILES TOTAL PROJECT	SHEET No	TOTAL SHEETS
04	Ala	680	4.8/5.2	35	66

REGISTERED CIVIL ENGINEER — DATE 8/4/09

11-16-09
PLANS APPROVAL DATE

REGISTERED PROFESSIONAL ENGINEER — Laurence A. Moore — No. 53476 — Exp. 6/30/11 — CIVIL — STATE OF CALIFORNIA

THE STATE OF CALIFORNIA OR ITS OFFICERS OR AGENTS SHALL NOT BE RESPONSIBLE FOR THE ACCURACY OR COMPLETENESS OF ELECTRONIC COPIES OF THIS PLAN SHEET.

CALTRANS
111 GRAND AVENUE
OAKLAND, CA 94612

URS Corporation
55 S Market Street
Suite 1500
San Jose, CA, 95113

CEMENTATION

Description	Criteria
Weak	Crumbles or breaks with handling or little finger pressure.
Moderate	Crumbles or breaks with considerable finger pressure.
Strong	Will not crumble or break with finger pressure.

CONSISTENCY OF COHESIVE SOILS

Description	Unconfined Compressive Strength (tsf)	Pocket Penetrometer Measurement (tsf)	Torvane Measurement (tsf)	Field Approximation
Very Soft	< 0.25	< 0.25	< 0.12	Easily penetrated several inches by fist
Soft	0.25 to 0.50	0.25 to 0.50	0.12 to 0.25	Easily penetrated several inches by thumb
Medium Stiff	0.50 to 1.0	0.50 to 1.0	0.25 to 0.50	Penetrated several inches by thumb with moderate effort
Stiff	1 to 2	1 to 2	0.50 to 1.0	Readily indented by thumb but penetrated only with great effort
Very Stiff	2 to 4	2 to 4	1.0 to 2.0	Readily indented by thumbnail
Hard	> 4.0	> 4.0	> 2.0	Indented by thumbnail with difficulty

BOREHOLE IDENTIFICATION

Symbol	Hole Type	Description
Size	A	Auger Boring
Size	R P	Rotary drilled boring Rotary percussion boring (air)
Size	R	Rotary drilled diamond core
Size	HD HA	Hand driven (1-inch soil tube) Hand Auger
●	D	Dynamic Cone Penetration Boring
▲	CPT	Cone Penetration Test (ASTM D 5778-95)
⬚	O	Other

Note: Size in inches.

PLASTICITY OF FINE-GRAINED SOILS

Description	Criteria
Nonplastic	A 1/8-inch thread cannot be rolled at any water content.
Low	The thread can barely be rolled and the lump cannot be formed when drier than the plastic limit.
Medium	The thread is easy to roll and not much time is required to reach the plastic limit. The thread cannot be rerolled after reaching the plastic limit. The lump crumbles when drier than the plastic limit.
High	It takes considerable time rolling and kneading to reach the plastic limit. The thread can be rerolled several times after reaching the plastic limit. The lump can be formed without crumbling when drier than the plastic limit.

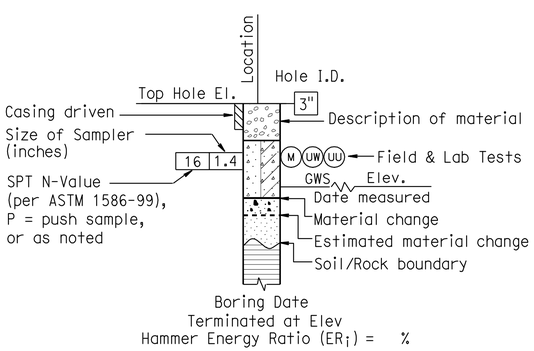

ROTARY BORING

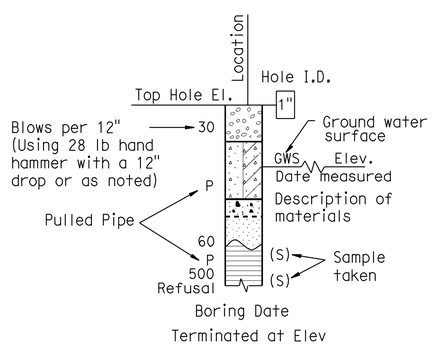

HAND BORING

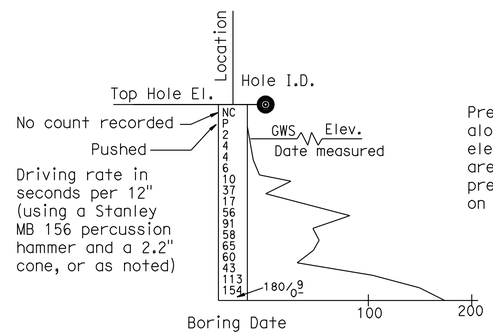

DYNAMIC CONE PENETRATION BORING

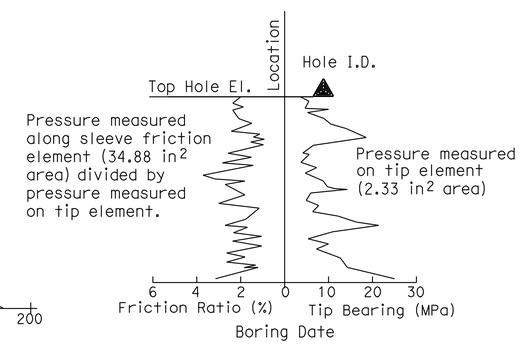

CONE PENETRATION TEST (CPT) SOUNDING

ENGINEERING SERVICES	GEOTECHNICAL SERVICES	STATE OF CALIFORNIA DEPARTMENT OF TRANSPORTATION	DIVISION OF ENGINEERING SERVICES STRUCTURE DESIGN DESIGN BRANCH	BRIDGE NO. NA / POST MILES 4.8/5.2	SOIL LEGEND LOG OF TEST BORINGS
FUNCTIONAL SUPERVISOR NAME: LAURENCE ALLEN MOORE	DRAWN BY: ANDREW CHEUNG/ERNIE GARNICA CHECKED BY: ANNE-MARIE MOORE FIELD INVESTIGATION BY: CHARLES RAMBO		CU 04341 EA 253761	DISREGARD PRINTS BEARING EARLIER REVISION DATES →	REVISION DATES / SHEET / OF

OGS CIVIL LOG OF TEST BORINGS SHEET

ORIGINAL SCALE IN INCHES FOR REDUCED PLANS 0 1 2 3

FILE => 425376ra001.dgn

USERNAME => triemard DATE PLOTTED => 19-NOV-2009 TIME PLOTTED => 11:15

REFERENCE: CALTRANS SOIL & ROCK LOGGING, CLASSIFICATION, AND PRESENTATION MANUAL (JUNE 2007)

DIST	COUNTY	ROUTE	POST MILES TOTAL PROJECT	SHEET No	TOTAL SHEETS
04	Ala	680	4.8/5.2	36	66

REGISTERED CIVIL ENGINEER — DATE 8/4/09

11-16-09
PLANS APPROVAL DATE

REGISTERED PROFESSIONAL ENGINEER — Laurence A. Moore — No. 53476 — Exp. 6/30/11 — CIVIL — STATE OF CALIFORNIA

THE STATE OF CALIFORNIA OR ITS OFFICERS OR AGENTS SHALL NOT BE RESPONSIBLE FOR THE ACCURACY OR COMPLETENESS OF ELECTRONIC COPIES OF THIS PLAN SHEET.

CALTRANS
111 GRAND AVENUE
OAKLAND, CA 94612

URS Corporation
55 S Market Street
Suite 1500
San Jose, CA, 95113

GROUP SYMBOLS AND NAMES

Graphic/Symbol	Group Names	Graphic/Symbol	Group Names
GW	Well-graded GRAVEL Well-graded GRAVEL with SAND	CL	Lean CLAY Lean CLAY with SAND Lean CLAY with GRAVEL SANDY lean CLAY SANDY lean CLAY with GRAVEL GRAVELLY lean CLAY GRAVELLY lean CLAY with SAND
GP	Poorly graded GRAVEL Poorly graded GRAVEL with SAND		
GW-GM	Well-graded GRAVEL with SILT Well-graded GRAVEL with SILT and SAND	CL-ML	SILTY CLAY SILTY CLAY with SAND SILTY CLAY with GRAVEL SANDY SILTY CLAY SANDY SILTY CLAY with GRAVEL GRAVELLY SILTY CLAY GRAVELLY SILTY CLAY with SAND
GW-GC	Well-graded GRAVEL with CLAY (or SILTY CLAY) Well-graded GRAVEL with CLAY and SAND (or SILTY CLAY and SAND)		
GP-GM	Poorly graded GRAVEL with SILT Poorly graded GRAVEL with SILT and SAND	ML	SILT SILT with SAND SILT with GRAVEL SANDY SILT SANDY SILT with GRAVEL GRAVELLY SILT GRAVELLY SILT with SAND
GP-GC	Poorly graded GRAVEL with CLAY (or SILTY CLAY) Poorly graded GRAVEL with CLAY and SAND (or SILTY CLAY and SAND)		
GM	SILTY GRAVEL SILTY GRAVEL with SAND	OL	ORGANIC lean CLAY ORGANIC lean CLAY with SAND ORGANIC lean CLAY with GRAVEL SANDY ORGANIC lean CLAY SANDY ORGANIC lean CLAY with GRAVEL GRAVELLY ORGANIC lean CLAY GRAVELLY ORGANIC lean CLAY with SAND
GC	CLAYEY GRAVEL CLAYEY GRAVEL with SAND		
GC-GM	SILTY, CLAYEY GRAVEL SILTY, CLAYEY GRAVEL with SAND	OL	ORGANIC SILT ORGANIC SILT with SAND ORGANIC SILT with GRAVEL SANDY ORGANIC SILT SANDY ORGANIC SILT with GRAVEL GRAVELLY ORGANIC SILT GRAVELLY ORGANIC SILT with SAND
SW	Well-graded SAND Well-graded SAND with GRAVEL		
SP	Poorly graded SAND Poorly graded SAND with GRAVEL	CH	Fat CLAY Fat CLAY with SAND Fat CLAY with GRAVEL SANDY fat CLAY SANDY fat CLAY with GRAVEL GRAVELLY fat CLAY GRAVELLY fat CLAY with SAND
SW-SM	Well-graded SAND with SILT Well-graded SAND with SILT and GRAVEL		
SW-SC	Well-graded SAND with CLAY (or SILTY CLAY) Well-graded SAND with CLAY and GRAVEL (or SILTY CLAY and GRAVEL)	MH	Elastic SILT Elastic SILT with SAND Elastic SILT with GRAVEL SANDY elastic SILT SANDY elastic SILT with GRAVEL GRAVELLY elastic SILT GRAVELLY elastic SILT with SAND
SP-SM	Poorly graded SAND with SILT Poorly graded SAND with SILT and GRAVEL		
SP-SC	Poorly graded SAND with CLAY (or SILTY CLAY) Poorly graded SAND with CLAY and GRAVEL (or SILTY CLAY and GRAVEL)	OH	ORGANIC fat CLAY ORGANIC fat CLAY with SAND ORGANIC fat CLAY with GRAVEL SANDY ORGANIC fat CLAY SANDY ORGANIC fat CLAY with GRAVEL GRAVELLY ORGANIC fat CLAY GRAVELLY ORGANIC fat CLAY with SAND
SM	SILTY SAND SILTY SAND with GRAVEL		
SC	CLAYEY SAND CLAYEY SAND with GRAVEL	OH	ORGANIC elastic SILT ORGANIC elastic SILT with SAND ORGANIC elastic SILT with GRAVEL SANDY ORGANIC elastic SILT SANDY ORGANIC elastic SILT with GRAVEL GRAVELLY ORGANIC elastic SILT GRAVELLY ORGANIC elastic SILT with SAND
SC-SM	SILTY, CLAYEY SAND SILTY, CLAYEY SAND with GRAVEL		
PT	PEAT	OL/OH	ORGANIC SOIL ORGANIC SOIL with SAND ORGANIC SOIL with GRAVEL SANDY ORGANIC SOIL SANDY ORGANIC SOIL with GRAVEL GRAVELLY ORGANIC SOIL GRAVELLY ORGANIC SOIL with SAND
	COBBLES COBBLES and BOULDERS BOULDERS		

FIELD AND LABORATORY TESTING

- (C) Consolidation (ASTM D 2435)
- (CL) Collapse Potential (ASTM D 5333)
- (CP) Compaction Curve (CTM 216)
- (CR) Corrosivity Testing (CTM 643, CTM 422, CTM 417)
- (CU) Consolidated Undrained Triaxial (ASTM D 4767)
- (DS) Direct Shear (ASTM D 3080)
- (EI) Expansion Index (ASTM D 4829)
- (M) Moisture Content (ASTM D 2216)
- (OC) Organic Content-% (ASTM D 2974)
- (P) Permeability (CTM 220)
- (PA) Particle Size Analysis (ASTM D 422)
- (PI) Plasticity Index (AASHTO T 90) Liquid Limit (AASHTO T 89)
- (PL) Point Load Index (ASTM D 5731)
- (PM) Pressure Meter
- (PP) Pocket Penetrometer
- (R) R-Value (CTM 301)
- (SE) Sand Equivalent (CTM 217)
- (SG) Specific Gravity (AASHTO T 100)
- (SL) Shrinkage Limit (ASTM D 427)
- (SW) Swell Potential (ASTM D 4546)
- (TV) Pocket Torvane
- (UC) Unconfined Compression-Soil (ASTM D 2166) Unconfined Compression-Rock (ASTM D 2938)
- (UU) Unconsolidated Undrained Triaxial (ASTM D 2850)
- (UW) Unit Weight (ASTM D 4767)
- (VS) Vane Shear (AASHTO T 223)

APPARENT DENSITY OF COHESIONLESS SOILS

Description	SPT N_{60} (Blows / 12 inches)
Very loose	0 - 4
Loose	5 - 10
Medium Dense	11 - 30
Dense	31 - 50
Very Dense	> 50

MOISTURE

Description	Criteria
Dry	Absence of moisture, dusty, dry to the touch
Moist	Damp but no visible water
Wet	Visible free water, usually soil is below water table

PERCENT OR PROPORTION OF SOILS

Description	Criteria
Trace	Particles are present but estimated to be less than 5%
Few	5 to 10%
Little	15 to 25%
Some	30 to 45%
Mostly	50 to 100%

PARTICLE SIZE

Description		Size
Boulder		> 12"
Cobble		3" to 12"
Gravel	Coarse	3/4" to 3"
	Fine	No. 4 to 3/4"
Sand	Coarse	No. 10 to No. 4
	Medium	No. 40 to No. 10
	Fine	No. 200 to No. 40

ENGINEERING SERVICES

FUNCTIONAL SUPERVISOR
NAME: LAURENCE ALLEN MOORE

GEOTECHNICAL SERVICES

DRAWN BY: ANDREW CHEUNG/ERNIE GARNICA
CHECKED BY: ANNE-MARIE MOORE
FIELD INVESTIGATION BY: CHARLES RAMBO

STATE OF CALIFORNIA
DEPARTMENT OF TRANSPORTATION

DIVISION OF ENGINEERING SERVICES
STRUCTURE DESIGN
DESIGN BRANCH

BRIDGE NO. NA
POST MILES 4.8/5.2

SOIL LEGEND
LOG OF TEST BORINGS

OGS CIVIL LOG OF TEST BORINGS SHEET

ORIGINAL SCALE IN INCHES FOR REDUCED PLANS 0 1 2 3

CU 04341
EA 253761

DISREGARD PRINTS BEARING EARLIER REVISION DATES

REVISION DATES — SHEET — OF

FILE => 425376ra002.dgn

USERNAME => trienard DATE PLOTTED => 19-NOV-2009 TIME PLOTTED => 11:15

Dist	COUNTY	ROUTE	POST MILES TOTAL PROJECT	SHEET No.	TOTAL SHEETS
04	Alp	680	4.8/5.2	37	66

REGISTERED CIVIL ENGINEER 8/4/09 DATE

11-16-09
PLANS APPROVAL DATE

REGISTERED PROFESSIONAL ENGINEER Laurence A. Moore No. 53476 Exp. 6/30/11 CIVIL STATE OF CALIFORNIA

THE STATE OF CALIFORNIA OR ITS OFFICERS OR AGENTS SHALL NOT BE RESPONSIBLE FOR THE ACCURACY OR COMPLETENESS OF SCANNED COPIES OF THIS PLAN SHEET.

CALTRANS
111 GRAND AVENUE
OAKLAND, CA 94612

URS Corporation
55 S Market Street
Suite 1500
San Jose, CA, 95113

BENCH MARK

SANITARY SEWER MANHOLE AT STATION "A" 10+79.56
ELEVATION = 104.66'

Notes:
1. 2.5" diameter samples were retrieved with a California Sampler with a inside diameter (ID) of 64 mm and outside diameter (OD) of 3".
2. 2" diameter samples were retrieved using a Modified California Sampler with an inside diameter (ID) of 2" and an outside diameter (OD) of 2.5".
3. 1.4" diameter samples were retrieved using a Standard Penetration Test Sampler with an ID of 1.4" and an OD of 2".
4. Blow counts shown in boring logs are actual field blow counts; no adjustment to sampler type was made.
5. Sample penetration was based on automatic hammer with efficiency rating of 107%.

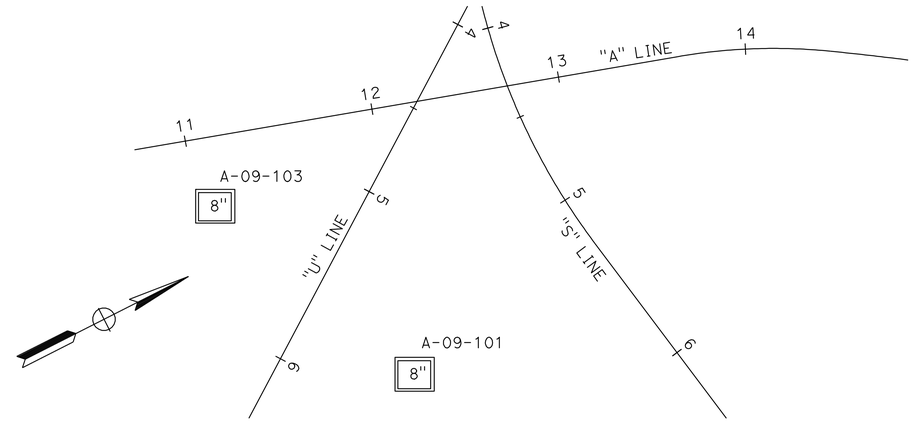

PLAN
1" = 40'

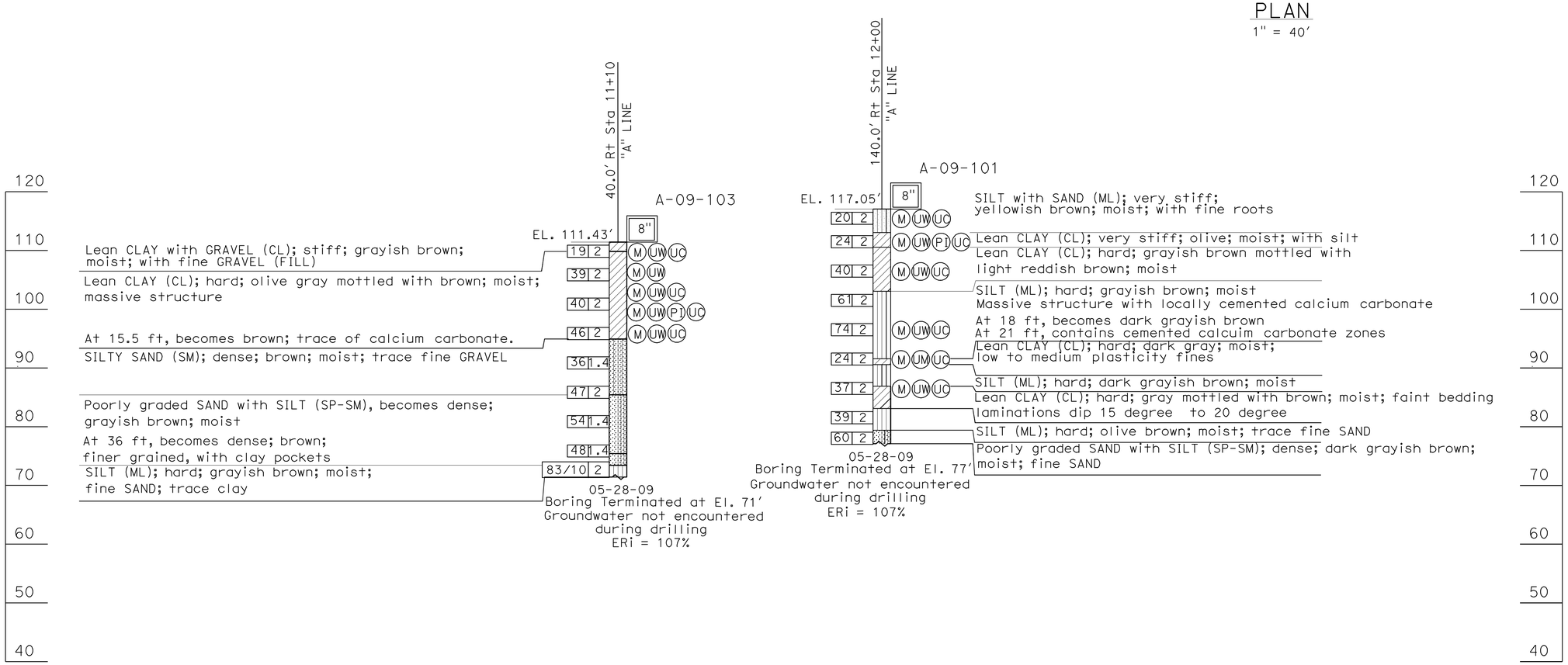

PROFILE
Ver. 1" = 10'
Hor. 1" = 20'

LOG OF TEST BORINGS 1 OF 3

STATE OF CALIFORNIA - DEPARTMENT OF TRANSPORTATION
Caltrans

CONSULTANT FUNCTIONAL SUPERVISOR: Laurence Allen Moore
CALCULATED-DESIGNED BY: Ernie Garnica
CHECKED BY: Anne-Marie Moore
REVISED BY
DATE REVISED

LAST REVISION 00-00-00
DATE PLOTTED => 19-NOV-2009
TIME PLOTTED => 11:15

Dist	COUNTY	ROUTE	POST MILES TOTAL PROJECT	SHEET No.	TOTAL SHEETS
04	Ala	680	4.8/5.2	38	66

REGISTERED CIVIL ENGINEER 8/4/09 DATE

11-16-09
PLANS APPROVAL DATE

REGISTERED PROFESSIONAL ENGINEER
Laurence A. Moore
No. 53476
Exp. 6/30/11
CIVIL
STATE OF CALIFORNIA

THE STATE OF CALIFORNIA OR ITS OFFICERS OR AGENTS SHALL NOT BE RESPONSIBLE FOR THE ACCURACY OR COMPLETENESS OF SCANNED COPIES OF THIS PLAN SHEET.

CALTRANS
111 GRAND AVENUE
OAKLAND, CA 94612

URS Corporation
55 S Market Street
Suite 1500
San Jose, CA, 95113

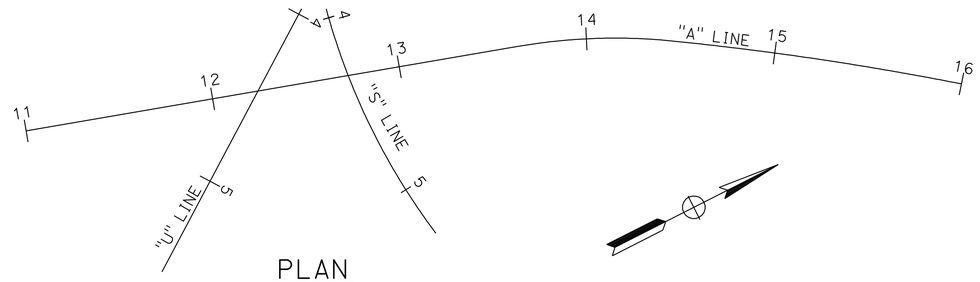

PLAN
1" = 40'

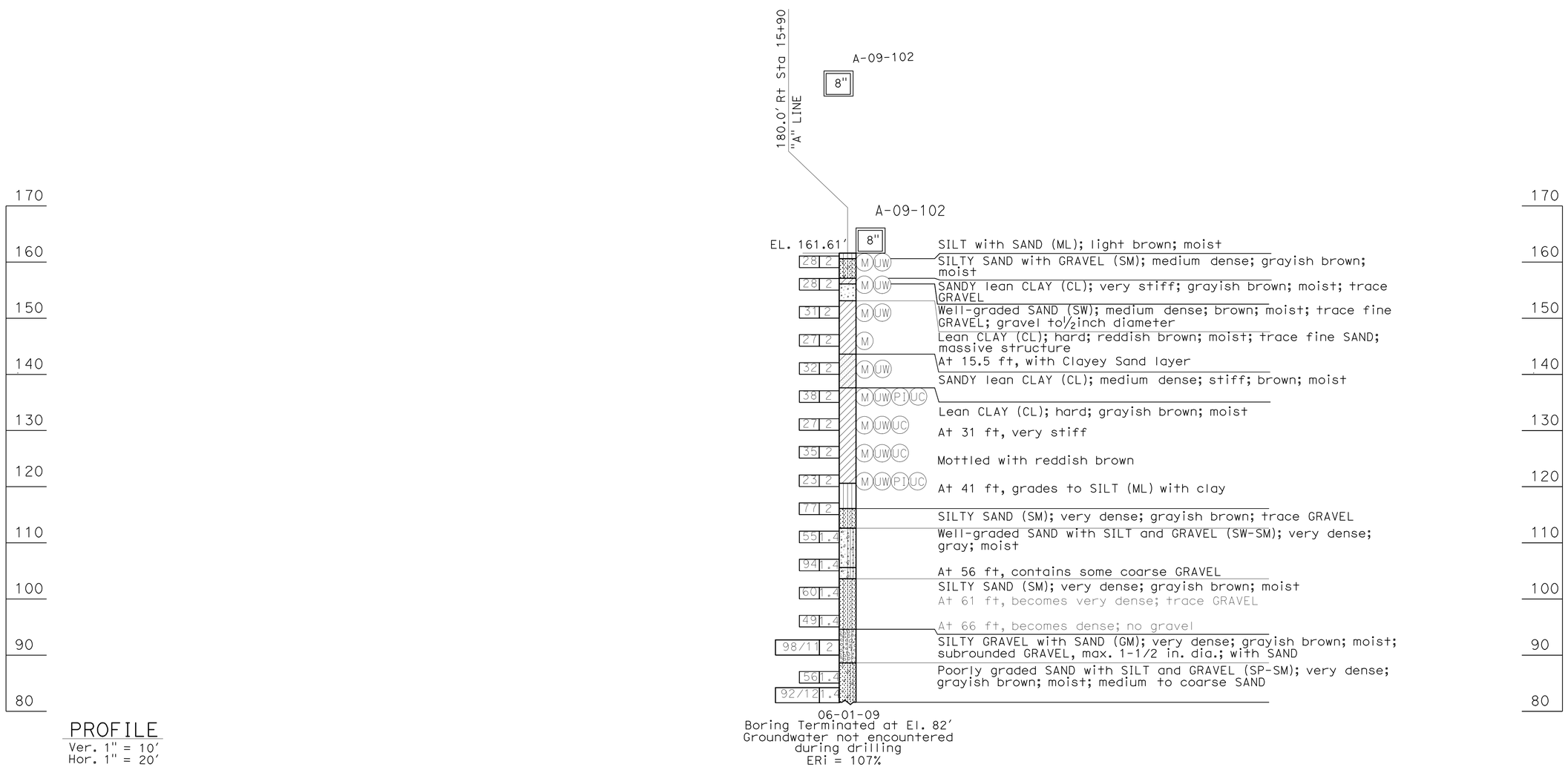

PROFILE
Ver. 1" = 10'
Hor. 1" = 20'

LOG OF TEST BORINGS 2 OF 3

STATE OF CALIFORNIA - DEPARTMENT OF TRANSPORTATION
Caltrans

CONSULTANT FUNCTIONAL SUPERVISOR: Laurence Allen Moore
CALCULATED-DESIGNED BY: Ernie Garnica
CHECKED BY: Anne-Marie Moore
REVISED BY
DATE REVISED

LAST REVISION 00-00-00
DATE PLOTTED => 19-NOV-2009
TIME PLOTTED => 11:16

Dist	COUNTY	ROUTE	POST MILES TOTAL PROJECT	SHEET No.	TOTAL SHEETS
04	Ala	680	4.8/5.2	39	66

REGISTERED CIVIL ENGINEER 8/4/09 DATE

11-16-09
PLANS APPROVAL DATE

REGISTERED PROFESSIONAL ENGINEER
Laurence A. Moore
No. 53476
Exp. 6/30/11
CIVIL
STATE OF CALIFORNIA

THE STATE OF CALIFORNIA OR ITS OFFICERS OR AGENTS SHALL NOT BE RESPONSIBLE FOR THE ACCURACY OR COMPLETENESS OF SCANNED COPIES OF THIS PLAN SHEET.

CALTRANS
111 GRAND AVENUE
OAKLAND, CA 94612

URS Corporation
55 S Market Street
Suite 1500
San Jose, CA, 95113

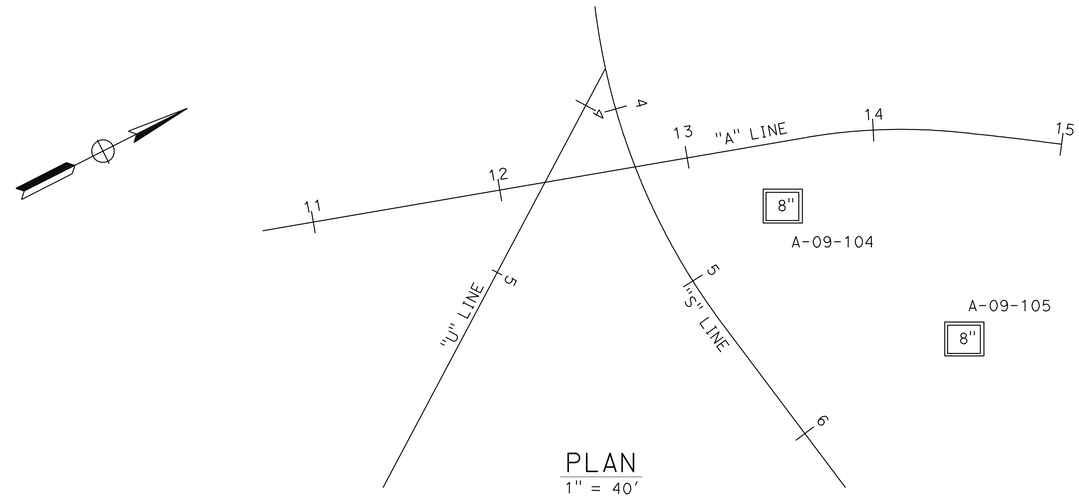

PLAN
1" = 40'

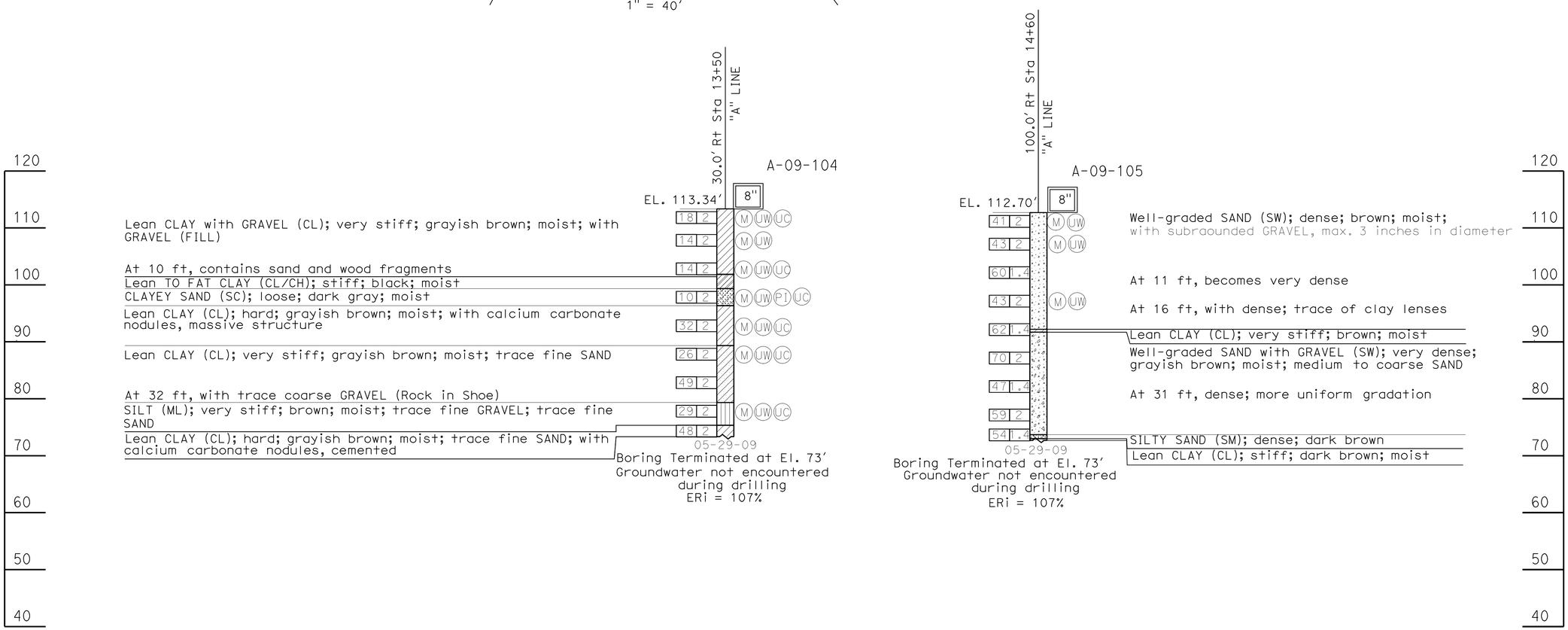

PROFILE
Ver. 1" = 10'
Hor. 1" = 20'

LOG OF TEST BORINGS 3 OF 3

STATE OF CALIFORNIA - DEPARTMENT OF TRANSPORTATION
Caltrans

CONSULTANT FUNCTIONAL SUPERVISOR: Laurence Allen Moore
CALCULATED-DESIGNED BY: Ernie Garnica
CHECKED BY: Anne-Marie Moore
REVISED BY
DATE REVISED

LAST REVISION 00-00-00
DATE PLOTTED => 19-NOV-2009
TIME PLOTTED => 11:16

Dist	COUNTY	ROUTE	POST MILES TOTAL PROJECT	SHEET No.	TOTAL SHEETS
04	Ala	680	4.8/5.2	40	66

LICENSED LANDSCAPE ARCHITECT

11-16-09
PLANS APPROVAL DATE

LICENSED LANDSCAPE ARCHITECT — SALLY BANG No. 5262 — Signature — 11-30-11 Renewal Date — Date — STATE OF CALIFORNIA

THE STATE OF CALIFORNIA OR ITS OFFICERS OR AGENTS SHALL NOT BE RESPONSIBLE FOR THE ACCURACY OR COMPLETENESS OF SCANNED COPIES OF THIS PLAN SHEET.

ABBREVIATIONS

AMEND — amendment
B & B — balled and burlapped
Dia — diameter
EA — each
LB — pound
Oz — ounce
Ft — foot/feet
SQFT — square feet
SQYD — square yard
CF — cubic feet
Max — maximum
Min — minimum
NCN — no common name
No. — number
Pkt — packet
PLT ESTB — plant establishment
Pvmt — pavement
R/W — right of way
SF — state furnished
TRVD — traveled

PLANT LIST AND PLANTING SPECIFICATIONS

PLANT GROUP	PLANT No.	SYMBOL	BOTANICAL NAME	COMMON NAME	SIZE ⑦	QUANTITY EACH	HOLE SIZE (INCH) Dia	HOLE SIZE (INCH) DEPTH	BASIN TYPE	IRON SULFATE	SOIL AMEND ①⑦	COMMERCIAL FERTILIZER ① PLANTING	COMMERCIAL FERTILIZER ① PLT ESTB	BASIN MULCH	STAKING	PLANTING LIMITS MINIMUM DISTANCE (Ft) FROM TRVD WAY	PVMT	FENCE	WALL	PAVED DITCH	EARTH DITCH	ON CENTER (Ft)	REMARKS
M	1		AESCULUS CALIFORNICA	CALIFORNIA BUCKEYE	LINER	7	48	18	I	—	6 CF	1 Pkt	—	1.8 CF	—	40	—	20	—	10	12	15	TREE ⑧ ⑨
	2		CEANOTHUS RAY HARTMAN	MOUNTAIN LILAC	LINER	131	48	18	I	—	6 CF	1 Pkt	—	1.8 CF	—	—	15	15	—	10	12	10	SHRUB ⑧ ⑨
	3		CERCIS OCCIDENTALIS	WESTERN REDBUD	LINER	13	48	18	I	—	6 CF	1 Pkt	—	1.8 CF	—	40	—	15	—	15	15	10	TREE ⑧ ⑨
	4		JUGLANS CALIFORNICA	CALIFORNIA BLACK WALNUT	LINER	7	48	18	I	—	6 CF	1 Pkt	—	1.8 CF	—	40	—	—	—	15	15	20	TREE ⑧ ⑨
	5		PLATANUS RACEMOSA	CALIFORNIA SYCAMORE	LINER	7	48	18	I	—	6 CF	1 Pkt	—	1.8 CF	—	40	—	20	—	10	12	20	TREE ⑧ ⑨
	6		QUERCUS AGRIFOLIA	COAST LIVE OAK	LINER	273	48	18	I	—	6 CF	1 Pkt	—	1.8 CF	—	40	—	20	—	15	17	20	TREE ⑧ ⑨
	7		QUERCUS DOUGLASII	BLUE OAK	LINER	176	48	18	I	—	6 CF	1 Pkt	—	1.8 CF	—	40	—	20	—	15	17	20	TREE ⑧ ⑨
	8		QUERCUS KELLOGGII	CALIFORNIA BLACK OAK	LINER	5	48	18	I	—	6 CF	1 Pkt	—	1.8 CF	—	40	—	20	—	20	22	20	TREE ⑧ ⑨
	9		QUERCUS LOBATA	VALLEY OAK	LINER	12	48	18	I	—	6 CF	1 Pkt	—	1.8 CF	—	40	—	20	—	20	22	20	TREE ⑧ ⑨
	10		SAMBUCUS MEXICANA	BLUE ELDERBERRY	LINER	69	48	18	I	—	6 CF	1 Pkt	—	1.8 CF	—	40	15	20	—	15	17	10	TREE ⑧ ⑨
	11		UMBELLULARIA CALIFORNICA	CALIFORNIA BAY	LINER	27	48	18	I	—	6 CF	1 Pkt	—	1.8 CF	—	40	—	30	—	20	22	20	TREE ⑧ ⑨
W	12		SALIX LASIOLEPIS	ARROYO WILLOW	CUTTING	42	⑦		—	—	—	1 Pkt	—	—	—	40	—	—	—	—	—	15	TREE ⑨

APPLICABLE WHEN CIRCLED:

1 - Quantities shown are "per plant" unless shown as SQFT or SQYD application rates.
2 - Sufficient to receive root ball.
3 - Does not apply to mulch areas.
4 - As shown on plans.
5 - Unless otherwise shown on plans.
6 - See detail.
7 - See Special Provisions.
8 - Install with Foliage Protector and Landscape Fabric.
9 - Natural form.

LEGEND:

EXISTING PLANTS TO REMAIN

NOTE:

Underlined portions of botanical name indicate abbreviations used on Planting Plans.

PLANT LIST
PL-1

REVISED BY | DATE REVISED
ANGELA KWAN | SALLY BANG
CALCULATED-DESIGNED BY | CHECKED BY
SENIOR LANDSCAPE ARCHITECT | DAVID W. YAM
STATE OF CALIFORNIA - DEPARTMENT OF TRANSPORTATION
Caltrans
WATER QUALITY

LAST REVISION 08-10-09 | DATE PLOTTED => 19-NOV-2009 | TIME PLOTTED => 11:16

FOR COMPLETE RIGHT OF WAY AND ACCURATE ACCESS DATA, SEE RIGHT OF WAY RECORD MAPS AT DISTRICT OFFICE.

Dist	COUNTY	ROUTE	POST MILES TOTAL PROJECT	SHEET No.	TOTAL SHEETS
04	Ala	680	4.8/5.2	41	66

LICENSED LANDSCAPE ARCHITECT

11-16-09
PLANS APPROVAL DATE

LICENSED LANDSCAPE ARCHITECT
SALLY BANG No. 5262
Signature
11-30-11
Renewal Date
Date
STATE OF CALIFORNIA

THE STATE OF CALIFORNIA OR ITS OFFICERS OR AGENTS SHALL NOT BE RESPONSIBLE FOR THE ACCURACY OR COMPLETENESS OF SCANNED COPIES OF THIS PLAN SHEET.

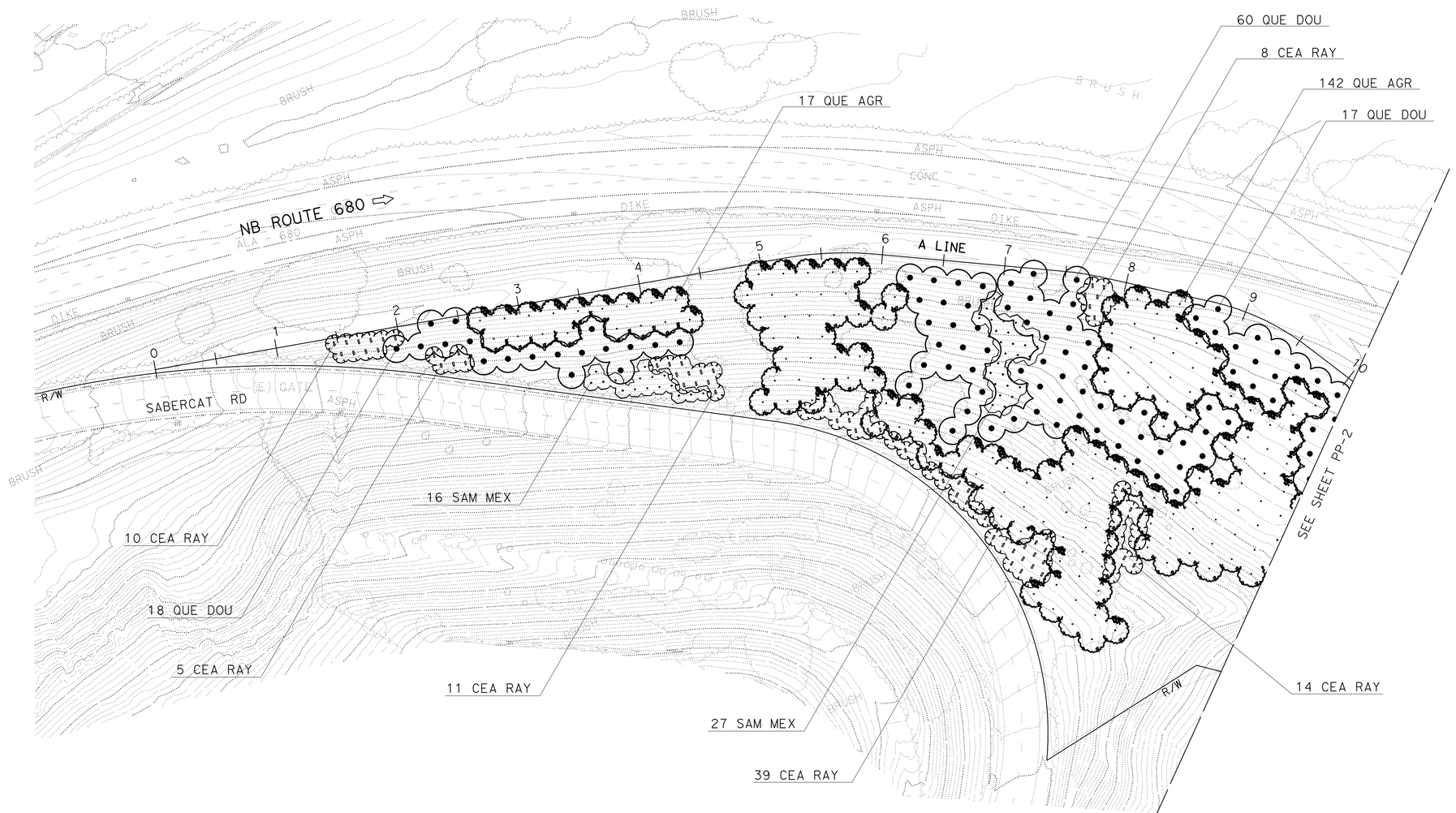

THIS PLAN ACCURATE FOR PLANTING WORK ONLY.

PLANTING PLAN

SCALE 1''=50'

PP-1

STATE OF CALIFORNIA - DEPARTMENT OF TRANSPORTATION
Caltrans®
WATER QUALITY

SENIOR LANDSCAPE ARCHITECT: DAVID W. YAM

CALCULATED-DESIGNED BY: ANGELA KWAN
CHECKED BY: SALLY BANG

REVISED BY
DATE REVISED

LAST REVISION 08-10-09
DATE PLOTTED => 19-NOV-2009
TIME PLOTTED => 11:16

Dist	COUNTY	ROUTE	POST MILES TOTAL PROJECT	SHEET No.	TOTAL SHEETS
04	Ala	680	4.8/5.2	42	66

LICENSED LANDSCAPE ARCHITECT

11-16-09
PLANS APPROVAL DATE

LICENSED LANDSCAPE ARCHITECT — SALLY BANG No. 5080 — Signature — 11-30-11 Renewal Date — Date — STATE OF CALIFORNIA

THE STATE OF CALIFORNIA OR ITS OFFICERS OR AGENTS SHALL NOT BE RESPONSIBLE FOR THE ACCURACY OR COMPLETENESS OF SCANNED COPIES OF THIS PLAN SHEET.

FOR COMPLETE RIGHT OF WAY AND ACCURATE ACCESS DATA, SEE RIGHT OF WAY RECORD MAPS AT DISTRICT OFFICE.

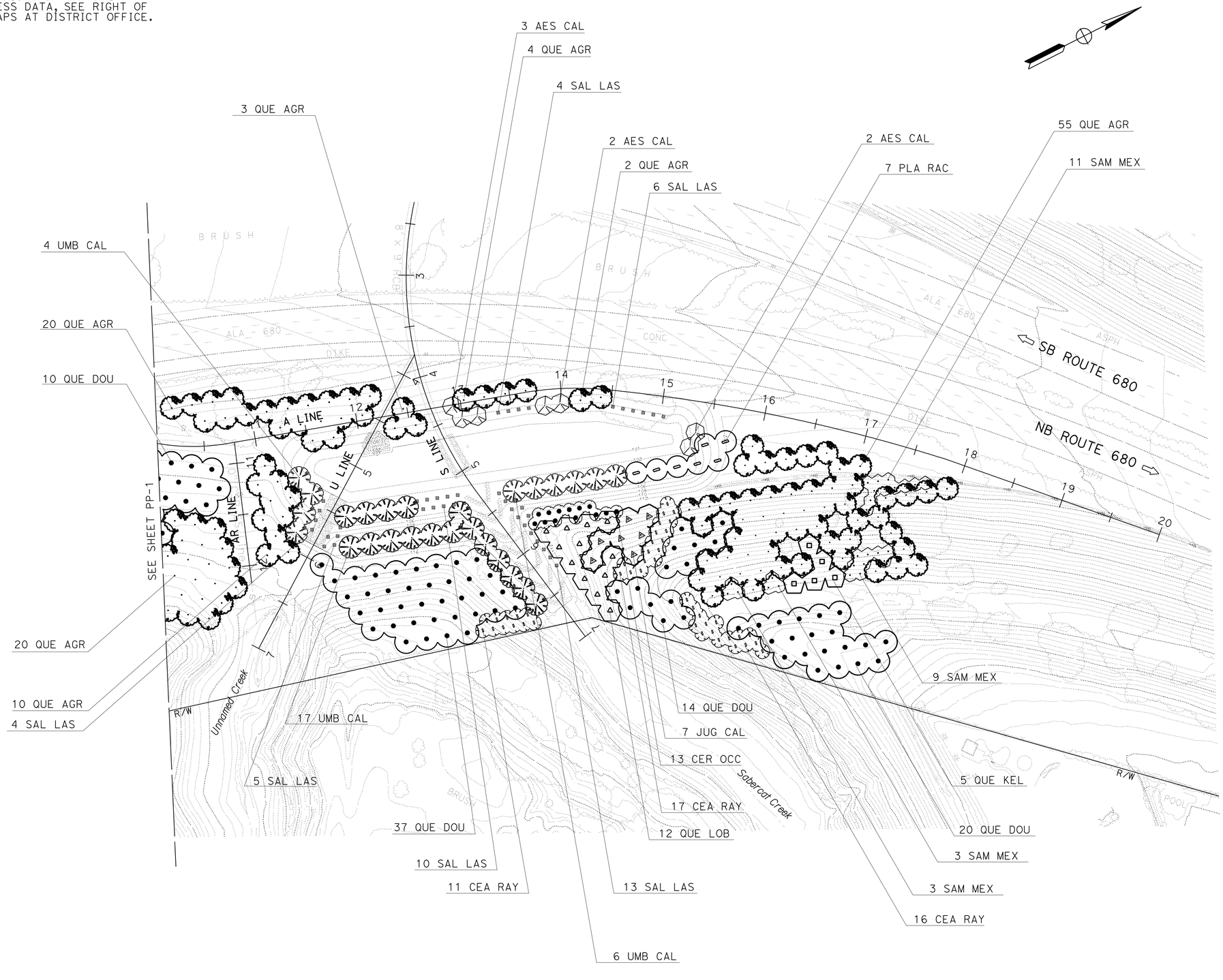

THIS PLAN ACCURATE FOR PLANTING WORK ONLY.

PLANTING PLAN

SCALE 1''=50'

PP-2

STATE OF CALIFORNIA - DEPARTMENT OF TRANSPORTATION
Caltrans®
WATER QUALITY

SENIOR LANDSCAPE ARCHITECT: DAVID W. YAM
CALCULATED-DESIGNED BY: ANGELA KWAN
CHECKED BY: SALLY BANG
REVISED BY
DATE REVISED

LAST REVISION 08-10-09
DATE PLOTTED => 19-NOV-2009
TIME PLOTTED => 12:36

Dist	COUNTY	ROUTE	POST MILES TOTAL PROJECT	SHEET No.	TOTAL SHEETS
04	Ala	680	4.8/5.2	43	66

LICENSED LANDSCAPE ARCHITECT

11-16-09
PLANS APPROVAL DATE

LICENSED LANDSCAPE ARCHITECT — SALLY BANG No. 5080 — Signature — 11-30-11 Renewal Date — Date — STATE OF CALIFORNIA

THE STATE OF CALIFORNIA OR ITS OFFICERS OR AGENTS SHALL NOT BE RESPONSIBLE FOR THE ACCURACY OR COMPLETENESS OF SCANNED COPIES OF THIS PLAN SHEET.

FOR COMPLETE RIGHT OF WAY AND ACCURATE ACCESS DATA, SEE RIGHT OF WAY RECORD MAPS AT DISTRICT OFFICE.

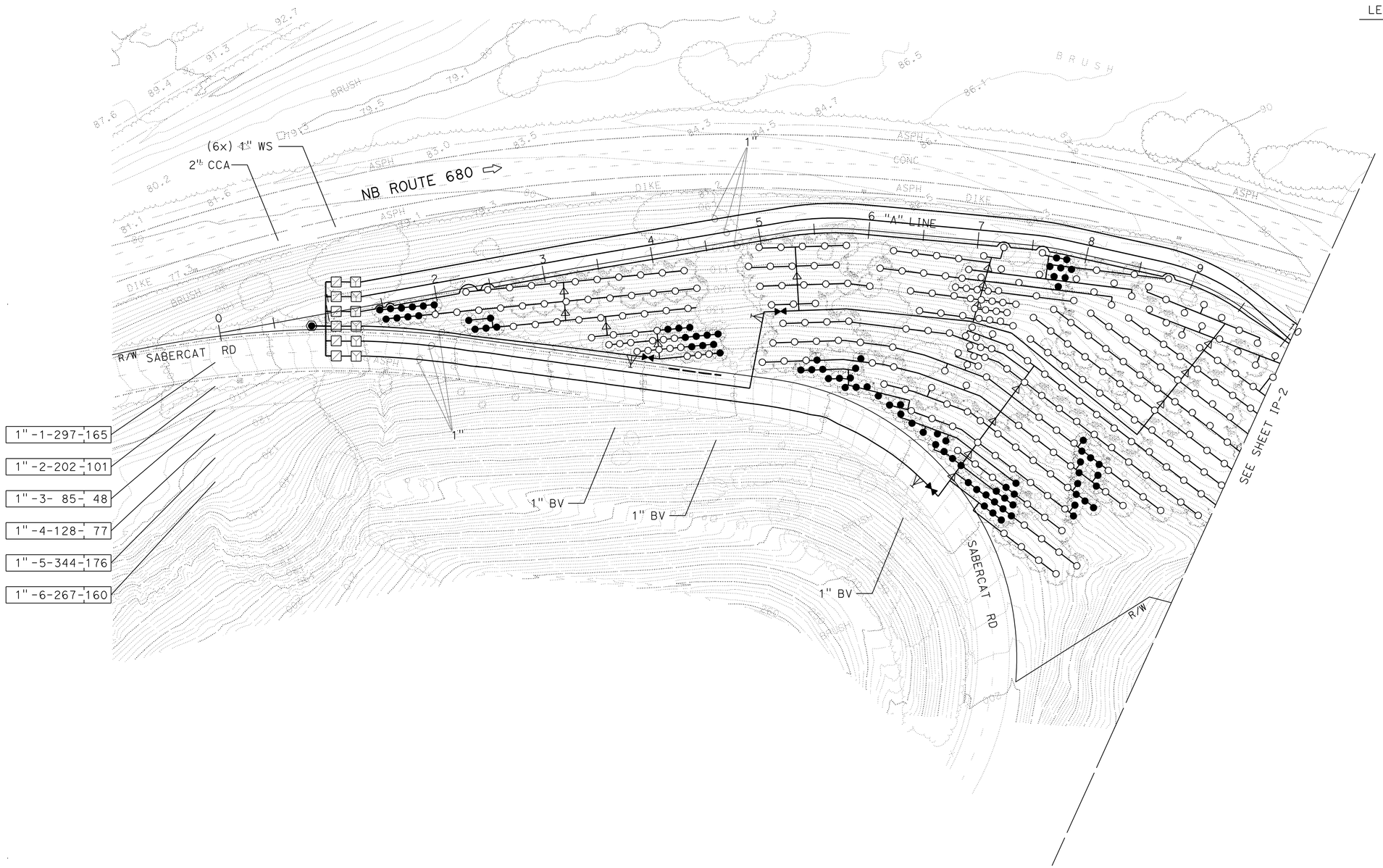

THIS PLAN ACCURATE FOR IRRIGATION WORK ONLY.

LEGEND

MCV SIZE
VALVE NUMBER
GPH
QUANTITY OF SPRINKLERS

2"-3-30-50

1" PRESSURE REGULATOR VALVE (PRV)

PLASTIC PIPE (SCHEDULE40) (SUPPLY LINE) (MAIN)

PLASTIC PIPE (SUPPLY LINE) (LATERAL)
3/4" = PR 200
1" = SCHEDULE 40

NOTES:

1. Plastic pipe (supply line) (main) upstream of manual control valves (MCV) shall be 2", unless otherwise noted.
2. Plastic pipe (supply line) (lateral) upstream of pressure regulator valve (PRV) shall be 1", unless otherwise noted.
3. Unlabeled plastic pipe (supply line) (lateral) downstream of PRV shall be 3/4".
4. Sprinkler (Type D) locations on slopes, shall be installed on the uphill side of plant basins.
5. Check valve shall be the same size as the plastic pipe (Supply Line) upstream of the valve.

IRRIGATION PLAN

SCALE 1''=50'

IP-1

REVISED BY | DATE REVISED
ANGELA KWAN | SALLY BANG
CALCULATED-DESIGNED BY | CHECKED BY
SENIOR LANDSCAPE ARCHITECT
DAVID W. YAM

STATE OF CALIFORNIA - DEPARTMENT OF TRANSPORTATION
Caltrans®
WATER QUALITY

LAST REVISION 08-10-09
DATE PLOTTED => 19-NOV-2009
TIME PLOTTED => 11:17

Dist	COUNTY	ROUTE	POST MILES TOTAL PROJECT	SHEET No.	TOTAL SHEETS
04	Ala	680	4.8/5.2	44	66

LICENSED LANDSCAPE ARCHITECT

11-16-09
PLANS APPROVAL DATE

LICENSED LANDSCAPE ARCHITECT
SALLY BANG No. 5080
Signature
11-30-11
Renewal Date
Date
STATE OF CALIFORNIA

THE STATE OF CALIFORNIA OR ITS OFFICERS OR AGENTS SHALL NOT BE RESPONSIBLE FOR THE ACCURACY OR COMPLETENESS OF SCANNED COPIES OF THIS PLAN SHEET.

FOR COMPLETE RIGHT OF WAY AND ACCURATE ACCESS DATA, SEE RIGHT OF WAY RECORD MAPS AT DISTRICT OFFICE.

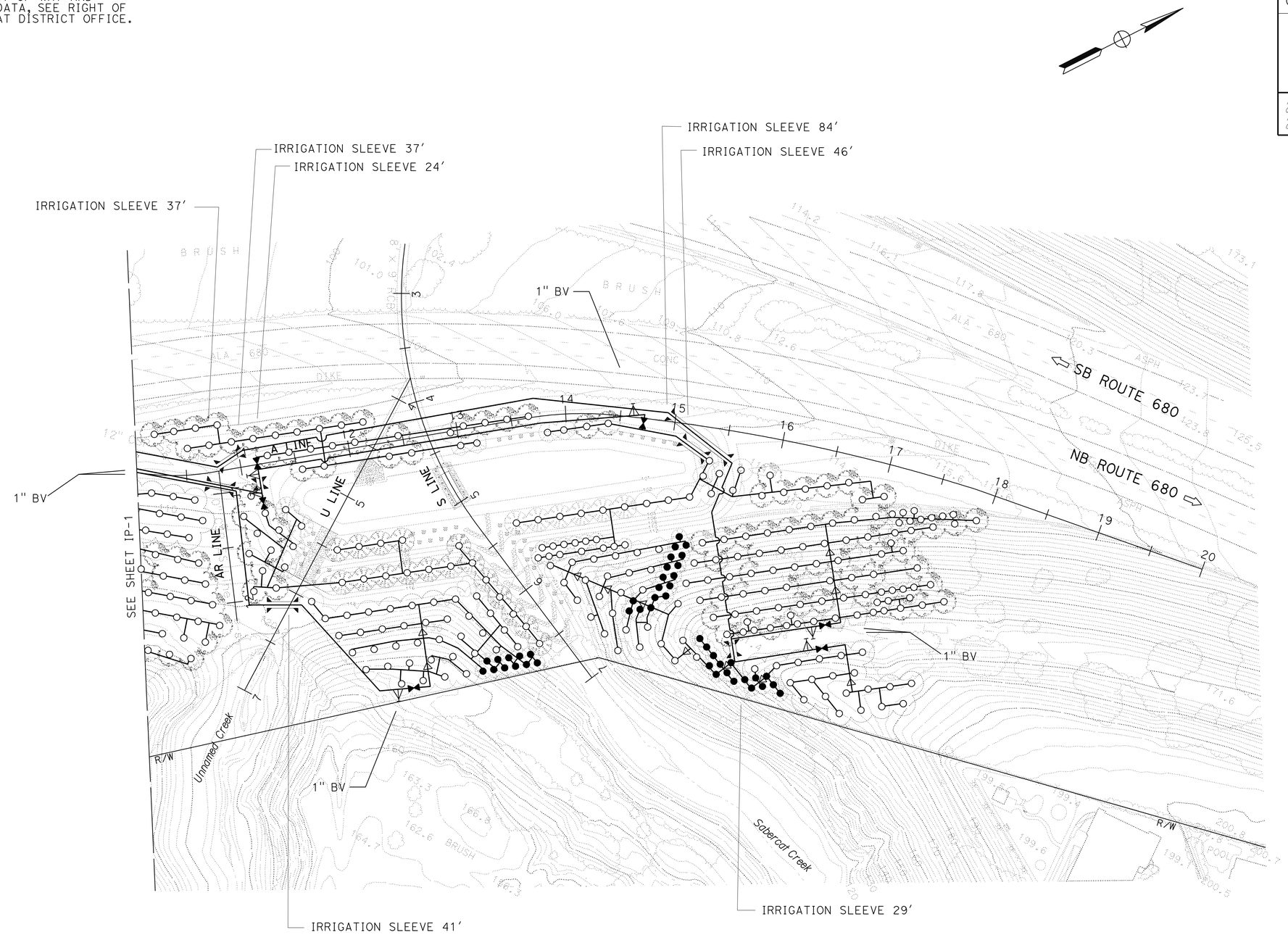

THIS PLAN ACCURATE FOR IRRIGATION WORK ONLY.

IRRIGATION PLAN

SCALE 1′′=50′

IP-2

STATE OF CALIFORNIA - DEPARTMENT OF TRANSPORTATION
Caltrans®
WATER QUALITY

SENIOR LANDSCAPE ARCHITECT: DAVID W. YAM

CALCULATED-DESIGNED BY: ANGELA KWAN
CHECKED BY: SALLY BANG

REVISED BY
DATE REVISED

LAST REVISION 08-10-09
DATE PLOTTED => 19-NOV-2009
TIME PLOTTED => 12:36

Dist	COUNTY	ROUTE	POST MILES TOTAL PROJECT	SHEET No.	TOTAL SHEETS
04	Ala	680	4.8/5.2	45	66

LICENSED LANDSCAPE ARCHITECT

11-16-09
PLANS APPROVAL DATE

LICENSED LANDSCAPE ARCHITECT — SALLY BANG No. 5080 — Signature — 11-30-11 Renewal Date — Date — STATE OF CALIFORNIA

THE STATE OF CALIFORNIA OR ITS OFFICERS OR AGENTS SHALL NOT BE RESPONSIBLE FOR THE ACCURACY OR COMPLETENESS OF SCANNED COPIES OF THIS PLAN SHEET.

NOTES:

1. CUT OPENING IN LANDSCAPE FABRIC SUFFICIENT FOR SPRINKLER AND. RISER. SECURE AS NEEDED.

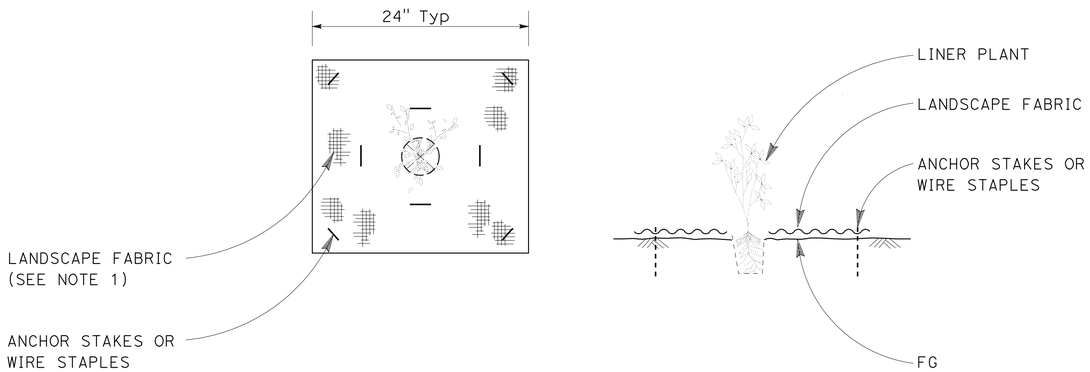

PLAN SECTION

LANDSCAPE FABRIC

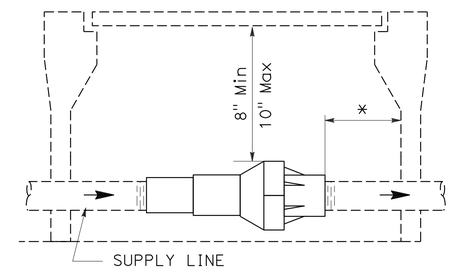

ELEVATION

PRESSURE REGULATOR VALVE

* 2" CLEARANCE ON ALL SIDES MIN.

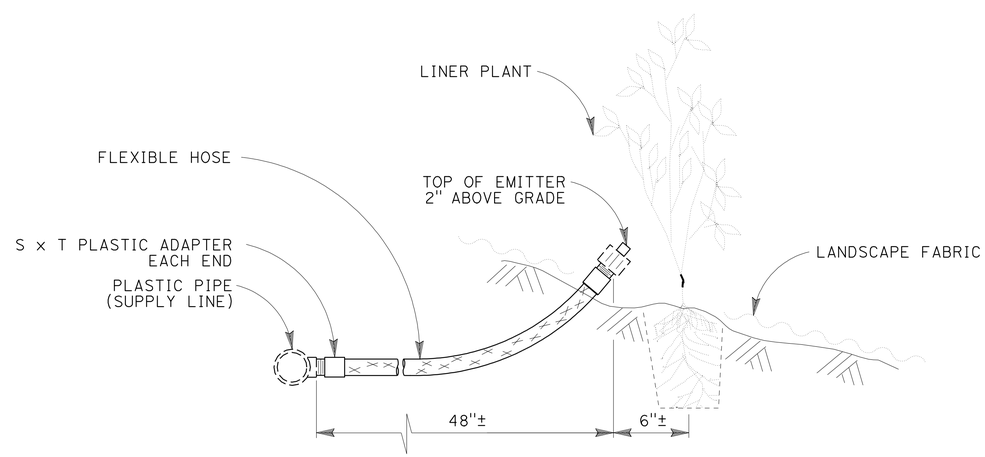

ELEVATION

(MODIFIED) RISER TYPE V

LANDSCAPE DETAILS

NO SCALE

LD-1

STATE OF CALIFORNIA - DEPARTMENT OF TRANSPORTATION
Caltrans®
WATER QUALITY

SENIOR LANDSCAPE ARCHITECT: DAVID W. YAM
CALCULATED-DESIGNED BY: ANGELA KWAN
CHECKED BY: SALLY BANG
REVISED BY
DATE REVISED

LAST REVISION 11-10-09
DATE PLOTTED => 19-NOV-2009
TIME PLOTTED => 11:17

Dist	COUNTY	ROUTE	POST MILES TOTAL PROJECT	SHEET No.	TOTAL SHEETS
04	Ala	680	4.8/5.2	46	66

LICENSED LANDSCAPE ARCHITECT

11-16-09
PLANS APPROVAL DATE

LICENSED LANDSCAPE ARCHITECT — SALLY BANG No. 5080 — Signature — 11-30-11 Renewal Date — Date — STATE OF CALIFORNIA

THE STATE OF CALIFORNIA OR ITS OFFICERS OR AGENTS SHALL NOT BE RESPONSIBLE FOR THE ACCURACY OR COMPLETENESS OF SCANNED COPIES OF THIS PLAN SHEET.

SPRINKLER SCHEDULE

SYMBOL	TYPE	DESCRIPTION	SPRAY PATTERN	OPERATING PRESSURE (PSI)	PRESSURE COMPENSATING	PLUS/MINUS 5% ② DISCHARGE: GALLONS PER MINUTE (GPM)	GALLONS PER HOUR (GPH)	RADIUS (Ft)	WIDTH x LENGTH (Ft)	MATERIAL	INLET CONNECTION (NPT INCH)	POSITIVE-LOCKING ADJ ARC STOP	BACKSPLASH PREVENTER	DIFFUSER PIN	DISTANCE CONTROL FLAP	ADJ DISCHARGE	RISER: TYPE	MATERIAL: PLASTIC	GALVANIZED	SIZE (IPS INCH)	HEIGHT (INCH)	FLOW SHUTOFF DEVICE	⑤ SWING JOINT (TYPE)	RISER SUPPORT	SPRINKLER PROTECTOR (TYPE)	REMARKS
○	D-1	SINGLE OUTLET EMITTER	—	20	X	—	2	—	—	PL	0.5	—	—	—	—	—	⑥	X	—	0.5	—	—	—	—	—	SINGLE EMITTER ON ½" FPT X 10-32 THREADED ADAPTER. PLACE ON UPHILL SIDE OF SLOPE ⑥
●	D-2	SINGLE OUTLET EMITTER	—	20	X	—	1	—	—	PL	0.5	—	—	—	—	—	⑥	X	—	0.5	—	—	—	—	—	SINGLE EMITTER ON ½" FPT X 10-32 THREADED ADAPTER. PLACE ON UPHILL SIDE OF SLOPE ⑥

X IN BOX DENOTES REQUIREMENT

APPLICABLE WHEN CIRCLED BELOW:

1 - See Special Provisions.
② - If a pressure compensating device is specified, the discharge and radii shown reflect its use.
3 - Arc Stop shall be fitted with a nut and bolt.
4 - Vinyl-coated cast iron housing.
5 - Swing Joints required adjacent to shoulders, curbs, sidewalks, and dikes.
⑥ - See Details.

ABBREVIATIONS

F	full circle	Ft	feet/foot
P	part circle	GPM	gallons per minute
F/P	full/part circle	GPH	gallons per hour
Q	quarter circle	Adj	adjustable
T	third circle	PL	plastic
H	half circle	B/B	brass/bronze
TT	two third circle	B/PL	brass/plastic
TQ	three quarter circle	B/B/PL	brass/bronze/plastic
CST	center strip	NPT	national pipe thread
SST	side strip	IPS	iron pipe size
EST	end strip	PSI	pounds per square inch

LANDSCAPE DETAILS

NO SCALE

LD-2

ANGELA KWAN — REVISED BY
SALLY BANG — DATE REVISED
CALCULATED-DESIGNED BY
CHECKED BY
SENIOR LANDSCAPE ARCHITECT
DAVID W. YAM
STATE OF CALIFORNIA - DEPARTMENT OF TRANSPORTATION
Caltrans
WATER QUALITY

LAST REVISION 08-10-09 | DATE PLOTTED => 19-NOV-2009 | TIME PLOTTED => 11:17

Dist	COUNTY	ROUTE	POST MILES TOTAL PROJECT	SHEET No.	TOTAL SHEETS
04	Ala	680	4.8/5.2	47	66

LICENSED LANDSCAPE ARCHITECT

11-16-09
PLANS APPROVAL DATE

LICENSED LANDSCAPE ARCHITECT — SALLY BANG No. 5262 — Signature — 11-30-11 Renewal Date — Date — STATE OF CALIFORNIA

THE STATE OF CALIFORNIA OR ITS OFFICERS OR AGENTS SHALL NOT BE RESPONSIBLE FOR THE ACCURACY OR COMPLETENESS OF SCANNED COPIES OF THIS PLAN SHEET.

ABBREVIATIONS:

EA — each
DIP — ductile iron pipe
GSP — galvanized steel pipe
Ft — foot/feet
PR — pressure rated
PPIL — plastic pipe irrigation line

SUBTOTALS PER VALVE ON LATERAL SUPPLY SIDE OF CONTROL VALVE

DESCRIPTION			UNIT	VALVE OR ASSEMBLY NUMBER 1	2	3	4	5	6	SUBTOTALS	UNIT	DESCRIPTION		
PLASTIC PIPE SUPPLY LINE	SCH 40	1"	LF	1,900	1,400	1,300	300	500	600	6,000	LF	1"	SCH 40	PLASTIC PIPE SUPPLY LINE
PLASTIC PIPE SUPPLY LINE	PR 200	¾"	LF	2,715	2,250	820	1,175	3,350	3,035	13,345	LF	¾"	PR 200	PLASTIC PIPE SUPPLY LINE
GSP														GSP
PPIL														PPIL
SPRINKLER TYPE		D-1	EA	132	101	37	51	168	107	596	EA	D-1		SPRINKLER TYPE
SPRINKLER TYPE		D-2	EA	33	—	11	26	8	53	131	EA	D-2		SPRINKLER TYPE

IRRIGATION QUANTITIES
IQ-1

REVISED BY | DATE REVISED
ANGELA KWAN | SALLY BANG
CALCULATED-DESIGNED BY | CHECKED BY
SENIOR LANDSCAPE ARCHITECT
DAVID W. YAM

STATE OF CALIFORNIA - DEPARTMENT OF TRANSPORTATION
Caltrans
WATER QUALITY

LAST REVISION 08-10-09 | DATE PLOTTED => 19-NOV-2009 | TIME PLOTTED => 11:18

Dist	COUNTY	ROUTE	POST MILES TOTAL PROJECT	SHEET No.	TOTAL SHEETS
04	Ala	680	4.8/5.2	48	66

LICENSED LANDSCAPE ARCHITECT

11-16-09
PLANS APPROVAL DATE

LICENSED LANDSCAPE ARCHITECT — SALLY BANG No. 5262 — Signature — 11-30-11 Renewal Date — Date — STATE OF CALIFORNIA

THE STATE OF CALIFORNIA OR ITS OFFICERS OR AGENTS SHALL NOT BE RESPONSIBLE FOR THE ACCURACY OR COMPLETENESS OF SCANNED COPIES OF THIS PLAN SHEET.

SUBTOTALS PER PLAN SHEET ON MAIN SUPPLY SIDE OF CONTROL VALVE

DESCRIPTION			UNIT	SHEET NUMBER IP-1	IP-2	SUBTOTALS
BPA		ENCLOSURE				
BOOSTER PUMP						
IRRIGATION CONTROLLER	CEC	STATION				
		STATION				
		STATION				
		SINGLE				
		DOUBLE				
VALVES AND ASSEMBLIES*	WS	1"	EA	6	—	6
	MCV	1"	EA	6	—	6
	PRV	1"	EA	3	6	9
	BV	1"	EA	3	6	9
	CV	¾"	EA	15	9	26
	CCA	2"	EA	1	—	1
IS	SCH 40	6"	LF	—	298	298
PLASTIC PIPE SUPPLY LINE	SCH 40	2"	LF	100	—	100
	PR 200					
PLASTIC PIPE IRRIGATION LINE						

* NOTE: SOME IRRIGATION SLEEVES VALVES AND ASSEMBLIES ARE ON LATERAL SUPPLY SIDE OF CONTROL VALVE.

TOTAL QUANTITIES

TOTALS	UNIT	DESCRIPTION		
		ENCLOSURE		BPA
		BOOSTER PUMP		
		STATION		IRRIGATION CONTROLLER
		STATION		
		STATION		
		SINGLE	CEC	
		DOUBLE		
6	EA	1"	WS	VALVES AND ASSEMBLIES
6	EA	1"	MCV	
9	EA	1"	PRV	
9	EA	1"	BV	
26	EA	¾"	CV	
1	EA	2"	CCA	
298	LF	6"	SCH 40	IS
100	LF	2"	SCH 40	PLASTIC PIPE SUPPLY LINE
6,000	LF	1"		
13,345	LF	¾"	PR 200	
				PLASTIC PIPE IRRIGATION LINE
596	EA	D-1		SPRINKLER TYPE
131	EA	D-2		

ABBREVIATIONS:

BPA — backflow preventer assembly
BV — ball valve
CCA — cam coupler assembly
CV — check valve
CEC — controller enclosure cabinet
CSP — corrugated steel pipe
DIP — ductile iron pipe
EA — each
FAU — filter assembly unit
FCV — flow control valve
FS — flow sensor
FV — flush valve
Ft — foot/feet
GSP — galvanized steel pipe
GV — gate valve
IS — irrigation sleeve
MCV — manual control valve
PPIL — plastic pipe irrigation line
PR — pressure rated
PRV — pressure regulator valve
PRLV — pressure relief valve
QCV — quick coupling valve
RCV — remote control valve
RCVM — remote control valve (master)
UVR — ultraviolet resistant
VAU — valve assembly unit
WSP — welded steel pipe
WS — wye strainer

IRRIGATION QUANTITIES
IQ-2

STATE OF CALIFORNIA - DEPARTMENT OF TRANSPORTATION
Caltrans®
WATER QUALITY
SENIOR LANDSCAPE ARCHITECT: DAVID W. YAM
CALCULATED-DESIGNED BY: ANGELA KWAN
CHECKED BY: SALLY BANG
REVISED BY
DATE REVISED

LAST REVISION 08-10-09
DATE PLOTTED => 19-NOV-2009
TIME PLOTTED => 11:18

DIST	COUNTY	ROUTE	POST MILES TOTAL PROJECT	SHEET NO.	TOTAL SHEETS
04	Ala	680	4.8/5.2	49	66

REGISTERED CIVIL ENGINEER

June 5, 2009
PLANS APPROVAL DATE

REGISTERED PROFESSIONAL ENGINEER Glenn DeCou No. C34547 Exp. 9-30-09 CIVIL STATE OF CALIFORNIA

The State of California or its officers or agents shall not be responsible for the accuracy or completeness of electronic copies of this plan sheet.

To accompany plans dated 11-16-09

2006 REVISED STANDARD PLAN RSP A85

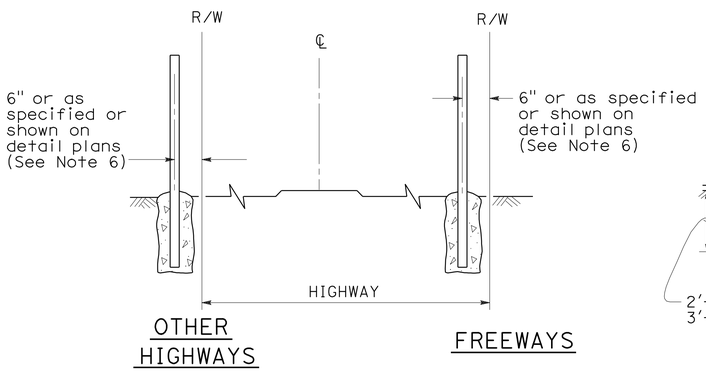

FENCE LOCATION

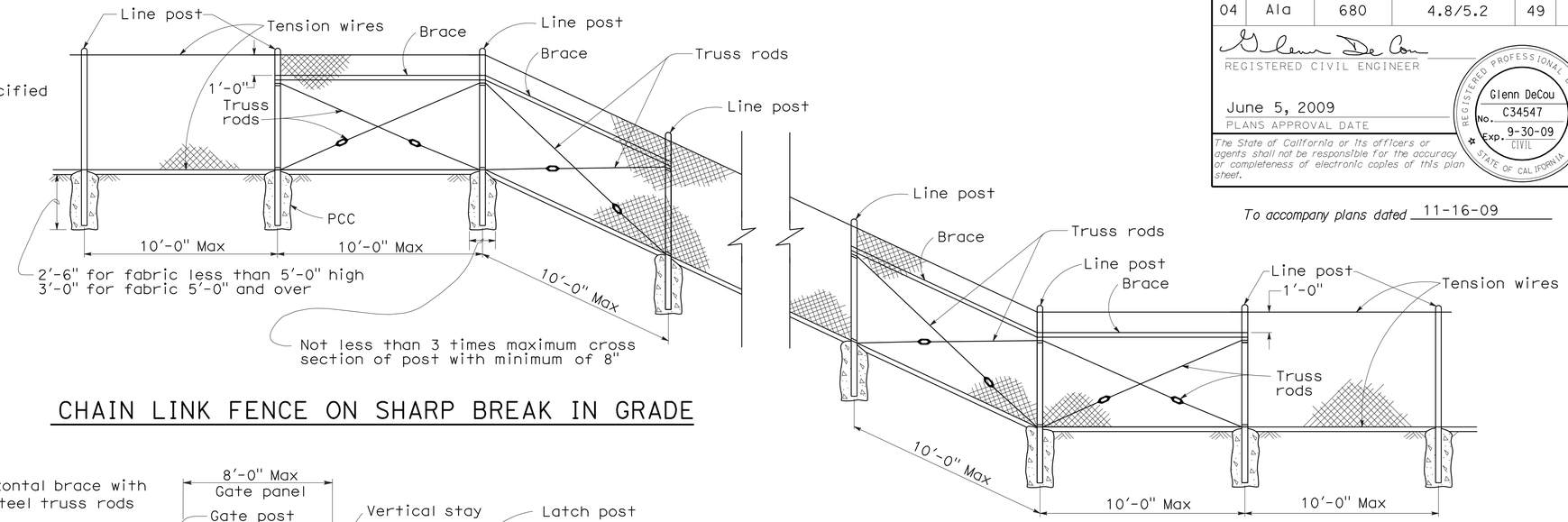

CHAIN LINK FENCE ON SHARP BREAK IN GRADE

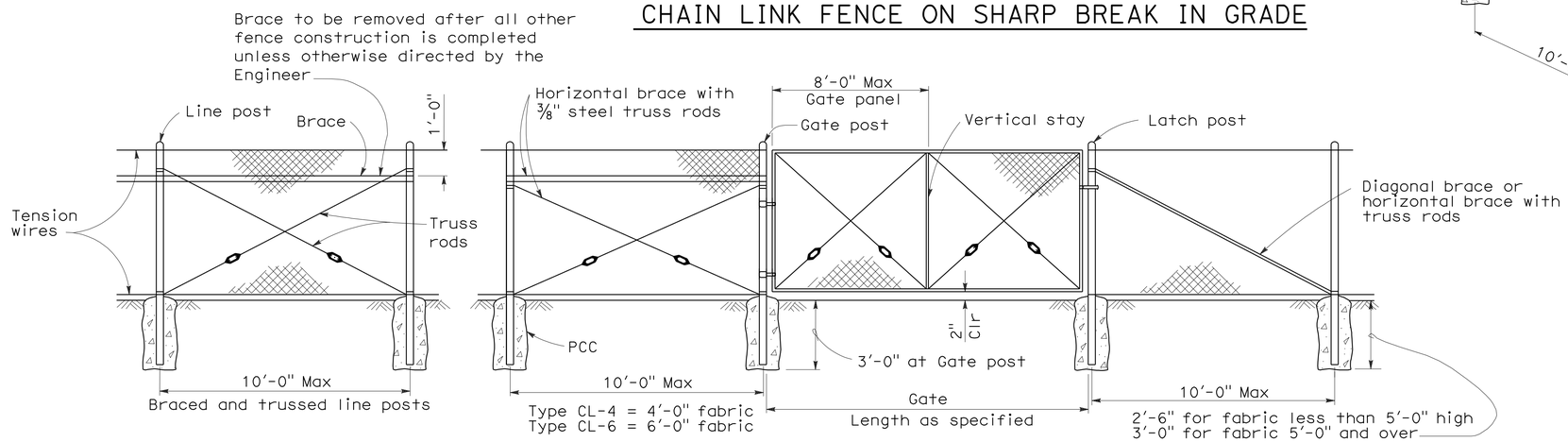

CHAIN LINK GATE INSTALLATION

GATE POST			
FENCE HEIGHT	GATE WIDTHS	NOMINAL ID	WEIGHT PER FOOT
6'-0" and Less	Up thru 6'-0"	2½"	4.95 LB
	Over 6'-0" thru 12'-0"	4"	10.79 LB
	Over 12'-0" thru 18'-0"	5"	14.62 LB
	Over 18'-0" to 24'-0" Max	6"	18.97 LB
Over 6'-0"	Up thru 6'-0"	3"	7.58 LB
	Over 6'-0" thru 12'-0"	5"	14.62 LB
	Over 12'-0" thru 18'-0"	6"	18.97 LB
	Over 18'-0" to 24'-0" Max	8"	28.55 LB

Above post dimensions and weights are minimums. Larger sizes may be used on approval of the Engineer.

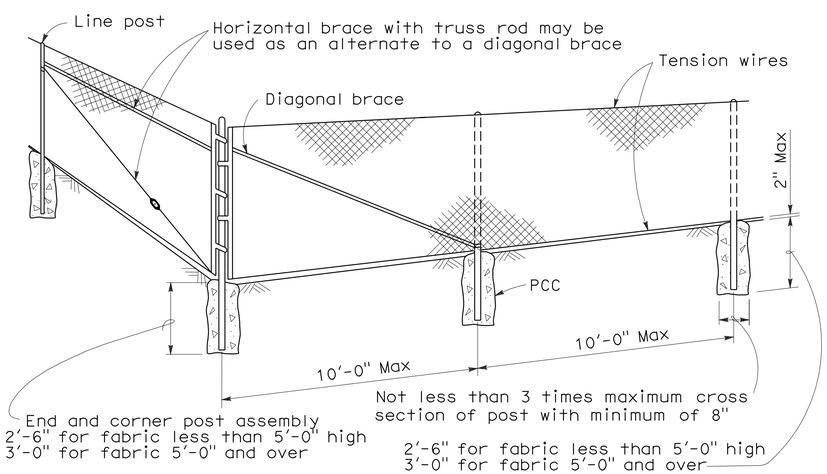

CORNER POST

NOTES:

1. The below table shows examples of post and brace sections which may comply with the Specifications.
2. Sections shown in the tables must also comply with the strength requirements and other provisions of the Specifications.
3. Other sections which comply with the strength requirements and other provisions of the Specifications may be used on approval of the Engineer.
4. Options exercised shall be uniform on any one project.
5. Dimensions shown are nominal.
6. Offset to be 2'-0" at monument locations, measured at right angles to R/W lines. Taper to achieve offset to be at least 20'-0" long.

TYPICAL MEMBER DIMENSIONS (See Notes)											
FENCE HEIGHT	LINE POSTS			END, LATCH & CORNER POSTS				BRACES			
	ROUND ID	H	ROLL FORMED	ROUND ID	ROLL FORMED			ROUND ID	H	ROLL FORMED	
6' & less	1½"	1⅞" × 1⅝"	1⅞" × 1⅝"	2"	3½" × 3½"	2" × 1¾"		1¼"	1½" × 1 5/16"	1⅝" × 1¼"	1¾" × 1¼"
Over 6'	2"	2¼" × 2"	2" × 1¾"	2½"	3½" × 3½"	2½" × 2½"		1¼"	1½" × 1 5/16"	1⅝" × 1¼"	1¾" × 1¼"

STATE OF CALIFORNIA
DEPARTMENT OF TRANSPORTATION

CHAIN LINK FENCE

NO SCALE

RSP A85 DATED JUNE 5, 2009 SUPERSEDES STANDARD PLAN A85
DATED MAY 1, 2006 - PAGE 111 OF THE STANDARD PLANS BOOK DATED MAY 2006.

REVISED STANDARD PLAN RSP A85

5-7-09

DIST	COUNTY	ROUTE	POST MILES TOTAL PROJECT	SHEET NO.	TOTAL SHEETS
04	Ala	680	4.8/5.2	50	66

REGISTERED CIVIL ENGINEER

June 5, 2009
PLANS APPROVAL DATE

REGISTERED PROFESSIONAL ENGINEER Glenn DeCou No. C34547 Exp. 9-30-09 CIVIL STATE OF CALIFORNIA

The State of California or its officers or agents shall not be responsible for the accuracy or completeness of electronic copies of this plan sheet.

To accompany plans dated 11-16-09

NOTES:

1. H is 2'-6" for fabric less than 5'-0" high. H is 3'-0" for fabric 5'-0" and over.
2. T is not less than 3 times maximum cross section of post with minimum of 8".
3. Arms with barbed wire to be used where shown on plans.
4. See Revised Standard Plan RSP A85 for Chain Link Fencing dimensions.
5. Reinforcing must comply with ASTM A 706.
6. See Detail A on New Standard Plan NSP A86B for connection at headwall.

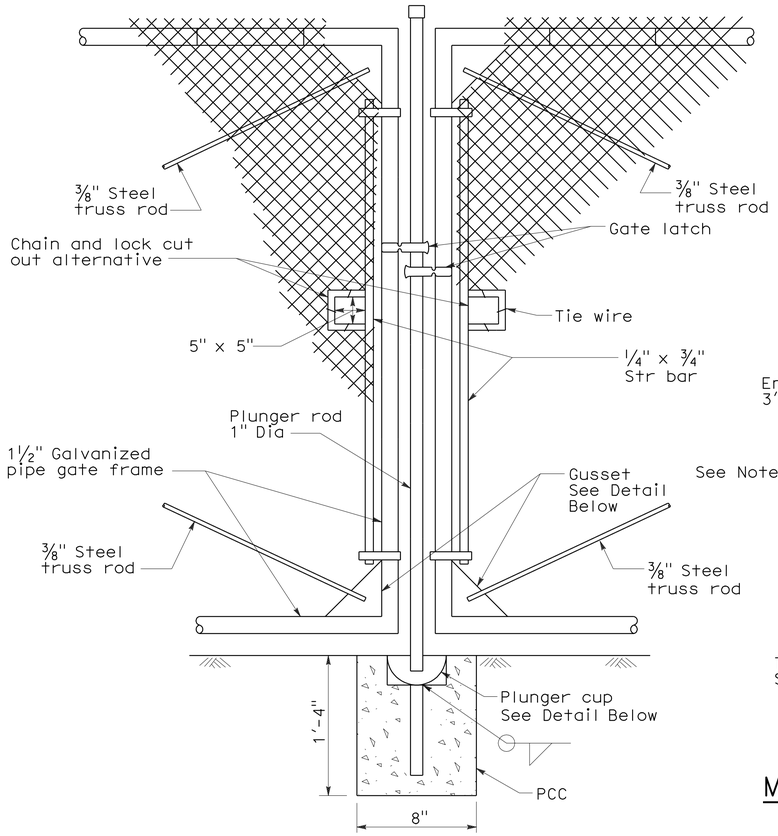

TYPICAL DOUBLE GATE
REMOVABLE CENTER POST

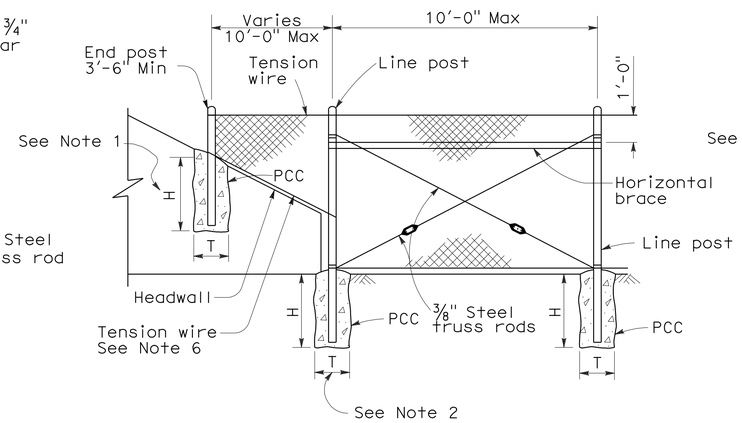

METHOD OF TYING FENCE TO HEADWALL

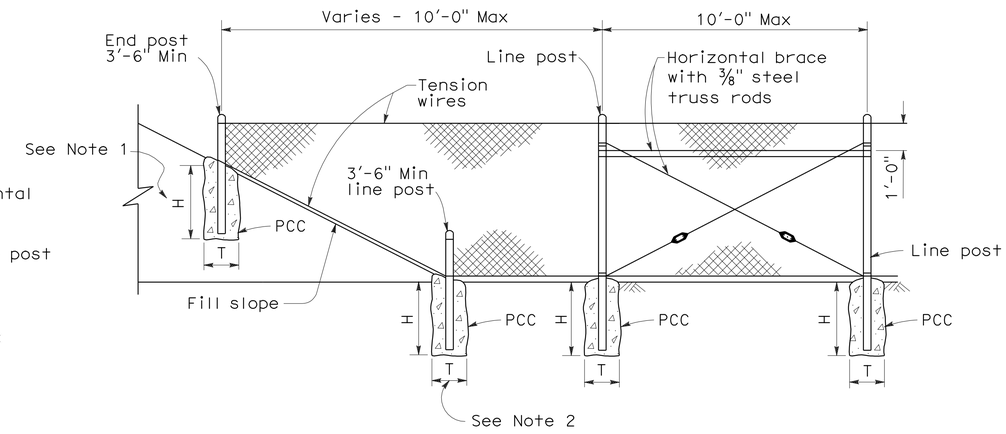

METHOD OF ERECTING FENCE FOR FILL SLOPE

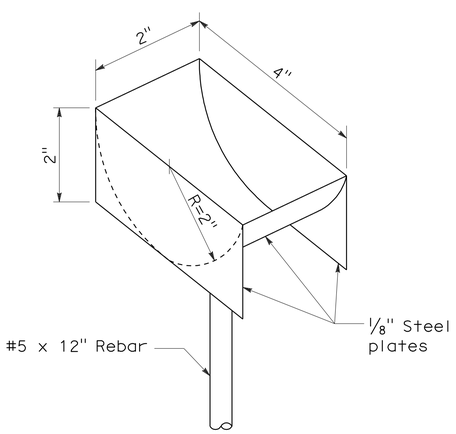

PLUNGER CUP DETAIL

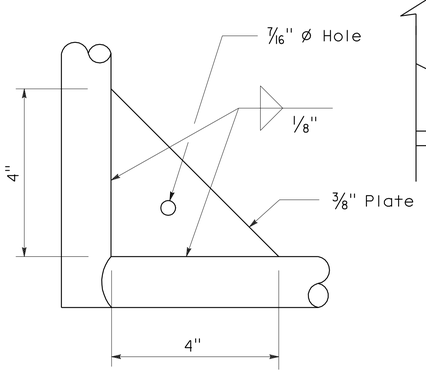

GUSSET DETAIL

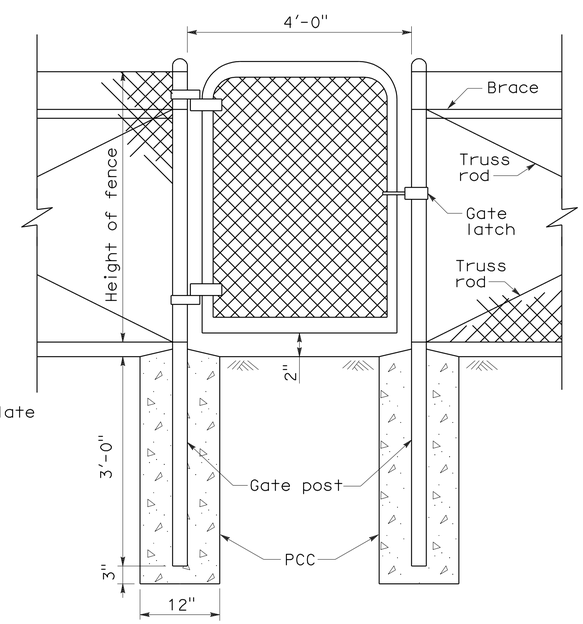

WALK GATE

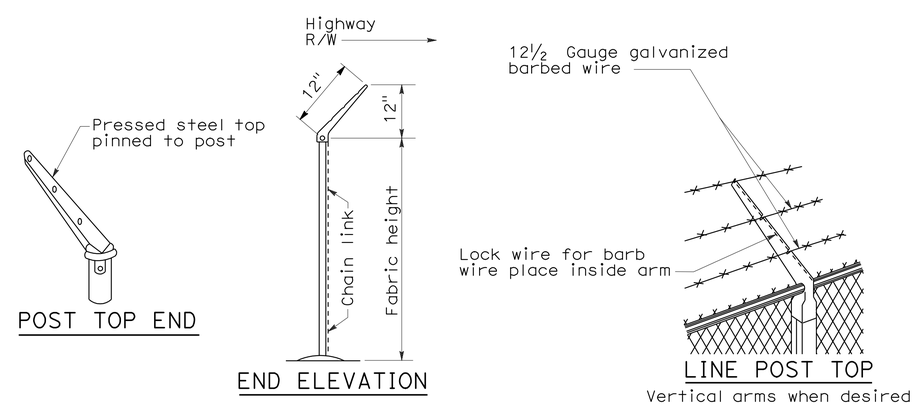

POST TOP END

END ELEVATION

LINE POST TOP
Vertical arms when desired

BARBED WIRE POST TOP
See Note 3

STATE OF CALIFORNIA
DEPARTMENT OF TRANSPORTATION

CHAIN LINK FENCE DETAILS

NO SCALE

NSP A85A DATED JUNE 5, 2009 SUPPLEMENTS THE STANDARD PLANS BOOK DATED MAY 2006.

NEW STANDARD PLAN NSP A85A

2006 NEW STANDARD PLAN NSP A85A

5-7-09

DIST	COUNTY	ROUTE	POST MILES TOTAL PROJECT	SHEET NO.	TOTAL SHEETS
04	Ala	680	4.8/5.2	51	66

REGISTERED CIVIL ENGINEER

June 5, 2009
PLANS APPROVAL DATE

REGISTERED PROFESSIONAL ENGINEER Glenn DeCou No. C34547 Exp. 9-30-09 CIVIL STATE OF CALIFORNIA

The State of California or its officers or agents shall not be responsible for the accuracy or completeness of electronic copies of this plan sheet.

To accompany plans dated 11-16-09

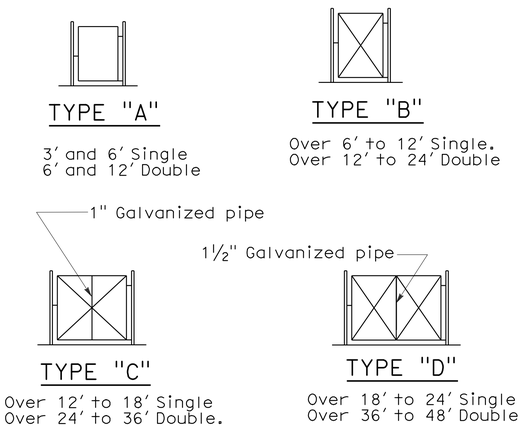

TYPICAL FRAMEWORK SHOWING NUMBER OF BAYS IN GATE

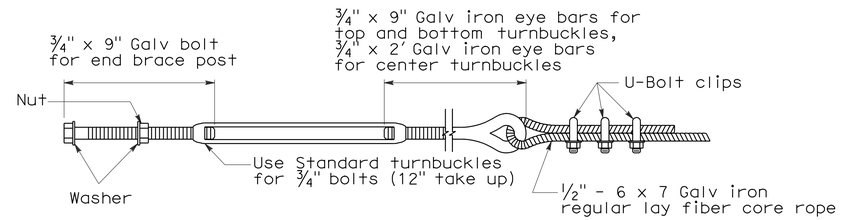

TURNBUCKLE A

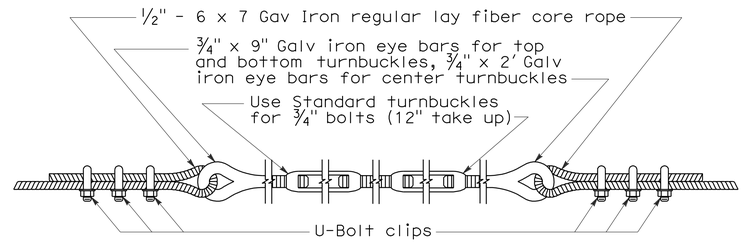

TURNBUCKLE B

NOTES:

1. All material for abutment connection to be galvanized.
2. The chain link fabric shall be replaced by barbed wire strands at 12" maximum centers between the double posts.
3. When the width of the culvert makes it necessary to anchor a post to the top of the culvert, a cast iron shoe or other device approved by the Engineer shall be used.
4. Fencing over stream and around headwall may also use Barbed Wire or Wire Mesh fencing with either wood post or steel post installation.
5. See Revised Standard Plan RSP A85 for Chain Link fence dimensions. See Standard Plan A86 for Barbed Wire and Wire Mesh fence dimensions and for wood post and steel post installation.

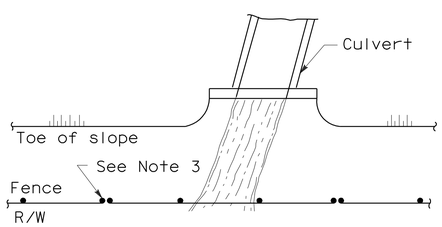

PLAN

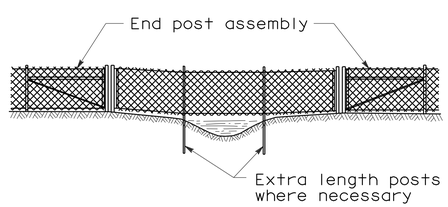

ELEVATION

INSTALLATION OVER STREAM

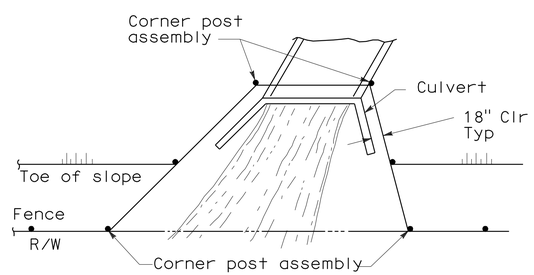

PLAN

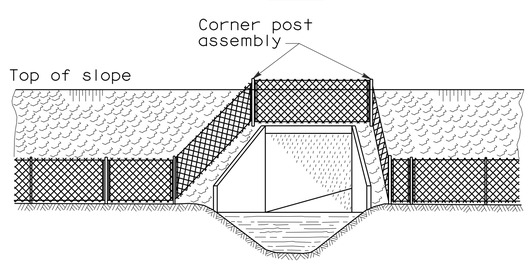

ELEVATION

INSTALLATION AROUND HEADWALL

See Note 4

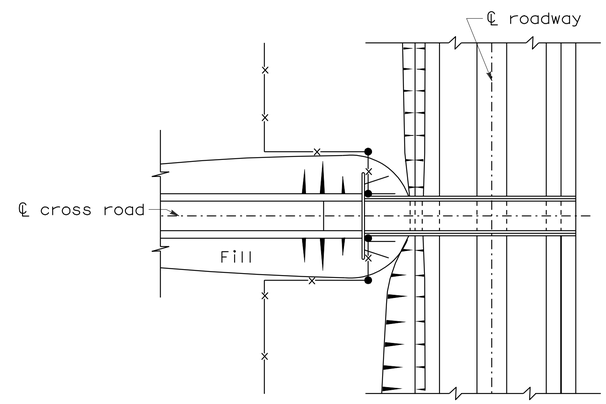

PLAN OF ROADWAY - UNDERPASS

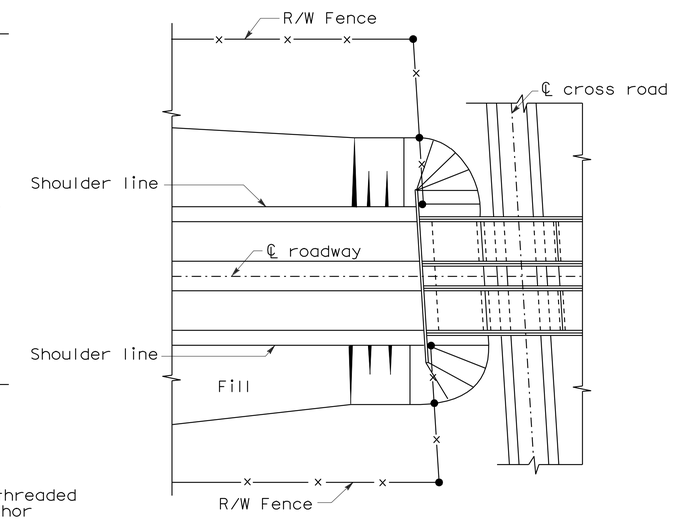

PLAN OF ROADWAY - OVERPASS

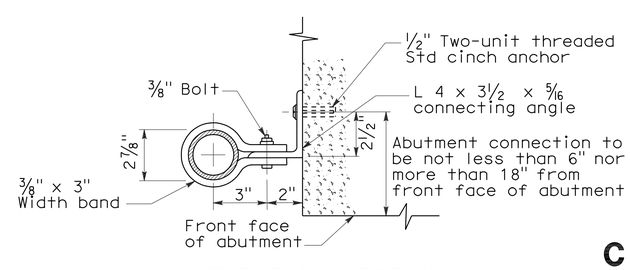

ABUTMENT CONNECTION

TYPICAL INSTALLATION AT BRIDGES

STATE OF CALIFORNIA
DEPARTMENT OF TRANSPORTATION

CHAIN LINK FENCE DETAILS

NO SCALE

NSP A85B DATED JUNE 5, 2009 SUPPLEMENTS THE STANDARD PLANS BOOK DATED MAY 2006.

NEW STANDARD PLAN NSP A85B

2006 NEW STANDARD PLAN NSP A85B

5-12-09

DIST	COUNTY	ROUTE	POST MILES TOTAL PROJECT	SHEET NO.	TOTAL SHEETS
04	Ala	680	4.8/5.2	52	66

Gregory A. Balzer
LICENSED LANDSCAPE ARCHITECT

June 5, 2009
PLANS APPROVAL DATE

The State of California or its officers or agents shall not be responsible for the accuracy or completeness of electronic copies of this plan sheet.

LICENSED LANDSCAPE ARCHITECT
Gregory A. Balzer 2576
10 expiration date
2-28-11
renewal date
5-14-09
date
STATE OF CALIFORNIA

To accompany plans dated 11-16-09

A

AB	aggregate base
ABS	acrylonitrile-butadiene-styrene
AC	asphalt concrete
Adj	adjacent/adjustable
AIC	auxiliary irrigation controller
Alt	alternative
AMEND	amendment
ARV	air release valve
AUTO	automatic
AUX	auxiliary
AVB	atmospheric vacuum breaker

B

B&B	balled and burlapped
B/B	brass/bronze
B/B/PL	brass/bronze/plastic
B/PL	brass/plastic
BFM	bonded fiber matrix
Bit Ctd	bituminous coated
BP	booster pump
BPA	backflow preventer assembly
BPAE	backflow preventer assembly in enclosure
BPE	backflow preventer enclosure
BV	ball valve

C

CAP	corrugated aluminum pipe
CARV	combination air release valve
CCA	cam coupler assembly
CEC	controller enclosure cabinet
CHDPE	corrugated high density polyethylene
CL	chain link
CNC	control and neutral conductors
Conc	concrete
Cond	conduit
CSP	corrugated steel pipe
CST	center strip
CV	check valve

D

Dia	diameter
DIP	ductile iron pipe
DN	diameter nominal

E

EA	each
Elect	electric/electrical
Elev	elevation
ENCL	enclosure
EP	edge of pavement
ES	edge of shoulder
EST	end strip
ESTB	establishment
ETW	edge of traveled way

F

F	full circle
F/P	full/part circle
FAU	filter assembly unit
FCV	flow control valve
FERT	fertilizer
FG	finished grade
FIPT	female iron pipe thread
FIS	fertilizer injector system
FL	flow line
FM	flow monitor
FS	flow sensor
Ft	foot/feet
FV	flush valve

G

GAL	Gallon(s)
Galv	galvanized
GARV	garden valve
GPH	gallons per hour
GPM	gallons per minute
GSP	galvanized steel pipe
GV	gate valve

H

H	half circle
HB	hose bib
HDPE	high density polyethylene
HP	horsepower/hinge point
HPL	high pressure line
Hwy	highway

I

IC	irrigation controller
ICC	irrigation controller(s) in controller enclosure cabinet
ID	inside diameter
In	inches
IFS	irrigation filtration system
IPS	iron pipe size
IPT	iron pipe thread
Irr	irrigation

L

L	length
LF	linear foot

M

Max	maximum
MBGR	metal beam guard railing
MCV	manual control valve
MIC	master irrigation controller
Min	minimum
MIPT	male iron pipe thread
Misc	miscellaneous
Mtl	material
MVP	maintenance vehicle pullout

N

NCN	no common name
NL	nozzle line
No.	number
NPT	national pipe thread

O

O/C	on center
OD	outside diameter
Oz	ounce

P

P	part circle
PB	pull box
PCC	portland cement concrete
PE	polyethylene
Pkt	packet
PL	plastic
PLT	plant/planting
PLT ESTB	plant establishment
PM	post mile
PR	pressure rated
PRLV	pressure relief valve
PSFM	polymer stabilized fiber matrix
PSI	pounds per square inch
PRV	pressure reducing valve
PVC	polyvinyl chloride
Pvmt	pavement

Q

Q	quarter circle
QCV	quick coupling valve

R

R	radius
RCP	reinforced concrete pipe
RCV	remote control valve
RCVM	remote control valve (master)
RCVMF	remote control valve (master) w/ flow meter
RCW	recycled/reclaimed water
RECP	rolled erosion control product
REQ	required
R/W	right of way

S

S	slip
SCC	sprinkler control conduit
SCH	schedule
SF	state-furnished
Shld	shoulder
SQFT	square foot/feet
SQYD	square yard(s)
SST	side strip
Sta	station
Std	standard
SW	sidewalk/sound wall

T

T	third circle/thread
TLS	truck loading standpipe
TQ	three quarter circle
TRM	turf reinforcement mat
TRVD	traveled
TT	two third circle
Typ	typical

U

UG	underground

V

VAU	valve assembly unit

W

W	width
W/	with
WM	water meter
WS	wye strainer
WSP	welded steel pipe
WWM	welded wire mesh

NOTE:

FOR ADDITIONAL ABBREVIATIONS, SEE STANDARD PLANS A10A AND A10B.

STATE OF CALIFORNIA
DEPARTMENT OF TRANSPORTATION

PLANTING AND IRRIGATION ABBREVIATIONS

NO SCALE

RSP H1 DATED JUNE 5, 2009 SUPERSEDES STANDARD PLAN H1
DATED MAY 1, 2006 - PAGE 201 OF THE STANDARD PLANS BOOK DATED MAY 2006.

REVISED STANDARD PLAN RSP H1

2006 REVISED STANDARD PLAN RSP H1

5-28-09

DIST	COUNTY	ROUTE	POST MILES TOTAL PROJECT	SHEET NO.	TOTAL SHEETS
04	Ala	680	4.8/5.2	53	66

LICENSED LANDSCAPE ARCHITECT

June 5, 2009
PLANS APPROVAL DATE

The State of California or its officers or agents shall not be responsible for the accuracy or completeness of electronic copies of this plan sheet.

Gregory A. Balzer 2016 — 10 (expiration) — 2-28-11 (renewal date) — 5-14-09 (date) — LICENSED LANDSCAPE ARCHITECT — STATE OF CALIFORNIA

To accompany plans dated 11-16-09

EXISTING	PROPOSED	ITEM DESCRIPTION
		WATER METER (WM)
		BACKFLOW PREVENTER ASSEMBLY (BPA)
		BACKFLOW PREVENTER ASSEMBLY IN ENCLOSURE (BPAE)
		BACKFLOW PREVENTER ENCLOSURE (BPE)
		BOOSTER PUMP (BP)
		TRUCK LOADING STANDPIPE (TLS)
FS	FS	FLOW SENSOR (FS)
X	X	MASTER IRRIGATION CONTROLLER (MIC)
		AUXILIARY IRRIGATION CONTROLLER (AIC)
		IRRIGATION CONTROLLER (IC)/ IRRIGATION CONTROLLER (IC) (BATTERY) IRRIGATION CONTROLLER (IC) (SOLAR)
		IRRIGATION CONTROLLER(S) IN CONTROLLER ENCLOSURE CABINET (ICC)
		CONTROL AND NEUTRAL CONDUCTORS (CNC)
SCC	SCC	SPRINKLER CONTROL CONDUIT (SCC)
		IRRIGATION CROSSOVER
		EXTEND IRRIGATION CROSSOVER
		IRRIGATION SLEEVE
dip	DIP	DUCTILE IRON PIPE (SUPPLY LINE) (MAIN) (DIP)
		GALVANIZED STEEL PIPE (SUPPLY LINE) (MAIN) (GSP)
		GALVANIZED STEEL PIPE (SUPPLY LINE) (LATERAL) (GSP)
		PLASTIC PIPE (PR 200) (SUPPLY LINE) (MAIN)
		PLASTIC PIPE (PR 200) (SUPPLY LINE) (LATERAL)
		PLASTIC PIPE (IRRIGATION LINE)
		REMOTE CONTROL VALVE (RCV) REMOTE CONTROL VALVE (MASTER) (RCVM) REMOTE CONTROL VALVE (MASTER) W/FLOW METER (RCVMF)
		MANUAL CONTROL VALVE (MCV)
		VALVE ASSEMBLY UNIT (VAU)
		WYE STRAINER (WS)
		FILTER ASSEMBLY UNIT (FAU)
		GATE VALVE (GV)
		BALL VALVE (BV)

EXISTING	PROPOSED	ITEM DESCRIPTION
		QUICK COUPLING VALVE (QCV)
		CAM COUPLER ASSEMBLY (CCA)
		PRESSURE REDUCING VALVE (PRV)
		PRESSURE RELIEF VALVE (PRLV)
		FLOW CONTROL VALVE (FCV)
		COMBINATION AIR RELEASE VALVE (CARV)
		CHECK VALVE (CV)
		FLUSH VALVE (FV)
		NOZZLE LINE W/TURNING UNION
		IRRIGATION SYSTEM
		IRRIGATION SYSTEM TO BE REMOVED
		CHAIN LINK GATE
		QUICK COUPLING VALVE W/SPRINKLER PROTECTOR
3	3	SPRINKLER W/SPRINKLER PROTECTOR
	C	CONNECT TO EXISTING SYSTEM
		CAP
		CAP EXISTING

VALVE CODE

RCV SIZE
IRRIGATION CONTROLLER
CONTROLLER STATION
VALVE IN PARALLEL (IF APPLICABLE)
GPM
QUANTITY OF SPRINKLERS (WHEN SHOWN)

* 2½"-A-2b-40 -60

MCV SIZE
VALVE NUMBER
GPM
QUANTITY OF TYPE SPRINKLERS (WHEN SHOWN)

* 2"-3-30 -50

* VALVE CODES FOR EXISTING VALVES ARE SHOWN IN A DASHED ENCLOSURE.

STATE OF CALIFORNIA
DEPARTMENT OF TRANSPORTATION

PLANTING AND IRRIGATION SYMBOLS

NO SCALE

RSP H2 DATED JUNE 5, 2009 SUPERSEDES RSP H2 DATED MARCH 7, 2008 AND STANDARD PLAN H2 DATED MAY 1, 2006 - PAGE 202 OF THE STANDARD PLANS BOOK DATED MAY 2006.

REVISED STANDARD PLAN RSP H2

2006 REVISED STANDARD PLAN RSP H2

5-11-09

DIST	COUNTY	ROUTE	POST MILES TOTAL PROJECT	SHEET NO.	TOTAL SHEETS
04	Ala	680	4.8/5.2	54	66

LICENSED LANDSCAPE ARCHITECT

June 5, 2009
PLANS APPROVAL DATE

The State of California or its officers or agents shall not be responsible for the accuracy or completeness of electronic copies of this plan sheet.

LICENSED LANDSCAPE ARCHITECT
Gregory A. Balzer 2576
10 January
2-28-11
Renewal Date
5-14-09
Date
STATE OF CALIFORNIA

To accompany plans dated 11-16-09

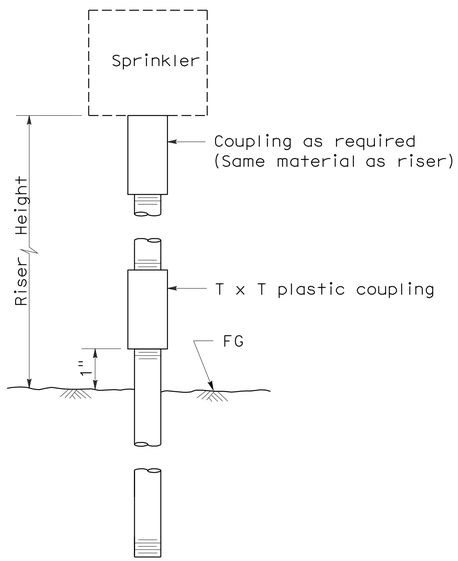

ELEVATION
RISER TYPE I

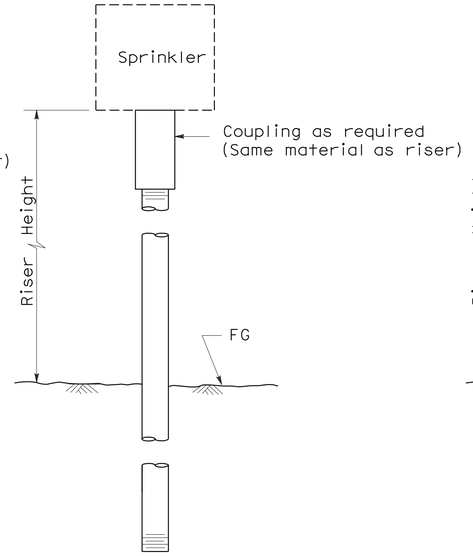

ELEVATION
RISER TYPE II

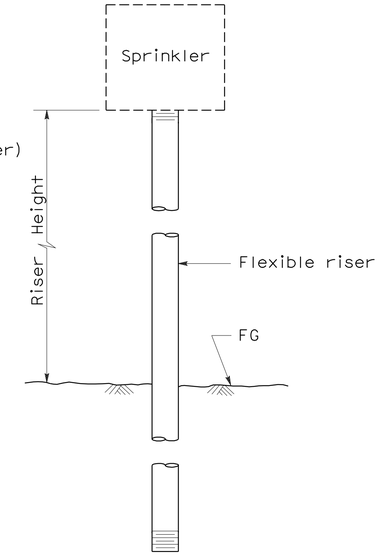

ELEVATION
RISER TYPE III

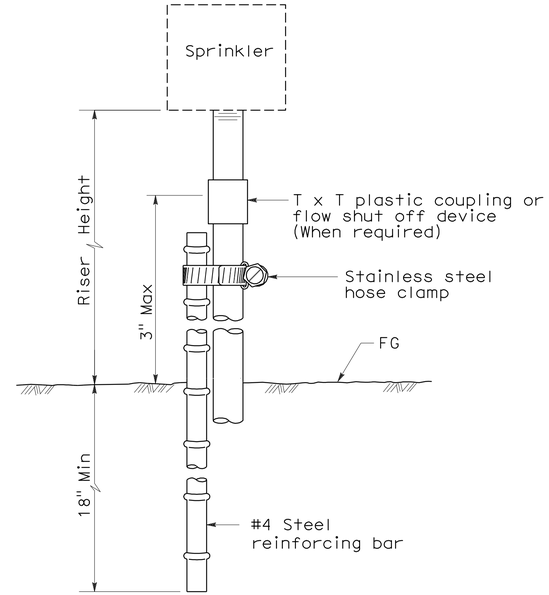

ELEVATION
RISER TYPE IV

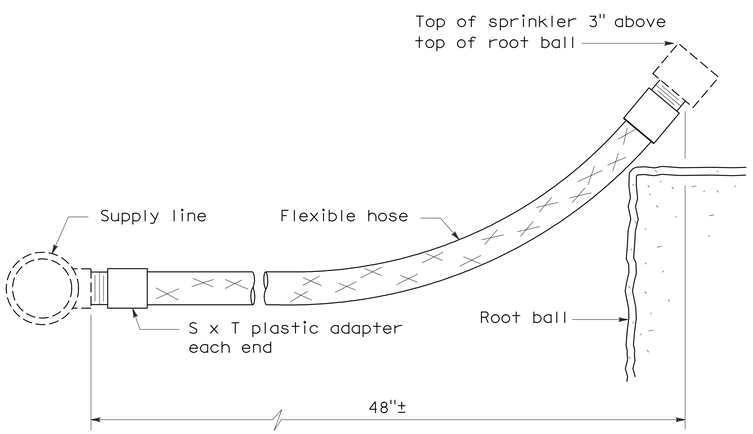

ELEVATION
RISER TYPE V

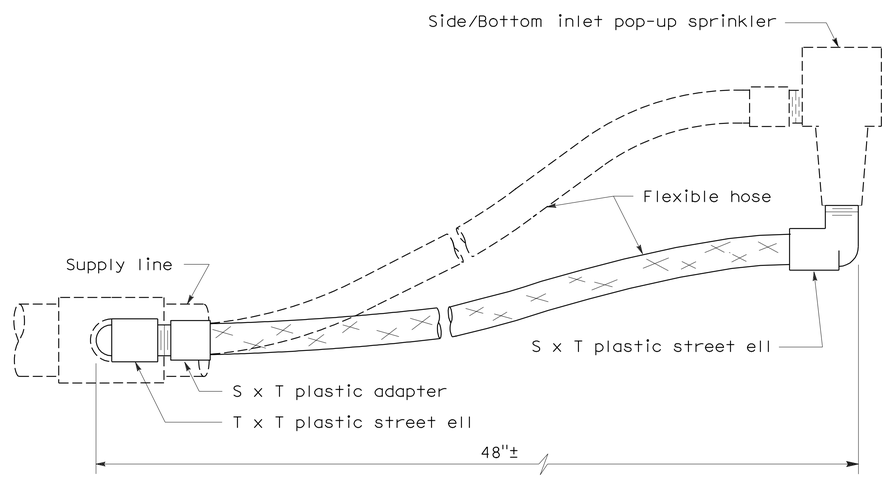

ELEVATION
RISER TYPE VI

STATE OF CALIFORNIA
DEPARTMENT OF TRANSPORTATION

PLANTING AND IRRIGATION DETAILS

NO SCALE

RSP H5 DATED JUNE 5, 2009 SUPERSEDES STANDARD PLAN H5
DATED MAY 1, 2006 - PAGE 205 OF THE STANDARD PLANS BOOK DATED MAY 2006.

REVISED STANDARD PLAN RSP H5

2006 REVISED STANDARD PLAN RSP H5

DIST	COUNTY	ROUTE	POST MILES TOTAL PROJECT	SHEET NO.	TOTAL SHEETS
04	Ala	680	4.8/5.2	55	66

Gregory A. Balzer
LICENSED LANDSCAPE ARCHITECT

June 5, 2009
PLANS APPROVAL DATE

LICENSED LANDSCAPE ARCHITECT — Gregory A. Balzer — 2576 — STATE OF CALIFORNIA
10 expiration date
2-28-11 renewal date
5-14-09 date

The State of California or its officers or agents shall not be responsible for the accuracy or completeness of electronic copies of this plan sheet.

To accompany plans dated 11-16-09

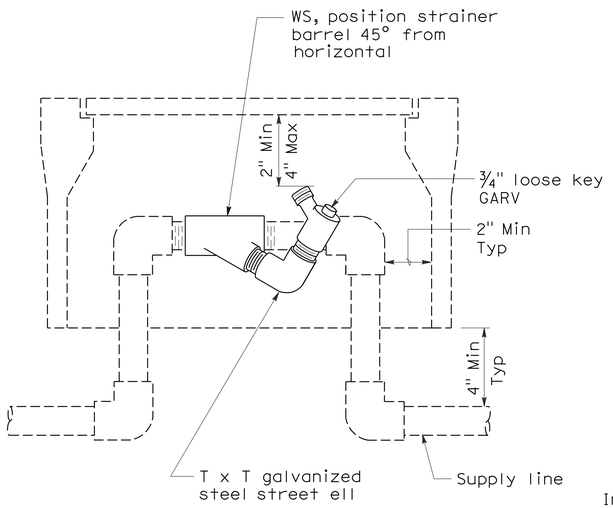

ELEVATION
WYE STRAINER

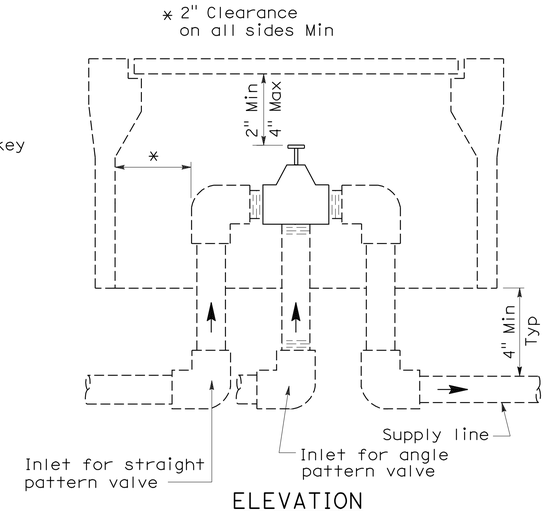

ELEVATION
VALVE

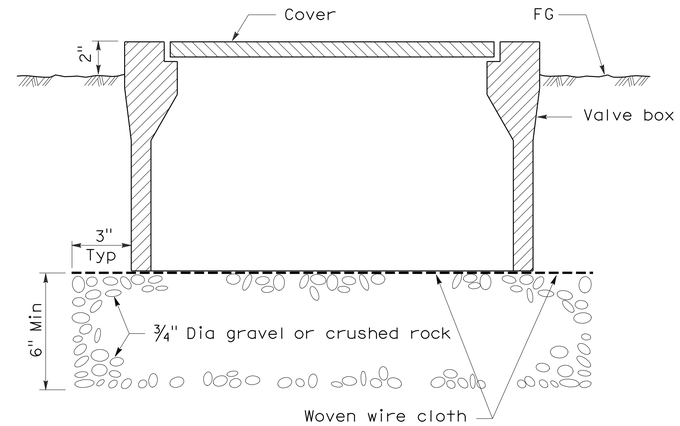

SECTION
VALVE BOX

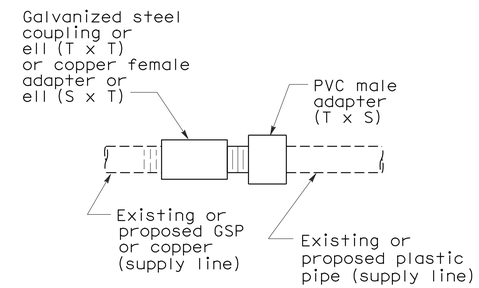

PLAN
GALVANIZED OR COPPER PIPE CONNECTION TO PLASTIC PIPE

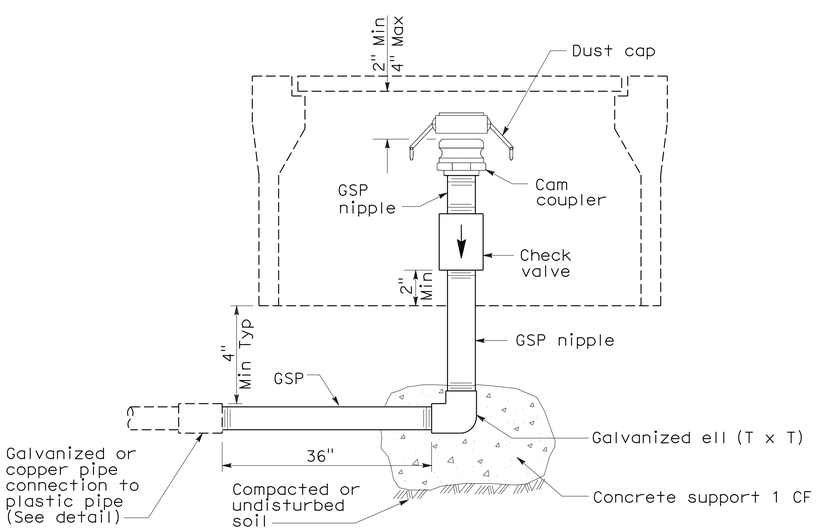

ELEVATION
CAM COUPLER ASSEMBLY

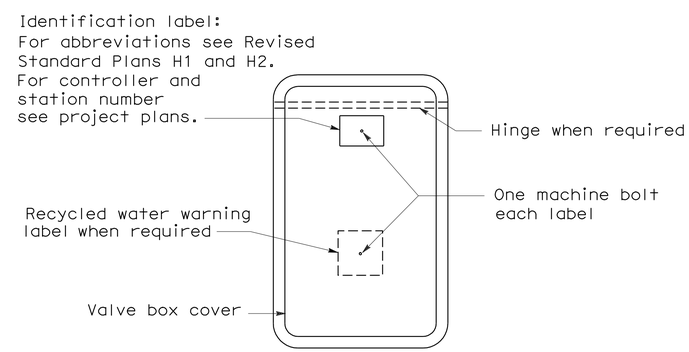

PLAN

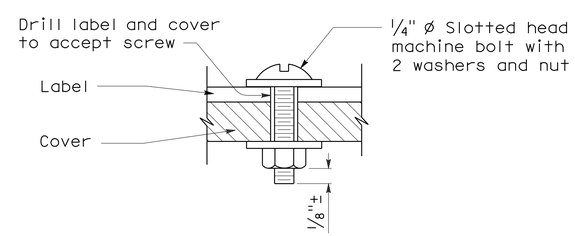

SECTION
VALVE BOX IDENTIFICATION

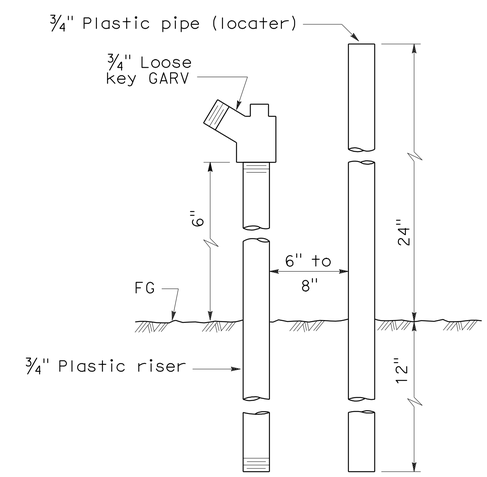

ELEVATION
FLUSH VALVE

STATE OF CALIFORNIA
DEPARTMENT OF TRANSPORTATION

PLANTING AND IRRIGATION DETAILS

NO SCALE

RSP H7 DATED JUNE 5, 2009 SUPERSEDES STANDARD PLAN H7
DATED MAY 1, 2006 - PAGE 207 OF THE STANDARD PLANS BOOK DATED MAY 2006.

REVISED STANDARD PLAN RSP H7

2006 REVISED STANDARD PLAN RSP H7

5-28-09

DIST	COUNTY	ROUTE	POST MILES TOTAL PROJECT	SHEET NO.	TOTAL SHEETS
04	Ala	680	4.8/5.2	56	66

LICENSED LANDSCAPE ARCHITECT

April 3, 2009
PLANS APPROVAL DATE

The State of California or its officers or agents shall not be responsible for the accuracy or completeness of electronic copies of this plan sheet.

LICENSED LANDSCAPE ARCHITECT
Gregory A. Balzer 2572
Signature
02-28-11
Renewal date
03-04-09
Date
STATE OF CALIFORNIA

To accompany plans dated 11-16-09

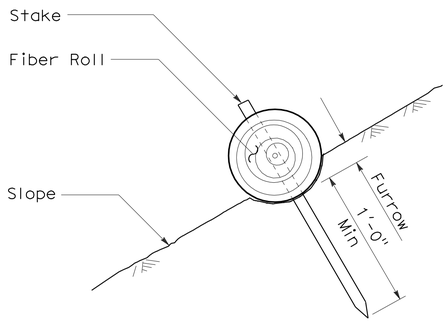

SECTION

FIBER ROLL (TYPE 1)

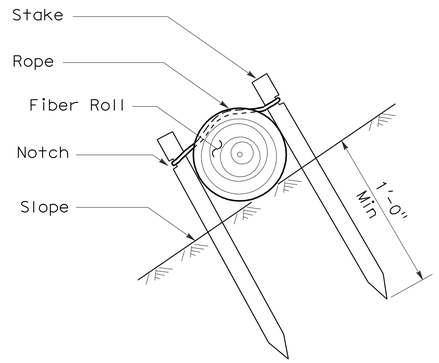

SECTION

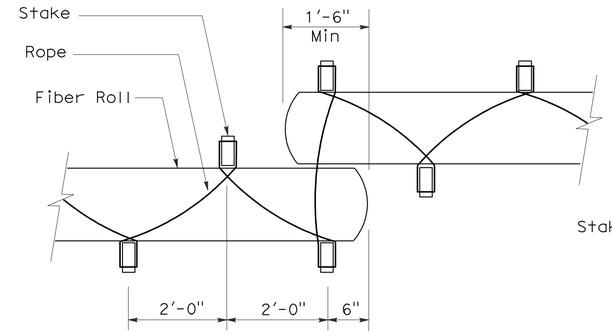

PLAN

FIBER ROLL (TYPE 2)

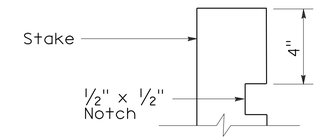

ELEVATION

STAKE NOTCH DETAIL

NOTES:

1. Fiber roll spacing varies depending upon slope inclination.
2. Installations shown in the perspectives are for slope inclination of 10:1 and steeper.

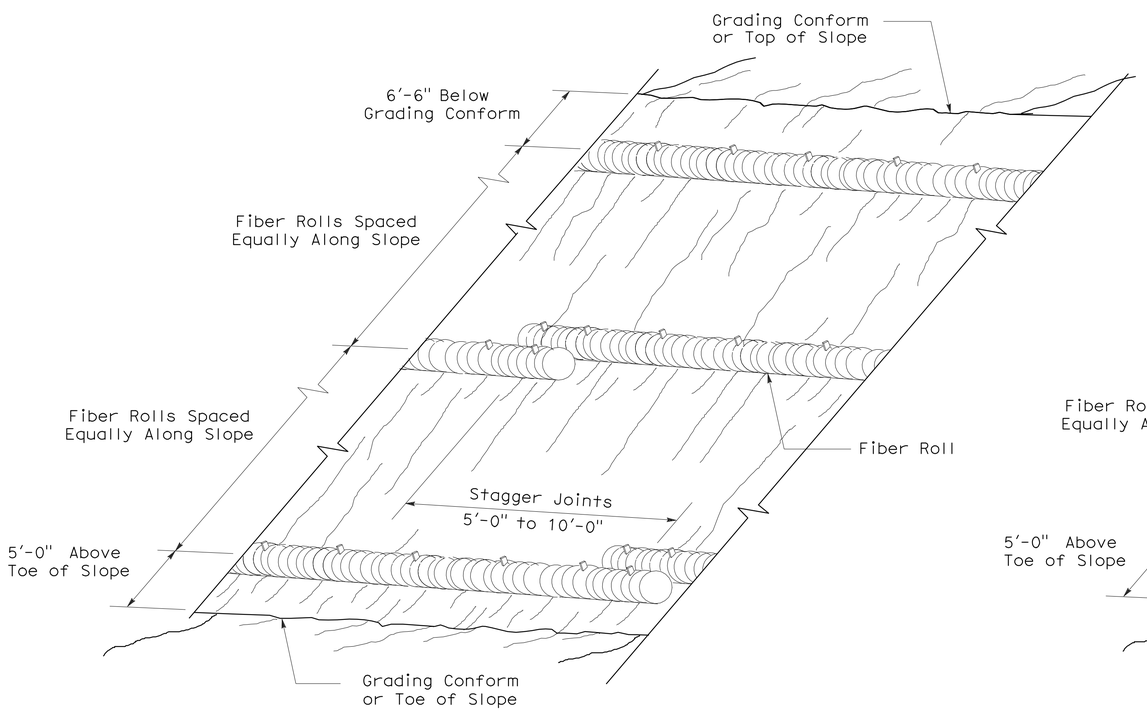

PERSPECTIVE

FIBER ROLL (TYPE 1)

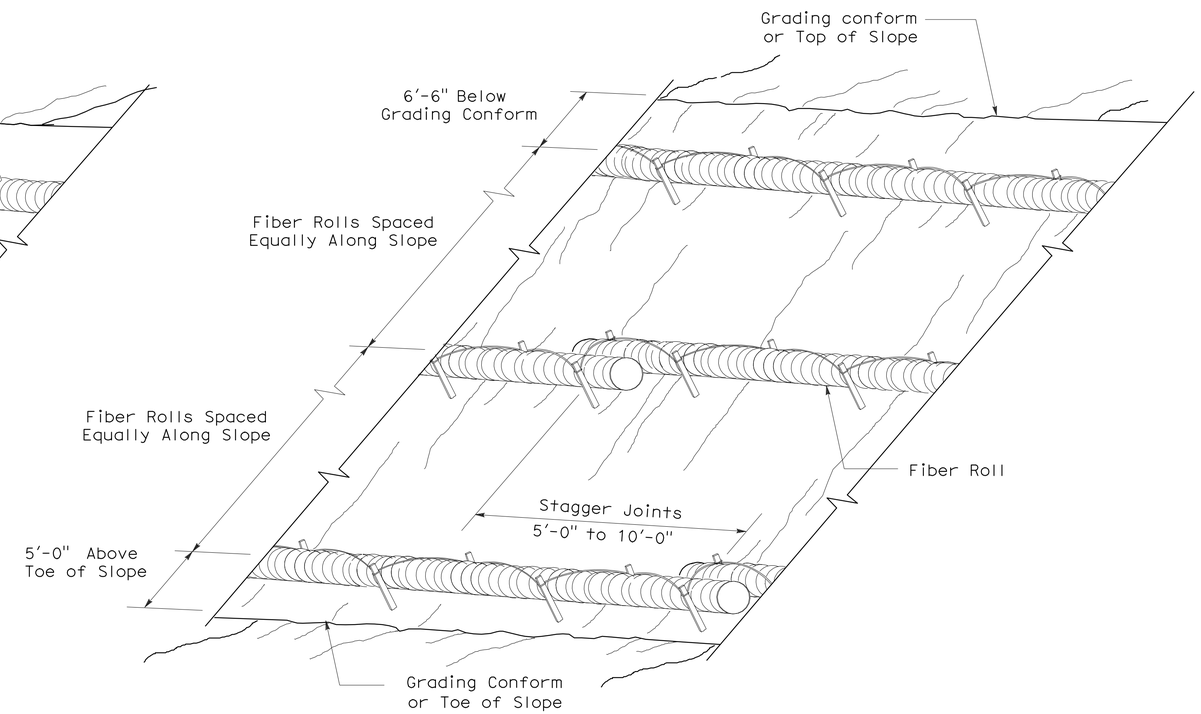

PERSPECTIVE

FIBER ROLL (TYPE 2)

STATE OF CALIFORNIA
DEPARTMENT OF TRANSPORTATION

EROSION CONTROL DETAILS (FIBER ROLL)

NO SCALE

RNSP H51 DATED APRIL 3, 2009 SUPERSEDES NSP H51 DATED DECEMBER 1, 2006 THAT SUPPLEMENTS THE STANDARD PLANS BOOK DATED MAY 2006.

REVISED NEW STANDARD PLAN RNSP H51

2006 REVISED NEW STANDARD PLAN RNSP H51

3-4-09

DIST	COUNTY	ROUTE	POST MILES TOTAL PROJECT	SHEET NO.	TOTAL SHEETS
04	Ala	680	4.8/5.2	57	66

LICENSED LANDSCAPE ARCHITECT

June 5, 2009
PLANS APPROVAL DATE

The State of California or its officers or agents shall not be responsible for the accuracy or completeness of electronic copies of this plan sheet.

LICENSED LANDSCAPE ARCHITECT — Gregory A. Balzer — No. 2498 — Expiration 2-28-11 (Renewal Date) — 5-14-09 (Date) — STATE OF CALIFORNIA

To accompany plans dated 11-16-09

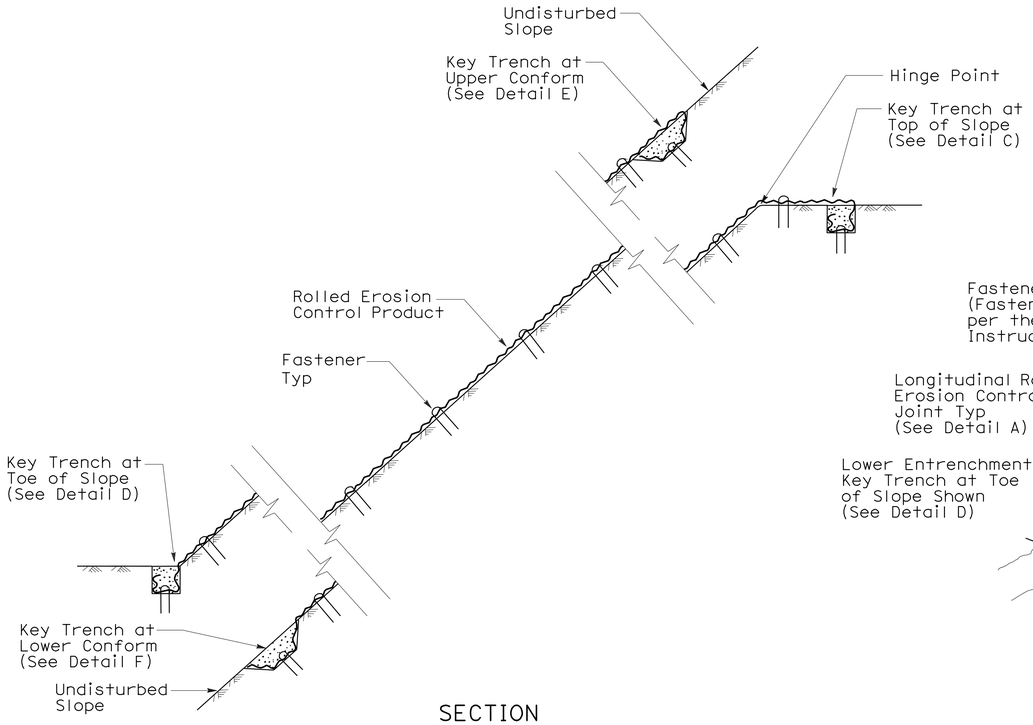

SECTION

ROLLED EROSION CONTROL PRODUCT ON SLOPE WITH VARIOUS KEY ENTRENCHMENTS

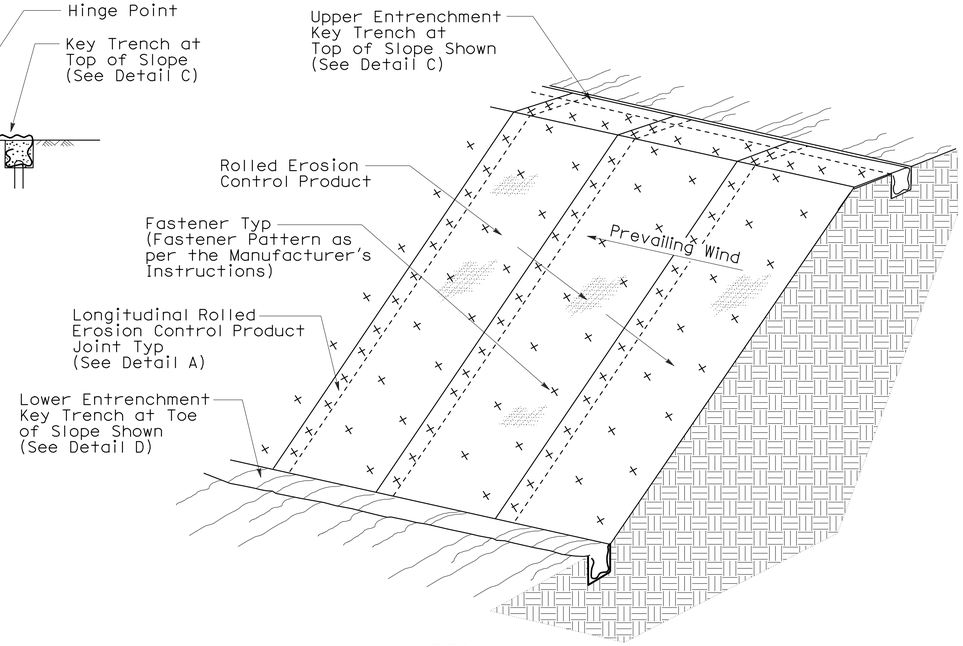

ISOMETRIC

ROLLED EROSION CONTROL PRODUCT ON SLOPE

NOTE:

1. Fiber Roll/Compost Sock shown for reference purposes only.
2. If transverse rolled erosion control product joints are required on slopes, see Detail B.

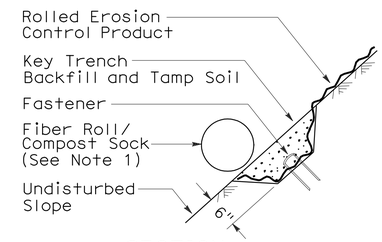

SECTION

DETAIL F
KEY TRENCH AT LOWER CONFORM

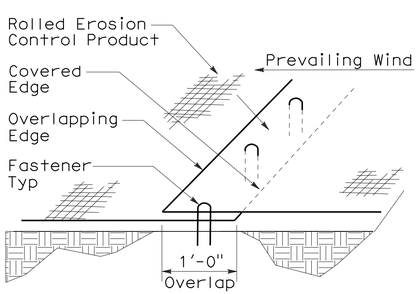

PERSPECTIVE

DETAIL A
LONGITUDINAL ROLLED EROSION CONTROL PRODUCT JOINT

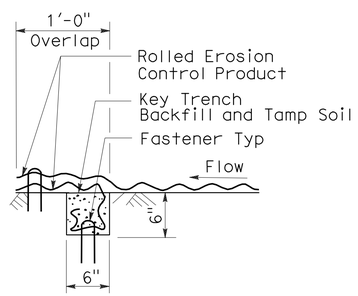

SECTION

DETAIL B
TRANSVERSE ROLLED EROSION CONTROL PRODUCT JOINT

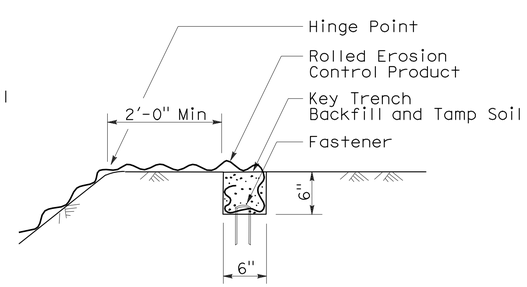

SECTION

DETAIL C
KEY TRENCH AT TOP OF SLOPE

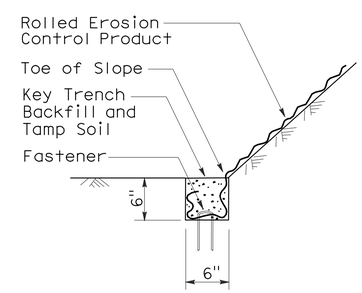

SECTION

DETAIL D
KEY TRENCH AT TOE OF SLOPE

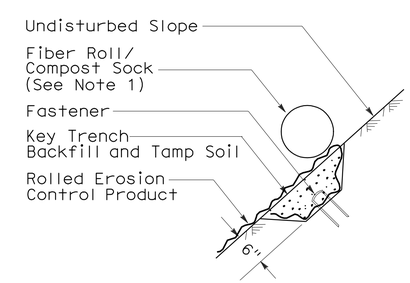

SECTION

DETAIL E
KEY TRENCH AT UPPER CONFORM

STATE OF CALIFORNIA
DEPARTMENT OF TRANSPORTATION

ROLLED EROSION CONTROL PRODUCT

NO SCALE

NSP H53 DATED JUNE 5, 2009 SUPPLEMENTS THE STANDARD PLANS BOOK DATED MAY 2006.

NEW STANDARD PLAN NSP H53

2006 NEW STANDARD PLAN NSP H53

3-4-09

DIST	COUNTY	ROUTE	POST MILES TOTAL PROJECT	SHEET NO.	TOTAL SHEETS
04	Ala	680	4.8/5.2	58	66

Randell D. Hiatt
REGISTERED CIVIL ENGINEER

June 6, 2008
PLANS APPROVAL DATE

REGISTERED PROFESSIONAL ENGINEER
Randell D. Hiatt
No. C50200
Exp. 6-30-09
CIVIL
STATE OF CALIFORNIA

The State of California or its officers or agents shall not be responsible for the accuracy or completeness of electronic copies of this plan sheet.

To accompany plans dated 11-16-09

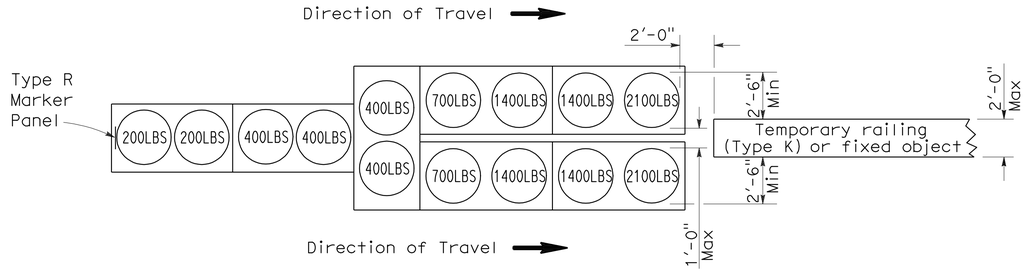

ARRAY 'TU14'

Approach speed 45 mph or more

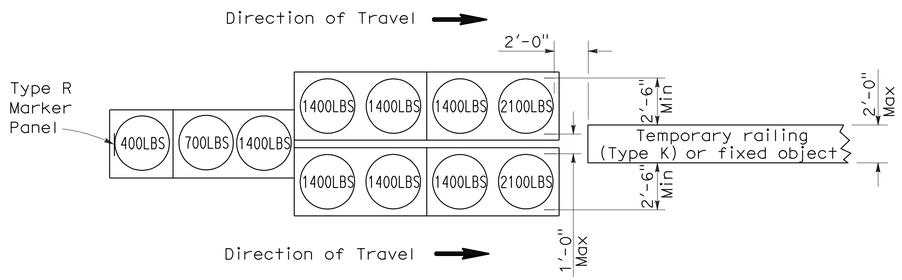

ARRAY 'TU11'

Approach speed less than 45 mph

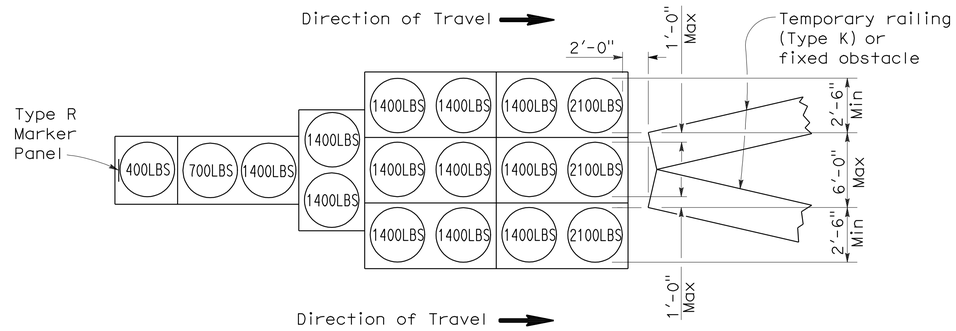

ARRAY 'TU17'

Approach speed less than 45 mph

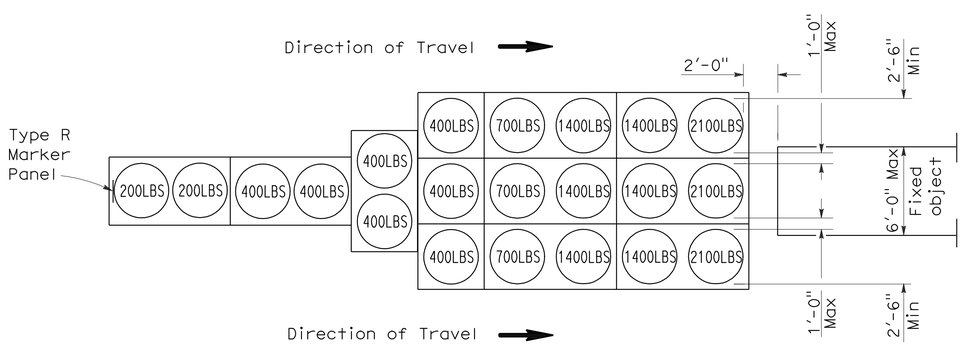

ARRAY 'TU21'

Approach speed 45 mph or more

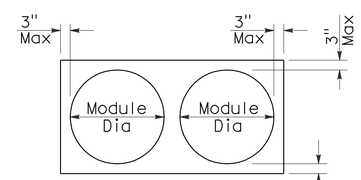

PLAN

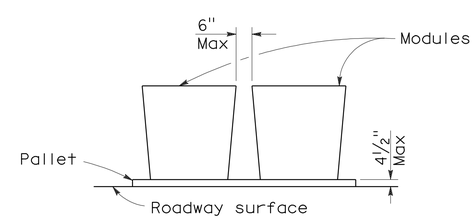

ELEVATION

CRASH CUSHION PALLET DETAIL

See Note 7

NOTES:

1. (XXX) Indicates sand filled module location and weight of sand in pounds for each module. Module spacing is based on the greater diameter of the module.
2. All sand weights are nominal.
3. Temporary crash cushion arrays shall not encroach on the traveled way.
4. Place the top of Type R marker panel 1" below the module lid.
5. Refer to Standard Plan A73B for marker details.
6. Approach speeds indicated conform to NCHRP 350 Report criteria.
7. Use of pallets is optional.

STATE OF CALIFORNIA
DEPARTMENT OF TRANSPORTATION

TEMPORARY CRASH CUSHION, SAND FILLED (UNIDIRECTIONAL)

NO SCALE

RSP T1A DATED JUNE 6, 2008 SUPERSEDES STANDARD PLAN T1A
DATED MAY 1, 2006 - PAGE 211 OF THE STANDARD PLANS BOOK DATED MAY 2006.

REVISED STANDARD PLAN RSP T1A

2006 REVISED STANDARD PLAN RSP T1A

5-15-08

DIST	COUNTY	ROUTE	POST MILES TOTAL PROJECT	SHEET NO.	TOTAL SHEETS
04	Ala	680	4.8/5.2	59	66

Randell D. Hiatt
REGISTERED CIVIL ENGINEER

June 6, 2008
PLANS APPROVAL DATE

REGISTERED PROFESSIONAL ENGINEER
Randell D. Hiatt
No. C50200
Exp. 6-30-09
CIVIL
STATE OF CALIFORNIA

The State of California or its officers or agents shall not be responsible for the accuracy or completeness of electronic copies of this plan sheet.

To accompany plans dated 11-16-09

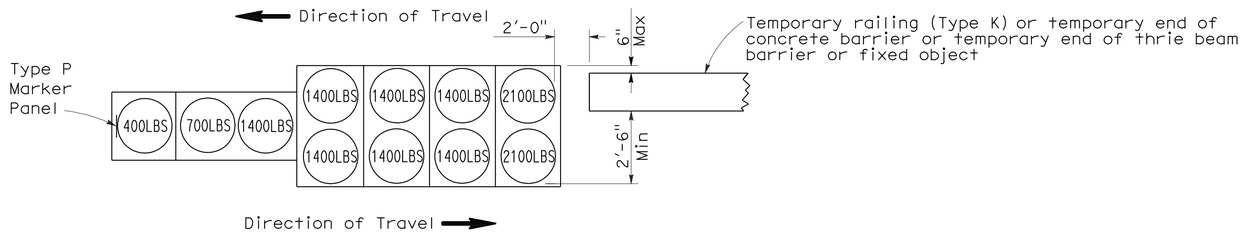

ARRAY 'TB11'

Approach speed less than 45 mph

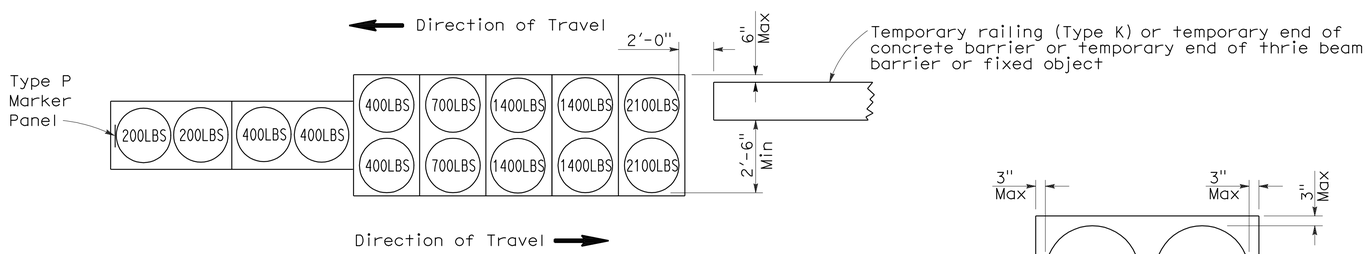

ARRAY 'TB14'

Approach speed 45 mph or more

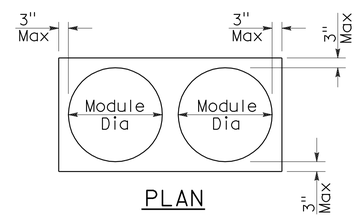

PLAN

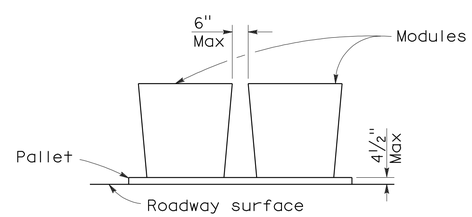

ELEVATION

CRASH CUSHION PALLET DETAIL

See Note 7

NOTES:

1. (XXX) Indicates sand filled module location and weight of sand in pounds for each module. Module spacing is based on the greater diameter of the module.
2. All sand weights are nominal.
3. Temporary crash cushion arrays shall not encroach on the traveled way.
4. Place the Type P marker panel so that the bottom of the panel rests upon the pallet.
5. Refer to Standard Plan A73B for marker details.
6. Approach speeds indicated conform to NCHRP 350 Report criteria.
7. Use of pallets is optional.

STATE OF CALIFORNIA
DEPARTMENT OF TRANSPORTATION

TEMPORARY CRASH CUSHION, SAND FILLED (BIDIRECTIONAL)

NO SCALE

RSP T1B DATED JUNE 6, 2008 SUPERSEDES STANDARD PLAN T1B
DATED MAY 1, 2006 - PAGE 212 OF THE STANDARD PLANS BOOK DATED MAY 2006.

REVISED STANDARD PLAN RSP T1B

2006 REVISED STANDARD PLAN RSP T1B

5-15-08

DIST	COUNTY	ROUTE	POST MILES TOTAL PROJECT	SHEET NO.	TOTAL SHEETS
04	Ala	680	4.8/5.2	60	66

Randell D. Hiatt
REGISTERED CIVIL ENGINEER

June 6, 2008
PLANS APPROVAL DATE

REGISTERED PROFESSIONAL ENGINEER
Randell D. Hiatt
No. C50200
Exp. 6-30-09
CIVIL
STATE OF CALIFORNIA

The State of California or its officers or agents shall not be responsible for the accuracy or completeness of electronic copies of this plan sheet.

To accompany plans dated 11-16-09

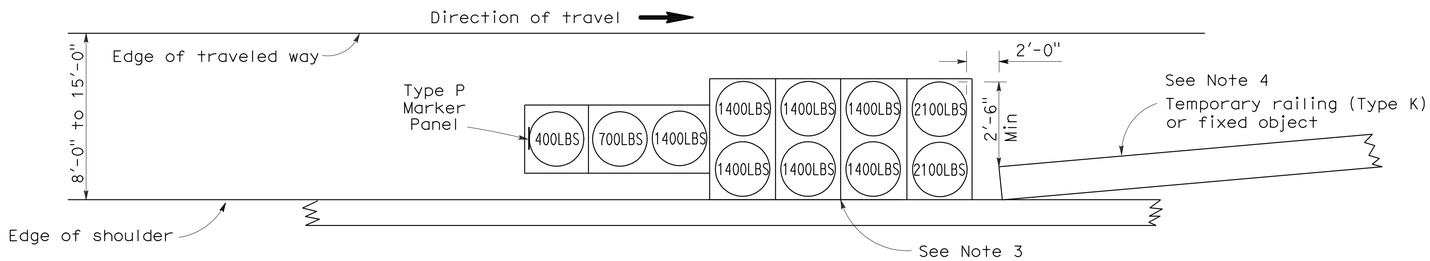

ARRAY 'TS11'

Approach speed less than 45 mph
See Note 9

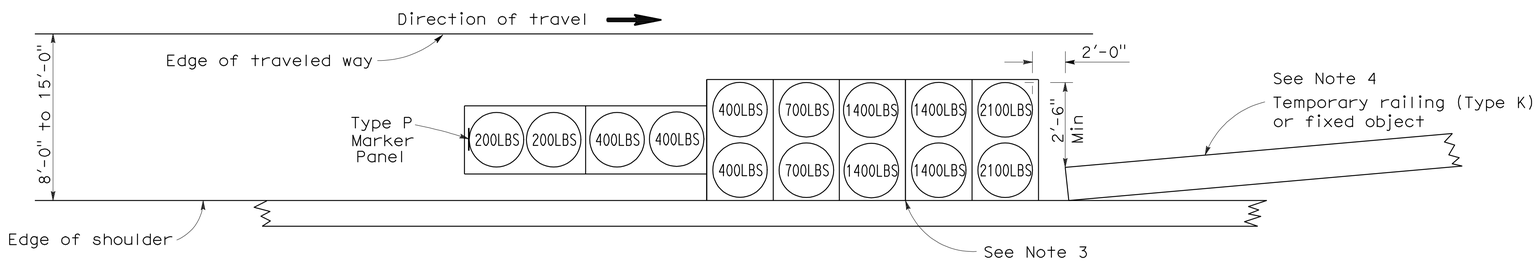

ARRAY 'TS14'

Approach speed 45 mph or more
See Note 9

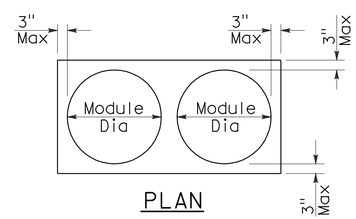

PLAN

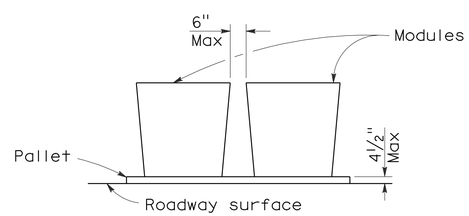

ELEVATION

CRASH CUSHION PALLET DETAIL

See Note 11

NOTES:

1. (XXX) Indicates sand filled module location and weight of sand in pounds for each module. Module spacing is based on the greater diameter of the module.
2. All sand weights are nominal.
3. The temporary crash cushion arrays shown on this plan shall be used only in locations where there will be traffic on one side of the temporary crash cushion array.
4. If the fixed object or approach end of the temporary railing is less than 15'-0" from the edge of traveled way, a temporary crash cushion is required in a construction or work zone.
5. Temporary crash cushion arrays shall not encroach on the traveled way.
6. Arrays for median shoulders shall conform to details shown on this plan for outside shoulders.
7. Place the Type P marker panel so that the bottom of the panel rests upon the pallet and faces traffic.
8. Refer to Standard Plan A73B for marker details.
9. For shoulder widths less than 8'-0", appropriate approved crash cushion protection, other than sand filled modules, shall be provided at fixed objects and at approach ends of temporary railing. The specific type of crash cushion shall be as shown on the project plans or as specified in the Special Provisions, or if not shown on the project plans or specified in the Special Provisions, shall be as approved by the Engineer.
10. Approach speeds indicated conform to NCHRP 350 Report criteria.
11. Use of pallets is optional.

STATE OF CALIFORNIA
DEPARTMENT OF TRANSPORTATION

TEMPORARY CRASH CUSHION, SAND FILLED (SHOULDER INSTALLATIONS)

NO SCALE

RSP T2 DATED JUNE 6, 2008 SUPERSEDES STANDARD PLAN T2
DATED MAY 1, 2006 - PAGE 213 OF THE STANDARD PLANS BOOK DATED MAY 2006.

REVISED STANDARD PLAN RSP T2

2006 REVISED STANDARD PLAN RSP T2

5-15-08

DIST	COUNTY	ROUTE	POST MILES TOTAL PROJECT	SHEET NO.	TOTAL SHEETS
04	Ala	680	4.8/5.2	61	66

Robert B Schott
LICENSED LANDSCAPE ARCHITECT

April 3, 2009
PLANS APPROVAL DATE

LICENSED LANDSCAPE ARCHITECT
Robert B. Schott 3625
Robert B Schott
Registered Expires
11-30-10
Renewal Date
2-25-09
Date
STATE OF CALIFORNIA

The State of California or its officers or agents shall not be responsible for the accuracy or completeness of electronic copies of this plan sheet.

To accompany plans dated 11-16-09

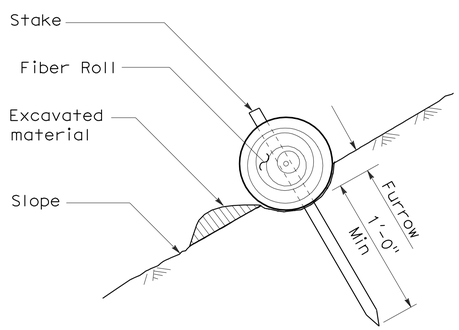

SECTION

TEMPORARY FIBER ROLL (TYPE 1)

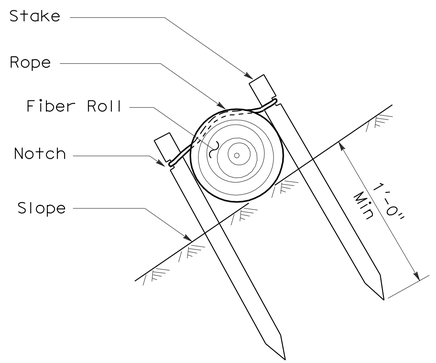

SECTION

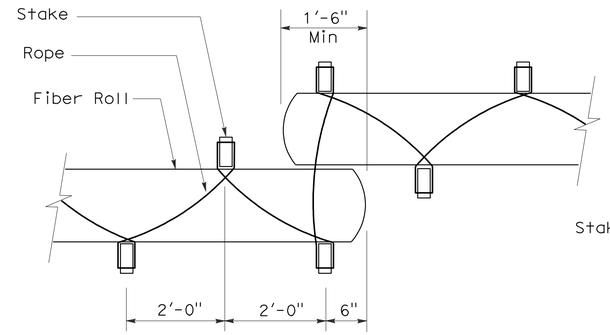

PLAN

TEMPORARY FIBER ROLL (TYPE 2)

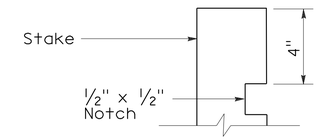

ELEVATION

STAKE NOTCH DETAIL

NOTES:

1. Temporary fiber roll spacing varies depending upon slope inclination.
2. Installations shown in the perspectives are for slope inclination of 10:1 and steeper.

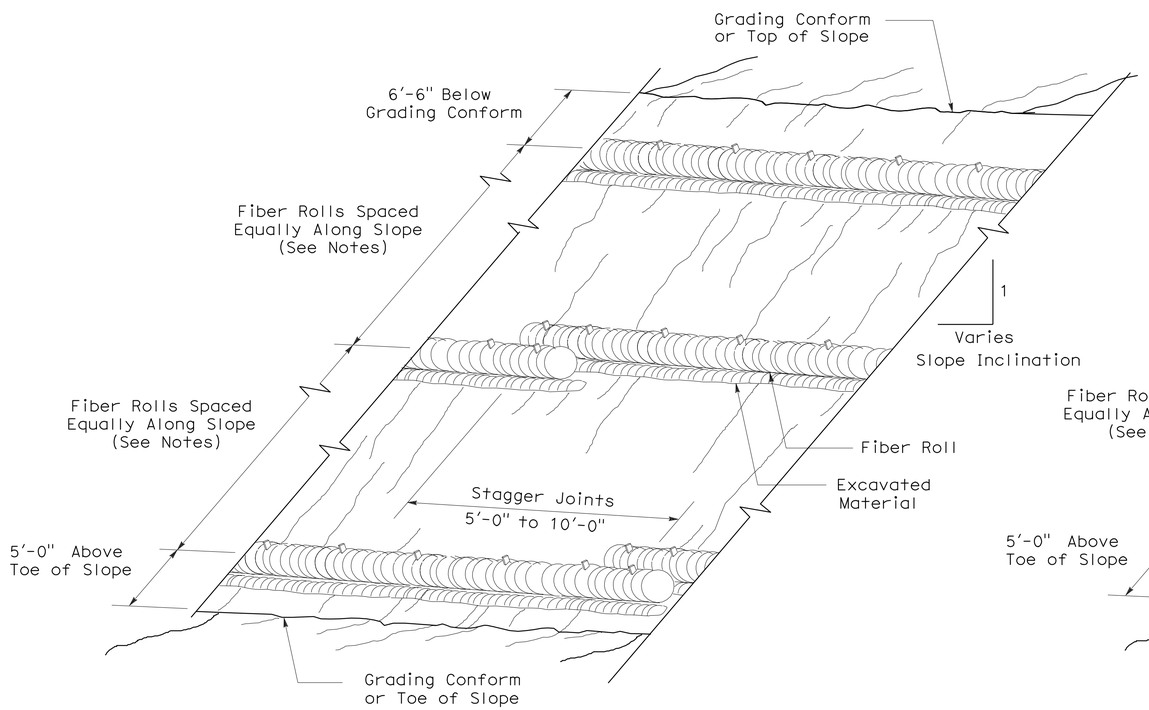

PERSPECTIVE

TEMPORARY FIBER ROLL (TYPE 1)

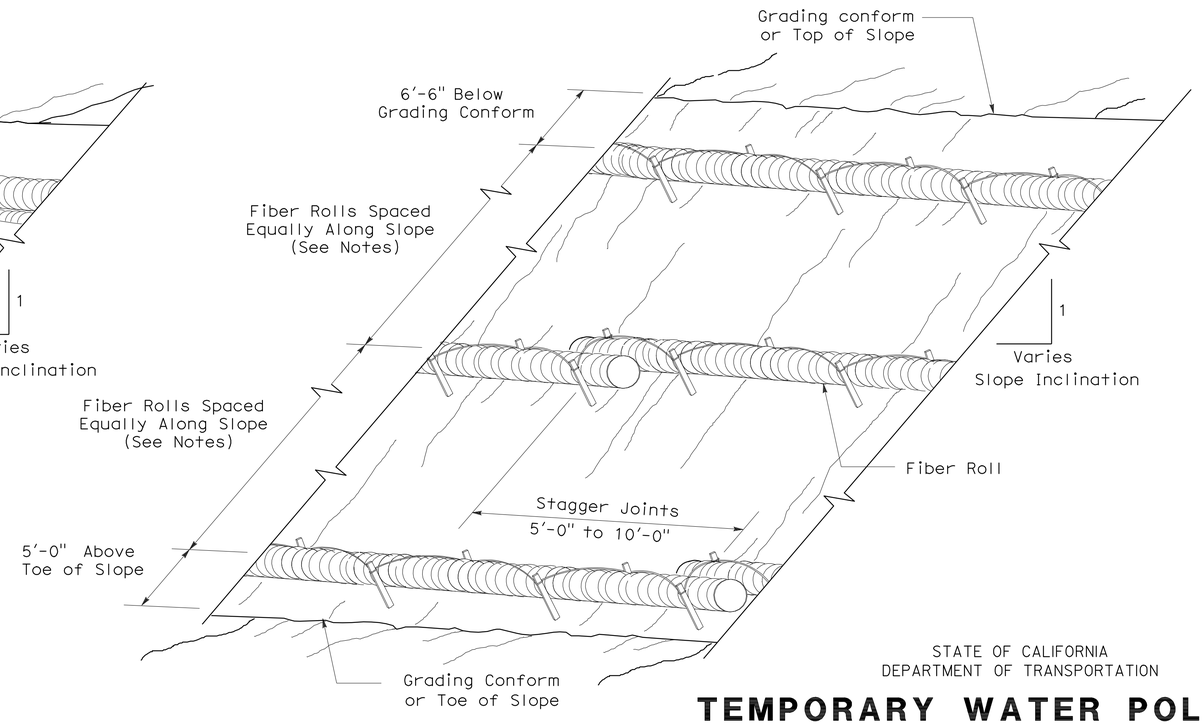

PERSPECTIVE

TEMPORARY FIBER ROLL (TYPE 2)

STATE OF CALIFORNIA
DEPARTMENT OF TRANSPORTATION

TEMPORARY WATER POLLUTION CONTROL DETAILS (TEMPORARY FIBER ROLL)

NO SCALE

RSP T56 DATED APRIL 3, 2009 SUPERSEDES STANDARD PLAN T56
DATED MAY 1, 2006 - PAGE 232 OF THE STANDARD PLANS BOOK DATED MAY 2006.

REVISED STANDARD PLAN RSP T56

2006 REVISED STANDARD PLAN RSP T56

DIST	COUNTY	ROUTE	POST MILES TOTAL PROJECT	SHEET NO.	TOTAL SHEETS
04	Ala	680	4.8/5.2	62	66

LICENSED LANDSCAPE ARCHITECT

August 15, 2008
PLANS Approval DATE

LICENSED LANDSCAPE ARCHITECT
Robert B. Schott 3625
Signature
11-04-08
Renewal Date
08-11-08
Date
STATE OF CALIFORNIA

The State of California or its officers or agents shall not be responsible for the accuracy or completeness of electronic copies of this plan sheet.

To accompany plans dated 11-16-09

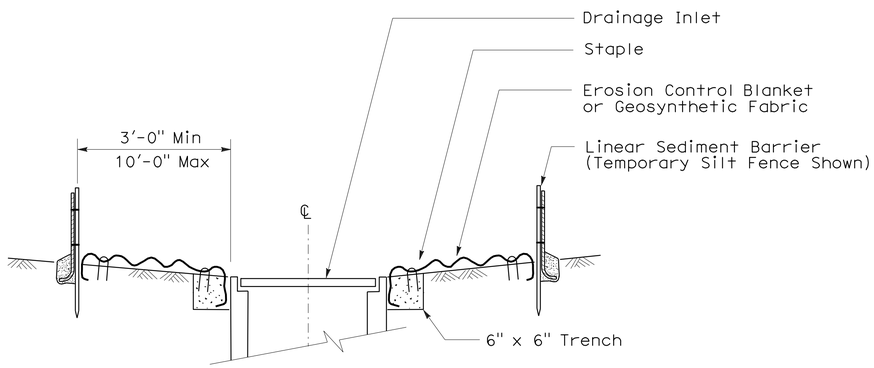

SECTION A-A

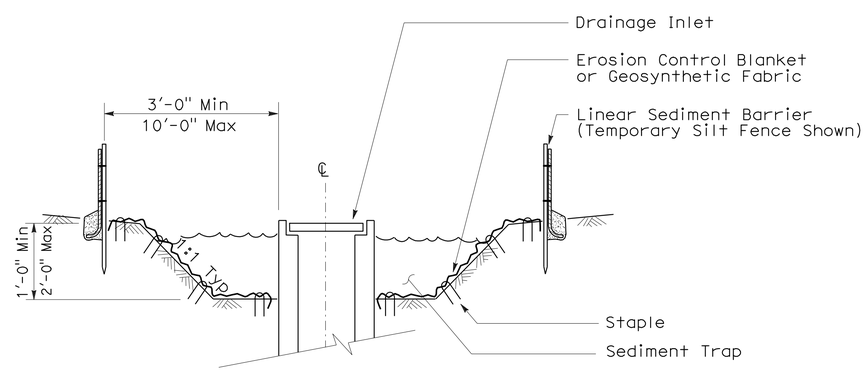

SECTION B-B

NOTES:

1. See Standard Plan T51 for Temporary Silt Fence.
2. Dimensions may vary to fit field conditions.

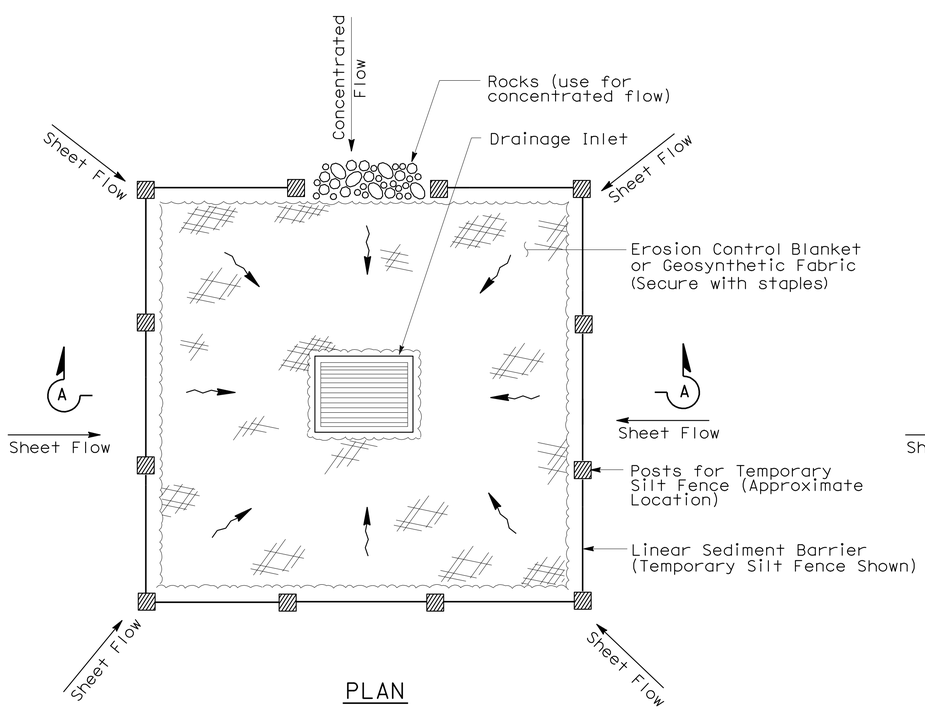

PLAN

TEMPORARY DRAINAGE INLET PROTECTION (TYPE 1)

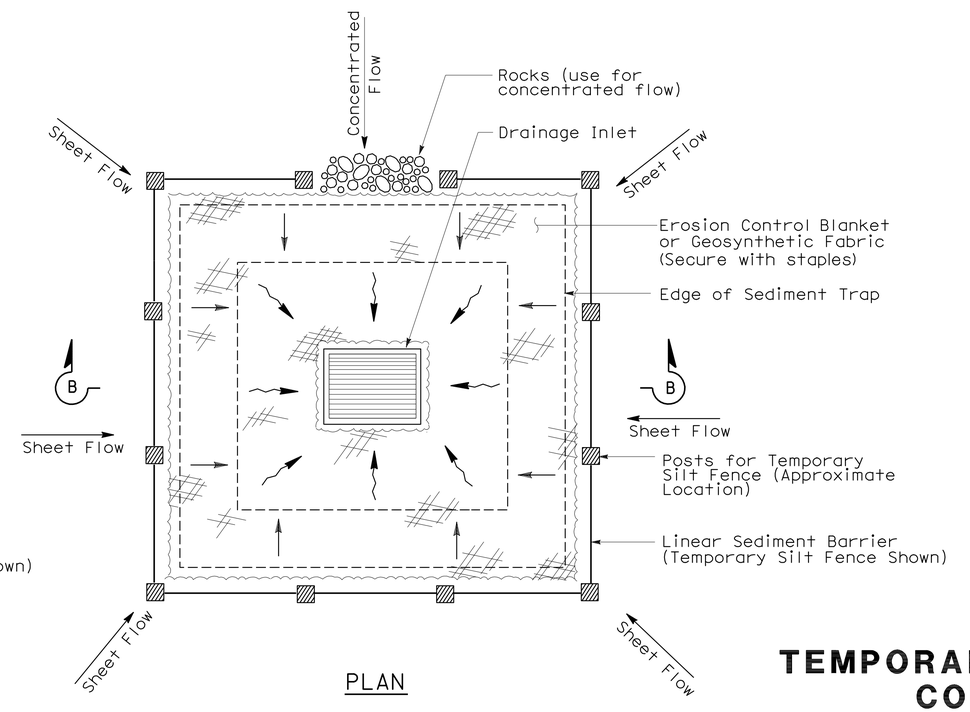

PLAN

TEMPORARY DRAINAGE INLET PROTECTION (TYPE 2) (EXCAVATED SEDIMENT TRAP)

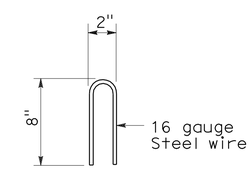

STAPLE DETAIL

STATE OF CALIFORNIA
DEPARTMENT OF TRANSPORTATION

TEMPORARY WATER POLLUTION CONTROL DETAILS (TEMPORARY DRAINAGE INLET PROTECTION)

NO SCALE

NSP T61 DATED AUGUST 15, 2008 SUPPLEMENTS THE STANDARD PLANS BOOK DATED MAY 2006.

NEW STANDARD PLAN NSP T61

2006 NEW STANDARD PLAN NSP T61

7-11-08

DIST	COUNTY	ROUTE	POST MILES TOTAL PROJECT	SHEET NO.	TOTAL SHEETS
04	Ala	680	4.8/5.2	63	66

LICENSED LANDSCAPE ARCHITECT

August 15, 2008
PLANS APPROVAL DATE

LICENSED LANDSCAPE ARCHITECT Robert B. Schott 3625 Signature 11-04-08 Renewal Date 08-11-08 Date STATE OF CALIFORNIA

The State of California or its officers or agents shall not be responsible for the accuracy or completeness of electronic copies of this plan sheet.

To accompany plans dated 11-16-09

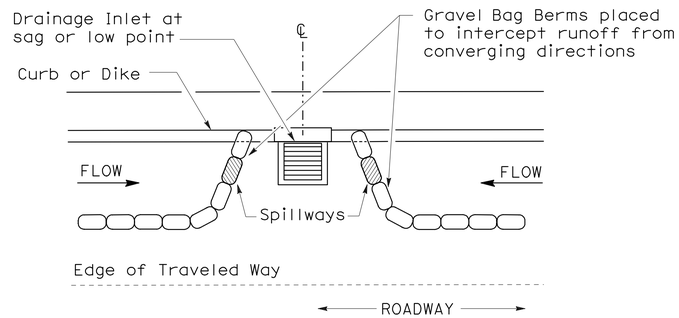

PLAN

CONFIGURATION FOR SAG POINT INLET (GRAVEL BAG BERM)

GRAVEL BAG BERM (TYPE 3A) SPACING TABLE

SLOPE OF ROADWAY (PERCENT)	1 to 3.9	4 to 5.9	6 to 7.9	8 to 10	10+
INTERVAL BETWEEN BERM	100′	75′	50′	25′	12′

For slope of less than 1%, install barriers only if erosion/sediment is prevalent

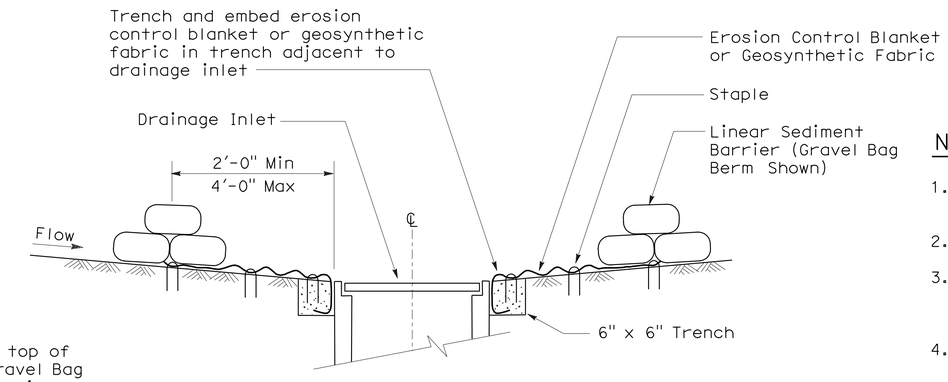

SECTION A-A

NOTES:

1. Place safety cones adjacent to drainage inlet protection.
2. Dimensions may vary to fit field conditions.
3. Install a minimum of 3 gravel bag berms upstream of each drainage inlet to be protected.
4. Position erosion control blanket or geosynthetic fabric at edge of concrete apron and secure in trench.
5. Erosion control blanket or geosynthetic fabric is not required if the area adjacent to the drainage inlet is vegetated or paved.

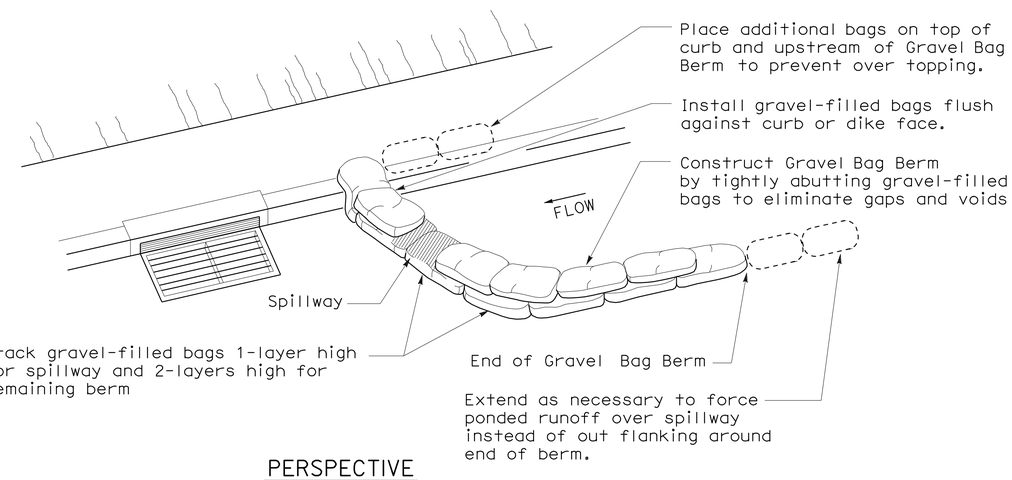

PERSPECTIVE

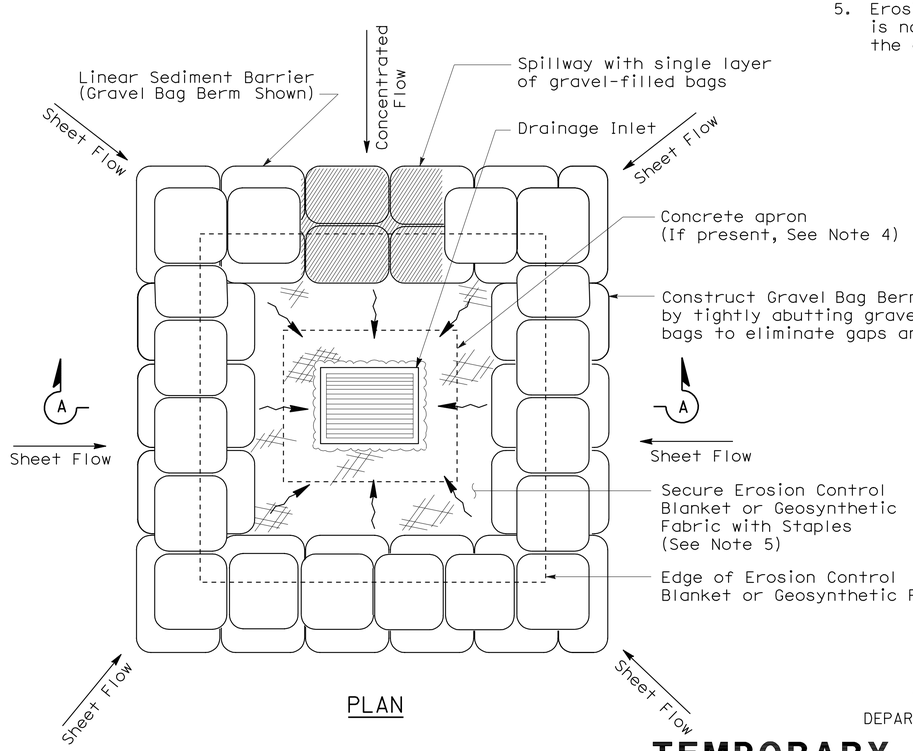

PLAN

TEMPORARY DRAINAGE INLET PROTECTION (TYPE 3B)

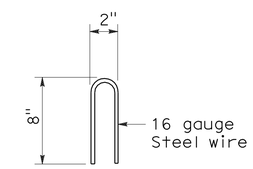

STAPLE DETAIL

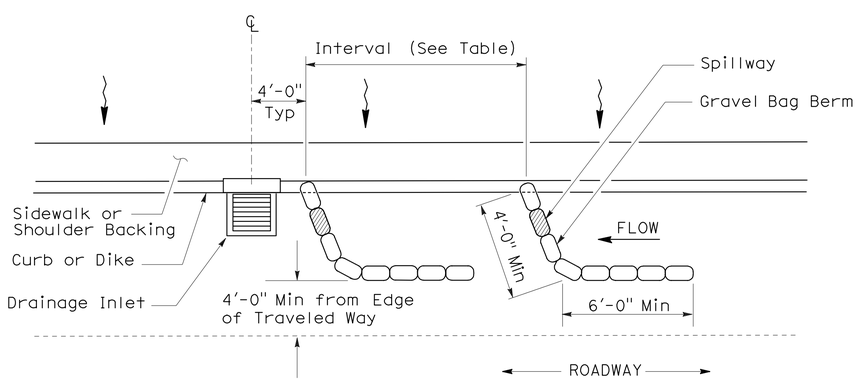

PLAN

TEMPORARY DRAINAGE INLET PROTECTION (TYPE 3A) (GRAVEL BAG BERM)

STATE OF CALIFORNIA
DEPARTMENT OF TRANSPORTATION

TEMPORARY WATER POLLUTION CONTROL DETAILS (TEMPORARY DRAINAGE INLET PROTECTION)

NO SCALE

NSP T62 DATED AUGUST 15, 2008 SUPPLEMENTS THE STANDARD PLANS BOOK DATED MAY 2006.

NEW STANDARD PLAN NSP T62

2006 NEW STANDARD PLAN NSP T62

7-11-08

DIST	COUNTY	ROUTE	POST MILES TOTAL PROJECT	SHEET NO.	TOTAL SHEETS
04	Ala	680	4.8/5.2	64	66

LICENSED LANDSCAPE ARCHITECT

August 15, 2008
PLANS APPROVAL DATE

The State of California or its officers or agents shall not be responsible for the accuracy or completeness of electronic copies of this plan sheet.

LICENSED LANDSCAPE ARCHITECT — Robert B. Schott — Signature — 11-04-08 Renewal Date — 08-11-08 Date — STATE OF CALIFORNIA

To accompany plans dated 11-16-09

FLEXIBLE SEDIMENT BARRIER SPACING TABLE

SLOPE OF ROADWAY (PERCENT)	0 to 0.9	1 to 1.9	2 to 2.9	3 to 4	5+
INTERVAL BETWEEN BARRIERS	50′	35′	30′	25′	20′
ANGLE FROM FACE OF CURB	70°	70°	70°	45°	45°
SUGGESTED BARRIER LENGTH	6′	6′	6′	6′	6′

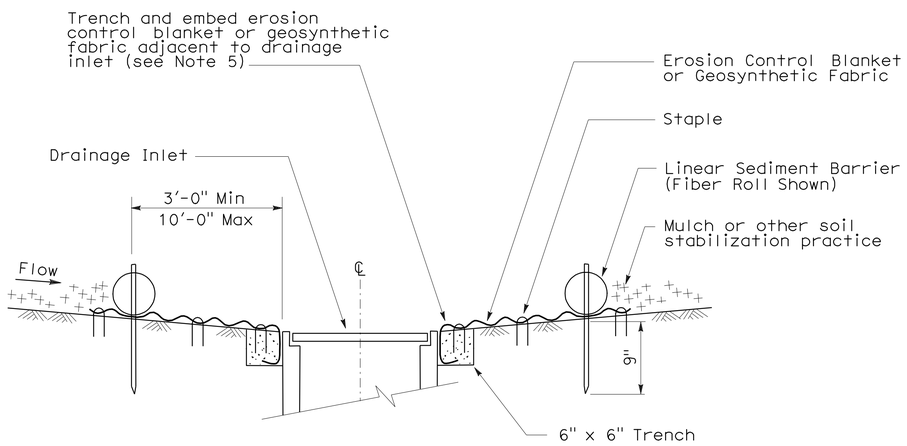

SECTION A-A

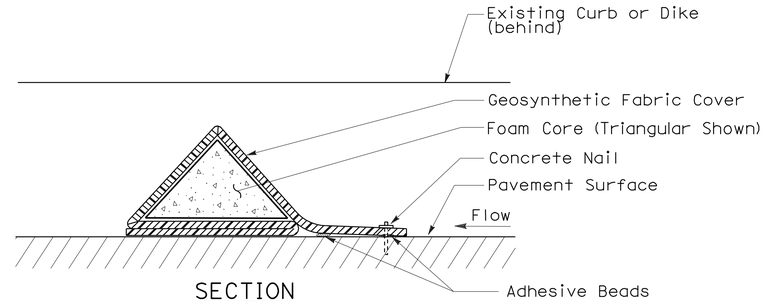

SECTION

FLEXIBLE SEDIMENT BARRIER DETAIL (FOAM BARRIER SHOWN)

NOTES:

1. See Standard Plan T51 for Temporary Silt Fence.
2. Dimensions may vary to fit field conditions.
3. Install a minimum of 3 flexible sediment barriers upstream of each drainage inlet to be protected.
4. Position erosion control blanket or geosynthetic fabric at edge of concrete apron and secure in trench.
5. Erosion control blanket or geosynthetic fabric is not required if the area adjacent to the drainage inlet is vegetated.

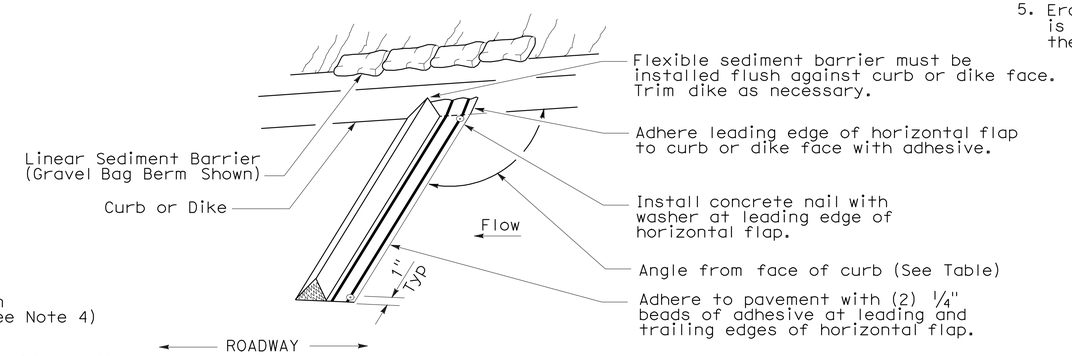

PERSPECTIVE

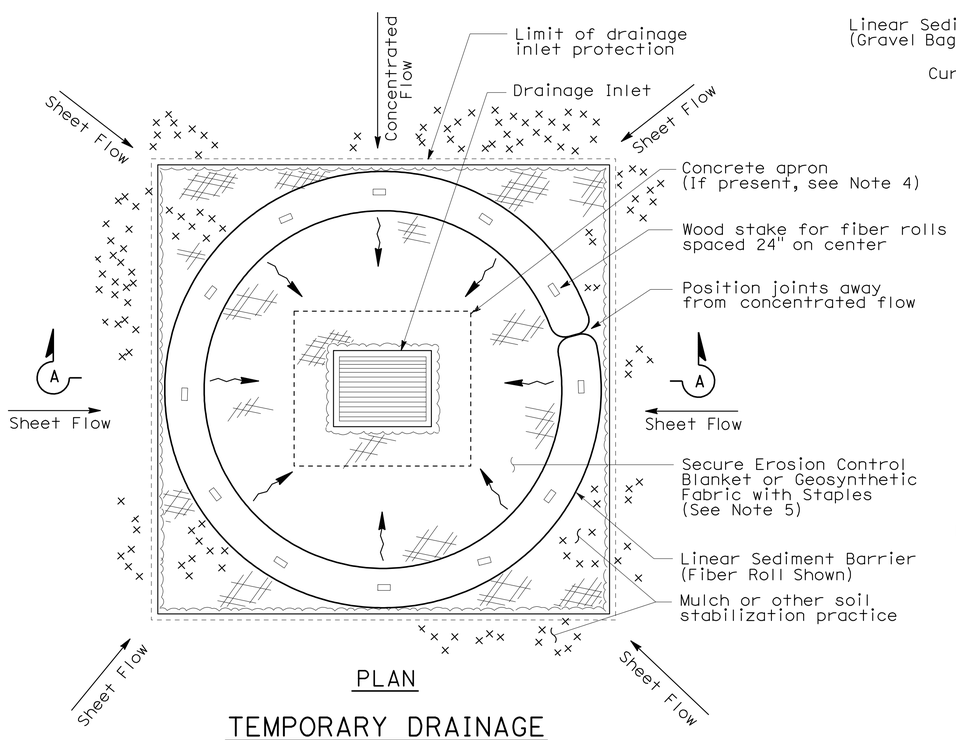

PLAN

TEMPORARY DRAINAGE INLET PROTECTION (TYPE 4A)

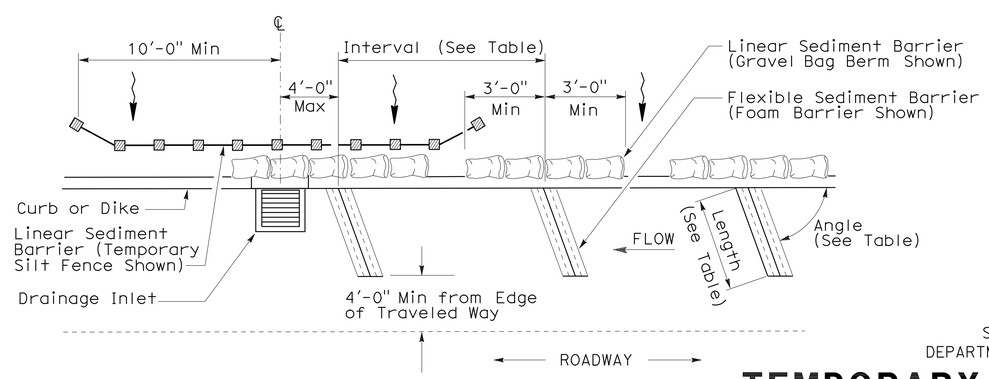

PLAN

TEMPORARY DRAINAGE INLET PROTECTION (TYPE 4B) FLEXIBLE SEDIMENT BARRIER

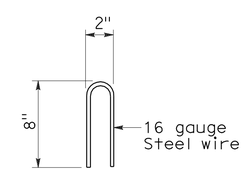

STAPLE DETAIL

STATE OF CALIFORNIA
DEPARTMENT OF TRANSPORTATION

TEMPORARY WATER POLLUTION CONTROL DETAILS (TEMPORARY DRAINAGE INLET PROTECTION)

NO SCALE

NSP T63 DATED AUGUST 15, 2008 SUPPLEMENTS THE STANDARD PLANS BOOK DATED MAY 2006.

NEW STANDARD PLAN NSP T63

2006 NEW STANDARD PLAN NSP T63

DIST	COUNTY	ROUTE	POST MILES TOTAL PROJECT	SHEET NO.	TOTAL SHEETS
04	Ala	680	4.8/5.2	65	66

LICENSED LANDSCAPE ARCHITECT

August 15, 2008
PLANS APPROVAL DATE

LICENSED LANDSCAPE ARCHITECT
Robert B. Schott 3625
Signature
11-04-08
Renewal Date
08-11-08
Date
STATE OF CALIFORNIA

The State of California or its officers or agents shall not be responsible for the accuracy or completeness of electronic copies of this plan sheet.

To accompany plans dated 11-16-09

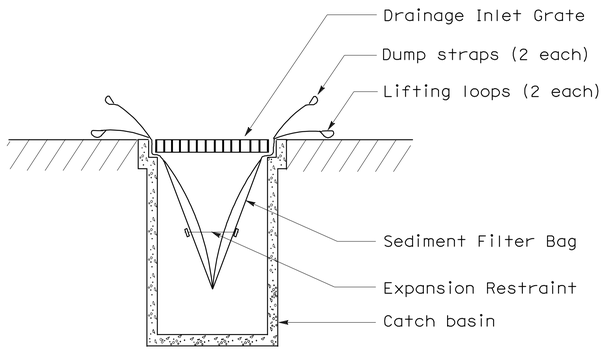

SECTION B-B

SEDIMENT FILTER BAG DETAIL

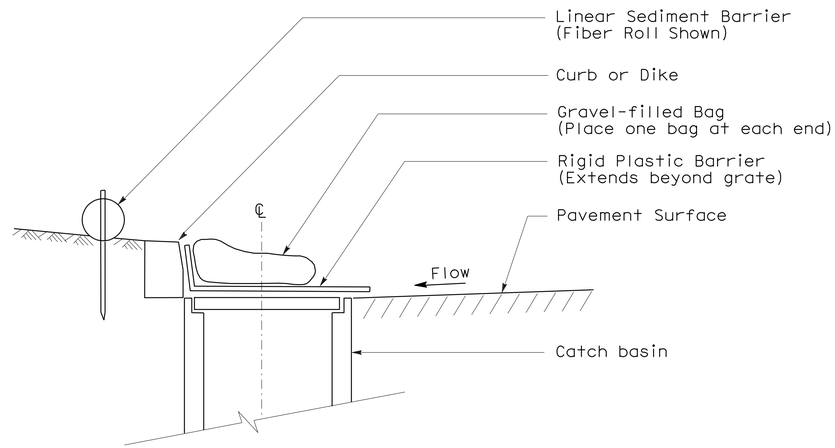

SECTION

TEMPORARY DRAINAGE INLET PROTECTION (TYPE 6A) (CATCH BASIN WITH GRATE)

NOTES:

1. See Standard Plan T51 for Temporary Silt Fence.
2. Dimensions may vary to fit field conditions.

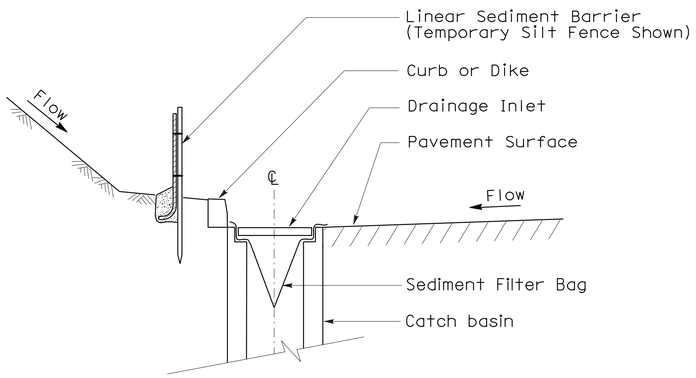

SECTION A-A

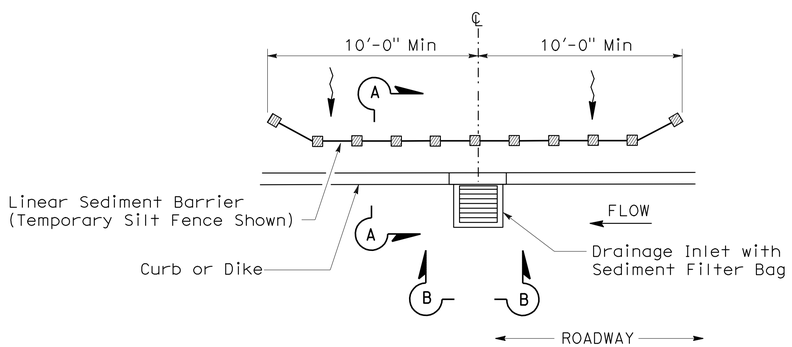

PLAN

TEMPORARY DRAINAGE INLET PROTECTION (TYPE 5) (SEDIMENT FILTER BAG)

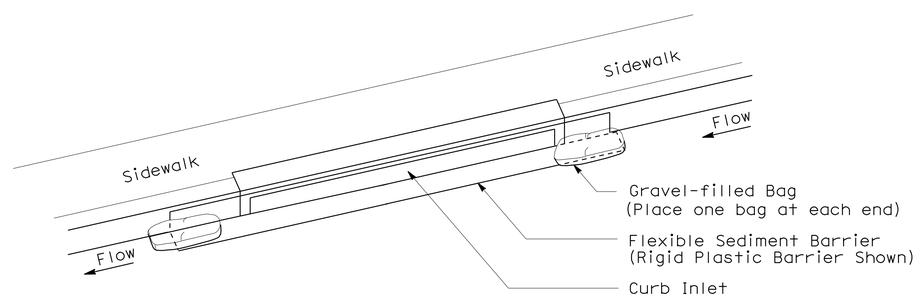

PERSPECTIVE

TEMPORARY DRAINAGE INLET PROTECTION (TYPE 6B) (CURB INLET WITHOUT GRATE)

STATE OF CALIFORNIA
DEPARTMENT OF TRANSPORTATION

TEMPORARY WATER POLLUTION CONTROL DETAILS (TEMPORARY DRAINAGE INLET PROTECTION)

NO SCALE

NSP T64 DATED AUGUST 15, 2008 SUPPLEMENTS
THE STANDARD PLANS BOOK DATED MAY 2006.

NEW STANDARD PLAN NSP T64

2006 NEW STANDARD PLAN NSP T64

7-11-08

DIST	COUNTY	ROUTE	POST MILES TOTAL PROJECT	SHEET NO.	TOTAL SHEETS
04	Ala	680	4.8/5.2	66	66

Robert B Schott
LICENSED LANDSCAPE ARCHITECT

April 3, 2009
PLANS APPROVAL DATE

LICENSED LANDSCAPE ARCHITECT
Robert B. Schott 3625
Robert B Schott
Signature
11-30-10
Renewal Date
2-25-09
Date
STATE OF CALIFORNIA

The State of California or its officers or agents shall not be responsible for the accuracy or completeness of electronic copies of this plan sheet.

To accompany plans dated 11-16-09

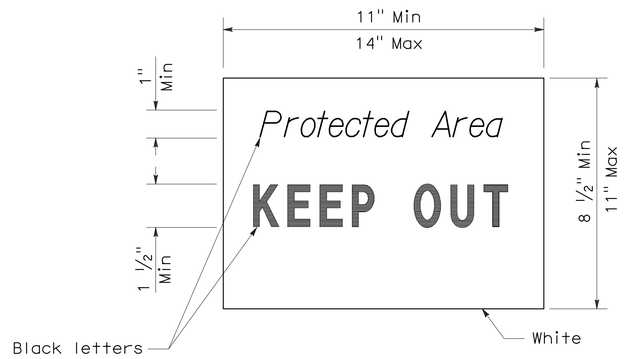

SIGN DETAIL

NOTE:

1. Temporary silt fence and temporary straw bale barrier shown for reference purposes only.

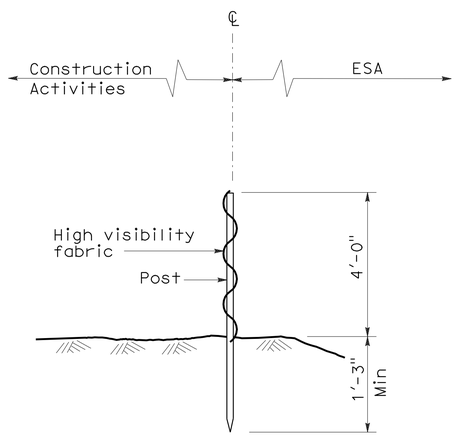

SECTION
TEMPORARY FENCE (TYPE ESA)

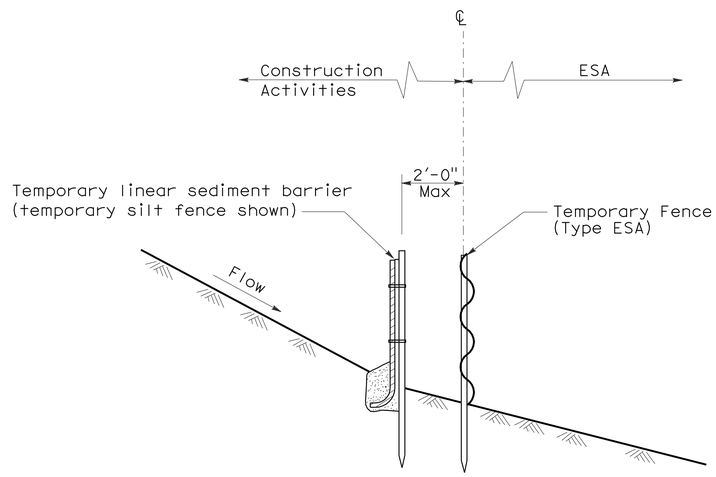

SECTION
PLACEMENT DETAIL
FOR TEMPORARY LINEAR SEDIMENT BARRIER
USED WITH TEMPORARY
FENCE (TYPE ESA)
(See Note 1)

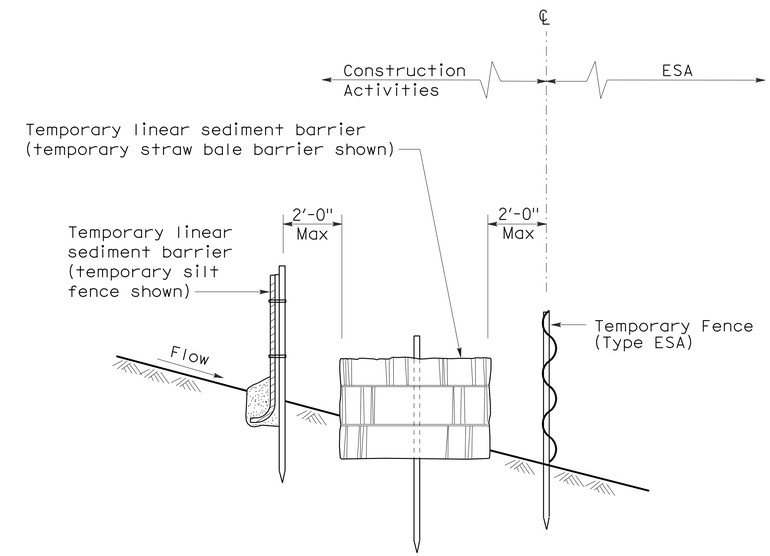

SECTION
PLACEMENT DETAIL
FOR TEMPORARY SILT FENCE
AND TEMPORARY STRAW BALE BARRIER
USED WITH TEMPORARY FENCE (TYPE ESA)
(See Note 1)

STATE OF CALIFORNIA
DEPARTMENT OF TRANSPORTATION

TEMPORARY WATER POLLUTION CONTROL DETAILS [TEMPORARY FENCE (TYPE ESA)]

NO SCALE

NSP T65 DATED APRIL 3, 2009 SUPPLEMENTS
THE STANDARD PLANS BOOK DATED MAY 2006.

NEW STANDARD PLAN NSP T65

2006 NEW STANDARD PLAN NSP T65