Dist	COUNTY	ROUTE	POST MILES TOTAL PROJECT	SHEET No.	TOTAL SHEETS
04	SM	101	16.3/17.1	707	814

REGISTERED CIVIL ENGINEER

November 15, 2013
PLANS APPROVAL DATE

REGISTERED PROFESSIONAL ENGINEER
Stanley P. Johnson
No. C57793
Exp. 3-31-14
CIVIL
STATE OF CALIFORNIA

THE STATE OF CALIFORNIA OR ITS OFFICERS OR AGENTS SHALL NOT BE RESPONSIBLE FOR THE ACCURACY OR COMPLETENESS OF SCANNED COPIES OF THIS PLAN SHEET.

TO ACCOMPANY PLANS DATED 10-21-13

POLE TYPE	POLE DATA				BASE PLATE DATA				CIDH	
	HEIGHT "h"	Min OD		THICKNESS	"C"	THICKNESS	ANCHOR BOLT SIZE	BC = BOLT CIRCLE	Dia	"d"
		BASE	TOP							
CCTV 25	25′	7⅜"	3¾"	0.1793"	1′-1"	1"	1½" ø x 36"	11½"	2′-6"	7′-0"
CCTV 30	30′	8"			1′-1½"			1′-0"		7′-6"
CCTV 35	35′	8⅝"			1′-2"			1′-1"		8′-0"
CCTV 40	40′	9⅜"			1′-3"			1′-1½"		8′-6"
CCTV 45	45′	10"						1′-2"		

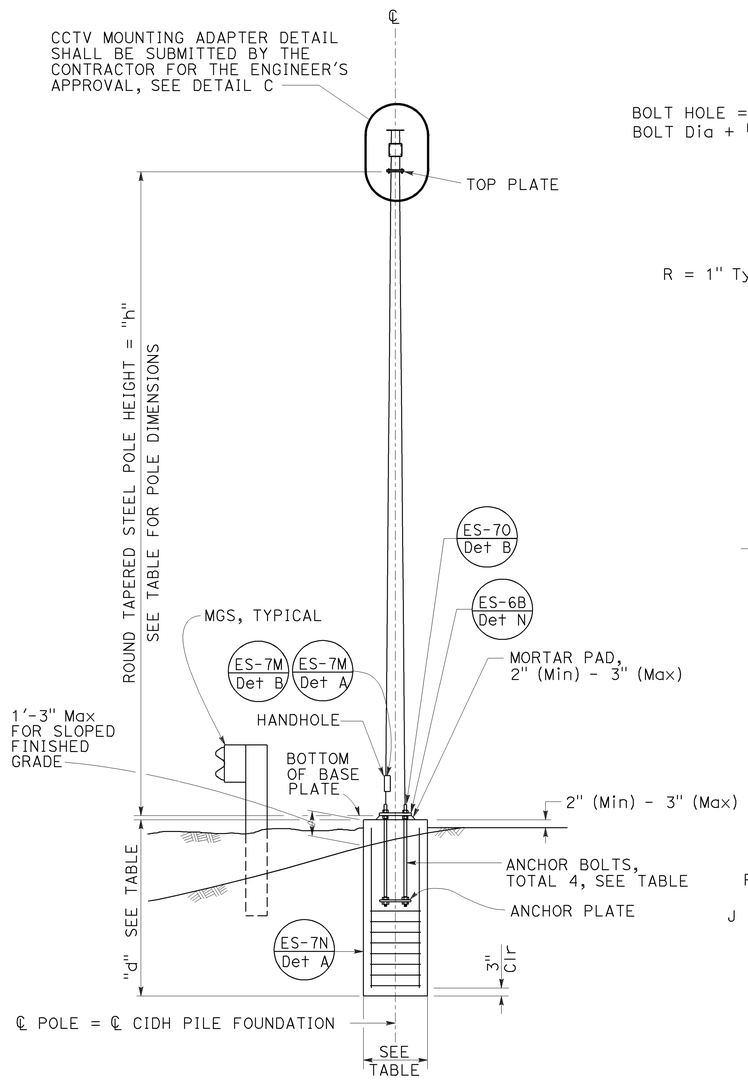

ELEVATION A

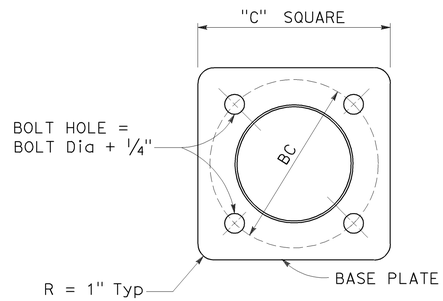

BASE PLATE

DETAIL A

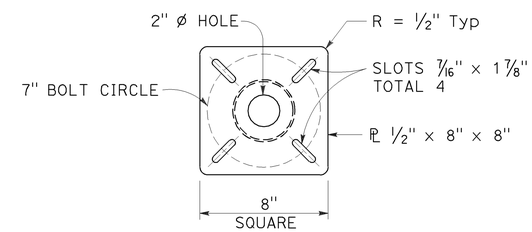

TOP PLATE

DETAIL B

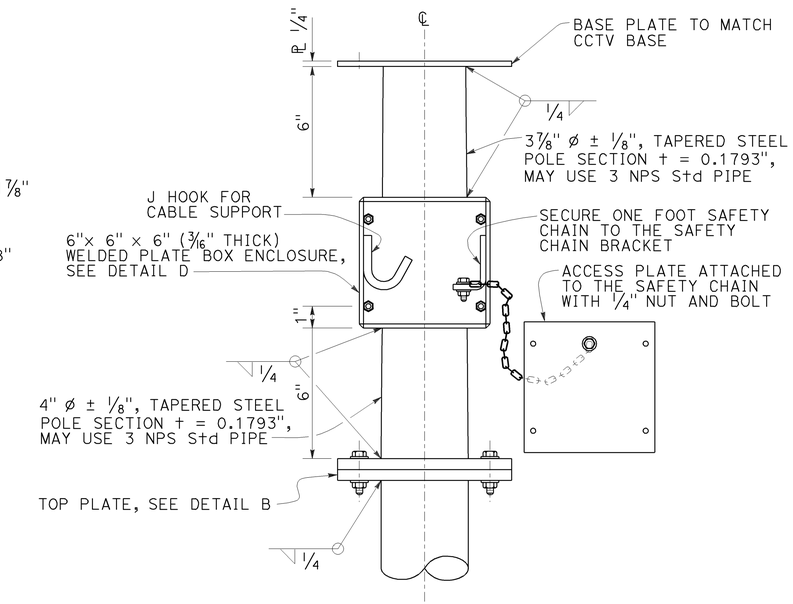

CLOSED CIRCUIT TELEVISION MOUNTING ADAPTER

DETAIL C

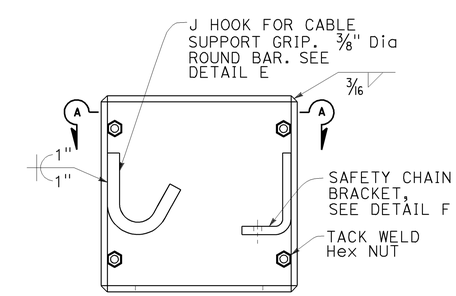

BOX ENCLOSURE

DETAIL D

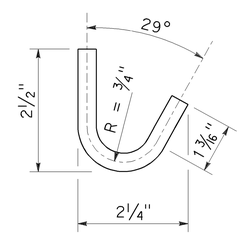

J HOOK

DETAIL E

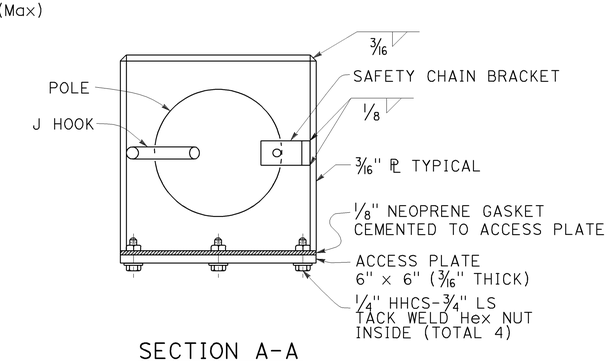

SECTION A-A

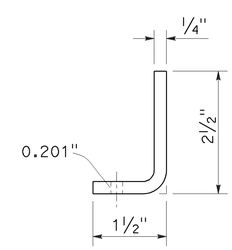

SAFETY CHAIN BRACKET

DETAIL F

NOTES:

1. The Contractor shall verify controlling field dimensions before ordering or fabricating any material.
2. During pole installation, the post shall be raked as necessary with the use of leveling nuts to provide a plumb pole axis.
3. Wind Loadings (3-second gust): 100 mph
4. Unit Stresses (Structural Steel):
   a. fy = 55,000 psi (tapered steel tube and anchor bolts)
   b. fy = 50,000 psi (unless otherwise noted)
5. Unit Stresses (Reinforced Concrete):
   a. f′c = 3,625 psi
   b. fy = 60,000 psi

STATE OF CALIFORNIA
DEPARTMENT OF TRANSPORTATION

ELECTRICAL SYSTEMS (CLOSED CIRCUIT TELEVISION, 25' TO 45' POLE)

NO SCALE

RSP ES-16B DATED NOVEMBER 15, 2013 SUPERSEDES STANDARD PLAN ES-16B DATED MAY 20, 2011 - PAGE 501 OF THE STANDARD PLANS BOOK DATED 2010.

REVISED STANDARD PLAN RSP ES-16B

2010 REVISED STANDARD PLAN RSP ES-16B

10-4-13

Dist	COUNTY	ROUTE	POST MILES TOTAL PROJECT	SHEET No.	TOTAL SHEETS
04	SM	101	16.3/17.1	708	814

REGISTERED CIVIL ENGINEER

November 15, 2013
PLANS APPROVAL DATE

REGISTERED PROFESSIONAL ENGINEER Stanley P. Johnson No. C57793 Exp. 3-31-14 CIVIL STATE OF CALIFORNIA

THE STATE OF CALIFORNIA OR ITS OFFICERS OR AGENTS SHALL NOT BE RESPONSIBLE FOR THE ACCURACY OR COMPLETENESS OF SCANNED COPIES OF THIS PLAN SHEET.

TO ACCOMPANY PLANS DATED 10-21-13

2010 REVISED STANDARD PLAN RSP ES-16D

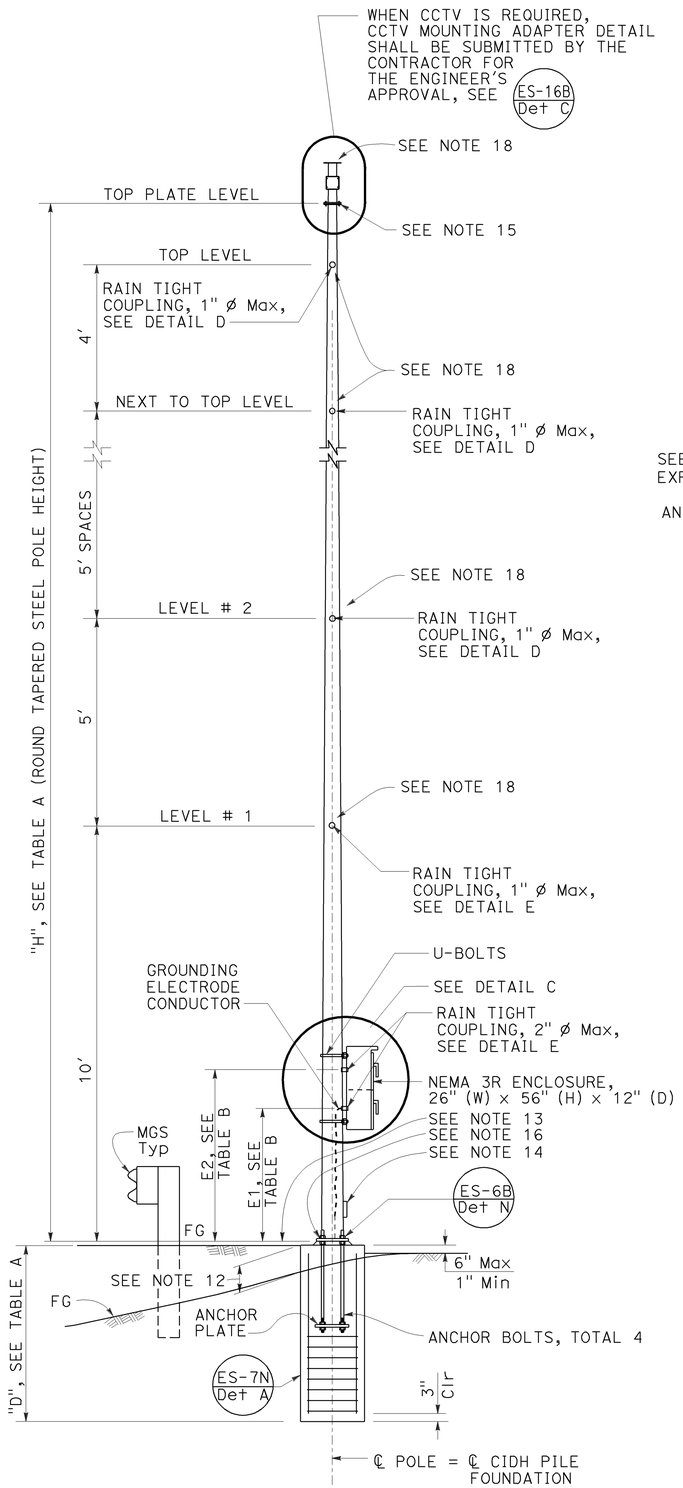

ELEVATION A

TABLE A

POLE TYPE	POLE DATA: HEIGHT "H"	Min OD BASE	Min OD TOP	THICKNESS	BASE PLATE DATA: "C"	THICKNESS	ANCHOR BOLTS SIZE	BC = BOLT CIRCLE	"D" 2'-6" ø CIDH Pile: LEVEL GROUND	UP TO 2:1
VDS 30	30'	8"	3⅞"	0.1793"	1'-1½"	1½"	1½" ø x 3'-0"	1'-1½"	11'-0"	13'-0"
VDS 35	35'	8⅝"			1'-2"			1'-2"	11'-0"	
VDS 40	40'	9⅜"			1'-3"			1'-3"	12'-0"	14'-0"

TABLE B

POLE TYPE	COUPLING E1(Max)	COUPLING E2(Max)
VDS 30	3'-6"	4'-9"
VDS 35		
VDS 40		

TABLE C

SPREAD FOOTING

GROUND	FOOTING SIZE (LENGTH x WIDTH x DEPTH)	REINFORCEMENT TOP & BOTTOM
LEVEL	8'-6" x 8'-6" x 2'-0"	12 - #5 EW
UP TO 2:1	10'-0" x 10'-0" x 2'-0"	15 - #5 EW

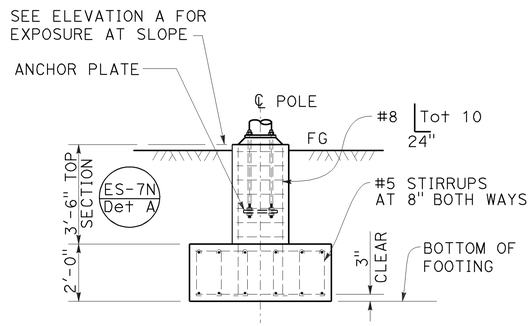

ALTERNATIVE FOOTING
ELEVATION B

TABLE D - LIMITATION ON ATTACHMENTS *

LOCATION	MAXIMUM TOTAL EPA PER LEVEL (SQUARE FEET)	MAXIMUM TOTAL WEIGHT (lb)
LEVEL #1	14	200
LEVEL #2		
LEVEL #3	10 ***	
LEVEL #4 (VDS 35 AND VDS 40 ONLY)	2.5	50
LEVEL #5 (VDS 40 ONLY)		
NEXT TO TOP LEVEL		
TOP LEVEL		
ON TOP PLATE LEVEL **		

* MAXIMUM HORIZONTAL EXTENT BEYOND POLE FACE IS 4 FEET.
** MAXIMUM EXTENT ABOVE TOP PLATE IS 3 FEET.
*** 14 IF LEVEL #1 IS ZERO.

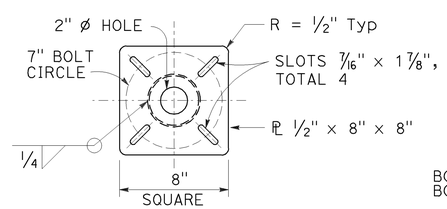

TOP PLATE
DETAIL A

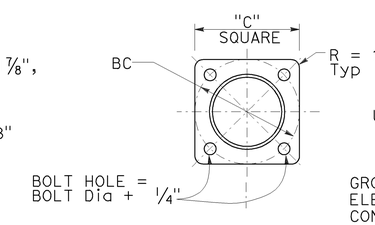

BASE PLATE
DETAIL B

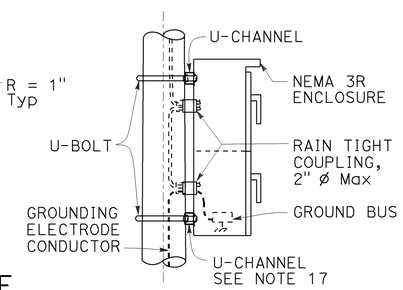

DETAIL C

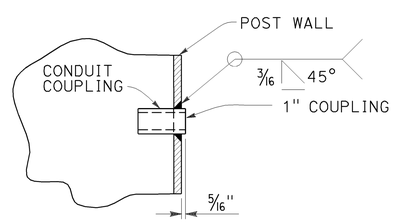

1" COUPLING
DETAIL D

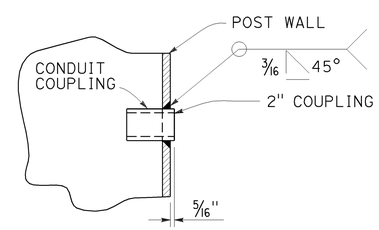

2" COUPLING
DETAIL E

NOTES:

1. All steel shall be galvanized after fabrication.
2. During pole installation the post shall be raked as necessary with the use of leveling nuts to provide a plumb pole axis.
3. The foundation shall be treated as level ground condition if the slope inclination is flatter than 4 : 1 (Horizontal : Vertical)
4. For devices mounted and mounting heights, see TABLE B.
5. Design Specification: AASHTO Standard Specification for structural support for highway signs, luminaires and traffic signal dated 2001.
6. Wind Loadings: 100 mph (3-second gust)
7. Unit Stresses (Structural Steel):
   a. fy = 55,000 psi (tapered steel tube)
   b. fy = 50,000 psi (unless otherwise noted)
8. Anchor bolts: fy = 55,000 psi
9. Unit Stresses (Reinforced Concrete):
   a. f'c = 3,600 psi
   b. fy = 60,000 psi
10. The Contractor shall verify all controlling field dimensions before ordering of fabricating any material.
11. When no barriers are used, the NEMA 3R enclosure shall be located on the downstream side and perpendicular to the roadway.
12. 1'-3" (Max) for sloped finished grade.
13. Bottom of base plate.
14. Handhole. ES-7M Det B / ES-7M Det A
15. Top plate.
    Install a blank flange on the top plate when closed circuit television is not used.
16. ES-7O Elev B
17. U-channel with bracket.
18. Use the manufacturer's Effective Projected Area (EPA) for attachments. Assign attachments to nearest level and sum each level, see Table D for limitations.

STATE OF CALIFORNIA
DEPARTMENT OF TRANSPORTATION

ELECTRICAL SYSTEMS (CLOSED CIRCUIT TELEVISION WITH VEHICLE DETECTION SYSTEM, 30' TO 40' POLE)

NO SCALE

RSP ES-16D DATED NOVEMBER 15, 2013 SUPERSEDES RSP ES-16D DATED JULY 19, 2013 AND STANDARD PLAN ES-16D DATED MAY 20, 2011 - PAGE 503 OF THE STANDARD PLANS BOOK DATED 2010.

REVISED STANDARD PLAN RSP ES-16D

10-4-13

DIST	COUNTY	ROUTE	POST MILES TOTAL PROJECT	SHEET No	TOTAL SHEETS
04	SM	101	16.3/17.1	709	814

REGISTERED CIVIL ENGINEER — DATE 5-15-13

10/21/13
PLANS APPROVAL DATE

REGISTERED PROFESSIONAL ENGINEER — Austin Prince — No. C80659 — Exp. 3/31/15 — CIVIL — STATE OF CALIFORNIA

The State of California or its officers or agents shall not be responsible for the accuracy or completeness of scanned copies of this plan sheet.

SMCTA
1250 SAN CARLOS AVENUE
SAN CARLOS, CA 94070-1306

URS CORPORATION
2870 GATEWAY OAKS DRIVE, SUITE 150
SACRAMENTO, CA 95833-4308

PROFILE GRADE
NO SCALE

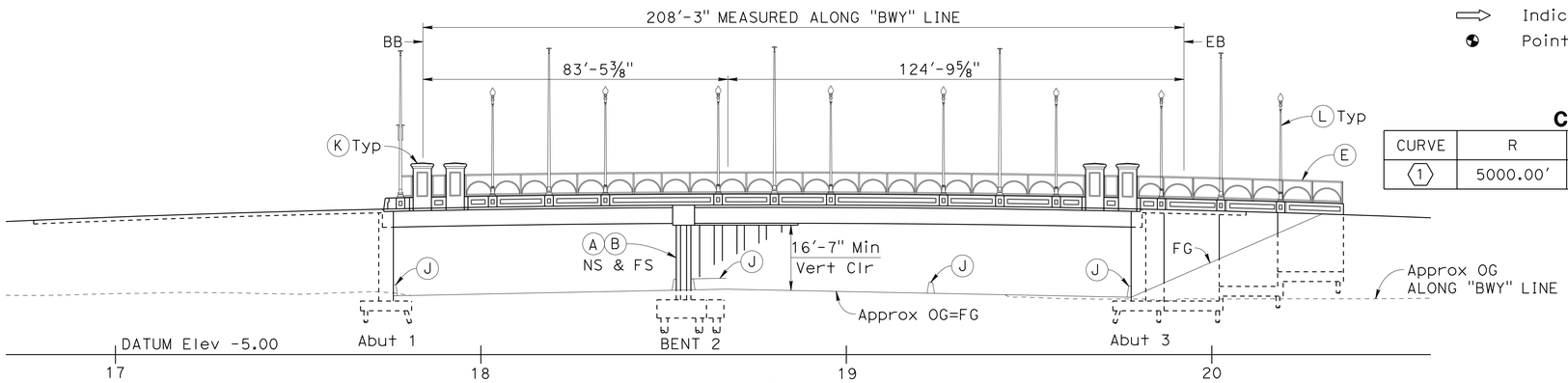

ELEVATION
1"=20'-0"

LEGEND:

- Indicates existing structure
- Indicates direction of traffic
- Point of minimum vertical clearance

CURVE DATA

CURVE	R	Δ	T	L
1	5000.00'	2°26'50"	106.80'	213.56'

NOTES:

(A) Paint "Bridge No. 35-0351" and Year Constructed
(B) Paint Bridge Name
(C) Concrete Barrier (Type 26 Modified)
(D) Concrete Barrier (Type 736 Modified)
(E) Ornamental Railing
(F) Raised Median, see "ROAD PLANS"
(G) Structure Approach Type N(30S) Modified
(H) MSE Wall, see "RETAINING WALL" sheets
(I) MBGR, see "ROAD PLANS"
(J) Concrete Barrier, see "ROAD PLANS"
(K) Corbel, see "ARCHITECTURAL DETAILS No. 2" sheet
(L) Light with pedestal, see "ARCHITECTURAL DETAILS No. 2" sheet
(M) Curb Ramp, Case CM, see A88B

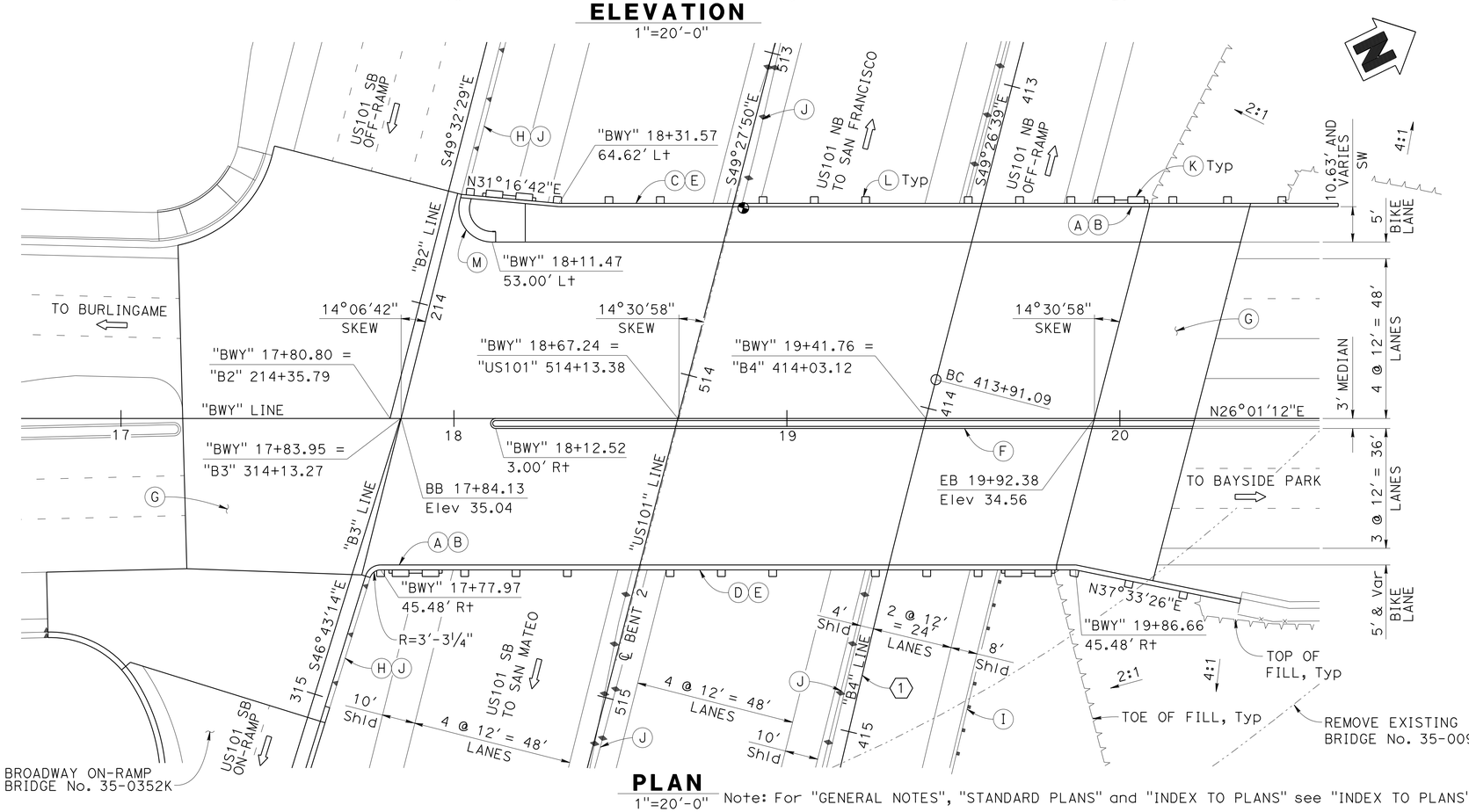

PLAN
1"=20'-0"

Note: For "GENERAL NOTES", "STANDARD PLANS" and "INDEX TO PLANS" see "INDEX TO PLANS" sheet.

BROADWAY OC (REPLACE) — BRIDGE NO 35-0351

QUANTITIES

BRIDGE REMOVAL	LUMP	SUM
STRUCTURE EXCAVATION (TYPE D)	2,695	CY
STRUCTURE BACKFILL (BRIDGE)	1,975	CY
STRUCTURE BACKFILL (RETAINING WALL)	935	CY
PERVIOUS BACKFILL MATERIAL	180	CY
PERVIOUS BACKFILL MATERIAL (RETAINING WALL)	42	CY
2" SUPPLY LINE (BRIDGE)	295	LF
FURNISH PILING (CLASS 140) (ALTERNATIVE X MODIFIED)	12,910	LF
DRIVE PILE (CLASS 140) (ALTERNATIVE X MODIFIED)	220	EA
FURNISH 24" CAST-IN-STEEL SHELL CONCRETE PILING	4,180	LF
DRIVE 24" CAST-IN-STEEL SHELL CONCRETE PILE	80	EA
PRESTRESSING PRECAST GIRDER	LUMP	SUM
STRUCTURAL CONCRETE, BRIDGE FOOTING	855	CY
STRUCTURAL CONCRETE, BRIDGE	1,805	CY
STRUCTURAL CONCRETE, RETAINING WALL	272	CY
STRUCTURAL CONCRETE, APPROACH SLAB (TYPE N MODIFIED)	420	CY
FRACTURED RIB TEXTURE	1,140	SQFT
FRACTURED RIB (TREE PATTERN)	4,065	SQFT
FURNISH PRECAST PRESTRESSED CONCRETE GIRDER (70'-80')	7	EA
FURNISH PRECAST PRESTRESSED CONCRETE GIRDER (80'-90')	7	EA
FURNISH PRECAST PRESTRESSED CONCRETE GIRDER (120'-130')	14	EA
ERECT PRECAST PRESTRESSED CONCRETE GIRDER	28	EA
CORBEL CAP (PRECAST CONCRETE)	8	EA
JOINT SEAL (MR 1 1/2")	232	LF
BAR REINFORCING STEEL (BRIDGE)	736,020	LB
BAR REINFORCING STEEL (RETAINING WALL)	62,670	LB
BAR REINFORCING STEEL (EPOXY COATED) BRIDGE	2,550	LB
HEADED BAR REINFORCEMENT	580	EA
ORNAMENTAL RAILING	516	LF
CONCRETE BARRIER (TYPE 26 MODIFIED)	239	LF
CONCRETE BARRIER (TYPE 26A MODIFIED)	27	LF
CONCRETE BARRIER (TYPE 736A MODIFIED)	28	LF
CONCRETE BARRIER (TYPE 736 MODIFIED)	236	LF

Paul Cotter
DESIGN OVERSIGHT — Paul Cotter
6-20-13
SIGN OFF DATE

	BY	CHECKED
DESIGN	A. Prince	J. Hueser
DETAILS	R. Lim	J. Hueser
QUANTITIES	A. Prince	S. Landis

LOAD & RESISTANCE FACTOR DESIGN — LIVE LOADING: HL93 W/"LOW-BOY"; PERMIT DESIGN VEHICLE
LAYOUT — BY A. Prince — CHECKED J. Hueser
SPECIFICATIONS — BY D. Harnagel — PLANS AND SPECS COMPARED J. Hueser

PREPARED FOR THE STATE OF CALIFORNIA DEPARTMENT OF TRANSPORTATION

Syed Kazmi
PROJECT ENGINEER

BRIDGE NO. 35-0351
POST MILES 16.61

BROADWAY OC (REPLACE)
GENERAL PLAN No. 1

DESIGN GENERAL PLAN SHEET (ENGLISH) (REV. 03/14/12)

ORIGINAL SCALE IN INCHES FOR REDUCED PLANS 0 1 2 3

UNIT: 0703
PROJECT NUMBER & PHASE: 04000006841 CONTRACT NO.: 235844

DISREGARD PRINTS BEARING EARLIER REVISION DATES — REVISION DATES 2-12-13 4-8-13 5-15-13 11-16-12 — SHEET 1 OF 42

FILE => 0400000684we001.dgn

USERNAME => s141070 DATE PLOTTED => 03-FEB-2014 TIME PLOTTED => 13:50

DIST	COUNTY	ROUTE	POST MILES TOTAL PROJECT	SHEET No	TOTAL SHEETS
04	SM	101	16.3/17.1	710	418

REGISTERED CIVIL ENGINEER — DATE 5-15-13

10/21/13
PLANS APPROVAL DATE

REGISTERED PROFESSIONAL ENGINEER — Austin Prince — No. C80659 — Exp. 3/31/15 — CIVIL — STATE OF CALIFORNIA

The State of California or its officers or agents shall not be responsible for the accuracy or completeness of scanned copies of this plan sheet.

SMCTA
1250 SAN CARLOS AVENUE
SAN CARLOS, CA 94070-1306

URS CORPORATION
2870 GATEWAY OAKS DRIVE, SUITE 150
SACRAMENTO, CA 95833-4308

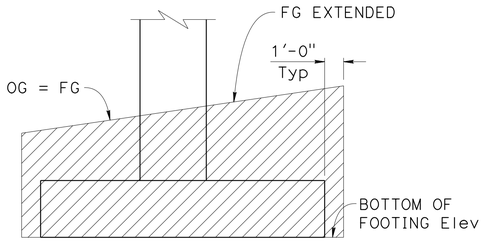

TYPICAL ABUTMENT

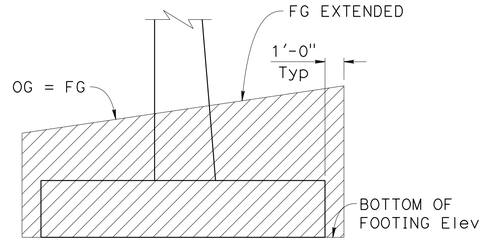

TYPICAL RETAINING WALL

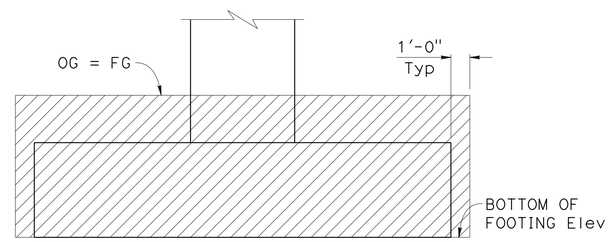

TYPICAL COLUMN

INDICATES LIMITS OF STRUCTURE EXCAVATION (TYPE D)

LIMITS OF STRUCTURE EXCAVATION

NO SCALE

NOTES:

- (C) Concrete Barrier (Type 26 Modified)
- (D) Concrete Barrier (Type 736 Modified)
- (E) Ornamental Railing
- (F) Raised Median, see "ROAD PLANS"
- (N) 2" Galv steel pipe (supply line)
- (O) Electrical Conduit, see "ELECTRICAL PLANS"

LEGEND:

··–··– Indicates existing structure

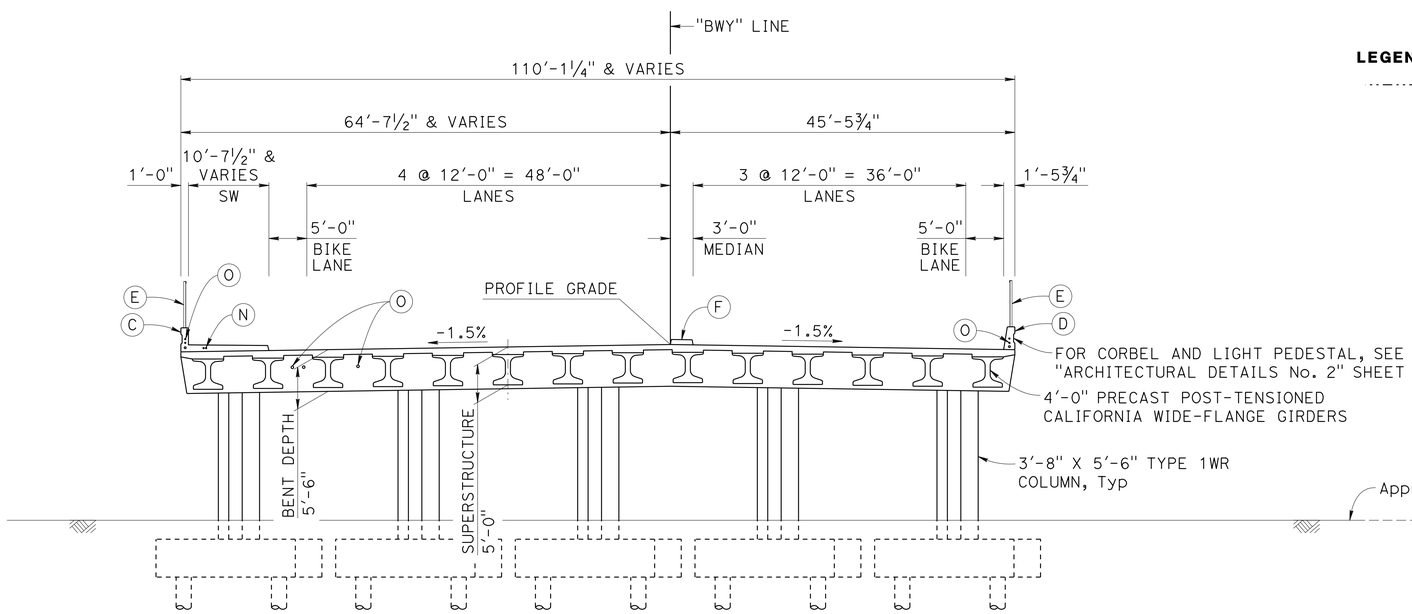

TYPICAL SECTION

1" = 10'-0"

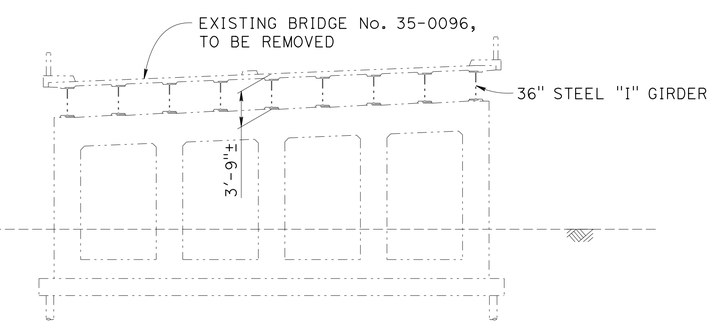

Paul Cotter
DESIGN OVERSIGHT — Paul Cotter
6-20-13
SIGN OFF DATE

	BY	CHECKED
DESIGN	A. Prince	J. Hueser
DETAILS	R. Lim	J. Hueser
QUANTITIES	A. Prince	S. Landis

LOAD & RESISTANCE FACTOR DESIGN — LIVE LOADING: HL93 W/"LOW-BOY"; PERMIT DESIGN VEHICLE

	BY	CHECKED
LAYOUT	A. Prince	J. Hueser
SPECIFICATIONS	D. Harnagel	PLANS AND SPECS COMPARED J. Hueser

PREPARED FOR THE STATE OF CALIFORNIA DEPARTMENT OF TRANSPORTATION

Syed Kazmi
PROJECT ENGINEER

BRIDGE NO. 35-0351
POST MILES 16.61

BROADWAY OC (REPLACE)
GENERAL PLAN No. 2

DESIGN GENERAL PLAN SHEET (ENGLISH) (REV. 03/14/12)

ORIGINAL SCALE IN INCHES FOR REDUCED PLANS 0 1 2 3

UNIT: 0703
PROJECT NUMBER & PHASE: 04000006841 CONTRACT NO.: 235844

DISREGARD PRINTS BEARING EARLIER REVISION DATES

REVISION DATES: 2-12-13 4-8-13 5-15-13 11-16-12

SHEET 2 OF 42

FILE => 0400000684we002.dgn

USERNAME => s141070 DATE PLOTTED => 03-FEB-2014 TIME PLOTTED => 13:50

DIST	COUNTY	ROUTE	POST MILES TOTAL PROJECT	SHEET No	TOTAL SHEETS
04	SM	101	16.3/17.1	711	814

REGISTERED CIVIL ENGINEER 5-15-13 DATE

10/21/13
PLANS APPROVAL DATE

REGISTERED PROFESSIONAL ENGINEER Austin Prince No. C80659 Exp. 3/31/15 CIVIL STATE OF CALIFORNIA

The State of California or its officers or agents shall not be responsible for the accuracy or completeness of scanned copies of this plan sheet.

SMCTA
1250 SAN CARLOS AVENUE
SAN CARLOS, CA 94070-1306

URS CORPORATION
2870 GATEWAY OAKS DRIVE, SUITE 150
SACRAMENTO, CA 95833-4308

INDEX TO PLANS

SHEET NO.	TITLE
1	GENERAL PLAN No. 1
2	GENERAL PLAN No. 2
3	INDEX TO PLANS
4	BRIDGE CONSTRUCTION SEQUENCE
5	DECK CONTOURS
6	FOUNDATION PLAN
7	ABUTMENT 1 LAYOUT
8	ABUTMENT 1 PILE LAYOUT
9	ABUTMENT 3 LAYOUT
10	ABUTMENT 3 PILE LAYOUT
11	ABUTMENT 3 FOOTING DETAILS
12	ABUTMENT DETAILS No. 1
13	ABUTMENT DETAILS No. 2
14	ABUTMENT DETAILS No. 3
15	ABUTMENT DETAILS No. 4
16	BENT LAYOUT
17	BENT DETAILS No. 1
18	BENT DETAILS No. 2
19	BENT DETAILS No. 3
20	BENT DETAILS No. 4
21	BENT DETAILS No. 5
22	TYPICAL SECTION
23	PART TYPICAL SECTION
24	GIRDER LAYOUT
25	GIRDER POST-TENSIONING
26	GIRDER DETAILS No. 1
27	GIRDER DETAILS No. 2
28	GIRDER DETAILS No. 3
29	GIRDER DETAILS No. 4
30	DECK REINFORCEMENT
31	END DIAPHRAGM DETAILS
32	STRUCTURE APPROACH LAYOUT
33	STRUCTURE APPROACH TYPE N(30S)
34	ARCHITECTURAL DETAILS No. 1
35	ARCHITECTURAL DETAILS No. 2
36	CORBEL DETAILS No. 1
37	CORBEL DETAILS No. 2
38	PEDESTAL DETAILS
39	ORNAMENTAL RAILING DETAILS
40	LOG OF TEST BORINGS 1 OF 3
41	LOG OF TEST BORINGS 2 OF 3
42	LOG OF TEST BORINGS 3 OF 3

GENERAL NOTES
LOAD AND RESISTANCE FACTOR DESIGN

DESIGN: AASHTO LRFD Bridge Design Specifications, 4th edition and the California Amendments, preface dated December 2011; except that concrete barriers and bridge details taken from Standard Plans 2010 are designed using Bridge Design Specifications ('96 AASHTO with Revisions by Caltrans).

SEISMIC DESIGN: Caltrans Seismic Design Criteria (SDC), Version 1.6 Dated November 2010.

DEAD LOAD: Includes 35 psf for future wearing surface.

LIVE LOAD: HL93 and permit design load.

SEISMIC LOAD: Soil profile: Type D
Shear wave velocity, Vs30 = 820 ft/sec for the top 100 ft of soil
Moment Magnitude: 7.9
Peak Ground Acceleration = 0.68g

SHRINKAGE DESIGN: CEB-FIP-90

CONCRETE: fy = 60 ksi
f'c = 3.6 ksi
n = 8
See prestressing notes on "GIRDER POST-TENSIONING" sheet.

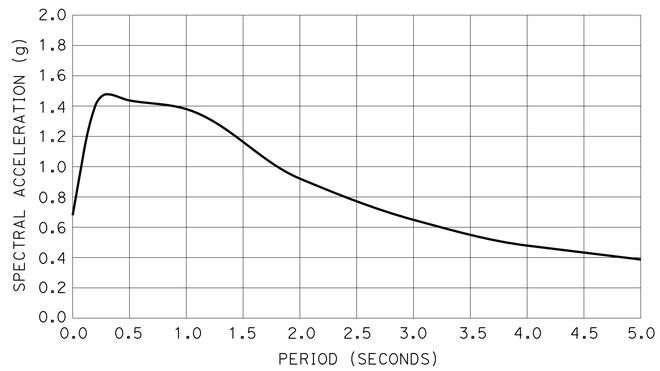

ARS CURVE

STANDARD PLANS 2010

A10A	ABBREVIATIONS (SHEET 1 OF 2)
A10B	ABBREVIATIONS (SHEET 2 OF 2)
A10C	LINES AND SYMBOLS (SHEET 1 OF 3)
A10D	LINES AND SYMBOLS (SHEET 2 OF 3)
A10E	LINES AND SYMBOLS (SHEET 3 OF 3)
A10F	LEGEND - SOIL (SHEET 1 OF 2)
A10G	LEGEND - SOIL (SHEET 2 OF 2)
A62C	LIMITS OF PAYMENT FOR EXCAVATION AND BACKFILL BRIDGE
A88A	CURB RAMP DETAILS
RSP P-10	CONCRETE PAVEMENT - DOWEL BAR DETAILS
B0-1	BRIDGE DETAILS
B0-3	BRIDGE DETAILS
B0-5	BRIDGE DETAILS
B0-13	BRIDGE DETAILS
B2-5	PILE DETAILS CLASS 90 AND CLASS 140
RSP B3-1A	RETAINING WALL TYPE 1 (CASE 1)
RSP B3-5	RETAINING WALL DETAILS No. 1
B6-10	UTILITY OPENINGS T-BEAM
B6-21	JOINT SEALS (MAXIMUM MOVEMENT RATING = 2")
B11-54	CONCRETE BARRIER TYPE 26
B11-56	CONCRETE BARRIER TYPE 736
B14-3	COMMUNICATION AND SPRINKLER CONTROL CONDUITS (CONDUIT LESS THAN 4")

STANDARD PLAN SHEET No.

DETAIL No.

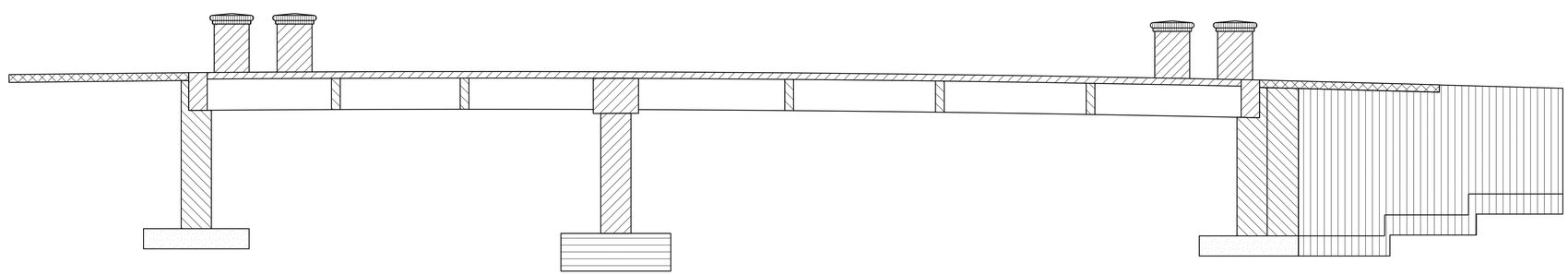

PRECAST PRESTRESSED POST-TENSIONED CALIFORNIA WIDE FLANGE GIRDER (SEE "GIRDER POST-TENSIONING" SHEET)
STRUCTURAL CONCRETE, BRIDGE
STRUCTURAL CONCRETE, RETAINING WALL
STRUCTURAL CONCRETE, BRIDGE FOOTING
PRECAST CORBEL CAP
STRUCTURAL CONCRETE, BRIDGE (f'c = 5.0 ksi @ 28 DAYS)
STRUCTURAL CONCRETE, BRIDGE FOOTING (f'c = 4.5 ksi @ 28 DAYS)
STRUCTURAL CONCRETE, APPROACH SLAB

CONCRETE STRENGTH AND TYPE LIMITS

NO SCALE

DESIGN OVERSIGHT Paul Cotter
6-20-13
SIGN OFF DATE

	BY	CHECKED
DESIGN	A. Prince	J. Hueser
DETAILS	R. Lim/L. Davis	J. Hueser
QUANTITIES	A. Prince	S. Landis

PREPARED FOR THE STATE OF CALIFORNIA DEPARTMENT OF TRANSPORTATION

Syed Kazmi
PROJECT ENGINEER

BRIDGE NO. 35-0351
POST MILES 16.61

BROADWAY OC (REPLACE)
INDEX TO PLANS

DESIGN DETAIL SHEET (ENGLISH) (REV. 03/14/12)

ORIGINAL SCALE IN INCHES FOR REDUCED PLANS 0 1 2 3

UNIT: 0703
PROJECT NUMBER & PHASE: 04000006841 CONTRACT NO.: 235844

DISREGARD PRINTS BEARING EARLIER REVISION DATES

REVISION DATES 5-15-13 11-16-12 2-12-13 4-8-13

SHEET 3 OF 42

FILE => 0400000684we003.dgn

USERNAME => s141070 DATE PLOTTED => 03-FEB-2014 TIME PLOTTED => 13:50

DIST	COUNTY	ROUTE	POST MILES TOTAL PROJECT	SHEET No	TOTAL SHEETS
04	SM	101	16.3/17.1	712	814

REGISTERED CIVIL ENGINEER — DATE 5-15-13

10/21/13
PLANS APPROVAL DATE

REGISTERED PROFESSIONAL ENGINEER — Austin Prince — No. C80659 — Exp. 3/31/15 — CIVIL — STATE OF CALIFORNIA

The State of California or its officers or agents shall not be responsible for the accuracy or completeness of scanned copies of this plan sheet.

SMCTA
1250 SAN CARLOS AVENUE
SAN CARLOS, CA 94070-1306

URS CORPORATION
2870 GATEWAY OAKS DRIVE, SUITE 150
SACRAMENTO, CA 95833-4308

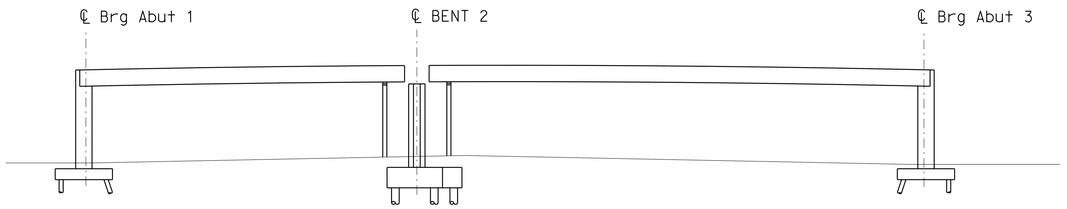

STEP 1, 2, AND 3

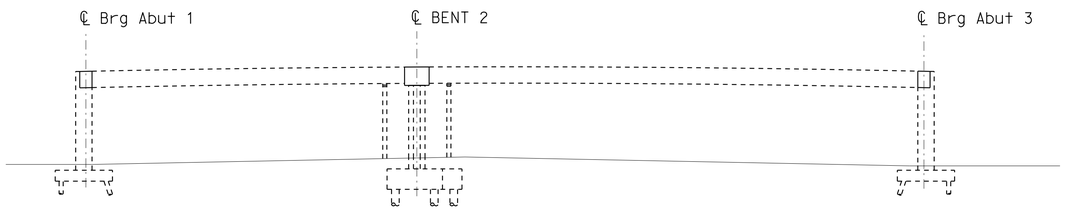

STEP 4

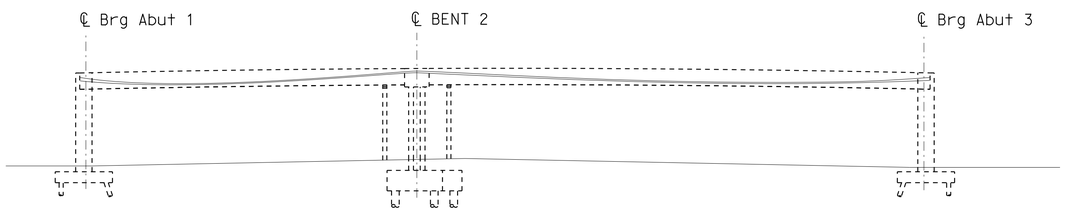

STEP 5

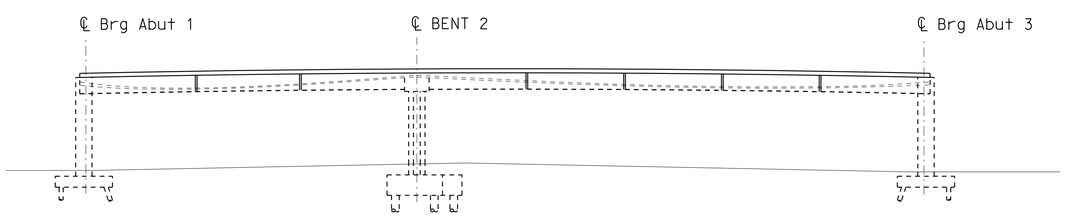

STEP 6 AND 7

CONSTRUCTION SEQUENCE

Step 1: Construct abutments, bent footings and columns.

Step 2: Erect falsework at Bent 2.

Step 3: Erect precast prestressed girders on falsework after girders achieve an age of 90 days after time of release.

Step 4: Construct cast-in-place end diaphragms and bent cap. Allow concrete to reach a minimum strength of 3.5 ksi.

Step 5: Complete Path 1 and Path 3 prestressing (post-tensioning) in the girders.

Step 6: Remove falsework at bent.

Step 7: Form and place deck concrete and intermediate diaphragms.

Step 8: Complete Path 2 prestressing (post-tensioning) in the girders. Path 2 prestressing shall not be permitted less than 14 days after deck concrete has been placed and the deck concrete compressible strength at time of stressing has achieved the minimum specified f'ci of 3.5 ksi.

Step 9: Complete prestress blockouts, construct backwalls, Abut 3 Left retaining wall Abut 1 and Abut 3 Middle approach slabs, barrier rails, pedestals, and corbels.

Step 10: Complete Abut 3 Right retaining wall, Abut 3 Left and Right approach slab, after existing structure has been removed in Stage 3 - Phase 1, see "ROAD PLANS".

Step 11: Complete the raised median in stage 4 - Phase 2, see "ROAD PLANS".

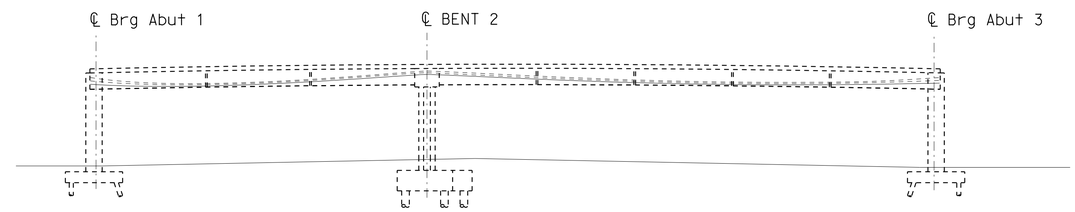

STEP 8

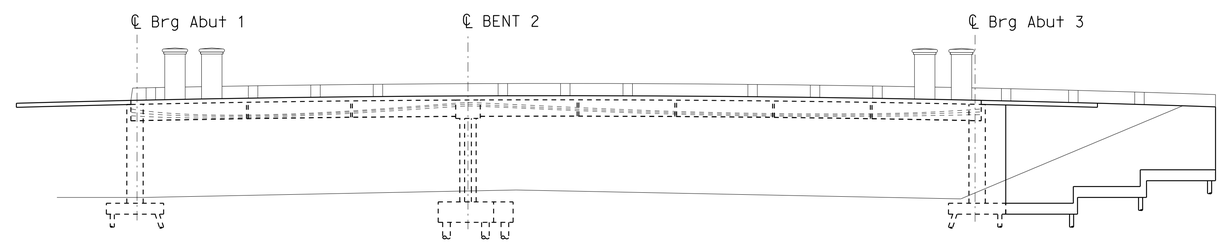

STEP 9, 10 AND 11

CONSTRUCTION SEQUENCE

NO SCALE

Note: Unless Otherwise Noted, all construction sequence steps occur during Stage 1 - Phase 2, see "ROAD PLANS"

DESIGN OVERSIGHT — Paul Cotter
6-20-13
SIGN OFF DATE

	BY	CHECKED
DESIGN	A. Prince	J. Hueser
DETAILS	R. Lim/L. Davis	J. Hueser
QUANTITIES	A. Prince	S. Landis

PREPARED FOR THE STATE OF CALIFORNIA DEPARTMENT OF TRANSPORTATION

Syed Kazmi
PROJECT ENGINEER

BRIDGE NO. 35-0351
POST MILES 16.61

BROADWAY OC (REPLACE)
BRIDGE CONSTRUCTION SEQUENCE

DESIGN DETAIL SHEET (ENGLISH) (REV. 03/14/12)

ORIGINAL SCALE IN INCHES FOR REDUCED PLANS 0 1 2 3

UNIT: 0703
PROJECT NUMBER & PHASE: 04000006841 CONTRACT NO.: 235844

DISREGARD PRINTS BEARING EARLIER REVISION DATES

REVISION DATES: 5-15-13 11-16-12 2-12-13 4-8-13

SHEET 4 OF 42

FILE => 0400000684we004.dgn

USERNAME => s141070 DATE PLOTTED => 03-FEB-2014 TIME PLOTTED => 13:50

DIST	COUNTY	ROUTE	POST MILES TOTAL PROJECT	SHEET No	TOTAL SHEETS
04	SM	101	16.3/17.1	713	814

REGISTERED CIVIL ENGINEER — DATE 5-15-13

10/21/13
PLANS APPROVAL DATE

REGISTERED PROFESSIONAL ENGINEER — Austin Prince — No. C80659 — Exp. 3/31/15 — CIVIL — STATE OF CALIFORNIA

The State of California or its officers or agents shall not be responsible for the accuracy or completeness of scanned copies of this plan sheet.

SMCTA
1250 SAN CARLOS AVENUE
SAN CARLOS, CA 94070-1306

URS CORPORATION
2870 GATEWAY OAKS DRIVE, SUITE 150
SACRAMENTO, CA 95833-4308

NOTES:

1. Contours do not include camber.
2. Contour interval = 0.20′.

LEGEND:

× Indicates 10′ interval measured along "BWY" Line.

□ Indicates even foot contours.

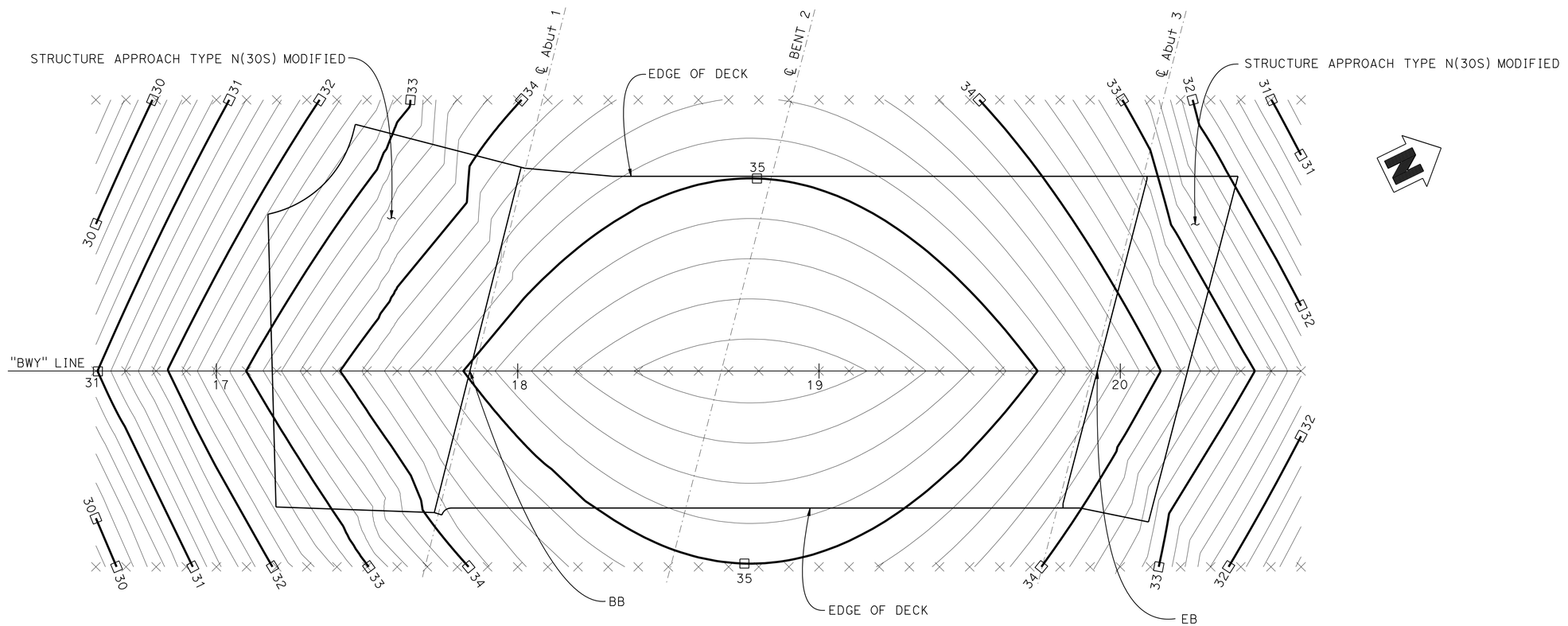

PLAN

1" = 20′-0"

Paul Cotter — DESIGN OVERSIGHT — Paul Cotter	DESIGN	BY A. Prince	CHECKED J. Hueser	PREPARED FOR THE STATE OF CALIFORNIA DEPARTMENT OF TRANSPORTATION	Syed Kazmi — PROJECT ENGINEER
6-20-13 — SIGN OFF DATE	DETAILS	BY R. Lim/L. Davis	CHECKED J. Hueser		BRIDGE NO. 35-0351
	QUANTITIES	BY A. Prince	CHECKED S. Landis		POST MILES 16.61

BROADWAY OC (REPLACE)

DECK CONTOURS

DESIGN DETAIL SHEET (ENGLISH) (REV. 03/14/12)

ORIGINAL SCALE IN INCHES FOR REDUCED PLANS 0 1 2 3

UNIT: 0703
PROJECT NUMBER & PHASE: 04000006841 CONTRACT NO.: 235844

DISREGARD PRINTS BEARING EARLIER REVISION DATES

REVISION DATES: 5-15-13 ~~11-16-12~~ ~~2-12-13~~ ~~4-8-13~~

SHEET 5 OF 42

FILE => 0400000684we005.dgn

USERNAME => s141070 DATE PLOTTED => 03-FEB-2014 TIME PLOTTED => 13:50

DIST	COUNTY	ROUTE	POST MILES TOTAL PROJECT	SHEET No	TOTAL SHEETS
04	SM	101	16.3/17.1	714	814

REGISTERED CIVIL ENGINEER — DATE 5-15-13

10/21/13
PLANS APPROVAL DATE

The State of California or its officers or agents shall not be responsible for the accuracy or completeness of scanned copies of this plan sheet.

REGISTERED PROFESSIONAL ENGINEER — Austin Prince — No. C80659 — Exp. 3/31/15 — CIVIL — STATE OF CALIFORNIA

SMCTA
1250 SAN CARLOS AVENUE
SAN CARLOS, CA 94070-1306

URS CORPORATION
2870 GATEWAY OAKS DRIVE, SUITE 150
SACRAMENTO, CA 95833-4308

PILE DATA TABLE

LOCATION	PILE TYPE	NOMINAL RESISTANCE (kips)		DESIGN TIP ELEVATION (ft)	SPECIFIED TIP ELEVATION (ft)	NOMINAL DRIVING RESISTANCE (kips)*
		COMPRESSION	TENSION			
Abut 1	CLASS 140 Alt "X", T=16"	240	0	-45(A), -20(C), -16(D)	-45	240
BENT 2	24" CISS NPS 24 x 0.5"	430	200	-47(A), -28(B), -25(C), -25(D)	-47	440
Abut 3	CLASS 140 Alt "X", T=16"	280	0	-53(A), -28(C), -16(D)	-53	280
Abut 3 Lt RW	CLASS 140 Alt "X", T=16"	260	140	-53(A), -23(B), -28(C), -16(D)	-53	260
Abut 3 Rt RW	CLASS 140 Alt "X", T=16"	260	140	-53(A), -23(B), -28(C), -16(D)	-53	260

DESIGN TIP ELEVATION IS CONTROLLED BY THE FOLLOWING DEMANDS:
(A) COMPRESSION, (B) TENSION, (C) SETTLEMENT, (D) LATERAL.
* NOMINAL DRIVING RESISTANCE IS THE SUM OF NOMINAL RESISTANCE AND DOWNDRAG.

BENCH MARK

BENCH MARK	N	E	ELEV	DESCRIPTION
1003	2043769.910	6021712.494	10.93	STANDARD CITY WELL MONUMENT AT THE CENTERLINE OF BAYSHORE HWY IN A CURB MEDIAN OVER A BOX CULVERT AT EASTON CREEK
510	2042355.119	6022633.562	12.66	SURVEY SPIKE & URS WASHER ON THE BROADWAY ON-RAMP TO SB US 101, IN THE AC SHOULDER, ± 3.2' SOUTHWEST OF ETW & ± 3' NORTHWEST OF EP

SURVEY CONTROL
HORIZONTAL CONTROL FOR THIS SURVEY IS BASED ON THE CALIFORNIA COORDINATE SYSTEM, ZONE 3, US SURVEY FEET, NORTH AMERICAN DATUM OF 1983 (NAD83 2007),
VERTICAL CONTROL IS THE NORTH AMERICAN VERTICAL DATUM (NAVD88 RCFCD).

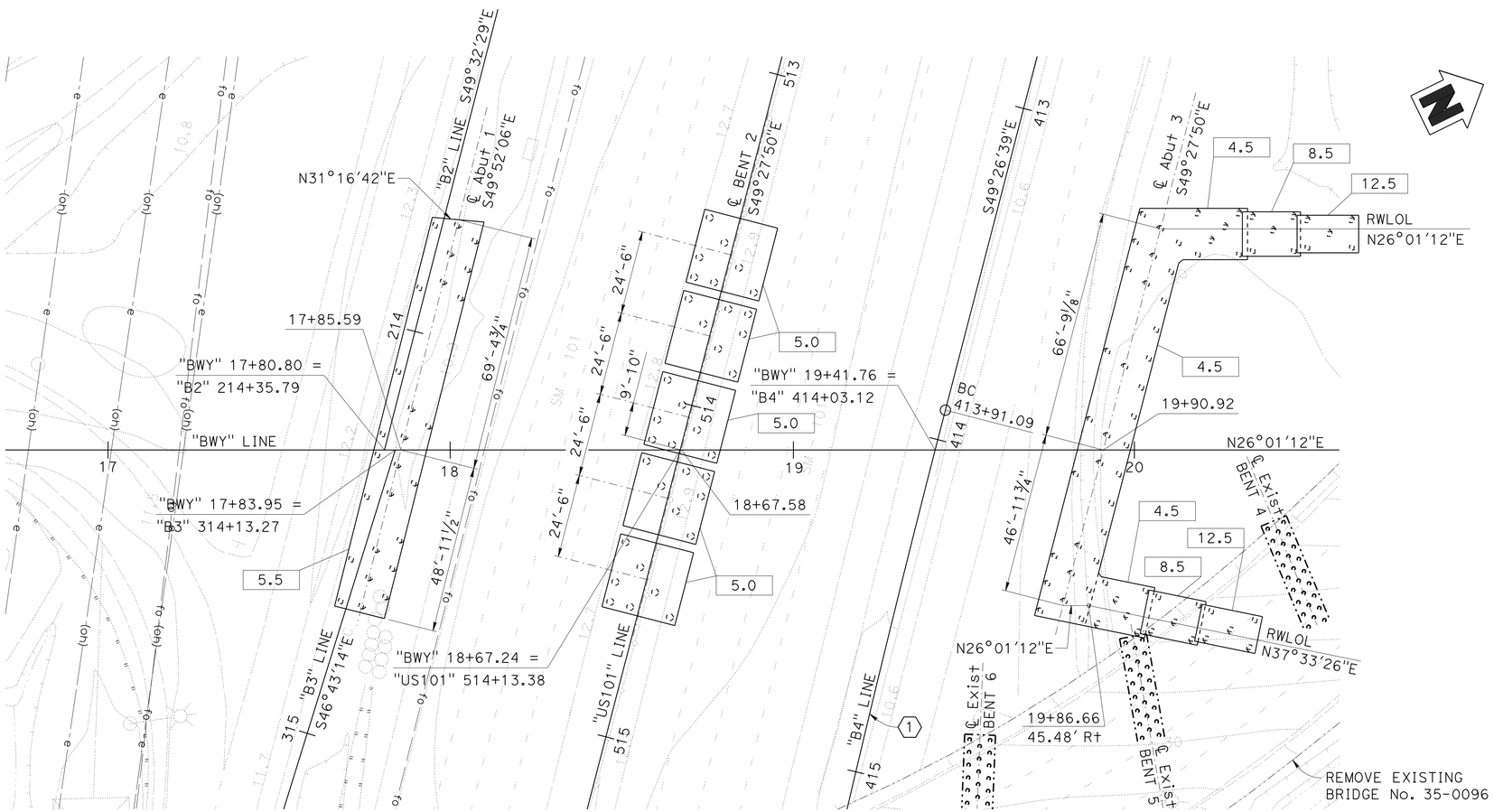

PLAN

NOTES:

1. For location of utilities, see "UTILITY PLANS".
2. Foundation for Broadway On-Ramp, Bridge No. 35-0352K not shown.

LEGEND:

- Indicates CISS piles
- Indicates Class 140 battered piles
- Indicates Class 140 vertical piles
- Indicates bottom of footing elevation

CURVE DATA

CURVE	R	Δ	T	L
1	5000.00'	2°26'50"	106.80'	213.56'

GEOTECHNICAL PROFESSIONAL — APPROVAL DATE 5-15-13

DESIGN OVERSIGHT — Paul Cotter — 6-20-13 — SIGN OFF DATE

SCALE: 1"=20'-0" | VERT.DATUM NAVD88 | HORZ.DATUM NAD83
PHOTOGRAMMETRY AS OF: 6-23-2010 | ALIGNMENT TIES
SURVEYED | BY C. Radman | DRAFTED | BY K. Iangari
FIELD CHECKED | BY S. Christensen | CHECKED | BY A. Bhoi

	BY	CHECKED
DESIGN	A. Prince	J. Hueser
DETAILS	R. Lim	J. Hueser
QUANTITIES	A. Prince	S. Landis

PREPARED FOR THE STATE OF CALIFORNIA DEPARTMENT OF TRANSPORTATION

Syed Kazmi
PROJECT ENGINEER

BRIDGE NO. 35-0351
POST MILES 16.61

BROADWAY OC (REPLACE)
FOUNDATION PLAN

FOUNDATION PLAN SHEET (ENGLISH) (REV. 03/14/12)

ORIGINAL SCALE IN INCHES FOR REDUCED PLANS 0 1 2 3

UNIT: 0703
PROJECT NUMBER & PHASE: 04000006841 CONTRACT NO.: 235844

DISREGARD PRINTS BEARING EARLIER REVISION DATES
REVISION DATES: 2-12-13 4-8-13 5-15-13 11-16-13
SHEET 6 OF 42

FILE => 0400000684we006.dgn

USERNAME => s141070 DATE PLOTTED => 03-FEB-2014 TIME PLOTTED => 13:50

DIST	COUNTY	ROUTE	POST MILES TOTAL PROJECT	SHEET No	TOTAL SHEETS
04	SM	101	16.3/17.1	715	814

REGISTERED CIVIL ENGINEER — DATE 5-15-13

10/21/13
PLANS APPROVAL DATE

REGISTERED PROFESSIONAL ENGINEER — Austin Prince — No. C80659 — Exp. 3/31/15 — CIVIL — STATE OF CALIFORNIA

The State of California or its officers or agents shall not be responsible for the accuracy or completeness of scanned copies of this plan sheet.

SMCTA
1250 SAN CARLOS AVENUE
SAN CARLOS, CA 94070-1306

URS CORPORATION
2870 GATEWAY OAKS DRIVE, SUITE 150
SACRAMENTO, CA 95833-4308

NOTES:

1. For "SECTION A-A", see "ABUTMENT DETAILS No. 1" sheet.
2. For "SHEAR KEY DETAIL", see "ABUTMENT DETAILS No. 3" sheet.

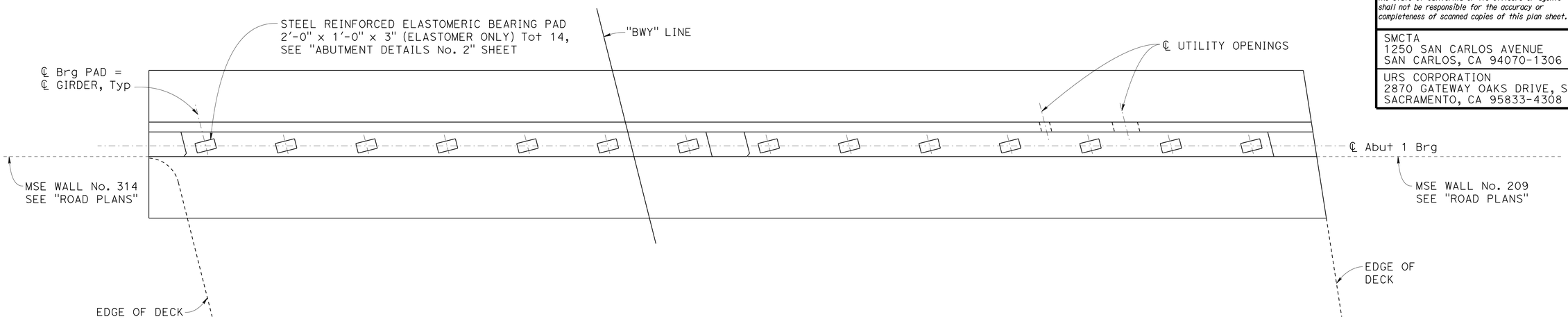

PLAN
3/16" = 1'-0"

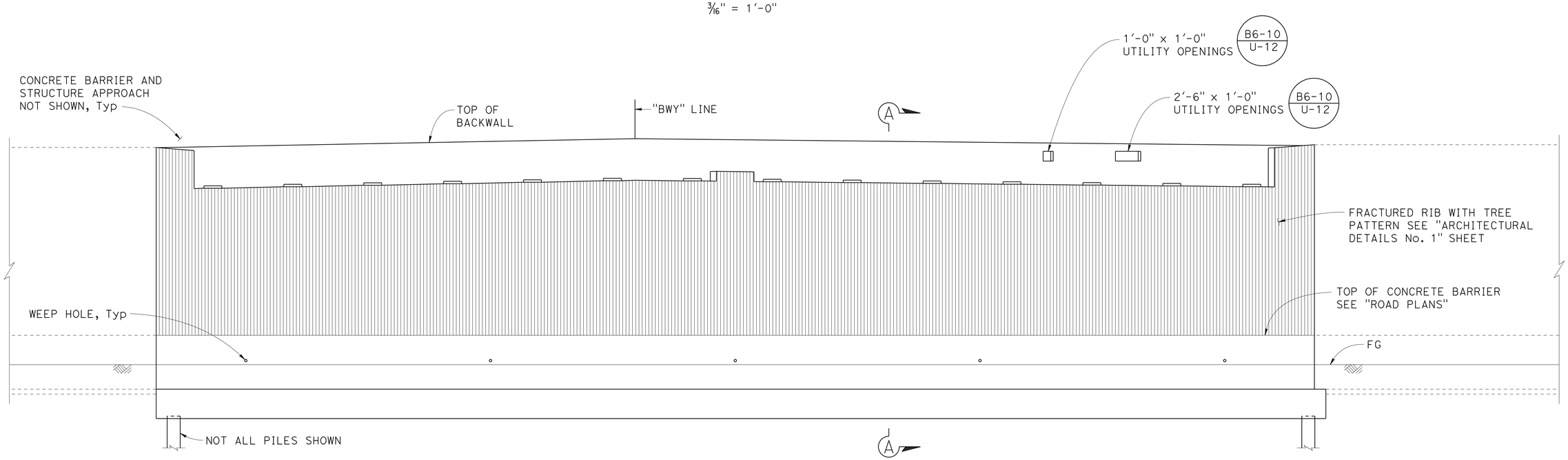

ELEVATION
3/16" = 1'-0"

Paul Cotter
DESIGN OVERSIGHT — Paul Cotter
6-20-13
SIGN OFF DATE

	BY	CHECKED
DESIGN	A. Prince	J. Hueser
DETAILS	R. Lim/L. Davis	J. Hueser
QUANTITIES	A. Prince	S. Landis

PREPARED FOR THE
STATE OF CALIFORNIA
DEPARTMENT OF TRANSPORTATION

Syed Kazmi
PROJECT ENGINEER

BRIDGE NO. 35-0351
POST MILES 16.61

BROADWAY OC (REPLACE)
ABUTMENT 1 LAYOUT

DESIGN DETAIL SHEET (ENGLISH) (REV. 03/14/12)

ORIGINAL SCALE IN INCHES FOR REDUCED PLANS 0 1 2 3

UNIT: 0703
PROJECT NUMBER & PHASE: 04000006841
CONTRACT NO.: 235844

DISREGARD PRINTS BEARING EARLIER REVISION DATES

REVISION DATES: 5-15-13 11-16-12 2-12-13 4-8-13

SHEET 7 OF 42

FILE => 0400000684we007.dgn

USERNAME => s141070 DATE PLOTTED => 03-FEB-2014 TIME PLOTTED => 13:50

DIST	COUNTY	ROUTE	POST MILES TOTAL PROJECT	SHEET No	TOTAL SHEETS
04	SM	101	16.3/17.1	716	814

REGISTERED CIVIL ENGINEER — DATE 5-15-13

10/21/13
PLANS APPROVAL DATE

REGISTERED PROFESSIONAL ENGINEER — Austin Prince — No. C80659 — Exp. 3/31/15 — CIVIL — STATE OF CALIFORNIA

The State of California or its officers or agents shall not be responsible for the accuracy or completeness of scanned copies of this plan sheet.

SMCTA
1250 SAN CARLOS AVENUE
SAN CARLOS, CA 94070-1306

URS CORPORATION
2870 GATEWAY OAKS DRIVE, SUITE 150
SACRAMENTO, CA 95833-4308

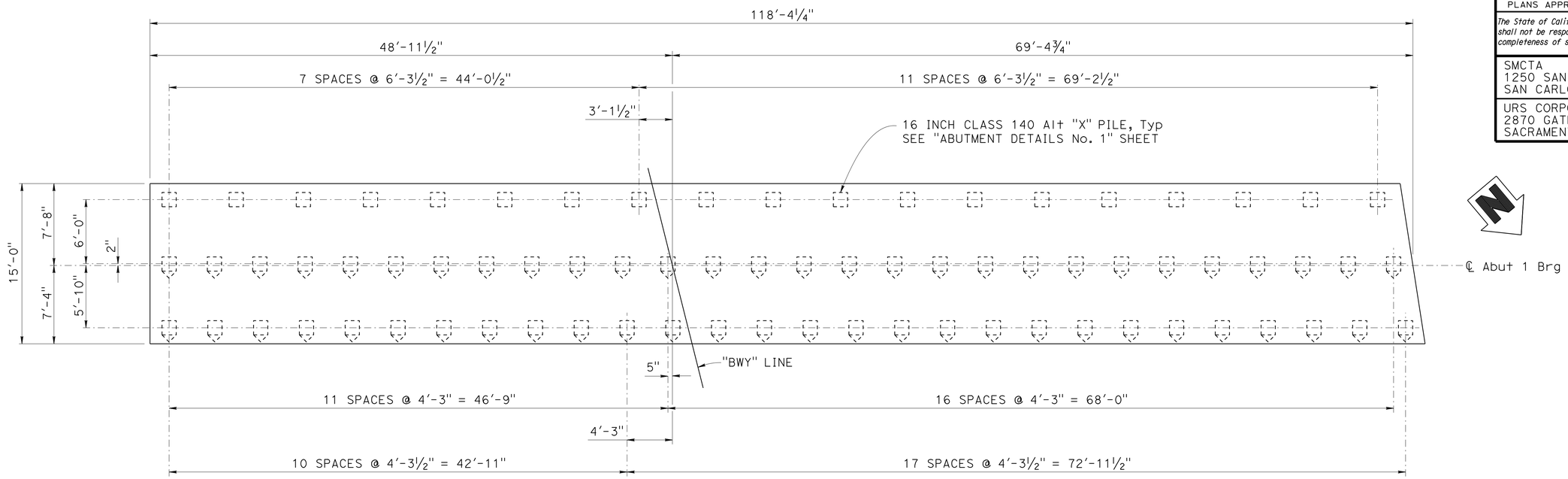

PILE LAYOUT
3/16" = 1'-0"

LEGEND:

- INDICATES VERTICAL PILES
- INDICATES BATTERED PILES

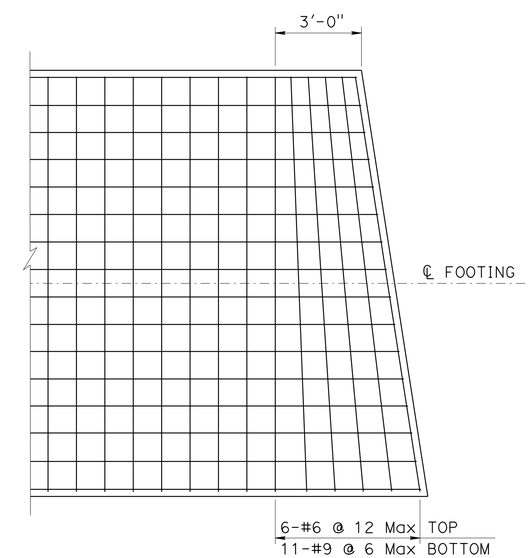

CORNER DETAIL
3/8" = 1'-0"

Paul Cotter
DESIGN OVERSIGHT — Paul Cotter
6-20-13
SIGN OFF DATE

	BY	CHECKED
DESIGN	A. Prince	J. Hueser
DETAILS	R. Lim/L. Davis	J. Hueser
QUANTITIES	A. Prince	S. Landis

PREPARED FOR THE STATE OF CALIFORNIA DEPARTMENT OF TRANSPORTATION

Syed Kazmi
PROJECT ENGINEER

BRIDGE NO. 35-0351
POST MILES 16.61

BROADWAY OC (REPLACE)
ABUTMENT 1 PILE LAYOUT

DESIGN DETAIL SHEET (ENGLISH) (REV. 03/14/12)

ORIGINAL SCALE IN INCHES FOR REDUCED PLANS 0 1 2 3

UNIT: 0703
PROJECT NUMBER & PHASE: 04000006841 CONTRACT NO.: 235844

DISREGARD PRINTS BEARING EARLIER REVISION DATES

REVISION DATES: 5-15-13 11-16-12 2-12-13 4-8-13

SHEET 8 OF 42

FILE => 0400000684we008.dgn

USERNAME => s141070 DATE PLOTTED => 03-FEB-2014 TIME PLOTTED => 13:51

DIST	COUNTY	ROUTE	POST MILES TOTAL PROJECT	SHEET No	TOTAL SHEETS
04	SM	101	16.3/17.1	717	814

REGISTERED CIVIL ENGINEER 5-15-13 DATE

10/21/13
PLANS APPROVAL DATE

The State of California or its officers or agents shall not be responsible for the accuracy or completeness of scanned copies of this plan sheet.

REGISTERED PROFESSIONAL ENGINEER Austin Prince No. C80659 Exp. 3/31/15 CIVIL STATE OF CALIFORNIA

SMCTA
1250 SAN CARLOS AVENUE
SAN CARLOS, CA 94070-1306

URS CORPORATION
2870 GATEWAY OAKS DRIVE, SUITE 150
SACRAMENTO, CA 95833-4308

NOTES:

1. For "SECTION B-B", see "ABUTMENT DETAILS No. 1" sheet.
2. For "SHEAR KEY DETAIL", see "ABUTMENT DETAILS No. 3" sheet.
3. For retaining wall details, see "ABUTMENT DETAILS No. 4" sheet.
4. For stub wall details, see "ABUTMENT DETAILS No. 2" sheet.

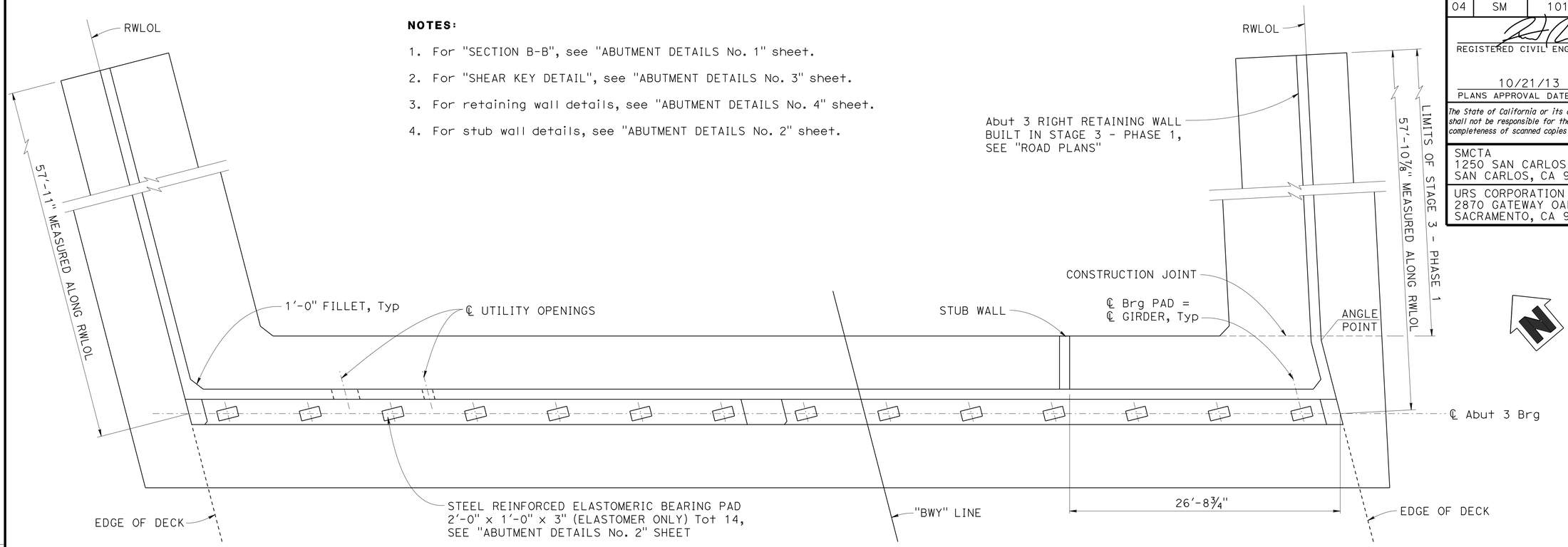

PLAN
3/16" = 1'-0"

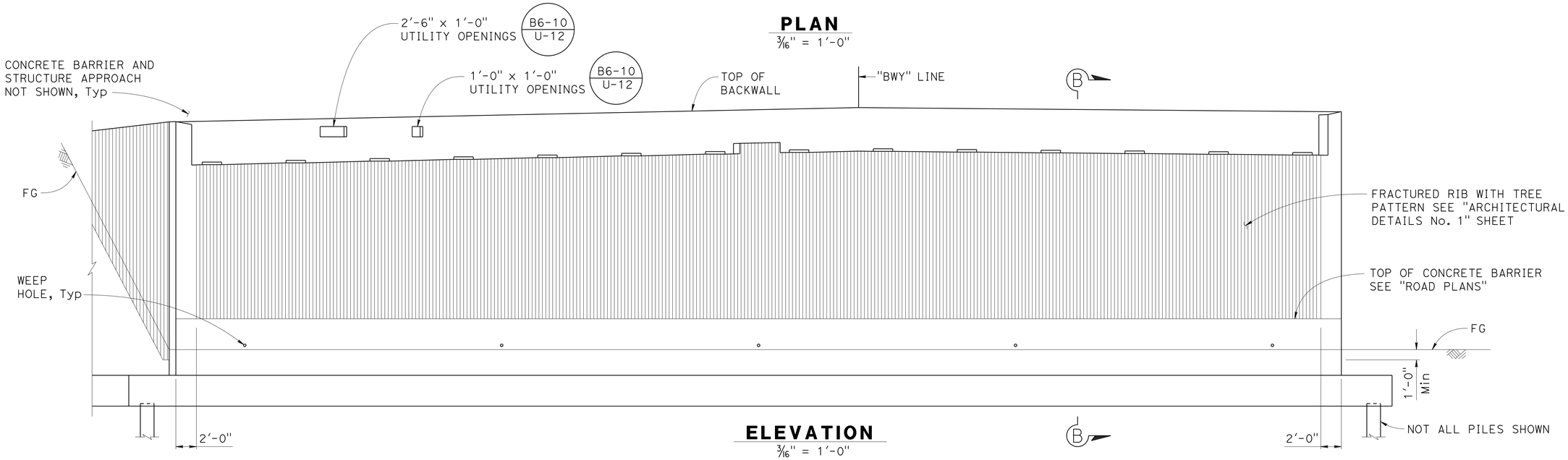

ELEVATION
3/16" = 1'-0"

Paul Cotter
DESIGN OVERSIGHT Paul Cotter
6-20-13
SIGN OFF DATE

	BY	CHECKED
DESIGN	A. Prince	J. Hueser
DETAILS	R. Lim/L. Davis	J. Hueser
QUANTITIES	A. Prince	S. Landis

PREPARED FOR THE
STATE OF CALIFORNIA
DEPARTMENT OF TRANSPORTATION

Syed Kazmi
PROJECT ENGINEER

BRIDGE NO. 35-0351
POST MILES 16.61

BROADWAY OC (REPLACE)
ABUTMENT 3 LAYOUT

DESIGN DETAIL SHEET (ENGLISH) (REV. 03/14/12)

ORIGINAL SCALE IN INCHES FOR REDUCED PLANS 0 1 2 3

UNIT: 0703
PROJECT NUMBER & PHASE: 04000006841 CONTRACT NO.: 235844

DISREGARD PRINTS BEARING EARLIER REVISION DATES

REVISION DATES 5-15-13 11-16-12 2-12-13 4-8-13

SHEET 9 OF 42

FILE => 0400000684we009.dgn

USERNAME => s141070 DATE PLOTTED => 03-FEB-2014 TIME PLOTTED => 13:51

DIST	COUNTY	ROUTE	POST MILES TOTAL PROJECT	SHEET No	TOTAL SHEETS
04	SM	101	16.3/17.1	718	814

REGISTERED CIVIL ENGINEER — DATE 5-15-13

10/21/13
PLANS APPROVAL DATE

REGISTERED PROFESSIONAL ENGINEER — Austin Prince — No. C80659 — Exp. 3/31/15 — CIVIL — STATE OF CALIFORNIA

The State of California or its officers or agents shall not be responsible for the accuracy or completeness of scanned copies of this plan sheet.

SMCTA
1250 SAN CARLOS AVENUE
SAN CARLOS, CA 94070-1306

URS CORPORATION
2870 GATEWAY OAKS DRIVE, SUITE 150
SACRAMENTO, CA 95833-4308

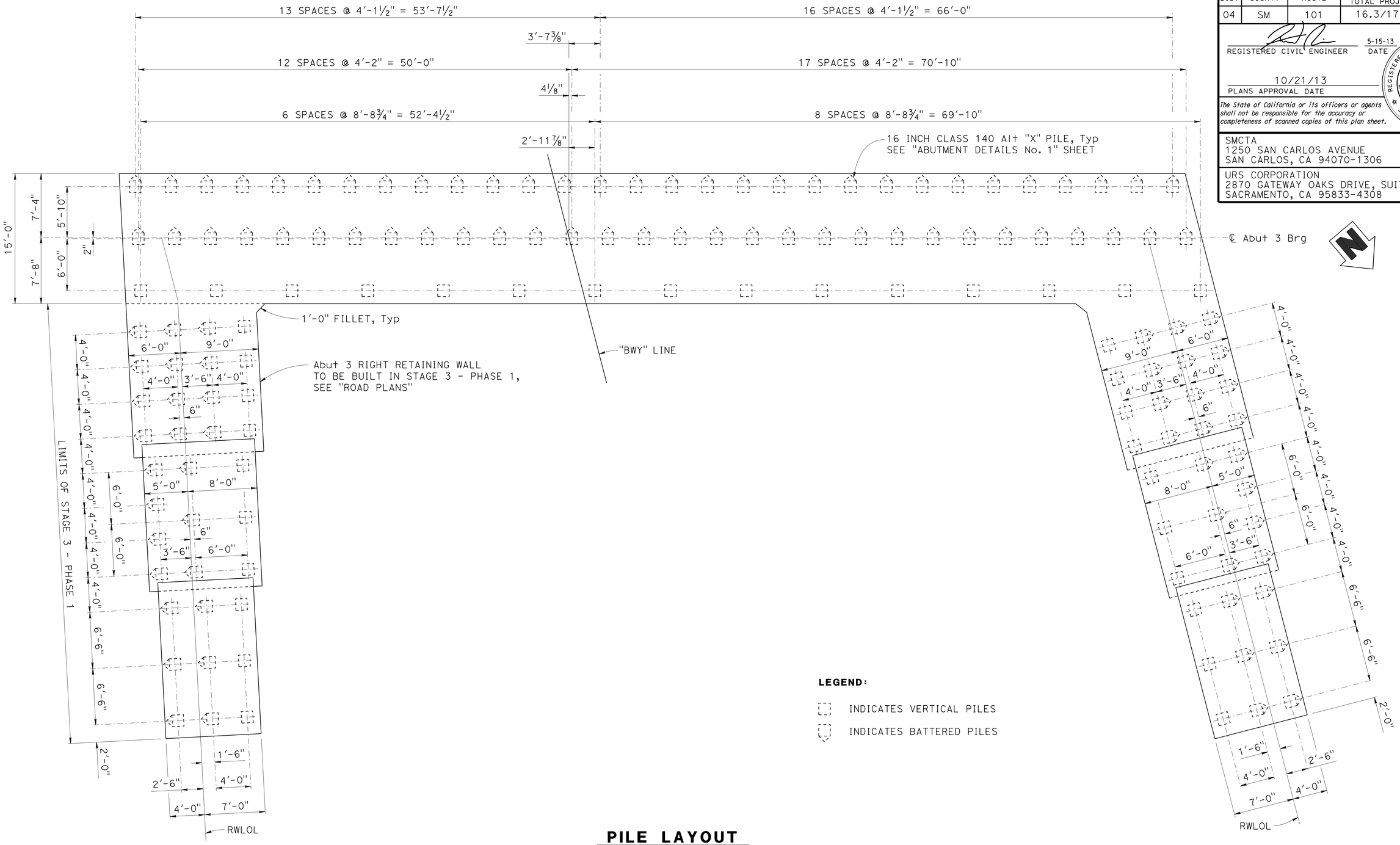

LEGEND:

INDICATES VERTICAL PILES

INDICATES BATTERED PILES

PILE LAYOUT

3/16" = 1'-0"

DESIGN OVERSIGHT: Paul Cotter	DESIGN	BY A. Prince	CHECKED J. Hueser	PREPARED FOR THE STATE OF CALIFORNIA DEPARTMENT OF TRANSPORTATION	Syed Kazmi, PROJECT ENGINEER
6-20-13 SIGN OFF DATE	DETAILS	BY R. Lim/L. Davis	CHECKED J. Hueser		BRIDGE NO. 35-0351
	QUANTITIES	BY A. Prince	CHECKED S. Landis		POST MILES 16.61

BROADWAY OC (REPLACE)

ABUTMENT 3 PILE LAYOUT

DESIGN DETAIL SHEET (ENGLISH) (REV. 03/14/12)

ORIGINAL SCALE IN INCHES FOR REDUCED PLANS 0 1 2 3

UNIT: 0703
PROJECT NUMBER & PHASE: 04000006841 CONTRACT NO.: 235844

DISREGARD PRINTS BEARING EARLIER REVISION DATES

REVISION DATES: 5-15-13 11-16-12 2-12-13 4-8-13

SHEET 10 OF 42

FILE => 0400000684we010.dgn

USERNAME => s141070 DATE PLOTTED => 03-FEB-2014 TIME PLOTTED => 13:51

DIST	COUNTY	ROUTE	POST MILES TOTAL PROJECT	SHEET No	TOTAL SHEETS
04	SM	101	16.3/17.1	719	814

REGISTERED CIVIL ENGINEER 5-15-13 DATE

10/21/13
PLANS APPROVAL DATE

REGISTERED PROFESSIONAL ENGINEER
Austin Prince
No. C80659
Exp. 3/31/15
CIVIL
STATE OF CALIFORNIA

The State of California or its officers or agents shall not be responsible for the accuracy or completeness of scanned copies of this plan sheet.

SMCTA
1250 SAN CARLOS AVENUE
SAN CARLOS, CA 94070-1306

URS CORPORATION
2870 GATEWAY OAKS DRIVE, SUITE 150
SACRAMENTO, CA 95833-4308

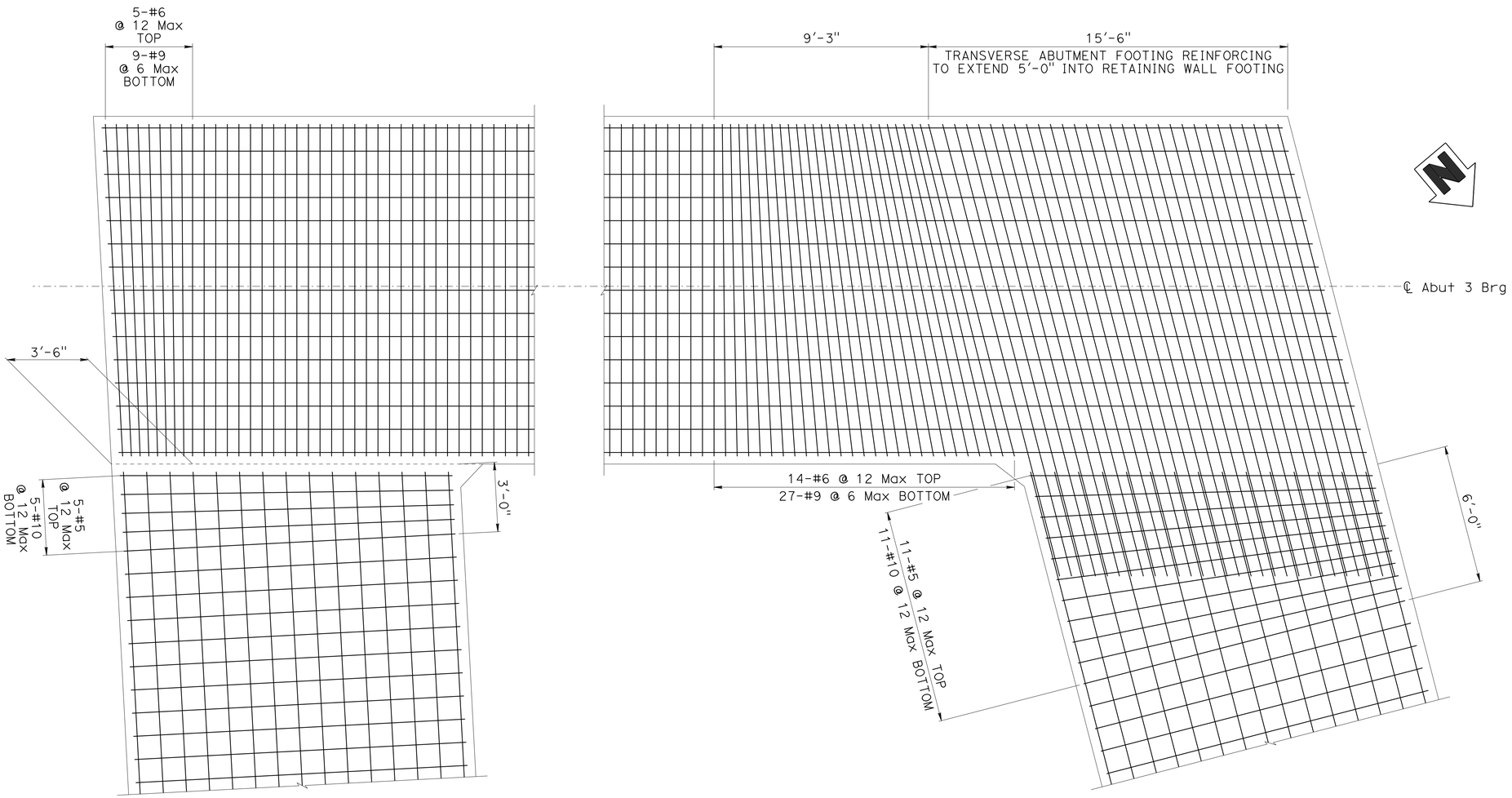

RIGHT CORNER DETAIL
3/8" = 1'-0"

LEFT CORNER DETAIL
3/8" = 1'-0"

Paul Cotter DESIGN OVERSIGHT Paul Cotter 6-20-13 SIGN OFF DATE		DESIGN	BY A. Prince	CHECKED J. Hueser	PREPARED FOR THE STATE OF CALIFORNIA DEPARTMENT OF TRANSPORTATION
		DETAILS	BY R. Lim/L. Davis	CHECKED J. Hueser	
		QUANTITIES	BY A. Prince	CHECKED S. Landis	

Syed Kazmi
PROJECT ENGINEER

BRIDGE NO. 35-0351
POST MILES 16.61

BROADWAY OC (REPLACE)
ABUTMENT 3 FOOTING DETAILS

DESIGN DETAIL SHEET (ENGLISH) (REV. 03/14/12)

ORIGINAL SCALE IN INCHES FOR REDUCED PLANS 0 1 2 3

UNIT: 0703
PROJECT NUMBER & PHASE: 04000006841 CONTRACT NO.: 235844

DISREGARD PRINTS BEARING EARLIER REVISION DATES

REVISION DATES: 5-15-13 11-16-12 2-12-13 4-8-13

SHEET 11 OF 42

FILE => 0400000684we011.dgn

USERNAME => s141070 DATE PLOTTED => 03-FEB-2014 TIME PLOTTED => 13:51

DIST	COUNTY	ROUTE	POST MILES TOTAL PROJECT	SHEET No	TOTAL SHEETS
04	SM	101	16.3/17.1	720	814

REGISTERED CIVIL ENGINEER — DATE 5-15-13

10/21/13
PLANS APPROVAL DATE

The State of California or its officers or agents shall not be responsible for the accuracy or completeness of scanned copies of this plan sheet.

REGISTERED PROFESSIONAL ENGINEER — Austin Prince — No. C80659 — Exp. 3/31/15 — CIVIL — STATE OF CALIFORNIA

SMCTA
1250 SAN CARLOS AVENUE
SAN CARLOS, CA 94070-1306

URS CORPORATION
2870 GATEWAY OAKS DRIVE, SUITE 150
SACRAMENTO, CA 95833-4308

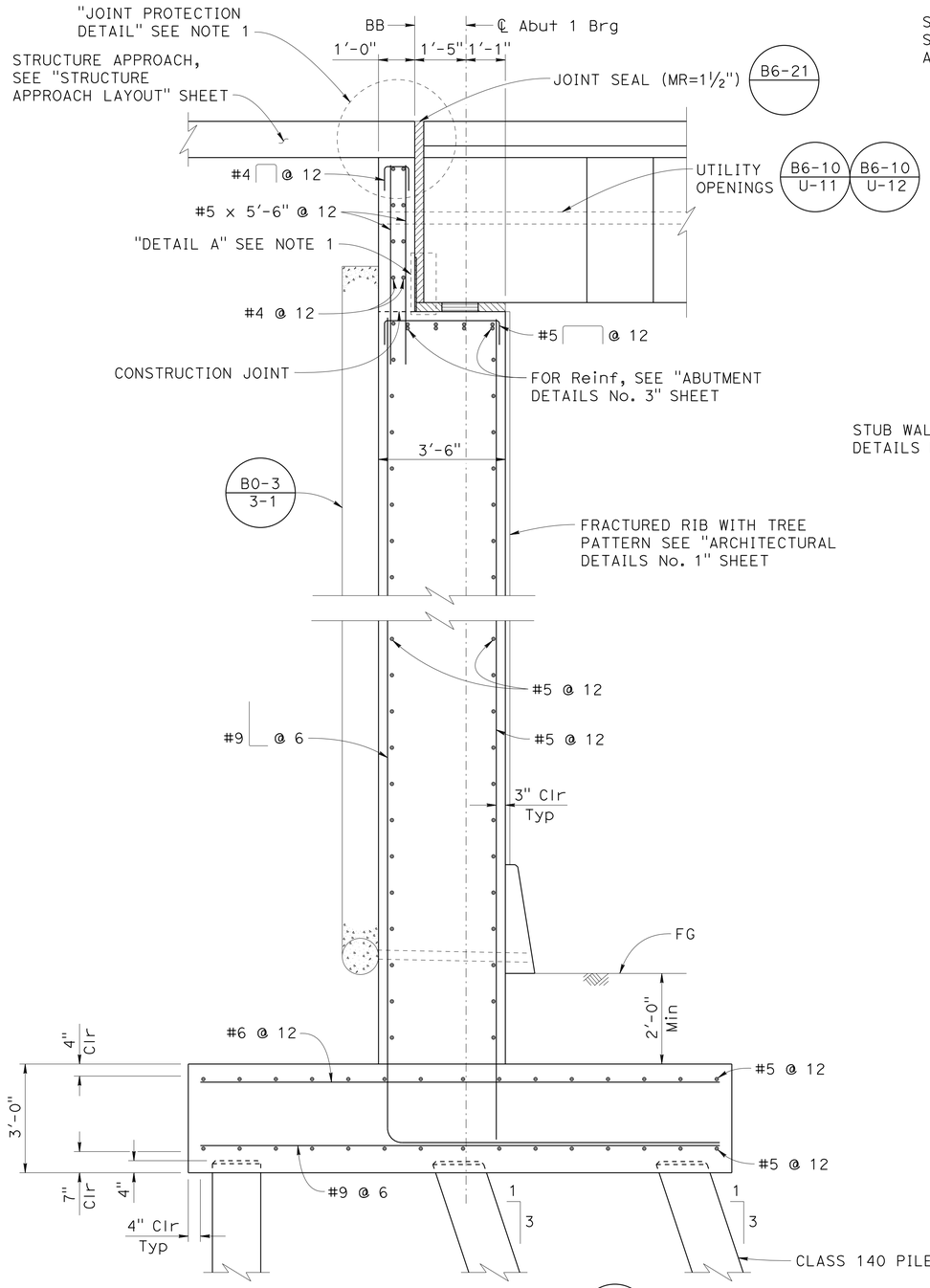

SECTION A-A
½" = 1'-0"
A62C

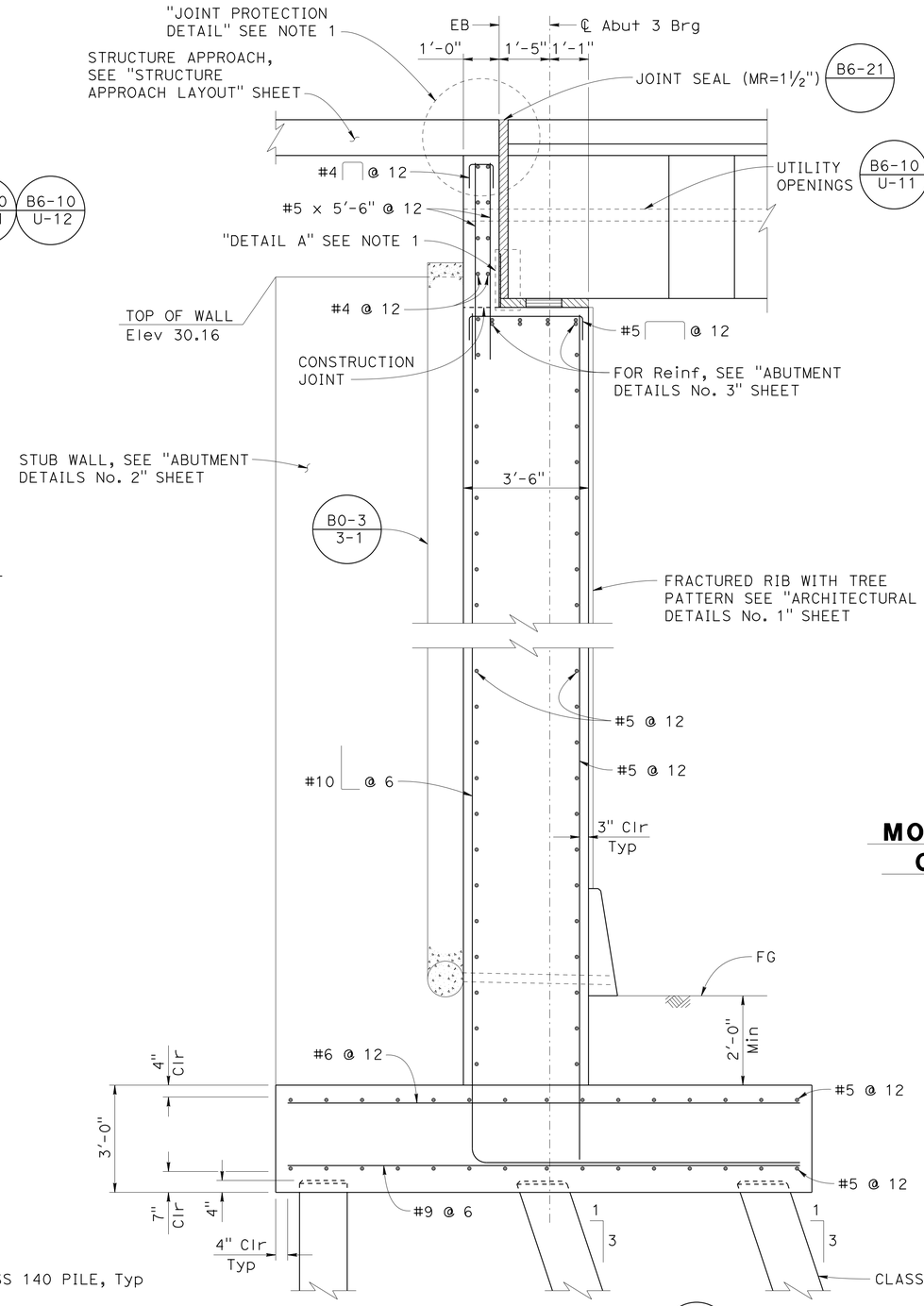

SECTION B-B
½" = 1'-0"
A62C

NOTES:

1. For "DETAIL A" and "JOINT PROTECTION DETAIL" see "ABUTMENT DETAILS No. 2" sheet.
2. For retaining wall details, see "ABUTMENT DETAILS No. 4" SHEET.

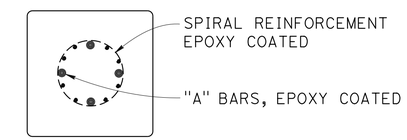

MODIFICATIONS TO CLASS 140 PILE
NO SCALE
B2-5

DESIGN	BY A. Prince	CHECKED J. Hueser	
DETAILS	BY R. Lim/L. Davis	CHECKED J. Hueser	
QUANTITIES	BY A. Prince	CHECKED S. Landis	

DESIGN OVERSIGHT: Paul Cotter
6-20-13
SIGN OFF DATE

PREPARED FOR THE STATE OF CALIFORNIA DEPARTMENT OF TRANSPORTATION

Syed Kazmi
PROJECT ENGINEER

BRIDGE NO. 35-0351
POST MILES 16.61

BROADWAY OC (REPLACE)
ABUTMENT DETAILS No. 1

DESIGN DETAIL SHEET (ENGLISH) (REV. 03/14/12)

ORIGINAL SCALE IN INCHES FOR REDUCED PLANS 0 1 2 3

UNIT: 0703
PROJECT NUMBER & PHASE: 04000006841
CONTRACT NO.: 235844

DISREGARD PRINTS BEARING EARLIER REVISION DATES

REVISION DATES: 5-15-13 11-16-12 2-12-13 4-8-13

SHEET 12 OF 42

FILE => 0400000684we012.dgn

USERNAME => s141070 DATE PLOTTED => 03-FEB-2014 TIME PLOTTED => 13:51

DIST	COUNTY	ROUTE	POST MILES TOTAL PROJECT	SHEET No	TOTAL SHEETS
04	SM	101	16.3/17.1	721	814

REGISTERED CIVIL ENGINEER 5-15-13 DATE

10/21/13
PLANS APPROVAL DATE

REGISTERED PROFESSIONAL ENGINEER Austin Prince No. C80659 Exp. 3/31/15 CIVIL STATE OF CALIFORNIA

The State of California or its officers or agents shall not be responsible for the accuracy or completeness of scanned copies of this plan sheet.

SMCTA
1250 SAN CARLOS AVENUE
SAN CARLOS, CA 94070-1306

URS CORPORATION
2870 GATEWAY OAKS DRIVE, SUITE 150
SACRAMENTO, CA 95833-4308

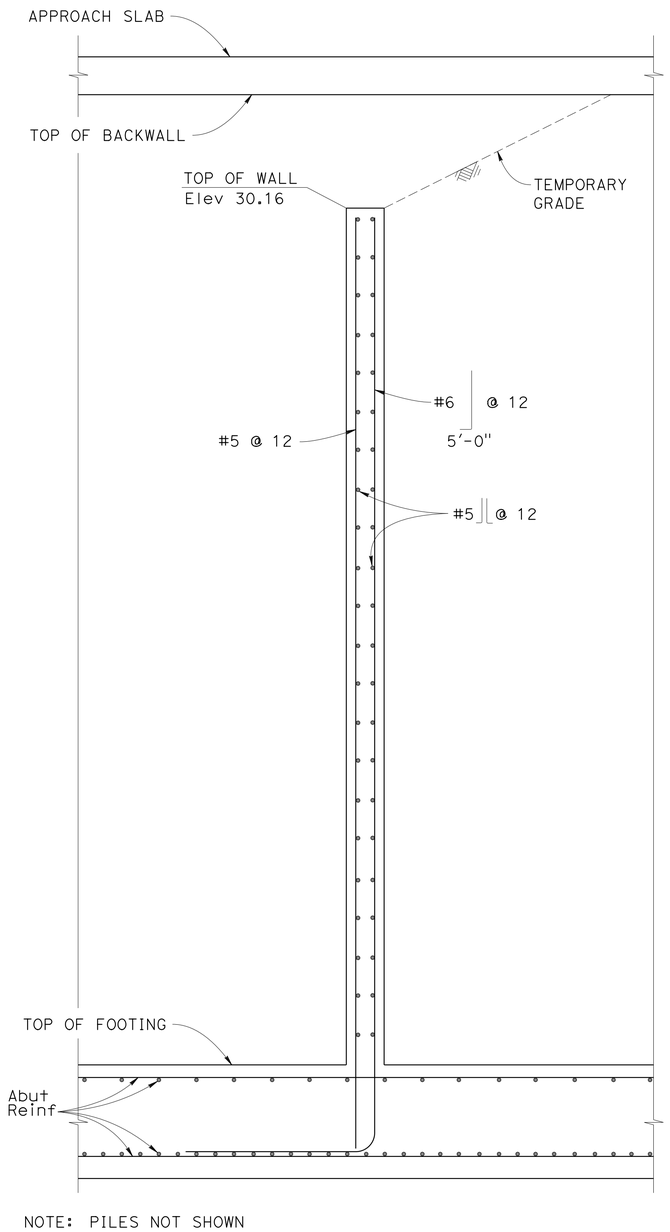

NOTE: PILES NOT SHOWN

ELEVATION

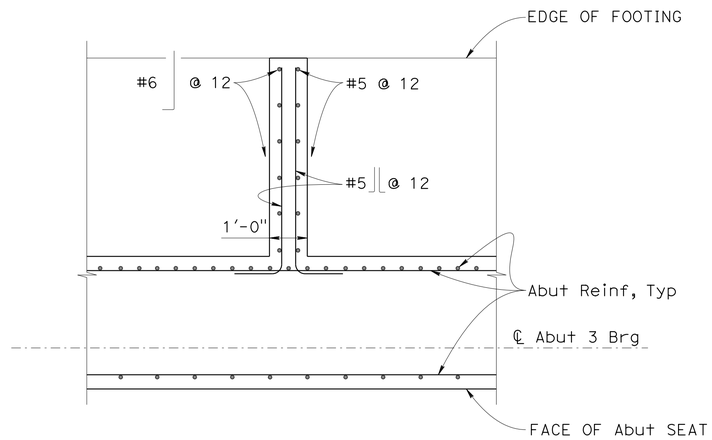

PLAN

ABUTMENT 3 - STUB WALL DETAILS

½" = 1'-0"

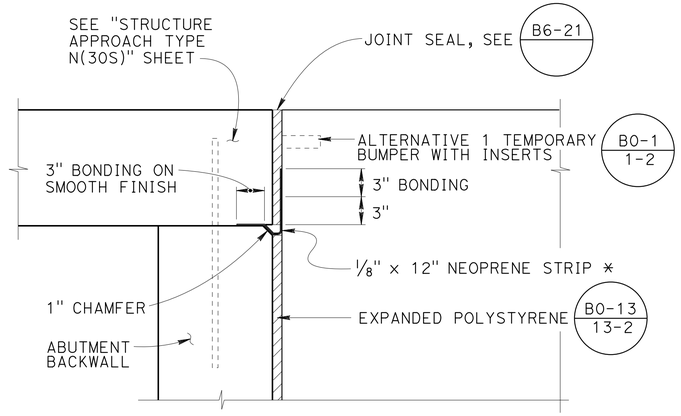

* PLACE PRIOR TO BACKFILLING THE ABUTMENT BACKWALL AND INSTALLING TEMPORARY BUMPER (FOLD NEOPRENE INTO CHAMFER)

JOINT PROTECTION DETAIL

NO SCALE

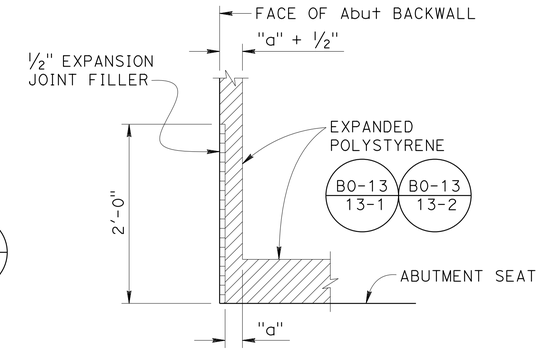

DETAIL A

NO SCALE

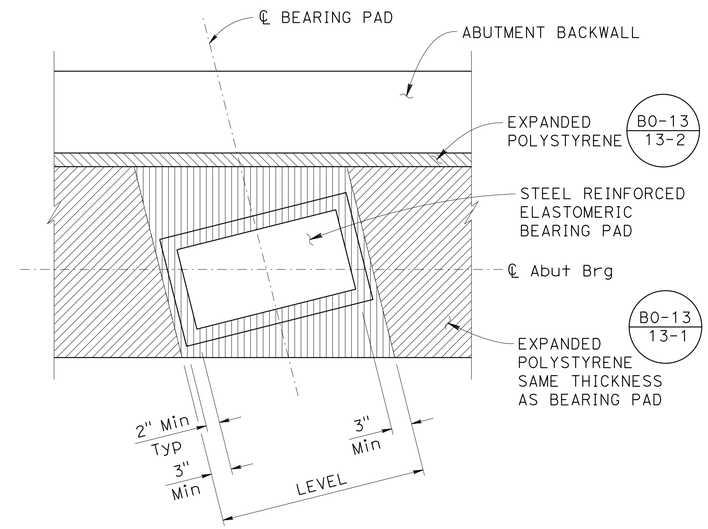

PLAN

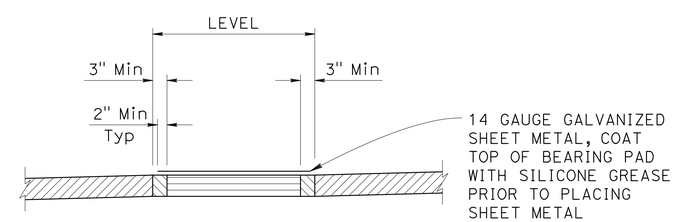

ELEVATION

BEARING PAD DETAIL

NO SCALE

Paul Cotter
DESIGN OVERSIGHT Paul Cotter
6-20-13
SIGN OFF DATE

	BY	CHECKED
DESIGN	A. Prince	J. Hueser
DETAILS	R. Lim/L. Davis	J. Hueser
QUANTITIES	A. Prince	S. Landis

PREPARED FOR THE STATE OF CALIFORNIA DEPARTMENT OF TRANSPORTATION

Syed Kazmi
PROJECT ENGINEER

BRIDGE NO. 35-0351
POST MILES 16.61

BROADWAY OC (REPLACE)
ABUTMENT DETAILS No. 2

DESIGN DETAIL SHEET (ENGLISH) (REV. 03/14/12)

ORIGINAL SCALE IN INCHES FOR REDUCED PLANS 0 1 2 3

UNIT: 0703
PROJECT NUMBER & PHASE: 04000006841 CONTRACT NO.: 235844

DISREGARD PRINTS BEARING EARLIER REVISION DATES

REVISION DATES: 5-15-13 11-16-12 2-12-13 4-8-13

SHEET 13 OF 42

FILE => 0400000684we013.dgn

USERNAME => s141070 DATE PLOTTED => 03-FEB-2014 TIME PLOTTED => 13:51

DIST	COUNTY	ROUTE	POST MILES TOTAL PROJECT	SHEET No	TOTAL SHEETS
04	SM	101	16.3/17.1	722	814

REGISTERED CIVIL ENGINEER — DATE 5-15-13

10/21/13
PLANS APPROVAL DATE

REGISTERED PROFESSIONAL ENGINEER — Austin Prince — No. C80659 — Exp. 3/31/15 — CIVIL — STATE OF CALIFORNIA

The State of California or its officers or agents shall not be responsible for the accuracy or completeness of scanned copies of this plan sheet.

SMCTA
1250 SAN CARLOS AVENUE
SAN CARLOS, CA 94070-1306

URS CORPORATION
2870 GATEWAY OAKS DRIVE, SUITE 150
SACRAMENTO, CA 95833-4308

NOTES:

1. Abutment 3 shown, Abutment 1 similar.

LEGEND:

∝ Indicates bundled bars

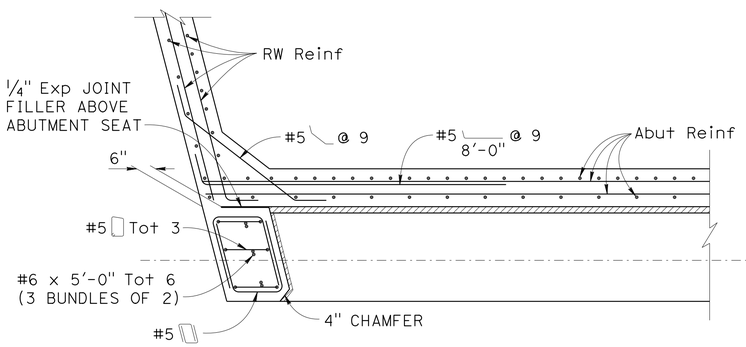

SECTION C-C
1/2" = 1'-0"

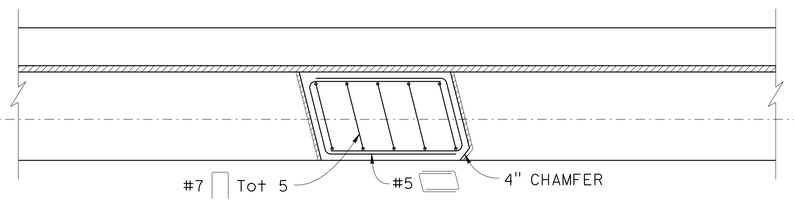

SECTION D-D
1/2" = 1'-0"

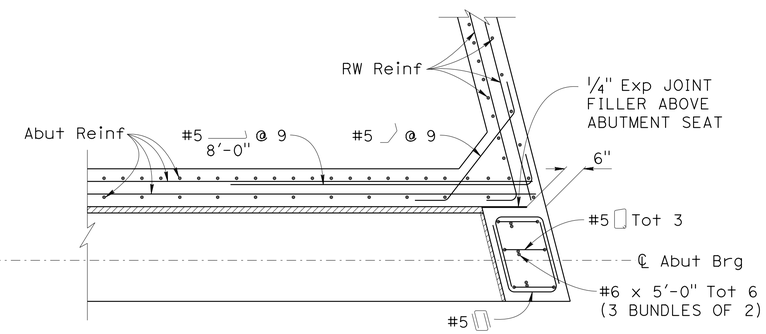

SECTION E-E
1/2" = 1'-0"

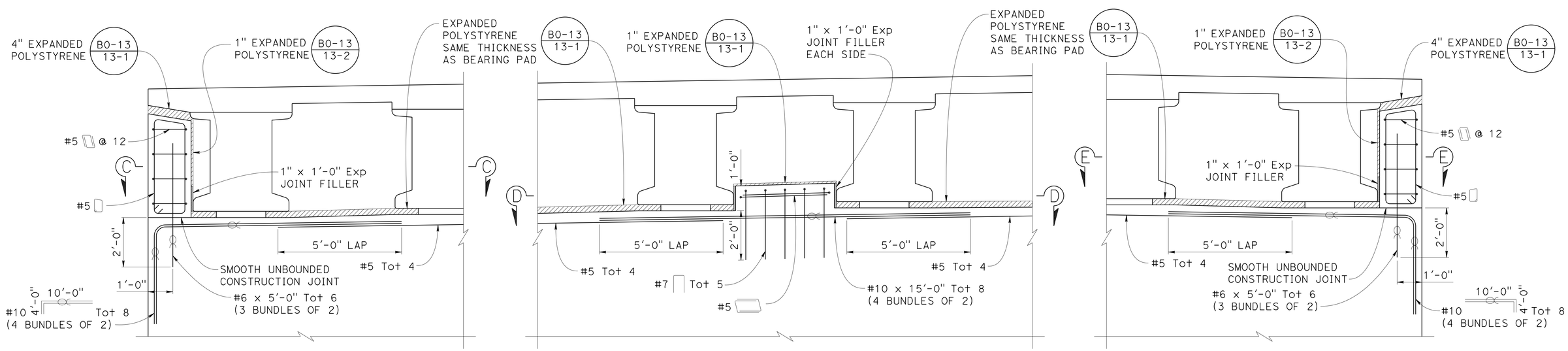

SHEAR KEY DETAIL
1/2" = 1'-0"

Paul Cotter
DESIGN OVERSIGHT — Paul Cotter
6-20-13
SIGN OFF DATE

	BY	CHECKED
DESIGN	A. Prince	J. Hueser
DETAILS	R. Lim/L. Davis	J. Hueser
QUANTITIES	A. Prince	S. Landis

PREPARED FOR THE STATE OF CALIFORNIA DEPARTMENT OF TRANSPORTATION

Syed Kazmi
PROJECT ENGINEER

BRIDGE NO. 35-0351
POST MILES 16.61

BROADWAY OC (REPLACE)
ABUTMENT DETAILS No. 3

DESIGN DETAIL SHEET (ENGLISH) (REV. 03/14/12)

ORIGINAL SCALE IN INCHES FOR REDUCED PLANS 0 1 2 3

UNIT: 0703
PROJECT NUMBER & PHASE: 04000006841
CONTRACT NO.: 235844

DISREGARD PRINTS BEARING EARLIER REVISION DATES

REVISION DATES: 5-15-13 11-16-12 2-12-13 4-8-13

SHEET 14 OF 42

FILE => 0400000684we014.dgn

USERNAME => s141070 DATE PLOTTED => 03-FEB-2014 TIME PLOTTED => 13:51

DIST	COUNTY	ROUTE	POST MILES TOTAL PROJECT	SHEET No	TOTAL SHEETS
04	SM	101	16.3/17.1	723	814

REGISTERED CIVIL ENGINEER — DATE 5-15-13

10/21/13
PLANS APPROVAL DATE

REGISTERED PROFESSIONAL ENGINEER — Austin Prince — No. C80659 — Exp. 3/31/15 — CIVIL — STATE OF CALIFORNIA

The State of California or its officers or agents shall not be responsible for the accuracy or completeness of scanned copies of this plan sheet.

SMCTA
1250 SAN CARLOS AVENUE
SAN CARLOS, CA 94070-1306

URS CORPORATION
2870 GATEWAY OAKS DRIVE, SUITE 150
SACRAMENTO, CA 95833-4308

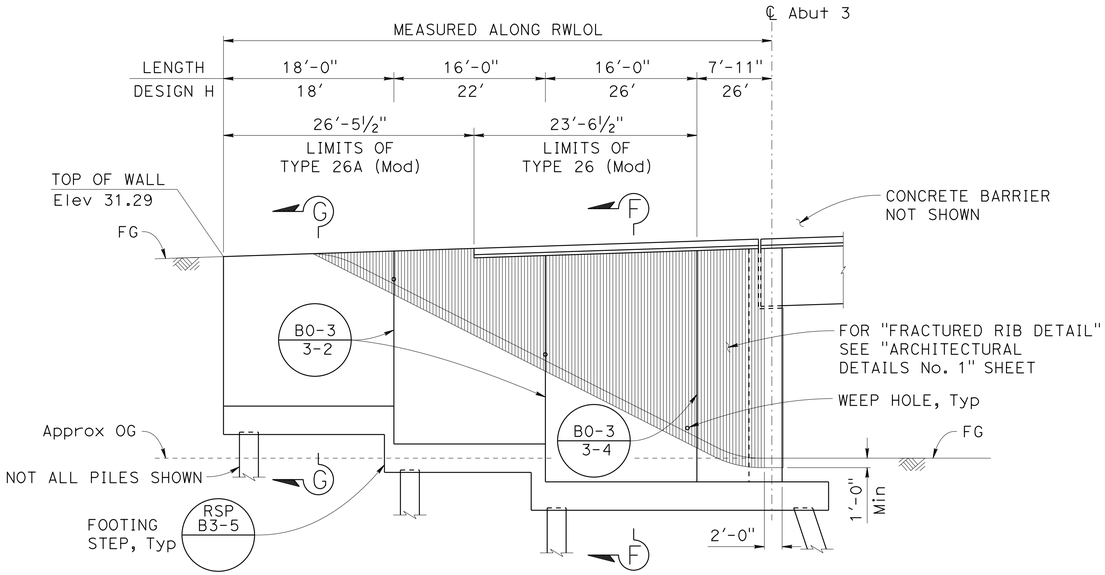

ABUTMENT 3 - LEFT RETAINING WALL ELEVATION (B0-3 / 3-3)

⅛" = 1'-0"

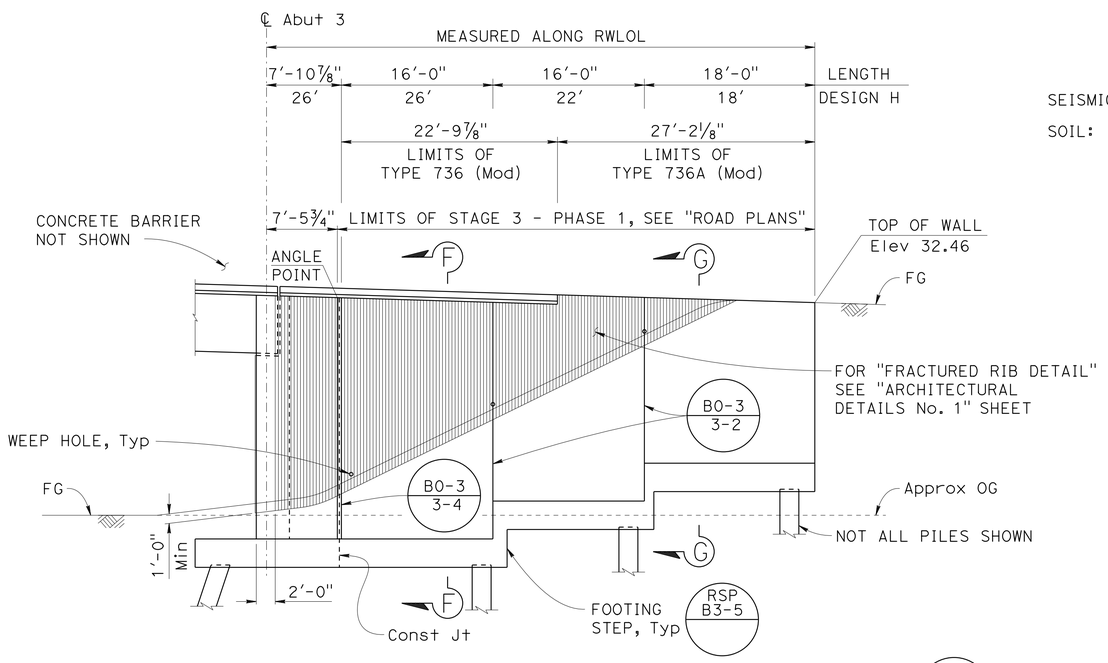

ABUTMENT 3 - RIGHT RETAINING WALL ELEVATION (B0-3 / 3-3)

⅛" = 1'-0"

DESIGN NOTES:

CT: 54 kip transverse force applied at He = 32", distributed over 10 feet at the top of wall and 1:1 distribution down and outward. Distribution below footing taken no less than 40'.

SEISMIC: $k_h = 0.23$, $k_v = 0.0$

SOIL: $\phi = 34°$, $\gamma = 120$ pcf

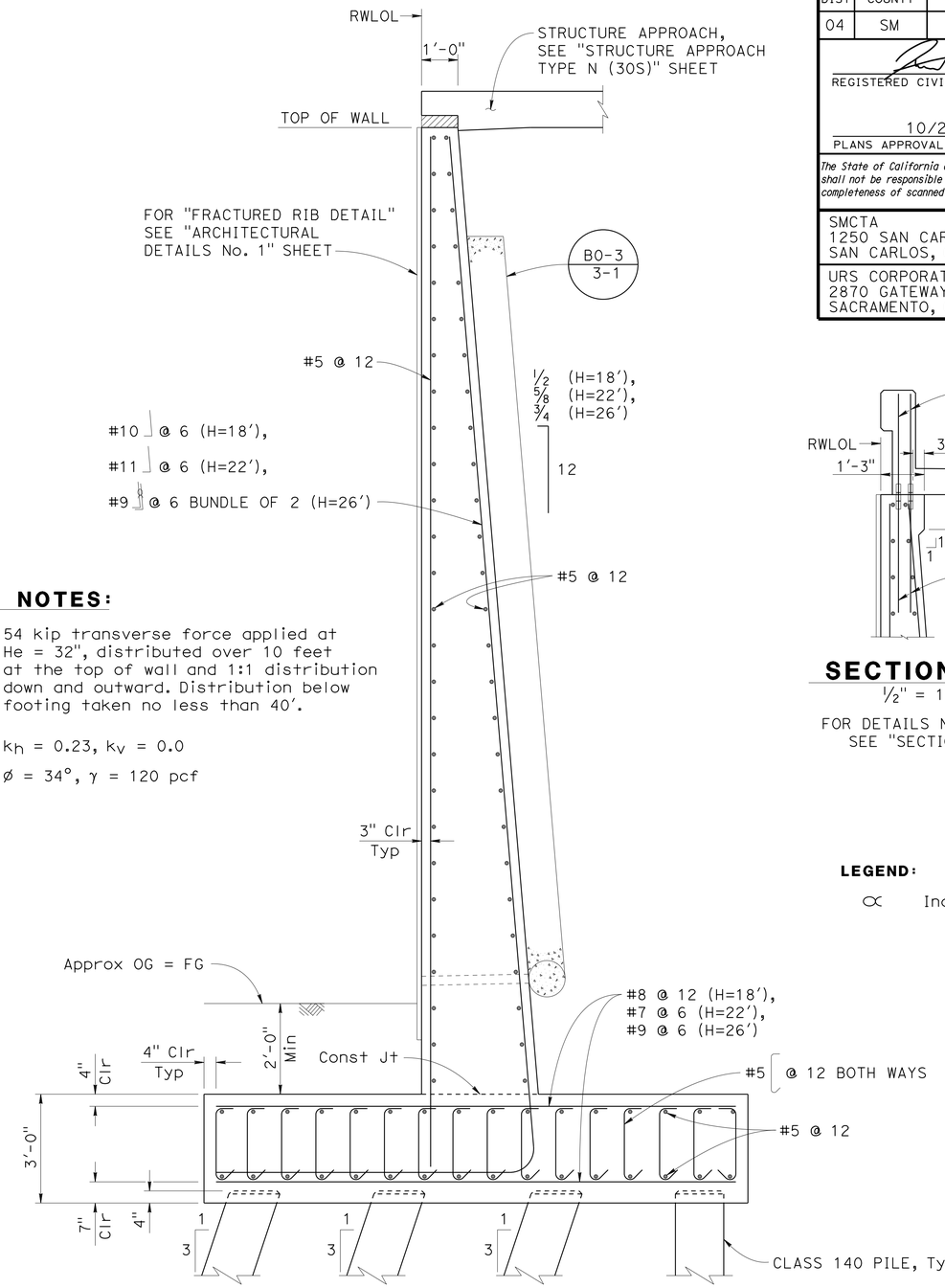

SECTION F-F (A62C)

½" = 1'-0"

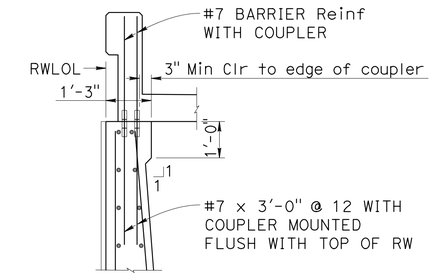

SECTION G-G (B11-54)

½" = 1'-0"

FOR DETAILS NOT SHOWN, SEE "SECTION F-F"

LEGEND:

∝ Indicates bundled bars

DESIGN	BY A. Prince	CHECKED J. Hueser	
DETAILS	BY R. Lim/L. Davis	CHECKED J. Hueser	
QUANTITIES	BY A. Prince	CHECKED S. Landis	

Paul Cotter
DESIGN OVERSIGHT — Paul Cotter
6-20-13
SIGN OFF DATE

PREPARED FOR THE STATE OF CALIFORNIA DEPARTMENT OF TRANSPORTATION

Syed Kazmi
PROJECT ENGINEER

BRIDGE NO. 35-0351
POST MILES 16.61

BROADWAY OC (REPLACE)
ABUTMENT DETAILS No. 4

DESIGN DETAIL SHEET (ENGLISH) (REV. 03/14/12)

ORIGINAL SCALE IN INCHES FOR REDUCED PLANS 0 1 2 3

UNIT: 0703
PROJECT NUMBER & PHASE: 04000006841 CONTRACT NO.: 235844

DISREGARD PRINTS BEARING EARLIER REVISION DATES — REVISION DATES 5-15-13 11-16-12 2-12-13 4-8-13 — SHEET 15 OF 42

FILE => 0400000684we015.dgn

USERNAME => s141070 DATE PLOTTED => 03-FEB-2014 TIME PLOTTED => 13:51

DIST	COUNTY	ROUTE	POST MILES TOTAL PROJECT	SHEET No	TOTAL SHEETS
04	SM	101	16.3/17.1	724	814

REGISTERED CIVIL ENGINEER 5-15-13 DATE

10/21/13
PLANS APPROVAL DATE

REGISTERED PROFESSIONAL ENGINEER Austin Prince No. C80659 Exp. 3/31/15 CIVIL STATE OF CALIFORNIA

The State of California or its officers or agents shall not be responsible for the accuracy or completeness of scanned copies of this plan sheet.

SMCTA
1250 SAN CARLOS AVENUE
SAN CARLOS, CA 94070-1306

URS CORPORATION
2870 GATEWAY OAKS DRIVE, SUITE 150
SACRAMENTO, CA 95833-4308

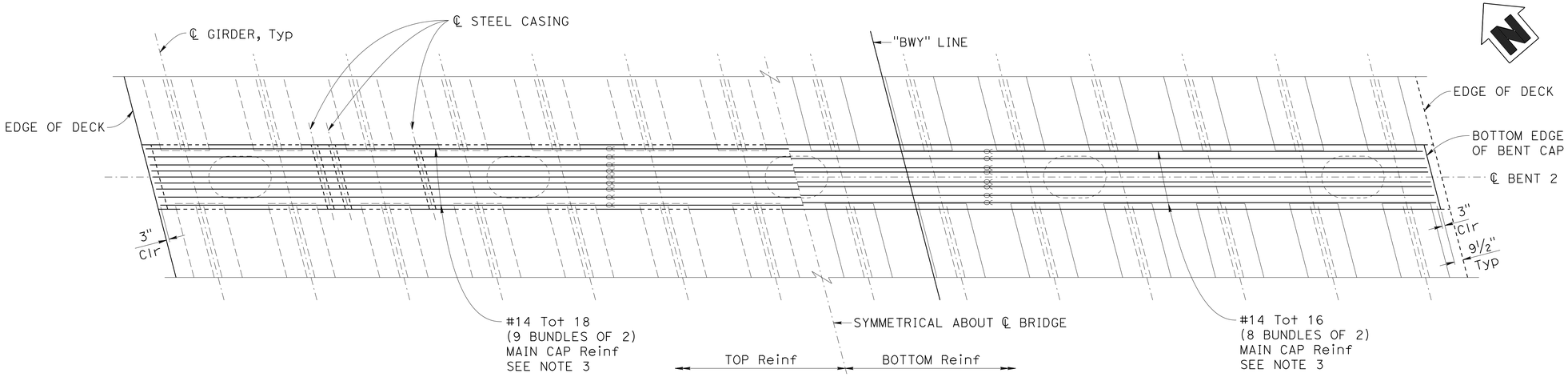

PLAN

3/16" = 1'-0"

NOTES:

1. For stirrup configuration, see "BENT DETAILS No. 1" sheet.
2. For column and footing details, see "BENT DETAILS No. 3 and No. 4" sheets.
3. Only staggered "SERVICE LEVEL" splices are allowed in main cap Reinf.

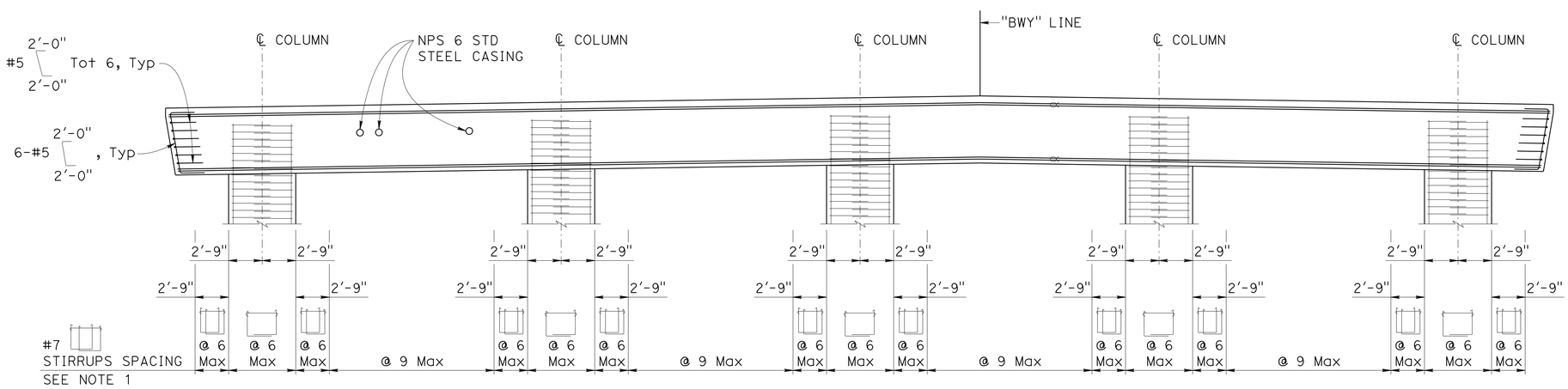

ELEVATION

3/16" = 1'-0"

LEGEND:

∝ Indicates bundled bars

Paul Cotter DESIGN OVERSIGHT Paul Cotter	DESIGN	BY A. Prince	CHECKED J. Hueser
6-20-13 SIGN OFF DATE	DETAILS	BY R. Lim/L. Davis	CHECKED J. Hueser
	QUANTITIES	BY A. Prince	CHECKED S. Landis

PREPARED FOR THE STATE OF CALIFORNIA DEPARTMENT OF TRANSPORTATION

Syed Kazmi
PROJECT ENGINEER

BRIDGE NO. 35-0351
POST MILES 16.61

BROADWAY OC (REPLACE)
BENT LAYOUT

DESIGN DETAIL SHEET (ENGLISH) (REV. 03/14/12)

ORIGINAL SCALE IN INCHES FOR REDUCED PLANS 0 1 2 3

UNIT: 0703
PROJECT NUMBER & PHASE: 04000006841 CONTRACT NO.: 235844

DISREGARD PRINTS BEARING EARLIER REVISION DATES

REVISION DATES 5-15-13 11-16-12 2-12-13 4-8-13

SHEET 16 OF 42

FILE => 0400000684we016.dgn

USERNAME => s141070 DATE PLOTTED => 03-FEB-2014 TIME PLOTTED => 13:51

DIST	COUNTY	ROUTE	POST MILES TOTAL PROJECT	SHEET No	TOTAL SHEETS
04	SM	101	16.3/17.1	725	814

REGISTERED CIVIL ENGINEER — DATE 5-15-13

10/21/13
PLANS APPROVAL DATE

REGISTERED PROFESSIONAL ENGINEER — Austin Prince — No. C80659 — Exp. 3/31/15 — CIVIL — STATE OF CALIFORNIA

The State of California or its officers or agents shall not be responsible for the accuracy or completeness of scanned copies of this plan sheet.

SMCTA
1250 SAN CARLOS AVENUE
SAN CARLOS, CA 94070-1306

URS CORPORATION
2870 GATEWAY OAKS DRIVE, SUITE 150
SACRAMENTO, CA 95833-4308

LEGEND:

∝ Indicates bundled bars

NOTES:

1. For "SECTION A-A" thru "SECTION F-F", see "BENT DETAILS No. 2" sheet.
2. For stirrup spacing, see "BENT LAYOUT" sheet.

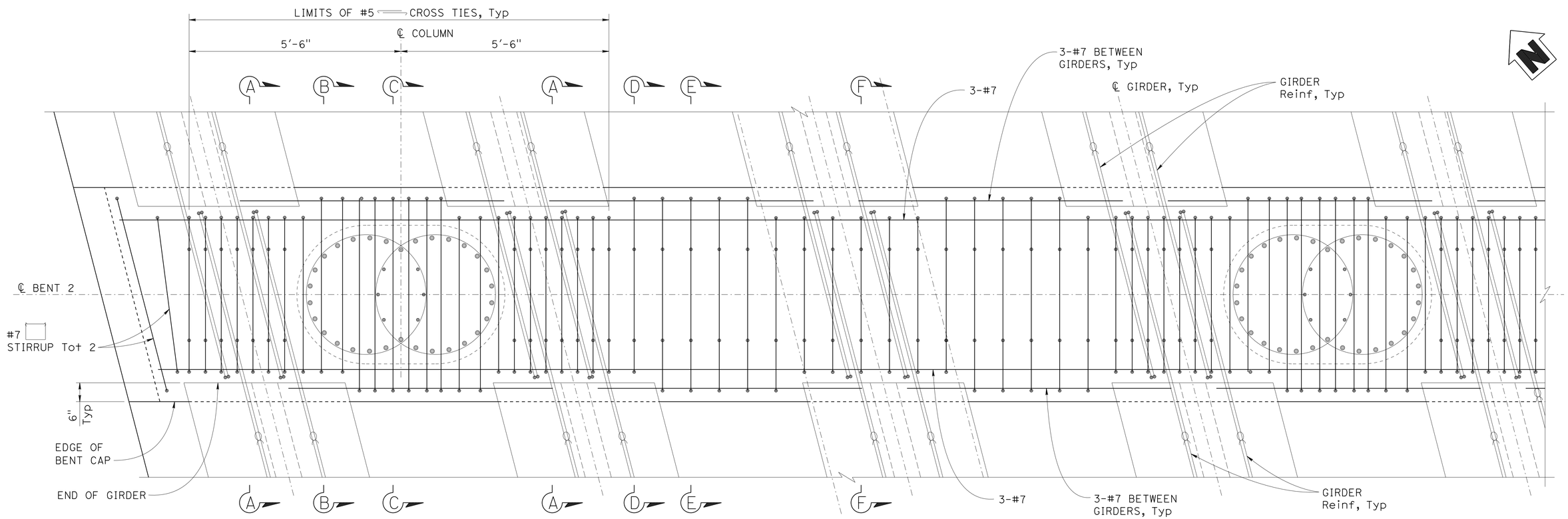

PART PLAN

3/4" = 1'-0"

Paul Cotter — DESIGN OVERSIGHT — Paul Cotter	DESIGN	BY A. Prince	CHECKED J. Hueser	PREPARED FOR THE STATE OF CALIFORNIA DEPARTMENT OF TRANSPORTATION	Syed Kazmi — PROJECT ENGINEER
6-20-13 — SIGN OFF DATE	DETAILS	BY R. Lim/L. Davis	CHECKED J. Hueser		BRIDGE NO. 35-0351
	QUANTITIES	BY A. Prince	CHECKED S. Landis		POST MILES 16.61

BROADWAY OC (REPLACE)

BENT DETAILS No. 1

DESIGN DETAIL SHEET (ENGLISH) (REV. 03/14/12)

ORIGINAL SCALE IN INCHES FOR REDUCED PLANS 0 1 2 3

UNIT: 0703
PROJECT NUMBER & PHASE: 04000006841 CONTRACT NO.: 235844

DISREGARD PRINTS BEARING EARLIER REVISION DATES → REVISION DATES 5-15-13 11-16-12 2-12-13 4-8-13

SHEET 17 OF 42

FILE => 0400000684we017.dgn

USERNAME => s140070 DATE PLOTTED => 03-FEB-2014 TIME PLOTTED => 13:51

DIST	COUNTY	ROUTE	POST MILES TOTAL PROJECT	SHEET No	TOTAL SHEETS
04	SM	101	16.3/17.1	726	814

REGISTERED CIVIL ENGINEER 5-15-13 DATE

10/21/13
PLANS APPROVAL DATE

REGISTERED PROFESSIONAL ENGINEER Austin Prince No. C80659 Exp. 3/31/15 CIVIL STATE OF CALIFORNIA

The State of California or its officers or agents shall not be responsible for the accuracy or completeness of scanned copies of this plan sheet.

SMCTA
1250 SAN CARLOS AVENUE
SAN CARLOS, CA 94070-1306

URS CORPORATION
2870 GATEWAY OAKS DRIVE, SUITE 150
SACRAMENTO, CA 95833-4308

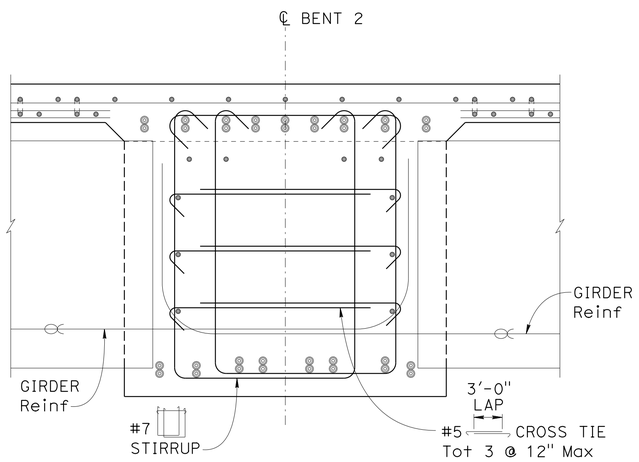

SECTION A-A

¾" = 1'-0"

FOR DETAILS NOT SHOWN, SEE "SECTION E-E"

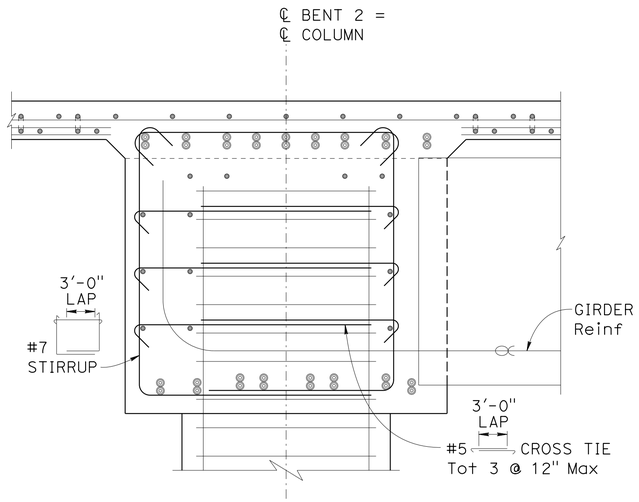

SECTION B-B

¾" = 1'-0"

FOR DETAILS NOT SHOWN, SEE "SECTION E-E"

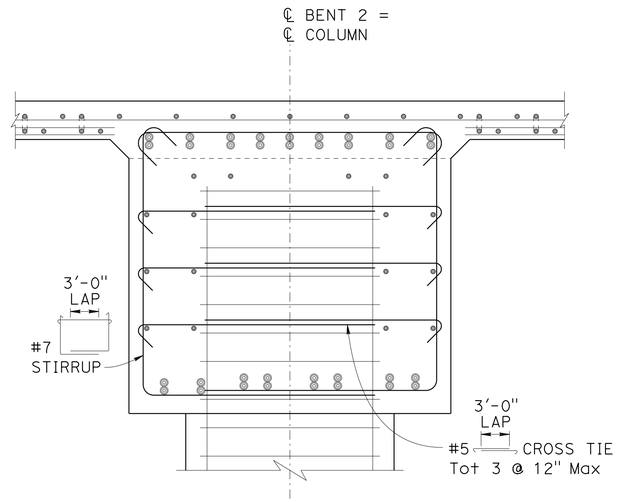

SECTION C-C

¾" = 1'-0"

FOR DETAILS NOT SHOWN, SEE "SECTION E-E"

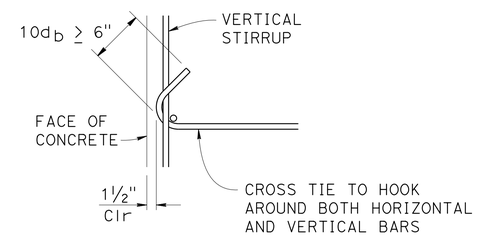

CROSS TIE DETAIL

NO SCALE

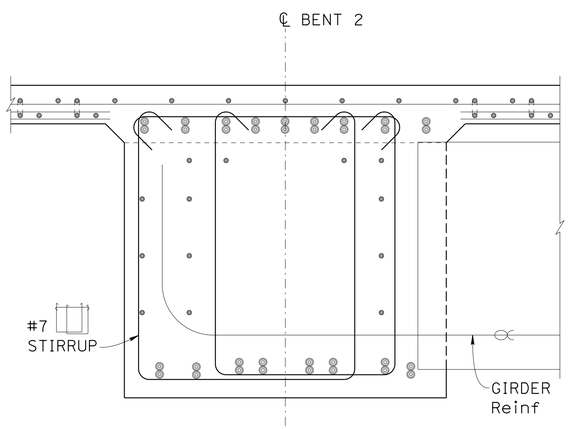

SECTION D-D

¾" = 1'-0"

FOR DETAILS NOT SHOWN, SEE "SECTION E-E"

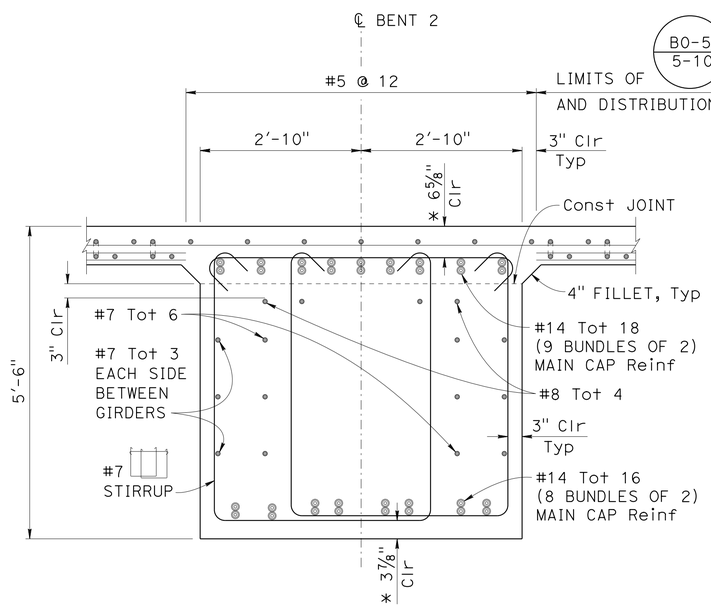

SECTION E-E

¾" = 1'-0"

* CLEARANCE TO MAIN CAP Reinf

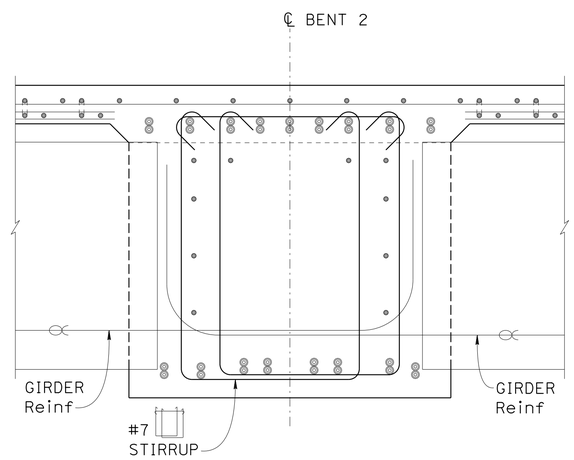

SECTION F-F

¾" = 1'-0"

FOR DETAILS NOT SHOWN, SEE "SECTION E-E"

NOTES:

1. Reinforcement may be bent or lowered to clear prestressing ducts and conduit casing, subject to the approval of the Engineer.
2. For locations of "SECTION A-A" thru "SECTION F-F", see "BENT DETAILS No. 1" sheet.

LEGEND:

∝ Indicates bundled bars

Paul Cotter
DESIGN OVERSIGHT Paul Cotter
6-20-13
SIGN OFF DATE

	BY	CHECKED
DESIGN	A. Prince	J. Hueser
DETAILS	R. Lim/L. Davis	J. Hueser
QUANTITIES	A. Prince	S. Landis

PREPARED FOR THE STATE OF CALIFORNIA DEPARTMENT OF TRANSPORTATION

Syed Kazmi
PROJECT ENGINEER

BRIDGE NO. 35-0351
POST MILES 16.61

BROADWAY OC (REPLACE)

BENT DETAILS No. 2

DESIGN DETAIL SHEET (ENGLISH) (REV. 03/14/12)

ORIGINAL SCALE IN INCHES FOR REDUCED PLANS 0 1 2 3

UNIT: 0703
PROJECT NUMBER & PHASE: 04000006841 CONTRACT NO.: 235844

DISREGARD PRINTS BEARING EARLIER REVISION DATES

REVISION DATES: 5-15-13 11-16-12 2-12-13 4-8-13

SHEET 18 OF 42

FILE => 0400000684we018.dgn

USERNAME => s141070 DATE PLOTTED => 03-FEB-2014 TIME PLOTTED => 13:51

DIST	COUNTY	ROUTE	POST MILES TOTAL PROJECT	SHEET No	TOTAL SHEETS
04	SM	101	16.3/17.1	727	814

REGISTERED CIVIL ENGINEER — DATE 5-15-13

10/21/13
PLANS APPROVAL DATE

REGISTERED PROFESSIONAL ENGINEER — Austin Prince — No. C80659 — Exp. 3/31/15 — CIVIL — STATE OF CALIFORNIA

The State of California or its officers or agents shall not be responsible for the accuracy or completeness of scanned copies of this plan sheet.

SMCTA
1250 SAN CARLOS AVENUE
SAN CARLOS, CA 94070-1306

URS CORPORATION
2870 GATEWAY OAKS DRIVE, SUITE 150
SACRAMENTO, CA 95833-4308

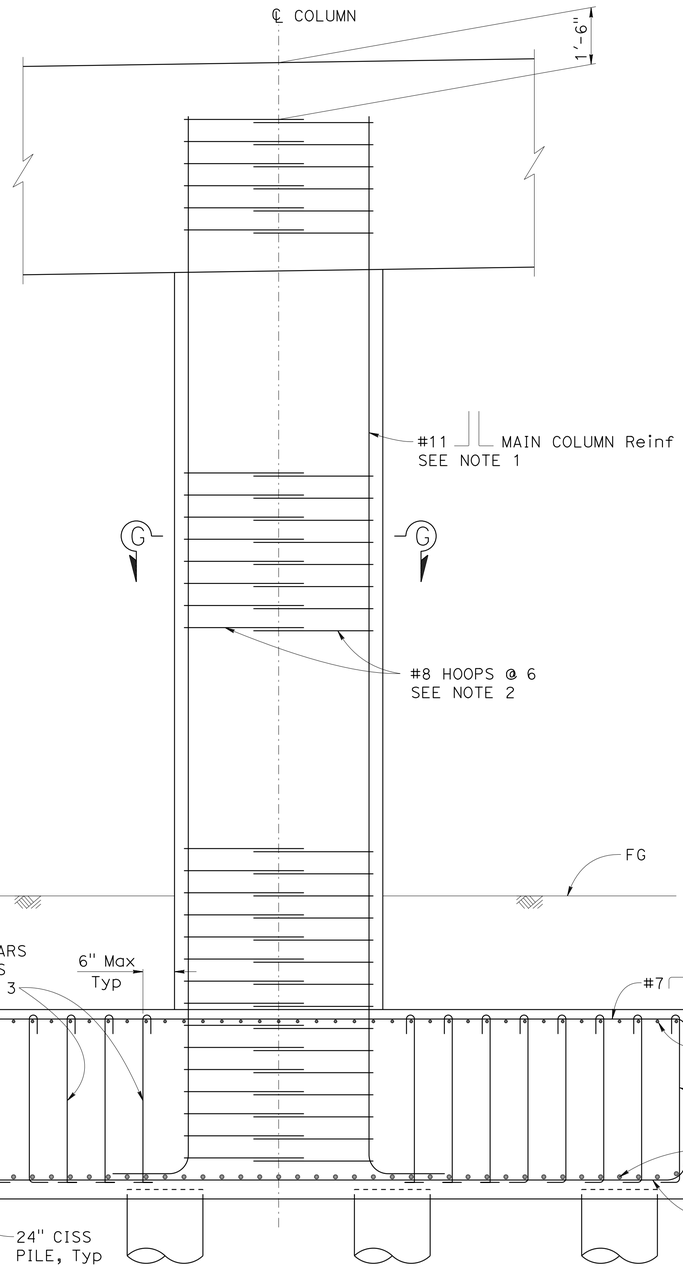

COLUMN ELEVATION A62C

½" = 1'-0"

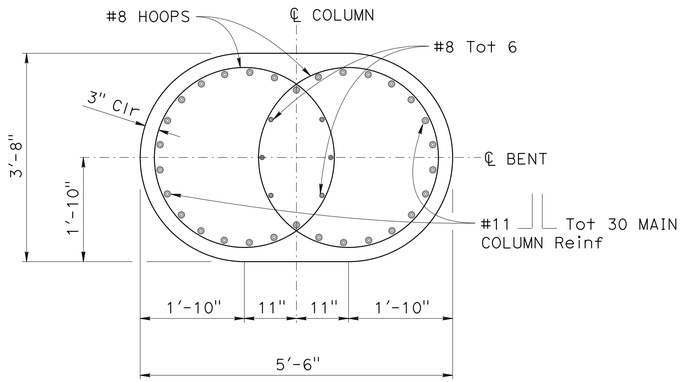

SECTION G-G

¾" = 1'-0"

NOTES:

1. No splices allowed in main column reinforcement.
2. All hoops shall be "Ultimate" butt spliced.
3. For layout of headed bars, see "BENT DETAILS No. 4" sheet.

Paul Cotter
DESIGN OVERSIGHT Paul Cotter
6-20-13
SIGN OFF DATE

	BY	CHECKED
DESIGN	A. Prince	J. Hueser
DETAILS	R. Lim/L. Davis	J. Hueser
QUANTITIES	A. Prince	S. Landis

PREPARED FOR THE STATE OF CALIFORNIA DEPARTMENT OF TRANSPORTATION

Syed Kazmi
PROJECT ENGINEER

BRIDGE NO. 35-0351
POST MILES 16.61

BROADWAY OC (REPLACE)
BENT DETAILS No. 3

DESIGN DETAIL SHEET (ENGLISH) (REV. 03/14/12)

ORIGINAL SCALE IN INCHES FOR REDUCED PLANS 0 1 2 3

UNIT: 0703
PROJECT NUMBER & PHASE: 04000006841 CONTRACT NO.: 235844

DISREGARD PRINTS BEARING EARLIER REVISION DATES → REVISION DATES 5-15-13 11-16-12 2-12-13 4-8-13

SHEET 19 OF 42

FILE => 0400000684we019.dgn

USERNAME => s141070 DATE PLOTTED => 03-FEB-2014 TIME PLOTTED => 13:51

DIST	COUNTY	ROUTE	POST MILES TOTAL PROJECT	SHEET No	TOTAL SHEETS
04	SM	101	16.3/17.1	728	814

REGISTERED CIVIL ENGINEER 5-15-13 DATE

10/21/13
PLANS APPROVAL DATE

REGISTERED PROFESSIONAL ENGINEER Austin Prince No. C80659 Exp. 3/31/15 CIVIL STATE OF CALIFORNIA

The State of California or its officers or agents shall not be responsible for the accuracy or completeness of scanned copies of this plan sheet.

SMCTA
1250 SAN CARLOS AVENUE
SAN CARLOS, CA 94070-1306

URS CORPORATION
2870 GATEWAY OAKS DRIVE, SUITE 150
SACRAMENTO, CA 95833-4308

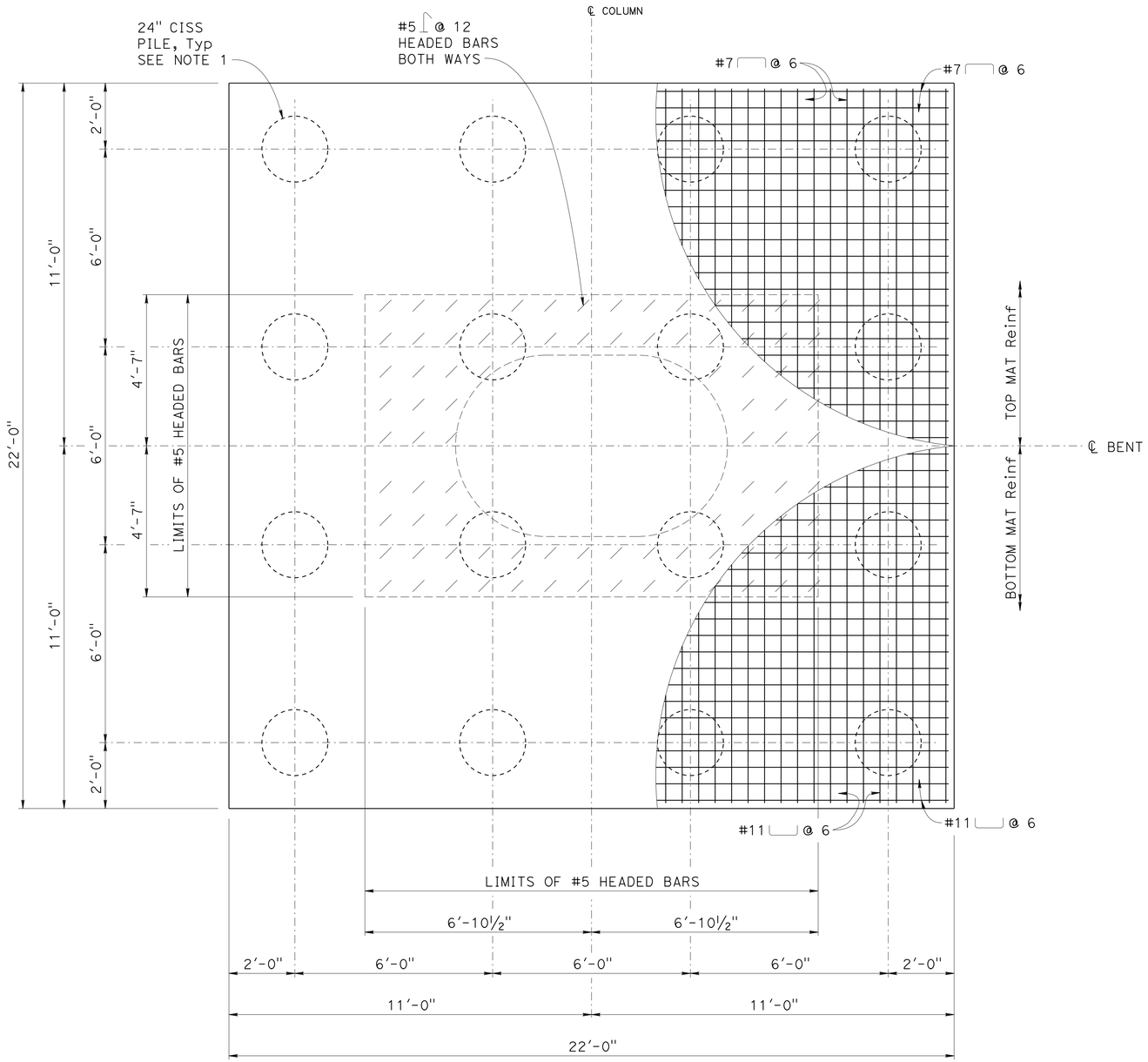

FOOTING DETAIL

½" = 1'-0"

NOTE:

1. For pile details, see "BENT DETAILS No. 5" sheet.
2. Reinforcement may be bent or lowered to clear CISS pile reinforcement, subject to the approval of the Engineer.

Paul Cotter
DESIGN OVERSIGHT Paul Cotter
6-20-13
SIGN OFF DATE

	BY	CHECKED
DESIGN	A. Prince	J. Hueser
DETAILS	R. Lim/L. Davis	J. Hueser
QUANTITIES	A. Prince	S. Landis

PREPARED FOR THE STATE OF CALIFORNIA DEPARTMENT OF TRANSPORTATION

Syed Kazmi
PROJECT ENGINEER

BRIDGE NO. 35-0351
POST MILES 16.61

BROADWAY OC (REPLACE)
BENT DETAILS No. 4

DESIGN DETAIL SHEET (ENGLISH) (REV. 03/14/12)

ORIGINAL SCALE IN INCHES FOR REDUCED PLANS 0 1 2 3

UNIT: 0703
PROJECT NUMBER & PHASE: 04000006841 CONTRACT NO.: 235844

DISREGARD PRINTS BEARING EARLIER REVISION DATES

REVISION DATES: 5-15-13 ~~11-16-12~~ ~~2-12-13~~ ~~4-8-13~~

SHEET 20 OF 42

FILE => 0400000684we020.dgn

USERNAME => s141070 DATE PLOTTED => 03-FEB-2014 TIME PLOTTED => 13:51

DIST	COUNTY	ROUTE	POST MILES TOTAL PROJECT	SHEET No	TOTAL SHEETS
04	SM	101	16.3/17.1	729	814

REGISTERED CIVIL ENGINEER 5-15-13 DATE

10/21/13
PLANS APPROVAL DATE

REGISTERED PROFESSIONAL ENGINEER Austin Prince No. C80659 Exp. 3/31/15 CIVIL STATE OF CALIFORNIA

The State of California or its officers or agents shall not be responsible for the accuracy or completeness of scanned copies of this plan sheet.

SMCTA
1250 SAN CARLOS AVENUE
SAN CARLOS, CA 94070-1306

URS CORPORATION
2870 GATEWAY OAKS DRIVE, SUITE 150
SACRAMENTO, CA 95833-4308

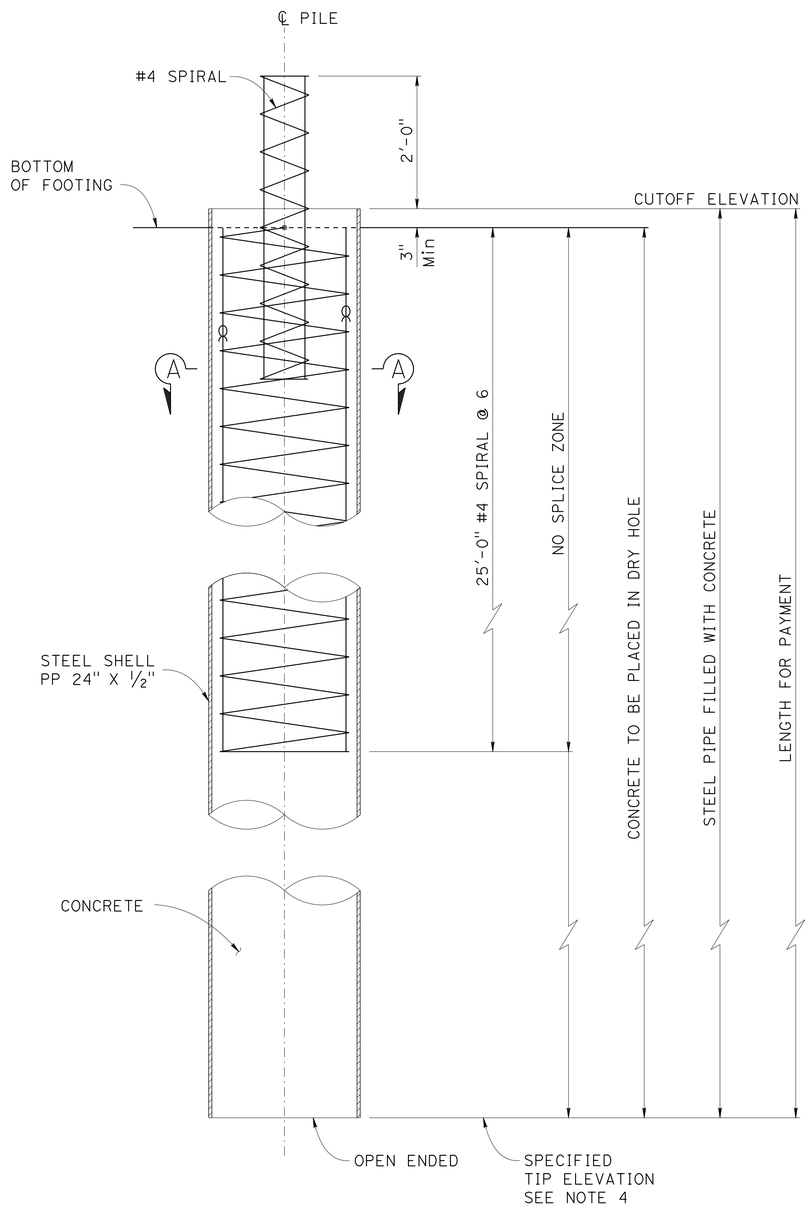

24 INCH CISS PIPE PILE

1" = 1'-0"

NOTES:

1. All hoops are "ultimate" butt spliced.
2. Spiral reinforcement shall terminate in, and begin with special hook.
3. Lapped splices in spiral reinforcement shall be lapped at 80 bar diameter.
4. For tip elevation, see "PILE DATA TABLE" on "FOUNDATION PLAN" sheet.

LEGEND:

∝ Indicates bundled bars

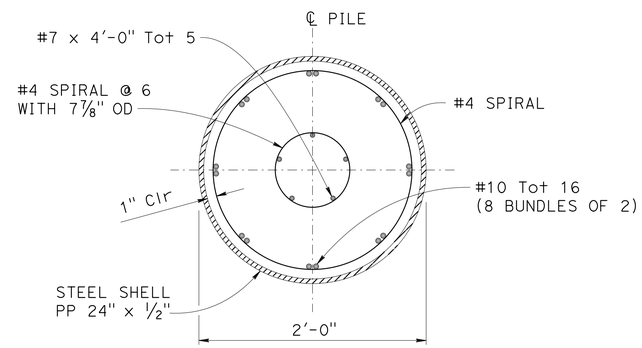

SECTION A-A

1 1/2" = 1'-0"

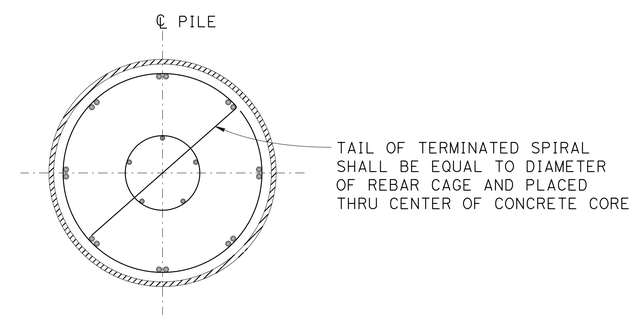

SPECIAL HOOK DETAIL

1 1/2" = 1'-0"

FOR DETAILS NOT SHOWN, SEE "SECTION A-A"

PILE DESIGN NOTES

REINFORCED CONCRETE: f'c = 4.5 ksi
fy = 60 ksi

STEEL PIPE PILE: fy = 35 ksi

DESIGN CAPACITY: See "PILE DATA TABLE" on "FOUNDATION PLAN" sheet.

Paul Cotter
DESIGN OVERSIGHT Paul Cotter
6-20-13
SIGN OFF DATE

	BY	CHECKED
DESIGN	A. Prince	J. Hueser
DETAILS	R. Lim/L. Davis	J. Hueser
QUANTITIES	A. Prince	S. Landis

PREPARED FOR THE STATE OF CALIFORNIA DEPARTMENT OF TRANSPORTATION

Syed Kazmi
PROJECT ENGINEER

BRIDGE NO. 35-0351
POST MILES 16.61

BROADWAY OC (REPLACE)
BENT DETAILS No. 5

DESIGN DETAIL SHEET (ENGLISH) (REV. 03/14/12)

ORIGINAL SCALE IN INCHES FOR REDUCED PLANS 0 1 2 3

UNIT: 0703
PROJECT NUMBER & PHASE: 04000006841 CONTRACT NO.: 235844

DISREGARD PRINTS BEARING EARLIER REVISION DATES

REVISION DATES: 5-15-13 ~~11-16-12~~ ~~2-12-13~~ ~~4-8-13~~

SHEET 21 OF 42

FILE => 0400000684we021.dgn

USERNAME => s141070 DATE PLOTTED => 03-FEB-2014 TIME PLOTTED => 13:51

DIST	COUNTY	ROUTE	POST MILES TOTAL PROJECT	SHEET No	TOTAL SHEETS
04	SM	101	16.3/17.1	730	814

REGISTERED CIVIL ENGINEER — DATE 5-15-13

10/21/13
PLANS APPROVAL DATE

REGISTERED PROFESSIONAL ENGINEER — Austin Prince — No. C80659 — Exp. 3/31/15 — CIVIL — STATE OF CALIFORNIA

The State of California or its officers or agents shall not be responsible for the accuracy or completeness of scanned copies of this plan sheet.

SMCTA
1250 SAN CARLOS AVENUE
SAN CARLOS, CA 94070-1306

URS CORPORATION
2870 GATEWAY OAKS DRIVE, SUITE 150
SACRAMENTO, CA 95833-4308

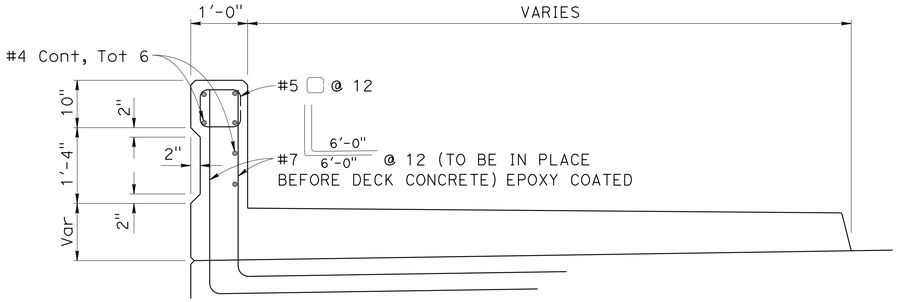

CONCRETE BARRIER (TYPE 26 MODIFIED) B11-54

3/4" = 1'-0"

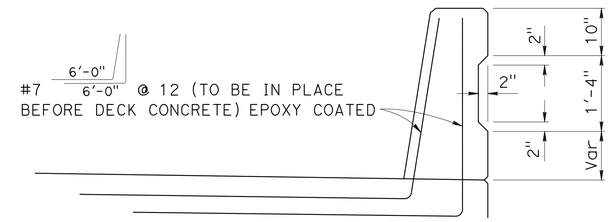

CONCRETE BARRIER (TYPE 736 MODIFIED) B11-56

3/4" = 1'-0"

NOTE:

1. Conduit hanger support spacing to be staggered.

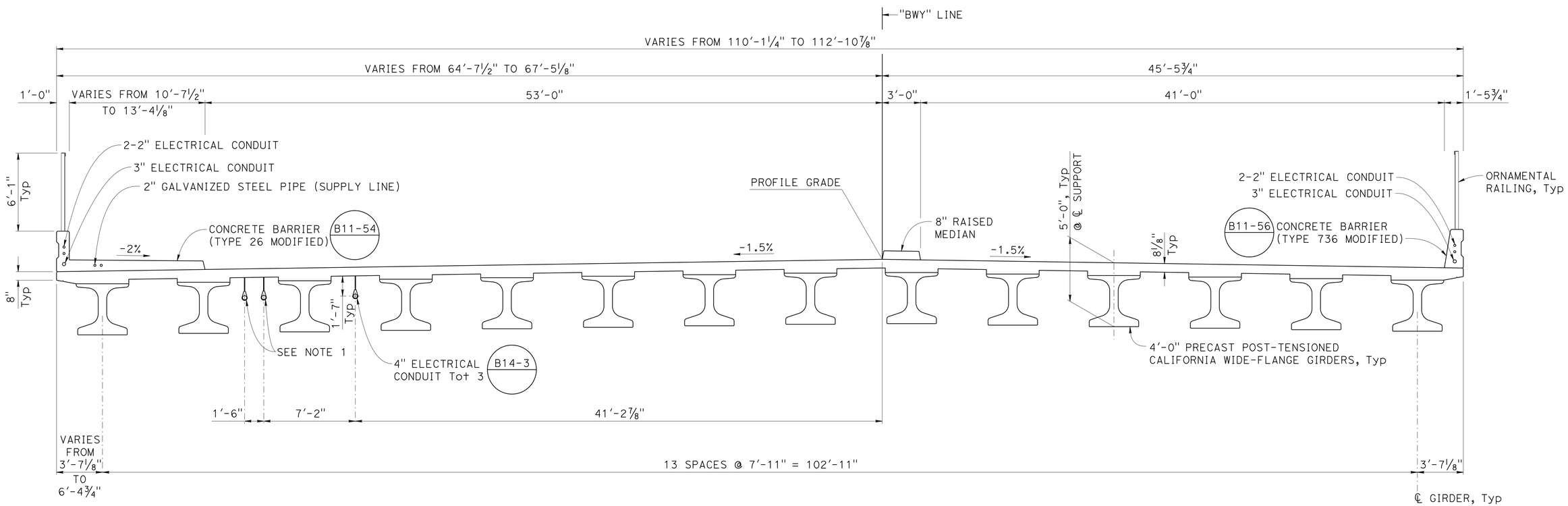

TYPICAL SECTION

1/4" = 1'-0"

DESIGN OVERSIGHT: Paul Cotter	DESIGN	BY A. Prince	CHECKED J. Hueser	PREPARED FOR THE STATE OF CALIFORNIA DEPARTMENT OF TRANSPORTATION	Syed Kazmi, PROJECT ENGINEER
6-20-13 SIGN OFF DATE	DETAILS	BY R. Lim/L. Davis	CHECKED J. Hueser		BRIDGE NO. 35-0351
	QUANTITIES	BY A. Prince	CHECKED S. Landis		POST MILES 16.61

BROADWAY OC (REPLACE)

TYPICAL SECTION

DESIGN DETAIL SHEET (ENGLISH) (REV. 03/14/12)

ORIGINAL SCALE IN INCHES FOR REDUCED PLANS 0 1 2 3

UNIT: 0703
PROJECT NUMBER & PHASE: 04000006841 CONTRACT NO.: 235844

DISREGARD PRINTS BEARING EARLIER REVISION DATES

REVISION DATES: 5-15-13 11-16-12 2-12-13 4-8-13

SHEET 22 OF 42

FILE => 0400000684we022.dgn

USERNAME => s141070 DATE PLOTTED => 03-FEB-2014 TIME PLOTTED => 13:51

DIST	COUNTY	ROUTE	POST MILES TOTAL PROJECT	SHEET No	TOTAL SHEETS
04	SM	101	16.3/17.1	731	814

REGISTERED CIVIL ENGINEER — DATE 5-15-13

10/21/13
PLANS APPROVAL DATE

REGISTERED PROFESSIONAL ENGINEER — Austin Prince — No. C80659 — Exp. 3/31/15 — CIVIL — STATE OF CALIFORNIA

The State of California or its officers or agents shall not be responsible for the accuracy or completeness of scanned copies of this plan sheet.

SMCTA
1250 SAN CARLOS AVENUE
SAN CARLOS, CA 94070-1306

URS CORPORATION
2870 GATEWAY OAKS DRIVE, SUITE 150
SACRAMENTO, CA 95833-4308

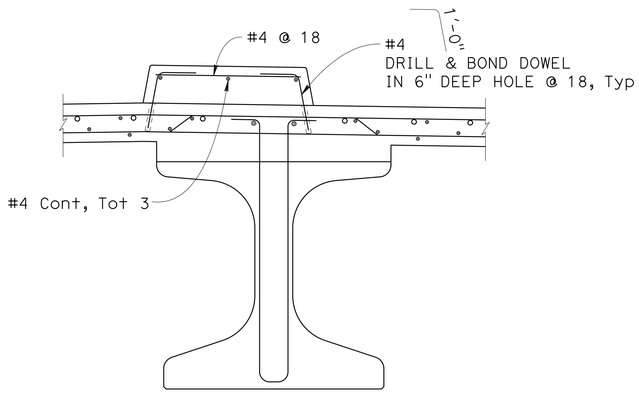

RAISED MEDIAN DETAIL

3/4" = 1'-0"

NOTE:

1. For additional reinforcement, see "DECK REINFORCEMENT" sheet.

LEGEND:

- ° Indicates additional mild reinforcement.
- * Splices of reinforcement indicated shall be staggered service level splices. Lap splices equal to two times the standard lap splice may be substituted for service splices.

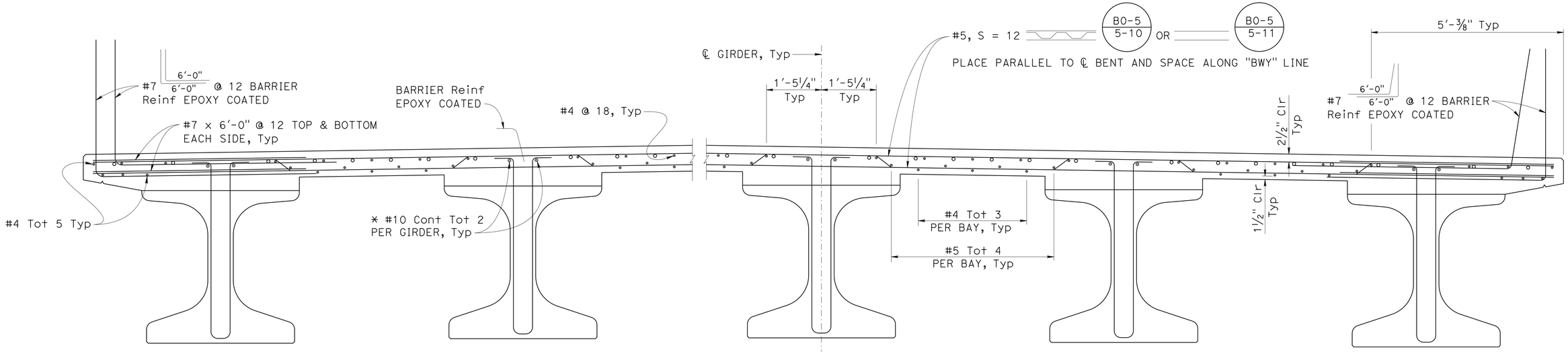

PART TYPICAL SECTION (B0-5)

3/4" = 1'-0"

DESIGN	BY A. Prince	CHECKED J. Hueser	
DETAILS	BY R. Lim/L. Davis	CHECKED J. Hueser	
QUANTITIES	BY A. Prince	CHECKED S. Landis	

DESIGN OVERSIGHT: Paul Cotter
6-20-13
SIGN OFF DATE

PREPARED FOR THE STATE OF CALIFORNIA DEPARTMENT OF TRANSPORTATION

Syed Kazmi
PROJECT ENGINEER

BRIDGE NO. 35-0351
POST MILES 16.61

BROADWAY OC (REPLACE)
PART TYPICAL SECTION

DESIGN DETAIL SHEET (ENGLISH) (REV. 03/14/12)

ORIGINAL SCALE IN INCHES FOR REDUCED PLANS 0 1 2 3

UNIT: 0703
PROJECT NUMBER & PHASE: 04000006841 CONTRACT NO.: 235844

DISREGARD PRINTS BEARING EARLIER REVISION DATES

REVISION DATES: 5-15-13 11-16-12 2-12-13 4-8-13

SHEET 23 OF 42

FILE => 0400000684we023.dgn

USERNAME => s141070 DATE PLOTTED => 03-FEB-2014 TIME PLOTTED => 13:51

DIST	COUNTY	ROUTE	POST MILES TOTAL PROJECT	SHEET No	TOTAL SHEETS
04	SM	101	16.3/17.1	732	814

REGISTERED CIVIL ENGINEER — DATE 5-15-13

10/21/13
PLANS APPROVAL DATE

REGISTERED PROFESSIONAL ENGINEER — Austin Prince — No. C80659 — Exp. 3/31/15 — CIVIL — STATE OF CALIFORNIA

The State of California or its officers or agents shall not be responsible for the accuracy or completeness of scanned copies of this plan sheet.

SMCTA
1250 SAN CARLOS AVENUE
SAN CARLOS, CA 94070-1306

URS CORPORATION
2870 GATEWAY OAKS DRIVE, SUITE 150
SACRAMENTO, CA 95833-4308

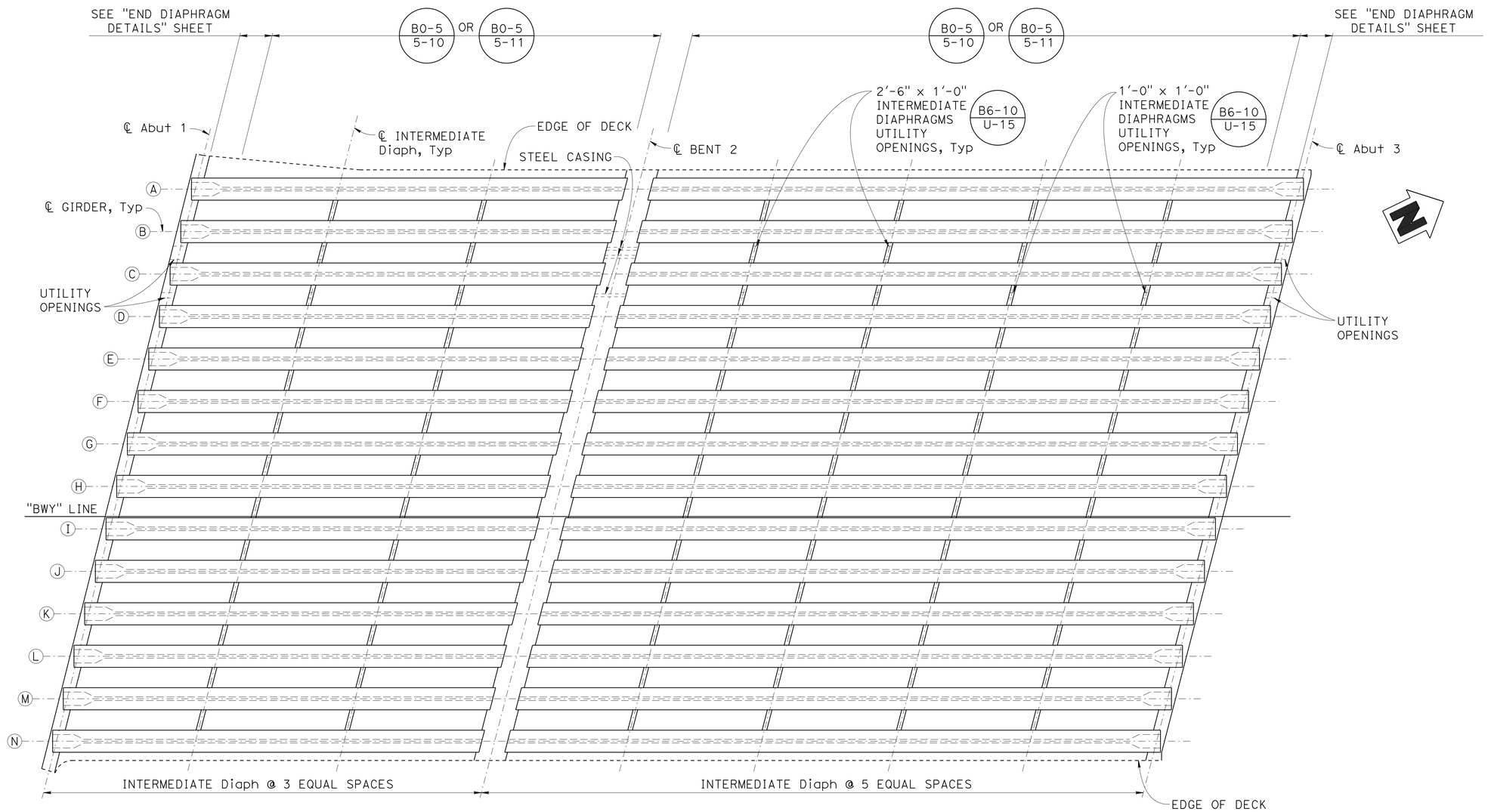

GIRDER LAYOUT

3/32" = 1'-0"

DESIGN	BY A. Prince	CHECKED J. Hueser	
DETAILS	BY R. Lim/L. Davis	CHECKED J. Hueser	
QUANTITIES	BY A. Prince	CHECKED S. Landis	

DESIGN OVERSIGHT Paul Cotter
6-20-13
SIGN OFF DATE

PREPARED FOR THE STATE OF CALIFORNIA DEPARTMENT OF TRANSPORTATION

Syed Kazmi
PROJECT ENGINEER

BRIDGE NO. 35-0351
POST MILES 16.61

BROADWAY OC (REPLACE)

GIRDER LAYOUT

DESIGN DETAIL SHEET (ENGLISH) (REV. 03/14/12)

ORIGINAL SCALE IN INCHES FOR REDUCED PLANS 0 1 2 3

UNIT: 0703
PROJECT NUMBER & PHASE: 04000006841 CONTRACT NO.: 235844

DISREGARD PRINTS BEARING EARLIER REVISION DATES

REVISION DATES: 5-15-13 11-16-12 2-12-13 4-8-13

SHEET 24 OF 42

FILE => 0400000684we024.dgn

USERNAME => s141070 DATE PLOTTED => 03-FEB-2014 TIME PLOTTED => 13:51

DIST	COUNTY	ROUTE	POST MILES TOTAL PROJECT	SHEET No	TOTAL SHEETS
04	SM	101	16.3/17.1	733	814

REGISTERED CIVIL ENGINEER — DATE 5-15-13

10/21/13
PLANS APPROVAL DATE

REGISTERED PROFESSIONAL ENGINEER — Austin Prince — No. C80659 — Exp. 3/31/15 — CIVIL — STATE OF CALIFORNIA

The State of California or its officers or agents shall not be responsible for the accuracy or completeness of scanned copies of this plan sheet.

SMCTA
1250 SAN CARLOS AVENUE
SAN CARLOS, CA 94070-1306

URS CORPORATION
2870 GATEWAY OAKS DRIVE, SUITE 150
SACRAMENTO, CA 95833-4308

POST-TENSIONING NOTES

270 ksi Low Relaxation Strand

	PATH 1	PATH 2	PATH 3
Pjack =	530 kips per girder	= 530 kips per girder	= 840 kips per girder

PATH 1, 2 and 3

$As = \frac{Pjack}{0.75fs}$

Anchor set = 3/8"

Total No. of Girders = 14

Distribution of prestress force (Pjack) between girders shall not exceed the ratio of 3:2.

Concrete: f'c = 8.0 ksi @ 28 days
f'ci = 6.0 ksi @ time of stressing

Contractor shall submit elongation calculations based on initial stress at

☒ = 0.877 times jacking stress for PATH 1.

☒ = 0.891 times jacking stress for PATH 2.

☒ = 0.897 times jacking stress for PATH 3.

One end stressing shall be performed from Abut 3

For each post-tensioning path no more than half of the post-tensioning force in any girder may be applied before an equal force is applied in the adjacent girders. The maximum force variation between girders shall not exceed the post-tensioning force of the largest tendon used in all girders. At no time during stressing operations will more than 1/6 of the total prestressing force be applied eccentrically about the centerline of each individual stage of the structure.

Prestressing force design is based on friction curvature coefficient μ = 0.15 and friction wobble coefficient k = 0.0002/ft

The Contractor shall submit working drawings to the Engineer for approval. The working drawings shall include any additions or rearrangement of reinforcing steel from that shown on the plans. Sufficient points shall be shown on the working drawings to place ducts accurately.

NOTES:

1. For post-tensioning sequence, see "BRIDGE CONSTRUCTION SEQUENCE" sheet.
2. Bar reinforcement interfering with the prestressing tendons shall be adjusted, as approved by the Engineer.

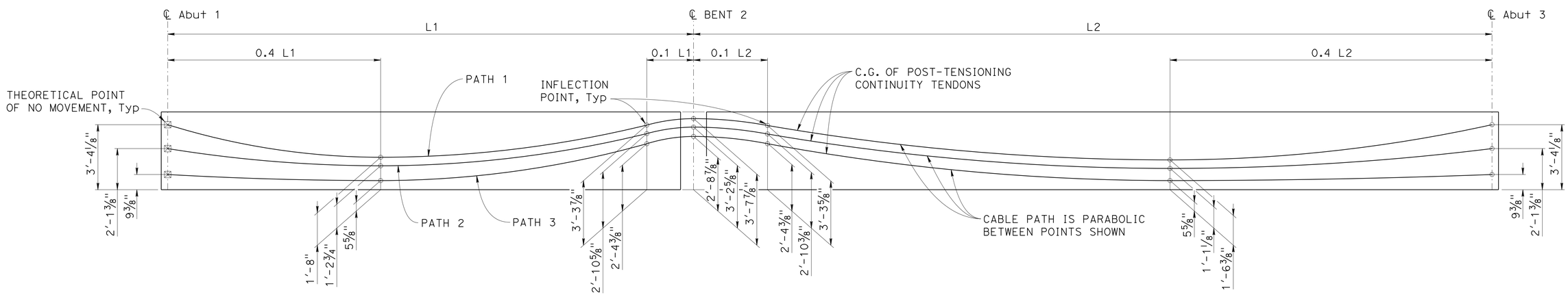

GIRDER LONGITUDINAL SECTION

NO SCALE

Paul Cotter — DESIGN OVERSIGHT — Paul Cotter — 6-20-13 SIGN OFF DATE	DESIGN	BY A. Prince	CHECKED J. Hueser	PREPARED FOR THE STATE OF CALIFORNIA DEPARTMENT OF TRANSPORTATION	Syed Kazmi — PROJECT ENGINEER
	DETAILS	BY R. Lim/L. Davis	CHECKED J. Hueser		
	QUANTITIES	BY A. Prince	CHECKED S. Landis		

BRIDGE NO. 35-0351 — POST MILES 16.61

BROADWAY OC (REPLACE)
GIRDER POST-TENSIONING

DESIGN DETAIL SHEET (ENGLISH) (REV. 03/14/12)

ORIGINAL SCALE IN INCHES FOR REDUCED PLANS 0 1 2 3

UNIT: 0703
PROJECT NUMBER & PHASE: 04000006841 CONTRACT NO.: 235844

DISREGARD PRINTS BEARING EARLIER REVISION DATES

REVISION DATES: 5-15-13 11-16-12 2-12-13 4-8-13

SHEET 25 OF 42

FILE => 0400000684we025.dgn

USERNAME => s141070 DATE PLOTTED => 03-FEB-2014 TIME PLOTTED => 13:51

DIST	COUNTY	ROUTE	POST MILES TOTAL PROJECT	SHEET No	TOTAL SHEETS
04	SM	101	16.3/17.1	734	814

REGISTERED CIVIL ENGINEER 5-15-13 DATE

10/21/13
PLANS APPROVAL DATE

REGISTERED PROFESSIONAL ENGINEER Austin Prince No. C80659 Exp. 3/31/15 CIVIL STATE OF CALIFORNIA

The State of California or its officers or agents shall not be responsible for the accuracy or completeness of scanned copies of this plan sheet.

SMCTA
1250 SAN CARLOS AVENUE
SAN CARLOS, CA 94070-1306

URS CORPORATION
2870 GATEWAY OAKS DRIVE, SUITE 150
SACRAMENTO, CA 95833-4308

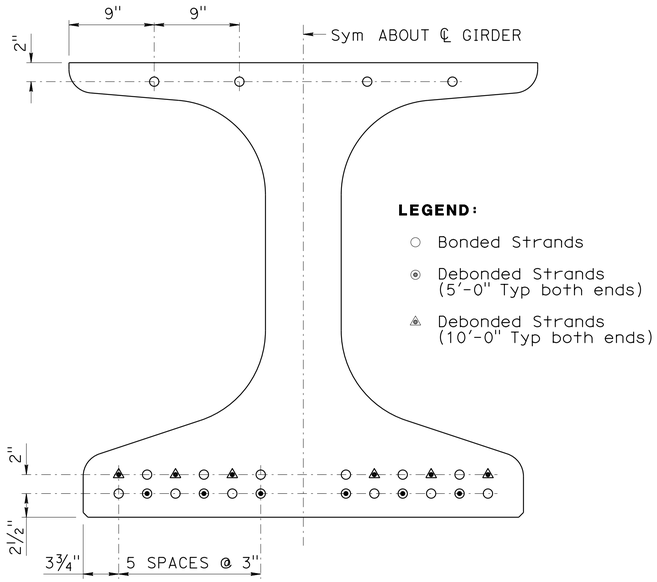

LEGEND:

- ○ Bonded Strands
- ◉ Debonded Strands (5'-0" Typ both ends)
- ◉ Debonded Strands (10'-0" Typ both ends)

STRAND LAYOUT

1½" = 1'-0"

GIRDER LOCATION	℄ GIRDER LENGTH
A	80'-8"
B	80'-7⅜"
C	80'-6⅝"
D	80'-5⅞"
E	80'-5⅛"
F	80'-4½"
G	80'-3¾"
H	80'-3"
I	80'-2⅜"
J	80'-1⅝"
K	80'-0⅞"
L	80'-0⅛"
M	79'-11½"
N	79'-10¾"

TABLE

LOCATION	℄ GIRDER LENGTH	No. OF GIRDERS	TOTAL No. OF 0.6"Ø STRANDS	JACKING FORCE (P)	CONCRETE STRENGTH (ksi)	
					f'ci	f'c
SPAN 1	SEE TABLE	14	28	1230 kips (43.94 kips/STRAND)	6.0	8.0

PRESTRESSING NOTES:

1. Jacking Force (P):
   The manufacturer's jacking force required at point of control along the span. The jacking force does not include any fabrication specific losses.
2. Concrete Strength:
   f'ci is at time of initial stressing.
   f'c is at 28 days.
3. Screed line elevations for deck shall be determined by the Engineer.
4. Prestressing strand shall be 0.6" ø 270 ksi low relaxation.
5. Strand locations may be adjusted as approved by the Engineer.
6. Pretensioning strand shall be placed straight between points shown in Pretensioning Strand Layout.

LEGEND:

∝ Indicates bundled bars

NOTES:

1. For "SECTION A-A and B-B", see "GIRDER DETAILS No. 3" sheet.
2. Splices of reinforcement indicated shall be staggered service level splices. Lap splices equal to two times the standard lap splice may be substituted for service splices. No splices within 10'-0" of end of girder.

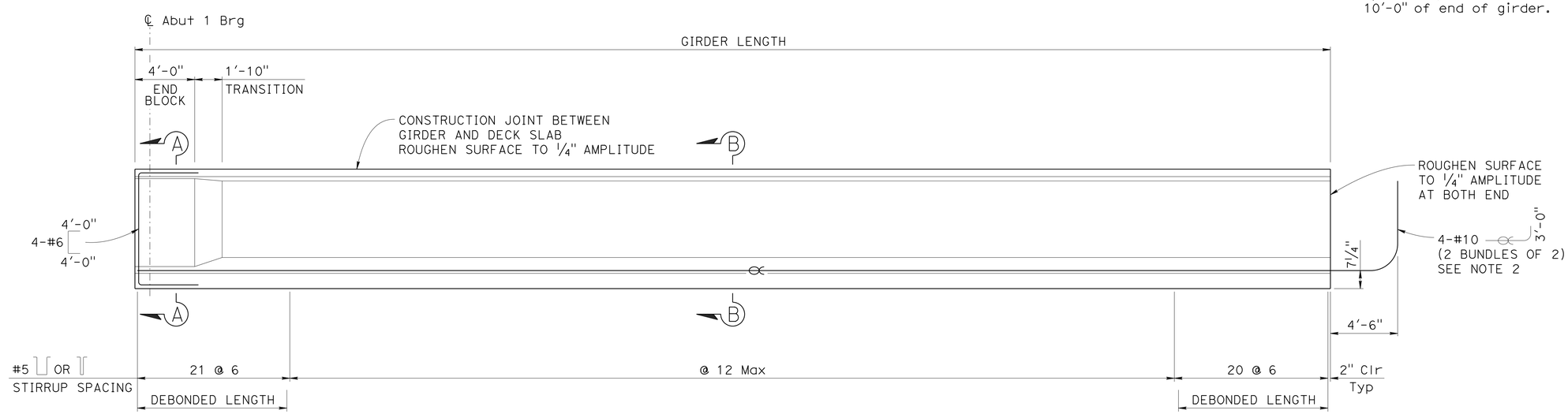

ELEVATION - SPAN 1

NO SCALE

DESIGN OVERSIGHT: Paul Cotter	DESIGN	BY A. Prince	CHECKED J. Hueser
6-20-13 SIGN OFF DATE	DETAILS	BY R. Lim/L. Davis	CHECKED J. Hueser
	QUANTITIES	BY A. Prince	CHECKED S. Landis

PREPARED FOR THE STATE OF CALIFORNIA DEPARTMENT OF TRANSPORTATION

Syed Kazmi
PROJECT ENGINEER

BRIDGE NO. 35-0351
POST MILES 16.61

BROADWAY OC (REPLACE)
GIRDER DETAILS No. 1

DESIGN DETAIL SHEET (ENGLISH) (REV. 03/14/12)

ORIGINAL SCALE IN INCHES FOR REDUCED PLANS 0 1 2 3

UNIT: 0703
PROJECT NUMBER & PHASE: 04000006841 CONTRACT NO.: 235844

DISREGARD PRINTS BEARING EARLIER REVISION DATES

REVISION DATES: 5-15-13 11-16-12 2-12-13 4-8-13

SHEET 26 OF 42

FILE => 0400000684we026.dgn

USERNAME => s141070 DATE PLOTTED => 03-FEB-2014 TIME PLOTTED => 13:51

DIST	COUNTY	ROUTE	POST MILES TOTAL PROJECT	SHEET No	TOTAL SHEETS
04	SM	101	16.3/17.1	735	814

REGISTERED CIVIL ENGINEER 5-15-13 DATE

10/21/13
PLANS APPROVAL DATE

REGISTERED PROFESSIONAL ENGINEER Austin Prince No. C80659 Exp. 3/31/15 CIVIL STATE OF CALIFORNIA

The State of California or its officers or agents shall not be responsible for the accuracy or completeness of scanned copies of this plan sheet.

SMCTA
1250 SAN CARLOS AVENUE
SAN CARLOS, CA 94070-1306

URS CORPORATION
2870 GATEWAY OAKS DRIVE, SUITE 150
SACRAMENTO, CA 95833-4308

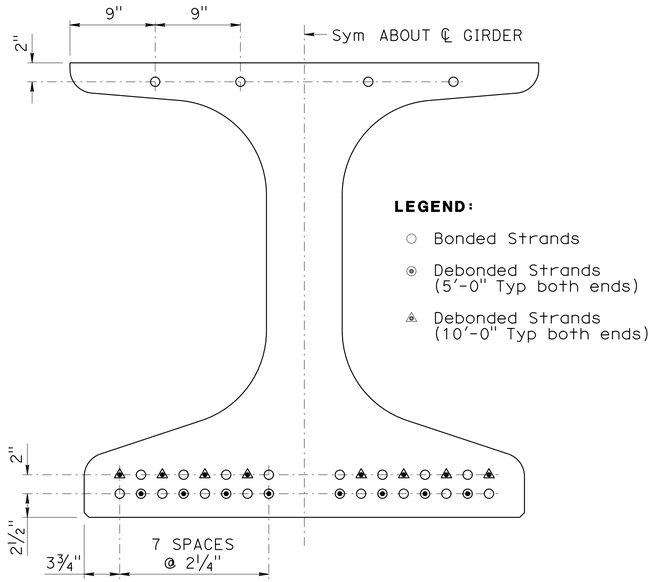

STRAND LAYOUT

1 1/2" = 1'-0"

LOCATION	℄ GIRDER LENGTH	No. OF GIRDERS	TOTAL No. OF 0.6"Ø STRANDS	JACKING FORCE (P)	CONCRETE STRENGTH (ksi)	
					f'ci	f'c
SPAN 2	121'-6 3/4"	14	36	1582 kips (43.94 kips/STRAND)	6.0	8.0

NOTES:

1. For "SECTION A-A and B-B", see "GIRDER DETAILS No. 3" sheet.
2. For "PRESTRESSION NOTES", see "GIRDER DETAILS No. 1" sheet.
3. Splices of reinforcement indicated shall be staggered service level splices. Lap splices equal to two times the standard lap splice may be substituted for service splices. No splices within 10'-0" of end of girder.

LEGEND:

∝ Indicates bundled bars

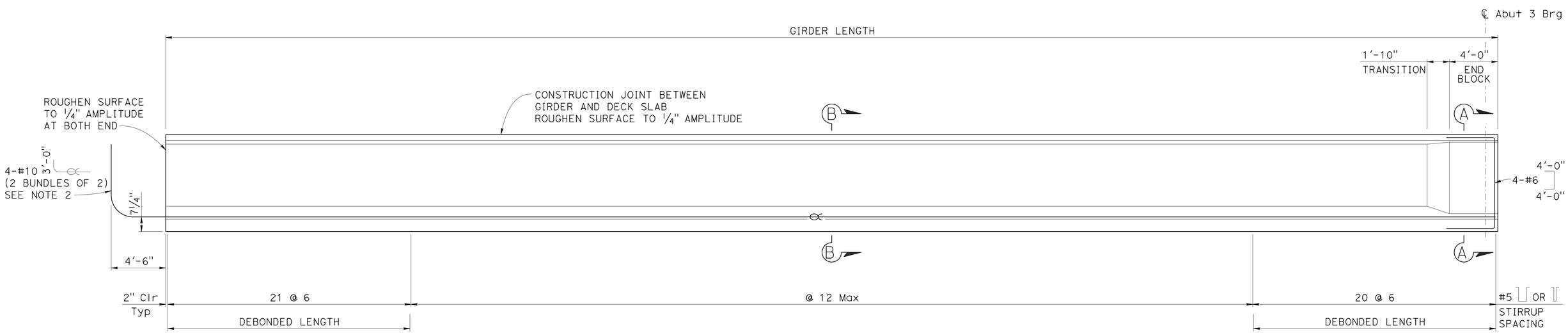

ELEVATION - SPAN 2

NO SCALE

Paul Cotter
DESIGN OVERSIGHT Paul Cotter
6-20-13
SIGN OFF DATE

	BY	CHECKED
DESIGN	A. Prince	J. Hueser
DETAILS	R. Lim/L. Davis	J. Hueser
QUANTITIES	A. Prince	S. Landis

PREPARED FOR THE STATE OF CALIFORNIA DEPARTMENT OF TRANSPORTATION

Syed Kazmi
PROJECT ENGINEER

BRIDGE NO. 35-0351
POST MILES 16.61

BROADWAY OC (REPLACE)
GIRDER DETAILS No. 2

DESIGN DETAIL SHEET (ENGLISH) (REV. 03/14/12)

ORIGINAL SCALE IN INCHES FOR REDUCED PLANS 0 1 2 3

UNIT: 0703
PROJECT NUMBER & PHASE: 04000006841 CONTRACT NO.: 235844

DISREGARD PRINTS BEARING EARLIER REVISION DATES

REVISION DATES 5-15-13 11-16-12 2-12-13 4-8-13

SHEET 27 OF 42

FILE => 0400000684we027.dgn

USERNAME => s141070 DATE PLOTTED => 03-FEB-2014 TIME PLOTTED => 13:51

DIST	COUNTY	ROUTE	POST MILES TOTAL PROJECT	SHEET No	TOTAL SHEETS
04	SM	101	16.3/17.1	736	814

REGISTERED CIVIL ENGINEER — DATE 5-15-13

10/21/13
PLANS APPROVAL DATE

REGISTERED PROFESSIONAL ENGINEER — Austin Prince — No. C80659 — Exp. 3/31/15 — CIVIL — STATE OF CALIFORNIA

The State of California or its officers or agents shall not be responsible for the accuracy or completeness of scanned copies of this plan sheet.

SMCTA
1250 SAN CARLOS AVENUE
SAN CARLOS, CA 94070-1306

URS CORPORATION
2870 GATEWAY OAKS DRIVE, SUITE 150
SACRAMENTO, CA 95833-4308

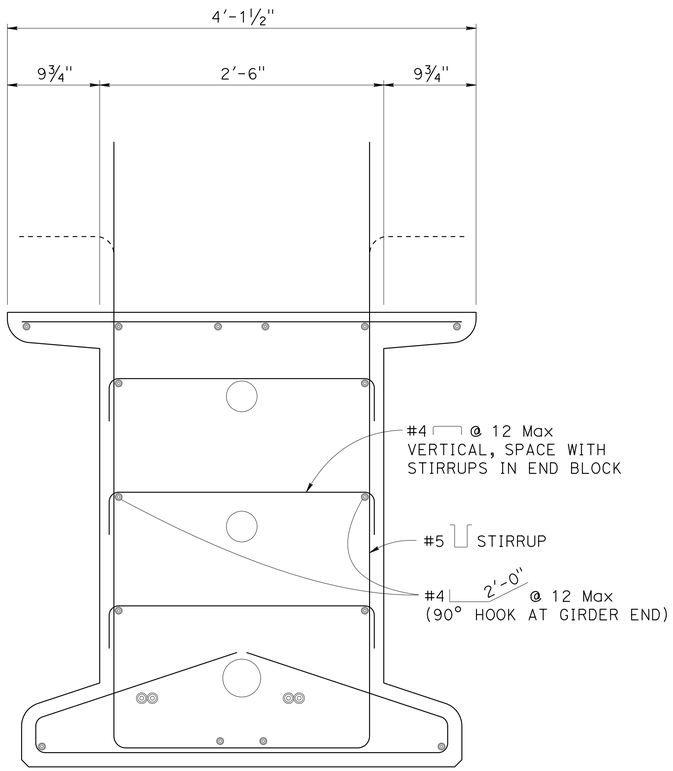

SECTION A-A

1½" = 1'-0"

FOR DETAILS NOT SHOWN, SEE "SECTION B-B"

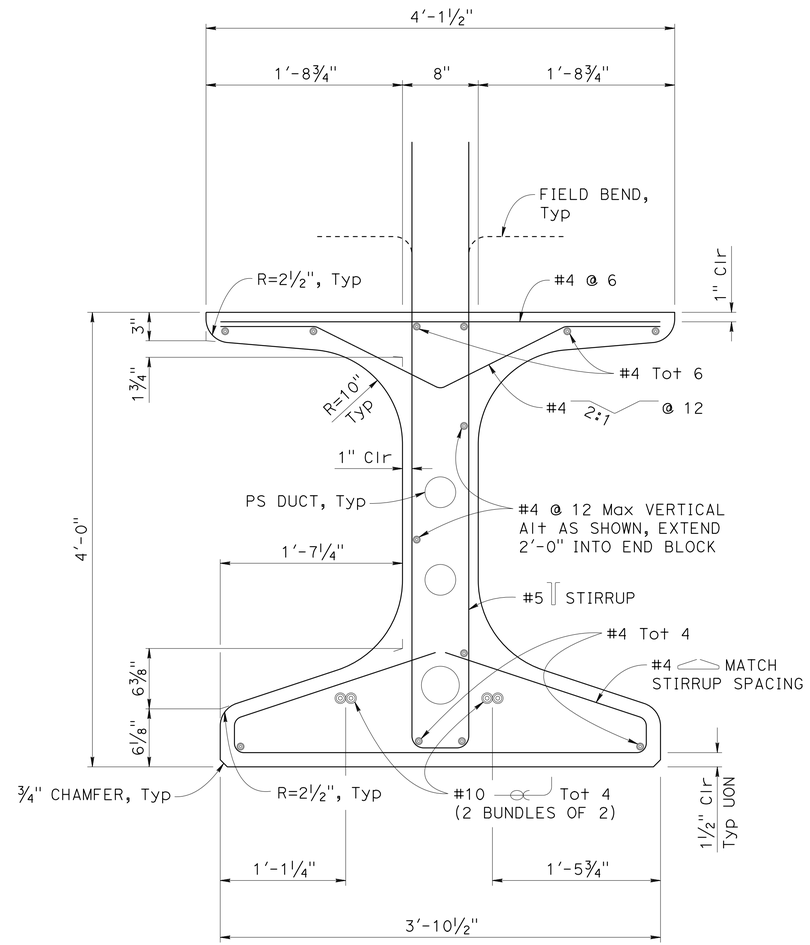

SECTION B-B

1½" = 1'-0"

LEGEND:

∝ Indicates bundled bars

Paul Cotter — DESIGN OVERSIGHT: Paul Cotter		DESIGN	BY A. Prince	CHECKED J. Hueser	PREPARED FOR THE STATE OF CALIFORNIA DEPARTMENT OF TRANSPORTATION
6-20-13 — SIGN OFF DATE		DETAILS	BY R. Lim/L. Davis	CHECKED J. Hueser	
		QUANTITIES	BY A. Prince	CHECKED S. Landis	

Syed Kazmi — PROJECT ENGINEER

BRIDGE NO. 35-0351
POST MILES 16.61

BROADWAY OC (REPLACE)
GIRDER DETAILS No. 3

DESIGN DETAIL SHEET (ENGLISH) (REV. 03/14/12)

ORIGINAL SCALE IN INCHES FOR REDUCED PLANS 0 1 2 3

UNIT: 0703
PROJECT NUMBER & PHASE: 04000006841 CONTRACT NO.: 235844

DISREGARD PRINTS BEARING EARLIER REVISION DATES → 5-15-13 11-16-12 2-12-13 4-8-13

SHEET 28 OF 42

FILE => 0400000684we028.dgn

USERNAME => s140070 DATE PLOTTED => 03-FEB-2014 TIME PLOTTED => 13:51

DIST	COUNTY	ROUTE	POST MILES TOTAL PROJECT	SHEET No	TOTAL SHEETS
04	SM	101	16.3/17.1	737	814

REGISTERED CIVIL ENGINEER 5-15-13 DATE

10/21/13
PLANS APPROVAL DATE

REGISTERED PROFESSIONAL ENGINEER Austin Prince No. C80659 Exp. 3/31/15 CIVIL STATE OF CALIFORNIA

The State of California or its officers or agents shall not be responsible for the accuracy or completeness of scanned copies of this plan sheet.

SMCTA
1250 SAN CARLOS AVENUE
SAN CARLOS, CA 94070-1306

URS CORPORATION
2870 GATEWAY OAKS DRIVE, SUITE 150
SACRAMENTO, CA 95833-4308

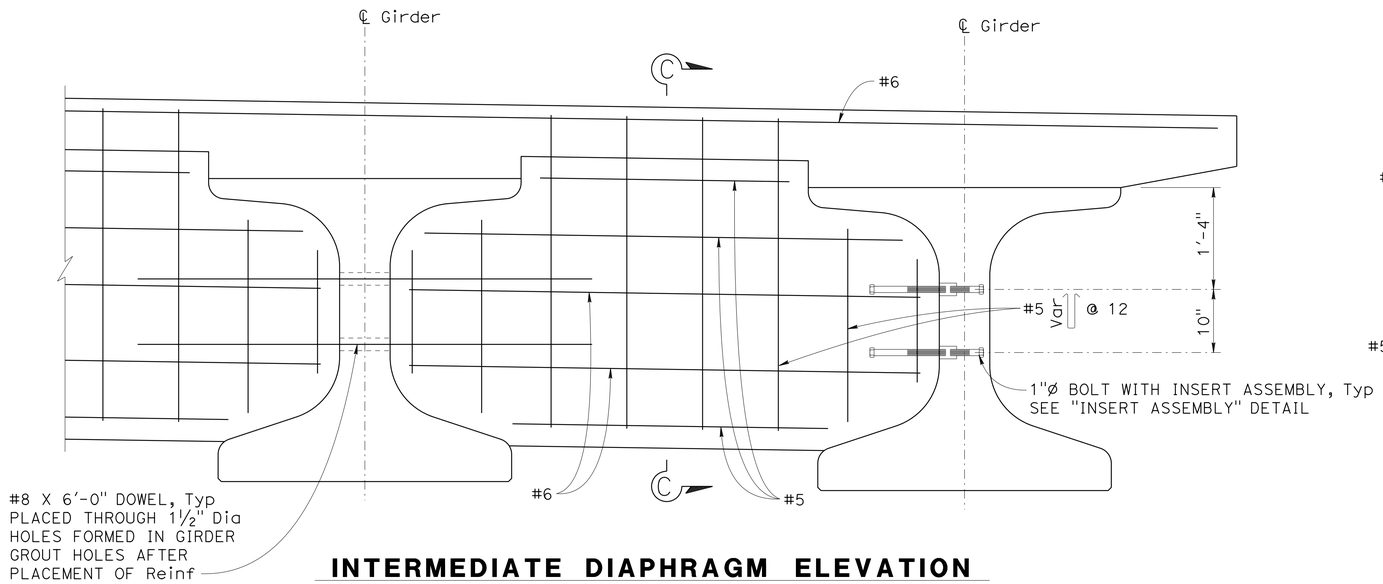

INTERMEDIATE DIAPHRAGM ELEVATION

1" = 1'-0"

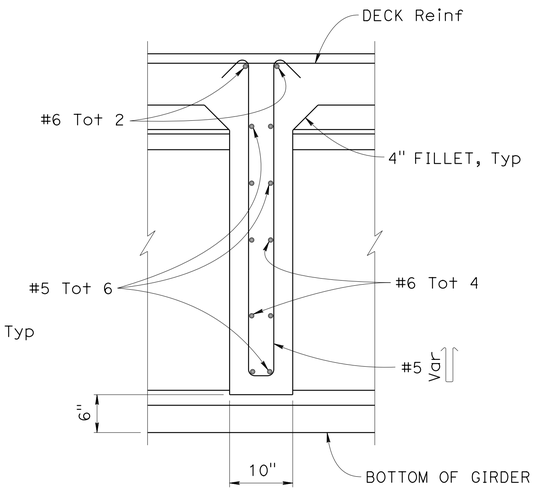

SECTION C-C

1" = 1'-0"

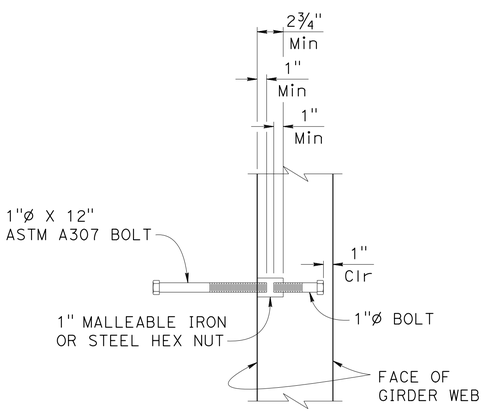

INSERT ASSEMBLY

1½" = 1'-0"

NOTE:

1. Location of 1½" Dia holes formed in girder to avoid prestressing and post-tensioning duct conflicts.

Paul Cotter
DESIGN OVERSIGHT Paul Cotter

6-20-13
SIGN OFF DATE

DESIGN DETAIL SHEET (ENGLISH) (REV. 03/14/12)

	BY	CHECKED
DESIGN	A. Prince	J. Hueser
DETAILS	R. Lim/L. Davis	J. Hueser
QUANTITIES	A. Prince	S. Landis

ORIGINAL SCALE IN INCHES FOR REDUCED PLANS 0 1 2 3

PREPARED FOR THE STATE OF CALIFORNIA DEPARTMENT OF TRANSPORTATION

Syed Kazmi
PROJECT ENGINEER

BRIDGE NO. 35-0351
POST MILES 16.61

BROADWAY OC (REPLACE)
GIRDER DETAILS No. 4

UNIT: 0703
PROJECT NUMBER & PHASE: 04000006841 CONTRACT NO.: 235844

DISREGARD PRINTS BEARING EARLIER REVISION DATES

REVISION DATES: 5-15-13 11-16-12 2-12-13 4-8-13

SHEET 29 OF 42

FILE => 0400000684we029.dgn

USERNAME => s141070 DATE PLOTTED => 03-FEB-2014 TIME PLOTTED => 13:51

DIST	COUNTY	ROUTE	POST MILES TOTAL PROJECT	SHEET No	TOTAL SHEETS
04	SM	101	16.3/17.1	738	814

REGISTERED CIVIL ENGINEER 5-15-13 DATE

10/21/13
PLANS APPROVAL DATE

REGISTERED PROFESSIONAL ENGINEER Austin Prince No. C80659 Exp. 3/31/15 CIVIL STATE OF CALIFORNIA

The State of California or its officers or agents shall not be responsible for the accuracy or completeness of scanned copies of this plan sheet.

SMCTA
1250 SAN CARLOS AVENUE
SAN CARLOS, CA 94070-1306

URS CORPORATION
2870 GATEWAY OAKS DRIVE, SUITE 150
SACRAMENTO, CA 95833-4308

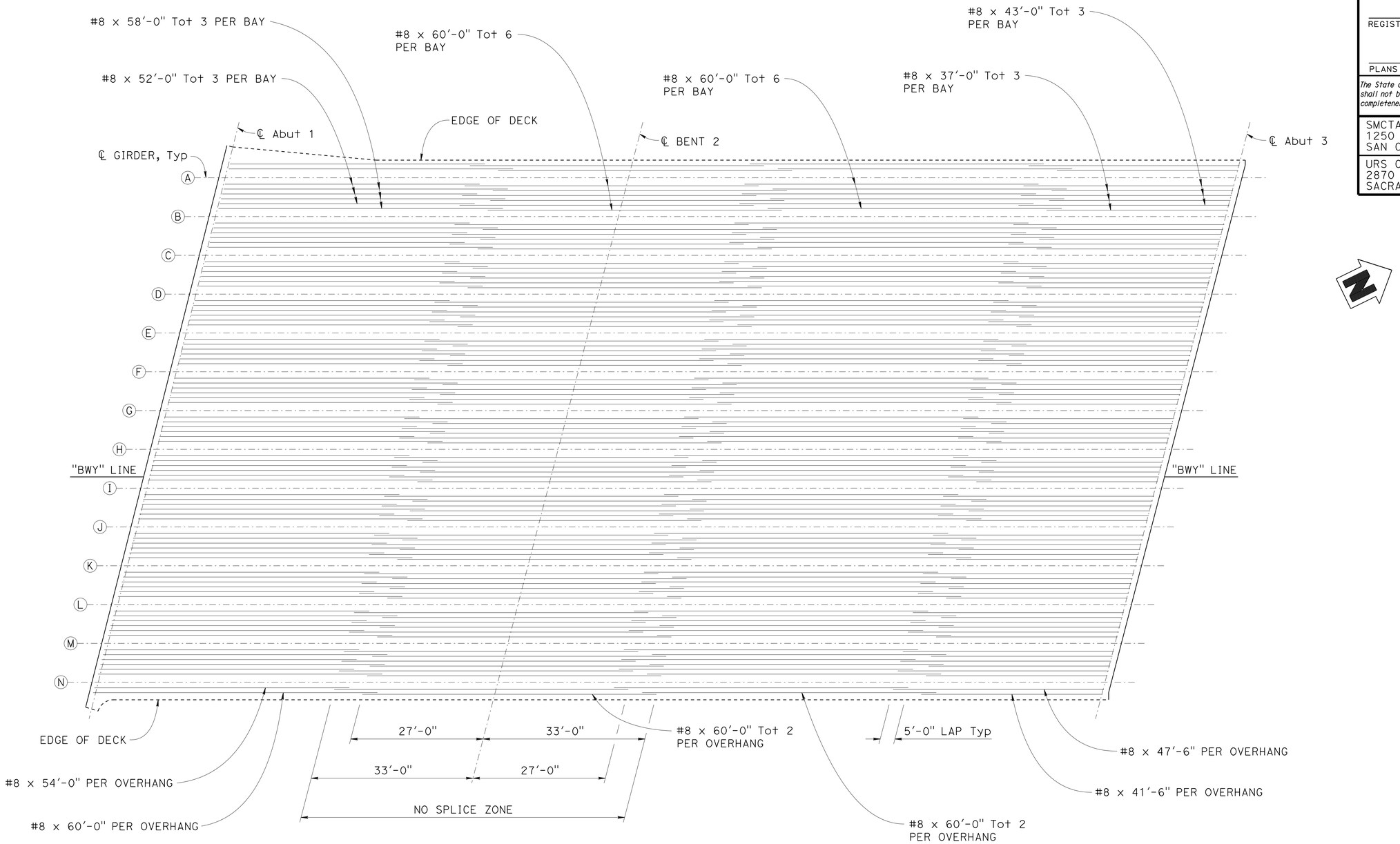

ADDITIONAL DECK REINFORCEMENT

NO SCALE

Paul Cotter
DESIGN OVERSIGHT Paul Cotter
6-20-13
SIGN OFF DATE

	BY	CHECKED
DESIGN	A. Prince	J. Hueser
DETAILS	R. Lim/L. Davis	J. Hueser
QUANTITIES	A. Prince	S. Landis

PREPARED FOR THE STATE OF CALIFORNIA DEPARTMENT OF TRANSPORTATION

Syed Kazmi
PROJECT ENGINEER

BRIDGE NO. 35-0351
POST MILES 16.61

BROADWAY OC (REPLACE)
DECK REINFORCEMENT

DESIGN DETAIL SHEET (ENGLISH) (REV. 03/14/12)

ORIGINAL SCALE IN INCHES FOR REDUCED PLANS 0 1 2 3

UNIT: 0703
PROJECT NUMBER & PHASE: 04000006841 CONTRACT NO.: 235844

DISREGARD PRINTS BEARING EARLIER REVISION DATES

REVISION DATES: 5-15-13 ~~11-16-12~~ ~~2-12-13~~ ~~4-8-13~~

SHEET 30 OF 42

FILE => 0400000684we030.dgn

USERNAME => s141070 DATE PLOTTED => 03-FEB-2014 TIME PLOTTED => 13:51

DIST	COUNTY	ROUTE	POST MILES TOTAL PROJECT	SHEET No	TOTAL SHEETS
04	SM	101	16.3/17.1	739	814

REGISTERED CIVIL ENGINEER — DATE 5-15-13

10/21/13
PLANS APPROVAL DATE

REGISTERED PROFESSIONAL ENGINEER — Austin Prince — No. C80659 — Exp. 3/31/15 — CIVIL — STATE OF CALIFORNIA

The State of California or its officers or agents shall not be responsible for the accuracy or completeness of scanned copies of this plan sheet.

SMCTA
1250 SAN CARLOS AVENUE
SAN CARLOS, CA 94070-1306

URS CORPORATION
2870 GATEWAY OAKS DRIVE, SUITE 150
SACRAMENTO, CA 95833-4308

NOTES:

1. Abutment 3 shown, Abutment 1 similar.
2. Location of 1½" Dia holes formed in girder to avoid prestressing and post-tensioning duct conflicts.

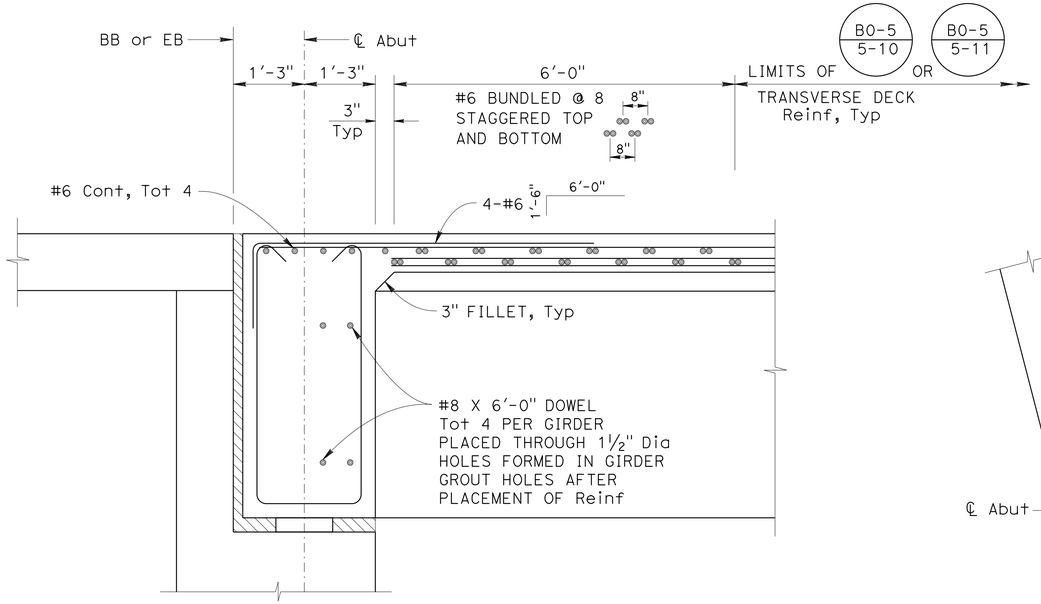

SECTION A-A

¾" = 1'-0"

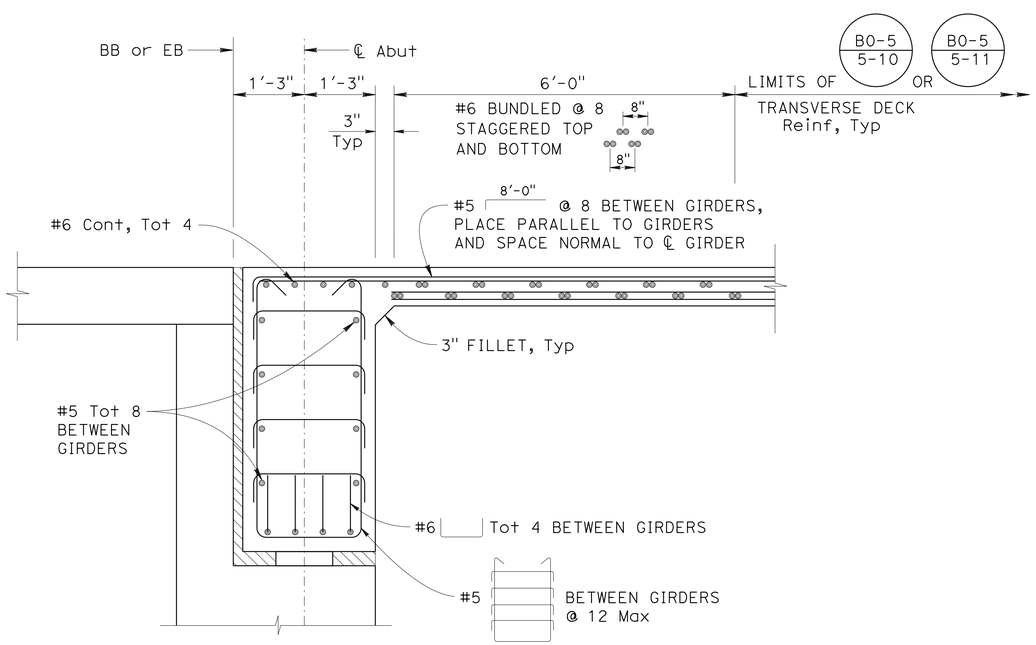

SECTION B-B

¾" = 1'-0"

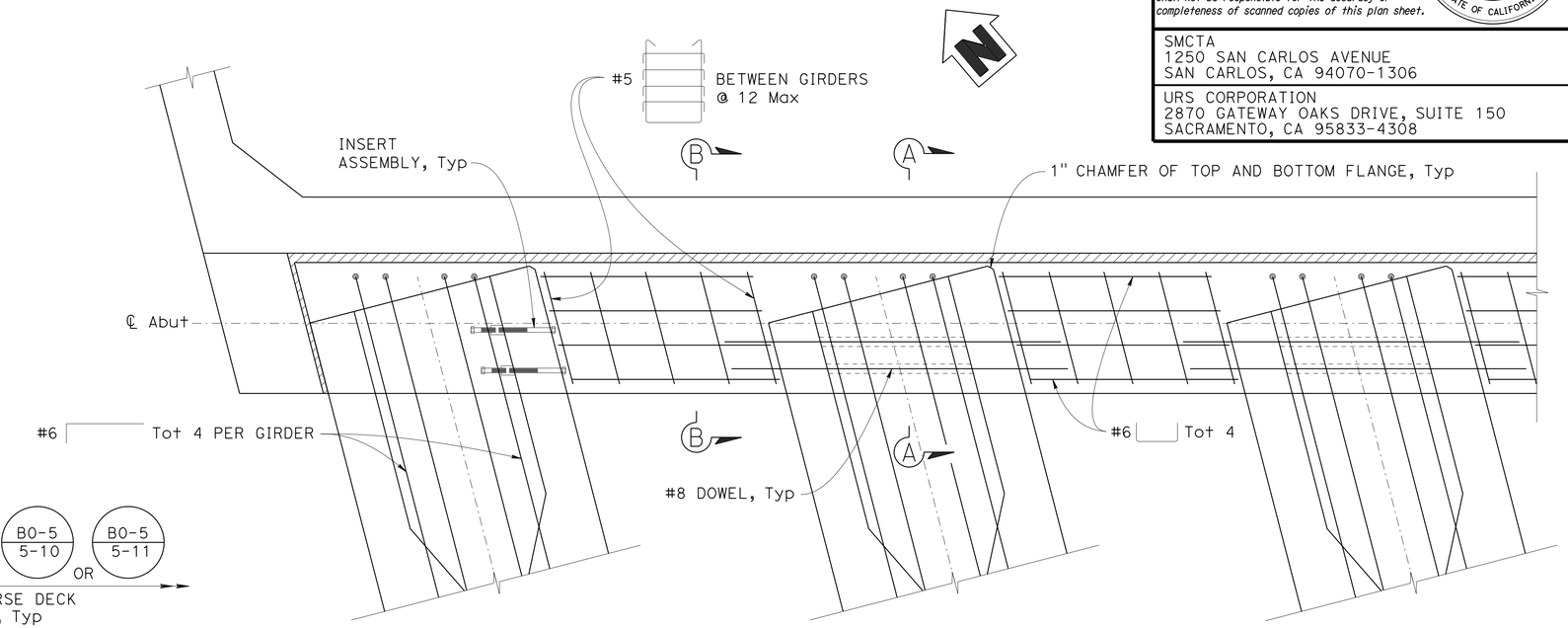

PARTIAL PLAN

¾" = 1'-0"

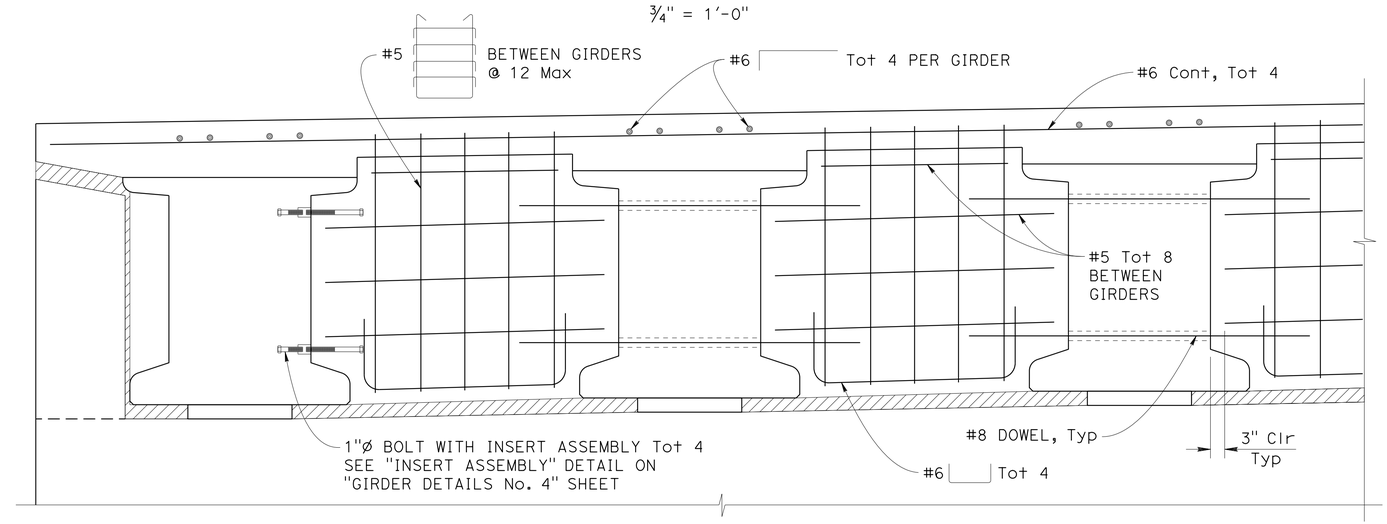

PARTIAL ELEVATION

¾" = 1'-0"

Paul Cotter
DESIGN OVERSIGHT — Paul Cotter
6-20-13
SIGN OFF DATE

	BY	CHECKED
DESIGN	A. Prince	J. Hueser
DETAILS	R. Lim/L. Davis	J. Hueser
QUANTITIES	A. Prince	S. Landis

PREPARED FOR THE STATE OF CALIFORNIA DEPARTMENT OF TRANSPORTATION

Syed Kazmi
PROJECT ENGINEER

BRIDGE NO. 35-0351
POST MILES 16.61

BROADWAY OC (REPLACE)
END DIAPHRAGM DETAILS

DESIGN DETAIL SHEET (ENGLISH) (REV. 03/14/12)

ORIGINAL SCALE IN INCHES FOR REDUCED PLANS 0 1 2 3

UNIT: 0703
PROJECT NUMBER & PHASE: 04000006841 CONTRACT NO.: 235844

DISREGARD PRINTS BEARING EARLIER REVISION DATES → 5-15-13 11-16-12 2-12-13 4-9-13

SHEET 31 OF 42

FILE => 0400000684we031.dgn

USERNAME => s141070 DATE PLOTTED => 03-FEB-2014 TIME PLOTTED => 13:51

DIST	COUNTY	ROUTE	POST MILES TOTAL PROJECT	SHEET No	TOTAL SHEETS
04	SM	101	16.3/17.1	740	814

REGISTERED CIVIL ENGINEER — DATE 5-15-13

PLANS APPROVAL DATE 10/21/13

REGISTERED PROFESSIONAL ENGINEER — Austin Prince — No. C80659 — Exp. 3/31/15 — CIVIL — STATE OF CALIFORNIA

The State of California or its officers or agents shall not be responsible for the accuracy or completeness of scanned copies of this plan sheet.

SMCTA
1250 SAN CARLOS AVENUE
SAN CARLOS, CA 94070-1306

URS CORPORATION
2870 GATEWAY OAKS DRIVE, SUITE 150
SACRAMENTO, CA 95833-4308

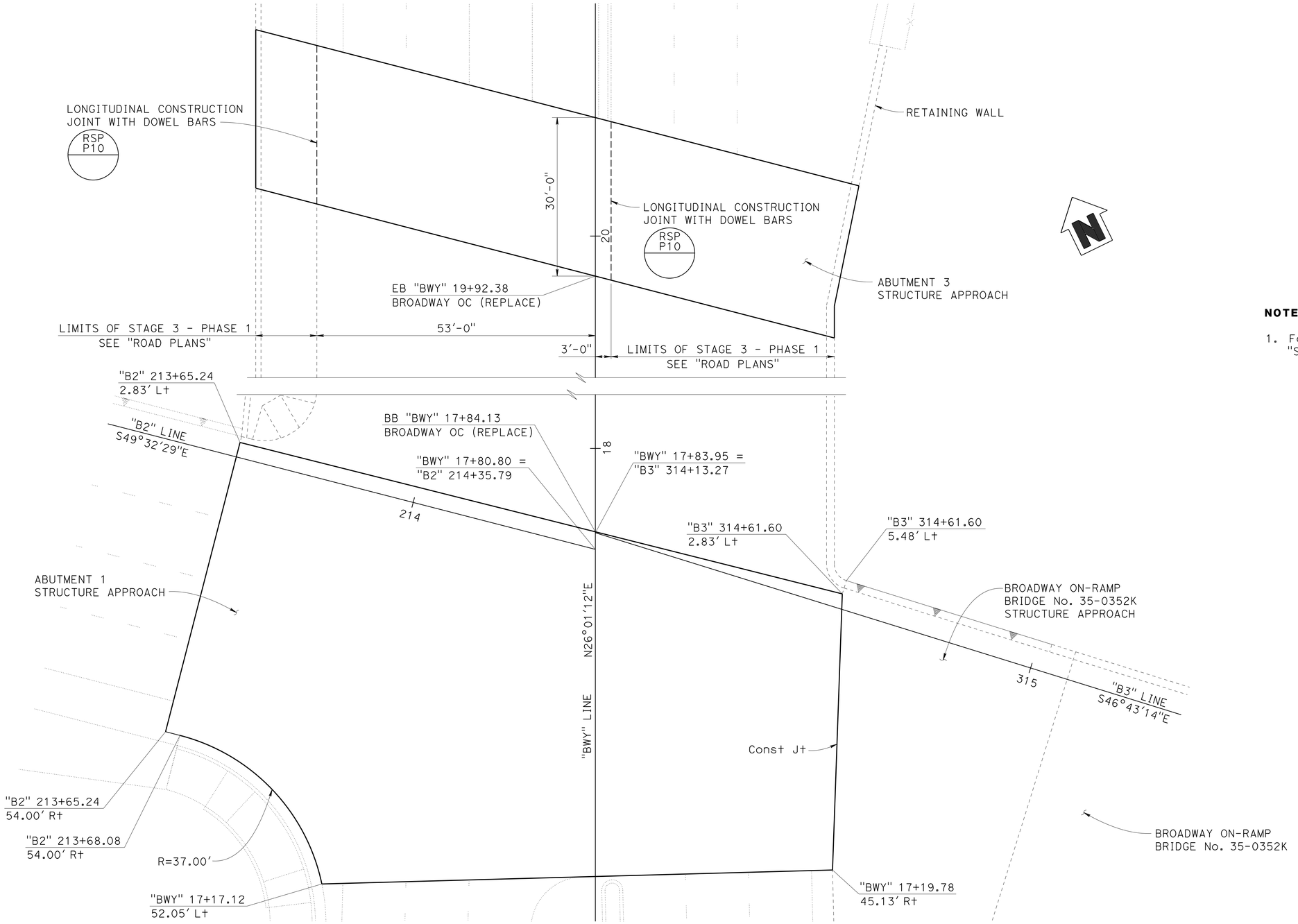

STRUCTURE APPROACH LAYOUT

1"=10'-0"

NOTES:

1. For reinforcing and details not shown, see "STRUCTURE APPROACH TYPE N(30S)" sheet.

DESIGN	BY A. Prince	CHECKED J. Hueser	
DETAILS	BY R. Lim/L. Davis	CHECKED J. Hueser	
QUANTITIES	BY A. Prince	CHECKED S. Landis	

DESIGN OVERSIGHT Paul Cotter — 6-20-13 SIGN OFF DATE

PREPARED FOR THE STATE OF CALIFORNIA DEPARTMENT OF TRANSPORTATION

Syed Kazmi — PROJECT ENGINEER

BRIDGE NO. 35-0351 — POST MILES 16.61

BROADWAY OC (REPLACE)
STRUCTURE APPROACH LAYOUT

DESIGN DETAIL SHEET (ENGLISH) (REV. 03/14/12)

ORIGINAL SCALE IN INCHES FOR REDUCED PLANS 0 1 2 3

UNIT: 0703
PROJECT NUMBER & PHASE: 04000006841 CONTRACT NO.: 235844

DISREGARD PRINTS BEARING EARLIER REVISION DATES

REVISION DATES: 5-15-13 11-16-12 2-12-13 4-8-13

SHEET 32 OF 42

FILE => 0400000684we032.dgn

USERNAME => s141070 DATE PLOTTED => 03-FEB-2014 TIME PLOTTED => 13:51

DIST	COUNTY	ROUTE	POST MILES TOTAL PROJECT	SHEET No	TOTAL SHEETS
04	SM	101	16.3/17.1	741	814

REGISTERED CIVIL ENGINEER — DATE 5-15-13

PLANS APPROVAL DATE 10/21/13

REGISTERED PROFESSIONAL ENGINEER — Austin Prince — No. C80659 — Exp. 3/31/15 — CIVIL — STATE OF CALIFORNIA

The State of California or its officers or agents shall not be responsible for the accuracy or completeness of scanned copies of this plan sheet.

SMCTA
1250 SAN CARLOS AVENUE
SAN CARLOS, CA 94070-1306

URS CORPORATION
2870 GATEWAY OAKS DRIVE, SUITE 150
SACRAMENTO, CA 95833-4308

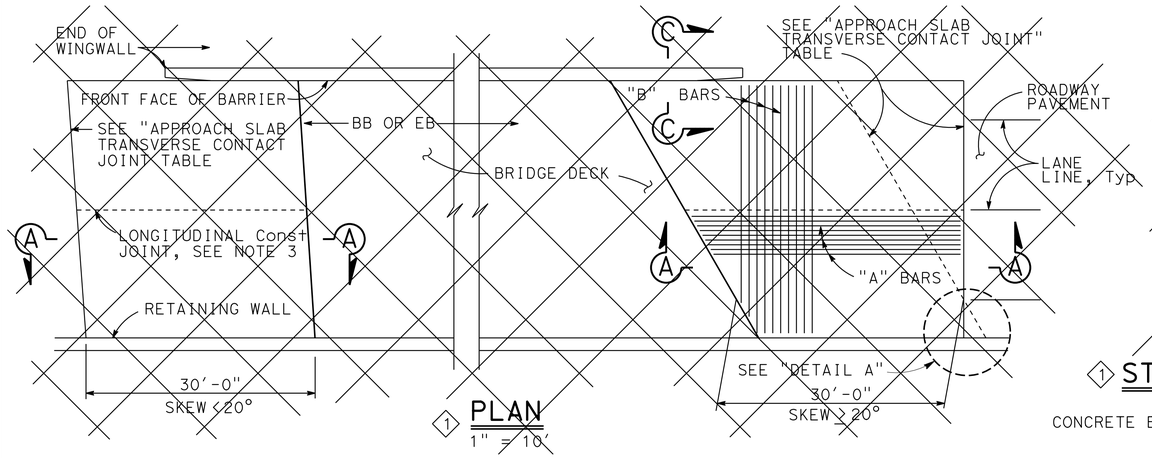

1 PLAN
1" = 10'

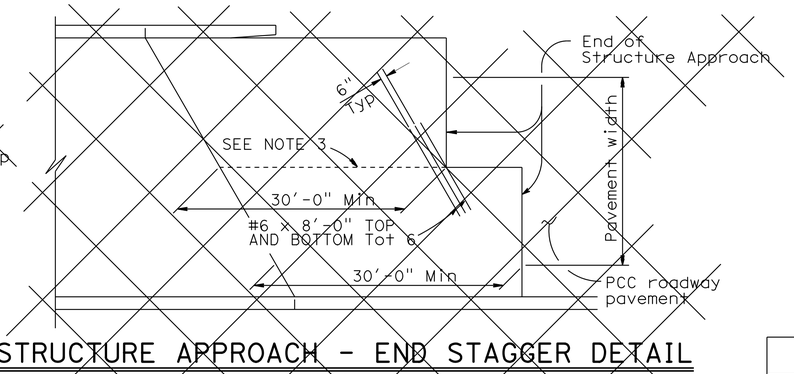

1 STRUCTURE APPROACH - END STAGGER DETAIL
No Scale

APPROACH SLAB TRANSVERSE CONTACT JOINT		
APPROACH SKEW	WITH AC ROADWAY PAVEMENT	WITH PCC ROADWAY PAVEMENT
< 20°	PARALLEL TO FACE OF PN	PARALLEL TO FACE OF PN
20° - 45°	PARALLEL TO FACE OF PN USE "DETAIL A"	STAGGER LINES 24' TO 36' APART
> 45°	PARALLEL TO FACE OF PN USE "DETAIL A"	STAGGER AT EACH LANE LINE

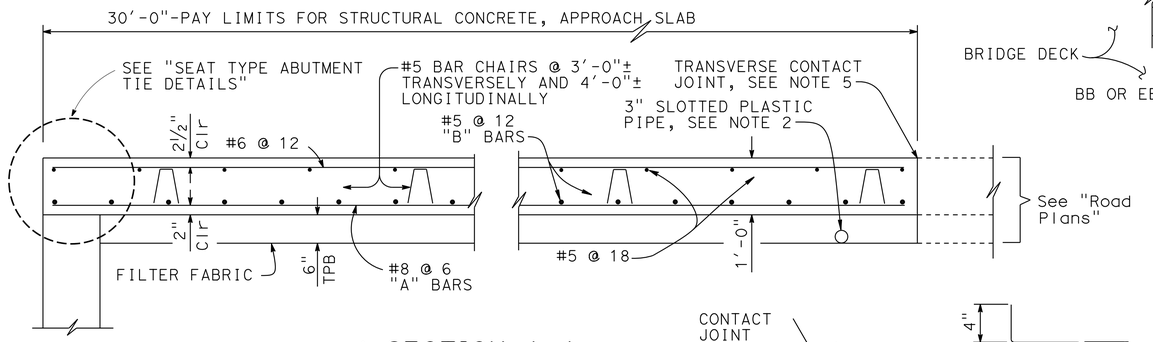

2 SECTION A-A
¾"=1'-0"

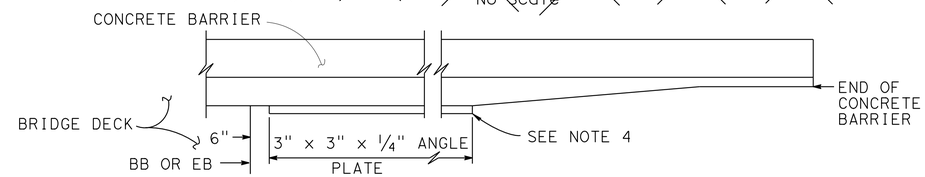

EDGE ANGLE DETAIL
½"=1'-0"

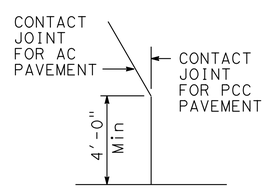

DETAIL A
No Scale

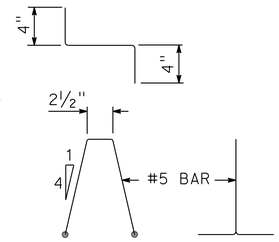

BAR CHAIR DETAIL
1½"=1'-0"

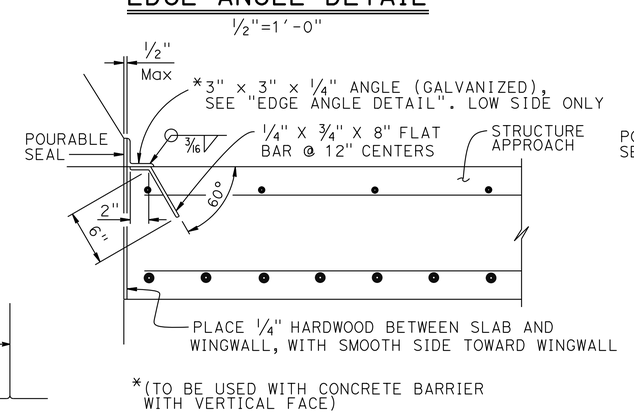

*(TO BE USED WITH CONCRETE BARRIER WITH VERTICAL FACE)

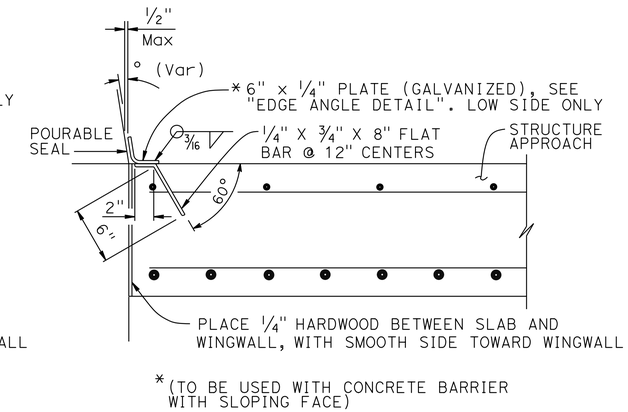

*(TO BE USED WITH CONCRETE BARRIER WITH SLOPING FACE)

DETAIL B
1½" = 1'-0"

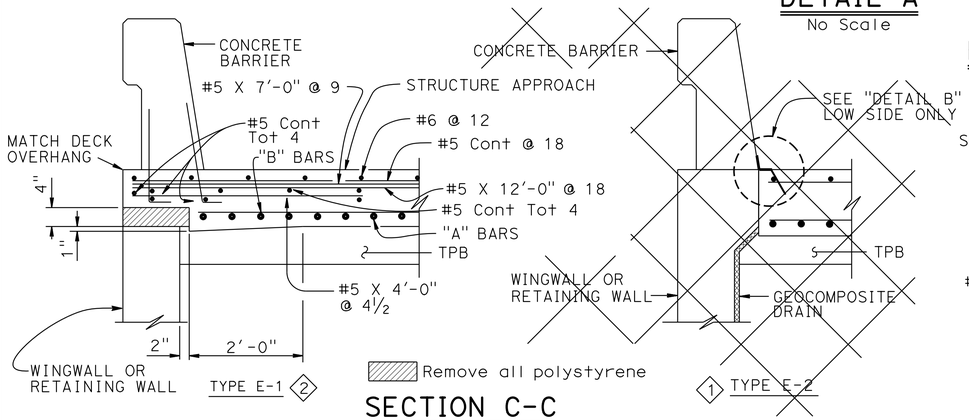

SECTION C-C
¾"=1'-0"
(Type E-1 to be used, unless otherwise shown on plans)

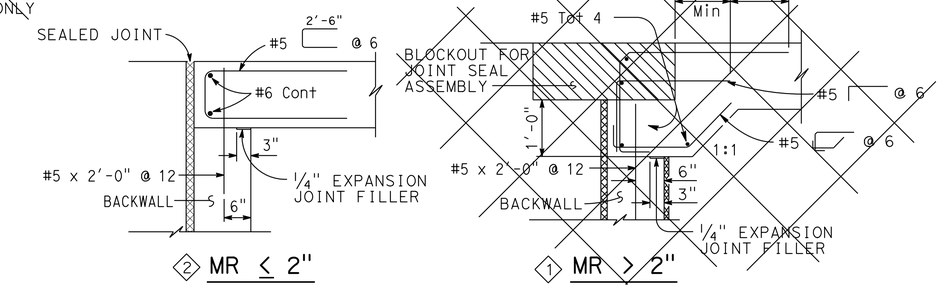

2 MR ≤ 2"

1 MR > 2"

SEAT TYPE ABUTMENT TIE DETAILS (SEE NOTE 1)
¾"=1'-0"

NOTES:

1. For details not shown, see Structure Plans. For MR ≤ 2", adjust bar reinforcement to clear a sawcut for sealed joint, when required
2. ~~For drainage details, see "STRUCTURE APPROACH DRAINAGE DETAILS" sheet~~ (1)
3. Longitudinal construction joints, when permitted by the Engineer, shall be located on lane lines
4. End angle or plate at beginning of barrier transition, end of wingwall or end of structure approach as applicable
5. For transverse contact joint with new PCC paving, refer to Standard Plan P10
6. At the Contractor's option, approach slab transverse reinforcement may be placed parallel to paving notch. Spacing of transverse reinforcement is measured along ℄ roadway

SPECIAL DETAILS

REVISED STANDARD DRAWING
FILE NO. xs3-120
APPROVAL DATE July 2011

1 DOES NOT APPLY
2 REVISED DETAIL

STATE OF CALIFORNIA
DEPARTMENT OF TRANSPORTATION

DIVISION OF ENGINEERING SERVICES

BRIDGE NO. 35-0351
POST MILES 16.61

BROADWAY OC (REPLACE)
STRUCTURE APPROACH TYPE N(30S)

DS OSD 2147A (ENGLISH STANDARD DRAWING "XS" BORDER REV. (02-02-11))

ORIGINAL SCALE IN INCHES FOR REDUCED PLANS 0 1 2 3

UNIT: 0703
PROJECT NUMBER & PHASE: 04000006841
CONTRACT NO.: 235844

DISREGARD PRINTS BEARING EARLIER REVISION DATES

REVISION DATES: 5-15-13 11-16-12 2-12-13 4-8-13

SHEET 33 OF 42

FILE => 0400000684we033.dgn

USERNAME => s141070 DATE PLOTTED => 03-FEB-2014 TIME PLOTTED => 13:51

DIST	COUNTY	ROUTE	POST MILES TOTAL PROJECT	SHEET No	TOTAL SHEETS
04	SM	101	16.3/17.1	742	814

REGISTERED CIVIL ENGINEER — DATE 5-15-13

10/21/13
PLANS APPROVAL DATE

REGISTERED PROFESSIONAL ENGINEER — Austin Prince — No. C80659 — Exp. 3/31/15 — CIVIL — STATE OF CALIFORNIA

The State of California or its officers or agents shall not be responsible for the accuracy or completeness of scanned copies of this plan sheet.

SMCTA
1250 SAN CARLOS AVENUE
SAN CARLOS, CA 94070-1306

URS CORPORATION
2870 GATEWAY OAKS DRIVE, SUITE 150
SACRAMENTO, CA 95833-4308

NOTES:

1. These details are diagrammatic and indicative of the design intent for the Abut and retaining wall trees and fractured rib form liner patterns. Drawings do not show all the required elements and details for fabrication of the form liner or installation on Abut and retaining walls. Provide shop drawings of sufficient size and detail that clearly indicate construction, including, but not limited to details of layout, materials, finishes and installation.
2. Contractor is responsible for ensuring form liner trees and fractured rib patterns are fabricated so that they can be formed and released to provide patterns shown. Do not fabricate form liner patterns until engineer approves shop drawings and samples. Provide full size samples of the tree pattern for review and approval. Fractured rib pattern and tree trunks to be plumb.
3. In some locations, the top and/or bottom of the tree patterns will be under safety shape, below finish grade of soil and/or covered on top by ramp barrier.

LEGEND:

- FRACTURED RIB PATTERN WITH BUSH HAMMERED TOP SURFACE +0" TO +1.5" FROM FOC
- BUSH HAMMERED SURFACE AROUND RAISED TREE PATTERNS +1.5" FROM FOC
- BACKGROUND SHORT TREE WITH SMOOTH TOP SURFACE +2.25" FROM FOC
- FOREGROUND SHORT TREE WITH SMOOTH TOP SURFACE +3" FROM FOC

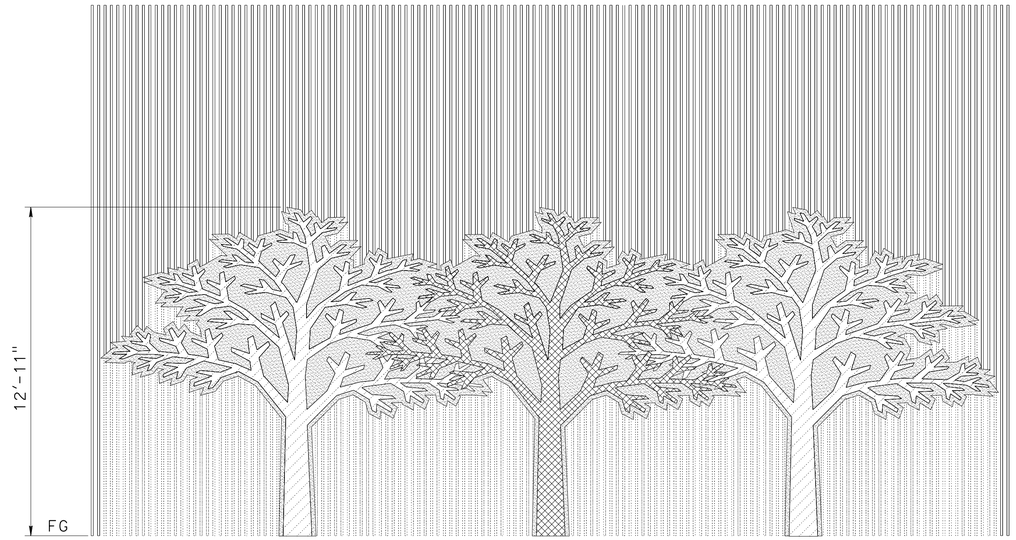

TREE PATTERN DETAIL
NO SCALE

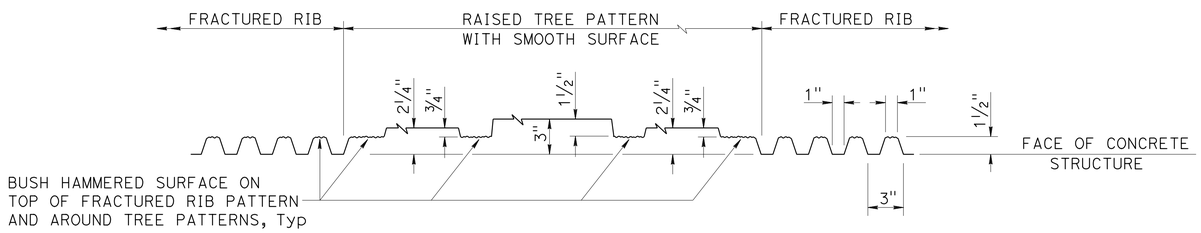

TREE PATTERN DETAIL
NO SCALE

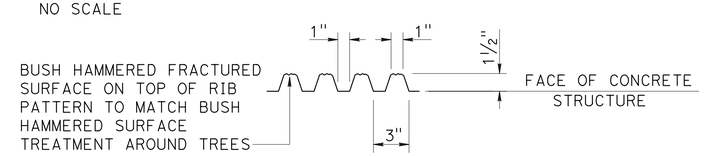

FRACTURED RIB DETAIL
NO SCALE

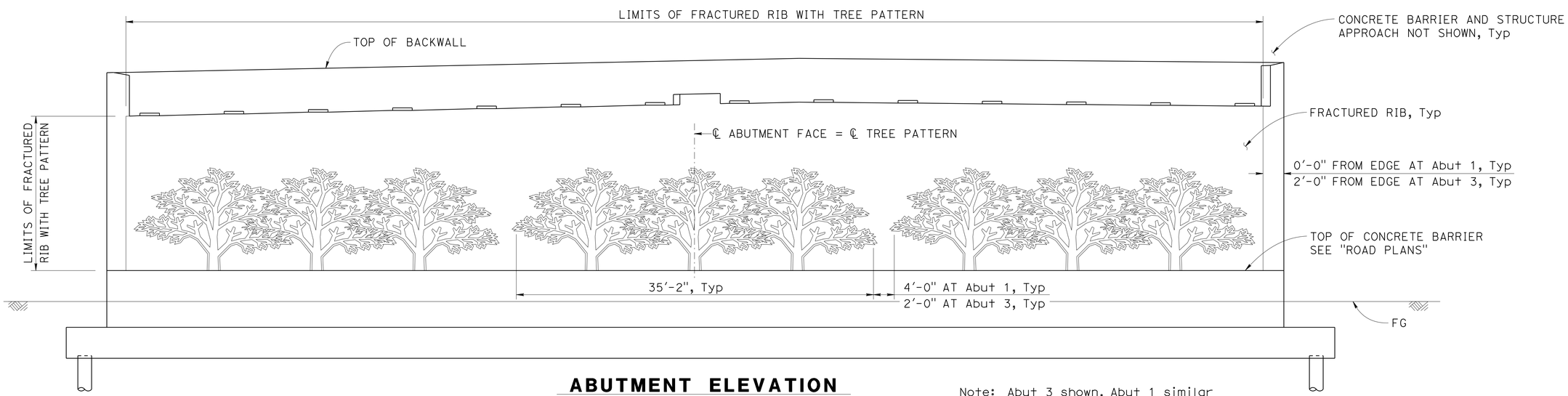

ABUTMENT ELEVATION
3/16" = 1'-0"

Note: Abut 3 shown, Abut 1 similar

Paul Cotter
DESIGN OVERSIGHT — Paul Cotter
6-20-13
SIGN OFF DATE

	BY	CHECKED
DESIGN	A. Prince	J. Hueser
DETAILS	R. Lim/L. Davis	J. Hueser
QUANTITIES	A. Prince	S. Landis

PREPARED FOR THE STATE OF CALIFORNIA DEPARTMENT OF TRANSPORTATION

Syed Kazmi
PROJECT ENGINEER

BRIDGE NO. 35-0351
POST MILES 16.61

BROADWAY OC (REPLACE)
ARCHITECTURAL DETAILS No. 1

DESIGN DETAIL SHEET (ENGLISH) (REV. 03/14/12)

ORIGINAL SCALE IN INCHES FOR REDUCED PLANS 0 1 2 3

UNIT: 0703
PROJECT NUMBER & PHASE: 04000006841
CONTRACT NO.: 235844

DISREGARD PRINTS BEARING EARLIER REVISION DATES → 5-15-13 11-16-12 2-12-13 4-8-13

SHEET 34 OF 42

FILE => 0400000684we034.dgn

USERNAME => s141070 DATE PLOTTED => 03-FEB-2014 TIME PLOTTED => 13:51

DIST	COUNTY	ROUTE	POST MILES TOTAL PROJECT	SHEET No	TOTAL SHEETS
04	SM	101	16.3/17.1	743	814

REGISTERED CIVIL ENGINEER — DATE 5-15-13

10/21/13
PLANS APPROVAL DATE

REGISTERED PROFESSIONAL ENGINEER — Austin Prince — No. C80659 — Exp. 3/31/15 — CIVIL — STATE OF CALIFORNIA

The State of California or its officers or agents shall not be responsible for the accuracy or completeness of scanned copies of this plan sheet.

SMCTA
1250 SAN CARLOS AVENUE
SAN CARLOS, CA 94070-1306

URS CORPORATION
2870 GATEWAY OAKS DRIVE, SUITE 150
SACRAMENTO, CA 95833-4308

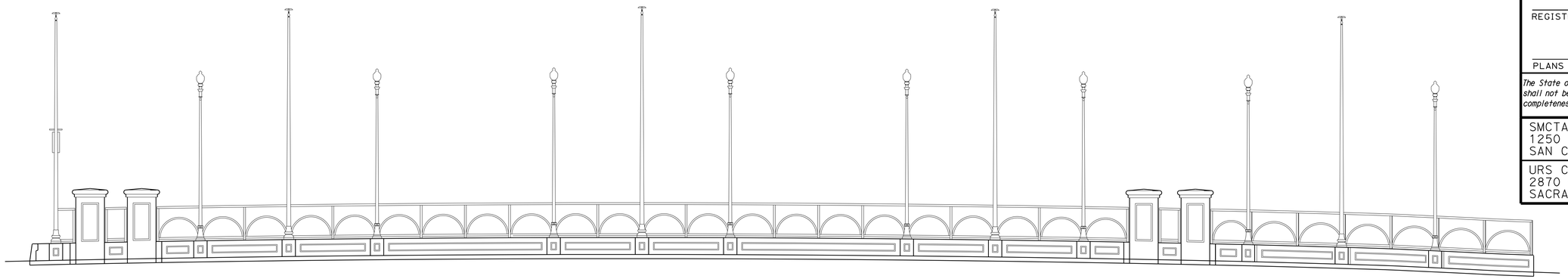

PARTIAL ELEVATION

1"=10'-0"

Right side shown, Left side similar

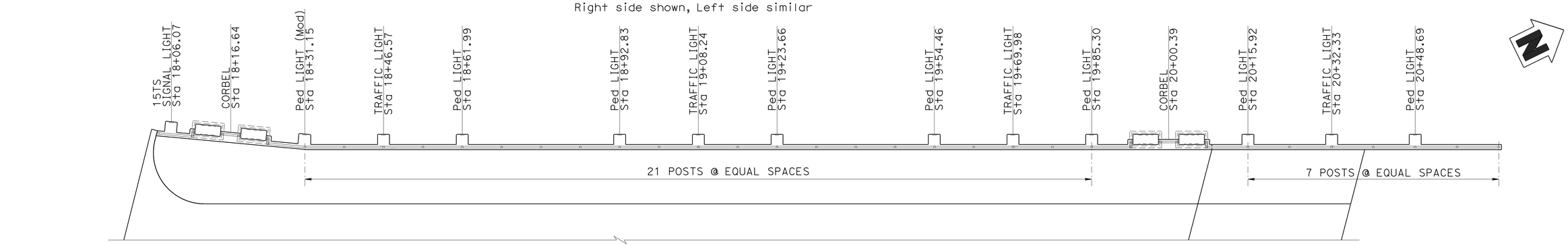

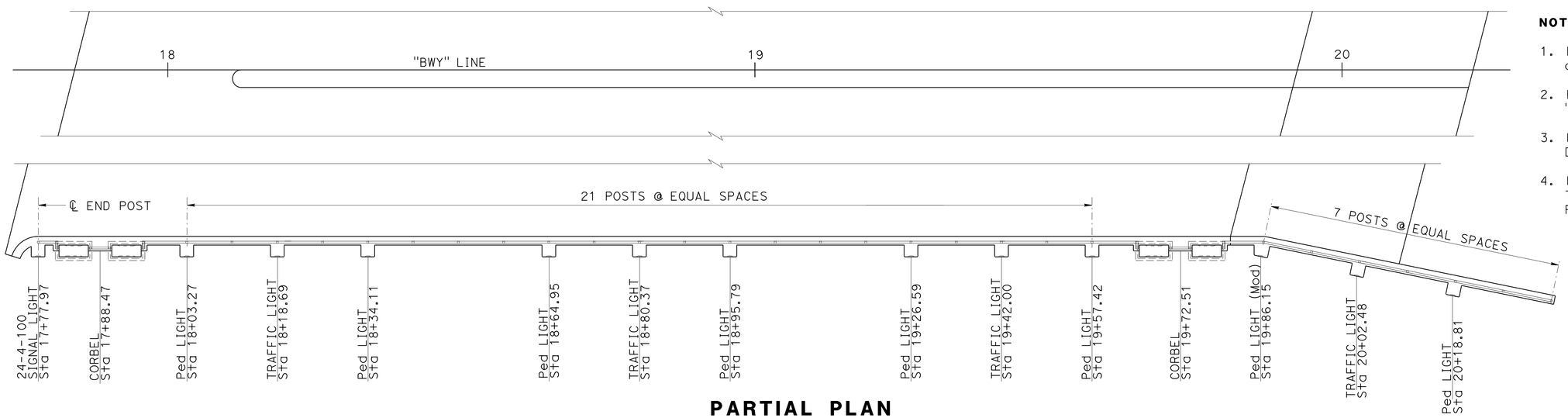

PARTIAL PLAN

1"=10'-0"

NOTES:

1. For Corbel, see "CORBEL DETAILS No. 1" and "CORBEL DETAILS No. 2" sheets.
2. For Signal and Light Pedestal, see "PEDESTAL DETAILS" sheet.
3. For Railing, see "ORNAMENTAL RAILING DETAILS" sheet.
4. For Signal Light, Pedestal Light and Traffic Light details, see "Electrical Plans"

DESIGN OVERSIGHT — Paul Cotter
6-20-13
SIGN OFF DATE

	BY	CHECKED
DESIGN	A. Prince	J. Hueser
DETAILS	R. Lim/L. Davis	J. Hueser
QUANTITIES	A. Prince	S. Landis

PREPARED FOR THE STATE OF CALIFORNIA DEPARTMENT OF TRANSPORTATION

Syed Kazmi
PROJECT ENGINEER

BRIDGE NO. 35-0351
POST MILES 16.61

BROADWAY OC (REPLACE)
ARCHITECTURAL DETAILS No. 2

DESIGN DETAIL SHEET (ENGLISH) (REV. 03/14/12)

ORIGINAL SCALE IN INCHES FOR REDUCED PLANS 0 1 2 3

UNIT: 0703
PROJECT NUMBER & PHASE: 04000006841 CONTRACT NO.: 235844

DISREGARD PRINTS BEARING EARLIER REVISION DATES

REVISION DATES: 5-15-13 ~~11-16-12~~ ~~2-12-13~~ ~~4-8-13~~

SHEET 35 OF 42

FILE => 0400000684we035.dgn

USERNAME => s141070 DATE PLOTTED => 03-FEB-2014 TIME PLOTTED => 13:51

DIST	COUNTY	ROUTE	POST MILES TOTAL PROJECT	SHEET No	TOTAL SHEETS
04	SM	101	16.3/17.1	744	814

REGISTERED CIVIL ENGINEER 5-15-13 DATE

10/21/13
PLANS APPROVAL DATE

REGISTERED PROFESSIONAL ENGINEER Austin Prince No. C80659 Exp. 3/31/15 CIVIL STATE OF CALIFORNIA

The State of California or its officers or agents shall not be responsible for the accuracy or completeness of scanned copies of this plan sheet.

SMCTA
1250 SAN CARLOS AVENUE
SAN CARLOS, CA 94070-1306

URS CORPORATION
2870 GATEWAY OAKS DRIVE, SUITE 150
SACRAMENTO, CA 95833-4308

NOTES:

1. For location of Corbels, see "ARCHITECTURAL DETAILS No. 2" sheet.
2. For "SECTION A-A" through "SECTION C-C", see "CORBEL DETAILS No. 2" sheet.
3. For railing details, see "ORNAMENTAL RAILING DETAILS" sheet.
4. For barrier details, see "TYPICAL SECTION" sheet.
5. For precast corbel cap details, see "CORBEL DETAILS No. 2" Sheet.
6. Working Point denotes pedestal location as shown on "ARCHITECTURAL DETAILS No. 2" sheet.

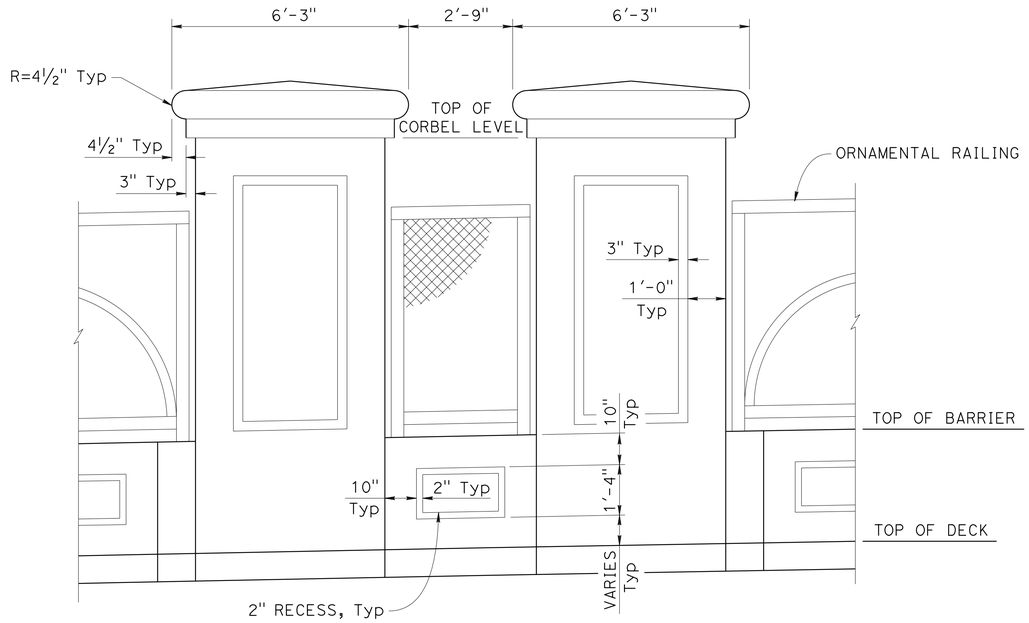

ELEVATION

½" = 1'-0"

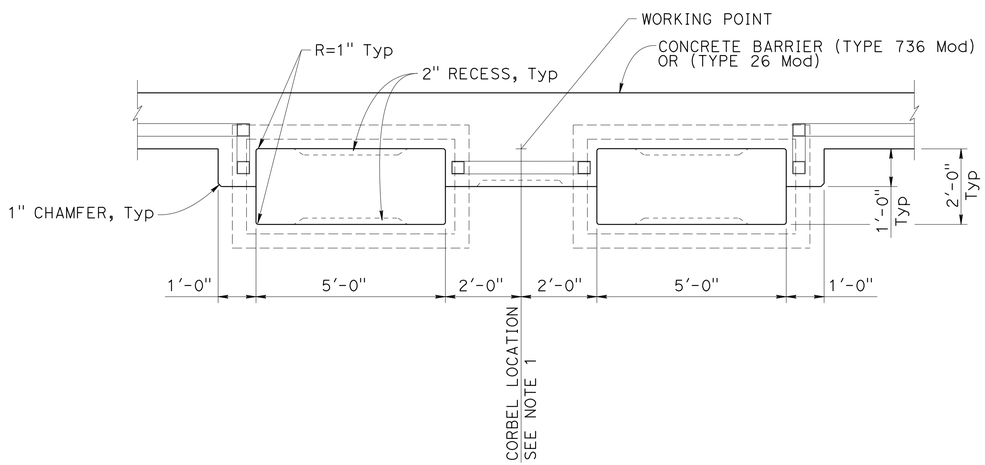

PLAN

½" = 1'-0"

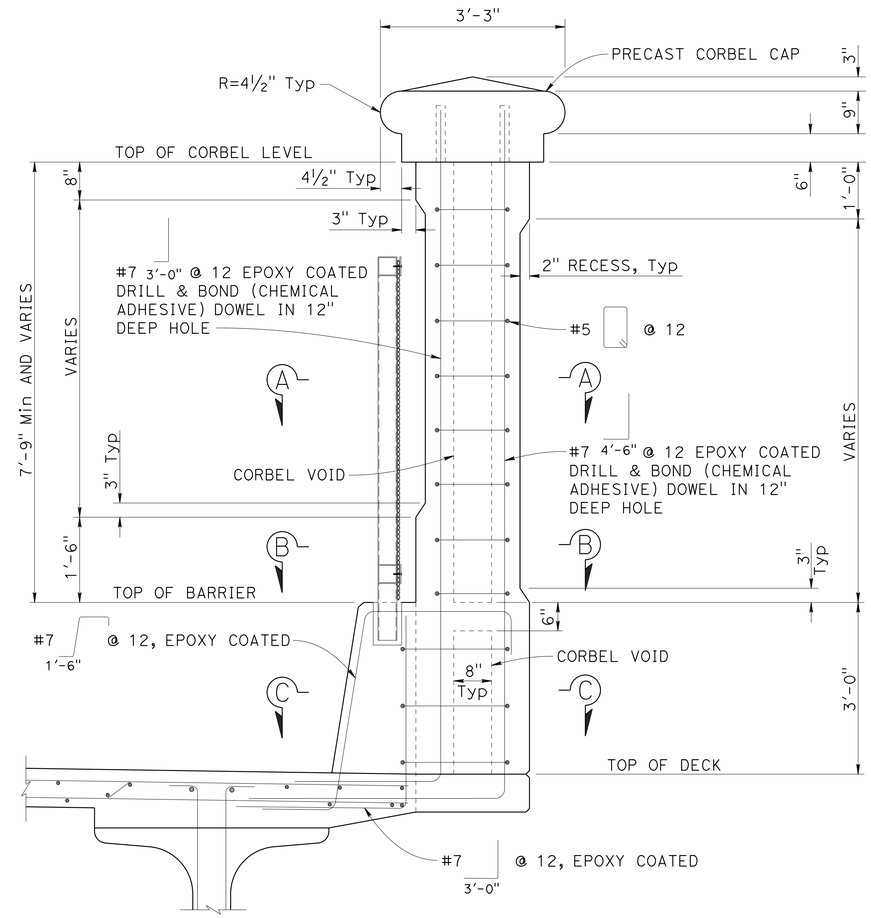

TYPICAL SECTION

¾" = 1'-0"

CONCRETE BARRIER (TYPE 736 Mod) SHOWN, (TYPE 26 Mod) SIMILAR.

Paul Cotter
DESIGN OVERSIGHT Paul Cotter
6-20-13
SIGN OFF DATE

	BY	CHECKED
DESIGN	A. Prince	J. Hueser
DETAILS	R. Lim/L. Davis	J. Hueser
QUANTITIES	A. Prince	S. Landis

PREPARED FOR THE STATE OF CALIFORNIA DEPARTMENT OF TRANSPORTATION

Syed Kazmi
PROJECT ENGINEER

BRIDGE NO. 35-0351
POST MILES 16.61

BROADWAY OC (REPLACE)
CORBEL DETAILS No. 1

DESIGN DETAIL SHEET (ENGLISH) (REV. 03/14/12)

ORIGINAL SCALE IN INCHES FOR REDUCED PLANS 0 1 2 3

UNIT: 0703
PROJECT NUMBER & PHASE: 04000006841 CONTRACT NO.: 235844

DISREGARD PRINTS BEARING EARLIER REVISION DATES

REVISION DATES: 5-15-13 11-16-12 2-12-13 4-8-13

SHEET 36 OF 42

FILE => 0400000684we036.dgn

USERNAME => s141070 DATE PLOTTED => 03-FEB-2014 TIME PLOTTED => 13:51

DIST	COUNTY	ROUTE	POST MILES TOTAL PROJECT	SHEET No	TOTAL SHEETS
04	SM	101	16.3/17.1	745	814

REGISTERED CIVIL ENGINEER 5-15-13 DATE

10/21/13
PLANS APPROVAL DATE

REGISTERED PROFESSIONAL ENGINEER Austin Prince No. C80659 Exp. 3/31/15 CIVIL STATE OF CALIFORNIA

The State of California or its officers or agents shall not be responsible for the accuracy or completeness of scanned copies of this plan sheet.

SMCTA
1250 SAN CARLOS AVENUE
SAN CARLOS, CA 94070-1306

URS CORPORATION
2870 GATEWAY OAKS DRIVE, SUITE 150
SACRAMENTO, CA 95833-4308

NOTES:

1. For location of "SECTION A-A" through "SECTION C-C", see "CORBEL DETAILS No. 1" sheet.
2. For Railing details, see "ORNAMENTAL RAILING DETAILS" sheet.

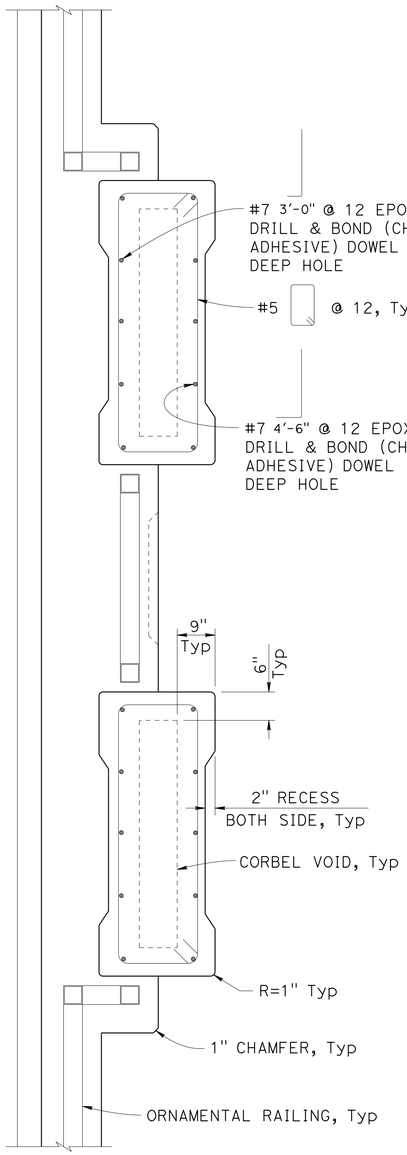

SECTION A-A
3/4" = 1'-0"

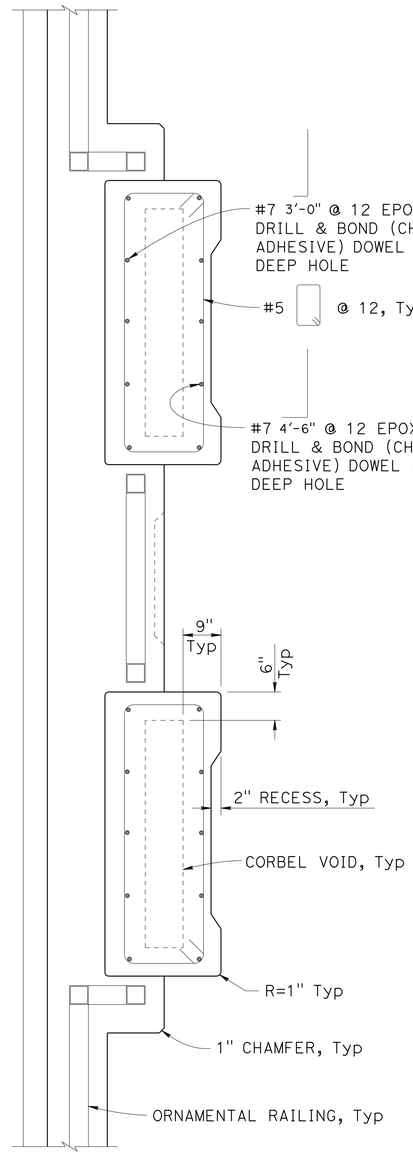

SECTION B-B
3/4" = 1'-0"

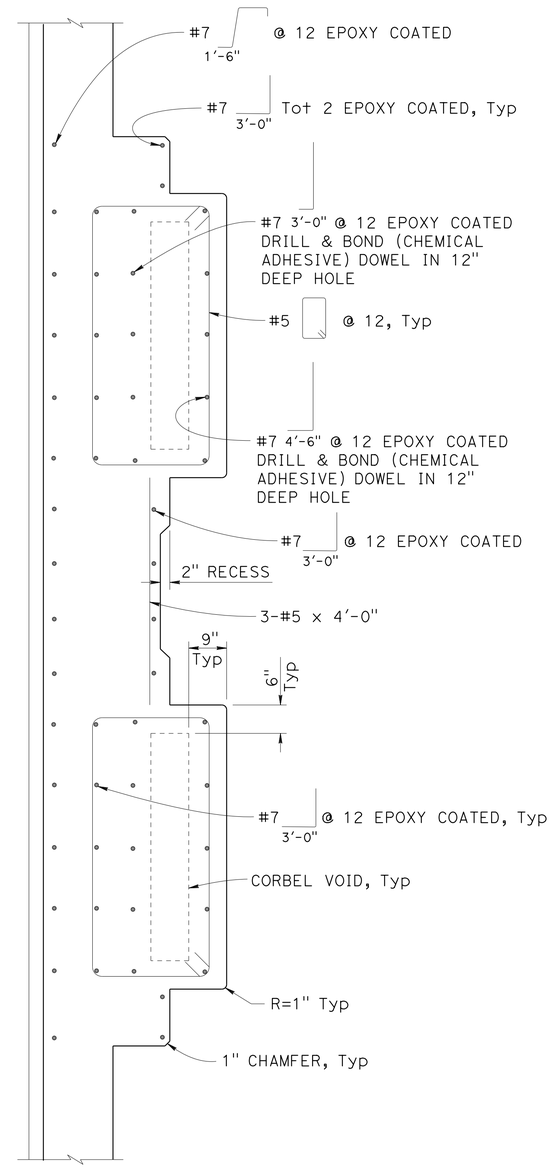

SECTION C-C
3/4" = 1'-0"

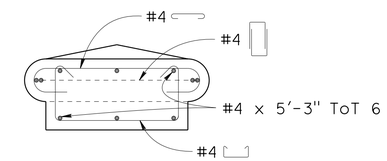

SECTION D-D
3/4" = 1'-0"

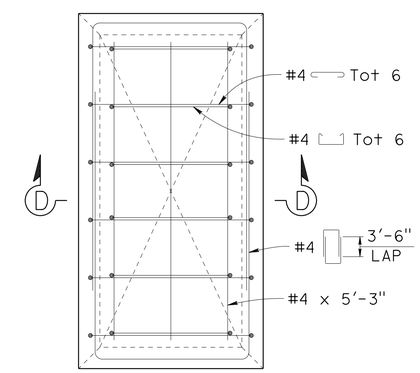

PRECAST CORBEL CAP DETAIL
3/4" = 1'-0"

Paul Cotter
DESIGN OVERSIGHT Paul Cotter
6-20-13
SIGN OFF DATE

	BY	CHECKED
DESIGN	A. Prince	J. Hueser
DETAILS	R. Lim/L. Davis	J. Hueser
QUANTITIES	A. Prince	S. Landis

PREPARED FOR THE STATE OF CALIFORNIA DEPARTMENT OF TRANSPORTATION

Syed Kazmi
PROJECT ENGINEER

BRIDGE NO. 35-0351
POST MILES 16.61

BROADWAY OC (REPLACE)
CORBEL DETAILS No. 2

DESIGN DETAIL SHEET (ENGLISH) (REV. 03/14/12)

ORIGINAL SCALE IN INCHES FOR REDUCED PLANS 0 1 2 3

UNIT: 0703
PROJECT NUMBER & PHASE: 04000006841 CONTRACT NO.: 235844

DISREGARD PRINTS BEARING EARLIER REVISION DATES

REVISION DATES: 5-15-13 11-16-12 2-12-13 4-8-13

SHEET 37 OF 42

FILE => 0400000684we037.dgn

USERNAME => s141070 DATE PLOTTED => 03-FEB-2014 TIME PLOTTED => 13:51

DIST	COUNTY	ROUTE	POST MILES TOTAL PROJECT	SHEET No	TOTAL SHEETS
04	SM	101	16.3/17.1	746	814

REGISTERED CIVIL ENGINEER — DATE 5-15-13

10/21/13
PLANS APPROVAL DATE

REGISTERED PROFESSIONAL ENGINEER — Austin Prince — No. C80659 — Exp. 3/31/15 — CIVIL — STATE OF CALIFORNIA

The State of California or its officers or agents shall not be responsible for the accuracy or completeness of scanned copies of this plan sheet.

SMCTA
1250 SAN CARLOS AVENUE
SAN CARLOS, CA 94070-1306

URS CORPORATION
2870 GATEWAY OAKS DRIVE, SUITE 150
SACRAMENTO, CA 95833-4308

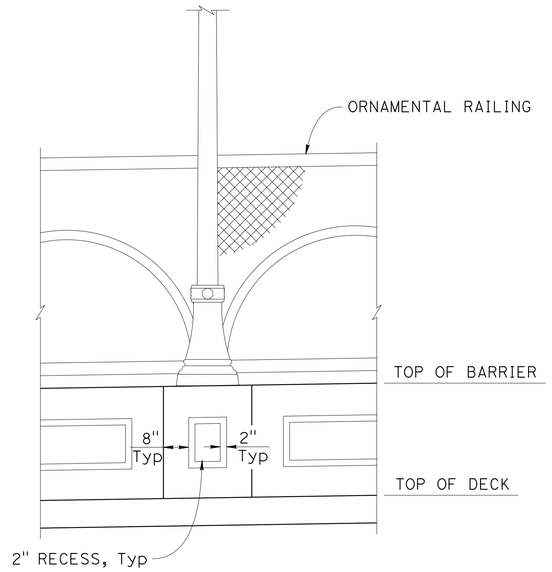

ELEVATION
½" = 1'-0"

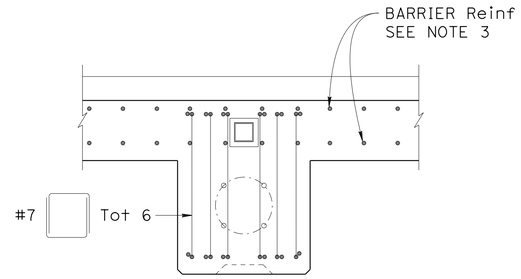

SECTION B-B
¾" = 1'-0"

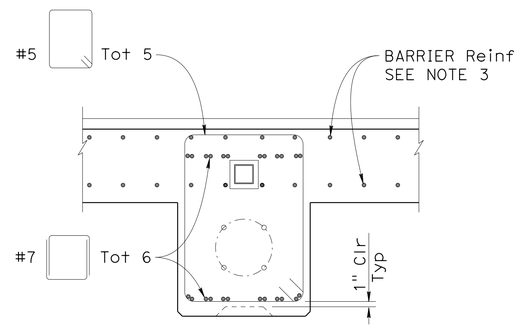

SECTION A-A
¾" = 1'-0"

NOTES:

1. For location of Pedestals, see "ARCHITECTURAL DETAILS No. 2" sheet.
2. For Railing details, see "ORNAMENTAL RAILING DETAILS" sheet.
3. For barrier reinforcement, see "TYPICAL SECTION" sheet.
4. Working Point denotes pedestal location as shown on "ARCHITECTURAL DETAILS No. 2" sheet.
5. For Light details, see "ROAD PLANS".

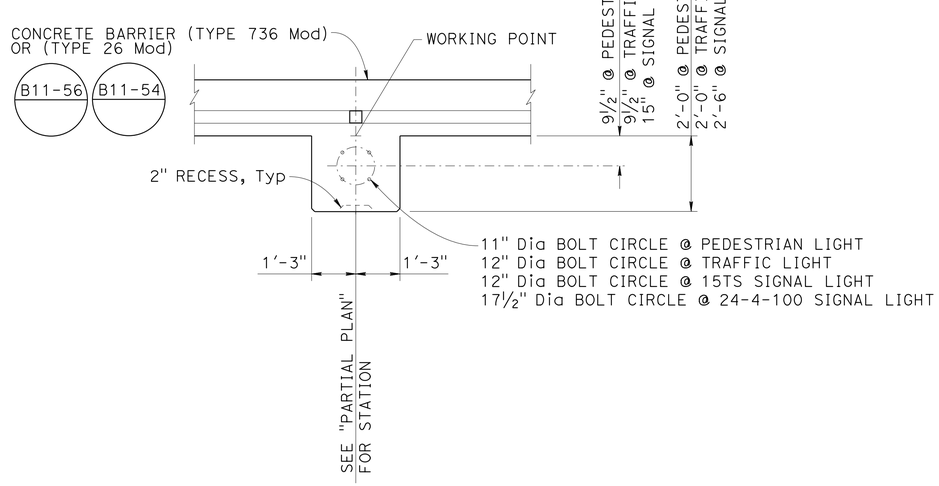

PLAN
½" = 1'-0"

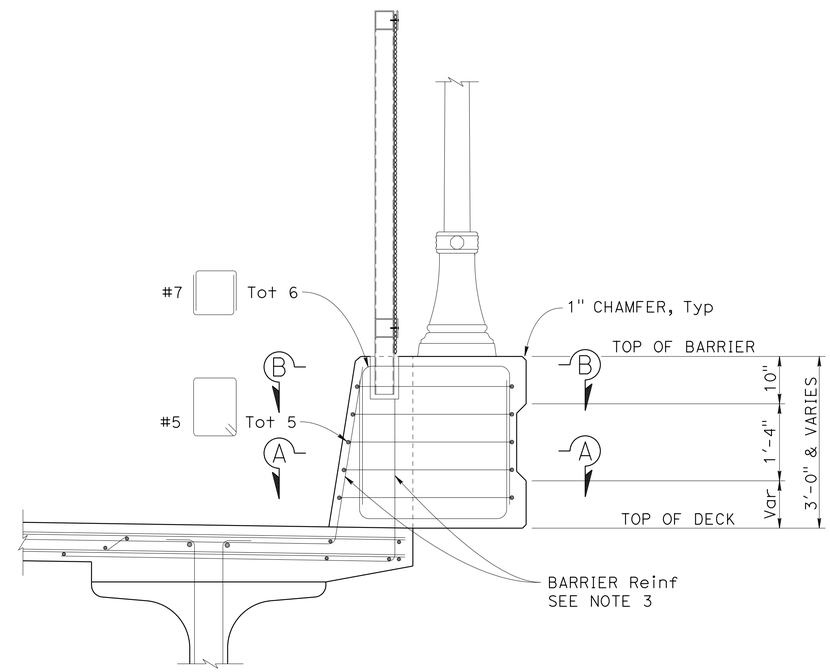

TYPICAL SECTION
¾" = 1'-0"

CONCRETE BARRIER (TYPE 736 Mod) SHOWN, (TYPE 26 Mod) SIMILAR.
SECTION ON BRIDGE SHOWN, SECTION ON APPROACH SLAB SIMILAR.

DESIGN OVERSIGHT — Paul Cotter
6-20-13
SIGN OFF DATE

	BY	CHECKED
DESIGN	A. Prince	J. Hueser
DETAILS	R. Lim/L. Davis	J. Hueser
QUANTITIES	A. Prince	S. Landis

PREPARED FOR THE STATE OF CALIFORNIA DEPARTMENT OF TRANSPORTATION

Syed Kazmi
PROJECT ENGINEER

BRIDGE NO. 35-0351
POST MILES 16.61

BROADWAY OC (REPLACE)
PEDESTAL DETAILS

DESIGN DETAIL SHEET (ENGLISH) (REV. 03/14/12)

ORIGINAL SCALE IN INCHES FOR REDUCED PLANS 0 1 2 3

UNIT: 0703
PROJECT NUMBER & PHASE: 04000006841 CONTRACT NO.: 235844

DISREGARD PRINTS BEARING EARLIER REVISION DATES → 5-15-13 11-16-12 2-12-13 4-8-13

SHEET 38 OF 42

FILE => 0400000684we038.dgn

USERNAME => s141070 DATE PLOTTED => 03-FEB-2014 TIME PLOTTED => 13:51

DIST	COUNTY	ROUTE	POST MILES TOTAL PROJECT	SHEET No	TOTAL SHEETS
04	SM	101	16.3/17.1	747	814

REGISTERED CIVIL ENGINEER — DATE 5-15-13

10/21/13
PLANS APPROVAL DATE

REGISTERED PROFESSIONAL ENGINEER — Austin Prince — No. C80659 — Exp. 3/31/15 — CIVIL — STATE OF CALIFORNIA

The State of California or its officers or agents shall not be responsible for the accuracy or completeness of scanned copies of this plan sheet.

SMCTA
1250 SAN CARLOS AVENUE
SAN CARLOS, CA 94070-1306

URS CORPORATION
2870 GATEWAY OAKS DRIVE, SUITE 150
SACRAMENTO, CA 95833-4308

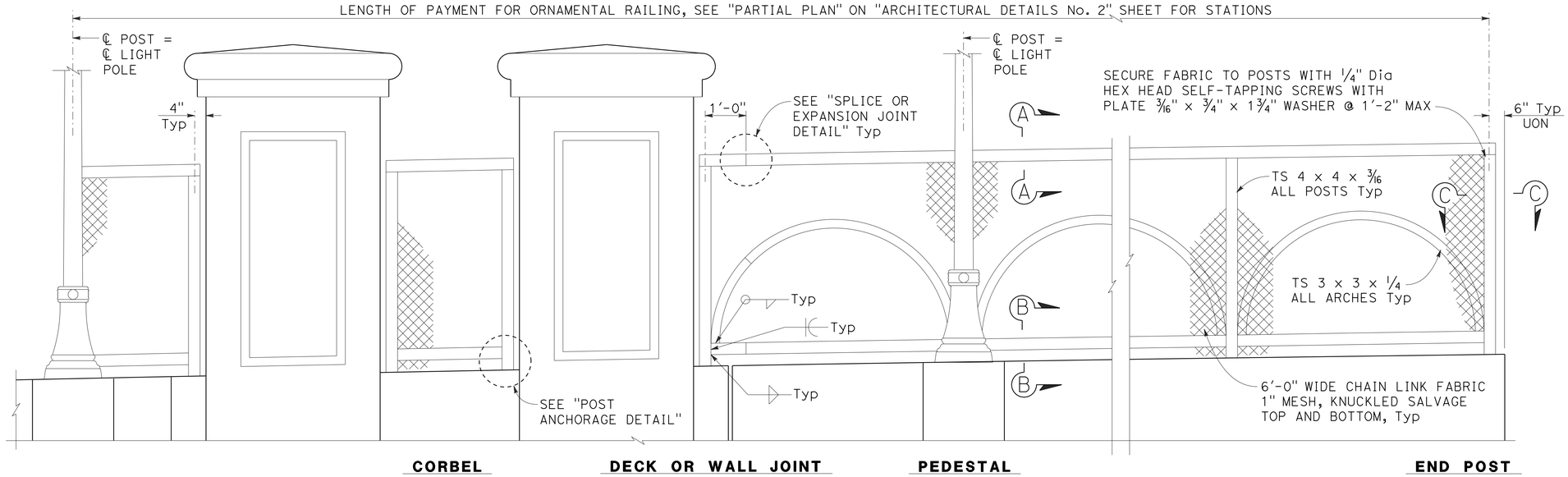

ELEVATION
NO SCALE

NOTES:

1. Railing assembly except chain link fabric to be galvanized after fabrication.
2. Posts shall be vertical.
3. Railing shall conform to horizontal and vertical alignment.
4. Top horizontal angle shall be continuous over not less than two intermediate posts, except that a shorter length is permitted at expansion joints and other rail discontinuities.
5. When rail is on slope, place fabric parallel to slope.
6. Alternative details may be submitted by Contractor for Engineer's approval.
7. Provide thimbles at all cable loops.
8. Expansion joint same dimension as expansion joint in deck or wall. Increase slotted hole length and splice bar length correspondingly.

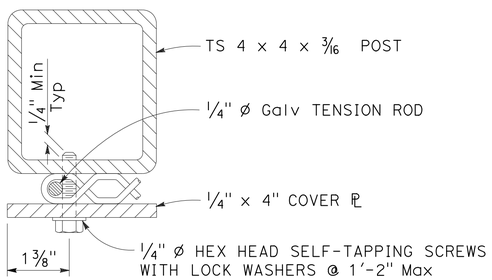

SECTION C-C
NO SCALE

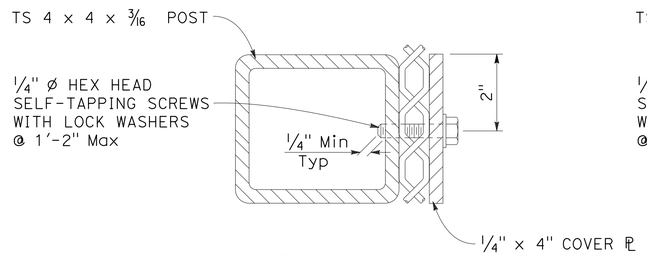

SECTION B-B
NO SCALE

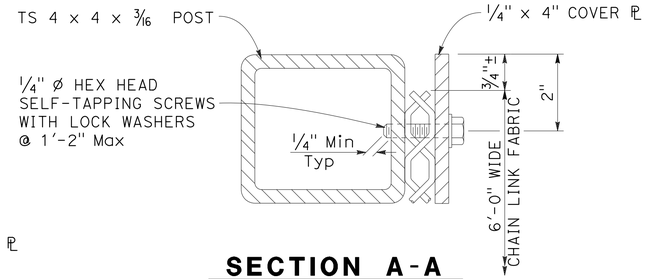

SECTION A-A
NO SCALE

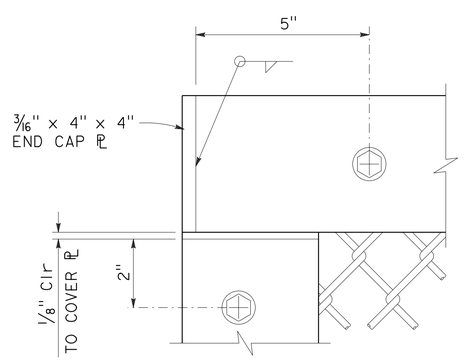

END POST ELEVATION
NO SCALE

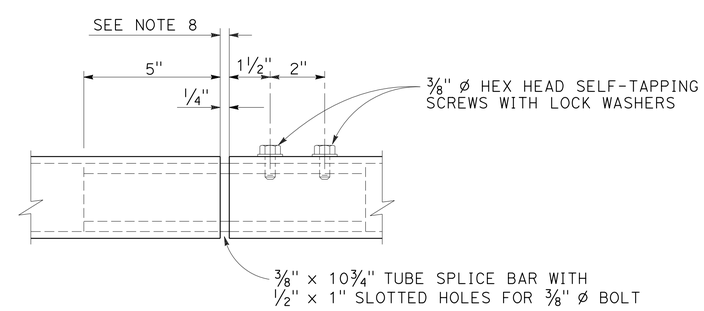

SPLICE OR EXPANSION JOINT DETAIL
NO SCALE

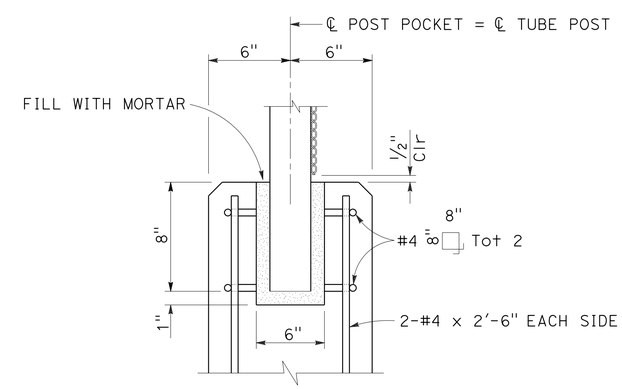

POST ANCHORAGE DETAIL
NO SCALE

DESIGN OVERSIGHT — Paul Cotter
6-20-13
SIGN OFF DATE

	BY	CHECKED
DESIGN	A. Prince	J. Hueser
DETAILS	R. Lim/L. Davis	J. Hueser
QUANTITIES	A. Prince	S. Landis

PREPARED FOR THE STATE OF CALIFORNIA DEPARTMENT OF TRANSPORTATION

Syed Kazmi
PROJECT ENGINEER

BRIDGE NO. 35-0351
POST MILES 16.61

BROADWAY OC (REPLACE)
ORNAMENTAL RAILING DETAILS

DESIGN DETAIL SHEET (ENGLISH) (REV. 03/14/12)

ORIGINAL SCALE IN INCHES FOR REDUCED PLANS 0 1 2 3

UNIT: 0703
PROJECT NUMBER & PHASE: 04000006841
CONTRACT NO.: 235844

DISREGARD PRINTS BEARING EARLIER REVISION DATES — REVISION DATES 5-15-13 11-16-12 2-12-13 4-8-13

SHEET 39 OF 42

FILE => 0400000684we039.dgn

USERNAME => s141070 DATE PLOTTED => 03-FEB-2014 TIME PLOTTED => 13:51

DIST	COUNTY	ROUTE	POST MILES TOTAL PROJECT	SHEET No	TOTAL SHEETS
04	SM	101	16.3/17.1	748	814

GEOTECHNICAL PROFESSIONAL — DATE 5-15-13

10/21/13
PLANS APPROVAL DATE

The State of California or its officers or agents shall not be responsible for the accuracy or completeness of scanned copies of this plan sheet.

REGISTERED PROFESSIONAL ENGINEER — Stephen Huang — No. C 42289 — Exp. 03/31/14 — GEOTECHNICAL — STATE OF CALIFORNIA

SMCTA
1250 SAN CARLOS AVENUE
SAN CARLOS, CA 94070-1306

URS CORPORATION
2870 GATEWAY OAKS DRIVE, SUITE 150
SACRAMENTO, CA 95833-4308

BENCH MARK

All elevations based on vertical datum NAVD88.
All stations and offsets based on horizontal datum NAD83

BM No. 1, Monument 501, El 9.35, N2045276.165 E6019489.935
BM No. 2, Monument 1003, El 10.93, N2043769.910 E6021712.494
BM No. 3, Monument 505, El 10.21, N2043140.717 E6021760.224
BM No. 4, Monument 74, El 35.48, N2042621.214 E6022476.873
BM No. 5, Monument 510, El 12.66 N2042355.119 E6022633.562

NOTES

1. This LOTB Sheet was prepared in accordance with the Caltrans Soil and Rock Logging, Classification, and Presentation Manual (2010).
2. Standard Penetration test sampler I.D. = 1.44 inch (1.4)
   Modified California sampler I.D. = 1.96 inch (2.0)
   Thin-walled Shelby tube sampler I.D. = 2.97 inch (3.0)

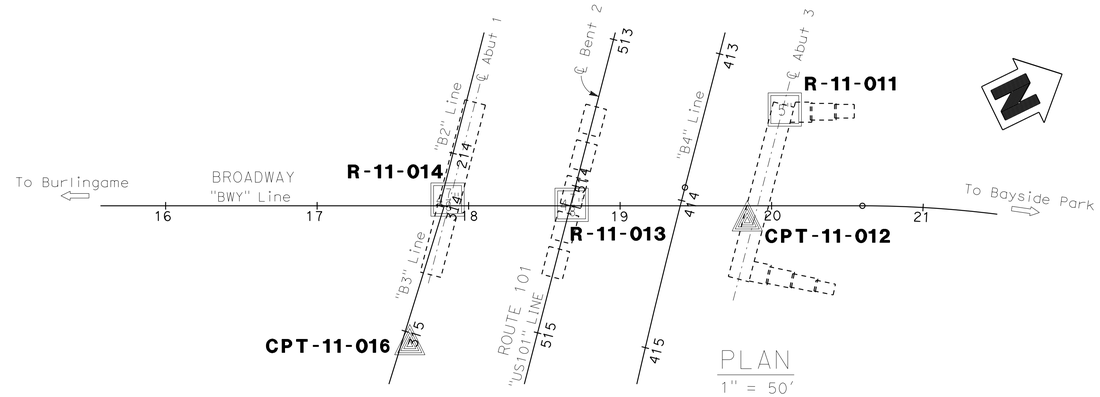

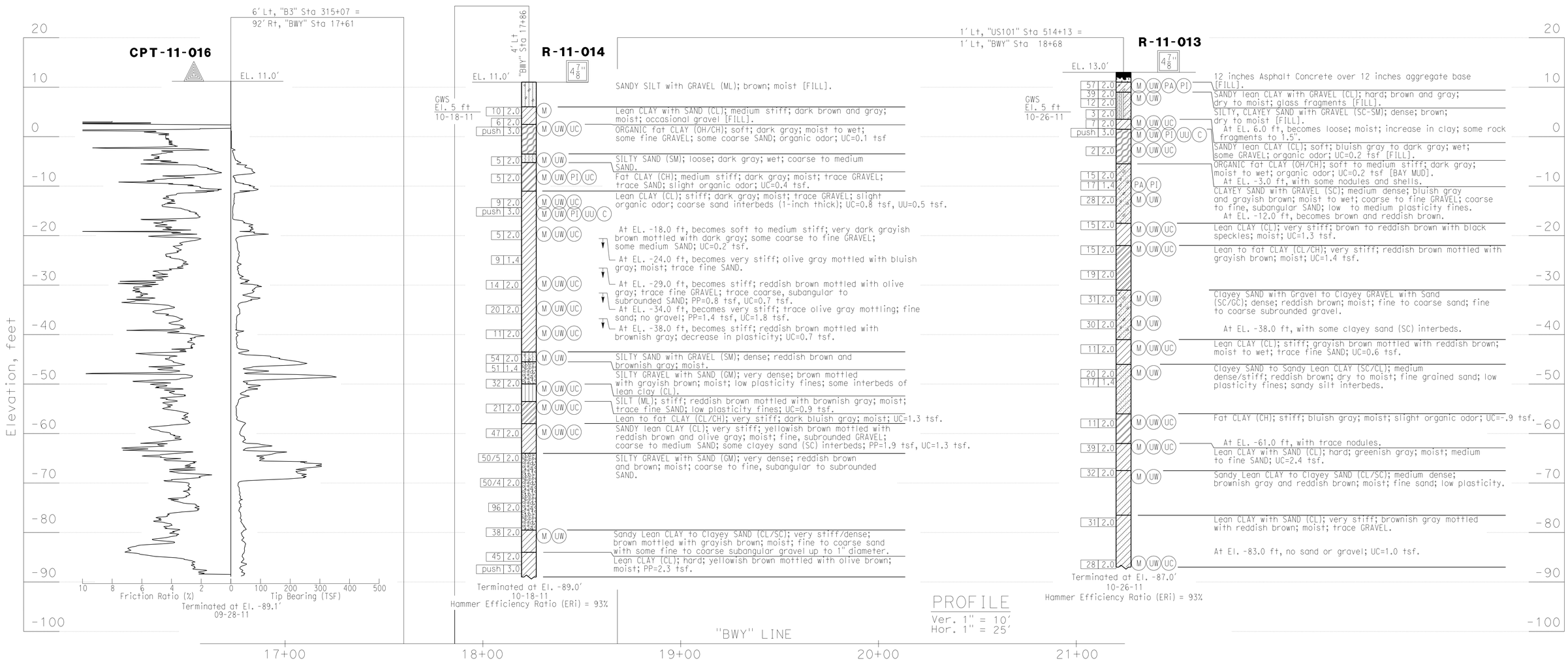

DESIGN OVERSIGHT: Paul Cotter	DRAWN BY: B. VUONG	J. LOPEZ / A. CHEUNG	PREPARED FOR THE STATE OF CALIFORNIA DEPARTMENT OF TRANSPORTATION
6-20-13 SIGN OFF DATE	CHECKED BY: A. M. MOORE	FIELD INVESTIGATION BY: DATE:	S. HUANG PROJECT ENGINEER

BRIDGE NO. 35-0351 — POST MILES 16.61

BROADWAY OC (REPLACE)
LOG OF TEST BORINGS 1 OF 3

GS GEOTECHNICAL LOG OF TEST BORINGS SHEET (ENGLISH) (REV. 03/14/12)

ORIGINAL SCALE IN INCHES FOR REDUCED PLANS 0 1 2 3

UNIT: 0703
PROJECT NUMBER & PHASE: 04000006841 CONTRACT NO.: 235844

DISREGARD PRINTS BEARING EARLIER REVISION DATES → 5-15-13 11-16-12 2-12-13 4-8-13

SHEET 40 OF 42

FILE => 0400000684we040.dgn

USERNAME => s141070 DATE PLOTTED => 03-FEB-2014 TIME PLOTTED => 13:51

DIST	COUNTY	ROUTE	POST MILES TOTAL PROJECT	SHEET No	TOTAL SHEETS
04	SM	101	16.3/17.1	749	814

GEOTECHNICAL PROFESSIONAL — DATE 5-15-13

10/21/13
PLANS APPROVAL DATE

The State of California or its officers or agents shall not be responsible for the accuracy or completeness of scanned copies of this plan sheet.

REGISTERED PROFESSIONAL ENGINEER — Stephen Huang — No. C 42289 — Exp. 03/31/14 — GEOTECHNICAL — STATE OF CALIFORNIA

SMCTA
1250 SAN CARLOS AVENUE
SAN CARLOS, CA 94070-1306

URS CORPORATION
2870 GATEWAY OAKS DRIVE, SUITE 150
SACRAMENTO, CA 95833-4308

BENCH MARK

All elevations based on vertical datum NAVD88.
All stations and offsets based on horizontal datum NAD83

BM No. 1, Monument 501, El 9.35, N2045276.165 E6019489.935
BM No. 2, Monument 1003, El 10.93, N2043769.910 E6021712.494
BM No. 3, Monument 505, El 10.21, N2043140.717 E6021760.224
BM No. 4, Monument 74, El 35.48, N2042621.214 E6022476.873
BM No. 5, Monument 510, El 12.66 N2042355.119 E6022633.562

NOTES

1. This LOTB Sheet was prepared in accordance with the Caltrans Soil and Rock Logging, Classification, and Presentation Manual (2010).
2. Standard Penetration test sampler I.D. = 1.44 inch (1.4)
   Modified California sampler I.D. = 1.96 inch (2.0)
   Thin-walled Shelby tube sampler I.D. = 2.97 inch (3.0)

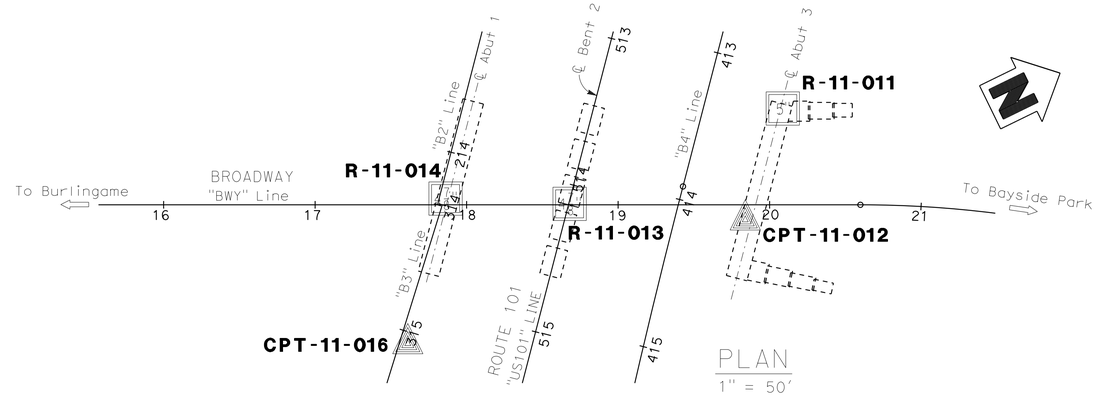

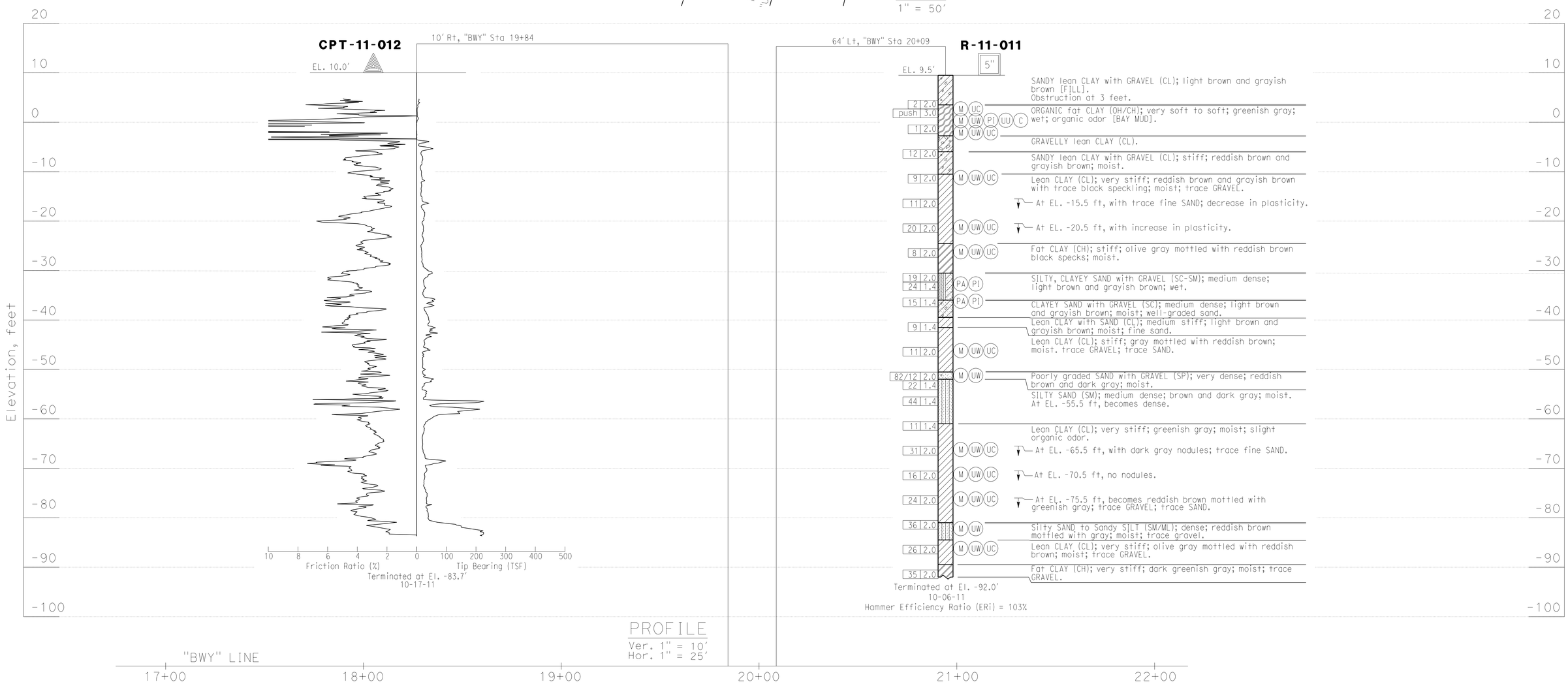

Paul Cotter — DESIGN OVERSIGHT: Paul Cotter	DRAWN BY: B. VUONG	J. LOPEZ / A. CHEUNG — FIELD INVESTIGATION BY:	PREPARED FOR THE STATE OF CALIFORNIA DEPARTMENT OF TRANSPORTATION
6-20-13 — SIGN OFF DATE	CHECKED BY: A. M. MOORE	DATE:	S. HUANG — PROJECT ENGINEER

BRIDGE NO. 35-0351
POST MILES 16.61

BROADWAY OC (REPLACE)
LOG OF TEST BORINGS 2 OF 3

GS GEOTECHNICAL LOG OF TEST BORINGS SHEET (ENGLISH) (REV. 03/14/12)

ORIGINAL SCALE IN INCHES FOR REDUCED PLANS 0 1 2 3

UNIT: 0703
PROJECT NUMBER & PHASE: 04000006841 CONTRACT NO.: 235844

DISREGARD PRINTS BEARING EARLIER REVISION DATES → REVISION DATES 5-15-13 11-16-12 2-12-13 4-8-13

SHEET 41 OF 42

FILE => 0400000684we041.dgn

USERNAME => s141070 DATE PLOTTED => 03-FEB-2014 TIME PLOTTED => 13:51

DIST.	COUNTY	ROUTE	POST MILES—TOTAL PROJECT	SHEET NO.	TOTAL SHEETS
04	SM	101	16.6	62	62

BRIDGE ENGINEER — REGISTERED CIVIL ENGINEER NO. 6046

DATE APPROVED September 14, 1990

DIVISION OF ENGINEERING SERVICES - GEOTECHNICAL SERVICES

As-Built Log of Test Borings sheet is considered an informational document only. As such, the State of California registration seal with signature, license number and registration certificate expiration date confirm that this is a true and accurate copy of the original document. This drawing is available and presented only for the convenience of any bidder, contractor or other interested party.

DIST.	COUNTY	ROUTE	POST MILES-TOTAL PROJECT	Sheet No.	Total Sheets
04	SM	101		750	814

REGISTERED CIVIL ENGINEER — 5-15-13 DATE

BROADWAY OC (REPLACE)

LOG OF TEST BORINGS 3 OF 3

NOTE: A COPY OF THIS LOG OF TEST BORINGS IS AVAILABLE AT OFFICE OF STRUCTURE MAINTENANCE AND INVESTIGATIONS, SACRAMENTO, CALIFORNIA

UNIT: 0703
PROJECT NUMBER & PHASE: 04000006841

BRIDGE No.	Sheet	of
35-0351	42	42

Revisions made to this Log of Test Borings from the original ____ Log of Test Borings are the addition of the following table and notes:

Boring	Station	Offset from C/L Rte. 101
B-1	15+94	68.9 Rt
B-2	16+15	10.9 Rt
B-3	16+92	81.5 Rt

REGISTERED PROFESSIONAL ENGINEER — Stephen Huang — No. C 42289 — Exp. 03/31/14 — CIVIL — STATE OF CALIFORNIA

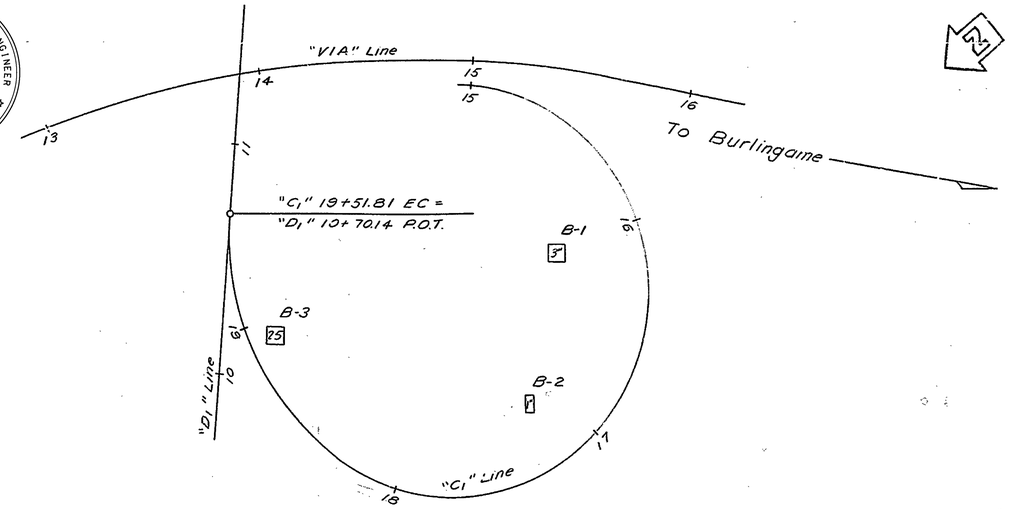

PLAN
Scale: 1" = 30'

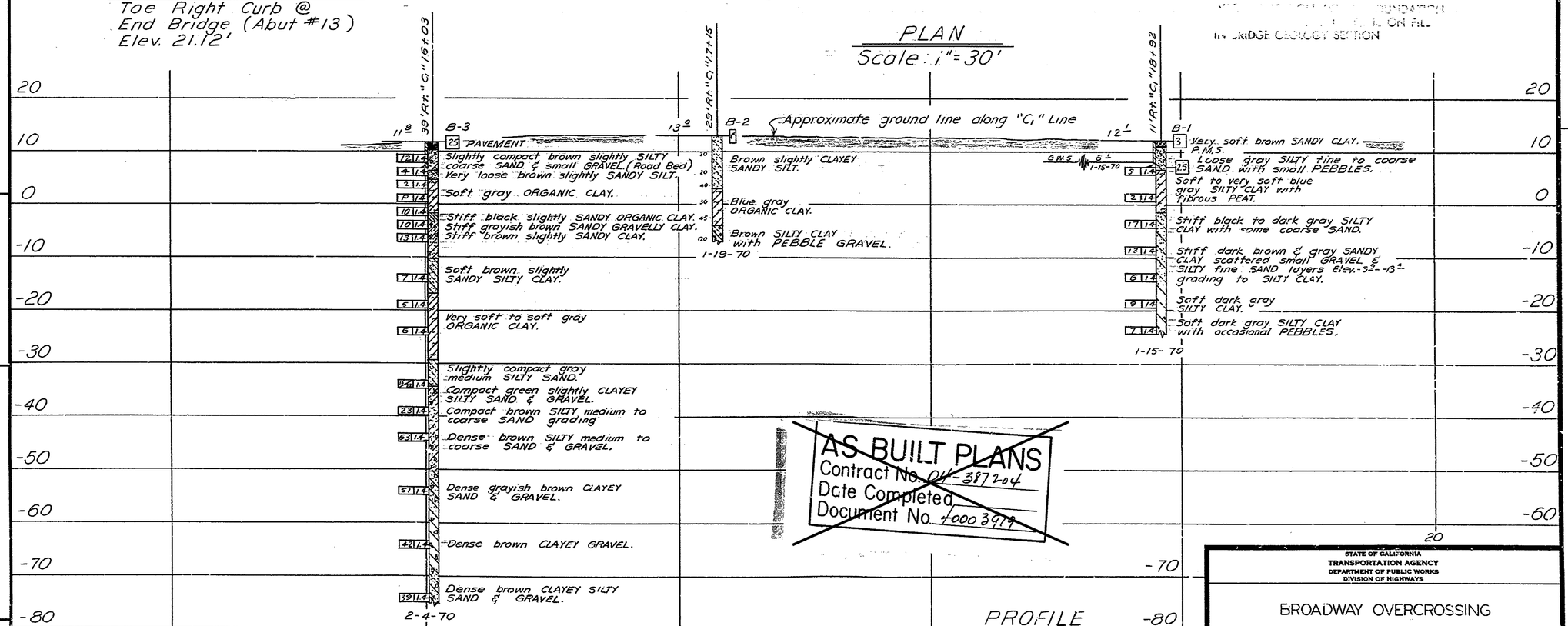

PROFILE
Scale: Horz. 1" = 20'
Vert. 1" = 10'

AS BUILT PLANS
Contract No. 04-387204
Date Completed
Document No. 4000 3979

LEGEND OF BORING OPERATIONS

PENETROMETER — 2½" CONE PENETROMETER — SAMPLER BORING (WET) — ROTARY BORING (DRY) — AUGER BORING — JET BORING — CORE BORING — TEST PIT

PENETRATION BORING — ROTARY BORING — 1" SOIL TUBE

LEGEND OF EARTH MATERIALS

GRAVEL — SAND — SILT — CLAY — SILTY CLAY OR CLAYEY SILT — SANDY CLAY OR CLAYEY SAND — SANDY SILT OR SILTY SAND — PEAT AND/OR ORGANIC MATTER — FILL MATERIAL — IGNEOUS ROCK — SEDIMENTARY ROCK — METAMORPHIC ROCK

CLASSIFICATION OF MATERIAL BASED ON STANDARD GRADE SIZE LIMITS

DIAGRAM SHOWING THE BASIS FOR ESTIMATED GRADING DESCRIPTIONS USED IN THE CLASSIFICATION OF CLASS NAMES. IF GRAVEL IS PRESENT IN APPRECIABLE QUANTITY, THE TERM "GRAVELLY" MAY BE ADDED TO THE CLASS NAME, VIZ. "GRAVELLY SANDY CLAY". THE TERMS "GRAVELLY SAND" AND "GRAVELLY GRAVEL" WHEN USED TO DESCRIBE SAND, SILT AND GRAVEL, REFER TO STANDARD GRADE SIZE LIMITS.

NOTE: Classification of earth material as shown on this sheet is based upon field inspection and is not to be construed to imply mechanical analysis.

FIELD STUDY	G. Miller	2-70
DRAWN	S. Sawyer	2-70
CHECKED	G. Miller	2-70

Approval Recommended by: J. L. Sommers, Engineering Geologist — 1975

BRIDGE DEPARTMENT
ENGINEERING GEOLOGY SECTION

62

STATE OF CALIFORNIA
TRANSPORTATION AGENCY
DEPARTMENT OF PUBLIC WORKS
DIVISION OF HIGHWAYS

BROADWAY OVERCROSSING

LOG OF TEST BORINGS

BRIDGE NO.	POST MILE	DRAWING NO.	SHEET	OF
35-96	16.6		10	10

WO 387201
CU 04205

Disregard prints bearing earlier revision dates

REVISION DATES (PRELIMINARY STAGE ONLY): 2/6/70

I HEREBY CERTIFY THAT THIS IS A TRUE AND ACCURATE COPY OF THE ABOVE DOCUMENT TAKEN UNDER MY DIRECTION AND CONTROL ON THIS DATE IN SACRAMENTO, CALIFORNIA PURSUANT TO AUTHORIZATION BY THE DIRECTOR OF PUBLIC WORKS.

DATE 6-13-72 SIGNATURE ____ TITLE SR. RDMC

DIST	COUNTY	ROUTE	POST MILES TOTAL PROJECT	SHEET No	TOTAL SHEETS
04	SM	101	16.3/17.1	751	814

REGISTERED CIVIL ENGINEER — DATE 5-15-13

10/21/13
PLANS APPROVAL DATE

REGISTERED PROFESSIONAL ENGINEER — Austin Prince — No. C80659 — Exp. 3/31/15 — CIVIL — STATE OF CALIFORNIA

The State of California or its officers or agents shall not be responsible for the accuracy or completeness of scanned copies of this plan sheet.

SMCTA
1250 SAN CARLOS AVENUE
SAN CARLOS, CA 94070-1306

URS CORPORATION
2870 GATEWAY OAKS DRIVE, SUITE 150
SACRAMENTO, CA 95833-4308

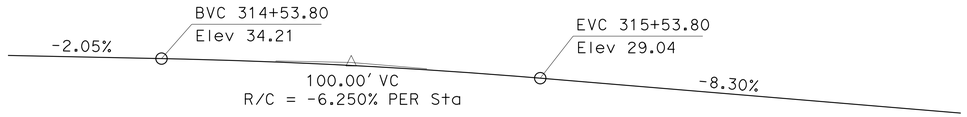

PROFILE GRADE
NO SCALE

CURVE DATA

CURVE	R	Δ	T	L
1	28.33'	56°54'25"	15.35'	28.14'
2	56.62'	51°44'49"	27.46'	51.13'

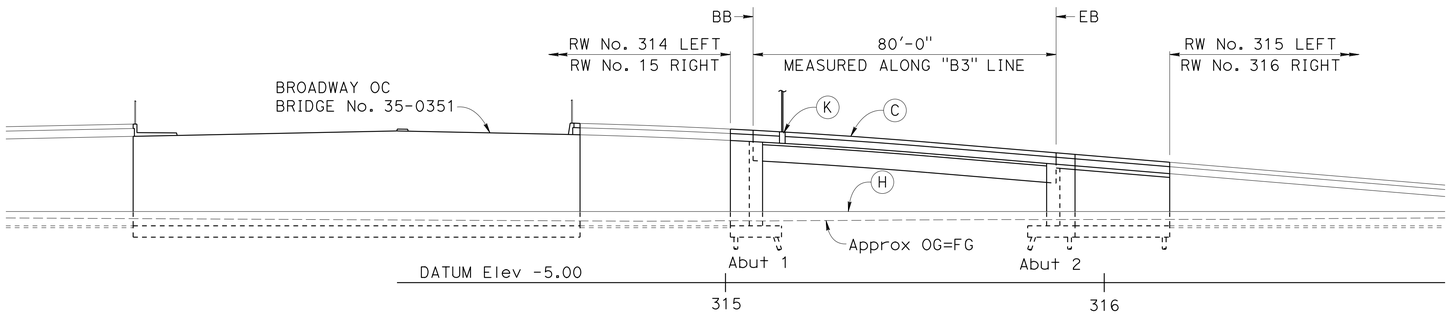

MIRRORED ELEVATION
1"=20'-0"

LEGEND:

- Indicates existing structure
- Indicates direction of traffic

NOTES:

(A) Paint "Bridge No. 35-0352K" and Year Constructed
(B) Paint Bridge Name
(C) Concrete Barrier (Type 736)
(D) California ST-10 Bridge Rail
(E) Structure Approach Type N(30S)
(F) Structure Approach Type N(30S) Modified
(G) MSE Wall, see "RETAINING WALL" sheets
(H) Concrete Barrier, see "ROAD PLANS"
(I) Light with pedestal, see "PEDESTAL DETAILS" sheet
(J) Chain Link Railing Type 2 - ST-10 (VINYL-CLAD)

(K) Light pedestal 315+15.00 "B3" Line, see B11-56

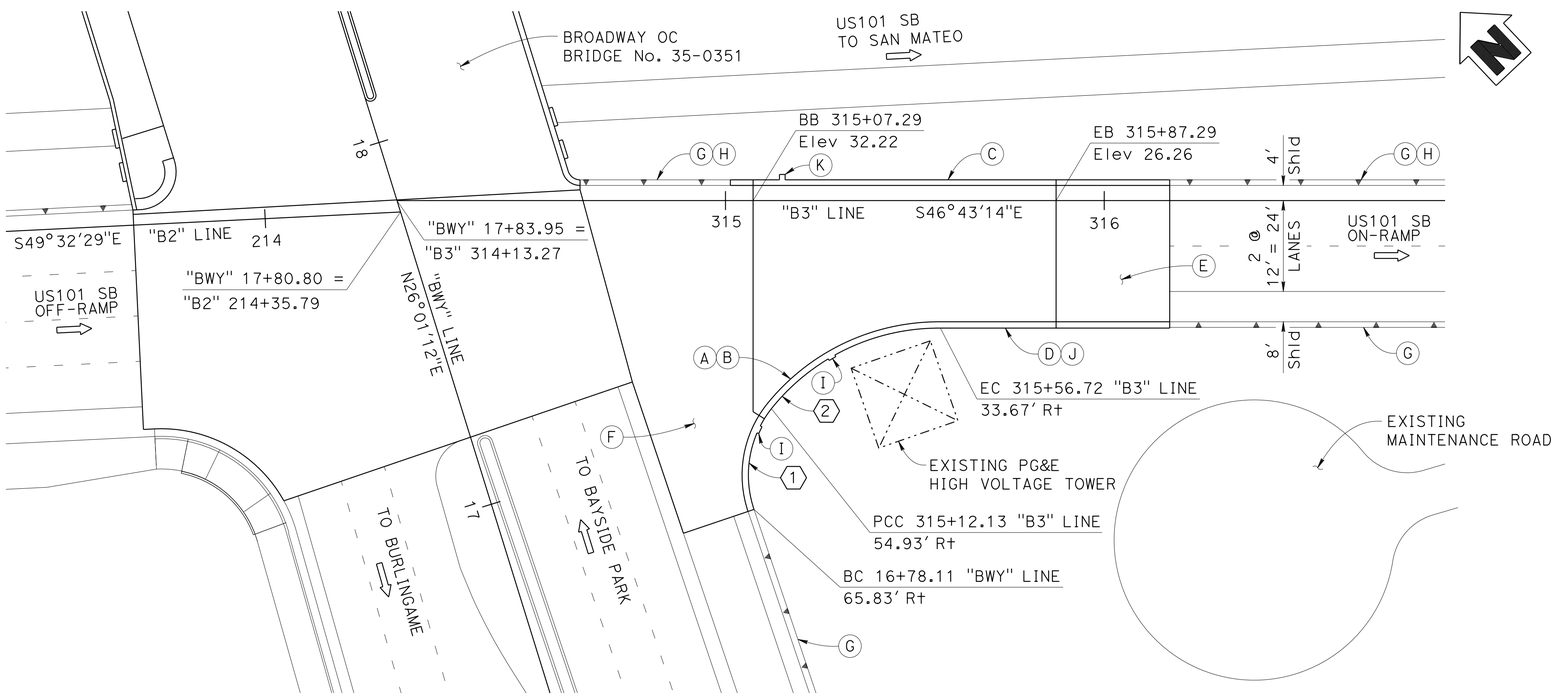

PLAN
1"=20'-0"

BROADWAY ON-RAMP — BRIDGE NO 35-0352K

QUANTITIES

STRUCTURE EXCAVATION (TYPE D)	708	CY
STRUCTURE BACKFILL (BRIDGE)	575	CY
STRUCTURE BACKFILL (RETAINING WALL)	328	CY
PERVIOUS BACKFILL MATERIAL	63	CY
PERVIOUS BACKFILL MATERIAL (RETAINING WALL)	35	CY
FURNISH PILING (CLASS 90) (ALTERNATIVE X MODIFIED)	5,053	LF
DRIVE PILE (CLASS 90) (ALTERNATIVE X MODIFIED)	123	EA
STRUCTURAL CONCRETE, BRIDGE FOOTING	178	CY
STRUCTURAL CONCRETE, BRIDGE	520	CY
STRUCTURAL CONCRETE, RETAINING WALL	160	CY
STRUCTURAL CONCRETE, APPROACH SLAB (TYPE N)	44	CY
STRUCTURAL CONCRETE, APPROACH SLAB (TYPE N MODIFIED)	113	CY
FRACTURED RIB TEXTURE	2,008	SQFT
FRACTURED RIB (TREE PATTERN)	805	SQFT
JOINT SEAL (MR1/2")	105	LF
BAR REINFORCING STEEL (BRIDGE)	132,040	LB
BAR REINFORCING STEEL (RETAINING WALL)	22,800	LB
CHAIN LINK RAILING (TYPE 2 - ST-10 MODIFIED 6, VINYL-CLAD)	140	LF
CONCRETE BARRIER (TYPE 736)	116	LF
CALIFORNIA ST-10 BRIDGE RAIL	140	LF

Note: For "GENERAL NOTES", "STANDARD PLANS" and "INDEX TO PLANS" see "INDEX TO PLANS" sheet.

Paul Cotter — DESIGN OVERSIGHT — Paul Cotter
6-20-13 — SIGN OFF DATE

	BY	CHECKED
DESIGN	A. Prince	J. Hueser
DETAILS	R. Lim	J. Hueser
QUANTITIES	A. Prince	S. Landis

LOAD & RESISTANCE FACTOR DESIGN — LIVE LOADING: HL93 W/"LOW-BOY"; PERMIT DESIGN VEHICLE
LAYOUT — A. Prince — J. Hueser
SPECIFICATIONS — D. Harnagel — PLANS AND SPECS COMPARED

PREPARED FOR THE STATE OF CALIFORNIA DEPARTMENT OF TRANSPORTATION

Syed Kazmi — PROJECT ENGINEER

BRIDGE NO. 35-0352K
POST MILES 16.58

BROADWAY ON-RAMP
GENERAL PLAN No. 1

DESIGN GENERAL PLAN SHEET (ENGLISH) (REV. 03/14/12)

ORIGINAL SCALE IN INCHES FOR REDUCED PLANS 0 1 2 3

UNIT: 0703
PROJECT NUMBER & PHASE: 04000006841 CONTRACT NO.: 235844

DISREGARD PRINTS BEARING EARLIER REVISION DATES — REVISION DATES 2-12-13 4-8-13 5-15-13 11-16-13 — SHEET 1 OF 28

FILE => 0400000684we043.dgn

USERNAME => s141070 DATE PLOTTED => 03-FEB-2014 TIME PLOTTED => 13:51

DIST	COUNTY	ROUTE	POST MILES TOTAL PROJECT	SHEET No	TOTAL SHEETS
04	SM	101	16.3/17.1	752	814

REGISTERED CIVIL ENGINEER 5-15-13 DATE

10/21/13
PLANS APPROVAL DATE

REGISTERED PROFESSIONAL ENGINEER Austin Prince No. C80659 Exp. 3/31/15 CIVIL STATE OF CALIFORNIA

The State of California or its officers or agents shall not be responsible for the accuracy or completeness of scanned copies of this plan sheet.

SMCTA
1250 SAN CARLOS AVENUE
SAN CARLOS, CA 94070-1306

URS CORPORATION
2870 GATEWAY OAKS DRIVE, SUITE 150
SACRAMENTO, CA 95833-4308

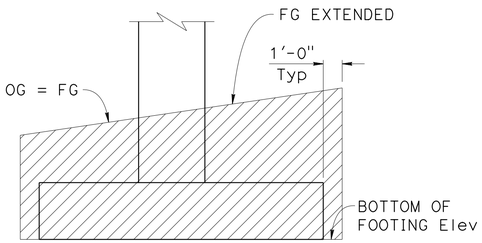

TYPICAL ABUTMENT

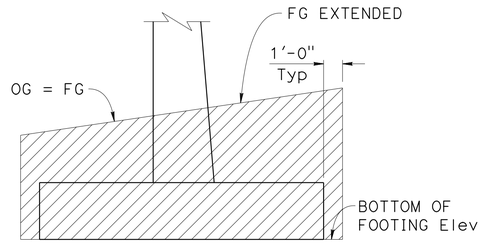

TYPICAL RETAINING WALL

INDICATES LIMITS OF STRUCTURE EXCAVATION (TYPE D)

LIMITS OF STRUCTURE EXCAVATION

NO SCALE

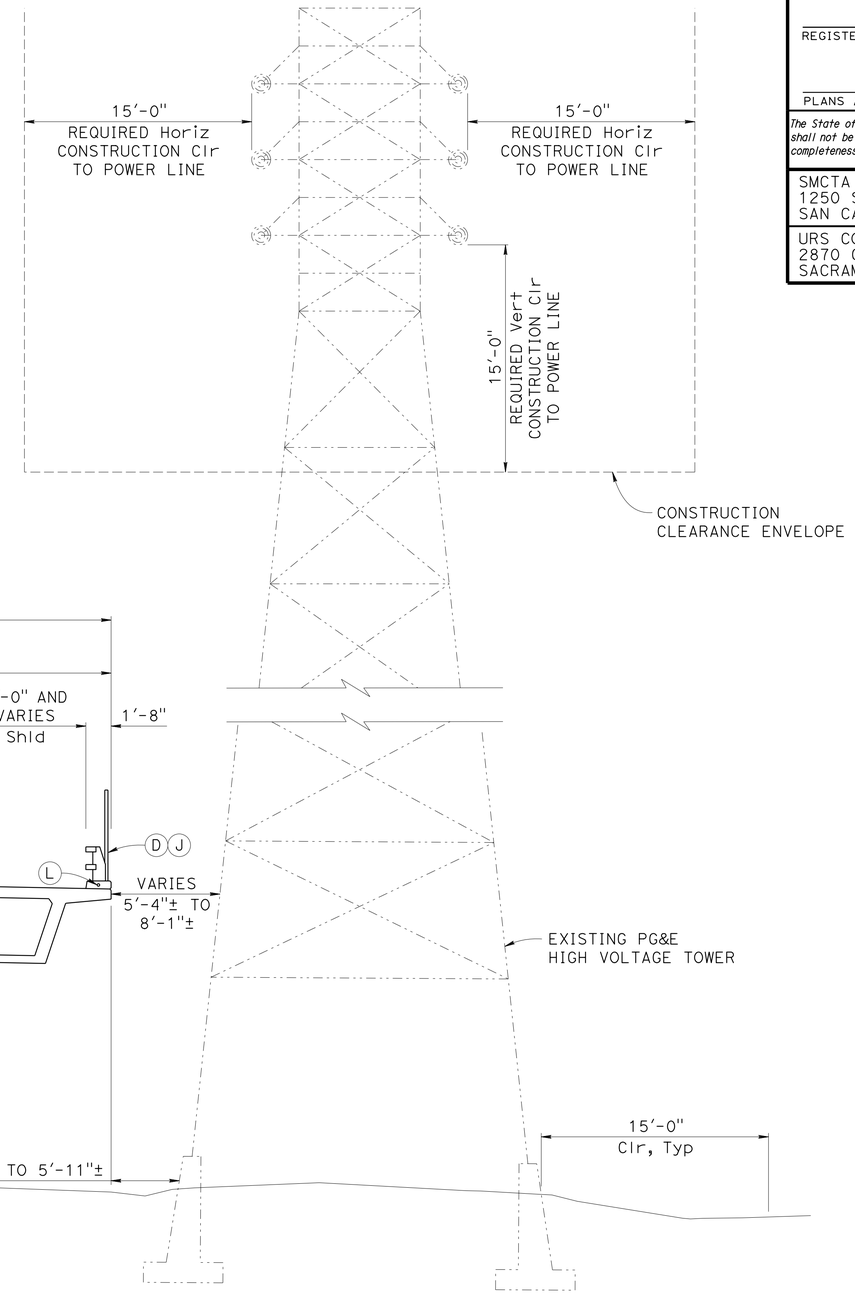

NOTES:

(C) Concrete Barrier (Type 736)
(D) California ST-10 Bridge Rail
(H) Concrete Barrier, see "ROAD PLANS"
(J) Chain Link Railing Type 2 - ST-10 (VINYL-CLAD)
(L) 2" Electrical Conduit, see "ELECTRICAL PLANS"

LEGEND:

··—··— Indicates existing structure

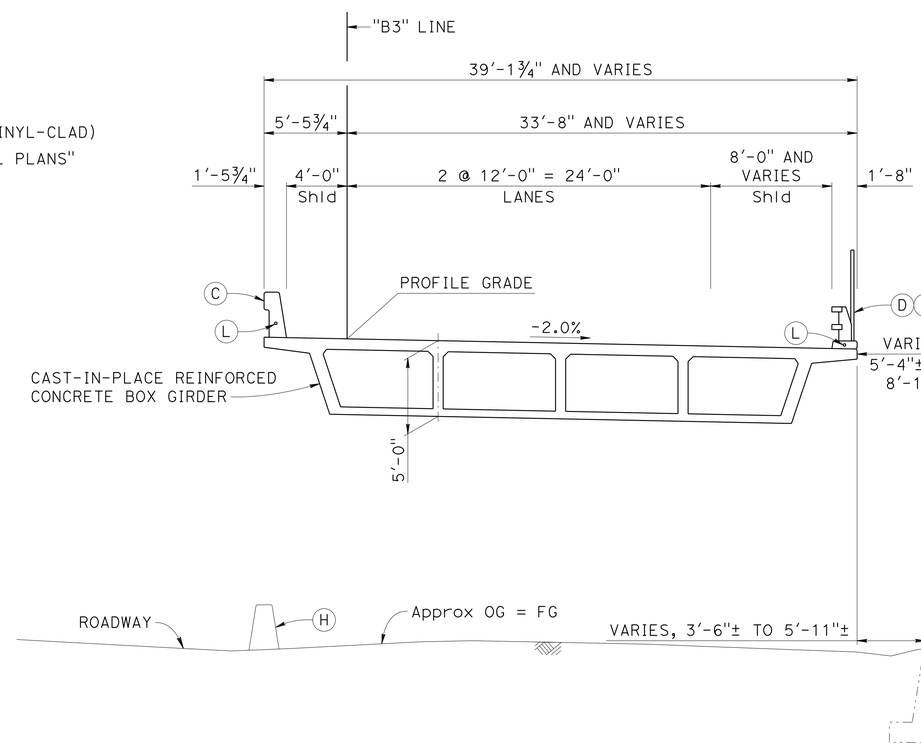

TYPICAL SECTION

1" = 5'-0"

Paul Cotter DESIGN OVERSIGHT Paul Cotter 6-20-13 SIGN OFF DATE	DESIGN	BY A. Prince	CHECKED J. Hueser	LOAD & RESISTANCE FACTOR DESIGN	LIVE LOADING: HL93 W/"LOW-BOY"; PERMIT DESIGN VEHICLE		
	DETAILS	BY R. Lim	CHECKED J. Hueser	LAYOUT	BY A. Prince	CHECKED J. Hueser	
	QUANTITIES	BY A. Prince	CHECKED S. Landis	SPECIFICATIONS	BY D. Harnagel	PLANS AND SPECS COMPARED	

PREPARED FOR THE STATE OF CALIFORNIA DEPARTMENT OF TRANSPORTATION

Syed Kazmi
PROJECT ENGINEER

BRIDGE NO. 35-0352K
POST MILES 16.58

BROADWAY ON-RAMP
GENERAL PLAN No. 2

DESIGN GENERAL PLAN SHEET (ENGLISH) (REV. 03/14/12)

ORIGINAL SCALE IN INCHES FOR REDUCED PLANS 0 1 2 3

UNIT: 0703
PROJECT NUMBER & PHASE: 04000006841 CONTRACT NO.: 235844

DISREGARD PRINTS BEARING EARLIER REVISION DATES

REVISION DATES: 2-12-13 4-8-13 5-15-13 11-16-12 SHEET 2 OF 28

FILE => 0400000684we044.dgn

USERNAME => s141070 DATE PLOTTED => 03-FEB-2014 TIME PLOTTED => 13:51

DIST	COUNTY	ROUTE	POST MILES TOTAL PROJECT	SHEET No	TOTAL SHEETS
04	SM	101	16.3/17.1	753	814

REGISTERED CIVIL ENGINEER — DATE 5-15-13

10/21/13
PLANS APPROVAL DATE

REGISTERED PROFESSIONAL ENGINEER — Austin Prince — No. C80659 — Exp. 3/31/15 — CIVIL — STATE OF CALIFORNIA

The State of California or its officers or agents shall not be responsible for the accuracy or completeness of scanned copies of this plan sheet.

SMCTA
1250 SAN CARLOS AVENUE
SAN CARLOS, CA 94070-1306

URS CORPORATION
2870 GATEWAY OAKS DRIVE, SUITE 150
SACRAMENTO, CA 95833-4308

INDEX TO PLANS

SHEET NO.	TITLE
1	GENERAL PLAN No. 1
2	GENERAL PLAN No. 2
3	INDEX TO PLANS
4	DECK CONTOURS
5	FOUNDATION PLAN
6	ABUTMENT 1 LAYOUT
7	ABUTMENT 1 PILE LAYOUT
8	ABUTMENT 2 LAYOUT
9	ABUTMENT 2 PILE LAYOUT
10	ABUTMENT DETAILS No. 1
11	ABUTMENT DETAILS No. 2
12	ABUTMENT DETAILS No. 3
13	ABUTMENT DETAILS No. 4
14	ABUTMENT DETAILS No. 5
15	TYPICAL SECTION No. 1
16	TYPICAL SECTION No. 2
17	GIRDER LAYOUT
18	GIRDER DETAILS
19	LONGITUDINAL SECTION
20	GIRDER REINFORCEMENT
21	STRUCTURE APPROACH LAYOUT
22	STRUCTURE APPROACH TYPE N(30S)
23	CHAIN LINK RAILING TYPE 2 - ST-10 DETAILS No. 1
24	CHAIN LINK RAILING TYPE 2 - ST-10 DETAILS No. 2
25	ARCHITECTURAL DETAILS
26	PEDESTAL DETAILS
27	LOG OF TEST BORINGS 1 OF 2
28	LOG OF TEST BORINGS 2 OF 2

GENERAL NOTES
LOAD AND RESISTANCE FACTOR DESIGN

DESIGN: AASHTO LRFD Bridge Design Specifications, 4th edition and the California Amendments, preface dated December 2011; except that concrete barriers and bridge details taken from Standard Plans 2010 are designed using Bridge Design Specifications ('96 AASHTO with Revisions by Caltrans).

SEISMIC DESIGN: Caltrans Seismic Design Criteria (SDC), Version 1.6 Dated November 2010.

DEAD LOAD: Includes 35 psf for future wearing surface.

LIVE LOAD: HL93 and permit design load.

SEISMIC LOAD: Soil profile: Type D
Shear wave velocity, Vs30 = 820 ft/sec for the top 100 ft of soil
Moment Magnitude: 7.9
Peak Ground Acceleration = 0.68g

CONCRETE: fy = 60 ksi
f'c = 3.6 ksi
n = 8

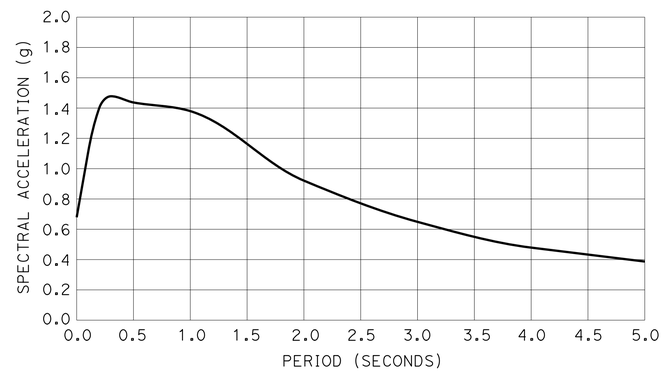

ARS CURVE

STANDARD PLANS 2010

A10A	ABBREVIATIONS (SHEET 1 OF 2)
A10B	ABBREVIATIONS (SHEET 2 OF 2)
A10C	LINES AND SYMBOLS (SHEET 1 OF 3)
A10D	LINES AND SYMBOLS (SHEET 2 OF 3)
A10E	LINES AND SYMBOLS (SHEET 3 OF 3)
A10F	LEGEND - SOIL (SHEET 1 OF 2)
A10G	LEGEND - SOIL (SHEET 2 OF 2)
A62C	LIMITS OF PAYMENT FOR EXCAVATION AND BACKFILL BRIDGE
RSP P10	CONCRETE PAVEMENT - DOWEL BAR DETAILS
B0-1	BRIDGE DETAILS
B0-3	BRIDGE DETAILS
B0-5	BRIDGE DETAILS
B0-13	BRIDGE DETAILS
B2-5	PILE DETAILS CLASS 90 AND CLASS 140
B6-21	JOINT SEALS (MAXIMUM MOVEMENT RATING = 2")
B7-1	BOX GIRDER DETAILS
B11-56	CONCRETE BARRIER TYPE 736
RSP B11-68	CALIFORNIA ST-10 BRIDGE RAIL (SHEET 1 OF 3)
B11-69	CALIFORNIA ST-10 BRIDGE RAIL (SHEET 2 OF 3)
B11-70	CALIFORNIA ST-10 BRIDGE RAIL (SHEET 3 OF 3)

STANDARD PLAN SHEET No.

DETAIL No.

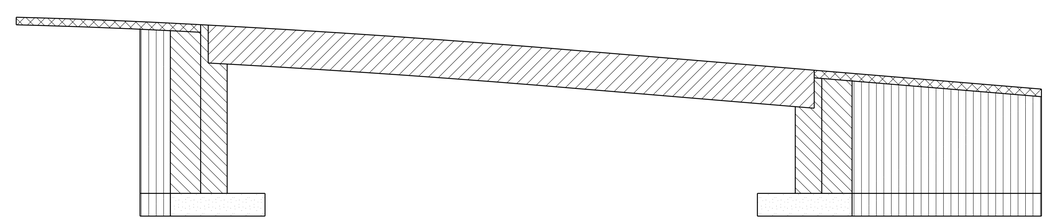

STRUCTURAL CONCRETE, BRIDGE (f'c = 4.0 ksi @ 28 DAYS)
STRUCTURAL CONCRETE, BRIDGE
STRUCTURAL CONCRETE, BRIDGE FOOTING
STRUCTURAL CONCRETE, RETAINING WALL
STRUCTURAL CONCRETE, APPROACH SLAB

CONCRETE STRENGTH AND TYPE LIMITS

NO SCALE

Paul Cotter
DESIGN OVERSIGHT — Paul Cotter
6-20-13
SIGN OFF DATE

	BY	CHECKED
DESIGN	A. Prince	J. Hueser
DETAILS	R. Lim	J. Hueser
QUANTITIES	A. Prince	S. Landis

PREPARED FOR THE STATE OF CALIFORNIA DEPARTMENT OF TRANSPORTATION

Syed Kazmi
PROJECT ENGINEER

BRIDGE NO. 35-0352K
POST MILES 16.58

BROADWAY ON-RAMP
INDEX TO PLANS

DESIGN DETAIL SHEET (ENGLISH) (REV. 03/14/12)

ORIGINAL SCALE IN INCHES FOR REDUCED PLANS 0 1 2 3

UNIT: 0703
PROJECT NUMBER & PHASE: 04000006841 CONTRACT NO.: 235844

DISREGARD PRINTS BEARING EARLIER REVISION DATES

REVISION DATES: 5-15-13 ~~11-16-12~~ ~~2-12-13~~ ~~4-8-13~~

SHEET 3 OF 28

FILE => 0400000684we045.dgn

USERNAME => s141070 DATE PLOTTED => 03-FEB-2014 TIME PLOTTED => 13:51

DIST	COUNTY	ROUTE	POST MILES TOTAL PROJECT	SHEET No	TOTAL SHEETS
04	SM	101	16.3/17.1	754	814

REGISTERED CIVIL ENGINEER — DATE 5-15-13

10/21/13
PLANS APPROVAL DATE

REGISTERED PROFESSIONAL ENGINEER — Austin Prince — No. C80659 — Exp. 3/31/15 — CIVIL — STATE OF CALIFORNIA

The State of California or its officers or agents shall not be responsible for the accuracy or completeness of scanned copies of this plan sheet.

SMCTA
1250 SAN CARLOS AVENUE
SAN CARLOS, CA 94070-1306

URS CORPORATION
2870 GATEWAY OAKS DRIVE, SUITE 150
SACRAMENTO, CA 95833-4308

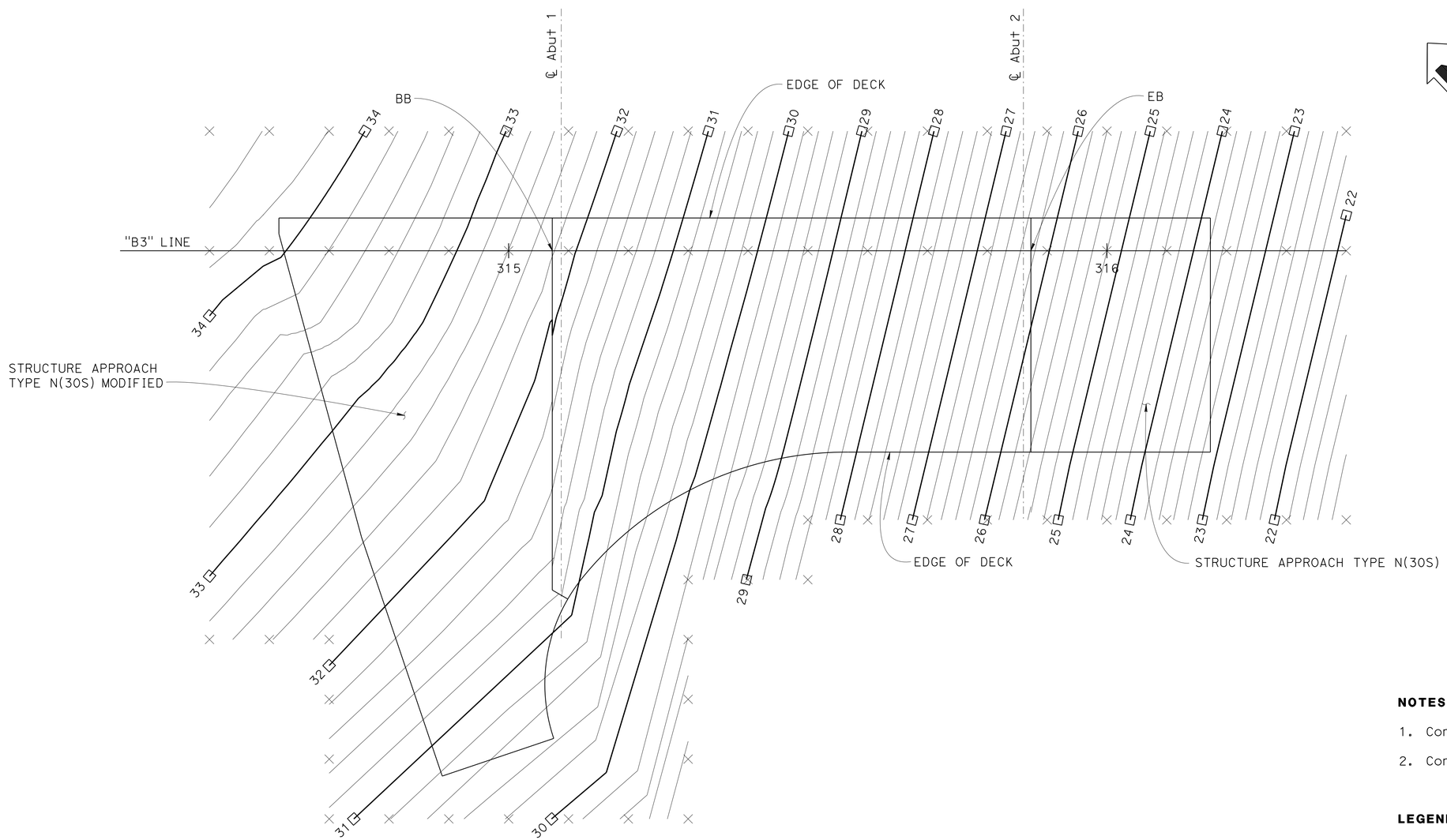

PLAN
1" = 10'-0"

NOTES:

1. Contours do not include camber.
2. Contour interval = 0.20'.

LEGEND:

× Indicates 10' interval measured along "B3" Line.

□ Indicates even foot contours.

Paul Cotter
DESIGN OVERSIGHT — Paul Cotter
6-20-13
SIGN OFF DATE

	BY	CHECKED
DESIGN	A. Prince	J. Hueser
DETAILS	R. Lim	J. Hueser
QUANTITIES	A. Prince	S. Landis

PREPARED FOR THE
STATE OF CALIFORNIA
DEPARTMENT OF TRANSPORTATION

Syed Kazmi
PROJECT ENGINEER

BRIDGE NO. 35-0352K
POST MILES 16.58

BROADWAY ON-RAMP
DECK CONTOURS

DESIGN DETAIL SHEET (ENGLISH) (REV. 03/14/12)

ORIGINAL SCALE IN INCHES FOR REDUCED PLANS 0 1 2 3

UNIT: 0703
PROJECT NUMBER & PHASE: 04000006841 CONTRACT NO.: 235844

DISREGARD PRINTS BEARING EARLIER REVISION DATES → 5-15-13 ~~11-16-12~~ ~~2-12-13~~ ~~4-9-13~~

SHEET 4 OF 28

FILE => 0400000684we046.dgn

USERNAME => s141070 DATE PLOTTED => 03-FEB-2014 TIME PLOTTED => 13:51

DIST	COUNTY	ROUTE	POST MILES TOTAL PROJECT	SHEET No	TOTAL SHEETS
04	SM	101	16.3/17.1	755	814

REGISTERED CIVIL ENGINEER — DATE 5-15-13

10/21/13
PLANS APPROVAL DATE

The State of California or its officers or agents shall not be responsible for the accuracy or completeness of scanned copies of this plan sheet.

REGISTERED PROFESSIONAL ENGINEER — Austin Prince — No. C80659 — Exp. 3/31/15 — CIVIL — STATE OF CALIFORNIA

SMCTA
1250 SAN CARLOS AVENUE
SAN CARLOS, CA 94070-1306

URS CORPORATION
2870 GATEWAY OAKS DRIVE, SUITE 150
SACRAMENTO, CA 95833-4308

PILE DATA TABLE

LOCATION	PILE TYPE	NOMINAL RESISTANCE (kips)		DESIGN TIP ELEVATION (ft)	SPECIFIED TIP ELEVATION (ft)	NOMINAL DRIVING RESISTANCE (kips)*
		COMPRESSION	TENSION			
Abut 1	CLASS 90 Alt "X", T=16"	170	0	-35(A), -24(C), -16(D)	-35	170
Abut 1 Rt RW	CLASS 90 Alt "X", T=16"	160	20	-35(A), -11(B), -24(C), -16(D)	-35	160
Abut 2	CLASS 90 Alt "X", T=16"	180	0	-35(A), -24(C), -16(D)	-35	180
Abut 2 Lt RW	CLASS 90 Alt "X", T=16"	160	30	-35(A), -20(B), -24(C), -16(D)	-35	160
Abut 2 Rt RW	CLASS 90 Alt "X", T=16"	150	30	-35(A), -20(B), -24(C), -16(D)	-35	150

DESIGN TIP ELEVATION IS CONTROLLED BY THE FOLLOWING DEMANDS:
(A) COMPRESSION, (B) TENSION, (C) SETTLEMENT, (D) LATERAL LOAD.
* NOMINAL DRIVING RESISTANCE IS THE SUM OF NOMINAL RESISTANCE AND DOWNDRAG.

BENCH MARK

BENCH MARK	N	E	ELEV	DESCRIPTION
1003	2043769.910	6021712.494	10.93	STANDARD CITY WELL MONUMENT AT THE CENTERLINE OF BAYSHORE HWY IN A CURB MEDIAN OVER A BOX CULVERT AT EASTON CREEK
510	2042355.119	6022633.562	12.66	SURVEY SPIKE & URS WASHER ON THE BROADWAY ON-RAMP TO SB US 101, IN THE AC SHOULDER, ± 3.2′ SOUTHWEST OF ETW & ± 3′ NORTHWEST OF EP

SURVEY CONTROL
HORIZONTAL CONTROL FOR THIS SURVEY IS BASED ON THE CALIFORNIA COORDINATE SYSTEM, ZONE 3, US SURVEY FEET, NORTH AMERICAN DATUM OF 1983 (NAD83 2007),
VERTICAL CONTROL IS THE NORTH AMERICAN VERTICAL DATUM (NAVD88 RCFCD).

NOTES:

1. For location of utilities, see "UTILITY PLANS".
2. Foundation for Broadway OC (Replace), Bridge No. 35-0351 not shown.
3. Construct Broadway On-Ramp, Bridge No. 25-0352k after existing structure has been removed.

LEGEND:

- Indicates battered piles
- Indicates vertical piles
- Indicates bottom of footing elevation

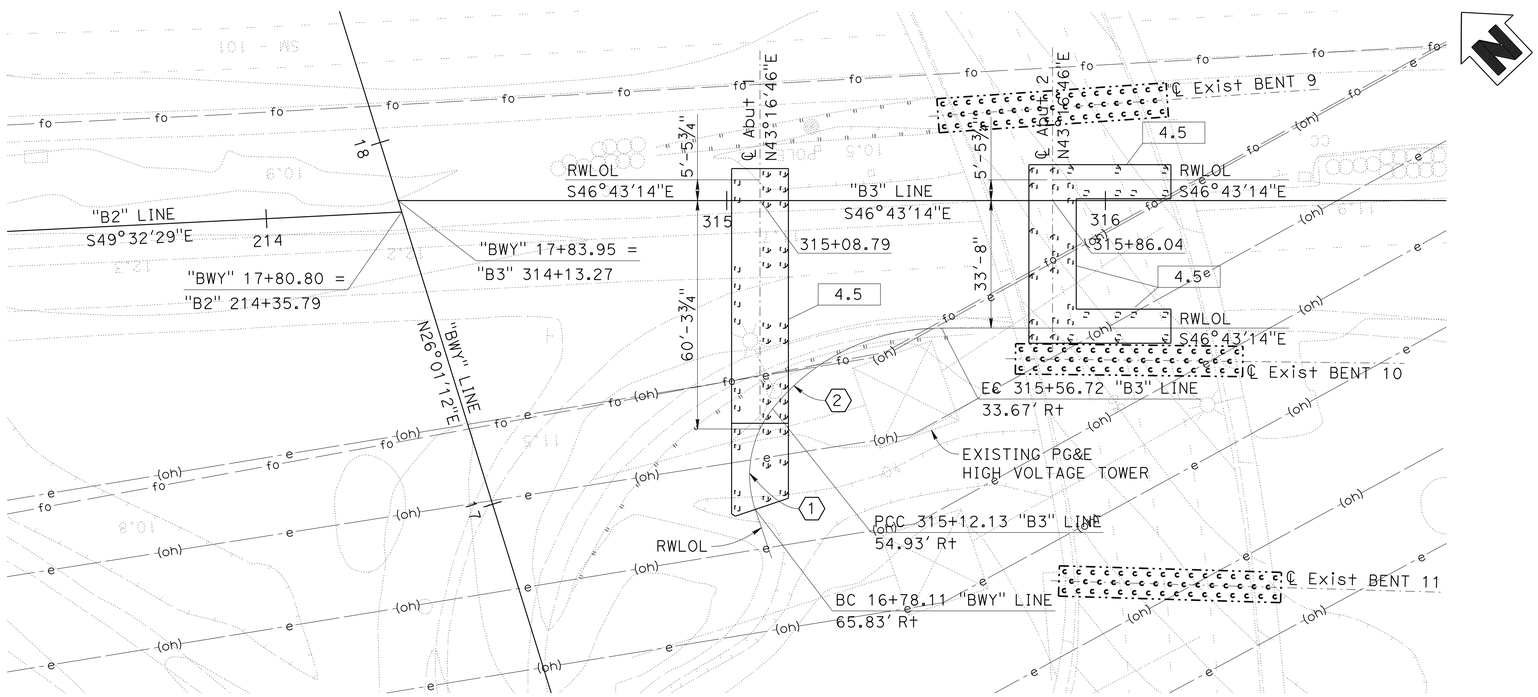

PLAN

CURVE DATA

CURVE	R	Δ	T	L
1	28.33′	56°54′25"	15.35′	28.14′
2	56.62′	51°44′49"	27.46′	51.13′

GEOTECHNICAL PROFESSIONAL — APPROVAL DATE 5-15-13

DESIGN OVERSIGHT — Paul Cotter — 6-20-13 — SIGN OFF DATE

SCALE: 1"=20′-0"	VERT.DATUM NAVD88	HORZ.DATUM NAD83	
PHOTOGRAMMETRY AS OF: 6-23-2010	ALIGNMENT TIES		
SURVEYED	BY C. Radman	DRAFTED	BY K. Iangari
FIELD CHECKED	BY S. Christensen	CHECKED	BY A. Bhoi

	BY	CHECKED
DESIGN	A. Prince	J. Hueser
DETAILS	R. Lim	J. Hueser
QUANTITIES	A. Prince	S. Landis

PREPARED FOR THE STATE OF CALIFORNIA DEPARTMENT OF TRANSPORTATION

Syed Kazmi
PROJECT ENGINEER

BRIDGE NO. 35-0352K
POST MILES 16.58

BROADWAY ON-RAMP
FOUNDATION PLAN

FOUNDATION PLAN SHEET (ENGLISH) (REV. 03/14/12)

ORIGINAL SCALE IN INCHES FOR REDUCED PLANS 0 1 2 3

UNIT: 0703
PROJECT NUMBER & PHASE: 04000006841 CONTRACT NO.: 235844

DISREGARD PRINTS BEARING EARLIER REVISION DATES — REVISION DATES 2-12-13 4-8-13 5-15-13 11-14-13 — SHEET 5 OF 28

FILE => 0400000684we047.dgn

USERNAME => s141070 DATE PLOTTED => 03-FEB-2014 TIME PLOTTED => 13:51

DIST	COUNTY	ROUTE	POST MILES TOTAL PROJECT	SHEET No	TOTAL SHEETS
04	SM	101	16.3/17.1	756	814

REGISTERED CIVIL ENGINEER — DATE 5-15-13

10/21/13
PLANS APPROVAL DATE

REGISTERED PROFESSIONAL ENGINEER — Austin Prince — No. C80659 — Exp. 3/31/15 — CIVIL — STATE OF CALIFORNIA

The State of California or its officers or agents shall not be responsible for the accuracy or completeness of scanned copies of this plan sheet.

SMCTA
1250 SAN CARLOS AVENUE
SAN CARLOS, CA 94070-1306

URS CORPORATION
2870 GATEWAY OAKS DRIVE, SUITE 150
SACRAMENTO, CA 95833-4308

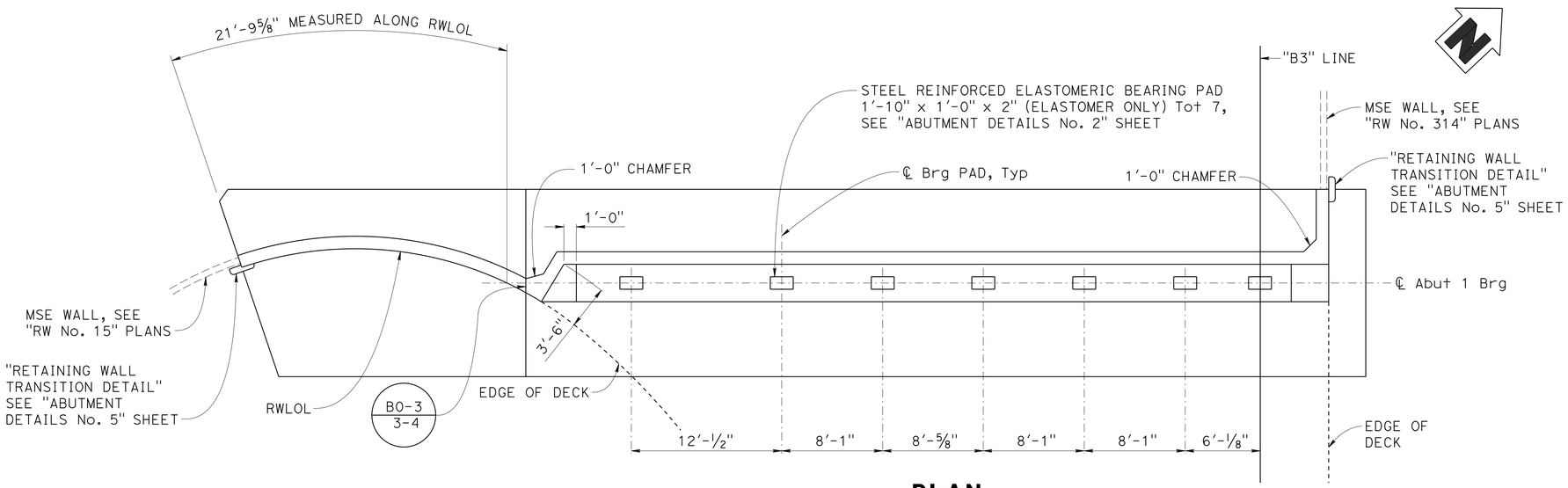

PLAN
3/16" = 1'-0"

NOTES:

1. For "SECTION A-A", see "ABUTMENT DETAILS No. 1" sheet.
2. For "SHEAR KEY DETAIL", see "ABUTMENT DETAILS No. 2" sheet.
3. For retaining wall details, see "ABUTMENT DETAILS No. 3" sheet.

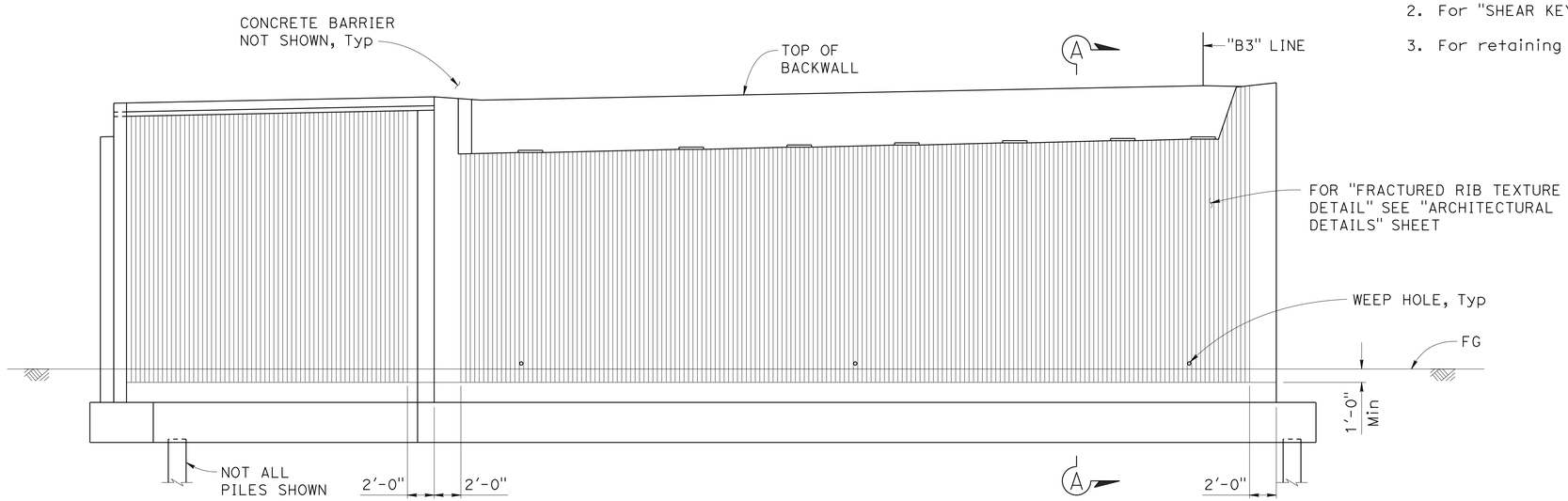

ELEVATION
3/16" = 1'-0"

Paul Cotter
DESIGN OVERSIGHT — Paul Cotter
6-20-13
SIGN OFF DATE

	BY	CHECKED
DESIGN	A. Prince	J. Hueser
DETAILS	R. Lim	J. Hueser
QUANTITIES	A. Prince	S. Landis

PREPARED FOR THE STATE OF CALIFORNIA DEPARTMENT OF TRANSPORTATION

Syed Kazmi
PROJECT ENGINEER

BRIDGE NO. 35-0352K
POST MILES 16.58

BROADWAY ON-RAMP
ABUTMENT 1 LAYOUT

DESIGN DETAIL SHEET (ENGLISH) (REV. 03/14/12)

ORIGINAL SCALE IN INCHES FOR REDUCED PLANS 0 1 2 3

UNIT: 0703
PROJECT NUMBER & PHASE: 04000006841 CONTRACT NO.: 235844

DISREGARD PRINTS BEARING EARLIER REVISION DATES

REVISION DATES: 5-15-13 ~~11-16-12~~ ~~2-12-13~~ ~~4-8-13~~

SHEET 6 OF 28

FILE => 0400000684we048.dgn

USERNAME => s141070 DATE PLOTTED => 03-FEB-2014 TIME PLOTTED => 13:51

DIST	COUNTY	ROUTE	POST MILES TOTAL PROJECT	SHEET No	TOTAL SHEETS
04	SM	101	16.3/17.1	757	814

REGISTERED CIVIL ENGINEER — DATE 5-15-13

10/21/13
PLANS APPROVAL DATE

REGISTERED PROFESSIONAL ENGINEER — Austin Prince — No. C80659 — Exp. 3/31/15 — CIVIL — STATE OF CALIFORNIA

The State of California or its officers or agents shall not be responsible for the accuracy or completeness of scanned copies of this plan sheet.

SMCTA
1250 SAN CARLOS AVENUE
SAN CARLOS, CA 94070-1306

URS CORPORATION
2870 GATEWAY OAKS DRIVE, SUITE 150
SACRAMENTO, CA 95833-4308

LEGEND:

- INDICATES VERTICAL PILES
- INDICATES BATTERED PILES

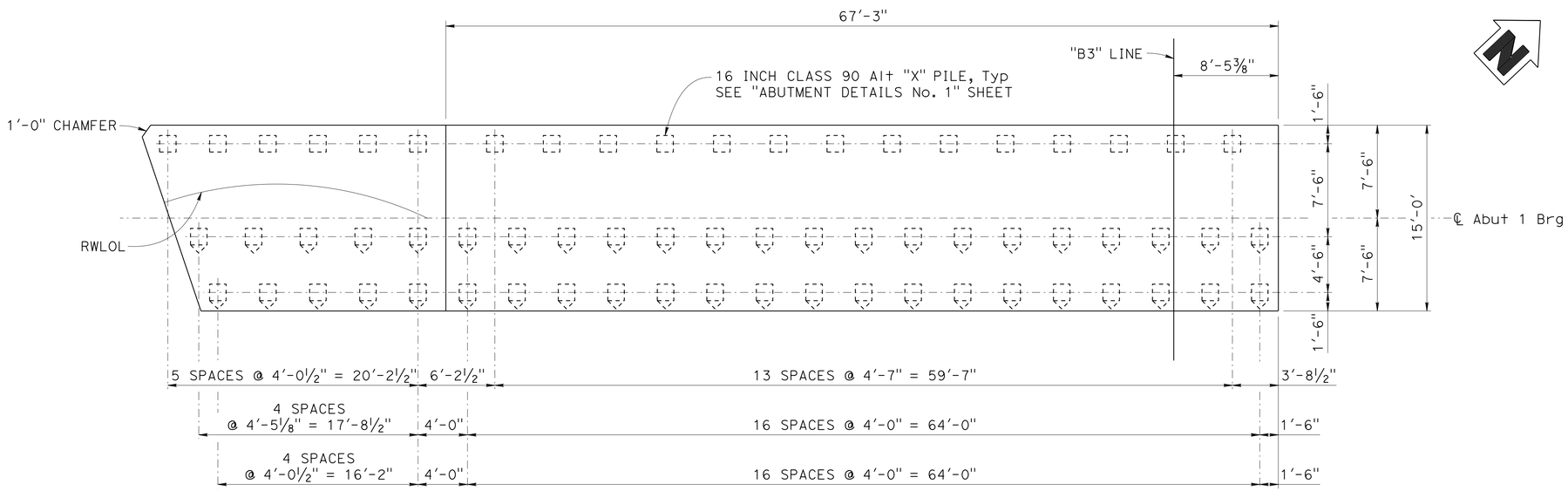

PILE LAYOUT

3/16" = 1'-0"

DESIGN OVERSIGHT — Paul Cotter
6-20-13
SIGN OFF DATE

	BY	CHECKED
DESIGN	A. Prince	J. Hueser
DETAILS	R. Lim	J. Hueser
QUANTITIES	A. Prince	S. Landis

PREPARED FOR THE STATE OF CALIFORNIA DEPARTMENT OF TRANSPORTATION

Syed Kazmi
PROJECT ENGINEER

BRIDGE NO. 35-0352K
POST MILES 16.58

BROADWAY ON-RAMP
ABUTMENT 1 PILE LAYOUT

DESIGN DETAIL SHEET (ENGLISH) (REV. 03/14/12)

ORIGINAL SCALE IN INCHES FOR REDUCED PLANS 0 1 2 3

UNIT: 0703
PROJECT NUMBER & PHASE: 04000006841
CONTRACT NO.: 235844

DISREGARD PRINTS BEARING EARLIER REVISION DATES

REVISION DATES: 5-15-13 ~~11-16-12~~ ~~2-12-13~~ ~~4-8-13~~

SHEET 7 OF 28

FILE => 0400000684we049.dgn

USERNAME => s141070 DATE PLOTTED => 03-FEB-2014 TIME PLOTTED => 13:51

DIST	COUNTY	ROUTE	POST MILES TOTAL PROJECT	SHEET No	TOTAL SHEETS
04	SM	101	16.3/17.1	758	814

REGISTERED CIVIL ENGINEER — DATE 5-15-13

10/21/13
PLANS APPROVAL DATE

REGISTERED PROFESSIONAL ENGINEER — Austin Prince — No. C80659 — Exp. 3/31/15 — CIVIL — STATE OF CALIFORNIA

The State of California or its officers or agents shall not be responsible for the accuracy or completeness of scanned copies of this plan sheet.

SMCTA
1250 SAN CARLOS AVENUE
SAN CARLOS, CA 94070-1306

URS CORPORATION
2870 GATEWAY OAKS DRIVE, SUITE 150
SACRAMENTO, CA 95833-4308

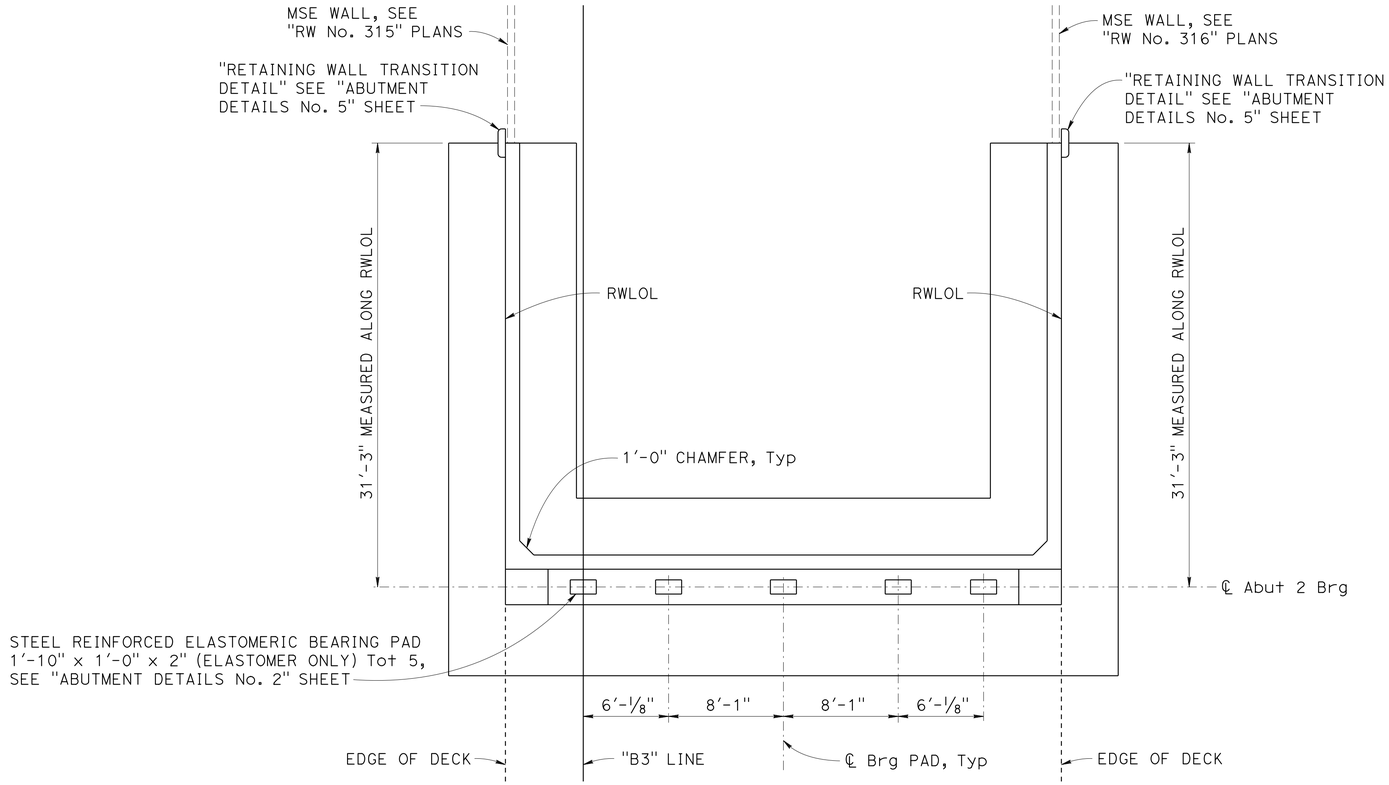

PLAN

3/16" = 1'-0"

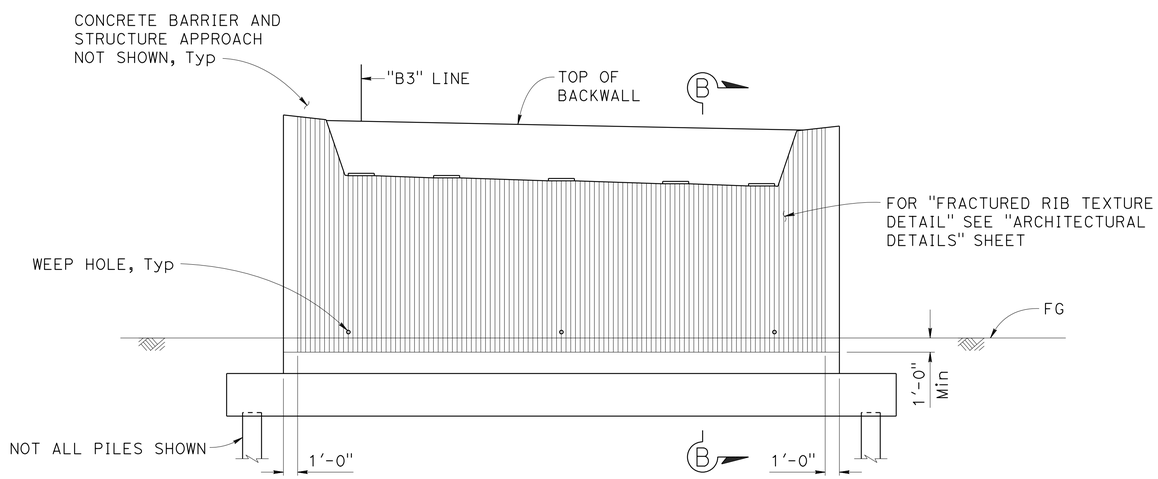

ELEVATION

3/16" = 1'-0"

NOTES:

1. For "SECTION B-B", see "ABUTMENT DETAILS No. 1" sheet.
2. For "SHEAR KEY DETAIL", see "ABUTMENT DETAILS No. 2" sheet.
3. For retaining wall details, see "ABUTMENT DETAILS No. 4" sheet.

Paul Cotter
DESIGN OVERSIGHT — Paul Cotter
6-20-13
SIGN OFF DATE

	BY	CHECKED
DESIGN	A. Prince	J. Hueser
DETAILS	R. Lim	J. Hueser
QUANTITIES	A. Prince	S. Landis

PREPARED FOR THE STATE OF CALIFORNIA DEPARTMENT OF TRANSPORTATION

Syed Kazmi
PROJECT ENGINEER

BRIDGE NO. 35-0352K
POST MILES 16.58

BROADWAY ON-RAMP
ABUTMENT 2 LAYOUT

DESIGN DETAIL SHEET (ENGLISH) (REV. 03/14/12)

ORIGINAL SCALE IN INCHES FOR REDUCED PLANS 0 1 2 3

UNIT: 0703
PROJECT NUMBER & PHASE: 04000006841 CONTRACT NO.: 235844

DISREGARD PRINTS BEARING EARLIER REVISION DATES

REVISION DATES: 5-15-13 11-16-12 2-12-13 4-8-13

SHEET 8 OF 28

FILE => 0400000684we050.dgn

USERNAME => s141070 DATE PLOTTED => 03-FEB-2014 TIME PLOTTED => 13:51

DIST	COUNTY	ROUTE	POST MILES TOTAL PROJECT	SHEET No	TOTAL SHEETS
04	SM	101	16.3/17.1	759	814

REGISTERED CIVIL ENGINEER — DATE 5-15-13

10/21/13
PLANS APPROVAL DATE

REGISTERED PROFESSIONAL ENGINEER — Austin Prince — No. C80659 — Exp. 3/31/15 — CIVIL — STATE OF CALIFORNIA

The State of California or its officers or agents shall not be responsible for the accuracy or completeness of scanned copies of this plan sheet.

SMCTA
1250 SAN CARLOS AVENUE
SAN CARLOS, CA 94070-1306

URS CORPORATION
2870 GATEWAY OAKS DRIVE, SUITE 150
SACRAMENTO, CA 95833-4308

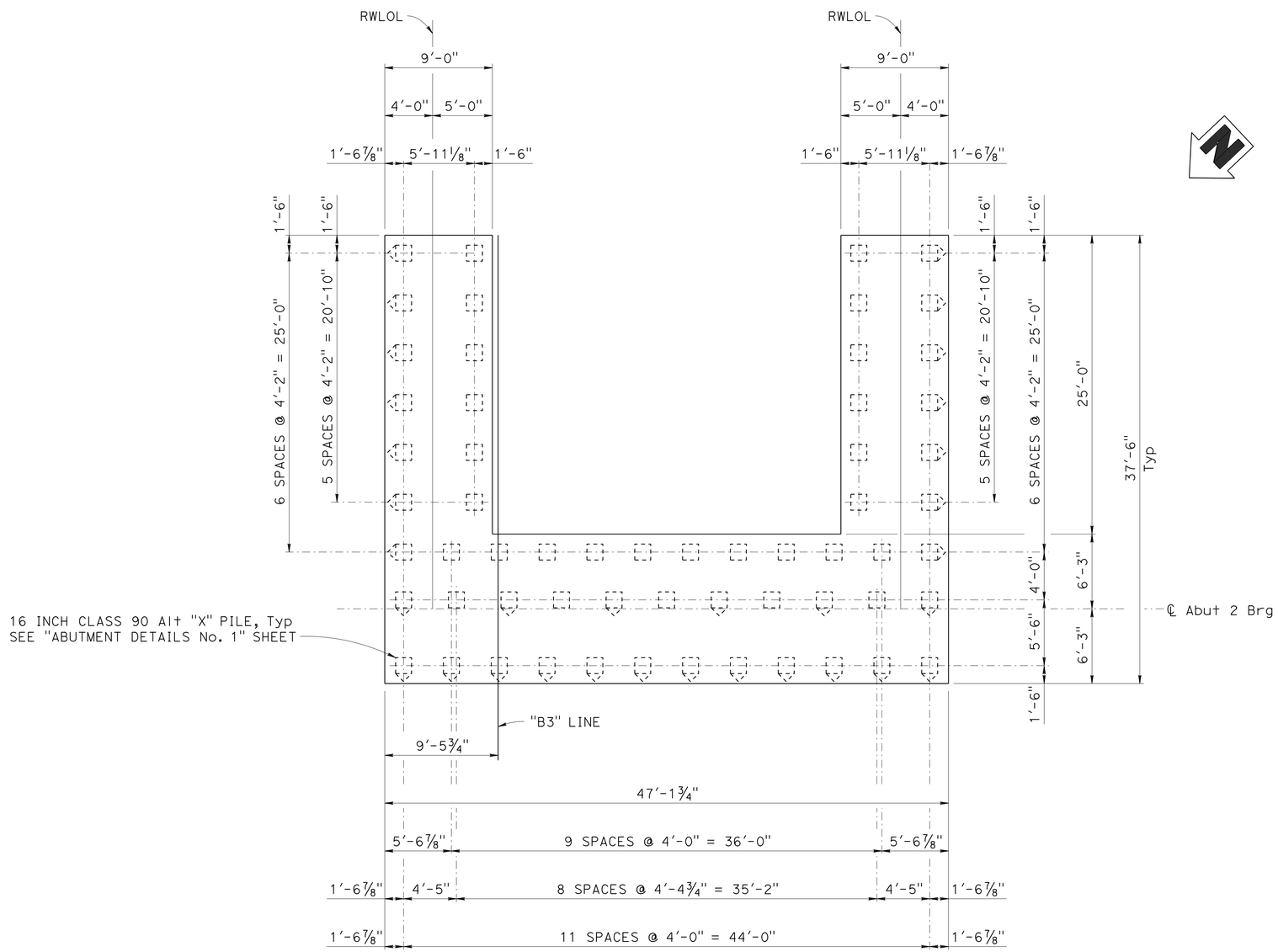

PILE LAYOUT

3/16" = 1'-0"

LEGEND:

- INDICATES VERTICAL PILES
- INDICATES BATTERED PILES

DESIGN	BY A. Prince	CHECKED J. Hueser	
DETAILS	BY R. Lim	CHECKED J. Hueser	
QUANTITIES	BY A. Prince	CHECKED S. Landis	

DESIGN OVERSIGHT Paul Cotter — Paul Cotter
6-20-13
SIGN OFF DATE

PREPARED FOR THE STATE OF CALIFORNIA DEPARTMENT OF TRANSPORTATION

Syed Kazmi
PROJECT ENGINEER

BRIDGE NO. 35-0352K
POST MILES 16.58

BROADWAY ON-RAMP
ABUTMENT 2 PILE LAYOUT

DESIGN DETAIL SHEET (ENGLISH) (REV. 03/14/12)

ORIGINAL SCALE IN INCHES FOR REDUCED PLANS 0 1 2 3

UNIT: 0703
PROJECT NUMBER & PHASE: 04000006841 CONTRACT NO.: 235844

DISREGARD PRINTS BEARING EARLIER REVISION DATES

REVISION DATES: 5-15-13 11-16-12 2-12-13 4-8-13

SHEET 9 OF 28

FILE => 0400000684we051.dgn

USERNAME => s141070 DATE PLOTTED => 03-FEB-2014 TIME PLOTTED => 13:51

DIST	COUNTY	ROUTE	POST MILES TOTAL PROJECT	SHEET No	TOTAL SHEETS
04	SM	101	16.3/17.1	760	814

REGISTERED CIVIL ENGINEER — DATE 5-15-13

10/21/13
PLANS APPROVAL DATE

REGISTERED PROFESSIONAL ENGINEER — Austin Prince — No. C80659 — Exp. 3/31/15 — CIVIL — STATE OF CALIFORNIA

The State of California or its officers or agents shall not be responsible for the accuracy or completeness of scanned copies of this plan sheet.

SMCTA
1250 SAN CARLOS AVENUE
SAN CARLOS, CA 94070-1306

URS CORPORATION
2870 GATEWAY OAKS DRIVE, SUITE 150
SACRAMENTO, CA 95833-4308

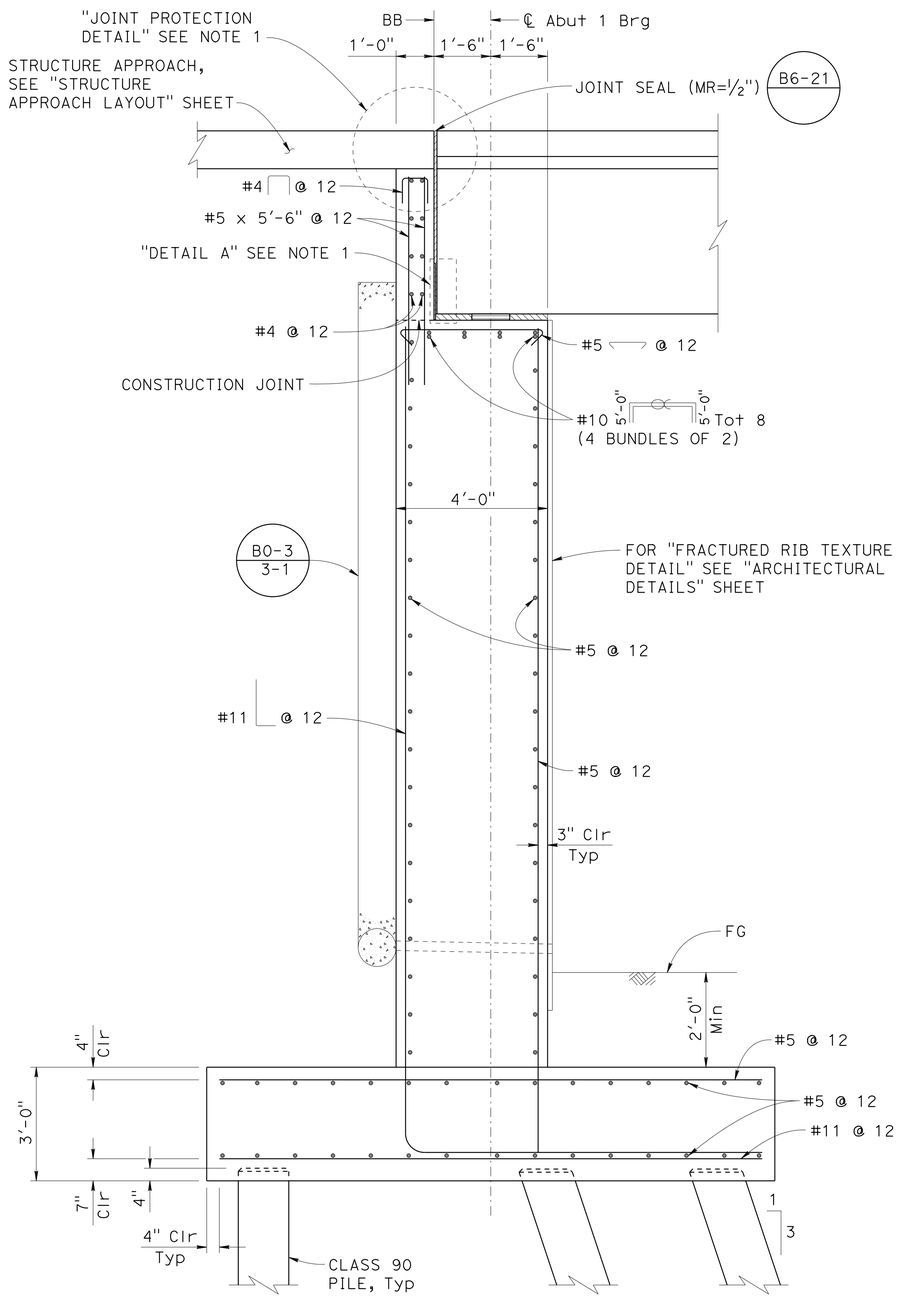

SECTION A-A (A62C)
½" = 1'-0"

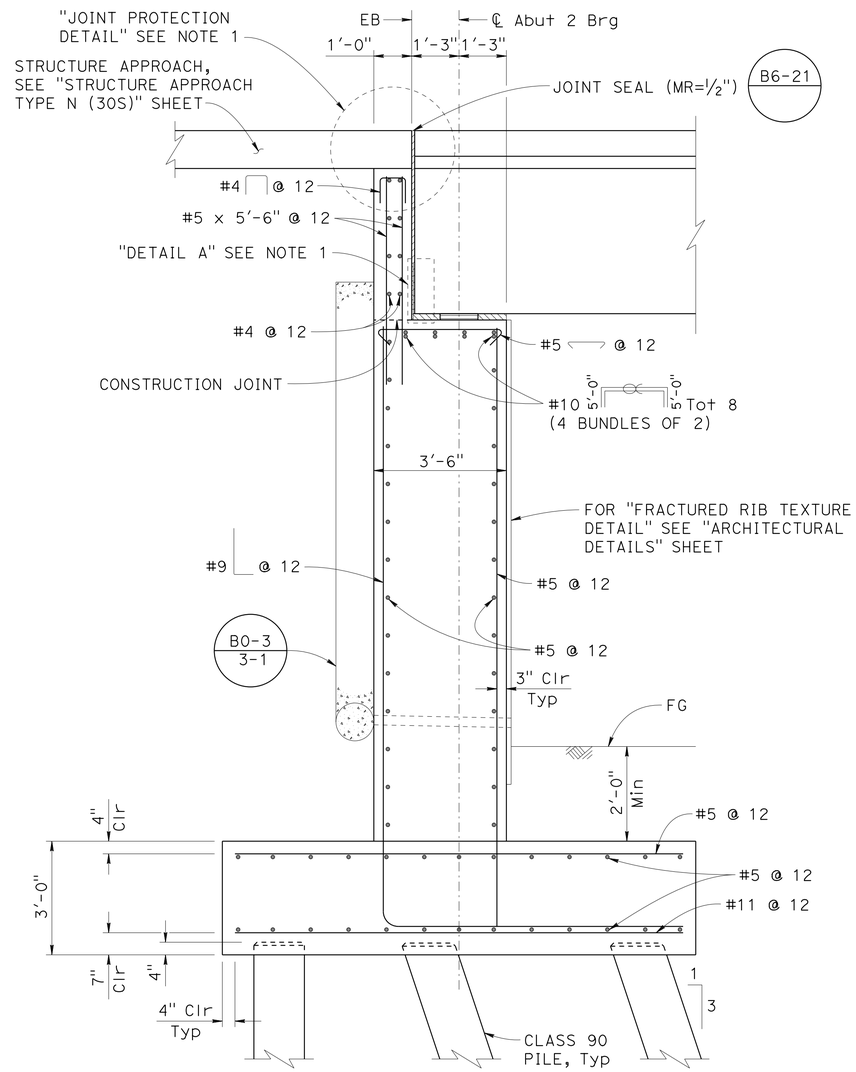

SECTION B-B (A62C)
½" = 1'-0"

NOTES:

1. For "DETAIL A" and "JOINT PROTECTION DETAIL" see "ABUTMENT DETAILS No. 2" sheet.

LEGEND:

∝ Indicates bundled bars

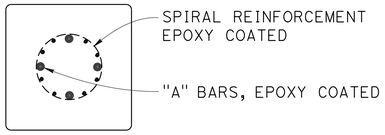

MODIFICATIONS TO CLASS 90 PILE (B2-5)
NO SCALE

Paul Cotter
DESIGN OVERSIGHT — Paul Cotter
6-20-13
SIGN OFF DATE

	BY	CHECKED
DESIGN	A. Prince	J. Hueser
DETAILS	R. Lim	J. Hueser
QUANTITIES	A. Prince	S. Landis

PREPARED FOR THE STATE OF CALIFORNIA DEPARTMENT OF TRANSPORTATION

Syed Kazmi
PROJECT ENGINEER

BRIDGE NO. 35-0352K
POST MILES 16.58

BROADWAY ON-RAMP
ABUTMENT DETAILS No. 1

DESIGN DETAIL SHEET (ENGLISH) (REV. 03/14/12)

ORIGINAL SCALE IN INCHES FOR REDUCED PLANS 0 1 2 3

UNIT: 0703
PROJECT NUMBER & PHASE: 04000006841 CONTRACT NO.: 235844

DISREGARD PRINTS BEARING EARLIER REVISION DATES

REVISION DATES: 5-15-13 11-16-12 2-12-13 4-8-13

SHEET 10 OF 28

FILE => 0400000684we052.dgn

USERNAME => s141070 DATE PLOTTED => 03-FEB-2014 TIME PLOTTED => 13:52

DIST	COUNTY	ROUTE	POST MILES TOTAL PROJECT	SHEET No	TOTAL SHEETS
04	SM	101	16.3/17.1	761	814

REGISTERED CIVIL ENGINEER 5-15-13 DATE

10/21/13
PLANS APPROVAL DATE

REGISTERED PROFESSIONAL ENGINEER Austin Prince No. C80659 Exp. 3/31/15 CIVIL STATE OF CALIFORNIA

The State of California or its officers or agents shall not be responsible for the accuracy or completeness of scanned copies of this plan sheet.

SMCTA
1250 SAN CARLOS AVENUE
SAN CARLOS, CA 94070-1306

URS CORPORATION
2870 GATEWAY OAKS DRIVE, SUITE 150
SACRAMENTO, CA 95833-4308

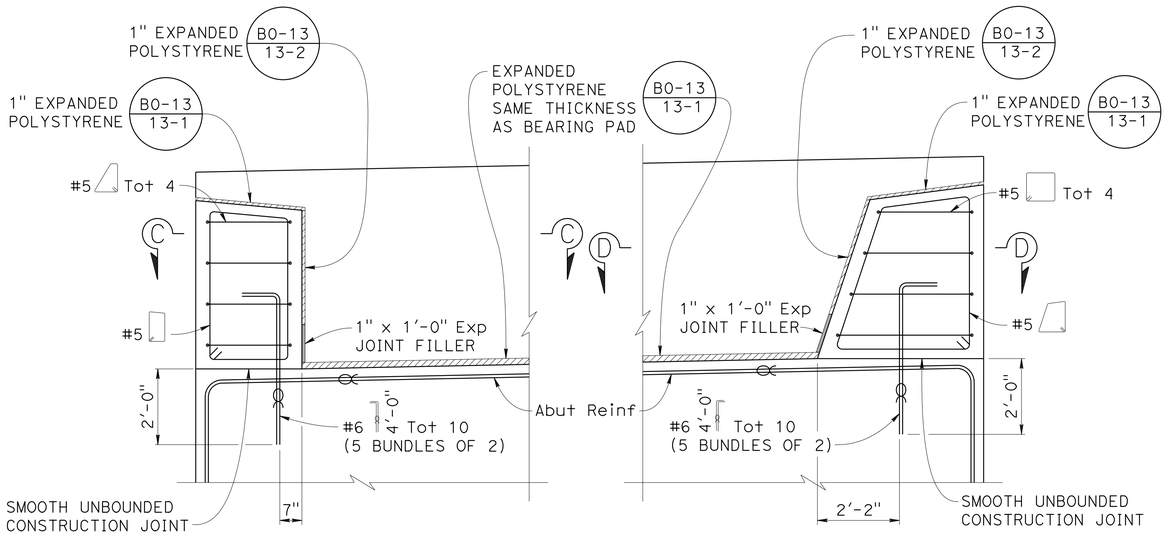

SHEAR KEY DETAIL

1/2" = 1'-0"

ABUTMENT 1 SHOWN, ABUTMENT 3 SIMILAR

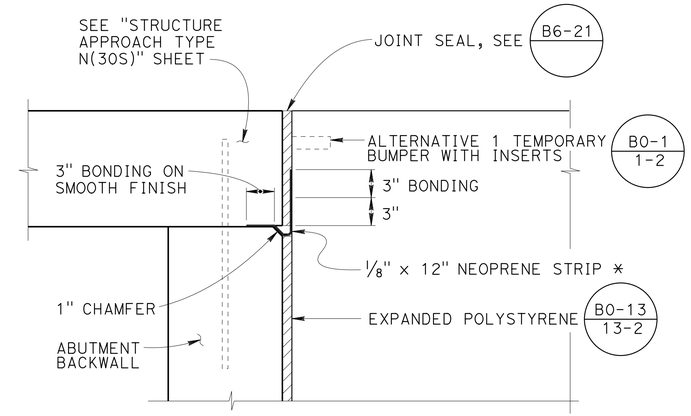

* PLACE PRIOR TO BACKFILLING THE ABUTMENT BACKWALL AND INSTALLING TEMPORARY BUMPER (FOLD NEOPRENE INTO CHAMFER)

JOINT PROTECTION DETAIL

NO SCALE

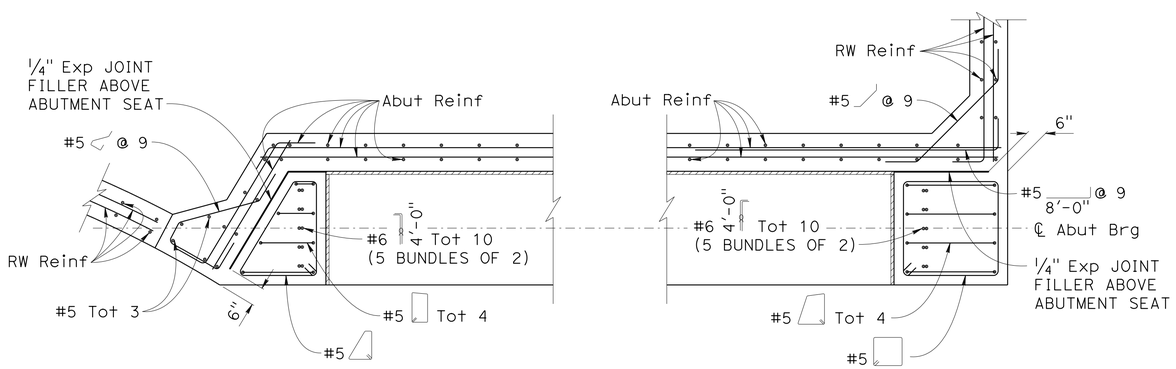

SECTION C-C

1/2" = 1'-0"

SECTION D-D

1/2" = 1'-0"

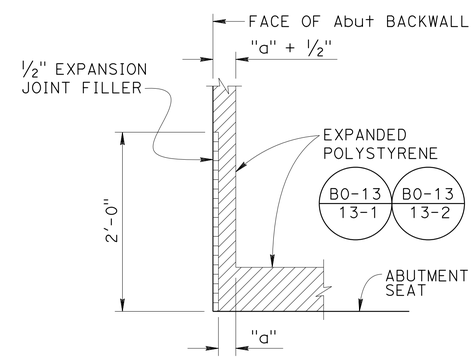

DETAIL A

NO SCALE

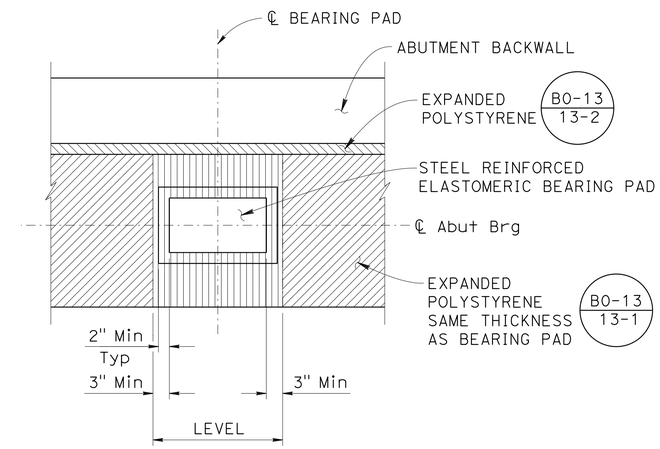

PLAN

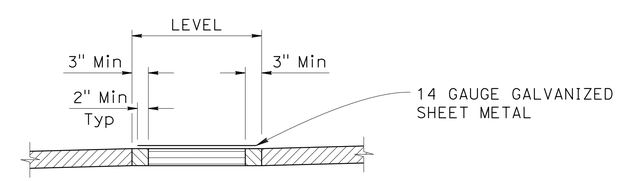

ELEVATION

BEARING PAD DETAIL

NO SCALE

LEGEND:

∝ Indicates bundled bars

Paul Cotter
DESIGN OVERSIGHT Paul Cotter
6-20-13
SIGN OFF DATE

	BY	CHECKED
DESIGN	A. Prince	J. Hueser
DETAILS	R. Lim	J. Hueser
QUANTITIES	A. Prince	S. Landis

PREPARED FOR THE STATE OF CALIFORNIA DEPARTMENT OF TRANSPORTATION

Syed Kazmi
PROJECT ENGINEER

BRIDGE NO. 35-0352K
POST MILES 16.58

BROADWAY ON-RAMP
ABUTMENT DETAILS No. 2

DESIGN DETAIL SHEET (ENGLISH) (REV. 03/14/12)

ORIGINAL SCALE IN INCHES FOR REDUCED PLANS 0 1 2 3

UNIT: 0703
PROJECT NUMBER & PHASE: 04000006841 CONTRACT NO.: 235844

DISREGARD PRINTS BEARING EARLIER REVISION DATES

REVISION DATES: 5-15-13 11-16-12 2-12-13 4-9-13

SHEET 11 OF 28

FILE => 0400000684we053.dgn

USERNAME => s141070 DATE PLOTTED => 03-FEB-2014 TIME PLOTTED => 13:52

DIST	COUNTY	ROUTE	POST MILES TOTAL PROJECT	SHEET No	TOTAL SHEETS
04	SM	101	16.3/17.1	762	814

REGISTERED CIVIL ENGINEER — DATE 5-15-13

10/21/13
PLANS APPROVAL DATE

REGISTERED PROFESSIONAL ENGINEER — Austin Prince — No. C80659 — Exp. 3/31/15 — CIVIL — STATE OF CALIFORNIA

The State of California or its officers or agents shall not be responsible for the accuracy or completeness of scanned copies of this plan sheet.

SMCTA
1250 SAN CARLOS AVENUE
SAN CARLOS, CA 94070-1306

URS CORPORATION
2870 GATEWAY OAKS DRIVE, SUITE 150
SACRAMENTO, CA 95833-4308

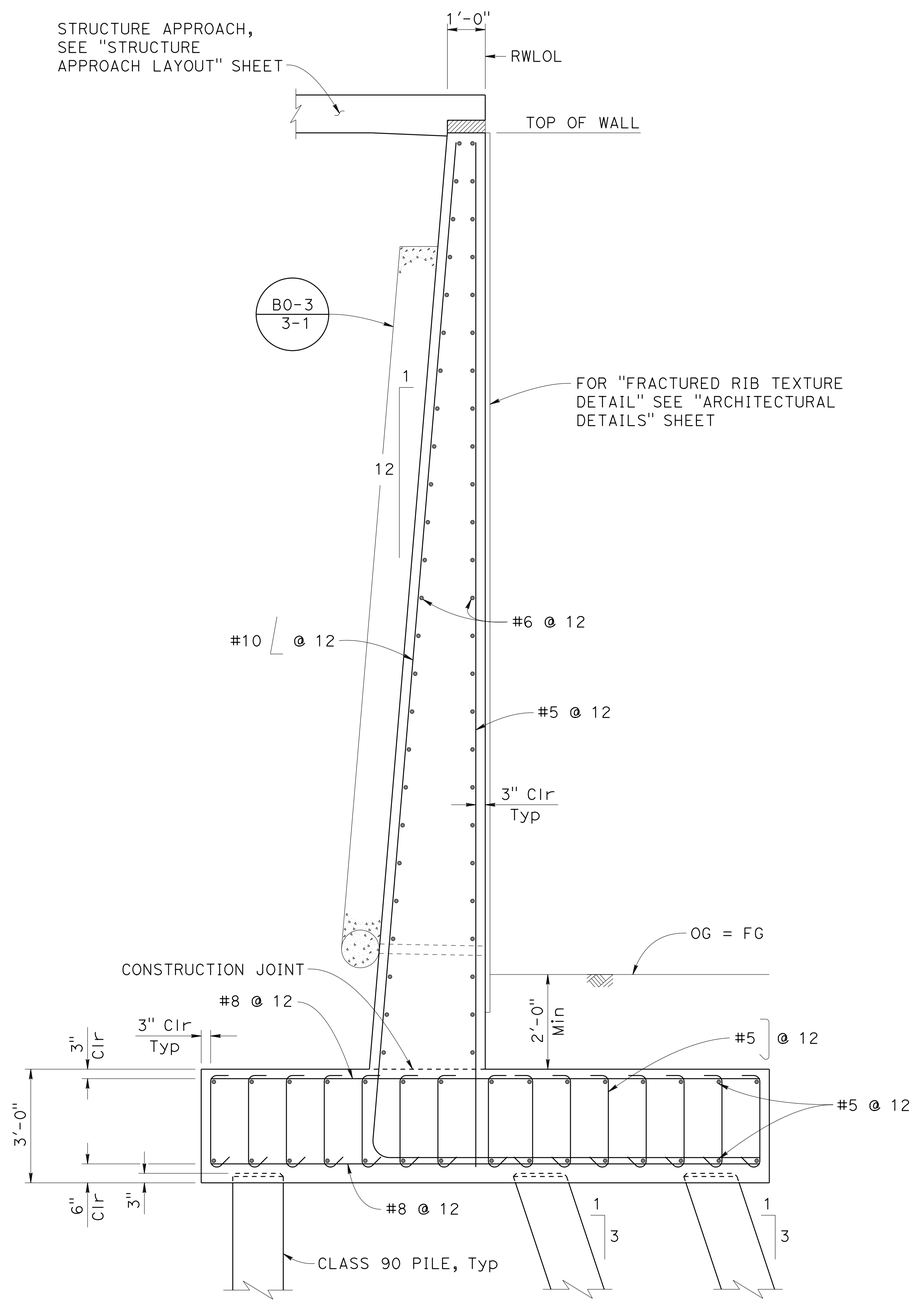

SECTION E-E

½" = 1'-0"

A62C

Abut 1 RIGHT SHOWN, Abut 1 LEFT SIMILAR.

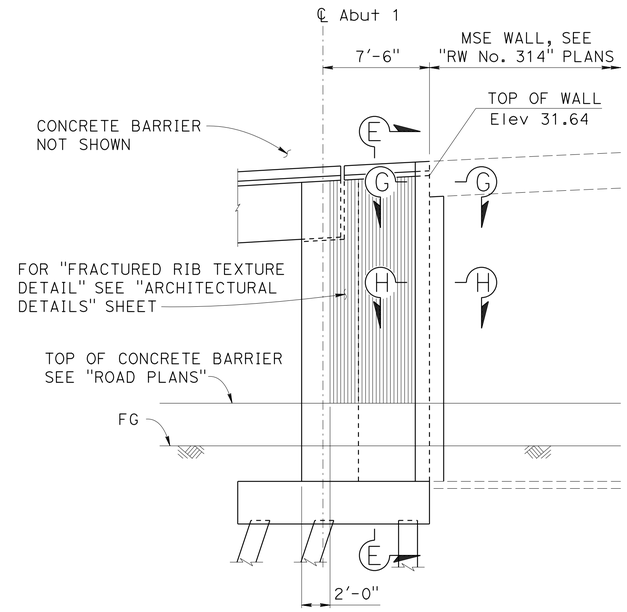

ABUTMENT 1 - LEFT RETAINING WALL ELEVATION

3/16" = 1'-0"

B0-3
3-3

NOTE:

1. For "SECTION G-G" and "SECTION H-H", see "ABUTMENT DETAILS No. 5" sheet.

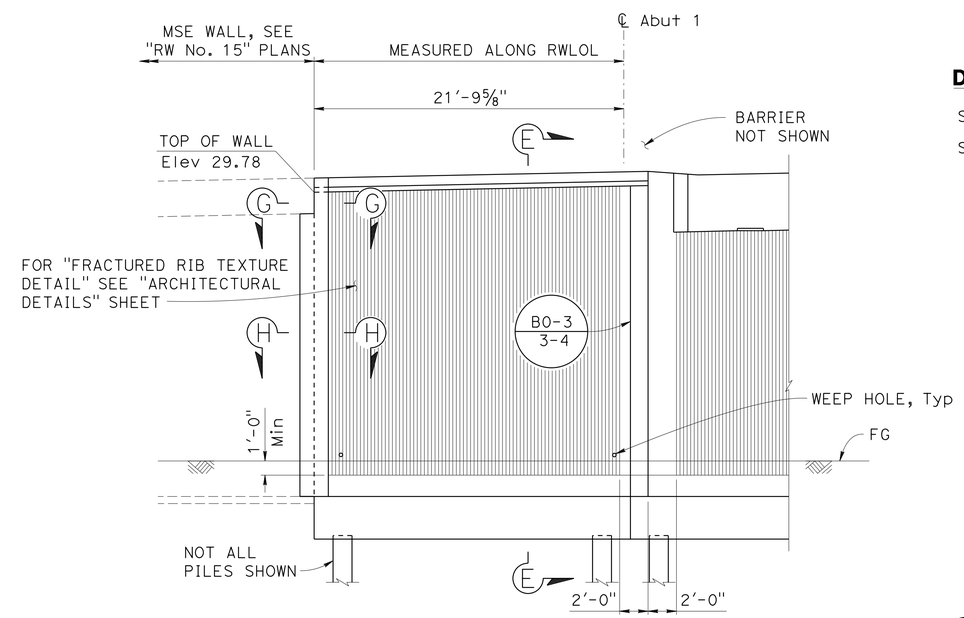

ABUTMENT 1 - RIGHT RETAINING WALL ELEVATION

3/16" = 1'-0"

B0-3
3-3

DESIGN NOTES:

SEISMIC: $k_h = 0.23$, $k_v = 0.0$

SOIL: $\phi = 34°$, $\gamma = 120$ pcf

Paul Cotter
DESIGN OVERSIGHT — Paul Cotter
6-20-13
SIGN OFF DATE

	BY	CHECKED
DESIGN	A. Prince	J. Hueser
DETAILS	R. Lim	J. Hueser
QUANTITIES	A. Prince	S. Landis

PREPARED FOR THE STATE OF CALIFORNIA DEPARTMENT OF TRANSPORTATION

Syed Kazmi
PROJECT ENGINEER

BRIDGE NO. 35-0352K
POST MILES 16.58

BROADWAY ON-RAMP
ABUTMENT DETAILS No. 3

DESIGN DETAIL SHEET (ENGLISH) (REV. 03/14/12)

ORIGINAL SCALE IN INCHES FOR REDUCED PLANS 0 1 2 3

UNIT: 0703
PROJECT NUMBER & PHASE: 04000006841 CONTRACT NO.: 235844

DISREGARD PRINTS BEARING EARLIER REVISION DATES

REVISION DATES: 5-15-13 ~~11-16-12~~ ~~2-12-13~~ ~~4-8-13~~

SHEET 12 OF 28

FILE => 0400000684we054.dgn

USERNAME => s141070 DATE PLOTTED => 03-FEB-2014 TIME PLOTTED => 13:52

DIST	COUNTY	ROUTE	POST MILES TOTAL PROJECT	SHEET No	TOTAL SHEETS
04	SM	101	16.3/17.1	763	814

REGISTERED CIVIL ENGINEER 5-15-13 DATE

10/21/13
PLANS APPROVAL DATE

REGISTERED PROFESSIONAL ENGINEER Austin Prince No. C80659 Exp. 3/31/15 CIVIL STATE OF CALIFORNIA

The State of California or its officers or agents shall not be responsible for the accuracy or completeness of scanned copies of this plan sheet.

SMCTA
1250 SAN CARLOS AVENUE
SAN CARLOS, CA 94070-1306

URS CORPORATION
2870 GATEWAY OAKS DRIVE, SUITE 150
SACRAMENTO, CA 95833-4308

NOTE:

1. For "SECTION G-G" and "SECTION H-H", see "ABUTMENT DETAILS No. 5" sheet.

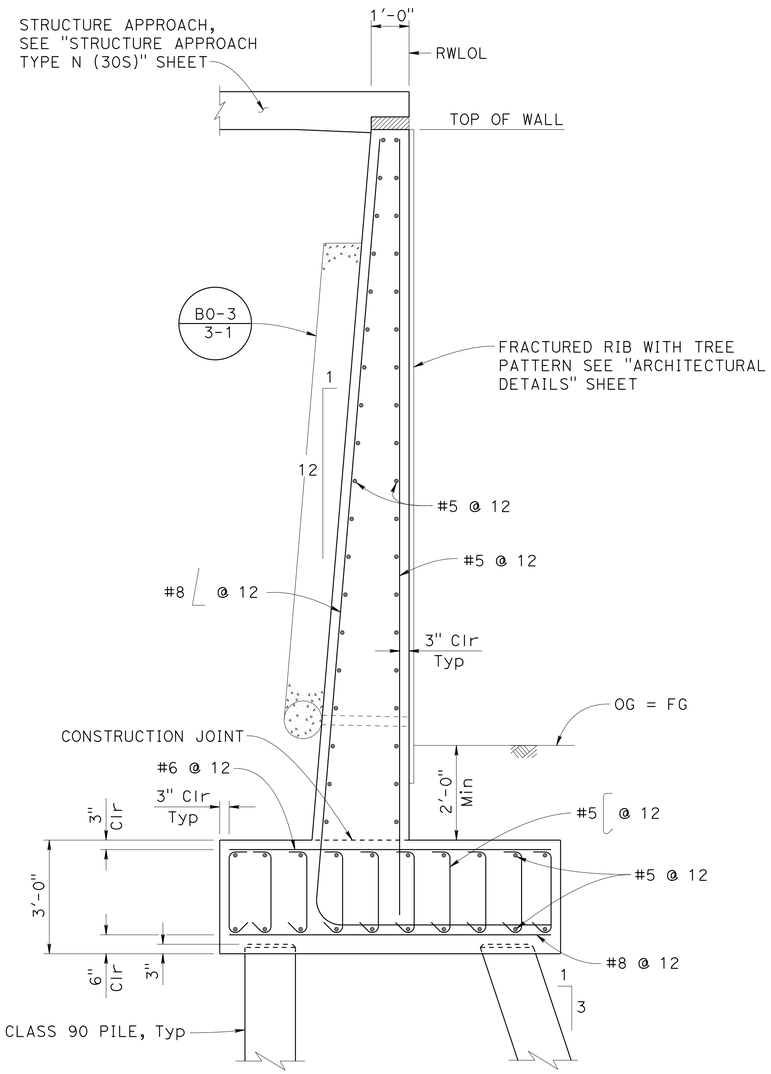

SECTION F-F (A62C)
1/2" = 1'-0"

Abut 2 RIGHT SHOWN, Abut 2 LEFT SIMILAR.

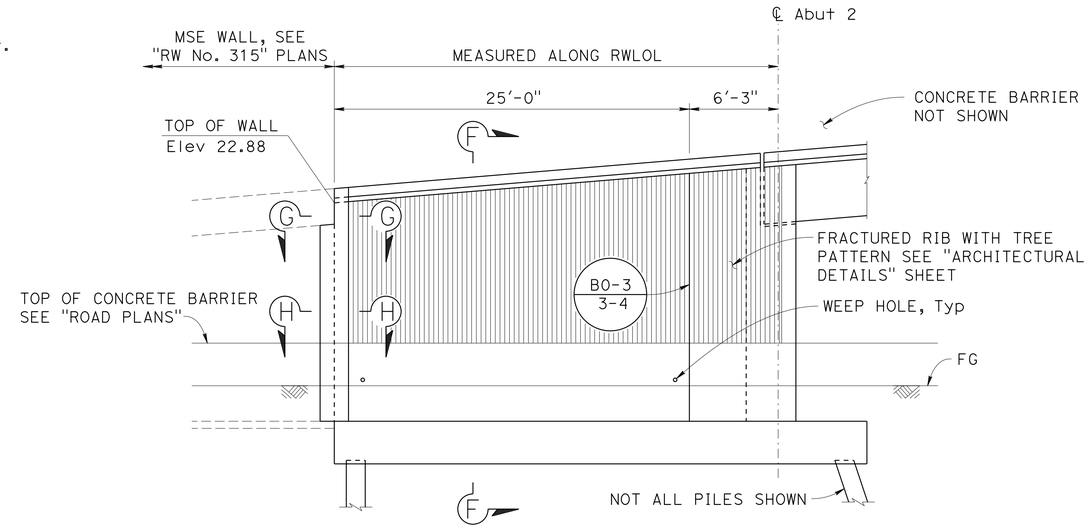

ABUTMENT 2 - LEFT RETAINING WALL ELEVATION (B0-3 / 3-3)
3/16" = 1'-0"

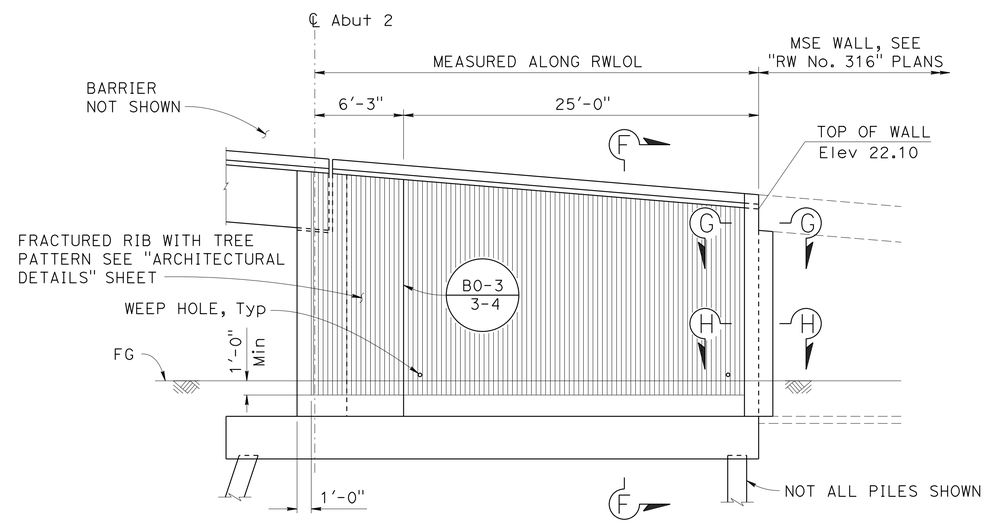

ABUTMENT 2 - RIGHT RETAINING WALL ELEVATION (B0-3 / 3-3)
3/16" = 1'-0"

DESIGN NOTES:

SEISMIC: $k_h = 0.23$, $k_v = 0.0$

SOIL: $\phi = 34°$, $\gamma = 120$ pcf

Paul Cotter
DESIGN OVERSIGHT Paul Cotter
6-20-13
SIGN OFF DATE

	BY	CHECKED
DESIGN	A. Prince	J. Hueser
DETAILS	R. Lim	J. Hueser
QUANTITIES	A. Prince	S. Landis

PREPARED FOR THE STATE OF CALIFORNIA DEPARTMENT OF TRANSPORTATION

Syed Kazmi
PROJECT ENGINEER

BRIDGE NO. 35-0352K
POST MILES 16.58

BROADWAY ON-RAMP
ABUTMENT DETAILS No. 4

DESIGN DETAIL SHEET (ENGLISH) (REV. 03/14/12)

ORIGINAL SCALE IN INCHES FOR REDUCED PLANS 0 1 2 3

UNIT: 0703
PROJECT NUMBER & PHASE: 04000006841 CONTRACT NO.: 235844

DISREGARD PRINTS BEARING EARLIER REVISION DATES

REVISION DATES: 5-15-13 11-16-12 2-12-13 4-8-13

SHEET 13 OF 28

FILE => 0400000684we055.dgn

USERNAME => s141070 DATE PLOTTED => 03-FEB-2014 TIME PLOTTED => 13:52

DIST	COUNTY	ROUTE	POST MILES TOTAL PROJECT	SHEET No	TOTAL SHEETS
04	SM	101	16.3/17.1	764	814

REGISTERED CIVIL ENGINEER — DATE 5-15-13

10/21/13
PLANS APPROVAL DATE

REGISTERED PROFESSIONAL ENGINEER — Austin Prince — No. C80659 — Exp. 3/31/15 — CIVIL — STATE OF CALIFORNIA

The State of California or its officers or agents shall not be responsible for the accuracy or completeness of scanned copies of this plan sheet.

SMCTA
1250 SAN CARLOS AVENUE
SAN CARLOS, CA 94070-1306

URS CORPORATION
2870 GATEWAY OAKS DRIVE, SUITE 150
SACRAMENTO, CA 95833-4308

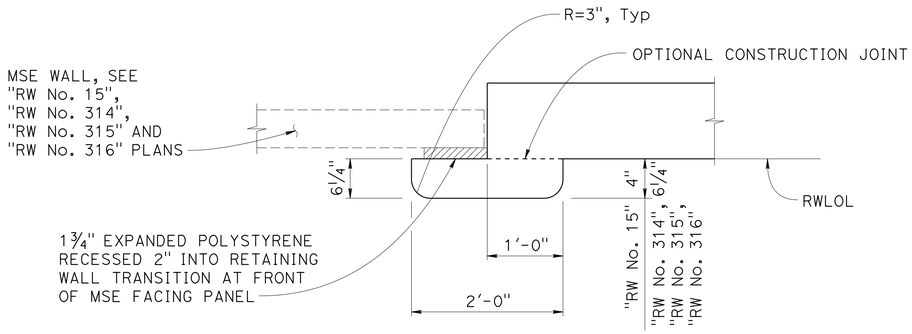

RETAINING WALL TRANSITION DETAIL

1" = 1'-0"

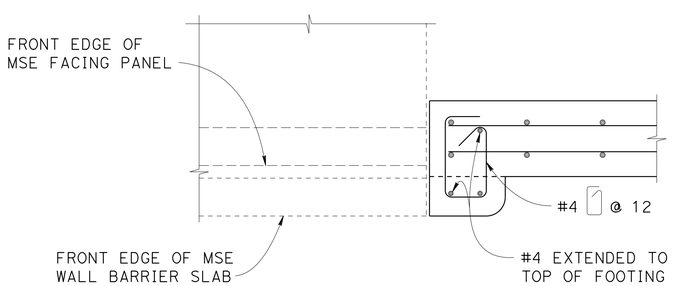

SECTION G-G

1" = 1'-0"

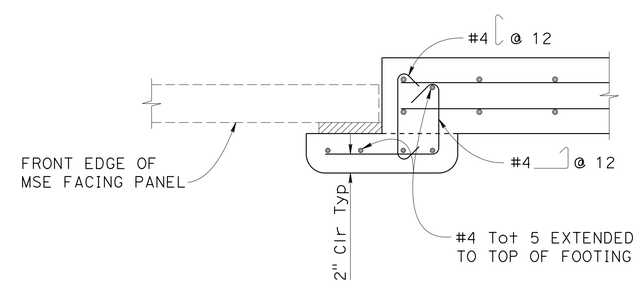

SECTION H-H

1" = 1'-0"

Paul Cotter
DESIGN OVERSIGHT — Paul Cotter
6-20-13
SIGN OFF DATE

	BY	CHECKED
DESIGN	A. Prince	J. Hueser
DETAILS	R. Lim	J. Hueser
QUANTITIES	A. Prince	S. Landis

PREPARED FOR THE STATE OF CALIFORNIA DEPARTMENT OF TRANSPORTATION

Syed Kazmi
PROJECT ENGINEER

BRIDGE NO. 35-0352K
POST MILES 16.58

BROADWAY ON-RAMP
ABUTMENT DETAILS No. 5

DESIGN DETAIL SHEET (ENGLISH) (REV. 03/14/12)

ORIGINAL SCALE IN INCHES FOR REDUCED PLANS 0 1 2 3

UNIT: 0703
PROJECT NUMBER & PHASE: 04000006841 CONTRACT NO.: 235844

DISREGARD PRINTS BEARING EARLIER REVISION DATES → 5-15-13 11-16-12 2-12-13 4-8-13

SHEET 14 OF 28

FILE => 0400000684we056.dgn

USERNAME => s141070 DATE PLOTTED => 03-FEB-2014 TIME PLOTTED => 13:52

DIST	COUNTY	ROUTE	POST MILES TOTAL PROJECT	SHEET No	TOTAL SHEETS
04	SM	101	16.3/17.1	765	814

REGISTERED CIVIL ENGINEER 5-15-13 DATE

10/21/13
PLANS APPROVAL DATE

REGISTERED PROFESSIONAL ENGINEER Austin Prince No. C80659 Exp. 3/31/15 CIVIL STATE OF CALIFORNIA

The State of California or its officers or agents shall not be responsible for the accuracy or completeness of scanned copies of this plan sheet.

SMCTA
1250 SAN CARLOS AVENUE
SAN CARLOS, CA 94070-1306

URS CORPORATION
2870 GATEWAY OAKS DRIVE, SUITE 150
SACRAMENTO, CA 95833-4308

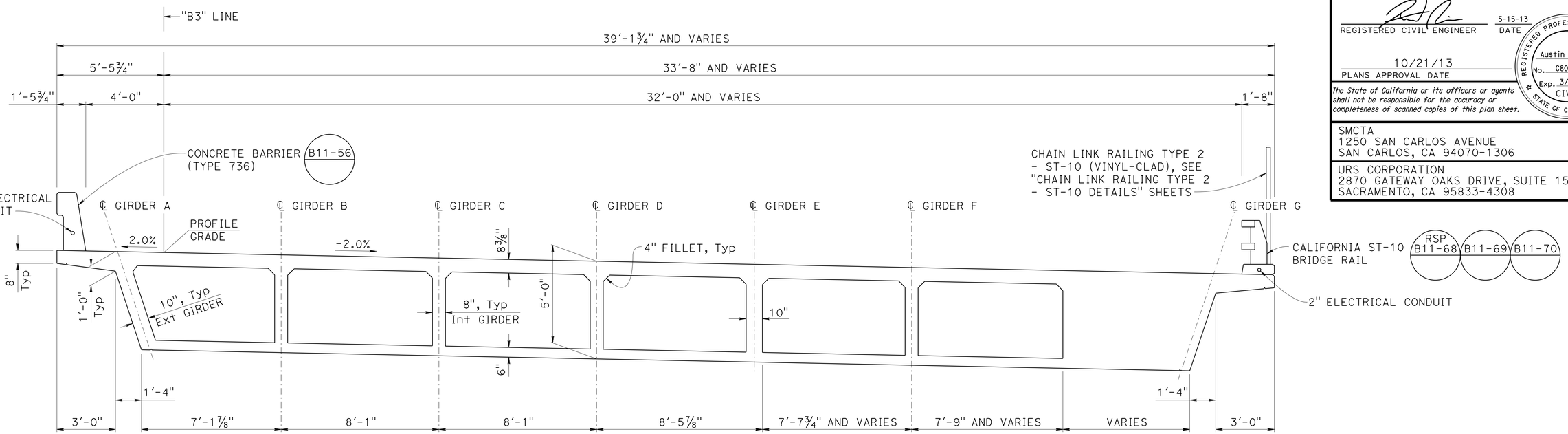

BB TO STA 315+56.72

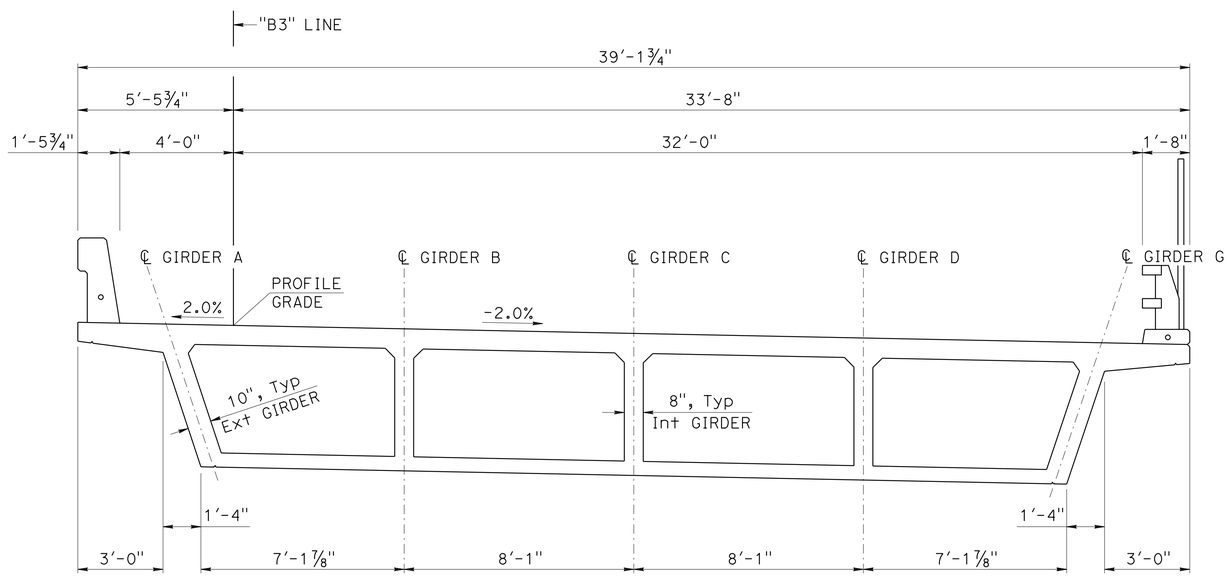

STA 315+56.72 TO EB

TYPICAL SECTION

B7-1

⅜" = 1'-0"

DESIGN	BY A. Prince	CHECKED J. Hueser	
DETAILS	BY R. Lim	CHECKED J. Hueser	
QUANTITIES	BY A. Prince	CHECKED S. Landis	

DESIGN OVERSIGHT Paul Cotter
6-20-13
SIGN OFF DATE

PREPARED FOR THE STATE OF CALIFORNIA DEPARTMENT OF TRANSPORTATION

Syed Kazmi
PROJECT ENGINEER

BRIDGE NO. 35-0352K
POST MILES 16.58

BROADWAY ON-RAMP

TYPICAL SECTION No. 1

DESIGN DETAIL SHEET (ENGLISH) (REV. 03/14/12)

ORIGINAL SCALE IN INCHES FOR REDUCED PLANS 0 1 2 3

UNIT: 0703
PROJECT NUMBER & PHASE: 04000006841 CONTRACT NO.: 235844

DISREGARD PRINTS BEARING EARLIER REVISION DATES

REVISION DATES 5-15-13 11-16-12 2-12-13 4-8-13

SHEET 15 OF 28

FILE => 0400000684we057.dgn

USERNAME => s141070 DATE PLOTTED => 03-FEB-2014 TIME PLOTTED => 13:52

DIST	COUNTY	ROUTE	POST MILES TOTAL PROJECT	SHEET No	TOTAL SHEETS
04	SM	101	16.3/17.1	766	814

REGISTERED CIVIL ENGINEER 5-15-13 DATE

10/21/13
PLANS APPROVAL DATE

REGISTERED PROFESSIONAL ENGINEER Austin Prince No. C80659 Exp. 3/31/15 CIVIL STATE OF CALIFORNIA

The State of California or its officers or agents shall not be responsible for the accuracy or completeness of scanned copies of this plan sheet.

SMCTA
1250 SAN CARLOS AVENUE
SAN CARLOS, CA 94070-1306

URS CORPORATION
2870 GATEWAY OAKS DRIVE, SUITE 150
SACRAMENTO, CA 95833-4308

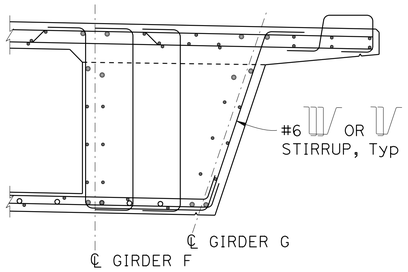

SECTION A-A
½" = 1'-0"
FOR DETAILS NOT SHOWN, SEE "TYPICAL SECTION"

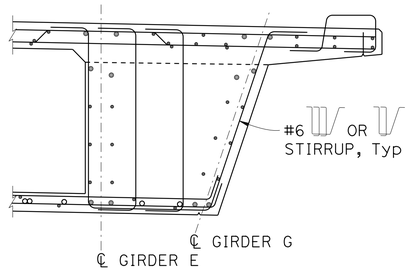

SECTION B-B
½" = 1'-0"
FOR DETAILS NOT SHOWN, SEE "TYPICAL SECTION"

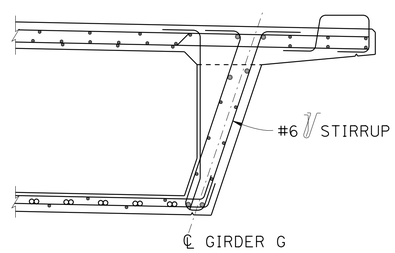

SECTION C-C
½" = 1'-0"
FOR DETAILS NOT SHOWN, SEE "TYPICAL SECTION"

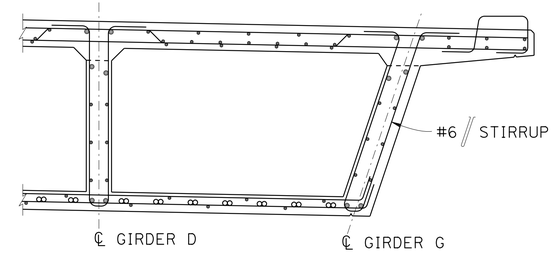

SECTION D-D
½" = 1'-0"
FOR DETAILS NOT SHOWN, SEE "TYPICAL SECTION"

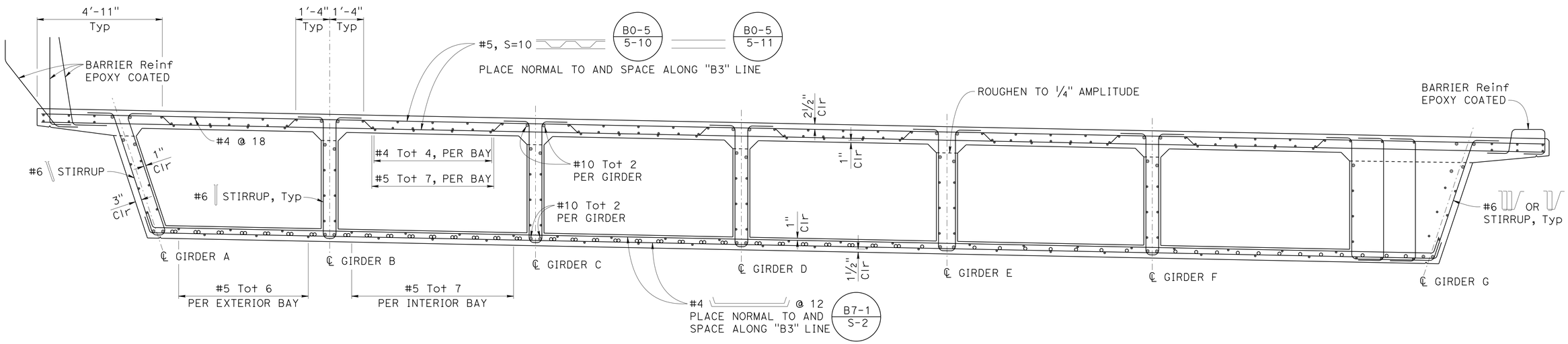

TYPICAL SECTION
½" = 1'-0"
B0-5 B7-1

NOTE:

1. For "SECTION A-A" thru "SECTION D-D" location, see "GIRDER LAYOUT" sheet.

LEGEND:

- Indicates additional reinforcement, see "GIRDER REINFORCEMENT" sheet.

Paul Cotter DESIGN OVERSIGHT Paul Cotter	DESIGN	BY A. Prince	CHECKED J. Hueser	PREPARED FOR THE STATE OF CALIFORNIA DEPARTMENT OF TRANSPORTATION	Syed Kazmi PROJECT ENGINEER
6-20-13 SIGN OFF DATE	DETAILS	BY R. Lim	CHECKED J. Hueser		
	QUANTITIES	BY A. Prince	CHECKED S. Landis		

BRIDGE NO. 35-0352K
POST MILES 16.58

BROADWAY ON-RAMP
TYPICAL SECTION No. 2

DESIGN DETAIL SHEET (ENGLISH) (REV. 03/14/12)

ORIGINAL SCALE IN INCHES FOR REDUCED PLANS 0 1 2 3

UNIT: 0703
PROJECT NUMBER & PHASE: 04000006841 CONTRACT NO.: 235844

DISREGARD PRINTS BEARING EARLIER REVISION DATES

REVISION DATES: 5-15-13 11-16-12 2-12-13 4-8-13

SHEET 16 OF 28

FILE => 0400000684we058.dgn

USERNAME => s141070 DATE PLOTTED => 03-FEB-2014 TIME PLOTTED => 13:52

DIST	COUNTY	ROUTE	POST MILES TOTAL PROJECT	SHEET No	TOTAL SHEETS
04	SM	101	16.3/17.1	767	814

REGISTERED CIVIL ENGINEER — DATE 5-15-13

10/21/13
PLANS APPROVAL DATE

REGISTERED PROFESSIONAL ENGINEER — Austin Prince — No. C80659 — Exp. 3/31/15 — CIVIL — STATE OF CALIFORNIA

The State of California or its officers or agents shall not be responsible for the accuracy or completeness of scanned copies of this plan sheet.

SMCTA
1250 SAN CARLOS AVENUE
SAN CARLOS, CA 94070-1306

URS CORPORATION
2870 GATEWAY OAKS DRIVE, SUITE 150
SACRAMENTO, CA 95833-4308

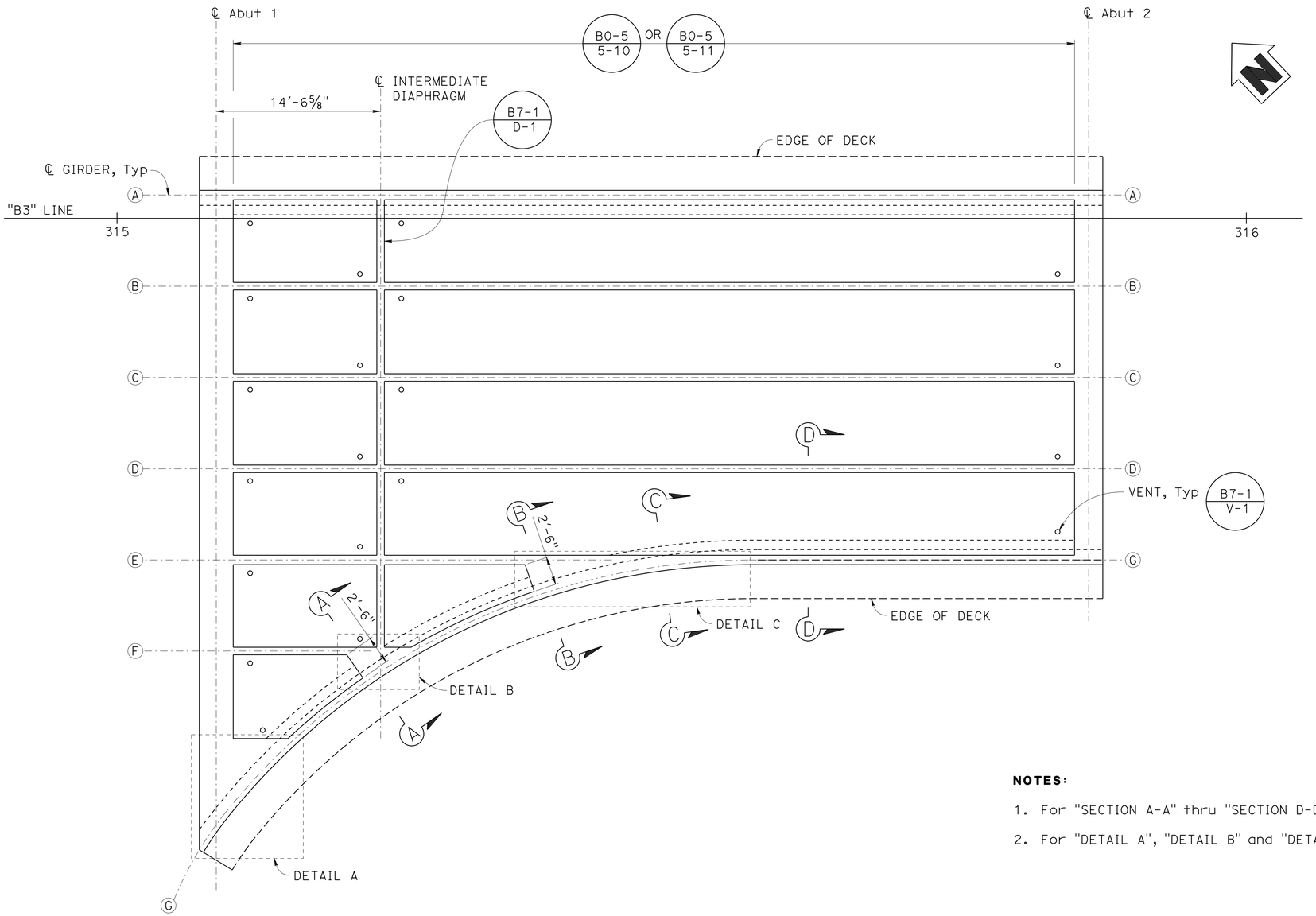

GIRDER LAYOUT

3/16" = 1'-0"

NOTES:

1. For "SECTION A-A" thru "SECTION D-D", see "TYPICAL SECTION No. 2" sheet.
2. For "DETAIL A", "DETAIL B" and "DETAIL C", see "GIRDER DETAILS" sheet.

Paul Cotter — DESIGN OVERSIGHT: Paul Cotter	DESIGN	BY A. Prince	CHECKED J. Hueser	PREPARED FOR THE STATE OF CALIFORNIA DEPARTMENT OF TRANSPORTATION	Syed Kazmi — PROJECT ENGINEER
6-20-13 — SIGN OFF DATE	DETAILS	BY R. Lim	CHECKED J. Hueser		BRIDGE NO. 35-0352K
	QUANTITIES	BY A. Prince	CHECKED S. Landis		POST MILES 16.58

BROADWAY ON-RAMP
GIRDER LAYOUT

DESIGN DETAIL SHEET (ENGLISH) (REV. 03/14/12)

ORIGINAL SCALE IN INCHES FOR REDUCED PLANS 0 1 2 3

UNIT: 0703
PROJECT NUMBER & PHASE: 04000006841 CONTRACT NO.: 235844

DISREGARD PRINTS BEARING EARLIER REVISION DATES

REVISION DATES: 5-15-13 11-16-12 2-12-13 4-8-13

SHEET 17 OF 28

FILE => 0400000684we059.dgn

USERNAME => s141070 DATE PLOTTED => 03-FEB-2014 TIME PLOTTED => 13:52

DIST	COUNTY	ROUTE	POST MILES TOTAL PROJECT	SHEET No	TOTAL SHEETS
04	SM	101	16.3/17.1	768	814

REGISTERED CIVIL ENGINEER — DATE 5-15-13

10/21/13
PLANS APPROVAL DATE

REGISTERED PROFESSIONAL ENGINEER — Austin Prince — No. C80659 — Exp. 3/31/15 — CIVIL — STATE OF CALIFORNIA

The State of California or its officers or agents shall not be responsible for the accuracy or completeness of scanned copies of this plan sheet.

SMCTA
1250 SAN CARLOS AVENUE
SAN CARLOS, CA 94070-1306

URS CORPORATION
2870 GATEWAY OAKS DRIVE, SUITE 150
SACRAMENTO, CA 95833-4308

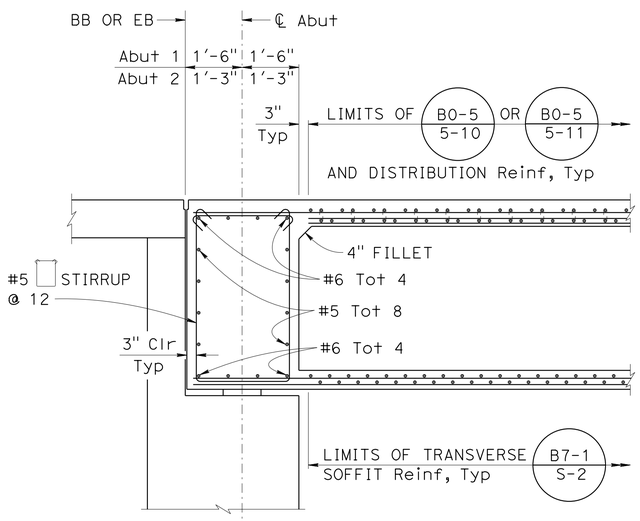

END DIAPHRAGM
½" = 1'-0"

NOTES:

1. For stirrup spacing, see "LONGITUDINAL SECTION" sheet.
2. For details location, see "GIRDER LAYOUT" sheet.

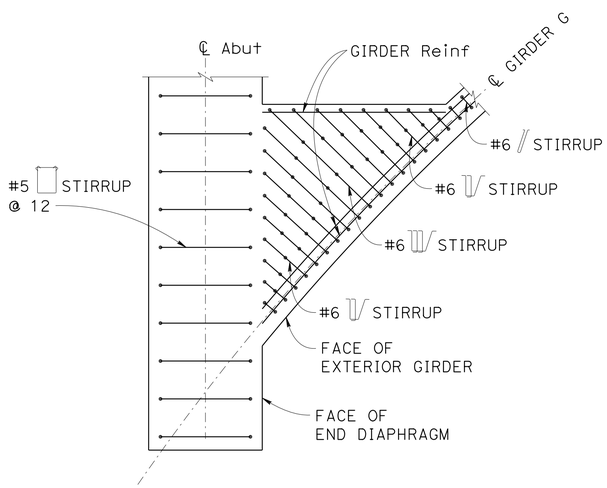

DETAIL A
½" = 1'-0"

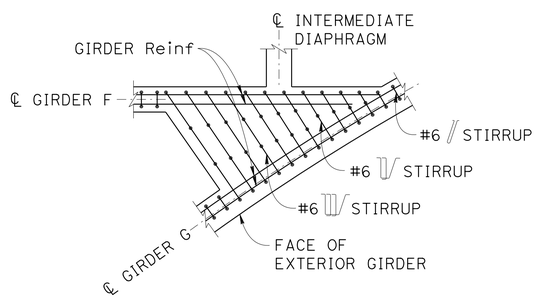

DETAIL B
½" = 1'-0"

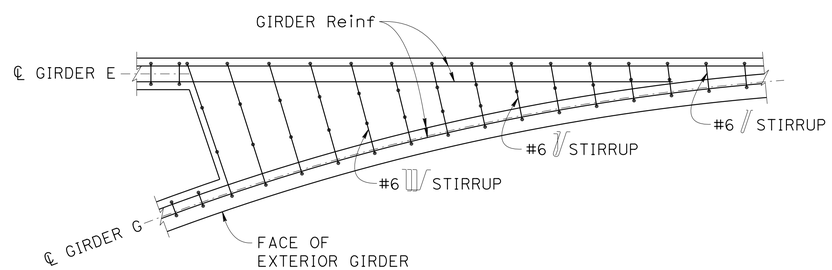

DETAIL C
½" = 1'-0"

Paul Cotter
DESIGN OVERSIGHT — Paul Cotter
6-20-13
SIGN OFF DATE

	BY	CHECKED
DESIGN	A. Prince	J. Hueser
DETAILS	R. Lim	J. Hueser
QUANTITIES	A. Prince	S. Landis

PREPARED FOR THE STATE OF CALIFORNIA DEPARTMENT OF TRANSPORTATION

Syed Kazmi
PROJECT ENGINEER

BRIDGE NO. 35-0352K
POST MILES 16.58

BROADWAY ON-RAMP
GIRDER DETAILS

DESIGN DETAIL SHEET (ENGLISH) (REV. 03/14/12)

ORIGINAL SCALE IN INCHES FOR REDUCED PLANS 0 1 2 3

UNIT: 0703
PROJECT NUMBER & PHASE: 04000006841 CONTRACT NO.: 235844

DISREGARD PRINTS BEARING EARLIER REVISION DATES

REVISION DATES: 5-15-13 11-16-12 2-12-13 4-8-13

SHEET 18 OF 28

FILE => 0400000684we060.dgn

USERNAME => s141070 DATE PLOTTED => 03-FEB-2014 TIME PLOTTED => 13:52

DIST	COUNTY	ROUTE	POST MILES TOTAL PROJECT	SHEET No	TOTAL SHEETS
04	SM	101	16.3/17.1	769	814

REGISTERED CIVIL ENGINEER 5-15-13 DATE

10/21/13
PLANS APPROVAL DATE

REGISTERED PROFESSIONAL ENGINEER Austin Prince No. C80659 Exp. 3/31/15 CIVIL STATE OF CALIFORNIA

The State of California or its officers or agents shall not be responsible for the accuracy or completeness of scanned copies of this plan sheet.

SMCTA
1250 SAN CARLOS AVENUE
SAN CARLOS, CA 94070-1306

URS CORPORATION
2870 GATEWAY OAKS DRIVE, SUITE 150
SACRAMENTO, CA 95833-4308

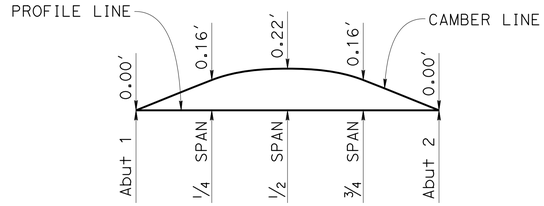

GIRDER CAMBER DIAGRAM

NO SCALE

DOES NOT INCLUDE ALLOWANCE FOR FALSEWORK SETTLEMENT

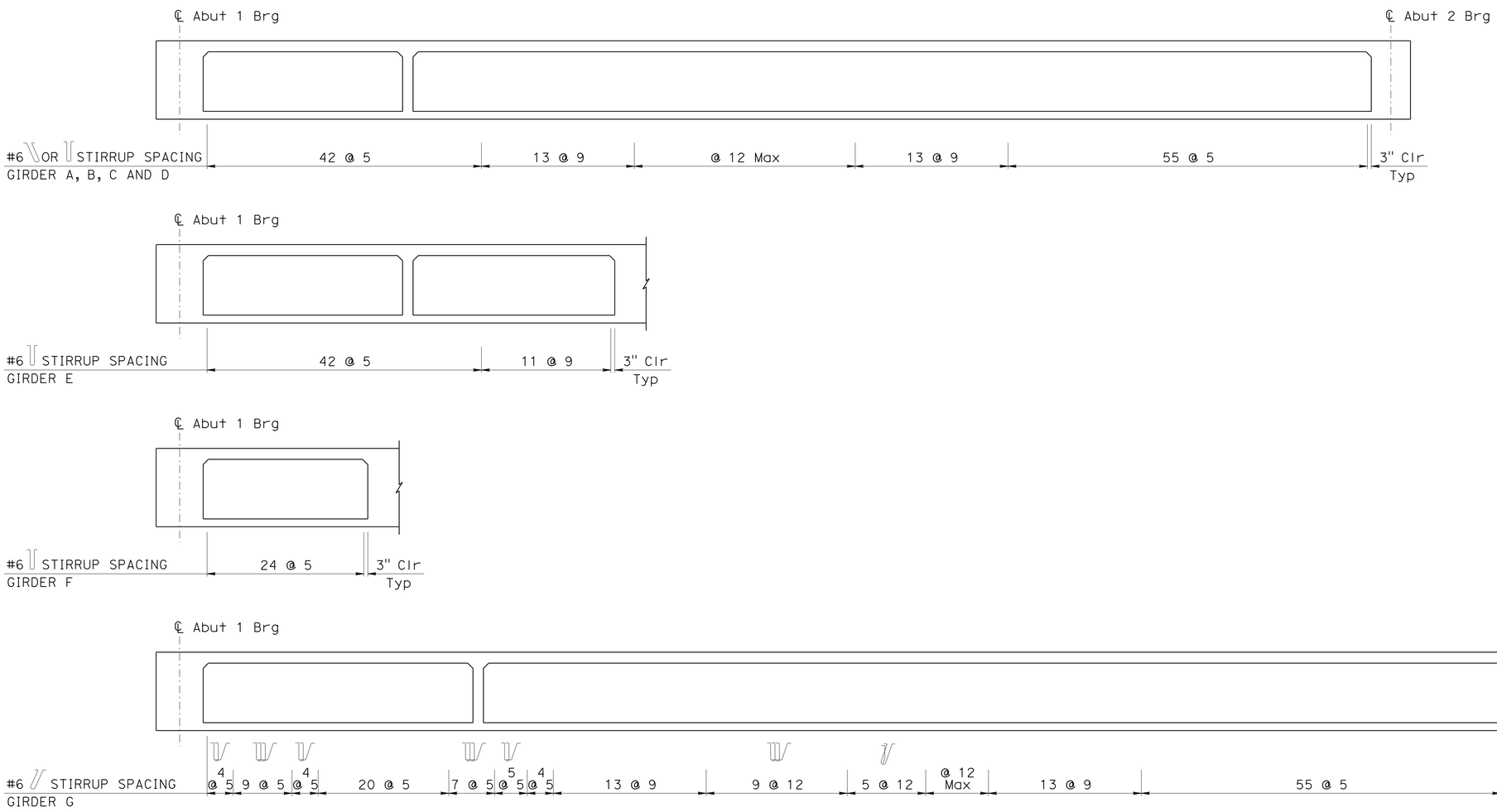

LONGITUDINAL SECTION

NO SCALE

Paul Cotter
DESIGN OVERSIGHT Paul Cotter
6-20-13
SIGN OFF DATE

	BY	CHECKED
DESIGN	A. Prince	J. Hueser
DETAILS	R. Lim	J. Hueser
QUANTITIES	A. Prince	S. Landis

PREPARED FOR THE STATE OF CALIFORNIA DEPARTMENT OF TRANSPORTATION

Syed Kazmi
PROJECT ENGINEER

BRIDGE NO. 35-0352K
POST MILES 16.58

BROADWAY ON-RAMP
LONGITUDINAL SECTION

DESIGN DETAIL SHEET (ENGLISH) (REV. 03/14/12)

ORIGINAL SCALE IN INCHES FOR REDUCED PLANS 0 1 2 3

UNIT: 0703
PROJECT NUMBER & PHASE: 04000006841 CONTRACT NO.: 235844

DISREGARD PRINTS BEARING EARLIER REVISION DATES

REVISION DATES 5-15-13 11-16-12 2-12-13 4-8-13

SHEET 19 OF 28

FILE => 0400000684we061.dgn

USERNAME => s141070 DATE PLOTTED => 03-FEB-2014 TIME PLOTTED => 13:52

DIST	COUNTY	ROUTE	POST MILES TOTAL PROJECT	SHEET No	TOTAL SHEETS
04	SM	101	16.3/17.1	770	814

REGISTERED CIVIL ENGINEER 5-15-13 DATE

10/21/13
PLANS APPROVAL DATE

REGISTERED PROFESSIONAL ENGINEER Austin Prince No. C80659 Exp. 3/31/15 CIVIL STATE OF CALIFORNIA

The State of California or its officers or agents shall not be responsible for the accuracy or completeness of scanned copies of this plan sheet.

SMCTA
1250 SAN CARLOS AVENUE
SAN CARLOS, CA 94070-1306

URS CORPORATION
2870 GATEWAY OAKS DRIVE, SUITE 150
SACRAMENTO, CA 95833-4308

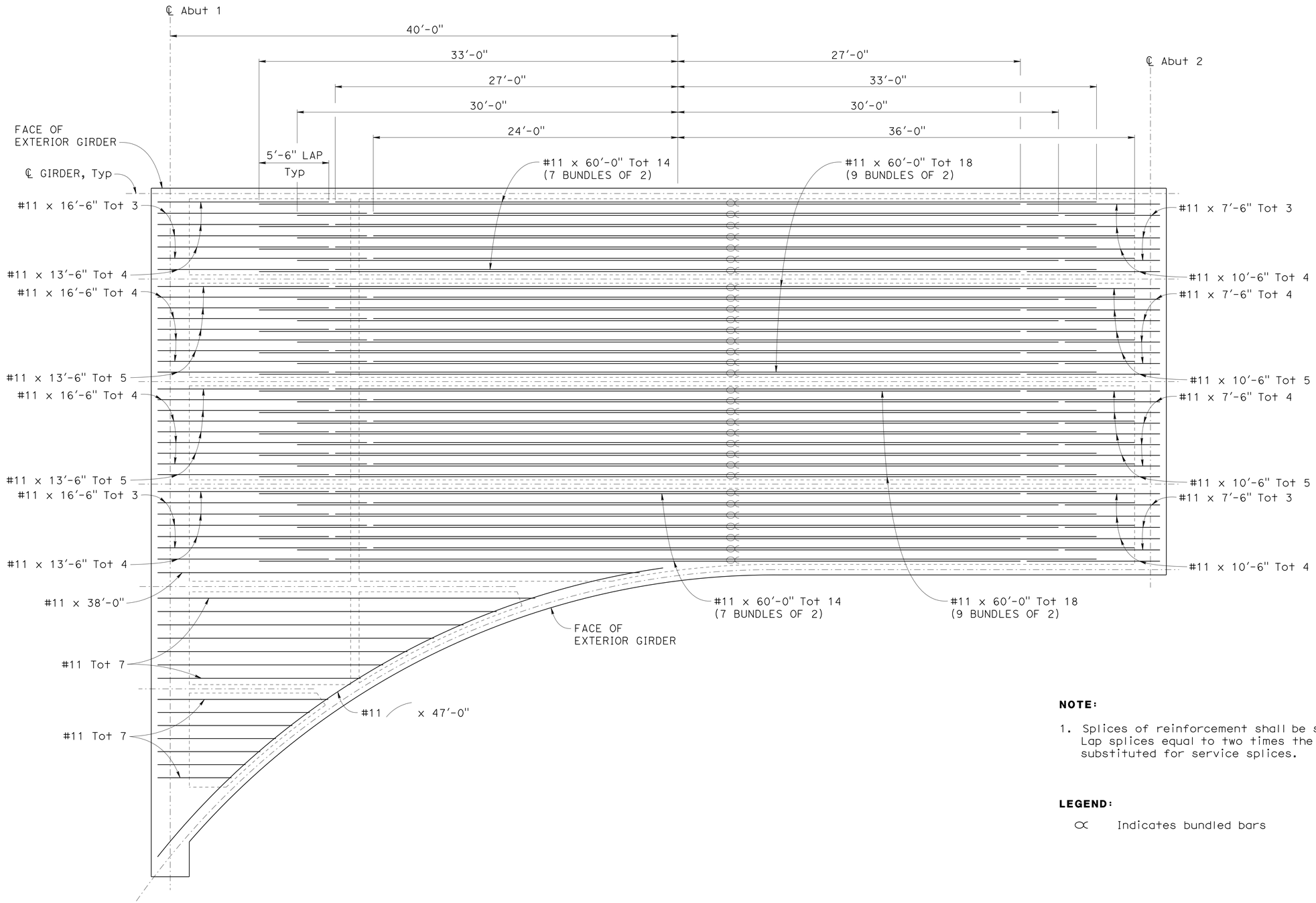

SOFFIT REINFORCEMENT

NO SCALE

NOTE:

1. Splices of reinforcement shall be staggered service level splices. Lap splices equal to two times the standard lap splice may be substituted for service splices.

LEGEND:

∝ Indicates bundled bars

DESIGN	BY A. Prince	CHECKED J. Hueser	
DETAILS	BY R. Lim	CHECKED J. Hueser	
QUANTITIES	BY A. Prince	CHECKED S. Landis	

DESIGN OVERSIGHT Paul Cotter
6-20-13
SIGN OFF DATE

PREPARED FOR THE STATE OF CALIFORNIA DEPARTMENT OF TRANSPORTATION

Syed Kazmi
PROJECT ENGINEER

BRIDGE NO. 35-0352K
POST MILES 16.58

BROADWAY ON-RAMP
GIRDER REINFORCEMENT

DESIGN DETAIL SHEET (ENGLISH) (REV. 03/14/12)

ORIGINAL SCALE IN INCHES FOR REDUCED PLANS 0 1 2 3

UNIT: 0703
PROJECT NUMBER & PHASE: 04000006841 CONTRACT NO.: 235844

DISREGARD PRINTS BEARING EARLIER REVISION DATES

REVISION DATES: 5-15-13 11-16-12 2-12-13 4-8-13

SHEET 20 OF 28

FILE => 0400000684we062.dgn

USERNAME => s141070 DATE PLOTTED => 03-FEB-2014 TIME PLOTTED => 13:52

DIST	COUNTY	ROUTE	POST MILES TOTAL PROJECT	SHEET No	TOTAL SHEETS
04	SM	101	16.3/17.1	771	814

REGISTERED CIVIL ENGINEER 5-15-13 DATE

10/21/13
PLANS APPROVAL DATE

REGISTERED PROFESSIONAL ENGINEER Austin Prince No. C80659 Exp. 3/31/15 CIVIL STATE OF CALIFORNIA

The State of California or its officers or agents shall not be responsible for the accuracy or completeness of scanned copies of this plan sheet.

SMCTA
1250 SAN CARLOS AVENUE
SAN CARLOS, CA 94070-1306

URS CORPORATION
2870 GATEWAY OAKS DRIVE, SUITE 150
SACRAMENTO, CA 95833-4308

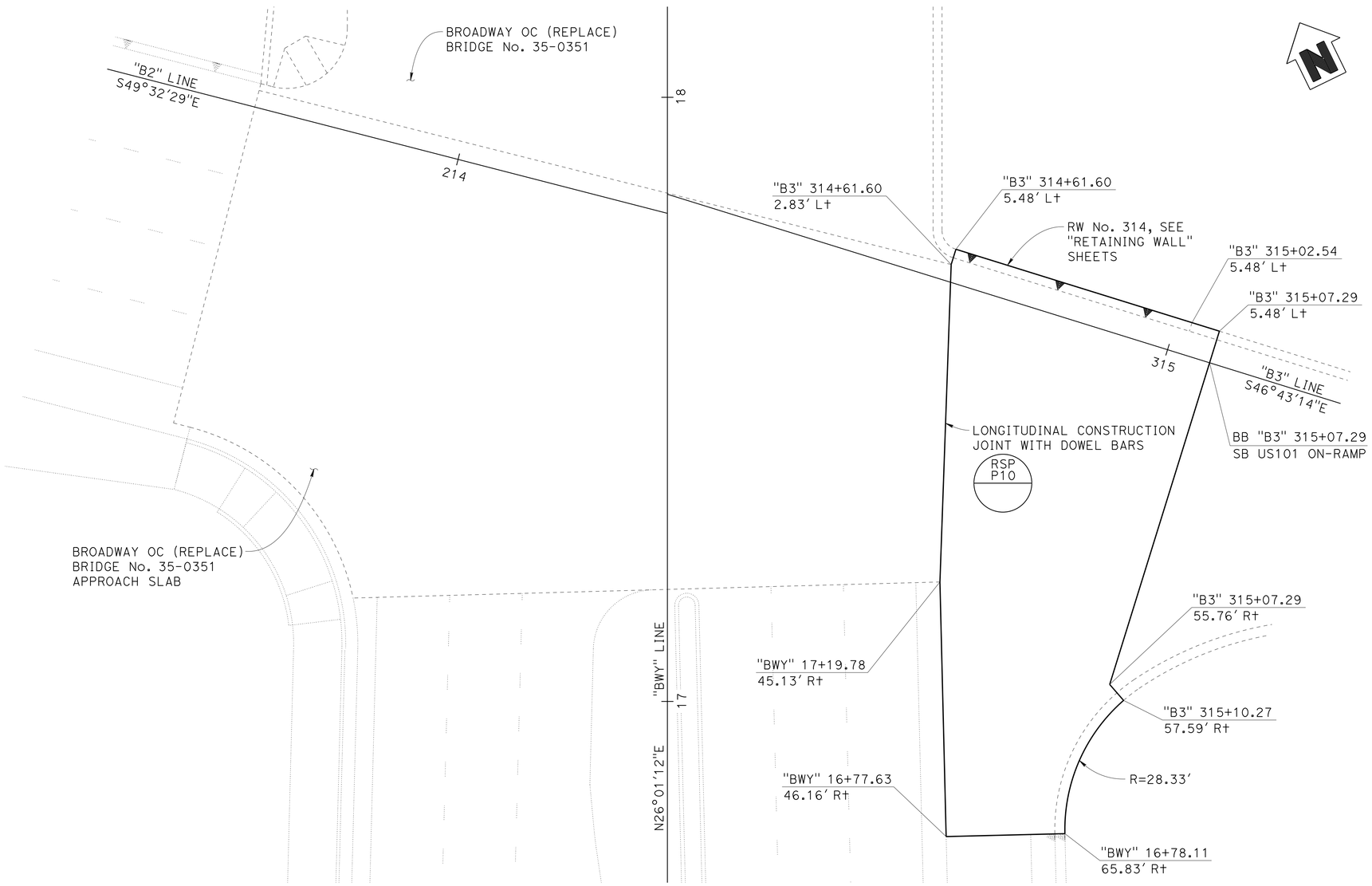

STRUCTURE APPROACH LAYOUT AT ABUTMENT 1

1"=10'-0"

NOTES:

1. For reinforcing and details not shown, see "STRUCTURE APPROACH TYPE N(30S)" sheet.

Paul Cotter
DESIGN OVERSIGHT Paul Cotter

6-20-13
SIGN OFF DATE

	BY	CHECKED
DESIGN	A. Prince	J. Hueser
DETAILS	R. Lim	J. Hueser
QUANTITIES	A. Prince	S. Landis

PREPARED FOR THE STATE OF CALIFORNIA DEPARTMENT OF TRANSPORTATION

Syed Kazmi
PROJECT ENGINEER

BRIDGE NO. 35-0352K
POST MILES 16.58

BROADWAY ON-RAMP
STRUCTURE APPROACH LAYOUT

DESIGN DETAIL SHEET (ENGLISH) (REV. 03/14/12)

ORIGINAL SCALE IN INCHES FOR REDUCED PLANS 0 1 2 3

UNIT: 0703
PROJECT NUMBER & PHASE: 04000006841 CONTRACT NO.: 235844

DISREGARD PRINTS BEARING EARLIER REVISION DATES

REVISION DATES: 5-15-13 11-16-12 2-12-13 4-9-13

SHEET 21 OF 28

FILE => 0400000684we063.dgn

USERNAME => s141070 DATE PLOTTED => 03-FEB-2014 TIME PLOTTED => 13:52

DIST	COUNTY	ROUTE	POST MILES TOTAL PROJECT	SHEET No	TOTAL SHEETS
04	SM	101	16.3/17.1	772	814

REGISTERED CIVIL ENGINEER — DATE 5-15-13

10/21/13
PLANS APPROVAL DATE

REGISTERED PROFESSIONAL ENGINEER — Austin Prince — No. C80659 — Exp. 3/31/15 — CIVIL — STATE OF CALIFORNIA

The State of California or its officers or agents shall not be responsible for the accuracy or completeness of scanned copies of this plan sheet.

SMCTA
1250 SAN CARLOS AVENUE
SAN CARLOS, CA 94070-1306

URS CORPORATION
2870 GATEWAY OAKS DRIVE, SUITE 150
SACRAMENTO, CA 95833-4308

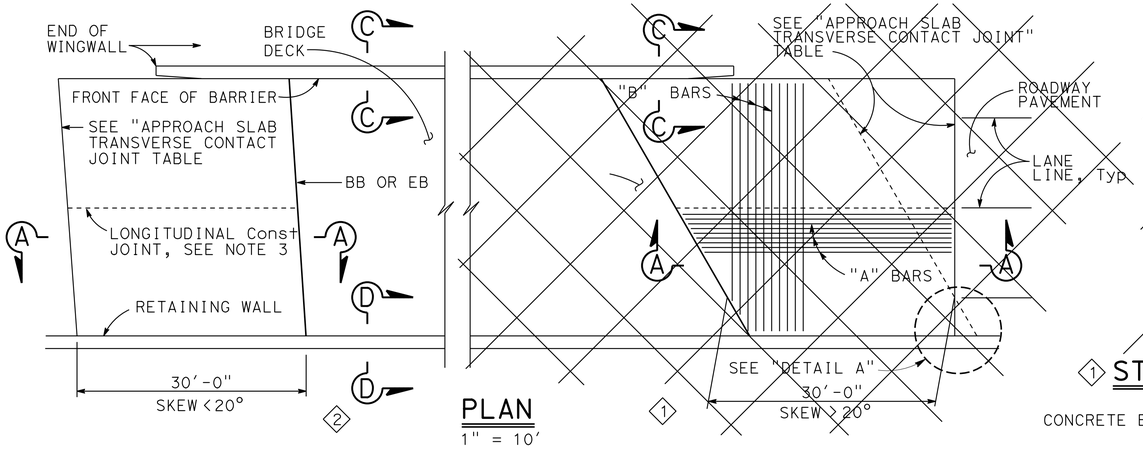

PLAN
1" = 10'

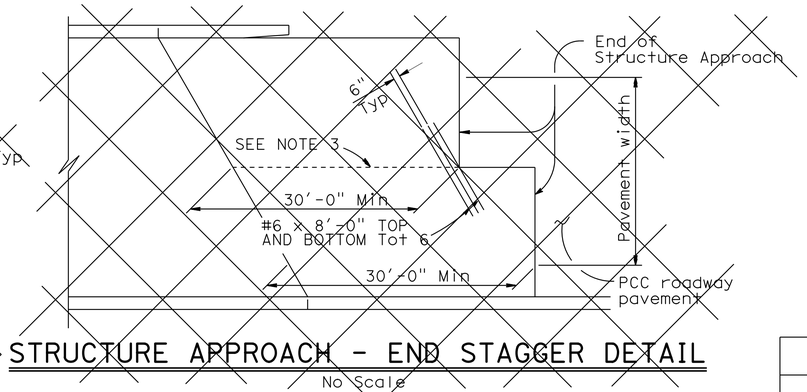

① STRUCTURE APPROACH - END STAGGER DETAIL
No Scale

APPROACH SLAB TRANSVERSE CONTACT JOINT		
APPROACH SKEW	WITH AC ROADWAY PAVEMENT	WITH PCC ROADWAY PAVEMENT
< 20°	PARALLEL TO FACE OF PN	PARALLEL TO FACE OF PN
20° - 45°	PARALLEL TO FACE OF PN USE "DETAIL A"	STAGGER LINES 24' TO 36' APART
> 45°	PARALLEL TO FACE OF PN USE "DETAIL A"	STAGGER AT EACH LANE LINE

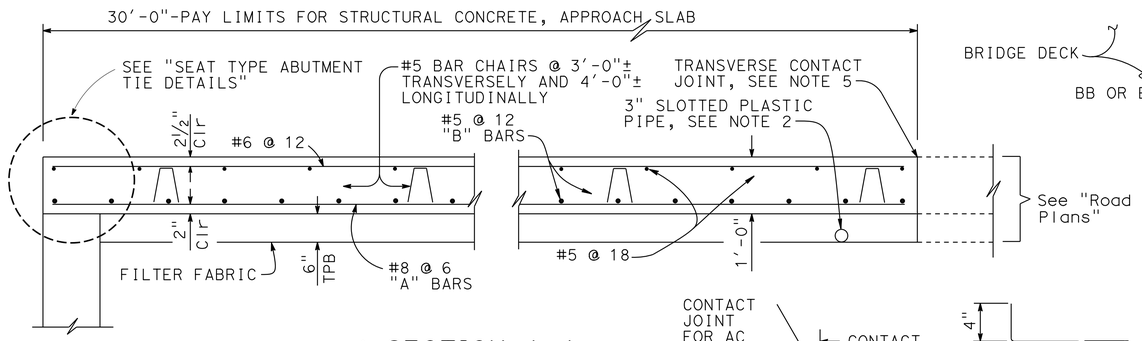

② SECTION A-A
¾"=1'-0"

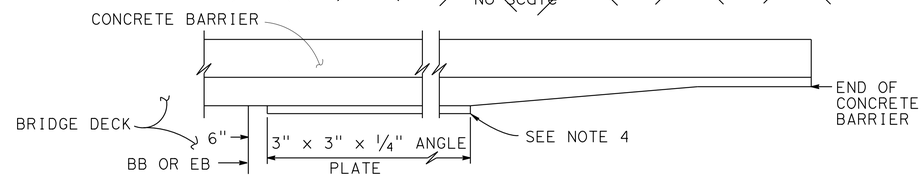

EDGE ANGLE DETAIL
½"=1'-0"

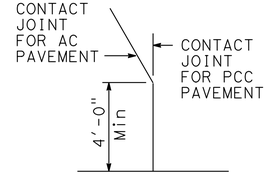

DETAIL A
No Scale

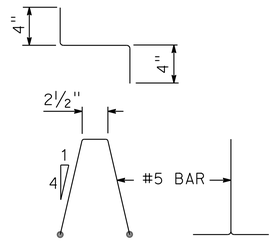

BAR CHAIR DETAIL
1½"=1'-0"

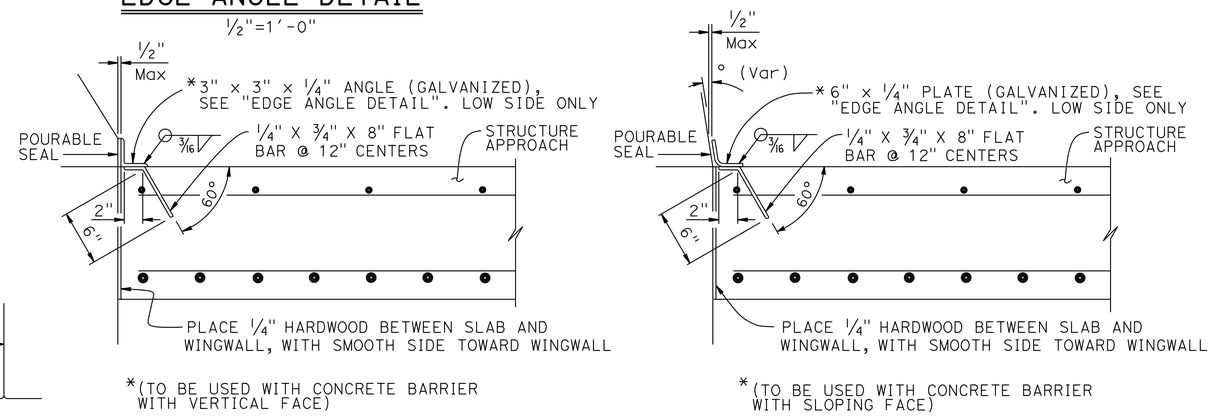

DETAIL B
1½" = 1'-0"

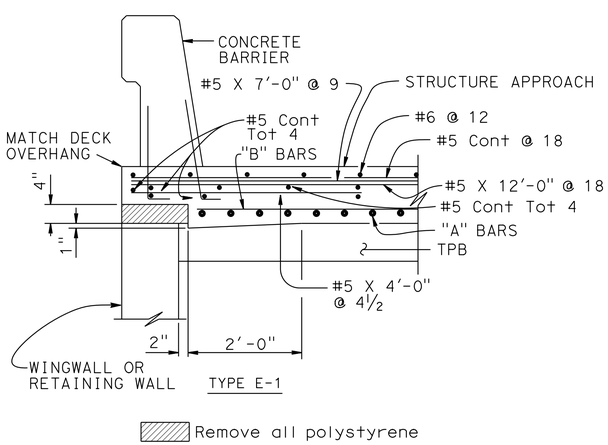

② SECTION C-C
¾"=1'-0"
(Type E-1 to be used, unless otherwise shown on plans)

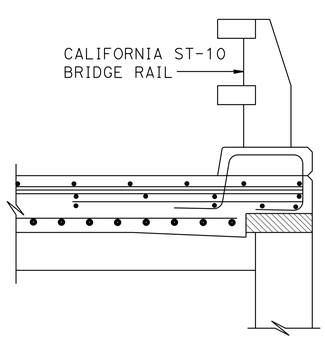

③ SECTION D-D
¾"=1'-0"
FOR DETAILS NOT SHOWN, SEE "SECTION C-C"

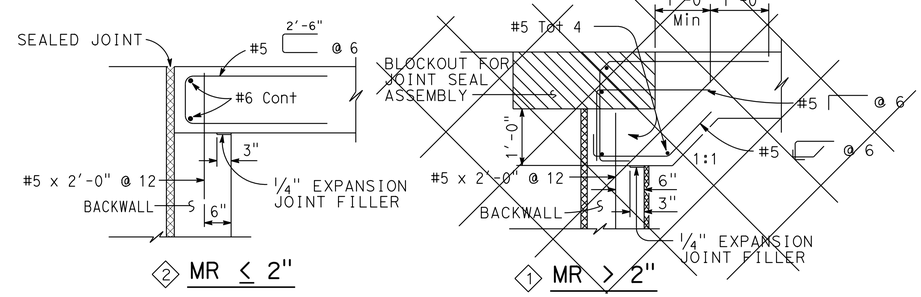

② MR ≤ 2" ① MR > 2"

SEAT TYPE ABUTMENT TIE DETAILS (SEE NOTE 1)
¾"=1'-0"

NOTES:

1. For details not shown, see Structure Plans. For MR ≤ 2", adjust bar reinforcement to clear a sawcut for sealed joint, when required
2. ① ~~For drainage details, see "STRUCTURE APPROACH DRAINAGE DETAILS" sheet~~
3. Longitudinal construction joints, when permitted by the Engineer, shall be located on lane lines
4. End angle or plate at beginning of barrier transition, end of wingwall or end of structure approach as applicable
5. For transverse contact joint with new PCC paving, refer to Standard Plan P10
6. At the Contractor's option, approach slab transverse reinforcement may be placed parallel to paving notch. Spacing of transverse reinforcement is measured along ℄ roadway

SPECIAL DETAILS

REVISED STANDARD DRAWING
FILE NO. xs3-120
APPROVAL DATE July 2011

① DOES NOT APPLY ③ ADDED DETAIL
② REVISED DETAIL

STATE OF CALIFORNIA
DEPARTMENT OF TRANSPORTATION

DIVISION OF ENGINEERING SERVICES

BRIDGE NO. 35-0352K
POST MILES 16.58

BROADWAY ON-RAMP
STRUCTURE APPROACH TYPE N(30S)

DS OSD 2147A (ENGLISH STANDARD DRAWING "XS" BORDER REV. (02-02-11))

ORIGINAL SCALE IN INCHES FOR REDUCED PLANS 0 1 2 3

UNIT: 0703
PROJECT NUMBER & PHASE: 04000006841
CONTRACT NO.: 235844

DISREGARD PRINTS BEARING EARLIER REVISION DATES

REVISION DATES: 5-15-13 11-16-12 2-12-13 4-8-13

SHEET 22 OF 28

FILE => 0400000684we064.dgn

USERNAME => s141070 DATE PLOTTED => 03-FEB-2014 TIME PLOTTED => 13:52

DIST	COUNTY	ROUTE	POST MILES TOTAL PROJECT	SHEET No	TOTAL SHEETS
04	SM	101	16.3/17.1	773	814

REGISTERED CIVIL ENGINEER 5-15-13 DATE

10/21/13
PLANS APPROVAL DATE

REGISTERED PROFESSIONAL ENGINEER Austin Prince No. C80659 Exp. 3/31/15 CIVIL STATE OF CALIFORNIA

The State of California or its officers or agents shall not be responsible for the accuracy or completeness of scanned copies of this plan sheet.

SMCTA
1250 SAN CARLOS AVENUE
SAN CARLOS, CA 94070-1306

URS CORPORATION
2870 GATEWAY OAKS DRIVE, SUITE 150
SACRAMENTO, CA 95833-4308

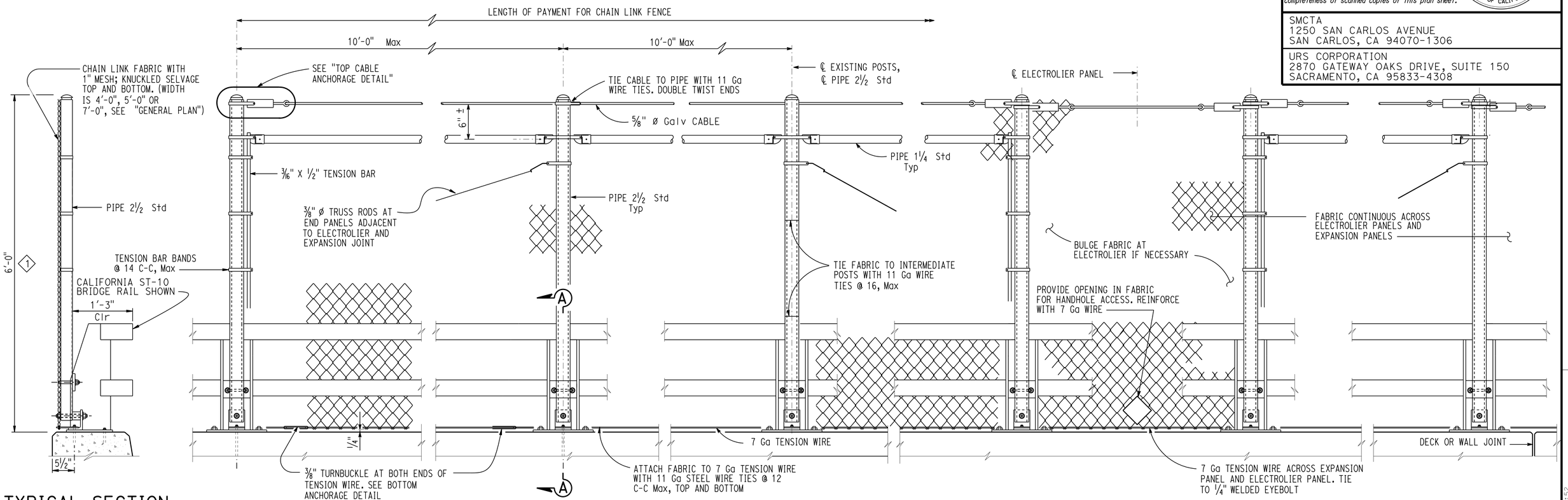

ELEVATION

1" = 1'-0"

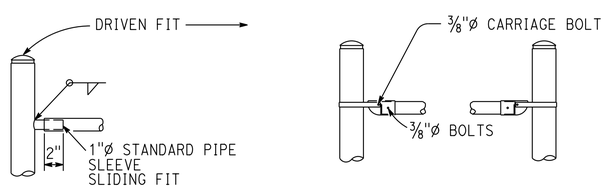

TYPICAL DETAILS

ALTERNATIVE DETAILS

END BRACE DETAILS

1½" = 1'-0"

NOTE:
THE CONTRACTOR SHALL VERIFY ALL CONTROLLING FIELD DIMENSIONS BEFORE ORDERING OR FABRICATING ANY MATERIAL.

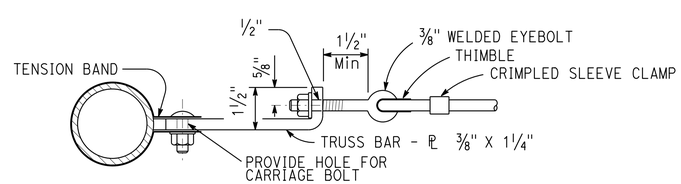

NOTE:
A two sided tension band is an allowable alternative for Intermediate Chain Link Panels

TOP CABLE ANCHORAGE DETAIL

No Scale

NOTES:

1. Posts shall be vertical
2. Railing shall conform to horizontal and vertical alignment
3. When rail is on slope, place fabric parallel to post
4. Alternative details may be submitted by the Contractor for Engineer approval
5. Provide thimbles at all cable loops
6. Peen all ⅜" ø bolts
7. See "GENERAL PLAN" for end post location
8. At intermediate posts only. Contractor has the option of either ⅛" x 2" strap or ¼" anchor plate with eyebolt
9. For "SECTION A-A", see "CHAIN LINK RAILING TYPE 2 - ST-10 DETAILS No. 2" sheet

SPECIAL DETAILS

REVISED STANDARD DRAWING

FILE NO. xs16-150-1

APPROVAL DATE July 2011

1 REVISED DETAIL

STATE OF CALIFORNIA DEPARTMENT OF TRANSPORTATION

DIVISION OF ENGINEERING SERVICES

BRIDGE NO. 35-0352K

POST MILES 16.58

BROADWAY ON-RAMP

CHAIN LINK RAILING TYPE 2 - ST-10 DETAILS No. 1

DS OSD 2147A (ENGLISH STANDARD DRAWING "XS" BORDER REV. (02-02-11)

ORIGINAL SCALE IN INCHES FOR REDUCED PLANS 0 1 2 3

UNIT: 0703
PROJECT NUMBER & PHASE: 04000006841 CONTRACT NO.: 235844

DISREGARD PRINTS BEARING EARLIER REVISION DATES

REVISION DATES 5-15-13 11-16-12 2-12-13 4-8-13

SHEET 23 OF 28

FILE => 0400000684we065.dgn

USERNAME => s141070 DATE PLOTTED => 03-FEB-2014 TIME PLOTTED => 13:52

DIST	COUNTY	ROUTE	POST MILES TOTAL PROJECT	SHEET No	TOTAL SHEETS
04	SM	101	16.3/17.1	774	814

REGISTERED CIVIL ENGINEER 5-15-13 DATE

10/21/13
PLANS APPROVAL DATE

REGISTERED PROFESSIONAL ENGINEER Austin Prince No. C80659 Exp. 3/31/15 CIVIL STATE OF CALIFORNIA

The State of California or its officers or agents shall not be responsible for the accuracy or completeness of scanned copies of this plan sheet.

SMCTA
1250 SAN CARLOS AVENUE
SAN CARLOS, CA 94070-1306

URS CORPORATION
2870 GATEWAY OAKS DRIVE, SUITE 150
SACRAMENTO, CA 95833-4308

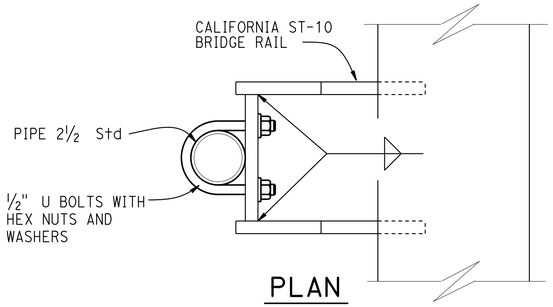

PLAN

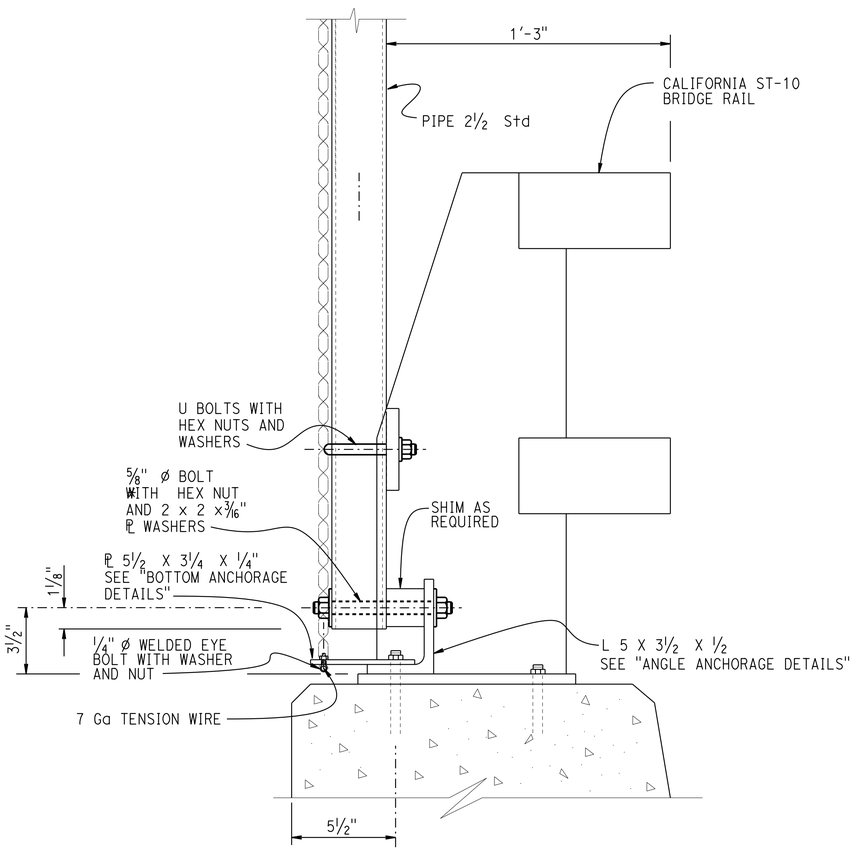

* IF NECESSARY, SEE "NUT/BOLT EXTENSION"

ELEVATION

SECTION A-A

3" = 1'-0"

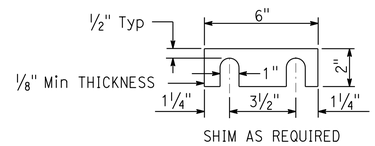

RAILING SHIM DETAILS

3" = 1'-0"

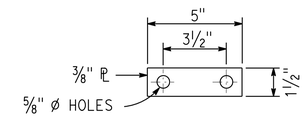

SPACER PLATE

3" = 1'-0"

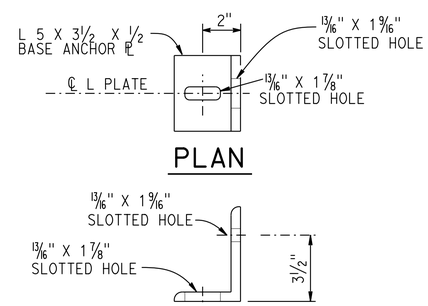

PLAN

ELEVATION

ANGLE ANCHORAGE DETAILS

3" = 1'-0"

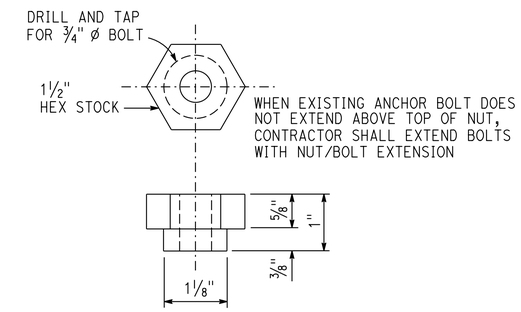

NUT/BOLT EXTENSION

NO SCALE

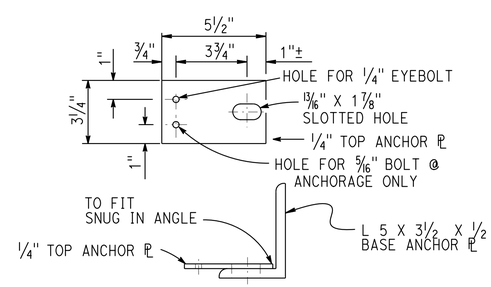

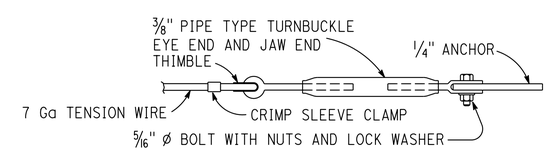

BOTTOM ANCHORAGE DETAILS

3" = 1'-0"

SPECIAL DETAILS

STANDARD DRAWING		STATE OF CALIFORNIA DEPARTMENT OF TRANSPORTATION	DIVISION OF ENGINEERING SERVICES	BRIDGE NO. 35-0352K	BROADWAY ON-RAMP
FILE NO. xs16-150-2	APPROVAL DATE July 2011			POST MILES 16.58	CHAIN LINK RAILING TYPE 2 - ST-10 DETAILS No. 2

DS OSD 2147A (ENGLISH STANDARD DRAWING "XS" BORDER REV. (02-02-11)

ORIGINAL SCALE IN INCHES FOR REDUCED PLANS 0 1 2 3

UNIT: 0703
PROJECT NUMBER & PHASE: 04000006841 CONTRACT NO.: 235844

DISREGARD PRINTS BEARING EARLIER REVISION DATES → REVISION DATES 5-15-13 11-16-12 2-12-13 4-8-13 SHEET 24 OF 28

FILE => 0400000684we066.dgn

USERNAME => s141070 DATE PLOTTED => 03-FEB-2014 TIME PLOTTED => 13:52

DIST	COUNTY	ROUTE	POST MILES TOTAL PROJECT	SHEET No	TOTAL SHEETS
04	SM	101	16.3/17.1	775	814

REGISTERED CIVIL ENGINEER 5-15-13 DATE

10/21/13
PLANS APPROVAL DATE

REGISTERED PROFESSIONAL ENGINEER Austin Prince No. C80659 Exp. 3/31/15 CIVIL STATE OF CALIFORNIA

The State of California or its officers or agents shall not be responsible for the accuracy or completeness of scanned copies of this plan sheet.

SMCTA
1250 SAN CARLOS AVENUE
SAN CARLOS, CA 94070-1306

URS CORPORATION
2870 GATEWAY OAKS DRIVE, SUITE 150
SACRAMENTO, CA 95833-4308

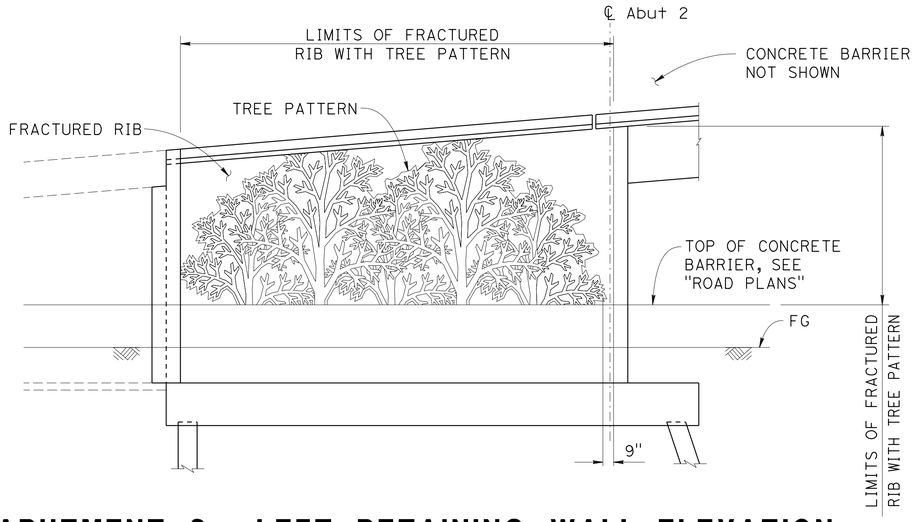

ABUTMENT 2 - LEFT RETAINING WALL ELEVATION

3/16" = 1'-0"

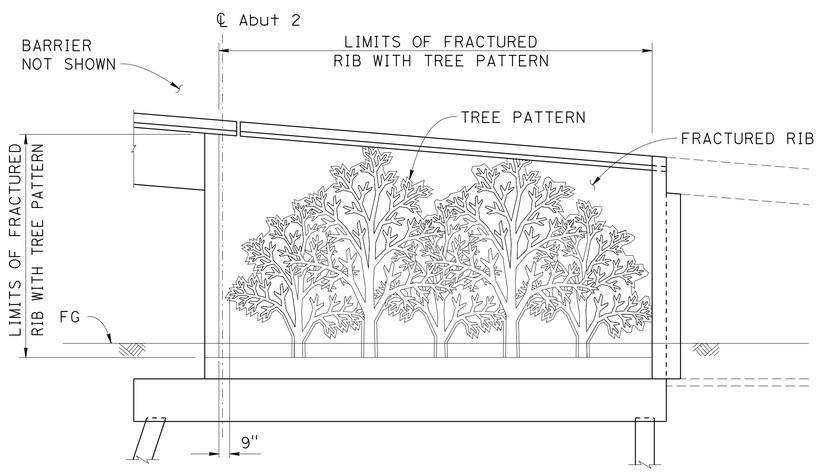

ABUTMENT 2 - RIGHT RETAINING WALL ELEVATION

3/16" = 1'-0"

NOTES:

1. These details are diagrammatic and indicative of the design intent for the Abut and retaining wall trees and fractured rib form liner patterns. Drawings do not show all the required elements and details for fabrication of the form liner or installation on Abut and retaining walls. Provide shop drawings of sufficient size and detail that clearly indicate construction, including, but not limited to details of layout, materials, finishes and installation.

2. Contractor is responsible for ensuring form liner trees and fractured rib patterns are fabricated so that they can be formed and released to provide patterns shown. Do not fabricate form liner patterns until engineer approves shop drawings and samples. Provide full size samples of the tree pattern for review and approval. Fractured rib pattern and tree trunks to be plumb.

3. In some locations, the top and/or bottom of the tree patterns will be under safety shape, below finish grade of soil and/or covered on top by ramp barrier.

LEGEND:

- FRACTURED RIB PATTERN WITH BUSH HAMMERED TOP SURFACE +0" TO +1.5" FROM FOC
- BUSH HAMMERED SURFACE AROUND RAISED TREE PATTERNS +1.5" FROM FOC
- BACKGROUND SHORT TREE WITH SMOOTH TOP SURFACE +2.25" FROM FOC
- FOREGROUND SHORT TREE WITH SMOOTH TOP SURFACE +3" FROM FOC

TREE PATTERN DETAIL

NO SCALE

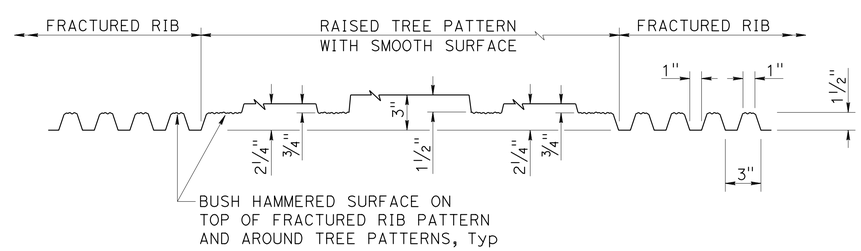

TREE PATTERN DETAIL

NO SCALE

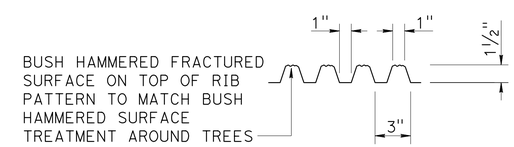

FRACTURED RIB DETAIL

NO SCALE

Paul Cotter
DESIGN OVERSIGHT Paul Cotter
6-20-13
SIGN OFF DATE

	BY	CHECKED
DESIGN	A. Prince	J. Hueser
DETAILS	R. Lim	J. Hueser
QUANTITIES	A. Prince	S. Landis

PREPARED FOR THE STATE OF CALIFORNIA DEPARTMENT OF TRANSPORTATION

Syed Kazmi
PROJECT ENGINEER

BRIDGE NO. 35-0352K
POST MILES 16.58

BROADWAY ON-RAMP
ARCHITECTURAL DETAILS

DESIGN DETAIL SHEET (ENGLISH) (REV. 03/14/12)

ORIGINAL SCALE IN INCHES FOR REDUCED PLANS 0 1 2 3

UNIT: 0703
PROJECT NUMBER & PHASE: 04000006841 CONTRACT NO.: 235844

DISREGARD PRINTS BEARING EARLIER REVISION DATES

REVISION DATES 5-15-13 11-16-12 2-12-13 4-8-13

SHEET 25 OF 28

FILE => 0400000684we067.dgn

USERNAME => s141070 DATE PLOTTED => 03-FEB-2014 TIME PLOTTED => 13:52

DIST	COUNTY	ROUTE	POST MILES TOTAL PROJECT	SHEET No	TOTAL SHEETS
04	SM	101	16.3/17.1	776	814

REGISTERED CIVIL ENGINEER — DATE 5-15-13

10/21/13
PLANS APPROVAL DATE

REGISTERED PROFESSIONAL ENGINEER — Austin Prince — No. C80659 — Exp. 3/31/15 — CIVIL — STATE OF CALIFORNIA

The State of California or its officers or agents shall not be responsible for the accuracy or completeness of scanned copies of this plan sheet.

SMCTA
1250 SAN CARLOS AVENUE
SAN CARLOS, CA 94070-1306

URS CORPORATION
2870 GATEWAY OAKS DRIVE, SUITE 150
SACRAMENTO, CA 95833-4308

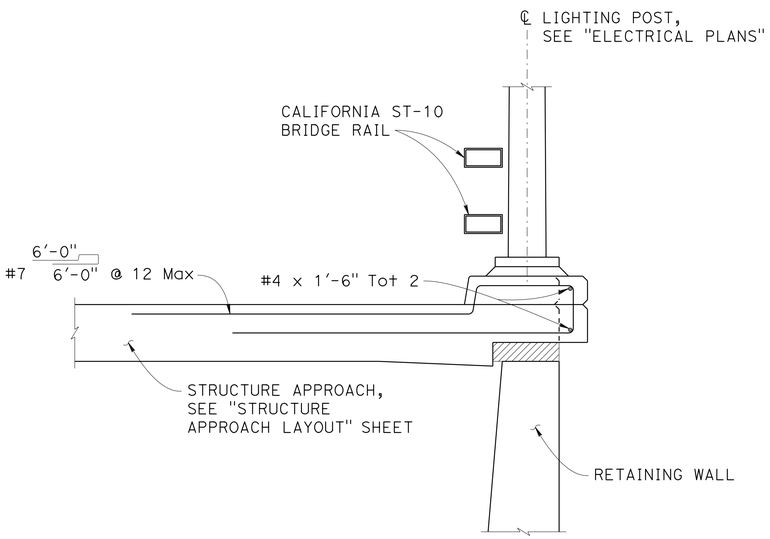

TYPICAL SECTION

3/4" = 1'-0"

SECTION AT STRUCTURE APPROACH SHOWN,
SECTION AT BRIDGE DECK SIMILAR.

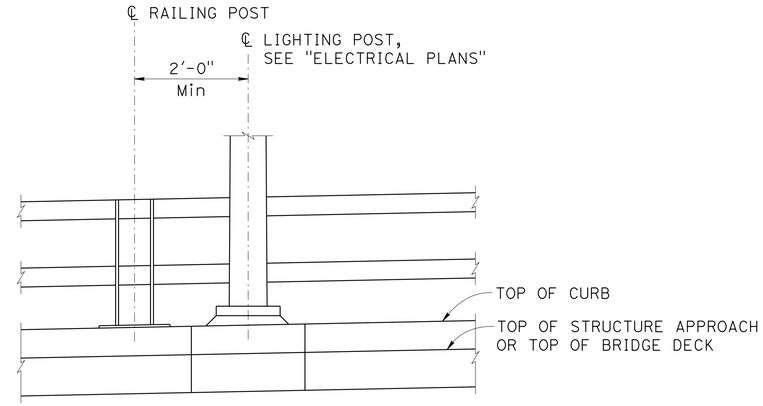

ELEVATION

3/4" = 1'-0"

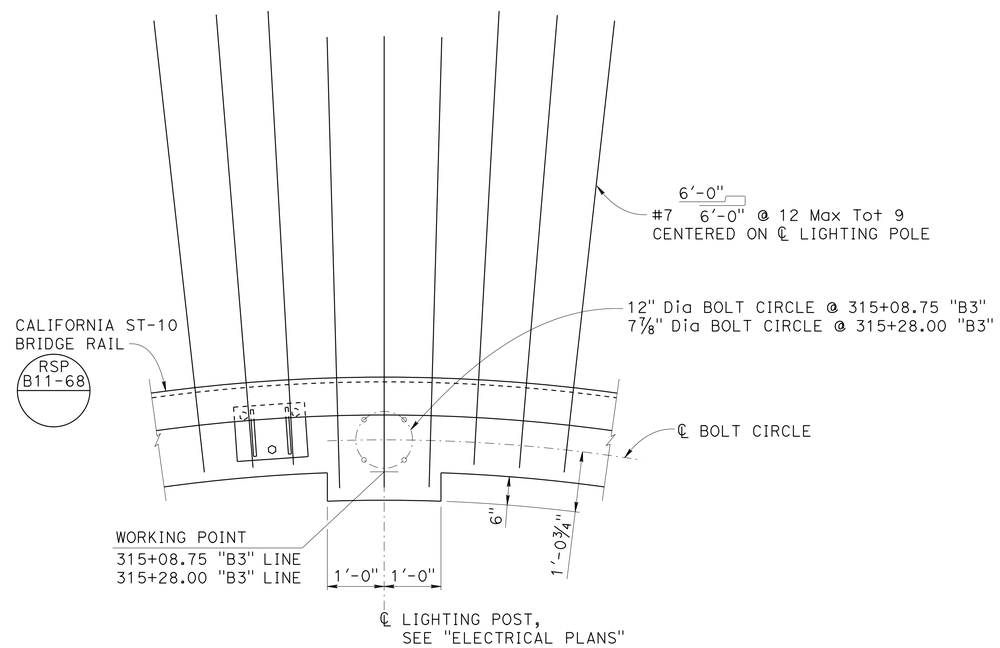

PLAN

3/4" = 1'-0"

Paul Cotter
DESIGN OVERSIGHT — Paul Cotter
6-20-13
SIGN OFF DATE

	BY	CHECKED
DESIGN	A. Prince	J. Hueser
DETAILS	R. Lim	J. Hueser
QUANTITIES	A. Prince	S. Landis

PREPARED FOR THE
STATE OF CALIFORNIA
DEPARTMENT OF TRANSPORTATION

Syed Kazmi
PROJECT ENGINEER

BRIDGE NO. 35-0352K
POST MILES 16.58

BROADWAY ON-RAMP
PEDESTAL DETAILS

DESIGN DETAIL SHEET (ENGLISH) (REV. 03/14/12)

ORIGINAL SCALE IN INCHES FOR REDUCED PLANS 0 1 2 3

UNIT: 0703
PROJECT NUMBER & PHASE: 04000006841 CONTRACT NO.: 235844

DISREGARD PRINTS BEARING EARLIER REVISION DATES

REVISION DATES: 5-15-13 11-16-12 2-12-13 4-8-13

SHEET 26 OF 28

FILE => 0400000684we068.dgn

USERNAME => s141070 DATE PLOTTED => 03-FEB-2014 TIME PLOTTED => 13:52

DIST	COUNTY	ROUTE	POST MILES TOTAL PROJECT	SHEET No	TOTAL SHEETS
04	SM	101	16.3/17.1	777	814

GEOTECHNICAL PROFESSIONAL — DATE 5-15-13

10/21/13
PLANS APPROVAL DATE

REGISTERED PROFESSIONAL ENGINEER — Stephen Huang — No. C 42289 — Exp. 03/31/14 — GEOTECHNICAL — STATE OF CALIFORNIA

The State of California or its officers or agents shall not be responsible for the accuracy or completeness of scanned copies of this plan sheet.

SMCTA
1250 SAN CARLOS AVENUE
SAN CARLOS, CA 94070-1306

URS CORPORATION
2870 GATEWAY OAKS DRIVE, SUITE 150
SACRAMENTO, CA 95833-4308

BENCH MARK

All elevations based on vertical datum NAVD88.
All stations and offsets based on horizontal datum NAD83

BM No. 1, Monument 501, El 9.35, N2045276.165 E6019489.935
BM No. 2, Monument 1003, El 10.93, N2043769.910 E6021712.494
BM No. 3, Monument 505, El 10.21, N2043140.717 E6021760.224
BM No. 4, Monument 74, El 35.48, N2042621.214 E6022476.873
BM No. 5, Monument 510, El 12.66 N2042355.119 E6022633.562

NOTES

1. This LOTB Sheet was prepared in accordance with the Caltrans Soil and Rock Logging, Classification, and Presentation Manual (2010).
2. Standard Penetration test sampler I.D. = 1.44 inch (1.4)
   Modified California sampler I.D. = 1.96 inch (2.0)
   Thin-walled Shelby tube sampler I.D. = 2.97 inch (3.0)

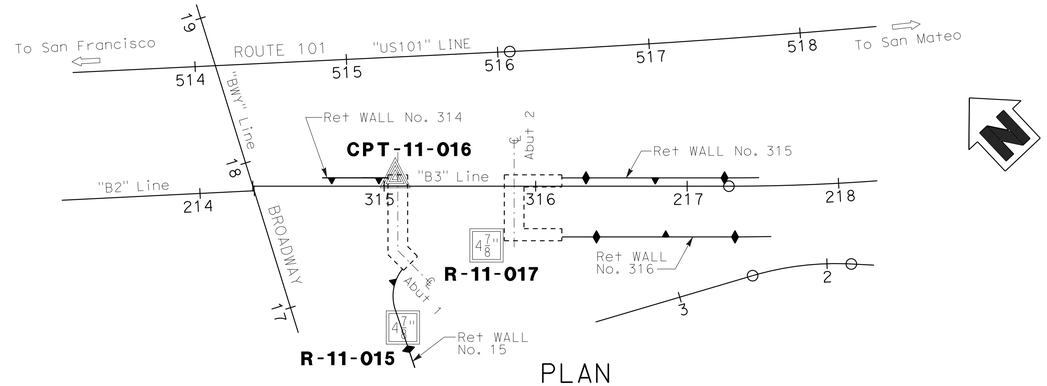

PLAN
1" = 50'

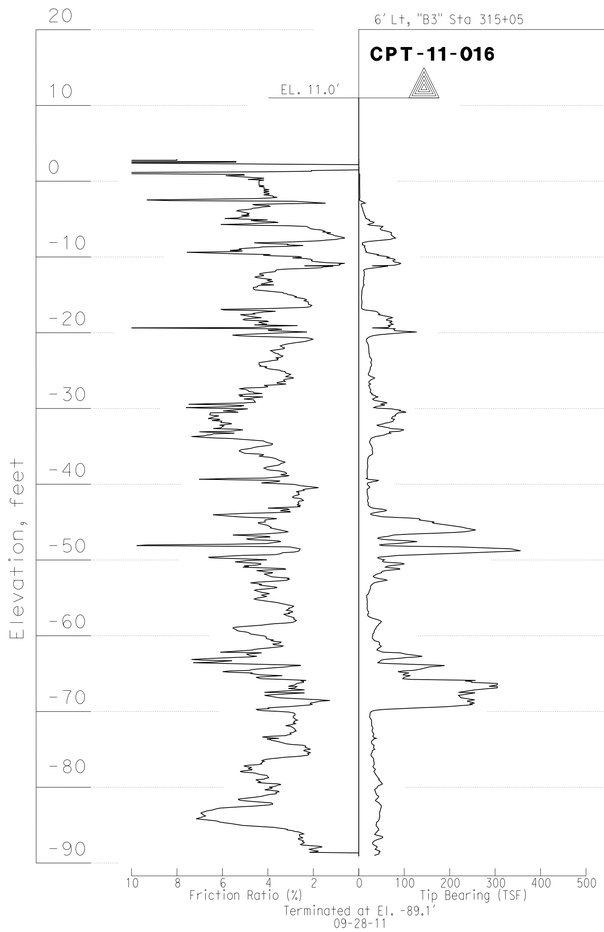

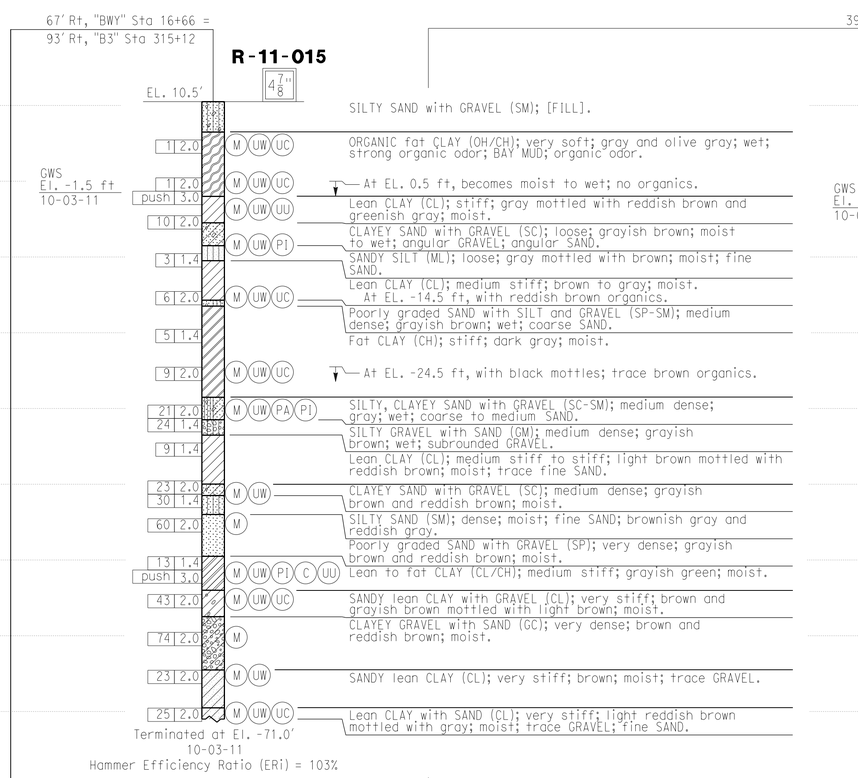

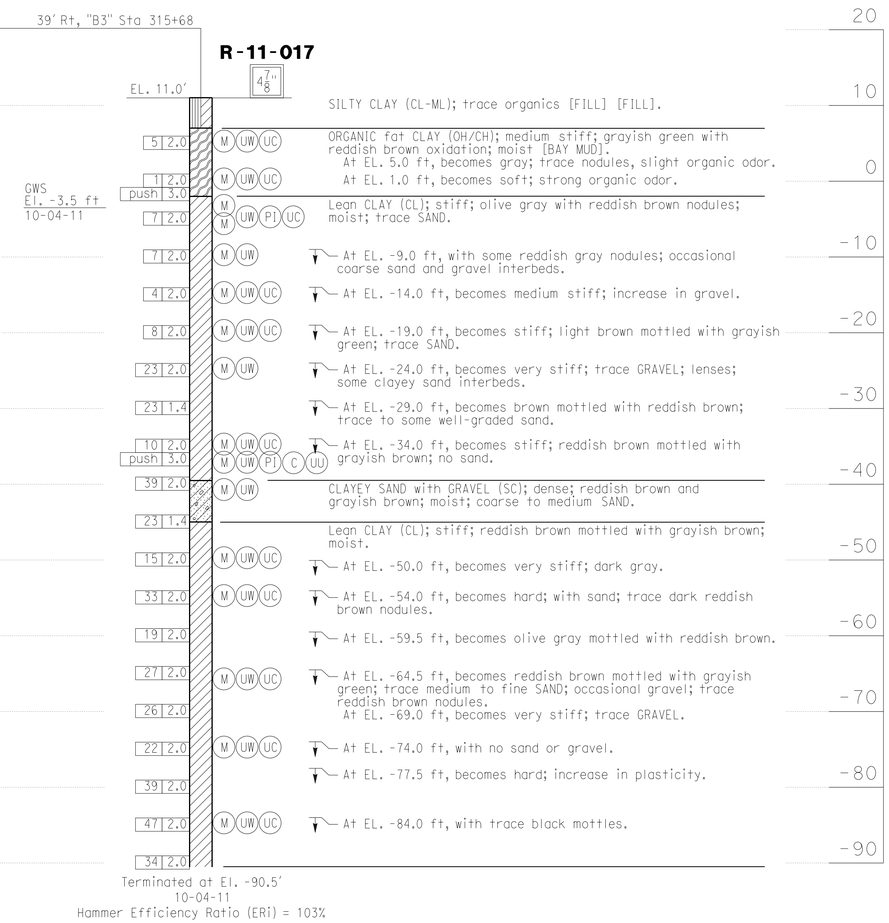

PROFILE
Ver. 1" = 10'
Hor. 1" = 10'

"B3" LINE
315+00
316+00

DESIGN OVERSIGHT Paul Cotter	DRAWN BY	B. VUONG	J. LOPEZ / A. CHEUNG
6-20-13 SIGN OFF DATE	CHECKED BY	A. M. MOORE	FIELD INVESTIGATION BY: DATE:

PREPARED FOR THE STATE OF CALIFORNIA DEPARTMENT OF TRANSPORTATION

S. HUANG
PROJECT ENGINEER

BRIDGE NO. 35-0352K
POST MILES 16.58

BROADWAY ON-RAMP
LOG OF TEST BORINGS 1 OF 2

GS GEOTECHNICAL LOG OF TEST BORINGS SHEET (ENGLISH) (REV. 03/14/12)

ORIGINAL SCALE IN INCHES FOR REDUCED PLANS 0 1 2 3

UNIT: 0703
PROJECT NUMBER & PHASE: 04000006841 CONTRACT NO.: 235844

DISREGARD PRINTS BEARING EARLIER REVISION DATES

REVISION DATES: 5-15-13 11-16-12 2-12-13 4-8-13

SHEET 27 OF 28

FILE => 0400000684we069.dgn

USERNAME => s141070 DATE PLOTTED => 03-FEB-2014 TIME PLOTTED => 13:52

DIST.	COUNTY	ROUTE	POST MILES—TOTAL PROJECT	SHEET NO.	TOTAL SHEETS
04	SM	101	16.6	62	62

BRIDGE ENGINEER — REGISTERED CIVIL ENGINEER NO. 42289

DATE APPROVED September 14, 1990

DIVISION OF ENGINEERING SERVICES - GEOTECHNICAL SERVICES

As-Built Log of Test Borings sheet is considered an informational document only. As such, the State of California registration seal with signature, license number and registration certificate expiration date confirm that this is a true and accurate copy of the original document. This drawing is available and presented only for the convenience of any bidder, contractor or other interested party.

DIST.	COUNTY	ROUTE	POST MILES-TOTAL PROJECT	Sheet No.	Total Sheets
04	SM	101		778	814

REGISTERED CIVIL ENGINEER — DATE 5-15-13

REGISTERED PROFESSIONAL ENGINEER — Stephen Huang — No. C 42289 — Exp. 03/31/14 — CIVIL — STATE OF CALIFORNIA

BROADWAY ON-RAMP

LOG OF TEST BORINGS 2 OF 2

NOTE: A COPY OF THIS LOG OF TEST BORINGS IS AVAILABLE AT OFFICE OF STRUCTURE MAINTENANCE AND INVESTIGATIONS, SACRAMENTO, CALIFORNIA

UNIT: 0703
PROJECT NUMBER & PHASE: 04000006841

BRIDGE No.	Sheet	of
35-0352K	28	28

Revisions made to this Log of Test Borings from the original ____ Log of Test Borings are the addition of the following table and notes:

Boring	Station	Offset from C/L Rte. 101
B-1	15+94	68.9 Rt
B-2	16+15	10.9 Rt
B-3	16+92	81.5 Rt

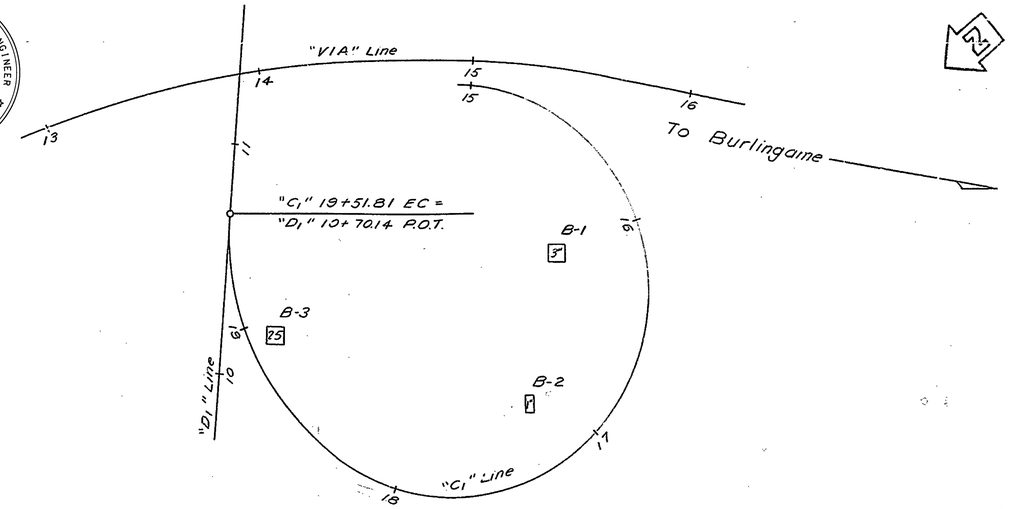

PLAN
Scale: 1" = 30'

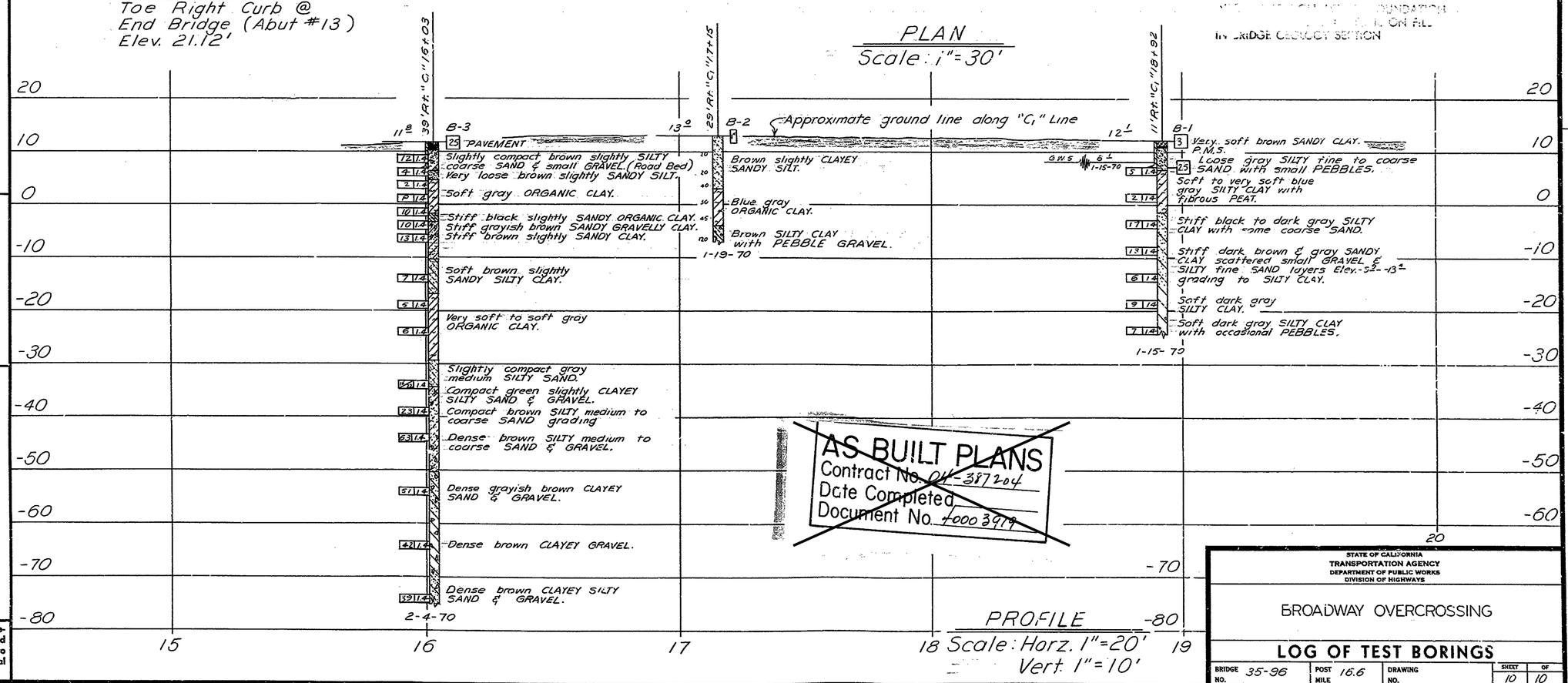

PROFILE
Scale: Horz. 1" = 20'
Vert. 1" = 10'

AS BUILT PLANS
Contract No. 04-387204
Date Completed
Document No. 4000 3979

LEGEND OF BORING OPERATIONS

PENETROMETER — 2½" CONE PENETROMETER — SAMPLER BORING (WET) — ROTARY BORING (DRY) — AUGER BORING — JET BORING — CORE BORING — TEST PIT

PENETRATION BORING — ROTARY BORING — 1" SOIL TUBE

LEGEND OF EARTH MATERIALS

GRAVEL — SAND — SILT — CLAY — SILTY CLAY OR CLAYEY SILT — SANDY CLAY OR CLAYEY SAND — SANDY SILT OR SILTY SAND — PEAT AND/OR ORGANIC MATTER — FILL MATERIAL — IGNEOUS ROCK — SEDIMENTARY ROCK — METAMORPHIC ROCK

CLASSIFICATION OF MATERIAL BASED ON STANDARD GRADE SIZE LIMITS

DIAGRAM SHOWING THE BASIS FOR ESTIMATED GRADING DESCRIPTIONS USED IN THE CLASSIFICATION OF CLASS NAMES. IF GRAVEL IS PRESENT IN APPRECIABLE AMOUNTS, THE TERM "GRAVELLY" MAY BE ADDED TO THE CLASS NAME, VIZ. "GRAVELLY SANDY CLAY". THE TERMS "GRAVELLY SAND" AND "GRAVELLY GRAVEL" WHEN USED TO DESCRIBE SAND, SILT AND GRAVEL, REFER TO STANDARD GRADE SIZE LIMITS.

NOTE: Classification of earth material as shown on this sheet is based upon field inspection and is not to be construed to imply mechanical analysis.

FIELD STUDY	G. Miller	2-70
DRAWN	S. Sawyer	2-70
CHECKED	G. Miller	2-70

Approval Recommended by: J. L. Sommers, Engineering Geologist, 1975

BRIDGE DEPARTMENT
ENGINEERING GEOLOGY SECTION

62

STATE OF CALIFORNIA
TRANSPORTATION AGENCY
DEPARTMENT OF PUBLIC WORKS
DIVISION OF HIGHWAYS

BROADWAY OVERCROSSING

LOG OF TEST BORINGS

BRIDGE NO.	POST MILE	DRAWING NO.	SHEET	OF
35-96	16.6		10	10

REVISION DATES (PRELIMINARY STAGE ONLY): 2/6/70

WO 387201
CU 04205

Disregard prints bearing earlier revision dates

I HEREBY CERTIFY THAT THIS IS A TRUE AND ACCURATE COPY OF THE ABOVE DOCUMENT TAKEN UNDER MY DIRECTION AND CONTROL ON THIS DATE IN SACRAMENTO, CALIFORNIA PURSUANT TO AUTHORIZATION BY THE DIRECTOR OF PUBLIC WORKS.

DATE 6-13-72 SIGNATURE [illegible] TITLE SR. [illegible]

DIST	COUNTY	ROUTE	POST MILES TOTAL PROJECT	SHEET No	TOTAL SHEETS
04	SM	101	16.3/17.1	779	814

REGISTERED CIVIL ENGINEER 04-08-13 DATE

10/21/13
PLANS APPROVAL DATE

REGISTERED PROFESSIONAL ENGINEER CHAO GONG No. C53837 Exp. 9-30-15 CIVIL STATE OF CALIFORNIA

The State of California or its officers or agents shall not be responsible for the accuracy or completeness of scanned copies of this plan sheet.

SAN MATEO COUNTY TRANSPORTATION AUTHORITY
1250 SAN CARLOS AVENUE
SAN CARLOS, CA 94070-1306

URS CORPORATION
1333 BROADWAY, SUITE 800
OAKLAND, CA 94612-1924

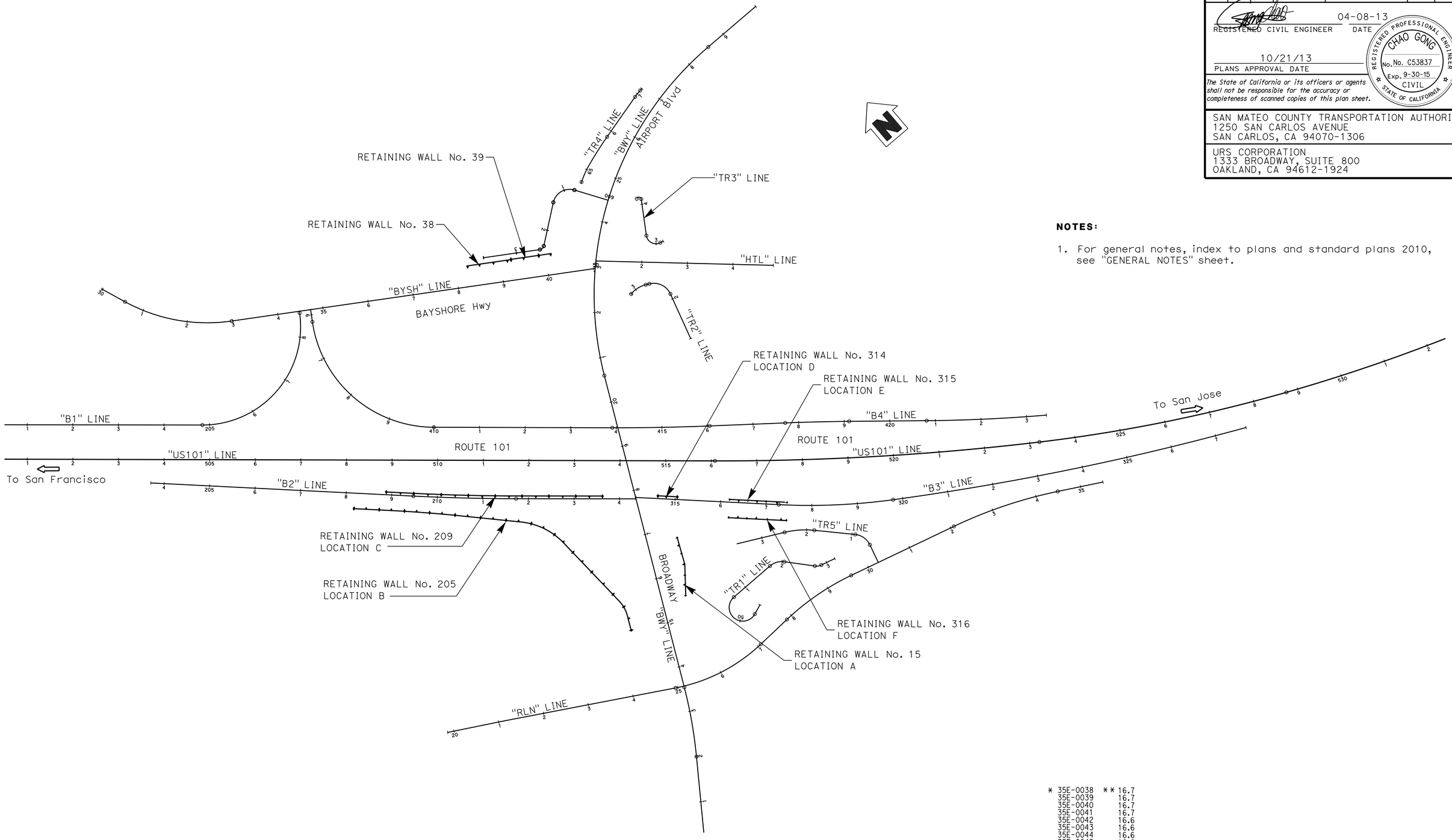

NOTES:

1. For general notes, index to plans and standard plans 2010, see "GENERAL NOTES" sheet.

* 35E-0038	** 16.7
35E-0039	16.7
35E-0040	16.7
35E-0041	16.7
35E-0042	16.6
35E-0043	16.6
35E-0044	16.6
35E-0045	16.6

Paul Cotter
DESIGN OVERSIGHT Paul Cotter
6-20-13
SIGN OFF DATE

	BY	CHECKED
DESIGN	G. CARROLL	H. HAKIMI
DETAILS	N. HUTTON	G. CARROLL
QUANTITIES	P. JACOBS	A. FINKELSTEIN

LOAD & RESISTANCE FACTOR DESIGN — LIVE LOADING: HL93 DESIGN VEHICLE

	BY	CHECKED
LAYOUT	T. SILVA	A. BHOI
SPECIFICATIONS	D. HARNAGEL	PLANS AND SPECS COMPARED C. GONG

PREPARED FOR THE STATE OF CALIFORNIA DEPARTMENT OF TRANSPORTATION

C. GONG
PROJECT ENGINEER

BRIDGE NO. *
POST MILES **

RETAINING WALLS
KEY MAP

DESIGN GENERAL PLAN SHEET (ENGLISH) (REV. 03/14/12)

ORIGINAL SCALE IN INCHES FOR REDUCED PLANS 0 1 2 3

UNIT: 0703
PROJECT NUMBER & PHASE: 04000006841 CONTRACT NO.: 04-235844

DISREGARD PRINTS BEARING EARLIER REVISION DATES → 11-16-12 01-16-13 02-12-13 04-08-13

SHEET 1 OF 36

FILE => 0400000684we071.dgn

USERNAME => s141070 DATE PLOTTED => 03-FEB-2014 TIME PLOTTED => 13:52

DIST	COUNTY	ROUTE	POST MILES TOTAL PROJECT	SHEET No	TOTAL SHEETS
04	SM	101	16.3/17.1	780	814

REGISTERED CIVIL ENGINEER 05-15-13 DATE

10/21/13
PLANS APPROVAL DATE

REGISTERED PROFESSIONAL ENGINEER CHAO GONG No. C53837 Exp. 9-30-15 CIVIL STATE OF CALIFORNIA

The State of California or its officers or agents shall not be responsible for the accuracy or completeness of scanned copies of this plan sheet.

SAN MATEO COUNTY TRANSPORTATION AUTHORITY
1250 SAN CARLOS AVENUE
SAN CARLOS, CA 94070-1306

URS CORPORATION
1333 BROADWAY, SUITE 800
OAKLAND, CA 94612-1924

INDEX TO PLANS

SHEET NO.	TITLE
1	RETAINING WALLS KEY MAP
2	RETAINING WALLS INDEX TO PLANS
3	RETAINING WALL No. 205 GENERAL PLAN No. 1
4	RETAINING WALL No. 205 GENERAL PLAN No. 2
5	RETAINING WALL No. 209 GENERAL PLAN
6	RETAINING WALL No. 38 GENERAL PLAN
7	RETAINING WALL No. 39 GENERAL PLAN
8	RETAINING WALL No. 314 GENERAL PLAN
9	RETAINING WALL No. 15 GENERAL PLAN
10	RETAINING WALL No. 315 GENERAL PLAN
11	RETAINING WALL No. 316 GENERAL PLAN
12	RETAINING WALLS MECHANICALLY STABILIZED EMBANKMENT DETAILS No. 1
13	RETAINING WALLS MECHANICALLY STABILIZED EMBANKMENT DETAILS No. 2
14	RETAINING WALLS MECHANICALLY STABILIZED EMBANKMENT DETAILS No. 3
15	RETAINING WALLS MECHANICALLY STABILIZED EMBANKMENT DETAILS No. 4
16	RETAINING WALLS MECHANICALLY STABILIZED EMBANKMENT DETAILS No. 5
17	RETAINING WALLS MECHANICALLY STABILIZED EMBANKMENT DETAILS No. 6
18	RETAINING WALLS MECHANICALLY STABILIZED EMBANKMENT DETAILS No. 7
19	RETAINING WALLS MISCELLANEOUS DETAILS
20	RETAINING WALL No. 15 CHAIN LINK RAILING TYPE 2 DETAILS No.1
21	RETAINING WALL No. 15 CHAIN LINK RAILING TYPE 2 DETAILS No.2
22	RETAINING WALLS ARCHITECTURAL TREATMENT DETAILS No. 1
23	RETAINING WALLS ARCHITECTURAL TREATMENT DETAILS No. 2
24	RETAINING WALLS ARCHITECTURAL TREATMENT DETAILS No. 3
25	RETAINING WALLS ARCHITECTURAL TREATMENT DETAILS No. 4
26	RETAINING WALLS ARCHITECTURAL TREATMENT DETAILS No. 5
27	RETAINING WALL No. 15 LOG OF TEST BORINGS 1 OF 10
28	RETAINING WALL No. 38 LOG OF TEST BORINGS 2 OF 10
29	RETAINING WALL No. 39 LOG OF TEST BORINGS 3 OF 10
30	RETAINING WALL No. 205 LOG OF TEST BORINGS 4 OF 10
31	RETAINING WALL No. 205 LOG OF TEST BORINGS 5 OF 10
32	RETAINING WALL No. 209 LOG OF TEST BORINGS 6 OF 10
33	RETAINING WALL No. 209 LOG OF TEST BORINGS 7 OF 10
34	RETAINING WALL No. 314 LOG OF TEST BORINGS 8 OF 10
35	RETAINING WALL No. 315 LOG OF TEST BORINGS 9 OF 10
36	RETAINING WALL No. 316 LOG OF TEST BORINGS 10 OF 10

STANDARD PLANS 2010

A10A	ABBREVIATIONS (SHEET 1 OF 2)
A10B	ABBREVIATIONS (SHEET 2 OF 2)
A10C	LINES AND SYMBOLS (SHEET 1 OF 3)
A10D	LINES AND SYMBOLS (SHEET 2 OF 3)
A10E	LINES AND SYMBOLS (SHEET 3 OF 3)
A10F	LEGEND - SOIL (SHEET 1 OF 2)
A10G	LEGEND - SOIL (SHEET 2 OF 2)
A62B	LIMITS OF PAYMENT FOR EXCAVATION AND BACKFILL BRIDGE SURCHARGE AND WALL
A76A	CONCRETE BARRIER TYPE 60
A85	CHAIN LINK FENCE
B0-3	BRIDGE DETAILS
B2-5	PILE DETAILS CLASS 90 AND CLASS 140
RSP B3-4A	RETAINING WALL TYPE 5 (CASE 1)
RSP B3-5	RETAINING WALL DETAILS No. 1
B3-6	RETAINING WALL DETAILS No. 2
B11-7	CHAIN LINK RAILING
RSP B11-56	CONCRETE BARRIER TYPE 736
RSP B11-68	CALIFORNIA ST-10 BRIDGE RAIL (SHEET 1 OF 3)
RSP P31B	CONTINUOUSLY REINFORCED CONCRETE PAVEMENT-EXPANSION JOINT AND ANCHOR DETAILS

STANDARD PLAN SHEET No.

DETAIL No.

GENERAL NOTES
LOAD AND RESISTANCE FACTOR DESIGN

1. DESIGN: AASHTO LRFD Bridge Design Specifications, 4th Edition with California Amendments

2. DESIGN LOAD:
   Soil Pressure: 40 pcf Equivalent Fluid Pressure For Horizontal Backfill
   Soil Pressure: 68 pcf Equivalent Fluid Pressure For Sloping Backfill
   Live Load: Surcharge = 240 lb/ft^2
   Vehicular Collision Force: 54 kip Transverse Force Applied at He = 32", Distributed Over 10 feet at The Top of Wall and 1 : 1 Distribution Down and Outward. Distribution Below Footing Taken No Less Than 40'.

3. SOIL PARAMETERS:
   MSE: Internal design $\phi = 34°$, $\gamma = 120$ lb/ft^3
   External design ϕ(Retained Backfill) = 30°, $\gamma = 120$ lb/ft^3
   ϕ(Foundation) = 30°
   TYPE 5: Design $\phi = 34°$, $\gamma = 120$ lb/ft^3
   $K_h = 0.23$, $K_v = 0.0$
   Ultimate Bearing Capacity = 16,500 psf
   Ultimate Friction Factor = 0.35

4. PRECAST CONCRETE PANELS:
   f'c = 4,000 psi (Concrete compressive strength at 28 days)
   fy = 60,000 psi (Yield strength of reinforcement)

5. SOIL REINFORCEMENT:
   Welded wire mats: fy = 65,000 psi (Yield strength)
   Coupler: fy = 36,000 psi (Yield strength)
   Corrosion rate = 1.1 mils/year

6. REINFORCED CONCRETE:
   f'c = 3,600 psi, except as noted
   (Concrete compressive strength at 28 days)
   fy = 60,000 psi (Yield strength of reinforcement)

*	**
35E-0038	16.7
35E-0039	16.7
35E-0040	16.7
35E-0041	16.7
35E-0042	16.6
35E-0043	16.6
35E-0044	16.6
35E-0045	16.6

Paul Cotter
DESIGN OVERSIGHT Paul Cotter
6-20-13
SIGN OFF DATE

	BY	CHECKED			
DESIGN	G. CARROLL	H. HAKIMI	LOAD & RESISTANCE FACTOR DESIGN	LIVE LOADING: HL93 DESIGN VEHICLE	
DETAILS	N. HUTTON	G. CARROLL	LAYOUT	T. SILVA	A. BHOI
QUANTITIES	P. JACOBS	A. FINKELSTEIN	SPECIFICATIONS	D. HARNAGEL	PLANS AND SPECS COMPARED C. GONG

PREPARED FOR THE STATE OF CALIFORNIA DEPARTMENT OF TRANSPORTATION

C. GONG
PROJECT ENGINEER

BRIDGE NO. *
POST MILES **

RETAINING WALLS
INDEX TO PLANS

DESIGN GENERAL PLAN SHEET (ENGLISH) (REV. 03/14/12)

ORIGINAL SCALE IN INCHES FOR REDUCED PLANS 0 1 2 3

UNIT: 0703
PROJECT NUMBER & PHASE: 04000006841 CONTRACT NO.: 04-235844

DISREGARD PRINTS BEARING EARLIER REVISION DATES

REVISION DATES 11-16-12 01-16-13 02-12-13 05-15-13

SHEET 2 OF 36

FILE => 0400000684we072.dgn

USERNAME => s141070 DATE PLOTTED => 03-FEB-2014 TIME PLOTTED => 13:52

DIST	COUNTY	ROUTE	POST MILES TOTAL PROJECT	SHEET No	TOTAL SHEETS
04	SM	101	16.3/17.1	781	814

REGISTERED CIVIL ENGINEER 05-15-13 DATE

10/21/13
PLANS APPROVAL DATE

REGISTERED PROFESSIONAL ENGINEER CHAO GONG No. C53837 Exp. 9-30-15 CIVIL STATE OF CALIFORNIA

The State of California or its officers or agents shall not be responsible for the accuracy or completeness of scanned copies of this plan sheet.

SAN MATEO COUNTY TRANSPORTATION AUTHORITY
1250 SAN CARLOS AVENUE
SAN CARLOS, CA 94070-1306

URS CORPORATION
1333 BROADWAY, SUITE 800
OAKLAND, CA 94612-1924

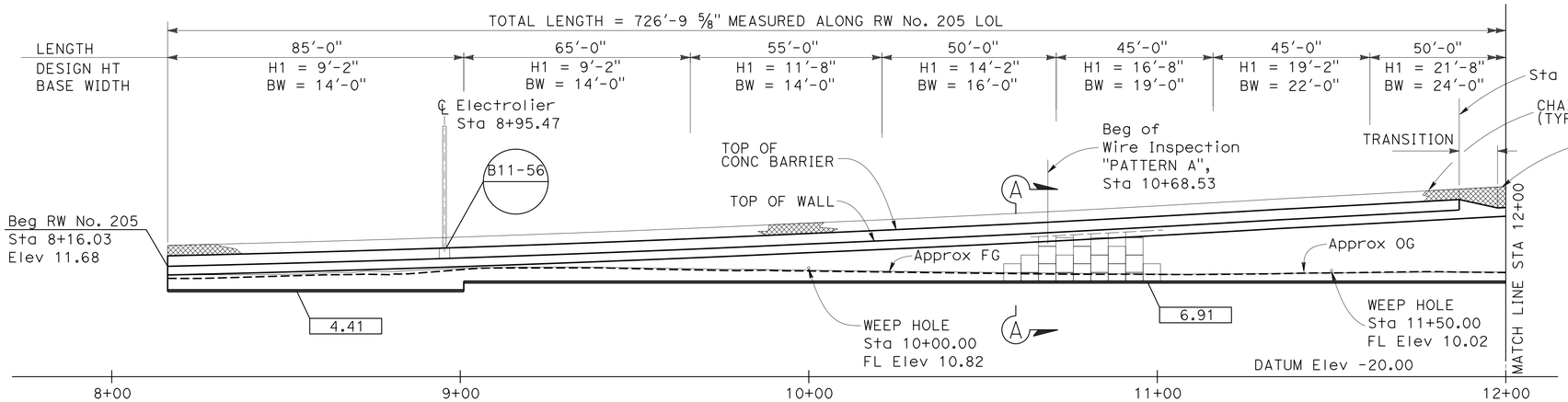

DEVELOPED ELEVATION

SCALE: 1" = 20'

ELEV AT TOP OF WALL

STA	ELEV
8+20	11.77
8+40	12.27
8+60	12.82
8+80	13.42
9+00	14.07
9+20	14.77
9+40	15.53
9+60	16.33
9+80	17.18
10+00	18.09
10+20	18.97
10+40	19.90

ELEV AT TOP OF WALL

STA	ELEV
10+60	20.89
10+80	21.92
11+00	23.00
11+20	24.14
11+40	25.28
11+60	26.36
11+80	27.46
12+00	28.54
12+20	29.50
12+40	30.32
12+60	30.65
12+80	28.47
13+00	25.29
13+20	21.99
13+40	18.65
13+60	15.25
13+80	14.63
14+00	17.12
14+20	19.70
14+40	22.27
14+60	24.25
14+80	25.19
15+00	24.33
15+20	23.30
15+40	22.34

NOTES:

1. For general notes, see "INDEX TO PLANS" sheet.
2. For MSE wall panel layout and wiremat details, see "MECHANICALLY STABILIZED EMBANKMENT DETAILS No. 2" sheet.
3. For details of Wire Inspection "PATTERN A", see "MECHANICALLY STABILIZED EMBANKMENT DETAILS No. 7" sheet.
4. For architectural details, see "ARCHITECTURAL TREATMENT DETAILS No. 2", "ARCHITECTURAL TREATMENT DETAILS No. 4" and "ARCHITECTURAL TREATMENT DETAILS No. 5" sheets.
5. For soil cement treatment under MSE walls, see "ROADWAY PLANS".
6. For G2 Manhole details, see "MECHANICALLY STABILIZED EMBANKMENT DETAILS No. 6" sheet.
7. For all other details, see "MECHANICALLY STABILIZED EMBANKMENT DETAILS No. 1" through "MECHANICALLY STABILIZED EMBANKMENT DETAILS No. 7" sheets.

LEGEND:

⇨ Indicates direction of traffic

xx.xx Indicates elev at bottom of leveling pad

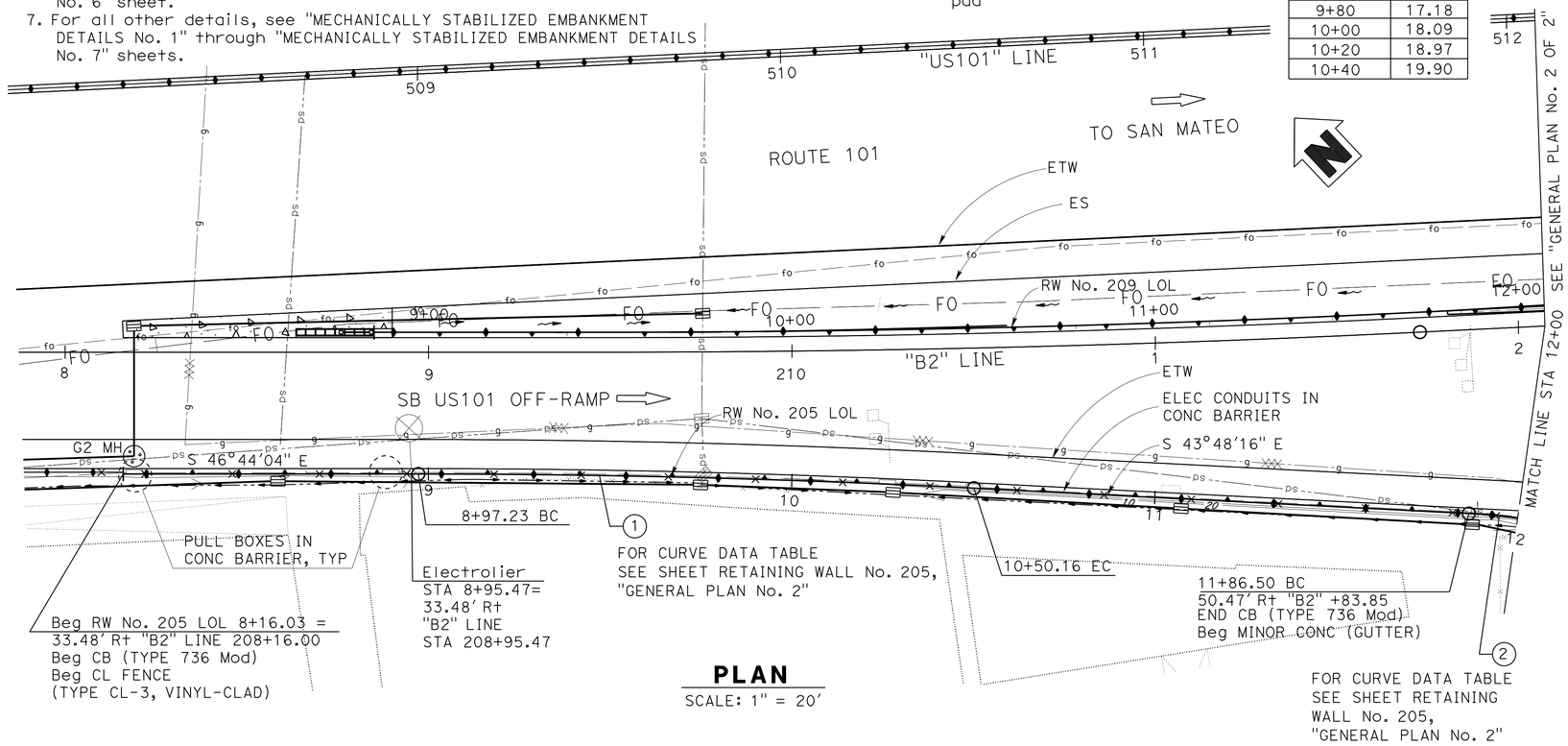

PLAN

SCALE: 1" = 20'

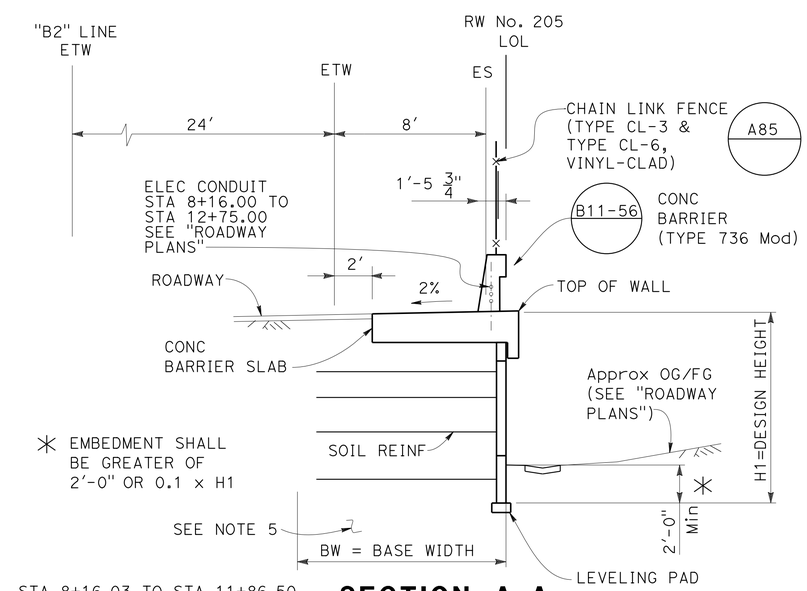

STA 8+16.03 TO STA 11+86.50
STA 14+79.51 TO STA 15+42.84

SECTION A-A

NO SCALE

Paul Cotter
DESIGN OVERSIGHT Paul Cotter
6-20-13
SIGN OFF DATE

	BY	CHECKED
DESIGN	G. CARROLL	H. HAKIMI
DETAILS	N. HUTTON	G. CARROLL
QUANTITIES	P. JACOBS	A. FINKELSTEIN

LOAD & RESISTANCE FACTOR DESIGN — LIVE LOADING: HL93 DESIGN VEHICLE

	BY	CHECKED
LAYOUT	T. SILVA	A. BHOI
SPECIFICATIONS	D. HARNAGEL	PLANS AND SPECS COMPARED C. GONG

PREPARED FOR THE STATE OF CALIFORNIA DEPARTMENT OF TRANSPORTATION

C. GONG
PROJECT ENGINEER

BRIDGE NO. 35E0038
POST MILES 16.7

RETAINING WALL No. 205
GENERAL PLAN No. 1

DESIGN GENERAL PLAN SHEET (ENGLISH) (REV. 03/14/12)

ORIGINAL SCALE IN INCHES FOR REDUCED PLANS 0 1 2 3

UNIT: 0703
PROJECT NUMBER & PHASE: 04000006841 CONTRACT NO.: 04-235844

DISREGARD PRINTS BEARING EARLIER REVISION DATES

REVISION DATES 11-16-12 01-16-13 02-12-13 05-15-13 SHEET 3 OF 36

FILE => 0400000684we073.dgn

USERNAME => s141070 DATE PLOTTED => 03-FEB-2014 TIME PLOTTED => 13:52

DIST	COUNTY	ROUTE	POST MILES TOTAL PROJECT	SHEET No	TOTAL SHEETS
04	SM	101	16.3/17.1	782	814

REGISTERED CIVIL ENGINEER — DATE 04-08-13

PLANS APPROVAL DATE 10/21/13

REGISTERED PROFESSIONAL ENGINEER CHAO GONG No. C53837 Exp. 9-30-15 CIVIL STATE OF CALIFORNIA

The State of California or its officers or agents shall not be responsible for the accuracy or completeness of scanned copies of this plan sheet.

SAN MATEO COUNTY TRANSPORTATION AUTHORITY
1250 SAN CARLOS AVENUE
SAN CARLOS, CA 94070-1306

URS CORPORATION
1333 BROADWAY, SUITE 800
OAKLAND, CA 94612-1924

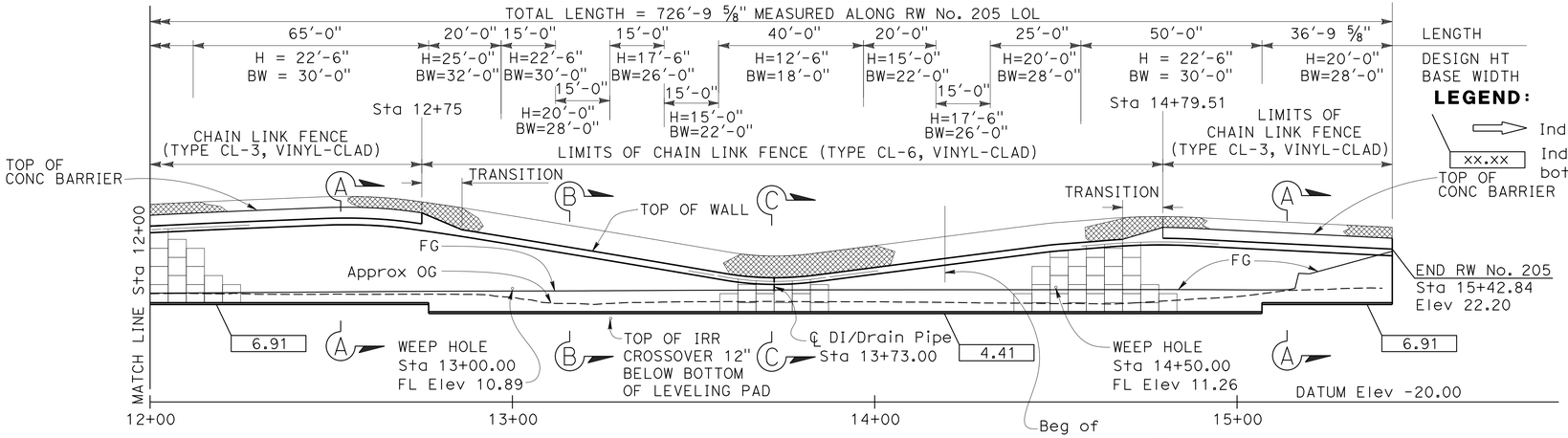

LEGEND:

Indicates direction of traffic

xx.xx — Indicates elev at bottom of leveling pad

DEVELOPED ELEVATION

SCALE: 1" = 20'

CURVE DATA				
No.	R	△	T	L
1	2990.52'	2°55'48"	76.48'	152.93'
2	150.00'	40°30'44"	55.36'	106.06'
3	75.00'	29°18'44"	19.61'	38.37'

RETAINING WALL NO. 205 — BRIDGE NO 35E0038

QUANTITIES

MECHANICALLY STABILIZED EMBANKMENT, LOCATION B	9,560	SQFT
STRUCTURAL CONCRETE, BARRIER SLAB	270	CY
MINOR CONC (GUTTER) (LF)	294	LF
CHAIN LINK FENCE (TYPE CL-3, VINYL-CLAD)	523	LF
CHAIN LINK FENCE (TYPE CL-6, VINYL-CLAD)	205	LF
CONCRETE BARRIER (TYPE 736 MODIFIED)	523	LF

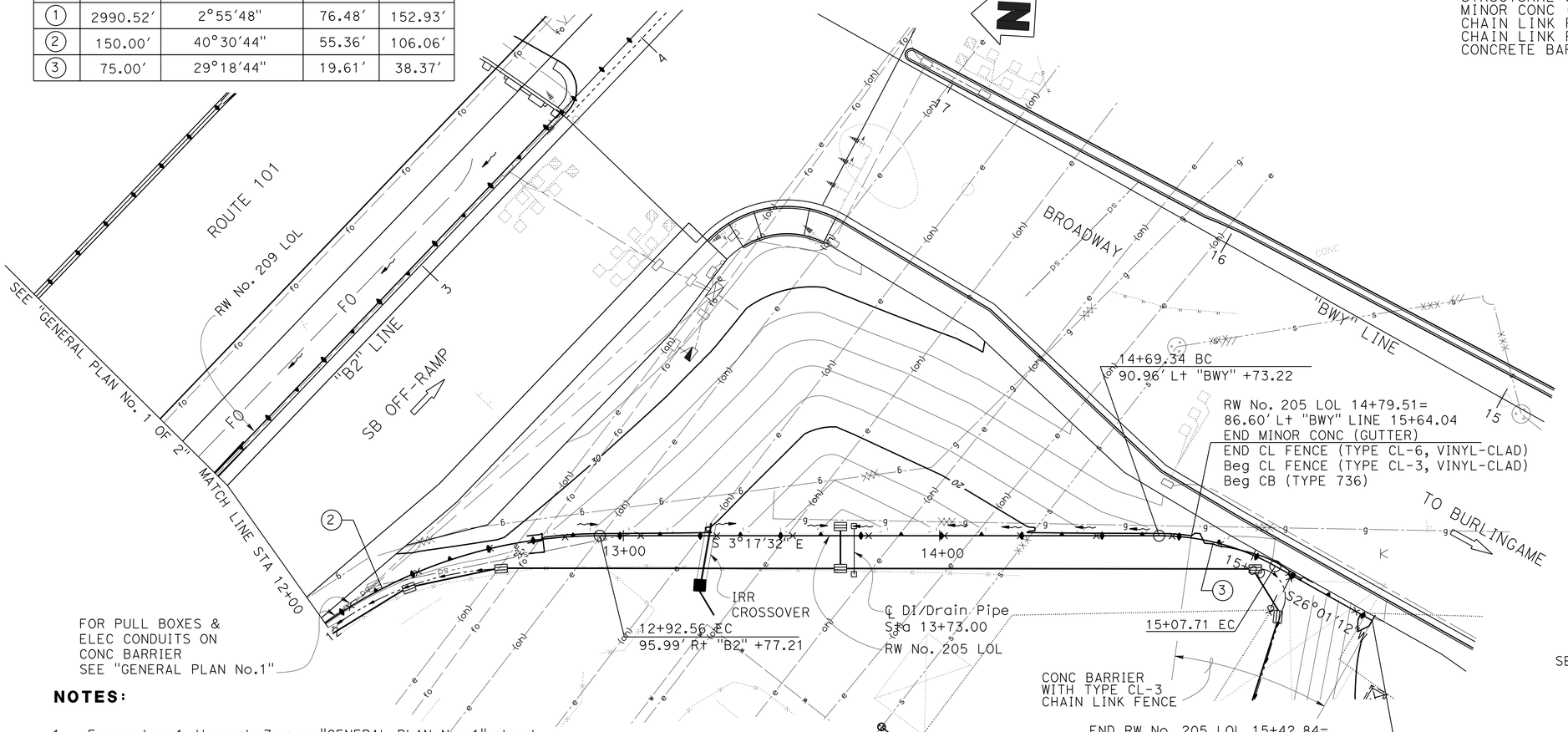

NOTES:

1. For notes 1 through 7, see "GENERAL PLAN No. 1" sheet.
2. For SECTION C-C, see "MISCELLANEOUS DETAILS" sheet.

PLAN

SCALE: 1" = 20'

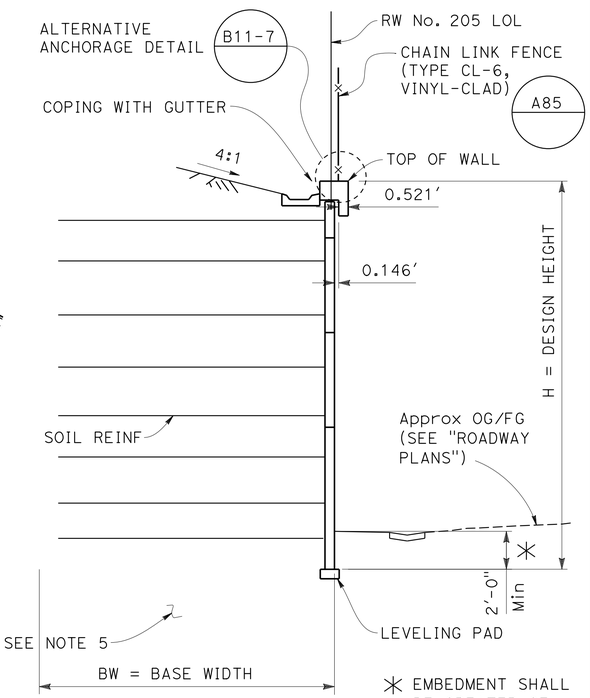

STA 12+75.50 TO 14+79.51

✳ EMBEDMENT SHALL BE GREATER OF 2'-0" OR 0.1 x H

SECTION B-B

NO SCALE

DESIGN OVERSIGHT Paul Cotter	DESIGN	BY G. CARROLL	CHECKED H. HAKIMI	LOAD & RESISTANCE FACTOR DESIGN	LIVE LOADING: HL93 DESIGN VEHICLE
6-20-13 SIGN OFF DATE	DETAILS	BY N. HUTTON	CHECKED G. CARROLL	LAYOUT BY T. SILVA	CHECKED A. BHOI
	QUANTITIES	BY P. JACOBS	CHECKED A. FINKELSTEIN	SPECIFICATIONS BY D. HARNAGEL	PLANS AND SPECS COMPARED C. GONG

PREPARED FOR THE STATE OF CALIFORNIA DEPARTMENT OF TRANSPORTATION

C. GONG — PROJECT ENGINEER

BRIDGE NO. 35E0038 — POST MILES 16.7

RETAINING WALL No. 205
GENERAL PLAN No. 2

DESIGN GENERAL PLAN SHEET (ENGLISH) (REV. 03/14/12)

ORIGINAL SCALE IN INCHES FOR REDUCED PLANS 0 1 2 3

UNIT: 0703
PROJECT NUMBER & PHASE: 04000006841 CONTRACT NO.: 04-235844

DISREGARD PRINTS BEARING EARLIER REVISION DATES

REVISION DATES 11-16-12 01-16-13 02-12-13 04-08-13

SHEET 4 OF 36

FILE => 0400000684we074.dgn

USERNAME => s141070 DATE PLOTTED => 03-FEB-2014 TIME PLOTTED => 13:52

DIST	COUNTY	ROUTE	POST MILES TOTAL PROJECT	SHEET No	TOTAL SHEETS
04	SM	101	16.3/17.1	783	814

REGISTERED CIVIL ENGINEER 05-15-13 DATE

10/21/13
PLANS APPROVAL DATE

REGISTERED PROFESSIONAL ENGINEER CHAO GONG No. C53837 Exp. 9-30-15 CIVIL STATE OF CALIFORNIA

The State of California or its officers or agents shall not be responsible for the accuracy or completeness of scanned copies of this plan sheet.

SAN MATEO COUNTY TRANSPORTATION AUTHORITY
1250 SAN CARLOS AVENUE
SAN CARLOS, CA 94070-1306

URS CORPORATION
1333 BROADWAY, SUITE 800
OAKLAND, CA 94612-1924

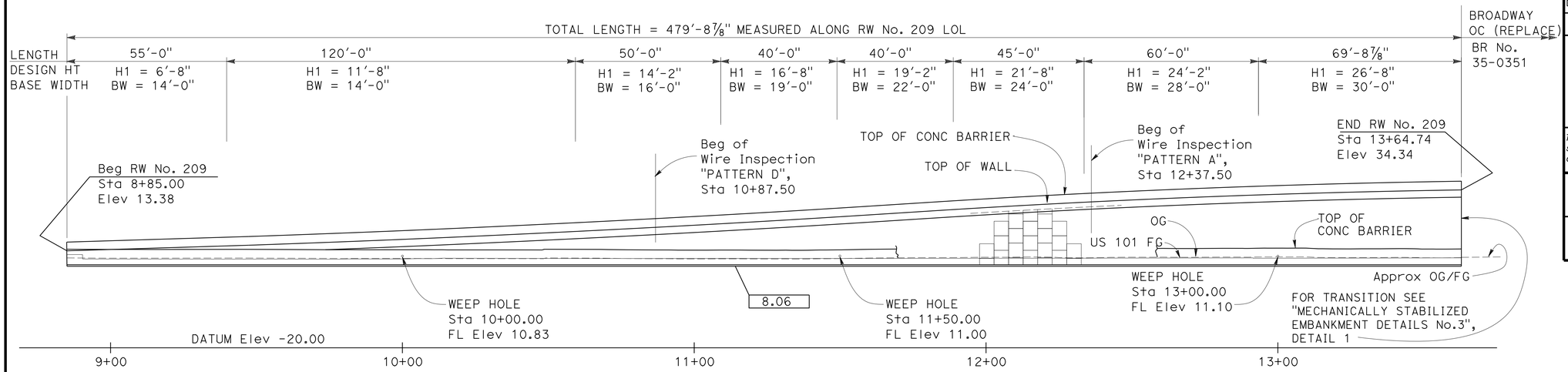

DEVELOPED MIRRORED ELEVATION

SCALE: 1" = 20'

CURVE DATA				
No.	R	△	T	L
1	4594.52'	2°48'24.79"	112.56'	225.08'

NOTES:

1. For general notes, see "INDEX TO PLANS" sheet.
2. For MSE wall panel layout and wiremat details, see "MECHANICALLY STABILIZED EMBANKMENT DETAILS No. 2" sheet.
3. For details of Wire Inspection "PATTERN A" and "PATTERN D", see "MECHANICALLY STABILIZED EMBANKMENT DETAILS No. 7" sheet.
4. For architectural details, see "ARCHITECTURAL TREATMENT DETAILS No. 2", "ARCHITECTURAL TREATMENT DETAILS No. 4" and "ARCHITECTURAL TREATMENT DETAILS No. 5" sheets.
5. For soil cement treatment under MSE walls, see "ROADWAY PLANS".
6. For all other details, see "MECHANICALLY STABILIZED EMBANKMENT DETAILS No. 1" through "MECHANICALLY STABILIZED EMBANKMENT DETAILS No. 7" sheets.
7. For BARRIER SLAB WITH GLD, SEE "MECHANICALLY STABILIZED EMBANKMENT DETAILS No. 6" sheet.

RETAINING WALL NO. 209 BRIDGE NO 35E0039

QUANTITIES

MECHANICALLY STABILIZED EMBANKMENT, LOCATION C	6,610	SQFT
STRUCTURAL CONCRETE, BARRIER SLAB	240	CY
TUBULAR HANDRAILING	480	LF
CONCRETE BARRIER (TYPE 736 MODIFIED)	480	LF

ELEV AT TOP OF WALL

STA	ELEV	STA	ELEV
9+00	13.80	11+40	24.44
9+20	14.40	11+60	25.68
9+40	15.05	11+80	26.95
9+60	15.74	12+00	28.19
9+80	16.50	12+20	29.32
10+00	17.30	12+40	30.34
10+20	18.17	12+60	31.26
10+40	19.08	12+80	32.08
10+60	20.05	13+00	32.78
10+80	21.07	13+20	33.38
11+00	22.14	13+40	33.88
11+20	23.26	13+60	34.26

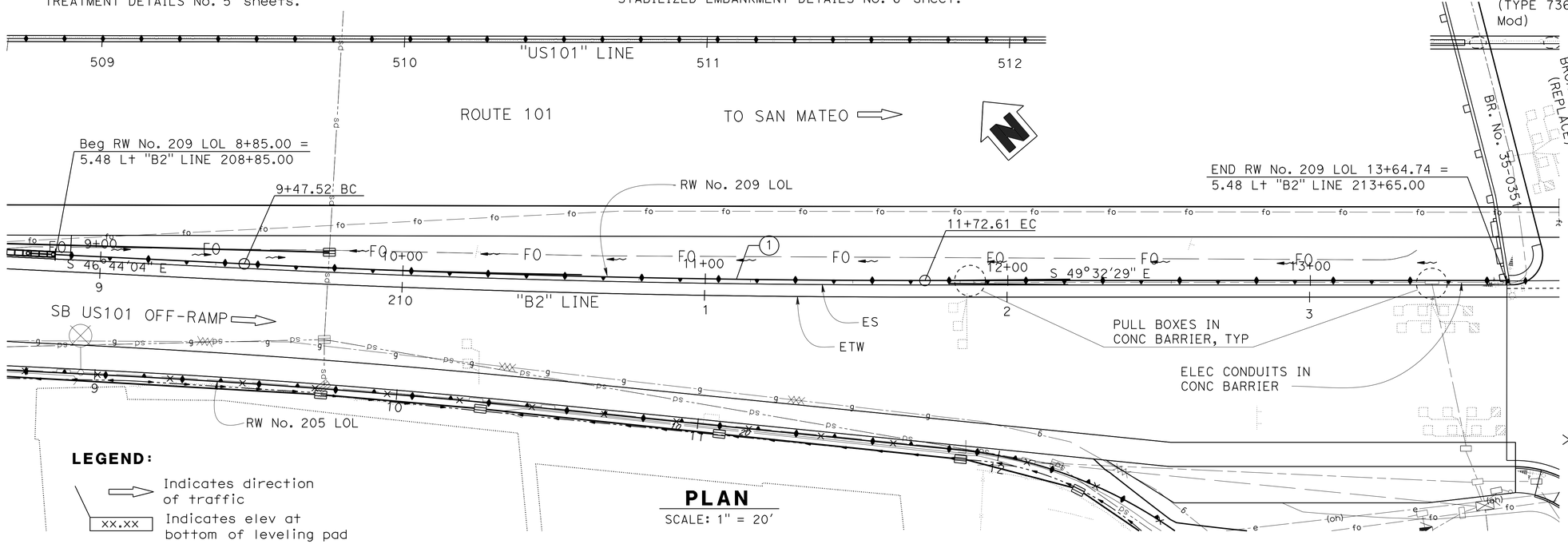

PLAN

SCALE: 1" = 20'

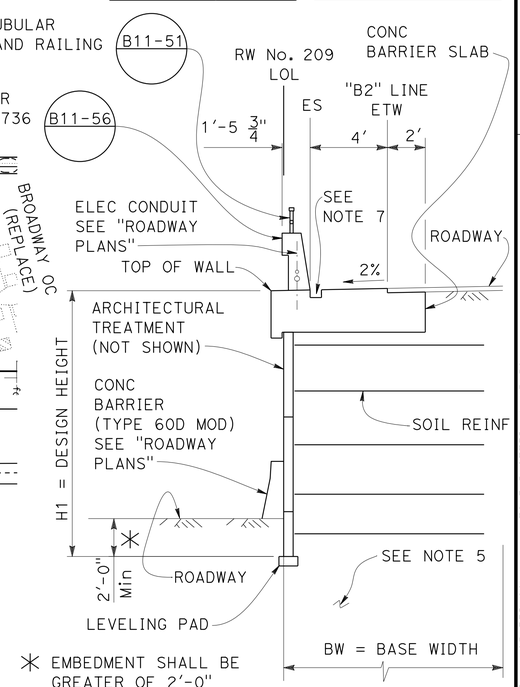

✳ EMBEDMENT SHALL BE GREATER OF 2'-0" OR 0.1 × H1

TYPICAL SECTION

NO SCALE

LEGEND:

⇨ Indicates direction of traffic

xx.xx Indicates elev at bottom of leveling pad

DESIGN OVERSIGHT Paul Cotter	DESIGN	BY G. CARROLL	CHECKED H. HAKIMI	LOAD & RESISTANCE FACTOR DESIGN	LIVE LOADING: HL93 DESIGN VEHICLE
6-20-13 SIGN OFF DATE	DETAILS	BY N. HUTTON	CHECKED G. CARROLL	LAYOUT BY T. SILVA	CHECKED A. BHOI
	QUANTITIES	BY P. JACOBS	CHECKED A. FINKELSTEIN	SPECIFICATIONS BY D. HARNAGEL	PLANS AND SPECS COMPARED C. GONG

PREPARED FOR THE STATE OF CALIFORNIA DEPARTMENT OF TRANSPORTATION

C. GONG
PROJECT ENGINEER

BRIDGE NO. 35E0039
POST MILES 16.7

RETAINING WALL No. 209
GENERAL PLAN

DESIGN GENERAL PLAN SHEET (ENGLISH) (REV. 03/14/12)

ORIGINAL SCALE IN INCHES FOR REDUCED PLANS 0 1 2 3

UNIT: 0703
PROJECT NUMBER & PHASE: 04000006841 CONTRACT NO.: 04-235844

DISREGARD PRINTS BEARING EARLIER REVISION DATES

REVISION DATES 11-16-12 01-16-13 02-12-13 05-15-13

SHEET 5 OF 36

FILE => 0400000684we075.dgn

USERNAME => s141070 DATE PLOTTED => 03-FEB-2014 TIME PLOTTED => 13:52

DIST	COUNTY	ROUTE	POST MILES TOTAL PROJECT	SHEET No	TOTAL SHEETS
04	SM	101	16.3/17.1	784	814

REGISTERED CIVIL ENGINEER 05-15-13 DATE

10/21/13
PLANS APPROVAL DATE

REGISTERED PROFESSIONAL ENGINEER CHAO GONG No. C53837 Exp. 9-30-15 CIVIL STATE OF CALIFORNIA

The State of California or its officers or agents shall not be responsible for the accuracy or completeness of scanned copies of this plan sheet.

SAN MATEO COUNTY TRANSPORTATION AUTHORITY
1250 SAN CARLOS AVENUE
SAN CARLOS, CA 94070-1306

URS CORPORATION
1333 BROADWAY, SUITE 800
OAKLAND, CA 94612-1924

RETAINING WALL NO. 38 BRIDGE NO 35E0040

QUANTITIES

STRUCTURE EXCAVATION (TYPE D)	130	CY
STRUCTURE BACKFILL (RETAINING WALL)	170	CY
PERVIOUS BACKFILL MATERIAL (RETAINING WALL)	10	CY
STRUCTURAL CONCRETE, RETAINING WALL	80	CY
FRACTURED RIB TEXTURE	330	SQFT
FRACTURED RIB (TREE PATTERN)	270	SQFT
BAR REINFORCING STEEL (RETAINING WALL)	7,650	LB
CHAIN LINK FENCE (TYPE CL-6, VINYL-CLAD)	97	LF

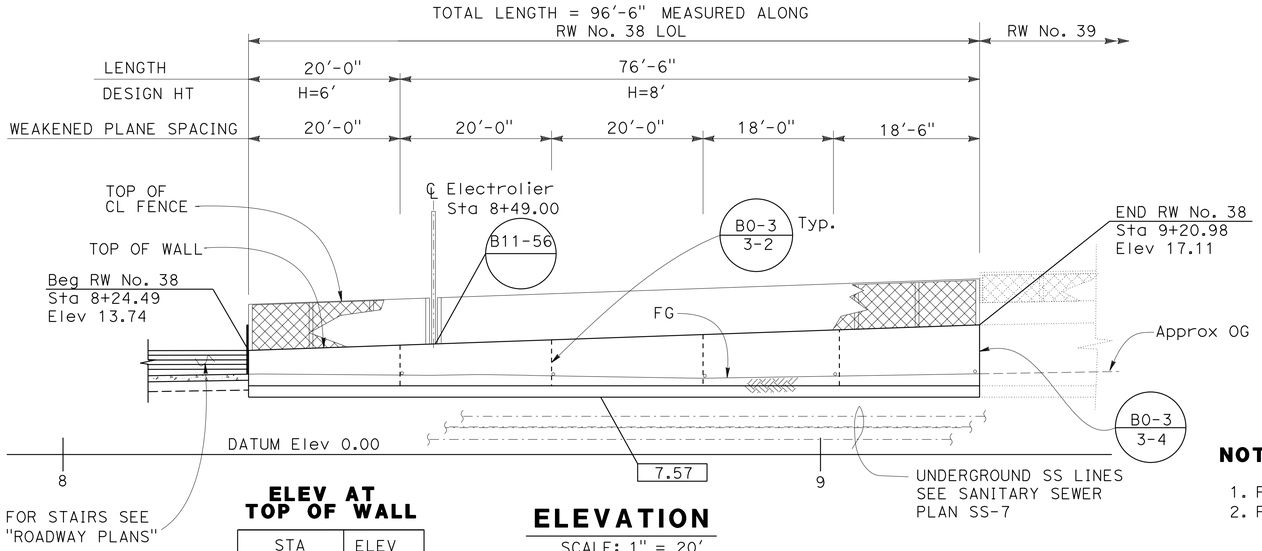

ELEV AT TOP OF WALL

STA	ELEV
8+40	14.27
8+60	15.03
8+80	15.85
9+00	16.67

ELEVATION
SCALE: 1" = 20'

NOTES:

1. For general notes, see "INDEX TO PLANS" sheet.
2. For architectural details, see "ARCHITECTURAL TREATMENT DETAILS No. 1" sheet and "ARCHITECTURAL TREATMENT DETAILS No. 3" sheet.
3. For soil cement treatment under foundation, see "ROADWAY PLANS".
4. Structure excavation shall be STRUCTURE EXCAVATION (TYPE D). For limits of payment see A62B
5. For SECTION E-E, see "MISCELLANEOUS DETAILS" sheet.
6. For footing key detail, see "MISCELLANEOUS DETAILS" sheet.

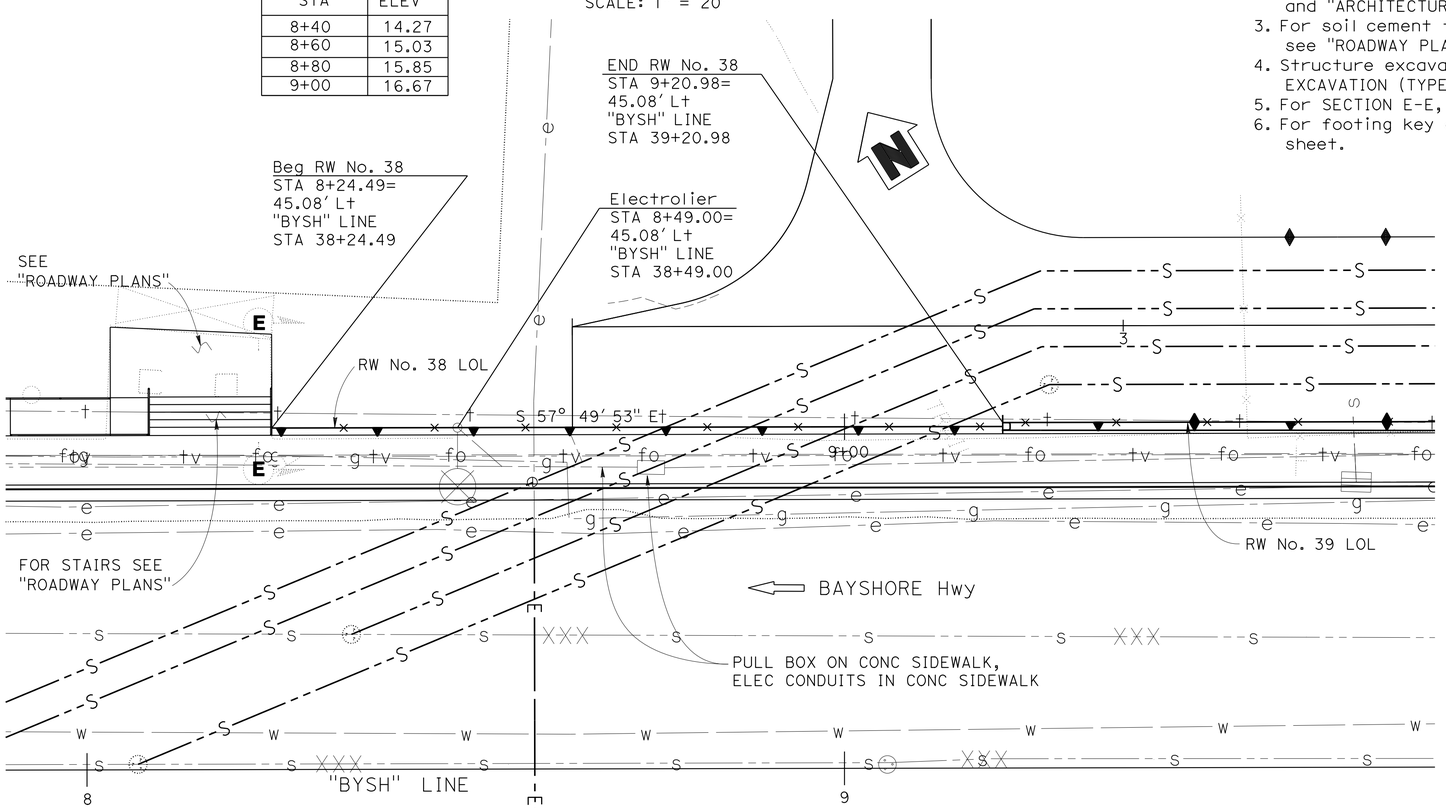

PLAN
SCALE: 1" = 20'

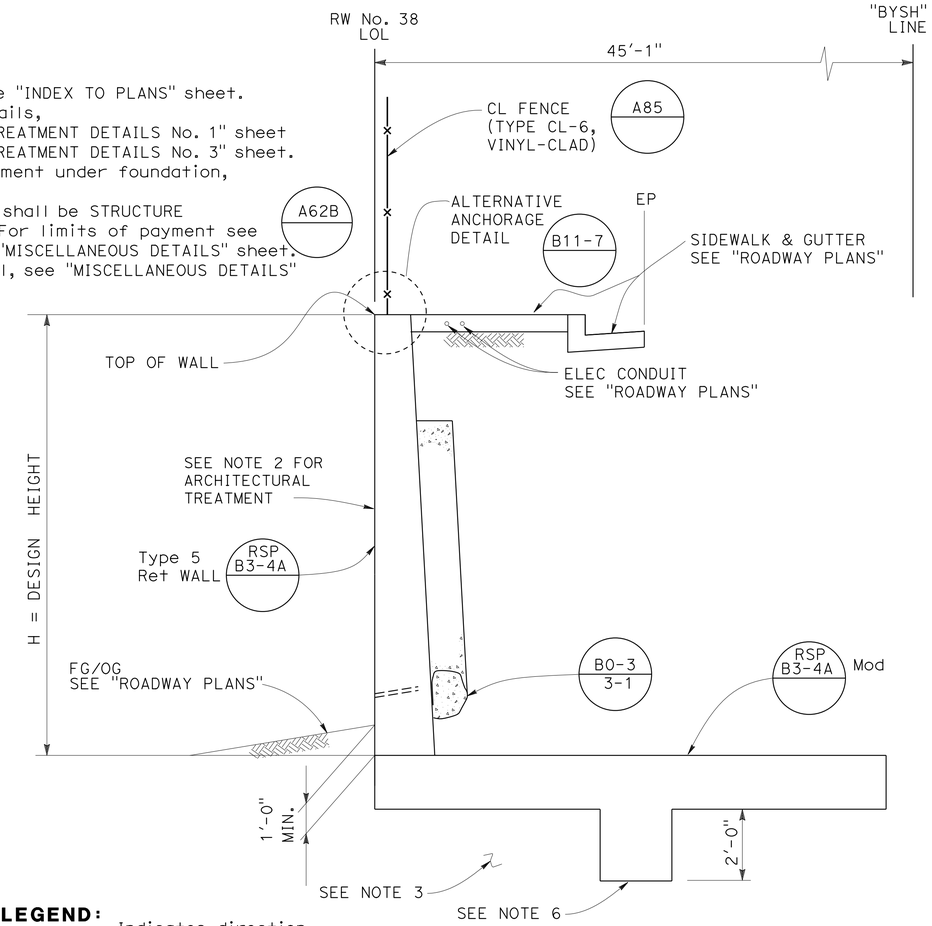

LEGEND:
Indicates direction of traffic
XX.XX Bottom of footing

TYPICAL SECTION
NO SCALE

DESIGN OVERSIGHT Paul Cotter	DESIGN	BY G. CARROLL	CHECKED H. HAKIMI	LOAD & RESISTANCE FACTOR DESIGN	LIVE LOADING: HL93 DESIGN VEHICLE
6-20-13 SIGN OFF DATE	DETAILS	BY N. HUTTON	CHECKED G. CARROLL	LAYOUT BY T. SILVA	CHECKED A. BHOI
	QUANTITIES	BY P. JACOBS	CHECKED A. FINKELSTEIN	SPECIFICATIONS BY D. HARNAGEL	PLANS AND SPECS COMPARED C. GONG

PREPARED FOR THE STATE OF CALIFORNIA DEPARTMENT OF TRANSPORTATION

C. GONG
PROJECT ENGINEER

BRIDGE NO. 35E0040
POST MILES 16.7

RETAINING WALL No. 38
GENERAL PLAN

DESIGN GENERAL PLAN SHEET (ENGLISH) (REV. 03/14/12)

ORIGINAL SCALE IN INCHES FOR REDUCED PLANS 0 1 2 3

UNIT: 0703
PROJECT NUMBER & PHASE: 04000006841 CONTRACT NO.: 04-235844

DISREGARD PRINTS BEARING EARLIER REVISION DATES

REVISION DATES 11-16-12 01-16-13 02-12-13 05-15-13

SHEET 6 OF 36

FILE => 0400000684we076.dgn

USERNAME => s141070 DATE PLOTTED => 03-FEB-2014 TIME PLOTTED => 13:52

DIST	COUNTY	ROUTE	POST MILES TOTAL PROJECT	SHEET No	TOTAL SHEETS
04	SM	101	16.3/17.1	785	814

REGISTERED CIVIL ENGINEER 05-15-13 DATE

10/21/13
PLANS APPROVAL DATE

REGISTERED PROFESSIONAL ENGINEER CHAO GONG No. C53837 Exp. 9-30-15 CIVIL STATE OF CALIFORNIA

The State of California or its officers or agents shall not be responsible for the accuracy or completeness of scanned copies of this plan sheet.

SAN MATEO COUNTY TRANSPORTATION AUTHORITY
1250 SAN CARLOS AVENUE
SAN CARLOS, CA 94070-1306

URS CORPORATION
1333 BROADWAY, SUITE 800
OAKLAND, CA 94612-1924

RETAINING WALL NO. 39 BRIDGE NO 35E0041

QUANTITIES

STRUCTURE EXCAVATION (TYPE D)	110	CY
STRUCTURE BACKFILL (RETAINING WALL)	245	CY
PERVIOUS BACKFILL MATERIAL (RETAINING WALL)	20	CY
STRUCTURAL CONCRETE, RETAINING WALL	90	CY
FRACTURED RIB TEXTURE	90	SQFT
FRACTURED RIB (TREE PATTERN)	680	SQFT
BAR REINFORCING STEEL (RETAINING WALL)	10,000	LB
CHAIN LINK FENCE (TYPE CL-3, VINYL-CLAD)	90	LF
CONCRETE BARRIER (TYPE 736A MODIFIED)	90	LF

ELEV AT TOP OF WALL

STA	ELEV
9+40	17.38
9+60	17.61
9+80	18.10
10+00	18.52

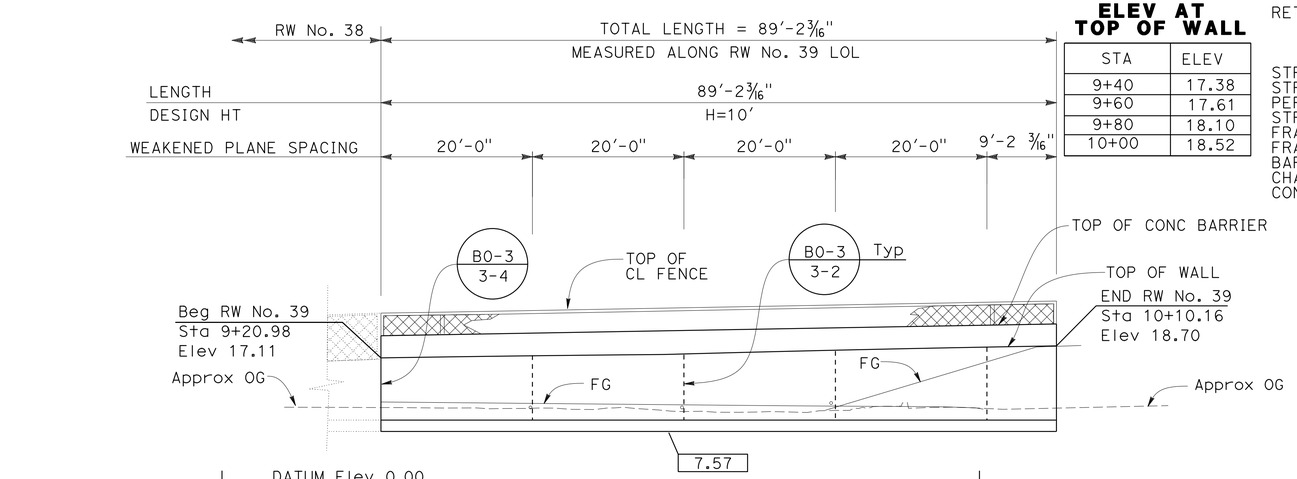

MIRRORED ELEVATION

SCALE: 1" = 20'

NOTES:

1. For general notes, see "INDEX TO PLANS" sheet.
2. For architectural details, see "ARCHITECTURAL TREATMENT DETAILS No. 1" sheet and "ARCHITECTURAL TREATMENT DETAILS No. 3" sheet.
3. For soil cement treatment under foundation, see "ROADWAY PLANS".
4. Structure excavation shall be STRUCTURE EXCAVATION (TYPE D). For limits of payment see A62B
5. For footing key detail, see "MISCELLANEOUS DETAILS" sheet.

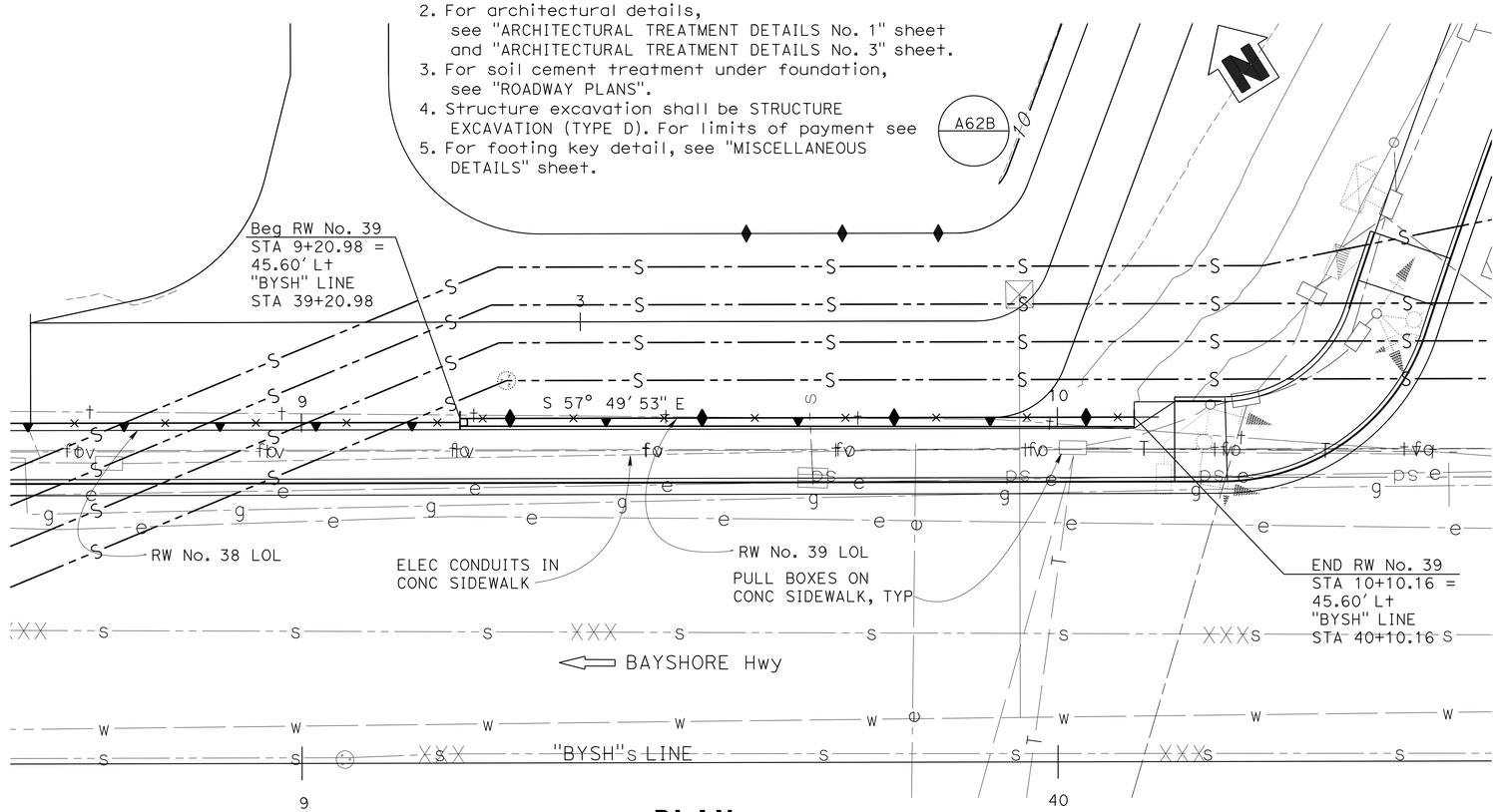

PLAN

SCALE: 1" = 20'

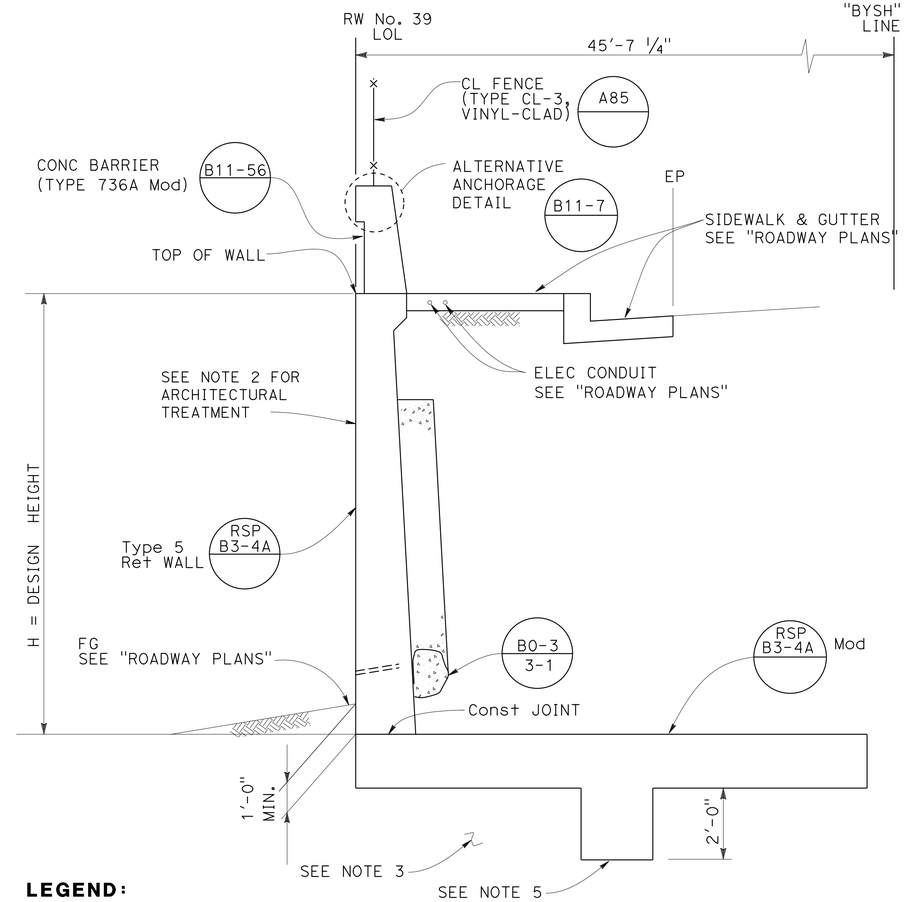

LEGEND:

Indicates direction of traffic

XX.XX Bottom of footing

TYPICAL SECTION

NO SCALE

Paul Cotter
DESIGN OVERSIGHT Paul Cotter
6-20-13
SIGN OFF DATE

DESIGN	BY G. CARROLL	CHECKED H. HAKIMI	LOAD & RESISTANCE FACTOR DESIGN	LIVE LOADING: HL93 DESIGN VEHICLE
DETAILS	BY N. HUTTON	CHECKED G. CARROLL	LAYOUT BY T. SILVA	CHECKED A. BHOI
QUANTITIES	BY P. JACOBS	CHECKED A. FINKELSTEIN	SPECIFICATIONS BY D. HARNAGEL	PLANS AND SPECS COMPARED C. GONG

PREPARED FOR THE STATE OF CALIFORNIA DEPARTMENT OF TRANSPORTATION

C. GONG
PROJECT ENGINEER

BRIDGE NO. 35E0041
POST MILES 16.7

RETAINING WALL No. 39
GENERAL PLAN

DESIGN GENERAL PLAN SHEET (ENGLISH) (REV. 03/14/12)

ORIGINAL SCALE IN INCHES FOR REDUCED PLANS 0 1 2 3

UNIT: 0703
PROJECT NUMBER & PHASE: 04000006841 CONTRACT NO.: 04-235844

DISREGARD PRINTS BEARING EARLIER REVISION DATES

REVISION DATES 11-16-12 01-16-13 02-12-13 05-15-13

SHEET 7 OF 36

FILE => 0400000684we077.dgn

USERNAME => s141070 DATE PLOTTED => 03-FEB-2014 TIME PLOTTED => 13:52

DIST	COUNTY	ROUTE	POST MILES TOTAL PROJECT	SHEET No	TOTAL SHEETS
04	SM	101	16.3/17.1	786	814

REGISTERED CIVIL ENGINEER 04-08-13 DATE

10/21/13
PLANS APPROVAL DATE

REGISTERED PROFESSIONAL ENGINEER CHAO GONG No. C53837 Exp. 9-30-15 CIVIL STATE OF CALIFORNIA

The State of California or its officers or agents shall not be responsible for the accuracy or completeness of scanned copies of this plan sheet.

SAN MATEO COUNTY TRANSPORTATION AUTHORITY
1250 SAN CARLOS AVENUE
SAN CARLOS, CA 94070-1306

URS CORPORATION
1333 BROADWAY, SUITE 800
OAKLAND, CA 94612-1924

NOTES:

1. For general notes, see "GENERAL NOTES" sheet.
2. For MSE wall panel layout and wiremat details, see "MECHANICALLY STABILIZED EMBANKMENT DETAILS No. 2" sheet.
3. For details of Wire Inspection "PATTERN C", see "MECHANICALLY STABILIZED EMBANKMENT DETAILS No. 7" sheet.
4. For architectural details, see "ARCHITECTURAL TREATMENT DETAILS No. 2", "ARCHITECTURAL TREATMENT DETAILS No. 4" and "ARCHITECTURAL TREATMENT DETAILS No. 5" sheets.
5. For soil cement treatment under MSE walls, see "ROADWAY PLANS".
6. For electrical post anchorage detail, SEE "MISCELLANEOUS DETAILS" SHEET.
7. For all other details, see "MECHANICALLY STABILIZED EMBANKMENT DETAILS No. 1" through "MECHANICALLY STABILIZED EMBANKMENT DETAILS No. 7" sheets.

ELEV AT TOP OF WALL

STA	ELEV
14+80	33.57
15+00	32.71

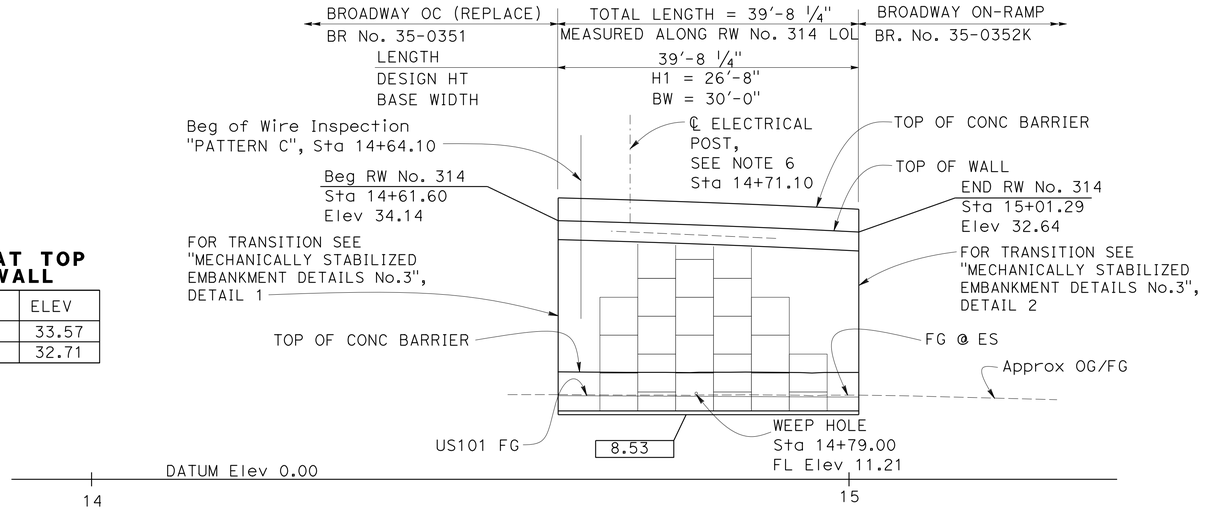

MIRRORED ELEVATION

SCALE: 1" = 10'

RETAINING WALL NO. 314

BRIDGE NO 35E0042

QUANTITIES

MECHANICALLY STABILIZED EMBANKMENT, LOCATION D	900	SQFT
16" CAST-IN-DRILLED-HOLE CONCRETE PILING	45	LF
STRUCTURAL CONCRETE, RETAINING WALL	2	CY
STRUCTURAL CONCRETE, BARRIER SLAB	20	CY
BAR REINFORCING STEEL (RETAINING WALL)	880	LB
CONCRETE BARRIER (TYPE 736 MODIFIED)	40	LF

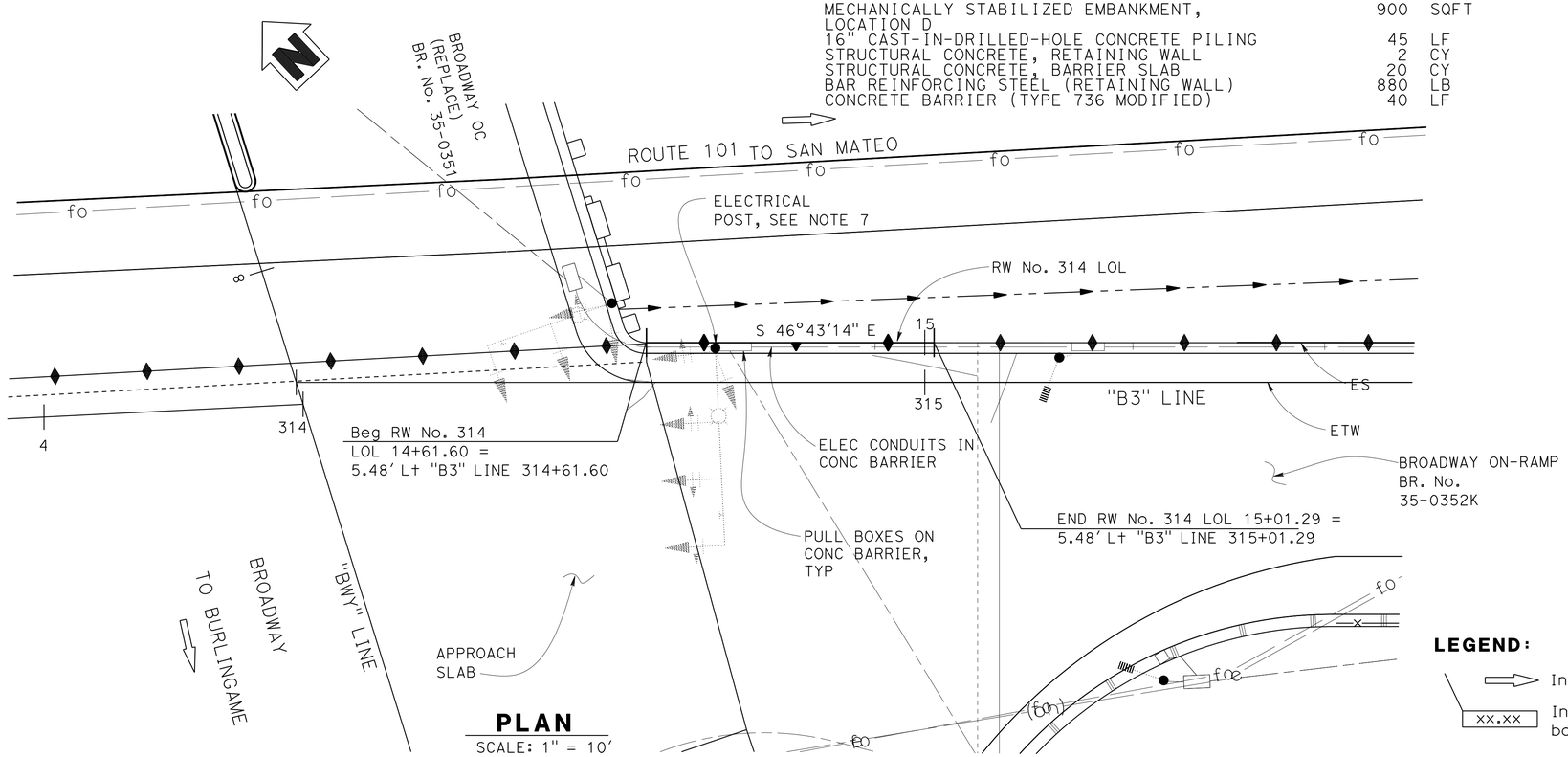

PLAN

SCALE: 1" = 10'

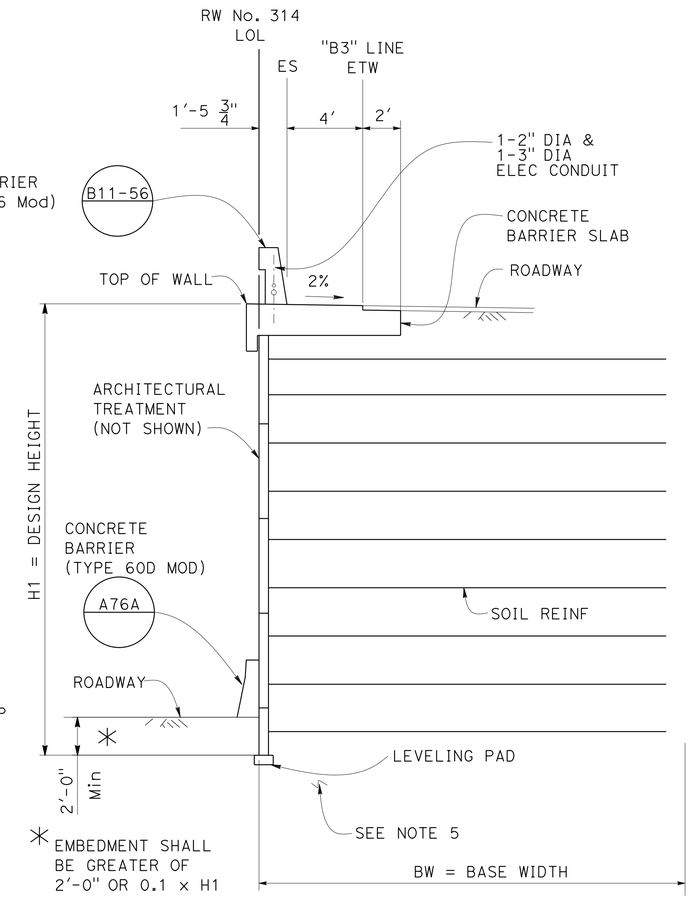

TYPICAL SECTION

NO SCALE

LEGEND:

Indicates direction of traffic

XX.XX Indicates elev at bottom of leveling pad

DESIGN OVERSIGHT Paul Cotter 6-20-13 SIGN OFF DATE	DESIGN	BY G. CARROLL	CHECKED H. HAKIMI	LOAD & RESISTANCE FACTOR DESIGN	LIVE LOADING: HL93 DESIGN VEHICLE
	DETAILS	BY N. HUTTON	CHECKED G. CARROLL	LAYOUT BY T. SILVA	CHECKED A. BHOI
	QUANTITIES	BY P. JACOBS	CHECKED A. FINKELSTEIN	SPECIFICATIONS BY D. HARNAGEL	PLANS AND SPECS COMPARED C. GONG

PREPARED FOR THE STATE OF CALIFORNIA DEPARTMENT OF TRANSPORTATION

C. GONG
PROJECT ENGINEER

BRIDGE NO. 35E0042
POST MILES 16.6

RETAINING WALL No. 314
GENERAL PLAN

DESIGN GENERAL PLAN SHEET (ENGLISH) (REV. 03/14/12)

ORIGINAL SCALE IN INCHES FOR REDUCED PLANS 0 1 2 3

UNIT: 0703
PROJECT NUMBER & PHASE: 04000006841 CONTRACT NO.: 04-235844

DISREGARD PRINTS BEARING EARLIER REVISION DATES

REVISION DATES 11-16-12 01-16-13 02-12-13 04-08-13

SHEET 8 OF 36

FILE => 0400000684we078.dgn

USERNAME => s141070 DATE PLOTTED => 03-FEB-2014 TIME PLOTTED => 13:52

DIST	COUNTY	ROUTE	POST MILES TOTAL PROJECT	SHEET No	TOTAL SHEETS
04	SM	101	16.3/17.1	787	814

REGISTERED CIVIL ENGINEER 04-08-13 DATE

10/21/13
PLANS APPROVAL DATE

REGISTERED PROFESSIONAL ENGINEER CHAO GONG No. C53837 Exp. 9-30-15 CIVIL STATE OF CALIFORNIA

The State of California or its officers or agents shall not be responsible for the accuracy or completeness of scanned copies of this plan sheet.

SAN MATEO COUNTY TRANSPORTATION AUTHORITY
1250 SAN CARLOS AVENUE
SAN CARLOS, CA 94070-1306

URS CORPORATION
1333 BROADWAY, SUITE 800
OAKLAND, CA 94612-1924

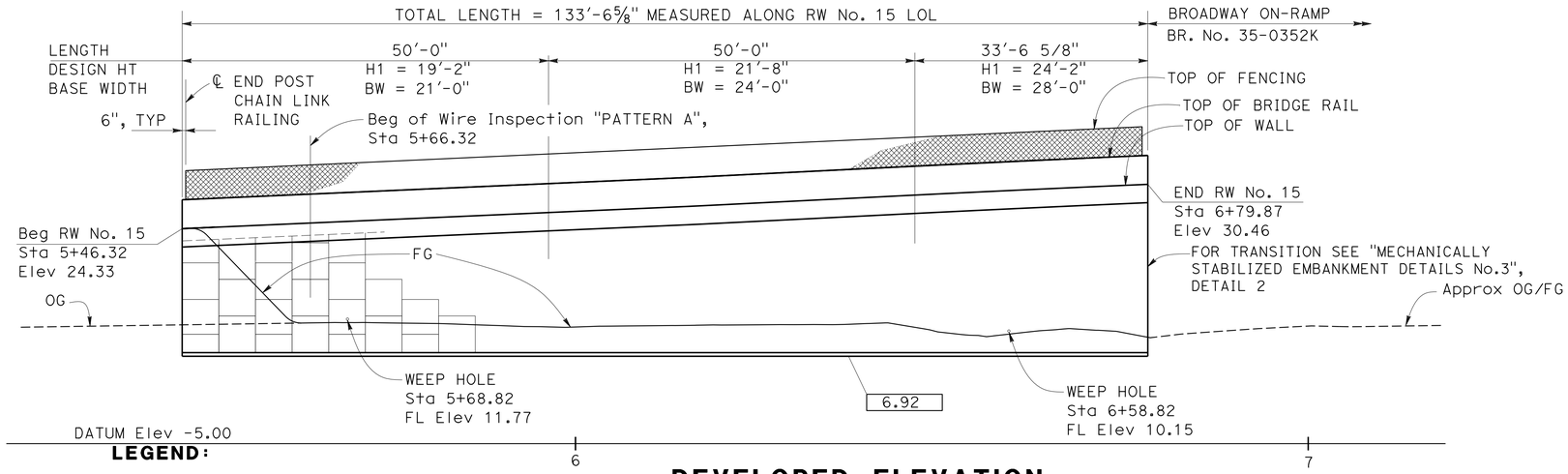

DEVELOPED ELEVATION

SCALE: 1" = 10'

LEGEND:

Indicates direction of traffic

xx.xx Indicates elev at bottom of leveling pad

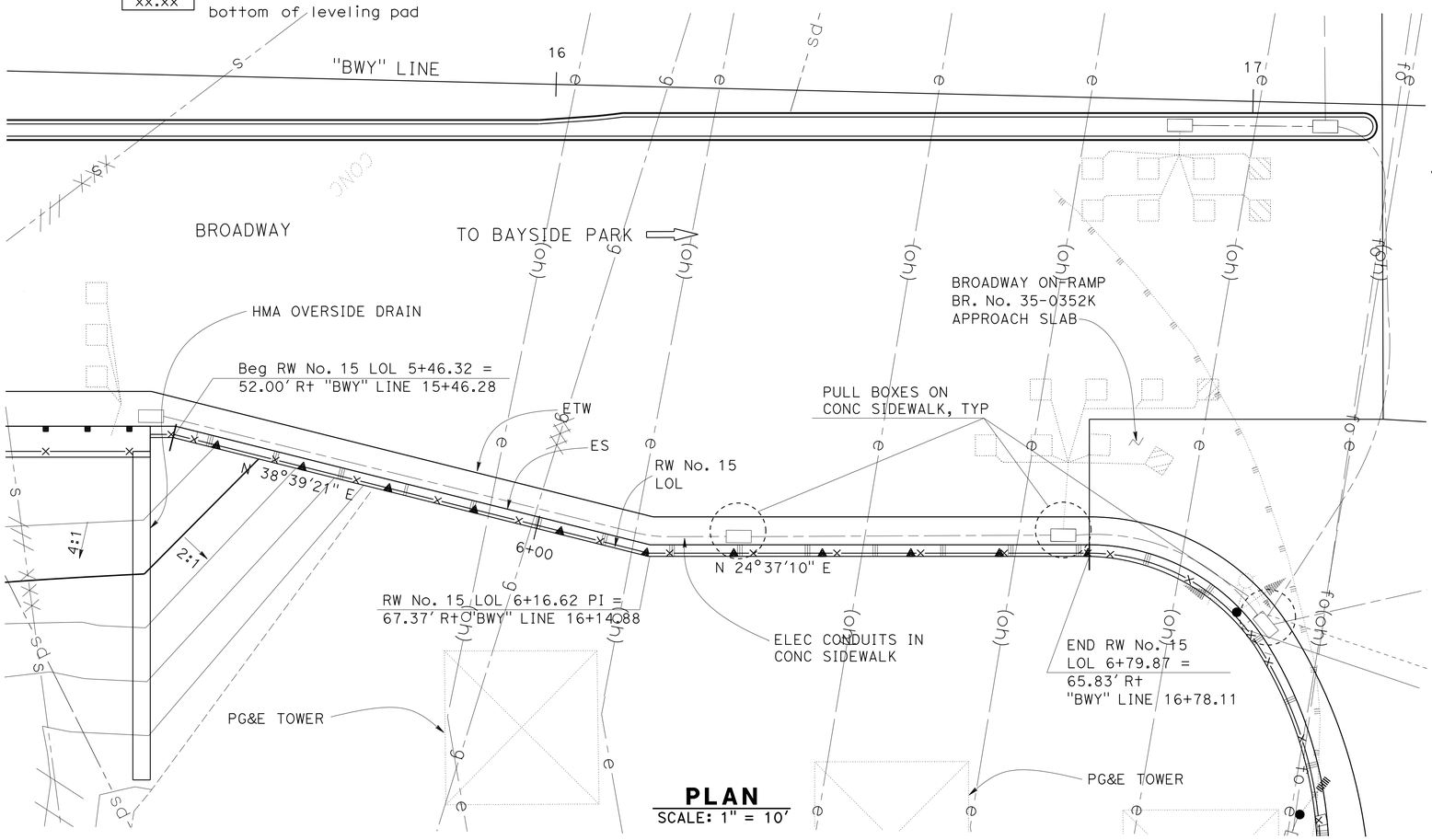

PLAN

SCALE: 1" = 10'

ELEV AT TOP OF WALL

STA	ELEV
5+65.00	25.15
5+85.00	26.03
6+05.00	26.91
6+25.00	27.84
6+45.00	28.84
6+65.00	29.80

NOTES:

1. For general notes, see "GENERAL NOTES" sheet.
2. For MSE wall panel layout and wiremat details, see "MECHANICALLY STABILIZED EMBANKMENT DETAILS No. 2" sheet.
3. For details of Wire Inspection "PATTERN A", see "MECHANICALLY STABILIZED EMBANKMENT DETAILS No. 7" sheet.
4. For architectural details, see "ARCHITECTURAL TREATMENT DETAILS No. 2", "ARCHITECTURAL TREATMENT DETAILS No. 4" and "ARCHITECTURAL TREATMENT DETAILS No. 5" sheets.
5. For soil cement treatment under MSE walls, see "ROADWAY PLANS".
6. For all other details, see "MECHANICALLY STABILIZED EMBANKMENT DETAILS No. 1" through "MECHANICALLY STABILIZED EMBANKMENT DETAILS No. 7" sheets.

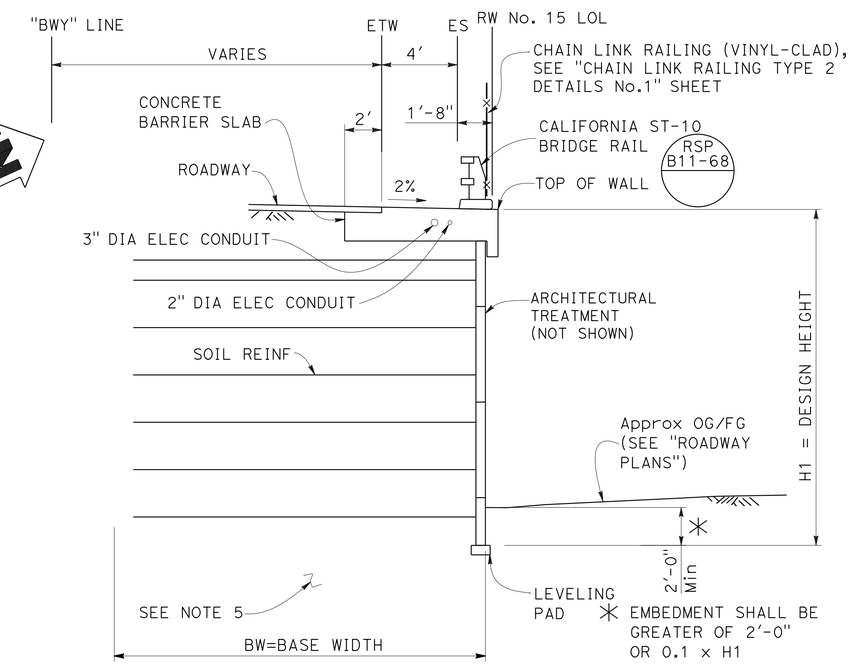

TYPICAL SECTION

NO SCALE

RETAINING WALL NO. 15 BRIDGE NO 35E0043

QUANTITIES

MECHANICALLY STABILIZED EMBANKMENT, LOCATION A	2,370	SQFT
STRUCTURAL CONCRETE, BARRIER SLAB	70	CY
CHAIN LINK RAILING (TYPE 2 - ST-10 MODIFIED 4.5, VINYL-CLAD)	134	LF
CALIFORNIA ST-10 BRIDGE RAIL	134	LF

Paul Cotter
DESIGN OVERSIGHT Paul Cotter
6-20-13
SIGN OFF DATE

	BY	CHECKED
DESIGN	G. CARROLL	H. HAKIMI
DETAILS	N. HUTTON	G. CARROLL
QUANTITIES	P. JACOBS	A. FINKELSTEIN

LOAD & RESISTANCE FACTOR DESIGN — LIVE LOADING: HL93 DESIGN VEHICLE

	BY	CHECKED
LAYOUT	T. SILVA	A. BHOI
SPECIFICATIONS	D. HARNAGEL	PLANS AND SPECS COMPARED C. GONG

PREPARED FOR THE STATE OF CALIFORNIA DEPARTMENT OF TRANSPORTATION

C. GONG
PROJECT ENGINEER

BRIDGE NO. 35E0043
POST MILES 16.6

RETAINING WALL No. 15
GENERAL PLAN

DESIGN GENERAL PLAN SHEET (ENGLISH) (REV. 03/14/12)

ORIGINAL SCALE IN INCHES FOR REDUCED PLANS 0 1 2 3

UNIT: 0703
PROJECT NUMBER & PHASE: 04000006841 CONTRACT NO.: 04-235844

DISREGARD PRINTS BEARING EARLIER REVISION DATES

REVISION DATES 11-16-12 01-16-13 02-12-13 04-08-13

SHEET 9 OF 36

FILE => 0400000684we079.dgn

USERNAME => s141070 DATE PLOTTED => 03-FEB-2014 TIME PLOTTED => 13:52

DIST	COUNTY	ROUTE	POST MILES TOTAL PROJECT	SHEET No	TOTAL SHEETS
04	SM	101	16.3/17.1	788	814

REGISTERED CIVIL ENGINEER 04-08-13 DATE

10/21/13
PLANS APPROVAL DATE

REGISTERED PROFESSIONAL ENGINEER CHAO GONG No. C53837 Exp. 9-30-15 CIVIL STATE OF CALIFORNIA

The State of California or its officers or agents shall not be responsible for the accuracy or completeness of scanned copies of this plan sheet.

SAN MATEO COUNTY TRANSPORTATION AUTHORITY
1250 SAN CARLOS AVENUE
SAN CARLOS, CA 94070-1306

URS CORPORATION
1333 BROADWAY, SUITE 800
OAKLAND, CA 94612-1924

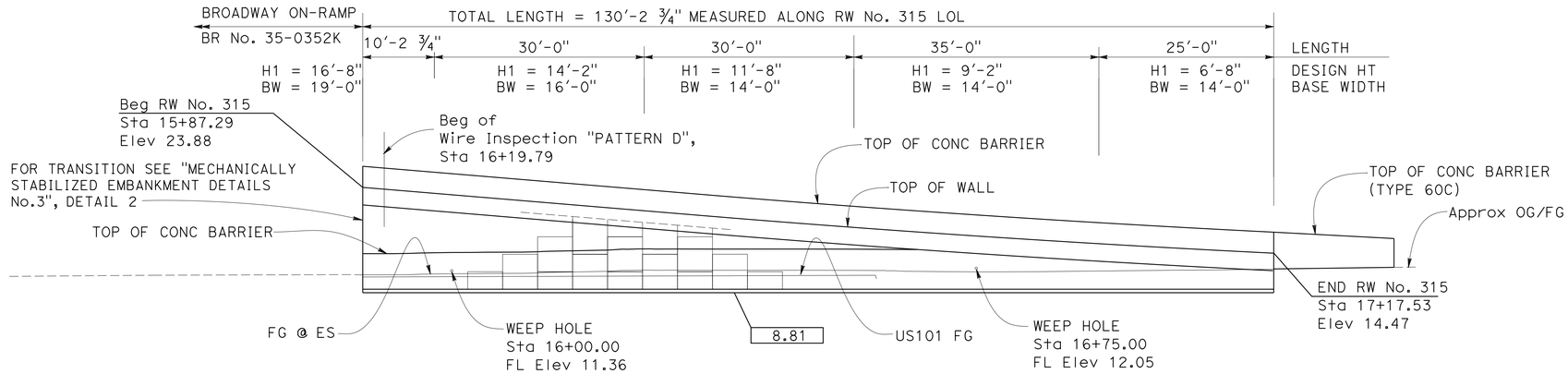

ELEV AT TOP OF WALL

STA	ELEV
16+00	22.82
16+20	21.16
16+40	19.51
16+60	17.97
16+80	16.60
17+00	15.39

CURVE DATA

No.	R	△	T	L
1	1344.52'	0°51'04"	9.99'	19.97'

DEVELOPED MIRRORED ELEVATION

SCALE: 1" = 10'

RETAINING WALL NO. 315

BRIDGE NO 35E0044

QUANTITIES

MECHANICALLY STABILIZED EMBANKMENT, LOCATION E	1,020	SQFT
STRUCTURAL CONCRETE, BARRIER SLAB	70	CY
CONCRETE BARRIER (TYPE 736 MODIFIED)	131	LF

LEGEND:

Indicates direction of traffic

xx.xx Indicates elev at bottom of leveling pad

NOTES:

1. For general notes, see "GENERAL NOTES" sheet.
2. For MSE wall panel layout and wiremat details, see "MECHANICALLY STABILIZED EMBANKMENT DETAILS No. 2" sheet.
3. For reinforcement overlapping with RW No.316 at beginning of wall, see "MECHANICALLY STABILIZED EMBANKMENT DETAILS No. 5" sheet.
4. For details of Wire Inspection "PATTERN D", see "MECHANICALLY STABILIZED EMBANKMENT DETAILS No. 7" sheet.
5. For architectural details, see "ARCHITECTURAL TREATMENT DETAILS No. 2", "ARCHITECTURAL TREATMENT DETAILS No. 4" and "ARCHITECTURAL TREATMENT DETAILS No. 5" sheets.
6. For soil cement treatment under MSE walls, see "ROADWAY PLANS".
7. For all other details, see "MECHANICALLY STABILIZED EMBANKMENT DETAILS No. 1 THROUGH DETAILS No. 7" sheets.

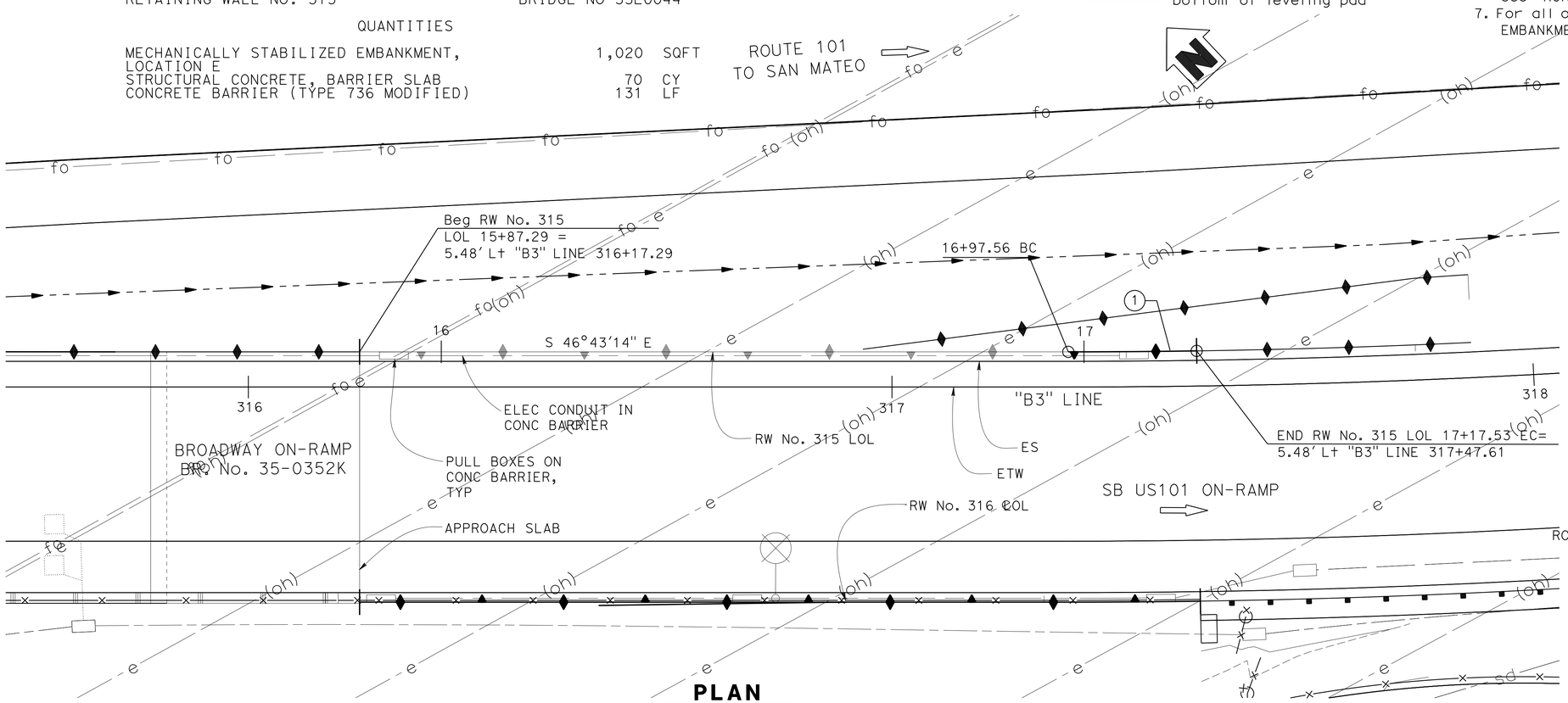

PLAN

SCALE: 1" = 10'

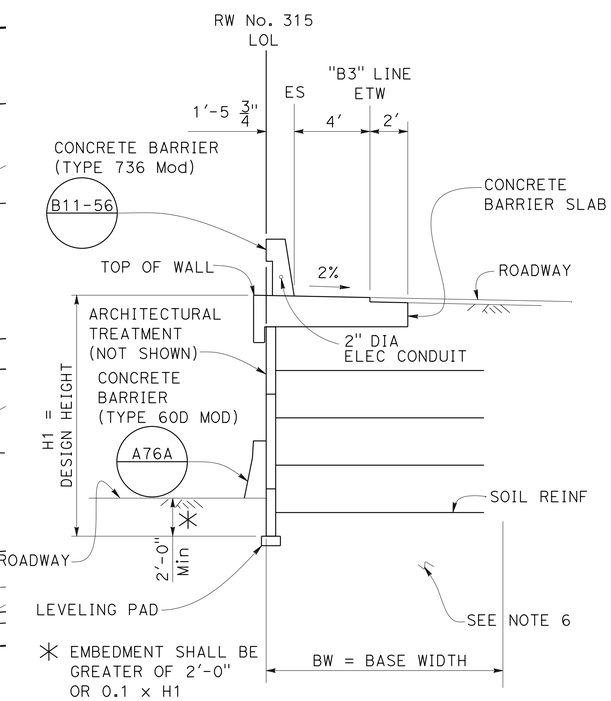

TYPICAL SECTION

NO SCALE

DESIGN OVERSIGHT Paul Cotter	DESIGN	BY G. CARROLL	CHECKED H. HAKIMI	LOAD & RESISTANCE FACTOR DESIGN	LIVE LOADING: HL93 DESIGN VEHICLE
6-20-13 SIGN OFF DATE	DETAILS	BY N. HUTTON	CHECKED G. CARROLL	LAYOUT BY T. SILVA	CHECKED A. BHOI
	QUANTITIES	BY P. JACOBS	CHECKED A. FINKELSTEIN	SPECIFICATIONS BY D. HARNAGEL	PLANS AND SPECS COMPARED C. GONG

PREPARED FOR THE STATE OF CALIFORNIA DEPARTMENT OF TRANSPORTATION

C. GONG
PROJECT ENGINEER

BRIDGE NO. 35E0044
POST MILES 16.6

RETAINING WALL No. 315
GENERAL PLAN

DESIGN GENERAL PLAN SHEET (ENGLISH) (REV. 03/14/12)

ORIGINAL SCALE IN INCHES FOR REDUCED PLANS 0 1 2 3

UNIT: 0703
PROJECT NUMBER & PHASE: 04000006841
CONTRACT NO.: 04-235844

DISREGARD PRINTS BEARING EARLIER REVISION DATES

REVISION DATES 11-16-12 01-16-13 02-12-13 04-08-13

SHEET 10 OF 36

FILE => 0400000684we080.dgn

USERNAME => s141070 DATE PLOTTED => 03-FEB-2014 TIME PLOTTED => 13:52

DIST	COUNTY	ROUTE	POST MILES TOTAL PROJECT	SHEET No	TOTAL SHEETS
04	SM	101	16.3/17.1	789	814

REGISTERED CIVIL ENGINEER 04-08-13 DATE

10/21/13
PLANS APPROVAL DATE

REGISTERED PROFESSIONAL ENGINEER CHAO GONG No. C53837 Exp. 9-30-15 CIVIL STATE OF CALIFORNIA

The State of California or its officers or agents shall not be responsible for the accuracy or completeness of scanned copies of this plan sheet.

SAN MATEO COUNTY TRANSPORTATION AUTHORITY
1250 SAN CARLOS AVENUE
SAN CARLOS, CA 94070-1306

URS CORPORATION
1333 BROADWAY, SUITE 800
OAKLAND, CA 94612-1924

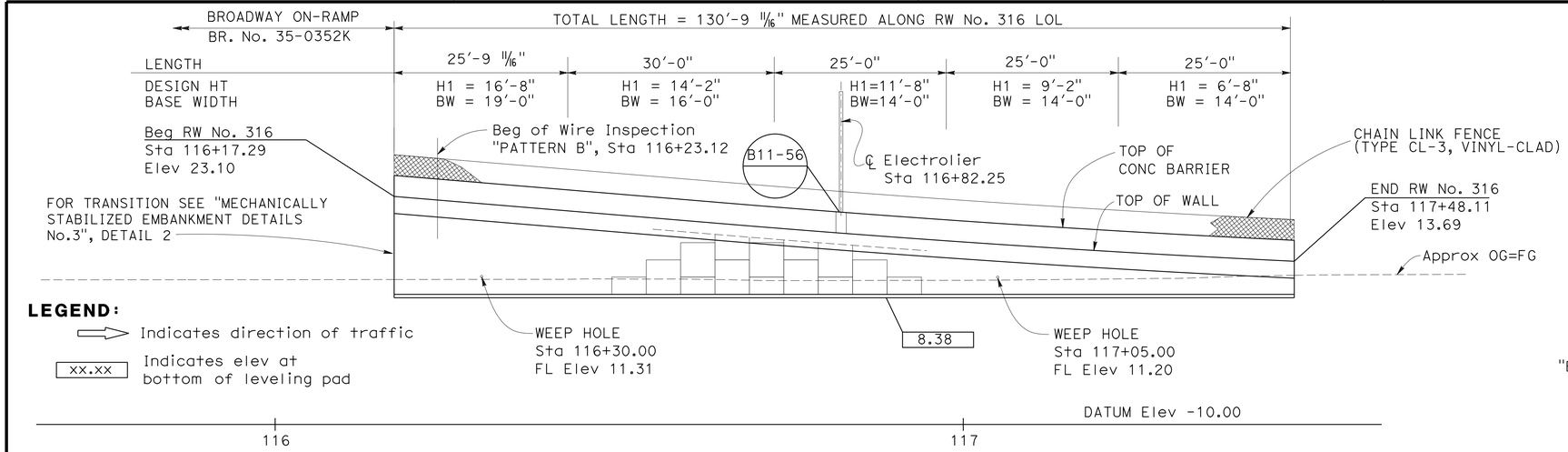

LEGEND:

⇨ Indicates direction of traffic

[xx.xx] Indicates elev at bottom of leveling pad

ELEV AT TOP OF WALL

STA	ELEV
116+20	22.87
116+40	21.21
116+60	19.55
116+80	17.94
117+00	16.49
117+20	15.20
117+40	14.09

DEVELOPED ELEVATION

SCALE: 1" = 10'

CURVE DATA				
No.	R	△	T	L
1	1383.48'	0°51'03.36"	10.27'	20.55'

RETAINING WALL NO. 316 BRIDGE NO 35E0045

QUANTITIES

MECHANICALLY STABILIZED EMBANKMENT, LOCATION F	910	SQFT
STRUCTURAL CONCRETE, BARRIER SLAB	70	CY
CONCRETE BARRIER (TYPE 736 MODIFIED)	131	LF

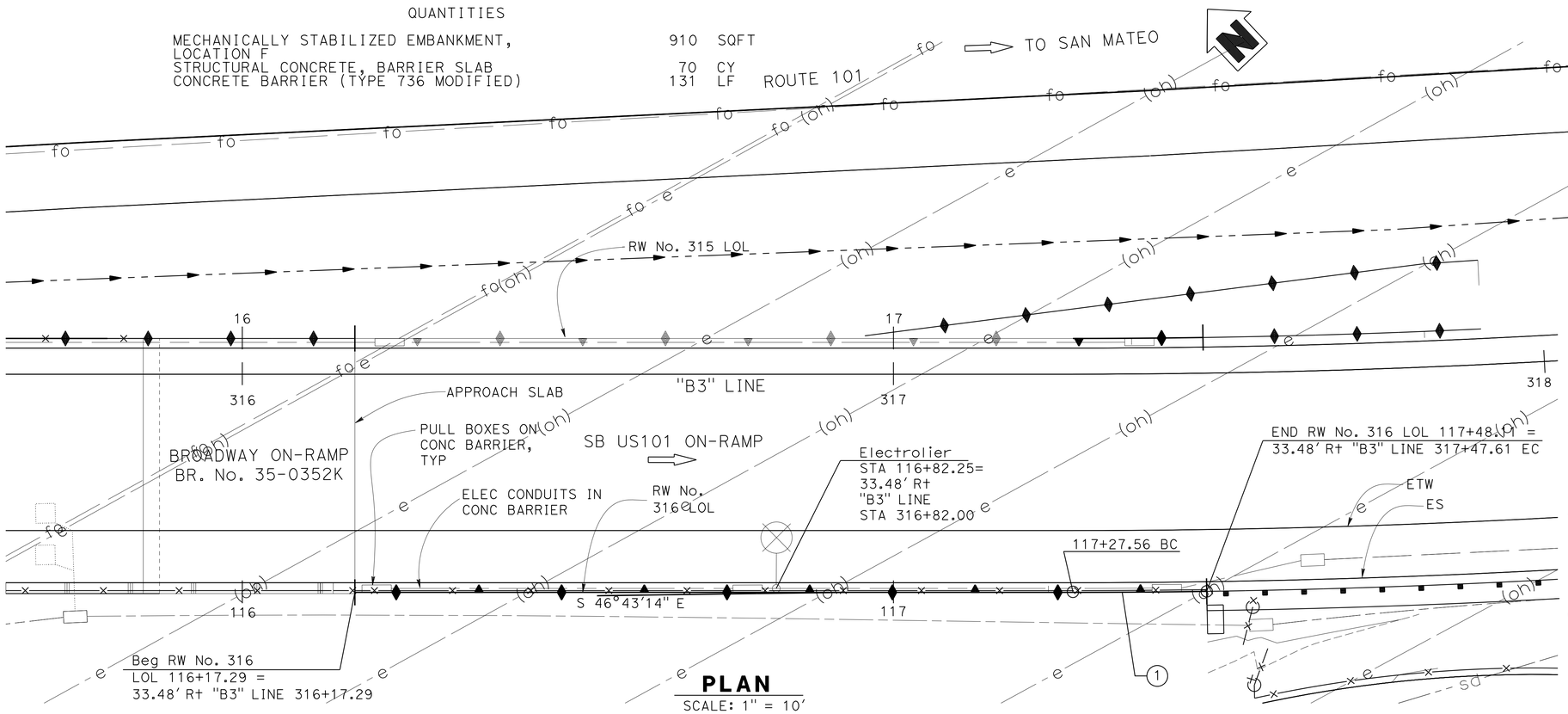

PLAN

SCALE: 1" = 10'

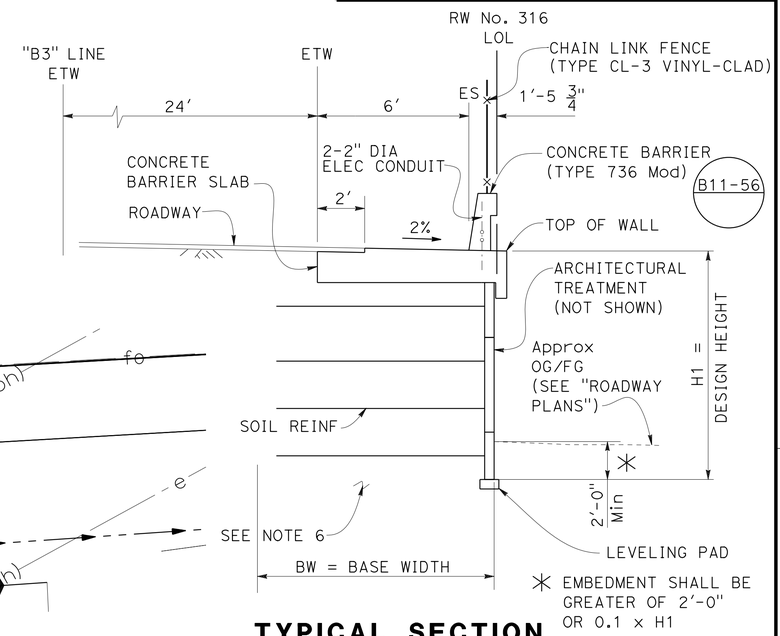

TYPICAL SECTION

NO SCALE

NOTES:

1. For general notes, see "GENERAL NOTES" sheet.
2. For MSE wall panel layout and wiremat details, see "MECHANICALLY STABILIZED EMBANKMENT DETAILS No. 2" sheet.
3. For reinforcement overlapping with RW No.315 at beginning of wall, see "MECHANICALLY STABILIZED EMBANKMENT DETAILS No. 5" sheet.
4. For details of Wire Inspection "PATTERN D", see "MECHANICALLY STABILIZED EMBANKMENT DETAILS No. 7" sheet.
5. For architectural details, see "ARCHITECTURAL TREATMENT DETAILS No. 2", "ARCHITECTURAL TREATMENT DETAILS No. 4" and "ARCHITECTURAL TREATMENT DETAILS No. 5" sheets.
6. For soil cement treatment under MSE walls, see "ROADWAY PLANS".
7. For all other details, see "MECHANICALLY STABILIZED EMBANKMENT DETAILS No. 1" through "MECHANICALLY STABILIZED EMBANKMENT DETAILS No. 7" sheets.

Paul Cotter DESIGN OVERSIGHT Paul Cotter 6-20-13 SIGN OFF DATE	DESIGN	BY G. CARROLL	CHECKED H. HAKIMI	LOAD & RESISTANCE FACTOR DESIGN	LIVE LOADING: HL93 DESIGN VEHICLE
	DETAILS	BY N. HUTTON	CHECKED G. CARROLL	LAYOUT BY T. SILVA	CHECKED A. BHOI
	QUANTITIES	BY P. JACOBS	CHECKED A. FINKELSTEIN	SPECIFICATIONS BY D. HARNAGEL	PLANS AND SPECS COMPARED C. GONG

PREPARED FOR THE STATE OF CALIFORNIA DEPARTMENT OF TRANSPORTATION

C. GONG
PROJECT ENGINEER

BRIDGE NO. 35E0045
POST MILES 16.6

RETAINING WALL No. 316
GENERAL PLAN

DESIGN GENERAL PLAN SHEET (ENGLISH) (REV. 03/14/12)

ORIGINAL SCALE IN INCHES FOR REDUCED PLANS 0 1 2 3

UNIT: 0703
PROJECT NUMBER & PHASE: 04000006841 CONTRACT NO.: 04-235844

DISREGARD PRINTS BEARING EARLIER REVISION DATES

REVISION DATES 11-16-12 01-16-13 02-12-13 04-08-13

SHEET 11 OF 36

FILE => 0400000684we081.dgn

USERNAME => s14070 DATE PLOTTED => 03-FEB-2014 TIME PLOTTED => 13:52

DIST	COUNTY	ROUTE	POST MILES TOTAL PROJECT	SHEET No	TOTAL SHEETS
04	SM	101	16.3/17.1	790	814

REGISTERED CIVIL ENGINEER 04-08-13 DATE

10/21/13
PLANS APPROVAL DATE

REGISTERED PROFESSIONAL ENGINEER CHAO GONG No. C53837 Exp. 9-30-15 CIVIL STATE OF CALIFORNIA

The State of California or its officers or agents shall not be responsible for the accuracy or completeness of scanned copies of this plan sheet.

SAN MATEO COUNTY TRANSPORTATION AUTHORITY
1250 SAN CARLOS AVENUE
SAN CARLOS, CA 94070-1306

URS CORPORATION
1333 BROADWAY, SUITE 800
OAKLAND, CA 94612-1924

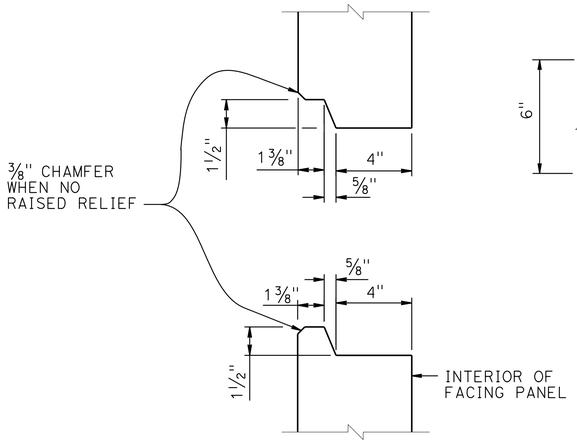

HORIZONTAL JOINT DETAIL

3" = 1'-0"

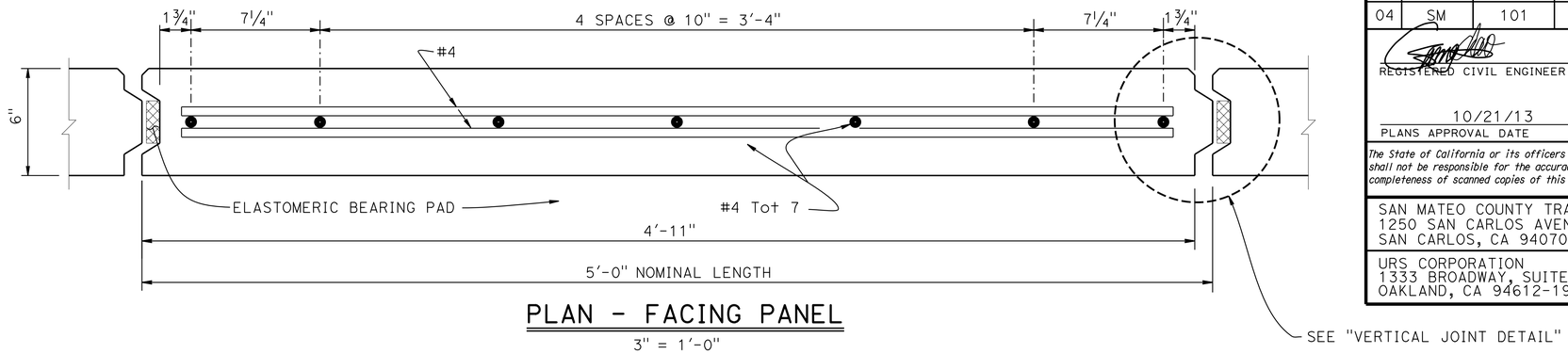

PLAN - FACING PANEL

3" = 1'-0"

NOTES:

1. Architectural treatment not shown
2. Place reinforced elastomeric bearing pads in all of the panel joints between the panels. Place one in each vertical joint where the horizontal joints intersect. Place two per panel in each horizontal joint:
   3/4" x 2 3/8" x 6" for vertical joints
   3/4" x 4" x 6" for horizontal joints
3. Bond a strip of filter fabric, 1'-0" wide, over the full length of all panel joints
4. Top layer of welded wire mats attached parallel to top of panel when top of wall is angled or curved as shown elsewhere in "STRUCTURE PLANS"
5. Eliminate mid level mat when closer than 6" to top mat, continue variable dimension between remaining mats

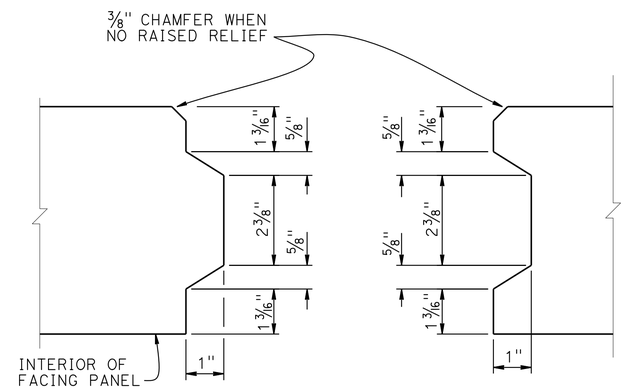

VERTICAL JOINT DETAIL

6" = 1'-0"

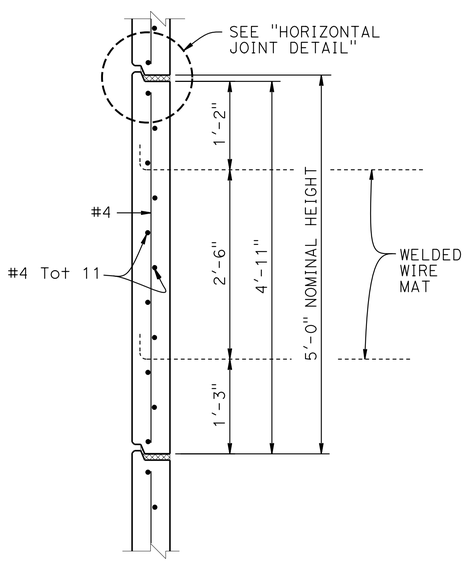

INTERMEDIATE PANEL

1" = 1'-0"

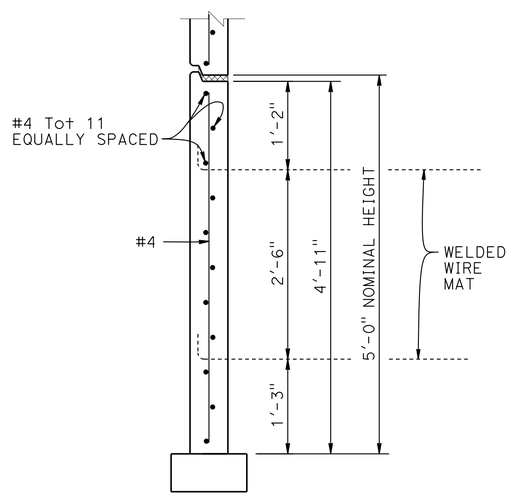

BOTTOM PANEL

1" = 1'-0"

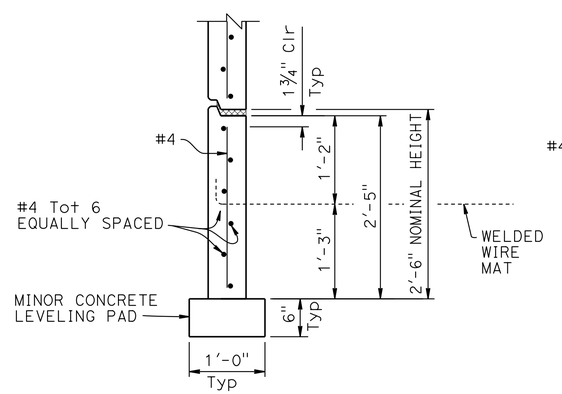

BOTTOM HALF PANEL

1" = 1'-0"

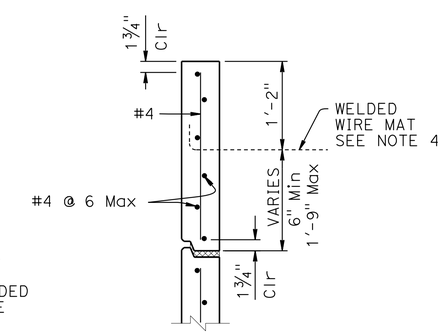

TOP HALF PANEL

1" = 1'-0"

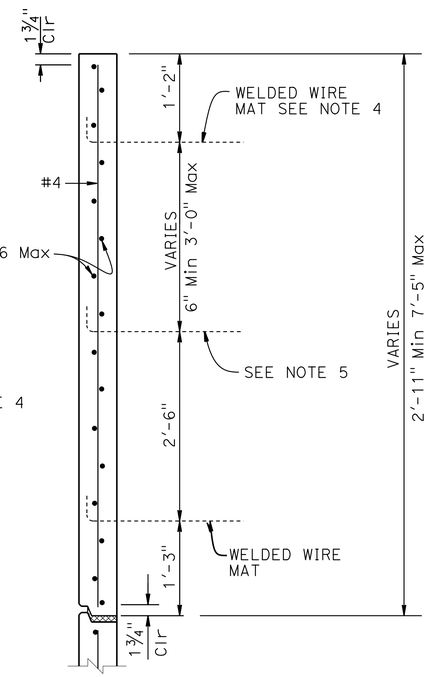

TOP PANEL WITH MULTIPLE MATS

1" = 1'-0"

* 35E-0038	** 16.7
35E-0039	16.7
35E-0042	16.6
35E-0043	16.6
35E-0044	16.6
35E-0045	16.6

SPECIAL DETAILS

STANDARD DRAWING
FILE NO. xs13-020-1
APPROVAL DATE January 2012

STATE OF CALIFORNIA
DEPARTMENT OF TRANSPORTATION

DIVISION OF ENGINEERING SERVICES

BRIDGE NO. *
POST MILES **

RETAINING WALLS

MECHANICALLY STABILIZED EMBANKMENT DETAILS No.1

DS OSD 2147A (ENGLISH STANDARD DRAWING "XS" BORDER REV. (02-02-11)

ORIGINAL SCALE IN INCHES FOR REDUCED PLANS 0 1 2 3

UNIT: 0703
PROJECT NUMBER & PHASE: 04000006841 CONTRACT NO.: 04-235844

DISREGARD PRINTS BEARING EARLIER REVISION DATES

REVISION DATES 11-16-12 01-16-13 02-12-13 04-08-13

SHEET 12 OF 36

FILE => 0400000684we082.dgn

USERNAME => s141070 DATE PLOTTED => 03-FEB-2014 TIME PLOTTED => 13:52

DIST	COUNTY	ROUTE	POST MILES TOTAL PROJECT	SHEET No	TOTAL SHEETS
04	SM	101	16.3/17.1	791	814

REGISTERED CIVIL ENGINEER 04-08-13 DATE

10/21/13
PLANS APPROVAL DATE

REGISTERED PROFESSIONAL ENGINEER CHAO GONG No. C53837 Exp. 9-30-15 CIVIL STATE OF CALIFORNIA

The State of California or its officers or agents shall not be responsible for the accuracy or completeness of scanned copies of this plan sheet.

SAN MATEO COUNTY TRANSPORTATION AUTHORITY
1250 SAN CARLOS AVENUE
SAN CARLOS, CA 94070-1306

URS CORPORATION
1333 BROADWAY, SUITE 800
OAKLAND, CA 94612-1924

GENERAL NOTES
LOAD & RESISTANCE FACTOR DESIGN

DESIGN: AASHTO LRFD Bridge Design Specifications, 4th Edition with California Amendments

LIVE LOAD: Surcharge = 240 lb/ft^2

SOIL PARAMETERS:

Internal design ϕ = 34°, γ = 120 lb/ft^3

External design ϕ (Retained Backfill) = 30°, γ = 120 lb/ft^3

ϕ (Foundation) = 30°

K_h = 0.23

PRECAST CONCRETE PANELS:

f'c = 4,000 psi (Concrete compressive strength at 28 days)

fy = 60,000 psi (Yield strength of reinforcement)

SOIL REINFORCEMENT:

Welded wire mats: fy = 65,000 psi (Yield strength)

Coupler: fy = 36,000 psi (Yield strength)

Corrosion rate = 1.1 mils/year

REINFORCED CONCRETE:

f'c = 3,600 psi, except as noted

(Concrete compressive strength at 28 days)

fy = 60,000 psi (Yield strength of reinforcement)

MSE = Mechanically Stabilized Embankment

NOTES:

(A) Distance as required to permit coupler to be swaged

(B) Place #4 x 3'-2", centered on connector mat, but not welded to it

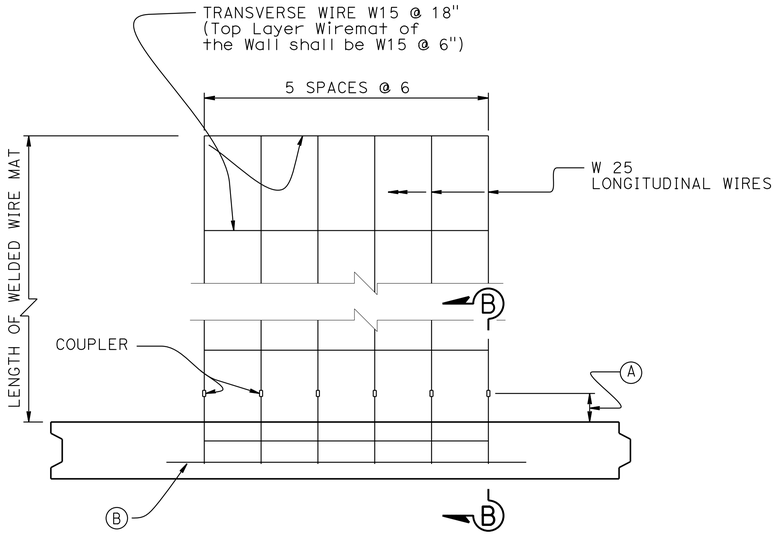

PLAN OF PANEL WITH DESIGN HEIGHT 24'-2" < DESIGN HEIGHT ≤ 29'-2" (1)

1½" = 1'-0"

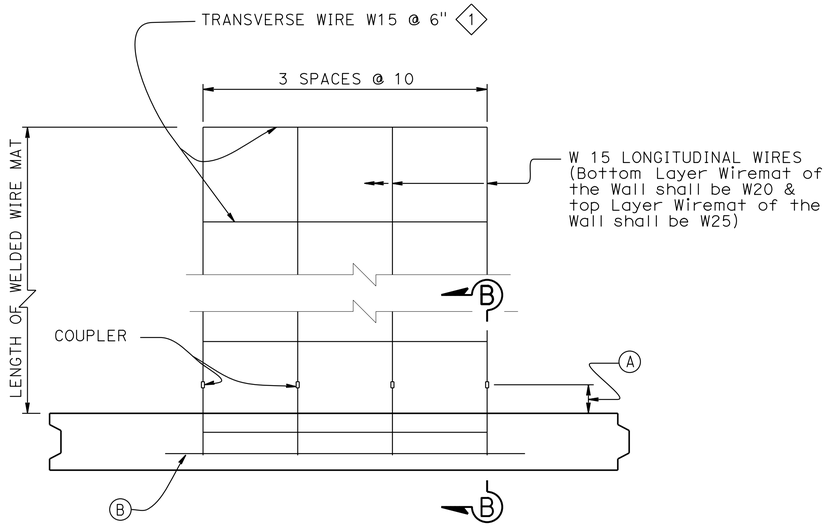

PLAN OF PANEL WITH DESIGN HEIGHT ≤ 14'-2"

1½" = 1'-0"

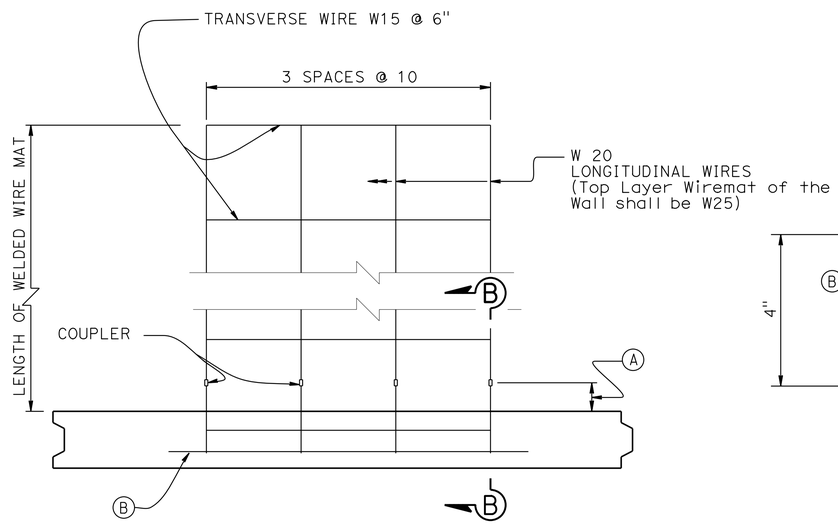

PLAN OF PANEL WITH DESIGN HEIGHT 14'-2" < DESIGN HEIGHT ≤ 24'-2"

1½" = 1'-0"

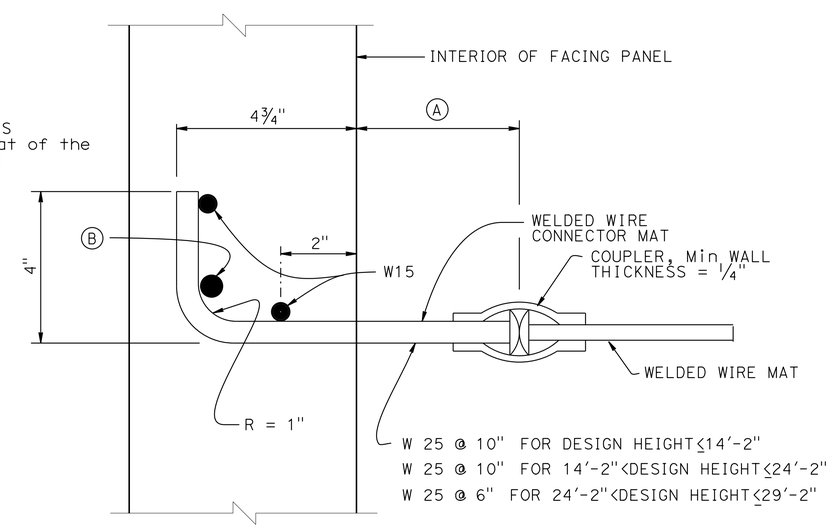

SECTION B-B

6" = 1'-0"

*	35E-0038	16.7
	35E-0039	16.7
	35E-0042	16.6
	35E-0043	16.6
	35E-0044	16.6
	35E-0045	16.6

SPECIAL DETAILS

REVISED STANDARD DRAWING

FILE NO. xs13-020-2

APPROVAL DATE January 2012

STATE OF CALIFORNIA DEPARTMENT OF TRANSPORTATION

DIVISION OF ENGINEERING SERVICES

BRIDGE NO. *

POST MILES **

RETAINING WALLS

MECHANICALLY STABILIZED EMBANKMENT DETAILS No.2

DS OSD 2147A (ENGLISH STANDARD DRAWING "XS" BORDER REV. (02-02-11)

ORIGINAL SCALE IN INCHES FOR REDUCED PLANS 0 1 2 3

UNIT: 0703
PROJECT NUMBER & PHASE: 04000006841 CONTRACT NO.: 04-235844

DISREGARD PRINTS BEARING EARLIER REVISION DATES

REVISION DATES 11-16-12 01-16-13 02-12-13 04-08-13

SHEET 13 OF 36

FILE => 0400000684we083.dgn

USERNAME => s1410170 DATE PLOTTED => 03-FEB-2014 TIME PLOTTED => 13:52

DIST	COUNTY	ROUTE	POST MILES TOTAL PROJECT	SHEET No	TOTAL SHEETS
04	SM	101	16.3/17.1	792	814

REGISTERED CIVIL ENGINEER 04-08-13 DATE

10/21/13
PLANS APPROVAL DATE

REGISTERED PROFESSIONAL ENGINEER CHAO GONG No. C53837 Exp. 9-30-15 CIVIL STATE OF CALIFORNIA

The State of California or its officers or agents shall not be responsible for the accuracy or completeness of scanned copies of this plan sheet.

SAN MATEO COUNTY TRANSPORTATION AUTHORITY
1250 SAN CARLOS AVENUE
SAN CARLOS, CA 94070-1306

URS CORPORATION
1333 BROADWAY, SUITE 800
OAKLAND, CA 94612-1924

NOTES:

(A) Bond a strip of filter fabric, 1'-6" wide, to back of MSE panels and the adjacent concrete wall for entire length of vertical joint

(B) Bond expansion joint material to the concrete wall

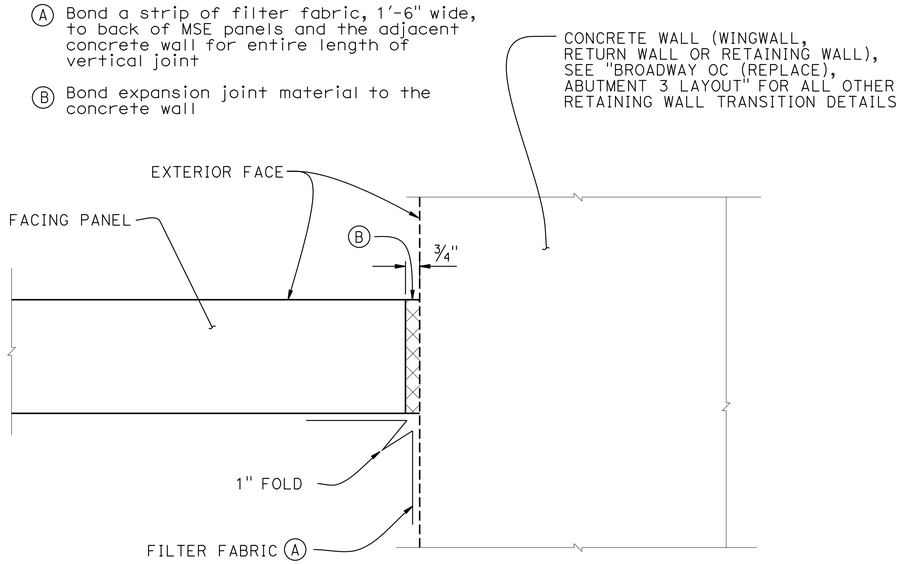

MSE FACING PANEL-TO-CONCRETE WALL JOINT DETAIL 1

3" = 1'-0"

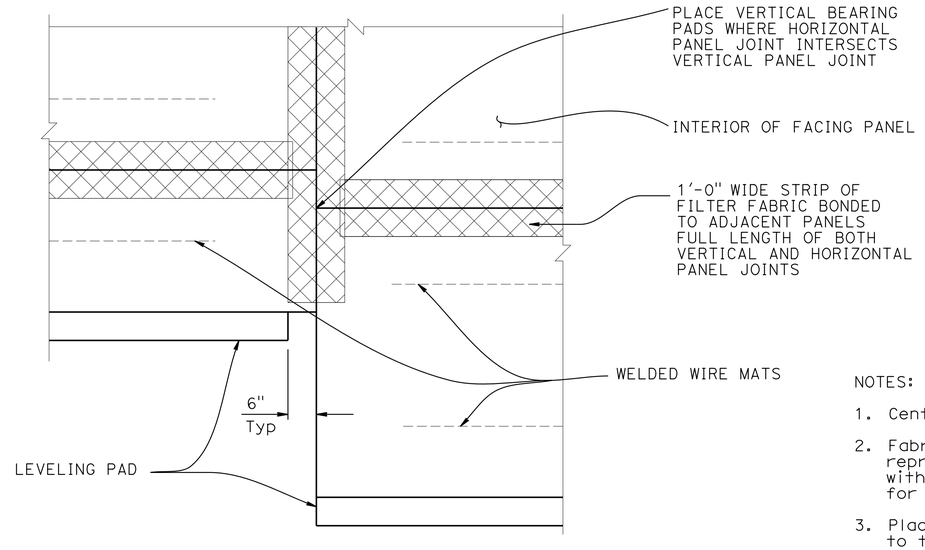

PART ELEVATION

3/4" = 1'-0"

NOTES:

1. Center inspection wire in facing panel.
2. Fabricated inspection wire from W11 wire representative of the welded wire mats, with 3/8" ø 16 "Unified Coarse Threads" for at least 1 1/2" of one end.
3. Place inspection wire horizontal and perpendicular to the wall panel prior to backfilling.
4. Encapsulate threaded end with corrosion inhibiting mastic, vinyl covering, and secure with plastic tie.

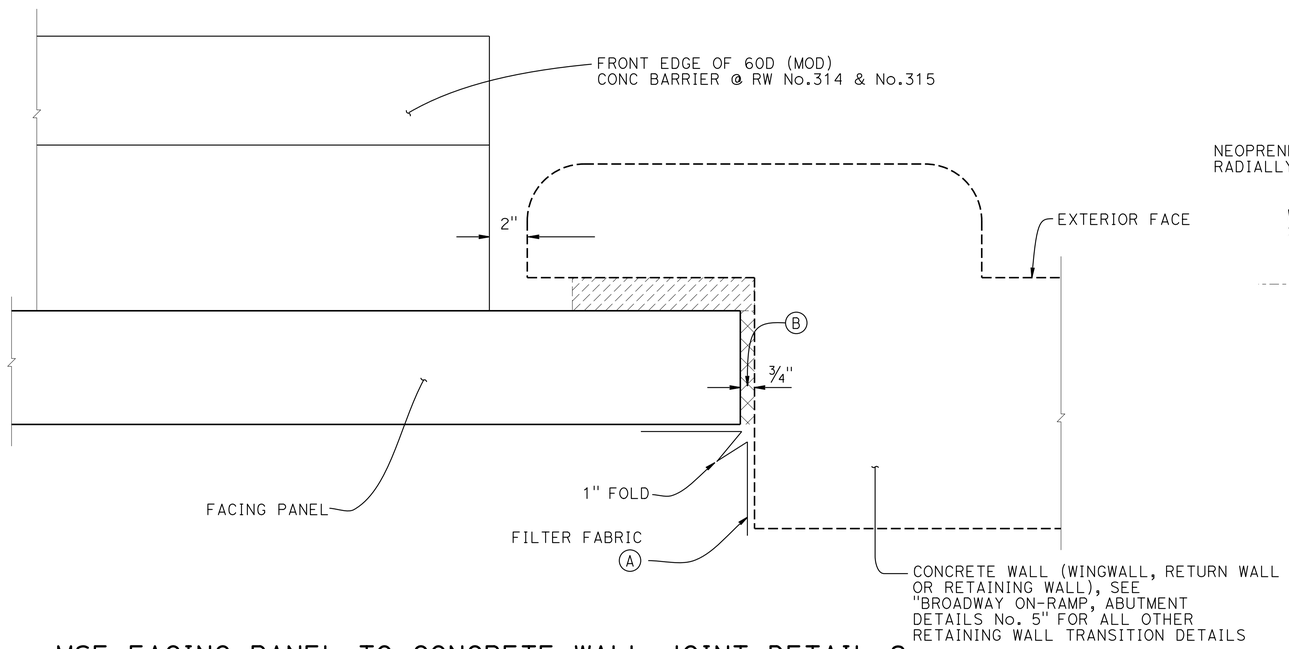

MSE FACING PANEL-TO-CONCRETE WALL JOINT DETAIL 2

3" = 1'-0"

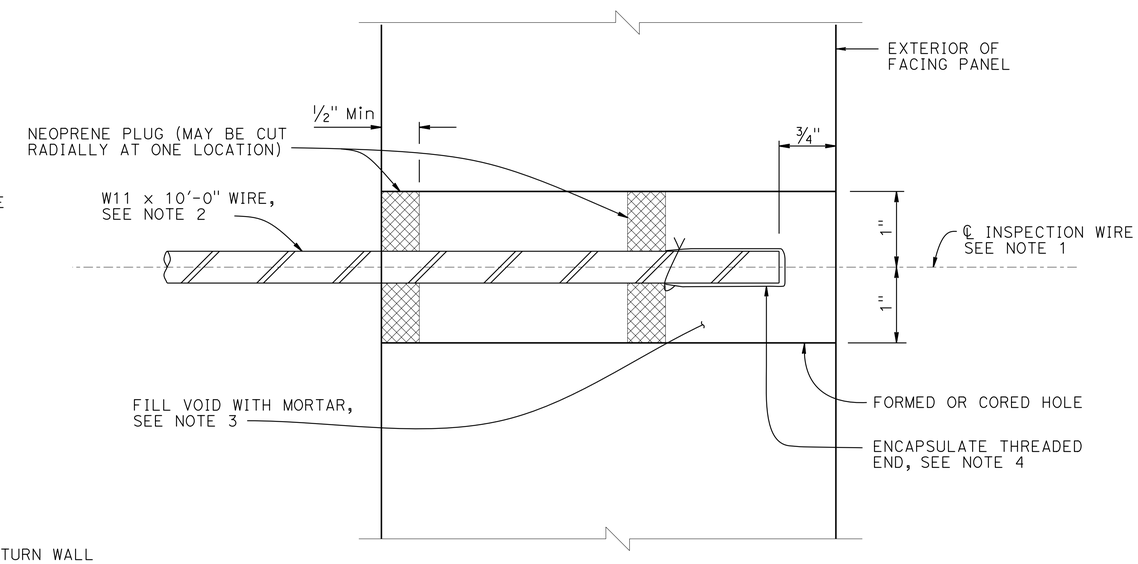

SECTION THRU INSPECTION WIRE

NO SCALE

* 35E-0038	** 16.7
35E-0039	16.7
35E-0042	16.6
35E-0043	16.6
35E-0044	16.6
35E-0045	16.6

SPECIAL DETAILS

STANDARD DRAWING

FILE NO. xs13-020-3

APPROVAL DATE January 2012

STATE OF CALIFORNIA DEPARTMENT OF TRANSPORTATION

DIVISION OF ENGINEERING SERVICES

BRIDGE NO. *

POST MILES **

RETAINING WALLS

MECHANICALLY STABILIZED EMBANKMENT DETAILS No.3

DS OSD 2147A (ENGLISH STANDARD DRAWING "XS" BORDER REV. (02-02-11)

ORIGINAL SCALE IN INCHES FOR REDUCED PLANS 0 1 2 3

UNIT: 0703
PROJECT NUMBER & PHASE: 04000006841 CONTRACT NO.: 04-235844

DISREGARD PRINTS BEARING EARLIER REVISION DATES

REVISION DATES 11-16-12 01-16-13 02-12-13 04-08-13

SHEET 14 OF 36

FILE => 0400000684we084.dgn

USERNAME => s141070 DATE PLOTTED => 03-FEB-2014 TIME PLOTTED => 13:52

DIST	COUNTY	ROUTE	POST MILES TOTAL PROJECT	SHEET No	TOTAL SHEETS
04	SM	101	16.3/17.1	793	814

REGISTERED CIVIL ENGINEER 04-08-13 DATE

10/21/13
PLANS APPROVAL DATE

REGISTERED PROFESSIONAL ENGINEER CHAO GONG No. C53837 Exp. 9-30-15 CIVIL STATE OF CALIFORNIA

The State of California or its officers or agents shall not be responsible for the accuracy or completeness of scanned copies of this plan sheet.

SAN MATEO COUNTY TRANSPORTATION AUTHORITY
1250 SAN CARLOS AVENUE
SAN CARLOS, CA 94070-1306

URS CORPORATION
1333 BROADWAY, SUITE 800
OAKLAND, CA 94612-1924

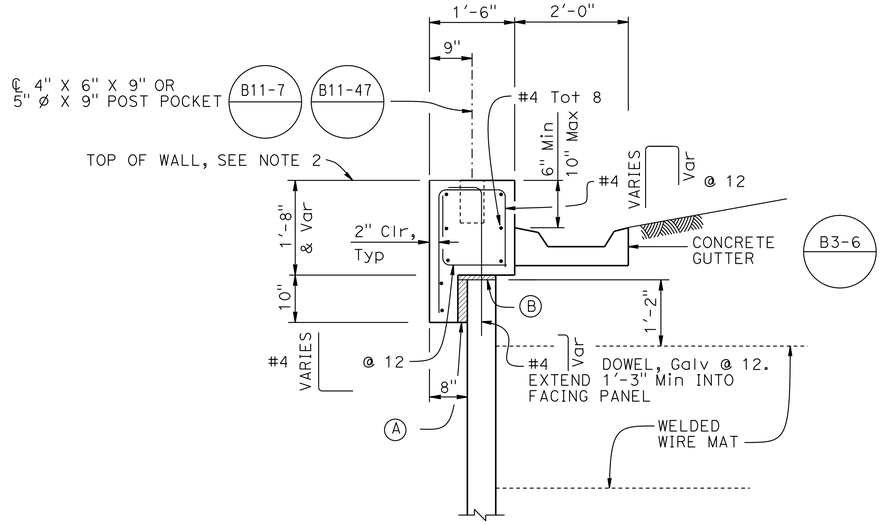

SECTION A-A
BEGINNING OF COPING TRANSITION

¾" = 1'-0"

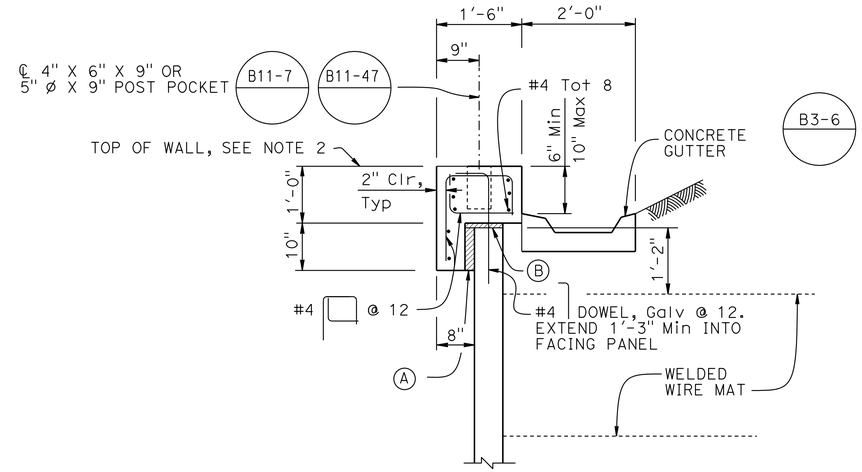

STANDARD COPING

¾" = 1'-0"

NOTES:

1. For Barrier slab details see "CONCRETE BARRIER SLAB DETAIL" on "MECHANICALLY STABILIZED EMBANKMENT DETAILS No. 6".
2. Install cable railing or chain link railing when indicated

(A) 2" Expanded Polystyrene

(B) 1" Expanded Polystyrene

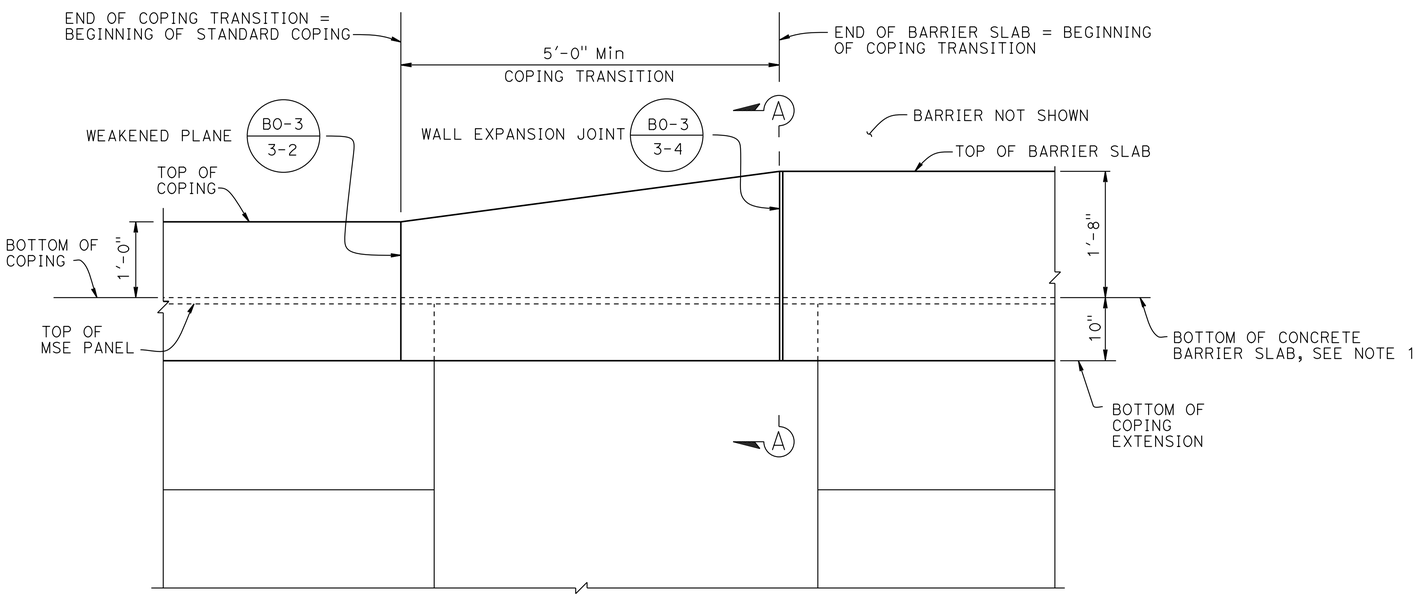

TRANSITION FROM COPING TO BARRIER SLAB

1" = 1'-0"

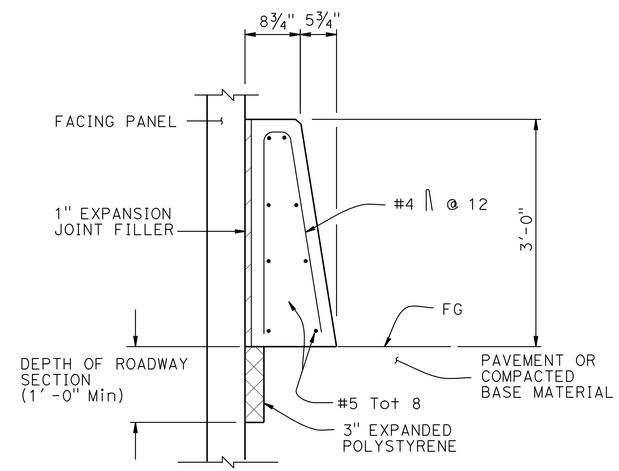

CONCRETE BARRIER TYPE 60D (MOD) AT FACE OF MSE

1" = 1'-0"

* 35E-0038 ** 16.7
35E-0039 16.7
35E-0042 16.6
35E-0043 16.6
35E-0044 16.6
35E-0045 16.6

SPECIAL DETAILS

STANDARD DRAWING

FILE NO. xs13-020-4

APPROVAL DATE January 2012

STATE OF CALIFORNIA
DEPARTMENT OF TRANSPORTATION

DIVISION OF ENGINEERING SERVICES

BRIDGE NO. *

POST MILES **

RETAINING WALLS
MECHANICALLY STABILIZED EMBANKMENT DETAILS No.4

DS OSD 2147A (ENGLISH STANDARD DRAWING "XS" BORDER REV. (02-02-11)

ORIGINAL SCALE IN INCHES FOR REDUCED PLANS 0 1 2 3

UNIT: 0703
PROJECT NUMBER & PHASE: 04000006841 CONTRACT NO.: 04-235844

DISREGARD PRINTS BEARING EARLIER REVISION DATES

REVISION DATES 11-16-12 01-16-13 02-12-13 04-08-13

SHEET 15 OF 36

FILE => 0400000684we085.dgn

USERNAME => s141070 DATE PLOTTED => 03-FEB-2014 TIME PLOTTED => 13:52

DIST	COUNTY	ROUTE	POST MILES TOTAL PROJECT	SHEET No	TOTAL SHEETS
04	SM	101	16.3/17.1	794	814

REGISTERED CIVIL ENGINEER 04-08-13 DATE

10/21/13
PLANS APPROVAL DATE

REGISTERED PROFESSIONAL ENGINEER CHAO GONG No. C53837 Exp. 9-30-15 CIVIL STATE OF CALIFORNIA

The State of California or its officers or agents shall not be responsible for the accuracy or completeness of scanned copies of this plan sheet.

SAN MATEO COUNTY TRANSPORTATION AUTHORITY
1250 SAN CARLOS AVENUE
SAN CARLOS, CA 94070-1306

URS CORPORATION
1333 BROADWAY, SUITE 800
OAKLAND, CA 94612-1924

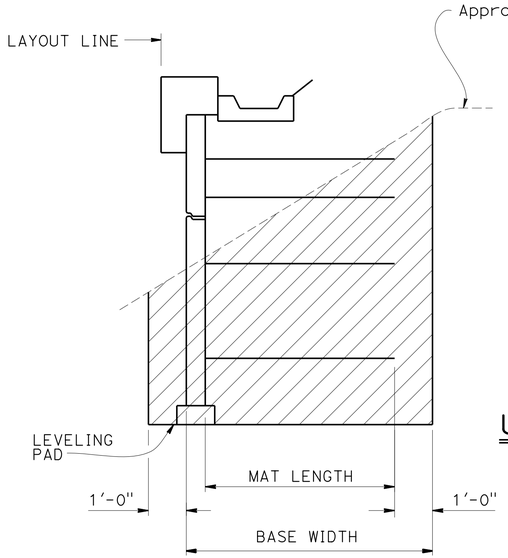

LIMITS OF EXCAVTION

½" = 1'-0"

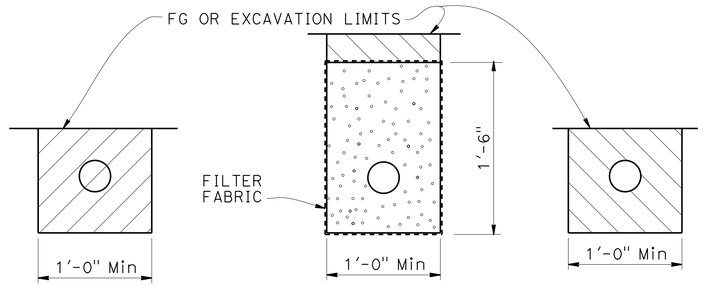

OUTLET PIPE CLEANOUT PIPE

EXCAVATION BACKFILL

UNPERFORATED OUTLET OR CLEAN OUT PIPE FOR UNDERDRAIN

NO SCALE

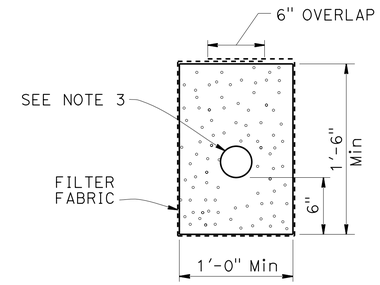

UNDERDRAIN DETAIL

NOTES:

1. Limits to FG except to GP when in roadway section.
2. Locate underdrain behind bottom level of welded wire mats wherever possible, or at elevation needed to drain, as shown elsewhere on plans.
3. Place perforated pipe underdrain of diameter minimum 4" Ø smoothed wall PVC or minimum 8" Ø corrugated HDPE.
4. Maximum spacing of outlet pipe is 200 feet.
5. At sags in profile of underdrain, install outlet pipe for each direction of flow.

LEGEND:

- Limits of Structure Excavation (TYPE D)
- Limits of Structure Backfill
- Limits of Permeable Material

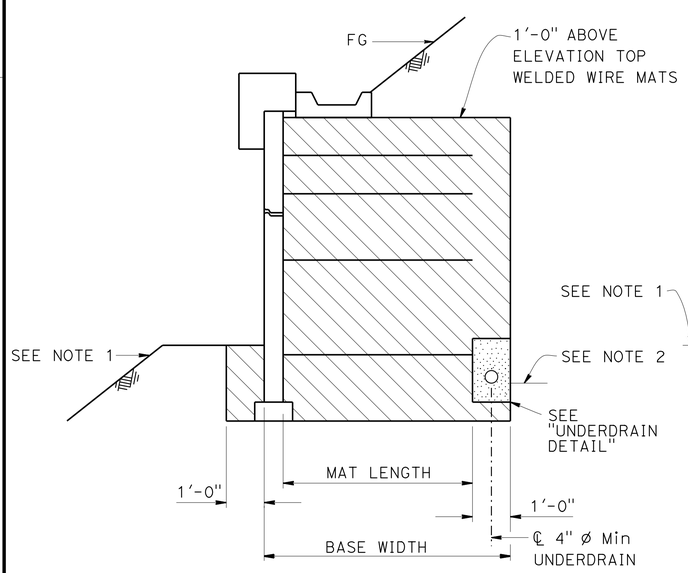

SLOPING FINISHED SURFACE

½" = 1'-0"

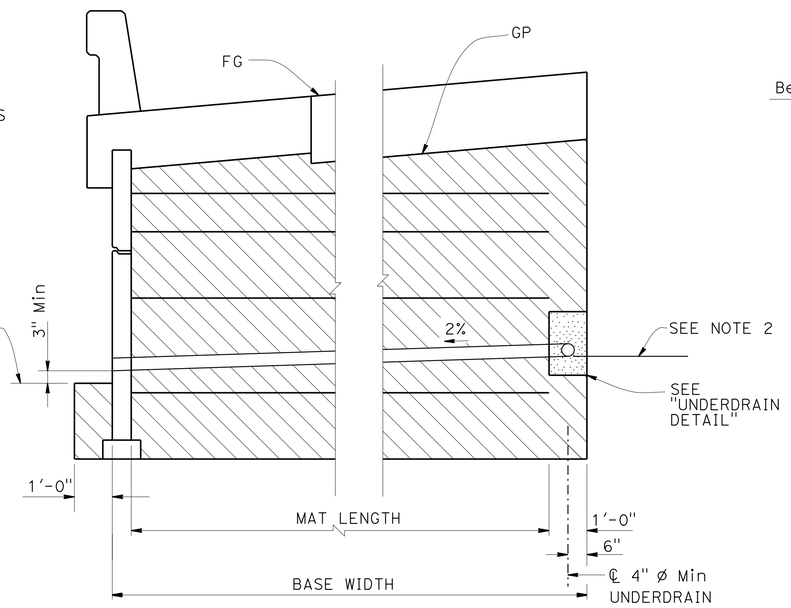

ROADWAY SECTION

½" = 1'-0"

LIMITS OF BACKFILL

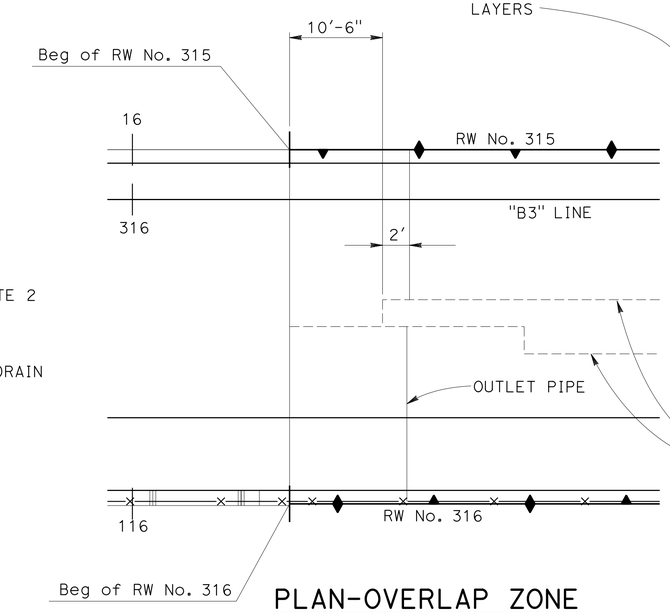

PLAN-OVERLAP ZONE

NTS

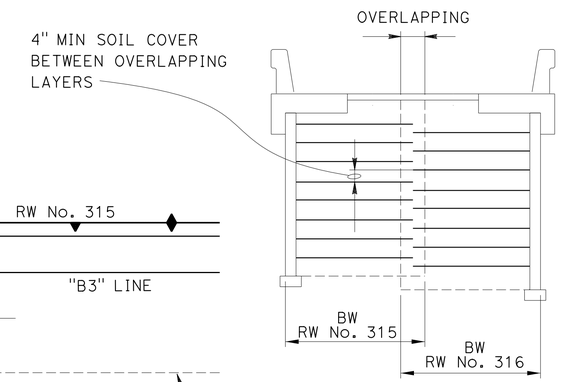

SECTION-OVERLAP ZONE

NTS

* 35E-0038	** 16.7
35E-0039	16.7
35E-0042	16.6
35E-0043	16.6
35E-0044	16.6
35E-0045	16.6

SPECIAL DETAILS

STANDARD DRAWING

FILE NO. xs13-020-6

APPROVAL DATE January 2012

STATE OF CALIFORNIA DEPARTMENT OF TRANSPORTATION

DIVISION OF ENGINEERING SERVICES

BRIDGE NO. *

POST MILES **

RETAINING WALLS

MECHANICALLY STABILIZED EMBANKMENT DETAILS No.5

DS OSD 2147A (ENGLISH STANDARD DRAWING "XS" BORDER REV. (02-02-11)

ORIGINAL SCALE IN INCHES FOR REDUCED PLANS 0 1 2 3

UNIT: 0703
PROJECT NUMBER & PHASE: 04000006841 CONTRACT NO.: 04-235844

DISREGARD PRINTS BEARING EARLIER REVISION DATES

REVISION DATES 11-16-12 01-16-13 02-12-13 04-08-13

SHEET 16 OF 36

FILE => 0400000684we086.dgn

USERNAME => s141070 DATE PLOTTED => 03-FEB-2014 TIME PLOTTED => 13:52

DIST	COUNTY	ROUTE	POST MILES TOTAL PROJECT	SHEET No	TOTAL SHEETS
04	SM	101	16.3/17.1	795	814

REGISTERED CIVIL ENGINEER 04-08-13 DATE

10/21/13
PLANS APPROVAL DATE

The State of California or its officers or agents shall not be responsible for the accuracy or completeness of scanned copies of this plan sheet.

REGISTERED PROFESSIONAL ENGINEER CHAO GONG No. C53837 Exp. 9-30-15 CIVIL STATE OF CALIFORNIA

SAN MATEO COUNTY TRANSPORTATION AUTHORITY
1250 SAN CARLOS AVENUE
SAN CARLOS, CA 94070-1306

URS CORPORATION
1333 BROADWAY, SUITE 800
OAKLAND, CA 94612-1924

DESIGN DATA

DESIGN: AASHTO LRFD Bridge Design Specifications, 4th Edition with California Amendments.

REINFORCED CONCRETE: $f'c$ = 3600 psi, fy = 60 ksi, n = 8

F_t : 54 kips on barrier

EQE: k_h = 0.23, k_v = 0.0

NOTES:

1. Clearance to reinforcing steel in concrete barrier to be 1".
2. Not all barrier reinforcement shown.
3. No expansion joints in concrete barrier or barrier slab within wall limits.
4. Specific concrete barrier to be used is shown elsewhere in Project Plans.
5. Install cable railing or chain link railing when indicated in Project Plans. Refer to Standard Plans B11-7 for anchorage details to top of concrete barrier.
6. Minimum slab length: 40 ft

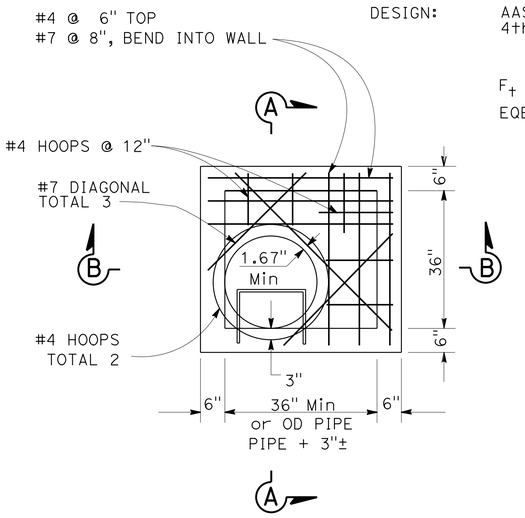

PLAN - G2 MH (RW No.205 ONLY)

N.T.S.

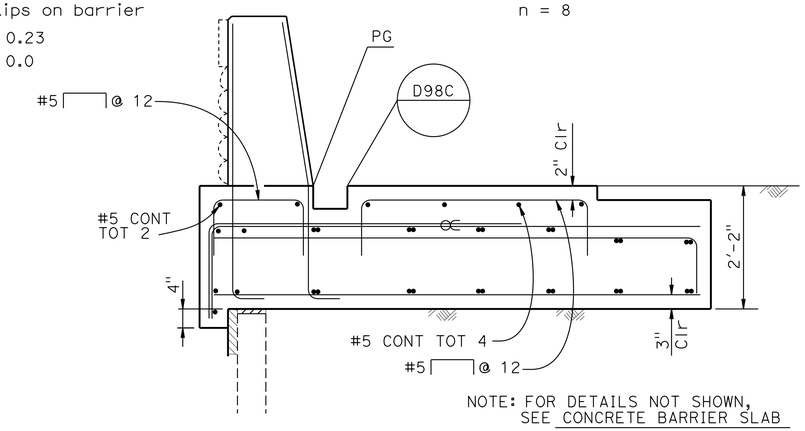

NOTE: FOR DETAILS NOT SHOWN, SEE CONCRETE BARRIER SLAB

RW No.209 BARRIER SLAB WITH GLD

¾" = 1'-0"

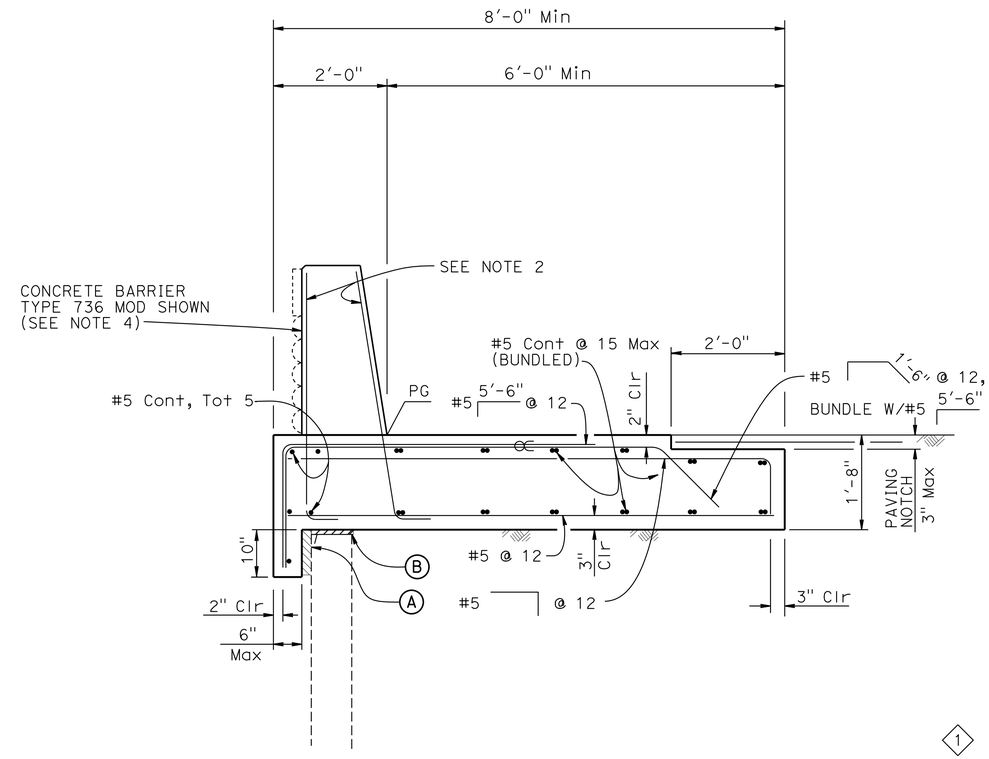

CONCRETE BARRIER SLAB WITH PAVING NOTCH

¾" = 1'-0"

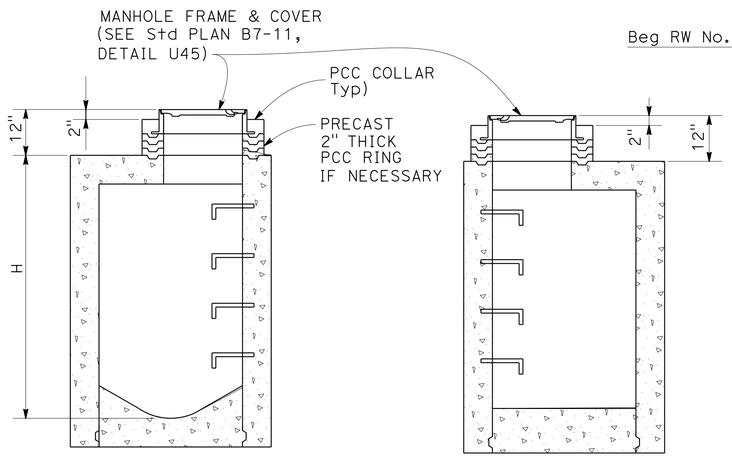

SECTION A-A

N.T.S.

SECTION B-B

N.T.S.

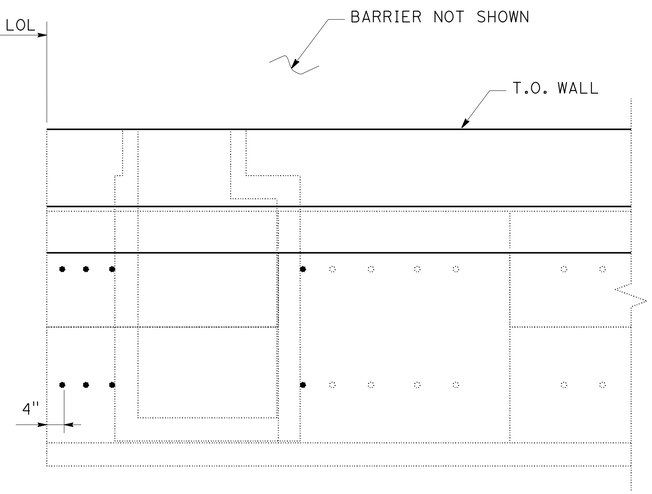

WIRE MESH LAYOUT

N.T.S.

NOTES:

Ⓐ 2" Min Expanded polystyrene

Ⓑ 1" Expanded Polystyrene on MSE

∝ Indicates bundled bars

NOTES:

FOR DETAILS NOT SHOWN, SEE Std PLAN D73-TYPE G2 INLET.

*	35E-0038
	35E-0039
	35E-0042
	35E-0043
	35E-0044
	35E-0045
**	16.7
	16.7
	16.6
	16.6
	16.6
	16.6

SPECIAL DETAILS

REVISED STANDARD DRAWING

xs12-090

APPROVAL DATE January 2012

STATE OF CALIFORNIA DEPARTMENT OF TRANSPORTATION

DIVISION OF ENGINEERING SERVICES

BRIDGE NO. *

POST MILES **

RETAINING WALLS

MECHANICALLY STABILIZED EMBANKMENT DETAILS No.6

DS OSD 2147A (ENGLISH STANDARD DRAWING "XS" BORDER REV. (02-02-11)

ORIGINAL SCALE IN INCHES FOR REDUCED PLANS 0 1 2 3

UNIT: 0703
PROJECT NUMBER & PHASE: 04000006841 CONTRACT NO.: 04-235844

DISREGARD PRINTS BEARING EARLIER REVISION DATES

REVISION DATES 11-16-12 01-16-13 02-12-13 04-08-13

SHEET 17 OF 36

FILE => 0400000684we087.dgn

USERNAME => s141070 DATE PLOTTED => 03-FEB-2014 TIME PLOTTED => 13:52

DIST	COUNTY	ROUTE	POST MILES TOTAL PROJECT	SHEET No	TOTAL SHEETS
04	SM	101	16.3/17.1	796	814

REGISTERED CIVIL ENGINEER 04-08-13 DATE

10/21/13
PLANS APPROVAL DATE

REGISTERED PROFESSIONAL ENGINEER CHAO GONG No. C53837 Exp. 9-30-15 CIVIL STATE OF CALIFORNIA

The State of California or its officers or agents shall not be responsible for the accuracy or completeness of scanned copies of this plan sheet.

SAN MATEO COUNTY TRANSPORTATION AUTHORITY
1250 SAN CARLOS AVENUE
SAN CARLOS, CA 94070-1306

URS CORPORATION
1333 BROADWAY, SUITE 800
OAKLAND, CA 94612-1924

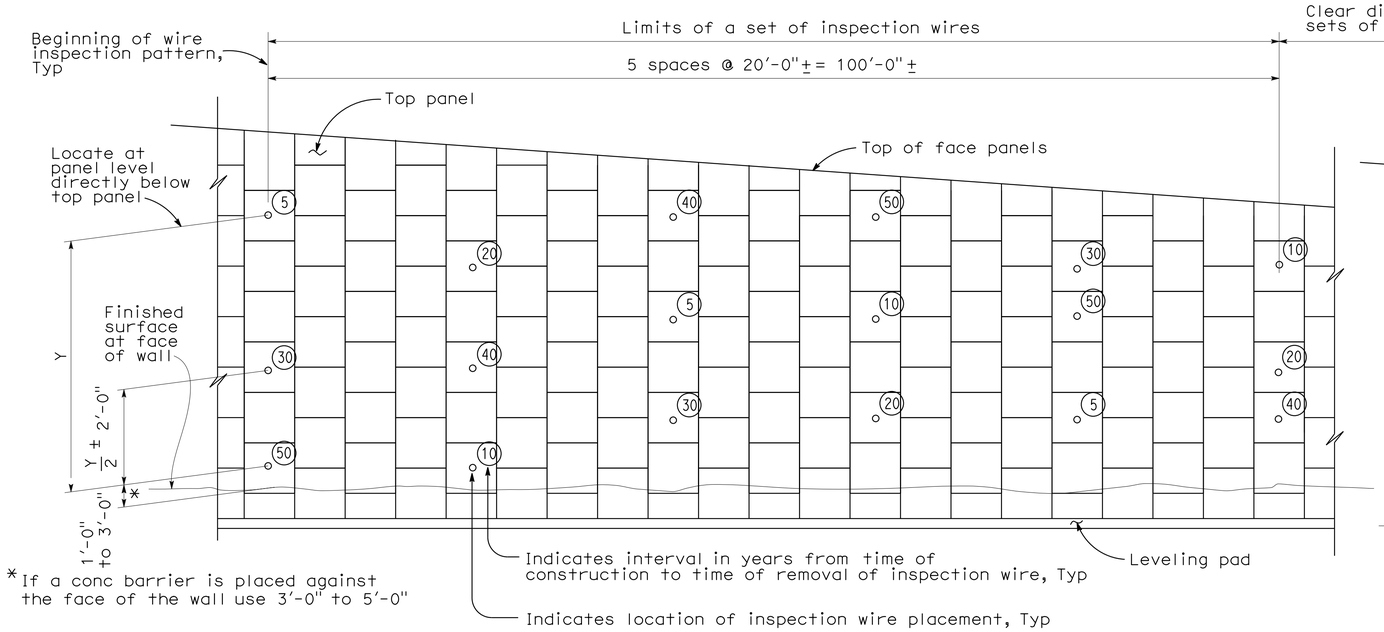

*If a conc barrier is placed against the face of the wall use 3'-0" to 5'-0"

PART ELEVATION-PATTERN A

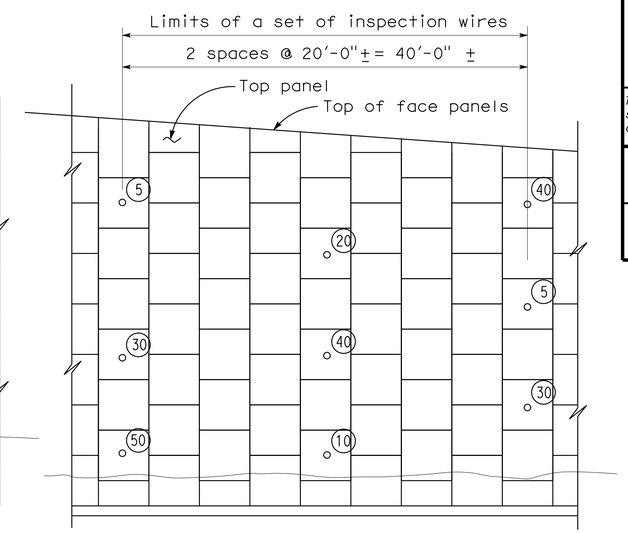

PART ELEVATION-PATTERN C

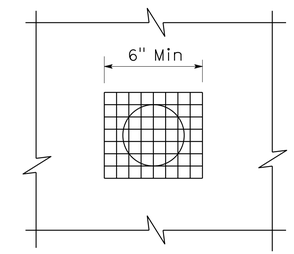

ELEVATION

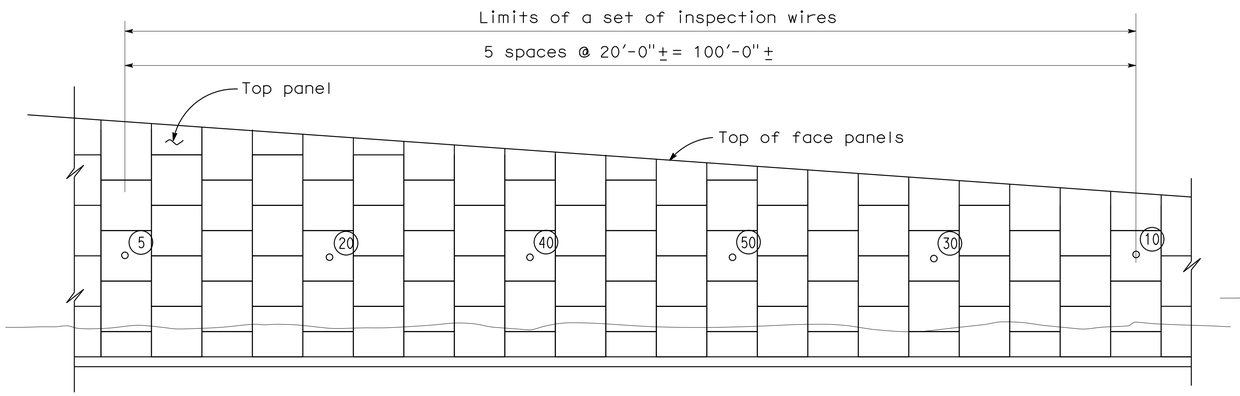

PART ELEVATION-PATTERN B

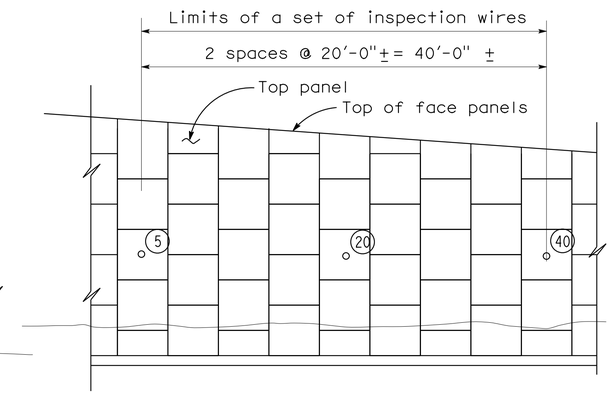

PART ELEVATION-PATTERN D

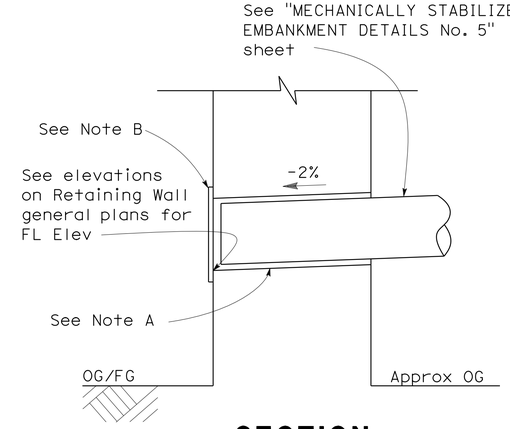

SECTION

WEEP HOLE DETAIL

NO SCALE

NOTES:

A. 4" diameter drains at 200 feet maximum center to center. Exposed wall drains shall be located 3 inches minimum above grade.

B. 6" square aluminum or galvanized steel wire 1/4 inch hardware cloth, minimum wire diameter 0.025 inch. Anchor firmly to backface.

NOTES:

1. See sheet "MECHANICALLY STABILIZED EMBANKMENT DETAILS No. 3" for additional details.
2. For walls with a design height greater than 17 feet, a set of eighteen inspection wires are required as shown on the typical layout. Sets of inspection wires along the LOL of a single MSE wall shall be spaced no greater than 500 feet apart.
3. Each set of eighteen inspection wires shall be placed in six columns spaced every four panels (20 feet apart) across the 100 foot long segment. Each column shall be approximately evenly distributed vertically and numbered according to the typical layout shown.
4. Walls which do not meet the design height requirement in Note 2 shall have a minimum of 6 inspection wires spaced at a maximum of every four panels (20 feet apart) across a length of wall segment not to exceed 100 feet. Similar to Note 2, sets of inspection wires along the LOL of a single MSE wall shall be spaced no greater than 500 feet apart.
5. Inspection wires shall be installed in a location that will be exposed above finished grade following the completion of the wall.
6. When there is at least 12ft space in front of the MSE wall face panel, inspection wires sets shall be optimized such that a set of inspection wires is located at areas of maximum wall height and such that an inspection wire set begins within 20 feet of each end of the wall.
7. Refer to project plans for location of wall segments where inspection wire placement is planned to be installed.

*	**
35E-0038	16.7
35E-0039	16.7
35E-0042	16.6
35E-0043	16.6
35E-0044	16.6
35E-0045	16.6

Paul Cotter
DESIGN OVERSIGHT Paul Cotter
6-20-13
SIGN OFF DATE

	BY	CHECKED
DESIGN	G. CARROLL	H. HAKIMI
DETAILS	N. HUTTON	G. CARROLL
QUANTITIES	P. JACOBS	A. FINKELSTEIN

PREPARED FOR THE STATE OF CALIFORNIA DEPARTMENT OF TRANSPORTATION

C. GONG
PROJECT ENGINEER

BRIDGE NO. *
POST MILES **

RETAINING WALLS

MECHANICALLY STABILIZED EMBANKMENT DETAILS No. 7

DESIGN DETAIL SHEET (ENGLISH) (REV. 03/14/12)

ORIGINAL SCALE IN INCHES FOR REDUCED PLANS 0 1 2 3

UNIT: 0703
PROJECT NUMBER & PHASE: 04000006841 CONTRACT NO.: 04-235844

DISREGARD PRINTS BEARING EARLIER REVISION DATES

REVISION DATES: 11-16-12 01-16-13 02-12-13 04-08-13

SHEET 18 OF 36

FILE => 0400000684we088.dgn

USERNAME => s141070 DATE PLOTTED => 03-FEB-2014 TIME PLOTTED => 13:53

DIST	COUNTY	ROUTE	POST MILES TOTAL PROJECT	SHEET No	TOTAL SHEETS
04	SM	101	16.3/17.1	797	814

REGISTERED CIVIL ENGINEER 05-15-13 DATE

10/21/13
PLANS APPROVAL DATE

REGISTERED PROFESSIONAL ENGINEER CHAO GONG No. C53837 Exp. 9-30-15 CIVIL STATE OF CALIFORNIA

The State of California or its officers or agents shall not be responsible for the accuracy or completeness of scanned copies of this plan sheet.

SAN MATEO COUNTY TRANSPORTATION AUTHORITY
1250 SAN CARLOS AVENUE
SAN CARLOS, CA 94070-1306

URS CORPORATION
1333 BROADWAY, SUITE 800
OAKLAND, CA 94612-1924

NOTE:

MECHANICALLY STABILIZED EMBANKMENT WALL SOIL REINFORCEMENT SHALL BE DETAILED TO AVOID AND WORK AROUND PILE LOCATIONS.

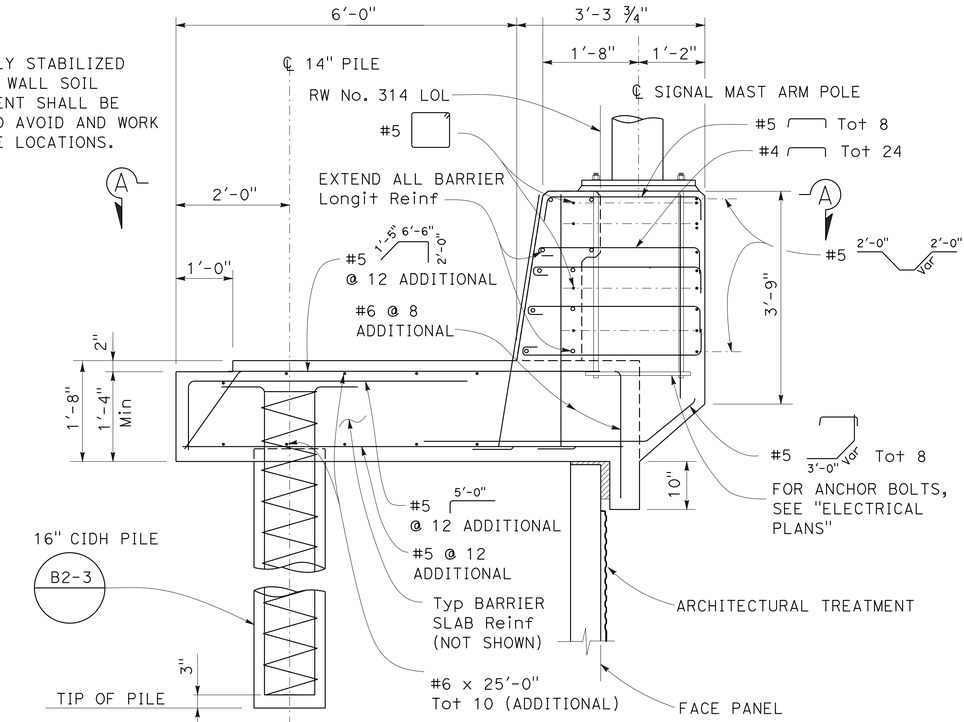

SECTION AT SIGNAL MAST ARM POLE

NO SCALE

PILE DATA TABLE					
LOCATION	PILE TYPE	NOMINAL RESISTANCE (Kips)		PILE DESIGN TIP ELEVATION (ft)	PILE SPECIFIED TIP ELEVATION (ft)
		COMPRESSION	TENSION		
PILE FOUNDATION	16" CIDH PILE	20	10	10 10	10

NOTE:

FOR ALL INFORMATION NOT SHOWN, SEE SHEET "RETAINING WALL No. 205 GENERAL PLAN No. 2" SECTION B-B.

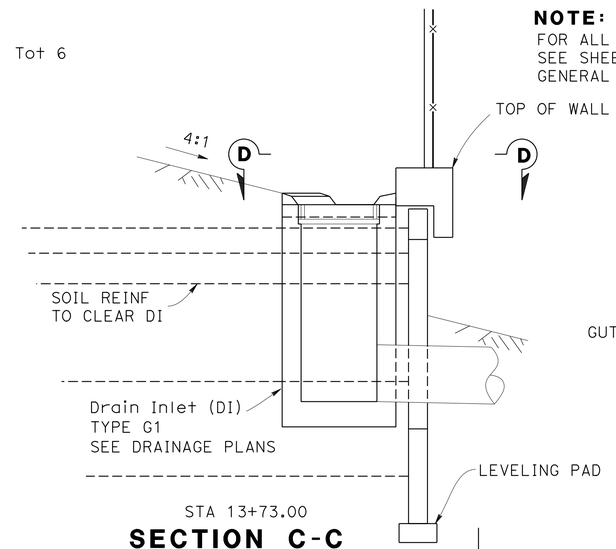

SECTION C-C

NO SCALE

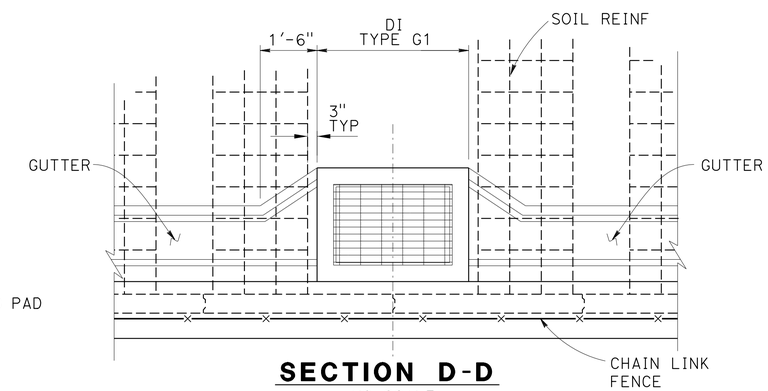

SECTION D-D

NO SCALE

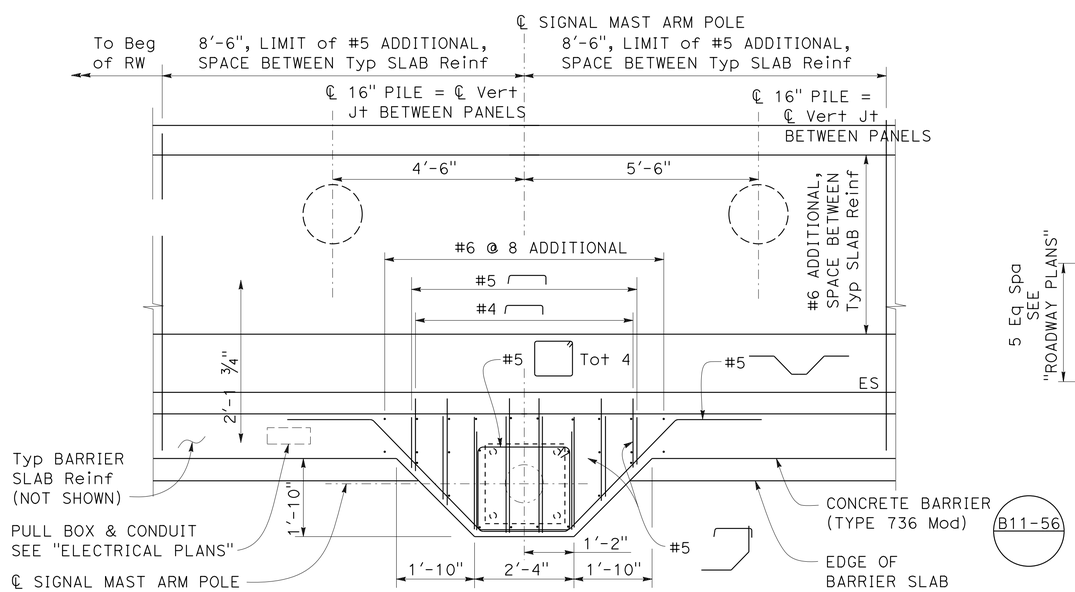

PLAN AT SIGNAL MAST ARM POLE

SECTION A-A (ROTATED -90°)

NO SCALE

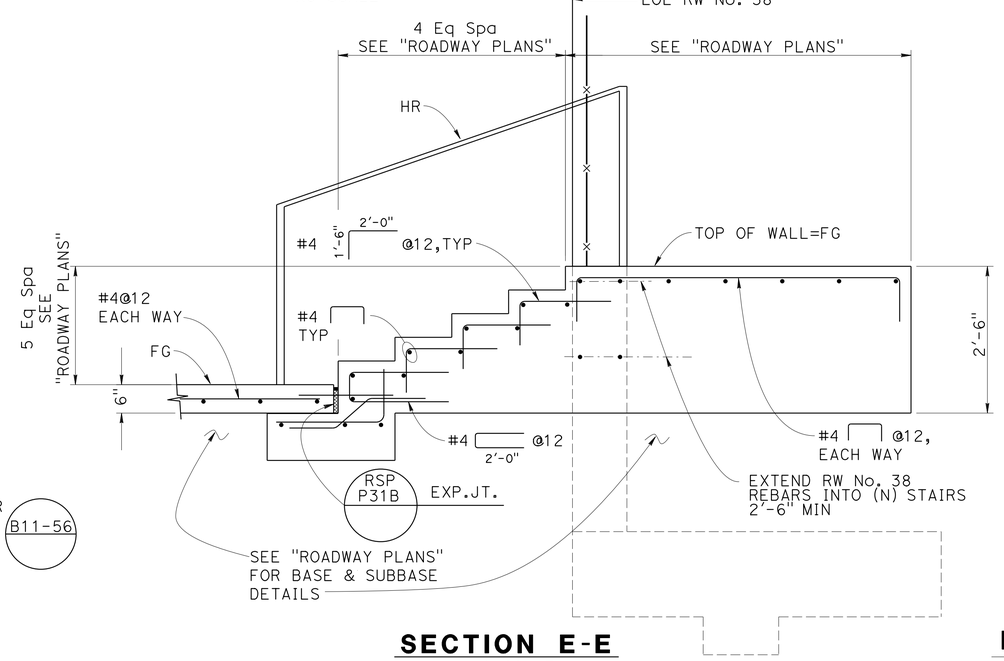

SECTION E-E

NO SCALE

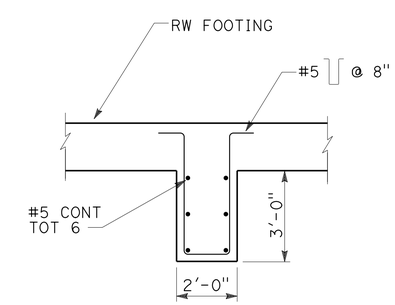

RW FOOTING KEY DETAIL

NO SCALE

Paul Cotter
DESIGN OVERSIGHT Paul Cotter
6-20-13
SIGN OFF DATE

DESIGN	BY P. JACOBS	CHECKED G. CARROLL	
DETAILS	BY N. HUTTON	CHECKED G. CARROLL	
QUANTITIES	BY P. JACOBS	CHECKED A. FINKELSTEIN	

PREPARED FOR THE STATE OF CALIFORNIA DEPARTMENT OF TRANSPORTATION

C. GONG
PROJECT ENGINEER

BRIDGE NO. 35E-0042
POST MILES 16.6

RETAINING WALLS
MISCELLANEOUS DETAILS

DESIGN DETAIL SHEET (ENGLISH) (REV. 03/14/12)

ORIGINAL SCALE IN INCHES FOR REDUCED PLANS 0 1 2 3

UNIT: 0703
PROJECT NUMBER & PHASE: 04000006841 CONTRACT NO.: 04-235844

DISREGARD PRINTS BEARING EARLIER REVISION DATES

REVISION DATES 11-16-12 01-16-13 02-12-13 05-15-13

SHEET 19 OF 36

FILE => 0400000684we089.dgn

USERNAME => s141070 DATE PLOTTED => 03-FEB-2014 TIME PLOTTED => 13:53

DIST	COUNTY	ROUTE	POST MILES TOTAL PROJECT	SHEET No	TOTAL SHEETS
04	SM	101	16.3/17.1	798	814

REGISTERED CIVIL ENGINEER 05-15-13 DATE

10/21/13
PLANS APPROVAL DATE

REGISTERED PROFESSIONAL ENGINEER CHAO GONG No. C53837 Exp. 9-30-15 CIVIL STATE OF CALIFORNIA

The State of California or its officers or agents shall not be responsible for the accuracy or completeness of scanned copies of this plan sheet.

SAN MATEO COUNTY TRANSPORTATION AUTHORITY
1250 SAN CARLOS AVENUE
SAN CARLOS, CA 94070-1306

URS CORPORATION
1333 BROADWAY, SUITE 800
OAKLAND, CA 94612-1924

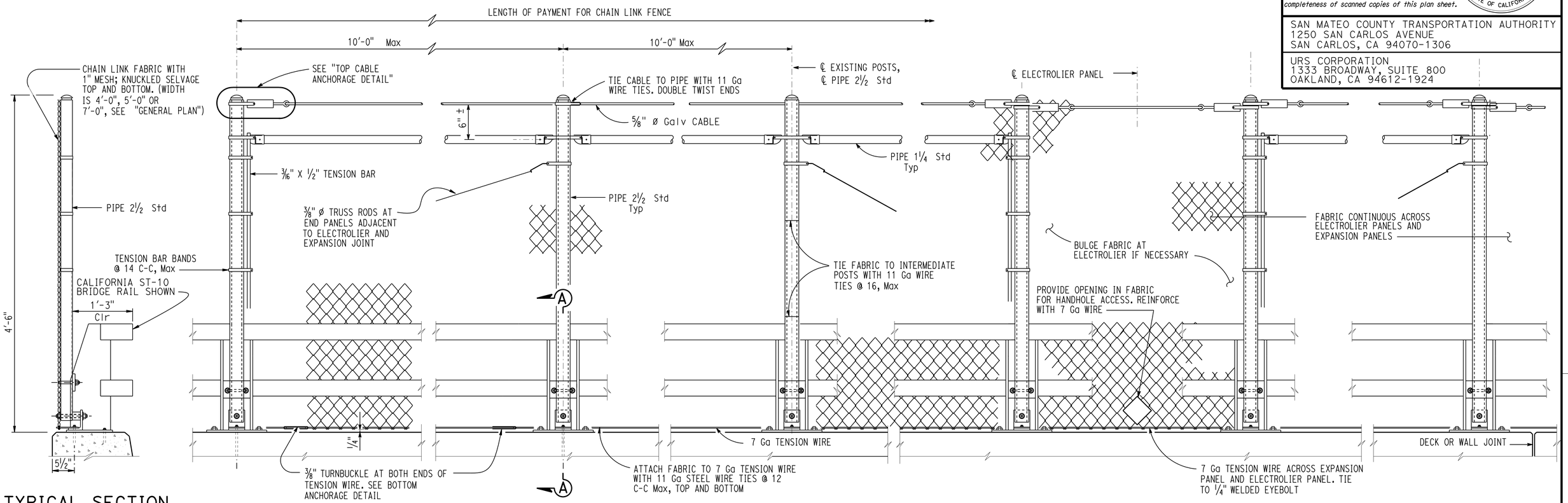

TYPICAL SECTION

END POST

INTERMEDIATE PANEL

ELECTROLIER PANEL

EXPANSION JOINT
(SIMILAR TO ELECTROLIER PANEL)

ELEVATION
1" = 1'-0"

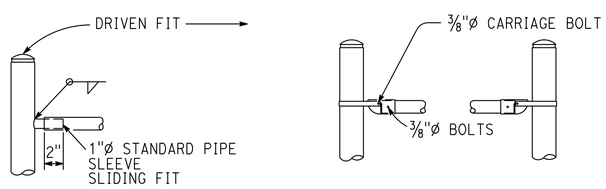

TYPICAL DETAILS

ALTERNATIVE DETAILS

END BRACE DETAILS
1½" = 1'-0"

NOTE:
THE CONTRACTOR SHALL VERIFY ALL CONTROLLING FIELD DIMENSIONS BEFORE ORDERING OR FABRICATING ANY MATERIAL.

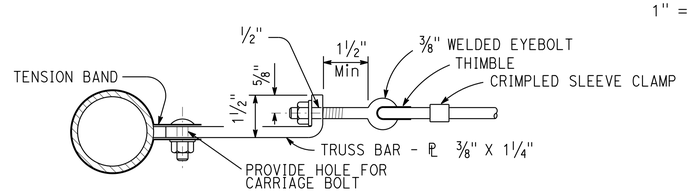

NOTE:
A two sided tension band is an allowable alternative for Intermediate Chain Link Panels

TOP CABLE ANCHORAGE DETAIL
No Scale

NOTES:

1. Posts shall be vertical
2. Railing shall conform to horizontal and vertical alignment
3. When rail is on slope, place fabric parallel to post
4. Alternative details may be submitted by the Contractor for Engineer approval
5. Provide thimbles at all cable loops
6. Peen all ⅜" ø bolts
7. See "RETAINING WALL No. 15, GENERAL PLAN" for end post location
8. At intermediate posts only. Contractor has the option of either ⅛" x 2" strap or ¼" anchor plate with eyebolt
9. For "SECTION A-A", see "CHAIN LINK RAILING TYPE 2 DETAILS NO. 2" sheet

REVISED STANDARD DRAWING
xs16-150-1
APPROVAL DATE July 2011

STATE OF CALIFORNIA
DEPARTMENT OF TRANSPORTATION

DIVISION OF ENGINEERING SERVICES

BRIDGE NO. 35E-0043
POST MILES 16.6

RETAINING WALL No. 15

CHAIN LINK RAILING TYPE 2 DETAILS No.1

DS OSD 2147A (ENGLISH STANDARD DRAWING "XS" BORDER REV. (02-02-11)

ORIGINAL SCALE IN INCHES FOR REDUCED PLANS 0 1 2 3

UNIT: 0703
PROJECT NUMBER & PHASE: 04000006841 CONTRACT NO.: 04-235844

DISREGARD PRINTS BEARING EARLIER REVISION DATES

REVISION DATES 11-16-12 01-16-13 02-12-13 05-15-13

SHEET 20 OF 36

FILE => 0400000684we090.dgn

USERNAME => s141070 DATE PLOTTED => 03-FEB-2014 TIME PLOTTED => 13:53

DIST	COUNTY	ROUTE	POST MILES TOTAL PROJECT	SHEET No	TOTAL SHEETS
04	SM	101	16.3/17.1	799	814

REGISTERED CIVIL ENGINEER 04-08-13 DATE

10/21/13
PLANS APPROVAL DATE

REGISTERED PROFESSIONAL ENGINEER CHAO GONG No. C53837 Exp. 9-30-15 CIVIL STATE OF CALIFORNIA

The State of California or its officers or agents shall not be responsible for the accuracy or completeness of scanned copies of this plan sheet.

SAN MATEO COUNTY TRANSPORTATION AUTHORITY
1250 SAN CARLOS AVENUE
SAN CARLOS, CA 94070-1306

URS CORPORATION
1333 BROADWAY, SUITE 800
OAKLAND, CA 94612-1924

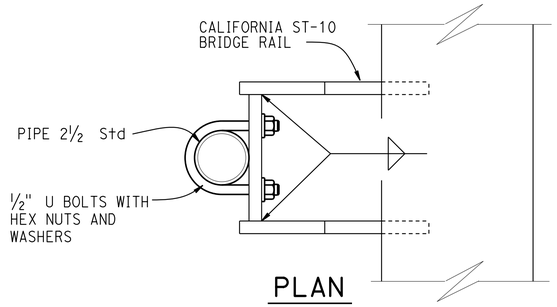

PLAN

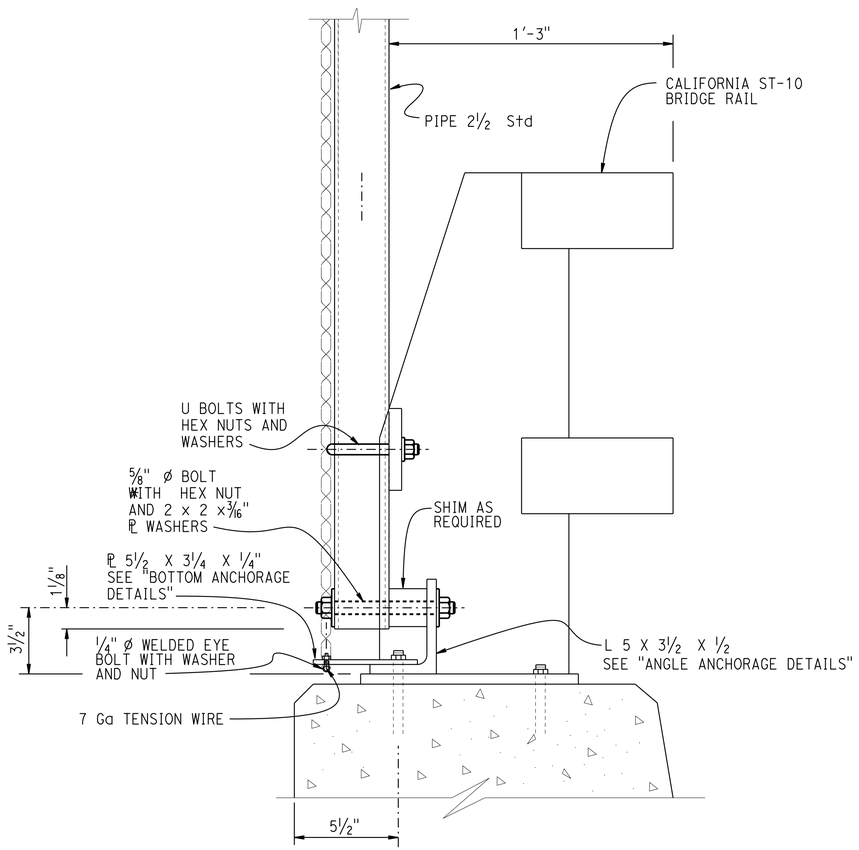

* IF NECESSARY, SEE "NUT/BOLT EXTENSION"

ELEVATION

SECTION A-A

3" = 1'-0"

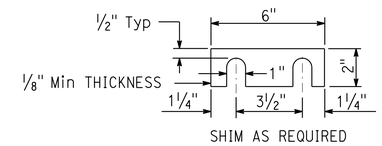

RAILING SHIM DETAILS

3" = 1'-0"

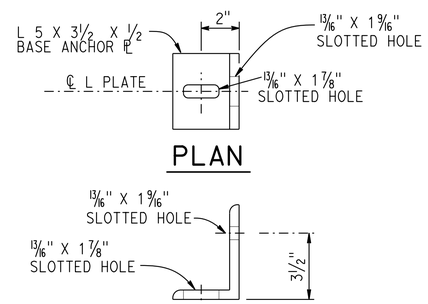

PLAN

ELEVATION

ANGLE ANCHORAGE DETAILS

3" = 1'-0"

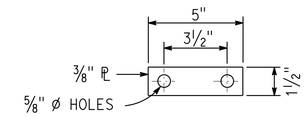

SPACER PLATE

3" = 1'-0"

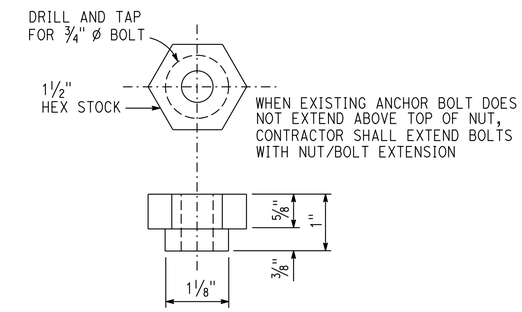

NUT/BOLT EXTENSION

NO SCALE

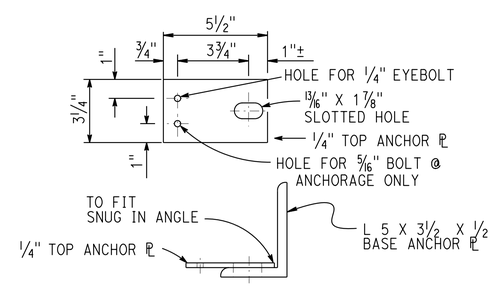

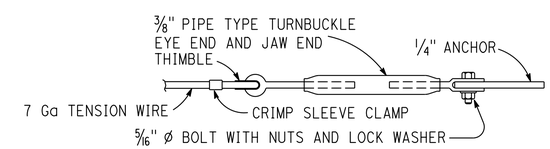

BOTTOM ANCHORAGE DETAILS

3" = 1'-0"

STANDARD DRAWING		STATE OF CALIFORNIA DEPARTMENT OF TRANSPORTATION	DIVISION OF ENGINEERING SERVICES	BRIDGE NO. 35E-0043	RETAINING WALL No. 15
xs16-150-2	APPROVAL DATE July 2011			POST MILES 16.6	CHAIN LINK RAILING TYPE 2 DETAILS No.2

DS OSD 2147A (ENGLISH STANDARD DRAWING "XS" BORDER REV. (02-02-11)

ORIGINAL SCALE IN INCHES FOR REDUCED PLANS 0 1 2 3

UNIT: 0703
PROJECT NUMBER & PHASE: 04000006841 CONTRACT NO.: 04-235844

DISREGARD PRINTS BEARING EARLIER REVISION DATES

REVISION DATES 11-16-12 01-16-13 02-12-13 04-08-13

SHEET 21 OF 36

FILE => 0400000684we091.dgn

USERNAME => s141070 DATE PLOTTED => 03-FEB-2014 TIME PLOTTED => 13:53

DIST	COUNTY	ROUTE	POST MILES TOTAL PROJECT	SHEET No	TOTAL SHEETS
04	SM	101	16.3/17.1	800	814

REGISTERED CIVIL ENGINEER 04-08-13 DATE

10/21/13
PLANS APPROVAL DATE

REGISTERED PROFESSIONAL ENGINEER CHAO GONG No. No. C53837 Exp. 9-30-15 CIVIL STATE OF CALIFORNIA

The State of California or its officers or agents shall not be responsible for the accuracy or completeness of scanned copies of this plan sheet.

SAN MATEO COUNTY TRANSPORTATION AUTHORITY
1250 SAN CARLOS AVENUE
SAN CARLOS, CA 94070-1306

URS CORPORATION
1333 BROADWAY, SUITE 800
OAKLAND, CA 94612-1924

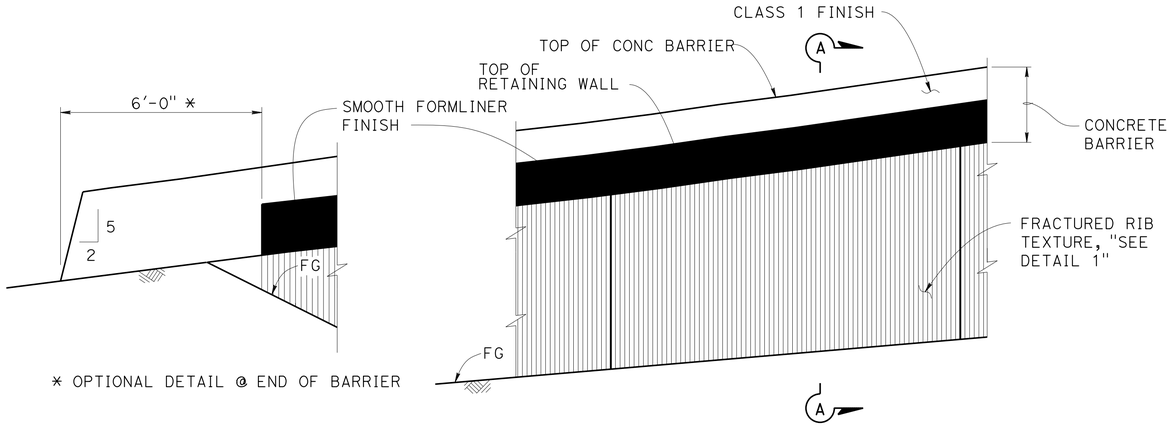

RETAINING WALL WITH BARRIER

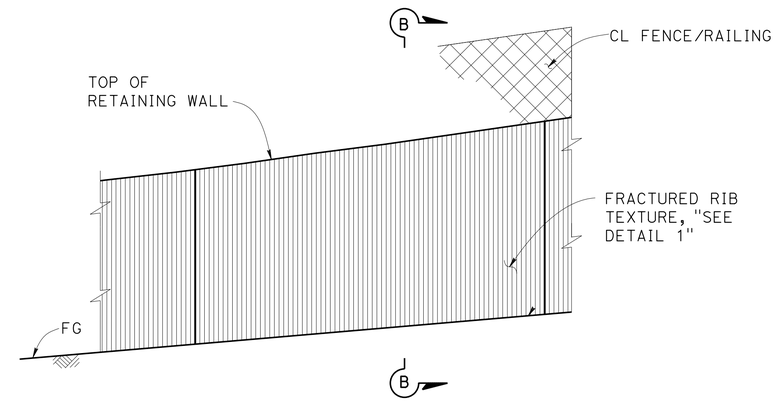

RETAINING WALL WITH FENCE/RAILING

TYPICAL AESTHETIC TREATMENT ELEVATION

NO SCALE

NOTE:

1. FOR ADDITIONAL DETAILS SEE SHEET "ARCHITECTURAL TREATMENT DETAILS No. 3".

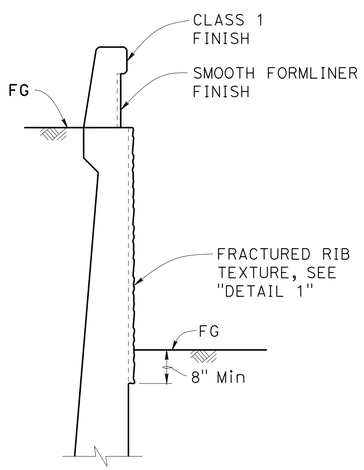

RETAINING WALL WITH BARRIER

SECTION A-A

NO SCALE

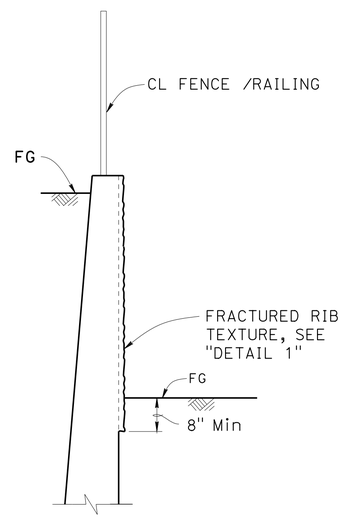

RETAINING WALL WITH FENCE/RAILING

SECTION B-B

NO SCALE

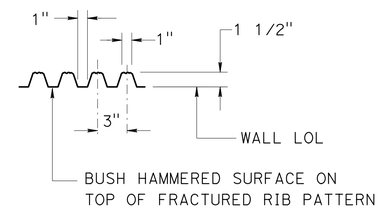

ARCHITECTURAL TREATMENT SCHEMATIC SECTION FRACTURED RIB

DETAIL 1

NO SCALE

* 35E-0040 35E-0041 ** 16.7 16.7

Paul Cotter
DESIGN OVERSIGHT Paul Cotter
6-20-13
SIGN OFF DATE

	BY	CHECKED
DESIGN	G. CARROLL	H. HAKIMI
DETAILS	N. HUTTON	G. CARROLL
QUANTITIES	P. JACOBS	A. FINKELSTEIN

PREPARED FOR THE STATE OF CALIFORNIA DEPARTMENT OF TRANSPORTATION

C. GONG
PROJECT ENGINEER

BRIDGE NO. *
POST MILES **

RETAINING WALLS
ARCHITECTURAL TREATMENT DETAILS No. 1

DESIGN DETAIL SHEET (ENGLISH) (REV. 03/14/12)

ORIGINAL SCALE IN INCHES FOR REDUCED PLANS 0 1 2 3

UNIT: 0703
PROJECT NUMBER & PHASE: 04000006841 CONTRACT NO.: 04-235844

DISREGARD PRINTS BEARING EARLIER REVISION DATES

REVISION DATES 11-16-12 01-16-13 02-12-13 04-08-13

SHEET 22 OF 36

FILE => 0400000684we092.dgn

USERNAME => s141070 DATE PLOTTED => 03-FEB-2014 TIME PLOTTED => 13:53

DIST	COUNTY	ROUTE	POST MILES TOTAL PROJECT	SHEET No	TOTAL SHEETS
04	SM	101	16.3/17.1	801	814

REGISTERED CIVIL ENGINEER 04-08-13 DATE

10/21/13
PLANS APPROVAL DATE

REGISTERED PROFESSIONAL ENGINEER CHAO GONG No. C53837 Exp. 9-30-15 CIVIL STATE OF CALIFORNIA

The State of California or its officers or agents shall not be responsible for the accuracy or completeness of scanned copies of this plan sheet.

SAN MATEO COUNTY TRANSPORTATION AUTHORITY
1250 SAN CARLOS AVENUE
SAN CARLOS, CA 94070-1306

URS CORPORATION
1333 BROADWAY, SUITE 800
OAKLAND, CA 94612-1924

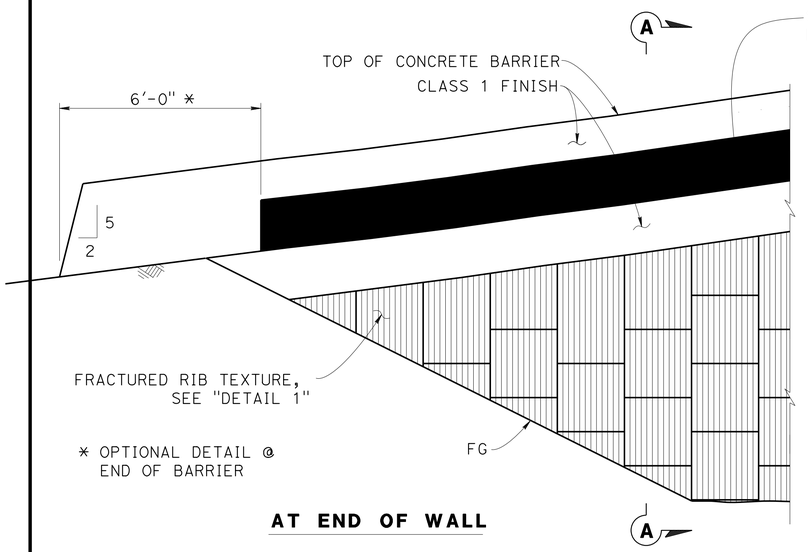

AT END OF WALL

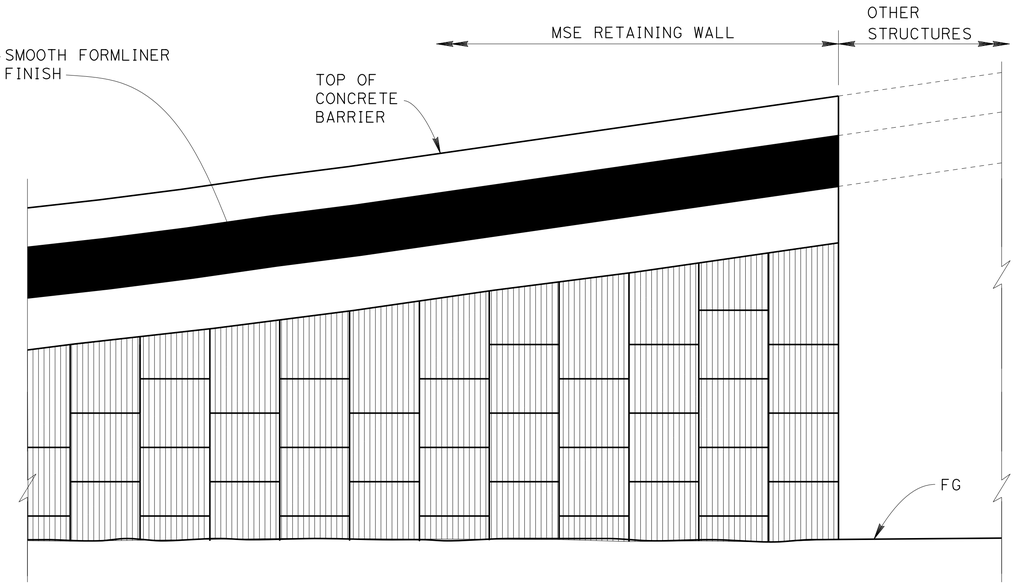

TYPICAL ELEVATION

MSE WALL ARCHITECTURAL TREATMENT DETAILS

NO SCALE

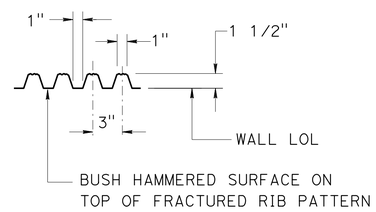

ARCHITECTURAL TREATMENT SCHEMATIC SECTION FRACTURED RIB

DETAIL 1

NO SCALE

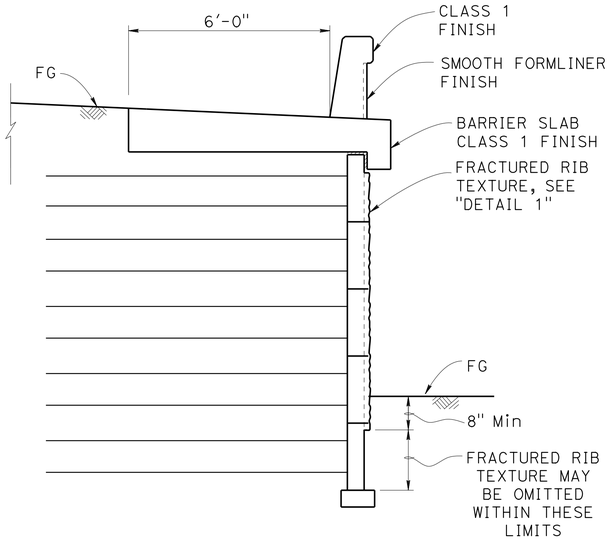

MSE WALL WITH BARRIER

SECTION A-A

NO SCALE

*	**
35E-0038	16.7
35E-0039	16.7
35E-0042	16.6
35E-0043	16.6
35E-0044	16.6
35E-0045	16.6

NOTE:

1. FOR ADDITIONAL DETAILS SEE SHEETS "ARCHITECTURAL TREATMENT DETAILS No. 4" AND "ARCHITECTURAL TREATMENT DETAILS No. 5".

Paul Cotter
DESIGN OVERSIGHT Paul Cotter
6-20-13
SIGN OFF DATE

	BY	CHECKED
DESIGN	G. CARROLL	H. HAKIMI
DETAILS	N. HUTTON	G. CARROLL
QUANTITIES	P. JACOBS	A. FINKELSTEIN

PREPARED FOR THE STATE OF CALIFORNIA DEPARTMENT OF TRANSPORTATION

C. GONG
PROJECT ENGINEER

BRIDGE NO. *
POST MILES **

RETAINING WALLS
ARCHITECTURAL TREATMENT DETAILS No. 2

DESIGN DETAIL SHEET (ENGLISH) (REV. 03/14/12)

ORIGINAL SCALE IN INCHES FOR REDUCED PLANS 0 1 2 3

UNIT: 0703
PROJECT NUMBER & PHASE: 04000006841 CONTRACT NO.: 04-235844

DISREGARD PRINTS BEARING EARLIER REVISION DATES

REVISION DATES 11-16-12 01-16-13 02-12-13 04-08-13 SHEET 23 OF 36

FILE => 0400000684we093.dgn

USERNAME => s141070 DATE PLOTTED => 03-FEB-2014 TIME PLOTTED => 13:53

DIST	COUNTY	ROUTE	POST MILES TOTAL PROJECT	SHEET No	TOTAL SHEETS
04	SM	101	16.3/17.1	802	814

LICENSED LANDSCAPE ARCHITECT

10/21/13
PLANS APPROVAL DATE

The State of California or its officers or agents shall not be responsible for the accuracy or completeness of scanned copies of this plan sheet.

LICENSED LANDSCAPE ARCHITECT — Name & License No. — Leah C. Haygood 1595 — Signature — 08-31-15 Renewal Date — 02-12-13 Date — STATE OF CALIFORNIA

SMCTA
1250 SAN CARLOS AVENUE
SAN CARLOS, CA 94070-1306

HAYGOOD & ASSOCIATES-LANDSCAPE ARCHITECTS
1496-B SOLANO AVENUE
ALBANY, CA 94706

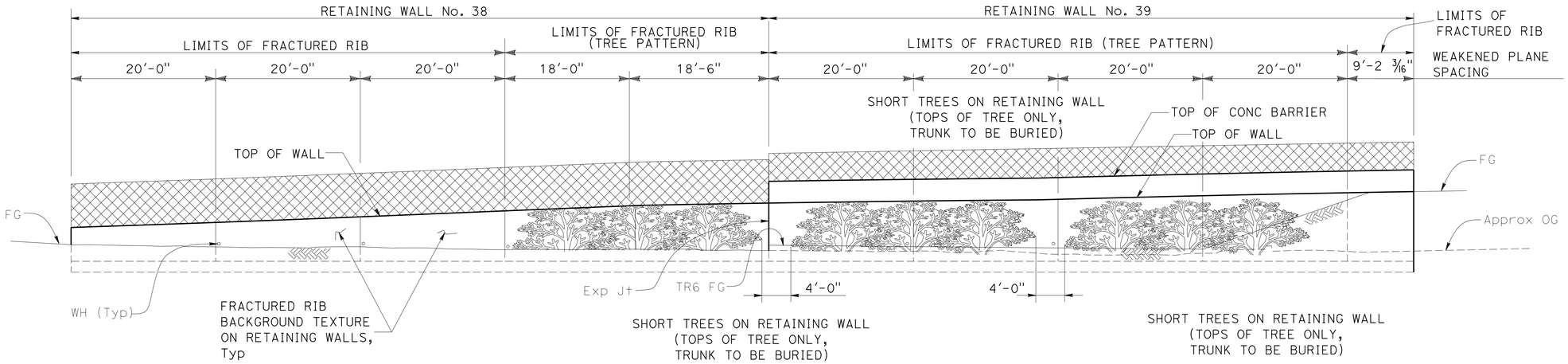

RETAINING WALL No. 38

NO SCALE

RETAINING WALL No. 39

NO SCALE

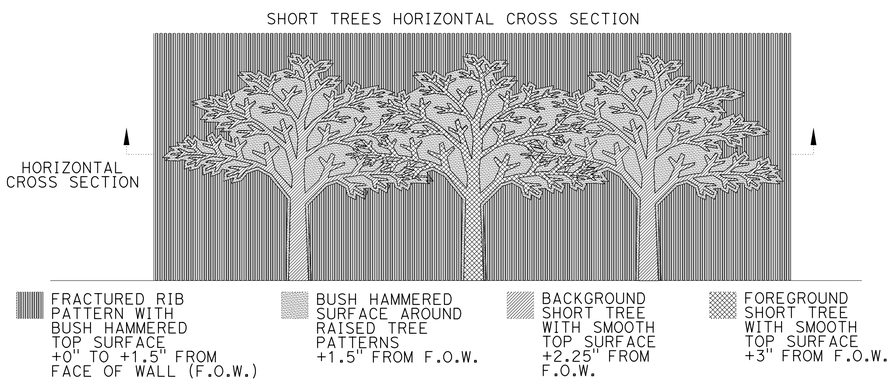

SHORT TREES DETAIL

SHORT TREES HORIZONTAL CROSS SECTION

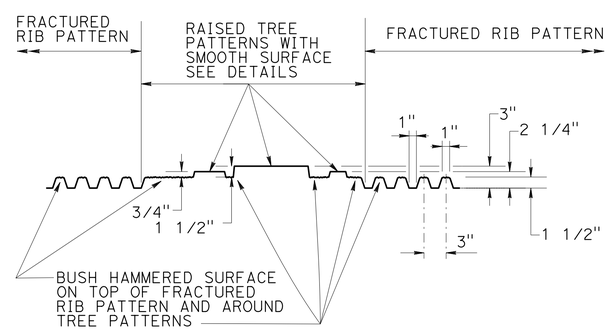

ARCHITECTURAL TREATMENT SCHEMATIC SECTION WITH TREE PATTERNS

NO SCALE

NOTES:

1. THESE DETAILS ARE DIAGRAMMATIC AND INDICATIVE OF THE DESIGN INTENT FOR THE RETAINING WALL SHORT TREES AND FRACTURED RIB FORMLINER PATTERNS. DRAWINGS DO NOT SHOW ALL THE REQUIRED ELEMENTS AND DETAILS FOR FABRICATION OF THE FORMLINER OR INSTALLATION ON RETAINING WALLS. PROVIDE SHOP DRAWINGS OF SUFFICIENT SIZE AND DETAIL THAT CLEARLY INDICATE CONSTRUCTION, INCLUDING, BUT NOT LIMITED TO DETAILS OF LAYOUT, MATERIALS, FINISHES AND INSTALLATION.
2. SEE SPECS FOR REQUIREMENTS FOR TEST PANELS.
3. IN SOME LOCATIONS, THE TOP AND/OR BOTTOM OF THE TREE PATTERNS WILL BE BEHIND SAFETY SHAPE (CONCRETE BARRIER TYPE 60D), BELOW FINISH GRADE OF SOIL AND/OR COVERED ON TOP BY RAMP BARRIER.
4. FOR RETAINING WALL SURFACE FRACTURED RIB TEXTURE DETAILS SEE SHEET "ARCHITECTURAL TREATMENT DETAILS No. 1".
5. TREE FEATURES AND FRACTURED RIB PATTERN MUST BE SET PLUMB.

* 35E-0040 ** 16.7
35E-0041 16.7

DESIGN OVERSIGHT Paul Cotter
6-20-13
SIGN OFF DATE

	BY	CHECKED
DESIGN	L. HAYGOOD	C. SAITO
DETAILS	N. HUTTON	C. GONG
QUANTITIES	P. JACOBS	E.FLANDRO

PREPARED FOR THE STATE OF CALIFORNIA DEPARTMENT OF TRANSPORTATION

A. BHOI
PROJECT ENGINEER

BRIDGE NO. *
POST MILES **

RETAINING WALLS
ARCHITECTURAL TREATMENT DETAILS No. 3

DESIGN DETAIL SHEET (ENGLISH) (REV. 03/14/12)

ORIGINAL SCALE IN INCHES FOR REDUCED PLANS 0 1 2 3

UNIT: 0703
PROJECT NUMBER & PHASE: 04000006841 CONTRACT NO.: 04-235844

DISREGARD PRINTS BEARING EARLIER REVISION DATES

REVISION DATES 11-16-12 01-16-13 02-12-13 05-15-13

SHEET 24 OF 36

FILE => 0400000684we094.dgn

USERNAME => s141070 DATE PLOTTED => 03-FEB-2014 TIME PLOTTED => 13:53

DIST	COUNTY	ROUTE	POST MILES TOTAL PROJECT	SHEET No	TOTAL SHEETS
04	SM	101	16.3/17.1	803	814

Leah Haygood
LICENSED LANDSCAPE ARCHITECT

10/21/13
PLANS APPROVAL DATE

The State of California or its officers or agents shall not be responsible for the accuracy or completeness of scanned copies of this plan sheet.

LICENSED LANDSCAPE ARCHITECT
Name & License No.
Leah C. Haygood
1595
Signature
08-31-15
Licensed Date
02-12-13
Date
STATE OF CALIFORNIA

SMCTA
1250 SAN CARLOS AVENUE
SAN CARLOS, CA 94070-1306

HAYGOOD & ASSOCIATES-LANDSCAPE ARCHITECTS
1496-B SOLANO AVENUE
ALBANY, CA 94706

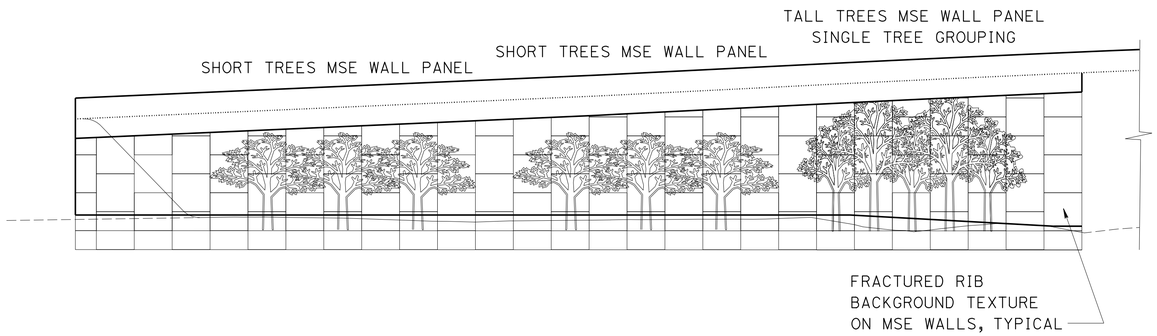

RETAINING WALL No. 15

NO SCALE

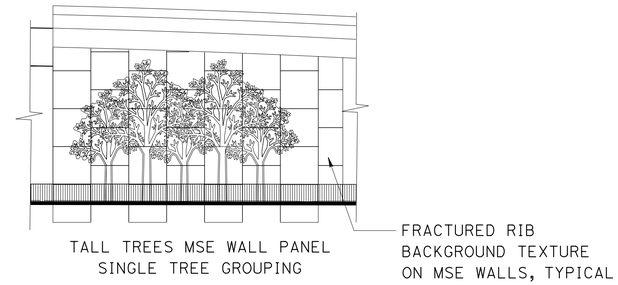

RETAINING WALL No. 314

NO SCALE

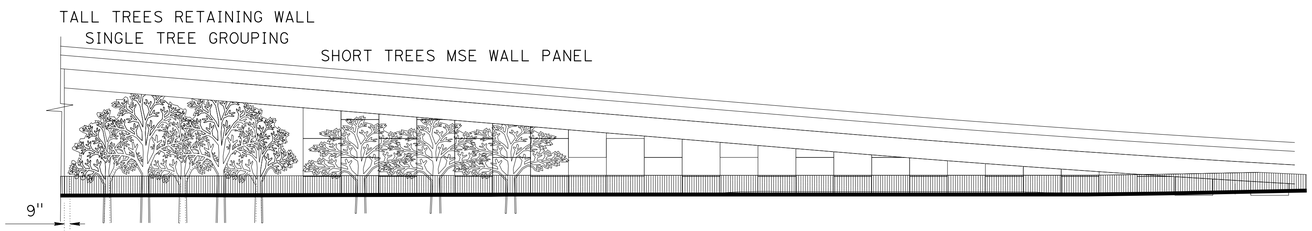

RETAINING WALL No. 315

NO SCALE

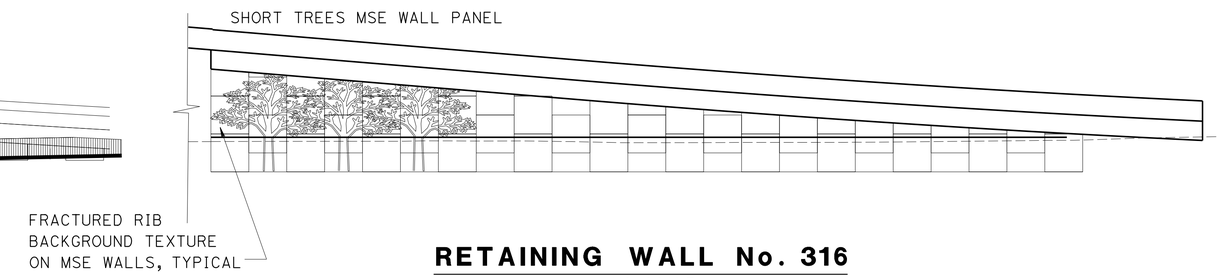

RETAINING WALL No. 316

NO SCALE

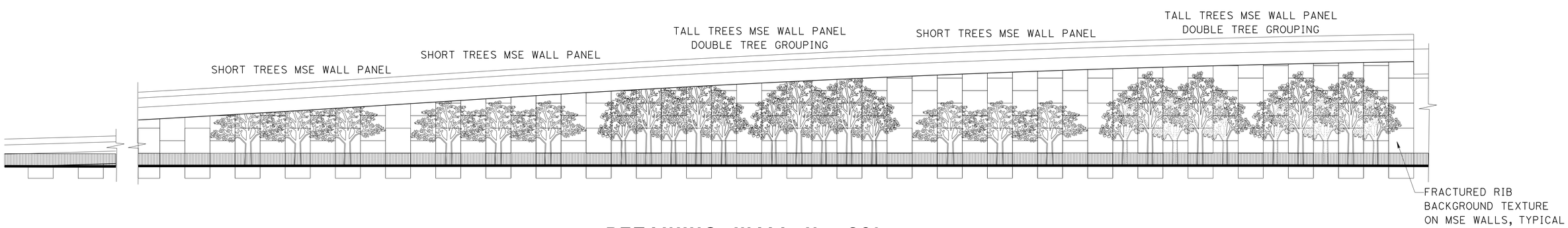

RETAINING WALL No. 209

NO SCALE

* 35E-0039
35E-0042
35E-0043
35E-0044
35E-0045

Paul Cotter
DESIGN OVERSIGHT Paul Cotter
6-20-13
SIGN OFF DATE

	BY	CHECKED
DESIGN	L. HAYGOOD	C. SAITO
DETAILS	N. HUTTON	C. GONG
QUANTITIES	P. JACOBS	E.FLANDRO

PREPARED FOR THE
STATE OF CALIFORNIA
DEPARTMENT OF TRANSPORTATION

A. BHOI
PROJECT ENGINEER

BRIDGE NO. *
POST MILES 16.48

RETAINING WALLS
ARCHITECTURAL TREATMENT DETAILS No. 4

DESIGN DETAIL SHEET (ENGLISH) (REV. 03/14/12)

ORIGINAL SCALE IN INCHES FOR REDUCED PLANS 0 1 2 3

UNIT: 0703
PROJECT NUMBER & PHASE: 04000006841 CONTRACT NO.: 04-235844

DISREGARD PRINTS BEARING EARLIER REVISION DATES

REVISION DATES: 11-16-12 01-16-13 02-12-13 04-08-13

SHEET 25 OF 36

FILE => 0400000684we095.dgn

USERNAME => s141070 DATE PLOTTED => 03-FEB-2014 TIME PLOTTED => 13:53

DIST	COUNTY	ROUTE	POST MILES TOTAL PROJECT	SHEET No	TOTAL SHEETS
04	SM	101	16.3/17.1	804	814

Leah Haygood
LICENSED LANDSCAPE ARCHITECT

10/21/13
PLANS APPROVAL DATE

LICENSED LANDSCAPE ARCHITECT
Name & License No.
Leah C. Haygood
1595
Signature
08-31-15
Renewal Date
02-12-13
Date
STATE OF CALIFORNIA

The State of California or its officers or agents shall not be responsible for the accuracy or completeness of scanned copies of this plan sheet.

SMCTA
1250 SAN CARLOS AVENUE
SAN CARLOS, CA 94070-1306

HAYGOOD & ASSOCIATES-LANDSCAPE ARCHITECTS
1496-B SOLANO AVENUE
ALBANY, CA 94706

SHORT TREES HORIZONTAL CROSS SECTION

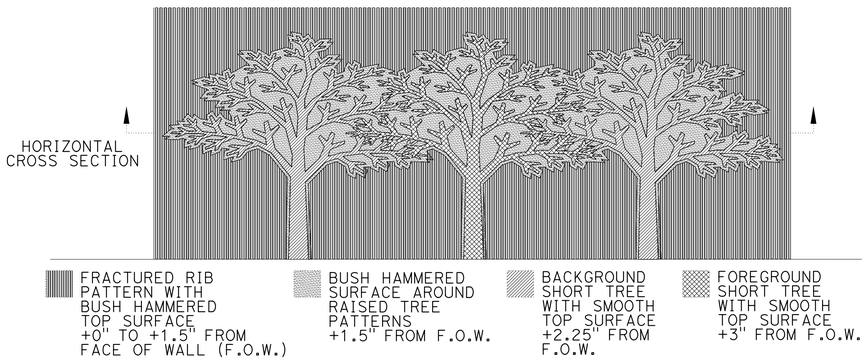

SHORT TREES DETAIL

SHORT TREES HORIZONTAL CROSS SECTION

TALL TREES HORIZONTAL CROSS SECTION

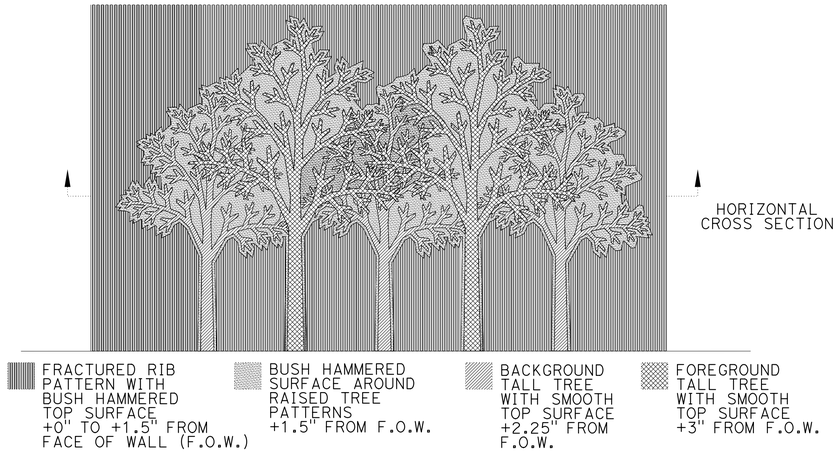

TALL TREES DETAIL

TALL TREES HORIZONTAL CROSS SECTION

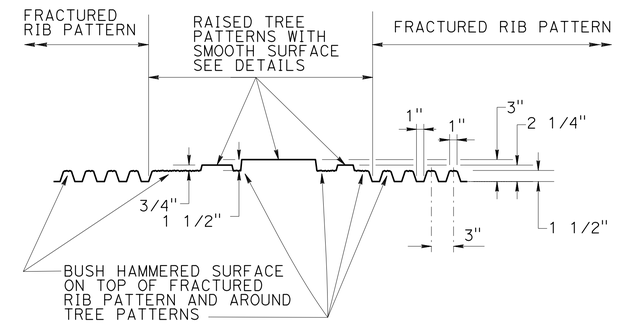

ARCHITECTURAL TREATMENT SCHEMATIC SECTION WITH TREE PATTERNS

NO SCALE

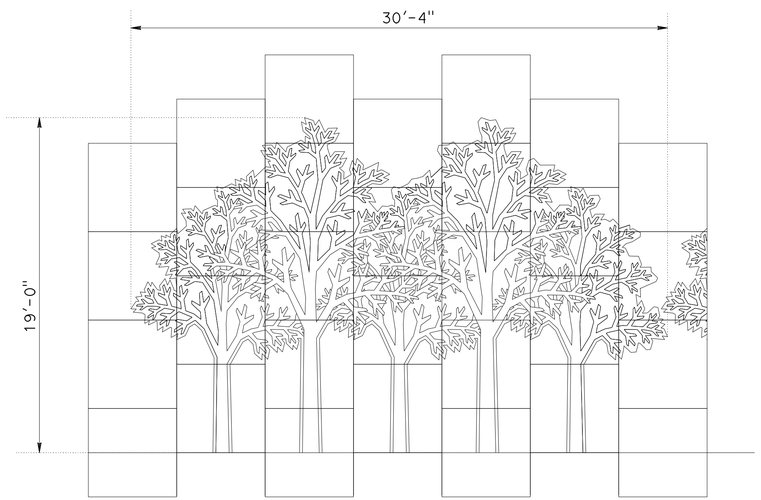

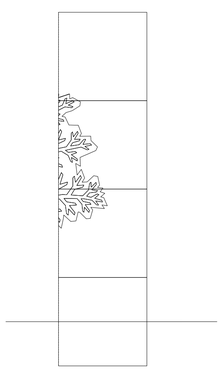

END PANEL FOR DOUBLE TALL TREE GROUPING

END PANEL FOR SINGLE TALL TREE GROUPING

TALL TREES MSE WALL PANEL LAYOUT (FORMLINER FOR CAST IN PLACE RETAINING WALL TREE GROUP DIMENSIONS SAME)

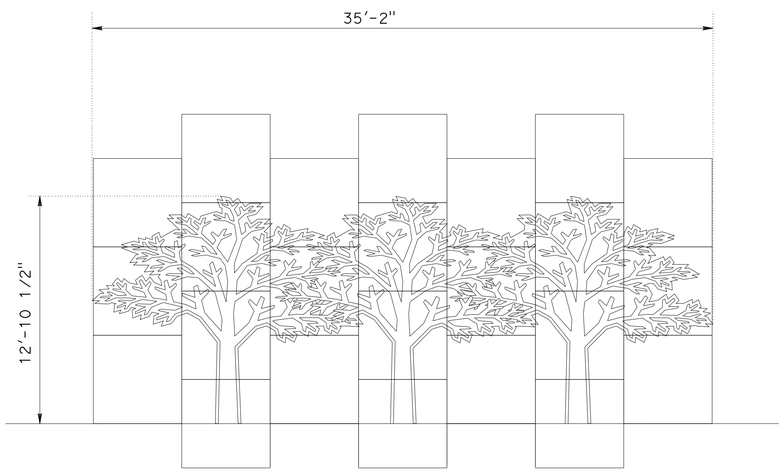

SHORT TREES MSE WALL PANEL LAYOUT (FORMLINER FOR CAST IN PLACE RETAINING WALL TREE GROUP DIMENSIONS SAME)

NOTES:

1. THESE DETAILS ARE DIAGRAMMATIC AND INDICATIVE OF THE DESIGN INTENT FOR THE MSE WALL SHORT AND TALL TREES AND FRACTURED RIB FORMLINER PATTERNS. DRAWINGS DO NOT SHOW ALL THE REQUIRED ELEMENTS AND DETAILS FOR FABRICATION OF THE FORMLINER OR INSTALLATION ON MSE WALLS. PROVIDE SHOP DRAWINGS OF SUFFICIENT SIZE AND DETAIL THAT CLEARLY INDICATE CONSTRUCTION, INCLUDING, BUT NOT LIMITED TO DETAILS OF LAYOUT, MATERIALS, FINISHES AND INSTALLATION.
2. SEE SPECS FOR REQUIREMENTS FOR TEST PANELS.
3. IN SOME LOCATIONS, THE TOP AND/OR BOTTOM OF THE TREE PATTERNS WILL BE BEHIND SAFETY SHAPE (CONCRETE BARRIER TYPE 60D), BELOW FINISH GRADE OF SOIL AND/OR COVERED ON TOP BY RAMP BARRIER.
4. FOR RETAINING WALL SURFACE FRACTURED RIB TEXTURE DETAILS SEE SHEET "ARCHITECTURAL TREATMENT DETAILS No. 2".
5. TREE FEATURES AND FRACTURED RIB PATTERN MUST BE SET PLUMB.

* 35E-0039
35E-0042
35E-0043
35E-0044
35E-0045

Paul Cotter
DESIGN OVERSIGHT Paul Cotter
6-20-13
SIGN OFF DATE

	BY	CHECKED
DESIGN	L. HAYGOOD	C. SAITO
DETAILS	N. HUTTON	C. GONG
QUANTITIES	P. JACOBS	E.FLANDRO

PREPARED FOR THE STATE OF CALIFORNIA DEPARTMENT OF TRANSPORTATION

A. BHOI
PROJECT ENGINEER

BRIDGE NO. *
POST MILES 16.48

RETAINING WALLS
ARCHITECTURAL TREATMENT DETAILS No. 5

DESIGN DETAIL SHEET (ENGLISH) (REV. 03/14/12)

ORIGINAL SCALE IN INCHES FOR REDUCED PLANS 0 1 2 3

UNIT: 0703
PROJECT NUMBER & PHASE: 04000006841 CONTRACT NO.: 04-235844

DISREGARD PRINTS BEARING EARLIER REVISION DATES

REVISION DATES 11-16-12 01-16-13 02-12-13 04-08-13

SHEET 26 OF 36

FILE => 0400000684we096.dgn

USERNAME => s141070 DATE PLOTTED => 03-FEB-2014 TIME PLOTTED => 13:53

DIST	COUNTY	ROUTE	POST MILES TOTAL PROJECT	SHEET No	TOTAL SHEETS
04	SM	101	16.3/17.1	805	814

GEOTECHNICAL PROFESSIONAL — DATE 04-08-13

PLANS APPROVAL DATE 10/21/13

REGISTERED PROFESSIONAL ENGINEER — Stephen Huang No. C 42289 Exp. 03/31/14 GEOTECHNICAL STATE OF CALIFORNIA

The State of California or its officers or agents shall not be responsible for the accuracy or completeness of scanned copies of this plan sheet.

SAN MATEO COUNTY TRANSPORTATION AUTHORITY
1250 SAN CARLOS AVENUE
SAN CARLOS, CA 94070-1306

URS CORPORATION
1333 BROADWAY, SUITE 800
OAKLAND, CA 94612-1924

BENCH MARK

All elevations based on vertical datum NAVD88.
All stations and offsets based on horizontal datum NAD83

BM No. 1, Monument 501, El 9.35, N2045276.165 E6019489.935
BM No. 2, Monument 1003, El 10.93, N2043769.910 E6021712.494
BM No. 3, Monument 505, El 10.21, N2043140.717 E6021760.224
BM No. 4, Monument 74, El 35.48, N2042621.214 E6022476.873
BM No. 5, Monument 510, El 12.66 N2042355.119 E6022633.562

NOTES

1. This LOTB Sheet was prepared in accordance with the Caltrans Soil and Rock Logging, Classification, and Presentation Manual (2010).
2. Standard Penetration test sampler I.D. = 1.44 inch (1.4)
   Modified California sampler I.D. = 1.96 inch (2.0)
   Thin-walled Shelby tube sampler I.D. = 2.97 inch (3.0)

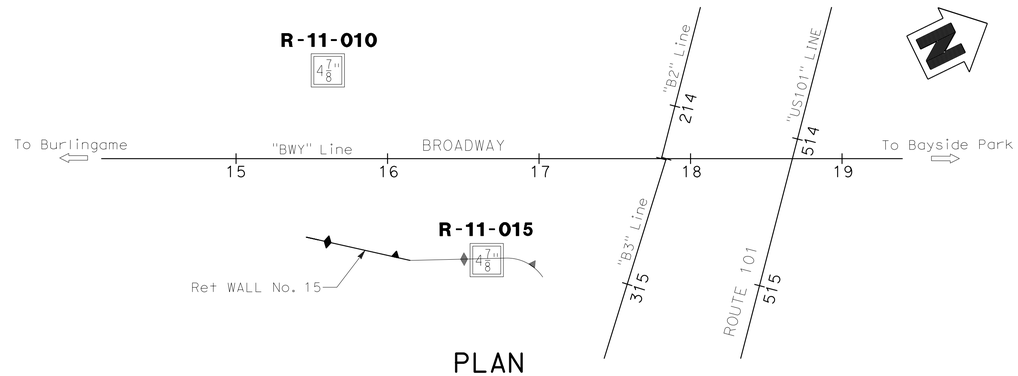

PLAN
1" = 50'

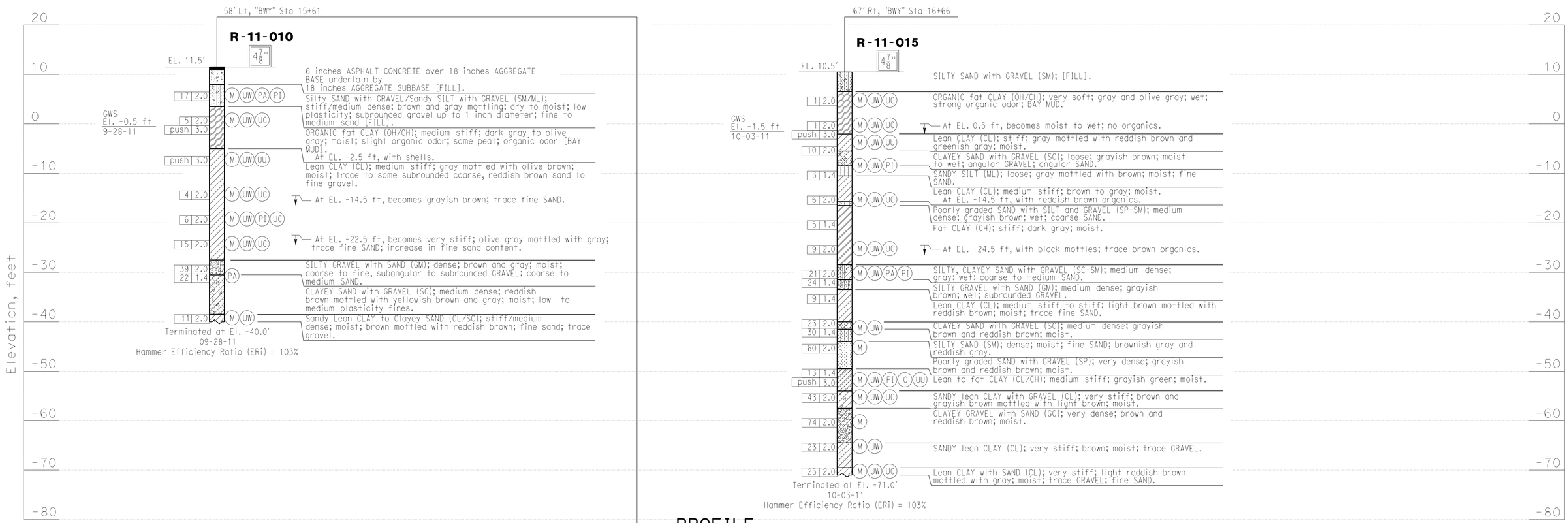

PROFILE
Ver. 1"=10'
Hor. 1"=25'

DESIGN OVERSIGHT Paul Cotter	DRAWN BY	B. VUONG	J. LOPEZ / A. CHEUNG
6-20-13 SIGN OFF DATE	CHECKED BY	A. M. MOORE	FIELD INVESTIGATION BY: DATE: X

PREPARED FOR THE STATE OF CALIFORNIA DEPARTMENT OF TRANSPORTATION

S. HUANG — PROJECT ENGINEER

BRIDGE NO. 35E0043 — POST MILES 16.6

RETAINING WALL No. 15

LOG OF TEST BORINGS 1 OF 10

GS GEOTECHNICAL LOG OF TEST BORINGS SHEET (ENGLISH) (REV. 03/14/12)

ORIGINAL SCALE IN INCHES FOR REDUCED PLANS 0 1 2 3

UNIT: 0703
PROJECT NUMBER & PHASE: 04000006841 CONTRACT NO.: 04-235844

DISREGARD PRINTS BEARING EARLIER REVISION DATES

REVISION DATES 11-16-12 01-16-13 02-12-13 04-08-13

SHEET 27 OF 36

FILE => 0400000684we097.dgn

USERNAME => s141070 DATE PLOTTED => 03-FEB-2014 TIME PLOTTED => 13:53

DIST	COUNTY	ROUTE	POST MILES TOTAL PROJECT	SHEET No	TOTAL SHEETS
04	SM	101	16.3/17.1	806	814

GEOTECHNICAL PROFESSIONAL — DATE 04-08-13

10/21/13
PLANS APPROVAL DATE

REGISTERED PROFESSIONAL ENGINEER — Stephen Huang — No. C 42289 — Exp. 03/31/14 — GEOTECHNICAL — STATE OF CALIFORNIA

The State of California or its officers or agents shall not be responsible for the accuracy or completeness of scanned copies of this plan sheet.

SAN MATEO COUNTY TRANSPORTATION AUTHORITY
1250 SAN CARLOS AVENUE
SAN CARLOS, CA 94070-1306

URS CORPORATION
1333 BROADWAY, SUITE 800
OAKLAND, CA 94612-1924

BENCH MARK

All elevations based on vertical datum NAVD88.
All stations and offsets based on horizontal datum NAD83

BM No. 1, Monument 501, El 9.35, N2045276.165 E6019489.935
BM No. 2, Monument 1003, El 10.93, N2043769.910 E6021712.494
BM No. 3, Monument 505, El 10.21, N2043140.717 E6021760.224
BM No. 4, Monument 74, El 35.48, N2042621.214 E6022476.873
BM No. 5, Monument 510, El 12.66 N2042355.119 E6022633.562

NOTES

1. This LOTB Sheet was prepared in accordance with the Caltrans Soil and Rock Logging, Classification, and Presentation Manual (2010).
2. Standard Penetration test sampler I.D. = 1.44 inch (1.4)
   Modified California sampler I.D. = 1.96 inch (2.0)
   Thin-walled Shelby tube sampler I.D. = 2.97 inch (3.0)

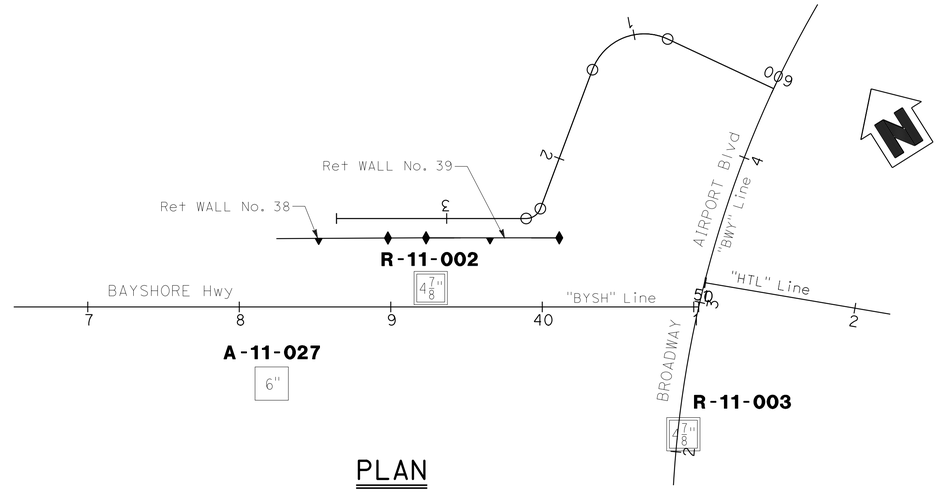

PLAN
1" = 50'

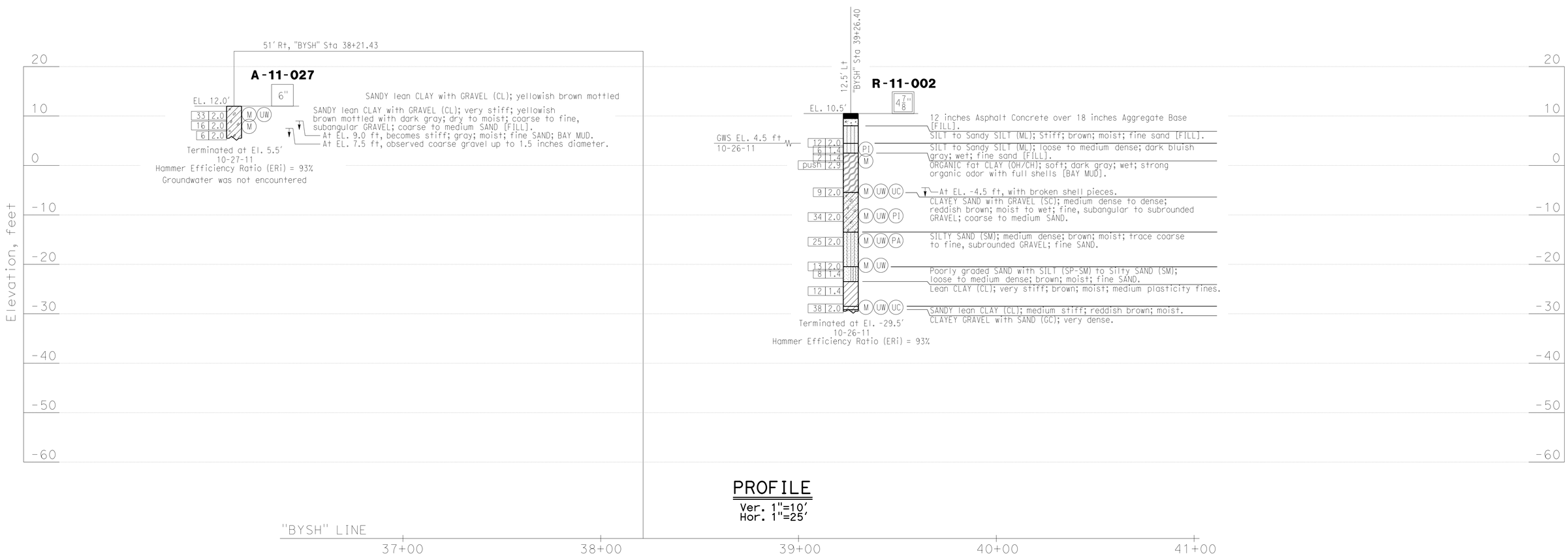

PROFILE
Ver. 1"=10'
Hor. 1"=25'

Paul Cotter
DESIGN OVERSIGHT Paul Cotter
6-20-13
SIGN OFF DATE

DRAWN BY	B. VUONG	J. LOPEZ / A. CHEUNG	
CHECKED BY	A. M. MOORE	FIELD INVESTIGATION BY: DATE: X	

PREPARED FOR THE STATE OF CALIFORNIA DEPARTMENT OF TRANSPORTATION

S. HUANG
PROJECT ENGINEER

BRIDGE NO. 35E0040
POST MILES 16.7

RETAINING WALL No. 38
LOG OF TEST BORINGS 2 OF 10

GS GEOTECHNICAL LOG OF TEST BORINGS SHEET (ENGLISH) (REV. 03/14/12)

ORIGINAL SCALE IN INCHES FOR REDUCED PLANS 0 1 2 3

UNIT: 0703
PROJECT NUMBER & PHASE: 04000006841 CONTRACT NO.: 04-235844

DISREGARD PRINTS BEARING EARLIER REVISION DATES
REVISION DATES 11-16-12 01-16-13 02-12-13 04-08-13
SHEET 28 OF 36

FILE => 0400000684we098.dgn

USERNAME => s141070 DATE PLOTTED => 03-FEB-2014 TIME PLOTTED => 13:53

DIST	COUNTY	ROUTE	POST MILES TOTAL PROJECT	SHEET No	TOTAL SHEETS
04	SM	101	16.3/17.1	807	814

GEOTECHNICAL PROFESSIONAL — DATE 04-08-13

10/21/13
PLANS APPROVAL DATE

REGISTERED PROFESSIONAL ENGINEER — Stephen Huang — No. C 42289 — Exp. 03/31/14 — GEOTECHNICAL — STATE OF CALIFORNIA

The State of California or its officers or agents shall not be responsible for the accuracy or completeness of scanned copies of this plan sheet.

SAN MATEO COUNTY TRANSPORTATION AUTHORITY
1250 SAN CARLOS AVENUE
SAN CARLOS, CA 94070-1306

URS CORPORATION
1333 BROADWAY, SUITE 800
OAKLAND, CA 94612-1924

BENCH MARK

All elevations based on vertical datum NAVD88.
All stations and offsets based on horizontal datum NAD83

BM No. 1, Monument 501, El 9.35, N2045276.165 E6019489.935
BM No. 2, Monument 1003, El 10.93, N2043769.910 E6021712.494
BM No. 3, Monument 505, El 10.21, N2043140.717 E6021760.224
BM No. 4, Monument 74, El 35.48, N2042621.214 E6022476.873
BM No. 5, Monument 510, El 12.66 N2042355.119 E6022633.562

NOTES

1. This LOTB Sheet was prepared in accordance with the Caltrans Soil and Rock Logging, Classification, and Presentation Manual (2010).
2. Standard Penetration test sampler I.D. = 1.44 inch (1.4)
   Modified California sampler I.D. = 1.96 inch (2.0)
   Thin-walled Shelby tube sampler I.D. = 2.97 inch (3.0)

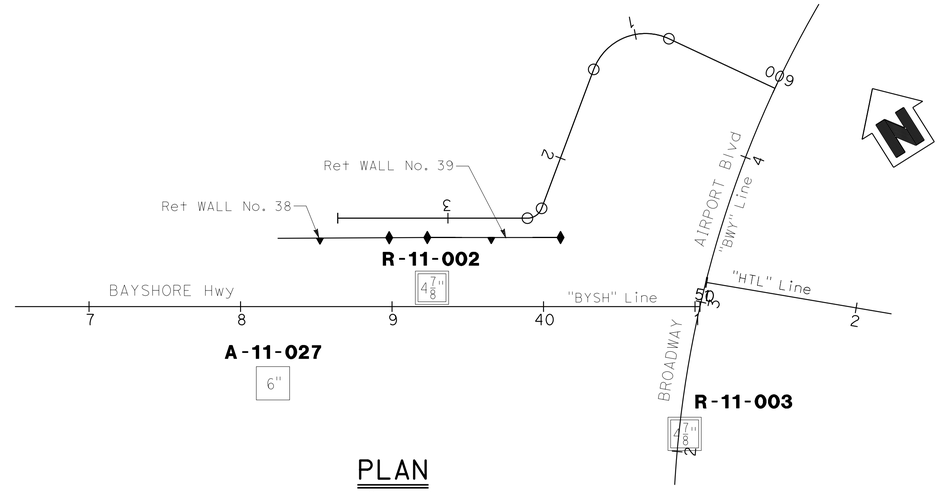

PLAN

1" = 50'

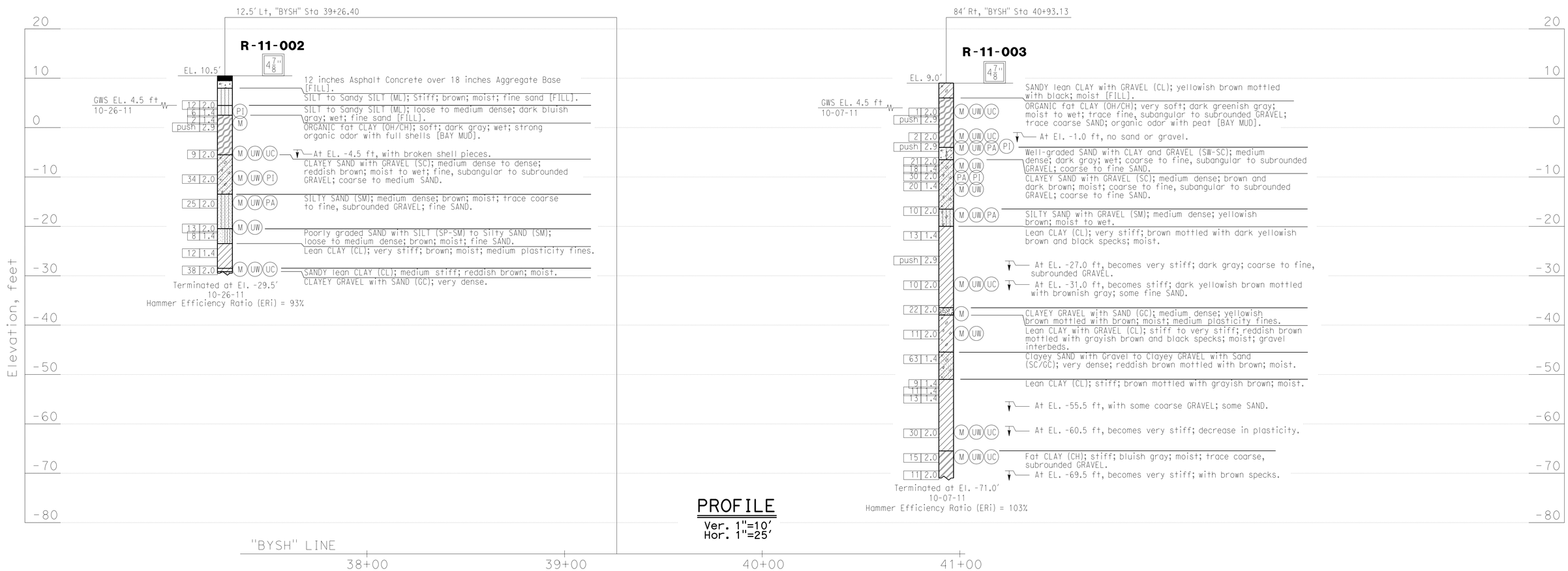

PROFILE

Ver. 1"=10'
Hor. 1"=25'

DESIGN OVERSIGHT Paul Cotter — 6-20-13 SIGN OFF DATE	DRAWN BY B. VUONG	J. LOPEZ / A. CHEUNG FIELD INVESTIGATION BY:	PREPARED FOR THE STATE OF CALIFORNIA DEPARTMENT OF TRANSPORTATION
	CHECKED BY A. M. MOORE	DATE: X	

S. HUANG — PROJECT ENGINEER

BRIDGE NO. 35E0041 — POST MILES 16.7

RETAINING WALL No. 39

LOG OF TEST BORINGS 3 OF 10

GS GEOTECHNICAL LOG OF TEST BORINGS SHEET (ENGLISH) (REV. 03/14/12)

ORIGINAL SCALE IN INCHES FOR REDUCED PLANS 0 1 2 3

UNIT: 0703
PROJECT NUMBER & PHASE: 04000006841 CONTRACT NO.: 04-235844

DISREGARD PRINTS BEARING EARLIER REVISION DATES → REVISION DATES 11-16-12 01-16-13 02-12-13 04-08-13

SHEET 29 OF 36

FILE => 0400000684we099.dgn

USERNAME => s141070 DATE PLOTTED => 03-FEB-2014 TIME PLOTTED => 13:53