DESIGN STUDY ONLY

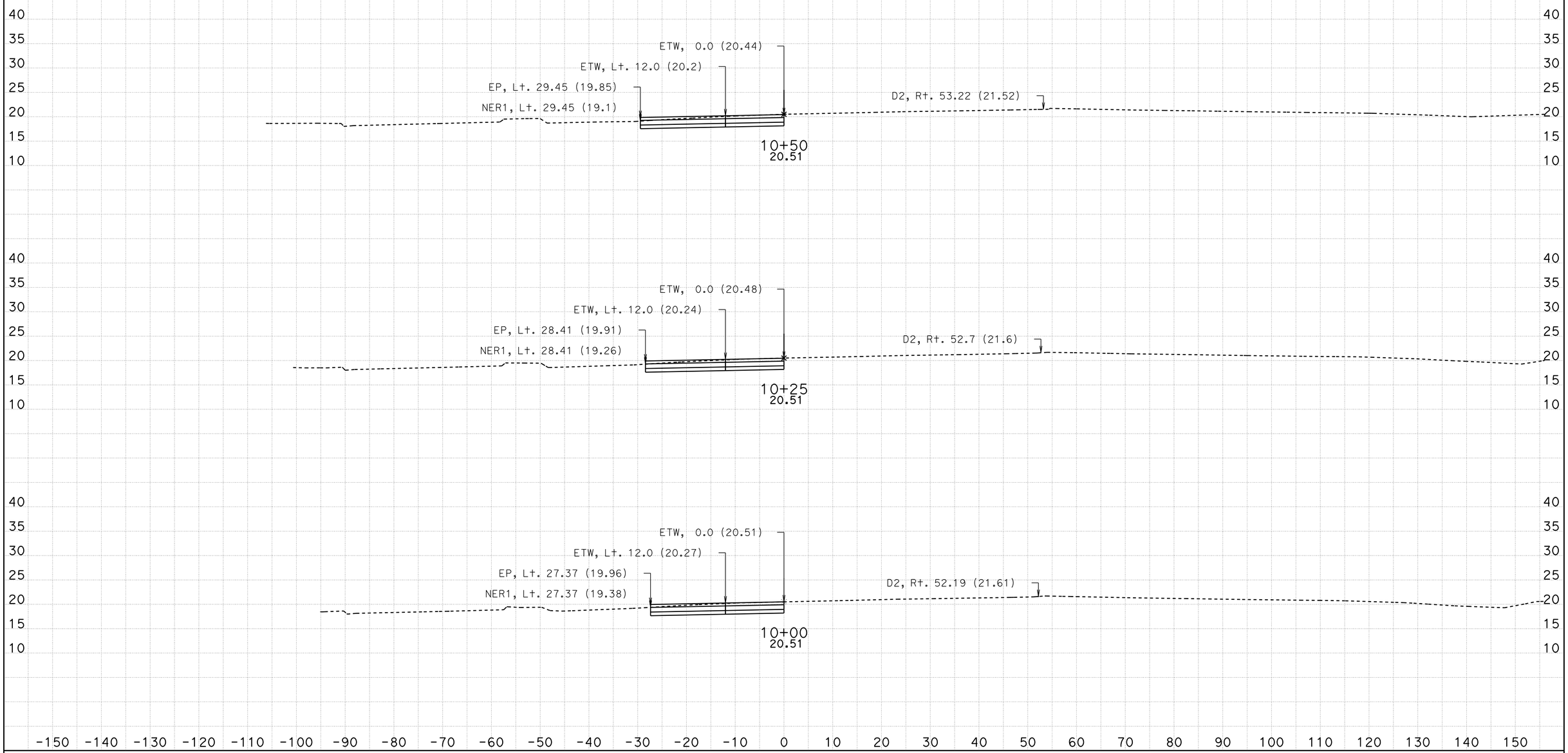

DATE: 7/6/2016

KC Project: 14148

File: D:\Projects\Willow-12-24-14-caice\14148\x sections\Design X Sections\Ramps\July 2016\sel110704.dgn

SCALE: 1" = 10' Horiz.
1" = 10' Vert.

All Dimensions are US Survey Feet

SEL1
CROSS SECTIONS

SHEET 1 OF 21

DESIGN STUDY ONLY

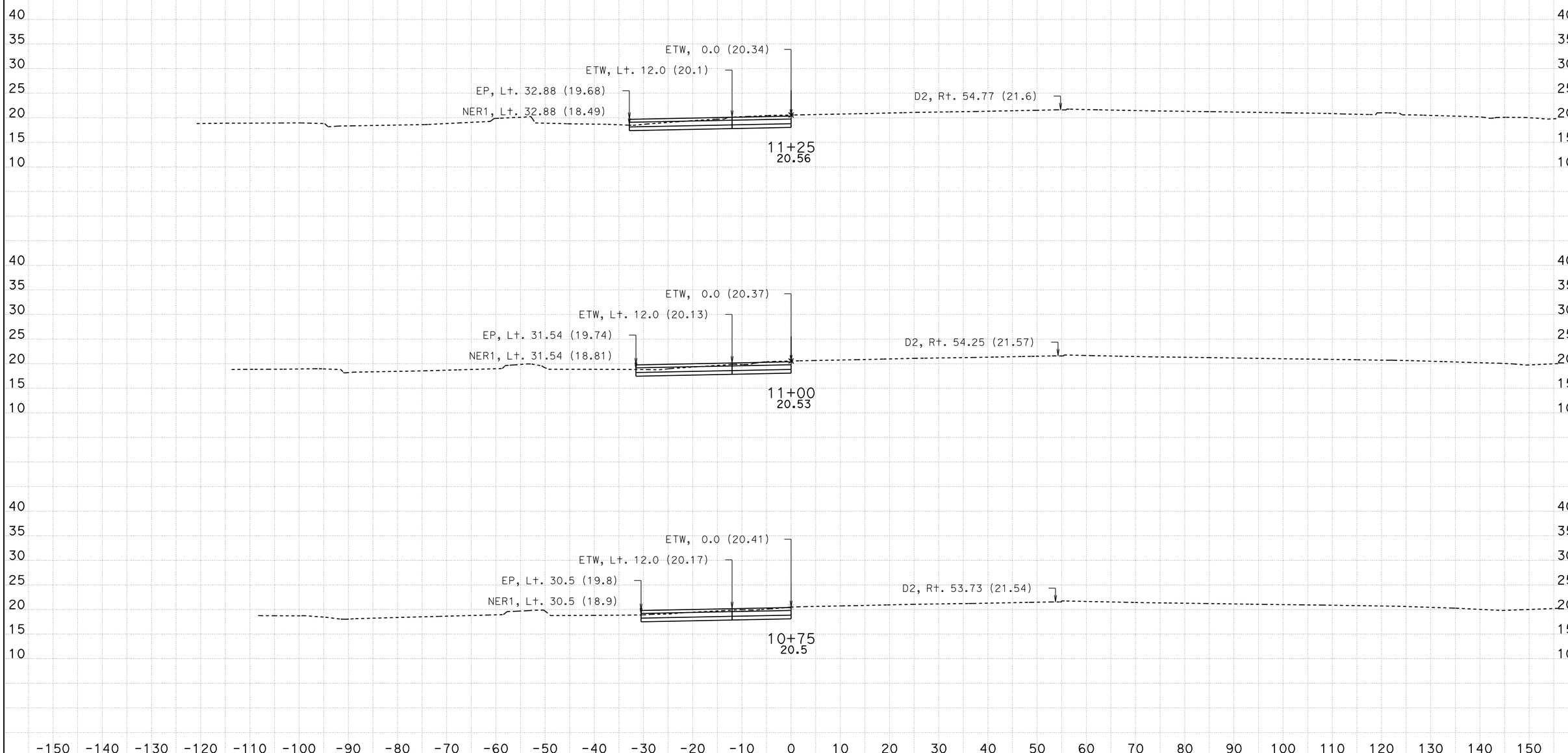

DATE: 7/6/2016

KC Project: 14148

File: D:\Projects\Willow-12-24-14-caice\14148\x sections\Design X Sections\Ramps\July 2016\sel110704.dgn

All Dimensions are US Survey Feet

SCALE: 1" = 10' Horiz.
1" = 10' Vert.

SEL1
CROSS SECTIONS

SHEET 2 OF 21

DESIGN STUDY ONLY

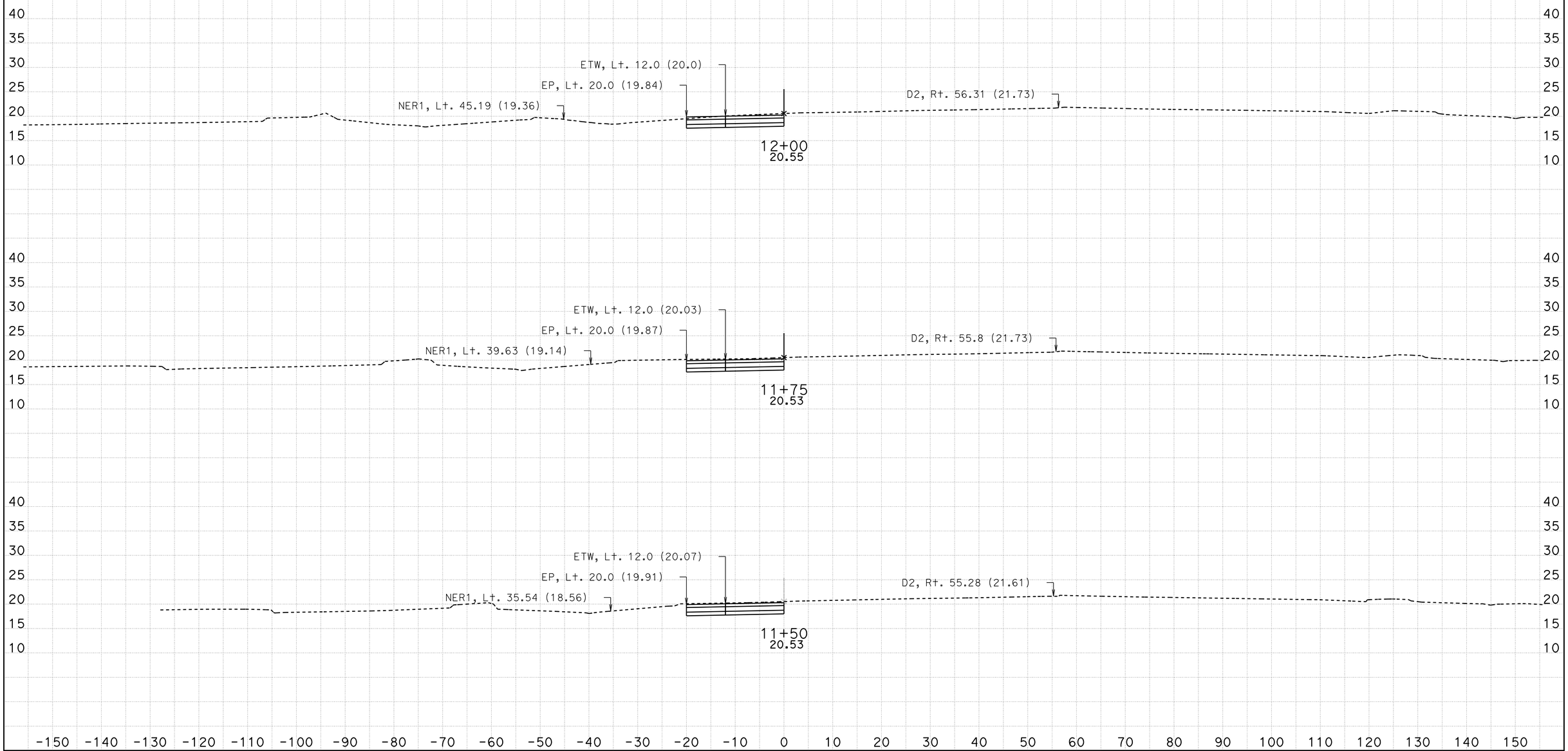

DATE: 7/6/2016

KC Project: 14148 File: D:\Projects\Willow-12-24-14-caice\14148\x sections\Design X Sections\Ramps\July 2016\sel110704.dgn

SCALE: 1" = 10' Horiz.
1" = 10' Vert.

All Dimensions are US Survey Feet

SEL1
CROSS SECTIONS

SHEET 3 OF 21

DESIGN STUDY ONLY

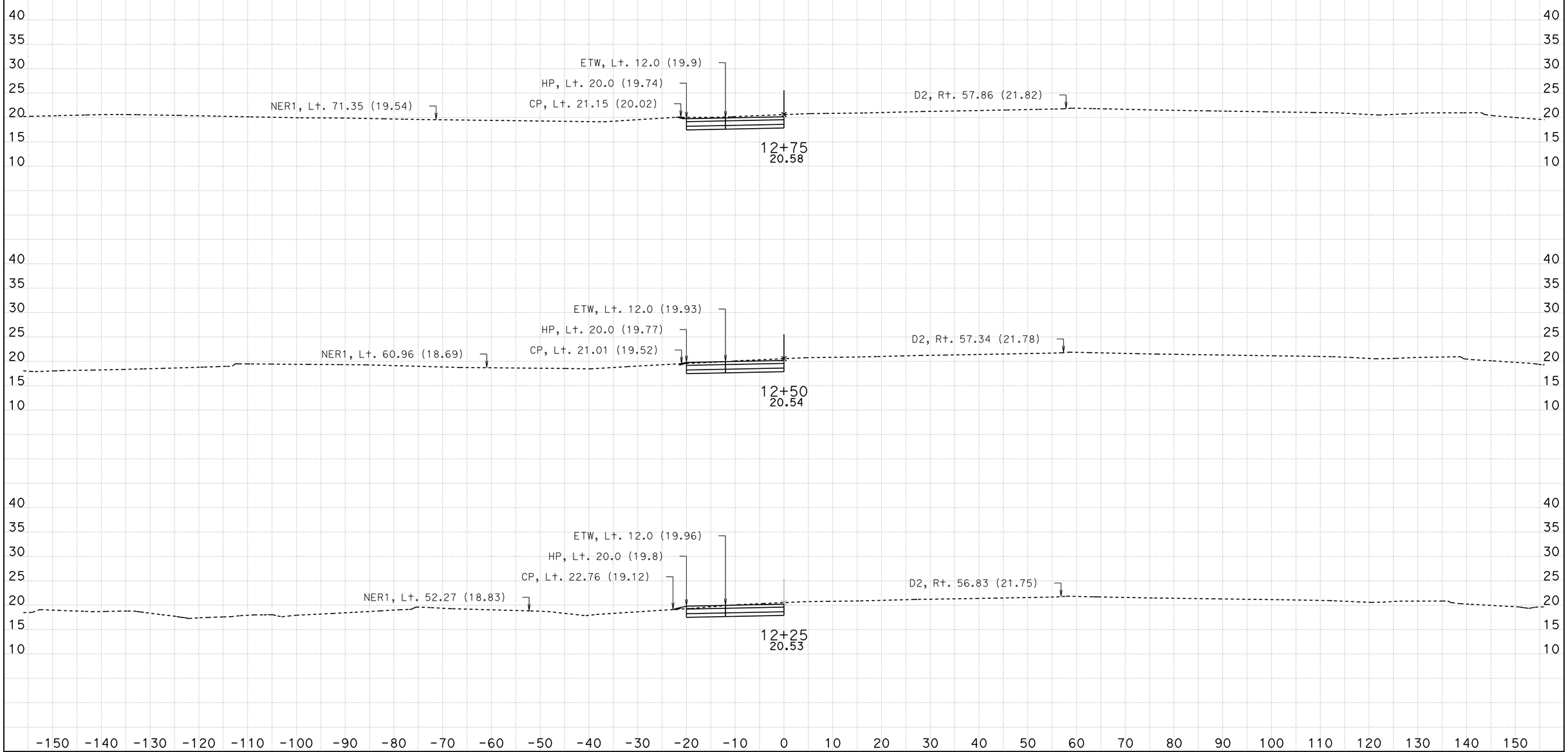

DATE: 7/6/2016

KC Project: 14148

File: D:\Projects\Willow-12-24-14-caice\14148\x sections\Design X Sections\Ramps\July 2016\sel110704.dgn

SCALE: 1" = 10' Horiz.
1" = 10' Vert.

All Dimensions are US Survey Feet

SEL1
CROSS SECTIONS

SHEET 4 OF 21

DESIGN STUDY ONLY

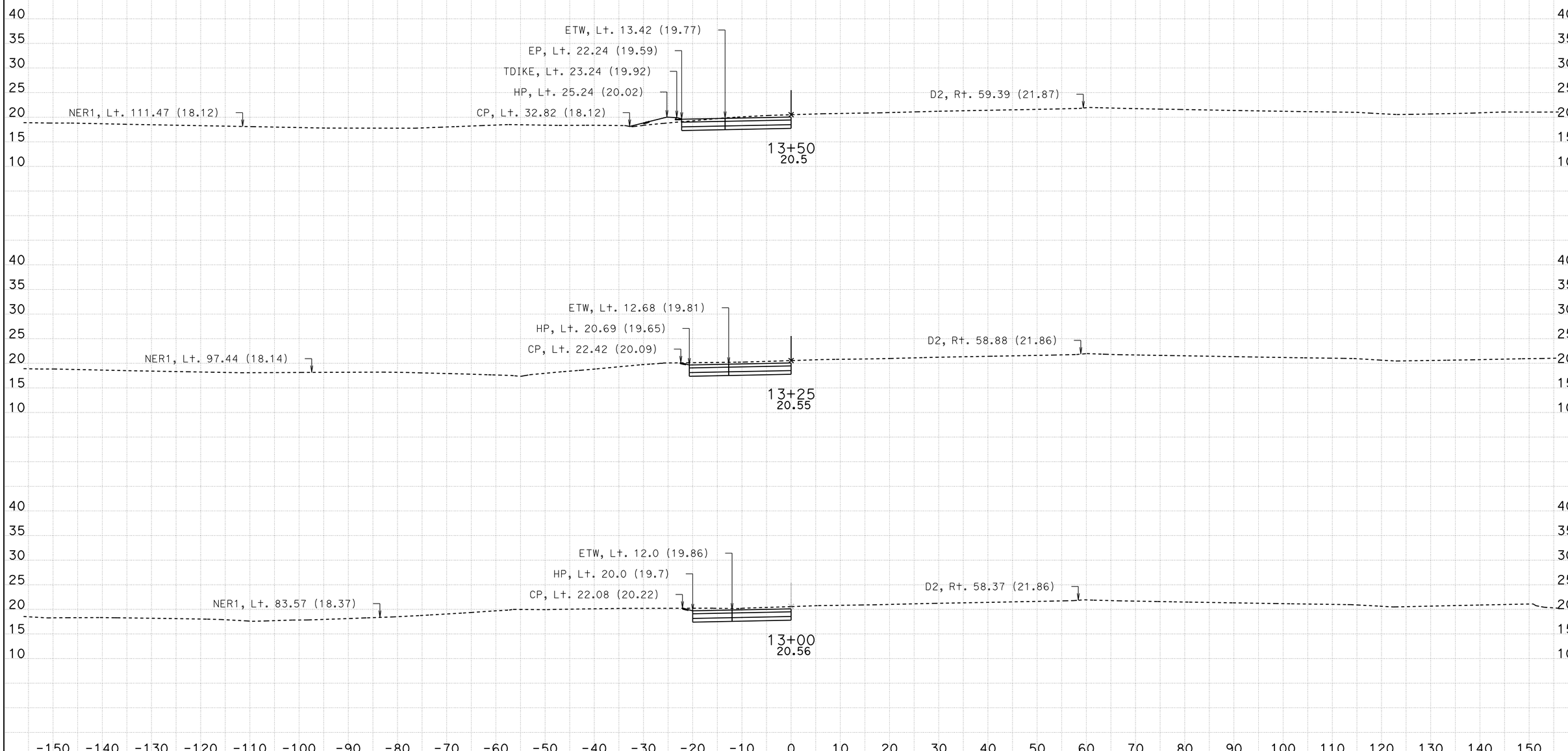

DATE: 7/6/2016

KC Project: 14148 File: D:\Projects\Willow-12-24-14-caice\14148\x sections\Design X Sections\Ramps\July 2016\sel110704.dgn

SCALE: 1" = 10' Horiz.
1" = 10' Vert.

All Dimensions are US Survey Feet

SEL1
CROSS SECTIONS

SHEET 5 OF 21

DESIGN STUDY ONLY

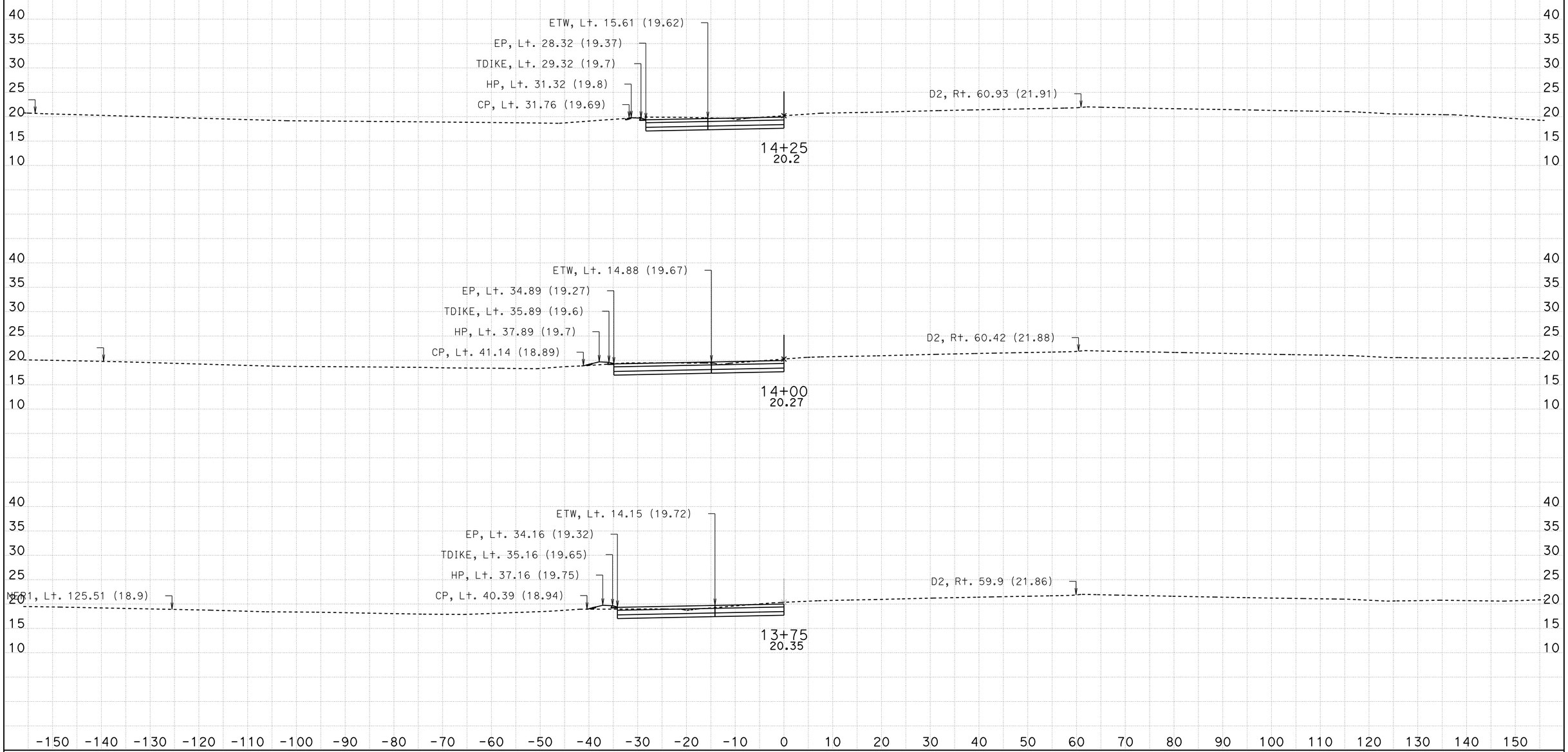

DATE: 7/6/2016

KC Project: 14148

File: D:\Projects\Willow-12-24-14-caice\14148\x sections\Design X Sections\Ramps\July 2016\sel110706.dgn

All Dimensions are US Survey Feet

SCALE: 1" = 10' Horiz.
1" = 10' Vert.

SEL1
CROSS SECTIONS

SHEET 6 OF 21

DESIGN STUDY ONLY

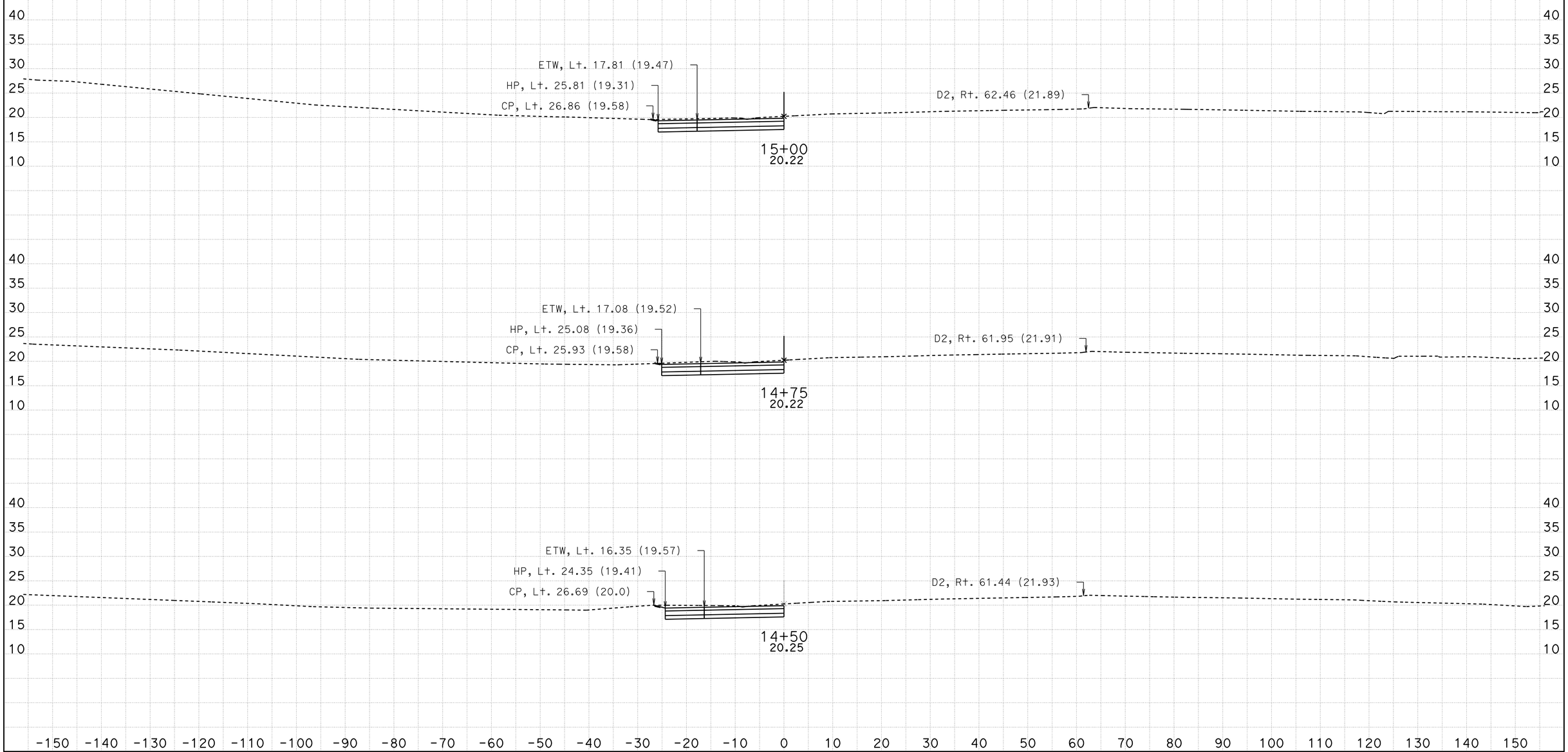

DATE: 7/6/2016

KC Project: 14148 File: D:\Projects\Willow-12-24-14-caice\14148\x sections\Design X Sections\Ramps\July 2016\sel110704.dgn

SCALE: 1" = 10' Horiz.
1" = 10' Vert.

All Dimensions are US Survey Feet

SEL1
CROSS SECTIONS

SHEET 7 OF 21

DESIGN STUDY ONLY

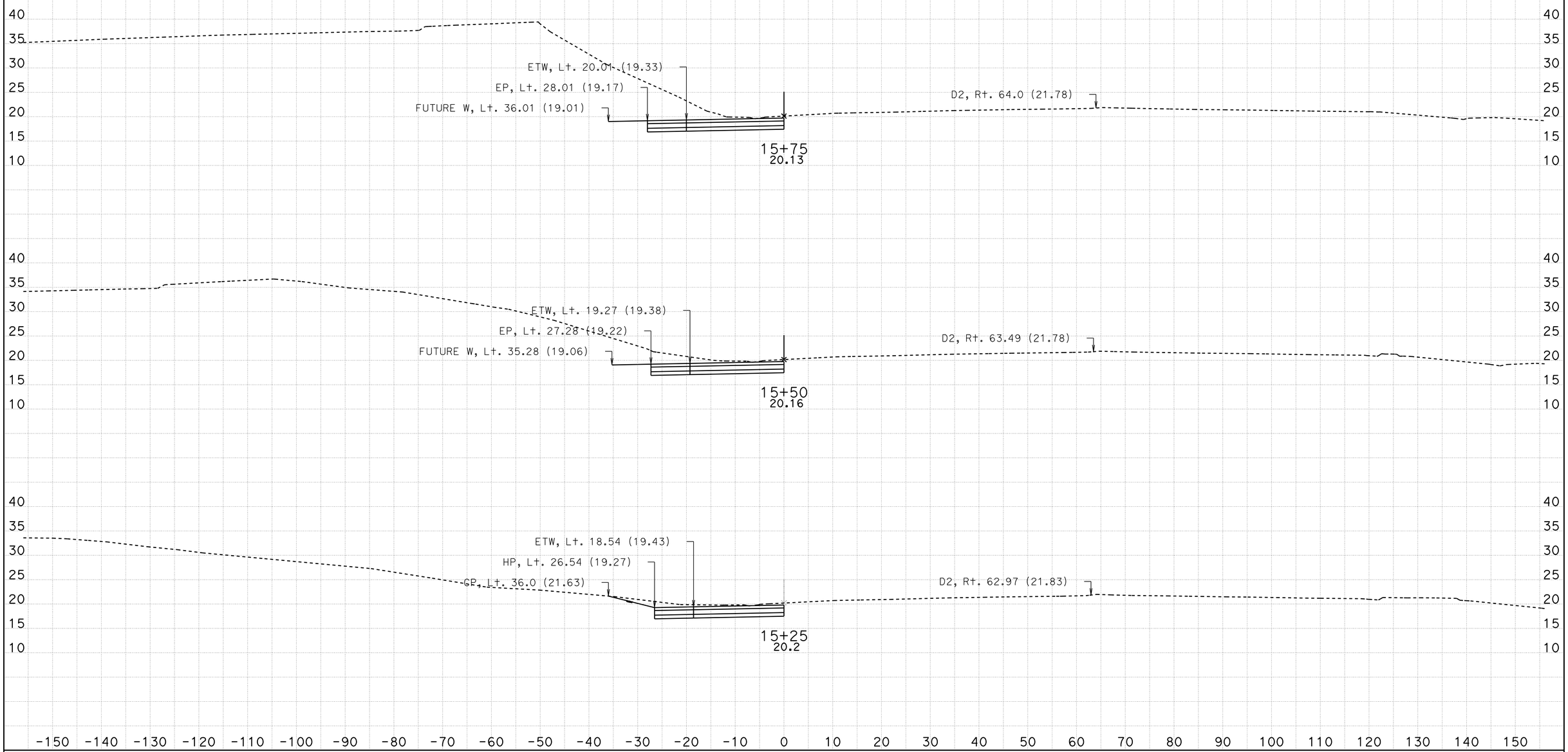

DATE: 7/6/2016

KC Project: 14148

File: D:\Projects\Willow-12-24-14-caice\14148\x sections\Design X Sections\Ramps\July 2016\sel110704.dgn

SCALE: 1" = 10' Horiz.
1" = 10' Vert.

All Dimensions are US Survey Feet

SEL1
CROSS SECTIONS

SHEET 8 OF 21

DESIGN STUDY ONLY

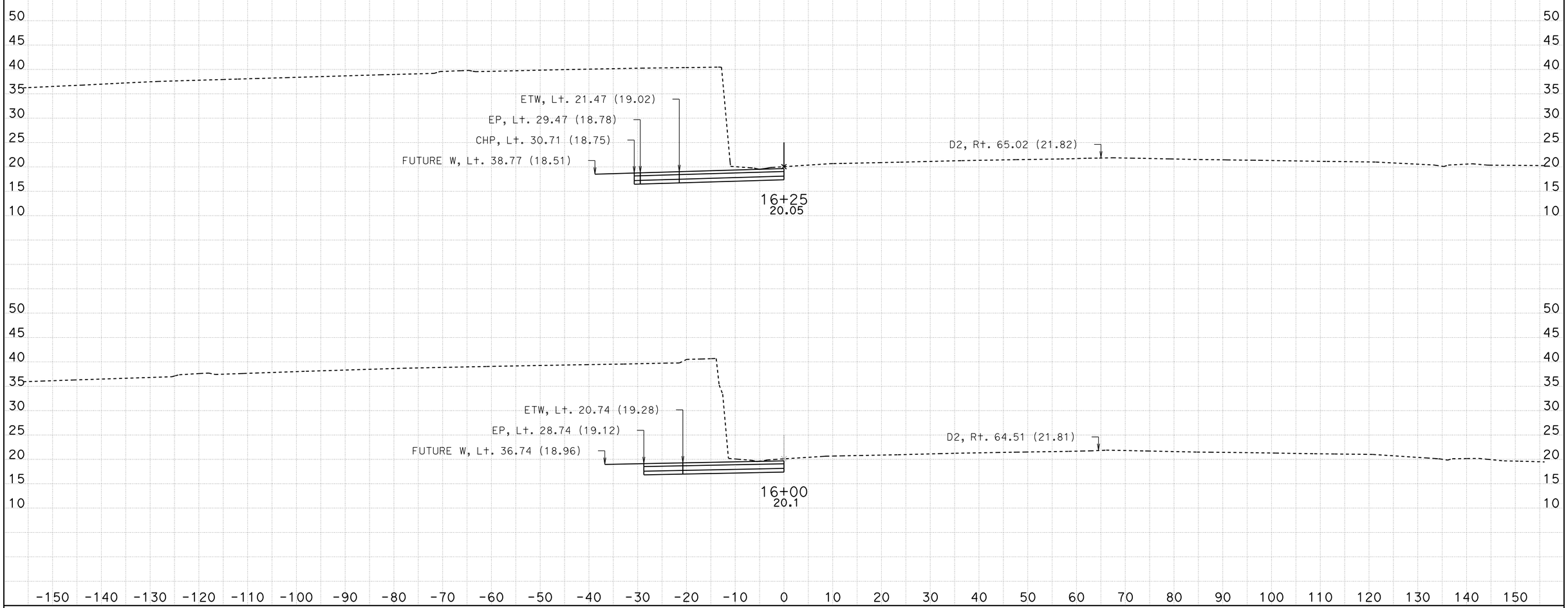

DATE: 7/6/2016

KC Project: 14148 File: D:\Projects\Willow-12-24-14-caice\14148\x sections\Design X Sections\Ramps\July 2016\sel110706.dgn

SCALE: 1" = 10' Horiz.
1" = 10' Vert.

All Dimensions are US Survey Feet

SEL1
CROSS SECTIONS

SHEET 9 OF 21

DESIGN STUDY ONLY

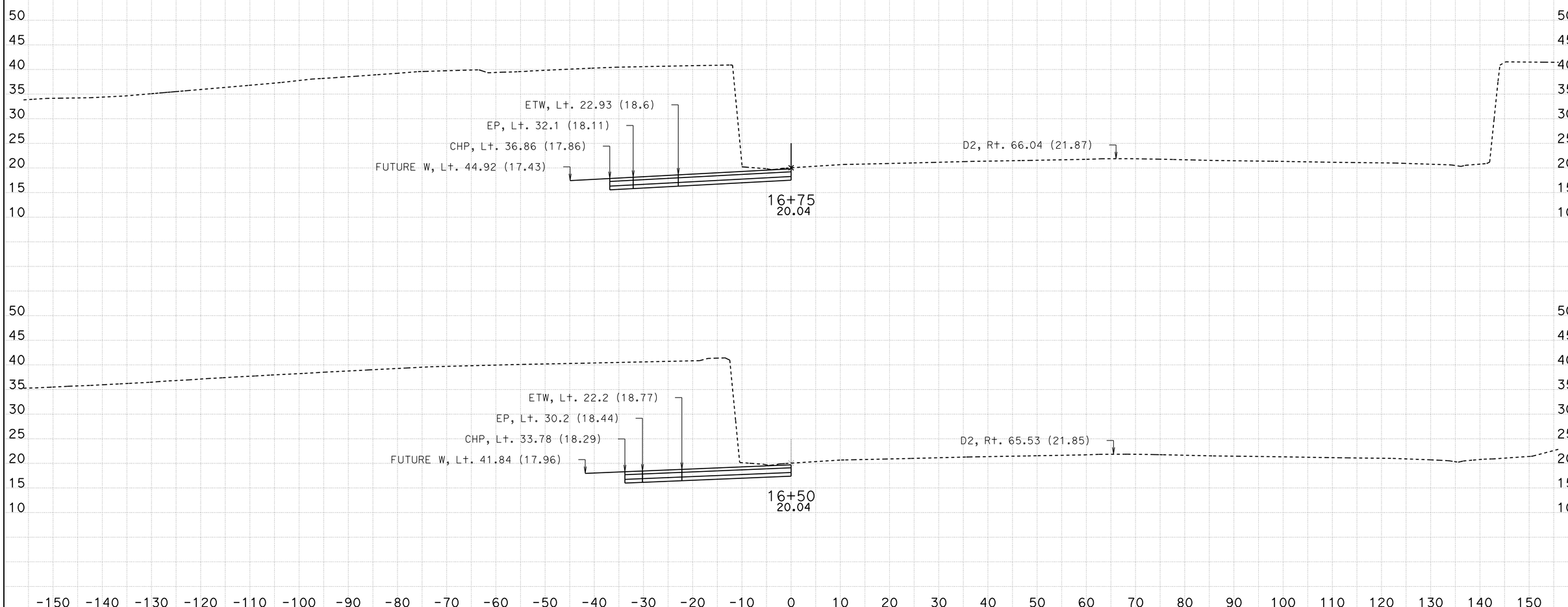

DATE: 7/6/2016

KC Project: 14148 File: D:\Projects\Willow-12-24-14-caice\14148\x sections\Design X Sections\Ramps\July 2016\sel110706.dgn

SCALE: 1" = 10' Horiz.
1" = 10' Vert.

All Dimensions are US Survey Feet

SEL1
CROSS SECTIONS

SHEET 10 OF 21

DESIGN STUDY ONLY

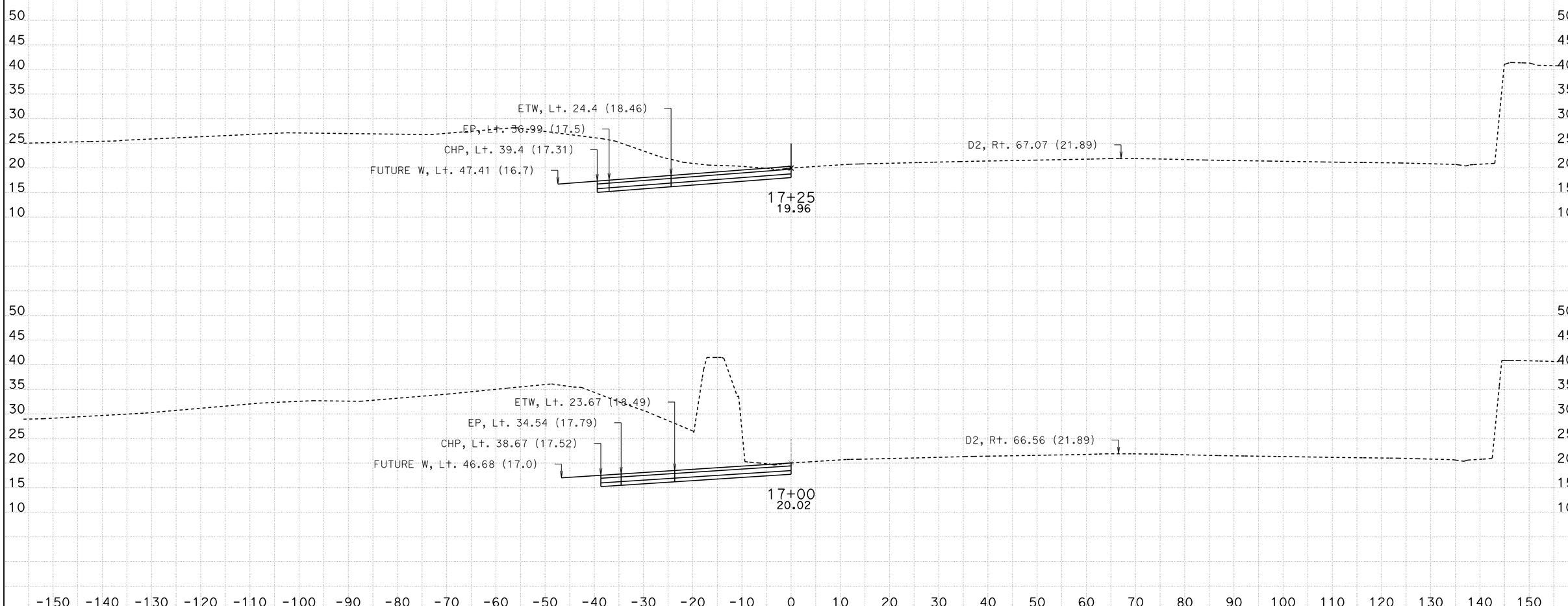

DATE: 7/6/2016

KC Project: 14148 File: D:\Projects\Willow-12-24-14-caice\14148\x sections\Design X Sections\Ramps\July 2016\sel110704.dgn

SCALE: 1" = 10' Horiz.
1" = 10' Vert.

All Dimensions are US Survey Feet

SEL1
CROSS SECTIONS

SHEET 11 OF 21

DESIGN STUDY ONLY

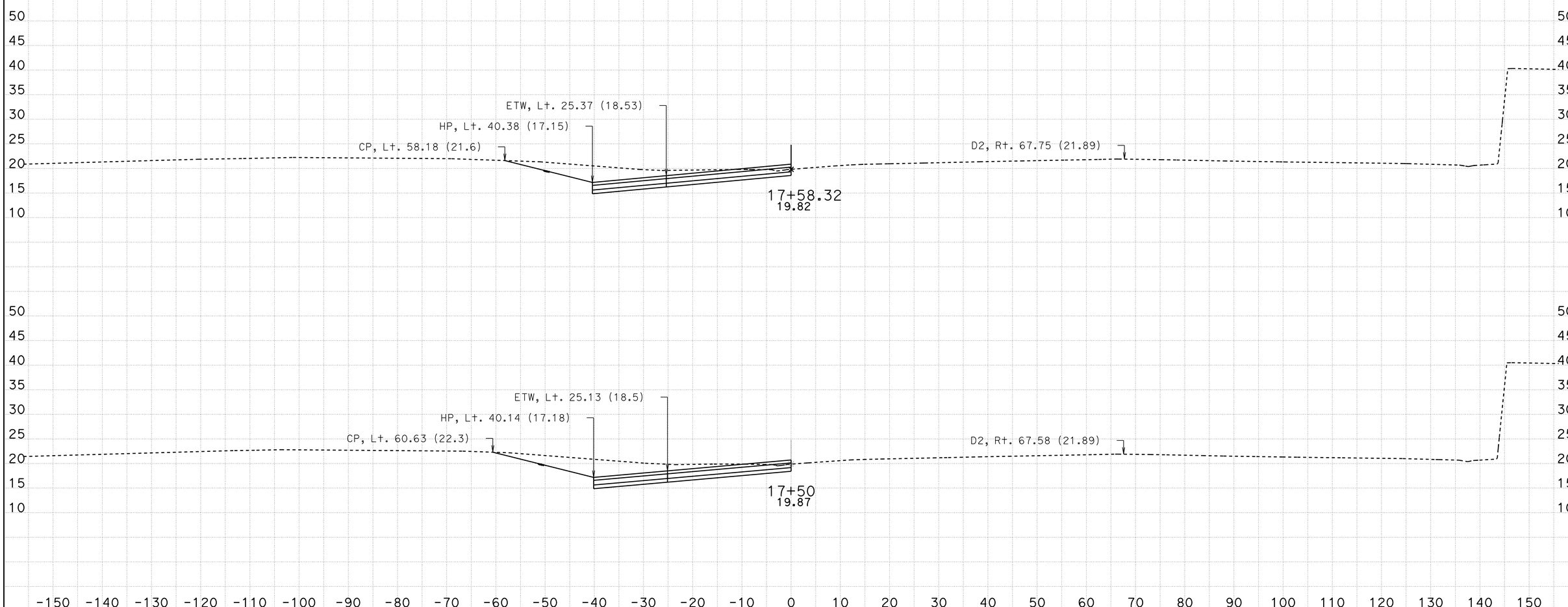

DATE: 7/6/2016

KC Project: 14148 File: D:\Projects\Willow-12-24-14-caice\14148\x sections\Design X Sections\Ramps\July 2016\sel110706.dgn

SCALE: 1" = 10' Horiz.
1" = 10' Vert.

All Dimensions are US Survey Feet

SEL1
CROSS SECTIONS

SHEET 12 OF 21

DESIGN STUDY ONLY

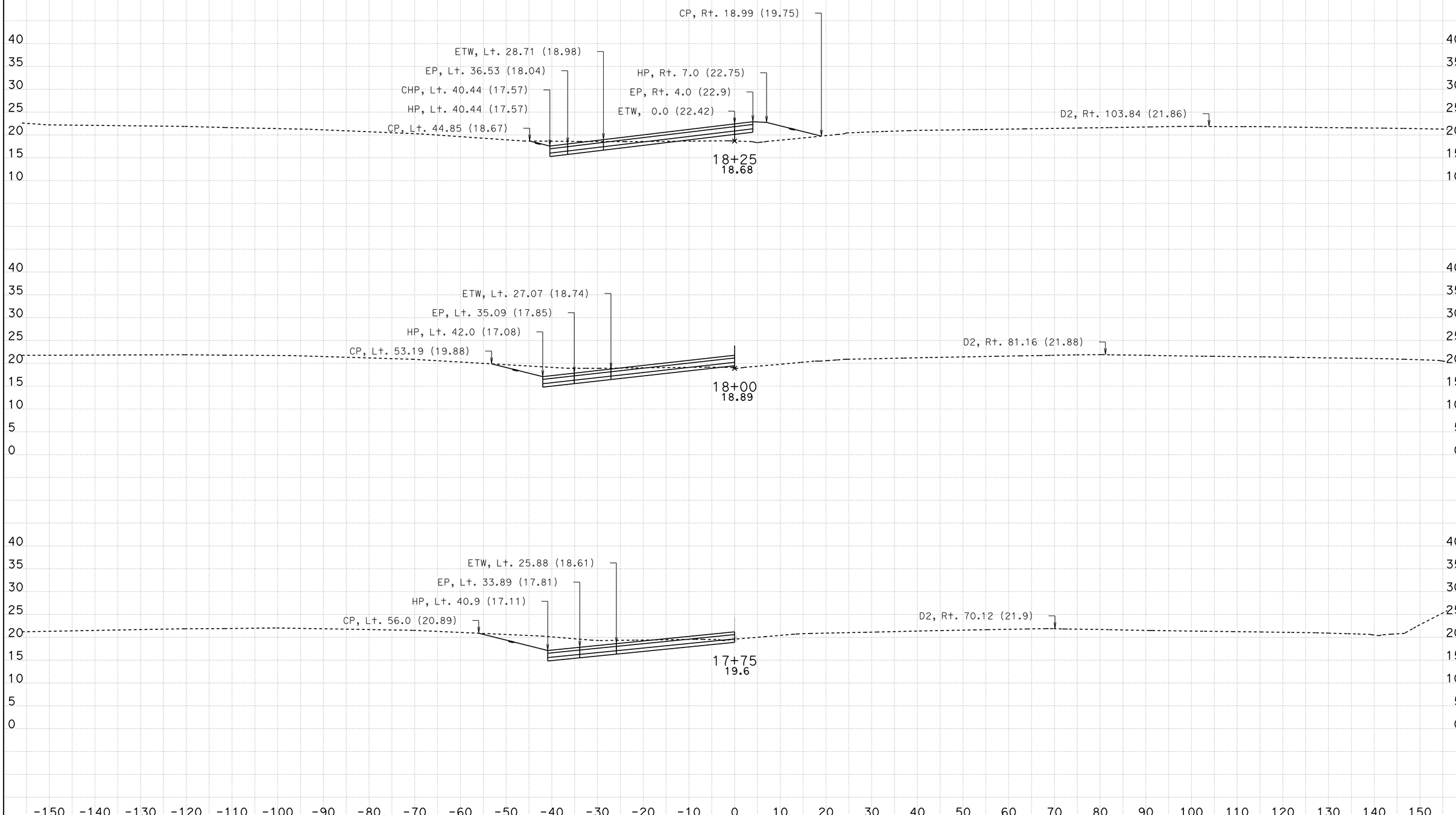

DATE: 7/6/2016

KC Project: 14148

File: D:\Projects\Willow-12-24-14-caice\14148\x sections\Design X Sections\Ramps\July 2016\sel110704.dgn

SCALE: 1" = 10' Horiz.
1" = 10' Vert.

All Dimensions are US Survey Feet

SEL1
CROSS SECTIONS

SHEET 13 OF 21

DESIGN STUDY ONLY

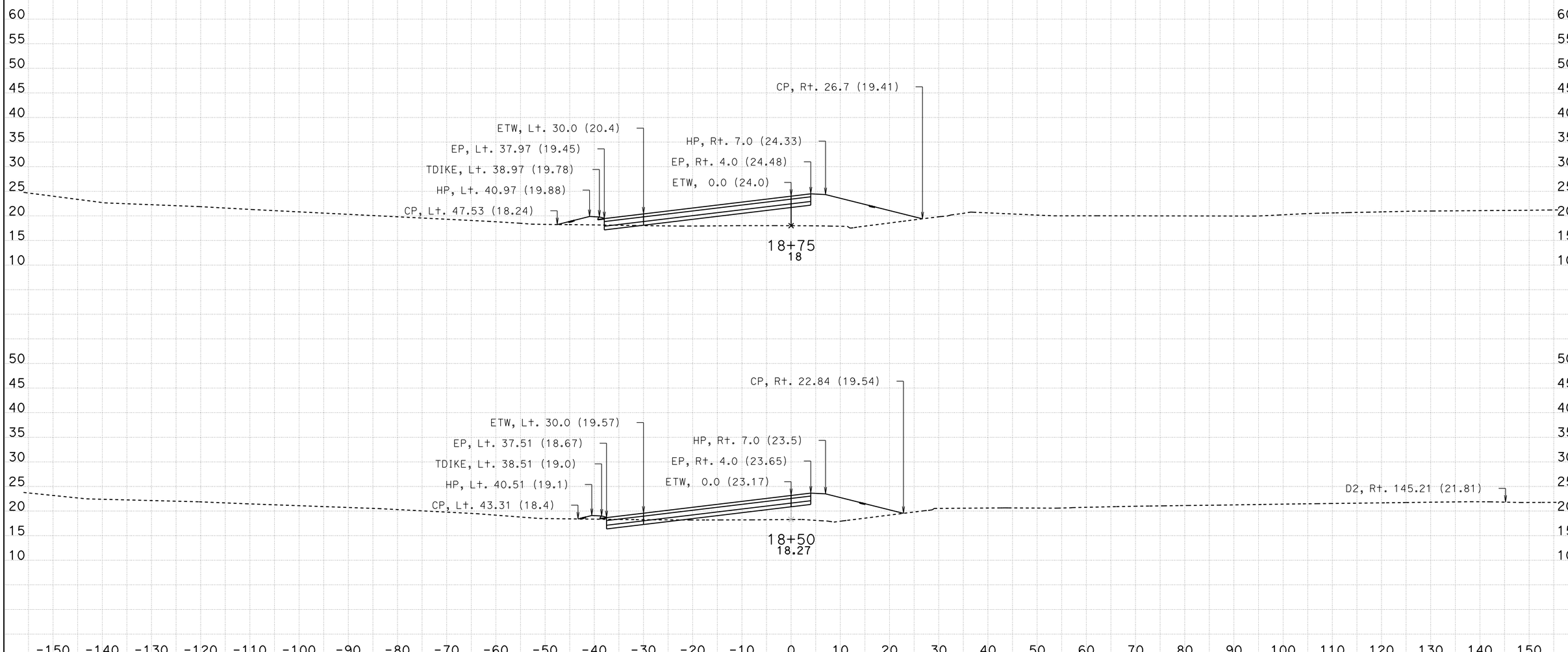

DATE: 7/6/2016

KC Project: 14148 File: D:\Projects\Willow-12-24-14-caice\14148\x sections\Design X Sections\Ramps\July 2016\sel110704.dgn

All Dimensions are US Survey Feet

SCALE: 1" = 10' Horiz.
1" = 10' Vert.

SEL1
CROSS SECTIONS

SHEET 14 OF 21

DESIGN STUDY ONLY

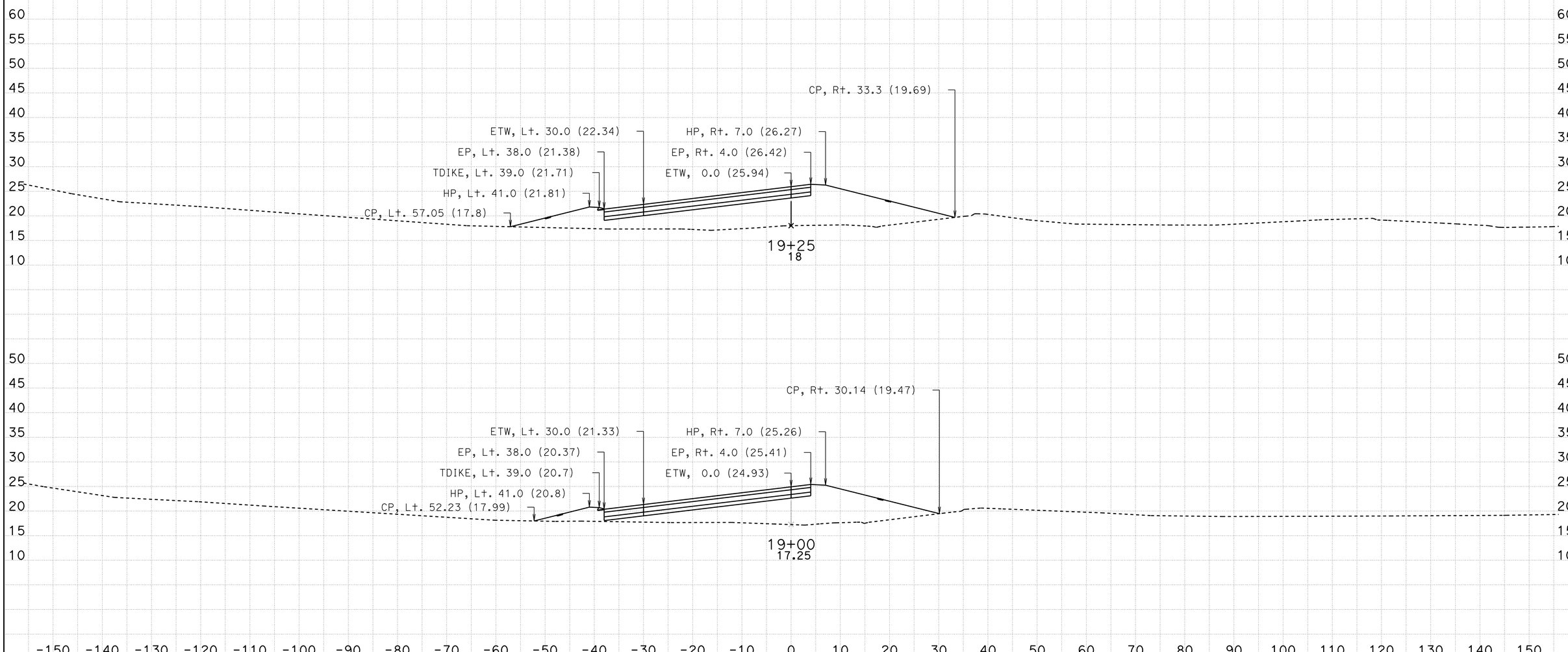

DATE: 7/6/2016

KC Project: 14148 File: D:\Projects\Willow-12-24-14-caice\14148\x sections\Design X Sections\Ramps\July 2016\sel110704.dgn

SCALE: 1" = 10' Horiz.
1" = 10' Vert.

All Dimensions are US Survey Feet

SEL1
CROSS SECTIONS

DESIGN STUDY ONLY

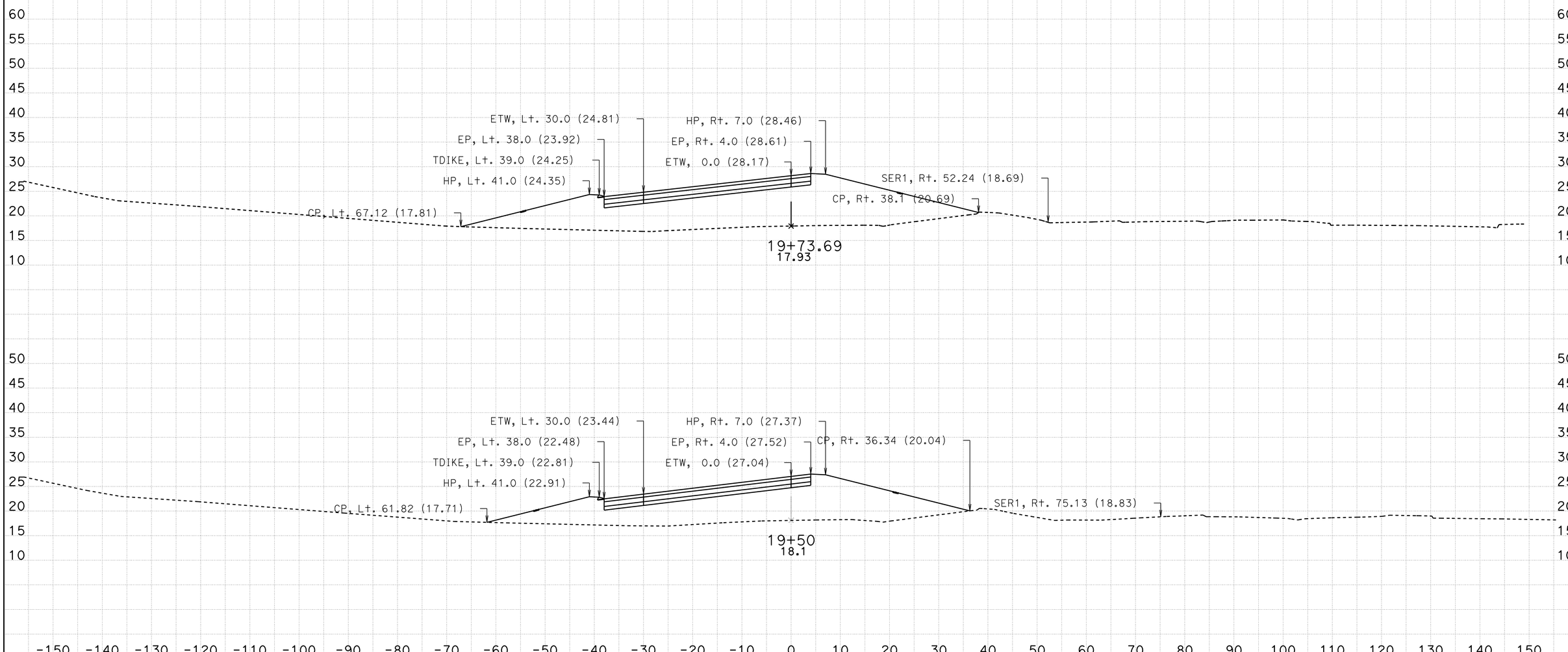

DATE: 7/6/2016

KC Project: 14148 File: D:\Projects\Willow-12-24-14-caice\14148\x sections\Design X Sections\Ramps\July 2016\sel110704.dgn

All Dimensions are US Survey Feet

SCALE: 1" = 10' Horiz.
1" = 10' Vert.

SEL1
CROSS SECTIONS

SHEET 16 OF 21

DESIGN STUDY ONLY

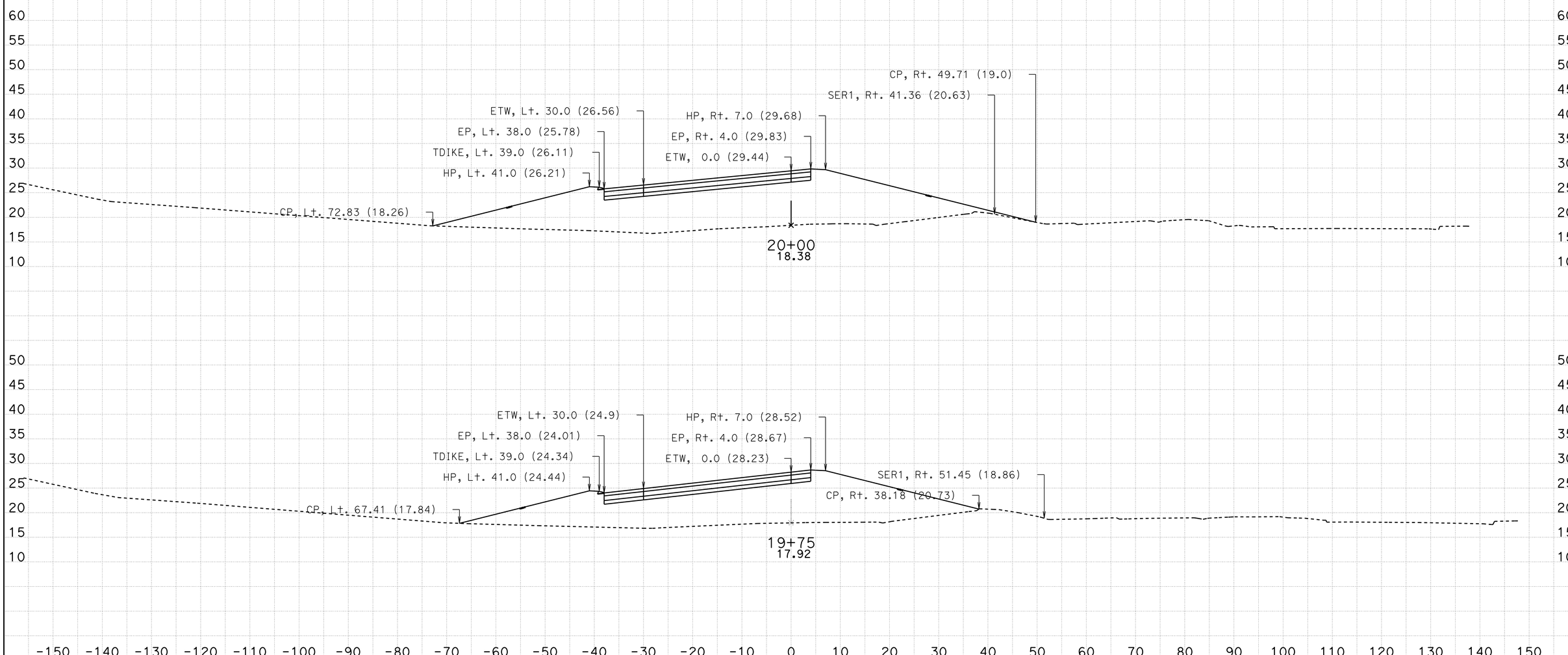

DATE: 7/6/2016

KC Project: 14148 File: D:\Projects\Willow-12-24-14-caice\14148\x sections\Design X Sections\Ramps\July 2016\sel110704.dgn

SCALE: 1" = 10' Horiz.
1" = 10' Vert.

All Dimensions are US Survey Feet

SEL1
CROSS SECTIONS

SHEET 17 OF 21

DESIGN STUDY ONLY

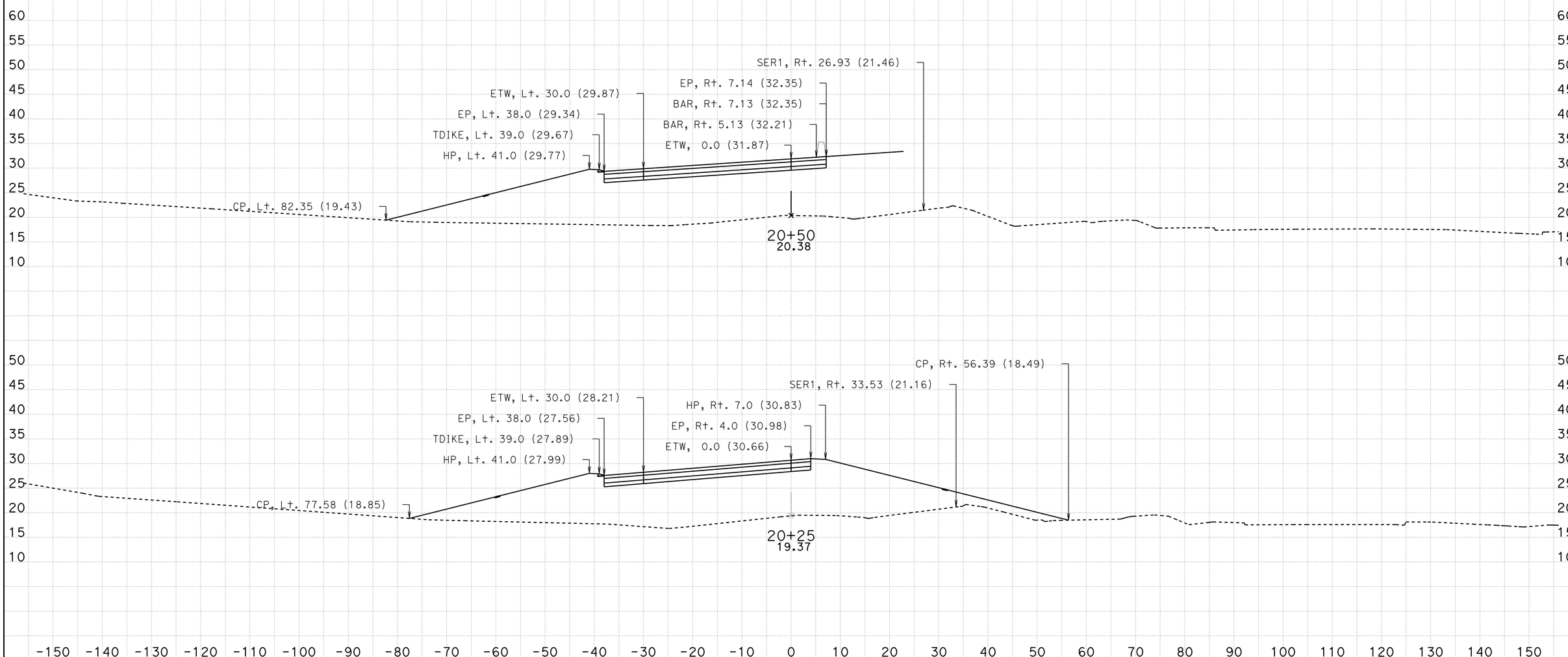

DATE: 7/6/2016

KC Project: 14148 File: D:\Projects\Willow-12-24-14-caice\14148\x sections\Design X Sections\Ramps\July 2016\sel110704.dgn

SCALE: 1" = 10' Horiz.
1" = 10' Vert.

All Dimensions are US Survey Feet

SEL1
CROSS SECTIONS

SHEET 18 OF 21

DESIGN STUDY ONLY

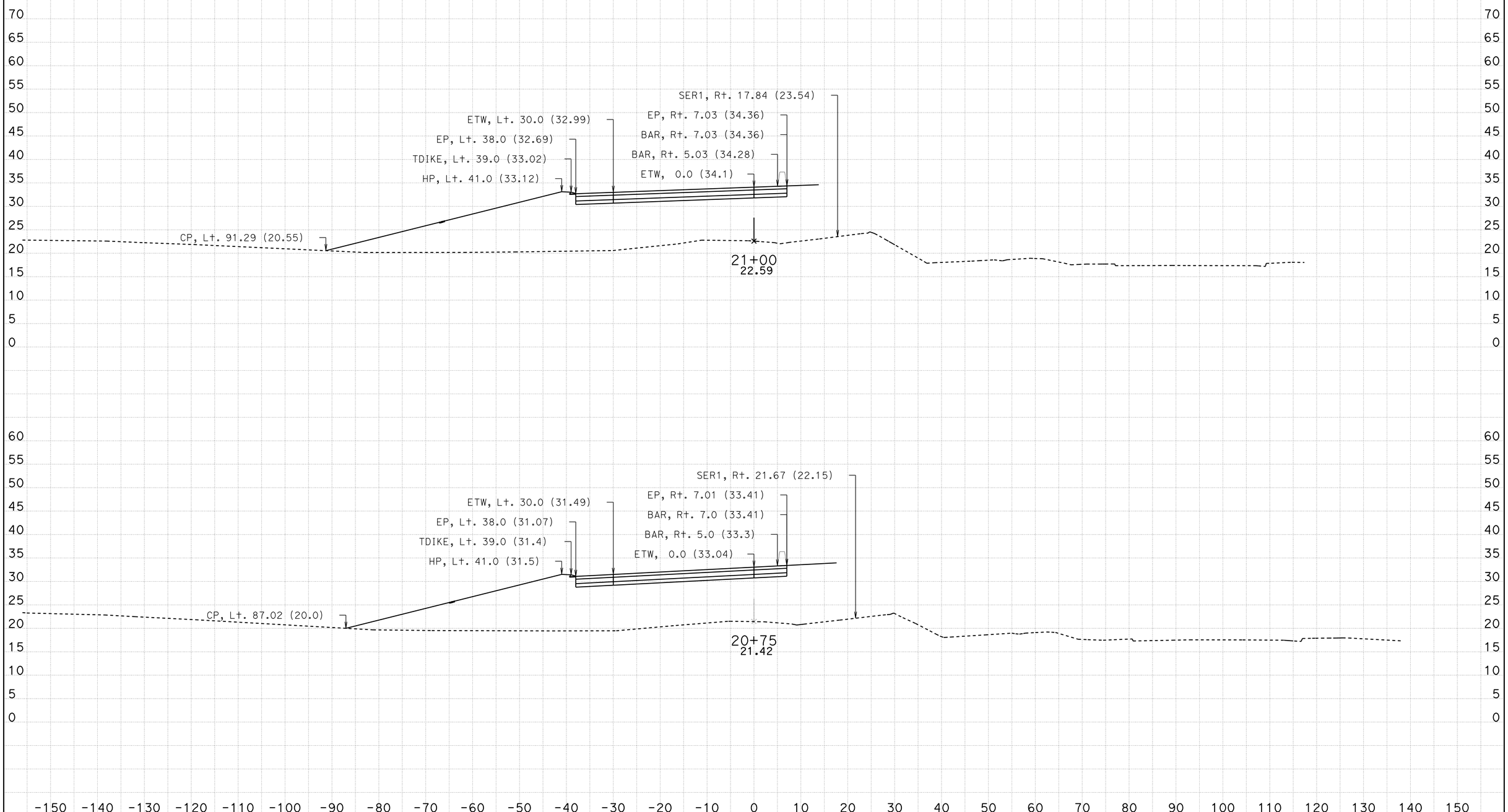

DATE: 7/6/2016

KC Project: 14148

File: D:\Projects\Willow-12-24-14-caice\14148\x sections\Design X Sections\Ramps\July 2016\sel110704.dgn

SCALE: 1" = 10' Horiz.
1" = 10' Vert.

All Dimensions are US Survey Feet

SEL1
CROSS SECTIONS

SHEET 19 OF 21

DESIGN STUDY ONLY

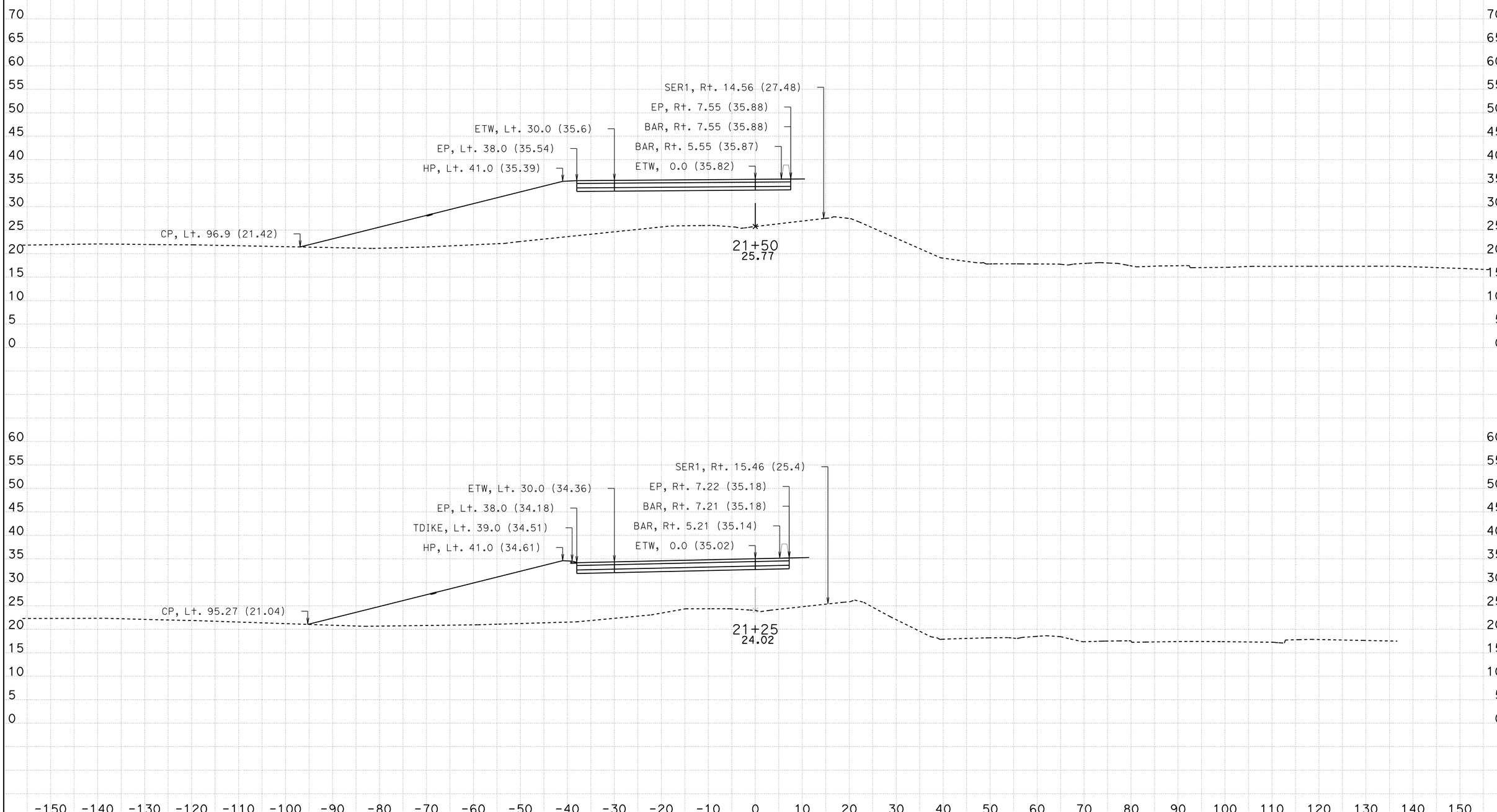

DATE: 7/6/2016

KC Project: 14148

File: D:\Projects\Willow-12-24-14-caice\14148\x sections\Design X Sections\Ramps\July 2016\sel110704.dgn

All Dimensions are US Survey Feet

SCALE: 1" = 10' Horiz.
1" = 10' Vert.

SEL1
CROSS SECTIONS

SHEET 20 OF 21

DESIGN STUDY ONLY

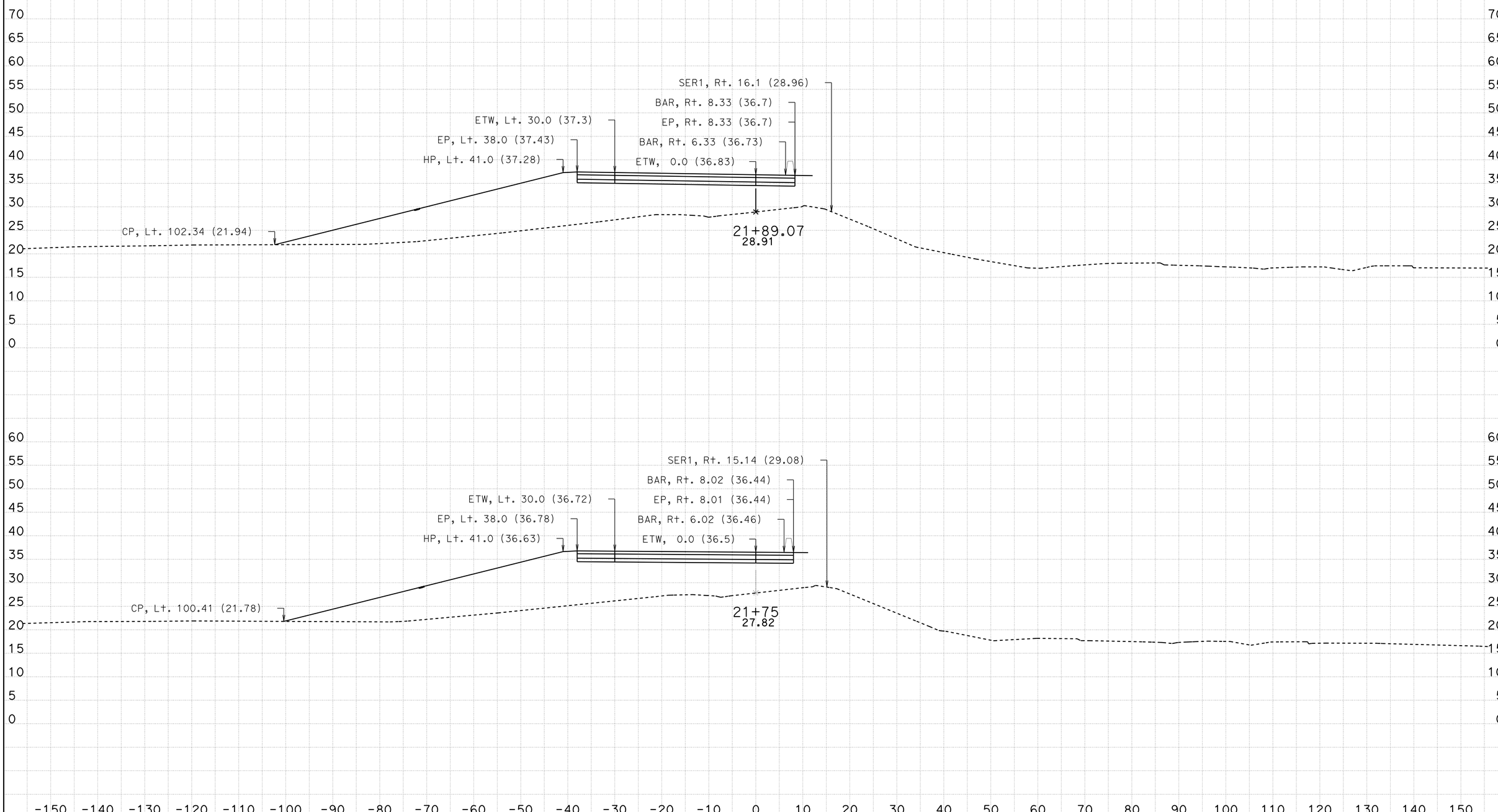

DATE: 7/6/2016

KC Project: 14148

File: D:\Projects\Willow-12-24-14-caice\14148\x sections\Design X Sections\Ramps\July 2016\sel110704.dgn

SCALE: 1" = 10' Horiz.
1" = 10' Vert.

All Dimensions are US Survey Feet

SEL1
CROSS SECTIONS

SHEET 21 OF 21

DESIGN STUDY ONLY

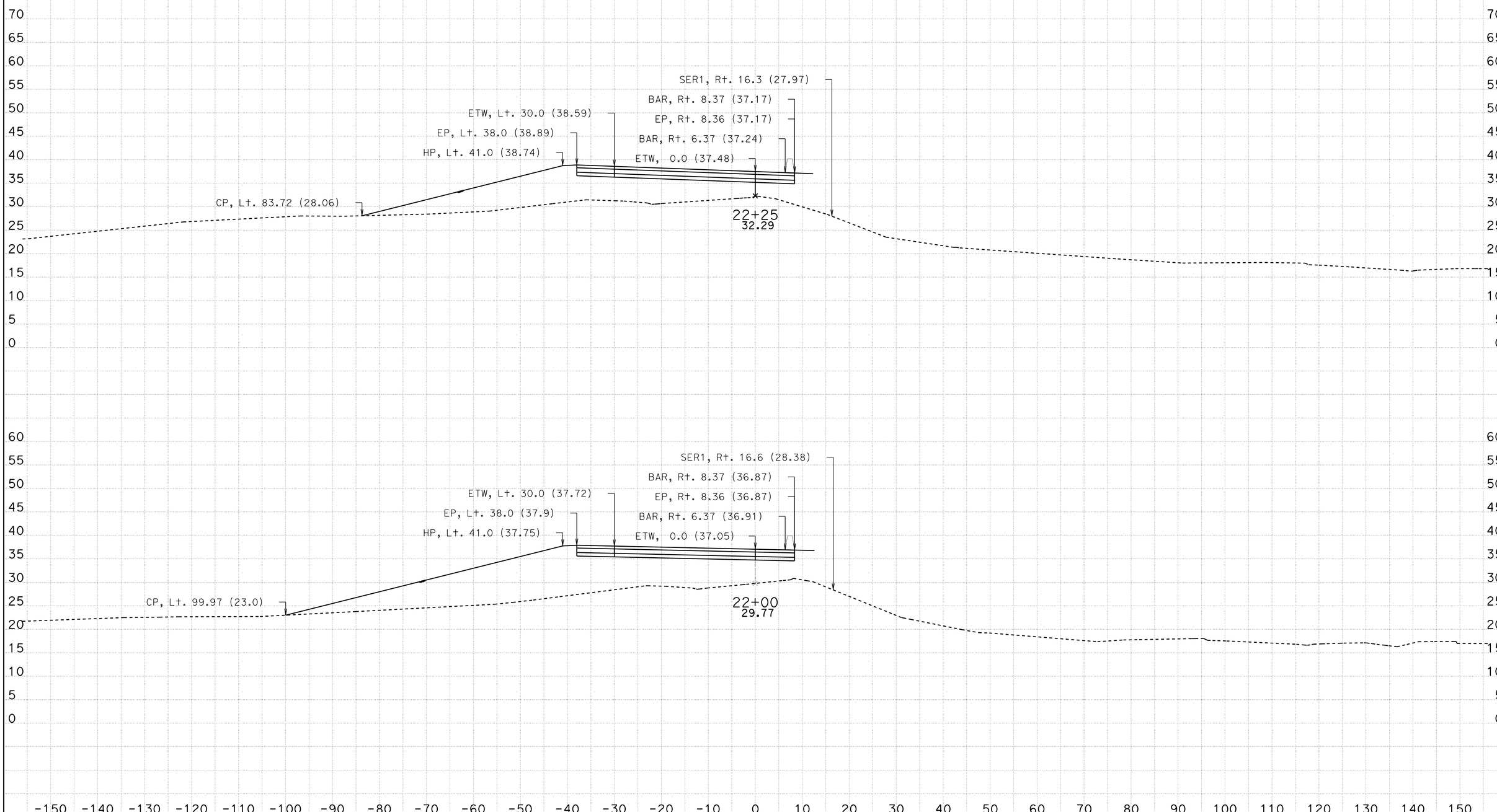

DATE: 7/6/2016

KC Project: 14148

File: D:\Projects\Willow-12-24-14-caice\14148\x sections\Design X Sections\Ramps\July 2016\sel110706.dgn

SCALE: 1" = 10' Horiz.
1" = 10' Vert.

All Dimensions are US Survey Feet

SEL1
CROSS SECTIONS

SHEET 22 OF 21

DESIGN STUDY ONLY

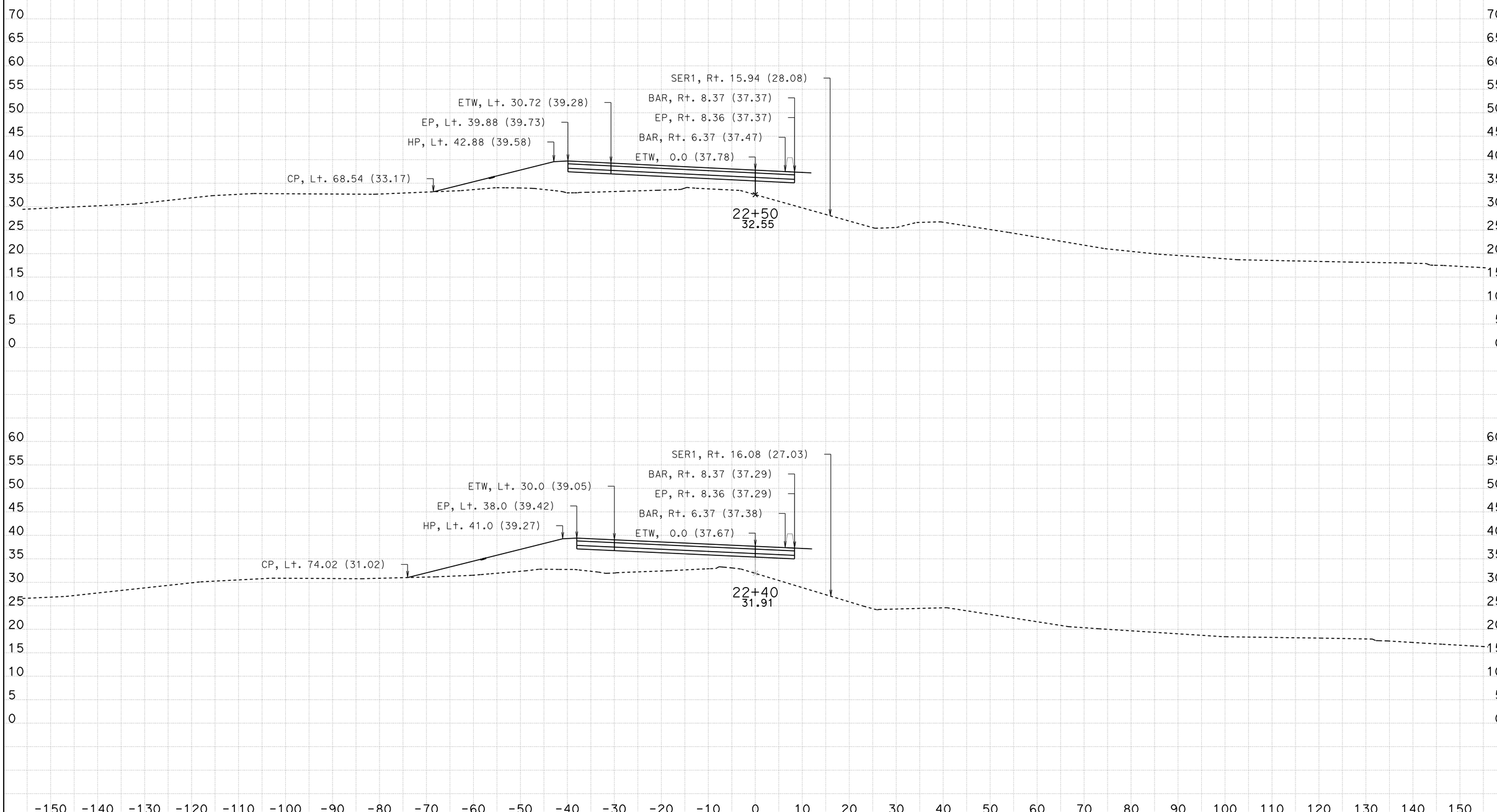

DATE: 7/6/2016

KC Project: 14148

File: D:\Projects\Willow-12-24-14-caice\14148\x sections\Design X Sections\Ramps\July 2016\sel110704.dgn

SCALE: 1" = 10' Horiz.
1" = 10' Vert.

All Dimensions are US Survey Feet

SEL1
CROSS SECTIONS

SHEET 23 OF 21