| Dist | COUNTY | ROUTE | POST MILES TOTAL PROJECT | SHEET No. | TOTAL SHEETS |
|---|---|---|---|---|---|
| 04 | SM | 101,114 | 1.3/2.5, 5.0/5.3 | 401 | 568 |

Devinder Singh
REGISTERED CIVIL ENGINEER

October 30, 2015
PLANS APPROVAL DATE

REGISTERED PROFESSIONAL ENGINEER
Devinder Singh
No. C50470
Exp. 6-30-17
CIVIL
STATE OF CALIFORNIA

THE STATE OF CALIFORNIA OR ITS OFFICERS OR AGENTS SHALL NOT BE RESPONSIBLE FOR THE ACCURACY OR COMPLETENESS OF SCANNED COPIES OF THIS PLAN SHEET.

TO ACCOMPANY PLANS DATED 6-29-16

2010 REVISED STANDARD PLAN RSP T13

## NOTES:

See Revised Standard Plan RSP T9 for tables.

Use cone spacing X for taper segment, Y for tangent segment or Z for conflict situations, as approriate, per Table 1, unless X, Y, or Z cone spacing is shown on this sheet.

Unless otherwise specified in the special provisions, all temporary warning signs shall have black legend on fluorescent orange background.

California codes are designated by (CA). Otherwise, Federal (MUTCD) codes are shown.

## TYPICAL LANE CLOSURE WITH REVERSIBLE CONTROL

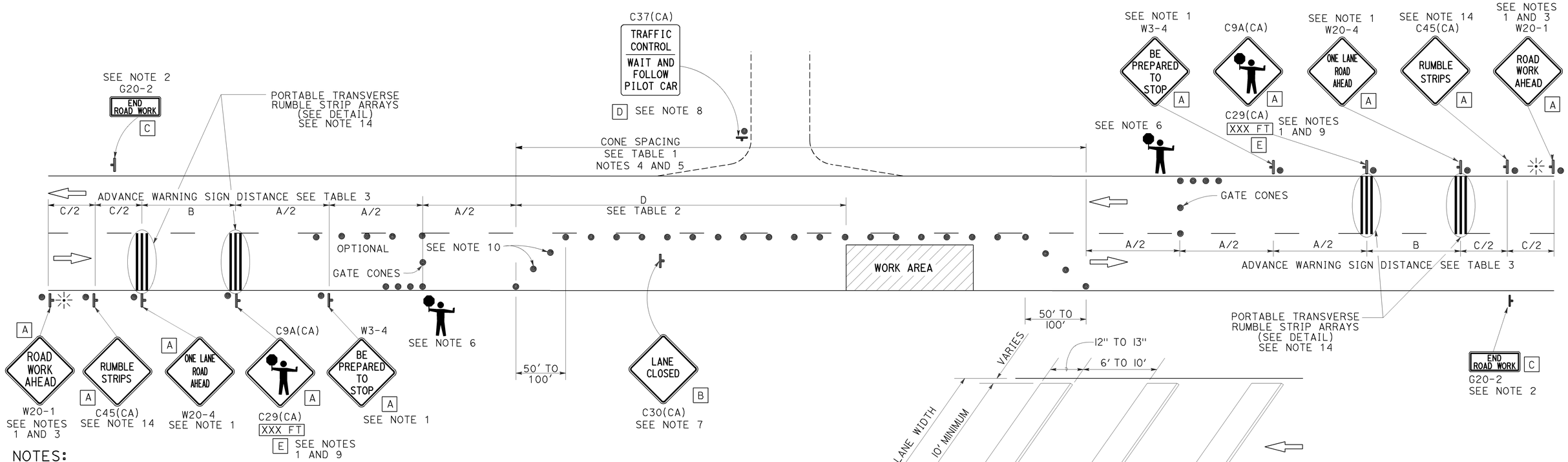


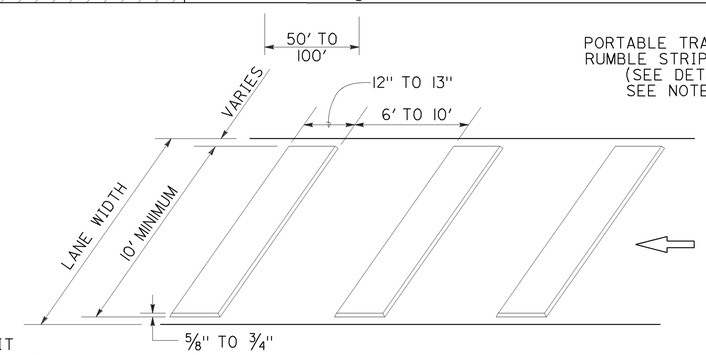


PORTABLE TRANSVERSE RUMBLE STRIP ARRAY DETAIL

## NOTES:

1. Each advance warning sign in each direction of travel shall be equipped with at least two flags for daytime closure. Each flag shall be at least 16" x 16" in size and shall be orange or fluorescent red-orange in color. Flashing beacons shall be placed at the locations indicated for lane closure during hours of darkness.
2. A G20-2 "END ROAD WORK" sign, as appropriate, shall be placed at the end of the lane control unless the end of work area is obvious, or ends within a larger project's limits.
3. If the W20-1 sign would follow within 2000' of a stationary W20-1 or G20-1 "ROAD WORK NEXT _____ MILES", use a W20-4 sign for the first advance warning sign.
4. All cones used for lane closures during the hours of darkness shall be fitted with retroreflective bands (or sleeves) as specified in the specifications.
5. Portable delineators, placed at one-half the spacing indicated for traffic cones, may be used instead of cones for daytime closures only.
6. Additional advance flaggers may be required. Flagger should stand in a conspicuous place, be visible to approaching traffic as well as approaching vehicles after the first vehicle has stopped. During the hours of darkness, the flagging-station and flagger shall be illuminated and clearly visible to approaching traffic. The illumination footprint of the lighting on the ground shall be at least 20' in diameter. Place a minimum of four cones at 50' intervals in advance of flagger station as shown.
7. Place C30(CA) "LANE CLOSED" sign at 500' to 1000' intervals throughout extended work areas. They are optional if the work area is visible from the flagger station.
8. When a pilot car is used, place a C37(CA) "TRAFFIC CONTROL-WAIT AND FOLLOW PILOT CAR" sign with black legend on white background at all intersections, driveways and alleys without a flagger within traffic control area. Signs shall be clean and visible at all times. Where traffic can not be effectively self-regulated, at least one flagger shall be used at each intersection within traffic control area.
9. An optional C29(CA) sign may be placed below the C9A(CA) sign.
10. Either traffic cones or barricades shall be placed on the taper. Barricades shall be Type I, II, or III.
11. The color of the portable transverse rumble strips shall be black or orange. Use 2 arrays, each array shall consist of 3 rumble strips.
12. Portable transverse rumble strips shall not be placed on sharp horizontal or vertical curves nor shall they be placed through pedestrian crossings.
13. If the portable transverse rumble strips become out of alignment (skewed) by more than 6 inches, measured from one end to the other, they shall be readjusted to bring the placement back to the original location.
14. Portable transverse rumble strips are not required if any one of the following conditions is satisfied:
    A. Work duration occupies a location for four hours or less
    B. Posted speed limit is below 45 MPH
    C. Work is of emergency nature
    D. Work zone is in snow or icy weather conditions

## LEGEND

- TRAFFIC CONE
- TEMPORARY TRAFFIC CONTROL SIGN
- PORTABLE FLASHING BEACON
- FLAGGER

## SIGN PANEL SIZE (Min)

| | |
|---|---|
| A | 48" x 48" |
| B | 30" x 30" |
| C | 36" x 18" |
| D | 36" x 42" |
| E | 20" x 7" |

STATE OF CALIFORNIA
DEPARTMENT OF TRANSPORTATION

# TRAFFIC CONTROL SYSTEM FOR LANE CLOSURE ON TWO LANE CONVENTIONAL HIGHWAYS

NO SCALE

RSP T13 DATED OCTOBER 30, 2015 SUPERSEDES RSP T13 DATED OCTOBER 17, 2014, RSP T13 DATED JULY 18, 2014 AND RSP T13 DATED APRIL 19, 2013 AND STANDARD PLAN T13 DATED MAY 20, 2011 - PAGE 241 OF THE STANDARD PLANS BOOK DATED 2010.

**REVISED STANDARD PLAN RSP T13**

10-13-15

| Dist | COUNTY | ROUTE | POST MILES TOTAL PROJECT | SHEET No. | TOTAL SHEETS |
|---|---|---|---|---|---|
| 04 | SM | 101,114 | 1.3/2.5, 5.0/5.3 | 402 | 568 |

REGISTERED CIVIL ENGINEER

April 19, 2013
PLANS APPROVAL DATE

REGISTERED PROFESSIONAL ENGINEER Gurinderpal Bhullar No. C48815 Exp. 9-30-14 CIVIL STATE OF CALIFORNIA

THE STATE OF CALIFORNIA OR ITS OFFICERS OR AGENTS SHALL NOT BE RESPONSIBLE FOR THE ACCURACY OR COMPLETENESS OF SCANNED COPIES OF THIS PLAN SHEET.

TO ACCOMPANY PLANS DATED 6-29-16

# TYPICAL RAMP CLOSURES

## SIGN PANEL SIZE (Min)

- A 48" × 48"
- B 48" × 30"
- C 36" × 36"
- D 48" × 36"

## LEGEND

- TRAFFIC CONE
- TEMPORARY TRAFFIC CONTROL SIGN
- BARRICADES
- PORTABLE FLASHING BEACON

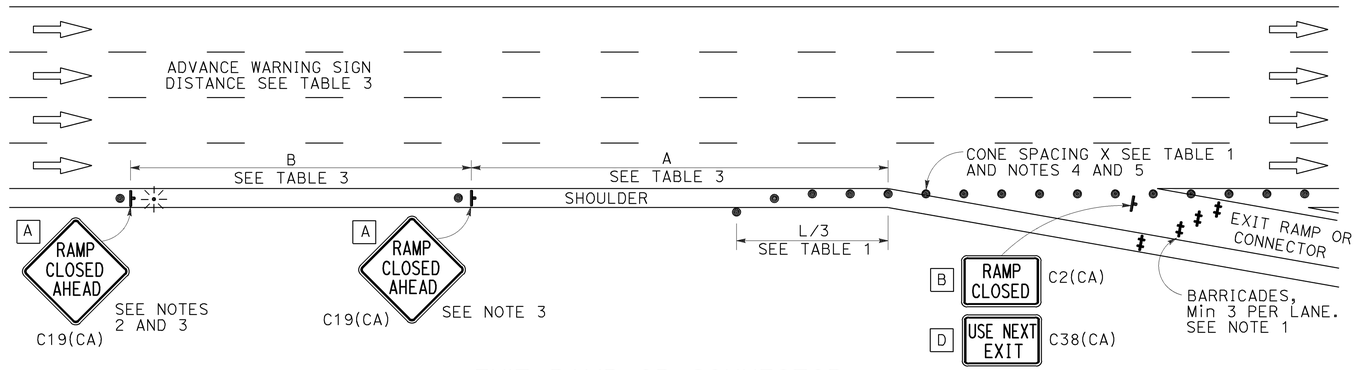


EXIT RAMP OR CONNECTOR

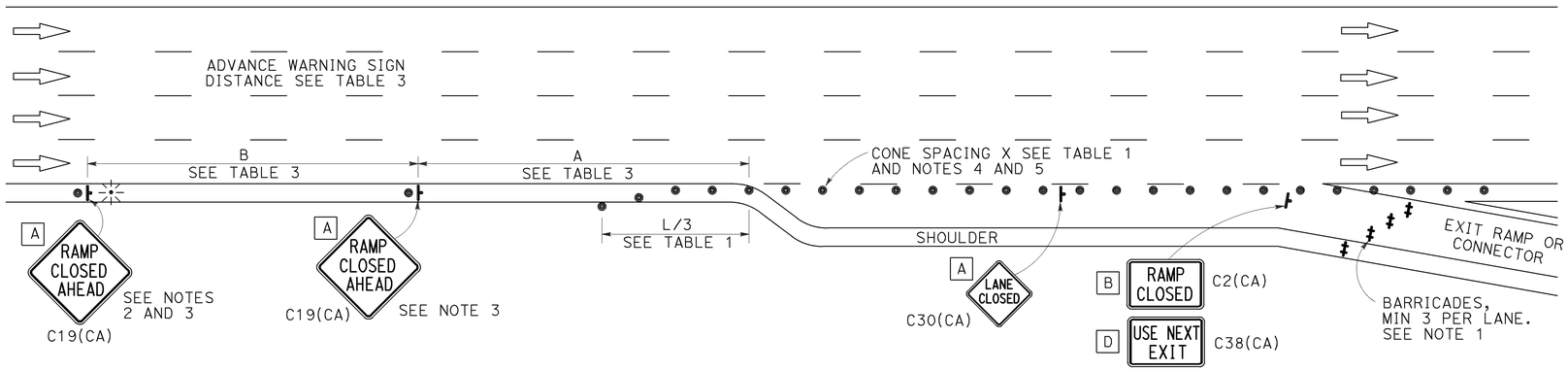


EXIT RAMP OR CONNECTOR WITH ADDITIONAL LANE

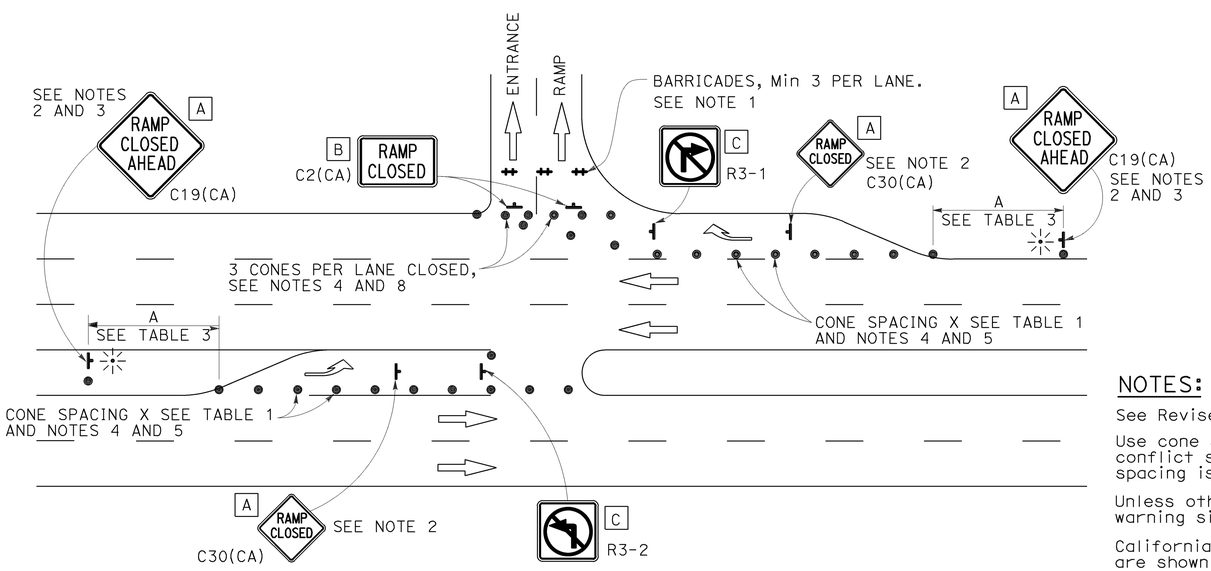


ENTRANCE RAMP WITH TURNING POCKETS

## NOTES:

1. Barricades shall be Type I, II, or III for closures lasting one week or less and Type III for closures lasting longer than one week.
2. In addition to placing the C19(CA) "RAMP CLOSED AHEAD" and C30(CA) "RAMP CLOSED" signs, black on orange overlay plates with the word "CLOSED" may be mounted, as directed by the Engineer, on all guide signs that refer to the closed ramp. The letter size on the overlay shall be the same as the guide sign.
3. Each advance C19(CA) "RAMP CLOSED AHEAD" sign shall be equipped with at least two flags for daytime closure. Each flag shall be at least 16" × 16" in size and shall be orange or fluorescent red-orange in color. A flashing beacon shall be placed on top of the first C19(CA) sign during hours of darkness.
4. All cones used for ramp closures during the hours of darkness shall be fitted with retroreflective bands (or sleeves) as specified in the specifications.
5. Portable delineators, placed at one-half the spacing indicated for traffic cones, may be used instead of cones for daytime ramp closures only.
6. At least one person shall be assigned to provide full time maintenance of traffic control devices, unless otherwise directed by the Engineer.
7. The existing "EXIT" signs shall be covered during ramp closures.
8. A minimum of 3 cones shall be placed transversely across each closed lane and shoulder.

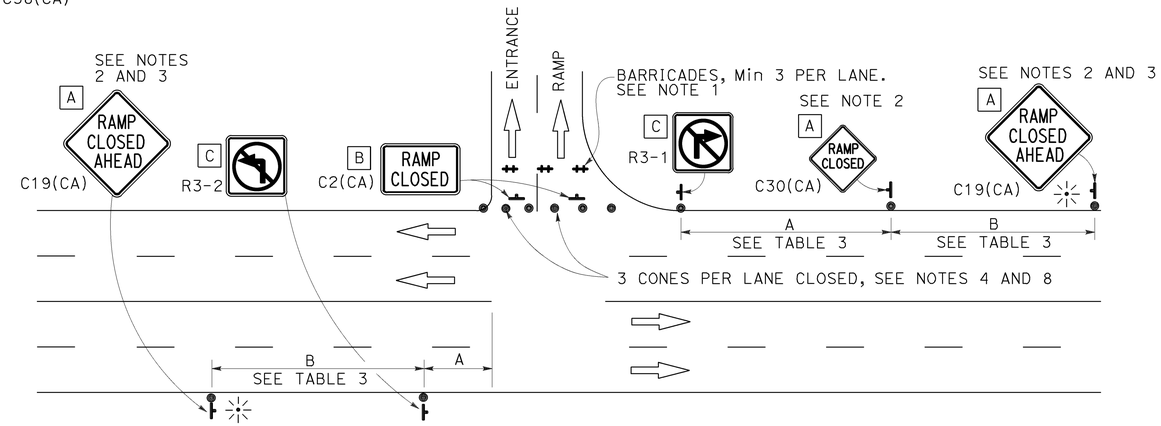


ENTRANCE RAMP WITHOUT TURNING POCKETS

## NOTES:

See Revised Standard Plan RSP T9 for tables.

Use cone spacing X for taper segment, Y for tangent segment or Z for conflict situations, as approriate, per Table 1, unless X, Y, or Z cone spacing is shown on this sheet.

Unless otherwise specified in the special provisions, all temporary warning signs shall have black legend on fluorescent orange background.

California codes are designated by (CA). Otherwise, Federal (MUTCD) codes are shown.

STATE OF CALIFORNIA
DEPARTMENT OF TRANSPORTATION

# TRAFFIC CONTROL SYSTEM FOR RAMP CLOSURE

NO SCALE

RSP T14 DATED APRIL 19, 2013 SUPERSEDES STANDARD PLAN T14 DATED MAY 20, 2011 - PAGE 242 OF THE STANDARD PLANS BOOK DATED 2010.

**REVISED STANDARD PLAN RSP T14**

**2010 REVISED STANDARD PLAN RSP T14**

12-18-12

| Dist | COUNTY | ROUTE | POST MILES TOTAL PROJECT | SHEET No. | TOTAL SHEETS |
|---|---|---|---|---|---|
| 04 | SM | 101,114 | 1.3/2.5, 5.0/5.3 | 403 | 568 |

REGISTERED CIVIL ENGINEER

April 19, 2013
PLANS APPROVAL DATE

REGISTERED PROFESSIONAL ENGINEER
Gurinderpal Bhullar
No. C48815
Exp. 9-30-14
CIVIL
STATE OF CALIFORNIA

THE STATE OF CALIFORNIA OR ITS OFFICERS OR AGENTS SHALL NOT BE RESPONSIBLE FOR THE ACCURACY OR COMPLETENESS OF SCANNED COPIES OF THIS PLAN SHEET.

TO ACCOMPANY PLANS DATED 6-29-16

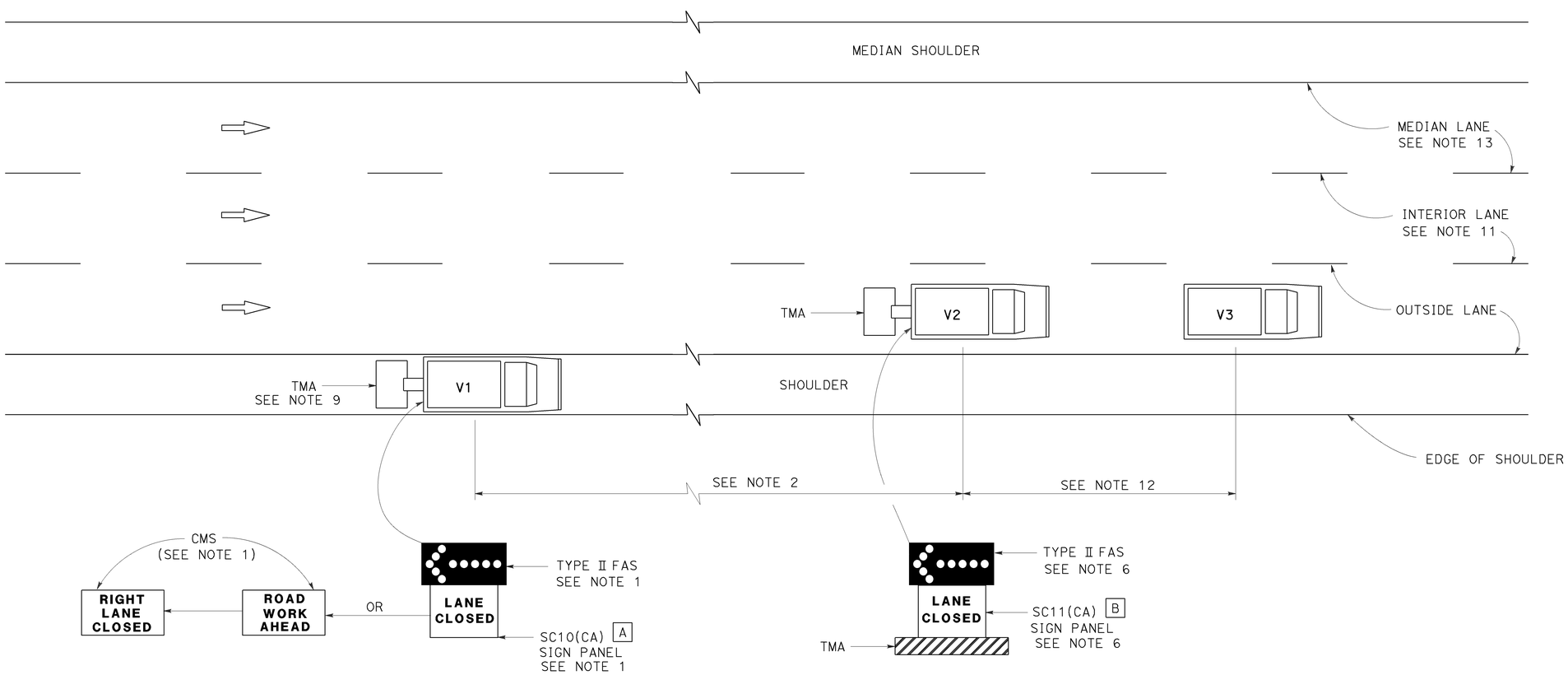


## MOVING LANE CLOSURE ON MEDIAN LANE OR OUTSIDE LANE OF MULTILANE HIGHWAYS

## SIGN PANEL SIZE (Min)

A 66" x 36"

B 54" x 42"

## LEGEND

| | |
|---|---|
| V1 | SIGN VEHICLE |
| V2 | SHADOW VEHICLE |
| V3 | WORK/APPLICATION VEHICLE |
| | FLASHING ARROW SIGN (FAS) |
| CMS | CHANGEABLE MESSAGE SIGN |
| TMA | TRUCK-MOUNTED ATTENUATOR |

## NOTES:

1. Either a changeable message sign or a SC10(CA) sign panel and a Type II flashing arrow sign shall be mounted on the rear of sign vehicle V1. The changeable message sign shall be sequenced to show the "ROAD WORK AHEAD" message first, followed by the "RIGHT LANE CLOSED" message. For median lane closure, the flashing arrow symbol shall be reversed with the arrowhead on the right and the changeable message sign shall show "LEFT LANE CLOSED".
2. If traffic queues develop, sign vehicle V1 should be positioned upstream from the end of queue. Sign vehicle V1 shall be positioned where highly visible when shoulders are not available.
3. A minimum sight distance of 1500′ should be provided in advance of sign vehicle V1.
4. Sign vehicle V1 should remain at the beginning of horizontal or vertical curves until the other vehicles (V2 and V3) are far enough beyond the curve to resume the minimum sight distance of 1500′.
5. Vehicle-mounted sign panels shall have Type III or above retroreflective sheeting, black on white, or black on fluorescent orange, with 6" minimum series D letters per Caltrans sign specifications.
6. Shadow vehicle V2 shall be equipped with a truck-mounted attenuator. The sign panel shown and a Type II flashing arrow sign shall be mounted on the rear of shadow vehicle V2. For median lane closure the flashing arrow sign symbol shall be displayed with the arrowhead on the right.
7. All vehicles used for lane closures shall be equipped with two-way radios, and the vehicle operators shall maintain communication during the work or application operation.
8. All vehicles shall be equipped with flashing or rotating amber lights.
9. If sign vehicle V1 encroaches into the traffic lane due to insufficient shoulder width, sign vehicle V1 shall be equipped with a truck-mounted attenuator. Sign vehicle V1 shall stay as close to the edge of shoulder as practicable.
10. Where workers would be on foot in the work area, a stationary type lane closure (Revised Standard Plan T10, T11, etc., as applicable) shall be used instead of this plan.
11. For moving lane closure on interior lane of multilane highways, use Revised Standard Plan T16.
12. The spacing between work vehicle(s) and the shadow vehicles, and between each shadow vehicle should be minimized to deter road users from driving in between.
13. When the work/application vehicle V3 occupies the median lane, sign vehicle V1 should drive in the median shoulder and indicate left lane closed ahead.

STATE OF CALIFORNIA
DEPARTMENT OF TRANSPORTATION

# TRAFFIC CONTROL SYSTEM FOR MOVING LANE CLOSURE ON MULTILANE HIGHWAYS

NO SCALE

RSP T15 DATED APRIL 19, 2013 SUPERSEDES STANDARD PLAN T15
DATED MAY 20, 2011 - PAGE 243 OF THE STANDARD PLANS BOOK DATED 2010.

**REVISED STANDARD PLAN RSP T15**

**2010 REVISED STANDARD PLAN RSP T15**

12-18-12

| Dist | COUNTY | ROUTE | POST MILES TOTAL PROJECT | SHEET No. | TOTAL SHEETS |
|---|---|---|---|---|---|
| 04 | SM | 101,114 | 1.3/2.5, 5.0/5.3 | 404 | 568 |

REGISTERED CIVIL ENGINEER

April 19, 2013
PLANS APPROVAL DATE

REGISTERED PROFESSIONAL ENGINEER Gurinderpal Bhullar No. C48815 Exp. 9-30-14 CIVIL STATE OF CALIFORNIA

*THE STATE OF CALIFORNIA OR ITS OFFICERS OR AGENTS SHALL NOT BE RESPONSIBLE FOR THE ACCURACY OR COMPLETENESS OF SCANNED COPIES OF THIS PLAN SHEET.*

TO ACCOMPANY PLANS DATED 6-29-16

**2010 REVISED STANDARD PLAN RSP T16**

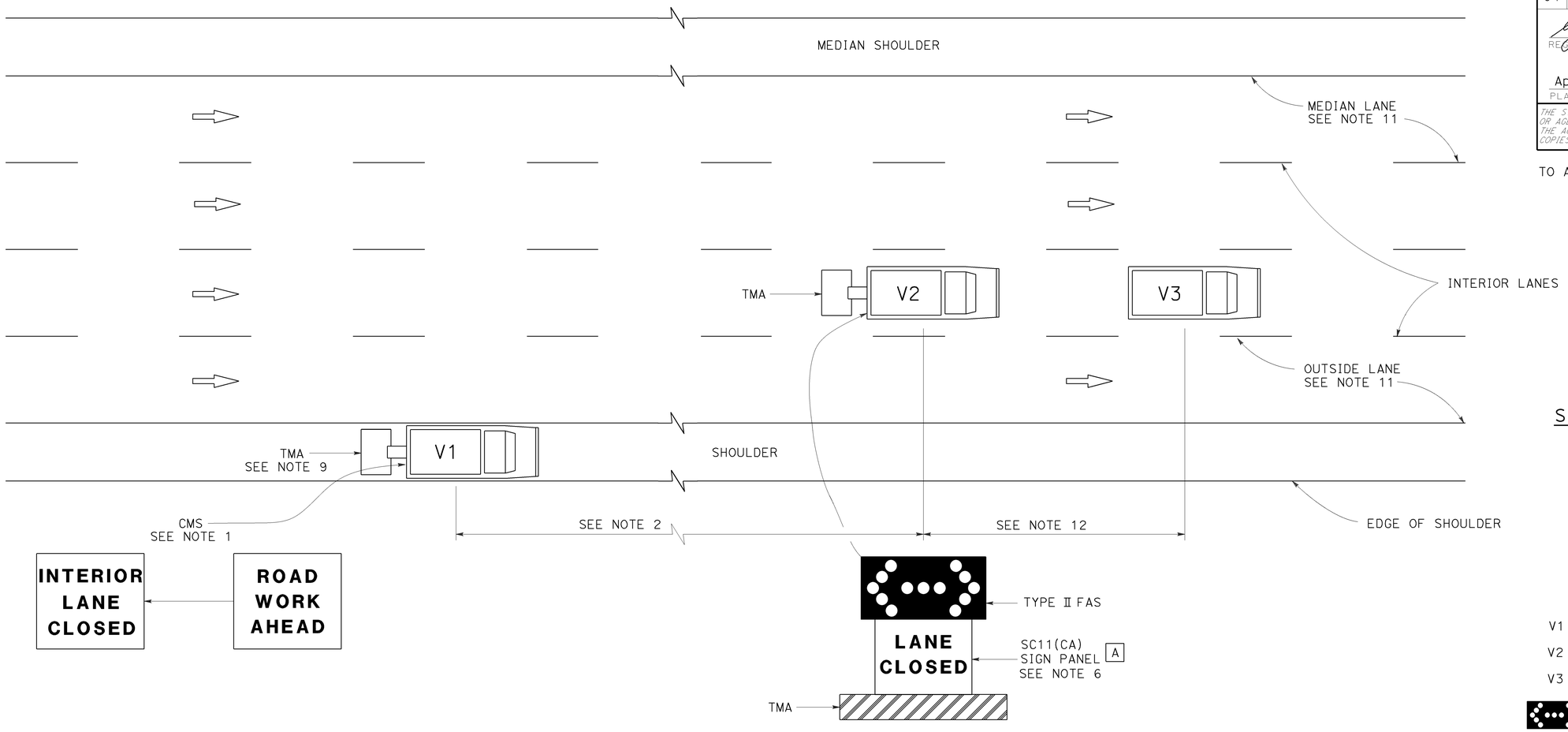


## SIGN PANEL SIZE (Min)

A 54" x 42"

## LEGEND

| | |
|---|---|
| V1 | SIGN VEHICLE |
| V2 | SHADOW VEHICLE |
| V3 | WORK/APPLICATION VEHICLE |
| | FLASHING ARROW SIGN (FAS) IN FLASHING DOUBLE ARROW MODE |
| CMS | CHANGEABLE MESSAGE SIGN |
| TMA | TRUCK-MOUNTED ATTENUATOR |

## MOVING LANE CLOSURE ON INTERIOR LANE OF MULTILANE HIGHWAYS

## NOTES:

1. A changeable message sign shall be mounted on the rear of sign vehicle V1. The changeable message sign shall be sequenced to show the "ROAD WORK AHEAD" message first, followed by the "INTERIOR LANE CLOSED" message. The message "CENTER LANE CLOSED" may be used in place of the "INTERIOR LANE CLOSED" message.
2. If traffic queues develop, sign vehicle V1 should be positioned upstream from the end of queue. Sign vehicle V1 shall be positioned where highly visible when shoulders are not available.
3. A minimum sight distance of 1500′ should be provided in advance of sign vehicle V1.
4. Sign vehicle V1 should remain at the beginning of horizontal or vertical curves until the other vehicles (V2 and V3) are far enough beyond the curve to resume the minimum sight distance of 1500′.
5. Vehicle-mounted sign panels shall have Type III or above retroreflective sheeting, black on white, or black on fluorescent orange, with 6" minimum series D letters per Caltrans sign specifications.
6. Shadow vehicle V2 shall be equipped with a truck-mounted attenuator. The sign panel shown and a Type II flashing arrow sign shall be mounted on the rear of shadow vehicle V2.
7. All vehicles used for lane closures shall be equipped with two-way radios, and the vehicle operators shall maintain communication during the work or application operation.
8. All vehicles shall be equipped with flashing or rotating amber lights.
9. If sign vehicle V1 encroaches into the traffic lane due to insufficient shoulder width, sign vehicle V1 shall be equipped with a truck-mounted attenuator. Sign vehicle V1 shall stay as close to the edge of shoulder as practicable.
10. Where workers would be on foot in the work area, a stationary type lane closure (Revised Standard Plan T10, T11 etc., as applicable) shall be used instead of this plan.
11. For moving lane closure on median lane or outside lane of multilane highways, use Revised Standard Plan T15.
12. The spacing between work vehicle(s) and the shadow vehicles, and between each shadow vehicle should be minimized to deter road users from driving in between.

STATE OF CALIFORNIA
DEPARTMENT OF TRANSPORTATION

# TRAFFIC CONTROL SYSTEM FOR MOVING LANE CLOSURE ON MULTILANE HIGHWAYS

NO SCALE

RSP T16 DATED APRIL 19, 2013 SUPERSEDES STANDARD PLAN T16
DATED MAY 20, 2011 - PAGE 244 OF THE STANDARD PLANS BOOK DATED 2010.

**REVISED STANDARD PLAN RSP T16**

12-18-12

| Dist | COUNTY | ROUTE | POST MILES TOTAL PROJECT | SHEET No. | TOTAL SHEETS |
|---|---|---|---|---|---|
| 04 | SM | 101,114 | 1.3/2.5, 5.0/5.3 | 405 | 568 |

REGISTERED CIVIL ENGINEER

April 19, 2013
PLANS APPROVAL DATE

REGISTERED PROFESSIONAL ENGINEER
Gurinderpal Bhullar
No. C48815
Exp. 9-30-14
CIVIL
STATE OF CALIFORNIA

THE STATE OF CALIFORNIA OR ITS OFFICERS OR AGENTS SHALL NOT BE RESPONSIBLE FOR THE ACCURACY OR COMPLETENESS OF SCANNED COPIES OF THIS PLAN SHEET.

TO ACCOMPANY PLANS DATED 6-29-16

2010 REVISED STANDARD PLAN RSP T17

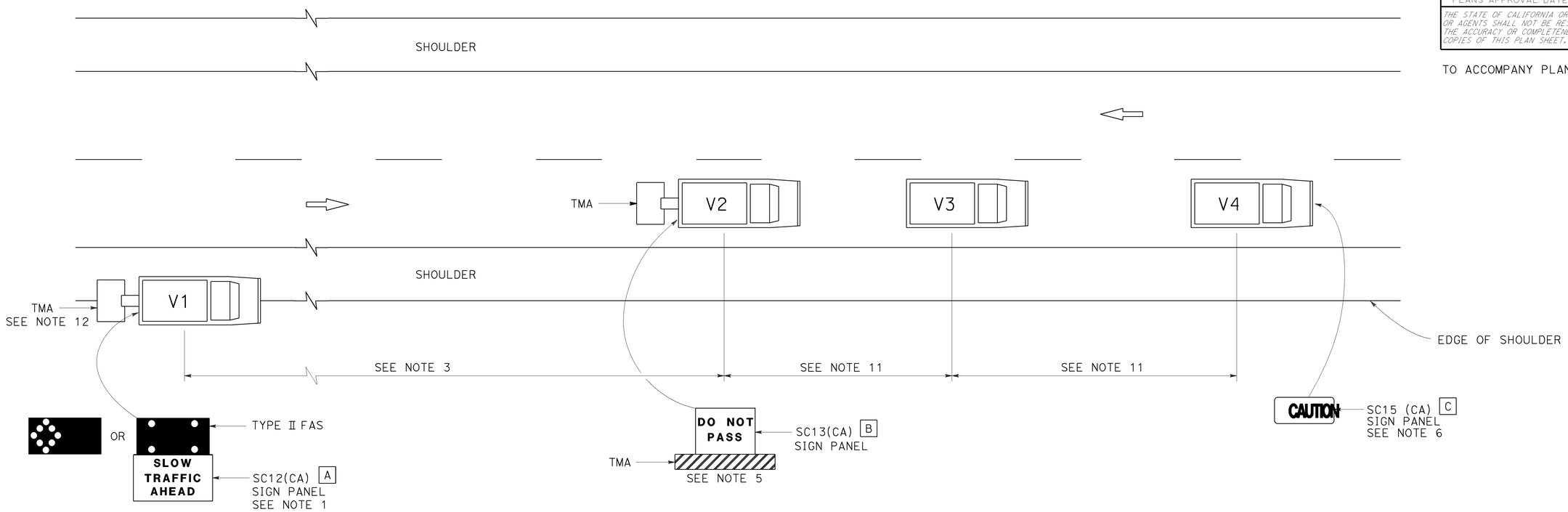


## LEGEND

| | |
|---|---|
| V1 | SIGN VEHICLE |
| V2 | SHADOW VEHICLE |
| V3 | WORK/APPLICATION VEHICLE |
| V4 | SIGN VEHICLE |
| TMA | TRUCK-MOUNTED ATTENUATOR |
| | FLASHING ARROW SIGN (FAS) IN FLASHING CAUTION MODE |
| | FLASHING ARROW SIGN (FAS) IN ALTERNATING DIAMOND CAUTION |

## SIGN PANEL SIZE (Min)

| | |
|---|---|
| A | 72" x 42" |
| B | 54" x 42" |
| C | 54" x 24" |

## NOTES:

1. Either a changeable message sign or a SC12(CA) "SLOW TRAFFIC AHEAD" sign shall be mounted on the rear of sign vehicle V1. The changeable message sign shall be sequenced to show the "CAUTION" message first, follow by the "SLOW TRAFFIC AHEAD" message. A Type II flashing arrow sign may be used with the SC12(CA) sign panel.
2. Sign vehicle V1 should be positioned where highly visible when shoulders are not available.
3. If traffic queues develop, sign vehicle V1 should be positioned upstream from the end of queue.
4. Vehicle-mounted sign panels shall have Type III or above retroreflective sheeting, black on white, or black on fluorescent orange, with 6" minimum series D letters per Caltrans sign specifications.
5. Shadow vehicle shall be equipped with a truck-mounted attenuator. The sign panel shown shall be mounted on the rear of shadow vehicle V2. The message "LANE CLOSED" may be used in place of the "DO NOT PASS" message.
6. The sign panel shown shall be mounted on the front of sign vehicle V4, facing opposing traffic.
7. All vehicles shall be equipped with flashing or rotating amber lights.
8. Sign vehicle V4 will not be required when the work and vehicles V2 and V3 are 2′ or more from the centerline of the highway during the work or application operations.
9. All vehicles used for lane closures shall be equipped with two-way radios and the vehicle operators shall maintain communication during the work or application operation.
10. This plan shall not be used where workers would be on foot in the work area. Use a stationary type lane closure (Revised Standard Plan T13) for this condition.
11. Minimize spacing between vehicles V2 and V3 and vehicles V3 and V4 to deter road users from driving in between them.
12. If sign vehicle V1 encroaches into the traffic lane due to insufficient shoulder width, sign vehicle V1 shall be equipped with a truck-mounted attenuator. Sign vehicle V1 shall stay as close to the edge of shoulder as practicable.

STATE OF CALIFORNIA
DEPARTMENT OF TRANSPORTATION

# TRAFFIC CONTROL SYSTEM FOR MOVING LANE CLOSURE ON TWO LANE HIGHWAYS

NO SCALE

RSP T17 DATED APRIL 19, 2013 SUPERSEDES STANDARD PLAN T17
DATED MAY 20, 2011 - PAGE 245 OF THE STANDARD PLANS BOOK DATED 2010.

**REVISED STANDARD PLAN RSP T17**

12-18-12

| Dist | COUNTY | ROUTE | POST MILES TOTAL PROJECT | SHEET No. | TOTAL SHEETS |
|---|---|---|---|---|---|
| 04 | SM | 101,114 | 1.3/2.5, 5.0/5.3 | 406 | 568 |

REGISTERED CIVIL ENGINEER

April 20, 2012
PLANS APPROVAL DATE

REGISTERED PROFESSIONAL ENGINEER Gary Wang No. C58298 Exp. 6-30-12 CIVIL STATE OF CALIFORNIA

*THE STATE OF CALIFORNIA OR ITS OFFICERS OR AGENTS SHALL NOT BE RESPONSIBLE FOR THE ACCURACY OR COMPLETENESS OF SCANNED COPIES OF THIS PLAN SHEET.*

TO ACCOMPANY PLANS DATED 6-29-16

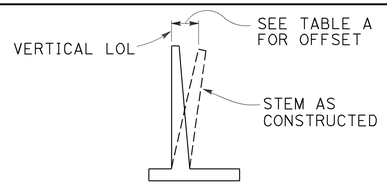


## APPROXIMATE WALL OFFSET VALUES

Values for offseting forms to be determined by the Engineer.

TABLE A

| H | OFFSET |
|---|---|
| 4'-12' | H/200 |
| 14'-16' | H/160 |
| 18'-20' | H/140 |
| 22'-24' | H/130 |
| 26'-36' | 2½" |

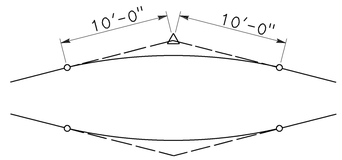


## 20'-0" VC AT TOP OF WALL SLOPE CHANGE

Where shown on the plans

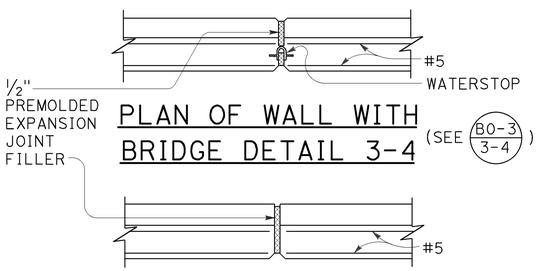


## PLAN OF WALL WITH BRIDGE DETAIL 3-4

(SEE B0-3 / 3-4)

## PLAN OF WALL WITH EXPANSION JOINT ONLY

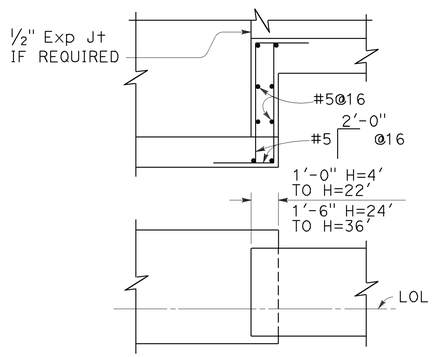


## FOOTING STEP

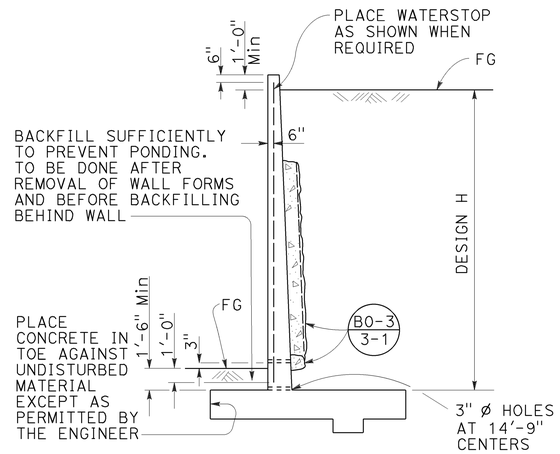


## DESIGN AND DRAINAGE

## DESIGN CONDITIONS:

Design "H" may be exceeded by 6" before going to the next size. Special footing design is required where foundation material is incapable of supporting bearing stress listed in table

Return wall not required unless shown elsewhere

## DESIGN NOTES:

DESIGN: AASHTO LRFD Bridge Design Specifications, 4th edition with California Amendments

LIVE LOAD: Surcharge on level ground surface

SOIL: $\phi$ = 34°
$\gamma$ = 120 pcf

REINFORCED CONCRETE: fy = 60,000 psi
fc' = 3,600 psi

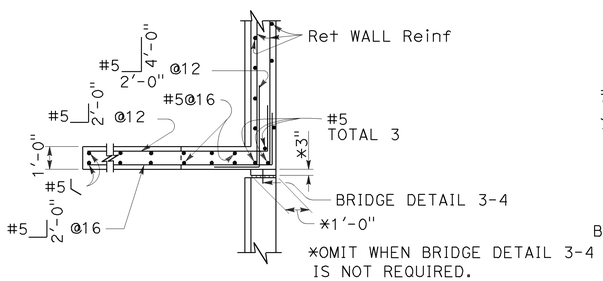


## PLAN

(For return wall Type "A")

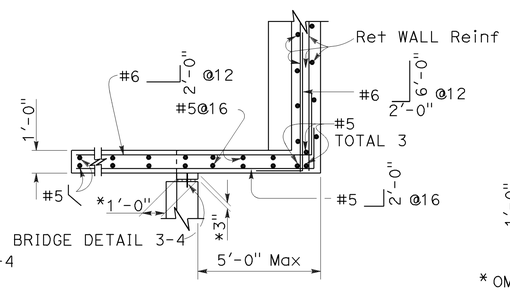


## PLAN

(For return wall Type "B")

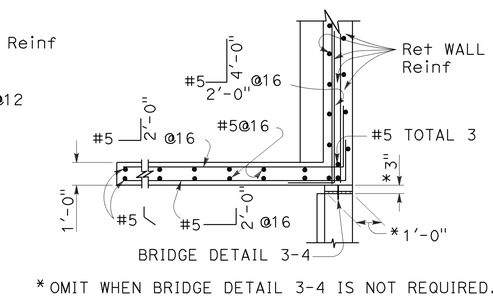


*OMIT WHEN BRIDGE DETAIL 3-4 IS NOT REQUIRED.

## PLAN

(For return wall Type "C")

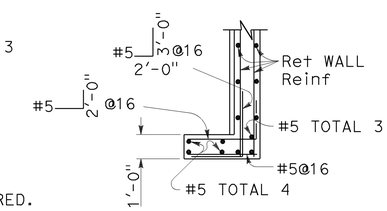


## PLAN

(For return wall Type "D")

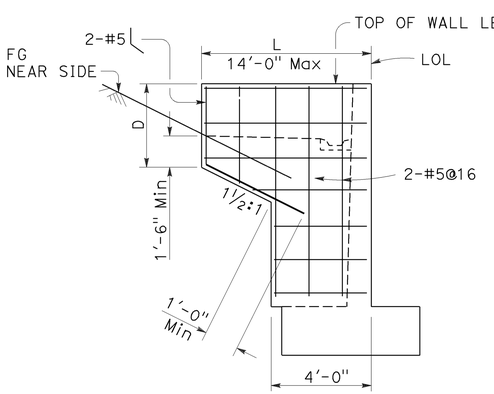


## ELEVATION

## RETURN WALL TYPE "A"

Use where H=8' or less

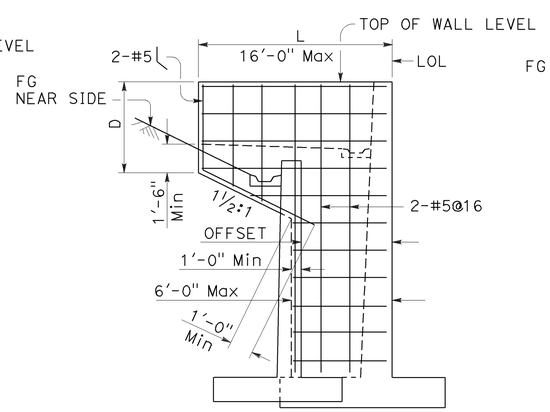


## ELEVATION

## RETURN WALL TYPE "B"

Use where H=10' or more on offset walls

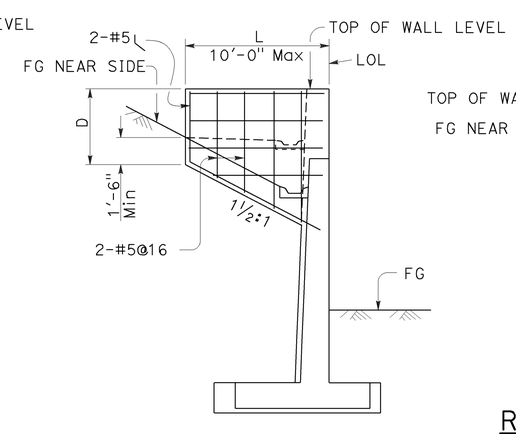


## ELEVATION

## RETURN WALL TYPE "C"

Use where H=10' or more on straight walls

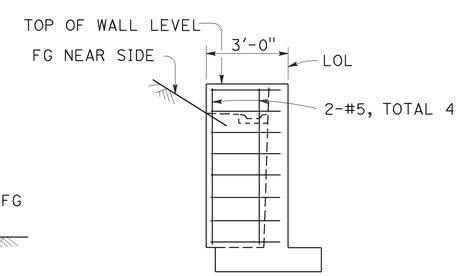


## ELEVATION

## RETURN WALL TYPE "D"

Use where H=6' or less

STATE OF CALIFORNIA
DEPARTMENT OF TRANSPORTATION

# RETAINING WALL DETAILS No. 1

NO SCALE

RSP B3-5 DATED APRIL 20, 2012 SUPERSEDES STANDARD PLAN B3-5
DATED MAY 20, 2011 - PAGE 277 OF THE STANDARD PLANS BOOK DATED 2010.

**REVISED STANDARD PLAN RSP B3-5**

**2010 REVISED STANDARD PLAN RSP B3-5**

| Dist | COUNTY | ROUTE | POST MILES TOTAL PROJECT | SHEET No. | TOTAL SHEETS |
|---|---|---|---|---|---|
| 04 | SM | 101,114 | 1.3/2.5, 5.0/5.3 | 407 | 568 |

REGISTERED CIVIL ENGINEER

October 30, 2015
PLANS APPROVAL DATE

REGISTERED PROFESSIONAL ENGINEER Efthymios Delis No. C51434 Exp. 6-30-17 CIVIL STATE OF CALIFORNIA

*THE STATE OF CALIFORNIA OR ITS OFFICERS OR AGENTS SHALL NOT BE RESPONSIBLE FOR THE ACCURACY OR COMPLETENESS OF SCANNED COPIES OF THIS PLAN SHEET.*

TO ACCOMPANY PLANS DATED 6-29-16

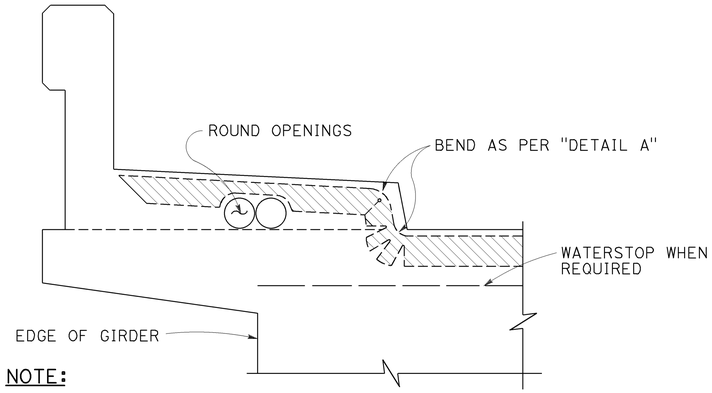


**NOTE:**
Type "B" seal shown. Type "A" seals to comform to the general path of seal shown, cuts for bending not required. Bend type "A" seals 3" up into curb or barrier rail on only the low end of the seal.

CONCRETE BARRIER AND SIDEWALK

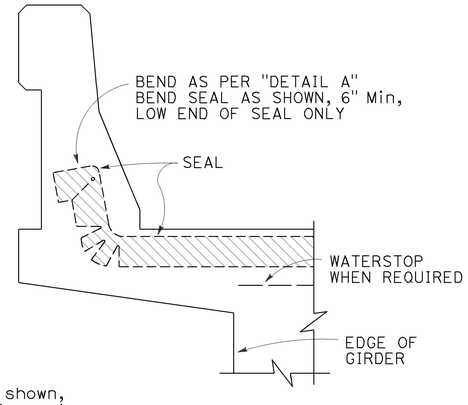


CONCRETE BARRIER

# JOINT SEALS DETAILS

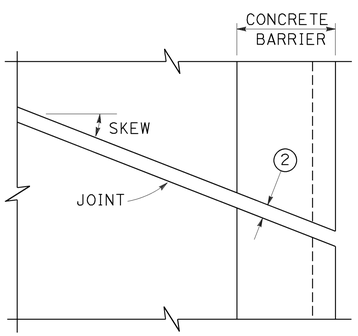


PLAN OF JOINT (SKEW ≤ 20°)

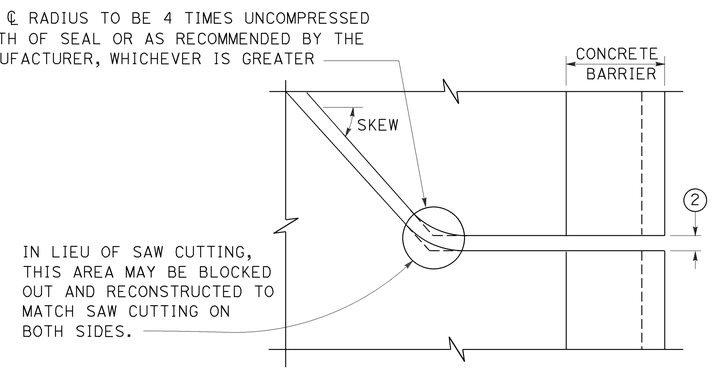


PLAN OF JOINT (SKEW > 20°)

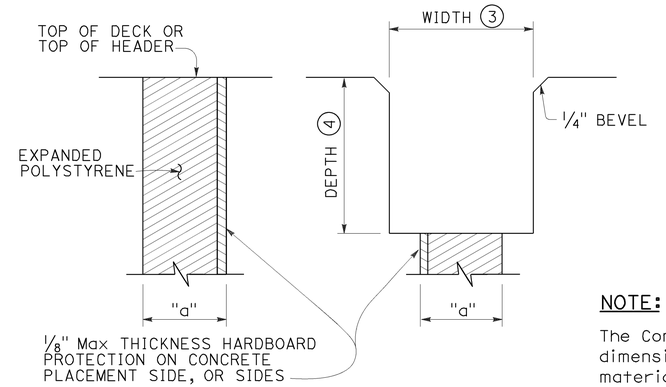


FORMING DETAIL SAWCUT DETAIL

**NOTE:**
The Contractor shall verify all controlling field dimensions before ordering or fabricatiing any material.

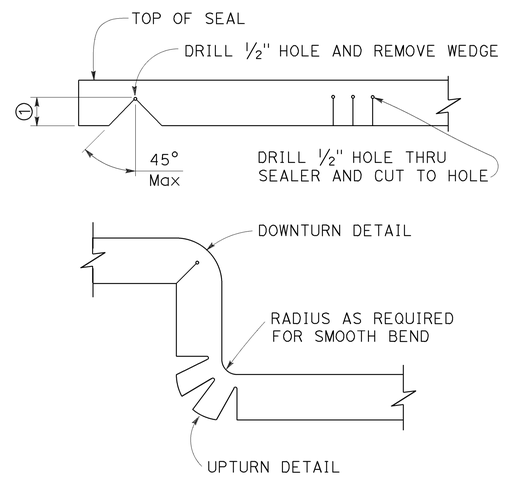


DETAIL A

**NOTES:**

1. Make smooth cuts from the bottom of seal to 1½" clear of top leaving at least one complete cell between the top of the cut and top of the seal. When necessary cut back of seal to clear conduit and round openings.
2. Opening in barrier to match width of sawn deck joint.
3. Sawcut groove widths shall be as ordered by the Engineer.
4. Depth of sawcut: Type A - Depth to be 2" minimum.
   Type B - Depth to be equal to or greater than the depth of seal measured along the contact surface, when compressed to minimum width position ($W_2$) plus dimensions shown.
5. MR (movement rating) as shown on other plan sheets.
6. Other depths must be approved by the Engineer.
7. A sidewalk joint shall be covered by an expansion joint armor.

DIMENSIONS "a" OF JOINT REQUIRED

| MOVEMENT RATING (MR) 5 | BRIDGE TYPE | "a" DIMENSION DECK CONCRETE PLACED | | |
|---|---|---|---|---|
| | | WINTER | FALL-SPRING | SUMMER |
| 2" | ALL EXCEPT CIP/PS | 1½" | 1¼" | ¾" |
| | CIP/PS | 1¼" | 1" | ½" |
| 1½" | ALL EXCEPT CIP/PS | 1¼" | 1" | ½" |
| | CIP/PS | 1" | ¾" | ½" |
| 1" | ALL EXCEPT CIP/PS | 1" | ¾" | ½" |
| | CIP/PS | ¾" | ½" | ½" |
| ½" | ALL EXCEPT CIP/PS | ¾" | ¾" | ½" |
| | CIP/PS | ½" | ½" | ½" |

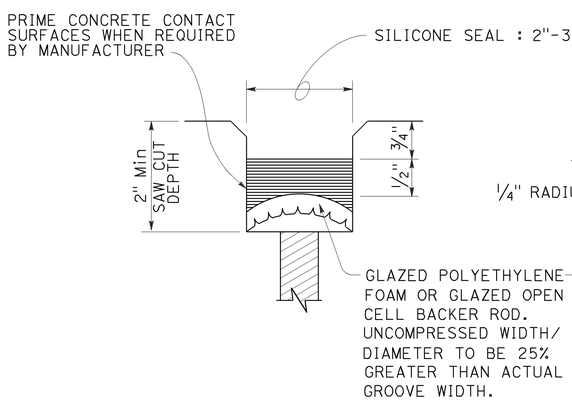


TYPE A SEAL
Movement rating : Silicone = 1" Max

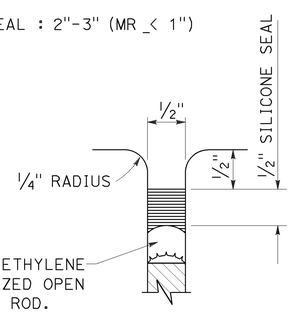


TYPE AL SEAL
Longitudinal joints only

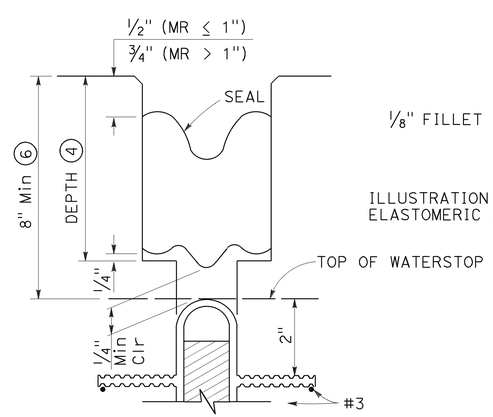


TYPE B JOINT SEAL
IN MINIMUM WIDTH POSITION ($W_2$)

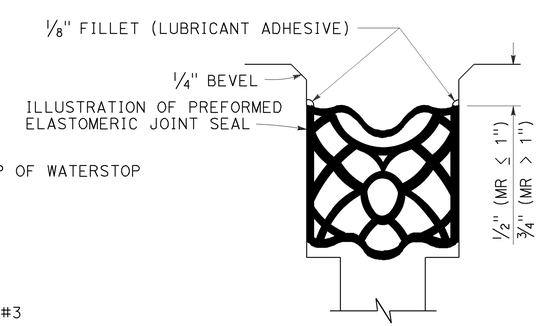


TYPE B SEAL
Movement Rating ≤ 2"

STATE OF CALIFORNIA
DEPARTMENT OF TRANSPORTATION

**JOINT SEALS (MAXIMUM MOVEMENT RATING = 2")**

NO SCALE

RSP B6-21 DATED OCTOBER 30, 2015 SUPERSEDES STANDARD PLAN B6-21 DATED MAY 20, 2011 - PAGE 283 OF THE STANDARD PLANS BOOK DATED 2010.

**REVISED STANDARD PLAN RSP B6-21**

**2010 REVISED STANDARD PLAN RSP B6-21**

8-18-15

| Dist | COUNTY | ROUTE | POST MILES TOTAL PROJECT | SHEET No. | TOTAL SHEETS |
|---|---|---|---|---|---|
| 04 | SM | 101,114 | 1.3/2.5, 5.0/5.3 | 408 | 568 |

REGISTERED CIVIL ENGINEER

July 15, 2016
PLANS APPROVAL DATE

REGISTERED PROFESSIONAL ENGINEER
Tillat Satter
No. C42892
Exp. 3-31-18
CIVIL
STATE OF CALIFORNIA

*THE STATE OF CALIFORNIA OR ITS OFFICERS OR AGENTS SHALL NOT BE RESPONSIBLE FOR THE ACCURACY OR COMPLETENESS OF SCANNED COPIES OF THIS PLAN SHEET.*

TO ACCOMPANY PLANS DATED 6-29-16

**2010 REVISED STANDARD PLAN RSP B11-54**

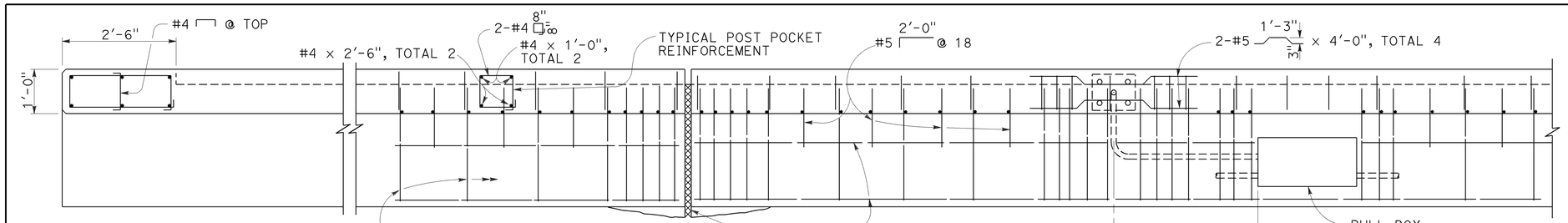


PLAN

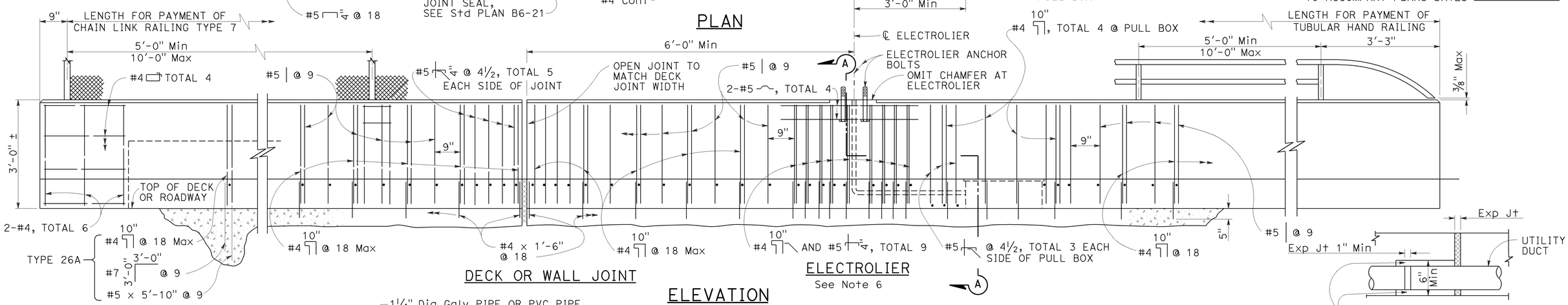


DECK OR WALL JOINT

ELECTROLIER
See Note 6

ELEVATION

UTILITY DUCT EXPANSION JOINT

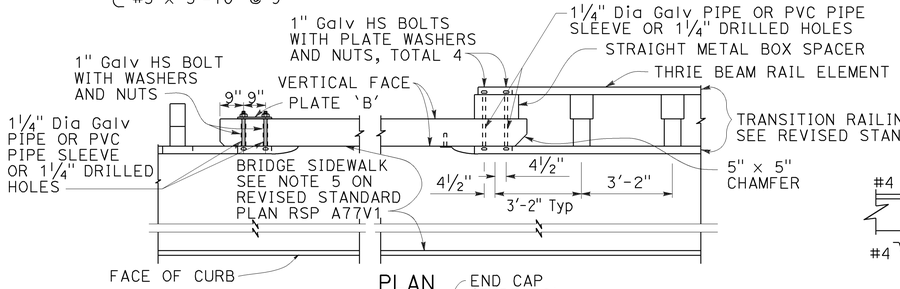


PLAN

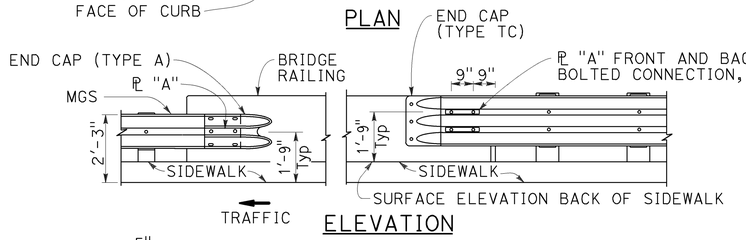


ELEVATION

METAL RAILING CONNECTION TO BRIDGE RAILING

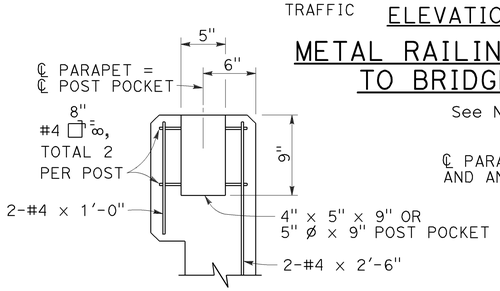


POST ANCHORAGE DETAIL

Applies to Chain Link Railing Type 7 and Tubular Hand Railing. See respective Standard Plans for additional details.

See Note 9

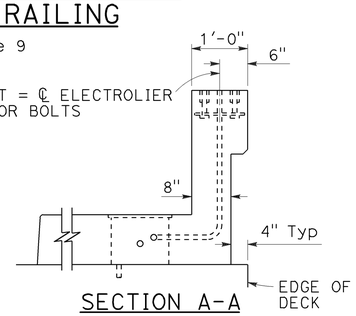


SECTION A-A

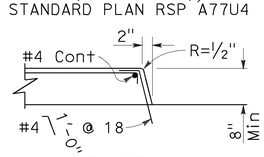


TYPE H

To be used unless otherwise shown on plans.

CURB DETAIL

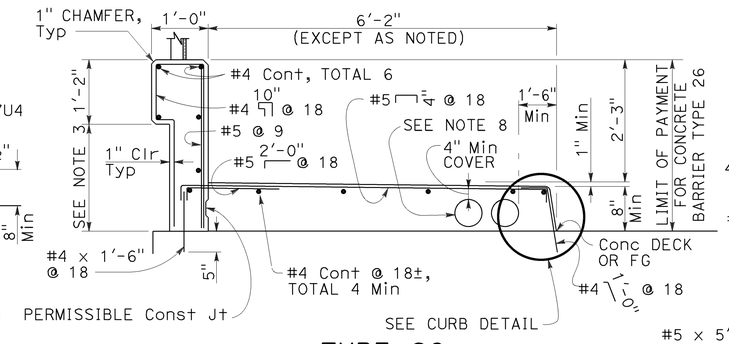


TYPE 26

On bridge deck

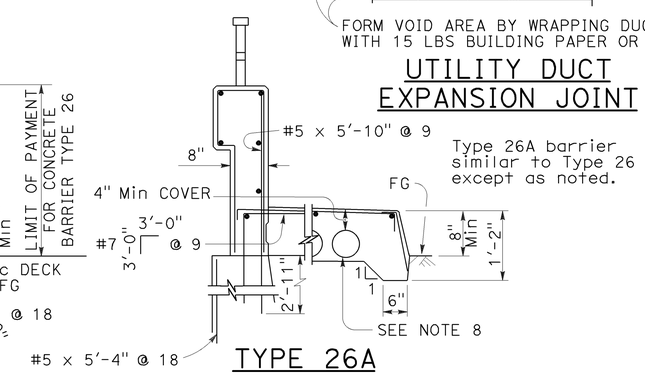


TYPE 26A

Off bridge deck

NOTES:

1. For Chain Link Railing notes and details not shown, see Standard Plan B11-52.
2. For Hand Railing notes and details not shown, see Revised Standard Plan RSP B11-51.
3. Dimensions will vary with cross slope and with certain thicknesses of surfacing. See Project Plans.
4. Walls are to be backfilled before railing is placed.
5. Clearance to reinforcing steel in curb and railing to be 1" except as noted. Longitudinal reinforcement to stop at all expansion joints.
6. See Project Plans for electrolier locations and pull box type.
7. For electrical details, see Revised Standard Plans RSP ES-9A, RSP ES-9B, RSP ES-9C, RSP ES-9D and RSP ES-9E.
8. A maximum of five - 4" and a minimum of two - 4" round openings for future utilities. Openings are to be sealed at ends and extended 8" minimum past end of sidewalk if not used. Duct forms are to be tied down. Minimum of 6" from face of rail to utility opening. See Standard Plan B14-3 for minimum spacing between conduits and for details at joints.
9. For typical metal railing connection details not shown, see Revised Standard Plans RSP A77V1 and RSP A77V2.
10. This barrier is to be used only for speeds of 45 MPH or less. For speeds greater than 45 MPH, pedestrians should be protected by a separation traffic barrier.

STATE OF CALIFORNIA
DEPARTMENT OF TRANSPORTATION

# CONCRETE BARRIER TYPE 26

NO SCALE

RSP B11-54 DATED JULY 15, 2016 SUPERSEDES RSP B11-54 DATED NOVEMBER 15, 2013 AND RSP B11-54 DATED JULY 19, 2013 AND STANDARD PLAN B11-54 DATED MAY 20, 2011 - PAGE 296 OF THE STANDARD PLANS BOOK DATED 2010.

**REVISED STANDARD PLAN RSP B11-54**

6-29-16

| Dist | COUNTY | ROUTE | POST MILES TOTAL PROJECT | SHEET No. | TOTAL SHEETS |
|---|---|---|---|---|---|
| 04 | SM | 101,114 | 1.3/2.5, 5.0/5.3 | 409 | 568 |

REGISTERED CIVIL ENGINEER

July 15, 2016
PLANS APPROVAL DATE

REGISTERED PROFESSIONAL ENGINEER
Tillat Satter
No. C42892
Exp. 3-31-18
CIVIL
STATE OF CALIFORNIA

*THE STATE OF CALIFORNIA OR ITS OFFICERS OR AGENTS SHALL NOT BE RESPONSIBLE FOR THE ACCURACY OR COMPLETENESS OF SCANNED COPIES OF THIS PLAN SHEET.*

TO ACCOMPANY PLANS DATED 6-29-16

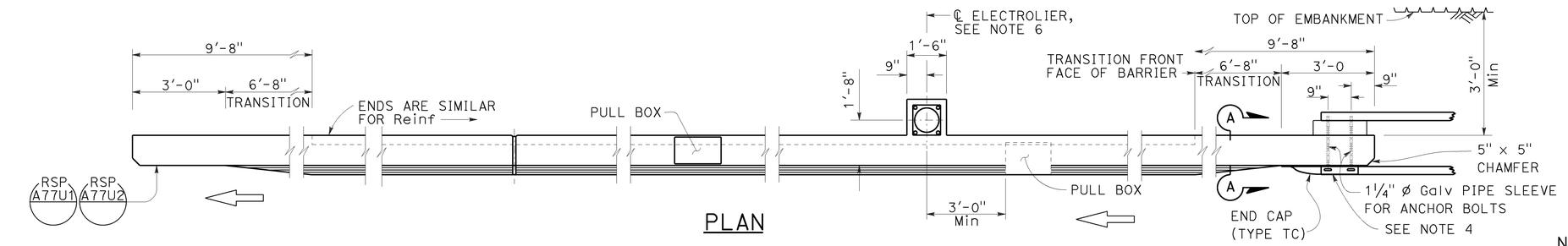


## PLAN

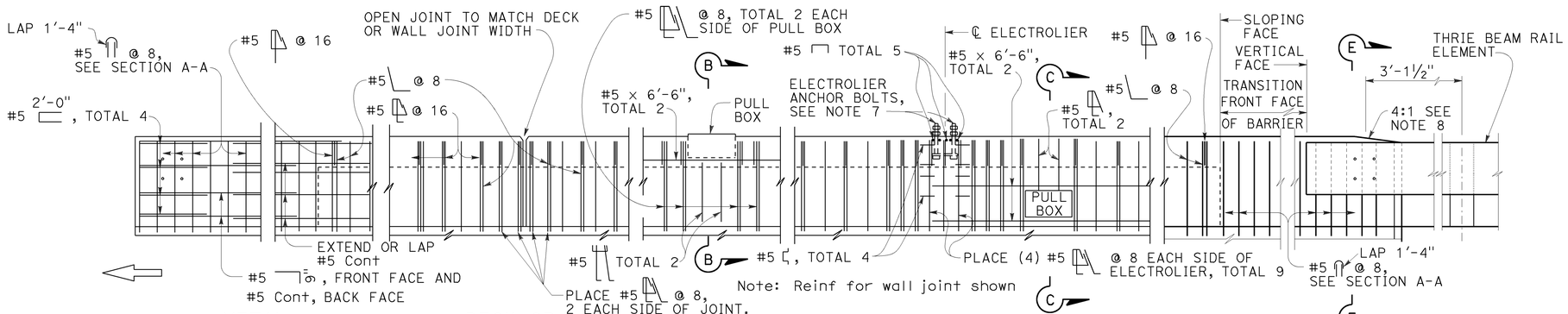


METAL RAILING CONNECTION

DECK OR WALL JOINT

## ELEVATION

ELECTROLIER
See Note F

TYPE 736A

## NOTES:

1. Walls are to be backfilled before barrier is placed.
2. Clearance to reinforcing steel in barrier to be 1", except as noted. Longitudinal reinforcement to stop at all expansion joints.
3. Dimensions may vary with roadway cross slope and with certain thickness of surfacing. See Project Plans.
4. For typical metal railing connection details not shown, see Revised Standard Plans RSP A77U1 and RSP A77U2.
5. See Revised Standard Plans RSP ES-9A, RSP ES-9B, RSP ES-9C, RSP ES-9D and RSP ES-9E for electrical details. The maximum number of conduits in the barrier is limited to two 2" conduits along with one 3" conduit. When a 3" conduit is used, it is restricted to the base of the barrier.
6. For electrolier mounting details, See Revised Standard Plans RSP ES-6A and RSP ES-6B.
7. Minimum concrete edge distance, to the reinforcing shown, shall be maintained. Edge distance may be adjusted to accommodate increase in concrete cover for architectual treatment.
8. Taper the top of the end of the bridge railing at 4:1 to match the top elevation of the thrie beam rail element.

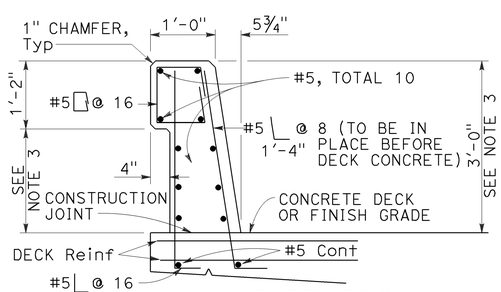


TYPE 736

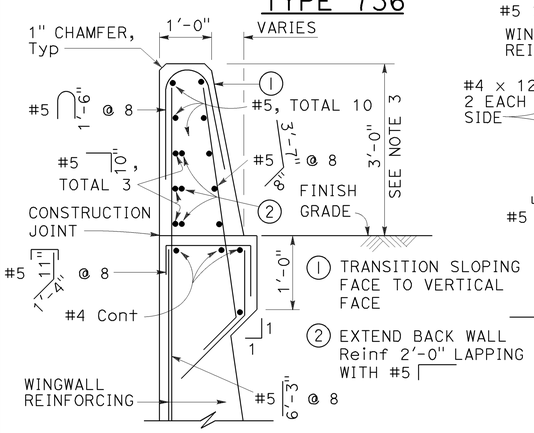


SECTION A-A

Details shown for barrier anchorage to Type 736A. Anchorgae for barrier Types 736 and 736B are similar to their respective details.

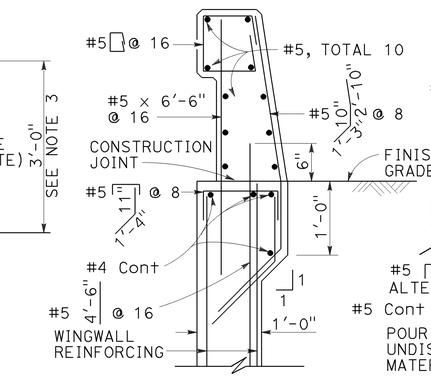


TYPE 736A

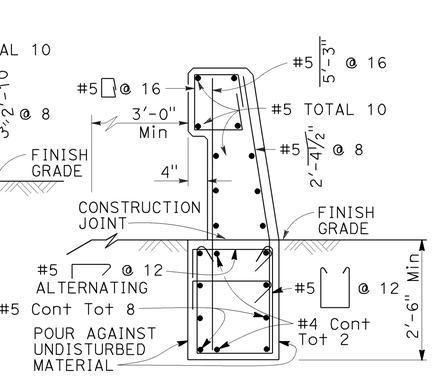


TYPE 736B

Note: Types 736A & 736B are similar to Type 736 except as noted

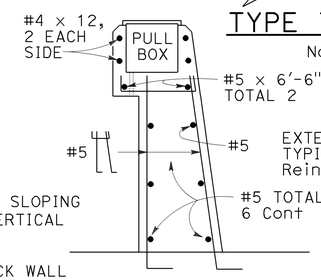


SECTION B-B

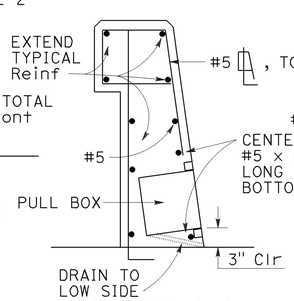


SECTION C-C

See Notes

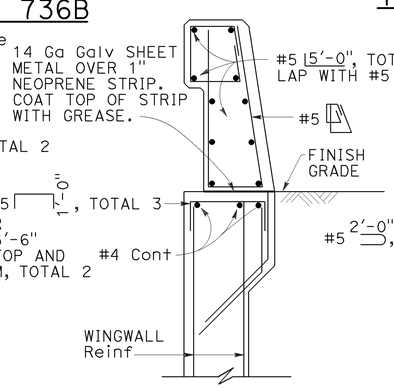


SECTION D-D

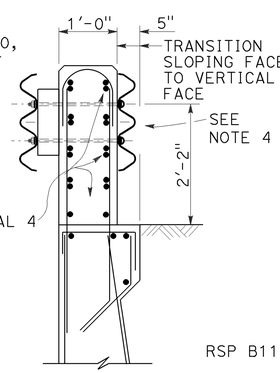


SECTION E-E

See Notes

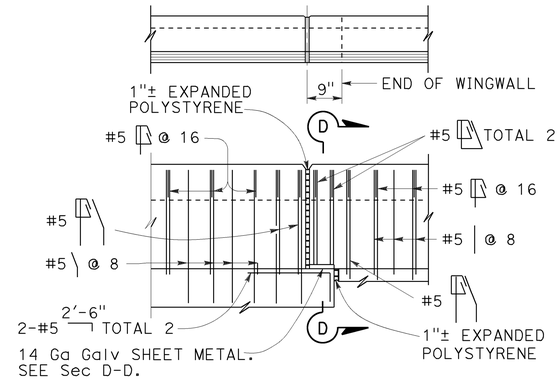


TYPE 736A TYPE 736B

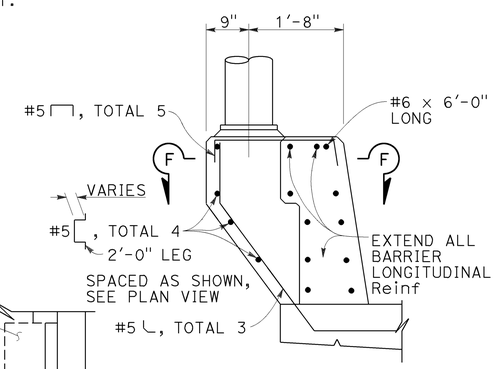


PEDESTAL ELEVATION

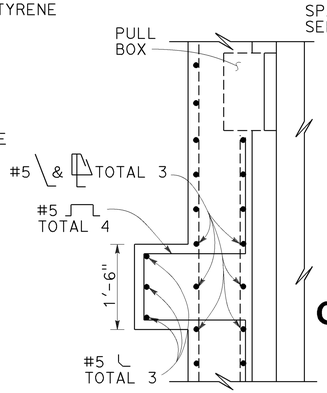


SECTION F-F

STATE OF CALIFORNIA
DEPARTMENT OF TRANSPORTATION

# CONCRETE BARRIER TYPE 736

NO SCALE

RSP B11-55 DATED JULY 15, 2016 SUPERSEDES RSP B11-56 DATED NOVEMBER 15, 2013 AND RSP B11-56 DATED JULY 19, 2013 AND STANDARD PLAN B11-56 DATED MAY 20, 2011 - PAGE 298 OF THE STANDARD PLANS BOOK DATED 2010.

**REVISED STANDARD PLAN RSP B11-56**

**2010 REVISED STANDARD PLAN RSP B11-56**

6-29-16

| Dist | COUNTY | ROUTE | POST MILES TOTAL PROJECT | SHEET No. | TOTAL SHEETS |
|---|---|---|---|---|---|
| 04 | SM | 101,114 | 1.3/2.5, 5.0/5.3 | 410 | 568 |

REGISTERED CIVIL ENGINEER

July 15, 2016
PLANS APPROVAL DATE

REGISTERED PROFESSIONAL ENGINEER Tillat Satter No. C42892 Exp. 3-31-18 CIVIL STATE OF CALIFORNIA

*THE STATE OF CALIFORNIA OR ITS OFFICERS OR AGENTS SHALL NOT BE RESPONSIBLE FOR THE ACCURACY OR COMPLETENESS OF SCANNED COPIES OF THIS PLAN SHEET.*

TO ACCOMPANY PLANS DATED 6-29-16

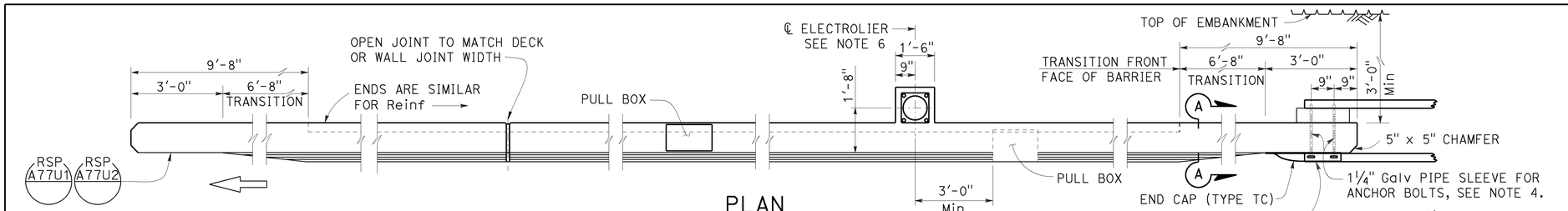


PLAN

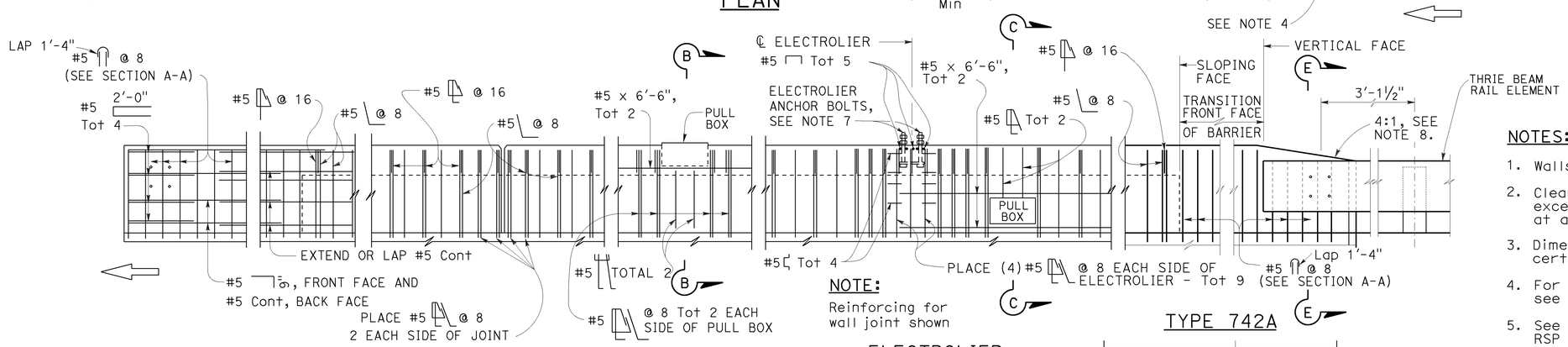


METAL RAILING CONNECTION

DECK OR WALL JOINT

NOTE:
Reinforcing for wall joint shown

ELEVATION

ELECTROLIER
(See Note 5)

## NOTES:

1. Walls are to be backfilled before barrier is placed.
2. Clearance to reinforcing steel in barrier to be 1", except as noted. Longitudinal reinforcement to stop at all expansion joints.
3. Dimensions may vary with roadway cross slope and with certain thickness of surfacing. See Project Plans.
4. For typical metal railing connection details not shown, see Revised Standard Plans RSP A77U1 and RSP A77U2.
5. See Revised Standard Plans RSP ES-9A, RSP ES-9B, RSP ES-9C, RSP ES-9D and RSP ES-9E for electrical details. The maximum number of conduits in the barrier is limited to two 2" conduits along with one 3" conduit. When a 3" conduit is used, it is restricted to the base of the barrier.
6. For electrolier mounting details, See Revised Standard Plans RSP ES-6A and RSP ES-6B.
7. Minimum concrete edge distance, to the reinforcing shown, shall be maintained. Edge distance may be adjusted to accommodate increase in concrete cover for architectual treatment.
8. Taper the top of the end of the bridge railing at 4:1 to match the top elevation of the thrie beam rail element.

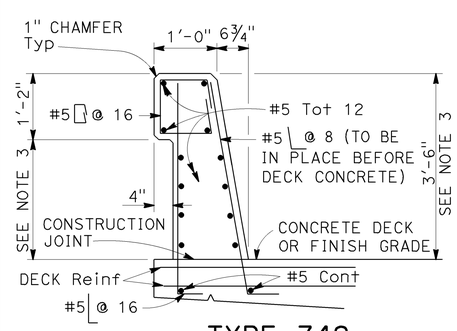


TYPE 742

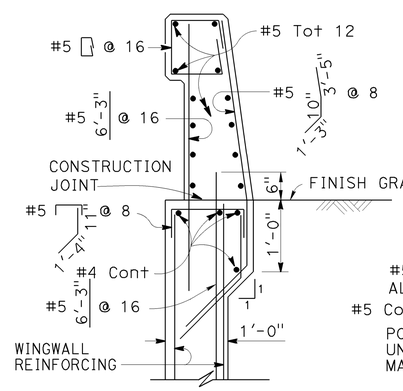


TYPE 742A

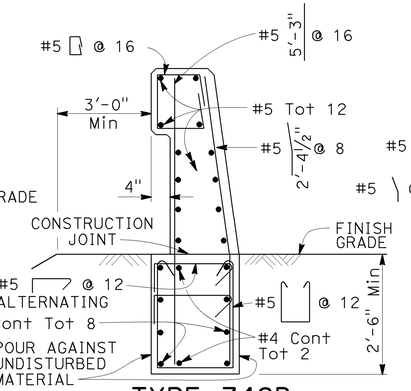


TYPE 742B

NOTE:
Types 742A & 742B are similar to Type 742 except as noted

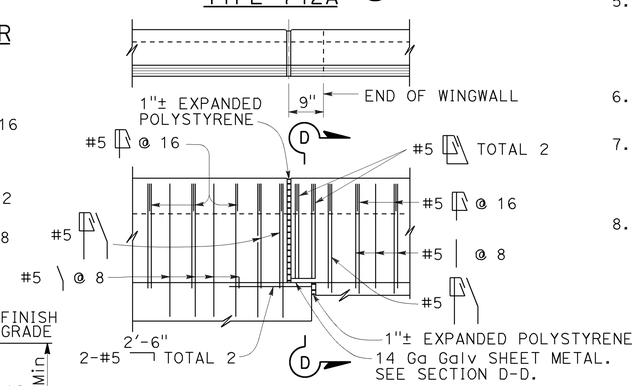


TYPE 742A TYPE 742B

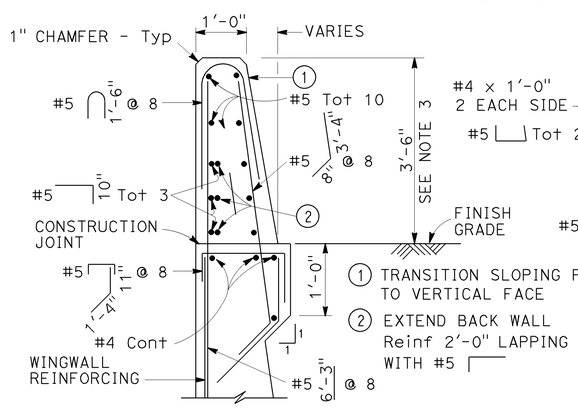


SECTION A-A

Details shown for barrier anchorage to Type 742A. Anchorage for barrier Types 742 and 742A are similar to their respective details.

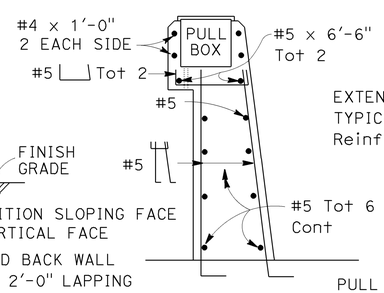


SECTION B-B

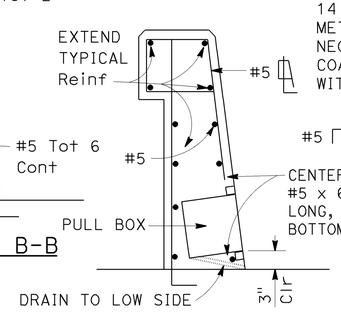


SECTION C-C
See Notes

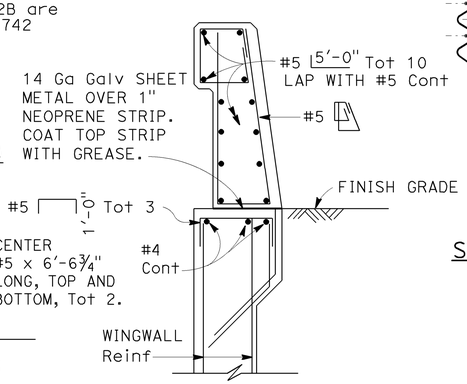


SECTION D-D

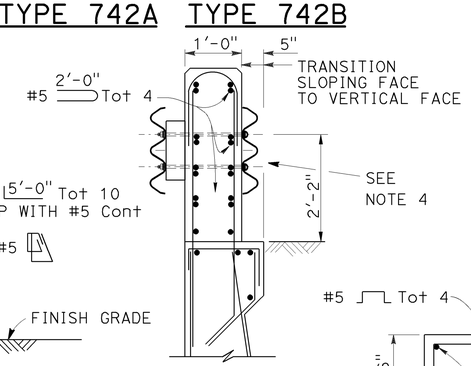


SECTION E-E
See Note 4

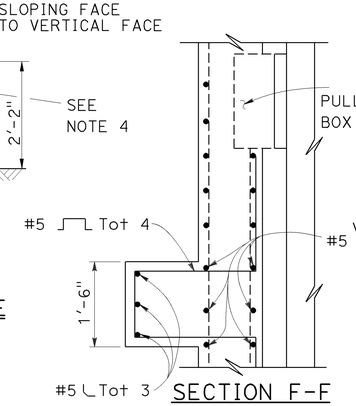


SECTION F-F

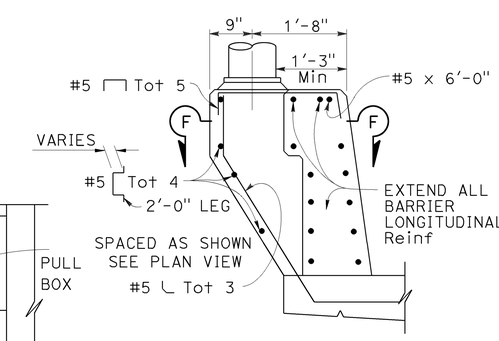


PEDESTAL ELEVATION

STATE OF CALIFORNIA
DEPARTMENT OF TRANSPORTATION

# CONCRETE BARRIER TYPE 742

NO SCALE

RSP B11-57 DATED JULY 15, 2016 SUPERSEDES RSP B11-57 DATED NOVEMBER 15, 2013 AND RSP B11-57 DATED JULY 19, 2013 AND STANDARD PLAN B11-57 DATED MAY 20, 2011 - PAGE 299 OF THE STANDARD PLANS BOOK DATED 2010.

**REVISED STANDARD PLAN RSP B11-57**

**2010 REVISED STANDARD PLAN RSP B11-57**

7-1-16

| Dist | COUNTY | ROUTE | POST MILES TOTAL PROJECT | SHEET No. | TOTAL SHEETS |
|---|---|---|---|---|---|
| 04 | SM | 101,114 | 1.3/2.5, 5.0/5.3 | 411 | 568 |

REGISTERED CIVIL ENGINEER

October 19, 2012
PLANS APPROVAL DATE

REGISTERED PROFESSIONAL ENGINEER Tillat Satter No. C42892 Exp. 3-31-14 CIVIL STATE OF CALIFORNIA

*THE STATE OF CALIFORNIA OR ITS OFFICERS OR AGENTS SHALL NOT BE RESPONSIBLE FOR THE ACCURACY OR COMPLETENESS OF SCANNED COPIES OF THIS PLAN SHEET.*

TO ACCOMPANY PLANS DATED 6-29-16

**2010 REVISED STANDARD PLAN RSP B15-6**

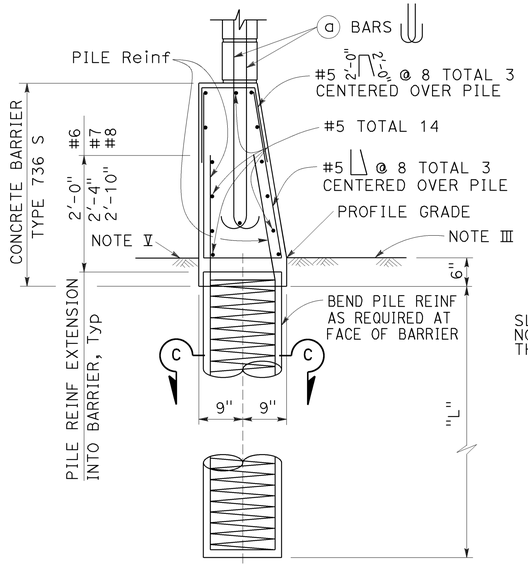


## CASE 1

For details not shown, See Case 2.
Level ground ±10% on both sides of barrier.

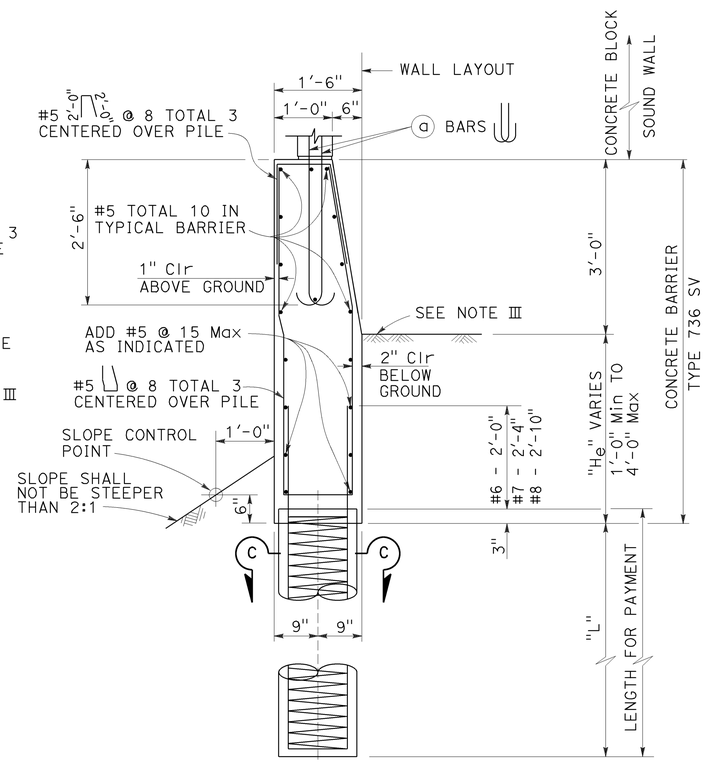


## CASE 2

For details not shown, See Case 1.
Level ground ±10% at the traffic side of barrier and sloping ground on the opposite side.

## BARRIER SECTIONS

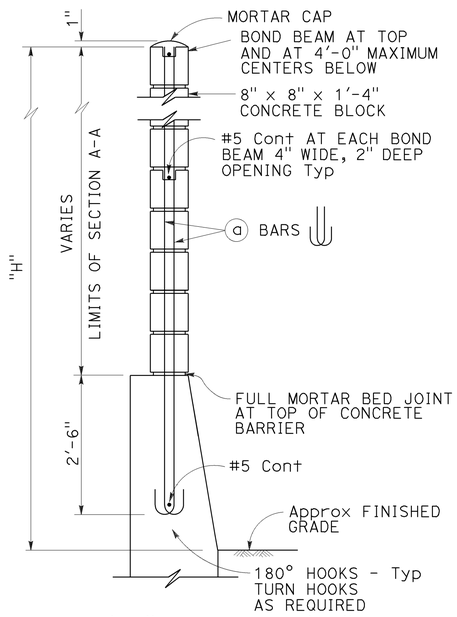


H=6'-4" THRU H=10'-4"

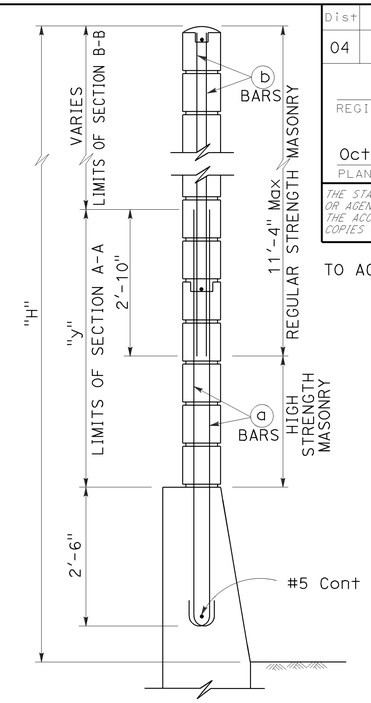


H=12'-4" THRU H=16'-4"

For details not shown, see H=6'-4" thru H=10'-4".

## TYPICAL SECTIONS

See Standard Plan B15-8 for pile details.

### SOUND WALL REINFORCEMENT TABLE

| MAXIMUM H | (a) BARS @ 1'-4" Max | (b) BARS @ 1'-4" Max | "y" | f'm (psi) | COMPRESSIVE STRENGTH OF CMU (psi) | H |
|---|---|---|---|---|---|---|
| 6'-4" | #4 | --- | --- | 1500 | 1900 | 6'-4" |
| 8'-4" | #4 | --- | --- | 1500 | 1900 | 8'-4" |
| 10'-4" | #4 | --- | --- | 1500 | 1900 | 10'-4" |
| 12'-4" | #5 | #4 | 5'-0" | 1500 | 1900 | 12'-4" |
| 14'-4" | #6 | #4 | 7'-0" | 1500 | 1900 | 14'-4" |
| 16'-4" | #6 | #4 | 9'-0" | 2500 | 3750 | 16'-4" |

### NOTES I THROUGH VI:

I. Details shown are primarily to conform design of sound walls to Type 736S and Type 736 SV Concrete Barriers. For sound wall details conforming with barriers see Standard Plans B15-7 and B15-8.

II. For details and sections not shown, see Standard Plans B15-7 and B15-8.

III. Slope ground at traffic side of barrier to drain. Maximum slope ±10%. See Std Plan B11-56, Note 3.

IV. Pile spacing may be varied, but shall not exceed the tabular values. See Standard Plan B15-8.

V. For Case 1 - ground line to be at the same elevation on both sides of the barrier. Barrier shall not be used to retain earth.

VI. See Standard Plan B15-9 for other details.

### NOTES A THROUGH F:

A. For type of block, type of block bond, and joint finish, see other sheets.

B. When blocks are laid in stacked bond, ladder type, galvanized joint reinforcement shall be provided. A minimum of 2-9 gauge wires continuous at 4'-0" maximum to be used. Locate reinforcement in joints that are at the approximate midpoint between bond beams.

C. Horizontal joints shall be tooled concave or may be weathered. Vertical joints shall be tooled concave or may be raked.

D. For intermediate wall heights (H), or barrier depths ($H_e$), that are between the values given, use the tabular information for the next higher (H) or ($H_e$).

E. Concrete to be used for the barrier shall contain not less than 590 pounds of cementitious material per cubic yard.

F. Masonry strengths are listed in the "SOUND WALL REINFORCEMENT TABLE".

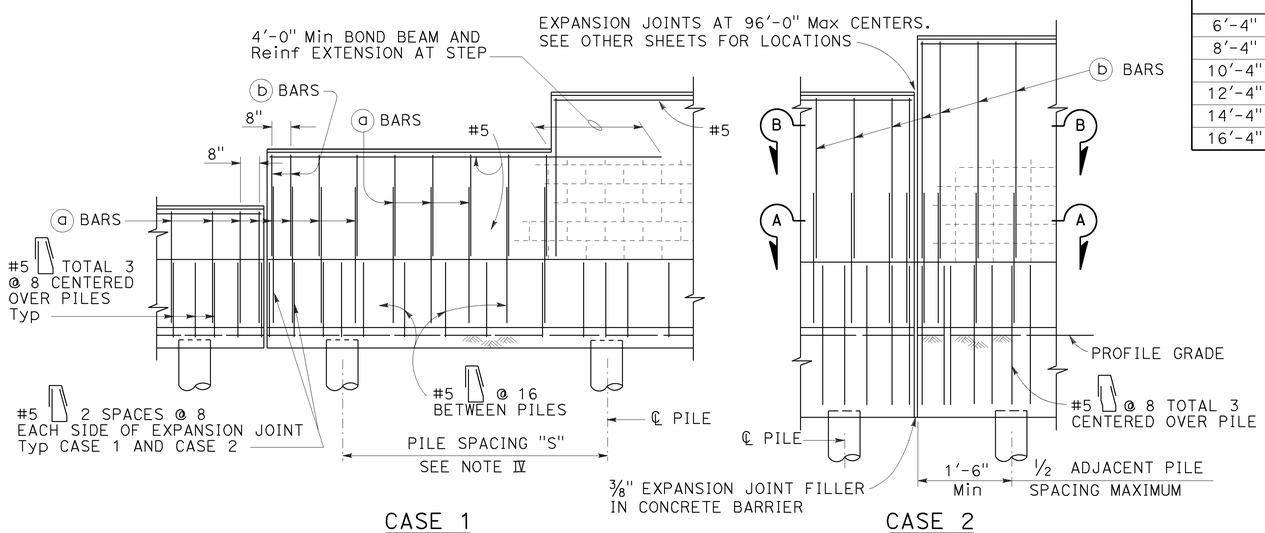


## CASE 1

For details not shown, See Case 2.

## CASE 2

For details not shown, See Case 1.

## PARTIAL ELEVATIONS

STATE OF CALIFORNIA
DEPARTMENT OF TRANSPORTATION

# SOUND WALL MASONRY BLOCK ON TYPE 736S/SV BARRIER DETAILS (1)

NO SCALE

RSP B15-6 DATED OCTOBER 19, 2012 SUPERSEDES STANDARD PLAN B15-6 DATED MAY 20, 2011 - PAGE 320 OF THE STANDARD PLANS BOOK DATED 2010.

**REVISED STANDARD PLAN RSP B15-6**

7-19-12

| Dist | COUNTY | ROUTE | POST MILES TOTAL PROJECT | SHEET No. | TOTAL SHEETS |
|---|---|---|---|---|---|
| 04 | SM | 101,114 | 1.3/2.5, 5.0/5.3 | 412 | 568 |

REGISTERED CIVIL ENGINEER

November 15, 2013
PLANS APPROVAL DATE

REGISTERED PROFESSIONAL ENGINEER
Tillat Satter
No. C42892
Exp. 3-31-14
CIVIL
STATE OF CALIFORNIA

*THE STATE OF CALIFORNIA OR ITS OFFICERS OR AGENTS SHALL NOT BE RESPONSIBLE FOR THE ACCURACY OR COMPLETENESS OF SCANNED COPIES OF THIS PLAN SHEET.*

TO ACCOMPANY PLANS DATED 6-29-16

**2010 REVISED STANDARD PLAN RSP B15-7**

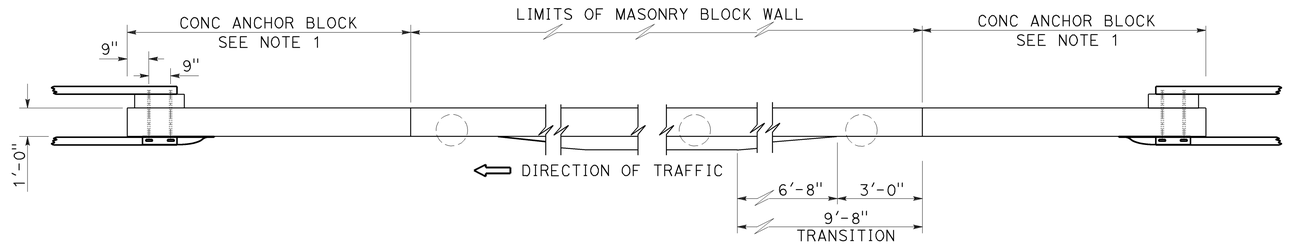


PLAN

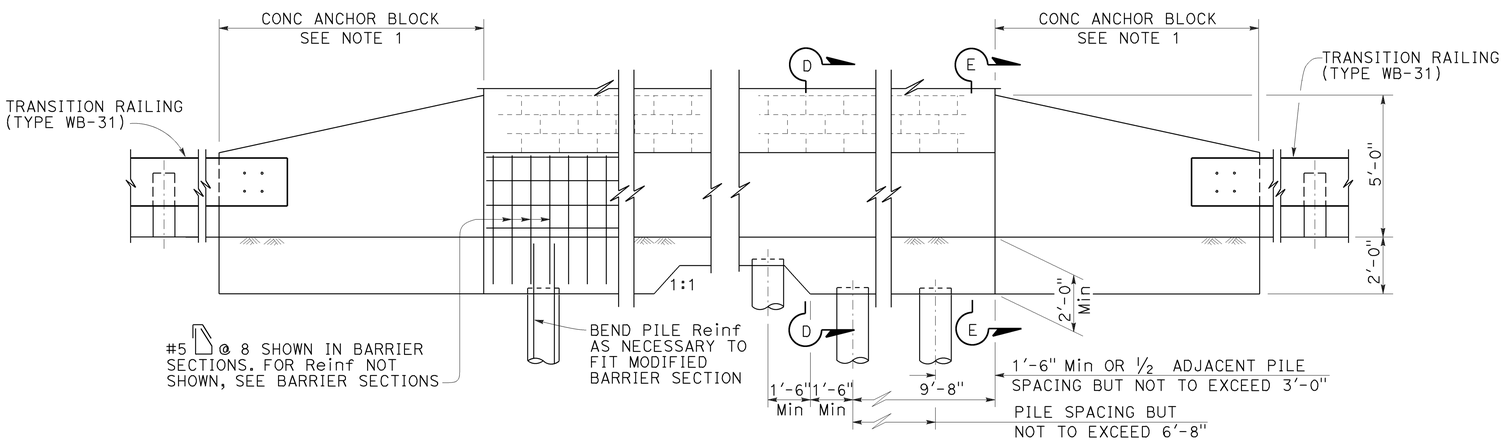


ELEVATION

## MIDWEST GUARDRAIL SYSTEM ANCHORAGE

For details not shown, see Revised Standard Plan RSP B11-56.

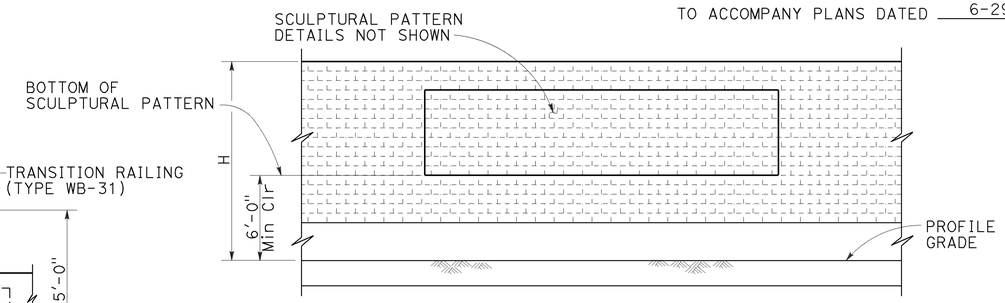


CLEARANCE DETAIL

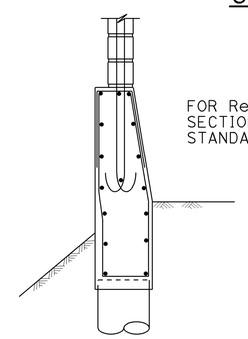

SECTION D-D

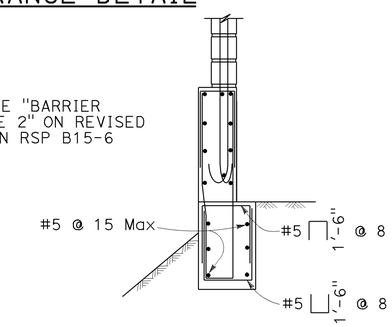


SECTION E-E

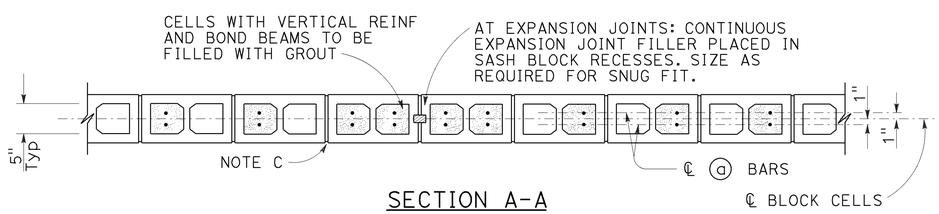


SECTION A-A

For details not shown, see other details.

H=6'-4" THRU H=10-4"

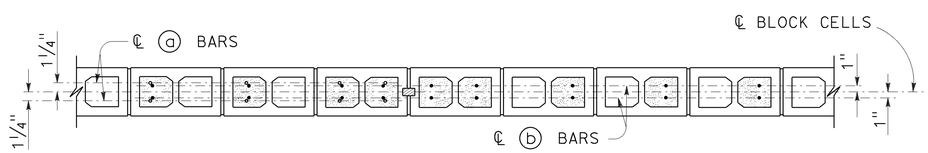


SECTION A-A SECTION B-B

For details not shown, see other details.

H=12'-4" THRU H=16'-4"

## DESIGN NOTES:

### DESIGN

Uniform Building Code, 1997 Edition
and the Bridge Design Specifications.

### DESIGN WIND LOAD

27 psf

### DESIGN SEISMIC LOAD

0.57 Dead load

### REINFORCED CONCRETE

f'c = 3.6 ksi
fy = 60 ksi

### CONCRETE MASONRY

| REGULAR STRENGTH | HIGH STRENGTH | |
|---|---|---|
| f'm = 1500 psi | f'm = 2000 psi | f'm = 2500 psi |
| fb = 495 psi | fb = 660 psi | fb = 830 psi |
| fs = 24,000 psi | fs = 24,000 psi | fs = 24,000 psi |
| n = 25.8 | n = 19.3 | n = 15.5 |

NOTE:

1. For Concrete Anchor Block and connection details, see "Connection Detail DD" on Revised Standard Plan RSP A77U3.

STATE OF CALIFORNIA
DEPARTMENT OF TRANSPORTATION

# SOUND WALL MASONRY BLOCK ON TYPE 736S/SV BARRIER DETAILS (2)

NO SCALE

RSP B15-7 DATED NOVEMBER 15, 2013 SUPERSEDES RSP B15-7 DATED JULY 19, 2013 AND STANDARD PLAN B15-7 DATED MAY 20, 2011 - PAGE 321 OF THE STANDARD PLANS BOOK DATED 2010.

**REVISED STANDARD PLAN RSP B15-7**

10-4-13

| Dist | COUNTY | ROUTE | POST MILES TOTAL PROJECT | SHEET No. | TOTAL SHEETS |
|---|---|---|---|---|---|
| 04 | SM | 101,114 | 1.3/2.5, 5.0/5.3 | 413 | 568 |

REGISTERED CIVIL ENGINEER

July 19, 2013
PLANS APPROVAL DATE

REGISTERED PROFESSIONAL ENGINEER
Stanley P. Johnson
No. C57793
Exp. 3-31-14
CIVIL
STATE OF CALIFORNIA

*THE STATE OF CALIFORNIA OR ITS OFFICERS OR AGENTS SHALL NOT BE RESPONSIBLE FOR THE ACCURACY OR COMPLETENESS OF SCANNED COPIES OF THIS PLAN SHEET.*

TO ACCOMPANY PLANS DATED 6-29-16

## INSTRUCTIONS TO FABRICATOR

PROJECT PLANS SHOW:

1. Sign structure location.
2. Length of structure frame.
3. Panel size and locations on structure.
4. Walkway length for two post signs.
5. Post type and height to bottom of frame.
6. Base plate elevation.
7. Footing elevation or location of pile foundation.
8. Photoelectric unit location if required.

REFER TO THE FOLLOWING STANDARD PLANS FOR DETAILS NOT SHOWN ON PROJECT PLANS:

| Sheet No. | SHEET NAME |
|---|---|
| S1 | Overhead Signs-Truss, Instructions and Examples |
| S2 | Overhead Signs-Truss, Single Post Type, Post Types II to IX |
| S3 | Overhead Signs-Truss, Single Post Type, Base Plate and Anchorage Details |
| S4 | Overhead Signs-Truss, Single Post Type, Structural Frame Members Details No. 1 |
| S5 | Overhead Signs-Truss, Single Post Type, Structural Frame Members Details No. 2 |
| S6 | Overhead Signs-Truss, Gusset Plate Details |
| S8 | Overhead Signs-Truss, Single Post Type, Round Pedestal Pile Foundation |
| S9 | Overhead Signs-Truss, Two Post Type, Post Types I-S through VII-S |
| S10 | Overhead Signs-Truss, Two Post Type, Base Plate and Anchorage Details |
| S11 | Overhead Signs-Truss, Two Post Type, Structural Frame Members |
| S12 | Overhead Signs-Truss, Structural Frame Details |
| S13 | Overhead Signs-Truss, Frame Juncture Details |
| S15 | Overhead Signs-Truss, Two Post Type, Round Pedestal Pile Foundation |
| S16 | Overhead Signs, Walkway Details No. 1 |
| S17 | Overhead Signs, Walkway Details No. 2 |
| S17A | Overhead Signs, Walkway Details No. 3 |
| S18 | Overhead Signs, Walkway Safety Railing Details |
| S19 | Overhead Signs-Truss, Sign Mounting Details, Laminated Panel-Type A |
| S20 | Overhead Signs, Steel Frames, Removable Sign Panel Frames |
| S21 | Overhead Signs, Removable Sign Panel Frames, Mounting Details |
| S22 | Overhead Signs-Truss, Removable Sign Panel Frames, 9'-2" and 10'-0" Sign Panels |

WALKWAY BRACKETS:

Space all walkway brackets maintaining uniform spacing where possible. Maximum spacing shall not exceed 5'-6".

LIGHTING FIXTURE SUPPORTS:

Where distance from walkway bracket to end of sign panel exceeds 1'-4", extend lighting fixture supports to next walkway bracket. See Example No. 2.

WALKWAY AND SAFETY RAILING:

Walkway to be continuous for entire length of frame for single post signs. For two post signs, see Project Plans. Safety railing to protect entire walkway, but continuous for no more than 11'-0" in one unit.

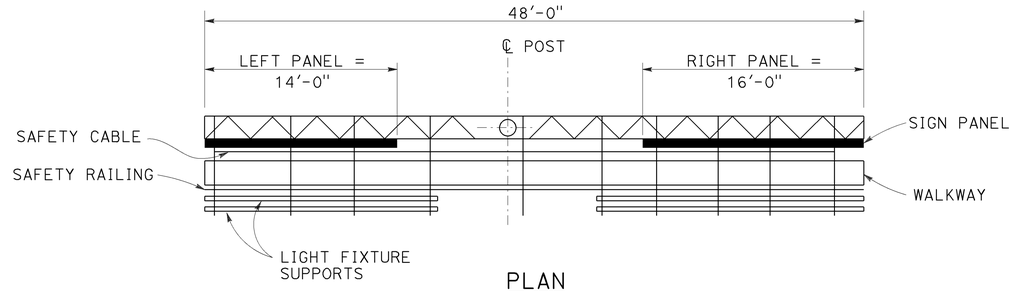


PLAN

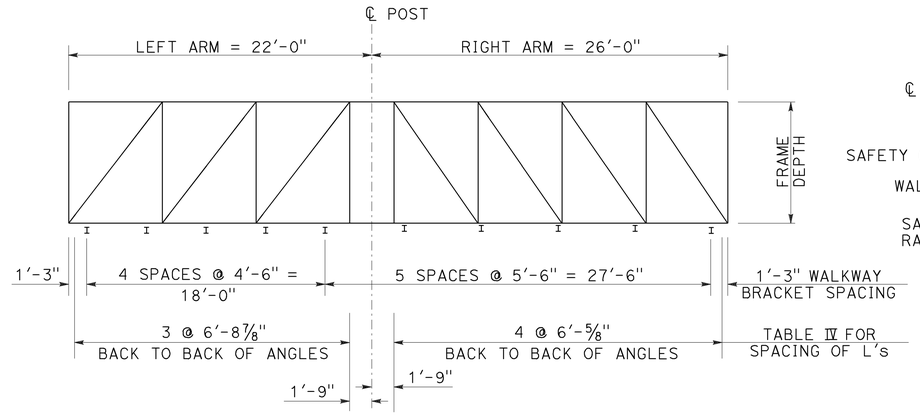


ELEVATION

## UNBALANCED SINGLE POST TYPE

Example No. 1

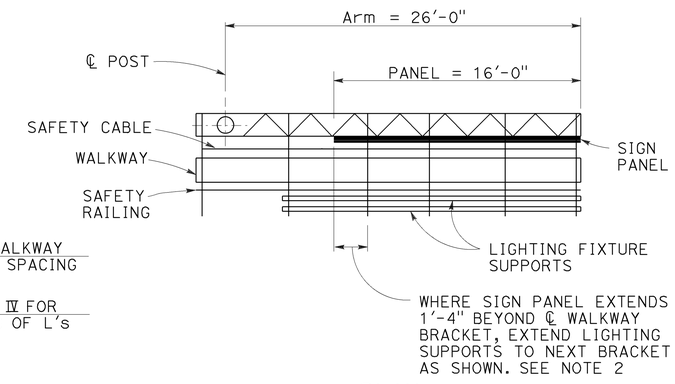


PLAN

## CANTILEVER SINGLE POST TYPE

Example No. 2

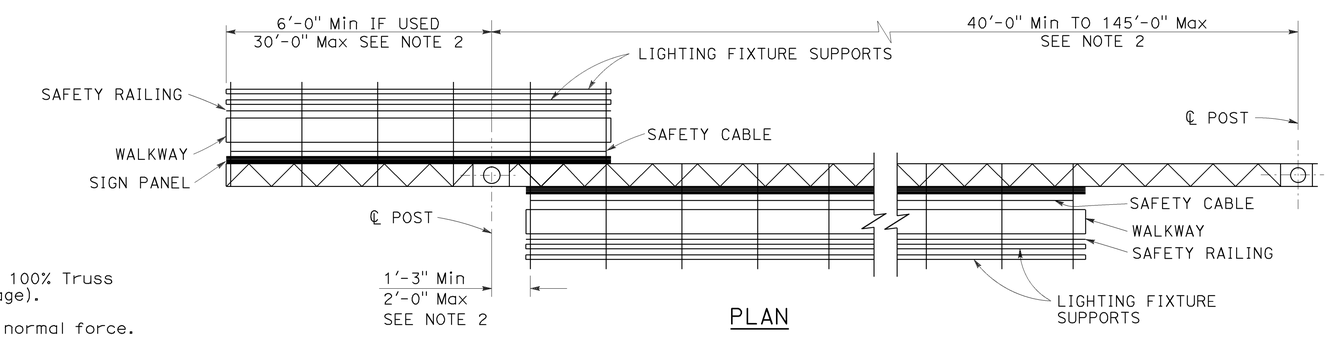


PLAN

## TWO POST TYPE WITH CANTILEVER (PART DOUBLE-FACED)

Example No. 3

## GENERAL NOTES:

LOADING:

WIND LOADING:

Normal to face of sign: 40.3 psf on 100% Truss surface area (i.e. 100% panel coverage).

Transverse to face of sign: 20% of normal force.

WALKWAY LOADING:

Dead load +500 LB concentrated live load.

UNIT STRESSES:

STRUCTURAL STEEL: fy = 36,000 psi
REINFORCED CONCRETE: fy = 60,000 psi
f'c = 3600 psi
FOOTING SOIL PRESSURE: 2.5 ksf (spread footing)

MINIMUM CLEARANCE

Vertical roadway clearance 18'-0" (bottom of walkway system)

WELDING:

All welding continuous unless otherwise noted on the plans.

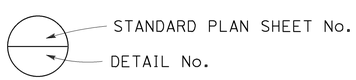


## NOTES:

1. Signs are shown and dimensioned looking in the direction of traffic. Double faced signs are shown and dimensioned looking ahead along stationing.
2. Mandatory dimension limit.

STATE OF CALIFORNIA
DEPARTMENT OF TRANSPORTATION

# OVERHEAD SIGNS-TRUSS INSTRUCTIONS AND EXAMPLES

NO SCALE

RSP S1 DATED JULY 19, 2013 SUPERSEDES STANDARD PLAN S1 DATED MAY 20, 2011 - PAGE 334 OF THE STANDARD PLANS BOOK DATED 2010.

**REVISED STANDARD PLAN RSP S1**

**2010 REVISED STANDARD PLAN RSP S1**

7-11-13

| Dist | COUNTY | ROUTE | POST MILES TOTAL PROJECT | SHEET No. | TOTAL SHEETS |
|---|---|---|---|---|---|
| 04 | SM | 101,114 | 1.3/2.5, 5.0/5.3 | 414 | 568 |

REGISTERED CIVIL ENGINEER

July 19, 2013
PLANS APPROVAL DATE

REGISTERED PROFESSIONAL ENGINEER
Stanley P. Johnson
No. C57793
Exp. 3-31-14
CIVIL
STATE OF CALIFORNIA

*THE STATE OF CALIFORNIA OR ITS OFFICERS OR AGENTS SHALL NOT BE RESPONSIBLE FOR THE ACCURACY OR COMPLETENESS OF SCANNED COPIES OF THIS PLAN SHEET.*

TO ACCOMPANY PLANS DATED 6-29-16

# TABLE XV

| POST TYPE | PIPE | | CAP PLATE SIZE FOR CHORD L's 5 x 5 | CAP PLATE SIZE FOR CHORD L's 6 x 6 | ROUND PEDESTAL | | | | | SQUARE PEDESTAL | | | | | | SPREAD FOOTING | | | | | | |
|---|---|---|---|---|---|---|---|---|---|---|---|---|---|---|---|---|---|---|---|---|---|---|
| | | | | | PEDESTAL SIZE | VERTICAL J-BARS | | SPIRAL | | PEDESTAL SIZE | VERTICAL J-BARS | | | HOOP | | (SEE NOTE 2) | REINFORCEMENT | | | | | |
| | | | | | | | | | | | | | | | | | WIDTH | | LONGITUDINAL | | FOOTING STIRRUPS | |
| | NPS | THICKNESS | | | Dia | EQUALLY SPACED TOTAL | BAR SIZE | BAR SIZE | PITCH | SQUARE | EQUALLY SPACED TOTAL | BAR SIZE | # OF BARS EA FACE | BAR SIZE | SPACING | | TOP | BOTTOM | TOP | BOTTOM | | |
| II | 14 | 1/2" | 2'-0" x 2'-0" x 1" | 2'-2" x 2'-2" x 1" | 5'-3" | 16 | #10 | #5 | 3 1/2" | 5'-3" | 16 | #10 | 5 | #5 | 3 1/2" | 12'-0" x 14'-0" x 2'-6" | 14-#6 | 14-#7 | 13-#9 | 13-#9 | #5 @ 12 | |
| III | 16 | | 2'-2" x 2'-2" x 1" | 2'-4" x 2'-4" x 1" | | | | | | | | | | | | 12'-0" x 14'-0" x 2'-6" | 15-#6 | 15-#7 | | | | |
| IV | 18 | | 2'-4" x 2'-4" x 1" | 2'-6" x 2'-6" x 1" | | | | | | | | | | | | 12'-0" x 14'-0" x 2'-6" | 15-#6 | 15-#7 | | | | |
| V | 20 | | 2'-6" x 2'-6" x 1" | 2'-8" x 2'-8" x 1" | | | | | | | | | | | | 13'-0" x 14'-0" x 2'-6" | 15-#6 | 15-#7 | 14-#9 | 14-#9 | | |
| VI | 24 | | 2'-10" x 2'-10" x 1" | 3'-0" x 3'-0" x 1" | 5'-9" | | #11 | | | 5'-9" | | #11 | | | | 13'-0" x 16'-0" x 2'-6" | 17-#7 | 17-#7 | | 14-#11 | | |
| VII | 24 | 3/4" | | | | | | | | | | | | | | 13'-0" x 17'-0" x 2'-6" | 18-#7 | 18-#7 | | | | |
| VIII | 24 | 31/32" | | | | | | | | | | | | | | 13'-0" x 18'-0" x 2'-6" | 19-#7 | 19-#7 | | | | |
| IX | 24 | 31/32" | | | | | | | | | | | | | | 13'-0" x 18'-0" x 2'-6" | 19-#7 | 19-#7 | | | | |

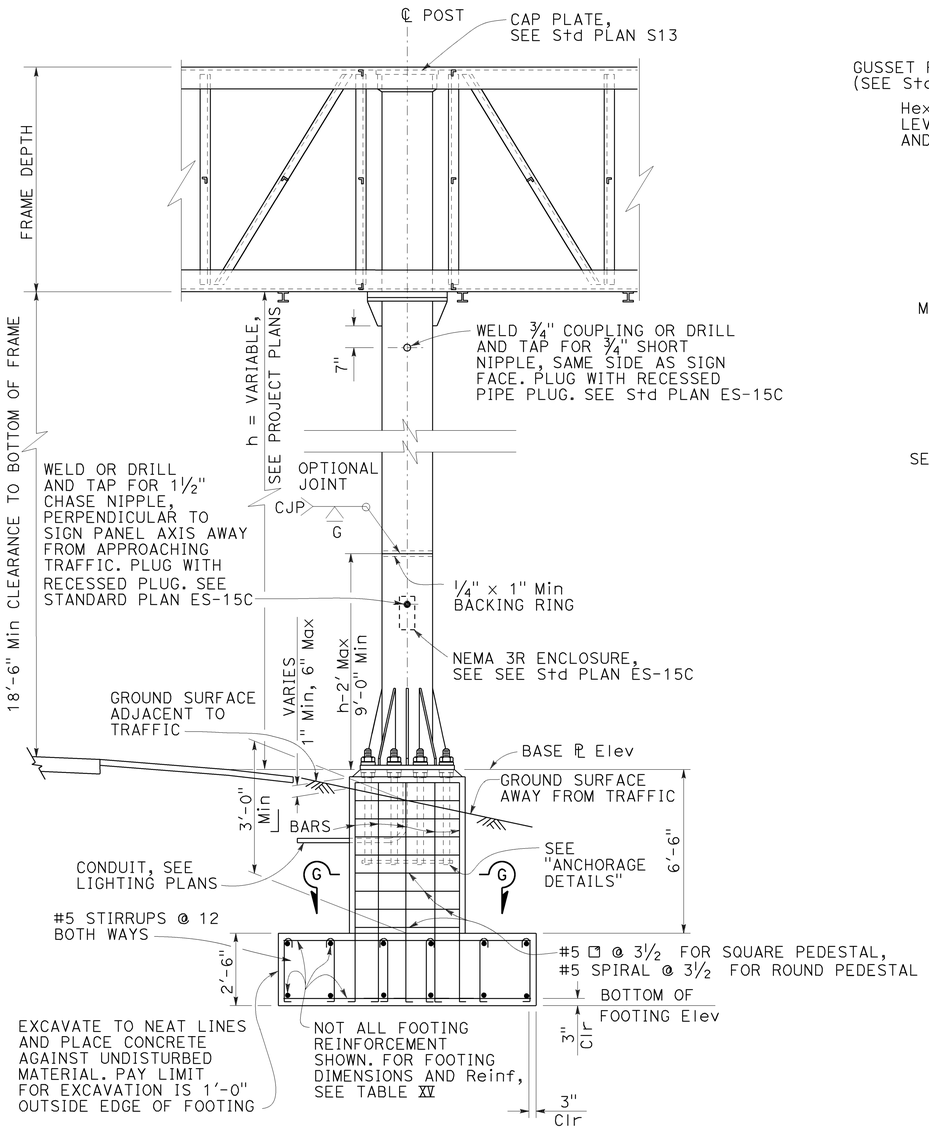


ELEVATION
See Note 5

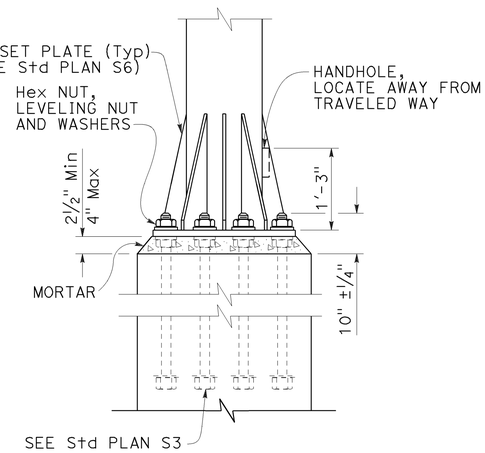


ELEVATION

## ANCHORAGE DETAILS

## NOTES:

1. For "General Notes", see Revised Standard Plan RSP S1.
2. Longer side of footing (longitudinal) shall be normal to axis of sign.
3. Backfill shall be in place prior to erection of post.
4. Thread upper 10" of anchor bolts and galvanize upper 1'-0".
5. Spread footing with square pedestal foundation shown, use Pile Foundation when shown on the Project Plans. For pile foundation details, see Standard Plan S8.
6. Anchor plates may be retained with hexagon nut or formed head as alternatives to details shown.
7. On single post sign structures, the post shall be raked out of plumb, with the use of the leveling nuts to make the bottom of the sign frame level.
8. At final position of post all top and bottom nuts shall be tightened against base plate.
9. When foundation is located on a steep slope with exposed face of concrete adjacent to traffic, see "Detail C" on Standard Plan S8, as applicable.
10. Slope protection required when indicated on the Project Plans.

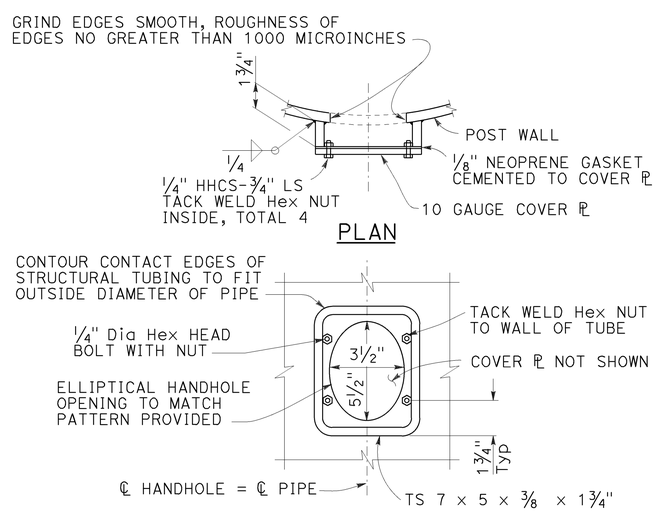


## TYPICAL DETAILS OF HANDHOLE AND COVER

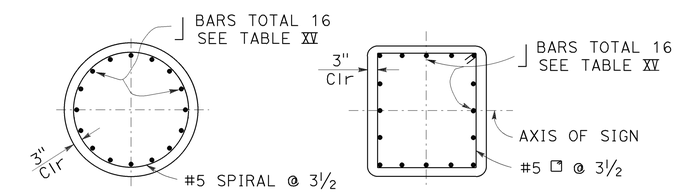


SECTION G-G
## ROUND PEDESTAL

SECTION G-G
## SQUARE PEDESTAL

STATE OF CALIFORNIA
DEPARTMENT OF TRANSPORTATION

# OVERHEAD SIGNS-TRUSS SINGLE POST TYPE POST TYPES II THROUGH IX

NO SCALE

RSP S2 DATED JULY 19, 2013 SUPERSEDES STANDARD PLAN S2
DATED MAY 20, 2011 - PAGE 335 OF THE STANDARD PLANS BOOK DATED 2010.

**REVISED STANDARD PLAN RSP S2**

**2010 REVISED STANDARD PLAN RSP S2**

7-11-13

| Dist | COUNTY | ROUTE | POST MILES TOTAL PROJECT | SHEET No. | TOTAL SHEETS |
|---|---|---|---|---|---|
| 04 | SM | 101,114 | 1.3/2.5, 5.0/5.3 | 415 | 568 |

Theresa Gabriel
REGISTERED ELECTRICAL ENGINEER

October 30, 2015
PLANS APPROVAL DATE

REGISTERED PROFESSIONAL ENGINEER Theresa Aziz Gabriel No. E15129 Exp. 6-30-16 ELECTRICAL STATE OF CALIFORNIA

*THE STATE OF CALIFORNIA OR ITS OFFICERS OR AGENTS SHALL NOT BE RESPONSIBLE FOR THE ACCURACY OR COMPLETENESS OF SCANNED COPIES OF THIS PLAN SHEET.*

TO ACCOMPANY PLANS DATED 6-29-16

## LEGEND:

- AB — ABANDON. IF APPLIED TO CONDUIT, REMOVE CONDUCTORS
- BC — INSTALL PULL BOX IN EXISTING CONDUIT RUN
- BP — PEDESTRIAN BARRICADE, TYPE AS INDICATED ON PLAN
- CB — INSTALL CONDUIT INTO EXISTING PULL BOX
- CC — CONNECT NEW AND EXISTING CONDUIT. REMOVE EXISTING CONDUCTORS AND INSTALL CONDUCTORS AS INDICATED
- CF — CONDUIT TO REMAIN FOR FUTURE USE. REMOVE CONDUCTORS. INSTALL PULL TAPE
- DH — DETECTOR HANDHOLE
- FA — FOUNDATION TO BE ABANDONED
- IS — INSTALL SIGN ON SIGNAL MAST ARM
- NS — NO SLIP BASE ON STANDARD
- PEC — PHOTOELECTRIC CONTROL
- PEU — PHOTOELECTRIC UNIT
- RC — EQUIPMENT OR MATERIAL TO BE REMOVED AND BECOME THE PROPERTY OF THE CONTRACTOR
- RE — REMOVE ELECTROLIER, FUSES AND BALLAST. TAPE ENDS OF CONDUCTORS
- RL — RELOCATE EQUIPMENT
- RR — REMOVE AND REUSE EQUIPMENT
- RS — REMOVE AND SALVAGE EQUIPMENT
- SC — SPLICE NEW TO EXISTING CONDUCTORS
- SD — SERVICE DISCONNECT
- TSP — TELEPHONE SERVICE POINT

## ABBREVIATIONS

| | |
|---|---|
| AC+ | UNDERGROUNDED CONDUCTOR |
| APS | ACCESSIBLE PEDESTRIAN SIGNAL |
| Batt | BATTERY |
| BBS | BATTERY BACKUP SYSTEM |
| BC | BOLT CIRCLE |
| Blk | BLACK |
| BP | BYPASS |
| BPB | BICYCLE PUSH BUTTON |
| C | CONDUIT |
| CB | CIRCUIT BREAKER |
| CCTV | CLOSED CIRCUIT TELEVISION |
| Ckt | CIRCUIT |
| CMS | CHANGEABLE MESSAGE SIGN |
| Ctid | CALTRANS IDENTIFICATION |
| Comm | COMMUNICATION |
| Cntl | CONTROL |
| DF | DEPARTMENT-FURNISHED |
| DLC | LOOP DETECTOR LEAD-IN CABLE |
| EMS | EXTINGUISHABLE MESSAGE SIGN |
| EVUC | EMERGENCY VEHICLE UNIT CABLE |
| EVUD | EMERGENCY VEHICLE UNIT DETECTOR |
| FB | FLASHING BEACON |
| FBCA | FLASHING BEACON CONTROL ASSEMBLY |
| FBS | FLASHING BEACON WITH SLIP BASE |
| FO | FIBER OPTIC |
| G | EQUIPMENT GROUNDING CONDUCTOR |
| GB | GROUND BUS |
| GFCI | GROUND FAULT CIRCUIT INTERRUPTER |
| Grn | GREEN |
| HAR | HIGHWAY ADVISORY RADIO |
| Hex | HEXAGONAL |
| HPS | HIGH PRESSURE SODIUM |
| IISNS | INTERNALLY ILLUMINATED STREET NAME SIGN |
| ISL | INDUCTION SIGN LIGHTING |
| LED | LIGHT EMITTING DIODE |
| LMA | LUMINAIRE MAST ARM |
| LPS | LOW PRESSURE SODIUM |
| Ltg | LIGHTING |
| Lum | LUMINAIRE |
| M | METERED |
| MAT | MAST ARM MOUNTING TOP ATTACHMENT |
| MAS | MAST ARM MOUNTING SIDE ATTACHMENT |
| MBPS | MANUAL BYPASS SWITCH |
| M/M | MULTIPLE TO MULTIPLE TRANSFORMER |
| Mtg | MOUNTING |
| MV | MERCURY VAPOR LIGHTING FIXTURE |
| MVDS | MICROWAVE VEHICLE DETECTION SYSTEM |
| N | NEUTRAL (GROUNDED CONDUCTOR) |
| NB | NEUTRAL BUS |
| NC | NORMALLY CLOSE |
| NO | NORMALLY OPEN |
| P | CIRCUIT BREAKER'S POLE |
| PB | PULL BOX |
| PBA | PUSH BUTTON ASSEMBLY |
| PEC | PHOTOELECTRIC CONTROL |
| Ped | PEDESTRIAN |
| PEU | PHOTOELECTRIC UNIT |
| PT | CONDUIT WITH PULL TAPE |
| PTR | POWER TRANSFER RELAY |
| RE | RELOCATED EQUIPMENT |
| RM | RAMP METERING |
| RWIS | ROADSIDE WEATHER INFORMATION SYSTEM |
| SB | SLIP BASE |
| SIC | SIGNAL INTERCONNECT CABLE |
| Sig | SIGNAL |
| SMA | SIGNAL MAST ARM |
| SNS | STREET NAME SIGN |
| SP | SERVICE POINT |
| TB | TERMINAL BOARD |
| TDC | TELEPHONE DEMARCATION CABINET |
| Temp | TEMPERATURE |
| TMS | TRAFFIC MONITORING STATION |
| TOS | TRAFFIC OPERATIONS SYSTEM |
| UPS | UNINTERRUPTABLE POWER SUPPLY |
| UPSC | UNINTERRUPTABLE POWER SUPPLY CONTROLLER |
| Veh | VEHICLE |
| VIVDS | VIDEO IMAGE VEHICLE DETECTION SYSTEM |
| Wht | WHITE |
| WIM | WEIGH-IN-MOTION |
| Xfmr | TRANSFORMER |

## SOFFIT AND WALL-MOUNTED LUMINAIRES

- PENDANT SOFFIT LUMINAIRE, 70 W HPS UNLESS OTHERWISE SPECIFIED
- FLUSH-MOUNTED SOFFIT LUMINAIRE, 70 W HPS UNLESS OTHERWISE SPECIFIED
- WALL-MOUNTED LUMINAIRE, 70 W HPS UNLESS OTHERWISE SPECIFIED
- EXISTING SOFFIT OR WALL-MOUNTED LUMINAIRE TO REMAIN UNMODIFIED
- EXISTING SOFFIT OR WALL-MOUNTED LUMINAIRE TO BE MODIFIED AS SPECIFIED

NOTE:
Arrow indicates "street side" of luminaire.

COMMONLY USED SYMBOLS FOR UNITED STATES CUSTOMARY UNITS OF MEASUREMENT:

| SYMBOL | DEFINITIONS |
|---|---|
| Ω | OHMS |
| min | MINUTE |
| s | SECOND |
| bps | BITS PER SECOND |
| Bps | BYTES PER SECOND |
| A | AMPERE |
| V | VOLT |
| $V_{(dc)}$ | VOLT (DIRECT CURRENT) |
| $V_{(ac)}$ | VOLT (ALTERNATING CURRENT) |
| FC | FOOT - CANDLE |
| W | WATTS |
| VA | VOLT-AMPERE |
| M | MEGA |
| k | KILO |
| m | MILLI |
| μ | MICRO |
| P | PICO |
| Hz | HERTZ |

## MISCELLANEOUS ELECTROLIERS

| NEW | EXISTING | |
|---|---|---|
| | | LUMINAIRE ON WOOD POLE |
| | | NON-STANDARD ELECTROLIER (SEE PROJECT LEGEND) |
| | | CITY ELECTROLIER |
| | | ELECTROLIER FOUNDATION (FUTURE INSTALLATION) |

NOTES:

1. LED luminaires shall be 235 W when installed on Type 21, 21D, 30, 31 and 32 Standards, unless otherwise specified. LED luminaires shall be 165 W when installed on other type standards or poles, unless otherwise specified.
2. Luminaires shall be the cutoff type, ANSI Type III medium cutoff lighting distribution, unless otherwise specified.

## STANDARD ELECTROLIER

| NEW | EXISTING | STANDARD TYPE |
|---|---|---|
| | | 15 |
| | | 15D |
| | | 15 STRUCTURE |
| | | 15D STRUCTURE |
| | | 21 |
| | | 21D |
| | | 21 STRUCTURE |
| | | 21D STRUCTURE |
| | | 30 |
| | | 31 |
| | | 32 |

STATE OF CALIFORNIA
DEPARTMENT OF TRANSPORTATION

# ELECTRICAL SYSTEMS (LEGEND AND ABBREVIATIONS)

NO SCALE

RSP ES-1A DATED OCTOBER 30, 2015 SUPERSEDES RSP ES-1A DATED JULY 19, 2013 AND STANDARD PLAN ES-1A DATED MAY 20, 2011 - PAGE 425 OF THE STANDARD PLANS BOOK DATED 2010.

**REVISED STANDARD PLAN RSP ES-1A**

**2010 REVISED STANDARD PLAN RSP ES-1A**

9-29-15

| Dist | COUNTY | ROUTE | POST MILES TOTAL PROJECT | SHEET No. | TOTAL SHEETS |
|---|---|---|---|---|---|
| 04 | SM | 101,114 | 1.3/2.5, 5.0/5.3 | 416 | 568 |

Theresa Gabriel
REGISTERED ELECTRICAL ENGINEER

October 30, 2015
PLANS APPROVAL DATE

REGISTERED PROFESSIONAL ENGINEER Theresa Aziz Gabriel No. E15129 Exp. 6-30-16 ELECTRICAL STATE OF CALIFORNIA

*THE STATE OF CALIFORNIA OR ITS OFFICERS OR AGENTS SHALL NOT BE RESPONSIBLE FOR THE ACCURACY OR COMPLETENESS OF SCANNED COPIES OF THIS PLAN SHEET.*

TO ACCOMPANY PLANS DATED 6-29-16

## CONDUIT

| NEW | EXISTING | |
|---|---|---|
| | | LIGHTING CONDUIT, UNLESS OTHERWISE INDICATED OR NOTED |
| | | TRAFFIC SIGNAL CONDUIT |
| C | c | COMMUNICATION CONDUIT |
| T | t | TELEPHONE CONDUIT |
| F | f | FIRE ALARM CONDUIT |
| FO | fo | FIBER OPTIC CONDUIT |
| | | CONDUIT TERMINATION |
| R | r | CONDUIT RISER ATTACHED TO THE STRUCTURE OR SERVICE POLE |

## SERVICE EQUIPMENT

| NEW | EXISTING | |
|---|---|---|
| OH | oh | OVERHEAD LINES |
| U | U | WOOD POLE, "U" INDICATES UTILITY OWNED |
| | | POLE GUY WITH ANCHOR |
| | | UTILITY TRANSFORMER - GROUND MOUNTED |
| III | III | SERVICE EQUIPMENT ENCLOSURE TYPE. DOOR INDICATES FRONT OF ENCLOSURE |
| T | t | TELEPHONE DEMARCATION CABINET |

## POLE-MOUNTED SERVICE DESIGNATION

TYPE H SERVICE, 28'-10" — TYPE OF INSTALLATION AND POLE HEIGHT ABOVE GRADE

## FLASHING BEACON

| NEW | EXISTING | |
|---|---|---|
| R | R | FLASHING BEACON (ONE VEHICLE SIGNAL HEAD WITH BACKPLATE AND VISOR) "R" INDICATES RED INDICATION, "Y" INDICATES YELLOW INDICATION |
| Y Y | Y Y | FLASHING BEACON WITH TYPE 15-FBS STANDARD AND A SIGN. |
| R R | R R | FLASHING BEACON WITH TYPES 9, 9A OR 9B SIGN UNLESS OTHERWISE SPECIFIED OR INDICATED |

## SIGNAL EQUIPMENT

| NEW | EXISTING | |
|---|---|---|
| | | PEDESTRIAN SIGNAL HEAD |
| | | PUSH BUTTON ASSEMBLY POST |
| | | PEDESTRIAN BARRICADE |
| | | VEHICLE SIGNAL HEAD (WITH BACKPLATE AND 3-SECTIONS: RED, YELLOW AND GREEN) |
| | | VEHICLE SIGNAL HEAD WITH ANGLE VISOR |
| PV | PV | MODIFICATIONS OF BASIC SYMBOL: "L" INDICATES ALL NON-ARROW SECTIONS LOUVERED "LG" INDICATES LOUVERED GREEN SECTION ONLY "PV" INDICATES ALL 12" SECTIONS PROGRAMMED VISIBILITY "8" INDICATES ALL 8" SECTIONS (ONLY WHEN SPECIFIED) |
| | | VEHICLE SIGNAL HEAD CONSISTING OF RED, YELLOW AND GREEN LEFT ARROW SECTIONS |
| | | VEHICLE SIGNAL HEAD CONSISTING OF RED AND YELLOW SECTIONS WITH AN UP GREEN ARROW SECTION |
| | | VEHICLE SIGNAL HEAD (5 SECTION) CONSISTING OF RED, YELLOW AND GREEN SECTIONS WITH YELLOW AND GREEN RIGHT ARROW SECTIONS |
| | | TYPE 15TS STANDARD WITH VEHICLE SIGNAL HEAD AND LUMINAIRE |
| | | TYPE 21TS STANDARD WITH VEHICLE SIGNAL HEAD AND LUMINAIRE |
| | | STANDARD WITH LUMINAIRE AND SIGNAL MAST ARMS AND ATTACHED VEHICLE SIGNAL HEADS |
| | | TYPE 1 STANDARD WITH ATTACHED VEHICLE SIGNAL HEADS |
| | | STANDARD WITH A SIGNAL MAST ARM, ATTACHED VEHICLE SIGNAL HEADS AND INTERNALLY ILLUMINATED STREET NAME SIGN |
| | | CONTROLLER ASSEMBLY. DOOR INDICATES FRONT OF CABINET |

## SIGNAL EQUIPMENT Cont

| NEW | EXISTING | |
|---|---|---|
| | | GUARD POST |
| | | TYPE 1 STANDARD WITH RAMP METERING SIGN |
| | | OPTICAL DETECTOR FOR THE EMERGENCY VEHICLE DETECTION |

### NOTES:

1. All signal sections shall be 12" unless shown otherwise.
2. Signal heads shall be provided with backplates unless shown otherwise.

## ILLUMINATED OVERHEAD SIGN

| NEW | EXISTING | |
|---|---|---|
| | | SINGLE POST, SINGLE ILLUMINATED SIGN, BALANCED BUTTERFLY |
| | | SINGLE POST, DOUBLE ILLUMINATED SIGN, BALANCED BUTTERFLY |
| | | SINGLE POST, SINGLE ILLUMINATED SIGN, FULL CANTILEVER |
| | | DOUBLE POST, SINGLE ILLUMINATED SIGN |
| | | SINGLE ILLUMINATED SIGN MOUNTED ON STRUCTURE |
| | | DOUBLE POST, SINGLE ILLUMINATED SIGN WITH ELECTROLIER |

STATE OF CALIFORNIA
DEPARTMENT OF TRANSPORTATION

# ELECTRICAL SYSTEMS (LEGEND AND ABBREVIATIONS)

NO SCALE

RSP ES-1B DATED OCTOBER 30, 2015 SUPERSEDES RSP ES-1B DATED JULY 19, 2013 AND STANDARD PLAN ES-1B DATED MAY 20, 2011 - PAGE 426 OF THE STANDARD PLANS BOOK DATED 2010.

**REVISED STANDARD PLAN RSP ES-1B**

**2010 REVISED STANDARD PLAN RSP ES-1B**

8-19-15

| Dist | COUNTY | ROUTE | POST MILES TOTAL PROJECT | SHEET No. | TOTAL SHEETS |
|---|---|---|---|---|---|
| 04 | SM | 101,114 | 1.3/2.5, 5.0/5.3 | 417 | 568 |

Theresa Gabriel
REGISTERED ELECTRICAL ENGINEER

April 15, 2016
PLANS APPROVAL DATE

REGISTERED PROFESSIONAL ENGINEER
Theresa Aziz Gabriel
No. E15129
Exp. 6-30-16
ELECTRICAL
STATE OF CALIFORNIA

*THE STATE OF CALIFORNIA OR ITS OFFICERS OR AGENTS SHALL NOT BE RESPONSIBLE FOR THE ACCURACY OR COMPLETENESS OF SCANNED COPIES OF THIS PLAN SHEET.*

TO ACCOMPANY PLANS DATED 6-29-16

**2010 REVISED STANDARD PLAN RSP ES-1C**

## EQUIPMENT IDENTIFICATION

### ILLUMINATED SIGN IDENTIFICATION:

SIGN No. 12345 — SIGN EQUIPMENT IDENTIFICATION CHARACTERS - PLACE ON POST OR STRUCTURE

10 ISL SCI 1.0

- 1.0 — TRANSFORMER RATING (kVA)
- SCI — LIGHTING CONTROL TYPE
- ISL — NUMBER AND TYPE OF FIXTURES

DO NOT PLACE ON STANDARD OR STRUCTURE

### ELECTROLIER OR EQUIPMENT IDENTIFICATION:

L2745 - 15'-0"

- 15'-0" — MAST ARM LENGTH, IF SHOWN. DO NOT PLACE ON STANDARD OR STRUCTURE
- L2745 — EQUIPMENT IDENTIFICATION CHARACTERS - PLACE ON STANDARD OR STRUCTURE. EXISTING EQUIPMENT IDENTIFICATION CHARACTERS ARE SHOWN IN PARENTHESIS

### CONDUIT AND CONDUCTOR IDENTIFICATION:

1½"C, 2#10, 15#14, 2 DLC, 12P#18 (PAIR)

- 2#10, 15#14, 2 DLC, 12P#18 — NUMBER AND SIZE OF CONDUCTORS AND CABLES
- 1½"C — SIZE OF CONDUIT IN INCHES

| | |
|---|---|
| ø1, ø2, ø2P, etc. | TRAFFIC PHASE IDENTIFICATION FOR SIGNALS, DETECTORS AND PHASE DIAGRAMS |
| 1 2 3 | LEGEND NUMBERS |
| A B C | EQUIPMENT, SIGNAL POLES, INSTALLATION OR ITEMS |
| 1 2 3 | CONDUIT RUN NUMBERS |

### SIGNAL AND LIGHTING STANDARD (TYPICAL DESIGNATION):

19A - 3 - 100

- 100 — WIND VELOCITY = 100 mph
- 3 — CASE 3 ARM LOADING
- 19A — STANDARD TYPE
- STANDARD PLAN SHEET NUMBER
- DETAIL, NUMBER, SECTION, TYPE OR ELEVATION

## MISCELLANEOUS EQUIPMENT

| NEW | EXISTING | |
|---|---|---|
| CMS | cms | CHANGEABLE MESSAGE SIGN |
| | | CLOSED CIRCUIT TELEVISION CAMERA |
| | | HIGHWAY ADVISORY RADIO POLE AND ANTENNA |
| EMS | ems | LED EXTINGUISHABLE MESSAGE SIGN |
| M V | m v | DETECTION DEVICE<br>M = MICROWAVE SENSOR<br>V = VIDEO IMAGE SENSOR |

## WIRING DIAGRAM LEGEND

- EXTERNAL CONDUCTOR
- CONDUCTOR OR BUS
- TIE POINT
- CONTACTOR COIL
- CONTACTOR, NO CONTACT
- TERMINAL BLOCKS
- CONTACTOR, NC CONTACT
- ENCLOSURE BOND
- GROUNDING ELECTRODE
- CIRCUIT BREAKER
- RECEPTACLE

## PULL BOXES

| NEW | EXISTING | |
|---|---|---|
| | | PULL BOX, No. 5 UNLESS OTHERWISE INDICATED OR NOTED |
| 3 | 9A(21) | PULL BOX, ADDITIONAL DESIGNATIONS OR DESCRIPTIONS |

3 No. 3½ PULL BOX
5 No. 5 PULL BOX
6 No. 6 PULL BOX
7 No. 7 PULL BOX (CEILING)
8 No. 8 PULL BOX
9 No. 9 PULL BOX (STRUCTURE)
9A No. 9A PULL BOX (STRUCTURE)

(C) COMMUNICATIONS PULL BOX
(E) PULL BOX WITH EXTENSION
(S) SPRINKLER CONTROL PULL BOX
(21) ANCHOR BOLTS AND CONDUIT FOR FUTURE INSTALLATION OF TYPE 21 STANDARD
(T) TRAFFIC PULL BOX

## VEHICLE DETECTORS

5 J 9 U

- U = UPPER
- L = LOWER
- SLOT NUMBER IN INPUT FILE
- INPUT FILE (I OR J)
- PHASE

| NEW | EXISTING | |
|---|---|---|
| | | TYPE A LOOP DETECTOR. OUTLINE OF SAW CUT SHOWN |
| | | TYPE B LOOP DETECTOR. OUTLINE OF SAW CUT SHOWN |
| | | TYPE C LOOP DETECTOR. OUTLINE OF SAW CUT SHOWN |
| | | TYPE D LOOP DETECTOR. OUTLINE OF SAW CUT SHOWN |
| | | TYPE E LOOP DETECTOR. OUTLINE OF SAW CUT SHOWN |
| | | TYPE Q LOOP DETECTOR. OUTLINE OF SAW CUT SHOWN |
| DH | dh | DETECTOR HANDHOLE |
| | | MICROWAVE OR VIDEO DETECTION ZONE |

STATE OF CALIFORNIA
DEPARTMENT OF TRANSPORTATION

# ELECTRICAL SYSTEMS (LEGEND AND ABBREVIATIONS)

NO SCALE

RSP ES-1C DATED APRIL 15, 2016 SUPERSEDES RSP ES-1C DATED OCTOBER 30, 2015 AND RSP ES-1C DATED JULY 19, 2013 AND STANDARD PLAN ES-1C DATED MAY 20, 2011 - PAGE 427 OF THE STANDARD PLANS BOOK DATED 2010.

**REVISED STANDARD PLAN RSP ES-1C**

1-22-16

| Dist | COUNTY | ROUTE | POST MILES TOTAL PROJECT | SHEET No. | TOTAL SHEETS |
|---|---|---|---|---|---|
| 04 | SM | 101,114 | 1.3/2.5, 5.0/5.3 | 418 | 568 |

Theresa Gabriel
REGISTERED ELECTRICAL ENGINEER

October 30, 2015
PLANS APPROVAL DATE

REGISTERED PROFESSIONAL ENGINEER Theresa Aziz Gabriel No. E15129 Exp. 6-30-16 ELECTRICAL STATE OF CALIFORNIA

*THE STATE OF CALIFORNIA OR ITS OFFICERS OR AGENTS SHALL NOT BE RESPONSIBLE FOR THE ACCURACY OR COMPLETENESS OF SCANNED COPIES OF THIS PLAN SHEET.*

TO ACCOMPANY PLANS DATED 6-29-16

**2010 REVISED STANDARD PLAN RSP ES-2A**

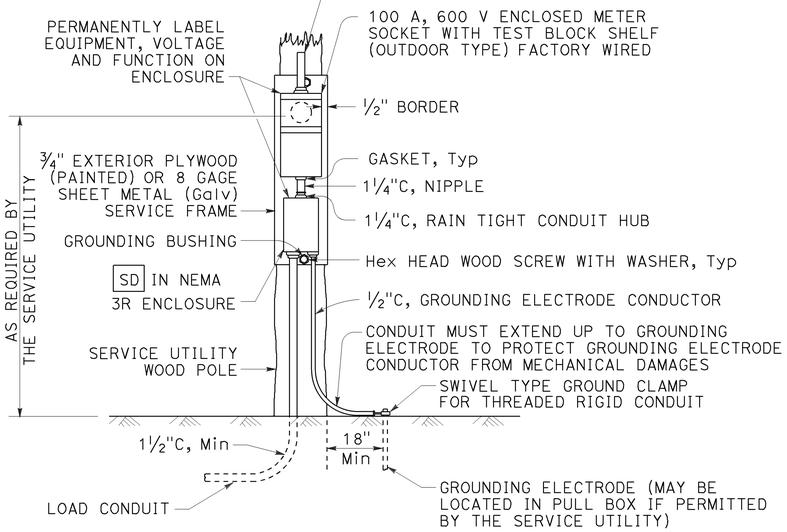


## TYPE SCE-1
DETAIL A

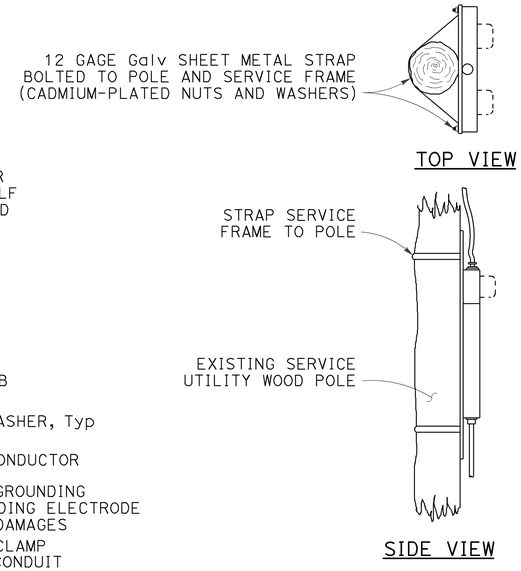


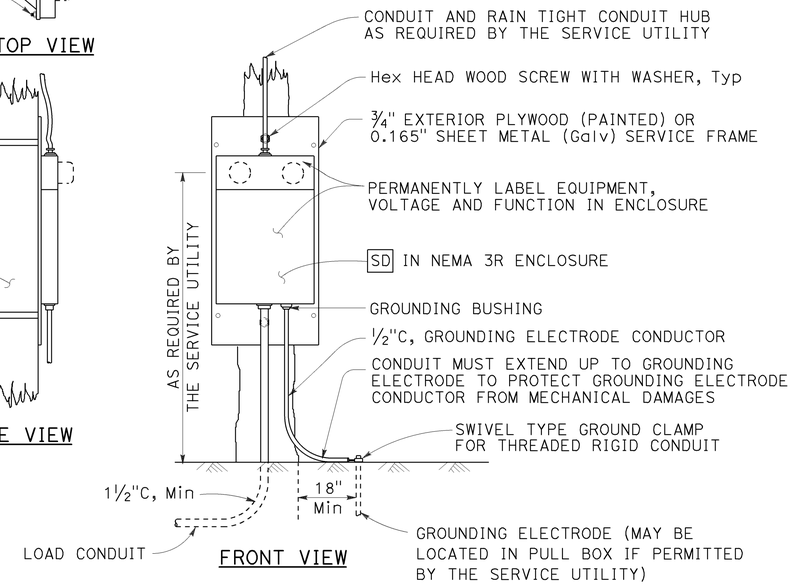


## TYPE SCE-2
DETAIL B

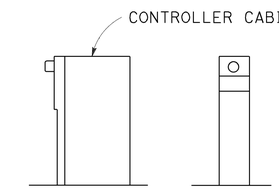


## TYPE OF SERVICE (TYPICAL)
DETAIL C

See Notes 1 and 2

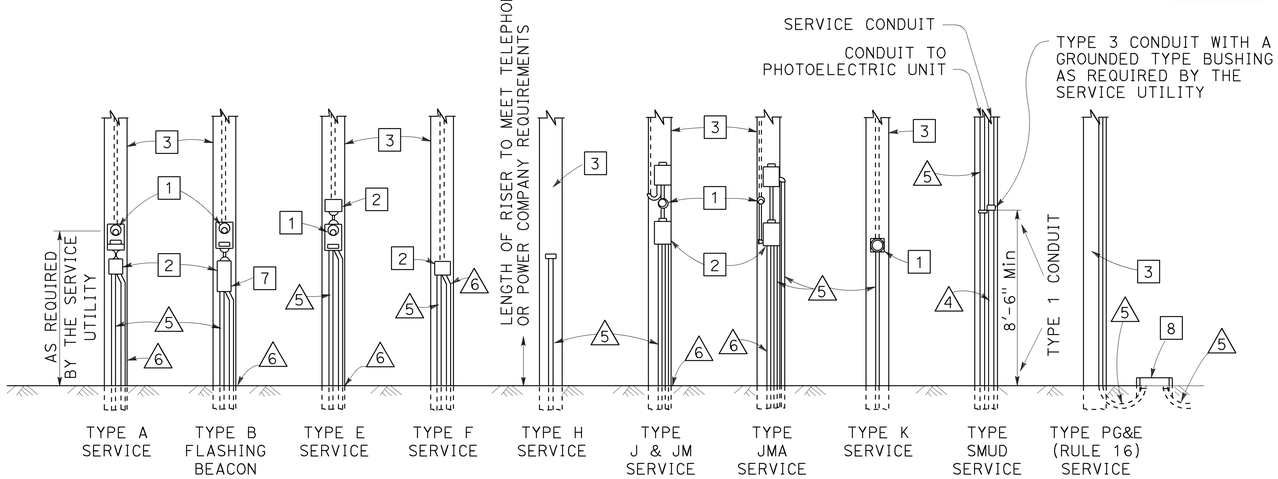


## POLE MOUNTED SERVICE INSTALLATIONS
DETAIL D

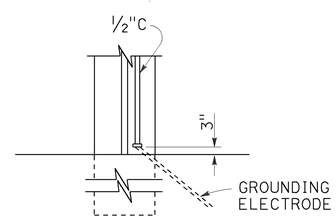


TYPE A
See Note 3

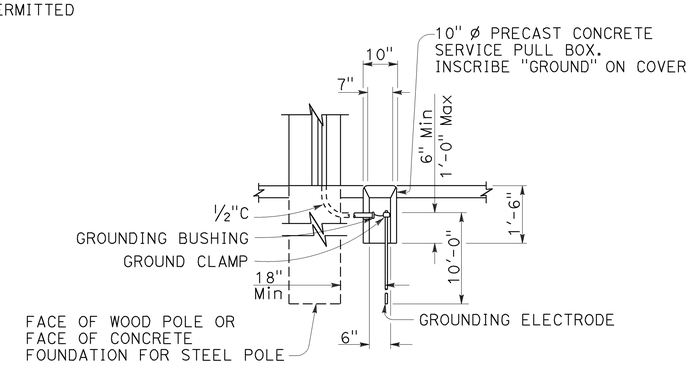


TYPE B
See Note 4

## SERVICE GROUNDING
DETAIL E

**LEGEND:**

1. METER SOCKET.
2. SERVICE ENCLOSURE WITH A MINIMUM 60 A RATED MAIN CIRCUIT BREAKER, UNLESS OTHERWISE SHOWN.
3. A. UTILITY OWNED POLE. THE SERVICE UTILITY WILL FURNISH AND INSTALL REQUIRED SERVICE RISER, PEU WITH CONDUCTORS AND OTHER EQUIPMENT AS NEEDED.
   B. STATE OWNED POLE. THE CONTRACTOR SHALL FURNISH AND INSTALL REQUIRED SERVICE RISER AND EQUIPMENT.
4. 2"C, SERVICE CONDUIT MUST HAVE A GROUNDED TYPE BUSHING INSTALLED AT UPPER END OF THE METALLIC POLE RISER CONDUIT. A GROUNDING CONDUCTOR MUST BE ATTACHED TO THE BUSHING, CARRIED THROUGH THE CONDUIT RUN AND ATTACHED TO THE SERVICE EQUIPMENT ENCLOSURE'S GROUNDING ELECTRODE.
5. CONDUIT, LENGTH AND SIZE AS REQUIRED.
6. ½"C, 1#6. SEE DETAIL E.
7. FLASHING BEACON CONTROL ASSEMBLY.
8. SERVICE PULL BOX, No. 5 UNLESS OTHERWISE NOTED, FURNISHED AND INSTALLED BY THE CONTRACTOR. SERVICE UTILITY SHALL DETERMINE THE EXACT LOCATION.

**NOTES:**

1. Type II service equipment enclosure mounted on the side of a controller cabinet.
2. Type III complete free-standing service equipment enclosure.
3. Ground clamp and required fittings must be accessible. Conduit must extend to protect grounding electrode conductor from mechanical damage.
4. Use where service utility requires 18" clearance between grounding electrode and the pole or service equipment enclosure. Installation shown is for sidewalk or paved areas. In unpaved areas, omit special service pull box and locate ground clamp above ground or locate ground clamp in nearest pull box.

STATE OF CALIFORNIA
DEPARTMENT OF TRANSPORTATION

# ELECTRICAL SYSTEMS (SERVICE EQUIPMENT)

NO SCALE

RSP ES-2A DATED OCTOBER 30, 2015 SUPERSEDES STANDARD PLAN ES-2A DATED MAY 20, 2011 - PAGE 428 OF THE STANDARD PLANS BOOK DATED 2010.

**REVISED STANDARD PLAN RSP ES-2A**

8-20-15

| Dist | COUNTY | ROUTE | POST MILES TOTAL PROJECT | SHEET No. | TOTAL SHEETS |
|---|---|---|---|---|---|
| 04 | SM | 101,114 | 1.3/2.5, 5.0/5.3 | 419 | 568 |

Theresa Gabriel
REGISTERED ELECTRICAL ENGINEER

October 30, 2015
PLANS APPROVAL DATE

REGISTERED PROFESSIONAL ENGINEER
Theresa Aziz Gabriel
No. E15129
Exp. 6-30-16
ELECTRICAL
STATE OF CALIFORNIA

*THE STATE OF CALIFORNIA OR ITS OFFICERS OR AGENTS SHALL NOT BE RESPONSIBLE FOR THE ACCURACY OR COMPLETENESS OF SCANNED COPIES OF THIS PLAN SHEET.*

TO ACCOMPANY PLANS DATED 6-29-16

2010 REVISED STANDARD PLAN RSP ES-2C

NOTES:

1. The plan shows the approximate location of devices within the enclosure. Components may be rearranged, however, the "working" clearances within the service equipment enclosure shall be maintained.

2. In unpaved areas a raised portland cement concrete pad 2'-0" x 4" x width of foundation shall be constructed in front of new service equipment enclosure installation. Pad shall be set to elevation of foundation.

3. Plug-in circuit breakers may be mounted in the vertical or horizontal position. Cable-in/cable-out circuit breakers shall be mounted in the vertical position.

4. Type III-AF and Type III-BF service equipment enclosures shall have the meter viewing windows located on the front side of the service equipment enclosures.

5. Type III-AR and Type III-BR service equipment enclosure shall be similarly constructed as Type III-AF and Type III-BF respectively, except the meter viewing windows shall be located on the back side of the service equipment enclosures.

STATE OF CALIFORNIA
DEPARTMENT OF TRANSPORTATION

# ELECTRICAL SYSTEMS (SERVICE EQUIPMENT ENCLOSURE NOTES TYPE III SERIES)

NO SCALE

RSP ES-2C DATED OCTOBER 30, 2015 SUPERSEDES STANDARD PLAN ES-2C DATED MAY 20, 2011 - PAGE 430 OF THE STANDARD PLANS BOOK DATED 2010.

**REVISED STANDARD PLAN RSP ES-2C**

| Dist | COUNTY | ROUTE | POST MILES TOTAL PROJECT | SHEET No. | TOTAL SHEETS |
|---|---|---|---|---|---|
| 04 | SM | 101,114 | 1.3/2.5, 5.0/5.3 | 420 | 568 |

Theresa Gabriel
REGISTERED ELECTRICAL ENGINEER

October 30, 2015
PLANS APPROVAL DATE

REGISTERED PROFESSIONAL ENGINEER Theresa Aziz Gabriel No. E15129 Exp. 6-30-16 ELECTRICAL STATE OF CALIFORNIA

*THE STATE OF CALIFORNIA OR ITS OFFICERS OR AGENTS SHALL NOT BE RESPONSIBLE FOR THE ACCURACY OR COMPLETENESS OF SCANNED COPIES OF THIS PLAN SHEET.*

TO ACCOMPANY PLANS DATED 6-29-16

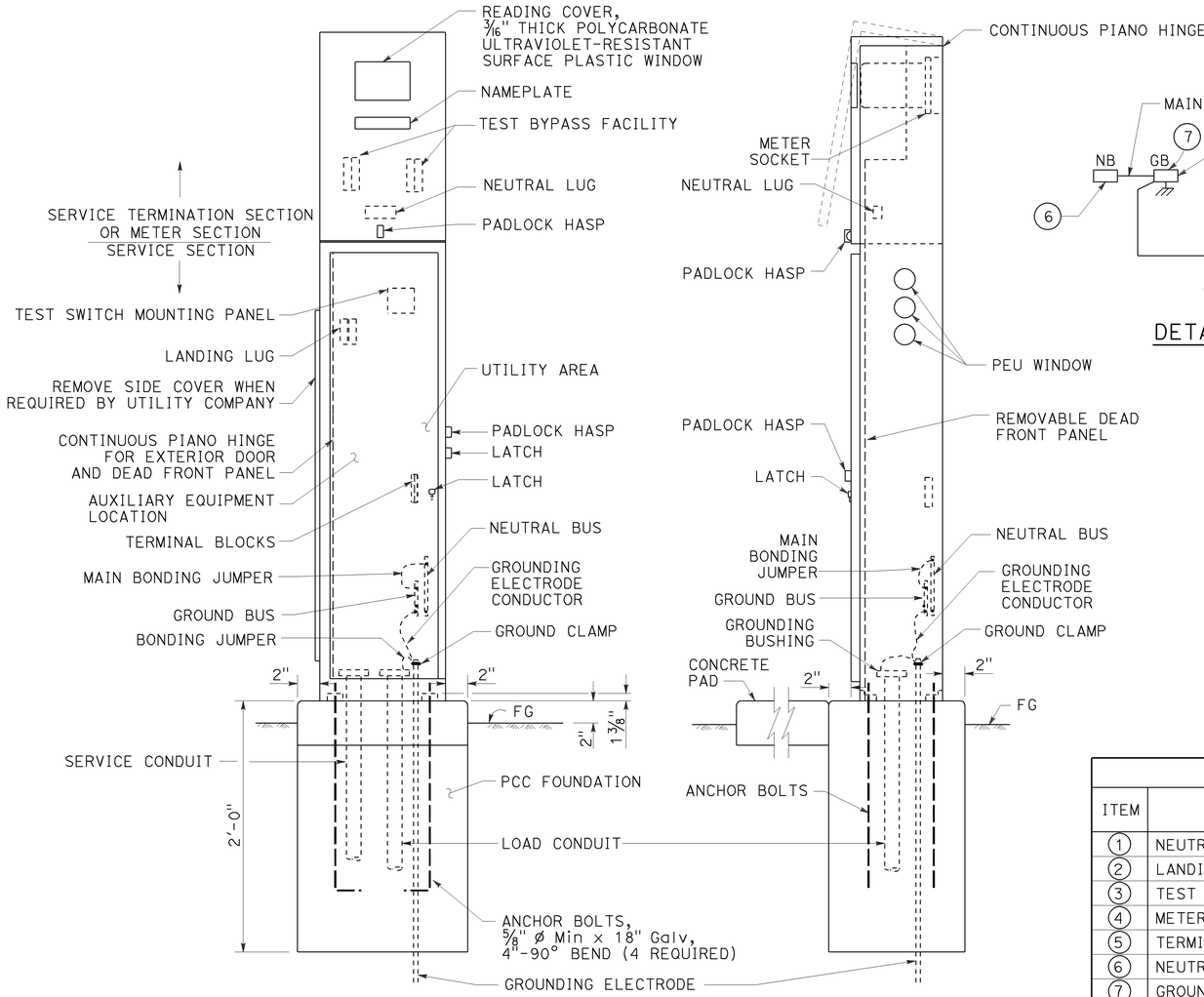


FRONT VIEW

SIDE VIEW

## TYPE III-AF SERVICE EQUIPMENT ENCLOSURE (TYPICAL)

DETAIL A

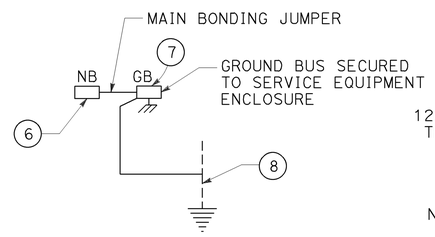


DETAIL D

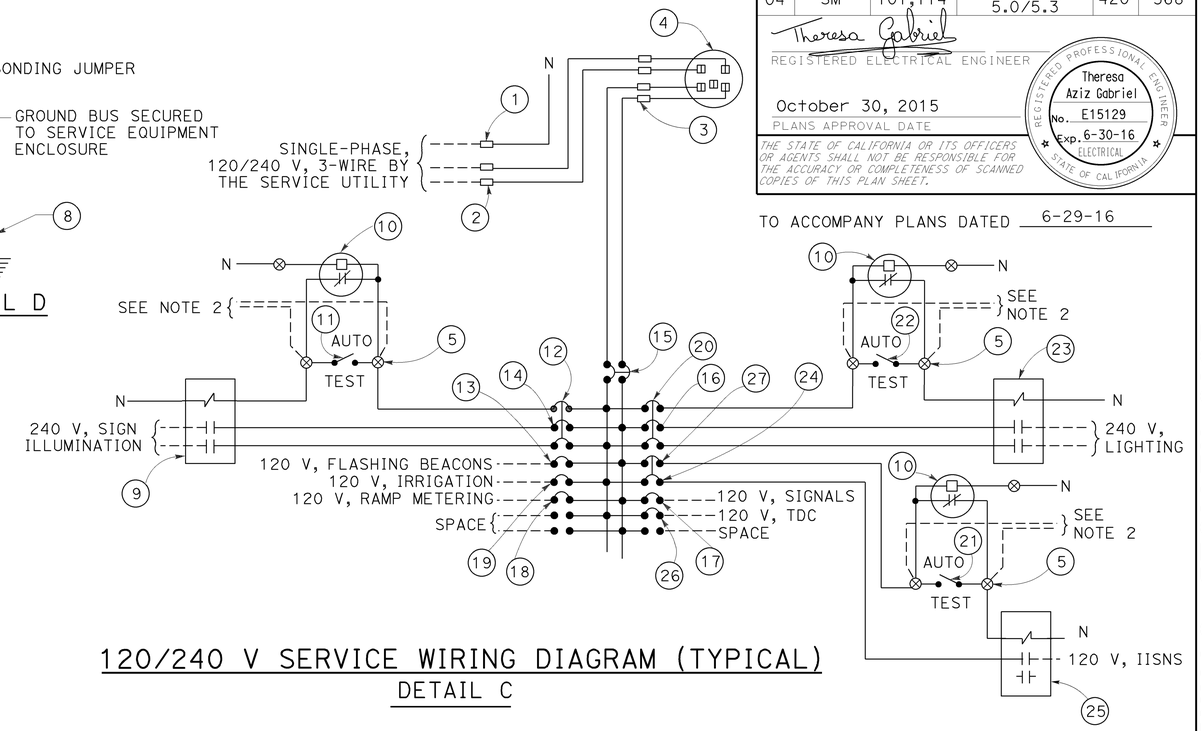


## 120/240 V SERVICE WIRING DIAGRAM (TYPICAL)

DETAIL C

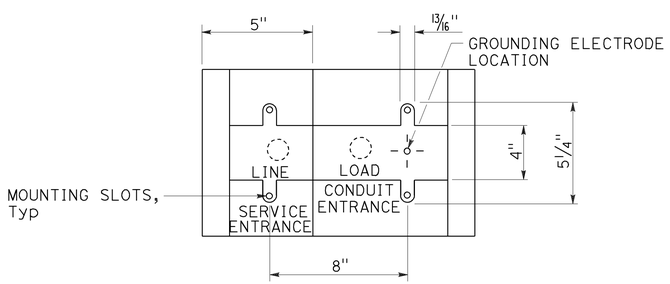


## BASE FOR TYPE III-A SERVICE EQUIPMENT ENCLOSURE

DETAIL B

### TYPE III-A SERVICE EQUIPMENT ENCLOSURE LEGEND (120/240 V)

| ITEM | COMPONENT | NAMEPLATE DESCRIPTION | ITEM | COMPONENT | NAMEPLATE DESCRIPTION |
|---|---|---|---|---|---|
| 1 | NEUTRAL LUG | | 14 | 30 A, 240 V, 2P, CB | SIGN ILLUMINATION |
| 2 | LANDING LUG | | 15 | 100 A, 240 V, 2P, CB | MAIN BREAKER |
| 3 | TEST BYPASS FACILITY | | 16 | 30 A, 240 V, 2P, CB | LIGHTING |
| 4 | METER SOCKET AND SUPPORT | | 17 | 50 A, 120 V, 1P, CB | SIGNALS |
| 5 | TERMINAL BLOCKS | | 18 | 30 A, 120 V, 1P, CB | RAMP METERING |
| 6 | NEUTRAL BUS | | 19 | 20 A, 120 V, 1P, CB | IRRIGATION |
| 7 | GROUND BUS | | 20 | 15 A, 120 V, 1P, CB | LIGHTING CONTROL |
| 8 | GROUNDING ELECTRODE | | 21 | 15 A, 1P, TEST SWITCH | IISNS TEST SWITCH |
| 9 | 30 A, 2P, NO CONTACTOR | SIGN ILLUMINATION | 22 | 15 A, 1P, TEST SWITCH | LIGHTING TEST SWITCH |
| 10 | PHOTOELECTRIC UNIT (NOTE 4) | PEU | 23 | 60 A, 2P, NO CONTACTOR | LIGHTING |
| 11 | 15 A, 1P, TEST SWITCH | SIGN ILLUMINATION TEST SWITCH | 24 | 15 A, 120 V, 1P, CB | IISNS |
| 12 | 15 A, 120 V, 1P, CB | SIGN ILLUMINATION CONTROL | 25 | 30 A, 2P, NO CONTACTOR | IISNS |
| 13 | 15 A, 120 V, 1P, CB | FLASHING BEACON | 26 | 20 A, 120 V, 1P, CB | TELEPHONE DEMARCATION CABINET |
| | | | 27 | 15 A, 120 V, 1P, CB | IISNS CONTROL |

NOTES:

1. Unless otherwise indicated on the plans, service equipment items shall be provided for each service equipment enclosure as shown.
2. Connect to remote test switch mounted on lighting standards, sign post or structure when required.
3. Items 1 and 6 shall be isolated from the service equipment enclosure.
4. Type V photoelectric control shall be used unless otherwise indicated on the plans.
5. Item 12, 20 and 27 shall be ganged operated CB.

STATE OF CALIFORNIA
DEPARTMENT OF TRANSPORTATION

# ELECTRICAL SYSTEMS (SERVICE EQUIPMENT ENCLOSURE AND TYPICAL WIRING DIAGRAM, TYPE III-A SERIES)

NO SCALE

RSP ES-2D DATED OCTOBER 30, 2015 SUPERSEDES STANDARD PLAN ES-2D DATED MAY 20, 2011 - PAGE 431 OF THE STANDARD PLANS BOOK DATED 2010.

**REVISED STANDARD PLAN RSP ES-2D**

2010 REVISED STANDARD PLAN RSP ES-2D

| Dist | COUNTY | ROUTE | POST MILES TOTAL PROJECT | SHEET No. | TOTAL SHEETS |
|---|---|---|---|---|---|
| 04 | SM | 101,114 | 1.3/2.5, 5.0/5.3 | 421 | 568 |

Theresa Gabriel
REGISTERED ELECTRICAL ENGINEER

April 15, 2016
PLANS APPROVAL DATE

REGISTERED PROFESSIONAL ENGINEER Theresa Aziz Gabriel No. E15129 Exp. 6-30-16 ELECTRICAL STATE OF CALIFORNIA

*THE STATE OF CALIFORNIA OR ITS OFFICERS OR AGENTS SHALL NOT BE RESPONSIBLE FOR THE ACCURACY OR COMPLETENESS OF SCANNED COPIES OF THIS PLAN SHEET.*

TO ACCOMPANY PLANS DATED 6-29-16

**2010 REVISED STANDARD PLAN RSP ES-3C**

NOTES:

1. Controller units, plug-mounted equipment, shelf-mounted equipment and wall-mounted equipment shall be located to permit safe and easy removal or replacement without removing any other piece of equipment.
2. Cabinet fan may be installed at an alternate location near the top of the cabinet when approved by the Engineer.
3. Where telephone interconnect is required, a minimum of 5" clear vertical space shall be provided inside the cabinet for the equipment.
4. Telephone interconnect conductors shall be enclosed in a ¾"C or larger conduit through the foundation. Type 4 conduit shall be used to separate telephone and power conductors in cabinets.

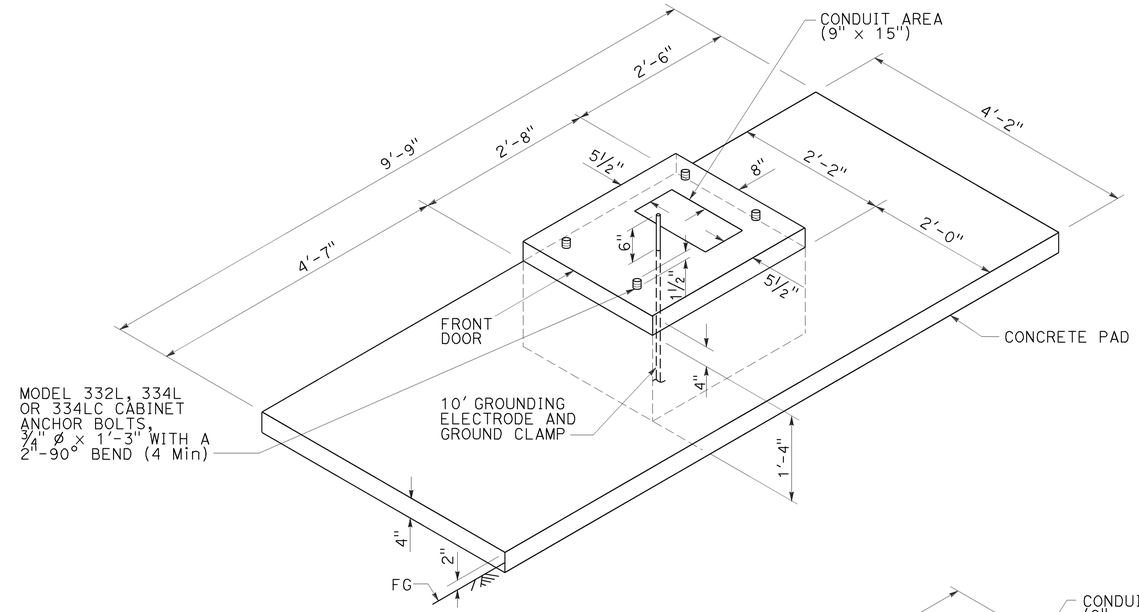


## FOUNDATION AND PAD DETAIL

Model 332L, 334L and 334LC

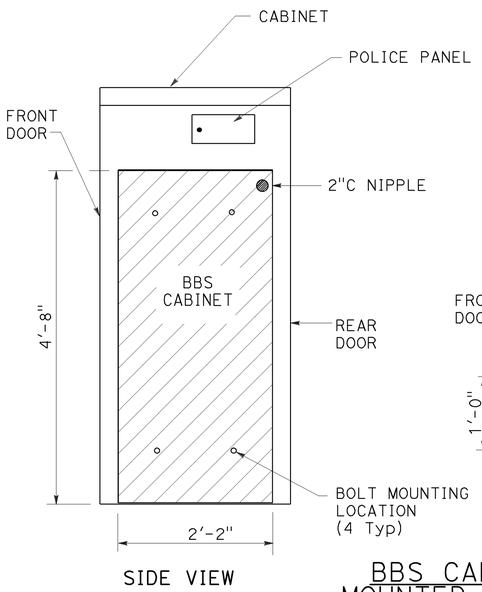


SIDE VIEW

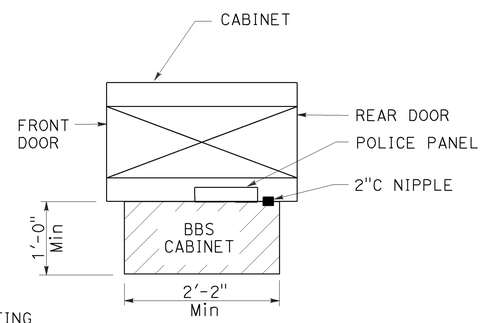


TOP VIEW

## BBS CABINET MOUNTED TO THE MODEL 332L CABINET

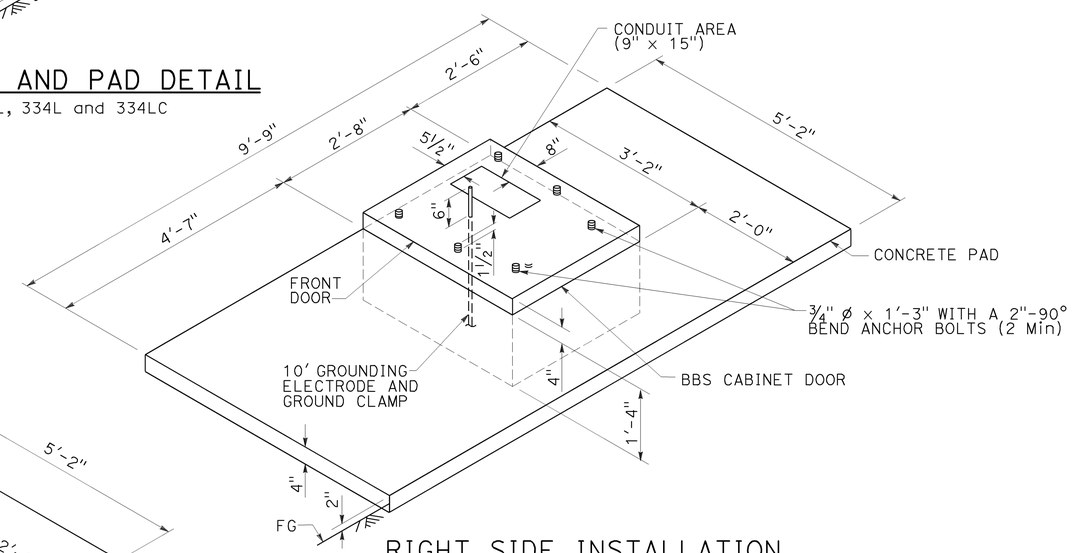


## RIGHT SIDE INSTALLATION

DETAIL B

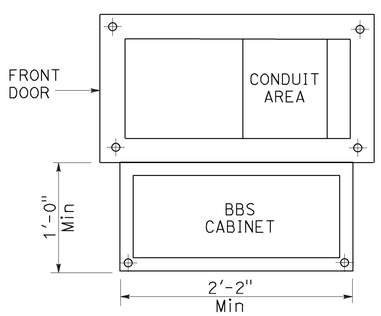


## BASE PLAN FOR BBS MOUNTED TO THE MODEL 332L CABINET

(FOR DIMENSIONS AND DETAILS NOT SHOWN, SEE CABINET HOUSING DETAILS OF THE TRANSPORTATION ELECTRICAL EQUIPMENT SPECIFICATION (TEES))

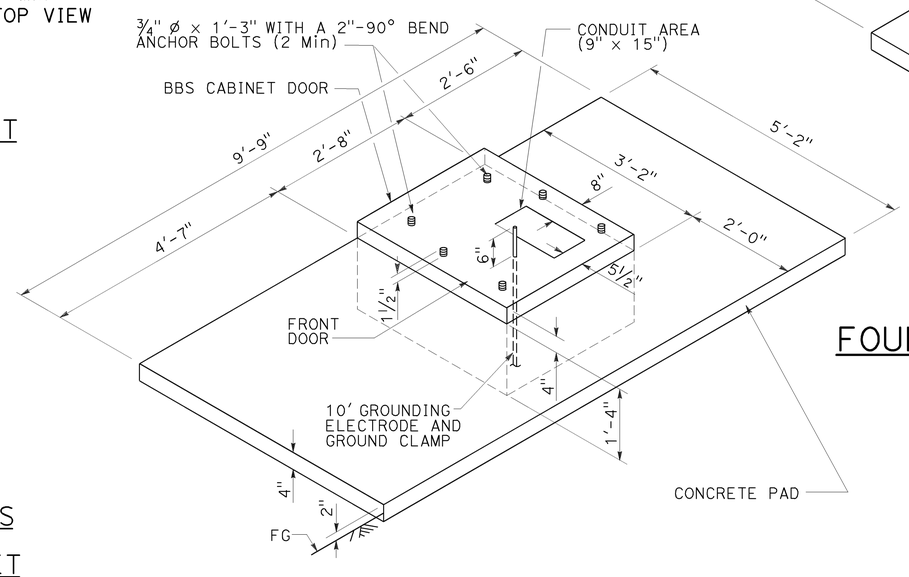


## LEFT SIDE INSTALLATION

DETAIL A

## MODIFIED MODEL 332L CABINET FOUNDATION DETAIL FOR BATTERY BACKUP SYSTEM

STATE OF CALIFORNIA
DEPARTMENT OF TRANSPORTATION

# ELECTRICAL SYSTEMS (CONTROLLER CABINET FOUNDATION AND PAD DETAILS)

NO SCALE

RSP ES-3C DATED APRIL 15, 2016 SUPERSEDES RSP ES-3C DATED OCTOBER 30, 2015 AND STANDARD PLAN ES-3C DATED MAY 20, 2011 - PAGE 437 OF THE STANDARD PLANS BOOK DATED 2010.

**REVISED STANDARD PLAN RSP ES-3C**

| Dist | COUNTY | ROUTE | POST MILES TOTAL PROJECT | SHEET No. | TOTAL SHEETS |
|---|---|---|---|---|---|
| 04 | SM | 101,114 | 1.3/2.5, 5.0/5.3 | 422 | 568 |

Theresa Gabriel
REGISTERED ELECTRICAL ENGINEER

July 15, 2016
PLANS APPROVAL DATE

REGISTERED PROFESSIONAL ENGINEER
Theresa Aziz Gabriel
No. E15129
Exp. 6-30-18
ELECTRICAL
STATE OF CALIFORNIA

*THE STATE OF CALIFORNIA OR ITS OFFICERS OR AGENTS SHALL NOT BE RESPONSIBLE FOR THE ACCURACY OR COMPLETENESS OF SCANNED COPIES OF THIS PLAN SHEET.*

TO ACCOMPANY PLANS DATED 6-29-16

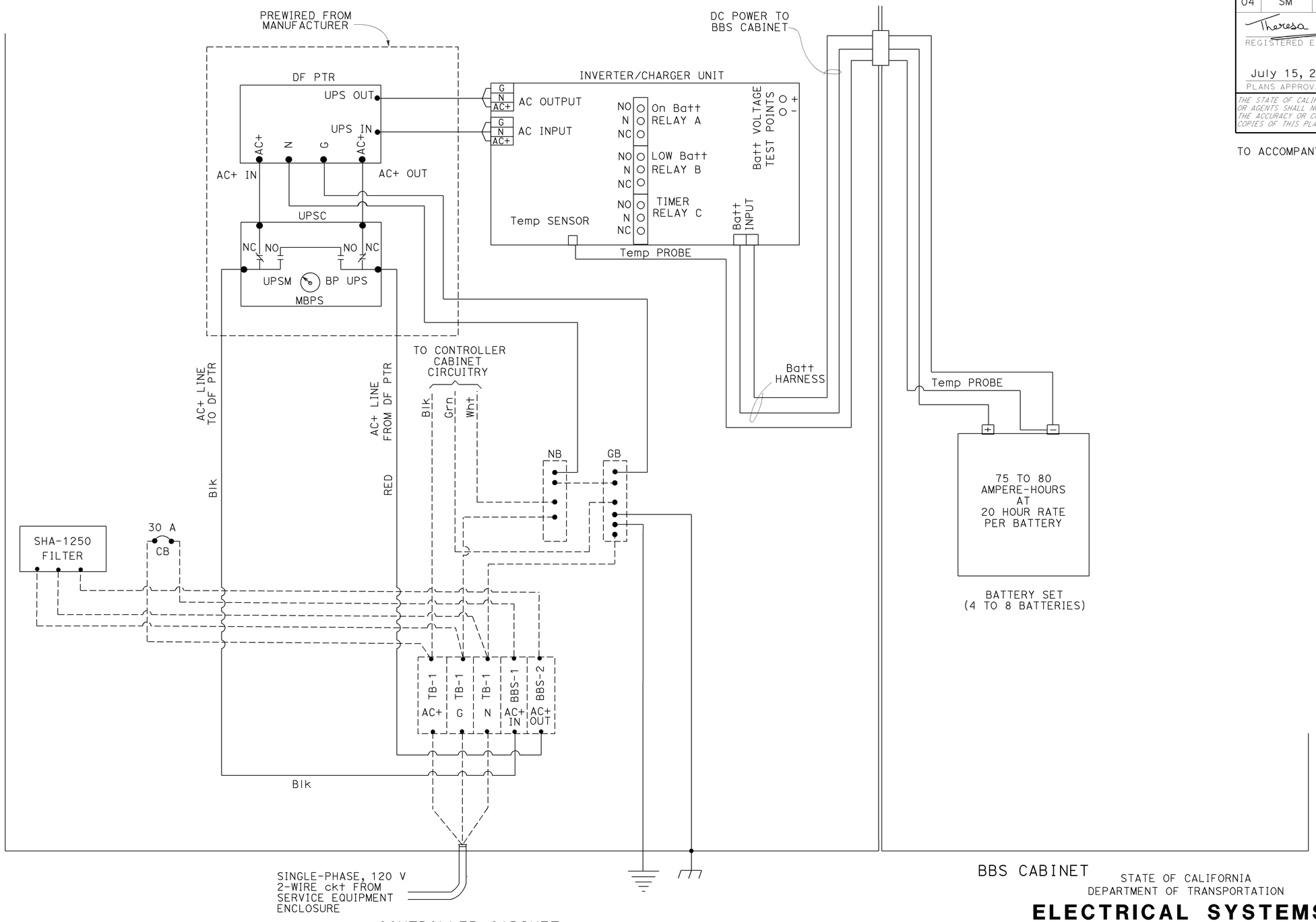


STATE OF CALIFORNIA
DEPARTMENT OF TRANSPORTATION

# ELECTRICAL SYSTEMS (ELECTRONICS ASSEMBLY CONNECTION DIAGRAM, WITHOUT BYPASS CONTROL LINE)

NO SCALE

RSP ES-3L DATED JULY 15, 2016 SUPERSEDES RSP ES-3L DATED APRIL 15, 2016 AND RSP ES-3L DATED OCTOBER 30, 2015 THAT SUPPLEMENTS THE STANDARD PLANS BOOK DATED 2010.

**REVISED STANDARD PLAN RSP ES-3L**

**2010 REVISED STANDARD PLAN RSP ES-3L**

5-24-16

| Dist | COUNTY | ROUTE | POST MILES TOTAL PROJECT | SHEET No. | TOTAL SHEETS |
|---|---|---|---|---|---|
| 04 | SM | 101,114 | 1.3/2.5, 5.0/5.3 | 423 | 568 |

Theresa Gabriel
REGISTERED ELECTRICAL ENGINEER

October 30, 2015
PLANS APPROVAL DATE

REGISTERED PROFESSIONAL ENGINEER
Theresa Aziz Gabriel
No. E15129
Exp. 6-30-16
ELECTRICAL
STATE OF CALIFORNIA

*THE STATE OF CALIFORNIA OR ITS OFFICERS OR AGENTS SHALL NOT BE RESPONSIBLE FOR THE ACCURACY OR COMPLETENESS OF SCANNED COPIES OF THIS PLAN SHEET.*

TO ACCOMPANY PLANS DATED 6-29-16

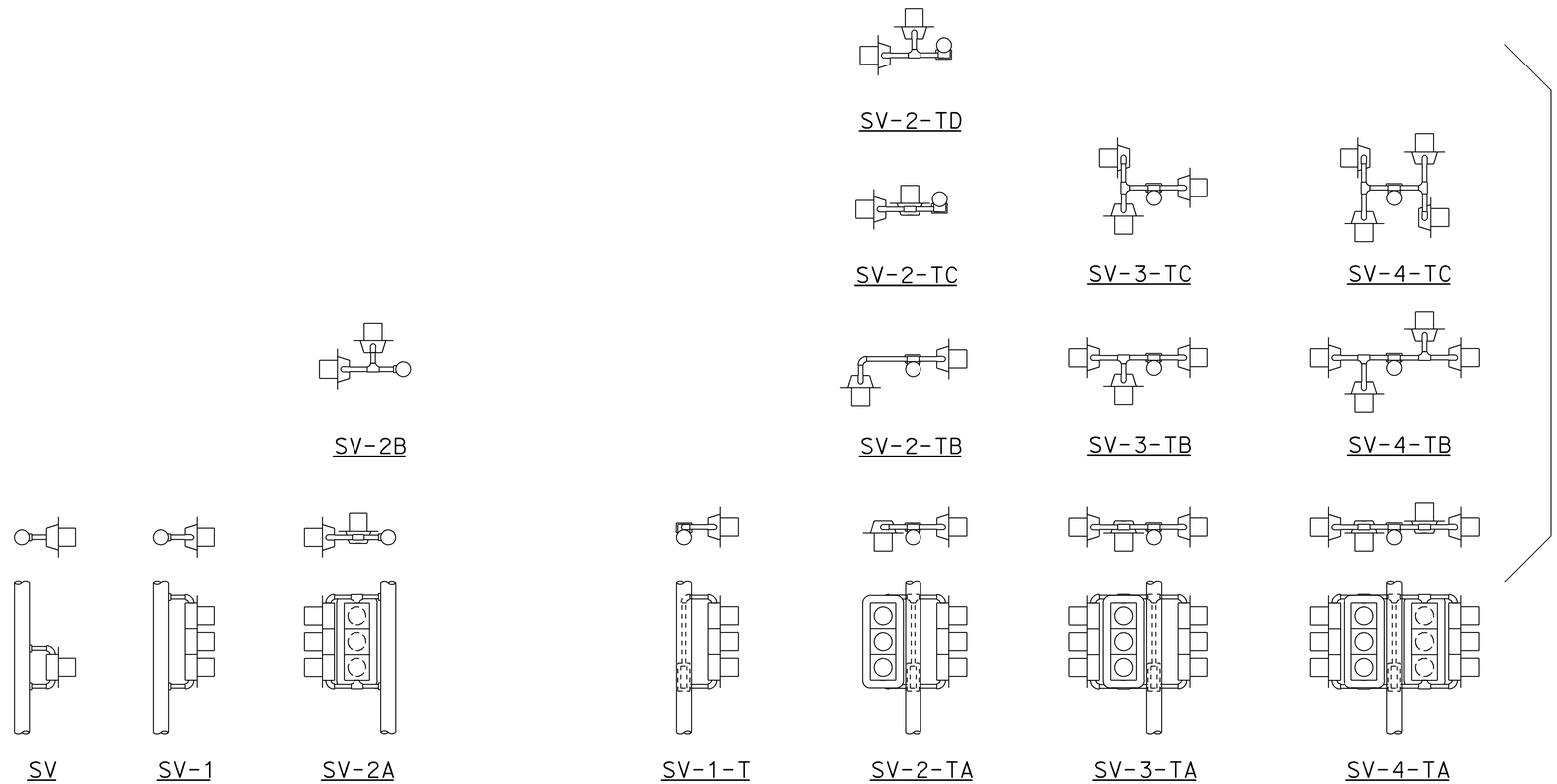


SIDE MOUNTINGS

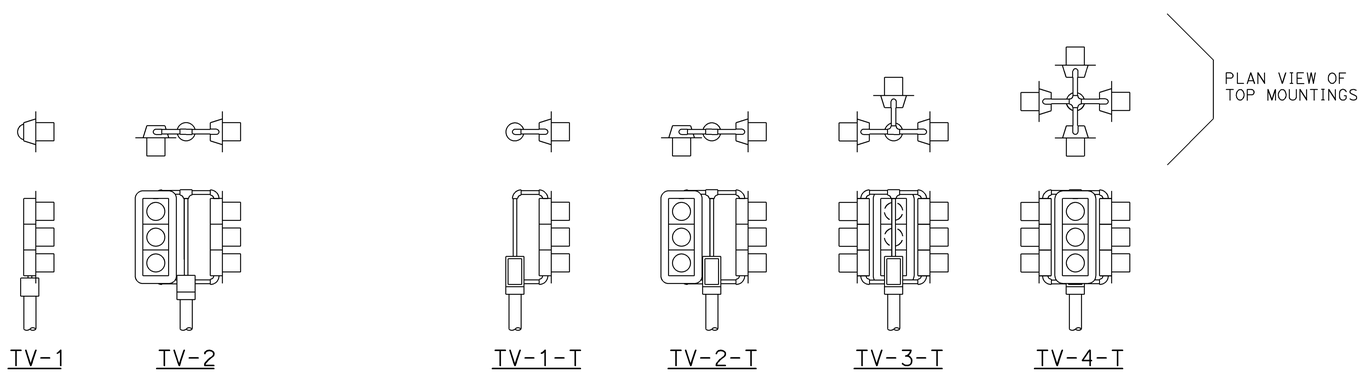


TOP MOUNTINGS

## ABBREVIATIONS:

| | |
|---|---|
| SV | SIDE MOUNTED SIGNAL HEADS |
| T | TERMINAL COMPARTMENT |
| TV | TOP MOUNTED SIGNAL HEADS |
| 1, 2, 3, 4 | NUMBER OF SIGNAL FACES (3 - SECTION, UNLESS OTHERWISE INDICATED) |
| A, B, C, D | CONFIGURATION OF SIGNALS |

## NOTES:

1. Mountings shall be oriented to provide maximum horizontal clearance to adjacent roadway.
2. Bracket arms shall be long enough to permit proper alignment of signals and backplate installation.
3. See Revised Standard Plans RSP ES-4D and RSP ES-4E for attachment fitting details.

STATE OF CALIFORNIA
DEPARTMENT OF TRANSPORTATION

# ELECTRICAL SYSTEMS (SIGNAL HEADS AND MOUNTINGS)

NO SCALE

RSP ES-4A DATED OCTOBER 30, 2015 SUPERSEDES RSP ES-4A DATED JULY 19, 2013 AND STANDARD PLAN ES-4A DATED MAY 20, 2011 - PAGE 443 OF THE STANDARD PLANS BOOK DATED 2010.

**REVISED STANDARD PLAN RSP ES-4A**

**2010 REVISED STANDARD PLAN RSP ES-4A**

9-28-15

| Dist | COUNTY | ROUTE | POST MILES TOTAL PROJECT | SHEET No. | TOTAL SHEETS |
|---|---|---|---|---|---|
| 04 | SM | 101,114 | 1.3/2.5, 5.0/5.3 | 424 | 568 |

Theresa Gabriel
REGISTERED ELECTRICAL ENGINEER

October 30, 2015
PLANS APPROVAL DATE

REGISTERED PROFESSIONAL ENGINEER
Theresa Aziz Gabriel
No. E15129
Exp. 6-30-16
ELECTRICAL
STATE OF CALIFORNIA

*THE STATE OF CALIFORNIA OR ITS OFFICERS OR AGENTS SHALL NOT BE RESPONSIBLE FOR THE ACCURACY OR COMPLETENESS OF SCANNED COPIES OF THIS PLAN SHEET.*

TO ACCOMPANY PLANS DATED 6-29-16

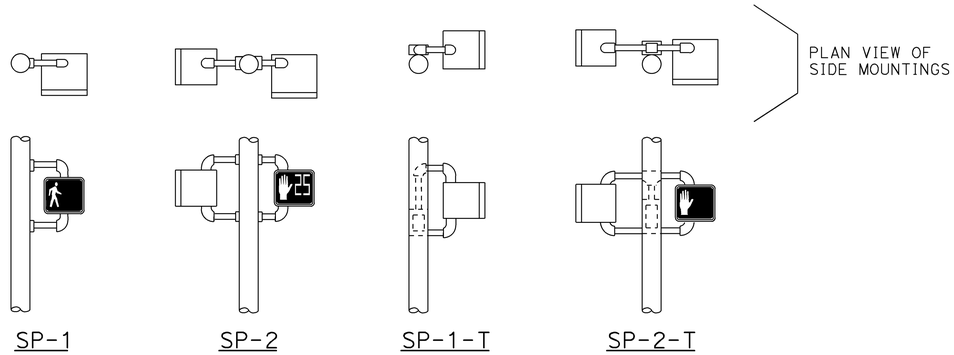


SIDE MOUNTINGS

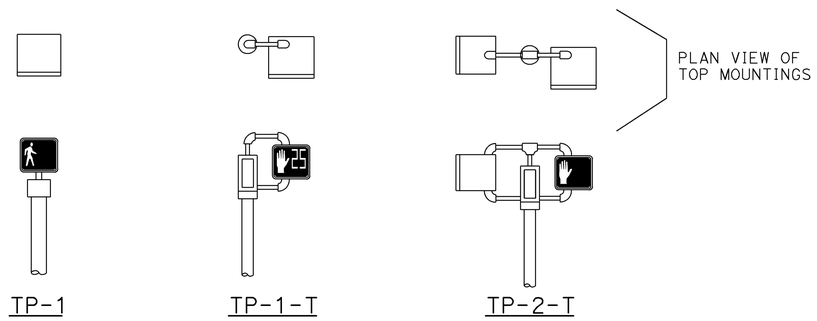


TOP MOUNTINGS

PEDESTRIAN SIGNAL HEAD MOUNTINGS

DETAIL A

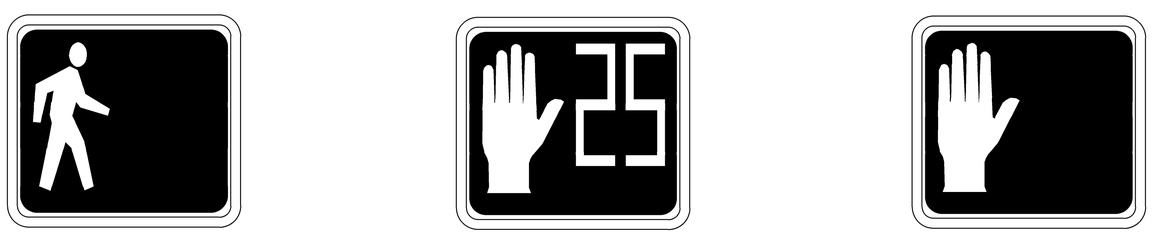

PERSON WALKING INTERVAL FLASHING UPRAISED HAND INTERVAL STEADY UPRAISED HAND INTERVAL

LED COUNTDOWN PEDESTRIAN SIGNAL FACE MODULE

DETAIL B

## NOTES:

1. Mounting shall be oriented to provide maximum horizontal clearance to adjacent roadway.
2. Bracket arms shall be long enough to permit proper alignment of signals.
3. See Revised Standard Plan RSP ES-4D for attachment fittings details.

## ABBREVIATIONS:

| | |
|---|---|
| 1, 2 | NUMBER OF SIGNAL FACES |
| SP | SIDE MOUNTED PEDESTRIAN SIGNAL |
| T | TERMINAL COMPARTMENT |
| TP | TOP MOUNTED PEDESTRIAN SIGNAL |

STATE OF CALIFORNIA
DEPARTMENT OF TRANSPORTATION

# ELECTRICAL SYSTEMS (PEDESTRIAN SIGNAL HEADS)

NO SCALE

RSP ES-4B DATED OCTOBER 30, 2015 SUPERSEDES RSP ES-4B DATED JULY 19, 2013 AND STANDARD PLAN ES-4B DATED MAY 20, 2011 - PAGE 444 OF THE STANDARD PLANS BOOK DATED 2010.

**REVISED STANDARD PLAN RSP ES-4B**

**2010 REVISED STANDARD PLAN RSP ES-4B**

9-1-15

| Dist | COUNTY | ROUTE | POST MILES TOTAL PROJECT | SHEET No. | TOTAL SHEETS |
|---|---|---|---|---|---|
| 04 | SM | 101,114 | 1.3/2.5, 5.0/5.3 | 425 | 568 |

Theresa Gabriel
REGISTERED ELECTRICAL ENGINEER

October 30, 2015
PLANS APPROVAL DATE

REGISTERED PROFESSIONAL ENGINEER Theresa Aziz Gabriel No. E15129 Exp. 6-30-16 ELECTRICAL STATE OF CALIFORNIA

*THE STATE OF CALIFORNIA OR ITS OFFICERS OR AGENTS SHALL NOT BE RESPONSIBLE FOR THE ACCURACY OR COMPLETENESS OF SCANNED COPIES OF THIS PLAN SHEET.*

TO ACCOMPANY PLANS DATED 6-29-16

**2010 REVISED STANDARD PLAN RSP ES-4C**

## VISORS

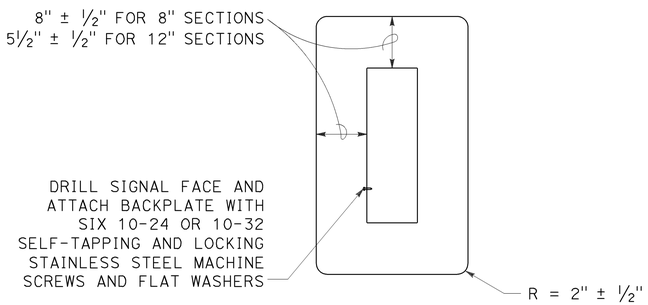


8" AND 12" SECTIONS

## BACKPLATE

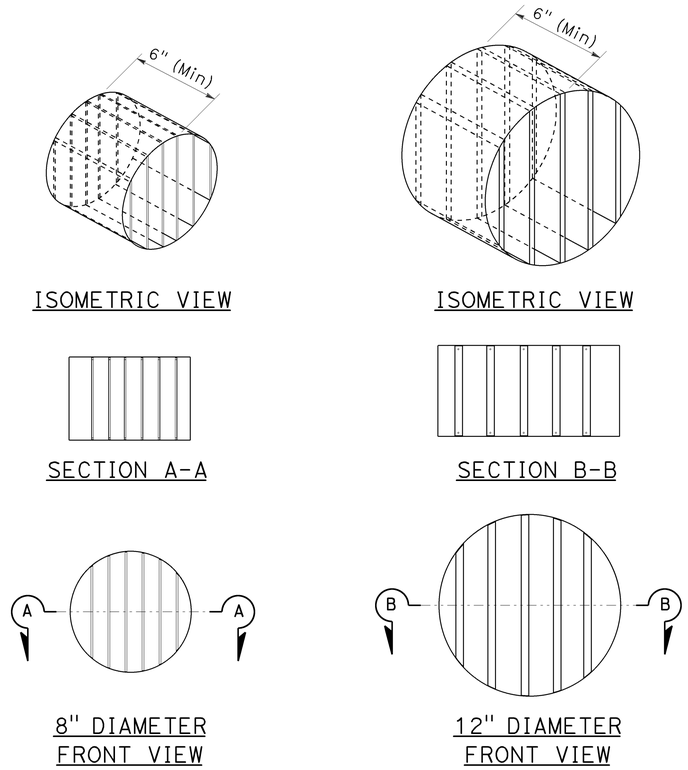


## DIRECTIONAL LOUVER

Directional louvers shall be oriented and secured in place with one plated brass machine screw and nut.

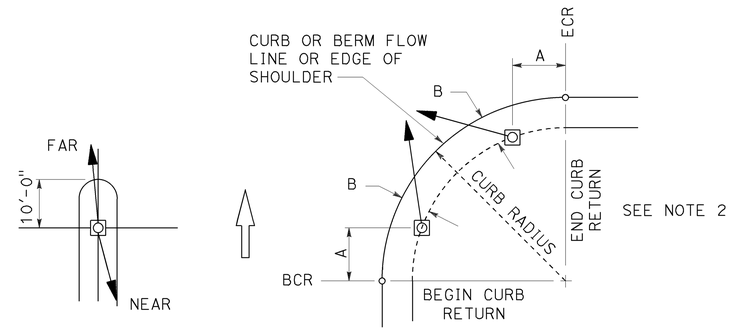


**NOTES:**

1. Typical signal pole placement unless dimensioned on plans.
2. For A and B dimensions, see Pole Schedule.

## SIGNAL STANDARD PLACEMENT DIMENSIONS AND EQUIPMENT LOCATIONS

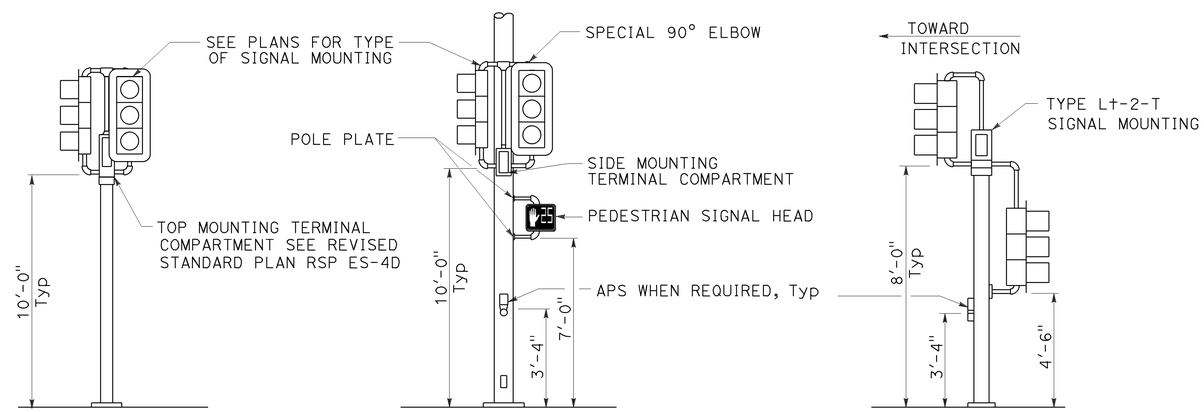


TOP MOUNTED SIGNALS (TV)
Type 1-A, 1-B, 1-C and 1-D standard as indicated on the plans

SIDE MOUNTED SIGNALS (SV AND SP)
Normally used on standards with luminaire or signal mast arm

LEFT TURN LANE SIGNAL
Type 1-A, 1-B, 1-C and 1-D standard as indicated on plans

## TYPICAL SIGNAL HEAD INSTALLATIONS

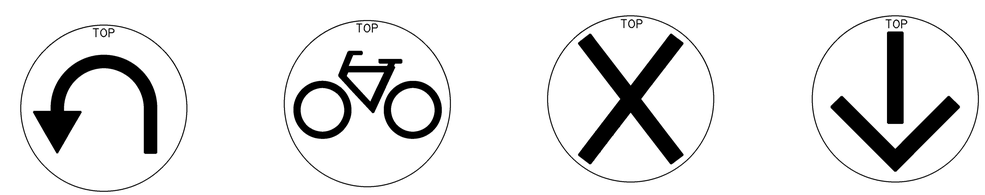


U-TURN | BICYCLE | LANE CONTROL | LANE CONTROL

## SIGNAL FACES

STATE OF CALIFORNIA
DEPARTMENT OF TRANSPORTATION

# ELECTRICAL SYSTEMS (SIGNAL HEADS AND MOUNTINGS)

NO SCALE

RSP ES-4C DATED OCTOBER 30, 2015 SUPERSEDES RSP ES-4C DATED JULY 19, 2013 AND STANDARD PLAN ES-4C DATED MAY 20, 2011 - PAGE 445 OF THE STANDARD PLANS BOOK DATED 2010.

**REVISED STANDARD PLAN RSP ES-4C**

9-28-15

| Dist | COUNTY | ROUTE | POST MILES TOTAL PROJECT | SHEET No. | TOTAL SHEETS |
|---|---|---|---|---|---|
| 04 | SM | 101,114 | 1.3/2.5, 5.0/5.3 | 426 | 568 |

Theresa Gabriel
REGISTERED ELECTRICAL ENGINEER

October 30, 2015
PLANS APPROVAL DATE

REGISTERED PROFESSIONAL ENGINEER Theresa Aziz Gabriel No. E15129 Exp. 6-30-16 ELECTRICAL STATE OF CALIFORNIA

*THE STATE OF CALIFORNIA OR ITS OFFICERS OR AGENTS SHALL NOT BE RESPONSIBLE FOR THE ACCURACY OR COMPLETENESS OF SCANNED COPIES OF THIS PLAN SHEET.*

TO ACCOMPANY PLANS DATED 6-29-16

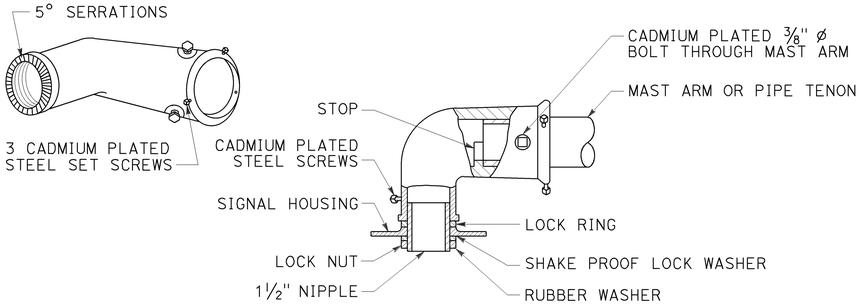


TYPE MAT
MAST ARM MOUNTING
For 2 NPS pipe, see Note 1.

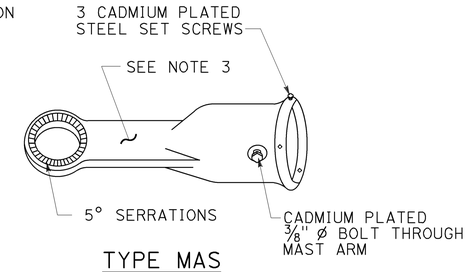


TYPE MAS
MAST ARM MOUNTING
For 2 NPS pipe, see Note 1.

SIGNAL SLIP FITTERS

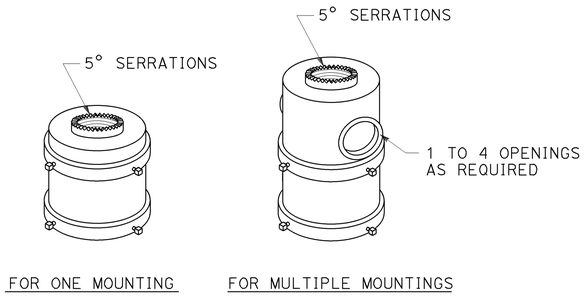


TOP MOUNTINGS
For 4 NPS pipe, see Note 2.

NOTES:

1. After mast arm signal has been plumbed and secured, drill 7/16" hole through mast arm tenon in line with slip fitter hole. Place a cadmium plated ⅜" ø galvanized bolt with washer under bolt head through hole and secure with washer, nut, and locknut. Seal openings between mast arm mountings and mast arm with mastic.
2. (A) Threaded top mounted slip fitter openings shall be 1½ NPS.
   (B) Serrations in fittings shall match those on bottom of signal heads or in lock ring.
   (C) Top opening shall be offset when backplate is used.
3. Wireway shall have a cross section area of 0.95 square inch minimum. Minimum width of ½".

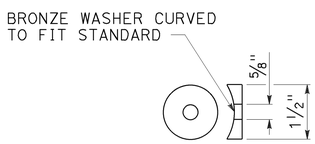


DETAIL C

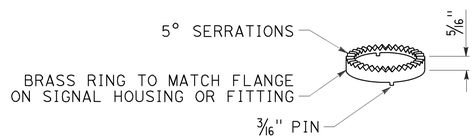


LOCK RING
Use where locking ring is not integral With signal housing or fitting.

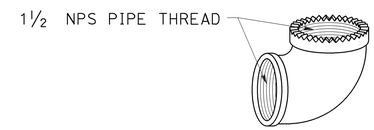


SPECIAL 90° ELBOW
One for each signal head, except those With special slip fitter mounting

MISCELLANEOUS MOUNTING HARDWARE

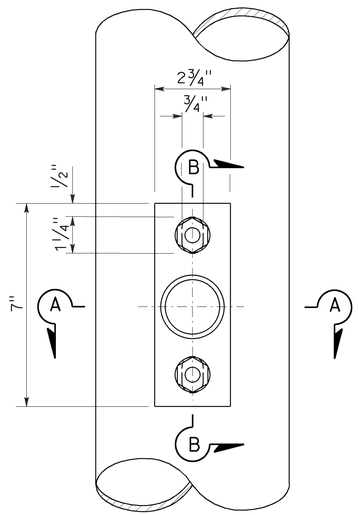


TOP VIEW

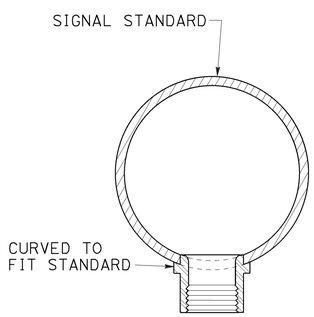


SECTION A-A

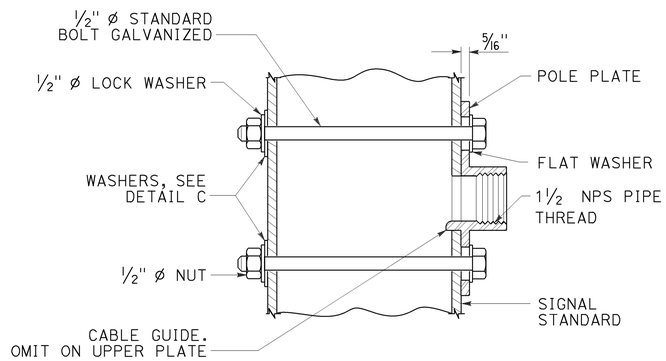


SECTION B-B

POLE PLATE FOR SIDE MOUNTED SIGNAL HEAD
WITHOUT TERMINAL COMPARTMENT

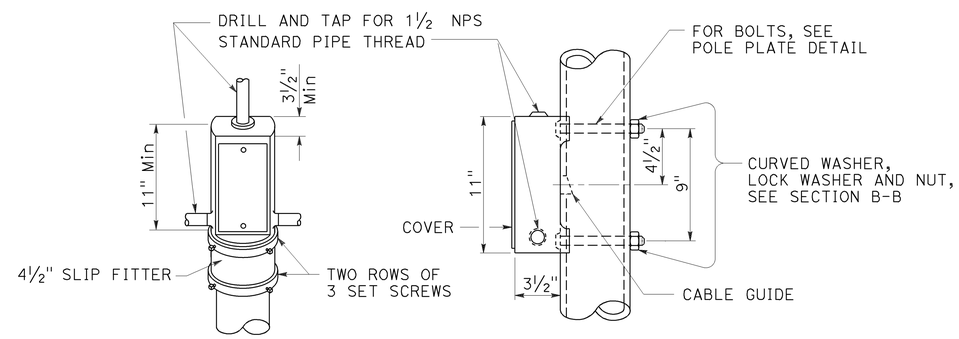


TOP MOUNTING

SIDE MOUNTING

TERMINAL COMPARTMENT

STATE OF CALIFORNIA
DEPARTMENT OF TRANSPORTATION

# ELECTRICAL SYSTEMS (SIGNAL HEAD MOUNTING)

NO SCALE

RSP ES-4D DATED OCTOBER 30, 2015 SUPERSEDES STANDARD PLAN ES-4D DATED MAY 20, 2011 - PAGE 446 OF THE STANDARD PLANS BOOK DATED 2010.

**REVISED STANDARD PLAN RSP ES-4D**

**2010 REVISED STANDARD PLAN RSP ES-4D**

8-20-15

| Dist | COUNTY | ROUTE | POST MILES TOTAL PROJECT | SHEET No. | TOTAL SHEETS |
|---|---|---|---|---|---|
| 04 | SM | 101,114 | 1.3/2.5, 5.0/5.3 | 427 | 568 |

Theresa Gabriel
REGISTERED ELECTRICAL ENGINEER

October 30, 2015
PLANS APPROVAL DATE

REGISTERED PROFESSIONAL ENGINEER
Theresa Aziz Gabriel
No. E15129
Exp. 6-30-16
ELECTRICAL
STATE OF CALIFORNIA

*THE STATE OF CALIFORNIA OR ITS OFFICERS OR AGENTS SHALL NOT BE RESPONSIBLE FOR THE ACCURACY OR COMPLETENESS OF SCANNED COPIES OF THIS PLAN SHEET.*

TO ACCOMPANY PLANS DATED 6-29-16

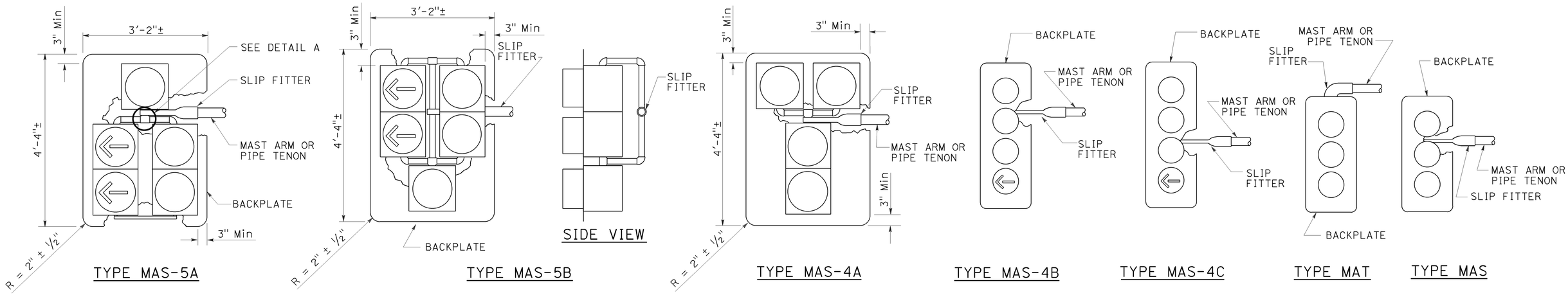


MAST ARM MOUNTINGS

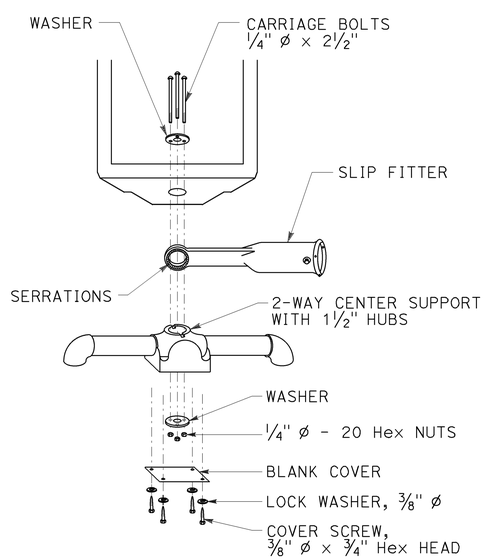


DETAIL A

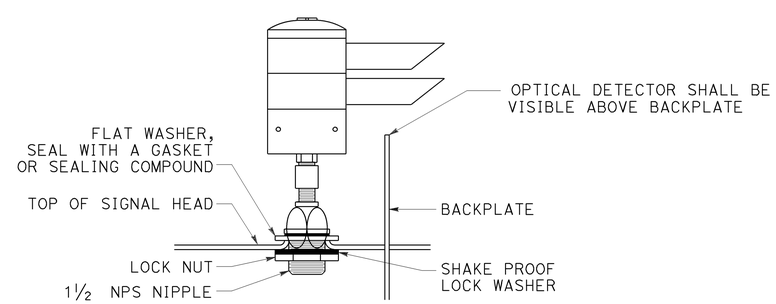


OPTICAL DETECTOR MOUNTING FOR EMERGENCY VEHICLE DETECTION

DETAIL B

STATE OF CALIFORNIA
DEPARTMENT OF TRANSPORTATION

# ELECTRICAL SYSTEMS (SIGNAL HEADS AND OPTICAL DETECTOR MOUNTING)

NO SCALE

RSP ES-4E DATED OCTOBER 30, 2015 SUPERSEDES RSP ES-4E DATED JULY 19, 2013 AND STANDARD PLAN ES-4E DATED MAY 20, 2011 - PAGE 447 OF THE STANDARD PLANS BOOK DATED 2010.

**REVISED STANDARD PLAN RSP ES-4E**

**2010 REVISED STANDARD PLAN RSP ES-4E**

8-19-15

| Dist | COUNTY | ROUTE | POST MILES TOTAL PROJECT | SHEET No. | TOTAL SHEETS |
|---|---|---|---|---|---|
| 04 | SM | 101,114 | 1.3/2.5, 5.0/5.3 | 428 | 568 |

Theresa Gabriel
REGISTERED ELECTRICAL ENGINEER

April 15, 2016
PLANS APPROVAL DATE

REGISTERED PROFESSIONAL ENGINEER
Theresa Aziz Gabriel
No. E15129
Exp. 6-30-16
ELECTRICAL
STATE OF CALIFORNIA

*THE STATE OF CALIFORNIA OR ITS OFFICERS OR AGENTS SHALL NOT BE RESPONSIBLE FOR THE ACCURACY OR COMPLETENESS OF SCANNED COPIES OF THIS PLAN SHEET.*

TO ACCOMPANY PLANS DATED 6-29-16

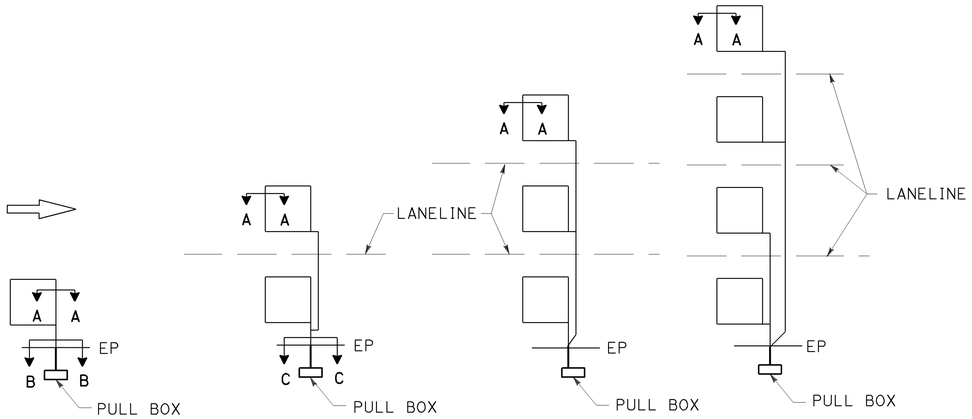


## SAW CUT DETAILS

Type A loop detector configurations illustrated

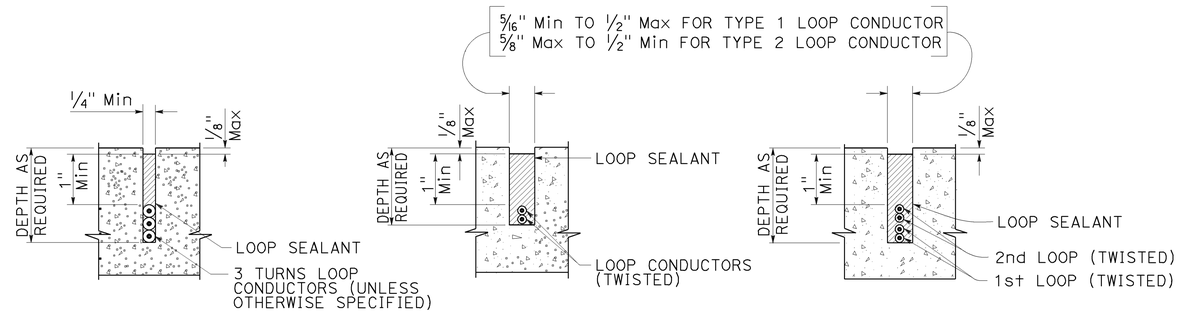


SECTION A-A SECTION B-B SECTION C-C

## SLOT DETAILS - TYPE 1 AND TYPE 2 LOOP CONDUCTOR

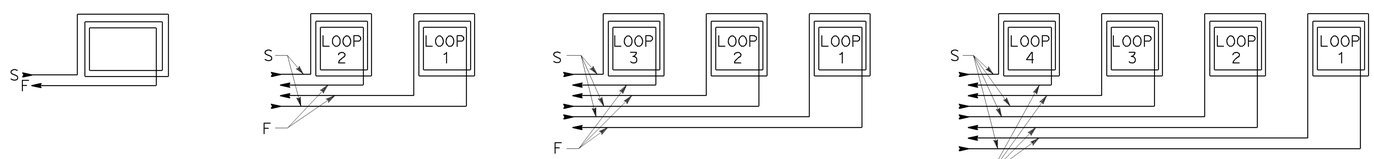


## WINDING DETAILS

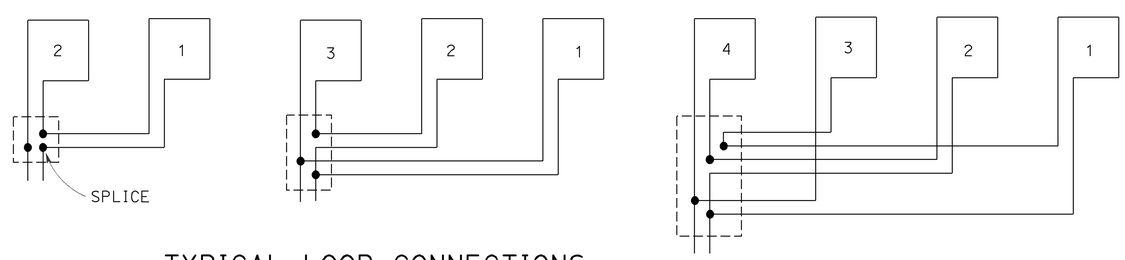


## TYPICAL LOOP CONNECTIONS

Dashed lines represent the pull box

ABBREVIATIONS:

S - START
F - FINISH

STATE OF CALIFORNIA
DEPARTMENT OF TRANSPORTATION

# ELECTRICAL SYSTEMS (LOOP DETECTORS)

NO SCALE

RSP ES-5A DATED APRIL 15, 2016 SUPERSEDES RSP ES-5A DATED OCTOBER 30, 2015 AND STANDARD PLAN ES-5A DATED MAY 20, 2011 - PAGE 448 OF THE STANDARD PLANS BOOK DATED 2010.

**REVISED STANDARD PLAN RSP ES-5A**

**2010 REVISED STANDARD PLAN RSP ES-5A**

1-12-16

| Dist | COUNTY | ROUTE | POST MILES TOTAL PROJECT | SHEET No. | TOTAL SHEETS |
|---|---|---|---|---|---|
| 04 | SM | 101,114 | 1.3/2.5, 5.0/5.3 | 429 | 568 |

Theresa Gabriel
REGISTERED ELECTRICAL ENGINEER

April 15, 2016
PLANS APPROVAL DATE

REGISTERED PROFESSIONAL ENGINEER Theresa Aziz Gabriel No. E15129 Exp. 6-30-16 ELECTRICAL STATE OF CALIFORNIA

*THE STATE OF CALIFORNIA OR ITS OFFICERS OR AGENTS SHALL NOT BE RESPONSIBLE FOR THE ACCURACY OR COMPLETENESS OF SCANNED COPIES OF THIS PLAN SHEET.*

TO ACCOMPANY PLANS DATED 6-29-16

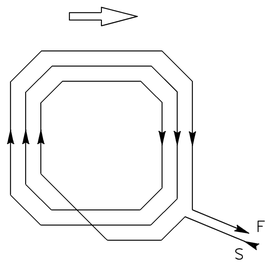


WINDING DETAIL

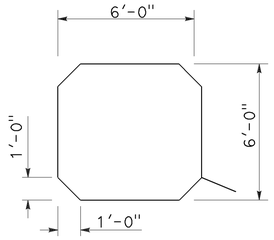


SAW CUT DETAIL

TYPE A LOOP DETECTOR CONFIGURATION

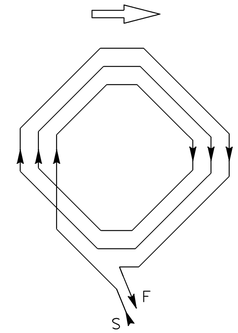


WINDING DETAIL

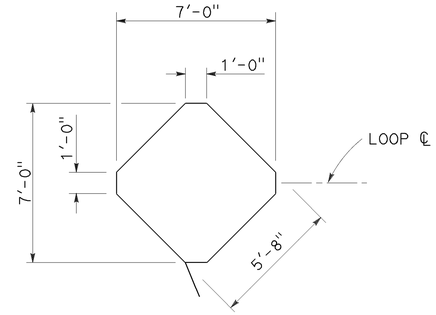


SAW CUT DETAIL

TYPE B LOOP DETECTOR CONFIGURATION

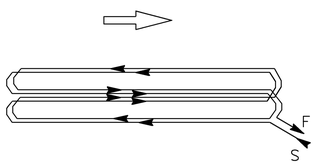


WINDING DETAIL

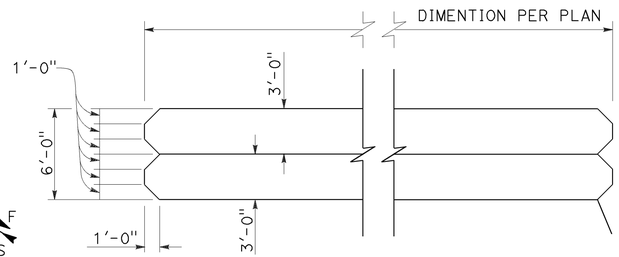


SAW CUT DETAIL

TYPE C LOOP DETECTOR CONFIGURATION

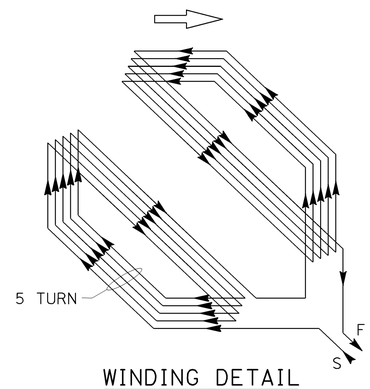


WINDING DETAIL

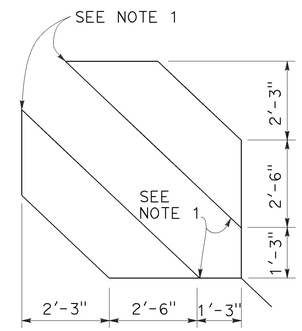


SAW CUT DETAIL

TYPE D LOOP DETECTOR CONFIGURATION

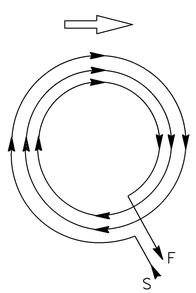


WINDING DETAIL

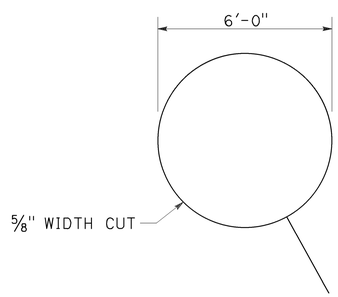


SAW CUT DETAIL

TYPE E LOOP DETECTOR CONFIGURATION

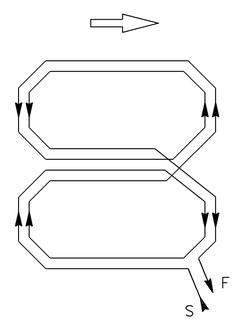


WINDING DETAIL

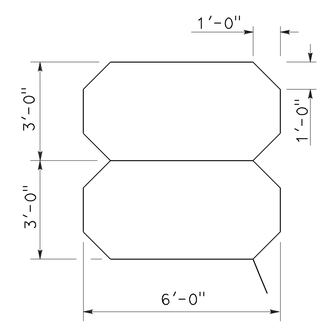


SAW CUT DETAIL

TYPE Q LOOP DETECTOR CONFIGURATION

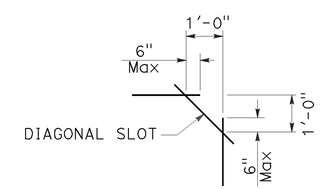


PLAN VIEW OF DIAGONAL SLOT AT CORNERS

NOTES:

1. Round corners of acute angle saw cuts to prevent damage to conductors.
2. Typical distance separating loops from edge to edge is 10' for Type A, B, D and E installation in single lane.
3. Use Type D loops for limit line detection and bicycle lanes.

STATE OF CALIFORNIA
DEPARTMENT OF TRANSPORTATION

# ELECTRICAL SYSTEMS (DETECTORS)

NO SCALE

RSP ES-5B DATED APRIL 15, 2016 SUPERSEDES RSP ES-5B DATED OCTOBER 30, 2015 AND RSP ES-5B DATED JULY 19, 2013 AND STANDARD PLAN ES-5B DATED MAY 20, 2011 - PAGE 449 OF THE STANDARD PLANS BOOK DATED 2010.

**REVISED STANDARD PLAN RSP ES-5B**

**2010 REVISED STANDARD PLAN RSP ES-5B**

1-22-16

| Dist | COUNTY | ROUTE | POST MILES TOTAL PROJECT | SHEET No. | TOTAL SHEETS |
|---|---|---|---|---|---|
| 04 | SM | 101,114 | 1.3/2.5, 5.0/5.3 | 430 | 568 |

Theresa Gabriel
REGISTERED ELECTRICAL ENGINEER

October 30, 2015
PLANS APPROVAL DATE

REGISTERED PROFESSIONAL ENGINEER
Theresa Aziz Gabriel
No. E15129
Exp. 6-30-16
ELECTRICAL
STATE OF CALIFORNIA

*THE STATE OF CALIFORNIA OR ITS OFFICERS OR AGENTS SHALL NOT BE RESPONSIBLE FOR THE ACCURACY OR COMPLETENESS OF SCANNED COPIES OF THIS PLAN SHEET.*

TO ACCOMPANY PLANS DATED 6-29-16

**2010 REVISED STANDARD PLAN RSP ES-5C**

## NOTES:

1. Back casting shape to fit curvature of pole.
2. Provide cover fitting for top of post, when PBA is mounted on push button assembly post.
3. Install push button on crosswalk side of standard.
4. Use R10 series regulatory signs and plaques for pedestrian and bicycle facilities.

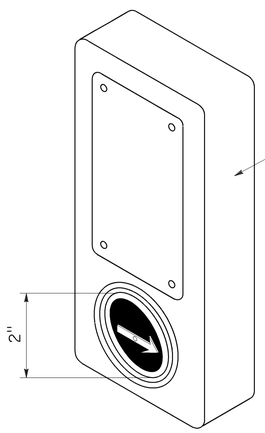


ACCESSIBLE PEDESTRIAN SIGNAL

DETAIL A

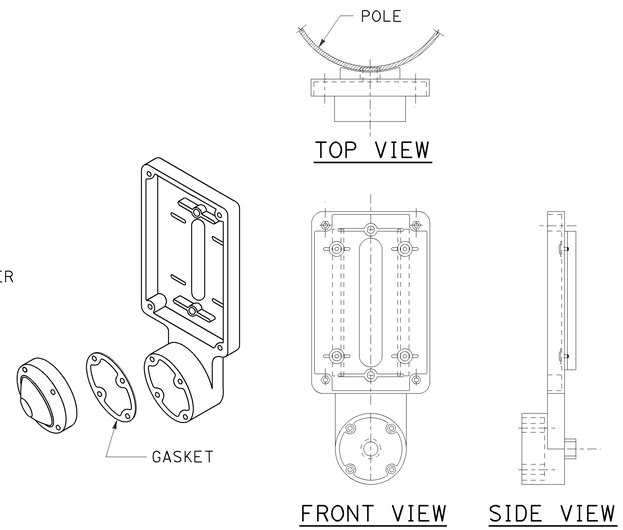


TYPE B PUSH BUTTON ASSEMBLY

DETAIL B

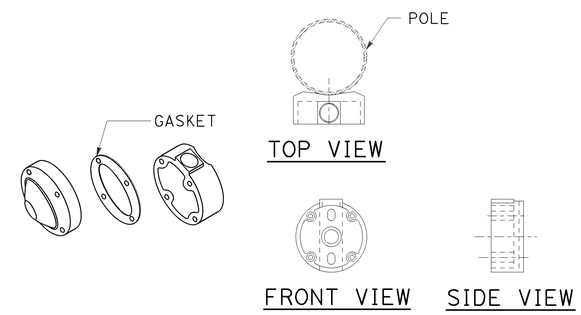


TYPE C PUSH BUTTON ASSEMBLY

DETAIL C

STATE OF CALIFORNIA
DEPARTMENT OF TRANSPORTATION

# ELECTRICAL SYSTEMS (ACCESSIBLE PEDESTRIAN SIGNAL AND PUSH BUTTON ASSEMBLIES)

NO SCALE

RSP ES-5C DATED OCTOBER 30, 2015 SUPERSEDES RSP ES-5C DATED JULY 19, 2013 AND STANDARD PLAN ES-5C DATED MAY 20, 2011 - PAGE 450 OF THE STANDARD PLANS BOOK DATED 2010.

**REVISED STANDARD PLAN RSP ES-5C**

| Dist | COUNTY | ROUTE | POST MILES TOTAL PROJECT | SHEET No. | TOTAL SHEETS |
|---|---|---|---|---|---|
| 04 | SM | 101,114 | 1.3/2.5, 5.0/5.3 | 431 | 568 |

Theresa Gabriel
REGISTERED ELECTRICAL ENGINEER

October 30, 2015
PLANS APPROVAL DATE

REGISTERED PROFESSIONAL ENGINEER Theresa Aziz Gabriel No. E15129 Exp. 6-30-16 ELECTRICAL STATE OF CALIFORNIA

*THE STATE OF CALIFORNIA OR ITS OFFICERS OR AGENTS SHALL NOT BE RESPONSIBLE FOR THE ACCURACY OR COMPLETENESS OF SCANNED COPIES OF THIS PLAN SHEET.*

TO ACCOMPANY PLANS DATED 6-29-16

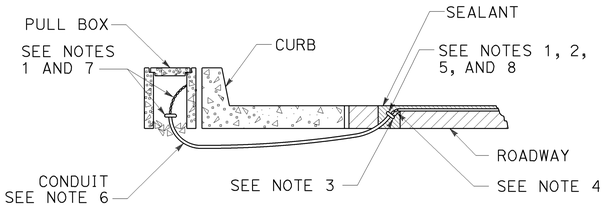


TYPE A
## CURB TERMINATION DETAIL

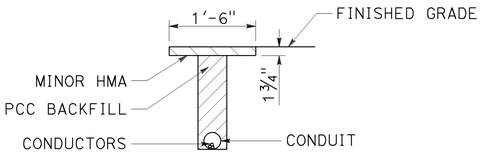


## "T" TRENCH DETAIL T

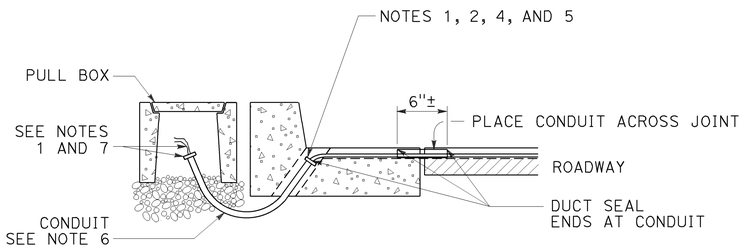


CROSS SECTION

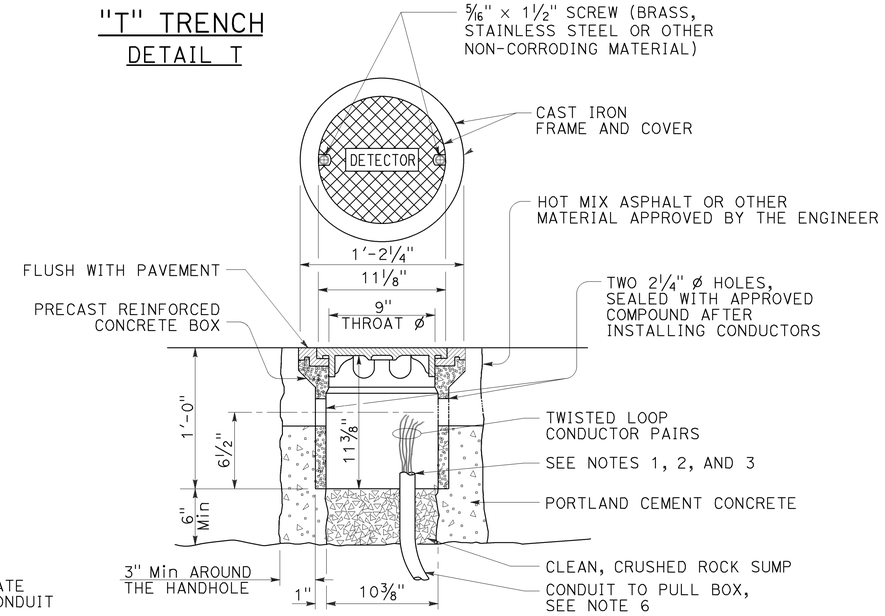


## DETECTOR HANDHOLE DETAIL

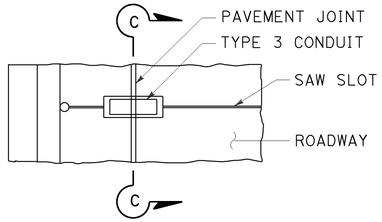


PLAN VIEW

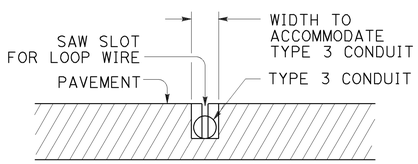


SECTION C-C

TYPE B
## CURB TERMINATION DETAIL

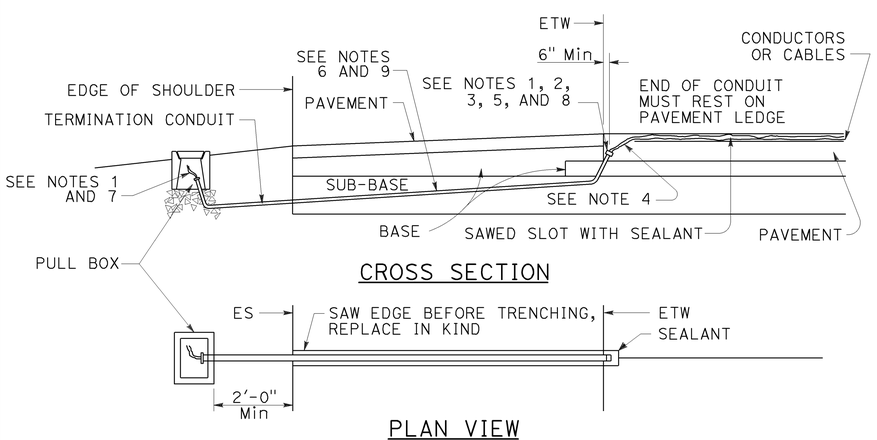


CROSS SECTION

PLAN VIEW

## SHOULDER TERMINATION DETAILS

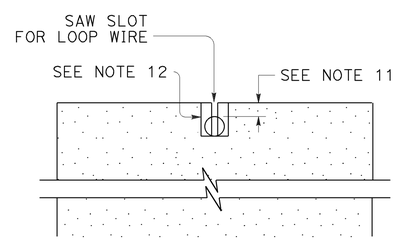


SECTION A-A

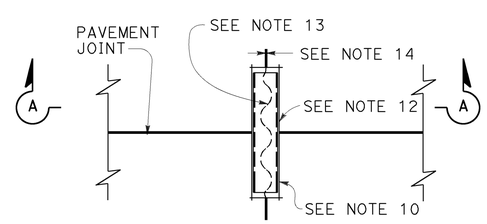


PLAN VIEW

## TYPICAL LOOP LEAD-IN DETAIL AT PAVEMENT JOINT

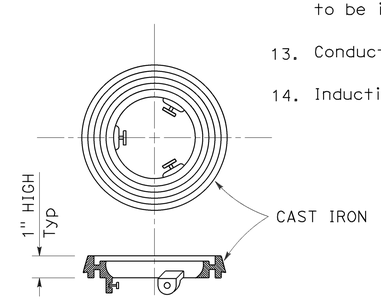


## LOCKING GRADE RING

## NOTES:

1. Bushing shall be used at end of conduit.
2. Tape detector conductors or cables 3" each side of bushings.
3. Install duct seal compound to each end of termination conduit before installing sealant.
4. Round all sharp edges where detector conductors or cables have to pass.
5. End of conduit shall be 3⅛" below roadway surface.
6. 

| Conduit size | Loop conductors |
|---|---|
| 1"C minimum | 1 to 2 pairs |
| 1½"C minimum | 3 to 4 pairs |
| 2"C minimum | 5 or more pairs |

7. Splice detector conductors or cables to detector lead-in-cable.
8. Location of detector handhole when shown on plans.
9. When the shoulder and traveled way are paved with the same material and there is no joint between them, the conduit shall extend only 2'-0" into the shoulder pavement.
10. ¾"C, Type 3 conduit 6" long minimum, plug both ends with duct compound to keep out sealant.
11. ½" Minimum between top of conduit and pavement surface.
12. Sawcut shall not exceed 1" in width and ⅛" longer than conduit to be installed.
13. Conductors with ½" minimum slack inside conduit.
14. Inductive loop detector saw slot.

STATE OF CALIFORNIA
DEPARTMENT OF TRANSPORTATION

# ELECTRICAL SYSTEMS (CURB AND SHOULDER TERMINATION, TRENCH, AND HANDHOLE DETAILS)

NO SCALE

RSP ES-5D DATED OCTOBER 30, 2015 SUPERSEDES RSP ES-5D DATED JULY 19, 2013 AND STANDARD PLAN ES-5D DATED MAY 20, 2011 - PAGE 451 OF THE STANDARD PLANS BOOK DATED 2010.

**REVISED STANDARD PLAN RSP ES-5D**

**2010 REVISED STANDARD PLAN RSP ES-5D**

8-19-15

| Dist | COUNTY | ROUTE | POST MILES TOTAL PROJECT | SHEET No. | TOTAL SHEETS |
|---|---|---|---|---|---|
| 04 | SM | 101,114 | 1.3/2.5, 5.0/5.3 | 432 | 568 |

REGISTERED CIVIL ENGINEER

July 15, 2016
PLANS APPROVAL DATE

REGISTERED PROFESSIONAL ENGINEER
Stanley P. Johnson
No. C57793
Exp. 3-31-18
CIVIL
STATE OF CALIFORNIA

*THE STATE OF CALIFORNIA OR ITS OFFICERS OR AGENTS SHALL NOT BE RESPONSIBLE FOR THE ACCURACY OR COMPLETENESS OF SCANNED COPIES OF THIS PLAN SHEET.*

TO ACCOMPANY PLANS DATED 6-29-16

**2010 REVISED STANDARD PLAN RSP ES-6A**

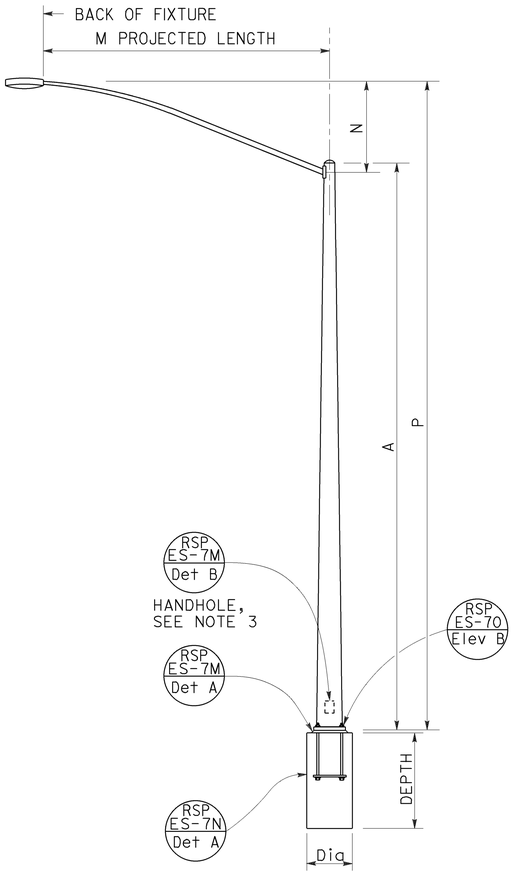


TYPE 15 AND TYPE 21
ELEVATION A

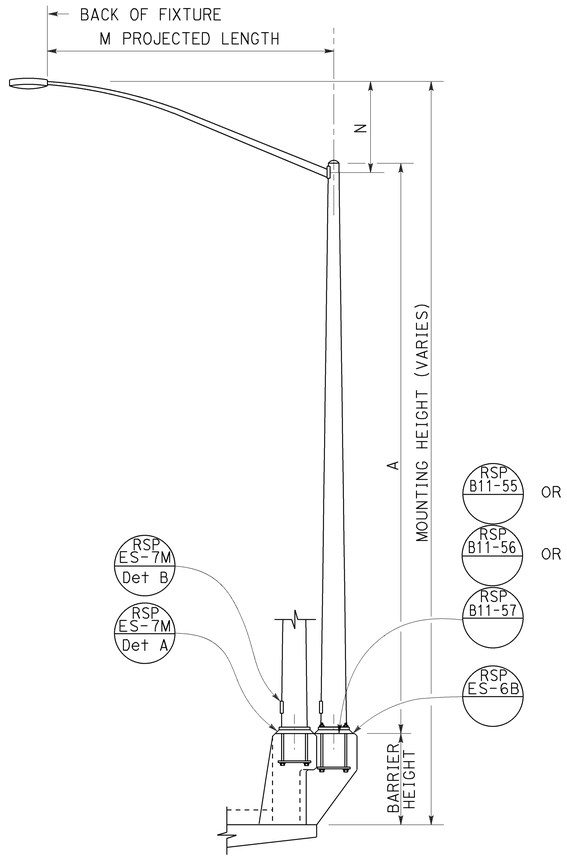


TYPE 15 AND TYPE 21 BARRIER RAIL MOUNTED
ELEVATION B

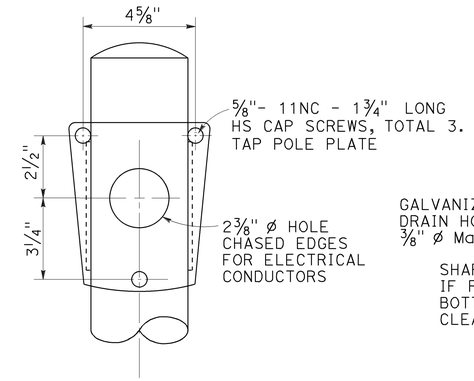


FRONT VIEW

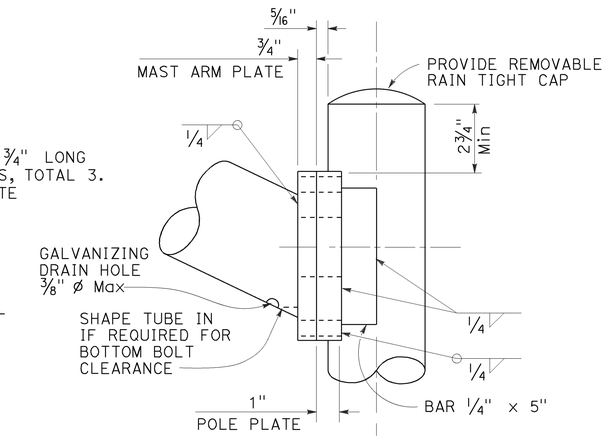


SIDE VIEW

LUMINAIRE MAST ARM CONNECTION
DETAIL R

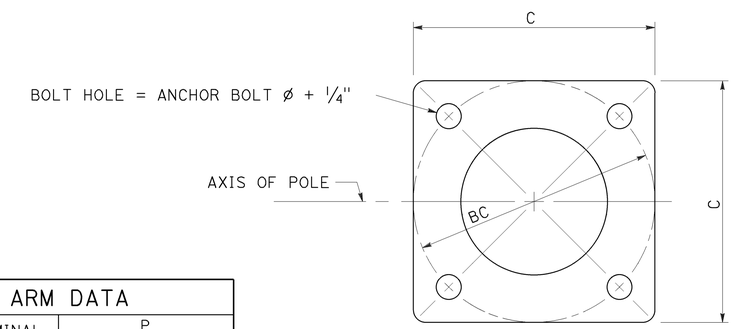


BASE PLATE
DETAIL A

| POLE TYPE | POLE DATA | | | | BASE PLATE DATA | | | | CIDH PILE FOUNDATION | |
|---|---|---|---|---|---|---|---|---|---|---|
| | A HEIGHT | Min OD BASE | Min OD TOP | WALL THICKNESS | C | BC = BOLT CIRCLE | THICKNESS | ANCHOR BOLT SIZE | Dia | DEPTH |
| 15 | 30'-0" | 8" | 3 11/16" | 0.1196" | 1'-0" | 1'-0" | 1 1/2" | 1" ø x 36" * | 2'-6" | 6'-0" |
| 21 | 35'-0" | 8 5/8" | 3 9/16" | 0.1793" | | | 2" | 1 1/4" ø x 36" * | | 7'-0" |

* FOR BARRIER RAIL BOLTS, SEE REVISED STANDARD PLAN RSP ES-6B.

| LUMINAIRE MAST ARM DATA | | | | | |
|---|---|---|---|---|---|
| M PROJECTED LENGTH | N RISE | Min OD AT POLE | NOMINAL THICKNESS | P TYPE 15 | P TYPE 21 |
| 6'-0" | 2'-0"± | 3 1/4" | 0.1196" | 31'-6"± | 36'-6"± |
| 8'-0" | 2'-6"± | 3 1/2" | | 32'-0"± | 37'-0"± |
| 10'-0" | 3'-3"± | 3 7/8" | | 32'-9"± | 37'-9"± |
| 12'-0" | 4'-3"± | | | 33'-9"± | 38'-9"± |
| 15'-0" | 4'-9"± | 4 1/4" | | 34'-3"± | 39'-3"± |

NOTES:

1. ☐ Indicates mast arm length to be used unless otherwise noted on the plans.
2. For Type 15-SB, use Type 15 standard with Type 30 slip base plate details, see Revised Standard Plan RSP ES-6F.
3. Handhole shall be located on the downstream side of traffic.
4. For additional notes and details, see Revised Standard Plans RSP ES-7M and RSP ES-7N.

STATE OF CALIFORNIA
DEPARTMENT OF TRANSPORTATION

# ELECTRICAL SYSTEMS (LIGHTING STANDARD, TYPES 15 AND 21)

NO SCALE

RSP ES-6A DATED JULY 15, 2016 SUPERSEDES RSP ES-6A DATED OCTOBER 30, 2015 AND STANDARD PLAN ES-6A DATED MAY 20, 2011 - PAGE 452 OF THE STANDARD PLANS BOOK DATED 2010.

**REVISED STANDARD PLAN RSP ES-6A**

6-20-16

| Dist | COUNTY | ROUTE | POST MILES TOTAL PROJECT | SHEET No. | TOTAL SHEETS |
|---|---|---|---|---|---|
| 04 | SM | 101,114 | 1.3/2.5, 5.0/5.3 | 433 | 568 |

REGISTERED CIVIL ENGINEER

July 15, 2016
PLANS APPROVAL DATE

REGISTERED PROFESSIONAL ENGINEER Stanley P. Johnson No. C57793 Exp. 3-31-18 CIVIL STATE OF CALIFORNIA

*THE STATE OF CALIFORNIA OR ITS OFFICERS OR AGENTS SHALL NOT BE RESPONSIBLE FOR THE ACCURACY OR COMPLETENESS OF SCANNED COPIES OF THIS PLAN SHEET.*

TO ACCOMPANY PLANS DATED 6-29-16

**2010 REVISED STANDARD PLAN RSP ES-6E**

| LUMINAIRE MAST ARM DATA | | | |
|---|---|---|---|
| PROJECTED LENGTH | THICKNESS | MINIMUM OD AT POLE | MOUNTING HEIGHT |
| * 6'-0" | 0.1196" | 3¼" | 36'-9"± |
| * 8'-0" | | 3½" | 37'-3"± |
| * 10'-0" | | 3⅞" | 38'-0"± |
| * 12'-0" | | | 39'-0"± |
| * 15'-0" | | 4¼" | 39'-6"± |
| ** 20'-0" | 0.1793" | 5" | 37'-0"± |

* TYPE 30
** TYPE 31

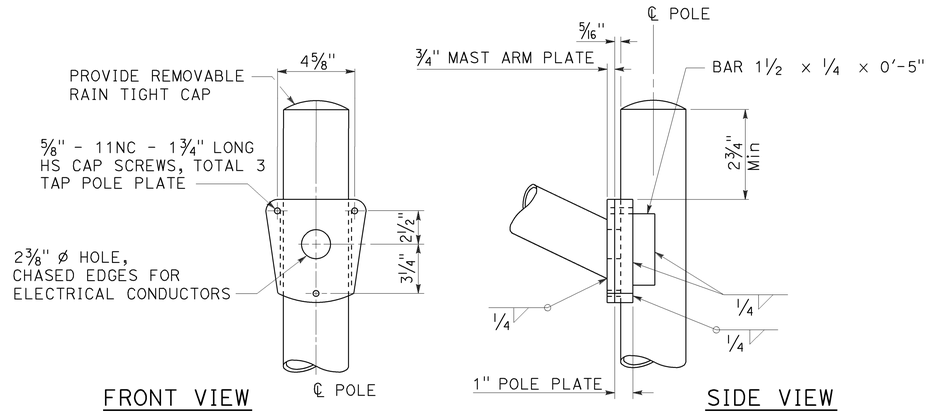


TYPE 30
DETAIL A

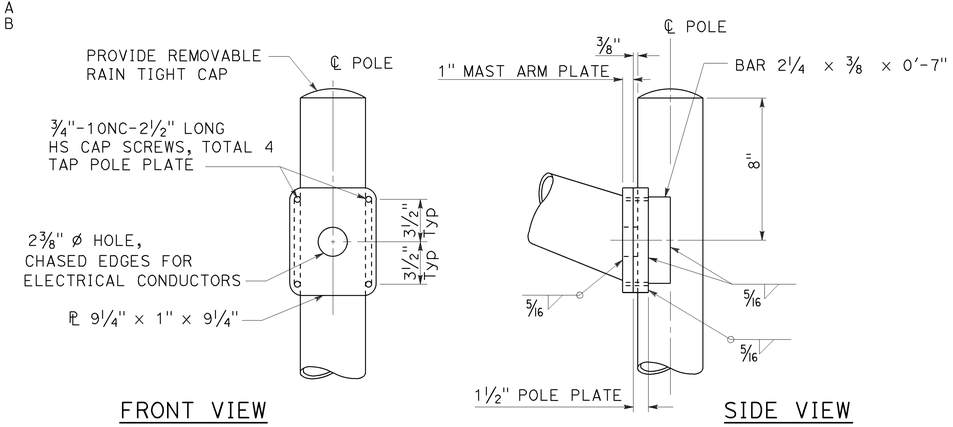


TYPE 31
DETAIL B

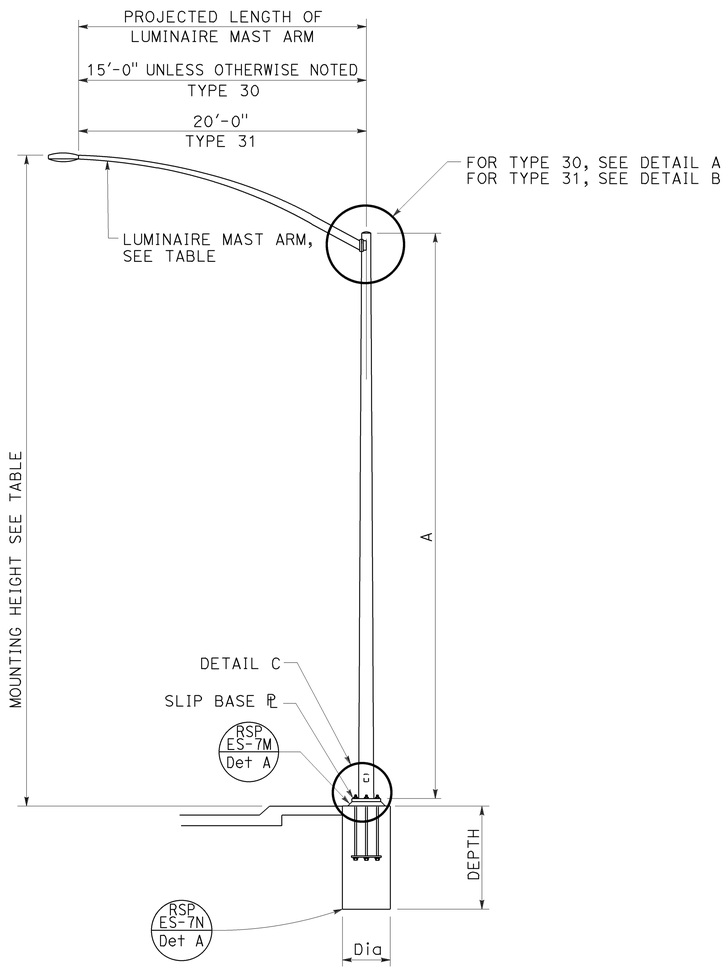


ELEVATION A

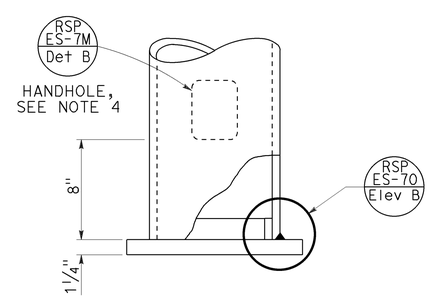


DETAIL C

NOTES:

1. For slip base plate details, see Revised Standard Plan RSP ES-6F.
2. For Type 30 fixed base use Type 15 base plate and foundation shown on Revised Standard Plan RSP ES-6A. Use 1¼" Dia x 3'-6" anchor bolts.
3. For Type 31 fixed base use Type 32 base plate, anchor bolts and foundation on Revised Standard Plan RSP ES-6G.
4. Handhole shall be located on the downstream side of traffic.
5. For additional notes and details, see Revised Standard Plans RSP ES-7M and RSP ES-7N.

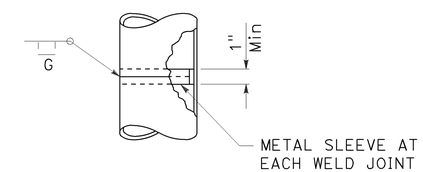


POLE SPLICE

| POLE TYPE | POLE DATA | | | | CIDH PILE FOUNDATION | |
|---|---|---|---|---|---|---|
| | A HEIGHT | Min OD BASE | Min OD TOP | Min THICKNESS | Dia | DEPTH |
| 30 | 35'-0" | 8¾" | 3 11/16" | 0.1196" | 2'-6" | 7'-0" |
| 31 | | 10¾" | 5 11/16" | 0.1793" | 3'-0" | 8'-0" |

STATE OF CALIFORNIA
DEPARTMENT OF TRANSPORTATION

# ELECTRICAL SYSTEMS (LIGHTING STANDARD, TYPES 30 AND 31)

NO SCALE

RSP ES-6E DATED JULY 15, 2016 SUPERSEDES RSP ES-6E DATED OCTOBER 30, 2015 AND STANDARD PLAN ES-6E DATED MAY 20, 2011 - PAGE 456 OF THE STANDARD PLANS BOOK DATED 2010.

**REVISED STANDARD PLAN RSP ES-6E**

| Dist | COUNTY | ROUTE | POST MILES TOTAL PROJECT | SHEET No. | TOTAL SHEETS |
|---|---|---|---|---|---|
| 04 | SM | 101,114 | 1.3/2.5, 5.0/5.3 | 434 | 568 |

REGISTERED CIVIL ENGINEER

October 30, 2015
PLANS APPROVAL DATE

REGISTERED PROFESSIONAL ENGINEER
Stanley P. Johnson
No. C57793
Exp. 3-31-16
CIVIL
STATE OF CALIFORNIA

*THE STATE OF CALIFORNIA OR ITS OFFICERS OR AGENTS SHALL NOT BE RESPONSIBLE FOR THE ACCURACY OR COMPLETENESS OF SCANNED COPIES OF THIS PLAN SHEET.*

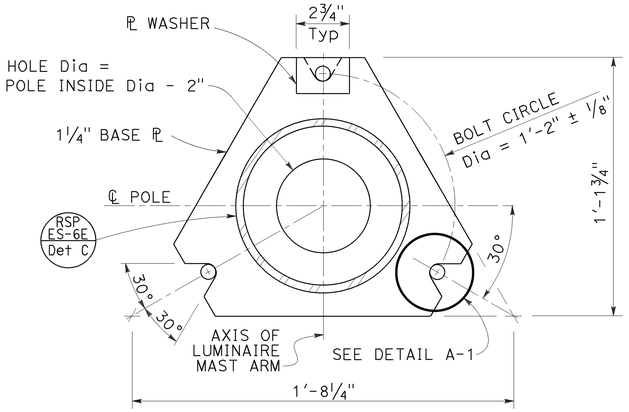


BASE PLATE
DETAIL A

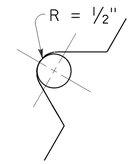


DETAIL A-1

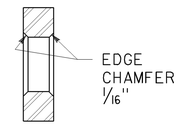


SECTION A-A

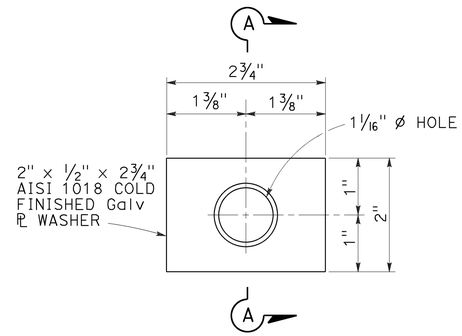


PLATE WASHER
DETAIL D

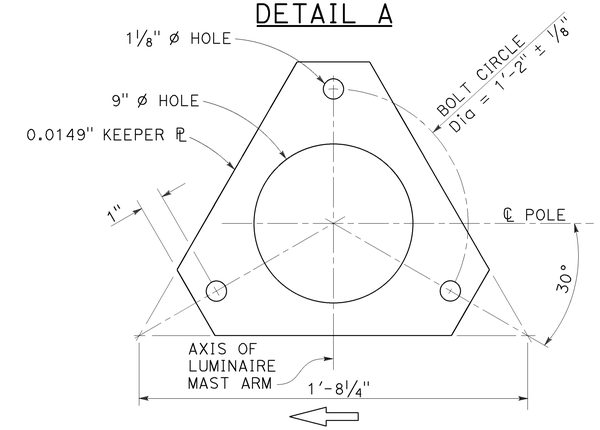


KEEPER PLATE
DETAIL B

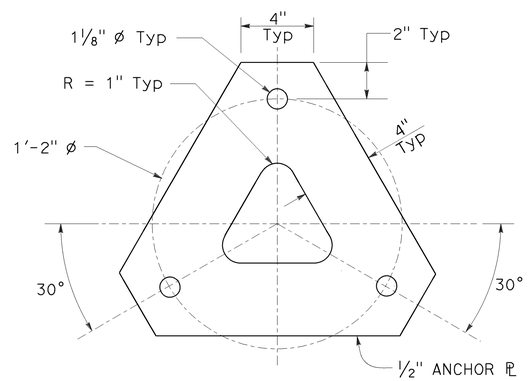


ANCHOR PLATE
DETAIL E

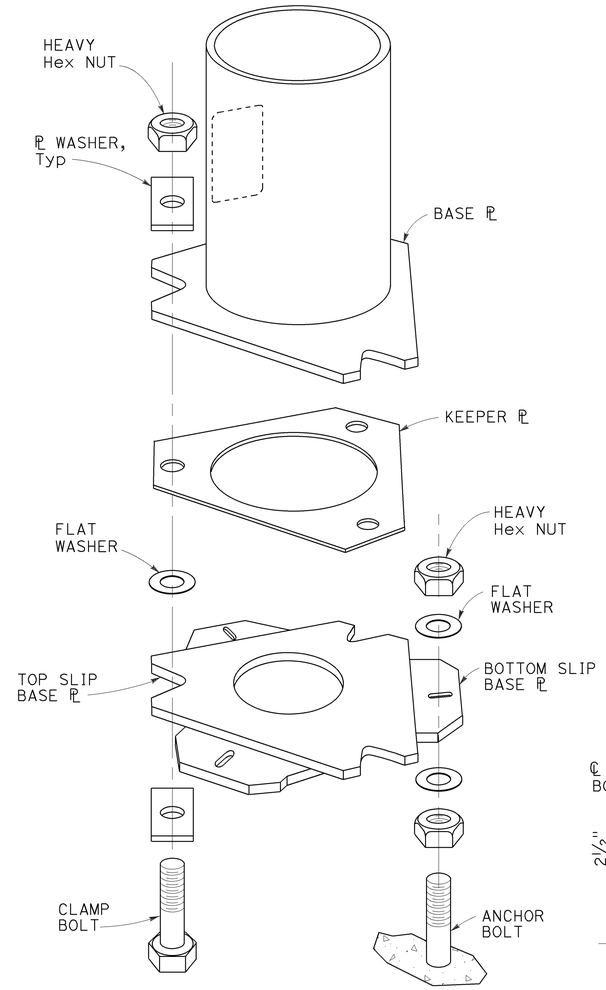


SLIP BASE DETAIL
DETAIL F

NOTES: TO ACCOMPANY PLANS DATED 6-29-16

1. 1" ø HS anchor bolts. For clamp bolts, see specifications.
2. Conduit shall not protrude more than 2" above top of foundation.
3. Handhole shall be located on the downstream side of traffic.
4. For Type 30 fixed base and for Type 31 fixed base, see Notes 3 and 4 on Revised Standard Plan RSP ES-6E.

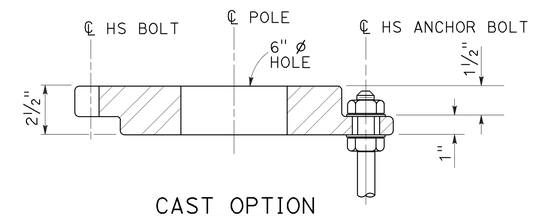


CAST OPTION

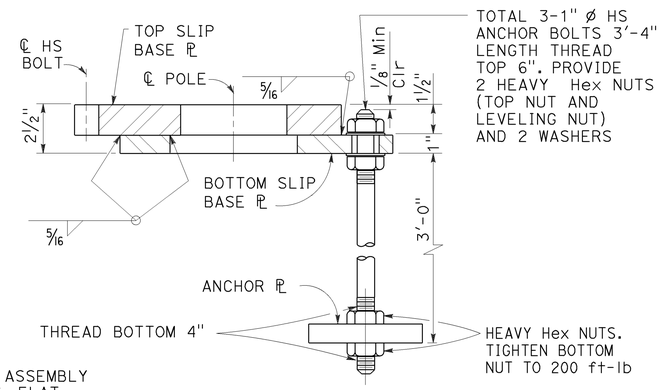


WELDED OPTION

SECTION B-B

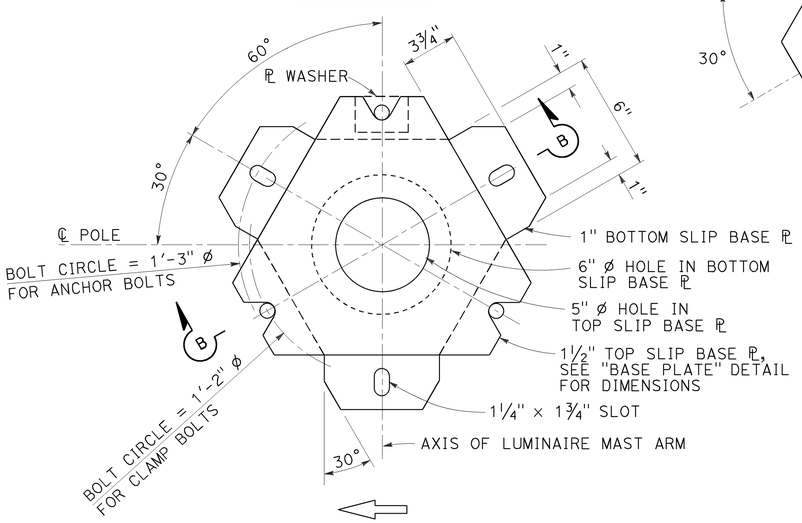


BOTTOM PLATE
DETAIL C

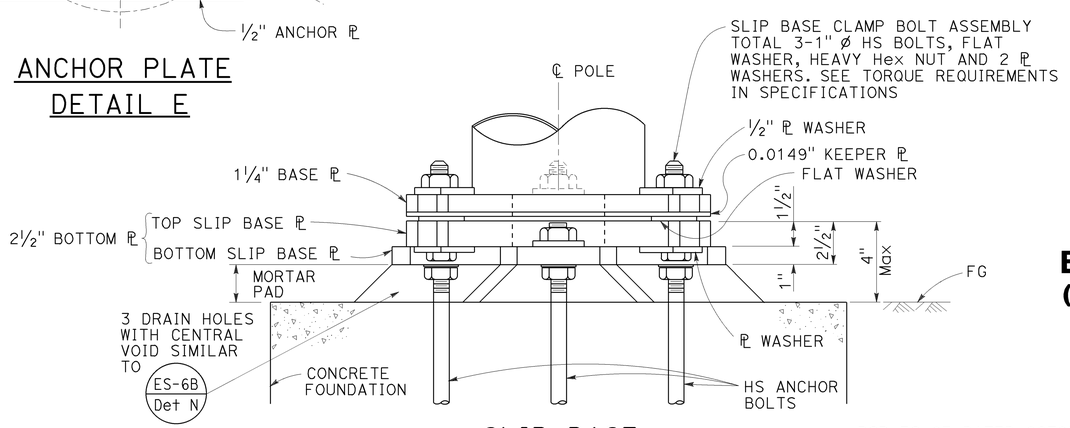


SLIP BASE
ELEVATION A

STATE OF CALIFORNIA
DEPARTMENT OF TRANSPORTATION

# ELECTRICAL SYSTEMS (LIGHTING STANDARD, SLIP BASE PLATE)

NO SCALE

RSP ES-6F DATED OCTOBER 30, 2015 SUPERSEDES STANDARD PLAN ES-6F DATED MAY 20, 2011 - PAGE 457 OF THE STANDARD PLANS BOOK DATED 2010.

**REVISED STANDARD PLAN RSP ES-6F**

**2010 REVISED STANDARD PLAN RSP ES-6F**

8-20-15

| Dist | COUNTY | ROUTE | POST MILES TOTAL PROJECT | SHEET No. | TOTAL SHEETS |
|---|---|---|---|---|---|
| 04 | SM | 101,114 | 1.3/2.5, 5.0/5.3 | 435 | 568 |

REGISTERED CIVIL ENGINEER

July 15, 2016
PLANS APPROVAL DATE

REGISTERED PROFESSIONAL ENGINEER
Stanley P. Johnson
No. C57793
Exp. 3-31-18
CIVIL
STATE OF CALIFORNIA

THE STATE OF CALIFORNIA OR ITS OFFICERS OR AGENTS SHALL NOT BE RESPONSIBLE FOR THE ACCURACY OR COMPLETENESS OF SCANNED COPIES OF THIS PLAN SHEET.

TO ACCOMPANY PLANS DATED 6-29-16

**2010 REVISED STANDARD PLAN RSP ES-7A**

## NOTES:

1. For additional notes, details and data for Type 15TS and Type 21TS Standards, see Revised Standard Plan RSP ES-6A.
2. Handhole shall be located on the downstream side of traffic.

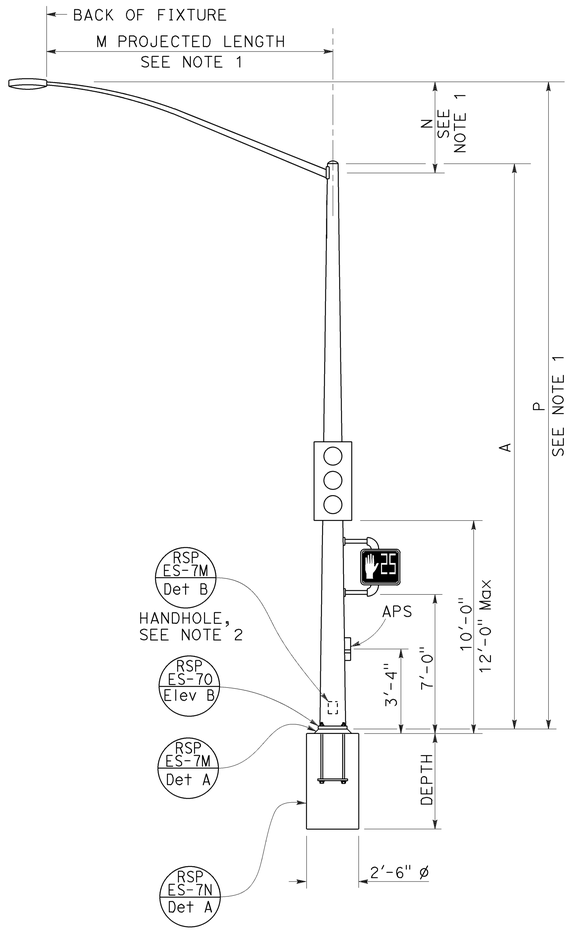


TYPE 15TS AND 21TS STANDARD

ELEVATION A

(See Note 1)

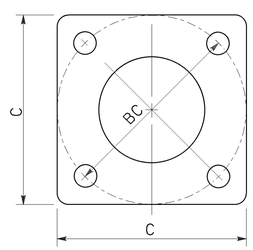


BASE PLATE

TYPE 15TS AND 21TS

DETAIL A

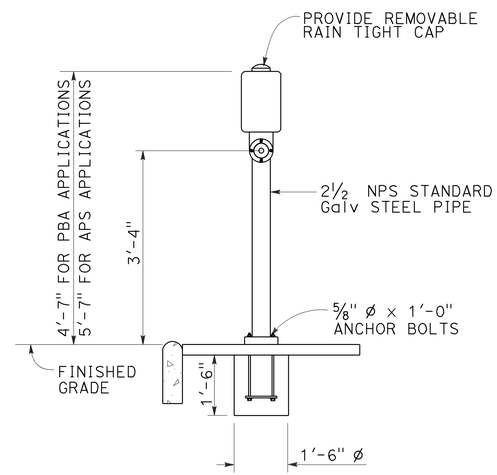


ELEVATION

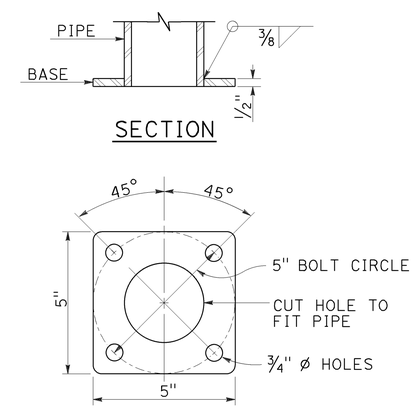


BASE PLATE

PBA POST

PUSH BUTTON ASSEMBLY POST

DETAIL B

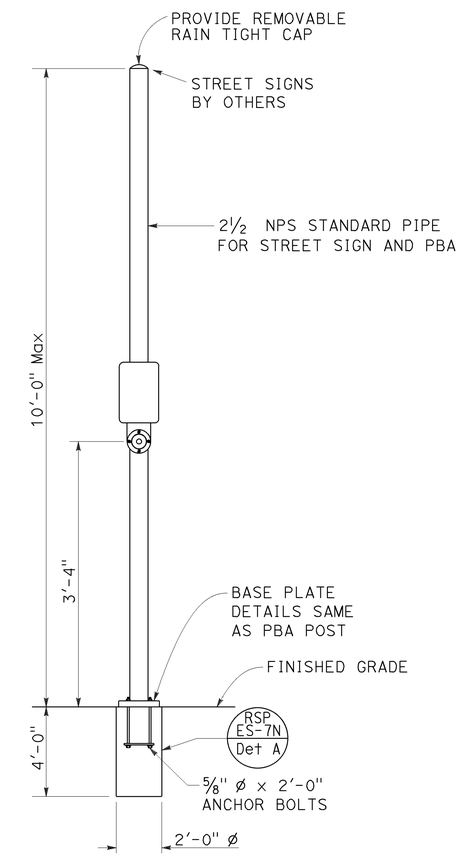


COMBINED STREET SIGN
PUSH BUTTON ASSEMBLY POST

DETAIL C

| POLE TYPE | POLE DATA | | | | BASE PLATE DATA | | | | CIDH |
|---|---|---|---|---|---|---|---|---|---|
| | A HEIGHT | Min OD BASE | Min OD TOP | WALL THICKNESS | C | BC = BOLT CIRCLE | THICKNESS | ANCHOR BOLT SIZE | DEPTH |
| 15TS | 30'-0" | 8" | 3 11/16" | 0.1793" | 1'-1½" | 1'-0" | 2" | 1½" ø x 42" | 7'-6" |
| 21TS | 35'-0" | 9⅜" | 3 9/16" | | 1'-3" | 1'-2" | | | 8'-6" |

STATE OF CALIFORNIA
DEPARTMENT OF TRANSPORTATION

# ELECTRICAL SYSTEMS (SIGNAL AND LIGHTING STANDARD, TYPE TS, AND PUSH BUTTON ASSEMBLY POST)

NO SCALE

RSP ES-7A DATED JULY 15, 2016 SUPERSEDES RSP ES-7A
DATED OCTOBER 30, 2015 AND RSP ES-7A DATED JULY 19, 2013 AND
STANDARD PLAN ES-7A DATED MAY 20, 2011 - PAGE 462 OF THE STANDARD PLANS BOOK DATED 2010.

**REVISED STANDARD PLAN RSP ES-7A**

| Dist | COUNTY | ROUTE | POST MILES TOTAL PROJECT | SHEET No. | TOTAL SHEETS |
|---|---|---|---|---|---|
| 04 | SM | 101,114 | 1.3/2.5, 5.0/5.3 | 436 | 568 |

TO ACCOMPANY PLANS DATED 6-29-16

REGISTERED CIVIL ENGINEER

July 15, 2016
PLANS APPROVAL DATE

REGISTERED PROFESSIONAL ENGINEER Stanley P. Johnson No. C57793 Exp. 3-31-18 CIVIL STATE OF CALIFORNIA

*THE STATE OF CALIFORNIA OR ITS OFFICERS OR AGENTS SHALL NOT BE RESPONSIBLE FOR THE ACCURACY OR COMPLETENESS OF SCANNED COPIES OF THIS PLAN SHEET.*

**NOTE:**

Handhole shall be located on the downstream side of traffic.

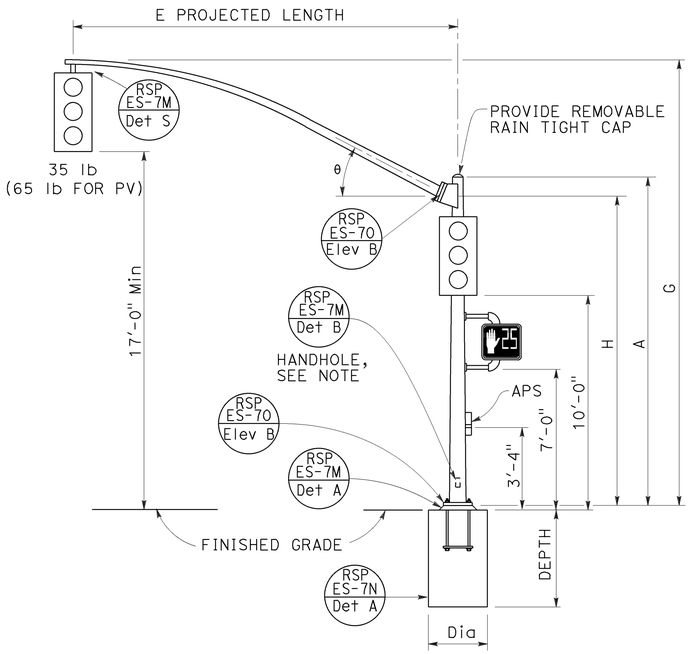


TYPE 16-1-100, 18-1-100

ELEVATION A

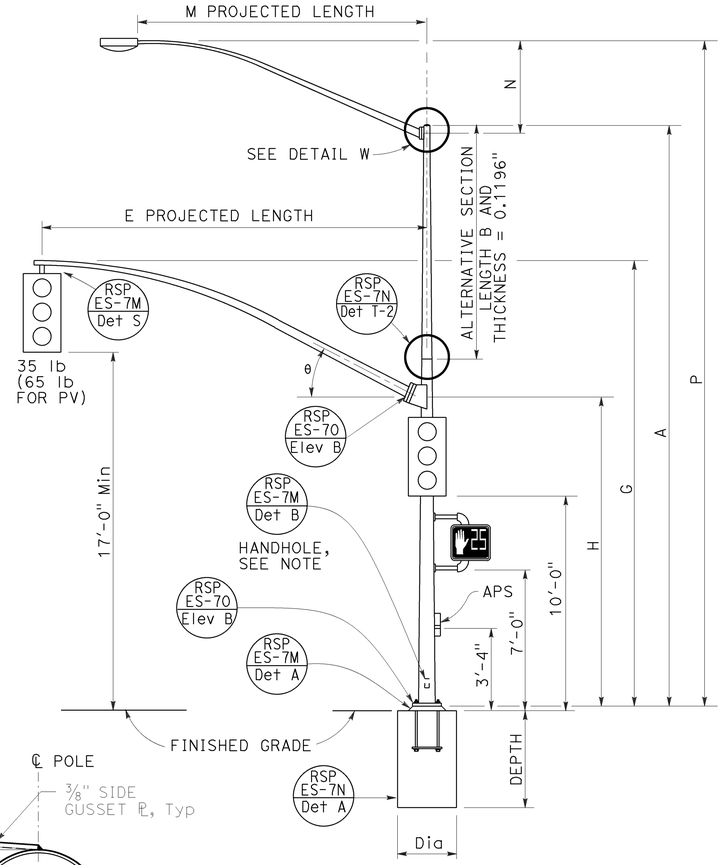


TYPE 19-1-100, 19A-1-100

ELEVATION B

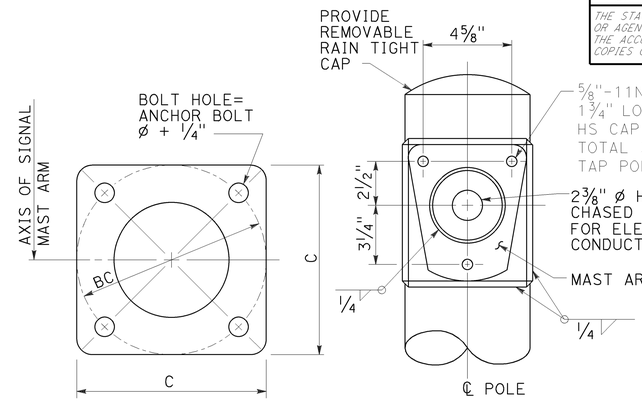


DETAIL D

BASE PLATE

DETAIL W-1

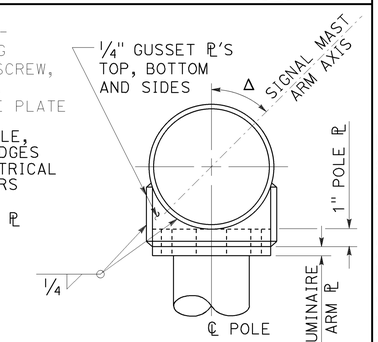


DETAIL W-2

LUMINAIRE MAST ARM CONNECTION

DETAIL W

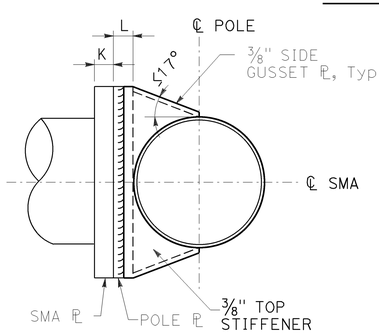


SECTION B-B

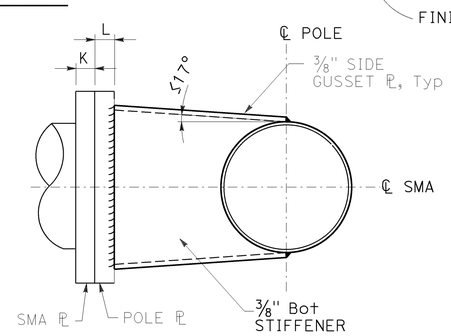


SECTION C-C

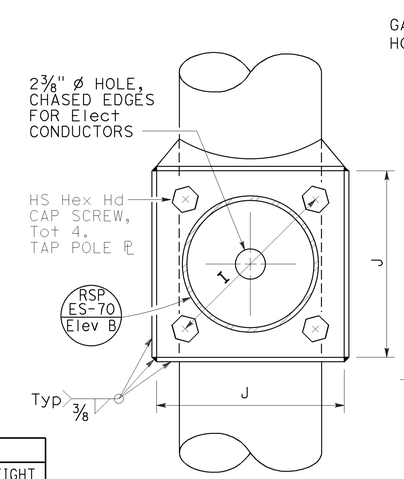


SECTION A-A

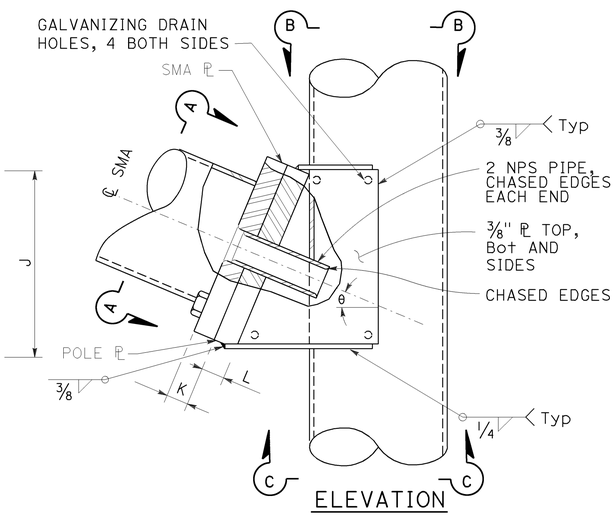


ELEVATION

SIGNAL MAST ARM CONNECTION

DETAIL A

| SIGNAL MAST ARM DATA | | | | | | | | | | |
|---|---|---|---|---|---|---|---|---|---|---|
| E PROJECTED LENGTH | G MOUNTING HEIGHT | H | Min OD AT POLE | THICKNESS | I BOLT CIRCLE | HS CAP SCREWS | J PLATE SIZE | K MAST ARM ℄ THICKNESS | L POLE ℄ THICKNESS | θ |
| 15'-0" | 21'-8"± | 17'-6" | 7 3/8" | 0.1793" | 12" | 1 1/4"-7NC-3" | 1'-0" | 1 1/4" | 1 1/2" | 23° |
| 20'-0" | | | 8" | | | | 1'-1" | | | |
| 25'-0" | 22'-8"± | 16'-0" | 9" | | | | | | | |
| 30'-0" | 23'-0"± | | 10" | | | | | | | |

| LUMINAIRE MAST ARM DATA | | | | | |
|---|---|---|---|---|---|
| M PROJECTED LENGTH | N RISE | Min OD AT POLE | THICKNESS | P MOUNTING HEIGHT 30'-0" POLE | P MOUNTING HEIGHT 35'-0" POLE |
| 6'-0" | 2'-0"± | 3 1/4" | 0.1196" | 31'-6"± | 36'-6"± |
| 8'-0" | 2'-6"± | 3 1/2" | | 32'-0"± | 37'-0"± |
| 10'-0" | 3'-3"± | 3 7/8" | | 32'-9"± | 37'-9"± |
| 12'-0" | 4'-3"± | | | 33'-9"± | 38'-9"± |
| 15'-0" | 4'-9"± | 4 1/4" | | 34'-3"± | 39'-3"± |

| POLE TYPE | LOAD CASE | WIND VELOCITY (mph) | POLE DATA: A HEIGHT | Min OD BASE | Min OD TOP | THICKNESS | ALTERNATIVE SECTION B LENGTH | ALTERNATIVE SECTION BOTTOM | ALTERNATIVE SECTION TOP | BASE PLATE DATA: C | BC = BOLT CIRCLE | THICKNESS | ANCHOR BOLT SIZE | LUMINAIRE MAST ARM | SIGNAL MAST ARM | CIDH PILE FOUNDATION Dia | CIDH PILE FOUNDATION DEPTH |
|---|---|---|---|---|---|---|---|---|---|---|---|---|---|---|---|---|---|
| 16-1-100 | 1 | 100 | 18'-6" | 12" | 9 3/8" | 0.2391" OR 0.25" | None | | | 1'-6" | 1'-4" | 2" | 1 3/4"ø × 42" | NONE | 15'-0", [20'-0"] | 3'-0" | 9'-0" |
| 18-1-100 | | | 17'-0" | | | | None | | | | | | | NONE | | | |
| 19-1-100 | | | 30'-0" | 14" | 9 3/4" | | 10'-0" | 11 1/8" | 9 3/4" | 1'-10" | 1'-8" | 2 1/2" | 2"ø × 42" | 6'-15' [12'-0"] | 25'-0", [30'-0"] | 3'-6" | 10'-0" |
| 19A-1-100 | | | 35'-0" | | 9" | | 15'-0" | | 9" | | | | | 6'-15' [15'-0"] | | | |

[ ] INDICATES MAST ARM LENGTH TO BE USED UNLESS OTHERWISE NOTED ON PLANS.

STATE OF CALIFORNIA
DEPARTMENT OF TRANSPORTATION

# ELECTRICAL SYSTEMS (SIGNAL AND LIGHTING STANDARD, CASE 1 SIGNAL MAST ARM LOADING, WIND VELOCITY = 100 MPH AND SIGNAL MAST ARM LENGTHS 15' TO 30')

NO SCALE

RSP ES-7C DATED JULY 15, 2016 SUPERSEDES RSP ES-7C DATED OCTOBER 30, 2015 AND RSP ES-7C DATED JULY 19, 2013 AND STANDARD PLAN ES-7C DATED MAY 20, 2011 - PAGE 464 OF THE STANDARD PLANS BOOK DATED 2010.

**REVISED STANDARD PLAN RSP ES-7C**

**2010 REVISED STANDARD PLAN RSP ES-7C**

6-20-16

| Dist | COUNTY | ROUTE | POST MILES TOTAL PROJECT | SHEET No. | TOTAL SHEETS |
|---|---|---|---|---|---|
| 04 | SM | 101,114 | 1.3/2.5, 5.0/5.3 | 437 | 568 |

REGISTERED CIVIL ENGINEER

July 15, 2016

PLANS APPROVAL DATE

REGISTERED PROFESSIONAL ENGINEER Stanley P. Johnson No. C57793 Exp. 3-31-18 CIVIL STATE OF CALIFORNIA

*THE STATE OF CALIFORNIA OR ITS OFFICERS OR AGENTS SHALL NOT BE RESPONSIBLE FOR THE ACCURACY OR COMPLETENESS OF SCANNED COPIES OF THIS PLAN SHEET.*

**NOTE:** TO ACCOMPANY PLANS DATED 6-29-16

Handhole shall be located on the downstream side of traffic.

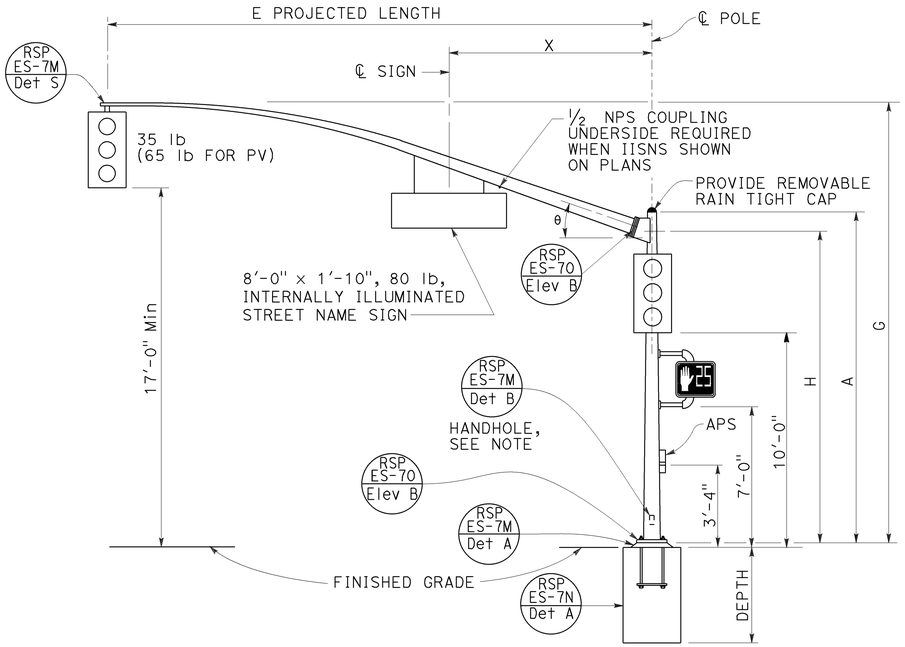


TYPE 16-2-100, 18-2-100

ELEVATION A

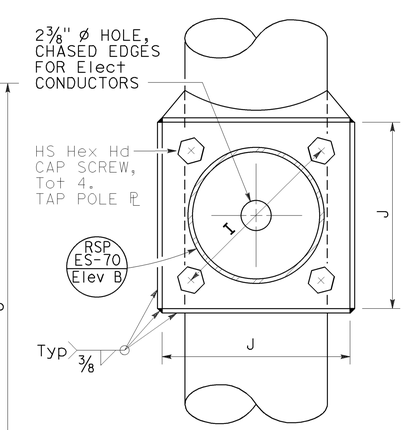


SECTION A-A

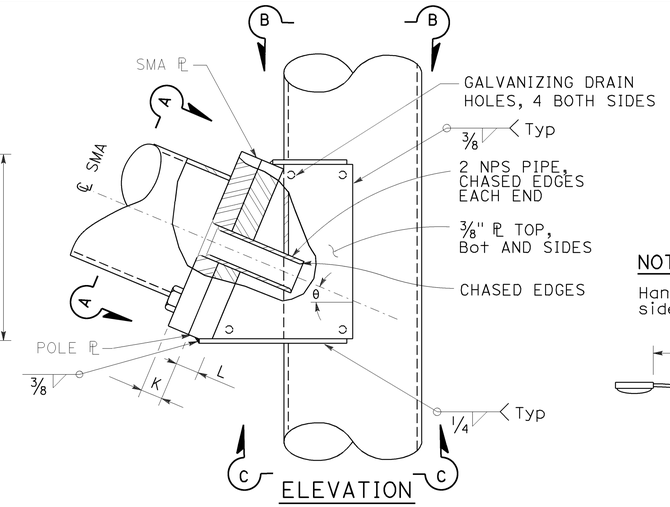


ELEVATION

SIGNAL MAST ARM CONNECTION

DETAIL A

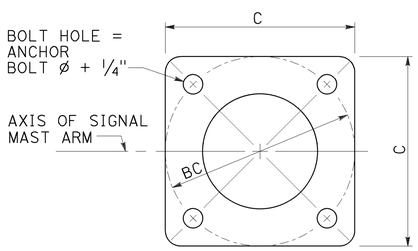


BASE PLATE

DETAIL B

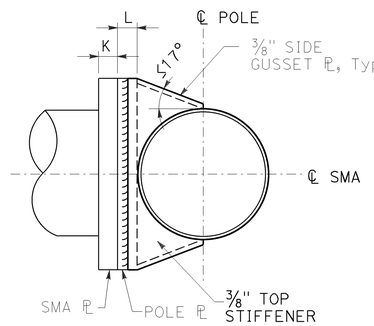


SECTION B-B

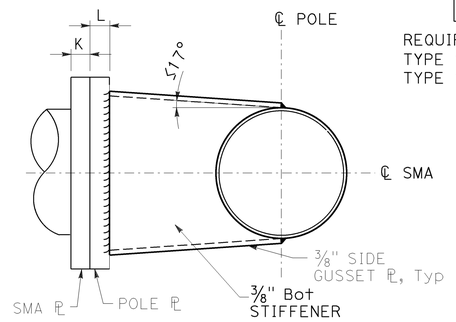


SECTION C-C

REQUIRED FOR
TYPE 17-2-100
TYPE 17A-2-100

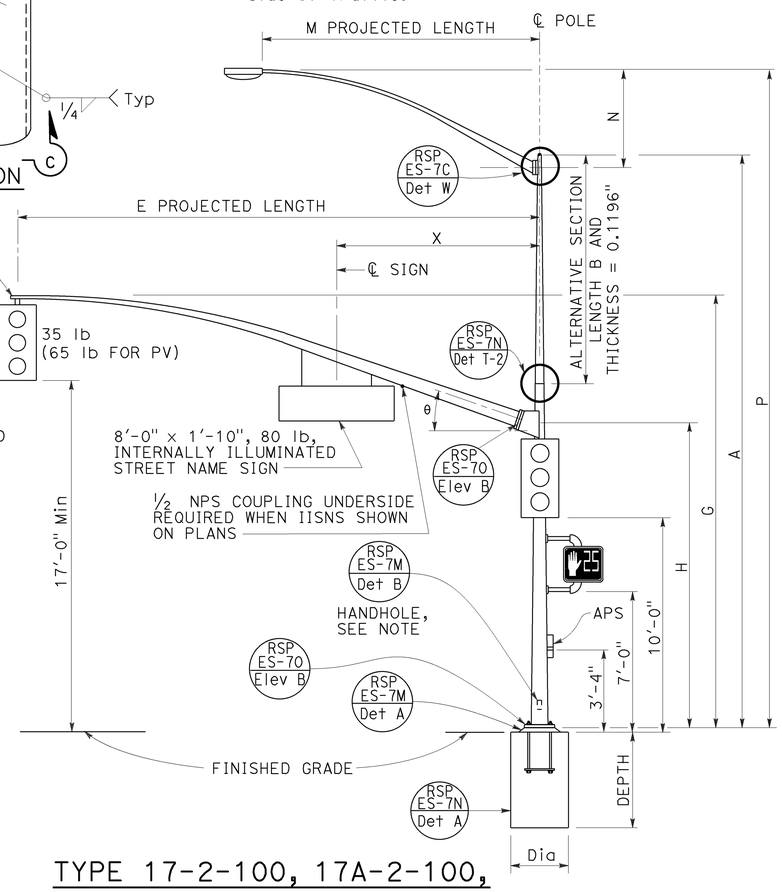


TYPE 17-2-100, 17A-2-100, 19-2-100, 19A-2-100

ELEVATION B

| SIGNAL MAST ARM DATA | | | | | | | | | | | |
|---|---|---|---|---|---|---|---|---|---|---|---|
| E PROJECTED LENGTH | G MOUNTING HEIGHT | H | Min OD AT POLE | THICKNESS | I BOLT CIRCLE | HS CAP SCREWS | J PLATE SIZE | K MAST ARM ℙ THICKNESS | L POLE ℙ THICKNESS | θ | X Max |
| 15'-0" | 21'-8"± | 17'-6" | 7⅜" | 0.1793" | 12" | 1¼"-7NC-3" | 1'-1" | 1¼" | 1½" | 23° | 10'-6" |
| 20'-0" | 21'-8"± | | 8" | | | | | | | | |
| 25'-0" | 22'-8"± | 16'-0" | 9" | | | | 1'-3" | | | | |
| 30'-0" | 23'-0"± | | 10" | 0.2391" | | | | | | | |

| LUMINAIRE MAST ARM DATA | | | | | |
|---|---|---|---|---|---|
| M PROJECTED LENGTH | N RISE | Min OD AT POLE | THICKNESS | P MOUNTING HEIGHT | |
| | | | | 30'-0" POLE | 35'-0" POLE |
| 6'-0" | 2'-0"± | 3¼" | 0.1196" | 31'-6"± | 36'-6"± |
| 8'-0" | 2'-6"± | 3½" | | 32'-0"± | 37'-0"± |
| 10'-0" | 3'-3"± | 3⅞" | | 32'-9"± | 37'-9"± |
| 12'-0" | 4'-3"± | | | 33'-9"± | 38'-9"± |
| 15'-0" | 4'-9"± | 4¼" | | 34'-3"± | 39'-3"± |

| POLE TYPE | LOAD CASE | WIND VELOCITY (mph) | POLE DATA | | | | | | | BASE PLATE DATA | | | | LUMINAIRE MAST ARM | SIGNAL MAST ARM | CIDH PILE FOUNDATION | |
|---|---|---|---|---|---|---|---|---|---|---|---|---|---|---|---|---|---|
| | | | A HEIGHT | Min OD | | THICKNESS | ALTERNATIVE SECTION | | | C | BC = BOLT CIRCLE | THICKNESS | ANCHOR BOLT SIZE | | | Dia | DEPTH |
| | | | | BASE | TOP | | B LENGTH | BOTTOM | TOP | | | | | | | | |
| 16-2-100 | 2 | 100 | 18'-6" | 14" | 11⅜" | 0.2391" OR 0.25" | | | | 1'-10" | 1'-8" | 2½" | 2"ø × 42" | NONE | 15'-0", 20'-0" | 3'-6" | 10'-0" |
| 17-2-100 | | | 30'-0" | | 9¾" | | 10'-0" | 11⅛" | 9¾" | | | | | 6'-15' 12'-0" | | | |
| 17A-2-100 | | | 35'-0" | | 9" | | 15'-0" | | 9" | | | | | 6'-15' 15'-0" | | | |
| 18-2-100 | | | 17'-0" | | 11⅝" | | | | | | | | | None | 25'-0", 30'-0" | | |
| 19-2-100 | | | 30'-0" | | 9¾" | | 10'-0" | 11⅛" | 9¾" | | | | | 6'-15' 12'-0" | | | |
| 19A-2-100 | | | 35'-0" | 16" | 11" | | 15'-0" | 13⅛" | 11" | 1'-11" | 1'-9" | 3" | 2¼"ø × 42" | 6'-15' 15'-0" | | | 12'-0" |

[ ] INDICATES MAST ARM LENGTH TO BE USED UNLESS OTHERWISE NOTED ON PLANS.

STATE OF CALIFORNIA
DEPARTMENT OF TRANSPORTATION

# ELECTRICAL SYSTEMS (SIGNAL AND LIGHTING STANDARD, CASE 2 SIGNAL MAST ARM LOADING, WIND VELOCITY=100 MPH AND SIGNAL MAST ARM LENGTHS 15' TO 30')

NO SCALE

RSP ES-7D DATED JULY 15, 2016 SUPERSEDES RSP ES-7D DATED OCTOBER 30, 2015 AND RSP ES-7D DATED JULY 19, 2013 AND STANDARD PLAN ES-7D DATED MAY 20, 2011 - PAGE 465 OF THE STANDARD PLANS BOOK DATED 2010.

**REVISED STANDARD PLAN RSP ES-7D**

**2010 REVISED STANDARD PLAN RSP ES-7D**

6-20-16

| Dist | COUNTY | ROUTE | POST MILES TOTAL PROJECT | SHEET No. | TOTAL SHEETS |
|---|---|---|---|---|---|
| 04 | SM | 101,114 | 1.3/2.5, 5.0/5.3 | 438 | 568 |

REGISTERED CIVIL ENGINEER

July 15, 2016

PLANS APPROVAL DATE

REGISTERED PROFESSIONAL ENGINEER Stanley P. Johnson No. C57793 Exp. 3-31-18 CIVIL STATE OF CALIFORNIA

*THE STATE OF CALIFORNIA OR ITS OFFICERS OR AGENTS SHALL NOT BE RESPONSIBLE FOR THE ACCURACY OR COMPLETENESS OF SCANNED COPIES OF THIS PLAN SHEET.*

TO ACCOMPANY PLANS DATED 6-29-16

**NOTE:**

Handhole shall be located on the downstream side of traffic.

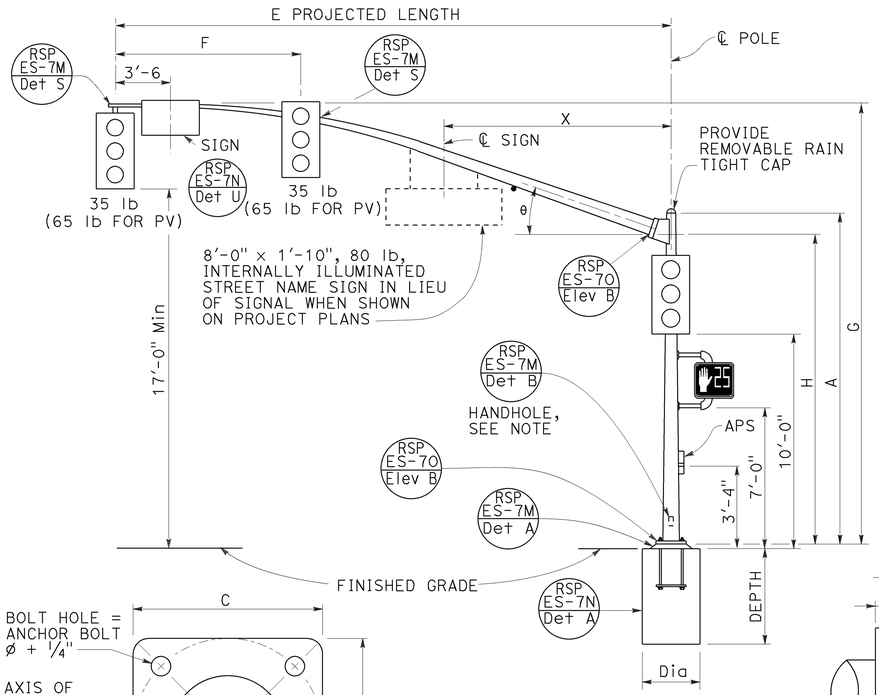


TYPE 16-3-100, 18-3-100, 23-3-100, 27-3-100

ELEVATION A

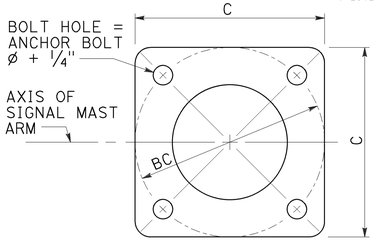


BASE PLATE

DETAIL B

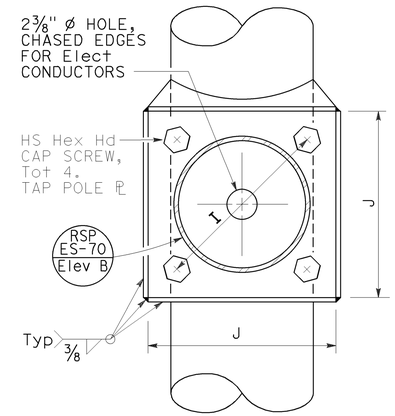


SECTION A-A

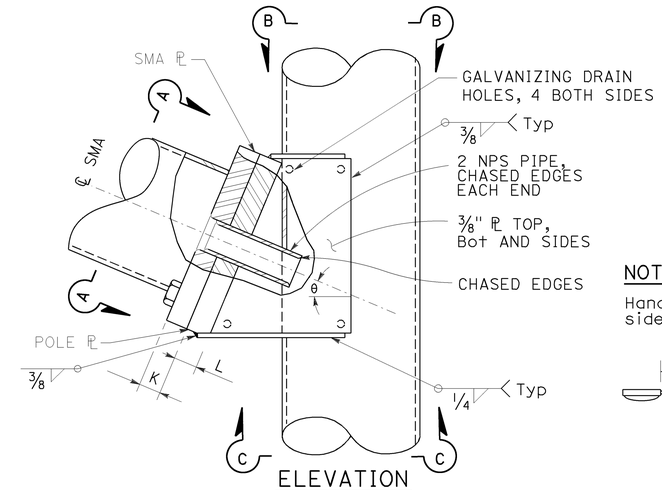


ELEVATION

SIGNAL MAST ARM CONNECTION

DETAIL A

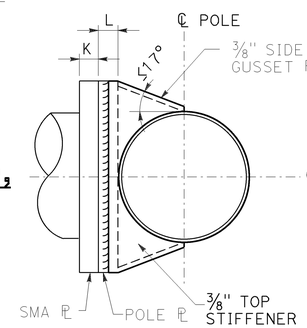


SECTION B-B

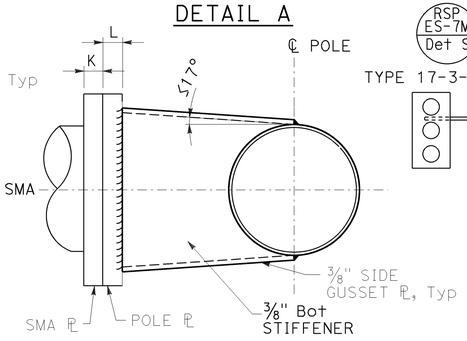


SECTION C-C

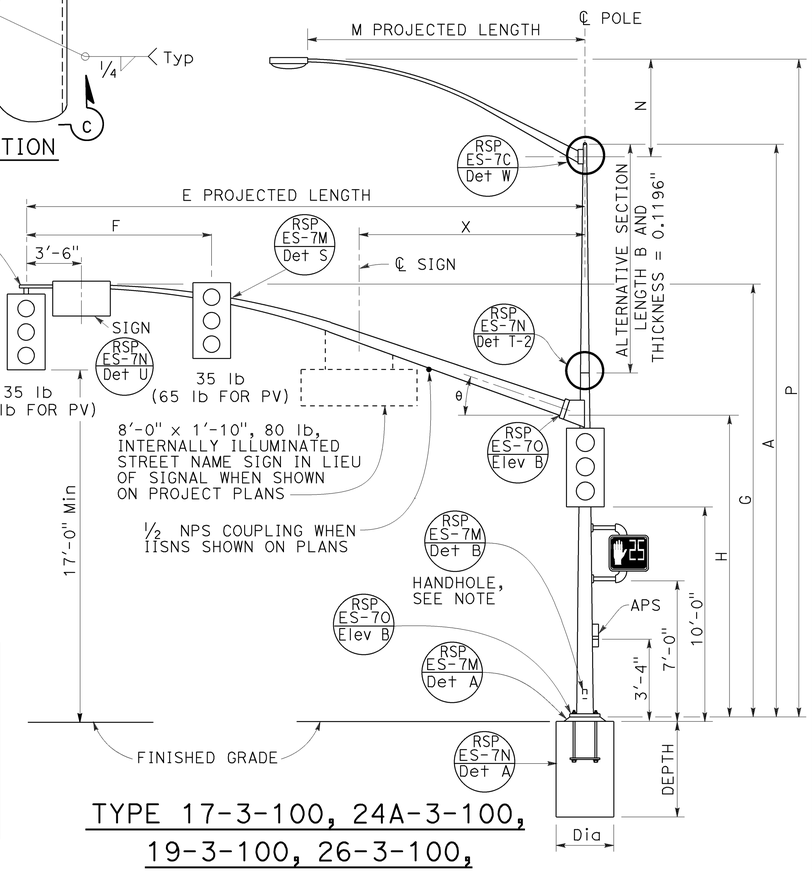


TYPE 17-3-100, 24A-3-100, 19-3-100, 26-3-100, 19A-3-100, 26A-3-100, 24-3-100

ELEVATION B

SIGNAL MAST ARM DATA

| E PROJECTED LENGTH | F Min SPACING | G MOUNTING HEIGHT | H | Min OD AT POLE | THICKNESS | I BOLT CIRCLE | HS CAP SCREWS | J PLATE SIZE | K MAST ARM ℄ THICKNESS | L POLE ℄ THICKNESS | θ | X Max |
|---|---|---|---|---|---|---|---|---|---|---|---|---|
| 15'-0" | 8'-0" | 21'-8"± | 17'-6" | 7 3/8" | 0.1793" | 12" | 1 1/4"-7NC-3" | 1'-3" | 1 1/4" | 1 1/2" | 23° | - |
| 20'-0" | | 21'-8"± | | 7 3/8" | | | | | | | | |
| 25'-0" | 12'-0" | 22'-8"± | 16'-0" | 7 3/8" | 0.2391" | | | | | | | 10'-6" |
| 30'-0" | | 23'-0"± | | 8" | | | | | | | | |
| 35'-0" | 14'-0" | | | 8 3/4" | | 13" | | | 1 1/2" | 1 3/4" | 21° | |
| 40'-0" | 15'-0" | | | 9 3/8" | | | | | | | 15° | 13'-0" |
| 45'-0" | | 23'-8"± | | 10 1/16" | | | | 1'-5" | | | | |

LUMINAIRE MAST ARM DATA

| M PROJECTED LENGTH | N RISE | Min OD AT POLE | THICKNESS | P MOUNTING HEIGHT 30'-0" POLE | P MOUNTING HEIGHT 35'-0" POLE |
|---|---|---|---|---|---|
| 6'-0" | 2'-0"± | 3 1/4" | 0.1196" | 31'-6"± | 36'-6"± |
| 8'-0" | 2'-6"± | 3 1/2" | | 32'-0"± | 37'-0"± |
| 10'-0" | 3'-3"± | 3 7/8" | | 32'-9"± | 37'-9"± |
| 12'-0" | 4'-3"± | | | 33'-9"± | 38'-9"± |
| 15'-0" | 4'-9"± | 4 1/4" | | 34'-3"± | 39'-3"± |

POLE DATA / BASE PLATE DATA

| POLE TYPE | LOAD CASE | WIND VELOCITY (mph) | A HEIGHT | Min OD BASE | Min OD TOP | THICKNESS | ALTERNATIVE SECTION B LENGTH | ALTERNATIVE SECTION BOTTOM | ALTERNATIVE SECTION TOP | C | BC = BOLT CIRCLE | THICKNESS | ANCHOR BOLT SIZE | LUMINAIRE MAST ARM | SIGNAL MAST ARM | CIDH PILE FOUNDATION Dia | CIDH PILE FOUNDATION DEPTH |
|---|---|---|---|---|---|---|---|---|---|---|---|---|---|---|---|---|---|
| 16-3-100 | 3 | 100 | 18'-6" | 16" | 13 3/8" | 0.2391" OR 0.25" | | | | 1'-11" | 1'-9" | 3" | 2 1/4" Ø x 42" | NONE | 15'-0", 20'-0" | 3'-6" | 12'-0" |
| 17-3-100 | | | 30'-0" | | 11 3/4" | | 10'-0" | 13 1/8" | 11 3/4" | | | | | 6'-15' 12'-0" | | | |
| 18-3-100 | | | 17'-0" | | 13 5/8" | | | | | | | | | NONE | 25'-0", 30'-0" | | |
| 19-3-100 | | | 30'-0" | | 11 3/4" | | 10'-0" | 13 1/8" | 11 3/4" | | | | | 6'-15' 12'-0" | | | |
| 19A-3-100 | | | 35'-0" | | 11" | 0.3125" | 15'-0" | | 11" | | | | | 6'-15' 15'-0" | | | |
| 23-3-100 | | | 17'-0" | | 13 5/8" | 0.2391" OR 0.25" | | | | | | | | NONE | 35'-0" | | |
| 24-3-100 | | | 30'-0" | | 11 3/4" | 0.3125" | 10'-0" | 13 1/8" | 11 3/4" | | | | | 6'-15' 12'-0" | | | |
| 24A-3-100 | | | 35'-0" | | 11" | | 15'-0" | | 11" | | | | | 6'-15' 15'-0" | | | |
| 26-3-100 | | | 30'-0" | 18" | 13 3/4" | | 10'-0" | 15 1/8" | 13 3/4" | 2'-1" | 1'-11" | | | 6'-15' 12'-0" | 40'-0", 45'-0" | | 13'-0" |
| 26A-3-100 | | | 35'-0" | | 13" | | 15'-0" | | 13" | | | | | 6'-15' 15'-0" | | | |
| 27-3-100 | | | 17'-0" | | 15 5/8" | | | | | | | | | NONE | | | |

[ ] INDICATES MAST ARM LENGTH TO BE USED UNLESS OTHERWISE NOTED ON PLANS.

STATE OF CALIFORNIA
DEPARTMENT OF TRANSPORTATION

# ELECTRICAL SYSTEMS (SIGNAL AND LIGHTING STANDARD, CASE 3 SIGNAL MAST ARM LOADING, WIND VELOCITY=100 MPH AND SIGNAL MAST ARM LENGTHS 15' TO 45')

NO SCALE

RSP ES-7E DATED JULY 15, 2016 SUPERSEDES RSP ES-7E DATED OCTOBER 30, 2015 AND RSP ES-7E DATED JULY 19, 2013 AND STANDARD PLAN ES-7E DATED MAY 20, 2011 - PAGE 466 OF THE STANDARD PLANS BOOK DATED 2010.

**REVISED STANDARD PLAN RSP ES-7E**

**2010 REVISED STANDARD PLAN RSP ES-7E**

6-20-16

| Dist | COUNTY | ROUTE | POST MILES TOTAL PROJECT | SHEET No. | TOTAL SHEETS |
|---|---|---|---|---|---|
| 04 | SM | 101,114 | 1.3/2.5, 5.0/5.3 | 439 | 568 |

REGISTERED CIVIL ENGINEER

July 15, 2016

PLANS APPROVAL DATE

REGISTERED PROFESSIONAL ENGINEER Stanley P. Johnson No. C57793 Exp. 3-31-18 CIVIL STATE OF CALIFORNIA

*THE STATE OF CALIFORNIA OR ITS OFFICERS OR AGENTS SHALL NOT BE RESPONSIBLE FOR THE ACCURACY OR COMPLETENESS OF SCANNED COPIES OF THIS PLAN SHEET.*

**NOTE:** TO ACCOMPANY PLANS DATED 6-29-16

Handhole shall be located on the downstream side of traffic.

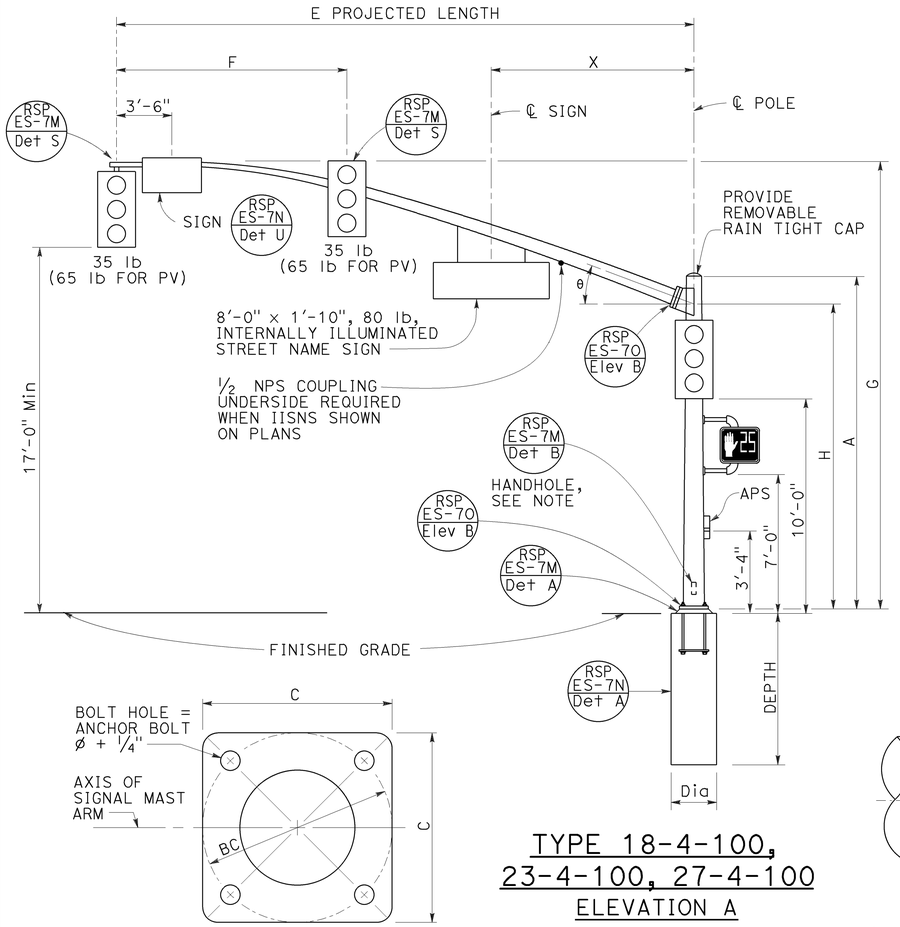


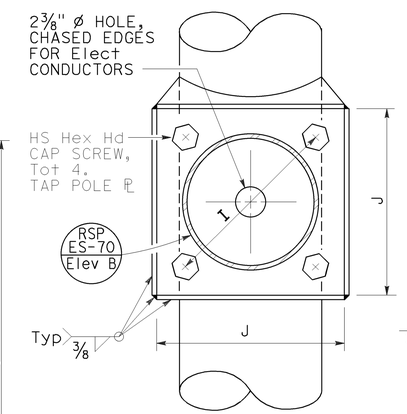


SECTION A-A

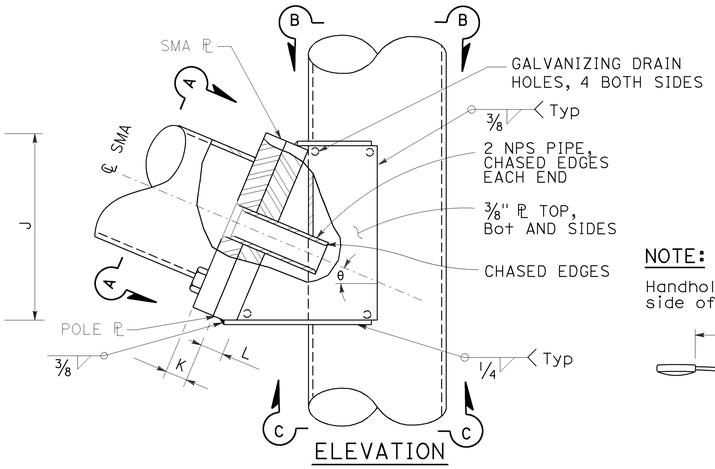


ELEVATION

## SIGNAL MAST ARM CONNECTION

DETAIL A




BASE PLATE

DETAIL B

TYPE 18-4-100, 23-4-100, 27-4-100

ELEVATION A

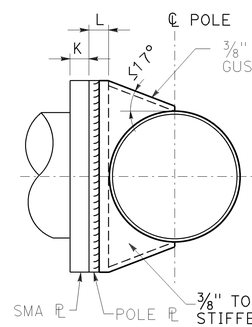


SECTION B-B

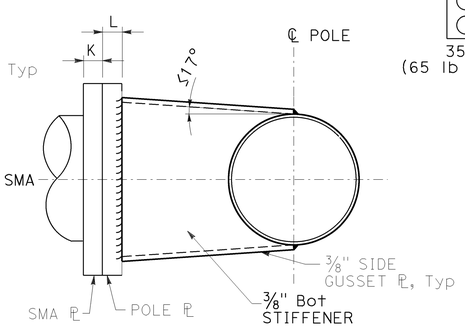


SECTION C-C

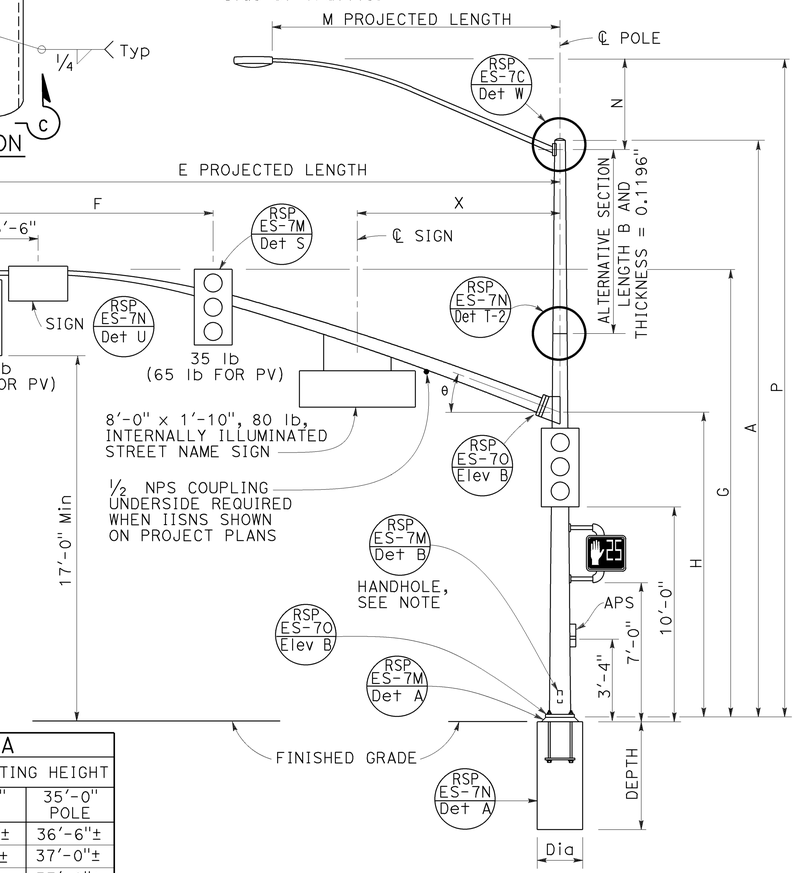


TYPE 19-4-100, 19A-4-100, 24-4-100, 24A-4-100, 26-4-100, 26A-4-100

ELEVATION B

| SIGNAL MAST ARM DATA | | | | | | | | | | | | |
|---|---|---|---|---|---|---|---|---|---|---|---|---|
| E PROJECTED LENGTH | F Min SPACING | G MOUNTING HEIGHT | H | Min OD AT POLE | THICKNESS | I BOLT CIRCLE | HS CAP SCREWS | J PLATE SIZE | K MAST ARM ℙ THICKNESS | L POLE ℙ THICKNESS | θ | X Max |
| 25'-0" | 10'-0" | 22'-8"± | 16'-0" | 7 3/8" | 0.2391" | 12" | 1 1/4"-7NC-3" | 1'-3" | 1 1/4" | 1 1/2" | 23° | 10'-6" |
| 30'-0" | 12'-0" | 23'-0"± | | 8" | | | | | | | | |
| 35'-0" | 14'-0" | | | 8 11/16" | | 13 1/2" | | | 1 1/2" | 1 3/4" | 21° | |
| 40'-0" | 15'-0" | | | 9 3/8" | | | | | | | 15° | 13'-0" |
| 45'-0" | | 23'-8"± | | 10 1/4" | | | | 1'-5" | | | | |

| LUMINAIRE MAST ARM DATA | | | | | |
|---|---|---|---|---|---|
| M PROJECTED LENGTH | N RISE | Min OD AT POLE | THICKNESS | P MOUNTING HEIGHT 30'-0" POLE | P MOUNTING HEIGHT 35'-0" POLE |
| 6'-0" | 2'-0"± | 3 1/4" | 0.1196" | 31'-6"± | 36'-6"± |
| 8'-0" | 2'-6"± | 3 1/2" | | 32'-0"± | 37'-0"± |
| 10'-0" | 3'-3"± | 3 7/8" | | 32'-9"± | 37'-9"± |
| 12'-0" | 4'-3"± | | | 33'-9"± | 38'-9"± |
| 15'-0" | 4'-9"± | 4 1/4" | | 34'-3"± | 39'-3"± |

| POLE TYPE | LOAD CASE | WIND VELOCITY (mph) | POLE DATA | | | | | | | BASE PLATE DATA | | | | LUMINAIRE MAST ARM | SIGNAL MAST ARM | CIDH PILE FOUNDATION | |
|---|---|---|---|---|---|---|---|---|---|---|---|---|---|---|---|---|---|
| | | | A HEIGHT | Min OD BASE | Min OD TOP | THICKNESS | ALTERNATIVE SECTION B LENGTH | ALTERNATIVE SECTION BOTTOM | ALTERNATIVE SECTION TOP | C | BC = BOLT CIRCLE | THICKNESS | ANCHOR BOLT SIZE | | | Dia | DEPTH |
| 18-4-100 | 4 | 100 | 17'-0" | 16" | 13 5/8" | 0.2391" OR 0.25" | | | | 1'-11" | 1'-9" | 3" | 2 1/4"ø x 42" | NONE | 25'-0", [30'-0"] | 3'-6" | 12'-0" |
| 19-4-100 | | | 30'-0" | | 11 3/4" | | 10'-0" | 13 1/8" | 11 3/4" | | | | | 6'-15' [12'-0"] | | | |
| 19A-4-100 | | | 35'-0" | | 11" | 0.3125" | 15'-0' | 13 1/8" | 11" | | | | | 6'-15' [15'-0"] | | | |
| 23-4-100 | | | 17'-0" | | 13 5/8" | | | | | | | | | NONE | 35'-0" | | |
| 24-4-100 | | | 30'-0" | | 11 3/4" | | 10'-0" | 15 1/8" | 13 3/4" | | | | | 6'-15' [12'-0"] | | | |
| 24A-4-100 | | | 35'-0" | | 11" | | 15'-0" | 13 1/8" | 11" | | | | | 6'-15' [15'-0"] | | | |
| 26-4-100 | | | 30'-0" | 18" | 13 3/4" | | 10'-0" | 15 1/8" | 13 3/4" | 2'-1" | 1'-11" | | | 6'-15' [12'-0"] | 40'-0", [45'-0"] | | 13'-0" |
| 26A-4-100 | | | 35'-0" | | 13" | | 15'-0" | 15 1/8" | 13" | | | | | 6'-15' [15'-0"] | | | |
| 27-4-100 | | | 17'-0" | | 15 5/8" | | | | | | | | | NONE | | | |

[ ] INDICATES MAST ARM LENGTH TO BE USED UNLESS OTHERWISE NOTED ON PLANS.

STATE OF CALIFORNIA
DEPARTMENT OF TRANSPORTATION

# ELECTRICAL SYSTEMS (SIGNAL AND LIGHTING STANDARD, CASE 4 SIGNAL MAST ARM LOADING, WIND VELOCITY=100 MPH AND SIGNAL MAST ARM LENGTHS 25' TO 45')

NO SCALE

RSP ES-7F DATED JULY 15, 2016 SUPERSEDES RSP ES-7F DATED OCTOBER 30, 2015 AND RSP ES-7F DATED JULY 19, 2013 AND STANDARD PLAN ES-7F DATED MAY 20, 2011 - PAGE 467 OF THE STANDARD PLANS BOOK DATED 2010.

**REVISED STANDARD PLAN RSP ES-7F**

**2010 REVISED STANDARD PLAN RSP ES-7F**

6-20-16

| Dist | COUNTY | ROUTE | POST MILES TOTAL PROJECT | SHEET No. | TOTAL SHEETS |
|---|---|---|---|---|---|
| 04 | SM | 101,114 | 1.3/2.5, 5.0/5.3 | 440 | 568 |

REGISTERED CIVIL ENGINEER

July 15, 2016

PLANS APPROVAL DATE

REGISTERED PROFESSIONAL ENGINEER Stanley P. Johnson No. C57793 Exp. 3-31-18 CIVIL STATE OF CALIFORNIA

*THE STATE OF CALIFORNIA OR ITS OFFICERS OR AGENTS SHALL NOT BE RESPONSIBLE FOR THE ACCURACY OR COMPLETENESS OF SCANNED COPIES OF THIS PLAN SHEET.*

TO ACCOMPANY PLANS DATED 6-29-16

**NOTE:**
Handhole shall be located on the downstream side of traffic.

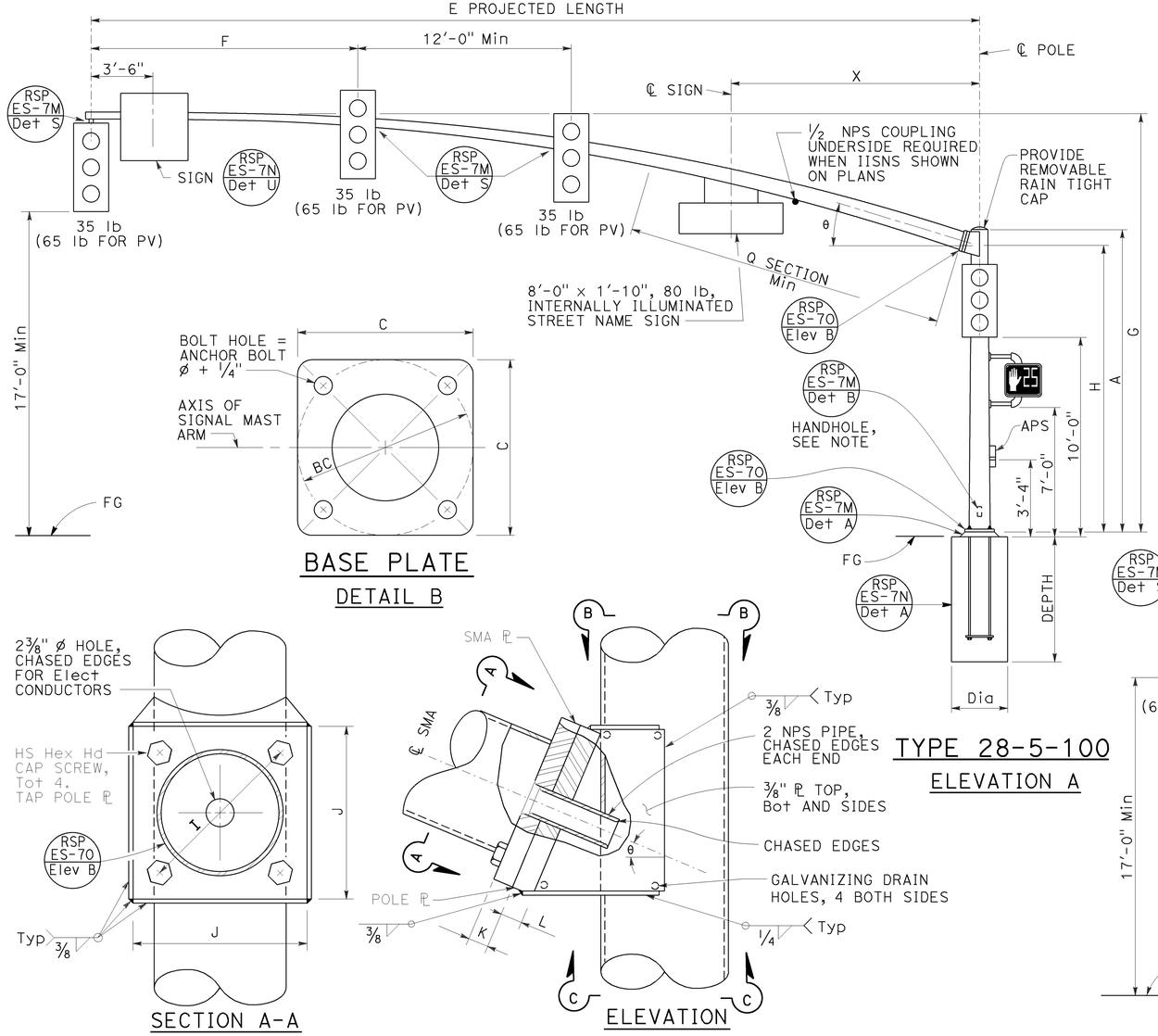


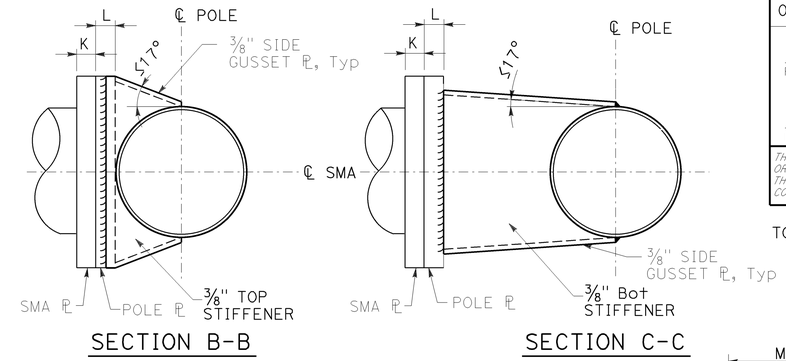





TYPE 28-5-100
ELEVATION A

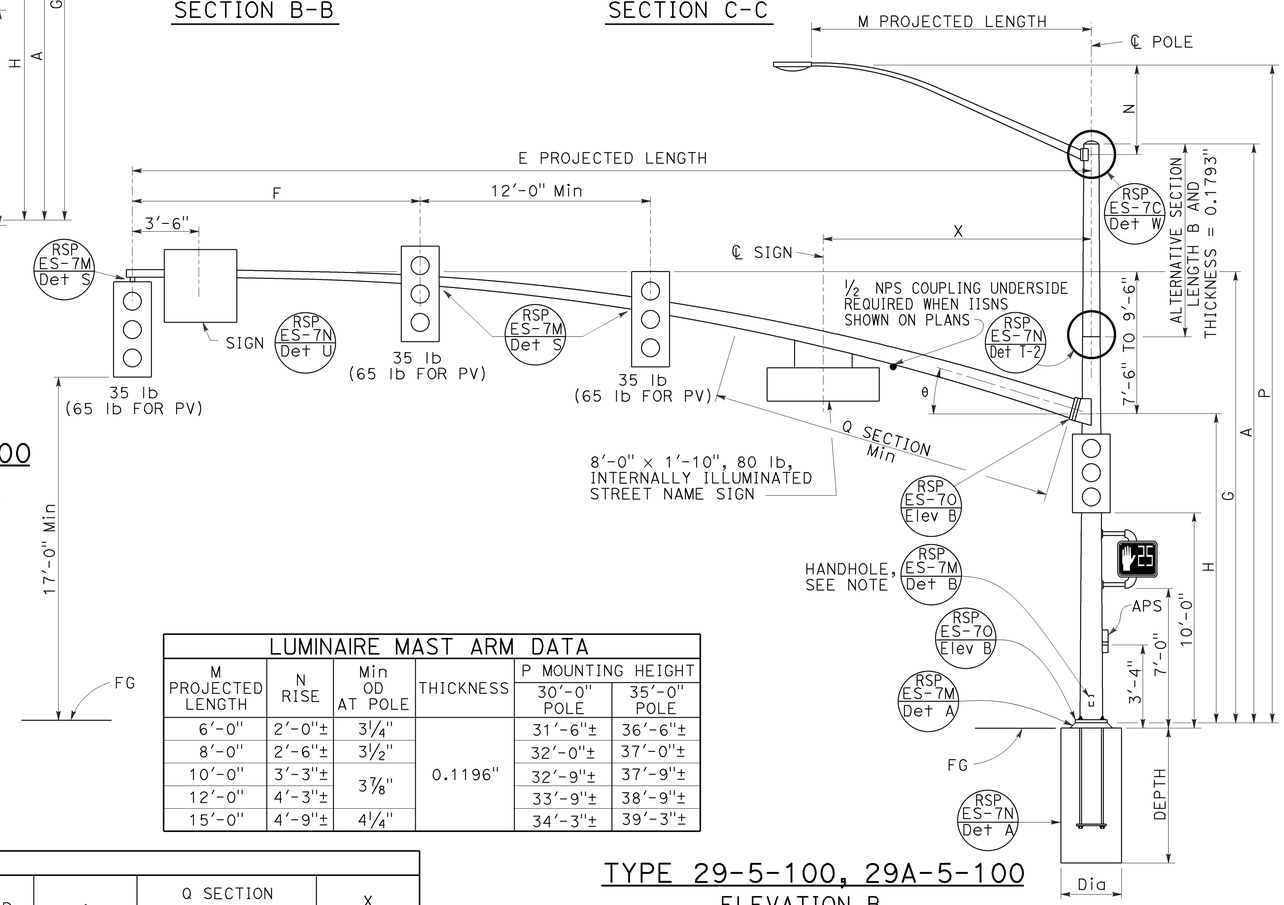


TYPE 29-5-100, 29A-5-100
ELEVATION B

| LUMINAIRE MAST ARM DATA | | | | | |
|---|---|---|---|---|---|
| M PROJECTED LENGTH | N RISE | Min OD AT POLE | THICKNESS | P MOUNTING HEIGHT 30'-0" POLE | P MOUNTING HEIGHT 35'-0" POLE |
| 6'-0" | 2'-0"± | 3¼" | 0.1196" | 31'-6"± | 36'-6"± |
| 8'-0" | 2'-6"± | 3½" | | 32'-0"± | 37'-0"± |
| 10'-0" | 3'-3"± | 3⅞" | | 32'-9"± | 37'-9"± |
| 12'-0" | 4'-3"± | | | 33'-9"± | 38'-9"± |
| 15'-0" | 4'-9"± | 4¼" | | 34'-3"± | 39'-3"± |

| SIGNAL MAST ARM DATA | | | | | | | | | | | | | | |
|---|---|---|---|---|---|---|---|---|---|---|---|---|---|---|
| E PROJECTED LENGTH | F Min SPACING | G MOUNTING HEIGHT | H | Min OD AT POLE | THICKNESS | I BOLT CIRCLE | HS CAP SCREWS | J PLATE SIZE | K MAST ARM ℙ THICKNESS | L POLE ℙ THICKNESS | θ | Q SECTION LENGTH | Q SECTION THICKNESS | X Max |
| 50'-0" | 15'-0" | 23'-7"± TO 25'-7"± | 16'-0" | 11 7/16" | 0.1793" | 16" | 1½"-6NC-3¼" | 1'-9" | 1¾" | 1¾" | 15° | 18'-0" | 0.2391" | 14'-0" |
| 55'-0" | | | | 1'-¼" | | | | | | | | 23'-0" | | |

| POLE TYPE | LOAD CASE | WIND VELOCITY (mph) | POLE DATA A HEIGHT | Min OD BASE | Min OD TOP | THICKNESS | ALTERNATIVE SECTION B LENGTH | ALTERNATIVE SECTION BOTTOM | ALTERNATIVE SECTION TOP | BASE PLATE DATA C | BC = BOLT CIRCLE | THICKNESS | ANCHOR BOLT SIZE | LUMINAIRE MAST ARM | SIGNAL MAST ARM | CIDH PILE FOUNDATION Dia | CIDH PILE FOUNDATION DEPTH |
|---|---|---|---|---|---|---|---|---|---|---|---|---|---|---|---|---|---|
| 28-5-100 | 5 | 100 | 17'-0" | 22" | 19 5/8" | 0.375" | | | | 2'-6" | 2'-4" | 3" | 2¼"ø x 42" | NONE | 50'-0", 55'-0" | 4'-0" | 14'-0" |
| 29-5-100 | | | 30'-0" | | 17¾" | | 10'-0" | 19⅛" | 17¾" | | | | | 6'-15' 15'-0" | | | |
| 29A-5-100 | | | 35'-0" | | 17" | | 15'-0" | | 17" | | | | | | | | |

INDICATES MAST ARM LENGTH TO BE USED UNLESS OTHERWISE NOTED ON PLANS.

STATE OF CALIFORNIA
DEPARTMENT OF TRANSPORTATION

# ELECTRICAL SYSTEMS (SIGNAL AND LIGHTING STANDARD, CASE 5 SIGNAL MAST ARM LOADING, WIND VELOCITY=100 MPH AND SIGNAL MAST ARM LENGTHS 50' TO 55')

NO SCALE

RSP ES-7G DATED JULY 15, 2016 SUPERSEDES RSP ES-7G DATED OCTOBER 30, 2015 AND RSP ES-7G DATED JULY 19, 2013 AND STANDARD PLAN ES-7G DATED MAY 20, 2011 - PAGE 468 OF THE STANDARD PLANS BOOK DATED 2010.

**REVISED STANDARD PLAN RSP ES-7G**

**2010 REVISED STANDARD PLAN RSP ES-7G**

6-20-16

| Dist | COUNTY | ROUTE | POST MILES TOTAL PROJECT | SHEET No. | TOTAL SHEETS |
|---|---|---|---|---|---|
| 04 | SM | 101,114 | 1.3/2.5, 5.0/5.3 | 441 | 568 |

REGISTERED CIVIL ENGINEER

July 15, 2016

PLANS APPROVAL DATE

REGISTERED PROFESSIONAL ENGINEER Stanley P. Johnson No. C57793 Exp. 3-31-18 CIVIL STATE OF CALIFORNIA

*THE STATE OF CALIFORNIA OR ITS OFFICERS OR AGENTS SHALL NOT BE RESPONSIBLE FOR THE ACCURACY OR COMPLETENESS OF SCANNED COPIES OF THIS PLAN SHEET.*

TO ACCOMPANY PLANS DATED 6-29-16

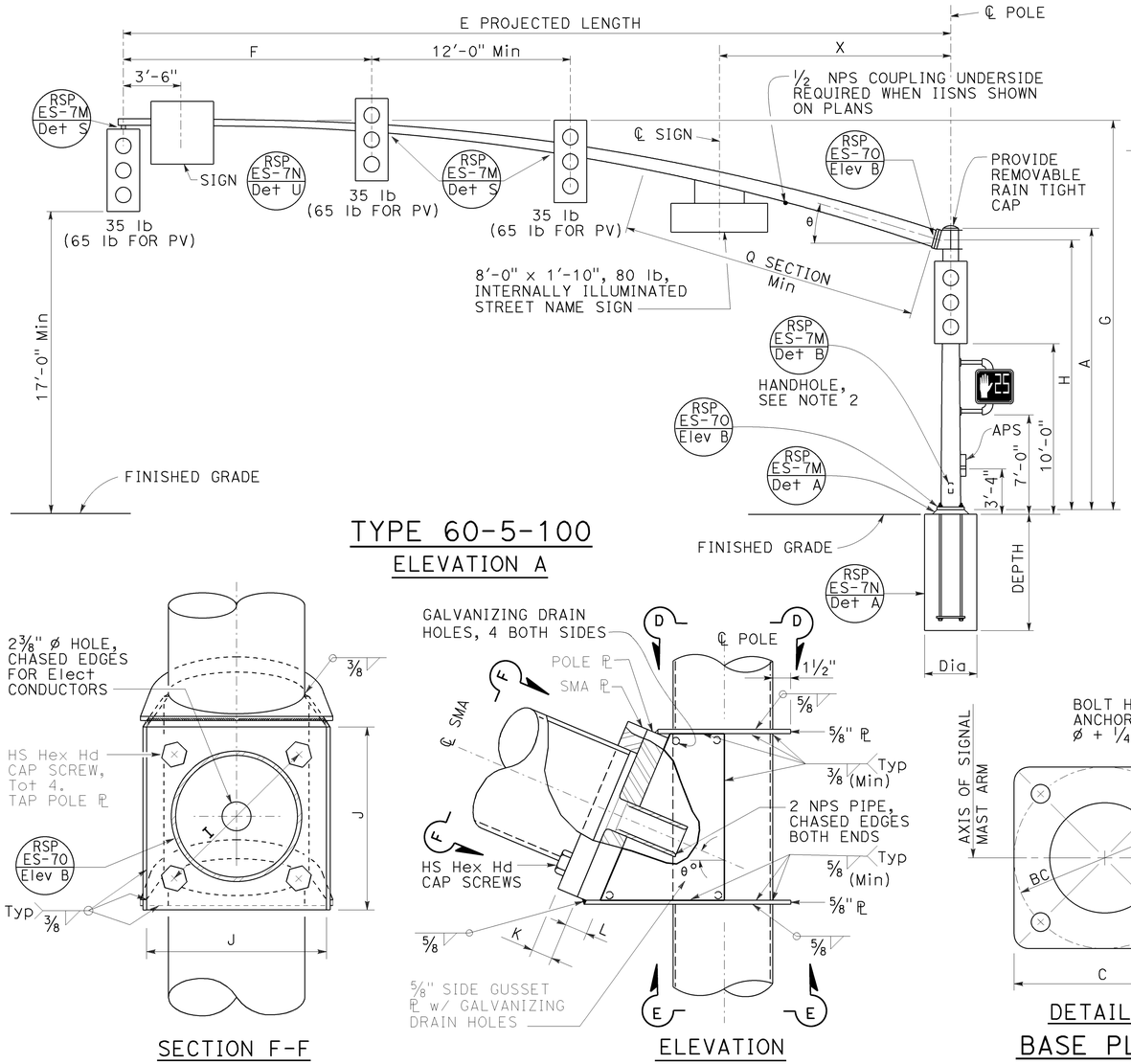


TYPE 60-5-100

ELEVATION A




SECTION F-F




ELEVATION

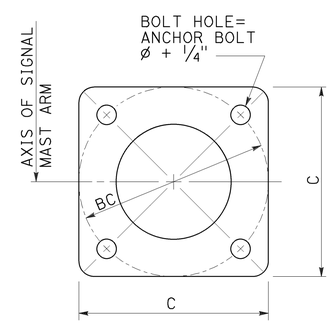


DETAIL B

BASE PLATE

SIGNAL MAST ARM CONNECTION

DETAIL B

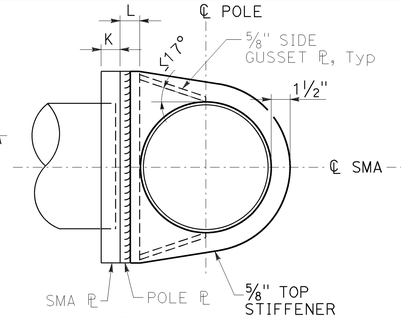


SECTION D-D

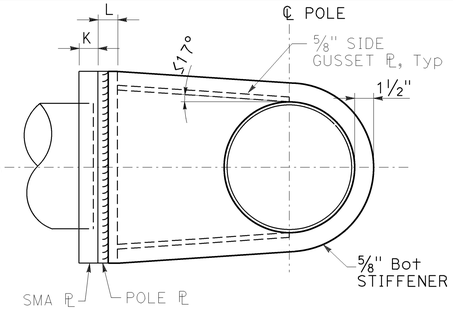


SECTION E-E

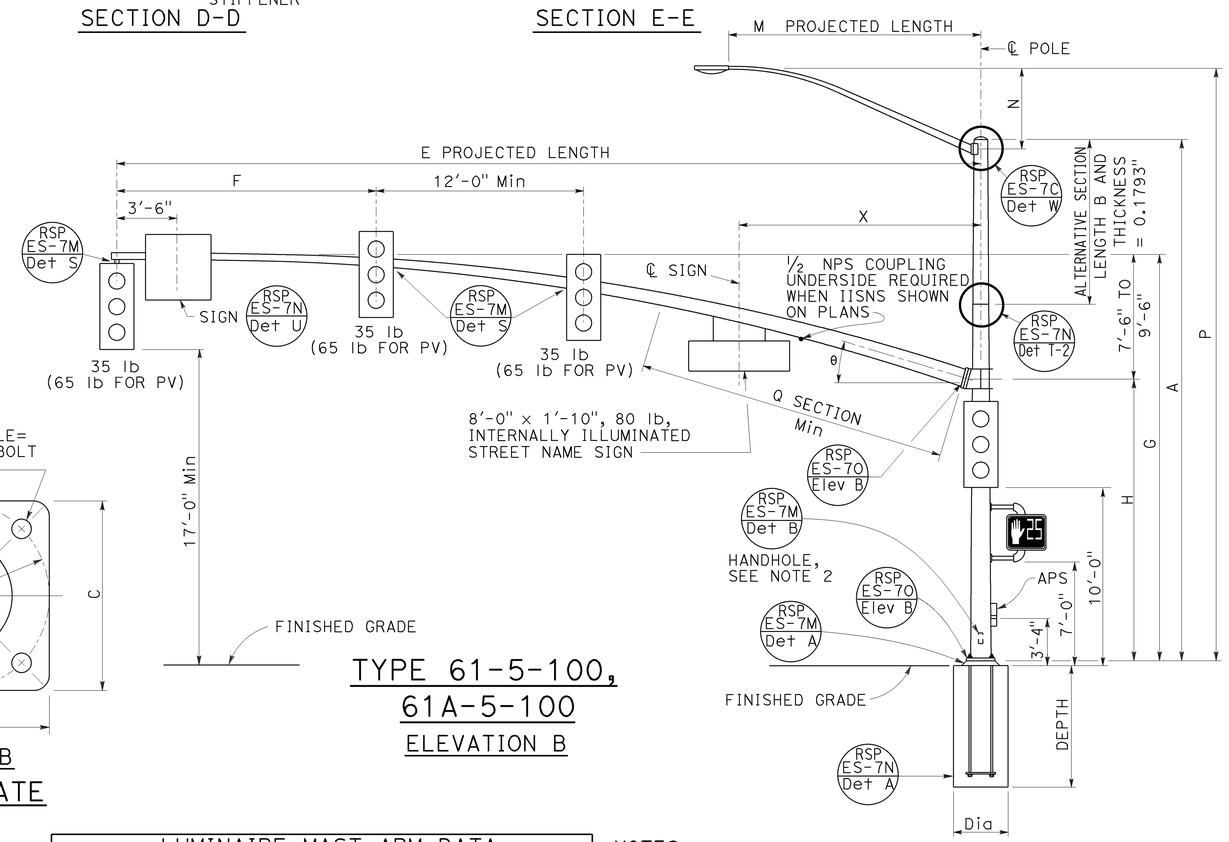


TYPE 61-5-100,

61A-5-100

ELEVATION B

| SIGNAL MAST ARM DATA | | | | | | | | | | | | | | |
|---|---|---|---|---|---|---|---|---|---|---|---|---|---|---|
| E PROJECTED LENGTH | F Min SPACING | G MOUNTING HEIGHT | H | Min OD AT POLE | THICKNESS | I BOLT CIRCLE | HS CAP SCREWS | J PLATE SIZE | K MAST ARM ℄ THICKNESS | L POLE ℄ THICKNESS | θ | Q SECTION LENGTH | Q SECTION THICKNESS | X Max |
| 60'-0" | 15'-0" | 23'-7" TO 25'-7" | 16'-0" | 1'-1½" | 0.1793" | 20" | 1½"-6NC-4" | 2'-0" | 2" | 2" | 15° | 24'-0" | 0.2391" | 14'-0" |
| 65'-0" | | | | | 0.2391" | | | | | | | 29'-0" | 0.3125" | |

| LUMINAIRE MAST ARM DATA | | | | | |
|---|---|---|---|---|---|
| M PROJECTED LENGTH | N RISE | Min OD AT POLE | THICKNESS | P MOUNTING HEIGHT 30'-0" POLE | P MOUNTING HEIGHT 35'-0" POLE |
| 6'-0" | 2'-0"± | 3¼" | 0.1196" | 31'-6"± | 36'-6"± |
| 8'-0" | 2'-6"± | 3½" | | 32'-0"± | 37'-0"± |
| 10'-0" | 3'-3"± | 3⅞" | | 32'-9"± | 37'-9"± |
| 12'-0" | 4'-3"± | | | 33'-9"± | 38'-9"± |
| 15'-0" | 4'-9"± | 4¼" | | 34'-3"± | 39'-3"± |

NOTES:

1. The radial separation between the face of the pole and the adjacent insides of the top and bottom gusset plates shall not exceed 3/16". Fillet weld size to be increased by amount of gap.
2. Handhole shall be located on the downstream side of traffic.

| POLE TYPE | LOAD CASE | WIND VELOCITY (mph) | POLE DATA A HEIGHT | Min OD BASE | Min OD TOP | THICKNESS | ALTERNATIVE SECTION B LENGTH | ALTERNATIVE SECTION BOTTOM | ALTERNATIVE SECTION TOP | BASE PLATE DATA C | BC = BOLT CIRCLE | THICKNESS | ANCHOR BOLT SIZE | LUMINAIRE MAST ARM | SIGNAL MAST ARM | CIDH PILE FOUNDATION Dia | CIDH PILE FOUNDATION DEPTH |
|---|---|---|---|---|---|---|---|---|---|---|---|---|---|---|---|---|---|
| 60-5-100 | 5 | 100 | 17'-0" | 22" | 19⅝" | 0.375" | | | | 2'-6" | 2'-4" | 3" | 2¼"ø x 42" | NONE | 50'-0", [55'-0"] | 4'-0" | 14'-0" |
| 61-5-100 | | | 30'-0" | 25" | 20¾" | | 10'-0" | 22⅛" | 20¾" | 2'-11" | 2'-9" | | 3"ø x 60" | 6'-15' [15'-0"] | | 4'-6" | 15'-0" |
| 61A-5-100 | | | 35'-0" | | 20" | | 15'-0" | | 20" | | | | | | | | |

[ ] INDICATES MAST ARM LENGTH TO BE USED UNLESS OTHERWISE NOTED ON PLANS.

STATE OF CALIFORNIA
DEPARTMENT OF TRANSPORTATION

# ELECTRICAL SYSTEMS (SIGNAL AND LIGHTING STANDARD, CASE 5 SIGNAL MAST ARM LOADING, WIND VELOCITY=100 MPH AND SIGNAL MAST ARM LENGTHS 60' TO 65')

NO SCALE

RSP ES-7H DATED JULY 15, 2016 SUPERSEDES RSP ES-7H DATED OCTOBER 30, 2015 AND RSP ES-7H DATED JULY 19, 2013 AND STANDARD PLAN ES-7H DATED MAY 20, 2011 - PAGE 469 OF THE STANDARD PLANS BOOK DATED 2010.

**REVISED STANDARD PLAN RSP ES-7H**

**2010 REVISED STANDARD PLAN RSP ES-7H**

6-20-16

| Dist | COUNTY | ROUTE | POST MILES TOTAL PROJECT | SHEET No. | TOTAL SHEETS |
|---|---|---|---|---|---|
| 04 | SM | 101,114 | 1.3/2.5, 5.0/5.3 | 442 | 568 |

REGISTERED CIVIL ENGINEER

July 15, 2016
PLANS APPROVAL DATE

REGISTERED PROFESSIONAL ENGINEER Stanley P. Johnson No. C57793 Exp. 3-31-18 CIVIL STATE OF CALIFORNIA

*THE STATE OF CALIFORNIA OR ITS OFFICERS OR AGENTS SHALL NOT BE RESPONSIBLE FOR THE ACCURACY OR COMPLETENESS OF SCANNED COPIES OF THIS PLAN SHEET.*

TO ACCOMPANY PLANS DATED 6-29-16

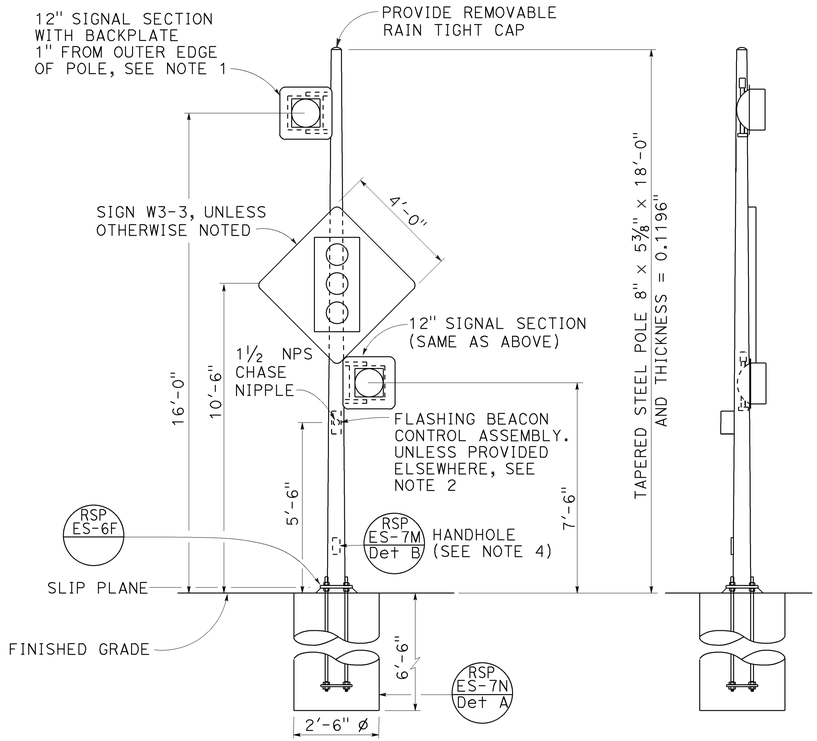


FRONT VIEW

SIDE VIEW

## TYPE 15-FBS
## FLASHING BEACON WITH SLIP BASE INSTALLATION
### DETAIL A

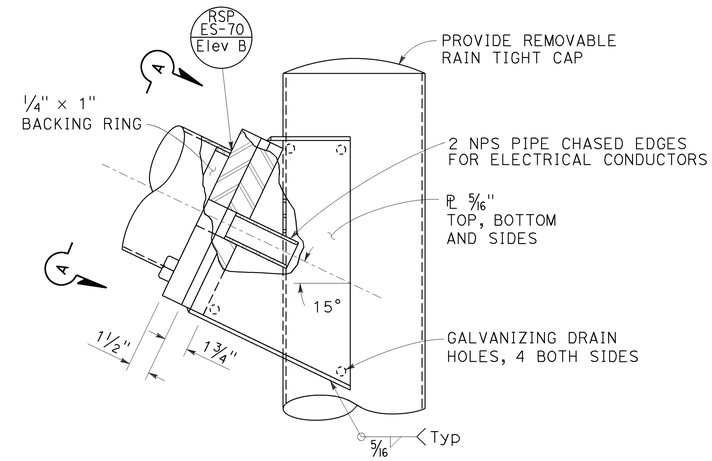


ELEVATION B

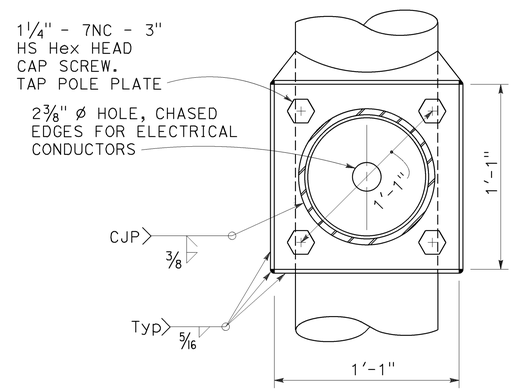


VIEW A-A

## FLASHING BEACON MAST ARM CONNECTION DETAIL
### DETAIL B

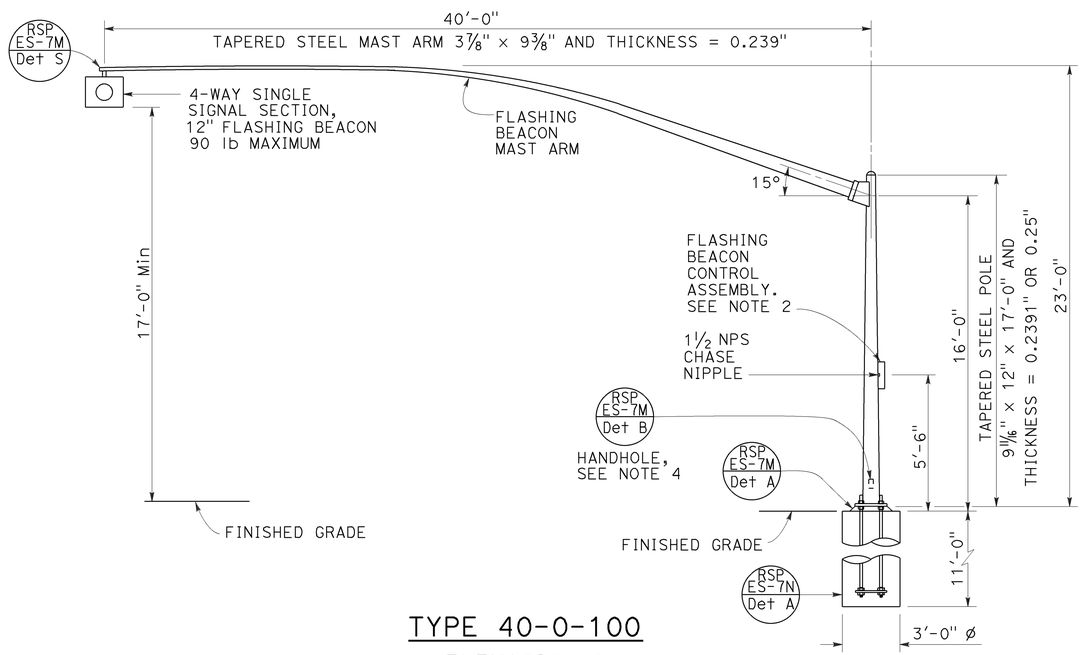


## TYPE 40-0-100
### ELEVATION A

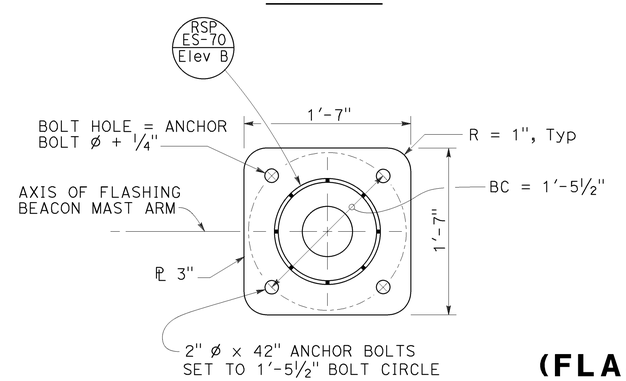


## BASE PLATE
### DETAIL C

## NOTES:

1. See Revised Standard Plans RSP ES-4A and RSP ES-4D for attachment fitting details.
2. For wiring diagram, see Revised Standard Plan RSP ES-14B.
3. For additional notes and details, see Revised Standard Plans RSP ES-7M and RSP ES-7N.
4. Handhole shall be located on the downstream side of traffic.
5. See project plans for type of standard to be installed.

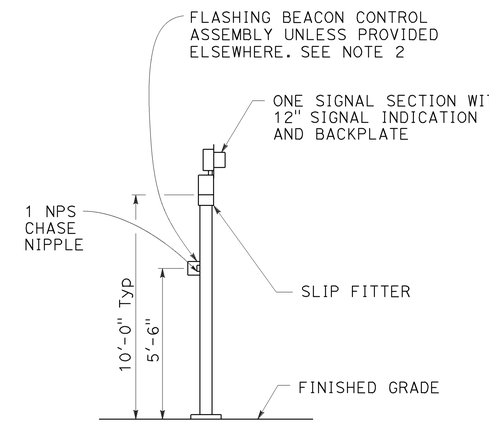


## TYPE 1-A, 1-B, 1-C, AND 1-D
### FLASHING BEACON INSTALLATION
### DETAIL D
See Note 5

STATE OF CALIFORNIA
DEPARTMENT OF TRANSPORTATION

# ELECTRICAL SYSTEMS (FLASHING BEACON ON A TYPE 1, TYPE 15-FBS, AND TYPE 40 STANDARD)

NO SCALE

RSP ES-7J DATED JULY 15, 2016 SUPERSEDES RSP ES-7J DATED APRIL 15, 2016 AND RSP ES-7J DATED OCTOBER 30, 2015 AND RSP ES-7J DATED JULY 19, 2013 AND STANDARD PLAN ES-7J DATED MAY 20, 2011 - PAGE 471 OF THE STANDARD PLANS BOOK DATED 2010.

**REVISED STANDARD PLAN RSP ES-7J**

**2010 REVISED STANDARD PLAN RSP ES-7J**

6-20-16

| Dist | COUNTY | ROUTE | POST MILES TOTAL PROJECT | SHEET No. | TOTAL SHEETS |
|---|---|---|---|---|---|
| 04 | SM | 101,114 | 1.3/2.5, 5.0/5.3 | 443 | 568 |

REGISTERED CIVIL ENGINEER

July 15, 2016
PLANS APPROVAL DATE

REGISTERED PROFESSIONAL ENGINEER
Stanley P. Johnson
No. C57793
Exp. 3-31-18
CIVIL
STATE OF CALIFORNIA

*THE STATE OF CALIFORNIA OR ITS OFFICERS OR AGENTS SHALL NOT BE RESPONSIBLE FOR THE ACCURACY OR COMPLETENESS OF SCANNED COPIES OF THIS PLAN SHEET.*

TO ACCOMPANY PLANS DATED 6-29-16

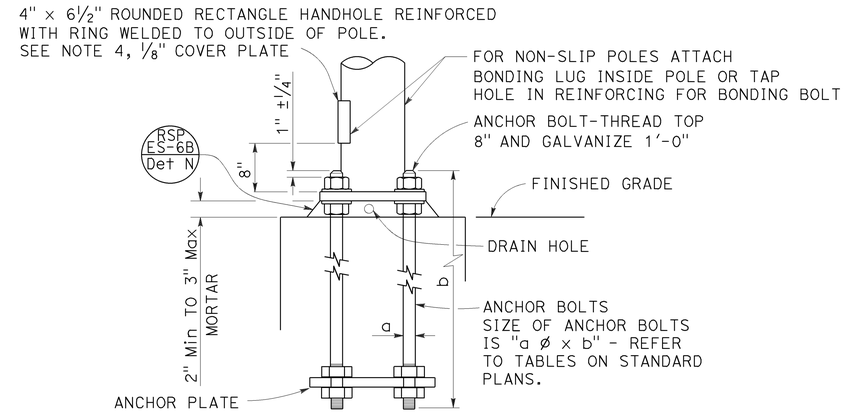


## HANDHOLE AND ANCHORAGE
### DETAIL A

## IDENTIFICATION NUMBER

1. Attach a stamped metal tag with pole's identification number above the handhole. ¼" high number, minimum.
2. Attach a stamped metal tag with mast arm's identification number to the bottom of the signal mast arm near the pole plate. ¼" high number, minimum.

Type — Load case (Use SL for special load case) — Design wind velocity (mph) — Signal mast arm length (ft) {Near handhole: Maximum signal mast arm length for pole type; Near pole plate: Installed signal mast arm length} — Standard plan year — Only for poles or mast arms using Detail F — Only for poles or mast arms using RSP ES-7O

26A - 3 - 100 - 45 - 10 - F or FB

## SAMPLE IDENTIFICATION NUMBER

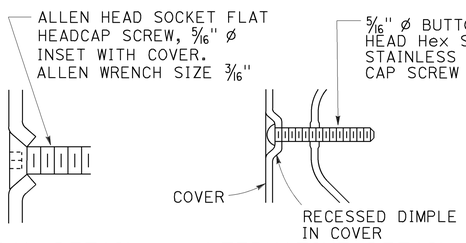


## TYPICAL DETAIL
### DETAIL B-1

## ALTERNATIVE DETAIL
### DETAIL B-2

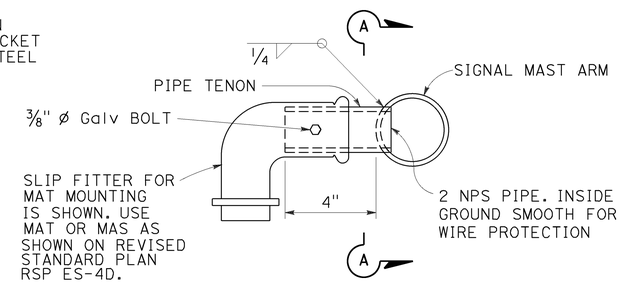


## SIDE TENON
### DETAIL S-1

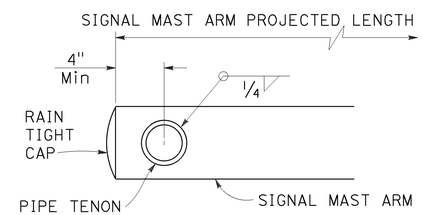


## SECTION A-A

## PIPE TENONS
### DETAIL S

## NOTES:

1. Provide a Hex nut, leveling nut and 2 washers for each bolt.
2. Luminaire mast arms shall be round, tapered steel tubes, taper of 0.1375" to 0.143-inch per foot with an end section 2⅜" OD for mounting hardware. Extensions of 2 NPS Standard pipe and 7" long may be used at the option of the manufacturer. When low pressure sodium luminaires are required, the extension shall be 1'-3".
3. Signal mast arms shall be round, tapered steel tubes, maximum taper 0.143-inch per foot.
4. Handhole reinforcement ring shall be ¼" x 2" for 0.1196" to 0.2391" thick poles, ⅜" x 2" for 0.3125" to 0.375" thick poles.
5. Handholes shall be located on the downstream side of traffic.
6. Detail F, fatigue resistant weld, is required at socket welded signal mast arm plate and pole base plate.
7. Cap screws shall be tightened by the turn-of-nut method ⅓ turn from a snug tight condition. No washer will be required.
8. Outside diameter, wall thickness, and corresponding section properties of poles and mast arms as shown in the Standard Plans are minimums. Unless otherwise specified, alternative sections shall require approval by the Engineer.
9. Design: AASHTO Standard Specifications for Structural Support for Highway Signs, Luminaires, and Traffic Signals, 6th Edition. Basic Wind Speed = 100 mph (3 seconds gust). Yearly Mean Wind Velocity = 15.6 mph.
10. Materials (Structural steel):
    fy = 55,000 psi (tapered steel tube and anchor bolts)
    fy = 50,000 psi (unless otherwise noted)
11. Materials (Reinforced concrete):
    f'c = 3,625 psi
    fy = 60,000 psi

| WELD SIZE | WALL THICKNESS |
|---|---|
| 3/16" | 0.1196" |
| ¼" | 0.1793" |
| 5/16" | 0.2391" |
| ⅜" | 0.3125" |
| 7/16" | 0.375" |

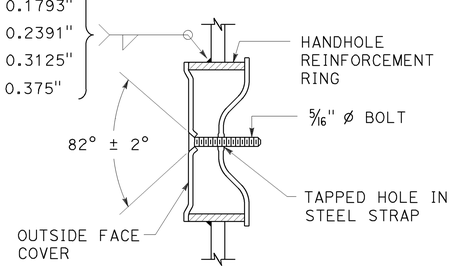


## TAMPER RESISTANT HANDHOLE COVER
### DETAIL B

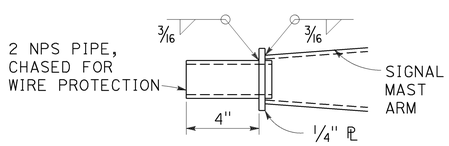


## TIP TENON
### DETAIL TL

This detail supersedes Detail S when so designated

| WELD SIZE | WALL THICKNESS |
|---|---|
| ⅛" | 0.1196" |
| 3/16" | 0.1793" |
| ¼" | 0.2391" |

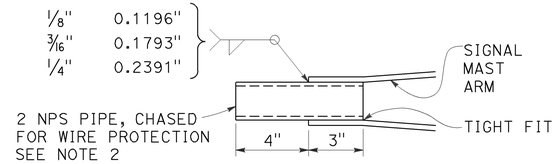


## TIP TENON
### DETAIL TS

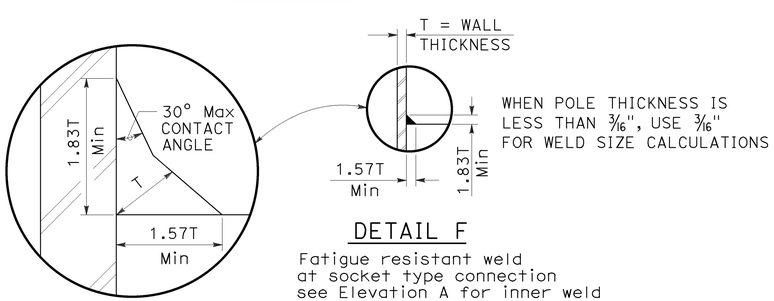


## DETAIL F

Fatigue resistant weld at socket type connection see Elevation A for inner weld

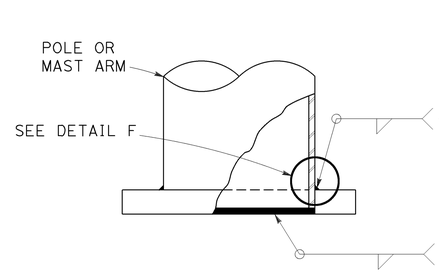


| WELD SIZE | WALL THICKNESS |
|---|---|
| ¼" | 0.1196" |
| 5/16" | 0.1793" |
| ⅜" | 0.2391" |
| 7/16" | 0.3125" |

| | |
|---|---|
| ⅛" | 0.1196" |
| 3/16" | 0.1793" |
| ¼" | 0.2391" |
| 5/16" | 0.3125" |

## ELEVATION A

STATE OF CALIFORNIA
DEPARTMENT OF TRANSPORTATION

# ELECTRICAL SYSTEMS (SIGNAL AND LIGHTING STANDARD, DETAIL No. 1)

NO SCALE

RSP ES-7M DATED JULY 15, 2016 SUPERSEDES RSP ES-7M DATED OCTOBER 30, 2015 AND STANDARD PLAN ES-7M DATED MAY 20, 2011 - PAGE 474 OF THE STANDARD PLANS BOOK DATED 2010.

**REVISED STANDARD PLAN RSP ES-7M**

**2010 REVISED STANDARD PLAN RSP ES-7M**

6-20-16

| Dist | COUNTY | ROUTE | POST MILES TOTAL PROJECT | SHEET No. | TOTAL SHEETS |
|---|---|---|---|---|---|
| 04 | SM | 101,114 | 1.3/2.5, 5.0/5.3 | 444 | 568 |

REGISTERED CIVIL ENGINEER

July 15, 2016
PLANS APPROVAL DATE

REGISTERED PROFESSIONAL ENGINEER
Stanley P. Johnson
No. C57793
Exp. 3-31-18
CIVIL
STATE OF CALIFORNIA

*THE STATE OF CALIFORNIA OR ITS OFFICERS OR AGENTS SHALL NOT BE RESPONSIBLE FOR THE ACCURACY OR COMPLETENESS OF SCANNED COPIES OF THIS PLAN SHEET.*

TO ACCOMPANY PLANS DATED 6-29-16

**2010 REVISED STANDARD PLAN RSP ES-7N**

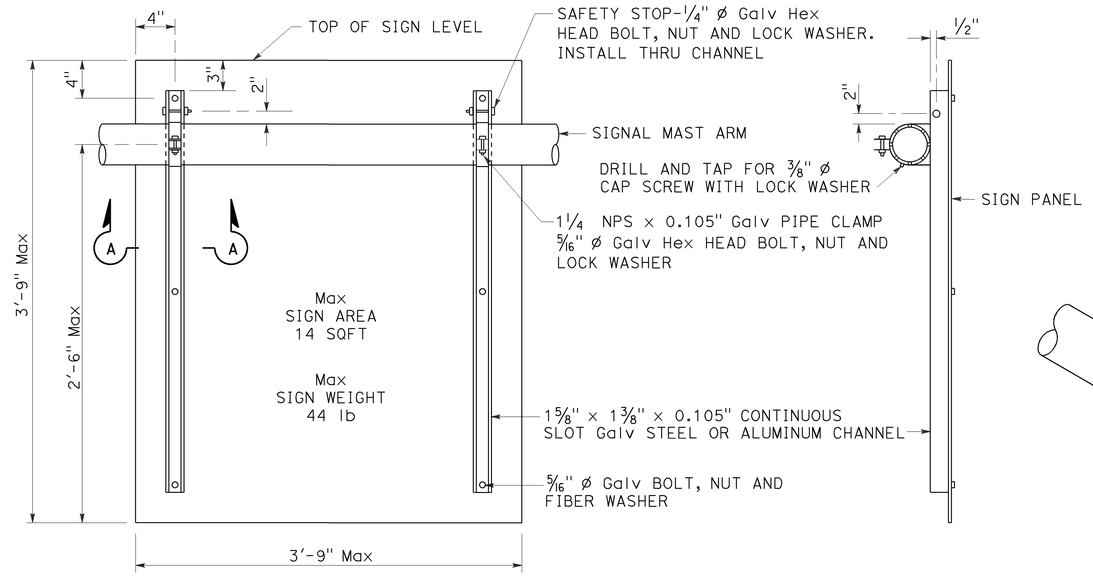


REAR VIEW

SIDE VIEW

## SIGN MOUNTING DETAILS
DETAIL U

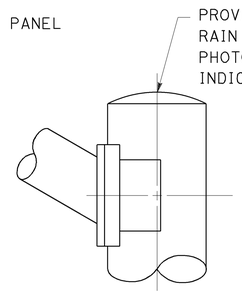


STANDARD TOP
DETAIL B-1

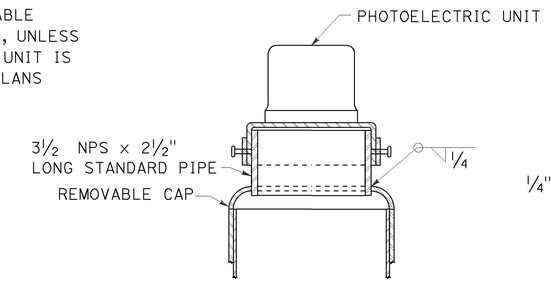


MOUNTING ADAPTER FOR
PHOTOELECTRIC UNIT
DETAIL B-2

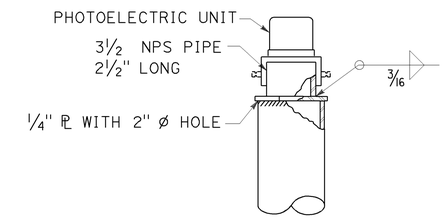


ALTERNATIVE
MOUNTING ADAPTER
DETAIL B-3

## POLE TOP DETAILS
DETAIL B

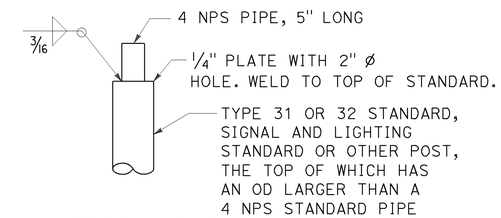


DETAIL C-1

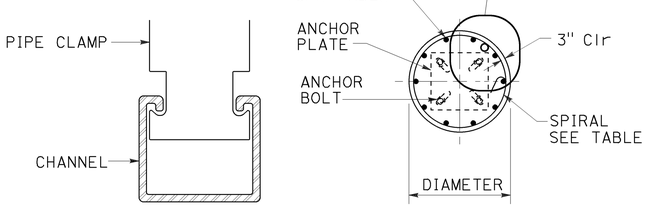


SECTION A-A

SECTION B-B

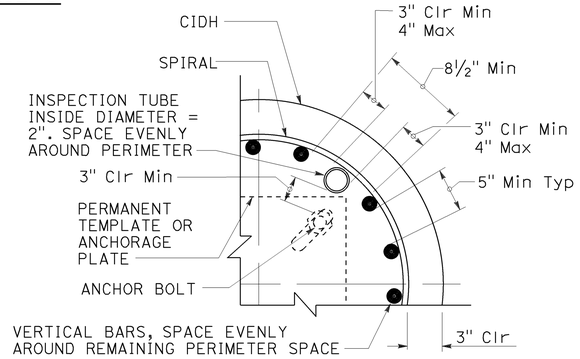


INSPECTION TUBE PLACEMENT
DETAIL I

| CIDH REINFORCING AND INSPECTION TUBE SCHEDULE | | | |
|---|---|---|---|
| CIDH DIAMETER | VERTICAL BARS | SPIRAL | INSPECTION TUBE |
| 2 ft | 8-#5 | #4 AT 6 | 2 |
| 2.5 ft | 10-#6 | | 4* |
| 3 ft | 12-#7 | #5 AT 6 | |
| 3.5 ft | 14-#8 | | 4 |
| 4 ft | 18-#9 | 2-#4 AT 7 | 5 |
| 4.5 ft | 18-#9 | 2-#5 AT 7 | 5 |
| 5 ft | 22-#10 | 2-#5 AT 7 | 6 |
| 6 ft | 26-#11 | 2-#6 AT 7 | 7 |

* FOR SLIP BASE VERSIONS WITH 3 ANCHOR BOLTS USE 3 INSPECTION TUBES.

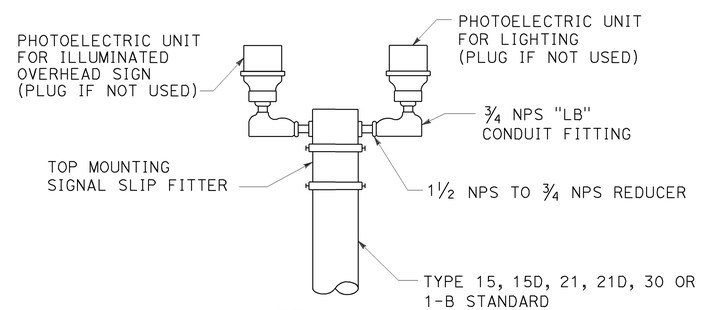


DETAIL C-2

## DUAL PHOTOELECTRIC UNIT MOUNTING DETAIL
DETAIL C

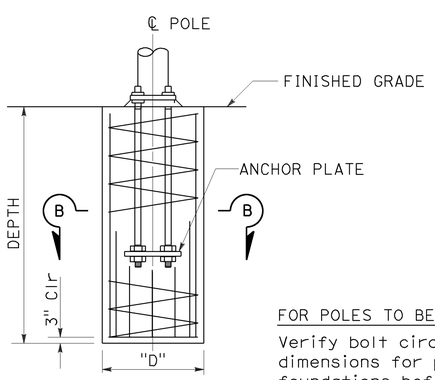


ELEVATION

FOR POLES TO BE INSTALLED ON EXISTING FOUNDATION:

Verify bolt circles, anchor bolt sizes and dependent dimensions for poles to be installed on existing foundations before fabricating the poles.

## CAST-IN-DRILLED-HOLE PILE FOUNDATION, REINFORCED PILE
DETAIL A

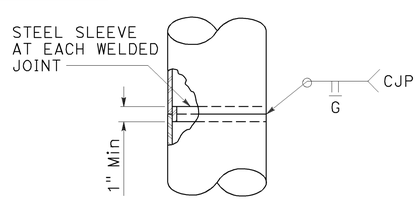


FOR UNIFORM TUBE THICKNESS
DETAIL T-1

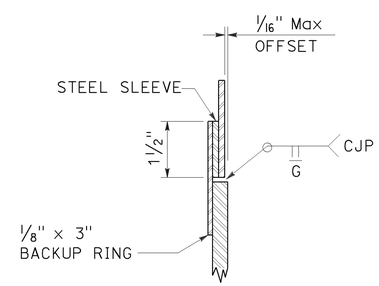


AT TUBE THICKNESS CHANGE
DETAIL T-2

## POLE SPLICES
DETAIL T

STATE OF CALIFORNIA
DEPARTMENT OF TRANSPORTATION

# ELECTRICAL SYSTEMS (SIGNAL AND LIGHTING STANDARD, DETAIL No. 2)

NO SCALE

RSP ES-7N DATED JULY 15, 2016 SUPERSEDES RSP ES-7N DATED OCTOBER 30, 2015 AND STANDARD PLAN ES-7N DATED MAY 20, 2011 - PAGE 475 OF THE STANDARD PLANS BOOK DATED 2010.

**REVISED STANDARD PLAN RSP ES-7N**

6-20-16

| Dist | COUNTY | ROUTE | POST MILES TOTAL PROJECT | SHEET No. | TOTAL SHEETS |
|---|---|---|---|---|---|
| 04 | SM | 101,114 | 1.3/2.5, 5.0/5.3 | 445 | 568 |

REGISTERED CIVIL ENGINEER

October 30, 2015
PLANS APPROVAL DATE

REGISTERED PROFESSIONAL ENGINEER
Stanley P. Johnson
No. C57793
Exp. 3-31-16
CIVIL
STATE OF CALIFORNIA

*THE STATE OF CALIFORNIA OR ITS OFFICERS OR AGENTS SHALL NOT BE RESPONSIBLE FOR THE ACCURACY OR COMPLETENESS OF SCANNED COPIES OF THIS PLAN SHEET.*

TO ACCOMPANY PLANS DATED 6-29-16

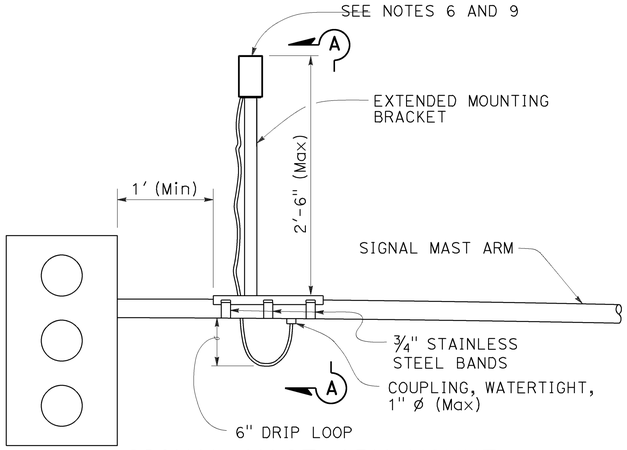


SIGNAL MAST ARM MOUNT

DETAIL A

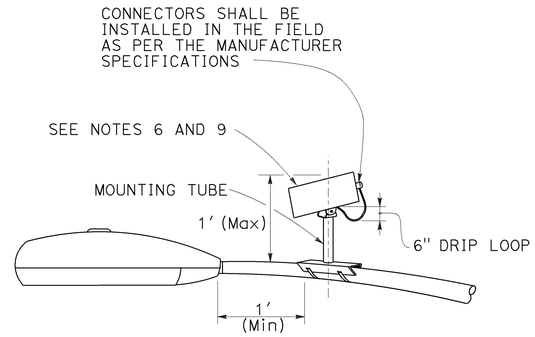


LUMINAIRE MAST ARM MOUNT

DETAIL B

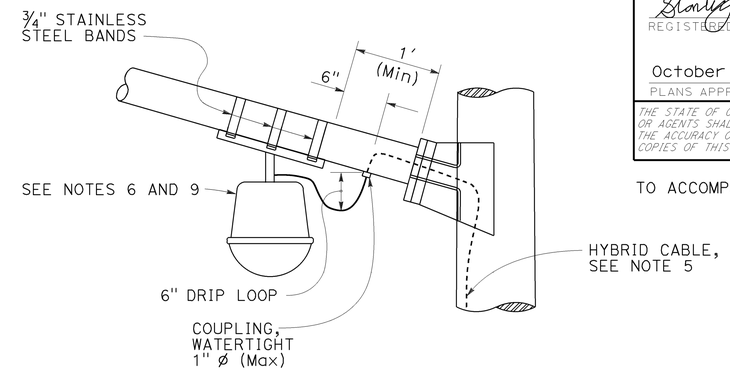


LUMINAIRE MAST ARM MOUNT

DETAIL C

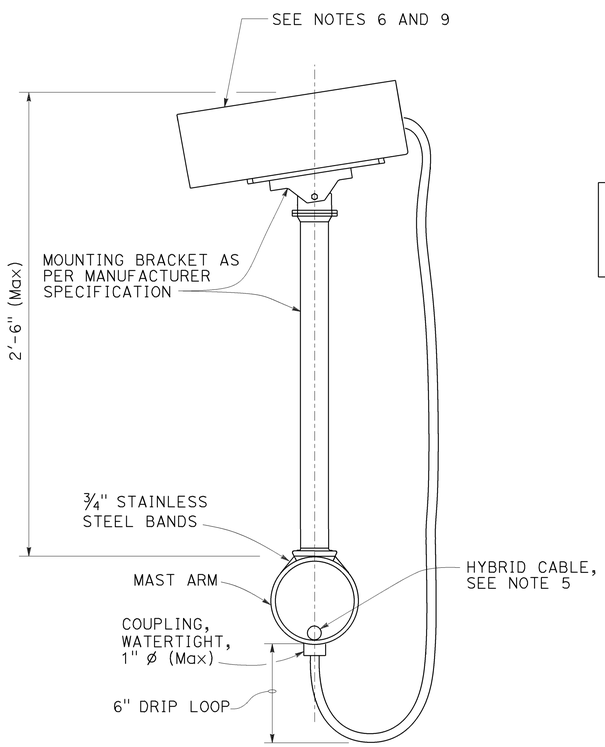


SECTION A-A

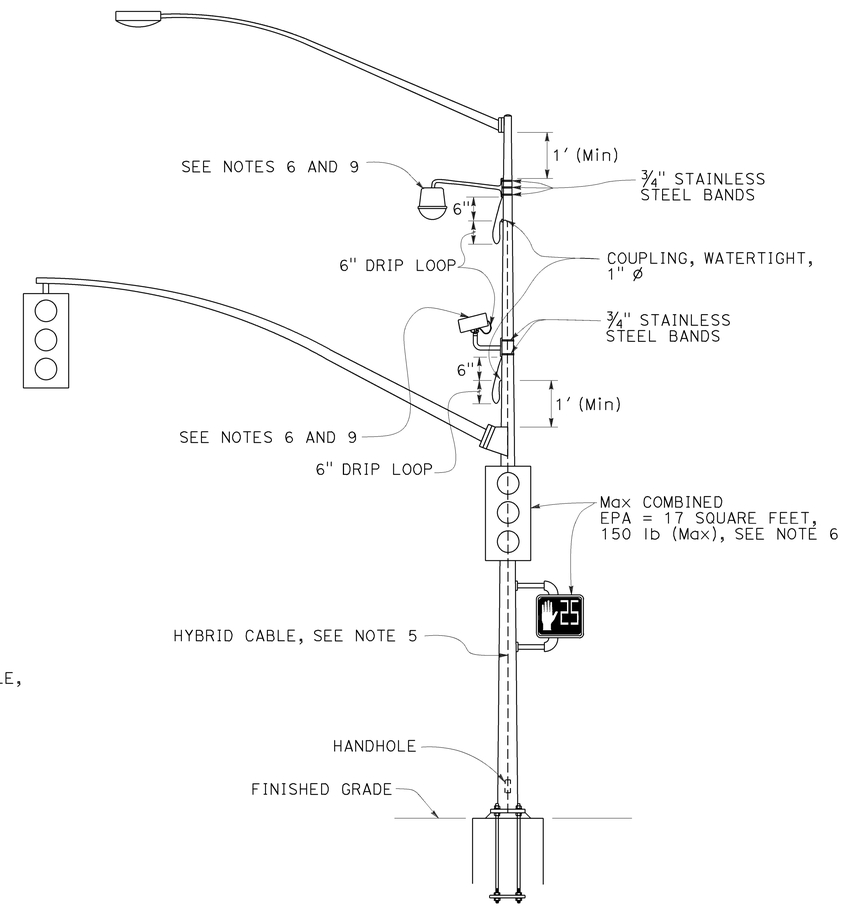


SIGNAL POLE MOUNT

DETAIL D

## NOTES:

1. Exact mounting location of miscellaneous attachment and bracket shall be approved by the Engineer per manufacturer's recommendation.
2. Location of cable entrances on signal pole shall be a minimum of 1′ from any flange or base plate.
3. Hybrid cable entrances on signal pole shall be drilled for weathertight coupling as required.
4. Hybrid cable shall have a drip loop at the entrance into signal pole, luminaire mast arm and signal mast arm.
5. A single hybrid cable shall run continuous and shall not be twisted from the miscellaneous attachment to the controller cabinet. No splices shall be allowed.
6. Use the manufacturer's Effective Projected Area (EPA) for miscellaneous attachment. The maximum EPA for each miscellaneous attachment shall be 1.6 square feet with 10 lb Max.
7. Maximum of two miscellaneous attachments per traffic signal standard.
8. Maximum of one miscellaneous attachment per mast arm.
9. Miscellaneous attachment shall be mounted using clamping devices.

STATE OF CALIFORNIA
DEPARTMENT OF TRANSPORTATION

# ELECTRICAL SYSTEMS (SIGNAL AND LIGHTING, MISCELLANEOUS ATTACHMENT)

NO SCALE

RSP ES-7R DATED OCTOBER 30, 2015 SUPERSEDES RSP ES-7R DATED JULY 19, 2013 AND STANDARD PLAN ES-7R DATED MAY 20, 2011 - PAGE 479 OF THE STANDARD PLANS BOOK DATED 2010.

**REVISED STANDARD PLAN RSP ES-7R**

**2010 REVISED STANDARD PLAN RSP ES-7R**

8-21-15

| DIST | COUNTY | ROUTE | POST MILES TOTAL PROJECT | SHEET NO. | TOTAL SHEETS |
|---|---|---|---|---|---|
| 04 | SM | 101,114 | 1.3/2.5, 5.0/5.3 | 446 | 568 |

Theresa Gabriel
REGISTERED ELECTRICAL ENGINEER

April 15, 2016
PLANS APPROVAL DATE

REGISTERED PROFESSIONAL ENGINEER Theresa Aziz Gabriel No. E15129 Exp. 6-30-16 ELECTRICAL STATE OF CALIFORNIA

*THE STATE OF CALIFORNIA OR ITS OFFICERS OR AGENTS SHALL NOT BE RESPONSIBLE FOR THE ACCURACY OR COMPLETENESS OF SCANNED COPIES OF THIS PLAN SHEET.*

TO ACCOMPANY PLANS DATED 6-29-16

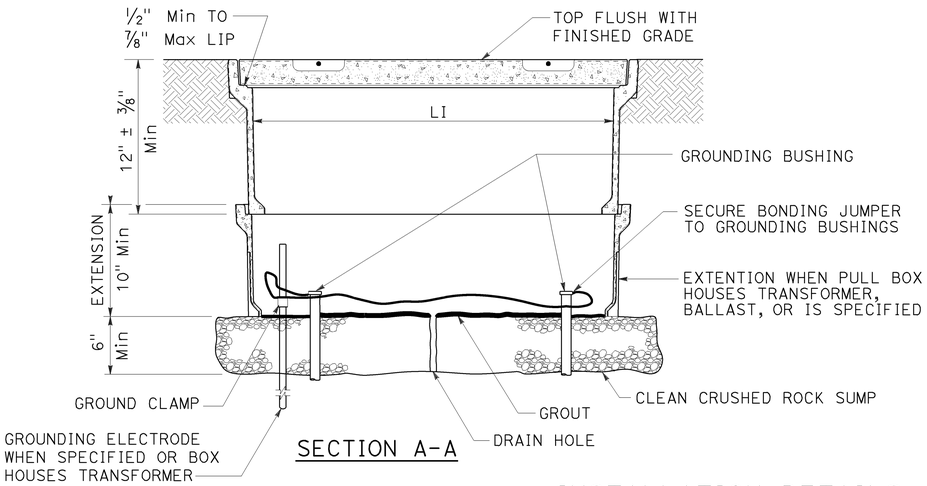


SECTION A-A

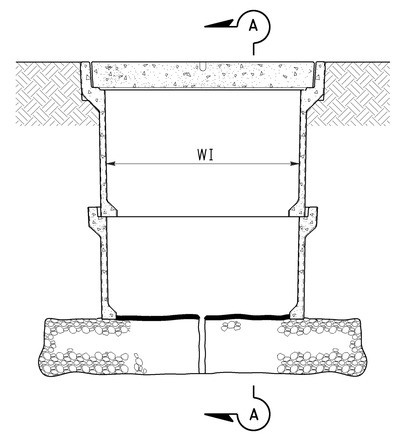


SIDE VIEW

## INSTALLATION DETAILS

### DETAIL A

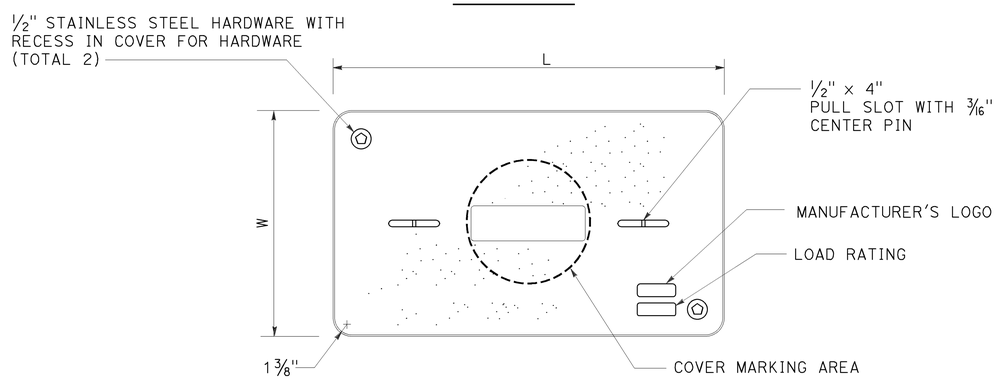


COVER TOP VIEW

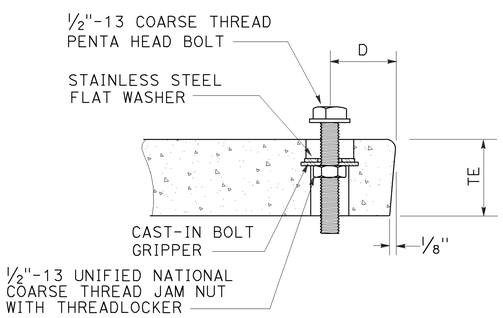


TYPICAL COVER CAPTIVE BOLT

OR SIMILAR

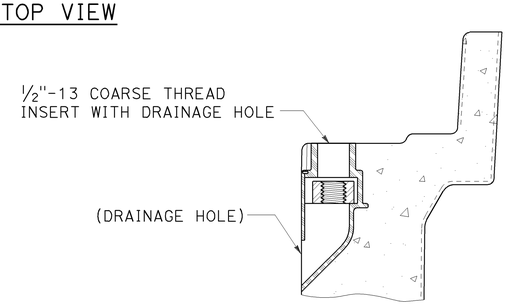


TYPICAL THREADED INSERT

OR SIMILAR

## NOTES:

1. The nominal dimensions of the opening in which the cover sets shall be the same as the cover dimensions except the length and width dimensions shall be 1/8" greater.
2. Covers and boxes shall be interchangeable with California standard male and female gages. When interchanged with a standard male or female gage, the top surfaces shall be flush within 1/8". Top outside radius of covers and pull boxes shall have a 1/8" radius.
3. Dimensions for the cover for non-traffic pull box are nominal values.

### DIMENSION TABLE

| PULL BOX | PULL BOX | | | | | COVER | | | | |
|---|---|---|---|---|---|---|---|---|---|---|
| | MINIMUM DEPTH BOX | MINIMUM DEPTH EXTENSION | MINIMUM WEIGHT | LI Min | WI Min | TE | D | L | W | MINIMUM WEIGHT |
| No. 3 1/2 | 12" | N/A | 40 lb | 1' - 3" | 9" | 1 3/4" | 1 3/4" | 1'-3 1/4" - 1'-3 3/8" | 10" - 10 1/8" | 30 lb |
| No. 5 | 12" | 10" | 55 lb | 1' - 8" | 11" | 2" | 1 3/4" | 1'-11 1/4" | 1'-1 3/4" | 60 lb |
| No. 6 | 12" | 10" | 70 lb | 2' - 4 1/4" | 1' - 3 1/4" | 2" | 2" | 2'-6 1/2" | 1'-5 1/2" | 85 lb |

STATE OF CALIFORNIA
DEPARTMENT OF TRANSPORTATION

# ELECTRICAL SYSTEMS (NON-TRAFFIC PULL BOX)

NO SCALE

RSP ES-8A DATED APRIL 15, 2016 SUPERSEDES RSP ES-8A DATED OCTOBER 30, 2015 AND RSP ES-8A DATED JULY 19, 2013 AND RSP ES-8A DATED JANUARY 20, 2012 THAT SUPPLEMENTS THE STANDARD PLANS BOOK DATED 2010.

**REVISED STANDARD PLAN RSP ES-8A**

**2010 REVISED STANDARD PLAN RSP ES-8A**

1-22-16

| DIST | COUNTY | ROUTE | POST MILES TOTAL PROJECT | SHEET NO. | TOTAL SHEETS |
|---|---|---|---|---|---|
| 04 | SM | 101,114 | 1.3/2.5, 5.0/5.3 | 447 | 568 |

Theresa Gabriel
REGISTERED ELECTRICAL ENGINEER

April 15, 2016
PLANS APPROVAL DATE

REGISTERED PROFESSIONAL ENGINEER
Theresa Aziz Gabriel
No. E15129
Exp. 6-30-16
ELECTRICAL
STATE OF CALIFORNIA

*THE STATE OF CALIFORNIA OR ITS OFFICERS OR AGENTS SHALL NOT BE RESPONSIBLE FOR THE ACCURACY OR COMPLETENESS OF SCANNED COPIES OF THIS PLAN SHEET.*

TO ACCOMPANY PLANS DATED 6-29-16

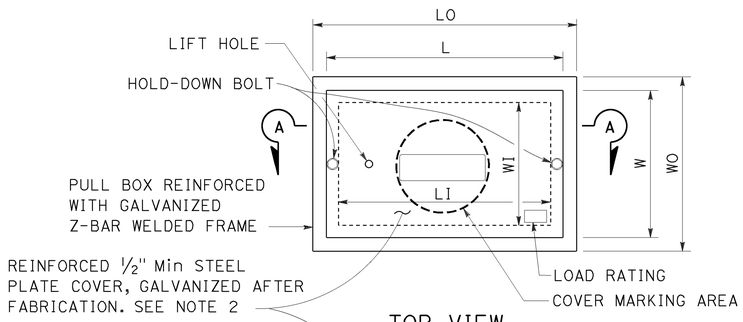


TOP VIEW

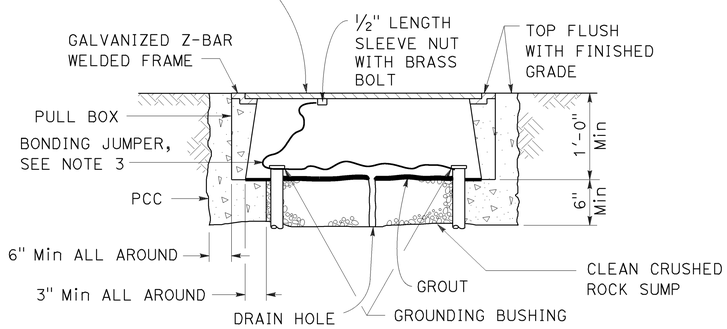


SECTION A-A

## No. 3½(T), No. 5(T) AND No. 6(T) TRAFFIC PULL BOX

## NOTES:

1. Traffic pull box shall be provided with steel cover and special concrete footing. Steel cover shall have embossed non-skid pattern.
2. Steel reinforcing shall be as regularly used in the standard products of the respective manufacturer.
3. Bonding jumper for metal covers shall be 3' long, minimum.
4. The nominal dimensions of the opening in which the cover sets shall be the same as the cover dimensions except the length and width dimensions shall be ⅛" greater.
5. Covers and boxes shall be interchangeable with California standard male and female gages. When interchanged with a standard male or female gage, the top surfaces shall be flush within ⅛".

DIMENSION TABLE

| PULL BOX | PULL BOX | | | | | | COVER | |
|---|---|---|---|---|---|---|---|---|
| | MINIMUM * THICKNESS | MINIMUM DEPTH BOX AND EXTENSION | LO | LI | WO | WI | L ** | W ** |
| No. 3½(T) | 1½" | 1'-0" | 1'-10" - 1'-11" | 1'-5" - 1'-6½" | 1'-3" - 1'-4" | 10" - 1'-0" | 1'-8" -1'-8½" | 1'-1" - 1'-2" |
| No. 5(T) | 1¾" | 1'-0" | 2'-5" - 2'-6" | 2'-0" - 2'-1" | 1'-6" - 1'-7" | 1'-1" - 1'-2" | 2'-3" - 2'-3½" | 1'-4" - 1'-4½" |
| No. 6(T) | 2" | 1'-0" | 2'-11" - 3'-1" | 2'-6" - 2'-7" | 1'-10" - 2'-0" | 1'-5" - 1'-6" | 2'-9" - 2'-9½" | 1'-8" - 1'-8½" |

* EXCLUDING CONDUIT WEB ** TOP DIMENSION

STATE OF CALIFORNIA
DEPARTMENT OF TRANSPORTATION

# ELECTRICAL SYSTEMS (TRAFFIC PULL BOX)

NO SCALE

RSP ES-8B DATED APRIL 15, 2016 SUPERSEDES RSP ES-8B DATED OCTOBER 30, 2015 AND RSP ES-8B DATED JULY 19, 2013 AND RSP ES-8B DATED JANUARY 20, 2012 THAT SUPPLEMENTS THE STANDARD PLANS BOOK DATED 2010.

**REVISED STANDARD PLAN RSP ES-8B**

**2010 REVISED STANDARD PLAN RSP ES-8B**

1-22-16

| Dist | COUNTY | ROUTE | POST MILES TOTAL PROJECT | SHEET No. | TOTAL SHEETS |
|---|---|---|---|---|---|
| 04 | SM | 101,114 | 1.3/2.5, 5.0/5.3 | 448 | 568 |

Theresa Gabriel
REGISTERED ELECTRICAL ENGINEER

October 30, 2015
PLANS APPROVAL DATE

REGISTERED PROFESSIONAL ENGINEER
Theresa Aziz Gabriel
No. E15129
Exp. 6-30-16
ELECTRICAL
STATE OF CALIFORNIA

*THE STATE OF CALIFORNIA OR ITS OFFICERS OR AGENTS SHALL NOT BE RESPONSIBLE FOR THE ACCURACY OR COMPLETENESS OF SCANNED COPIES OF THIS PLAN SHEET.*

TO ACCOMPANY PLANS DATED 6-29-16

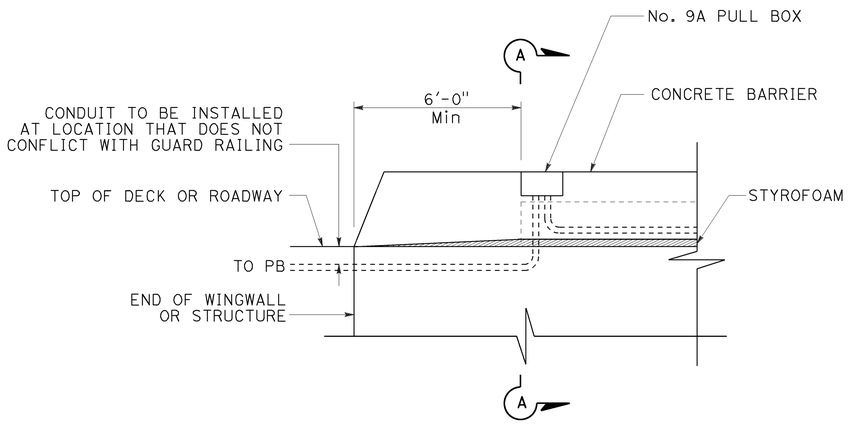


SIDE VIEW

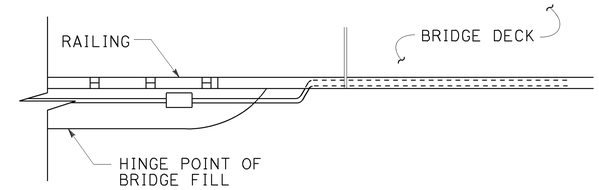


TOP VIEW

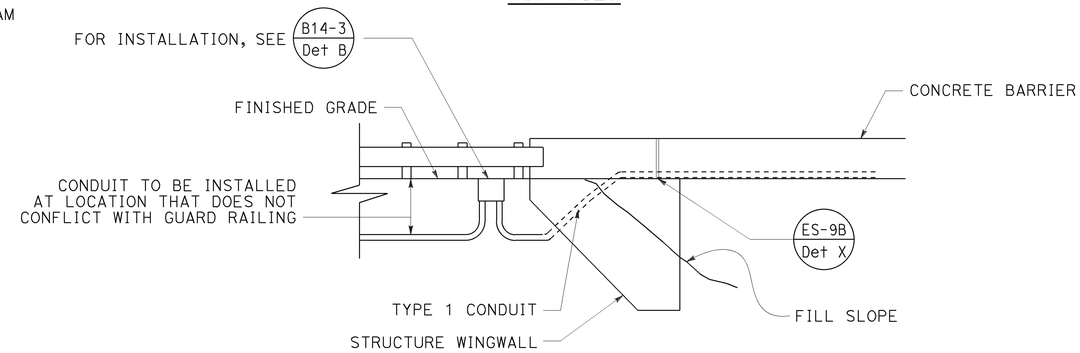


SIDE VIEW

CONDUIT TERMINATION
DETAIL I

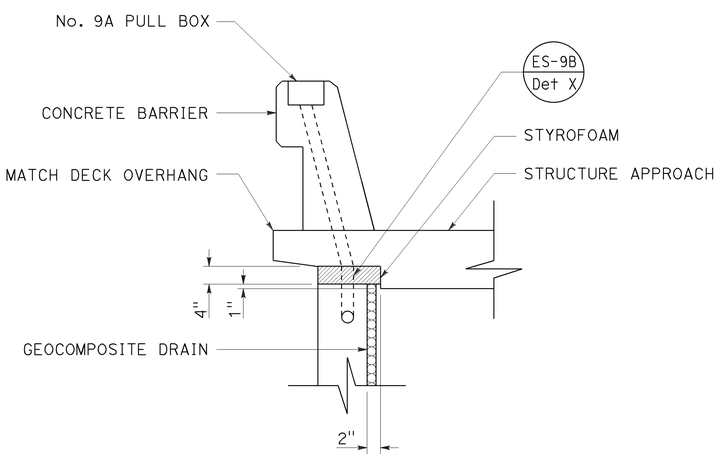


SECTION A-A

CONDUIT TERMINATION
DETAIL A

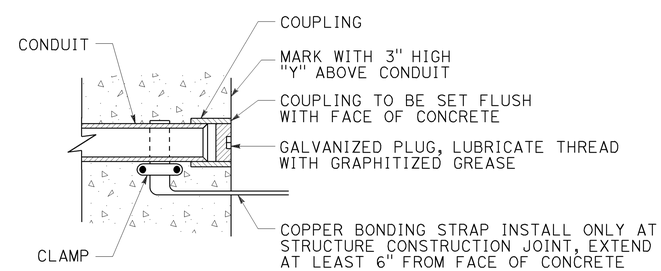


CONDUIT TERMINATION
DETAIL C

STATE OF CALIFORNIA
DEPARTMENT OF TRANSPORTATION

# ELECTRICAL SYSTEMS (STRUCTURE PULL BOX INSTALLATIONS)

NO SCALE

RSP ES-9A DATED OCTOBER 30, 2015 SUPERSEDES STANDARD PLAN ES-9A DATED MAY 20, 2011 - PAGE 481 OF THE STANDARD PLANS BOOK DATED 2010.

**REVISED STANDARD PLAN RSP ES-9A**

**2010 REVISED STANDARD PLAN RSP ES-9A**

| Dist | COUNTY | ROUTE | POST MILES TOTAL PROJECT | SHEET No. | TOTAL SHEETS |
|---|---|---|---|---|---|
| 04 | SM | 101,114 | 1.3/2.5, 5.0/5.3 | 449 | 568 |

Jaswinder S Gill
REGISTERED ELECTRICAL ENGINEER

October 30, 2015
PLANS APPROVAL DATE

REGISTERED PROFESSIONAL ENGINEER Jaswinder S. Gill No. E18551 Exp. 12-31-16 ELECTRICAL STATE OF CALIFORNIA

*THE STATE OF CALIFORNIA OR ITS OFFICERS OR AGENTS SHALL NOT BE RESPONSIBLE FOR THE ACCURACY OR COMPLETENESS OF SCANNED COPIES OF THIS PLAN SHEET.*

TO ACCOMPANY PLANS DATED 6-29-16

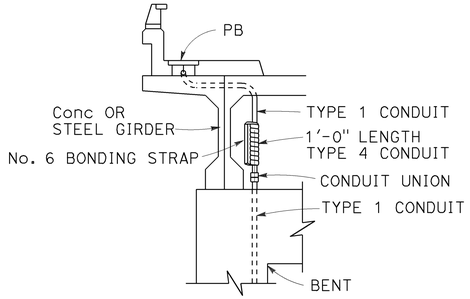


## CONDUIT RISER CONNECTION

DETAIL R

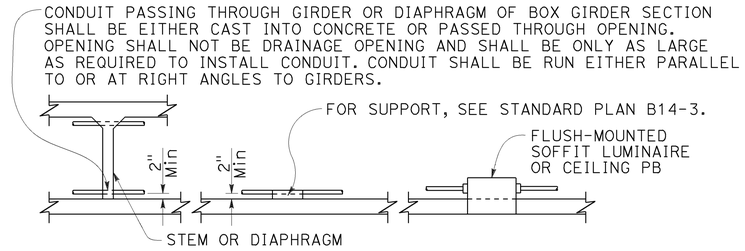


## CONDUIT INSTALLATION WITHIN BOX GIRDER SECTIONS

DETAIL S

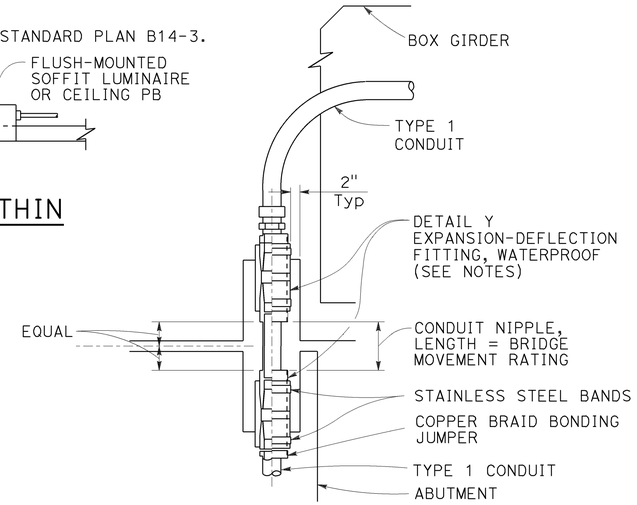


NOTES:

1. Fitting and pocket required only where movement can occur between girder and abutment.
2. Fill pocket around fitting with resilient waterproof compound.

## CONDUIT RISER CONNECTION AT COLUMN, ABUTMENT OR STRUCTURE WING WALL

DETAIL U

NOTES:

1. Except for sidewalk joints, a conduit expansion fitting or expansion-deflection fitting shall be installed at each ½" or greater structure joint, hinge or abutment.
2. Fittings or combination of fittings shall be installed to accommodate the movement rating as shown on the structure plans.
3. Fittings shall be installed parallel to superstructure girders.
4. Where lateral movement greater than ¼" may occur, a neoprene sleeve expansion-deflection fitting shall be installed straddling the joint.

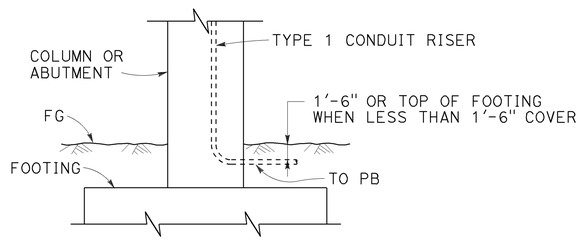


## LOWER END OF CONDUIT RISER AT COLUMN OR ABUTMENT

DETAIL T

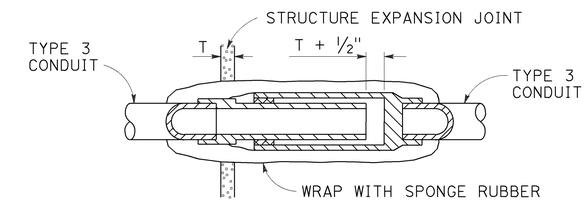


## NON-METALLIC CONDUIT EXPANSION FITTING INSTALLATION DETAIL

To be used only when shown or specified on Project Plans

DETAIL V

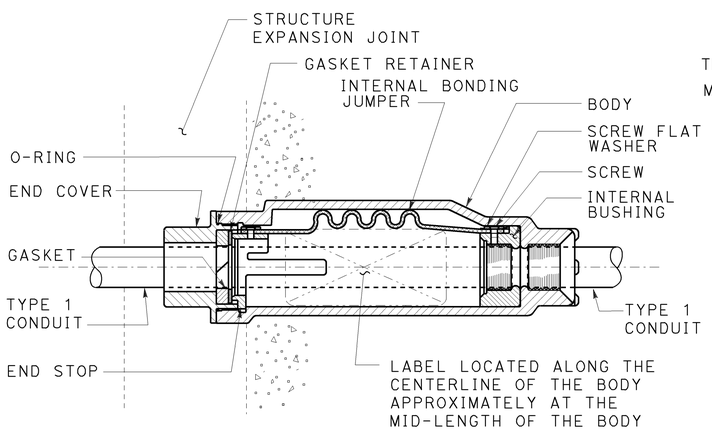


## CONDUIT EXPANSION FITTING

DETAIL X

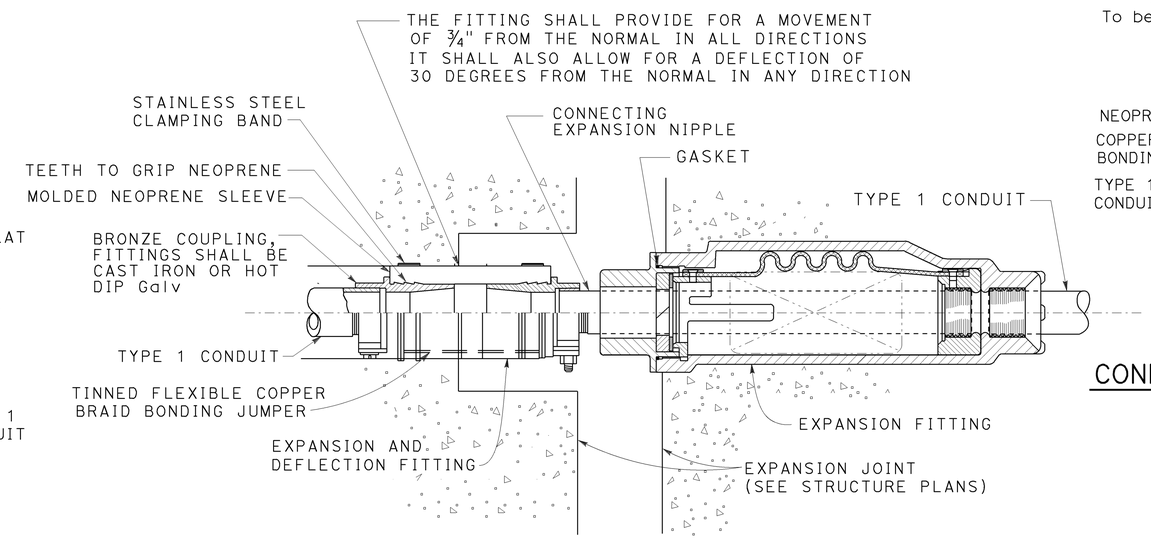


## COMBINATION EXPANSION-DEFLECTION FITTINGS METALLIC CONDUIT INSTALLATION

DETAIL XY

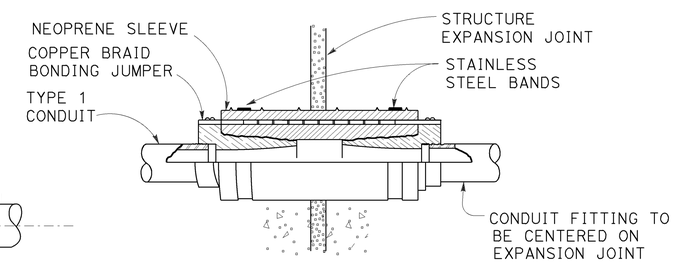


## CONDUIT EXPANSION-DEFLECTION FITTING

DETAIL Y

STATE OF CALIFORNIA
DEPARTMENT OF TRANSPORTATION

# ELECTRICAL SYSTEMS (CONDUIT RISER AND EXPANSION FITTING, STRUCTURE INSTALLATIONS)

NO SCALE

RSP ES-9B DATED OCTOBER 30, 2015 SUPERSEDES STANDARD PLAN ES-9B DATED MAY 20, 2011 - PAGE 482 OF THE STANDARD PLANS BOOK DATED 2010.

**REVISED STANDARD PLAN RSP ES-9B**

**2010 REVISED STANDARD PLAN RSP ES-9B**

9-1-15

| Dist | COUNTY | ROUTE | POST MILES TOTAL PROJECT | SHEET No. | TOTAL SHEETS |
|---|---|---|---|---|---|
| 04 | SM | 101,114 | 1.3/2.5, 5.0/5.3 | 450 | 568 |

Theresa Gabriel
REGISTERED ELECTRICAL ENGINEER

April 15, 2016
PLANS APPROVAL DATE

REGISTERED PROFESSIONAL ENGINEER Theresa Aziz Gabriel No. E15129 Exp. 6-30-16 ELECTRICAL STATE OF CALIFORNIA

*THE STATE OF CALIFORNIA OR ITS OFFICERS OR AGENTS SHALL NOT BE RESPONSIBLE FOR THE ACCURACY OR COMPLETENESS OF SCANNED COPIES OF THIS PLAN SHEET.*

TO ACCOMPANY PLANS DATED 6-29-16

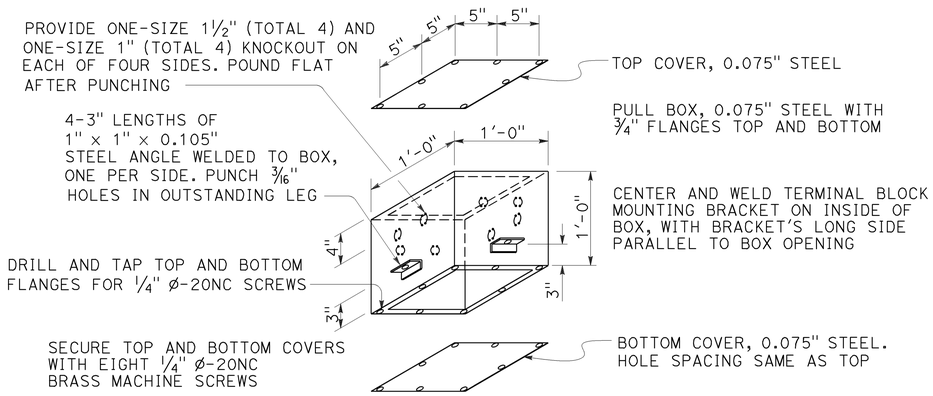


## No. 7 PULL BOX (CEILING)

See Note 6

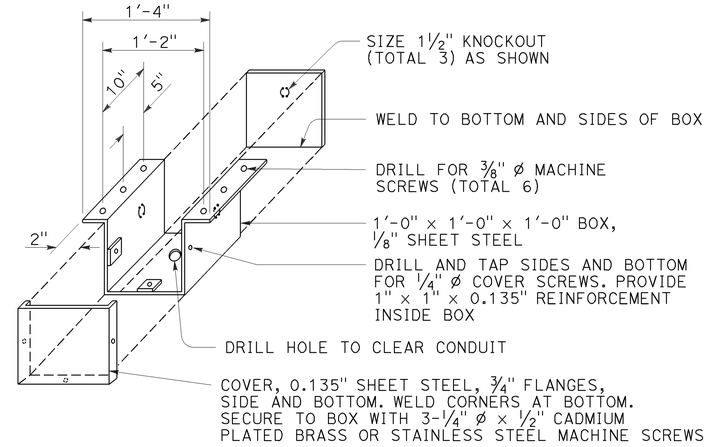


## No. 8 PULL BOX

## NOTES:

1. Corner joints shall be lapped and secured by spot welding or riveting.
2. Where cap screws are used to attach cover to box, either of the following methods of providing adequate threading may be used:
   a. Tack weld stainless steel Hex nut to bottom of flange (total 4)
   b. Tack weld a ¼" × ⅝" × 8" bar beneath flange (total 2)
3. Pound knockouts flat after punching.
4. Multiple size knockouts (concentric) shall not be permitted.
5. Pull box covers shall be marked as specified.
6. Installation of No. 7 pull box:
   a) Install with bottom flange flush with concrete.
   b) Both covers shall be on a box during pouring.
7. Install box parallel to top of railing. Cover box during pouring with ¼" plywood of sufficient size to provide 1:1 chamfer on 3 sides of cover. Upper edge of plywood shall fit against lower edge of rain tight hood.

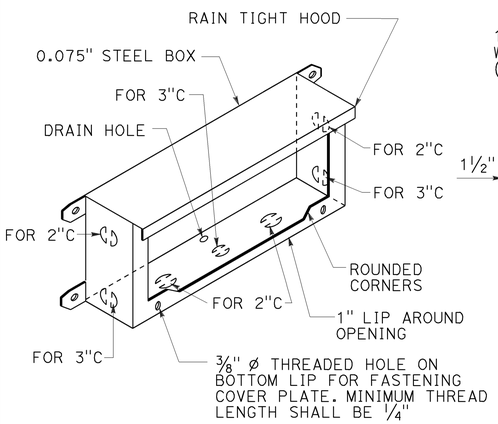


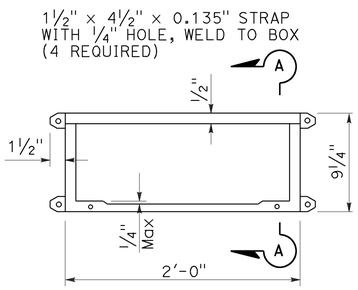


PLAN

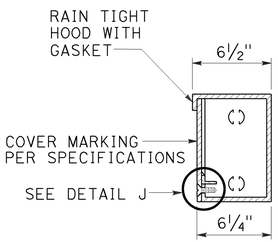


SECTION A-A

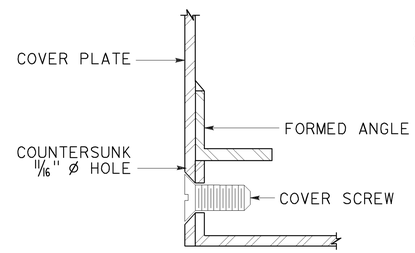


DETAIL J

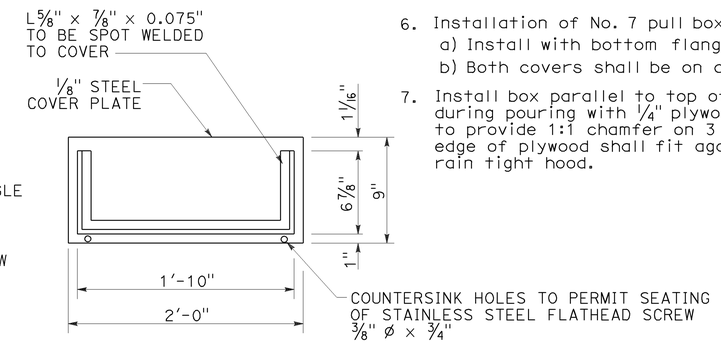


COVER DETAIL

## No. 9 PULL BOX (STRUCTURE)

See Note 7

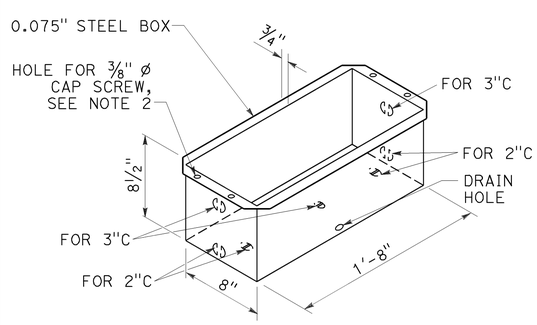


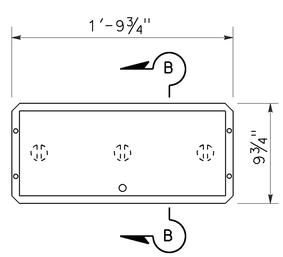


PLAN

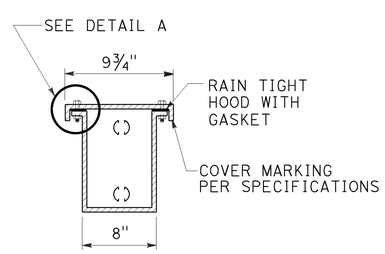


SECTION B-B

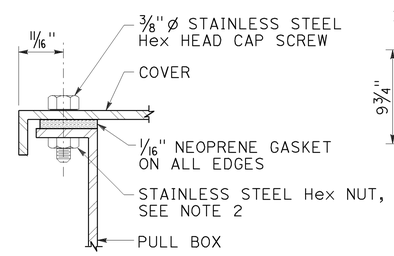


DETAIL A

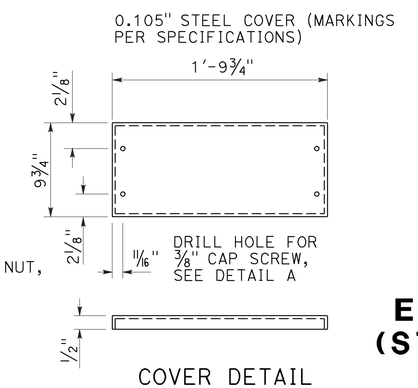


COVER DETAIL

## No. 9A PULL BOX (STRUCTURE)

STATE OF CALIFORNIA
DEPARTMENT OF TRANSPORTATION

# ELECTRICAL SYSTEMS (STRUCTURE PULL BOX)

NO SCALE

RSP ES-9C DATED APRIL 15, 2016 SUPERSEDES RSP ES-9C DATED OCTOBER 30, 2015 AND STANDARD PLAN ES-9C DATED MAY 20, 2011 - PAGE 483 OF THE STANDARD PLANS BOOK DATED 2010.

**REVISED STANDARD PLAN RSP ES-9C**

**2010 REVISED STANDARD PLAN RSP ES-9C**

1-12-16

| Dist | COUNTY | ROUTE | POST MILES TOTAL PROJECT | SHEET No. | TOTAL SHEETS |
|---|---|---|---|---|---|
| 04 | SM | 101,114 | 1.3/2.5, 5.0/5.3 | 451 | 568 |

Theresa Gabriel
REGISTERED ELECTRICAL ENGINEER

April 15, 2016
PLANS APPROVAL DATE

REGISTERED PROFESSIONAL ENGINEER Theresa Aziz Gabriel No. E15129 Exp. 6-30-16 ELECTRICAL STATE OF CALIFORNIA

*THE STATE OF CALIFORNIA OR ITS OFFICERS OR AGENTS SHALL NOT BE RESPONSIBLE FOR THE ACCURACY OR COMPLETENESS OF SCANNED COPIES OF THIS PLAN SHEET.*

TO ACCOMPANY PLANS DATED 6-29-16

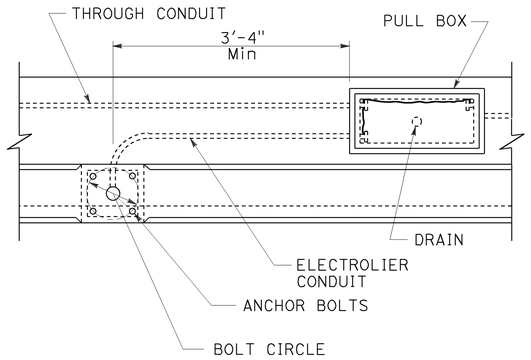


TOP VIEW

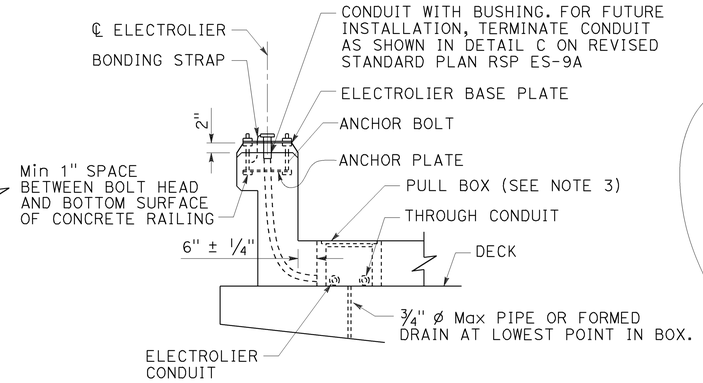


END VIEW

## No. 3½, 5, OR 6 PULL BOX INSTALLATION

DETAIL A

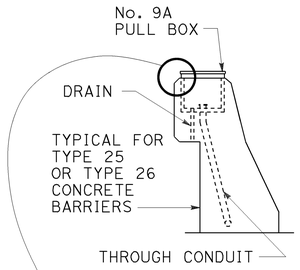


END VIEW

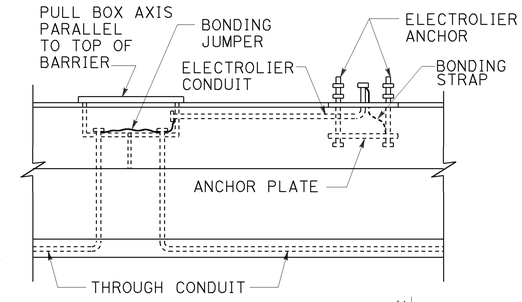


SIDE VIEW

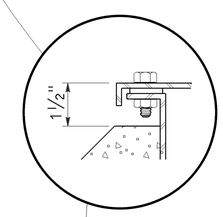


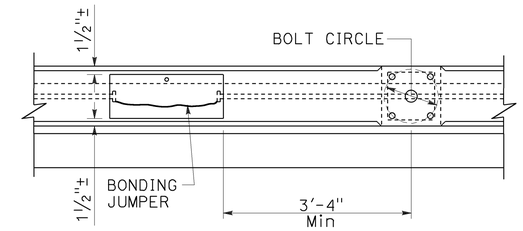


TOP VIEW

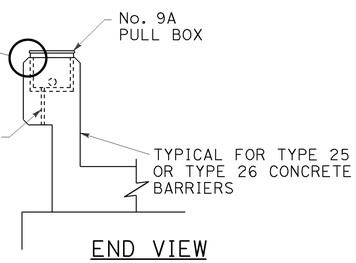


END VIEW

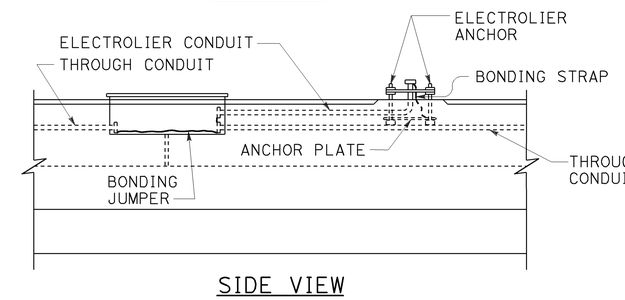


SIDE VIEW

## No. 9A PULL BOX INSTALLATION

DETAIL C

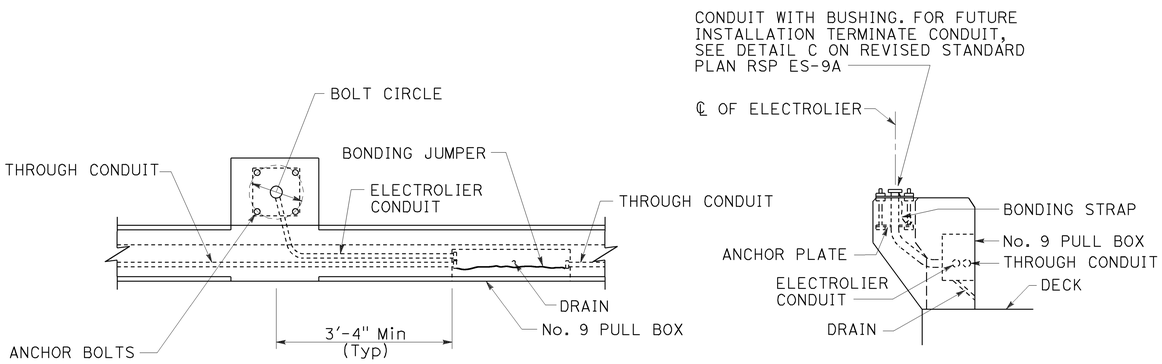


TOP VIEW END VIEW

## No. 9 PULL BOX INSTALLATION

DETAIL B

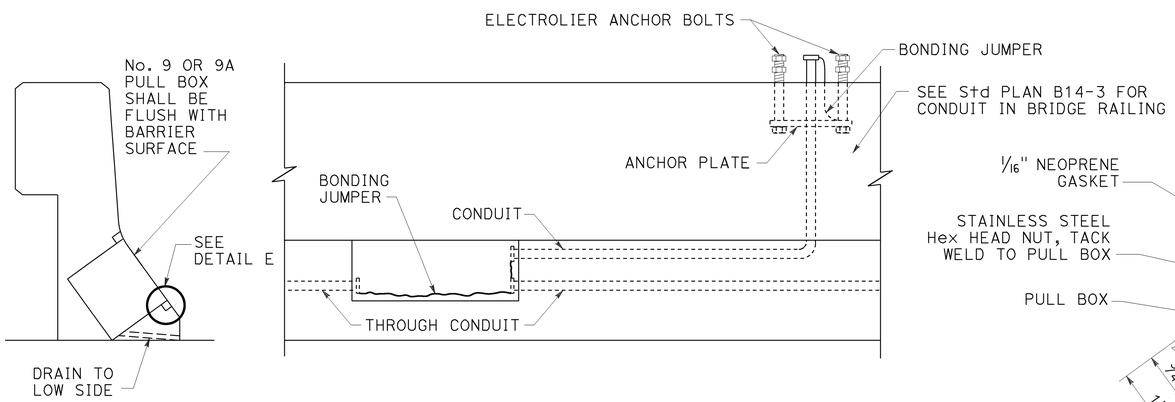


## INSTALLATION IN SLOPING PARAPETS

DETAIL D

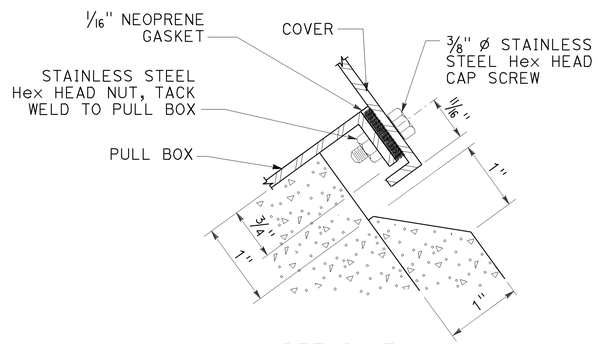


DETAIL E

NOTES:

1. Axis of pull box shall be parallel to top of barrier, sidewalk or railing.
2. See railing sheet for reinforcement and structural details at electroliers and pull boxes.
3. Top of pull boxes in sidewalk areas shall be flush with sidewalk. Modify base of pull box as required.
4. Boxes inside of vertical barrier or railing shall be closed during pouring of PCC with 1/4" plywood of sufficient size to provide 1:1 chamfer on 3 sides of cover. Upper edge of plywood shall fit against lower edge of raintight hood.
5. Use drain in center if box is horizontal, or at low end if box is inclined. When box is mounted in sloping parapet 1/2" elongated drain hole inside at center or near end as required for drainage.
6. For electrolier anchorage bolts and grouting details, see Revised Standard Plan RSP ES-6B.
7. See Standard Plan B14-3 for conduit in concrete barrier.

STATE OF CALIFORNIA
DEPARTMENT OF TRANSPORTATION

# ELECTRICAL SYSTEMS (STRUCTURE PULL BOX INSTALLATIONS)

NO SCALE

RSP ES-9D DATED APRIL 15, 2016 SUPERSEDES RSP ES-9D DATED OCTOBER 30, 2015 AND STANDARD PLAN ES-9D DATED MAY 20, 2011 - PAGE 484 OF THE STANDARD PLANS BOOK DATED 2010.

**REVISED STANDARD PLAN RSP ES-9D**

**2010 REVISED STANDARD PLAN RSP ES-9D**

1-22-16

| Dist | COUNTY | ROUTE | POST MILES TOTAL PROJECT | SHEET No. | TOTAL SHEETS |
|---|---|---|---|---|---|
| 04 | SM | 101,114 | 1.3/2.5, 5.0/5.3 | 452 | 568 |

Theresa Gabriel
REGISTERED ELECTRICAL ENGINEER

October 30, 2015
PLANS APPROVAL DATE

REGISTERED PROFESSIONAL ENGINEER
Theresa Aziz Gabriel
No. E15129
Exp. 6-30-16
ELECTRICAL
STATE OF CALIFORNIA

*THE STATE OF CALIFORNIA OR ITS OFFICERS OR AGENTS SHALL NOT BE RESPONSIBLE FOR THE ACCURACY OR COMPLETENESS OF SCANNED COPIES OF THIS PLAN SHEET.*

TO ACCOMPANY PLANS DATED 6-29-16

**NOTE:**

Curves represent the minimum footcandle (FC).

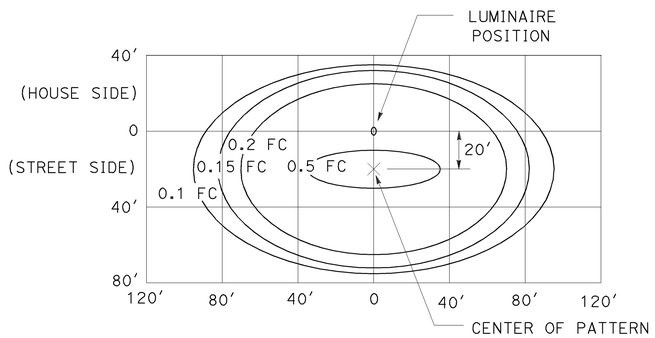


LED LUMINAIRE 165 W

34′ Mounting Height

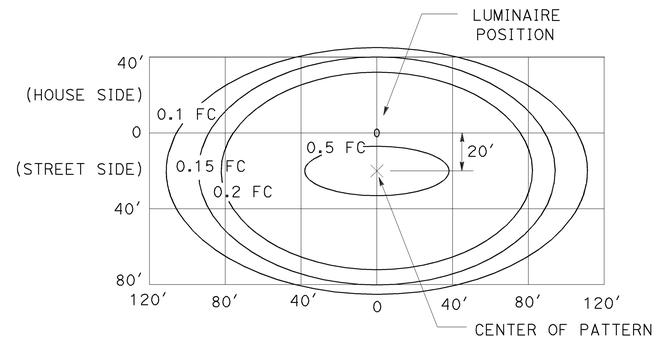


LED LUMINAIRE 235 W

40′ Mounting Height

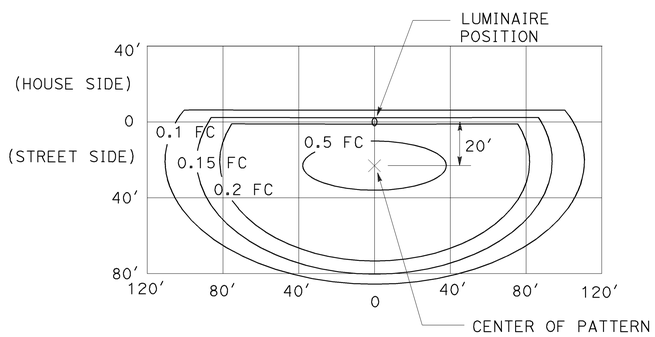


LED LUMINAIRE 235 W

40′ Mounting Height
with back side control

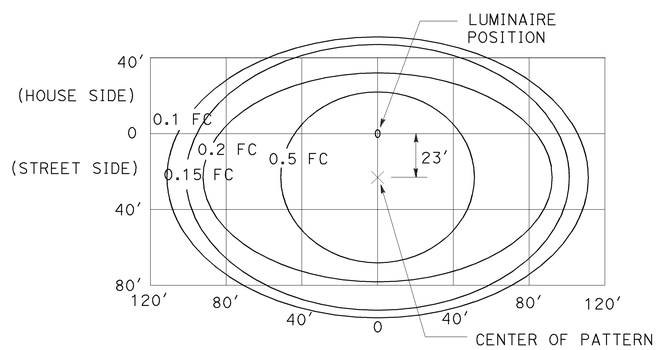


LED LUMINAIRE 300 W

40′ Mounting Height

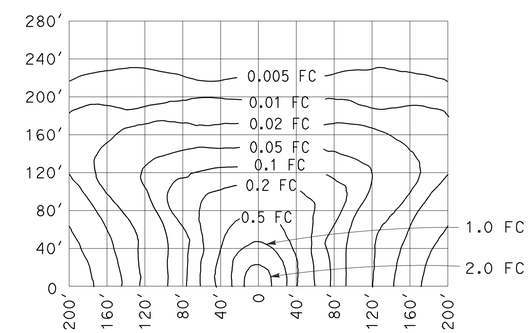


LOW-PRESSURE SODIUM LUMINAIRE 180 W

40′ Mounting Height
Lamp operated at 33,000 lm

STATE OF CALIFORNIA
DEPARTMENT OF TRANSPORTATION

# ELECTRICAL SYSTEMS (ISOFOOTCANDLE CURVES)

NO SCALE

RSP ES-10A DATED OCTOBER 30, 2015 SUPERSEDES RSP ES-10A DATED JULY 19, 2013 THAT SUPPLEMENTS THE STANDARD PLANS BOOK DATED 2010.

**REVISED STANDARD PLAN RSP ES-10A**

**2010 REVISED STANDARD PLAN RSP ES-10A**

| Dist | COUNTY | ROUTE | POST MILES TOTAL PROJECT | SHEET No. | TOTAL SHEETS |
|---|---|---|---|---|---|
| 04 | SM | 101,114 | 1.3/2.5, 5.0/5.3 | 453 | 568 |

REGISTERED CIVIL ENGINEER

July 15, 2016
PLANS APPROVAL DATE

REGISTERED PROFESSIONAL ENGINEER
Stanley P. Johnson
No. C57793
Exp. 3-31-18
CIVIL
STATE OF CALIFORNIA

*THE STATE OF CALIFORNIA OR ITS OFFICERS OR AGENTS SHALL NOT BE RESPONSIBLE FOR THE ACCURACY OR COMPLETENESS OF SCANNED COPIES OF THIS PLAN SHEET.*

TO ACCOMPANY PLANS DATED 6-29-16

**2010 REVISED STANDARD PLAN RSP ES-11**

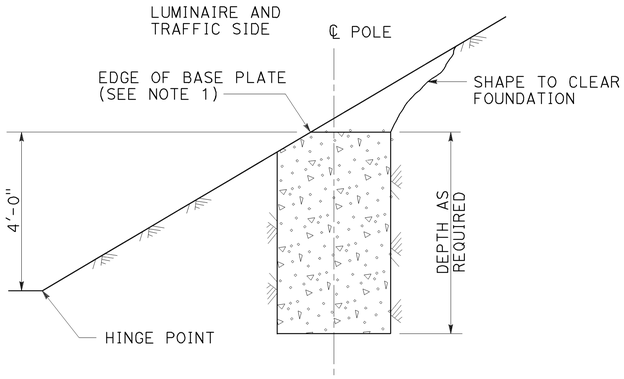


CUT SLOPES
STEEPER THAN 4:1,
LESS THAN 2:1
DETAIL A-1
See Note 2 and 3

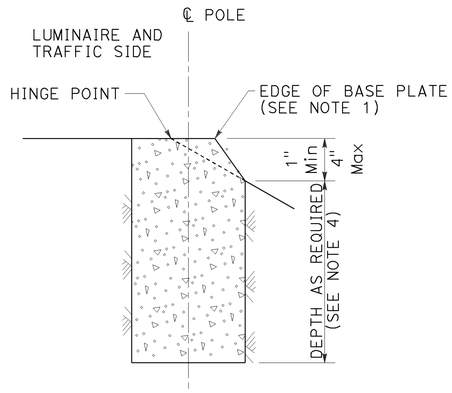


FILL SLOPES
STEEPER THAN 4:1,
LESS THAN 2:1
DETAIL A-2
See Note 2 and 3

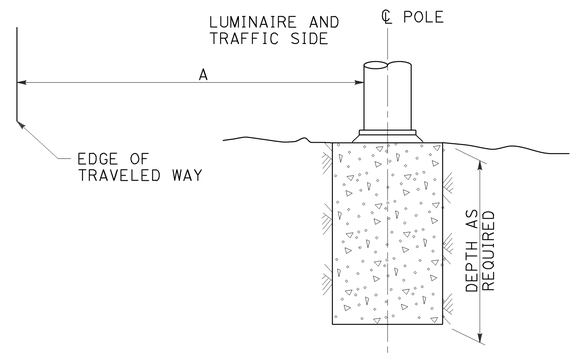


FLAT SECTIONS, CUT OR FILL SLOPES
4:1 OR FLATTER
DETAIL A-3
See Note 2

| STANDARD TYPE | SETBACK (DIMENSION A) |
|---|---|
| 32 | 30'-0" (Min) |
| 31 | 20'-0" (Min) |
| 15, 15D, 15-SB, 21, 21D, 30 | ARM LENGTH (Min) |

FOUNDATIONS ADJACENT TO ALL ROADWAYS EXCEPT
IN SIDEWALK, MEDIAN AND ISLAND AREAS
DETAIL A

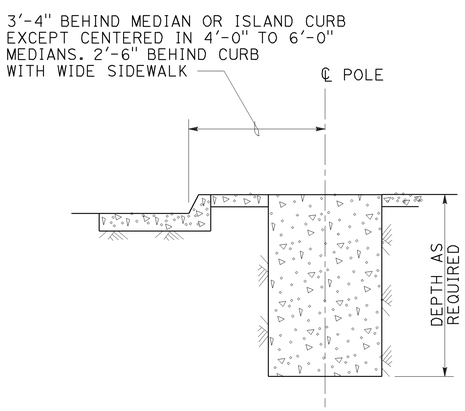


MEDIAN, ISLAND
OR WIDE SIDEWALK
DETAIL B-1
7' Wide and wider

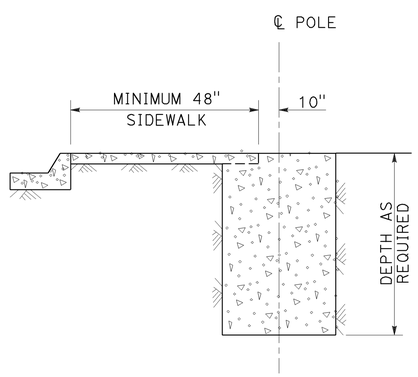


NARROW SIDEWALK
DETAIL B-2
Less than 7' wide

FOUNDATIONS IN SIDEWALK, MEDIAN AND ISLAND AREAS
DETAIL B

NOTES:

1. Where a portion of the foundation is above grade, the top edges shall have a 1" chamfer.
2. Slopes shall be horizontal to vertical ratio (Horizontal : Vertical).
3. Horizontal setbacks on cut and fill slopes steeper than 4:1 shall not exceed the distance shown for flat sections.
4. CIDH embedment depth shall be increased beyond standard depths by the diameter of the CIDH.

STATE OF CALIFORNIA
DEPARTMENT OF TRANSPORTATION

# ELECTRICAL SYSTEMS (FOUNDATION INSTALLATIONS)

NO SCALE

RSP ES-11 DATED JULY 15, 2016 SUPERSEDES RSP ES-11 DATED JULY 19, 2013 AND STANDARD PLAN ES-11 DATED MAY 20, 2011 - PAGE 488 OF THE STANDARD PLANS BOOK DATED 2010.

**REVISED STANDARD PLAN RSP ES-11**

| Dist | COUNTY | ROUTE | POST MILES TOTAL PROJECT | SHEET No. | TOTAL SHEETS |
|---|---|---|---|---|---|
| 04 | SM | 101,114 | 1.3/2.5, 5.0/5.3 | 454 | 568 |

Theresa Gabriel
REGISTERED ELECTRICAL ENGINEER

April 15, 2016
PLANS APPROVAL DATE

REGISTERED PROFESSIONAL ENGINEER
Theresa Aziz Gabriel
No. E15129
Exp. 6-30-16
ELECTRICAL
STATE OF CALIFORNIA

*THE STATE OF CALIFORNIA OR ITS OFFICERS OR AGENTS SHALL NOT BE RESPONSIBLE FOR THE ACCURACY OR COMPLETENESS OF SCANNED COPIES OF THIS PLAN SHEET.*

TO ACCOMPANY PLANS DATED 6-29-16

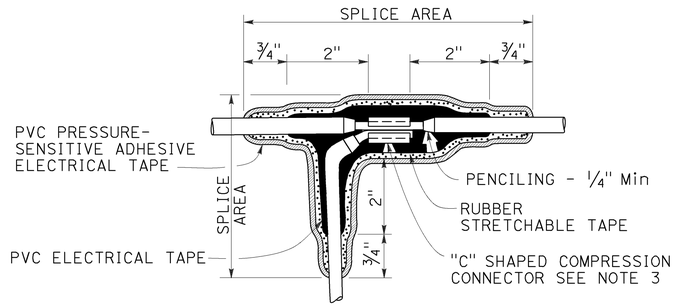


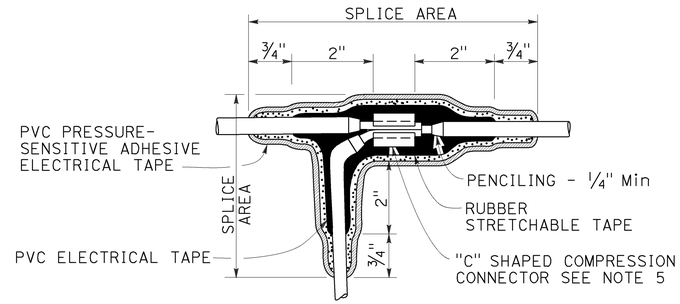


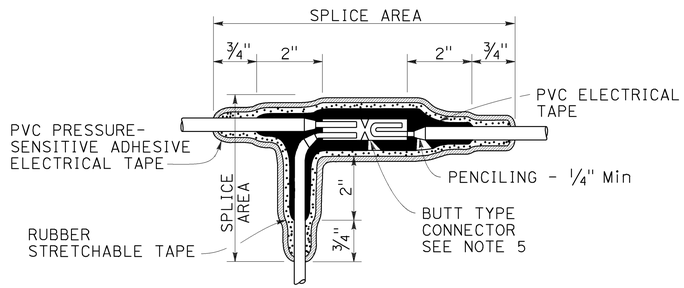


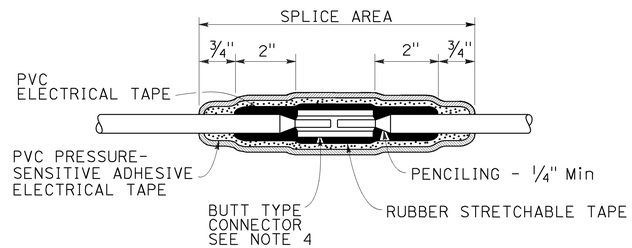


## NOTES:

1. Dimensions are minimum.
2. Rubber tapes shall be rolled after application.
3. Between 1 free-end and 1 through conductor.
4. Between 2 free-end conductors.
5. Between 3 free-end conductors.

## TYPICAL SPLICE INSULATION METHOD B

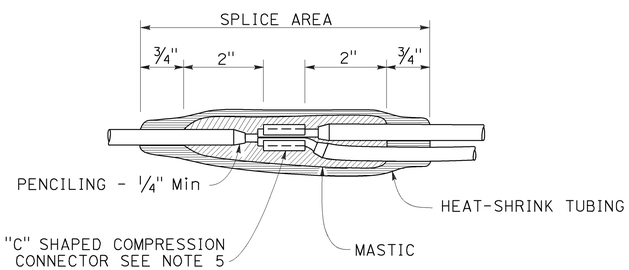


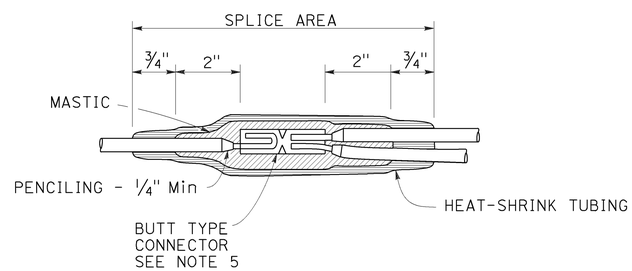


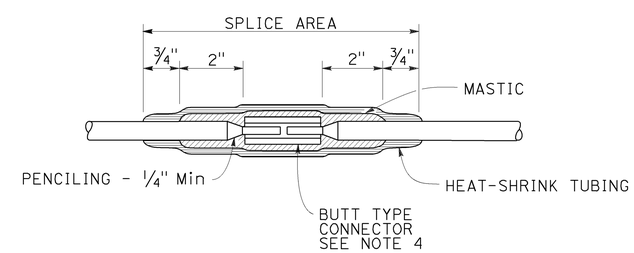


## TYPICAL SPLICE INSULATION HEAT-SHRINK TUBING

STATE OF CALIFORNIA
DEPARTMENT OF TRANSPORTATION

# ELECTRICAL SYSTEMS (SPLICE INSULATION METHODS DETAILS)

NO SCALE

RSP ES-13A DATED APRIL 15, 2016 SUPERSEDES RSP ES-13A DATED OCTOBER 30, 2015 AND STANDARD PLAN ES-13A DATED MAY 20, 2011 - PAGE 491 OF THE STANDARD PLANS BOOK DATED 2010.

**REVISED STANDARD PLAN RSP ES-13A**

**2010 REVISED STANDARD PLAN RSP ES-13A**

1-22-16

| Dist | COUNTY | ROUTE | POST MILES TOTAL PROJECT | SHEET No. | TOTAL SHEETS |
|---|---|---|---|---|---|
| 04 | SM | 101,114 | 1.3/2.5, 5.0/5.3 | 455 | 568 |

REGISTERED CIVIL ENGINEER

July 15, 2016
PLANS APPROVAL DATE

REGISTERED PROFESSIONAL ENGINEER
Stanley P. Johnson
No. C57793
Exp. 3-31-18
CIVIL
STATE OF CALIFORNIA

*THE STATE OF CALIFORNIA OR ITS OFFICERS OR AGENTS SHALL NOT BE RESPONSIBLE FOR THE ACCURACY OR COMPLETENESS OF SCANNED COPIES OF THIS PLAN SHEET.*

TO ACCOMPANY PLANS DATED 6-29-16

| POLE TYPE | POLE DATA | | | | BASE PLATE DATA | | | | CIDH | |
|---|---|---|---|---|---|---|---|---|---|---|
| | HEIGHT "h" | Min OD BASE | Min OD TOP | THICKNESS | "C" | THICKNESS | ANCHOR BOLT SIZE | BC = BOLT CIRCLE | Dia | "d" |
| CCTV 25 | 25′ | 7⅜" | 3¾" | 0.1793" | 1′-1" | 1" | 1½" ø x 36" | 11½" | 2′-6" | 7′-0" |
| CCTV 30 | 30′ | 8" | | | 1′-1½" | | | 1′-0" | | 7′-6" |
| CCTV 35 | 35′ | 8⅝" | | | 1′-2" | | | 1′-1" | | 8′-0" |
| CCTV 40 | 40′ | 9⅜" | | | 1′-3" | | | 1′-1½" | | 8′-6" |
| CCTV 45 | 45′ | 10" | | | | | | 1′-2" | | |

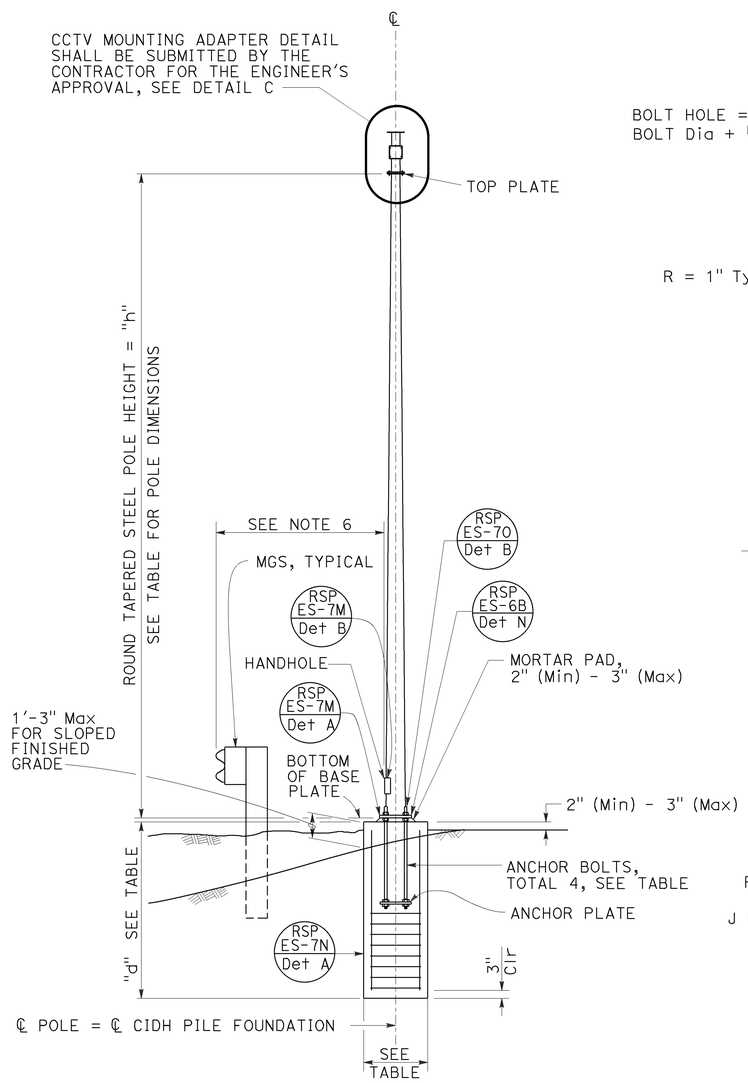


ELEVATION A

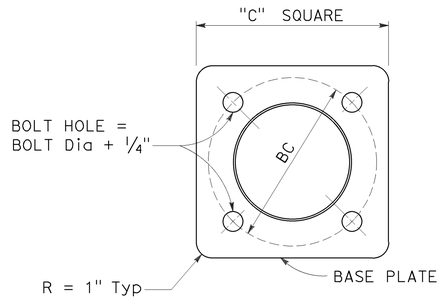


BASE PLATE

DETAIL A

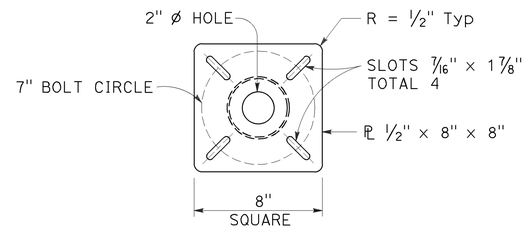


TOP PLATE

DETAIL B

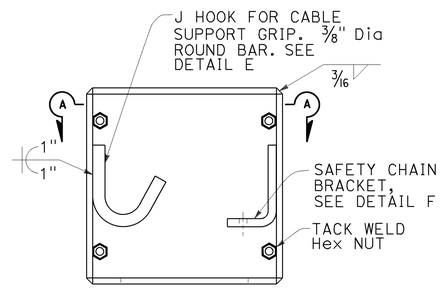


BOX ENCLOSURE

DETAIL D

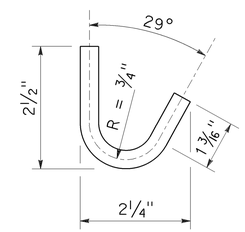


J HOOK

DETAIL E

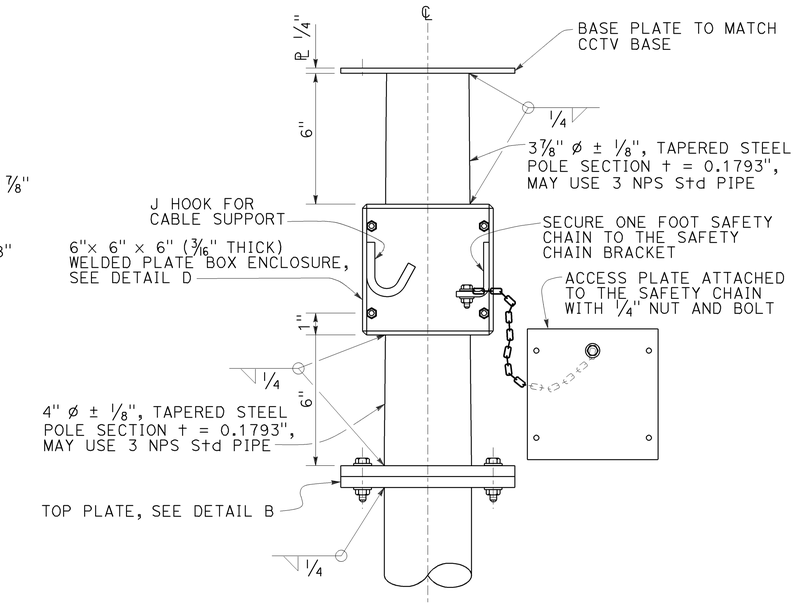


CLOSED CIRCUIT TELEVISION MOUNTING ADAPTER

DETAIL C

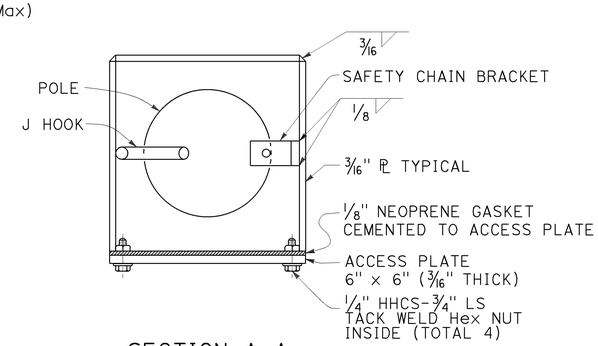


SECTION A-A

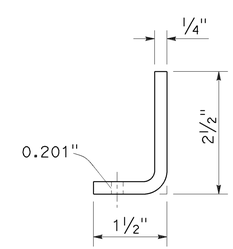


SAFETY CHAIN BRACKET

DETAIL F

NOTES:

1. Verify controlling field dimensions before ordering or fabricating any material.
2. During pole installation, the post shall be raked as necessary with the use of leveling nuts to provide a plumb pole axis.
3. For wind loading see RSP ES-7M.
4. Materials (Structural Steel):
   a. fy = 55,000 psi (tapered steel tube and anchor bolts)
   b. fy = 50,000 psi (unless otherwise noted)
5. Materials (Reinforced Concrete):
   a. f′c = 3,625 psi
   b. fy = 60,000 psi
6. See RSP A77R1 thru RSP A77R8

STATE OF CALIFORNIA
DEPARTMENT OF TRANSPORTATION

# ELECTRICAL SYSTEMS (CLOSED CIRCUIT TELEVISION, 25' TO 45' POLE)

NO SCALE

RSP ES-16B DATED JULY 15, 2016 SUPERSEDES RSP ES-16B DATED OCTOBER 30, 2015 AND STANDARD PLAN ES-16B DATED MAY 20, 2011 - PAGE 501 OF THE STANDARD PLANS BOOK DATED 2010.

**REVISED STANDARD PLAN RSP ES-16B**

**2010 REVISED STANDARD PLAN RSP ES-16B**

6-20-16

| DIST | COUNTY | ROUTE | POST MILES TOTAL PROJECT | SHEET No. | TOTAL SHEETS |
|---|---|---|---|---|---|
| 04 | SM | 101,114 | 1.3/2.5, 5.0/5.3 | 456 | 568 |

REGISTERED CIVIL ENGINEER 11-10-15 DATE

6-29-16
PLANS APPROVAL DATE

REGISTERED PROFESSIONAL ENGINEER LINAN WANG No. 54714 Exp. 12-31-17 CIVIL STATE OF CALIFORNIA

*The State of California or its officers or agents shall not be responsible for the accuracy or completeness of scanned copies of this plan sheet.*

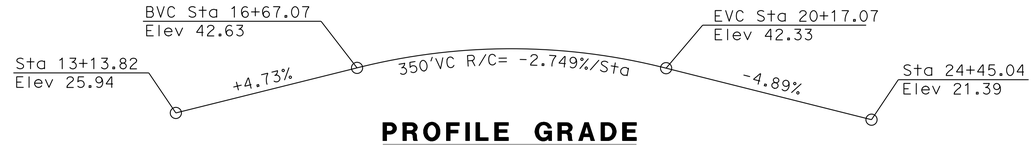


## PROFILE GRADE

NO SCALE

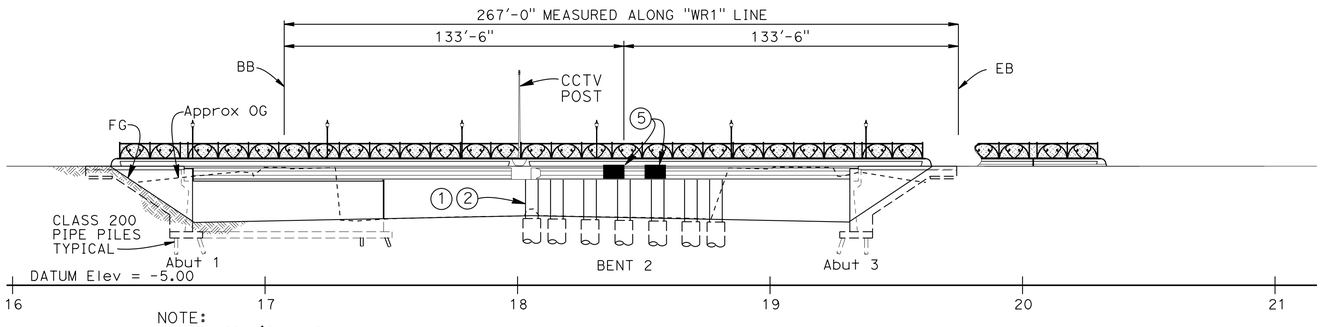


NOTE:
Not all piles shown.
Abutment 3 only partially shown.
Existing Bridge not shown.

## ELEVATION

1"=30'

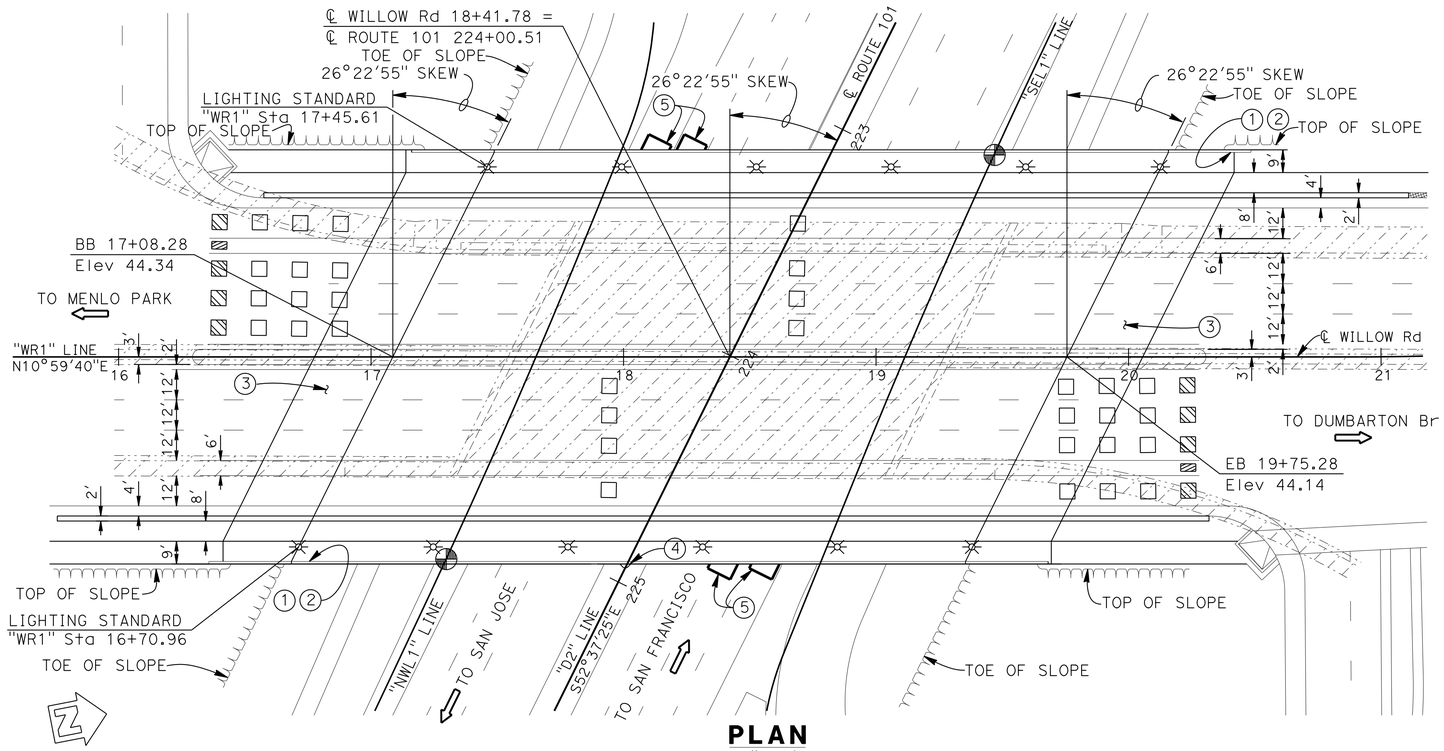


## PLAN

1"=30'

QUANTITIES

| | | |
|---|---|---|
| WORK AREA MONITORING (BRIDGE) | LUMP | SUM |
| BRIDGE REMOVAL | LUMP | SUM |
| STRUCTURE EXCAVATION (BRIDGE) | 4,760 | CY |
| STRUCTURE BACKFILL (BRIDGE) | 2,320 | CY |
| TEMPORARY SUPPORT | LUMP | SUM |
| 84" CAST-IN-DRILLED-HOLE CONCRETE PILING | 595 | LF |
| FURNISH PILING (CLASS 200) (ALTERNATIVE W) | 13,704 | LF |
| DRIVE PILE (CLASS 200) (ALTERNATIVE W) | 164 | EA |
| STRUCTURAL CONCRETE, BRIDGE FOOTING | 390 | CY |
| STRUCTURAL CONCRETE, BRIDGE | 1,662 | CY |
| STRUCTURAL CONCRETE, BRIDGE (POLYMER FIBER) | 1,230 | CY |
| STRUCTURAL CONCRETE, APPROACH SLAB (TYPE N) | 485 | CY |
| CONCRETE SURFACE TEXTURE (SEQUOIA TREE MOTIF) | 3,695 | SQFT |
| CONCRETE SURFACE TEXTURE (OAK TREE MOTIF) | 3,367 | SQFT |
| CONCRETE SURFACE TEXTURE (GRAVE STAKE) | 1,560 | SQFT |
| CONCRETE SURFACE TEXTURE (RUGGED FLAGSTONE) | 1,918 | SQFT |
| FURNISH PRECAST PRESTRESSED CONCRETE WIDE-FLANGE GIRDER (130'-140') | 34 | EA |
| ERECT PRECAST CONCRETE GIRDER | 34 | EA |
| JOINT SEAL (MR 1 1/2") | 374 | LF |
| BAR REINFORCING STEEL (BRIDGE) | 853,600 | LB |
| WELDED STEEL PIPE CASING (BRIDGE) | 194 | LF |
| MISCELLANEOUS METAL (BRIDGE) | 816 | LB |
| BRIDGE DECK DRAINAGE SYSTEM | 22,081 | LB |
| CHAIN LINK RAILING (TYPE 6 MODIFIED) | 649 | LF |
| CONCRETE BARRIER (TYPE 26 MODIFIED) | 649 | LF |
| CONCRETE BARRIER (TYPE 742 MODIFIED) | 649 | LF |

NOTES:

1. Paint "Willow Road Separation"
2. Paint "Br. No. 35-0354"
3. Structure Approach Slab Type N(30S)
4. CCTV Post, see "ROADWAY PLANS"
5. Structure mounted sign, see "ROADWAY PLANS"

For Index to Plan and General Notes see "Index To PLans" sheet

For Typical Section see "GENERAL PLAN NO. 2" sheet

LEGEND:

——— Indicates New Structure

-·-·-·- Indicates Existing Structure

Indicates Limits of Bridge No. 35-0084 removal

Indicates Point of Minimum Vertical Clearance = 17.19'

Indicates City Lighting Standard spaced @ 53'-4" C-C, see "ROADWAY PLANS"

Indicates Preform Loop, see "ROADWAY PLANS"

# ROUTE 101/ WILLOW INTERCHANGE
# WILLOW ROAD SEPARATION
# GENERAL PLAN NO. 1

| | BY | CHECKED |
|---|---|---|
| DESIGN | T. Masroor | Q. Zhao |
| DETAILS | F. Maagma/A. Onodera | Q. Zhao |
| QUANTITIES | L. Wang/T. Masroor | Q. Zhao |

LOAD & RESISTANCE FACTOR DESIGN — LIVE LOADING: HL93 W/"LOW-BOY": PERMIT DESIGN VEHICLE

| | BY | CHECKED |
|---|---|---|
| LAYOUT | L. Wang | Q. Zhao |
| SPECIFICATIONS | S. Nelapatia | PLANS AND SPECS COMPARED L. Wang |

X
DESIGN ENGINEER

ORIGINAL SCALE IN INCHES FOR REDUCED PLANS 0 1 2 3

STATE OF CALIFORNIA
DEPARTMENT OF TRANSPORTATION

DIVISION OF ENGINEERING SERVICES
STRUCTURE DESIGN
DESIGN BRANCH 4

BRIDGE NO. 35-0354
POST MILE 1.7/2.1

UNIT: 3579
PROJECT NUMBER & PHASE: 04000006804
CONTRACT NO.: 04-235654

DISREGARD PRINTS BEARING EARLIER REVISION DATES

REVISION DATES: 9-30-15 11-5-15 8-8-15 8-22-15

SHEET 1 OF 33

USERNAME => s132175 DATE PLOTTED => 17-AUG-2016 TIME PLOTTED => 09:36

STRUCTURES DESIGN GENERAL PLAN SHEET (ENGLISH) (REV.09-01-10)

FILE => 35-0354-a-gp01_alt-3.dgn

| DIST | COUNTY | ROUTE | POST MILES TOTAL PROJECT | SHEET No. | TOTAL SHEETS |
|---|---|---|---|---|---|
| 04 | SM | 101,114 | 1.3/2.5, 5.0/5.3 | 457 | 568 |

REGISTERED CIVIL ENGINEER 11-10-15 DATE

6-29-16
PLANS APPROVAL DATE

REGISTERED PROFESSIONAL ENGINEER LINAN WANG No. 54714 Exp. 12-31-17 CIVIL STATE OF CALIFORNIA

*The State of California or its officers or agents shall not be responsible for the accuracy or completeness of scanned copies of this plan sheet.*

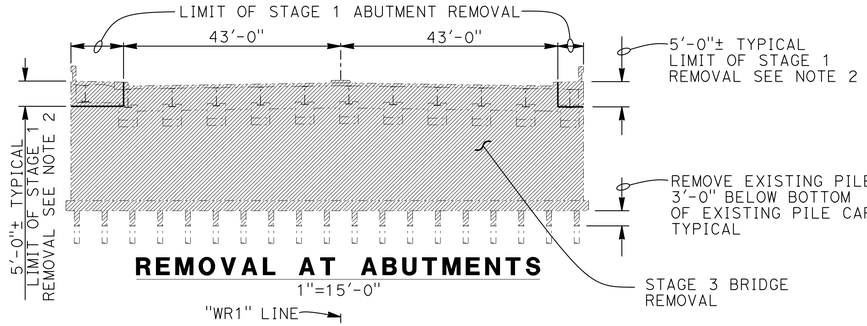


## REMOVAL AT ABUTMENTS
1"=15'-0"

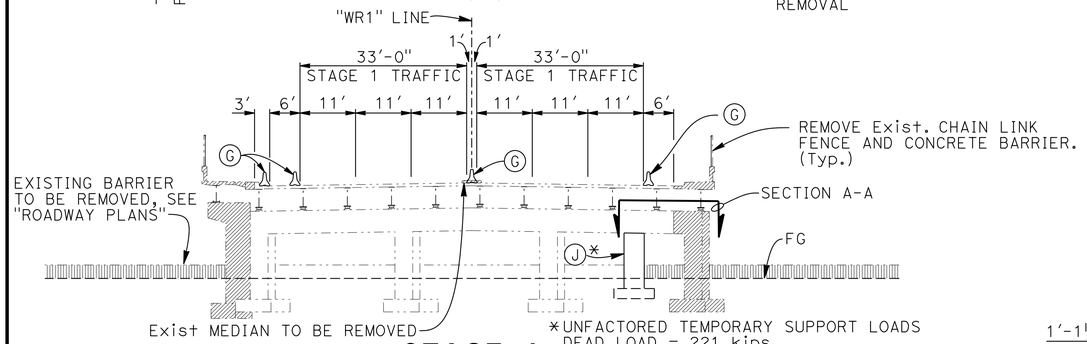


*UNFACTORED TEMPORARY SUPPORT LOADS
DEAD LOAD = 221 kips
LIVE LOAD = 224 kips
LATERAL LOAD = 4% OF DEAD LOAD AT ½"
LATERAL DEFLECTION

## STAGE 1
1"=15'-0"

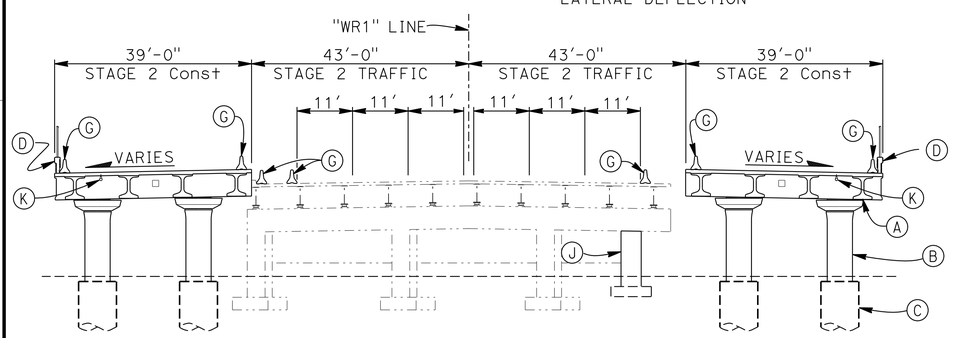


## STAGE 2
1"=15'-0"

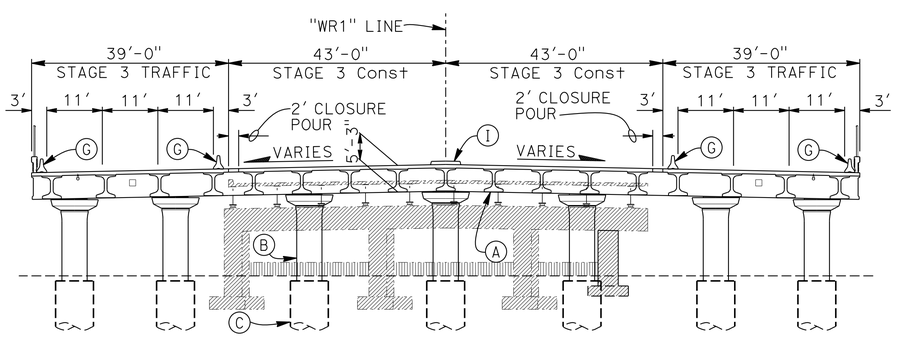


## STAGE 3
1"=15'-0"

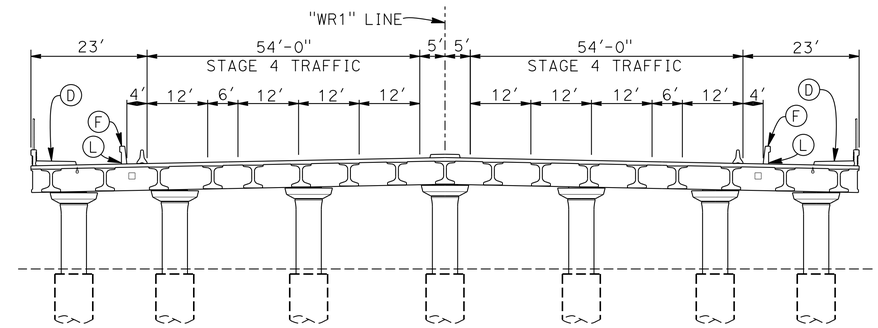


## STAGE 4
1"=15'-0"

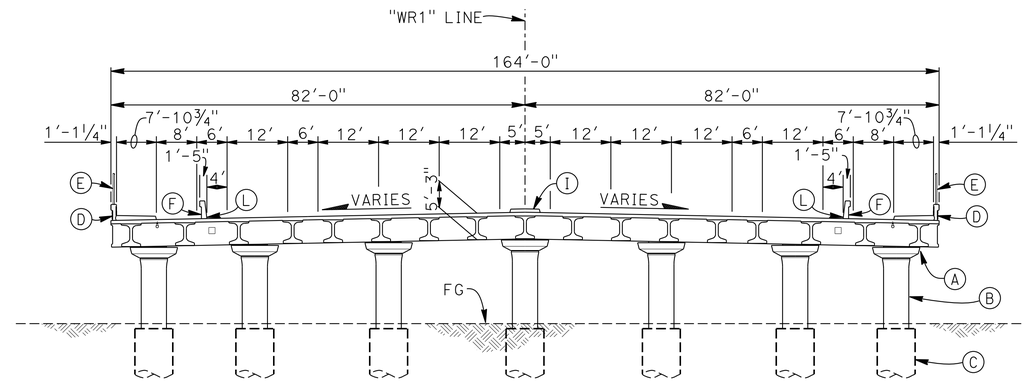


## TYPICAL SECTION
1"=15'-0"

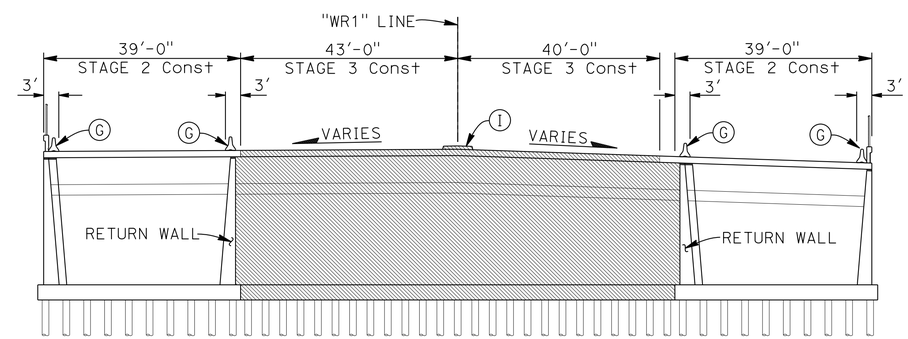


NOTE:
The backwall of Abutment 1 shown Abutment 3 is similar

## ABUTMENT STAGE CONSTRUCTION
1"=15'-0"

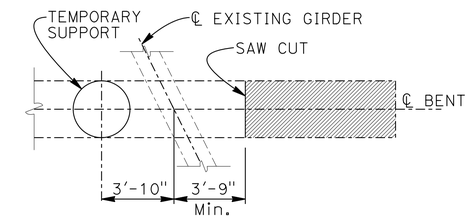


## SECTION A-A
¼"=1'-0"

NOTES:
1. For Architectural Treatment see "ARCHITECTURAL DETAILS NO. 1" through "ARCHITECTURAL DETAILS NO. 7" sheets
2. Remove existing stem wall 1'-0" below the bottom of new PC girder

(A) PC/PS Wide-Flange Girder (Typ)
(B) 5'-0"ø Column (Typ)
(C) 7'-0"ø CIDH Concrete Pile (Typ)
(D) Concrete Barrier Type 26 (Mod)
(E) Chain Link Railing Type 6 (Mod)
(F) Concrete Barrier Type 742 (Mod)
(G) Temporary Railing Type K (Mod), see Roadway Plans
(I) Median Curb
(J) Temporary support
(K) Deck Drainage System
(L) Scupper Drain every 8'-0" symmetrical about ℄ Bent

LEGEND:
- Indicates New Structure
- Indicates Existing Structure
- Indicates Limits of Bridge removal
- Indicates Stage 3 Abutment construction
- Indicates existing concrete barrier removal, see "Roadway Plans"

# ROUTE 101/ WILLOW INTERCHANGE
# WILLOW ROAD SEPARATION
# GENERAL PLAN NO. 2

| | BY | CHECKED |
|---|---|---|
| DESIGN | T. Masroor | Q. Zhao |
| DETAILS | A. Onodera | Q. Zhao |
| QUANTITIES | L. Wang/T. Masroor | Q. Zhao |

STATE OF CALIFORNIA
DEPARTMENT OF TRANSPORTATION

DIVISION OF ENGINEERING SERVICES
STRUCTURE DESIGN
DESIGN BRANCH 4

BRIDGE NO. 35-0354
POST MILE 1.7/2.1

STRUCTURES DESIGN DETAIL SHEET (ENGLISH) (REV. 09-01-10)

ORIGINAL SCALE IN INCHES FOR REDUCED PLANS 0 1 2 3

UNIT: 3579
PROJECT NUMBER & PHASE: 04000006804
CONTRACT NO.: 04-235654

DISREGARD PRINTS BEARING EARLIER REVISION DATES

REVISION DATES 10-10-15 11-4-15 11-10-15 7-24-16

SHEET 2 OF 33

FILE => 35-0354-a-gp02_alt-3.dgn

USERNAME => s132775 DATE PLOTTED => 17-AUG-2016 TIME PLOTTED => 09:36

| DIST | COUNTY | ROUTE | POST MILES TOTAL PROJECT | SHEET No. | TOTAL SHEETS |
|---|---|---|---|---|---|
| 04 | SM | 101,114 | 1.3/2.5, 5.0/5.3 | 458 | 568 |

REGISTERED CIVIL ENGINEER 11-10-15 DATE

6-29-16
PLANS APPROVAL DATE

REGISTERED PROFESSIONAL ENGINEER LINAN WANG No. 54714 Exp. 12-31-17 CIVIL STATE OF CALIFORNIA

*The State of California or its officers or agents shall not be responsible for the accuracy or completeness of scanned copies of this plan sheet.*

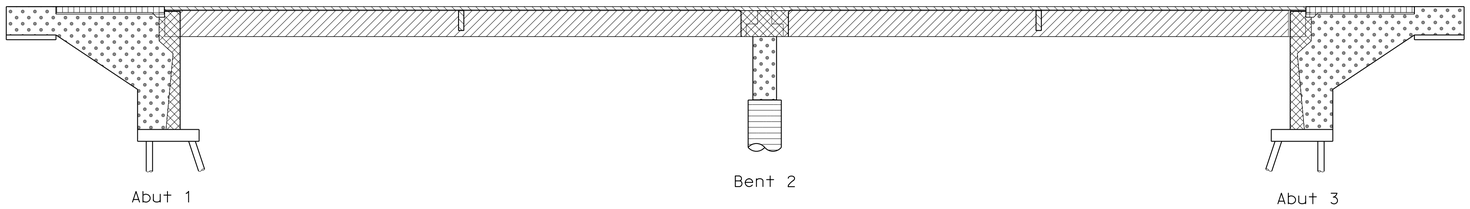


PC/PS Wide Flange Girder (f'c = 7,000 psi @ 28 days)
Structural Concrete, Bridge (Polymer Fiber)(f'c = 5,000 psi @ 28 days)
Structural Concrete, Bridge (f'c = 5,000 psi @ 28 days)
Structural Concrete, Bridge (f'c = 4,000 psi @ 28 days)
Structural Concrete, Bridge Footing (f'c = 5,000 psi @ 28 days)
Structural Concrete, Approach Slab (f'c = 4,000 psi @ 28 days)
CIDH Concrete Pile (f'c = 4,000 psi @ 28 days)

## CONCRETE STRENGTH AND TYPE LIMITS

NO SCALE

**PILE DATA TABLE**

| Location | Pile Type | Nominal Resistance (kips) | | Design Tip Elevation (ft) | Specified Tip Elevation (ft) | Nominal Driving Resistance (kips) |
|---|---|---|---|---|---|---|
| | | Strength Limit | Extreme Event | | | |
| Abut 1 | Class 200 Alt-W | 380 | 140 | -61.0(a)<br>-29.0(c)<br>-41.0(d) | -61.0 | 400 |
| Bent 2 | 84" CIDH | 3,290 | 1,350 | -66.0(a)<br>-38.0(c)<br>-56.0(d) | -66.0 | N/A |
| Abut 3 | Class 200 Alt-W | 380 | 140 | -61.0(a)<br>-29.0(c)<br>-41.0(d) | -61.0 | 400 |

Design tip elevation is controlled by: a) compression b) tension c) settlement d) lateral stability

## GENERAL NOTES
## LOAD AND RESISTANCE FACTOR DESIGN

DESIGN:
AASHTO LRFD Bridge Design Specifications, 6th edition and the California Amendments, dated November 2014.

SEISMIC DESIGN:
Caltrans Seismic Design Criteria (SDC), Version 1.7 dated April 2013.

DEAD LOAD:
Includes 35 psf for future wearing surface.
The deck dead load between the girders has been increased by a factor of 10% to allow for the use of steel deck forms.

LIVE LOADING:
HL-93 with "LOW-BOY" and permit design load.

SEISMIC LOADING:
See "SITE SPECIFIC ACCELERATION RESPONSE SPECTRA".

REINFORCED CONCRETE:
fy = 60 Ksi
f'c = See "CONCRETE STRENGTH AND TYPE LIMITS"

STRUCTURAL STEEL:
fy = Grade 50 min

PRESTRESSING:
See "PRESTRESSING NOTES" on "PC/PS WIDE FLANGE GIRDER DETAILS NO. 1" sheet.

## INDEX TO PLANS


| SHT NO. | TITLE |
|---|---|
| 1. | General Plan No. 1 |
| 2. | General Plan No. 2 |
| 3. | Index to Plans |
| 4. | Deck Contours |
| 5. | Foundation Plan |
| 6. | Abutment Layout |
| 7. | Abutment Details No. 1 |
| 8. | Abutment Details No. 2 |
| 9. | Bent Details No. 1 |
| 10. | Bent Details No. 2 |
| 11. | Column Details |
| 12. | Typical Section |
| 13. | Girder Layout |
| 14. | Girder Details |
| 15. | Deck Reinforcement |
| 16. | PC/PS Wide Flange Girder Details No. 1 |
| 17. | PC/PS Wide Flange Girder Details No. 2 |
| 18. | Bearing Details |
| 19. | Deck Drainage System |
| 20. | Pedestal Details |
| 21. | Architectural Details No. 1 |
| 22. | Architectural Details No. 2 |
| 23. | Architectural Details No. 3 |
| 24. | Architectural Details No. 4 |
| 25. | Architectural Details No. 5 |
| 26. | Architectural Details No. 6 |
| 27. | Architectural Details No. 7 |
| 28. | Structure Approach Type N(30S) |
| 29. | Structure Approach Drainage Details |
| 30. | Chain Link Railing Type 6 |
| 31. | Joint Armor For Pedestrian Walkways |
| 32. | Log of Test Borings 1 OF 2 |
| 33. | Log of Test Borings 2 OF 2 |


## STANDARD PLANS DATED 2010 EDITION


| | SHT NO. | TITLE |
|---|---|---|
| | A10A | Abbreviations (Sheet 1 of 2) |
| RSP | A10B | Abbreviations (Sheet 2 of 2) |
| | A10C | Lines and Symbols (Sheet 1 of 3) |
| | A10D | Lines and Symbols (Sheet 2 of 3) |
| | A10E | Lines and Symbols (Sheet 3 of 3) |
| RSP | A10F | Legend - Soil (Sheet 1 of 2) |
| RSP | A10G | Legend - Soil (Sheet 2 of 2) |
| | A10H | Legend - Rock |
| | A62C | Limits of Payment for Excavation and Backfill - Bridge |
| | B0-1 | Bridge Details |
| | B0-3 | Bridge Details |
| | B0-5 | Bridge Details |
| | B0-13 | Bridge Details |
| | B2-8 | Pile Details - Class 200 |
| | B6-10 | Utility Openings T-Beam |
| RSP | B6-21 | Joint Seal (Maximum Movement Rating = 2") |
| | B7-5 | Deck Drains |
| | B7-8 | Deck Drainage Details |
| RSP | B11-54 | Concrete Barrier Type 26 |
| RSP | B11-57 | Concrete Barrier Type 742 |
| | ES-6B | Electrical Systems (Electrolier Anchorage and Grouting for Type 15 and Type 21 Barrier Rail Mounted) |
| RSP | ES-16B | Electrical Systems (Closed Circuit Television, 25' to 45' Pole) |
| | T3A | Temporary Railing (Type K) |
| | T3B | Temporary Railing (Type K) |


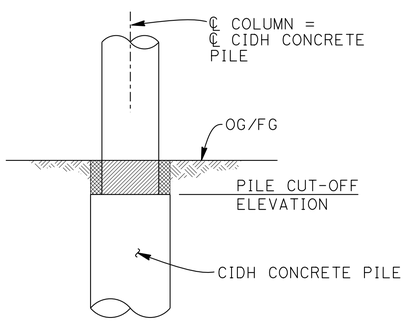


LEGEND:
Indicates structure excavation (Bridge)
Indicates structure backfill (Bridge)

## STRUCTURE EXCAVATION AND BACKFILL

NO SCALE

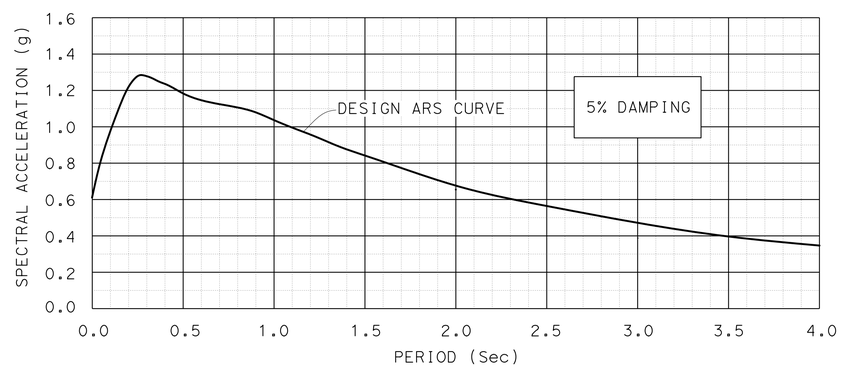


## ACCELERATION RESPONSE SPECTRUM

Standard Plan Sheet No.
Detail No.

# ROUTE 101/ WILLOW INTERCHANGE
# WILLOW ROAD SEPARATION
# INDEX TO PLANS

| | BY | CHECKED |
|---|---|---|
| DESIGN | T. Masroor | Q. Zhao |
| DETAILS | A. Onodera | Q. Zhao |
| QUANTITIES | L. Wang/T. Masroor | Q. Zhao |

STATE OF CALIFORNIA
DEPARTMENT OF TRANSPORTATION

DIVISION OF ENGINEERING SERVICES
STRUCTURE DESIGN
DESIGN BRANCH 4

BRIDGE NO. 35-0354
POST MILE 1.7/2.1

STRUCTURES DESIGN DETAIL SHEET (ENGLISH) (REV. 09-01-10)

ORIGINAL SCALE IN INCHES FOR REDUCED PLANS 0 1 2 3

UNIT: 3579
PROJECT NUMBER & PHASE: 04000006804
CONTRACT NO.: 04-235654

DISREGARD PRINTS BEARING EARLIER REVISION DATES
REVISION DATES 10-15-15 11-5-15 9-28-16 9-30-16
SHEET 3 OF 33

FILE => 35-0354-a-itp.dgn

USERNAME => s132175 DATE PLOTTED => 17-AUG-2016 TIME PLOTTED => 09:36

| DIST | COUNTY | ROUTE | POST MILES TOTAL PROJECT | SHEET No. | TOTAL SHEETS |
|---|---|---|---|---|---|
| 04 | SM | 101,114 | 1.3/2.5, 5.0/5.3 | 459 | 568 |

REGISTERED CIVIL ENGINEER 11-10-15 DATE

6-29-16
PLANS APPROVAL DATE

REGISTERED PROFESSIONAL ENGINEER
LINAN WANG
No. 54714
Exp. 12-31-17
CIVIL
STATE OF CALIFORNIA

*The State of California or its officers or agents shall not be responsible for the accuracy or completeness of scanned copies of this plan sheet.*

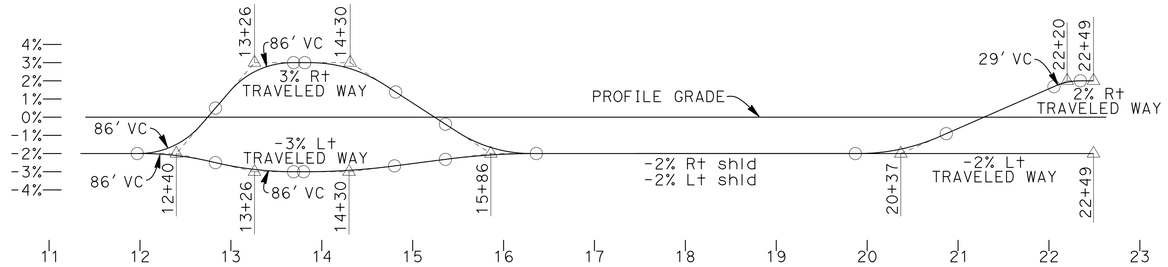


## SUPERELEVATION DIAGRAM

NO SCALE

Note:
All vertical curves 100' unless otherwise noted

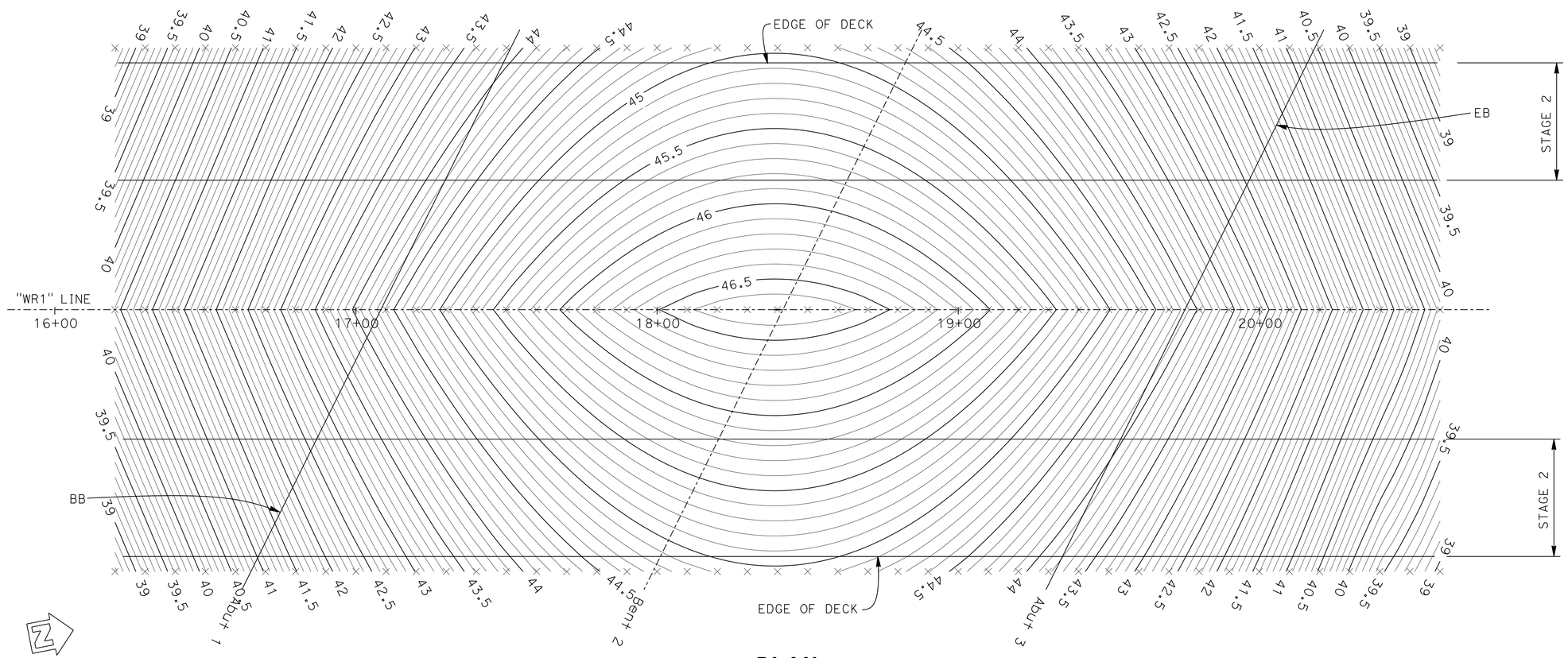


## PLAN

1"-20'

Note:
× - 10' intervals along station line
Contours do not include camber
Contour interval = 0.10'

# ROUTE 101/ WILLOW INTERCHANGE
# WILLOW ROAD SEPARATION
# DECK CONTOURS

| | | | |
|---|---|---|---|
| DESIGN | BY T. Masroor | CHECKED Q. Zhao | |
| DETAILS | BY A. Onodera | CHECKED Q. Zhao | |
| QUANTITIES | BY L. Wang/T. Masroor | CHECKED Q. Zhao | |

STATE OF CALIFORNIA
DEPARTMENT OF TRANSPORTATION

DIVISION OF ENGINEERING SERVICES
STRUCTURE DESIGN
DESIGN BRANCH 4

BRIDGE NO. 35-0354
POST MILE 1.7/2.1

STRUCTURES DESIGN DETAIL SHEET (ENGLISH) (REV. 09-01-10)

ORIGINAL SCALE IN INCHES FOR REDUCED PLANS 0 1 2 3

UNIT: 3579
PROJECT NUMBER & PHASE: 04000006804
CONTRACT NO.: 04-235654

DISREGARD PRINTS BEARING EARLIER REVISION DATES

REVISION DATES: 11-16-14 9-30-15

SHEET 4 OF 33

FILE => 35-0354-d-dc01-pre-cast.dgn

USERNAME => s132775 DATE PLOTTED => 17-AUG-2016 TIME PLOTTED => 09:37

| DIST | COUNTY | ROUTE | POST MILES TOTAL PROJECT | SHEET No. | TOTAL SHEETS |
|---|---|---|---|---|---|
| 04 | SM | 101,114 | 1.3/2.5, 5.0/5.3 | 460 | 568 |

REGISTERED CIVIL ENGINEER 11-10-15 DATE

6-29-16
PLANS APPROVAL DATE

REGISTERED PROFESSIONAL ENGINEER LINAN WANG No. 54714 Exp. 12-31-17 CIVIL STATE OF CALIFORNIA

*The State of California or its officers or agents shall not be responsible for the accuracy or completeness of electronic copies of this plan sheet.*

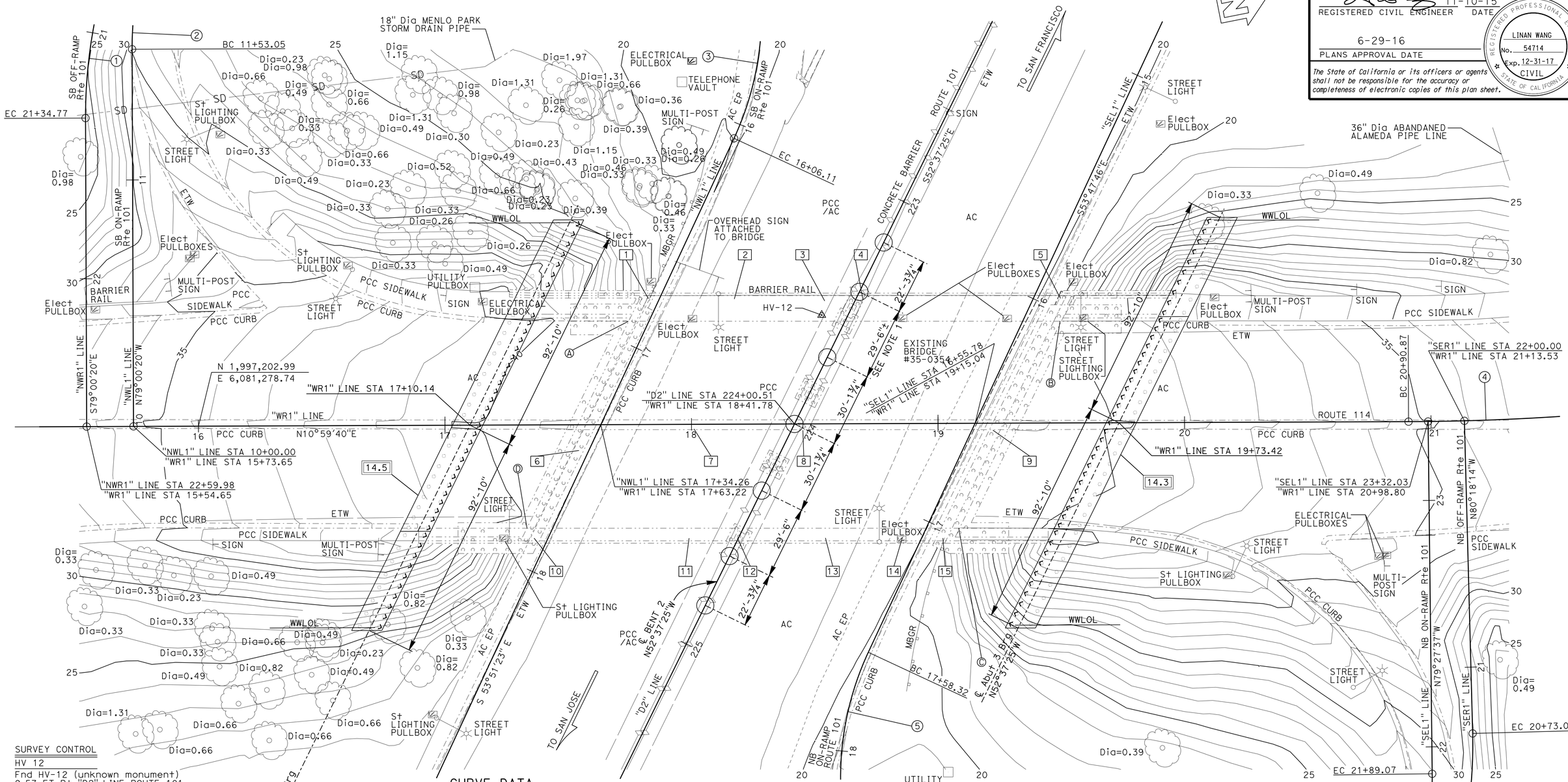


SURVEY CONTROL

HV 12
Fnd HV-12 (unknown monument)
9.57 FT Rt "D2" LINE ROUTE 101
Sta 223+55.98
N 1,997,459.76
E 6,081,283.65
Elev = 41.97

HV 10142 (NOT SHOWN ON PLAN)
Fnd WP10102 PK
1311.66 Ft Lt "D2" LINE ROUTE 101
Sta 216+59.97
N 1,998,932.13
E 6,081,532.78
Elev = 14.09

CURVE DATA

| No. | R | Δ | T | L |
|---|---|---|---|---|
| 1 | 200.00′ | 68°08′50" | 135.28′ | 237.88′ |
| 2 | 134.00′ | 95°45′31" | 148.19′ | 223.95′ |
| 3 | 120.00′ | 109°23′26" | 169.45′ | 229.11′ |
| 4 | 1000.01′ | 11°55′02" | 104.38′ | 208.00′ |
| 5 | 120.00′ | 102°49′55" | 150.41′ | 215.37′ |
| 6 | 120.00′ | 102°49′55" | 150.41′ | 215.37′ |
| 7 | 180.00′ | 83°01′55" | 159.34′ | 260.85′ |

Bridge Location #35-0354
Ⓐ - 41.84 Lt Rte 84, Sta 17+74.42, Elev = 40.71±
Ⓑ - 41.36 Lt Rte 84, Sta 19+49.66, Elev = 40.00±
Ⓒ - 42.45 Rt Rte 84, Sta 19+08.22, Elev = 40.79±
Ⓓ - 41.77 Rt Rte 84, Sta 17+33.09, Elev = 40.05±

SOFFIT ELEVATIONS-EXISTING BRIDGE

| | | | | | |
|---|---|---|---|---|---|
| 1 | 37.79 | 8 | 37.65 | 15 | 36.71 |
| 2 | 38.23 | 9 | 36.96 | | |
| 3 | 38.32 | 10 | 35.92 | | |
| 4 | 38.05 | 11 | 36.71 | | |
| 5 | 36.85 | 12 | 36.84 | | |
| 6 | 36.76 | 13 | 36.87 | | |
| 7 | 37.39 | 14 | 36.72 | | |

NOTE:
1. ADJUST LOCATION OF NEW CIDH TO AVOID CONFLICT WITH EXISTING PILES AS APPROVED BY THE ENGINEER

13.7 Indicates bottom of footing elevation

PRELIMINARY INVESTIGATION SECTION

| | | | | | |
|---|---|---|---|---|---|
| SCALE 1"=20′ | VERT.DATUM NGVD29 | PHOTOGRAMMETRY AS OF: X | | | |
| HORZ.DATUM NAD83 (1991.35) | SURVEYED | BY DISTRICT | CHECKED | BY C. FASSETT 3/2015 | |
| ALIGNMENT TIES Dist TRAVERSE SHEET | DRAFTED | BY L. YOUNG 3/2015 | CHECKED | BY L. LAWRENCE 3/2015 | |

| | | |
|---|---|---|
| DESIGN | BY T. Masroor/L. Wang | CHECKED Q. Zhao |
| DETAILS | BY A. Onodera | CHECKED Q. Zhao |
| QUANTITIES | BY L. Wang/T. Masroor | CHECKED Q. Zhao |

STATE OF CALIFORNIA
DEPARTMENT OF TRANSPORTATION

DIVISION OF ENGINEERING SERVICES
STRUCTURE DESIGN
DESIGN BRANCH 4

BRIDGE NO. 35-0354
POST MILE 1.7/2.1

# WILLOW ROAD SEPARATION
# FOUNDATION PLAN

STRUCTURES FOUNDATION PLAN SHEET (ENGLISH) (REV. 09-01-10)

ORIGINAL SCALE IN INCHES FOR REDUCED PLANS 0 1 2 3

UNIT: 3646
PROJECT NUMBER & PHASE: 0400000680 4
CONTRACT NO.: 04-235654

| SUBMITTAL DATE | REVISION DATES | | | | SHEET | OF |
|---|---|---|---|---|---|---|
| ~~3/17/2015~~ | 3-27-15 | 4-17-15 | | | 5 | 33 |

USERNAME => s132175 DATE PLOTTED => 17-AUG-2016 TIME PLOTTED => 09:37

FILE => 35-0354-e-fpl01-plot.dgn

| DIST | COUNTY | ROUTE | POST MILES TOTAL PROJECT | SHEET No. | TOTAL SHEETS |
|---|---|---|---|---|---|
| 04 | SM | 101,114 | 1.3/2.5, 5.0/5.3 | 461 | 568 |

REGISTERED CIVIL ENGINEER 11-10-15 DATE

6-29-16
PLANS APPROVAL DATE

REGISTERED PROFESSIONAL ENGINEER LINAN WANG No. 54714 Exp. 12-31-17 CIVIL STATE OF CALIFORNIA

*The State of California or its officers or agents shall not be responsible for the accuracy or completeness of scanned copies of this plan sheet.*

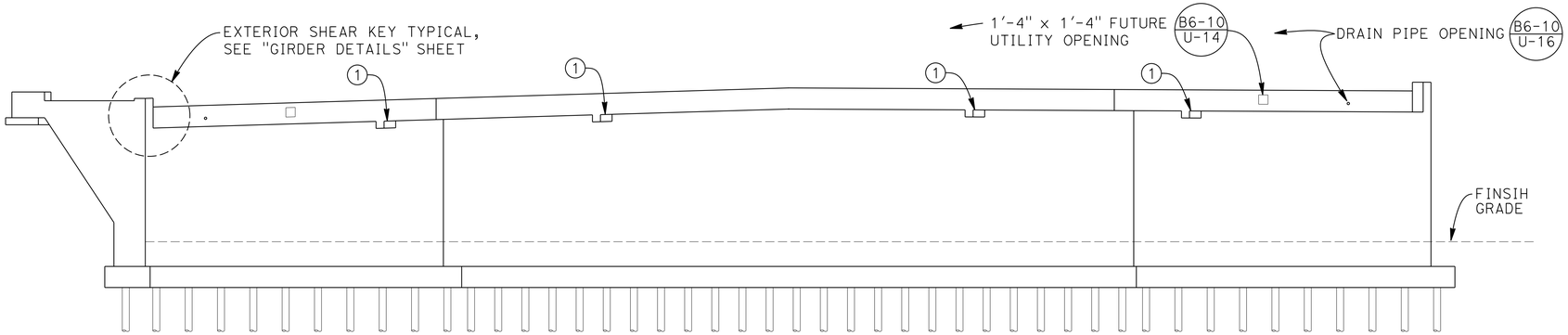


## ELEVATION
1"=10'-0"

NOTE:
Abutment 1 shown Abutment 3 similar

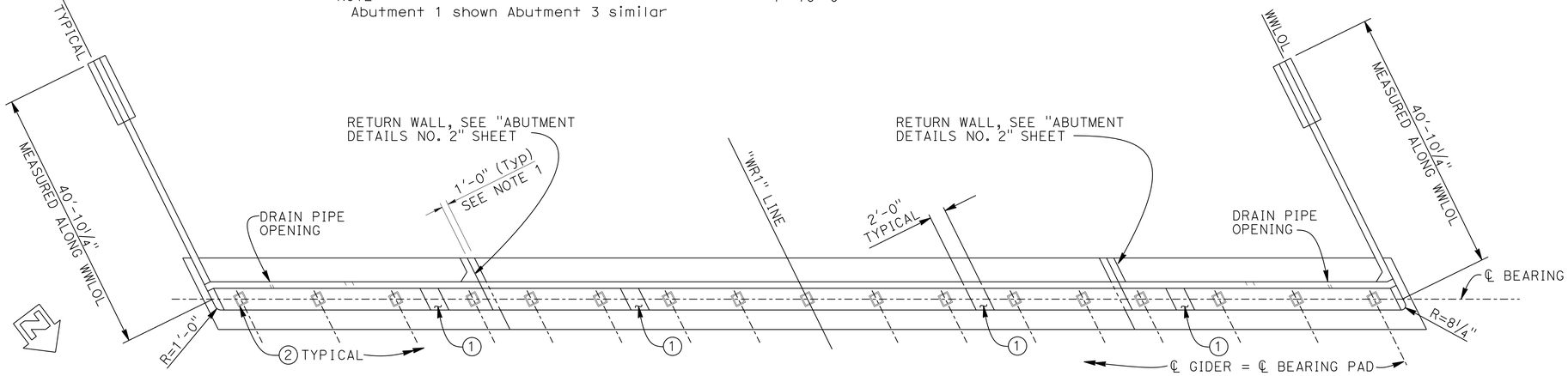


NOTE:
Abutment 1 shown Abutment 3 similar

## PLAN
1"=10'-0"

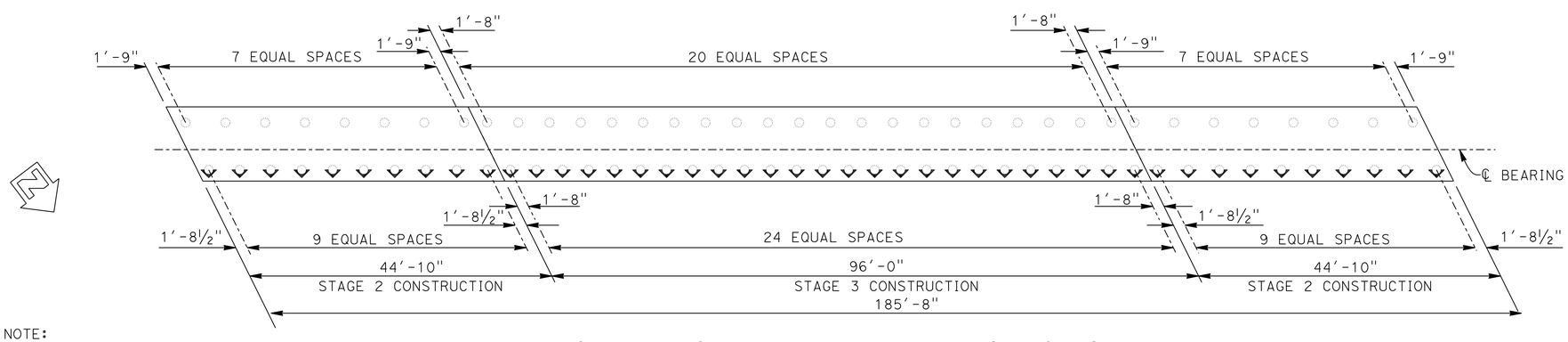


NOTES:
1. For wingwall details, see "ABUTMENT DETAILS NO. 1" sheet
2. For Architectural Treatment see ARCHITECTURAL DETAILS sheets

(1) Interior shear key, see "GIRDER DETAILS" sheet

(2) 18"x15"x4" bearing pad. For details, see "BEARING DETAILS" sheet

NOTE:
Abutment 1 shown Abutment 3 similar

Indicates verical pile

Indicates battered pile 1:3

## FOUNDATION PLAN AND PILE SPACING
1"=10'-0"

# ROUTE 101/ WILLOW INTERCHANGE
# WILLOW ROAD SEPARATION
# ABUTMENT LAYOUT

| | BY | CHECKED |
|---|---|---|
| DESIGN | T. Masroor/L. Wang | Q. Zhao |
| DETAILS | A. Onodera | Q. Zhao |
| QUANTITIES | L. Wang/T. Masroor | Q. Zhao |

STATE OF CALIFORNIA
DEPARTMENT OF TRANSPORTATION

DIVISION OF ENGINEERING SERVICES
STRUCTURE DESIGN
DESIGN BRANCH 4

BRIDGE NO. 35-0354
POST MILE 1.7/2.1

STRUCTURES DESIGN DETAIL SHEET (ENGLISH) (REV. 09-01-10)

ORIGINAL SCALE IN INCHES FOR REDUCED PLANS 0 1 2 3

UNIT: 3579
PROJECT NUMBER & PHASE: 04000006804
CONTRACT NO.: 04-235654

DISREGARD PRINTS BEARING EARLIER REVISION DATES

REVISION DATES: 8-1-15 11-6-15 11-10-15 11-20-15

SHEET 6 OF 33

FILE => 35-0354-f-a01_lo1.dgn

USERNAME => s132775 DATE PLOTTED => 17-AUG-2016 TIME PLOTTED => 09:37

| DIST | COUNTY | ROUTE | POST MILES TOTAL PROJECT | SHEET No. | TOTAL SHEETS |
|---|---|---|---|---|---|
| 04 | SM | 101,114 | 1.3/2.5, 5.0/5.3 | 462 | 568 |

REGISTERED CIVIL ENGINEER — DATE 11-10-15

6-29-16
PLANS APPROVAL DATE

REGISTERED PROFESSIONAL ENGINEER — LINAN WANG — No. 54714 — Exp. 12-31-17 — CIVIL — STATE OF CALIFORNIA

*The State of California or its officers or agents shall not be responsible for the accuracy or completeness of scanned copies of this plan sheet.*

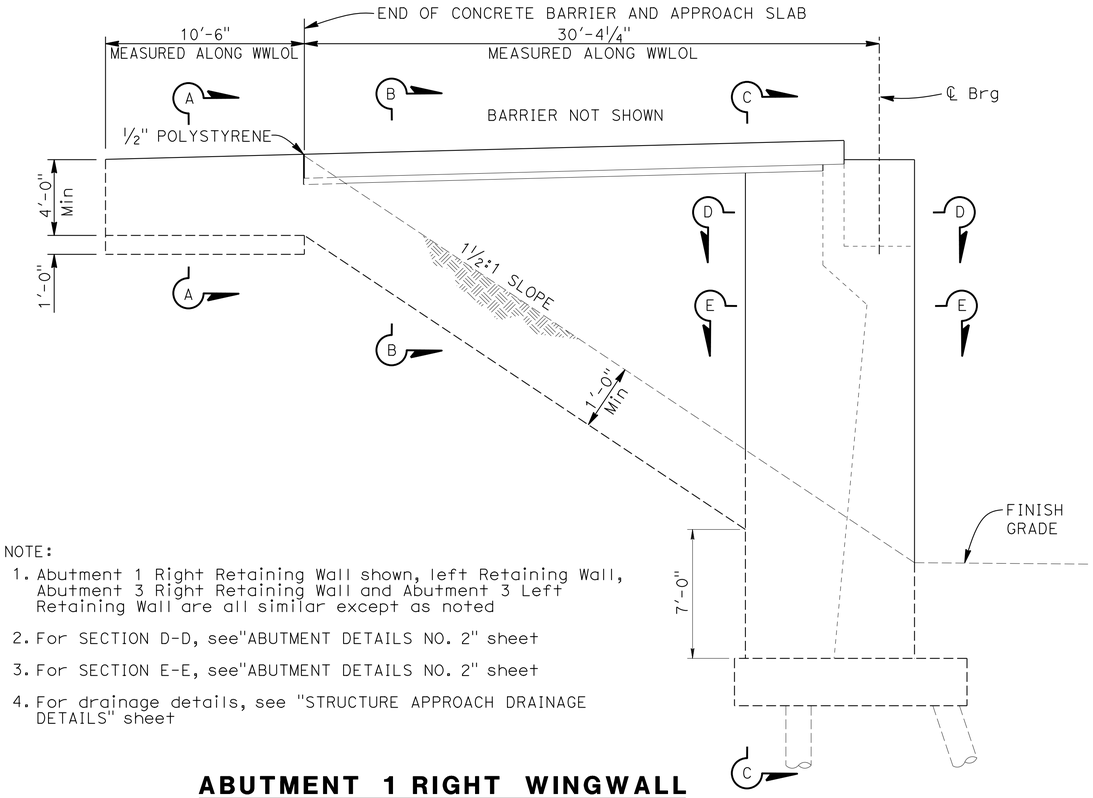


NOTES:

1. Abutment 1 Right Retaining Wall shown, left Retaining Wall, Abutment 3 Right Retaining Wall and Abutment 3 Left Retaining Wall are all similar except as noted
2. For SECTION D-D, see"ABUTMENT DETAILS NO. 2" sheet
3. For SECTION E-E, see"ABUTMENT DETAILS NO. 2" sheet
4. For drainage details, see "STRUCTURE APPROACH DRAINAGE DETAILS" sheet

## ABUTMENT 1 RIGHT WINGWALL

¼"=1'-0"

NOTES:

1. For Architectural Treatment see "ARCHITECTURAL DETAILS NO. 1" sheet
2. For location of "SECTION F-F" see "ABUTMENT DETAILS NO. 2" sheet

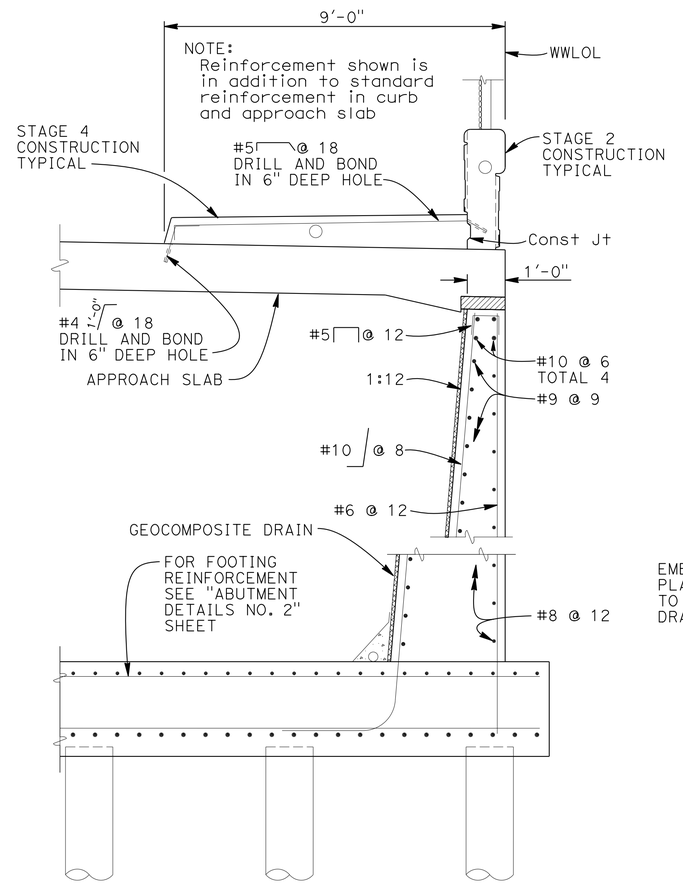


## SECTION C-C

½"=1'-0"

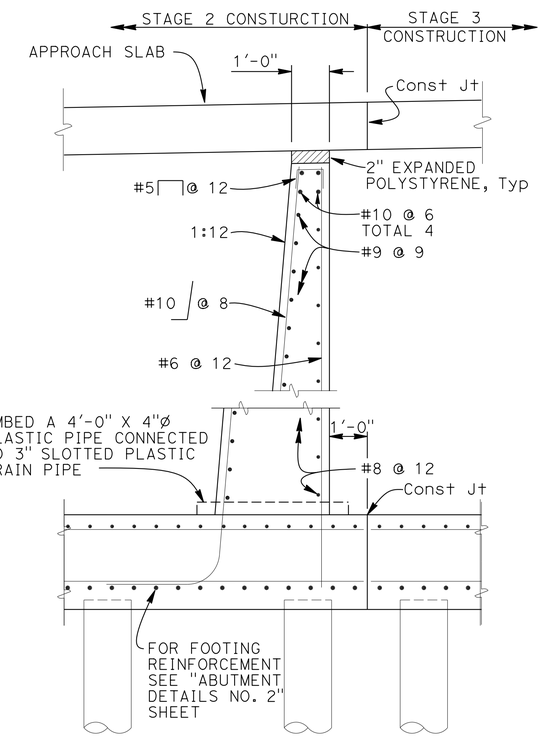


## SECTION F-F

½"=1'-0"

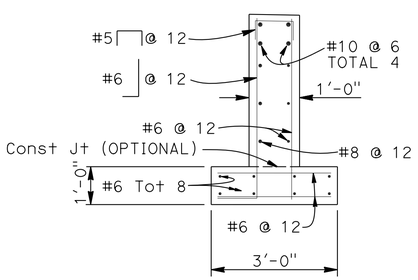


## SECTION A-A

½"=1'-0"

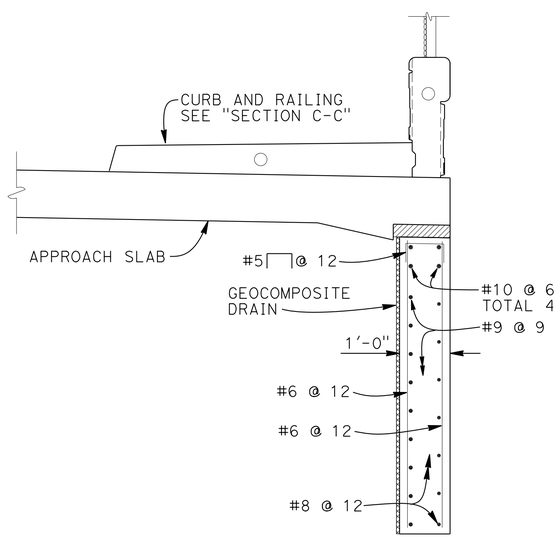


## SECTION B-B

½"=1'-0"

| | | | |
|---|---|---|---|
| DESIGN | BY T. Masroor/L. Wang | CHECKED Q. Zhao | |
| DETAILS | BY A. Onodera | CHECKED Q. Zhao | |
| QUANTITIES | BY L. Wang/T. Masroor | CHECKED Q. Zhao | |

STATE OF CALIFORNIA
DEPARTMENT OF TRANSPORTATION

DIVISION OF ENGINEERING SERVICES
STRUCTURE DESIGN
DESIGN BRANCH 4

BRIDGE NO. 35-0354
POST MILE 1.7/2.1

# ROUTE 101/ WILLOW INTERCHANGE
# WILLOW ROAD SEPARATION
# ABUTMENT DETAILS NO. 1

STRUCTURES DESIGN DETAIL SHEET (ENGLISH) (REV. 09-01-10)

ORIGINAL SCALE IN INCHES FOR REDUCED PLANS 0 1 2 3

UNIT: 3579
PROJECT NUMBER & PHASE: 04000006804
CONTRACT NO.: 04-235654

DISREGARD PRINTS BEARING EARLIER REVISION DATES

REVISION DATES: 6-30-15 7-1-15 11-5-15 11-10-15

SHEET 7 OF 33

FILE => 35-0354-f-a01d101.dgn

USERNAME => s132175 DATE PLOTTED => 17-AUG-2016 TIME PLOTTED => 09:37

| DIST | COUNTY | ROUTE | POST MILES TOTAL PROJECT | SHEET No. | TOTAL SHEETS |
|---|---|---|---|---|---|
| 04 | SM | 101,114 | 1.3/2.5, 5.0/5.3 | 463 | 568 |

REGISTERED CIVIL ENGINEER 11-10-15 DATE

6-29-16
PLANS APPROVAL DATE

REGISTERED PROFESSIONAL ENGINEER LINAN WANG No. 54714 Exp. 12-31-17 CIVIL STATE OF CALIFORNIA

*The State of California or its officers or agents shall not be responsible for the accuracy or completeness of scanned copies of this plan sheet.*

NOTES:

1. For Architectural Treatment see ARCHITECTURAL DETAILS NO. 1 through NO. 6 sheets
2. For "SECTION F-F" see "ABUTMENT DETAILS NO. 1" sheet
3. For location of "SECTION D-D" and "SECTION E-E", see "ABUTMENT DETAILS NO. 1" sheet

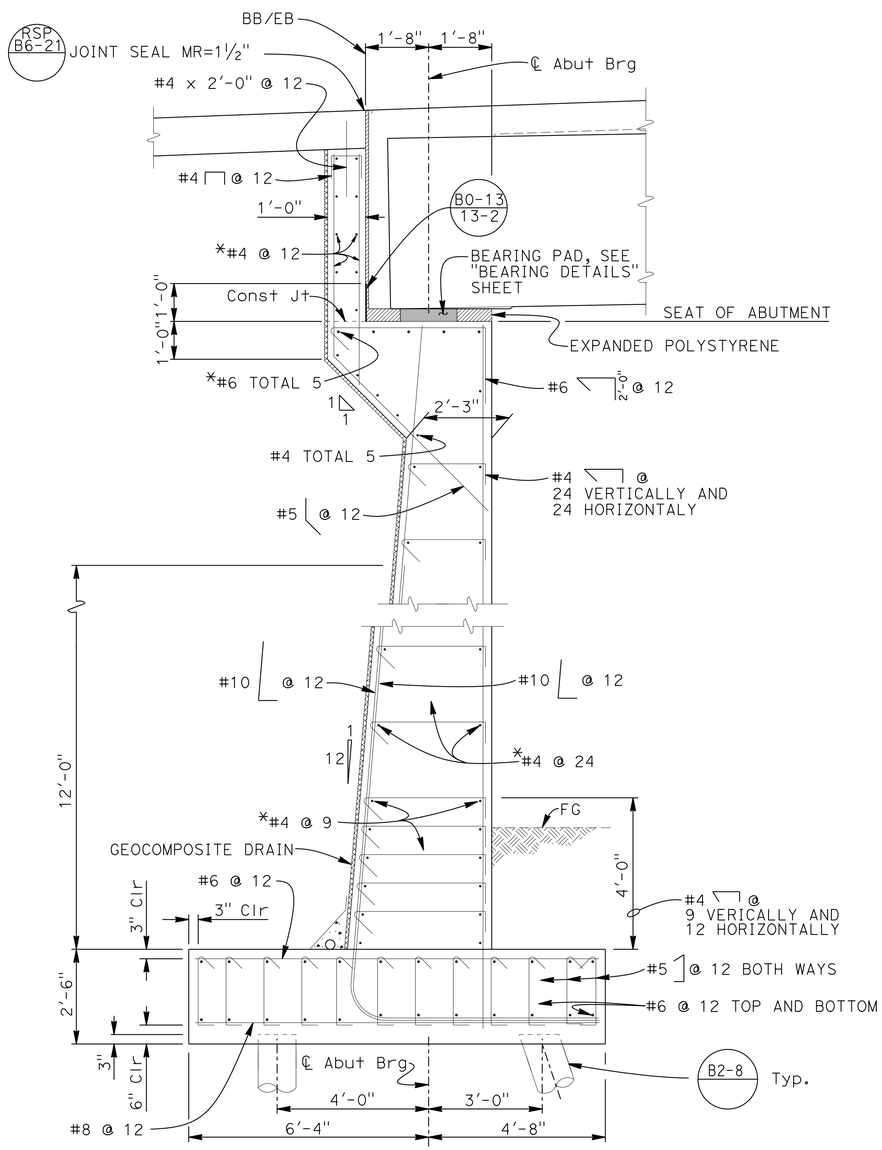


## TYPICAL SECTION - ABUTMENT

½"=1'-0"

* Mechanical butt splice at construction joint, typical for all horizontal bars in wall and footing.

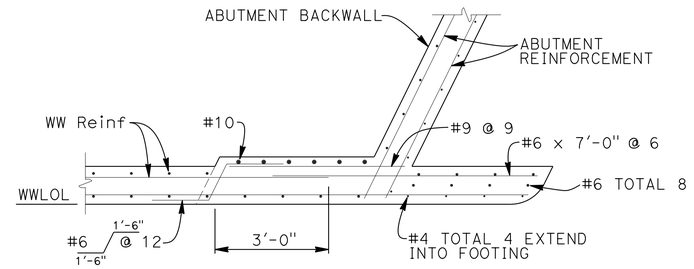


**OBTUSE CORNER**

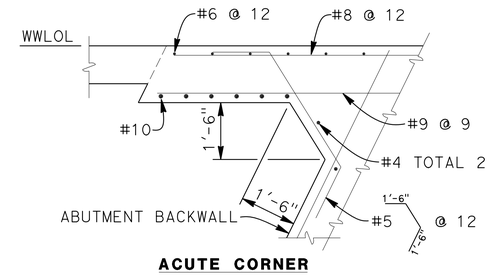


**ACUTE CORNER**

## SECTION D-D

½"=1'-0"

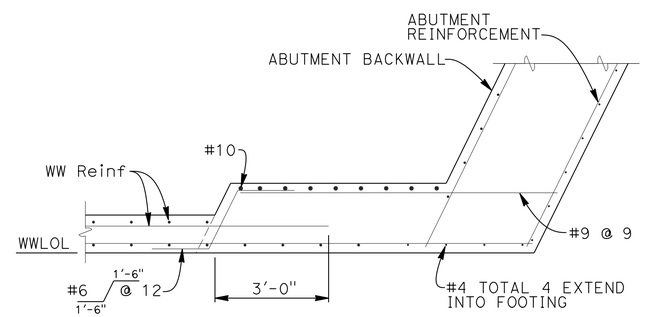


**OBTUSE CORNER**

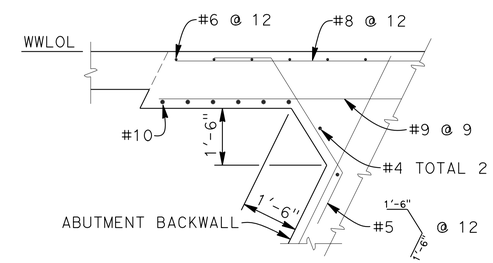


**ACUTE CORNER**

## SECTION E-E

½"=1'-0"

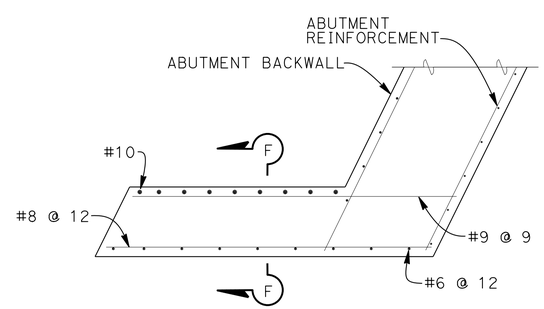


**OBTUSE CORNER**

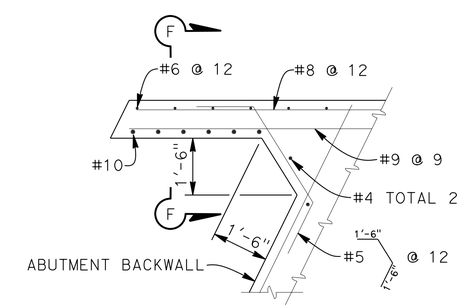


**ACUTE CORNER**

## RETURN WALL DETAILS

½"=1'-0"

| | | | |
|---|---|---|---|
| DESIGN | BY T. Masroor/L. Wang | CHECKED Q. Zhao | |
| DETAILS | BY A. Onodera | CHECKED Q. Zhao | |
| QUANTITIES | BY L. Wang/T. Masroor | CHECKED Q. Zhao | |

STATE OF CALIFORNIA
DEPARTMENT OF TRANSPORTATION

DIVISION OF ENGINEERING SERVICES
STRUCTURE DESIGN
DESIGN BRANCH 4

BRIDGE NO. 35-0354
POST MILE 1.7/2.1

# ROUTE 101/ WILLOW INTERCHANGE
# WILLOW ROAD SEPARATION
# ABUTMENT DETAILS NO. 2

STRUCTURES DESIGN DETAIL SHEET (ENGLISH) (REV. 09-01-10)

ORIGINAL SCALE IN INCHES FOR REDUCED PLANS 0 1 2 3

UNIT: 3579
PROJECT NUMBER & PHASE: 04000006804
CONTRACT NO.: 04-235654

DISREGARD PRINTS BEARING EARLIER REVISION DATES

REVISION DATES: 4-30-15 7-1-15 11-5-15 11-10-15

SHEET 8 OF 33

FILE => 35-0354-f-a01d+02.dgn

USERNAME => s132175 DATE PLOTTED => 17-AUG-2016 TIME PLOTTED => 09:37

| DIST | COUNTY | ROUTE | POST MILES TOTAL PROJECT | SHEET No. | TOTAL SHEETS |
|---|---|---|---|---|---|
| 04 | SM | 101,114 | 1.3/2.5, 5.0/5.3 | 464 | 568 |

REGISTERED CIVIL ENGINEER 11-10-15 DATE

6-29-16
PLANS APPROVAL DATE

REGISTERED PROFESSIONAL ENGINEER LINAN WANG No. 54714 Exp. 12-31-17 CIVIL STATE OF CALIFORNIA

*The State of California or its officers or agents shall not be responsible for the accuracy or completeness of scanned copies of this plan sheet.*

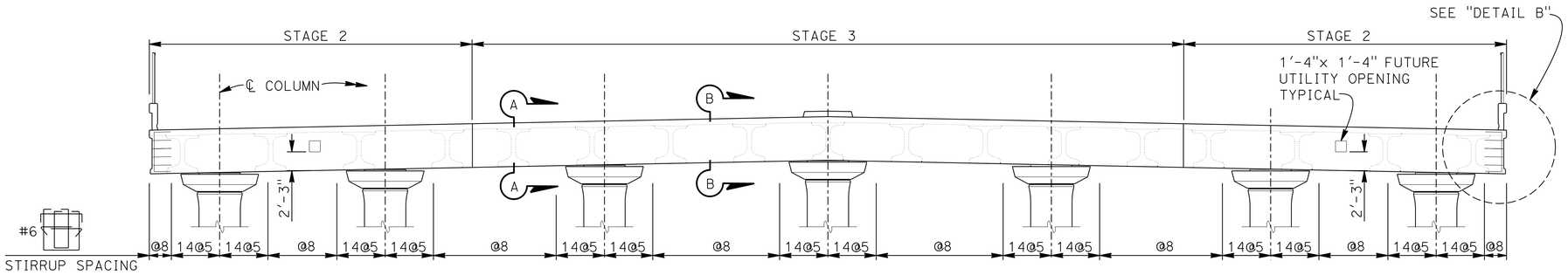


## ELEVATION
1/8"=1'-0"

NOTES:
For "SECTION A-A" and "SECTION B-B" see "BENT DETAILS NO. 2" sheet

NOTES:
1. For Architectural Treatment see "ARCHITECTURAL DETAILS NO. 2" sheet

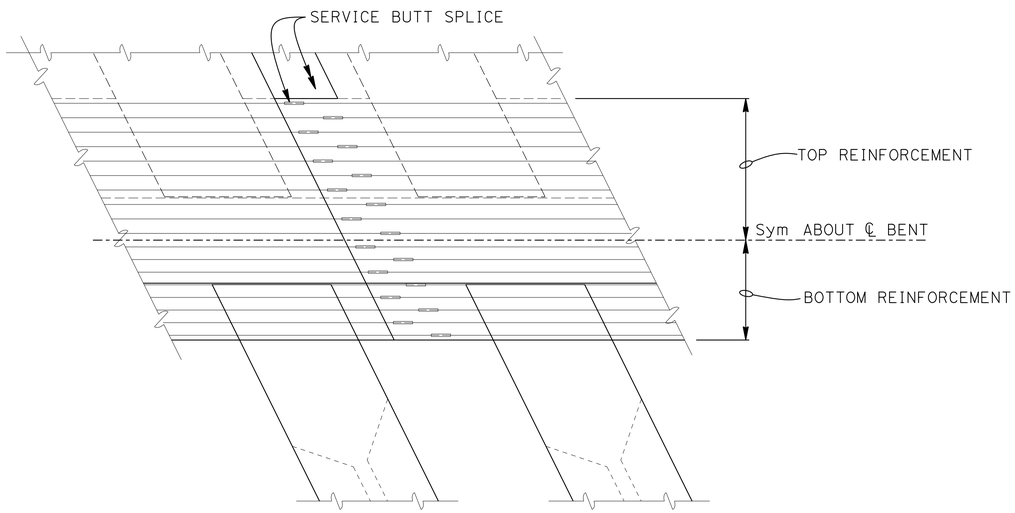


## DETAIL A
3/8"=1'-0"

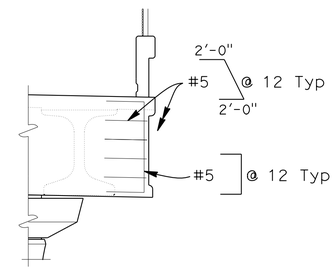


## DETAIL B
1/4"=1'-0"

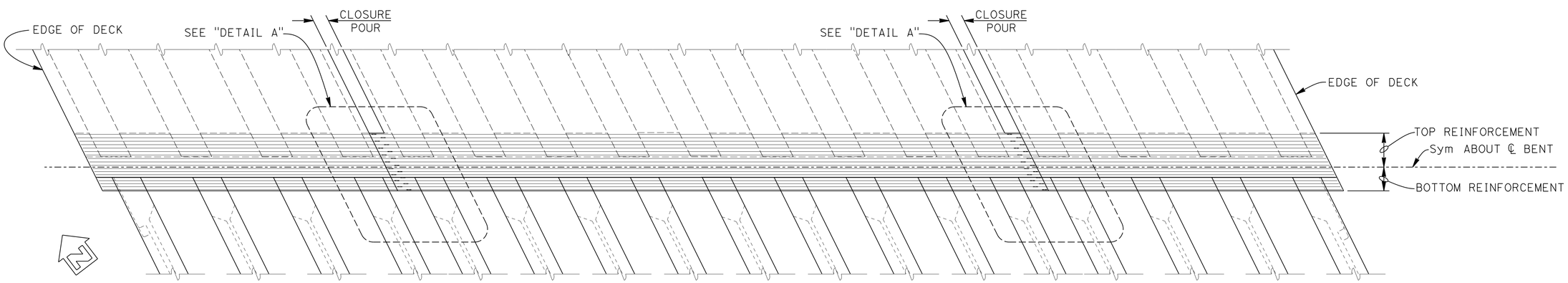


NOTE:
All main top bar reinf #10 tot 20 cont
All main bottom bar reinf #11 tot 16 cont

## PLAN
1/8"=1'-0"

| | BY | CHECKED |
|---|---|---|
| DESIGN | T. Masroor | Q. Zhao |
| DETAILS | A. Onodera | Q. Zhao |
| QUANTITIES | L. Wang/T. Masroor | Q. Zhao |

STATE OF CALIFORNIA
DEPARTMENT OF TRANSPORTATION

DIVISION OF ENGINEERING SERVICES
STRUCTURE DESIGN
DESIGN BRANCH 4

BRIDGE NO. 35-0354
POST MILE 1.7/2.1

# ROUTE 101/ WILLOW INTERCHANGE
# WILLOW ROAD SEPARATION
# BENT DETAILS NO. 1

STRUCTURES DESIGN DETAIL SHEET (ENGLISH) (REV. 09-01-10)

ORIGINAL SCALE IN INCHES FOR REDUCED PLANS 0 1 2 3

UNIT: 3579
PROJECT NUMBER & PHASE: 04000006804
CONTRACT NO.: 04-235654

DISREGARD PRINTS BEARING EARLIER REVISION DATES

REVISION DATES: 11-20-15 4-13-15 6-30-15 8-1-15

SHEET 9 OF 33

FILE => 35-0354-n-b01dt01.dgn

USERNAME => s132775 DATE PLOTTED => 17-AUG-2016 TIME PLOTTED => 09:37

| DIST | COUNTY | ROUTE | POST MILES TOTAL PROJECT | SHEET No. | TOTAL SHEETS |
|---|---|---|---|---|---|
| 04 | SM | 101,114 | 1.3/2.5, 5.0/5.3 | 465 | 568 |

REGISTERED CIVIL ENGINEER 11-10-15 DATE

6-29-16
PLANS APPROVAL DATE

REGISTERED PROFESSIONAL ENGINEER LINAN WANG No. 54714 Exp. 12-31-17 CIVIL STATE OF CALIFORNIA

*The State of California or its officers or agents shall not be responsible for the accuracy or completeness of scanned copies of this plan sheet.*

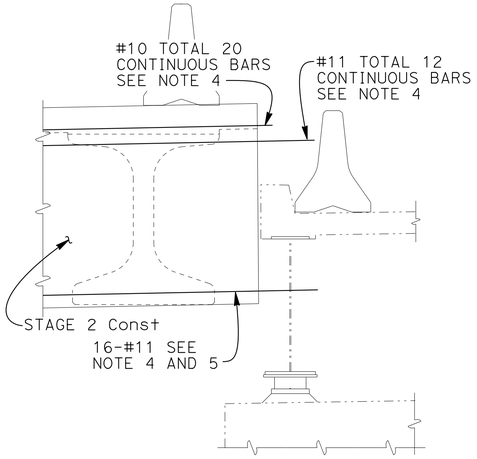


**DETAIL A**
1/2"=1'-0"

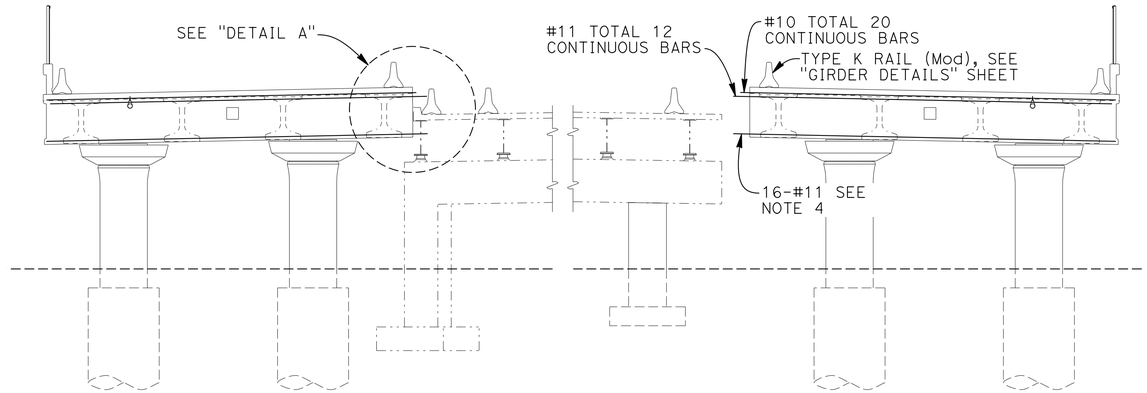


**STAGE 2 - PARTIAL ELEVATION**
1/8"=1'-0"

NOTES:
1. Reinforcement shall be "service" butt splice continuous
2. For location of "SECTION A-A" and "SECTION B-B" see "BENT DETAILS NO. 1" sheet
3. For stirrup spacing see "BENT DETAILS NO. 1" sheet
4. All splices in bent top and bottom reinforcement shall be staggered service butt splice.
5. Drill 2 1/2" diameter holes through the existing steel girder web to allow splicing of every other bent cap bottom reinforcement as shown
6. Adjust rebar spacing to avoid conflict with future utility opening

LEGEND:

——— Indicates New Structure

—·—·— Indicates Existing Structure

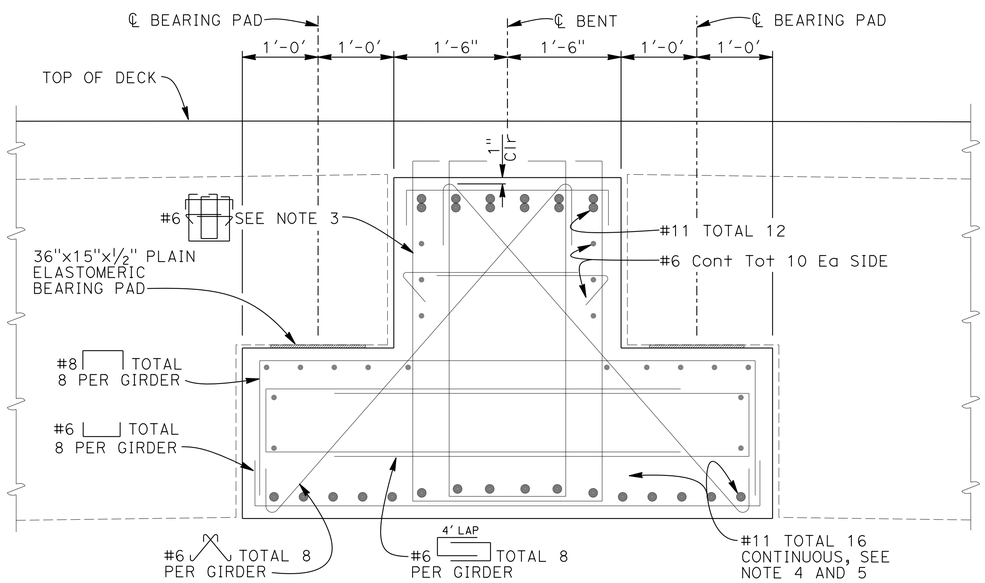


**SECTION A-A**
**AT GIRDER**
1"=1'-0"

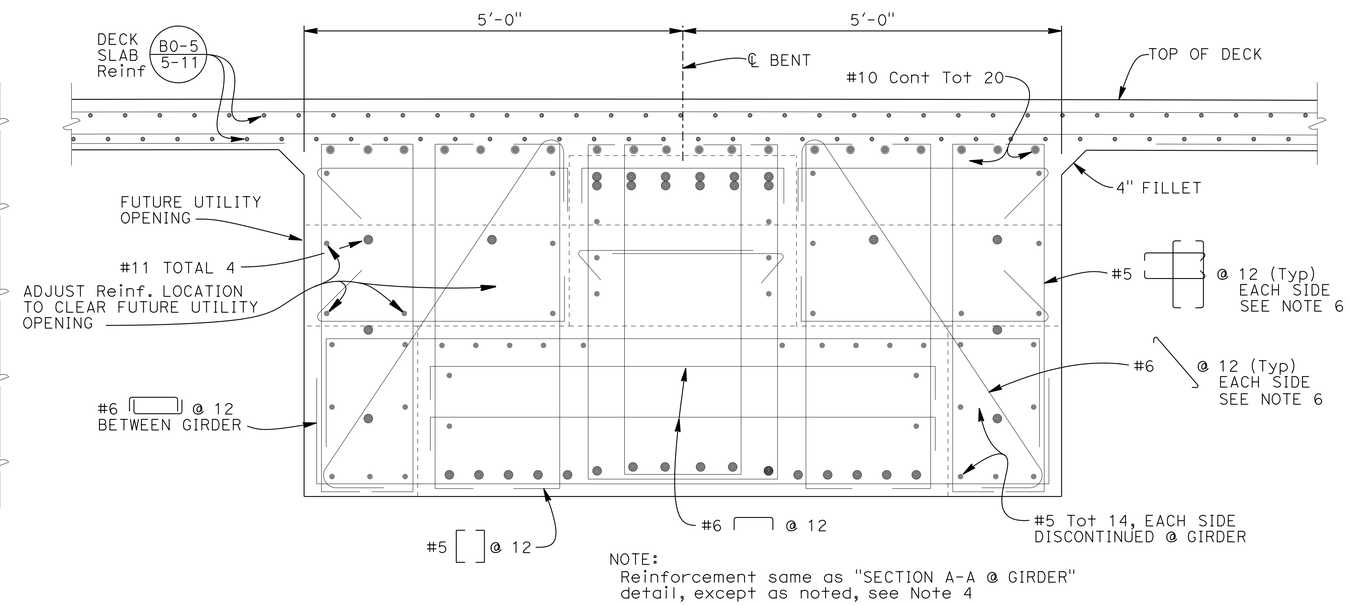


NOTE:
Reinforcement same as "SECTION A-A @ GIRDER" detail, except as noted, see Note 4

**SECTION B-B**
**BETWEEN GIRDERS**
1"=1'-0"

| | | | |
|---|---|---|---|
| DESIGN | BY T. Masroor | CHECKED Q. Zhao | |
| DETAILS | BY A. Onodera | CHECKED Q. Zhao | |
| QUANTITIES | BY L. Wang/T. Masroor | CHECKED Q. Zhao | |

STATE OF CALIFORNIA
DEPARTMENT OF TRANSPORTATION

DIVISION OF ENGINEERING SERVICES
STRUCTURE DESIGN
DESIGN BRANCH 4

BRIDGE NO. 35-0354
POST MILE 1.7/2.1

**ROUTE 101/ WILLOW INTERCHANGE**
**WILLOW ROAD SEPARATION**
**BENT DETAILS NO. 2**

STRUCTURES DESIGN DETAIL SHEET (ENGLISH) (REV. 09-01-10)

ORIGINAL SCALE IN INCHES FOR REDUCED PLANS 0 1 2 3

UNIT: 3579
PROJECT NUMBER & PHASE: 04000006804
CONTRACT NO.: 04-235654

DISREGARD PRINTS BEARING EARLIER REVISION DATES

REVISION DATES 6-30-15 7-7-15 8-22-15 5-1-16

SHEET 10 OF 33

FILE => 35-0354-h-b01dt02.dgn

USERNAME => s133275 DATE PLOTTED => 17-AUG-2016 TIME PLOTTED => 09:37

| DIST | COUNTY | ROUTE | POST MILES TOTAL PROJECT | SHEET No. | TOTAL SHEETS |
|---|---|---|---|---|---|
| 04 | SM | 101,114 | 1.3/2.5, 5.0/5.3 | 466 | 568 |

REGISTERED CIVIL ENGINEER 11-10-15 DATE

6-29-16
PLANS APPROVAL DATE

REGISTERED PROFESSIONAL ENGINEER LINAN WANG No. 54714 Exp. 12-31-17 CIVIL STATE OF CALIFORNIA

*The State of California or its officers or agents shall not be responsible for the accuracy or completeness of scanned copies of this plan sheet.*

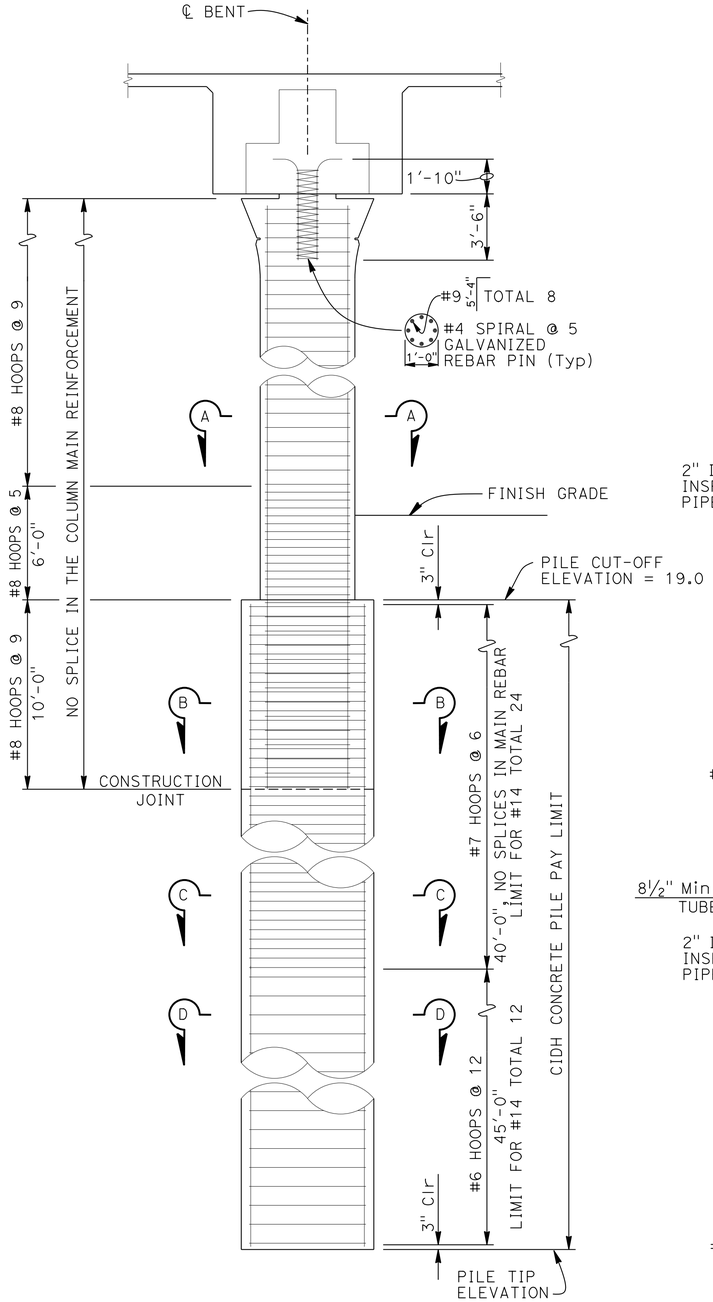


## COLUMN DETAIL
1/4"=1'-0"

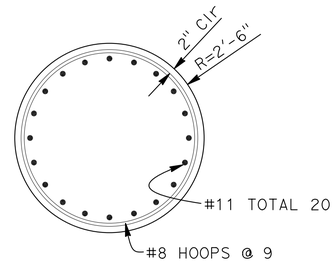


## SECTION A-A
1/2"=1'-0"

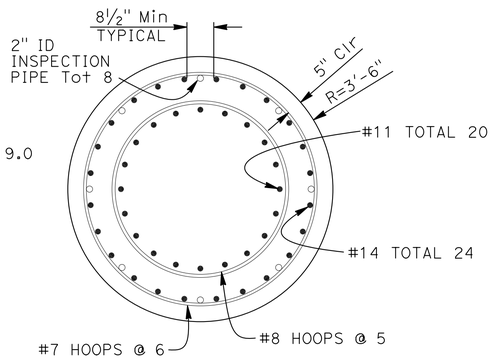


## SECTION B-B
1/2"=1'-0"

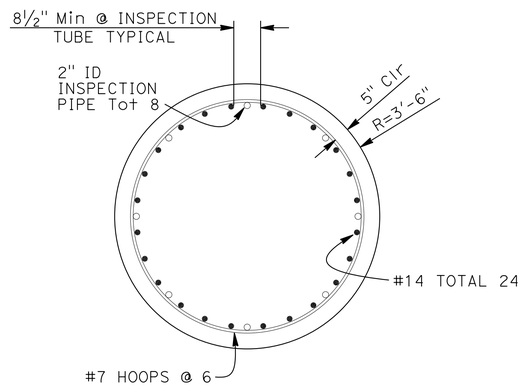


## SECTION C-C
1/2"=1'-0"

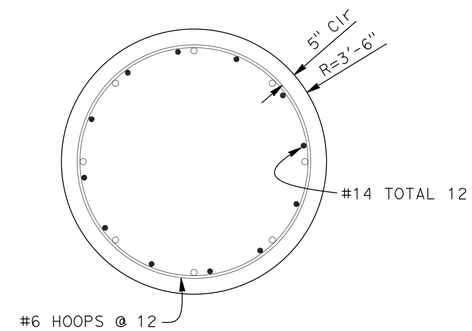


## SECTION D-D
1/2"=1'-0"

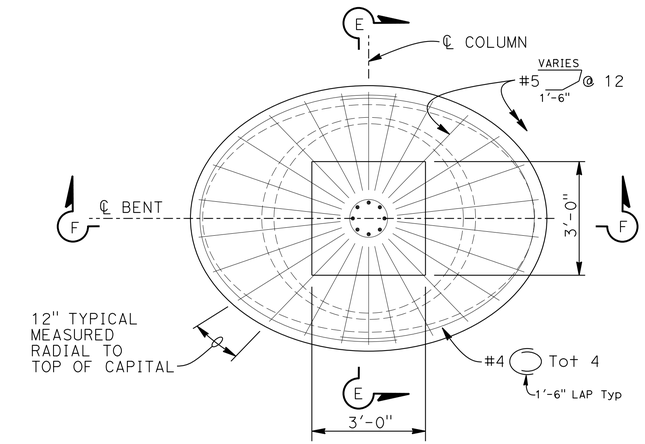


## COLUMN CAPITAL DETAIL
1/2"=1'-0"

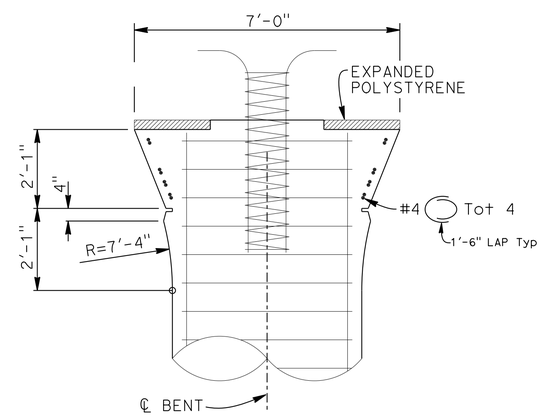


## VIEW E-E
1/2"=1'-0"

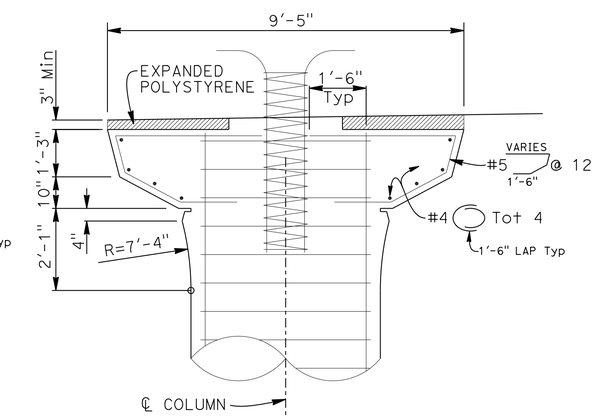


## VIEW F-F
1/2"=1'-0"

NOTES:

1. For Architectural Treatment see "ARCHITECTURAL DETAILS NO. 1" sheet
2. All hoops shall be ultimate butt splice continuous
3. For Finished Grade (FG) see "FOUNDATION PLAN" sheet

# ROUTE 101/ WILLOW INTERCHANGE
# WILLOW ROAD SEPARATION
# COLUMN DETAILS

| | BY | CHECKED |
|---|---|---|
| DESIGN | T. Masroor | Q. Zhao |
| DETAILS | A. Onodera | Q. Zhao |
| QUANTITIES | L. Wang/T. Masroor | Q. Zhao |

STATE OF CALIFORNIA
DEPARTMENT OF TRANSPORTATION

DIVISION OF ENGINEERING SERVICES
STRUCTURE DESIGN
DESIGN BRANCH 4

BRIDGE NO. 35-0354
POST MILE 1.7/2.1

STRUCTURES DESIGN DETAIL SHEET (ENGLISH) (REV. 09-01-10)

ORIGINAL SCALE IN INCHES FOR REDUCED PLANS 0 1 2 3

UNIT: 3579
PROJECT NUMBER & PHASE: 04000006804
CONTRACT NO.: 04-235654

DISREGARD PRINTS BEARING EARLIER REVISION DATES

REVISION DATES: 7-8-15 11-5-15 5-18-15 6-30-15

SHEET 11 OF 33

FILE => 35-0354-j-cdet01.dgn

USERNAME => s132775 DATE PLOTTED => 17-AUG-2016 TIME PLOTTED => 09:37

| DIST | COUNTY | ROUTE | POST MILES TOTAL PROJECT | SHEET No. | TOTAL SHEETS |
|---|---|---|---|---|---|
| 04 | SM | 101,114 | 1.3/2.5, 5.0/5.3 | 467 | 568 |

REGISTERED CIVIL ENGINEER 11-10-15 DATE

6-29-16
PLANS APPROVAL DATE

REGISTERED PROFESSIONAL ENGINEER LINAN WANG No. 54714 Exp. 12-31-17 CIVIL STATE OF CALIFORNIA

*The State of California or its officers or agents shall not be responsible for the accuracy or completeness of scanned copies of this plan sheet.*

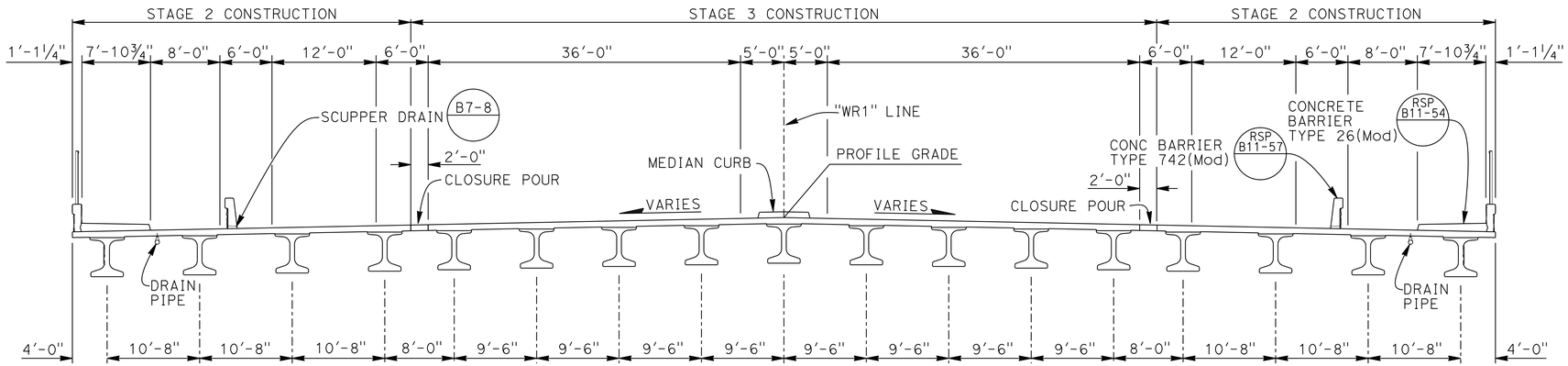


## TYPICAL SECTION

⅛"=1'-0"

NOTE:

1. 1" maximum haunch at Bent and Abutment and varies along the span, see "HAUNCH DETAIL"
2. For Deck Reinforcement not shown see "DECK REINFORCEMENT" sheet
3. Expanded polystyrene bonded to girder top and varies in thickness along the girder length
4. For Architectural Treatment see "ARCHITECTURAL DETAILS NO. 1", "ARCHITECTURAL DETAILS NO. 2" and "ARCHITECTURAL DETAILS NO. 3" sheets

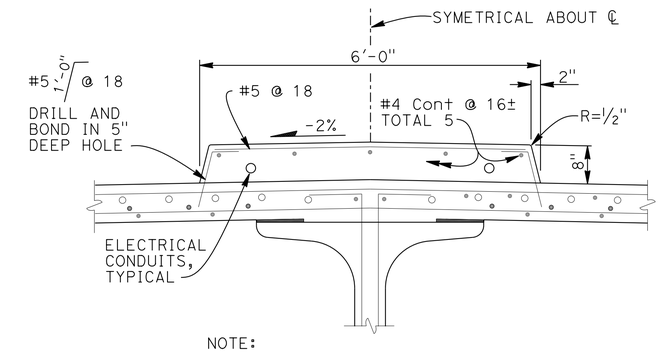


NOTE:
For reinf not labeled, see "Part Typical Section" detail

## MEDIAN CURB DETAIL

¾"=1'-0"

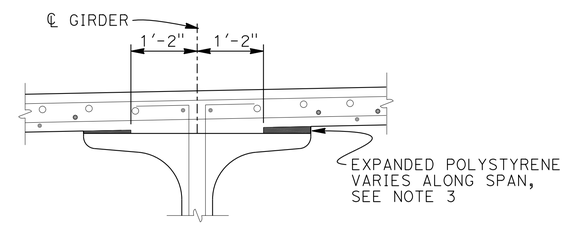


## HAUNCH DETAIL

¾"=1'-0"

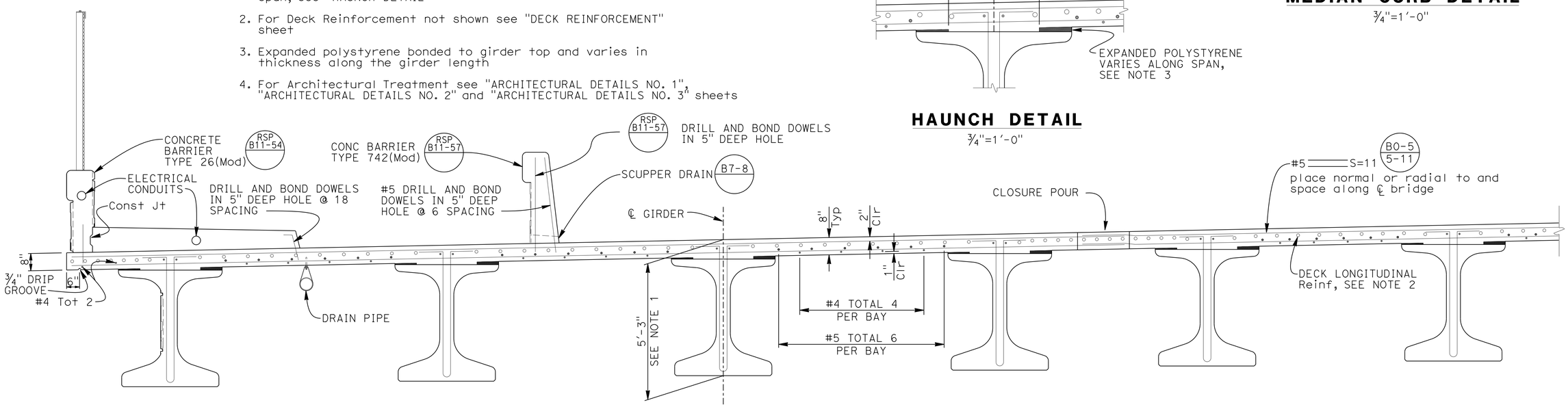


## PART TYPICAL SECTION

½"=1'-0"

# ROUTE 101/ WILLOW INTERCHANGE
# WILLOW ROAD SEPARATION
# TYPICAL SECTION

| | BY | CHECKED |
|---|---|---|
| DESIGN | T. Masroor | Q. Zhao |
| DETAILS | A. Onodera | Q. Zhao |
| QUANTITIES | L. Wang/T. Masroor | Q. Zhao |

STATE OF CALIFORNIA
DEPARTMENT OF TRANSPORTATION

DIVISION OF ENGINEERING SERVICES
STRUCTURE DESIGN
DESIGN BRANCH 4

BRIDGE NO. 35-0354
POST MILE 1.7/2.1

STRUCTURES DESIGN DETAIL SHEET (ENGLISH) (REV. 09-01-10)

ORIGINAL SCALE IN INCHES FOR REDUCED PLANS 0 1 2 3

UNIT: 3579
PROJECT NUMBER & PHASE: 04000006804
CONTRACT NO.: 04-235654

DISREGARD PRINTS BEARING EARLIER REVISION DATES

REVISION DATES: 11-6-15 11-10-15 7-24-15 10-16-15

SHEET 12 OF 33

FILE => 35-0354-k-ts01.dgn

USERNAME => s132175 DATE PLOTTED => 17-AUG-2016 TIME PLOTTED => 09:37

| DIST | COUNTY | ROUTE | POST MILES TOTAL PROJECT | SHEET No. | TOTAL SHEETS |
|---|---|---|---|---|---|
| 04 | SM | 101,114 | 1.3/2.5, 5.0/5.3 | 468 | 568 |

REGISTERED CIVIL ENGINEER 11-10-15 DATE

6-29-16
PLANS APPROVAL DATE

REGISTERED PROFESSIONAL ENGINEER
LINAN WANG
No. 54714
Exp. 12-31-17
CIVIL
STATE OF CALIFORNIA

*The State of California or its officers or agents shall not be responsible for the accuracy or completeness of scanned copies of this plan sheet.*

LEGEND:
- Ⓐ Indicates girder designation
- ◇ Indicates Pedestrian Structure Drain (B7-5 / 7-5)
- ⇝ Indicates direction of water flow
- ① Utility Opening (B6-10)
- ② FUTURE UTILITY OPENING (B6-10)

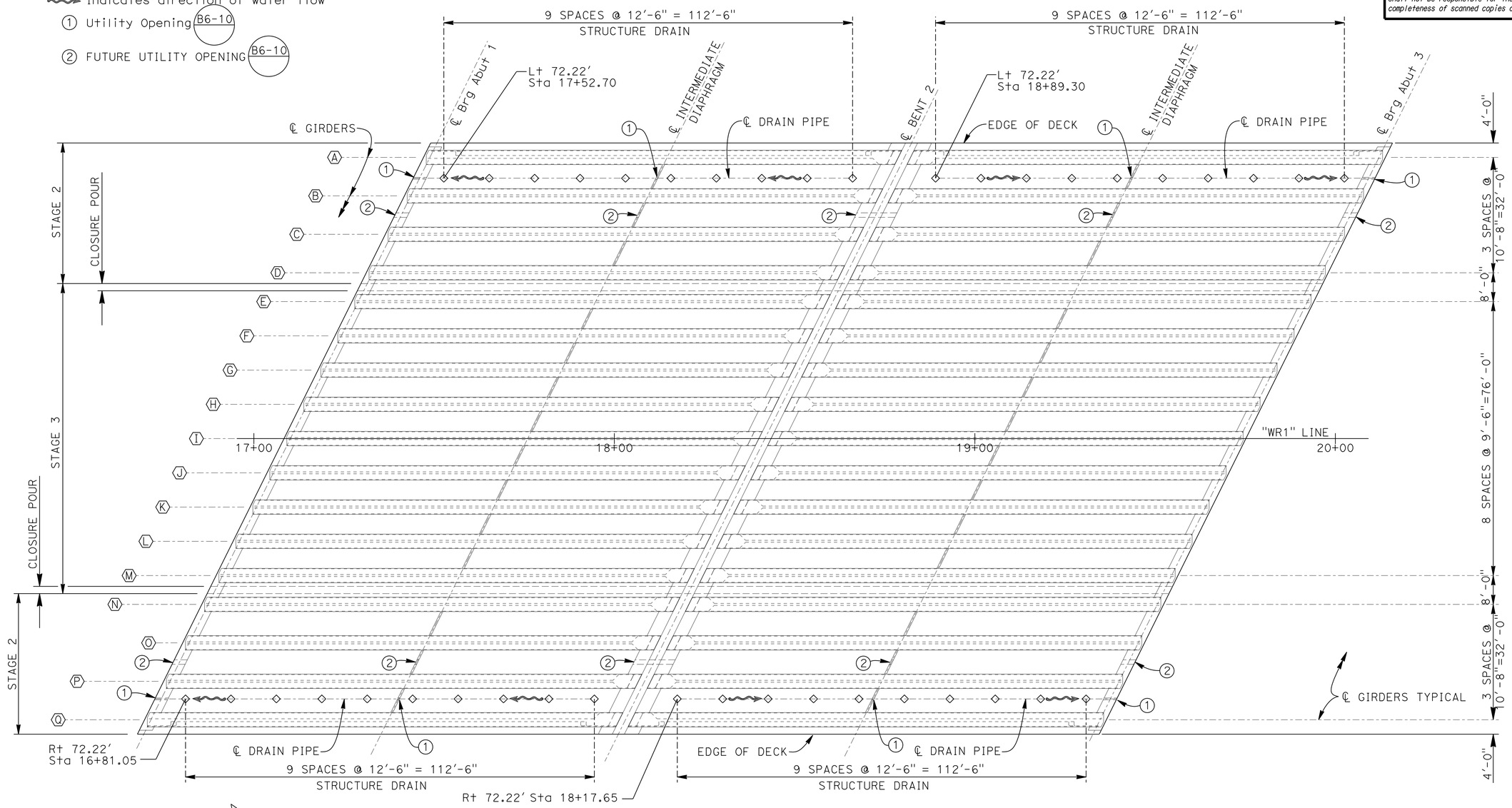


## GIRDER LAYOUT (B0-5 / 5-11) (B6-10)
1"=15'-0"

| | | | |
|---|---|---|---|
| DESIGN | BY T. Masroor | CHECKED Q. Zhao | |
| DETAILS | BY A. Onodera | CHECKED Q. Zhao | |
| QUANTITIES | BY L. Wang/T. Masroor | CHECKED Q. Zhao | |

STATE OF CALIFORNIA
DEPARTMENT OF TRANSPORTATION

DIVISION OF ENGINEERING SERVICES
STRUCTURE DESIGN
DESIGN BRANCH 4

BRIDGE NO. 35-0354
POST MILE 1.7/2.1

# ROUTE 101/WILLOW INTERCHANGE
# WILLOW ROAD SEPARATION
# GIRDER LAYOUT

STRUCTURES DESIGN DETAIL SHEET (ENGLISH) (REV. 09-01-10)

ORIGINAL SCALE IN INCHES FOR REDUCED PLANS 0 1 2 3

UNIT: 3579
PROJECT NUMBER & PHASE: 04000006804
CONTRACT NO.: 04-235654

DISREGARD PRINTS BEARING EARLIER REVISION DATES

REVISION DATES: 12-1-14 5-5-15 6-30-15 11-10-15

SHEET 13 OF 33

FILE => 35-0354-I-g_lo1.dgn

USERNAME => s132175 DATE PLOTTED => 17-AUG-2016 TIME PLOTTED => 09:37

| DIST | COUNTY | ROUTE | POST MILES TOTAL PROJECT | SHEET No. | TOTAL SHEETS |
|---|---|---|---|---|---|
| 04 | SM | 101,114 | 1.3/2.5, 5.0/5.3 | 469 | 568 |

REGISTERED CIVIL ENGINEER 11-10-15 DATE

6-29-16
PLANS APPROVAL DATE

REGISTERED PROFESSIONAL ENGINEER LINAN WANG No. 54714 Exp. 12-31-17 CIVIL STATE OF CALIFORNIA

*The State of California or its officers or agents shall not be responsible for the accuracy or completeness of scanned copies of this plan sheet.*

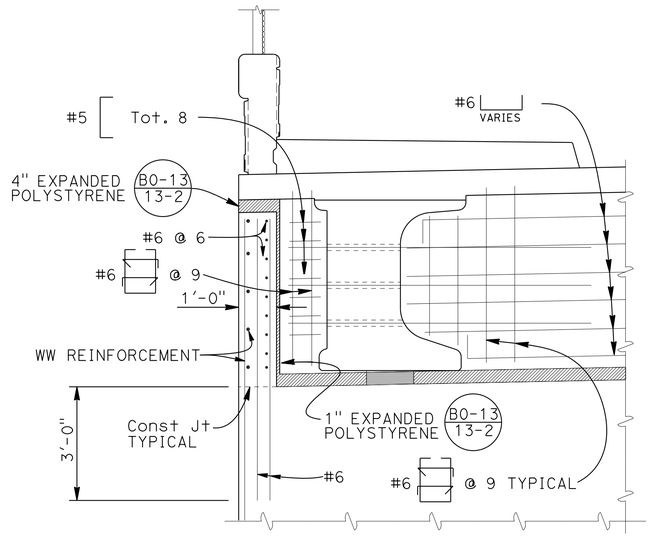


## EXTERIOR SHEAR KEY

1/2"=1'-0"

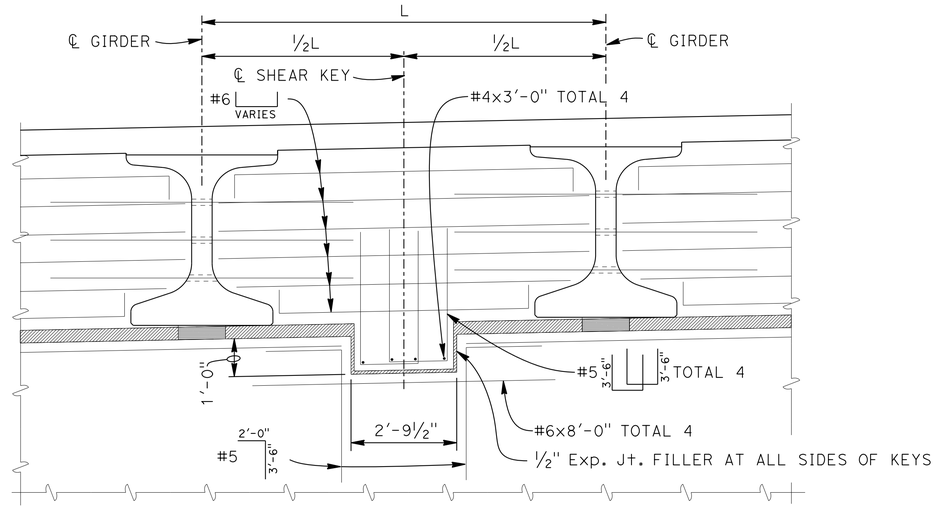


## INTERIOR SHEAR KEY

1/2"=1'-0"

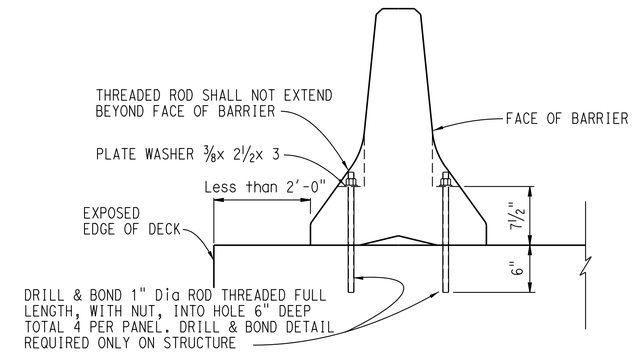


## TEMPORARY RAILING TYPE K (MOD) ATTACHMENT DETAIL

No Scale

SEE "TEMPORARY RAILING (TYPE K)" FOR DETAILS NOT SHOWN.
SEE "ROADWAY PLANS"

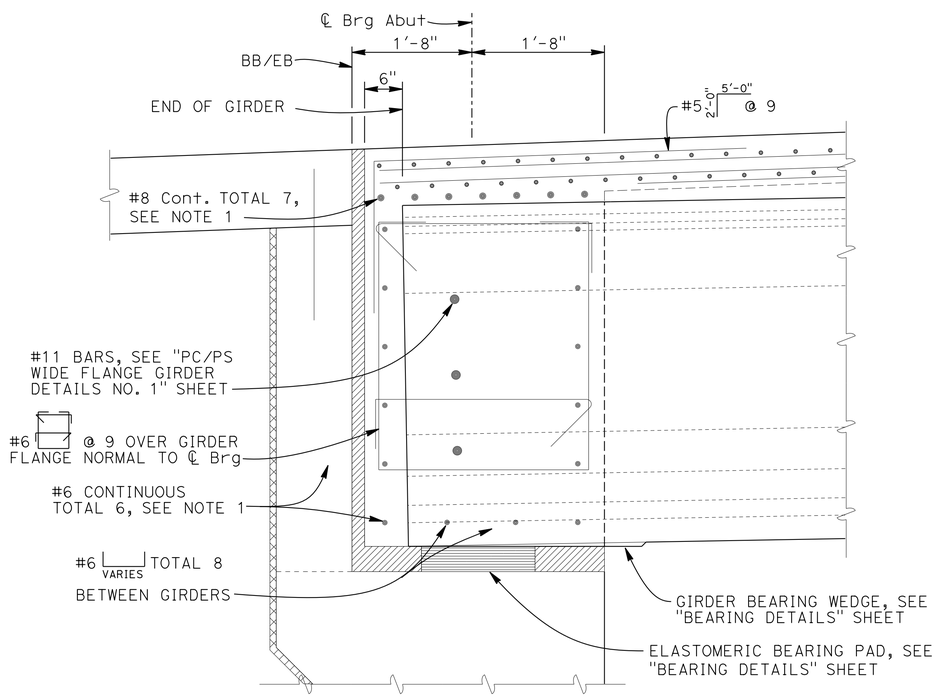


## END DIAPHRAGM SECTION OVER GIRDER FLANGES

1"=1'-0"

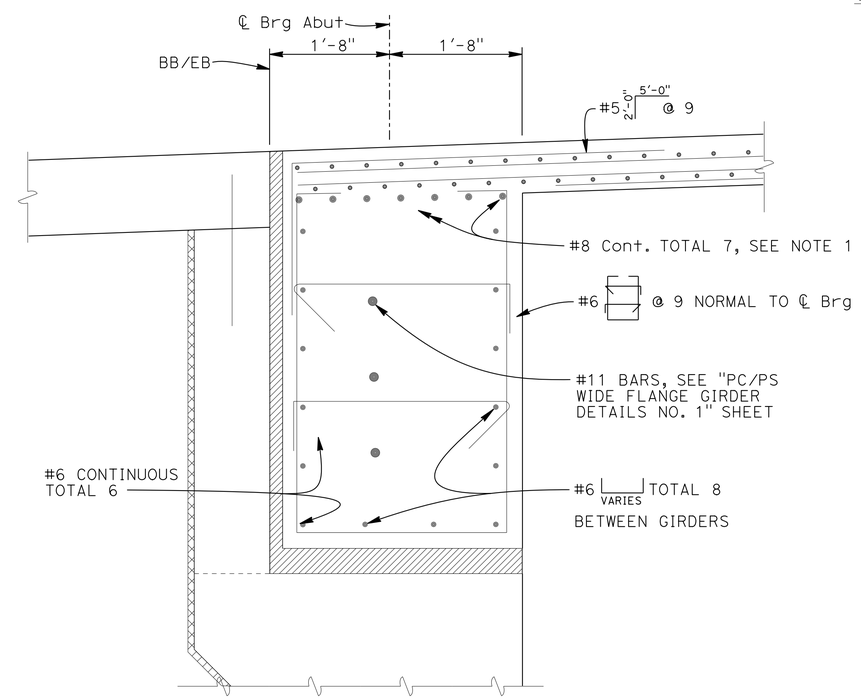


## END DIAPHRAGM SECTION BETWEEN GIRDER

1"=1'-0"

NOTES:

1. All continuous reinforcement shall be service mechanical butt spliced at construction joint

| | BY | CHECKED |
|---|---|---|
| DESIGN | T. Masroor | Q. Zhao |
| DETAILS | A. Onodera | Q. Zhao |
| QUANTITIES | L. Wang/T. Masroor | Q. Zhao |

STATE OF CALIFORNIA
DEPARTMENT OF TRANSPORTATION

DIVISION OF ENGINEERING SERVICES
STRUCTURE DESIGN
DESIGN BRANCH 4

BRIDGE NO. 35-0354
POST MILE 1.7/2.1

# ROUTE 101/ WILLOW INTERCHANGE
# WILLOW ROAD SEPARATION
# GIRDER DETAILS

STRUCTURES DESIGN DETAIL SHEET (ENGLISH) (REV. 09-01-10)

ORIGINAL SCALE IN INCHES FOR REDUCED PLANS 0 1 2 3

UNIT: 3579
PROJECT NUMBER & PHASE: 04000006804
CONTRACT NO.: 04-235654

DISREGARD PRINTS BEARING EARLIER REVISION DATES

REVISION DATES: 7-18-15 11-5-15 4-22-15 7-1-15

SHEET 14 OF 33

FILE => 35-0354-1-gdt01.dgn

USERNAME => s132175 DATE PLOTTED => 17-AUG-2016 TIME PLOTTED => 09:37

| DIST | COUNTY | ROUTE | POST MILES TOTAL PROJECT | SHEET No. | TOTAL SHEETS |
|---|---|---|---|---|---|
| 04 | SM | 101,114 | 1.3/2.5, 5.0/5.3 | 470 | 568 |

REGISTERED CIVIL ENGINEER 11-10-15 DATE

6-29-16
PLANS APPROVAL DATE

REGISTERED PROFESSIONAL ENGINEER
LINAN WANG
No. 54714
Exp. 12-31-17
CIVIL
STATE OF CALIFORNIA

*The State of California or its officers or agents shall not be responsible for the accuracy or completeness of scanned copies of this plan sheet.*

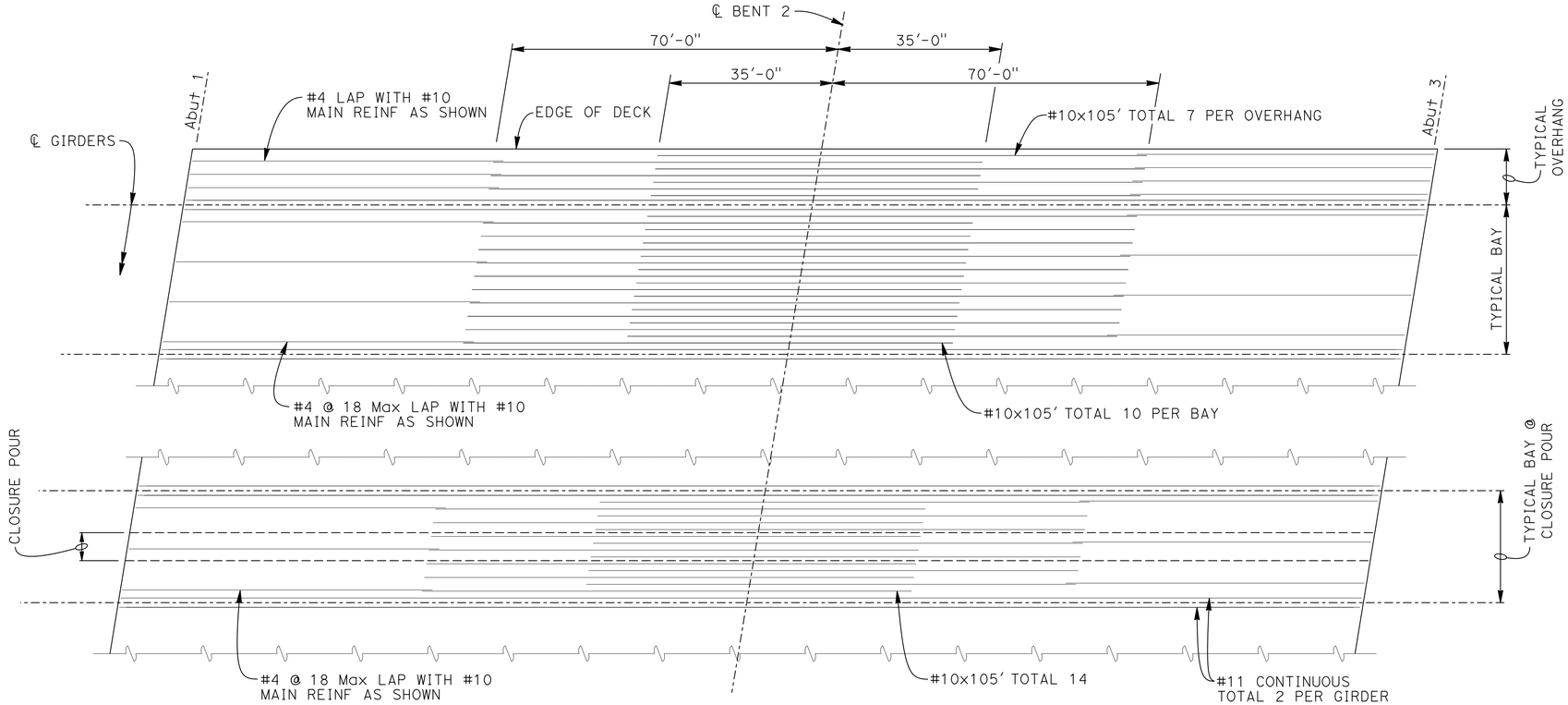


## DECK LONGITUDINAL REINFORCEMENT

NO SCALE

| | | | |
|---|---|---|---|
| DESIGN | BY T. Masroor | CHECKED Q. Zhao | |
| DETAILS | BY A. Onodera | CHECKED Q. Zhao | |
| QUANTITIES | BY T. Masroor | CHECKED Q. Zhao | |

STATE OF CALIFORNIA
DEPARTMENT OF TRANSPORTATION

DIVISION OF ENGINEERING SERVICES
STRUCTURE DESIGN
DESIGN BRANCH 4

BRIDGE NO. 35-0354
POST MILE 1.7/2.1

# ROUTE 101/ WILLOW INTERCHANGE
# WILLOW ROAD SEPARATION
# DECK REINFORCEMENT

STRUCTURES DESIGN DETAIL SHEET (ENGLISH) (REV. 09-01-10)

ORIGINAL SCALE IN INCHES FOR REDUCED PLANS 0 1 2 3

UNIT: 3579
PROJECT NUMBER & PHASE: 04000006804
CONTRACT NO.: 04-235654

DISREGARD PRINTS BEARING EARLIER REVISION DATES

REVISION DATES: 3-24-15 4-22-15 4-29-15

SHEET 15 OF 33

FILE => 35-0354-o-gir_rf01.dgn

USERNAME => s132775 DATE PLOTTED => 17-AUG-2016 TIME PLOTTED => 09:38

| DIST | COUNTY | ROUTE | POST MILES TOTAL PROJECT | SHEET No. | TOTAL SHEETS |
|---|---|---|---|---|---|
| 04 | SM | 101,114 | 1.3/2.5, 5.0/5.3 | 471 | 568 |

REGISTERED CIVIL ENGINEER 11-10-15 DATE

6-29-16
PLANS APPROVAL DATE

REGISTERED PROFESSIONAL ENGINEER LINAN WANG No. 54714 Exp. 12-31-17 CIVIL STATE OF CALIFORNIA

*The State of California or its officers or agents shall not be responsible for the accuracy or completeness of scanned copies of this plan sheet.*

## GIRDER DATA TABLE

| LOCATION | GIRDER LENGTH (L) | GIRDER DEPTH (D) | NUMBER OF 0.6" Ø STRANDS | JACKING FORCE (P) | CONCRETE STRENGTH (ksi) | | MIDSPAN DEAD LOAD DEFLECTION (in) | | DISTANCE FROM BOTTOM | |
|---|---|---|---|---|---|---|---|---|---|---|
| | | | | | f'ci | f'c | DECK | RAIL | X | Y |
| GIRDER A - Q | 130'-10" | 4.5' | 48 | 2155 kips | 6 | 7 | 3.70 | 0.10 | 4.0 | 9.75 |

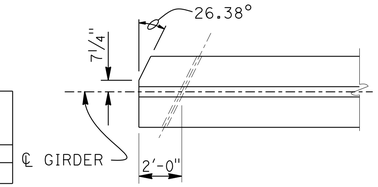


**SECTION Z-Z**
NO SCALE

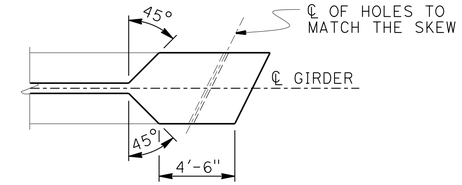


**SECTION J-J**
NO SCALE

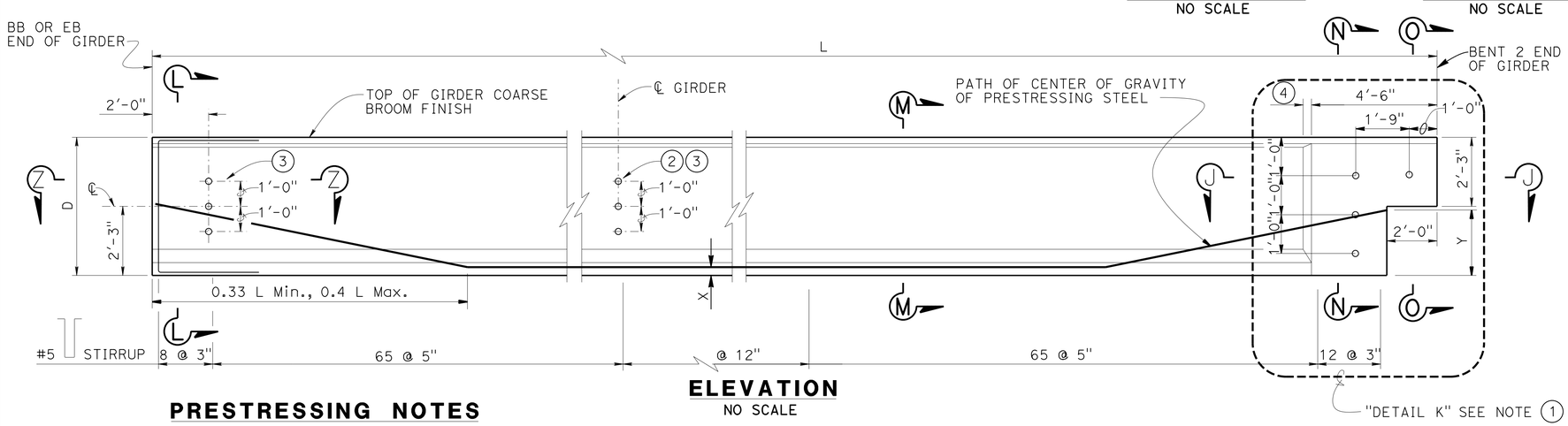


**ELEVATION**
NO SCALE

## PRESTRESSING NOTES

1. THE JACKING FORCE (P) IS IN THE JACKING FORCE REQUIRED AT THE POINT OF CONTROL ALONG THE SPAN. THE JACKING FORCE DOES NOT INCLUDE THE FABRICATION SPECIFIC LOSSES.
2. THE MAXIMUM TENSILE STRESS IN THE PRESTRESSING STEEL UPON RELEASE SHALL NOT EXCEED 75% OF THE SPECIFIED MINIMUM ULTIMATE TENSILE STRENGTH OF THE PRESTRESSING STEEL.
3. THE MAXIMUM TEMPORARY TENSILE STRESS (JACKING STRESS) IN THE PRESTRESSING STEEL SHALL NOT EXCEED 80% OF THE SPECIFIED MINIMUM ULTIMATE TENSILE STRENGTH OF THE PRESTRESSING STEEL.
4. CONCRETE STRENGTH:
   $f'_{ci}$ IS AT TIME OF INITIAL STRESSING
   $f'_c$ IS AT 28 DAYS
5. DEFLECTION COMPONENTS ARE INFORMATIONAL AND WILL BE USED TO SET SCREED LINE ELEVATIONS.
6. SCREED LINE ELEVATIONS FOR DECK CONCRETE WILL BE DETERMINED BY THE ENGINEER.
7. PRESTRESSING STRAND SHALL BE 270 KSI LOW RELAXATION.
8. FOR EXTERIER GIRDER END DETAILS, SEE "PC/PS WIDE FLANGE GIRDER DETAILS NO. 2" SHEET.

NOTES:

1. FOR "DETAIL K", SEE "PC/PS WIDE FLANGE GIRDER DETAILS NO. 2" SHEET.
2. FORMED HOLE IN INTERIOR GIRDERS ONLY FOR EXTERIOR GIRDERS, SEE "INTERMEDIATE DIAPHRAGM DETAILS" ON "OC/PS WIDE FLANGE GIRDER DETAILS No. 2" SHEET.
3. #8 X 6'-0" DOWEL THROUGH 1½" Ø HOLES AT INTERMEDIATE DIAPHRAGM. #11 X 8'-0" DOWEL THROUGH 2" Ø HOLES AT GIRDER ENDS. CENTERLINE OF HOLES TO MATCH THE SKEW.
4. TAPER GIRDER WEB AT 45° TO MATCH "SECTION J-J".
5. FOR SECTION N-N AND O-O, SEE "PC/PS WIDE FLANGE GIRDER DETAILS No. 2" SHEET.
6. STIRRUP LENGTH TO MATCH WITH INCREASED HAUNCH BEYOND

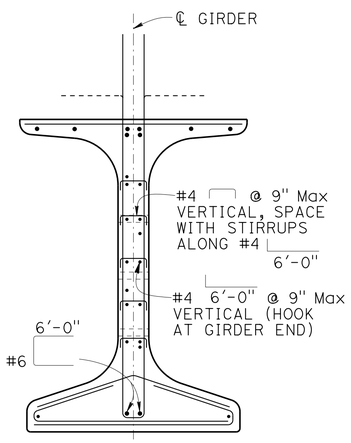


NOTE:
FOR TYPICAL INFORMATION, SEE "SECTION M-M"

**SECTION L-L**
NO SCALE

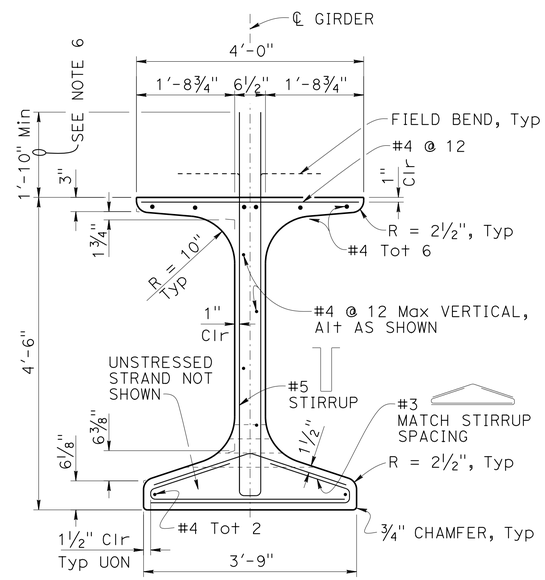


**SECTION M-M**
NO SCALE

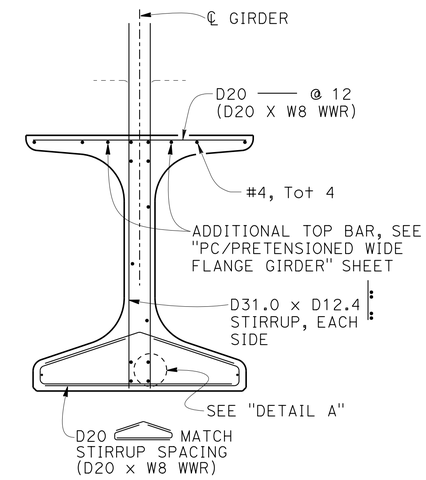


NOTE:
W8 WWR not all shown

**WELDED WIRE REINFORCEMENT (WWR) ALTERNATIVE**
¾"=1'-0"

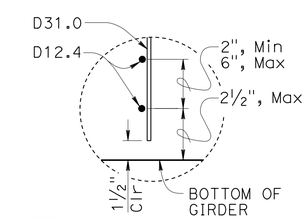


NOTES:
1. Bottom of stirrup WWR detail shown, top similar
2. Longitudinal wire area shall be 40% or greater of vertical deformed wire's area

**DETAIL A**

NOTES:
1. For Architectural Treatment see "ARCHITECTURAL DETAILS NO. 2" sheet

| | BY | CHECKED |
|---|---|---|
| DESIGN | T. Masroor | Q. Zhao |
| DETAILS | A. Onodera | Q. Zhao |
| QUANTITIES | T. Masroor | Q. Zhao |

STATE OF CALIFORNIA
DEPARTMENT OF TRANSPORTATION

DIVISION OF ENGINEERING SERVICES
STRUCTURE DESIGN
DESIGN BRANCH 4

BRIDGE NO. 35-0354
POST MILE 1.7/2.1

# ROUTE 101/ WILLOW INTERCHANGE
# WILLOW ROAD SEPARATION
## PC/PS WIDE FLANGE GIRDER DETAILS No. 1

STRUCTURES DESIGN DETAIL SHEET (ENGLISH) (REV. 09-01-10)

ORIGINAL SCALE IN INCHES FOR REDUCED PLANS 0 1 2 3

UNIT: 3579
PROJECT NUMBER & PHASE: 04000006804
CONTRACT NO.: 04-235654

DISREGARD PRINTS BEARING EARLIER REVISION DATES
REVISION DATES: 6-10-15 7-1-15 11-5-15 6-22-16

SHEET 16 OF 33

FILE => 35-0354-o-girdet01.dgn

USERNAME => s132175 DATE PLOTTED => 17-AUG-2016 TIME PLOTTED => 09:38

| DIST | COUNTY | ROUTE | POST MILES TOTAL PROJECT | SHEET No. | TOTAL SHEETS |
|---|---|---|---|---|---|
| 04 | SM | 101,114 | 1.3/2.5, 5.0/5.3 | 472 | 568 |

REGISTERED CIVIL ENGINEER 11-10-15 DATE

6-29-16
PLANS APPROVAL DATE

REGISTERED PROFESSIONAL ENGINEER LINAN WANG No. 54714 Exp. 12-31-17 CIVIL STATE OF CALIFORNIA

*The State of California or its officers or agents shall not be responsible for the accuracy or completeness of scanned copies of this plan sheet.*

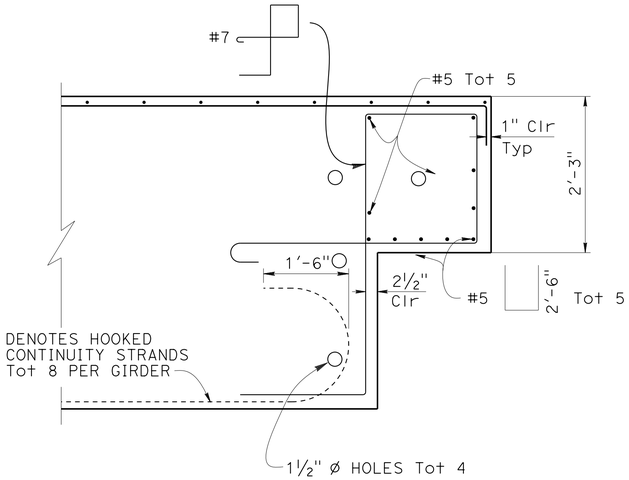


## DETAIL K

NO SCALE

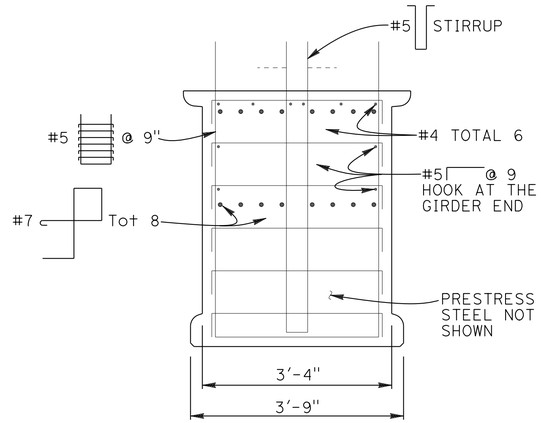


## SECTION N-N

¾" = 1'-0"

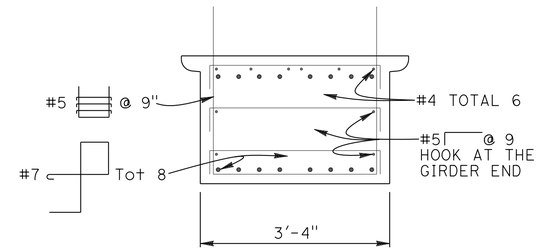


## SECTION O-O

¾" = 1'-0"

NOTES:

1. For Architectural Treatment see "ARCHITECTURAL DETAILS NO. 2" sheet

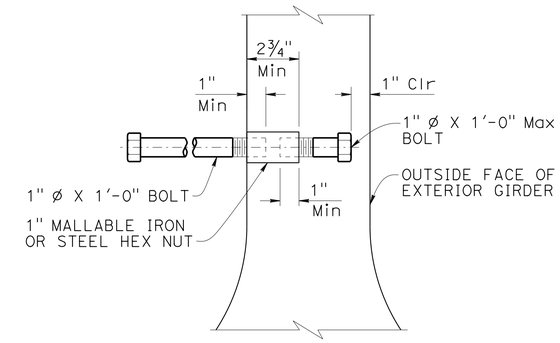


## INSERT ASSEMBLY

3" = 1'-0"

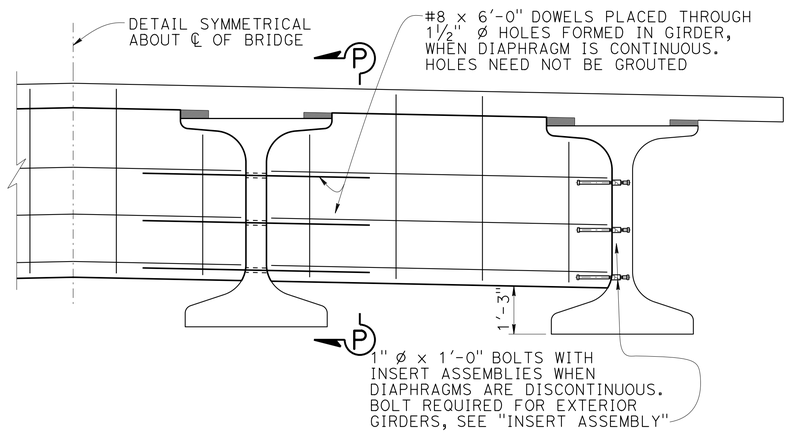


## INTERMEDIATE DIAPHRAGM DETAILS

NO SCALE

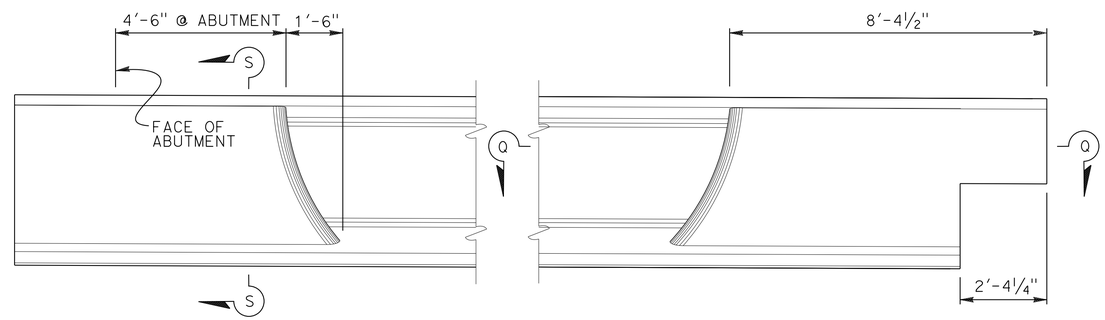


## EXTERIOR GIRDER ELEVATION

½"=1'-0"

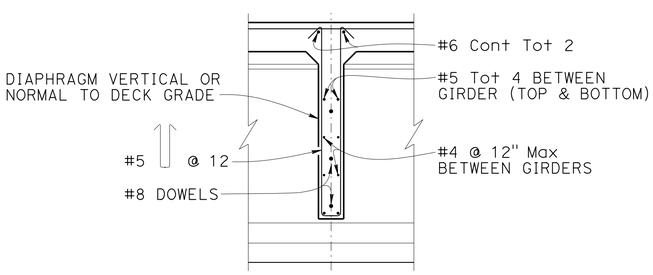


## SECTION P-P

NO SCALE

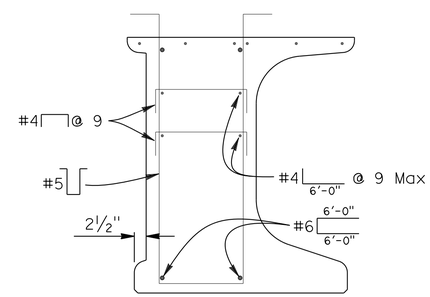


## SECTION S-S

¾" = 1'-0"

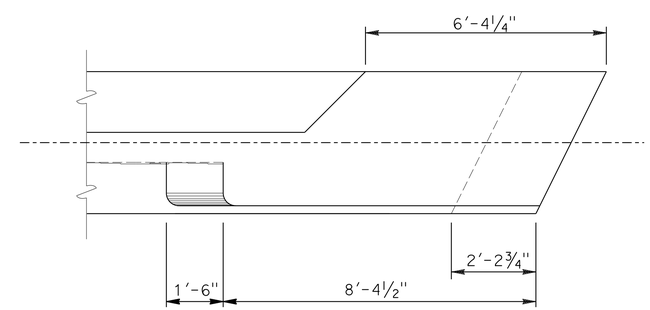


## SECTION Q-Q

½"=1'-0"

# ROUTE 101/ WILLOW INTERCHANGE

# WILLOW ROAD SEPARATION

## PC/PS WIDE FLANGE GIRDER DETAILS No. 2

| | BY | CHECKED |
|---|---|---|
| DESIGN | T. Masroor | Q. Zhao |
| DETAILS | A. Onodera | Q. Zhao |
| QUANTITIES | L. Wang/T. Masroor | Q. Zhao |

STATE OF CALIFORNIA
DEPARTMENT OF TRANSPORTATION

DIVISION OF ENGINEERING SERVICES
STRUCTURE DESIGN
DESIGN BRANCH 4

BRIDGE NO. 35-0354
POST MILE 1.7/2.1

STRUCTURES DESIGN DETAIL SHEET (ENGLISH) (REV. 09-01-10)

ORIGINAL SCALE IN INCHES FOR REDUCED PLANS 0 1 2 3

UNIT: 3579
PROJECT NUMBER & PHASE: 04000006804
CONTRACT NO.: 04-235654

DISREGARD PRINTS BEARING EARLIER REVISION DATES

REVISION DATES 1-1-15 6-18-15 7-1-15 11-6-15

SHEET 17 OF 33

FILE => 35-0354-o-girder02.dgn

USERNAME => s132175 DATE PLOTTED => 17-AUG-2016 TIME PLOTTED => 09:38

| DIST | COUNTY | ROUTE | POST MILES TOTAL PROJECT | SHEET No. | TOTAL SHEETS |
|---|---|---|---|---|---|
| 04 | SM | 101,114 | 1.3/2.5, 5.0/5.3 | 473 | 568 |

REGISTERED CIVIL ENGINEER 11-10-15 DATE

6-29-16
PLANS APPROVAL DATE

REGISTERED PROFESSIONAL ENGINEER LINAN WANG No. 54714 Exp. 12-31-17 CIVIL STATE OF CALIFORNIA

*The State of California or its officers or agents shall not be responsible for the accuracy or completeness of scanned copies of this plan sheet.*

## GIRDER BEARING PAD ELEVATIONS

| SPAN | LOCATION | *GIRDER | GIRDER END X LENGTH(Ft) | GIRDER END Y (in) | BOTTOM OF BRG. PAD ELEV. (Ft) |
|---|---|---|---|---|---|
| 1 | Abut 1 | A | 3.163 | 0.27 | 38.431 |
| 1 | Abut 1 | B | 3.163 | 0.33 | 38.509 |
| 1 | Abut 1 | C | 3.163 | 0.38 | 38.578 |
| 1 | Abut 1 | D | 3.163 | 0.44 | 38.640 |
| 1 | Abut 1 | E | 3.163 | 0.48 | 38.681 |
| 1 | Abut 1 | F | 3.163 | 0.53 | 38.725 |
| 1 | Abut 1 | G | 3.163 | 0.58 | 38.763 |
| 1 | Abut 1 | H | 3.163 | 0.63 | 38.796 |
| 1 | Abut 1 | I | 3.163 | 0.67 | 38.825 |
| 1 | Abut 1 | J | 3.163 | 0.72 | 38.486 |
| 1 | Abut 1 | K | 3.163 | 0.76 | 38.150 |
| 1 | Abut 1 | L | 3.163 | 0.79 | 37.819 |
| 1 | Abut 1 | M | 3.163 | 0.83 | 37.494 |
| 1 | Abut 1 | N | 3.163 | 0.85 | 37.226 |
| 1 | Abut 1 | O | 3.163 | 0.88 | 36.879 |
| 1 | Abut 1 | P | 3.163 | 0.90 | 36.544 |
| 1 | Abut 1 | Q | 3.163 | 0.92 | 36.224 |
| 1 | Bent 2 | A | 1.953 | 0.17 | 41.911 |
| 1 | Bent 2 | B | 1.953 | 0.20 | 42.177 |
| 1 | Bent 2 | C | 1.953 | 0.24 | 42.435 |
| 1 | Bent 2 | D | 1.953 | 0.27 | 42.685 |
| 1 | Bent 2 | E | 1.953 | 0.30 | 42.867 |
| 1 | Bent 2 | F | 1.953 | 0.33 | 43.078 |
| 1 | Bent 2 | G | 1.953 | 0.36 | 43.283 |
| 1 | Bent 2 | H | 1.953 | 0.39 | 43.482 |
| 1 | Bent 2 | I | 1.953 | 0.42 | 43.675 |
| 1 | Bent 2 | J | 1.953 | 0.44 | 43.482 |
| 1 | Bent 2 | K | 1.953 | 0.47 | 43.283 |
| 1 | Bent 2 | L | 1.953 | 0.49 | 43.077 |
| 1 | Bent 2 | M | 1.953 | 0.51 | 42.865 |
| 1 | Bent 2 | N | 1.953 | 0.53 | 42.683 |
| 1 | Bent 2 | O | 1.953 | 0.54 | 42.432 |
| 1 | Bent 2 | P | 1.953 | 0.56 | 42.174 |
| 1 | Bent 2 | Q | 1.953 | 0.57 | 41.908 |

* For girder location see "GIRDER LAYOUT" sheet

## GIRDER BEARING PAD ELEVATIONS

| SPAN | LOCATION | *GIRDER | GIRDER END X LENGTH(Ft) | GIRDER END Y (in) | BOTTOM OF BRG. PAD ELEV. (Ft) |
|---|---|---|---|---|---|
| 2 | Bent 2 | A | 1.953 | -0.70 | 41.848 |
| 2 | Bent 2 | B | 1.953 | -0.67 | 42.121 |
| 2 | Bent 2 | C | 1.953 | -0.63 | 42.387 |
| 2 | Bent 2 | D | 1.953 | -0.60 | 42.646 |
| 2 | Bent 2 | E | 1.953 | -0.57 | 42.834 |
| 2 | Bent 2 | F | 1.953 | -0.54 | 43.053 |
| 2 | Bent 2 | G | 1.953 | -0.51 | 43.265 |
| 2 | Bent 2 | H | 1.953 | -0.48 | 43.471 |
| 2 | Bent 2 | I | 1.953 | -0.45 | 43.671 |
| 2 | Bent 2 | J | 1.953 | -0.41 | 43.485 |
| 2 | Bent 2 | K | 1.953 | -0.37 | 43.293 |
| 2 | Bent 2 | L | 1.953 | -0.34 | 43.095 |
| 2 | Bent 2 | M | 1.953 | -0.31 | 42.890 |
| 2 | Bent 2 | N | 1.953 | -0.28 | 42.714 |
| 2 | Bent 2 | O | 1.953 | -0.25 | 42.471 |
| 2 | Bent 2 | P | 1.953 | -0.21 | 42.221 |
| 2 | Bent 2 | Q | 1.953 | -0.18 | 41.963 |
| 2 | Abut 3 | A | 3.721 | -1.33 | 35.442 |
| 2 | Abut 3 | B | 3.721 | -1.27 | 35.903 |
| 2 | Abut 3 | C | 3.721 | -1.20 | 36.356 |
| 2 | Abut 3 | D | 3.721 | -1.14 | 36.802 |
| 2 | Abut 3 | E | 3.721 | -1.09 | 37.131 |
| 2 | Abut 3 | F | 3.721 | -1.03 | 37.516 |
| 2 | Abut 3 | G | 3.721 | -0.97 | 37.895 |
| 2 | Abut 3 | H | 3.721 | -0.91 | 38.268 |
| 2 | Abut 3 | I | 3.721 | -0.86 | 38.635 |
| 2 | Abut 3 | J | 3.721 | -0.78 | 38.663 |
| 2 | Abut 3 | K | 3.721 | -0.71 | 38.672 |
| 2 | Abut 3 | L | 3.721 | -0.65 | 38.664 |
| 2 | Abut 3 | M | 3.721 | -0.58 | 38.641 |
| 2 | Abut 3 | N | 3.721 | -0.53 | 38.609 |
| 2 | Abut 3 | O | 3.721 | -0.47 | 38.553 |
| 2 | Abut 3 | P | 3.721 | -0.41 | 38.481 |
| 2 | Abut 3 | Q | 3.721 | -0.35 | 38.396 |

* For girder location see "GIRDER LAYOUT" sheet

NOTE:
Coat top of bearing pad with grease prior to placing sheet metal

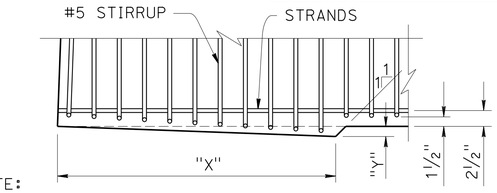


NOTE:
For "X" and "Y" see "GIRDER BEARING PAD ELEVATIONS" table

## GIRDER BEARING WEDGE AT ABUTMENTS

NO SCALE

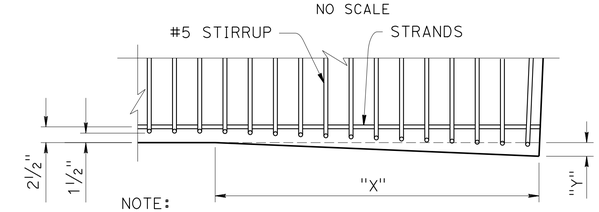


NOTE:
For "X" and "Y" see "GIRDER BEARING PAD ELEVATIONS" table

## GIRDER BEARING WEDGE AT BENT 2

NO SCALE

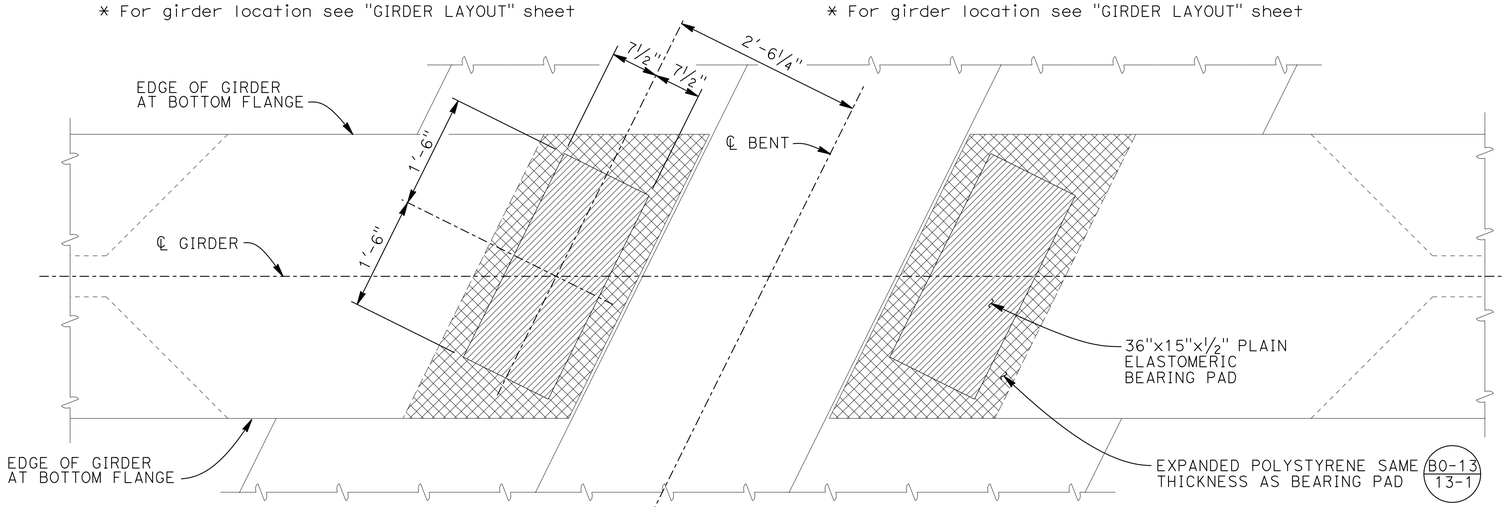


## BEARING PAD DETAILS AT BENT

1"=1'-0"

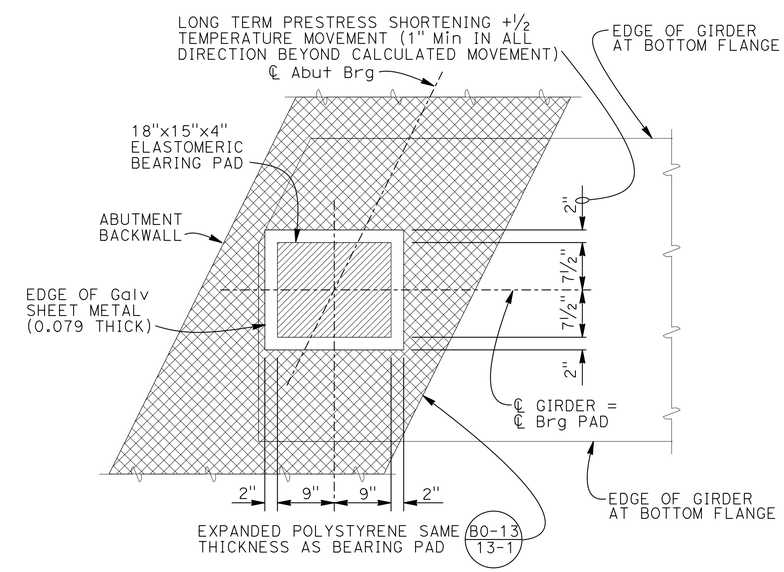


## BEARING PAD DETAILS AT ABUTMENTS

1"=1'-0"

| | | | |
|---|---|---|---|
| DESIGN | BY Q. Zhao | CHECKED T. Masroor | |
| DETAILS | BY A. Onodera | CHECKED T. Masroor | |
| QUANTITIES | BY L. Wang/T. Masroor | CHECKED Q. Zhao | |

STATE OF CALIFORNIA
DEPARTMENT OF TRANSPORTATION

DIVISION OF ENGINEERING SERVICES
STRUCTURE DESIGN
DESIGN BRANCH 4

BRIDGE NO. 35-0354
POST MILE 1.7/2.1

# ROUTE 101/ WILLOW INTERCHANGE
# WILLOW ROAD SEPARATION
# BEARING DETAILS

STRUCTURES DESIGN DETAIL SHEET (ENGLISH) (REV. 09-01-10)

ORIGINAL SCALE IN INCHES FOR REDUCED PLANS 0 1 2 3

UNIT: 3579
PROJECT NUMBER & PHASE: 04000006804
CONTRACT NO.: 04-235654

DISREGARD PRINTS BEARING EARLIER REVISION DATES

REVISION DATES: 2-14-15 4-1-15 6-10-15 7-4-15

SHEET 18 OF 33

FILE => 35-0354-q-brgdt01.dgn

USERNAME => s132775 DATE PLOTTED => 17-AUG-2016 TIME PLOTTED => 09:38

| DIST | COUNTY | ROUTE | POST MILES TOTAL PROJECT | SHEET No. | TOTAL SHEETS |
|---|---|---|---|---|---|
| 04 | SM | 101,114 | 1.3/2.5, 5.0/5.3 | 474 | 568 |

REGISTERED CIVIL ENGINEER 11-10-15 DATE

6-29-16
PLANS APPROVAL DATE

REGISTERED PROFESSIONAL ENGINEER
LINAN WANG
No. 54714
Exp. 12-31-17
CIVIL
STATE OF CALIFORNIA

*The State of California or its officers or agents shall not be responsible for the accuracy or completeness of scanned copies of this plan sheet.*

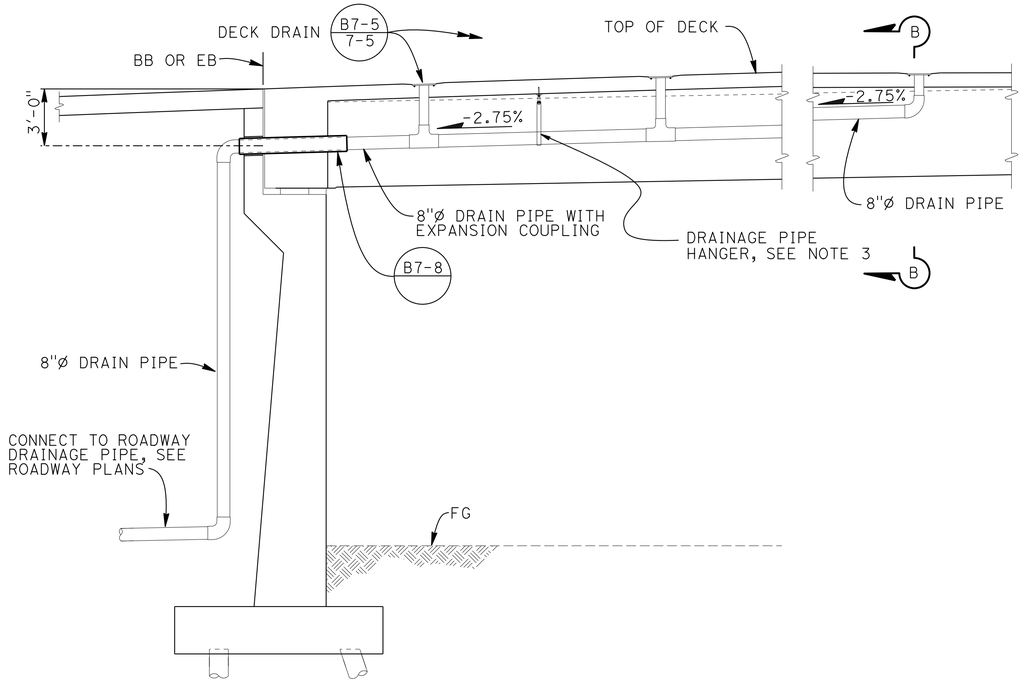


## PART ELEVATION
1/4"=1'-0"

## DECK DRAINAGE SYSTEM

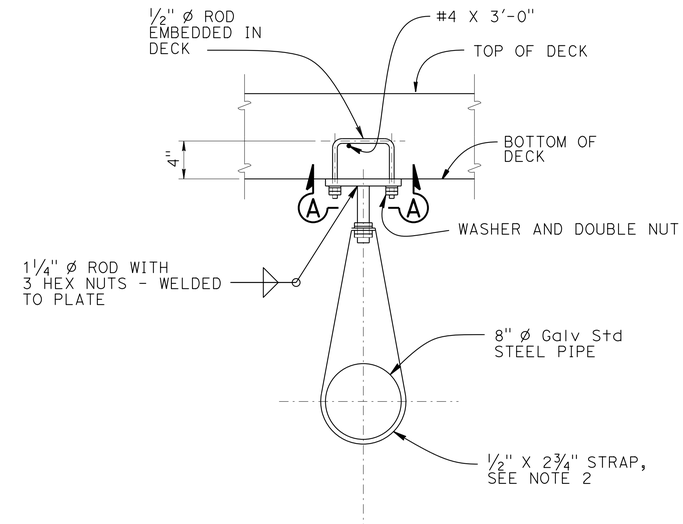


## DRAINAGE PIPE HANGER DETAIL
1 1/2"=1'-0"

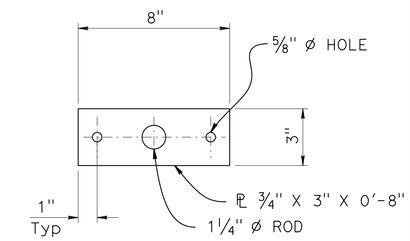


## SECTION A-A
3"=1'-0"

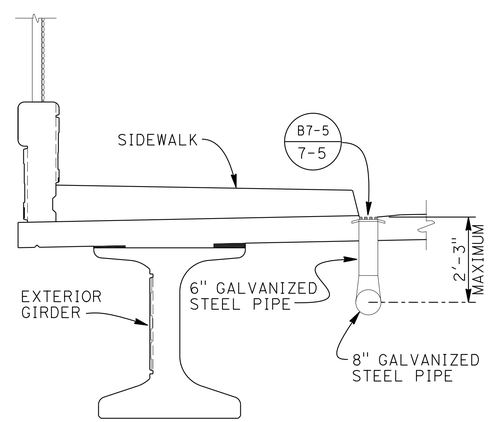


## SECTION B-B
1/2"=1'-0"

NOTES:

1. For locations of drains see "GIRDER LAYOUT" sheet
2. Adjust strap length as needed to match the drain pipe
3. Place hanger at center of 12'-6" deck drain spacing except at intermediate diaphragm
4. All steel pipe to be NPS 8x0.148 and shall be galvanized. Fittings and bends shall have a minimum wall thickness of 1/8". All joints or connections to be smooth throughout inside of pipe except as noted. All bends to be 2'-0" radius measured along centerline of pipe. All bends to be smooth
5. For pipe connection not shown, see B7-6

# ROUTE 101/ WILLOW INTERCHANGE
# WILLOW ROAD SEPARATION
# DECK DRAINAGE SYSTEM

| | BY | CHECKED |
|---|---|---|
| DESIGN | Linan Wang | Q. Zhao |
| DETAILS | A. Onodera/M. Lane | Q. Zhao |
| QUANTITIES | L. Wang/T. Masroor | Q. Zhao |

STATE OF CALIFORNIA
DEPARTMENT OF TRANSPORTATION

DIVISION OF ENGINEERING SERVICES
STRUCTURE DESIGN
DESIGN BRANCH 4

BRIDGE NO. 35-0354
POST MILE 1.7/2.1

STRUCTURES DESIGN DETAIL SHEET (ENGLISH) (REV. 09-01-10)

ORIGINAL SCALE IN INCHES FOR REDUCED PLANS 0 1 2 3

UNIT: 3579
PROJECT NUMBER & PHASE: 04000006804
CONTRACT NO.: 04-235654

DISREGARD PRINTS BEARING EARLIER REVISION DATES

REVISION DATES: 11-6-15 11-10-15 7-2-16 7-13-16

SHEET 19 OF 33

FILE => 35-0354-r-deckdrn01.dgn

USERNAME => s132175 DATE PLOTTED => 17-AUG-2016 TIME PLOTTED => 09:38

| DIST | COUNTY | ROUTE | POST MILES TOTAL PROJECT | SHEET No. | TOTAL SHEETS |
|---|---|---|---|---|---|
| 04 | SM | 101,114 | 1.3/2.5, 5.0/5.3 | 475 | 568 |

REGISTERED CIVIL ENGINEER 11-10-15 DATE

6-29-16
PLANS APPROVAL DATE

REGISTERED PROFESSIONAL ENGINEER LINAN WANG No. 54714 Exp. 12-31-17 CIVIL STATE OF CALIFORNIA

*The State of California or its officers or agents shall not be responsible for the accuracy or completeness of scanned copies of this plan sheet.*

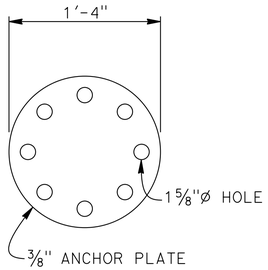


## CCTV ANCHOR PLATE DETAIL

RSP ES-16B

1 1/2"=1'-0"

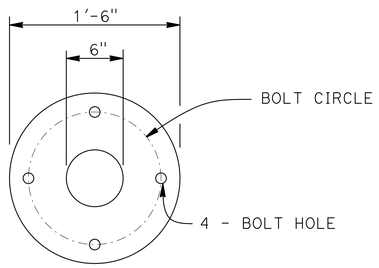


## ANCHOR PLATE DETAIL

1 1/2"=1'-0"

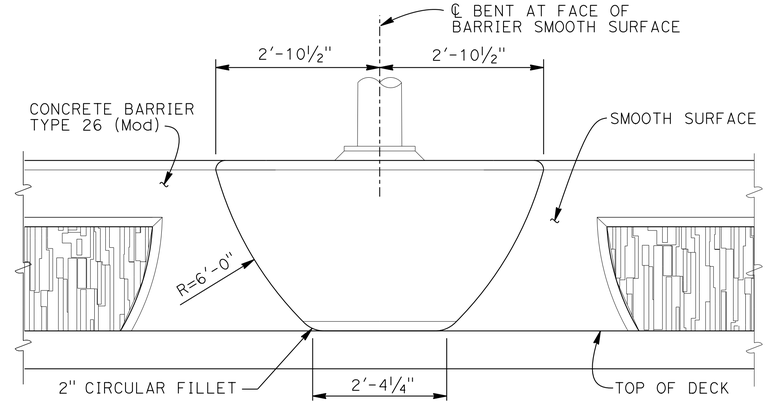


## CCTV PEDESTAL ELEVATION

3/4"=1'-0"

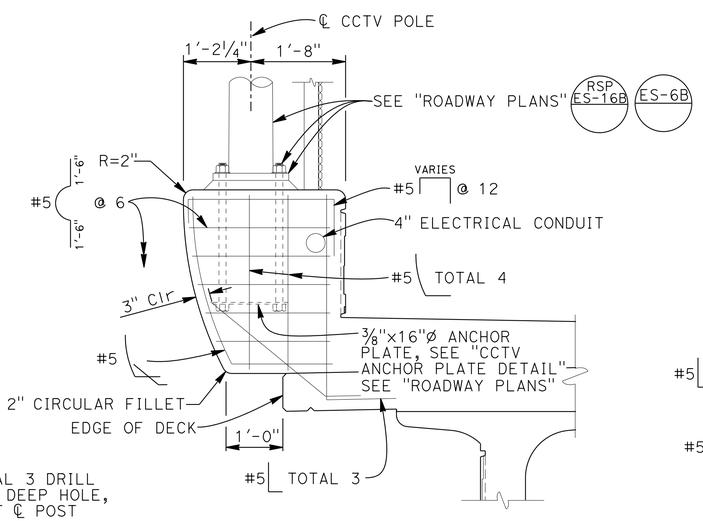


## SECTION A-A

3/4"=1'-0"

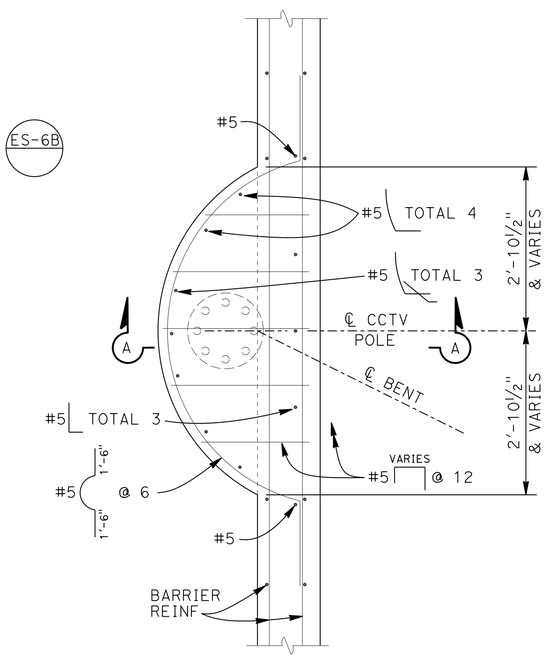


## CCTV PEDESTAL PLAN

3/4"=1'-0"

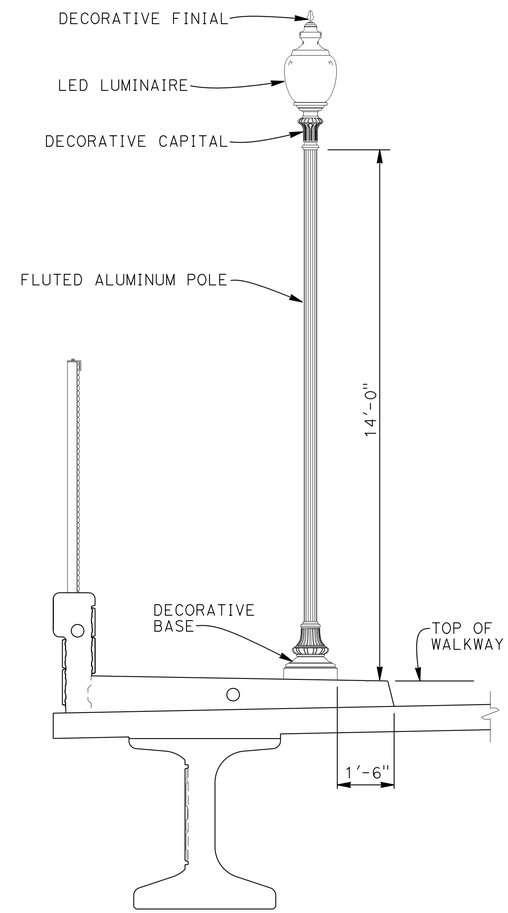


## SCHEMATIC CITY LIGHTING STANDARD

1/2"=1'-0"

FOR CITY LIGHTING STD DETAILS NOT SHOWN SEE "ROADWAY PLANS"

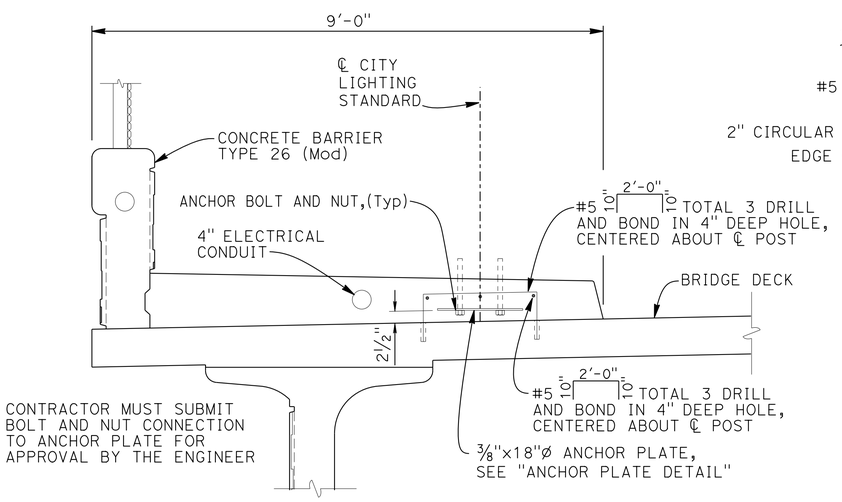


## CITY LIGHTING STANDARD DETAIL

3/4"=1'-0"

NOTES:

1. Barrier reinforcing not shown for clarity.
2. For location of CCTV40 see "GENERAL PLAN NO. 1"

| | | | |
|---|---|---|---|
| DESIGN | BY T. Masroor | CHECKED Q. Zhao | |
| DETAILS | BY A. Onodera | CHECKED Q. Zhao | |
| QUANTITIES | BY L. Wang/T. Masroor | CHECKED Q. Zhao | |

STATE OF CALIFORNIA DEPARTMENT OF TRANSPORTATION

DIVISION OF ENGINEERING SERVICES STRUCTURE DESIGN DESIGN BRANCH 4

BRIDGE NO. 35-0354
POST MILE 1.7/2.1

# ROUTE 101/ WILLOW INTERCHANGE
# WILLOW ROAD SEPARATION
# PEDESTAL DETAILS

STRUCTURES DESIGN DETAIL SHEET (ENGLISH) (REV. 09-01-10)

ORIGINAL SCALE IN INCHES FOR REDUCED PLANS 0 1 2 3

UNIT: 3579
PROJECT NUMBER & PHASE: 04000006804
CONTRACT NO.: 04-235654

DISREGARD PRINTS BEARING EARLIER REVISION DATES

REVISION DATES 11-16-15 12-9-15 8-18-15 11-10-15

SHEET 20 OF 33

FILE => 35-0354-ft-brdt.dgn

USERNAME => s132175 DATE PLOTTED => 17-AUG-2016 TIME PLOTTED => 09:38

| DIST | COUNTY | ROUTE | POST MILES TOTAL PROJECT | SHEET No. | TOTAL SHEETS |
|---|---|---|---|---|---|
| 04 | SM | 101,114 | 1.3/2.5, 5.0/5.3 | 476 | 568 |

REGISTERED CIVIL ENGINEER 11-10-15 DATE

6-29-16
PLANS APPROVAL DATE

REGISTERED PROFESSIONAL ENGINEER
LINAN WANG
No. 54714
Exp. 12-31-17
CIVIL
STATE OF CALIFORNIA

*The State of California or its officers or agents shall not be responsible for the accuracy or completeness of scanned copies of this plan sheet.*

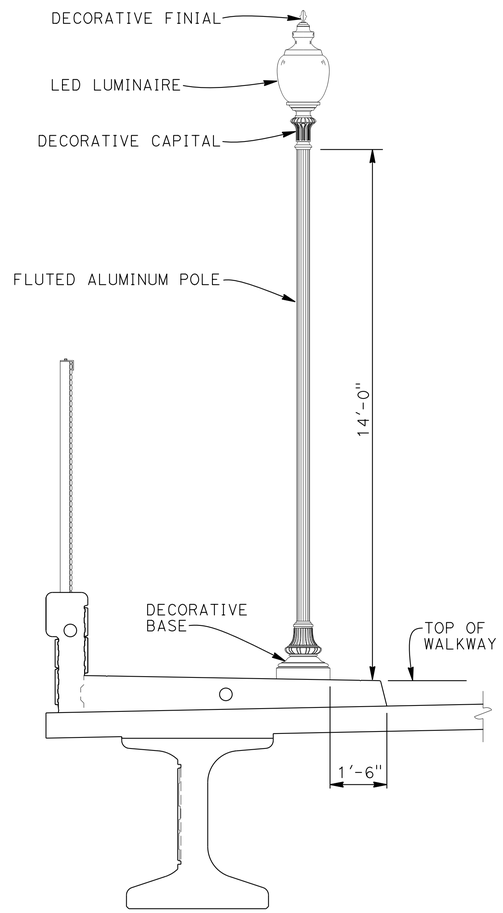


## SCHEMATIC CITY LIGHTING STANDARD

½"=1'-0"

FOR CITY LIGHTING STD DETAILS NOT SHOWN SEE "ROADWAY PLANS"

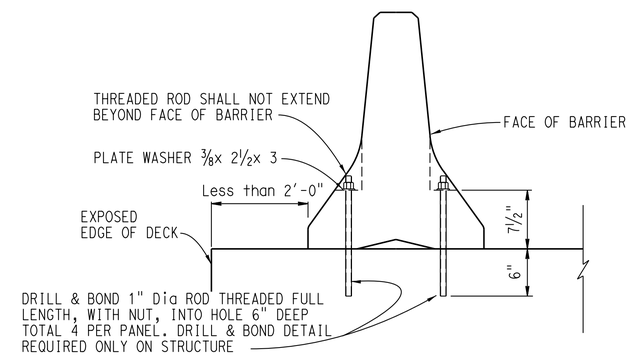


## TEMPORARY RAILING TYPE K (MOD) ATTACHMENT DETAIL

No Scale

SEE "TEMPORARY RAILING (TYPE K)" FOR DETAILS NOT SHOWN.
SEE "ROADWAY PLANS"

| | BY | CHECKED |
|---|---|---|
| DESIGN | T. Masroor | Q. Zhao |
| DETAILS | A. Onodera | Q. Zhao |
| QUANTITIES | L. Wang/T. Masroor | Q. Zhao |

STATE OF CALIFORNIA
DEPARTMENT OF TRANSPORTATION

DIVISION OF ENGINEERING SERVICES
STRUCTURE DESIGN
DESIGN BRANCH 4

BRIDGE NO. 35-0354
POST MILE 1.7/2.1

# ROUTE 101/ WILLOW INTERCHANGE
# WILLOW ROAD SEPARATION
# MISCELLANEOUS DETAILS

STRUCTURES DESIGN DETAIL SHEET (ENGLISH) (REV. 09-01-10)

ORIGINAL SCALE IN INCHES FOR REDUCED PLANS 0 1 2 3

UNIT: 3579
PROJECT NUMBER & PHASE: 04000006804
CONTRACT NO.: 04-235654

DISREGARD PRINTS BEARING EARLIER REVISION DATES

REVISION DATES: 7-10-15

SHEET 21 OF 33

FILE => 35-0354-u-miscdt01.dgn

USERNAME => s132175 DATE PLOTTED => 17-AUG-2016 TIME PLOTTED => 09:38

| DIST | COUNTY | ROUTE | POST MILES TOTAL PROJECT | SHEET No. | TOTAL SHEETS |
|---|---|---|---|---|---|
| 04 | SM | 101,114 | 1.3/2.5, 5.0/5.3 | 477 | 568 |

REGISTERED CIVIL ENGINEER 11-10-15 DATE

6-29-16
PLANS APPROVAL DATE

REGISTERED PROFESSIONAL ENGINEER LINAN WANG No. 54714 Exp. 12-31-17 CIVIL STATE OF CALIFORNIA

*The State of California or its officers or agents shall not be responsible for the accuracy or completeness of scanned copies of this plan sheet.*

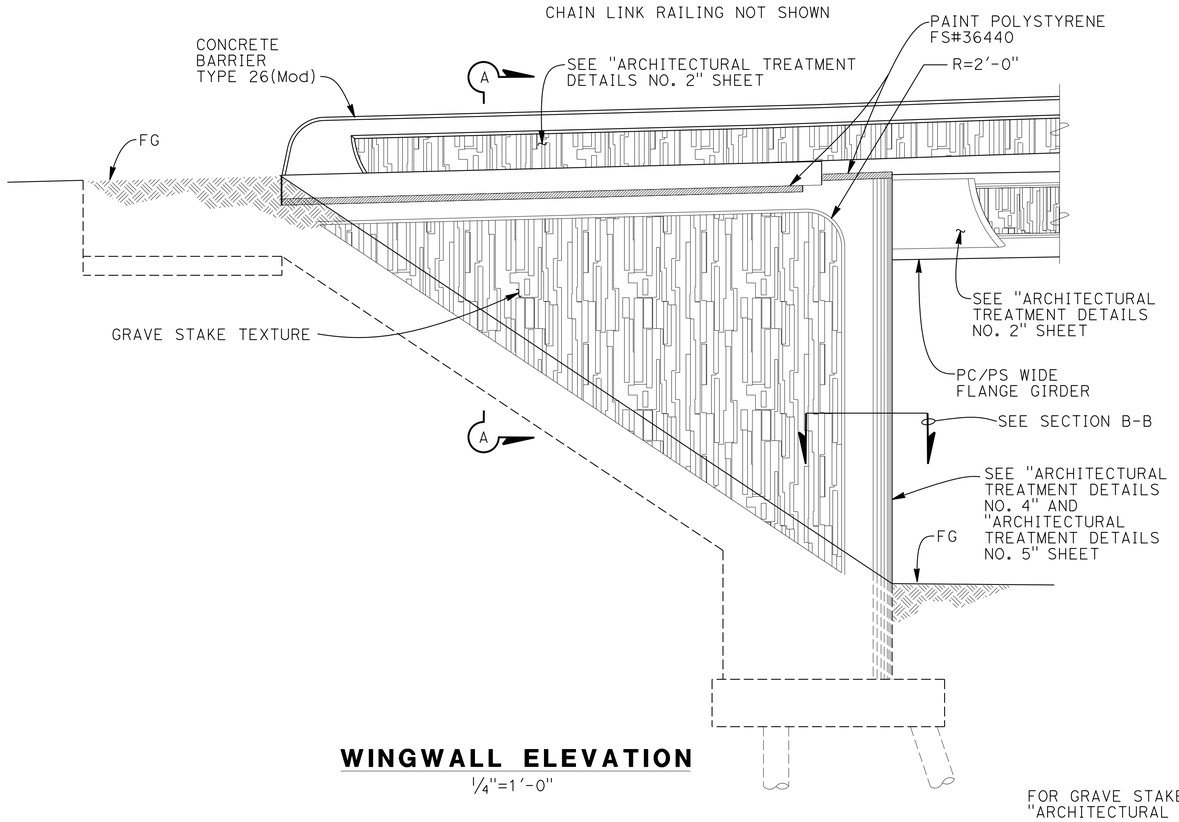


## WINGWALL ELEVATION
1/4"=1'-0"

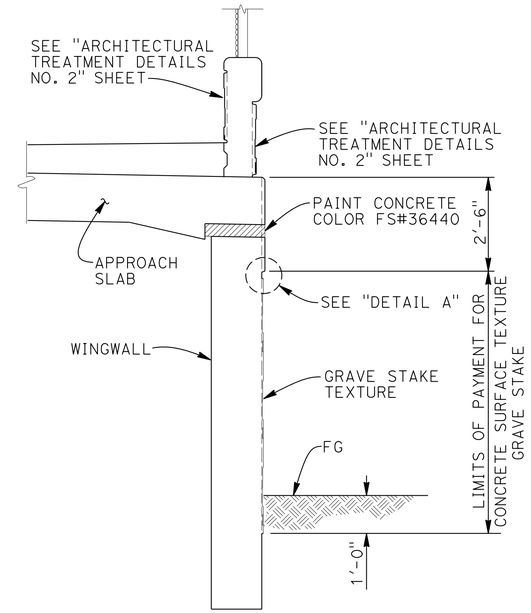


## SECTION A-A
1/2"=1'-0"

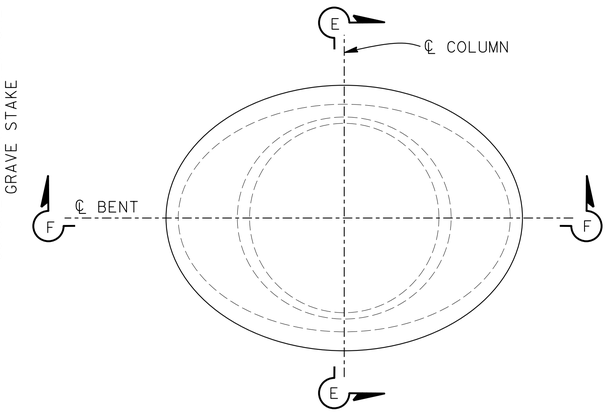


## TOP OF COLUMN PLAN
1/2"=1'-0"

FOR GRAVE STAKE DETAILS SEE "ARCHITECTURAL DETAILS NO. 2" SHEET

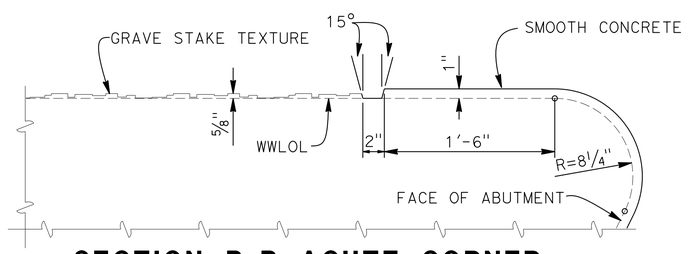


## SECTION B-B ACUTE CORNER
1 1/2"=1'-0"

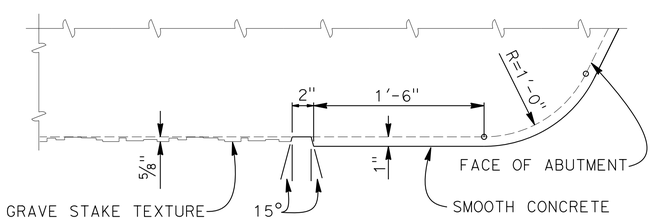


## SECTION B-B OBTUSE CORNER
1 1/2"=1'-0"

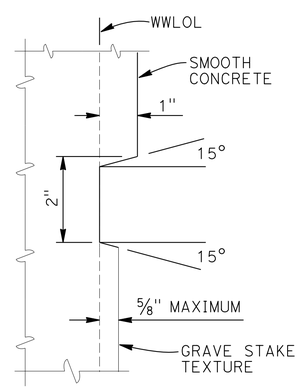


## DETAIL A
6"=1'-0"

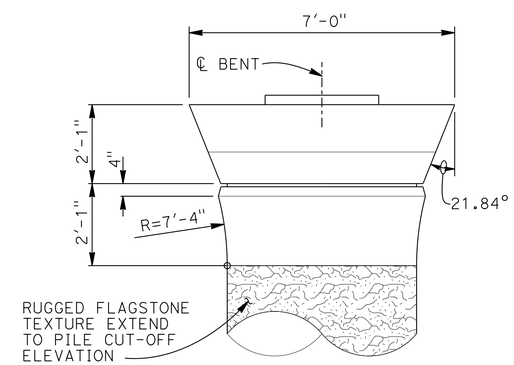


## VIEW E-E
1/2"=1'-0"

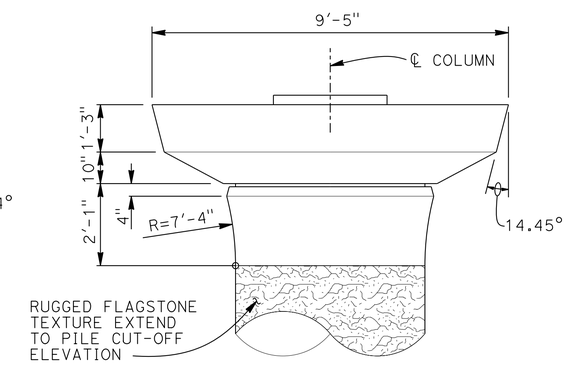


## VIEW F-F
1/2"=1'-0"

FOR RUGGED FLAGSTONE DETAILS SEE "ARCHITECTURAL DETAILS NO. 4" SHEET

| | BY | CHECKED |
|---|---|---|
| DESIGN | T. Masroor | Q. Zhao |
| DETAILS | A. Onodera | Q. Zhao |
| QUANTITIES | L. Wang/T. Masroor | Q. Zhao |

STATE OF CALIFORNIA
DEPARTMENT OF TRANSPORTATION

DIVISION OF ENGINEERING SERVICES
STRUCTURE DESIGN
DESIGN BRANCH 4

BRIDGE NO. 35-0354
POST MILE 1.7/2.1

# ROUTE 101/ WILLOW INTERCHANGE
# WILLOW ROAD SEPARATION
# ARCHITECTURAL DETAILS NO. 1

STRUCTURES DESIGN DETAIL SHEET (ENGLISH) (REV. 09-01-10)

ORIGINAL SCALE IN INCHES FOR REDUCED PLANS 0 1 2 3

UNIT: 3579
PROJECT NUMBER & PHASE: 04000006804
CONTRACT NO.: 04-235654

DISREGARD PRINTS BEARING EARLIER REVISION DATES

REVISION DATES 11-18-14 8-1-15 11-5-15

SHEET 21 OF 33

FILE => 35-0354-w-arch01.dgn

USERNAME => s132775 DATE PLOTTED => 17-AUG-2016 TIME PLOTTED => 09:39

| DIST | COUNTY | ROUTE | POST MILES TOTAL PROJECT | SHEET No. | TOTAL SHEETS |
|---|---|---|---|---|---|
| 04 | SM | 101,114 | 1.3/2.5, 5.0/5.3 | 478 | 568 |

REGISTERED CIVIL ENGINEER 11-10-15 DATE

6-29-16
PLANS APPROVAL DATE

REGISTERED PROFESSIONAL ENGINEER LINAN WANG No. 54714 Exp. 12-31-17 CIVIL STATE OF CALIFORNIA

*The State of California or its officers or agents shall not be responsible for the accuracy or completeness of scanned copies of this plan sheet.*

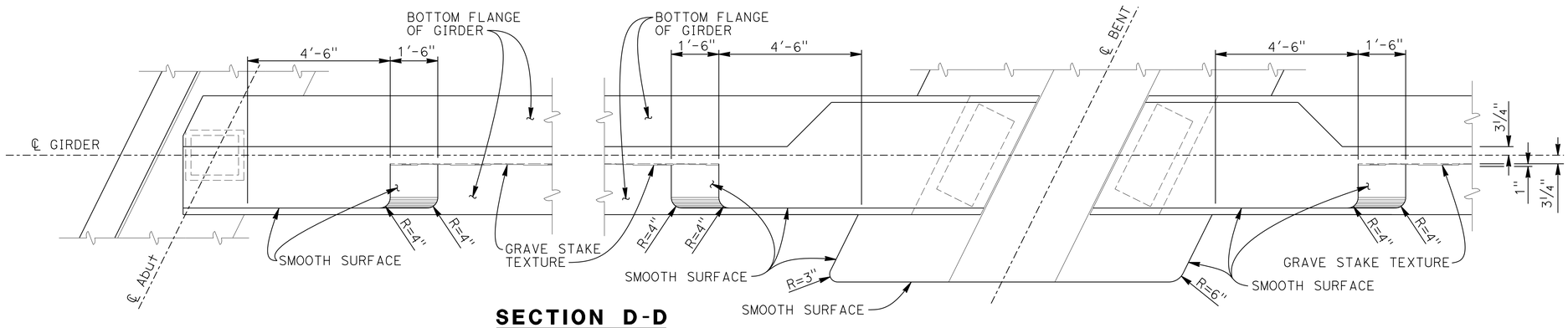


## SECTION D-D
½"=1'-0"

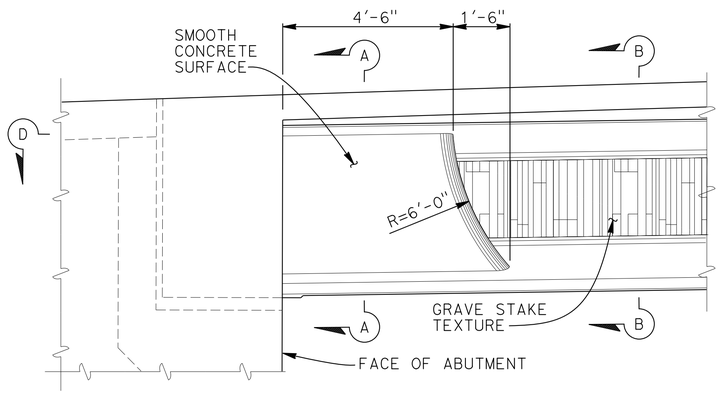


## ABUTMENT ELEVATION
½"=1'-0"

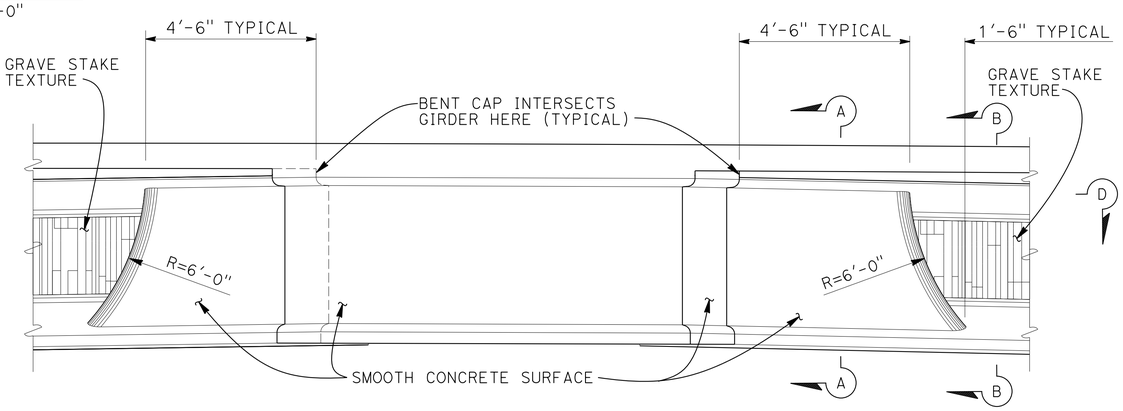


## ELEVATION EXTERIOR GIRDERS
½"=1'-0"

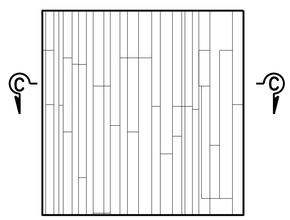


## GRAVE STAKE TEXTURE
NO SCALE

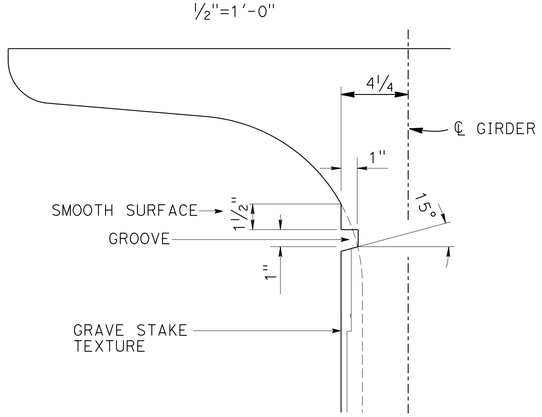


## DETAIL A
NO SCALE

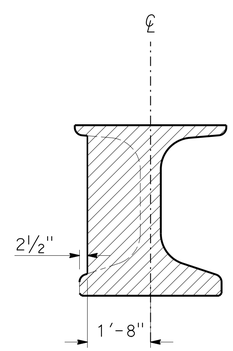


## SECTION A-A
NO SCALE

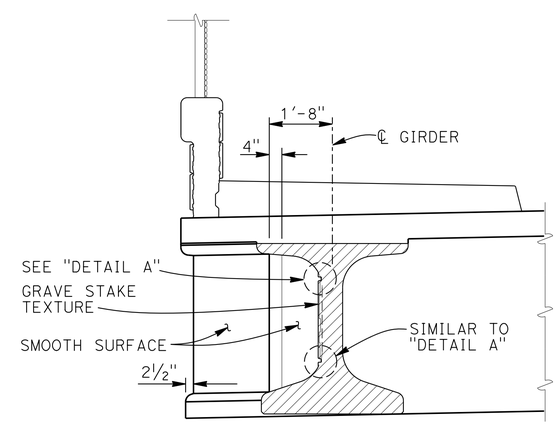


## SECTION B-B
½"=1'-0"

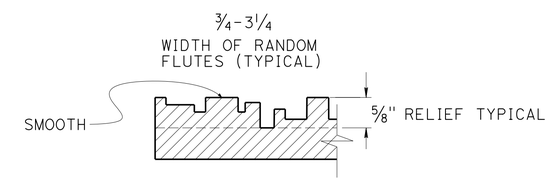


## PARTIAL SECTION C-C
NO SCALE

# ROUTE 101/ WILLOW INTERCHANGE
# WILLOW ROAD SEPARATION
# ARCHITECTURAL DETAILS NO. 2

| | BY | CHECKED |
|---|---|---|
| DESIGN | T. Masroor | Q. Zhao |
| DETAILS | A. Onodera | Q. Zhao |
| QUANTITIES | L. Wang/T. Masroor | Q. Zhao |

STATE OF CALIFORNIA
DEPARTMENT OF TRANSPORTATION

DIVISION OF ENGINEERING SERVICES
STRUCTURE DESIGN
DESIGN BRANCH 4

BRIDGE NO. 35-0354
POST MILE 1.7/2.1

STRUCTURES DESIGN DETAIL SHEET (ENGLISH) (REV. 09-01-10)

ORIGINAL SCALE IN INCHES FOR REDUCED PLANS 0 1 2 3

UNIT: 3579
PROJECT NUMBER & PHASE: 04000006804
CONTRACT NO.: 04-235654

DISREGARD PRINTS BEARING EARLIER REVISION DATES

REVISION DATES 11-13-14 11-4-15

SHEET 22 OF 33

FILE => 35-0354-w-arch02.dgn

USERNAME => s132775 DATE PLOTTED => 17-AUG-2016 TIME PLOTTED => 09:39

| DIST | COUNTY | ROUTE | POST MILES TOTAL PROJECT | SHEET No. | TOTAL SHEETS |
|---|---|---|---|---|---|
| 04 | SM | 101,114 | 1.3/2.5, 5.0/5.3 | 479 | 568 |

REGISTERED CIVIL ENGINEER 11-10-15 DATE

6-29-16
PLANS APPROVAL DATE

REGISTERED PROFESSIONAL ENGINEER LINAN WANG No. 54714 Exp. 12-31-17 CIVIL STATE OF CALIFORNIA

*The State of California or its officers or agents shall not be responsible for the accuracy or completeness of scanned copies of this plan sheet.*

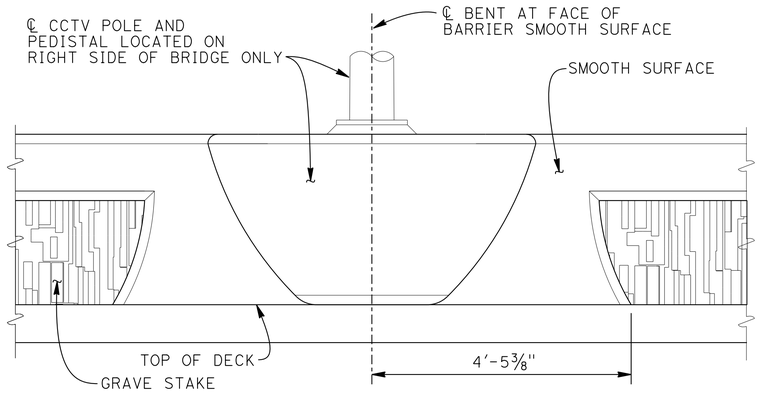


## CCTV PEDESTAL ELEVATION
¾"=1'-0"

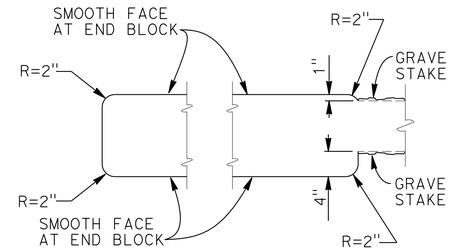


## SECTION B-B
1"=1'-0"

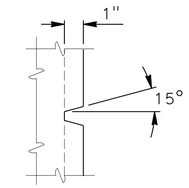


## DETAIL A
3"=1'-0"

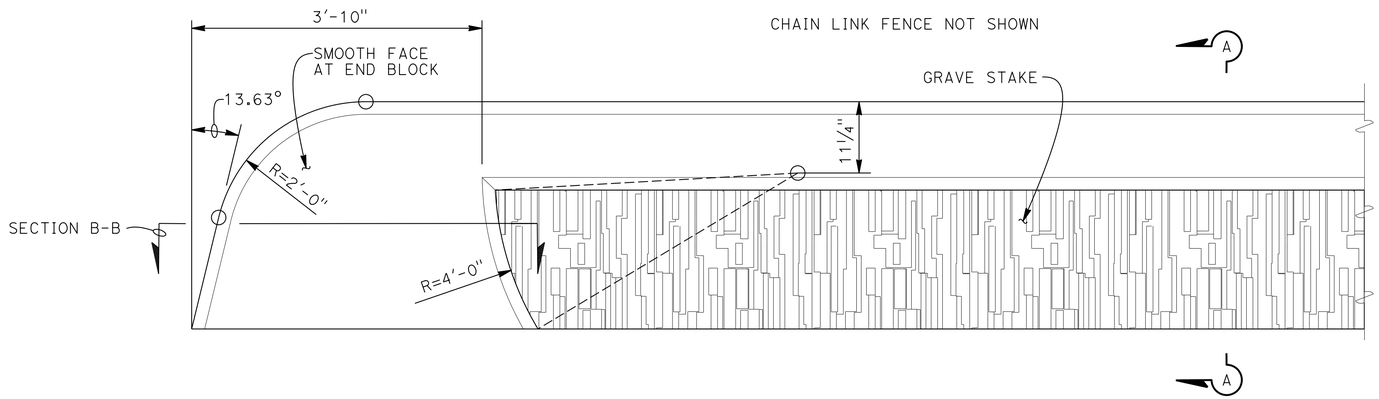


## PART ELEVATION CONCRETE BARRIER TYPE 26 (MOD)
1"=1'-0"

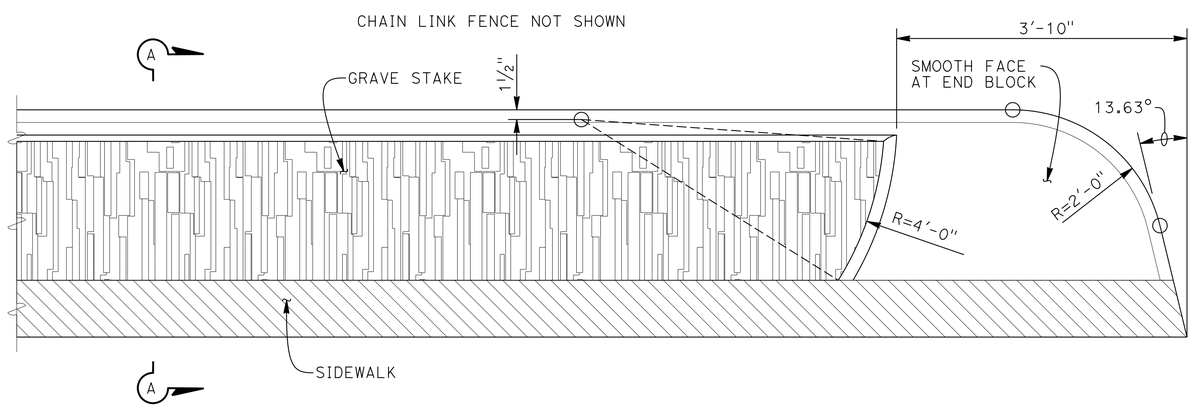


## PART ELEVATION SIDEWALK/CONCRETE BARRIER TYPE 26 (MOD)
1"=1'-0"

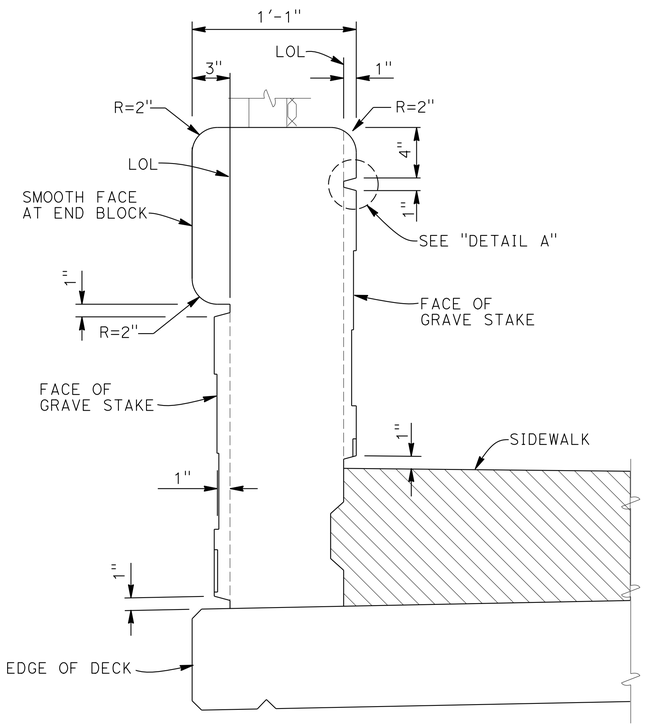


## SECTION A-A
2"=1'-0"

| | | | |
|---|---|---|---|
| DESIGN | BY T. Masroor | CHECKED Q. Zhao | |
| DETAILS | BY A. Onodera | CHECKED Q. Zhao | |
| QUANTITIES | BY L. Wang/T. Masroor | CHECKED Q. Zhao | |

STATE OF CALIFORNIA
DEPARTMENT OF TRANSPORTATION

DIVISION OF ENGINEERING SERVICES
STRUCTURE DESIGN
DESIGN BRANCH 4

BRIDGE NO. 35-0354
POST MILE 1.7/2.1

# ROUTE 101/WILLOW INTERCHANGE
# WILLOW ROAD SEPARATION
# ARCHITECTURAL DETAILS NO. 3

STRUCTURES DESIGN DETAIL SHEET (ENGLISH) (REV. 09-01-10)

ORIGINAL SCALE IN INCHES FOR REDUCED PLANS 0 1 2 3

UNIT: 3579
PROJECT NUMBER & PHASE: 04000006804
CONTRACT NO.: 04-235654

DISREGARD PRINTS BEARING EARLIER REVISION DATES

REVISION DATES: 6-1-15 11-10-15 11-18-15

SHEET 23 OF 33

FILE => 35-0354-w-arch03-gstake.dgn

USERNAME => s132775 DATE PLOTTED => 17-AUG-2016 TIME PLOTTED => 09:39

| DIST | COUNTY | ROUTE | POST MILES TOTAL PROJECT | SHEET No. | TOTAL SHEETS |
|---|---|---|---|---|---|
| 04 | SM | 101,114 | 1.3/2.5, 5.0/5.3 | 480 | 568 |

REGISTERED CIVIL ENGINEER 11-10-15 DATE

6-29-16
PLANS APPROVAL DATE

REGISTERED PROFESSIONAL ENGINEER LINAN WANG No. 54714 Exp. 12-31-17 CIVIL STATE OF CALIFORNIA

*The State of California or its officers or agents shall not be responsible for the accuracy or completeness of scanned copies of this plan sheet.*

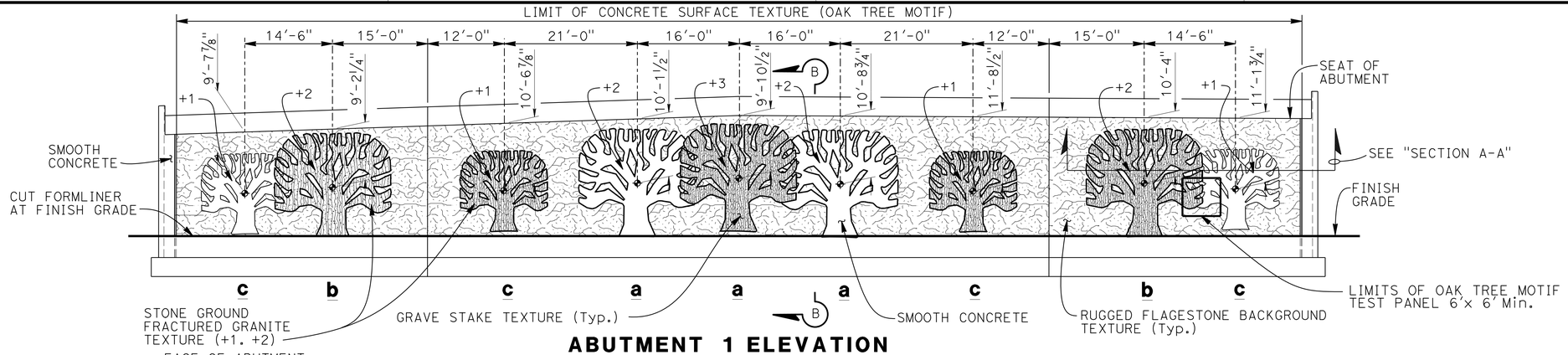


## ABUTMENT 1 ELEVATION

1"=10'

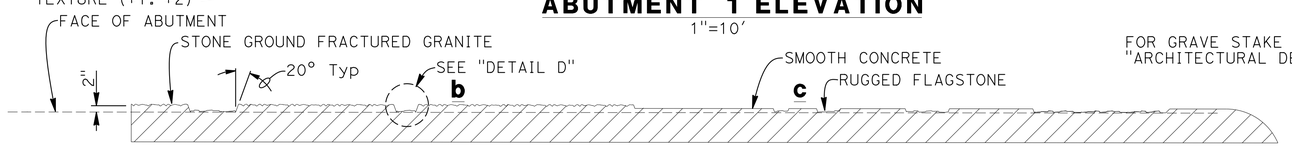


FOR GRAVE STAKE DETAILS, SEE "ARCHITECTURAL DETAILS NO. 5" SHEET

## SECTION A-A

1/2"=1'-0"

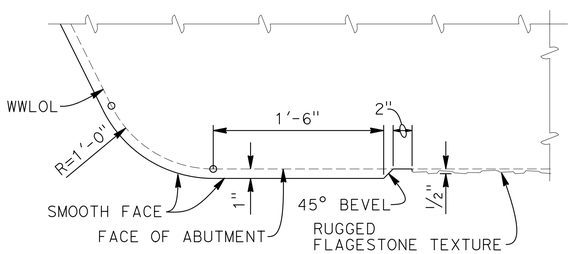


## OBTUSE CORNER

1 1/2"=1'-0"

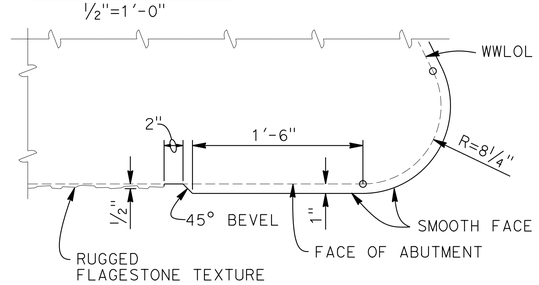


## ACUTE CORNER

1 1/2"=1'-0"

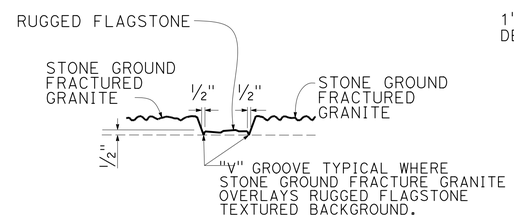


## DETAIL D

NO SCALE

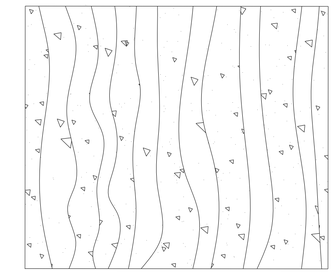

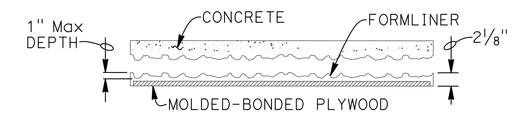


## STONE GROUND FRACTURED GRANITE TEXTURE

NO SCALE

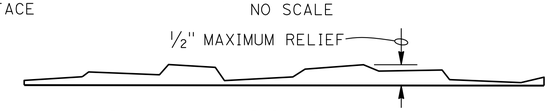


## RUGGED FLAGSTONE TEXTURE

NO SCALE

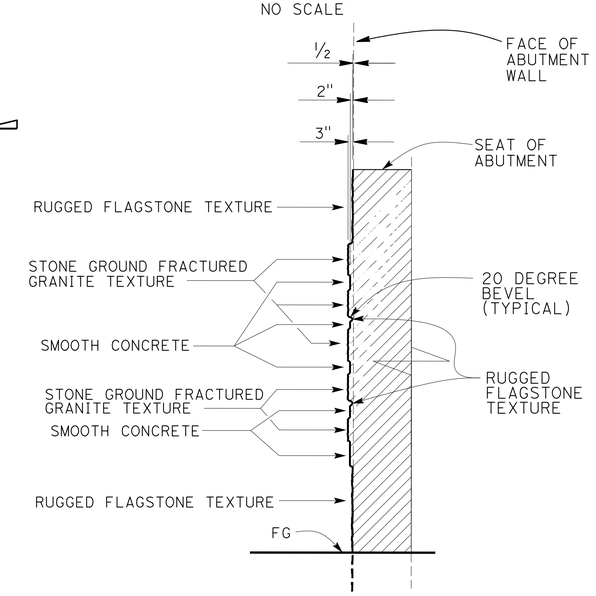


## SECTION B-B

NO SCALE

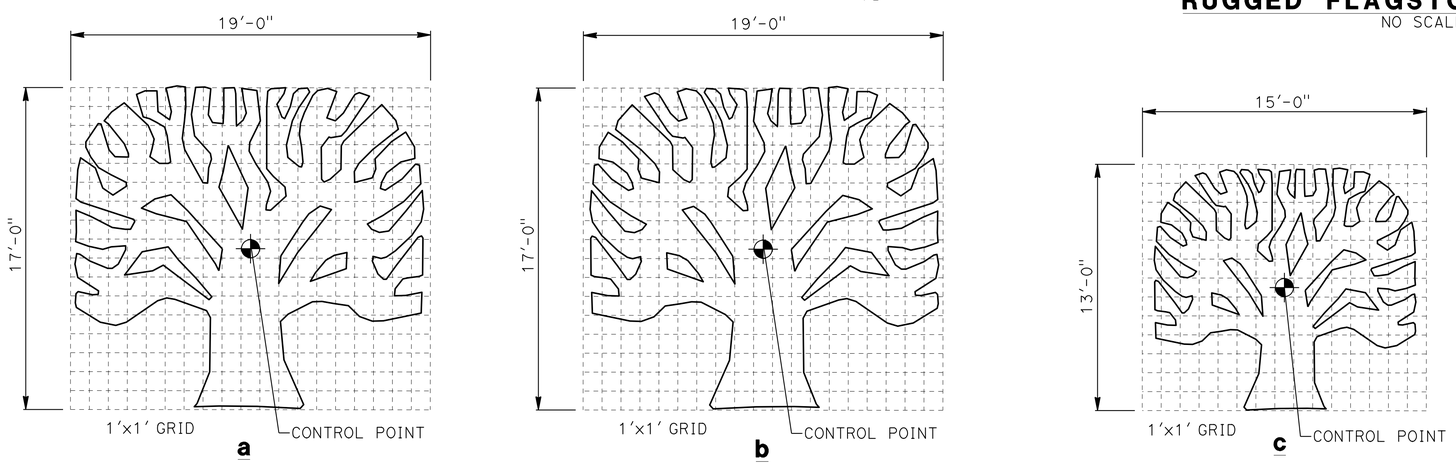


## TEMPLATES

1/8"=1'-0"

| | | | |
|---|---|---|---|
| DESIGN | BY T. Masroor | CHECKED Q. Zhao | |
| DETAILS | BY A. Onodera/M. Lane | CHECKED Q. Zhao | |
| QUANTITIES | BY L. Wang/T. Masroor | CHECKED Q. Zhao | |

STATE OF CALIFORNIA
DEPARTMENT OF TRANSPORTATION

DIVISION OF ENGINEERING SERVICES
STRUCTURE DESIGN
DESIGN BRANCH 4

BRIDGE NO. 35-0354
POST MILE 1.7/2.1

# ROUTE 101/ WILLOW INTERCHANGE
# WILLOW ROAD SEPARATION
# ARCHITECTURAL DETAILS NO. 4

STRUCTURES DESIGN DETAIL SHEET (ENGLISH) (REV. 09-01-10)

ORIGINAL SCALE IN INCHES FOR REDUCED PLANS 0 1 2 3

UNIT: 3579
PROJECT NUMBER & PHASE: 04000006804
CONTRACT NO.: 04-235654

DISREGARD PRINTS BEARING EARLIER REVISION DATES

REVISION DATES 6-1-15 11-5-15 11-10-15 11-18-15

SHEET 24 OF 33

FILE => 35-0354-w-archi04.dgn

USERNAME => s132175 DATE PLOTTED => 17-AUG-2016 TIME PLOTTED => 09:39

| DIST | COUNTY | ROUTE | POST MILES TOTAL PROJECT | SHEET No. | TOTAL SHEETS |
|---|---|---|---|---|---|
| 04 | SM | 101,114 | 1.3/2.5, 5.0/5.3 | 481 | 568 |

REGISTERED CIVIL ENGINEER 11-10-15 DATE

6-29-16
PLANS APPROVAL DATE

REGISTERED PROFESSIONAL ENGINEER LINAN WANG No. 54714 Exp. 12-31-17 CIVIL STATE OF CALIFORNIA

*The State of California or its officers or agents shall not be responsible for the accuracy or completeness of scanned copies of this plan sheet.*

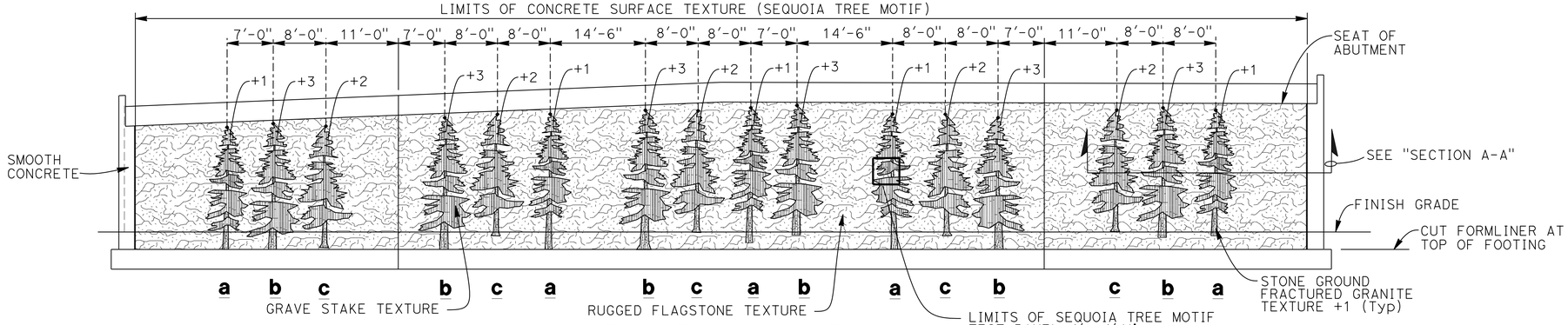


## ABUTMENT 3 ELEVATION

1"=10'

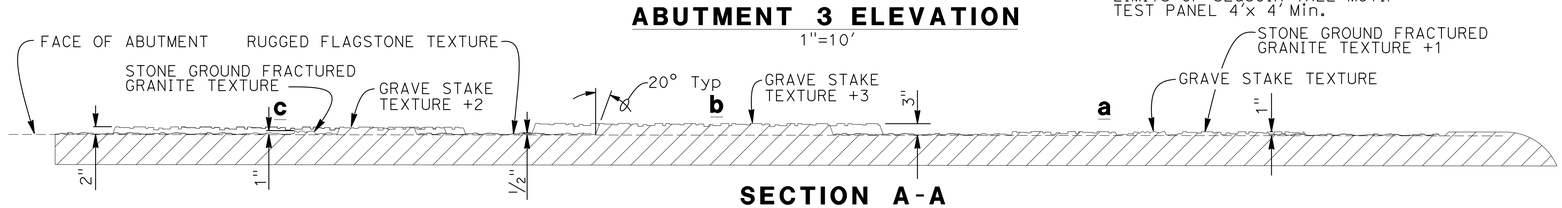


## SECTION A-A

NO SCALE

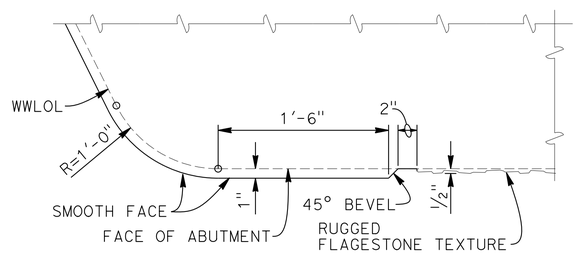


## OBTUSE CORNER

1 1/2"=1'-0"

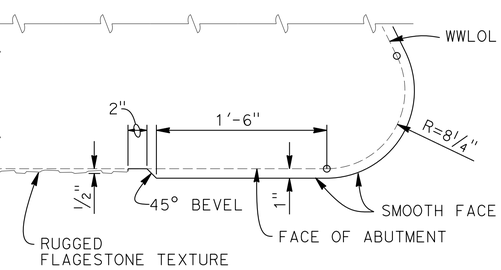


## ACUTE CORNER

1 1/2"=1'-0"

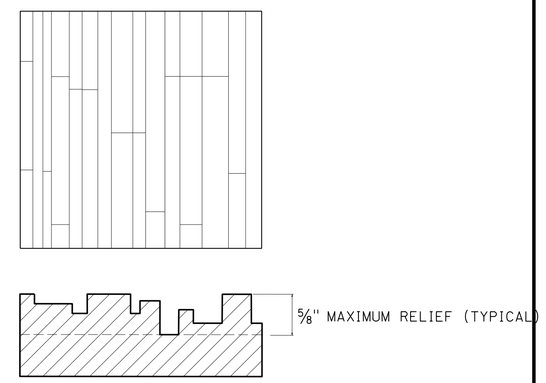


GRAVE STAKE TEXTURE
3/4" - 3 1/4" WIDTH OF RANDOM FLUTES, TYP

## GRAVE STAKE TEXTURE

NO SCALE

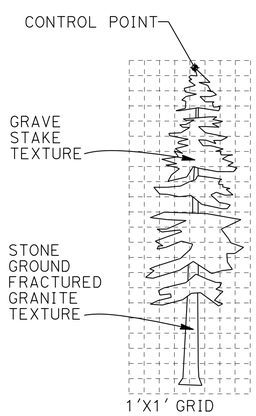


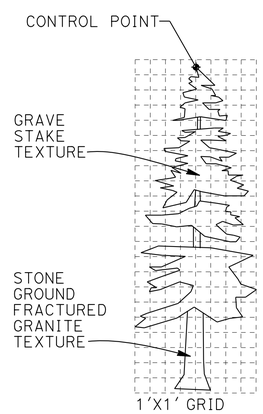


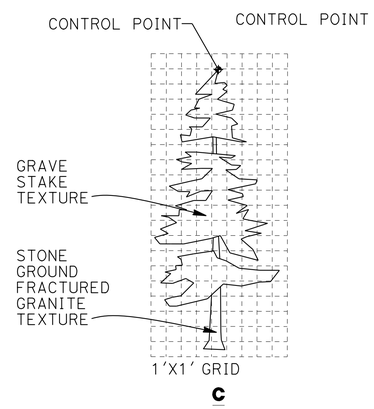


## TEMPLATES

NO SCALE

NOTE:
The distance between control point to seat of abutment varies from 4" minimum to 12" maximum

FOR DETAILS OF "RUGGED FLAGSTONE TEXTURE" AND "STONE GROUND FRACTURED GRANITE TEXTURE", SEE "ARCHITECTURAL DETAILS NO. 4" SHEET

| | BY | CHECKED |
|---|---|---|
| DESIGN | T. Masroor | Q. Zhao |
| DETAILS | A. Onodera/M. Lane | Q. Zhao |
| QUANTITIES | L. Wang/T. Masroor | Q. Zhao |

STATE OF CALIFORNIA
DEPARTMENT OF TRANSPORTATION

DIVISION OF ENGINEERING SERVICES
STRUCTURE DESIGN
DESIGN BRANCH 4

BRIDGE NO. 35-0354
POST MILE 1.7/2.1

# ROUTE 101/ WILLOW INTERCHANGE
# WILLOW ROAD SEPARATION
# ARCHITECTURAL DETAILS NO. 5

STRUCTURES DESIGN DETAIL SHEET (ENGLISH) (REV. 09-01-10)

ORIGINAL SCALE IN INCHES FOR REDUCED PLANS 0 1 2 3

UNIT: 3579
PROJECT NUMBER & PHASE: 04000006804
CONTRACT NO.: 04-235654

DISREGARD PRINTS BEARING EARLIER REVISION DATES

REVISION DATES: 6-1-15 11-10-15 11-16-15 11-18-15

SHEET 25 OF 33

FILE => 35-0354-w-arch05.dgn

USERNAME => s132175 DATE PLOTTED => 17-AUG-2016 TIME PLOTTED => 09:39

| DIST | COUNTY | ROUTE | POST MILES TOTAL PROJECT | SHEET No. | TOTAL SHEETS |
|---|---|---|---|---|---|
| 04 | SM | 101,114 | 1.3/2.5, 5.0/5.3 | 482 | 568 |

REGISTERED CIVIL ENGINEER 11-10-15 DATE

6-29-16
PLANS APPROVAL DATE

REGISTERED PROFESSIONAL ENGINEER LINAN WANG No. 54714 Exp. 12-31-17 CIVIL STATE OF CALIFORNIA

*The State of California or its officers or agents shall not be responsible for the accuracy or completeness of scanned copies of this plan sheet.*

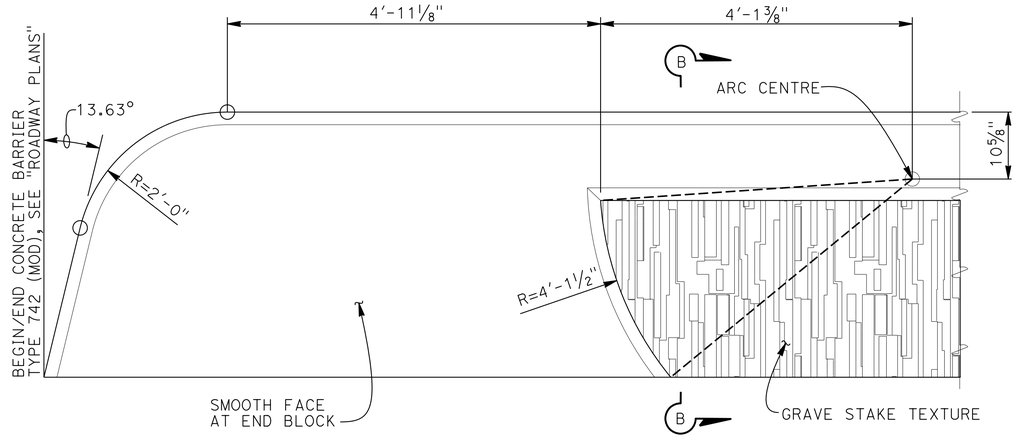


## CONCRETE BARRIER TYPE 742 (MOD)

1"=1'-0"

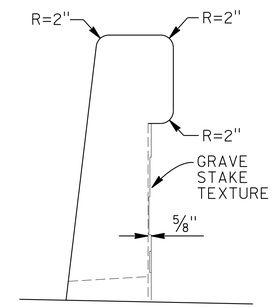


## SECTION B-B

1"=1'-0"

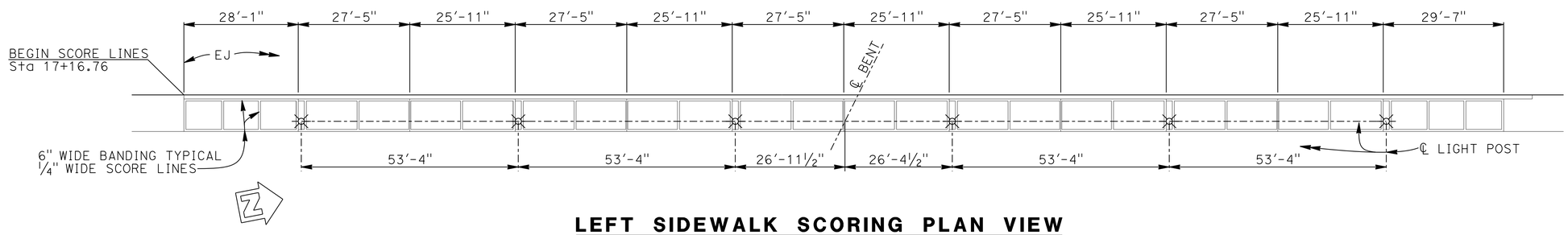


## LEFT SIDEWALK SCORING PLAN VIEW

1"=15'-0"

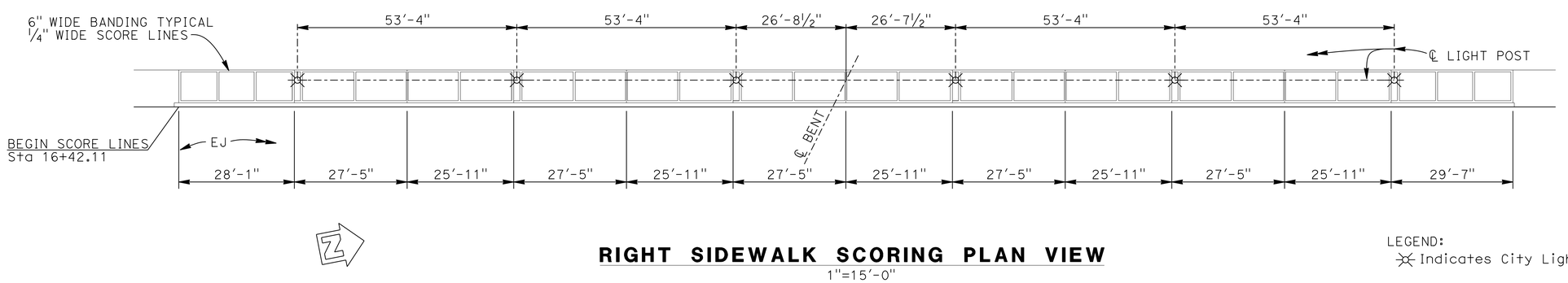


## RIGHT SIDEWALK SCORING PLAN VIEW

1"=15'-0"

LEGEND:
Indicates City Lighting Standard spaced @ 53'-4" C-C

| | BY | CHECKED |
|---|---|---|
| DESIGN | T. Masroor | Q. Zhao |
| DETAILS | A. Onodera | Q. Zhao |
| QUANTITIES | L. Wang/T. Masroor | Q. Zhao |

STATE OF CALIFORNIA
DEPARTMENT OF TRANSPORTATION

DIVISION OF ENGINEERING SERVICES
STRUCTURE DESIGN
DESIGN BRANCH 4

BRIDGE NO. 35-0354
POST MILE 1.7/2.1

# ROUTE 101/ WILLOW INTERCHANGE
# WILLOW ROAD SEPARATION
# ARCHITECTURAL DETAILS NO. 6

STRUCTURES DESIGN DETAIL SHEET (ENGLISH) (REV. 09-01-10)

ORIGINAL SCALE IN INCHES FOR REDUCED PLANS 0 1 2 3

UNIT: 3579
PROJECT NUMBER & PHASE: 04000006804
CONTRACT NO.: 04-235654

DISREGARD PRINTS BEARING EARLIER REVISION DATES

REVISION DATES: 6-1-15 7-24-15 10-16-15 11-10-15

SHEET 26 OF 33

FILE => 35-0354-w-archi06.dgn

USERNAME => s132175 DATE PLOTTED => 17-AUG-2016 TIME PLOTTED => 09:39

| DIST | COUNTY | ROUTE | POST MILES TOTAL PROJECT | SHEET No. | TOTAL SHEETS |
|---|---|---|---|---|---|
| 04 | SM | 101,114 | 1.3/2.5, 5.0/5.3 | 483 | 568 |

REGISTERED CIVIL ENGINEER 11-10-15 DATE

6-29-16
PLANS APPROVAL DATE

REGISTERED PROFESSIONAL ENGINEER LINAN WANG No. 54714 Exp. 12-31-17 CIVIL STATE OF CALIFORNIA

*The State of California or its officers or agents shall not be responsible for the accuracy or completeness of scanned copies of this plan sheet.*

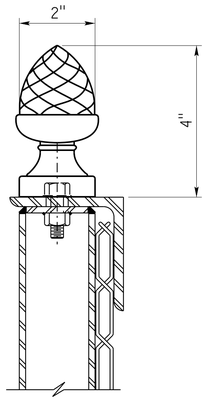


**DECORATIVE ACORN FINIAL**
NO SCALE

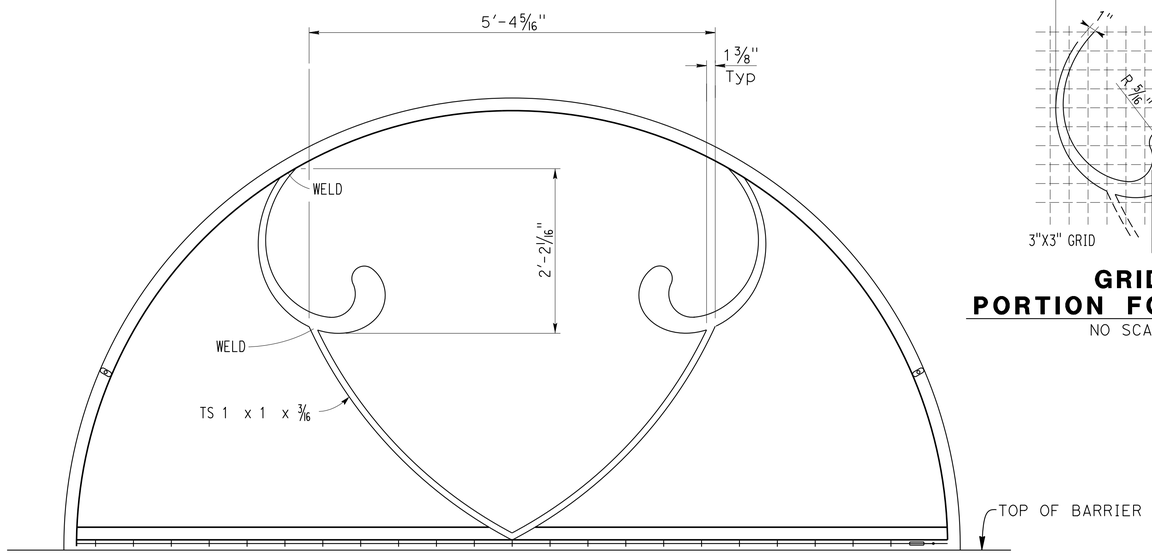


**DECORATIVE STEEL ELEVATION**
NO SCALE

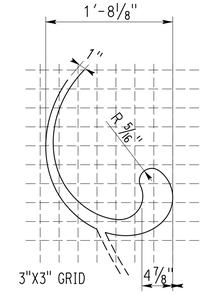


**GRID PORTION FOR TEST**
NO SCALE

NOTE

Contractor shall fabricate a test potion for approval before final fabrication.

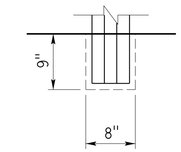


DEEP POST POCKET
FILL WITH MORTAR 4" x 8" x 9"

**EMBEDDED POST DETAIL**

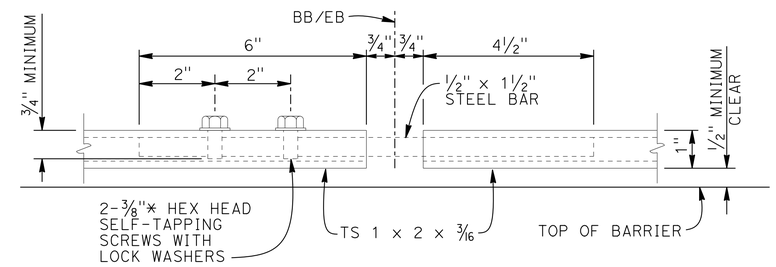


**DETAIL A**
6"=1'-0"

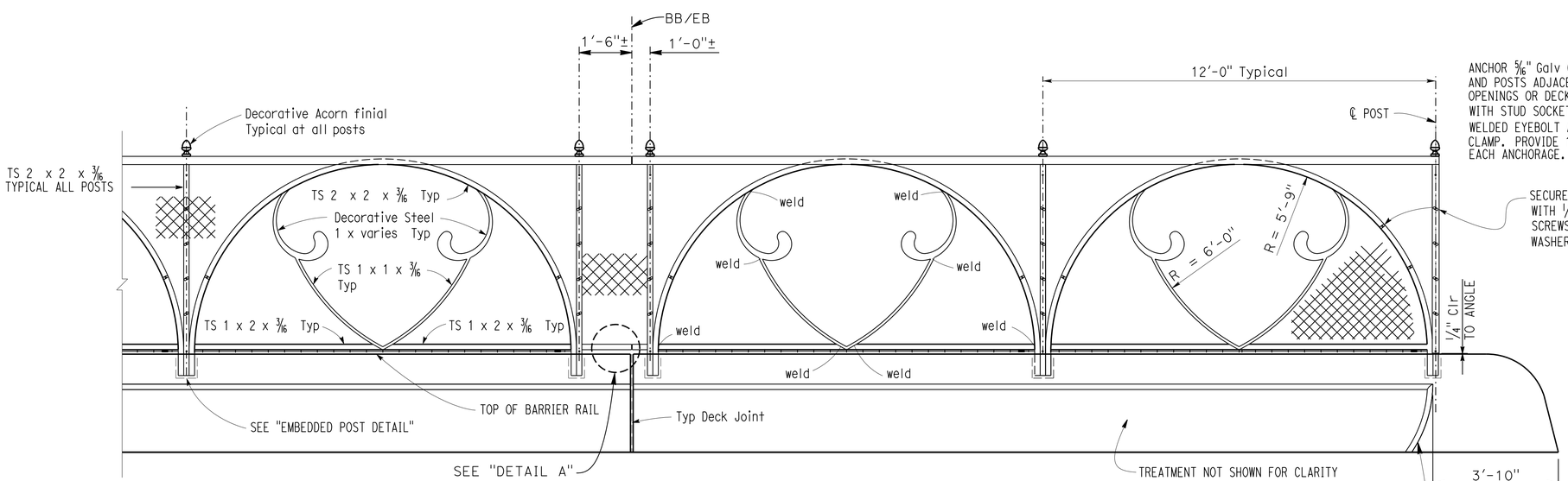


ANCHOR 5/16" Galv CABLE AT END POSTS AND POSTS ADJACENT TO ELECTROLIER OPENINGS OR DECK OR WALL JOINTS WITH STUD SOCKET ASSEMBLY OR 1/2" WELDED EYEBOLT AND CRIMPED SLEEVE CLAMP. PROVIDE 1 1/2" Min TAKE-UP AT EACH ANCHORAGE.

SECURE FABRIC TO INTERMEDIATE POSTS WITH 1/4" ø HEX HEAD SELF-TAPPING SCREWS WITH ℙ 3/4 X 1 3/4 X 3/16" WASHER @ 15 C-C, Max (Typ)

**CHAIN LINK RAILING (TYPE 6 MODIFIED) PART ELEVATION**
NO SCALE

NOTE

1. For all details not shown, see "CHAIN LINK RAILING TYPE 6" sheet.
2. Chain link fabric shall be vinyl clad brown (FS#20080)
3. All structure steel components shall be painted (FS#20080)
4. Decorative acorn Finial shall be painted (FS#20080)
5. Adjust the post spacing at BB/EB as needed

| | BY | CHECKED |
|---|---|---|
| DESIGN | T. Masroor | Q. Zhao |
| DETAILS | A. Onodera | Q. Zhao |
| QUANTITIES | L. Wang/T. Masroor | Q. Zhao |

STATE OF CALIFORNIA
DEPARTMENT OF TRANSPORTATION

DIVISION OF ENGINEERING SERVICES
STRUCTURE DESIGN
DESIGN BRANCH 4

BRIDGE NO. 35-0354
POST MILE 1.7/2.1

# ROUTE 101/ WILLOW INTERCHANGE
# WILLOW ROAD SEPARATION
# ARCHITECTURAL DETAILS NO. 7

STRUCTURES DESIGN DETAIL SHEET (ENGLISH) (REV. 09-01-10)

ORIGINAL SCALE IN INCHES FOR REDUCED PLANS 0 1 2 3

UNIT: 3579
PROJECT NUMBER & PHASE: 04000006804
CONTRACT NO.: 04-235654

DISREGARD PRINTS BEARING EARLIER REVISION DATES

REVISION DATES 7-24-15

SHEET 27 OF 33

FILE => 35-0354-w-archi07.dgn

USERNAME => s132775 DATE PLOTTED => 17-AUG-2016 TIME PLOTTED => 09:40

| DIST | COUNTY | ROUTE | POST MILES TOTAL PROJECT | SHEET No. | TOTAL SHEETS |
|---|---|---|---|---|---|
| 04 | SM | 101,114 | 1.3/2.5, 5.0/5.3 | 484 | 568 |

REGISTERED CIVIL ENGINEER 11-10-15 DATE

6-29-16
PLANS APPROVAL DATE

REGISTERED PROFESSIONAL ENGINEER LINAN WANG No. 54714 Exp. 12-31-17 CIVIL STATE OF CALIFORNIA

*The State of California or its officers or agents shall not be responsible for the accuracy or completeness of electronic copies of this plan sheet.*

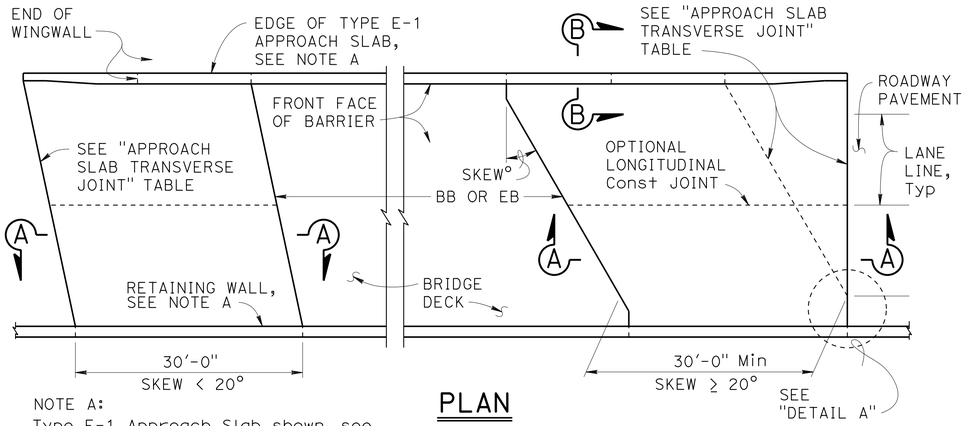


NOTE A:
Type E-1 Approach Slab shown, see "SECTION B-B" for Type E-2 details.

## PLAN
1" = 10'

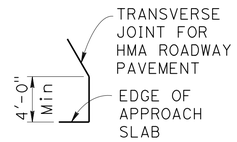


## DETAIL A
No Scale

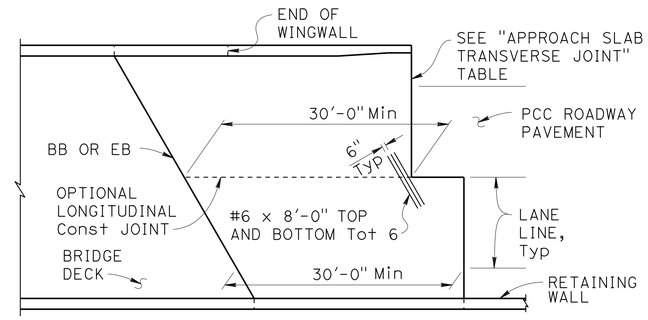


## END STAGGER DETAIL
1" = 10'

| APPROACH SLAB TRANSVERSE JOINT | | |
|---|---|---|
| APPROACH SKEW | WITH HMA ROADWAY PAVEMENT | WITH PCC ROADWAY PAVEMENT |
| < 20° | PARALLEL TO BB OR EB | PARALLEL TO BB OR EB |
| 20° - 45° | PARALLEL TO BB OR EB USE "DETAIL A" | STAGGER AT LANE LINES 24' TO 36' APART, SEE "END STAGGER DETAIL" |
| > 45° | PARALLEL TO BB OR EB USE "DETAIL A" | STAGGER AT EACH LANE LINE, SEE "END STAGGER DETAIL" |

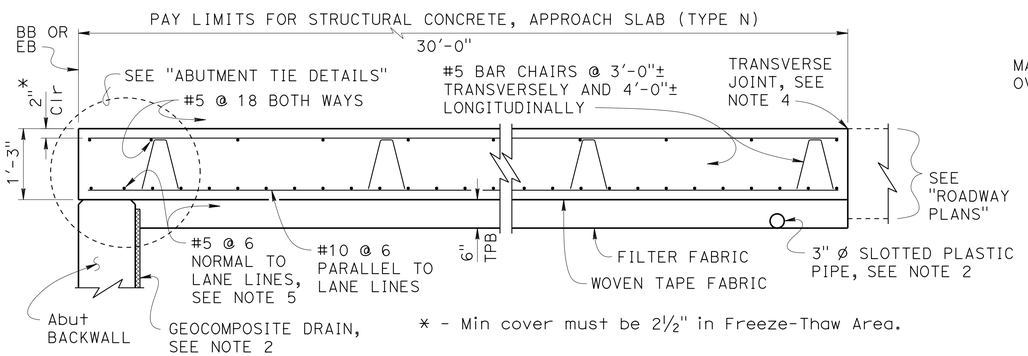


* - Min cover must be 2½" in Freeze-Thaw Area.

## SECTION A-A
¾" = 1'-0"

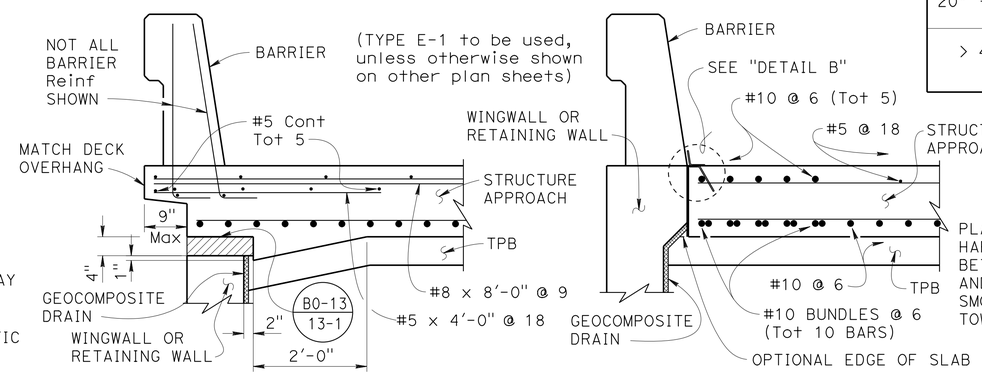


TYPE E-1 — Indicates Expanded Polystyrene, remove after concrete is placed. — TYPE E-2

## SECTION B-B
¾" = 1'-0"

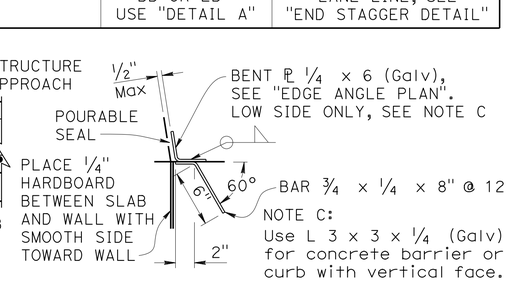


NOTE C:
Use L 3 x 3 x ¼ (Galv) for concrete barrier or curb with vertical face.

## DETAIL B
1½" = 1'-0"

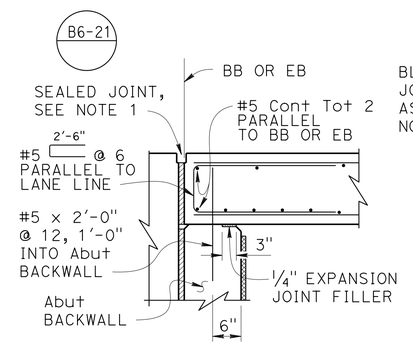


MR ≤ 2"

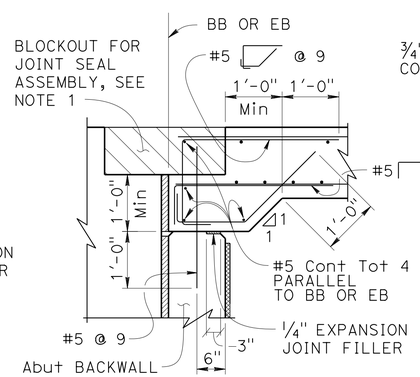


MR > 2"

## ABUTMENT TIE DETAILS
¾" = 1'-0"

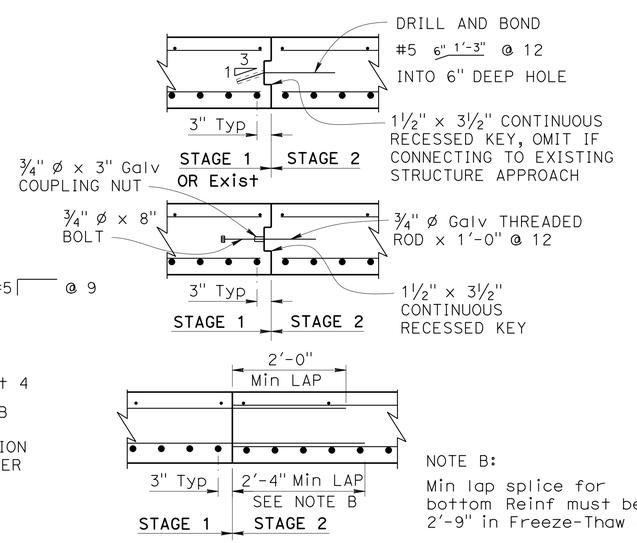


NOTE B:
Min lap splice for bottom Reinf must be 2'-9" in Freeze-Thaw Area.

## LONGITUDINAL CONSTRUCTION JOINT ALTERNATIVES
¾" = 1'-0"

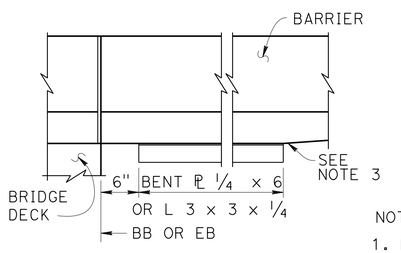


## EDGE ANGLE PLAN
1" = 1'-0"

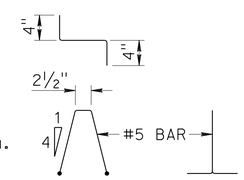


## BAR CHAIR DETAIL
1" = 1'-0"

## DESIGN NOTES

DESIGN: AASHTO LRFD Bridge Design Specifications, 2012 Edition with Caltrans Amendments, preface dated January 2014

LIMIT STATES: Service I, Strength I & II, Extreme II and Fatigue I ( $\gamma_{FAT}$ = 1.0)

DEAD LOAD: Includes 35 psf for future wearing surface

LIVE LOAD: HL93 and permit design load
Equivalent strip width method: $W_1$ = 12 ft
Slab span: $L_1$ = 24.5 ft

REINFORCED CONCRETE:
$f_y$ = 60 ksi
$f'_c$ = 3.6 ksi
n = 8

NOTES:

1. For joint protection details, blockout dimensions for joint seal assembly, and other details not shown, see other plan sheets. For MR ≤ 2", adjust reinforcement to clear sawcut for sealed joint. For MR > 2", haunch reinforcement placed for joint seal assembly blockout must be normal to BB or EB and spaced to avoid joint seal assembly anchorage.
2. For drainage details, see "STRUCTURE APPROACH DRAINAGE DETAILS" sheet.
3. End the plate or edge angle at beginning of barrier transition, end of wingwall, or end of structure approach as applicable.
4. Transverse Joint must be a minimum of 5'-0" from an existing or constructed weakened plane joint in approach PCC roadway pavement. Refer to Standard Plans P10 and P14.
5. At the Contractor's option, approach slab transverse reinforcement may be placed parallel to BB or EB. Spacing of transverse reinforcement is measured along ℄ roadway.

# ROUTE 101/ WILLOW INTERCHANGE
## WILLOW ROAD SEPARATION
## STRUCTURE APPROACH TYPE N (30S)

STANDARD DRAWING
FILE NO. xs3-120
APPROVAL DATE January 2015

STATE OF CALIFORNIA DEPARTMENT OF TRANSPORTATION
DIVISION OF ENGINEERING SERVICES

BRIDGE NO. 35-0354
POST MILE 1.7/2.1

DS OSD 2147A (ENGLISH STANDARD DRAWING "XS" BORDER REV. (10-01-14)

ORIGINAL SCALE IN INCHES FOR REDUCED PLANS 0 1 2 3

UNIT: 3579
PROJECT NUMBER & PHASE: 04000006804
CONTRACT NO.: 04-235654

DISREGARD PRINTS BEARING EARLIER REVISION DATES

REVISION DATES

SHEET 28 OF 33

FILE => 35-0354-x-xs03-120.dgn

USERNAME => s132775 DATE PLOTTED => 17-AUG-2016 TIME PLOTTED => 09:40

| DIST | COUNTY | ROUTE | POST MILES TOTAL PROJECT | SHEET No. | TOTAL SHEETS |
|---|---|---|---|---|---|
| 04 | SM | 101,114 | 1.3/2.5, 5.0/5.3 | 485 | 568 |

REGISTERED CIVIL ENGINEER 11-10-15 DATE

6-29-16
PLANS APPROVAL DATE

REGISTERED PROFESSIONAL ENGINEER LINAN WANG No. 54714 Exp. 12-31-17 CIVIL STATE OF CALIFORNIA

*The State of California or its officers or agents shall not be responsible for the accuracy or completeness of electronic copies of this plan sheet.*

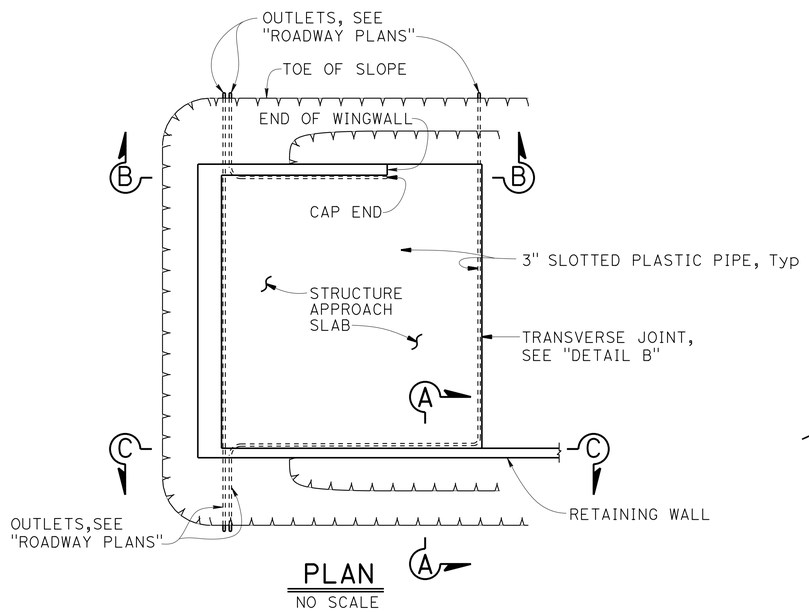


PLAN
NO SCALE

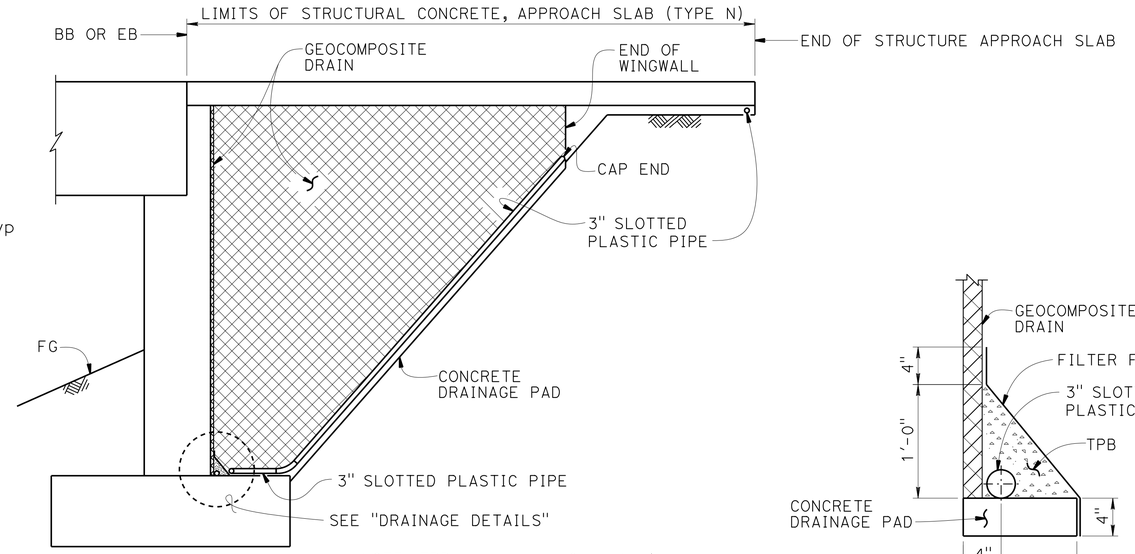


NOTE: TPB not shown for clarity.

SECTION B-B
NO SCALE

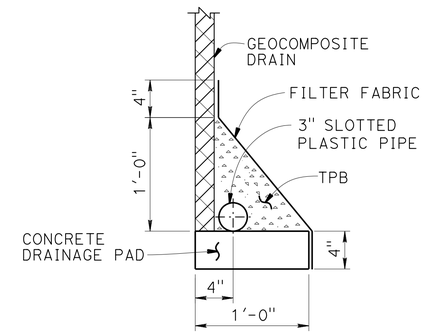


DRAINAGE PAD

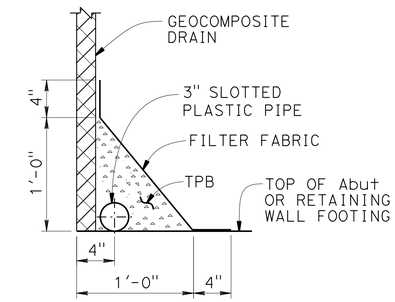


FOOTING

DRAINAGE DETAILS
1½" = 1'-0"

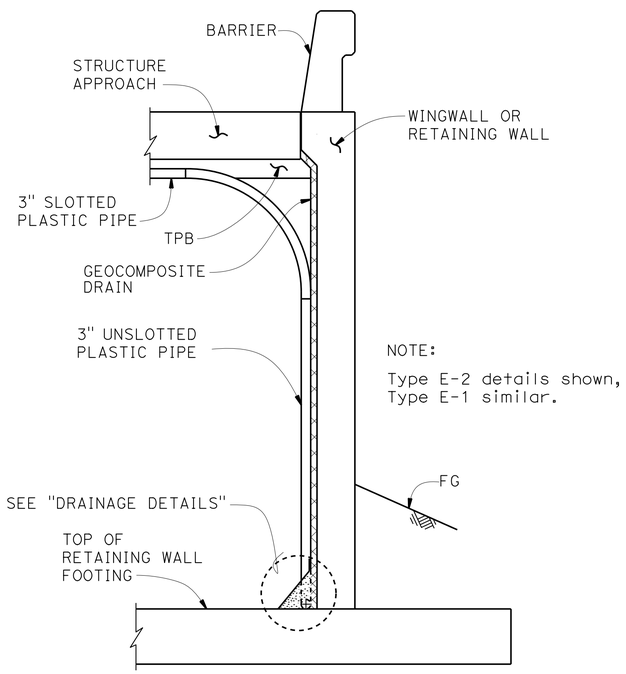


NOTE:
Type E-2 details shown, Type E-1 similar.

SECTION A-A
NO SCALE

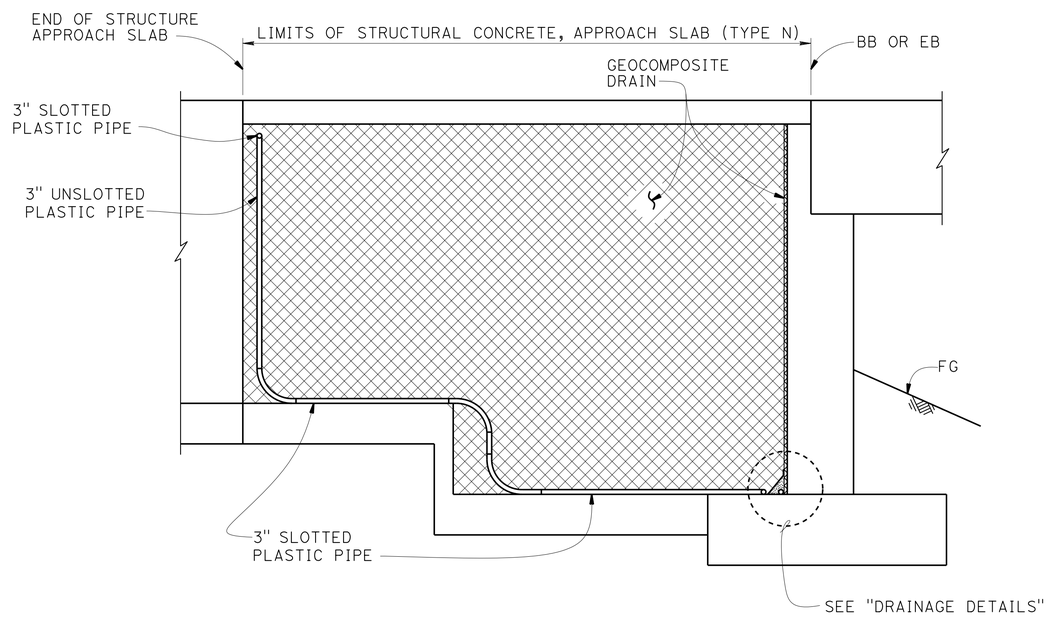


SECTION C-C
NO SCALE

NOTE: TPB not shown for clarity.

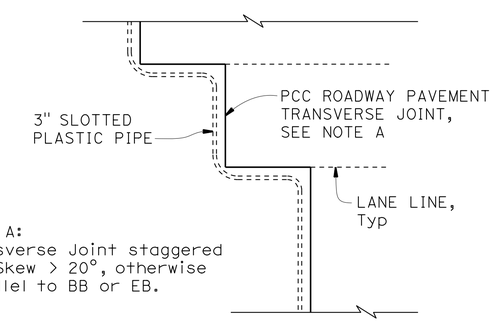


NOTE A:
Transverse Joint staggered for Skew > 20°, otherwise parallel to BB or EB.

DETAIL B
NO SCALE

NOTES:

1. For structural approach and other details not shown, see other plan sheets.
2. All bends in plastic pipe must have 3'-0" minimum radius. Plastic pipe used for bends is not required to be slotted.

STANDARD DRAWING
FILE NO. xs3-110
APPROVAL DATE January 2015

STATE OF CALIFORNIA
DEPARTMENT OF TRANSPORTATION

DIVISION OF ENGINEERING SERVICES

BRIDGE NO. 35-0354
POST MILE 1.7/2.1

# ROUTE 101/ WILLOW INTERCHANGE
## WILLOW ROAD SEPARATION
## STRUCTURE APPROACH DRAINAGE DETAILS

DS OSD 2147A (ENGLISH STANDARD DRAWING "XS" BORDER REV. (10-01-14)

ORIGINAL SCALE IN INCHES FOR REDUCED PLANS 0 1 2 3

UNIT: 3579
PROJECT NUMBER & PHASE: 04000006804
CONTRACT NO.: 04-235654

DISREGARD PRINTS BEARING EARLIER REVISION DATES
REVISION DATES 11/19/14

SHEET 29 OF 33

FILE => 35-0354-x-xs3-110.dgn

USERNAME => s132175 DATE PLOTTED => 17-AUG-2016 TIME PLOTTED => 09:40

| DIST | COUNTY | ROUTE | POST MILES TOTAL PROJECT | SHEET No. | TOTAL SHEETS |
|---|---|---|---|---|---|
| 04 | SM | 101,114 | 1.3/2.5, 5.0/5.3 | 486 | 568 |

REGISTERED CIVIL ENGINEER 11-10-15 DATE

6-29-16
PLANS APPROVAL DATE

REGISTERED PROFESSIONAL ENGINEER LINAN WANG No. 54714 Exp. 12-31-17 CIVIL STATE OF CALIFORNIA

*The State of California or its officers or agents shall not be responsible for the accuracy or completeness of electronic copies of this plan sheet.*

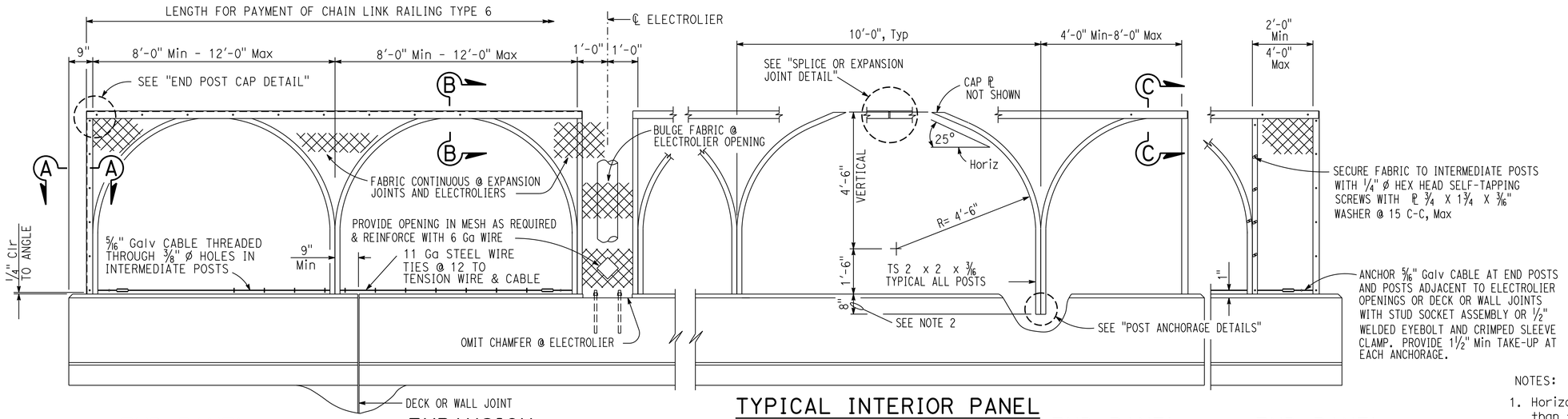


END PANEL 8'-0" - 12'-0" | EXPANSION PANEL | TYPICAL INTERIOR PANEL AT ELECTROLIER | END PANEL 4'-0" - 8'-0" | END PANEL 2'-0" - 4'-0"

## ELEVATION

1/2" = 1'-0"

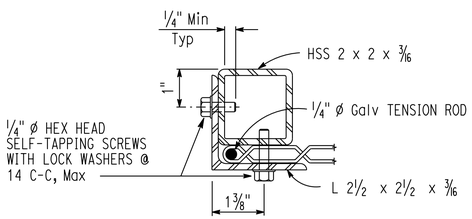


## SECTION A-A

6" = 1'-0"

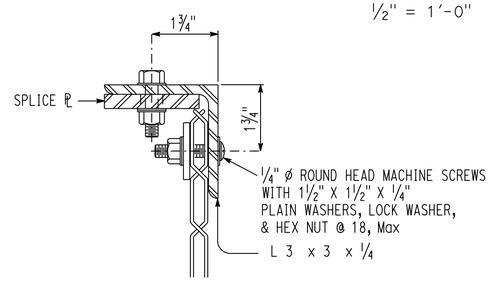


## SECTION B-B

6" = 1'-0"

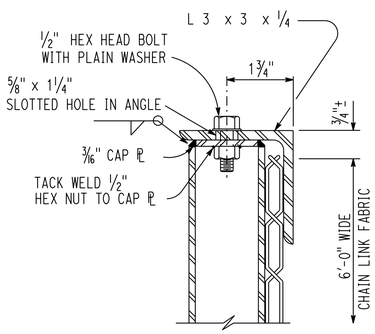


## SECTION C-C

6" = 1'-0"

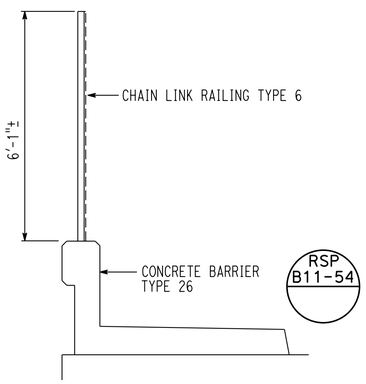


## TYPICAL SECTION

1/2" = 1'-0"

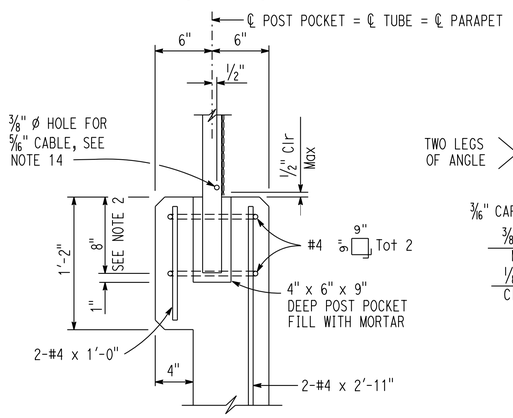


## POST ANCHORAGE DETAIL

1 1/2" = 1'-0"

NOTE:
THE CONTRACTOR MUST VERIFY ALL CONTROLLING FIELD DIMENSIONS BEFORE ORDERING OR FABRICATING ANY MATERIAL.

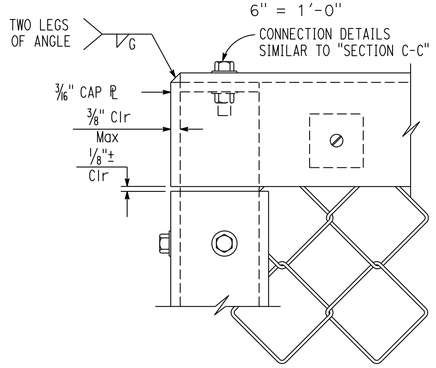


## END POST CAP DETAIL

6" = 1'-0"

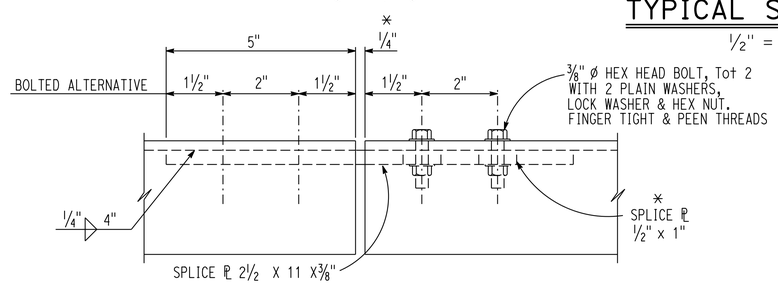


## SPLICE OR EXPANSION JOINT DETAIL

6" = 1'-0"

* Expansion joint same dimension as expansion joint in deck or wall. Increase slotted hole length and splice ℙ length correspondingly.

NOTES:

1. Horizontal angle must be continuous over not less than two intermediate posts except that a shorter length is permitted at expansion joints, electroliers and other rail discontinuities.
2. One post may be embedded 6" minimum to accommodate grade changes, otherwise fabricate post lengths as required.
3. Curved posts may be rotated in plane within post pockets to accommodate curved horizontal alignment.
4. Straight posts and straight portions of curved posts must be installed normal to bridge profile grade.
5. Top horizontal angle must be parallel to bridge profile grade and must be shop bent to fit horizontal curves.
6. When railing is on slope, fabric must be placed parallel to slope.
7. Alternative details may be submitted by Contractor for Engineer's approval.
8. For details and reinforcement not shown, see "CONCRETE BARRIER TYPE 26" sheet. (B11-54)
9. See Bridge Plans for limits of Chain Link Railing Type 6.
10. Provide thimbles at all cable loops.
11. Chain link fabric to be 6'-0" wide with 1" mesh and with knuckled selvage top and bottom.
12. When railing is placed on a horizontal alignment with a radius of 150'-0" or less, thread 5/16" cable through 3/8" * welded eye rods embedded 4" into the top of the concrete parapet and equally spaced to limit the middle ordinate distance between 5/16" cable and the curve to 1" maximum.
13. Splices and expansion joints must be located at ℄ panel.
14. Holes in posts for 5/16" cable and its anchorage may be field drilled and painted with zinc rich paint.

STANDARD DRAWING

FILE NO. xs16-200 | APPROVAL DATE October 2014

STATE OF CALIFORNIA DEPARTMENT OF TRANSPORTATION

DIVISION OF ENGINEERING SERVICES

BRIDGE NO. 35-0354 | POST MILE 1.7/2.1

# ROUTE 101/ WILLOW INTERCHANGE
# WILLOW ROAD SEPARATION
## CHAIN LINK RAILING TYPE 6

DS OSD 2147A (ENGLISH STANDARD DRAWING "XS" BORDER REV. (02-02-11)

ORIGINAL SCALE IN INCHES FOR REDUCED PLANS 0 1 2 3

UNIT: 3579
PROJECT NUMBER & PHASE: 04000006804
CONTRACT NO.: 04-235654

DISREGARD PRINTS BEARING EARLIER REVISION DATES

REVISION DATES 6-26-14 9-18-14 9-15-14

SHEET 30 OF 33

FILE => 35-0354-y-xs16-200.dgn

USERNAME => s132775 DATE PLOTTED => 17-AUG-2016 TIME PLOTTED => 09:40

| DIST | COUNTY | ROUTE | POST MILES TOTAL PROJECT | SHEET No. | TOTAL SHEETS |
|---|---|---|---|---|---|
| 04 | SM | 101,114 | 1.3/2.5, 5.0/5.3 | 487 | 568 |

REGISTERED CIVIL ENGINEER 11-10-15 DATE

6-29-16
PLANS APPROVAL DATE

REGISTERED PROFESSIONAL ENGINEER
LINAN WANG
No. 54714
Exp. 12-31-17
CIVIL
STATE OF CALIFORNIA

*The State of California or its officers or agents shall not be responsible for the accuracy or completeness of scanned copies of this plan sheet.*

*The components of this Bridge Standard Drawing have been prepared under the responsible charge of the Technical Owner, a registered civil engineer in the State of California. Refer to: http://www.dot.ca.gov/hq/esc/techpubs/manual/bridgemanuals/bridge-standard-detail-sheets/index.html. The selection and proper application of the component design and any modifications shown have been prepared under the responsible charge of the registered civil engineer for the project.*

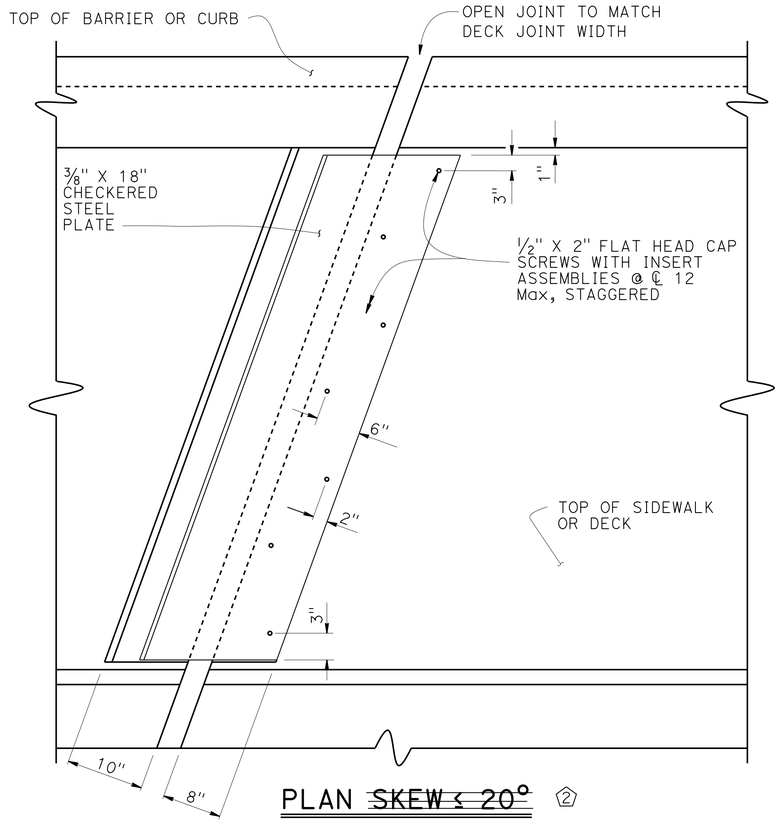


PLAN ~~SKEW ≤ 20°~~ ②
NO SCALE
⇦ DIRECTION OF TRAFFIC

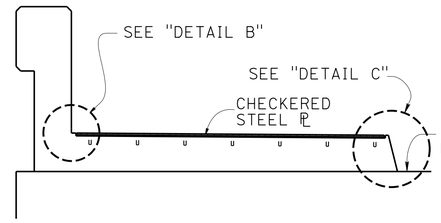


SECTION A-A
NO SCALE

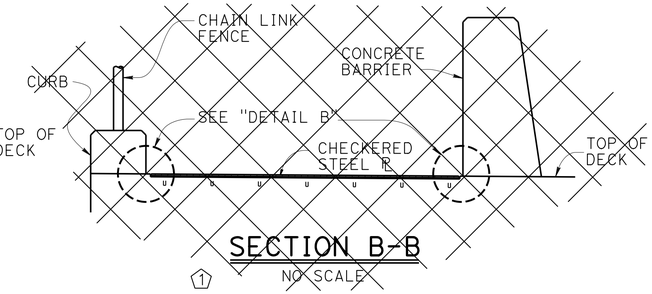


SECTION B-B ①
NO SCALE

NOTES:

1. Utility openings and expansion joints not shown for clarity.
2. Recess concrete 1/2" for plates.
3. Plates to be galvanized.
4. Architectural treatment not shown

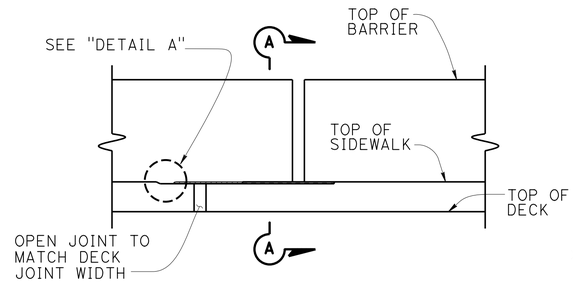


ELEVATION
NO SCALE

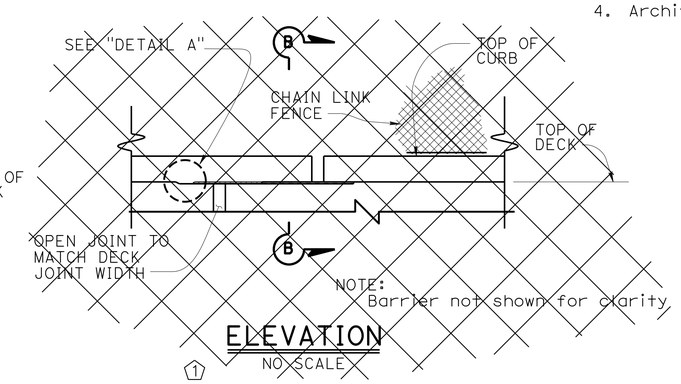


ELEVATION ①
NO SCALE

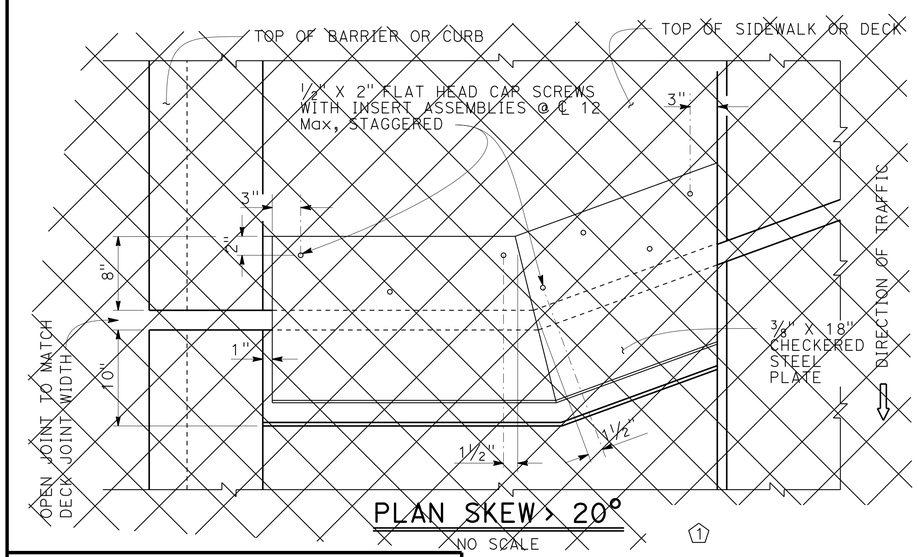


PLAN SKEW > 20°
NO SCALE ①

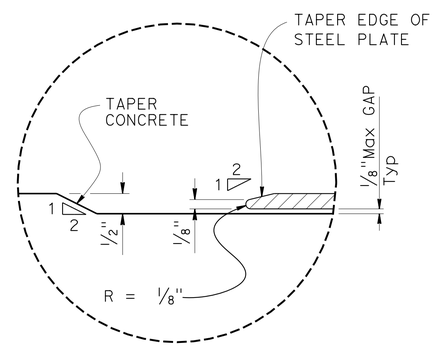


DETAIL A
NO SCALE

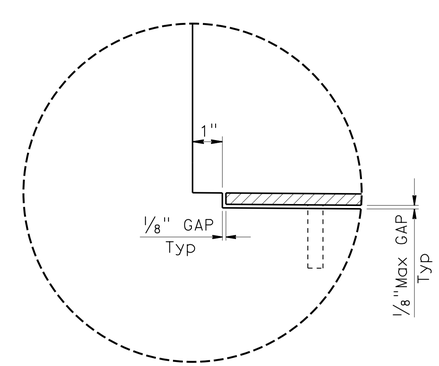


DETAIL B
NO SCALE

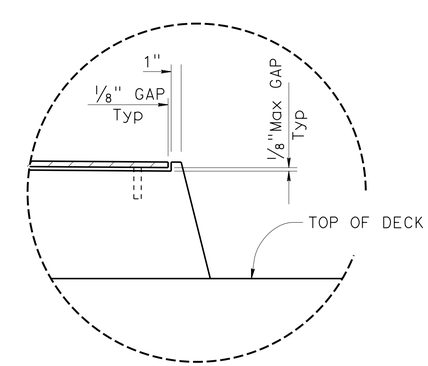


DETAIL C
NO SCALE

MODIFIED
STANDARD DRAWING

FILE NO. xs8-050
APPROVAL DATE July 2014

① DETAIL REMOVED
② MODIFIED CALL OUT

STATE OF CALIFORNIA
DEPARTMENT OF TRANSPORTATION

DIVISION OF ENGINEERING SERVICES

BRIDGE NO. 35-0354
POST MILE 1.7/2.1

# ROUTE 101/ WILLOW INTERCHANGE
# WILLOW ROAD SEPARATION
# JOINT ARMOR FOR PEDESTRIAN WALKWAYS

DS OSD 2147A (ENGLISH STANDARD DRAWING "XS" BORDER REV. (02-02-11)

ORIGINAL SCALE IN INCHES FOR REDUCED PLANS 0 1 2 3

UNIT: 3579
PROJECT NUMBER & PHASE: 04000006804
CONTRACT NO.: 04-235654

DISREGARD PRINTS BEARING EARLIER REVISION DATES →

REVISION DATES

SHEET 31 OF 33

FILE => 35-0354-yy-xs8-050.dgn

USERNAME => s132175 DATE PLOTTED => 17-AUG-2016 TIME PLOTTED => 09:40

| DIST | COUNTY | ROUTE | POST MILES TOTAL PROJECT | SHEET No. | TOTAL SHEETS |
|---|---|---|---|---|---|
| 04 | SM | 101,114 | 1.3/2.5, 5.0/5.3 | 488 | 568 |

REGISTERED CIVIL ENGINEER — DATE 10-20-15

PROFESSIONAL GEOLOGIST — Matthew Gaffney — No. 8045 — Exp. 6-30-16 — STATE OF CALIFORNIA

6-29-16
PLANS APPROVAL DATE

*The State of California or its officers or agents shall not be responsible for the accuracy or completeness of electronic copies of this plan sheet.*

This LOTB sheet was prepared in accordance with the Caltrans Soil & Rock Logging, Classification, & Presentation Manual (2010 Edition).

See 2010 Standard Plans A10F and A10G for Soil Legend, and A10H for Rock Legend.

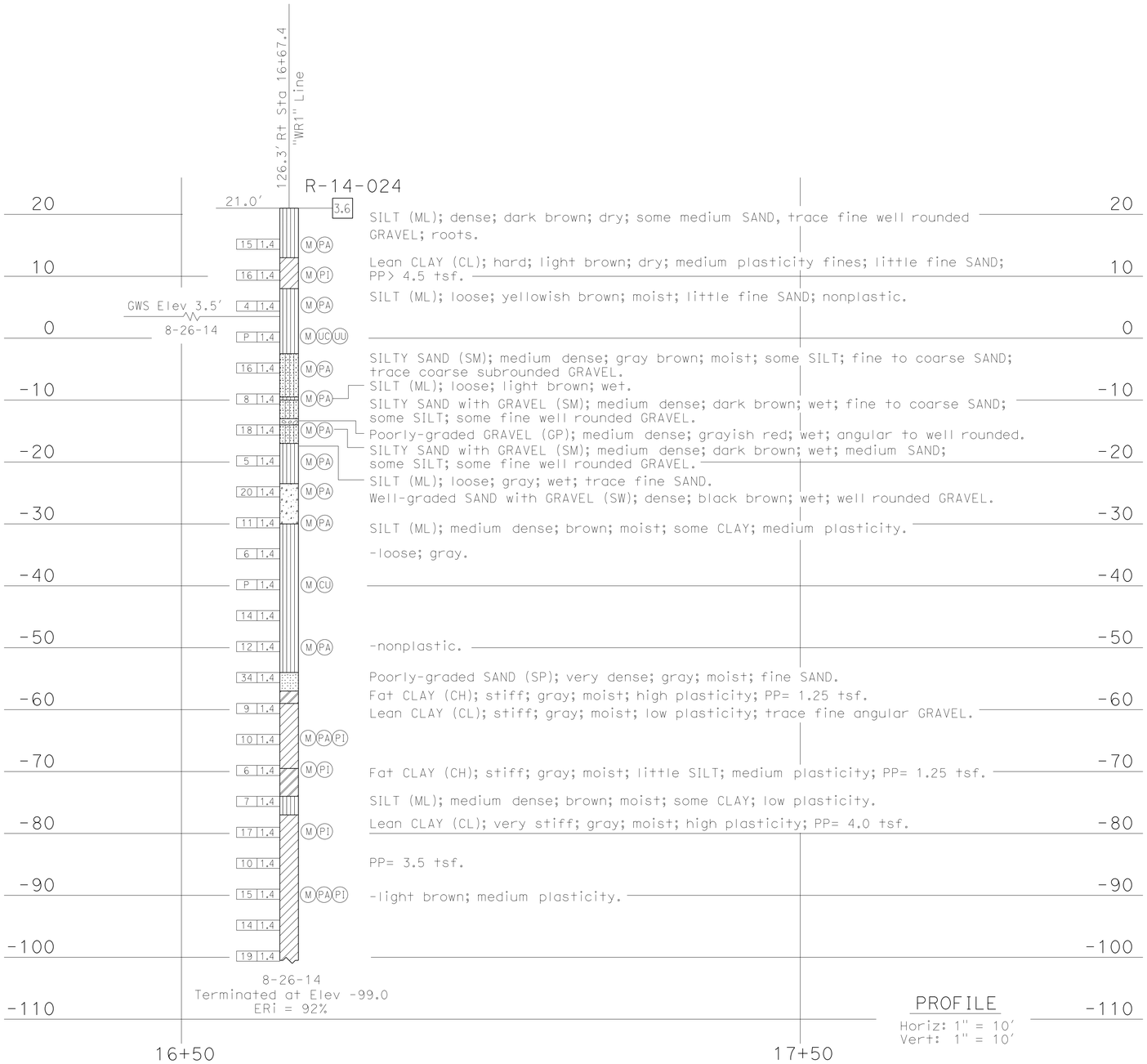


PROFILE
Horiz: 1" = 10'
Vert: 1" = 10'

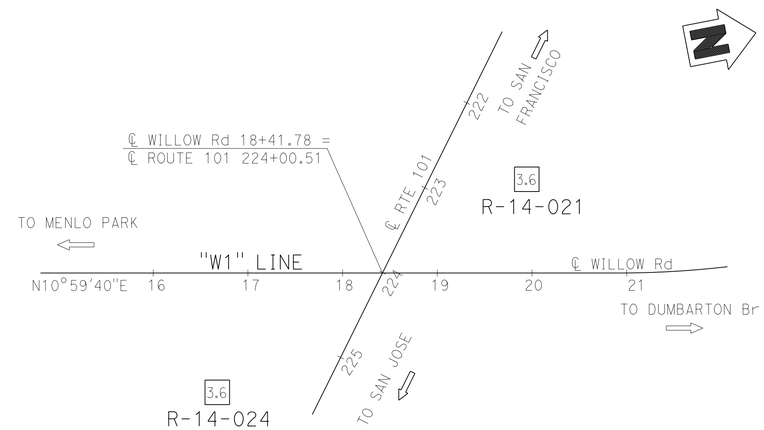


PLAN
1" = 80'

## BENCH MARK

HV 12
Fnd HV-12 (unknown monument)
9.57 FT Rt "D2" LINE ROUTE 101
Sta 223+55.98
N 1,997,459.76
E 6,081,283.65
Elev = 41.97

HV 10142
Fnd WP10102 PK
1311.66 Ft Lt "D2" LINE ROUTE 101
Sta 216+59.97
N 1,998,932.13
E 6,081,532.78
Elev = 14.09

| ENGINEERING SERVICES | MATERIALS AND GEOTECHNICAL SERVICES | STATE OF CALIFORNIA DEPARTMENT OF TRANSPORTATION | DIVISION OF ENGINEERING SERVICES STRUCTURE DESIGN DESIGN BRANCH 4 | BRIDGE NO. 35-0354 / POST MILE 1.7/2.1 | ROUTE 101/ WILLOW INTERCHANGE WILLOW ROAD SEPARATION LOG OF TEST BORINGS 1 OF 2 |
|---|---|---|---|---|---|
| FUNCTIONAL SUPERVISOR NAME: C. Risden | DRAWN BY: I. G-Remmen CHECKED BY: XX | FIELD INVESTIGATION BY: M. Gaffney, R. Nashed | | | |

OGS CIVIL LOG OF TEST BORINGS SHEET — ORIGINAL SCALE IN INCHES FOR REDUCED PLANS 0 1 2 3

UNIT: 3650
PROJECT NUMBER & PHASE: 04000006804 — CONTRACT NO.: 04-235654

DISREGARD PRINTS BEARING EARLIER REVISION DATES — REVISION DATES 08-25-15 10-19-15 — SHEET 32 OF 33

FILE => 35-0354-z-ltb01.dgn

USERNAME => s132175 DATE PLOTTED => 17-AUG-2016 TIME PLOTTED => 09:40

| DIST | COUNTY | ROUTE | POST MILES TOTAL PROJECT | SHEET No. | TOTAL SHEETS |
|---|---|---|---|---|---|
| 04 | SM | 101,114 | 1.3/2.5, 5.0/5.3 | 489 | 568 |

REGISTERED CIVIL ENGINEER — DATE 10-20-15

6-29-16
PLANS APPROVAL DATE

PROFESSIONAL GEOLOGIST — Matthew Gaffney — No. 8045 — Exp. 6-30-16 — STATE OF CALIFORNIA

*The State of California or its officers or agents shall not be responsible for the accuracy or completeness of electronic copies of this plan sheet.*

This LOTB sheet was prepared in accordance with the Caltrans Soil & Rock Logging, Classification, & Presentation Manual (2010 Edition).

See 2010 Standard Plans A10F and A10G for Soil Legend, and A10H for Rock Legend.

FOR PLAN VIEW, SEE
"LOG OF TEST BORINGS 1 OF 2"

Note: Groundwater was not measured in Boring R-14-021.

99' Lt Sta 19+94.5
"WR1" Line

R-14-021

21.5' — 3.6

| Elev | Description |
|---|---|
| 20 | PEAT (PT); brown; moist. |
| | SILT (ML); hard; reddish brown; dry; nonplastic fines; PP>4.5 tsf. |
| 10 | SILTY SAND with GRAVEL (SM); medium dense; reddish brown; dry; little fine to coarse, subrounded GRAVEL; mostly medium SAND. |
| 0 | Poorly-graded SAND (SP); medium dense; brown; wet; fine SAND. |
| | SANDY lean CLAY (CL); stiff; dark bluish gray; wet; some fine SAND; PP=1.0 tsf. |
| -10 | Well-graded SAND with GRAVEL (SW); dense; wet; some fine to coarse, subrounded GRAVEL; mostly medium, angular SAND; trace fines; gray/reddish brown. |
| -20 | GRAVELLY SILT (ML); gray; wet; some fine and coarse, subrounded GRAVEL. |
| | -light brown. |
| -30 | Well-graded SAND with GRAVEL (SW); dense; reddish brown; wet; some fine to coarse subangular GRAVEL; mostly medium, subangular SAND. |
| | SILT with SAND (ML); medium dense; gray; wet; little fine SAND. |
| -40 | Poorly-graded SAND (SP); medium dense; gray; wet; fine SAND. |
| | SILT (ML); stiff; gray; wet; trace fine SAND; medium plasticity fines; PP=1.25 tsf. |
| -50 | PP=1.50 tsf. |
| | SANDY SILT (ML); medium dense; gray; wet; some fine SAND; nonplastic fines. |
| -60 | Lean CLAY (CL); stiff; gray; moist; medium plasticity fines; PP=1.75 tsf. |
| | Fat CLAY (CH); stiff; medium plasticity fines; PP=1.75 tsf. |
| -70 | Lean CLAY (CL); stiff; gray; moist; PP=1.25 tsf. |
| -80 | Fat CLAY (CH); stiff; gray; moist; medium plasticity fines; PP=1.45 tsf. |
| -90 | Lean CLAY (CL); very stiff; gray; moist; trace fine angular GRAVEL; medium plasticity fines; PP=3.0 tsf. |
| | Well-graded SAND with CLAY (SW-SC); very dense; gray; wet; some fine to coarse, rounded GRAVEL; little fines. |
| -100 | Fat CLAY (CH); very stiff; gray; moist; trace fine rounded GRAVEL; low plasticity fines; PP=3.0 tsf. |
| | CLAYEY SAND (SC); dense; gray; wet; some fines. |
| -110 | SANDY fat CLAY (CH); very stiff; gray; moist; some fine SAND; PP= 3.0 tsf. |
| | -hard; PP= 4.0 tsf. |
| -120 | SILT (ML); dense; gray; moist; low plasticity fines. |
| -130 | |

8-13-14
Terminated at Elev -120
ERi = 92%

19+00 — 20+00 — 21+00

PROFILE
Horiz: 1" = 10'
Vert: 1" = 10'

| ENGINEERING SERVICES | MATERIALS AND GEOTECHNICAL SERVICES | STATE OF CALIFORNIA DEPARTMENT OF TRANSPORTATION | DIVISION OF ENGINEERING SERVICES STRUCTURE DESIGN DESIGN BRANCH 4 | BRIDGE NO. 35-0354 / POST MILE 1.7/2.1 | ROUTE 101/ WILLOW INTERCHANGE WILLOW ROAD SEPARATION LOG OF TEST BORINGS 2 OF 2 |
|---|---|---|---|---|---|
| FUNCTIONAL SUPERVISOR NAME: C. Risden | DRAWN BY: I. G-Remmen CHECKED BY: D. Nesbitt | FIELD INVESTIGATION BY: M. Gaffney, R. Nashed | | | |

OGS CIVIL LOG OF TEST BORINGS SHEET

ORIGINAL SCALE IN INCHES FOR REDUCED PLANS 0 1 2 3

UNIT: 3650
PROJECT NUMBER & PHASE: 04000006804 CONTRACT NO.: 04-235654

DISREGARD PRINTS BEARING EARLIER REVISION DATES

REVISION DATES: 08-25-15, 10-19-15 — SHEET 33 OF 33

FILE => 35-0354-z-1tb02.dgn

USERNAME => s132175 DATE PLOTTED => 17-AUG-2016 TIME PLOTTED => 09:40

| DIST | COUNTY | ROUTE | POST MILES TOTAL PROJECT | SHEET No. | TOTAL SHEETS |
|---|---|---|---|---|---|
| 04 | SM | 101,114 | 1.3/2.5, 5.0/5.3 | 490 | 568 |

REGISTERED CIVIL ENGINEER 11-10-15 DATE

6-29-16
PLANS APPROVAL DATE

REGISTERED PROFESSIONAL ENGINEER LINAN WANG No. 54714 Exp. 12-31-17 CIVIL STATE OF CALIFORNIA

*THE STATE OF CALIFORNIA OR ITS OFFICERS OR AGENTS SHALL NOT BE RESPONSIBLE FOR THE ACCURACY OR COMPLETENESS OF ELECTRONIC COPIES OF THIS PLAN SHEET.*

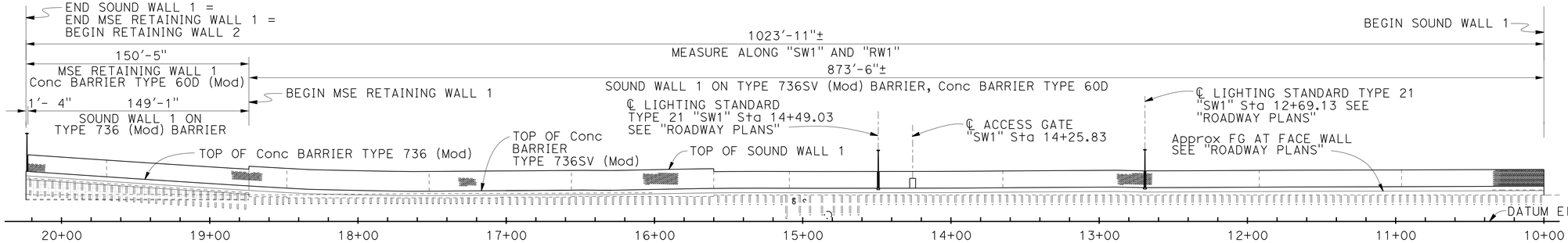


## DEVELOPED AND MIRRORED ELEVATION

1" = 40'

## INDEX TO PLANS


| SHEET NO. | TITLE |
|---|---|
| 1. | GENERAL PLAN |
| 2. | STRUCTURE PLAN NO. 1 |
| 3. | STRUCTURE PLAN NO. 2 |
| 4. | STRUCTURE PLAN NO. 3 |
| 5. | STRUCTURE PLAN NO. 4 |
| 6. | FOUNDATION PLAN NO. 1 |
| 7. | FOUNDATION PLAN NO. 2 |
| 8. | FOUNDATION PLAN NO. 3 |
| 9. | MISCELLANEOUS DETAILS No. 1 |
| 10. | MISCELLANEOUS DETAILS No. 2 |
| 11. | UNDERDRAIN DETAILS |
| 12. | MECHANICALLY STABILIZED EMBANKMENT DETAILS NO. 1 |
| 13. | MECHANICALLY STABILIZED EMBANKMENT DETAILS NO. 2 |
| 14. | MECHANICALLY STABILIZED EMBANKMENT DETAILS NO. 3 |
| 15. | MECHANICALLY STABILIZED EMBANKMENT DETAILS NO. 4 |
| 16. | ARCHITECTURAL DETAILS |
| 17. | LOG OF TEST BORINGS RETAINING WALL 1 |
| 18. | LOG OF TEST BORINGS SOUND WALL 1 |


## STANDARD PLANS DATED 2010

| SHEET NO. | TITLE |
|---|---|
| A10A | ACRONYMS AND ABBREVIATIONS (SHEET 1 OF 2) |
| RSP A10B | ACRONYMS AND ABBREVIATIONS (SHEET 2 OF 2) |
| RSP A10F | LEGEND - SOIL (SHEET 1 OF 2) |
| RSP A10G | LEGEND - SOIL (SHEET 2 OF 2) |
| B2-5 | PILE DETAILS CLASS 90 AND CLASS 140 |
| B15-4 | SOUND WALL MASONRY BLOCK ON PILE CAP DETAILS (2) |
| RSP B15-6 | SOUND WALL MASONRY BLOCK ON TYPE 736S/SV BARRIER DETAILS No. 1 |
| RSP B15-7 | SOUND WALL MASONRY BLOCK ON TYPE 736S/SV BARRIER DETAILS No. 2 |
| B15-9 | SOUND WALL MASONRY BLOCK MISCELLANEOUS DETAILS |
| B15-12 | SOUND WALL MASONRY BLOCK ON FOOTING OR PILE CAP - 5'-0" ACCESS GATE DETAILS (1) |
| B15-13 | SOUND WALL MASONRY BLOCK ON FOOTING OR PILE CAP - 5'-0" ACCESS GATE DETAILS (2) |
| B15-14 | SOUND WALL MASONRY BLOCK ACCESS GATE LOCKING DETAILS |
| B15-15 | SOUND WALL MASONRY BLOCK ON TYPE 736S/SV BARRIER ON PILE FOOTINGFOR SPANNING UTILITIES |
| RSP ES-6A | ELECTRICAL SYSTEMS (LIGHTING STANDARD, TYPE 15 AND 21) |

Standard Plan Sheet No.

Detail No.

QUANTITIES

| | | |
|---|---|---|
| REMOVE SOUND WALL (PORTION), LOCATION A | LUMP | SUM |
| REMOVE CONCRETE BARRIER (PORTION), LOCATION A | LUMP | SUM |
| MECHANICALLY STABILIZED EMBANKMENT, LOCATION A | 1,379 | SQFT |
| 18" CAST-IN-DRILLED-HOLE CONCRETE PILING | 300 | LF |
| FURNISH PILING (CLASS 90)(ALTERNATIVE Y) | 4,576 | LF |
| DRIVE PILE (CLASS 90)(ALTERNATIVE Y) | 176 | EA |
| STRUCTURAL CONCRETE, BARRIER SLAB | 71 | CY |
| SOUND WALL (MASONRY BLOCK) | 12,379 | SQFT |
| CONCRETE BARRIER (TYPE 60D) | 874 | LF |
| CONCRETE BARRIER (TYPE 60D MODIFIED) | 151 | LF |
| CONCRETE BARRIER (TYPE 736 MODIFIED) | 151 | LF |
| CONCRETE BARRIER (TYPE 736SV MODIFIED) | 874 | LF |

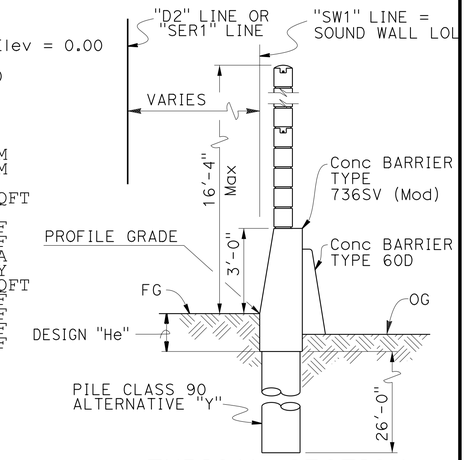


## TYPICAL SECTION

(Sta 10+00.00 To Sta 18+73.56)

3/8"=1'-0"

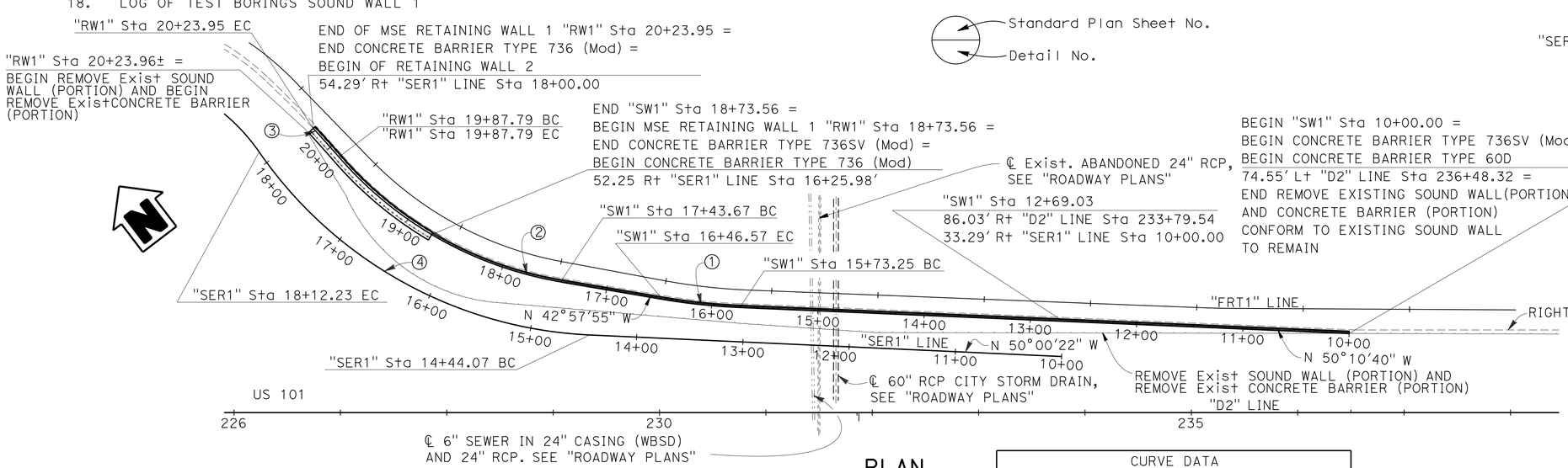


## PLAN

1" = 60'

| CURVE DATA | | | | |
|---|---|---|---|---|
| | R | Δ | T | L |
| ① | 582' | 7°12'45" | 36.71' | 73.32' |
| ② | 354' | 39°30'33" | 127.13' | 244.11' |
| ③ | 1000' | 2°4'22.55" | 18.09' | 36.17' |
| ④ | 400' | 52°44'03.83" | 198.28' | 368.16' |

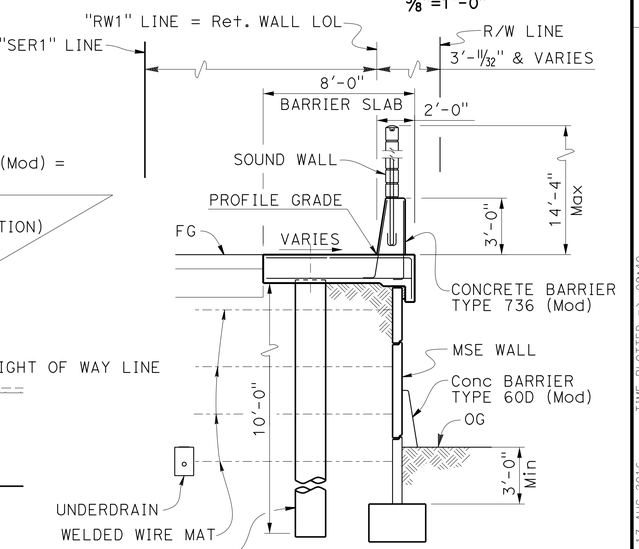


## TYPICAL SECTION

(Sta 18+73.56 To Sta 20+23.95)

1/4"=1'-0"

NOTE:
THE CONTRACTOR MUST VERIFY ALL CONTROLLING FIELD DIMENSIONS BEFORE ORDERING OR FABRICATING ANY MATERIAL.

NOTE:
For FG see "ROADWAY PLANS".

# ROUTE 101/ WILLOW INTERCHANGE

# SOUND WALL 1 AND RETAINING WALL 1

# GENERAL PLAN

| | | | |
|---|---|---|---|
| DESIGN | BY Li Barnard | CHECKED Linan Wang | LOAD & RESISTANCE FACTOR DESIGN — LIVE LOADING: HL93 W/"LOW-BOY" PERMIT DESIGN VEHICLE |
| DETAILS | BY Wei Zhang | CHECKED Linan Wang | LAYOUT — BY Li Barnard — CHECKED Linan Wang |
| QUANTITIES | BY Li Barnard | CHECKED Linan Wang | SPECIFICATIONS — BY Sirisha Nelapatia — PLANS AND SPECS COMPARED Linan Wang |

Minh Ha
DESIGN ENGINEER

ORIGINAL SCALE IN INCHES FOR REDUCED PLANS 0 1 2 3

STATE OF CALIFORNIA
DEPARTMENT OF TRANSPORTATION

DIVISION OF ENGINEERING SERVICES
STRUCTURE DESIGN
DESIGN BRANCH 4

BRIDGE NO. 35E0048
POST MILE 1.75-1.82

UNIT: 59-3579
PROJECT NUMBER & PHASE: 0400000680 4
CONTRACT NO.: 04-235654

DISREGARD PRINTS BEARING EARLIER REVISION DATES

REVISION DATES 11-10-14 11-16-15 11-02-15

SHEET 1 OF 18

USERNAME => s13321f5 DATE PLOTTED => 17-AUG-2016 TIME PLOTTED => 09:40

STRUCTURES DESIGN GENERAL PLAN SHEET (ENGLISH) (REV.09-01-10)

FILE => 35e0048-a-gp01-mse_wall.dgn

| DIST | COUNTY | ROUTE | POST MILES TOTAL PROJECT | SHEET No. | TOTAL SHEETS |
|---|---|---|---|---|---|
| 04 | SM | 101,114 | 1.3/2.5, 5.0/5.3 | 491 | 568 |

REGISTERED CIVIL ENGINEER 11-10-15 DATE

6-29-16
PLANS APPROVAL DATE

REGISTERED PROFESSIONAL ENGINEER
LINAN WANG
No. 54714
Exp. 12-31-17
CIVIL
STATE OF CALIFORNIA

*The State of California or its officers or agents shall not be responsible for the accuracy or completeness of electronic copies of this plan sheet.*

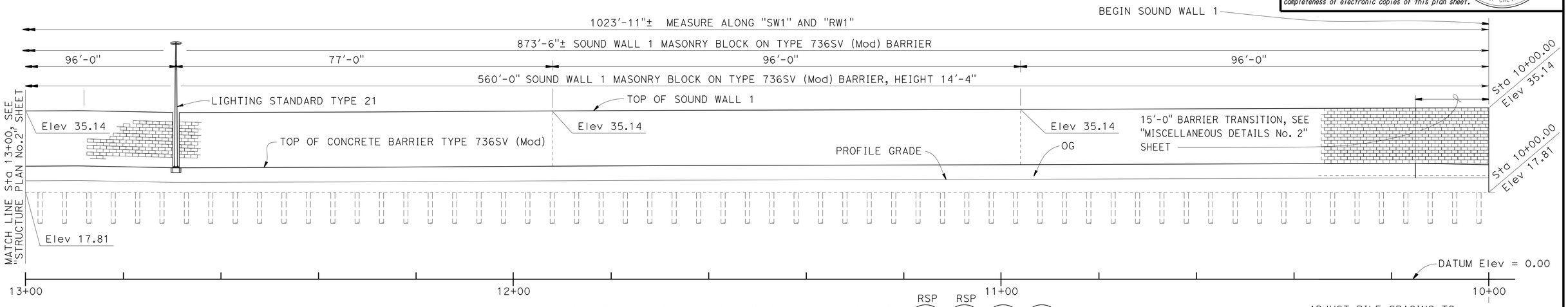


## DEVELOPED AND MIRRORED ELEVATION

1" = 10'

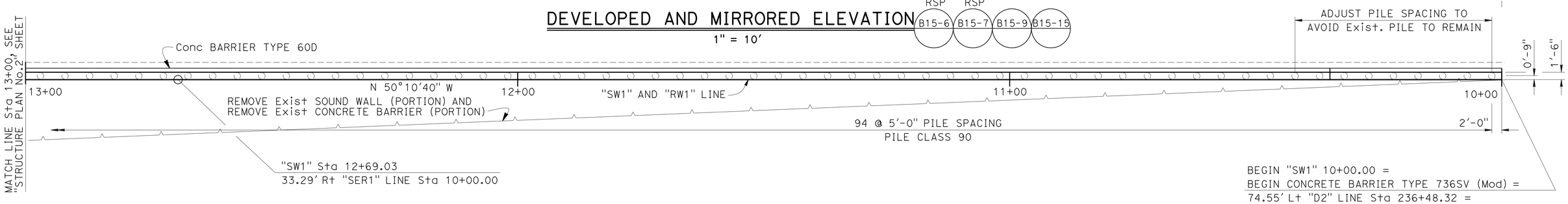


BEGIN "SW1" 10+00.00 =
BEGIN CONCRETE BARRIER TYPE 736SV (Mod) =
74.55' Lt "D2" LINE Sta 236+48.32 =
END REMOVE Exist SOUND WALL (PORTION) AND Exist CONCRETE BARRIER (PORTION) CONFORM TO Exist SOUND WALL TO REMAIN. FILL CONSTRUCTION JOINT WITH 1/2" EXPANDED MATERIAL

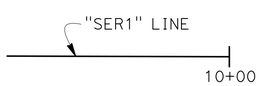


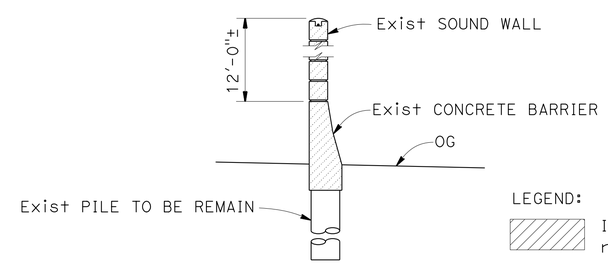


LEGEND:

Indicates remove Exist Sound Wall (Portion) and remove Exist Concrete Barrier (Portion).

## Exist SOUND WALL AND Exist CONCRETE BARRIER TO BE REMOVED (PORTION)

3/8" = 1'

NOTES:
1. For Profile Grade, see "ROADWAY PLANS".
2. For Lighting Standard, see "ROADWAY PLANS".
3. All class 90, Alt "Y" piles are 26'-0" long from bottom of concrete barrier type 736SV (Mod).

NOTE:
THE CONTRACTOR MUST VERIFY ALL CONTROLLING FIELD DIMENSIONS BEFORE ORDERING OR FABRICATING ANY MATERIAL.

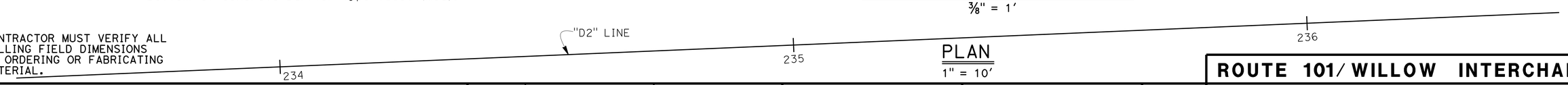


## PLAN

1" = 10'

| | | | |
|---|---|---|---|
| DESIGN | BY Li Barnard | CHECKED Linan Wang | |
| DETAILS | BY Wei Zhang / A. Onodera | CHECKED Linan Wang | |
| QUANTITIES | BY Li Barnard | CHECKED Linan Wang | |

STATE OF CALIFORNIA
DEPARTMENT OF TRANSPORTATION

DIVISION OF ENGINEERING SERVICES
STRUCTURE DESIGN
DESIGN BRANCH 4

BRIDGE NO. 35E0048
POST MILE 1.75-1.82

# ROUTE 101/ WILLOW INTERCHANGE
## SOUND WALL 1 AND RETAINING WALL 1
## STRUCTURE PLAN No. 1

STRUCTURES DESIGN DETAIL SHEET (ENGLISH) (REV. 09-01-10)

ORIGINAL SCALE IN INCHES FOR REDUCED PLANS 0 1 2 3

UNIT: 59-3579
PROJECT NUMBER & PHASE: 0400000680 4
CONTRACT NO.: 04-235654

DISREGARD PRINTS BEARING EARLIER REVISION DATES

REVISION DATES: 03-18-15 11-18-15 11-23-15 03-24-16

SHEET 2 OF 18

FILE => 35e0048-c-sp01-mse_wall.dgn

USERNAME => s132775 DATE PLOTTED => 17-AUG-2016 TIME PLOTTED => 09:40

| DIST | COUNTY | ROUTE | POST MILES TOTAL PROJECT | SHEET No. | TOTAL SHEETS |
|---|---|---|---|---|---|
| 04 | SM | 101,114 | 1.3/2.5, 5.0/5.3 | 492 | 568 |

REGISTERED CIVIL ENGINEER 11-10-15 DATE

6-29-16
PLANS APPROVAL DATE

REGISTERED PROFESSIONAL ENGINEER LINAN WANG No. 54714 Exp. 12-31-17 CIVIL STATE OF CALIFORNIA

*The State of California or its officers or agents shall not be responsible for the accuracy or completeness of electronic copies of this plan sheet.*

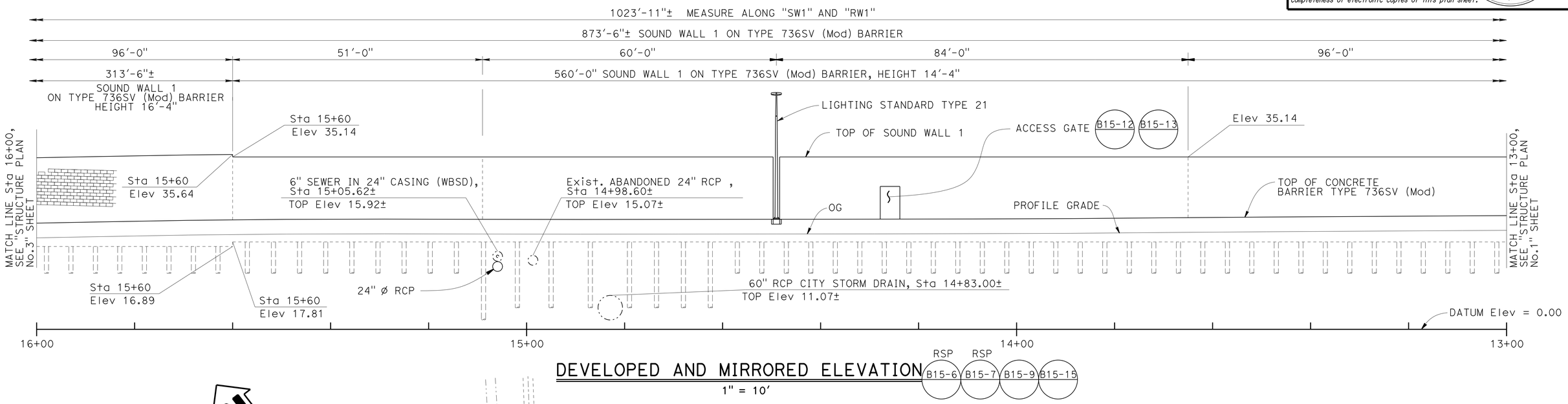


## DEVELOPED AND MIRRORED ELEVATION

1" = 10'

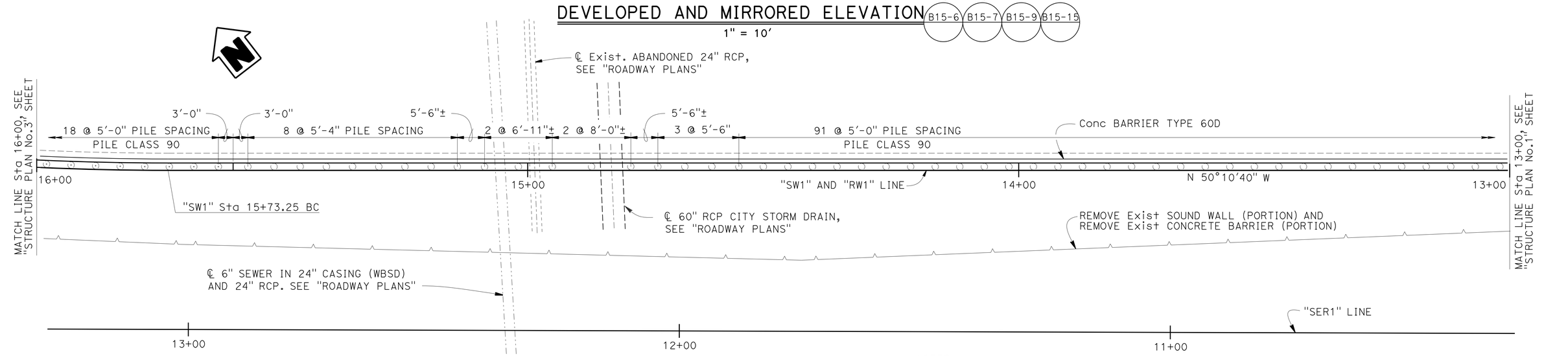


## PLAN

1" = 10'

NOTES:
1. For Profile Grade, see "ROADWAY PLANS".
2. For Lighting Standard, see "ROADWAY PLANS".
3. The clear distance between Exist utility pipe to piles shall be 1'-0" Min., Adjust pile as needed.
4. All class 90, Alt "Y" piles are 26'-0" long from bottom of concrete barrier type 736SV (Mod).
5. Verify locations and top elevations of all existing utility pipes before construction.

NOTE:
THE CONTRACTOR MUST VERIFY ALL CONTROLLING FIELD DIMENSIONS BEFORE ORDERING OR FABRICATING ANY MATERIAL.

# ROUTE 101/ WILLOW INTERCHANGE
## SOUND WALL 1 AND RETAINING WALL 1
## STRUCTURE PLAN No. 2

| | BY | CHECKED |
|---|---|---|
| DESIGN | Li Barnard | Linan Wang |
| DETAILS | Wei Zhang/ A. Onodera | Linan Wang |
| QUANTITIES | Li Barnard | Linan Wang |

STATE OF CALIFORNIA
DEPARTMENT OF TRANSPORTATION

DIVISION OF ENGINEERING SERVICES
STRUCTURE DESIGN
DESIGN BRANCH 4

BRIDGE NO. 35E0048
POST MILE 1.75-1.82

STRUCTURES DESIGN DETAIL SHEET (ENGLISH) (REV. 09-01-10)

ORIGINAL SCALE IN INCHES FOR REDUCED PLANS 0 1 2 3

UNIT: 59-3579
PROJECT NUMBER & PHASE: 0400000680 4
CONTRACT NO.: 04-235654

DISREGARD PRINTS BEARING EARLIER REVISION DATES

REVISION DATES: 11-16-15 11-23-15 10-14-15 11-04-15

SHEET 3 OF 18

FILE => 35e0048-c-sp02-mse_wall.dgn

USERNAME => s132175 DATE PLOTTED => 17-AUG-2016 TIME PLOTTED => 09:40

| DIST | COUNTY | ROUTE | POST MILES TOTAL PROJECT | SHEET No. | TOTAL SHEETS |
|---|---|---|---|---|---|
| 04 | SM | 101,114 | 1.3/2.5, 5.0/5.3 | 493 | 568 |

REGISTERED CIVIL ENGINEER 11-10-15 DATE

6-29-16
PLANS APPROVAL DATE

REGISTERED PROFESSIONAL ENGINEER LINAN WANG No. 54714 Exp. 12-31-17 CIVIL STATE OF CALIFORNIA

*The State of California or its officers or agents shall not be responsible for the accuracy or completeness of electronic copies of this plan sheet.*

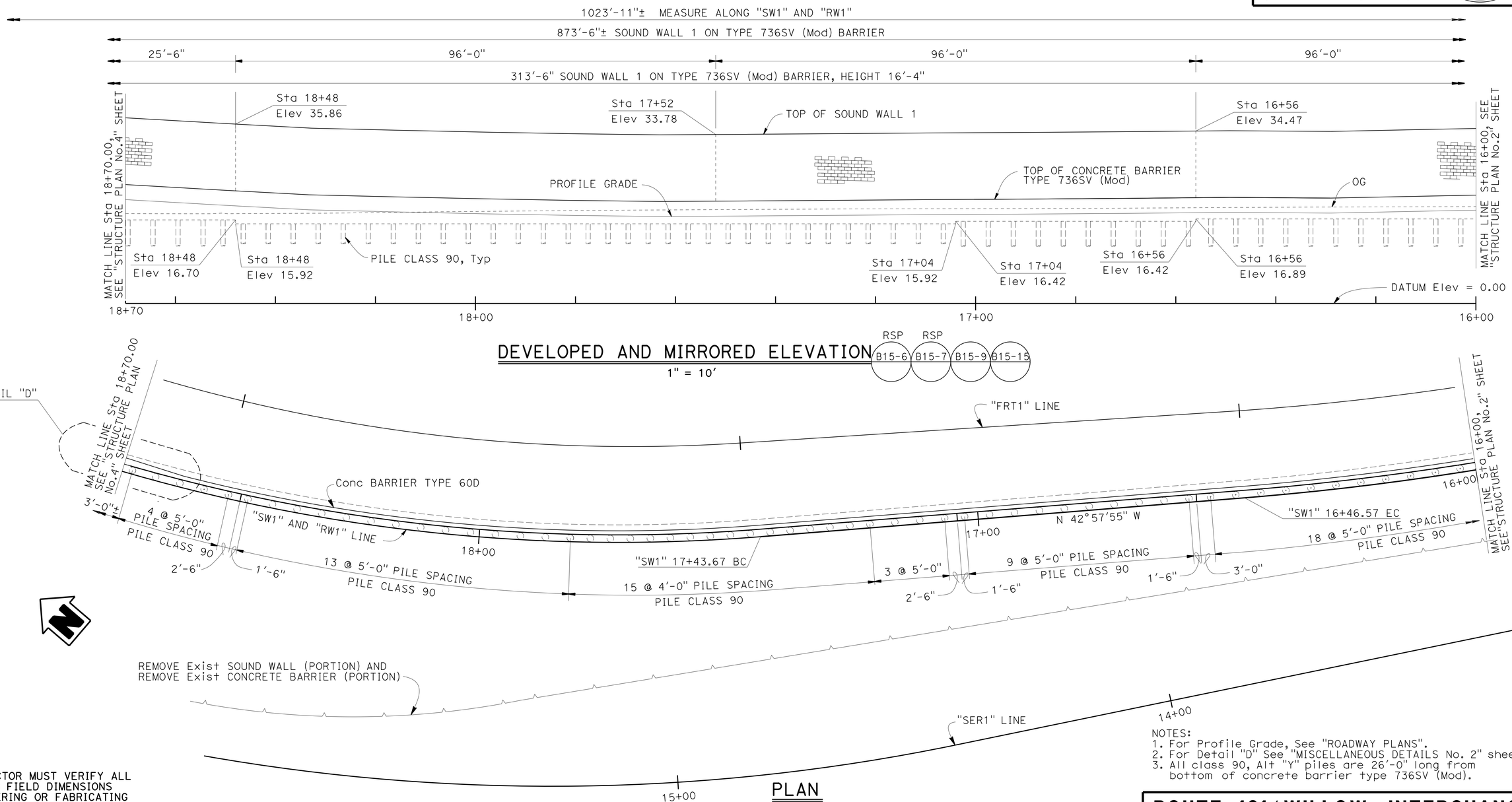


NOTES:
1. For Profile Grade, See "ROADWAY PLANS".
2. For Detail "D" See "MISCELLANEOUS DETAILS No. 2" sheet.
3. All class 90, Alt "Y" piles are 26'-0" long from bottom of concrete barrier type 736SV (Mod).

NOTE:
THE CONTRACTOR MUST VERIFY ALL CONTROLLING FIELD DIMENSIONS BEFORE ORDERING OR FABRICATING ANY MATERIAL.

| | BY | CHECKED |
|---|---|---|
| DESIGN | Li Barnard | Linan Wang |
| DETAILS | Wei Zhang | Linan Wang |
| QUANTITIES | Li Barnard | Linan Wang |

STATE OF CALIFORNIA
DEPARTMENT OF TRANSPORTATION

DIVISION OF ENGINEERING SERVICES
STRUCTURE DESIGN
DESIGN BRANCH 4

BRIDGE NO. 35E0048
POST MILE 1.75-1.82

# ROUTE 101/ WILLOW INTERCHANGE
## SOUND WALL 1 AND RETAINING WALL 1
## STRUCTURE PLAN No. 3

STRUCTURES DESIGN DETAIL SHEET (ENGLISH) (REV. 09-01-10)

ORIGINAL SCALE IN INCHES FOR REDUCED PLANS 0 1 2 3

UNIT: 59-3579
PROJECT NUMBER & PHASE: 0400000680 4
CONTRACT NO.: 04-235654

DISREGARD PRINTS BEARING EARLIER REVISION DATES

REVISION DATES: 11-16-15 10-27-15 11-20-15

SHEET 4 OF 18

FILE => 35e0048-c-sp03-mse_wall.dgn

USERNAME => s132775 DATE PLOTTED => 17-AUG-2016 TIME PLOTTED => 09:41

| DIST | COUNTY | ROUTE | POST MILES TOTAL PROJECT | SHEET No. | TOTAL SHEETS |
|---|---|---|---|---|---|
| 04 | SM | 101,114 | 1.3/2.5, 5.0/5.3 | 494 | 568 |

REGISTERED CIVIL ENGINEER 11-10-15 DATE

6-29-16
PLANS APPROVAL DATE

REGISTERED PROFESSIONAL ENGINEER LINAN WANG No. 54714 Exp. 12-31-17 CIVIL STATE OF CALIFORNIA

*The State of California or its officers or agents shall not be responsible for the accuracy or completeness of electronic copies of this plan sheet.*

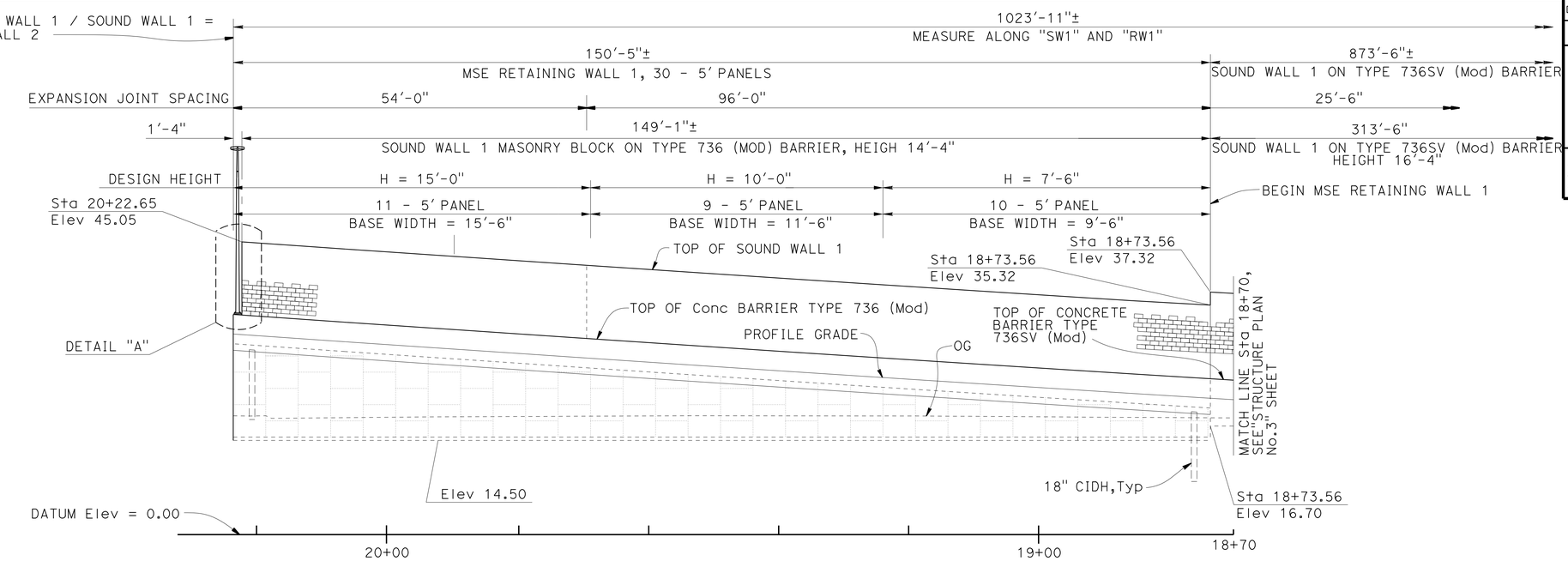


## DEVELOPED AND MIRRORED ELEVATION

1" = 10'

RSP B15-6 RSP B15-7 B15-9 B15-15

NOTE: NOT ALL 18" CIDH PILE SHOWN FOR CLARITY.

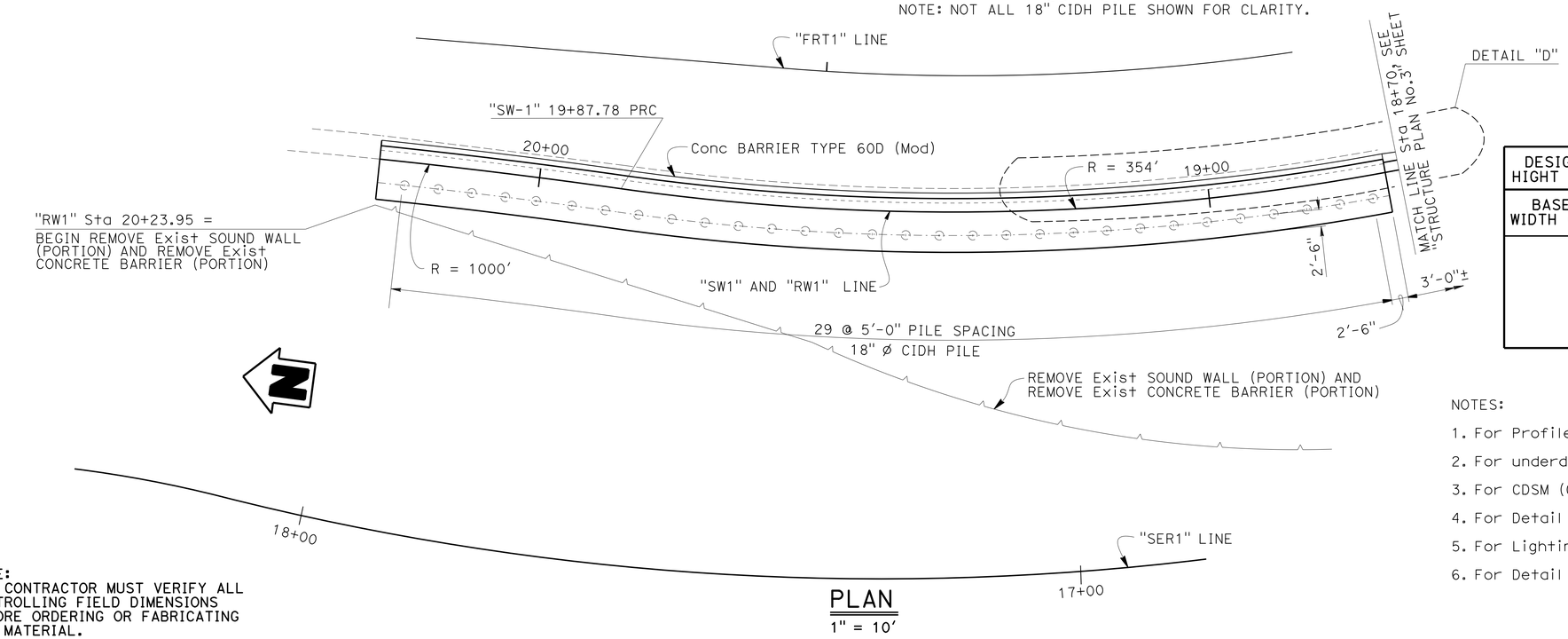


## PLAN

1" = 10'

NOTE:
THE CONTRACTOR MUST VERIFY ALL CONTROLLING FIELD DIMENSIONS BEFORE ORDERING OR FABRICATING ANY MATERIAL.

## STEEL SOIL REINFORCEMENT FOR CASE LOAD 1

| DESIGN HIGHT (H) | 7'-6" | 10'-0" | 15'-0" |
|---|---|---|---|
| BASE WIDTH (L) | 9'-6" | 9'-6" | 13'-6" |
| | Top 4-W15xW15@6 | Top 4-W15xW15@6 | Top 4-W15xW15@6 |
| | 1 of 4-W15xW15@6 | 2 of 4-W15xW15@6 | 3 of 4-W15xW15@6 |
| | Bot. 4-W15xW15@6 | Bot. 4-W20xW15@9 | 1 of 4-W20xW15@9 |
| | | | Bot. 4-W20xW15@9 |

NOTES:

1. For Profile Grade, see "ROADWAY PLANS".
2. For underdrain, see "UNDERDRAIN DETAILS" sheet.
3. For CDSM (Cement Deep Soil Mixing) limits, see "ROADWAY PLANS".
4. For Detail "A", see "MISCELLANEOUS DETAILS No. 1" sheet.
5. For Lighting Standard, see "ROADWAY PLANS".
6. For Detail "D", see "MISCELLANEOUS DETAILS No. 2" sheet.

# ROUTE 101/ WILLOW INTERCHANGE
## SOUND WALL 1 AND RETAINING WALL 1
## STRUCTURE PLAN No. 4

| | BY | CHECKED |
|---|---|---|
| DESIGN | Li Barnard | Linan Wang |
| DETAILS | Wei Zhang | Linan Wang |
| QUANTITIES | Li Barnard | Linan Wang |

STATE OF CALIFORNIA
DEPARTMENT OF TRANSPORTATION

DIVISION OF ENGINEERING SERVICES
STRUCTURE DESIGN
DESIGN BRANCH 4

BRIDGE NO. 35E0048
POST MILE 1.75-1.82

STRUCTURES DESIGN DETAIL SHEET (ENGLISH) (REV. 09-01-10)

ORIGINAL SCALE IN INCHES FOR REDUCED PLANS 0 1 2 3

UNIT: 59-3579
PROJECT NUMBER & PHASE: 0400000680 4
CONTRACT NO.: 04-235654

DISREGARD PRINTS BEARING EARLIER REVISION DATES

REVISION DATES 03-18-15 11-04-15 11-23-15

SHEET 5 OF 18

FILE => 35e0048-c-sp04-mse_wall.dgn

USERNAME => s132175 DATE PLOTTED => 17-AUG-2016 TIME PLOTTED => 09:41

| DIST | COUNTY | ROUTE | POST MILES TOTAL PROJECT | SHEET No. | TOTAL SHEETS |
|---|---|---|---|---|---|
| 04 | SM | 101,114 | 1.3/2.5, 5.0/5.3 | 495 | 568 |

REGISTERED CIVIL ENGINEER 11-10-15 DATE

6-29-16
PLANS APPROVAL DATE

REGISTERED PROFESSIONAL ENGINEER
LINAN WANG
No. 54714
Exp. 12-31-17
CIVIL
STATE OF CALIFORNIA

*The State of California or its officers or agents shall not be responsible for the accuracy or completeness of electronic copies of this plan sheet.*

## CURVE DATA

| No. Ⓡ | R | Δ | T | L |
|---|---|---|---|---|
| 4 | 400.00 | 52°44'04" | 198.28 | 368.16 |
| 5 | 180.00 | 83°01'55" | 159.34 | 260.85 |
| 6 | 354.00 | 39°30'33" | 127.13 | 244.11 |
| 8 | 1000.00 | 02°04'22" | 18.09 | 36.17 |
| 10 | 1000.00 | 03°39'15" | 31.90 | 63.68 |
| 11 | 230.48 | 30°39'17" | 64.03 | 124.90 |
| 12 | 335.00 | 35°16'25" | 106.50 | 206.24 |
| 13 | 280.00 | 31°45'56" | 79.67 | 155.24 |

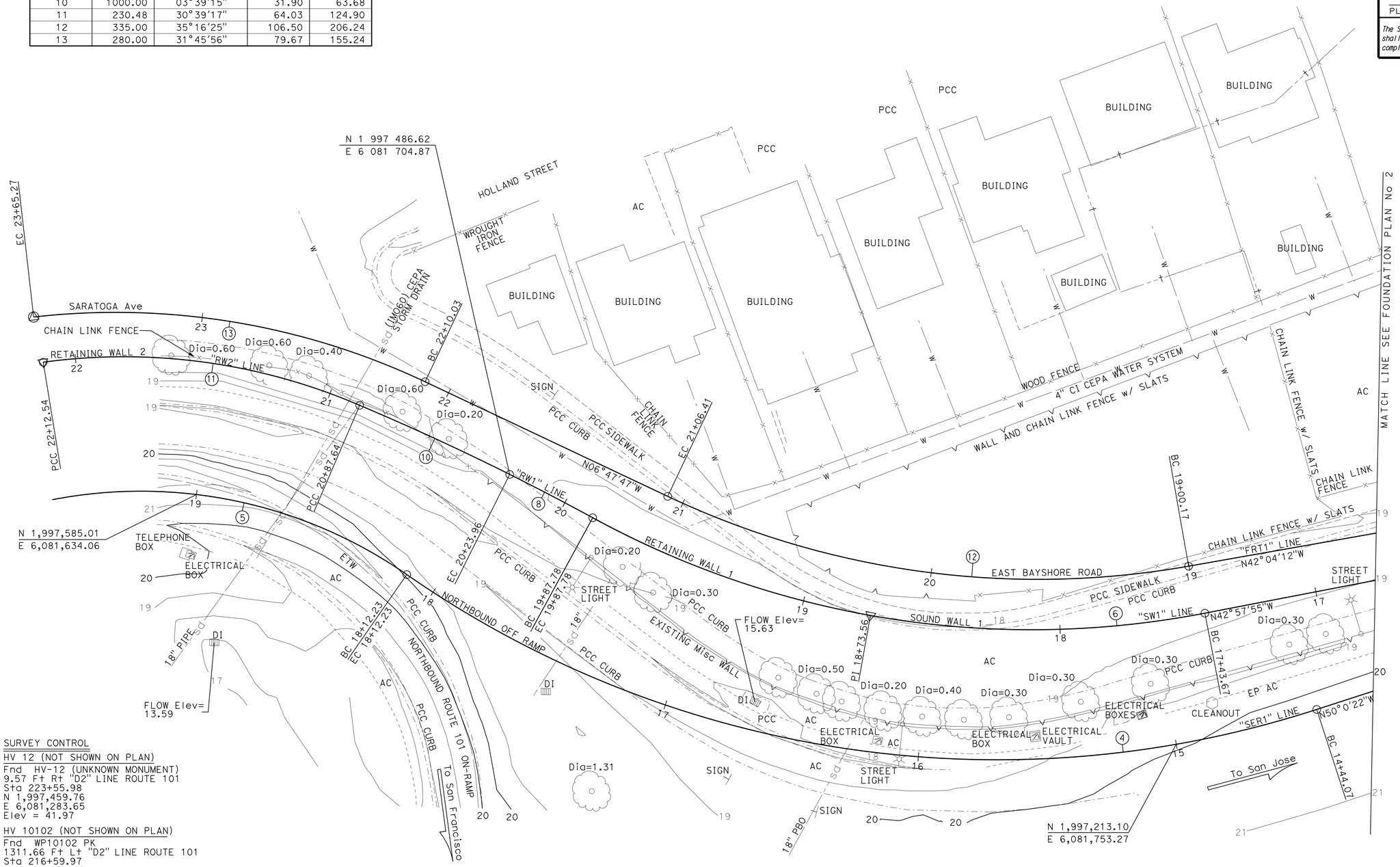


SURVEY CONTROL

HV 12 (NOT SHOWN ON PLAN)
Fnd HV-12 (UNKNOWN MONUMENT)
9.57 Ft Rt "D2" LINE ROUTE 101
Sta 223+55.98
N 1,997,459.76
E 6,081,283.65
Elev = 41.97

HV 10102 (NOT SHOWN ON PLAN)
Fnd WP10102 PK
1311.66 Ft Lt "D2" LINE ROUTE 101
Sta 216+59.97
N 1,998,932.13
E 6,081,532.78
Elev = 14.09

# ROUTE 101/ WILLOW INTERCHANGE
## SOUND WALL 1 AND RETAINING WALL 1
## FOUNDATION PLAN No 1

PRELIMINARY INVESTIGATION SECTION

| SCALE | VERT.DATUM NGVD29 | PHOTOGRAMMETRY AS OF: X | | | |
|---|---|---|---|---|---|
| 1"=20' | HORZ.DATUM NAD83 (1991.35) | SURVEYED | BY DISTRICT | CHECKED | BY C. FASSETT 01/2015 |
| ALIGNMENT TIES Dist TRAVERSE SHEET | | DRAFTED | BY T. ZOLNIKOV 01/2015 | CHECKED | BY L. LEW 01/2015 |

| | | |
|---|---|---|
| DESIGN | BY Li Barnard | CHECKED Linan Wang |
| DETAILS | BY Jeff Thorne | CHECKED Linan Wang |
| QUANTITIES | BY Li Barnard | CHECKED Linan Wang |

STATE OF CALIFORNIA
DEPARTMENT OF TRANSPORTATION

DIVISION OF ENGINEERING SERVICES
STRUCTURE DESIGN
DESIGN BRANCH 4

BRIDGE NO. 35E0048
POST MILE 1.75-1.82

STRUCTURES FOUNDATION PLAN SHEET (ENGLISH) (REV. 09-01-10)

ORIGINAL SCALE IN INCHES FOR REDUCED PLANS 0 1 2 3

UNIT: 3646
PROJECT NUMBER & PHASE: 0400000680 4
CONTRACT NO.: 04-235654

| SUBMITTAL DATE | REVISION DATES | | | SHEET | OF |
|---|---|---|---|---|---|
| 03/20/15 | 11/20/15 | | | 6 | 18 |

FILE => 35e0048-e-fpl01.dgn

USERNAME => s132175 DATE PLOTTED => 17-AUG-2016 TIME PLOTTED => 09:41

| DIST | COUNTY | ROUTE | POST MILES TOTAL PROJECT | SHEET No. | TOTAL SHEETS |
|---|---|---|---|---|---|
| 04 | SM | 101,114 | 1.3/2.5, 5.0/5.3 | 496 | 568 |

REGISTERED CIVIL ENGINEER 11-10-15 DATE

6-29-16
PLANS APPROVAL DATE

REGISTERED PROFESSIONAL ENGINEER
LINAN WANG
No. 54714
Exp. 12-31-17
CIVIL
STATE OF CALIFORNIA

*The State of California or its officers or agents shall not be responsible for the accuracy or completeness of electronic copies of this plan sheet.*

## CURVE DATA

| No. ⑧ | R | Δ | T | L |
|---|---|---|---|---|
| 2 | 582.49 | 07°12'45" | 36.71 | 73.32 |
| 3 | 564.00 | 08°19'30" | 41.05 | 81.95 |

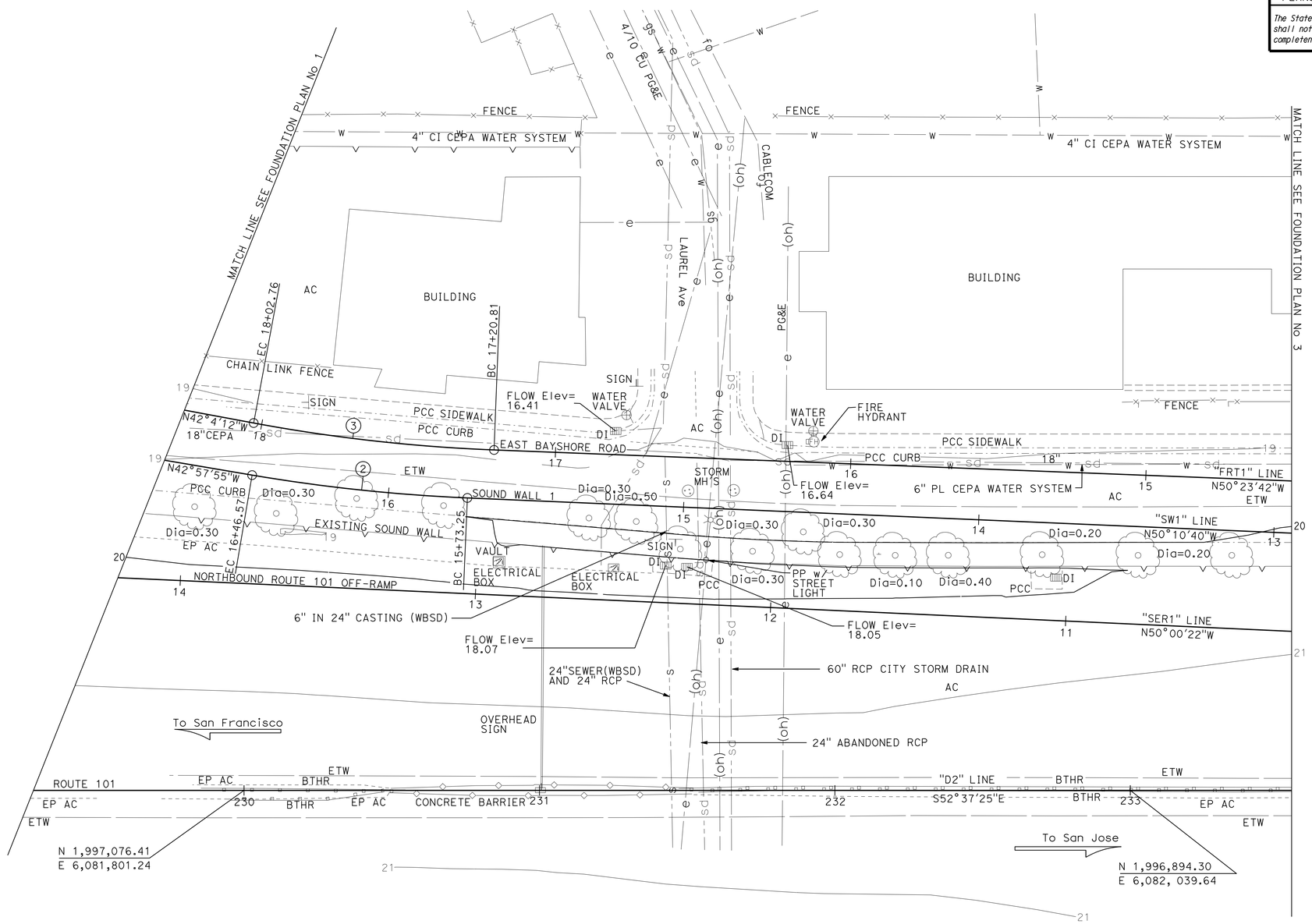


| PRELIMINARY INVESTIGATION SECTION | | | | | | | |
|---|---|---|---|---|---|---|---|
| SCALE 1"=20' | VERT.DATUM NGVD29 | PHOTOGRAMMETRY AS OF: X | | | | | |
| | HORZ.DATUM NAD83 (1991.35) | SURVEYED | BY DISTRICT | CHECKED | BY C. FASSETT 01/2015 | | |
| | ALIGNMENT TIES Dist TRAVERSE SHEET | DRAFTED | BY T. ZOLNIKOV 01/2015 | CHECKED | BY L. LEW 01/2015 | | |

| | | |
|---|---|---|
| DESIGN | BY Li Barnard | CHECKED Linan Wang |
| DETAILS | BY Jeff Thorne | CHECKED Linan Wang |
| QUANTITIES | BY Li Barnard | CHECKED Linan Wang |

STATE OF CALIFORNIA
DEPARTMENT OF TRANSPORTATION

DIVISION OF ENGINEERING SERVICES
STRUCTURE DESIGN
DESIGN BRANCH 4

BRIDGE NO. 35E0048
POST MILE 1.75-1.82

# ROUTE 101/ WILLOW INTERCHANGE
# SOUND WALL 1 AND RETAINING WALL 1
# FOUNDATION PLAN No 2

STRUCTURES FOUNDATION PLAN SHEET (ENGLISH) (REV. 09-01-10)

ORIGINAL SCALE IN INCHES FOR REDUCED PLANS 0 1 2 3

UNIT: 3646
PROJECT NUMBER & PHASE: 04 00000680 4 CONTRACT NO.: 04-235654

| SUBMITTAL DATE | REVISION DATES | | | SHEET | OF |
|---|---|---|---|---|---|
| 03/20/15 | 11/20/15 | | | 7 | 18 |

FILE => 35e0048-e-fpl02.dgn

USERNAME => s132775 DATE PLOTTED => 17-AUG-2016 TIME PLOTTED => 09:41

| DIST | COUNTY | ROUTE | POST MILES TOTAL PROJECT | SHEET No. | TOTAL SHEETS |
|---|---|---|---|---|---|
| 04 | SM | 101,114 | 1.3/2.5, 5.0/5.3 | 497 | 568 |

REGISTERED CIVIL ENGINEER 11-10-15 DATE

6-29-16
PLANS APPROVAL DATE

REGISTERED PROFESSIONAL ENGINEER LINAN WANG No. 54714 Exp. 12-31-17 CIVIL STATE OF CALIFORNIA

*The State of California or its officers or agents shall not be responsible for the accuracy or completeness of electronic copies of this plan sheet.*

## CURVE DATA

| No. | R | Δ | T | L |
|---|---|---|---|---|
| 1 | 1000.00 | 01°55'21" | 16.78 | 33.56 |

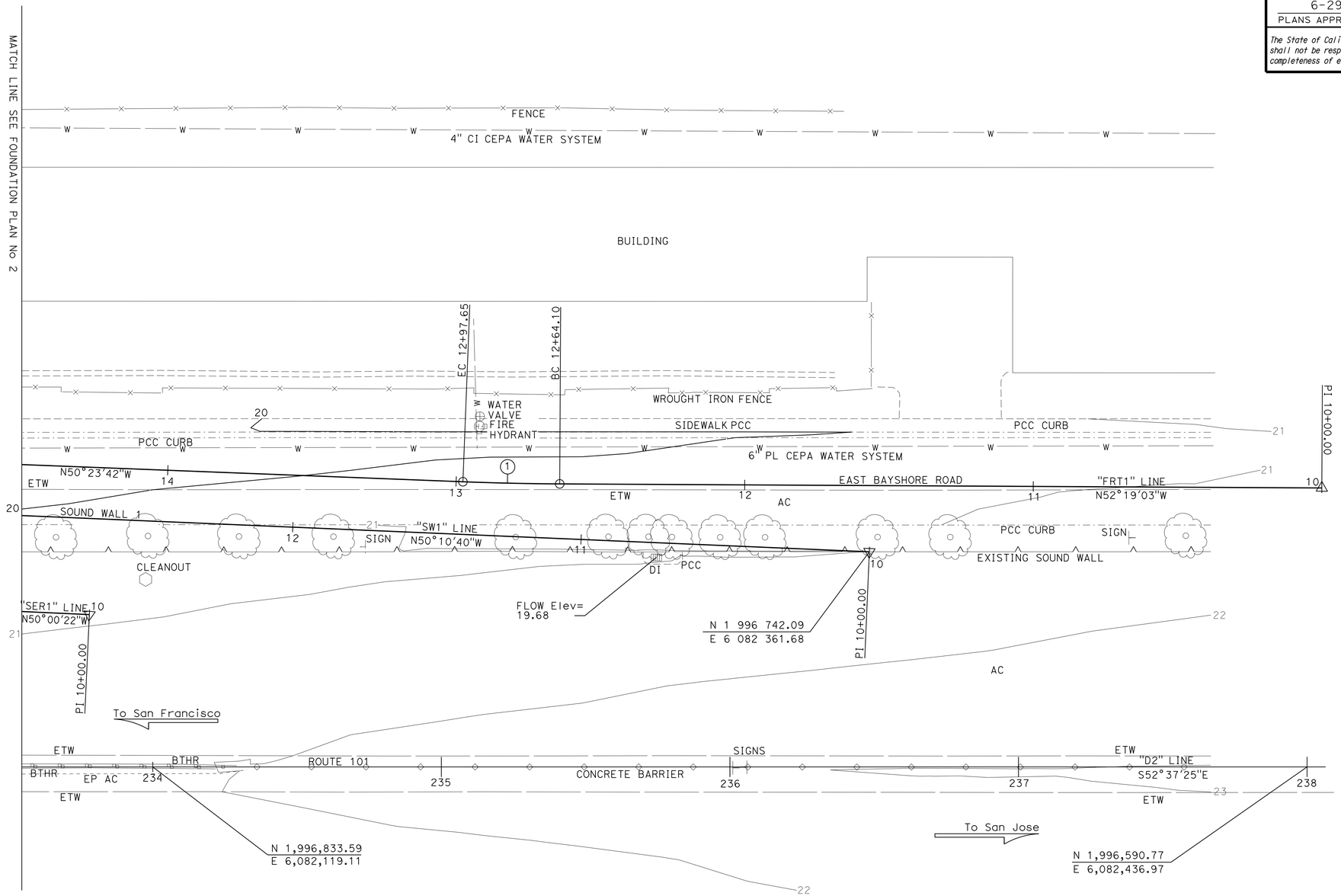


| PRELIMINARY INVESTIGATION SECTION | | | | | | | |
|---|---|---|---|---|---|---|---|
| SCALE 1"=20' | VERT.DATUM NGVD29 | PHOTOGRAMMETRY AS OF: X | | | | | |
| | HORZ.DATUM NAD83 (1991.35) | SURVEYED | BY DISTRICT | CHECKED | BY C. FASSETT 01/2015 | | |
| ALIGNMENT TIES Dist TRAVERSE SHEET | | DRAFTED | BY T. ZOLNIKOV 01/2015 | CHECKED | BY L. LEW 01/2015 | | |

| | | |
|---|---|---|
| DESIGN | BY Li Barnard | CHECKED Linan Wang |
| DETAILS | BY Jeff Thorne | CHECKED Linan Wang |
| QUANTITIES | BY Li Barnard | CHECKED Linan Wang |

STATE OF CALIFORNIA
DEPARTMENT OF TRANSPORTATION

DIVISION OF ENGINEERING SERVICES
STRUCTURE DESIGN
DESIGN BRANCH 4

BRIDGE NO. 35E0048
POST MILE 1.75-1.82

# ROUTE 101/ WILLOW INTERCHANGE
## SOUND WALL 1 AND RETAINING WALL 1
## FOUNDATION PLAN No 3

STRUCTURES FOUNDATION PLAN SHEET (ENGLISH) (REV. 09-01-10)

ORIGINAL SCALE IN INCHES FOR REDUCED PLANS 0 1 2 3

UNIT: 3646
PROJECT NUMBER & PHASE: 0400000680 4 CONTRACT NO.: 04-235654

| SUBMITTAL DATE | REVISION DATES | | | SHEET | OF |
|---|---|---|---|---|---|
| 03/20/15 | 11/20/15 | | | 8 | 18 |

FILE => 35e0048-e-fp103.dgn

USERNAME => s132175 DATE PLOTTED => 17-AUG-2016 TIME PLOTTED => 03:41

| DIST | COUNTY | ROUTE | POST MILES TOTAL PROJECT | SHEET No. | TOTAL SHEETS |
|---|---|---|---|---|---|
| 04 | SM | 101,114 | 1.3/2.5, 5.0/5.3 | 498 | 568 |

REGISTERED CIVIL ENGINEER 11-10-15 DATE

6-29-16
PLANS APPROVAL DATE

REGISTERED PROFESSIONAL ENGINEER LINAN WANG No. 54714 Exp. 12-31-17 CIVIL STATE OF CALIFORNIA

*The State of California or its officers or agents shall not be responsible for the accuracy or completeness of electronic copies of this plan sheet.*

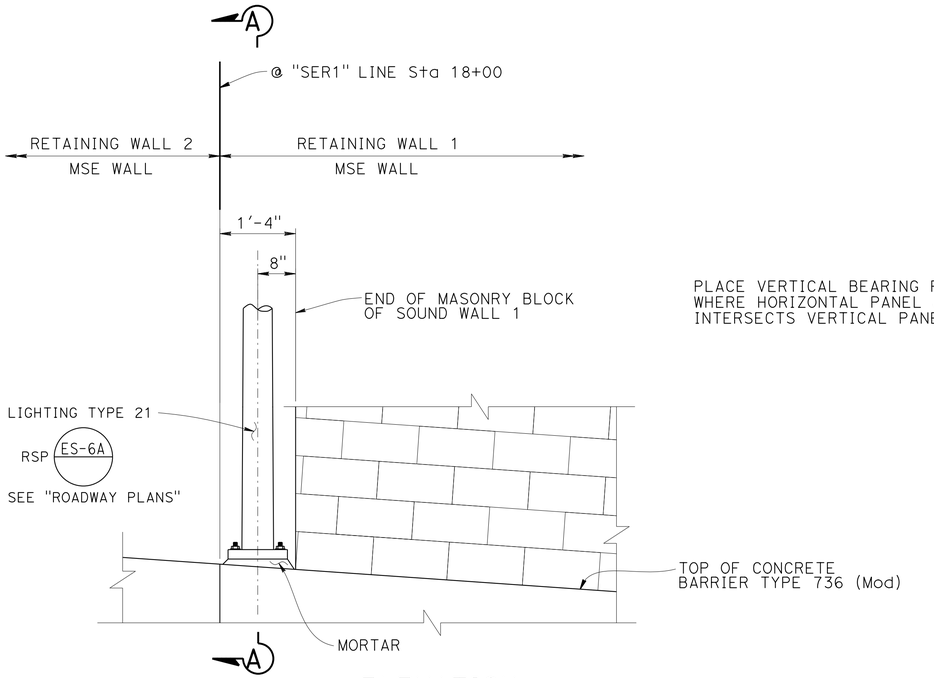


## ELEVATION

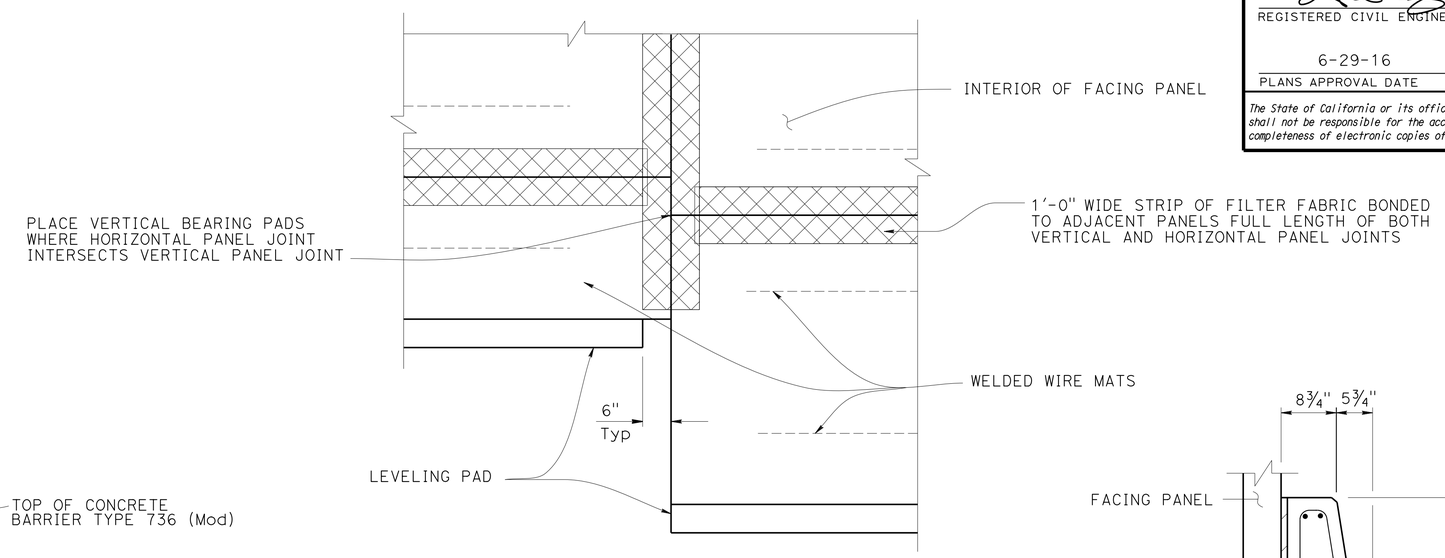


## PART ELEVATION

3/4" = 1'-0"

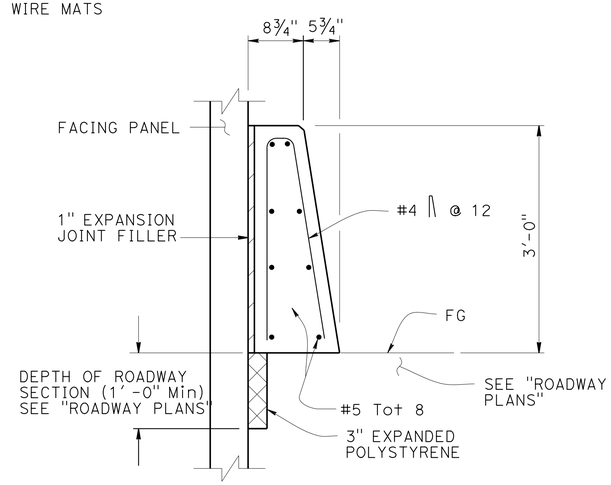


## CONCRETE BARRIER TYPE 60D (MOD) AT FACE OF MSE

1" = 1'-0"

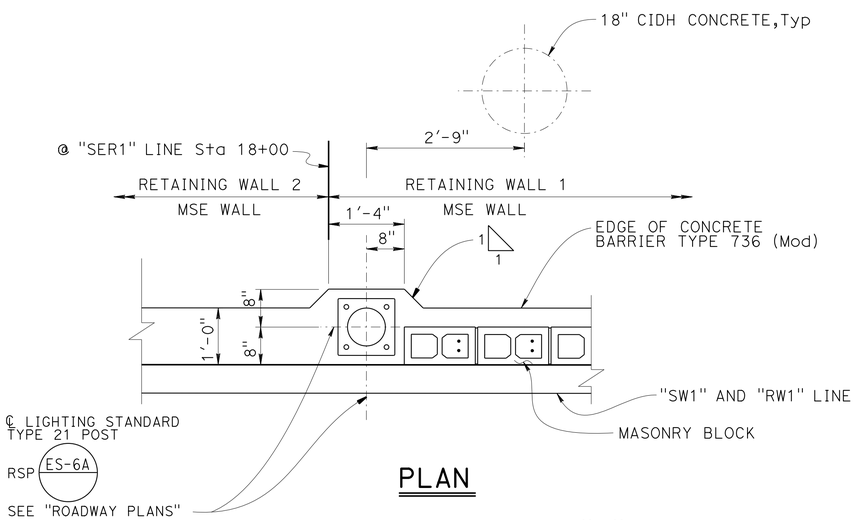


## PLAN

## DETAIL "A"
## PART OF LIGHTING STANDARD TYPE 21
( AT "SW1" Sta 20+23.25 )

3/4" = 1'-0"

NOTE:
For Section A-A, see "MISCELLANEOUS DATAILS No. 2" sheet.

NOTE:
THE CONTRACTOR MUST VERIFY ALL CONTROLLING FIELD DIMENSIONS BEFORE ORDERING OR FABRICATING ANY MATERIAL.

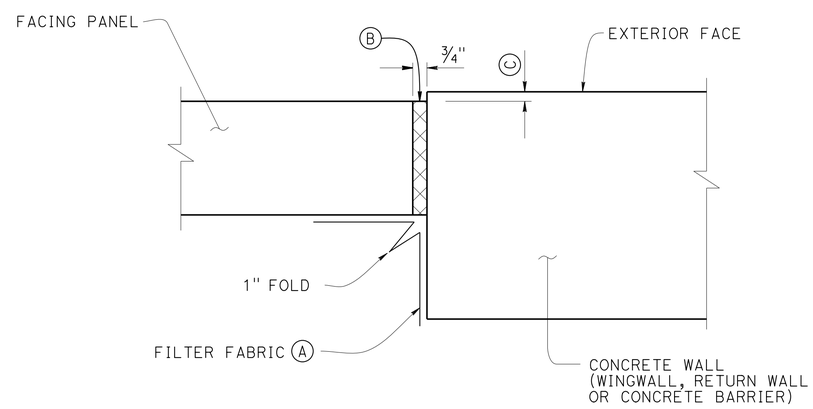


## MSE FACING PANEL-TO-CONCRETE WALL JOINT DETAIL

3" = 1'-0"

NOTES:

(A) Bond a strip of filter fabric, 1'-6" wide, to back of MSE panels and the adjacent concrete wall for entire length of vertical joint

(B) Bond expansion joint material to the concrete wall

(C) Offset between face of MSE facing panel and face of the concrete wall as dictated by location of layout lines shown on "GENERAL PLAN"

NOTES:

1. Center inspection wire in facing panel.
2. Fabricated inspection wire from W11 wire representative of the welded wire mats, with 3/8" ø 16 UNC threads for at least 1 1/2" of one end.
3. Place inspection wire horizontal and perpendicular to the wall panel prior to backfilling.
4. Encapsulate threaded end with corrosion inhibiting mastic, vinyl covering, and secure with plastic tie.

UNC = Unified Coarse Threads

# ROUTE 101/ WILLOW INTERCHANGE
# SOUND WALL 1 AND RETAINING WALL 1
# MISCELLANEOUS DETAILS No. 1

| | | | |
|---|---|---|---|
| DESIGN | BY Li Barnard | CHECKED Linan Wang | |
| DETAILS | BY Wei Zhang | CHECKED Linan Wang | |
| QUANTITIES | BY Li Barnard | CHECKED Linan Wang | |

STATE OF CALIFORNIA
DEPARTMENT OF TRANSPORTATION

DIVISION OF ENGINEERING SERVICES
STRUCTURE DESIGN
DESIGN BRANCH 4

BRIDGE NO. 35E0048
POST MILE 1.75-1.82

STRUCTURES DESIGN DETAIL SHEET (ENGLISH) (REV. 09-01-10)

ORIGINAL SCALE IN INCHES FOR REDUCED PLANS 0 1 2 3

UNIT: 59-3579
PROJECT NUMBER & PHASE: 0400000680 4
CONTRACT NO.: 04-235654

DISREGARD PRINTS BEARING EARLIER REVISION DATES

REVISION DATES 11-16-15 10-22-15 11-23-15

SHEET 9 OF 18

FILE => 35e0048-u-miscdt01-mse_wall.dgn

USERNAME => s132775 DATE PLOTTED => 17-AUG-2016 TIME PLOTTED => 09:41

| DIST | COUNTY | ROUTE | POST MILES TOTAL PROJECT | SHEET No. | TOTAL SHEETS |
|---|---|---|---|---|---|
| 04 | SM | 101,114 | 1.3/2.5, 5.0/5.3 | 499 | 568 |

REGISTERED CIVIL ENGINEER 11-10-15 DATE

6-29-16
PLANS APPROVAL DATE

REGISTERED PROFESSIONAL ENGINEER LINAN WANG No. 54714 Exp. 12-31-17 CIVIL STATE OF CALIFORNIA

*The State of California or its officers or agents shall not be responsible for the accuracy or completeness of electronic copies of this plan sheet.*

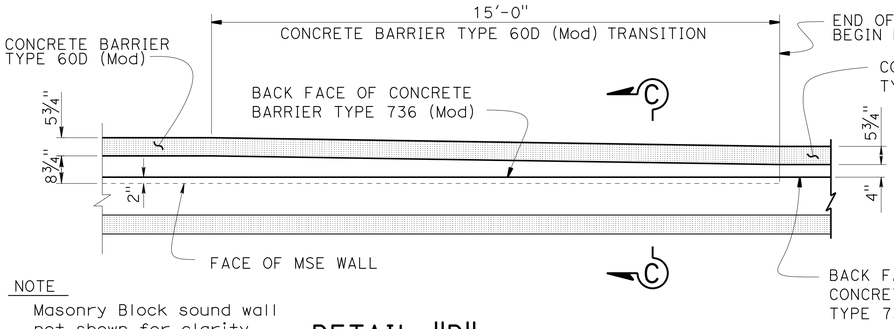


NOTE
Masonry Block sound wall not shown for clarity.

## DETAIL "D"
½" = 1'-0"

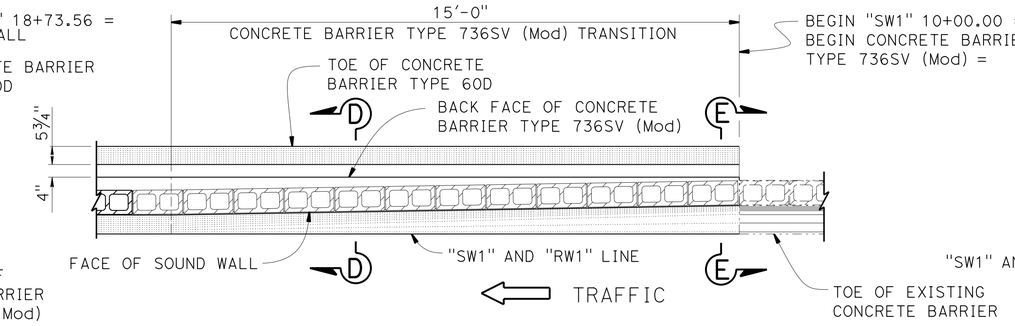


## TRANSITION FROM EXISTING BARRIER TO TYPE 736SV (MOD.) PART PLAN
½" = 1'-0"

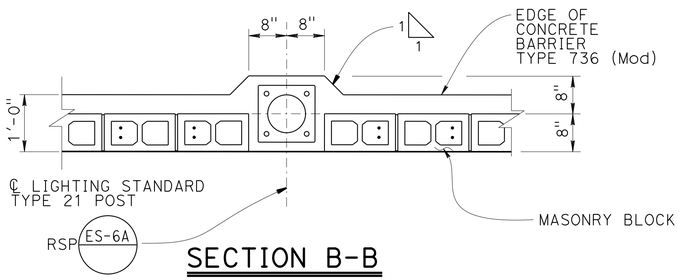


## SECTION B-B
¾" = 1'-0"

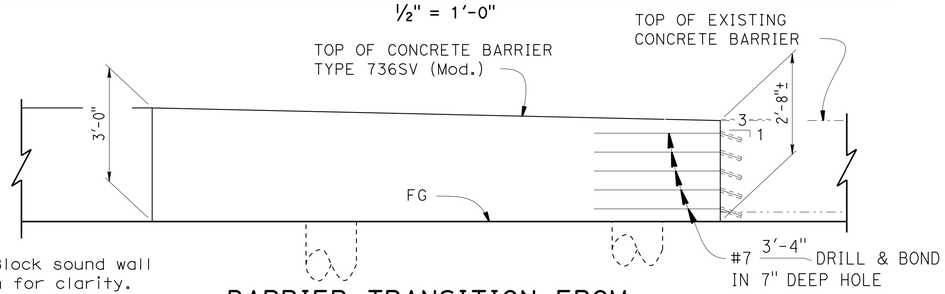


NOTE
Masonry Block sound wall not shown for clarity.

## BARRIER TRANSITION FROM EXISTING BARRIER TO TYPE 736SV (MOD.) ELEVATION
½" = 1'-0"

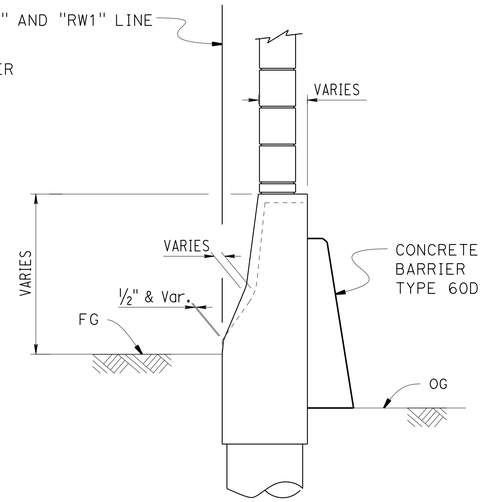


## SECTION D-D
¾" = 1'-0"

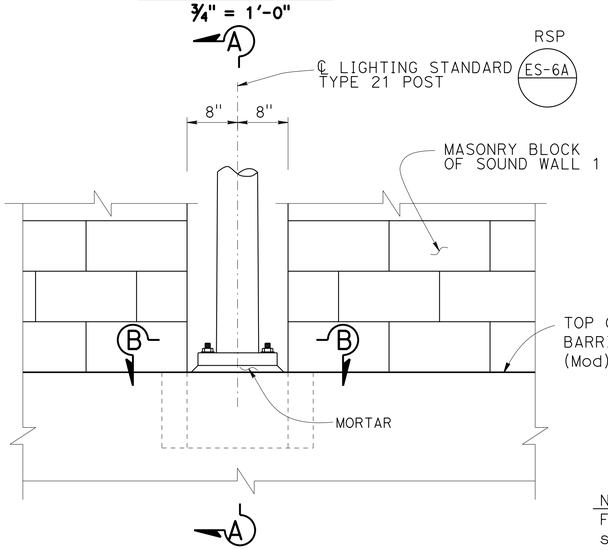


## PART ELEVATION @ LIGHTING STANDARD TYPE 21
( AT "SW1" Sta 12+69.13 AND Sta 14+49.03 )
1" = 1'-0"

NOTE:
THE CONTRACTOR MUST VERIFY ALL CONTROLLING FIELD DIMENSIONS BEFORE ORDERING OR FABRICATING ANY MATERIAL.

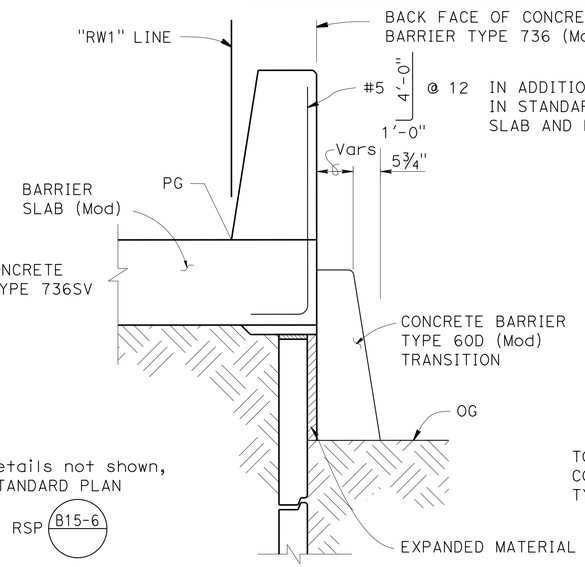


NOTE
For details not shown, see STANDARD PLAN
RSP B15-6

For reinforcing in Concrete Barrier Type 60D (Mod) Transition see "CONCRETE BARRIER TYPE 60D (Mod)" on "MISCELLANEOUS DETAILS No. 1" sheet.

## SECTION C-C
¾" = 1'-0"

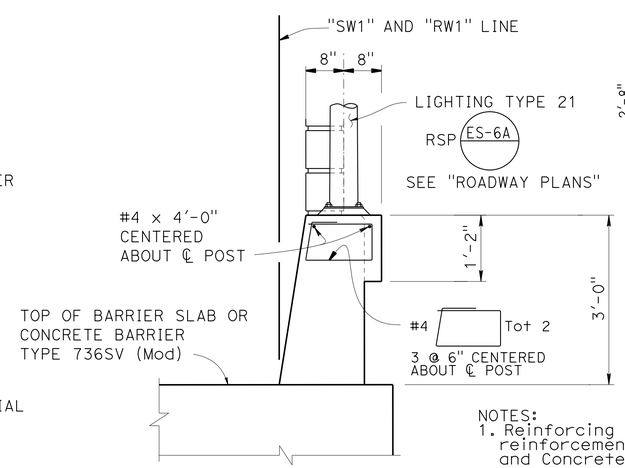


## SECTION A-A
¾" = 1'-0"

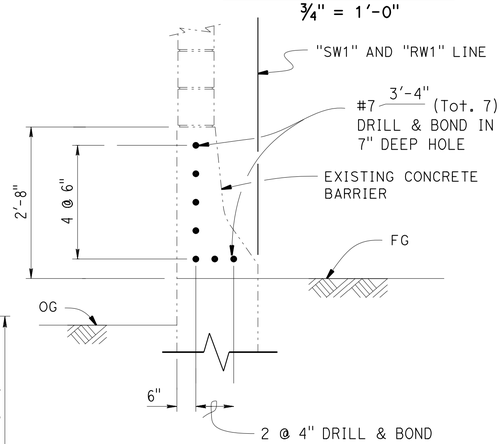


## SECTION E-E
¾" = 1'-0"

NOTES:
1. Reinforcing shown is in addition to the reinforcement in Concrete Barrier Type 736 (Mod) and Concrete Barrier Type 736SV (Mod).
2. For Lighting Standard Type 21 see "ROADWAY PLANS".

| | BY | CHECKED |
|---|---|---|
| DESIGN | Li Barnard | Linan Wang |
| DETAILS | Wei Zhang | Linan Wang |
| QUANTITIES | Li Barnard | Linan Wang |

STATE OF CALIFORNIA
DEPARTMENT OF TRANSPORTATION

DIVISION OF ENGINEERING SERVICES
STRUCTURE DESIGN
DESIGN BRANCH 4

BRIDGE NO. 35E0048
POST MILE 1.75-1.82

# ROUTE 101/ WILLOW INTERCHANGE
# SOUND WALL 1 AND RETAINING WALL 1
# MISCELLANEOUS DETAILS No. 2

STRUCTURES DESIGN DETAIL SHEET (ENGLISH) (REV. 09-01-10)

ORIGINAL SCALE IN INCHES FOR REDUCED PLANS 0 1 2 3

UNIT: 59-3579
PROJECT NUMBER & PHASE: 0400000680 4
CONTRACT NO.: 04-235654

DISREGARD PRINTS BEARING EARLIER REVISION DATES

REVISION DATES: 03-25-16 10-18-15 11-23-15

SHEET 10 OF 18

FILE => 35e0048-u-miscdt02-mse_wall.dgn

USERNAME => s132175 DATE PLOTTED => 17-AUG-2016 TIME PLOTTED => 09:41

| DIST | COUNTY | ROUTE | POST MILES TOTAL PROJECT | SHEET No. | TOTAL SHEETS |
|---|---|---|---|---|---|
| 04 | SM | 101,114 | 1.3/2.5, 5.0/5.3 | 500 | 568 |

REGISTERED CIVIL ENGINEER 11-10-15 DATE

6-29-16
PLANS APPROVAL DATE

REGISTERED PROFESSIONAL ENGINEER
LINAN WANG
No. 54714
Exp. 12-31-17
CIVIL
STATE OF CALIFORNIA

*The State of California or its officers or agents shall not be responsible for the accuracy or completeness of electronic copies of this plan sheet.*

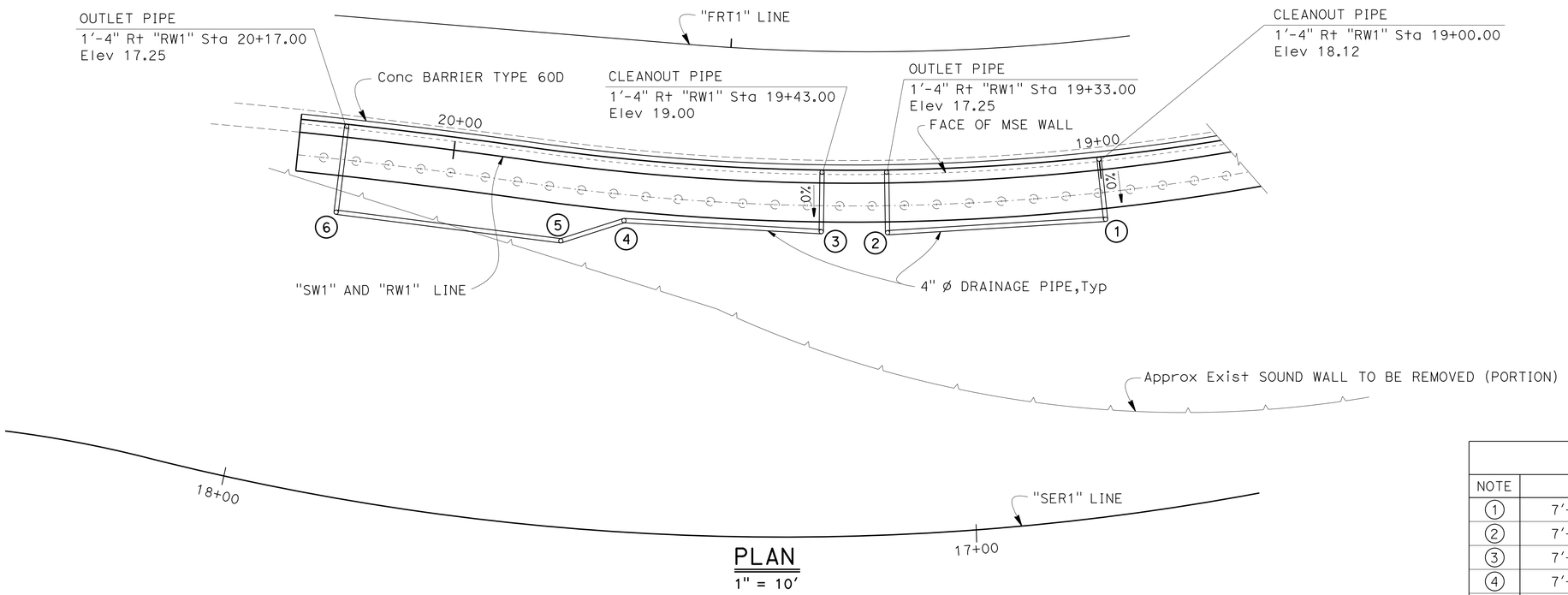


PLAN
1" = 10'

| UNDERDRAIN DATA | | |
|---|---|---|
| NOTE | OFFSET | ELEVATION |
| 1 | 7'-8" Lt "RW1" Sta 19+00.00 | 18.12 |
| 2 | 7'-8" Lt "RW1" Sta 19+33.00 | 17.45 |
| 3 | 7'-6" Lt "RW1" Sta 19+43.00 | 19.00 |
| 4 | 7'-6" Lt "RW1" Sta 19+73.00 | 18.40 |
| 5 | 11'-8" Lt "RW1" Sta 19+81.95 | 18.20 |
| 6 | 11'-8" Lt "RW1" Sta 20+17.00 | 17.50 |

NOTES:
1. For CDSM (Cement Deep Soil Mixing) Limits, see "ROADWAY PLANS'.
2. For information not shown, see "STRUCTURE PLANS No. 4" sheet.

NOTE:
THE CONTRACTOR MUST VERIFY ALL CONTROLLING FIELD DIMENSIONS BEFORE ORDERING OR FABRICATING ANY MATERIAL.

# ROUTE 101/ WILLOW INTERCHANGE
## SOUND WALL 1 AND RETAINING WALL 1
## UNDERDRAIN DETAILS

| | BY | CHECKED |
|---|---|---|
| DESIGN | Li Barnard | Linan Wang |
| DETAILS | Wei Zhang | Linan Wang |
| QUANTITIES | Li Barnard | Linan Wang |

STATE OF CALIFORNIA
DEPARTMENT OF TRANSPORTATION

DIVISION OF ENGINEERING SERVICES
STRUCTURE DESIGN
DESIGN BRANCH 4

BRIDGE NO. 35E0048
POST MILE 1.75-1.82

STRUCTURES DESIGN DETAIL SHEET (ENGLISH) (REV. 09-01-10)

ORIGINAL SCALE IN INCHES FOR REDUCED PLANS 0 1 2 3

UNIT: 59-3579
PROJECT NUMBER & PHASE: 0400000680 4
CONTRACT NO.: 04-235654

DISREGARD PRINTS BEARING EARLIER REVISION DATES

REVISION DATES 08-31-15 10-8-15 11-02-15

SHEET 11 OF 18

FILE => 35e0048-w-dde101-mse_wall.dgn

USERNAME => s133275 DATE PLOTTED => 17-AUG-2016 TIME PLOTTED => 09:41