Dist	COUNTY	ROUTE	POST MILES TOTAL PROJECT	SHEET No.	TOTAL SHEETS
04	SM	101	0.9/3.6	4	283

REGISTERED CIVIL ENGINEER 6-22-10 DATE

8-9-10
PLANS APPROVAL DATE

REGISTERED PROFESSIONAL ENGINEER Aijun Ding No. 58899 Exp. 6-30-11 CIVIL STATE OF CALIFORNIA

THE STATE OF CALIFORNIA OR ITS OFFICERS OR AGENTS SHALL NOT BE RESPONSIBLE FOR THE ACCURACY OR COMPLETENESS OF SCANNED COPIES OF THIS PLAN SHEET.

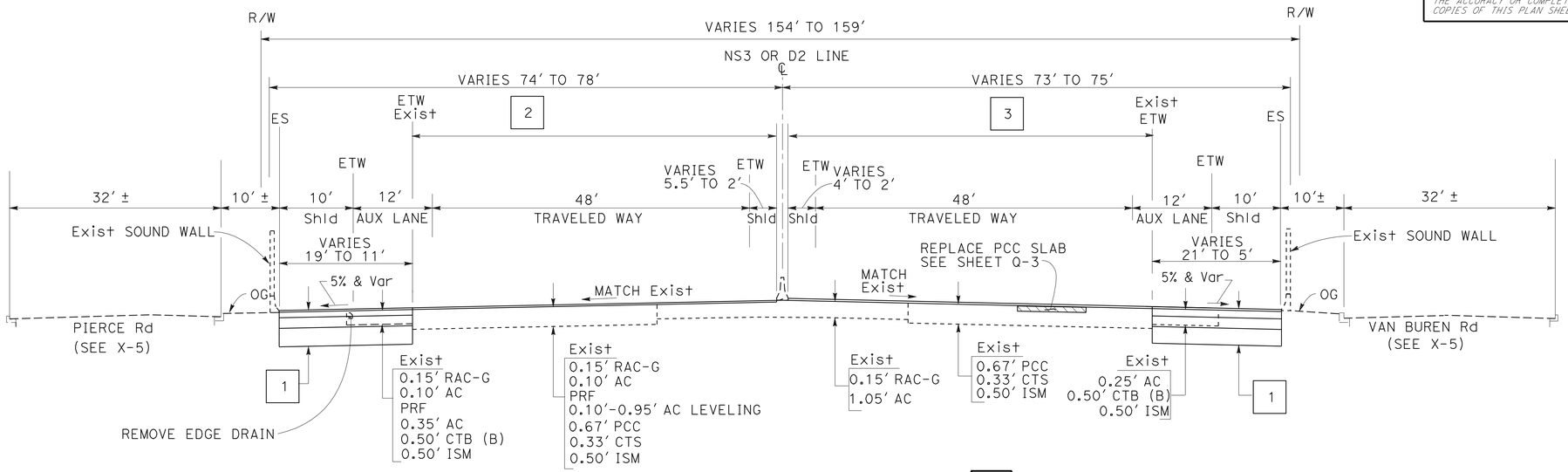

NORTHBOUND NS3 177+75 TO 182+60.15 ~~D2 183+27 TO 182+48.31~~ 1 SOUTHBOUND

ROUTE 101 D2 182+48.31 TO 216+28

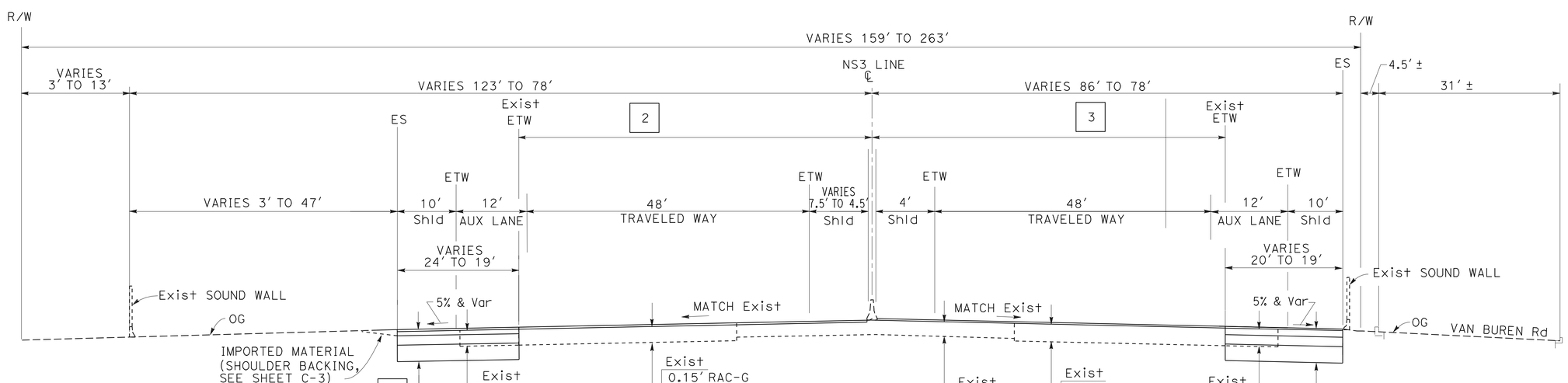

NORTHBOUND NS3 176+25 TO 177+75 SOUTHBOUND

ROUTE 101

TYPICAL CROSS SECTIONS

NO SCALE

1 **REVISED PER ADDENDUM No. 1 DATED MARCH 30, 2011**

FOR NOTES, ABBREVIATIONS AND LEGEND, SEE SHEET X-1

X-3

STATE OF CALIFORNIA - DEPARTMENT OF TRANSPORTATION
Caltrans® DESIGN

FUNCTIONAL SUPERVISOR: TEBLEZ NEMARIAM
CALCULATED-DESIGNED BY: AIJUN DING
CHECKED BY
REVISED BY
DATE REVISED

423563ca003.add

LAST REVISION 05-29-10
DATE PLOTTED => 28-MAR-2011
TIME PLOTTED => 14:43

BORDER LAST REVISED 4/11/2008
RELATIVE BORDER SCALE IS IN INCHES 0 1 2 3
USERNAME => trmnguye
DGN FILE => 423563ca003.add
CU 04243
EA 235631

Dist	COUNTY	ROUTE	POST MILES TOTAL PROJECT	SHEET No.	TOTAL SHEETS
04	SM	101	0.9/3.6	6	283

REGISTERED CIVIL ENGINEER 6-22-10 DATE

8-9-10
PLANS APPROVAL DATE

REGISTERED PROFESSIONAL ENGINEER Aijun Ding No. 58899 Exp. 6-30-11 CIVIL STATE OF CALIFORNIA

THE STATE OF CALIFORNIA OR ITS OFFICERS OR AGENTS SHALL NOT BE RESPONSIBLE FOR THE ACCURACY OR COMPLETENESS OF SCANNED COPIES OF THIS PLAN SHEET.

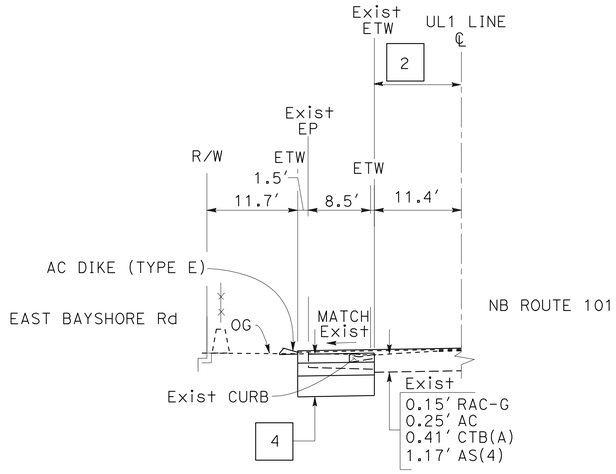

ROUTE 101
NB ON-RAMP FROM UNIVERSITY Ave
Sta UL2 10+00 TO 12+47
Sta UL1 10+00 TO 15+72

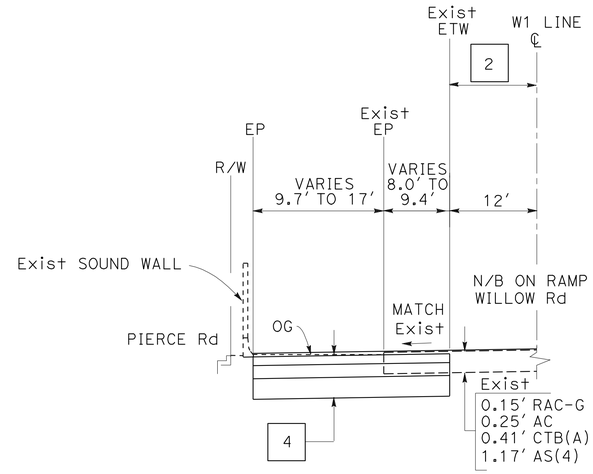

NB ON-RAMP FROM WILLOW Rd
Sta W1 Line 10+00 TO 14+78.65

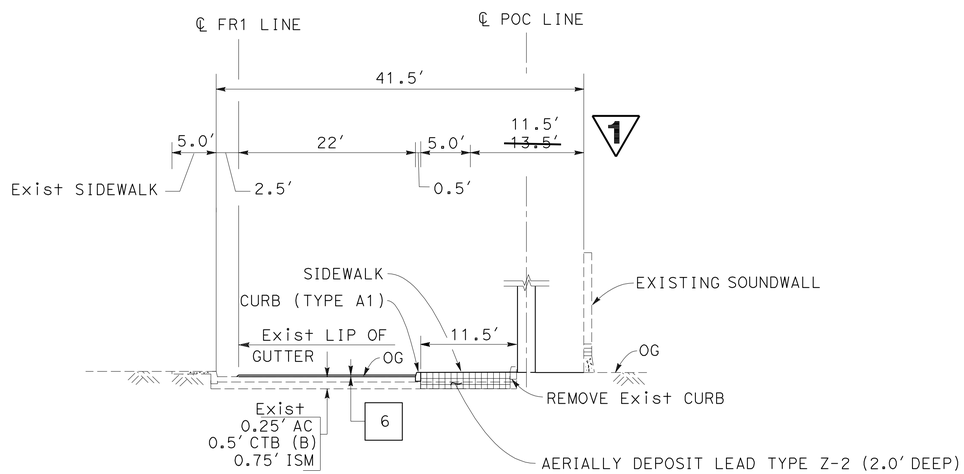

PIERCE Rd
FR1 13+00 TO 23+00

NOTE: SEE SHEET C-4 FOR SIDEWALK DETAIL.

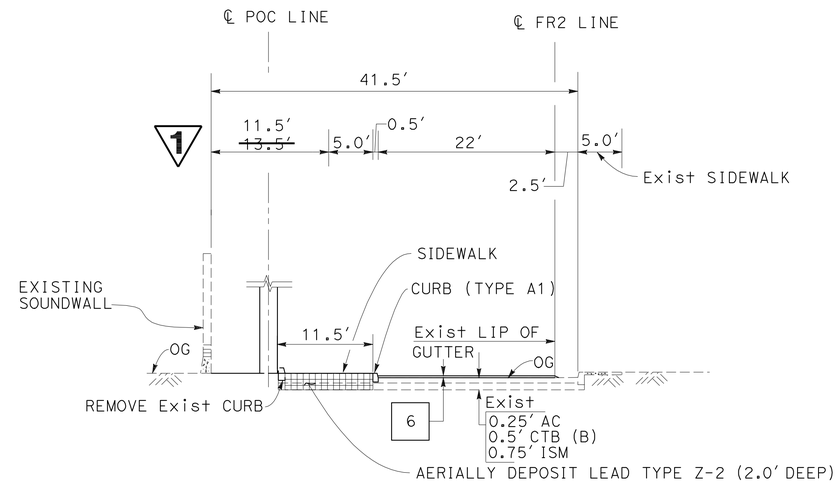

VAN BUREN Rd
FR2 14+50 TO 22+50

1 REVISED PER ADDENDUM No. 1 DATED MARCH 30, 2011

FOR NOTES, ABBREVIATIONS AND LEGEND, SEE SHEET X-1

TYPICAL CROSS SECTIONS
NO SCALE

X-5

STATE OF CALIFORNIA - DEPARTMENT OF TRANSPORTATION
DESIGN
FUNCTIONAL SUPERVISOR: TEBLEZ NEMARIAM
CALCULATED-DESIGNED BY: AIJUN DING
CHECKED BY
REVISED BY
DATE REVISED
EDGAR URBANO

423563ca005.add

LAST REVISION 06-14-10
DATE PLOTTED => 28-MAR-2011
TIME PLOTTED => 14:38

Dist	COUNTY	ROUTE	POST MILES TOTAL PROJECT	SHEET No.	TOTAL SHEETS
04	SM	101	0.9/3.6	7	283

REGISTERED CIVIL ENGINEER 6-22-10 DATE

8-9-10
PLANS APPROVAL DATE

REGISTERED PROFESSIONAL ENGINEER Aijun Ding No. 58899 Exp. 6-30-11 CIVIL STATE OF CALIFORNIA

THE STATE OF CALIFORNIA OR ITS OFFICERS OR AGENTS SHALL NOT BE RESPONSIBLE FOR THE ACCURACY OR COMPLETENESS OF SCANNED COPIES OF THIS PLAN SHEET.

FOR ACCURATE RIGHT OF WAY DATA,
CONTACT RIGHT OF WAY ENGINEERING AT THE DISTRICT OFFICE.

"COORDINATE VALUES SHOWN ARE
CCS 83 ZONE 3 ".

LEGEND:

- CONCRETE BARRIER
- METAL BEAM GUARD RAIL
- RETAINING WALL
- COLD PLANE 0.15′ OF AC PAVEMENT 0.15′ RHMA-G
- OVERLAY
- AERIALLY DEPOSIT LEAD TYPE Z-2 (VARIES 0′ TO 2.5′)
- BRIDGE WIDENING AT HETCH HETCHY
- PAVEMENT SECTION OVER EXISTING UTILITY
- GORE PAVING
- REPLACE PCC SLAB
- No. STRUCTURAL SECTION No.
- CLEARING AND GRUBBING (REMOVE TREE)
- ROADSIDE CLEARING (REMOVE TREE)

ABBREVIATION:

RSC RAPID STRENGTH CONCRETE
MVP MAINTENANCE VEHICLE PULLOUT

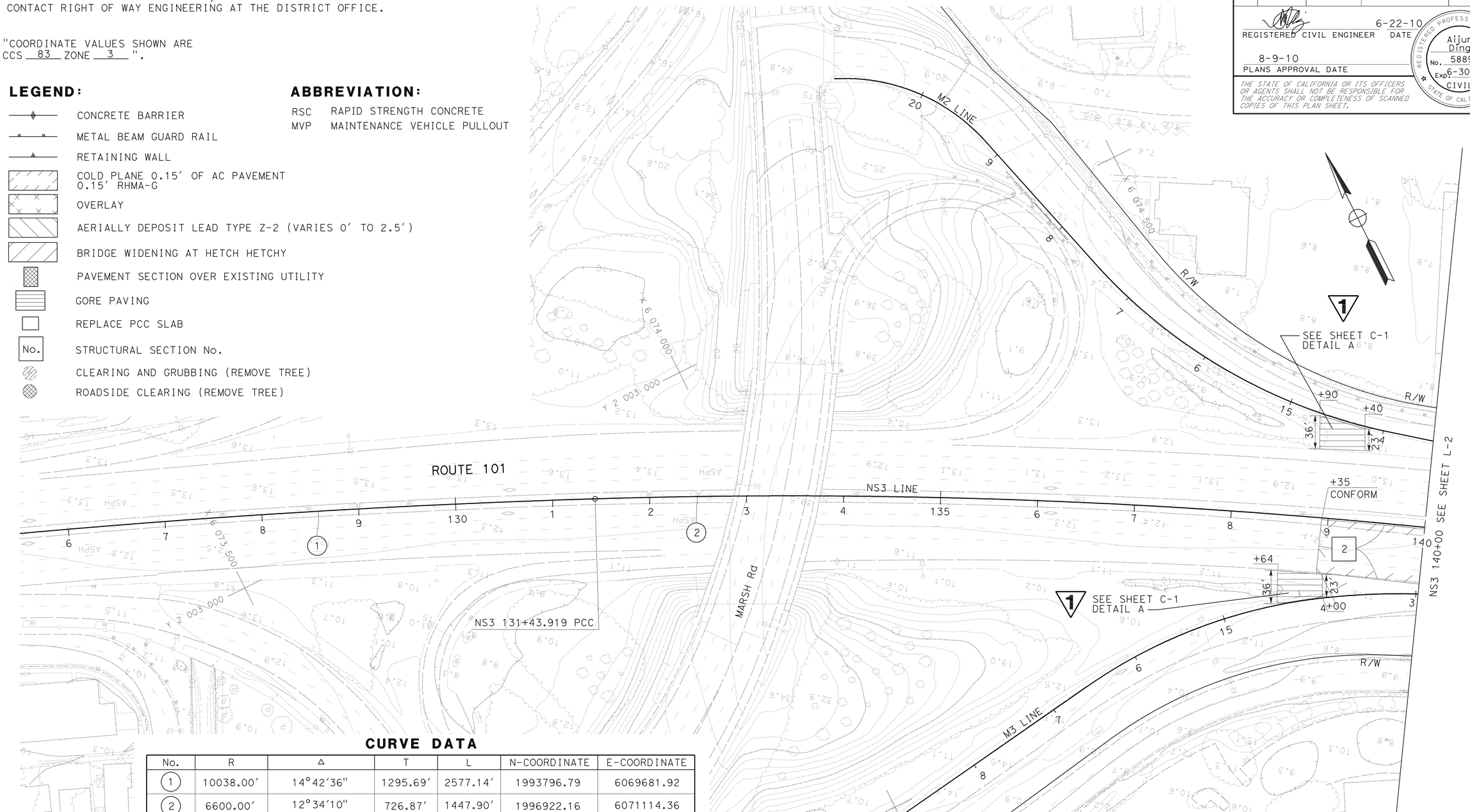

CURVE DATA

No.	R	Δ	T	L	N-COORDINATE	E-COORDINATE
1	10038.00′	14°42′36"	1295.69′	2577.14′	1993796.79	6069681.92
2	6600.00′	12°34′10"	726.87′	1447.90′	1996922.16	6071114.36

NOTES:

1. FOR OVERHEAD SIGN STRUCTURES SEE SIGN PLANS.
2. SEE CONSTRUCTION DETAIL SHEETS FOR BARRIER TRANSITION DETAILS.
3. SEE CONSTRUCTION DETAIL SHEETS FOR CONTRAST SURFACE TREATMENT.
4. SEE QUANTITY SHEETS FOR QUANTITIES AND LIMITS OF MBGR.
5. TREE REMOVAL LOCATIONS SHOWN ARE APPROXIMATE.

1 REVISED PER ADDENDUM No. 1 DATED MARCH 30, 2011

FOR NOTES, ABBREVIATIONS AND LEGEND, SEE SHEET L-1

LAYOUT
SCALE: 1" = 50′

L-1

REVISED BY	DATE REVISED

EDGAR URBANO — AIJUN DING
CALCULATED-DESIGNED BY — CHECKED BY
FUNCTIONAL SUPERVISOR: TEBLEZ NEMARIAM

STATE OF CALIFORNIA - DEPARTMENT OF TRANSPORTATION
Caltrans DESIGN

423563ea001.add

LAST REVISION 06-22-10 | DATE PLOTTED => 28-MAR-2011 | TIME PLOTTED => 14:38

Dist	COUNTY	ROUTE	POST MILES TOTAL PROJECT	SHEET No.	TOTAL SHEETS
04	SM	101	0.9/3.6	14	283

REGISTERED CIVIL ENGINEER 6-22-10 DATE

8-9-10
PLANS APPROVAL DATE

REGISTERED PROFESSIONAL ENGINEER Aijun Ding No. 58899 Exp. 6-30-11 CIVIL STATE OF CALIFORNIA

THE STATE OF CALIFORNIA OR ITS OFFICERS OR AGENTS SHALL NOT BE RESPONSIBLE FOR THE ACCURACY OR COMPLETENESS OF SCANNED COPIES OF THIS PLAN SHEET.

NOTE:

FOR ACCURATE RIGHT OF WAY DATA, CONTACT RIGHT OF WAY ENGINEERING AT THE DISTRICT OFFICE.

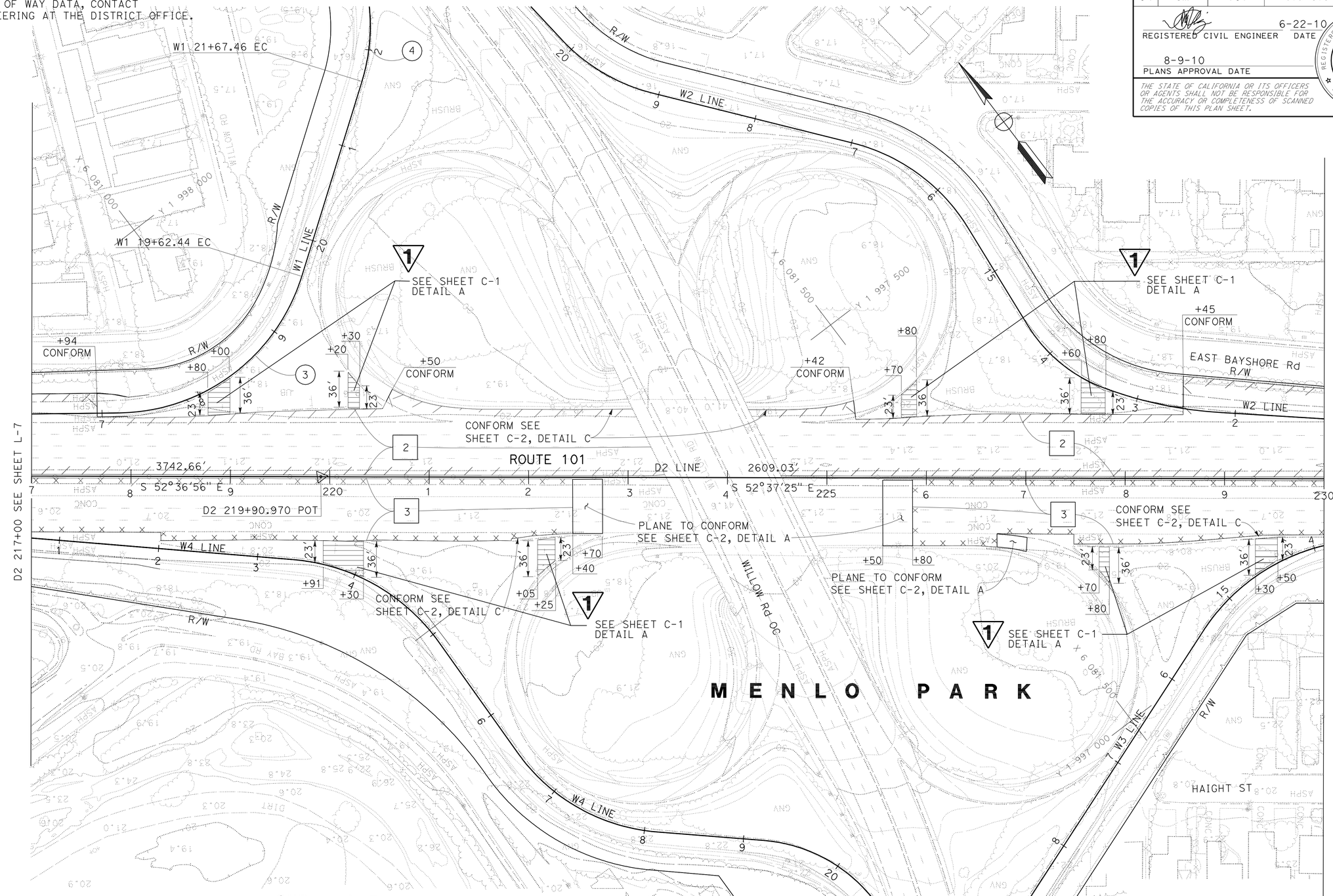

CURVE DATA

No.	R	Δ	T	L	N-COORDINATE	E-COORDINATE
3	195'	72° 8'46"	142.06'	245.54'	1998019.62	6080992.73
4	190'	45° 35'32"	79.85'	151.19'	1998134.81	6081162.41

1 REVISED PER ADDENDUM No. 1 DATED MARCH 30, 2011

FOR NOTES, ABBREVIATIONS AND LEGEND, SEE SHEET L-1

LAYOUT
SCALE: 1'' = 50'

L-8

STATE OF CALIFORNIA - DEPARTMENT OF TRANSPORTATION
Caltrans DESIGN

FUNCTIONAL SUPERVISOR: TEBLEZ NEMARIAM
CALCULATED-DESIGNED BY: EDGAR URBANO
CHECKED BY: AIJUN DING
REVISED BY
DATE REVISED

423563ea008.add

LAST REVISION 03-23-10 | DATE PLOTTED => 28-MAR-2011 | TIME PLOTTED => 14:38

BORDER LAST REVISED 4/11/2008 | RELATIVE BORDER SCALE IS IN INCHES 0 1 2 3 | USERNAME => trmnguye | DGN FILE => 423563ea008.add | CU 04243 | EA 235631

Dist	COUNTY	ROUTE	POST MILES TOTAL PROJECT	SHEET No.	TOTAL SHEETS
04	SM	101	0.9/3.6	18	283

REGISTERED CIVIL ENGINEER 6-22-10 DATE

8-9-10
PLANS APPROVAL DATE

REGISTERED PROFESSIONAL ENGINEER Aijun Ding No. 58899 Exp. 6-30-11 CIVIL STATE OF CALIFORNIA

THE STATE OF CALIFORNIA OR ITS OFFICERS OR AGENTS SHALL NOT BE RESPONSIBLE FOR THE ACCURACY OR COMPLETENESS OF SCANNED COPIES OF THIS PLAN SHEET.

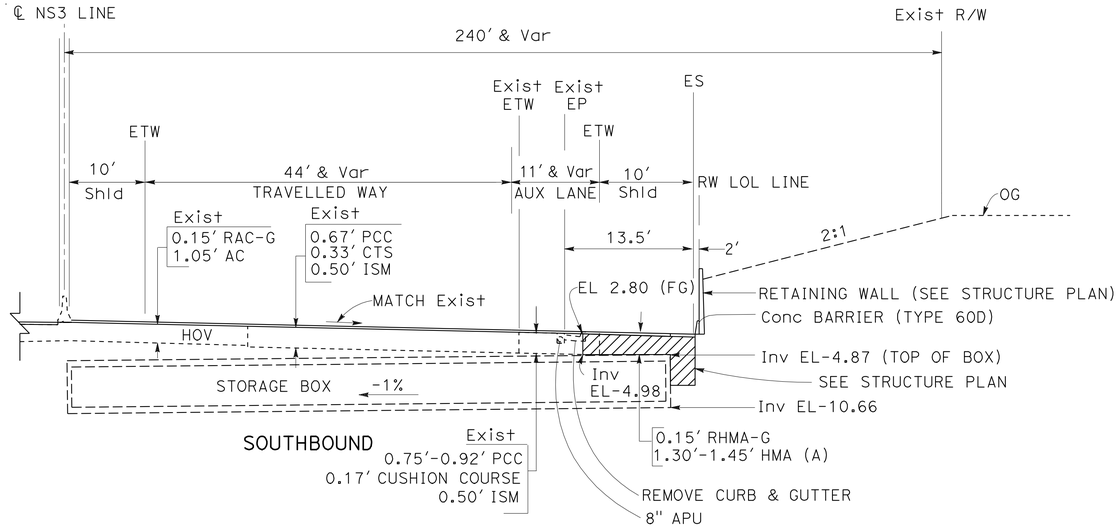

ROUTE 101
SB: NS3 162+72.89 TO 162+90.51
STORAGE BOX

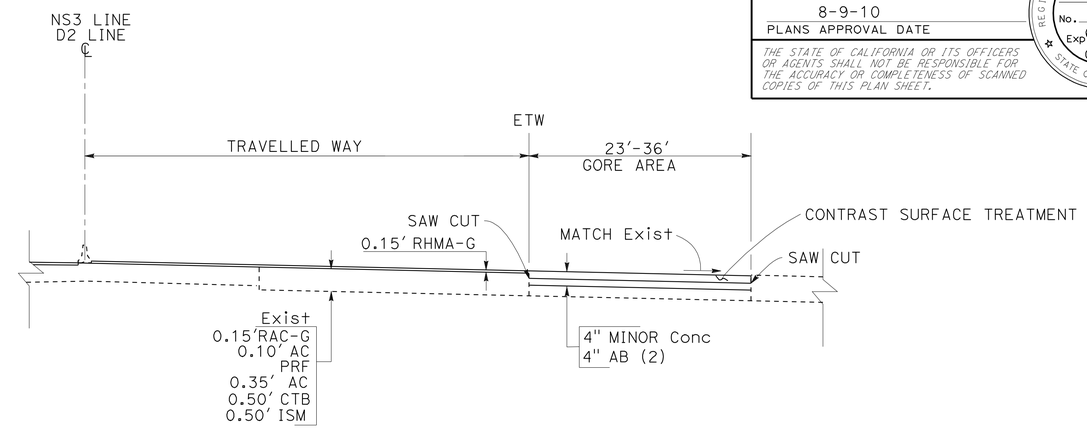

1 GORE PAVING SB ~~CONTRAST SURFACE TREATMENT~~, TYPICAL
DETAIL A

NOTES:
1. SEE LAYOUT SHEETS FOR LOCATIONS & LIMITS.
2. DETAILS FOR NB SIMILAR TO SB.

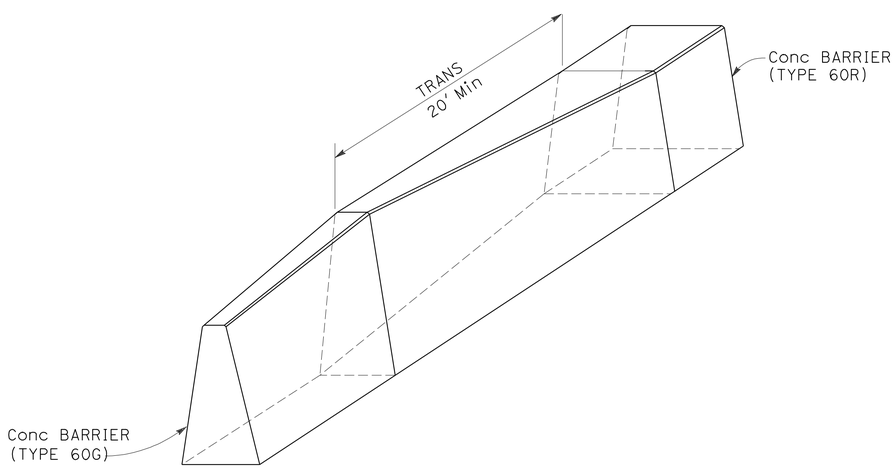

TRANSITION FROM CONCRETE BARRIER (TYPE 60G)
TO CONCRETE BARRIER (TYPE 60R)

NOTE: FOR DETAILS NOT SHOWN SEE STANDARD PLAN A76G

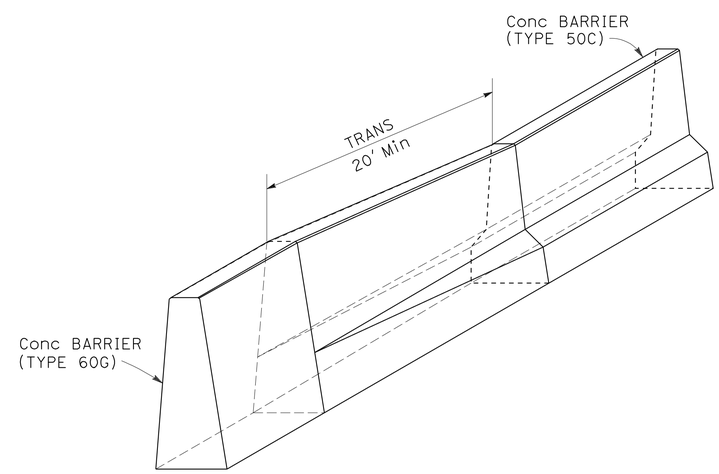

TRANSITION FROM CONCRETE BARRIER (TYPE 60G)
TO CONCRETE BARRIER (TYPE 50C)

1 REVISED PER ADDENDUM No. 1 DATED MARCH 30, 2011

CONSTRUCTION DETAILS
NO SCALE

C-1

REVISED BY | DATE REVISED
EDGAR URBANO | AIJUN DING
CALCULATED-DESIGNED BY | CHECKED BY
FUNCTIONAL SUPERVISOR: TEBLEZ NEMARIAM
STATE OF CALIFORNIA - DEPARTMENT OF TRANSPORTATION
Caltrans DESIGN

423563ga001.add

LAST REVISION 04-20-10 | DATE PLOTTED => 28-MAR-2011 | TIME PLOTTED => 14:39

Dist	COUNTY	ROUTE	POST MILES TOTAL PROJECT	SHEET No.	TOTAL SHEETS
04	SM	101	0.9/3.6	37	283

REGISTERED CIVIL ENGINEER 6-23-10 DATE

8-9-10
PLANS APPROVAL DATE

REGISTERED PROFESSIONAL ENGINEER Dixon T. Lau No. 46706 Exp. 6-30-11 CIVIL STATE OF CALIFORNIA

THE STATE OF CALIFORNIA OR ITS OFFICERS OR AGENTS SHALL NOT BE RESPONSIBLE FOR THE ACCURACY OR COMPLETENESS OF SCANNED COPIES OF THIS PLAN SHEET.

1

NOTE:

FOR ACCURATE RIGHT OF WAY DATA, CONTACT RIGHT OF WAY ENGINEERING AT THE DISTRICT OFFICE.

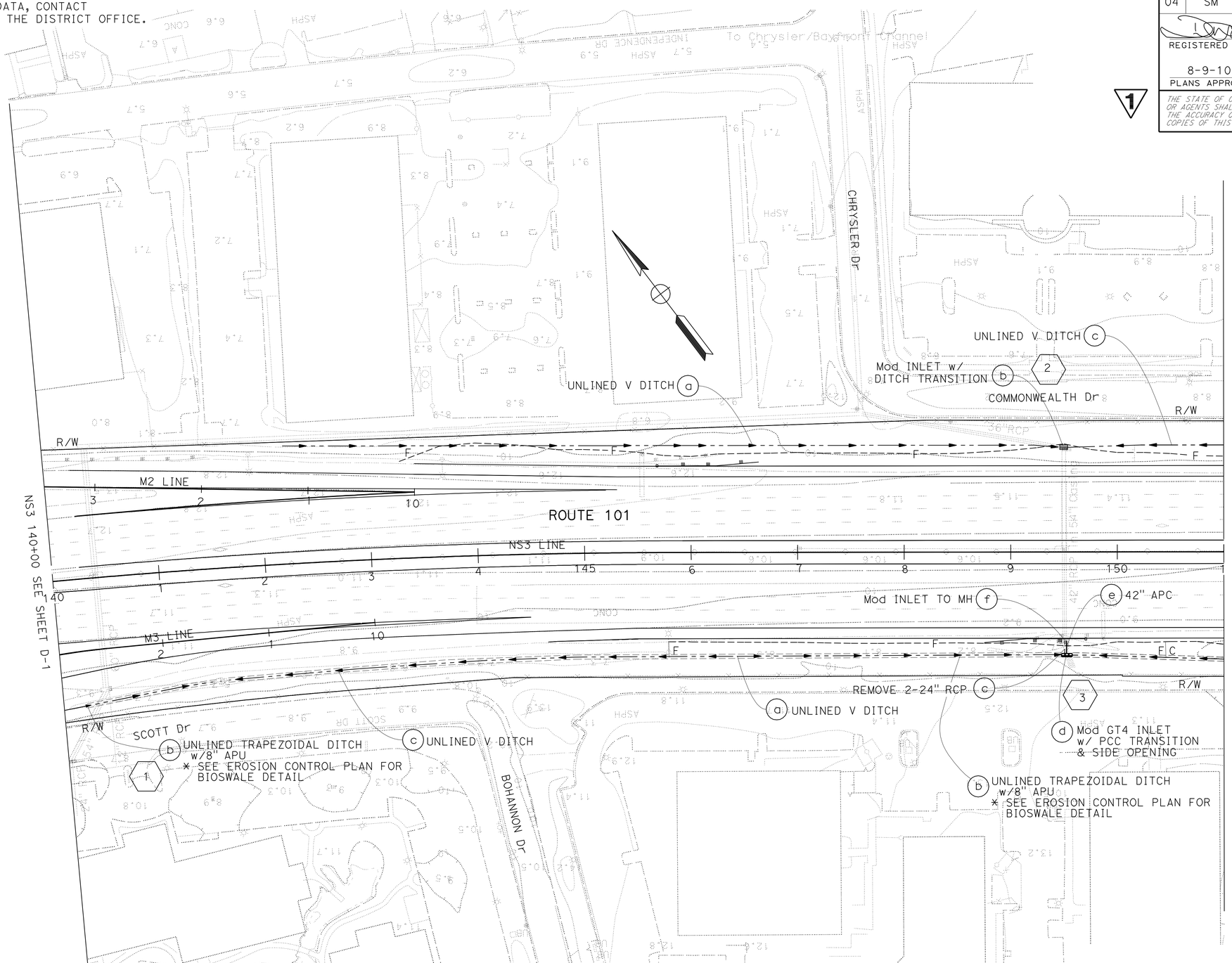

1 **REVISED PER ADDENDUM No. 1 DATED MARCH 30, 2011**

FOR NOTES, ABBREVIATIONS AND LEGEND, SEE SHEET D-1

THIS PLAN ACCURATE FOR DRAINAGE WORK ONLY

DRAINAGE PLAN

SCALE: 1" = 50'

D-2

STATE OF CALIFORNIA - DEPARTMENT OF TRANSPORTATION

Caltrans

HYDRAULICS

FUNCTIONAL SUPERVISOR: DIXON LAU

CALCULATED-DESIGNED BY: MICHAEL PUSTOV

CHECKED BY: DIXON LAU

REVISED BY

DATE REVISED

423563ia002.add

LAST REVISION 05-12-10

DATE PLOTTED => 29-MAR-2011
TIME PLOTTED => 10:56

Dist	COUNTY	ROUTE	POST MILES TOTAL PROJECT	SHEET No.	TOTAL SHEETS
04	SM	101	0.9/3.6	38	283

REGISTERED CIVIL ENGINEER 6-23-10 DATE

8-9-10
PLANS APPROVAL DATE

REGISTERED PROFESSIONAL ENGINEER Dixon T. Lau No. 46706 Exp. 6-30-11 CIVIL STATE OF CALIFORNIA

THE STATE OF CALIFORNIA OR ITS OFFICERS OR AGENTS SHALL NOT BE RESPONSIBLE FOR THE ACCURACY OR COMPLETENESS OF SCANNED COPIES OF THIS PLAN SHEET.

NOTE:

FOR ACCURATE RIGHT OF WAY DATA, CONTACT RIGHT OF WAY ENGINEERING AT THE DISTRICT OFFICE.

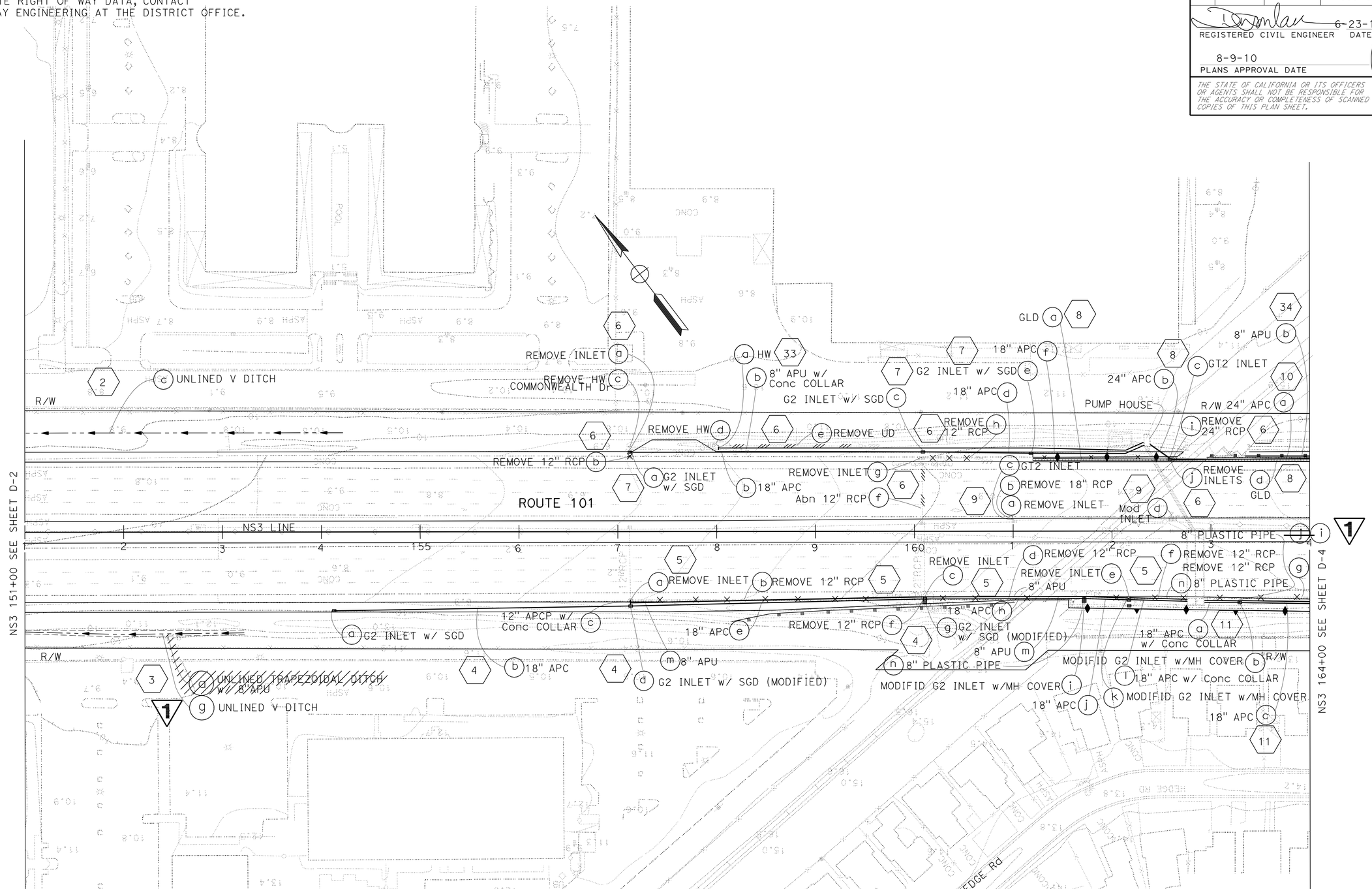

1 REVISED PER ADDENDUM No. 1 DATED MARCH 30, 2011

FOR NOTES, ABBREVIATIONS AND LEGEND, SEE SHEET D-1

THIS PLAN ACCURATE FOR DRAINAGE WORK ONLY

DRAINAGE PLAN

SCALE: 1" = 50'

D-3

STATE OF CALIFORNIA - DEPARTMENT OF TRANSPORTATION
Caltrans
HYDRAULICS

FUNCTIONAL SUPERVISOR: DIXON LAU
CALCULATED-DESIGNED BY: MICHAEL PUSTOV
CHECKED BY: DIXON LAU
REVISED BY
DATE REVISED

423563ia003.add

LAST REVISION 05-12-10
DATE PLOTTED => 30-MAR-2011
TIME PLOTTED => 08:48

BORDER LAST REVISED 4/11/2008
RELATIVE BORDER SCALE IS IN INCHES 0 1 2 3
USERNAME => trmikesl
DGN FILE => 423563ia003.add
CU 04243
EA 235631

Dist	COUNTY	ROUTE	POST MILES TOTAL PROJECT	SHEET No.	TOTAL SHEETS
04	SM	101	0.9/3.6	40	283

REGISTERED CIVIL ENGINEER 6-23-10 DATE

8-9-10
PLANS APPROVAL DATE

REGISTERED PROFESSIONAL ENGINEER Dixon T. Lau No. 46706 Exp. 6-30-11 CIVIL STATE OF CALIFORNIA

THE STATE OF CALIFORNIA OR ITS OFFICERS OR AGENTS SHALL NOT BE RESPONSIBLE FOR THE ACCURACY OR COMPLETENESS OF SCANNED COPIES OF THIS PLAN SHEET.

NOTE:

FOR ACCURATE RIGHT OF WAY DATA, CONTACT RIGHT OF WAY ENGINEERING AT THE DISTRICT OFFICE.

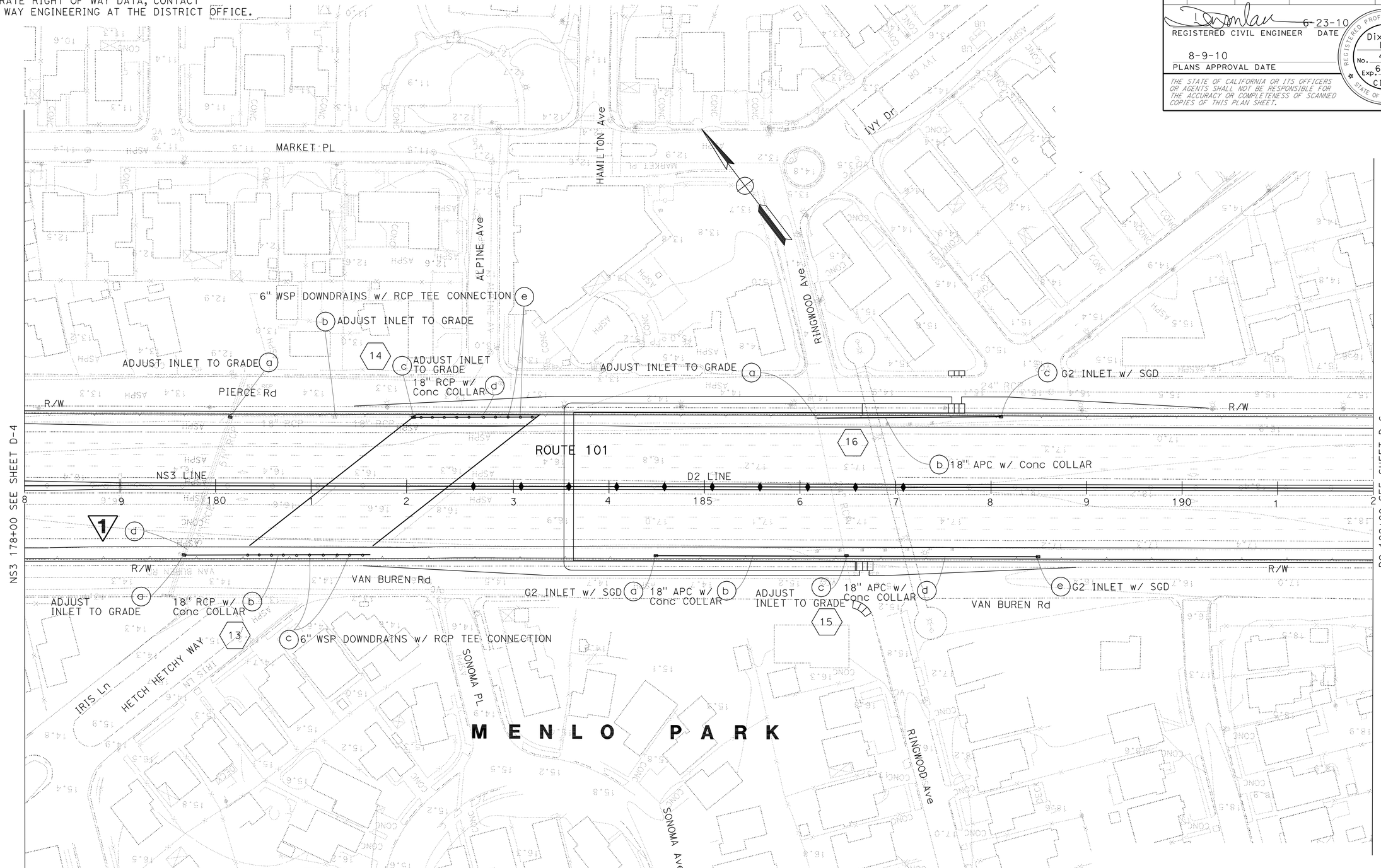

1 REVISED PER ADDENDUM No. 1 DATED MARCH 30, 2011

FOR NOTES, ABBREVIATIONS AND LEGEND, SEE SHEET D-1

THIS PLAN ACCURATE FOR DRAINAGE WORK ONLY

DRAINAGE PLAN

SCALE: 1" = 50'

D-5

STATE OF CALIFORNIA - DEPARTMENT OF TRANSPORTATION
Caltrans
HYDRAULICS

FUNCTIONAL SUPERVISOR: DIXON LAU
CALCULATED-DESIGNED BY: MICHAEL PUSTOV
CHECKED BY: DIXON LAU
REVISED BY
DATE REVISED

LAST REVISION 05-12-10
DATE PLOTTED => 28-MAR-2011
TIME PLOTTED => 14:47

423563ia005.add

BORDER LAST REVISED 4/11/2008
RELATIVE BORDER SCALE IS IN INCHES 0 1 2 3
USERNAME => trmartin
DGN FILE => 423563ia005.add
CU 04243
EA 235631

Dist	COUNTY	ROUTE	POST MILES TOTAL PROJECT	SHEET No.	TOTAL SHEETS
04	SM	101	0.9/3.6	41	283

REGISTERED CIVIL ENGINEER 6-23-10 DATE

8-9-10
PLANS APPROVAL DATE

REGISTERED PROFESSIONAL ENGINEER Dixon T. Lau No. 46706 Exp. 6-30-11 CIVIL STATE OF CALIFORNIA

THE STATE OF CALIFORNIA OR ITS OFFICERS OR AGENTS SHALL NOT BE RESPONSIBLE FOR THE ACCURACY OR COMPLETENESS OF SCANNED COPIES OF THIS PLAN SHEET.

NOTE:

FOR ACCURATE RIGHT OF WAY DATA, CONTACT RIGHT OF WAY ENGINEERING AT THE DISTRICT OFFICE.

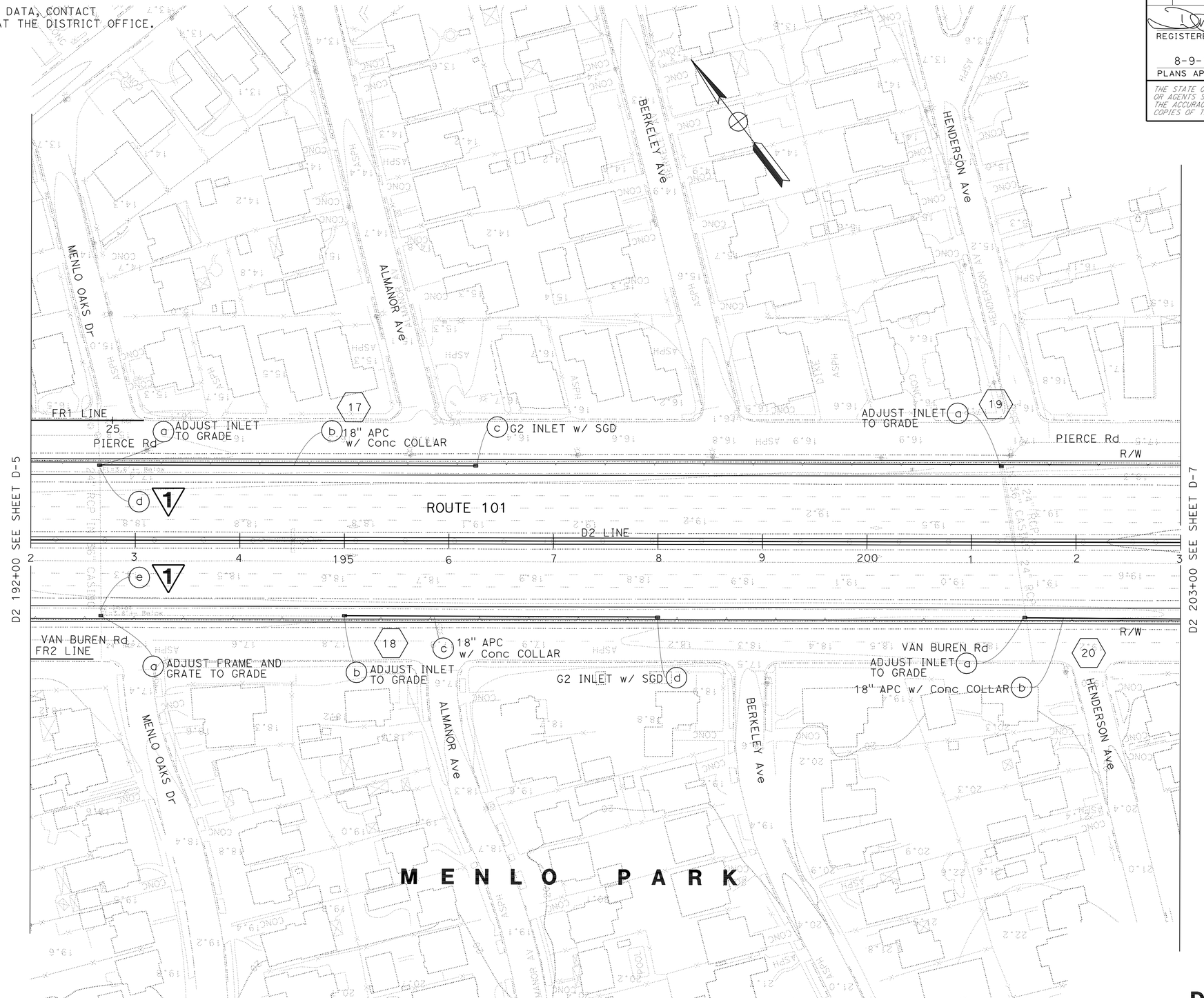

1 REVISED PER ADDENDUM No. 1 DATED MARCH 30, 2011

FOR NOTES, ABBREVIATIONS AND LEGEND, SEE SHEET D-1

THIS PLAN ACCURATE FOR DRAINAGE WORK ONLY

DRAINAGE PLAN

SCALE: 1" = 50'

D-6

STATE OF CALIFORNIA - DEPARTMENT OF TRANSPORTATION

Caltrans

HYDRAULICS

FUNCTIONAL SUPERVISOR: DIXON LAU

CALCULATED-DESIGNED BY: MICHAEL PUSTOV

CHECKED BY: DIXON LAU

REVISED BY

DATE REVISED

423563ia006.add

LAST REVISION 05-12-10

DATE PLOTTED => 28-MAR-2011
TIME PLOTTED => 14:47

BORDER LAST REVISED 4/11/2008

RELATIVE BORDER SCALE IS IN INCHES 0 1 2 3

USERNAME => trmartin
DGN FILE => 423563ia006.add

CU 04243

EA 235631

Dist	COUNTY	ROUTE	POST MILES TOTAL PROJECT	SHEET No.	TOTAL SHEETS
04	SM	101	0.9/3.6	44	283

REGISTERED CIVIL ENGINEER 6-23-10 DATE

8-9-10
PLANS APPROVAL DATE

REGISTERED PROFESSIONAL ENGINEER Dixon T. Lau No. 46706 Exp. 6-30-11 CIVIL STATE OF CALIFORNIA

THE STATE OF CALIFORNIA OR ITS OFFICERS OR AGENTS SHALL NOT BE RESPONSIBLE FOR THE ACCURACY OR COMPLETENESS OF SCANNED COPIES OF THIS PLAN SHEET.

NOTE:

FOR ACCURATE RIGHT OF WAY DATA, CONTACT RIGHT OF WAY ENGINEERING AT THE DISTRICT OFFICE.

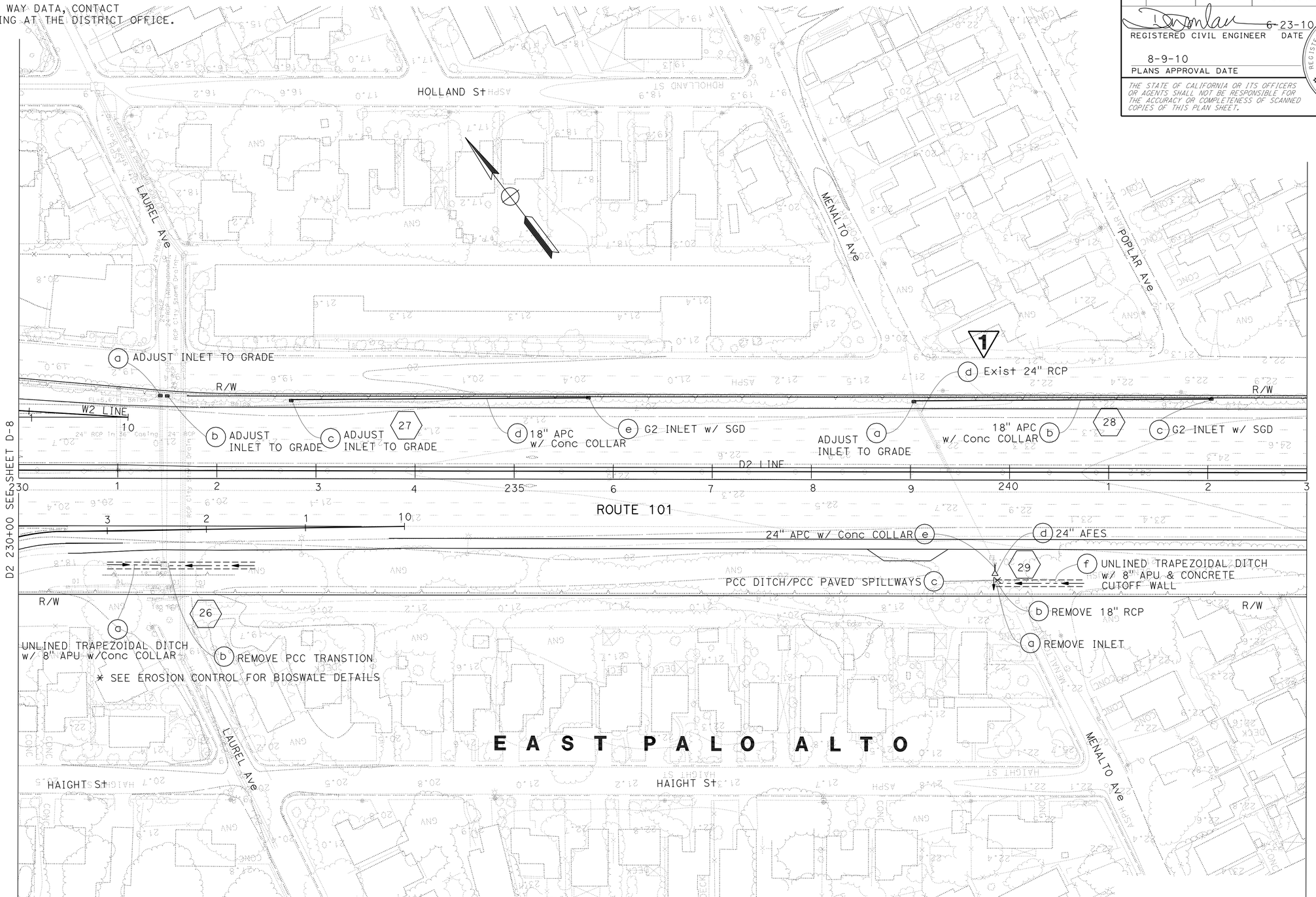

1 **REVISED PER ADDENDUM No. 1 DATED MARCH 30, 2011**

FOR NOTES, ABBREVIATIONS AND LEGEND, SEE SHEET D-1

THIS PLAN ACCURATE FOR DRAINAGE WORK ONLY

DRAINAGE PLAN

SCALE: 1" = 50'

D-9

REVISED BY	DATE REVISED

CALCULATED-DESIGNED BY	CHECKED BY
MICHAEL PUSTOV	DIXON LAU

FUNCTIONAL SUPERVISOR: DIXON LAU

STATE OF CALIFORNIA - DEPARTMENT OF TRANSPORTATION

Caltrans

HYDRAULICS

423563ia009.add

LAST REVISION 05-12-10 | DATE PLOTTED => 29-MAR-2011 | TIME PLOTTED => 10:56

Dist	COUNTY	ROUTE	POST MILES TOTAL PROJECT	SHEET No.	TOTAL SHEETS
04	SM	101	0.9/3.6	47	283

REGISTERED CIVIL ENGINEER 6-22-10 DATE

8-9-10
PLANS APPROVAL DATE

REGISTERED PROFESSIONAL ENGINEER Aijun Ding No. 58899 Exp. 6-30-11 CIVIL STATE OF CALIFORNIA

1

THE STATE OF CALIFORNIA OR ITS OFFICERS OR AGENTS SHALL NOT BE RESPONSIBLE FOR THE ACCURACY OR COMPLETENESS OF SCANNED COPIES OF THIS PLAN SHEET.

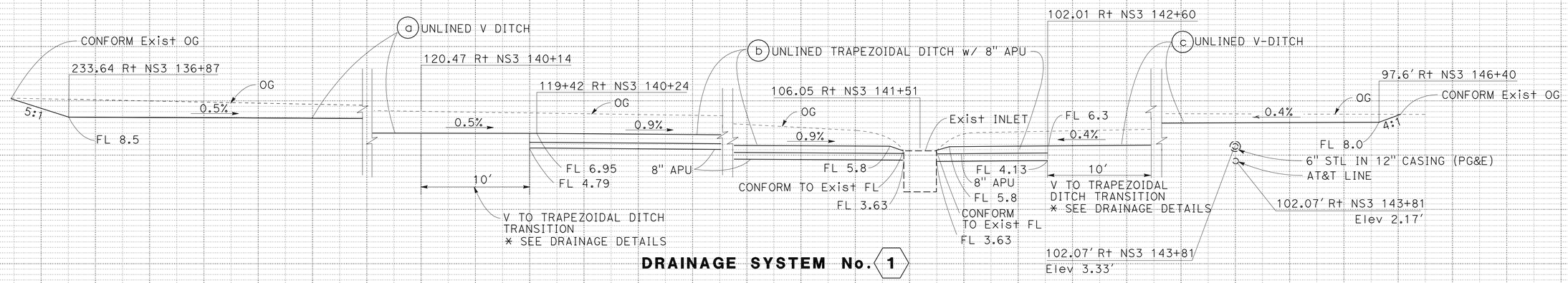

DRAINAGE SYSTEM No. 1

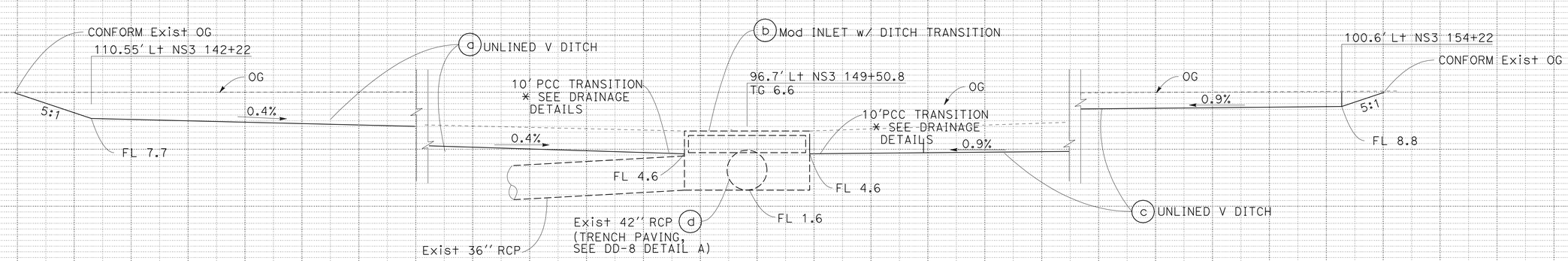

DRAINAGE SYSTEM No. 2

1 **REVISED PER ADDENDUM No. 1 DATED MARCH 30, 2011**

DRAINAGE PROFILES

SCALE: HORIZ: 1" = 5'
VERT: 1" = 5'

DP-1

STATE OF CALIFORNIA - DEPARTMENT OF TRANSPORTATION
Caltrans
HYDRAULICS

FUNCTIONAL SUPERVISOR: TEBLEZ NEMARIAM
CALCULATED-DESIGNED BY: REJA EREIQAT
CHECKED BY
REVISED BY: RACHEL LIU
DATE REVISED

423563ib001.add

LAST REVISION 06-03-10
DATE PLOTTED => 30-MAR-2011
TIME PLOTTED => 08:49

Dist	COUNTY	ROUTE	POST MILES TOTAL PROJECT	SHEET No.	TOTAL SHEETS
04	SM	101	0.9/3.6	48	283

REGISTERED CIVIL ENGINEER 6-22-10 DATE

8-9-10
PLANS APPROVAL DATE

REGISTERED PROFESSIONAL ENGINEER Aijun Ding No. 58899 Exp 6-30-11 CIVIL STATE OF CALIFORNIA

THE STATE OF CALIFORNIA OR ITS OFFICERS OR AGENTS SHALL NOT BE RESPONSIBLE FOR THE ACCURACY OR COMPLETENESS OF SCANNED COPIES OF THIS PLAN SHEET.

1

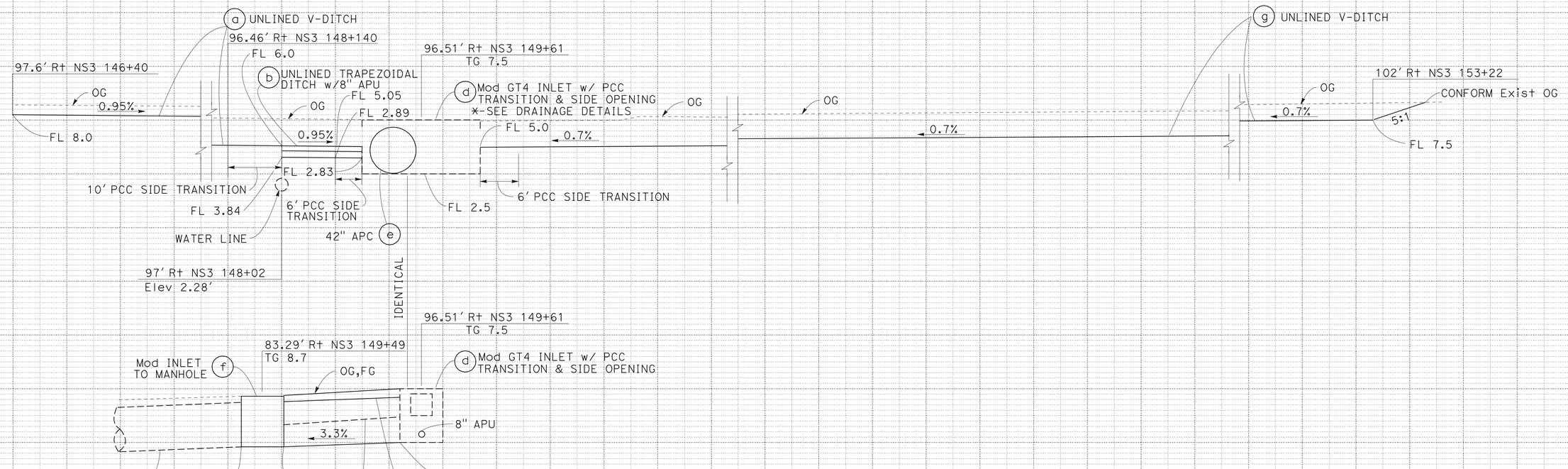

DRAINAGE SYSTEM No. 3

1 **REVISED PER ADDENDUM No. 1 DATED MARCH 30, 2011**

DRAINAGE PROFILES

SCALE: HORIZ: 1" = 5'
VERT: 1" = 5'

DP-2

STATE OF CALIFORNIA - DEPARTMENT OF TRANSPORTATION
Caltrans
HYDRAULICS

FUNCTIONAL SUPERVISOR: TEBLEZ NEMARIAM
CALCULATED-DESIGNED BY: REJA EREIQAT
CHECKED BY: RACHEL LIU
REVISED BY
DATE REVISED

423563ib002.add

LAST REVISION 06-03-10
DATE PLOTTED => 30-MAR-2011
TIME PLOTTED => 09:46

Dist	COUNTY	ROUTE	POST MILES TOTAL PROJECT	SHEET No.	TOTAL SHEETS
04	SM	101	0.9/3.6	49	283

REGISTERED CIVIL ENGINEER 6-22-10 DATE

8-9-10
PLANS APPROVAL DATE

REGISTERED PROFESSIONAL ENGINEER Aijun Ding No. 58899 Exp. 6-30-11 CIVIL STATE OF CALIFORNIA

THE STATE OF CALIFORNIA OR ITS OFFICERS OR AGENTS SHALL NOT BE RESPONSIBLE FOR THE ACCURACY OR COMPLETENESS OF SCANNED COPIES OF THIS PLAN SHEET.

1

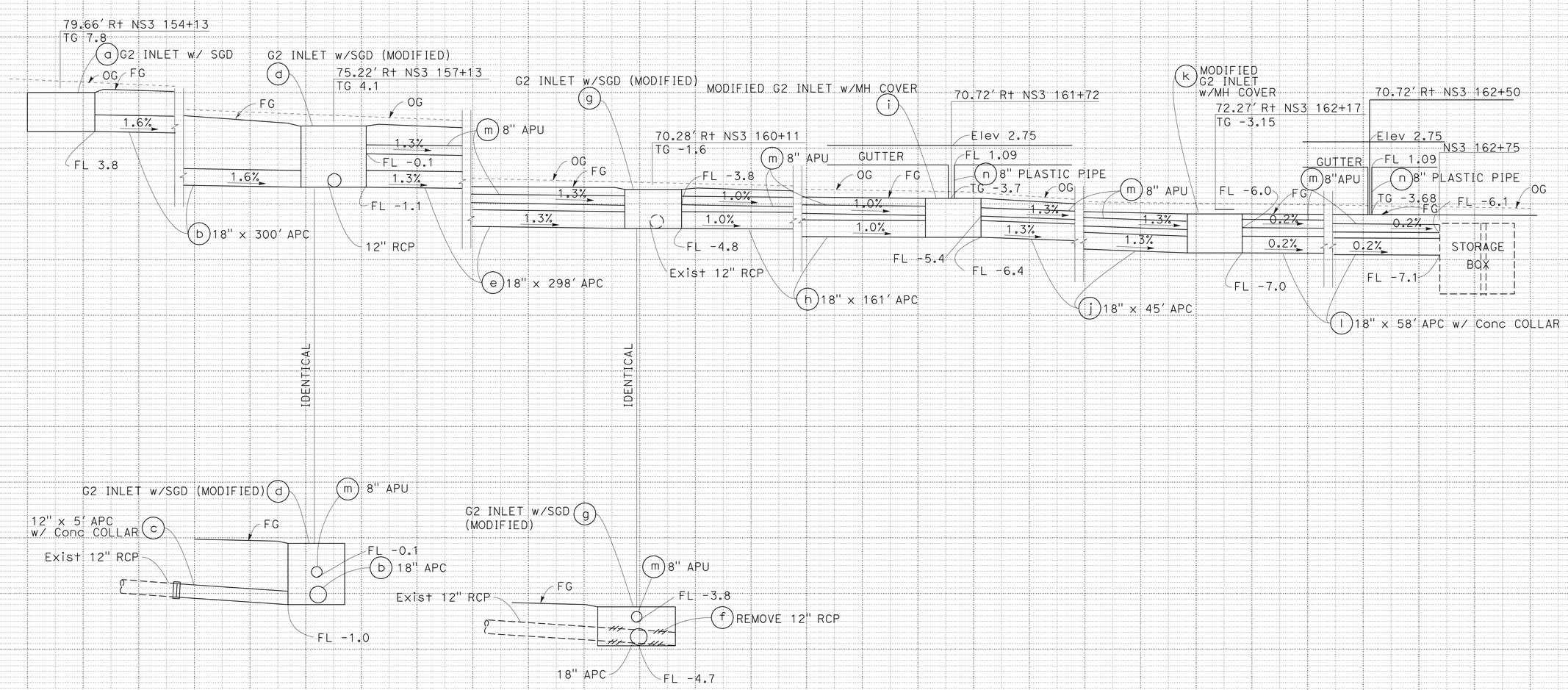

DRAINAGE SYSTEM No. 4

NOTE:

SEE PLAN DD-6 AND DP-12 FOR WALL DRAIN DETAILS

1 **REVISED PER ADDENDUM No. 1 DATED MARCH 30, 2011**

DRAINAGE PROFILES

SCALE: HORIZ: 1" = 5'
VERT: 1" = 5'

DP-3

REVISED BY | DATE REVISED
RACHEL LIU | REJA EREIGAT
CALCULATED-DESIGNED BY | CHECKED BY
FUNCTIONAL SUPERVISOR | TEBLEZ NEMARIAM

STATE OF CALIFORNIA - DEPARTMENT OF TRANSPORTATION
Caltrans
HYDRAULICS

LAST REVISION 06-03-10 | DATE PLOTTED => 30-MAR-2011 | TIME PLOTTED => 08:49

4235631b003.add

BORDER LAST REVISED 4/11/2008 | RELATIVE BORDER SCALE IS IN INCHES 0 1 2 3 | USERNAME => trmikesl | DGN FILE => 423563ib003.add | CU 04243 | EA 235631

Dist	COUNTY	ROUTE	POST MILES TOTAL PROJECT	SHEET No.	TOTAL SHEETS
04	SM	101	0.9/3.6	50	283

REGISTERED CIVIL ENGINEER 6-22-10 DATE

8-9-10
PLANS APPROVAL DATE

REGISTERED PROFESSIONAL ENGINEER Aijun Ding No. 58899 Exp. 6-30-11 CIVIL STATE OF CALIFORNIA

THE STATE OF CALIFORNIA OR ITS OFFICERS OR AGENTS SHALL NOT BE RESPONSIBLE FOR THE ACCURACY OR COMPLETENESS OF SCANNED COPIES OF THIS PLAN SHEET.

1

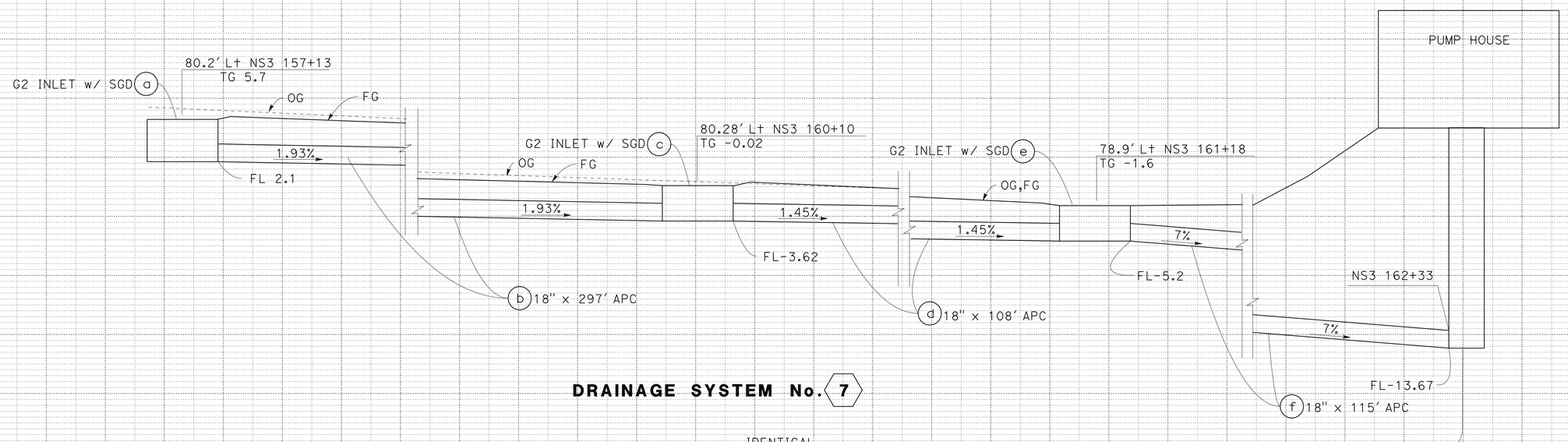

DRAINAGE SYSTEM No. 7

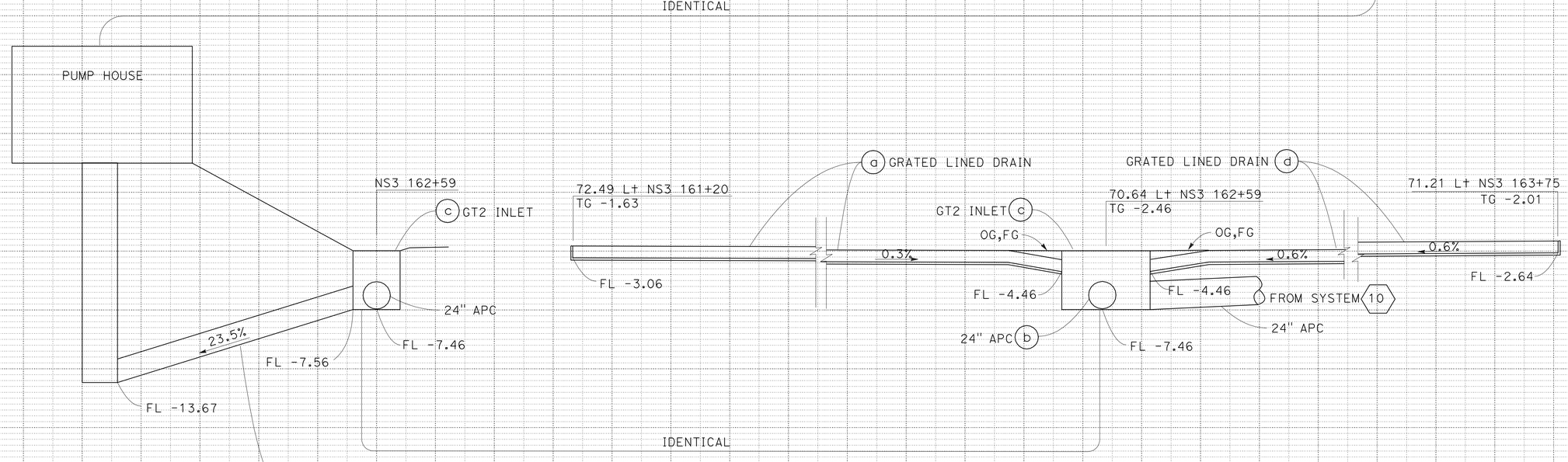

DRAINAGE SYSTEM No. 8

1 **REVISED PER ADDENDUM No. 1 DATED MARCH 30, 2011**

DRAINAGE PROFILES

SCALE: HORIZ: 1" = 5'
VERT: 1" = 5'

DP-4

STATE OF CALIFORNIA - DEPARTMENT OF TRANSPORTATION
Caltrans
HYDRAULICS

FUNCTIONAL SUPERVISOR: TEBLEZ NEMARIAM
CALCULATED-DESIGNED BY: REJA EREIQAT
CHECKED BY: RACHEL LIU
REVISED BY / DATE REVISED

LAST REVISION 06-03-10
DATE PLOTTED => 30-MAR-2011
TIME PLOTTED => 08:49

423563ib004.add

Dist	COUNTY	ROUTE	POST MILES TOTAL PROJECT	SHEET No.	TOTAL SHEETS
04	SM	101	0.9/3.6	51	283

REGISTERED CIVIL ENGINEER 6-22-10 DATE

8-9-10
PLANS APPROVAL DATE

REGISTERED PROFESSIONAL ENGINEER Aijun Ding No. 58899 Exp 6-30-11 CIVIL STATE OF CALIFORNIA

THE STATE OF CALIFORNIA OR ITS OFFICERS OR AGENTS SHALL NOT BE RESPONSIBLE FOR THE ACCURACY OR COMPLETENESS OF SCANNED COPIES OF THIS PLAN SHEET.

1

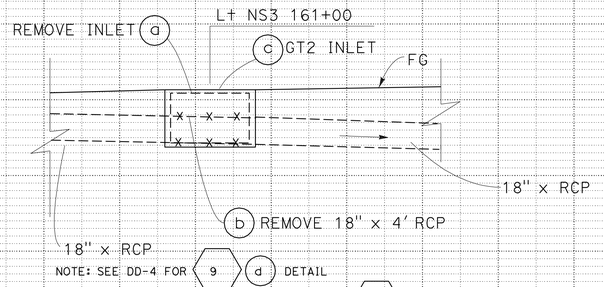

DRAINAGE SYSTEM No. 9

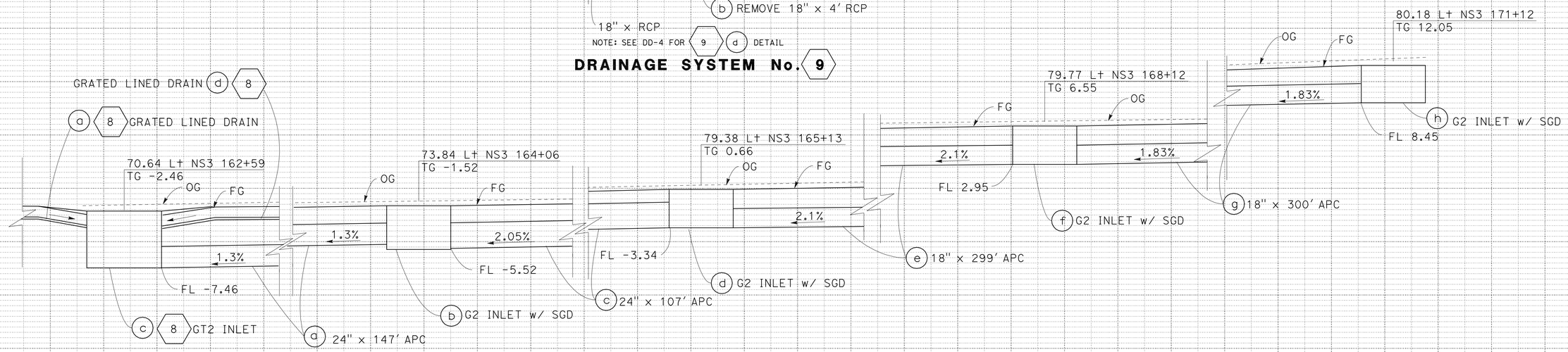

DRAINAGE SYSTEM No. 10

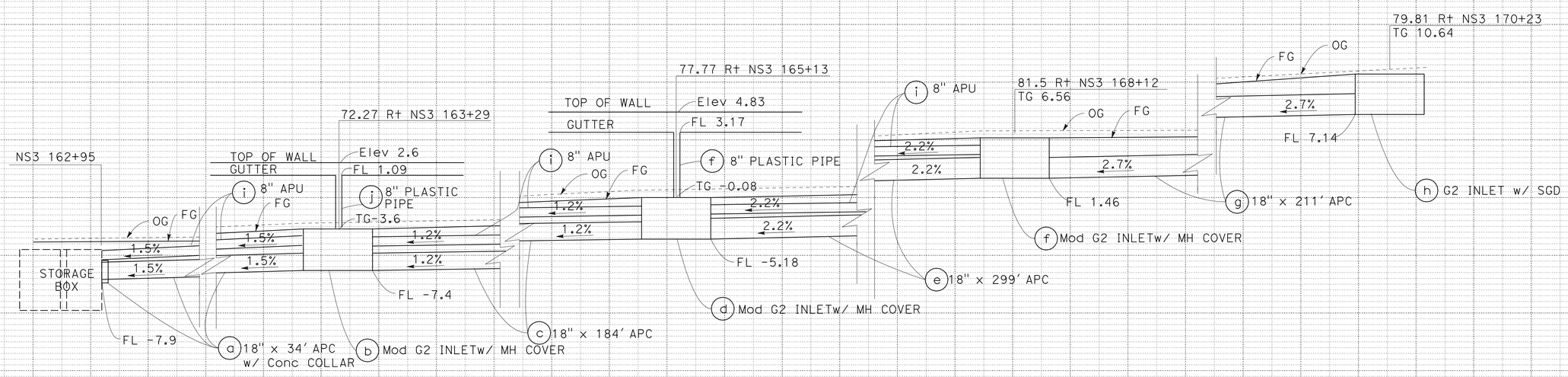

DRAINAGE SYSTEM No. 11

NOTE: SEE PLAN DD-6 AND DP-12 FOR WALL DRAIN DETAILS

1 **REVISED PER ADDENDUM No. 1 DATED MARCH 30, 2011**

DRAINAGE PROFILES

SCALE: HORIZ: 1" = 5'
VERT: 1" = 5'

DP-5

REVISED BY | DATE REVISED

RACHEL LIU | REJA EREIQAT

CALCULATED-DESIGNED BY | CHECKED BY

FUNCTIONAL SUPERVISOR: TEBLEZ NEMARIAM

STATE OF CALIFORNIA - DEPARTMENT OF TRANSPORTATION

Caltrans® HYDRAULICS

423563ib005.add

LAST REVISION 06-03-10 | DATE PLOTTED => 30-MAR-2011 TIME PLOTTED => 08:49

Dist	COUNTY	ROUTE	POST MILES TOTAL PROJECT	SHEET No.	TOTAL SHEETS
04	SM	101	0.9/3.6	52	283

REGISTERED CIVIL ENGINEER 6-22-10 DATE

8-9-10
PLANS APPROVAL DATE

REGISTERED PROFESSIONAL ENGINEER Aijun Ding No. 58899 Exp. 6-30-11 CIVIL STATE OF CALIFORNIA

THE STATE OF CALIFORNIA OR ITS OFFICERS OR AGENTS SHALL NOT BE RESPONSIBLE FOR THE ACCURACY OR COMPLETENESS OF SCANNED COPIES OF THIS PLAN SHEET.

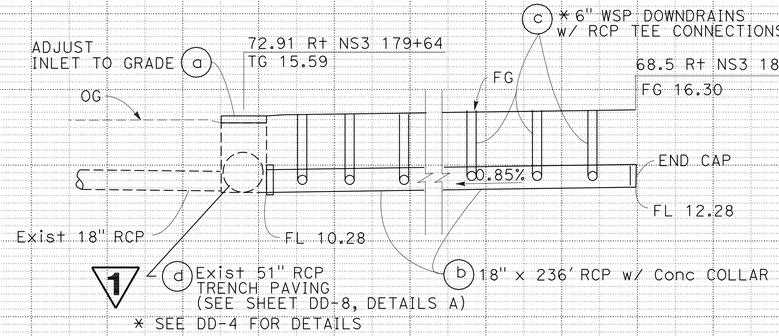

DRAINAGE SYSTEM No. 13

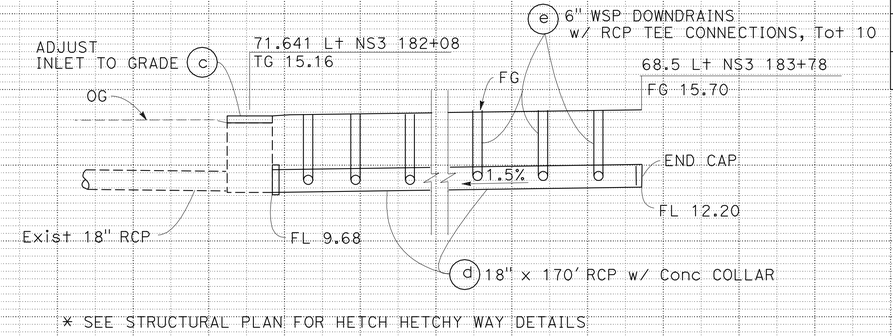

DRAINAGE SYSTEM No. 14

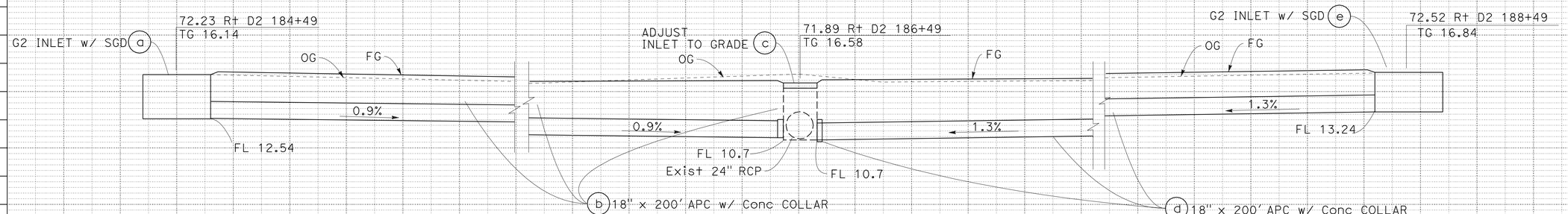

DRAINAGE SYSTEM No. 15

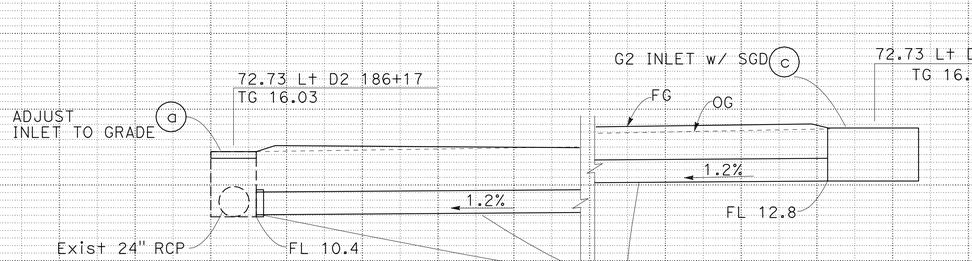

DRAINAGE SYSTEM No. 16

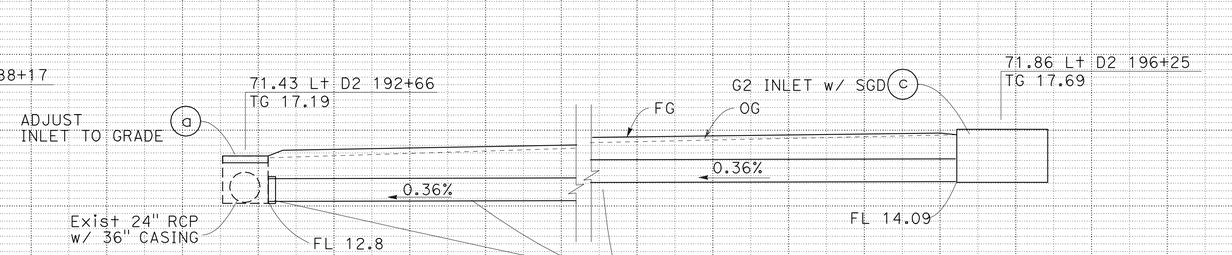

DRAINAGE SYSTEM No. 17

1 **REVISED PER ADDENDUM No. 1 DATED MARCH 30, 2011**

DRAINAGE PROFILES

SCALE: HORIZ: 1" = 5'
VERT: 1" = 5'

DP-6

STATE OF CALIFORNIA - DEPARTMENT OF TRANSPORTATION
Caltrans® **HYDRAULICS**

FUNCTIONAL SUPERVISOR: TEBLEZ NEMARIAM
CALCULATED-DESIGNED BY: RACHEL LIU
CHECKED BY: REJA EREIQAT
REVISED BY / DATE REVISED

423563ib006.add

LAST REVISION | DATE PLOTTED => 28-MAR-2011
06-03-10 | TIME PLOTTED => 14:45

BORDER LAST REVISED 4/11/2008 | RELATIVE BORDER SCALE IS IN INCHES 0 1 2 3 | USERNAME => trcarol | DGN FILE => 423563ib006.add | CU 04243 | EA 235631

Dist	COUNTY	ROUTE	POST MILES TOTAL PROJECT	SHEET No.	TOTAL SHEETS
04	SM	101	0.9/3.6	53	283

REGISTERED CIVIL ENGINEER 6-22-10 DATE

8-9-10
PLANS APPROVAL DATE

REGISTERED PROFESSIONAL ENGINEER Aijun Ding No. 58899 Exp 6-30-11 CIVIL STATE OF CALIFORNIA

THE STATE OF CALIFORNIA OR ITS OFFICERS OR AGENTS SHALL NOT BE RESPONSIBLE FOR THE ACCURACY OR COMPLETENESS OF SCANNED COPIES OF THIS PLAN SHEET.

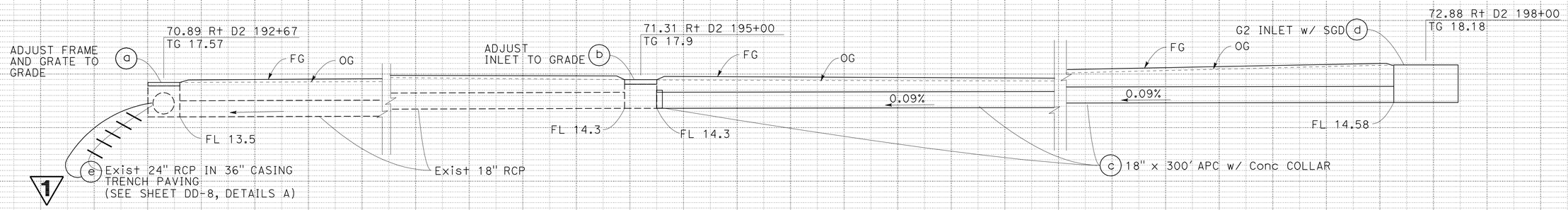

DRAINAGE SYSTEM No. 18

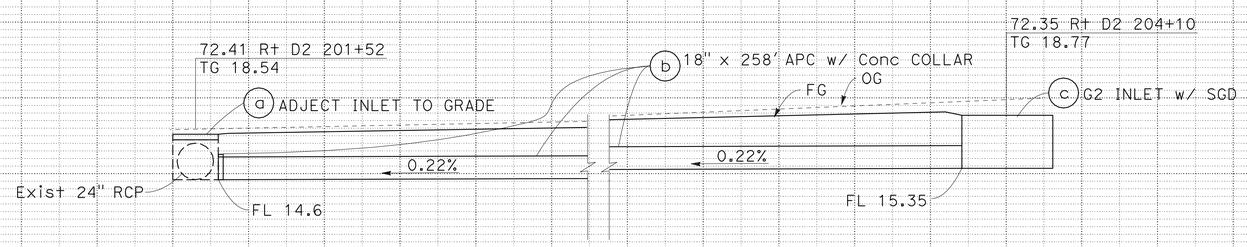

DRAINAGE SYSTEM No. 20

1 **REVISED PER ADDENDUM No. 1 DATED MARCH 30, 2011**

DRAINAGE PROFILES

SCALE: HORIZ: 1" = 5'
VERT: 1" = 5'

DP-7

STATE OF CALIFORNIA - DEPARTMENT OF TRANSPORTATION
Caltrans
HYDRAULICS

FUNCTIONAL SUPERVISOR: TEBLEZ NEMARIAM
CALCULATED-DESIGNED BY: REJA EREIQAT
CHECKED BY: RACHEL LIU
REVISED BY / DATE REVISED

LAST REVISION 06-03-10
DATE PLOTTED => 29-MAR-2011
TIME PLOTTED => 14:44

423563ib007.add

BORDER LAST REVISED 4/11/2008
RELATIVE BORDER SCALE IS IN INCHES 0 1 2 3
USERNAME => trmikesl
DGN FILE => 423563ib007.add
CU 04243
EA 235631

Dist	COUNTY	ROUTE	POST MILES TOTAL PROJECT	SHEET No.	TOTAL SHEETS
04	SM	101	0.9/3.6	54	283

REGISTERED CIVIL ENGINEER 6-22-10 DATE

8-9-10
PLANS APPROVAL DATE

REGISTERED PROFESSIONAL ENGINEER Aijun Ding No. 58899 Exp 6-30-11 CIVIL STATE OF CALIFORNIA

THE STATE OF CALIFORNIA OR ITS OFFICERS OR AGENTS SHALL NOT BE RESPONSIBLE FOR THE ACCURACY OR COMPLETENESS OF SCANNED COPIES OF THIS PLAN SHEET.

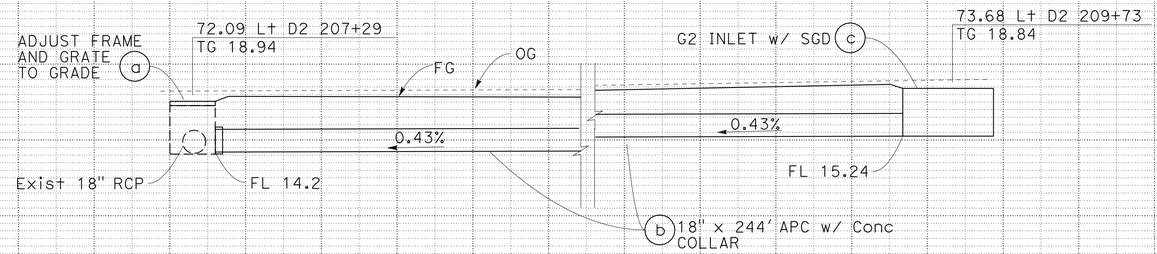

DRAINAGE SYSTEM No. 22

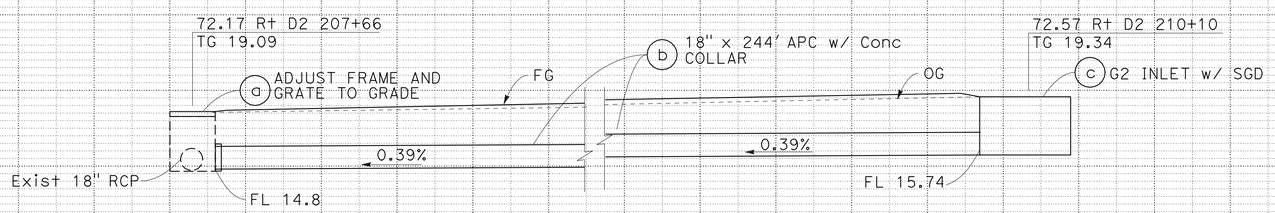

DRAINAGE SYSTEM No. 23

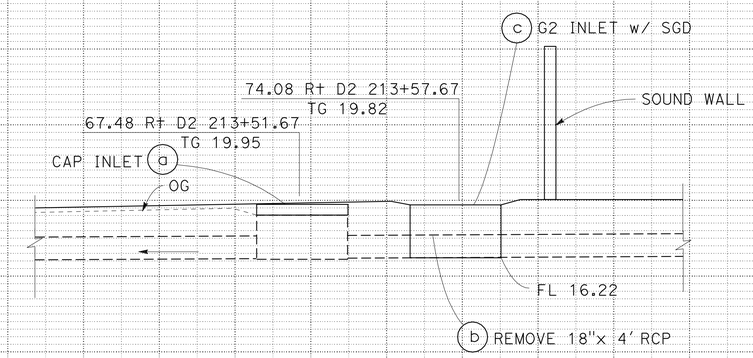

DRAINAGE SYSTEM No. 25

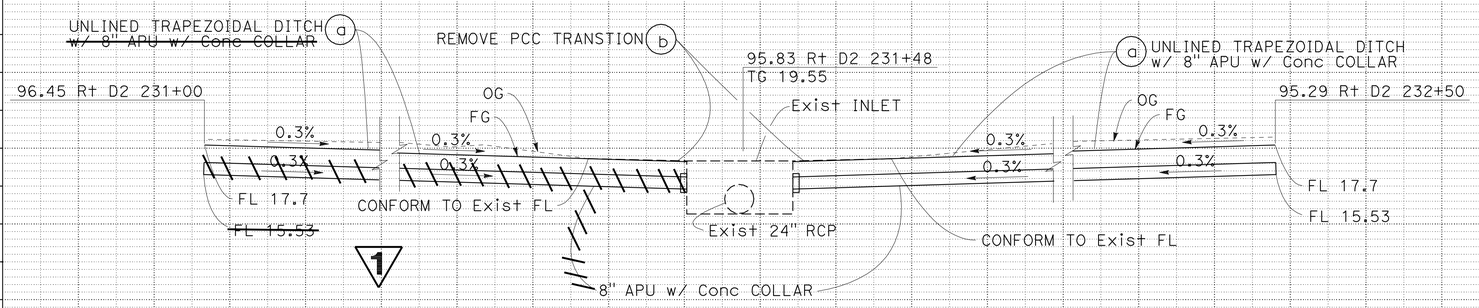

DRAINAGE SYSTEM No. 26

1 REVISED PER ADDENDUM No. 1 DATED MARCH 30, 2011

DRAINAGE PROFILES

SCALE: Horiz: 1" = 5'
Vert: 1" = 5'

DP-8

REVISED BY | DATE REVISED
RACHEL LIU | REJA EREIQAT
CALCULATED-DESIGNED BY | CHECKED BY
FUNCTIONAL SUPERVISOR | TEBLEZ NEMARIAM
STATE OF CALIFORNIA - DEPARTMENT OF TRANSPORTATION
Caltrans
HYDRAULICS

4235631ib008.add

LAST REVISION 06-03-10 | DATE PLOTTED => 28-MAR-2011 | TIME PLOTTED => 14:45

Dist	COUNTY	ROUTE	POST MILES TOTAL PROJECT	SHEET No.	TOTAL SHEETS
04	SM	101	0.9/3.6	55	283

REGISTERED CIVIL ENGINEER 6-22-10 DATE

8-9-10
PLANS APPROVAL DATE

REGISTERED PROFESSIONAL ENGINEER Aijun Ding No. 58899 Exp 6-30-11 CIVIL STATE OF CALIFORNIA

THE STATE OF CALIFORNIA OR ITS OFFICERS OR AGENTS SHALL NOT BE RESPONSIBLE FOR THE ACCURACY OR COMPLETENESS OF SCANNED COPIES OF THIS PLAN SHEET.

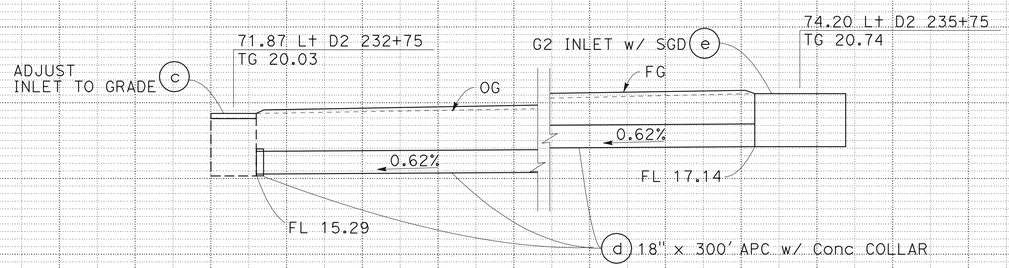

DRAINAGE SYSTEM No. 27

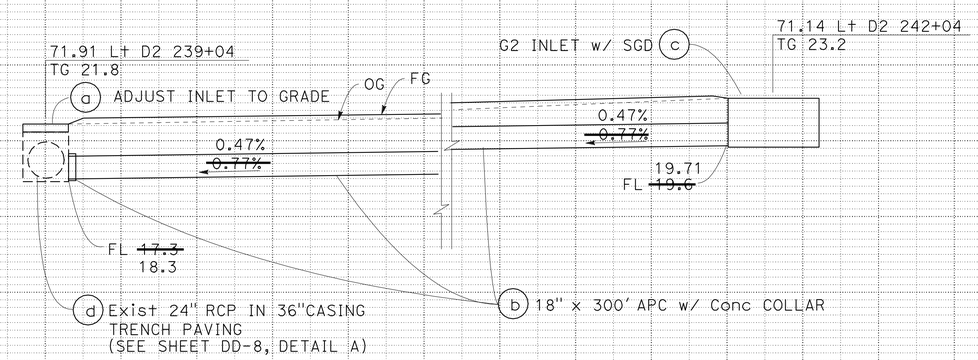

1 **DRAINAGE SYSTEM No. 28**

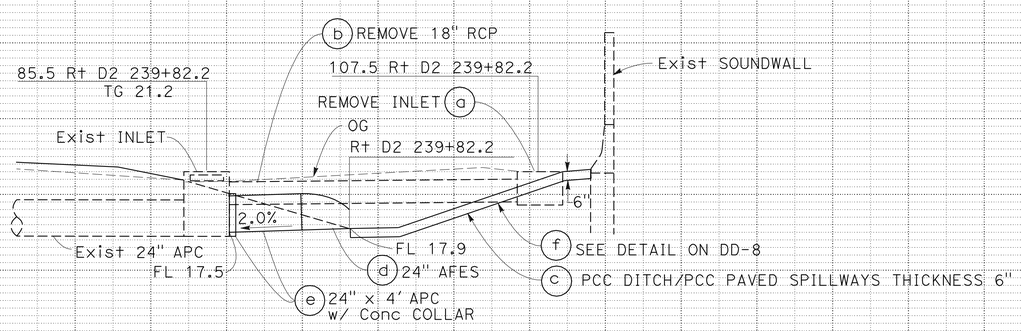

DRAINAGE SYSTEM No. 29

1 **REVISED PER ADDENDUM No. 1 DATED MARCH 30, 2011**

DRAINAGE PROFILES

SCALE: Horiz: 1" = 5'
Vert: 1" = 5'

DP-9

STATE OF CALIFORNIA - DEPARTMENT OF TRANSPORTATION
Caltrans
HYDRAULICS

FUNCTIONAL SUPERVISOR: TEBLEZ NEMARIAM
CALCULATED-DESIGNED BY: REJA EREIQAT
CHECKED BY: RACHEL LIU
REVISED BY / DATE REVISED

423563ib009.add

LAST REVISION 06-03-10
DATE PLOTTED => 28-MAR-2011
TIME PLOTTED => 14:48

Dist	COUNTY	ROUTE	POST MILES TOTAL PROJECT	SHEET No.	TOTAL SHEETS
04	SM	101	0.9/3.6	59	283

REGISTERED CIVIL ENGINEER DATE 6-23-10

8-9-10
PLANS APPROVAL DATE

REGISTERED PROFESSIONAL ENGINEER Dixon T. Lau No. 46706 Exp. 6-30-11 CIVIL STATE OF CALIFORNIA

THE STATE OF CALIFORNIA OR ITS OFFICERS OR AGENTS SHALL NOT BE RESPONSIBLE FOR THE ACCURACY OR COMPLETENESS OF SCANNED COPIES OF THIS PLAN SHEET.

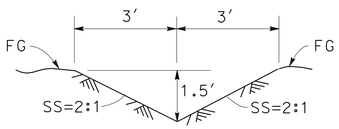

UNLINED "V" DITCH

1 (1) (a), (c), (3) (a), (g)

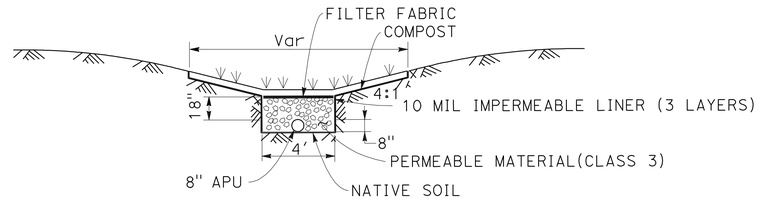

UNLINED TRAPEZOIDAL DITCH WITH 8" APU

1 (1) (b), ~~(c)~~ (3) ~~(a)~~ b (26) (a) (29) (f)

NOTE: SEE EROSION CONTROL SHEETS FOR BIOSWALE DETAILS

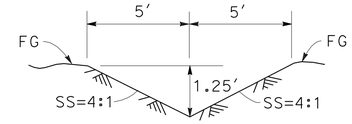

UNLINED "V" DITCH

(2) (a) (c)

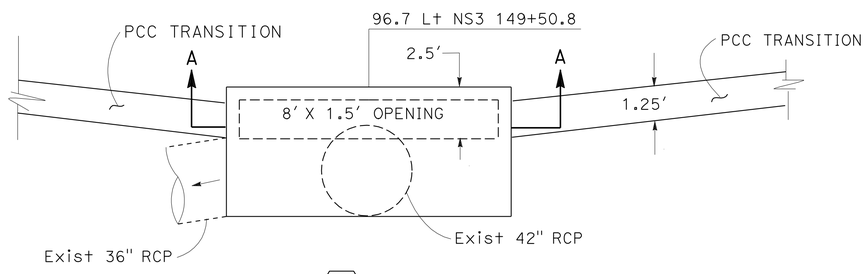

(2) (b)

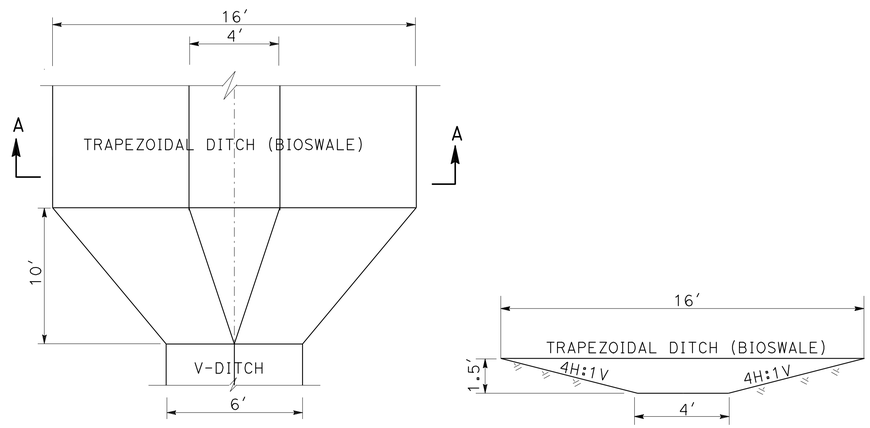

PLAN VIEW

SECTION A-A

V TO TRAPEZOIDAL TRANSTION

1 (1) (a) TO (b), (c) TO (b), (3) (a) TO (b)

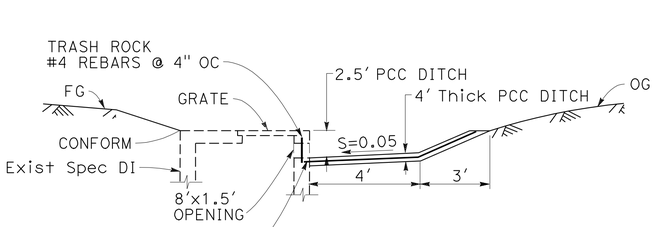

SECTION B-B

(2) (b)

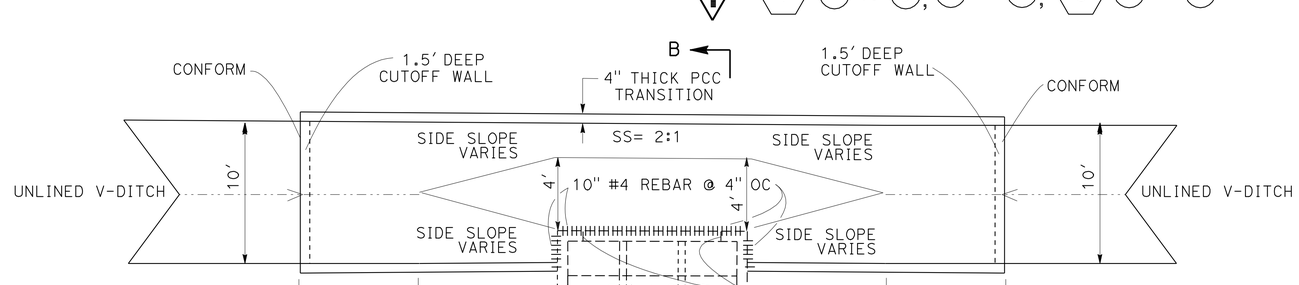

SECTION A-A

(2) (b)

1 **REVISED PER ADDENDUM No. 1 DATED MARCH 30, 2011**

DRAINAGE DETAILS

NO SCALE

DD-1

REVISED BY	DATE REVISED
MICHAEL PUSTOV	DIXON LAU
CALCULATED-DESIGNED BY	CHECKED BY
FUNCTIONAL SUPERVISOR	DIXON LAU

STATE OF CALIFORNIA - DEPARTMENT OF TRANSPORTATION

Caltrans HYDRAULICS

423563ic001.add

LAST REVISION 06-02-10 | DATE PLOTTED => 28-MAR-2011 | TIME PLOTTED => 14:48

Dist	COUNTY	ROUTE	POST MILES TOTAL PROJECT	SHEET No.	TOTAL SHEETS
04	SM	101	0.9/3.6	60	283

REGISTERED CIVIL ENGINEER 6-23-10 DATE

8-9-10
PLANS APPROVAL DATE

REGISTERED PROFESSIONAL ENGINEER Dixon T. Lau No. 46706 Exp. 6-30-11 CIVIL STATE OF CALIFORNIA

1

THE STATE OF CALIFORNIA OR ITS OFFICERS OR AGENTS SHALL NOT BE RESPONSIBLE FOR THE ACCURACY OR COMPLETENESS OF SCANNED COPIES OF THIS PLAN SHEET.

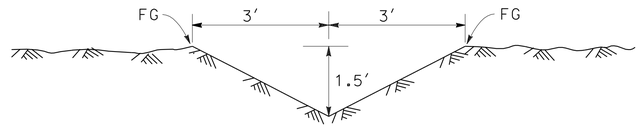

SECTION D-D

3 g

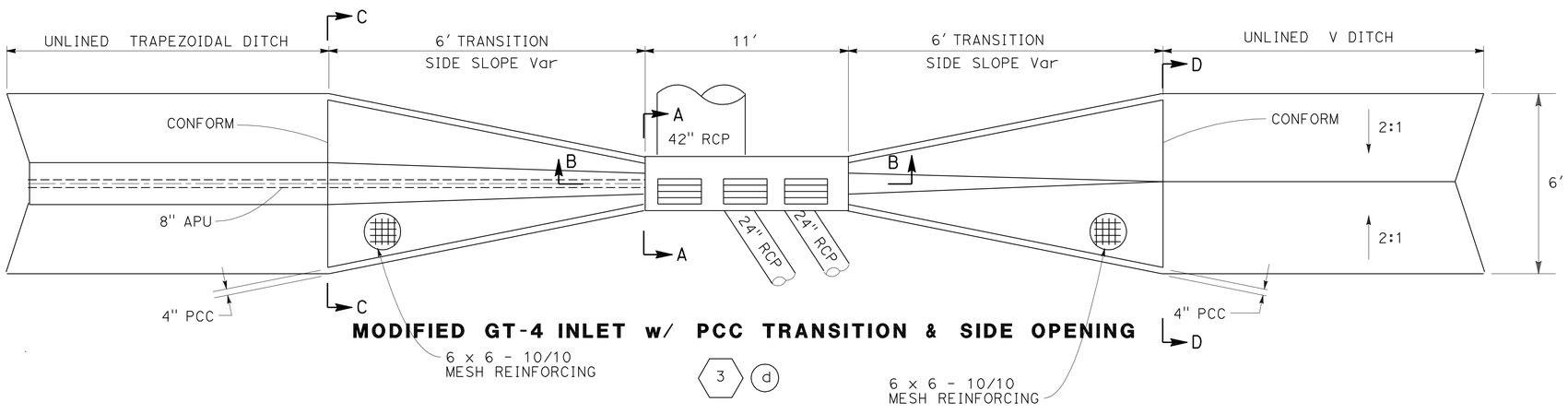

MODIFIED GT-4 INLET w/ PCC TRANSITION & SIDE OPENING

3 d

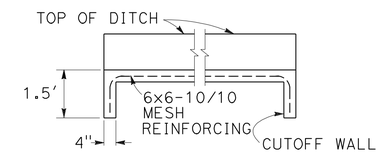

LONGITUDINAL SECTION
PCC TRANSITION/CONCRETE DITCH

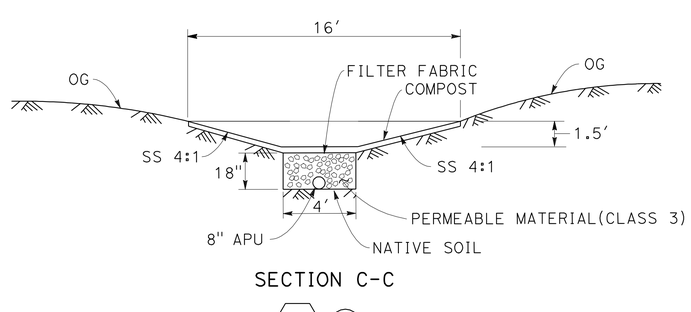

SECTION C-C

3 b

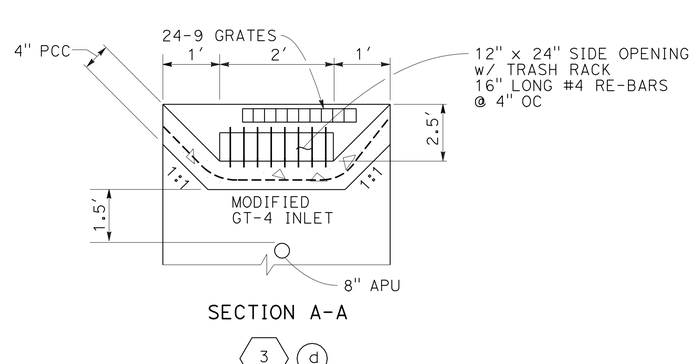

SECTION A-A

3 d

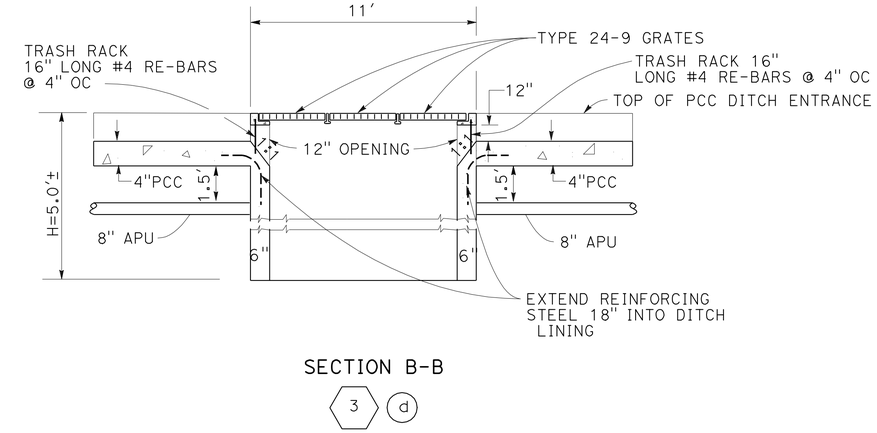

SECTION B-B

3 d

NOTE:
SEE STD PLAN D-74-A FOR GT-4 INLET DETAILS NOT SHOWN
GT-4 w/ SIDE OPENINGS

1 **REVISED PER ADDENDUM No. 1 DATED MARCH 30, 2011**

DRAINAGE DETAILS
NO SCALE

DD-2

REVISED BY | DATE REVISED
MICHAEL PUSTOV | DIXON LAU
CALCULATED-DESIGNED BY | CHECKED BY
FUNCTIONAL SUPERVISOR | DIXON LAU

STATE OF CALIFORNIA - DEPARTMENT OF TRANSPORTATION
Caltrans
HYDRAULICS

423563ic002.add

LAST REVISION 04-30-10 | DATE PLOTTED => 30-MAR-2011 | TIME PLOTTED => 08:49

Dist	COUNTY	ROUTE	POST MILES TOTAL PROJECT	SHEET No.	TOTAL SHEETS
04	SM	101	0.9/3.6	66	283

REGISTERED CIVIL ENGINEER 6-23-10 DATE

8-9-10
PLANS APPROVAL DATE

REGISTERED PROFESSIONAL ENGINEER Dixon T. Lau No. 46706 Exp. 6-30-11 CIVIL STATE OF CALIFORNIA

THE STATE OF CALIFORNIA OR ITS OFFICERS OR AGENTS SHALL NOT BE RESPONSIBLE FOR THE ACCURACY OR COMPLETENESS OF SCANNED COPIES OF THIS PLAN SHEET.

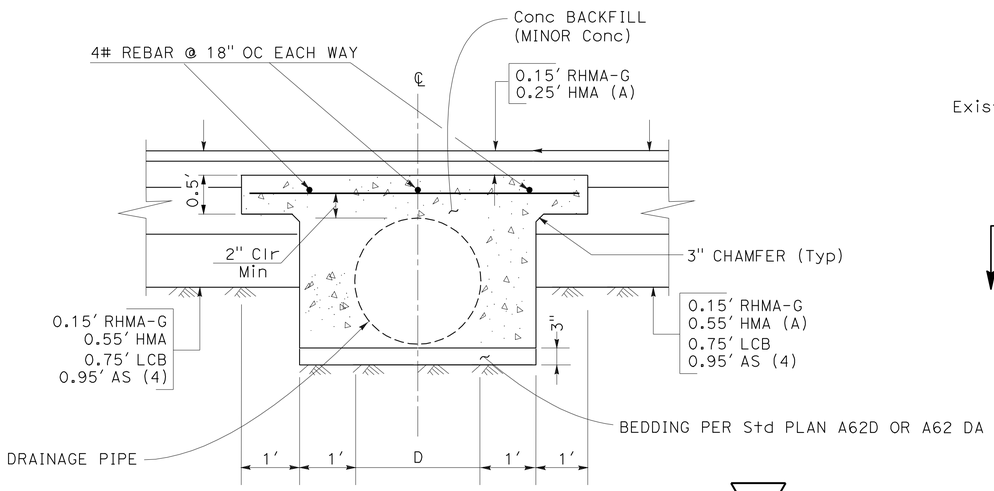

TRENCH PAVING DETAIL

(DETAIL-A)

* SEE TABLE BELOW

1

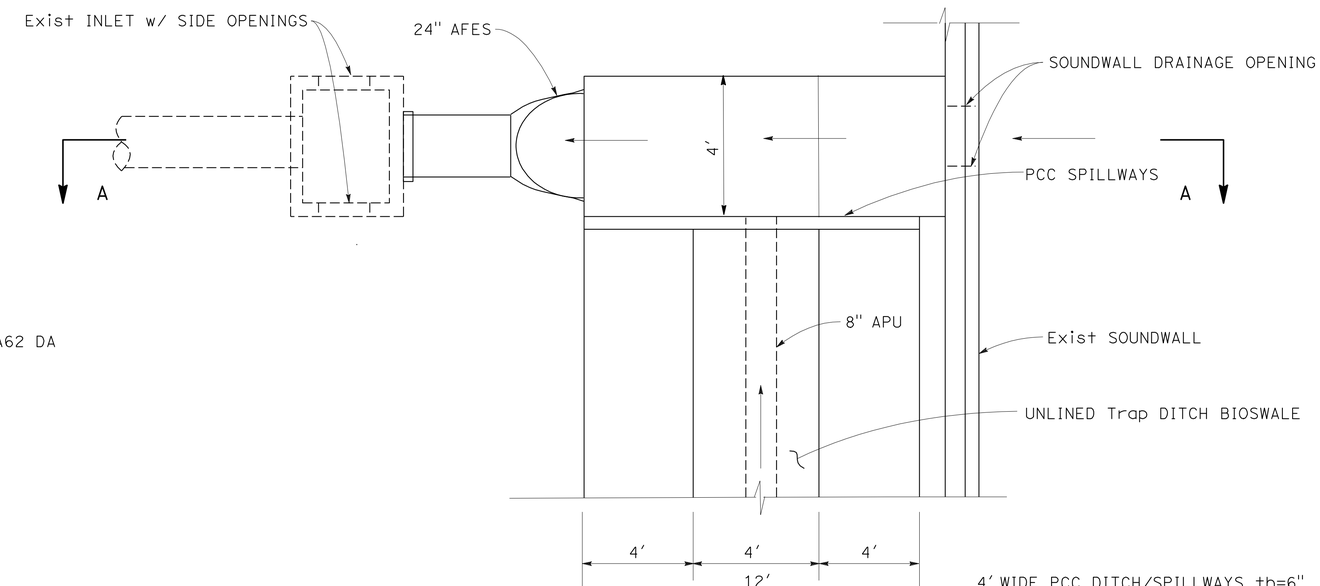

PLAN

Drainage System/ Unit No.	STATION
2d EXIST	NS3 149+50.8
13d EXIST	NS3 179+64
15b	D2 184+49 - D2 185+05
17d EXIST	D2 192+66
18e EXIST	D2 192+67
28d EXIST	D2 239+04

1

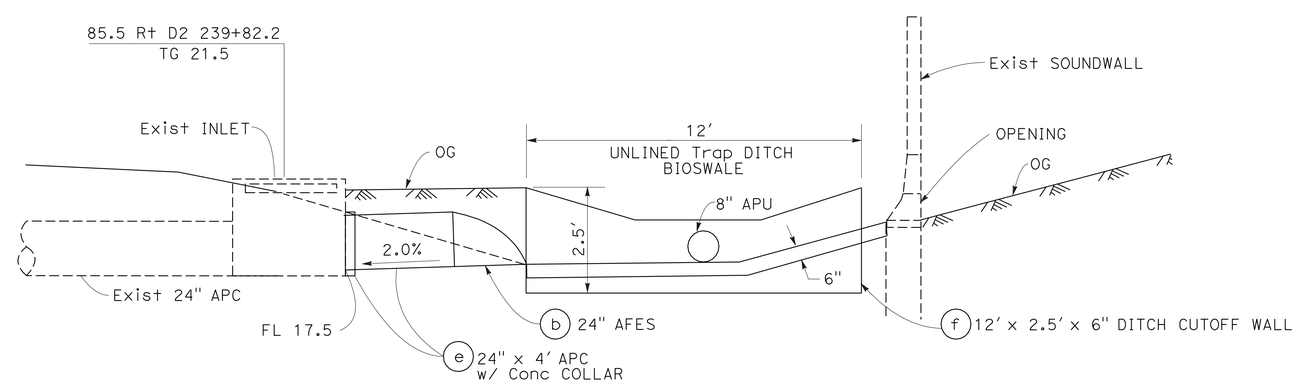

SECTION A-A

DRAINAGE SYSTEM No. 29 DETAIL

1 **REVISED PER ADDENDUM No. 1 DATED MARCH 30, 2011**

DRAINAGE DETAILS

NO SCALE

DD-8

STATE OF CALIFORNIA - DEPARTMENT OF TRANSPORTATION
Caltrans® **HYDRAULICS**

FUNCTIONAL SUPERVISOR: DIXON LAU
CALCULATED-DESIGNED BY: MICHAEL PUSTOV
CHECKED BY: DIXON LAU
REVISED BY / DATE REVISED

V:\ProjectPlans\PSEWorking\d4\04-235631-add\423563ic008.add

LAST REVISION 05-12-10
DATE PLOTTED => 29-MAR-2011
TIME PLOTTED => 07:35

BORDER LAST REVISED 4/11/2008 | RELATIVE BORDER SCALE IS IN INCHES 0 1 2 3 | USERNAME => trlenard | DGN FILE => 423563ic008.add | CU 04243 | EA 235631

NOTES:

1. ALL OFFSETS ARE TO THE CENTER OF GRATE.

* SEE ROADWAY QUANTITIES FOR TOTAL MINOR CONCRETE (MISC CONSTRUCTION)

ABBREVIATIONS:

GLD = GRATED LINE DRAIN
SGD = STANDARD GUTTER DEPRESSION

APU SELECTION TABLE
(GROUND WATER TABLE CONTROL)

ALLOWABLE PIPE MATERIAL AND PROTECTION					
DESIGNATION	CSP				PLASTIC
	SIZE (IN)	THICK (IN)	Bitum COATING	Bitum COAT PAVED Inv	SMOOTH Inter (IN)
8" Alt PIPE	8	0.11	NO	NO	8
	8	0.05	YES	YES	8

1

Dist	COUNTY	ROUTE	POST MILES TOTAL PROJECT	SHEET No.	TOTAL SHEETS
04	SM	101	0.9/3.6	67	283

REGISTERED CIVIL ENGINEER 6-22-10 DATE

8-9-10
PLANS APPROVAL DATE

REGISTERED PROFESSIONAL ENGINEER Aijun Ding No. 58899 Exp. 6-30-11 CIVIL STATE OF CALIFORNIA

THE STATE OF CALIFORNIA OR ITS OFFICERS OR AGENTS SHALL NOT BE RESPONSIBLE FOR THE ACCURACY OR COMPLETENESS OF SCANNED COPIES OF THIS PLAN SHEET.

DRAINAGE QUANTITIES

DRAINAGE SYSTEM No.	DRAINAGE UNIT	MINOR Conc: MINOR STRUCTURE (F)	MINOR Conc: Misc CONSTRUCTION *	MINOR Conc: CONCRETE BACKFILL	SAND BACKFILL	FRAMES GRATES COVERS (N): 18-9	24-9	24-12	U45	Misc IRON & STEEL (F)	APC: 12"	APC: 18"	APC: 24"	APC: 42"	GRATED LINE DRAIN	ABANDON CULVERT	ADJUST FRAME & GRATE TO GRADE	24" Conc FLARED END Sect	MODIFY INLET	ADJUST INLET TO GRADE	MODIFY INLET TO MH	CAP INLET	REMOVE INLET	REMOVE HW	DITCH EXCAVATION (TYPE Z-2) (AERIALLY DEPOSITED LEAD)	REMOVE 12" RCP	REMOVE 18" RCP	REMOVE 24" RCP	REMOVE UD	PIPE JOINT CLASSIFICATION (N)	Max COVER (N)	HEIGHT OF INLET (N)	8" PLASTIC PIPE	8" APU	18" RCP	6" WSP	REMOVE Conc	GEOMEMBRANE (IMPERMEABLE LINER)	DESCRIPTION	STATION	DRAINAGE PLAN SHEET No.	DRAINAGE SYSTEM No.	DRAINAGE UNIT
		CY				EA				LB	LF						EA								CY	LF					FT		LF		LF		CY	SQYD					
1	a																								58														UNLINED V DITCH	R+ NS3 136+87		1	a
	b																								131									236				430	UNLINED TRAPEZOIDAL DITCH w/ 8" APU	R+ NS3 140+24			b
	c																								66														UNLINED V DITCH	R+ NS3 142+60			c
2	a																								160														UNLINED V DITCH	L+ NS3 142+22		2	a
	b	2.05																	1																				Mod INLET w/ DITCH TRANSITION	L+ NS3 149+51			b
	c																								99														UNLINED V DITCH	L+ NS3 149+66			c
	d			9.89						64.13																													TRENCH PAVING OVER 42" RCP	NS3 149+51			d
3	a																								37														UNLINED V DITCH	R+ NS3 146+40		3	a
	b																								56									100				182	UNLINED TRAPEZOIDAL DITCH w/ 8" APU	R+ NS3 148+50			b
	c																											24										REMOVE 2-24" RCP	R+ NS3 149+49			c
	d	4.34	3.18				3			789									1						5						5		6				11	Mod GT4 INLET w/ PCC TRANSITION & SIDE OPENING	R+ NS3 149+61			d
	e													12																S								42" APC	R+ NS3 149+49			e
	f	1.45							1	435											1																		Mod INLET TO MH	R+ NS3 149+49			f
	g																								58														UNLINED V DITCH	R+ NS3 149+73			g
4	a	1.44	1.26					1		326																						3.5							G2 INLET w/SGD	R+ NS3 154+13		4	a
	b											300																		S								18" APC	R+ NS3 154+13			b
	c										5																											12" APC w/ Conc COLLAR	R+ NS3 157+13			c
	d	3.22	1.26					1	1	761																						5.2							G2 INLET w/SGD (MODIFIED)	R+ NS3 157+13			d
	e											298																		S								18" APC	R+ NS3 157+13			e
	f																									1.5													REMOVE 12" RCP	R+ NS3 160+11			f
	g	3.22	1.26					1	1	761																						3.2							G2 INLET w/SGD (MODIFIED)	R+ NS3 160+11			g
	h											161																		S								18" APC	R+ NS3 160+11			h
	I	2.8						3	1	1413																						2.7							MODIFIED G2 INLET w/MH COVER	R+ NS3 161+72			I
	j											45																		S								18" APC	R+ NS3 161+72			j
	k	2.8						3	1	1413																						4.0							MODIFIED G2 INLET w/MH COVER	R+ NS3 162+17			k
	l											58																		S								18" APC w/ Conc COLLAR	R+ NS3 162+17			l
	m																																	562					8" APU	R+ NS3 157+13			m
	n																																16						8" PLASTIC PIPE	R+ NS3 162+50			n
5	a																						1																REMOVE INLET	R+ NS3 157+13		5	a
	b																									298													REMOVE 12" RCP	R+ NS3 157+13			b
	c																						1																REMOVE INLET	R+ NS3 160+11			c
	d																									206													REMOVE 12" RCP	R+ NS3 160+11			d
	e																						1																REMOVE INLET	R+ NS3 162+17			e
	f																									60													REMOVE 12" RCP	R+ NS3 162+17			f
	g																									220													REMOVE 12" RCP	R+ NS3 162+93			g
	h																						1																REMOVE INLET	R+ NS3 165+13			h
	I																									300													REMOVE 12" RCP	R+ NS3 165+13			I
	j																						1																REMOVE INLET	R+ NS3 168+13			j
6	a																						1																REMOVE INLET	L+ NS3 157+12		6	a
	b																									10													REMOVE 12" RCP	L+ NS3 157+12			b
	c																							1															REMOVE HW	L+ NS3 157+12			c
SHEET TOTAL		21.32	6.96	9.89						5962	5	862		12					2		1		6	1	670	1095.5		24					16	904			623					

(N) NOT A SEPARATE PAY ITEM, FOR INFORMATION ONLY.

1 **REVISED PER ADDENDUM No. 1 DATED MARCH 30, 2011**

DRAINAGE QUANTITIES DQ-1

STATE OF CALIFORNIA - DEPARTMENT OF TRANSPORTATION
Caltrans DESIGN

RACHEL LIU — REVISED BY
REJA EREIQAT — DATE REVISED
CALCULATED-DESIGNED BY
CHECKED BY
FUNCTIONAL SUPERVISOR
TEBLEZ NEMARIAM

LAST REVISION 06-21-10
DATE PLOTTED => 29-MAR-2011
TIME PLOTTED => 13:02

4235631d001.add

APC ALLOWABLE PIPE MATERIAL AND PROTECTION

DESIGNATION	RCP SIZE (IN)	CSP SIZE (IN)	CSP THICK (IN)	CSP Bitum COATING	CSP Bitum COAT PAVED Inv	PLASTIC Corrug Inter (IN)	PLASTIC SMOOTH Inter (IN)
12"Alt PIPE	12	12	0.11	NO	NO	NO	12
		12	0.05	YES	YES	NO	
18"Alt PIPE	18	18	0.11	NO	NO	NO	18
		18	0.05	YES	YES	NO	
24"Alt PIPE	24	24	0.11	NO	NO	NO	24
		24	0.05	YES	YES	NO	
42"Alt PIPE	42	42	0.11	NO	NO	NO	NO
		42	0.05	YES	YES	NO	

1

Dist	COUNTY	ROUTE	POST MILES TOTAL PROJECT	SHEET No.	TOTAL SHEETS
04	SM	101	0.9/3.6	68	283

REGISTERED CIVIL ENGINEER 6-22-10 DATE

8-9-10
PLANS APPROVAL DATE

REGISTERED PROFESSIONAL ENGINEER Aijun Ding No. 58899 Exp. 6-30-11 CIVIL STATE OF CALIFORNIA

THE STATE OF CALIFORNIA OR ITS OFFICERS OR AGENTS SHALL NOT BE RESPONSIBLE FOR THE ACCURACY OR COMPLETENESS OF SCANNED COPIES OF THIS PLAN SHEET.

DRAINAGE QUANTITIES

DRAINAGE SYSTEM No.	DRAINAGE UNIT	MINOR Conc: MINOR STRUCTURE (F)	MINOR Conc: Misc CONSTRUCTION	CONCRETE BACKFILL	SAND BACKFILL	FRAMES GRATES COVERS (N): 18-9	24-9	24-12	U45	Misc IRON & STEEL (F)	APC 12"	APC 18"	APC 24"	APC 42"	GRATED LINE DRAIN	ABANDON CULVERT	ADJUST FRAME & GRATE TO GRADE	24" Conc FLARED END Sect	MODIFY INLET	ADJUST INLET TO GRADE	MODIFY INLET TO MH	CAP INLET	REMOVE INLET	REMOVE HW	DITCH EXCAVATION (TYPE Z-2) (AERIALLY DEPOSITED LEAD)	REMOVE 12" RCP	REMOVE 18" RCP	REMOVE 24" RCP	REMOVE UD	PIPE JOINT CLASSIFICATION (N)	Max COVER (N)	HEIGHT OF INLET (N)	8" PLASTIC PIPE	8" APU	18" RCP	6" WSP	REMOVE Conc	GEOMEMBRANE (IMPERMEABLE LINER)	DESCRIPTION	STATION	DRAINAGE PLAN SHEET No.	DRAINAGE SYSTEM No.	DRAINAGE UNIT
		CY				EA				LB	LF						EA								CY	LF					FT		LF		LF		CY	SQYD					
6	d																							1															REMOVE HW	Lt NS3 158+02		6	d
	e																												425										REMOVE UD	Lt NS3 158+02			e
	f				1.9											65																							ABN 12" RCP	Lt NS3 160+09			f
	g																						1																REMOVE INLET	Lt NS3 160+09			g
	h																									250													REMOVE 12" RCP	Lt NS3 160+09			h
	I																											10											REMOVE 24" RCP	Lt NS3 162+59			I
	j																						2																REMOVE INLET	Lt NS3 162+59			j
	k				7.3											250																							ABN 12" RCP	Lt NS3 162+59			k
	l																						1																REMOVE INLET	Lt NS3 165+13			l
	m																												465										REMOVE UD	Lt NS3 166+75			m
	n																							1															REMOVE HW	Lt NS3 167+04			n
	o																							1															REMOVE HW	Lt NS3 168+12			o
	p																									8													REMOVE 12" RCP	Lt NS3 168+12			p
	q																						1																REMOVE INLET	Lt NS3 168+12			q
7	a	1.44	1.26					1		326																					3.5							G2 INLET w/SGD	Lt NS3 157+13		7	a
	b											297																		S								18" APC	Lt NS3 157+13			b
	c	1.44	1.26					1		326																					3.5							G2 INLET w/SGD	Lt NS3 160+10			c
	d											108																		S								18" APC	Lt NS3 160+10			d
	e	1.44	1.26					1		326																					3.5							G2 INLET w/SGD	Lt NS3 161+18			e
	f											115																		S								18" APC	Lt NS3 161+18			f
8	a														138																							GRATED LINE DRAIN	Lt NS3 161+20		8	a
	b												26																	S								24" APC	Lt NS3 162+59			b
	c	1.2				1				249																					5							GT2 INLET	Lt NS3 162+59			c
	d														116																							GRATED LINE DRAIN	Lt NS3 162+59			d
9	a																						1																REMOVE INLET	Lt NS3 161+00		9	a
	b																										4												REMOVE 18" RCP	Lt NS3 161+00			b
	c	2.11				2				498																					3							GT2 INLET	Lt NS3 161+00			c
	d	0.40				2				498																												Mod INLET	Lt NS3 162+62			d
10	a												147																	S								24" APC	Lt NS3 162+59		10	a
	b	1.57	1.26					1		326																					4							G2 INLET w/SGD	Lt NS3 164+06			b
	c												107																	S								24" APC	Lt NS3 164+06			c
	d	1.44	1.26					1		326																					4							G2 INLET w/SGD	Lt NS3 165+13			d
	e											299																		S								18" APC	Lt NS3 165+13			e
	f	1.44	1.26					1		326																					3.5							G2 INLET w/SGD	Lt NS3 168+12			f
	g											300																		S								18" APC	Lt NS3 168+12			g
	h	1.44	1.26					1		326																					3.5							G2 INLET w/SGD	Lt NS3 171+12			h
SHEET TOTAL		13.92	8.82		9.2					3527		1119	280		254	315							6	3		258	4	10	890													

1 REVISED PER ADDENDUM No. 1 DATED MARCH 30, 2011

DRAINAGE QUANTITIES DQ-2

STATE OF CALIFORNIA - DEPARTMENT OF TRANSPORTATION
Caltrans DESIGN

FUNCTIONAL SUPERVISOR: TEBLEZ NEMARIAM
CALCULATED-DESIGNED BY: REJA EREIQAT
CHECKED BY: RACHEL LIU
REVISED BY / DATE REVISED

423563id002.add

LAST REVISION 06-21-10
DATE PLOTTED => 29-MAR-2011
TIME PLOTTED => 13:03

Dist	COUNTY	ROUTE	POST MILES TOTAL PROJECT	SHEET No.	TOTAL SHEETS
04	SM	101	0.9/3.6	69	283

REGISTERED CIVIL ENGINEER 6-22-10 DATE

8-9-10
PLANS APPROVAL DATE

REGISTERED PROFESSIONAL ENGINEER Aijun Ding No. 58899 Exp. 6-30-11 CIVIL STATE OF CALIFORNIA

THE STATE OF CALIFORNIA OR ITS OFFICERS OR AGENTS SHALL NOT BE RESPONSIBLE FOR THE ACCURACY OR COMPLETENESS OF SCANNED COPIES OF THIS PLAN SHEET.

DRAINAGE QUANTITIES

DRAINAGE SYSTEM No.	DRAINAGE UNIT	MINOR Conc: MINOR STRUCTURE (F)	MINOR Conc: Misc CONSTRUCTION	MINOR Conc: CONCRETE BACKFILL (CY)	SAND BACKFILL (CY)	FRAMES GRATES COVERS (N) (EA): 18-9	24-9	24-12	U45	Misc IRON & STEEL (F) (LB)	APC (LF): 12"	18"	24"	42"	GRATED LINE DRAIN (LF)	ABANDON CULVERT (LF)	ADJUST FRAME & GRATE TO GRADE (EA)	24" Conc FLARED END Sect (EA)	MODIFY INLET (EA)	ADJUST INLET TO GRADE (EA)	MODIFY INLET TO MH (EA)	CAP INLET (EA)	REMOVE INLET (EA)	REMOVE HW (EA)	DITCH EXCAVATION (TYPE Z-2) (AERIALLY DEPOSITED LEAD) (CY)	REMOVE 12" RCP (LF)	REMOVE 18" RCP (LF)	REMOVE 24" RCP (LF)	REMOVE UD (LF)	PIPE JOINT CLASSIFICATION (N)	Max COVER (N)	HEIGHT OF INLET (N) (FT)	8" PLASTIC PIPE (LF)	8" APU (LF)	18" RCP (LF)	6" WSP (LF)	REMOVE Conc (CY)	GEOMEMBRANE (IMPERMEABLE LINER) (SQYD)	DESCRIPTION	STATION	DRAINAGE PLAN SHEET No.	DRAINAGE SYSTEM No.	DRAINAGE UNIT
11	a											34																	S									18" APC w/ CONCRETE COLLAR	R+ NS3 162+95		11	a
	b	2.8						3	1	1413																				1.5							MODIFIED G2 INLET w/MH COVER	R+ NS3 163+29			b
	c											184																	S									18" APC	R+ NS3 163+29			c
	d	2.8						3	1	1413																				1.5							MODIFIED G2 INLET w/MH COVER	R+ NS3 165+13			d
	e											299																	S									18" APC	R+ NS3 165+13			e
	f	2.8						3	1	1413																				1.5							MODIFIED G2 INLET w/MH COVER	R+ NS3 168+12			f
	g											211																	S									18" APC	R+ NS3 168+12			g
	h	1.44	1.26					1		326																				3.5							G2 INLET w/SGD	R+ NS3 170+23			h
	i																																519					8" APU	R+ NS3 162+95			i
	j																														14							8" PLASIC PIPE	R+ NS3 163+29			j
12	a		1.26																	1																		ADJUST INLET TO GRADE	R+ NS3 176+31		12	a
13	a		1.26																	1																		ADJUST INLET TO GRADE	R+ NS3 179+64		13	a
	b																																236					18" RCP w/ Conc COLLAR	R+ NS3 179+64			b
	c																																	70				6" WSP DD w/ RCP TEE CONNECTION	R+ D2 180+40			c
	d			12.97						93.52																												TRENCH PAVING OVER Exist 51" RCP	NS3 179+64			d
14	a		1.26																	1																		ADJUST INLET TO GRADE	L+ NS3 180+27		14	a
	b		1.26																	1																		ADJUST INLET TO GRADE	L+ NS3 181+25			b
	c		1.26																	1																		ADJUST INLET TO GRADE	L+ NS3 182+08			c
	d																																170					18" RCP w/ Conc COLLAR	L+ NS3 182+08			d
	e																																	70				6" WSP DD w/ RCP TEE CONNECTION				e
15	a	1.44	1.26					1		326																				3.5							G2 INLET w/SGD	R+ D2 184+49		15	a
	b			15.91						187		200																	S									18" APC w/ Conc COLLAR, TRENCH PAVING	R+ D2 184+49			b
	c		1.26																	1																		ADJUST INLET TO GRADE	R+ D2 186+49			c
	d											200																	S									18" APC w/ Conc COLLAR	R+ D2 186+49			d
	e	1.44	1.26					1		326																				3.5							G2 INLET w/SGD	R+ D2 188+49			e
16	a		1.26																	1																		ADJUST INLET TO GRADE	L+ D2 186+17		16	a
	b											200																	S									18" APC w/ Conc COLLAR	L+ D2 186+17			b
	c	1.44	1.26					1		326																				3.5							G2 INLET w/SGD	L+ D2 188+17			c
17	a		1.26																	1																		ADJUST INLET TO GRADE	L+ D2 192+66		17	a
	b											359																	S									18" APC w/ Conc COLLAR	L+ D2 192+66			b
	c	1.44	1.26					1		326																				3.5							G2 INLET w/SGD	L+ D2 196+25			c
	d			9.77						76.15																												TRENCH PAVING OVER Exist 24" RCP	D2 192+66			d
18	a																1																					ADJUST FRAME AND GRATE TO GRADE	R+ D2 192+67		18	a
	b		1.26																	1																		ADJUST INLET TO GRADE	R+ D2 195+00			b
SHEET TOTAL		15.6	17.64	38.65						6226		1687					1			9											14	519	406	140								

1 REVISED PER ADDENDUM No. 1 DATED MARCH 30, 2011

DRAINAGE QUANTITIES DQ-3

STATE OF CALIFORNIA - DEPARTMENT OF TRANSPORTATION
Caltrans® DESIGN

RACHEL LIU — REVISED BY
REJA EREIQAT — DATE REVISED
CALCULATED-DESIGNED BY
CHECKED BY
FUNCTIONAL SUPERVISOR
TEBLEZ NEMARIAM

LAST REVISION 06-21-10
DATE PLOTTED => 29-MAR-2011
TIME PLOTTED => 13:03

423563id003.add

1 REVISED PER ADDENDUM No. 1 DATED MARCH 30, 2011

Dist	COUNTY	ROUTE	POST MILES TOTAL PROJECT	SHEET No.	TOTAL SHEETS
04	SM	101	0.9/3.6	70	283

REGISTERED CIVIL ENGINEER 6-22-10 DATE

8-9-10
PLANS APPROVAL DATE

REGISTERED PROFESSIONAL ENGINEER Aijun Ding No. 58899 Exp. 6-30-11 CIVIL STATE OF CALIFORNIA

THE STATE OF CALIFORNIA OR ITS OFFICERS OR AGENTS SHALL NOT BE RESPONSIBLE FOR THE ACCURACY OR COMPLETENESS OF SCANNED COPIES OF THIS PLAN SHEET.

1

DRAINAGE QUANTITIES

DRAINAGE SYSTEM No.	DRAINAGE UNIT	MINOR Conc: MINOR STRUCTURE (F)	MINOR Conc: Misc CONSTRUCTION	MINOR Conc: CONCRETE BACKFILL	SAND BACKFILL	FRAMES GRATES COVERS (N): 18-9	FRAMES GRATES COVERS (N): 24-9	FRAMES GRATES COVERS (N): 24-12	FRAMES GRATES COVERS (N): U45	Misc IRON & STEEL (F)	APC: 12"	APC: 18"	APC: 24"	APC: 42"	GRATED LINE DRAIN	ABANDON CULVERT	ADJUST FRAME & GRATE TO GRADE	24" Conc FLARED END Sect	MODIFY INLET	ADJUST INLET TO GRADE	MODIFY INLET TO MH	CAP INLET	REMOVE INLET	REMOVE HW	DITCH EXCAVATION (TYPE Z-2) (AERIALLY DEPOSITED LEAD)	REMOVE 12" RCP	REMOVE 18" RCP	REMOVE 24" RCP	REMOVE UD	PIPE JOINT CLASSIFICATION (N)	Max COVER (N)	HEIGHT OF INLET (N)	8" PLASTIC PIPE	8" APU	18" RCP	6" WSP	REMOVE Conc	GEOMEMBRANE (IMPERMEABLE LINER)	DESCRIPTION	STATION	DRAINAGE PLAN SHEET No.	DRAINAGE SYSTEM No.	DRAINAGE UNIT
		CY				EA				LB	LF						EA								CY	LF					FT		LF		LF		CY	SQYD					
18	c											300																	S										18" APC w/ Conc COLLAR	R+ D2 195+00		18	c
↓	d	1.44	1.26					1		326																					3.5								G2 INLET w/SGD	R+ D2 198+00		↓	d
↓	e			9.10						80.16																													TRENCH PAVING OVER 24" RCP	D2 192+67		↓	e
19	a		1.26																	1																			ADJUST INLET TO GRADE	L+ D2 201+29		19	a
20	a		1.26																	1																			ADJUST INLET TO GRADE	R+ D2 201+52		20	a
↓	b											258																	S										18" APC w/ Conc COLLAR	R+ D2 201+52		↓	b
↓	c	1.44	1.26					1		326																					3.5								G2 INLET w/ SGD	R+ D2 204+10		↓	c
21	a		1.26																	1																			ADJUST INLET TO GRADE	L+ D2 204+41		21	a
22	a																1																						ADJUST FRAME AND GRATE TO GRADE	L+ D2 207+29		22	a
↓	b											244																	S										18" APC w/ Conc COLLAR	L+ D2 207+29		↓	b
↓	c	1.44	1.26					1		326																					3.5								G2 INLET w/ SGD	L+ D2 209+73		↓	c
23	a																1																						ADJUST FRAME AND GRATE TO GRADE	R+ D2 207+66		23	a
↓	b											244																	S										18" APC w/ Conc COLLAR	R+ D2 207+66		↓	b
↓	c	1.44	1.26					1		326																					3.5								G2 INLET w/ SGD	R+ D2 210+10		↓	c
24	a																				1																		CAP INLET	L+ D2 213+10		24	a
↓	b		1.26																	1																			ADJUST INLET TO GRADE	L+ D2 213+09		↓	b
25	a																				1																		CAP INLET	R+ D2 213+51		25	a
↓	b																									4													REMOVE 18" RCP	R+ D2 213+57		↓	b
↓	c	1.44	1.26					1		326																					3.5								G2 INLET w/ SGD	R+ D2 213+57		↓	c
26	a																								95								102				158		UNLINED Trap DITCH w/ 8" APU w/ Conc COLLAR	R+ D2 231+00		26	a
↓	b																																			1.26			REMOVE PCC TRANSITION	R+ D2 231+00		↓	b
27	a		1.26																	1																			ADJUST INLET TO GRADE	L+ D2 231+43		27	a
↓	b		1.26																	1																			ADJUST INLET TO GRADE	L+ D2 231+50		↓	b
↓	c		1.26																	1																			ADJUST INLET TO GRADE	L+ D2 232+75		↓	c
↓	d											300																	S										18" APC w/ CONCRETE COLLAR	L+ D2 232+75		↓	d
↓	e	1.44	1.26					1		326																					3.5								G2 INLET w/ SGD	L+ D2 235+75		↓	e
28	a		1.26																	1																			ADJUST INLET TO GRADE	L+ D2 239+04		28	a
↓	b											300																	S										18" APC w/ CONCRETE COLLAR	L+ D2 239+04		↓	b
↓	c	1.44	1.26					1		326																					3.5								G2 INLET w/ SGD	L+ D2 242+04		↓	c
↓	d			12.03						90.18																													TRENCH PAVING OVER 24" RCP	D2 239+04		↓	d
29	a																						1																REMOVE INLET	R+ D2 239+82		29	a
↓	b																									22													REMOVE 18" RCP	R+ D2 239+82		↓	b
↓	c	4																							4														PCC DITCH/PCC PAVED SPILLWAYS	R+ D2 239+82		↓	c
↓	d																	1											S										24" AFES	R+ D2 239+82		↓	d
SHEET TOTAL		14.08	18.9	21.13						2,452		1646					2	1		8		2	1		99	26							102			1.26	158						

DRAINAGE QUANTITIES DQ-4

RACHEL LIU — REVISED BY
REJA EREIQAT — DATE REVISED
CALCULATED-DESIGNED BY
CHECKED BY
FUNCTIONAL SUPERVISOR
TEBLEZ NEMARIAM

STATE OF CALIFORNIA - DEPARTMENT OF TRANSPORTATION
Caltrans DESIGN

423563id004.add

LAST REVISION 06-21-10
DATE PLOTTED => 30-MAR-2011
TIME PLOTTED => 09:46

Dist	COUNTY	ROUTE	POST MILES TOTAL PROJECT	SHEET No.	TOTAL SHEETS
04	SM	101	0.9/3.6	71	283

REGISTERED CIVIL ENGINEER 6-22-10 DATE

8-9-10
PLANS APPROVAL DATE

REGISTERED PROFESSIONAL ENGINEER Aijun Ding No. 58899 Exp. 6-30-11 CIVIL STATE OF CALIFORNIA

THE STATE OF CALIFORNIA OR ITS OFFICERS OR AGENTS SHALL NOT BE RESPONSIBLE FOR THE ACCURACY OR COMPLETENESS OF SCANNED COPIES OF THIS PLAN SHEET.

1 **REVISED PER ADDENDUM No. 1 DATED MARCH 30, 2011**

1

DRAINAGE QUANTITIES

DRAINAGE SYSTEM No.	DRAINAGE UNIT	MINOR Conc: MINOR STRUCTURE (F)	MINOR Conc: Misc CONSTRUCTION	MINOR Conc: Conc BACKFILL	SAND BACKFILL	FRAMES GRATES COVERS (N): 18-9	FRAMES GRATES COVERS (N): 24-9	FRAMES GRATES COVERS (N): 24-12	FRAMES GRATES COVERS (N): U45	Misc IRON & STEEL (F)	APC 12"	APC 18"	APC 24"	APC 42"	GRATED LINE DRAIN	ABANDON CULVERT	ADJUST FRAME & GRATE TO GRADE	24" Conc FLARED END Sect	MODIFY INLET	ADJUST INLET TO GRADE	MODIFY INLET TO MH	CAP INLET	REMOVE INLET	REMOVE HW	DITCH EXCAVATION (TYPE Z-2) (AERIALLY DEPOSITED LEAD)	REMOVE 12" RCP	REMOVE 18" RCP	REMOVE 24" RCP	REMOVE UD	PIPE JOINT CLASSIFICATION (N)	Max COVER (N)	HEIGHT OF INLET (N)	8" PLASTIC PIPE	8" APU	18" RCP	6" WSP	REMOVE Conc	GEOMEMBRANE (IMPERMEABLE LINER)	DESCRIPTION	STATION	DRAINAGE PLAN SHEET No.	DRAINAGE SYSTEM No.	DRAINAGE UNIT
		CY				EA				LB	LF						EA								CY	LF					FT		LF		LF		CY	SQYD					
29	e												4																	S									24" APC w/ Conc COLLAR	R+ D2 239+82		29	e
↓	f	0.56																							63								100				156	UNLINED Trap DITCH w/ 8" APU & Conc CUTOFF WALL			↓	f
30	a		1.26																	1																		ADJUST INLET TO GRADE	L+ D2 245+00		30	a
31	a	1.44	1.26					1		326																						3.5						G2 INLET w/ SGD	L+ D2 253+50		31	a
	b											300																		S								18" APC w/ Conc COLLAR	L+ D2 253+50			b
	c	1.44	1.26					1		326																						3.5						G2 INLET w/ SGD	L+ D2 256+50			c
	d											300																										18" APC w/ Conc COLLAR	L+ D2 256+50			d
	e																1																					ADJUST FRAME AND GRATE TO GRADE	L+ D2 259+50			e
	f																1																					ADJUST FRAME AND GRATE TO GRADE	L+ D2 260+26			f
	g																1																					ADJUST FRAME AND GRATE TO GRADE	L+ D2 261+36			g
	h																1																					ADJUST FRAME AND GRATE TO GRADE	L+ D2 262+00		↓	h
32	a	1.44	1.26					1		326																						3.5						G2 INLET w/ SGD	R+ D2 256+50		32	a
	b											300																		S								18" APC w/ Conc COLLAR	R+ D2 256+50			b
	c		1.26																	1																		ADJUST INLET TO GRADE	R+ D2 259+50			c
	d		1.26																	1																		ADJUST INLET TO GRADE	R+ D2 259+77			d
	e		1.26																	1																		ADJUST INLET TO GRADE	R+ D2 260+03			e
	f		1.26																	1																		ADJUST INLET TO GRADE	R+ D2 260+52		↓	f
33	a	0.6																																				HW	L+ NS3 158+02		33	a
↓	b																																430					8" APU w/ Conc COLLAR			↓	b
34	a	0.6																																				HW	L+ NS3 167+00		34	a
↓	b																																370					8" APU w/ Conc COLLAR			↓	b
SHEET TOTAL		6.08	10.08							978		900	4				4			5					63								900				156					
DQ-1 TOTAL		21.32	6.96	9.89						5962	5	862		12					2		1		6	1	670	1095.5		24				16	904				623					
DQ-2 TOTAL		13.92	8.82		9.2					3527		1119	280		254	315							6	3		258	4	10	890													
DQ-3 TOTAL		15.6	17.64	38.65						6226		1687					1			9												14	519	406	140								
DQ-4 TOTAL		14.08	18.9	21.13						2452		1646					2	1		8		2	1		99		26						102			1.26	158					
DQ-5 TOTAL		6.08	10.08							978		900	4				4			5					63								900				156					
TOTAL		71.00	62.40	69.67	9.2					19145	5	6214	284	12	254	315	7	1	2	22	1	2	13	4	832	1353.5	30	34	890				30	2425	406	140	1.26	973					

• QUANTITIES IN Q SHEET Q-I

DRAINAGE QUANTITIES DQ-5

RACHEL LIU — REVISED BY
REJA EREIQAT — DATE REVISED
CALCULATED-DESIGNED BY
CHECKED BY
FUNCTIONAL SUPERVISOR
TEBLEZ NEMARIAM

STATE OF CALIFORNIA - DEPARTMENT OF TRANSPORTATION
Caltrans
DESIGN

423563id005.add

LAST REVISION 06-21-10
DATE PLOTTED => 30-MAR-2011
TIME PLOTTED => 09:24

Dist	COUNTY	ROUTE	POST MILES TOTAL PROJECT	SHEET No.	TOTAL SHEETS
04	SM	101	0.9/3.6	83	283

REGISTERED CIVIL ENGINEER 6-22-10 DATE

8-9-10
PLANS APPROVAL DATE

REGISTERED PROFESSIONAL ENGINEER Duc Duy Vo No. 74538 Exp. 12-31-11 CIVIL STATE OF CALIFORNIA

THE STATE OF CALIFORNIA OR ITS OFFICERS OR AGENTS SHALL NOT BE RESPONSIBLE FOR THE ACCURACY OR COMPLETENESS OF SCANNED COPIES OF THIS PLAN SHEET.

1

NOTE:

EXACT LOCATION AND POSITION OF SIGNS WILL BE DETERMINED BY THE ENGINEER.

LEGEND:

No. CONSTRUCTION AREA SIGN NUMBER

STATIONARY MOUNTED CONSTRUCTION AREA SIGN QUANTITIES

SIGN No.	MUTCD CODE	SIGN MESSAGE	PANEL SIZE	NUMBER OF POST AND SIZE	NUMBER SIGNS	REMARKS
A	W20-1	ROAD WORK AHEAD	48" x 48"	1 - 4" x 6"	2	
A1	W20-1	ROAD WORK AHEAD	36" x 36"	1 - 4" x 6"	8	
B	G20-2	END ROAD WORK	36" x 18"	1 - 4" x 4"	10	
C	C40(CA)	TRAFFIC FINES DOUBLE IN CONSTRUCTION ZONE	72" x 36"	2 - 4" x 6"	2	
DD	G85(CA)	MARSH ROAD	78'' x 84''	2 - 6'' x 6''	1	SEE DETAIL IN THIS SHEET
EE	C31A(CA)	NO SHOULDER	48'' x 48''	1 - 4'' x 6''	7	
FF	W21-5b	SHOULDER WORK AHEAD	30'' x 30''	1 - 4'' x 4''	4	
TOTAL					34	

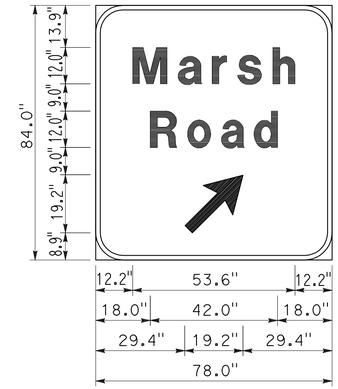

9" RADIUS, 1.5" BORDER, BLACK ON ORANGE;
[Marsh] E Mod;
[Road] E Mod;
ARROW 10.67UC-2LV -24.3" 45°

SIGN DD

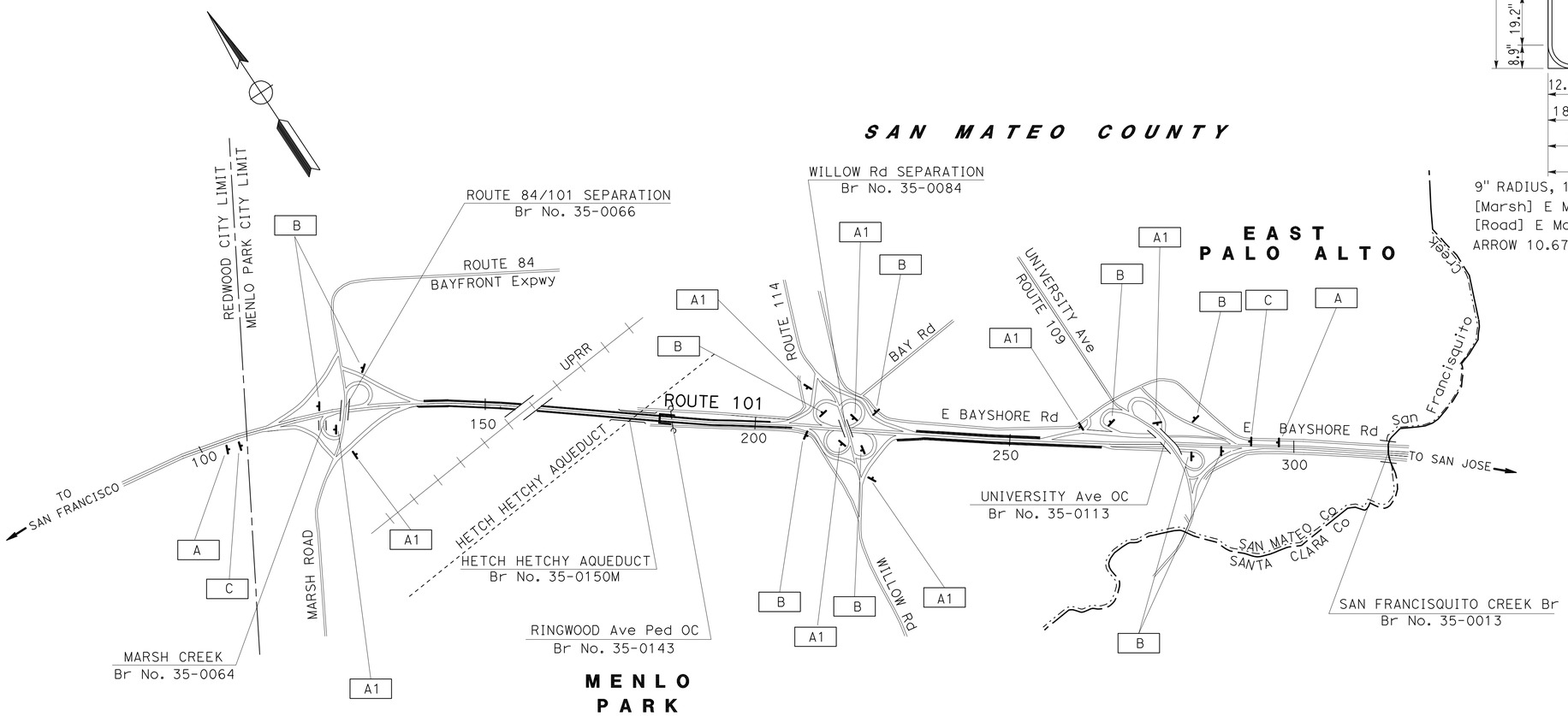

1 **REVISED PER ADDENDUM No. 1 DATED MARCH 30, 2011**

THIS PLAN ACCURATE FOR CONSTRUCTION AREA SIGN WORK ONLY

CONSTRUCTION AREA SIGNS

NO SCALE

CS-1

STATE OF CALIFORNIA - DEPARTMENT OF TRANSPORTATION
Caltrans
TRAFFIC

FUNCTIONAL SUPERVISOR: Jerilyn Struven
CALCULATED-DESIGNED BY: DUc VO
CHECKED BY: Jerilyn Struven
REVISED BY
DATE REVISED

V:\ProjectPlans\PSEWorking\d4\04-235631-add\4235631a001.add

LAST REVISION 07-22-10 | DATE PLOTTED => 30-MAR-2011 | TIME PLOTTED => 09:32

BORDER LAST REVISED 4/11/2008 | RELATIVE BORDER SCALE IS IN INCHES 0 1 2 3 | USERNAME => trlenard | DGN FILE => 4235631a001.add | CU 04243 | EA 235631

Dist	COUNTY	ROUTE	POST MILES TOTAL PROJECT	SHEET No.	TOTAL SHEETS
04	SM	101	0.9/3.6	84	283

REGISTERED CIVIL ENGINEER 6-22-10 DATE

8-9-10
PLANS APPROVAL DATE

REGISTERED PROFESSIONAL ENGINEER Aijun Ding No. 58899 Exp. 6-30-11 CIVIL STATE OF CALIFORNIA

THE STATE OF CALIFORNIA OR ITS OFFICERS OR AGENTS SHALL NOT BE RESPONSIBLE FOR THE ACCURACY OR COMPLETENESS OF SCANNED COPIES OF THIS PLAN SHEET.

NOTE:

FOR ACCURATE RIGHT OF WAY DATA, CONTACT RIGHT OF WAY ENGINEERING AT THE DISTRICT OFFICE.

LEGEND:

- DIRECTION OF TRAVEL
- CONSTRUCT THIS STAGE
- No. PAVEMENT DELINEATION DETAIL
- CHANNELIZER (SURFACE MOUNTED)
- No. WORK ACTIVITY
- MEDIAN BARRIER
- 1 LETTERS TEMPORARY CONSTRUCTION AREA SIGNS (SEE TABLE ON SHEET CS-1 FOR DETAILS)

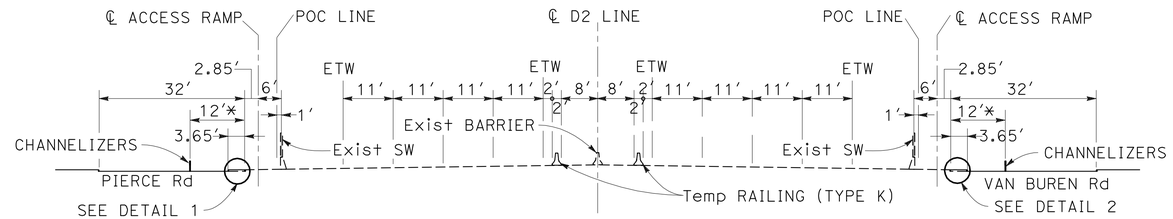

SECTION A-A
NO SCALE
NOTE (*) : LANE TO BE CLOSED DURING CONSTRUCTION.

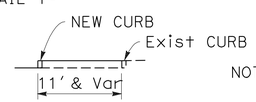

DETAIL 1

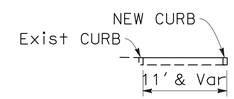

DETAIL 2

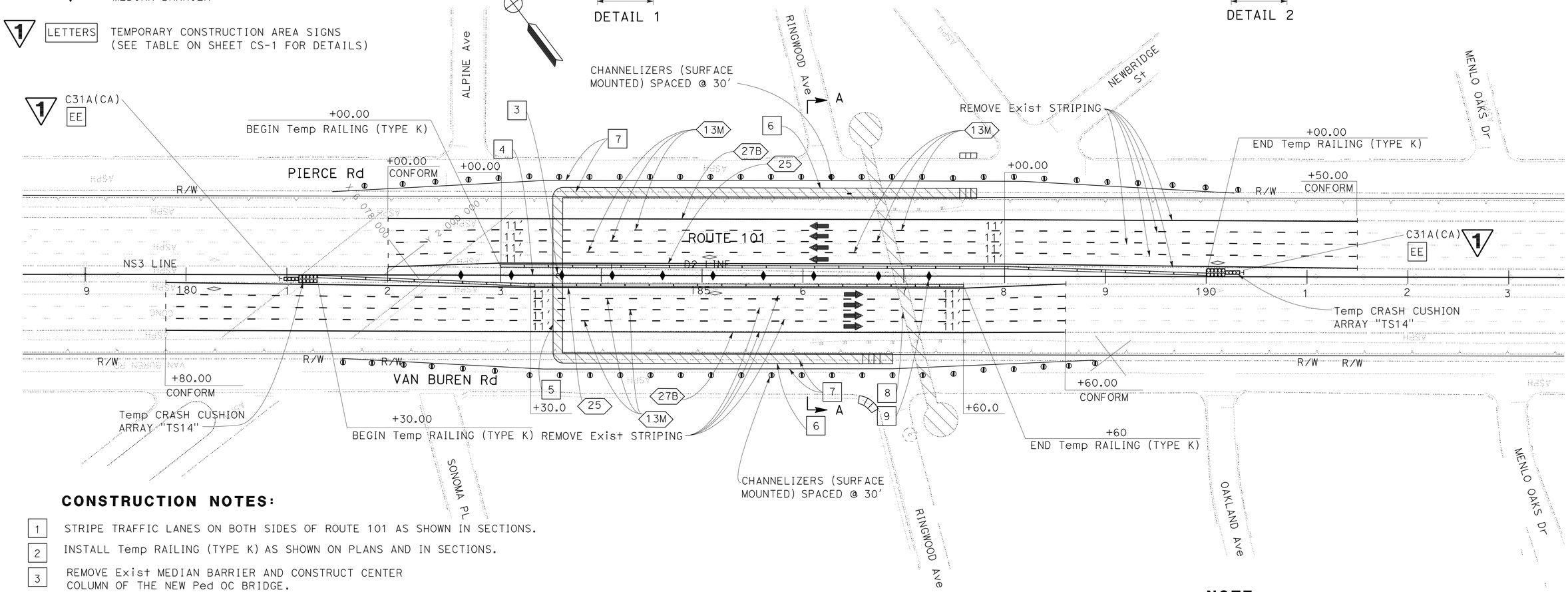

CONSTRUCTION NOTES:

1. STRIPE TRAFFIC LANES ON BOTH SIDES OF ROUTE 101 AS SHOWN IN SECTIONS.
2. INSTALL Temp RAILING (TYPE K) AS SHOWN ON PLANS AND IN SECTIONS.
3. REMOVE Exist MEDIAN BARRIER AND CONSTRUCT CENTER COLUMN OF THE NEW Ped OC BRIDGE.
4. CONSTRUCT NEW MEDIAN BARRIER.
5. CONSTRUCT Ped OC BRIDGE STRUCTURE. FOR DETAILS SEE STRUCTURAL PLANS.
6. CONSTRUCT ACCESS RAMP STRUCTURE, FOR DETAILS SEE STRUCTURAL PLANS.
7. REMOVE Exist CURBS & CONSTRUCT NEW CURBS ALONG FREEWAY SIDE OF FRONTAGE ROADS.
8. REMOVE Exist Ped OC AFTER COMPLETION OF THE NEW Ped OC.
9. REMOVE Exist Ped OC COLUMN AND CONSTRUCT NEW MEDIAN BARRIER.
10. CONSTRUCT OUTSIDE WIDENING BETWEEN WILLOW Rd/UNIVERSITY Ave, INCLUDING NB UNIVERSITY Ave ON RAMP.
11. AFTER COMPLETION OF STAGE 1, REMOVE PAVEMENT MARKERS AND THE REMAINING Exist THERMOPLASTIC STRIPES AND MARKINGS.
12. CONSTRUCT RHMA-G OVERLAY BETWEEN D2 230+00 AND 265+90 AS SHOWN ON THE PLANS, INCLUDING NB UNIVERSITY Ave ON-RAMP.
13. STRIPE PAVEMENT DELINEATION FROM D2 230+50 TO 260+00 SEE SHEET PD-9 TO PD-11.

NOTE:

1. ALL TEMPORARY TRAFFIC STRIPES ARE TO BE 2-COAT PAINTED LINES.

1 REVISED PER ADDENDUM No. 1 DATED MARCH 30, 2011

THIS PLAN ACCURATE FOR STAGE CONSTRUCTION AND TRAFFIC HANDLING WORK ONLY

STAGE CONSTRUCTION AND TRAFFIC HANDLING PLAN

STAGE 1

SCALE: 1" = 50′

SC-1

STATE OF CALIFORNIA - DEPARTMENT OF TRANSPORTATION
Caltrans® DESIGN

FUNCTIONAL SUPERVISOR: TEBLEZ NEMARIAM
CALCULATED-DESIGNED BY: DENIS PU
CHECKED BY: DEEPTHI MADABUSHI
REVISED BY / DATE REVISED

423563ma001.add

LAST REVISION 05-12-10
DATE PLOTTED => 28-MAR-2011
TIME PLOTTED => 15:10

Dist	COUNTY	ROUTE	POST MILES TOTAL PROJECT	SHEET No.	TOTAL SHEETS
04	SM	101	0.9/3.6	85	283

REGISTERED CIVIL ENGINEER 6-22-10 DATE

8-9-10
PLANS APPROVAL DATE

REGISTERED PROFESSIONAL ENGINEER Aijun Ding No. 58899 Exp. 6-30-11 CIVIL STATE OF CALIFORNIA

THE STATE OF CALIFORNIA OR ITS OFFICERS OR AGENTS SHALL NOT BE RESPONSIBLE FOR THE ACCURACY OR COMPLETENESS OF SCANNED COPIES OF THIS PLAN SHEET.

NOTE:

FOR ACCURATE RIGHT OF WAY DATA, CONTACT RIGHT OF WAY ENGINEERING AT THE DISTRICT OFFICE.

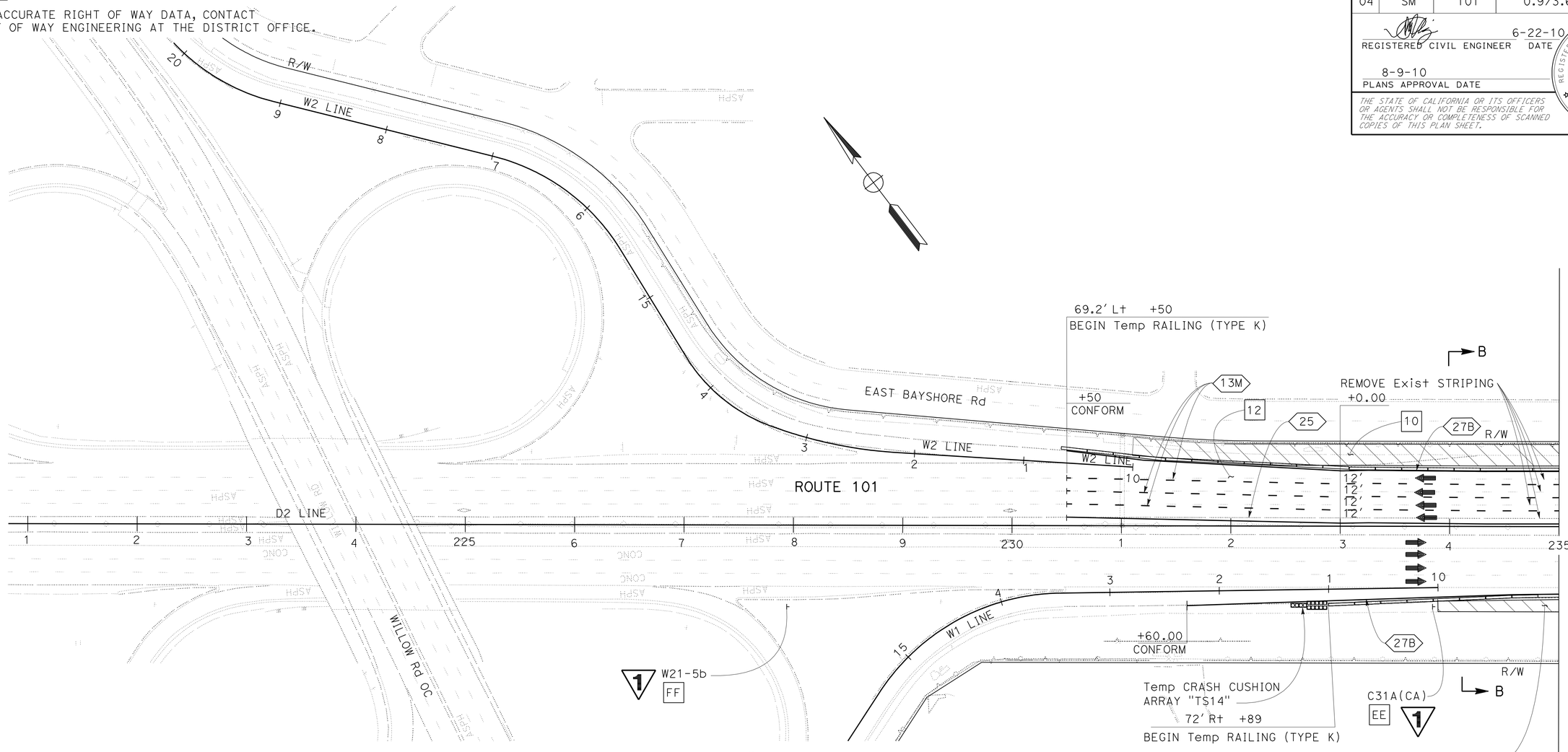

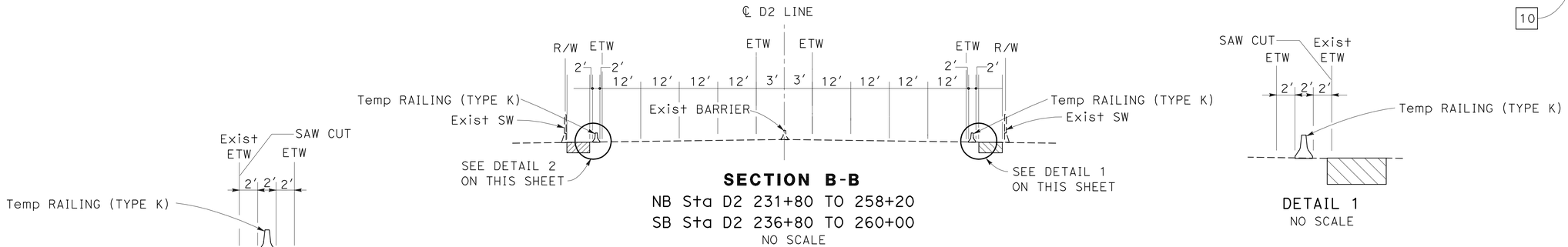

SECTION B-B
NB Sta D2 231+80 TO 258+20
SB Sta D2 236+80 TO 260+00
NO SCALE

1 **REVISED PER ADDENDUM No. 1 DATED MARCH 30, 2011**

STAGE CONSTRUCTION AND TRAFFIC HANDLING PLAN
STAGE 1

SCALE: 1" = 50'

SC-2

FOR NOTES, ABBREVIATIONS AND LEGEND, SEE SHEET SC-1

THIS PLAN ACCURATE FOR STAGE CONSTRUCTION AND TRAFFIC HANDLING WORK ONLY

STATE OF CALIFORNIA - DEPARTMENT OF TRANSPORTATION
DESIGN
Caltrans

FUNCTIONAL SUPERVISOR: TEBLEZ NEMARIAM
CALCULATED-DESIGNED BY: DEEPTHI MADABUSHI
CHECKED BY: DENIS PU
REVISED BY / DATE REVISED

423563ma002.add

LAST REVISION 05-12-10 | DATE PLOTTED => 28-MAR-2011 | TIME PLOTTED => 15:10

BORDER LAST REVISED 4/11/2008 | RELATIVE BORDER SCALE IS IN INCHES 0 1 2 3 | USERNAME => trmariak | DGN FILE => 423563ma002.add | CU 04243 | EA 235631

Dist	COUNTY	ROUTE	POST MILES TOTAL PROJECT	SHEET No.	TOTAL SHEETS
04	SM	101	0.9/3.6	88	283

REGISTERED CIVIL ENGINEER 6-22-10 DATE

8-9-10
PLANS APPROVAL DATE

REGISTERED PROFESSIONAL ENGINEER Aijun Ding No. 58899 Exp. 6-30-11 CIVIL STATE OF CALIFORNIA

THE STATE OF CALIFORNIA OR ITS OFFICERS OR AGENTS SHALL NOT BE RESPONSIBLE FOR THE ACCURACY OR COMPLETENESS OF SCANNED COPIES OF THIS PLAN SHEET.

NOTE:

FOR ACCURATE RIGHT OF WAY DATA, CONTACT RIGHT OF WAY ENGINEERING AT THE DISTRICT OFFICE.

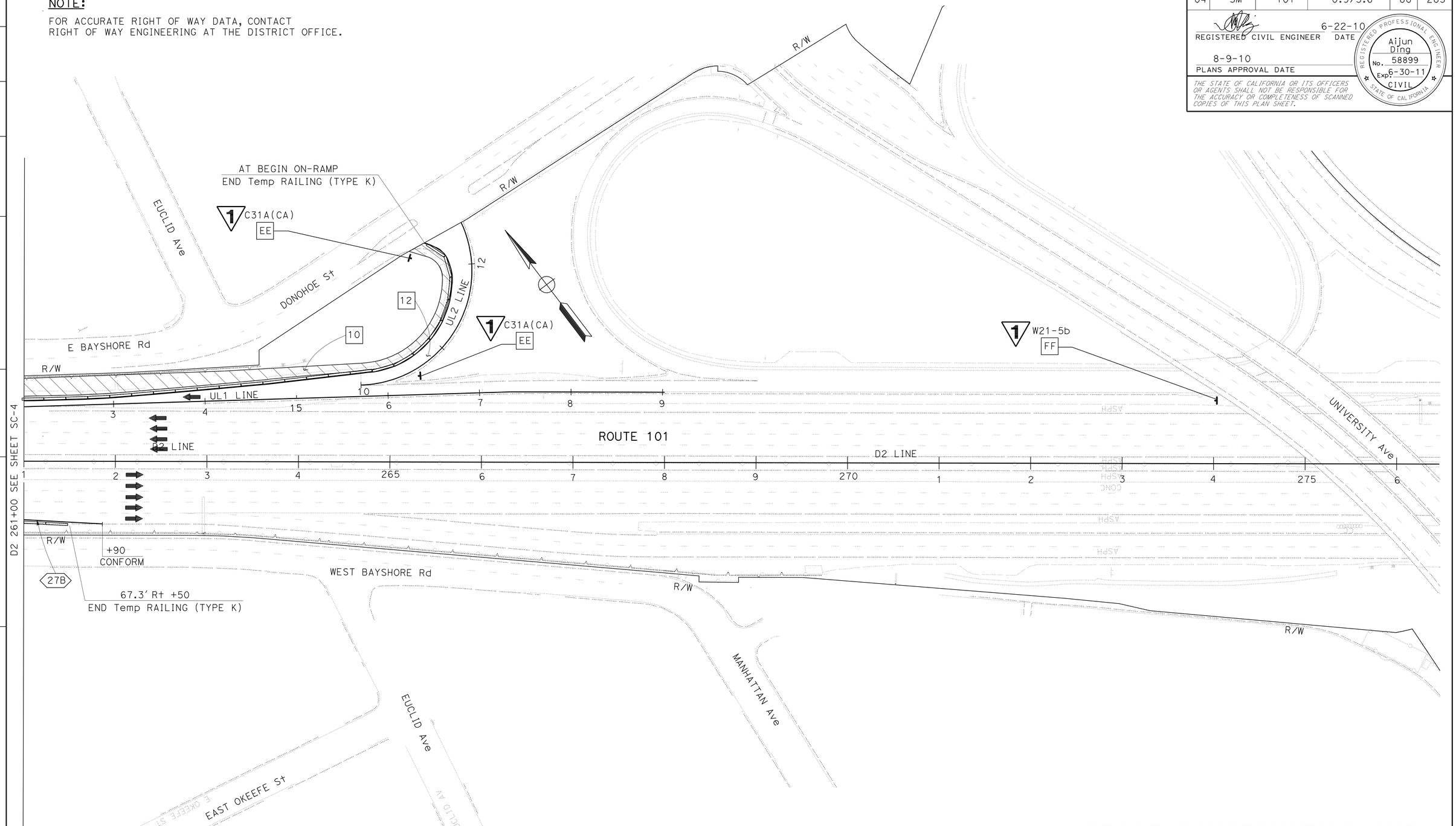

1 REVISED PER ADDENDUM No. 1 DATED MARCH 30, 2011

FOR NOTES, ABBREVIATIONS AND LEGEND, SEE SHEET SC-1

THIS PLAN ACCURATE FOR STAGE CONSTRUCTION AND TRAFFIC HANDLING WORK ONLY

STAGE CONSTRUCTION AND TRAFFIC HANDLING PLAN

STAGE 1

SCALE: 1" = 50'

SC-5

STATE OF CALIFORNIA - DEPARTMENT OF TRANSPORTATION
Caltrans® DESIGN

FUNCTIONAL SUPERVISOR: TEBLEZ NEMARIAM
CALCULATED-DESIGNED BY: DENIS PU
CHECKED BY: DEEPTHI MADABUSHI
REVISED BY / DATE REVISED

LAST REVISION 07-22-10 | DATE PLOTTED => 28-MAR-2011 | TIME PLOTTED => 15:19

423563ma005.add

BORDER LAST REVISED 4/11/2008 | RELATIVE BORDER SCALE IS IN INCHES 0 1 2 3 | USERNAME => trmnguye | DGN FILE => 423563ma005.add | CU 04243 | EA 235631

Dist	COUNTY	ROUTE	POST MILES TOTAL PROJECT	SHEET No.	TOTAL SHEETS
04	SM	101	0.9/3.6	89	283

REGISTERED CIVIL ENGINEER 6-22-10 DATE

8-9-10
PLANS APPROVAL DATE

REGISTERED PROFESSIONAL ENGINEER Aijun Ding No. 58899 Exp 6-30-11 CIVIL STATE OF CALIFORNIA

THE STATE OF CALIFORNIA OR ITS OFFICERS OR AGENTS SHALL NOT BE RESPONSIBLE FOR THE ACCURACY OR COMPLETENESS OF SCANNED COPIES OF THIS PLAN SHEET.

NOTE:

FOR ACCURATE RIGHT OF WAY DATA, CONTACT RIGHT OF WAY ENGINEERING AT THE DISTRICT OFFICE.

LEGEND:

- DIRECTION OF TRAVEL
- CONSTRUCT THIS STAGE
- No. PAVEMENT DELINEATION DETAIL
- CHANNELIZER (SURFACE MOUNTED)
- No. WORK ACTIVITY
- 1 LETTERS TEMPORARY CONSTRUCTION AREA SIGNS (SEE TABLE IN SHEET CS-1 FOR DETAILS)

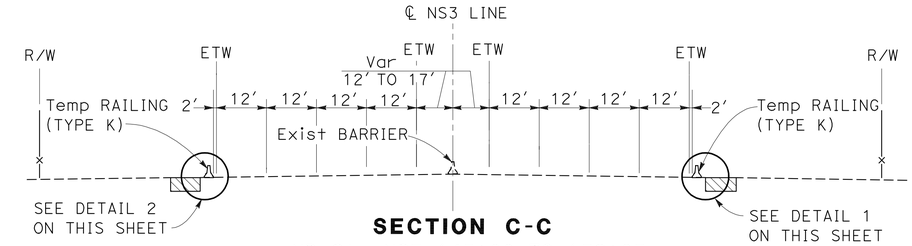

SECTION C-C
NB Sta NS3 145+00 TO 152+85
SB Sta NS3 144+30 TO 152+85
NO SCALE

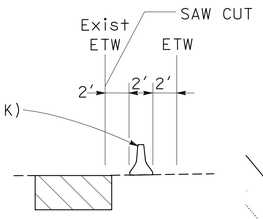

DETAIL 2
NO SCALE

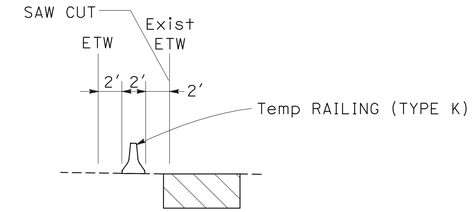

DETAIL 1
NO SCALE

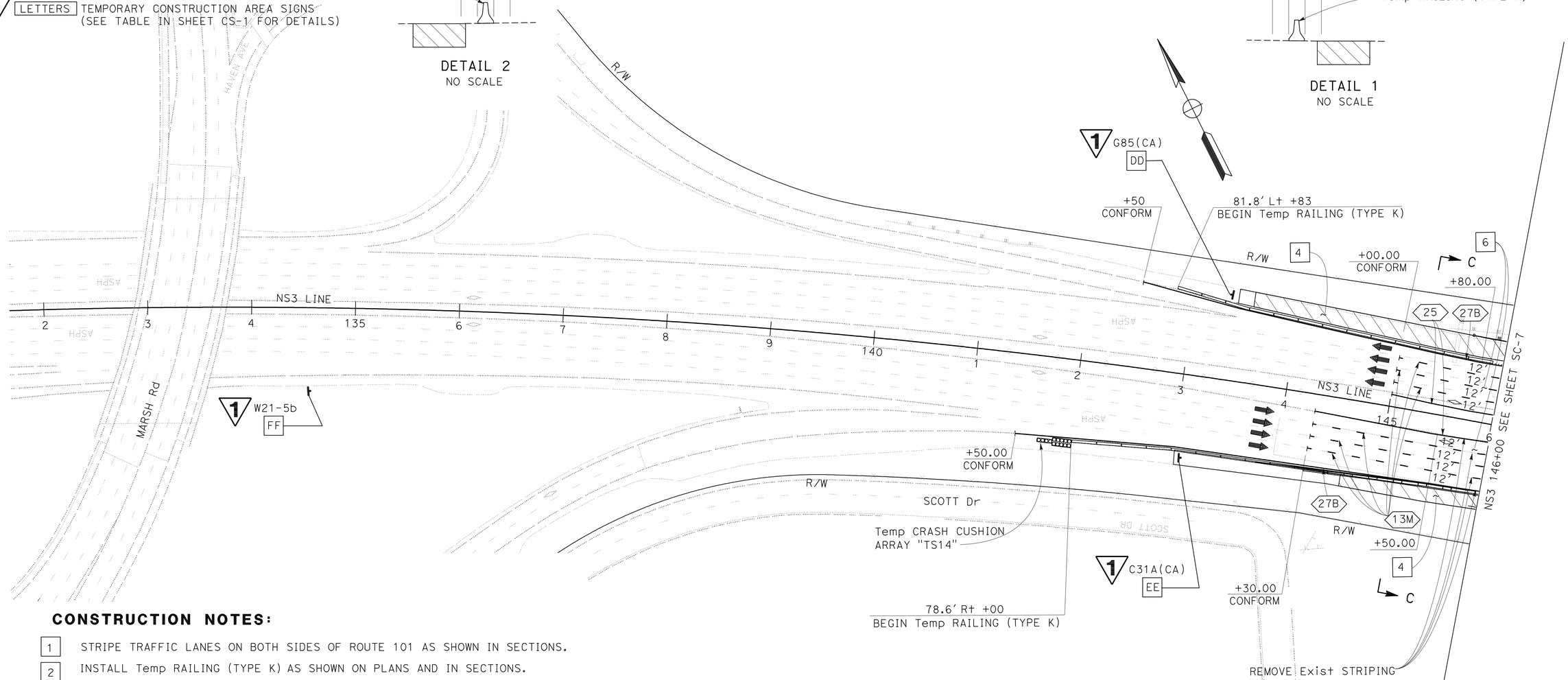

CONSTRUCTION NOTES:

1. STRIPE TRAFFIC LANES ON BOTH SIDES OF ROUTE 101 AS SHOWN IN SECTIONS.
2. INSTALL Temp RAILING (TYPE K) AS SHOWN ON PLANS AND IN SECTIONS.
3. CONSTRUCT WIDENING OF BRIDGE No. 35-015M (HETCH HETCHY AQUEDUCT) STRUCTURE AND RETAINING WALL, FOR DETAILS SEE STRUCTURAL PLANS.
4. CONSTRUCT OUTSIDE WIDENING ON BOTH SIDES OF MAINLINE.
5. AFTER COMPLETION OF STAGE 2, REMOVE PAVEMENT MARKERS, AND THE REMAINING Exist THERMOPLASTIC STRIPES AND MARKINGS.
6. CONSTRUCT RHMA-G OVERLAY BETWEEN Sta NS3 138+65 TO D2 230+00.
7. COMPLETE FINAL STRIPING, SEE SHEET PD-1 TO PD-8.

1 REVISED PER ADDENDUM No. 1 DATED MARCH 30, 2011

THIS PLAN ACCURATE FOR STAGE CONSTRUCTION AND TRAFFIC HANDLING WORK ONLY

STAGE CONSTRUCTION AND TRAFFIC HANDLING PLAN

STAGE 2

SCALE: 1" = 50'

SC-6

REVISED BY	DATE REVISED
DENIS PU	DEEPTHI MADABUSHI
CALCULATED-DESIGNED BY	CHECKED BY
FUNCTIONAL SUPERVISOR	TEBLEZ NEMARIAM

STATE OF CALIFORNIA - DEPARTMENT OF TRANSPORTATION
Caltrans
DESIGN

423563ma006.add

LAST REVISION 04-14-10 | DATE PLOTTED => 29-MAR-2011 | TIME PLOTTED => 14:51

Dist	COUNTY	ROUTE	POST MILES TOTAL PROJECT	SHEET No.	TOTAL SHEETS
04	SM	101	0.9/3.6	94	283

REGISTERED CIVIL ENGINEER 6-22-10 DATE

8-9-10
PLANS APPROVAL DATE

REGISTERED PROFESSIONAL ENGINEER Aijun Ding No. 58899 Exp. 6-30-11 CIVIL STATE OF CALIFORNIA

THE STATE OF CALIFORNIA OR ITS OFFICERS OR AGENTS SHALL NOT BE RESPONSIBLE FOR THE ACCURACY OR COMPLETENESS OF SCANNED COPIES OF THIS PLAN SHEET.

FOR ACCURATE RIGHT OF WAY DATA,
CONTACT RIGHT OF WAY ENGINEERING AT THE DISTRICT OFFICE.

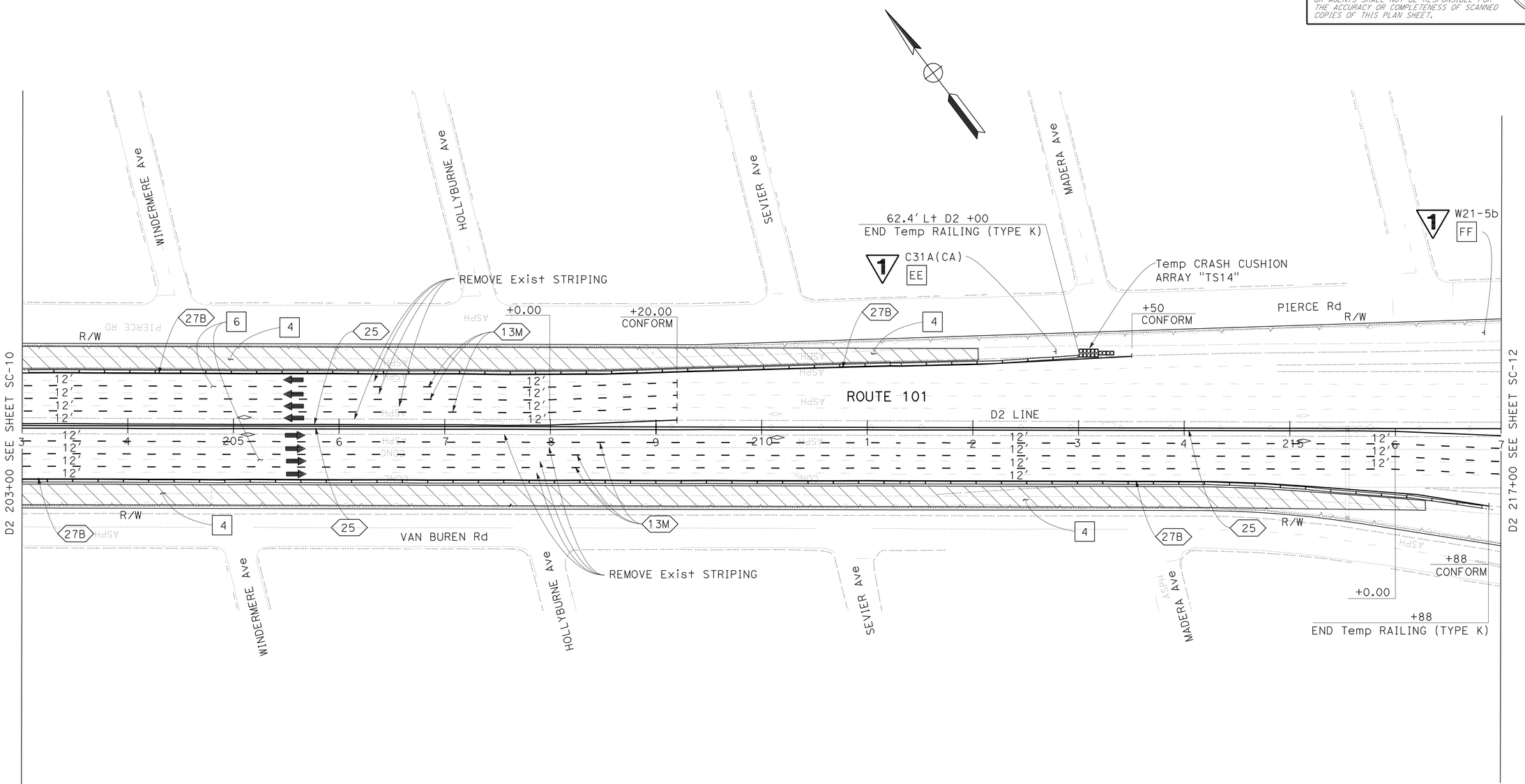

1 REVISED PER ADDENDUM No. 1 DATED MARCH 30, 2011

STAGE CONSTRUCTION AND TRAFFIC HANDLING PLAN

STAGE 2

SCALE: 1" = 50'

FOR NOTES, ABBREVIATIONS AND LEGEND, SEE SHEET SC-6

THIS PLAN ACCURATE FOR STAGE CONSTRUCTION AND TRAFFIC HANDLING WORK ONLY

SC-11

STATE OF CALIFORNIA - DEPARTMENT OF TRANSPORTATION
Caltrans DESIGN

FUNCTIONAL SUPERVISOR: TEBLEZ NEMARIAM
CALCULATED-DESIGNED BY: DENIS PU
CHECKED BY: DEEPTHI MADABUSHI
REVISED BY
DATE REVISED

423563ma011.add

LAST REVISION 04-01-10
DATE PLOTTED => 28-MAR-2011
TIME PLOTTED => 15:49

BORDER LAST REVISED 4/11/2008
RELATIVE BORDER SCALE IS IN INCHES 0 1 2 3
USERNAME => trmariak
DGN FILE => 423563ma011.add
CU 04243
EA 235631

Dist	COUNTY	ROUTE	POST MILES TOTAL PROJECT	SHEET No.	TOTAL SHEETS
04	SM	101	0.9/3.6	103	283

REGISTERED CIVIL ENGINEER 6-22-10 DATE

8-9-10
PLANS APPROVAL DATE

REGISTERED PROFESSIONAL ENGINEER Duc Duy Vo No. 74538 Exp. 12-31-11 CIVIL STATE OF CALIFORNIA

THE STATE OF CALIFORNIA OR ITS OFFICERS OR AGENTS SHALL NOT BE RESPONSIBLE FOR THE ACCURACY OR COMPLETENESS OF SCANNED COPIES OF THIS PLAN SHEET.

TRAFFIC HANDLING SIGN QUANTITIES

SIGN No.	MUTCD CODE	SIGN MESSAGE	PANEL SIZE	NUMBER OF POST AND SIZE	No. OF SIGNS (N)	REMARKS
D	W20-2	DETOUR AHEAD	36" x 36"	1 - 4" x 6"	13	(S)
D1	W20-2	DETOUR AHEAD	48" x 48"	1 - 4" x 6"	13	(S)
E	M4-8A	END DETOUR	24" x 18"	1 - 4" x 4"	10	(S)
E1	Spec PANEL A M4-8A	(SEE DETAILS IN THD-1) END DETOUR	24" x 24" 24" x 18"	1 - 4" x 6"	1	(S)
F	Spec SIGN	FREEWAY WILL BE CLOSED (WITH DATE AND TIME)	120" x 60"	2 - 6" x 6"	2	(S) SEE DETAILS IN THD-1
G	W20-3	RAMP CLOSED AHEAD	36" x 36"	1 - 4" x 6"	4	
G1	W20-3	RAMP CLOSED AHEAD	48" x 48"	1 - 4" x 6"	2	(S)
G2	W20-3 (MODIFIED)	ROAD CLOSED AHEAD	36" x 36"	1 - 4" x 6"	4	(S)
H	SC6-4(CA)	RAMP CLOSED (WITH DATE AND TIME)	48" x 60" ~~60" x 48"~~	1 - 6" x 6" ~~2 - 4" x 6"~~	9	(S)
H1	SC6-4(CA) (MODIFIED)	ROAD CLOSED (WITH DATE AND TIME)	48" x 60" ~~60" x 48"~~	1 - 6" x 6" ~~2 - 4" x 6"~~	4	(S)
I	R11-2	ROAD CLOSED	60" x 48"	1 - 4" x 6"	4	(S)
J	R11-4 (MODIFIED)	ROAD CLOSED THROUGH TRAFFIC	60" x 30"	1 - 4" x 6"	6	(S) SEE DETAILS IN THD-1
1	M4-8	DETOUR	30" x 15"	1 - 6" x 6"	1	(S)
	G48(CA)	SOUTH	26" x 12"			
	M1-4(101)	US ROUTE SHIELD (101)	35" x 30"			
	G44(↗)(CA)	UPRIGHT DIAGONAL ARROW	26" x 18"			
2	M4-8	DETOUR	24" x 12"	1 - 4" x 6"	2	(S)
	G48(CA)	SOUTH	21" x 9"			
	M1-4(101)	US ROUTE SHIELD (101)	28" x 24"			
	G34(R↑)(CA)	RIGHT ARROW	21" x 15"			
3	M4-8	DETOUR	24" x 12"	1 - 4" x 6"	5	(S)
	G48(CA)	SOUTH	21" x 9"			
	M1-4(101)	US ROUTE SHIELD (101)	28" x 24"			
	G34(L↑)(CA)	LEFT ARROW	21" x 15"			
4	SC9	FREEWAY DETOUR (WITH STRAIGHT AHEAD ARROW)	36" x 36"	1 - 6" x 6"	1	(S)
5	SC3(CA)	DETOUR (STRAIGHT AHEAD ARROW)	48" x 18"	1 - 6" x 6"	3	(S)
	G48(CA)	SOUTH	21" x 9"			
	M1-4(101)	US ROUTE SHIELD (101)	28" x 24"			
6	M4-8	DETOUR	30" x 15"	1 - 6" x 6"	2	(S)
	G47(CA)	NORTH	26" x 12"			
	M1-4(101)	US ROUTE SHIELD (101)	35" x 30"			
	G44(↗)(CA)	UPRIGHT DIAGONAL ARROW	26" x 18"			

NOTE: (N) NOT A SEPARATE PAY ITEM, FOR INFORMATION ONLY.

1 **REVISED PER ADDENDUM No. 1 DATED MARCH 30, 2011**

TRAFFIC HANDLING SIGN QUANTITIES

SIGN No.	MUTCD CODE	SIGN MESSAGE	PANEL SIZE	NUMBER OF POST AND SIZE	No. OF SIGNS (N)	REMARKS
7	M4-8	DETOUR	24" x 12"	1 - 4" x 6"	7	(S)
	G47(CA)	NORTH	21" x 9"			
	M1-4(101)	US ROUTE SHIELD (101)	28" x 24"			
	G34(R↑)(CA)	RIGHT ARROW	21" x 15"			
8	M4-8	DETOUR	24" x 12"	1 - 4" x 6"	6	(S)
	G47(CA)	NORTH	21" x 9"			
	M1-4(101)	US ROUTE SHIELD (101)	28" x 24"			
	G34(L↑)(CA)	LEFT ARROW	21" x 15"			
9	SC3(CA)	DETOUR (STRAIGHT AHEAD ARROW)	48" x 18"	1 - 4" x 6"	3	(S)
	G47(CA)	NORTH	21" x 9"			
	M1-4(101)	US ROUTE SHIELD (101)	28" x 24"			
10	SC3(CA)	"DETOUR (STRAIGHT AHEAD ARROW)	48" x 18"	1 - 6" x 6"	1	(S)
	Spes PANEL E	(SEE DETAILS IN THD-1)	36" x 24"			
	G28-1(CA)	STATE SHIELD (114)	28" X 25"			
	G47(CA)	NORTH"	21" x 9"			
11	M4-8	"DETOUR	24" x 12"	1 - 6" x 6"	2	(S)
	Spec PANEL E1	(SEE DETAILS IN THD-1)	30" x 24"			
	G28-1(CA)	STATE SHIELD (114)	28" x 25"			
	G47(CA)	NORTH	21" x 9"			
	G44(↗)(CA)	UPRIGHT DIAGONAL ARROW"	21" x 15"			
12	SC3(CA)	"DETOUR (STRAIGHT AHEAD ARROW)	48" x 18"	1 - 6" x 6"	1	(S)
	Spec PANEL F	(SEE DETAILS IN THD-1)	36" x 24"			
	G28-1(CA)	STATE SHIELD (114)	28" x 25"			
	G48(CA)	SOUTH"	21" x 9"			
13	M4-8	"DETOUR	24" x 12"	1 - 6" x 6"	2	(S)
	Spec PANEL F1	(SEE DETAILS IN THD-1)	30" x 24"			
	G28-1(CA)	STATE SHIELD (114)	28" x 25"			
	G48(CA)	SOUTH	21" x 9"			
	G44(↗)(CA)	UPRIGHT DIAGONAL ARROW"	21" x 15"			

TRAFFIC HANDLING QUANTITIES

NO SCALE

THQ-1

STATE OF CALIFORNIA - DEPARTMENT OF TRANSPORTATION
Caltrans
TRAFFIC

FUNCTIONAL SUPERVISOR: Jerilyn Struven
CALCULATED-DESIGNED BY: DUc VO
CHECKED BY: Jerilyn Struven
REVISED BY
DATE REVISED

423563mf001.add

LAST REVISION 07-22-09
DATE PLOTTED => 28-MAR-2011
TIME PLOTTED => 15:38

Dist	COUNTY	ROUTE	POST MILES TOTAL PROJECT	SHEET No.	TOTAL SHEETS
04	SM	101	0.9/3.6	121	283

REGISTERED CIVIL ENGINEER 5-10-10 DATE

8-9-10
PLANS APPROVAL DATE

REGISTERED PROFESSIONAL ENGINEER Duc Duy Vo No. 74538 Exp. 12-31-11 CIVIL STATE OF CALIFORNIA

THE STATE OF CALIFORNIA OR ITS OFFICERS OR AGENTS SHALL NOT BE RESPONSIBLE FOR THE ACCURACY OR COMPLETENESS OF SCANNED COPIES OF THIS PLAN SHEET.

NOTE:

FOR ACCURATE RIGHT OF WAY DATA, CONTACT RIGHT OF WAY ENGINEERING AT THE DISTRICT OFFICE.

LEGEND:

- ROADSIDE SIGN/OVERHEAD SIGN TO REMAIN
- SALVAGE ROADSIDE SIGN
- RELOCATE ROADSIDE SIGN
- RESET ROADSIDE SIGN
- (No.) ROADSIDE SIGN NUMBER
- ◇ OVERHEAD SIGN LETTER

NOTES:

1. EXACT LOCATION AND POSITION OF ROADSIDE SIGNS AND CONSTRUCTION AREA SIGNS TO BE DETERMINED BY THE ENGINEER.
2. POST SIZE AND LENGTH GIVEN ARE APPROXIMATE. EXACT SIZE AND LENGTH TO BE DETERMINED BY THE ENGINEER.

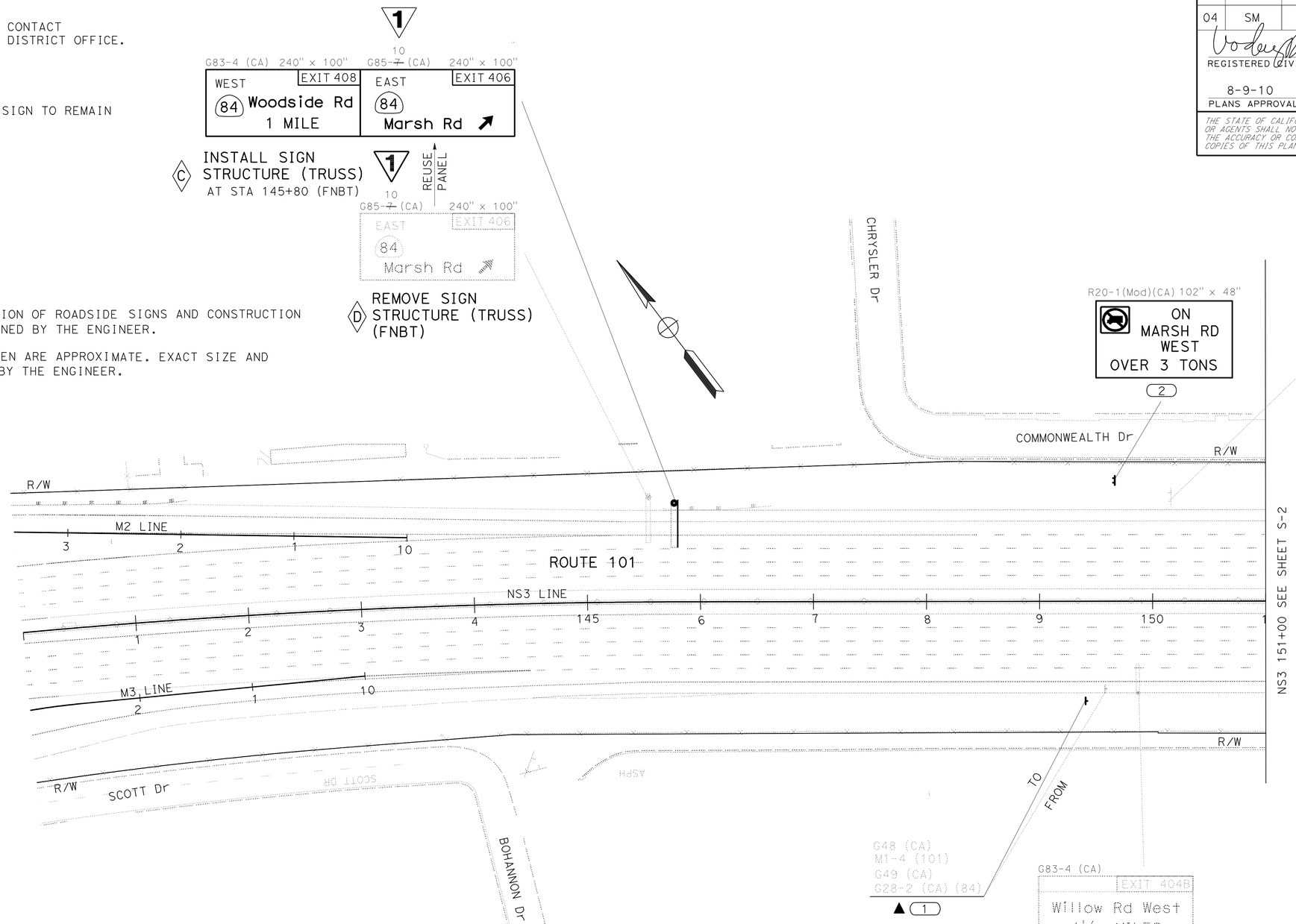

1 REVISED PER ADDENDUM No. 1 DATED MARCH 30, 2011

THIS PLAN ACCURATE FOR SIGN WORK ONLY

SIGN PLAN
NO SCALE

S-1

STATE OF CALIFORNIA - DEPARTMENT OF TRANSPORTATION
Caltrans
TRAFFIC

FUNCTIONAL SUPERVISOR: Jerilyn Struven
CALCULATED-DESIGNED BY: DUc VO
CHECKED BY: Jerilyn Struven
REVISED BY
DATE REVISED

423563oa001.add

LAST REVISION 07-22-10
DATE PLOTTED => 28-MAR-2011
TIME PLOTTED => 15:38

BORDER LAST REVISED 4/11/2008
RELATIVE BORDER SCALE IS IN INCHES 0 1 2 3
USERNAME => trrichf
DGN FILE => 423563oa001.add
CU 04243
EA 235631

Dist	COUNTY	ROUTE	POST MILES TOTAL PROJECT	SHEET No.	TOTAL SHEETS
04	SM	101	0.9/3.6	122	283

REGISTERED CIVIL ENGINEER 5-10-10 DATE

8-9-10
PLANS APPROVAL DATE

REGISTERED PROFESSIONAL ENGINEER Duc Duy Vo No. 74538 Exp. 12-31-11 CIVIL STATE OF CALIFORNIA

THE STATE OF CALIFORNIA OR ITS OFFICERS OR AGENTS SHALL NOT BE RESPONSIBLE FOR THE ACCURACY OR COMPLETENESS OF SCANNED COPIES OF THIS PLAN SHEET.

NOTE:

FOR ACCURATE RIGHT OF WAY DATA, CONTACT
RIGHT OF WAY ENGINEERING AT THE DISTRICT OFFICE.

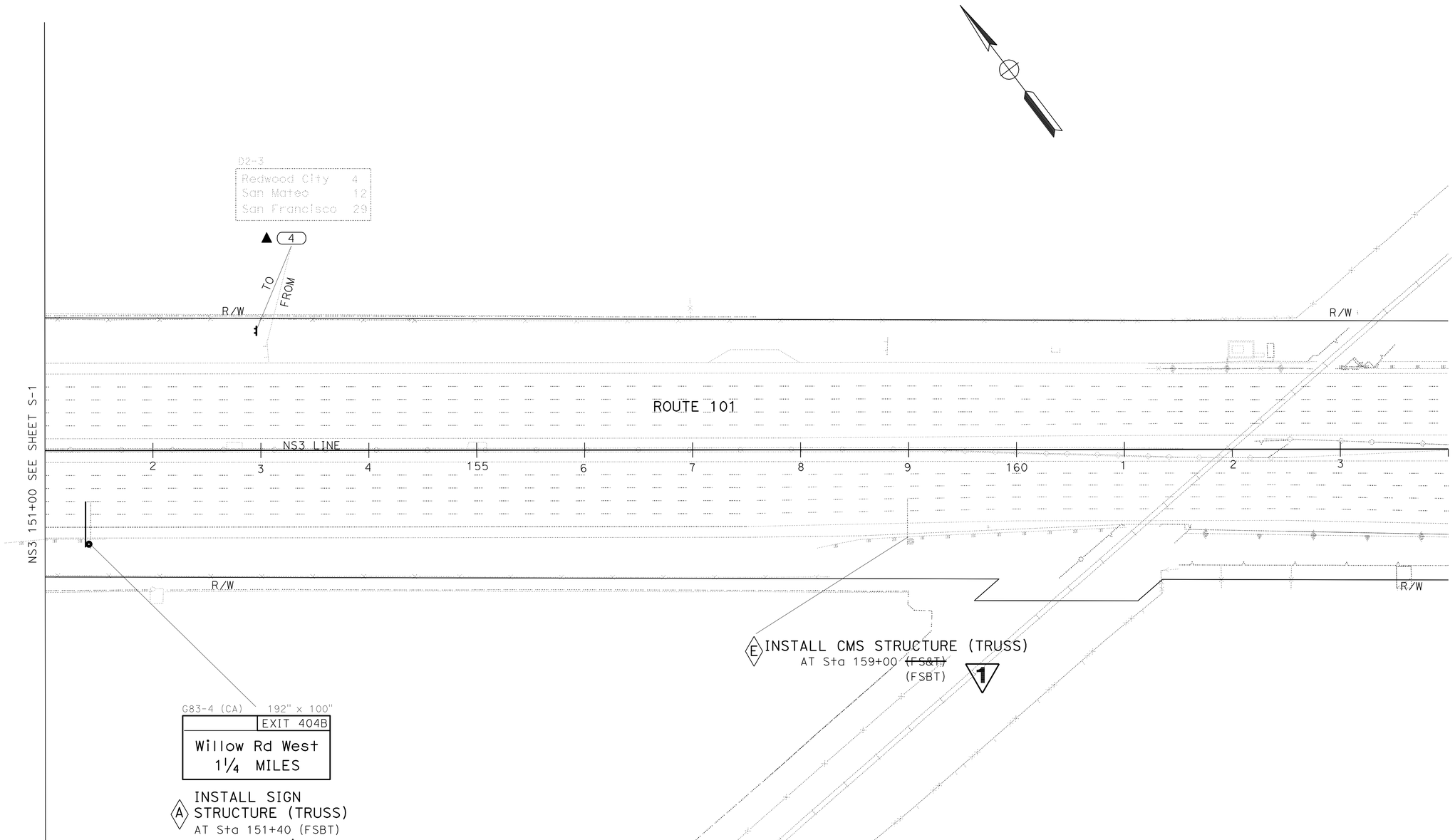

1 **REVISED PER ADDENDUM No. 1 DATED MARCH 30, 2011**

FOR NOTES, ABBREVIATIONS AND LEGEND, SEE SHEET S-1

THIS PLAN ACCURATE FOR SIGN WORK ONLY

SIGN PLAN
NO SCALE

S-2

STATE OF CALIFORNIA - DEPARTMENT OF TRANSPORTATION
Caltrans
TRAFFIC

FUNCTIONAL SUPERVISOR: Jerilyn Struven
CALCULATED-DESIGNED BY: DUc VO
CHECKED BY: Jerilyn Struven
REVISED BY
DATE REVISED

423563oa002.add

LAST REVISION 05-13-10
DATE PLOTTED => 28-MAR-2011
TIME PLOTTED => 15:38

BORDER LAST REVISED 4/11/2008
RELATIVE BORDER SCALE IS IN INCHES 0 1 2 3
USERNAME => trrichf
DGN FILE => 423563oa002.add
CU 04243
EA 235631

Dist	COUNTY	ROUTE	POST MILES TOTAL PROJECT	SHEET No.	TOTAL SHEETS
04	SM	101	0.9/3.6	130	283

REGISTERED CIVIL ENGINEER 5-10-10 DATE

8-9-10
PLANS APPROVAL DATE

REGISTERED PROFESSIONAL ENGINEER Duc Duy Vo No. 74538 Exp. 12-31-11 CIVIL STATE OF CALIFORNIA

THE STATE OF CALIFORNIA OR ITS OFFICERS OR AGENTS SHALL NOT BE RESPONSIBLE FOR THE ACCURACY OR COMPLETENESS OF SCANNED COPIES OF THIS PLAN SHEET.

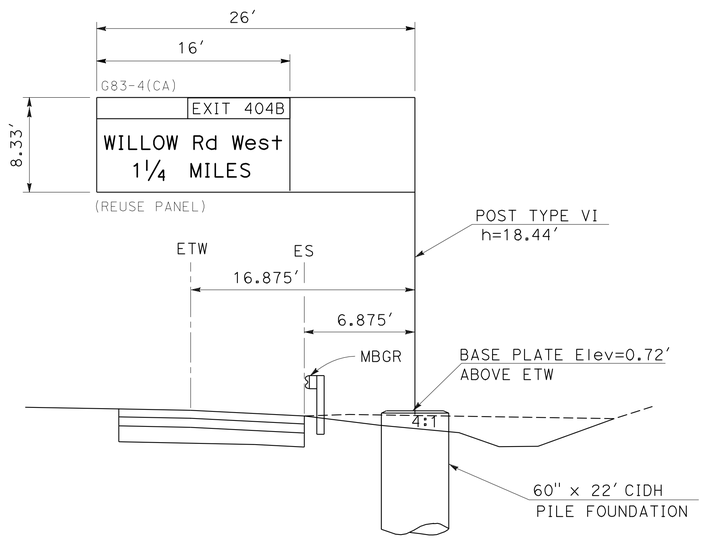

A SEE SHEET S-2

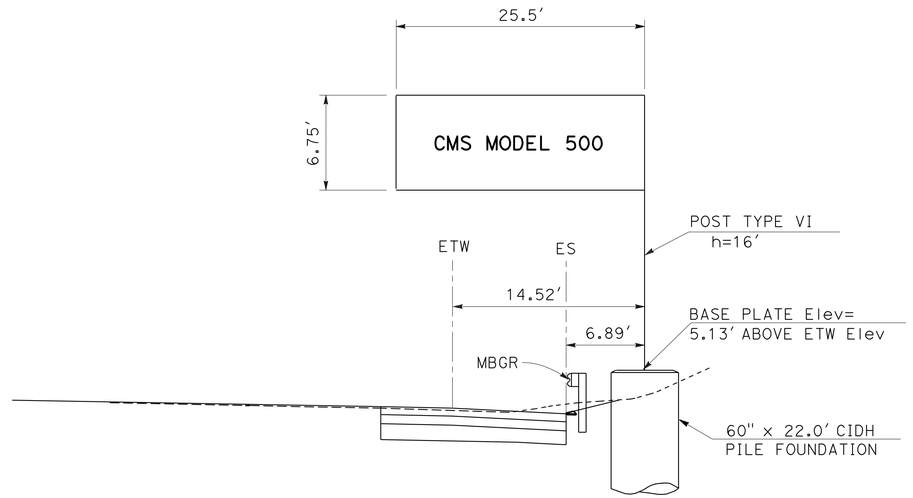

E SEE SHEET S-2

6" RADIUS, 2" BORDER, WHITE ON GREEN;
[EXIT] E; [408] E;
NO BORDER, WHITE ON GREEN;

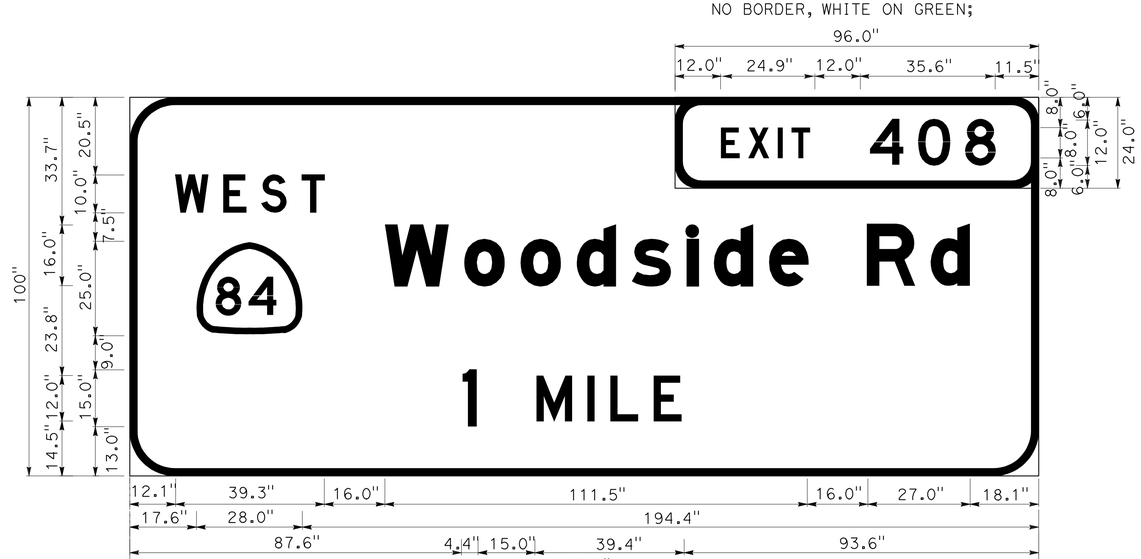

12" RADIUS, 2" BORDER, WHITE ON GREEN;
[WEST] E; [Woodside Rd] E Mod; [1] E; [MILE] E;
NO BORDER, WHITE ON GREEN;

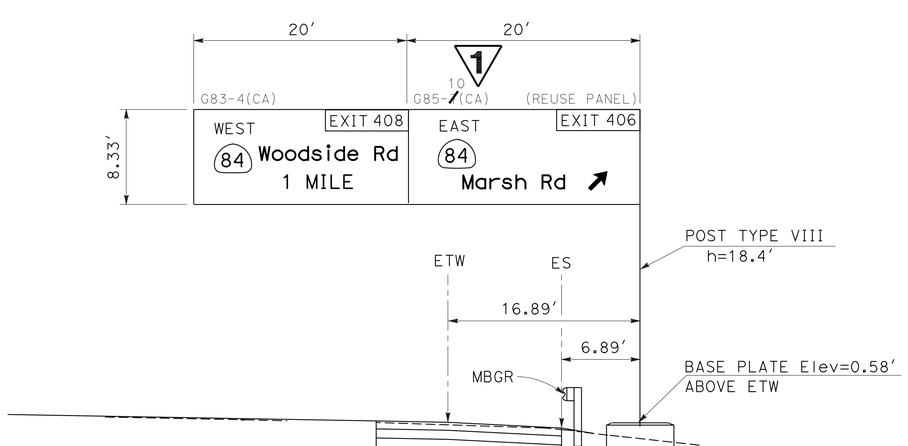

C SEE SHEET S-1

1 REVISED PER ADDENDUM No. 1 DATED MARCH 30, 2011

THIS PLAN ACCURATE FOR SIGN WORK ONLY

SIGN DETAILS
NO SCALE

SD-1

STATE OF CALIFORNIA - DEPARTMENT OF TRANSPORTATION
Caltrans TRAFFIC

FUNCTIONAL SUPERVISOR: Jerilyn Struven
CALCULATED-DESIGNED BY: DUc VO
CHECKED BY: Jerilyn Struven
REVISED BY / DATE REVISED

LAST REVISION 07-22-10 | DATE PLOTTED => 28-MAR-2011 | TIME PLOTTED => 15:35

423563ob001.add

BORDER LAST REVISED 4/11/2008 | RELATIVE BORDER SCALE IS IN INCHES 0 1 2 3 | USERNAME => trpierce | DGN FILE => 423563ob001.add | CU 04243 | EA 235631

Dist	COUNTY	ROUTE	POST MILES TOTAL PROJECT	SHEET No.	TOTAL SHEETS
04	SM	101	0.9/3.6	135	283

REGISTERED CIVIL ENGINEER 5-10-10 DATE

8-9-10
PLANS APPROVAL DATE

REGISTERED PROFESSIONAL ENGINEER Duc Duy Vo No. 74538 Exp. 12-31-11 CIVIL STATE OF CALIFORNIA

THE STATE OF CALIFORNIA OR ITS OFFICERS OR AGENTS SHALL NOT BE RESPONSIBLE FOR THE ACCURACY OR COMPLETENESS OF SCANNED COPIES OF THIS PLAN SHEET.

1

OVERHEAD SIGN QUANTITIES

SHEET No.	SIGN LETTER	SIGN CODE	PANEL SIZE	SINGLE FACE	FURNISH SIGN STRUCTURE TRUSS (F)	INSTALL SIGN STRUCTURE (TRUSS)(F)	CIDH CONCRETE PILE (SIGN FOUNDATION) (60")	REMOVE SIGN STRUCTURE	BACKGROUND		LEGEND		PROTECTIVE OVERLAY		FURNISH FORMED PANEL SIGN (OVERHEAD)	REMARKS
					Lbs		LF	EA	SHEETING COLOR	RETROFLECTIVE ASTM TYPE	SHEETING COLOR	RETROFLECTIVE ASTM TYPE	STANDARD	PREMIUM	SQFT	
S-1	B	G83-4(CA)	192" X 100"	X				1								
	C	G83-4(CA)	240" X 100"	X	19,880	19,880	25		GREEN	IV	WHITE	IX		X	167	
		G85-10(CA)	240" X 100"													REUSE PANEL FROM SALVAGED SIGN STRUCTURE D
	D	G85-10(CA)	240" X 100"	X				1								
S-2	A	G83-4(CA)	192" X 100"	X	13,830	13,830	22									REUSE PANEL FROM SALVAGED SIGN STRUCTURE B
	E	CMS			12,580	12,580	22									ELECTRICAL ITEM
TOTAL					46,290	46,290	69	2							167	

1 **REVISED PER ADDENDUM No. 1 DATED MARCH 30, 2011**

THIS PLAN ACCURATE FOR SIGN WORK ONLY

SIGN QUANTITIES

SQ-2

STATE OF CALIFORNIA - DEPARTMENT OF TRANSPORTATION
Caltrans
TRAFFIC

FUNCTIONAL SUPERVISOR: Jerilyn Struven
CALCULATED-DESIGNED BY: DUc VO
CHECKED BY: Jerilyn Struven
REVISED BY
DATE REVISED

423563oc002.dgn

LAST REVISION 05-28-10
DATE PLOTTED => 28-MAR-2011
TIME PLOTTED => 15:35

Dist	COUNTY	ROUTE	POST MILES TOTAL PROJECT	SHEET No.	TOTAL SHEETS
04	SM	101	0.9/3.6	136	283

REGISTERED CIVIL ENGINEER 6-22-10 DATE

8-9-10
PLANS APPROVAL DATE

REGISTERED PROFESSIONAL ENGINEER Aijun Ding No. 58899 Exp. 6-30-11 CIVIL STATE OF CALIFORNIA

THE STATE OF CALIFORNIA OR ITS OFFICERS OR AGENTS SHALL NOT BE RESPONSIBLE FOR THE ACCURACY OR COMPLETENESS OF SCANNED COPIES OF THIS PLAN SHEET.

ROADWAY QUANTITIES 1

SHEET No.	STATION LIMITS	LOCATION	RUBBERIZED HOT MIX ASPHALT (GAP GRADED)	HOT MIX ASPHALT (TYPE A)	TACK COAT	IMPORTED MATERIAL (SHOULDER BACKING)	LEAN CONCRETE BASE	AGGREGATE BASE CLASS 2	AGGREGATE SUBBASE CLASS 4	PERMEABLE MATERIAL (BLANKET)	COLD PLANE AC PAVEMENT
			TON				CY				SQYD
L-2 TO L-3	NS3 140+00 TO 161+20	L†	2369	830	5	16	559		708		11211
L-3	NS3 157+15 TO 158+00	MVP		21				16			
L-3 TO L-11	NS3 163+65 TO D2 265+75	L†	10594	5867	22	11	3692		4676		61696
L-11	UL1 10+00 TO UL2 12+47	L†	329	384	1			293	328		1563
L-1 TO L-2	NS3 138+65 TO 144+00	R†	690		1						5448
L-5	FR1 12+40 TO 23+60	L†		359	0.5						2835
L-5	FR2 13+90 TO 23+10	R†		296	0.5						2340
L-9	D2 238+50 TO 239+35	MVP		21				16			
L-2 TO L-11	NS3 144+00 TO D2 260+20	R†	12027	6541	20	18	4405		5579	336	
C-1	NS3 162+72.89 TO 162+90.51	S/B		25							
	TOTAL		26008	~~14344~~ 14321	49	45	~~8656~~ 8636	309	~~11292~~ 11267	336	85092

EARTHWORK SUMMARY 1

SHEET No.	STATION LIMITS	LOCATION	DITCH EXCAVATION(TYPE Z-2) (AERIALLY DEPOSITED LEAD)	ROADWAY EXCAVATION(TYPE Z-2) (AERIALLY DEPOSITED LEAD)	ROADWAY EXCAVATION	(N) EMBANKMENT
			CY			
L-2	NS3 143+00 TO 161+20	L† & R†			6135	135
L-2 TO L-3	NS3 143+75 TO 165+00	L† & R†		3756		
L-3	NS3 157+15 TO 158+00	L† (MVP)			28	
L-4	NS3 161+56 TO 167+40	R†		600	1703	574
L-4 TO L-5	NS3 165+00 TO 182+60.15	L† & R†		3428		
L-4	NS3 171+60 TO 182+60.15	L† & R†			7870	145
L-5 TO L-7	D2 182+48.31 TO 216+28.158	L† & R†		5951	8805	105
L-5	FR1 13+55 TO 22+50	L†		600	375	
L-5	FR2 14+64.50 TO 22+10.60	R†		377	236	
L-5	FR1 18+86.9 TO 19+77.23	R†			41	
L-9	D2 238+50 TO 239+35	R† (MVP)			28	
L-9 TO L-11	D2 230+80 TO 260+00	L† & R†		4913	8415	565
L-11	UL1 10+00 TO 15+50	L†		441		
L-11	UL2 10+00 TO 12+47	L†		230		
	FROM DRAINAGE QUANTITIES (DQ-5)		832 ~~1157~~			
		SUBTOTAL	832 ~~1157~~	20296	33636	
		TOTAL	21128 ~~21453~~		13340*	

(N) - NOT A SEPARATE PAY ITEM, FOR INFORMATION ONLY.
(*) - EXCLUDING ROADWAY EXCAVATION (TYPE Z-2) AERIALLY DEPOSITED LEAD.

REPAIR SPALLED JOINTS (POLYESTER GROUT)*

SHEET No.	STATION LIMITS	LOCATION	QUANTITY
			SQYD
L-2 TO L-4	NS3 145+81 TO 166+93	R†	4.0
L-4	NS3 166+93 TO 177+49	R†	3.2
L-4 TO L-6	NS3 177+49 TO D2 193+33	R†	3.2
L-6 TO L-7	D2 193+33 TO 203+89	R†	2.8
L-7	D2 203+89 TO 209+17	R†	3.6
L-7	D2 209+17 TO 214+45	R†	3.2
L-7 TO L-9	D2 214+45 TO 230+29	R†	3.8
L-9	D2 230+29 TO 240+85	R†	4.0
L-9 TO L-10	D2 240+85 TO 246+13	R†	4.2
L-10 TO L-11	D2 246+13 TO 256+69	R†	3.8
L-3 TO L-4	NS3 152+15 TO 173+27	L†	3.6
	TOTAL		39.4

(*) - APPROXIMATE LOCATIONS WILL BE DETERMINED BY THE ENGINEER.

1 REVISED PER ADDENDUM No. 1 DATED MARCH 30, 2011

SUMMARY OF QUANTITIES
Q-1

STATE OF CALIFORNIA - DEPARTMENT OF TRANSPORTATION
Caltrans DESIGN
FUNCTIONAL SUPERVISOR TEBLEZ NEMARIAM
CALCULATED-DESIGNED BY EDGAR URBANO
CHECKED BY DENIS PU
REVISED BY
DATE REVISED

423563pa001.add

LAST REVISION 07-27-10
DATE PLOTTED => 28-MAR-2011
TIME PLOTTED => 16:13

Dist	COUNTY	ROUTE	POST MILES TOTAL PROJECT	SHEET No.	TOTAL SHEETS
04	SM	101	0.9/3.6	162	283

Kenneth Y. Xu 6-25-10
REGISTERED ELECTRICAL ENGINEER DATE

8-9-10
PLANS APPROVAL DATE

REGISTERED PROFESSIONAL ENGINEER Kenneth Y. Xu No. 15219 Exp. 6-13-12 ELECTRICAL STATE OF CALIFORNIA

THE STATE OF CALIFORNIA OR ITS OFFICERS OR AGENTS SHALL NOT BE RESPONSIBLE FOR THE ACCURACY OR COMPLETENESS OF SCANNED COPIES OF THIS PLAN SHEET.

1

NOTE:

FOR ACCURATE RIGHT OF WAY DATA, CONTACT RIGHT OF WAY ENGINEERING AT THE DISTRICT OFFICE.

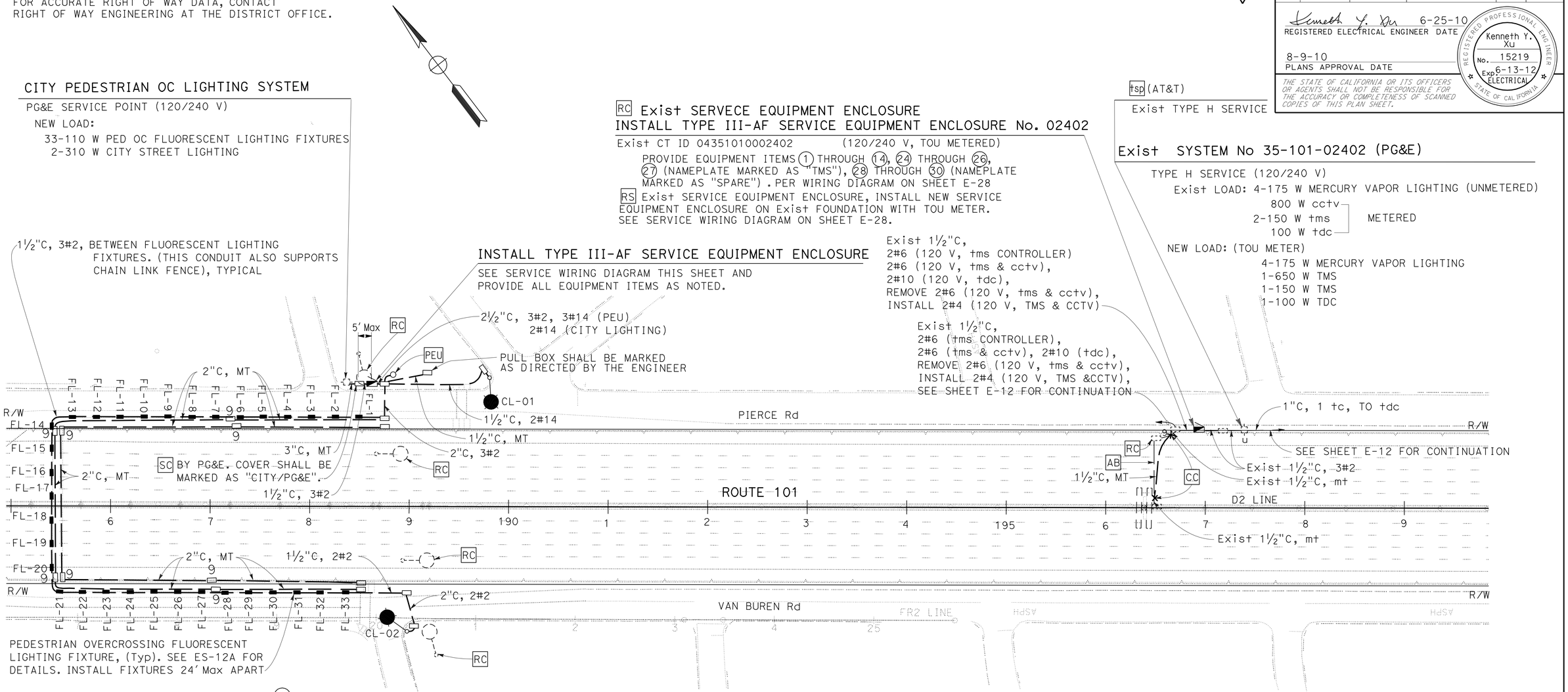

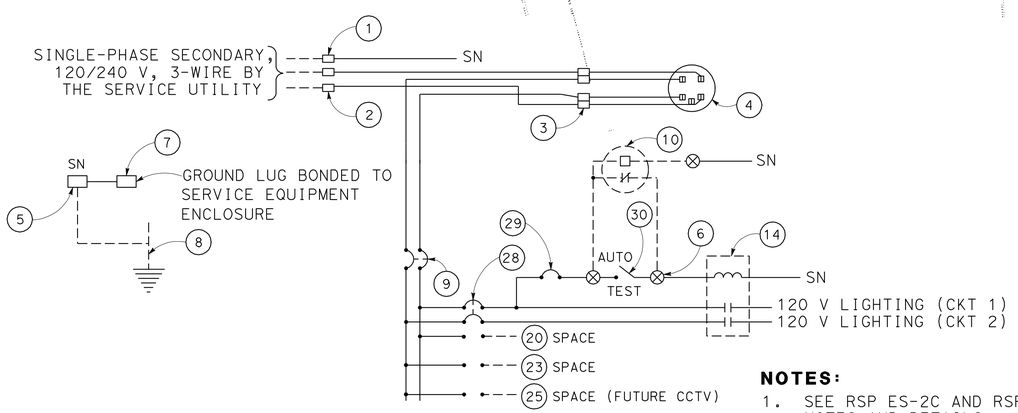

SERVICE WIRING DIAGRAM

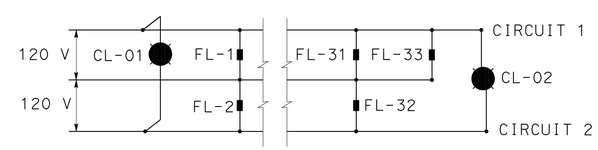

NOTES:

1. SEE RSP ES-2C AND RSP ES-2D FOR OTHER NOTES AND DETAILS.
2. SEE E-28 FOR EQUIPMENT LEGEND.

THIS PLAN IS ACCURATE FOR ELECTRICAL WORK ONLY

FOR NOTES, ABBREVIATIONS AND LEGEND, SEE SHEET E-1

MENLO PARK

1 REVISED PER ADDENDUM No. 1 DATED MARCH 30, 2011

MODIFY LIGHTING AND SIGN ILLUMINATION

SCALE: 1" = 50'

E-4

STATE OF CALIFORNIA - DEPARTMENT OF TRANSPORTATION
Caltrans
ELECTRICAL

FUNCTIONAL SUPERVISOR: KENNETH XU
CALCULATED-DESIGNED BY: MICHELLE CHAN
CHECKED BY: KENNETH XU
REVISED BY / DATE REVISED

LAST REVISION 07-06-10 | DATE PLOTTED => 30-MAR-2011 | TIME PLOTTED => 08:49

423563ua004.add