DIST	COUNTY	ROUTE	POST MILES TOTAL PROJECT	SHEET No	TOTAL SHEETS
04	CC	4	R26.6/R27.5	701	746

REGISTERED CIVIL ENGINEER 4/11/11 DATE

6-13-11
PLANS APPROVAL DATE

REGISTERED PROFESSIONAL ENGINEER INES S. LI No. C51561 Exp.6/30/12 CIVIL STATE OF CALIFORNIA

The State of California or its officers or agents shall not be responsible for the accuracy or completeness of scanned copies of this plan sheet.

BIGGS CARDOSA ASSOCIATES INC.
865 THE ALAMEDA
SAN JOSE, CALIFORNIA 95126

CCTA
2999 OAK ROAD, SUITE 100
WALNUT CREEK, CA 94597

RETAINING WALL NO.7B & 7D BRIDGE NO 28E0204

QUANTITIES

STRUCTURE EXCAVATION (RETAINING WALL)	124	CY
STRUCTURE BACKFILL (RETAINING WALL)	382	CY
PERVIOUS BACKFILL MATERIAL (RETAINING WALL)	23	CY
24" CAST-IN-DRILLED-HOLE CONCRETE PILING	983	LF
STRUCTURAL CONCRETE, RETAINING WALL	183	CY
BAR REINFORCING STEEL (RETAINING WALL)	66,013	LB
6" PERFORATED PLASTIC PIPE	32	LF
UNDERDRAIN (RETAINING WALL)		
CONCRETE BARRIER (TYPE 732A)	98	LF

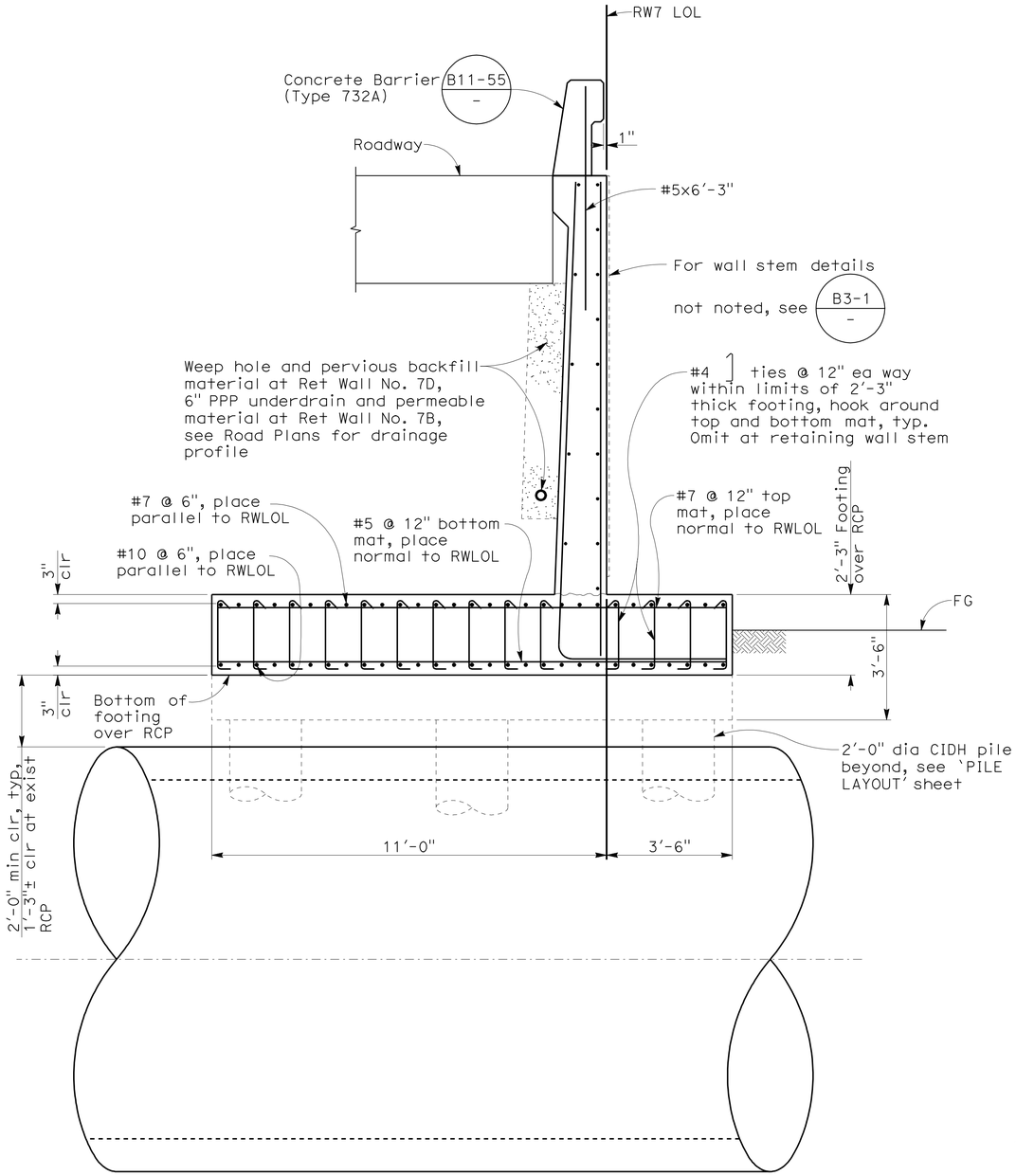

TYPICAL SECTION

1/2" = 1'-0"

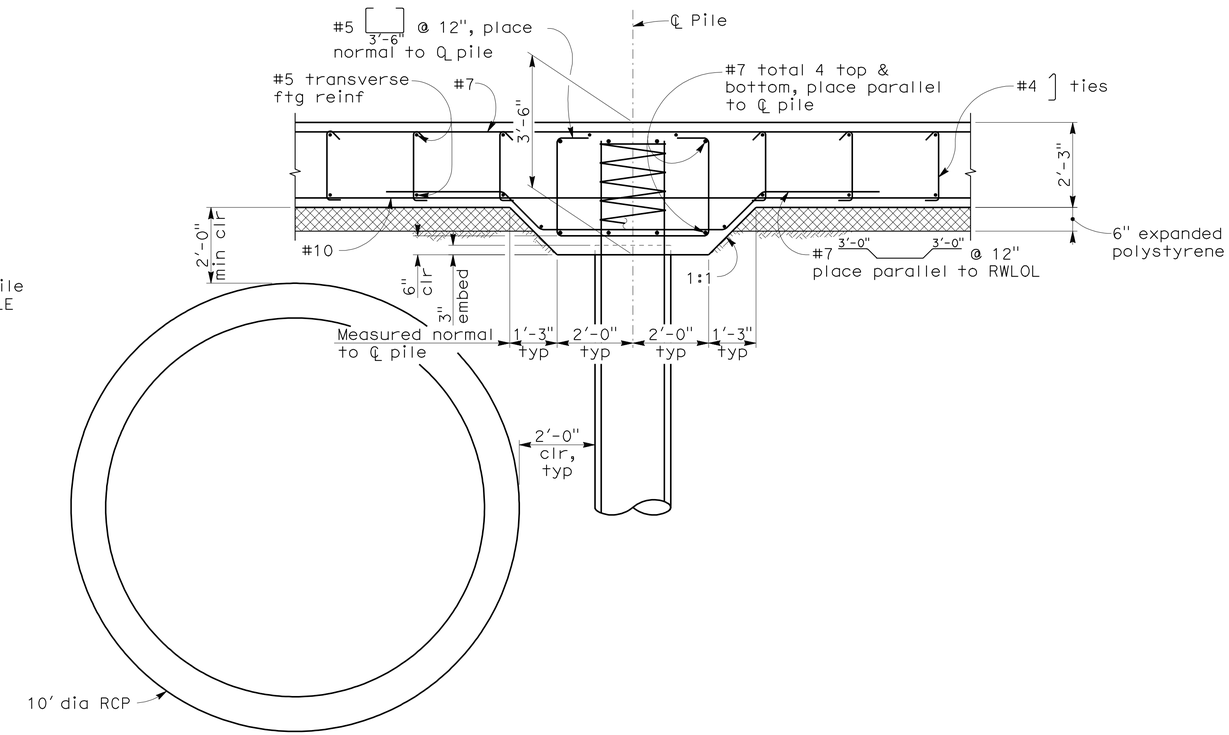

For details not noted, see 'SECTION B-B' & 'SECTION C-C' on 'RETAINING WALL TYPE 1 (MOD D) DETAILS No. 2' sheet

SECTION A-A

1/2" = 1'-0"

DESIGN OVERSIGHT Overcomer Y. Hor
5-18-11
SIGN OFF DATE

	BY	CHECKED
DESIGN	I. LI	P. GONGIDI
DETAILS	I. LI	G. JEYARAMAN
QUANTITIES	R. RIVAS	P. GONGIDI

PREPARED FOR THE STATE OF CALIFORNIA DEPARTMENT OF TRANSPORTATION

INES S. LI
PROJECT ENGINEER

BRIDGE NO. 28E0204
POST MILES 27.0

RETAINING WALL No. 7B & 7D

RETAINING WALL TYPE 1 (MOD D) DETAILS No. 1

DESIGN DETAIL SHEET (ENGLISH) (REV. 6-01-09)

ORIGINAL SCALE IN INCHES FOR REDUCED PLANS 0 1 2 3

CU 04275
EA 2285E1

DISREGARD PRINTS BEARING EARLIER REVISION DATES

REVISION DATES (PRELIMINARY STAGE ONLY) 7/9/10 9/8/10 10/28/10 12/17/10 1/14/11 4/11/11

SHEET 3 OF 6

FILE => 28e0204-b-pil-lo01.dgn

04275 2285E1

USERNAME => trmikesl DATE PLOTTED => 13-JUN-2011 TIME PLOTTED => 11:33

2006075 (2006075CRS148)

DIST	COUNTY	ROUTE	POST MILES TOTAL PROJECT	SHEET No	TOTAL SHEETS
04	CC	4	R26.6/R27.5	702	746

REGISTERED CIVIL ENGINEER — DATE 1/14/11

PLANS APPROVAL DATE 6-13-11

REGISTERED PROFESSIONAL ENGINEER — INES S. LI — No. C51561 — Exp. 6/30/12 — CIVIL — STATE OF CALIFORNIA

The State of California or its officers or agents shall not be responsible for the accuracy or completeness of scanned copies of this plan sheet.

BIGGS CARDOSA ASSOCIATES INC.
865 THE ALAMEDA
SAN JOSE, CALIFORNIA 95126

CCTA
2999 OAK ROAD, SUITE 100
WALNUT CREEK, CA 94597

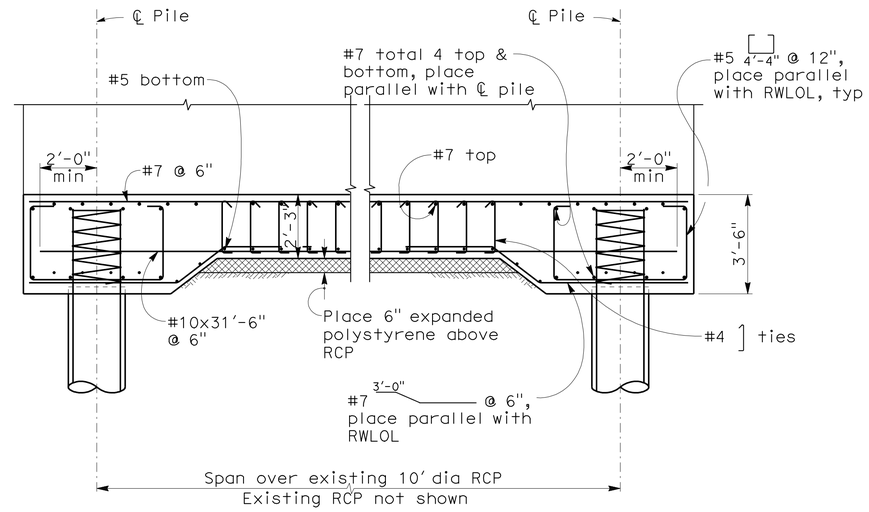

SECTION B-B

3/8" = 1'-0"

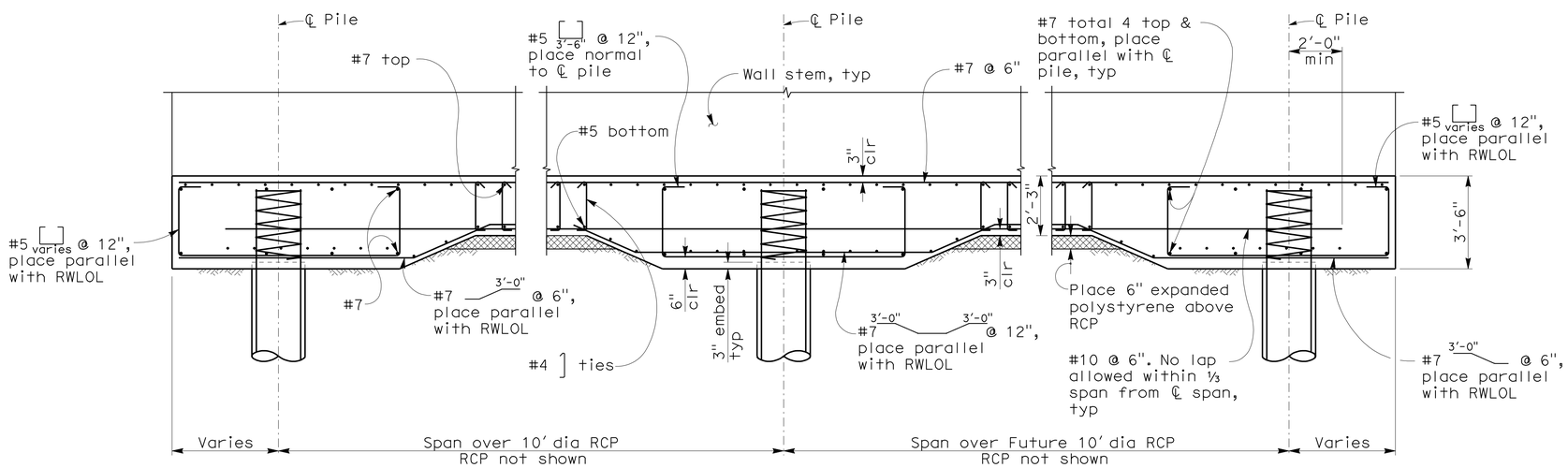

SECTION C-C

3/8" = 1'-0"

Overcomer Y. Hor
DESIGN OVERSIGHT — Overcomer Y. Hor
2-1-11
SIGN OFF DATE

	BY	CHECKED
DESIGN	I. LI	P. GONGIDI
DETAILS	I. LI	G. JEYARAMAN
QUANTITIES	R. RIVAS	P. GONGIDI

PREPARED FOR THE STATE OF CALIFORNIA DEPARTMENT OF TRANSPORTATION

INES S. LI
PROJECT ENGINEER

BRIDGE NO. 28E0204
POST MILES 27.0

RETAINING WALL No. 7B & 7D
RETAINING WALL TYPE 1 (MOD D) DETAILS No. 2

DESIGN DETAIL SHEET (ENGLISH) (REV. 6-01-09)

ORIGINAL SCALE IN INCHES FOR REDUCED PLANS 0 1 2 3

CU 04275
EA 2285E1

DISREGARD PRINTS BEARING EARLIER REVISION DATES → 7/9/10 9/8/10 10/28/10 12/17/10 1/14/11

REVISION DATES (PRELIMINARY STAGE ONLY)

SHEET 4 OF 6

FILE => 28e0204-d-retdt02.dgn

04275 2285E1

USERNAME => trmikesl DATE PLOTTED => 13-JUN-2011 TIME PLOTTED => 11:33

2006075 (2006075CRS14C)

DIST	COUNTY	ROUTE	POST MILES TOTAL PROJECT	SHEET No	TOTAL SHEETS
04	CC	4	R26.6/R27.5	703	746

REGISTERED CIVIL ENGINEER 1/14/11 DATE

6-13-11
PLANS APPROVAL DATE

REGISTERED PROFESSIONAL ENGINEER INES S. LI No. C51561 Exp.6/30/12 CIVIL STATE OF CALIFORNIA

The State of California or its officers or agents shall not be responsible for the accuracy or completeness of scanned copies of this plan sheet.

BIGGS CARDOSA ASSOCIATES INC.
865 THE ALAMEDA
SAN JOSE, CALIFORNIA 95126

CCTA
2999 OAK ROAD, SUITE 100
WALNUT CREEK, CA 94597

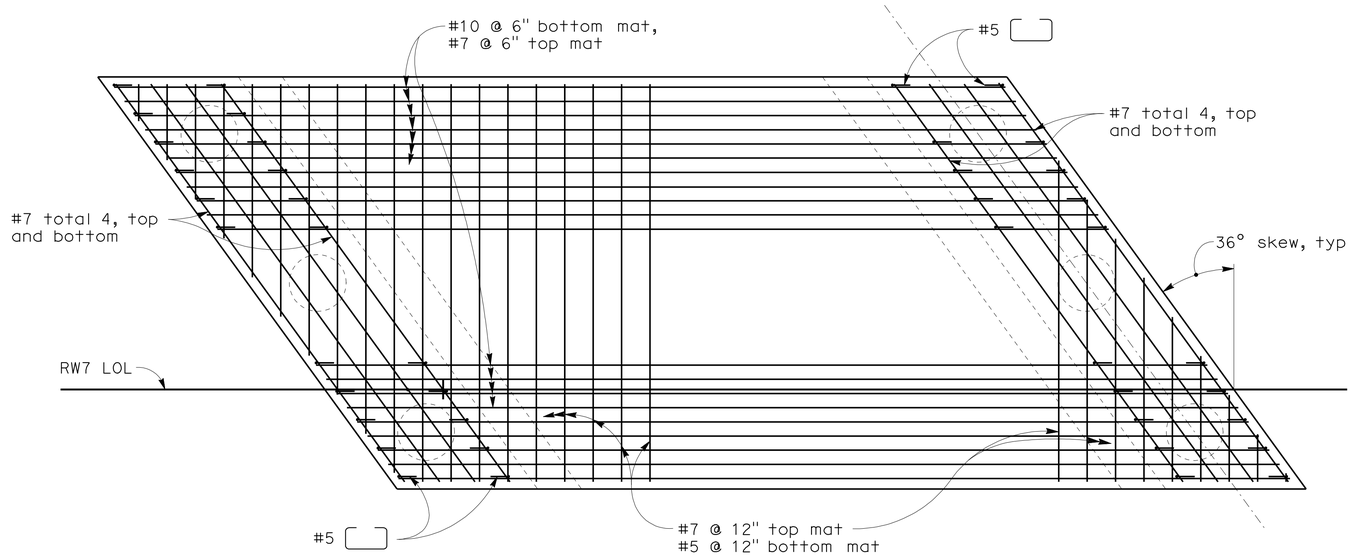

RETAINING WALL No. 7B FOOTING REINFORCEMENT

3/8" = 1'-0"

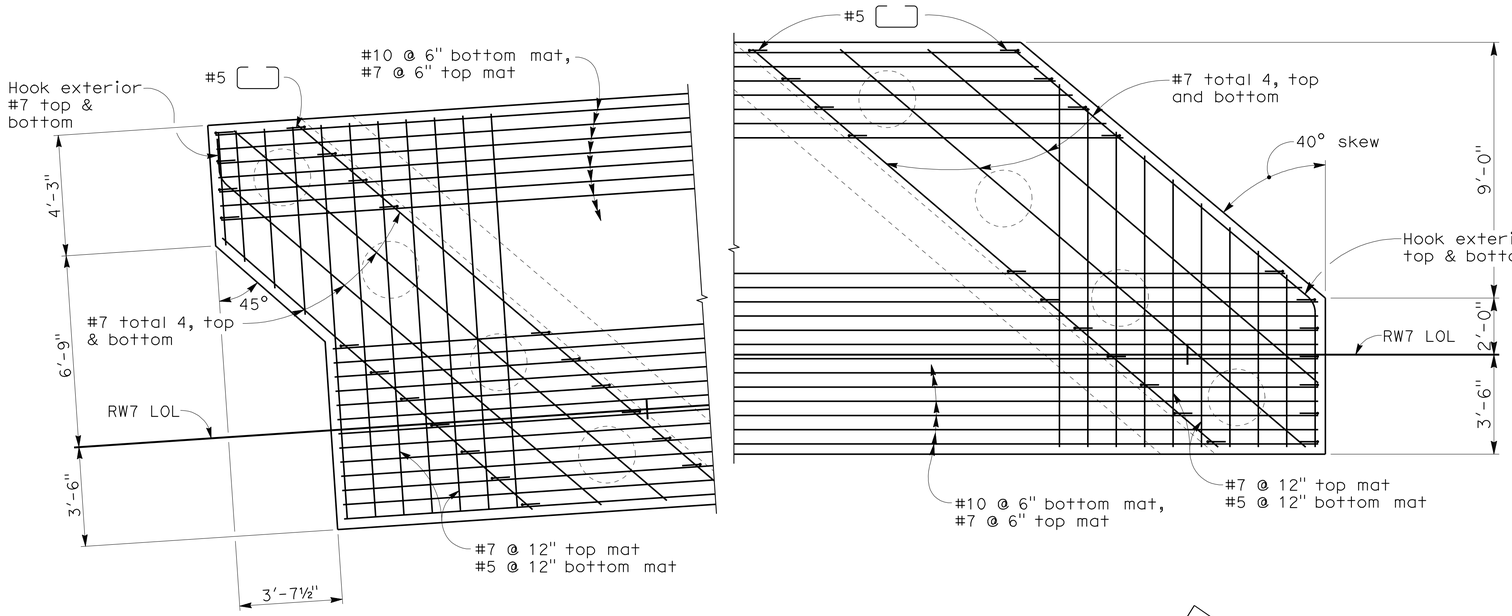

RETAINING WALL No. 7D FOOTING REINFORCEMENT

3/8" = 1'-0"

Overcomer Y. Hor
DESIGN OVERSIGHT Overcomer Y. Hor
2-1-11
SIGN OFF DATE

	BY	CHECKED
DESIGN	I. LI	P. GONGIDI
DETAILS	I. LI	G. JEYARAMAN
QUANTITIES	R. RIVAS	P. GONGIDI

PREPARED FOR THE STATE OF CALIFORNIA DEPARTMENT OF TRANSPORTATION

INES S. LI
PROJECT ENGINEER

BRIDGE NO. 28E0204
POST MILES 27.0

RETAINING WALL No. 7B & 7D
RETAINING WALL TYPE 1 (MOD D) DETAILS No. 3

DESIGN DETAIL SHEET (ENGLISH) (REV. 6-01-09)

ORIGINAL SCALE IN INCHES FOR REDUCED PLANS 0 1 2 3

CU 04275
EA 2285E1

DISREGARD PRINTS BEARING EARLIER REVISION DATES

REVISION DATES (PRELIMINARY STAGE ONLY) 7/9/10 9/8/10 10/20/10 12/17/10 1/14/11

SHEET 5 OF 6

FILE => 28e0204-d-retdt03.dgn

04275 2285E1

USERNAME => trmikes1 DATE PLOTTED => 13-JUN-2011 TIME PLOTTED => 11:33

2006075 (2006075CRS14D)

DIST	COUNTY	ROUTE	POST MILES TOTAL PROJECT	SHEET No	TOTAL SHEETS
04	CC	4	R26.6/R27.5	704	746

GEOTECHNICAL PROFESSIONAL — DATE 1/14/11

6-13-11
PLANS APPROVAL DATE

The State of California or its officers or agents shall not be responsible for the accuracy or completeness of scanned copies of this plan sheet.

REGISTERED PROFESSIONAL ENGINEER — GARY PARIKH — No. G.E. 666 — Exp. 12/31/11 — GEOTECHNICAL — STATE OF CALIFORNIA

CONTRA COSTA TRANSPORTATION AUTHORITY
2999 OAK ROAD, SUITE 100
WALNUT CREEK, CA 94597

PARIKH CONSULTANTS, INC.
2360 QUME DRIVE, SUITE A
SAN JOSE CA 95131

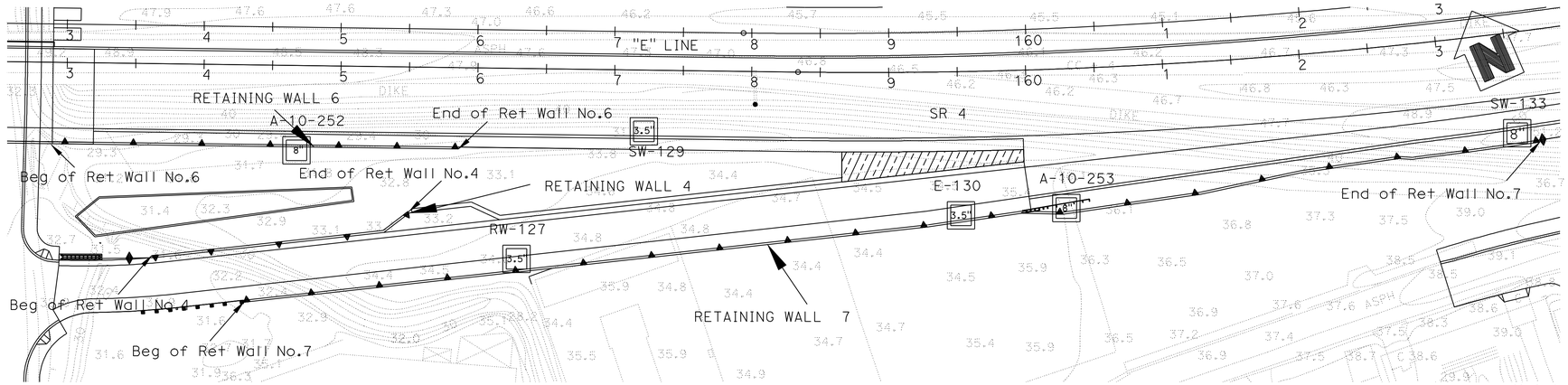

PLAN
1"=50'

Note:
Standard Penetration Test Sampler: I.D. = 1.4"; O.D. = 2"
Modified California Sampler: I.D. = 2.5"; O.D. = 3"
Hammer Assembly: A 140 lb hammer with a 30" drop (Automatic Hammer)

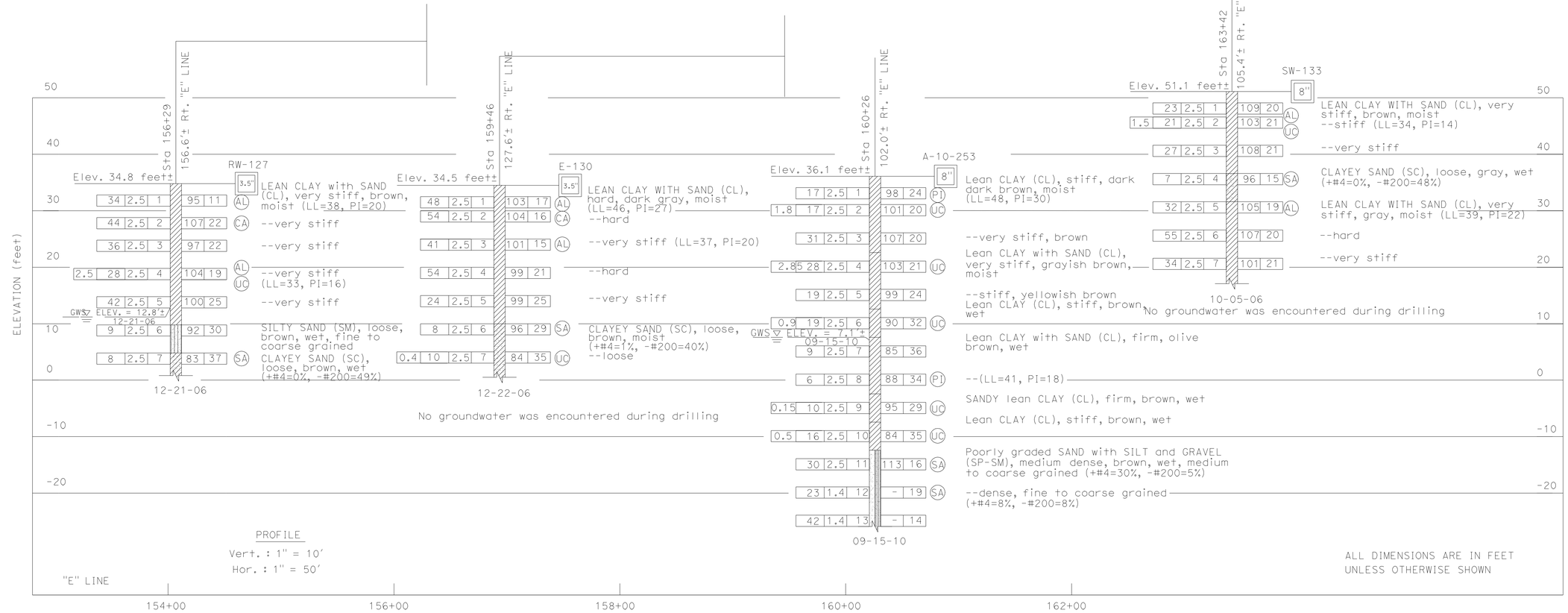

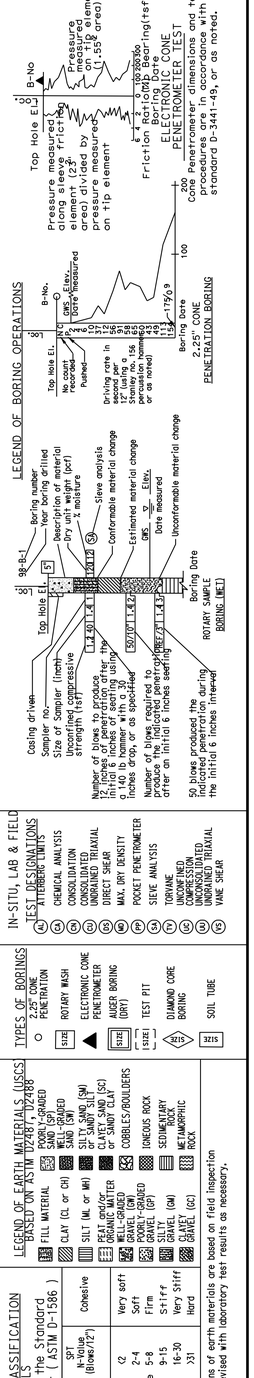

DESIGN OVERSIGHT Overcomer Y. Hor
2-1-11
SIGN OFF DATE

DRAWN BY OKSAN GOUTHIER
CHECKED BY PARTHA SIRCAR

GANGA TRIPATHI
FIELD INVESTIGATION BY:
DATE: 09/2006 - 10/2006

PREPARED FOR THE STATE OF CALIFORNIA DEPARTMENT OF TRANSPORTATION

PARTHA SIRCAR
PROJECT ENGINEER

BRIDGE NO. 28E0204
POST MILE 27.0

RETAINING WALL NO. 7B & 7D
LOG OF TEST BORINGS

ORIGINAL SCALE IN INCHES FOR REDUCED PLANS 0 1 2 3

CU 04275
EA 2285E1

DISREGARD PRINTS BEARING EARLIER REVISION DATES 9/28/09 05/20/10 9/8/10

REVISION DATES (PRELIMINARY STAGE ONLY)

SHEET 6 OF 6

OSF GEOTECHNICAL LOG OF TEST BORINGS SHEET (ENGLISH) (REV. 2/25/05)

FILE => 28E0204-z-1tb01.dgn

USERNAME => trmikest DATE PLOTTED => 13-JUN-2011 TIME PLOTTED => 11:33

FOR ACCURATE RIGHT OF WAY DATA, CONTACT
RIGHT OF WAY ENGINEERING AT THE DISTRICT OFFICE

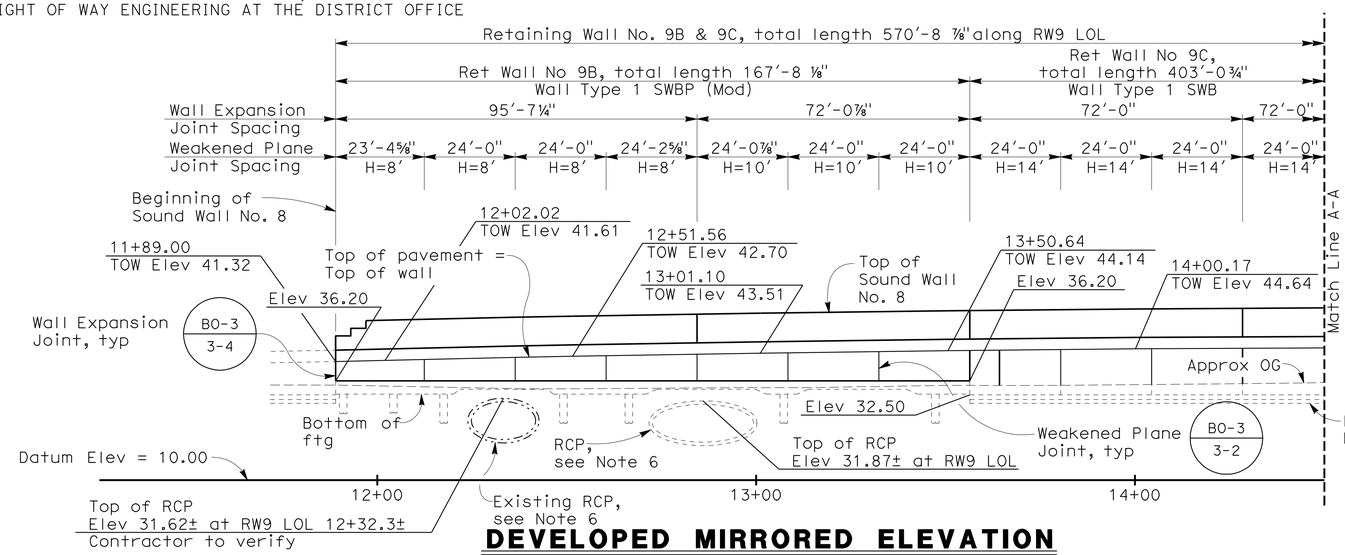

DEVELOPED MIRRORED ELEVATION

1" = 20'

CURVE DATA along RW9B LOL				
CURVE	RADIUS	LENGTH	TANGENT	DELTA
1	3791.50'	96.60'	48.30'	01°27'35"
2	3791.50'	399.17'	199.77	06°01'56"
3	1976.50'	124.18'	62.11	03°35'59"

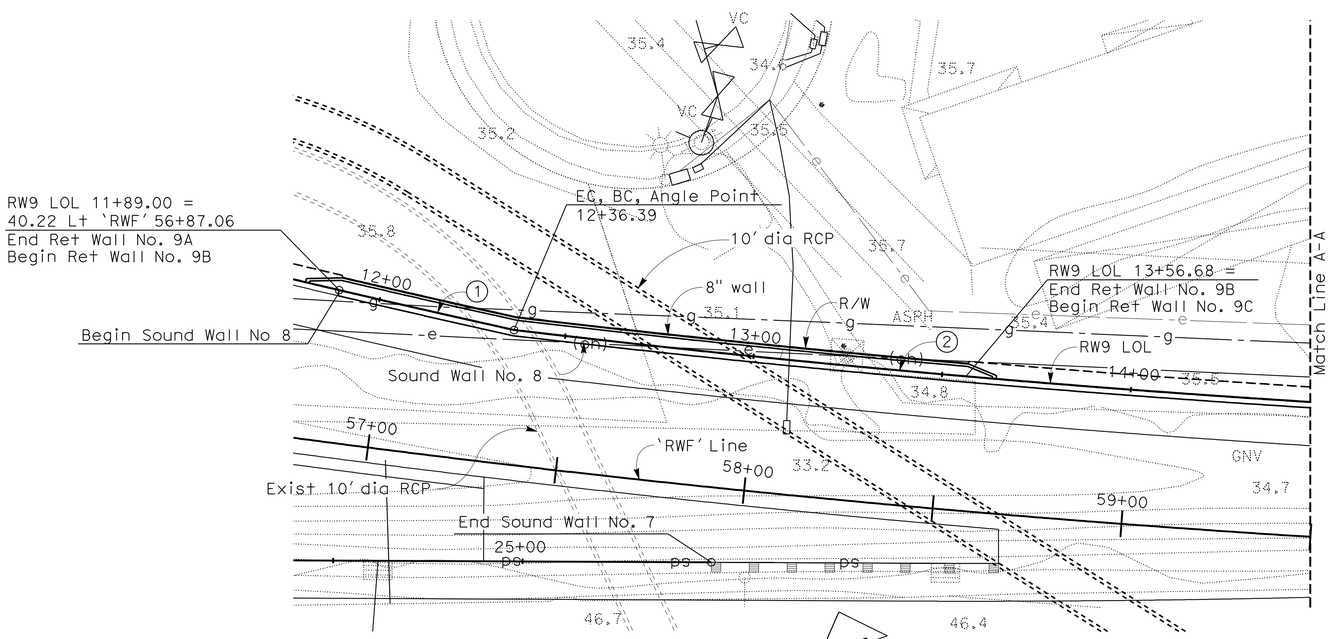

PLAN

1" = 20'

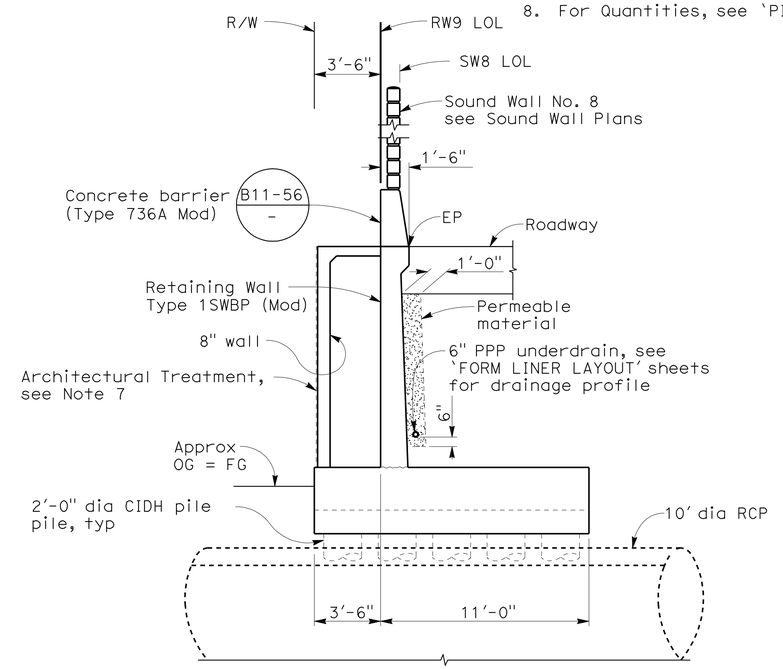

RETAINING WALL No. 9B

TYPICAL SECTION

1/4" = 1'-0"

INDEX TO PLANS

SHEET NO.	TITLE
1	GENERAL PLAN No. 1
2	GENERAL PLAN No. 2
3	PILE LAYOUT
4	FORM LINER LAYOUT No. 1
5	FORM LINER LAYOUT No. 2
6	FORM LINER LAYOUT No. 3
7	RETAINING WALL TYPE 1SWBP (MOD) DETAILS No. 1
8	RETAINING WALL TYPE 1SWBP (MOD) DETAILS No. 2
9	RETAINING WALL TYPE 1SWB
10	LOG OF TEST BORINGS

STANDARD PLANS DATED MAY 2006

A10A	ACRONYMS AND ABBREVIATIONS (SHEET 1 OF 2)
A10B	ACRONYMS AND ABBREVIATIONS (SHEET 2 OF 2)
A10C	SYMBOLS (SHEET 1 OF 2)
A10D	SYMBOLS (SHEET 2 OF 2)
A62B	LIMITS OF PAYMENT FOR EXCAVATION AND BACKFILL - BRIDGE SURCHARGE AND WALL
B0-3	BRIDGE DETAILS
B3-8	RETAINING WALL DETAILS No. 1
B11-56	CONCRETE BARRIER - TYPE 736

NOTES:

1. This plan accurate for retaining wall work only
2. Top of wall profiles are linear between points shown unless noted otherwise
3. Top of footing is level, typ
4. See Road Plans for right-of-way and utilities not shown
5. For footing step detail, see B3-8 / -
6. For location of drainage facilities, see Drainage Plans
7. For Architectural Treatment see 'FORM LINER LAYOUT' sheets and see Road Plans sheet R-30 for quantities
8. For Quantities, see 'PILE LAYOUT' sheet

DIST	COUNTY	ROUTE	POST MILES TOTAL PROJECT	SHEET No	TOTAL SHEETS
04	CC	4	R26.6/R27.5	705	746

REGISTERED CIVIL ENGINEER — DATE 5/19/11

6-13-11
PLANS APPROVAL DATE

REGISTERED PROFESSIONAL ENGINEER INES S. LI No. C51561 Exp.6/30/12 CIVIL STATE OF CALIFORNIA

The State of California or its officers or agents shall not be responsible for the accuracy or completeness of scanned copies of this plan sheet.

BIGGS CARDOSA ASSOCIATES INC.
865 THE ALAMEDA
SAN JOSE, CALIFORNIA 95126

CCTA
2999 OAK ROAD, SUITE 100
WALNUT CREEK, CA 94597

DESIGN OVERSIGHT Overcomer Y. Hor	DESIGN	BY I. LI	CHECKED P. GONGIDI	LOAD FACTOR DESIGN	
5-18-11 SIGN OFF DATE	DETAILS	BY I. LI	CHECKED G. JEYARAMAN	LAYOUT BY T. HICKS	CHECKED I. LI
	QUANTITIES	BY R. RIVAS	CHECKED P. GONGIDI	SPECIFICATIONS BY I. LI	PLANS AND SPECS COMPARED A. NOTARO

DESIGN GENERAL PLAN SHEET (ENGLISH) (REV. 6-01-09)

ORIGINAL SCALE IN INCHES FOR REDUCED PLANS 0 1 2 3

PREPARED FOR THE STATE OF CALIFORNIA DEPARTMENT OF TRANSPORTATION

INES S. LI
PROJECT ENGINEER

CU 04275
EA 2285E

BRIDGE NO. 28E0205
POST MILES 27.0

RETAINING WALL No. 9B & 9C

GENERAL PLAN No. 1

DISREGARD PRINTS BEARING EARLIER REVISION DATES → REVISION DATES (PRELIMINARY STAGE ONLY) 3/26/08 4/22/09 9/28/09 5/26/10 9/8/10 10/28/10 12/1/10 1/14/11 4/11/11 5/19/11

SHEET 1 OF 10

FILE => 28e0205-a-gp01.dgn

USERNAME => trmikesl DATE PLOTTED => 13-JUN-2011 TIME PLOTTED => 11:34

2006075 (2006075CRS15)

FOR ACCURATE RIGHT OF WAY DATA, CONTACT
RIGHT OF WAY ENGINEERING AT THE DISTRICT OFFICE

DIST	COUNTY	ROUTE	POST MILES TOTAL PROJECT	SHEET No	TOTAL SHEETS
04	CC	4	R26.6/R27.5	706	746

REGISTERED CIVIL ENGINEER — DATE 5/19/11

PLANS APPROVAL DATE 6-13-11

REGISTERED PROFESSIONAL ENGINEER — INES S. LI — No. C51561 — Exp. 6/30/12 — CIVIL — STATE OF CALIFORNIA

The State of California or its officers or agents shall not be responsible for the accuracy or completeness of scanned copies of this plan sheet.

BIGGS CARDOSA ASSOCIATES INC.
865 THE ALAMEDA
SAN JOSE, CALIFORNIA 95126

CCTA
2999 OAK ROAD, SUITE 100
WALNUT CREEK, CA 94597

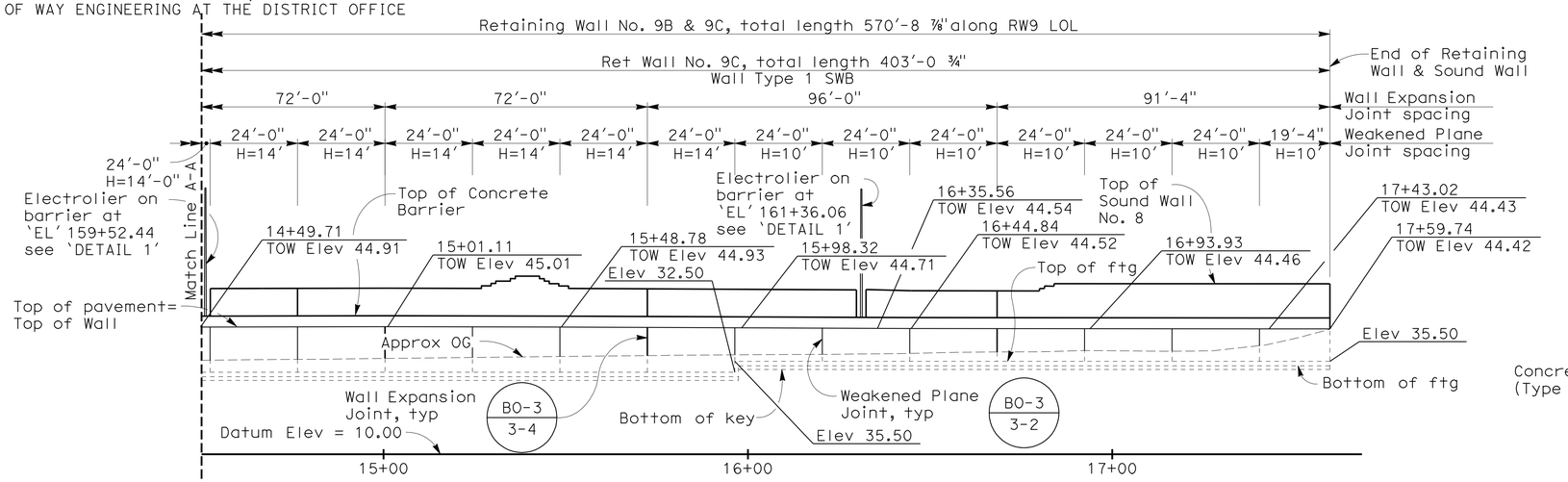

DEVELOPED MIRRORED ELEVATION

1" = 20'

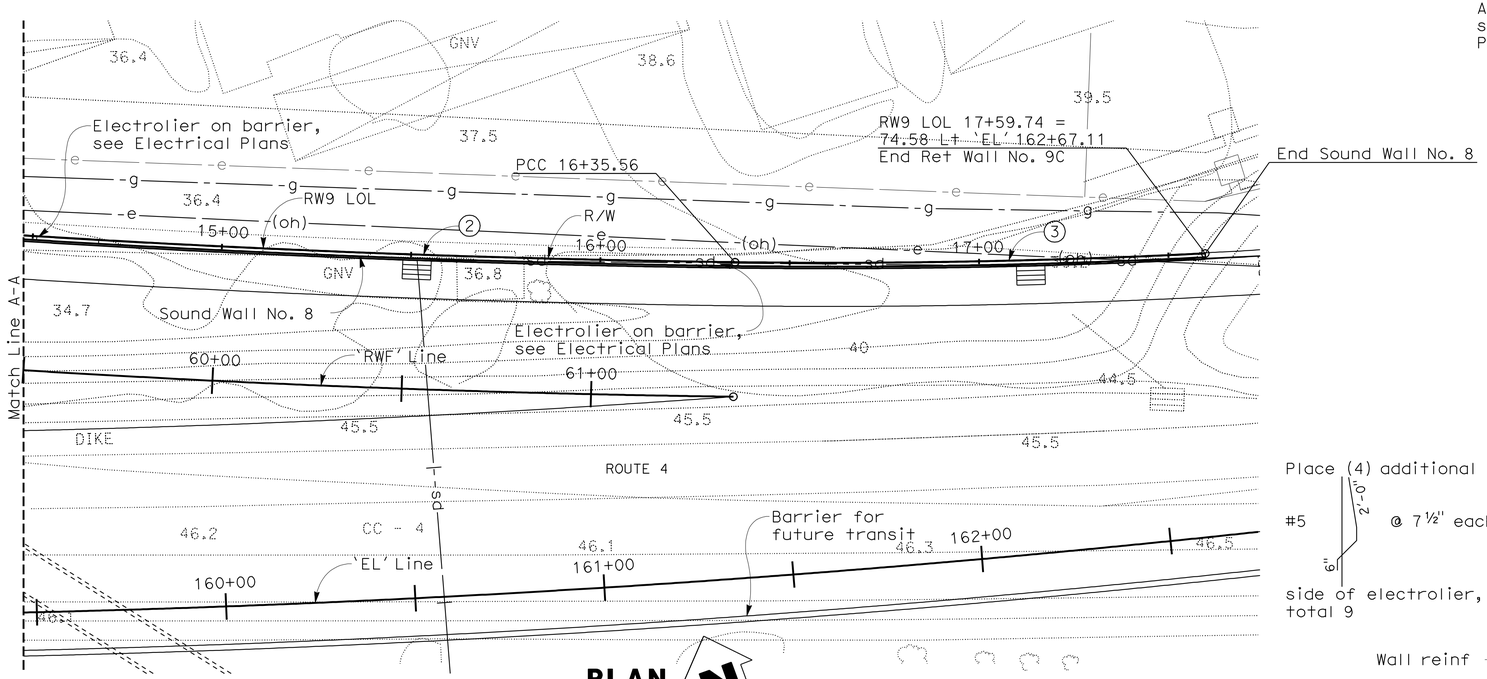

PLAN

1" = 20'

For notes, see 'GENERAL PLAN NO. 1' sheet

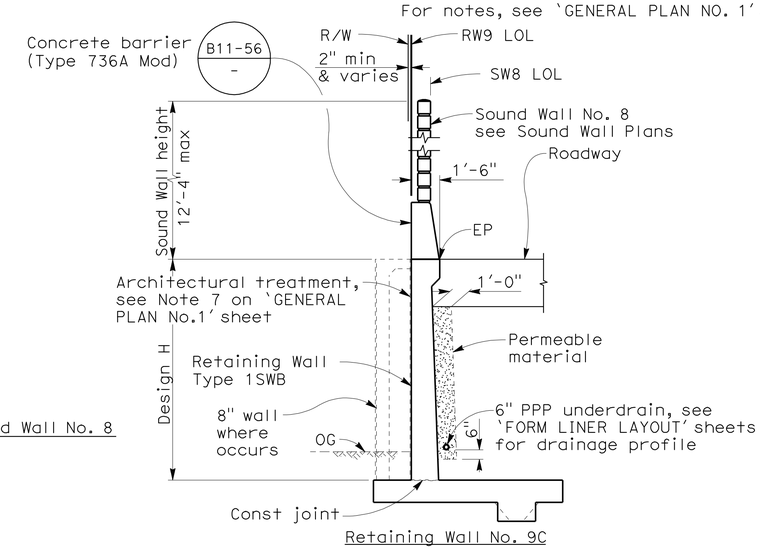

TYPICAL SECTION

NO SCALE

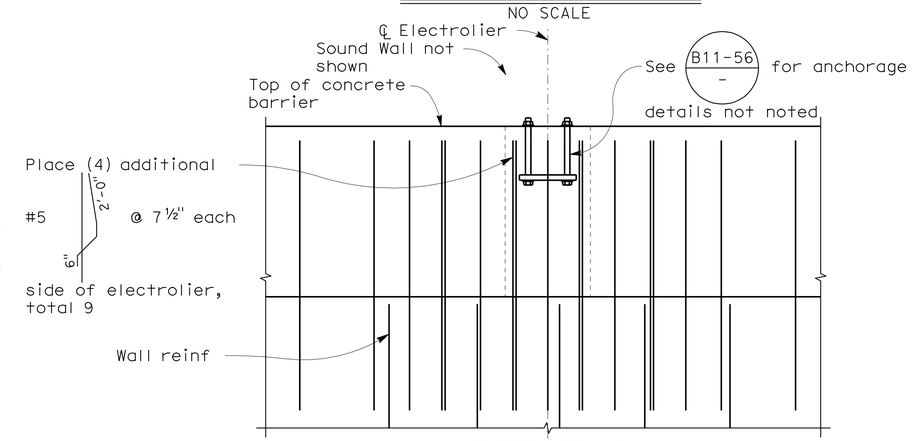

DETAIL 1

3/4" = 1'-0"

DESIGN OVERSIGHT Overcomer Y. Hor	DESIGN	BY I. LI	CHECKED P. GONGIDI	LOAD FACTOR DESIGN	
5-18-11 SIGN OFF DATE	DETAILS	BY I. LI	CHECKED G. JEYARAMAN	LAYOUT BY T. HICKS	CHECKED I. LI
	QUANTITIES	BY R. RIVAS	CHECKED P. GONGIDI	SPECIFICATIONS BY I. LI	PLANS AND SPECS COMPARED A. NOTARO

PREPARED FOR THE STATE OF CALIFORNIA DEPARTMENT OF TRANSPORTATION

INES S. LI
PROJECT ENGINEER

BRIDGE NO. 28E0205
POST MILES 27.0

RETAINING WALL No. 9B & 9C
GENERAL PLAN No. 2

DESIGN GENERAL PLAN SHEET (ENGLISH) (REV. 6-01-09)

ORIGINAL SCALE IN INCHES FOR REDUCED PLANS 0 1 2 3

CU 04275
EA 2285E1

FILE => 28e0205-a-gp02.dgn

DISREGARD PRINTS BEARING EARLIER REVISION DATES — REVISION DATES (PRELIMINARY STAGE ONLY) 3/26/08 4/22/09 9/28/09 5/28/10 9/8/10 10/28/10 12/17/10 1/11/11 4/11/11 5/19/11

SHEET 2 OF 10

USERNAME => trmikes1 DATE PLOTTED => 13-JUN-2011 TIME PLOTTED => 11:34 (2006075CRS16) 2006075

DIST	COUNTY	ROUTE	POST MILES TOTAL PROJECT	SHEET No	TOTAL SHEETS
04	CC	4	R26.6/R27.5	707	746

REGISTERED CIVIL ENGINEER — DATE 4/11/11

6-13-11
PLANS APPROVAL DATE

REGISTERED PROFESSIONAL ENGINEER — INES S. LI — No. C51561 — Exp.6/30/12 — CIVIL — STATE OF CALIFORNIA

The State of California or its officers or agents shall not be responsible for the accuracy or completeness of scanned copies of this plan sheet.

BIGGS CARDOSA ASSOCIATES INC.
865 THE ALAMEDA
SAN JOSE, CALIFORNIA 95126

CCTA
2999 OAK ROAD, SUITE 100
WALNUT CREEK, CA 94597

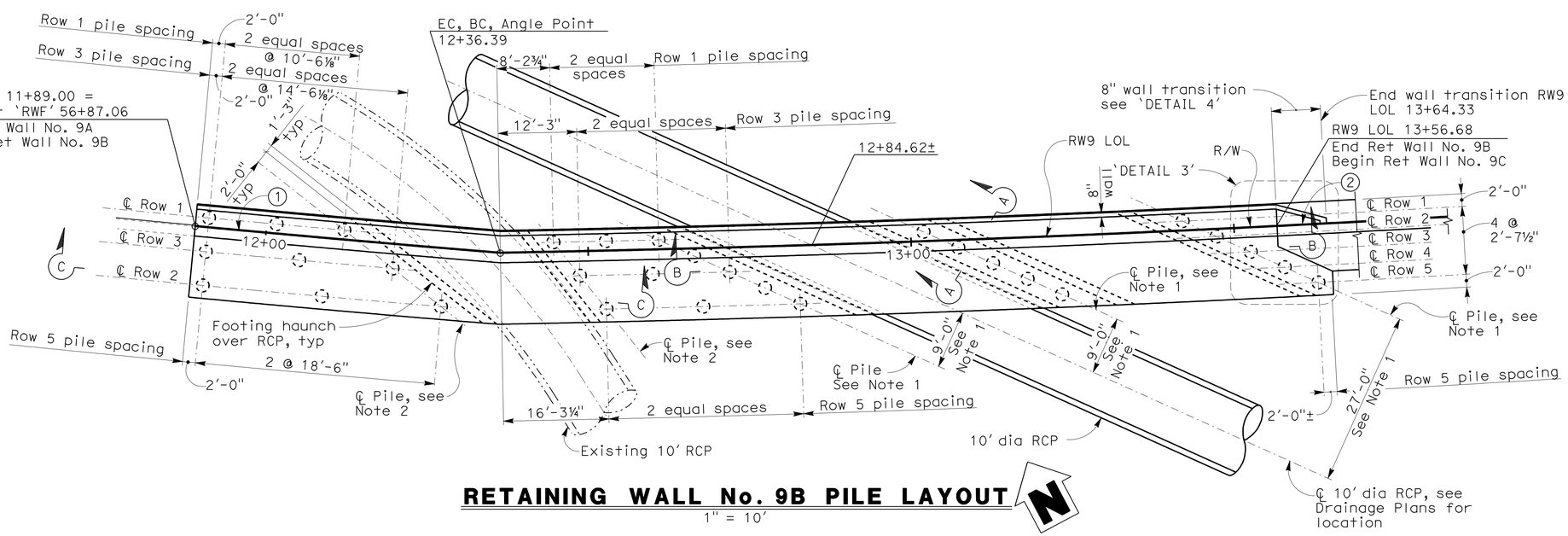

RETAINING WALL No. 9B PILE LAYOUT

1" = 10'

1. Locations of these piles are controlled by location of 10' RCP. Contractor shall locate ℄ 10' RCP in the field and offset ℄ piles from ℄ RCP
2. A minimum 2'-0" horizontal clearance shall be maintained between CIDH piles and RCP's, typ.
3. For 'SECTION A-A', see 'RETAINING WALL TYPE 1SWBP (MOD) DETAILS No. 1' sheet.
4. For 'SECTION B-B', 'SECTION C-C' and 'DETAIL 3', see 'RETAINING WALL TYPE 1SWBP (MOD) DETAILS No. 2' sheet.
5. For 'DETAIL 4', see 'FORM LINER LAYOUT No. 3' sheet
6. All piles are 24" dia CIDH piles.
7. For curve data (1) & (2) along RW9 LOL, see 'GENERAL PLAN No. 1' sheet

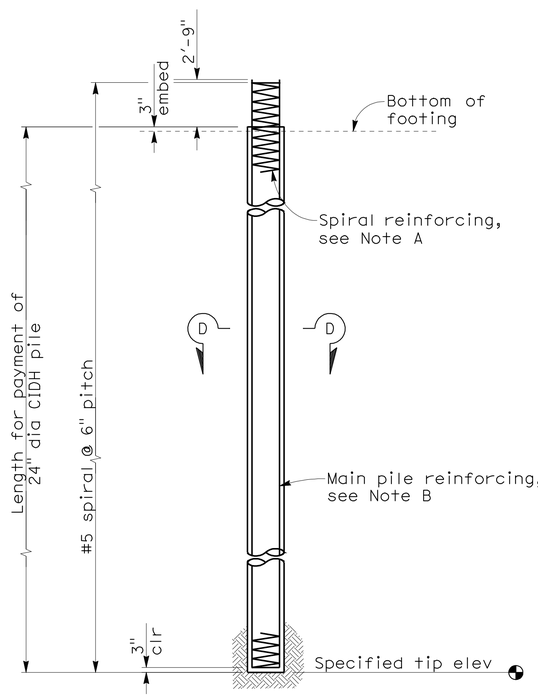

24" DIA CIDH PILE ELEVATION - DETAIL 2

1/4" = 1'-0"

NOTE:
The Contractor shall verify all controlling field dimensions before ordering or fabricating any material

PILE DATA TABLE

Location	Type	Design Load (kip)	Nominal Resistance (kips)		Design Tip Elev. (ft)(1)	Specified Tip Elev. (ft)
			Compression	Tension		
Retaining Wall No. 9B	24" dia CIDH	156 k	312	0	3.00(a); 8.70(c)	3.00

NOTE:
Design Tip Elevation is controlled by the following demands:
(a) Compression; (b) Tension; (c) Lateral Loads

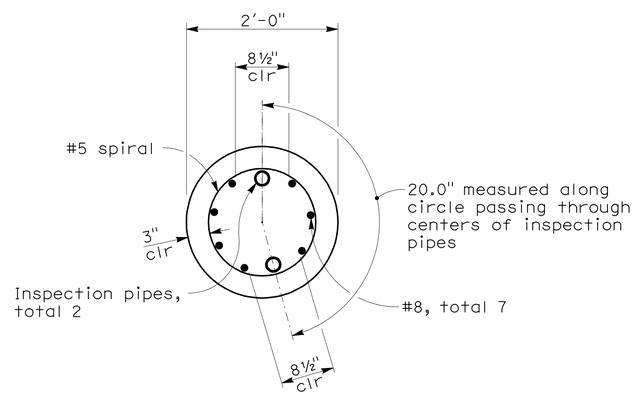

SECTION D-D

1" = 1'-0"

A. Lapped splices in spiral pile reinforcement shall be lapped at least 80 bar diameters Spiral reinforcing at ends shall be terminated by a 135° hook with a 6" long tail, hooked around a main reinforcing bar.

B. No splice in main reinforcing steel allowed.

REINFORCED CONCRETE: fy = 60 ksi
fc = 3.6 ksi

RETAINING WALL NO.9B & 9C — BRIDGE NO 28E0205

QUANTITIES

STRUCTURE EXCAVATION (RETAINING WALL)	977	CY
STRUCTURE BACKFILL (RETAINING WALL)	1,382	CY
24" CAST-IN-DRILLED-HOLE CONCRETE PILING	956	LF
STRUCTURAL CONCRETE, RETAINING WALL	768	CY
BAR REINFORCING STEEL (RETAINING WALL)	130,190	LB
6" PERFORATED PLASTIC PIPE	567	LF
UNDERDRAIN (RETAINING WALL)		

Overcomer Y. Hor
DESIGN OVERSIGHT — Overcomer Y. Hor
5-18-11
SIGN OFF DATE

	BY	CHECKED
DESIGN	I. LI	P. GONGIDI
DETAILS	I. LI	G. JEYARAMAN
QUANTITIES	R. RIVAS	P. GONGIDI

PREPARED FOR THE STATE OF CALIFORNIA DEPARTMENT OF TRANSPORTATION

INES S. LI
PROJECT ENGINEER

BRIDGE NO. 28E0205
POST MILES 27.0

RETAINING WALLS No. 9B & 9C
PILE LAYOUT

DESIGN DETAIL SHEET (ENGLISH) (REV. 6-01-09)

ORIGINAL SCALE IN INCHES FOR REDUCED PLANS 0 1 2 3

CU 04275
EA 2285E1

DISREGARD PRINTS BEARING EARLIER REVISION DATES — REVISION DATES (PRELIMINARY STAGE ONLY) 9/29/09 5/26/10 9/8/10 10/20/10 12/4/10 1/14/11 4/11/11

SHEET 3 OF 10

FILE => 28e0205-b-pil-lo01.dgn

USERNAME => trmikesl DATE PLOTTED => 13-JUN-2011 TIME PLOTTED => 11:34

(2006075CRS16A) 2006075

DIST	COUNTY	ROUTE	POST MILES TOTAL PROJECT	SHEET No	TOTAL SHEETS
04	CC	4	R26.6/R27.5	708	746

REGISTERED CIVIL ENGINEER 4/11/11 DATE

6-13-11
PLANS APPROVAL DATE

REGISTERED PROFESSIONAL ENGINEER INES S. LI No. C51561 Exp.6/30/12 CIVIL STATE OF CALIFORNIA

The State of California or its officers or agents shall not be responsible for the accuracy or completeness of scanned copies of this plan sheet.

BIGGS CARDOSA ASSOCIATES INC.
865 THE ALAMEDA
SAN JOSE, CALIFORNIA 95126

CCTA
2999 OAK ROAD, SUITE 100
WALNUT CREEK, CA 94597

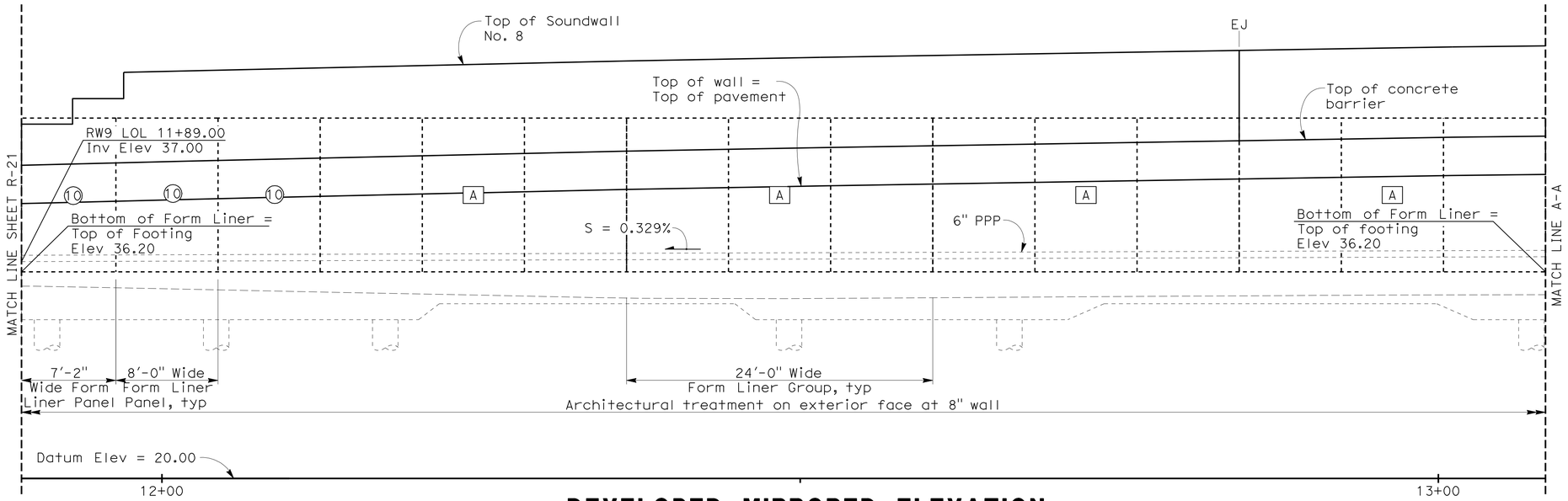

DEVELOPED MIRRORED ELEVATION

1" = 5'

1. EJ = Expansion Joint
2. For sheet R-21, see Road Plans
3. For 'DETAIL 4', see 'FORM LINER LAYOUT No. 3' sheet

(1) or [A] For form liner legend and details, see Road Plan sheets R-31 and R-32.

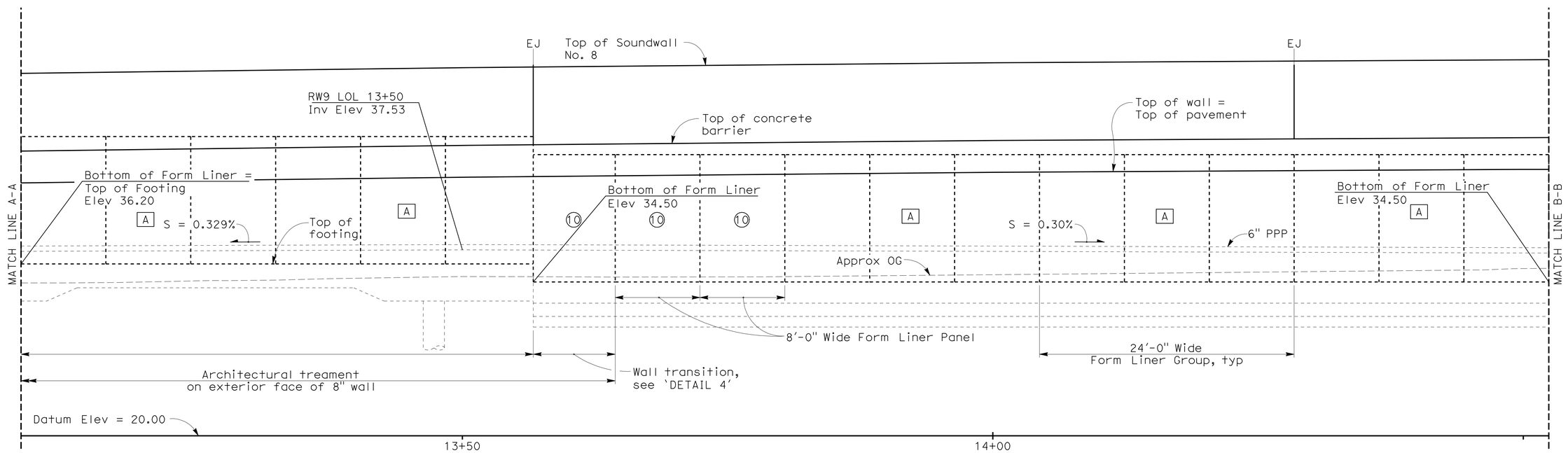

DEVELOPED MIRRORED ELEVATION

1" = 5'

DESIGN OVERSIGHT Overcomer Y. Hor
5-18-11
SIGN OFF DATE

	BY	CHECKED
DESIGN	I. LI	P. GONGIDI
DETAILS	I. LI	G. JEYARAMAN
QUANTITIES	R. RIVAS	P. GONGIDI

PREPARED FOR THE STATE OF CALIFORNIA DEPARTMENT OF TRANSPORTATION

INES S. LI
PROJECT ENGINEER

BRIDGE NO. 28E0205
POST MILES 27.0

RETAINING WALLS No. 9B & 9C
FORM LINER LAYOUT No. 1

DESIGN DETAIL SHEET (ENGLISH) (REV. 6-01-09)

ORIGINAL SCALE IN INCHES FOR REDUCED PLANS 0 1 2 3

CU 04275
EA 2285E1

FILE => 28e0205-c-fl-lo01.dgn

DISREGARD PRINTS BEARING EARLIER REVISION DATES

REVISION DATES (PRELIMINARY STAGE ONLY) 9/28/09 5/26/10 9/8/10 10/20/10 12/1/10 1/14/11 4/11/11

SHEET 4 OF 10

USERNAME => trmikes1 DATE PLOTTED => 13-JUN-2011 TIME PLOTTED => 11:34

2006075 (2006075CRS17)

DIST	COUNTY	ROUTE	POST MILES TOTAL PROJECT	SHEET No	TOTAL SHEETS
04	CC	4	R26.6/R27.5	709	746

REGISTERED CIVIL ENGINEER 4/11/11 DATE

6-13-11
PLANS APPROVAL DATE

REGISTERED PROFESSIONAL ENGINEER INES S. LI No. C51561 Exp. 6/30/12 CIVIL STATE OF CALIFORNIA

The State of California or its officers or agents shall not be responsible for the accuracy or completeness of scanned copies of this plan sheet.

BIGGS CARDOSA ASSOCIATES INC.
865 THE ALAMEDA
SAN JOSE, CALIFORNIA 95126

CCTA
2999 OAK ROAD, SUITE 100
WALNUT CREEK, CA 94597

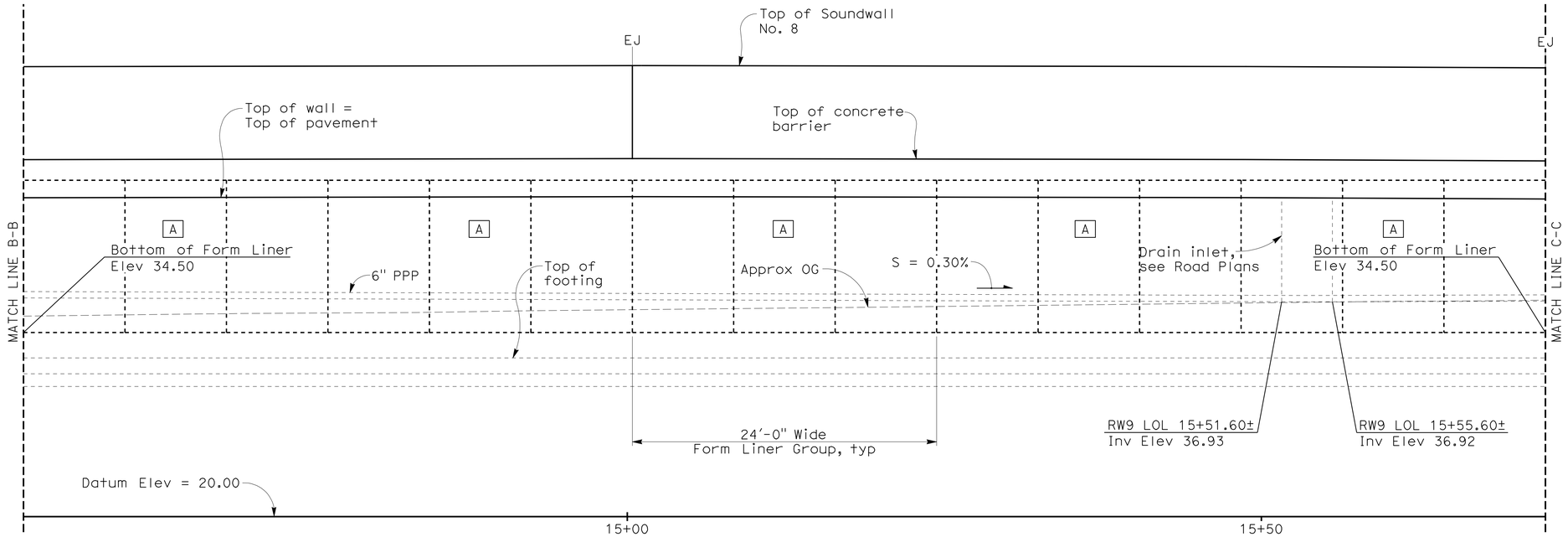

DEVELOPED MIRRORED ELEVATION

1" = 5'

NOTES:

EJ = Expansion Joint

A For form liner legend and details, see Road Plan sheets R-31 and R-32.

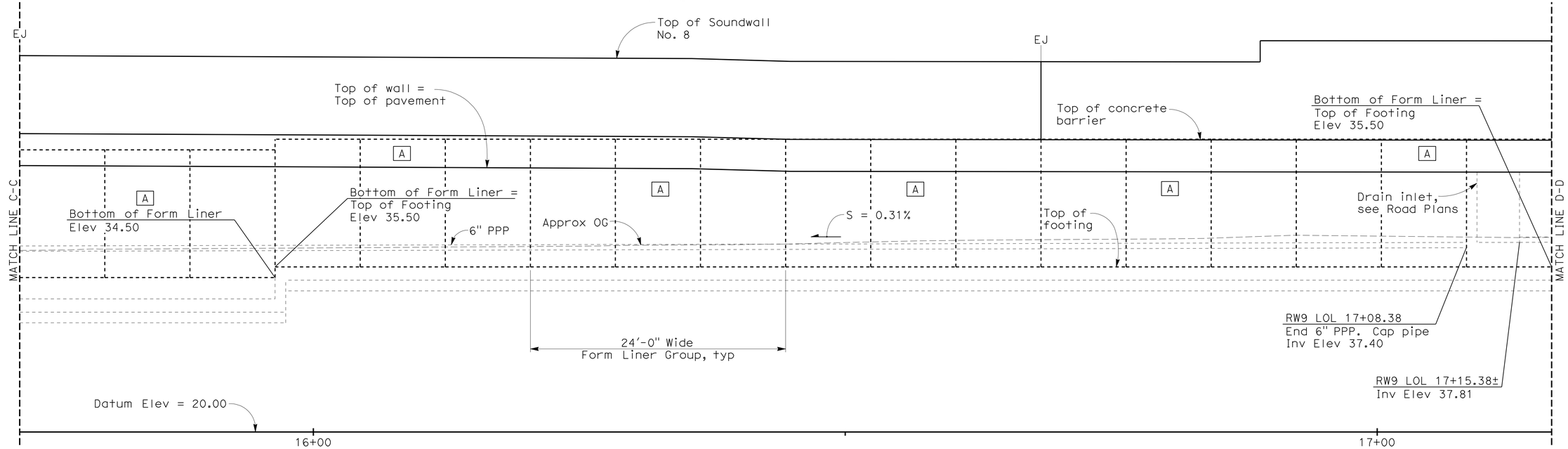

DEVELOPED MIRRORED ELEVATION

1" = 5'

DESIGN OVERSIGHT Overcomer Y. Hor
5-18-11
SIGN OFF DATE

	BY	CHECKED
DESIGN	I. LI	P. GONGIDI
DETAILS	I. LI	G. JEYARAMAN
QUANTITIES	R. RIVAS	P. GONGIDI

PREPARED FOR THE STATE OF CALIFORNIA DEPARTMENT OF TRANSPORTATION

INES S. LI
PROJECT ENGINEER

BRIDGE NO. 28E0205
POST MILES 27.0

RETAINING WALLS No. 9B & 9C
FORM LINER LAYOUT No. 2

DESIGN DETAIL SHEET (ENGLISH) (REV. 6-01-09)

ORIGINAL SCALE IN INCHES FOR REDUCED PLANS 0 1 2 3

CU 04275
EA 2285E1

FILE => 28e0205-c-fl-lo02.dgn

DISREGARD PRINTS BEARING EARLIER REVISION DATES

REVISION DATES (PRELIMINARY STAGE ONLY) 9/28/09 5/26/10 9/8/10 10/20/10 12/1/10 1/14/11 4/11/11

SHEET 5 OF 10

USERNAME => ttrmikes1 DATE PLOTTED => 13-JUN-2011 TIME PLOTTED => 11:34

2006075 (2006075CRS18)

DIST	COUNTY	ROUTE	POST MILES TOTAL PROJECT	SHEET No	TOTAL SHEETS
04	CC	4	R26.6/R27.5	710	746

REGISTERED CIVIL ENGINEER 4/11/11 DATE

6-13-11
PLANS APPROVAL DATE

REGISTERED PROFESSIONAL ENGINEER INES S. LI No. C51561 Exp.6/30/12 CIVIL STATE OF CALIFORNIA

The State of California or its officers or agents shall not be responsible for the accuracy or completeness of scanned copies of this plan sheet.

BIGGS CARDOSA ASSOCIATES INC.
865 THE ALAMEDA
SAN JOSE, CALIFORNIA 95126

CCTA
2999 OAK ROAD, SUITE 100
WALNUT CREEK, CA 94597

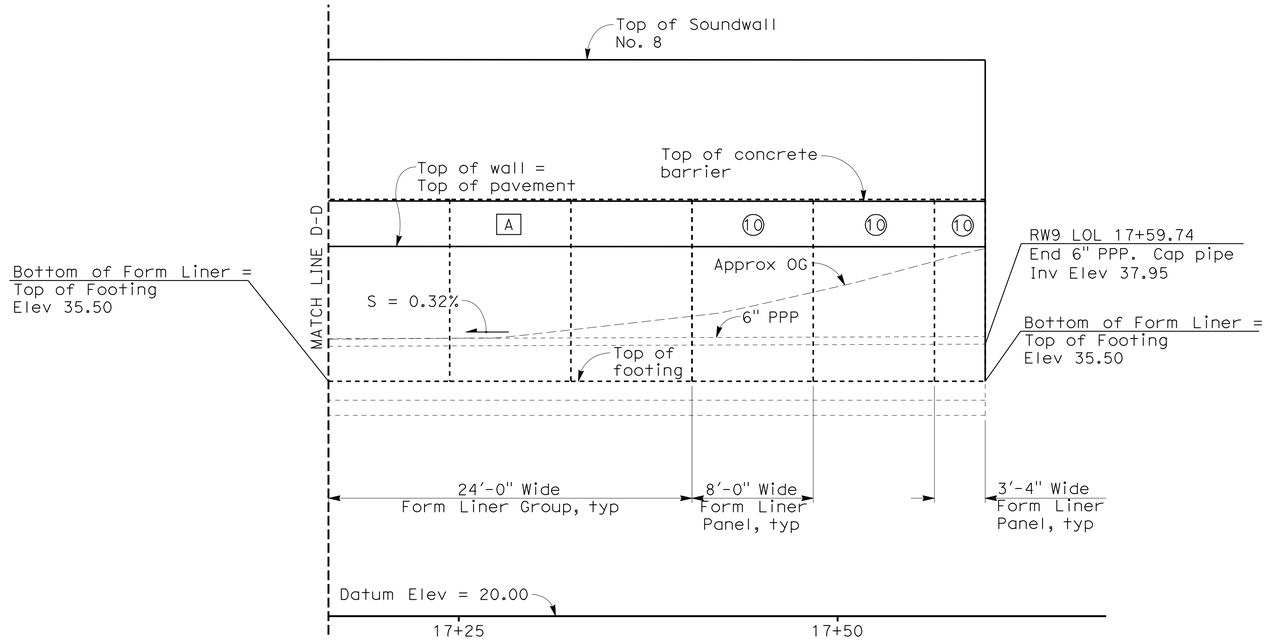

DEVELOPED MIRRORED ELEVATION

1" = 5'

EJ = Expansion Joint

(1) or [A] For form liner legend and details, see Road Plan sheets R-31 and R-32.

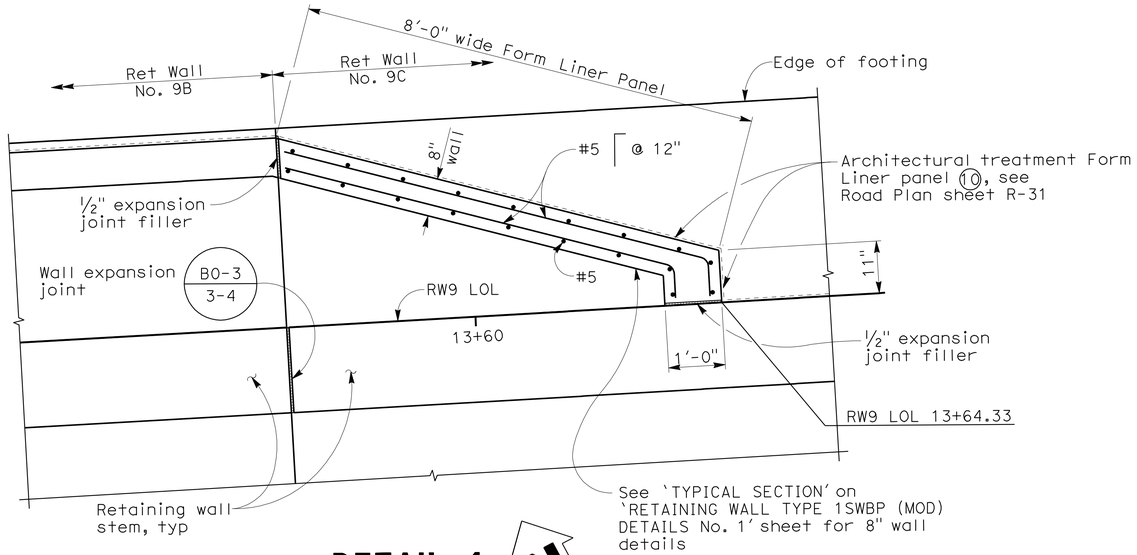

DETAIL 4

3/4" = 1'-0"

N

DESIGN OVERSIGHT Overcomer Y. Hor
5-18-11
SIGN OFF DATE

	BY	CHECKED
DESIGN	I. LI	P. GONGIDI
DETAILS	I. LI	G. JEYARAMAN
QUANTITIES	R. RIVAS	P. GONGIDI

PREPARED FOR THE STATE OF CALIFORNIA DEPARTMENT OF TRANSPORTATION

INES S. LI
PROJECT ENGINEER

BRIDGE NO. 28E0205
POST MILES 27.0

RETAINING WALLS No. 9B & 9C
FORM LINER LAYOUT No. 3

DESIGN DETAIL SHEET (ENGLISH) (REV. 6-01-09)

ORIGINAL SCALE IN INCHES FOR REDUCED PLANS 0 1 2 3

CU 04275
EA 2285E1

DISREGARD PRINTS BEARING EARLIER REVISION DATES

REVISION DATES (PRELIMINARY STAGE ONLY) 9/28/09 5/26/10 9/8/10 10/20/10 12/1/10 1/17/11 4/11/11

SHEET 6 OF 10

FILE => 28e0205-c-fl-lo03.dgn

USERNAME => trmikesl DATE PLOTTED => 13-JUN-2011 TIME PLOTTED => 11:35

20060075 (20060075CRS19)

DIST	COUNTY	ROUTE	POST MILES TOTAL PROJECT	SHEET No	TOTAL SHEETS
04	CC	4	R26.6/R27.5	711	746

REGISTERED CIVIL ENGINEER 4/11/11 DATE

6-13-11
PLANS APPROVAL DATE

REGISTERED PROFESSIONAL ENGINEER INES S. LI No. C51561 Exp.6/30/12 CIVIL STATE OF CALIFORNIA

The State of California or its officers or agents shall not be responsible for the accuracy or completeness of scanned copies of this plan sheet.

BIGGS CARDOSA ASSOCIATES INC.
865 THE ALAMEDA
SAN JOSE, CALIFORNIA 95126

CCTA
2999 OAK ROAD, SUITE 100
WALNUT CREEK, CA 94597

RETAINING WALL TYPE 1 SWBP (MOD) DESIGN DATA

Load Factor Design (LFD)

Reinforced Concrete, f'c = 3600 psi
fy = 60000 psi

Level ground with 240 psf live load surcharge and 10.33' soundwall.

Seismic Load	= 0.3x dead load
Wind Load	= 30 psf
Dead Load of soundwall	= 1414 lb/lf
Dead Load of barrier	= 372 lb/lf

Kh = 0.3g
Kv = 0.0
Kae : Mononobe-okabe method

Ø = 34° γ = 120 pcf
Equivalent Fluid Pressure:
= 36 pcf for determination of toe pressure
= 27 pcf for determination of heel pressure

Group A : βD+1.7E+1.7SC
Group B : βD+1.7E+1.3W
Group C :
Stem : 1.0D+1.0E+1.0EQD+1.0EQE
Footing : D+PYM
where : β = 1.0 or 1.3 whichever controls design
D = Dead load
E = Lateral earth pressure
SC = Surcharge
W = Wind load
EQD = Seismic dead load
EQE = Seismic lateral earth pressure
PYM = Probable yield moment (1.3 *nominal yield moment of stem)

GENERAL NOTES

1. 24" CIDH piles were used for the design.
2. Minimum, distance between pile centerline and edge of footing is 2'-0".
3. Reduction factors:
   Groups A & B : Ø = 0.75
   Group C : Ø = 1.0
4. Lateral resistance of each pile:
   Groups A & B : = 54 kips
   Group C : = 72 kips

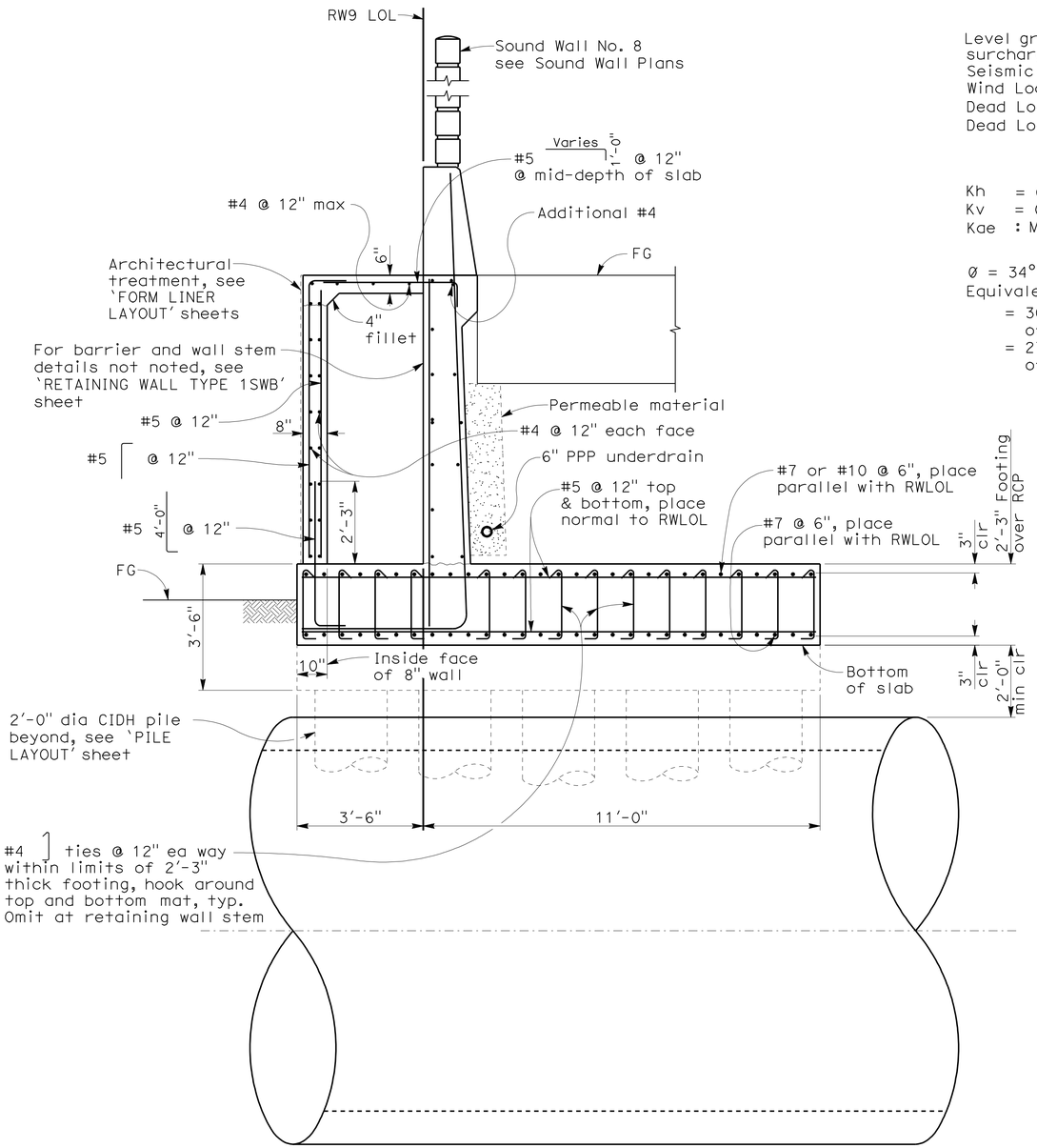

TYPE 1SWBP (MOD)

TYPICAL SECTION

1/2" = 1'-0"

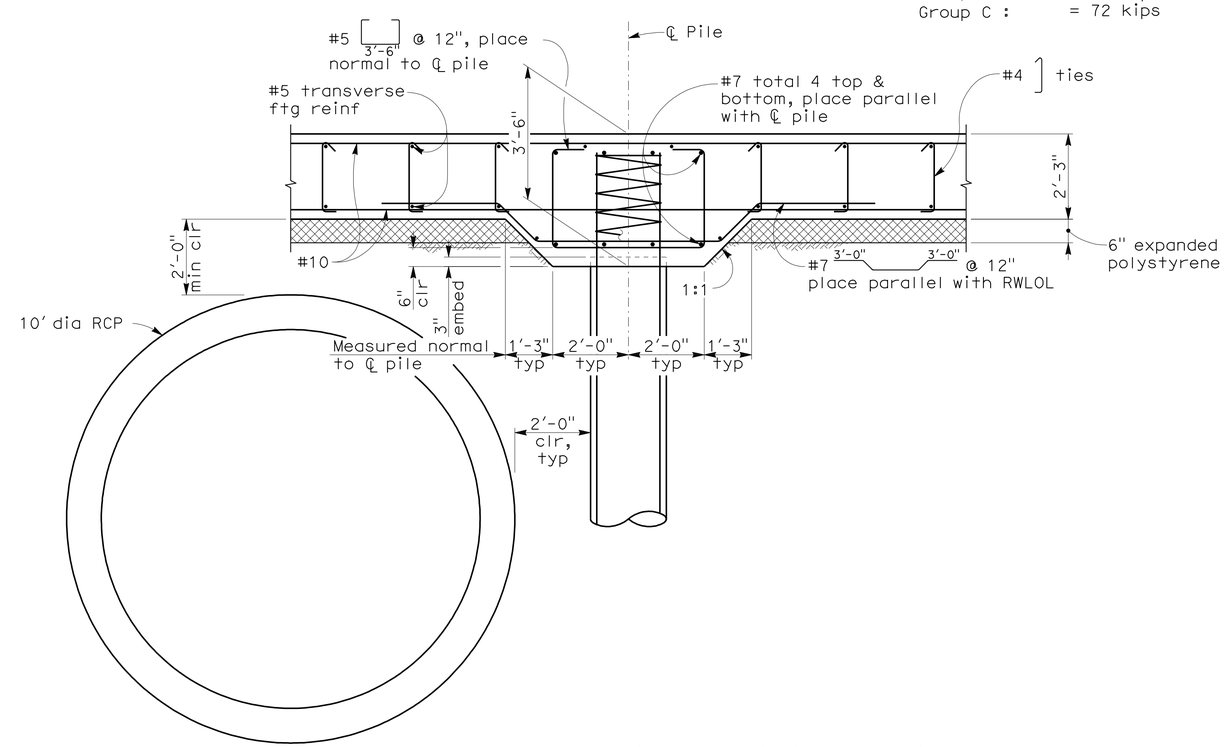

For details not noted, see 'SECTION B-B' & 'SECTION C-C' on 'RETAINING WALL TYPE 1SWBP (MOD) DETAILS No. 2' sheet

SECTION A-A

1/2" = 1'-0"

Overcomer Y. Hor
DESIGN OVERSIGHT Overcomer Y. Hor
5-18-11
SIGN OFF DATE

	BY	CHECKED
DESIGN	I. LI	P. GONGIDI
DETAILS	I. LI	G. JEYARAMAN
QUANTITIES	R. RIVAS	P. GONGIDI

PREPARED FOR THE STATE OF CALIFORNIA DEPARTMENT OF TRANSPORTATION

INES S. LI
PROJECT ENGINEER

BRIDGE NO. 28E0205
POST MILES 27.0

RETAINING WALLS No. 9B & 9C

RETAINING WALL TYPE 1SWBP (MOD) DETAILS No. 1

DESIGN DETAIL SHEET (ENGLISH) (REV. 6-01-09)

ORIGINAL SCALE IN INCHES FOR REDUCED PLANS 0 1 2 3

CU 04275
EA 2285E1

DISREGARD PRINTS BEARING EARLIER REVISION DATES

REVISION DATES (PRELIMINARY STAGE ONLY) 9/29/09 5/26/10 9/8/10 10/28/10 12/1/10 1/14/11 4/11/11

SHEET 7 OF 10

FILE => 28e0205-d-retdt01.dgn

USERNAME => trmikest DATE PLOTTED => 13-JUN-2011 TIME PLOTTED => 11:35

2006075 (2006075CRS19A)

DIST	COUNTY	ROUTE	POST MILES TOTAL PROJECT	SHEET No	TOTAL SHEETS
04	CC	4	R26.6/R27.5	712	746

REGISTERED CIVIL ENGINEER 1/14/11 DATE

6-13-11
PLANS APPROVAL DATE

REGISTERED PROFESSIONAL ENGINEER INES S. LI No. C51561 Exp.6/30/12 CIVIL STATE OF CALIFORNIA

The State of California or its officers or agents shall not be responsible for the accuracy or completeness of scanned copies of this plan sheet.

BIGGS CARDOSA ASSOCIATES INC.
865 THE ALAMEDA
SAN JOSE, CALIFORNIA 95126

CCTA
2999 OAK ROAD, SUITE 100
WALNUT CREEK, CA 94597

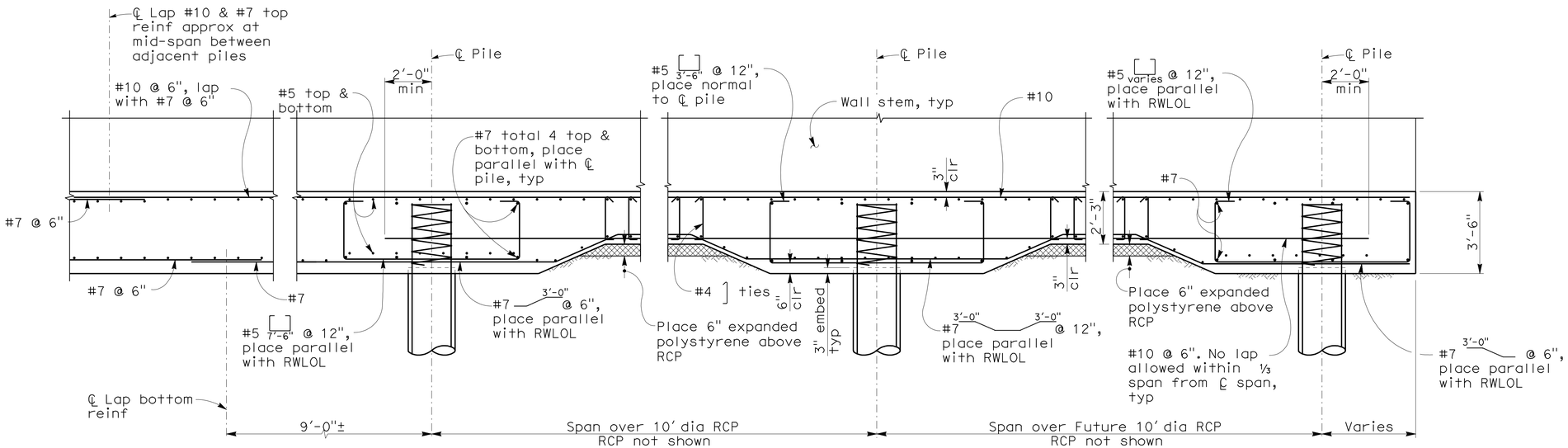

SECTION B-B

3/8" = 1'-0"

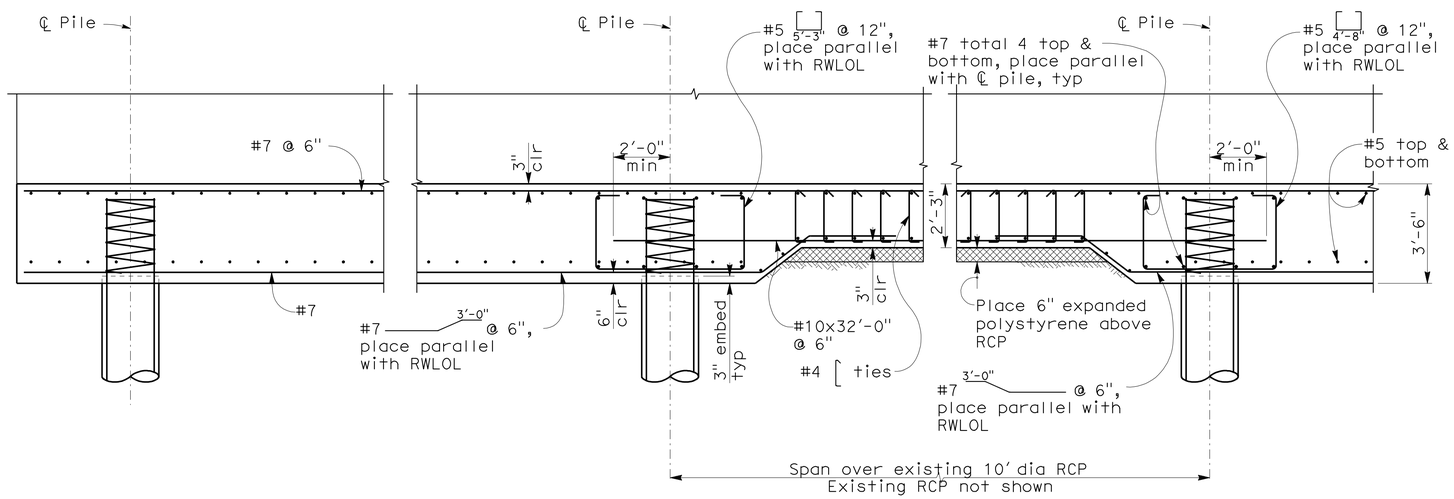

SECTION C-C

3/8" = 1'-0"

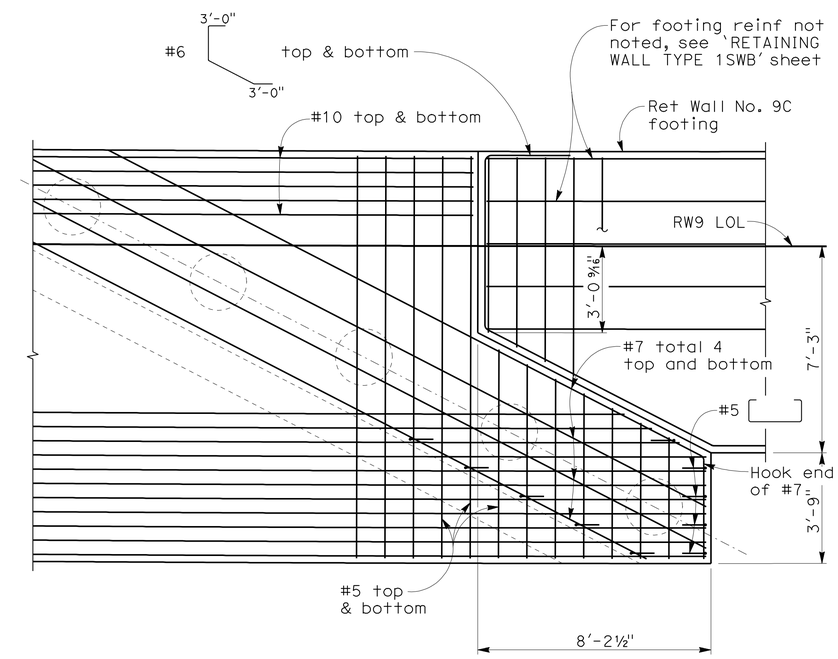

DETAIL 3

3/8" = 1'-0"

Note:
The Contractor shall verify all controlling field dimensions before ordering or fabricating any material

DESIGN OVERSIGHT Overcomer Y. Hor
2-1-11
SIGN OFF DATE

	BY	CHECKED
DESIGN	I. LI	P. GONGIDI
DETAILS	I. LI	G. JEYARAMAN
QUANTITIES	R. RIVAS	P. GONGIDI

PREPARED FOR THE STATE OF CALIFORNIA DEPARTMENT OF TRANSPORTATION

INES S. LI
PROJECT ENGINEER

BRIDGE NO. 28E0205
POST MILES 27.0

RETAINING WALLS No. 9B & 9C

RETAINING WALL TYPE 1SWBP (MOD) DETAILS No. 2

DESIGN DETAIL SHEET (ENGLISH) (REV. 6-01-09)

ORIGINAL SCALE IN INCHES FOR REDUCED PLANS 0 1 2 3

CU 04275
EA 2285E1

DISREGARD PRINTS BEARING EARLIER REVISION DATES

REVISION DATES (PRELIMINARY STAGE ONLY) 9/29/09 5/26/10 9/8/10 10/20/10 12/4/10 1/14/11

SHEET 8 OF 10

FILE => 28e0205-d-retdt02.dgn

USERNAME => trmikesl DATE PLOTTED => 13-JUN-2011 TIME PLOTTED => 11:35

2006075 (2006075CRS198)

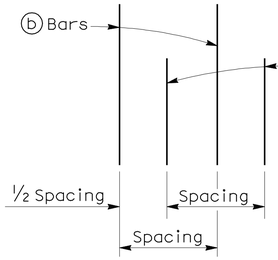

DETAIL B
NO SCALE

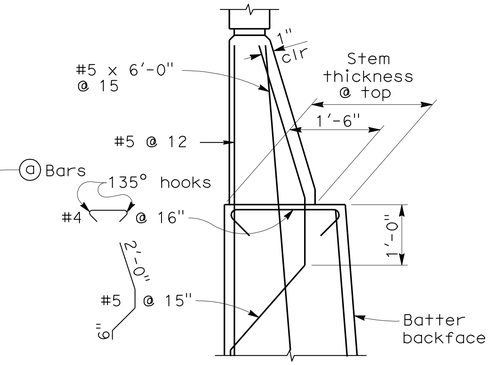

DETAIL A WITHOUT HAUNCH
NO SCALE

GENERAL NOTES

1. For soundwall and retaining wall architectural finish or texture, see details elsewhere in project plans.
2. For details not shown and drainage notes, see B3-8 / - & B0-3 / 3-1 (2)
3. Footing cover, 1'-6" minimum.
4. Limit of no splicing rebars = 3 times the bottom thickness of the stem.
5. Placement of reinforcements :
   - ⓑ & ⓒ bars are spliced together.
   - * ⓐ & ⓑ bars are bundled together.
   - ** Alternate ⓐ & ⓑ bars are shown in "Detail B".
   - Cont = Continuous.
6. For Soundwall & Barrier reinforcement, see "Soundwall Masonry Block on Barriers" sheets in Standard Plans.

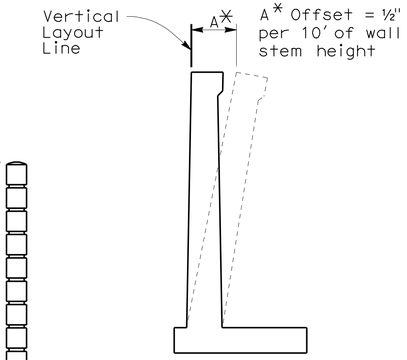

WALL OFFSET
NO SCALE

TABLE 1: TABLE OF REINFORCING STEEL DIMENSIONS AND DATA

	Stem With Haunch													
Design H	6'	8'	10'	12'	14'	16'	18'	20'	22'	24'	26'	28'	30'	32'
W	7'-9"	8'-0"	8'-9"	9'-9"	10'-9"	12'-0"	13'-0"	14'-3"	15'-3"	16'-6"	18'-6"	19'-9"	21'-3"	22'-6"
C	2'-9"	2'-9"	3'-0"	3'-3"	3'-6"	4'-0"	4'-3"	4'-9"	5'-0"	5'-6"	6'-3"	6'-9"	7'-3"	7'-9"
B	5'-0"	5'-3"	5'-9"	6'-6"	7'-3"	8'-0"	8'-9"	9'-6"	10'-3"	11'-0"	12'-3"	13'-0"	14'-0"	14'-9"
F Spread footing	1'-3"	1'-3"	1'-3"	1'-3"	1'-3"	1'-6"	1'-6"	1'-9"	2'-0"	2'-3"	2'-9"	3'-0"	3'-3"	3'-9"
Batter	0	1/2:12	1/2:12	1/2:12	1/2:12	1/2:12	1/2:12	1/2:12	1/2:12	5/8:12	3/4:12	7/8 :12	1 :12	1 :12
Stem thickn. at Haunch	1'-0"	1'-0"	1'-0"	1'-0"	1'-0"	1'-0"	1'-0"	1'-0"	1'-0"	1'-0"	1'-0"	1'-0"	1'-0"	1'-0"
ⓐ Bars				#6 @18**	#7 @18**	#8 @18**	#9 @18**	#10 @18**	#8 @ 9*	#8 @ 9*	#7 @ 6*	#10@12**	#9 @ 9*	#11@12**
X				Cont	Cont	Cont	Cont	Cont	Cont	Cont	Cont	Cont	Cont	Cont
Y				8'-0"	6'-6"	7'-6"	8'-6"	9'-6"	9'-6"	11'-0"	11'-6"	13'-0"	14'-0"	15'-6"
ⓑ Bars	#5 @12	#5 @12	#5 @ 9	#6 @18**	#7 @18**	#8 @18**	#9 @18**	#10 @18**	#8 @ 9*	#8 @ 9*	#7 @ 6*	#10@12**	#9 @ 9*	#11@12**
X	Cont	Cont	Cont	Cont	Cont	Cont	Cont	Cont	Cont	5'-6"	6'-6"	7'-0"	8'-0"	8'-6"
Y	Cont	Cont	Cont	Cont	10'-6"	13'-0"	15'-0"	17'-6"	19'-6"	21'-0"	18'-6"	19'-0"	25'-6"	23'-6"
ⓒ Bars					#6 @18	#6 @18	#6 @18	#6 @18	#6 @18	#6 @18	#6 @12	#7 @12	#7 @18	#7 @12
ⓓ Bars	#5 @12	#5 @12	#5 @12	#5 @ 9	#6 @ 9	#6 @ 9	#6 @ 6	#8 @ 9	#8 @ 9	#8 @ 9	#7 @ 6	#7 @ 6	#9 @ 9	#9 @ 9
	4.6	5.5	6.1	6.6	7.3	8.1	9.0	9.9	11.3	12.2	12.5	13.4	14.1	15.4

TABLE 2: TABLE OF REINFORCING STEEL DIMENSIONS AND DATA (1) (Not applicable)

	Stem With Haunch						Stem Without Haunch						
Design H	8'	10'	12'	14'	16'	18'	20'	22'	24'	26'	28'	30'	32'
W	8'-0"	8'-6"	9'-3"	10'-3"	11'-3"	13'-0"	13'-9"	16'-0"	16'-6"	18'-6"	20'-0"	20'-6"	21'-9"
C	2'-9"	2'-9"	3'-0"	3'-6"	3'-9"	4'-3"	4'-6"	5'-3"	5'-6"	6'-3"	6'-9"	6'-9"	7'-6"
B	5'-3"	5'-9"	6'-3"	6'-9"	7'-6"	8'-9"	9'-3"	10'-9"	11'-0"	12'-3"	13'-3"	13'-9"	14'-3"
F Spread footing	1'-3"	1'-3"	1'-3"	1'-3"	1'-6"	1'-6"	1'-9"	2'-0"	2'-3"	2'-9"	3'-0"	3'-3"	3'-6"
Batter	0	0	0	0	0	0	0	0	0	1/4:12	1/2:12	1/2:12	1/2:12
Stem thickn. at Haunch	1'-0"	1'-0"	1'-0"	1'-0"	1'-3"	1'-3"							
Stem thickn. at top							1'-6"	2'-0"	2'-0"	2'-0"	2'-0"	2'-0"	2'-0"
ⓐ Bars			#6 @12**	#5 @ 6*	#9 @18**	#9 @12**	#9 @12**	#9 @12**	#7 @ 6*	#7 @ 6*	#7 @ 6*	#9 @ 9*	#11@12**
X			Cont	Cont	Cont	Cont	Cont	Cont	Cont	Cont	Cont	Cont	Cont
Y			5'-6"	5'-6"	8'-6"	8'-6"	8'-6"	8'-6"	9'-6"	11'-0"	12'-6"	13'-6"	14'-6"
ⓑ Bars	#5 @ 9	#6 @ 9	#6 @12**	#5 @ 6*	#9 @18**	#9 @12**	#9 @12**	#9 @12**	#7 @ 6*	#7 @ 6*	#7 @ 6*	#9 @ 9*	#11@12**
X	Cont	Cont	Cont	Cont	Cont	Cont	Cont	Cont	5'-6"	6'-0"	7'-6"	7'-6"	8'-0"
Y	Cont	Cont	Cont	Cont	11'-6"	11'-6"	12'-0"	12'-0"	17'-6"	20'-0"	21'-6"	24'-0"	24'-0"
ⓒ Bars					#7 @18	#7 @12	#7 @12	#7 @12	#6 @ 12	#6 @ 12	#6 @12	#7 @18	#7 @12
ⓓ Bars	#5 @12	#5 @ 9	#5 @9	#6 @9	#6 @ 9	#9 @12	#9 @12	#7 @#7	6 @ 6	#7 @ 6	#7 @ 6	#9 @ 9	#9 @ 9
	5.5	6.5	7.3	7.6	9.0	9.0	10.6	10.5	12.2	12.6	13.3	15.4	16.0

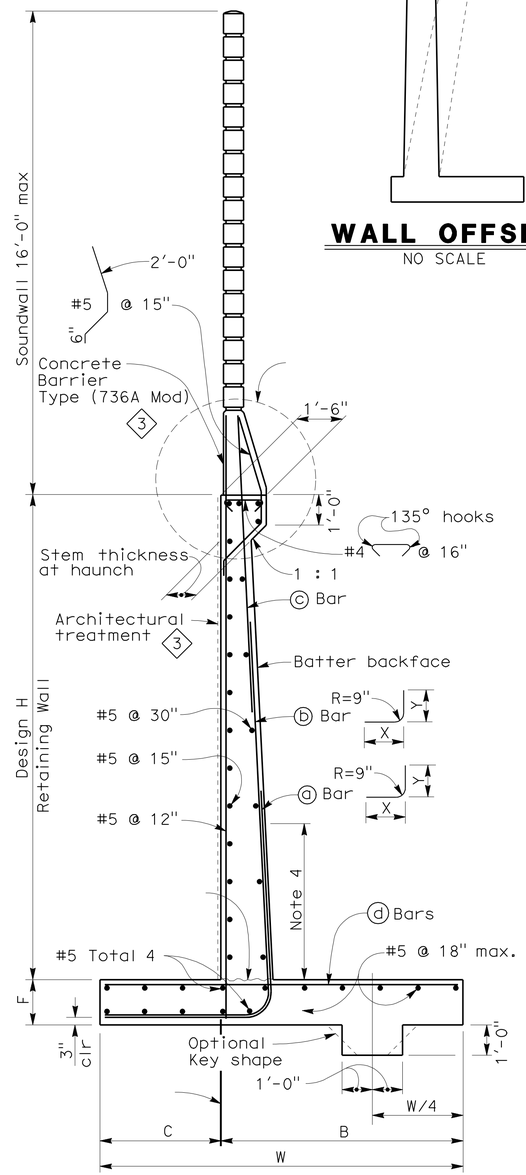

SPREAD FOOTING SECTION
NO SCALE

DESIGN DATA

DESIGN: Load Factor Design (LFD)

CONCRETE: Reinforced Concrete, f'c = 3600 psi
fy = 60,000 psi

LOADING CASE:
Level ground with 240 psf surcharge and 16' Soundwall

Seismic Load = 0.3 Dead Load
Wind Load = 30 psf
Dead Load of Soundwall = 1414 lb/ft
Dead Load of Barrier = 372 lb/ft

SEISMIC LOAD: SOIL
Kh = 0.3g
Kv = 0.0
Kae : Mononobe-Okabe Method

SOIL: Ø= 34° γ= 120 pcf
Equivalent fluid pressure:
= 36 pcf for determination of toe pressure
= 27 pcf for determination of heel pressure

EXTERNAL STABILITY:
Group 1 : D + E + SC
Group 2 : D + E + SC + W
Group 3 : D + PYM

INTERNAL STABILITY (LFD):
Group A : βD1.7E + 1.7SC
Group B : βD1.7E + 1.3W
Group C (stem) : 1.0D + 1.0E + 1.0EQD + 1.0EQE
Group C (footing) : D + PYM

Where : β = 1.0 or 1.3 whichever controls design
D = Dead Load
E = Lateral Earth Pressure
SC = Surcharge
W = Wind load
EQD = Seismic Dead Load
EQE = Seismic Lateral Earth Pressure
PYM = Probable Yield Moment
(1.3 x Nominal Yield Moment of Stem)

DIST	COUNTY	ROUTE	POST MILES TOTAL PROJECT	SHEET NO.	TOTAL SHEETS
04	CC	4	R26.6/R27.5	713	746

REGISTERED CIVIL ENGINEER 1/14/11
PLANS APPROVAL DATE 6-13-11

REGISTERED PROFESSIONAL ENGINEER INES S. LI No. C51561 Exp.6/30/12 CIVIL STATE OF CALIFORNIA

The State of California or its officers or agents shall not be responsible for the accuracy or completeness of scanned copies of this plan sheet.

BIGGS CARDOSA ASSOCIATES INC.
865 THE ALAMEDA
SAN JOSE, CALIFORNIA 95126

CCTA
2999 OAK ROAD, SUITE 100
WALNUT CREEK, CA 94597

STANDARD DRAWING

FILE NO. xs14-220-e

APPROVED BY G. WANG (RESPONSIBLE TECHNICAL SPECIALIST)
APPROVAL DATE 5-19-08
RELEASED BY ROBERTO LACALLE (RESPONSIBLE OFFICE CHIEF)
RELEASE DATE 5-19-08

(1) Note added
(2) Note added
(3) Call out revised

STATE OF CALIFORNIA
DEPARTMENT OF TRANSPORTATION

DIVISION OF ENGINEERING SERVICES

BRIDGE NO. 28E0205
POST MILES 27.0

RETAINING WALLS No. 9B & 9C
RETAINING WALL TYPE 1SWB

DS OSD 2147A (ENGLISH STANDARD DRAWING "XS" BORDER REV. 01/11/08)

ORIGINAL SCALE IN INCHES FOR REDUCED PLANS 0 1 2 3

CU 04275
EA 2285E1

DISREGARD PRINTS BEARING EARLIER REVISION DATES
REVISION DATES (PRELIMINARY STAGE ONLY) 4/22/09 9/28/09 5/26/10 9/9/10 10/28/10 12/1/10 1/14/11

SHEET 9 OF 10

USERNAME => trmikesl

28e0205-d-retdt03.dgn

2006075 (2006075CHS201) TIME PLOTTED => 11:35 DATE PLOTTED => 13-JUN-2011 USERNAME => trmikesl

DIST	COUNTY	ROUTE	POST MILES TOTAL PROJECT	SHEET No	TOTAL SHEETS
04	CC	4	R26.6/R27.5	714	746

GEOTECHNICAL PROFESSIONAL — 1/14/11 DATE

6-13-11
PLANS APPROVAL DATE

The State of California or its officers or agents shall not be responsible for the accuracy or completeness of scanned copies of this plan sheet.

REGISTERED PROFESSIONAL ENGINEER — GARY PARIKH — No. G.E. 666 — Exp. 12/31/11 — GEOTECHNICAL — STATE OF CALIFORNIA

CONTRA COSTA TRANSPORTATION AUTHORITY
2999 OAK ROAD, SUITE 100
WALNUT CREEK, CA 94597

PARIKH CONSULTANTS, INC.
2360 QUME DRIVE, SUITE A
SAN JOSE CA 95131

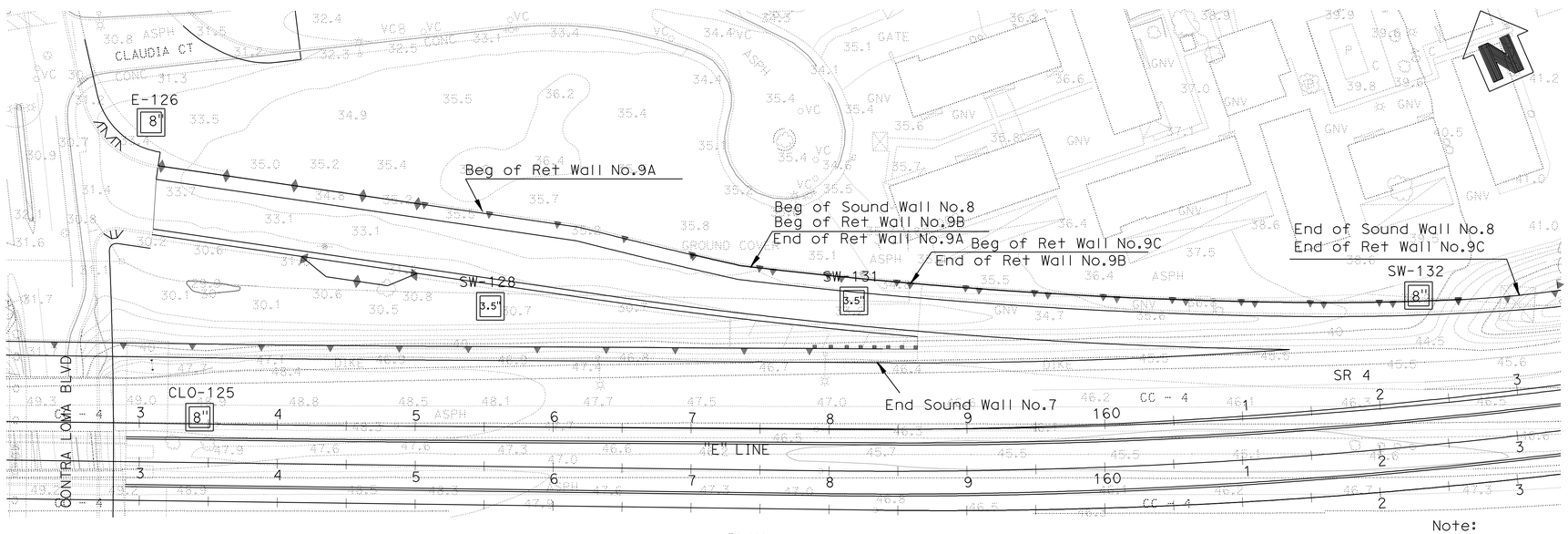

PLAN
1"=50'

Note:
Standard Penetration Test Sampler: I.D. = 1.4"; O.D. = 2"
Modified California Sampler: I.D. = 2.5"; O.D. = 3"
Hammer Assembly: A 140 lb hammer with a 30" drop
(Automatic Hammer)

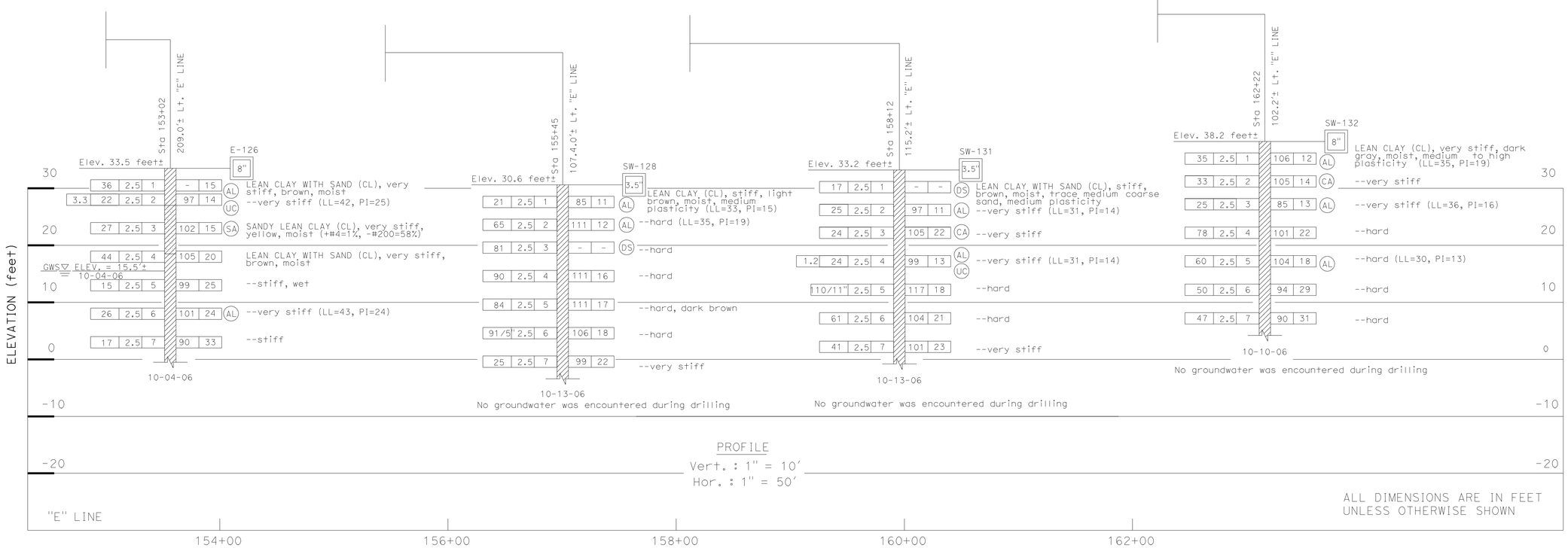

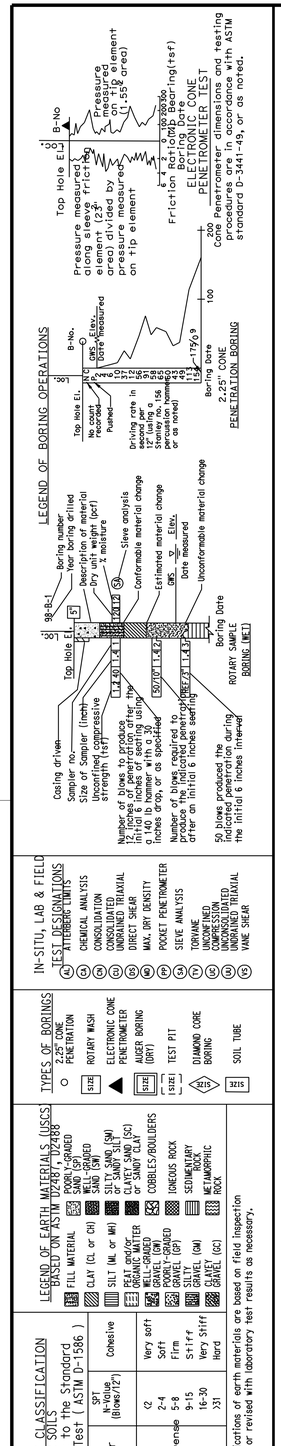

DESIGN OVERSIGHT Overcomer Y. Hor	DRAWN BY	OKSAN GOUTHIER	L. S. BHANGOO
2-1-11 SIGN OFF DATE	CHECKED BY	PARTHA SIRCAR	FIELD INVESTIGATION BY: DATE: 10/2006

PREPARED FOR THE STATE OF CALIFORNIA DEPARTMENT OF TRANSPORTATION

PARTHA SIRCAR
PROJECT ENGINEER

BRIDGE NO. 28E0205
POST MILE 27.0

RETAINING WALL NO. 9B & 9C
LOG OF TEST BORINGS

CU 04275
EA 2285E1

DISREGARD PRINTS BEARING EARLIER REVISION DATES — 9/21/09 02/04/10 9/17/10

REVISION DATES (PRELIMINARY STAGE ONLY)

SHEET 10 OF 10

ORIGINAL SCALE IN INCHES FOR REDUCED PLANS 0 1 2 3

OSF GEOTECHNICAL LOG OF TEST BORINGS SHEET (ENGLISH) (REV. 2/25/05)

FILE => 28E0205-z-1tb01.dgn

USERNAME => trmikest DATE PLOTTED => 13-JUN-2011 TIME PLOTTED => 11:35

FOR ACCURATE RIGHT OF WAY DATA, CONTACT
RIGHT OF WAY ENGINEERING AT THE DISTRICT OFFICE

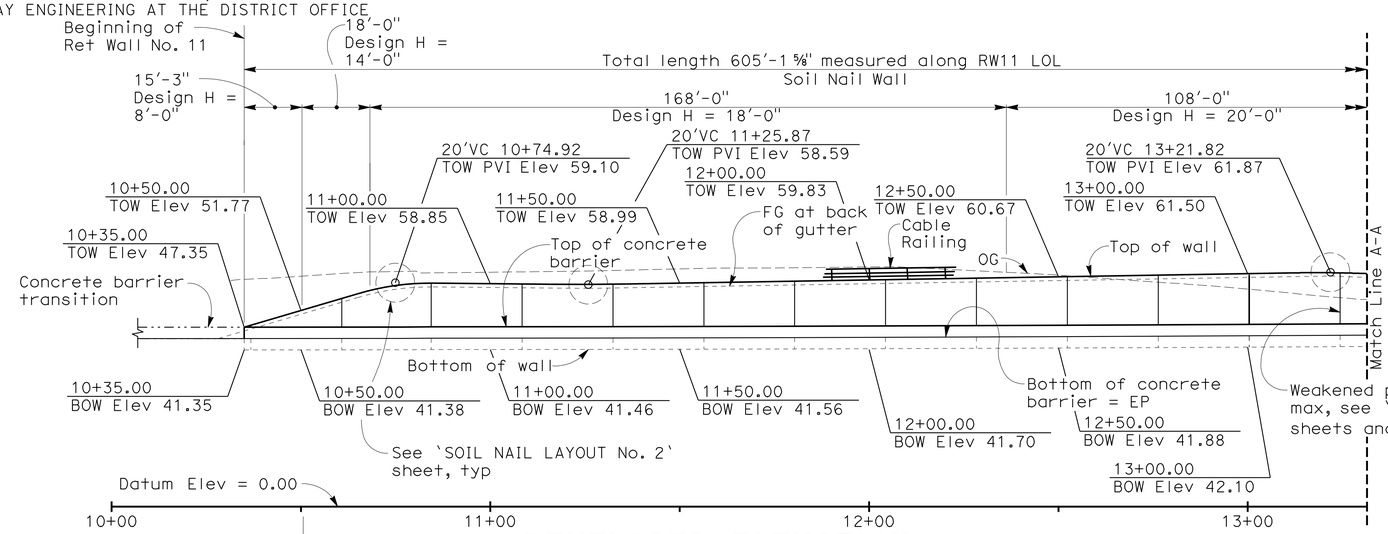

DEVELOPED ELEVATION

1" = 20'

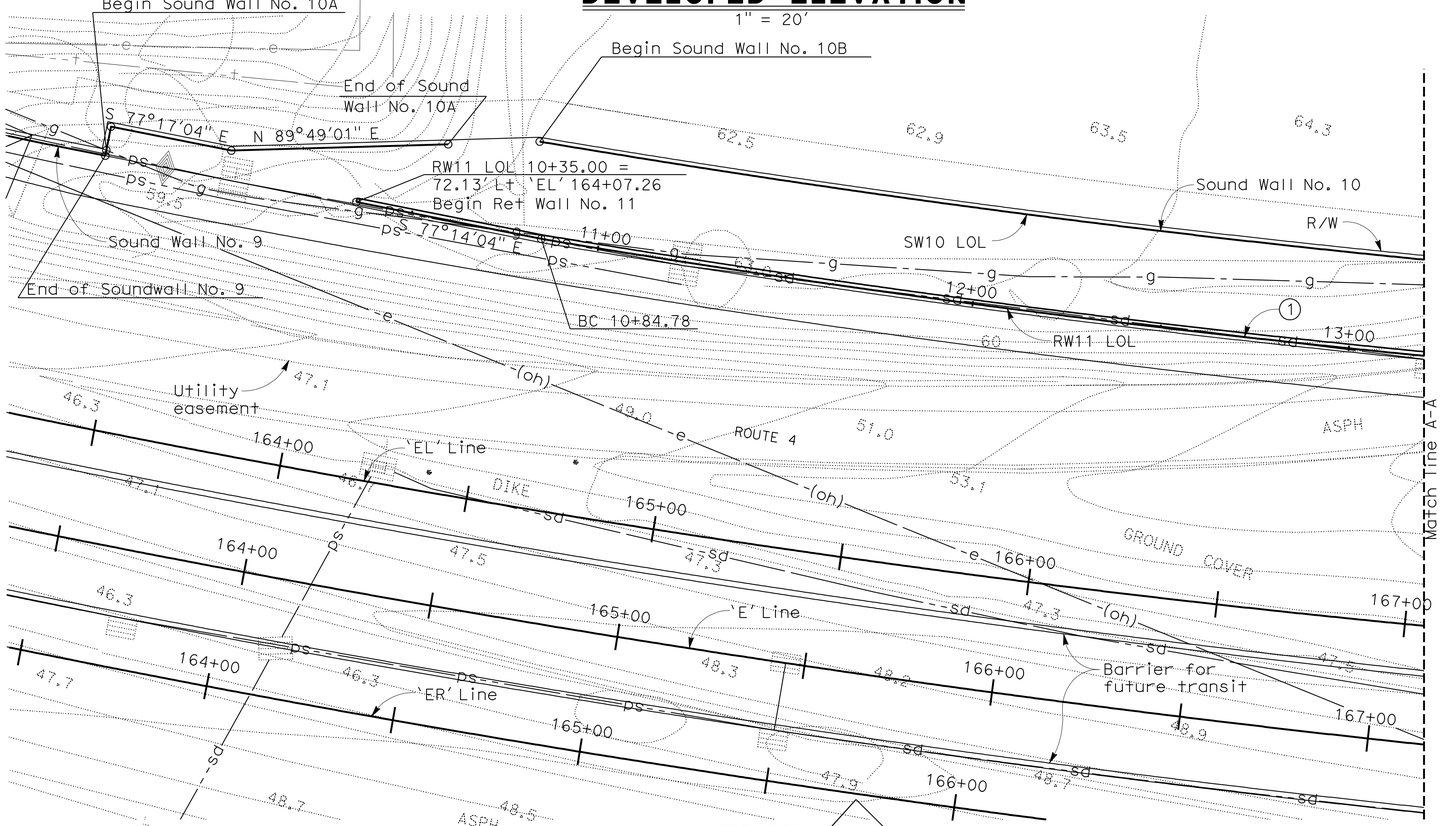

PLAN

1" = 20'

N

INDEX TO PLANS

SHEET NO.	TITLE
1	GENERAL PLAN No. 1
2	GENERAL PLAN No. 2
3	SOIL NAIL LAYOUT No. 1
4	SOIL NAIL LAYOUT No. 2
5	FORM LINER LAYOUT No. 1
6	FORM LINER LAYOUT No. 2
7	FORM LINER LAYOUT No. 3
8	SOIL NAIL WALL DETAILS No.1
9	SOIL NAIL WALL DETAILS No.2
10	SOIL NAIL WALL DETAILS No.3
11	LOG OF TEST BORINGS 1 of 2
12	LOG OF TEST BORINGS 2 of 2

ABBREVIATIONS

TOW	TOP OF WALL
NIC	NOT IN CONTRACT
Eq	EQUAL
FHWA	FEDERAL HIGHWAY ADMINISTRATION
BOW	BOTTOM OF WALL

DIST	COUNTY	ROUTE	POST MILES TOTAL PROJECT	SHEET No	TOTAL SHEETS
04	CC	4	R26.6/R27.5	715	746

REGISTERED CIVIL ENGINEER — DATE 1/14/11

6-13-11
PLANS APPROVAL DATE

REGISTERED PROFESSIONAL ENGINEER INES S. LI No. C51561 Exp.6/30/12 CIVIL STATE OF CALIFORNIA

The State of California or its officers or agents shall not be responsible for the accuracy or completeness of scanned copies of this plan sheet.

BIGGS CARDOSA ASSOCIATES INC.
865 THE ALAMEDA
SAN JOSE, CALIFORNIA 95126

CCTA
2999 OAK ROAD, SUITE 100
WALNUT CREEK, CA 94597

STANDARD PLANS DATED MAY 2006

A10A	ACRONYMS AND ABBREVIATIONS (SHEET 1 OF 2)
A10B	ACRONYMS AND ABBREVIATIONS (SHEET 2 OF 2)
A10C	SYMBOLS (SHEET 1 OF 2)
A10D	SYMBOLS (SHEET 2 OF 2)
A62B	LIMITS OF PAYMENT FOR EXCAVATION AND BACKFILL - BRIDGE SURCHARGE AND WALL
RSP A76A	CONCRETE BARRIER TYPE 60
B0-3	BRIDGE DETAILS
B3-9	RETAINING WALL DETAILS No. 2
B11-47	CABLE RAILING

1. This plan accurate for retaining wall work only
2. Top of wall profiles are linear between points shown unless noted otherwise
3. See Road Plans for right-of-way and utilities not shown
4. For curve data along RW11 LOL and Soil Nail Wall Design Data see 'GENERAL PLAN No. 2' sheet
5. For General Notes, see 'SOIL NAIL WALL DETAILS No. 1' sheet
6. For soil nail lengths, see 'SOIL NAIL LAYOUT No. 1' sheet
7. For vertical and horizontal nail spacing, see 'SOIL NAIL LAYOUT' sheet
8. For 'DETAIL 6', see 'SOIL NAIL WALL DETAILS No. 2' sheet
9. For Architectural Treatment see 'FORM LINER LAYOUT' sheets and see Road Plans sheet R-30 for quantities
10. For Quantities, see 'GENERAL PLAN No. 2' sheet

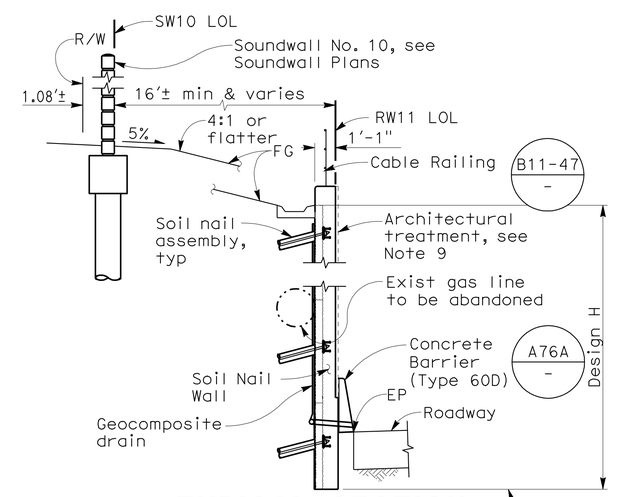

TYPICAL SECTION

NO SCALE

DESIGN OVERSIGHT Overcomer Y. Hor	DESIGN	BY R. RIVAS	CHECKED G. JEYARAMAN	LOAD FACTOR DESIGN	
2-1-11 SIGN OFF DATE	DETAILS	BY R. RIVAS	CHECKED A. NOTARO	LAYOUT BY T. HICKS	CHECKED I. LI
	QUANTITIES	BY R. RIVAS	CHECKED G. JEYARAMAN	SPECIFICATIONS BY I. LI	PLANS AND SPECS COMPARED A. NOTARO

PREPARED FOR THE STATE OF CALIFORNIA DEPARTMENT OF TRANSPORTATION

INES S. LI
PROJECT ENGINEER

BRIDGE NO. 28E0203
POST MILES 27.2

RETAINING WALL No. 11
GENERAL PLAN No. 1

DESIGN GENERAL PLAN SHEET (ENGLISH) (REV. 6-01-09)

ORIGINAL SCALE IN INCHES FOR REDUCED PLANS 0 1 2 3

CU 04275
EA 2285E1

DISREGARD PRINTS BEARING EARLIER REVISION DATES

REVISION DATES (PRELIMINARY STAGE ONLY) 3/26/08 4/22/09 9/28/09 5/26/10 9/8/10 10/28/10 12/1/10 1/14/11

SHEET 1 OF 12

FILE => 28e0203-a-gp01.dgn

USERNAME => trmikest DATE PLOTTED => 13-JUN-2011 TIME PLOTTED => 11:36 2006075 (2006075CRS21)

DIST	COUNTY	ROUTE	POST MILES TOTAL PROJECT	SHEET No	TOTAL SHEETS
04	CC	4	R26.6/R27.5	716	746

REGISTERED CIVIL ENGINEER — DATE 1/14/11

PLANS APPROVAL DATE 6-13-11

REGISTERED PROFESSIONAL ENGINEER — INES S. LI — No. C51561 — Exp. 6/30/12 — CIVIL — STATE OF CALIFORNIA

The State of California or its officers or agents shall not be responsible for the accuracy or completeness of scanned copies of this plan sheet.

BIGGS CARDOSA ASSOCIATES INC.
865 THE ALAMEDA
SAN JOSE, CALIFORNIA 95126

CCTA
2999 OAK ROAD, SUITE 100
WALNUT CREEK, CA 94597

FOR ACCURATE RIGHT OF WAY DATA, CONTACT
RIGHT OF WAY ENGINEERING AT THE DISTRICT OFFICE

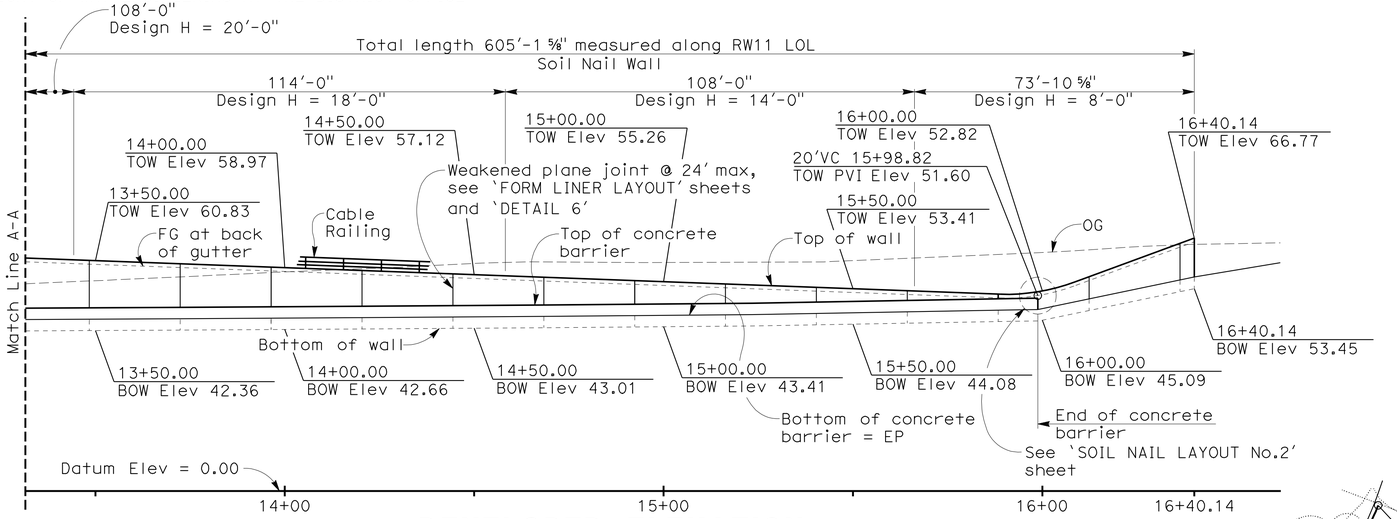

DEVELOPED ELEVATION

1" = 20'

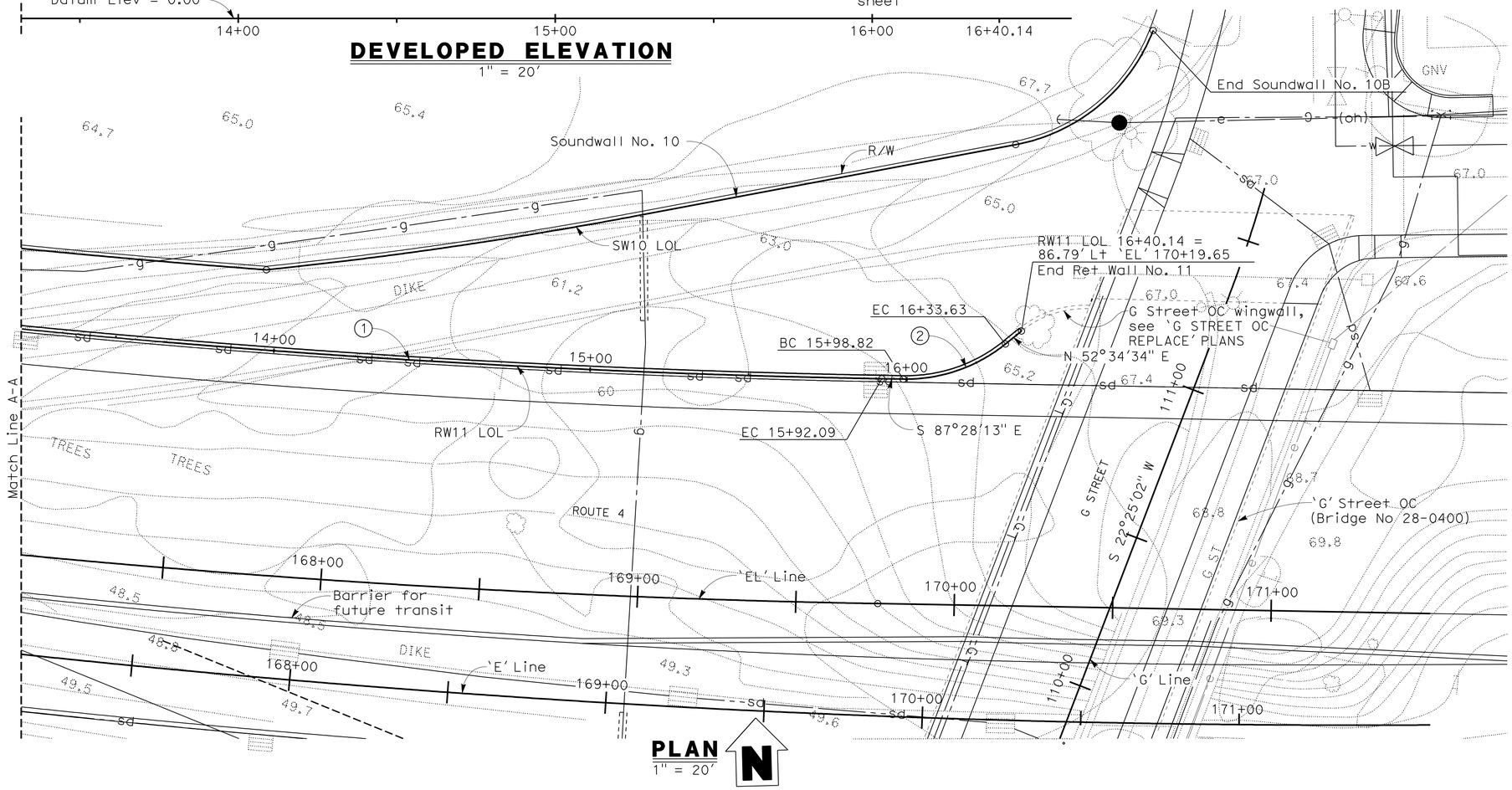

PLAN

1" = 20'

For notes, see 'GENERAL PLAN No.1' sheet

SOIL NAIL WALL DESIGN DATA

γ	=	125 pcf
ϕ	=	25 degrees
c	=	250 psf (Elevation 50 & above),
c	=	500 psf (Elevation 50 & below)
Q_d	=	1360 lb/ft (Top Row)
Q_d	=	1810 lb/ft (Second Row)
Q_d	=	2260 lb/ft (All Subsequent Rows)

LEGEND:

γ	=	Soil Unit Weight
ϕ	=	Internal Friction Angle of Soil
c	=	Cohesion
Q_d	=	Design pullout resistance in lb/ft

CURVE DATA along RW11 LOL				
CURVE	RADIUS	LENGTH	TANGENT	DELTA
1	3429.04'	507.31'	254.12'	8°28'36"
2	49.92'	34.81'	18.15'	39°57'13"

RETAINING WALL NO.11 — BRIDGE NO 28E0203

QUANTITIES		
STRUCTURE EXCAVATION (SOIL NAIL WALL)	900	CY
STRUCTURE BACKFILL (SOIL NAIL WALL)	340	CY
SOIL NAIL ASSEMBLY	7,492	LF
STRUCTURAL CONCRETE, RETAINING WALL	235	CY
BAR REINFORCING STEEL (RETAINING WALL)	37,900	LB
SHOTCRETE	140	CY
MINOR CONCRETE (GUTTER)	606	LF
CABLE RAILING	606	LF
CONCRETE BARRIER (TYPE 60D)	564	LF

2006075 (2006075CRS22)

TIME PLOTTED => 11:36

DATE PLOTTED => 13-JUN-2011

USERNAME => frmikest

Overcomer Y. Hor
DESIGN OVERSIGHT — Overcomer Y. Hor
2-1-11
SIGN OFF DATE

	BY	CHECKED		BY	CHECKED
DESIGN	R. RIVAS	G. JEYARAMAN	LOAD FACTOR DESIGN		
DETAILS	R. RIVAS	A. NOTARO	LAYOUT	T. HICKS	I. LI
QUANTITIES	R. RIVAS	G. JEYARAMAN	SPECIFICATIONS	I. LI	PLANS AND SPECS COMPARED A. NOTARO

PREPARED FOR THE STATE OF CALIFORNIA DEPARTMENT OF TRANSPORTATION

INES S. LI
PROJECT ENGINEER

BRIDGE NO. 28E0203
POST MILES 27.2

RETAINING WALL No. 11
GENERAL PLAN No. 2

DISREGARD PRINTS BEARING EARLIER REVISION DATES — REVISION DATES (PRELIMINARY STAGE ONLY) 3/26/08 4/22/09 9/28/09 5/26/10 9/8/10 10/28/10 12/1/10 1/14/11

SHEET 2 OF 12

DESIGN GENERAL PLAN SHEET (ENGLISH) (REV. 6-01-09)

ORIGINAL SCALE IN INCHES FOR REDUCED PLANS 0 1 2 3

CU 04275
EA 2285E1

FILE => 28e0203-a-gp02.dgn

DIST	COUNTY	ROUTE	POST MILES TOTAL PROJECT	SHEET No	TOTAL SHEETS
04	CC	4	R26.6/R27.5	717	746

REGISTERED CIVIL ENGINEER 1/14/11 DATE

6-13-11
PLANS APPROVAL DATE

REGISTERED PROFESSIONAL ENGINEER INES S. LI No. C51561 Exp. 6/30/12 CIVIL STATE OF CALIFORNIA

The State of California or its officers or agents shall not be responsible for the accuracy or completeness of scanned copies of this plan sheet.

BIGGS CARDOSA ASSOCIATES INC.
865 THE ALAMEDA
SAN JOSE, CALIFORNIA 95126

CCTA
2999 OAK ROAD, SUITE 100
WALNUT CREEK, CA 94597

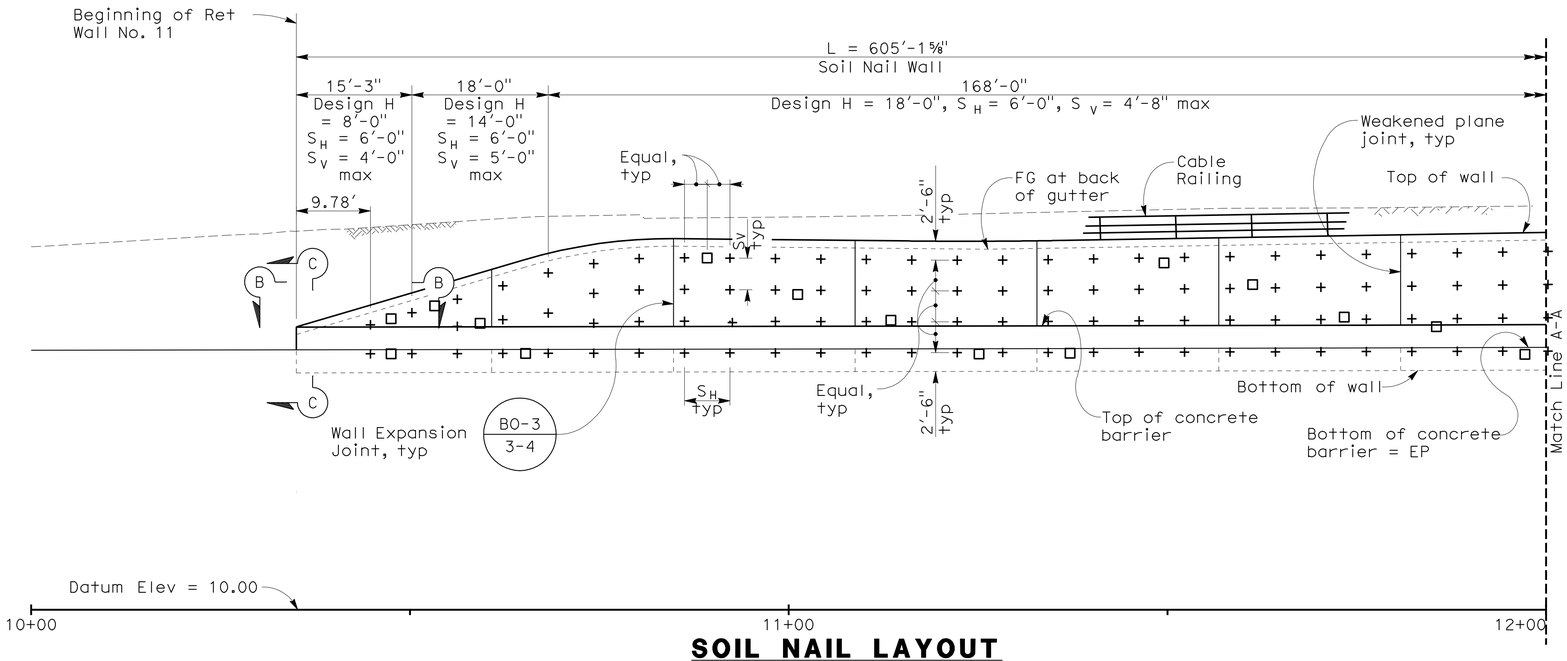

SOIL NAIL LAYOUT
1" = 10'

+ Indicates soil nail assembly
□ Indicates location of proof test nail assembly
S_H Horizontal spacing of soil nail assemblies
S_V Vertical spacing of soil nail assemblies

SOIL NAIL SCHEDULE		
Design H	# of nail layers	LE
8'-0"	2	15'-0"
14'-0"	3	15'-0"
18'-0"	4	18'-0"
20'-0"	5	22'-0"

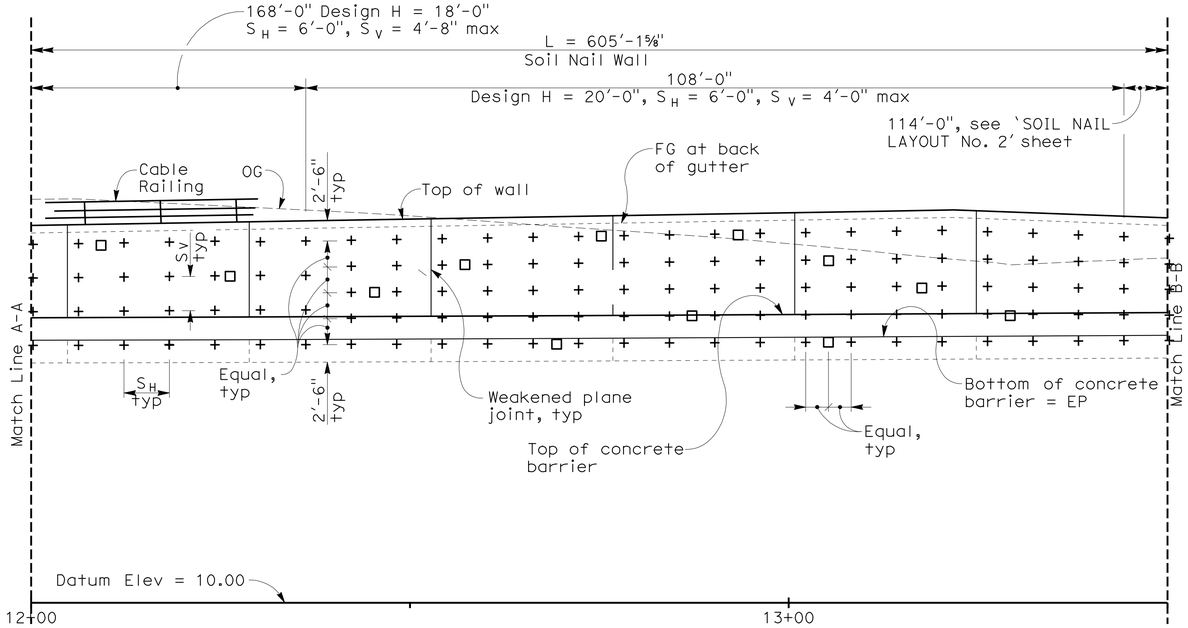

SOIL NAIL LAYOUT
1" = 10'

For 'SECTION B-B' and 'SECTION C-C', see 'SOIL NAIL DETAILS No. 3' sheet

DESIGN OVERSIGHT Overcomer Y. Hor
2-1-11
SIGN OFF DATE

	BY	CHECKED
DESIGN	R. RIVAS	G. JEYARAMAN
DETAILS	R. RIVAS	A. NOTARO
QUANTITIES	R. RIVAS	G. JEYARAMAN

PREPARED FOR THE STATE OF CALIFORNIA DEPARTMENT OF TRANSPORTATION

INES S. LI
PROJECT ENGINEER

BRIDGE NO. 28E0203
POST MILES 27.2

RETAINING WALL No. 11
SOIL NAIL LAYOUT No. 1

DESIGN DETAIL SHEET (ENGLISH) (REV. 6-01-09)

ORIGINAL SCALE IN INCHES FOR REDUCED PLANS 0 1 2 3

CU 04275
EA 2285E1

DISREGARD PRINTS BEARING EARLIER REVISION DATES

REVISION DATES (PRELIMINARY STAGE ONLY) 3/26/09 4/22/09 9/28/09 5/28/10 9/8/10 10/28/10 12/17/10 1/14/11

SHEET 3 OF 12

FILE => 28e0203-b-sln1-lo1.dgn

USERNAME => trmikes1 DATE PLOTTED => 13-JUN-2011 TIME PLOTTED => 11:36

2006075 (2006075CR523)

DIST	COUNTY	ROUTE	POST MILES TOTAL PROJECT	SHEET No	TOTAL SHEETS
04	CC	4	R26.6/R27.5	718	746

REGISTERED CIVIL ENGINEER 1/14/11 DATE

6-13-11
PLANS APPROVAL DATE

REGISTERED PROFESSIONAL ENGINEER INES S. LI No. C51561 Exp.6/30/12 CIVIL STATE OF CALIFORNIA

The State of California or its officers or agents shall not be responsible for the accuracy or completeness of scanned copies of this plan sheet.

BIGGS CARDOSA ASSOCIATES INC.
865 THE ALAMEDA
SAN JOSE, CALIFORNIA 95126

CCTA
2999 OAK ROAD, SUITE 100
WALNUT CREEK, CA 94597

For soil nail legend, see `SOIL NAIL LAYOUT No. 1` sheet

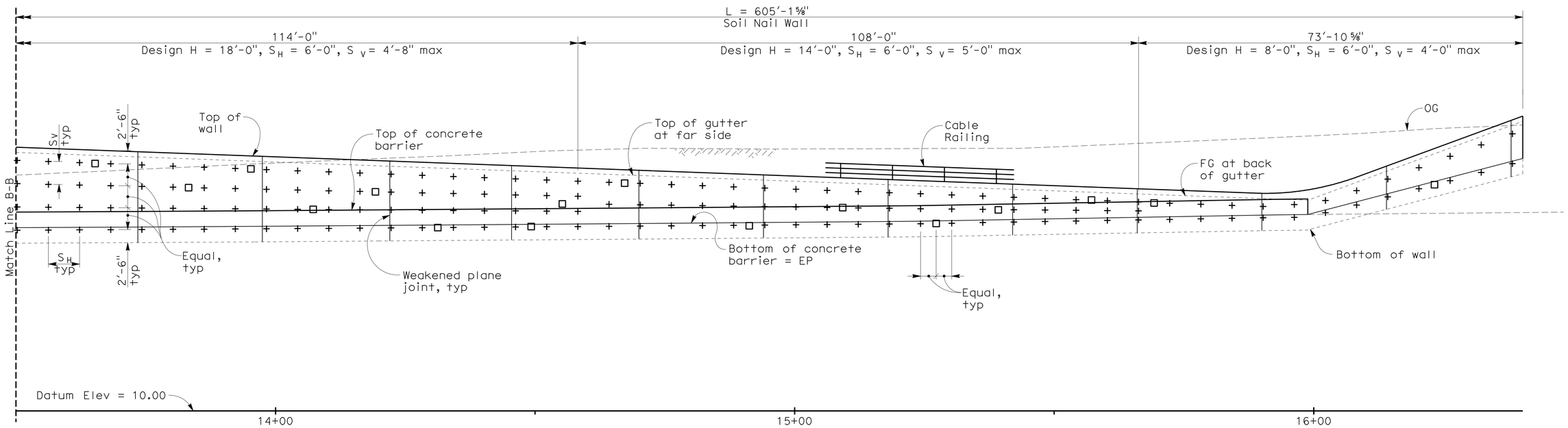

SOIL NAIL LAYOUT

1" = 10'

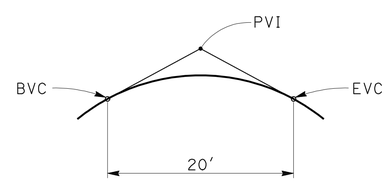

VERTICAL CURVE

NO SCALE

Overcomer Y. Hor DESIGN OVERSIGHT Overcomer Y. Hor 2-1-11 SIGN OFF DATE	DESIGN	BY R. RIVAS	CHECKED G. JEYARAMAN	PREPARED FOR THE STATE OF CALIFORNIA DEPARTMENT OF TRANSPORTATION	INES S. LI PROJECT ENGINEER	BRIDGE NO. 28E0203 POST MILES 27.2	RETAINING WALL No. 11 SOIL NAIL LAYOUT No. 2
	DETAILS	BY R. RIVAS	CHECKED A. NOTARO				
	QUANTITIES	BY R. RIVAS	CHECKED G. JEYARAMAN				

DESIGN DETAIL SHEET (ENGLISH) (REV. 6-01-09)

ORIGINAL SCALE IN INCHES FOR REDUCED PLANS 0 1 2 3

CU 04275
EA 2285E1

DISREGARD PRINTS BEARING EARLIER REVISION DATES → REVISION DATES (PRELIMINARY STAGE ONLY) 3/26/09 4/22/09 9/28/09 5/26/10 9/8/10 10/28/10 12/4/10 1/14/11

SHEET 4 OF 12

FILE => 28e0203-b-sln1-lo2.dgn

USERNAME => trmikest DATE PLOTTED => 13-JUN-2011 TIME PLOTTED => 11:36

2006075 (2006075CRS23A)

DIST	COUNTY	ROUTE	POST MILES TOTAL PROJECT	SHEET No	TOTAL SHEETS
04	CC	4	R26.6/R27.5	719	746

REGISTERED CIVIL ENGINEER 1/14/11 DATE

6-13-11
PLANS APPROVAL DATE

REGISTERED PROFESSIONAL ENGINEER INES S. LI No. C51561 Exp.6/30/12 CIVIL STATE OF CALIFORNIA

The State of California or its officers or agents shall not be responsible for the accuracy or completeness of scanned copies of this plan sheet.

BIGGS CARDOSA ASSOCIATES INC.
865 THE ALAMEDA
SAN JOSE, CALIFORNIA 95126

CCTA
2999 OAK ROAD, SUITE 100
WALNUT CREEK, CA 94597

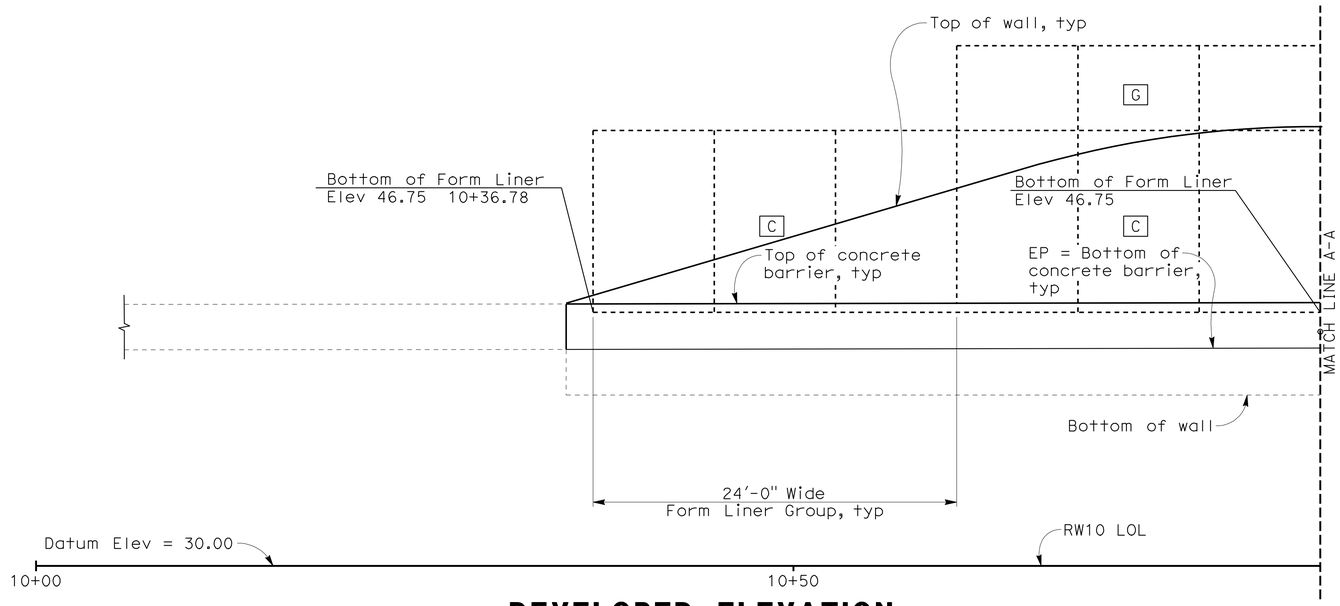

DEVELOPED ELEVATION

1" = 5'

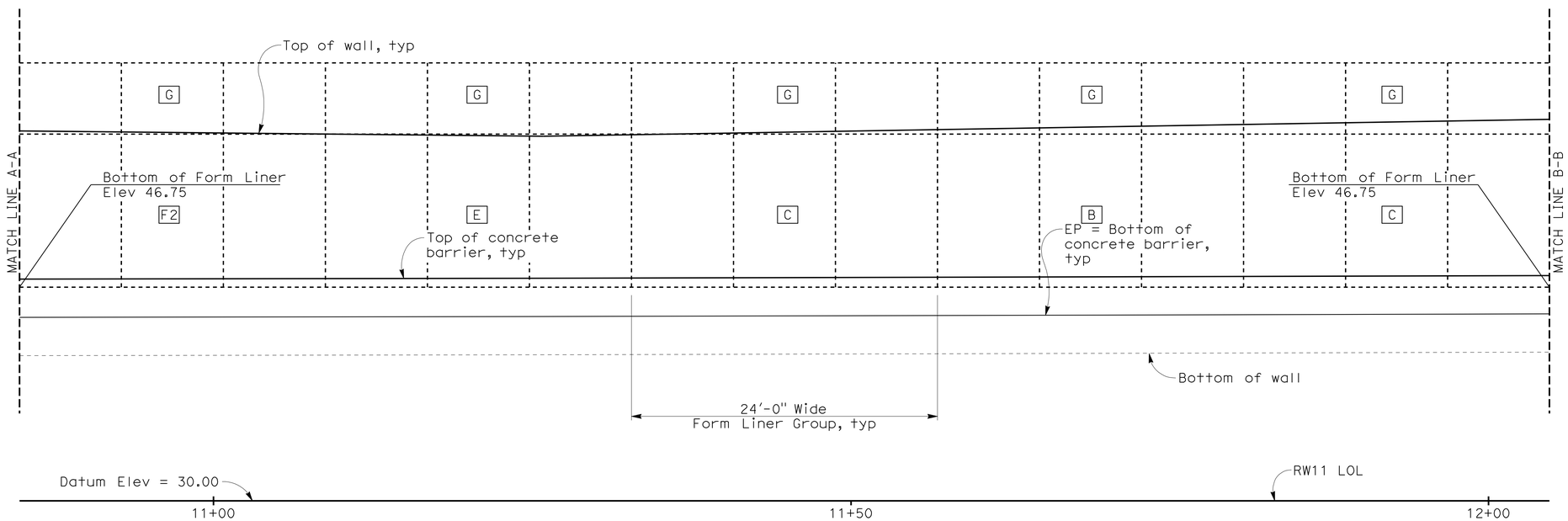

DEVELOPED ELEVATION

1" = 5'

1. EJ = Expansion Joint
2. Cable Railing not shown

A For form liner legend and details, see Road Plan sheets R-31 and R-32.

Overcomer Y. Hor
DESIGN OVERSIGHT Overcomer Y. Hor
2-1-11
SIGN OFF DATE

	BY	CHECKED
DESIGN	R. RIVAS	R. SCHNABEL
DETAILS	R. RIVAS	R. SCHNABEL
QUANTITIES	R. RIVAS	G. JEYARAMAN

PREPARED FOR THE STATE OF CALIFORNIA DEPARTMENT OF TRANSPORTATION

INES S. LI
PROJECT ENGINEER

BRIDGE NO. 28E0203
POST MILES 27.2

RETAINING WALL No. 11
FORM LINER LAYOUT No. 1

DESIGN DETAIL SHEET (ENGLISH) (REV. 6-01-09)

ORIGINAL SCALE IN INCHES FOR REDUCED PLANS 0 1 2 3

CU 04275
EA 2285E1

DISREGARD PRINTS BEARING EARLIER REVISION DATES

REVISION DATES (PRELIMINARY STAGE ONLY) 4/22/09 9/28/09 5/26/10 9/8/10 10/28/10 12/1/10 1/14/11

SHEET 5 OF 12

FILE => 28e0203-c-fl-lo01.dgn

USERNAME => trmikesl DATE PLOTTED => 13-JUN-2011 TIME PLOTTED => 11:36

20060075 (20060075CRS24)

DIST	COUNTY	ROUTE	POST MILES TOTAL PROJECT	SHEET No	TOTAL SHEETS
04	CC	4	R26.6/R27.5	720	746

REGISTERED CIVIL ENGINEER 1/14/11 DATE

6-13-11
PLANS APPROVAL DATE

REGISTERED PROFESSIONAL ENGINEER INES S. LI No. C51561 Exp. 6/30/12 CIVIL STATE OF CALIFORNIA

The State of California or its officers or agents shall not be responsible for the accuracy or completeness of scanned copies of this plan sheet.

BIGGS CARDOSA ASSOCIATES INC.
865 THE ALAMEDA
SAN JOSE, CALIFORNIA 95126

CCTA
2999 OAK ROAD, SUITE 100
WALNUT CREEK, CA 94597

1. EJ = Expansion Joint
2. Cable Railing not shown

[A] For form liner legend and details, see Road Plan sheets R-31 and R-32.

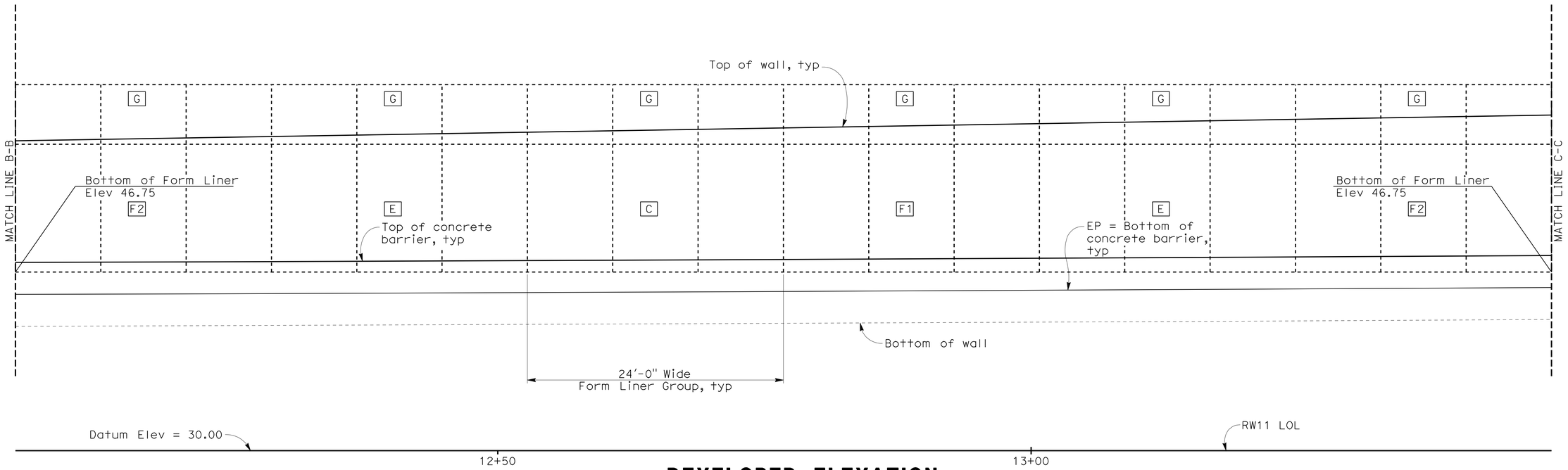

DEVELOPED ELEVATION

1" = 5'

DESIGN OVERSIGHT Overcomer Y. Hor	DESIGN	BY R. RIVAS	CHECKED R. SCHNABEL	PREPARED FOR THE STATE OF CALIFORNIA DEPARTMENT OF TRANSPORTATION	INES S. LI PROJECT ENGINEER
2-1-11 SIGN OFF DATE	DETAILS	BY R. RIVAS	CHECKED R. SCHNABEL		
	QUANTITIES	BY R. RIVAS	CHECKED G. JEYARAMAN		

BRIDGE NO. 28E0203
POST MILES 27.2

RETAINING WALL No. 11
FORM LINER LAYOUT No. 2

DESIGN DETAIL SHEET (ENGLISH) (REV. 6-01-09)

ORIGINAL SCALE IN INCHES FOR REDUCED PLANS 0 1 2 3

CU 04275
EA 2285E1

DISREGARD PRINTS BEARING EARLIER REVISION DATES

REVISION DATES (PRELIMINARY STAGE ONLY): ~~4/22/09~~ ~~9/28/09~~ ~~5/28/10~~ ~~9/8/10~~ ~~10/28/10~~ ~~12/17/10~~ 1/14/11

SHEET 6 OF 12

FILE => 28e0203-c-fl-lo02.dgn

USERNAME => trmikest DATE PLOTTED => 13-JUN-2011 TIME PLOTTED => 11:36

2006075 (2006075CRS25)

DIST	COUNTY	ROUTE	POST MILES TOTAL PROJECT	SHEET No	TOTAL SHEETS
04	CC	4	R26.6/R27.5	721	746

REGISTERED CIVIL ENGINEER 1/14/11 DATE

6-13-11
PLANS APPROVAL DATE

REGISTERED PROFESSIONAL ENGINEER INES S. LI No. C51561 Exp. 6/30/12 CIVIL STATE OF CALIFORNIA

The State of California or its officers or agents shall not be responsible for the accuracy or completeness of scanned copies of this plan sheet.

BIGGS CARDOSA ASSOCIATES INC.
865 THE ALAMEDA
SAN JOSE, CALIFORNIA 95126

CCTA
2999 OAK ROAD, SUITE 100
WALNUT CREEK, CA 94597

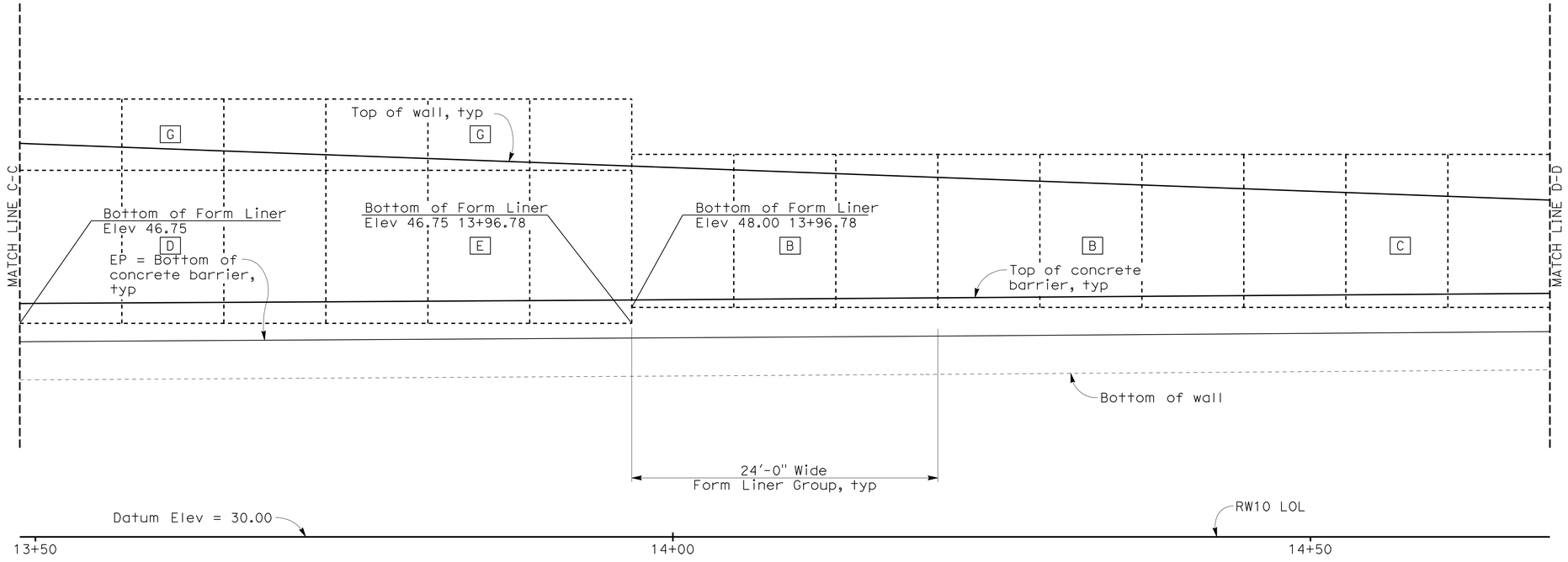

DEVELOPED ELEVATION

1" = 5'

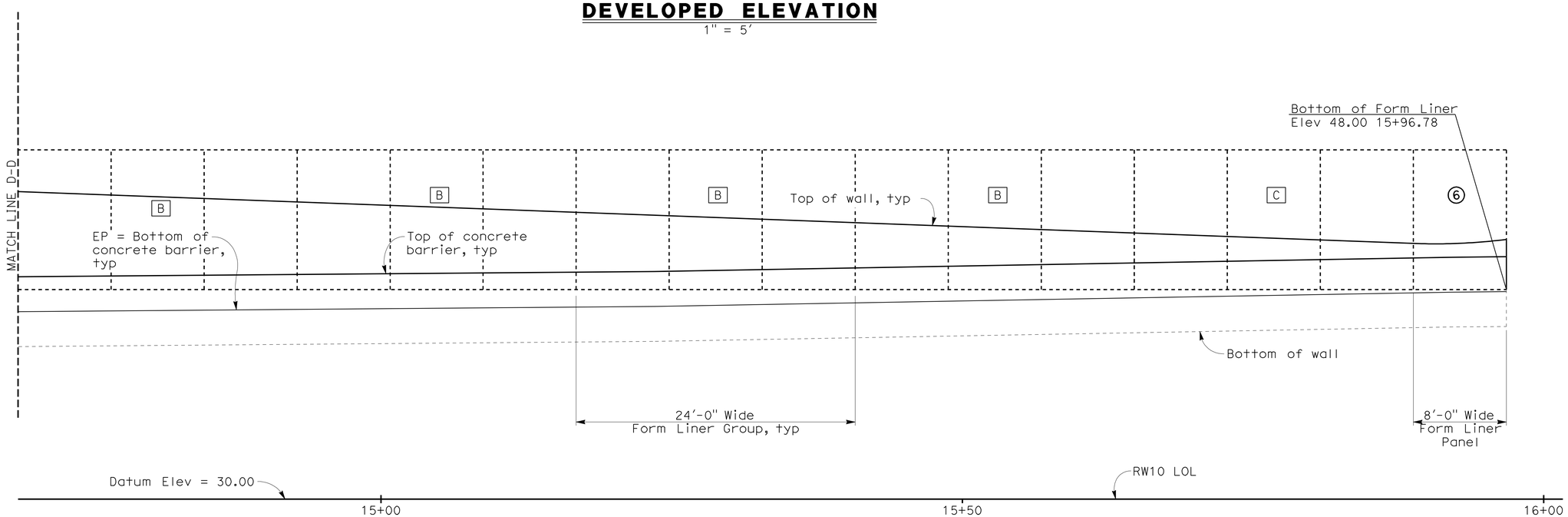

DEVELOPED ELEVATION

1" = 5'

1. EJ = Expansion Joint
2. Cable Railing not shown

(1) or [A] For form liner legend and details, see Road Plan sheets R-31 and R-32.

Overcomer Y. Hor
DESIGN OVERSIGHT Overcomer Y. Hor
2-1-11
SIGN OFF DATE

	BY	CHECKED
DESIGN	R. RIVAS	R. SCHNABEL
DETAILS	R. RIVAS	R. SCHNABEL
QUANTITIES	R. RIVAS	G. JEYARAMAN

PREPARED FOR THE STATE OF CALIFORNIA DEPARTMENT OF TRANSPORTATION

INES S. LI
PROJECT ENGINEER

BRIDGE NO. 28E0203
POST MILES 27.2

RETAINING WALL No. 11
FORM LINER LAYOUT No. 3

DESIGN DETAIL SHEET (ENGLISH) (REV. 6-01-09)

ORIGINAL SCALE IN INCHES FOR REDUCED PLANS 0 1 2 3

CU 04275
EA 2285E1

DISREGARD PRINTS BEARING EARLIER REVISION DATES

REVISION DATES (PRELIMINARY STAGE ONLY) 4/22/09 9/28/09 5/26/10 9/8/10 10/28/10 12/1/10 1/14/11

SHEET 7 OF 12

FILE => 28e0203-c-fl-lo03.dgn

USERNAME => trmikes1 DATE PLOTTED => 13-JUN-2011 TIME PLOTTED => 11:37

2006075 (2006075CRS26)

DIST	COUNTY	ROUTE	POST MILES TOTAL PROJECT	SHEET No	TOTAL SHEETS
04	CC	4	R26.6/R27.5	722	746

REGISTERED CIVIL ENGINEER — DATE 1/14/11

6-13-11
PLANS APPROVAL DATE

REGISTERED PROFESSIONAL ENGINEER — INES S. LI — No. C51561 — Exp. 6/30/12 — CIVIL — STATE OF CALIFORNIA

The State of California or its officers or agents shall not be responsible for the accuracy or completeness of scanned copies of this plan sheet.

BIGGS CARDOSA ASSOCIATES INC.
865 THE ALAMEDA
SAN JOSE, CALIFORNIA 95126

CCTA
2999 OAK ROAD, SUITE 100
WALNUT CREEK, CA 94597

GENERAL NOTES
LOAD FACTOR DESIGN

DESIGN: Bridge Design Specifications, April 2000 (LFD), (1996 AASHTO w/ revisions by Caltrans)

FHWA Publication No. FHWAO-1F-03-017 Geotechnical Engineering Circular No. 7 - Soil Nail Walls

CONCRETE:	fy = 60 ksi f'c = 4.0 ksi
SHOTCRETE:	f'c = 4.0 ksi
STRUCTURAL STEEL:	ASTM A709 Grade 36
WELDED STUDS:	ASTM A108
SOIL NAILS:	ASTM A615 or ASTM A706 Grade 60 fy = 60 ksi

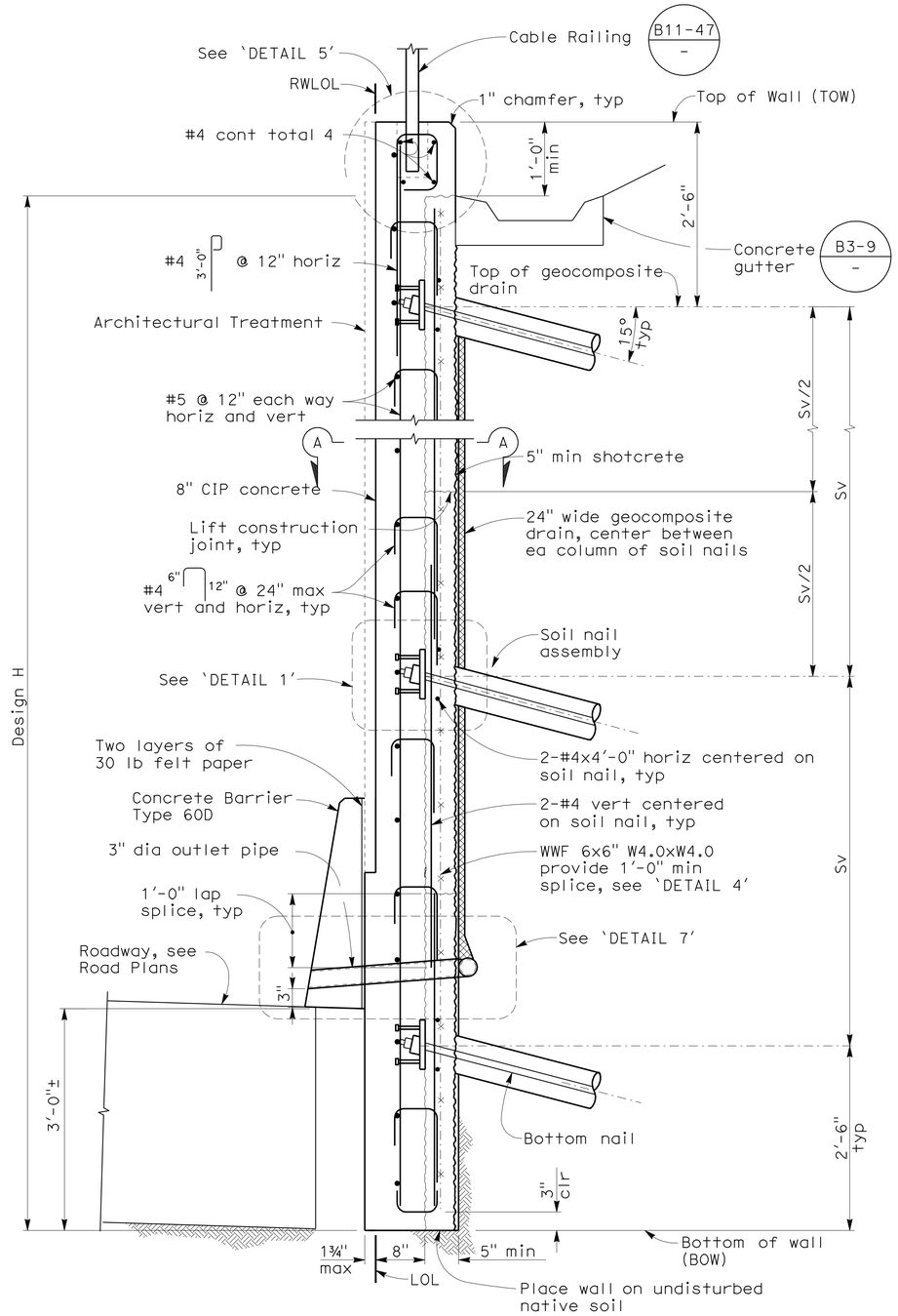

(LOOKING WEST)

TYPICAL SECTION
1" = 1'-0"

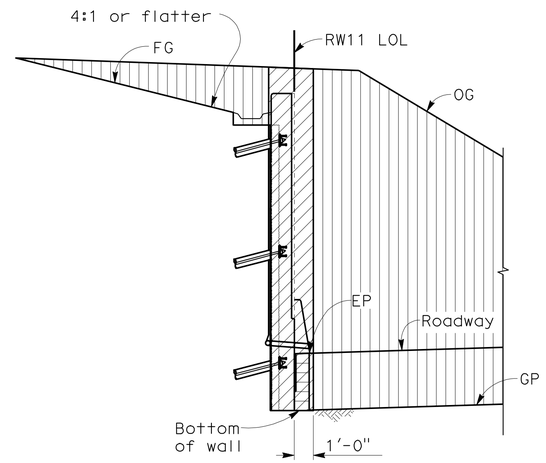

OG ABOVE FG

RW11 LOL Sta 10+35.00 to Sta 12+66.15±
RW11 LOL Sta 14+03.34± to Sta 16+40.14

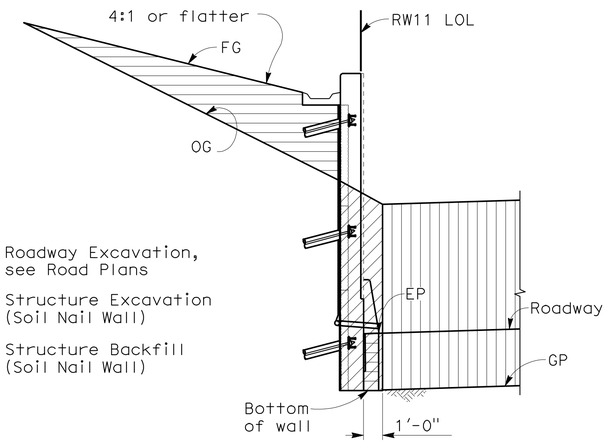

OG BELOW FG

RW11 LOL Sta 12+66.15± to Sta 14+03.34±

Roadway Excavation, see Road Plans
Structure Excavation (Soil Nail Wall)
Structure Backfill (Soil Nail Wall)

LIMITS OF PAYMENT FOR EXCAVATION AND BACKFILL
NO SCALE

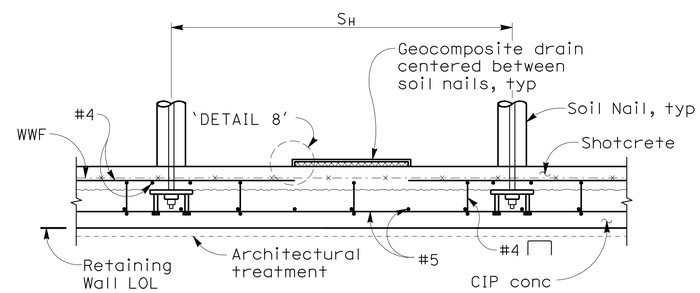

SECTION A-A
3/4" = 1'-0"

1. For vert and horiz nail spacing, see 'SOIL NAIL LAYOUT' sheets
2. For 'DETAIL 1', 'DETAIL 4', 'DETAIL 5', and 'DETAIL 8', see 'SOIL NAIL WALL DETAILS No. 2' sheet.
3. For 'DETAIL 7', see 'SOIL NAIL WALL DETAILS No. 3' sheet

DESIGN OVERSIGHT — Overcomer Y. Hor
2-1-11
SIGN OFF DATE

	BY	CHECKED
DESIGN	R. RIVAS	G. JEYARAMAN
DETAILS	R. RIVAS	A. NOTARO
QUANTITIES	R. RIVAS	G. JEYARAMAN

PREPARED FOR THE STATE OF CALIFORNIA DEPARTMENT OF TRANSPORTATION

INES S. LI
PROJECT ENGINEER

BRIDGE NO. 28E0203
POST MILES 27.2

RETAINING WALL No. 11
SOIL NAIL WALL DETAILS No. 1

DESIGN DETAIL SHEET (ENGLISH) (REV. 6-01-09)

ORIGINAL SCALE IN INCHES FOR REDUCED PLANS 0 1 2 3

CU 04275
EA 2285E1

DISREGARD PRINTS BEARING EARLIER REVISION DATES — REVISION DATES (PRELIMINARY STAGE ONLY) 4/22/09 9/28/09 5/26/09 8/10/10 10/28/10 12/17/10 1/14/11

SHEET 8 OF 12

FILE => 28e0203-d-retdt01.dgn

USERNAME => trmikest DATE PLOTTED => 13-JUN-2011 TIME PLOTTED => 11:37

(20060075CRS27) 20060075

DIST	COUNTY	ROUTE	POST MILES TOTAL PROJECT	SHEET No	TOTAL SHEETS
04	CC	4	R26.6/R27.5	723	746

REGISTERED CIVIL ENGINEER — DATE 1/14/11

6-13-11
PLANS APPROVAL DATE

REGISTERED PROFESSIONAL ENGINEER — INES S. LI — No. C51561 — Exp. 6/30/12 — CIVIL — STATE OF CALIFORNIA

The State of California or its officers or agents shall not be responsible for the accuracy or completeness of scanned copies of this plan sheet.

BIGGS CARDOSA ASSOCIATES INC.
865 THE ALAMEDA
SAN JOSE, CALIFORNIA 95126

CCTA
2999 OAK ROAD, SUITE 100
WALNUT CREEK, CA 94597

NOTES:

1. The test nail embedment length shall be equal to ⅔ of the embedment length, L_E, of adjacent production soil nail assemblies, but not less than 12'-0"
2. The total length of the test nail assembly equals the embedment length plus the length required for jacking equipment
3. For location of proof test nail see 'RETAINING WALL No. 11 'SOIL NAIL LAYOUT' sheets. Additional proof test nails will be installed and tested per special provisions
4. Contractor to determine drilled hole diameter
5. Finished grout surface to be normal to the bar
6. For soil nail schedule, see 'SOIL NAIL LAYOUT No. 1' sheet
7. For soil nail in fill condition 'L E' shall be measured from face of the existing slope

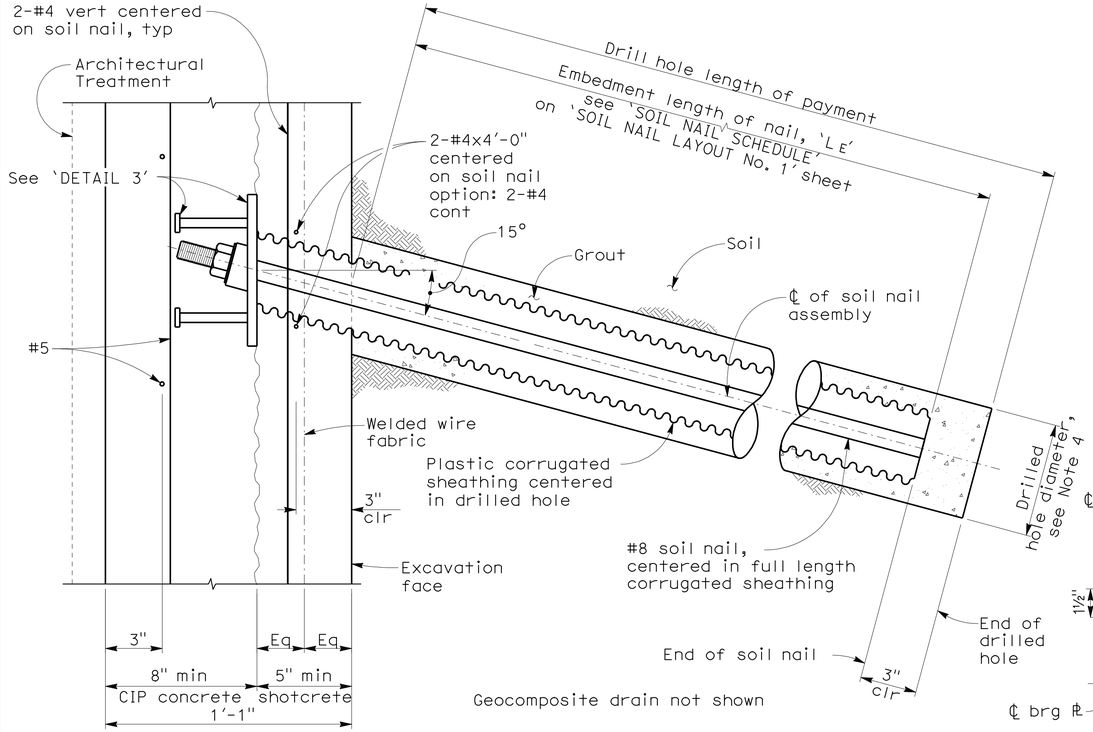

SOIL NAIL ASSEMBLY - DETAIL 1

3" = 1'-0"

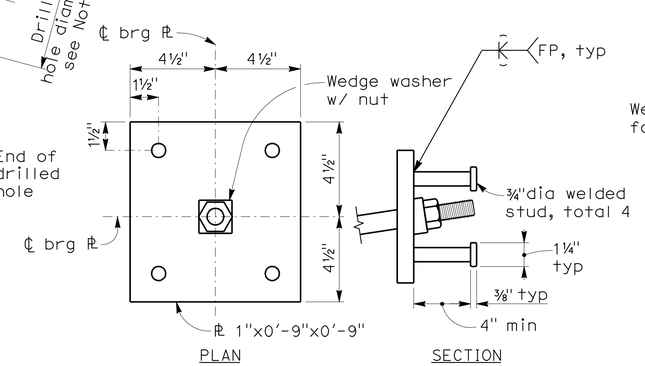

BEARING PLATE - DETAIL 3

3" = 1'-0"

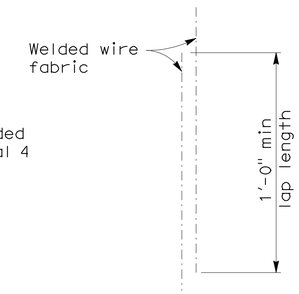

WWF LAP SPLICE - DETAIL 4

NO SCALE

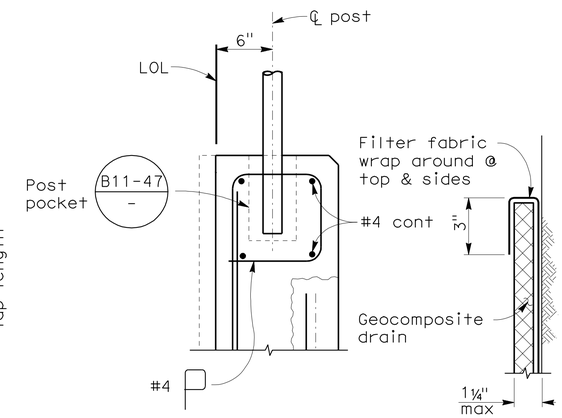

DETAIL 5

1 1/2"=1'-0"

DETAIL 8

NO SCALE

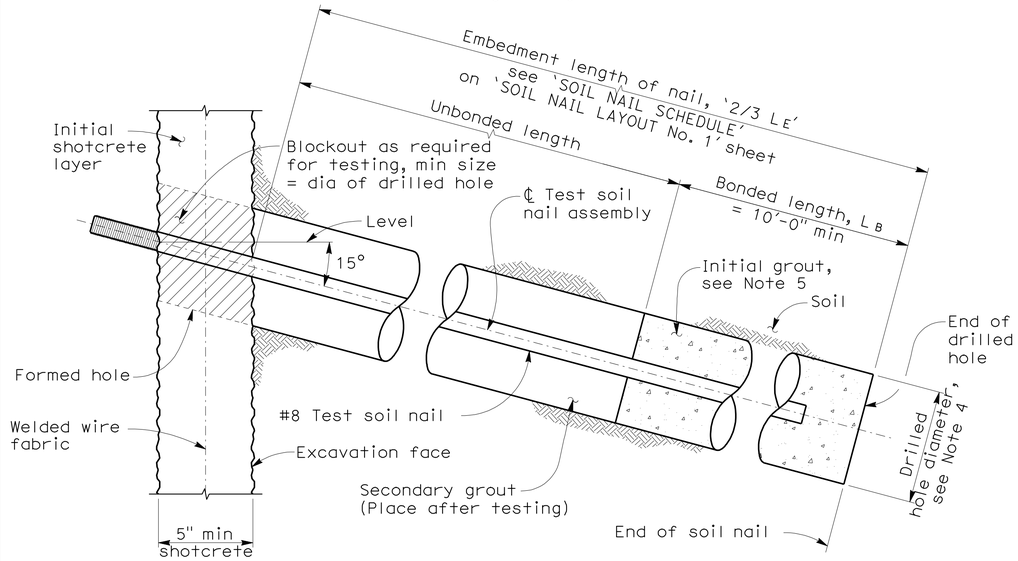

TEST SOIL NAIL ASSEMBLY - DETAIL 2

3" = 1'-0"

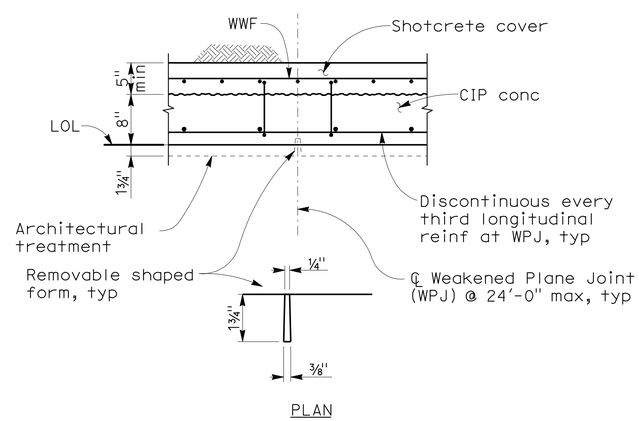

WEAKENED PLANE JOINT (WPJ) - DETAIL 6

NO SCALE

DESIGN OVERSIGHT: Overcomer Y. Hor	DESIGN	BY R. RIVAS	CHECKED G. JEYARAMAN
2-1-11 SIGN OFF DATE	DETAILS	BY R. RIVAS	CHECKED A. NOTARO
	QUANTITIES	BY R. RIVAS	CHECKED G. JEYARAMAN

PREPARED FOR THE STATE OF CALIFORNIA DEPARTMENT OF TRANSPORTATION

INES S. LI
PROJECT ENGINEER

BRIDGE NO. 28E0203
POST MILES 27.2

RETAINING WALL No. 11
SOIL NAIL WALL DETAILS No. 2

DESIGN DETAIL SHEET (ENGLISH) (REV. 6-01-09)

ORIGINAL SCALE IN INCHES FOR REDUCED PLANS 0 1 2 3

CU 04275
EA 2285E1

DISREGARD PRINTS BEARING EARLIER REVISION DATES

REVISION DATES (PRELIMINARY STAGE ONLY): 4/22/09 9/28/09 5/26/10 9/8/10 10/28/10 12/17/10 1/14/11

SHEET 9 OF 12

FILE => 28e0203-d-retdt02.dgn

USERNAME => trmikest DATE PLOTTED => 13-JUN-2011 TIME PLOTTED => 11:37

(2006075CRS28) 2006075

DIST	COUNTY	ROUTE	POST MILES TOTAL PROJECT	SHEET No	TOTAL SHEETS
04	CC	4	R26.6/R27.5	724	746

REGISTERED CIVIL ENGINEER 1/14/11 DATE

6-13-11
PLANS APPROVAL DATE

REGISTERED PROFESSIONAL ENGINEER INES S. LI No. C51561 Exp. 6/30/12 CIVIL STATE OF CALIFORNIA

The State of California or its officers or agents shall not be responsible for the accuracy or completeness of scanned copies of this plan sheet.

BIGGS CARDOSA ASSOCIATES INC.
865 THE ALAMEDA
SAN JOSE, CALIFORNIA 95126

CCTA
2999 OAK ROAD, SUITE 100
WALNUT CREEK, CA 94597

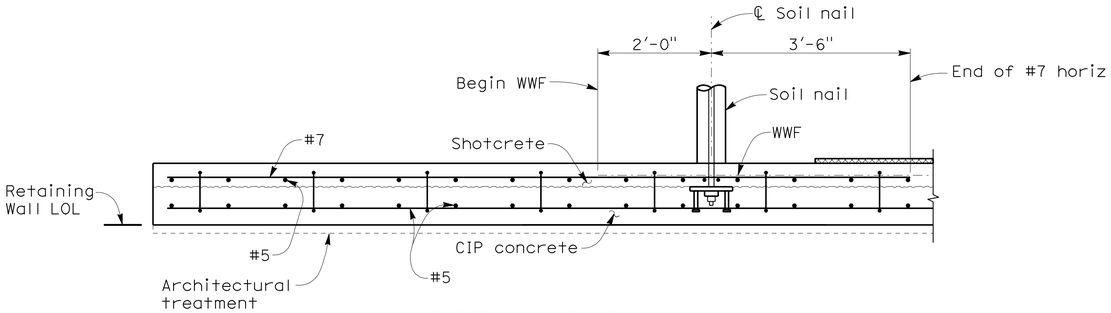

SECTION B-B
3/4" = 1'-0"

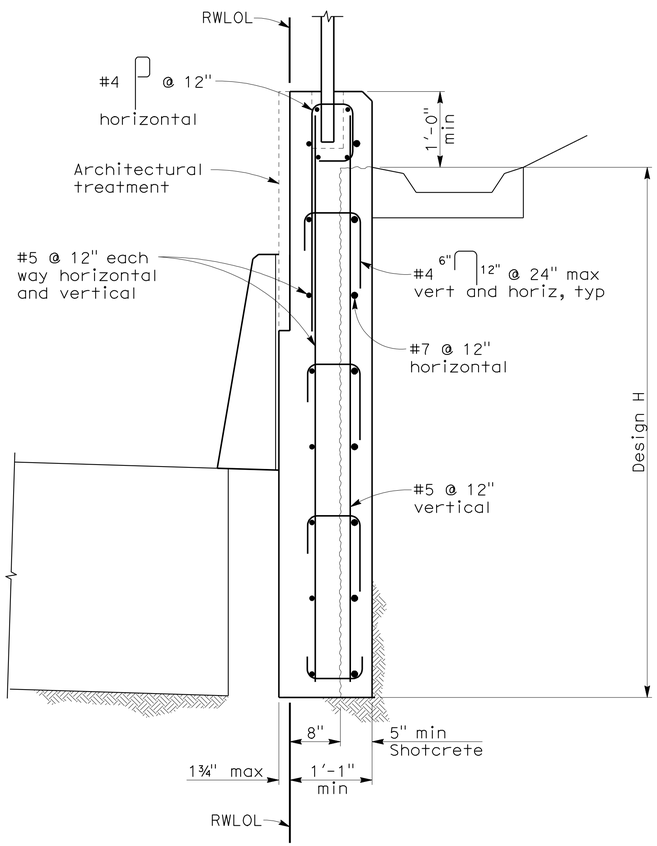

For details not noted, see 'TYPICAL SECTION' on

SECTION C-C
1" = 1'-0"

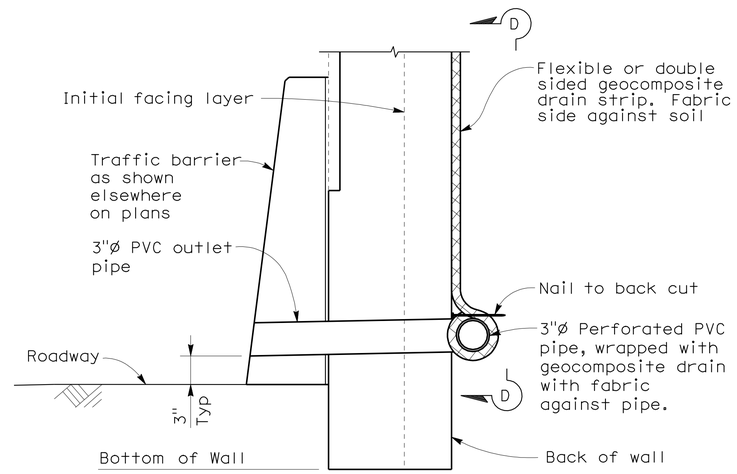

OPTION A

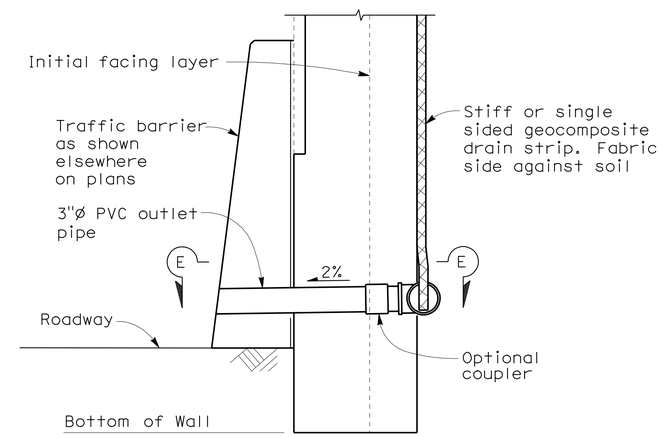

OPTION B

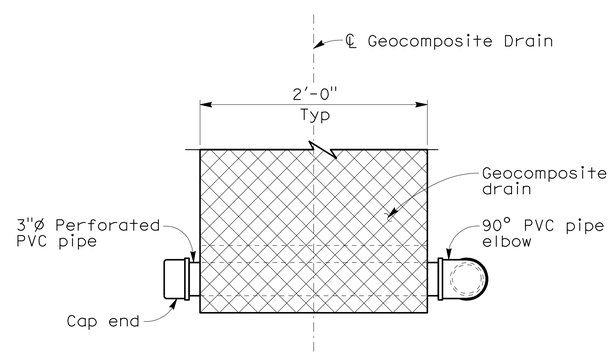

VIEW D-D

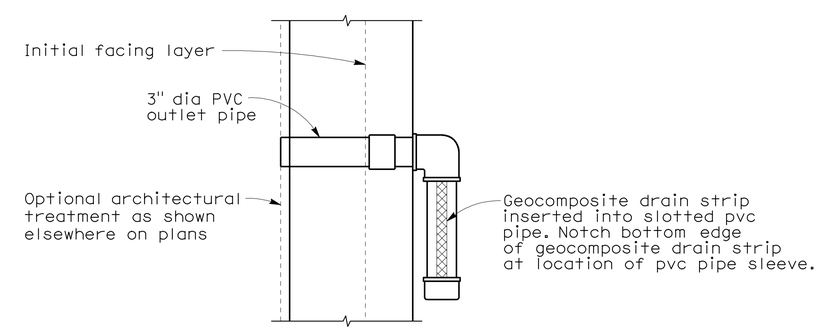

SECTION E-E

DETAIL 7
NO SCALE

Overcomer Y. Hor
DESIGN OVERSIGHT Overcomer Y. Hor
2-1-11
SIGN OFF DATE

	BY	CHECKED
DESIGN	R. RIVAS	G. JEYARAMAN
DETAILS	R. RIVAS	A. NOTARO
QUANTITIES	R. RIVAS	G. JEYARAMAN

PREPARED FOR THE STATE OF CALIFORNIA DEPARTMENT OF TRANSPORTATION

INES S. LI
PROJECT ENGINEER

BRIDGE NO. 28E0203
POST MILES 27.2

RETAINING WALL No. 11
SOIL NAIL WALL DETAILS No. 3

DESIGN DETAIL SHEET (ENGLISH) (REV. 6-01-09)

ORIGINAL SCALE IN INCHES FOR REDUCED PLANS 0 1 2 3

CU 04275
EA 2285E1

DISREGARD PRINTS BEARING EARLIER REVISION DATES

REVISION DATES (PRELIMINARY STAGE ONLY) 4/22/09 9/28/09 5/28/10 9/8/10 10/28/10 12/17/10 1/14/11

SHEET 10 OF 12

FILE => 28e0203-d-retdt03.dgn

USERNAME => trmikest DATE PLOTTED => 13-JUN-2011 TIME PLOTTED => 11:37

(2006075CRS29) 2006075

DIST	COUNTY	ROUTE	POST MILES TOTAL PROJECT	SHEET No	TOTAL SHEETS
04	CC	4	R26.6/R27.5	725	746

GEOTECHNICAL PROFESSIONAL — 1/14/11 DATE

6-13-11
PLANS APPROVAL DATE

The State of California or its officers or agents shall not be responsible for the accuracy or completeness of scanned copies of this plan sheet.

REGISTERED PROFESSIONAL ENGINEER — GARY PARIKH — No. G.E. 666 — Exp. 12/31/11 — GEOTECHNICAL — STATE OF CALIFORNIA

CONTRA COSTA TRANSPORTATION AUTHORITY
2999 OAK ROAD, SUITE 100
WALNUT CREEK, CA 94597

PARIKH CONSULTANTS, INC.
2360 QUME DRIVE, SUITE A
SAN JOSE CA 95131

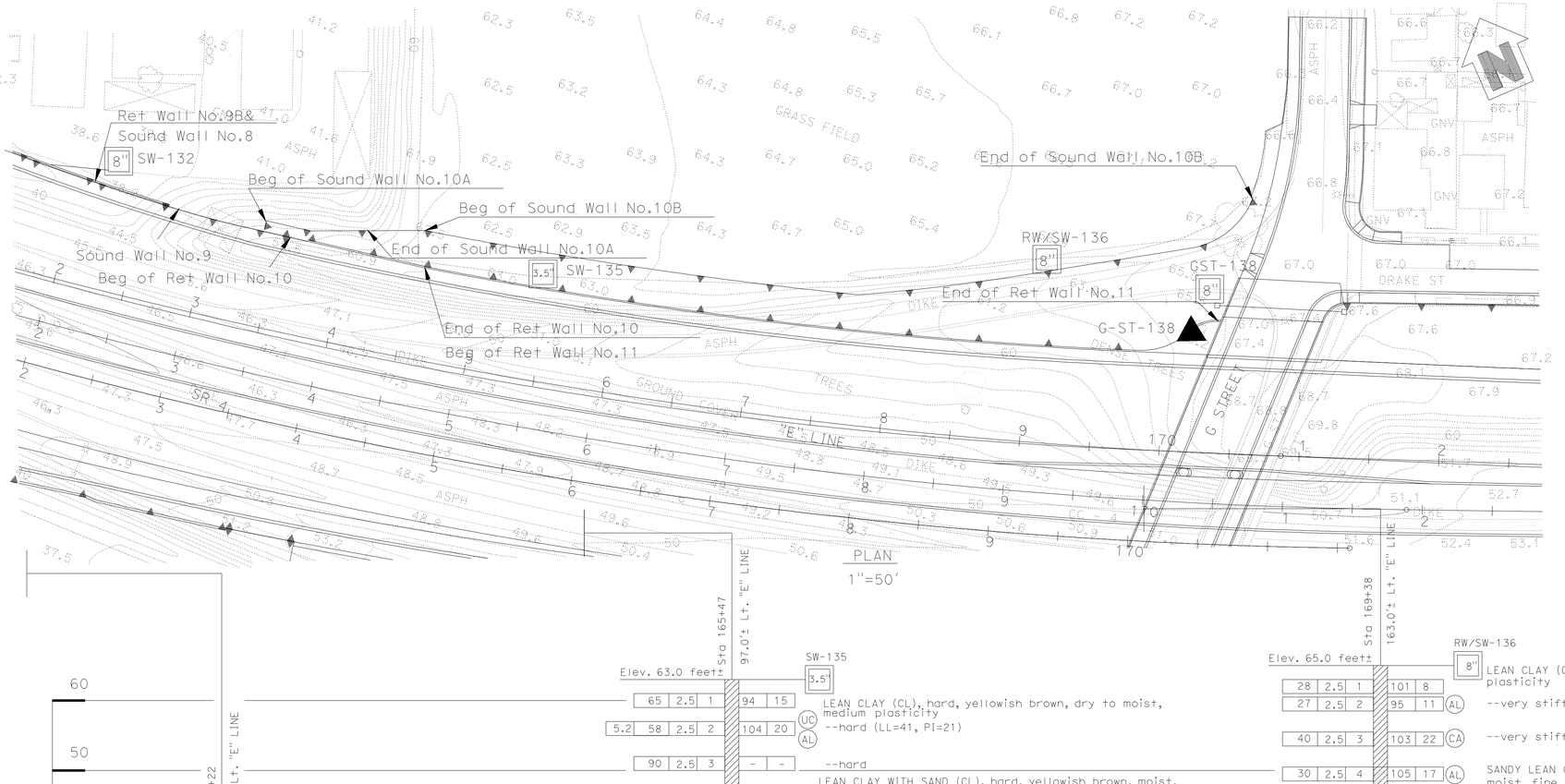

Note:
Standard Penetration Test Sampler: I.D. = 1.4"; O.D. = 2"
Modified California Sampler: I.D. = 2.5"; O.D. = 3"
Hammer Assembly: A 140 lb hammer with a 30" drop
(Automatic Hammer)

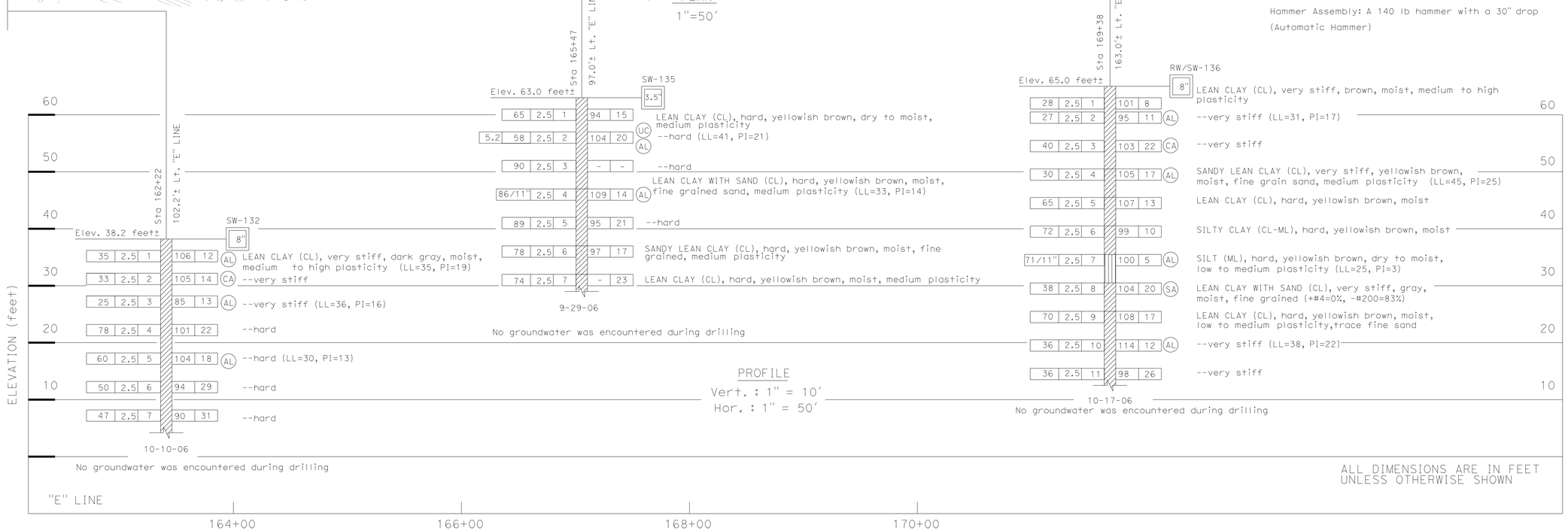

ALL DIMENSIONS ARE IN FEET UNLESS OTHERWISE SHOWN

Note: See Plate A-13 for log of test boring of GST-138 and G-ST-138

LEGEND OF BORING OPERATIONS

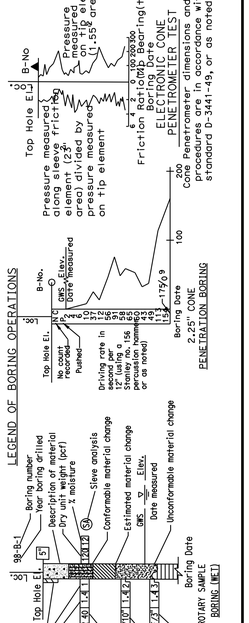

IN-SITU, LAB & FIELD TEST DESIGNATIONS

(A)	ATTERBERG LIMITS
(CA)	CHEMICAL ANALYSIS
(C)	CONSOLIDATION
(CU)	CONSOLIDATED UNDRAINED TRIAXIAL
(DS)	DIRECT SHEAR
(D)	MAX. DRY DENSITY
(P)	POCKET PENETROMETER
(S)	SIEVE ANALYSIS
(T)	TORVANE
(U)	UNCONFINED COMPRESSION
(UC)	UNCONSOLIDATED UNDRAINED TRIAXIAL
(V)	VANE SHEAR

TYPES OF BORINGS

○	2.25" CONE PENETRATION
5/16	ROTARY WASH
◀	ELECTRONIC CONE PENETROMETER
5/16 (SIZE)	AUGER BORING (DRY)
	TEST PIT
5/16	DIAMOND CORE BORING
3/215	SOIL TUBE

LEGEND OF EARTH MATERIALS (USCS) BASED ON ASTM D2487, D2488

	FILL MATERIAL
	CLAY (CL or CH)
	SILT (ML or MH)
	PEAT and/or ORGANIC MATTER
	WELL-GRADED GRAVEL (GW)
	POORLY-GRADED GRAVEL (GP)
	SILTY GRAVEL (GM)
	CLAYEY GRAVEL (GC)
	WELL-GRADED SAND (SW)
	POORLY-GRADED SAND (SP)
	SILTY SAND (SM)
	CLAYEY SAND (SC)
	COBBLES/BOULDERS
	IGNEOUS ROCK
	SEDIMENTARY ROCK
	METAMORPHIC ROCK

CONSISTENCY CLASSIFICATION FOR SOILS According to the Standard Penetration Test (ASTM D-1586)

SPT N-Value (Blows/FT)	Granular	SPT N-Value (Blows/FT)	Cohesive
0-4	Very loose	<2	Very soft
5-10	Loose	2-4	Soft
11-30	Medium Dense	5-8	Firm
31-50	Dense	9-15	Stiff
>50	Very Dense	16-30	Very Stiff
		>31	Hard

NOTE: Visual classifications of earth materials are based on field inspection and or a confirmed or revised with laboratory test results as necessary.

DESIGN OVERSIGHT Overcomer Y. Hor — 2-1-11 SIGN OFF DATE	DRAWN BY OKSAN GOUTHIER	GANGA TRIPATHI FIELD INVESTIGATION BY: DATE: 09/2006 - 10/2006	PREPARED FOR THE STATE OF CALIFORNIA DEPARTMENT OF TRANSPORTATION
	CHECKED BY PARTHA SIRCAR		

PARTHA SIRCAR, PROJECT ENGINEER

BRIDGE NO. 28E0203
POST MILE 27.2

RETAINING WALL NO. 11

LOG OF TEST BORINGS 1 OF 2

CU 04275
EA 2285E1

DISREGARD PRINTS BEARING EARLIER REVISION DATES — REVISION DATES (PRELIMINARY STAGE ONLY): 9/23/09 05/20/10 9/8/10

SHEET 11 OF 12

ORIGINAL SCALE IN INCHES FOR REDUCED PLANS 0 1 2 3

OSF GEOTECHNICAL LOG OF TEST BORINGS SHEET (ENGLISH) (REV. 2/25/05)

FILE => 28E0203-z-ltb01.dgn

USERNAME => rtrmikes1 DATE PLOTTED => 13-JUN-2011 TIME PLOTTED => 11:37

DIST	COUNTY	ROUTE	POST MILES TOTAL PROJECT	SHEET No	TOTAL SHEETS
04	CC	4	R26.6/R27.5	726	746

GEOTECHNICAL PROFESSIONAL — 1/14/11 DATE

6-13-11
PLANS APPROVAL DATE

REGISTERED PROFESSIONAL ENGINEER — GARY PARIKH — No. G.E. 666 — Exp. 12/31/11 — GEOTECHNICAL — STATE OF CALIFORNIA

The State of California or its officers or agents shall not be responsible for the accuracy or completeness of scanned copies of this plan sheet.

CONTRA COSTA TRANSPORTATION AUTHORITY
2999 OAK ROAD, SUITE 100
WALNUT CREEK, CA 94597

PARIKH CONSULTANTS, INC.
2360 QUME DRIVE, SUITE A
SAN JOSE CA 95131

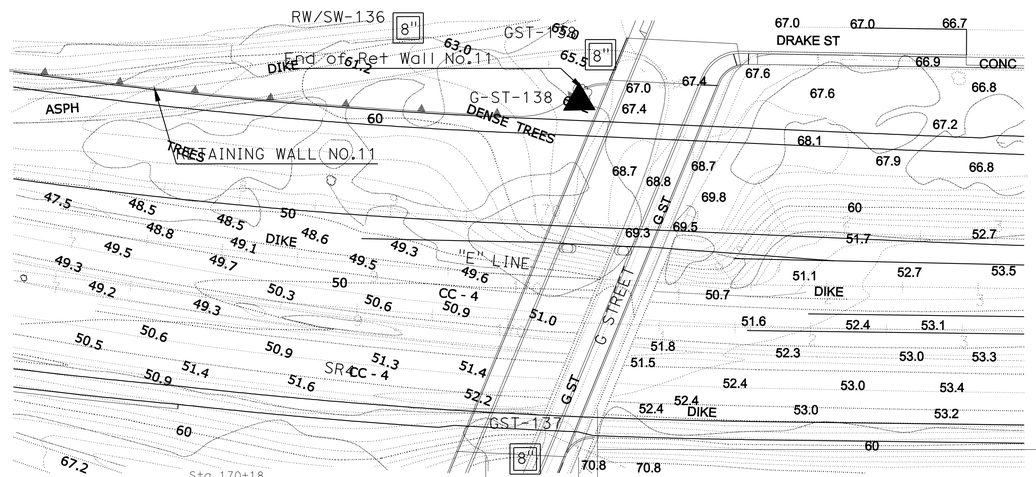

PLAN
1" = 50'

Note:
Standard Penetration Test Sampler: I.D. = 1.4"; O.D. = 2"
Modified California Sampler: I.D. = 2.5"; O.D. = 3"
Hammer Assembly: A 140 lb hammer with a 30" drop (Automatic Hammer)

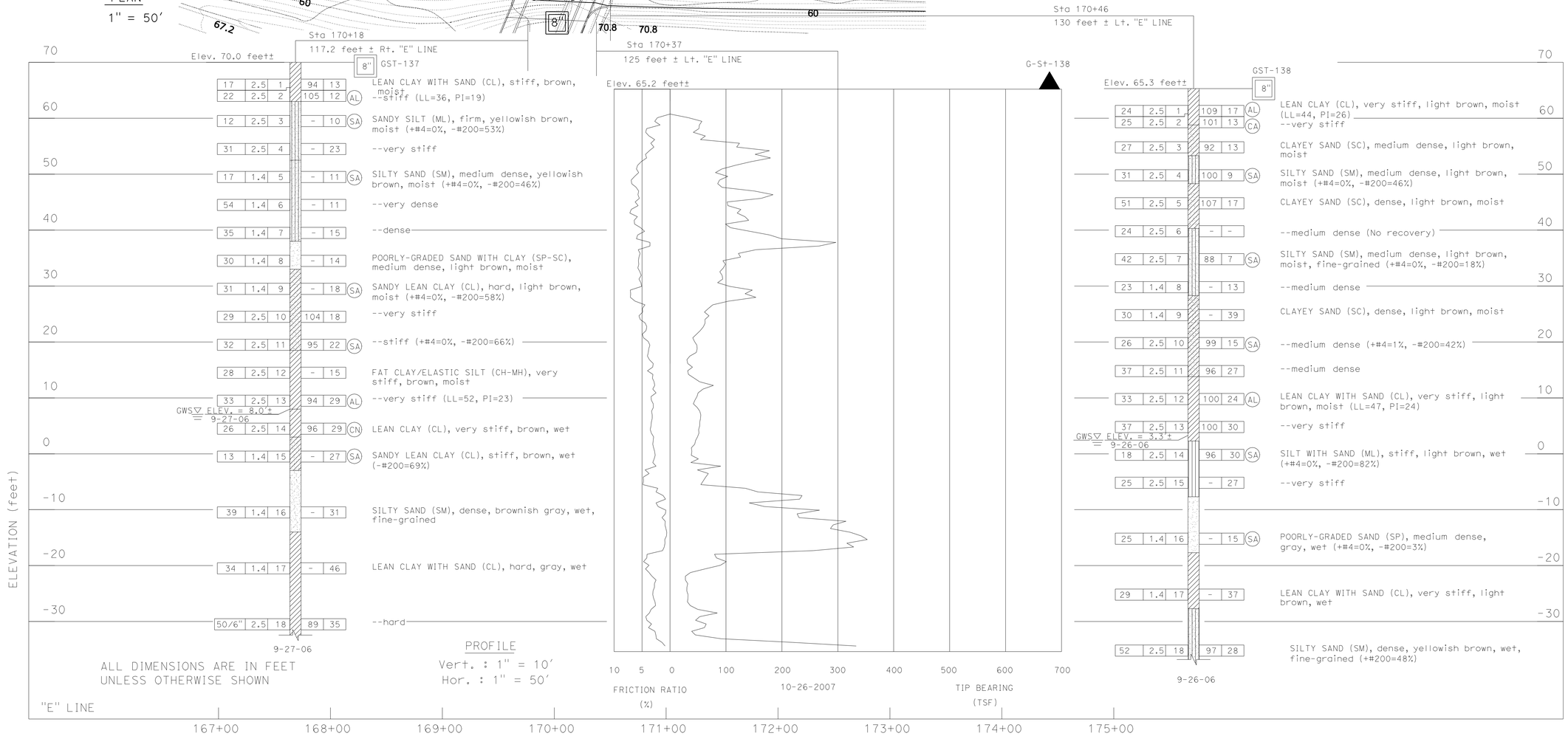

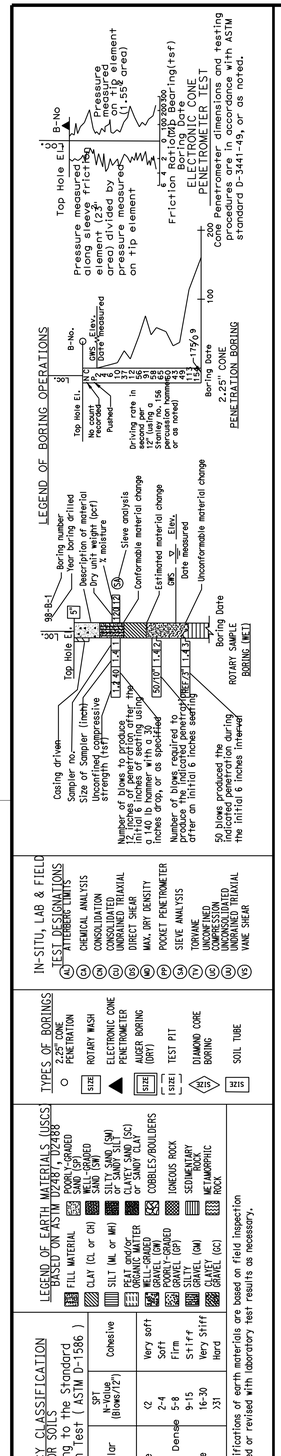

DESIGN OVERSIGHT — Overcomer Y. Hor — 2-1-11 — SIGN OFF DATE

DRAWN BY: OKSAN GOUTHIER
CHECKED BY: PARTHA SIRCAR

GANGA TRIPATHI — FIELD INVESTIGATION BY: DATE: 09/2006 - 10/2006

PREPARED FOR THE STATE OF CALIFORNIA DEPARTMENT OF TRANSPORTATION

PARTHA SIRCAR — PROJECT ENGINEER

BRIDGE NO. 28E0203
POST MILE 27.2

RETAINING WALL NO. 11

LOG OF TEST BORINGS 2 OF 2

CU 04275
EA 2285E1

DISREGARD PRINTS BEARING EARLIER REVISION DATES — REVISION DATES (PRELIMINARY STAGE ONLY): 9/23/09 05/26/10 9/8/10

SHEET 12 OF 12

ORIGINAL SCALE IN INCHES FOR REDUCED PLANS 0 1 2 3

OSF GEOTECHNICAL LOG OF TEST BORINGS SHEET (ENGLISH) (REV. 2/25/05)

FILE => 28E0203-z-1tb02.dgn

USERNAME => rtmikes! DATE PLOTTED => 13-JUN-2011 TIME PLOTTED => 11:38

FOR ACCURATE RIGHT OF WAY DATA, CONTACT
RIGHT OF WAY ENGINEERING AT THE DISTRICT OFFICE

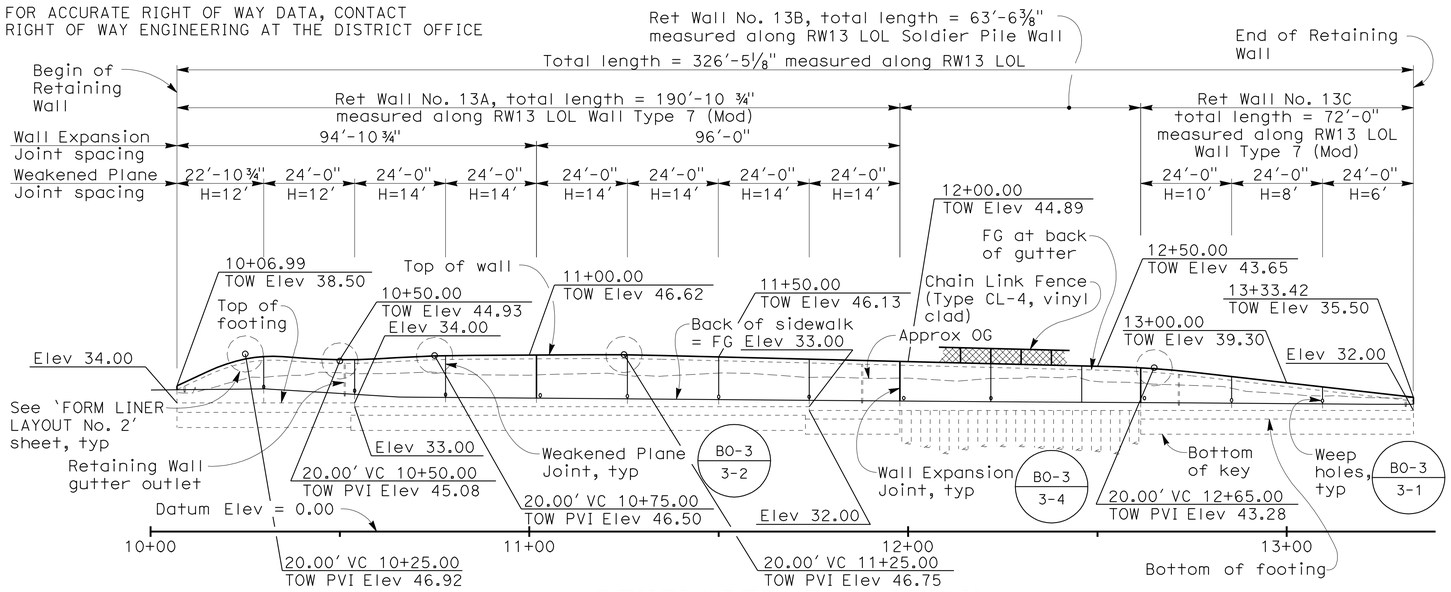

DEVELOPED ELEVATION

1" = 20'

CURVE DATA				
CURVE	RADIUS	LENGTH	TANGENT	DELTA
1	1201.00	191.45	95.93	09°08'01"
2	1111.00	68.42	34.22	03°31'42"

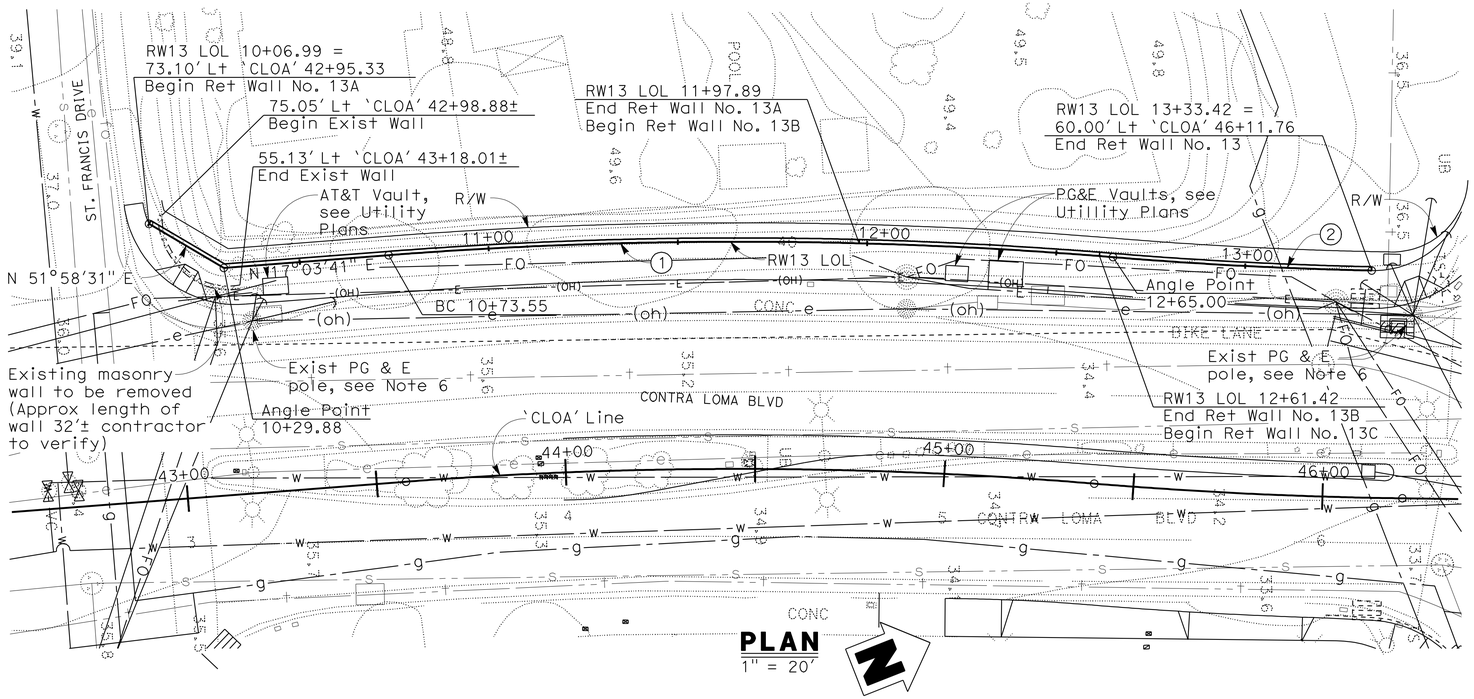

PLAN

1" = 20'

NOTES:

1. This plan accurate for retaining wall work only.
2. Top of wall profiles are linear between points shown unless noted otherwise.
3. Top of footing is level, typ.
4. See Road Plans for right-of-way and utilities not shown.
5. For footing step detail, see B3-8 / -.
6. PG&E poles, guy wires and anchorages shall be protected in place during masonry wall removal and retaining wall construction.
7. For 'INDEX TO PLANS' and list of Standard Plans used, see 'FORM LINER LAYOUT No. 1' sheet.
8. For location of retaining wall gutter outlet and Quantities, see 'RETAINING WALL TYPE 7 (MOD) DETAILS' sheet.
9. For Architectural Treatment, see 'FORM LINER LAYOUT' sheets and Road Plans sheet R-30 for quantities.
10. Contractor shall stay outside 10' radius of PG&E 21kV overhead line during construction.

DIST	COUNTY	ROUTE	POST MILES TOTAL PROJECT	SHEET No	TOTAL SHEETS
04	CC	4	R26.6/R27.5	727	746

REGISTERED CIVIL ENGINEER — DATE 4/11/11

6-13-11
PLANS APPROVAL DATE

REGISTERED PROFESSIONAL ENGINEER INES S. LI No. C51561 Exp. 6/30/12 CIVIL STATE OF CALIFORNIA

The State of California or its officers or agents shall not be responsible for the accuracy or completeness of scanned copies of this plan sheet.

BIGGS CARDOSA ASSOCIATES INC.
865 THE ALAMEDA
SAN JOSE, CALIFORNIA 95126

CCTA
2999 OAK ROAD, SUITE 100
WALNUT CREEK, CA 94597

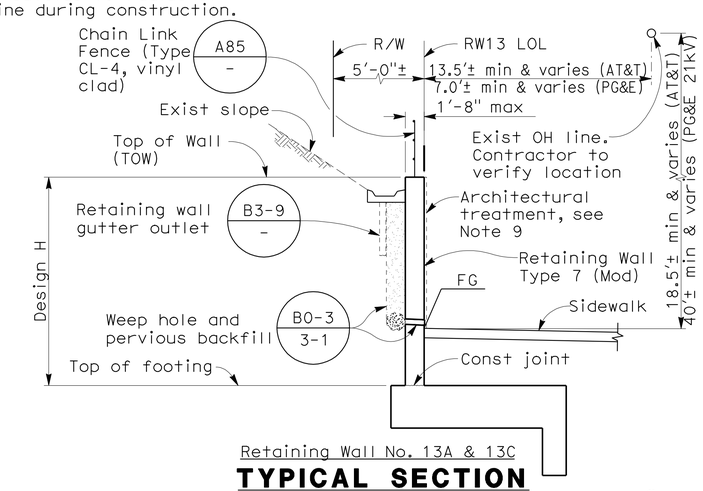

Retaining Wall No. 13A & 13C

TYPICAL SECTION

NO SCALE

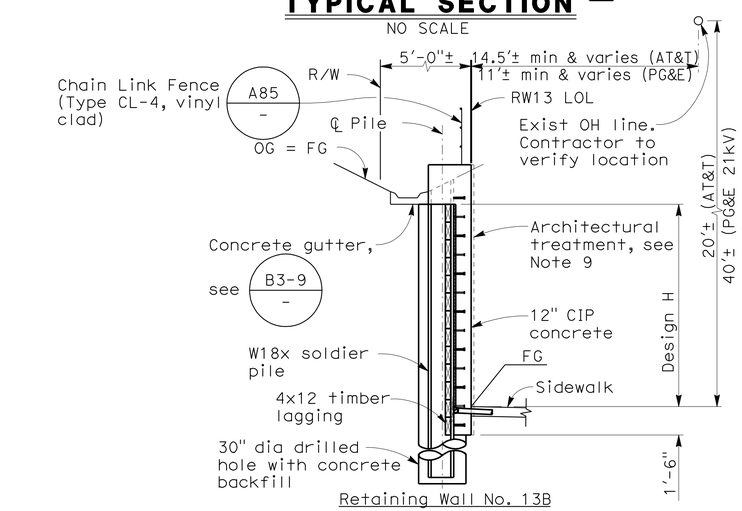

Retaining Wall No. 13B

TYPICAL SECTION

NO SCALE

DESIGN OVERSIGHT Overcomer Y. Hor	DESIGN	BY R. RIVAS	CHECKED G. JEYARAMAN	LOAD FACTOR DESIGN	
5-18-11 SIGN OFF DATE	DETAILS	BY R. RIVAS	CHECKED G. JEYARAMAN	LAYOUT	BY T. HICKS / CHECKED I. LI
	QUANTITIES	BY R. RIVAS	CHECKED G. JEYARAMAN	SPECIFICATIONS	BY I. LI / PLANS AND SPECS COMPARED A. NOTARO

PREPARED FOR THE STATE OF CALIFORNIA DEPARTMENT OF TRANSPORTATION

INES S. LI
PROJECT ENGINEER

BRIDGE NO. 28E0201
POST MILES 26.9

RETAINING WALL No. 13
GENERAL PLAN

DESIGN GENERAL PLAN SHEET (ENGLISH) (REV. 6-01-09)

ORIGINAL SCALE IN INCHES FOR REDUCED PLANS 0 1 2 3

CU 04275
EA 2285E1

DISREGARD PRINTS BEARING EARLIER REVISION DATES

REVISION DATES (PRELIMINARY STAGE ONLY) 4/22/09 9/28/09 5/26/10 9/8/10 10/28/10 12/17/10 1/14/11 4/11/11

SHEET 1 OF 7

FILE => 28e0201-a-gp01.dgn

USERNAME => ttrmikes1 DATE PLOTTED => 13-JUN-2011 TIME PLOTTED => 11:38

2006075 (2006075CRS36)

DIST	COUNTY	ROUTE	POST MILES TOTAL PROJECT	SHEET No	TOTAL SHEETS
04	CC	4	R26.6/R27.5	728	746

REGISTERED CIVIL ENGINEER 1/14/11 DATE

6-13-11
PLANS APPROVAL DATE

REGISTERED PROFESSIONAL ENGINEER INES S. LI No. C51561 Exp.6/30/12 CIVIL STATE OF CALIFORNIA

The State of California or its officers or agents shall not be responsible for the accuracy or completeness of scanned copies of this plan sheet.

BIGGS CARDOSA ASSOCIATES INC.
865 THE ALAMEDA
SAN JOSE, CALIFORNIA 95126

CCTA
2999 OAK ROAD, SUITE 100
WALNUT CREEK, CA 94597

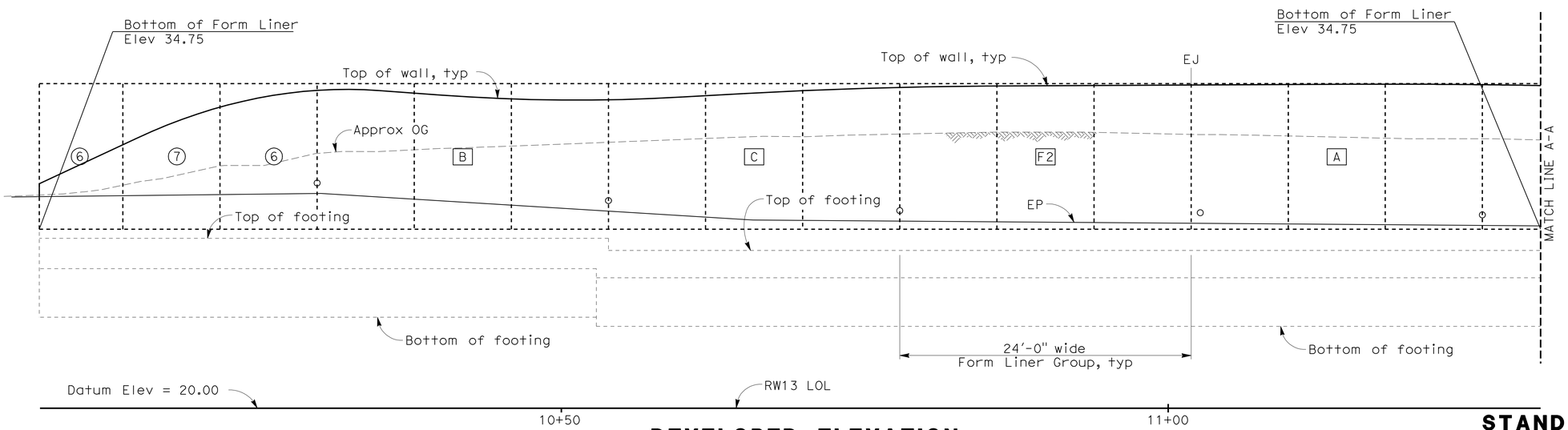

DEVELOPED ELEVATION

1" = 5'

1. EJ = Expansion Joint
2. Chain Link Fence not shown

A For form liner legend and details, see Road Plan sheets R-31 and R-32.

STANDARD PLANS DATED MAY 2006

A10A	ACRONYMS AND ABBREVIATIONS (SHEET 1 OF 2)
A10B	ACRONYMS AND ABBREVIATIONS (SHEET 2 OF 2)
A10C	SYMBOLS (SHEET 1 OF 2)
A10D	SYMBOLS (SHEET 2 OF 2)
A62B	LIMITS OF PAYMENT FOR EXCAVATION AND BACKFILL - BRIDGE SURCHARGE AND WALL
A85	CHAIN LINK FENCE
BO-3	BRIDGE DETAILS
B3-8	RETAINING WALL DETAILS NO. 1
B3-9	RETAINING WALL DETAILS NO. 2
B11-47	CABLE RAILING

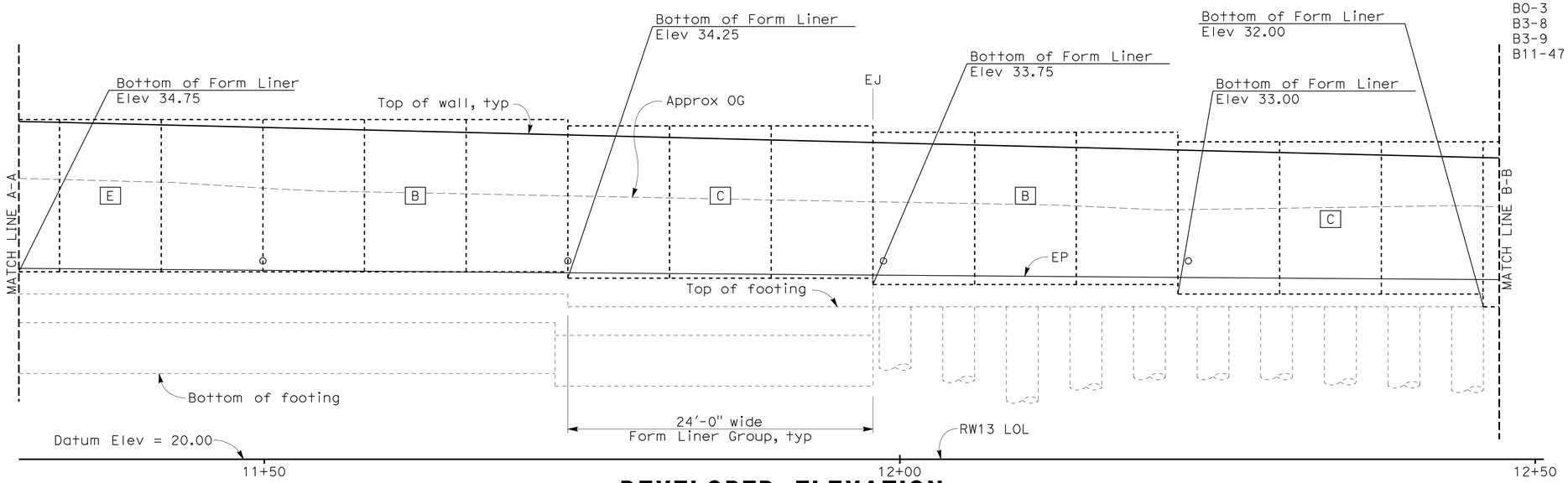

DEVELOPED ELEVATION

1" = 5'

INDEX TO PLANS

SHEET NO.	TITLE
1	GENERAL PLAN
2	FORM LINER LAYOUT No. 1
3	FORM LINER LAYOUT No. 2
4	RETAINING WALL TYPE 7 (MOD B) DETAILS
5	SOLDIER PILE WALL LAYOUT & DETAILS No. 1
6	SOLDIER PILE WALL LAYOUT & DETAILS No. 2
7	LOG OF TEST BORINGS

Overcomer Y. Hor
DESIGN OVERSIGHT Overcomer Y. Hor
2-1-11
SIGN OFF DATE

	BY	CHECKED
DESIGN	R. RIVAS	G. JEYARAMAN
DETAILS	R. RIVAS	G. JEYARAMAN
QUANTITIES	R. RIVAS	G. JEYARAMAN

PREPARED FOR THE STATE OF CALIFORNIA DEPARTMENT OF TRANSPORTATION

INES S. LI
PROJECT ENGINEER

BRIDGE NO. 28E0201
POST MILES 26.9

RETAINING WALL No. 13
FORM LINER LAYOUT No. 1

DESIGN DETAIL SHEET (ENGLISH) (REV. 6-01-09)

ORIGINAL SCALE IN INCHES FOR REDUCED PLANS 0 1 2 3

CU 04275
EA 2285E1

DISREGARD PRINTS BEARING EARLIER REVISION DATES 4/22/09 9/28/09 5/28/10 9/27/10 10/28/10 12/17/10 1/14/11

REVISION DATES (PRELIMINARY STAGE ONLY)

SHEET 2 OF 7

FILE => 28e0201-c-fl-lo01.dgn

USERNAME => trmikest DATE PLOTTED => 13-JUN-2011 TIME PLOTTED => 11:38

2006075 (2006075CRS37)

DIST	COUNTY	ROUTE	POST MILES TOTAL PROJECT	SHEET No	TOTAL SHEETS
04	CC	4	R26.6/R27.5	729	746

REGISTERED CIVIL ENGINEER 1/14/11 DATE

6-13-11
PLANS APPROVAL DATE

REGISTERED PROFESSIONAL ENGINEER INES S. LI No. C51561 Exp.6/30/12 CIVIL STATE OF CALIFORNIA

The State of California or its officers or agents shall not be responsible for the accuracy or completeness of scanned copies of this plan sheet.

BIGGS CARDOSA ASSOCIATES INC.
865 THE ALAMEDA
SAN JOSE, CALIFORNIA 95126

CCTA
2999 OAK ROAD, SUITE 100
WALNUT CREEK, CA 94597

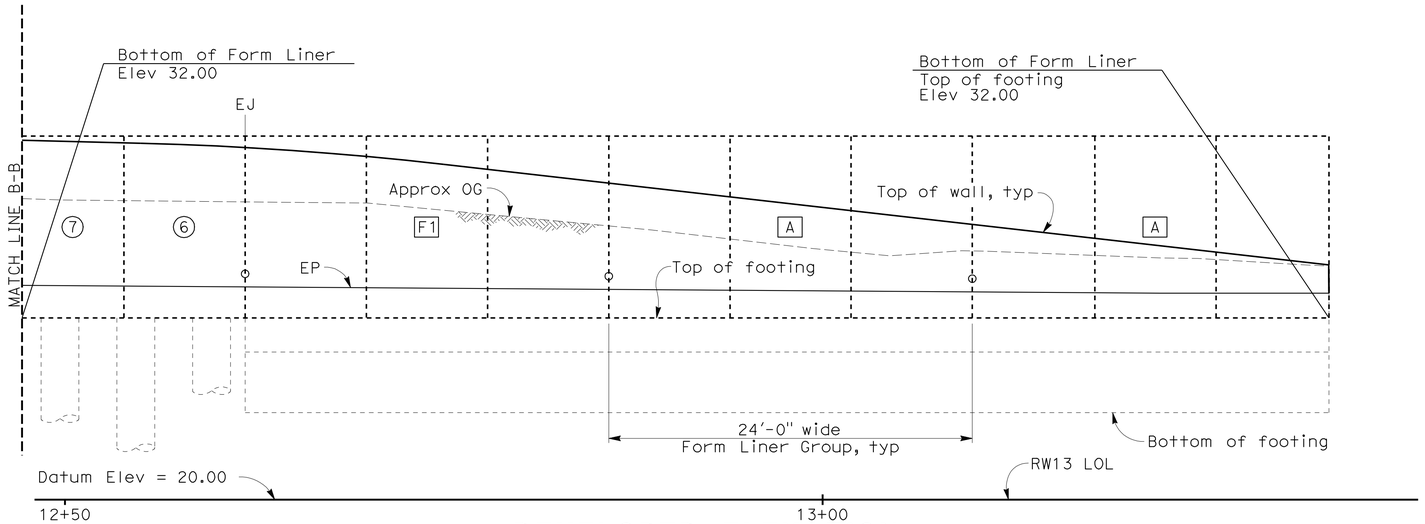

DEVELOPED ELEVATION

1" = 5'

1. EJ = Expansion Joint
2. Chain Link Fence not shown

(1) or [A] For form liner legend and details, see Road Plan sheets R-31 and R-32.

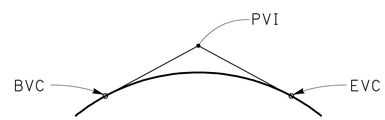

VERTICAL CURVE

NO SCALE

Overcomer Y. Hor
DESIGN OVERSIGHT Overcomer Y. Hor
2-1-11
SIGN OFF DATE

	BY	CHECKED
DESIGN	R. RIVAS	G. JEYARAMAN
DETAILS	R. RIVAS	G. JEYARAMAN
QUANTITIES	R. RIVAS	G. JEYARAMAN

PREPARED FOR THE STATE OF CALIFORNIA DEPARTMENT OF TRANSPORTATION

INES S. LI
PROJECT ENGINEER

BRIDGE NO. 28E0201
POST MILES 26.9

RETAINING WALL No. 13
FORM LINER LAYOUT No. 2

DESIGN DETAIL SHEET (ENGLISH) (REV. 6-01-09)

ORIGINAL SCALE IN INCHES FOR REDUCED PLANS 0 1 2 3

CU 04275
EA 2285E1

DISREGARD PRINTS BEARING EARLIER REVISION DATES

REVISION DATES (PRELIMINARY STAGE ONLY) 4/22/09 9/28/09 5/26/10 9/8/10 10/28/10 12/1/10 1/14/11

SHEET 3 OF 7

FILE => 28e0201-c-fl-lo02.dgn

USERNAME => trmikes1 DATE PLOTTED => 13-JUN-2011 TIME PLOTTED => 11:38

2006075 (2006075CRS38)

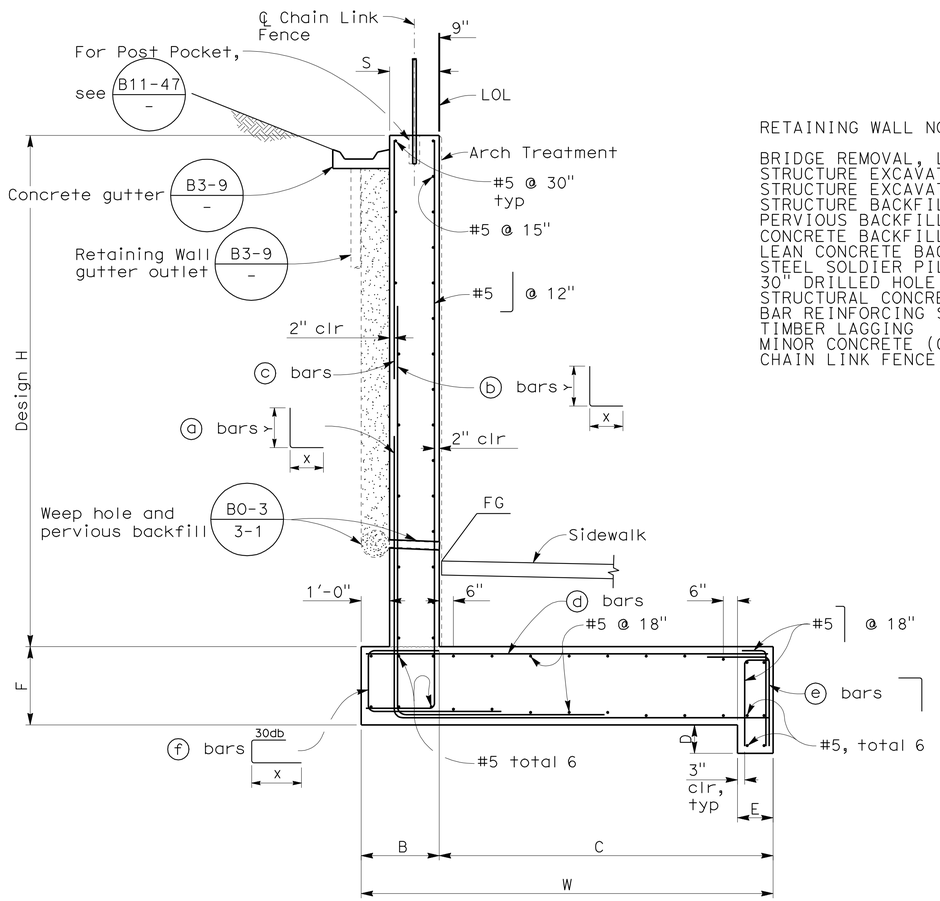

RETAINING WALL No. 13A & 13C

TYPICAL SECTION

NO SCALE

RETAINING WALL NO.13 BRIDGE NO 28E0201

QUANTITIES

	LUMP SUM	
BRIDGE REMOVAL, LOCATION C		
STRUCTURE EXCAVATION (RETAINING WALL)	759	CY
STRUCTURE EXCAVATION (SOLDIER PILE WALL)	81	CY
STRUCTURE BACKFILL (RETAINING WALL)	350	CY
PERVIOUS BACKFILL MATERIAL (RETAINING WALL)	72	CY
CONCRETE BACKFILL	49	CY
LEAN CONCRETE BACKFILL	12	CY
STEEL SOLDIER PILE (W18 X 158)	425	LF
30" DRILLED HOLE	285	LF
STRUCTURAL CONCRETE, RETAINING WALL	407	CY
BAR REINFORCING STEEL (RETAINING WALL)	37,763	LB
TIMBER LAGGING	3	MFBM
MINOR CONCRETE (GUTTER)	327	LF
CHAIN LINK FENCE (TYPE CL-4, VINYL-CLAD)	327	LF

RETAINING WALL GUTTER OUTLET LOCATIONS

10+08.99
10+51.28
11+87.88
12+71.52
13+31.41

NOTE:
All stations refer to RW13 LOL

DIST	COUNTY	ROUTE	POST MILES TOTAL PROJECT	SHEET No	TOTAL SHEETS
04	CC	4	R26.6/R27.5	730	746

REGISTERED CIVIL ENGINEER 1/14/11 DATE

6-13-11
PLANS APPROVAL DATE

REGISTERED PROFESSIONAL ENGINEER INES S. LI No. C51561 Exp.6/30/12 CIVIL STATE OF CALIFORNIA

The State of California or its officers or agents shall not be responsible for the accuracy or completeness of scanned copies of this plan sheet.

BIGGS CARDOSA ASSOCIATES INC.
865 THE ALAMEDA
SAN JOSE, CALIFORNIA 95126

CCTA
2999 OAK ROAD, SUITE 100
WALNUT CREEK, CA 94597

1. For retaining wall architectural treatment, see 'FORM LINER LAYOUT' sheets
2. For details not shown and drainage notes, see B3-8 / -
3. Footing coverage, 2'-0" minimum
4. Limit of no splicing rebars = H/3
5. Increasing stem thickness not permitted
6. Place footing key concrete against undisturbed material
7. No reinforcement in footing key for H = 6' to H = 10'

TABLE OF REINFORCING STEEL DIMENSIONS AND DATA

Design H	6'	8'	10'	12'	14'
W	6'-0"	7'-0"	8'-0"	9'-0"	11'-9"
C	3'-6"	4'-6"	5'-6"	6'-6"	9'-2"
B	2'-6"	2'-6"	2'-6"	2'-6"	2'-7"
F (ftg depth)	1'-9"	1'-9"	1'-9"	1'-9"	2'-0'
D (ftg key depth)	1'-0"	1'-0"	1'-6"	2'-0"	2'-6"
E (ftg key width)	1'-3"	1'-3"	1'-3"	1'-3"	1'-6"
S (Stem thickness)	1'-6"	1'-6"	1'-6"	1'-6"	1'-7"
ⓐ Bars			#5@12"	#5@12"	#6@12"
X			cont	cont	cont
Y			5'-0"	5'-6"	6'-0"
ⓑ Bars	#5@9"	#5@9"	#5@12"	#5@12"	#6@12"
X	cont	cont	5'-0"	5'-6"	6'-0"
Y	cont	cont	cont	10'	10'
ⓒ Bars				#5@12"	#5@12"
ⓓ Bars	#5@18"	#5@18"	#5@18"	#5@18"	#5@18"
ⓔ Bars					#5@18"
ⓕ Bars				#5@10"	#6@12
X				3'-3"	3'-9"

DESIGN DATA

DESIGN: Service Load Design

LOADING CASE:
1. 2:1 unlimited slope with 50 psf live load surcharge

CONCRETE: n = 9, f'c = 3600 psi

REINFORCING STEEL:
fy = 60,000 psi
fs = 24,000 psi

SOIL: Ø = 35° γ = 120 pcf
Equivalent fluid pressure:
= 49 pcf for determination of toe pressure (2:1 backfill)
Allowable bearing pressure

Retaining Walls No. 13A & 13C = 4300 psf

Overcomer Y. Hor
DESIGN OVERSIGHT Overcomer Y. Hor
2-1-11
SIGN OFF DATE

	BY	CHECKED
DESIGN	R. RIVAS	G. JEYARAMAN
DETAILS	R. RIVAS	G. JEYARAMAN
QUANTITIES	R. RIVAS	G. JEYARAMAN

PREPARED FOR THE STATE OF CALIFORNIA DEPARTMENT OF TRANSPORTATION

INES S. LI
PROJECT ENGINEER

BRIDGE NO. 28E0201
POST MILES 26.9

RETAINING WALL No. 13

RETAINING WALL TYPE 7 (MOD) DETAILS

DISREGARD PRINTS BEARING EARLIER REVISION DATES

REVISION DATES (PRELIMINARY STAGE ONLY) 4/22/09 9/28/09 5/26/10 9/8/10 10/28/10 12/1/10 1/14/11

SHEET 4 OF 7

DESIGN DETAIL SHEET (ENGLISH) (REV. 6-01-09)

ORIGINAL SCALE IN INCHES FOR REDUCED PLANS 0 1 2 3

CU 04275
EA 2285E1

FILE => 28e0201-d-retdt01.dgn

USERNAME => trmikesi DATE PLOTTED => 13-JUN-2011 TIME PLOTTED => 11:39

20060075 (2006075CRS39)

FOR ACCURATE RIGHT OF WAY DATA, CONTACT
RIGHT OF WAY ENGINEERING AT THE DISTRICT OFFICE

DIST	COUNTY	ROUTE	POST MILES TOTAL PROJECT	SHEET No	TOTAL SHEETS
04	CC	4	R26.6/R27.5	731	746

REGISTERED CIVIL ENGINEER — DATE 1/14/11

6-13-11
PLANS APPROVAL DATE

REGISTERED PROFESSIONAL ENGINEER — INES S. LI — No. C51561 — Exp. 6/30/12 — CIVIL — STATE OF CALIFORNIA

The State of California or its officers or agents shall not be responsible for the accuracy or completeness of scanned copies of this plan sheet.

BIGGS CARDOSA ASSOCIATES INC.
865 THE ALAMEDA
SAN JOSE, CALIFORNIA 95126

CCTA
2999 OAK ROAD, SUITE 100
WALNUT CREEK, CA 94597

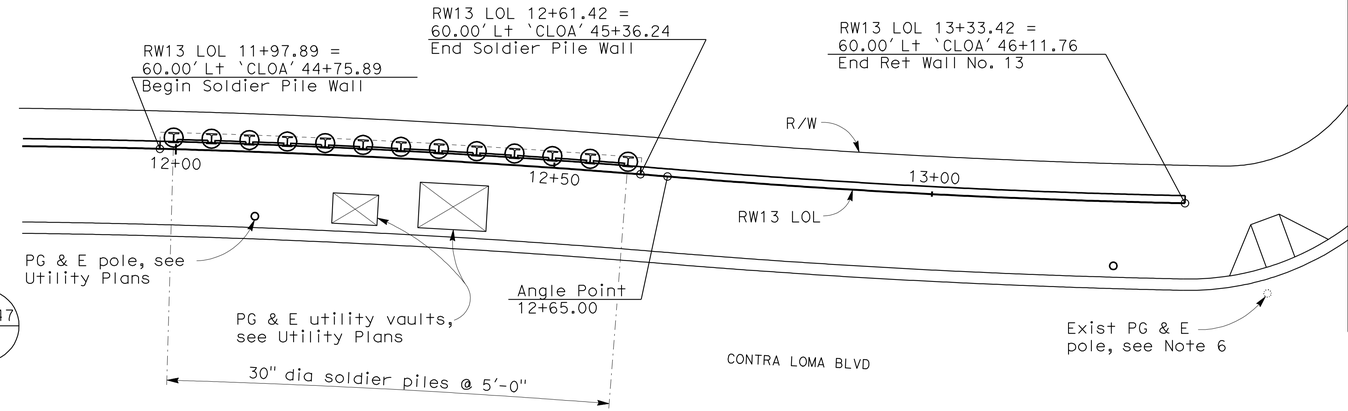

PARTIAL PLAN

1" = 10'

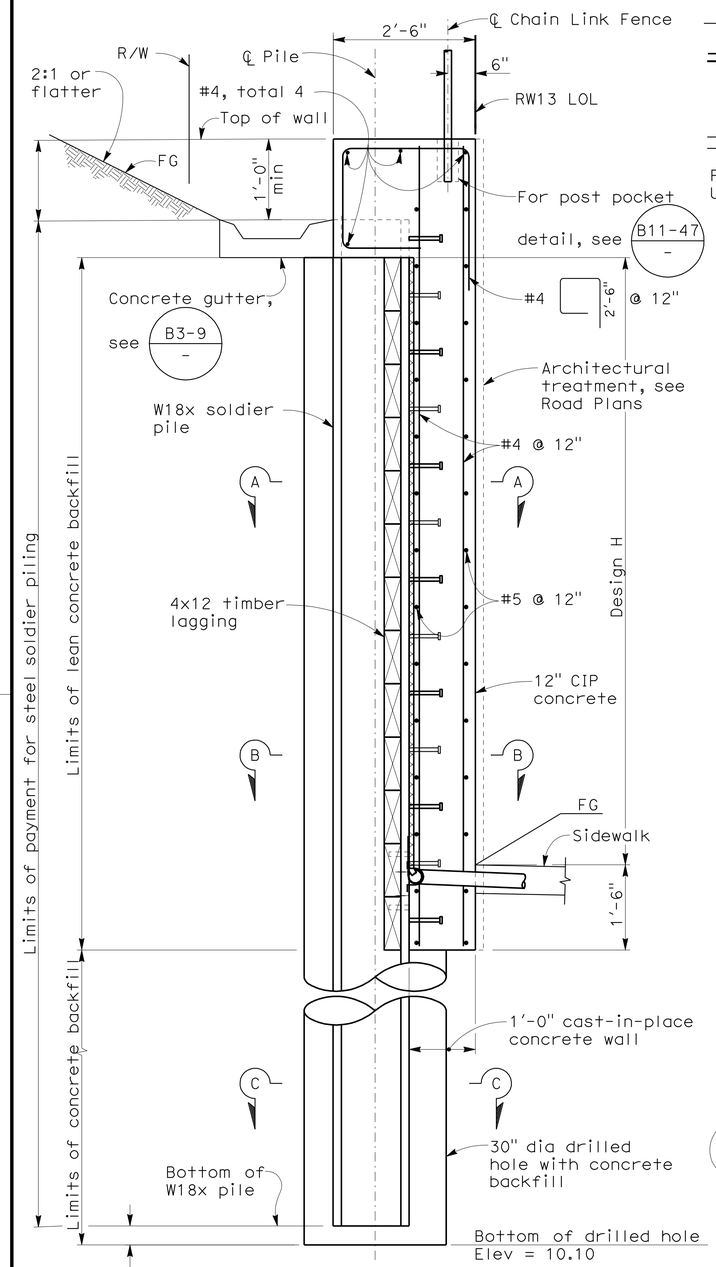

RETAINING WALL No. 13B

TYPICAL SECTION

NO SCALE

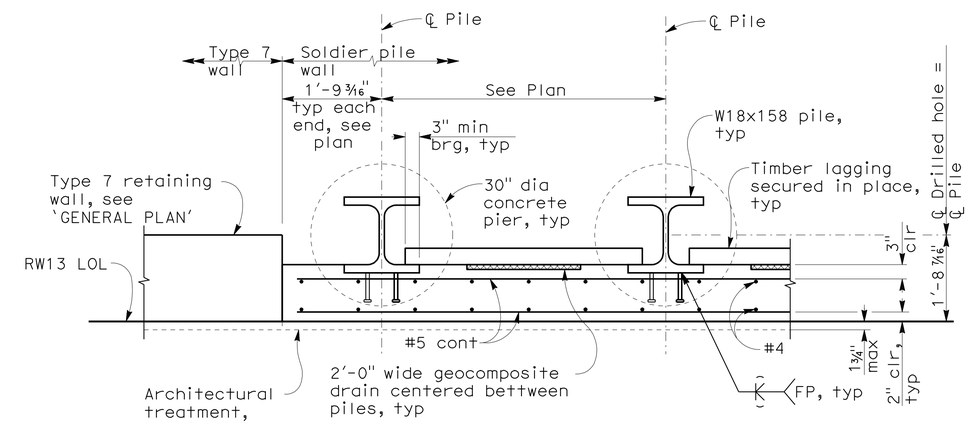

SECTION A-A

NO SCALE

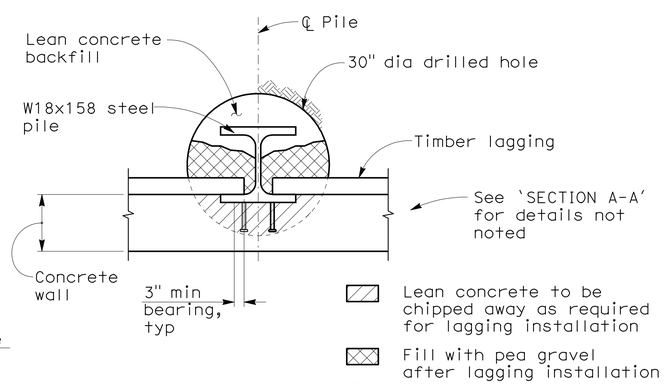

SECTION B-B

NO SCALE

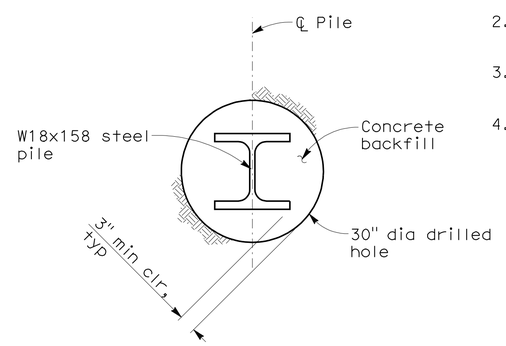

SECTION C-C

NO SCALE

DESIGN NOTES

DESIGN:	Service Load Design
CONCRETE:	f'c = 3.6 ksi
REINFORCING:	fy = 60 ksi
STRUCTURAL STEEL:	Shapes - ASTM A572/A572M, Grade 50
WELDED STUDS:	ASTM A108
STRUCTURAL TIMBER:	Full sawn treated Douglas Fir No. 1 or approved equal
SOIL:	Above the excavation line: ø = 35° γ = 125 pcf Below the excavation line: c = 10.42 psi γ = 125 pcf

1. Contractor shall field verify all controlling dimensions and existing construction prior to purchase or fabricating any material.
2. Upon completion of lagging installation, no gaps shall be left between the lagging and the soil.
3. PG&E vaults shall be protected in place during soldier pile wall construction.
4. For Note 6, see 'GENERAL PLAN' sheet

Overcomer Y. Hor
DESIGN OVERSIGHT — Overcomer Y. Hor
2-1-11
SIGN OFF DATE

	BY	CHECKED
DESIGN	R. RIVAS	G. JEYARAMAN
DETAILS	R. RIVAS	G. JEYARAMAN
QUANTITIES	R. RIVAS	G. JEYARAMAN

PREPARED FOR THE STATE OF CALIFORNIA DEPARTMENT OF TRANSPORTATION

INES S. LI
PROJECT ENGINEER

BRIDGE NO. 28E0201
POST MILES 26.9

RETAINING WALL No. 13

SOLDIER PILE WALL LAYOUT & DETAILS No.1

DESIGN DETAIL SHEET (ENGLISH) (REV. 6-01-09)

ORIGINAL SCALE IN INCHES FOR REDUCED PLANS 0 1 2 3

CU 04275
EA 2285E1

DISREGARD PRINTS BEARING EARLIER REVISION DATES

REVISION DATES (PRELIMINARY STAGE ONLY) 5/26/10 9/8/10 10/20/10 12/17/10 1/14/11

SHEET 5 OF 7

FILE => 28e0201-d-retdt02.dgn

USERNAME => trmikest DATE PLOTTED => 13-JUN-2011 TIME PLOTTED => 11:39 2006075 (2006075CRS40)

DIST	COUNTY	ROUTE	POST MILES TOTAL PROJECT	SHEET No	TOTAL SHEETS
04	CC	4	R26.6/R27.5	732	746

REGISTERED CIVIL ENGINEER 1/14/11 DATE

6-13-11
PLANS APPROVAL DATE

REGISTERED PROFESSIONAL ENGINEER INES S. LI No. C51561 Exp.6/30/12 CIVIL STATE OF CALIFORNIA

The State of California or its officers or agents shall not be responsible for the accuracy or completeness of scanned copies of this plan sheet.

BIGGS CARDOSA ASSOCIATES INC.
865 THE ALAMEDA
SAN JOSE, CALIFORNIA 95126

CCTA
2999 OAK ROAD, SUITE 100
WALNUT CREEK, CA 94597

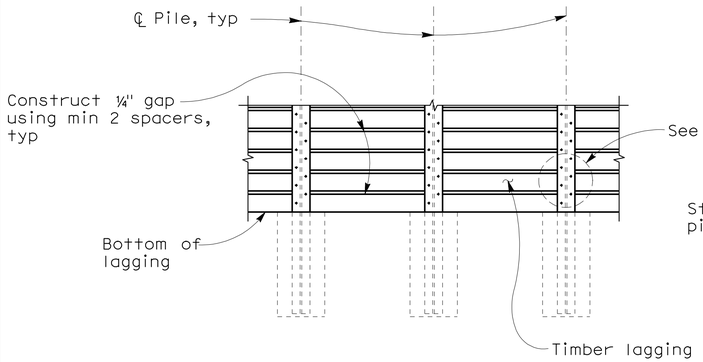

Concrete in front not shown

LAGGING - PART ELEVATION
1/4" = 1'-0"

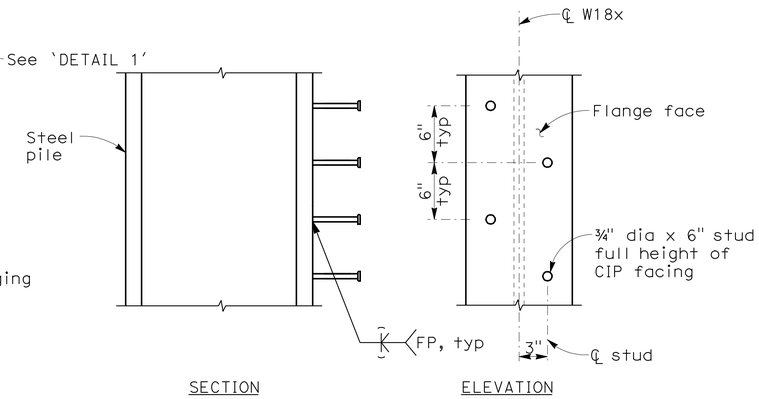

DETAIL 1
1 1/2" = 1'-0"

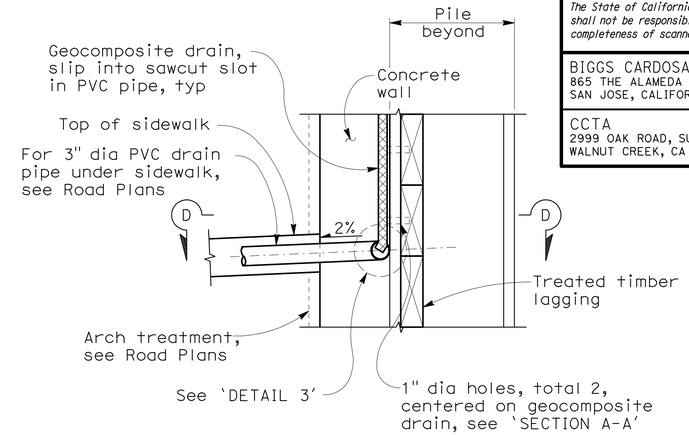

WALL DRAINAGE DETAIL 2
1" = 1'-0"

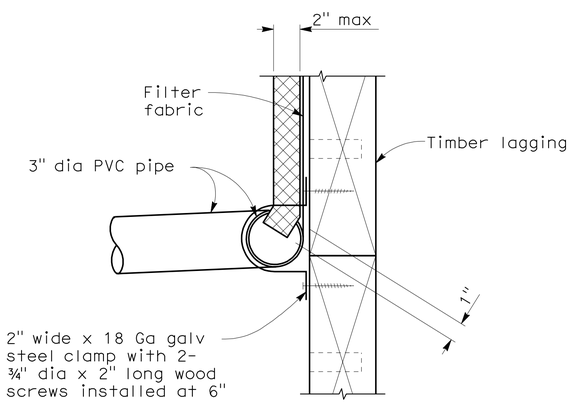

DETAIL 3
3" = 1'-0"

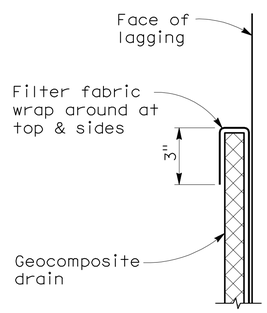

DETAIL 4
3" = 1'-0"

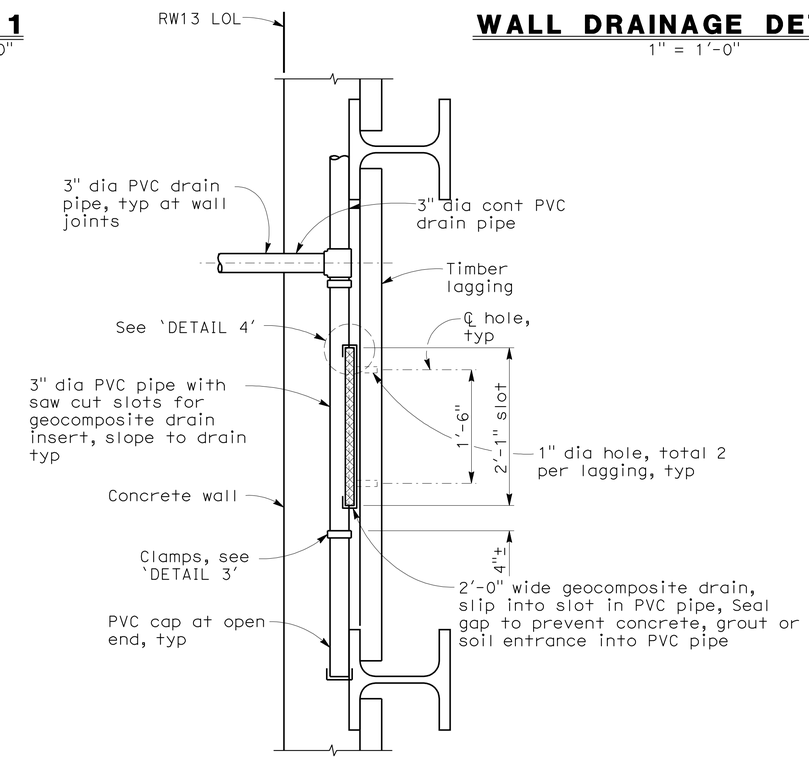

SECTION D-D
NO SCALE

Overcomer Y. Hor DESIGN OVERSIGHT Overcomer Y. Hor 2-1-11 SIGN OFF DATE	DESIGN	BY R. RIVAS	CHECKED G. JEYARAMAN	PREPARED FOR THE STATE OF CALIFORNIA DEPARTMENT OF TRANSPORTATION	INES S. LI PROJECT ENGINEER
	DETAILS	BY R. RIVAS	CHECKED G. JEYARAMAN		
	QUANTITIES	BY R. RIVAS	CHECKED G. JEYARAMAN		

BRIDGE NO. 28E0201
POST MILES 26.9

RETAINING WALL No. 13
SOLDIER PILE WALL LAYOUT & DETAILS No.2

DESIGN DETAIL SHEET (ENGLISH) (REV. 6-01-09)

ORIGINAL SCALE IN INCHES FOR REDUCED PLANS 0 1 2 3

CU 04275
EA 2285E1

DISREGARD PRINTS BEARING EARLIER REVISION DATES → REVISION DATES (PRELIMINARY STAGE ONLY) 5/26/10 9/8/10 10/28/10 12/17/10 1/14/11

SHEET 6 OF 7

FILE => 28e0201-d-retdt03.dgn

USERNAME => trmikest DATE PLOTTED => 13-JUN-2011 TIME PLOTTED => 11:39

20060075 (20060075CRS41)

DIST	COUNTY	ROUTE	POST MILES TOTAL PROJECT	SHEET No	TOTAL SHEETS
04	CC	4	R26.6/R27.5	733	746

GEOTECHNICAL PROFESSIONAL — DATE 1/14/11

6-13-11
PLANS APPROVAL DATE

The State of California or its officers or agents shall not be responsible for the accuracy or completeness of scanned copies of this plan sheet.

REGISTERED PROFESSIONAL ENGINEER — GARY PARIKH — No. G.E. 666 — Exp. 12/31/11 — GEOTECHNICAL — STATE OF CALIFORNIA

CONTRA COSTA TRANSPORTATION AUTHORITY
2999 OAK ROAD, SUITE 100
WALNUT CREEK, CA 94597

PARIKH CONSULTANTS, INC.
2360 QUME DRIVE, SUITE A
SAN JOSE CA 95131

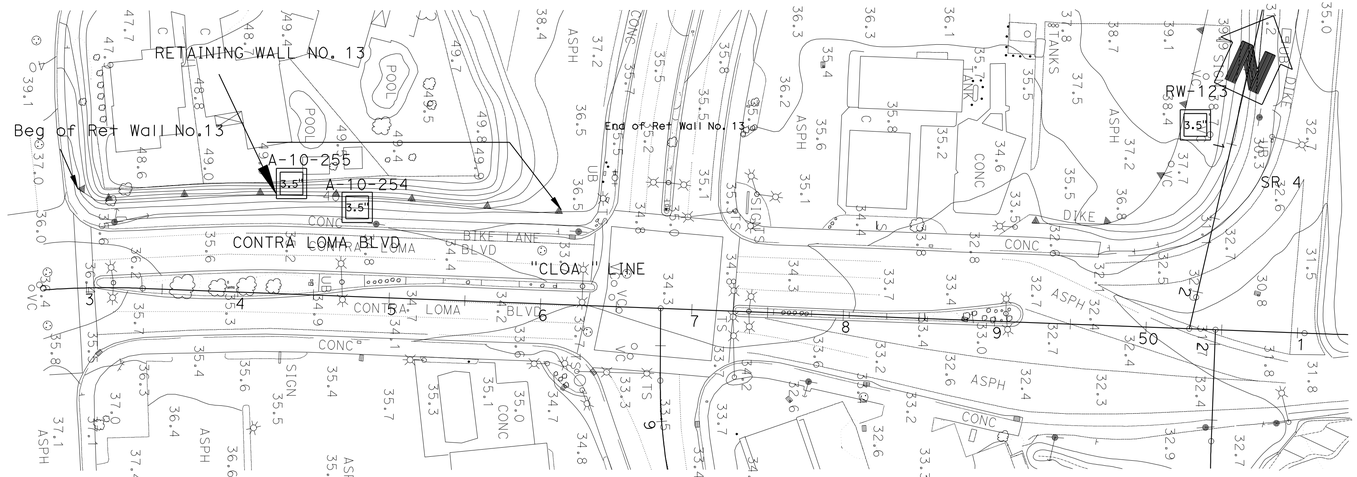

PLAN
1"=50'

Note:
Standard Penetration Test Sampler: I.D. = 1.4"; O.D. = 2"
Modified California Sampler: I.D. = 2.5"; O.D. = 3"
Hammer Assembly: A 140 lb hammer with a 30" drop
(Automatic Hammer)

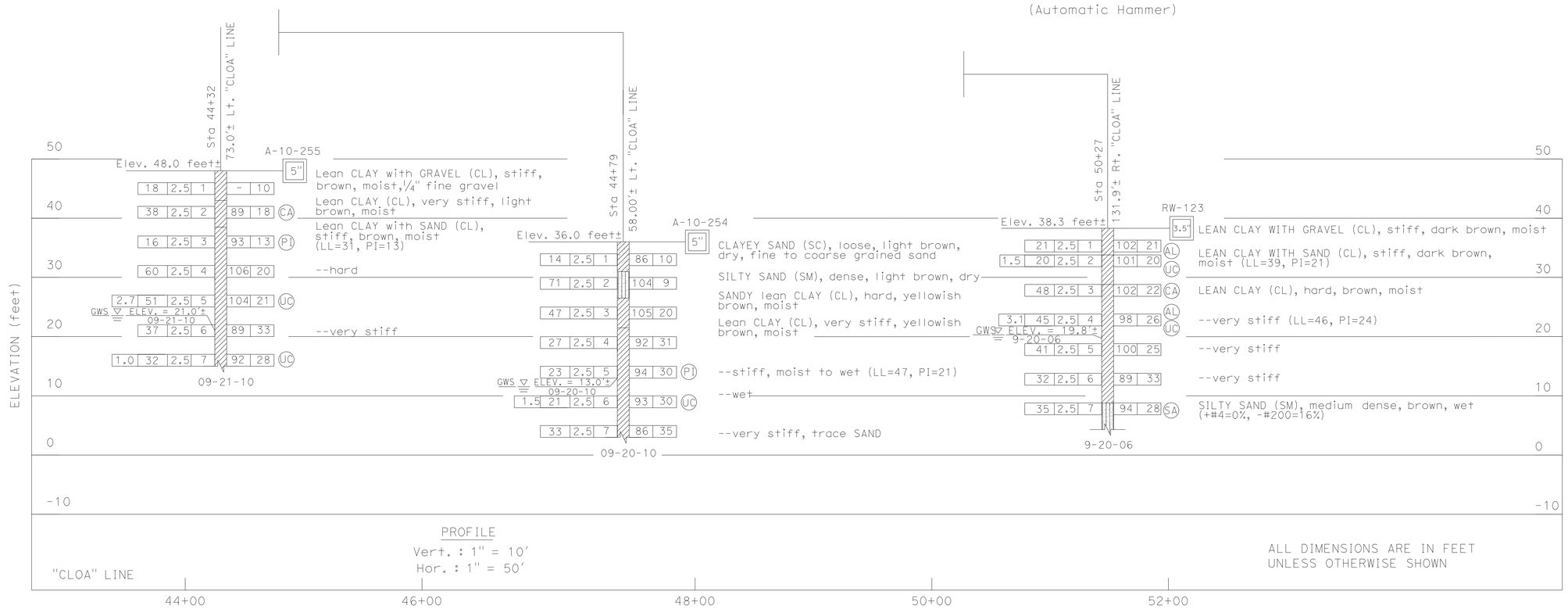

PROFILE
Vert. : 1" = 10'
Hor. : 1" = 50'

ALL DIMENSIONS ARE IN FEET
UNLESS OTHERWISE SHOWN

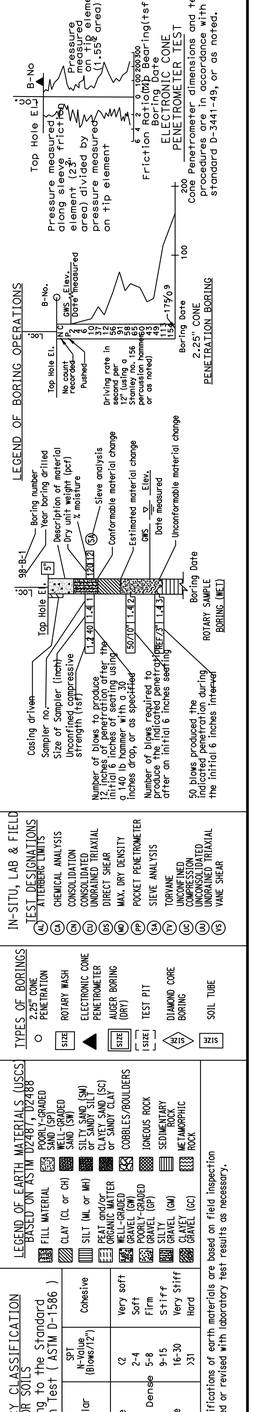

DESIGN OVERSIGHT Overcomer Y. Hor 2-1-11 SIGN OFF DATE	DRAWN BY OKSAN GOUTHIER	GANGA TRIPATHI FIELD INVESTIGATION BY: DATE: 09/2006	PREPARED FOR THE STATE OF CALIFORNIA DEPARTMENT OF TRANSPORTATION
	CHECKED BY PARTHA SIRCAR		

PARTHA SIRCAR
PROJECT ENGINEER

BRIDGE NO. 28E0201
POST MILE 26.9

RETAINING WALL NO. 13
LOG OF TEST BORINGS

CU 04275
EA 2285E1

DISREGARD PRINTS BEARING EARLIER REVISION DATES — REVISION DATES (PRELIMINARY STAGE ONLY) 9/24/09 05/20/10 9/8/10

SHEET 7 OF 7

ORIGINAL SCALE IN INCHES FOR REDUCED PLANS 0 1 2 3

OSF GEOTECHNICAL LOG OF TEST BORINGS SHEET (ENGLISH) (REV. 2/25/05)

FILE => 28E0201-z-1tb01.dgn

USERNAME => trmikest DATE PLOTTED => 13-JUN-2011 TIME PLOTTED => 11:39

FOR ACCURATE RIGHT OF WAY DATA, CONTACT
RIGHT OF WAY ENGINEERING AT THE DISTRICT OFFICE

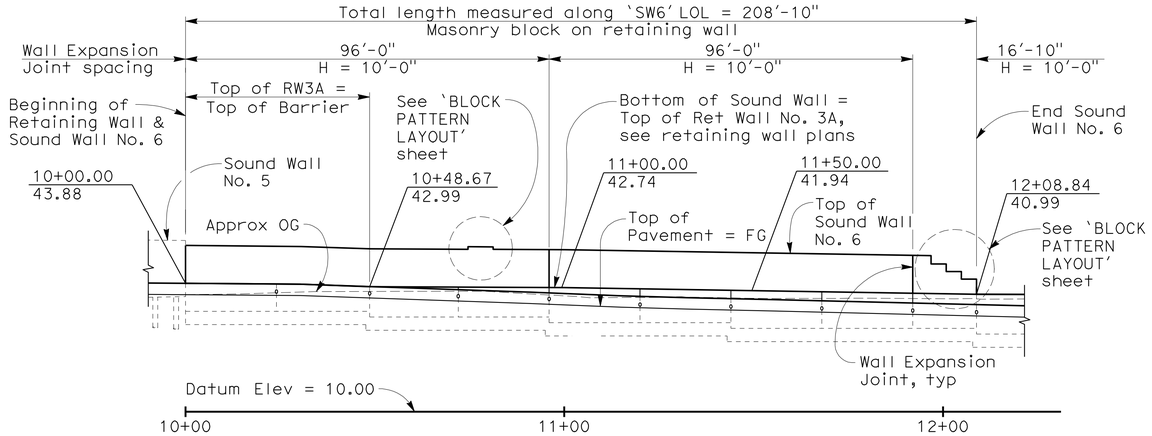

DEVELOPED MIRRORED ELEVATION

1" = 20'

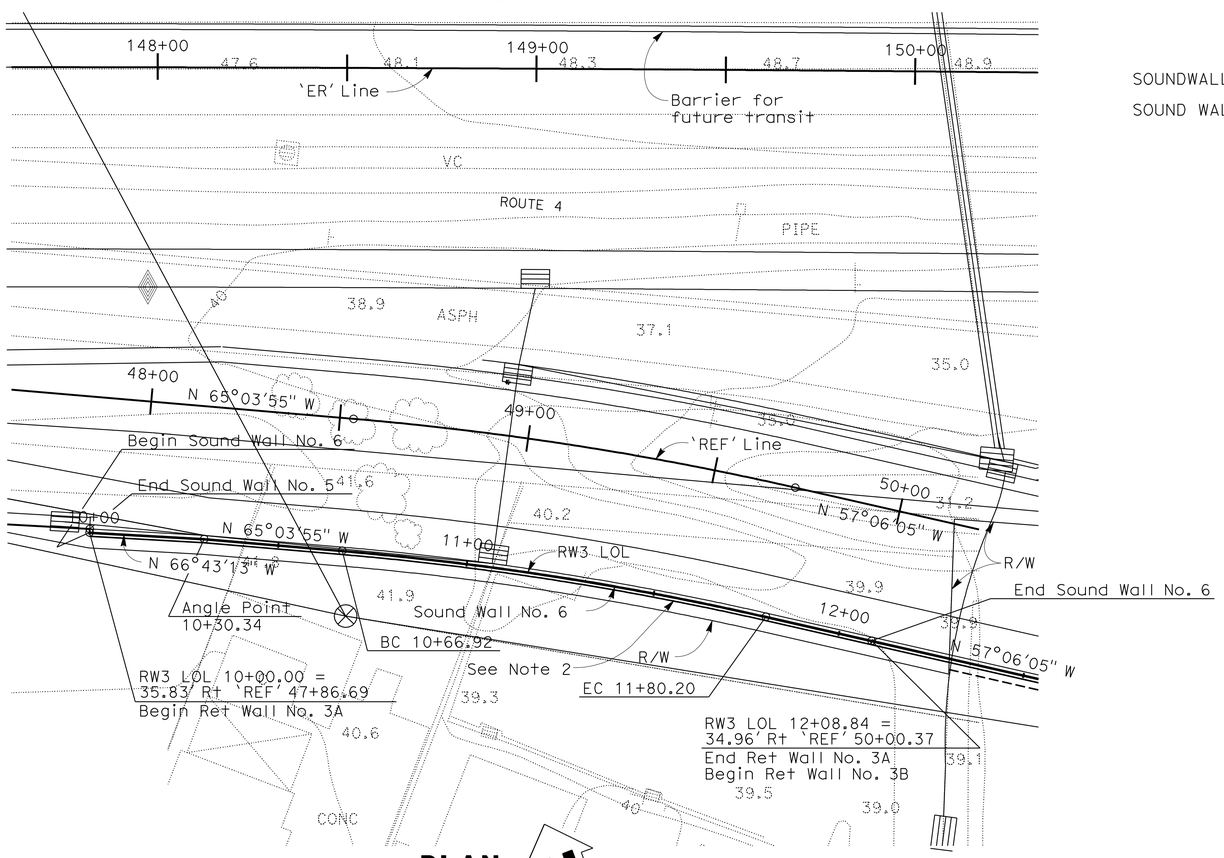

PLAN

1" = 20'

INDEX TO PLANS

SHEET NO.	TITLE
1	GENERAL PLAN
2	BLOCK PATTERN LAYOUT
3	SOUND WALL ON RETAINING WALL- MASONRY BLOCK DETAILS No. 1
4	SOUND WALL ON RETAINING WALL- MASONRY BLOCK DETAILS No. 2
5	LOG OF TEST BORINGS

STANDARD PLANS DATED MAY 2006

A10A	ACRONYMS AND ABBREVIATIONS (SHEET 1 OF 2)
A10B	ACRONYMS AND ABBREVIATIONS (SHEET 2 OF 2)
A10C	SYMBOLS (SHEET 1 OF 2)
A10D	SYMBOLS (SHEET 2 OF 2)

SOUNDWALL NO. 6 BRIDGE NO

QUANTITIES

SOUND WALL (MASONRY BLOCK) 2,089 SQFT

DIST	COUNTY	ROUTE	POST MILES TOTAL PROJECT	SHEET No	TOTAL SHEETS
04	CC	4	R26.6/R27.5	734	746

REGISTERED CIVIL ENGINEER 1/14/11 DATE

6-13-11
PLANS APPROVAL DATE

REGISTERED PROFESSIONAL ENGINEER INES S. LI No. C51561 Exp.6/30/12 CIVIL STATE OF CALIFORNIA

The State of California or its officers or agents shall not be responsible for the accuracy or completeness of scanned copies of this plan sheet.

BIGGS CARDOSA ASSOCIATES INC.
865 THE ALAMEDA
SAN JOSE, CALIFORNIA 95126

CCTA
2999 OAK ROAD, SUITE 100
WALNUT CREEK, CA 94597

1. This plan accurate for sound wall work only
2. For wall layout data, see 'RETAINING WALL No. 3A & 3B' plans
3. Elevations shown indicate top of retaining wall elevations
4. For Architectural Treatment see 'FORM LINER LAYOUT' sheets and see Road Plans sheet R-30 for quantities

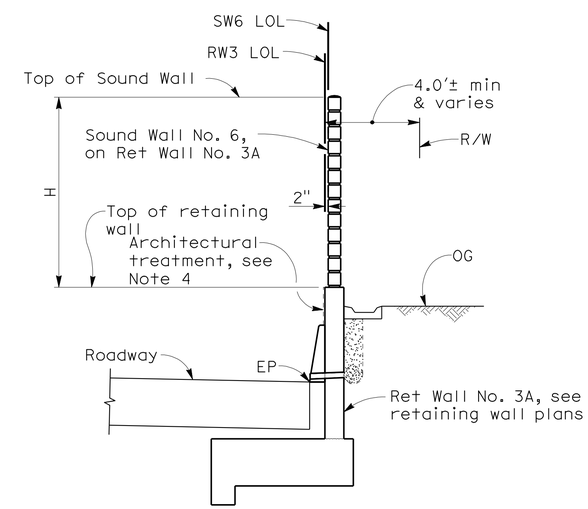

TYPICAL SECTION

NO SCALE

DESIGN OVERSIGHT Overcomer Y. Hor	DESIGN	BY R. RIVAS	CHECKED R. SCHNABEL	LOAD FACTOR DESIGN	
2-1-11 SIGN OFF DATE	DETAILS	BY R. RIVAS	CHECKED R. SCHNABEL	LAYOUT BY T. HICKS	CHECKED I. LI
	QUANTITIES	BY R. RIVAS	CHECKED G. JEYARAMAN	SPECIFICATIONS BY I. LI	PLANS AND SPECS COMPARED A. NOTARO

DESIGN GENERAL PLAN SHEET (ENGLISH) (REV. 6-01-09)

ORIGINAL SCALE IN INCHES FOR REDUCED PLANS 0 1 2 3

PREPARED FOR THE STATE OF CALIFORNIA DEPARTMENT OF TRANSPORTATION

INES S. LI
PROJECT ENGINEER

CU 04275
EA 2285E1

FILE => 2285e1-sw_6-aa-gp01.dgn

BRIDGE NO.

POST MILES

SOUND WALL No. 6

GENERAL PLAN

DISREGARD PRINTS BEARING EARLIER REVISION DATES → REVISION DATES (PRELIMINARY STAGE ONLY) 3/26/08 4/22/09 9/28/09 5/26/10 9/8/10 10/28/10 12/4/10 1/14/11

SHEET 1 OF 5

USERNAME => trmikesl DATE PLOTTED => 13-JUN-2011 TIME PLOTTED => 11:39

2006075 (2006075CWS1)

DIST	COUNTY	ROUTE	POST MILES TOTAL PROJECT	SHEET No	TOTAL SHEETS
04	CC	4	R26.6/R27.5	735	746

REGISTERED CIVIL ENGINEER 1/14/11 DATE

6-13-11
PLANS APPROVAL DATE

REGISTERED PROFESSIONAL ENGINEER INES S. LI No. C51561 Exp.6/30/12 CIVIL STATE OF CALIFORNIA

The State of California or its officers or agents shall not be responsible for the accuracy or completeness of scanned copies of this plan sheet.

BIGGS CARDOSA ASSOCIATES INC.
865 THE ALAMEDA
SAN JOSE, CALIFORNIA 95126

CCTA
2999 OAK ROAD, SUITE 100
WALNUT CREEK, CA 94597

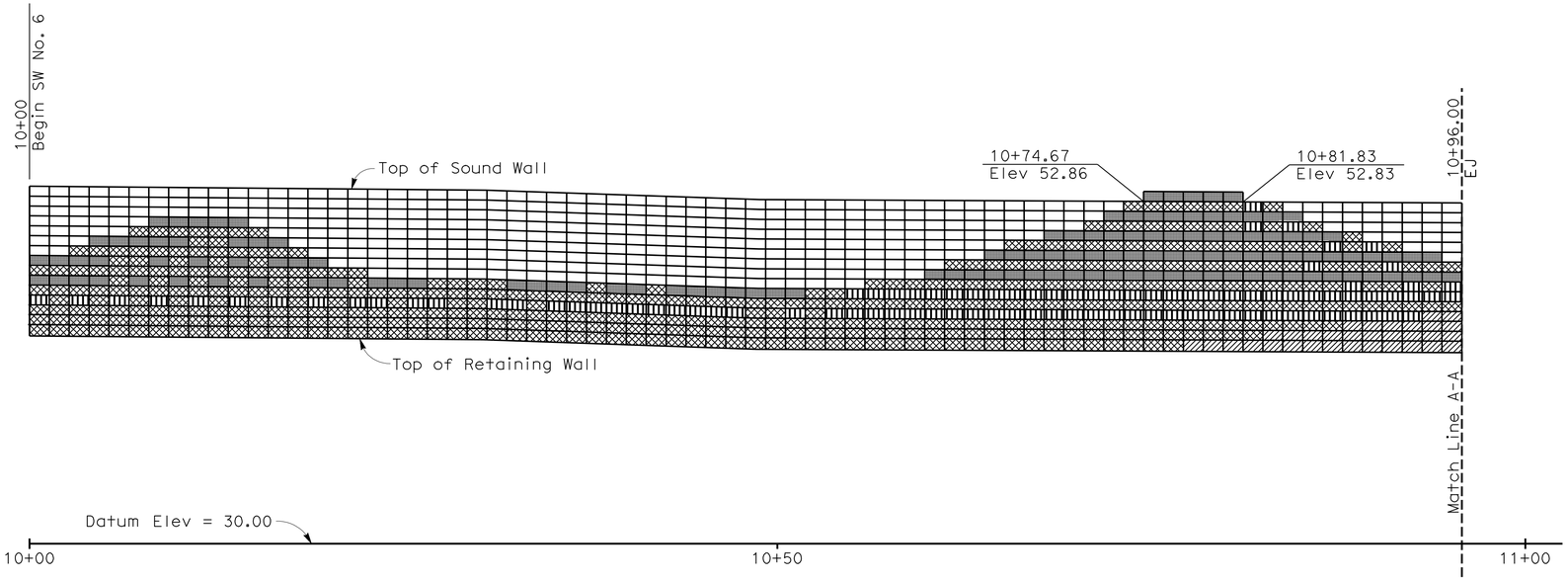

DEVELOPED MIRRORED ELEVATION

1" = 5'

1. For block legend and notes, see Road Plan SW-7B sheet
2. EJ = Expansion Joint

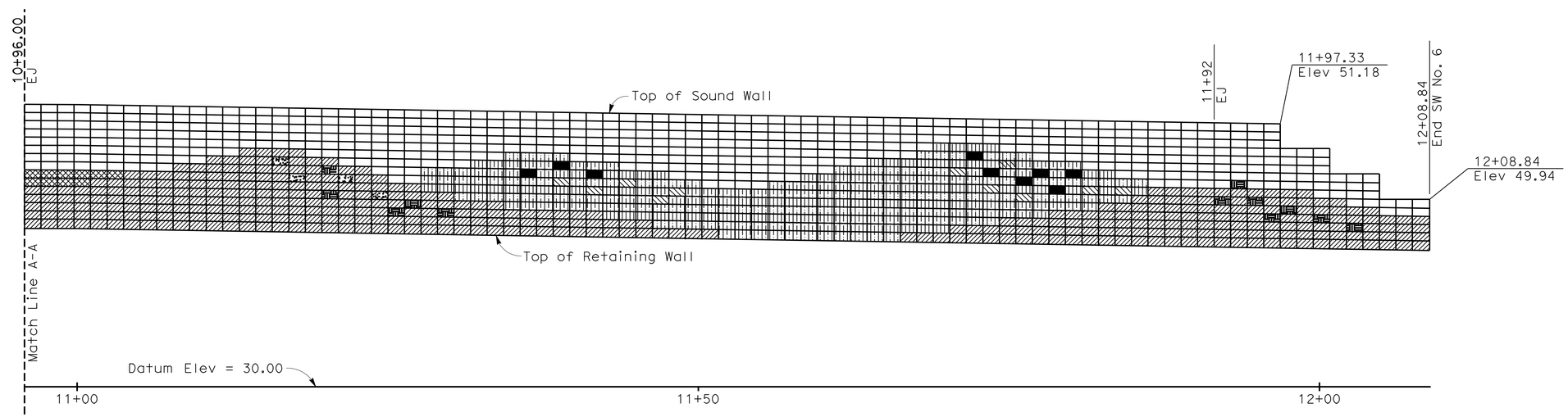

DEVELOPED MIRRORED ELEVATION

1" = 5'

Overcomer Y. Hor
DESIGN OVERSIGHT Overcomer Y. Hor
2-1-11
SIGN OFF DATE

	BY	CHECKED
DESIGN	R. RIVAS	R. SCHNABEL
DETAILS	R. RIVAS	R. SCHNABEL
QUANTITIES	R. RIVAS	G. JEYARAMAN

PREPARED FOR THE STATE OF CALIFORNIA DEPARTMENT OF TRANSPORTATION

INES S. LI
PROJECT ENGINEER

BRIDGE NO.
POST MILES

SOUND WALL No. 6
BLOCK PATTERN LAYOUT

DESIGN DETAIL SHEET (ENGLISH) (REV. 6-01-09)

ORIGINAL SCALE IN INCHES FOR REDUCED PLANS 0 1 2 3

CU 04275
EA 2285E1

DISREGARD PRINTS BEARING EARLIER REVISION DATES

REVISION DATES (PRELIMINARY STAGE ONLY) 9/29/09 5/26/10 9/8/10 10/20/10 12/1/10 1/14/11

SHEET 2 OF 5

FILE => 2285e1-sw_6-ab-blk-lo01.dgn

USERNAME => trmikesi DATE PLOTTED => 13-JUN-2011 TIME PLOTTED => 11:40

2006075 (2006075CWS2)

DIST	COUNTY	ROUTE	POST MILES TOTAL PROJECT	SHEET NO.	TOTAL SHEETS
04	CC	4	R26.6/R27.5	736	746

1/14/11
REGISTERED CIVIL ENGINEER

6-13-11
PLANS APPROVAL DATE

REGISTERED PROFESSIONAL ENGINEER INES S. LI No. C51561 Exp.6/30/12 CIVIL STATE OF CALIFORNIA

The State of California or its officers or agents shall not be responsible for the accuracy or completeness of scanned copies of this plan sheet.

BIGGS CARDOSA ASSOCIATES INC.
865 THE ALAMEDA
SAN JOSE, CALIFORNIA 95126

CCTA
2999 OAK ROAD, SUITE 100
WALNUT CREEK, CA 94597

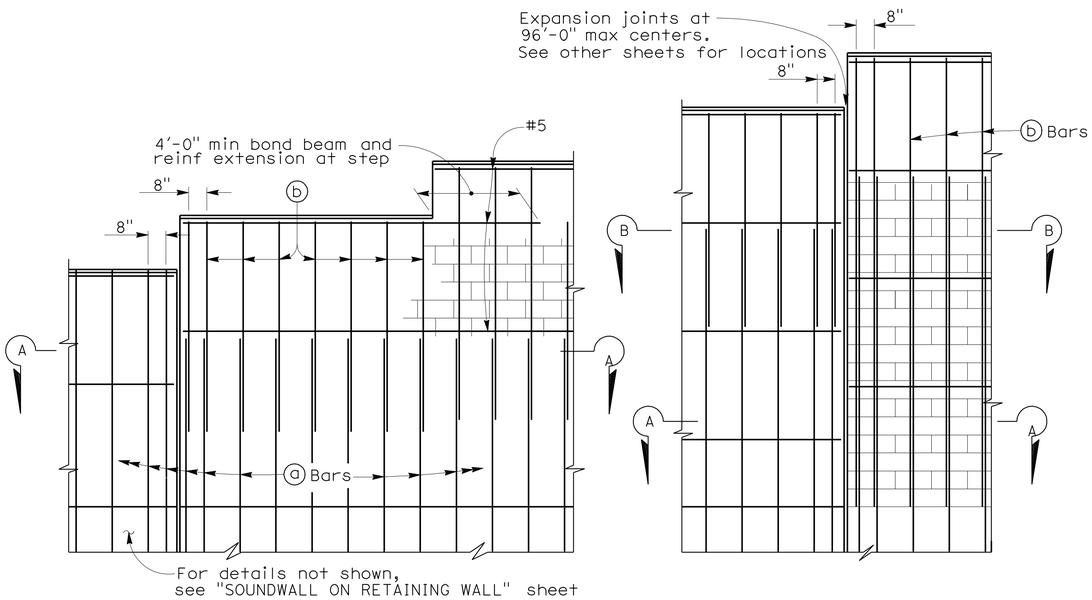

PART ELEVATIONS

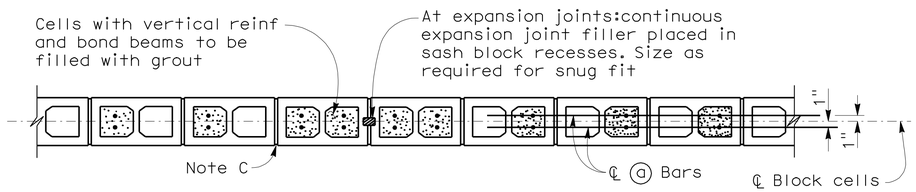

SECTION A-A

For details not shown, see other details

H = 6'-0" THRU H = 12'-0"

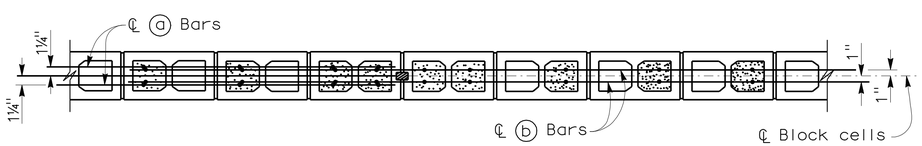

SECTION A-A SECTION B-B

For details not shown, see other details

H = 12'-0" THRU H = 16'-0"

DESIGN NOTES

DESIGN

Uniform Building Code,1997 Edition and the Bridge Design Specifications.

DESIGN WIND LOAD

33 psf

DESIGN SEISMIC LOAD

0.57 Dead load

REINFORCED CONCRETE

f'c = 3.250 ksi
fy = 60 ksi

CONCRETE MASONRY

REGULAR STRENGTH	HIGH STRENGTH	
f'm = 1500 psi	f'm = 2000 psi	f'm = 2500 psi
f_b = 495 psi	f_b = 660 psi	f_b = 830 psi
fs = 24000 psi	fs = 24000 psi	fs = 24000 psi
n = 25.8	n = 19.3	n = 15.5

LOAD FACTORS AND LOAD COMBINATIONS

Working Stress Design (WSD)

	Percentage of unit stress
Group 1: D + E + SC	100%
Group 2: D + W + SC + E	100%
Group 3: D + 0.71 EQD + E	100%

Where:

D = Dead load
E = Lateral earth pressure
SC = Live load surcharge
W = Wind load
EQD = Seismic dead load

Load Factor Design (LFD)

Group A: βD+1.7 E+1.7 SC
Group B: βD+1.7 E+1.3 W
Group C: βD+1.3 E+1.0 EQE
Group D: βD+1.3 E+1.0 EQD
Group E: βD+1.1 E+0.85 (EQE +EQD)

Where : β = 0.9 or 1.2, whichever controls in design
D = Dead load
E = Lateral earth pressure
SC = Live load surcharge
W = Wind load
EQD = Seismic dead load
EQE = Seismic earth load

STRENGTH REDUCTION FACTORS, Ø

Reinforced concrete:
For flexure ———— Ø=0.90
For shear ———— Ø=0.85

Concrete masonry:
For flexure ———— Ø=0.80
For shear ———— Ø=0.60

Foundations:
See 'RETAINING WALL No. 3' plans (1)

SOUNDWALL REINFORCEMENT TABLE

Maximum H	ⓐ bars @ 406 max	ⓑ bars @ 406 max	"y"	f'm (psi)	Compressive Strength of CMU (psi)	Maximum H
6'-0"	#4	———	———	1500	1900	6'-0"
8'-0"	#4	———	———	1500	1900	8'-0"
10'-0"	#4	———	———	1500	1900	10'-0"
12'-0"	#5	#4	6'-0"	2000	2800	12'-0"
14'-0"	#6	#4	8'-0"	2500	3750	14'-0"
16'-0"	#6	#4	10'-0"	2500	3750	16'-0"

GENERAL NOTES

Note A: For type of block and joint finish, See other sheets.

Note B: When blocks are laid in stacked bond, ladder type, galvanized joint reinforcement shall be provided. A minimum of 2 - 9 gauge wires continuous at 4'-0" maximum to be used. Locate reinforcement in joints that are at the approximate midpoint between bond beams.

Note C: Horizontal joints shall be tooled concave or may be weathered.
Vertical joints shall be tooled concave or may be raked.

Note D: For intermediate wall heights that are between the "H's" given. Use the tabular information for the next higher "H".

Note E: Masonry strengths are listed in the "SOUNDWALL REINFORCEMENT TABLE".

STANDARD DRAWING

FILE NO. xs15-120-1e

APPROVED BY T. SATTER
RESPONSIBLE TECHNICAL SPECIALIST
APPROVAL DATE 4-15-08

RELEASED BY ROBERTO LACALLE
RESPONSIBLE OFFICE CHIEF
RELEASE DATE 4-15-08

(1) Note modified

STATE OF CALIFORNIA
DEPARTMENT OF TRANSPORTATION

DIVISION OF ENGINEERING SERVICES

BRIDGE NO.
POST MILES

SOUND WALL No. 6 DETAILS

SOUND WALL ON RETAINING WALL-MASONRY BLOCK DETAILS NO. 1

DS OSD 2147A (ENGLISH STANDARD DRAWING "XS" BORDER REV. 01/11/08)

ORIGINAL SCALE IN INCHES FOR REDUCED PLANS 0 1 2 3

CU 04275
EA 2285E1

DISREGARD PRINTS BEARING EARLIER REVISION DATES

REVISION DATES (PRELIMINARY STAGE ONLY) 4/22/09 9/28/09 5/26/10 9/8/10 10/28/10 12/1/10 1/14/11

SHEET 3 OF 5

USERNAME => trmikesl

2285e1-sw_6-ad-sndt0

USERNAME => trmikesl DATE PLOTTED => 13-JUN-2011 TIME PLOTTED => 11:40 2006075 (2006075CWS3)

DIST	COUNTY	ROUTE	POST MILES TOTAL PROJECT	SHEET NO.	TOTAL SHEETS
04	CC	4	R26.6/R27.5	737	746

1/14/11
REGISTERED CIVIL ENGINEER

6-13-11
PLANS APPROVAL DATE

REGISTERED PROFESSIONAL ENGINEER INES S. LI No. C51561 Exp. 6/30/12 CIVIL STATE OF CALIFORNIA

The State of California or its officers or agents shall not be responsible for the accuracy or completeness of scanned copies of this plan sheet.

BIGGS CARDOSA ASSOCIATES INC.
865 THE ALAMEDA
SAN JOSE, CALIFORNIA 95126

CCTA
2999 OAK ROAD, SUITE 100
WALNUT CREEK, CA 94597

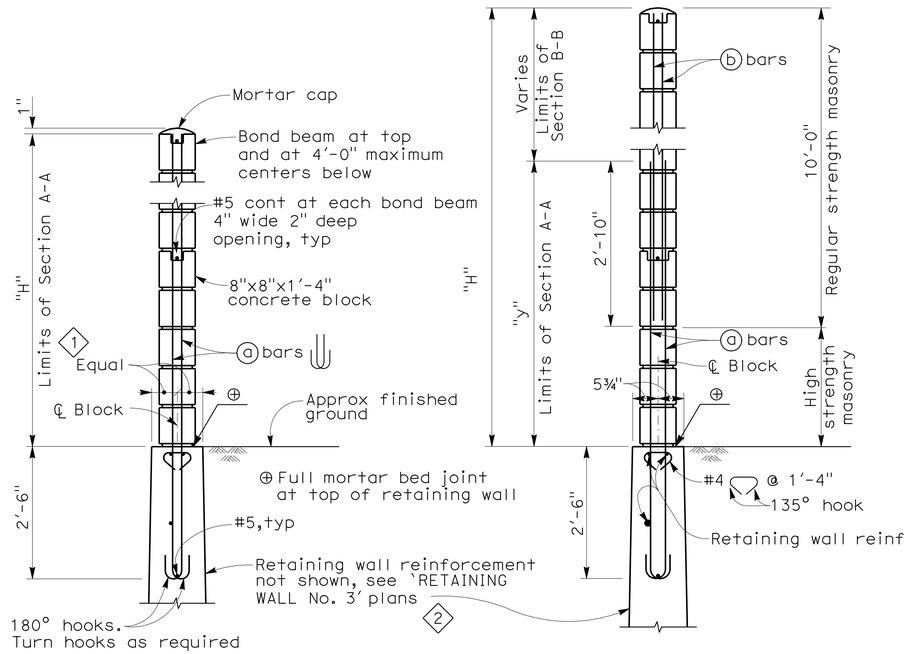

H=6'-0" THRU H=10'-0"

For details not shown, see H=12'-0" thru H=16'-0"

H=12'-0" THRU H=16'-0"

For details not shown, see H=6'-0" thru H=10'-0"

TYPICAL SECTIONS

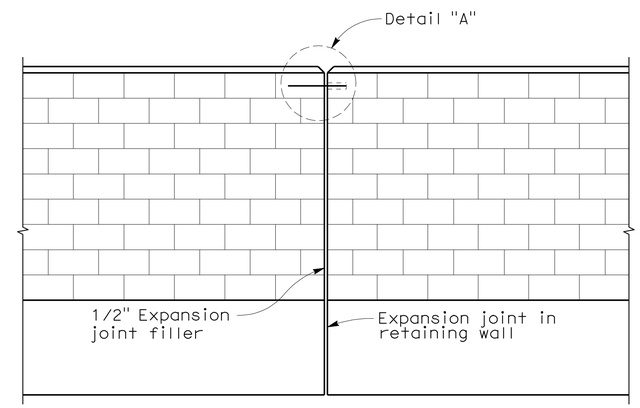

ALIGNMENT KEY DETAIL

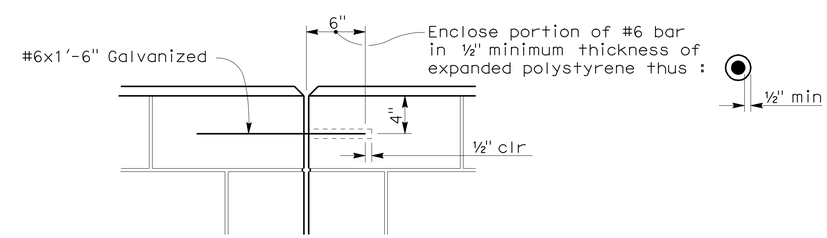

DETAIL A

STANDARD DRAWING

FILE NO. XS15-120-2e

APPROVED BY T. SATTER
RESPONSIBLE TECHNICAL SPECIALIST
APPROVAL DATE 4-15-08

RELEASED BY ROBERTO LACALLE
RESPONSIBLE OFFICE CHIEF
RELEASE DATE 4-15-08

1 Note added
2 Note modified

STATE OF CALIFORNIA
DEPARTMENT OF TRANSPORTATION

DIVISION OF ENGINEERING SERVICES

BRIDGE NO.
POST MILES

SOUND WALL No. 6 DETAILS

SOUND WALL ON RETAINING WALL-MASONRY BLOCK DETAILS NO. 2

DS OSD 2147A (ENGLISH STANDARD DRAWING "XS" BORDER REV. 01/11/08)

ORIGINAL SCALE IN INCHES FOR REDUCED PLANS 0 1 2 3

CU 04275
EA 2285E1

DISREGARD PRINTS BEARING EARLIER REVISION DATES

REVISION DATES (PRELIMINARY STAGE ONLY) 4/22/09 9/28/09 5/26/10 9/9/10 10/28/10 12/1/10 1/14/11

SHEET 4 OF 5

USERNAME => trmikesl

2285e1-sw_6-ad-snddt0

USERNAME => trmikesl DATE PLOTTED => 13-JUN-2011 TIME PLOTTED => 11:40 2006075

DIST	COUNTY	ROUTE	POST MILES TOTAL PROJECT	SHEET No	TOTAL SHEETS
04	CC	4	R26.6/R27.5	738	746

GEOTECHNICAL PROFESSIONAL — 1/14/11 DATE

6-13-11
PLANS APPROVAL DATE

REGISTERED PROFESSIONAL ENGINEER — GARY PARIKH — No. G.E. 666 — Exp. 12/31/11 — GEOTECHNICAL — STATE OF CALIFORNIA

The State of California or its officers or agents shall not be responsible for the accuracy or completeness of scanned copies of this plan sheet.

CONTRA COSTA TRANSPORTATION AUTHORITY
2999 OAK ROAD, SUITE 100
WALNUT CREEK, CA 94597

PARIKH CONSULTANTS, INC.
2360 QUME DRIVE, SUITE A
SAN JOSE CA 95131

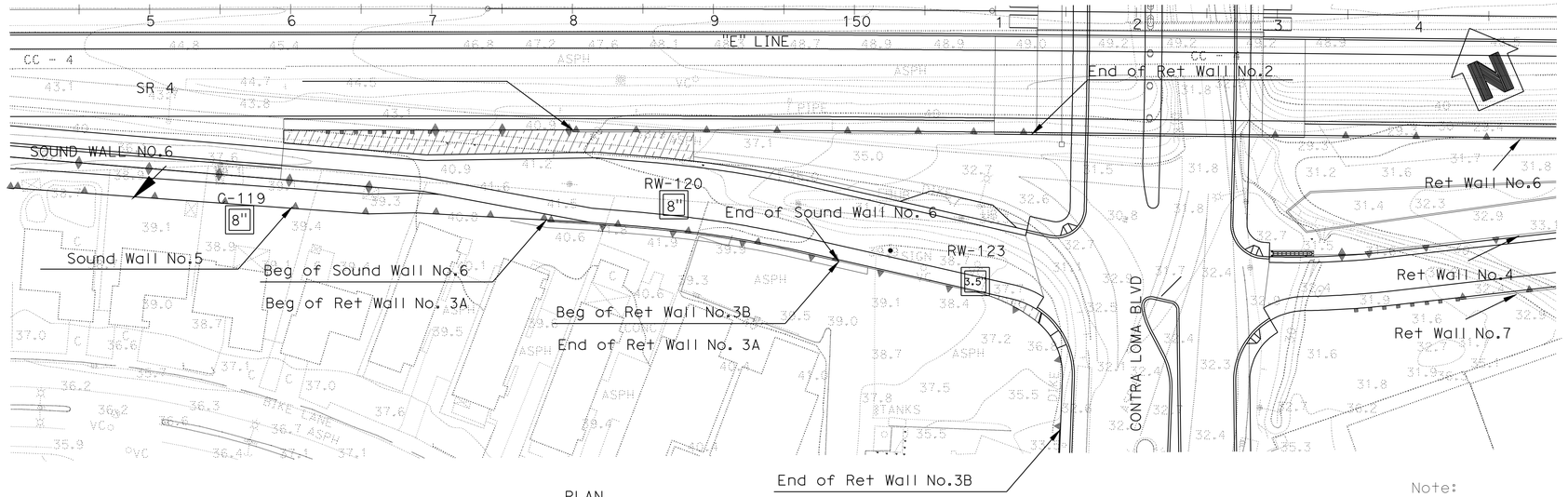

PLAN
1"=50'

Note:
Standard Penetration Test Sampler: I.D. = 1.4"; O.D. = 2"
Modified California Sampler: I.D. = 2.5"; O.D. = 3"
Hammer Assembly: A 140 lb hammer with a 30" drop
(Automatic Hammer)

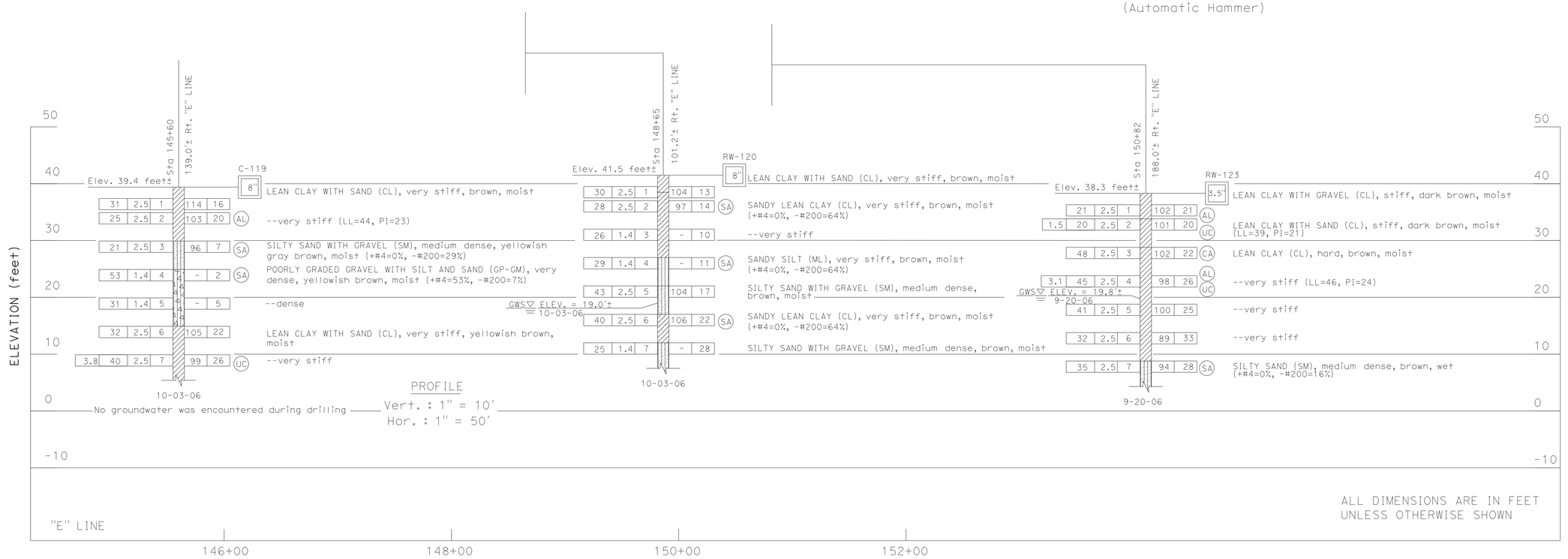

ALL DIMENSIONS ARE IN FEET
UNLESS OTHERWISE SHOWN

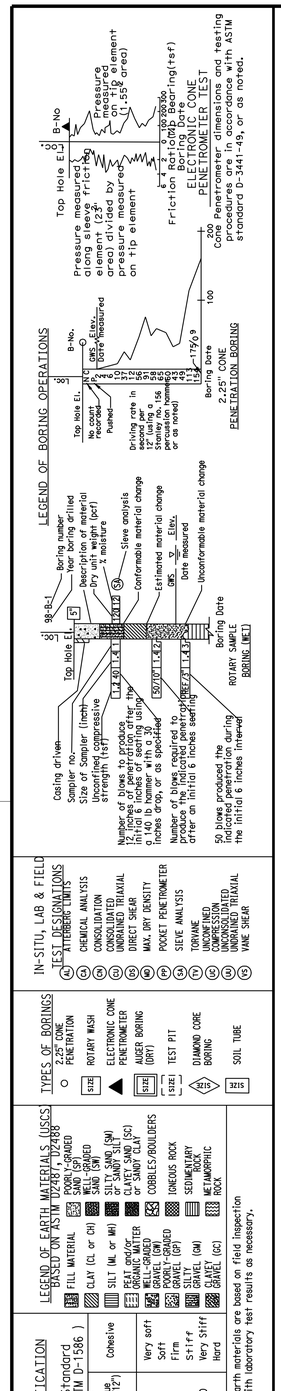

DESIGN OVERSIGHT Overcomer Y. Hor — 2-1-11 SIGN OFF DATE	DRAWN BY OKSAN GOUTHIER	GANGA TRIPATHI FIELD INVESTIGATION BY:	PREPARED FOR THE STATE OF CALIFORNIA DEPARTMENT OF TRANSPORTATION
	CHECKED BY PARTHA SIRCAR	DATE: 09/2006 - 10/2006	PARTHA SIRCAR PROJECT ENGINEER

BRIDGE NO.
POST MILE

SOUND WALL NO. 6
LOG OF TEST BORINGS

CU 04275
EA 2285E1

DISREGARD PRINTS BEARING EARLIER REVISION DATES

REVISION DATES (PRELIMINARY STAGE ONLY): 9/23/09 05/28/10 9/8/10

SHEET 5 OF 5

ORIGINAL SCALE IN INCHES FOR REDUCED PLANS 0 1 2 3

OSF GEOTECHNICAL LOG OF TEST BORINGS SHEET (ENGLISH) (REV. 2/25/05)

FILE => 2285e1-sw-6-z-ltb01.dgn

USERNAME => trmikest DATE PLOTTED => 13-JUN-2011 TIME PLOTTED => 11:40

FOR ACCURATE RIGHT OF WAY DATA, CONTACT
RIGHT OF WAY ENGINEERING AT THE DISTRICT OFFICE

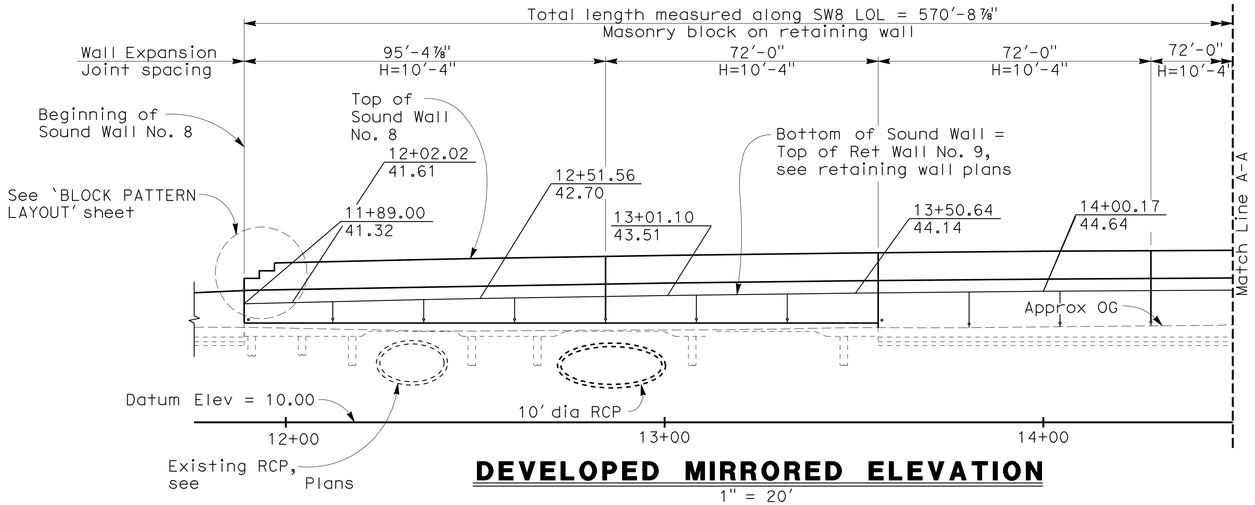

DEVELOPED MIRRORED ELEVATION

1" = 20'

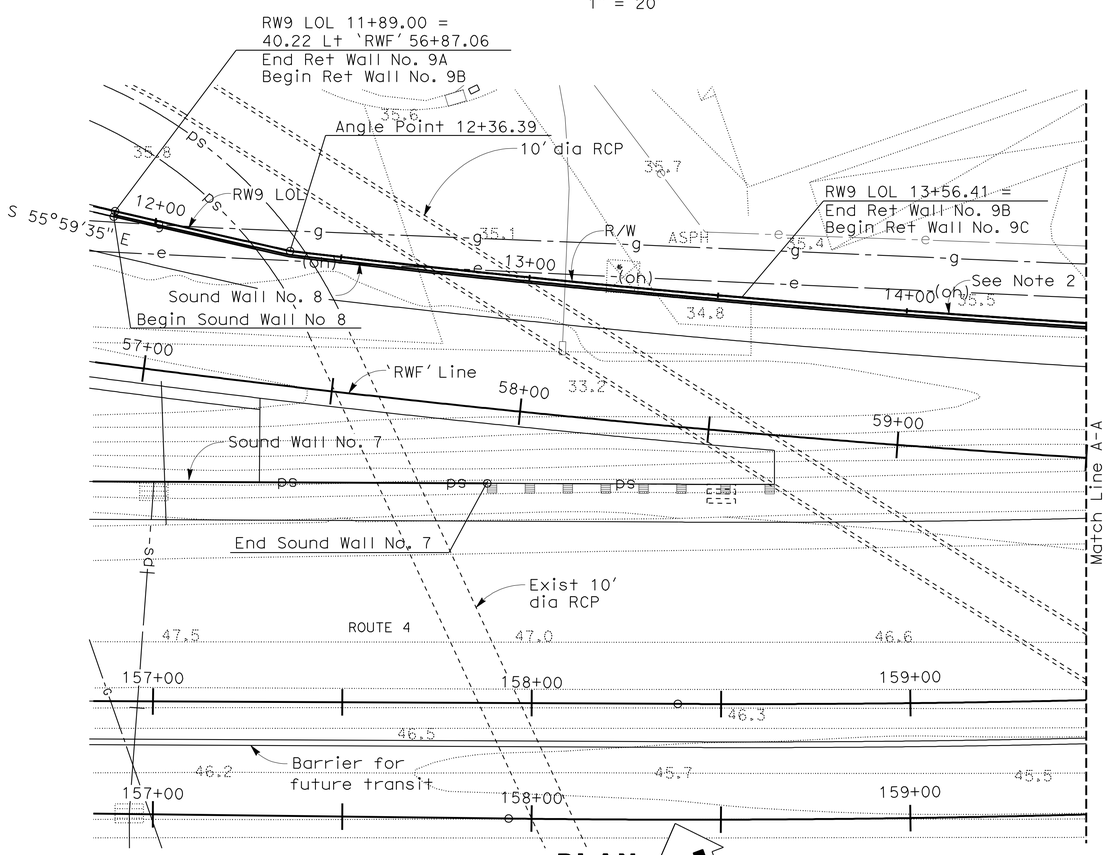

PLAN

1" = 20'

INDEX TO PLANS

SHEET NO.	TITLE
1	GENERAL PLAN No. 1
2	GENERAL PLAN No. 2
3	BLOCK PATTERN LAYOUT No. 1
4	BLOCK PATTERN LAYOUT No. 2
5	SOUND WALL OPENING DETAILS
6	SOUND WALL MASONRY BLOCK WITH BARRIER ON RETAINING WALL DETAILS No. 1
7	SOUND-WALL MASONRY BLOCK WITH BARRIER ON RETAINING WALL DETAILS No. 2
8	LOG OF TEST BORINGS

STANDARD PLANS DATED MAY 2006

A10A	ACRONYMS AND ABBREVIATIONS (SHEET 1 OF 2)
A10B	ACRONYMS AND ABBREVIATIONS (SHEET 2 OF 2)
A10C	SYMBOLS (SHEET 1 OF 2)
A10D	SYMBOLS (SHEET 2 OF 2)

SOUNDWALL NO. 8 BRIDGE NO

QUANTITIES

SOUND WALL (MASONRY BLOCK)	4,327	SQFT
CONCRETE BARRIER (TYPE 736 MODIFIED)	571	LF

1. This plan accurate for sound wall work only.
2. For wall layout data, see 'RETAINING WALLS No. 9B & 9C' plans.
3. Elevations shown indicate bottom of concrete barrier elevations.
4. For Architectural Treatment see 'FORM LINER LAYOUT' sheets and see Road Plans sheet R-30 for quantities

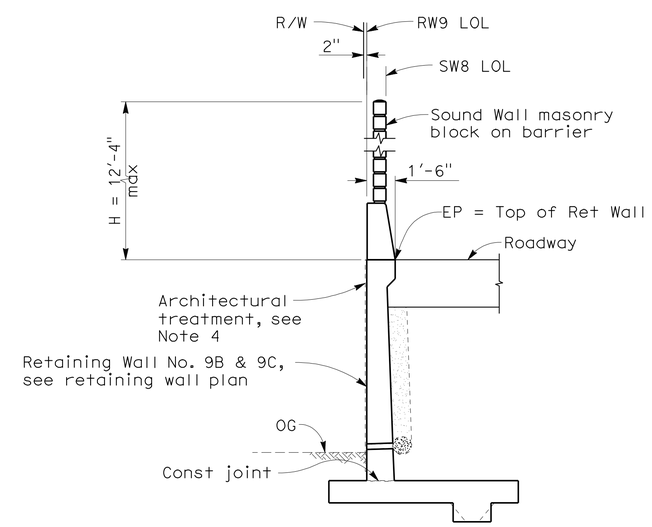

TYPICAL SECTION

NO SCALE

DIST	COUNTY	ROUTE	POST MILES TOTAL PROJECT	SHEET No	TOTAL SHEETS
04	CC	4	R26.6/R27.5	739	746

REGISTERED CIVIL ENGINEER 1/14/11 DATE

6-13-11
PLANS APPROVAL DATE

REGISTERED PROFESSIONAL ENGINEER INES S. LI No. C51561 Exp.6/30/12 CIVIL STATE OF CALIFORNIA

The State of California or its officers or agents shall not be responsible for the accuracy or completeness of scanned copies of this plan sheet.

BIGGS CARDOSA ASSOCIATES INC.
865 THE ALAMEDA
SAN JOSE, CALIFORNIA 95126

CCTA
2999 OAK ROAD, SUITE 100
WALNUT CREEK, CA 94597

Overcomer Y. Hor
DESIGN OVERSIGHT Overcomer Y. Hor
2-1-11
SIGN OFF DATE

	BY	CHECKED			
DESIGN	R. RIVAS	R. SCHNABEL	LOAD FACTOR DESIGN		
DETAILS	R. RIVAS	R. SCHNABEL	LAYOUT	T. HICKS	I. LI
QUANTITIES	R. RIVAS	G. JEYARAMAN	SPECIFICATIONS	I. LI	PLANS AND SPECS COMPARED A. NOTARO

PREPARED FOR THE STATE OF CALIFORNIA DEPARTMENT OF TRANSPORTATION

INES S. LI
PROJECT ENGINEER

BRIDGE NO.
POST MILES

SOUND WALL No. 8
GENERAL PLAN No. 1

DESIGN GENERAL PLAN SHEET (ENGLISH) (REV. 6-01-09)

ORIGINAL SCALE IN INCHES FOR REDUCED PLANS 0 1 2 3

CU 04275
EA 2285E1

DISREGARD PRINTS BEARING EARLIER REVISION DATES

REVISION DATES (PRELIMINARY STAGE ONLY) 3/26/08 4/22/09 9/28/09 5/26/10 9/8/10 10/28/10 12/4/10 1/14/11

SHEET 1 OF 8

FILE => 2285e1-sw_8-ba-gp01.dgn

USERNAME => trmikesl DATE PLOTTED => 13-JUN-2011 TIME PLOTTED => 11:41 2006075 (2006075CWS6)

FOR ACCURATE RIGHT OF WAY DATA, CONTACT
RIGHT OF WAY ENGINEERING AT THE DISTRICT OFFICE

DIST	COUNTY	ROUTE	POST MILES TOTAL PROJECT	SHEET No	TOTAL SHEETS
04	CC	4	R26.6/R27.5	740	746

REGISTERED CIVIL ENGINEER — DATE 1/14/11

6-13-11
PLANS APPROVAL DATE

REGISTERED PROFESSIONAL ENGINEER — INES S. LI — No. C51561 — Exp. 6/30/12 — CIVIL — STATE OF CALIFORNIA

The State of California or its officers or agents shall not be responsible for the accuracy or completeness of scanned copies of this plan sheet.

BIGGS CARDOSA ASSOCIATES INC.
865 THE ALAMEDA
SAN JOSE, CALIFORNIA 95126

CCTA
2999 OAK ROAD, SUITE 100
WALNUT CREEK, CA 94597

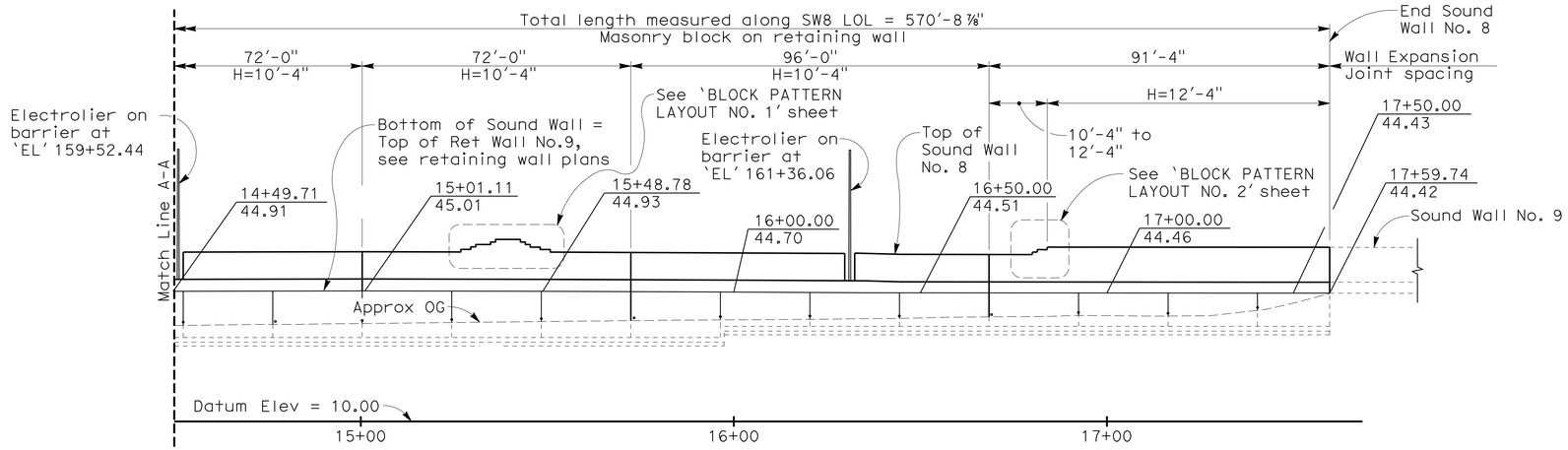

DEVELOPED MIRRORED ELEVATION

1" = 20'

1. This plan accurate for sound wall work only
2. For wall layout data, see 'RETAINING WALLS No. 9B & 9C' plans
3. Elevations shown indicate bottom of concrete barrier elevations

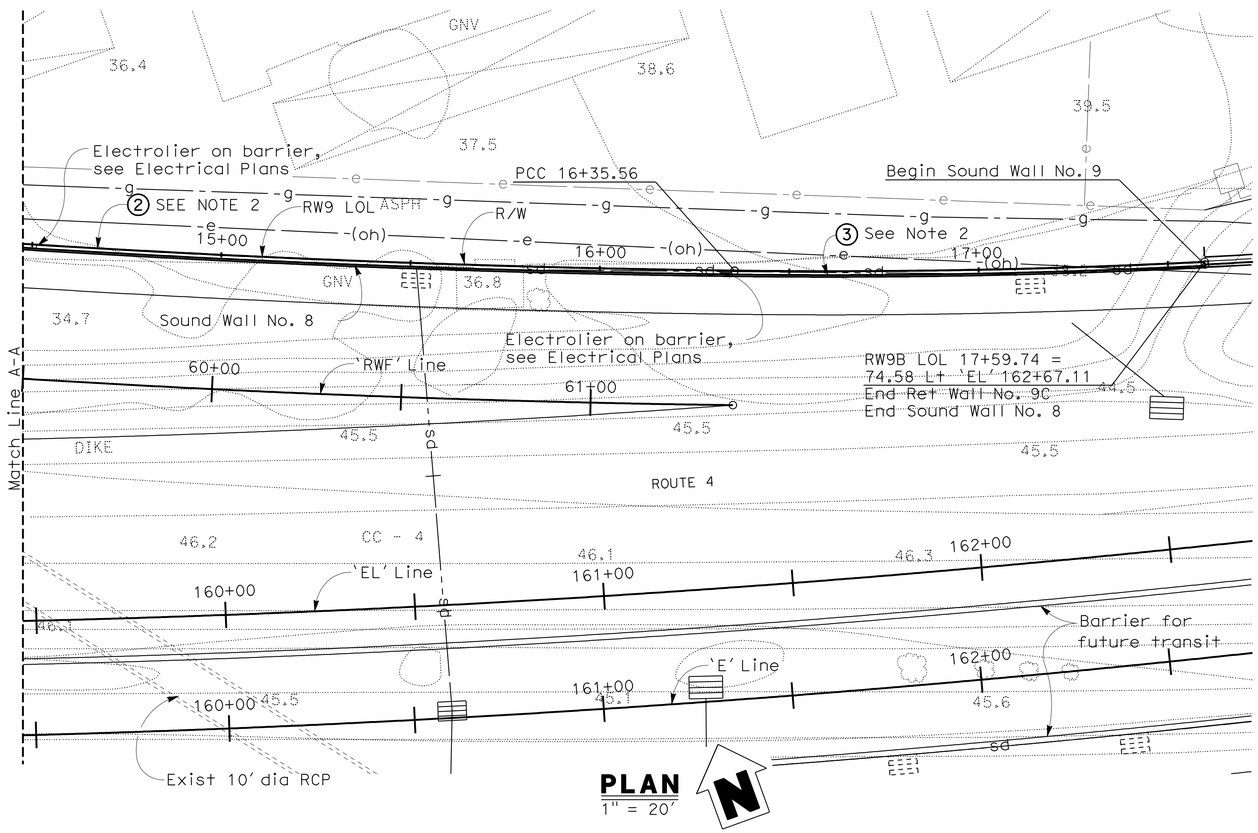

PLAN

1" = 20'

DESIGN OVERSIGHT Overcomer Y. Hor	DESIGN	BY R. RIVAS	CHECKED R. SCHNABEL	LOAD FACTOR DESIGN	
2-1-11 SIGN OFF DATE	DETAILS	BY R. RIVAS	CHECKED R. SCHNABEL	LAYOUT BY T. HICKS	CHECKED I. LI
	QUANTITIES	BY R. RIVAS	CHECKED G. JEYARAMAN	SPECIFICATIONS BY I. LI	PLANS AND SPECS COMPARED A. NOTARO

PREPARED FOR THE STATE OF CALIFORNIA DEPARTMENT OF TRANSPORTATION

INES S. LI
PROJECT ENGINEER

BRIDGE NO.
POST MILES

SOUND WALL No. 8
GENERAL PLAN No. 2

DESIGN GENERAL PLAN SHEET (ENGLISH) (REV. 6-01-09)

ORIGINAL SCALE IN INCHES FOR REDUCED PLANS 0 1 2 3

CU 04275
EA 2285E1

DISREGARD PRINTS BEARING EARLIER REVISION DATES

REVISION DATES (PRELIMINARY STAGE ONLY): 3/26/08 4/22/09 9/28/09 5/28/10 9/28/10 10/28/10 12/27/10 01/14/11

SHEET 2 OF 8

FILE => 2285e1-sw_8-ba-gp02.dgn

USERNAME => ttmikes1 DATE PLOTTED => 13-JUN-2011 TIME PLOTTED => 11:41

2006075 (2006075CWS7)

DIST	COUNTY	ROUTE	POST MILES TOTAL PROJECT	SHEET No	TOTAL SHEETS
04	CC	4	R26.6/R27.5	741	746

REGISTERED CIVIL ENGINEER 1/14/11 DATE

6-13-11
PLANS APPROVAL DATE

REGISTERED PROFESSIONAL ENGINEER INES S. LI No. C51561 Exp.6/30/12 CIVIL STATE OF CALIFORNIA

The State of California or its officers or agents shall not be responsible for the accuracy or completeness of scanned copies of this plan sheet.

BIGGS CARDOSA ASSOCIATES INC.
865 THE ALAMEDA
SAN JOSE, CALIFORNIA 95126

CCTA
2999 OAK ROAD, SUITE 100
WALNUT CREEK, CA 94597

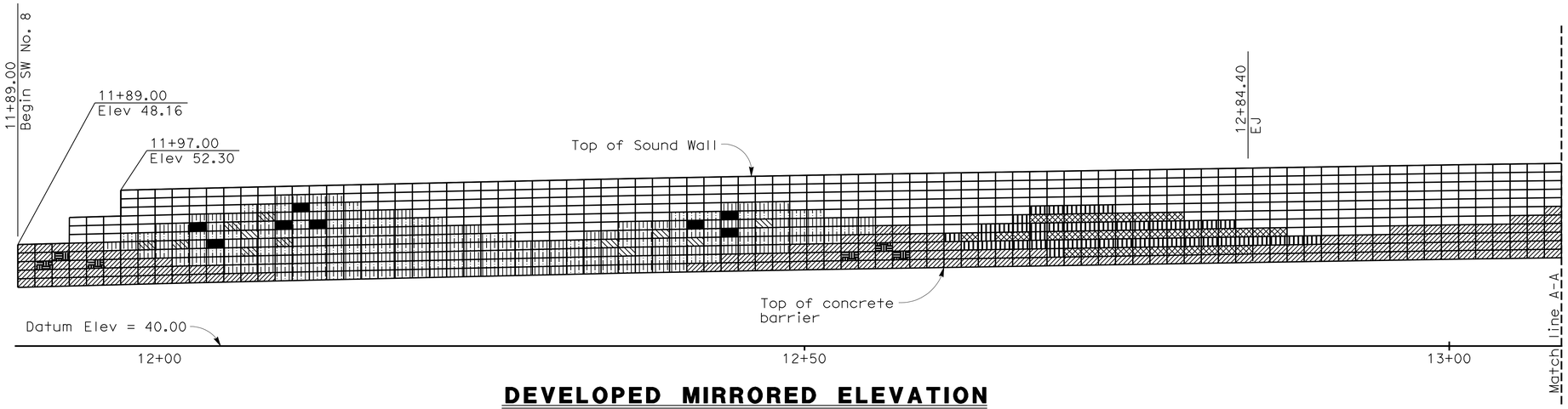

DEVELOPED MIRRORED ELEVATION
1" = 5'

1. For block legend and notes, see Road Plan SW-7B sheet
2. EJ = Expansion Joint

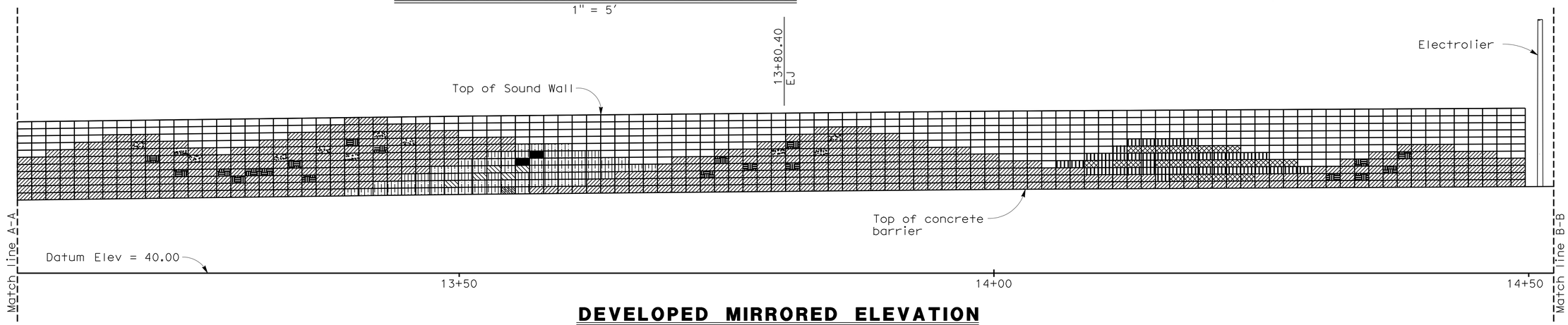

DEVELOPED MIRRORED ELEVATION
1" = 5'

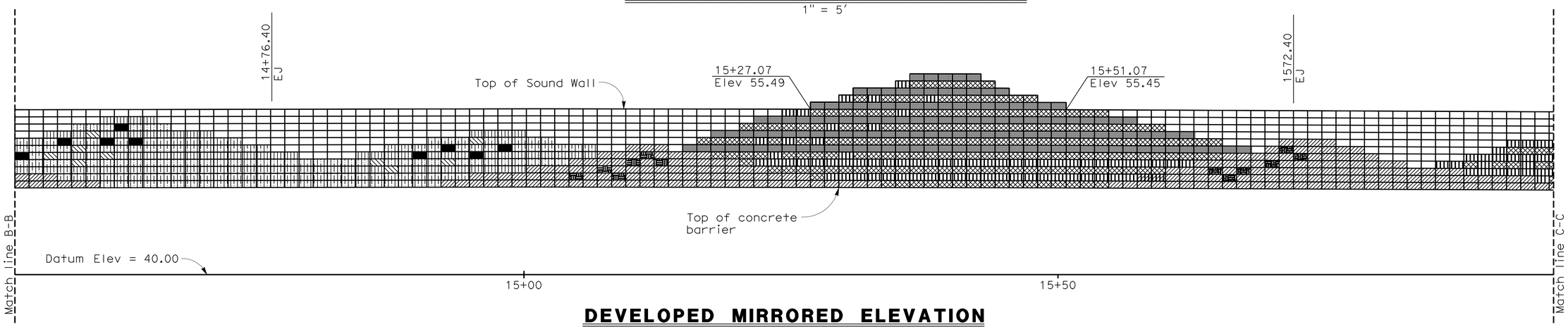

DEVELOPED MIRRORED ELEVATION
1" = 5'

Overcomer Y. Hor
DESIGN OVERSIGHT Overcomer Y. Hor
2-1-11
SIGN OFF DATE

	BY	CHECKED
DESIGN	R. RIVAS	R. SCHNABEL
DETAILS	R. RIVAS	R. SCHNABEL
QUANTITIES	R. RIVAS	G. JEYARAMAN

PREPARED FOR THE STATE OF CALIFORNIA DEPARTMENT OF TRANSPORTATION

INES S. LI
PROJECT ENGINEER

BRIDGE NO.
POST MILES

SOUND WALL No. 8
BLOCK PATTERN LAYOUT No. 1

DESIGN DETAIL SHEET (ENGLISH) (REV. 6-01-09)

ORIGINAL SCALE IN INCHES FOR REDUCED PLANS 0 1 2 3

CU 04275
EA 2285E1

DISREGARD PRINTS BEARING EARLIER REVISION DATES

REVISION DATES (PRELIMINARY STAGE ONLY) 9/28/09 5/26/10 9/28/10 10/20/10 12/4/10 1/14/11

SHEET 3 OF 8

FILE => 2285e1-sw_8-bb-blk-lo01.dgn

USERNAME => trmikest DATE PLOTTED => 13-JUN-2011 TIME PLOTTED => 11:41

2006075 (2006075CWS8)

DIST	COUNTY	ROUTE	POST MILES TOTAL PROJECT	SHEET No	TOTAL SHEETS
04	CC	4	R26.6/R27.5	742	746

REGISTERED CIVIL ENGINEER 1/14/11 DATE

6-13-11
PLANS APPROVAL DATE

REGISTERED PROFESSIONAL ENGINEER INES S. LI No. C51561 Exp.6/30/12 CIVIL STATE OF CALIFORNIA

The State of California or its officers or agents shall not be responsible for the accuracy or completeness of scanned copies of this plan sheet.

BIGGS CARDOSA ASSOCIATES INC.
865 THE ALAMEDA
SAN JOSE, CALIFORNIA 95126

CCTA
2999 OAK ROAD, SUITE 100
WALNUT CREEK, CA 94597

DEVELOPED MIRRORED ELEVATION

1" = 5'

1. EJ = Expansion Joint

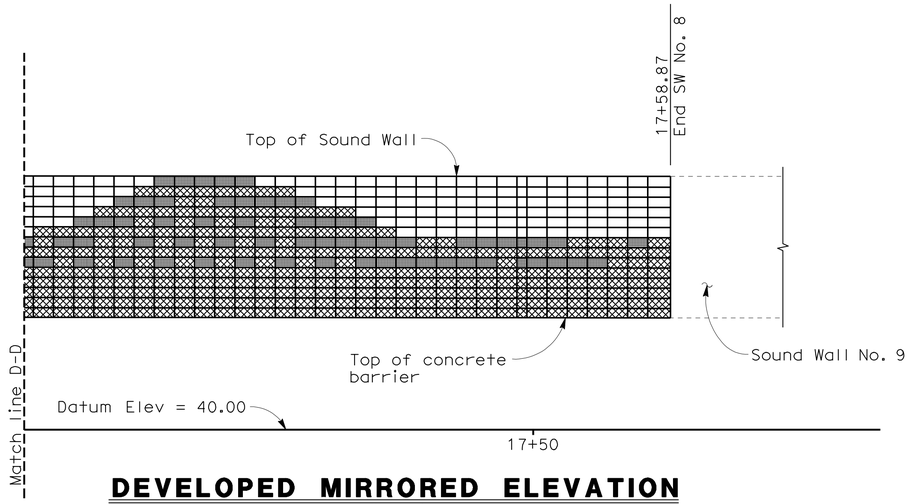

DEVELOPED MIRRORED ELEVATION

1" = 5'

DESIGN OVERSIGHT Overcomer Y. Hor
2-1-11
SIGN OFF DATE

	BY	CHECKED
DESIGN	R. RIVAS	R. SCHNABEL
DETAILS	R. RIVAS	R. SCHNABEL
QUANTITIES	R. RIVAS	G. JEYARAMAN

PREPARED FOR THE STATE OF CALIFORNIA DEPARTMENT OF TRANSPORTATION

INES S. LI
PROJECT ENGINEER

BRIDGE NO.
POST MILES

SOUND WALL No. 8
BLOCK PATTERN LAYOUT No. 2

DESIGN DETAIL SHEET (ENGLISH) (REV. 6-01-09)

ORIGINAL SCALE IN INCHES FOR REDUCED PLANS 0 1 2 3

CU 04275
EA 2285E1

DISREGARD PRINTS BEARING EARLIER REVISION DATES

REVISION DATES (PRELIMINARY STAGE ONLY) 9/28/09 5/26/10 9/8/10 10/20/10 12/1/10 1/14/11

SHEET 4 OF 8

FILE => 2285e1-sw_8-bb-blk-lo02.dgn

USERNAME => trmikes1 DATE PLOTTED => 13-JUN-2011 TIME PLOTTED => 11:41

2006075 (2006075CWS9)

DIST	COUNTY	ROUTE	POST MILES TOTAL PROJECT	SHEET No	TOTAL SHEETS
04	CC	4	R26.6/R27.5	743	746

REGISTERED CIVIL ENGINEER — DATE 1/14/11

6-13-11
PLANS APPROVAL DATE

REGISTERED PROFESSIONAL ENGINEER — INES S. LI — No. C51561 — Exp. 6/30/12 — CIVIL — STATE OF CALIFORNIA

The State of California or its officers or agents shall not be responsible for the accuracy or completeness of scanned copies of this plan sheet.

BIGGS CARDOSA ASSOCIATES INC.
865 THE ALAMEDA
SAN JOSE, CALIFORNIA 95126

CCTA
2999 OAK ROAD, SUITE 100
WALNUT CREEK, CA 94597

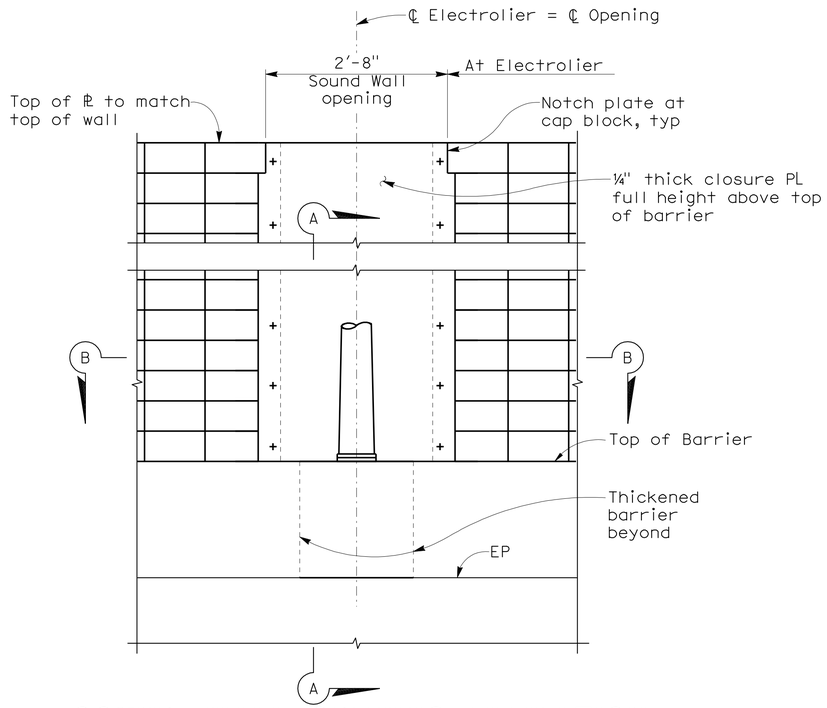

SOUND WALL OPENING ELEVATION
NO SCALE

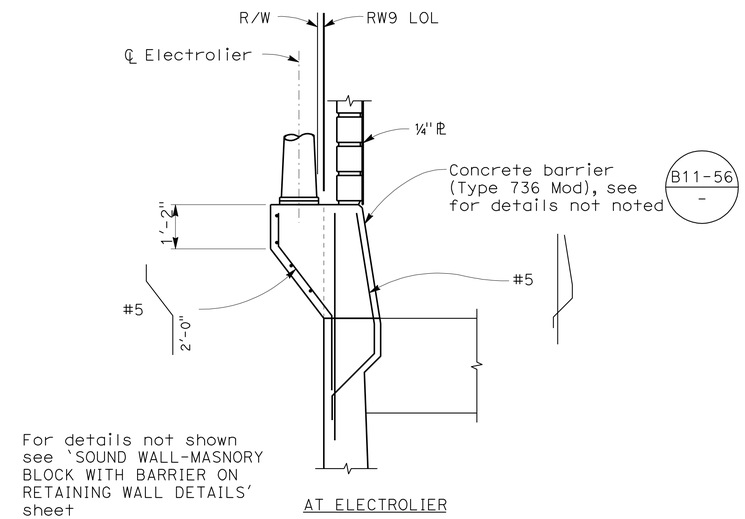

SECTION A-A
1/2" = 1'-0"

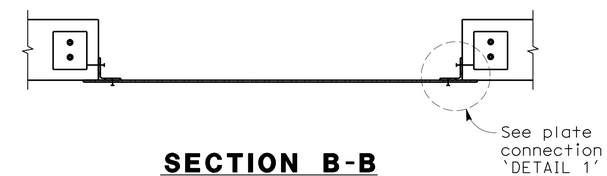

SECTION B-B
NO SCALE

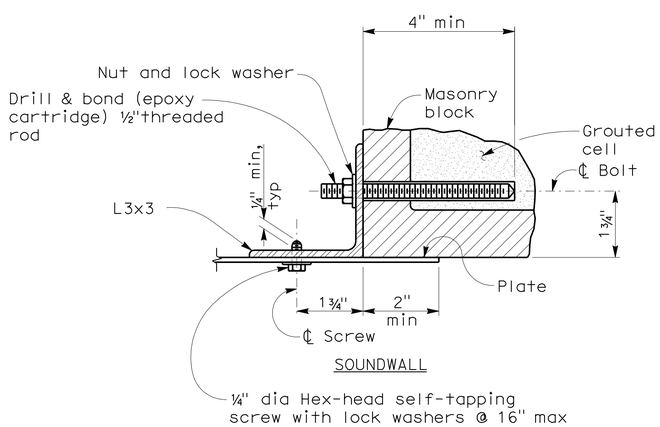

PLATE CONNECTION-DETAIL 1
NO SCALE

DESIGN OVERSIGHT Overcomer Y. Hor
2-1-11
SIGN OFF DATE

	BY	CHECKED
DESIGN	R. RIVAS	R. SCHNABEL
DETAILS	R. RIVAS	R. SCHNABEL
QUANTITIES	R. RIVAS	G. JEYARAMAN

PREPARED FOR THE STATE OF CALIFORNIA DEPARTMENT OF TRANSPORTATION

INES S. LI
PROJECT ENGINEER

BRIDGE NO.
POST MILES

SOUND WALL No. 8
SOUND WALL OPENING DETAILS

DESIGN DETAIL SHEET (ENGLISH) (REV. 6-01-09)

ORIGINAL SCALE IN INCHES FOR REDUCED PLANS 0 1 2 3

CU 04275
EA 2285E1

DISREGARD PRINTS BEARING EARLIER REVISION DATES → REVISION DATES (PRELIMINARY STAGE ONLY) 9/28/09 5/26/10 9/8/10 10/20/10 12/1/10 1/14/11

SHEET 5 OF 8

FILE => 2285e1-sw_8-bd-snddt01.dgn

USERNAME => trmikesl DATE PLOTTED => 13-JUN-2011 TIME PLOTTED => 11:41

2006075 (2006075CWS10)

DIST	COUNTY	ROUTE	POST MILES TOTAL PROJECT	SHEET NO.	TOTAL SHEETS
04	CC	4	R26.6/R27.5	744	746

REGISTERED CIVIL ENGINEER 1/14/11

PLANS APPROVAL DATE 6-13-11

REGISTERED PROFESSIONAL ENGINEER INES S. LI No. C51561 Exp.6/30/12 CIVIL STATE OF CALIFORNIA

The State of California or its officers or agents shall not be responsible for the accuracy or completeness of scanned copies of this plan sheet.

BIGGS CARDOSA ASSOCIATES INC.
865 THE ALAMEDA
SAN JOSE, CALIFORNIA 95126

CCTA
2999 OAK ROAD, SUITE 100
WALNUT CREEK, CA 94597

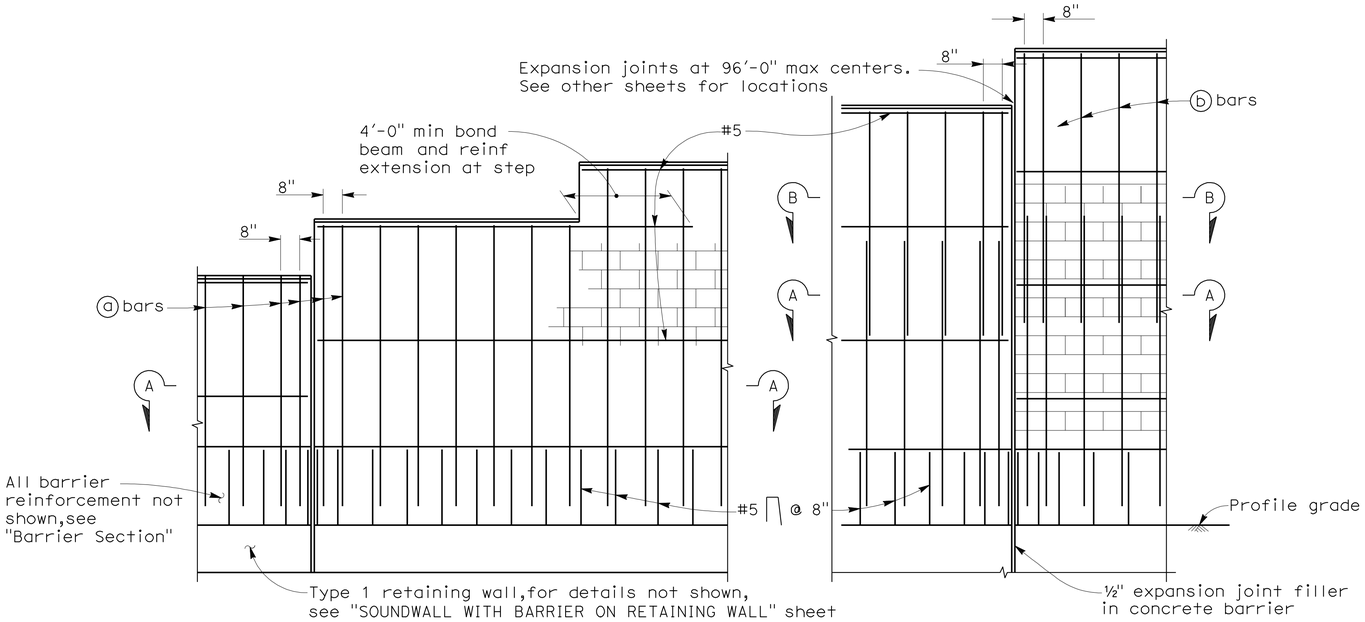

PART ELEVATION

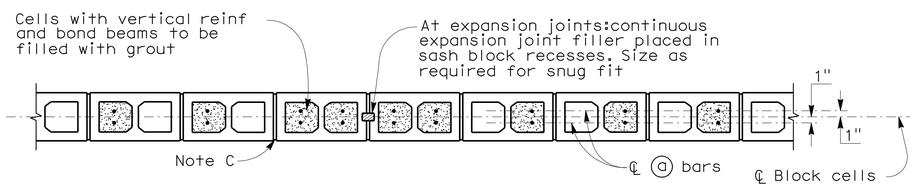

SECTION A-A

For details not shown,see other details

H=6'-4" THRU H=10'-4"

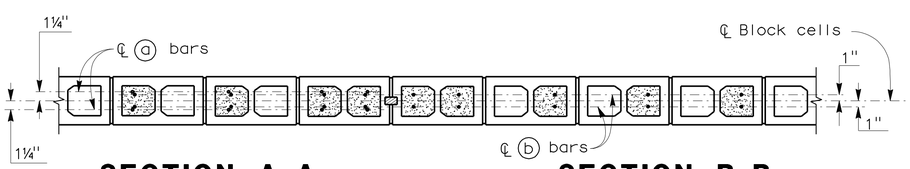

SECTION A-A

For details not shown, see other details

H=12'-4" THRU H=16'-4"

SECTION B-B

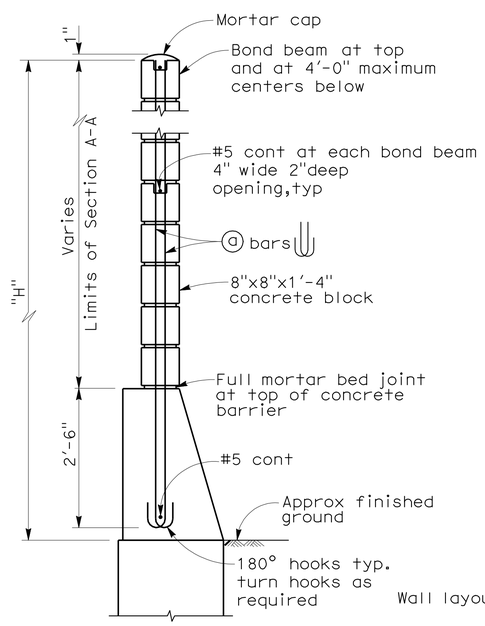

For details not shown, see H=12'-4" thru H=16'-4"

H=6'-4" THRU H=10'-4"

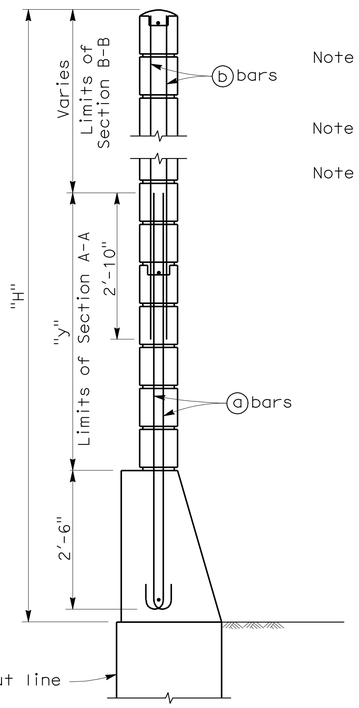

H=12'-4" THRU H=16'-4"

For details not shown, see H=6'-4" thru H=10'-4"

TYPICAL SECTIONS

SOUNDWALL REINFORCEMENT TABLE						
Maximum H	ⓐ bars @ 1'-4" max	ⓑ bars @ 1'-4" max	"y"	f'm (KSI)	Compressive Strength of CMU (KSI)	Maximum H
6'-4"	#4	———	———	1.5	1.9	6'-4"
8'-4"	#4	———	———	1.5	1.9	8'-4"
10'-4"	#4	———	———	1.5	1.9	10'-4"
12'-4"	#5	#4	5'-0"	1.5	1.9	12'-4"
14'-4"	#6	#4	7'-0"	1.5	1.9	14'-4"
16'-4"	#6	#4	9'-0"	2.5	3.7	16'-4"

Note I : For details not shown, see "SOUNDWALL WITH BARRIER ON RETAINING WALL - MASONRY BLOCK -- DETAILS NO.2" sheet.

Note II : Slope ground at traffic side of barrier to drain. Maximum slope ±10%.

Note III: See "SOUNDWALL MASONRY BLOCK - MISCELLANEOUS DETAILS" sheet for other details.

GENERAL NOTES

Note A: For type of block and joint finish, see other sheets.

Note B: When blocks are laid in stacked bond, ladder type, galvanized joint reinforcement shall be provided. A minimum of 0.07"-0.14" wire continuous at 4'-0" maximum to be used. Locate reinforcement in joints that are at the approximate midpoint between bond beams.

Note C: Horizontal joints shall be tooled concave or may be weathered.
Vertical joints shall be tooled concave or may be raked.

Note D: For intermediate wall heights that are between the "H's" given. Use the tabular information for the next higher "H".

Note E: Masonry strengths are listed in "SOUNDWALL REINFORCEMENT TABLE".

Note F: Class 2 concrete to be used for the barrier.

STANDARD DRAWING

FILE NO. XS15-130-1e

APPROVED BY T. SATTER (RESPONSIBLE TECHNICAL SPECIALIST) — APPROVAL DATE 2-13-09

RELEASED BY ROBERTO LACALLE (RESPONSIBLE OFFICE CHIEF) — RELEASE DATE 2-13-09

STATE OF CALIFORNIA DEPARTMENT OF TRANSPORTATION

DIVISION OF ENGINEERING SERVICES

BRIDGE NO.

POST MILES

SOUND WALL No. 8 DETAILS

SOUND WALL-MASONRY BLOCK WITH BARRIER ON RETAINING WALL DETAILS NO. 1

DS OSD 2147A (ENGLISH STANDARD DRAWING "XS" BORDER REV. 01/11/08)

ORIGINAL SCALE IN INCHES FOR REDUCED PLANS 0 1 2 3

CU 04275
EA 2285E1

DISREGARD PRINTS BEARING EARLIER REVISION DATES

REVISION DATES (PRELIMINARY STAGE ONLY) 4/22/09 9/28/09 5/26/10 9/8/10 10/28/10 12/1/10 1/14/11

SHEET 6 OF 8

USERNAME => trmikesl

2285e1-sw_8-bd-sndd10

USERNAME => trmikesl DATE PLOTTED => 13-JUN-2011 TIME PLOTTED => 11:41 (20060/CWS11)

DIST	COUNTY	ROUTE	POST MILES TOTAL PROJECT	SHEET NO.	TOTAL SHEETS
04	CC	4	R26.6/R27.5	745	746

REGISTERED CIVIL ENGINEER 1/14/11

PLANS APPROVAL DATE 6-13-11

REGISTERED PROFESSIONAL ENGINEER INES S. LI No. C51561 Exp.6/30/12 CIVIL STATE OF CALIFORNIA

The State of California or its officers or agents shall not be responsible for the accuracy or completeness of scanned copies of this plan sheet.

BIGGS CARDOSA ASSOCIATES INC.
865 THE ALAMEDA
SAN JOSE, CALIFORNIA 95126

CCTA
2999 OAK ROAD, SUITE 100
WALNUT CREEK, CA 94597

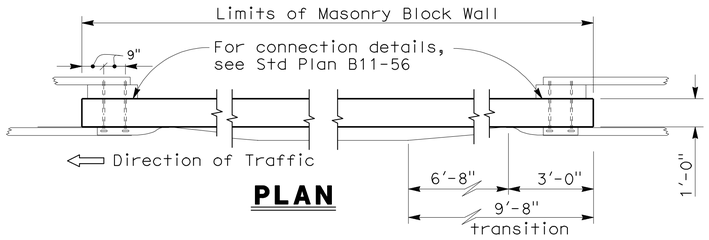

PLAN

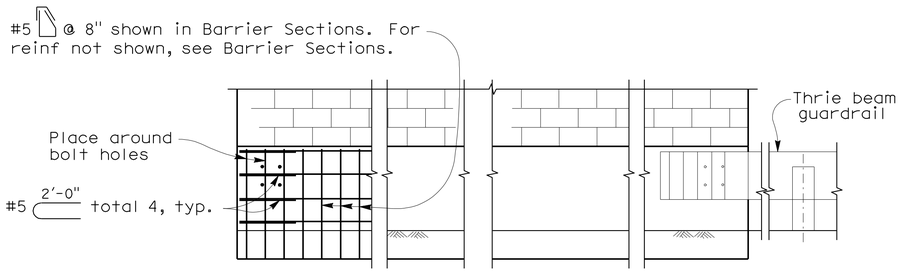

ELEVATION
METAL BEAM GUARDRAIL ANCHORAGE

For details not shown, see std. plan B11-56.

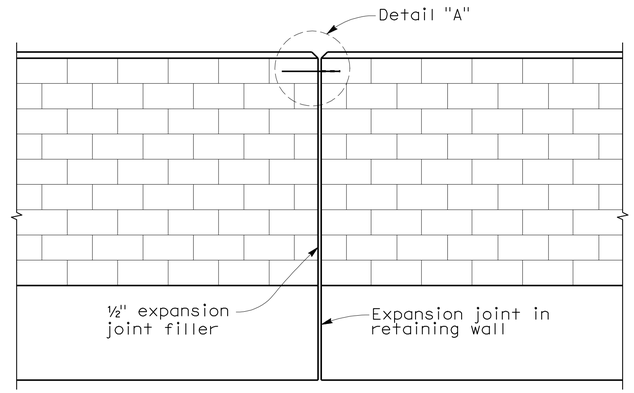

ALIGNMENT KEY DETAIL

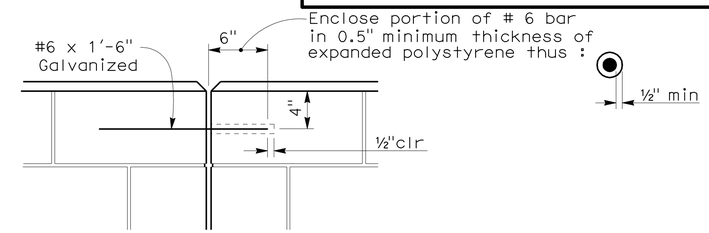

DETAIL A

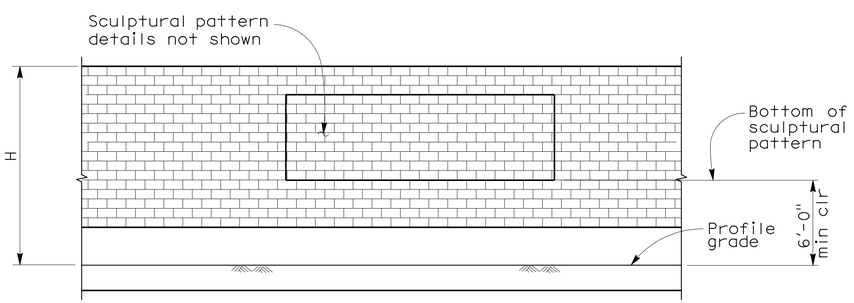

CLEARANCE DETAIL

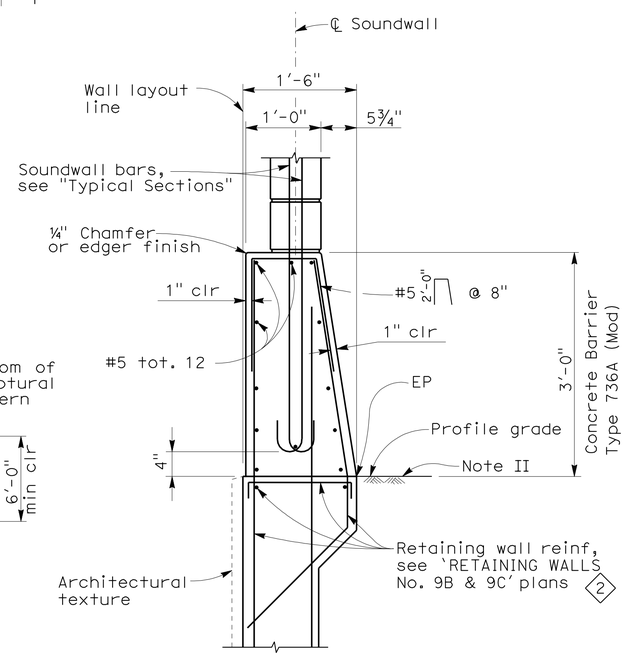

BARRIER SECTION 1

NOTES:

2 I : For details not shown,see 'RETAINING WALLS No. 9B & 9C' plans.

II : Slope ground at traffic side of barrier to drain. Maximum slope ±10%. See Standard Plan B11-56, Note D.

DESIGN NOTES

DESIGN

Uniform Building Code,1997 Edition and the Bridge Design Specifications.

DESIGN WIND LOAD

33 PSF

DESIGN SEISMIC LOAD

0.57 Dead load

REINFORCED CONCRETE

f'c = 3250 PSI
fy = 60 KSI

CONCRETE MASONRY

REGULAR STRENGTH	HIGH STRENGTH	
f'm = 1500 PSI	f'm = 2000 PSI	f'm = 2500 PSI
fb = 1500 PSI	fb = 660 PSI	fb = 830 PSI
fs = 24.0 KSI	fs = 24.0 KSI	fs = 24000 PSI
n = 25.8	n = 19.3	n = 15.5

LOAD FACTORS AND LOAD COMBINATIONS

Working Stress Design (WSD) Percentage of unit stress

Group 1: D + E + SC 100%
Group 2: D + W + SC + E 100%
Group 3: D + 0.71 EQD + E 100%

Where:

D = Dead load
E = Lateral earth pressure
SC = Live load surcharge
W = Wind load
EQD = Seismic dead load

Load Factor Design (LFD)

Group A: βD + 1.7 E + 1.7 SC
Group B: βD + 1.7 E + 1.3 W
Group C: βD + 1.3 E + 1.0 EQE
Group D: βD + 1.3 E + 1.0 EQD
Group E: βD + 1.1 E + 0.85 (EQE + EQD)

Where : β = 0.9 or 1.2, whichever controls in design
D = Dead load
E = Lateral earth pressure
SC = Live load surcharge
W = Wind load
EQD = Seismic dead load
EQE = Seismic earth load

STRENGTH REDUCTION FACTORS, Ø

Reinforced concrete:
For flexure Ø=0.90
For shear Ø=0.85

Concrete masonry:
For flexure Ø=0.80
For shear Ø=0.60

Foundations :

2 See 'RETAINING WALL No. 9B & 9C' plans.

STANDARD DRAWING

FILE NO. XS15-130-2e

APPROVED BY T. SATTER (RESPONSIBLE TECHNICAL SPECIALIST)
APPROVAL DATE 4-15-08
RELEASED BY ROBERTO LACALLE (RESPONSIBLE OFFICE CHIEF)
RELEASE DATE 4-15-08

1 Detail modified
2 Note modified

STATE OF CALIFORNIA DEPARTMENT OF TRANSPORTATION

DIVISION OF ENGINEERING SERVICES

BRIDGE NO.
POST MILES

SOUND WALL No. 8 DETAILS

SOUND WALL-MASONRY BLOCK WITH BARRIER ON RETAINING WALL DETAILS NO. 2

DS OSD 2147A (ENGLISH STANDARD DRAWING "XS" BORDER REV. 01/11/08)

ORIGINAL SCALE IN INCHES FOR REDUCED PLANS 0 1 2 3

CU 04275
EA 2285E1

DISREGARD PRINTS BEARING EARLIER REVISION DATES

REVISION DATES (PRELIMINARY STAGE ONLY) 4/22/09 9/28/09 5/26/10 9/28/10 10/28/10 12/17/10 1/14/11

SHEET 7 OF 8

USERNAME => trmikesl

2285e1-sw_8-bd-sndd10

USERNAME => trmikesl DATE PLOTTED => 13-JUN-2011 TIME PLOTTED => 11:41 2006075 (2006075WS12)

DIST	COUNTY	ROUTE	POST MILES TOTAL PROJECT	SHEET No	TOTAL SHEETS
04	CC	4	R26.6/R27.5	746	746

GEOTECHNICAL PROFESSIONAL — 1/14/11 DATE

6-13-11
PLANS APPROVAL DATE

REGISTERED PROFESSIONAL ENGINEER — GARY PARIKH — No. G.E. 666 — Exp. 12/31/11 — GEOTECHNICAL — STATE OF CALIFORNIA

The State of California or its officers or agents shall not be responsible for the accuracy or completeness of scanned copies of this plan sheet.

CONTRA COSTA TRANSPORTATION AUTHORITY
2999 OAK ROAD, SUITE 100
WALNUT CREEK, CA 94597

PARIKH CONSULTANTS, INC.
2360 QUME DRIVE, SUITE A
SAN JOSE CA 95131

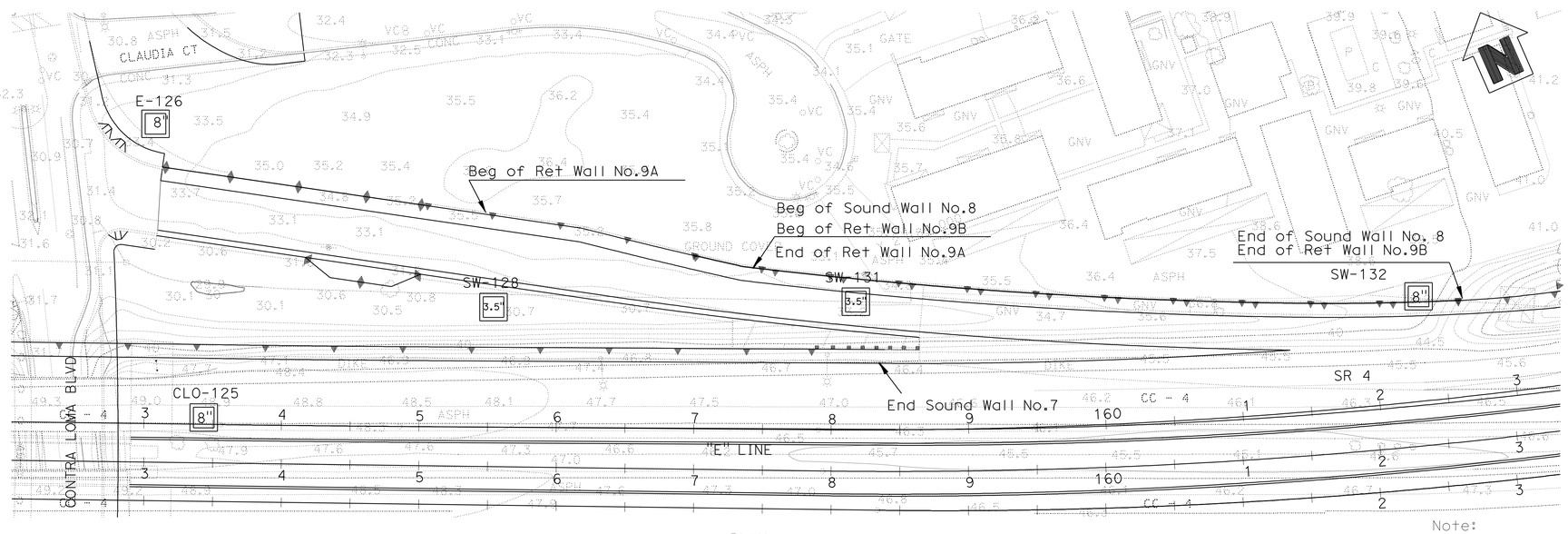

PLAN
1"=50'

Note:
Standard Penetration Test Sampler: I.D. = 1.4"; O.D. = 2"
Modified California Sampler: I.D. = 2.5"; O.D. = 3"
Hammer Assembly: A 140 lb hammer with a 30" drop
(Automatic Hammer)

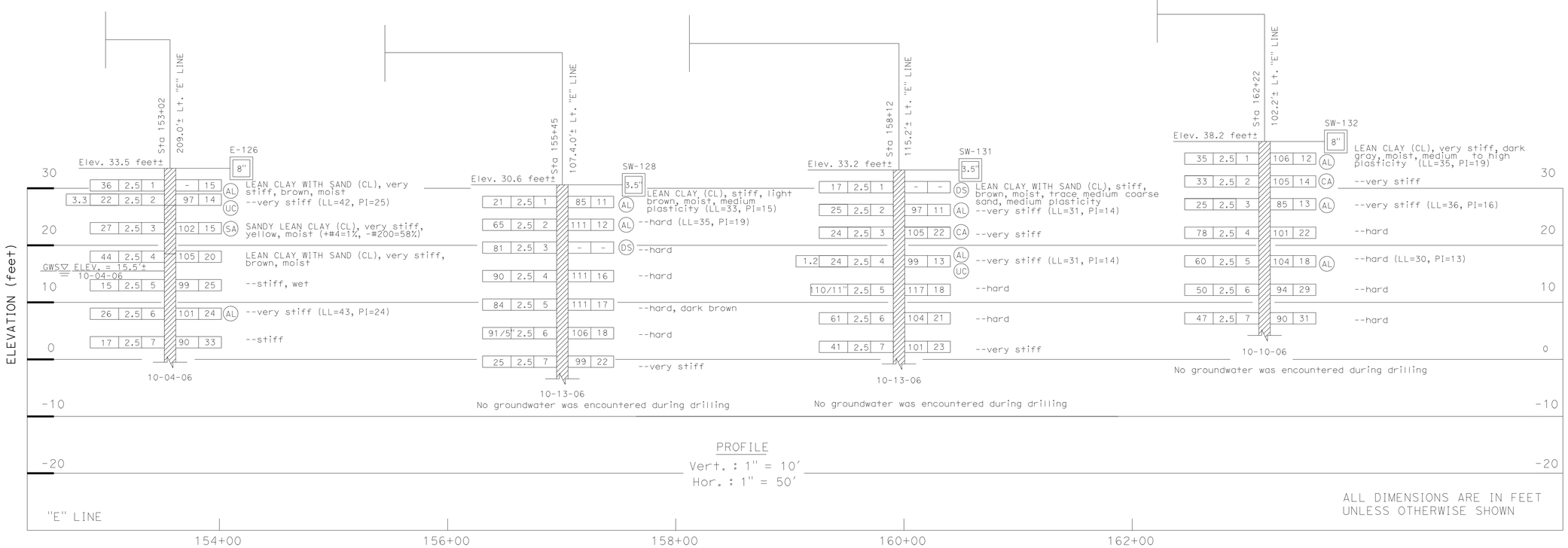

PROFILE
Vert. : 1" = 10'
Hor. : 1" = 50'

ALL DIMENSIONS ARE IN FEET UNLESS OTHERWISE SHOWN

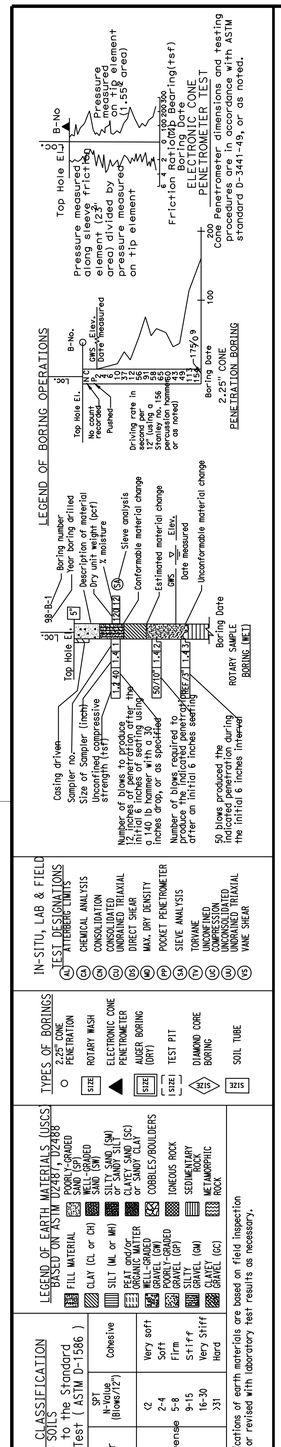

DESIGN OVERSIGHT Overcomer Y. Hor	DRAWN BY OKSAN GOUTHIER	L.S. BHANGOO	PREPARED FOR THE STATE OF CALIFORNIA DEPARTMENT OF TRANSPORTATION
2-1-11 SIGN OFF DATE	CHECKED BY PARTHA SIRCAR	FIELD INVESTIGATION BY: DATE: 10/2006	PARTHA SIRCAR PROJECT ENGINEER

BRIDGE NO.
POST MILE

SOUND WALL NO. 8
LOG OF TEST BORINGS

OSF GEOTECHNICAL LOG OF TEST BORINGS SHEET (ENGLISH) (REV. 2/25/05)

ORIGINAL SCALE IN INCHES FOR REDUCED PLANS 0 1 2 3

CU 04275
EA 2285E1

DISREGARD PRINTS BEARING EARLIER REVISION DATES → 9/29/09 05/20/10 9/8/10

REVISION DATES (PRELIMINARY STAGE ONLY)

SHEET 8 OF 8

FILE => 2285e1-sw-8-z-ltb01.dgn

USERNAME => trmikest DATE PLOTTED => 13-JUN-2011 TIME PLOTTED => 11:42