Dist	COUNTY	ROUTE	POST MILES TOTAL PROJECT	SHEET No.	TOTAL SHEETS
04	CC	4	R26.6/R27.5	101	746

REGISTERED CIVIL ENGINEER — DATE: 2/2/11

6-13-11
PLANS APPROVAL DATE

REGISTERED PROFESSIONAL ENGINEER — Joseph E. Peterson — No. 42777 — Exp. 3-31-12 — CIVIL — STATE OF CALIFORNIA

THE STATE OF CALIFORNIA OR ITS OFFICERS OR AGENTS SHALL NOT BE RESPONSIBLE FOR THE ACCURACY OR COMPLETENESS OF SCANNED COPIES OF THIS PLAN SHEET.

CALTRANS
111 GRAND AVENUE
OAKLAND, CA. 94612

CCTA
2999 OAK ROAD, SUITE 100
WALNUT CREEK, CA. 94597

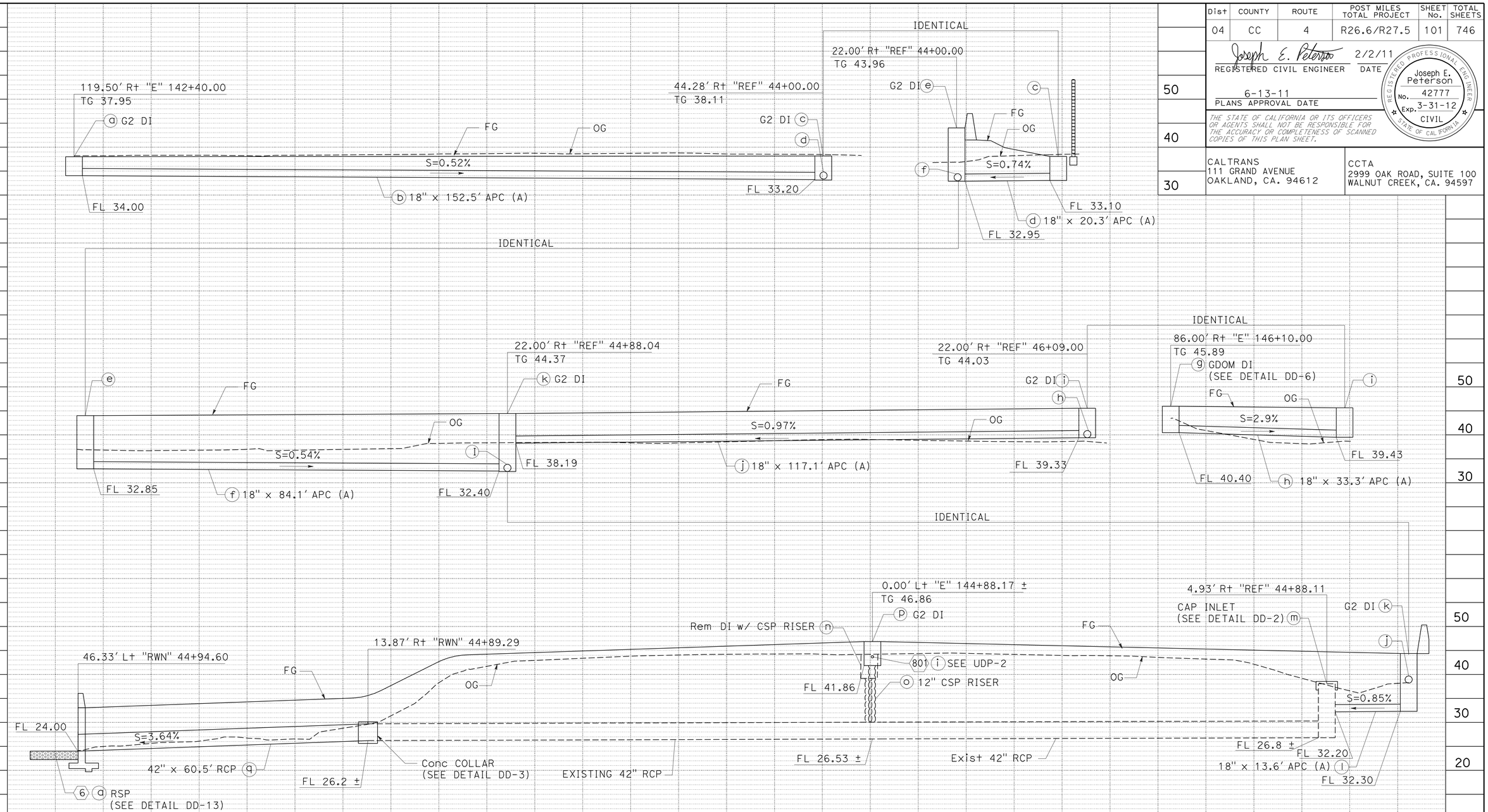

DRAINAGE SYSTEM No. 5

DRAINAGE PROFILE

SCALE: Horiz 1" = 10'
Vert 1" = 10'

DP-3

STATE OF CALIFORNIA - DEPARTMENT OF TRANSPORTATION

FUNCTIONAL SUPERVISOR: JOSEPH E. PETERSON

CALCULATED-DESIGNED BY: SHARON L. PATCH

CHECKED BY: KATHLEEN M. REILLY

REVISED BY: SP — DATE REVISED: 2/2/11

LAST REVISION 02-02-11 — DATE PLOTTED => 13-JUN-2011 — TIME PLOTTED => 08:59

Dist	COUNTY	ROUTE	POST MILES TOTAL PROJECT	SHEET No.	TOTAL SHEETS
04	CC	4	R26.6/R27.5	102	746

REGISTERED CIVIL ENGINEER — Joseph E. Peterson — DATE 2/2/11

PLANS APPROVAL DATE 6-13-11

REGISTERED PROFESSIONAL ENGINEER — Joseph E. Peterson — No. 42777 — Exp. 3-31-12 — CIVIL — STATE OF CALIFORNIA

THE STATE OF CALIFORNIA OR ITS OFFICERS OR AGENTS SHALL NOT BE RESPONSIBLE FOR THE ACCURACY OR COMPLETENESS OF SCANNED COPIES OF THIS PLAN SHEET.

CALTRANS
111 GRAND AVENUE
OAKLAND, CA. 94612

CCTA
2999 OAK ROAD, SUITE 100
WALNUT CREEK, CA. 94597

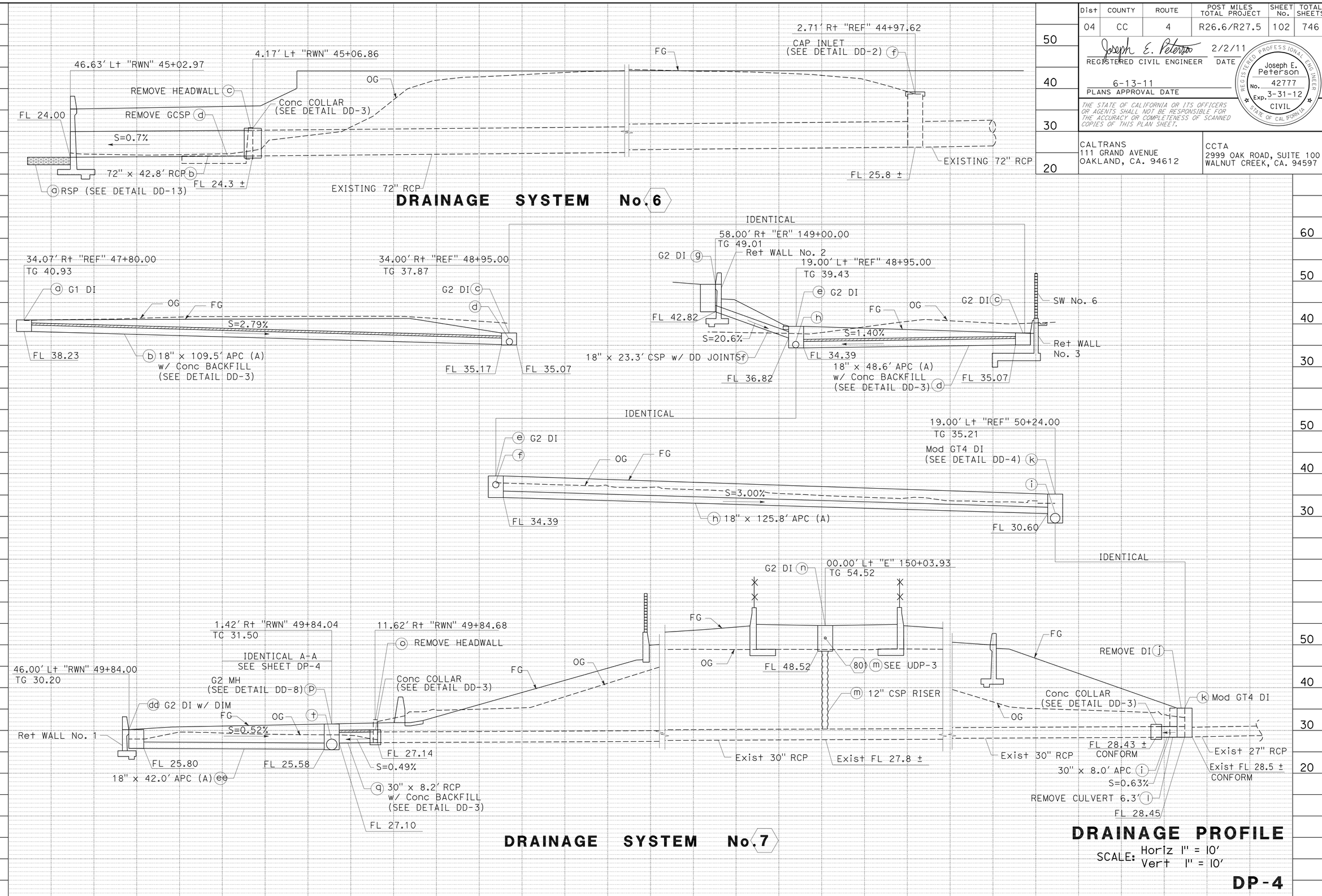

DRAINAGE PROFILE

SCALE: Horiz 1" = 10′
Vert 1" = 10′

DP-4

REVISED BY	DATE REVISED
SP	2/2/11

CALCULATED-DESIGNED BY: SHARON L. PATCH
CHECKED BY: KATHLEEN M. REILLY
FUNCTIONAL SUPERVISOR: JOSEPH E. PETERSON

STATE OF CALIFORNIA - DEPARTMENT OF TRANSPORTATION
Caltrans

LAST REVISION 02-02-11
DATE PLOTTED => 13-JUN-2011
TIME PLOTTED => 09:59

Dist	COUNTY	ROUTE	POST MILES TOTAL PROJECT	SHEET No.	TOTAL SHEETS
04	CC	4	R26.6/R27.5	103	746

Joseph E. Peterson 2/2/11
REGISTERED CIVIL ENGINEER DATE

6-13-11
PLANS APPROVAL DATE

REGISTERED PROFESSIONAL ENGINEER Joseph E. Peterson No. 42777 Exp. 3-31-12 CIVIL STATE OF CALIFORNIA

THE STATE OF CALIFORNIA OR ITS OFFICERS OR AGENTS SHALL NOT BE RESPONSIBLE FOR THE ACCURACY OR COMPLETENESS OF SCANNED COPIES OF THIS PLAN SHEET.

CALTRANS
111 GRAND AVENUE
OAKLAND, CA. 94612

CCTA
2999 OAK ROAD, SUITE 100
WALNUT CREEK, CA. 94597

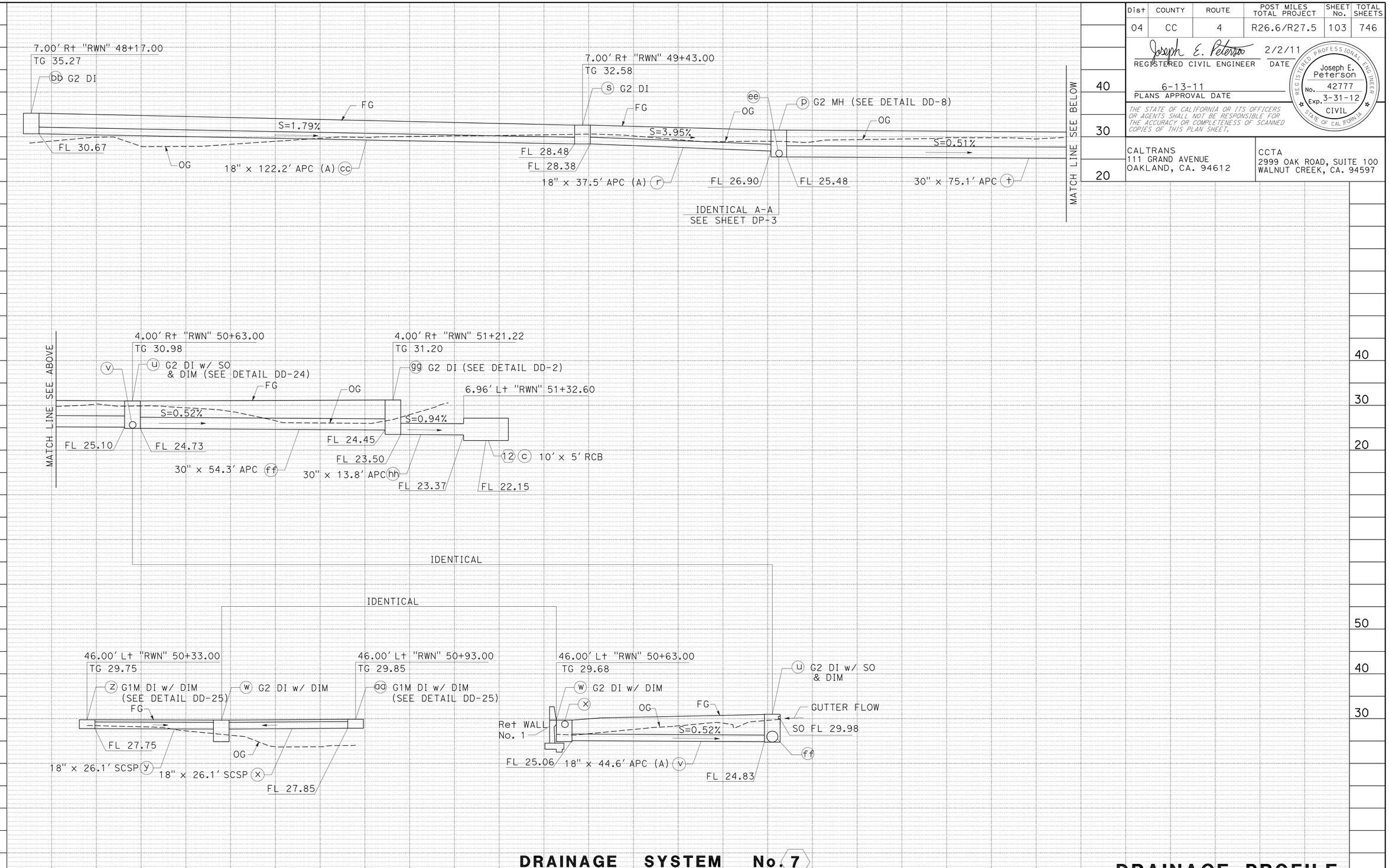

DRAINAGE SYSTEM No. 7

DRAINAGE PROFILE

SCALE: Horiz 1" = 10'
Vert 1" = 10'

DP-5

STATE OF CALIFORNIA - DEPARTMENT OF TRANSPORTATION
Caltrans

FUNCTIONAL SUPERVISOR: JOSEPH E. PETERSON
CALCULATED-DESIGNED BY: SHARON L. PATCH
CHECKED BY: KATHLEEN M. REILLY
REVISED BY: SP
DATE REVISED: 2/2/11

LAST REVISION 02-02-11
DATE PLOTTED => 13-JUN-2011
TIME PLOTTED => 09:59

Dist	COUNTY	ROUTE	POST MILES TOTAL PROJECT	SHEET No.	TOTAL SHEETS
04	CC	4	R26.6/R27.5	104	746

REGISTERED CIVIL ENGINEER — DATE: 2/2/11

6-13-11
PLANS APPROVAL DATE

REGISTERED PROFESSIONAL ENGINEER — Joseph E. Peterson No. 42777 Exp. 3-31-12 CIVIL — STATE OF CALIFORNIA

THE STATE OF CALIFORNIA OR ITS OFFICERS OR AGENTS SHALL NOT BE RESPONSIBLE FOR THE ACCURACY OR COMPLETENESS OF SCANNED COPIES OF THIS PLAN SHEET.

CALTRANS
111 GRAND AVENUE
OAKLAND, CA. 94612

CCTA
2999 OAK ROAD, SUITE 100
WALNUT CREEK, CA. 94597

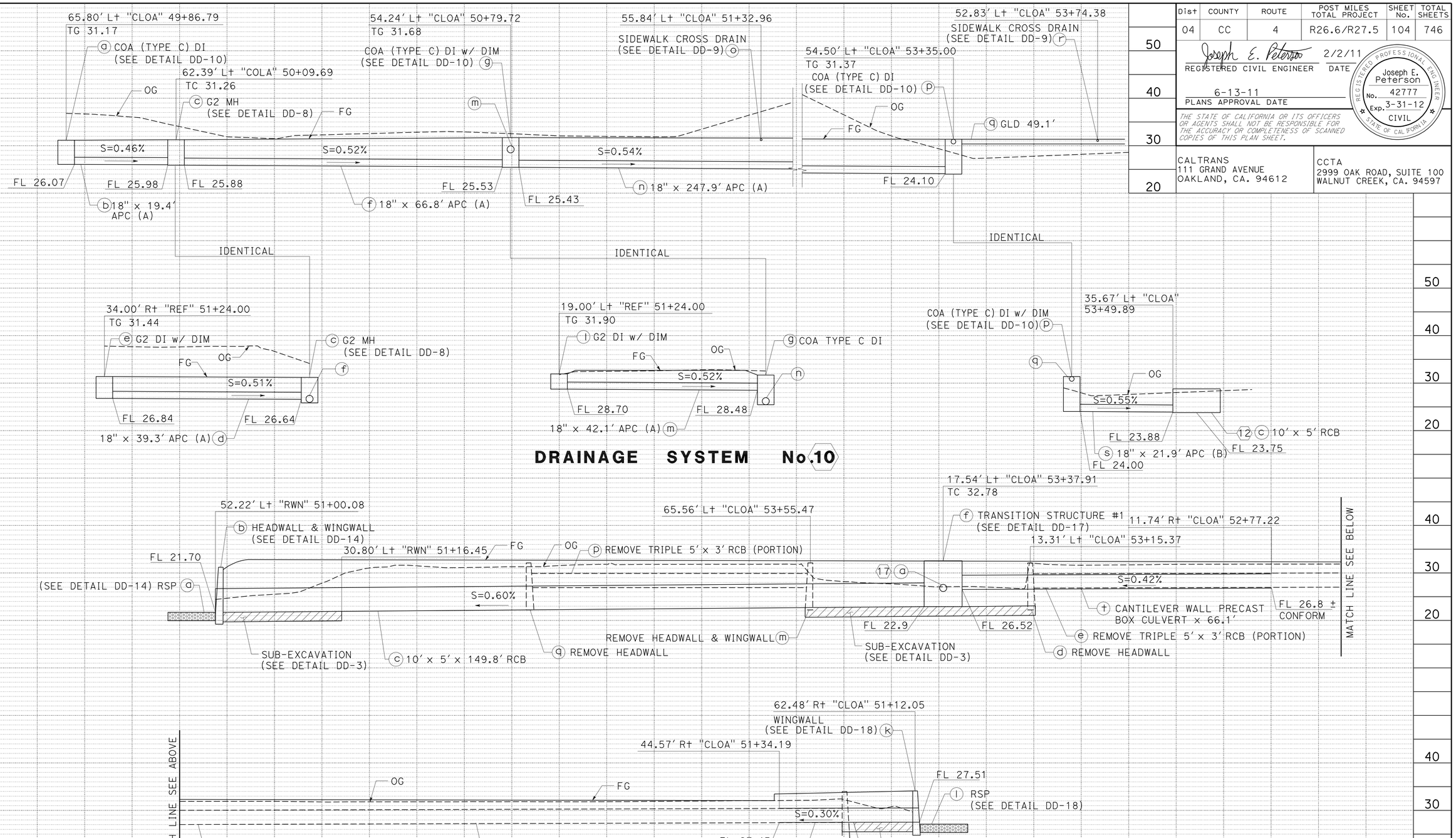

DRAINAGE SYSTEM No.10

DRAINAGE SYSTEM No.12

DRAINAGE PROFILE

SCALE: Horiz 1" = 10'
Vert 1" = 10'

DP-6

STATE OF CALIFORNIA - DEPARTMENT OF TRANSPORTATION

FUNCTIONAL SUPERVISOR: JOSEPH E. PETERSON

CALCULATED-DESIGNED BY: SHARON L. PATCH

CHECKED BY: KATHLEEN M. REILLY

REVISED BY: SP — DATE REVISED: 2/2/11

LAST REVISION: 02-02-11

DATE PLOTTED => 13-JUN-2011
TIME PLOTTED => 09:59

Dist	COUNTY	ROUTE	POST MILES TOTAL PROJECT	SHEET No.	TOTAL SHEETS
04	CC	4	R26.6/R27.5	105	746

REGISTERED CIVIL ENGINEER — DATE: 2/2/11

6-13-11
PLANS APPROVAL DATE

REGISTERED PROFESSIONAL ENGINEER — Joseph E. Peterson — No. 42777 — Exp. 3-31-12 — CIVIL — STATE OF CALIFORNIA

THE STATE OF CALIFORNIA OR ITS OFFICERS OR AGENTS SHALL NOT BE RESPONSIBLE FOR THE ACCURACY OR COMPLETENESS OF SCANNED COPIES OF THIS PLAN SHEET.

CALTRANS
111 GRAND AVENUE
OAKLAND, CA. 94612

CCTA
2999 OAK ROAD, SUITE 100
WALNUT CREEK, CA. 94597

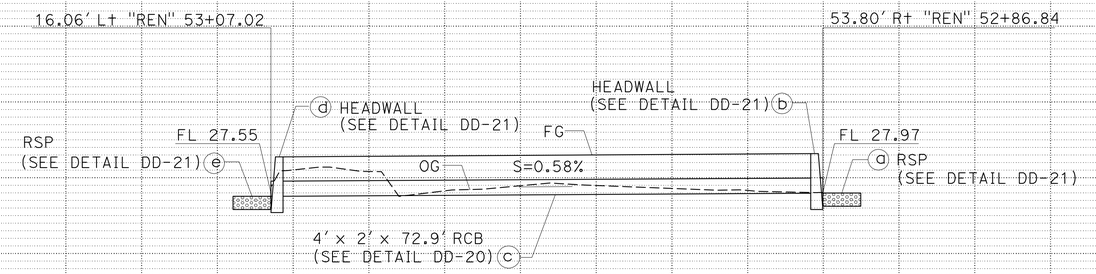

DRAINAGE SYSTEM No. 13

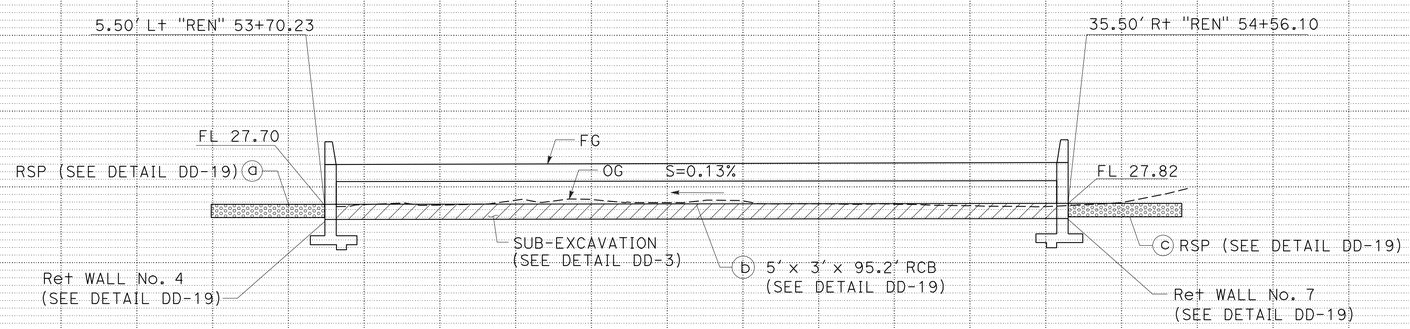

DRAINAGE SYSTEM No. 15

DRAINAGE PROFILE

SCALE: Horiz 1" = 10'
Vert 1" = 10'

DP-7

REVISED BY: SP — DATE REVISED: 2/2/11
SHARON L. PATCH — KATHLEEN M. REILLY
CALCULATED-DESIGNED BY — CHECKED BY
FUNCTIONAL SUPERVISOR: JOSEPH E. PETERSON
STATE OF CALIFORNIA - DEPARTMENT OF TRANSPORTATION — Caltrans

LAST REVISION 02-02-11 — DATE PLOTTED => 13-JUN-2011 — TIME PLOTTED => 09:59

Dist	COUNTY	ROUTE	POST MILES TOTAL PROJECT	SHEET No.	TOTAL SHEETS
04	CC	4	R26.6/R27.5	106	746

REGISTERED CIVIL ENGINEER — DATE 4/11/11

6-13-11
PLANS APPROVAL DATE

REGISTERED PROFESSIONAL ENGINEER — Joseph E. Peterson — No. 42777 — Exp. 3-31-12 — CIVIL — STATE OF CALIFORNIA

THE STATE OF CALIFORNIA OR ITS OFFICERS OR AGENTS SHALL NOT BE RESPONSIBLE FOR THE ACCURACY OR COMPLETENESS OF SCANNED COPIES OF THIS PLAN SHEET.

CALTRANS
111 GRAND AVENUE
OAKLAND, CA. 94612

CCTA
2999 OAK ROAD, SUITE 100
WALNUT CREEK, CA. 94597

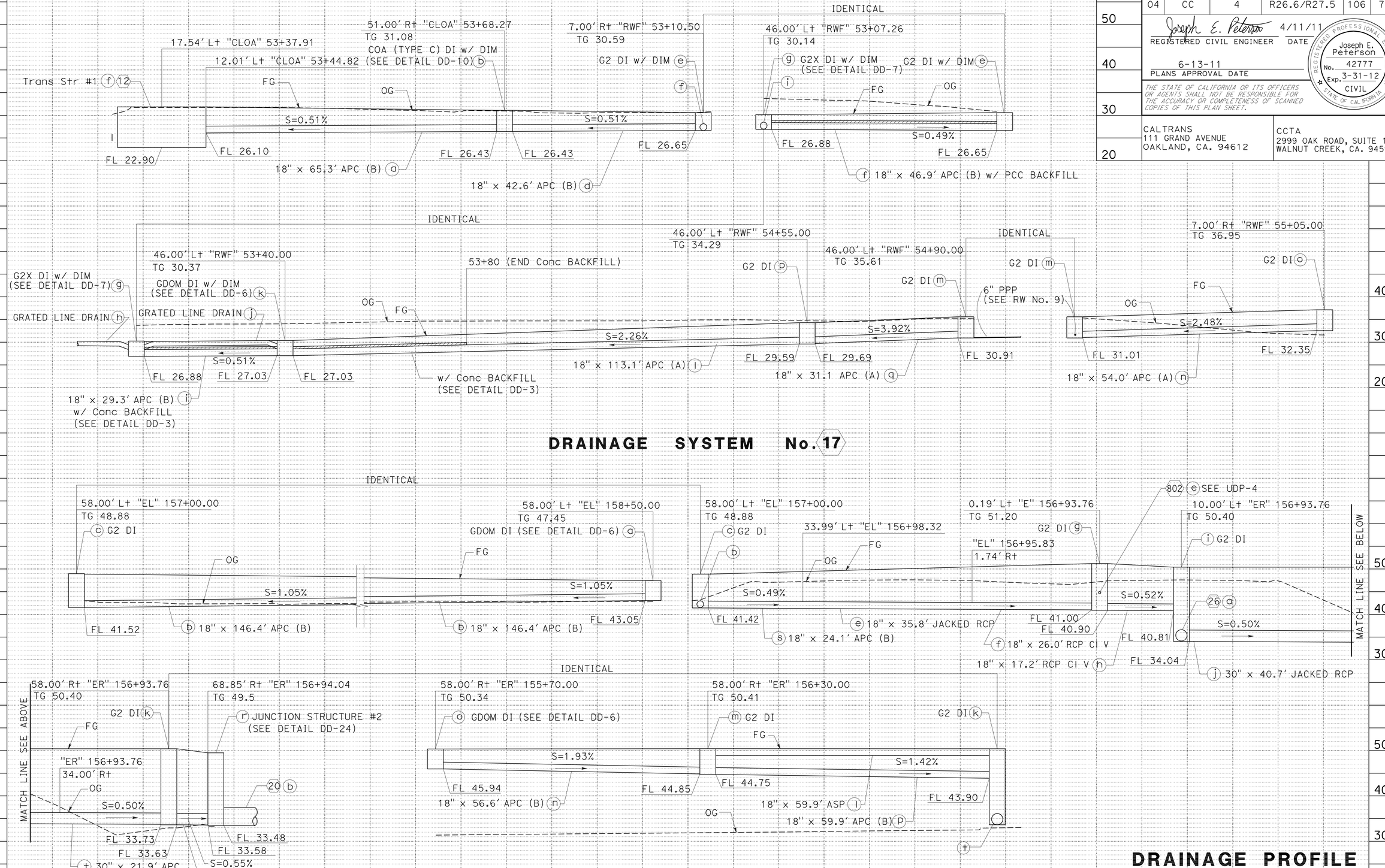

DRAINAGE PROFILE

SCALE: Horiz 1" = 10'
Vert 1" = 10'

DP-8

REVISED BY	DATE REVISED
SP	4/11/11

SHARON L. PATCH — KATHLEEN M. REILLY — CALCULATED-DESIGNED BY — CHECKED BY

FUNCTIONAL SUPERVISOR: JOSEPH E. PETERSON

STATE OF CALIFORNIA - DEPARTMENT OF TRANSPORTATION — Caltrans

LAST REVISION 04-11-11 — DATE PLOTTED => 13-JUN-2011 — TIME PLOTTED => 09:59

Dist	COUNTY	ROUTE	POST MILES TOTAL PROJECT	SHEET No.	TOTAL SHEETS
04	CC	4	R26.6/R27.5	107	746

REGISTERED CIVIL ENGINEER — Joseph E. Peterson — DATE 4/11/11

6-13-11
PLANS APPROVAL DATE

REGISTERED PROFESSIONAL ENGINEER — Joseph E. Peterson — No. 42777 — Exp. 3-31-12 — CIVIL — STATE OF CALIFORNIA

THE STATE OF CALIFORNIA OR ITS OFFICERS OR AGENTS SHALL NOT BE RESPONSIBLE FOR THE ACCURACY OR COMPLETENESS OF SCANNED COPIES OF THIS PLAN SHEET.

CALTRANS
111 GRAND AVENUE
OAKLAND, CA. 94612

CCTA
2999 OAK ROAD, SUITE 100
WALNUT CREEK, CA. 94597

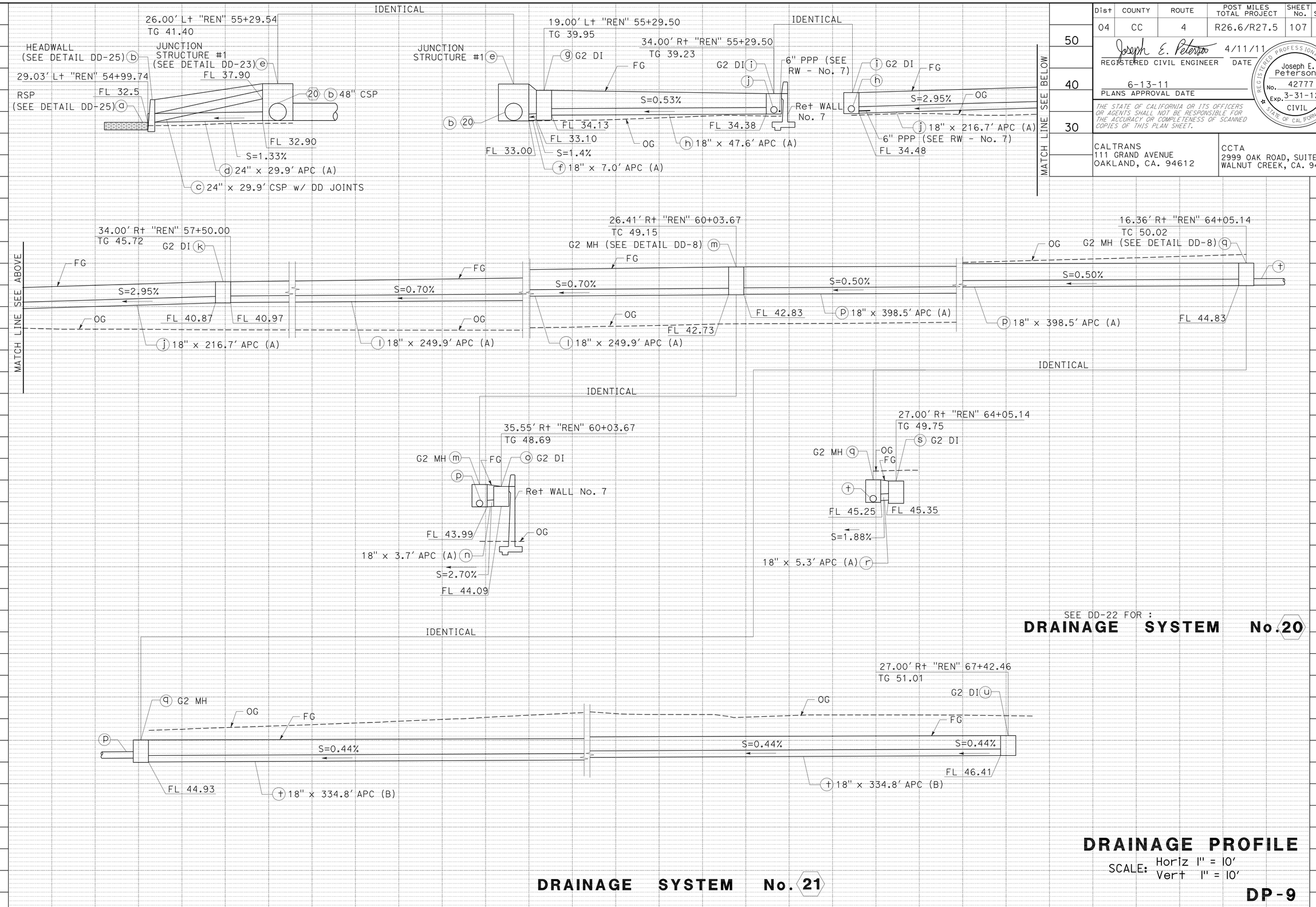

DRAINAGE PROFILE

SCALE: Horiz 1" = 10'
Vert 1" = 10'

DP-9

SP	4/11/11
REVISED BY	DATE REVISED
SHARON L. PATCH	KATHLEEN M. REILLY
CALCULATED-DESIGNED BY	CHECKED BY
FUNCTIONAL SUPERVISOR	JOSEPH E. PETERSON

STATE OF CALIFORNIA - DEPARTMENT OF TRANSPORTATION

Caltrans

LAST REVISION 04-11-11 — DATE PLOTTED => 13-JUN-2011 — TIME PLOTTED => 09:59

Dist	COUNTY	ROUTE	POST MILES TOTAL PROJECT	SHEET No.	TOTAL SHEETS
04	CC	4	R26.6/R27.5	108	746

REGISTERED CIVIL ENGINEER — DATE: 2/2/11

6-13-11
PLANS APPROVAL DATE

REGISTERED PROFESSIONAL ENGINEER — Joseph E. Peterson — No. 42777 — Exp. 3-31-12 — CIVIL — STATE OF CALIFORNIA

THE STATE OF CALIFORNIA OR ITS OFFICERS OR AGENTS SHALL NOT BE RESPONSIBLE FOR THE ACCURACY OR COMPLETENESS OF SCANNED COPIES OF THIS PLAN SHEET.

CALTRANS
111 GRAND AVENUE
OAKLAND, CA. 94612

CCTA
2999 OAK ROAD, SUITE 100
WALNUT CREEK, CA. 94597

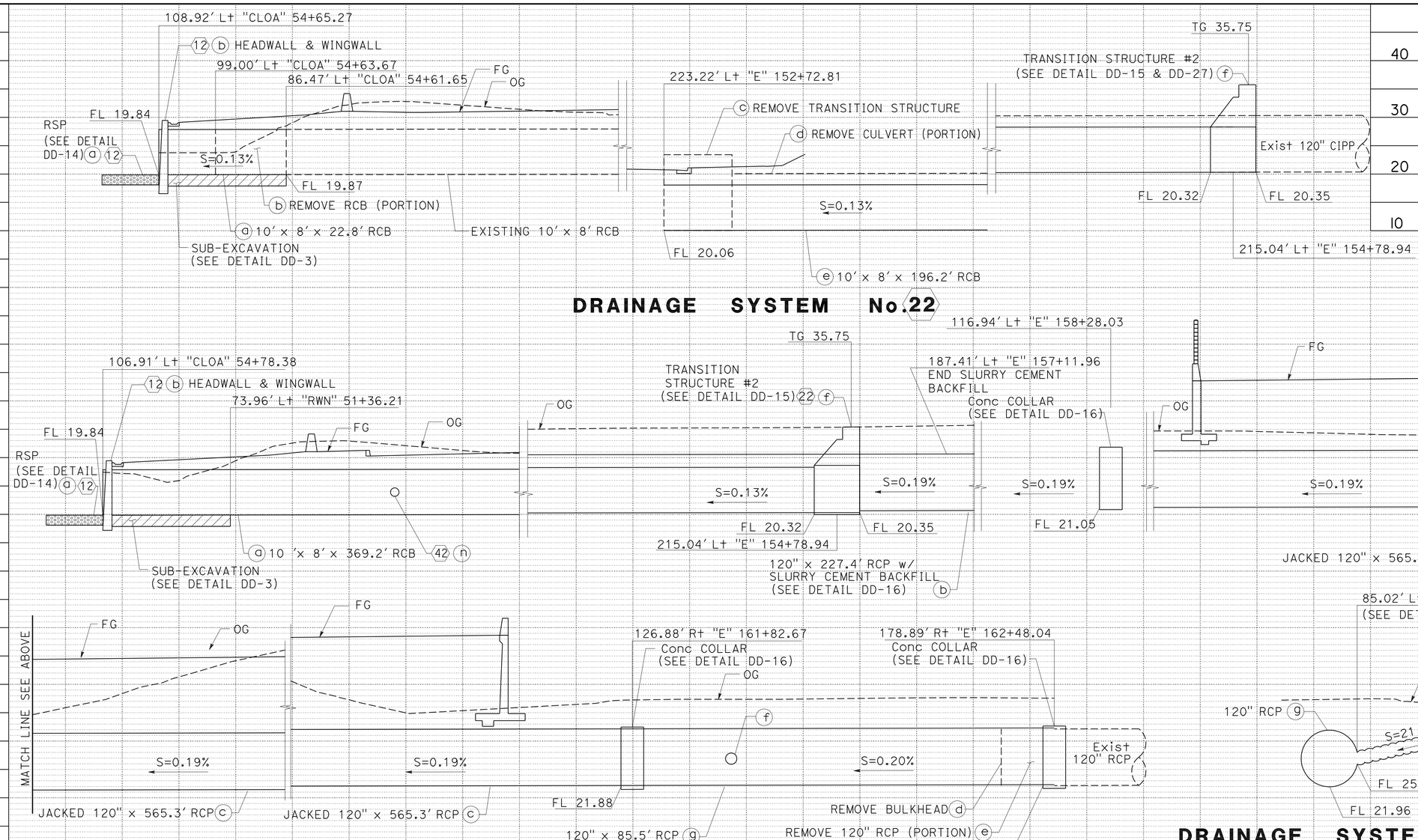

DRAINAGE SYSTEM No. 22

DRAINAGE SYSTEM No. 23

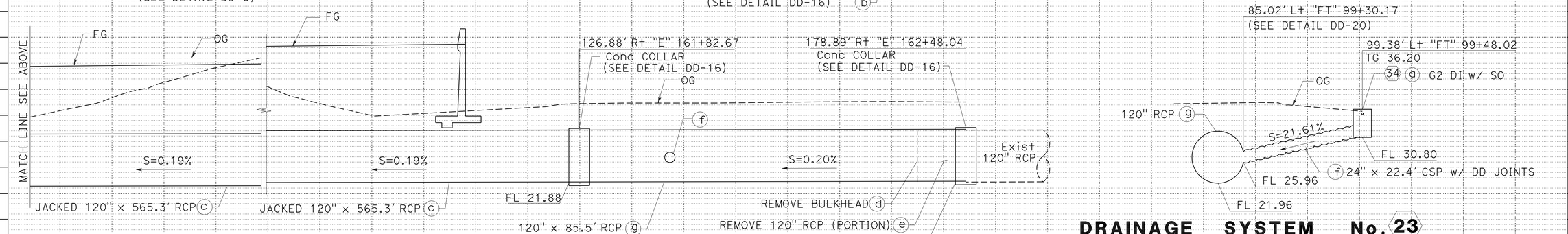

DRAINAGE SYSTEM No. 23

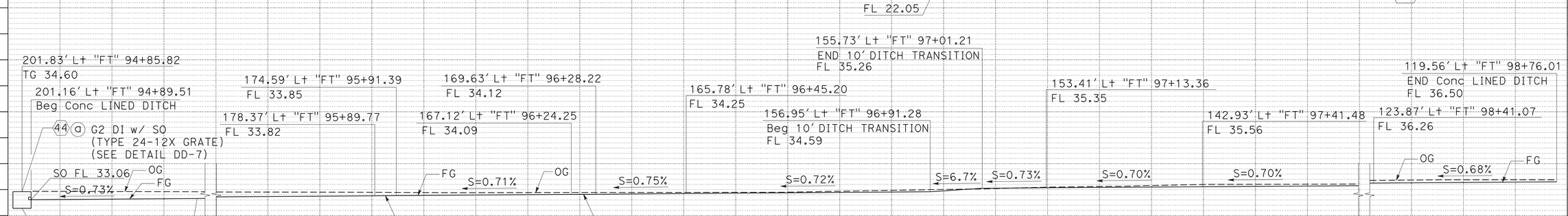

DRAINAGE SYSTEM No. 24

DRAINAGE PROFILE

SCALE: Horiz 1" = 10'
Vert 1" = 10'

DP-10

STATE OF CALIFORNIA - DEPARTMENT OF TRANSPORTATION — Caltrans

FUNCTIONAL SUPERVISOR: JOSEPH E. PETERSON

CALCULATED-DESIGNED BY: SHARON L. PATCH — CHECKED BY: KATHLEEN M. REILLY

REVISED BY: SP — DATE REVISED: 2/2/11

LAST REVISION 02-02-11 — DATE PLOTTED => 13-JUN-2011 — TIME PLOTTED => 0:00

Dist	COUNTY	ROUTE	POST MILES TOTAL PROJECT	SHEET No.	TOTAL SHEETS
04	CC	4	R26.6/R27.5	109	746

REGISTERED CIVIL ENGINEER — DATE 2/2/11

6-13-11
PLANS APPROVAL DATE

REGISTERED PROFESSIONAL ENGINEER — Joseph E. Peterson — No. 42777 — Exp. 3-31-12 — CIVIL — STATE OF CALIFORNIA

THE STATE OF CALIFORNIA OR ITS OFFICERS OR AGENTS SHALL NOT BE RESPONSIBLE FOR THE ACCURACY OR COMPLETENESS OF SCANNED COPIES OF THIS PLAN SHEET.

CALTRANS
111 GRAND AVENUE
OAKLAND, CA. 94612

CCTA
2999 OAK ROAD, SUITE 100
WALNUT CREEK, CA. 94597

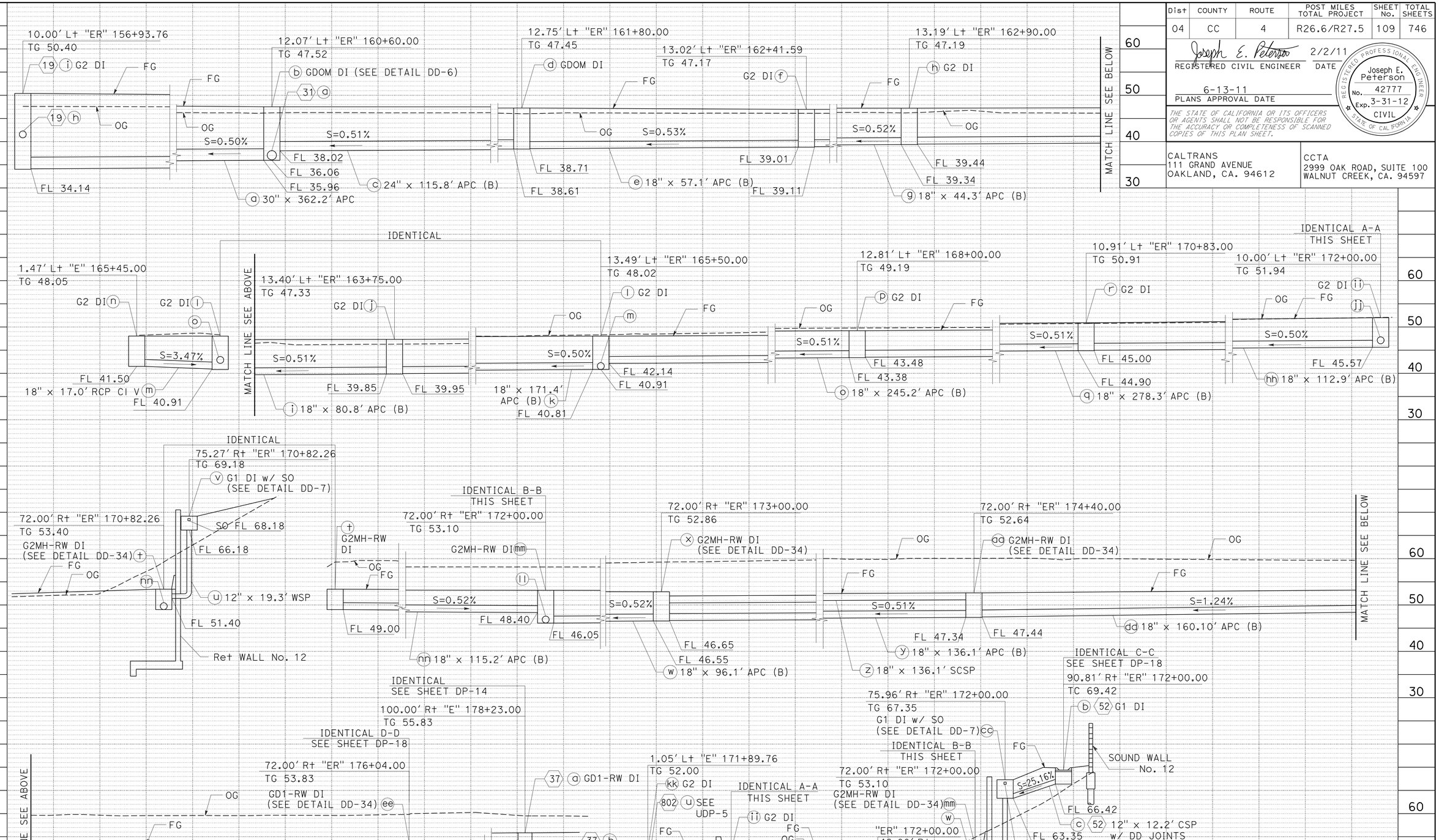

DRAINAGE SYSTEM No. 26

DRAINAGE PROFILE

SCALE: Horiz 1" = 10'
Vert 1" = 10'

DP-11

SP	2/2/11
REVISED BY	DATE REVISED
SHARON L. PATCH	KATHLEEN M. REILLY
CALCULATED-DESIGNED BY	CHECKED BY
FUNCTIONAL SUPERVISOR	JOSEPH E. PETERSON

STATE OF CALIFORNIA - DEPARTMENT OF TRANSPORTATION
Caltrans

LAST REVISION 02-02-11 — DATE PLOTTED => 13-JUN-2011 — TIME PLOTTED => 0400

Dist	COUNTY	ROUTE	POST MILES TOTAL PROJECT	SHEET No.	TOTAL SHEETS
04	CC	4	R26.6/R27.5	110	746

REGISTERED CIVIL ENGINEER — DATE 4/11/11

6-13-11
PLANS APPROVAL DATE

REGISTERED PROFESSIONAL ENGINEER — Joseph E. Peterson — No. 42777 — Exp. 3-31-12 — CIVIL — STATE OF CALIFORNIA

THE STATE OF CALIFORNIA OR ITS OFFICERS OR AGENTS SHALL NOT BE RESPONSIBLE FOR THE ACCURACY OR COMPLETENESS OF SCANNED COPIES OF THIS PLAN SHEET.

CALTRANS
111 GRAND AVENUE
OAKLAND, CA. 94612

CCTA
2999 OAK ROAD, SUITE 100
WALNUT CREEK, CA. 94597

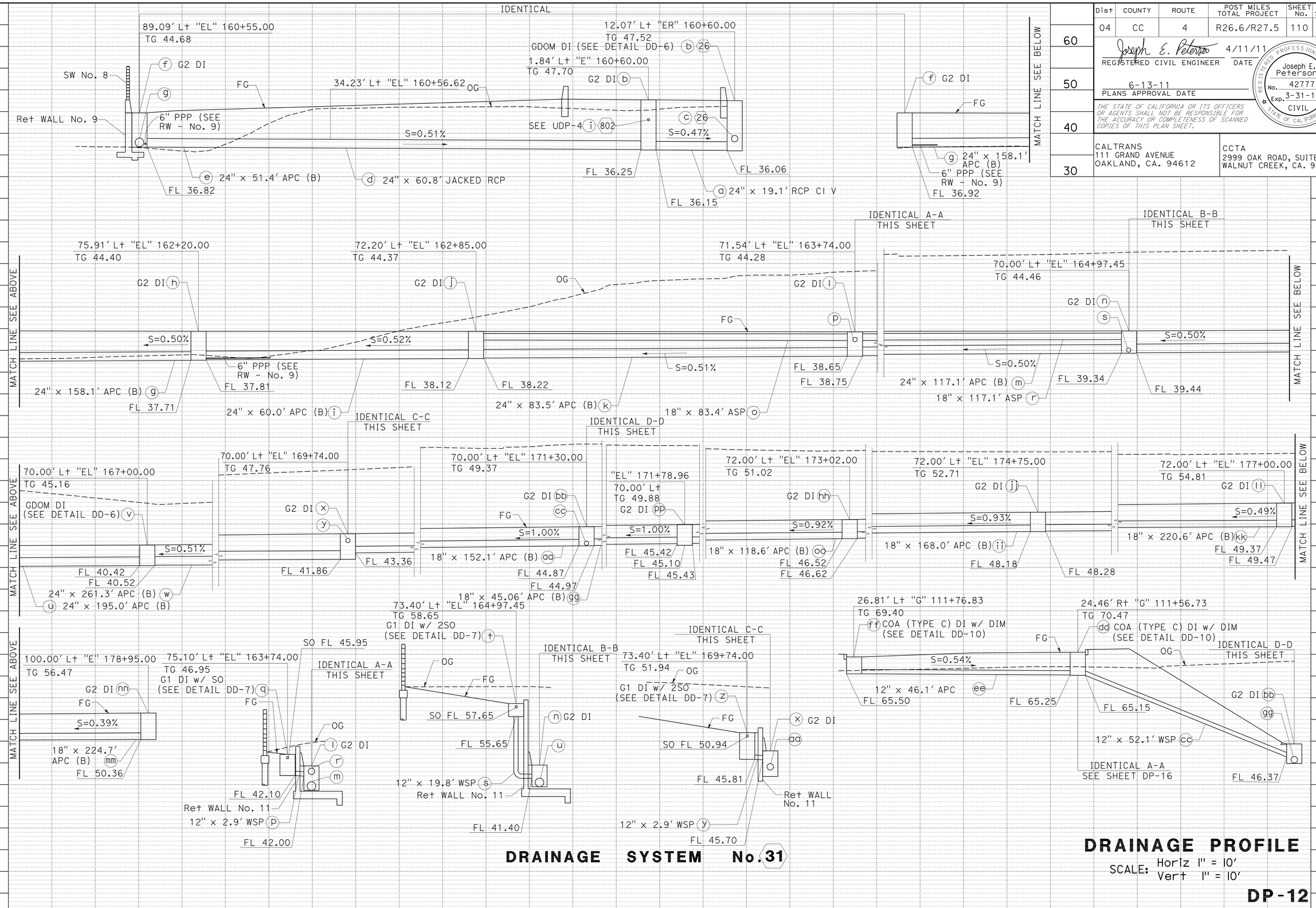

DRAINAGE SYSTEM No. 31

DRAINAGE PROFILE

SCALE: Horiz 1" = 10'
Vert 1" = 10'

DP-12

REVISED BY	DATE REVISED
SP	4/11/11

SHARON L. PATCH — KATHLEEN M. REILLY — CALCULATED-DESIGNED BY — CHECKED BY

FUNCTIONAL SUPERVISOR — JOSEPH E. PETERSON

STATE OF CALIFORNIA - DEPARTMENT OF TRANSPORTATION — Caltrans

LAST REVISION 04-11-11 — DATE PLOTTED => 13-JUN-2011 — TIME PLOTTED => 10:00

Dist	COUNTY	ROUTE	POST MILES TOTAL PROJECT	SHEET No.	TOTAL SHEETS
04	CC	4	R26.6/R27.5	111	746

REGISTERED CIVIL ENGINEER — DATE: 2/2/11

6-13-11
PLANS APPROVAL DATE

REGISTERED PROFESSIONAL ENGINEER — Joseph E. Peterson — No. 42777 — Exp. 3-31-12 — CIVIL — STATE OF CALIFORNIA

THE STATE OF CALIFORNIA OR ITS OFFICERS OR AGENTS SHALL NOT BE RESPONSIBLE FOR THE ACCURACY OR COMPLETENESS OF SCANNED COPIES OF THIS PLAN SHEET.

CALTRANS
111 GRAND AVENUE
OAKLAND, CA. 94612

CCTA
2999 OAK ROAD, SUITE 100
WALNUT CREEK, CA. 94597

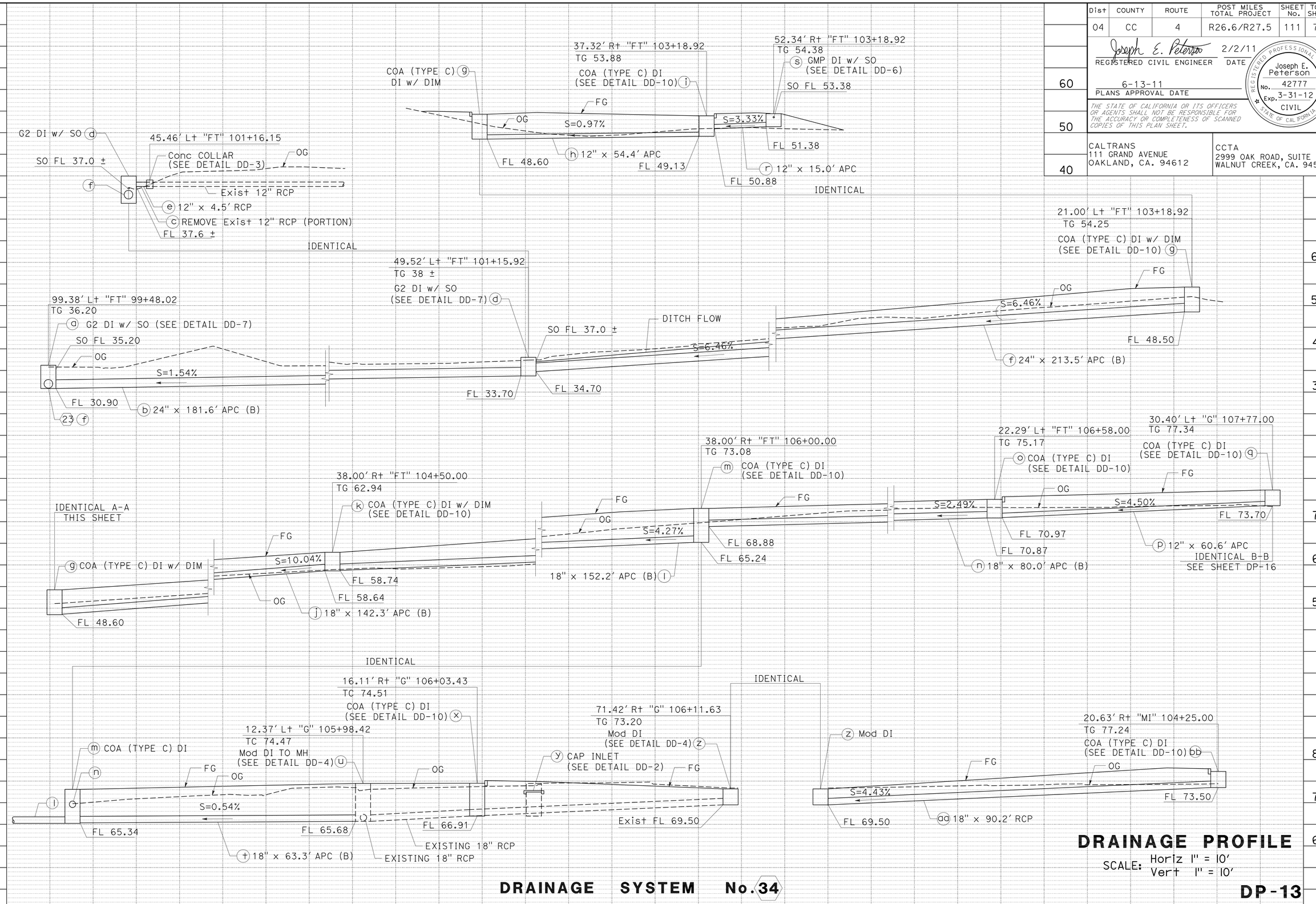

DRAINAGE PROFILE

SCALE: Horiz 1" = 10'
Vert 1" = 10'

DRAINAGE SYSTEM No. 34

DP-13

REVISED BY	DATE REVISED
SP	2/2/11

CALCULATED-DESIGNED BY: SHARON L. PATCH
CHECKED BY: KATHLEEN M. REILLY
FUNCTIONAL SUPERVISOR: JOSEPH E. PETERSON

STATE OF CALIFORNIA - DEPARTMENT OF TRANSPORTATION

Caltrans

LAST REVISION 02-02-11
DATE PLOTTED => 13-JUN-2011
TIME PLOTTED => 10:00

Dist	COUNTY	ROUTE	POST MILES TOTAL PROJECT	SHEET No.	TOTAL SHEETS
04	CC	4	R26.6/R27.5	112	746

REGISTERED CIVIL ENGINEER — DATE 2/2/11

6-13-11
PLANS APPROVAL DATE

REGISTERED PROFESSIONAL ENGINEER — Joseph E. Peterson — No. 42777 — Exp. 3-31-12 — CIVIL — STATE OF CALIFORNIA

THE STATE OF CALIFORNIA OR ITS OFFICERS OR AGENTS SHALL NOT BE RESPONSIBLE FOR THE ACCURACY OR COMPLETENESS OF SCANNED COPIES OF THIS PLAN SHEET.

CALTRANS
111 GRAND AVENUE
OAKLAND, CA. 94612

CCTA
2999 OAK ROAD, SUITE 100
WALNUT CREEK, CA. 94597

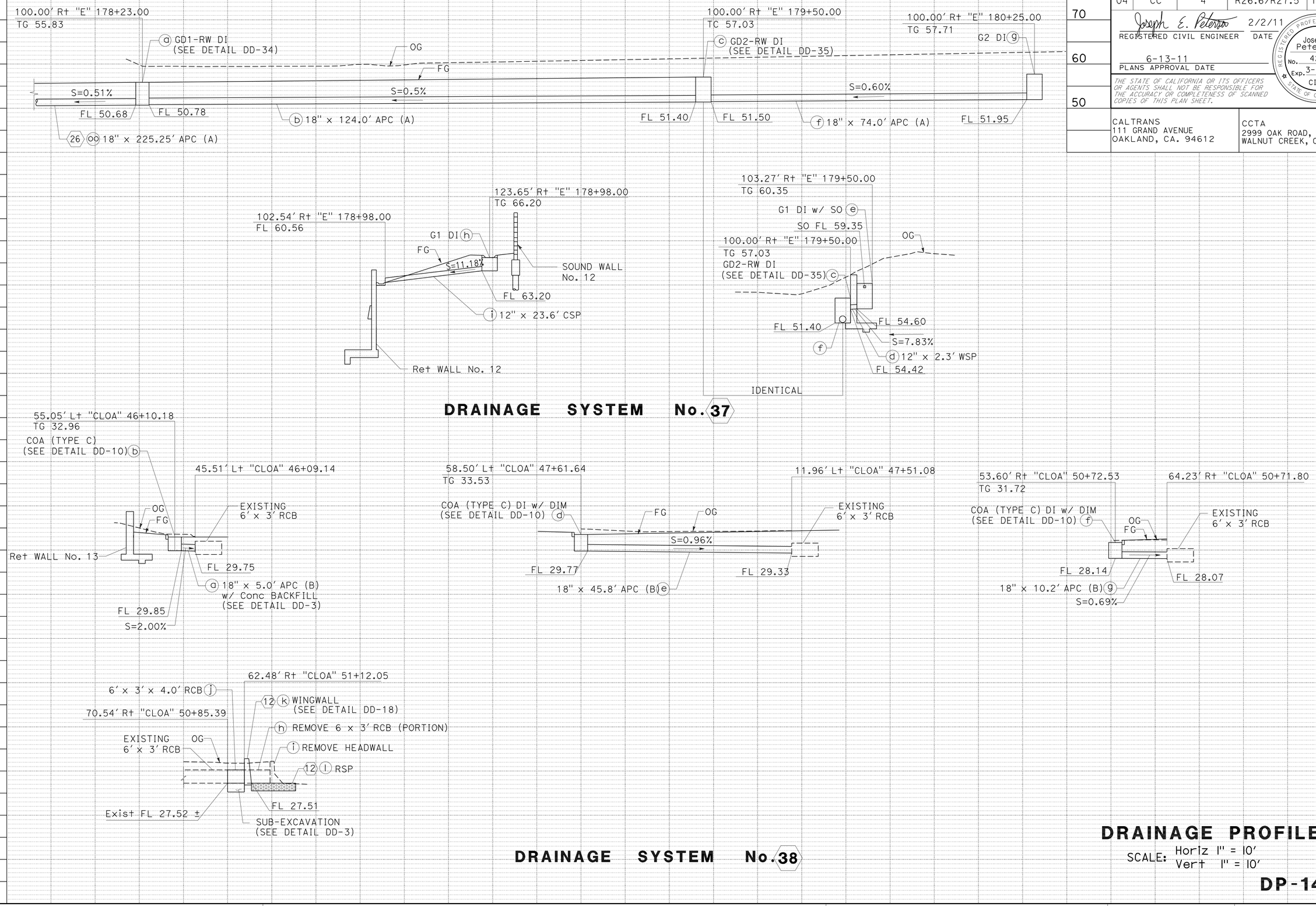

DRAINAGE PROFILE

SCALE: Horiz 1" = 10'
Vert 1" = 10'

DP-14

REVISED BY	DATE REVISED
SP	2/2/11

CALCULATED-DESIGNED BY: SHARON L. PATCH
CHECKED BY: KATHLEEN M. REILLY
FUNCTIONAL SUPERVISOR: JOSEPH E. PETERSON

STATE OF CALIFORNIA - DEPARTMENT OF TRANSPORTATION
Caltrans

LAST REVISION 02-02-11 — DATE PLOTTED => 13-JUN-2011 — TIME PLOTTED => 10:00

Dist	COUNTY	ROUTE	POST MILES TOTAL PROJECT	SHEET No.	TOTAL SHEETS
04	CC	4	R26.6/R27.5	113	746

REGISTERED CIVIL ENGINEER — DATE 2/2/11

6-13-11
PLANS APPROVAL DATE

REGISTERED PROFESSIONAL ENGINEER — Joseph E. Peterson — No. 42777 — Exp. 3-31-12 — CIVIL — STATE OF CALIFORNIA

THE STATE OF CALIFORNIA OR ITS OFFICERS OR AGENTS SHALL NOT BE RESPONSIBLE FOR THE ACCURACY OR COMPLETENESS OF SCANNED COPIES OF THIS PLAN SHEET.

CALTRANS
111 GRAND AVENUE
OAKLAND, CA. 94612

CCTA
2999 OAK ROAD, SUITE 100
WALNUT CREEK, CA. 94597

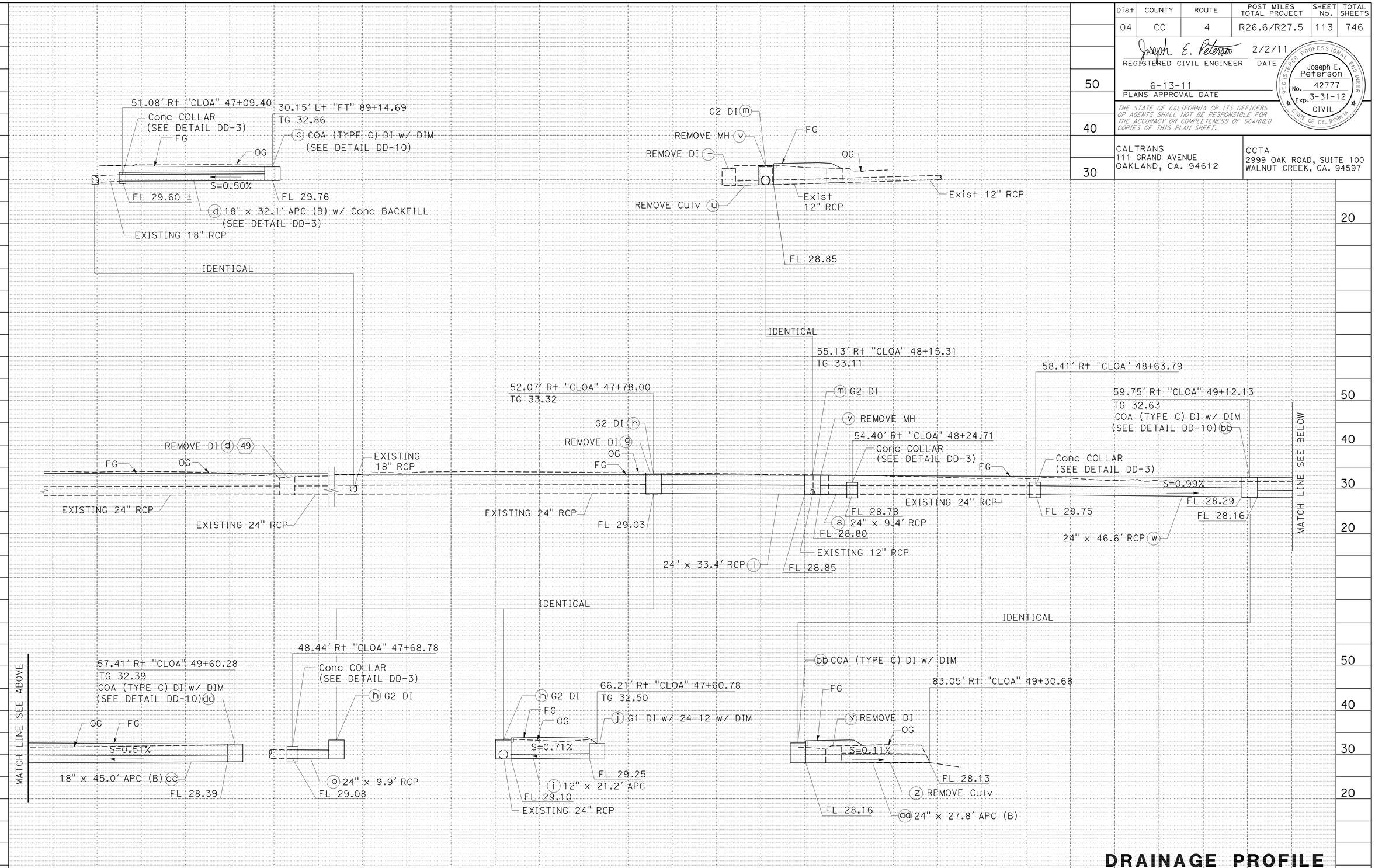

DRAINAGE SYSTEM No. 40

DRAINAGE PROFILE

SCALE: Horiz 1" = 10'
Vert 1" = 10'

DP-15

STATE OF CALIFORNIA - DEPARTMENT OF TRANSPORTATION

FUNCTIONAL SUPERVISOR: JOSEPH E. PETERSON

CALCULATED-DESIGNED BY: SHARON L. PATCH

CHECKED BY: KATHLEEN M. REILLY

REVISED BY: SP — DATE REVISED: 2/2/11

LAST REVISION 02-02-11 — DATE PLOTTED => 13-JUN-2011 — TIME PLOTTED => 0101

Dist	COUNTY	ROUTE	POST MILES TOTAL PROJECT	SHEET No.	TOTAL SHEETS
04	CC	4	R26.6/R27.5	114	746

REGISTERED CIVIL ENGINEER — Joseph E. Peterson — DATE 2/2/11

PLANS APPROVAL DATE 6-13-11

REGISTERED PROFESSIONAL ENGINEER Joseph E. Peterson No. 42777 Exp. 3-31-12 CIVIL STATE OF CALIFORNIA

THE STATE OF CALIFORNIA OR ITS OFFICERS OR AGENTS SHALL NOT BE RESPONSIBLE FOR THE ACCURACY OR COMPLETENESS OF SCANNED COPIES OF THIS PLAN SHEET.

CALTRANS
111 GRAND AVENUE
OAKLAND, CA. 94612

CCTA
2999 OAK ROAD, SUITE 100
WALNUT CREEK, CA. 94597

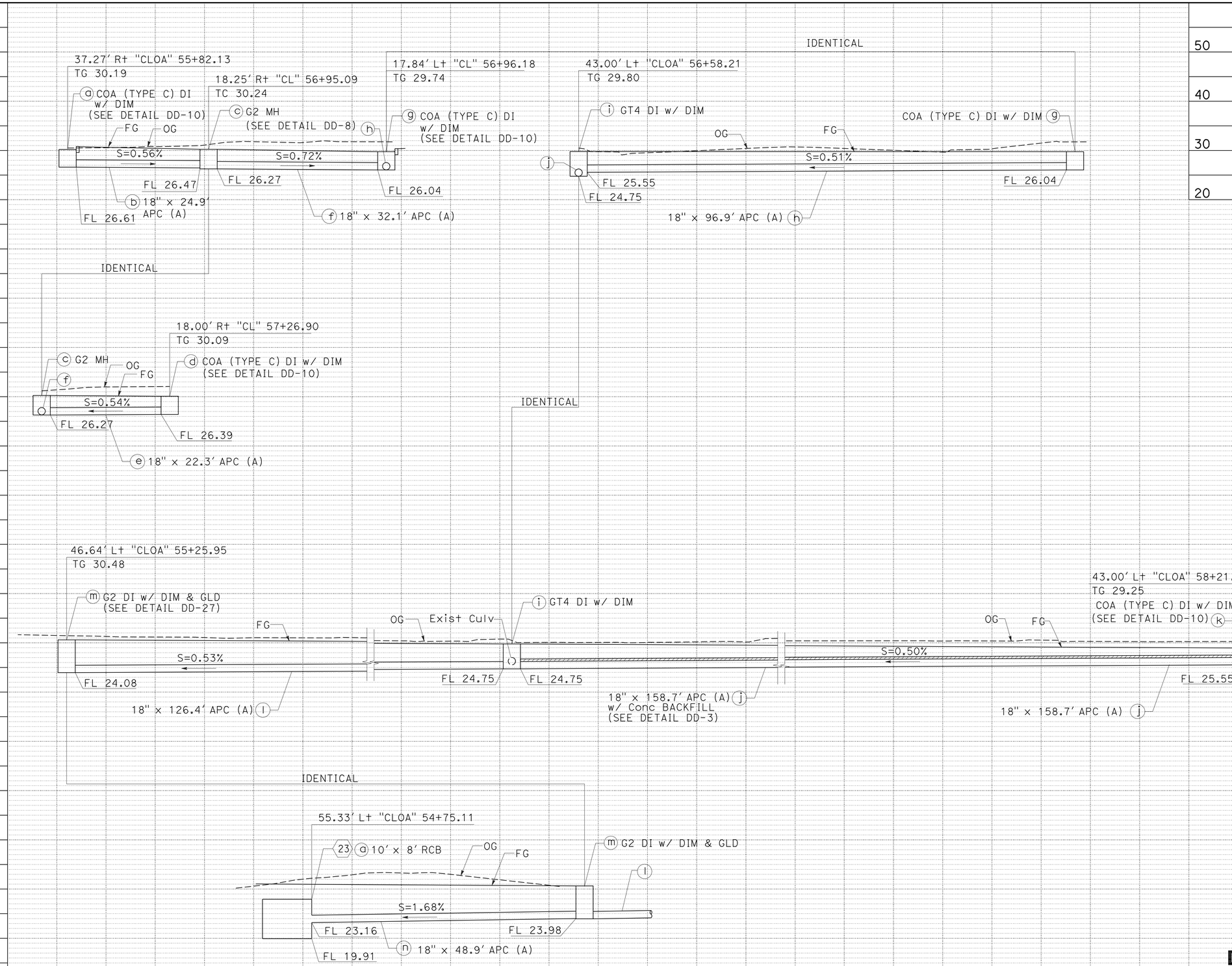

DRAINAGE SYSTEM No.42

DRAINAGE PROFILE

SCALE: Horiz 1" = 10'
Vert 1" = 10'

DP-16

STATE OF CALIFORNIA - DEPARTMENT OF TRANSPORTATION

FUNCTIONAL SUPERVISOR: JOSEPH E. PETERSON

CALCULATED-DESIGNED BY: SHARON L. PATCH

CHECKED BY: KATHLEEN M. REILLY

REVISED BY: SP

DATE REVISED: 2/2/11

LAST REVISION 02-02-11 DATE PLOTTED => 13-JUN-2011 TIME PLOTTED => 10:01

Dist	COUNTY	ROUTE	POST MILES TOTAL PROJECT	SHEET No.	TOTAL SHEETS
04	CC	4	R26.6/R27.5	115	746

REGISTERED CIVIL ENGINEER — DATE 2/2/11

6-13-11
PLANS APPROVAL DATE

REGISTERED PROFESSIONAL ENGINEER — Joseph E. Peterson — No. 42777 — Exp. 3-31-12 — CIVIL — STATE OF CALIFORNIA

THE STATE OF CALIFORNIA OR ITS OFFICERS OR AGENTS SHALL NOT BE RESPONSIBLE FOR THE ACCURACY OR COMPLETENESS OF SCANNED COPIES OF THIS PLAN SHEET.

CALTRANS
111 GRAND AVENUE
OAKLAND, CA. 94612

CCTA
2999 OAK ROAD, SUITE 100
WALNUT CREEK, CA. 94597

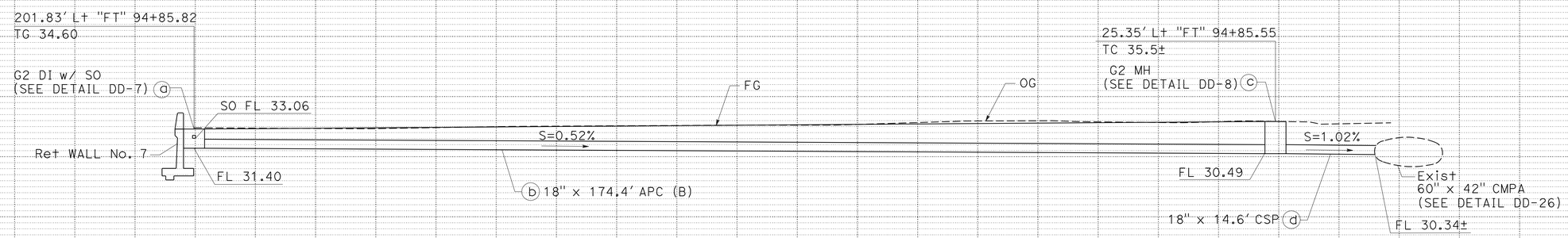

DRAINAGE SYSTEM No.44

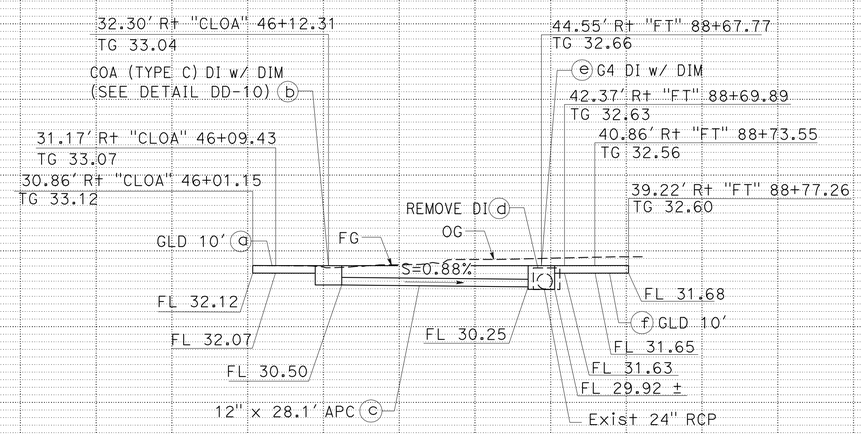

DRAINAGE SYSTEM No.49

DRAINAGE PROFILE

SCALE: Horiz 1" = 10'
Vert 1" = 10'

DP-17

REVISED BY	DATE REVISED
SP	2/2/11

SHARON L. PATCH — KATHLEEN M. REILLY — CALCULATED-DESIGNED BY — CHECKED BY

FUNCTIONAL SUPERVISOR: JOSEPH E. PETERSON

STATE OF CALIFORNIA - DEPARTMENT OF TRANSPORTATION — Caltrans

LAST REVISION 02-02-11 — DATE PLOTTED => 3-JUN-2011 — TIME PLOTTED => 0001

Dist	COUNTY	ROUTE	POST MILES TOTAL PROJECT	SHEET No.	TOTAL SHEETS
04	CC	4	R26.6/R27.5	116	746

REGISTERED CIVIL ENGINEER — DATE 2/2/11

6-13-11
PLANS APPROVAL DATE

REGISTERED PROFESSIONAL ENGINEER — Joseph E. Peterson — No. 42777 — Exp. 3-31-12 — CIVIL — STATE OF CALIFORNIA

THE STATE OF CALIFORNIA OR ITS OFFICERS OR AGENTS SHALL NOT BE RESPONSIBLE FOR THE ACCURACY OR COMPLETENESS OF SCANNED COPIES OF THIS PLAN SHEET.

CALTRANS
111 GRAND AVENUE
OAKLAND, CA. 94612

CCTA
2999 OAK ROAD, SUITE 100
WALNUT CREEK, CA. 94597

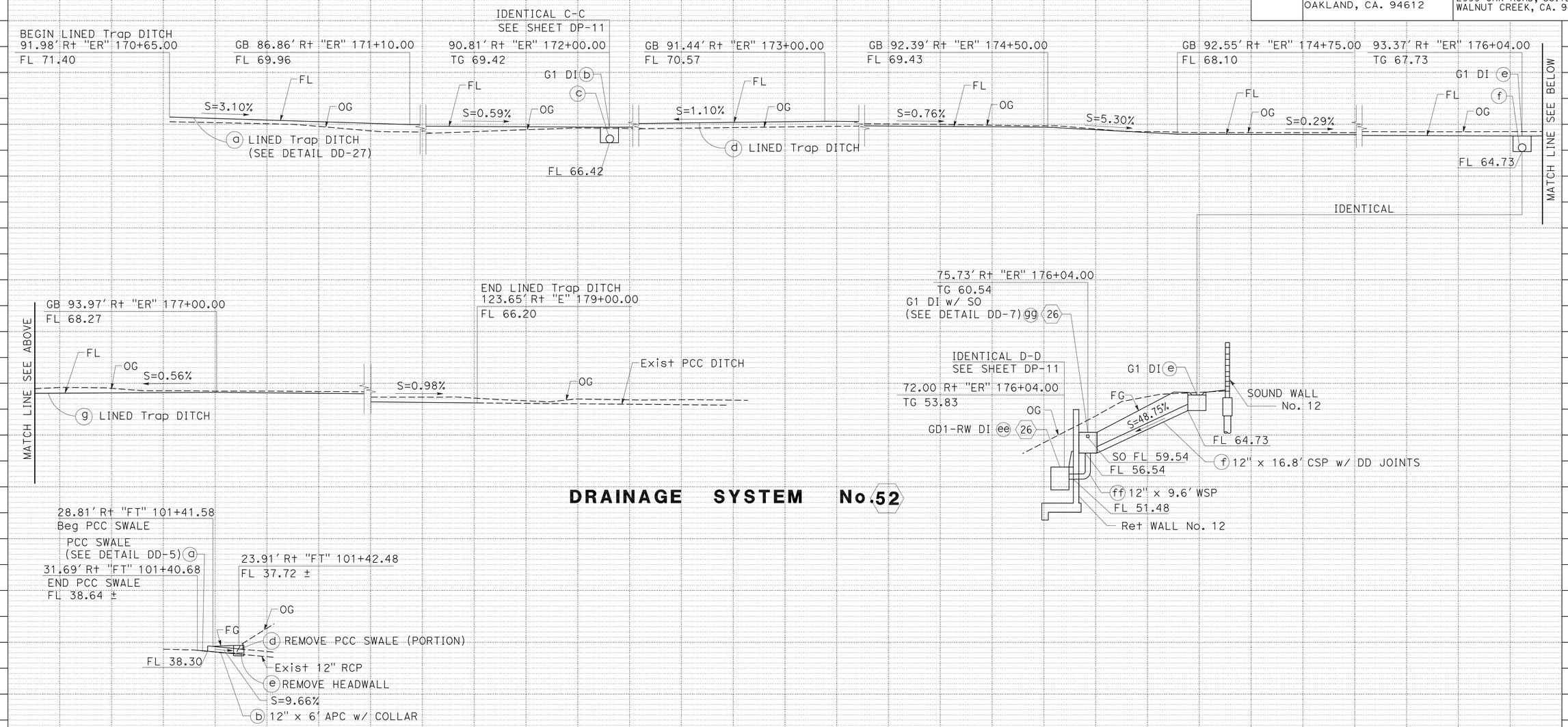

DRAINAGE PROFILE

SCALE: Horiz 1" = 10'
Vert 1" = 10'

DP-18

REVISED BY: SP — DATE REVISED: 2/2/11
CALCULATED-DESIGNED BY: SHARON L. PATCH — CHECKED BY: KATHLEEN M. REILLY
FUNCTIONAL SUPERVISOR: JOSEPH E. PETERSON

STATE OF CALIFORNIA - DEPARTMENT OF TRANSPORTATION — Caltrans

LAST REVISION 02-02-11 — DATE PLOTTED => 13-JUN-2011 — TIME PLOTTED => 10:01

Dist	COUNTY	ROUTE	POST MILES TOTAL PROJECT	SHEET No.	TOTAL SHEETS
04	CC	4	R26.6/R27.5	117	746

REGISTERED CIVIL ENGINEER — Joseph E. Peterson — DATE 2/2/11

PLANS APPROVAL DATE 6-13-11

REGISTERED PROFESSIONAL ENGINEER — Joseph E. Peterson — No. 42777 — Exp. 3-31-12 — CIVIL — STATE OF CALIFORNIA

THE STATE OF CALIFORNIA OR ITS OFFICERS OR AGENTS SHALL NOT BE RESPONSIBLE FOR THE ACCURACY OR COMPLETENESS OF SCANNED COPIES OF THIS PLAN SHEET.

CALTRANS
111 GRAND AVENUE
OAKLAND, CA. 94612

CCTA
2999 OAK ROAD, SUITE 100
WALNUT CREEK, CA. 94597

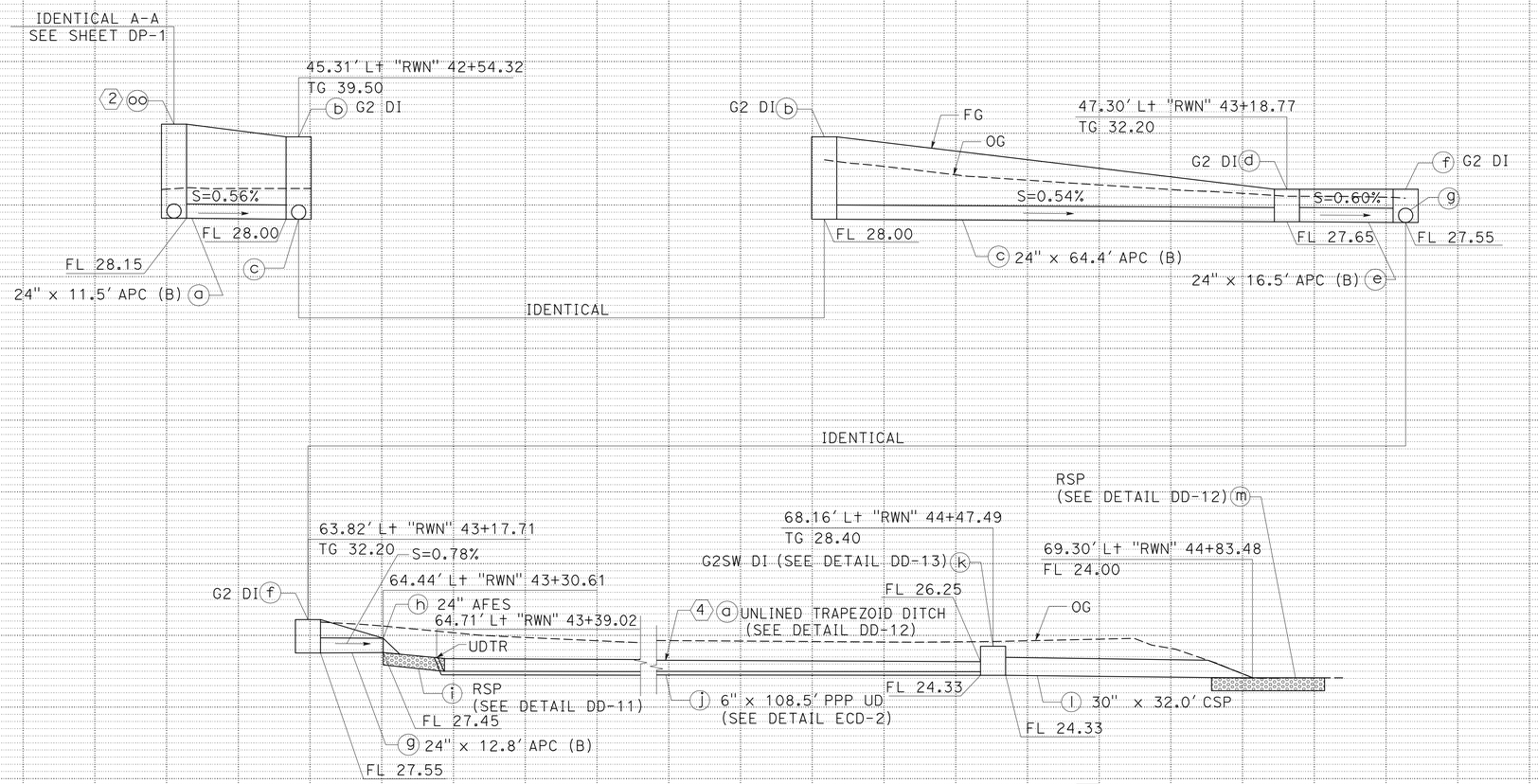

DRAINAGE SYSTEM No. 55

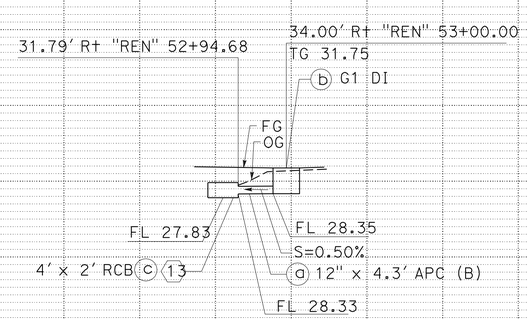

DRAINAGE SYSTEM No. 56

DRAINAGE PROFILE

SCALE: Horiz 1" = 10'
Vert 1" = 10'

DP-19

STATE OF CALIFORNIA - DEPARTMENT OF TRANSPORTATION
Caltrans

FUNCTIONAL SUPERVISOR: JOSEPH E. PETERSON
CALCULATED-DESIGNED BY: SHARON L. PATCH
CHECKED BY: KATHLEEN M. REILLY
REVISED BY: SP
DATE REVISED: 2/2/11

LAST REVISION 02-02-11
DATE PLOTTED => 13-JUN-2011
TIME PLOTTED => 10:01

Dist	COUNTY	ROUTE	POST MILES TOTAL PROJECT	SHEET No.	TOTAL SHEETS
04	CC	4	R26.6/R27.5	118	746

REGISTERED CIVIL ENGINEER — DATE: 2/9/11

6-13-11
PLANS APPROVAL DATE

REGISTERED PROFESSIONAL ENGINEER — Joseph E. Peterson — No. 42777 — Exp. 3-31-12 — CIVIL — STATE OF CALIFORNIA

THE STATE OF CALIFORNIA OR ITS OFFICERS OR AGENTS SHALL NOT BE RESPONSIBLE FOR THE ACCURACY OR COMPLETENESS OF SCANNED COPIES OF THIS PLAN SHEET.

CALTRANS
111 GRAND AVENUE
OAKLAND, CA. 94612

CCTA
2999 OAK ROAD, SUITE 100
WALNUT CREEK, CA. 94597

NOTES:

1. FOR INFORMATION NOT SHOWN, SEE Std PLAN D73 THRU D74B SHEETS.
2. ORIENTATION OF TYPE G1 INLETS SIMILAR.

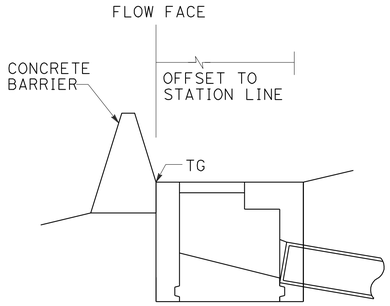

SECTION B-B

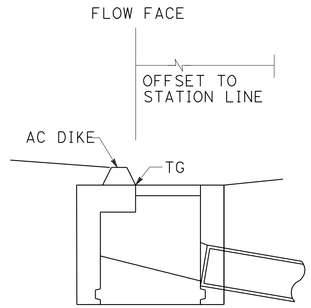

SECTION C-C

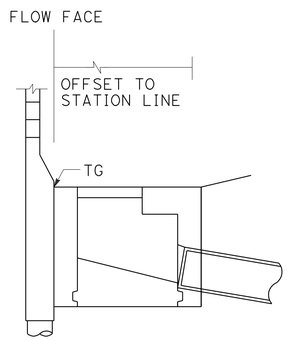

SECTION A-A

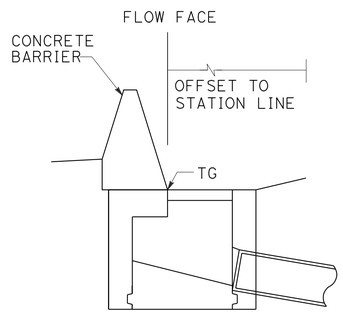

SECTION D-D

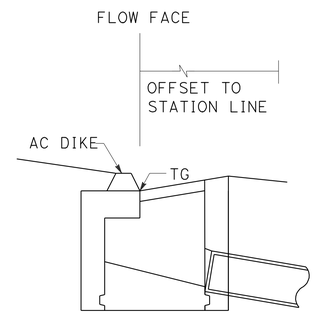

ELEVATION

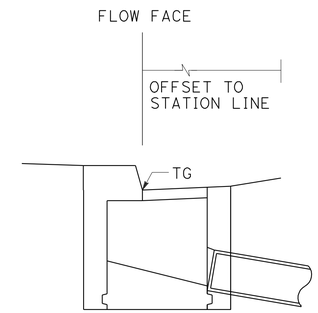

ELEVATION

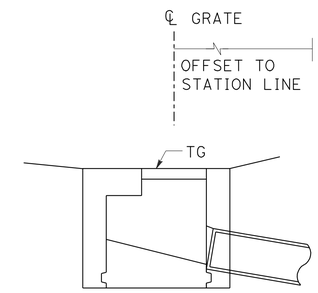

ELEVATION

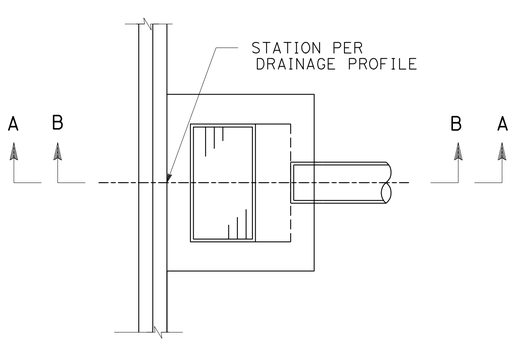

PLAN

INLET ADJACENT TO SOUNDWALL (SECTION A-A)
(TYPES 736 S/SV)
OR CONCRETE BARRIER (SECTION B-B)
(TYPES 60D, 60E, 60GE, 60SC, 60SE, OR HIGH SIDE OF TYPES 60C, 60GC)

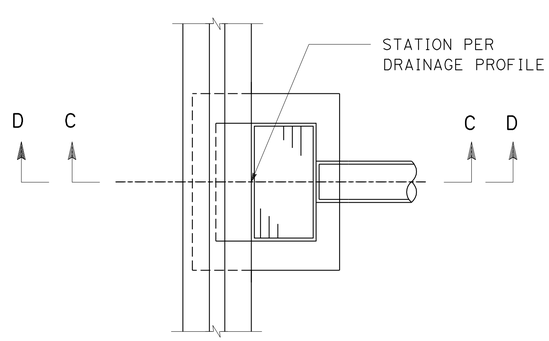

PLAN

INLET ADJACENT TO AC DIKE (SECTION C-C)
OR CONCRETE BARRIER (SECTION D-D)
(TYPE 60C SHOWN, TYPES 60, 60G, 60GC SIMILAR)

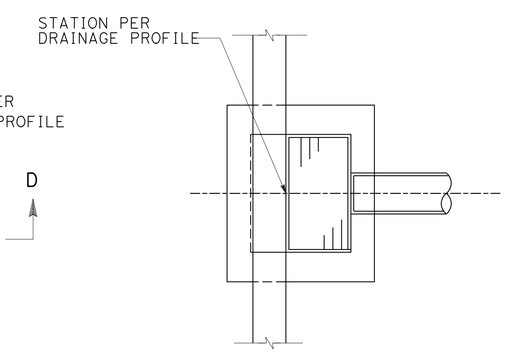

PLAN

INLET WITHIN AC SIDE GUTTER

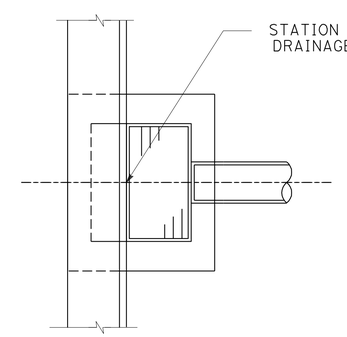

PLAN

INLET ADJACENT TO CURB

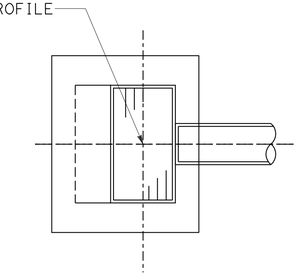

PLAN

FIELD INLET

DRAINAGE DETAILS

NO SCALE

DD-1

STATE OF CALIFORNIA - DEPARTMENT OF TRANSPORTATION
Caltrans
FUNCTIONAL SUPERVISOR: JOSEPH E. PETERSON
CALCULATED-DESIGNED BY: SHARON L. PATCH
CHECKED BY: KATHLEEN M. REILLY
REVISED BY: SP
DATE REVISED: 2/9/11

LAST REVISION 02-09-11
DATE PLOTTED => 13-JUN-2011
TIME PLOTTED => 10:01

Dist	COUNTY	ROUTE	POST MILES TOTAL PROJECT	SHEET No.	TOTAL SHEETS
04	CC	4	R26.6/R27.5	119	746

REGISTERED CIVIL ENGINEER — DATE: 2/9/11

6-13-11
PLANS APPROVAL DATE

REGISTERED PROFESSIONAL ENGINEER — Joseph E. Peterson — No. 42777 — Exp. 3-31-12 — CIVIL — STATE OF CALIFORNIA

THE STATE OF CALIFORNIA OR ITS OFFICERS OR AGENTS SHALL NOT BE RESPONSIBLE FOR THE ACCURACY OR COMPLETENESS OF SCANNED COPIES OF THIS PLAN SHEET.

CALTRANS
111 GRAND AVENUE
OAKLAND, CA. 94612

CCTA
2999 OAK ROAD, SUITE 100
WALNUT CREEK, CA. 94597

NOTES:

1. TOP OF CAP TO BE 1'-0" Min BELOW THE GRADING PLANE.
2. REMOVE EXISTING DRAINAGE STRUCTURE WALLS WHERE REQUIRED.

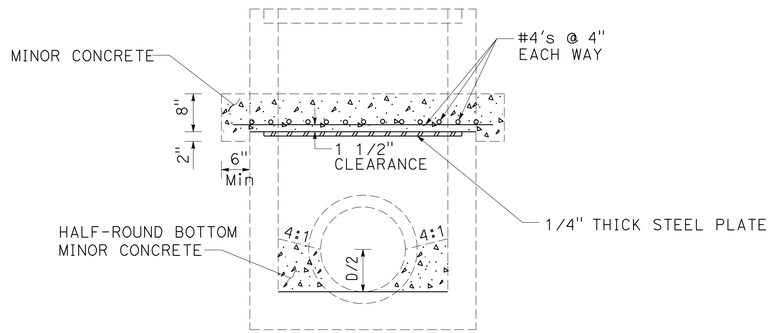

CAP DRAINAGE STRUCTURE

⟨5⟩ⓜ,⟨6⟩ⓕ,⟨34⟩ⓨ,⟨38⟩ⓘ

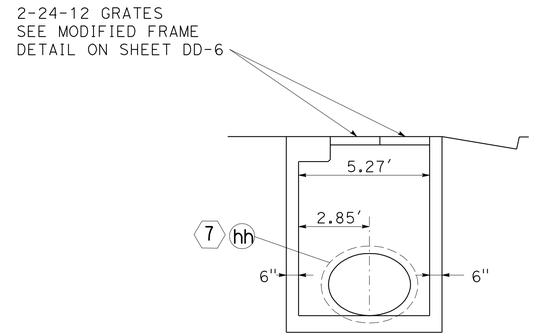

SECTION B-B

NOTE:

FOR DETAILS NOT SHOWN, SEE STANDARD PLAN D73.

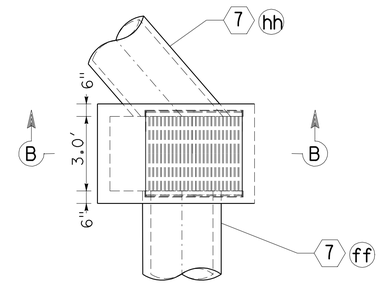

PLAN

SYSTEM ⟨7⟩ⓖⓖ

DRAINAGE UNIT	H, HEIGHT OF ADJUSTMENT (FT)	PROPOSED TG ELEVATION
2f	5.74'	41.77
2r	6.27'	41.66
2pp	5.35'	42.13

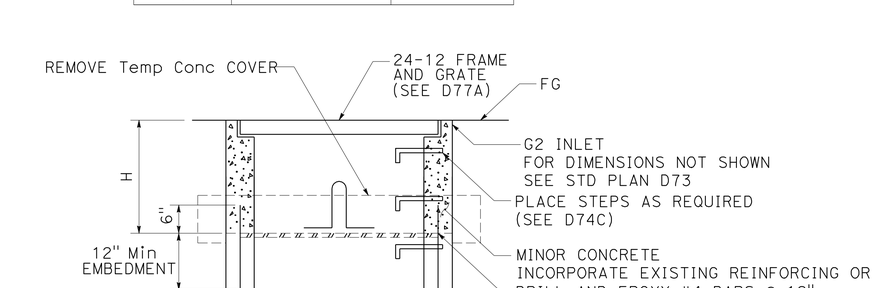

ADJUST PARTIAL INLET TO GRADE

⟨2⟩ⓕ,ⓡ,ⓨⓨ

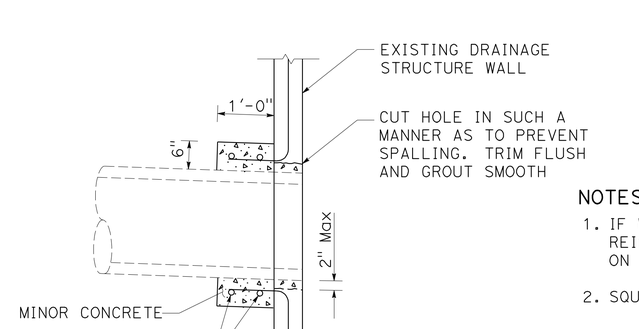

NOTES:

1. IF WALL OF EXISTING DRAINAGE STRUCTURE HAS NO REINFORCING, DRILL AND BOND #4 DOWELS, 1 FT. ON CENTER, 6" INTO WALL AND BEND INTO COLLAR.
2. SQUARE OR CIRCULAR COLLAR OPTIONAL.

PIPE CONNECTION TO EXISTING DRAINAGE STRUCTURE

⟨2⟩ⓡ,⟨5⟩ⓜ,⟨18⟩ⓕ,⟨40⟩ⓙ

DRAINAGE DETAILS

NO SCALE

DD-2

REVISED BY	DATE REVISED
SP	2/9/11

CALCULATED-DESIGNED BY: SHARON L. PATCH
CHECKED BY: KATHLEEN M. REILLY
FUNCTIONAL SUPERVISOR: JOSEPH E. PETERSON

STATE OF CALIFORNIA - DEPARTMENT OF TRANSPORTATION

LAST REVISION 02-09-11 | DATE PLOTTED => 13-JUN-2011 | TIME PLOTTED => 10:01

Dist	COUNTY	ROUTE	POST MILES TOTAL PROJECT	SHEET No.	TOTAL SHEETS
04	CC	4	R26.6/R27.5	120	746

REGISTERED CIVIL ENGINEER — DATE 2/9/11

6-13-11
PLANS APPROVAL DATE

REGISTERED PROFESSIONAL ENGINEER — Joseph E. Peterson — No. 42777 — Exp. 3-31-12 — CIVIL — STATE OF CALIFORNIA

THE STATE OF CALIFORNIA OR ITS OFFICERS OR AGENTS SHALL NOT BE RESPONSIBLE FOR THE ACCURACY OR COMPLETENESS OF SCANNED COPIES OF THIS PLAN SHEET.

CALTRANS
111 GRAND AVENUE
OAKLAND, CA. 94612

CCTA
2999 OAK ROAD, SUITE 100
WALNUT CREEK, CA. 94597

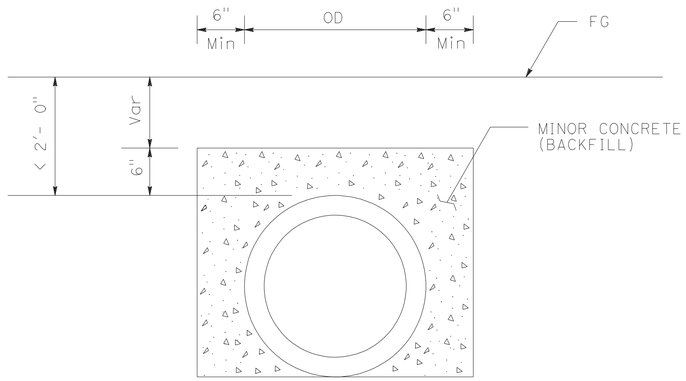

MINOR CONCRETE BACKFILL

PIPES WITH LESS THAN 2' COVER

7 b,d,q,17 f,i,l,37 d,38 a,40 d,42 j

NOTE:
COLLAR TO BE USED FOR JOINING NEW PIPE TO EXISTING PIPE, PIPES OF DIFFERENT TYPES OR PIPES OF DIFFERENT SIZES.

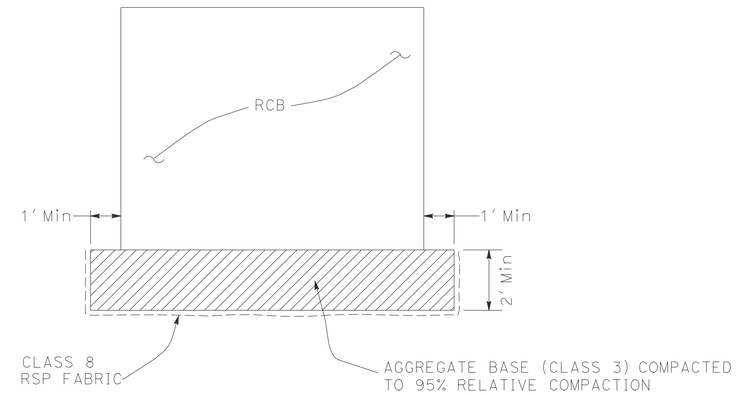

SUB-EXCAVATION DETAIL

12 h,c,15 b,22 a,23 a,38 p

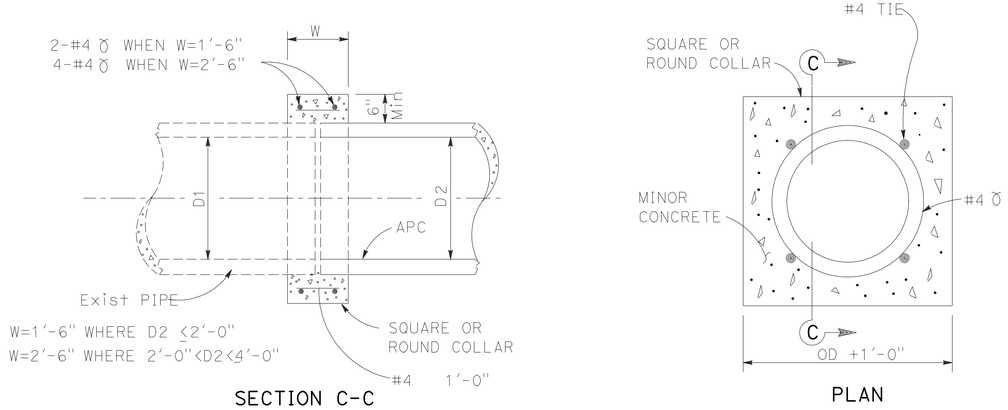

CONCRETE COLLAR DETAIL

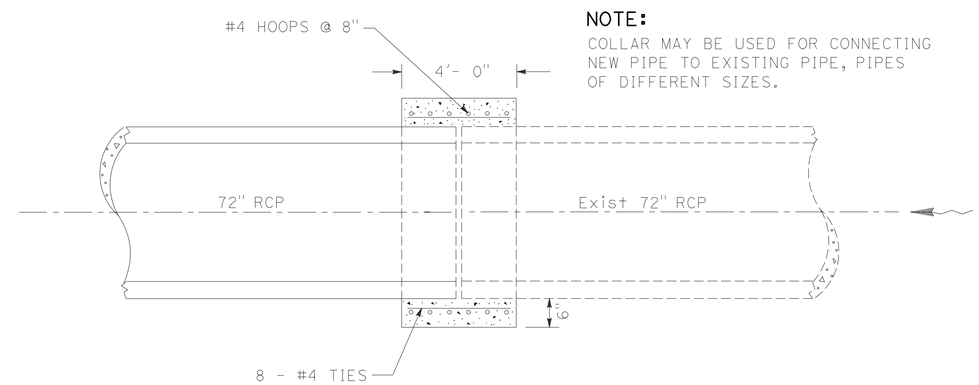

NOTE:
COLLAR MAY BE USED FOR CONNECTING NEW PIPE TO EXISTING PIPE, PIPES OF DIFFERENT SIZES.

CONNECTION DETAIL

6 b

DRAINAGE DETAILS

NO SCALE

DD-3

STATE OF CALIFORNIA - DEPARTMENT OF TRANSPORTATION
Caltrans

FUNCTIONAL SUPERVISOR: JOSEPH E. PETERSON
CALCULATED-DESIGNED BY: SHARON L. PATCH
CHECKED BY: KATHLEEN M. REILLY
REVISED BY: SP
DATE REVISED: 2/9/11

LAST REVISION 02-09-11
DATE PLOTTED => 13-JUN-2011
TIME PLOTTED => 10:01

Dist	COUNTY	ROUTE	POST MILES TOTAL PROJECT	SHEET No.	TOTAL SHEETS
04	CC	4	R26.6/R27.5	121	746

REGISTERED CIVIL ENGINEER — DATE: 2/9/11

6-13-11
PLANS APPROVAL DATE

REGISTERED PROFESSIONAL ENGINEER — Joseph E. Peterson — No. 42777 — Exp. 3-31-12 — CIVIL — STATE OF CALIFORNIA

THE STATE OF CALIFORNIA OR ITS OFFICERS OR AGENTS SHALL NOT BE RESPONSIBLE FOR THE ACCURACY OR COMPLETENESS OF SCANNED COPIES OF THIS PLAN SHEET.

CALTRANS
111 GRAND AVENUE
OAKLAND, CA. 94612

CCTA
2999 OAK ROAD, SUITE 100
WALNUT CREEK, CA. 94597

NOTES:

1. EXISTING PAVEMENT TO BE SAWCUT PRIOR TO MODIFYING INLET TO MH.
2. FOR DETAILS NOT SHOWN, SEE STANDARD PLAN D73 - TYPE G2 INLET.

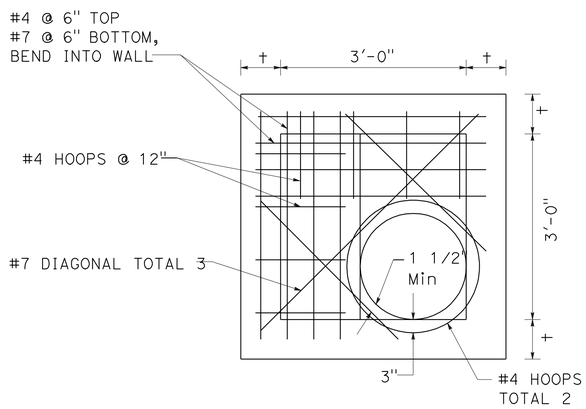

PLAN

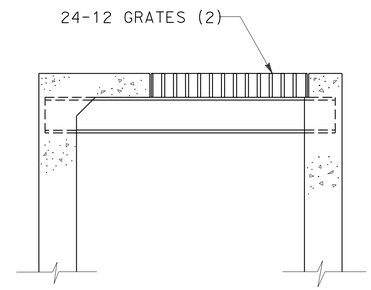

NOTE:

FOR DETAILS NOT SHOWN, SEE STANDARD PLAN D74A, TYPE GT4.

GT4M INLET

7 k

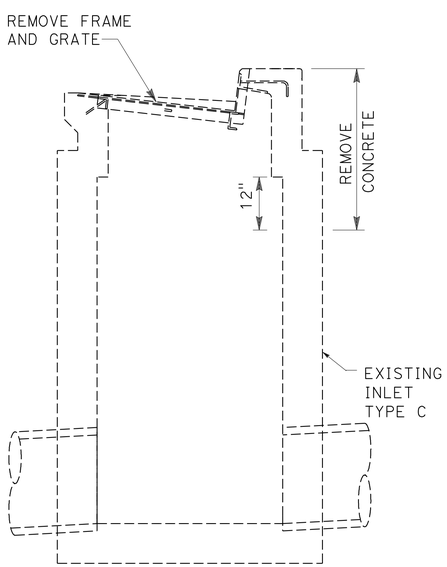

EXISTING CONDITION

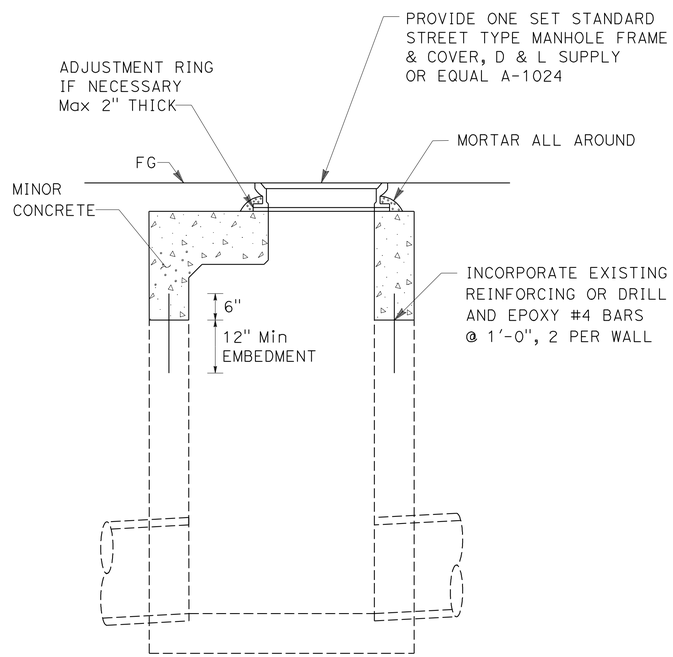

MODIFIED CONDITION

MODIFY DI TO MH

34 u

NOTE:

1. FOR DETAILS NOT SHOWN, SEE STANDARD PLAN D73 - TYPE G2 INLET.

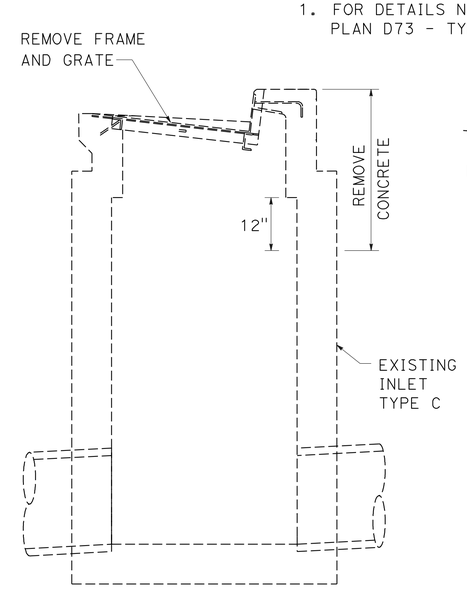

EXISTING CONDITION

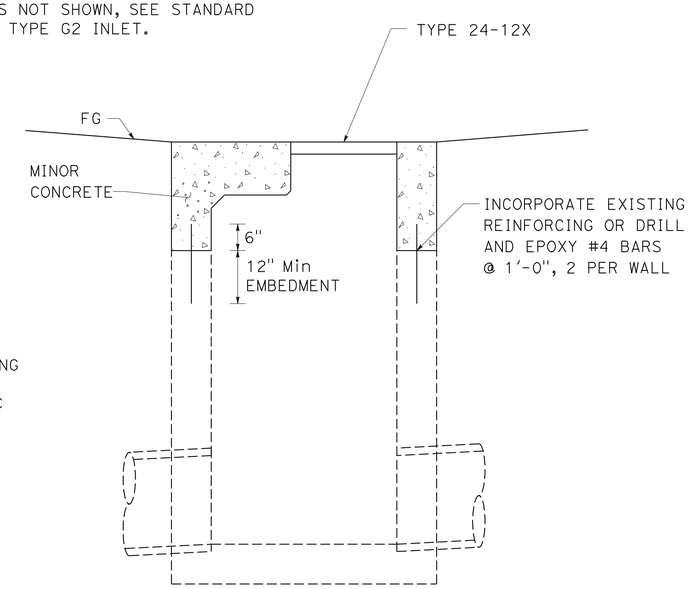

MODIFIED CONDITION

MODIFY DI

34 z

DRAINAGE DETAILS

NO SCALE

DD-4

STATE OF CALIFORNIA - DEPARTMENT OF TRANSPORTATION

Caltrans

FUNCTIONAL SUPERVISOR: JOSEPH E. PETERSON

CALCULATED-DESIGNED BY: SHARON L. PATCH

CHECKED BY: KATHLEEN M. REILLY

REVISED BY: SP

DATE REVISED: 2/9/11

LAST REVISION 02-09-11 | DATE PLOTTED => 13-JUN-2011 | TIME PLOTTED => 0:01

Dist	COUNTY	ROUTE	POST MILES TOTAL PROJECT	SHEET No.	TOTAL SHEETS
04	CC	4	R26.6/R27.5	122	746

Joseph E. Peterson 2/9/11
REGISTERED CIVIL ENGINEER DATE

6-13-11
PLANS APPROVAL DATE

REGISTERED PROFESSIONAL ENGINEER Joseph E. Peterson No. 42777 Exp. 3-31-12 CIVIL STATE OF CALIFORNIA

THE STATE OF CALIFORNIA OR ITS OFFICERS OR AGENTS SHALL NOT BE RESPONSIBLE FOR THE ACCURACY OR COMPLETENESS OF SCANNED COPIES OF THIS PLAN SHEET.

CALTRANS
111 GRAND AVENUE
OAKLAND, CA. 94612

CCTA
2999 OAK ROAD, SUITE 100
WALNUT CREEK, CA. 94597

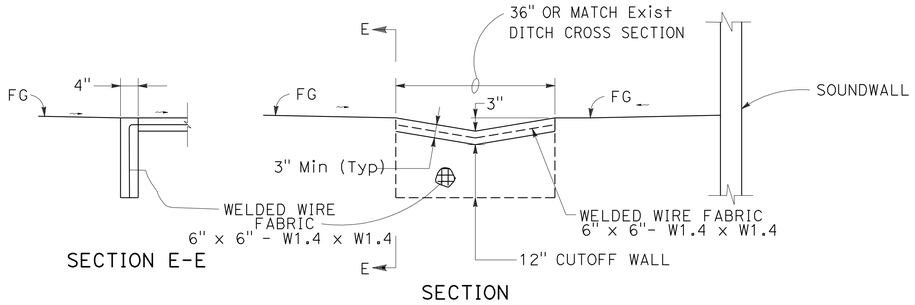

MINOR CONCRETE PCC SWALE

(1)(a),(b),(c),(d),(e)

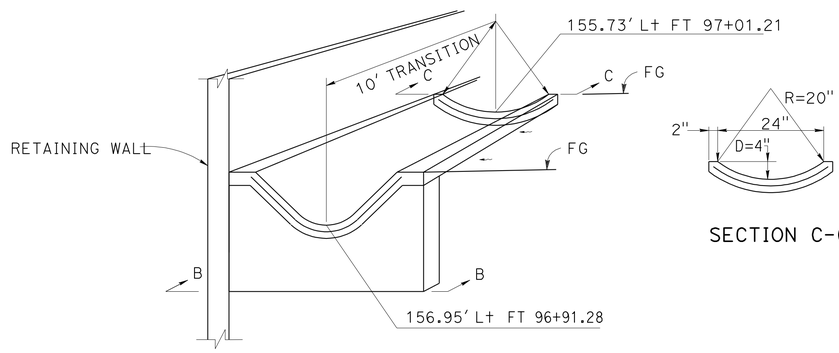

NOTES:

1. CUTOFF WALL REQUIRED AT THE BEGINNING AND END OF ALL LINED DITCHES.
2. CUTOFF WALL TO BE PLACED AT 100 FT INTERVALS OR AS DIRECTED BY THE ENGINEER.

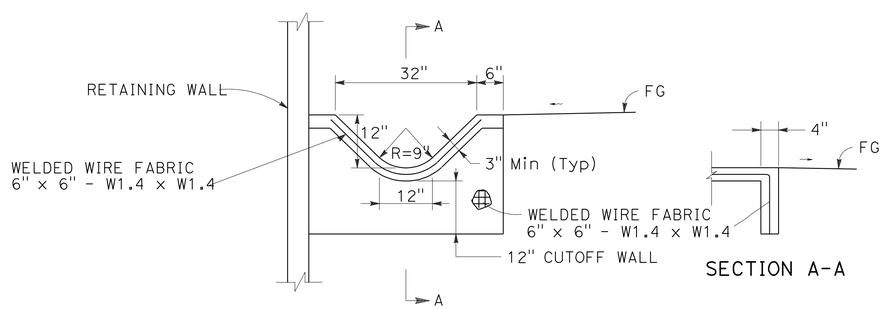

MINOR CONCRETE LINED DITCH

(24)(a)

NOTE:
NEW SWALE CROSS SECTION
TO MATCH EXISTING

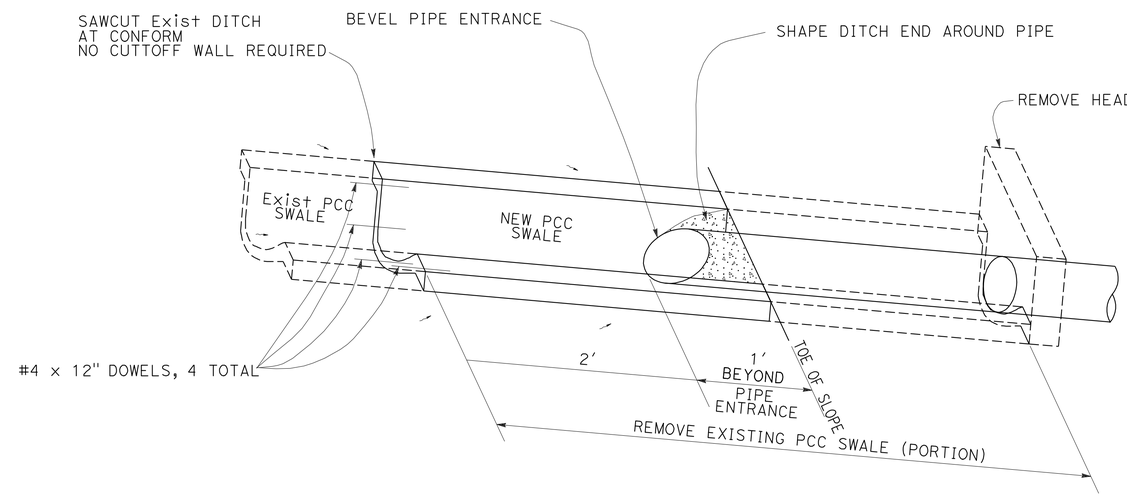

MINOR CONCRETE PCC SWALE

(53)(a)

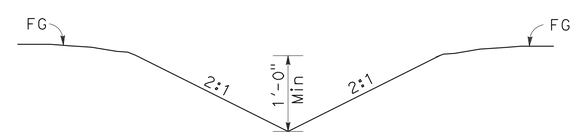

UNLINED V-DITCH/GUTTER

DRAINAGE DETAILS

NO SCALE

DD-5

REVISED BY	DATE REVISED
SP	2/9/11

SHARON L. PATCH — CALCULATED-DESIGNED BY
KATHLEEN M. REILLY — CHECKED BY
FUNCTIONAL SUPERVISOR
JOSEPH E. PETERSON

STATE OF CALIFORNIA - DEPARTMENT OF TRANSPORTATION

LAST REVISION 02-09-11 | DATE PLOTTED => 13-JUN-2011 | TIME PLOTTED => 10:01

Dist	COUNTY	ROUTE	POST MILES TOTAL PROJECT	SHEET No.	TOTAL SHEETS
04	CC	4	R26.6/R27.5	123	746

REGISTERED CIVIL ENGINEER — DATE 2/9/11

6-13-11
PLANS APPROVAL DATE

REGISTERED PROFESSIONAL ENGINEER — Joseph E. Peterson — No. 42777 — Exp. 3-31-12 — CIVIL — STATE OF CALIFORNIA

THE STATE OF CALIFORNIA OR ITS OFFICERS OR AGENTS SHALL NOT BE RESPONSIBLE FOR THE ACCURACY OR COMPLETENESS OF SCANNED COPIES OF THIS PLAN SHEET.

CALTRANS
111 GRAND AVENUE
OAKLAND, CA. 94612

CCTA
2999 OAK ROAD, SUITE 100
WALNUT CREEK, CA. 94597

NOTE:
FOR FRAME AND GRATE DETAILS NOT SHOWN, SEE STANDARD PLAN D77A.

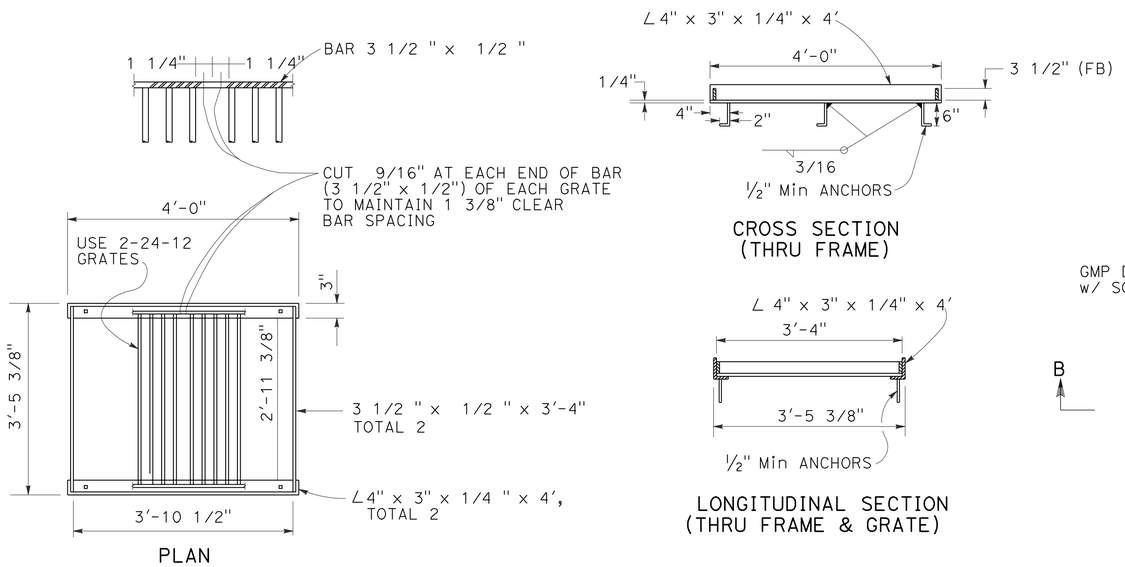

MODIFIED GRATE FRAME DETAIL

2 gg kk, 5 g, 17 g k, 19 a o, 26 b d ee, 31 v, 37 a c

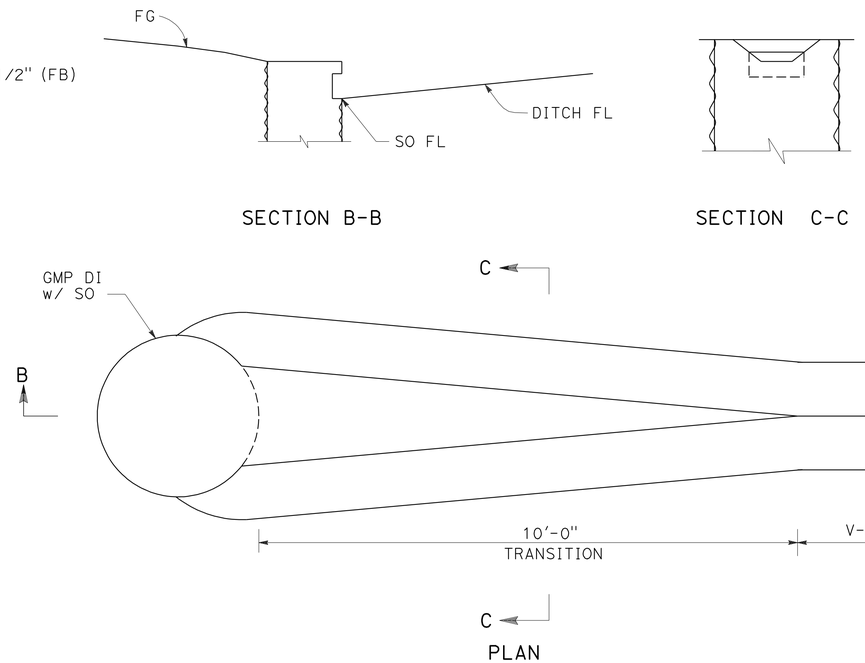

DITCH TRANSITION AT DI WITH SIDE OPENING

34 s

NOTE:
FOR INLET DETAILS NOT SHOWN, SEE STANDARD PLAN D74B.

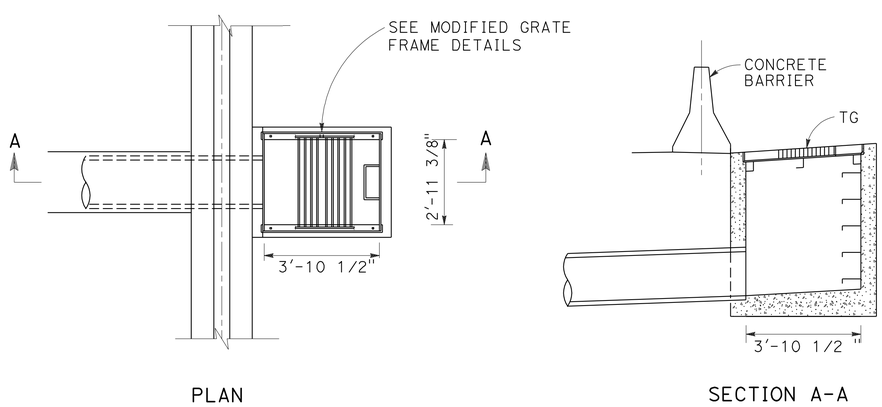

GDOM INLET

2 gg, kk, 5 g, 17 k, 19 a, o, 26 b d, 31 v

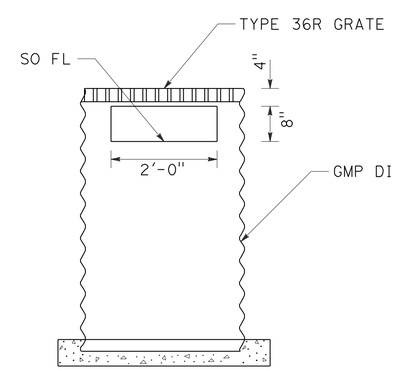

NOTES:

1. GMP DI WITH SIDE OPENING SHOWN. TRANSITION SIMILAR FOR OTHER DI's WITH SIDE OPENING.
2. TRANSITION FOR V-DITCH SHOWN. SIMILAR FOR TRAPEZOIDAL DITCH.
3. FOR GMP INLET DETAILS NOT SHOWN, SEE STANDARD PLAN D75A.
4. FOR TYPE 36R GRATE DETAILS NOT SHOWN, SEE STANDARD PLAN D77B.

GMP DI WITH SIDE OPENING(S)

34 s

DRAINAGE DETAILS

NO SCALE

DD-6

REVISED BY	DATE REVISED
SP	2/9/11

SHARON L. PATCH — KATHLEEN M. REILLY — CALCULATED-DESIGNED BY — CHECKED BY

FUNCTIONAL SUPERVISOR: JOSEPH E. PETERSON

STATE OF CALIFORNIA - DEPARTMENT OF TRANSPORTATION — Caltrans

LAST REVISION 02-09-11 — DATE PLOTTED => 13-JUN-2011 — TIME PLOTTED => 10:02

Dist	COUNTY	ROUTE	POST MILES TOTAL PROJECT	SHEET No.	TOTAL SHEETS
04	CC	4	R26.6/R27.5	124	746

REGISTERED CIVIL ENGINEER — DATE 2/9/11

6-13-11
PLANS APPROVAL DATE

REGISTERED PROFESSIONAL ENGINEER — Joseph E. Peterson — No. 42777 — Exp. 3-31-12 — CIVIL — STATE OF CALIFORNIA

THE STATE OF CALIFORNIA OR ITS OFFICERS OR AGENTS SHALL NOT BE RESPONSIBLE FOR THE ACCURACY OR COMPLETENESS OF SCANNED COPIES OF THIS PLAN SHEET.

CALTRANS
111 GRAND AVENUE
OAKLAND, CA. 94612

CCTA
2999 OAK ROAD, SUITE 100
WALNUT CREEK, CA. 94597

NOTES:

1. FOR INLET DETAILS NOT SHOWN, SEE STANDARD PLAN D73.
2. FOR RETAINING WALL GUTTER DETAILS NOT SHOWN, SEE STANDARD PLAN B3-9.

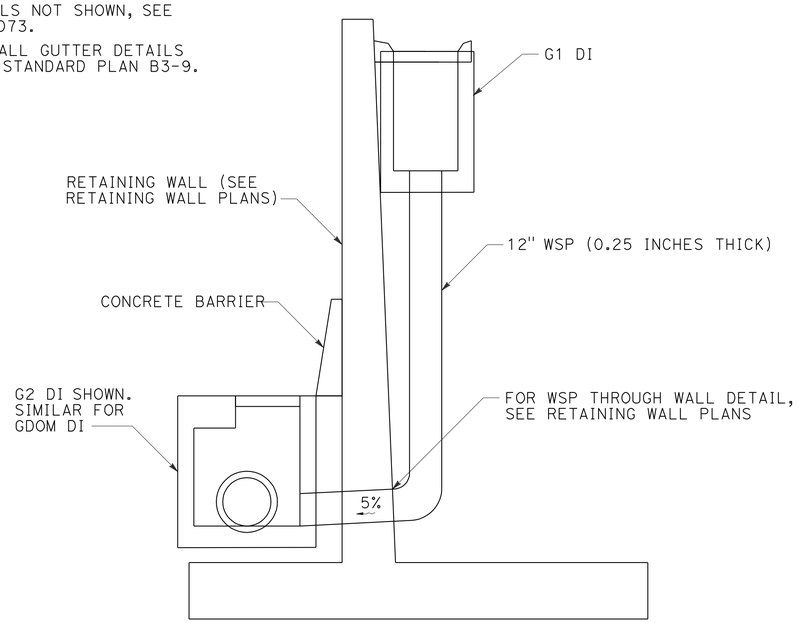

WSP FROM DI IN WALL GUTTER TO DI ON ROADWAY

26 t, v, x, aa, cc, ee, gg, mm 31 q, t, z, 37 c

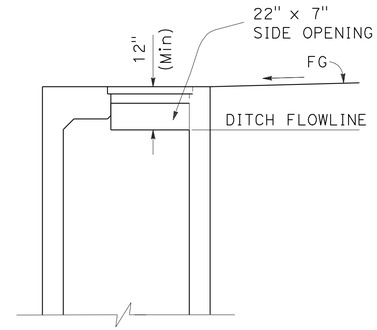

G2 INLET w/ SO

34 a, d, 44 a

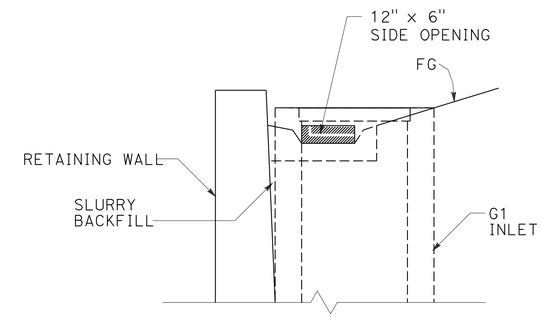

SECTION A-A

NOTES:

1. FOR G1 TYPE INLET DETAILS NOT SHOWN, SEE STANDARD PLAN D73.
2. FOR FRAME AND GRATE DETAILS NOT SHOWN, SEE STANDARD PLAN D77A.
3. FOR RETAINING WALL GUTTER DETAILS NOT SHOWN, SEE STANDARD PLAN B3-9.

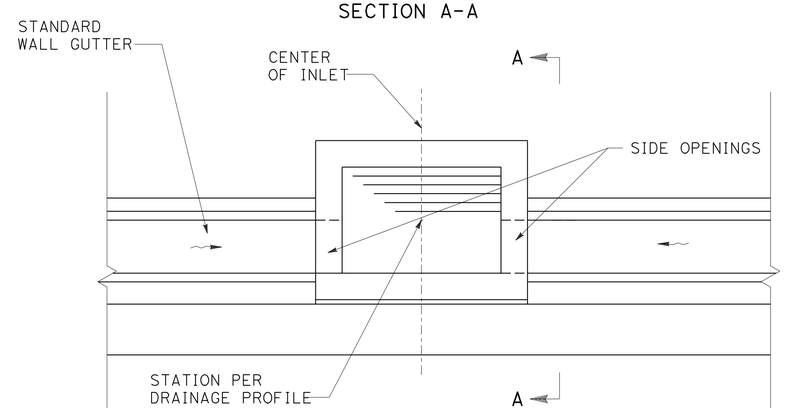

PLAN

RETAINING WALL GUTTER TRANSITION AT G1 INLET

26 v cc, gg, 31 q, t, z, 37 c, 38 a, c, e

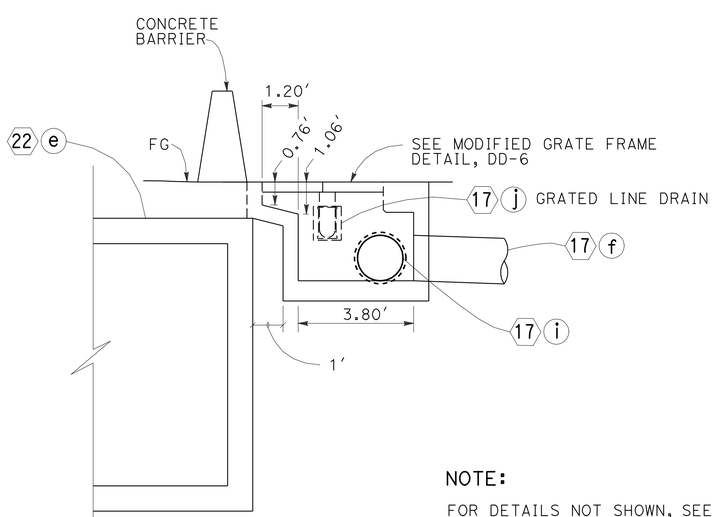

NOTE:

FOR DETAILS NOT SHOWN, SEE STANDARD PLAN D73.

G2X INLET

17 g

DRAINAGE DETAILS

NO SCALE

DD-7

STATE OF CALIFORNIA - DEPARTMENT OF TRANSPORTATION

FUNCTIONAL SUPERVISOR: JOSEPH E. PETERSON

CALCULATED-DESIGNED BY: SHARON L. PATCH — REVISED BY: SP

CHECKED BY: KATHLEEN M. REILLY — DATE REVISED: 2/9/11

LAST REVISION 02-09-11 — DATE PLOTTED => 13-JUN-2011 — TIME PLOTTED => 10:02

Dist	COUNTY	ROUTE	POST MILES TOTAL PROJECT	SHEET No.	TOTAL SHEETS
04	CC	4	R26.6/R27.5	125	746

REGISTERED CIVIL ENGINEER — DATE 2/9/11

6-13-11
PLANS APPROVAL DATE

REGISTERED PROFESSIONAL ENGINEER — Joseph E. Peterson — No. 42777 — Exp. 3-31-12 — CIVIL — STATE OF CALIFORNIA

THE STATE OF CALIFORNIA OR ITS OFFICERS OR AGENTS SHALL NOT BE RESPONSIBLE FOR THE ACCURACY OR COMPLETENESS OF SCANNED COPIES OF THIS PLAN SHEET.

CALTRANS
111 GRAND AVENUE
OAKLAND, CA. 94612

CCTA
2999 OAK ROAD, SUITE 100
WALNUT CREEK, CA. 94597

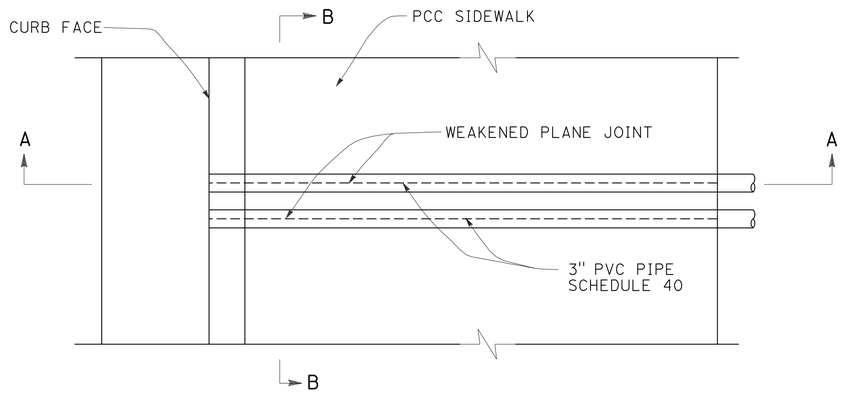

PLAN

NOTES:

1. FOR INLET DETAILS NOT SHOWN, SEE STANDARD PLAN D73 - TYPE G2.
2. FOR FRAME AND COVER DETAILS, SEE STANDARD PLAN B7-11.
3. PLACE STEPS AS REQUIRED, SEE STANDARD PLAN D74C.

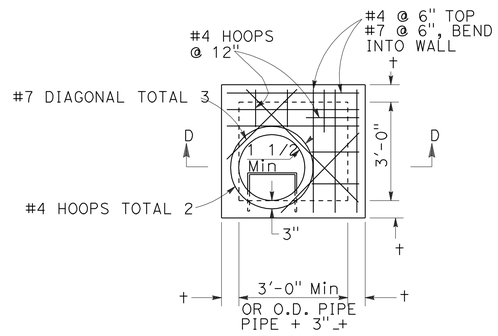

PLAN

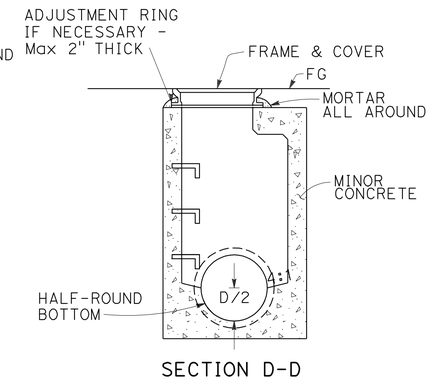

SECTION D-D

G2 MANHOLE

7 p, 10 c, 21 m q, 42 c, 44 c

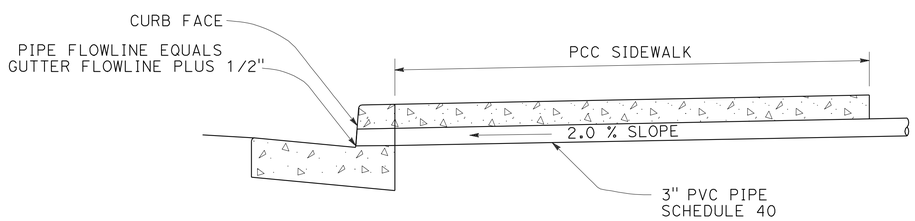

SECTION A-A

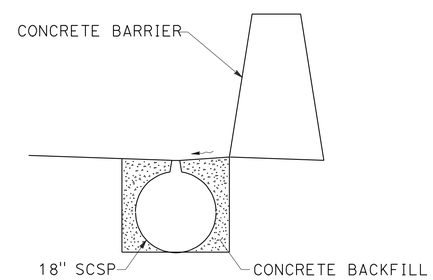

INSTALLATION OF ASP SCSP OPTION

7 x, y

NOTE:

FOR DETAILS NOT SHOWN, SEE SHEET C-13.

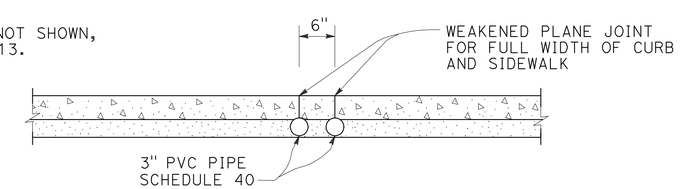

SECTION B-B

CURB DRAIN

48 a

DRAINAGE DETAILS

NO SCALE

DD-8

REVISED BY	DATE REVISED
SP	2/9/11

CALCULATED-DESIGNED BY: SHARON L. PATCH
CHECKED BY: KATHLEEN M. REILLY
FUNCTIONAL SUPERVISOR: JOSEPH E. PETERSON

STATE OF CALIFORNIA - DEPARTMENT OF TRANSPORTATION
Caltrans

LAST REVISION 02-09-11
DATE PLOTTED => 13-JUN-2011
TIME PLOTTED => 10:02

Dist	COUNTY	ROUTE	POST MILES TOTAL PROJECT	SHEET No.	TOTAL SHEETS
04	CC	4	R26.6/R27.5	126	746

REGISTERED CIVIL ENGINEER — DATE: 2/9/11

6-13-11
PLANS APPROVAL DATE

REGISTERED PROFESSIONAL ENGINEER — Joseph E. Peterson — No. 42777 — Exp. 3-31-12 — CIVIL — STATE OF CALIFORNIA

THE STATE OF CALIFORNIA OR ITS OFFICERS OR AGENTS SHALL NOT BE RESPONSIBLE FOR THE ACCURACY OR COMPLETENESS OF SCANNED COPIES OF THIS PLAN SHEET.

CALTRANS
111 GRAND AVENUE
OAKLAND, CA. 94612

CCTA
2999 OAK ROAD, SUITE 100
WALNUT CREEK, CA. 94597

NOTE:

SEE STANDARD PLAN B3-9
FOR PCC GUTTER DETAIL.

PCC GUTTER

8 a, 9 a, 11 a, 16 a, 18 a, 54 a

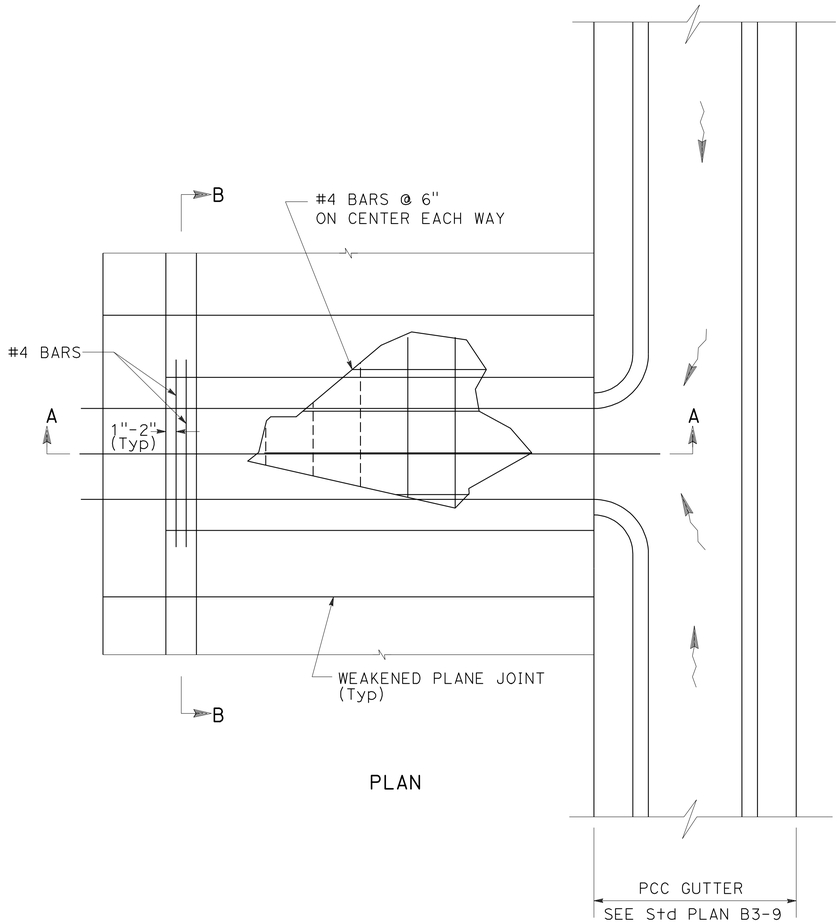

SIDEWALK CROSS DRAIN

10 o, r, 17 c, 47 a

SIDEWALK CROSS DRAIN NOTES:

1. THE CROSS DRAIN CONDUIT SHALL BE 10 GAUGE (9/64") HOT DIPPED GALVANIZED STEEL TUBING.
2. THE CONDUIT SHALL BE SUPPORTED TO PREVENT DISTORTION DURING POURING OF THE CONCRETE. COLLAPSIBLE REMOVABLE FORM MAY BE USED IN LIEU OF GALVANIZED STEEL TUBING.
3. THE CONDUIT SHALL EXTEND CONTINUOUSLY FROM THE BACK OF DRAIN TO THE FACE OF CURB.

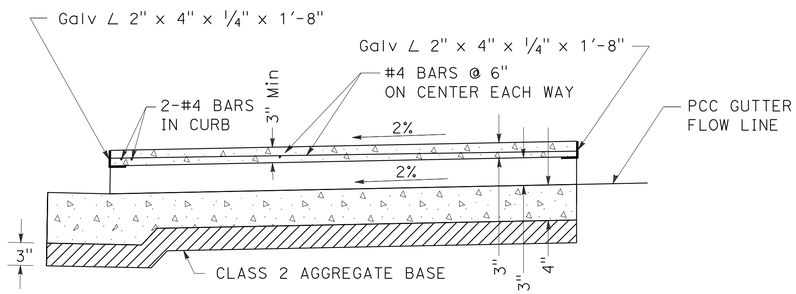

SECTION A-A

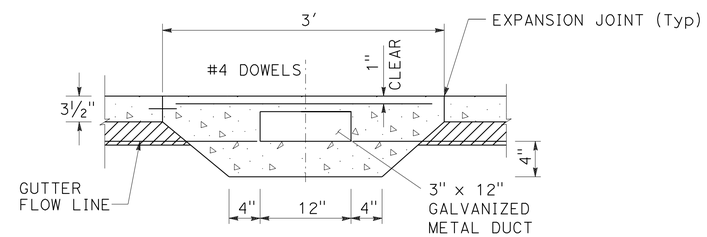

SECTION B-B

DRAINAGE DETAILS

NO SCALE

DD-9

STATE OF CALIFORNIA - DEPARTMENT OF TRANSPORTATION

FUNCTIONAL SUPERVISOR: JOSEPH E. PETERSON

CALCULATED-DESIGNED BY: SHARON L. PATCH

CHECKED BY: KATHLEEN M. REILLY

REVISED BY: SP

DATE REVISED: 2/9/11

LAST REVISION 02-09-11 | DATE PLOTTED => 13-JUN-2011 | TIME PLOTTED => 10:02

Dist	COUNTY	ROUTE	POST MILES TOTAL PROJECT	SHEET No.	TOTAL SHEETS
04	CC	4	R26.6/R27.5	127	746

REGISTERED CIVIL ENGINEER — DATE: 2/9/11

6-13-11
PLANS APPROVAL DATE

REGISTERED PROFESSIONAL ENGINEER — Joseph E. Peterson — No. 42777 — Exp. 3-31-12 — CIVIL — STATE OF CALIFORNIA

THE STATE OF CALIFORNIA OR ITS OFFICERS OR AGENTS SHALL NOT BE RESPONSIBLE FOR THE ACCURACY OR COMPLETENESS OF SCANNED COPIES OF THIS PLAN SHEET.

CALTRANS
111 GRAND AVENUE
OAKLAND, CA. 94612

CCTA
2999 OAK ROAD, SUITE 100
WALNUT CREEK, CA. 94597

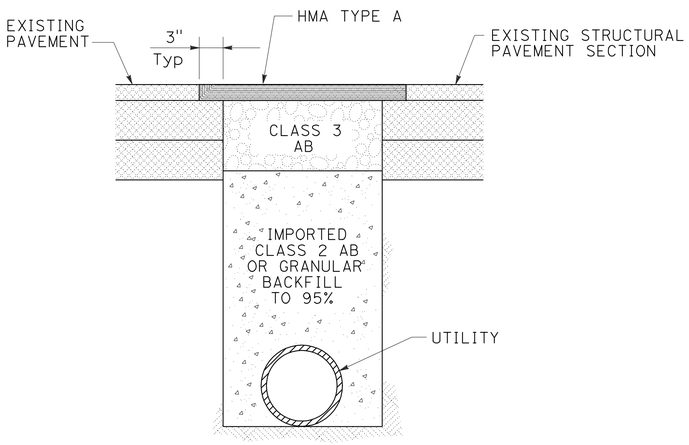

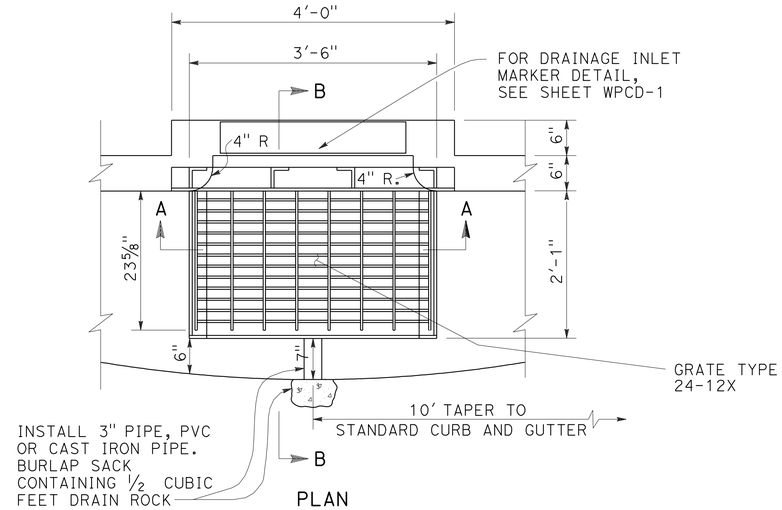

PLAN

NOTES:

1. ALL IRON WORK SHALL BE 1/2" GALVANIZED STEEL.
2. FOR FRAME AND GRATE DETAILS NOT SHOWN, SEE STANDARD PLANS D77A AND D77B.
3. FOR FACE ANGLE ANCHOR DETAILS, SEE STANDARD PLANS D74C.

NOTES:

1. ALL EXCAVATED MATERIAL TO BE REMOVED. ALL TRENCHES TO BE BACKFILLED THE SAME DAY. OPEN TRENCH SHALL NOT EXCEED 300 FEET. MAX. TEMPORARY SURFACING TO BE PLACED EACH NIGHT.
2. ALL IMPORTED GRANULAR BACKFILL AND AGGREGATE BASE TO BE COMPACTED TO 95% OF RELATIVE DENSITY WITHIN 2 1/2' OF FINAL GRADE & 90% BELOW 2 1/2'.
3. EXISTING PAVEMENT TO BE SAWCUT IN NEAT AND PARALLEL STRAIGHT LINES.

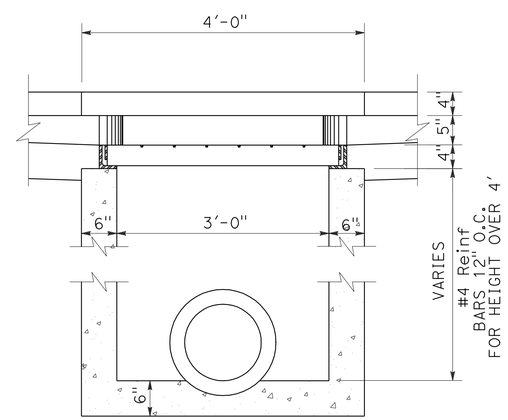

SECTION A-A

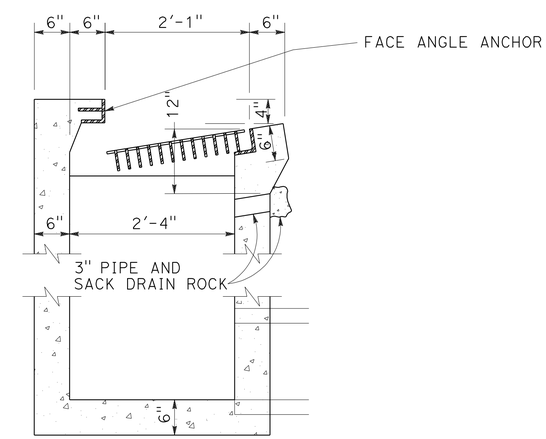

SECTION B-B

CITY OF ANTIOCH
TRENCH EXCAVATION AND BACKFILL IN EXISTING PAVEMENT

CITY OF ANTIOCH
DRAINAGE INLET TYPE "C"

10 a,g,p, 17 b, 31 dd,ff, 34 g,i,k,m,o,q,x,bb,
38 b,d,f, 40 c,h,bb,dd, 42 a,d,g,k

DRAINAGE DETAILS

NO SCALE

DD-10

REVISED BY	DATE REVISED
SP	2/9/11

SHARON L. PATCH — CALCULATED-DESIGNED BY
KATHLEEN M. REILLY — CHECKED BY
JOSEPH E. PETERSON — FUNCTIONAL SUPERVISOR

STATE OF CALIFORNIA - DEPARTMENT OF TRANSPORTATION
Caltrans

LAST REVISION 02-09-11 — DATE PLOTTED => 13-JUN-2011 — TIME PLOTTED => 10:02

Dist	COUNTY	ROUTE	POST MILES TOTAL PROJECT	SHEET No.	TOTAL SHEETS
04	CC	4	R26.6/R27.5	128	746

REGISTERED CIVIL ENGINEER — DATE 2/9/11

6-13-11
PLANS APPROVAL DATE

REGISTERED PROFESSIONAL ENGINEER — Joseph E. Peterson — No. 42777 — Exp. 3-31-12 — CIVIL — STATE OF CALIFORNIA

THE STATE OF CALIFORNIA OR ITS OFFICERS OR AGENTS SHALL NOT BE RESPONSIBLE FOR THE ACCURACY OR COMPLETENESS OF SCANNED COPIES OF THIS PLAN SHEET.

CALTRANS
111 GRAND AVENUE
OAKLAND, CA. 94612

CCTA
2999 OAK ROAD, SUITE 100
WALNUT CREEK, CA. 94597

NOTE:
FOR BIOFILTRATION SWALE COMPOSITION, SEE SHEET ECD-2.

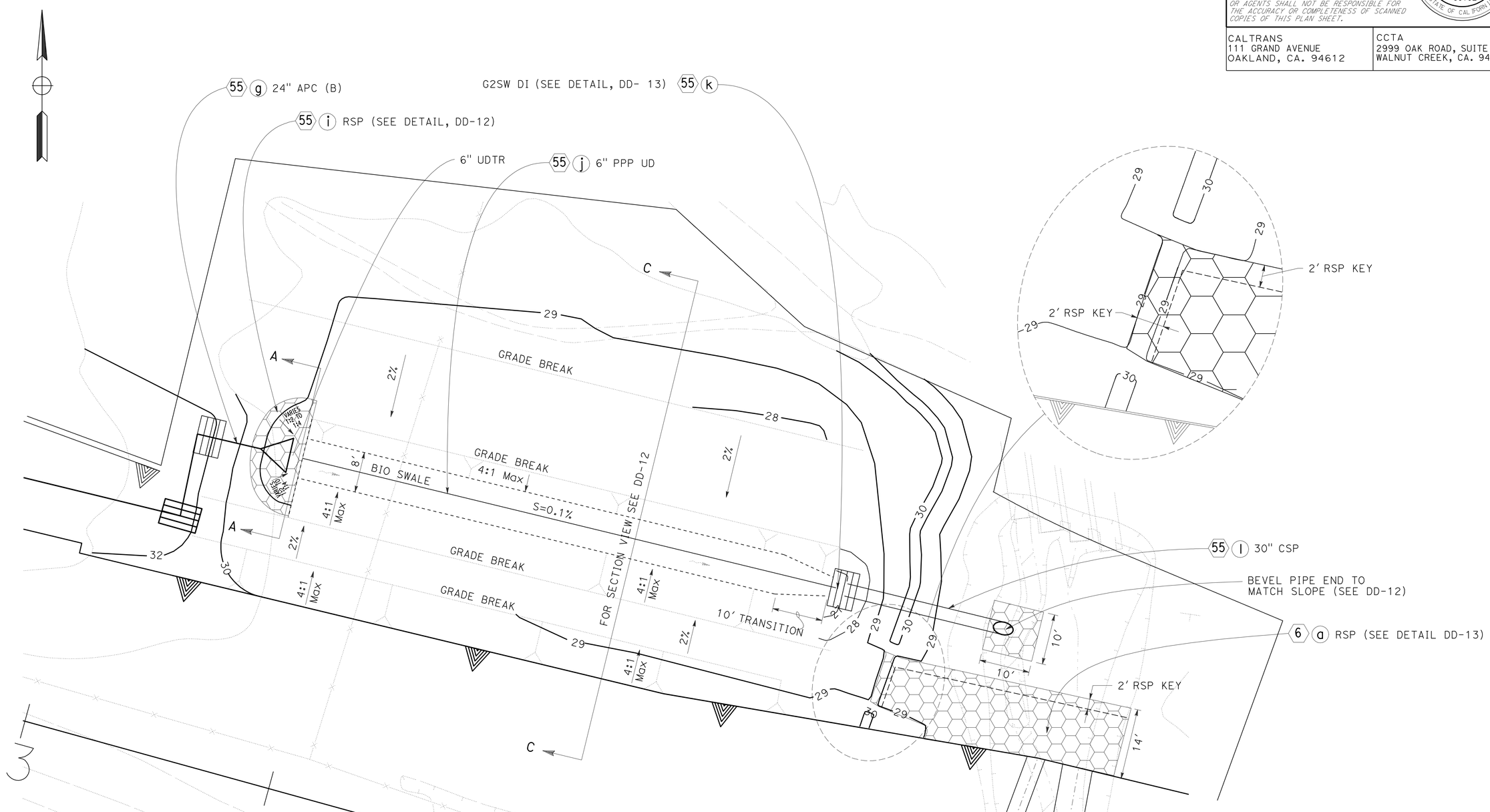

DRAINAGE DETAILS

NO SCALE

DD-11

STATE OF CALIFORNIA - DEPARTMENT OF TRANSPORTATION

FUNCTIONAL SUPERVISOR: JOSEPH E. PETERSON

CALCULATED-DESIGNED BY: SHARON L. PATCH

CHECKED BY: KATHLEEN M. REILLY

REVISED BY: SP

DATE REVISED: 2/9/11

LAST REVISION 02-09-11 | DATE PLOTTED => 13-JUN-2011 | TIME PLOTTED => 10:02

BORDER LAST REVISED 4/11/2008 | RELATIVE BORDER SCALE IS IN INCHES 0 1 2 3 | USERNAME => trmikesl | DGN FILE => 42285E1c011.dgn | CU 04275 | EA 2285E1

Dist	COUNTY	ROUTE	POST MILES TOTAL PROJECT	SHEET No.	TOTAL SHEETS
04	CC	4	R26.6/R27.5	129	746

REGISTERED CIVIL ENGINEER — DATE: 2/9/11

6-13-11
PLANS APPROVAL DATE

REGISTERED PROFESSIONAL ENGINEER — Joseph E. Peterson — No. 42777 — Exp. 3-31-12 — CIVIL — STATE OF CALIFORNIA

THE STATE OF CALIFORNIA OR ITS OFFICERS OR AGENTS SHALL NOT BE RESPONSIBLE FOR THE ACCURACY OR COMPLETENESS OF SCANNED COPIES OF THIS PLAN SHEET.

CALTRANS
111 GRAND AVENUE
OAKLAND, CA. 94612

CCTA
2999 OAK ROAD, SUITE 100
WALNUT CREEK, CA. 94597

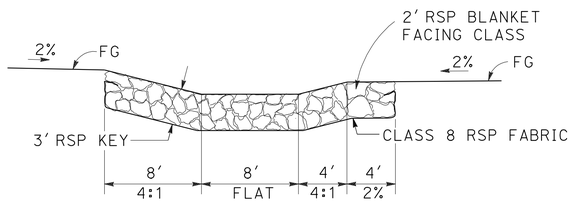

SECTION A-A

NOTE: RSP KEY: DEPTH = 3'
WIDTH = 2'

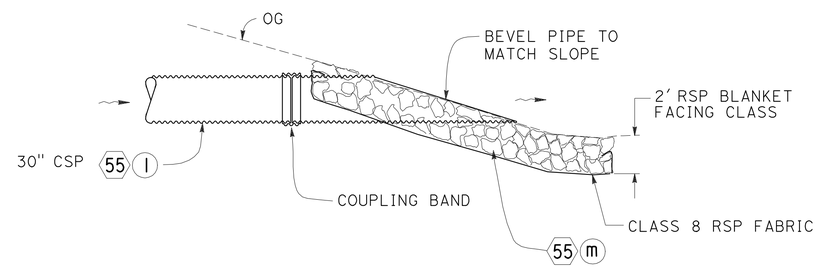

BEVEL PIPE DETAIL

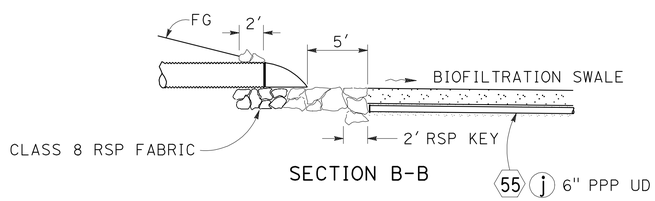

SECTION B-B

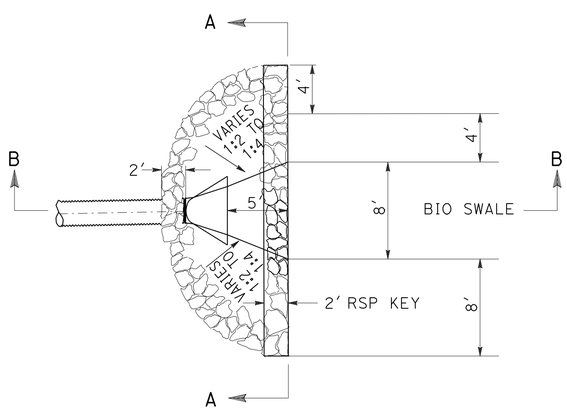

RSP DETAIL

55 i

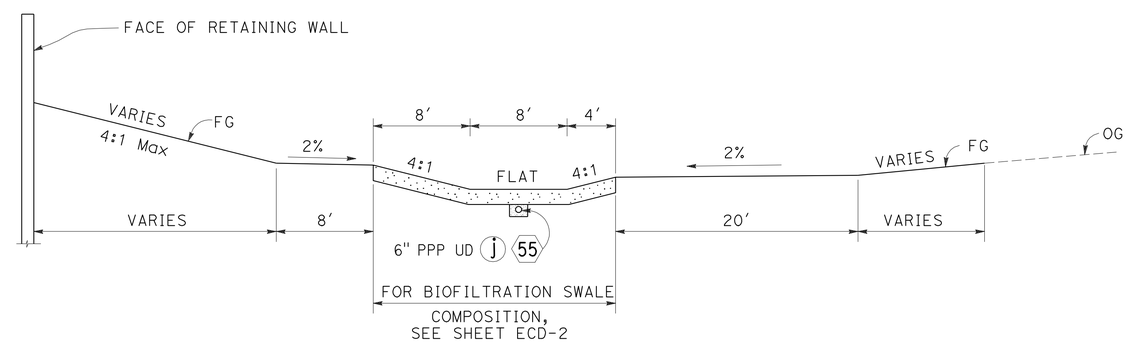

SECTION C-C

SLOPE = 1.0%

64.16' Lt "RWN" 43+21 to 68.05' Lt "RWN" 44+46

UNLINED TRAPEZOID DITCH

4 a

DRAINAGE DETAILS

NO SCALE

DD-12

REVISED BY	DATE REVISED
SP	2/9/11

CALCULATED-DESIGNED BY: SHARON L. PATCH
CHECKED BY: KATHLEEN M. REILLY
FUNCTIONAL SUPERVISOR: JOSEPH E. PETERSON

STATE OF CALIFORNIA - DEPARTMENT OF TRANSPORTATION
Caltrans

LAST REVISION 02-09-11 | DATE PLOTTED => 13-JUN-2011 | TIME PLOTTED => 10:02

Dist	COUNTY	ROUTE	POST MILES TOTAL PROJECT	SHEET No.	TOTAL SHEETS
04	CC	4	R26.6/R27.5	130	746

REGISTERED CIVIL ENGINEER — DATE: 2/9/11

6-13-11
PLANS APPROVAL DATE

REGISTERED PROFESSIONAL ENGINEER — Joseph E. Peterson — No. 42777 — Exp. 3-31-12 — CIVIL — STATE OF CALIFORNIA

THE STATE OF CALIFORNIA OR ITS OFFICERS OR AGENTS SHALL NOT BE RESPONSIBLE FOR THE ACCURACY OR COMPLETENESS OF SCANNED COPIES OF THIS PLAN SHEET.

CALTRANS
111 GRAND AVENUE
OAKLAND, CA. 94612

CCTA
2999 OAK ROAD, SUITE 100
WALNUT CREEK, CA. 94597

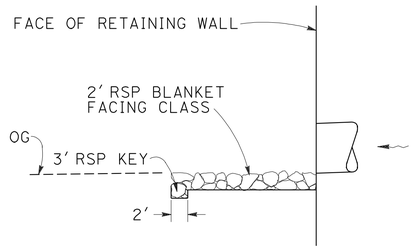

SECTION B-B

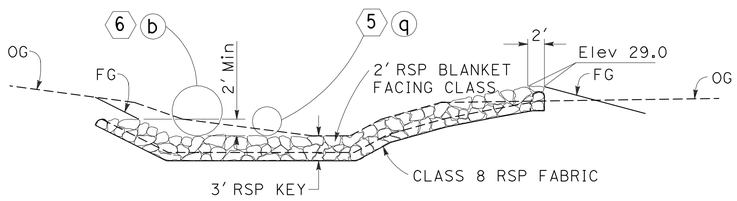

SECTION A-A

NOTE:

SEE Std PLAN D73, G2 INLET, FOR DETAILS NOT SHOWN.

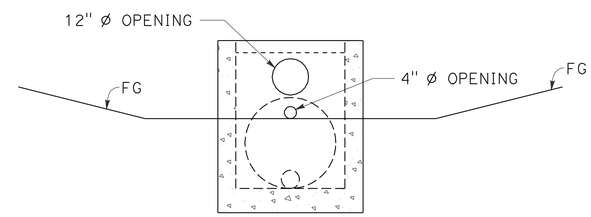

SECTION A-A

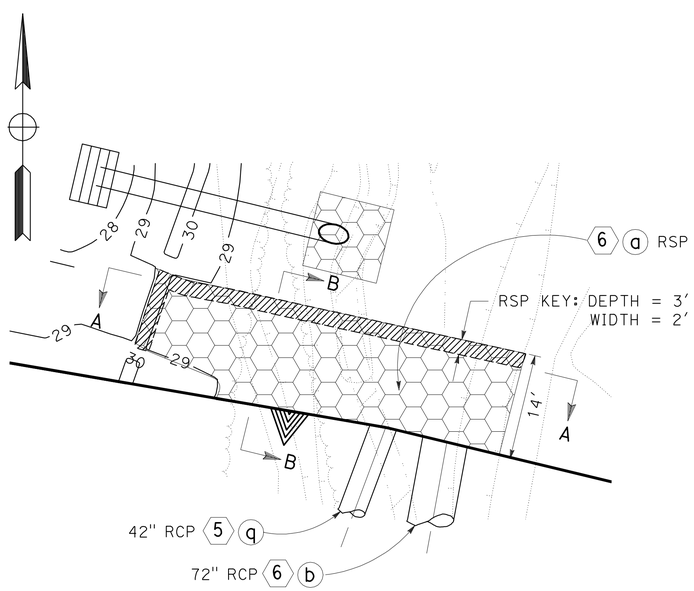

RSP DETAIL

6 a

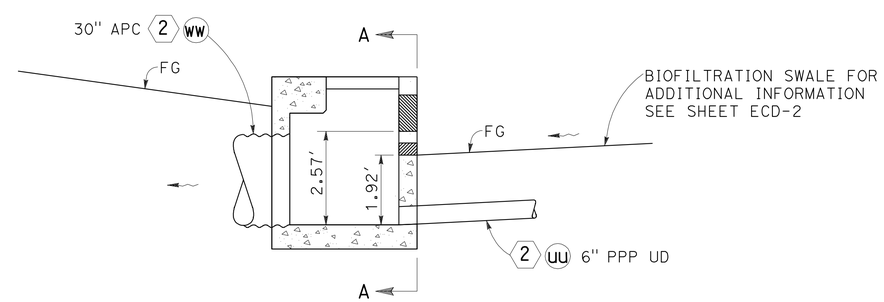

G2SW DI

2 vv

DRAINAGE DETAILS

NO SCALE

DD-13

LAST REVISION	02-09-11
DATE PLOTTED =>	13-JUN-2011
TIME PLOTTED =>	10:02

STATE OF CALIFORNIA - DEPARTMENT OF TRANSPORTATION

Caltrans

FUNCTIONAL SUPERVISOR: JOSEPH E. PETERSON

CALCULATED-DESIGNED BY: SHARON L. PATCH

CHECKED BY: KATHLEEN M. REILLY

REVISED BY: SP

DATE REVISED: 2/9/11

Dist	COUNTY	ROUTE	POST MILES TOTAL PROJECT	SHEET No.	TOTAL SHEETS
04	CC	4	R26.6/R27.5	131	746

REGISTERED CIVIL ENGINEER — DATE: 2/9/11

6-13-11
PLANS APPROVAL DATE

REGISTERED PROFESSIONAL ENGINEER — Joseph E. Peterson — No. 42777 — Exp. 3-31-12 — CIVIL — STATE OF CALIFORNIA

THE STATE OF CALIFORNIA OR ITS OFFICERS OR AGENTS SHALL NOT BE RESPONSIBLE FOR THE ACCURACY OR COMPLETENESS OF SCANNED COPIES OF THIS PLAN SHEET.

CALTRANS
111 GRAND AVENUE
OAKLAND, CA. 94612

CCTA
2999 OAK ROAD, SUITE 100
WALNUT CREEK, CA. 94597

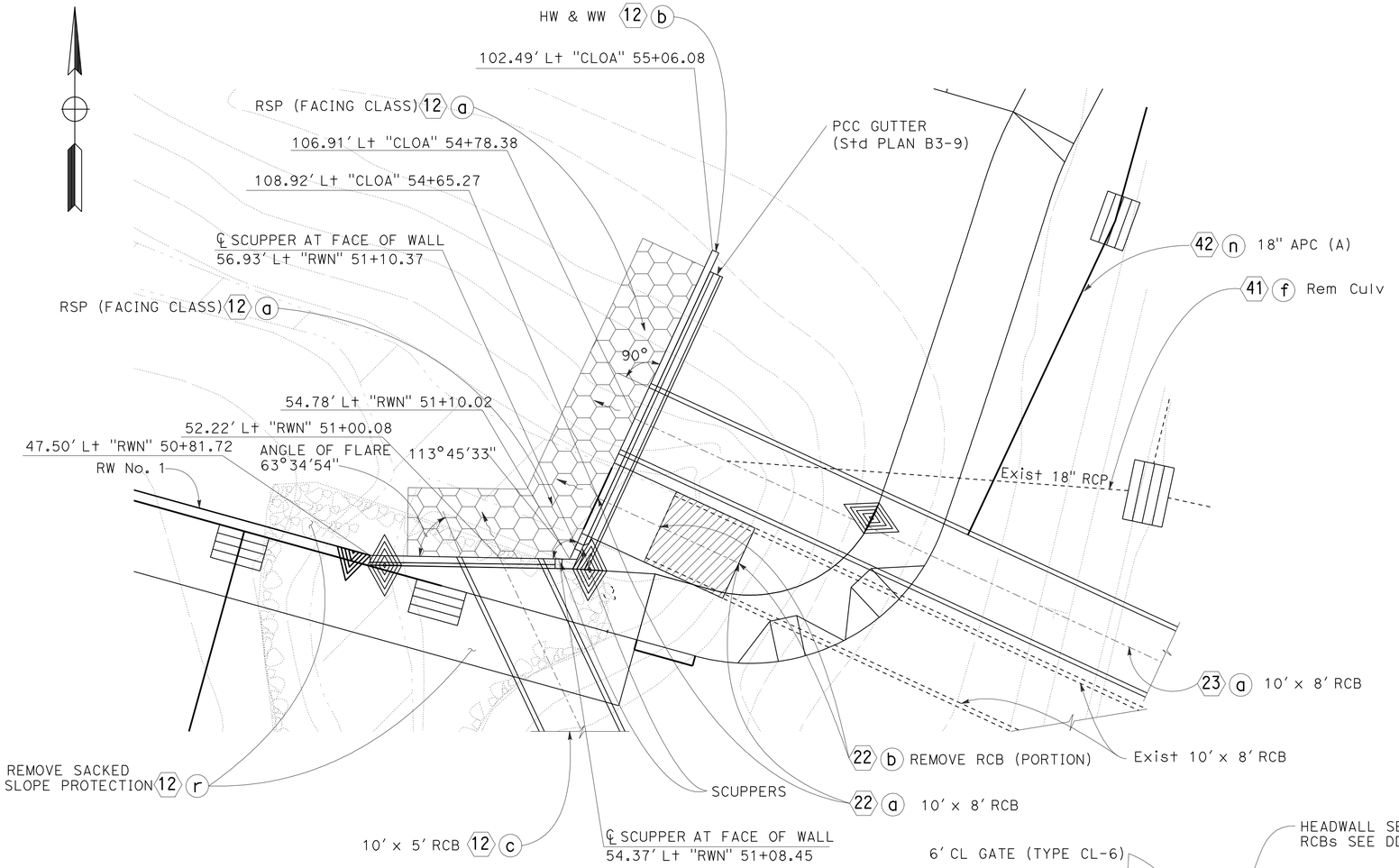

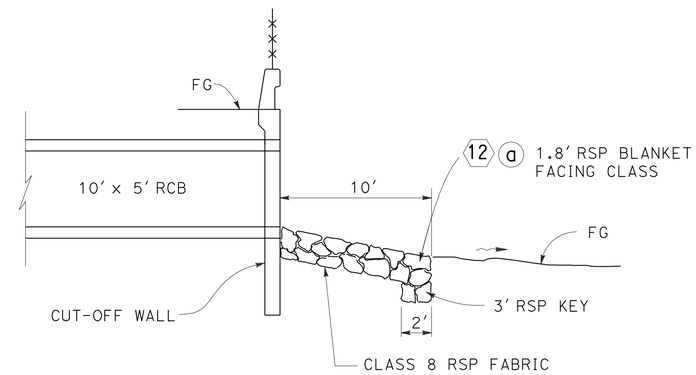

SECTION A-A

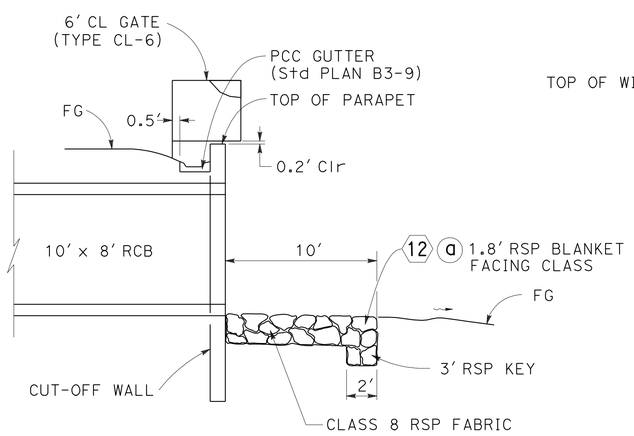

SECTION B-B

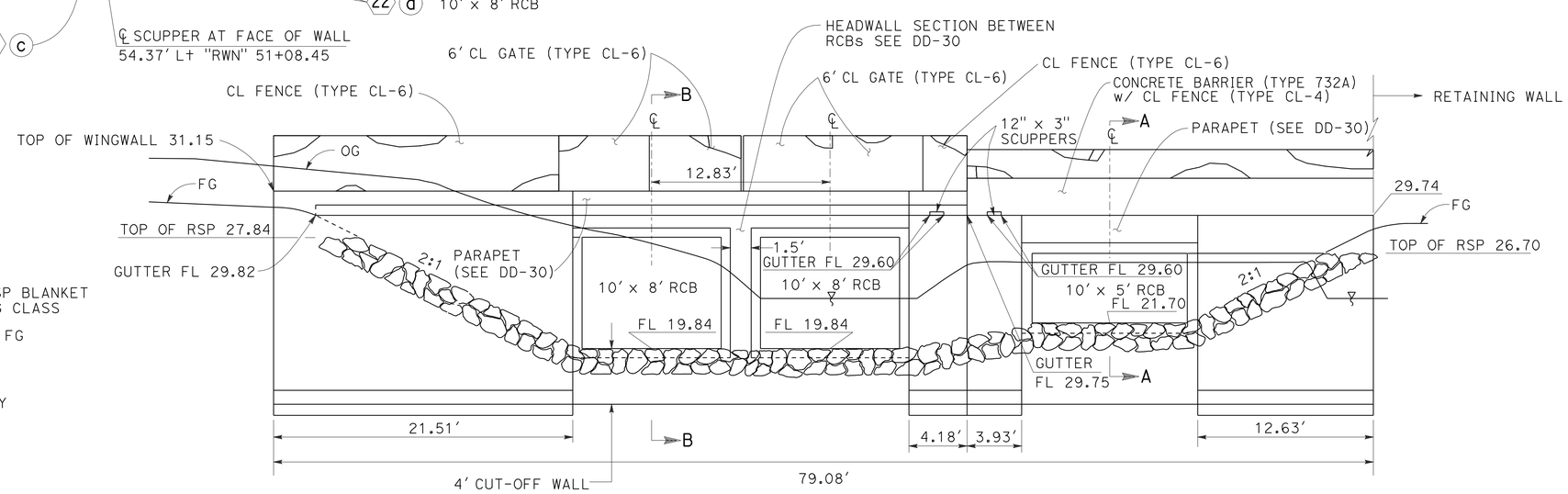

HEADWALL

12 b

DRAINAGE DETAILS

NO SCALE

DD-14

STATE OF CALIFORNIA - DEPARTMENT OF TRANSPORTATION

Caltrans

FUNCTIONAL SUPERVISOR: JOSEPH E. PETERSON

CALCULATED-DESIGNED BY: SHARON L. PATCH

CHECKED BY: KATHLEEN M. REILLY

REVISED BY: SP

DATE REVISED: 2/9/11

LAST REVISION 02-09-11

DATE PLOTTED => 13-JUN-2011
TIME PLOTTED => 10:03

Dist	COUNTY	ROUTE	POST MILES TOTAL PROJECT	SHEET No.	TOTAL SHEETS
04	CC	4	R26.6/R27.5	132	746

REGISTERED CIVIL ENGINEER — DATE 2/9/11

6-13-11
PLANS APPROVAL DATE

REGISTERED PROFESSIONAL ENGINEER — Joseph E. Peterson — No. 42777 — Exp. 3-31-12 — CIVIL — STATE OF CALIFORNIA

THE STATE OF CALIFORNIA OR ITS OFFICERS OR AGENTS SHALL NOT BE RESPONSIBLE FOR THE ACCURACY OR COMPLETENESS OF SCANNED COPIES OF THIS PLAN SHEET.

CALTRANS
111 GRAND AVENUE
OAKLAND, CA. 94612

CCTA
2999 OAK ROAD, SUITE 100
WALNUT CREEK, CA. 94597

NOTE:
FOR DETAILS NOT SHOWN, SEE SHEET DD-27

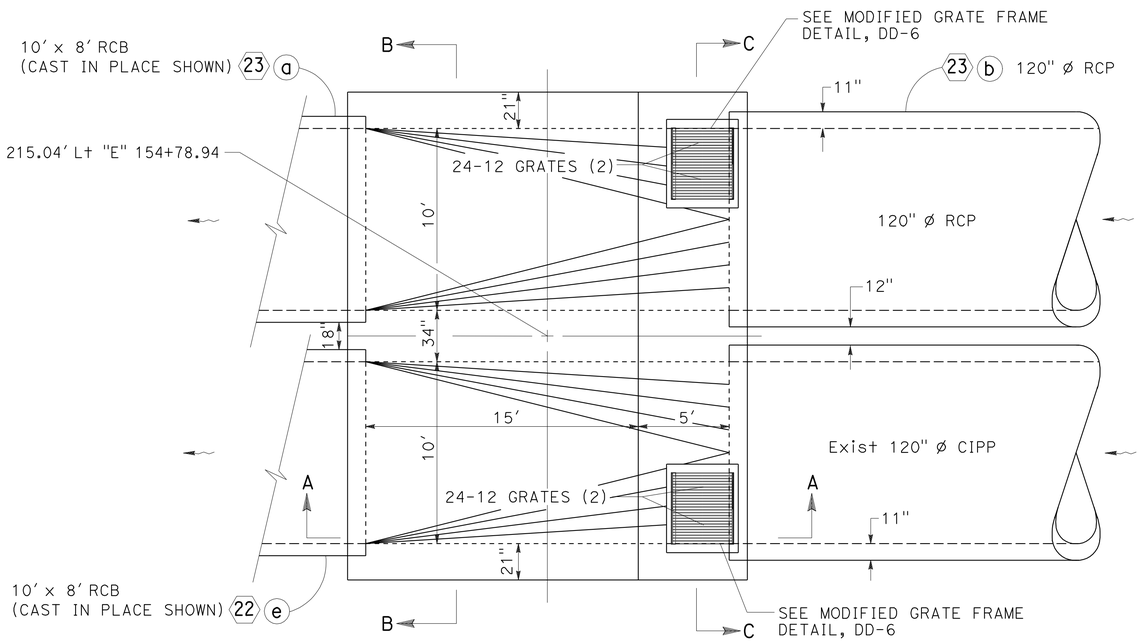

PLAN

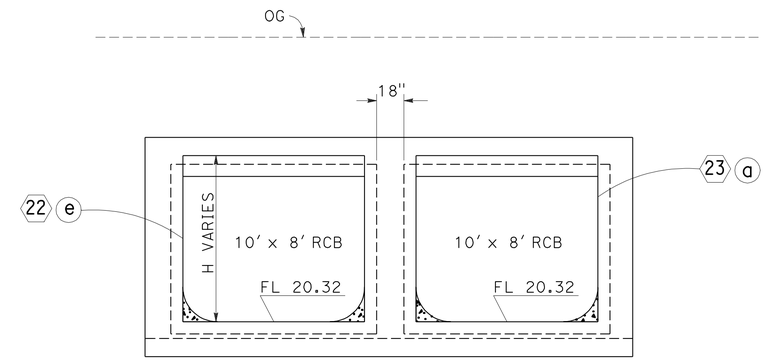

SECTION B-B

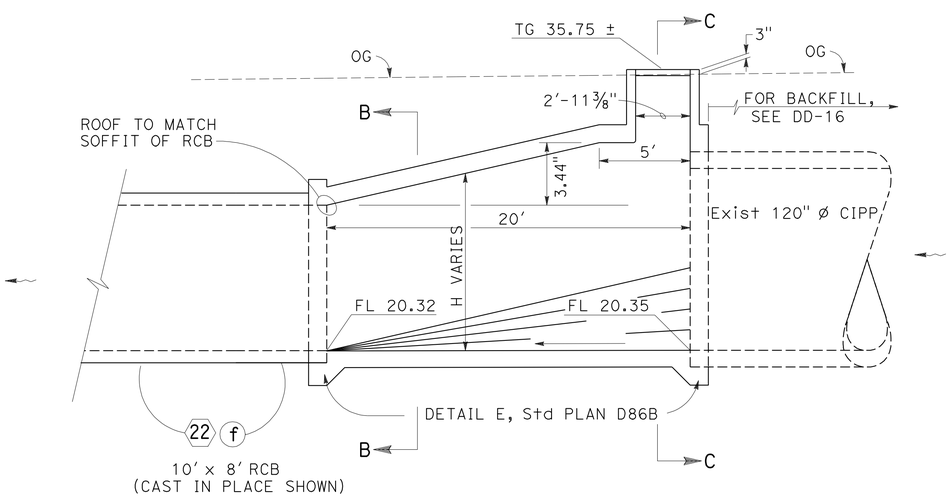

SECTION A-A

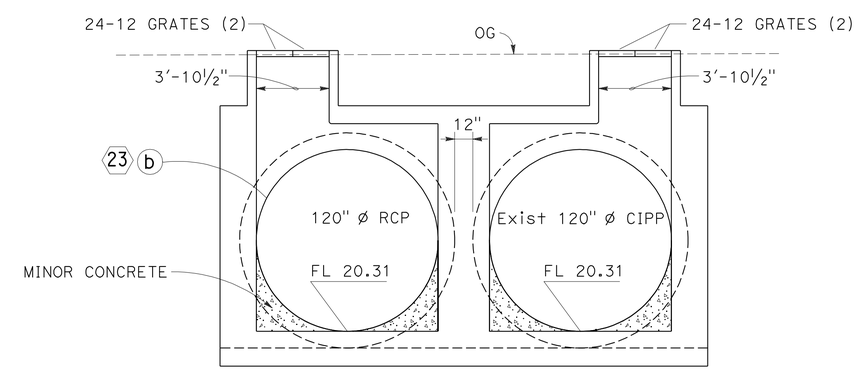

SECTION C-C

TRANSITION STRUCTURE #2

22 f

DRAINAGE DETAILS

NO SCALE

DD-15

STATE OF CALIFORNIA - DEPARTMENT OF TRANSPORTATION

FUNCTIONAL SUPERVISOR: JOSEPH E. PETERSON

CALCULATED-DESIGNED BY: SHARON L. PATCH

CHECKED BY: KATHLEEN M. REILLY

REVISED BY: SP — DATE REVISED: 2/9/11

LAST REVISION 02-09-11 — DATE PLOTTED => 13-JUN-2011 — TIME PLOTTED => 10:03

Dist	COUNTY	ROUTE	POST MILES TOTAL PROJECT	SHEET No.	TOTAL SHEETS
04	CC	4	R26.6/R27.5	133	746

REGISTERED CIVIL ENGINEER — DATE: 2/9/11

6-13-11
PLANS APPROVAL DATE

REGISTERED PROFESSIONAL ENGINEER — Joseph E. Peterson — No. 42777 — Exp. 3-31-12 — CIVIL — STATE OF CALIFORNIA

THE STATE OF CALIFORNIA OR ITS OFFICERS OR AGENTS SHALL NOT BE RESPONSIBLE FOR THE ACCURACY OR COMPLETENESS OF SCANNED COPIES OF THIS PLAN SHEET.

CALTRANS
111 GRAND AVENUE
OAKLAND, CA. 94612

CCTA
2999 OAK ROAD, SUITE 100
WALNUT CREEK, CA. 94597

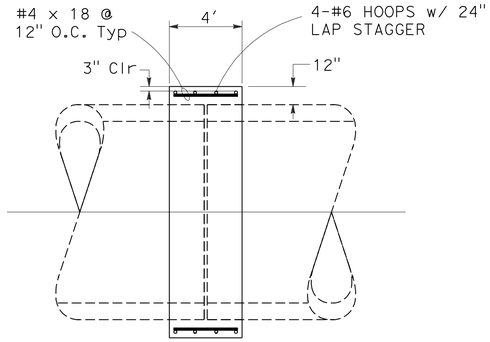

SECTION B-B

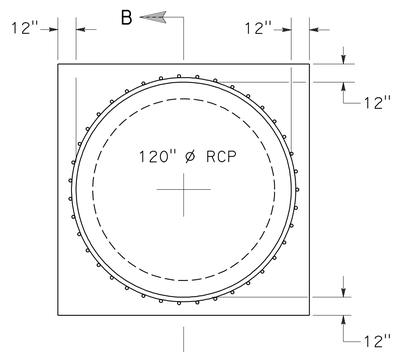

SECTION A-A

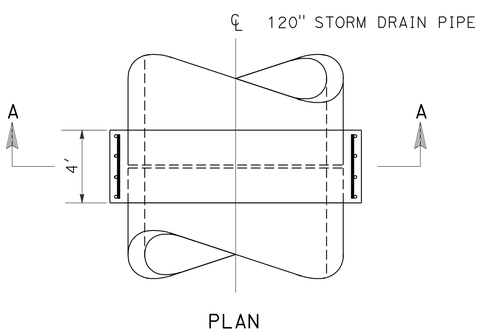

PLAN

COLLAR DETAIL

23 b,c

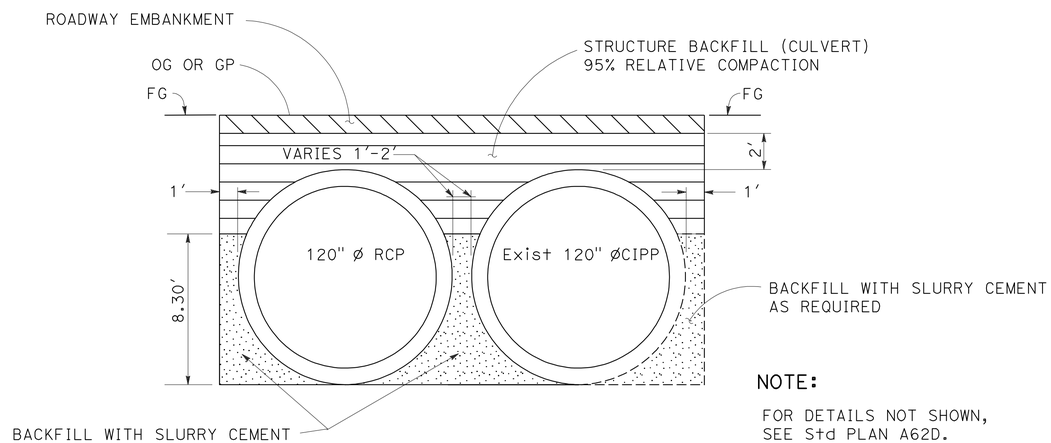

NOTE:

FOR DETAILS NOT SHOWN,
SEE Std PLAN A62D.

BACKFILL DETAIL

23 b

DRAINAGE DETAILS

NO SCALE

DD-16

STATE OF CALIFORNIA - DEPARTMENT OF TRANSPORTATION
Caltrans

FUNCTIONAL SUPERVISOR: JOSEPH E. PETERSON
CALCULATED-DESIGNED BY: SHARON L. PATCH
CHECKED BY: KATHLEEN M. REILLY
REVISED BY: SP
DATE REVISED: 2/9/11

LAST REVISION 02-09-11 | DATE PLOTTED => 13-JUN-2011 | TIME PLOTTED => 10:03

Dist	COUNTY	ROUTE	POST MILES TOTAL PROJECT	SHEET No.	TOTAL SHEETS
04	CC	4	R26.6/R27.5	134	746

REGISTERED CIVIL ENGINEER — DATE: 2/9/11

6-13-11
PLANS APPROVAL DATE

REGISTERED PROFESSIONAL ENGINEER — Joseph E. Peterson — No. 42777 — Exp. 3-31-12 — CIVIL — STATE OF CALIFORNIA

THE STATE OF CALIFORNIA OR ITS OFFICERS OR AGENTS SHALL NOT BE RESPONSIBLE FOR THE ACCURACY OR COMPLETENESS OF SCANNED COPIES OF THIS PLAN SHEET.

CALTRANS
111 GRAND AVENUE
OAKLAND, CA. 94612

CCTA
2999 OAK ROAD, SUITE 100
WALNUT CREEK, CA. 94597

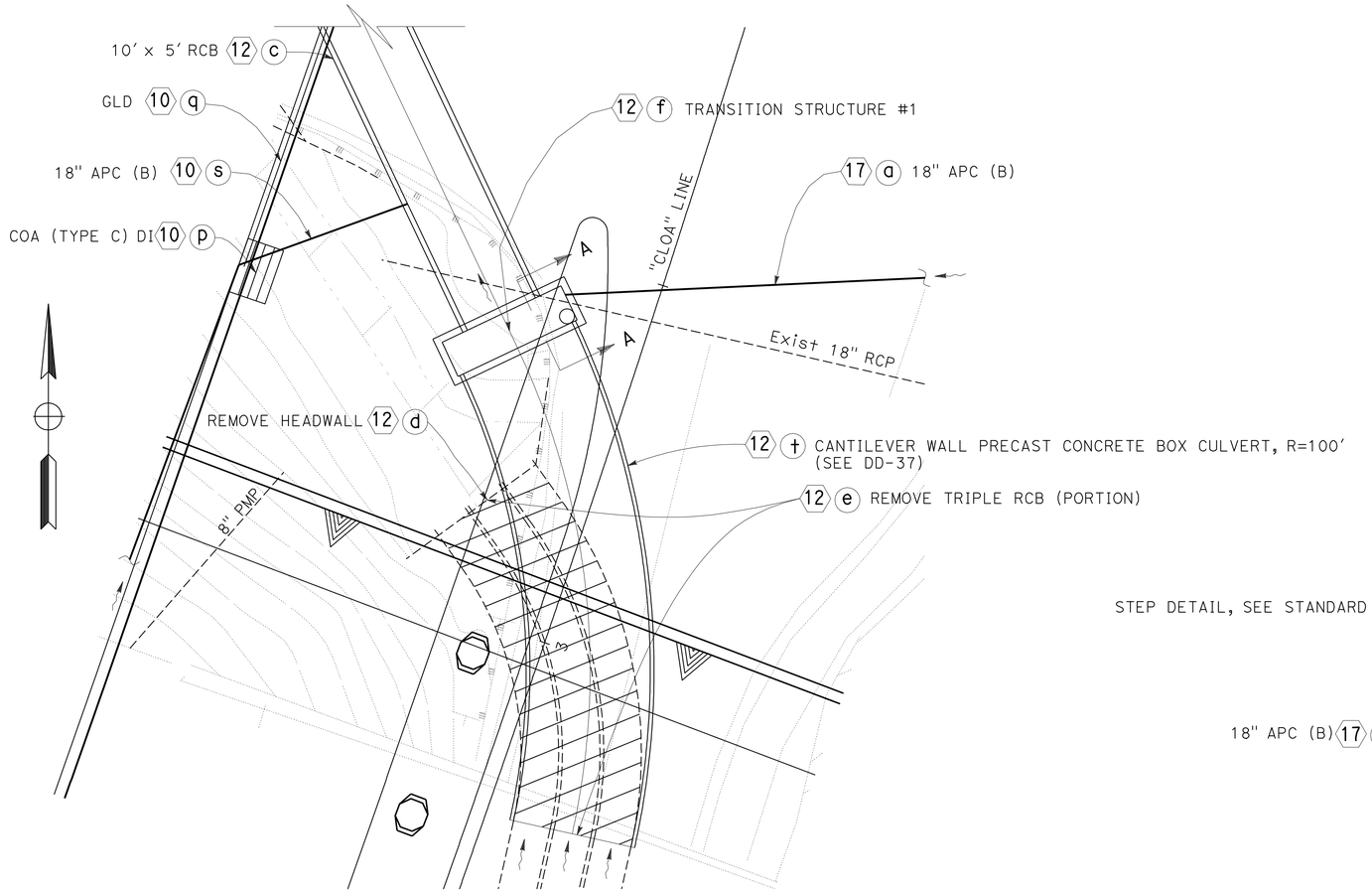

PLAN VIEW

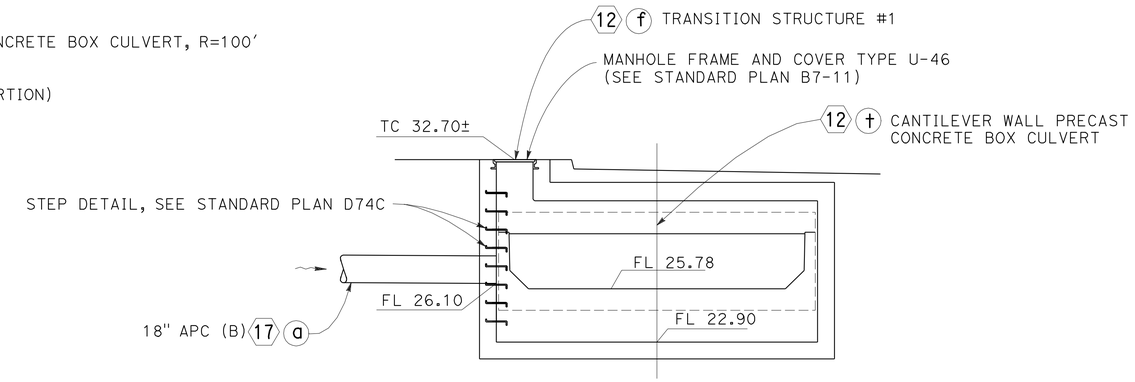

SECTION C-C

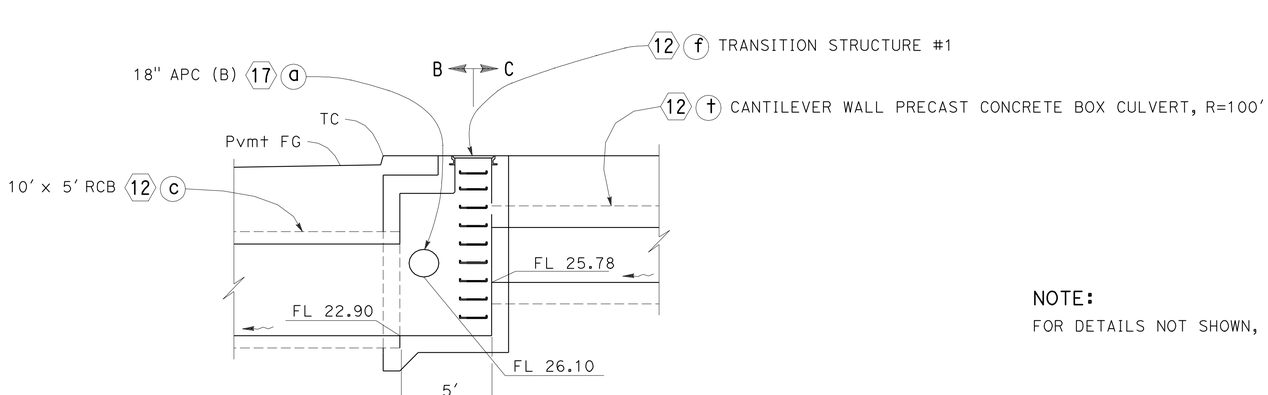

SECTION A-A

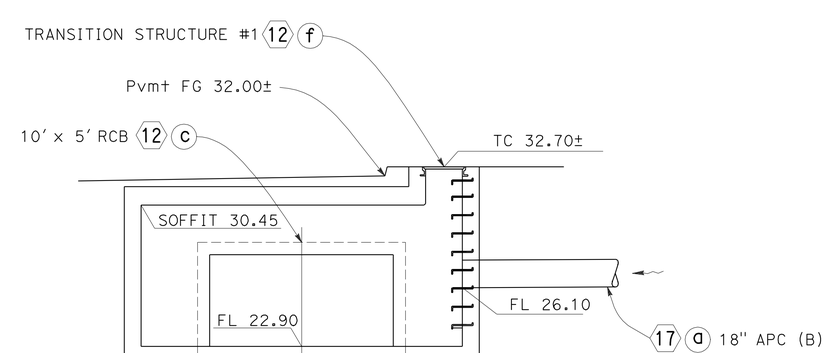

SECTION B-B

NOTE:
FOR DETAILS NOT SHOWN, SEE DD-28.

TRANSITION STRUCTURE #1
12 f

DRAINAGE DETAILS
NO SCALE

DD-17

REVISED BY	DATE REVISED
SP	2/9/11

CALCULATED-DESIGNED BY: SHARON L. PATCH
CHECKED BY: KATHLEEN M. REILLY
FUNCTIONAL SUPERVISOR: JOSEPH E. PETERSON

STATE OF CALIFORNIA - DEPARTMENT OF TRANSPORTATION
Caltrans

LAST REVISION 02-09-11 | DATE PLOTTED => 13-JUN-2011 | TIME PLOTTED => 10:03

Dist	COUNTY	ROUTE	POST MILES TOTAL PROJECT	SHEET No.	TOTAL SHEETS
04	CC	4	R26.6/R27.5	135	746

REGISTERED CIVIL ENGINEER — Joseph E. Peterson — DATE 2/9/11

6-13-11
PLANS APPROVAL DATE

REGISTERED PROFESSIONAL ENGINEER — Joseph E. Peterson — No. 42777 — Exp. 3-31-12 — CIVIL — STATE OF CALIFORNIA

THE STATE OF CALIFORNIA OR ITS OFFICERS OR AGENTS SHALL NOT BE RESPONSIBLE FOR THE ACCURACY OR COMPLETENESS OF SCANNED COPIES OF THIS PLAN SHEET.

CALTRANS
111 GRAND AVENUE
OAKLAND, CA. 94612

CCTA
2999 OAK ROAD, SUITE 100
WALNUT CREEK, CA. 94597

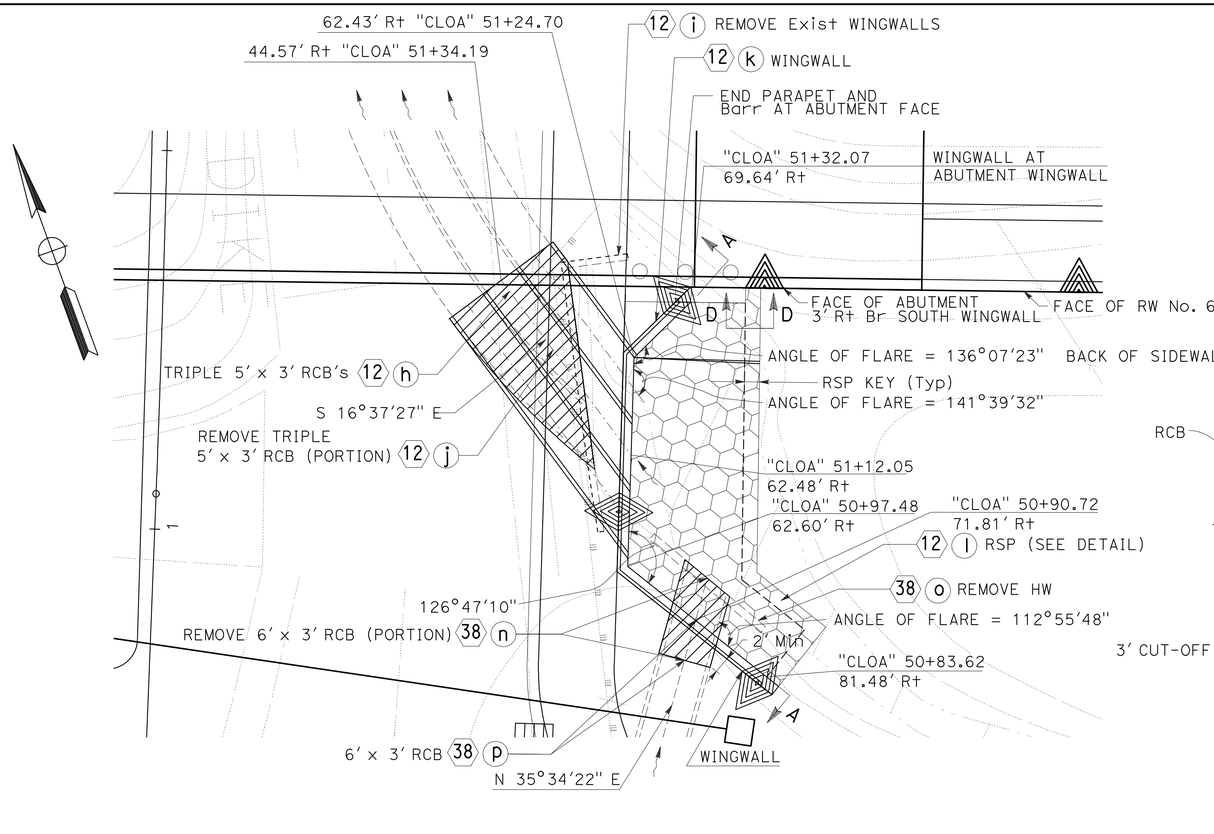

PLAN

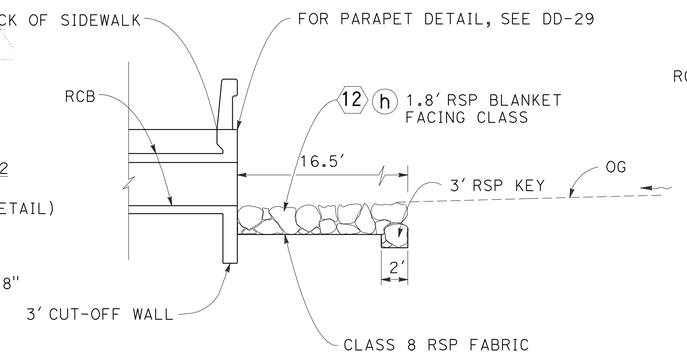

SECTION B-B

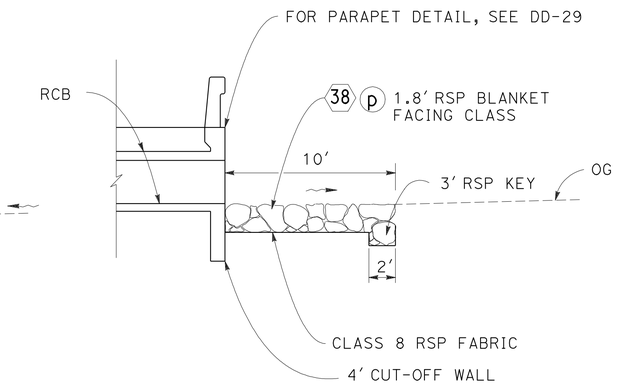

SECTION C-C

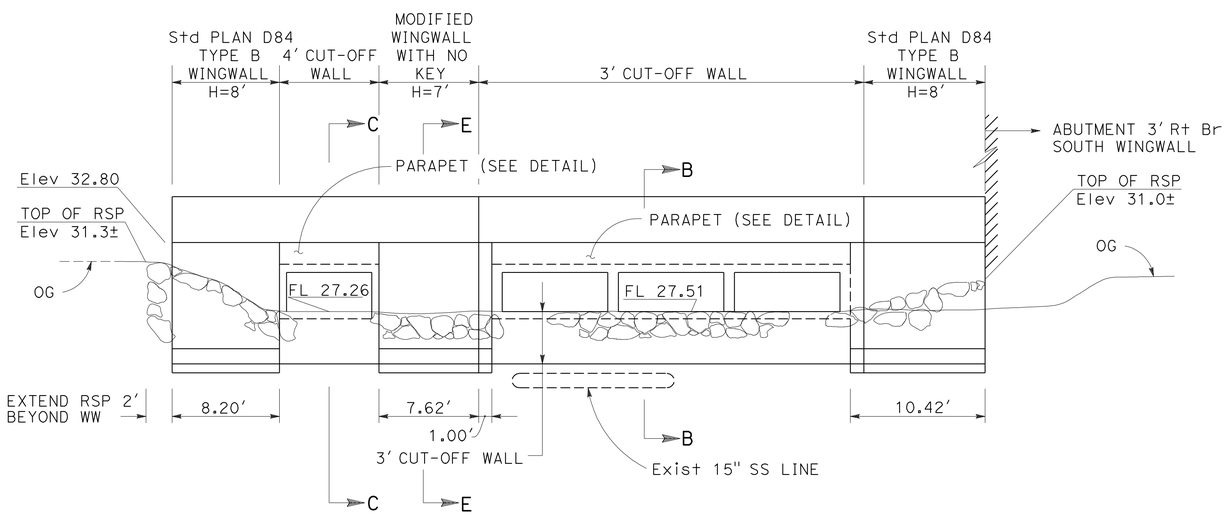

SECTION A-A

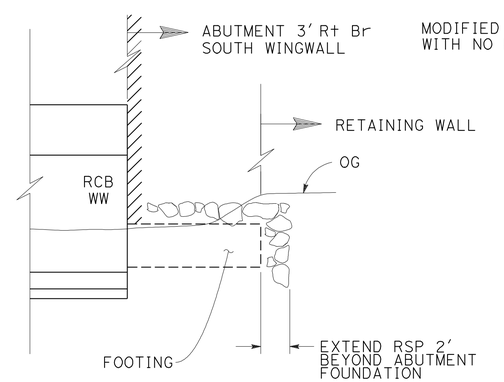

SECTION D-D

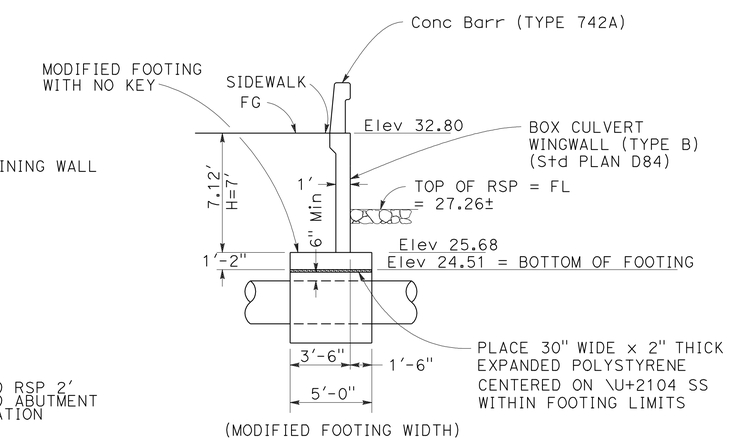

SECTION E-E

TRIPLE 5' x 3' RCB & RSP DETAILS

DRAINAGE DETAILS

NO SCALE

DD-18

REVISED BY	DATE REVISED
SP	2/9/11

CALCULATED-DESIGNED BY: SHARON L. PATCH
CHECKED BY: KATHLEEN M. REILLY
FUNCTIONAL SUPERVISOR: JOSEPH E. PETERSON

STATE OF CALIFORNIA - DEPARTMENT OF TRANSPORTATION
Caltrans

LAST REVISION 02-09-11 | DATE PLOTTED => 13-JUN-2011 | TIME PLOTTED => 10:03

Dist	COUNTY	ROUTE	POST MILES TOTAL PROJECT	SHEET No.	TOTAL SHEETS
04	CC	4	R26.6/R27.5	136	746

REGISTERED CIVIL ENGINEER — DATE: 2/9/11

6-13-11
PLANS APPROVAL DATE

REGISTERED PROFESSIONAL ENGINEER — Joseph E. Peterson — No. 42777 — Exp. 3-31-12 — CIVIL — STATE OF CALIFORNIA

THE STATE OF CALIFORNIA OR ITS OFFICERS OR AGENTS SHALL NOT BE RESPONSIBLE FOR THE ACCURACY OR COMPLETENESS OF SCANNED COPIES OF THIS PLAN SHEET.

CALTRANS
111 GRAND AVENUE
OAKLAND, CA. 94612

CCTA
2999 OAK ROAD, SUITE 100
WALNUT CREEK, CA. 94597

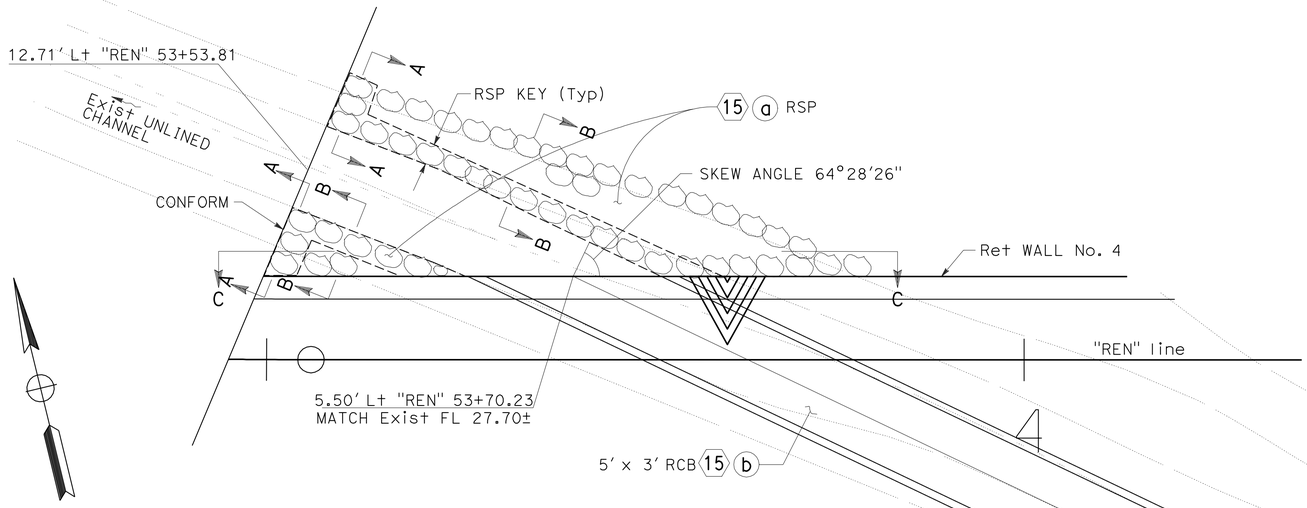

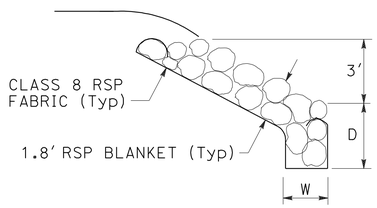

SECTION B-B

LIMITS OF RSP KEY:
DEPTH = 3'
WIDTH = 2'

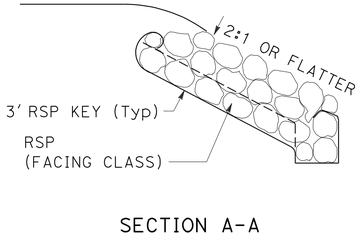

SECTION A-A

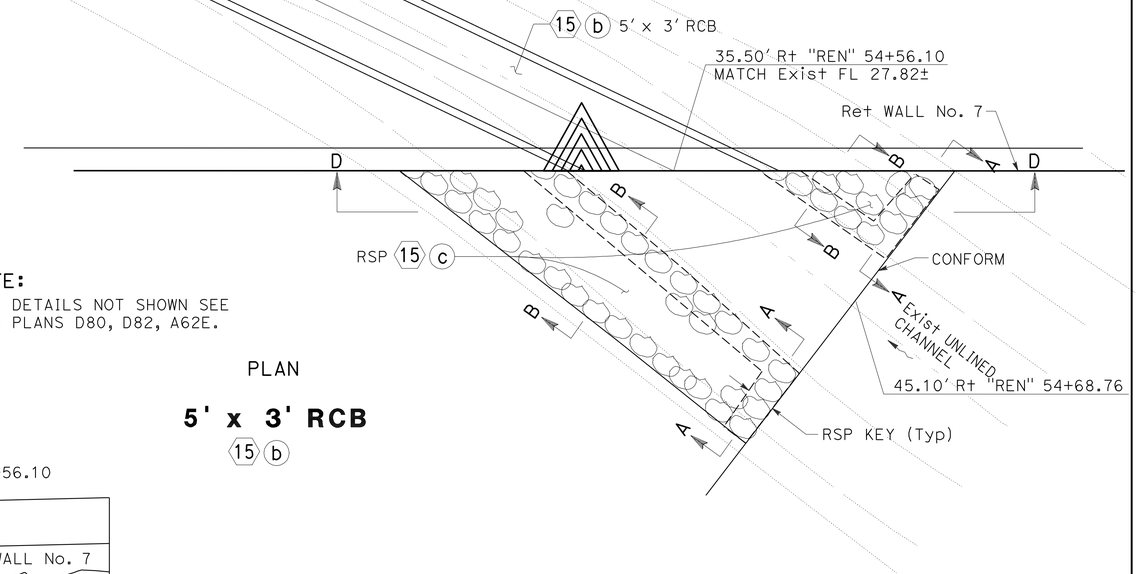

NOTE:
FOR DETAILS NOT SHOWN SEE Std PLANS D80, D82, A62E.

PLAN

5' x 3' RCB
15 b

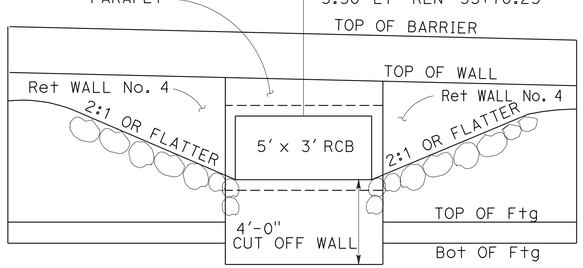

SECTION C-C

NOTE:
SEE PARAPET & BARRIER REINFORCEMENT DETAIL, SEE SHEET DD-30.

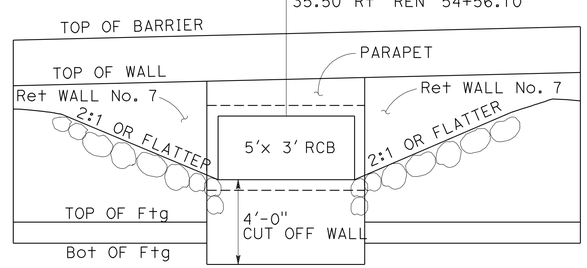

SECTION D-D

DRAINAGE DETAILS

NO SCALE

DD-19

REVISED BY	DATE REVISED
SP	2/9/11

SHARON L. PATCH — KATHLEEN M. REILLY — CALCULATED-DESIGNED BY — CHECKED BY

FUNCTIONAL SUPERVISOR: JOSEPH E. PETERSON

STATE OF CALIFORNIA - DEPARTMENT OF TRANSPORTATION — Caltrans

LAST REVISION 02-09-11 — DATE PLOTTED => 13-JUN-2011 — TIME PLOTTED => 0:03

Dist	COUNTY	ROUTE	POST MILES TOTAL PROJECT	SHEET No.	TOTAL SHEETS
04	CC	4	R26.6/R27.5	137	746

REGISTERED CIVIL ENGINEER — DATE: 2/9/11

6-13-11
PLANS APPROVAL DATE

REGISTERED PROFESSIONAL ENGINEER — Joseph E. Peterson — No. 42777 — Exp. 3-31-12 — CIVIL — STATE OF CALIFORNIA

THE STATE OF CALIFORNIA OR ITS OFFICERS OR AGENTS SHALL NOT BE RESPONSIBLE FOR THE ACCURACY OR COMPLETENESS OF SCANNED COPIES OF THIS PLAN SHEET.

CALTRANS
111 GRAND AVENUE
OAKLAND, CA. 94612

CCTA
2999 OAK ROAD, SUITE 100
WALNUT CREEK, CA. 94597

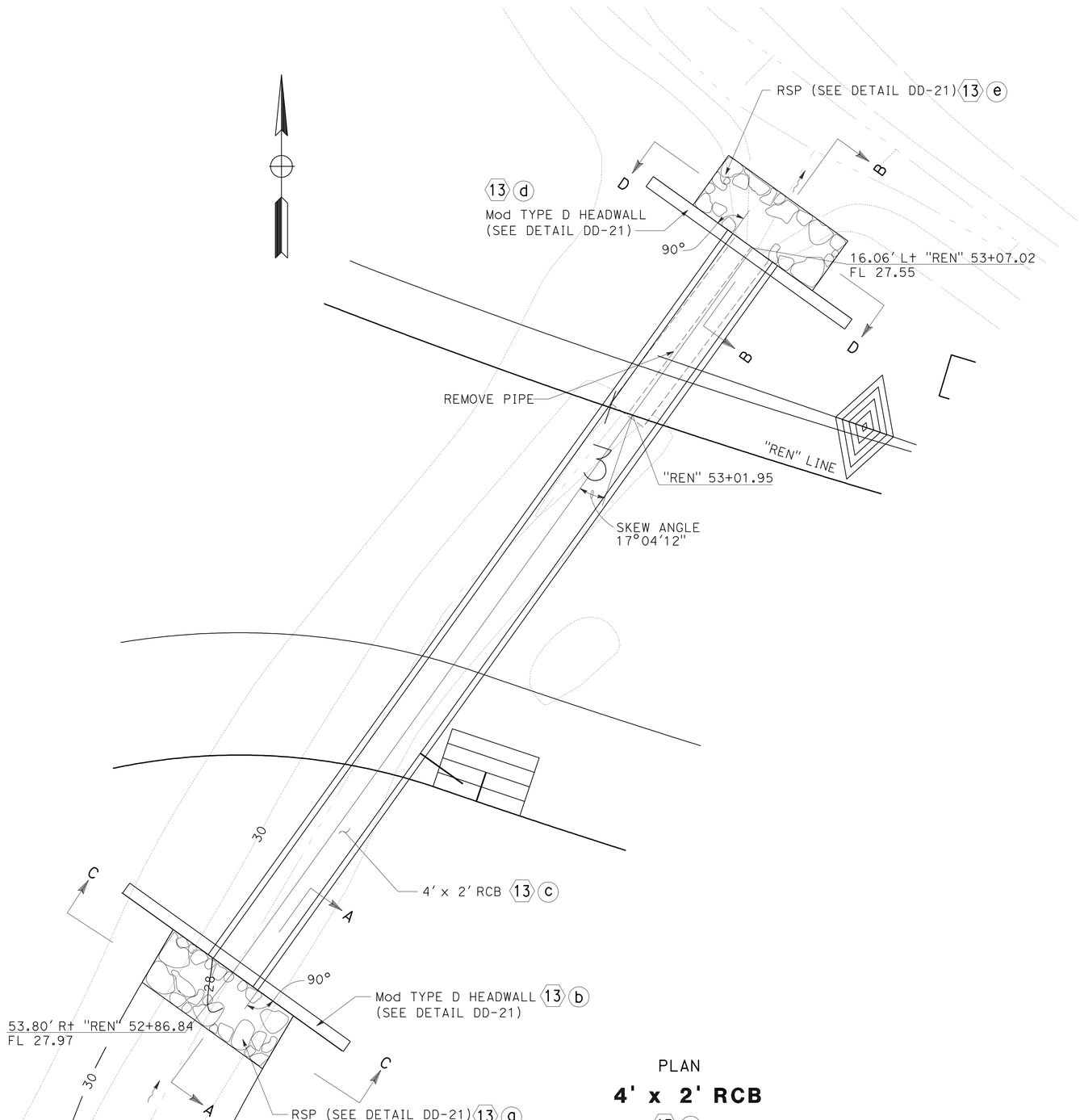

PLAN
4' x 2' RCB
13 c

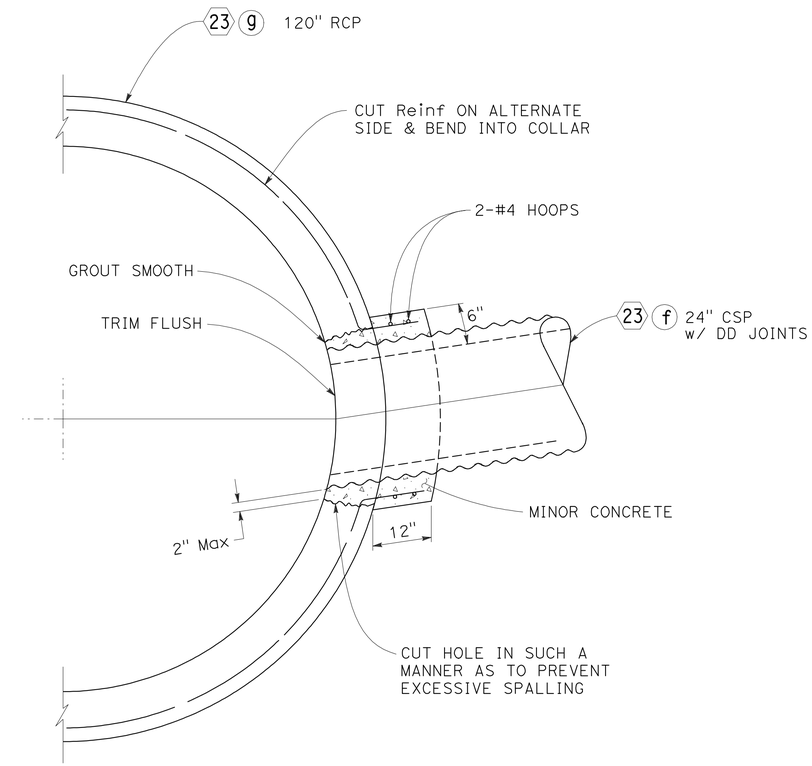

PLAN
PIPE CONNECTION
23 f

DRAINAGE DETAILS

NO SCALE

DD-20

SP	REVISED BY
2/9/11	DATE REVISED
SHARON L. PATCH	CALCULATED-DESIGNED BY
KATHLEEN M. REILLY	CHECKED BY
JOSEPH E. PETERSON	FUNCTIONAL SUPERVISOR

STATE OF CALIFORNIA - DEPARTMENT OF TRANSPORTATION

LAST REVISION 02-09-11 | DATE PLOTTED => 13-JUN-2011 | TIME PLOTTED => 10:03

Dist	COUNTY	ROUTE	POST MILES TOTAL PROJECT	SHEET No.	TOTAL SHEETS
04	CC	4	R26.6/R27.5	138	746

REGISTERED CIVIL ENGINEER — DATE 2/9/11

6-13-11
PLANS APPROVAL DATE

REGISTERED PROFESSIONAL ENGINEER — Joseph E. Peterson — No. 42777 — Exp. 3-31-12 — CIVIL — STATE OF CALIFORNIA

THE STATE OF CALIFORNIA OR ITS OFFICERS OR AGENTS SHALL NOT BE RESPONSIBLE FOR THE ACCURACY OR COMPLETENESS OF SCANNED COPIES OF THIS PLAN SHEET.

CALTRANS
111 GRAND AVENUE
OAKLAND, CA. 94612

CCTA
2999 OAK ROAD, SUITE 100
WALNUT CREEK, CA. 94597

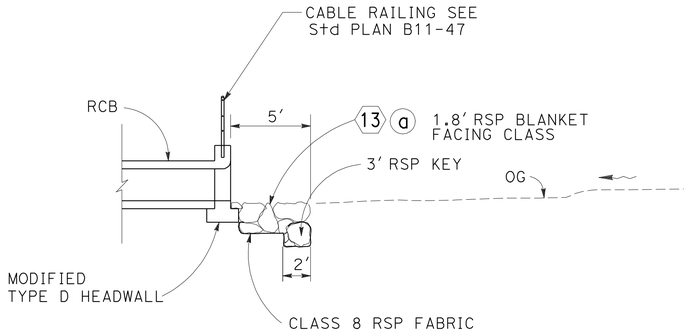

SECTION A-A

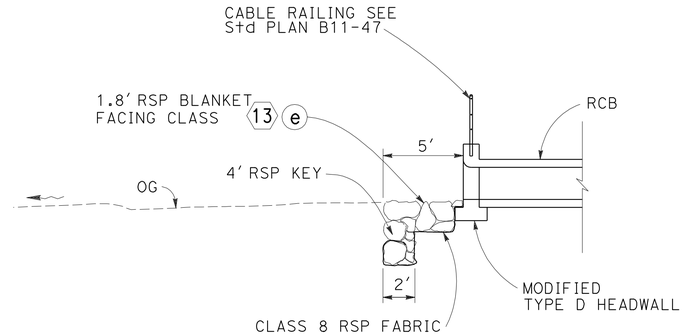

SECTION B-B

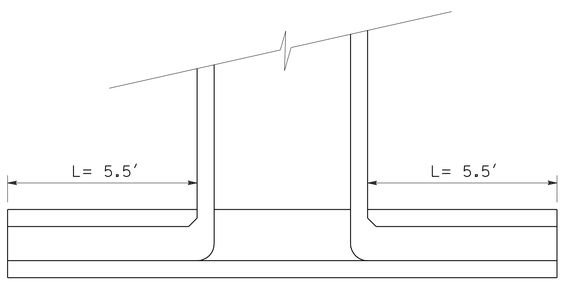

PLAN VIEW

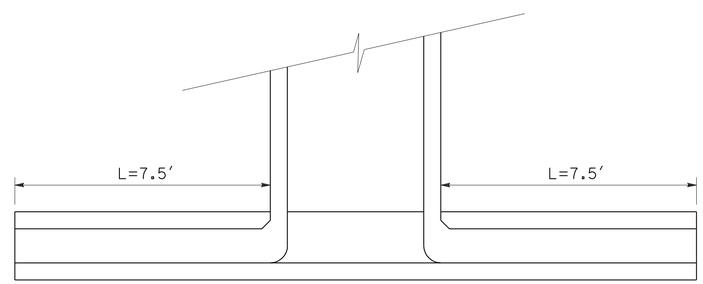

PLAN VIEW

NOTE:
FOR DETAILS NOT SHOWN
SEE Std PLANS D82, D85

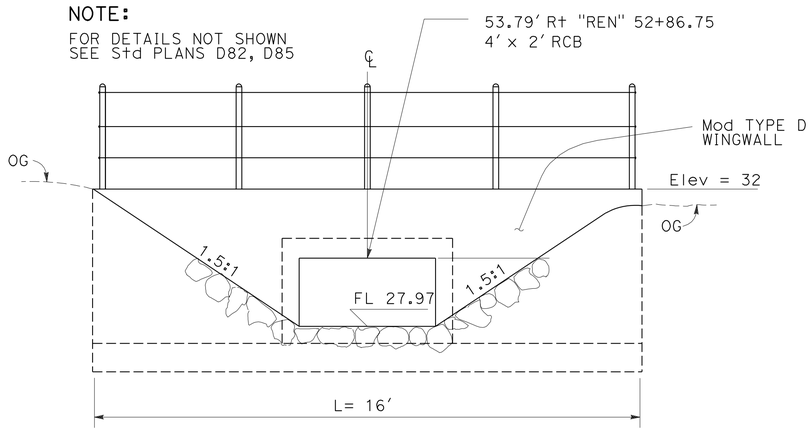

SECTION C-C

ELEVATION INLET

13 b

NOTE:
FOR DETAILS NOT SHOWN
SEE Std PLANS D82, D85

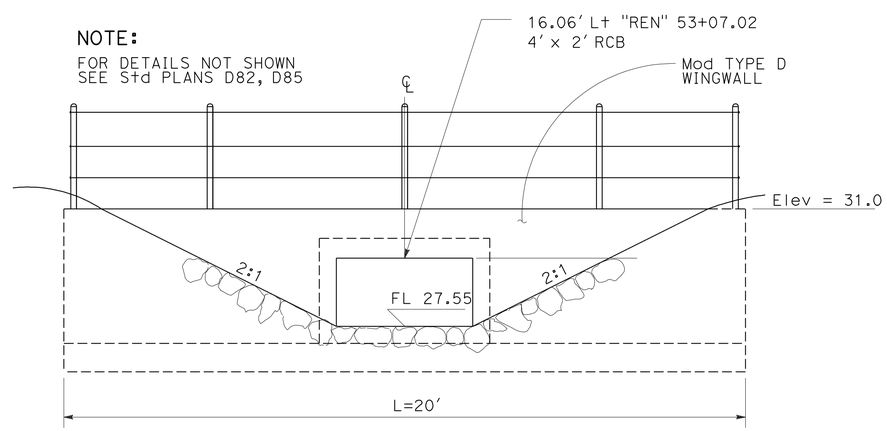

SECTION D-D

ELEVATION INLET

13 d

NOTE: SEE PARAPET DETAIL SHEET DD-30

MODIFIED TYPE D HEADWALL

DRAINAGE DETAILS
NO SCALE

DD-21

STATE OF CALIFORNIA - DEPARTMENT OF TRANSPORTATION
Caltrans

FUNCTIONAL SUPERVISOR: JOSEPH E. PETERSON
CALCULATED-DESIGNED BY: SHARON L. PATCH
CHECKED BY: KATHLEEN M. REILLY
REVISED BY: SP
DATE REVISED: 2/9/11

LAST REVISION 02-09-11
DATE PLOTTED => 13-JUN-2011
TIME PLOTTED => 10:03

Dist	COUNTY	ROUTE	POST MILES TOTAL PROJECT	SHEET No.	TOTAL SHEETS
04	CC	4	R26.6/R27.5	139	746

REGISTERED CIVIL ENGINEER — DATE: 2/9/11

6-13-11
PLANS APPROVAL DATE

REGISTERED PROFESSIONAL ENGINEER — Joseph E. Peterson — No. 42777 — Exp. 3-31-12 — CIVIL — STATE OF CALIFORNIA

THE STATE OF CALIFORNIA OR ITS OFFICERS OR AGENTS SHALL NOT BE RESPONSIBLE FOR THE ACCURACY OR COMPLETENESS OF SCANNED COPIES OF THIS PLAN SHEET.

CALTRANS
111 GRAND AVENUE
OAKLAND, CA. 94612

CCTA
2999 OAK ROAD, SUITE 100
WALNUT CREEK, CA. 94597

LOCATION	OFFSET	FLOWLINE ELEV
A	36.32′ Lt REN 56+71.39	33.48
B	43.45′ Lt REN 56+04.30	33.24
C	51.11′ Lt REN 55+32.20	32.98
D	43.15′ Lt REN 55+31.36	32.95
E	35.20′ Lt REN 55+30.51	32.92
F	29.46′ Lt REN 55+29.90	32.90
G	33.58′ Lt REN 56+73.58	33.48
H	28.11′ Lt REN 56+72.92	33.46
I	35.49′ Lt REN 56+03.45	33.21
J	20.17′ Lt REN 56+71.96	33.43
K	27.54′ Lt REN 56+02.61	33.18
L	12.23′ Lt REN 56+71.01	33.40
M	19.58′ Lt REN 56+01.76	33.15
N	26.98′ Lt REN 55+32.16	32.90

REACH	LENGTH/PIPE SIZE	
	24" CSP	48" CSP
A – B		67.47′
B – C		72.50′
C – D		8.00′
D – E		8.00′
E – F		5.77′
G – H		5.50′
H – I		69.86′
I – D		72.50′
H – J		8.00′
J – K		69.75′
K – E		72.50′
J – L		8.00′
L – M		69.63′
M – N		70.00′
B – I	8.00′	
I – K	8.00′	
K – M	8.00′	

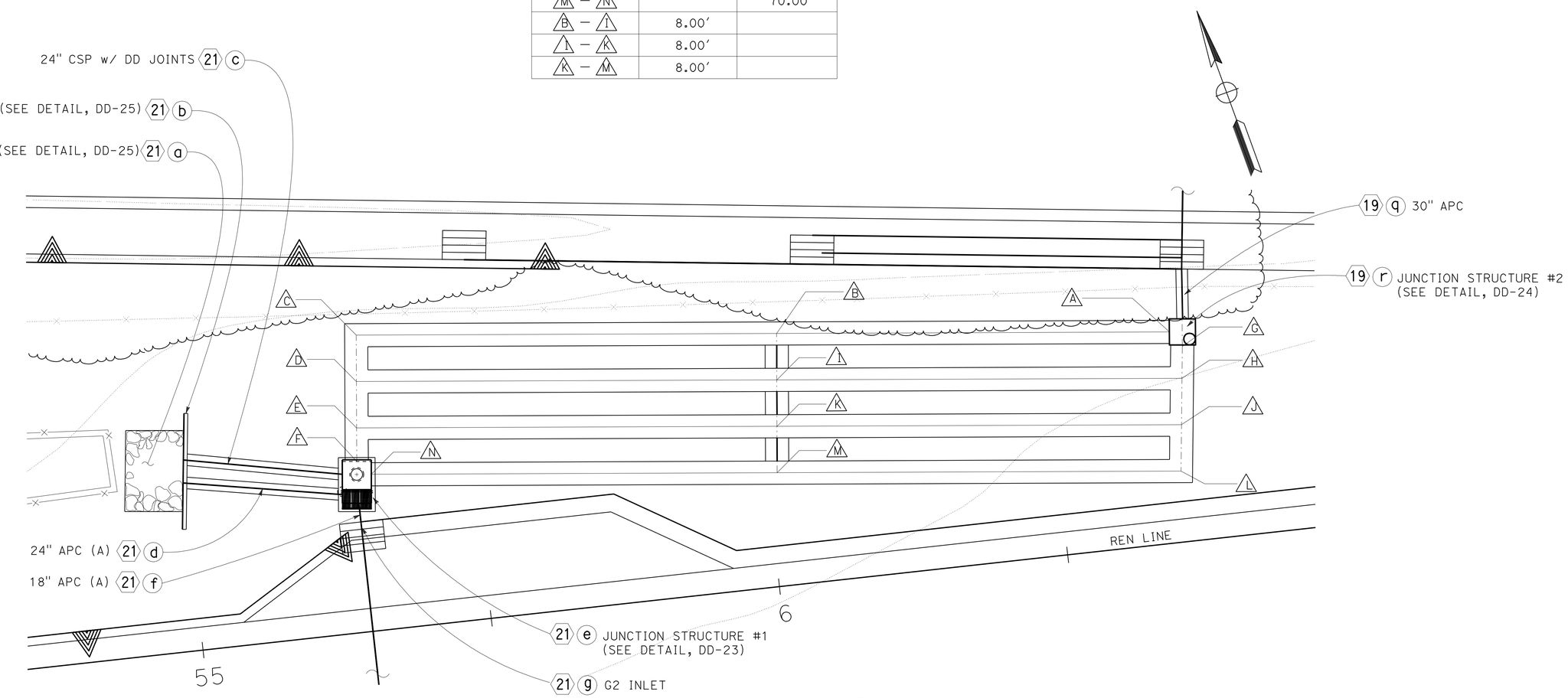

PLAN

UNDERGROUND DETENTION FACILITY

20

DRAINAGE DETAILS

NO SCALE

DD-22

SHARON L. PATCH — REVISED BY — SP
KATHLEEN M. REILLY — DATE REVISED — 2/9/11
CALCULATED-DESIGNED BY
CHECKED BY
FUNCTIONAL SUPERVISOR — JOSEPH E. PETERSON

STATE OF CALIFORNIA - DEPARTMENT OF TRANSPORTATION
Caltrans

LAST REVISION 02-09-11 — DATE PLOTTED => 13-JUN-2011 — TIME PLOTTED => 0:03

Dist	COUNTY	ROUTE	POST MILES TOTAL PROJECT	SHEET No.	TOTAL SHEETS
04	CC	4	R26.6/R27.5	140	746

REGISTERED CIVIL ENGINEER — DATE 2/9/11

6-13-11
PLANS APPROVAL DATE

REGISTERED PROFESSIONAL ENGINEER — Joseph E. Peterson — No. 42777 — Exp. 3-31-12 — CIVIL — STATE OF CALIFORNIA

THE STATE OF CALIFORNIA OR ITS OFFICERS OR AGENTS SHALL NOT BE RESPONSIBLE FOR THE ACCURACY OR COMPLETENESS OF SCANNED COPIES OF THIS PLAN SHEET.

CALTRANS
111 GRAND AVENUE
OAKLAND, CA. 94612

CCTA
2999 OAK ROAD, SUITE 100
WALNUT CREEK, CA. 94597

NOTE:
FOR DETAILS NOT SHOWN, SEE SHEET DD-29.

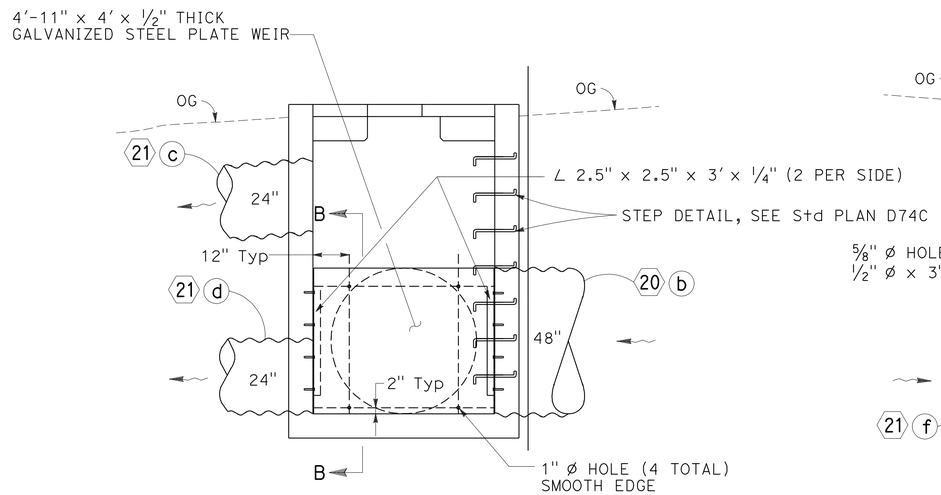

SECTION A-A

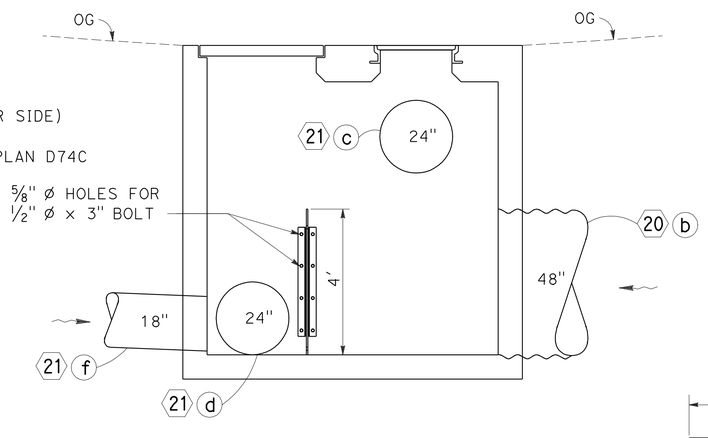

SECTION B-B

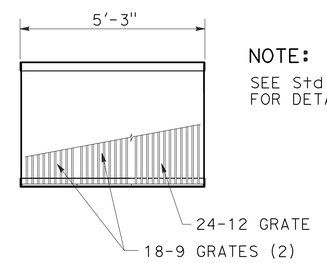

MODIFIED GRATE FRAME DETAIL

NOTE:
SEE Std PLAN D-77A
FOR DETAILS NOT SHOWN.

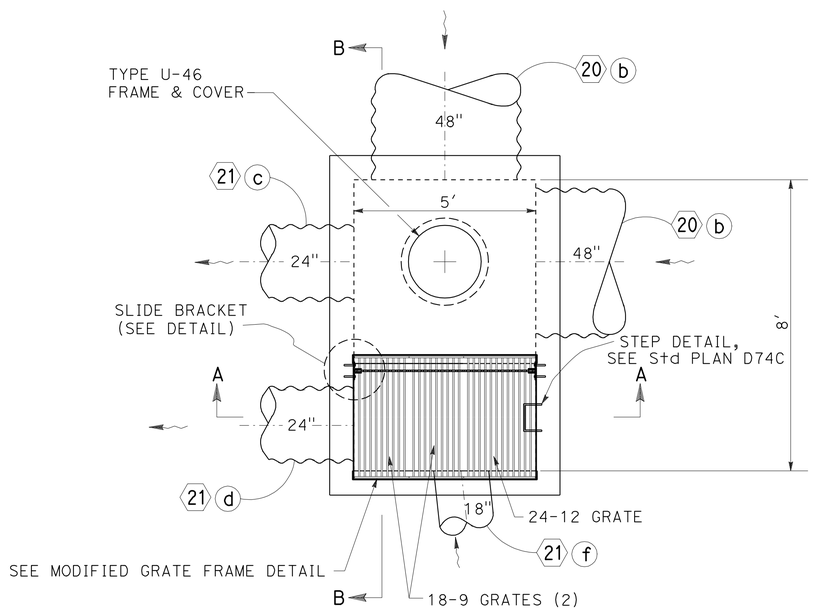

PLAN

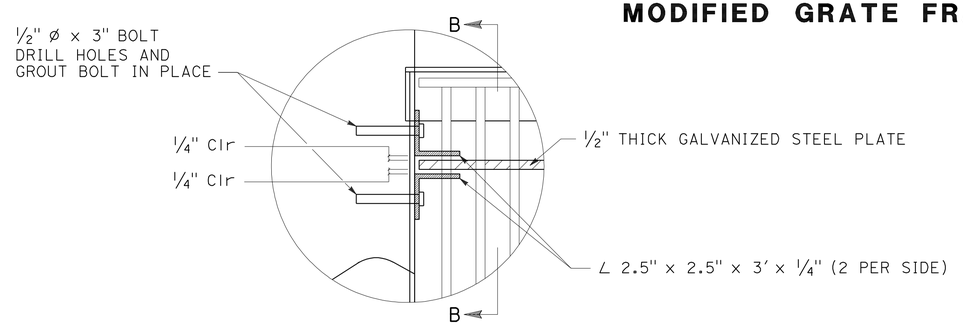

SLIDE BRACKET DETAIL

JUNCTION STRUCTURE #1
21 e

DRAINAGE DETAILS
NO SCALE

DD-23

REVISED BY	DATE REVISED
SP	2/9/11

CALCULATED-DESIGNED BY: SHARON L. PATCH
CHECKED BY: KATHLEEN M. REILLY
FUNCTIONAL SUPERVISOR: JOSEPH E. PETERSON

STATE OF CALIFORNIA - DEPARTMENT OF TRANSPORTATION
Caltrans

LAST REVISION 02-09-11 | DATE PLOTTED => 13-JUN-2011 | TIME PLOTTED => 10:03

Dist	COUNTY	ROUTE	POST MILES TOTAL PROJECT	SHEET No.	TOTAL SHEETS
04	CC	4	R26.6/R27.5	141	746

REGISTERED CIVIL ENGINEER — DATE 2/9/11

6-13-11
PLANS APPROVAL DATE

REGISTERED PROFESSIONAL ENGINEER — Joseph E. Peterson — No. 42777 — Exp. 3-31-12 — CIVIL — STATE OF CALIFORNIA

THE STATE OF CALIFORNIA OR ITS OFFICERS OR AGENTS SHALL NOT BE RESPONSIBLE FOR THE ACCURACY OR COMPLETENESS OF SCANNED COPIES OF THIS PLAN SHEET.

CALTRANS
111 GRAND AVENUE
OAKLAND, CA. 94612

CCTA
2999 OAK ROAD, SUITE 100
WALNUT CREEK, CA. 94597

NOTE:
FOR DETAILS NOT SHOWN, SEE SHEET DD-30.

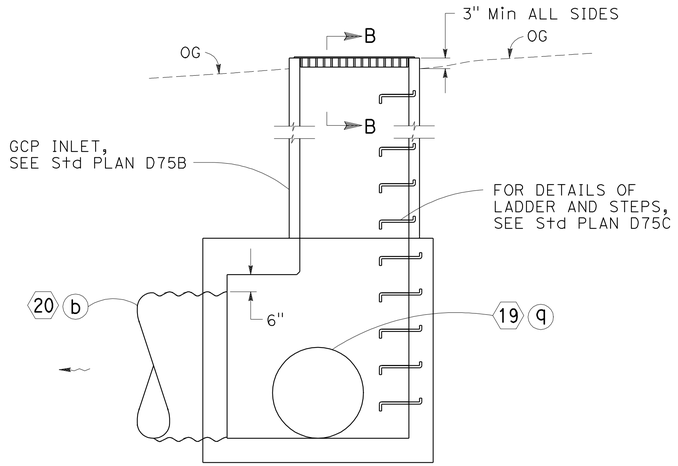

SECTION A-A

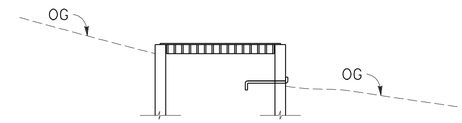

SECTION B-B

FOR DETAILS NOT SHOWN SEE Std PLAN D73, TYPE G2 INLET

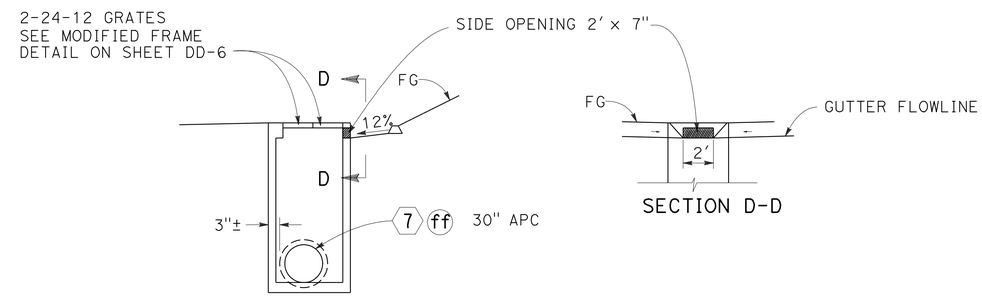

SECTION C-C

SECTION D-D

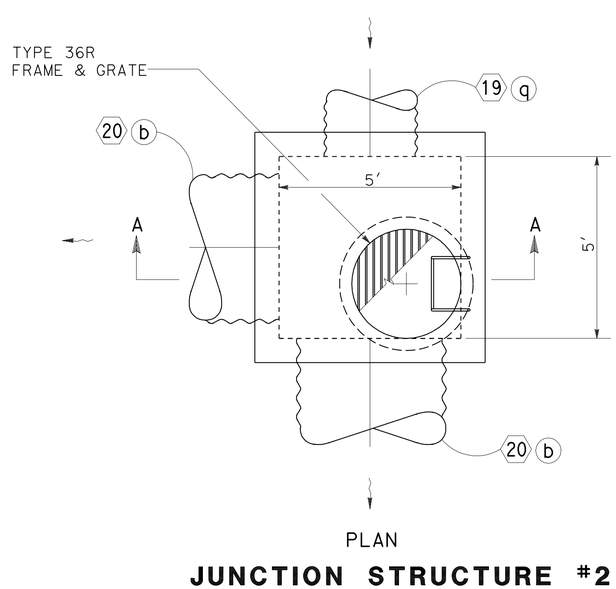

PLAN

JUNCTION STRUCTURE #2

19 r

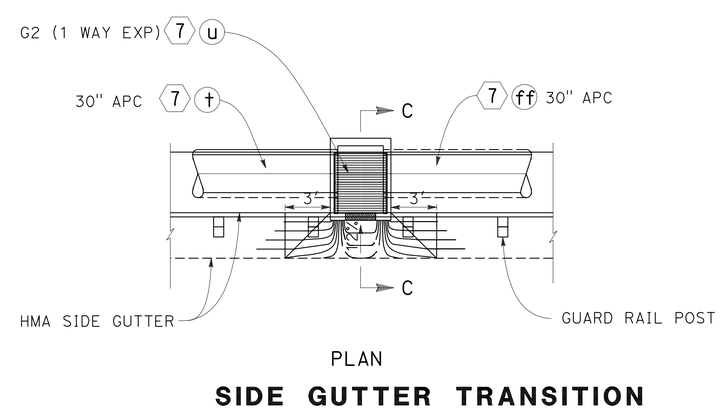

PLAN

SIDE GUTTER TRANSITION TO 7 u SIDE OPENING

DRAINAGE DETAILS

NO SCALE

DD-24

REVISED BY	DATE REVISED
SP	2/9/11

SHARON L. PATCH — KATHLEEN M. REILLY — CALCULATED-DESIGNED BY — CHECKED BY

FUNCTIONAL SUPERVISOR: JOSEPH E. PETERSON

STATE OF CALIFORNIA - DEPARTMENT OF TRANSPORTATION — Caltrans

LAST REVISION 02-09-11 — DATE PLOTTED => 13-JUN-2011 — TIME PLOTTED => 10:04

Dist	COUNTY	ROUTE	POST MILES TOTAL PROJECT	SHEET No.	TOTAL SHEETS
04	CC	4	R26.6/R27.5	142	746

REGISTERED CIVIL ENGINEER — DATE: 2/9/11

6-13-11
PLANS APPROVAL DATE

REGISTERED PROFESSIONAL ENGINEER — Joseph E. Peterson — No. 42777 — Exp. 3-31-12 — CIVIL — STATE OF CALIFORNIA

THE STATE OF CALIFORNIA OR ITS OFFICERS OR AGENTS SHALL NOT BE RESPONSIBLE FOR THE ACCURACY OR COMPLETENESS OF SCANNED COPIES OF THIS PLAN SHEET.

CALTRANS
111 GRAND AVENUE
OAKLAND, CA. 94612

CCTA
2999 OAK ROAD, SUITE 100
WALNUT CREEK, CA. 94597

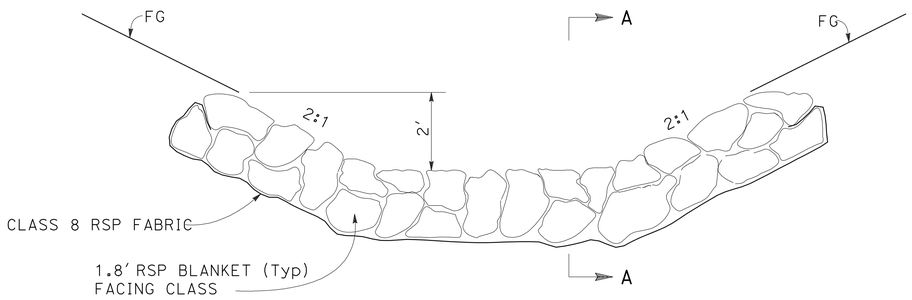

RSP
(21)(a)

NOTE:
FOR DETAILS NOT SHOWN
SEE Std PLAN D89.

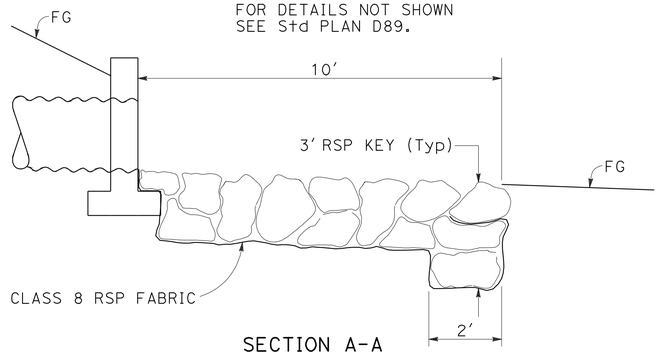

SECTION A-A

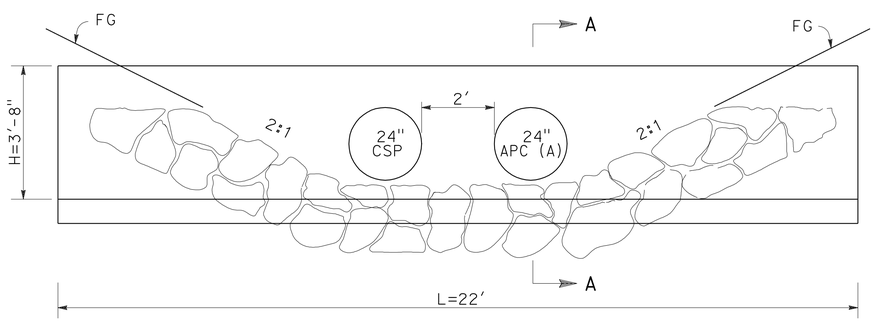

MODIFIED PIPE HEADWALL
(21)(b)

NOTE:
FOR DETAILS NOT SHOWN
SEE Std PLAN D77A.

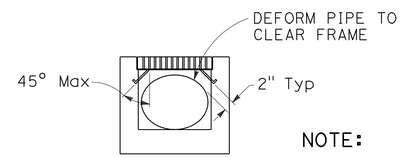

G1M INLET
(7)(z),(aa)

NOTE:
ROTATE ANCHORS 180°
AND BEND 45° Max TO
CLEAR PIPE.

DRAINAGE DETAILS
NO SCALE

DD-25

STATE OF CALIFORNIA - DEPARTMENT OF TRANSPORTATION
Caltrans

FUNCTIONAL SUPERVISOR: JOSEPH E. PETERSON
CALCULATED-DESIGNED BY: SHARON L. PATCH
CHECKED BY: KATHLEEN M. REILLY
REVISED BY: SP
DATE REVISED: 2/9/11

LAST REVISION 02-09-11 | DATE PLOTTED => 13-JUN-2011 | TIME PLOTTED => 10:04

Dist	COUNTY	ROUTE	POST MILES TOTAL PROJECT	SHEET No.	TOTAL SHEETS
04	CC	4	R26.6/R27.5	143	746

REGISTERED CIVIL ENGINEER — DATE 2/9/11

6-13-11
PLANS APPROVAL DATE

REGISTERED PROFESSIONAL ENGINEER — Joseph E. Peterson — No. 42777 — Exp. 3-31-12 — CIVIL — STATE OF CALIFORNIA

THE STATE OF CALIFORNIA OR ITS OFFICERS OR AGENTS SHALL NOT BE RESPONSIBLE FOR THE ACCURACY OR COMPLETENESS OF SCANNED COPIES OF THIS PLAN SHEET.

CALTRANS
111 GRAND AVENUE
OAKLAND, CA. 94612

CCTA
2999 OAK ROAD, SUITE 100
WALNUT CREEK, CA. 94597

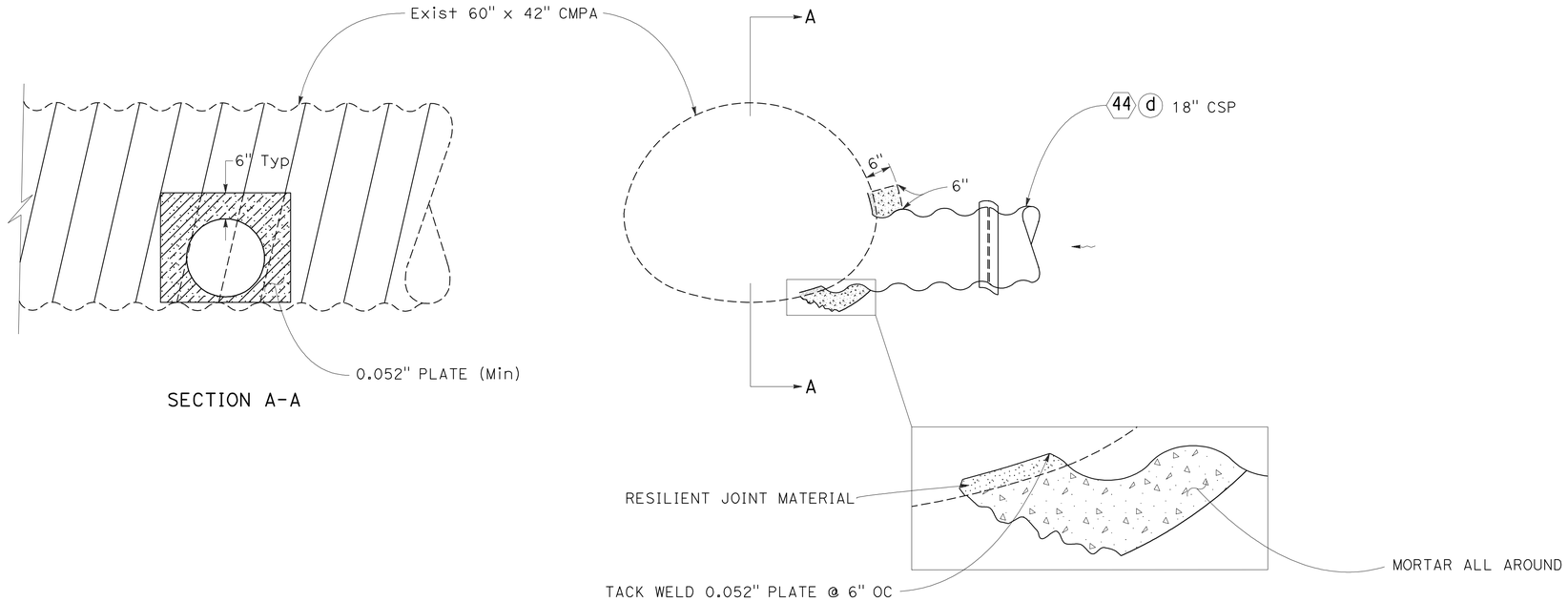

PIPE CONNECTION

44 d

DRAINAGE DETAILS

NO SCALE

DD-26

REVISED BY	DATE REVISED
SP	2/9/11

CALCULATED-DESIGNED BY: SHARON L. PATCH
CHECKED BY: KATHLEEN M. REILLY
FUNCTIONAL SUPERVISOR: JOSEPH E. PETERSON

STATE OF CALIFORNIA - DEPARTMENT OF TRANSPORTATION
Caltrans

LAST REVISION 02-09-11
DATE PLOTTED => 13-JUN-2011
TIME PLOTTED => 10:04

Dist	COUNTY	ROUTE	POST MILES TOTAL PROJECT	SHEET No.	TOTAL SHEETS
04	CC	4	R26.6/R27.5	144	746

REGISTERED CIVIL ENGINEER 2/14/11 DATE

6-13-11
PLANS APPROVAL DATE

REGISTERED PROFESSIONAL ENGINEER ROY M SCHNABEL No. C46828 Exp. 6/30/11 CIVIL STATE OF CALIFORNIA

THE STATE OF CALIFORNIA OR ITS OFFICERS OR AGENTS SHALL NOT BE RESPONSIBLE FOR THE ACCURACY OR COMPLETENESS OF SCANNED COPIES OF THIS PLAN SHEET.

BIGGS CARDOSA ASSOCIATES INC.
865 THE ALAMEDA
SAN JOSE, CA 95126

CCTA
2999 OAK ROAD, SUITE 100
WALNUT CREEK, CA 94597

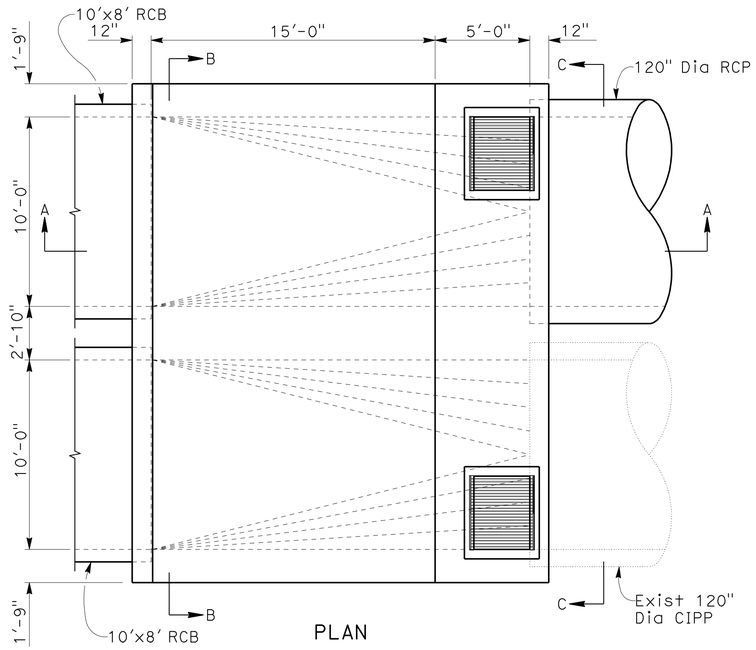

PLAN

TRANSITION STRUCTURE #2

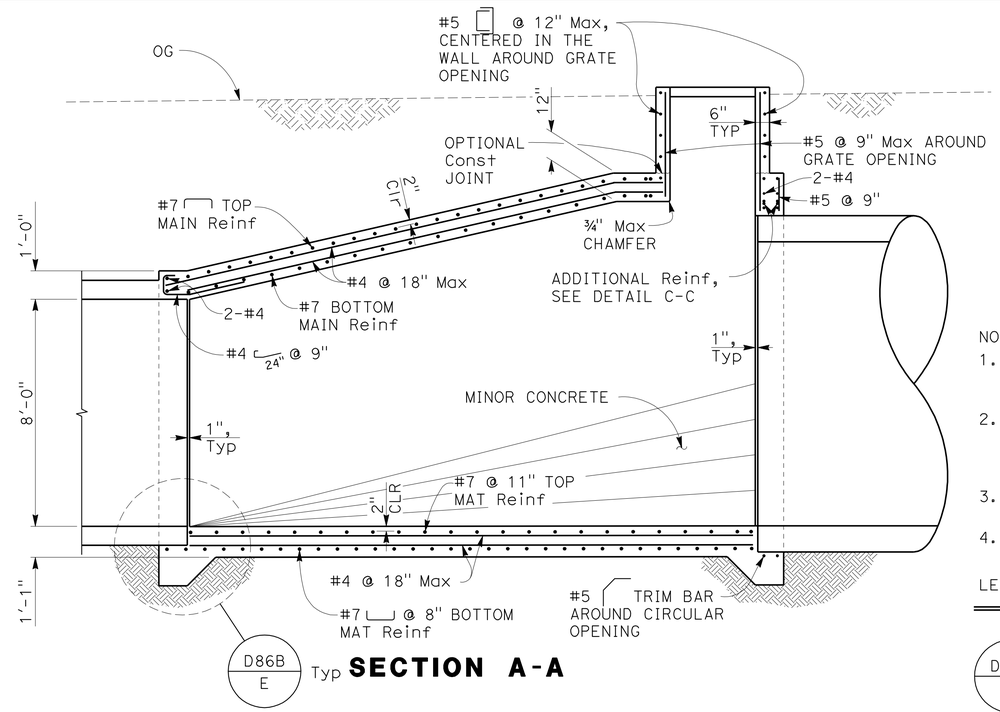

SECTION A-A

NOTES:

1. PIPE SIZE, THICKNESS AND ORIENTATION IS SCHEMATIC ONLY. SEE SHEET DD-15 FOR ACTUAL PIPE AND MANHOLE OPENING SIZES AND INVERT ELEVATIONS
2. CONSTRUCTION JOINT LOCATIONS SHOWN ON THE PLANS ARE OPTIONAL AND MAY BE MODIFIED BY THE CONTRACTOR WITH THE APPROVAL OF THE ENGINEER. PLACE 6" CONTINUOUS WATERSTOP AT ALL CONSTRUCTION JOINT LOCATIONS.
3. MANHOLE RISER AT DECK SLAB ONLY, RUN REINF CONTINUOUS AT INVERT SLAB.
4. ALL EXPOSED EDGES OF CONCRETE SHALL BE CHAMFERED ¾".

LEGEND:

INDICATES BUNDLED BARS

D86B / E — INDICATES STANDARD PLAN SHEET No. / INDICATES DETAIL No.

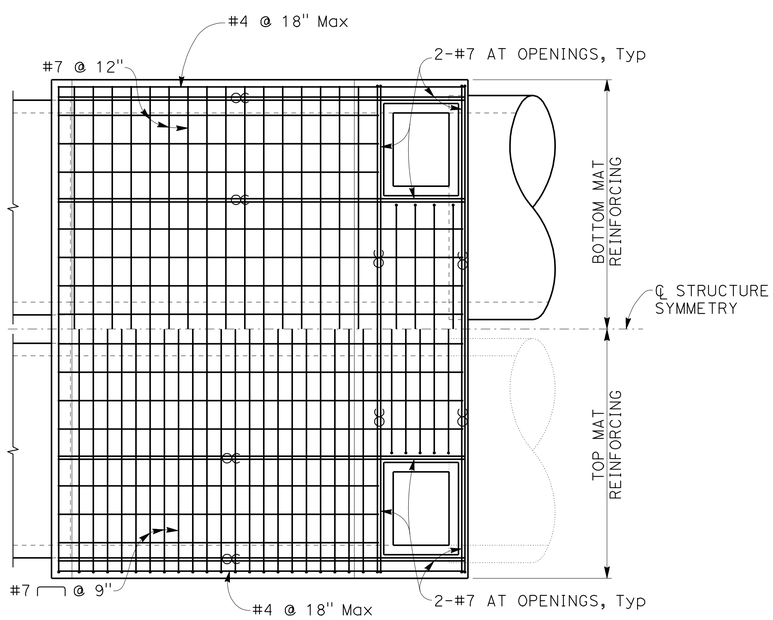

ROOF REINFORCEMENT LAYOUT

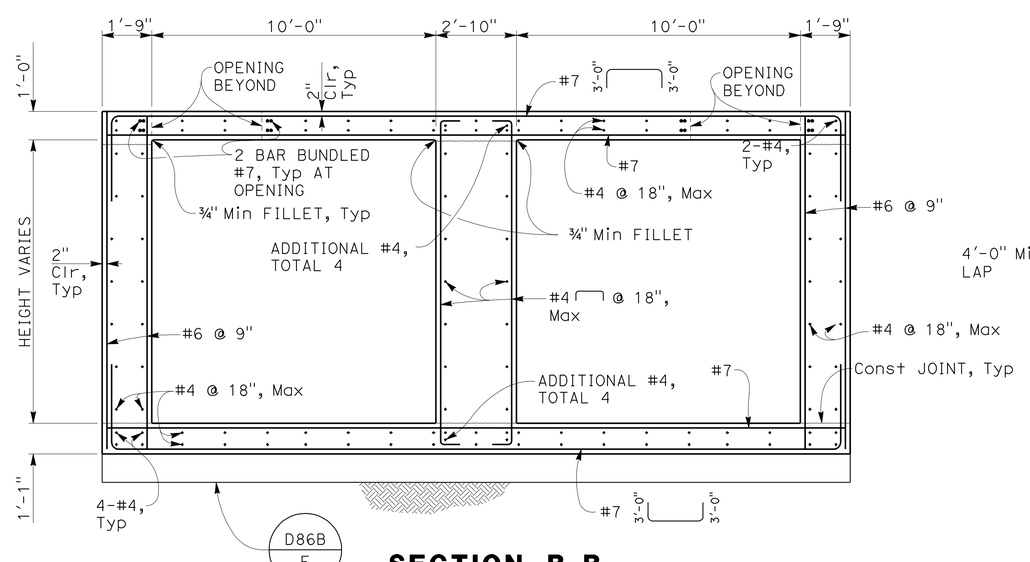

SECTION B-B

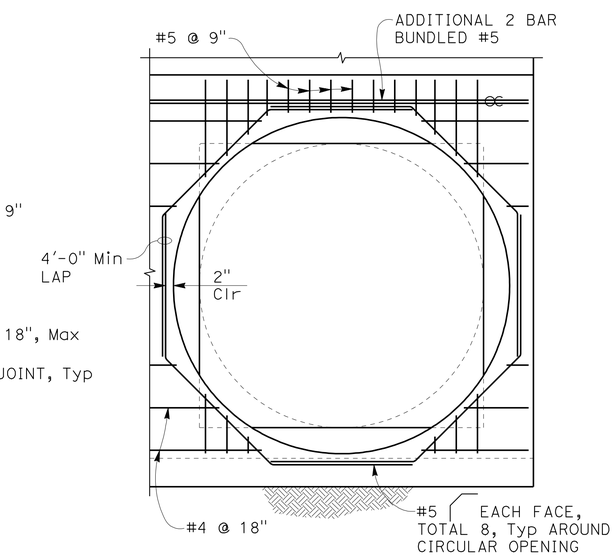

SECTION C-C

DRAINAGE DETAILS

NO SCALE

DD-27

SK	11/15/10
SK	6/23/10
SK	3/11/10
REVISED BY	DATE REVISED
SREENATH KOTAMALA	INES LI
CALCULATED-DESIGNED BY	CHECKED BY
CONSULTANT FUNCTIONAL SUPERVISOR	ROY M. SCHNABEL

STATE OF CALIFORNIA - DEPARTMENT OF TRANSPORTATION

Caltrans

LAST REVISION 2-14-11 | DATE PLOTTED => Feb 16 2011 | TIME PLOTTED => 3:26 pm

2006075 (2006075CRC1)

Dist	COUNTY	ROUTE	POST MILES TOTAL PROJECT	SHEET No.	TOTAL SHEETS
04	CC	4	R26.6/R27.5	145	746

REGISTERED CIVIL ENGINEER 2/14/11 DATE

6-13-11
PLANS APPROVAL DATE

REGISTERED PROFESSIONAL ENGINEER ROY M SCHNABEL No. C46828 Exp. 6/30/11 CIVIL STATE OF CALIFORNIA

THE STATE OF CALIFORNIA OR ITS OFFICERS OR AGENTS SHALL NOT BE RESPONSIBLE FOR THE ACCURACY OR COMPLETENESS OF SCANNED COPIES OF THIS PLAN SHEET.

BIGGS CARDOSA ASSOCIATES INC.
865 THE ALAMEDA
SAN JOSE, CA 95126

CCTA
2999 OAK ROAD, SUITE 100
WALNUT CREEK, CA 94597

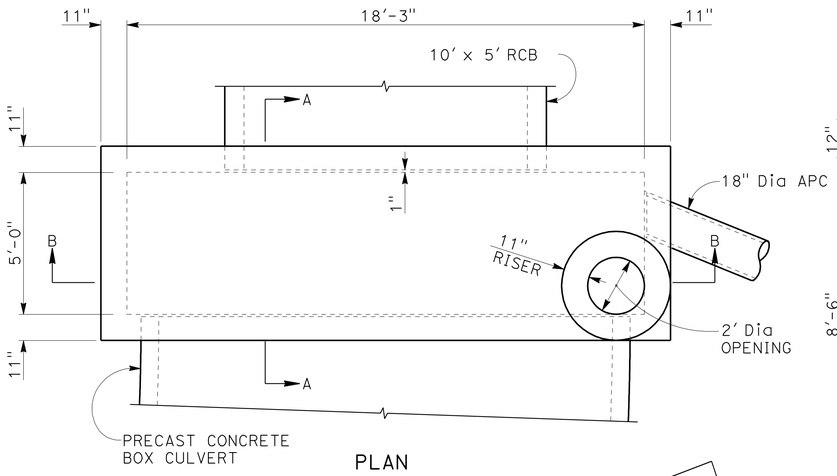

PLAN

TRANSITION STRUCTURE #1

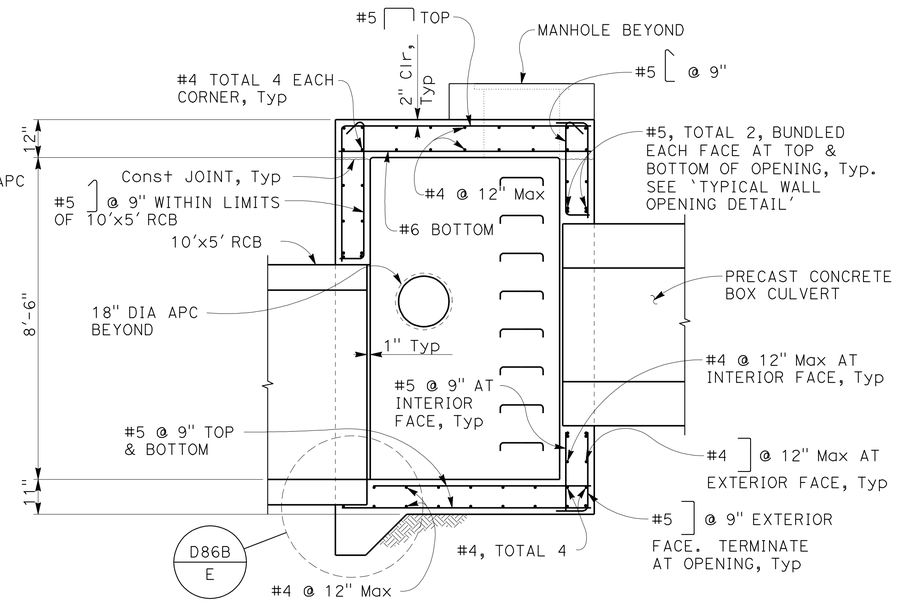

SECTION A-A

NOTES:

1. PIPE SIZE, THICKNESS AND ORIENTATION IS SCHEMATIC ONLY. SEE SHEET DD-17 FOR ACTUAL PIPE SIZES AND INVERT ELEVATIONS
2. CONSTRUCTION JOINT LOCATIONS SHOWN ON THE PLANS ARE OPTIONAL AND MAY BE MODIFIED BY THE CONTRACTOR WITH THE APPROVAL OF THE ENGINEER. PLACE 6" CONTINUOUS WATERSTOP AT ALL CONSTRUCTION JOINT LOCATIONS.
3. MANHOLE RISER AT DECK SLAB ONLY, RUN REINF CONTINUOUS AT INVERT SLAB.
4. ALL EXPOSED EDGES OF CONCRETE SHALL BE CHAMFERED ¾".

LEGEND:

CC — INDICATES BUNDLED BARS

D86B / E — INDICATES STANDARD PLAN SHEET No. / INDICATES DETAIL No.

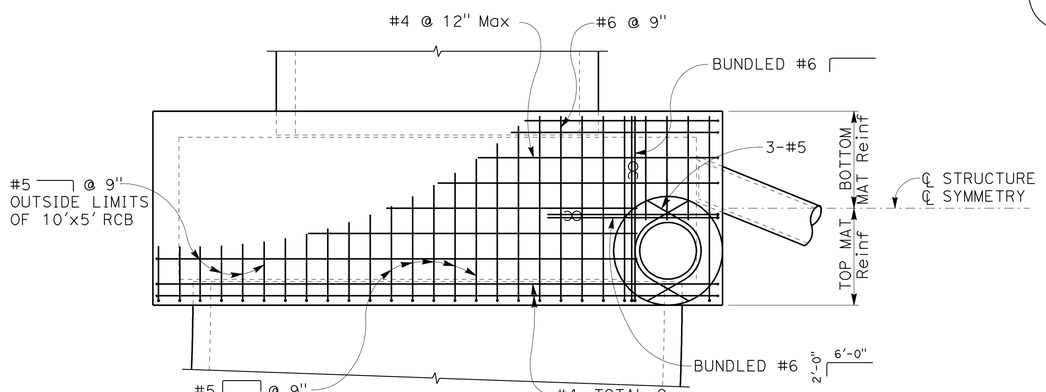

ROOF PLAN

ROOF REINFORCEMENT LAYOUT

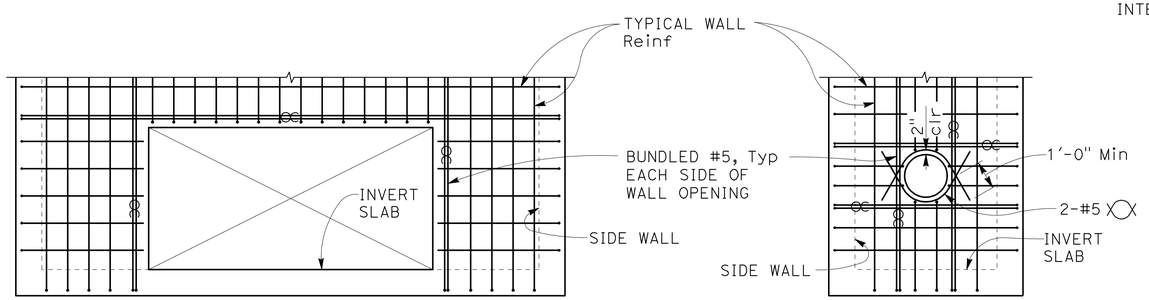

RECTANGULAR OPENING

PIPE OPENING

TYPICAL WALL OPENING DETAIL

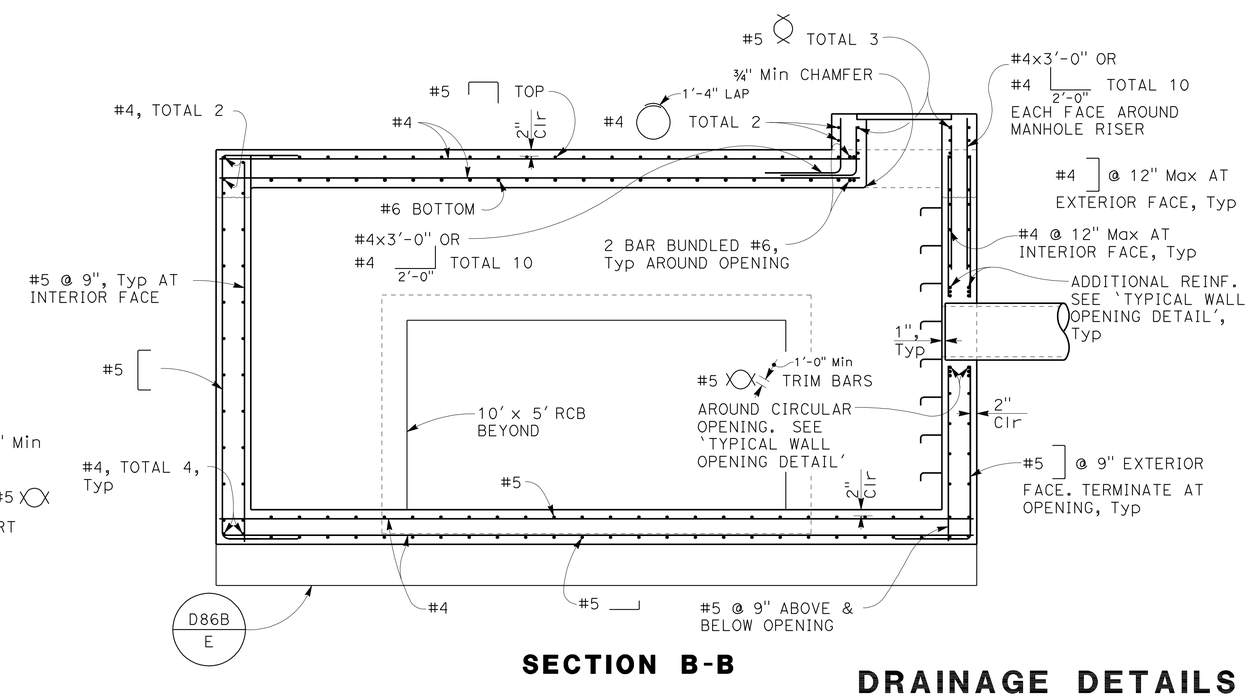

SECTION B-B

DRAINAGE DETAILS

NO SCALE

DD-28

SK	SK	SK	REVISED BY	SREENATH KOTAMALA	CALCULATED-DESIGNED BY
11/15/10	9/2/10	3/11/10	DATE REVISED	INES LI	CHECKED BY

CONSULTANT FUNCTIONAL SUPERVISOR: ROY M. SCHNABEL

STATE OF CALIFORNIA - DEPARTMENT OF TRANSPORTATION

Caltrans

2006075 (2006075D028)

LAST REVISION 2-14-11 | DATE PLOTTED => Feb 16 2011 | TIME PLOTTED => 3:26 pm

Dist	COUNTY	ROUTE	POST MILES TOTAL PROJECT	SHEET No.	TOTAL SHEETS
04	CC	4	R26.6/R27.5	146	746

REGISTERED CIVIL ENGINEER 2/14/11 DATE

6-13-11
PLANS APPROVAL DATE

REGISTERED PROFESSIONAL ENGINEER ROY M SCHNABEL No. C46828 Exp. 6/30/11 CIVIL STATE OF CALIFORNIA

THE STATE OF CALIFORNIA OR ITS OFFICERS OR AGENTS SHALL NOT BE RESPONSIBLE FOR THE ACCURACY OR COMPLETENESS OF SCANNED COPIES OF THIS PLAN SHEET.

BIGGS CARDOSA ASSOCIATES INC.
865 THE ALAMEDA
SAN JOSE, CA 95126

CCTA
2999 OAK ROAD, SUITE 100
WALNUT CREEK, CA 94597

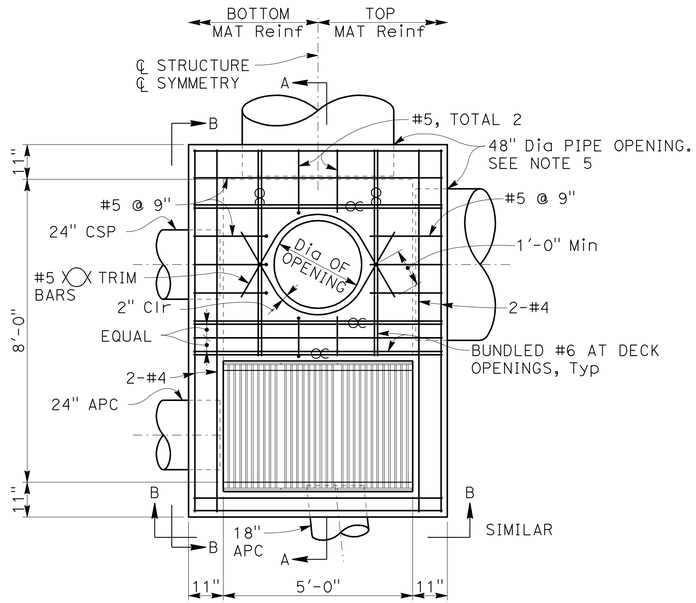

JUNCTION STRUCTURE #1

ROOF REINFORCEMENT LAYOUT

NOTES:

1. PIPE SIZE, THICKNESS AND ORIENTATION IS SCHEMATIC ONLY. SEE SHEET DD-23 FOR ACTUAL PIPE AND MANHOLE OPENING SIZES AND INVERT ELEVATIONS
2. CONSTRUCTION JOINT LOCATIONS SHOWN ON THE PLANS ARE OPTIONAL AND MAY BE MODIFIED BY THE CONTRACTOR WITH THE APPROVAL OF THE ENGINEER. PLACE 6" CONTINUOUS WATERSTOP AT ALL CONSTRUCTION JOINT LOCATIONS.
3. MANHOLE RISER AT DECK SLAB ONLY, RUN REINF CONTINUOUS AT INVERT SLAB.
4. ALL EXPOSED EDGES OF CONCRETE SHALL BE CHAMFERED ¾".
5. FOR WALL REINF AT 48" DIA PIPE OPENING, SEE WALL ELEVATION B-B ON SHEET DD-30.

LEGEND:

~~OC~~ INDICATES BUNDLED BARS

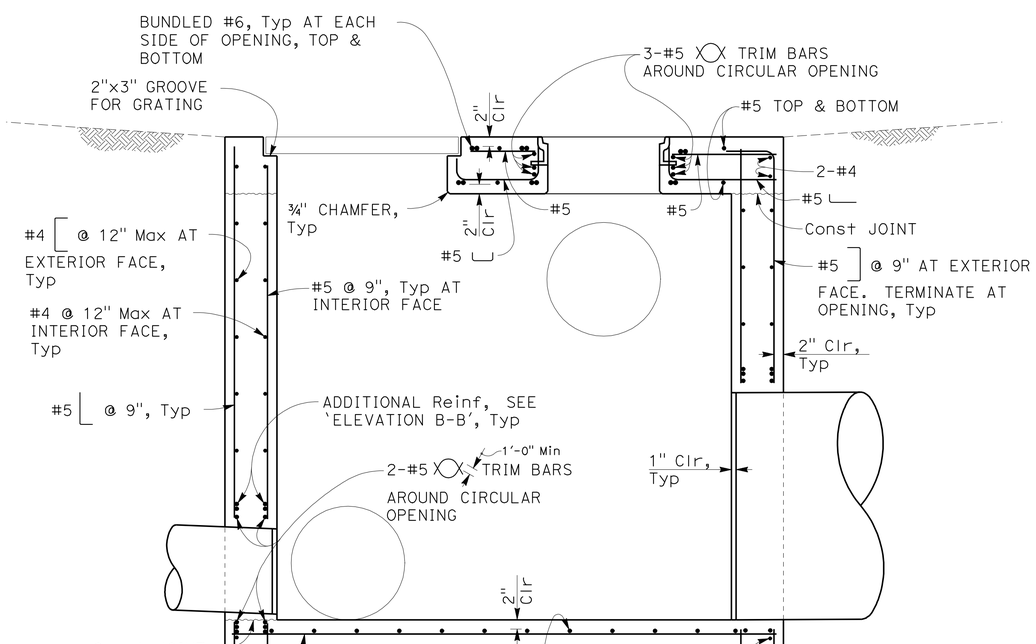

SECTION A-A

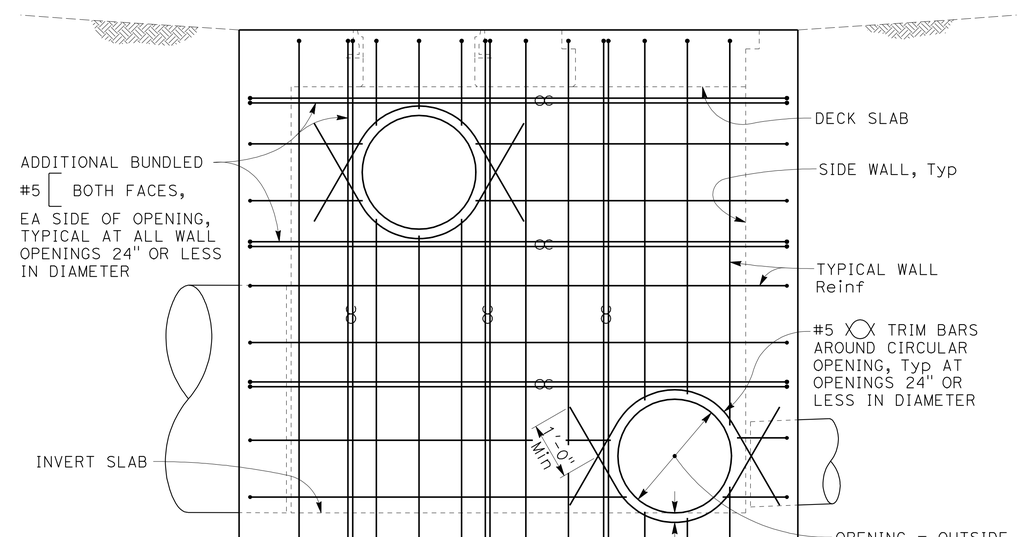

JUNCTION STRUCTURE #1

WALL ELEVATION B-B

DRAINAGE DETAILS

NO SCALE

DD-29

STATE OF CALIFORNIA - DEPARTMENT OF TRANSPORTATION

Caltrans

CONSULTANT FUNCTIONAL SUPERVISOR: ROY M. SCHNABEL

CALCULATED-DESIGNED BY: SREENATH KOTAMALA

CHECKED BY: INES LI

REVISED BY / DATE REVISED: SK 3/11/10; SK 6/23/10; SK 11/15/10

LAST REVISION 2-14-11

DATE PLOTTED => Feb 16 2011
TIME PLOTTED => 3:26 pm

2006075 (2006075CRC1)

Dist	COUNTY	ROUTE	POST MILES TOTAL PROJECT	SHEET No.	TOTAL SHEETS
04	CC	4	R26.6/R27.5	147	746

REGISTERED CIVIL ENGINEER 2/14/11 DATE

6-13-11
PLANS APPROVAL DATE

REGISTERED PROFESSIONAL ENGINEER ROY M SCHNABEL No. C46828 Exp. 6/30/11 CIVIL STATE OF CALIFORNIA

THE STATE OF CALIFORNIA OR ITS OFFICERS OR AGENTS SHALL NOT BE RESPONSIBLE FOR THE ACCURACY OR COMPLETENESS OF SCANNED COPIES OF THIS PLAN SHEET.

BIGGS CARDOSA ASSOCIATES INC.
865 THE ALAMEDA
SAN JOSE, CA 95126

CCTA
2999 OAK ROAD, SUITE 100
WALNUT CREEK, CA 94597

LEGEND:

INDICATES BUNDLED BARS

D86B / E — INDICATES STANDARD PLAN SHEET No. / INDICATES DETAIL No.

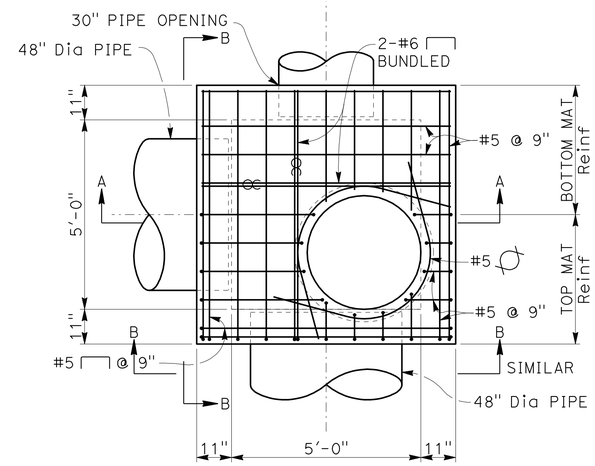

ROOF REINFORCEMENT LAYOUT

JUNCTION STRUCTURE #2

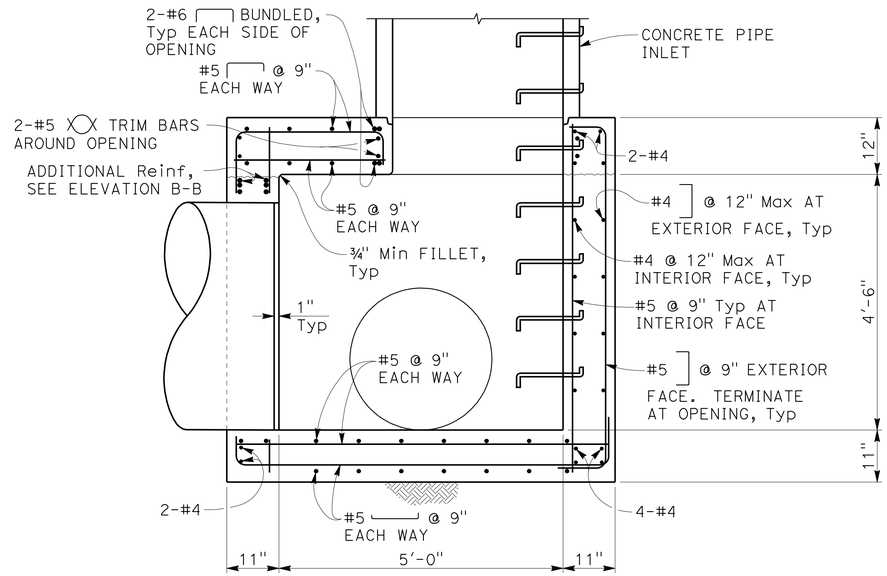

SECTION A-A

NOTES:

1. PIPE SIZE, THICKNESS AND ORIENTATION IS SCHEMATIC ONLY. SEE SHEET DD-24 FOR ACTUAL PIPE AND MANHOLE OPENING SIZES AND INVERT ELEVATIONS
2. CONSTRUCTION JOINT LOCATIONS SHOWN ON THE PLANS ARE OPTIONAL AND MAY BE MODIFIED BY THE CONTRACTOR WITH THE APPROVAL OF THE ENGINEER. PLACE 6" CONTINUOUS WATERSTOP AT ALL CONSTRUCTION JOINT LOCATIONS.
3. MANHOLE RISER AT DECK SLAB ONLY, RUN REINF CONTINUOUS AT INVERT SLAB.
4. ALL EXPOSED EDGES OF CONCRETE SHALL BE CHAMFERED ¾".
5. FOR SIGNAL POLE LOCATIONS, SEE SIGNAL AND LIGHTING PLANS

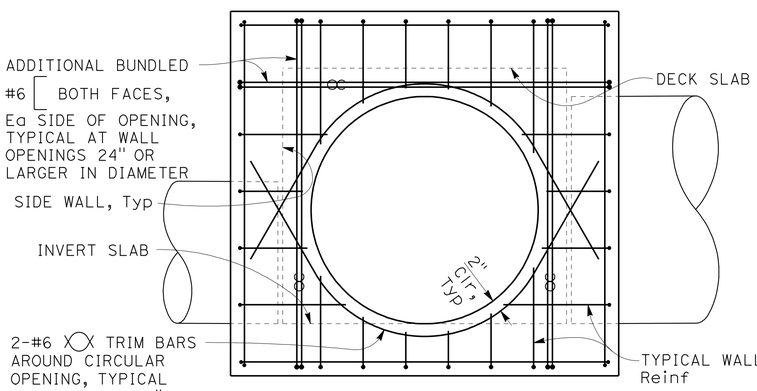

JUNCTION STRUCTURE #2

WALL ELEVATION B-B

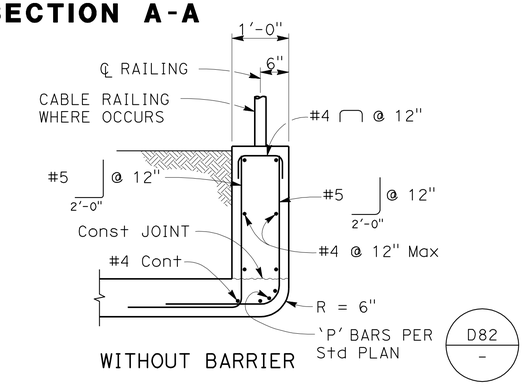

WITHOUT BARRIER

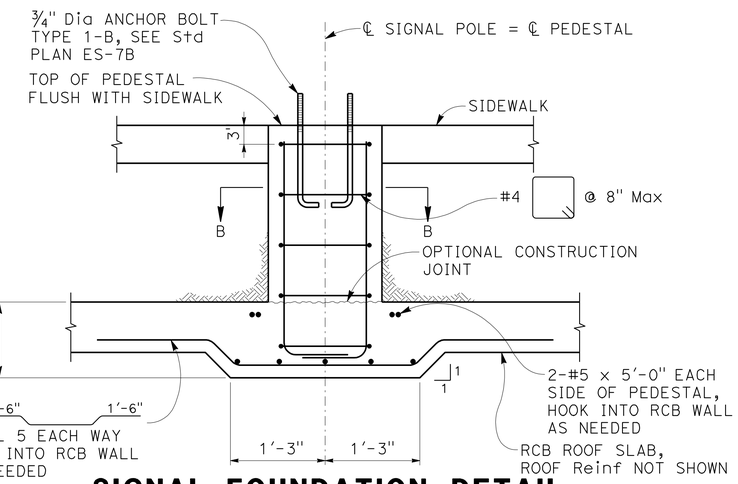

SIGNAL FOUNDATION DETAIL

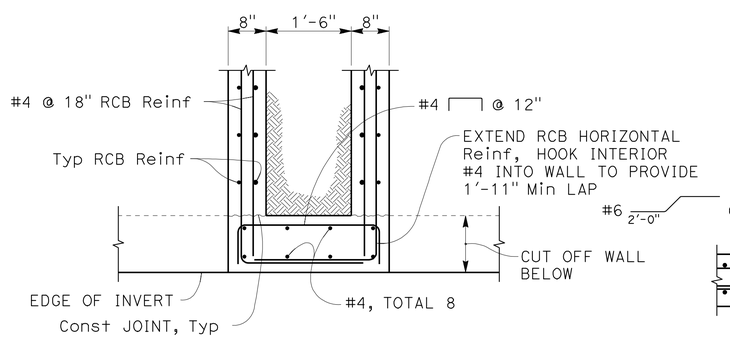

HEADWALL SECTION BETWEEN 10'x8' RCB'S

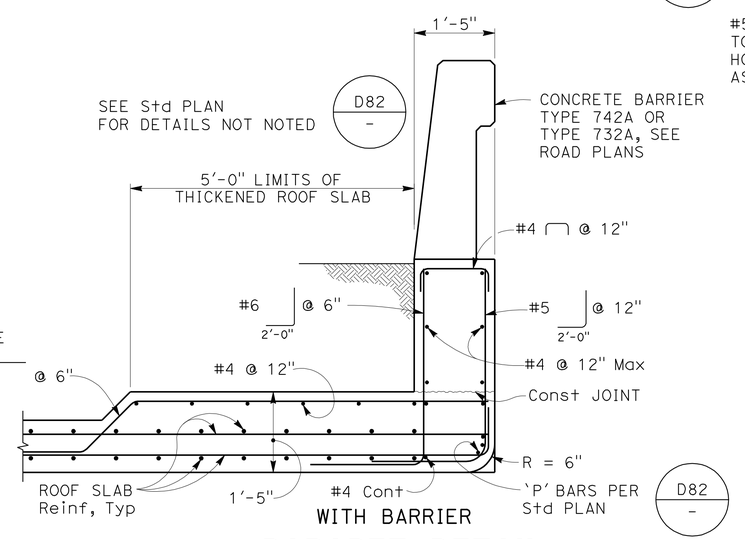

WITH BARRIER

PARAPET DETAIL

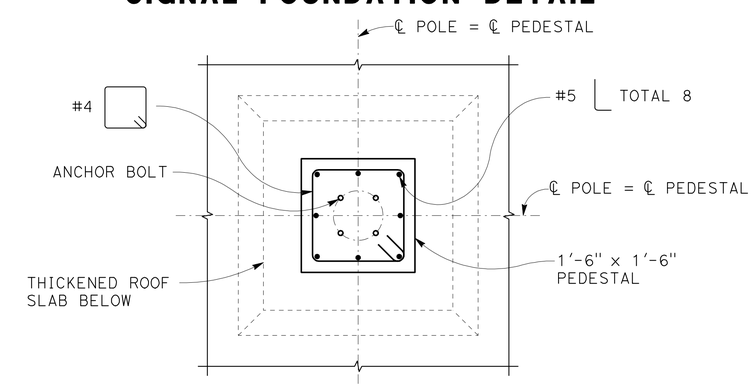

SECTION B-B

DRAINAGE DETAILS

NO SCALE

DD-30

SK	11/15/10
SK	6/23/10
SK	3/11/10
REVISED BY	DATE REVISED
SREENATH KOTAMALA	INES LI
CALCULATED-DESIGNED BY	CHECKED BY
CONSULTANT FUNCTIONAL SUPERVISOR	ROY M. SCHNABEL

STATE OF CALIFORNIA - DEPARTMENT OF TRANSPORTATION

Caltrans

LAST REVISION 2-14-11 | DATE PLOTTED => Feb 16 2011 | TIME PLOTTED => 3:26 pm | 2006075 (2006075CRC1)

Dist	COUNTY	ROUTE	POST MILES TOTAL PROJECT	SHEET No.	TOTAL SHEETS
04	CC	4	R26.6/R27.5	148	746

REGISTERED CIVIL ENGINEER — DATE: 2/9/11

6-13-11
PLANS APPROVAL DATE

REGISTERED PROFESSIONAL ENGINEER — Joseph E. Peterson — No. 42777 — Exp. 3-31-12 — CIVIL — STATE OF CALIFORNIA

THE STATE OF CALIFORNIA OR ITS OFFICERS OR AGENTS SHALL NOT BE RESPONSIBLE FOR THE ACCURACY OR COMPLETENESS OF SCANNED COPIES OF THIS PLAN SHEET.

CALTRANS
111 GRAND AVENUE
OAKLAND, CA. 94612

CCTA
2999 OAK ROAD, SUITE 100
WALNUT CREEK, CA. 94597

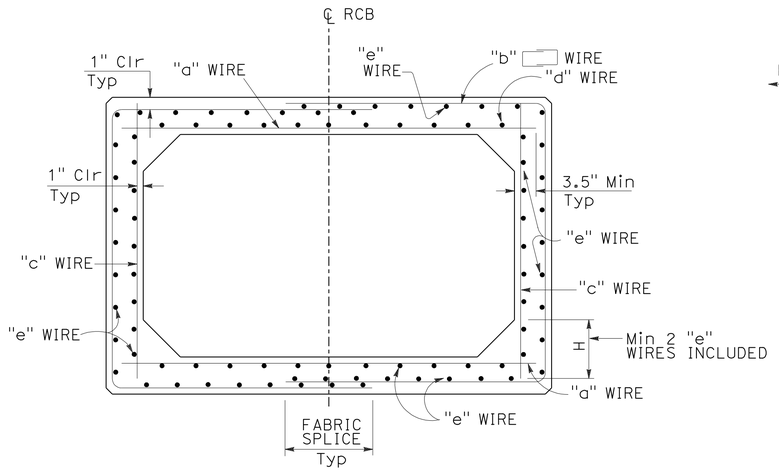

TYPICAL SECTION - SPANS 4'-0" THRU 12'-0"

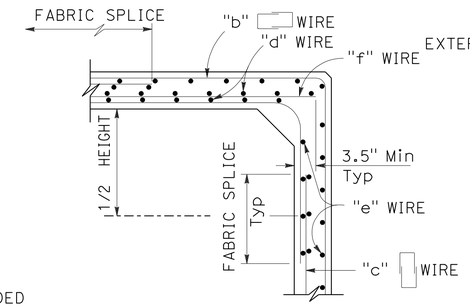

ALTERNATIVE DETAILING OPTION

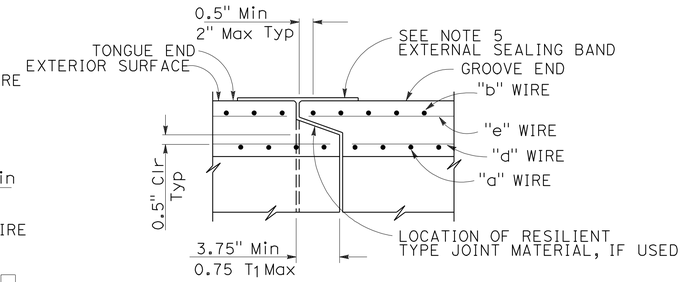

END JOINT DETAIL

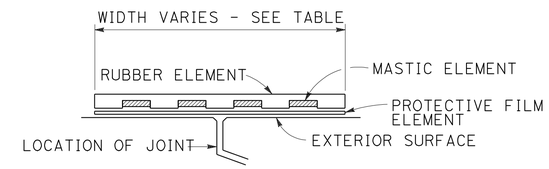

EXTERNAL SEALING BAND SCHEMATIC

NOTES:

1. THE INSIDE AND OUTSIDE SURFACES OF THE RCB ROOF SHALL BE MARKED "TOP".
2. H MINIMUM SHALL EQUAL THE WALL THICKNESS. H MAXIMUM SHALL BE 8" FOR SPANS THROUGH 8' AND 14" FOR SPANS OVER 8'.
3. QUANTITIES ARE APPROXIMATE AND FOR DESIGN PURPOSES ONLY.
4. FOR DESIGN AND DETAILS NOT SHOWN SEE "PRECAST RCB CULVERT, MISCELLANEOUS DETAILS" SHEET.
5. FOR EXTERNAL SEALING BAND APPLICATIONS SEE "PRECAST RCB CULVERT, EXCAVATION AND BACKFILL DETAILS" SHEET.

AASHTO STANDARD SHAPE			M259						M273						M259								M273								M259								M273							
SPAN (ft)			4						4						5								5								6								6							
HEIGHT (ft)			2		3		4		2		3		4		2		3		4		5		2		3		4		5		3		4		5		6		3		4		5		6	
MAXIMUM EARTH COVER (ft)			10	20	10	20	10	20	10	20	10	20	10	20	10	20	10	20	10	20	10	20	10	20	10	20	10	20	10	20	10	20	10	20	10	20	10	20	10	20	10	20	10	20	10	20
CONCRETE (INCH)	ROOF	T_1	5	5	5	5	5	5	7.5	7.5	7.5	7.5	7.5	7.5	6	6	6	6	6	6	6	6	8	8	8	8	8	8	8	8	7	7	7	7	7	7	7	7	8	8	8	8	8	8	8	8
	SIDE WALL	T_2	5	5	5	5	5	5	5	5	5	5	5	5	6	6	6	6	6	6	6	6	6	6	6	6	6	6	6	6	7	7	7	7	7	7	7	7	7	7	7	7	7	7	7	7
	INVERT	T_3	5	5	5	5	5	5	6	6	6	6	6	6	6	6	6	6	6	6	6	6	7	7	7	7	7	7	7	7	7	7	7	7	7	7	7	7	7	7	7	7	7	7	7	7
MINIMUM WELDED WIRE FABRIC Reinf AREAS (SQUARE INCH/LF)		"a"	.41	.41	.43	.43	.45	.45	.29	.29	.31	.31	.31	.31	.38	.38	.41	.41	.42	.42	.43	.43	.31	.31	.33	.33	.34	.34	.34	.34	.39	.39	.41	.41	.42	.42	.42	.42	.36	.38	.37	.40	.38	.40	.38	.39
		"b"	.36	.25	.32	.27	.32	.35	.14	.23	.15	.28	.20	.37	.34	.30	.31	.31	.30	.35	.30	.43	.18	.27	.16	.30	.19	.35	.25	.45	.30	.36	.29	.38	.29	.44	.35	.52	.23	.36	.25	.39	.29	.44	.35	.52
		"c"	.13	.13	.13	.13	.13	.18	.13	.13	.13	.13	.13	.20	.13	.13	.13	.13	.13	.13	.14	.23	.13	.13	.13	.13	.13	.13	.14	.25	.14	.14	.14	.14	.14	.14	.17	.29	.14	.14	.14	.14	.14	.14	.18	.29
		"d"	.21	.13	.22	.13	.23	.13	.15	.13	.16	.13	.16	.13	.17	.13	.19	.13	.19	.13	.20	.13	.14	.13	.15	.13	.16	.13	.16	.13	.16	.13	.17	.13	.18	.13	.18	.13	.15	.13	.16	.13	.16	.13	.16	.13
		"e"	.13	.13	.13	.13	.13	.13	.13	.13	.13	.13	.13	.13	.13	.13	.13	.13	.13	.13	.13	.13	.13	.13	.13	.13	.13	.13	.13	.13	.13	.13	.13	.13	.13	.13	.13	.13	.13	.13	.13	.13	.13	.13	.13	.13
		"f"	.28	.28	.30	.30	.32	.27	.16	.16	.18	.18	.18	.11	.25	.25	.28	.28	.29	.29	.29	.20	.18	.18	.20	.20	.21	.21	.20	.09	.25	.25	.27	.27	.28	.28	.25	.13	.22	.24	.23	.26	.24	.26	.20	.10
* QUANTITY	Conc	CY/LF	.22		.26		.29		.28		.31		.34		.32		.35		.39		.43		.37		.41		.44		.48		.47		.51		.55		.59		.49		.53		.57		.62	
	Reinf	LB/LF	53	45	56	53	62	63	35	40	40	48	47	61	56	52	61	58	65	67	71	83	42	47	45	55	52	64	62	82	67	71	72	81	78	90	90	110	60	72	67	81	75	89	88	108

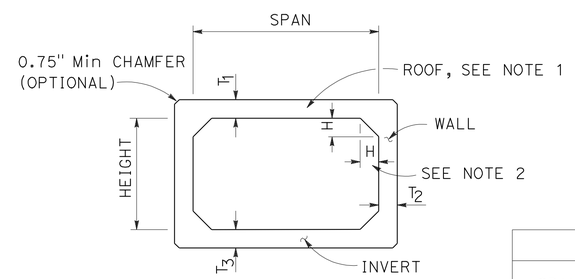

SCHEMATIC

TABLE	
SPAN (ft)	EXTERNAL SEALING BAND WIDTH (inch)
4-6	9
7-8	11
10-12	13

AASHTO STANDARD SHAPE			M259 AND M273										M259 AND M273										M259 AND M273										M259 AND M273											
SPAN (ft)			7										8										10												12											
HEIGHT (ft)			3		4		5		6		7		4		5		6		7		8		5		6		7		8		9		10		6		7		8		9		10		11		12	
MAXIMUM EARTH COVER (ft)			10	20	10	20	10	20	10	20	10	20	10	20	10	20	10	20	10	20	10	20	10	20	10	20	10	20	10	20	10	20	10	20	10	20	10	20	10	20	10	20	10	20	10	20
CONCRETE (INCH)		$T_1=T_2=T_3$	8	8	8	8	8	8	8	8	8	8	8	8	8	8	8	8	8	8	8	8	10	10	10	10	10	10	10	10	10	10	10	10	12	12	12	12	12	12	12	12	12	12	12	12
MINIMUM WELDED WIRE FABRIC Reinf AREAS (SQUARE INCH/LF)		"a"	.39	.44	.40	.47	.42	.48	.42	.48	.43	.48	.45	.59	.47	.61	.48	.62	.48	.62	.49	.61	.45	.71	.46	.74	.46	.75	.47	.76	.47	.75	.47	.74	.51	.85	.52	.87	.53	.89	.54	.90	.54	.90	.54	.89	.53	.88
		"b"	.31	.42	.30	.43	.30	.47	.35	.53	.42	.62	.34	.55	.37	.58	.41	.63	.47	.71	.55	.82	.45	.67	.47	.70	.50	.74	.55	.81	.62	.90	.71	1.02	.53	.80	.55	.83	.58	.87	.63	.93	.69	1.01	.77	1.12	.86	1.24
		"c"	.16	.16	.16	.16	.16	.16	.16	.18	.22	.35	.16	.16	.16	.16	.16	.16	.18	.27	.29	.47	.21	.21	.21	.21	.21	.21	.21	.21	.27	.40	.40	.60	.25	.25	.25	.25	.25	.25	.25	.25	.25	.35	.38	.54	.51	.76
		"d"	.15	.13	.16	.13	.16	.13	.16	.13	.16	.13	.16	.13	.17	.13	.17	.13	.17	.13	.18	.13	.15	.13	.15	.13	.15	.13	.15	.13	.15	.13	.15	.13	.15	.13	.15	.13	.16	.13	.16	.13	.16	.13	.16	.13	.16	.13
		"e"	.13	.13	.13	.13	.13	.13	.13	.13	.13	.13	.13	.13	.13	.13	.13	.13	.13	.13	.13	.13	.13	.13	.13	.13	.13	.13	.13	.13	.13	.13	.13	.13	.13	.13	.13	.13	.13	.13	.13	.13	.13	.13	.13	.13	.13	.13
		"f"	.23	.28	.24	.31	.26	.32	.26	.30	.21	.13	.29	.43	.31	.45	.32	.46	.30	.35	.20	.14	.24	.50	.25	.53	.25	.54	.26	.55	.20	.35	.07	.14	.26	.60	.27	.62	.28	.64	.29	.65	.29	.55	.16	.35	.02	.12
* QUANTITY	Conc		.59		.64		.69		.74		.79		.69		.74		.79		.84		.89		1.08		1.14		1.20		1.27		1.33		1.39		1.56		1.63		1.70		1.78		1.85		1.93		2.00	
	Reinf	LB/LF	77	89	82	97	84	103	98	121	115	146	96	125	106	140	117	149	131	171	156	205	133	179	142	193	153	206	168	227	189	294	221	304	173	243	184	259	198	276	215	297	233	328	265	372	302	425

* SEE NOTE 3

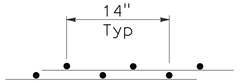

FABRIC SPLICE DETAIL

DESIGN BEARING PRESSURE TSF		
SPAN \ COVER	10'	20'
4' THRU 8'	1.1	2.0
10' THRU 12'	1.3	2.1

DRAINAGE DETAILS

NO SCALE

DD-31

REVISED BY	DATE REVISED
SP	2/9/11

CALCULATED-DESIGNED BY: SHARON L. PATCH
CHECKED BY: KATHLEEN M. REILLY
FUNCTIONAL SUPERVISOR: JOSEPH E. PETERSON

STATE OF CALIFORNIA - DEPARTMENT OF TRANSPORTATION

LAST REVISION 02-09-11 | DATE PLOTTED => 13-JUN-2011 | TIME PLOTTED => 10:05

Dist	COUNTY	ROUTE	POST MILES TOTAL PROJECT	SHEET No.	TOTAL SHEETS
04	CC	4	R26.6/R27.5	149	746

REGISTERED CIVIL ENGINEER — DATE: 2/9/11

6-13-11
PLANS APPROVAL DATE

REGISTERED PROFESSIONAL ENGINEER — Joseph E. Peterson — No. 42777 — Exp. 3-31-12 — CIVIL — STATE OF CALIFORNIA

THE STATE OF CALIFORNIA OR ITS OFFICERS OR AGENTS SHALL NOT BE RESPONSIBLE FOR THE ACCURACY OR COMPLETENESS OF SCANNED COPIES OF THIS PLAN SHEET.

CALTRANS
111 GRAND AVENUE
OAKLAND, CA. 94612

CCTA
2999 OAK ROAD, SUITE 100
WALNUT CREEK, CA. 94597

DESIGN NOTES

SPECIFICATIONS:

DESIGN: BRIDGE DESIGN SPECIFICATIONS (1983 AASHTO SPECIFICATIONS WITH REVISIONS BY CALTRANS). DEPTH OF COVER IS ASSUMED TO BE UNIFORM.

EARTH LOAD:

EARTH PRESSURES FOR TWO CONDITIONS:
-140 lb/cf Vert, 42 lb/cf Horiz
-140 lb/cf Vert, 140 lb/cf Horiz

UNIT STRESSES:

f'c = 5.0 KSI
f'y = 65.0 KSI FOR WELD WIRE FABRIC
n = 7

SHEAR:

MAXIMUM ALLOWABLE SHEAR, $v=3.5\sqrt{f'c}$, PSI

EXCLUSION:

AXIAL LOADING ON THE MEMBERS HAS NOT BEEN CONSIDERED.

EARTHWORK:

SEE "PRECAST RCB CULVERT, EXCAVATION AND BACKFILL DETAILS" SHEET.

GENERAL NOTES

DESIGNATION:

STANDARD SINGLE OR MULTIPLE PRECAST BOX CULVERTS ARE SHOWN ON THE PLANS AS SPAN TIMES HEIGHT WITH MAXIMUM COVER OVER ROOF THUS: 8' X 5' RCB WITH 10'-0" OR DOUBLE 10' X 5' RCB WITH 20'-0", FOLLOWED BY ALTERNATIVES.

ALTERNATIVES:

SINGLE CELL:

STANDARD DIMENSIONS OF AASHTO MATERIAL SPECIFICATION "M259" OR "M273".

MULTIPLE CELL:

CONSTRUCTED BY PLACING SINGLE CELLS ADJACENT TO EACH OTHER. INLET AND OUTLET ENDS OF CULVERT WILL BE ROUNDED UNLESS SQUARE ENDS ARE DESIGNATED. PARAPET WILL BE SHOWN UNLESS DESIGNATED IN PLANS. SUCH DESIGNATION MAY BE DIFFERENT FOR INLET AND OUTLET ENDS.

LIMITATIONS:

WHERE THE OVERFILL IS LESS THAN 12", PRECAST RCB CULVERTS ARE NOT TO BE USED. PRECAST RCB CULVERTS ARE NOT TO BE USED IN SIPHON OR PRESSURIZED INSTALLATIONS UNLESS APPROPRIATE "WATERTIGHT" JOINTING IS PROVIDED.

SPECIAL REINFORCEMENT COVERAGE:

PRECAST RCB CULVERT STANDARD DETAILS ARE NOT TO BE USED IN A CORROSIVE ENVIRONMENT OR WHERE THERE IS A SEVERE ABRASIVE FLOW CONDITION OR FREEZE-THAW LOCATIONS.

SPECIAL DESIGN:

REQUIRED FOR CULVERT WITH DIFFERENT CONDITIONS, OR LOADS OR DESIGN BEARING PRESSURES GREATER THAN THOSE GIVEN ON THESE PLANS. REQUIRED FOR CULVERTS WHERE END DETAILS NEED HIGHER SKEW ANGLES OR HIGHER PARAPETS OR BARRIER SECTIONS.

CONSTRUCTION NOTES

CUTOFF WALLS:

4'-0" CUTOFF WALLS ARE TO BE PROVIDED AT INLET AND/OR OUTLET UNLESS CHANNEL IS LINED AND UNLESS OTHERWISE SHOWN. THESE WALLS ARE TO BE EXTENDED IF SCOUR CONDITIONS WARRANT. SEE STANDARD PLANS D84, D85 AND D86A.

WINGWALLS:

WINGWALLS SHALL BE CAST-IN-PLACE AND SHALL CONFORM TO STANDARD PLAN DETAILS FOR BOX CULVERT WINGWALLS. SEE STANDARD PLAN D84, D85 AND D86A.

EARTHWORK:

SEE "PRECAST RCB CULVERT, EXCAVATION AND BACKFILL DETAILS" SHEET.

CONSTRUCTION LOADS:

STRUTTING MAY BE REQUIRED NEAR TEMPORARY ENDS. FOR CONSTRUCTION LOADS ON CULVERTS, SEE STANDARD PLAN D88.

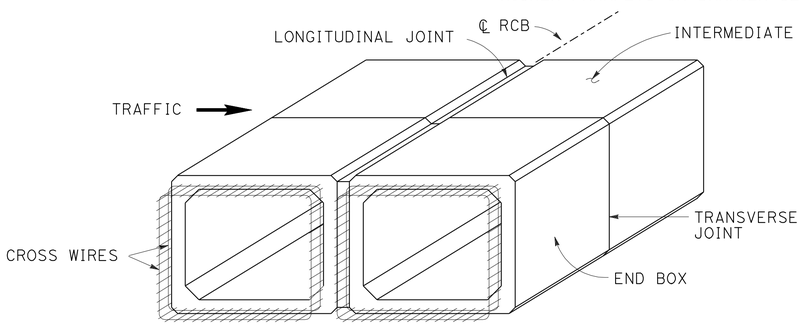

PRECAST RCB TERMINOLOGY

NOTE:

INNER AND OUTER REINFORCEMENT TO BE EXPOSED AS REQUIRED TO TIE TO CAST-IN-PLACE CONSTRUCTION. A MINIMUM OF TWO CROSS WIRES SHALL BE EXPOSED ON ALL SIDES.

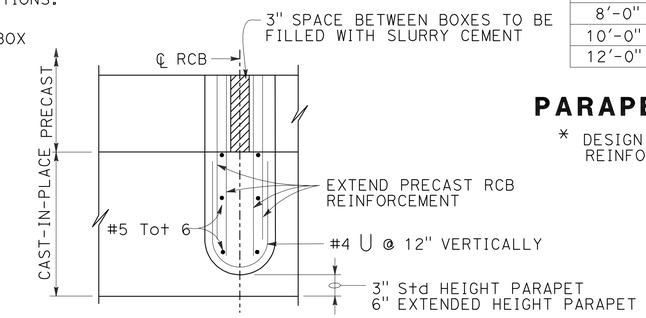

PARTIAL PLAN INTERIOR WALL MULTIPLE CELL CULVERT

Parapet "P" Bars			
Span \ Skew Angle	0° TO 15°	16° TO 30°	31° TO 45°
4'-0"	#5	#5	#5
6'-0"	#5	#5	*
8'-0"	#5	#5	*
10'-0"	#5	*	*
12'-0"	#6	*	*

PARAPET REINFORCEMENT

* DESIGN LIMITED BY SKEW OF PRECAST REINFORCED CONCRETE BOX SECTION

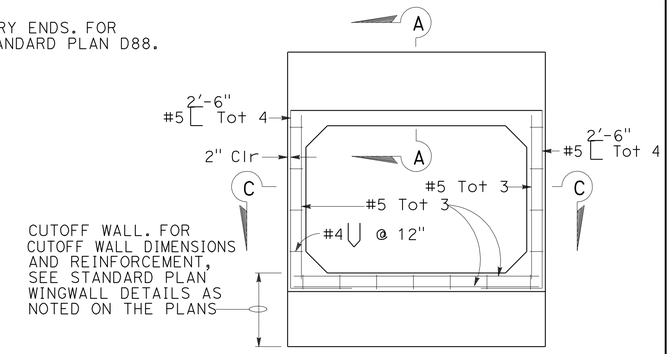

CAST-IN-PLACE END ELEVATION

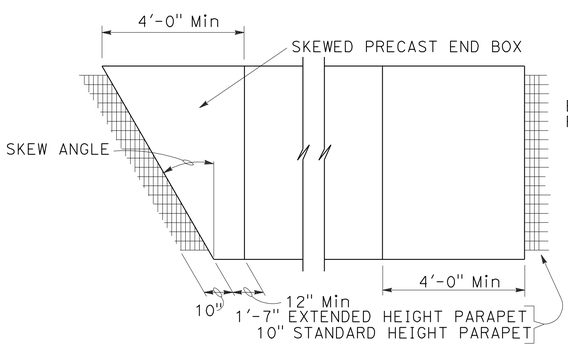

PARTIAL PLAN VIEW

FOR ILLUSTRATIVE PURPOSES ONLY.
FOR CORRECT SKEW DIRECTION SEE PLANS.

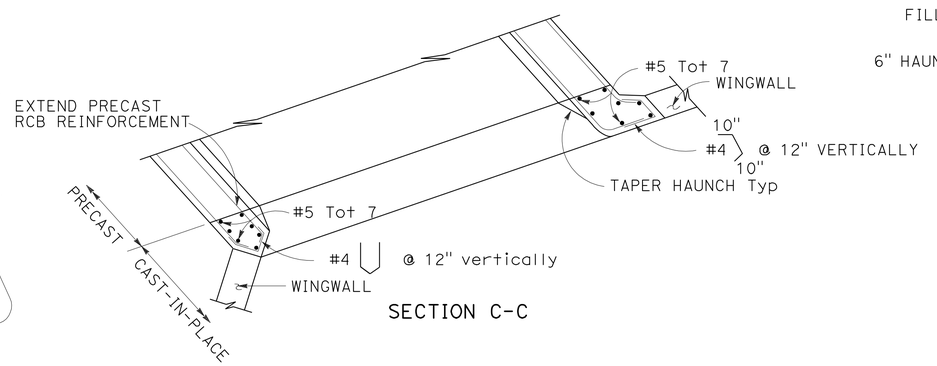

SECTION C-C

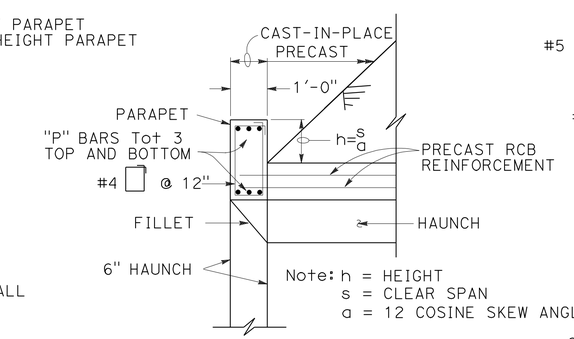

SECTION A-A
(STANDARD HEIGHT PARAPET)

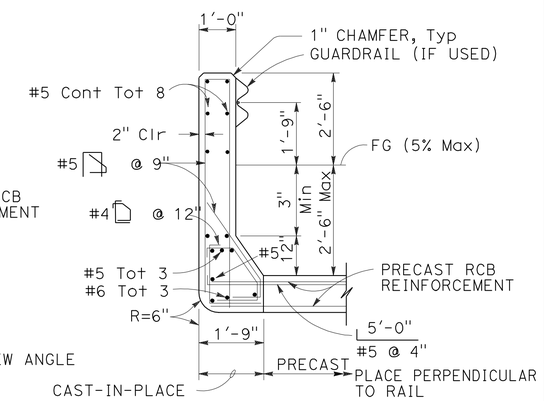

SECTION A-A
(EXTENDED HEIGHT PARAPET)

TYPICAL CULVERT END DETAILS

FOR WALL AND INVERT REINFORCEMENT NOT SHOWN, SEE "END ELEVATION" DETAIL

DRAINAGE DETAILS

NO SCALE

DD-32

REVISED BY	DATE REVISED
SP	2/9/11

CALCULATED-DESIGNED BY: SHARON L. PATCH
CHECKED BY: KATHLEEN M. REILLY
FUNCTIONAL SUPERVISOR: JOSEPH E. PETERSON

STATE OF CALIFORNIA - DEPARTMENT OF TRANSPORTATION

LAST REVISION 02-09-11 | DATE PLOTTED => 13-JUN-2011 | TIME PLOTTED => 10:05

Dist	COUNTY	ROUTE	POST MILES TOTAL PROJECT	SHEET No.	TOTAL SHEETS
04	CC	4	R26.6/R27.5	150	746

Joseph E. Peterson 2/9/11
REGISTERED CIVIL ENGINEER DATE

6-13-11
PLANS APPROVAL DATE

REGISTERED PROFESSIONAL ENGINEER Joseph E. Peterson No. 42777 Exp. 3-31-12 CIVIL STATE OF CALIFORNIA

THE STATE OF CALIFORNIA OR ITS OFFICERS OR AGENTS SHALL NOT BE RESPONSIBLE FOR THE ACCURACY OR COMPLETENESS OF SCANNED COPIES OF THIS PLAN SHEET.

CALTRANS
111 GRAND AVENUE
OAKLAND, CA. 94612

CCTA
2999 OAK ROAD, SUITE 100
WALNUT CREEK, CA. 94597

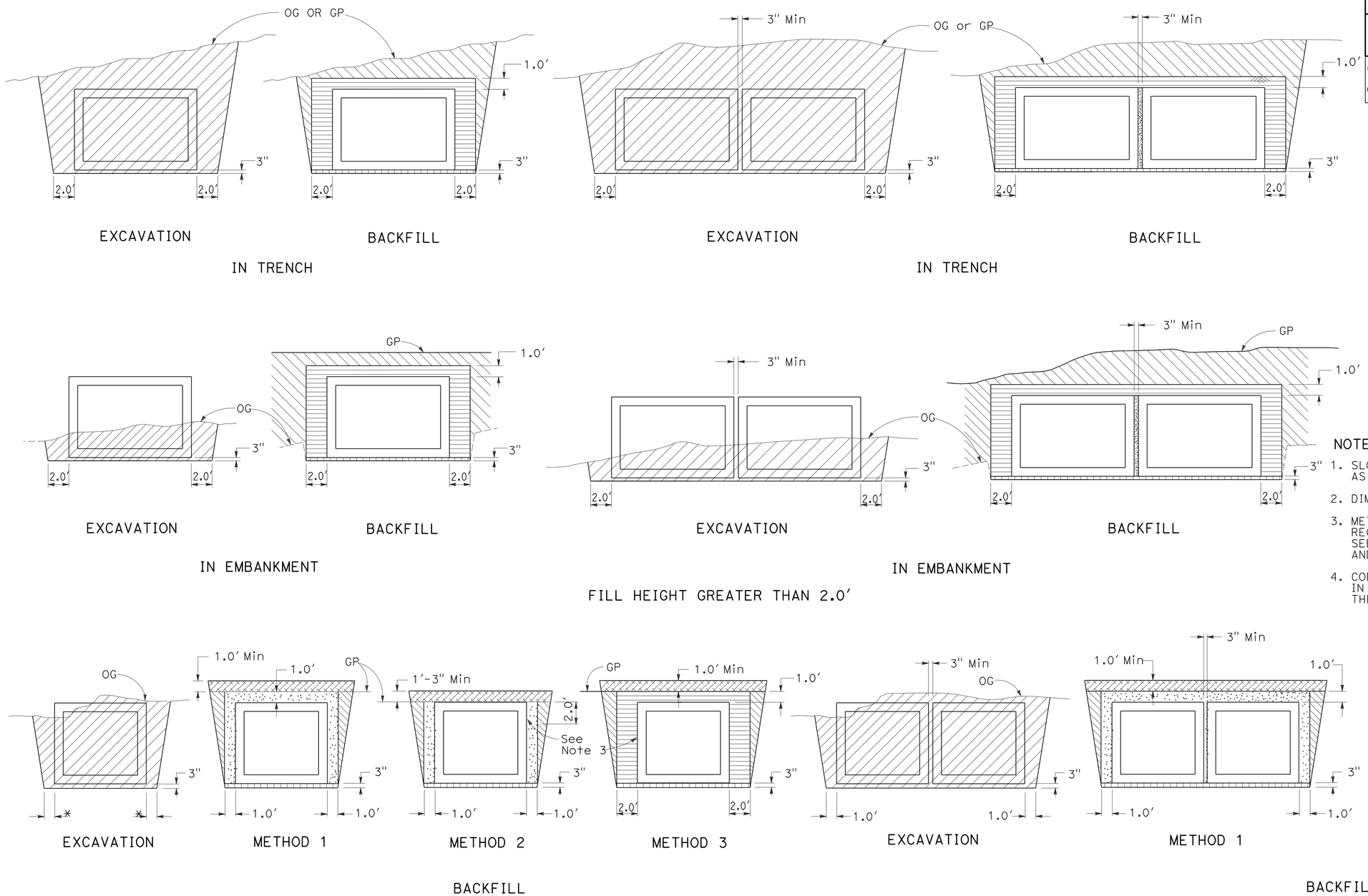

STRUCTURE EXCAVATION (CULVERT)
STRUCTURE BACKFILL (CULVERT) 95% RELATIVE COMPACTION
ROADWAY EMBANKMENT
SLURRY CEMENT BACKFILL
SAND BEDDING (CULVERT)
ROADWAY STRUCTURAL SECTION
ORIGINAL GROUND

NOTES:

1. SLOPE OR SHORE EXCAVATION SIDES AS NECESSARY.
2. DIMENSIONS SHOWN ARE MINIMUM.
3. METHOD 2 AND 3 FOR SINGLE OR MULTIPLE BOXES REQUIRES AN APPROVED EXTERNAL SEALING BAND. SEE, "PRECAST RCB, CULVERT, REINFORCEMENT AND DESIGN TABLES SHEET.
4. CONSTRUCTION OF ROADWAY STRUCTURAL SECTION IN METHOD 2 OR METHOD 3 SHALL NOT DISTURB THE EXTERNAL SEALING BAND INSTALLATION.

* 1.0′ WHERE METHOD 1 OR 2 BACKFILL IS USED
2.0′ WHERE METHOD 3 BACKFILL IS USED

DRAINAGE DETAILS

NO SCALE

DD-33

REVISED BY	DATE REVISED
SP	2/9/11

CALCULATED-DESIGNED BY: SHARON L. PATCH
CHECKED BY: KATHLEEN M. REILLY
FUNCTIONAL SUPERVISOR: JOSEPH E. PETERSON

STATE OF CALIFORNIA - DEPARTMENT OF TRANSPORTATION
Caltrans

LAST REVISION 02-09-11 | DATE PLOTTED => 13-JUN-2011 | TIME PLOTTED => 10:05

Dist	COUNTY	ROUTE	POST MILES TOTAL PROJECT	SHEET No.	TOTAL SHEETS
04	CC	4	R26.6/R27.5	151	746

REGISTERED CIVIL ENGINEER — DATE: 2/9/11

6-13-11
PLANS APPROVAL DATE

REGISTERED PROFESSIONAL ENGINEER — Joseph E. Peterson — No. 42777 — Exp. 3-31-12 — CIVIL — STATE OF CALIFORNIA

THE STATE OF CALIFORNIA OR ITS OFFICERS OR AGENTS SHALL NOT BE RESPONSIBLE FOR THE ACCURACY OR COMPLETENESS OF SCANNED COPIES OF THIS PLAN SHEET.

CALTRANS
111 GRAND AVENUE
OAKLAND, CA. 94612

CCTA
2999 OAK ROAD, SUITE 100
WALNUT CREEK, CA. 94597

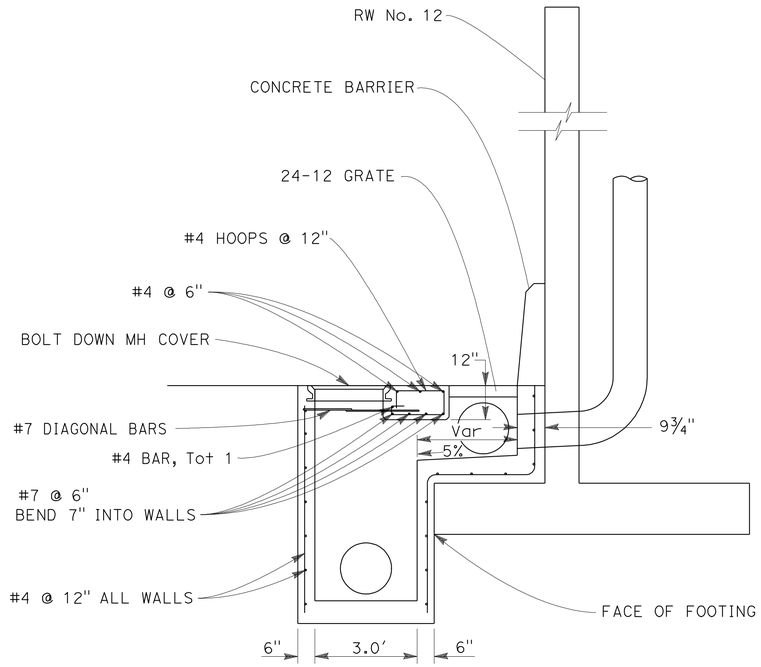

SECTION A-A

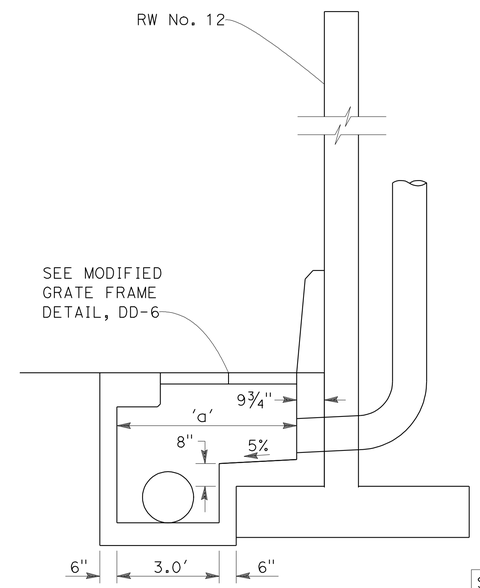

SECTION B-B

SYSTEM	'a'
26 ee	5.27'
37 a	4.69'

NOTE:

FOR DETAILS NOT SHOWN, SEE STANDARD PLAN D73.

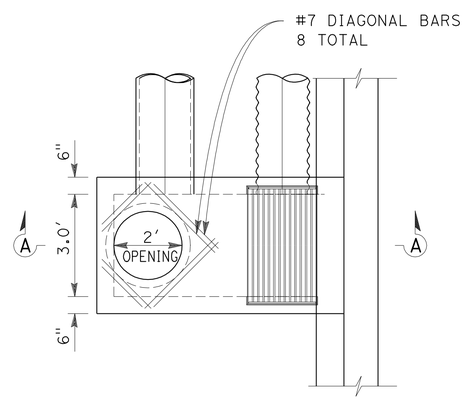

PLAN

G2MH-RW

26 † , x , aa , mm

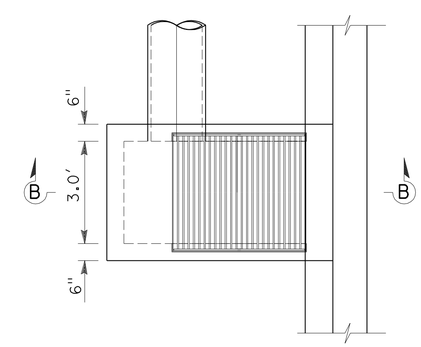

PLAN

GD1-RW

26 ee 37 a

DRAINAGE DETAILS

NO SCALE

DD-34

SP	2/9/11
REVISED BY	DATE REVISED
SHARON L. PATCH	KATHLEEN M. REILLY
CALCULATED-DESIGNED BY	CHECKED BY
FUNCTIONAL SUPERVISOR	JOSEPH E. PETERSON

STATE OF CALIFORNIA - DEPARTMENT OF TRANSPORTATION

Caltrans

LAST REVISION 02-09-11 — DATE PLOTTED => 13-JUN-2011 — TIME PLOTTED => 10:06

Dist	COUNTY	ROUTE	POST MILES TOTAL PROJECT	SHEET No.	TOTAL SHEETS
04	CC	4	R26.6/R27.5	152	746

REGISTERED CIVIL ENGINEER — DATE: 2/9/11

6-13-11
PLANS APPROVAL DATE

REGISTERED PROFESSIONAL ENGINEER — Joseph E. Peterson — No. 42777 — Exp. 3-31-12 — CIVIL — STATE OF CALIFORNIA

THE STATE OF CALIFORNIA OR ITS OFFICERS OR AGENTS SHALL NOT BE RESPONSIBLE FOR THE ACCURACY OR COMPLETENESS OF SCANNED COPIES OF THIS PLAN SHEET.

CALTRANS
111 GRAND AVENUE
OAKLAND, CA. 94612

CCTA
2999 OAK ROAD, SUITE 100
WALNUT CREEK, CA. 94597

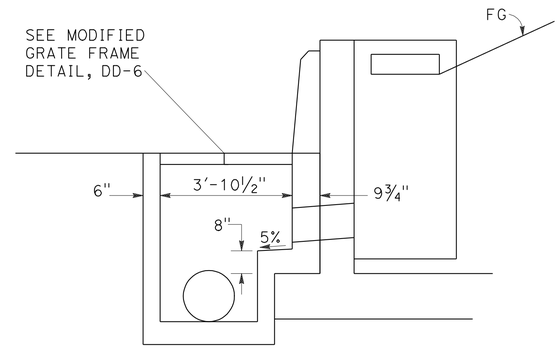

SECTION B-B

NOTE:

FOR DETAILS NOT SHOWN, SEE STANDARD PLAN D73.

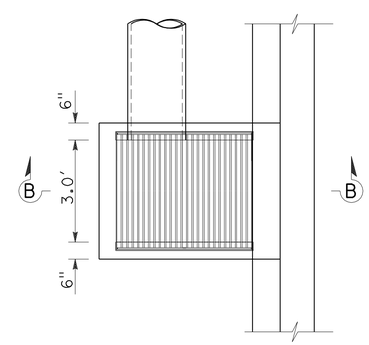

PLAN

GD2-RW
37 C

DRAINAGE DETAILS

NO SCALE

DD-35

SHARON L. PATCH	SP
KATHLEEN M. REILLY	2/9/11
CALCULATED-DESIGNED BY	REVISED BY
CHECKED BY	DATE REVISED
FUNCTIONAL SUPERVISOR	
JOSEPH E. PETERSON	

STATE OF CALIFORNIA - DEPARTMENT OF TRANSPORTATION
Caltrans

LAST REVISION 02-09-11 | DATE PLOTTED => 13-JUN-2011 | TIME PLOTTED => 10:06

Dist	COUNTY	ROUTE	POST MILES TOTAL PROJECT	SHEET No.	TOTAL SHEETS
04	CC	4	R26.6/R27.5	153	746

REGISTERED CIVIL ENGINEER — DATE 2/28/11

6-13-11
PLANS APPROVAL DATE

REGISTERED PROFESSIONAL ENGINEER — Joseph E. Peterson — No. 42777 — Exp. 3-31-12 — CIVIL — STATE OF CALIFORNIA

THE STATE OF CALIFORNIA OR ITS OFFICERS OR AGENTS SHALL NOT BE RESPONSIBLE FOR THE ACCURACY OR COMPLETENESS OF SCANNED COPIES OF THIS PLAN SHEET.

CALTRANS
111 GRAND AVENUE
OAKLAND, CA. 94612

CCTA
2999 OAK ROAD, SUITE 100
WALNUT CREEK, CA. 94597

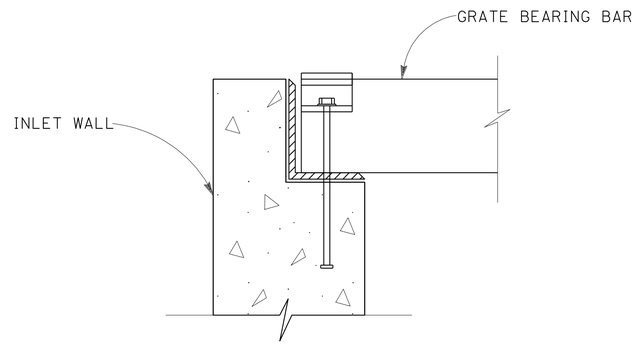

SIDE VIEW

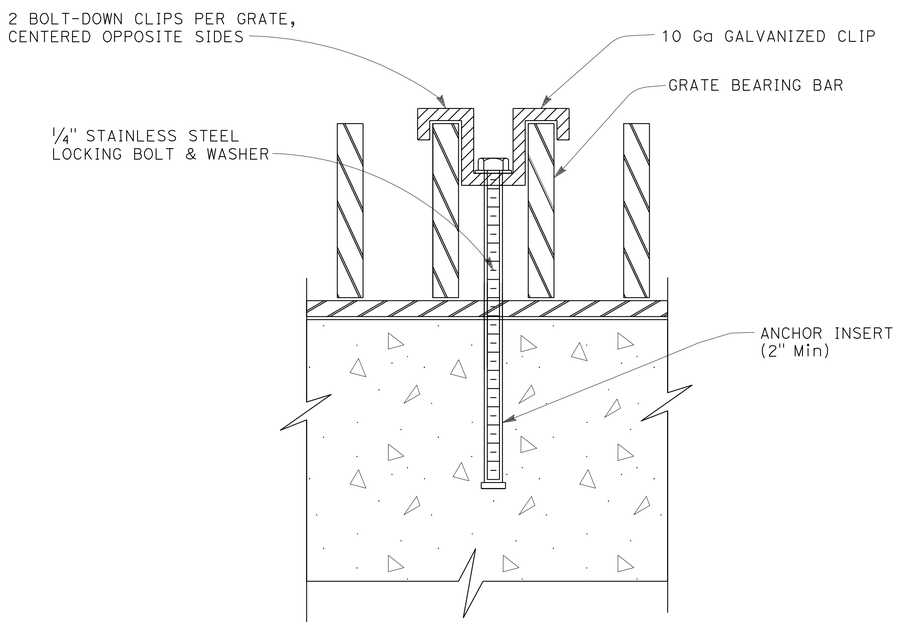

ELEVATION

GRATE LOCKING DEVICE

(42) (m)

NOTES:

1. CUTOFF WALL REQUIRED AT THE BEGINNING AND END OF ALL LINED GUTTERS.
2. CUTOFF WALL TO BE PLACED AT 100 FT INTERVALS OR AS DIRECTED BY THE ENGINEER.

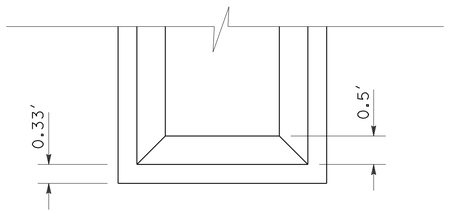

DITCH END - PLAN VIEW

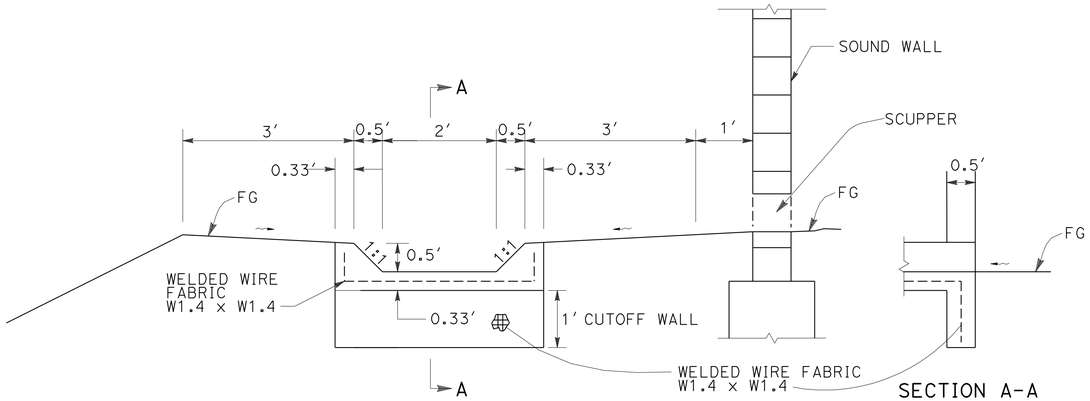

MINOR CONCRETE LINED TRAPEZOIDAL GUTTER

(52) (a) (d) (g)

DRAINAGE DETAILS

NO SCALE

DD-36

REVISED BY	DATE REVISED
SP	2/28/11

CALCULATED-DESIGNED BY: SHARON L. PATCH
CHECKED BY: KATHLEEN M. REILLY
FUNCTIONAL SUPERVISOR: JOSEPH E. PETERSON

STATE OF CALIFORNIA - DEPARTMENT OF TRANSPORTATION
Caltrans

LAST REVISION 02-28-11 | DATE PLOTTED => 13-JUN-2011 | TIME PLOTTED => 10:06

Dist	COUNTY	ROUTE	POST MILES TOTAL PROJECT	SHEET No.	TOTAL SHEETS
04	CC	4	R26.6/R27.5	154	746

REGISTERED CIVIL ENGINEER — DATE: 2/9/11

6-13-11
PLANS APPROVAL DATE

REGISTERED PROFESSIONAL ENGINEER — Joseph E. Peterson — No. 42777 — Exp. 3-31-12 — CIVIL — STATE OF CALIFORNIA

THE STATE OF CALIFORNIA OR ITS OFFICERS OR AGENTS SHALL NOT BE RESPONSIBLE FOR THE ACCURACY OR COMPLETENESS OF SCANNED COPIES OF THIS PLAN SHEET.

CALTRANS
111 GRAND AVENUE
OAKLAND, CA. 94612

CCTA
2999 OAK ROAD, SUITE 100
WALNUT CREEK, CA. 94597

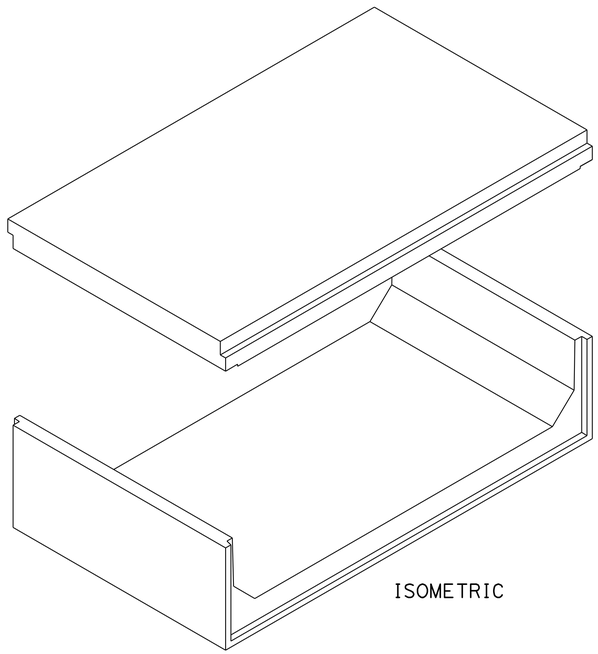

ISOMETRIC

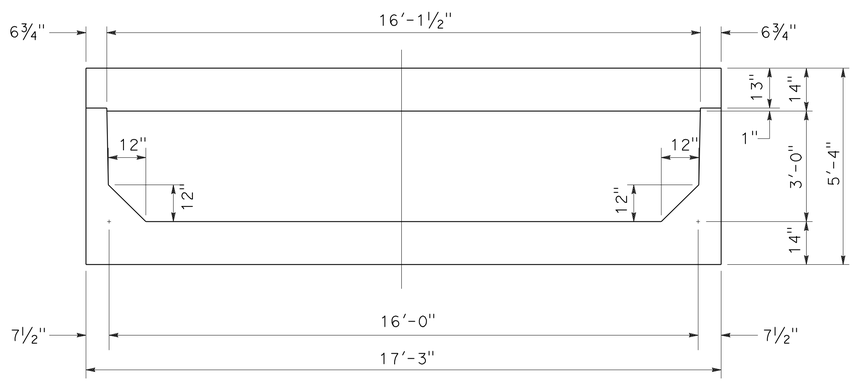

TYPE B

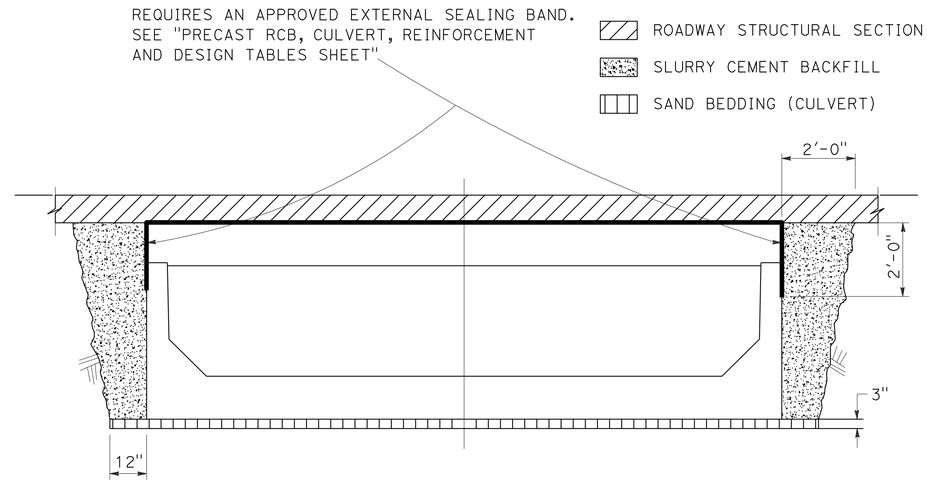

BACKFILL

CANTILEVER WALL PRECAST CONCRETE BOX CULVERT

12 +

DRAINAGE DETAILS

NO SCALE

DD-37

STATE OF CALIFORNIA - DEPARTMENT OF TRANSPORTATION

FUNCTIONAL SUPERVISOR: JOSEPH E. PETERSON

CALCULATED-DESIGNED BY: SHARON L. PATCH

CHECKED BY: KATHLEEN M. REILLY

REVISED BY: SP

DATE REVISED: 2/9/11

LAST REVISION 02-09-11 | DATE PLOTTED => 13-JUN-2011 | TIME PLOTTED => 10:06

Dist	COUNTY	ROUTE	POST MILES TOTAL PROJECT	SHEET No.	TOTAL SHEETS
04	CC	4	R26.6/R27.5	155	746

Joseph E. Peterson 2/9/11
REGISTERED CIVIL ENGINEER DATE

6-13-11
PLANS APPROVAL DATE

REGISTERED PROFESSIONAL ENGINEER Joseph E. Peterson No. 42777 Exp. 3-31-12 CIVIL STATE OF CALIFORNIA

THE STATE OF CALIFORNIA OR ITS OFFICERS OR AGENTS SHALL NOT BE RESPONSIBLE FOR THE ACCURACY OR COMPLETENESS OF SCANNED COPIES OF THIS PLAN SHEET.

CALTRANS
111 GRAND AVENUE
OAKLAND, CA. 94612

CCTA
2999 OAK ROAD, SUITE 100
WALNUT CREEK, CA. 94597

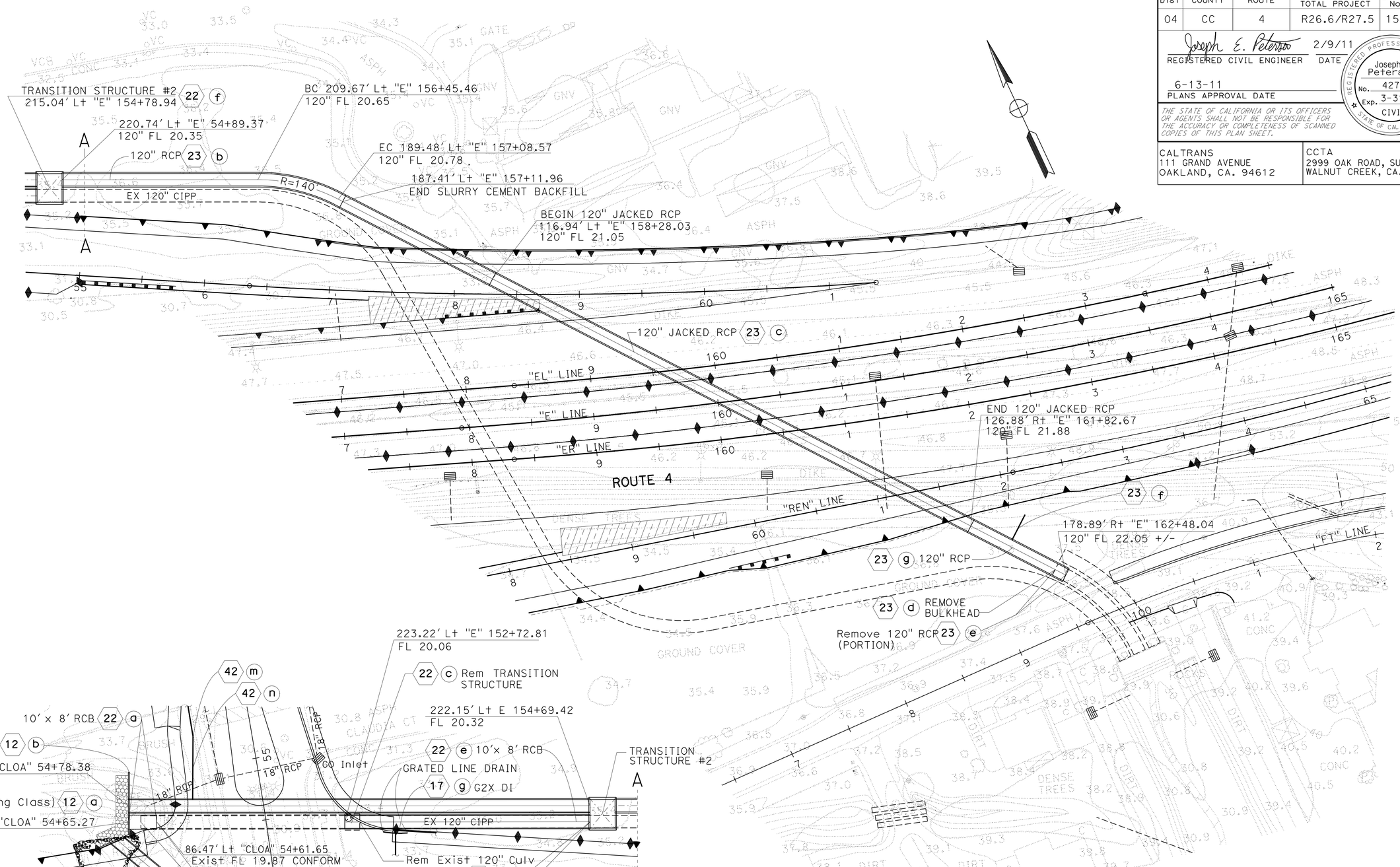

SYSTEM (23) ALIGNMENT

DRAINAGE DETAILS

NO SCALE

DD-38

SP	2/9/11
REVISED BY	DATE REVISED
SHARON L. PATCH	
KATHLEEN M. REILLY	
CALCULATED-DESIGNED BY	
CHECKED BY	
FUNCTIONAL SUPERVISOR	
JOSEPH E. PETERSON	

STATE OF CALIFORNIA - DEPARTMENT OF TRANSPORTATION

Caltrans

LAST REVISION 02-09-11 | DATE PLOTTED => 13-JUN-2011 | TIME PLOTTED => 10:06

LEGEND AND ABBREVIATIONS

ASP	ALTERNATIVE SLOTTED PIPE
COA	CITY OF ANTIOCH
DIM	DRAINAGE INLET MARKER
D	DOWNDRAIN JOINT
GCSP	GROUTED CONCRETE SLOPE PROTECTION
PSC	POLYMERIC SHEET COATING
S	STANDARD JOINT
SO	SIDE OPENING
TG	TOP OF GRATE
W/ SUB EX	WITH SUB EXCAVATION
WTJ	WATER TIGHT JOINT
(N)	NOT A SEPARATE PAY ITEM, FOR INFORMATION ONLY

NOTES:

1. FOR MINIMUM ALLOWABLE CLASS OF RCP, SEE STANDARD PLAN A62D.
2. BITUMINOUS COATING (Bit Ctd) IS ON SOIL SIDE ONLY.
3. ALLOWABLE ALTERNATIVE SLOTTED PIPE SHALL INCLUDE PLASTIC AND CORRUGATED STEEL.

APC, ALLOWABLE PIPE MATERIAL AND PROTECTION

DESIGNATION	RCP	SSRP		CSP		PLASTIC PIPE	
	SIZE	SIZE	THICKNESS	SIZE	THICKNESS	SIZE	INTERIOR TYPE
12" APC	12"	-	-	-	-	12"	SMOOTH INTERIOR
18" APC (A)	18"	-	-	18"	0.052" PSC	18"	SMOOTH OR CORR.
18" APC (B)	18"	-	-	-	-	18"	SMOOTH INTERIOR
24" APC (A)	24"	24"	0.079" Bit Ctd	24"	0.079" Bit Ctd	24"	SMOOTH OR CORR.
24" APC (B)	24"	24"	0.079" Bit Ctd	24"	-	24"	SMOOTH INTERIOR
30" APC	30"	30"	0.079" Bit Ctd	30"	-	30"	SMOOTH INTERIOR

Dist	COUNTY	ROUTE	POST MILES TOTAL PROJECT	SHEET No.	TOTAL SHEETS
04	CC	4	R26.6/R27.5	156	746

REGISTERED CIVIL ENGINEER 2/2/11 DATE

6-13-11
PLANS APPROVAL DATE

REGISTERED PROFESSIONAL ENGINEER N. V. BERNARDI No. 45407 Exp. 9/30/12 CIVIL STATE OF CALIFORNIA

THE STATE OF CALIFORNIA OR ITS OFFICERS OR AGENTS SHALL NOT BE RESPONSIBLE FOR THE ACCURACY OR COMPLETENESS OF SCANNED COPIES OF THIS PLAN SHEET.

BKF ENGINEERS
4670 WILLOW ROAD, SUITE 250
PLEASANTON, CA. 94588

CCTA
2999 OAK ROAD, SUITE 100
WALNUT CREEK, CA. 94597

DRAINAGE QUANTITIES

DRAINAGE SYSTEM No.	DRAINAGE UNIT	CLEAN DRAINAGE FACILITY	CLEAN AND INSPECT COA 72" PIPE	CLEAN AND INSPECT COA 120" PIPE	ABANDON CULVERT	REMOVE CULVERT	REMOVE DRAINAGE FACILITY	MODIFY INLET TO MANHOLE	ADJUST PARTIAL INLET TO GRADE	CAP INLET	REMOVE CONCRETE	SAND BACKFILL	SLURRY CEMENT BACKFILL	DITCH EXCAVATION	STRUCTURAL CONCRETE BOX CULVERT	STRUCTURAL CONCRETE HEADWALL/WINGWALL	STRUCTURAL CONCRETE TRANSITION STRUCTURE	MINOR CONCRETE MINOR STRUCTURE	MINOR CONCRETE MISC CONSTRUCTION	MINOR CONCRETE BACKFILL	MINOR CONCRETE DITCH LINING	BAR REINFORCING STEEL BOX CULVERT	BAR REINFORCING STEEL HEADWALL/WINGWALL	BAR REINFORCING STEEL TRANSITION STRUCTURE	APC 12" APC	APC 18" APC (A)	APC 18" APC (B)	APC 24" APC (A)	APC 24" APC (B)	APC 30" APC	RCP 18" JACKED RCP	RCP 24" JACKED RCP	RCP 30" JACKED RCP	RCP 120" JACKED RCP	RCP 12" RCP	RCP 18" RCP	RCP 18" RCP CLASS V	DESCRIPTION	STATION	DRAINAGE PLAN SHEET No.	DRAINAGE SYSTEM No.	DRAINAGE UNIT
		EA	LS	LS	EA	LF	EA	EA	EA	EA	CY	CY	CY	CY	CY	CY	CY	CY	CY	CY	CY	LB	LB	LB	LF	LF	LF	LF	LF	LF	LF	LF	LF	LF	LF	LF	LF					
1	a																				5.94																	PCC SWALE	101.53′ R+ "E" 136+00.00 TO 107.78′ R+ "E" 138+10.00	D-1	1	a
	b																				6.78																	PCC SWALE	107.78′ R+ "E" 138+10.00 TO 123.60′ R+ "E" 140+40.00			b
	c																				5.67																	PCC SWALE	123.60′ R+ "E" 140+40.00 TO 118.00′ R+ "E" 142+40.00	D-1		c
	d																				4.28																	PCC SWALE	118.00′ R+ "E" 142+40.00 TO 42.78′ R+ "REF" 44+00.00	D-2		d
1	e																				0.21																	PCC SWALE	42.78′ R+ "REF" 44+00.00 TO 42.74′ R+ "REF" 44+07.64	D-2	1	e
2	a																	1.85																				G2 INLET	101.02′ L+ "E" 137+10.00	D-1	2	a
	b																									86.1												18" APC (A)	101.02′ L+ "E" 137+10.00 TO 102.82′ L+ "E" 138+00.00			b
	c																	1.92																				G2 INLET	102.82′ L+ "E" 138+00.00			c
	d																									113.9												18" APC (A)	102.82′ L+ "E" 138+00.00 TO 105.18′ L+ "E" 139+17.81			d
	e																																					18" ASP	102.82′ L+ "E" 138+00.00 TO 105.18′ L+ "E" 139+17.81			e
	f								1																													ADJUST INLET	98.00′ R+ "E" 138+10.00			f
	g																																					18" ASP	98.00′ R+ "E" 138+10.00 TO 98.00′ R+ "E" 139+17.81			g
	h					53.7																																REMOVE CULVERT	149.22′ R+ "E" 139+17.77 TO 98.00′ R+ "E" 139+17.71			h
	i																	1.23																				G1 INLET	107.78′ R+ "E" 138+10.00			i
	j																									7.7												18" APC (A)	107.78′ R+ "E" 138+10.00 TO 98.00′ R+ "E" 138+10.00			j
	k																	1.21																				G1 INLET	123.60′ R+ "E" 140+40.00			k
	l																									23.6												18" APC (A)	123.60′ R+ "E" 140+40.00 TO 98.00′ R+ "E" 140+40.00	D-1		l
	m																	1.89																				G2 INLET	98.00′ R+ "E" 141+75.00	D-2		m
	n																									131.1												18" APC (A)	98.00′ R+ "E" 140+40.00 TO 98.00′ R+ "E" 141+75.00	D-1		n
	o																	2.17																				G2 INLET	98.00′ R+ "E" 140+40.00			o
	p																																					18" ASP	98.00′ R+ "E" 140+40.00 TO 98.00′ R+ "E" 139+17.81			p
	q																									118.3												18" APC (A)	98.00′ R+ "E" 140+40.00 TO 98.00′ R+ "E" 139+17.81			q
	r								1																													ADJUST INLET	98.00′ R+ "E" 139+17.81			r
	s																												45.3									24" APC (B)	98.00′ R+ "E" 139+17.81 TO 49.25′ R+ "E" 139+17.81			s
	t																															48.3						24" JACKED RCP	49.25′ R+ "E" 139+17.81 TO 0.00′ L+ "E" 139+17.81			t
	u																	5.17																				G2 INLET	0.00′ L+ "E" 139+17.81			u
	v																															63.5						24" JACKED RCP	0.00′ L+ "E" 139+17.81 TO 65.41′ L+ "E" 139+17.81			v
	w																												37.7									24" APC (B)	65.41′ L+ "E" 139+17.81 TO 0.00′ L+ "E" 139+17.81			w
	x																	4.63																				G2 INLET	105.18′ L+ "E" 139+17.81			x
	y																												78.3									24" APC (B)	105.18′ L+ "E" 139+17.81 TO 107.52′ L+ "E" 140+00.00			y
	z																																					18" ASP	105.18′ L+ "E" 139+17.91 TO 107.52′ L+ "E" 140+00.00			z
	aa																	4.82																				G2 INLET	107.52′ L+ "E" 140+00.00			aa
	bb																												61.3									24" APC (B)	107.52′ L+ "E" 140+00 TO 112.77′ L+ "E" 140+65.00			bb
2	cc																	4.99																				G2 INLET	112.77′ L+ "E" 140+65.00	D-1	2	cc
SHEET TOTAL						53.7			2									29.88			22.88					480.7			222.6			111.8											

DRAINAGE QUANTITIES
DQ-1

STATE OF CALIFORNIA - DEPARTMENT OF TRANSPORTATION
Caltrans

CONSULTANT FUNCTIONAL SUPERVISOR: NATALINA V. BERNARDI

DAT NGUYEN — LUIS GARCIA — DQN — 2/2/11

REVISED BY — DATE REVISED

CALCULATED-DESIGNED BY — CHECKED BY

LAST REVISION 02-02-11 — DATE PLOTTED =>13-JUN-2011 TIME PLOTTED =>10:06

Dist	COUNTY	ROUTE	POST MILES TOTAL PROJECT	SHEET No.	TOTAL SHEETS
04	CC	4	R26.6/R27.5	157	746

REGISTERED CIVIL ENGINEER 2/2/11 DATE

6-13-11
PLANS APPROVAL DATE

REGISTERED PROFESSIONAL ENGINEER N. V. BERNARDI No. 45407 Exp. 9/30/12 CIVIL STATE OF CALIFORNIA

THE STATE OF CALIFORNIA OR ITS OFFICERS OR AGENTS SHALL NOT BE RESPONSIBLE FOR THE ACCURACY OR COMPLETENESS OF SCANNED COPIES OF THIS PLAN SHEET.

BKF ENGINEERS
4670 WILLOW ROAD, SUITE 250
PLEASANTON, CA. 94588

CCTA
2999 OAK ROAD, SUITE 100
WALNUT CREEK, CA. 94597

DRAINAGE QUANTITIES

DRAINAGE SYSTEM No.	DRAINAGE UNIT	RCP 24" RCP	RCP 24" RCP CLASS V	RCP 30" RCP	RCP 36" RCP	RCP 42" RCP	RCP 72" RCP	RCP 120" RCP	CSP Bit Ctd 12" (0.064" THICK)	CSP Bit Ctd 18" (0.064" THICK)	CSP Bit Ctd 24" (0.079" THICK)	CSP Bit Ctd 30" (0.064" THICK)	CSP Bit Ctd 36" (0.064" THICK)	CSP Bit Ctd 48" (0.079" THICK)	18" ASP	18" SCSP	GRATED LINE DRAIN	CANTILEVER WALL PRECAST Conc BOX CULVERT	12" WSP (0.25" THICK)	24" AFES	COA (TYPE C) INLET	6" PPP UD	3" CURB DRAIN	SIDEWALK CROSS DRAIN	ROCK SLOPE PROTECTION (FACING METHOD B)	CLASS 8 ROCK SLOPE PROTECTION FABRIC	AGGREGATE BASE (CLASS 3)	FRAME & COVER (N) 18-9	FRAME & COVER (N) 24-9	FRAME & COVER (N) 24-12	FRAME & COVER (N) 24-12X	FRAME & COVER (N) 36R	FRAME & COVER (N) U45	FRAME & COVER (N) U46	BOLTDOWN (N)	GRATE LOCKING DEVICE	MISCELLANEOUS IRON AND STEEL	PLACE HMA MISCELLANEOUS AREA	HMA (TYPE A)	MAXIMUM COVER (N)	HEIGHT OF INLET "H" (N)	PIPE JOINT CLASSIFICATION (N)	DESCRIPTION	STATION	DRAINAGE PLAN SHEET No.	DRAINAGE SYSTEM No.	DRAINAGE UNIT
		LF	LF	LF	LF	LF	LF	LF	LF	LF	LF	LF	LF	LF	LF	LF	LF	LF	LF	EA	EA	LF	LF	EA	CY	SY	CY	EA	EA	EA	EA	EA	EA	EA	EA	EA	LB	SY	TON	LF	LF					
1	a																																										PCC SWALE	101.53′ R+ "E" 136+00.00 TO 107.78′ R+ "E" 138+10.00	D-1	1	a
	b																																										PCC SWALE	107.78′ R+ "E" 138+10.00 TO 123.60′ R+ "E" 140+40.00			b
	c																																										PCC SWALE	123.60′ R+ "E" 140+40.00 TO 118.00′ R+ "E" 142+40.00	D-1		c
	d																																										PCC SWALE	118.00′ R+ "E" 142+40.00 TO 42.78′ R+ "REF" 44+00.00	D-2		d
1	e																																										PCC SWALE	42.78′ R+ "REF" 44+00.00 TO 42.74′ R+ "REF" 44+07.64	D-2	1	e
2	a																													1						326				5.12		G2 INLET	101.02′ L+ "E" 137+10.00	D-1	2	a
	b																																						3.78		S	18" APC (A)	101.02′ L+ "E" 137+10.00 TO 102.82′ L+ "E" 138+00.00			b
	c																													1						326				5.38		G2 INLET	102.82′ L+ "E" 138+00.00			c
	d																																						4.29		S	18" APC (A)	102.82′ L+ "E" 138+00.00 TO 105.18′ L+ "E" 139+17.81			d
	e														113.9																											18" ASP	102.82′ L+ "E" 138+00.00 TO 105.18′ L+ "E" 139+17.81			e
	f																													1												ADJUST INLET	98.00′ R+ "E" 138+10.00			f
	g														103.9																											18" ASP	98.00′ R+ "E" 138+10.00 TO 98.00′ R+ "E" 139+17.81			g
	h																																									REMOVE CULVERT	149.22′ R+ "E" 139+17.77 TO 98.00′ R+ "E" 139+17.71			h
	i																													1						326				4.29		G1 INLET	107.78′ R+ "E" 138+10.00			i
	j																																						4.86		S	18" APC (A)	107.78′ R+ "E" 138+10.00 TO 98.00′ R+ "E" 138+10.00			j
	k																													1						326				4.19		G1 INLET	123.60′ R+ "E" 140+40.00			k
	l																																						5.21		S	18" APC (A)	123.60′ R+ "E" 140+40.00 TO 98.00′ R+ "E" 140+40.00	D-1		l
	m																													1						326				5.27		G2 INLET	98.00′ R+ "E" 141+75.00	D-2		m
	n																																						4.00		S	18" APC (A)	98.00′ R+ "E" 140+40.00 TO 98.00′ R+ "E" 141+75.00	D-1		n
	o																													1						326				6.80		G2 INLET	98.00′ R+ "E" 140+40.00			o
	p														118.3																											18" ASP	98.00′ R+ "E" 140+40.00 TO 98.00′ R+ "E" 139+17.81			p
	q																																						5.77		S	18" APC (A)	98.00′ R+ "E" 140+40.00 TO 98.00′ R+ "E" 139+17.81			q
	r																													1												ADJUST INLET	98.00′ R+ "E" 139+17.81			r
	s																																						9.42		S	24" APC (B)	98.00′ R+ "E" 139+17.81 TO 49.25′ R+ "E" 139+17.81			s
	t																																						10.57		S	24" JACKED RCP	49.25′ R+ "E" 139+17.81 TO 0.00′ L+ "E" 139+17.81			t
	u																													1						326				12.67		G2 INLET	0.00′ L+ "E" 139+17.81			u
	v																																						10.67		S	24" JACKED RCP	0.00′ L+ "E" 139+17.81 TO 65.41′ L+ "E" 139+17.81			v
	w																																						9.90		S	24" APC (B)	65.41′ L+ "E" 139+17.81 TO 0.00′ L+ "E" 139+17.81			w
	x																													1						326				11.24		G2 INLET	105.18′ L+ "E" 139+17.81			x
	y																																						9.67		S	24" APC (B)	105.18′ L+ "E" 139+17.81 TO 107.52′ L+ "E" 140+00.00			y
	z														78.3																											18" ASP	105.18′ L+ "E" 139+17.91 TO 107.52′ L+ "E" 140+00.00			z
	aa																													1						326				11.77		G2 INLET	107.52′ L+ "E" 140+00.00			aa
	bb																																						10.13		S	24" APC (B)	107.52′ L+ "E" 140+00 TO 112.77′ L+ "E" 140+65.00			bb
2	cc																													1						326				12.23		G2 INLET	112.77′ L+ "E" 140+65.00	D-1	2	cc
SHEET TOTAL															414.4															12						3260											

DRAINAGE QUANTITIES
DQ-2

FOR NOTES, ABBREVIATIONS AND LEGEND, SEE SHEET DQ-1

DAT NGUYEN — LUIS GARCIA — REVISED BY — DATE REVISED — DQN — 2/2/11

CALCULATED-DESIGNED BY — CHECKED BY

CONSULTANT FUNCTIONAL SUPERVISOR — NATALINA V. BERNARDI

STATE OF CALIFORNIA - DEPARTMENT OF TRANSPORTATION — Caltrans

LAST REVISION 02-02-11 — DATE PLOTTED =>13-JUN-2011 TIME PLOTTED =>10:06

Dist	COUNTY	ROUTE	POST MILES TOTAL PROJECT	SHEET No.	TOTAL SHEETS
04	CC	4	R26.6/R27.5	158	746

REGISTERED CIVIL ENGINEER 2/2/11 DATE

6-13-11
PLANS APPROVAL DATE

REGISTERED PROFESSIONAL ENGINEER N. V. BERNARDI No. 45407 Exp. 9/30/12 CIVIL STATE OF CALIFORNIA

THE STATE OF CALIFORNIA OR ITS OFFICERS OR AGENTS SHALL NOT BE RESPONSIBLE FOR THE ACCURACY OR COMPLETENESS OF SCANNED COPIES OF THIS PLAN SHEET.

BKF ENGINEERS
4670 WILLOW ROAD, SUITE 250
PLEASANTON, CA. 94588

CCTA
2999 OAK ROAD, SUITE 100
WALNUT CREEK, CA. 94597

DRAINAGE QUANTITIES

DRAINAGE SYSTEM No.	DRAINAGE UNIT	CLEAN DRAINAGE FACILITY	CLEAN AND INSPECT COA 72" PIPE	CLEAN AND INSPECT COA 120" PIPE	ABANDON CULVERT	REMOVE CULVERT	REMOVE DRAINAGE FACILITY	MODIFY INLET TO MANHOLE	ADJUST PARTIAL INLET TO GRADE	CAP INLET	REMOVE CONCRETE	SAND BACKFILL	SLURRY CEMENT BACKFILL	DITCH EXCAVATION	STRUCTURAL CONCRETE: BOX CULVERT	STRUCTURAL CONCRETE: HEADWALL/WINGWALL	STRUCTURAL CONCRETE: TRANSITION STRUCTURE	MINOR CONCRETE: MINOR STRUCTURE	MINOR CONCRETE: MISC CONSTRUCTION	MINOR CONCRETE: BACKFILL	MINOR CONCRETE: DITCH LINING	BAR REINFORCING STEEL: BOX CULVERT	BAR REINFORCING STEEL: HEADWALL/WINGWALL	BAR REINFORCING STEEL: TRANSITION STRUCTURE	APC: 12" APC	APC: 18" APC (A)	APC: 18" APC (B)	APC: 24" APC (A)	APC: 24" APC (B)	APC: 30" APC	RCP: 18" JACKED RCP	RCP: 24" JACKED RCP	RCP: 30" JACKED RCP	RCP: 120" JACKED RCP	RCP: 12" RCP	RCP: 18" RCP	RCP: 18" RCP CLASS V	DESCRIPTION	STATION	DRAINAGE PLAN SHEET No.	DRAINAGE SYSTEM No.	DRAINAGE UNIT
		EA	LS	LS	EA	LF	EA	EA	EA	EA	CY	CY	CY	CY	CY	CY	CY	CY	CY	CY	CY	LB	LB	LB	LF	LF	LF	LF	LF	LF	LF	LF	LF	LF	LF	LF	LF					
2	dd																												86.7									24" APC (B)	112.77′ Lt "E" 140+65.00 TO 123.01′ Lt "E" 141+55.00	D-2	2	dd
	ee																	5.22																				G2 INLET	123.01′ Lt "E" 141+55.00			ee
	ff																												91.8									24" APC (B)	123.01′ Lt "E" 141+55.00 TO 35.28′ Lt "RWN" 42+97.50			ff
	gg																	2.33																				GDOM	86.00′ Lt "E" 142+50.00			gg
	hh																									46.6												18" APC (A)	86.00′ Lt "E" 142+50.00 TO 86.00′ Lt "E" 143+00.00			hh
	ii																	1.88																				G2 INLET	58.00′ Lt "EL" 149+00.00			ii
	jj																									326.9												18" APC (A)	86.00′ Lt "E" 145+70.00 TO 58.00′ Lt "EL" 149+00.00			jj
	kk																	2.37																				GDOM	86.00′ Lt "E" 145+70.00			kk
	ll																									266.6												18" APC (A)	86.00′ Lt "E" 143+00.00 TO 86.00′ Lt "E" 145+70.00			ll
	mm																	1.90																				G2 INLET	86.00′ Lt "E" 143+00.00			mm
	nn																									46.8												18" APC (A)	86.00′ Lt "E" 142+50.00 TO 33.82′ Lt ""RWN"" 42+53.51			nn
	oo																	5.41																				G2 INLET	33.82′ Lt "RWN" 42+53.51	D-2		oo
2	pp							1																														ADJUST INLET	98.00′ Rt "E" 136+80.00	D-1	2	pp
3	a						1																															REMOVE FES	97.02′ Lt "E" 140+77.07	D-1	3	a
	b					27.0																																REMOVE CULVERT	70.06′ Lt "E" 140+77.57 TO 97.02 Lt "E" 140+77.07			b
	c						1																															REMOVE INLET	64.16′ Lt "E" 140+77.68			c
	d				1							1.77																										ABANDON CULVERT	3.70′ Lt "E" 140+78.41 TO 64.16′ Lt "E" 140+77.68			d
3	e						1																															REMOVE INLET	3.70′ Lt "E" 140+78.41	D-1	3	e
4	a													103.5																								UNLINED TRAPEZIOD DITCH	64.09′ Lt "RWN" 43+19.11 TO 68.16′ Lt "RWN" 44+47.49	D-2	4	a
5	a																	1.55																				G2 INLET	119.50′ Rt "E" 142+40.00	D-2	5	a
	b																									152.5												18" APC (A)	119.50′ Rt "E" 142+40.00 TO 44.28′ Rt "REF" 44+00.00			b
	c																	1.80																				G2 INLET	44.28′ Rt "REF" 44+00.00			c
	d																									20.3												18" APC (A)	43.28′ Rt "REF" 44+00.00 TO 22.00′ Rt "REF" 44+00.00			d
	e																	4.58																				G2 INLET	22.00′ Rt "REF" 44+00.00			e
	f																									84.1												18" APC (A)	22.00′ Rt "REF" 44+00.00 TO 22.00′ Rt "REF" 44+88.04			f
	g																	2.42																				GDOM	86.00′ Rt "E" 146+10.00			g
	h																									33.3												18" APC (A)	86.00′ Rt "E" 146+10.00 TO 22.00′ Rt "REF" 46+09.00			h
	i																	1.74																				G2 INLET	22.00′ Rt "REF" 46+09.00			i
	j																									117.1												18 " APC (A)	22.00′ Rt "REF" 44+88.04 TO 22.00′ Rt "REF" 46+09.00			j
	k																	4.95																				G2 INLET	22.00′ Rt "REF" 44+88.04			k
	l																									13.6												18 " APC (A)	22.00′ Rt "REF" 44+88.04 TO 4.93′ Rt "REF" 44+88.11			l
5	m								1																													CAP INLET	4.93′ Rt "REF" 44+88.11	D-2	5	m
SHEET TOTAL					1	27.0	3		1	1		1.77		103.5				36.15								1107.8			178.5													

DRAINAGE QUANTITIES
DQ-3

FOR NOTES, ABBREVIATIONS AND LEGEND, SEE SHEET DQ-1

STATE OF CALIFORNIA - DEPARTMENT OF TRANSPORTATION
Caltrans

CONSULTANT FUNCTIONAL SUPERVISOR: NATALINA V. BERNARDI
CALCULATED-DESIGNED BY: DAT NGUYEN
CHECKED BY: LUIS GARCIA
REVISED BY: DQN
DATE REVISED: 2/2/11

LAST REVISION 02-02-11
DATE PLOTTED => 13-JUN-2011
TIME PLOTTED => 10:07

Dist	COUNTY	ROUTE	POST MILES TOTAL PROJECT	SHEET No.	TOTAL SHEETS
04	CC	4	R26.6/R27.5	159	746

REGISTERED CIVIL ENGINEER 2/2/11 DATE

6-13-11
PLANS APPROVAL DATE

REGISTERED PROFESSIONAL ENGINEER N. V. BERNARDI No. 45407 Exp. 9/30/12 CIVIL STATE OF CALIFORNIA

THE STATE OF CALIFORNIA OR ITS OFFICERS OR AGENTS SHALL NOT BE RESPONSIBLE FOR THE ACCURACY OR COMPLETENESS OF SCANNED COPIES OF THIS PLAN SHEET.

BKF ENGINEERS
4670 WILLOW ROAD, SUITE 250
PLEASANTON, CA. 94588

CCTA
2999 OAK ROAD, SUITE 100
WALNUT CREEK, CA. 94597

DRAINAGE QUANTITIES

DRAINAGE SYSTEM No.	DRAINAGE UNIT	RCP 24" RCP	RCP 24" RCP CLASS V	RCP 30" RCP	RCP 36" RCP	RCP 42" RCP	RCP 72" RCP	RCP 120" RCP	CSP Bit Ctd 12" (0.064" THICK)	CSP Bit Ctd 18" (0.064" THICK)	CSP Bit Ctd 24" (0.079" THICK)	CSP Bit Ctd 30" (0.064" THICK)	CSP Bit Ctd 36" (0.064" THICK)	CSP Bit Ctd 48" (0.079" THICK)	18" ASP	18" SCSP	GRATED LINE DRAIN	CANTILEVER WALL PRECAST Conc BOX CULVERT	12" WSP (0.25" THICK)	24" AFES	COA (TYPE C) INLET	6" PPP UD	3" CURB DRAIN	SIDEWALK CROSS DRAIN	ROCK SLOPE PROTECTION (FACING METHOD B)	CLASS 8 ROCK SLOPE PROTECTION FABRIC	AGGREGATE BASE (CLASS 3)	FRAME & COVER (N) 18-9	FRAME & COVER (N) 24-9	FRAME & COVER (N) 24-12	FRAME & COVER (N) 24-12X	FRAME & COVER (N) 36R	FRAME & COVER (N) U45	FRAME & COVER (N) U46	BOLTDOWN (N)	GRATE LOCKING DEVICE	MISCELLANEOUS IRON AND STEEL	PLACE HMA MISCELLANEOUS AREA	HMA (TYPE A)	MAXIMUM COVER (N)	HEIGHT OF INLET "H" (N)	PIPE JOINT CLASSIFICATION (N)	DESCRIPTION	STATION	DRAINAGE PLAN SHEET No.	DRAINAGE SYSTEM No.	DRAINAGE UNIT
		LF	LF	LF	LF	LF	LF	LF	LF	LF	LF	LF	LF	LF	LF	LF	LF	LF	LF	EA	EA	LF	LF	EA	CY	SY	CY	EA	EA	EA	EA	EA	EA	EA	EA	EA	LB	SY	TON	LF	LF						
2	dd																																							10.80		S	24" APC (B)	112.77′ Lt "E" 140+65.00 TO 123.01′ Lt "E" 141+55.00	D-2	2	dd
	ee																													1						326				12.90		G2 INLET	123.01′ Lt "E" 141+55.00			ee
	ff																																							11.26		S	24" APC (B)	123.01′ Lt "E" 141+55.00 TO 35.28′ Lt "RWN" 42+97.50			ff
	gg																													2						634				5.22		GDOM	86.00′ Lt "E" 142+50.00			gg
	hh																																							3.80		S	18" APC (A)	86.00′ Lt "E" 142+50.00 TO 86.00′ Lt "E" 143+00.00			hh
	ii																													1						326				5.21		G2 INLET	58.00′ Lt "EL" 149+00.00			ii
	jj																																							3.80		S	18" APC (A)	86.00′ Lt "E" 145+70.00 TO 58.00′ Lt "EL" 149+00.00			jj
	kk																													2						634				5.33		GDOM	86.00′ Lt "E" 145+70.00			kk
	ll																																							3.83		S	18" APC (A)	86.00′ Lt "E" 143+00.00 TO 86.00′ Lt "E" 145+70.00			ll
	mm																													1						326				5.30		G2 INLET	86.00′ Lt "E" 143+00.00			mm
	nn																																							4.40		S	18" APC (A)	86.00′ Lt "E" 142+50.00 TO 33.82′ Lt "RWN" 42+53.51			nn
	oo																													1						326				13.36		G2 INLET	33.82′ Lt "RWN" 42+53.51	D-2		oo
2	pp																													1												ADJUST INLET	98.00′ Rt "E" 136+80.00	D-1	2	pp
3	a																																									REMOVE FES	97.02′ Lt "E" 140+77.07	D-1	3	a
	b																																									REMOVE CULVERT	70.06′ Lt "E" 140+77.57 TO 97.02 Lt "E" 140+77.07			b
	c																																									REMOVE INLET	64.16′ Lt "E" 140+77.68			c
	d																																									ABANDON CULVERT	3.70′ Lt "E" 140+78.41 TO 64.16′ Lt "E" 140+77.68			d
3	e																																									REMOVE INLET	3.70′ Lt "E" 140+78.41	D-1	3	e
4	a																																									UNLINED TRAPEZIOD DITCH	64.09′ Lt RWN 43+19.11 TO 68.16′ Lt "RWN" 44+47.49	D-2	4	a
5	a																													1						326				3.95		G2 INLET	119.50′ Rt "E" 142+40.00	D-2	5	a
	b																																							3.41		S	18" APC (A)	119.50′ Rt "E" 142+40.00 TO 44.28′ Rt "REF" 44+00.00			b
	c																													1						326				4.91		G2 INLET	44.28′ Rt "REF" 44+00.00			c
	d																																							7.10		S	18" APC (A)	43.28′ Rt "REF" 44+00.00 TO 22.00′ Rt "REF" 44+00.00			d
	e																													1						326				11.11		G2 INLET	22.00′ Rt "REF" 44+00.00			e
	f																																							10.47		S	18" APC (A)	22.00′ Rt "REF" 44+00.00 TO 22.00′ Rt "REF" 44+88.04			f
	g																													2						634				5.49		GDOM	86.00′ Rt "E" 146+10.00			g
	h																																							4.64		S	18" APC (A)	86.00′ Rt "E" 146+10.00 TO 22.00′ Rt "REF" 46+09.00			h
	i																													1						326				4.70		G2 INLET	22.00′ Rt "REF" 46+09.00			i
	j																																							4.68		S	18 " APC (A)	22.00′ Rt "REF" 44+88.04 TO 22.00′ Rt "REF" 46+09.00			j
	k																													1						326				12.07		G2 INLET	22.00′ Rt "REF" 44+88.04			k
	l																																							10.98		S	18 " APC (A)	22.00′ Rt "REF" 44+88.04 TO 4.93′ Rt "REF" 44+88.11			l
5	m																																									CAP INLET	4.93′ Rt "REF" 44+88.11	D-2	5	m
SHEET TOTAL																														16						4836											

DRAINAGE QUANTITIES
DQ-4

FOR NOTES, ABBREVIATIONS AND LEGEND, SEE SHEET DQ-1

STATE OF CALIFORNIA - DEPARTMENT OF TRANSPORTATION
Caltrans

CONSULTANT FUNCTIONAL SUPERVISOR: NATALINA V. BERNARDI
CALCULATED-DESIGNED BY: DAT NGUYEN
CHECKED BY: LUIS GARCIA
REVISED BY: DQN
DATE REVISED: 2/2/11

LAST REVISION 02-02-11
DATE PLOTTED => 13-JUN-2011
TIME PLOTTED => 10:07

Dist	COUNTY	ROUTE	POST MILES TOTAL PROJECT	SHEET No.	TOTAL SHEETS
04	CC	4	R26.6/R27.5	160	746

REGISTERED CIVIL ENGINEER 2/2/11 DATE

6-13-11
PLANS APPROVAL DATE

REGISTERED PROFESSIONAL ENGINEER N. V. BERNARDI No. 45407 Exp. 9/30/12 CIVIL STATE OF CALIFORNIA

THE STATE OF CALIFORNIA OR ITS OFFICERS OR AGENTS SHALL NOT BE RESPONSIBLE FOR THE ACCURACY OR COMPLETENESS OF SCANNED COPIES OF THIS PLAN SHEET.

BKF ENGINEERS
4670 WILLOW ROAD, SUITE 250
PLEASANTON, CA. 94588

CCTA
2999 OAK ROAD, SUITE 100
WALNUT CREEK, CA. 94597

DRAINAGE QUANTITIES

DRAINAGE SYSTEM No.	DRAINAGE UNIT	CLEAN DRAINAGE FACILITY	CLEAN AND INSPECT COA 72" PIPE	CLEAN AND INSPECT COA 120" PIPE	ABANDON CULVERT	REMOVE CULVERT	REMOVE DRAINAGE FACILITY	MODIFY INLET TO MANHOLE	ADJUST PARTIAL INLET TO GRADE	CAP INLET	REMOVE CONCRETE	SAND BACKFILL	SLURRY CEMENT BACKFILL	DITCH EXCAVATION	STRUCTURAL CONCRETE: BOX CULVERT	STRUCTURAL CONCRETE: HEADWALL/WINGWALL	STRUCTURAL CONCRETE: TRANSITION STRUCTURE	MINOR CONCRETE: MINOR STRUCTURE	MINOR CONCRETE: MISC CONSTRUCTION	MINOR CONCRETE: BACKFILL	MINOR CONCRETE: DITCH LINING	BAR REINFORCING STEEL: BOX CULVERT	BAR REINFORCING STEEL: HEADWALL/WINGWALL	BAR REINFORCING STEEL: TRANSITION STRUCTURE	APC: 12" APC	APC: 18" APC (A)	APC: 18" APC (B)	APC: 24" APC (A)	APC: 24" APC (B)	APC: 30" APC	RCP: 18" JACKED RCP	RCP: 24" JACKED RCP	RCP: 30" JACKED RCP	RCP: 120" JACKED RCP	RCP: 12" RCP	RCP: 18" RCP	RCP: 18" RCP CLASS V	DESCRIPTION	STATION	DRAINAGE PLAN SHEET No.	DRAINAGE SYSTEM No.	DRAINAGE UNIT
		EA	LS	LS	EA	LF	EA	EA	EA	EA	CY	CY	CY	CY	CY	CY	CY	CY	CY	CY	CY	LB	LB	LB	LF	LF	LF	LF	LF	LF	LF	LF	LF	LF	LF	LF	LF					
5	n						1																															REMOVE INLET	0.00′ L+ "E" 144+88.17±	D-2	5	n
	o																																					12" CSP RISER	0.00′ L+ "E" 144+88.17±			o
	p																	1.82																				G2 DI	0.00′ L+ "E" 144+88.17±			p
5	q																																					42" RCP w/ COLLAR	13.87′ R+ "RWN" 44+89.29 TO 46.33′ L+ "RWN" 44+94.60	D-2	5	q
6	a																																					RSP	46.63′ L+ "RWN" 45+02.97	D-2	6	a
	b																																					72" RCP w/ COLLAR	4.17′ L+ "RWN" 45+06.86 TO 46.63′ L+ "RWN" 45+02.97			b
	c										16.7																										REMOVE HEADWALL	4.17′ L+ "RWN" 45+06.86			c
	d										26.7																										REMOVE GCSP	4.17′ L+ "RWN" 45+06.86			d
	e				22.8																																	REMOVE CULVERT	13.87′ R+ "RWN" 44+89.29 TO 5.26′ L+ "RWN" 45+01.57			e
	f									1																											CAP INLET	2.71′ R+ "REF" 44+97.62			f
6	g		1																																			CLEAN AND INSPECT COA 72" PIPE	4.17′ L+ "RWN" 45+06.68 TO 44.40′ R+ "REF" 44+90.11	D-2	6	g
7	a																	0.95																				G1 INLET	34.07′ R+ "REF" 47+80.00	D-2	7	a
	b																			17.68						109.5												18" APC (A) w/ Conc BACKFILL	34.07′ R+ "REF" 47+80.00 TO 34.00′ R+ "REF" 48+95.00			b
	c																	1.31																				G2 INLET	34.00′ R+ "REF" 48+95.00			c
	d																			7.85						48.6												18" APC (A) w/ Conc BACKFILL	34.00′ R+ "REF" 48+95.00 TO 19.00′ L+ "REF" 48+95.00			d
	e																	1.83																				G2 INLET	19.00′ L+ "REF" 48+95.00			e
	f																																					18" CSP w/ DD JOINTS	19.00′ L+ "REF" 48+95.00 TO 58.00′ R+ "ER" 149+00.00			f
	g																	2.12																				G2 INLET	58.00′ R+ ER 149+00.00			g
	h																									125.8												18" APC (A)	19.00′ L+ "REF" 48+95.00 TO 19.00′ L+ "REF" 50+24.00			h
	i																													8.0								30" APC w/ COLLAR	24.89′ L+ "REF" 50+20.96 TO 19.00′ L+ "REF" 50+24.00			i
	j						1																															REMOVE INLET	19.12′ L+ "REF" 50+21.91			j
	k																	3.63																				GT4 MOD	19.00′ L+ "REF" 50+24.00			k
	l				6.3																																	REMOVE CULVERT (PORTION)	24.89′ L+ "REF" 50+20.96 TO 19.00′ L+ "REF" 50+24.00			l
	m																																					12" CSP RISER	0.00′ L+ "E" 150+03.93			m
	n																	2.08																				G2 INLET	0.00′ L+ "E" 150+03.93			n
	o										2.2																											REMOVE HEADWALL	11.62′ R+ "RWN" 49+84.68			o
	p																	2.08																				G2 MH	1.42′ R+ "RWN" 49+84.04			p
	q																			3.02																		30" RCP w/ COLLAR & BACKFILL	11.62′ R+ "RWN" 49+84.68 TO 1.42′ R+ "RWN" 49+84.04			q
	r																									37.5												18" APC (A)	7.00′ R+ "RWN" 49+43.00 TO 1.42′ R+ "RWN" 49+84.04			r
	s																	1.62																				G2 INLET	7.00′ R+ "RWN" 49+43.00			s
	t																													75.1								30" APC	1.42′ R+ "RWN" 49+84.04 4.00′ R+ "RWN" 50+63.00			t
	u																	2.14																				G2 INLET w/ SO & DIM (1 WAY EXP)	4.00′ R+ "RWN" 50+63.00			u
7	v																									44.6												18" APC (A)	4.00′ R+ "RWN" 50+63.00 TO 46.00′ L+ "RWN" 50+63.00	D-2	7	v
SHEET TOTAL			1		29.1	2				1	45.6							19.58		28.55						366				83.1												

DRAINAGE QUANTITIES
DQ-5

FOR NOTES, ABBREVIATIONS AND LEGEND, SEE SHEET DQ-1

STATE OF CALIFORNIA - DEPARTMENT OF TRANSPORTATION
Caltrans

CONSULTANT FUNCTIONAL SUPERVISOR: NATALINA V. BERNARDI
CALCULATED-DESIGNED BY: DAT NGUYEN
CHECKED BY: LUIS GARCIA
REVISED BY: DQN
DATE REVISED: 2/2/11

LAST REVISION 02-02-11
DATE PLOTTED => 13-JUN-2011
TIME PLOTTED => 10:07

Dist	COUNTY	ROUTE	POST MILES TOTAL PROJECT	SHEET No.	TOTAL SHEETS
04	CC	4	R26.6/R27.5	161	746

REGISTERED CIVIL ENGINEER 2/2/11 DATE

6-13-11
PLANS APPROVAL DATE

REGISTERED PROFESSIONAL ENGINEER N. V. BERNARDI No. 45407 Exp. 9/30/12 CIVIL STATE OF CALIFORNIA

THE STATE OF CALIFORNIA OR ITS OFFICERS OR AGENTS SHALL NOT BE RESPONSIBLE FOR THE ACCURACY OR COMPLETENESS OF SCANNED COPIES OF THIS PLAN SHEET.

BKF ENGINEERS
4670 WILLOW ROAD, SUITE 250
PLEASANTON, CA. 94588

CCTA
2999 OAK ROAD, SUITE 100
WALNUT CREEK, CA. 94597

DRAINAGE QUANTITIES

DRAINAGE SYSTEM No.	DRAINAGE UNIT	RCP 24" RCP (LF)	RCP 24" RCP CLASS V (LF)	RCP 30" RCP (LF)	RCP 36" RCP (LF)	RCP 42" RCP (LF)	RCP 72" RCP (LF)	RCP 120" RCP (LF)	CSP Bit Ctd 12" (0.064" THICK) (LF)	CSP Bit Ctd 18" (0.064" THICK) (LF)	CSP Bit Ctd 24" (0.079" THICK) (LF)	CSP Bit Ctd 30" (0.064" THICK) (LF)	CSP Bit Ctd 36" (0.064" THICK) (LF)	CSP Bit Ctd 48" (0.079" THICK) (LF)	18" ASP (LF)	18" SCSP (LF)	GRATED LINE DRAIN (LF)	CANTILEVER WALL PRECAST Conc BOX CULVERT (LF)	12" WSP (0.25" THICK) (LF)	24" AFES (EA)	COA (TYPE C) INLET (EA)	6" PPP UD (LF)	3" CURB DRAIN (LF)	SIDEWALK CROSS DRAIN (EA)	ROCK SLOPE PROTECTION (FACING METHOD B) (CY)	CLASS 8 ROCK SLOPE PROTECTION FABRIC (SY)	AGGREGATE BASE (CLASS 3) (CY)	FRAME & COVER (N) 18-9 (EA)	FRAME & COVER (N) 24-9 (EA)	FRAME & COVER (N) 24-12 (EA)	FRAME & COVER (N) 24-12X (EA)	FRAME & COVER (N) 36R (EA)	FRAME & COVER (N) U45 (EA)	FRAME & COVER (N) U46 (EA)	BOLTDOWN (N) (EA)	GRATE LOCKING DEVICE (EA)	MISCELLANEOUS IRON AND STEEL (LB)	PLACE HMA MISCELLANEOUS AREA (SY)	HMA (TYPE A) (TON)	MAXIMUM COVER (N) (LF)	HEIGHT OF INLET "H" (N) (LF)	PIPE JOINT CLASSIFICATION (N)	DESCRIPTION	STATION	DRAINAGE PLAN SHEET No.	DRAINAGE SYSTEM No.	DRAINAGE UNIT
5	n																																											REMOVE INLET	0.00′ Lt "E" 144+88.17±	D-2	5	n
	o								11.3																																	D	12" CSP RISER	0.00′ Lt "E" 144+88.17±			o
	p																													1						326				5.00		G2 DI	0.00′ Lt "E" 144+88.17±			p
5	q					60.5																																	5.58		S	42" RCP w/ COLLAR	13.87′ Rt "RWN" 44+89.29 TO 46.33′ Lt "RWN" 44+94.60	D-2	5	q
6	a																							53.32	95.56																	RSP	46.63′ Lt "RWN" 45+02.97	D-2	6	a
	b						42.8																																5.64		S	72" RCP w/ COLLAR	4.17′ Lt "RWN" 45+06.86 TO 46.63′ Lt "RWN" 45+02.97			b
	c																																									REMOVE HEADWALL	4.17′ Lt "RWN" 45+06.86			c
	d																																									REMOVE GCSP	4.17′ Lt "RWN" 45+06.86			d
	e																																									REMOVE CULVERT	13.87′ Rt "RWN" 44+89.29 TO 5.26′ Lt "RWN" 45+01.57			e
	f																																									CAP INLET	2.71′ Rt "REF" 44+97.62			f
6	g																																									CLEAN AND INSPECT COA 72" PIPE	4.17′ Lt "RWN" 45+06.68 TO 44.40′ Rt "REF" 44+90.11	D-2	6	g
7	a																													1						326				2.70		G1 INLET	34.07′ Rt "REF" 47+80.00	D-2	7	a
	b																																						4.03		S	18" APC (A) w/ Conc BACKFILL	34.07′ Rt "REF" 47+80.00 TO 34.00′ Rt "REF" 48+95.00			b
	c																													1						326				2.80		G2 INLET	34.00′ Rt "REF" 48+95.00			c
	d																																						3.54		S	18" APC (A) w/ Conc BACKFILL	34.00′ Rt "REF" 48+95.00 TO 19.00′ Lt "REF" 48+95.00			d
	e																													1						326				5.04		G2 INLET	19.00′ Lt "REF" 48+95.00			e
	f									23.3																													2.93		D	18" CSP w/ DD JOINTS	19.00′ Lt "REF" 48+95.00 TO 58.00′ Rt "ER" 149+00.00			f
	g																													1						326				6.19		G2 INLET	58.00′ Rt "ER" 149+00.00			g
	h																																						3.54		S	18" APC (A)	19.00′ Lt "REF" 48+95.00 TO 19.00′ Lt "REF" 50+24.00			h
	i																																						5.58		S	30" APC w/ COLLAR	24.89′ Lt "REF" 50+20.96 TO 19.00′ Lt "REF" 50+24.00			i
	j																																									REMOVE INLET	19.12′ Lt "REF" 50+21.91			j
	k																													2						634				6.76		GT4 MOD	19.00′ Lt "REF" 50+24.00			k
	l																																									REMOVE CULVERT (PORTION)	24.89′ Lt "REF" 50+20.96 TO 19.00′ Lt "REF" 50+24.00			l
	m								16.0																															D	12" CSP RISER	0.00′ Lt "E" 150+03.93			m
	n																													1						326				6.00		G2 INLET	0.00′ Lt "E" 150+03.93			n
	o																																									REMOVE HEADWALL	11.62′ Rt "RWN" 49+84.68			o
	p																																1		1	435				6.02		G2 MH	1.42′ Rt "RWN" 49+84.04			p
	q			8.2																																			2.08		S	30" RCP w/ COLLAR & BACKFILL	11.62′ Rt "RWN" 49+84.68 TO 1.42′ Rt "RWN" 49+84.04			q
	r																																						2.08		S	18" APC (A)	7.00′ Rt "RWN" 49+43.00 TO 1.42′ Rt "RWN" 49+84.04			r
	s																													1						326				4.20		G2 INLET	7.00′ Rt "RWN" 49+43.00			s
	t																																						3.52		S	30" APC	1.42′ Rt "RWN" 49+84.04 4.00′ Rt "RWN" 50+63.00			t
	u																													2						634				6.25		G2 INLET w/ SO & DIM (1 WAY EXP)	4.00′ Rt "RWN" 50+63.00			u
7	v																																						4.65		S	18" APC (A)	4.00′ Rt "RWN" 50+63.00 TO 46.00′ Lt "RWN" 50+63.00	D-2	7	v
SHEET TOTAL				8.2		60.5	42.8		27.3	23.3														53.32	95.56					11			1		1	3985											

DRAINAGE QUANTITIES
DQ-6

FOR NOTES, ABBREVIATIONS AND LEGEND, SEE SHEET DQ-1

DAT NGUYEN	LUIS GARCIA	DQN	2/2/11
REVISED BY	DATE REVISED		
CALCULATED-DESIGNED BY	CHECKED BY		
CONSULTANT FUNCTIONAL SUPERVISOR	NATALINA V. BERNARDI		

STATE OF CALIFORNIA - DEPARTMENT OF TRANSPORTATION

Caltrans

LAST REVISION 02-02-11 DATE PLOTTED =>13-JUN-2011 TIME PLOTTED =>10:07

Dist	COUNTY	ROUTE	POST MILES TOTAL PROJECT	SHEET No.	TOTAL SHEETS
04	CC	4	R26.6/R27.5	162	746

REGISTERED CIVIL ENGINEER 2/2/11 DATE

6-13-11
PLANS APPROVAL DATE

REGISTERED PROFESSIONAL ENGINEER N. V. BERNARDI No. 45407 Exp. 9/30/12 CIVIL STATE OF CALIFORNIA

THE STATE OF CALIFORNIA OR ITS OFFICERS OR AGENTS SHALL NOT BE RESPONSIBLE FOR THE ACCURACY OR COMPLETENESS OF SCANNED COPIES OF THIS PLAN SHEET.

BKF ENGINEERS
4670 WILLOW ROAD, SUITE 250
PLEASANTON, CA. 94588

CCTA
2999 OAK ROAD, SUITE 100
WALNUT CREEK, CA. 94597

DRAINAGE QUANTITIES

DRAINAGE SYSTEM No.	DRAINAGE UNIT	CLEAN DRAINAGE FACILITY	CLEAN AND INSPECT COA 72" PIPE	CLEAN AND INSPECT COA 120" PIPE	ABANDON CULVERT	REMOVE CULVERT	REMOVE DRAINAGE FACILITY	MODIFY INLET TO MANHOLE	ADJUST PARTIAL INLET TO GRADE	CAP INLET	REMOVE CONCRETE	SAND BACKFILL	SLURRY CEMENT BACKFILL	DITCH EXCAVATION	STRUCTURAL CONCRETE: BOX CULVERT	STRUCTURAL CONCRETE: HEADWALL/WINGWALL	STRUCTURAL CONCRETE: TRANSITION STRUCTURE	MINOR CONCRETE: MINOR STRUCTURE	MINOR CONCRETE: MISC CONSTRUCTION	MINOR CONCRETE: BACKFILL	MINOR CONCRETE: DITCH LINING	BAR REINFORCING STEEL: BOX CULVERT	BAR REINFORCING STEEL: HEADWALL/WINGWALL	BAR REINFORCING STEEL: TRANSITION STRUCTURE	APC: 12" APC	APC: 18" APC (A)	APC: 18" APC (B)	APC: 24" APC (A)	APC: 24" APC (B)	APC: 30" APC	RCP: 18" JACKED RCP	RCP: 24" JACKED RCP	RCP: 30" JACKED RCP	RCP: 120" JACKED RCP	RCP: 12" RCP	RCP: 18" RCP	RCP: 18" RCP CLASS V	DESCRIPTION	STATION	DRAINAGE PLAN SHEET No.	DRAINAGE SYSTEM No.	DRAINAGE UNIT
		EA	LS	LS	EA	LF	EA	EA	EA	EA	CY	CY	CY	CY	CY	CY	CY	CY	CY	CY	CY	LB	LB	LB	LF	LF	LF	LF	LF	LF	LF	LF	LF	LF	LF	LF	LF					
7	w																	1.72																				G2 INLET w/ DIM	46.00′ Lt "RWN" 50+63.00	D-2	7	w
	x																																					18" SCSP	46.00′ Lt "RWN" 50+63.00 TO 46.00′ Lt "RWN" 50+93.00			x
	y																																					18" SCSP	46.00′ Lt "RWN" 50+33.00 TO 46.00′ Lt "RWN" 50+63.00			y
	z																	0.95																				G1M INLET w/ DIM	46.00′ Lt "RWN" 50+33.00			z
	aa																	0.95																				G1M INLET w/ DIM	46.00′ Lt "RWN" 50+93.00			aa
	bb																	1.72																				G2 INLET	7.00′ Rt "RWN" 48+17.00			bb
	cc																									122.2												18" APC (A)	7.00′ Rt "RWN" 48+17.00 TO 7.00′ Rt "RWN" 49+43.00			cc
	dd																	1.67																				G2 INLET w/ DIM	46.00′ Lt "RWN" 49+84.00			dd
	ee																									42.0												18" APC (A)	46.00′ Lt "RWN" 49+84.00 TO 1.42′ Rt "RWN" 49+84.04			ee
	ff																													54.3								30" APC	4.00′ Rt "RWN" 50+63.00 TO 4.00′ Rt "RWN" 51+21.22			ff
	gg																	2.51																				G2 INLET (1 WAY EXP)	4.00′ Rt "RWN" 51+21.22			gg
7	hh																													13.8								30" APC	4.00′ Rt "RWN" 51+21.22 TO 6.96′ Lt "RWN" 51+32.60	D-2	7	hh
8	a																				1.82																	PCC GUTTER	4.00′ Rt "RWN" 49+45.00 TO 4.00′ Rt "RWN" 50+47.75	D-2	8	a
9	a																				1.44																	PCC GUTTER	26.00′ Lt "REF" 51+25.79 TO 65.00′ Lt "CLOA" 51+33.98	D-2	9	a
10	a																																					COA (TYPE C) DI w/ DIM	65.80′ Lt "CLOA" 49+86.79	D-2	10	a
	b																									19.4												18" APC (A)	65.80′ Lt "CLOA" 49+86.79 TO 62.39′ Lt "CLOA" 50+09.69			b
	c																	1.92																				G2 MH	62.39′ Lt "CLOA" 50+09.69			c
	d																									39.3												18" APC (A)	62.39′ Lt "CLOA" 50+09.69 TO 34.00′ Rt "REF" 51+24.00			d
	e																	1.72																				G2 DI w/ DIM	34.00′ Rt "REF" 51+24.00			e
	f																									66.8												18" APC (A)	62.39′ Lt "CLOA" 50+09.69 TO 54.24′ Lt "CLOA" 50+79.72			f
	g																																					COA (TYPE C) DI w/ DIM	54.24′ Lt "CLOA" 50+79.72			g
	h					49.2																																REMOVE CULVERT	20.20′ Lt "REF" 50+26.23 TO 19.60′ Lt "REF" 50+66.68			h
	i						1																															REMOVE INLET	19.63′ Lt "REF" 50+71.12			i
	j					122.5																																REMOVE CULVERT	20.23′ Lt "REF" 50+75.51 TO 37.95′ Lt "REF" 51+89.19			j
	k						1																															REMOVE INLET	38.63′ Lt "REF" 51+92.16			k
	l																	1.36																				G2 DI w/ DIM	19.00′ Lt "REF" 51+24.00			l
	m																									42.1												18" APC (A)	19.00′ Lt "REF" 51+24.00 TO 54.24′ Lt "CLOA" 50+79.72			m
	n																									247.9												18" APC (A)	54.24′ Lt "CLOA" 50+79.72 TO 54.50′ Lt "CLOA" 53+35.00			n
	o																																					SIDEWALK X DRAIN	65.00′ Lt "CLOA" 51+32.96 TO 55.84′ Lt "CLOA" 51+32.96			o
	p																																					COA (TYPE C) DI w/ DIM	54.50′ Lt "CLOA" 53+35.00			p
	q																																					GRATED LINE DRAIN	53.75′ Lt "CLOA" 53+35.00 TO 55.03′ Lt "CLOA" 53+84.51			q
10	r																																					SIDEWALK X DRAIN	63.58′ Lt "CLOA" 53+74.71 TO 52.83′ Lt "CLOA" 53+74.38	D-2	10	r
SHEET TOTAL					171.7	2												14.52			3.26					579.7				68.1												

DRAINAGE QUANTITIES
DQ-7

FOR NOTES, ABBREVIATIONS AND LEGEND, SEE SHEET DQ-1

STATE OF CALIFORNIA - DEPARTMENT OF TRANSPORTATION
Caltrans

CONSULTANT FUNCTIONAL SUPERVISOR: NATALINA V. BERNARDI
CALCULATED-DESIGNED BY: DAT NGUYEN
CHECKED BY: LUIS GARCIA
REVISED BY: DQN
DATE REVISED: 2/2/11

LAST REVISION 02-02-11
DATE PLOTTED => 13-JUN-2011
TIME PLOTTED => 10:07

Dist	COUNTY	ROUTE	POST MILES TOTAL PROJECT	SHEET No.	TOTAL SHEETS
04	CC	4	R26.6/R27.5	163	746

REGISTERED CIVIL ENGINEER 2/2/11 DATE

6-13-11
PLANS APPROVAL DATE

REGISTERED PROFESSIONAL ENGINEER N. V. BERNARDI No. 45407 Exp. 9/30/12 CIVIL STATE OF CALIFORNIA

THE STATE OF CALIFORNIA OR ITS OFFICERS OR AGENTS SHALL NOT BE RESPONSIBLE FOR THE ACCURACY OR COMPLETENESS OF SCANNED COPIES OF THIS PLAN SHEET.

BKF ENGINEERS
4670 WILLOW ROAD, SUITE 250
PLEASANTON, CA. 94588

CCTA
2999 OAK ROAD, SUITE 100
WALNUT CREEK, CA. 94597

DRAINAGE QUANTITIES

DRAINAGE SYSTEM No.	DRAINAGE UNIT	RCP 24" RCP	RCP 24" RCP CLASS V	RCP 30" RCP	RCP 36" RCP	RCP 42" RCP	RCP 72" RCP	RCP 120" RCP	CSP Bit Ctd 12" (0.064" THICK)	CSP Bit Ctd 18" (0.064" THICK)	CSP Bit Ctd 24" (0.079" THICK)	CSP Bit Ctd 30" (0.064" THICK)	CSP Bit Ctd 36" (0.064" THICK)	CSP Bit Ctd 48" (0.079" THICK)	18" ASP	18" SCSP	GRATED LINE DRAIN	CANTILEVER WALL PRECAST Conc BOX CULVERT	12" WSP (0.25" THICK)	24" AFES	COA (TYPE C) INLET	6" PPP UD	3" CURB DRAIN	SIDEWALK CROSS DRAIN	ROCK SLOPE PROTECTION (FACING METHOD B)	CLASS 8 ROCK SLOPE PROTECTION FABRIC	AGGREGATE BASE (CLASS 3)	FRAME & COVER (N) 18-9	FRAME & COVER (N) 24-9	FRAME & COVER (N) 24-12	FRAME & COVER (N) 24-12X	FRAME & COVER (N) 36R	FRAME & COVER (N) U45	FRAME & COVER (N) U46	BOLTDOWN (N)	GRATE LOCKING DEVICE	MISCELLANEOUS IRON AND STEEL	PLACE HMA MISCELLANEOUS AREA	HMA (TYPE A)	MAXIMUM COVER (N)	HEIGHT OF INLET "H" (N)	PIPE JOINT CLASSIFICATION (N)	DESCRIPTION	STATION	DRAINAGE PLAN SHEET No.	DRAINAGE SYSTEM No.	DRAINAGE UNIT
		LF	LF	LF	LF	LF	LF	LF	LF	LF	LF	LF	LF	LF	LF	LF	LF	LF	LF	EA	EA	LF	LF	EA	CY	SY	CY	EA	EA	EA	EA	EA	EA	EA	EA	EA	LB	SY	TON	LF	LF					
7	w																													1							326				4.62		G2 INLET w/ DIM	46.00' Lt "RWN" 50+63.00	D-2	7	w
	x															26.1																											18" SCSP	46.00' Lt "RWN" 50+63.00 TO 46.00' Lt "RWN" 50+93.00			x
	y															26.1																											18" SCSP	46.00' Lt "RWN" 50+33.00 TO 46.00' Lt "RWN" 50+63.00			y
	z																													1							326				2.00		G1M INLET w/ DIM	46.00' Lt "RWN" 50+33.00			z
	aa																													1							326				2.00		G1M INLET w/ DIM	46.00' Lt "RWN" 50+93.00			aa
	bb																													1							326				4.60		G2 INLET	7.00' Rt "RWN" 48+17.00			bb
	cc																																							3.32		S	18" APC (A)	7.00' Rt "RWN" 48+17.00 TO 7.00' Rt "RWN" 49+43.00			cc
	dd																													1							326				4.40		G2 INLET w/ DIM	46.00' Lt "RWN" 49+84.00			dd
	ee																																							4.44		S	18" APC (A)	46.00' Lt "RWN" 49+84.00 TO 1.42' Rt "RWN" 49+84.04			ee
	ff																																							4.24		S	30" APC	4.00' Rt "RWN" 50+63.00 TO 4.00' Rt "RWN" 51+21.22			ff
	gg																													2							634				7.70		G2 INLET (1 WAY EXP)	4.00' Rt "RWN" 51+21.22			gg
7	hh																																							4.65		S	30" APC	4.00' Rt "RWN" 51+21.22 TO 6.96' Lt "RWN" 51+32.60	D-2	7	hh
8	a																																										PCC GUTTER	4.00' Rt "RWN" 49+45.00 TO 4.00' Rt "RWN" 50+47.75	D-2	8	a
9	a																																										PCC GUTTER	26.00' Lt "REF" 51+25.79 TO 65.00' Lt "CLOA" 51+33.98	D-2	9	a
10	a																				1																						COA (TYPE C) DI w/ DIM	65.80' Lt "CLOA" 49+86.79	D-2	10	a
	b																																							3.78		S	18" APC (A)	65.80' Lt "CLOA" 49+86.79 TO 62.39' Lt "CLOA" 50+09.69			b
	c																															1		1			435				5.38		G2 MH	62.39' Lt "CLOA" 50+09.69			c
	d																																							3.12		S	18" APC (A)	62.39' Lt "CLOA" 50+09.69 TO 34.00' Rt "REF" 51+24.00			d
	e																													1							326				4.60		G2 DI w/ DIM	34.00' Rt "REF" 51+24.00			e
	f																																							4.65		S	18" APC (A)	62.39' Lt "CLOA" 50+09.69 TO 54.24' Lt "CLOA" 50+79.72			f
	g																				1																						COA (TYPE C) DI w/ DIM	54.24' Lt "CLOA" 50+79.72			g
	h																																										REMOVE CULVERT	20.20' Lt "REF" 50+26.23 TO 19.60' Lt "REF" 50+66.68			h
	i																																										REMOVE INLET	19.63' Lt "REF" 50+71.12			i
	j																																										REMOVE CULVERT	20.23' Lt "REF" 50+75.51 TO 37.95' Lt "REF" 51+89.19			j
	k																																										REMOVE INLET	38.63' Lt "REF" 51+92.16			k
	l																													1							326				3.20		G2 DI w/ DIM	19.00' Lt "REF" 51+24.00			l
	m																																							2.66		S	18" APC (A)	19.00' Lt "REF" 51+24.00 TO 54.24' Lt "CLOA" 50+79.72			m
	n																																							5.77		S	18" APC (A)	54.24' Lt "CLOA" 50+79.72 TO 54.50' Lt "CLOA" 53+35.00			n
	o																							1																			SIDEWALK X DRAIN	65.00' Lt "CLOA" 51+32.96 TO 55.84' Lt "CLOA" 51+32.96			o
	p																				1																				7.27		COA (TYPE C) DI w/ DIM	54.50' Lt "CLOA" 53+35.00			p
	q																49.1																										GRATED LINE DRAIN	53.75' Lt "CLOA" 53+35.00 TO 55.03' Lt "CLOA" 53+84.51			q
10	r																							1																			SIDEWALK X DRAIN	63.58' Lt "CLOA" 53+74.71 TO 52.83' Lt "CLOA" 53+74.38	D-2	10	r
SHEET TOTAL																52.2	49.1				3			2						9			1		1	3351										

DRAINAGE QUANTITIES
DQ-8

FOR NOTES, ABBREVIATIONS AND LEGEND, SEE SHEET DQ-1

STATE OF CALIFORNIA - DEPARTMENT OF TRANSPORTATION

Caltrans

CONSULTANT FUNCTIONAL SUPERVISOR: NATALINA V. BERNARDI

CALCULATED-DESIGNED BY: DAT NGUYEN

CHECKED BY: LUIS GARCIA

REVISED BY: DQN

DATE REVISED: 2/2/11

LAST REVISION 02-02-11

DATE PLOTTED =>13-JUN-2011
TIME PLOTTED =>10:07

Dist	COUNTY	ROUTE	POST MILES TOTAL PROJECT	SHEET No.	TOTAL SHEETS
04	CC	4	R26.6/R27.5	164	746

REGISTERED CIVIL ENGINEER 2/2/11 DATE

6-13-11
PLANS APPROVAL DATE

REGISTERED PROFESSIONAL ENGINEER N. V. BERNARDI No. 45407 Exp. 9/30/12 CIVIL STATE OF CALIFORNIA

THE STATE OF CALIFORNIA OR ITS OFFICERS OR AGENTS SHALL NOT BE RESPONSIBLE FOR THE ACCURACY OR COMPLETENESS OF SCANNED COPIES OF THIS PLAN SHEET.

BKF ENGINEERS
4670 WILLOW ROAD, SUITE 250
PLEASANTON, CA. 94588

CCTA
2999 OAK ROAD, SUITE 100
WALNUT CREEK, CA. 94597

DRAINAGE QUANTITIES

DRAINAGE SYSTEM No.	DRAINAGE UNIT	CLEAN DRAINAGE FACILITY	CLEAN AND INSPECT COA 72" PIPE	CLEAN AND INSPECT COA 120" PIPE	ABANDON CULVERT	REMOVE CULVERT	REMOVE DRAINAGE FACILITY	MODIFY INLET TO MANHOLE	ADJUST PARTIAL INLET TO GRADE	CAP INLET	REMOVE CONCRETE	SAND BACKFILL	SLURRY CEMENT BACKFILL	DITCH EXCAVATION	STRUCTURAL CONCRETE: BOX CULVERT	STRUCTURAL CONCRETE: HEADWALL/WINGWALL	STRUCTURAL CONCRETE: TRANSITION STRUCTURE	MINOR CONCRETE: MINOR STRUCTURE	MINOR CONCRETE: MISC CONSTRUCTION	MINOR CONCRETE: BACKFILL	MINOR CONCRETE: DITCH LINING	BAR REINFORCING STEEL: BOX CULVERT	BAR REINFORCING STEEL: HEADWALL/WINGWALL	BAR REINFORCING STEEL: TRANSITION STRUCTURE	APC: 12" APC	APC: 18" APC (A)	APC: 18" APC (B)	APC: 24" APC (A)	APC: 24" APC (B)	APC: 30" APC	RCP: 18" JACKED RCP	RCP: 24" JACKED RCP	RCP: 30" JACKED RCP	RCP: 120" JACKED RCP	RCP: 12" RCP	RCP: 18" RCP	RCP: 18" RCP CLASS V	DESCRIPTION	STATION	DRAINAGE PLAN SHEET No.	DRAINAGE SYSTEM No.	DRAINAGE UNIT
		EA	LS	LS	EA	LF	EA	EA	EA	EA	CY	CY	CY	CY	CY	CY	CY	CY	CY	CY	CY	LB	LB	LB	LF	LF	LF	LF	LF	LF	LF	LF	LF	LF	LF	LF	LF					
10	s																										21.9											18" APC (B)	54.50' Lt "CLOA" 53+35.00 TO 35.67' Lt "CLOA" 53+49.89	D-2	10	s
11	a																				1.59																	PCC GUTTER	64.84' Lt "CLOA" 53+10.21 TO 14.00' Rt "RWN" 51+27.75	D-2	11	a
12	a																																					RSP	52.22' Lt "RWN" 51+00.08	D-2	12	a
	b															52							6830															HEADWALL/WINGWALL	52.22' Lt "RWN" 51+00.08			b
	c														120							28612																10' x 5' RCB w/ SUB EX	52.22' Lt "RWN" 51+00.08 TO 17.54' Lt "CLOA" 53+37.91			c
	d										12.8																											REMOVE HEADWALL	13.31' Lt "CLOA" 53+15.57			d
	e										55.7																											REMOVE RCB	13.31' Lt "CLOA" 53+15.57 TO 11.74' Rt "CLOA" 52+77.22			e
	f																21							3900														TRANSITION STRUCTURE #1	17.54' Lt "CLOA" 53+37.91			f
	g	1																																				CLEAN DRAINAGE FACILITY	44.57' Rt "CLOA" 51+34.19 TO 11.74' Rt "CLOA" 52+77.22			g
	h														28							5100																TRIPLE 5' x 3' RCB w/ SUB EX	44.57' Rt "CLOA" 51+34.19 TO 62.48' Rt "CLOA" 51+12.04			h
	i										14.5																											REMOVE HEADWALL	55.60' Lt "CLOA" 51+22.64			i
	j										18.9																											REMOVE TRIPLE RCB	44.57' Rt "CLOA" 51+34.19 TO 55.60' Lt "CLOA" 51+22.64			j
	k															20							3100															WINGWALL	62.48' Rt "CLOA" 51+12.05			k
	l																																					RSP	62.48' Rt "CLOA" 51+12.05			l
	m										16.9																											REMOVE HEADWALL	79.80' Lt "CLOA" 53+45.24 TO 40.51' Lt "CLOA" 53+51.99			m
	n					84.9																																REMOVE RCP	36.64' Lt "CLOA" 53+41.65 TO 47.87' Rt "CLOA" 53+49.24			n
	o						1																															REMOVE INLET	58.81' Rt "CLOA" 53+49.47			o
	p										144.2																											REMOVE TRIPLE RCB	99.25' Lt "CLOA" 53+80.46 TO 65.84' Lt "CLOA" 53+54.71			p
	q										12.7																											REMOVE HEAD/WING WALLS	99.25' Lt "CLOA" 53+80.46			q
	r										100.0																											REMOVE SACK CONCRETE	99.25' Lt "CLOA" 53+80.46			r
	s					31.1																																REMOVE CULVERT	51.90' Lt "CLOA" 52+81.23 TO 40.14' Lt "CLOA" 53+10.42			s
12	t																																					CANTILEVER WALL PRECAST CONC. BOX CULVERT w/ SUB EX	13.31' Lt "CLOA" 53+15.37 TO 11.74' Rt "CLOA" 52+77.22	D-2	12	t
13	a																																					RSP	53.80' Rt "REN" 52+86.84	D-2	13	a
	b															3							246															HEADWALL	53.80' Rt "REN" 52+86.84			b
	c														20							3500																4' X 2' RCB	53.80' Rt "REN" 52+86.84 TO 16.06' Lt "REN" 53+07.02			c
	d															3							278															HEADWALL	16.06' Lt "REN" 53+07.02			d
	e																																					RSP	16.06' Lt "REN" 53+07.02			e
13	f					42.5																																REMOVE CULVERT	111.15' Rt "CLOA" 50+46.91 TO 115.52' Rt "CLOA" 50+63.44	D-2	13	f
14	a																																					HMA OVERSIDE DRIAN	0.00' Lt "REN" 58+20.00	D-2	14	a
15	a																																					RSP	5.50' Lt "REN" 53+70.23	D-2	15	a
SHEET TOTAL		1				158.5	1				375.7				168	78	21				1.59	37212	10454	3900			21.9															

FOR NOTES, ABBREVIATIONS AND LEGEND, SEE SHEET DQ-1

DRAINAGE QUANTITIES
DQ-9

STATE OF CALIFORNIA - DEPARTMENT OF TRANSPORTATION

Caltrans

CONSULTANT FUNCTIONAL SUPERVISOR: NATALINA V. BERNARDI

CALCULATED-DESIGNED BY: DAT NGUYEN
CHECKED BY: LUIS GARCIA

REVISED BY: DQN
DATE REVISED: 2/2/11

LAST REVISION 02-02-11
DATE PLOTTED =>13-JUN-2011
TIME PLOTTED =>10:07

Dist	COUNTY	ROUTE	POST MILES TOTAL PROJECT	SHEET No.	TOTAL SHEETS
04	CC	4	R26.6/R27.5	165	746

REGISTERED CIVIL ENGINEER 2/2/11 DATE

6-13-11
PLANS APPROVAL DATE

REGISTERED PROFESSIONAL ENGINEER N. V. BERNARDI No. 45407 Exp. 9/30/12 CIVIL STATE OF CALIFORNIA

THE STATE OF CALIFORNIA OR ITS OFFICERS OR AGENTS SHALL NOT BE RESPONSIBLE FOR THE ACCURACY OR COMPLETENESS OF SCANNED COPIES OF THIS PLAN SHEET.

BKF ENGINEERS
4670 WILLOW ROAD, SUITE 250
PLEASANTON, CA. 94588

CCTA
2999 OAK ROAD, SUITE 100
WALNUT CREEK, CA. 94597

DRAINAGE QUANTITIES

DRAINAGE SYSTEM No.	DRAINAGE UNIT	RCP 24" RCP	RCP 24" RCP CLASS V	RCP 30" RCP	RCP 36" RCP	RCP 42" RCP	RCP 72" RCP	RCP 120" RCP	CSP Bit Ctd 12" (0.064" THICK)	CSP Bit Ctd 18" (0.064" THICK)	CSP Bit Ctd 24" (0.079" THICK)	CSP Bit Ctd 30" (0.064" THICK)	CSP Bit Ctd 36" (0.064" THICK)	CSP Bit Ctd 48" (0.079" THICK)	18" ASP	18" SCSP	GRATED LINE DRAIN	CANTILEVER WALL PRECAST Conc BOX CULVERT	12" WSP (0.25" THICK)	24" AFES	COA (TYPE C) INLET	6" PPP UD	3" CURB DRAIN	SIDEWALK CROSS DRAIN	ROCK SLOPE PROTECTION (FACING METHOD B)	CLASS 8 ROCK SLOPE PROTECTION FABRIC	AGGREGATE BASE (CLASS 3)	FRAME & COVER (N) 18-9	FRAME & COVER (N) 24-9	FRAME & COVER (N) 24-12	FRAME & COVER (N) 24-12X	FRAME & COVER (N) 36R	FRAME & COVER (N) U45	FRAME & COVER (N) U46	BOLTDOWN (N)	GRATE LOCKING DEVICE	MISCELLANEOUS IRON AND STEEL	PLACE HMA MISCELLANEOUS AREA	HMA (TYPE A)	MAXIMUM COVER (N)	HEIGHT OF INLET "H" (N)	PIPE JOINT CLASSIFICATION (N)	DESCRIPTION	STATION	DRAINAGE PLAN SHEET No.	DRAINAGE SYSTEM No.	DRAINAGE UNIT
		LF	LF	LF	LF	LF	LF	LF	LF	LF	LF	LF	LF	LF	LF	LF	LF	LF	LF	EA	EA	LF	LF	EA	CY	SY	CY	EA	EA	EA	EA	EA	EA	EA	EA	EA	LB	SY	TON	LF	LF					
10	s																																							2.58		S	18" APC (B)	54.50' Lt "CLOA" 53+35.00 TO 35.67' Lt "CLOA" 53+49.89	D-2	10	s
11	a																																										PCC GUTTER	64.84' Lt "CLOA" 53+10.21 TO 14.00' Rt "RWN" 51+27.75	D-2	11	a
12	a																								52.02	78.2																	RSP	52.22' Lt "RWN" 51+00.08	D-2	12	a
	b																																										HEADWALL/WINGWALL	52.22' Lt "RWN" 51+00.08			b
	c																									100.6	56.9													6.09			10' x 5' RCB w/ SUB EX	52.22' Lt "RWN" 51+00.08 TO 17.54' Lt "CLOA" 53+37.91			c
	d																																										REMOVE HEADWALL	13.31' Lt "CLOA" 53+15.57			d
	e																																										REMOVE RCB	13.31' Lt "CLOA" 53+15.57 TO 11.74' Rt "CLOA" 52+77.22			e
	f																																	1			235						TRANSITION STRUCTURE #1	17.54' Lt "CLOA" 53+37.91			f
	g																																										CLEAN DRAINAGE FACILITY	44.57' Rt "CLOA" 51+34.19 TO 11.74' Rt "CLOA" 52+77.22			g
	h																									32.7	18.1													3.59			TRIPLE 5' x 3' RCB w/ SUB EX	44.57' Rt "CLOA" 51+34.19 TO 62.48' Rt "CLOA" 51+12.04			h
	i																																										REMOVE HEADWALL	55.60' Lt "CLOA" 51+22.64			i
	j																																										REMOVE TRIPLE RCB	44.57' Rt "CLOA" 51+34.19 TO 55.60' Lt "CLOA" 51+22.64			j
	k																																										WINGWALL	62.48' Rt "CLOA" 51+12.05			k
	l																								62.1	102.8																	RSP	62.48' Rt "CLOA" 51+12.05			l
	m																																										REMOVE HEADWALL	79.80' Lt "CLOA" 53+45.24 TO 40.51' Lt "CLOA" 53+51.99			m
	n																																										REMOVE RCP	36.64' Lt "CLOA" 53+41.65 TO 47.87' Rt "CLOA" 53+49.24			n
	o																																										REMOVE INLET	58.81' Rt "CLOA" 53+49.47			o
	p																																										REMOVE TRIPLE RCB	99.25' Lt "CLOA" 53+80.46 TO 65.84' Lt "CLOA" 53+54.71			p
	q																																										REMOVE HEAD/WING WALLS	99.25' Lt "CLOA" 53+80.46			q
	r																																										REMOVE SACK CONCRETE	99.25' Lt "CLOA" 53+80.46			r
	s																																										REMOVE CULVERT	51.90' Lt "CLOA" 52+81.23 TO 40.14' Lt "CLOA" 53+10.42			s
12	t																	66																									CANTILEVER WALL PRECAST Conc BOX CULVERT w/ SUB EX	13.31' Lt "CLOA" 53+15.37 TO 11.74' Rt "CLOA" 52+77.22	D-2	12	t
13	a																								5.12	8.4																	RSP	53.80' Rt "REN" 52+86.84	D-2	13	a
	b																																										HEADWALL	53.80' Rt "REN" 52+86.84			b
	c																																							3.21			4' X 2' RCB	53.80' Rt "REN" 52+86.84 TO 16.06' Lt "REN" 53+07.02			c
	d																																										HEADWALL	16.06' Lt "REN" 53+07.02			d
	e																								6.43	9.9																	RSP	16.06' Lt "REN" 53+07.02			e
13	f																																										REMOVE CULVERT	111.15' Rt "CLOA" 50+46.91 TO 115.52' Rt "CLOA" 50+63.44	D-2	13	f
14	a																																					1.86	0.375				HMA OVERSIDE DRIAN	0.00' Lt "REN" 58+20.00	D-2	14	a
15	a																								17.66	27.7																	RSP	5.50' Lt "REN" 53+70.23	D-2	15	a
SHEET TOTAL																		66							143.33	360.30	75							1			235	1.86	0.375								

DRAINAGE QUANTITIES
DQ-10

FOR NOTES, ABBREVIATIONS AND LEGEND, SEE SHEET DQ-1

DAT NGUYEN	REVISED BY	DQN	
LUIS GARCIA	DATE REVISED	2/2/11	
CALCULATED-DESIGNED BY			
CHECKED BY			
CONSULTANT FUNCTIONAL SUPERVISOR			
NATALINA V. BERNARDI			

STATE OF CALIFORNIA - DEPARTMENT OF TRANSPORTATION

Caltrans

LAST REVISION 02-02-11
DATE PLOTTED =>13-JUN-2011
TIME PLOTTED =>10:08

Dist	COUNTY	ROUTE	POST MILES TOTAL PROJECT	SHEET No.	TOTAL SHEETS
04	CC	4	R26.6/R27.5	166	746

REGISTERED CIVIL ENGINEER 2/2/11 DATE

6-13-11
PLANS APPROVAL DATE

REGISTERED PROFESSIONAL ENGINEER N. V. BERNARDI No. 45407 Exp. 9/30/12 CIVIL STATE OF CALIFORNIA

THE STATE OF CALIFORNIA OR ITS OFFICERS OR AGENTS SHALL NOT BE RESPONSIBLE FOR THE ACCURACY OR COMPLETENESS OF SCANNED COPIES OF THIS PLAN SHEET.

BKF ENGINEERS
4670 WILLOW ROAD, SUITE 250
PLEASANTON, CA. 94588

CCTA
2999 OAK ROAD, SUITE 100
WALNUT CREEK, CA. 94597

DRAINAGE QUANTITIES

DRAINAGE SYSTEM No.	DRAINAGE UNIT	CLEAN DRAINAGE FACILITY	CLEAN AND INSPECT COA 72" PIPE	CLEAN AND INSPECT COA 120" PIPE	ABANDON CULVERT	REMOVE CULVERT	REMOVE DRAINAGE FACILITY	MODIFY INLET TO MANHOLE	ADJUST PARTIAL INLET TO GRADE	CAP INLET	REMOVE CONCRETE	SAND BACKFILL	SLURRY CEMENT BACKFILL	DITCH EXCAVATION	STRUCTURAL CONCRETE BOX CULVERT	STRUCTURAL CONCRETE HEADWALL/WINGWALL	STRUCTURAL CONCRETE TRANSITION STRUCTURE	MINOR CONCRETE MINOR STRUCTURE	MINOR CONCRETE MISC CONSTRUCTION	MINOR CONCRETE BACKFILL	MINOR CONCRETE DITCH LINING	BAR REINFORCING STEEL BOX CULVERT	BAR REINFORCING STEEL HEADWALL/WINGWALL	BAR REINFORCING STEEL TRANSITION STRUCTURE	APC 12" APC	APC 18" APC (A)	APC 18" APC (B)	APC 24" APC (A)	APC 24" APC (B)	APC 30" APC	RCP 18" JACKED RCP	RCP 24" JACKED RCP	RCP 30" JACKED RCP	RCP 120" JACKED RCP	RCP 12" RCP	RCP 18" RCP	RCP 18" RCP CLASS V	DESCRIPTION	STATION	DRAINAGE PLAN SHEET No.	DRAINAGE SYSTEM No.	DRAINAGE UNIT
		EA	LS	LS	EA	LF	EA	EA	EA	EA	CY	CY	CY	CY	CY	CY	CY	CY	CY	CY	CY	LB	LB	LB	LF	LF	LF	LF	LF	LF	LF	LF	LF	LF	LF	LF	LF					
15	b														45							7770																5' X 3' RCB w/ SUB EX	5.50' Lt "REN" 53+70.23 TO 35.50' Rt "REN" 54+56.10	D-2	15	b
15	c																																					RSP	35.50' Rt "REN" 54+56.10	D-3	15	c
16	a																				1.61																	PCC GUTTER	61.00' Rt "CLOA" 53+05.49 TO 16.00' Rt "RWF" 53+08.32	D-2	16	a
17	a																										65.3											18" APC (B)	12.01' Lt "CLOA" 53+44.82 TO 51.00' Rt "CLOA" 53+68.27	D-3	17	a
	b																																					COA (TYPE C) DI w/ DIM	51.00' Rt "CLOA" 53+68.27	D-3		b
	c																																					SIDEWALK X DRAIN	51.00' Rt "CLOA" 53+69.75 TO 61.00' Rt "CLOA" 53+69.75	D-3		c
	d																										42.6											18" APC (B)	7.00' Rt "RWF" 53+10.50 TO 51.00' Rt "CLOA" 53+69.75	D-2		d
	e																	1.55																				G2 INLET w/ DIM	7.00' Rt "RWF" 53+10.50			e
	f																			7.57							46.9											18" APC (B) w/ Conc BACKFILL	46.00' Lt "RWF" 53+07.26 TO 7.00' Rt "RWF" 53+10.50			f
	g																	1.45																				G2X DI w/ DIM	46.00' Lt "RWF" 53+07.26			g
	h																																					GRATED LINE DRAIN	46.00' Lt "RWF" 53+07.26			h
	i																			4.73							29.3											18" APC (B) w/ Conc BACKFILL	46.00' Lt "RWF" 53+07.26 TO 46.00' Lt "RWF" 53+40.00			i
	j																																					GRATED LINE DRAIN	46.00' Lt "RWF" 53+07.26 TO 46.00' Lt "RWF" 53+40.00			j
	k																	1.35																				GDOM w/ DIM	46.00' Lt "RWF" 53+40.00			k
	l																			18.26						113.1												18" APC (A) w/ Conc BACKFILL	46.00' Lt "RWF" 54+90.00 TO 46.00' Lt "RWF" 53+40.00			l
	m																	1.74																				G2 INLET	46.00' Lt "RWF" 54+90.00			m
	n																									54.0												18" APC (A)	7.00' Rt "RWF" 55+05.00 TO 46.00' Lt "RWF" 54+90.00			n
	o																	1.72																				G2 INLET	7.00' Rt "RWF" 55+05.00			o
	p																	1.74																				G2 INLET	46.00' Lt "RWF" 54+55.00			p
17	q																									31.1												18" APC (A)	46.00' Lt "RWF" 54+90.00 TO 46.00' Lt "RWF" 54+55.00	D-2	17	q
18	a																				1.51																	PCC GUTTER	61.00' Rt "CLOA" 53+05.49 TO 16.00' Rt "RWF" 53+08.32	D-2	18	a
19	a																	2.07																				GDOM INLET	58.00' Lt "EL" 158+50.00	D-3	19	a
	b																										146.4											18" APC (B)	58.00' Lt "EL" 158+50.00 TO 58.00' Lt "EL" 157+00.00			b
	c																	2.45																				G2 INLET	58.00' Lt "EL" 157+00.00			c
	d					38.0																																REMOVE CULVERT	46.62' Lt "EL" 157+03.26 TO 84.59' Lt "EL" 157+01.81			d
	e																														35.8							18" JACKED RCP	33.99' Lt "EL" 156+98.32 TO 1.74' Rt "EL" 156+95.84			e
	f																																			26.0		18" RCP Cl V	1.74' Rt "EL" 156+95.84 TO 0.19' Lt "E" 156+93.76			f
	g																	4.32																				G2 INLET	0.19' Lt "E" 156+93.76			g
	h																																			17.2		18" RCP Cl V	0.19' Lt "E" 156+93.76 TO 10.00' Lt "ER" 156+93.76			h
	i																	6.45																				G2 INLET	10.00' Lt "ER" 156+93.76			i
19	j																																40.7					30" JACKED RCP	10.00' Lt "ER" 156+93.76 TO 34.00' Rt "ER" 156+93.76	D-3	19	j
SHEET TOTAL						38.0									45			24.84		30.56	3.12	7770				198.2	330.5			35.8		40.7				43.2						

FOR NOTES, ABBREVIATIONS AND LEGEND, SEE SHEET DQ-1

DRAINAGE QUANTITIES
DQ-11

STATE OF CALIFORNIA - DEPARTMENT OF TRANSPORTATION

Caltrans

CONSULTANT FUNCTIONAL SUPERVISOR: NATALINA V. BERNARDI

CALCULATED-DESIGNED BY: DAT NGUYEN

CHECKED BY: LUIS GARCIA

REVISED BY: XX

DATE REVISED: 2/2/11

LAST REVISION 02-02-11

DATE PLOTTED => 13-JUN-2011
TIME PLOTTED => 10:08

Dist	COUNTY	ROUTE	POST MILES TOTAL PROJECT	SHEET No.	TOTAL SHEETS
04	CC	4	R26.6/R27.5	167	746

REGISTERED CIVIL ENGINEER 2/2/11 DATE

6-13-11
PLANS APPROVAL DATE

REGISTERED PROFESSIONAL ENGINEER N. V. BERNARDI No. 45407 Exp. 9/30/12 CIVIL STATE OF CALIFORNIA

THE STATE OF CALIFORNIA OR ITS OFFICERS OR AGENTS SHALL NOT BE RESPONSIBLE FOR THE ACCURACY OR COMPLETENESS OF SCANNED COPIES OF THIS PLAN SHEET.

BKF ENGINEERS
4670 WILLOW ROAD, SUITE 250
PLEASANTON, CA. 94588

CCTA
2999 OAK ROAD, SUITE 100
WALNUT CREEK, CA. 94597

DRAINAGE QUANTITIES

DRAINAGE SYSTEM No.	DRAINAGE UNIT	RCP 24" RCP	RCP 24" RCP CLASS V	RCP 30" RCP	RCP 36" RCP	RCP 42" RCP	RCP 72" RCP	RCP 120" RCP	CSP Bit Ctd 12" (0.064" THICK)	CSP Bit Ctd 18" (0.064" THICK)	CSP Bit Ctd 24" (0.079" THICK)	CSP Bit Ctd 30" (0.064" THICK)	CSP Bit Ctd 36" (0.064" THICK)	CSP Bit Ctd 48" (0.079" THICK)	18" ASP	18" SCSP	GRATED LINE DRAIN	CANTILEVER WALL PRECAST Conc BOX CULVERT	12" WSP (0.25" THICK)	24" AFES	COA (TYPE C) INLET	6" PPP UD	3" CURB DRAIN	SIDEWALK CROSS DRAIN	ROCK SLOPE PROTECTION (FACING METHOD B)	CLASS 8 ROCK SLOPE PROTECTION FABRIC	AGGREGATE BASE (CLASS 3)	FRAME & COVER (N) 18-9	FRAME & COVER (N) 24-9	FRAME & COVER (N) 24-12	FRAME & COVER (N) 24-12X	FRAME & COVER (N) 36R	FRAME & COVER (N) U45	FRAME & COVER (N) U46	BOLTDOWN (N)	GRATE LOCKING DEVICE	MISCELLANEOUS IRON AND STEEL	PLACE HMA MISCELLANEOUS AREA	HMA (TYPE A)	MAXIMUM COVER (N)	HEIGHT OF INLET "H" (N)	PIPE JOINT CLASSIFICATION (N)	DESCRIPTION	STATION	DRAINAGE PLAN SHEET No.	DRAINAGE SYSTEM No.	DRAINAGE UNIT
		LF	LF	LF	LF	LF	LF	LF	LF	LF	LF	LF	LF	LF	LF	LF	LF	LF	LF	EA	EA	LF	LF	EA	CY	SY	CY	EA	EA	EA	EA	EA	EA	EA	EA	EA	LB	SY	TON	LF	LF					
15	b																									246.8	136.4													2.40			5' X 3' RCB w/ SUB EX	5.50' Lt "REN" 53+70.23 TO 35.50' Rt "REN" 54+56.10	D-2	15	b
15	c																								19.62	31.4																	RSP	35.50' Rt "REN" 54+56.10	D-3	15	c
16	a																																										PCC GUTTER	61.00' Rt "CLOA" 53+05.49 TO 16.00' Rt "RWF" 53+08.32	D-2	16	a
17	a																																							4.26		S	18" APC (B)	12.01' Lt "CLOA" 53+44.82 TO 51.00' Rt "CLOA" 53+68.27	D-3	17	a
	b																				1																				4.65		COA (TYPE C) DI w/ DIM	51.00' Rt "CLOA" 53+68.27	D-3		b
	c																							1																			SIDEWALK X DRAIN	51.00' Rt "CLOA" 53+69.75 TO 61.00' Rt "CLOA" 53+69.75	D-3		c
	d																																							3.15		S	18" APC (B)	7.00' Rt "RWF" 53+10.50 TO 51.00' Rt "CLOA" 53+69.75	D-2		d
	e																													1								326			3.94		G2 INLET w/ DIM	7.00' Rt "RWF" 53+10.50			e
	f																																							2.44		S	18" APC (B) w/ Conc BACKFILL	46.00' Lt "RWF" 53+07.26 TO 7.00' Rt "RWF" 53+10.50			f
	g																													2								634			3.26		G2X DI w/ DIM	46.00' Lt "RWF" 53+07.26			g
	h																9.8																										GRATED LINE DRAIN	46.00' Lt "RWF" 53+07.26			h
	i																																							1.84		S	18" APC (B) w/ Conc BACKFILL	46.00' Lt "RWF" 53+07.26 TO 46.00' Lt "RWF" 53+40.00			i
	j																29.4																										GRATED LINE DRAIN	46.00' Lt "RWF" 53+07.26 TO 46.00' Lt "RWF" 53+40.00			j
	k																													2								634			3.34		GDOM w/ DIM	46.00' Lt "RWF" 53+40.00			k
	l																																							3.20		S	18" APC (A) w/ Conc BACKFILL	46.00' Lt "RWF" 54+90.00 TO 46.00' Lt "RWF" 53+40.00			l
	m																													1								326			4.70		G2 INLET	46.00' Lt "RWF" 54+90.00			m
	n																																							3.10		S	18" APC (A)	7.00' Rt "RWF" 55+05.00 TO 46.00' Lt "RWF" 54+90.00			n
	o																													1								326			4.60		G2 INLET	7.00' Rt "RWF" 55+05.00			o
	p																													1								326			4.70		G2 INLET	46.00' Lt "RWF" 54+55.00			p
17	q																																							3.20		S	18" APC (A)	46.00' Lt "RWF" 54+90.00 TO 46.00' Lt "RWF" 54+55.00	D-2	17	q
18	a																																										PCC GUTTER	61.00' Rt "CLOA" 53+05.49 TO 16.00' Rt "RWF" 53+08.32	D-2	18	a
19	a																													2								634			4.40		GDOM INLET	58.00' Lt "EL" 158+50.00	D-3	19	a
	b																																							5.86		S	18" APC (B)	58.00' Lt "EL" 158+50.00 TO 58.00' Lt "EL" 157+00.00			b
	c																													1								326			7.46		G2 INLET	58.00' Lt "EL" 157+00.00			c
	d																																										REMOVE CULVERT	46.62' Lt "EL" 157+03.26 TO 84.59' Lt "EL" 157+01.81			d
	e																																							7.85		S	18" JACKED RCP	33.99' Lt "EL" 156+98.32 TO 1.74' Rt "EL" 156+95.84			e
	f																																							8.70		S	18" RCP CI V	1.74' Rt "EL" 156+95.84 TO 0.19' Lt "E" 156+93.76			f
	g																													1								326			10.30		G2 INLET	0.19' Lt "E" 156+93.76			g
	h																																							8.80		S	18" RCP CI V	0.19' Lt "E" 156+93.76 TO 10.00' Lt "ER" 156+93.76			h
	i																													1								326			16.36		G2 INLET	10.00' Lt "ER" 156+93.76			i
19	j																																							14.06		S	30" JACKED RCP	10.00' Lt "ER" 156+93.76 TO 34.00' Rt "ER" 156+93.76	D-3	19	j
SHEET TOTAL																	39.2				1			1	19.62	278.2	136.4			13								4184										

FOR NOTES, ABBREVIATIONS AND LEGEND, SEE SHEET DQ-1

DRAINAGE QUANTITIES
DQ-12

STATE OF CALIFORNIA - DEPARTMENT OF TRANSPORTATION

Caltrans

CONSULTANT FUNCTIONAL SUPERVISOR: NATALINA V. BERNARDI

CALCULATED-DESIGNED BY: DAT NGUYEN
CHECKED BY: LUIS GARCIA
REVISED BY: DQN
DATE REVISED: 2/2/11

LAST REVISION 02-02-11
DATE PLOTTED => 13-JUN-2011
TIME PLOTTED => 10:08

Dist	COUNTY	ROUTE	POST MILES TOTAL PROJECT	SHEET No.	TOTAL SHEETS
04	CC	4	R26.6/R27.5	168	746

REGISTERED CIVIL ENGINEER 2/2/11 DATE

6-13-11
PLANS APPROVAL DATE

REGISTERED PROFESSIONAL ENGINEER N. V. BERNARDI No. 45407 Exp. 9/30/12 CIVIL STATE OF CALIFORNIA

THE STATE OF CALIFORNIA OR ITS OFFICERS OR AGENTS SHALL NOT BE RESPONSIBLE FOR THE ACCURACY OR COMPLETENESS OF SCANNED COPIES OF THIS PLAN SHEET.

BKF ENGINEERS
4670 WILLOW ROAD, SUITE 250
PLEASANTON, CA. 94588

CCTA
2999 OAK ROAD, SUITE 100
WALNUT CREEK, CA. 94597

DRAINAGE QUANTITIES

DRAINAGE SYSTEM No.	DRAINAGE UNIT	CLEAN DRAINAGE FACILITY	CLEAN AND INSPECT COA 72" PIPE	CLEAN AND INSPECT COA 120" PIPE	ABANDON CULVERT	REMOVE CULVERT	REMOVE DRAINAGE FACILITY	MODIFY INLET TO MANHOLE	ADJUST PARTIAL INLET TO GRADE	CAP INLET	REMOVE CONCRETE	SAND BACKFILL	SLURRY CEMENT BACKFILL	DITCH EXCAVATION	STRUCTURAL CONCRETE: BOX CULVERT	STRUCTURAL CONCRETE: HEADWALL/WINGWALL	STRUCTURAL CONCRETE: TRANSITION STRUCTURE	MINOR CONCRETE: MINOR STRUCTURE	MINOR CONCRETE: MISC CONSTRUCTION	MINOR CONCRETE: BACKFILL	MINOR CONCRETE: DITCH LINING	BAR REINFORCING STEEL: BOX CULVERT	BAR REINFORCING STEEL: HEADWALL/WINGWALL	BAR REINFORCING STEEL: TRANSITION STRUCTURE	APC: 12" APC	APC: 18" APC (A)	APC: 18" APC (B)	APC: 24" APC (A)	APC: 24" APC (B)	APC: 30" APC	RCP: 18" JACKED RCP	RCP: 24" JACKED RCP	RCP: 30" JACKED RCP	RCP: 120" JACKED RCP	RCP: 12" RCP	RCP: 18" RCP	RCP: 18" RCP CLASS V	DESCRIPTION	STATION	DRAINAGE PLAN SHEET No.	DRAINAGE SYSTEM No.	DRAINAGE UNIT
		EA	LS	LS	EA	LF	EA	EA	EA	EA	CY	CY	CY	CY	CY	CY	CY	CY	CY	CY	CY	LB	LB	LB	LF	LF	LF	LF	LF	LF	LF	LF	LF	LF	LF	LF	LF					
19	k																	6.60																				G2 INLET	58.00′ R+ "ER" 156+93.76	D-3	19	k
	l																																					18" ASP	53.00′ R+ "ER" 156+93.76 TO 53.00′ R+ "ER" 156+30.00			l
	m																	1.99																				G2 INLET	58.00′ R+ "ER" 156+30.00			m
	n																										56.6											18" APC (B)	58.00′ R+ "ER" 156+30.00 TO 58.00′ R+ "ER" 155+70.00			n
	o																	2.07																				GDOM INLET	58.00′ R+ "ER" 155+70.00			o
	p																										59.9											18" APC (B)	58.00′ R+ "ER" 156+30.00 TO 58.00′ R+ "ER" 156+93.76			p
	q																													9.1								30" APC	58.00′ R+ "ER" 156+93.76 TO 68.85′ R+ "ER" 156+94.04			q
	r																	7.00																				JUNCTION STRUCTURE #2	68.85′ R+ "ER" 156+94.04			r
	s																										24.1											18" APC (B)	58.00′ L+ "EL" 157+00.00 TO 33.99′ L+ EL 156+98.32			s
19	t																													21.9								30" APC	34.00′ R+ "ER" 156+93.76 TO 58.00′ R+ "ER" 156+93.76	D-3	19	t
20	a																																					24" CSP	68.85′ R+ "ER" 156+94.04 TO 26.00′ L+ "REN" 55+29.54	D-3	20	a
20	b																																					48" CSP	68.85′ R+ "ER" 156+94.04 TO 26.00′ L+ "REN" 55+29.54	D-3	20	b
21	a																																					RSP	29.03′ L+ "REN" 54+99.74	D-3	21	a
	b															4							204															HEADWALL	29.03′ L+ "REN" 54+99.74			b
	c																																					24" CSP w/ DD JOINTS	29.03′ L+ "REN" 54+99.74 TO 26.00′ L+ "REN" 55+29.54			c
	d																											29.9										24" APC (A)	29.03′ L+ "REN" 54+99.74 TO 26.00′ L+ "REN" 55+29.54			d
	e																	10.00																				JUNCTION STRUCTURE #1	26.00′ L+ "REN" 55+29.54			e
	f																									7.0												18" APC (A)	26.00′ L+ "REN" 55+29.54 TO 19.00′ L+ "REN" 55+29.50			f
	g																	2.29																				G2 INLET	19.00′ L+ "REN" 55+29.50			g
	h																									47.6												18" APC (A)	19.00′ L+ "REN" 55+29.50 TO 34.00′ R+ "REN" 55+29.50			h
	i																	1.78																				G2 INLET	34.00′ R+ "REN" 55+29.50			i
	j																									216.7												18" APC (A)	34.00′ R+ "REN" 55+29.50 TO 34.00′ R+ "REN" 57+50.00			j
	k																	1.78																				G2 INLET	34.00′ R+ "REN" 57+50.00			k
	l																									249.9												18" APC (A)	34.00′ R+ "REN" 57+50.00 TO 26.41′ R+ "REN" 60+03.67			l
	m																	2.18																				G2 MH	26.41′ R+ "REN" 60+03.67			m
	n																									3.7												18" APC (A)	26.41′ R+ "REN" 60+03.67 TO 35.55′ R+ "REN" 60+03.67			n
	o																	1.72																				G2 INLET	35.55′ R+ "REN" 60+03.67			o
	p																									398.5												18" APC (A)	26.41′ R+ "REN" 60+03.67 TO 16.36′ R+ "REN" 64+05.14			p
	q																	1.76																				G2 MH	16.36′ R+ "REN" 64+05.14			q
	r																									5.3												18" APC (A)	16.36′ R+ "REN" 64+05.14 TO 27.00′ R+ "REN" 64+05.14			r
	s																	1.67																				G2 INLET	27.00′ R+ "REN" 64+05.14	D-3		s
	t																										334.8											18" APC (B)	27.00′ R+ "REN" 64+05.14 TO 27.00′ R+ "REN" 67+42.46	D-4		t
21	u																	1.64																				G2 INLET	27.00′ R+ "REN" 67+42.46	D-4	21	u
SHEET TOTAL																4		42.48					204			928.7	475.4	29.9		31.0													

DRAINAGE QUANTITIES
DQ-13

FOR NOTES, ABBREVIATIONS AND LEGEND, SEE SHEET DQ-1

STATE OF CALIFORNIA - DEPARTMENT OF TRANSPORTATION
Caltrans

CONSULTANT FUNCTIONAL SUPERVISOR: NATALINA V. BERNARDI
CALCULATED-DESIGNED BY: DAT NGUYEN
CHECKED BY: LUIS GARCIA
REVISED BY: DQN
DATE REVISED: 2/2/11

LAST REVISION 02-02-11
DATE PLOTTED => 13-JUN-2011
TIME PLOTTED => 10:08

Dist	COUNTY	ROUTE	POST MILES TOTAL PROJECT	SHEET No.	TOTAL SHEETS
04	CC	4	R26.6/R27.5	169	746

REGISTERED CIVIL ENGINEER 2/2/11 DATE

6-13-11
PLANS APPROVAL DATE

REGISTERED PROFESSIONAL ENGINEER N. V. BERNARDI No. 45407 Exp. 9/30/12 CIVIL STATE OF CALIFORNIA

THE STATE OF CALIFORNIA OR ITS OFFICERS OR AGENTS SHALL NOT BE RESPONSIBLE FOR THE ACCURACY OR COMPLETENESS OF SCANNED COPIES OF THIS PLAN SHEET.

BKF ENGINEERS
4670 WILLOW ROAD, SUITE 250
PLEASANTON, CA. 94588

CCTA
2999 OAK ROAD, SUITE 100
WALNUT CREEK, CA. 94597

DRAINAGE QUANTITIES

DRAINAGE SYSTEM No.	DRAINAGE UNIT	RCP 24" RCP	RCP 24" RCP CLASS V	RCP 30" RCP	RCP 36" RCP	RCP 42" RCP	RCP 72" RCP	RCP 120" RCP	CSP Bit Ctd 12" (0.064" THICK)	CSP Bit Ctd 18" (0.064" THICK)	CSP Bit Ctd 24" (0.079" THICK)	CSP Bit Ctd 30" (0.064" THICK)	CSP Bit Ctd 36" (0.064" THICK)	CSP Bit Ctd 48" (0.079" THICK)	18" ASP	18" SCSP	GRATED LINE DRAIN	CANTILEVER WALL PRECAST Conc BOX CULVERT	12" WSP (0.25" THICK)	24" AFES	COA (TYPE C) INLET	6" PPP UD	3" CURB DRAIN	SIDEWALK CROSS DRAIN	ROCK SLOPE PROTECTION (FACING METHOD B)	CLASS 8 ROCK SLOPE PROTECTION FABRIC	AGGREGATE BASE (CLASS 3)	FRAME & COVER (N) 18-9	FRAME & COVER (N) 24-9	FRAME & COVER (N) 24-12	FRAME & COVER (N) 24-12X	FRAME & COVER (N) 36R	FRAME & COVER (N) U45	FRAME & COVER (N) U46	BOLTDOWN (N)	GRATE LOCKING DEVICE	MISCELLANEOUS IRON AND STEEL	PLACE HMA MISCELLANEOUS AREA	HMA (TYPE A)	MAXIMUM COVER (N)	HEIGHT OF INLET "H" (N)	PIPE JOINT CLASSIFICATION (N)	DESCRIPTION	STATION	DRAINAGE PLAN SHEET No.	DRAINAGE SYSTEM No.	DRAINAGE UNIT
		LF	LF	LF	LF	LF	LF	LF	LF	LF	LF	LF	LF	LF	LF	LF	LF	LF	LF	EA	EA	LF	LF	EA	CY	SY	CY	EA	EA	EA	EA	EA	EA	EA	EA	EA	LB	SY	TON	LF	LF						
19	k																													1							326				16.77		G2 INLET	58.00′ R+ "ER" 156+93.76	D-3	19	k
	l														59.9																												18" ASP	53.00′ R+ "ER" 156+93.76 TO 53.00′ R+ "ER" 156+30.00			l
	m																													1							326				5.66		G2 INLET	58.00′ R+ "ER" 156+30.00			m
	n																																							4.06		S	18" APC (B)	58.00′ R+ "ER" 156+30.00 TO 58.00′ R+ "ER" 155+70.00			n
	o																													2							634				4.40		GDOM INLET	58.00′ R+ "ER" 155+70.00			o
	p																																							5.00		S	18" APC (B)	58.00′ R+ "ER" 156+30.00 TO 58.00′ R+ "ER" 156+93.76			p
	q																																							14.27		S	30" APC	58.00′ R+ "ER" 156+93.76 TO 68.85′ R+ "ER" 156+94.04			q
	r				10.5																											1				236							JUNCTION STRUCTURE #2	68.85′ R+ "ER" 156+94.04			r
	s																																							6.64		S	18" APC (B)	58.00′ L+ "EL"157+00.00 TO 33.99′ L+ "EL"156+98.32			s
19	t																																							14.17		S	30" APC	34.00′ R+ "ER" 156+93.76 TO 58.00′ R+ "ER" 156+93.76	D-3	19	t
20	a										24.0																														WTJ	24" CSP	68.85′ R+ "ER" 156+94.04 TO 26.00′ L+ "REN" 55+29.54	D-3	20	a
20	b													617.9																											DD	48" CSP	68.85′ R+ "ER" 156+94.04 TO 26.00′ L+ "REN" 55+29.54	D-3	20	b
21	a																								10.58	17.42																	RSP	29.03′ L+ "REN" 54+99.74	D-3	21	a
	b																																										HEADWALL	29.03′ L+ "REN" 54+99.74			b
	c										29.9																													3.18		DD	24" CSP w/ DD JOINTS	29.03′ L+ "REN" 54+99.74 TO 26.00′ L+ "REN" 55+29.54			c
	d																																							6.50		S	24" APC (A)	29.03′ L+ "REN" 54+99.74 TO 26.00′ L+ "REN" 55+29.54			d
	e																											2		1			1				1021							JUNCTION STRUCTURE #1	26.00′ L+ "REN" 55+29.54			e
	f																													1										6.93		S	18" APC (A)	26.00′ L+ "REN" 55+29.54 TO 19.00′ L+ "REN" 55+29.50			f
	g																													1							326				6.85		G2 INLET	19.00′ L+ "REN" 55+29.50			g
	h																																							4.21		S	18" APC (A)	19.00′ L+ "REN" 55+29.50 TO 34.00′ R+ "REN" 55+29.50			h
	i																													1							326				4.85		G2 INLET	34.00′ R+ "REN" 55+29.50			i
	j																																							3.40		S	18" APC (A)	34.00′ R+ "REN" 55+29.50 TO 34.00′ R+ "REN" 57+50.00			j
	k																													1							326				4.85		G2 INLET	34.00′ R+ "REN" 57+50.00			k
	l																																							4.92		S	18" APC (A)	34.00′ R+ "REN" 57+50.00 TO 26.41′ R+ "REN" 60+03.67			l
	m																															1					435				6.42		G2 MH	26.41′ R+ "REN" 60+03.67			m
	n																																							3.66		S	18" APC (A)	26.41′ R+ "REN" 60+03.67 TO 35.55′ R+ "REN" 60+03.67			n
	o																													1							326				4.60		G2 INLET	35.55′ R+ "REN" 60+03.67			o
	p																																							4.82		S	18" APC (A)	26.41′ R+ "REN" 60+03.67 TO 16.36′ R+ "REN" 64+05.14			p
	q																															1					435				4.77		G2 MH	16.36′ R+ "REN" 64+05.14			q
	r																																							3.27		S	18" APC (A)	16.36′ R+ "REN" 64+05.14 TO 27.00′ R+ "REN" 64+05.14			r
	s																													1							326				4.40		G2 INLET	27.00′ R+ "REN" 64+05.14	D-3		s
	t																																							3.59		S	18" APC (B)	27.00′ R+ "REN" 64+05.14 TO 27.00′ R+ "REN" 67+42.46	D-4		t
21	u																													1							326				4.60		G2 INLET	27.00′ R+ "REN" 67+42.46	D-4	21	u
SHEET TOTAL					10.5						53.9			617.9	59.9										10.58	17.42		2		12		1	2	1			5369										

DRAINAGE QUANTITIES
DQ-14

FOR NOTES, ABBREVIATIONS AND LEGEND, SEE SHEET DQ-1

STATE OF CALIFORNIA - DEPARTMENT OF TRANSPORTATION

Caltrans

CONSULTANT FUNCTIONAL SUPERVISOR: NATALINA V. BERNARDI

CALCULATED-DESIGNED BY: DAT NGUYEN
CHECKED BY: LUIS GARCIA

REVISED BY: DQN
DATE REVISED: 2/2/11

LAST REVISION 02-02-11
DATE PLOTTED => 13-JUN-2011
TIME PLOTTED => 10:08

Dist	COUNTY	ROUTE	POST MILES TOTAL PROJECT	SHEET No.	TOTAL SHEETS
04	CC	4	R26.6/R27.5	170	746

REGISTERED CIVIL ENGINEER 2/2/11 DATE

6-13-11
PLANS APPROVAL DATE

REGISTERED PROFESSIONAL ENGINEER N. V. BERNARDI No. 45407 Exp. 9/30/12 CIVIL STATE OF CALIFORNIA

THE STATE OF CALIFORNIA OR ITS OFFICERS OR AGENTS SHALL NOT BE RESPONSIBLE FOR THE ACCURACY OR COMPLETENESS OF SCANNED COPIES OF THIS PLAN SHEET.

BKF ENGINEERS
4670 WILLOW ROAD, SUITE 250
PLEASANTON, CA. 94588

CCTA
2999 OAK ROAD, SUITE 100
WALNUT CREEK, CA. 94597

DRAINAGE QUANTITIES

DRAINAGE SYSTEM No.	DRAINAGE UNIT	CLEAN DRAINAGE FACILITY	CLEAN AND INSPECT COA 72" PIPE	CLEAN AND INSPECT COA 120" PIPE	ABANDON CULVERT	REMOVE CULVERT	REMOVE DRAINAGE FACILITY	MODIFY INLET TO MANHOLE	ADJUST PARTIAL INLET TO GRADE	CAP INLET	REMOVE CONCRETE	SAND BACKFILL	SLURRY CEMENT BACKFILL	DITCH EXCAVATION	STRUCTURAL CONCRETE: BOX CULVERT	STRUCTURAL CONCRETE: HEADWALL/WINGWALL	STRUCTURAL CONCRETE: TRANSITION STRUCTURE	MINOR CONCRETE: MINOR STRUCTURE	MINOR CONCRETE: MISC CONSTRUCTION	MINOR CONCRETE: BACKFILL	MINOR CONCRETE: DITCH LINING	BAR REINFORCING STEEL: BOX CULVERT	BAR REINFORCING STEEL: HEADWALL/WINGWALL	BAR REINFORCING STEEL: TRANSITION STRUCTURE	APC: 12" APC	APC: 18" APC (A)	APC: 18" APC (B)	APC: 24" APC (A)	APC: 24" APC (B)	APC: 30" APC	RCP: 18" JACKED RCP	RCP: 24" JACKED RCP	RCP: 30" JACKED RCP	RCP: 120" JACKED RCP	RCP: 12" RCP	RCP: 18" RCP	RCP: 18" RCP CLASS V	DESCRIPTION	STATION	DRAINAGE PLAN SHEET No.	DRAINAGE SYSTEM No.	DRAINAGE UNIT
		EA	LS	LS	EA	LF	EA	EA	EA	EA	CY	CY	CY	CY	CY	CY	CY	CY	CY	CY	CY	LB	LB	LB	LF	LF	LF	LF	LF	LF	LF	LF	LF	LF	LF	LF	LF					
22	a														21							6800																10' x 8' RCB w/ SUB EX	108.92' Lt "CLOA" 54+65.27 TO 86.47' Lt "CLOA" 54+61.65	D-2	22	a
	b										12.1																											REMOVE RCB (PORTION)	99.00' Lt "CLOA" 54+63.67 TO 86.47' Lt "CLOA" 54+61.65			b
	c										26.6																											REMOVE TRANSITION STRUCTURE	222.32' Lt "E" 152+72.81			c
	d					191.2																																REMOVE CULVERT (PORTION)	223.22' Lt "E" 152+72.81 TO 215.04' Lt "E" 154+78.94			d
	e														186							58860																10' x 8' RCB	223.22' Lt "E" 152+72.81 TO 215.04' Lt "E" 154+78.94	D-2		e
	f																89							12050														TRANSITION STRUCTURE #2	215.04' Lt "E" 154+78.94	D-3		f
22	g			1																																		CLEAN AND INSPECT COA 120" PIPE	62.75' Lt "RWF" 54+83.19 TO 98.77' Rt "REN" 62+27.47	D-3	22	g
23	a														350							110760																10' x 8' RCB w/ SUB EX	106.91' Lt "CLOA" 54+78.38 TO 215.04' Lt "E" 154+78.94	D-2	23	a
	b												481.4																									120" RCP w/ SLURRY	215.04' Lt "E" 154+78.94 TO 187.41' Lt "E" 157+11.96	D-3		b
	c																																	565.3				120" JACKED RCP	187.41' Lt "E" 157+11.96 TO 126.88 Rt "E" 161+82.67			c
	d						1																															REMOVE BULKHEAD	173.04' Rt "E" 162+40.84			d
	e					9.2																																REMOVE CULVERT	173.04' Rt "E" 162+40.84 TO 178.89' Rt "E" 162+48.04			e
	f																																					24" CSP w/ DD JOINTS	85.02' Lt "FT" 99+30.17 TO 99.38' Lt "FT" 99+48.02			f
23	g																																					120" RCP	126.88' Rt "E" 161+82.67 TO 178.89' Rt "E" 162+48.04	D-3	23	g
24	a																			16.1																		CONCRETE LINED DITCH	37.33' Rt "REN" 57+27.03 TO 30.03' Rt "REN" 61+50.00	D-3	24	a
25	a					32.5																																REMOVE CULVERT	45.19' Rt "ER" 157+79.98 TO 12.76' Rt "ER" 157+81.36	D-3	25	a
25	b						1																															REMOVE INLET	12.76' Rt "ER" 157+81.36	D-3	25	b
26	a																													362.2								30" APC	10.00' Lt "ER" 156+93.76 TO 12.07' Lt "ER" 160+60.00	D-3	26	a
	b																	5.91																				GDOM INLET	12.07' Lt "ER" 160+60.00			b
	c																											115.8										24" APC (B)	12.07' Lt "ER" 160+60.00 TO 12.75' Lt "ER" 161+80.00			c
	d																	4.70																				GDOM INLET	12.75' Lt "ER" 161+80.00			d
	e																										57.1											18" APC (B)	12.75' Lt "ER" 161+80.00 TO 13.02' Lt "ER" 162+41.59			e
	f																	3.53																				G2 INLET	13.02' Lt "ER" 162+41.59			f
	g																										44.3											18" APC (B)	13.02' Lt "ER" 162+41.59 TO 13.19' Lt "ER" 162+90.00			g
	h																	2.55																				G2 INLET	13.19' Lt "ER" 162+90.00			h
	i																										80.8											18" APC (B)	13.19' Lt "ER" 162+90.00 TO 13.40' Lt "ER" 163+75.00			i
	j																	2.45																				G2 INLET	13.40' Lt "ER" 163+75.00			j
	k																										171.4											18" APC (B)	13.40' Lt "ER" 163+75.00 TO 13.49' Lt "ER" 165+50.00			k
	l																	2.39																				G2 INLET	13.49' Lt "ER" 165+50.00			l
	m																																				17.0	18" RCP Cl V	13.49' Lt "ER" 165+50.00 TO 1.47' Lt "E" 165+45.00			m
26	n																	2.22																				G2 INLET	1.47' Lt "E" 165+45.00	D-3	26	n
SHEET TOTAL				1		232.9	2				38.7		481.4		557		89	23.75			16.1	176420		12050			353.6		115.8	362.2				565.3			17.0					

DRAINAGE QUANTITIES
DQ-15

FOR NOTES, ABBREVIATIONS AND LEGEND, SEE SHEET DQ-1

STATE OF CALIFORNIA - DEPARTMENT OF TRANSPORTATION

Caltrans

CONSULTANT FUNCTIONAL SUPERVISOR: NATALINA V. BERNARDI

CALCULATED-DESIGNED BY: DAT NGUYEN
CHECKED BY: LUIS GARCIA
REVISED BY: DQN
DATE REVISED: 2/2/11

LAST REVISION 02-02-11
DATE PLOTTED => 13-JUN-2011
TIME PLOTTED => 10:08

Dist	COUNTY	ROUTE	POST MILES TOTAL PROJECT	SHEET No.	TOTAL SHEETS
04	CC	4	R26.6/R27.5	171	746

REGISTERED CIVIL ENGINEER 2/2/11 DATE

6-13-11
PLANS APPROVAL DATE

REGISTERED PROFESSIONAL ENGINEER N. V. BERNARDI No. 45407 Exp. 9/30/12 CIVIL STATE OF CALIFORNIA

THE STATE OF CALIFORNIA OR ITS OFFICERS OR AGENTS SHALL NOT BE RESPONSIBLE FOR THE ACCURACY OR COMPLETENESS OF SCANNED COPIES OF THIS PLAN SHEET.

BKF ENGINEERS
4670 WILLOW ROAD, SUITE 250
PLEASANTON, CA. 94588

CCTA
2999 OAK ROAD, SUITE 100
WALNUT CREEK, CA. 94597

DRAINAGE QUANTITIES

DRAINAGE SYSTEM No.	DRAINAGE UNIT	RCP 24" RCP	RCP 24" RCP CLASS V	RCP 30" RCP	RCP 36" RCP	RCP 42" RCP	RCP 72" RCP	RCP 120" RCP	CSP Bit Ctd 12" (0.064" THICK)	CSP Bit Ctd 18" (0.064" THICK)	CSP Bit Ctd 24" (0.079" THICK)	CSP Bit Ctd 30" (0.064" THICK)	CSP Bit Ctd 36" (0.064" THICK)	CSP Bit Ctd 48" (0.079" THICK)	18" ASP	18" SCSP	GRATED LINE DRAIN	CANTILEVER WALL PRECAST Conc BOX CULVERT	12" WSP (0.25" THICK)	24" AFES	COA (TYPE C) INLET	6" PPP UD	3" CURB DRAIN	SIDEWALK CROSS DRAIN	ROCK SLOPE PROTECTION (FACING METHOD B)	CLASS 8 ROCK SLOPE PROTECTION FABRIC	AGGREGATE BASE (CLASS 3)	FRAME & COVER (N) 18-9	FRAME & COVER (N) 24-9	FRAME & COVER (N) 24-12	FRAME & COVER (N) 24-12X	FRAME & COVER (N) 36R	FRAME & COVER (N) U45	FRAME & COVER (N) U46	BOLTDOWN (N)	GRATE LOCKING DEVICE	MISCELLANEOUS IRON AND STEEL	PLACE HMA MISCELLANEOUS AREA	HMA (TYPE A)	MAXIMUM COVER (N)	HEIGHT OF INLET "H" (N)	PIPE JOINT CLASSIFICATION (N)	DESCRIPTION	STATION	DRAINAGE PLAN SHEET No.	DRAINAGE SYSTEM No.	DRAINAGE UNIT
		LF	LF	LF	LF	LF	LF	LF	LF	LF	LF	LF	LF	LF	LF	LF	LF	LF	LF	EA	EA	LF	LF	EA	CY	SY	CY	EA	EA	EA	EA	EA	EA	EA	EA	EA	LB	SY	TON	LF	LF						
22	a																									51.48														2.34		S	10' x 8' RCB w/ SUB EX	108.92' Lt "CLOA" 54+65.27 TO 86.47' Lt "CLOA" 54+61.65	D-2	22	a
	b																																										REMOVE RCB (PORTION)	99.00' Lt "CLOA" 54+63.67 TO 86.47' Lt "CLOA" 54+61.65			b
	c																																										REMOVE TRANSITION STRUCTURE	222.32' Lt "E" 152+72.81			c
	d																																										REMOVE CULVERT (PORTION)	223.22' Lt "E" 152+72.81 TO 215.04' Lt "E" 154+78.94			d
	e																																							6.95		S	10' x 8' RCB	223.22' Lt "E" 152+72.81 TO 215.04' Lt "E" 154+78.94	D-2		e
	f																																										TRANSITION STRUCTURE #2	215.04' Lt "E" 154+78.94	D-3		f
22	g																																										CLEAN AND INSPECT COA 120" PIPE	62.75' Lt "RWF" 54+83.19 TO 98.77' Rt "REN" 62+27.47	D-3	22	g
23	a																									47.22														7.01		S	10' x 8' RCB w/ SUB EX	106.91' Lt "CLOA" 54+78.38 TO 215.04' Lt "E" 154+78.94	D-2	23	a
	b								227.4																															5.90		S	120" RCP w/ SLURRY	215.04' Lt "E" 154+78.94 TO 187.41' Lt "E" 157+11.96	D-3		b
	c																																							16.81		S	120" JACKED RCP	187.41' Lt "E" 157+11.96 TO 126.88 Rt "E" 161+82.67			c
	d																																										REMOVE BULKHEAD	173.04' Rt "E" 162+40.84			d
	e																																										REMOVE CULVERT	173.04' Rt "E" 162+40.84 TO 178.89' Rt "E" 162+48.04			e
	f										22.4																											9.37		D	24" CSP w/ DD JOINTS	85.02' Lt "FT" 99+30.17 TO 99.38' Lt "FT" 99+48.02			f
23	g								85.5																															5.65		S	120" RCP	126.88' Rt "E" 161+82.67 TO 178.89' Rt "E" 162+48.04	D-3	23	g
24	a																																										CONCRETE LINED DITCH	37.33' Rt "REN" 57+27.03 TO 30.03' Rt "REN" 61+50.00	D-3	24	a
25	a																																										REMOVE CULVERT	45.19' Rt "ER" 157+79.98 TO 12.76' Rt "ER" 157+81.36	D-3	25	a
25	b																																										REMOVE INLET	12.76' Rt "ER" 157+81.36	D-3	25	b
26	a																																							13.76		S	30" APC	10.00' Lt "ER" 156+93.76 TO 12.07' Lt "ER" 160+60.00	D-3	26	a
	b																											2							634						11.56		GDOM INLET	12.07' Lt "ER" 160+60.00			b
	c																																							8.00		S	24" APC (B)	12.07' Lt "ER" 160+60.00 TO 12.75' Lt "ER" 161+80.00			c
	d																											2							634						8.84		GDOM INLET	12.75' Lt "ER" 161+80.00			d
	e																																							7.24		S	18" APC (B)	12.75' Lt "ER" 161+80.00 TO 13.02' Lt "ER" 162+41.59			e
	f																											1							326						8.16		G2 INLET	13.02' Lt "ER" 162+41.59			f
	g																																							6.56		S	18" APC (B)	13.02' Lt "ER" 162+41.59 TO 13.19' Lt "ER" 162+90.00			g
	h																											1							326						7.85		G2 INLET	13.19' Lt "ER" 162+90.00			h
	i																																							6.25		S	18" APC (B)	13.19' Lt "ER" 162+90.00 TO 13.40' Lt "ER" 163+75.00			i
	j																											1							326						7.48		G2 INLET	13.40' Lt "ER" 163+75.00			j
	k																																							5.88		S	18" APC (B)	13.40' Lt "ER" 163+75.00 TO 13.49' Lt "ER" 165+50.00			k
	l																											1							326						7.21		G2 INLET	13.49' Lt "ER" 165+50.00			l
	m																																							5.61		S	18" RCP CI V	13.49' Lt "ER" 165+50.00 TO 1.47' Lt "E" 165+45.00			m
26	n																											1							326						6.55		G2 INLET	1.47' Lt "E" 165+45.00	D-3	26	n
SHEET TOTAL									312.9		22.4														98.7			9							2898													

FOR NOTES, ABBREVIATIONS AND LEGEND, SEE SHEET DQ-1

DRAINAGE QUANTITIES
DQ-16

DAT NGUYEN	DQN	REVISED BY	
LUIS GARCIA	2/2/11	DATE REVISED	
CALCULATED-DESIGNED BY			
CHECKED BY			
CONSULTANT FUNCTIONAL SUPERVISOR			
NATALINA V. BERNARDI			

STATE OF CALIFORNIA - DEPARTMENT OF TRANSPORTATION

Caltrans

LAST REVISION 02-02-11 DATE PLOTTED =>13-JUN-2011 TIME PLOTTED =>10:08

Dist	COUNTY	ROUTE	POST MILES TOTAL PROJECT	SHEET No.	TOTAL SHEETS
04	CC	4	R26.6/R27.5	172	746

REGISTERED CIVIL ENGINEER 2/2/11 DATE

6-13-11
PLANS APPROVAL DATE

REGISTERED PROFESSIONAL ENGINEER N. V. BERNARDI No. 45407 Exp. 9/30/12 CIVIL STATE OF CALIFORNIA

THE STATE OF CALIFORNIA OR ITS OFFICERS OR AGENTS SHALL NOT BE RESPONSIBLE FOR THE ACCURACY OR COMPLETENESS OF SCANNED COPIES OF THIS PLAN SHEET.

BKF ENGINEERS
4670 WILLOW ROAD, SUITE 250
PLEASANTON, CA. 94588

CCTA
2999 OAK ROAD, SUITE 100
WALNUT CREEK, CA. 94597

DRAINAGE QUANTITIES

DRAINAGE SYSTEM No.	DRAINAGE UNIT	CLEAN DRAINAGE FACILITY	CLEAN AND INSPECT COA 72" PIPE	CLEAN AND INSPECT COA 120" PIPE	ABANDON CULVERT	REMOVE CULVERT	REMOVE DRAINAGE FACILITY	MODIFY INLET TO MANHOLE	ADJUST PARTIAL INLET TO GRADE	CAP INLET	REMOVE CONCRETE	SAND BACKFILL	SLURRY CEMENT BACKFILL	DITCH EXCAVATION	STRUCTURAL CONCRETE: BOX CULVERT	STRUCTURAL CONCRETE: HEADWALL/WINGWALL	STRUCTURAL CONCRETE: TRANSITION STRUCTURE	MINOR CONCRETE: MINOR STRUCTURE	MINOR CONCRETE: MISC CONSTRUCTION	MINOR CONCRETE: BACKFILL	MINOR CONCRETE: DITCH LINING	BAR REINFORCING STEEL: BOX CULVERT	BAR REINFORCING STEEL: HEADWALL/WINGWALL	BAR REINFORCING STEEL: TRANSITION STRUCTURE	APC: 12" APC	APC: 18" APC (A)	APC: 18" APC (B)	APC: 24" APC (A)	APC: 24" APC (B)	APC: 30" APC	RCP: 18" JACKED RCP	RCP: 24" JACKED RCP	RCP: 30" JACKED RCP	RCP: 120" JACKED RCP	RCP: 12" RCP	RCP: 18" RCP	RCP: 18" RCP CLASS V	DESCRIPTION	STATION	DRAINAGE PLAN SHEET No.	DRAINAGE SYSTEM No.	DRAINAGE UNIT
		EA	LS	LS	EA	LF	EA	EA	EA	EA	CY	CY	CY	CY	CY	CY	CY	CY	CY	CY	CY	LB	LB	LB	LF	LF	LF	LF	LF	LF	LF	LF	LF	LF	LF	LF	LF					
26	o																										245.2											18" APC (B)	13.49′ L+ "ER" 165+50.00 TO 12.81′ L+ "ER" 168+00.00	D-3	26	o
	p																	2.03																				G2 INLET	12.81′ L+ "ER" 168+00.00	D-4		p
	q																										278.3											18" APC (B)	12.81′ L+ "ER" 168+00.00 TO 10.91′ L+ "ER" 170+83.00			q
	r																	2.08																				G2 INLET	10.91′ L+ "ER" 170+83.00			r
	s																														54							18" JACKED RCP	10.00′ L+ "ER" 172+00.00 TO 46.00′ R+ "ER" 172+00.00			s
	t																	2.55																				G2MH-RW DI	72.00′ R+ "ER" 170+82.26			t
	u																																					12" WSP	72.00′ R+ "ER" 170+82.26 TO 75.27′ R+ "ER" 170+82.26			u
	v																	0.95																				G1 INLET w/ SO	75.27′ R+ "ER" 170+82.26			v
	w																										96.1											18" APC (B)	72.00′ R+ "ER" 172+00.00 72.00′ R+ "ER" 173+00.00			w
	x																	2.89																				G2MH-RW DI	72.00′ R+ "ER" 173+00.00			x
	y																										136.1											18" APC (B)	72.00′ R+ "ER" 173+00.00 TO 72.00′ R+ "ER" 174+40.00			y
	z																																					18" SCSP	72.00′ R+ "ER" 173+00.00 TO 72.00′ R+ "ER" 174+40.00			z
	aa																	2.63																				G2MH-RW DI	72.00′ R+ "ER" 174+40.00			aa
	bb																																					12" WSP	72.00′ R+ "ER" 172+00.00 TO 75.27′ R+ "ER" 172+00.00			bb
	cc																	1.17																				G1 INLET w/ SO	75.27′ R+ "ER" 172+00.00			cc
	dd																										160.1											18" APC (B)	72.00′ R+ "ER" 174+40.00 TO 72.00′ R+ "ER" 176+04.00			dd
	ee																	2.69																				GD1-RW	72.00′ R+ "ER" 176+04.00			ee
	ff																																					12" WSP	72.00′ R+ "ER" 176+04.00 TO 75.27′ R+ "ER" 176+04.00			ff
	gg																	1.17																				G1 INLET w/ SO	75.27′ R+ "ER" 176+04.00			gg
	hh																										112.9											18" APC (B)	10.91′ L+ "ER" 170+83.00 TO 10.00′ L+ "ER" 172+10.00			hh
	ii																	2.13																				G2 INLET	10.00′ L+ "ER" 172+00.00			ii
	jj																																				17.0	18" RCP Cl V	1.05′ L+ "E" 171+89.76 TO 10.00′ L+ "ER" 172+00.00			jj
	kk																	4.07																				G2 INLET	1.05′ L+ "E" 171+89.76			kk
	ll																										24.0											18" APC (B)	46.00′ R+ "ER" 172+00.00 TO 72.00′ R+ "ER" 172+00.00			ll
	mm																	3.11																				G2MH-RW DI	72.00′ R+ "ER" 172+10.00			mm
	nn																										115.2											18" APC (B)	72.00′ R+ "ER" 170+83.00 TO 72.00′ R+ "ER" 172+10.00			nn
26	oo																									225.25												18" APC (A)	72.00′ R+ "ER" 176+04.00 TO 100.00 R+ "E" 178+23.00	D-4	26	oo
27	a					25.3																																REMOVE CULVERT	60.10′ R+ "ER" 160+29.68 TO 34.98′ R+ "ER" 160+32.46	D-3	27	a
27	b						1																															REMOVE INLET	34.98′ R+ "ER" 160+32.46	D-3	27	b
28	a					103.9																																REMOVE CULVERT	72.31′ R+ "ER" 161+23.09 TO 0.91′ LT "E" 161+27.13	D-3	28	a
28	b						1																															REMOVE INLET	0.91′ LT "E" 161+27.13	D-3	28	b
29	a					57.0																																REMOVE CULVERT	29.07′ R+ "REN" 62+01.03 TO 27.19′ L+ "REN" 62+10.41	D-3	29	a
29	b						1																															REMOVE INLET	27.19′ L+ "REN" 62+10.41	D-3	29	b
30																																						NOT USED			30	
SHEET TOTAL						186.2	3											27.47								225.25	1167.9				54						17.0					

FOR NOTES, ABBREVIATIONS AND LEGEND, SEE SHEET DQ-1

DRAINAGE QUANTITIES
DQ-17

STATE OF CALIFORNIA - DEPARTMENT OF TRANSPORTATION

Caltrans

CONSULTANT FUNCTIONAL SUPERVISOR: NATALINA V. BERNARDI

CALCULATED-DESIGNED BY: DAT NGUYEN

CHECKED BY: LUIS GARCIA

REVISED BY: DQN

DATE REVISED: 2/2/11

LAST REVISION 02-02-11

DATE PLOTTED =>13-JUN-2011
TIME PLOTTED =>10:08

Dist	COUNTY	ROUTE	POST MILES TOTAL PROJECT	SHEET No.	TOTAL SHEETS
04	CC	4	R26.6/R27.5	173	746

REGISTERED CIVIL ENGINEER 2/2/11 DATE

6-13-11
PLANS APPROVAL DATE

REGISTERED PROFESSIONAL ENGINEER N. V. BERNARDI No. 45407 Exp. 9/30/12 CIVIL STATE OF CALIFORNIA

THE STATE OF CALIFORNIA OR ITS OFFICERS OR AGENTS SHALL NOT BE RESPONSIBLE FOR THE ACCURACY OR COMPLETENESS OF SCANNED COPIES OF THIS PLAN SHEET.

BKF ENGINEERS
4670 WILLOW ROAD, SUITE 250
PLEASANTON, CA. 94588

CCTA
2999 OAK ROAD, SUITE 100
WALNUT CREEK, CA. 94597

DRAINAGE QUANTITIES

DRAINAGE SYSTEM No.	DRAINAGE UNIT	RCP 24" RCP	RCP 24" RCP CLASS V	RCP 30" RCP	RCP 36" RCP	RCP 42" RCP	RCP 72" RCP	RCP 120" RCP	CSP Bit Ctd 12" (0.064" THICK)	CSP Bit Ctd 18" (0.064" THICK)	CSP Bit Ctd 24" (0.079" THICK)	CSP Bit Ctd 30" (0.064" THICK)	CSP Bit Ctd 36" (0.064" THICK)	CSP Bit Ctd 48" (0.079" THICK)	18" ASP	18" SCSP	GRATED LINE DRAIN	CANTILEVER WALL PRECAST Conc BOX CULVERT	12" WSP (0.25" THICK)	24" AFES	COA (TYPE C) INLET	6" PPP UD	3" CURB DRAIN	SIDEWALK CROSS DRAIN	ROCK SLOPE PROTECTION (FACING METHOD B)	CLASS 8 ROCK SLOPE PROTECTION FABRIC	AGGREGATE BASE (CLASS 3)	FRAME & COVER (N) 18-9	FRAME & COVER (N) 24-9	FRAME & COVER (N) 24-12	FRAME & COVER (N) 24-12X	FRAME & COVER (N) 36R	FRAME & COVER (N) U45	FRAME & COVER (N) U46	BOLTDOWN (N)	GRATE LOCKING DEVICE	MISCELLANEOUS IRON AND STEEL	PLACE HMA MISCELLANEOUS AREA	HMA (TYPE A)	MAXIMUM COVER (N)	HEIGHT OF INLET "H" (N)	PIPE JOINT CLASSIFICATION (N)	DESCRIPTION	STATION	DRAINAGE PLAN SHEET No.	DRAINAGE SYSTEM No.	DRAINAGE UNIT
		LF	LF	LF	LF	LF	LF	LF	LF	LF	LF	LF	LF	LF	LF	LF	LF	LF	LF	EA	EA	LF	LF	EA	CY	SY	CY	EA	EA	EA	EA	EA	EA	EA	EA	EA	LB	SY	TON	LF	LF						
26	o																																							4.38		S	18" APC (B)	13.49′ Lt "ER" 165+50.00 TO 12.81′ Lt "ER" 168+00.00	D-3	26	o
	p																													1						326				5.81		G2 INLET	12.81′ Lt "ER" 168+00.00	D-4		p
	q																																							4.53		S	18" APC (B)	12.81′ Lt "ER" 168+00.00 TO 10.91′ Lt "ER" 170+83.00			q
	r																													1						326				6.03		G2 INLET	10.91′ Lt "ER" 170+83.00			r
	s																																							5.23		S	18" JACKED RCP	10.00′ Lt "ER" 172+00.00 TO 46.00′ Rt "ER" 172+00.00			s
	t																													1			1		1	761				4.4		G2MH-RW DI	72.00′ Rt "ER" 170+82.26			t
	u																		19.3																					16.76			12" WSP	72.00′ Rt "ER" 170+82.26 TO 75.27′ Rt "ER" 170+82.26			u
	v																												1							263				3.00		G1 INLET w/ SO	75.27′ Rt "ER" 170+82.26			v
	w																																							5.58		S	18" APC (B)	72.00′ Rt "ER" 172+10.00 72.00′ Rt "ER" 173+00.00			w
	x																													1			1		1	761				6.31		G2MH-RW DI	72.00′ Rt "ER" 173+00.00			x
	y																																							3.80		S	18" APC (B)	72.00′ Rt "ER" 173+00.00 TO 72.00′ Rt "ER" 174+40.00			y
	z															136.1																										18" SCSP	72.00′ Rt "ER" 173+00.00 TO 72.00′ Rt "ER" 174+40.00			z
	aa																													1			1		1	761				5.30		G2MH-RW DI	72.00′ Rt "ER" 174+40.00			aa
	bb																		17.5																					15.71			12" WSP	72.00′ Rt "ER" 172+00.00 TO 75.27′ Rt "ER" 172+00.00			bb
	cc																												1							263				4.00		G1 INLET w/ SO	75.27′ Rt "ER" 172+00.00			cc
	dd																																							3.70		S	18" APC (B)	72.00′ Rt "ER" 174+40.00 TO 72.00′ Rt "ER" 176+04.00			dd
	ee																													2						634				4.40		GD1-RW	72.00′ Rt "ER" 176+04.00			ee
	ff																		9.6																					7.69			12" WSP	72.00′ Rt "ER" 176+04.00 TO 75.27′ Rt "ER" 176+04.00			ff
	gg																												1							263				4.00		G1 INLET w/ SO	75.27′ Rt "ER" 176+04.00			gg
	hh																																							4.90		S	18" APC (B)	10.91′ Lt "ER" 170+83.00 TO 10.00′ Lt "ER" 172+10.00			hh
	ii																													1						326				6.24		G2 INLET	10.00′ Lt "ER" 172+00.00			ii
	jj																																							4.52		S	18" RCP Cl V	1.05′ Lt "E" 171+89.76 TO 10.00′ Lt "ER" 172+00.00			jj
	kk																													1						326				5.50		G2 INLET	1.05′ Lt "E" 171+89.76			kk
	ll																																							5.42		S	18" APC (B)	46.00′ Rt "ER" 172+00.00 TO 72.00′ Rt "ER" 172+00.00			ll
	mm																													1			1		1	761				7.08		G2MH-RW DI	72.00′ Rt "ER" 172+10.00			mm
	nn																																							3.19		S	18" APC (B)	72.00′ Rt "ER" 170+83.00 TO 72.00′ Rt "ER" 172+10.00			nn
26	oo																																							2.80		S	18" APC (A)	72.00′ Rt "ER" 176+04.00 TO 100.00 Rt "E" 178+23.00	D-4	26	oo
27	a																																										REMOVE CULVERT	60.10′ Rt "ER" 160+29.68 TO 34.98′ Rt "ER" 160+32.46	D-3	27	a
27	b																																										REMOVE INLET	34.98′ Rt "ER" 160+32.46	D-3	27	b
28	a																																										REMOVE CULVERT	72.31′ Rt "ER" 161+23.09 TO 0.91′ LT "E" 161+27.13	D-3	28	a
28	b																																										REMOVE INLET	0.91′ LT "E" 161+27.13	D-3	28	b
29	a																																										REMOVE CULVERT	29.07′ Rt "REN" 62+01.03 TO 27.19′ Lt "REN" 62+10.41	D-3	29	a
29	b																																										REMOVE INLET	27.19′ Lt "REN" 62+10.41	D-3	29	b
30																																											NOT USED			30	
SHEET TOTAL																136.1			46.4										3	10		4		4	5771											

DRAINAGE QUANTITIES
DQ-18

FOR NOTES, ABBREVIATIONS AND LEGEND, SEE SHEET DQ-1

DAT NGUYEN	DQN
LUIS GARCIA	2/2/11
REVISED BY	
DATE REVISED	
CALCULATED-DESIGNED BY	
CHECKED BY	
CONSULTANT FUNCTIONAL SUPERVISOR	
NATALINA V. BERNARDI	

STATE OF CALIFORNIA - DEPARTMENT OF TRANSPORTATION

Caltrans

LAST REVISION 02-02-11
DATE PLOTTED => 13-JUN-2011
TIME PLOTTED => 10:09

Dist	COUNTY	ROUTE	POST MILES TOTAL PROJECT	SHEET No.	TOTAL SHEETS
04	CC	4	R26.6/R27.5	174	746

REGISTERED CIVIL ENGINEER 2/2/11 DATE

6-13-11
PLANS APPROVAL DATE

REGISTERED PROFESSIONAL ENGINEER N. V. BERNARDI No. 45407 Exp. 9/30/12 CIVIL STATE OF CALIFORNIA

THE STATE OF CALIFORNIA OR ITS OFFICERS OR AGENTS SHALL NOT BE RESPONSIBLE FOR THE ACCURACY OR COMPLETENESS OF SCANNED COPIES OF THIS PLAN SHEET.

BKF ENGINEERS
4670 WILLOW ROAD, SUITE 250
PLEASANTON, CA. 94588

CCTA
2999 OAK ROAD, SUITE 100
WALNUT CREEK, CA. 94597

DRAINAGE QUANTITIES

DRAINAGE SYSTEM No.	DRAINAGE UNIT	CLEAN DRAINAGE FACILITY	CLEAN AND INSPECT COA 72" PIPE	CLEAN AND INSPECT COA 120" PIPE	ABANDON CULVERT	REMOVE CULVERT	REMOVE DRAINAGE FACILITY	MODIFY INLET TO MANHOLE	ADJUST PARTIAL INLET TO GRADE	CAP INLET	REMOVE CONCRETE	SAND BACKFILL	SLURRY CEMENT BACKFILL	DITCH EXCAVATION	STRUCTURAL CONCRETE: BOX CULVERT	STRUCTURAL CONCRETE: HEADWALL/WINGWALL	STRUCTURAL CONCRETE: TRANSITION STRUCTURE	MINOR CONCRETE: MINOR STRUCTURE	MINOR CONCRETE: MISC CONSTRUCTION	MINOR CONCRETE: BACKFILL	MINOR CONCRETE: DITCH LINING	BAR REINFORCING STEEL: BOX CULVERT	BAR REINFORCING STEEL: HEADWALL/WINGWALL	BAR REINFORCING STEEL: TRANSITION STRUCTURE	APC: 12" APC	APC: 18" APC (A)	APC: 18" APC (B)	APC: 24" APC (A)	APC: 24" APC (B)	APC: 30" APC	RCP: 18" JACKED RCP	RCP: 24" JACKED RCP	RCP: 30" JACKED RCP	RCP: 120" JACKED RCP	RCP: 12" RCP	RCP: 18" RCP	RCP: 18" RCP CLASS V	DESCRIPTION	STATION	DRAINAGE PLAN SHEET No.	DRAINAGE SYSTEM No.	DRAINAGE UNIT
		EA	LS	LS	EA	LF	EA	EA	EA	EA	CY	CY	CY	CY	CY	CY	CY	CY	CY	CY	CY	LB	LB	LB	LF	LF	LF	LF	LF	LF	LF	LF	LF	LF	LF	LF	LF					
31	a																																					24" RCP CI V	12.07' Lt "ER" 160+60.00 TO 1.84' Lt "ER" 160+60.00	D-3	31	a
	b																	4.78																				G2 INLET	1.84' Lt "ER" 160+60.00			b
	c																																					NOT USED				c
	d																															60.8						24" JACKED RCP	1.84' Lt "E" 160+60.00 TO 34.23' Rt "EL" 160+56.22			d
	e																												51.4									24" APC (B)	34.23' "EL" 160+56.22 TO 89.09' Lt "EL" 160+55.00			e
	f																	2.55																				G2 INLET	89.09' Lt "EL" 160+55.00			f
	g																												158.1									24" APC (B)	89.09' Lt "EL" 160+55.00 TO 75.91' Lt "EL" 162+20.00			g
	h																	2.17																				G2 INLET	75.91' Lt "EL" 162+20.00			h
	i																												60.0									24" APC (B)	75.91' Lt "EL" 162+20.00 TO 72.20' Lt "EL" 162+85.00			i
	j																	2.14																				G2 INLET	72.20' Lt "EL" 162+85.00			j
	k																												83.5									24" APC (B)	72.20' Lt "EL" 162+85.00 TO 71.54' Lt "EL" 163+74.00			k
	l																	1.98																				G2 INLET	71.54' Lt "EL" 163+74.00			l
	m																												117.1									24" APC (B)	71.54' Lt "EL" 163+74.00 TO 70.00' Lt "EL" 164+97.45			m
	n																	1.84																				G2 INLET	70.00' Lt "EL" 164+97.45			n
	o																																					18" ASP	72.20' Lt "EL" 162+85.00 TO 71.54' Lt "EL" 163+74.00			o
	p																																					12" WSP	71.54' Lt "EL" 163+74.00 TO 75.10' Lt "EL" 163+74.00			p
	q																	1.36																				G1 INLET w/ SO	71.54' Lt "EL" 163+74.00			q
	r																																					18" ASP	71.54' Lt "EL" 163+74.00 TO 70.00' Lt "EL" 164+97.45			r
	s																																					12" WSP	70.00' Lt "EL" 165+08.00 TO 73.40' Lt "EL" 164+97.45			s
	t																	0.95																				G1 INLET w/ 2SO	73.40' Lt "EL" 164+97.45			t
	u																												195.0									24" APC (B)	70.00' Lt "EL" 164+97.45 TO 70.00' Lt "EL" 167+00.00	D-3		u
	v																	2.18																				GDOM INLET	70.00' Lt "EL" 167+00.00	D-4		v
	w																												261.3									24" APC (B)	70.00' Lt "EL" 167+00.00 TO 70.00' Lt "EL" 169+74.00			w
	x																	2.05																				G2 INLET	70.00' Lt "EL" 169+74.00			x
	y																																					12" WSP	70.00' Lt "EL" 169+74.00 TO 73.40' Lt "EL" 169+74.00			y
	z																	1.64																				G1 INLET w/ 2SO	73.40' Lt "EL" 169+74.00			z
	aa																										152.1											18" APC (B)	70.00' Lt "EL" 169+74.00 TO 70.00' Lt "EL" 171+30.00			aa
	bb																	1.69																				G2 INLET	70.00' Lt "EL" 171+30.00			bb
	cc																																					12" WSP	70.00' Lt "EL" 171+30.00 TO 24.46' Rt G 111+56.73			cc
	dd																																					COA (TYPE C) DI w/ DIM	24.46' Rt "G" 111+56.73			dd
	ee																								46.1													12" APC	24.46' Rt "G" 111+56.73 TO 26.81' Lt "G" 111+76.83			ee
	ff																																					COA (TYPE C) DI w/ DIM	26.81' Lt "G" 111+76.83			ff
	gg																										45.06											18" APC (B)	70.00' Lt "EL" 171+30.00 TO 72.00' Lt "EL" 173+02.00			gg
	hh																	1.69																				G2 INLET	72.00' Lt "EL" 173+02.00			hh
31	ii																										168.0											18" APC (B)	72.00' Lt "EL" 173+02.00 TO 72.00' Lt "EL" 174+75.00	D-4	31	ii
SHEET TOTAL																		27.02							46.1		365.16		926.4			60.8										

DRAINAGE QUANTITIES
DQ-19

FOR NOTES, ABBREVIATIONS AND LEGEND, SEE SHEET DQ-1

STATE OF CALIFORNIA - DEPARTMENT OF TRANSPORTATION
Caltrans

CONSULTANT FUNCTIONAL SUPERVISOR: NATALINA V. BERNARDI

CALCULATED-DESIGNED BY: DAT NGUYEN
CHECKED BY: LUIS GARCIA

REVISED BY: DQN
DATE REVISED: 2/2/11

LAST REVISION 02-02-11
DATE PLOTTED => 13-JUN-2011
TIME PLOTTED => 10:09

Dist	COUNTY	ROUTE	POST MILES TOTAL PROJECT	SHEET No.	TOTAL SHEETS
04	CC	4	R26.6/R27.5	175	746

REGISTERED CIVIL ENGINEER 2/2/11 DATE

6-13-11
PLANS APPROVAL DATE

REGISTERED PROFESSIONAL ENGINEER N. V. BERNARDI No. 45407 Exp. 9/30/12 CIVIL STATE OF CALIFORNIA

THE STATE OF CALIFORNIA OR ITS OFFICERS OR AGENTS SHALL NOT BE RESPONSIBLE FOR THE ACCURACY OR COMPLETENESS OF SCANNED COPIES OF THIS PLAN SHEET.

BKF ENGINEERS
4670 WILLOW ROAD, SUITE 250
PLEASANTON, CA. 94588

CCTA
2999 OAK ROAD, SUITE 100
WALNUT CREEK, CA. 94597

DRAINAGE QUANTITIES

DRAINAGE SYSTEM No.	DRAINAGE UNIT	RCP 24" RCP	RCP 24" RCP CLASS V	RCP 30" RCP	RCP 36" RCP	RCP 42" RCP	RCP 72" RCP	RCP 120" RCP	CSP Bit Ctd 12" (0.064" THICK)	CSP Bit Ctd 18" (0.064" THICK)	CSP Bit Ctd 24" (0.079" THICK)	CSP Bit Ctd 30" (0.064" THICK)	CSP Bit Ctd 36" (0.064" THICK)	CSP Bit Ctd 48" (0.079" THICK)	18" ASP	18" SCSP	GRATED LINE DRAIN	CANTILEVER WALL PRECAST Conc BOX CULVERT	12" WSP (0.25" THICK)	24" AFES	COA (TYPE C) INLET	6" PPP UD	3" CURB DRAIN	SIDEWALK CROSS DRAIN	ROCK SLOPE PROTECTION (FACING METHOD B)	CLASS 8 ROCK SLOPE PROTECTION FABRIC	AGGREGATE BASE (CLASS 3)	FRAME & COVER (N) 18-9	FRAME & COVER (N) 24-9	FRAME & COVER (N) 24-12	FRAME & COVER (N) 24-12X	FRAME & COVER (N) 36R	FRAME & COVER (N) U45	FRAME & COVER (N) U46	BOLTDOWN (N)	GRATE LOCKING DEVICE	MISCELLANEOUS IRON AND STEEL	PLACE HMA MISCELLANEOUS AREA	HMA (TYPE A)	MAXIMUM COVER (N)	HEIGHT OF INLET "H" (N)	PIPE JOINT CLASSIFICATION (N)	DESCRIPTION	STATION	DRAINAGE PLAN SHEET No.	DRAINAGE SYSTEM No.	DRAINAGE UNIT
		LF	LF	LF	LF	LF	LF	LF	LF	LF	LF	LF	LF	LF	LF	LF	LF	LF	LF	EA	EA	LF	LF	EA	CY	SY	CY	EA	EA	EA	EA	EA	EA	EA	EA	EA	LB	SY	TON	LF	LF						
31	a		19.1																																					9.56		S	24" RCP CI V	12.07' Lt "ER" 160+60.00 TO 1.84' Lt "ER" 160+60.00	D-3	31	a
	b																													1						326				11.55		G2 INLET	1.84' Lt "ER" 160+60.00			b
	c																																									NOT USED				c
	d																																							9.20		S	24" JACKED RCP	1.84' Lt "E" 160+60.00 TO 34.23' Rt "EL" 160+56.22			d
	e																																							7.46		S	24" APC (B)	34.23' "EL" 160+56.22 TO 89.09' Lt "EL" 160+55.00			e
	f																													1						326				7.86		G2 INLET	89.09' Lt "EL" 160+55.00			f
	g																																							5.86		S	24" APC (B)	89.09' Lt "EL" 160+55.00 TO 75.91' Lt "EL" 162+20.00			g
	h																													1						326				6.69		G2 INLET	75.91' Lt "EL" 162+20.00			h
	i																																							4.59		S	24" APC (B)	75.91' Lt "EL" 162+20.00 TO 72.20' Lt "EL" 162+85.00			i
	j																													1						326				6.25		G2 INLET	72.20' Lt "EL" 162+85.00			j
	k																																							4.15		S	24" APC (B)	72.20' Lt "EL" 162+85.00 TO 71.54' Lt "EL" 163+74.00			k
	l																													1						326				5.63		G2 INLET	71.54' Lt "EL" 163+74.00			l
	m																																							3.53		S	24" APC (B)	71.54' Lt "EL" 163+74.00 TO 70.00' Lt "EL" 164+97.45			m
	n																													1						326				5.09		G2 INLET	70.00' Lt "EL" 164+97.45			n
	o														83.4																												18" ASP	72.20' Lt "EL" 162+85.00 TO 71.54' Lt "EL" 163+74.00			o
	p																		2.9																				3.85			12" WSP	71.54' Lt "EL" 163+74.00 TO 75.10' Lt "EL" 163+74.00			p
	q																												1							263				4.85		G1 INLET w/ SO	71.54' Lt "EL" 163+74.00			q
	r														117.1																									0.50			18" ASP	71.54' Lt "EL" 163+74.00 TO 70.00' Lt "EL" 164+97.45			r
	s																		19.8																				16.23			12" WSP	70.00' Lt "EL" 165+08.00 TO 73.40' Lt "EL" 164+97.45			s
	t																												1							263				3.00		G1 INLET w/ 2SO	73.40' Lt "EL" 164+97.45			t
	u																																							3.04		S	24" APC (B)	70.00' Lt "EL" 164+97.45 TO 70.00' Lt "EL" 167+00.00	D-3		u
	v																													2						634				4.74		GDOM INLET	70.00' Lt "EL" 167+00.00	D-4		v
	w																																							3.90		S	24" APC (B)	70.00' Lt "EL" 167+00.00 TO 70.00' Lt "EL" 169+74.00			w
	x																													1						326				5.90		G2 INLET	70.00' Lt "EL" 169+74.00			x
	y																		2.9																				5.25			12" WSP	70.00' Lt "EL" 169+74.00 TO 73.40' Lt "EL" 169+74.00			y
	z																												1							263				6.13		G1 INLET w/ 2SO	73.40' Lt "EL" 169+74.00			z
	aa																																							2.90		S	18" APC (B)	70.00' Lt "EL" 169+74.00 TO 70.00' Lt "EL" 171+30.00			aa
	bb																													1						326				4.50		G2 INLET	70.00' Lt "EL" 171+30.00			bb
	cc																		52.1																				9.23			12" WSP	70.00' Lt "EL" 171+30.00 TO 24.46' Rt "G" 111+56.73			cc
	dd																				1																			5.32		COA (TYPE C) DI w/ DIM	24.46' Rt "G" 111+56.73			dd
	ee																																							4.22		S	12" APC	24.46' Rt "G" 111+56.73 TO 26.81' Lt "G" 111+76.83			ee
	ff																				1																			3.90			COA (TYPE C) DI w/ DIM	26.81' Lt "G" 111+76.83			ff
	gg																																							2.85		S	18" APC (B)	70.00' Lt "EL" 171+30.00 TO 72.00' Lt "EL" 173+02.00			gg
	hh																													1						326				4.50		G2 INLET	72.00' Lt "EL" 173+02.00			hh
31	ii																																							2.80		S	18" APC (B)	72.00' Lt "EL" 173+02.00 TO 72.00' Lt "EL" 174+75.00	D-4	31	ii
SHEET TOTAL			19.1												200.5				77.7		2								3	11						4357											

DRAINAGE QUANTITIES
DQ-20

FOR NOTES, ABBREVIATIONS AND LEGEND, SEE SHEET DQ-1

REVISED BY	DQN
DATE REVISED	2/2/11
CALCULATED-DESIGNED BY	DAT NGUYEN
CHECKED BY	LUIS GARCIA
CONSULTANT FUNCTIONAL SUPERVISOR	NATALINA V. BERNARDI

STATE OF CALIFORNIA - DEPARTMENT OF TRANSPORTATION

Caltrans

LAST REVISION 02-02-11
DATE PLOTTED => 13-JUN-2011
TIME PLOTTED => 10:09

Dist	COUNTY	ROUTE	POST MILES TOTAL PROJECT	SHEET No.	TOTAL SHEETS
04	CC	4	R26.6/R27.5	176	746

REGISTERED CIVIL ENGINEER 2/2/11 DATE

6-13-11
PLANS APPROVAL DATE

REGISTERED PROFESSIONAL ENGINEER N. V. BERNARDI No. 45407 Exp. 9/30/12 CIVIL STATE OF CALIFORNIA

THE STATE OF CALIFORNIA OR ITS OFFICERS OR AGENTS SHALL NOT BE RESPONSIBLE FOR THE ACCURACY OR COMPLETENESS OF SCANNED COPIES OF THIS PLAN SHEET.

BKF ENGINEERS
4670 WILLOW ROAD, SUITE 250
PLEASANTON, CA. 94588

CCTA
2999 OAK ROAD, SUITE 100
WALNUT CREEK, CA. 94597

DRAINAGE QUANTITIES

DRAINAGE SYSTEM No.	DRAINAGE UNIT	CLEAN DRAINAGE FACILITY	CLEAN AND INSPECT COA 72" PIPE	CLEAN AND INSPECT COA 120" PIPE	ABANDON CULVERT	REMOVE CULVERT	REMOVE DRAINAGE FACILITY	MODIFY INLET TO MANHOLE	ADJUST PARTIAL INLET TO GRADE	CAP INLET	REMOVE CONCRETE	SAND BACKFILL	SLURRY CEMENT BACKFILL	DITCH EXCAVATION	STRUCTURAL CONCRETE BOX CULVERT	STRUCTURAL CONCRETE HEADWALL/WINGWALL	STRUCTURAL CONCRETE TRANSITION STRUCTURE	MINOR CONCRETE MINOR STRUCTURE	MINOR CONCRETE MISC CONSTRUCTION	MINOR CONCRETE BACKFILL	MINOR CONCRETE DITCH LINING	BAR REINFORCING STEEL BOX CULVERT	BAR REINFORCING STEEL HEADWALL/WINGWALL	BAR REINFORCING STEEL TRANSITION STRUCTURE	APC 12" APC	APC 18" APC (A)	APC 18" APC (B)	APC 24" APC (A)	APC 24" APC (B)	APC 30" APC	RCP 18" JACKED RCP	RCP 24" JACKED RCP	RCP 30" JACKED RCP	RCP 120" JACKED RCP	RCP 12" RCP	RCP 18" RCP	RCP 18" RCP CLASS V	DESCRIPTION	STATION	DRAINAGE PLAN SHEET No.	DRAINAGE SYSTEM No.	DRAINAGE UNIT
		EA	LS	LS	EA	LF	EA	EA	EA	EA	CY	CY	CY	CY	CY	CY	CY	CY	CY	CY	CY	LB	LB	LB	LF	LF	LF	LF	LF	LF	LF	LF	LF	LF	LF	LF	LF					
31	jj																	1.70																				G2 INLET	72.00′ L+ "EL" 174+75.00	D-3	31	jj
	kk																										220.6											18" APC (B)	72.00′ L+ "EL" 174+75.00 TO 72.00′ L+ "EL" 177+00.00			kk
	ll																	1.93																				G2 INLET	72.00′ L+ "EL" 177+00.00			ll
	mm																										224.7											18" APC (B)	72.00′ L+ "EL" 177+00.00 TO 100.00′ L+ "E" 178+95.00			mm
	nn																	2.10																				G2 INLET	100.00′ L+ "E" 178+95.00			nn
	oo																										118.6											18" APC (B)	72.00′ L+ "EL" 173+02.00 TO 70.00′ L+ "EL" 171+78.96			oo
31	pp																	1.68																				G2 INLET	70.00′ L+ "EL" 171+78.96	D-3	31	pp
32	a						1																															REMOVE INLET	37.28′ L+ "EL" 162+52.94	D-3	32	a
32	b					31.2																																REMOVE CULVERT	40.31′ L+ "EL" 162+52.56 TO 62.12′ L+ "EL" 162+29.91	D-3	32	b
33	a					128.4																																REMOVE CULVERT	55.63′ R+ "REN" 63+61.36 TO 9.91′ L+ "ER" 164+14.99	D-3	33	a
	b						1																															REMOVE INLET	13.15′ L+ "ER" 164+16.09			b
	c					48.4																																REMOVE CULVERT	15.06′ R+ "E" 164+12.87 TO 1.46′ L+ "EL" 164+24.12			c
33	d						1																															REMOVE INLET	4.36′ L+ "EL" 164+25.56	D-3	33	d
	e																																					NOT USED				e
	f																																					NOT USED				f
	g																																					NOT USED				g
	h																																					NOT USED				h
	i																																					NOT USED				i
	j																																					NOT USED				j
	k																																					NOT USED				k
	l																																					NOT USED				l
	m																																					NOT USED				m
	n																																					NOT USED				n
	o																																					NOT USED				o
	p																																					NOT USED				p
	q																																					NOT USED				q
	r																																					NOT USED				r
	s																																					NOT USED				s
	t																																					NOT USED				t
	u																																					NOT USED				u
	v																																					NOT USED				v
	w																																					NOT USED				w
	x																																					NOT USED				x
SHEET TOTAL						208	3											7.41									563.9																

DRAINAGE QUANTITIES
DQ-21

FOR NOTES, ABBREVIATIONS AND LEGEND, SEE SHEET DQ-1

STATE OF CALIFORNIA - DEPARTMENT OF TRANSPORTATION
Caltrans

CONSULTANT FUNCTIONAL SUPERVISOR: NATALINA V. BERNARDI

CALCULATED-DESIGNED BY: DAT NGUYEN
CHECKED BY: LUIS GARCIA

REVISED BY: DQN
DATE REVISED: 2/2/11

LAST REVISION 02-02-11
DATE PLOTTED => 13-JUN-2011
TIME PLOTTED => 12:37

Dist	COUNTY	ROUTE	POST MILES TOTAL PROJECT	SHEET No.	TOTAL SHEETS
04	CC	4	R26.6/R27.5	177	746

REGISTERED CIVIL ENGINEER 2/2/11 DATE

6-13-11
PLANS APPROVAL DATE

REGISTERED PROFESSIONAL ENGINEER N. V. BERNARDI No. 45407 Exp. 9/30/12 CIVIL STATE OF CALIFORNIA

THE STATE OF CALIFORNIA OR ITS OFFICERS OR AGENTS SHALL NOT BE RESPONSIBLE FOR THE ACCURACY OR COMPLETENESS OF SCANNED COPIES OF THIS PLAN SHEET.

BKF ENGINEERS
4670 WILLOW ROAD, SUITE 250
PLEASANTON, CA. 94588

CCTA
2999 OAK ROAD, SUITE 100
WALNUT CREEK, CA. 94597

DRAINAGE QUANTITIES

DRAINAGE SYSTEM No.	DRAINAGE UNIT	RCP 24" RCP	RCP 24" RCP CLASS V	RCP 30" RCP	RCP 36" RCP	RCP 42" RCP	RCP 72" RCP	RCP 120" RCP	CSP Bit Ctd 12" (0.064" THICK)	CSP Bit Ctd 18" (0.064" THICK)	CSP Bit Ctd 24" (0.079" THICK)	CSP Bit Ctd 30" (0.064" THICK)	CSP Bit Ctd 36" (0.064" THICK)	CSP Bit Ctd 48" (0.079" THICK)	18" ASP	18" SCSP	GRATED LINE DRAIN	CANTILEVER WALL PRECAST Conc BOX CULVERT	12" WSP (0.25" THICK)	24" AFES	COA (TYPE C) INLET	6" PPP UD	3" CURB DRAIN	SIDEWALK CROSS DRAIN	ROCK SLOPE PROTECTION (FACING METHOD B)	CLASS 8 ROCK SLOPE PROTECTION FABRIC	AGGREGATE BASE (CLASS 3)	FRAME & COVER (N) 18-9	FRAME & COVER (N) 24-9	FRAME & COVER (N) 24-12	FRAME & COVER (N) 24-12X	FRAME & COVER (N) 36R	FRAME & COVER (N) U45	FRAME & COVER (N) U46	BOLTDOWN (N)	GRATE LOCKING DEVICE	MISCELLANEOUS IRON AND STEEL	PLACE HMA MISCELLANEOUS AREA	HMA (TYPE A)	MAXIMUM COVER (N)	HEIGHT OF INLET "H" (N)	PIPE JOINT CLASSIFICATION (N)	DESCRIPTION	STATION	DRAINAGE PLAN SHEET No.	DRAINAGE SYSTEM No.	DRAINAGE UNIT
		LF	LF	LF	LF	LF	LF	LF	LF	LF	LF	LF	LF	LF	LF	LF	LF	LF	LF	EA	EA	LF	LF	EA	CY	SY	CY	EA	EA	EA	EA	EA	EA	EA	EA	EA	LB	SY	TON	LF	LF						
31	jj																													1							326				4.53		G2 INLET	72.00′ Lt "EL" 174+75.00	D-3	31	jj
	kk																																							3.94		S	18" APC (B)	72.00′ Lt "EL" 174+75.00 TO 72.00′ Lt "EL" 177+00.00			kk
	ll																													1							326				5.44		G2 INLET	72.00′ Lt "EL" 177+00.00			ll
	mm																																							4.15		S	18" APC (B)	72.00′ Lt "EL" 177+00.00 TO 100.00′ Lt "E" 178+95.00			mm
	nn																													1							326				6.11		G2 INLET	100.00′ Lt "E" 178+95.00			nn
	oo																																							2.90		S	18" APC (B)	72.00′ Lt "EL" 173+02.00 TO 70.00′ Lt "EL" 171+78.96			oo
31	pp																													1							326				4.46		G2 INLET	70.00′ Lt "EL" 171+78.96	D-3	31	pp
32	a																																										REMOVE INLET		D-3	32	a
32	b																																										REMOVE CULVERT	40.31′ Lt "EL" 162+52.56 TO 62.12′ Lt "EL" 162+29.91	D-3	32	b
33	a																																										REMOVE CULVERT	55.63′ Rt "REN" 63+61.36 TO 9.91′ Lt "ER" 164+14.99	D-3	33	a
	b																																										REMOVE INLET	13.15′ Lt "ER" 164+16.09			b
	c																																										REMOVE CULVERT	15.06′ Rt "E" 164+12.87 TO 1.46′ Lt "EL" 164+24.12			c
33	d																																										REMOVE INLET	4.36′ Lt "EL" 164+25.56	D-3	33	d
	e																																										NOT USED				e
	f																																										NOT USED				f
	g																																										NOT USED				g
	h																																										NOT USED				h
	i																																										NOT USED				i
	j																																										NOT USED				j
	k																																										NOT USED				k
	l																																										NOT USED				l
	m																																										NOT USED				m
	n																																										NOT USED				n
	o																																										NOT USED				o
	p																																										NOT USED				p
	q																																										NOT USED				q
	r																																										NOT USED				r
	s																																										NOT USED				s
	t																																										NOT USED				t
	u																																										NOT USED				u
	v																																										NOT USED				v
	w																																										NOT USED				w
	x																																										NOT USED				x
SHEET TOTAL																														4							1304											

DRAINAGE QUANTITIES
DQ-22

FOR NOTES, ABBREVIATIONS AND LEGEND, SEE SHEET DQ-1

STATE OF CALIFORNIA - DEPARTMENT OF TRANSPORTATION
Caltrans

CONSULTANT FUNCTIONAL SUPERVISOR: NATALINA V. BERNARDI

CALCULATED-DESIGNED BY: DAT NGUYEN
CHECKED BY: LUIS GARCIA

REVISED BY: DQN
DATE REVISED: 2/2/11

LAST REVISION 02-02-11
DATE PLOTTED => 13-JUN-2011
TIME PLOTTED => 12:37

Dist	COUNTY	ROUTE	POST MILES TOTAL PROJECT	SHEET No.	TOTAL SHEETS
04	CC	4	R26.6/R27.5	178	746

REGISTERED CIVIL ENGINEER 2/2/11 DATE

6-13-11
PLANS APPROVAL DATE

REGISTERED PROFESSIONAL ENGINEER N. V. BERNARDI No. 45407 Exp. 9/30/12 CIVIL STATE OF CALIFORNIA

THE STATE OF CALIFORNIA OR ITS OFFICERS OR AGENTS SHALL NOT BE RESPONSIBLE FOR THE ACCURACY OR COMPLETENESS OF SCANNED COPIES OF THIS PLAN SHEET.

BKF ENGINEERS
4670 WILLOW ROAD, SUITE 250
PLEASANTON, CA. 94588

CCTA
2999 OAK ROAD, SUITE 100
WALNUT CREEK, CA. 94597

DRAINAGE QUANTITIES

DRAINAGE SYSTEM No.	DRAINAGE UNIT	CLEAN DRAINAGE FACILITY	CLEAN AND INSPECT COA 72" PIPE	CLEAN AND INSPECT COA 120" PIPE	ABANDON CULVERT	REMOVE CULVERT	REMOVE DRAINAGE FACILITY	MODIFY INLET TO MANHOLE	ADJUST PARTIAL INLET TO GRADE	CAP INLET	REMOVE CONCRETE	SAND BACKFILL	SLURRY CEMENT BACKFILL	DITCH EXCAVATION	STRUCTURAL CONCRETE: BOX CULVERT	STRUCTURAL CONCRETE: HEADWALL/WINGWALL	STRUCTURAL CONCRETE: TRANSITION STRUCTURE	MINOR CONCRETE: MINOR STRUCTURE	MINOR CONCRETE: MISC CONSTRUCTION	MINOR CONCRETE: BACKFILL	MINOR CONCRETE: DITCH LINING	BAR REINFORCING STEEL: BOX CULVERT	BAR REINFORCING STEEL: HEADWALL/WINGWALL	BAR REINFORCING STEEL: TRANSITION STRUCTURE	APC: 12" APC	APC: 18" APC (A)	APC: 18" APC (B)	APC: 24" APC (A)	APC: 24" APC (B)	APC: 30" APC	RCP: 18" JACKED RCP	RCP: 24" JACKED RCP	RCP: 30" JACKED RCP	RCP: 120" JACKED RCP	RCP: 12" RCP	RCP: 18" RCP	RCP: 18" RCP CLASS V	DESCRIPTION	STATION	DRAINAGE PLAN SHEET No.	DRAINAGE SYSTEM No.	DRAINAGE UNIT
		EA	LS	LS	EA	LF	EA	EA	EA	EA	CY	CY	CY	CY	CY	CY	CY	CY	CY	CY	CY	LB	LB	LB	LF	LF	LF	LF	LF	LF	LF	LF	LF	LF	LF	LF	LF					
	y																																					NOT USED				y
	z																																					NOT USED				z
	aa																																					NOT USED				aa
34	a																	1.92																				G2 INLET w/ SO & DIM	99.38′ L+ "FT" 99+48.02	D-3	34	a
	b																												181.6									24" APC (B)	99.38′ L+ "FT" 99+48.02 TO 49.52′ L+ "FT" 101+15.92			b
	c				13.7																																	REMOVE CULVERT	45.31′ L+ "FT" 101+39.64 TO 20.22′ L+ "FT" 101+73.66			c
	d																	2.15																				G2 INLET w/ SO & DIM	49.52′ L+ "FT" 101+15.92			d
	e																																		4.5			12" RCP w/ COLLAR	49.52′ L+ "FT" 101+15.92 TO 45.46′ L+ "FT" 101+16.15			e
	f																												213.5									24" APC (B)	49.52′ L+ "FT" 101+15.92 TO 21.00′ R+ "FT" 103+18.92			f
	g																																					COA (TYPE C) DI w/ DIM	21.00′ L+ "FT" 103+18.92			g
	h																							54.4														12" APC	21.00′ L+ "FT" 103+18.92 TO 37.32′ R+ "FT" 103+18.92			h
	i																																					COA (TYPE C) DI w/ DIM	37.32′ R+ "FT" 103+18.92			i
	j																									142.3												18" APC (B)	37.32′ R+ "FT" 103+18.92 TO 38.00′ R+ "FT" 104+50.00	D-3		j
	k																																					COA (TYPE C) DI w/ DIM	38.00′ R+ "FT" 104+50.00	D-4		k
	l																									152.2												18" APC (B)	38.00′ R+ "FT" 104+50.00 TO 38.00′ R+ "FT" 106+00.00			l
	m																																					COA (TYPE C) DI w/ DIM	38.00′ R+ "FT" 106+00.00			m
	n																									80.0												18" APC (B)	38.00′ R+ "FT" 106+00.00 TO 22.29′ L+ "FT" 106+58.00			n
	o																																					COA (TYPE C) DI w/ DIM	22.29′ L+ "FT" 106+58.00			o
	p																							60.6														12" APC	22.29′ L+ "FT" 106+58.00 TO 30.40′ L+ "G" 107+77.00			p
	q																																					COA (TYPE C) DI w/ DIM	30.40′ L+ "G" 107+77.00	D-4		q
	r																							15.0														12" APC	37.32′ R+ "FT" 103+18.92 TO 52.34′ R+ "FT" 103+18.92	D-3		r
	s																		0.47																			GMP w/ SO	52.34′ R+ "FT" 103+18.92	D-3		s
	t																									63.3												18" APC (B)	38.00′ R+ "FT" 106+00.00 TO 12.37′ L+ "G" 105+98.42	D-4		t
	u						1																															MODIFY DI TO MH	12.37′ L+ "G" 105+98.42	D-4		u
	v					61.3																																REMOVE CULVERT	69.42′ L+ "G" 105+98.42 TO 15.20′ L+ "G" 105+97.68			v
	w									1.35																												REMOVE HEADWALL	69.42′ L+ "G" 105+98.42			w
	x																																					COA (TYPE C) DI w/ DIM	16.11′ R+ "G" 106+03.43			x
	y								1																													CAP INLET	26.51′ R+ "G" 106+05.38			y
	z																	0.36																				Mod INLET w/ DIM	71.42′ R+ "G" 106+11.63			z
	aa																																			90.2		18" RCP	71.42′ R+ "G" 106+11.63 TO 20.63′ R+ "MI" 104+25.00			aa
	bb																																					COA (TYPE C) DI w/ DIM	20.81′ R+ "MI" 104+25.00			bb
34	cc																																					NOT USED		D-4	34	cc
SHEET TOTAL						75		1		1	1.35							4.43	0.47						130		437.8		395.1						4.5	90.2						

FOR NOTES, ABBREVIATIONS AND LEGEND, SEE SHEET DQ-1

DRAINAGE QUANTITIES
DQ-23

DAT NGUYEN	LUIS GARCIA	DQN	2/2/11
REVISED BY	DATE REVISED		
CALCULATED-DESIGNED BY	CHECKED BY		

CONSULTANT FUNCTIONAL SUPERVISOR: NATALINA V. BERNARDI

STATE OF CALIFORNIA - DEPARTMENT OF TRANSPORTATION

Caltrans

LAST REVISION 02-02-11

DATE PLOTTED => 13-JUN-2011
TIME PLOTTED => 10:09

Dist	COUNTY	ROUTE	POST MILES TOTAL PROJECT	SHEET No.	TOTAL SHEETS
04	CC	4	R26.6/R27.5	179	746

REGISTERED CIVIL ENGINEER 2/2/11 DATE

6-13-11
PLANS APPROVAL DATE

REGISTERED PROFESSIONAL ENGINEER N. V. BERNARDI No. 45407 Exp. 9/30/12 CIVIL STATE OF CALIFORNIA

THE STATE OF CALIFORNIA OR ITS OFFICERS OR AGENTS SHALL NOT BE RESPONSIBLE FOR THE ACCURACY OR COMPLETENESS OF SCANNED COPIES OF THIS PLAN SHEET.

BKF ENGINEERS
4670 WILLOW ROAD, SUITE 250
PLEASANTON, CA. 94588

CCTA
2999 OAK ROAD, SUITE 100
WALNUT CREEK, CA. 94597

DRAINAGE QUANTITIES

DRAINAGE SYSTEM No.	DRAINAGE UNIT	RCP 24" RCP (LF)	RCP 24" RCP CLASS V (LF)	RCP 30" RCP (LF)	RCP 36" RCP (LF)	RCP 42" RCP (LF)	RCP 72" RCP (LF)	RCP 120" RCP (LF)	CSP Bit Ctd 12" (0.064" THICK) (LF)	CSP Bit Ctd 18" (0.064" THICK) (LF)	CSP Bit Ctd 24" (0.079" THICK) (LF)	CSP Bit Ctd 30" (0.064" THICK) (LF)	CSP Bit Ctd 36" (0.064" THICK) (LF)	CSP Bit Ctd 48" (0.079" THICK) (LF)	18" ASP (LF)	18" SCSP (LF)	GRATED LINE DRAIN (LF)	CANTILEVER WALL PRECAST Conc BOX CULVERT (LF)	12" WSP (0.25" THICK) (LF)	24" AFES (EA)	COA (TYPE C) INLET (EA)	6" PPP UD (LF)	3" CURB DRAIN (LF)	SIDEWALK CROSS DRAIN (EA)	ROCK SLOPE PROTECTION (FACING METHOD B) (CY)	CLASS 8 ROCK SLOPE PROTECTION FABRIC (SY)	AGGREGATE BASE (CLASS 3) (CY)	FRAME & COVER (N) 18-9 (EA)	FRAME & COVER (N) 24-9 (EA)	FRAME & COVER (N) 24-12 (EA)	FRAME & COVER (N) 24-12X (EA)	FRAME & COVER (N) 36R (EA)	FRAME & COVER (N) U45 (EA)	FRAME & COVER (N) U46 (EA)	BOLTDOWN (N) (EA)	GRATE LOCKING DEVICE (EA)	MISCELLANEOUS IRON AND STEEL (LB)	PLACE HMA MISCELLANEOUS AREA (SY)	HMA (TYPE A) (TON)	MAXIMUM COVER (N) (LF)	HEIGHT OF INLET "H" (N) (LF)	PIPE JOINT CLASSIFICATION (N)	DESCRIPTION	STATION	DRAINAGE PLAN SHEET No.	DRAINAGE SYSTEM No.	DRAINAGE UNIT
	y																																										NOT USED				y
	z																																										NOT USED				z
	aa																																										NOT USED				aa
34	a																													1						326				5.40		G2 INLET w/ SO & DIM	99.38′ Lt "FT" 99+48.02	D-3	34	a
	b																																						7.22		S	24" APC (B)	99.38′ Lt "FT" 99+48.02 TO 49.52′ Lt "FT" 101+15.92			b
	c																																									REMOVE CULVERT	45.31′ Lt "FT" 101+39.64 TO 20.22′ Lt "FT" 101+73.66			c
	d																													1						326				6.30		G2 INLET w/ SO & DIM	49.52′ Lt "FT" 101+15.92			d
	e																																						1.40		S	12" RCP w/ COLLAR	49.52′ Lt "FT" 101+15.92 TO 45.46′ Lt "FT" 101+16.15			e
	f																																						4.20		S	24" APC (B)	49.52′ Lt "FT" 101+15.92 TO 21.00′ Rt "FT" 103+18.92			f
	g																				1																			5.75		COA (TYPE C) DI w/ DIM	21.00′ Lt "FT" 103+18.92			g
	h																																						4.00		S	12" APC	21.00′ Lt "FT" 103+18.92 TO 37.32′ Rt "FT" 103+18.92			h
	i																				1																			4.75		COA (TYPE C) DI w/ DIM	37.32′ Rt "FT" 103+18.92			i
	j																																						4.25		S	18" APC (B)	37.32′ Rt "FT" 103+18.92 TO 38.00′ Rt "FT" 104+50.00	D-3		j
	k																				1																			4.30		COA (TYPE C) DI w/ DIM	38.00′ Rt "FT" 104+50.00	D-4		k
	l																																						6.34		S	18" APC (B)	38.00′ Rt "FT" 104+50.00 TO 38.00′ Rt "FT" 106+00.00			l
	m																				1																			7.84		COA (TYPE C) DI w/ DIM	38.00′ Rt "FT" 106+00.00			m
	n																																						2.80		S	18" APC (B)	38.00′ Rt "FT" 106+00.00 TO 22.29′ Lt "FT" 106+58.00			n
	o																				1																			4.30		COA (TYPE C) DI w/ DIM	22.29′ Lt "FT" 106+58.00			o
	p																																						3.81		S	12" APC	22.29′ Lt "FT" 106+58.00 TO 30.40′ Lt "G" 107+77.00			p
	q																				1																			3.64		COA (TYPE C) DI w/ DIM	30.40′ Lt "G" 107+77.00	D-4		q
	r																																						2.50		S	12" APC	37.32′ Rt "FT" 103+18.92 TO 52.34′ Rt "FT" 103+18.92	D-3		r
	s													3.5																		1					236			3.00		GMP w/ SO	52.34′ Rt "FT" 103+18.92	D-3		s
	t																																						7.29		S	18" APC (B)	38.00′ Rt "FT" 106+00.00 TO 12.37′ Lt "G" 105+98.42	D-4		t
	u																																1			435						MODIFY DI TO MH	12.37′ Lt "G" 105+98.42	D-4		u
	v																																									REMOVE CULVERT	69.42′ Lt "G" 105+98.42 TO 15.20′ Lt "G" 105+97.68			v
	w																																									REMOVE HEADWALL	69.42′ Lt "G" 105+98.42			w
	x																				1																			7.60		COA (TYPE C) DI w/ DIM	16.11′ Rt "G" 106+03.43			x
	y																																									CAP INLET	26.51′ Rt "G" 106+05.38			y
	z																														1					239							Mod INLET w/ DIM	71.42′ Rt "G" 106+11.63			z
	aa																																						3.51		S	18" RCP	71.42′ Rt "G" 106+11.63 TO 20.63′ Rt "MI" 104+25.00			aa
	bb																				1																			3.74		COA (TYPE C) DI w/ DIM	20.81′ Rt "MI" 104+25.00			bb
34	cc																																									NOT USED		D-4	34	cc
SHEET TOTAL														3.5							8									2	1	1	1			1562										

DRAINAGE QUANTITIES
DQ-24

FOR NOTES, ABBREVIATIONS AND LEGEND, SEE SHEET DQ-1

DAT NGUYEN	DQN	CALCULATED-DESIGNED BY	
LUIS GARCIA	2/2/11	CHECKED BY	
REVISED BY			
DATE REVISED			

CONSULTANT FUNCTIONAL SUPERVISOR
NATALINA V. BERNARDI

STATE OF CALIFORNIA - DEPARTMENT OF TRANSPORTATION
Caltrans

LAST REVISION 02-02-11
DATE PLOTTED => 13-JUN-2011
TIME PLOTTED => 10:09

Dist	COUNTY	ROUTE	POST MILES TOTAL PROJECT	SHEET No.	TOTAL SHEETS
04	CC	4	R26.6/R27.5	180	746

REGISTERED CIVIL ENGINEER 2/2/11 DATE

6-13-11
PLANS APPROVAL DATE

REGISTERED PROFESSIONAL ENGINEER N. V. BERNARDI No. 45407 Exp. 9/30/12 CIVIL STATE OF CALIFORNIA

THE STATE OF CALIFORNIA OR ITS OFFICERS OR AGENTS SHALL NOT BE RESPONSIBLE FOR THE ACCURACY OR COMPLETENESS OF SCANNED COPIES OF THIS PLAN SHEET.

BKF ENGINEERS
4670 WILLOW ROAD, SUITE 250
PLEASANTON, CA. 94588

CCTA
2999 OAK ROAD, SUITE 100
WALNUT CREEK, CA. 94597

DRAINAGE QUANTITIES

DRAINAGE SYSTEM No.	DRAINAGE UNIT	CLEAN DRAINAGE FACILITY	CLEAN AND INSPECT COA 72" PIPE	CLEAN AND INSPECT COA 120" PIPE	ABANDON CULVERT	REMOVE CULVERT	REMOVE DRAINAGE FACILITY	MODIFY INLET TO MANHOLE	ADJUST PARTIAL INLET TO GRADE	CAP INLET	REMOVE CONCRETE	SAND BACKFILL	SLURRY CEMENT BACKFILL	DITCH EXCAVATION	STRUCTURAL CONCRETE: BOX CULVERT	STRUCTURAL CONCRETE: HEADWALL/WINGWALL	STRUCTURAL CONCRETE: TRANSITION STRUCTURE	MINOR CONCRETE: MINOR STRUCTURE	MINOR CONCRETE: MISC CONSTRUCTION	MINOR CONCRETE: BACKFILL	MINOR CONCRETE: DITCH LINING	BAR REINFORCING STEEL: BOX CULVERT	BAR REINFORCING STEEL: HEADWALL/WINGWALL	BAR REINFORCING STEEL: TRANSITION STRUCTURE	APC: 12" APC	APC: 18" APC (A)	APC: 18" APC (B)	APC: 24" APC (A)	APC: 24" APC (B)	APC: 30" APC	RCP: 18" JACKED RCP	RCP: 24" JACKED RCP	RCP: 30" JACKED RCP	RCP: 120" JACKED RCP	RCP: 12" RCP	RCP: 18" RCP	RCP: 18" RCP CLASS V	DESCRIPTION	STATION	DRAINAGE PLAN SHEET No.	DRAINAGE SYSTEM No.	DRAINAGE UNIT
		EA	LS	LS	EA	LF	EA	EA	EA	EA	CY	CY	CY	CY	CY	CY	CY	CY	CY	CY	CY	LB	LB	LB	LF	LF	LF	LF	LF	LF	LF	LF	LF	LF	LF	LF	LF					
35	a					43.2																																REMOVE CULVERT	46.11′ L+ "FT" 101+40.20 TO 21.04′ L+ "FT" 101+74.21	D-3	35	a
36	a					29.5																																REMOVE CULVERT	24.32′ L+ "FT" 101+77.98 TO 53.83′ L+ "FT" 101+79.14	D-3	36	a
37	a																	1.59																				GD2-RW DI	100.00′ R+ "E" 178+23.00	D-4	37	a
	b																			18.65						124.0												18" APC (A)	100.00′ R+ "E" 178+23.00 TO 100.00′ R+ "E" 179+50.00			b
	c																	1.85																				GD2-RW DI	100.00′ R+ "E" 179+50.00			c
	d																																					12" WSP	100.00′ R+ "E" 179+50.00 TO 103.27′ R+ "E" 179+50.00			d
	e																	1.56																				G1 DI w/ SO	103.27′ R+ "E" 179+50.00			e
	f																									74.0												18" APC (A)	100.00′ R+ "E" 179+50.00 TO 100.00′ R+ "E" 180+23.04			f
	g																	2.01																				G2 DI	100.00′ R+ "E" 180+25.00			g
	h																	0.95																				G1 DI	123.65′ R+ "E" 178+98.00			h
37	i																																					12" CSP	123.65′ R+ "E" 178+98.00 TO 102.54′ R+ "E" 178+98.00	D-4	37	i
38	a																			0.6									5.0								18" APC (B) w/ Conc BACKFILL	50.00′ L+ "CLOA" 46+10.18 TO 45.62′ L+ "CLOA" 44+08.66	D-6	38	a
	b																																					COA (TYPE C) DI w/ DIM	50.00′ L+ "CLOA" 46+10.18			b
	c									1																												CAP INLET	45.26′ L+ "CLOA" 46+19.11			c
	d																																					COA (TYPE C) DI w/ DIM	58.50′ L+ "CLOA" 47+61.64			d
	e																												45.8									18" APC (B)	58.50′ L+ "CLOA" 47+61.64 TO 11.96′ L+ "CLOA" 47+51.08			e
	f																																					COA (TYPE C) DI w/ DIM	53.60′ R+ "CLOA" 50+72.53	D-2		f
	g																												10.2									18" APC (B)	53.60′ R+ "CLOA" 50+72.53 TO 63.72′ R+ "CLOA" 50+69.95	D-2		g
	h										4.5																										REMOVE RCB (PORTION)	70.65′ R+ "CLOA" 50+85.85 TO 73.15′ R+ "CLOA" 50+93.56			h
	i										4.1																										REMOVE HEADWALL	73.15′ R+ "CLOA" 50+96.36			i
38	j															2						280																6′ x 3′ RCB w/ SUB EX	70.54′ R+ "CLOA" 50+85.39 TO 71.81′ R+ "CLOA" 50+90.72	D-2	38	j
39	a						1																															REMOVE INLET	60.42′ L+ "CLOA" 49+02.90	D-6	39	a
40	a						1																															REMOVE INLET	71.13′ R+ "CLOA" 47+06.12	D-6	40	a
	b					29.1																																REMOVE CULVERT	55.13′ R+ "CLOA" 47+68.87 TO 71.13′ R+ "CLOA" 47+06.12			b
	c																																					COA (TYPE C) DI w/ DIM	30.15′ L+ "FT" 89+14.69			c
	d																			3.89									32.1									18" APC (B) w/ COLLAR & Conc BACKFILL	51.08′ R+ "CLOA" 47+09.40 TO 30.15′ L+ "FT" 89+14.69			d
	e						1																															REMOVE INLET	55.13′ R+ "CLOA" 47+68.87			e
	f					13.9																																REMOVE CULVERT	51.72′ R+ "CLOA" 47+75.11 TO 55.13′ R+ "CLOA" 47+68.87			f
	g						1																															REMOVE INLET	49.02′ R+ "CLOA" 47+77.92			g
	h																	1.64																				G2 DI	52.07′ R+ "CLOA" 47+78.00			h
40	i																								21.2													12" APC	52.27′ R+ "CLOA" 47+78.00 TO 67.27′ R+ "CLOA" 47+78.00	D-6	40	i
SHEET TOTAL						115.7	4			1	8.6					2		9.60		23.14		280			21.2	198	93.1															

DRAINAGE QUANTITIES
DQ-25

FOR NOTES, ABBREVIATIONS AND LEGEND, SEE SHEET DQ-1

CALCULATED-DESIGNED BY	DAT NGUYEN	REVISED BY	DQN
CHECKED BY	LUIS GARCIA	DATE REVISED	2/2/11

CONSULTANT FUNCTIONAL SUPERVISOR: NATALINA V. BERNARDI

STATE OF CALIFORNIA - DEPARTMENT OF TRANSPORTATION

Caltrans

LAST REVISION 02-02-11 | DATE PLOTTED => 13-JUN-2011 | TIME PLOTTED => 10:09

Dist	COUNTY	ROUTE	POST MILES TOTAL PROJECT	SHEET No.	TOTAL SHEETS
04	CC	4	R26.6/R27.5	181	746

REGISTERED CIVIL ENGINEER 2/2/11 DATE

6-13-11
PLANS APPROVAL DATE

REGISTERED PROFESSIONAL ENGINEER N. V. BERNARDI No. 45407 Exp. 9/30/12 CIVIL STATE OF CALIFORNIA

THE STATE OF CALIFORNIA OR ITS OFFICERS OR AGENTS SHALL NOT BE RESPONSIBLE FOR THE ACCURACY OR COMPLETENESS OF SCANNED COPIES OF THIS PLAN SHEET.

BKF ENGINEERS
4670 WILLOW ROAD, SUITE 250
PLEASANTON, CA. 94588

CCTA
2999 OAK ROAD, SUITE 100
WALNUT CREEK, CA. 94597

DRAINAGE QUANTITIES

DRAINAGE SYSTEM No.	DRAINAGE UNIT	RCP 24" RCP	RCP 24" RCP CLASS V	RCP 30" RCP	RCP 36" RCP	RCP 42" RCP	RCP 72" RCP	RCP 120" RCP	CSP Bit Ctd 12" (0.064" THICK)	CSP Bit Ctd 18" (0.064" THICK)	CSP Bit Ctd 24" (0.079" THICK)	CSP Bit Ctd 30" (0.064" THICK)	CSP Bit Ctd 36" (0.064" THICK)	CSP Bit Ctd 48" (0.079" THICK)	18" ASP	18" SCSP	GRATED LINE DRAIN	CANTILEVER WALL PRECAST Conc BOX CULVERT	12" WSP (0.25" THICK)	24" AFES	COA (TYPE C) INLET	6" PPP UD	3" CURB DRAIN	SIDEWALK CROSS DRAIN	ROCK SLOPE PROTECTION (FACING METHOD B)	CLASS 8 ROCK SLOPE PROTECTION FABRIC	AGGREGATE BASE (CLASS 3)	FRAME & COVER (N) 18-9	FRAME & COVER (N) 24-9	FRAME & COVER (N) 24-12	FRAME & COVER (N) 24-12X	FRAME & COVER (N) 36R	FRAME & COVER (N) U45	FRAME & COVER (N) U46	BOLTDOWN (N)	GRATE LOCKING DEVICE	MISCELLANEOUS IRON AND STEEL	PLACE HMA MISCELLANEOUS AREA	HMA (TYPE A)	MAXIMUM COVER (N)	HEIGHT OF INLET "H" (N)	PIPE JOINT CLASSIFICATION (N)	DESCRIPTION	STATION	DRAINAGE PLAN SHEET No.	DRAINAGE SYSTEM No.	DRAINAGE UNIT
		LF	LF	LF	LF	LF	LF	LF	LF	LF	LF	LF	LF	LF	LF	LF	LF	LF	LF	EA	EA	LF	LF	EA	CY	SY	CY	EA	EA	EA	EA	EA	EA	EA	EA	EA	LB	SY	TON	LF	LF					
35	a																																										REMOVE CULVERT	46.11′ L+ "FT" 101+40.20 TO 21.04′ L+ "FT" 101+74.21	D-3	35	a
36	a																																										REMOVE CULVERT	24.32′ L+ "FT" 101+77.98 TO 53.83′ L+ "FT" 101+79.14	D-3	36	a
37	a																													2						634				2.89		GD2-RW DI	100.00′ R+ "E" 178+23.00	D-4	37	a
	b																																						3.34		S	18" APC (A)	100.00′ R+ "E" 178+23.00 TO 100.00′ R+ "E" 179+50.00			b
	c																													2						634				4.73		GD2-RW DI	100.00′ R+ "E" 179+50.00			c
	d																		2.3																				6.25			12" WSP	100.00′ R+ "E" 179+50.00 TO 103.27′ R+ "E" 179+50.00			d
	e																												1							263				5.75		G1 DI w/ SO	103.27′ R+ "E" 179+50.00			e
	f																																						3.34		S	18" APC (A)	100.00′ R+ "E" 179+50.00 TO 100.00′ R+ "E" 180+23.04			f
	g																													1						326				5.76		G2 DI	100.00′ R+ "E" 180+25.00			g
	h																												1							263				3.00		G1 DI	123.65′ R+ "E" 178+98.00			h
37	i								23.6																																S	12" CSP	123.65′ R+ "E" 178+98.00 TO 102.54′ R+ "E" 178+98.00	D-4	37	i
38	a																																						1.71		S	18" APC (B) w/ Conc BACKFILL	50.00′ L+ "CLOA" 46+10.18 TO 45.62′ L+ "CLOA" 44+08.66	D-6	38	a
	b																				1																			3.31			COA (TYPE C) DI w/ DIM	50.00′ L+ "CLOA" 46+10.18			b
	c																																										CAP INLET	45.26′ L+ "CLOA" 46+19.11			c
	d																				1																			3.70			COA (TYPE C) DI w/ DIM	58.50′ L+ "CLOA" 47+61.64			d
	e																																						3.50		S	18" APC (B)	58.50′ L+ "CLOA" 47+61.64 TO 11.96′ L+ "CLOA" 47+51.08			e
	f																				1																			3.58			COA (TYPE C) DI w/ DIM	53.60′ R+ "CLOA" 50+72.53	D-2		f
	g																																						2.96		S	18" APC (B)	53.60′ R+ "CLOA" 50+72.53 TO 63.72′ R+ "CLOA" 50+69.95	D-2		g
	h																																										REMOVE RCB (PORTION)	70.65′ R+ "CLOA" 50+85.85 TO 73.15′ R+ "CLOA" 50+93.56			h
	i																																										REMOVE HEADWALL	73.15′ R+ "CLOA" 50+96.36			i
38	j																									5.8	2.7												1.52			6′ x 3′ RCB w/ SUB EX	70.54′ R+ "CLOA" 50+85.39 TO 71.81′ R+ "CLOA" 50+90.72	D-2	38	j
39	a																																										REMOVE INLET	60.42′ L+ "CLOA" 49+02.90	D-6	39	a
40	a																																										REMOVE INLET	71.13′ R+ "CLOA" 47+06.12	D-6	40	a
	b																																										REMOVE CULVERT	55.13′ R+ "CLOA" 47+68.87 TO 71.13′ R+ "CLOA" 47+06.12			b
	c																				1																			3.10			COA (TYPE C) DI w/ DIM	30.15′ L+ "FT" 89+14.69			c
	d																																						1.92		S	18" APC (B) w/ COLLAR & Conc BACKFILL	51.08′ R+ "CLOA" 47+09.40 TO 30.15′ L+ "FT" 89+14.69			d
	e																																										REMOVE INLET	55.13′ R+ "CLOA" 47+68.87			e
	f																																										REMOVE CULVERT	51.72′ R+ "CLOA" 47+75.11 TO 55.13′ R+ "CLOA" 47+68.87			f
	g																																										REMOVE INLET	49.02′ R+ "CLOA" 47+77.92			g
	h																													1						326				4.29		G2 DI	52.07′ R+ "CLOA" 47+78.00			h
40	i																																						3.75		S	12" APC	52.27′ R+ "CLOA" 47+78.00 TO 67.27′ R+ "CLOA" 47+78.00	D-6	40	i
SHEET TOTAL									23.6			4							2.3							5.8	2.7		2	6						2446										

DRAINAGE QUANTITIES
DQ-26

FOR NOTES, ABBREVIATIONS AND LEGEND, SEE SHEET DQ-1

STATE OF CALIFORNIA - DEPARTMENT OF TRANSPORTATION
Caltrans

CONSULTANT FUNCTIONAL SUPERVISOR: NATALINA V. BERNARDI

CALCULATED-DESIGNED BY: DAT NGUYEN
CHECKED BY: LUIS GARCIA

REVISED BY: DQN
DATE REVISED: 2/2/11

LAST REVISION 02-02-11
DATE PLOTTED => 13-JUN-2011
TIME PLOTTED => 10:09

Dist	COUNTY	ROUTE	POST MILES TOTAL PROJECT	SHEET No.	TOTAL SHEETS
04	CC	4	R26.6/R27.5	182	746

REGISTERED CIVIL ENGINEER 2/2/11 DATE

6-13-11
PLANS APPROVAL DATE

REGISTERED PROFESSIONAL ENGINEER N. V. BERNARDI No. 45407 Exp. 9/30/12 CIVIL STATE OF CALIFORNIA

THE STATE OF CALIFORNIA OR ITS OFFICERS OR AGENTS SHALL NOT BE RESPONSIBLE FOR THE ACCURACY OR COMPLETENESS OF SCANNED COPIES OF THIS PLAN SHEET.

BKF ENGINEERS
4670 WILLOW ROAD, SUITE 250
PLEASANTON, CA. 94588

CCTA
2999 OAK ROAD, SUITE 100
WALNUT CREEK, CA. 94597

DRAINAGE QUANTITIES

DRAINAGE SYSTEM No.	DRAINAGE UNIT	CLEAN DRAINAGE FACILITY	CLEAN AND INSPECT COA 72" PIPE	CLEAN AND INSPECT COA 120" PIPE	ABANDON CULVERT	REMOVE CULVERT	REMOVE DRAINAGE FACILITY	MODIFY INLET TO MANHOLE	ADJUST PARTIAL INLET TO GRADE	CAP INLET	REMOVE CONCRETE	SAND BACKFILL	SLURRY CEMENT BACKFILL	DITCH EXCAVATION	STRUCTURAL CONCRETE: BOX CULVERT	STRUCTURAL CONCRETE: HEADWALL/WINGWALL	STRUCTURAL CONCRETE: TRANSITION STRUCTURE	MINOR CONCRETE: MINOR STRUCTURE	MINOR CONCRETE: MISC CONSTRUCTION	MINOR CONCRETE: BACKFILL	MINOR CONCRETE: DITCH LINING	BAR REINFORCING STEEL: BOX CULVERT	BAR REINFORCING STEEL: HEADWALL/WINGWALL	BAR REINFORCING STEEL: TRANSITION STRUCTURE	APC: 12" APC	APC: 18" APC (A)	APC: 18" APC (B)	APC: 24" APC (A)	APC: 24" APC (B)	APC: 30" APC	RCP: 18" JACKED RCP	RCP: 24" JACKED RCP	RCP: 30" JACKED RCP	RCP: 120" JACKED RCP	RCP: 12" RCP	RCP: 18" RCP	RCP: 18" RCP CLASS V	DESCRIPTION	STATION	DRAINAGE PLAN SHEET No.	DRAINAGE SYSTEM No.	DRAINAGE UNIT
		EA	LS	LS	EA	LF	EA	EA	EA	EA	CY	CY	CY	CY	CY	CY	CY	CY	CY	CY	CY	LB	LB	LB	LF	LF	LF	LF	LF	LF	LF	LF	LF	LF	LF	LF	LF					
40	j																	1.01																				G1 DI w/ DIM	67.27′ R+ "CLOA" 47+78.00	D-6	40	j
	k					37.8																																REMOVE CULVERT	53.10′ R+ "CLOA" 48+12.54 TO 52.40′ R+ "CLOA" 48+06.36			k
	l																																					24" RCP	52.07′ R+ "CLOA" 47+78.00 TO 55.13′ R+ "CLOA" 48+15.31			l
	m																	1.64																				G2 DI	55.13′ R+ "CLOA" 48+15.31			m
	n					6.3																																REMOVE CULVERT (PORTION)	53.75′ R+ "CLOA" 48+18.41 TO 54.40′ R+ "CLOA" 48+24.71			n
	o																																					24" RCP w/ COLLAR	48.44′ R+ "CLOA" 47+68.78 TO 52.07′ R+ "CLOA" 47+78.00			o
	p					7.2																																REMOVE CULVERT (PORTION)	48.44′ R+ "CLOA" 47+68.78 TO 48.74′ R+ "CLOA" 47+75.99			p
	q																																					NOT USED				q
	r																																					NOT USED				r
	s																																					24" RCP w/ COLLAR	55.13′ R+ "CLOA" 48+15.31 TO 54.40′ R+ "CLOA" 48+24.71			s
	t						1																															REMOVE INLET	44.79′ R+ "CLOA" 48+17.08			t
	u					8.8																																REMOVE CULVERT	47.72′ R+ "CLOA" 48+16.65 TO 50.56′ R+ "CLOA" 48+16.07			u
	v						1																															REMOVE MANHOLE	54.79′ R+ "CLOA" 48+15.31			v
	w																																					24" RCP w/ COLLAR	59.75′ R+ "CLOA" 49+12.13 TO 58.41′ R+ "CLOA" 48+63.79			w
	x					102.0																																REMOVE CULVERT (PORTION)	63.47′ R+ "CLOA" 49+12.67 TO 58.41′ R+ "CLOA" 48+63.79			x
	y						1																															REMOVE INLET	63.83′ R+ "CLOA" 49+17.09			y
	z					25.6																																REMOVE CULVERT	83.99′ R+ "CLOA" 49+32.74 TO 66.78′ R+ "CLOA" 49+16.99			z
	aa																												27.8									24" APC (B)	59.75′ R+ "CLOA" 49+12.13 TO 83.05′ R+ "CLOA" 49+30.68			aa
	bb																																					COA (TYPE C) DI w/ DIM	59.75′ R+ "CLOA" 49+12.13			bb
	cc																												45.0									18" APC (B)	59.75′ R+ "CLOA" 49+12.13 TO 57.41′ R+ "CLOA" 49+60.28	D-6		cc
40	dd																																					COA (TYPE C) DI w/ DIM	57.41′ R+ "CLOA" 49+60.28	D-2	40	dd
41	a						1																															REMOVE INLET	49.02′ R+ "CLOA" 55+33.88	D-5	41	a
	b				1						3.00																											ABANDON CULVERT	49.02′ R+ "CLOA" 55+33.88 TO 49.25′ R+ "CLOA" 54+91.40	D-2		b
	c						1																															REMOVE INLET	49.25′ R+ "CLOA" 54+91.40			c
	d				1						5.26																											ABANDON CULVERT	49.25′ R+ "CLOA" 54+91.40 TO 28.55′ L+ "CLOA" 54+88.43			d
	e						1																															REMOVE INLET	28.55′ L+ "CLOA" 54+88.43			e
	f					62.1																																REMOVE CULVERT	28.55′ L+ "CLOA" 54+88.43 TO 92.40′ L+ "CLOA" 54+75.97			f
	g				1						11.20																											ABANDON CULVERT	28.55′ L+ "CLOA" 54+88.43 TO 33.62′ L+ "CLOA" 56+60.27	D-2		g
	h						1																															REMOVE INLET	33.62′ L+ "CLOA" 56+60.27	D-5		h
	i				1						10.29																											ABANDON CULVERT	33.62′ L+ "CLOA" 56+60.27 TO 33.44′ L+ "CLOA" 58+19.23			i
	j						1																															REMOVE INLET	33.44′ L+ "CLOA" 58+19.23			j
	k				1						4.31																											ABANDON CULVERT	33.62′ L+ "CLOA" 56+60.27 TO 31.98′ R+ "CLOA" 56+63.13			k
	l						1																															REMOVE INLET	31.98′ R+ "CLOA" 56+63.13			l
41	m				1						8.73																											ABANDON CULVERT	33.62′ L+ "CLOA" 56+60.27 TO 166.72′ L+ "CLOA" 56+54.37	D-5	41	m
SHEET TOTAL					6	249.8	9				42.79							2.65											45.0		27.8											

FOR NOTES, ABBREVIATIONS AND LEGEND, SEE SHEET DQ-1

DRAINAGE QUANTITIES
DQ-27

STATE OF CALIFORNIA - DEPARTMENT OF TRANSPORTATION
Caltrans

CONSULTANT FUNCTIONAL SUPERVISOR: NATALINA V. BERNARDI
CALCULATED-DESIGNED BY: DAT NGUYEN
CHECKED BY: LUIS GARCIA
REVISED BY: DQN
DATE REVISED: 2/2/11

LAST REVISION 02-02-11
DATE PLOTTED => 13-JUN-2011
TIME PLOTTED => 10:10

Dist	COUNTY	ROUTE	POST MILES TOTAL PROJECT	SHEET No.	TOTAL SHEETS
04	CC	4	R26.6/R27.5	183	746

REGISTERED CIVIL ENGINEER 2/2/11 DATE

6-13-11
PLANS APPROVAL DATE

REGISTERED PROFESSIONAL ENGINEER N. V. BERNARDI No. 45407 Exp. 9/30/12 CIVIL STATE OF CALIFORNIA

THE STATE OF CALIFORNIA OR ITS OFFICERS OR AGENTS SHALL NOT BE RESPONSIBLE FOR THE ACCURACY OR COMPLETENESS OF SCANNED COPIES OF THIS PLAN SHEET.

BKF ENGINEERS
4670 WILLOW ROAD, SUITE 250
PLEASANTON, CA. 94588

CCTA
2999 OAK ROAD, SUITE 100
WALNUT CREEK, CA. 94597

DRAINAGE QUANTITIES

DRAINAGE SYSTEM No.	DRAINAGE UNIT	RCP 24" RCP	RCP 24" RCP CLASS V	RCP 30" RCP	RCP 36" RCP	RCP 42" RCP	RCP 72" RCP	RCP 120" RCP	CSP Bit Ctd 12" (0.064" THICK)	CSP Bit Ctd 18" (0.064" THICK)	CSP Bit Ctd 24" (0.079" THICK)	CSP Bit Ctd 30" (0.064" THICK)	CSP Bit Ctd 36" (0.064" THICK)	CSP Bit Ctd 48" (0.079" THICK)	18" ASP	18" SCSP	GRATED LINE DRAIN	CANTILEVER WALL PRECAST Conc BOX CULVERT	12" WSP (0.25" THICK)	24" AFES	COA (TYPE C) INLET	6" PPP UD	3" CURB DRAIN	SIDEWALK CROSS DRAIN	ROCK SLOPE PROTECTION (FACING METHOD B)	CLASS 8 ROCK SLOPE PROTECTION FABRIC	AGGREGATE BASE (CLASS 3)	FRAME & COVER (N) 18-9	FRAME & COVER (N) 24-9	FRAME & COVER (N) 24-12	FRAME & COVER (N) 24-12X	FRAME & COVER (N) 36R	FRAME & COVER (N) U45	FRAME & COVER (N) U46	BOLTDOWN (N)	GRATE LOCKING DEVICE	MISCELLANEOUS IRON AND STEEL	PLACE HMA MISCELLANEOUS AREA	HMA (TYPE A)	MAXIMUM COVER (N)	HEIGHT OF INLET "H" (N)	PIPE JOINT CLASSIFICATION (N)	DESCRIPTION	STATION	DRAINAGE PLAN SHEET No.	DRAINAGE SYSTEM No.	DRAINAGE UNIT
		LF	LF	LF	LF	LF	LF	LF	LF	LF	LF	LF	LF	LF	LF	LF	LF	LF	LF	EA	EA	LF	LF	EA	CY	SY	CY	EA	EA	EA	EA	EA	EA	EA	EA	EA	LB	SY	TON	LF	LF					
40	j																														1						239				3.25		G1 DI w/ 24-12X & DIM	67.27′ R+ "CLOA" 47+78.00	D-6	40	j
	k																																										REMOVE CULVERT	53.10′ R+ "CLOA" 48+12.54 TO 52.40′ R+ "CLOA" 48+06.36			k
	l	33.4																																						2.31		S	24" RCP	52.07′ R+ "CLOA" 47+78.00 TO 55.13′ R+ "CLOA" 48+15.31			l
	m																														1						239				4.31		G2 DI	55.13′ R+ "CLOA" 48+15.31			m
	n																																										REMOVE CULVERT (PORTION)	53.75′ R+ "CLOA" 48+18.41 TO 54.40′ R+ "CLOA" 48+24.71			n
	o	9.9																																						2.31		S	24" RCP w/ COLLAR	48.44′ R+ "CLOA" 47+68.78 TO 52.07′ R+ "CLOA" 47+78.00			o
	p																																										REMOVE CULVERT (PORTION)	48.44′ R+ "CLOA" 47+68.78 TO 48.74′ R+ "CLOA" 47+75.99			p
	q																																										NOT USED				q
	r																																										NOT USED				r
	s	9.4																																						2.31		S	24" RCP w/ COLLAR	55.13′ R+ "CLOA" 48+15.31 TO 54.40′ R+ "CLOA" 48+24.71			s
	t																																										REMOVE INLET	44.79′ R+ "CLOA" 48+17.08			t
	u																																										REMOVE CULVERT	47.72′ R+ "CLOA" 48+16.65 TO 50.56′ R+ "CLOA" 48+16.07			u
	v																																										REMOVE MANHOLE	54.79′ R+ "CLOA" 48+15.31			v
	w	46.6																																						2.34		S	24" RCP w/ COLLAR	59.75′ R+ "CLOA" 49+12.13 TO 58.41′ R+ "CLOA" 48+63.79			w
	x																																										REMOVE CULVERT	63.47′ R+ "CLOA" 49+12.67 TO 58.41′ R+ "CLOA" 48+63.79			x
	y																																										REMOVE INLET	63.83′ R+ "CLOA" 49+17.09			y
	z																																										REMOVE CULVERT	83.99′ R+ "CLOA" 49+32.74 TO 66.78′ R+ "CLOA" 49+16.99			z
	aa																																							3.17		S	24" APC (B)	59.75′ R+ "CLOA" 49+12.13 TO 83.05′ R+ "CLOA" 49+30.68			aa
	bb																				1																				4.47		COA (TYPE C) DI w/ DIM	59.75′ R+ "CLOA" 49+12.13			bb
	cc																																							2.97		S	18" APC (B)	59.75′ R+ "CLOA" 49+12.13 TO 57.41′ R+ "CLOA" 49+60.28	D-6		cc
40	dd																				1																				4.00		COA (TYPE C) DI w/ DIM	57.41′ R+ "CLOA" 49+60.28	D-2	40	dd
41	a																																											REMOVE INLET	49.02′ R+ "CLOA" 55+33.88	D-5	41	a
	b																																										ABANDON CULVERT	49.02′ R+ "CLOA" 55+33.88 TO 49.25′ R+ "CLOA" 54+91.40	D-2		b
	c																																										REMOVE INLET	49.25′ R+ "CLOA" 54+91.40			c
	d																																										ABANDON CULVERT	49.25′ R+ "CLOA" 54+91.40 TO 28.55′ L+ "CLOA" 54+88.43			d
	e																																										REMOVE INLET	28.55′ L+ "CLOA" 54+88.43			e
	f																																										REMOVE CULVERT	28.55′ L+ "CLOA" 54+88.43 TO 92.40′ L+ "CLOA" 54+75.97			f
	g																																										ABANDON CULVERT	28.55′ L+ "CLOA" 54+88.43 TO 33.62′ L+ "CLOA" 56+60.27	D-2		g
	h																																										REMOVE INLET	33.62′ L+ "CLOA" 56+60.27	D-5		h
	i																																										ABANDON CULVERT	33.62′ L+ "CLOA" 56+60.27 TO 33.44′ L+ "CLOA" 58+19.23			i
	j																																										REMOVE INLET	33.44′ L+ "CLOA" 58+19.23			j
	k																																										ABANDON CULVERT	33.62′ L+ "CLOA" 56+60.27 TO 31.98′ R+ "CLOA" 56+63.13			k
	l																																										REMOVE INLET	31.98′ R+ "CLOA" 56+63.13			l
41	m																																										ABANDON CULVERT	33.62′ L+ "CLOA" 56+60.27 TO 166.72′ L+ "CLOA" 56+54.37	D-5	41	m
SHEET TOTAL		99.3																			2										2						478										

DRAINAGE QUANTITIES
DQ-28

FOR NOTES, ABBREVIATIONS AND LEGEND, SEE SHEET DQ-1

DAT NGUYEN	DQN	CALCULATED-DESIGNED BY	CONSULTANT FUNCTIONAL SUPERVISOR
LUIS GARCIA	2/2/11	CHECKED BY	NATALINA V. BERNARDI
REVISED BY	DATE REVISED		

STATE OF CALIFORNIA - DEPARTMENT OF TRANSPORTATION

Caltrans

LAST REVISION 02-02-11 DATE PLOTTED => 13-JUN-2011 TIME PLOTTED => 10:10

Dist	COUNTY	ROUTE	POST MILES TOTAL PROJECT	SHEET No.	TOTAL SHEETS
04	CC	4	R26.6/R27.5	184	746

REGISTERED CIVIL ENGINEER 2/2/11 DATE

6-13-11
PLANS APPROVAL DATE

REGISTERED PROFESSIONAL ENGINEER N. V. BERNARDI No. 45407 Exp. 9/30/12 CIVIL STATE OF CALIFORNIA

THE STATE OF CALIFORNIA OR ITS OFFICERS OR AGENTS SHALL NOT BE RESPONSIBLE FOR THE ACCURACY OR COMPLETENESS OF SCANNED COPIES OF THIS PLAN SHEET.

BKF ENGINEERS
4670 WILLOW ROAD, SUITE 250
PLEASANTON, CA. 94588

CCTA
2999 OAK ROAD, SUITE 100
WALNUT CREEK, CA. 94597

DRAINAGE QUANTITIES

DRAINAGE SYSTEM No.	DRAINAGE UNIT	CLEAN DRAINAGE FACILITY	CLEAN AND INSPECT COA 72" PIPE	CLEAN AND INSPECT COA 120" PIPE	ABANDON CULVERT	REMOVE CULVERT	REMOVE DRAINAGE FACILITY	MODIFY INLET TO MANHOLE	ADJUST PARTIAL INLET TO GRADE	CAP INLET	REMOVE CONCRETE	SAND BACKFILL	SLURRY CEMENT BACKFILL	DITCH EXCAVATION	STRUCTURAL CONCRETE: BOX CULVERT	STRUCTURAL CONCRETE: HEADWALL/WINGWALL	STRUCTURAL CONCRETE: TRANSITION STRUCTURE	MINOR CONCRETE: MINOR STRUCTURE	MINOR CONCRETE: MISC CONSTRUCTION	MINOR CONCRETE: BACKFILL	MINOR CONCRETE: DITCH LINING	BAR REINFORCING STEEL: BOX CULVERT	BAR REINFORCING STEEL: HEADWALL/WINGWALL	BAR REINFORCING STEEL: TRANSITION STRUCTURE	APC: 12" APC	APC: 18" APC (A)	APC: 18" APC (B)	APC: 24" APC (A)	APC: 24" APC (B)	APC: 30" APC	RCP: 18" JACKED RCP	RCP: 24" JACKED RCP	RCP: 30" JACKED RCP	RCP: 120" JACKED RCP	RCP: 12" RCP	RCP: 18" RCP	RCP: 18" RCP CLASS V	DESCRIPTION	STATION	DRAINAGE PLAN SHEET No.	DRAINAGE SYSTEM No.	DRAINAGE UNIT
		EA	LS	LS	EA	LF	EA	EA	EA	EA	CY	CY	CY	CY	CY	CY	CY	CY	CY	CY	CY	LB	LB	LB	LF	LF	LF	LF	LF	LF	LF	LF	LF	LF	LF	LF	LF					
42	a																																					COA (TYPE C) DI w/ DIM	37.27' Rt "CLOA" 55+82.13	D-5	42	a
	b																									24.9												18" APC (A)	37.27' Rt "CLOA" 55+82.13 TO 18.25' Rt "CL" 56+95.09			b
	c																	1.56																				G2 MH	18.25' Rt "CL" 56+95.09			c
	d																																					COA (TYPE C) DI w/ DIM	18.00' Rt "CL" 57+26.90			d
	e																									22.3												18" APC (A)	18.25' Rt "CL" 56+95.09 TO 18.00' Rt "CL" 57+26.90			e
	f																									32.1												18" APC (A)	18.25' Rt "CL" 56+95.09 TO 17.84' Lt "CL" 56+96.18			f
	g																																					COA (TYPE C) DI w/ DIM	17.84' Lt "CL" 56+96.18			g
	h																									96.9												18" APC (A)	46.64' Lt "CLOA" 55+25.95 TO 55.33' Lt "CLOA" 54+75.11			h
	i																	3.00																				GT4 DI w/ DIM	43.00' Lt "CLOA" 56+59.95			i
	j																			25.61						158.7												18" APC (A) w/ Conc BACKFILL	43.00' Lt "CLOA" 56+59.95 TO 43.00' Lt "CLOA" 58+21.58			j
	k																																					COA (TYPE C) DI w/ DIM	43.00' Lt "CLOA" 58+21.58			k
	l																									126.4												18" APC (A)	43.00' Lt "CLOA" 56+59.95 TO 48.11' Lt "CLOA" 54+94.91			l
	m																	2.18																				G2 DI w/ DIM & GL	46.64' Lt "CLOA" 55+25.95	D-5		m
	n																									48.9												18" APC (A)	46.64' Lt "CLOA" 55+25.95 TO 55.33' Lt "CLOA" 57+75.11	D-2		n
	o																																					NOT USED		D-2		o
42	p																																					NOT USED		D-2	42	p
43																																						NOT USED			43	
43																																						NOT USED			43	
43																																						NOT USED			43	
44	a																	1.36																				G2 DI w/ SO	201.83' Lt "FT" 94+85.82	D-3	44	a
	b																										174.4											18" APC (B)	201.83' Lt "FT" 94+85.82 TO 25.35' Lt "FT" 94+85.55			b
	c																	1.82																				G2 MH	25.35' Lt "FT" 94+85.55			c
44	d																																					18" CSP	25.35' Lt "FT" 94+85.55 TO 11.50' Lt "FT" 94+76.31	D-3	44	d
45																																						NOT USED			45	
46																																						NOT USED			46	
47	a																																					SIDEWALK X DRAIN	19.00' Rt "FT" 108+79.36 TO 24.00' Rt "FT" 108+79.36	D-4	47	a
48	a																																					2-3" CURB DRAIN	11.06' Lt "CL" 58+59.17 TO 36.15' Lt "CL" 58+69.53	D-5	48	a
SHEET TOTAL																		9.92		25.61						510.2	174.4															

DRAINAGE QUANTITIES
DQ-29

FOR NOTES, ABBREVIATIONS AND LEGEND, SEE SHEET DQ-1

DAT NGUYEN	REVISED BY	DQN
LUIS GARCIA	DATE REVISED	2/2/11
CALCULATED-DESIGNED BY		
CHECKED BY		
CONSULTANT FUNCTIONAL SUPERVISOR	NATALINA V. BERNARDI	

STATE OF CALIFORNIA - DEPARTMENT OF TRANSPORTATION

Caltrans

LAST REVISION 02-02-11 DATE PLOTTED => 13-JUN-2011 TIME PLOTTED => 10:10

Dist	COUNTY	ROUTE	POST MILES TOTAL PROJECT	SHEET No.	TOTAL SHEETS
04	CC	4	R26.6/R27.5	185	746

REGISTERED CIVIL ENGINEER 2/2/11 DATE

6-13-11
PLANS APPROVAL DATE

REGISTERED PROFESSIONAL ENGINEER N. V. BERNARDI No. 45407 Exp. 9/30/12 CIVIL STATE OF CALIFORNIA

THE STATE OF CALIFORNIA OR ITS OFFICERS OR AGENTS SHALL NOT BE RESPONSIBLE FOR THE ACCURACY OR COMPLETENESS OF SCANNED COPIES OF THIS PLAN SHEET.

BKF ENGINEERS
4670 WILLOW ROAD, SUITE 250
PLEASANTON, CA. 94588

CCTA
2999 OAK ROAD, SUITE 100
WALNUT CREEK, CA. 94597

DRAINAGE QUANTITIES

DRAINAGE SYSTEM No.	DRAINAGE UNIT	RCP 24" RCP	RCP 24" RCP CLASS V	RCP 30" RCP	RCP 36" RCP	RCP 42" RCP	RCP 72" RCP	RCP 120" RCP	CSP Bit Ctd 12" (0.064" THICK)	CSP Bit Ctd 18" (0.064" THICK)	CSP Bit Ctd 24" (0.079" THICK)	CSP Bit Ctd 30" (0.064" THICK)	CSP Bit Ctd 36" (0.064" THICK)	CSP Bit Ctd 48" (0.079" THICK)	18" ASP	18" SCSP	GRATED LINE DRAIN	CANTILEVER WALL PRECAST Conc BOX CULVERT	12" WSP (0.25" THICK)	24" AFES	COA (TYPE C) INLET	6" PPD UD	3" CURB DRAIN	SIDEWALK CROSS DRAIN	ROCK SLOPE PROTECTION (FACING METHOD B)	CLASS 8 ROCK SLOPE PROTECTION FABRIC	AGGREGATE BASE (CLASS 3)	FRAME & COVER (N) 18-9	FRAME & COVER (N) 24-9	FRAME & COVER (N) 24-12	FRAME & COVER (N) 24-12X	FRAME & COVER (N) 36R	FRAME & COVER (N) U45	FRAME & COVER (N) U46	BOLTDOWN (N)	GRATE LOCKING DEVICE	MISCELLANEOUS IRON AND STEEL	PLACE HMA MISCELLANEOUS AREA	HMA (TYPE A)	MAXIMUM COVER (N)	HEIGHT OF INLET "H" (N)	PIPE JOINT CLASSIFICATION (N)	DESCRIPTION	STATION	DRAINAGE PLAN SHEET No.	DRAINAGE SYSTEM No.	DRAINAGE UNIT
		LF	LF	LF	LF	LF	LF	LF	LF	LF	LF	LF	LF	LF	LF	LF	LF	LF	LF	EA	EA	LF	LF	EA	CY	SY	CY	EA	EA	EA	EA	EA	EA	EA	EA	EA	LB	SY	TON	LF	LF						
42	a																				1																				3.70		COA (TYPE C) DI w/ DIM	37.27′ R+ "CLOA" 55+82.13	D-5	42	a
	b																																							2.65		S	18" APC (A)	37.27′ R+ "CLOA" 55+82.13 TO 18.25′ R+ "CL" 56+95.09			b
	c																																1			435				3.97		G2 MH	18.25′ R+ "CL" 56+95.09			c
	d																				1																				3.70		COA (TYPE C) DI w/ DIM	18.00′ R+ "CL" 57+26.90			d
	e																																							2.47		S	18" APC (A)	18.25′ R+ "CL" 56+95.09 TO 18.00′ R+ "CL" 57+26.90			e
	f																																							2.47		S	18" APC (A)	18.25′ R+ "CL" 56+95.09 TO 17.84′ L+ "CL" 56+96.18			f
	g																				1																				3.70		COA (TYPE C) DI w/ DIM	17.84′ L+ "CL" 56+96.18			g
	h																																							2.75		S	18" APC (A)	46.64′ L+ "CLOA" 55+25.95 TO 55.33′ L+ "CLOA" 54+75.11			h
	i																			2																478				5.14		GT4 DI w/ DIM	43.00′ L+ "CLOA" 56+59.95			i
	j																																							3.57		S	18" APC (A) w/ Conc BACKFILL	43.00′ L+ "CLOA" 56+59.95 TO 43.00′ L+ "CLOA" 58+21.58			j
	k																				1																				3.43		COA (TYPE C) DI w/ DIM	43.00′ L+ "CLOA" 58+21.58			k
	l																																							5.17		S	18" APC (A)	43.00′ L+ "CLOA" 56+59.95 TO 48.11′ L+ "CLOA" 54+94.91			l
	m																			1														1	239				6.40		G2 DI w/ DIM & GD	46.64′ L+ "CLOA" 55+25.95	D-5		m
	n																																							6.29		S	18" APC (A)	46.64′ L+ "CLOA" 55+25.95 TO 55.33′ L+ "CLOA" 57+75.11	D-2		n
	o																																										NOT USED		D-2		o
42	p																																										NOT USED		D-2	42	p
43																																											NOT USED			43	
43																																											NOT USED			43	
43																																											NOT USED			43	
44	a																			1																239				3.20		G2 DI w/ SO	201.83′ L+ "FT" 94+85.82	D-3	44	a
	b																																							3.90		S	18" APC (B)	201.83′ L+ "FT" 94+85.82 TO 25.35′ L+ "FT" 94+85.55			b
	c																																1			235				5.00		G2 MH	25.35′ L+ "FT" 94+85.55			c
44	d									14.6																														3.80		S	18" CSP	25.35′ L+ "FT" 94+85.55 TO 11.50′ L+ "FT" 94+76.31	D-3	44	d
45																																											NOT USED			45	
46																																											NOT USED			46	
47	a																							1																			SIDEWALK X DRAIN	19.00′ R+ "FT" 108+79.36 TO 24.00′ R+ "FT" 108+79.36	D-4	47	a
48	a																					51.8																					2-3" CURB DRAIN	11.06′ L+ "CL" 58+59.17 TO 36.15′ L+ "CL" 58+69.53	D-5	48	a
SHEET TOTAL										14.6											4		51.8	1								4		1	1		1	1626									

DRAINAGE QUANTITIES
DQ-30

FOR NOTES, ABBREVIATIONS AND LEGEND, SEE SHEET DQ-1

STATE OF CALIFORNIA - DEPARTMENT OF TRANSPORTATION

Caltrans

CONSULTANT FUNCTIONAL SUPERVISOR: NATALINA V. BERNARDI

CALCULATED-DESIGNED BY: DAT NGUYEN
CHECKED BY: LUIS GARCIA

REVISED BY: DQN
DATE REVISED: 2/2/11

LAST REVISION 02-02-11
DATE PLOTTED => 13-JUN-2011
TIME PLOTTED => 10:10

Dist	COUNTY	ROUTE	POST MILES TOTAL PROJECT	SHEET No.	TOTAL SHEETS
04	CC	4	R26.6/R27.5	186	746

REGISTERED CIVIL ENGINEER 2/2/11 DATE

6-13-11
PLANS APPROVAL DATE

REGISTERED PROFESSIONAL ENGINEER N. V. BERNARDI No. 45407 Exp. 9/30/12 CIVIL STATE OF CALIFORNIA

THE STATE OF CALIFORNIA OR ITS OFFICERS OR AGENTS SHALL NOT BE RESPONSIBLE FOR THE ACCURACY OR COMPLETENESS OF SCANNED COPIES OF THIS PLAN SHEET.

BKF ENGINEERS
4670 WILLOW ROAD, SUITE 250
PLEASANTON, CA. 94588

CCTA
2999 OAK ROAD, SUITE 100
WALNUT CREEK, CA. 94597

DRAINAGE QUANTITIES

DRAINAGE SYSTEM No.	DRAINAGE UNIT	CLEAN DRAINAGE FACILITY	CLEAN AND INSPECT COA 72" PIPE	CLEAN AND INSPECT COA 120" PIPE	ABANDON CULVERT	REMOVE CULVERT	REMOVE DRAINAGE FACILITY	MODIFY INLET TO MANHOLE	ADJUST PARTIAL INLET TO GRADE	CAP INLET	REMOVE CONCRETE	SAND BACKFILL	SLURRY CEMENT BACKFILL	DITCH EXCAVATION	STRUCTURAL CONCRETE: BOX CULVERT	STRUCTURAL CONCRETE: HEADWALL/WINGWALL	STRUCTURAL CONCRETE: TRANSITION STRUCTURE	MINOR CONCRETE: MINOR STRUCTURE	MINOR CONCRETE: MISC CONSTRUCTION	MINOR CONCRETE: BACKFILL	MINOR CONCRETE: DITCH LINING	BAR REINFORCING STEEL: BOX CULVERT	BAR REINFORCING STEEL: HEADWALL/WINGWALL	BAR REINFORCING STEEL: TRANSITION STRUCTURE	APC: 12" APC	APC: 18" APC (A)	APC: 18" APC (B)	APC: 24" APC (A)	APC: 24" APC (B)	APC: 30" APC	RCP: 18" JACKED RCP	RCP: 24" JACKED RCP	RCP: 30" JACKED RCP	RCP: 120" JACKED RCP	RCP: 12" RCP	RCP: 18" RCP	RCP: 18" RCP CLASS V	DESCRIPTION	STATION	DRAINAGE PLAN SHEET No.	DRAINAGE SYSTEM No.	DRAINAGE UNIT
		EA	LS	LS	EA	LF	EA	EA	EA	EA	CY	CY	CY	CY	CY	CY	CY	CY	CY	CY	CY	LB	LB	LB	LF	LF	LF	LF	LF	LF	LF	LF	LF	LF	LF	LF	LF					
49	a																																					GRATED LINE DRAIN	30.86′ R+ "CLOA" 46+01.15 TO 32.30′ R+ "CLOA" 46+12.31	D-6	49	a
	b																																					COA (TYPE C) DI w/ DIM	32.30′ R+ "CLOA" 46+12.31			b
	c																								28.1													12" APC	32.30′ R+ "CLOA" 46+12.31 TO 44.55′ R+ "FT" 88+67.77			c
	d						1																															REMOVE INLET	43.77′ R+ "CLOA" 46+35.80			d
	e																	1.99																				G4 INLET w/ DIM	44.55′ R+ "FT" 88+67.77			e
49	f																																					GRATED LINE DRAIN	44.55′ R+ "FT" 88+67.77 TO 39.22′ R+ "FT" 88+77.26		49	f
50	a						1																															REMOVE INLET	16.80′ R+ "FT" 108+68.63	D-4	50	a
51	a																																					2-3" CURB DRAIN	18.23′ R+ "G" 112+65.51 TO 28.88′ R+ "G" 112+65.88	D-4	51	a
52	a																			9.5																		LINED TRAPEZOIDAL DITCH	91.98′ R+ "ER" 170+65.00 TO 90.91′ R+ "ER" 172+00.00	D-4	52	a
	b																	0.95																				G1 INLET	90.81′ R+ "ER" 172+00.00			b
	c																																					12" CSP	90.81′ R+ "ER" 172+00.00 TO 72.00′ R+ "ER" 172+00.00			c
	d																			27.1																		LINED TRAPEZOIDAL DITCH	90.81′ R+ "ER" 172+00.00 TO 93.37′ R+ "ER" 176+04.00			d
	e																	0.95																				G1 INLET	93.37′ R+ "ER" 176+04.00			e
	f																																					12" CSP w/ DD JOINTS	93.37′ R+ "ER" 176+04.00 TO xx.xx R+ "ER" 176+04.00			f
52	g																			20.6																		LINED TRAPEZOIDAL DITCH	93.37′ R+ "ER" 176+04.00 TO 123.62′ R+ "E" 179+50.00	D-4	52	g
53	a																			0.17																		PCC SWALE	28.81′ R+ "FT" 101+41.58 TO 31.69′ R+ "FT" 101+40.68	D-3	53	a
	b																								6.0													12" APC w/ COLLAR	28.81′ R+ "FT" 101+41.58 TO 23.91′ R+ "FT" 101+42.48			b
	c																																					NOT USED				c
	d										0.60																											REMOVE PCC SWALE (PORTION)	31.69′ R+ "FT" 101+40.68 TO 23.91′ R+ "FT" 101+42.48			d
53	e										0.48																											REMOVE HEADWALL	23.91′ R+ "FT" 101+42.48	D-3	53	e
54	a																			0.5																		PCC GUTTER	74.89′ L+ EL 163+77.83 TO 72.13′ L+ "EL" 164+07.26	D-3	54	a
55	a																												11.5									24" APC (B)	33.82′ L+ "RWN" 42+53.51 TO 45.31′ L+ "RWN" 42+54.32	D-2	55	a
	b																	4.72																				G2 INLET	45.31′ L+ "RWN" 42+54.32			b
	c																												64.5									24" APC (B)	45.31′ L+ "RWN" 42+54.32 TO 47.30′ L+ "RWN" 43+18.77			c
	d																	1.71																				G2 INLET	47.30′ L+ "RWN" 43+18.77			d
	e																												16.6									24" APC (B)	47.30′ L+ "RWN" 43+18.77 TO 63.82′ L+ "RWN" 43+17.71			e
	f																	1.73																				G2 INLET	63.82′ L+ "RWN" 43+17.71			f
	g																												12.8									24" APC (B)	63.82′ L+ "RWN" 43+17.71 TO 63.82′ L+ "RWN" 43+17.71			g
55	h																																					24" AFES	64.44′ L+ "RWN" 43+30.61	D-2	55	h
SHEET TOTAL							2				1.08							12.05		57.87					34.1				105.4														

FOR NOTES, ABBREVIATIONS AND LEGEND, SEE SHEET DQ-1

DRAINAGE QUANTITIES
DQ-31

STATE OF CALIFORNIA - DEPARTMENT OF TRANSPORTATION
Caltrans

CONSULTANT FUNCTIONAL SUPERVISOR: NATALINA V. BERNARDI

CALCULATED-DESIGNED BY: DAT NGUYEN
CHECKED BY: LUIS GARCIA
REVISED BY: DQN
DATE REVISED: 2/2/11

LAST REVISION 02-02-11
DATE PLOTTED => 13-JUN-2011
TIME PLOTTED => 10:10

Dist	COUNTY	ROUTE	POST MILES TOTAL PROJECT	SHEET No.	TOTAL SHEETS
04	CC	4	R26.6/R27.5	187	746

REGISTERED CIVIL ENGINEER 2/2/11 DATE

6-13-11
PLANS APPROVAL DATE

REGISTERED PROFESSIONAL ENGINEER N. V. BERNARDI No. 45407 Exp. 9/30/12 CIVIL STATE OF CALIFORNIA

THE STATE OF CALIFORNIA OR ITS OFFICERS OR AGENTS SHALL NOT BE RESPONSIBLE FOR THE ACCURACY OR COMPLETENESS OF SCANNED COPIES OF THIS PLAN SHEET.

BKF ENGINEERS
4670 WILLOW ROAD, SUITE 250
PLEASANTON, CA. 94588

CCTA
2999 OAK ROAD, SUITE 100
WALNUT CREEK, CA. 94597

DRAINAGE QUANTITIES

DRAINAGE SYSTEM No.	DRAINAGE UNIT	RCP 24" RCP	RCP 24" RCP CLASS V	RCP 30" RCP	RCP 36" RCP	RCP 42" RCP	RCP 72" RCP	RCP 120" RCP	CSP Bit Ctd 12" (0.064" THICK)	CSP Bit Ctd 18" (0.064" THICK)	CSP Bit Ctd 24" (0.079" THICK)	CSP Bit Ctd 30" (0.064" THICK)	CSP Bit Ctd 36" (0.064" THICK)	CSP Bit Ctd 48" (0.079" THICK)	18" ASP	18" SCSP	GRATED LINE DRAIN	CANTILEVER WALL PRECAST Conc BOX CULVERT	12" WSP (0.25" THICK)	24" AFES	COA (TYPE C) INLET	6" PPP UD	3" CURB DRAIN	SIDEWALK CROSS DRAIN	ROCK SLOPE PROTECTION (FACING METHOD B)	CLASS 8 ROCK SLOPE PROTECTION FABRIC	AGGREGATE BASE (CLASS 3)	FRAME & COVER (N) 18-9	FRAME & COVER (N) 24-9	FRAME & COVER (N) 24-12	FRAME & COVER (N) 24-12X	FRAME & COVER (N) 36R	FRAME & COVER (N) U45	FRAME & COVER (N) U46	BOLTDOWN (N)	GRATE LOCKING DEVICE	MISCELLANEOUS IRON AND STEEL	PLACE HMA MISCELLANEOUS AREA	HMA (TYPE A)	MAXIMUM COVER (N)	HEIGHT OF INLET "H" (N)	PIPE JOINT CLASSIFICATION (N)	DESCRIPTION	STATION	DRAINAGE PLAN SHEET No.	DRAINAGE SYSTEM No.	DRAINAGE UNIT
		LF	LF	LF	LF	LF	LF	LF	LF	LF	LF	LF	LF	LF	LF	LF	LF	LF	LF	EA	EA	LF	LF	EA	CY	SY	CY	EA	EA	EA	EA	EA	EA	EA	EA	EA	LB	SY	TON	LF	LF						
49	a																10																										GRATED LINE DRAIN	30.86′ R+ "CLOA" 46+01.15 TO 32.30′ R+ "CLOA" 46+12.31	D-6	49	a
	b																				1																				2.55		COA (TYPE C) DI w/ DIM	32.30′ R+ "CLOA" 46+12.31			b
	c																																						1.80		S	12" APC	32.30′ R+ "CLOA" 46+12.31 TO 44.55′ R+ "FT" 88+67.77			c
	d																																									REMOVE INLET	43.77′ R+ "CLOA" 46+35.80			d
	e																														1						239				2.74		G4 INLET w/ DIM	44.55′ R+ "FT" 88+67.77			e
49	f																10																										GRATED LINE DRAIN	44.55′ R+ "FT" 88+67.77 TO 39.22′ R+ "FT" 88+77.26	D-6	49	f
50	a																																										REMOVE INLET	16.80′ R+ "FT" 108+68.63	D-4	50	a
51	a																						21.3																				2-3" CURB DRAIN	18.23′ R+ "G" 112+65.51 TO 28.88′ R+ "G" 112+65.88	D-4	51	a
52	a																																										LINED TRAPEZOIDAL DITCH	91.98′ R+ "ER" 170+65.00 TO 90.91′ R+ "ER" 172+00.00	D-4	52	a
	b																												1								263				3.00		G1 INLET	90.81′ R+ "ER" 172+00.00			b
	c								12.2																														3.50		D	12" CSP w/ DD JOINTS	90.81′ R+ "ER" 172+00.00 TO 72.00′ R+ "ER" 172+00.00			c
	d																																									LINED TRAPEZOIDAL DITCH	90.81′ R+ "ER" 172+00.00 TO 93.37′ R+ "ER" 176+04.00			d
	e																												1								263				3.00		G1 INLET	93.37′ R+ "ER" 176+04.00			e
	f								16.8																														3.50		D	12" CSP w/ DD JOINTS	93.37′ R+ "ER" 176+04.00 TO xx.xx R+ "ER" 176+04.00			f
52	g																																										LINED TRAPEZOIDAL DITCH	93.37′ R+ "ER" 176+04.00 TO 123.62′ R+ "E" 179+50.00	D-4	52	g
53	a																																										PCC SWALE	28.81′ R+ "FT" 101+41.58 TO 31.69′ R+ "FT" 101+40.68	D-3	53	a
	b																																								S	12" APC w/ COLLAR	28.81′ R+ "FT" 101+41.58 TO 23.91′ R+ "FT" 101+42.48			b
	c																																									NOT USED				c
	d																																										REMOVE PCC SWALE (PORTION)	31.69′ R+ "FT" 101+40.68 TO 23.91′ R+ "FT" 101+42.48			d
53	e																																										REMOVE HEADWALL	23.91′ R+ "FT" 101+42.48	D-3	53	e
54	a																																										PCC GUTTER	74.89′ L+ "EL" 163+77.83 TO 72.13′ L+ "EL" 164+07.26	D-3	54	a
55	a																																						10.81		S	24" APC (B)	33.82′ L+ "RWN" 42+53.51 TO 45.31′ L+ "RWN" 42+54.32	D-2	55	a
	b																													1							326				11.5		G2 INLET	45.31′ L+ "RWN" 42+54.32			b
	c																																						9.25		S	24" APC (B)	45.31′ L+ "RWN" 42+54.32 TO 47.30′ L+ "RWN" 43+18.77			c
	d																													1							326				4.55		G2 INLET	47.30′ L+ "RWN" 43+18.77			d
	e																																						2.40		S	24" APC (B)	47.30′ L+ "RWN" 43+18.77 TO 63.82′ L+ "RWN" 43+17.71			e
	f																													1							326				4.65		G2 INLET	63.82′ L+ "RWN" 43+17.71			f
	g																																						2.40		S	24" APC (B)	63.82′ L+ "RWN" 43+17.71 TO 63.82′ L+ "RWN" 43+17.71			g
55	h																			1																							24" AFES	64.44′ L+ "RWN" 43+30.61	D-2	55	h
SHEET TOTAL									29.0								20			1	1		21.3					2	3	1						1743											

DRAINAGE QUANTITIES
DQ-32

FOR NOTES, ABBREVIATIONS AND LEGEND, SEE SHEET DQ-1

STATE OF CALIFORNIA - DEPARTMENT OF TRANSPORTATION

Caltrans

CONSULTANT FUNCTIONAL SUPERVISOR: NATALINA V. BERNARDI

CALCULATED-DESIGNED BY: DAT NGUYEN

CHECKED BY: LUIS GARCIA

REVISED BY: DQN

DATE REVISED: 2/2/11

LAST REVISION 02-02-11

DATE PLOTTED => 13-JUN-2011
TIME PLOTTED => 10:10

Dist	COUNTY	ROUTE	POST MILES TOTAL PROJECT	SHEET No.	TOTAL SHEETS
04	CC	4	R26.6/R27.5	188	746

REGISTERED CIVIL ENGINEER 2/2/11 DATE

6-13-11
PLANS APPROVAL DATE

REGISTERED PROFESSIONAL ENGINEER N. V. BERNARDI No. 45407 Exp. 9/30/12 CIVIL STATE OF CALIFORNIA

THE STATE OF CALIFORNIA OR ITS OFFICERS OR AGENTS SHALL NOT BE RESPONSIBLE FOR THE ACCURACY OR COMPLETENESS OF SCANNED COPIES OF THIS PLAN SHEET.

BKF ENGINEERS
4670 WILLOW ROAD, SUITE 250
PLEASANTON, CA. 94588

CCTA
2999 OAK ROAD, SUITE 100
WALNUT CREEK, CA. 94597

NOTE: DRAINAGE FACILITIES TO BE REMOVED INCLUDE 28 INLETS, 1 MANHOLE, 1 FLARED END SECTION, AND 1 BULKHEAD.

DRAINAGE QUANTITIES

DRAINAGE SYSTEM No.	DRAINAGE UNIT	CLEAN DRAINAGE FACILITY	CLEAN AND INSPECT COA 72" PIPE	CLEAN AND INSPECT COA 120" PIPE	ABANDON CULVERT	REMOVE CULVERT	REMOVE DRAINAGE FACILITY	MODIFY INLET TO MANHOLE	ADJUST PARTIAL INLET TO GRADE	CAP INLET	REMOVE CONCRETE	SAND BACKFILL	SLURRY CEMENT BACKFILL	DITCH EXCAVATION	STRUCTURAL CONCRETE BOX CULVERT	STRUCTURAL CONCRETE HEADWALL/WINGWALL	STRUCTURAL CONCRETE TRANSITION STRUCTURE	MINOR CONCRETE MINOR STRUCTURE	MINOR CONCRETE MISC CONSTRUCTION	MINOR CONCRETE BACKFILL	MINOR CONCRETE DITCH LINING	BAR REINFORCING STEEL BOX CULVERT	BAR REINFORCING STEEL HEADWALL/WINGWALL	BAR REINFORCING STEEL TRANSITION STRUCTURE	APC 12" APC	APC 18" APC (A)	APC 18" APC (B)	APC 24" APC (A)	APC 24" APC (B)	APC 30" APC	RCP 18" JACKED RCP	RCP 24" JACKED RCP	RCP 30" JACKED RCP	RCP 120" JACKED RCP	RCP 12" RCP	RCP 18" RCP	RCP 18" RCP CLASS V	DESCRIPTION	STATION	DRAINAGE PLAN SHEET No.	DRAINAGE SYSTEM No.	DRAINAGE UNIT
		EA	LS	LS	EA	LF	EA	EA	EA	EA	CY	CY	CY	CY	CY	CY	CY	CY	CY	CY	CY	LB	LB	LB	LF	LF	LF	LF	LF	LF	LF	LF	LF	LF	LF	LF	LF					
55	i																																					RSP	64.44′ Lt "RWN" 43+30.61	D-2	55	i
	j																																					6" PPP	64.63′ Lt "RWN" 43+36.43 TO 68.16′ Lt "RWN" 44+47.49			j
	k																	1.58																				G2 SW INLET	68.16′ Lt "RWN" 44+47.49			k
	l																																					30" CSP	68.16′ Lt "RWN" 44+47.49 TO 69.30′ Lt "RWN" 44+83.48			l
55	m																																					RSP	69.30′ Lt "RWN" 44+83.48	D-2	55	m
56	a																								4.3													12" APC (B)	31.79′ Rt "REN" 52+94.68 TO 34.00′ Rt "REN" 53+00.00	D-2	56	a
56	b																	1.04																				G1 DI	34.00′ Rt "REN" 53+00.00	D-2	56	b
SHEET TOTAL																		2.62							4.3																	
GRAND TOTAL		1	1	1	7	1545.6	31	1	3	4	471.03	44.56	481.4	103.5	772	82	110	294.37	0.47	107.86	104.82	221682	10658	15950	235.7	4594.5	4028.7	29.9	2015.1	544.4	89.8	172.6	40.7	565.3	4.5	90.2	77.2					

FOR NOTES, ABBREVIATIONS AND LEGEND, SEE SHEET DQ-1

DRAINAGE QUANTITIES
DQ-33

STATE OF CALIFORNIA - DEPARTMENT OF TRANSPORTATION
Caltrans

CONSULTANT FUNCTIONAL SUPERVISOR: NATALINA V. BERNARDI

CALCULATED-DESIGNED BY: DAT NGUYEN
CHECKED BY: LUIS GARCIA

REVISED BY: DQN
DATE REVISED: 2/2/11

LAST REVISION 02-02-11
DATE PLOTTED => 13-JUN-2011
TIME PLOTTED => 10:10

Dist	COUNTY	ROUTE	POST MILES TOTAL PROJECT	SHEET No.	TOTAL SHEETS
04	CC	4	R26.6/R27.5	189	746

REGISTERED CIVIL ENGINEER 2/2/11 DATE

6-13-11
PLANS APPROVAL DATE

REGISTERED PROFESSIONAL ENGINEER N. V. BERNARDI No. 45407 Exp. 9/30/12 CIVIL STATE OF CALIFORNIA

THE STATE OF CALIFORNIA OR ITS OFFICERS OR AGENTS SHALL NOT BE RESPONSIBLE FOR THE ACCURACY OR COMPLETENESS OF SCANNED COPIES OF THIS PLAN SHEET.

BKF ENGINEERS
4670 WILLOW ROAD, SUITE 250
PLEASANTON, CA. 94588

CCTA
2999 OAK ROAD, SUITE 100
WALNUT CREEK, CA. 94597

DRAINAGE QUANTITIES

DRAINAGE SYSTEM No.	DRAINAGE UNIT	RCP 24" RCP	RCP 24" RCP CLASS V	RCP 30" RCP	RCP 36" RCP	RCP 42" RCP	RCP 72" RCP	RCP 120" RCP	CSP Bit Ctd 12" (0.064" THICK)	CSP Bit Ctd 18" (0.064" THICK)	CSP Bit Ctd 24" (0.079" THICK)	CSP Bit Ctd 30" (0.064" THICK)	CSP Bit Ctd 36" (0.064" THICK)	CSP Bit Ctd 48" (0.079" THICK)	18" ASP	18" SCSP	GRATED LINE DRAIN	CANTILEVER WALL PRECAST Conc BOX CULVERT	12" WSP (0.25" THICK)	24" AFES	COA (TYPE C) INLET	6" PPP UD	3" CURB DRAIN	SIDEWALK CROSS DRAIN	ROCK SLOPE PROTECTION (FACING METHOD B)	CLASS 8 ROCK SLOPE PROTECTION FABRIC	AGGREGATE BASE (CLASS 3)	FRAME & COVER (N) 18-9	FRAME & COVER (N) 24-9	FRAME & COVER (N) 24-12	FRAME & COVER (N) 24-12X	FRAME & COVER (N) 36R	FRAME & COVER (N) U45	FRAME & COVER (N) U46	BOLTDOWN (N)	GRATE LOCKING DEVICE	MISCELLANEOUS IRON AND STEEL	PLACE HMA MISCELLANEOUS AREA	HMA (TYPE A)	MAXIMUM COVER (N)	HEIGHT OF INLET "H" (N)	PIPE JOINT CLASSIFICATION (N)	DESCRIPTION	STATION	DRAINAGE PLAN SHEET No.	DRAINAGE SYSTEM No.	DRAINAGE UNIT
		LF	LF	LF	LF	LF	LF	LF	LF	LF	LF	LF	LF	LF	LF	LF	LF	LF	LF	EA	EA	LF	LF	EA	CY	SY	CY	EA	EA	EA	EA	EA	EA	EA	EA	EA	LB	SY	TON	LF	LF					
55	i																								16.47	40.85																	RSP	64.44′ Lt "RWN" 43+30.61	D-2	55	i
	j																					108.5																				S	6" PPP	64.63′ Lt "RWN" 43+36.43 TO 68.16′ Lt "RWN" 44+47.49			j
	k																													1						326				4.07		G2 SW INLET	68.16′ Lt "RWN" 44+47.49			k
	l											32.0																											3.28			30" CSP	68.16′ Lt "RWN" 44+47.49 TO 69.30′ Lt "RWN" 44+83.48			l
55	m																								7.41	20.00																	RSP	69.30′ Lt "RWN" 44+83.48	D-2	55	m
56	a																																						2.4		S	12" APC (B)	31.79′ Rt "REN" 52+94.68 TO 34.00′ Rt "REN" 53+00.00	D-2	56	a
56	b																														1					239						G1 DI	34.00′ Rt "REN" 53+00.00	D-2	56	b
SHEET TOTAL												32.0										108.5			23.88	60.85				1	1					565										
GRAND TOTAL		99.3	19.1	8.2	10.5	60.5	42.8	312.9	79.9	37.9	76.3	32.0	3.5	617.9	674.8	188.3	108.3	66	126.4	1	25	108.5	73.1	4	250.73	916.83	214.1	2	10	119	9	2	10	3	6	1	47970	1.86	0.375								

FOR NOTES, ABBREVIATIONS AND LEGEND, SEE SHEET DQ-1

DRAINAGE QUANTITIES
DQ-34

STATE OF CALIFORNIA - DEPARTMENT OF TRANSPORTATION
Caltrans

CONSULTANT FUNCTIONAL SUPERVISOR: NATALINA V. BERNARDI

CALCULATED-DESIGNED BY: DAT NGUYEN
CHECKED BY: LUIS GARCIA

REVISED BY: DQN
DATE REVISED: 2/2/11

LAST REVISION 02-02-11
DATE PLOTTED => 13-JUN-2011
TIME PLOTTED => 10:10

Dist	COUNTY	ROUTE	POST MILES TOTAL PROJECT	SHEET No.	TOTAL SHEETS
04	CC	4	R26.6/R27.5	190	746

REGISTERED CIVIL ENGINEER — DATE 3/8/11

6-13-11
PLANS APPROVAL DATE

REGISTERED PROFESSIONAL ENGINEER — T.E. HILLESLAND — No. C54200 — Exp. 12/31/11 — CIVIL — STATE OF CALIFORNIA

THE STATE OF CALIFORNIA OR ITS OFFICERS OR AGENTS SHALL NOT BE RESPONSIBLE FOR THE ACCURACY OR COMPLETENESS OF SCANNED COPIES OF THIS PLAN SHEET.

MOFFATT & NICHOL
1300 CLAY ST, STE 550
OAKLAND, CA 94612

CCTA
2999 OAK ROAD, STE 100
WALNUT CREEK, CA 94597

LEGEND:

- (NO.) DRAINAGE SYSTEM No.
- (a) DRAINAGE ITEM No.
- INLET
- UNDERDRAIN RISER
- UNDERDRAIN

NOTES:

1. FOR UNDERDRAIN PROFILES, SEE SHEETS SBP-1 TO SBP-6.
2. FOR UNDERDRAIN DETAILS, SEE SHEET SBD-1 AND STANDARD PLAN D102.
3. ALL UNDERDRAIN CONNECTIONS TO INLET STRUCTURES SHALL BE STANDARD JOINTS.

ABBREVIATIONS:

NIC	NOT IN CONTRACT
UDTR	UNDERDRAIN TERMINAL RISER
UDR	UNDERDRAIN RISER

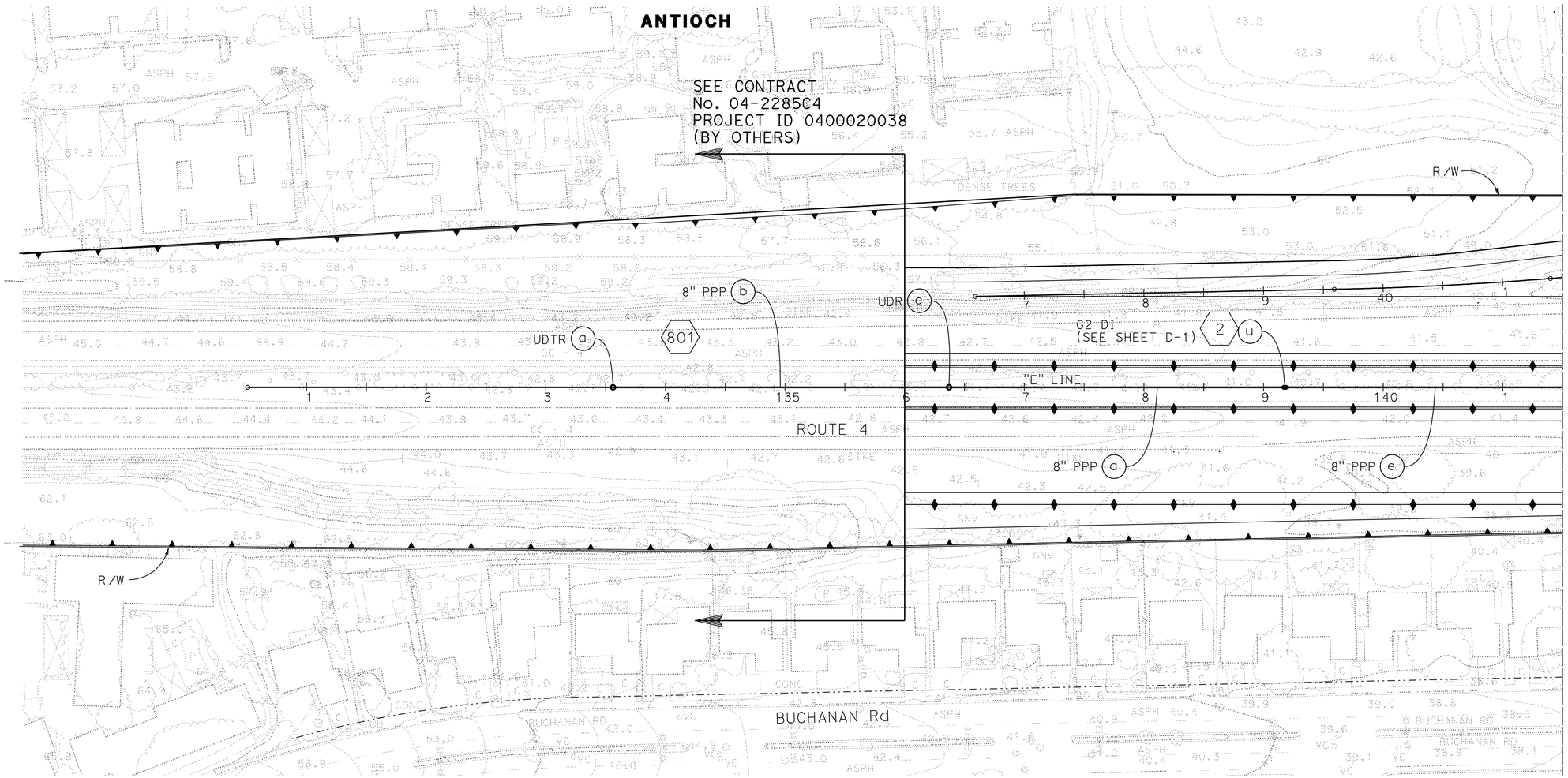

SUBSURFACE DRAINAGE PLAN
UNDERDRAIN
(eBART)

SCALE: 1" = 50'

SB-1

THIS PLAN ACCURATE FOR UNDERDRAIN WORK ONLY.

REVISED BY	DATE REVISED
NK	3/8/11

CALCULATED-DESIGNED BY: NIKKI KOBAYASHI
CHECKED BY: BRUCE ZAENI
CONSULTANT FUNCTIONAL SUPERVISOR: TOM HILLESLAND

STATE OF CALIFORNIA - DEPARTMENT OF TRANSPORTATION
Caltrans

LAST REVISION 03-08-11 | DATE PLOTTED => 13-JUN-2011 | TIME PLOTTED => 10:10

Dist	COUNTY	ROUTE	POST MILES TOTAL PROJECT	SHEET No.	TOTAL SHEETS
04	CC	4	R26.6/R27.5	191	746

REGISTERED CIVIL ENGINEER — DATE 3/8/11

6-13-11
PLANS APPROVAL DATE

REGISTERED PROFESSIONAL ENGINEER — T.E. HILLESLAND — No. C54200 — Exp. 12/31/11 — CIVIL — STATE OF CALIFORNIA

THE STATE OF CALIFORNIA OR ITS OFFICERS OR AGENTS SHALL NOT BE RESPONSIBLE FOR THE ACCURACY OR COMPLETENESS OF SCANNED COPIES OF THIS PLAN SHEET.

MOFFATT & NICHOL
1300 CLAY ST, STE 550
OAKLAND, CA 94612

CCTA
2999 OAK ROAD, STE 100
WALNUT CREEK, CA 94597

NOTE:

FOR LEGEND, NOTES AND ABBREVIATIONS SEE SHEET SB-1.

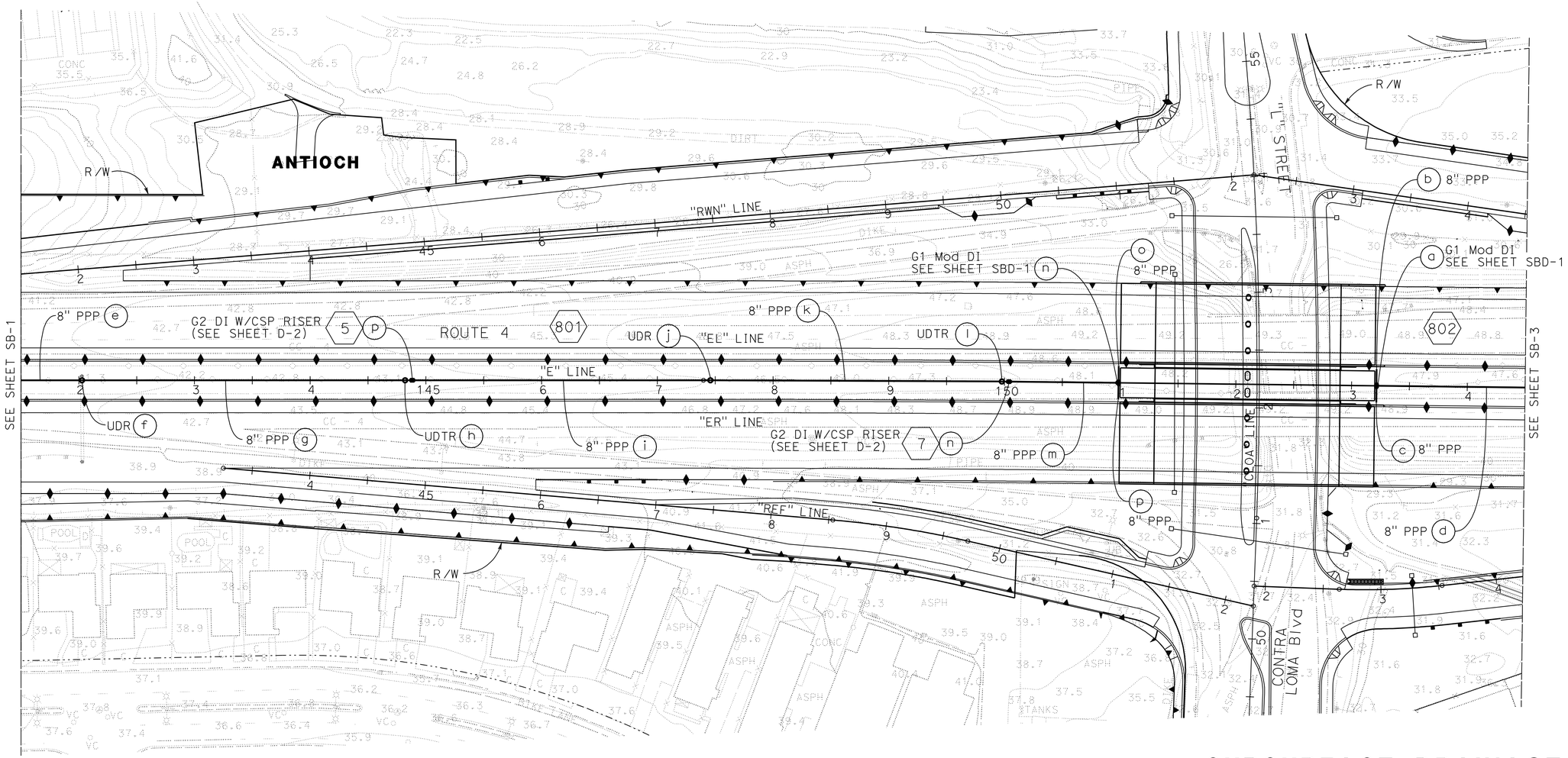

SUBSURFACE DRAINAGE PLAN
UNDERDRAIN
(eBART)

SCALE: 1" = 50'

SB-2

THIS PLAN ACCURATE FOR UNDERDRAIN WORK ONLY.

NK	3/8/11	NIKKI KOBAYASHI	BRUCE ZAENI

REVISED BY — DATE REVISED — CALCULATED-DESIGNED BY — CHECKED BY

CONSULTANT FUNCTIONAL SUPERVISOR: TOM HILLESLAND

STATE OF CALIFORNIA - DEPARTMENT OF TRANSPORTATION — Caltrans

LAST REVISION 03-08-11 — DATE PLOTTED => 13-JUN-2011 — TIME PLOTTED => 10:11

Dist	COUNTY	ROUTE	POST MILES TOTAL PROJECT	SHEET No.	TOTAL SHEETS
04	CC	4	R26.6/R27.5	192	746

REGISTERED CIVIL ENGINEER — DATE 3/8/11

6-13-11
PLANS APPROVAL DATE

REGISTERED PROFESSIONAL ENGINEER — T.E. HILLESLAND — No. C54200 — Exp. 12/31/11 — CIVIL — STATE OF CALIFORNIA

THE STATE OF CALIFORNIA OR ITS OFFICERS OR AGENTS SHALL NOT BE RESPONSIBLE FOR THE ACCURACY OR COMPLETENESS OF SCANNED COPIES OF THIS PLAN SHEET.

MOFFATT & NICHOL
1300 CLAY ST, STE 550
OAKLAND, CA 94612

CCTA
2999 OAK ROAD, STE 100
WALNUT CREEK, CA 94597

NOTE:

FOR LEGEND, NOTES AND ABBREVIATIONS SEE SHEET SB-1.

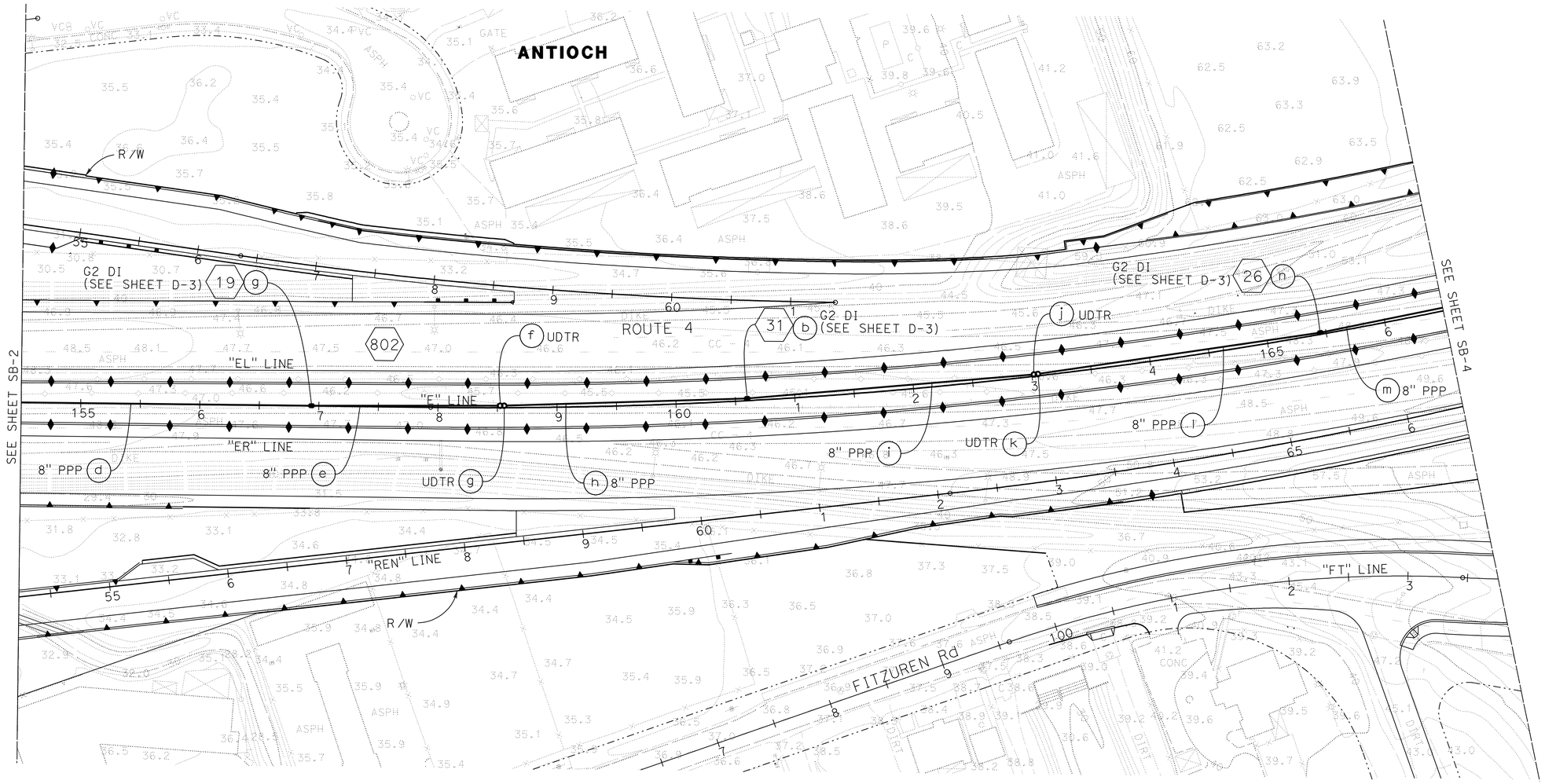

SUBSURFACE DRAINAGE PLAN
UNDERDRAIN
(eBART)

SCALE: 1" = 50'

SB-3

THIS PLAN ACCURATE FOR UNDERDRAIN WORK ONLY.

STATE OF CALIFORNIA - DEPARTMENT OF TRANSPORTATION — Caltrans

CONSULTANT FUNCTIONAL SUPERVISOR: TOM HILLESLAND

CALCULATED-DESIGNED BY: NIKKI KOBAYASHI

CHECKED BY: BRUCE ZAENI

REVISED BY: NK

DATE REVISED: 3/8/11

LAST REVISION 03-08-11 | DATE PLOTTED => 13-JUN-2011 | TIME PLOTTED => 10:11

BORDER LAST REVISED 4/11/2008

RELATIVE BORDER SCALE IS IN INCHES 0 1 2 3

USERNAME => trmikesl
DGN FILE => 42285Eie003.dgn

CU 04275

EA 2285E1

Dist	COUNTY	ROUTE	POST MILES TOTAL PROJECT	SHEET No.	TOTAL SHEETS
04	CC	4	R26.6/R27.5	193	746

REGISTERED CIVIL ENGINEER — DATE 3/8/11

6-13-11
PLANS APPROVAL DATE

REGISTERED PROFESSIONAL ENGINEER — T.E. HILLESLAND — No. C54200 — Exp. 12/31/11 — CIVIL — STATE OF CALIFORNIA

THE STATE OF CALIFORNIA OR ITS OFFICERS OR AGENTS SHALL NOT BE RESPONSIBLE FOR THE ACCURACY OR COMPLETENESS OF SCANNED COPIES OF THIS PLAN SHEET.

MOFFATT & NICHOL
1300 CLAY ST, STE 550
OAKLAND, CA 94612

CCTA
2999 OAK ROAD, STE 100
WALNUT CREEK, CA 94597

NOTE:

FOR LEGEND, NOTES AND ABBREVIATIONS SEE SHEET SB-1.

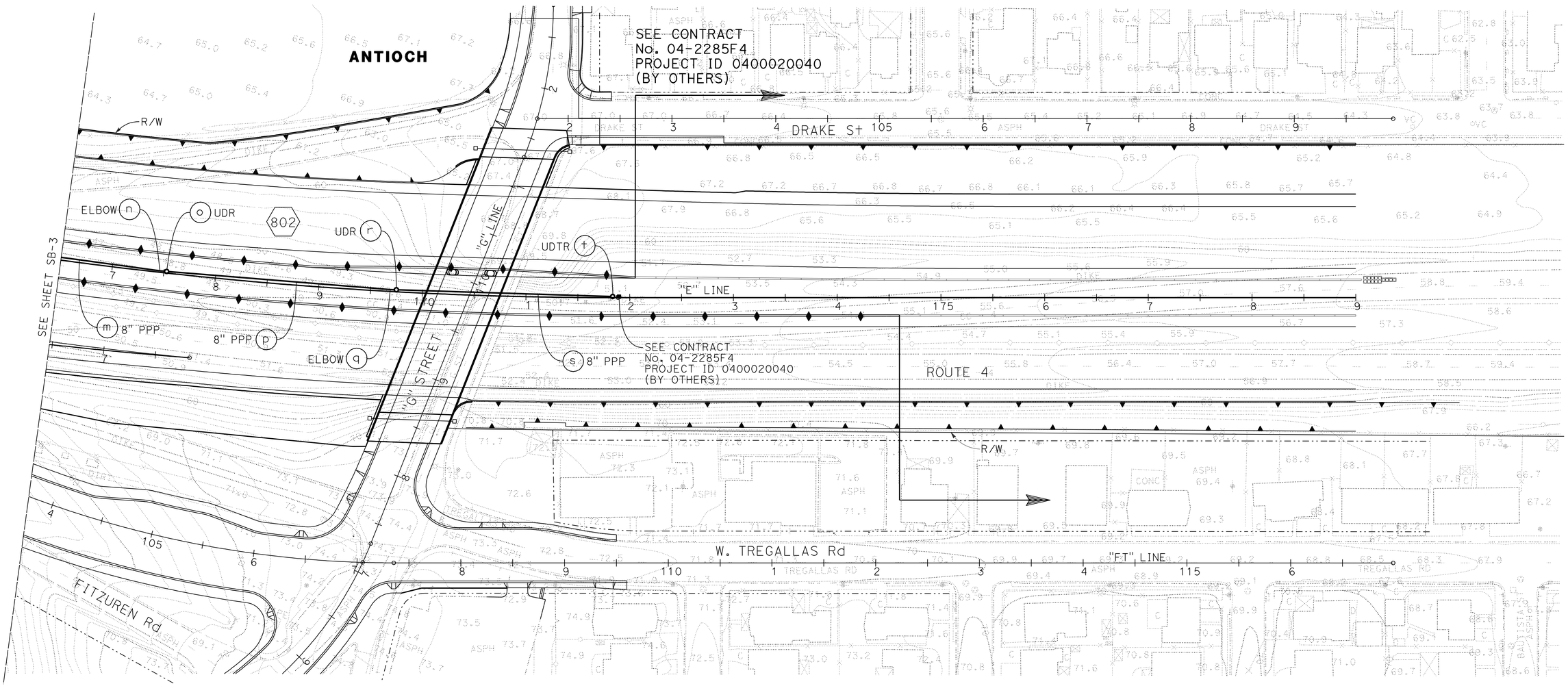

SUBSURFACE DRAINAGE PLAN
UNDERDRAIN
(eBART)

SCALE: 1" = 50'

SB-4

THIS PLAN ACCURATE FOR UNDERDRAIN WORK ONLY.

REVISED BY	NK
DATE REVISED	3/8/11
NIKKI KOBAYASHI	
BRUCE ZAENI	
CALCULATED-DESIGNED BY	
CHECKED BY	
CONSULTANT FUNCTIONAL SUPERVISOR	
TOM HILLESLAND	

STATE OF CALIFORNIA - DEPARTMENT OF TRANSPORTATION

Caltrans

LAST REVISION 03-08-11 — DATE PLOTTED => 13-JUN-2011 — TIME PLOTTED => 10:11

Dist	COUNTY	ROUTE	POST MILES TOTAL PROJECT	SHEET No.	TOTAL SHEETS
04	CC	4	R26.6/R27.5	194	746

REGISTERED CIVIL ENGINEER — DATE 2/2/11

6-13-11
PLANS APPROVAL DATE

REGISTERED PROFESSIONAL ENGINEER — T.E. Hillesland No. C54200 Exp. 12/31/11 CIVIL — STATE OF CALIFORNIA

THE STATE OF CALIFORNIA OR ITS OFFICERS OR AGENTS SHALL NOT BE RESPONSIBLE FOR THE ACCURACY OR COMPLETENESS OF SCANNED COPIES OF THIS PLAN SHEET.

MOFFATT & NICHOL
1300 CLAY ST, STE 550
OAKLAND, CA 94612

CCTA
2999 OAK ROAD, STE 100
WALNUT CREEK, CA 94597

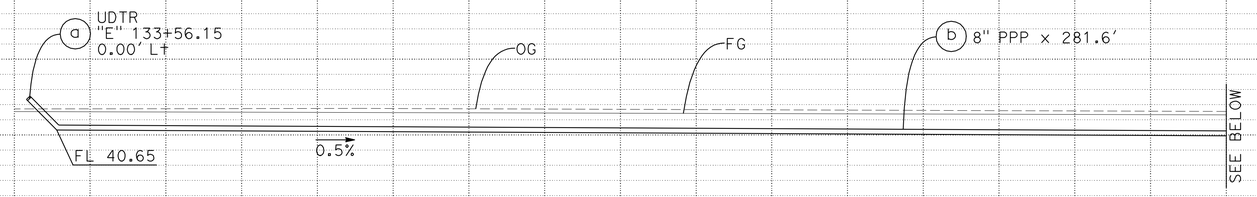

DRAINAGE SYSTEM No. 801

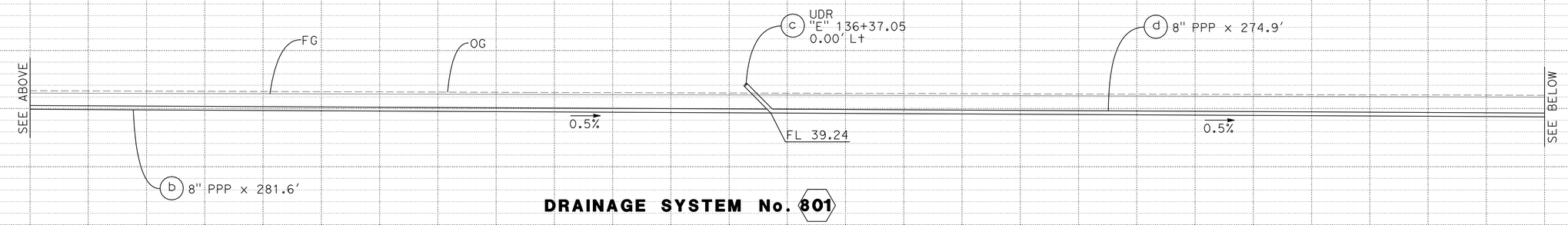

DRAINAGE SYSTEM No. 801

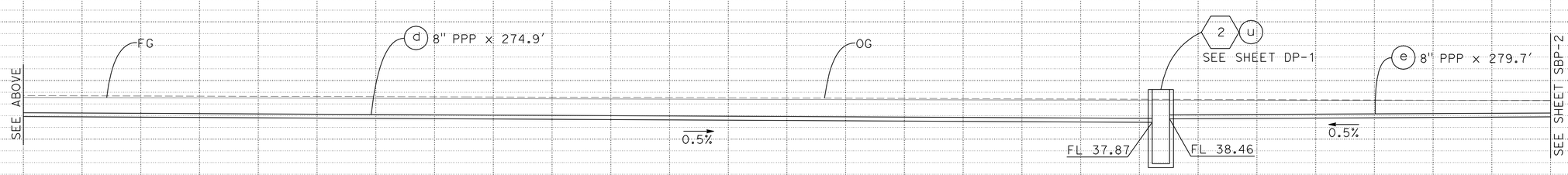

DRAINAGE SYSTEM No. 801

SUBSURFACE DRAINAGE PROFILES
UNDERDRAIN
(eBART)

SCALE: Horiz 1" = 10'
Vert 1" = 10'

SBP-1

STATE OF CALIFORNIA - DEPARTMENT OF TRANSPORTATION — Caltrans

CONSULTANT FUNCTIONAL SUPERVISOR: TOM HILLESLAND

CALCULATED-DESIGNED BY: NIKKI KOBAYASHI
CHECKED BY: BRUCE ZAENI

REVISED BY: NK
DATE REVISED: 2/2/11

LAST REVISION 02-02-11 — DATE PLOTTED => 13-JUN-2011 — TIME PLOTTED => 10:11

Dist	COUNTY	ROUTE	POST MILES TOTAL PROJECT	SHEET No.	TOTAL SHEETS
04	CC	4	R26.6/R27.5	195	746

REGISTERED CIVIL ENGINEER 2/2/11 DATE

6-13-11
PLANS APPROVAL DATE

REGISTERED PROFESSIONAL ENGINEER T.E. Hillesland No. C54200 Exp. 12/31/11 CIVIL STATE OF CALIFORNIA

THE STATE OF CALIFORNIA OR ITS OFFICERS OR AGENTS SHALL NOT BE RESPONSIBLE FOR THE ACCURACY OR COMPLETENESS OF SCANNED COPIES OF THIS PLAN SHEET.

MOFFATT & NICHOL
1300 CLAY ST, STE 550
OAKLAND, CA 94612

CCTA
2999 OAK ROAD, STE 100
WALNUT CREEK, CA 94597

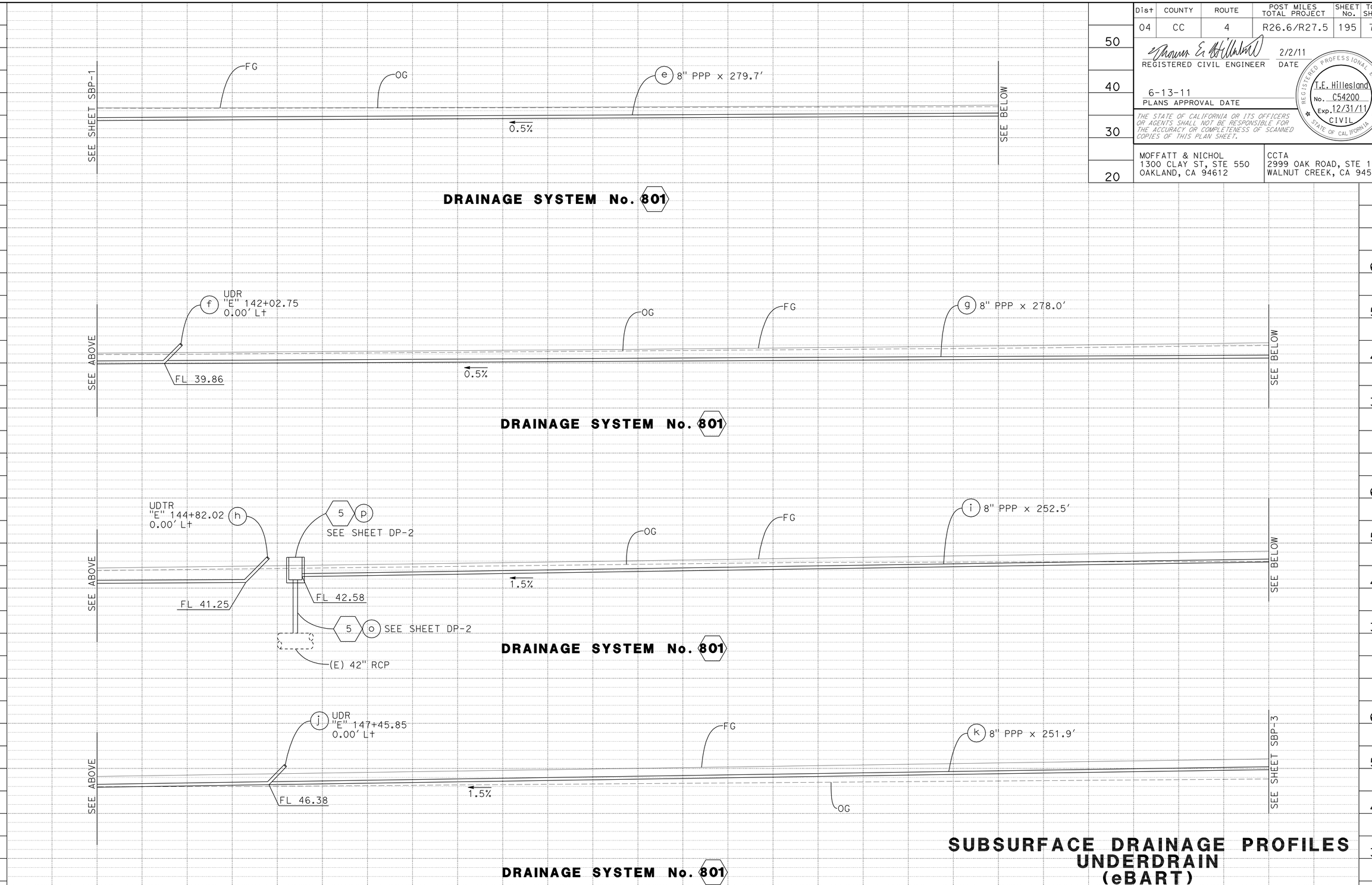

SUBSURFACE DRAINAGE PROFILES UNDERDRAIN (eBART)

SCALE: Horiz 1" = 10'
Vert 1" = 10'

SBP-2

REVISED BY	DATE REVISED
NK	2/2/11

NIKKI KOBAYASHI — BRUCE ZAENI — CALCULATED-DESIGNED BY — CHECKED BY — CONSULTANT FUNCTIONAL SUPERVISOR — TOM HILLESLAND

STATE OF CALIFORNIA - DEPARTMENT OF TRANSPORTATION

Caltrans

LAST REVISION 02-02-11 — DATE PLOTTED => 13-JUN-2011 — TIME PLOTTED => 10:11

Dist	COUNTY	ROUTE	POST MILES TOTAL PROJECT	SHEET No.	TOTAL SHEETS
04	CC	4	R26.6/R27.5	196	746

REGISTERED CIVIL ENGINEER 2/2/11 DATE

6-13-11
PLANS APPROVAL DATE

REGISTERED PROFESSIONAL ENGINEER T.E. Hillesland No. C54200 Exp. 12/31/11 CIVIL STATE OF CALIFORNIA

THE STATE OF CALIFORNIA OR ITS OFFICERS OR AGENTS SHALL NOT BE RESPONSIBLE FOR THE ACCURACY OR COMPLETENESS OF SCANNED COPIES OF THIS PLAN SHEET.

MOFFATT & NICHOL
1300 CLAY ST, STE 550
OAKLAND, CA 94612

CCTA
2999 OAK ROAD, STE 100
WALNUT CREEK, CA 94597

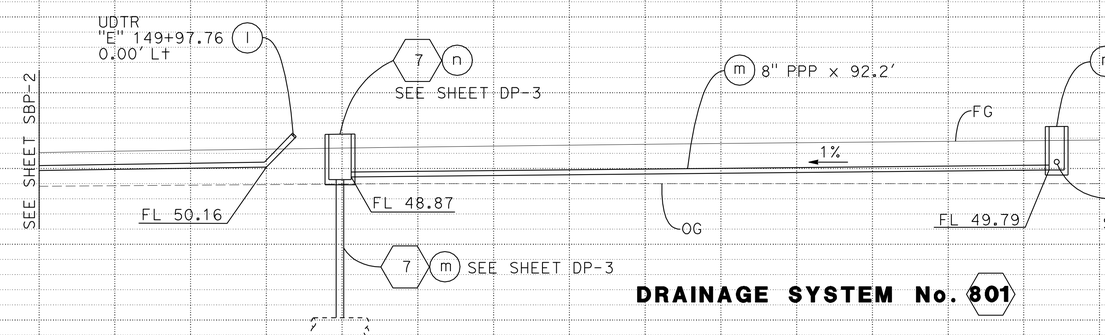

DRAINAGE SYSTEM No. 801

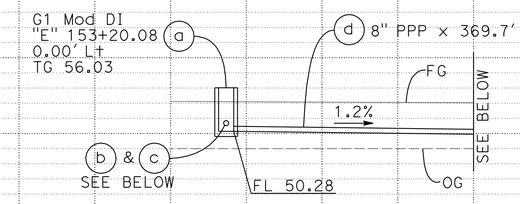

DRAINAGE SYSTEM No. 802

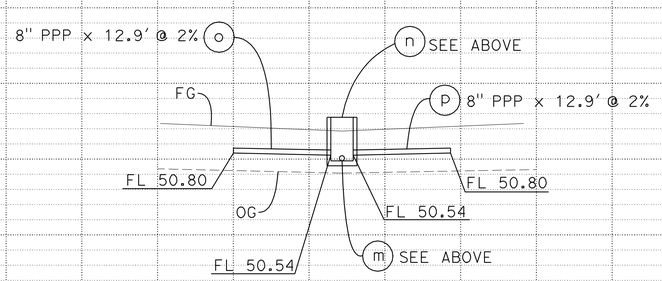

DRAINAGE SYSTEM No. 801

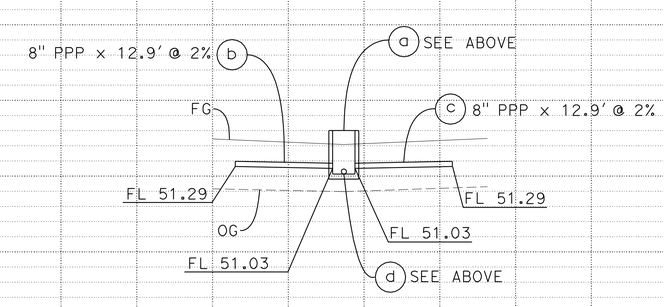

DRAINAGE SYSTEM No. 802

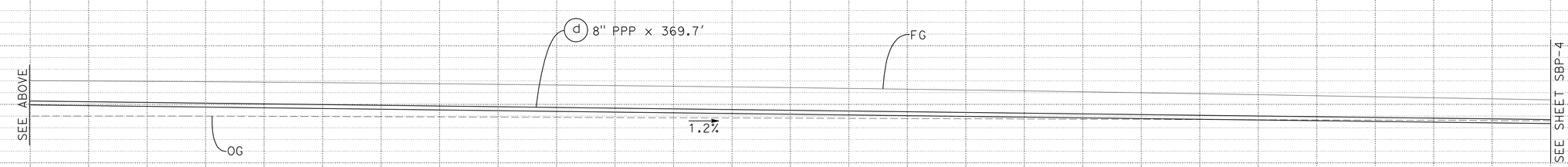

DRAINAGE SYSTEM No. 802

SUBSURFACE DRAINAGE PROFILES
UNDERDRAIN
(eBART)

SCALE: Horiz 1" = 10'
Vert 1" = 10'

SBP-3

STATE OF CALIFORNIA - DEPARTMENT OF TRANSPORTATION
Caltrans

CONSULTANT FUNCTIONAL SUPERVISOR: TOM HILLESLAND

CALCULATED-DESIGNED BY: NIKKI KOBAYASHI
CHECKED BY: BRUCE ZAENI

REVISED BY: NK
DATE REVISED: 2/2/11

LAST REVISION 02-02-11
DATE PLOTTED => 13-JUN-2011
TIME PLOTTED => 10:11

Dist	COUNTY	ROUTE	POST MILES TOTAL PROJECT	SHEET No.	TOTAL SHEETS
04	CC	4	R26.6/R27.5	197	746

REGISTERED CIVIL ENGINEER 2/2/11 DATE

6-13-11
PLANS APPROVAL DATE

REGISTERED PROFESSIONAL ENGINEER T.E. Hillesland No. C54200 Exp. 12/31/11 CIVIL STATE OF CALIFORNIA

THE STATE OF CALIFORNIA OR ITS OFFICERS OR AGENTS SHALL NOT BE RESPONSIBLE FOR THE ACCURACY OR COMPLETENESS OF SCANNED COPIES OF THIS PLAN SHEET.

MOFFATT & NICHOL
1300 CLAY ST, STE 550
OAKLAND, CA 94612

CCTA
2999 OAK ROAD, STE 100
WALNUT CREEK, CA 94597

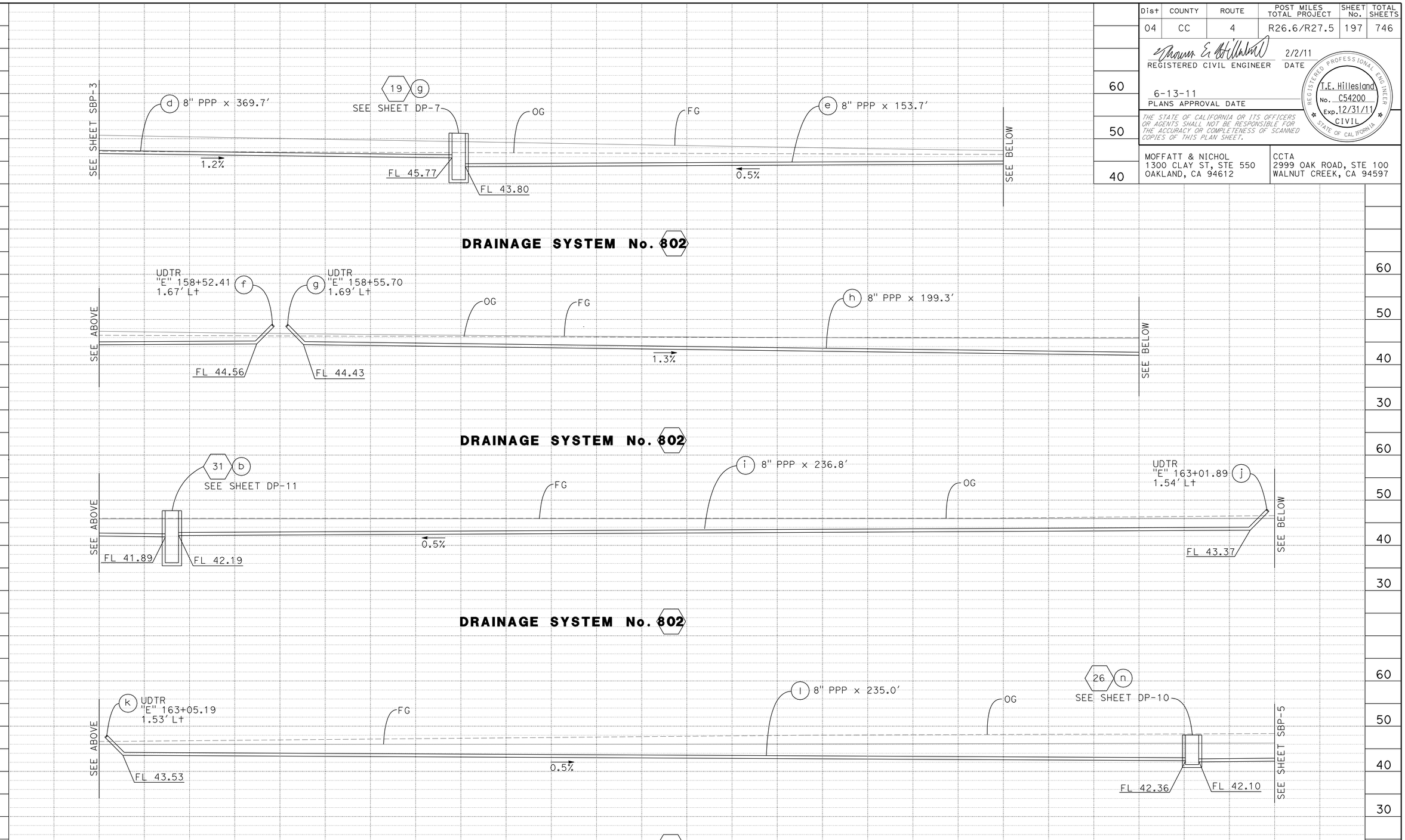

SUBSURFACE DRAINAGE PROFILES UNDERDRAIN (eBART)

SCALE: Horiz 1" = 10'
Vert 1" = 10'

SBP-4

REVISED BY	DATE REVISED
NK	2/2/11

NIKKI KOBAYASHI — BRUCE ZAENI — CALCULATED-DESIGNED BY — CHECKED BY

CONSULTANT FUNCTIONAL SUPERVISOR: TOM HILLESLAND

STATE OF CALIFORNIA - DEPARTMENT OF TRANSPORTATION — Caltrans

LAST REVISION 02-02-11 — DATE PLOTTED => 13-JUN-2011 — TIME PLOTTED => 10:11

Dist	COUNTY	ROUTE	POST MILES TOTAL PROJECT	SHEET No.	TOTAL SHEETS
04	CC	4	R26.6/R27.5	198	746

REGISTERED CIVIL ENGINEER 2/2/11 DATE

6-13-11
PLANS APPROVAL DATE

REGISTERED PROFESSIONAL ENGINEER T.E. Hillesland No. C54200 Exp. 12/31/11 CIVIL STATE OF CALIFORNIA

THE STATE OF CALIFORNIA OR ITS OFFICERS OR AGENTS SHALL NOT BE RESPONSIBLE FOR THE ACCURACY OR COMPLETENESS OF SCANNED COPIES OF THIS PLAN SHEET.

MOFFATT & NICHOL
1300 CLAY ST, STE 550
OAKLAND, CA 94612

CCTA
2999 OAK ROAD, STE 100
WALNUT CREEK, CA 94597

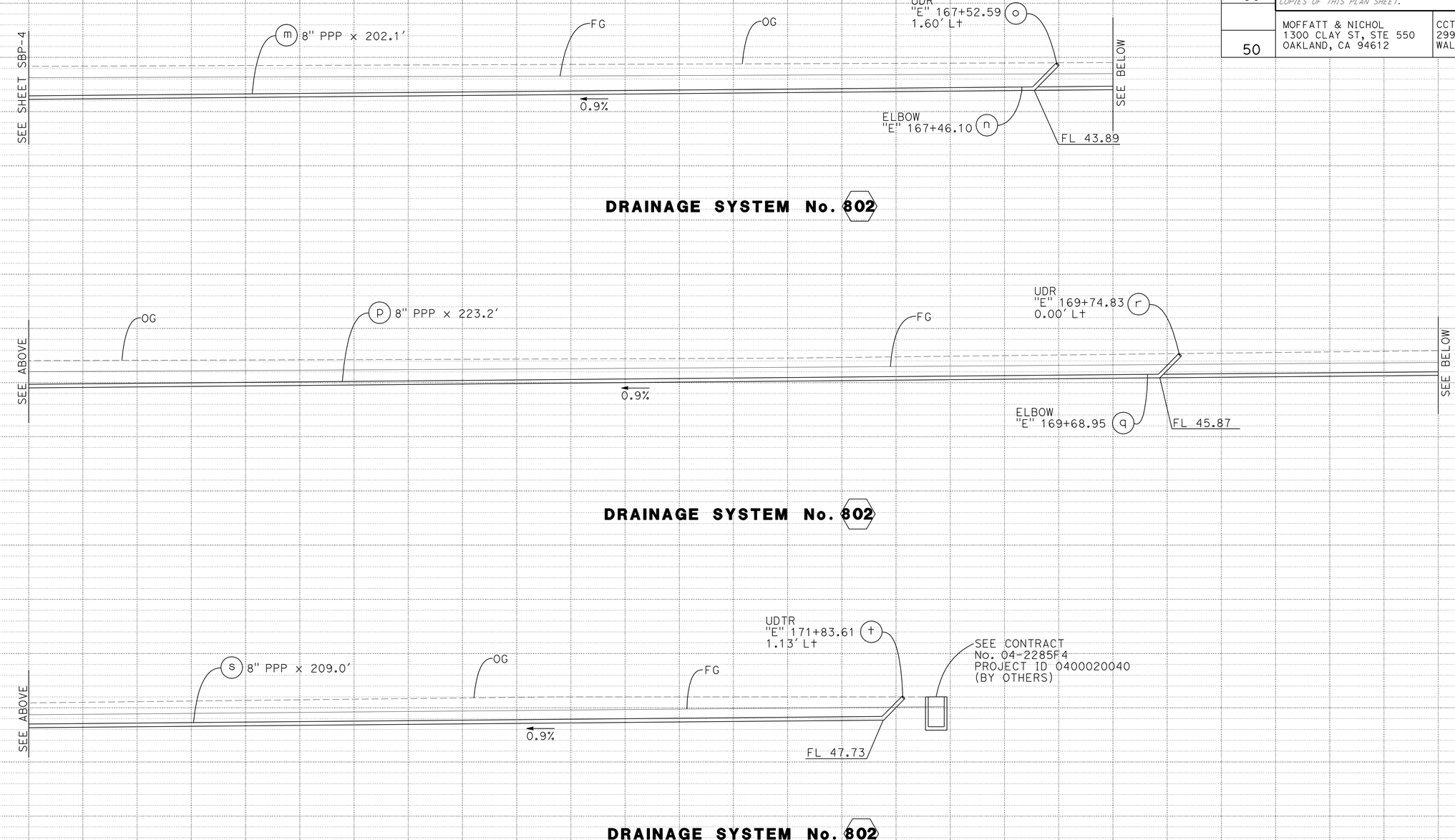

SUBSURFACE DRAINAGE PROFILES
UNDERDRAIN
(eBART)

SCALE: Horiz 1" = 10'
Vert 1" = 10'

SBP-5

REVISED BY	DATE REVISED
NK	2/2/11

NIKKI KOBAYASHI
BRUCE ZAENI

CALCULATED-DESIGNED BY
CHECKED BY

CONSULTANT FUNCTIONAL SUPERVISOR
TOM HILLESLAND

STATE OF CALIFORNIA - DEPARTMENT OF TRANSPORTATION
Caltrans

LAST REVISION 02-02-11 | DATE PLOTTED => 13-JUN-2011 | TIME PLOTTED => 10:11

Dist	COUNTY	ROUTE	POST MILES TOTAL PROJECT	SHEET No.	TOTAL SHEETS
04	CC	4	R26.6/R27.5	199	746

REGISTERED CIVIL ENGINEER — DATE 2/25/11

6-13-11
PLANS APPROVAL DATE

REGISTERED PROFESSIONAL ENGINEER — T.E. HILLESLAND — No. C54200 — Exp. 12/31/11 — CIVIL — STATE OF CALIFORNIA

THE STATE OF CALIFORNIA OR ITS OFFICERS OR AGENTS SHALL NOT BE RESPONSIBLE FOR THE ACCURACY OR COMPLETENESS OF SCANNED COPIES OF THIS PLAN SHEET.

MOFFATT & NICHOL
1300 CLAY ST, STE 550
OAKLAND, CA 94612

CCTA
2999 OAK ROAD, STE 100
WALNUT CREEK, CA 94597

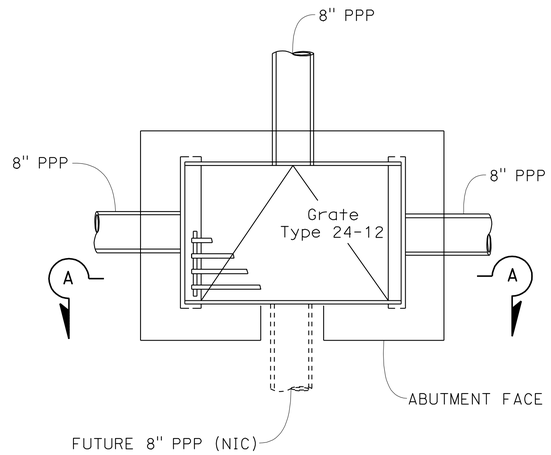

PLAN

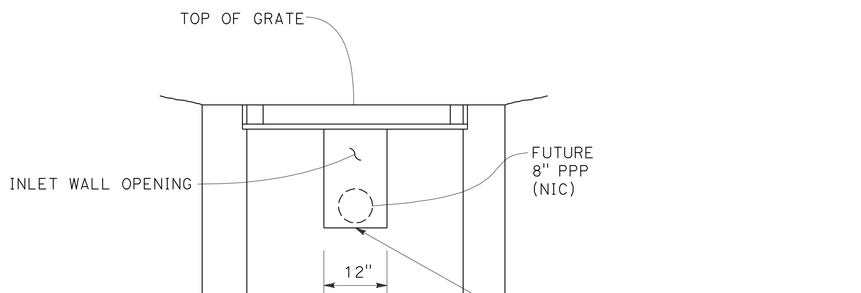

SECTION A-A

SEE NOTE 1

G1 MOD INLET DETAIL

801 n
802 a

NOTES:

1. FOR DIMENSIONS AND DETAILS NOT SHOWN, SEE TYPE G1 INLET DETAILS ON STANDARD PLAN D73.
2. FOR DIMENSIONS AND DETAILS NOT SHOWN, SEE UNDERDRAIN DETAILS ON STANDARD PLAN D102.

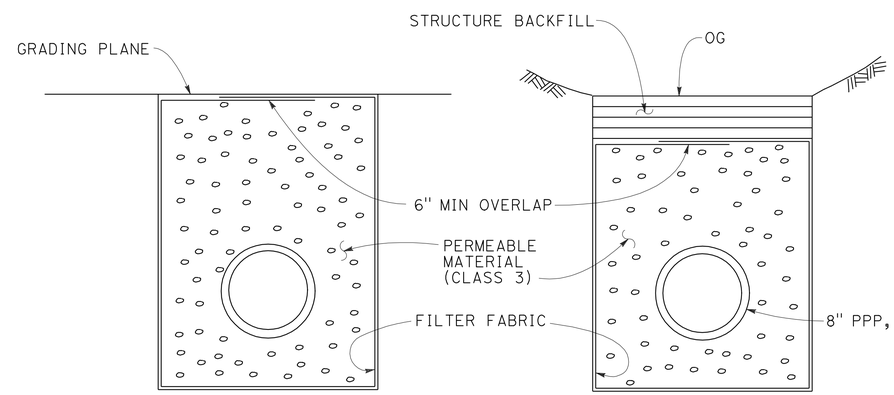

INSIDE SUBGRADE AREA **OUTSIDE SUBGRADE AREA**

SEE NOTE 2

UNDERDRAIN DETAIL

SUBSURFACE DRAINAGE DETAILS
UNDERDRAIN
(eBART)

NO SCALE

SBD-1

STATE OF CALIFORNIA - DEPARTMENT OF TRANSPORTATION	CONSULTANT FUNCTIONAL SUPERVISOR	CALCULATED-DESIGNED BY	REVISED BY
Caltrans	TOM HILLESLAND	CHECKED BY	DATE REVISED
		NIKKI KOBAYASHI	NK
		BRUCE ZAENI	2/25/11

LAST REVISION 02-25-11 — DATE PLOTTED => 13-JUN-2011 — TIME PLOTTED => 10:12

Dist	COUNTY	ROUTE	POST MILES TOTAL PROJECT	SHEET No.	TOTAL SHEETS
04	CC	4	R26.6/R27.5	200	746

REGISTERED CIVIL ENGINEER 2/25/11 DATE

6-13-11
PLANS APPROVAL DATE

REGISTERED PROFESSIONAL ENGINEER T.E. HILLESLAND No. C54200 Exp. 12/31/11 CIVIL STATE OF CALIFORNIA

THE STATE OF CALIFORNIA OR ITS OFFICERS OR AGENTS SHALL NOT BE RESPONSIBLE FOR THE ACCURACY OR COMPLETENESS OF SCANNED COPIES OF THIS PLAN SHEET.

MOFFATT & NICHOL
1300 CLAY ST, STE 550
OAKLAND, CA 94612

CCTA
2999 OAK ROAD, STE 100
WALNUT CREEK, CA 94597

UNDERDRAIN QUANTITIES

DRAINAGE SYSTEM No.	DRAINAGE UNIT	8" PERFORATED PLASTIC PIPE UNDERDRAIN	8" PLASTIC PIPE UNDERDRAIN RISER (N)	8" PLASTIC PIPE UNDERDRAIN TERMINAL RISER (N)	MINOR CONCRETE: MINOR STRUCTURE	MISCELLANEOUS IRON & STEEL	FRAME, GRATE & COVER (N): TYPE 24-12	ELBOW (N)	DESCRIPTION	STATION	DRAINAGE PLAN SHEET No.
		F†	F†	F†	CY	LB	EA	EA			
801	a			5.3					8" UDTR	"E" Sta 133+56.15	SB-1
801	b	286.9							8" PPP		SB-1
801	c		6.3						8" UDR	"E" Sta 136+37.05	SB-1
801	d	281.2							8" PPP		SB-1
801	e	285.1							8" PPP		SB-1/SB-2
801	f		5.4						8" UDR	"E" Sta 142+02.75	SB-2
801	g	285.1							8" PPP		SB-2
801	h			7.1					8" UDTR	"E" Sta 144+82.02	SB-2
801	i	257.8							8" PPP		SB-2
801	j		5.3						8" UDR	"E" Sta 147+45.85	SB-2
801	k	257.2							8" PPP		SB-2
801	l			5.3					8" UDTR	"E" Sta 149+97.76	SB-2
801	m	92.2							8" PPP		SB-2
801	n				2.01	326	1		G1 Mod DI	"E" Sta 151+00.08	SB-2
801	o	12.9							8" PPP		SB-2
801	p	12.9							8" PPP		SB-2
802	a				2.01	326	1		G1 Mod DI	"E" Sta 153+20.08	SB-2
802	b	12.9							8" PPP		SB-2
802	c	12.9							8" PPP		SB-2
802	d	369.7							8" PPP		SB-2/SB-3
802	e	158.9							8" PPP		SB-3
802	f			5.2					8" UDTR	"E" Sta 158+52.41	SB-3
802	g			5.3					8" UDTR	"E" Sta 158+55.70	SB-3
802	h	204.6							8" PPP		SB-3
802	i	242.4							8" PPP		SB-3
802	j			5.6					8" UDTR	"E" Sta 163+01.89	SB-3
802	k			5.3					8" UDTR	"E" Sta 163+05.19	SB-3
802	l	240.3							8" PPP		SB-3
SHEET TOTAL		3012.8	17.0	39.1	4.02	652	2	-			

(N) - NOT A SEPARATE PAY ITEM, FOR INFORMATION ONLY.

SUBSURFACE DRAINAGE QUANTITIES
UNDERDRAIN
(eBART)

SBQ-1

STATE OF CALIFORNIA - DEPARTMENT OF TRANSPORTATION
Caltrans

CONSULTANT FUNCTIONAL SUPERVISOR: TOM HILLESLAND
CALCULATED-DESIGNED BY: NIKKI KOBAYASHI
CHECKED BY: BRUCE ZAENI
REVISED BY: NK
DATE REVISED: 2/25/11

LAST REVISION 02-25-11
DATE PLOTTED => 13-JUN-2011
TIME PLOTTED => 10:12