DIST	COUNTY	ROUTE	KILOMETER POST TOTAL PROJECT	SHEET No	TOTAL SHEETS
04	CC	4	37.9/41.3	927	1086

REGISTERED CIVIL ENGINEER — DATE 1/30/09

9-21-09
PLANS APPROVAL DATE

REGISTERED PROFESSIONAL ENGINEER — James Carldon Hall Jr. — No. C49144 — Exp. 9/30/10 — CIVIL — STATE OF CALIFORNIA

The State of California or its officers or agents shall not be responsible for the accuracy or completeness of electronic copies of this plan sheet.

CONTRA COSTA TRANSPORTATION AUTHORITY
3478 BUSKIRK AVENUE, SUITE 100
PLEASANT HILL, CA 94523

URS CORPORATION
3440 VINCENT ROAD
PLEASANT HILL, CA 94523

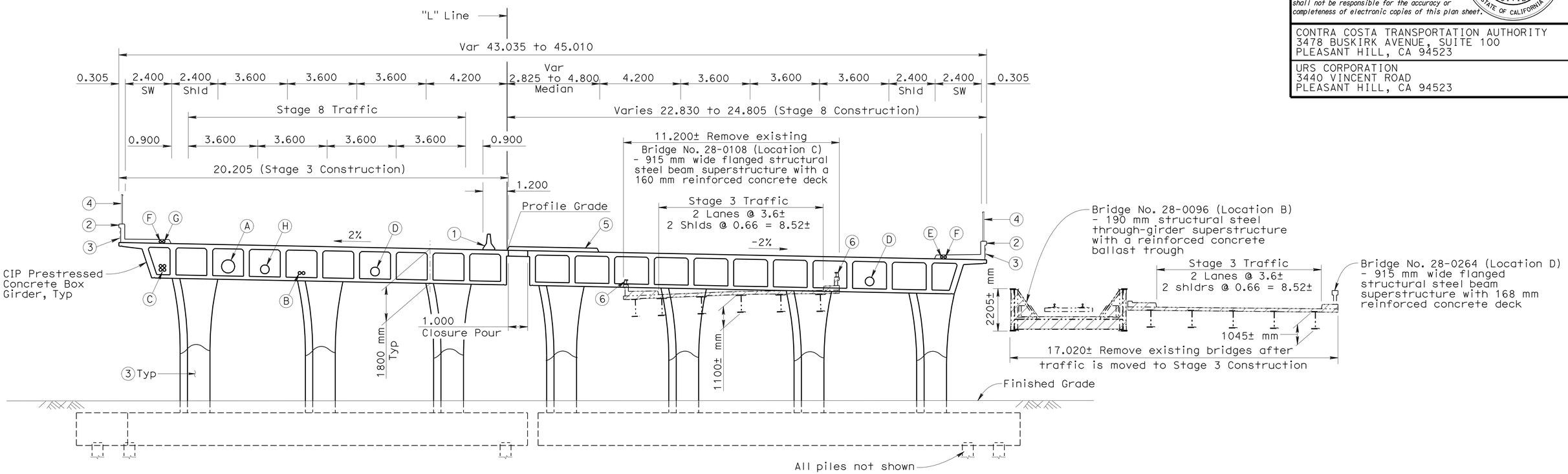

TYPICAL SECTION
1:100

Utilities:

- (A) 450 mm dia DIP Waterline, City of Pittsburgh
- (B) 2-150 mm dia Electrical Conduit (PG&E) (Future)
- (C) 4-100 mm dia Telephone Conduit (SBC) (Future)
- (D) Future Utility Opening (B7-10)
- (E) 53 mm Signal Interconnect Conduit
- (F) 53 mm Street Lighting Conduit
- (G) 53 mm Future Utility Conduit
- (H) Future Utility Opening (B7-10) at Bent 3 only

Note: For limits of utilities, see "Road Plans"

Legend:

1. Temporary Railing (Type K) see "Road Plans"
2. Concrete Barrier (Type 26 Modified)
3. Fractured Rib Texture
4. Chain Link Railing (Type 7, Black Vinyl-Clad)
5. Raised Median
6. Salvage existing metal railing

-·-·-·- Denotes existing construction

Denotes Bridge Removal, Locations B, C or D

2 **REVISED PER ADDENDUM No. 2 DATED DECEMBER 30, 2009**

ALL DIMENSIONS ARE IN METERS UNLESS OTHERWISE SHOWN

DESIGN OVERSIGHT — Emil A. Vergara Jr.
12-1-09
SIGN OFF DATE

	BY	CHECKED
DESIGN	S. Das	T. Dubovik
DETAILS	L. Davis	T. Dubovik
QUANTITIES	J. Sloan	N. Suan

PREPARED FOR THE STATE OF CALIFORNIA DEPARTMENT OF TRANSPORTATION

W. LaFranchi
PROJECT ENGINEER

BRIDGE NO. 28-0394
KILOMETER POST 38.8

LOVERIDGE ROAD OC (REPLACE)
GENERAL PLAN NO. 2

DESIGN DETAIL SHEET (METRIC) (REV. 10/27/05)

ORIGINAL SCALE IN MILLIMETERS FOR REDUCED PLANS 0 10 20 30 40 50 60 70 80 90 100

CU 04275
EA 228591

DISREGARD PRINTS BEARING EARLIER REVISION DATES — REVISION DATES (PRELIMINARY STAGE ONLY) 03/04/05 05/04/05 10/14/05 01/26/06 02/14/07 05/30/07 12/10/07 02/28/08 01/30/09

SHEET 2 OF 43

FILE => 28-0394-a-gp02.add

USERNAME => friehard DATE PLOTTED => 29-DEC-2009 TIME PLOTTED => 07:24

DIST	COUNTY	ROUTE	KILOMETER POST TOTAL PROJECT	SHEET No	TOTAL SHEETS
04	CC	4	37.9/41.3	931	1086

2

Caltrans Metric

REGISTERED CIVIL ENGINEER 1/30/09 DATE

9-21-09
PLANS APPROVAL DATE

REGISTERED PROFESSIONAL ENGINEER James Carldon Hall Jr. No. C49144 Exp. 9/30/10 CIVIL STATE OF CALIFORNIA

The State of California or its officers or agents shall not be responsible for the accuracy or completeness of electronic copies of this plan sheet.

CONTRA COSTA TRANSPORTATION AUTHORITY
3478 BUSKIRK AVENUE, SUITE 100
PLEASANT HILL, CA 94523

URS CORPORATION
3440 VINCENT ROAD
PLEASANT HILL, CA 94523

Utilities:

(A) 450 mm dia DIP Waterline, City of Pittsburgh
(B) 2-150 mm dia Electrical Conduit (PG&E) (Future)
(C) 4-100 mm dia Telephone Conduit (SBC) (Future)
(D) Future Utility Opening (B7-10 / U-4)

Notes:

1. For footing and pile information, see "Abutment 1 Pile Layout" sheet.
2. For "Section A-A" see "Abutment 1 Details" sheet.
3. For external key details and "Bearing Pad Detail" see "Abutment Details No. 1" sheet.
4. For construction joint detail, see "Detail 1" on "Abutment 1 Details" sheet.
5. For Retaining Walls, see "Abutment Details No. 4" sheet.
6. For Stage 8 piles placed during Stage 3 construction, see "Abutment 1 Pile Layout" sheet.

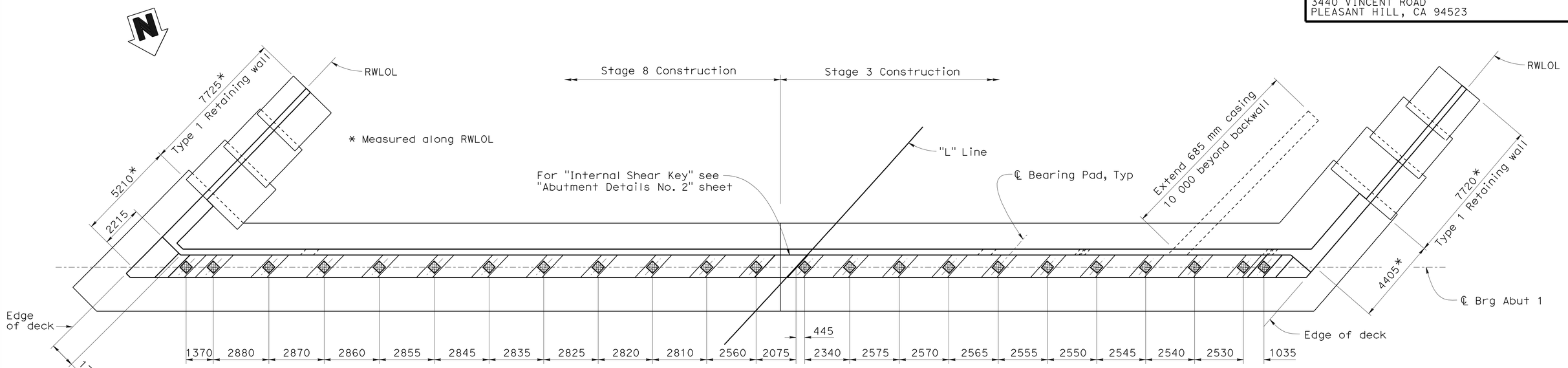

PLAN
1:100

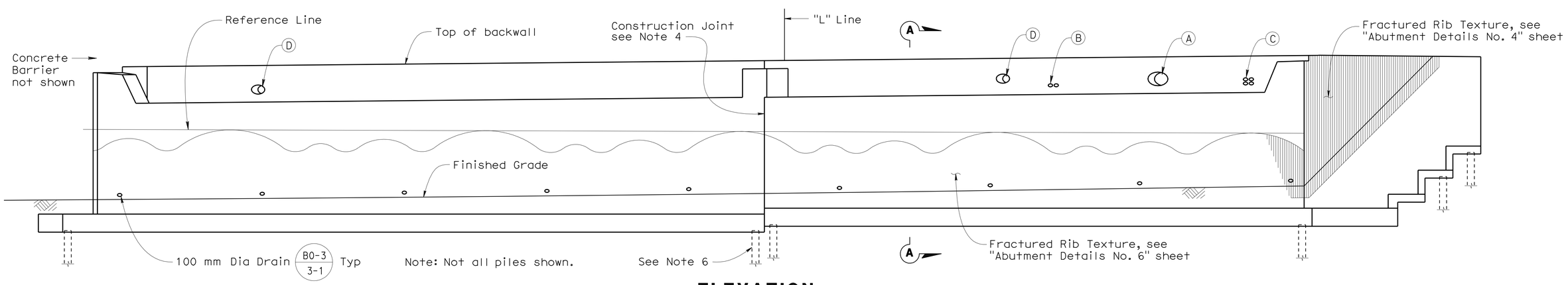

ELEVATION
1:100

2 **REVISED PER ADDENDUM No. 2 DATED DECEMBER 30, 2009**

ALL DIMENSIONS ARE IN MILLIMETERS UNLESS OTHERWISE SHOWN

DESIGN OVERSIGHT Emil A. Vergara Jr.
12-1-09
SIGN OFF DATE

	BY	CHECKED
DESIGN	J. Hall	T. Dubovik
DETAILS	L. Davis	T. Dubovik
QUANTITIES	J. Sloan	N. Suan

PREPARED FOR THE STATE OF CALIFORNIA DEPARTMENT OF TRANSPORTATION

W. LaFranchi
PROJECT ENGINEER

BRIDGE NO. 28-0394
KILOMETER POST 38.8

LOVERIDGE ROAD OC (REPLACE)
ABUTMENT 1 LAYOUT

DESIGN DETAIL SHEET (METRIC) (REV. 10/27/05)

ORIGINAL SCALE IN MILLIMETERS FOR REDUCED PLANS 0 10 20 30 40 50 60 70 80 90 100

CU 04275
EA 228591

DISREGARD PRINTS BEARING EARLIER REVISION DATES

REVISION DATES (PRELIMINARY STAGE ONLY): 03/04/05 05/24/05 10/24/05 01/26/06 02/14/07 05/24/07 12/14/07 02/22/08 04/28/08 01/30/09

SHEET 6 OF 43

FILE => 28-0394-f-a01_1o.add

USERNAME => tfrienard DATE PLOTTED => 29-DEC-2009 TIME PLOTTED => 07:24

DIST	COUNTY	ROUTE	KILOMETER POST TOTAL PROJECT	SHEET No	TOTAL SHEETS
04	CC	4	37.9/41.3	932	1086

REGISTERED CIVIL ENGINEER — DATE 1/30/09

9-21-09
PLANS APPROVAL DATE

The State of California or its officers or agents shall not be responsible for the accuracy or completeness of electronic copies of this plan sheet.

REGISTERED PROFESSIONAL ENGINEER — James Carldon Hall Jr. — No. C49144 — Exp. 9/30/10 — CIVIL — STATE OF CALIFORNIA

CONTRA COSTA TRANSPORTATION AUTHORITY
3478 BUSKIRK AVENUE, SUITE 100
PLEASANT HILL, CA 94523

URS CORPORATION
3440 VINCENT ROAD
PLEASANT HILL, CA 94523

2 Caltrans Metric

Utilities:

(A) 450 mm dia DIP Waterline, City of Pittsburgh
(B) 2-150 mm dia Electrical Conduit (PG&E) (Future)
(C) 4-100 mm dia Telephone Conduit (SBC) (Future)
(D) Future Utility Opening (B7-10 / U-4)

Notes:

1. For footing and pile information, see "Abutment 4 Pile Layout" sheet.
2. For "Section A-A" see "Abutment 4 Details" sheet.
3. For acute corner external key detail and "Bearing Pad Detail" see "Abutment Details No. 1" sheet.
4. For construction joint detail, see "Detail 1" on "Abutment 1 Details" sheet.
5. For Retaining Walls, see "Abutment Details No. 5" sheet.
6. For Stage 8 piles placed during Stage 3 construction, see "Abutment 4 Pile Layout" sheet.
7. For obtuse corner external key detail see "Abutment 4 Details" sheet.

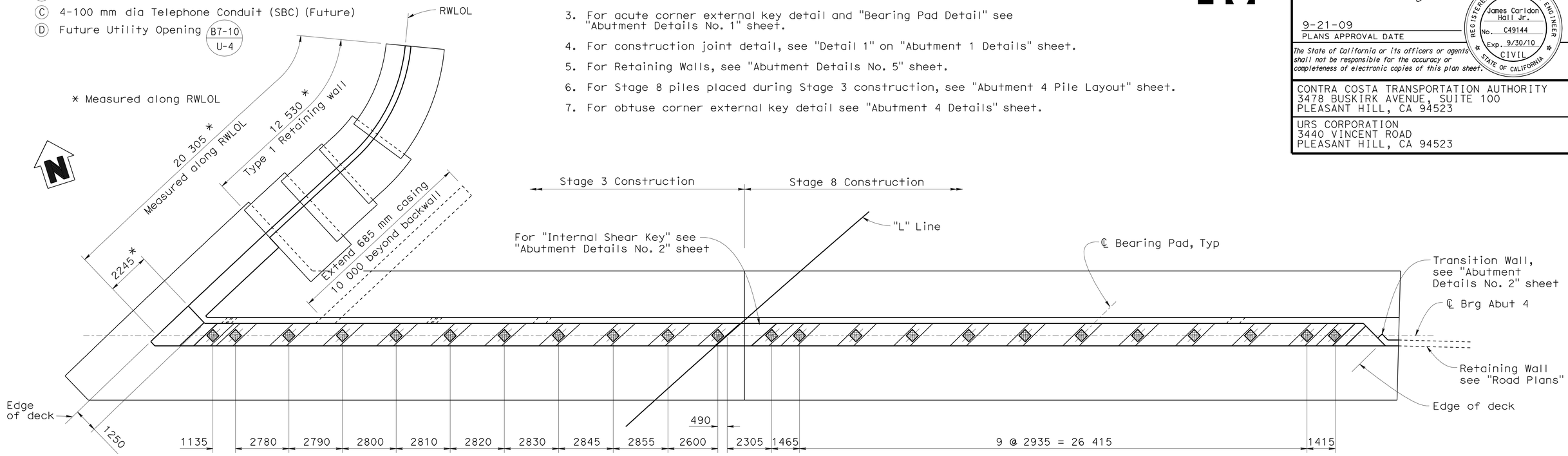

PLAN
1:100

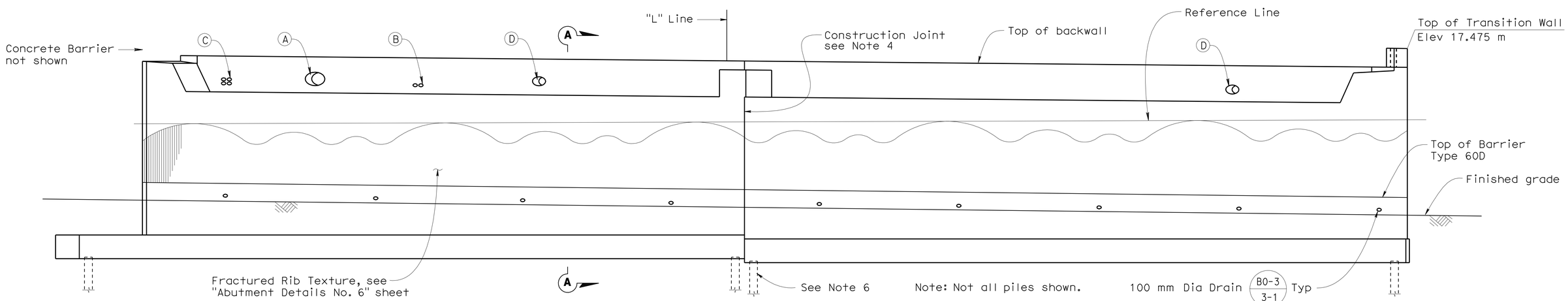

ELEVATION
1:100

2 **REVISED PER ADDENDUM No. 2 DATED DECEMBER 30, 2009**

ALL DIMENSIONS ARE IN MILLIMETERS UNLESS OTHERWISE SHOWN

DESIGN OVERSIGHT — Emil A. Vergara Jr.
12-1-09
SIGN OFF DATE

	BY	CHECKED
DESIGN	J. Hall	T. Dubovik
DETAILS	L. Davis	T. Dubovik
QUANTITIES	J. Sloan	N. Suan

PREPARED FOR THE STATE OF CALIFORNIA DEPARTMENT OF TRANSPORTATION

W. LaFranchi
PROJECT ENGINEER

BRIDGE NO. 28-0394
KILOMETER POST 38.8

LOVERIDGE ROAD OC (REPLACE)
ABUTMENT 4 LAYOUT

DESIGN DETAIL SHEET (METRIC) (REV. 10/27/05)

ORIGINAL SCALE IN MILLIMETERS FOR REDUCED PLANS 0 10 20 30 40 50 60 70 80 90 100

CU 04275
EA 228591

DISREGARD PRINTS BEARING EARLIER REVISION DATES

REVISION DATES (PRELIMINARY STAGE ONLY): 03/04/05 05/04/05 10/14/05 07/06/06 02/06/07 05/04/07 12/04/07 02/28/08 04/04/08 01/30/09

SHEET 7 OF 43

FILE => 28-0394-f-a04_lo.add

USERNAME => trlenard DATE PLOTTED => 29-DEC-2009 TIME PLOTTED => 07:24

DIST	COUNTY	ROUTE	KILOMETER POST TOTAL PROJECT	SHEET No	TOTAL SHEETS
04	CC	4	37.9/41.3	943	1086

REGISTERED CIVIL ENGINEER 1/30/09 DATE

9-21-09
PLANS APPROVAL DATE

REGISTERED PROFESSIONAL ENGINEER James Carlton Hall Jr. No. C49144 Exp. 9/30/10 CIVIL STATE OF CALIFORNIA

The State of California or its officers or agents shall not be responsible for the accuracy or completeness of electronic copies of this plan sheet.

CONTRA COSTA TRANSPORTATION AUTHORITY
3478 BUSKIRK AVENUE, SUITE 100
PLEASANT HILL, CA 94523

URS CORPORATION
3440 VINCENT ROAD
PLEASANT HILL, CA 94523

Caltrans Metric

2

Notes:

1. For "Section A-A" thru "Section D-D" see "Bent Details No. 1" sheet.
2. For details not shown see "Bent Details No. 1" thru "Bent Details No. 4" sheets.
3. The top and bottom main cap reinforcement shall have "service splices"
4. Place these piles in Stage 3 Construction.

Legend:

Denotes bundled bars

Utilities:

(A) 450 mm dia DIP Waterline, City of Pittsburgh
(B) 2-150 mm dia Electrical Conduit (PG&E) (Future)
(C) 4-100 mm dia Telephone Conduit (SBC) (Future)
(D) Future Utility Opening B7-10 / U-7

2 **REVISED PER ADDENDUM No. 2 DATED DECEMBER 30, 2009**

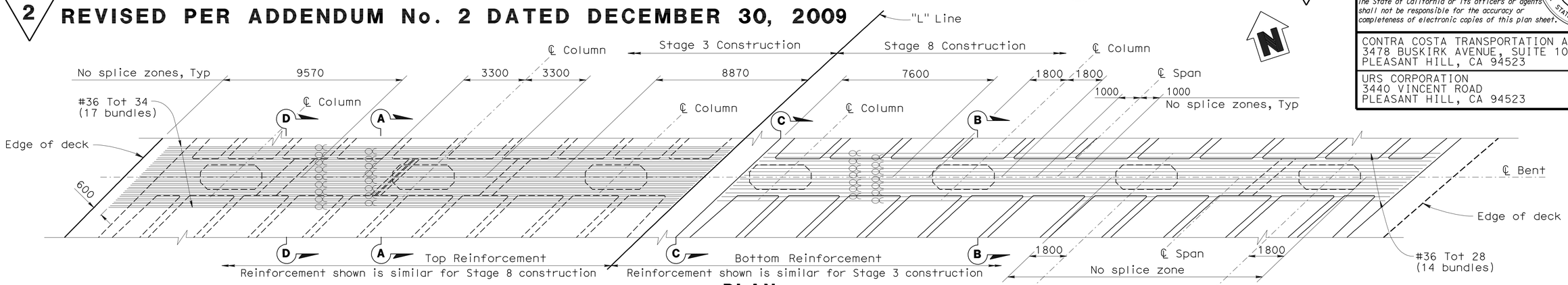

PLAN
1:100

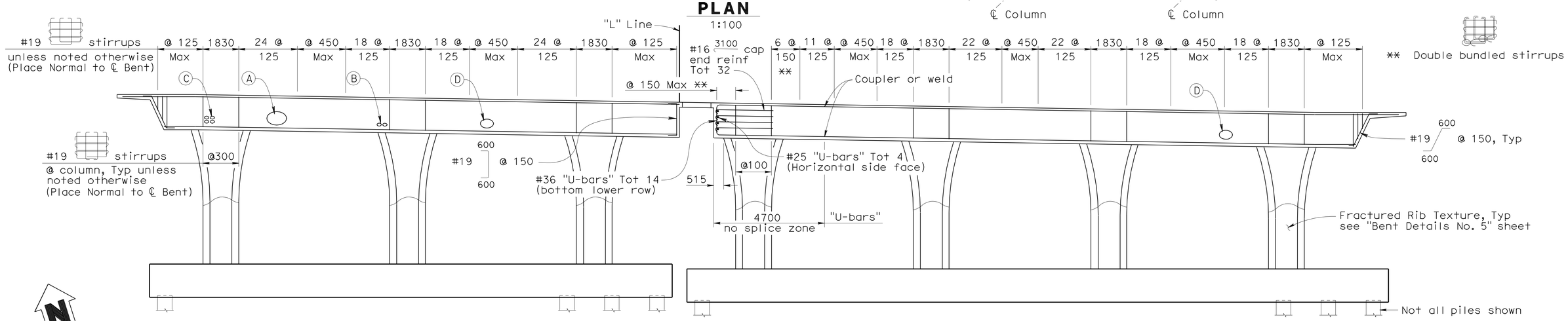

ELEVATION
1:100

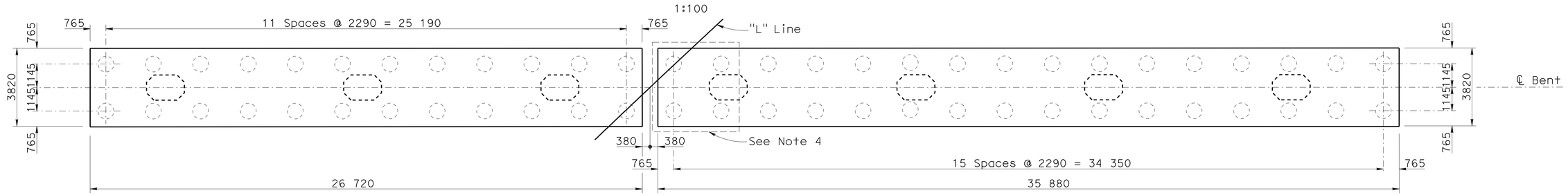

PILE LAYOUT
1:100

ALL DIMENSIONS ARE IN MILLIMETERS UNLESS OTHERWISE SHOWN

DESIGN OVERSIGHT Emil A. Vergara Jr.
12-1-09
SIGN OFF DATE

	BY	CHECKED
DESIGN	S. Das	T. Dubovik
DETAILS	L. Davis	T. Dubovik
QUANTITIES	J. Sloan	N. Suan

PREPARED FOR THE STATE OF CALIFORNIA DEPARTMENT OF TRANSPORTATION

W. LaFranchi
PROJECT ENGINEER

BRIDGE NO. 28-0394
KILOMETER POST 38.8

LOVERIDGE ROAD OC (REPLACE)
BENT 2 LAYOUT

DESIGN DETAIL SHEET (METRIC) (REV. 10/27/05)

ORIGINAL SCALE IN MILLIMETERS FOR REDUCED PLANS 0 10 20 30 40 50 60 70 80 90 100

CU 04275
EA 228591

DISREGARD PRINTS BEARING EARLIER REVISION DATES

REVISION DATES (PRELIMINARY STAGE ONLY): 03/04/05 05/24/05 10/14/05 01/26/06 02/14/07 05/16/07 12/18/07 02/28/08 01/30/09

SHEET 18 OF 43

FILE => 28-0394-h-b02_lo.add

USERNAME => trlew DATE PLOTTED => 29-DEC-2009 TIME PLOTTED => 09:59

DIST	COUNTY	ROUTE	KILOMETER POST TOTAL PROJECT	SHEET No	TOTAL SHEETS
04	CC	4	37.9/41.3	944	1086

REGISTERED CIVIL ENGINEER 1/30/09 DATE

9-21-09
PLANS APPROVAL DATE

The State of California or its officers or agents shall not be responsible for the accuracy or completeness of electronic copies of this plan sheet.

REGISTERED PROFESSIONAL ENGINEER James Carldon Hall Jr. No. C49144 Exp. 9/30/10 CIVIL STATE OF CALIFORNIA

CONTRA COSTA TRANSPORTATION AUTHORITY
3478 BUSKIRK AVENUE, SUITE 100
PLEASANT HILL, CA 94523

URS CORPORATION
3440 VINCENT ROAD
PLEASANT HILL, CA 94523

Caltrans Metric

Notes:

1. For "Section A-A" thru "Section D-D" see "Bent Details No. 1" sheet.
2. For details not shown see "Bent Details No. 1" thru "Bent Details No. 4" sheets.
3. The top and bottom main cap reinforcement shall have "service splices"
4. Place these piles in Stage 3 Construction.

Legend:

Denotes bundled bars

Utilities:

(A) 450 mm dia DIP Waterline, City of Pittsburgh
(B) 2-150 mm dia Electrical Conduit (PG&E) (Future)
(C) 4-100 mm dia Telephone Conduit (SBC) (Future)
(D) Future Utility Opening B7-10 / U-7
(H) Future Utility Opening B7-10 / U-7 at bent 3 only

2 **REVISED PER ADDENDUM No. 2 DATED DECEMBER 30, 2009**

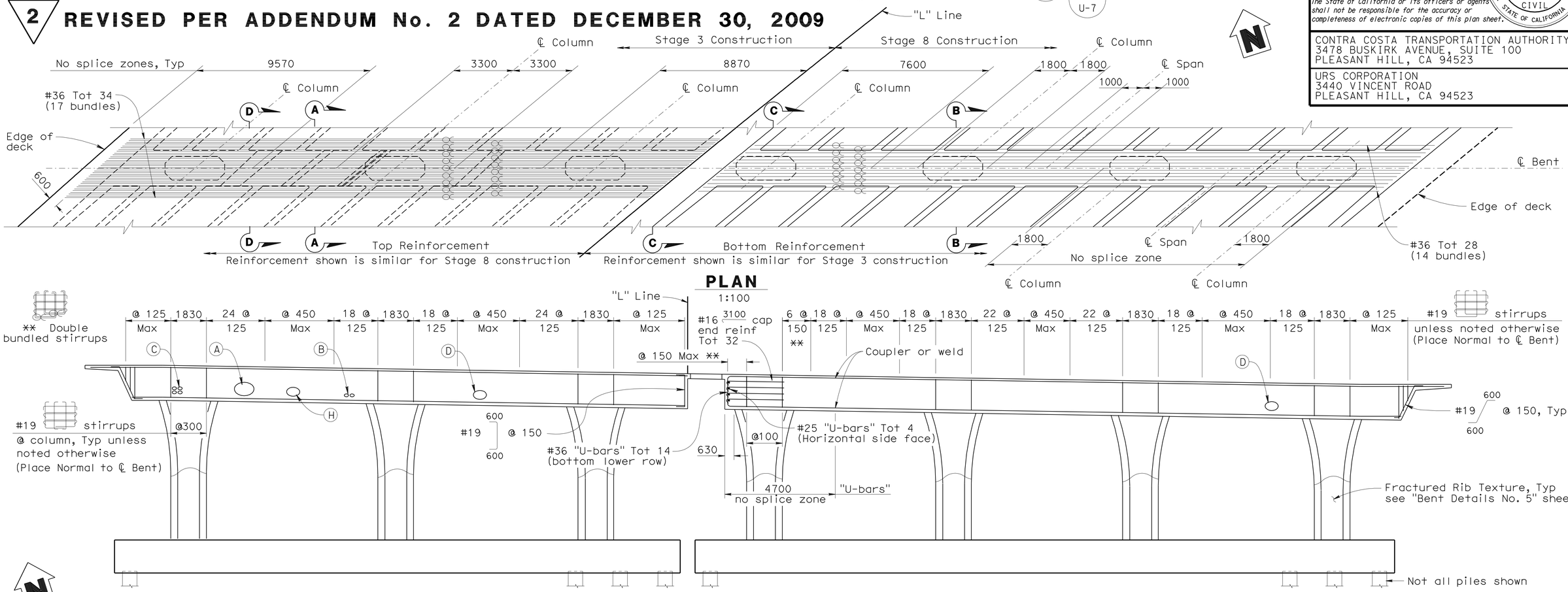

ALL DIMENSIONS ARE IN MILLIMETERS UNLESS OTHERWISE SHOWN

DESIGN OVERSIGHT Emil A. Vergara Jr.
12-1-09
SIGN OFF DATE

	BY	CHECKED
DESIGN	S. Das	T. Dubovik
DETAILS	L. Davis	T. Dubovik
QUANTITIES	J. Sloan	N. Suan

PREPARED FOR THE STATE OF CALIFORNIA DEPARTMENT OF TRANSPORTATION

W. LaFranchi
PROJECT ENGINEER

BRIDGE NO. 28-0394
KILOMETER POST 38.8

LOVERIDGE ROAD OC (REPLACE)
BENT 3 LAYOUT

DESIGN DETAIL SHEET (METRIC) (REV. 10/27/05)

ORIGINAL SCALE IN MILLIMETERS FOR REDUCED PLANS 0 10 20 30 40 50 60 70 80 90 100

CU 04275
EA 228591

DISREGARD PRINTS BEARING EARLIER REVISION DATES

REVISION DATES (PRELIMINARY STAGE ONLY): 03/04/05 05/24/05 10/14/05 07/26/06 02/14/07 05/16/07 12/18/07 02/28/08 01/30/09

SHEET 19 OF 43

FILE => 28-0394-h-b03_lo.add

USERNAME => trlew DATE PLOTTED => 29-DEC-2009 TIME PLOTTED => 10:01

DIST	COUNTY	ROUTE	KILOMETER POST TOTAL PROJECT	SHEET No	TOTAL SHEETS
04	CC	4	37.9/41.3	951	1086

REGISTERED CIVIL ENGINEER — DATE 1/30/09

9-21-09
PLANS APPROVAL DATE

REGISTERED PROFESSIONAL ENGINEER — James Carldon Hall Jr. — No. C49144 — Exp. 9/30/10 — CIVIL — STATE OF CALIFORNIA

The State of California or its officers or agents shall not be responsible for the accuracy or completeness of electronic copies of this plan sheet.

CONTRA COSTA TRANSPORTATION AUTHORITY
3478 BUSKIRK AVENUE, SUITE 100
PLEASANT HILL, CA 94523

URS CORPORATION
3440 VINCENT ROAD
PLEASANT HILL, CA 94523

2 Caltrans Metric

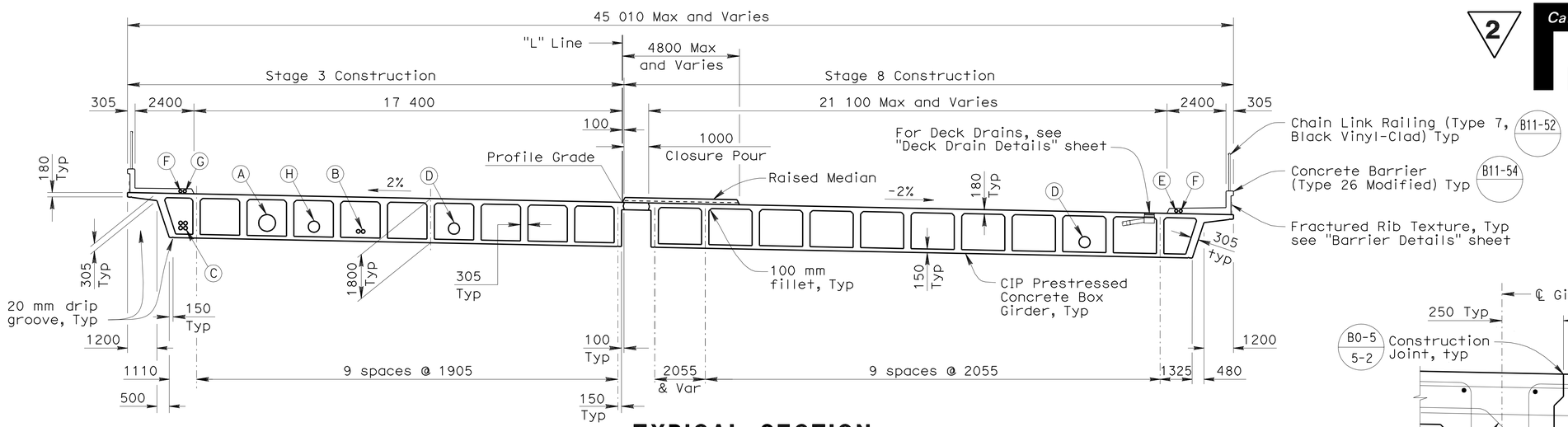

TYPICAL SECTION

1:100

Notes:

1. For details not shown see "Girder Layout" sheet.
2. For additional mild reinforcement see "Girder Reinforcement" sheet.

Legend:

- ° Indicates additional mild reinforcement
- • Indicates typical mild reinforcement

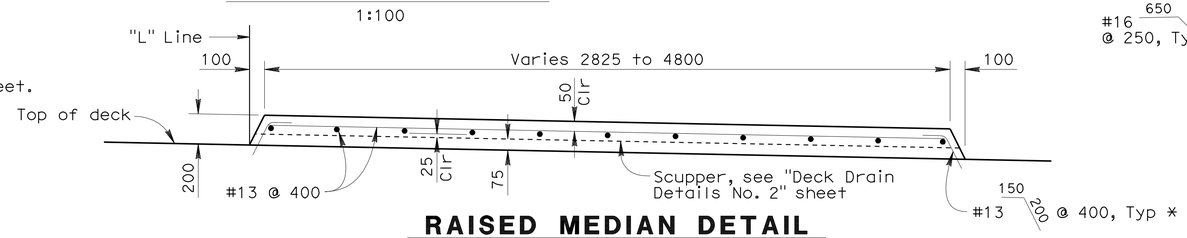

RAISED MEDIAN DETAIL

1:20

* Contractor shall have the option to use Drill & Bond technique to place these bars.

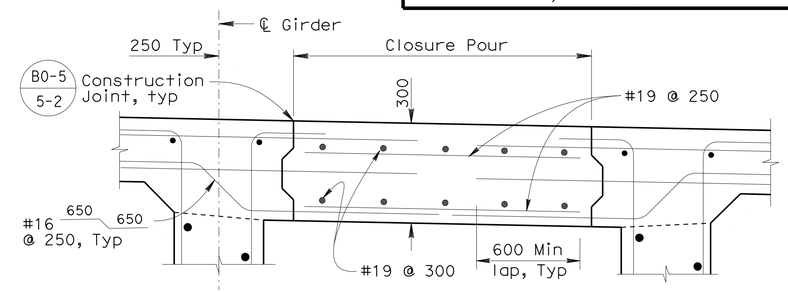

CLOSURE POUR DETAIL

No Scale

Utilities:

- (A) 450 mm dia DIP Waterline, City of Pittsburgh
- (B) 2-150 mm dia Electrical Conduit (PG&E) (Future)
- (C) 4-100 mm dia Telephone Conduit (SBC) (Future)
- (D) Future Utility Opening B7-10
- (E) 53 mm Signal Interconnect Conduit
- (F) 53 mm Street Lighting Conduit
- (G) 53 mm Future Utility Conduit
- (H) Future Utility Opening B7-10 at Bent 3 only

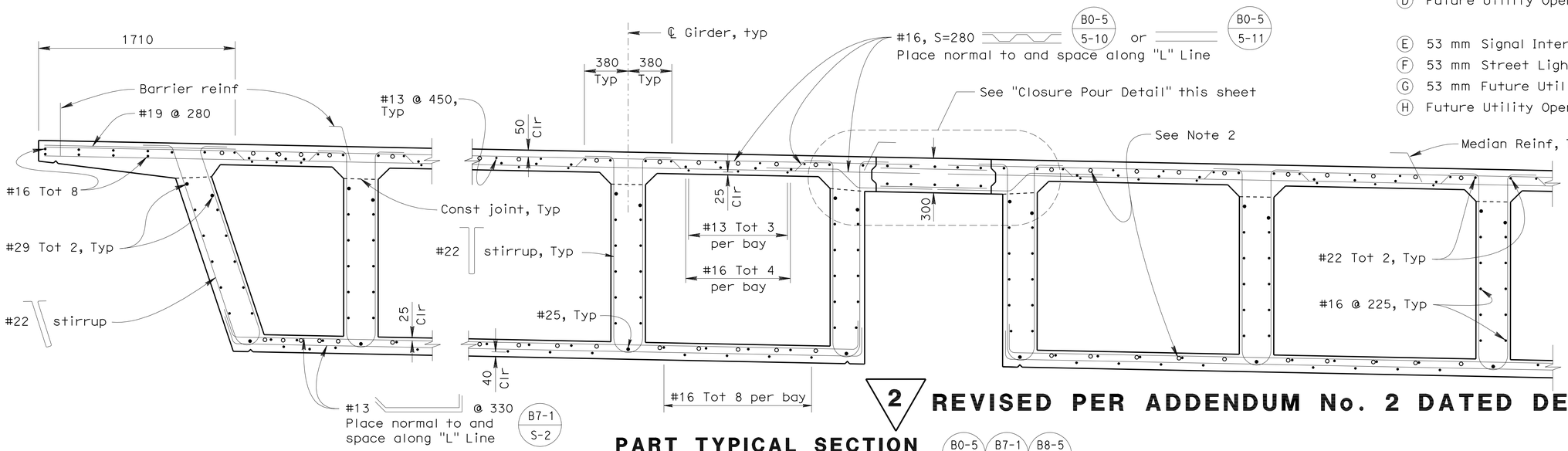

PART TYPICAL SECTION

1:20

B0-5 B7-1 B8-5

2 REVISED PER ADDENDUM No. 2 DATED DECEMBER 30, 2009

ALL DIMENSIONS ARE IN MILLIMETERS UNLESS OTHERWISE SHOWN

DESIGN OVERSIGHT Emil A. Vergara Jr. 12-1-09 SIGN OFF DATE	DESIGN	BY S. Das	CHECKED T. Dubovik	PREPARED FOR THE STATE OF CALIFORNIA DEPARTMENT OF TRANSPORTATION	W. LaFranchi PROJECT ENGINEER
	DETAILS	BY L. Davis	CHECKED T. Dubovik		
	QUANTITIES	BY J. Sloan	CHECKED N. Suan		

BRIDGE NO. 28-0394
KILOMETER POST 38.8

LOVERIDGE ROAD OC (REPLACE)
TYPICAL SECTION

DESIGN DETAIL SHEET (METRIC) (REV. 10/27/05)

ORIGINAL SCALE IN MILLIMETERS FOR REDUCED PLANS 0 10 20 30 40 50 60 70 80 90 100

CU 04275
EA 228591

DISREGARD PRINTS BEARING EARLIER REVISION DATES → REVISION DATES (PRELIMINARY STAGE ONLY) 03/04/05 05/04/05 10/04/05 01/26/06 02/16/07 05/16/07 12/10/07 02/28/08 04/28/08 01/30/09

SHEET 26 OF 43

FILE => 28-0394-k-ts01.add

USERNAME => trlenard DATE PLOTTED => 29-DEC-2009 TIME PLOTTED => 07:24

DIST	COUNTY	ROUTE	KILOMETER POST TOTAL PROJECT	SHEET No	TOTAL SHEETS
04	CC	4	37.9/41.3	952	1086

REGISTERED CIVIL ENGINEER — DATE 1/30/09

9-21-09
PLANS APPROVAL DATE

The State of California or its officers or agents shall not be responsible for the accuracy or completeness of electronic copies of this plan sheet.

REGISTERED PROFESSIONAL ENGINEER — James Carldon Hall Jr. — No. C49144 — Exp. 9/30/10 — CIVIL — STATE OF CALIFORNIA

CONTRA COSTA TRANSPORTATION AUTHORITY
3478 BUSKIRK AVENUE, SUITE 100
PLEASANT HILL, CA 94523

URS CORPORATION
3440 VINCENT ROAD
PLEASANT HILL, CA 94523

Caltrans Metric

2

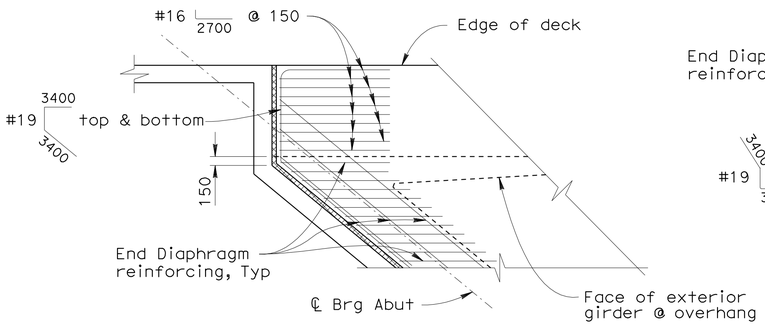

DETAIL "A"
No Scale

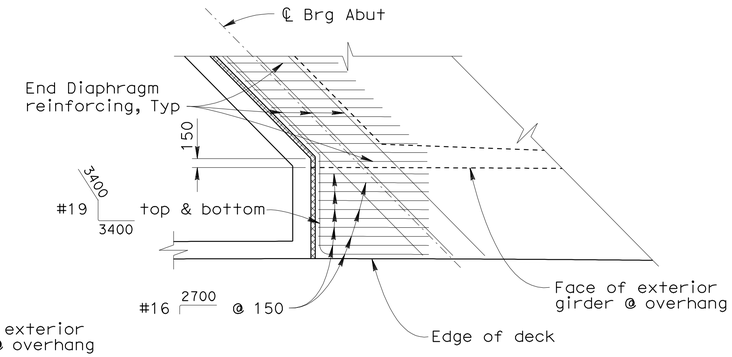

DETAIL "B"
No Scale

SOFFIT ACCESS OPENING (B14-5)	
STA 302+68.700	10.630 m LT
STA 302+72.700	6.820 m LT
STA 303+00.200	18.820 m RT
STA 303+09.800	10.630 m LT
STA 303+14.200	6.820 m LT
STA 303+41.600	10.630 m LT
STA 303+45.600	18.470 m RT
STA 303+45.700	6.820 m LT
STA 303+72.800	17.020 m RT

MANHOLE (B7-11 / U45)	
STA 302+32.400	14.440 m LT
STA 303+02.500	14.440 m LT
STA 303+34.700	14.440 m LT

SOFFIT DRAIN	
STA 302+29.800	14.440 m LT
STA 303+05.500	14.440 m LT
STA 303+37.700	14.440 m LT
STA 303+39.600	12.530 m LT

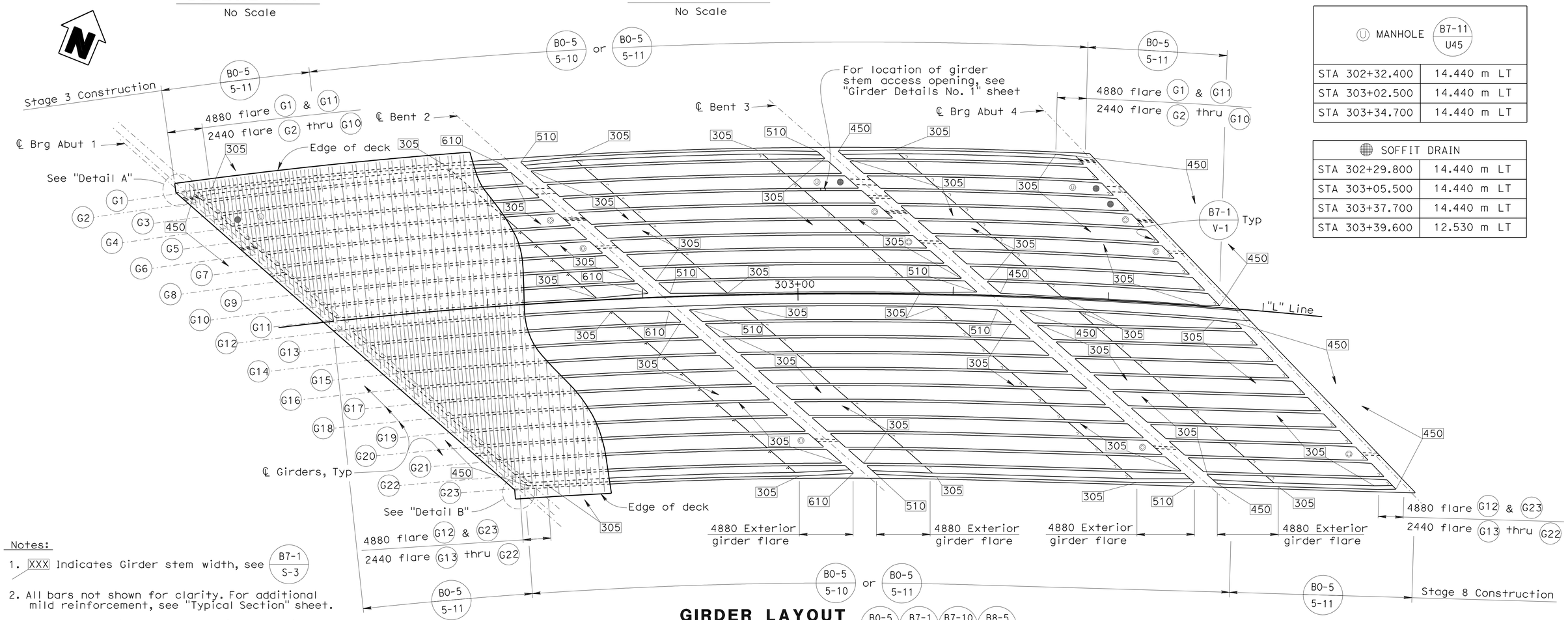

GIRDER LAYOUT
1:250

B0-5 B7-1 B7-10 B8-5

Notes:

1. XXX Indicates Girder stem width, see B7-1 / S-3
2. All bars not shown for clarity. For additional mild reinforcement, see "Typical Section" sheet.
3. For "Prestressing Notes" see "Girder Details No. 1" and "Girder Details No. 2" sheets.
4. For "Soffit Drain Detail" see "Miscellaneous Utility Details No. 1" sheets.

2 **REVISED PER ADDENDUM No. 2 DATED DECEMBER 30, 2009**

ALL DIMENSIONS ARE IN MILLIMETERS UNLESS OTHERWISE SHOWN

DESIGN OVERSIGHT — Emil A. Vergara Jr.
12-1-09
SIGN OFF DATE

	BY	CHECKED
DESIGN	S. Das	T. Dubovik
DETAILS	L. Davis	T. Dubovik
QUANTITIES	J. Sloan	N. Suan

PREPARED FOR THE STATE OF CALIFORNIA DEPARTMENT OF TRANSPORTATION

W. LaFranchi
PROJECT ENGINEER

BRIDGE NO. 28-0394
KILOMETER POST 38.8

LOVERIDGE ROAD OC (REPLACE)
GIRDER LAYOUT

DESIGN DETAIL SHEET (METRIC) (REV. 10/27/05)

ORIGINAL SCALE IN MILLIMETERS FOR REDUCED PLANS 0 10 20 30 40 50 60 70 80 90 100

CU 04275
EA 228591

DISREGARD PRINTS BEARING EARLIER REVISION DATES

REVISION DATES (PRELIMINARY STAGE ONLY): 03/04/05 05/24/05 10/14/05 01/26/06 02/14/07 05/14/07 12/14/07 02/28/08 01/30/09

SHEET 27 OF 43

FILE => 28-0394-1-g_1o01.add

USERNAME => trlenard DATE PLOTTED => 29-DEC-2009 TIME PLOTTED => 07:25

DIST	COUNTY	ROUTE	KILOMETER POST TOTAL PROJECT	SHEET No	TOTAL SHEETS
04	CC	4	37.9/41.3	953	1086

2 Caltrans Metric

REGISTERED CIVIL ENGINEER 2/22/08 DATE

9-21-09
PLANS APPROVAL DATE

REGISTERED PROFESSIONAL ENGINEER James Carldon Hall Jr. No. C49144 Exp. 9/30/08 CIVIL STATE OF CALIFORNIA

The State of California or its officers or agents shall not be responsible for the accuracy or completeness of electronic copies of this plan sheet.

CONTRA COSTA TRANSPORTATION AUTHORITY
3478 BUSKIRK AVENUE, SUITE 100
PLEASANT HILL, CA 94523

URS CORPORATION
3440 VINCENT ROAD
PLEASANT HILL, CA 94523

PRESTRESSING NOTES - STAGE 3

1860 MPa Low Relaxation Strand:

P_{jack} = 66 900 kN

Anchor Set = 10 mm

Total Number of Girders = 11

Distribution of prestress force (Pjack) between girders shall not exceed the ratio of 3:2. Maximum final force variation between girders shall not exceed 3220 kN.

Concrete: f'_c = 28 MPa @ 28 days

f'_{ci} = 25 MPa @ time of stressing

Contractor shall submit elongation calculations based on initial stress at

☒ = 0.900 times jacking stress.

One end stressing shall be performed from Abut 1.

Prestressing force design is based on friction curvature coefficient μ=0.25 and friction wobble coefficient k=6.6x10^{-7}/mm

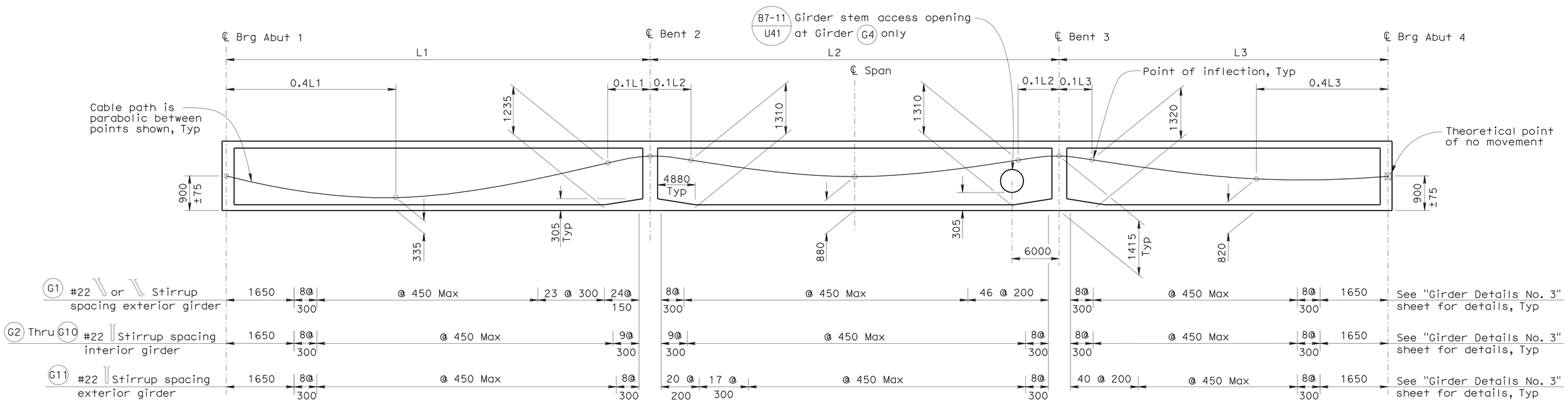

LONGITUDINAL SECTION (STAGE 3)

No Scale

2 **REVISED PER ADDENDUM No. 2 DATED DECEMBER 30, 2009**

ALL DIMENSIONS ARE IN MILLIMETERS UNLESS OTHERWISE SHOWN

DESIGN OVERSIGHT Emil A. Vergara Jr.
12-1-09
SIGN OFF DATE

	BY	CHECKED
DESIGN	S. Das	T. Dubovik
DETAILS	L. Davis	T. Dubovik
QUANTITIES	J. Sloan	N. Suan

PREPARED FOR THE STATE OF CALIFORNIA DEPARTMENT OF TRANSPORTATION

W. LaFranchi
PROJECT ENGINEER

BRIDGE NO. 28-0394
KILOMETER POST 38.8

LOVERIDGE ROAD OC (REPLACE)
GIRDER DETAILS NO. 1

DESIGN DETAIL SHEET (METRIC) (REV. 10/27/05)

ORIGINAL SCALE IN MILLIMETERS FOR REDUCED PLANS 0 10 20 30 40 50 60 70 80 90 100

CU 04275
EA 228591

DISREGARD PRINTS BEARING EARLIER REVISION DATES → REVISION DATES (PRELIMINARY STAGE ONLY) 03/04/05 05/24/05 10/24/05 01/26/06 02/16/01 05/16/01 12/10/01 02/22/08

SHEET 28 OF 43

FILE => 28-0394-1-gdt01.add

USERNAME => friehard DATE PLOTTED => 29-DEC-2009 TIME PLOTTED => 07:25

DIST	COUNTY	ROUTE	KILOMETER POST TOTAL PROJECT	SHEET No	TOTAL SHEETS
04	CC	4	37.9/41.3	958	1086

REGISTERED CIVIL ENGINEER — DATE 4/18/08

9-21-09
PLANS APPROVAL DATE

The State of California or its officers or agents shall not be responsible for the accuracy or completeness of electronic copies of this plan sheet.

REGISTERED PROFESSIONAL ENGINEER — James Carldon Hall Jr. — No. C49144 — Exp. 9/30/08 — CIVIL — STATE OF CALIFORNIA

CONTRA COSTA TRANSPORTATION AUTHORITY
3478 BUSKIRK AVENUE, SUITE 100
PLEASANT HILL, CA 94523

URS CORPORATION
3440 VINCENT ROAD
PLEASANT HILL, CA 94523

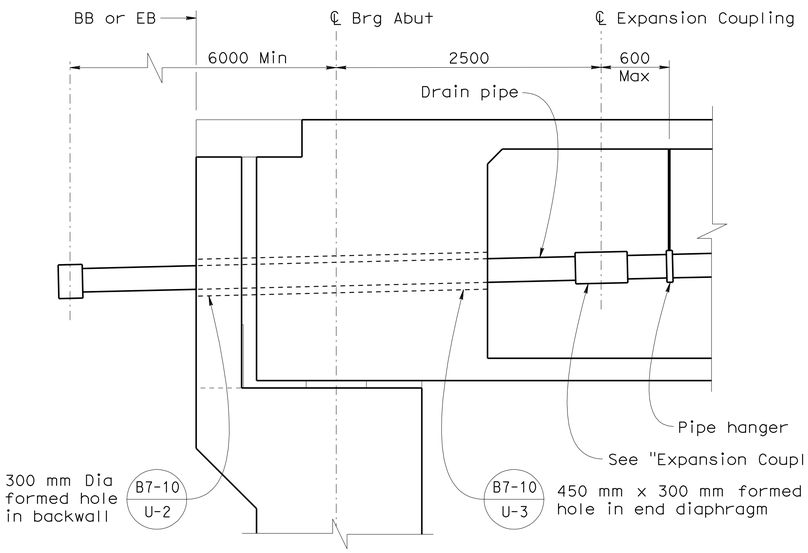

DECK DRAIN PIPE DETAIL
No Scale

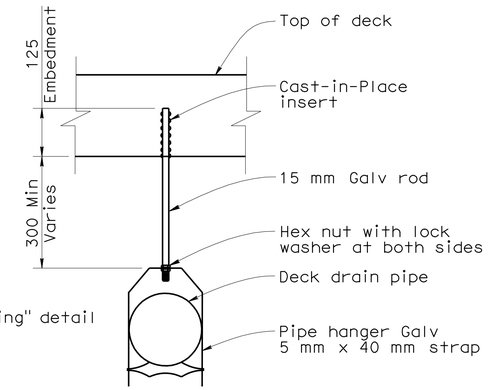

PIPE HANGER DETAIL
No Scale

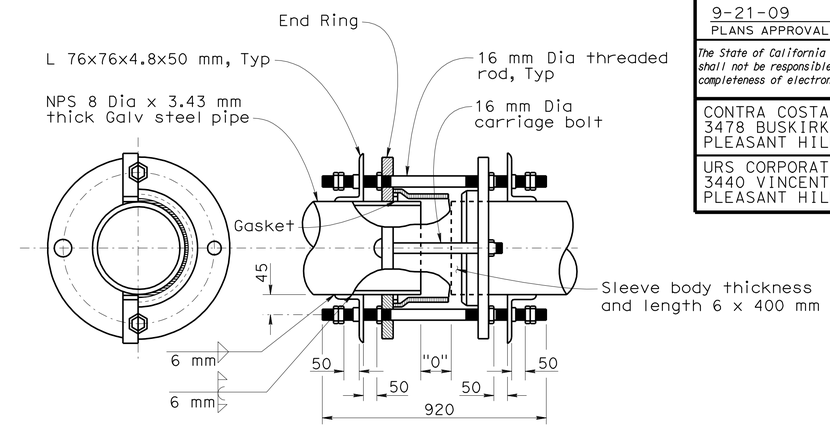

EXPANSION COUPLING
No Scale

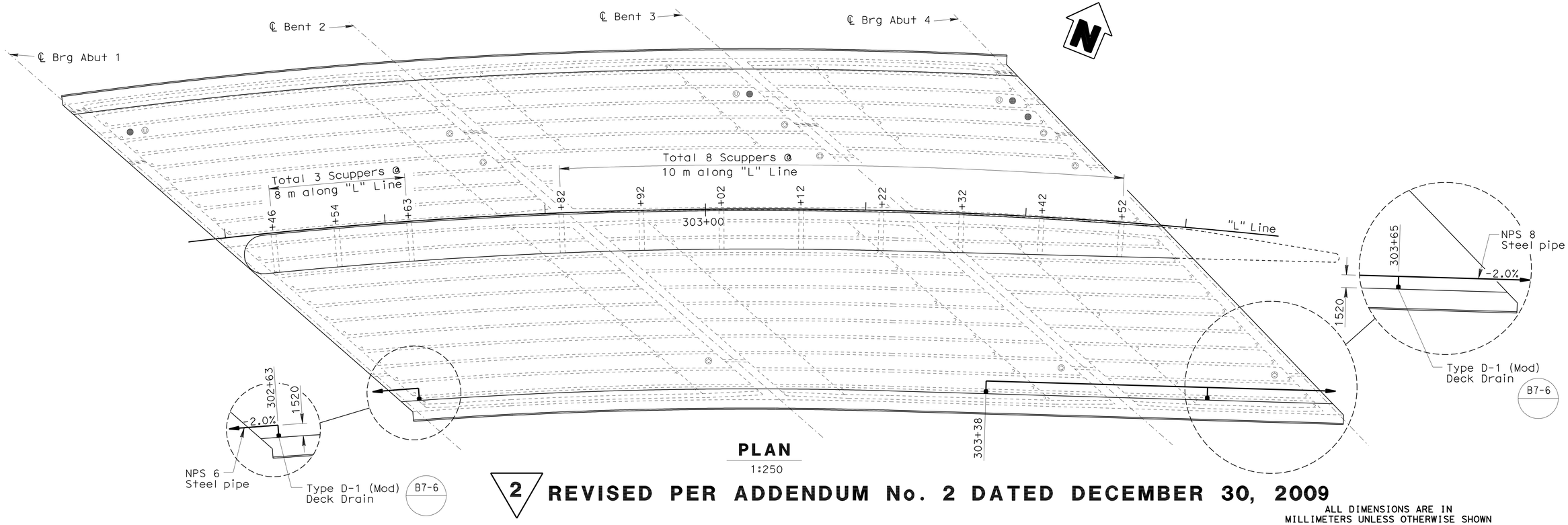

PLAN
1:250

2 REVISED PER ADDENDUM No. 2 DATED DECEMBER 30, 2009

ALL DIMENSIONS ARE IN MILLIMETERS UNLESS OTHERWISE SHOWN

DESIGN OVERSIGHT — Emil A. Vergara Jr.
12-1-09
SIGN OFF DATE

	BY	CHECKED
DESIGN	S. Das	T. Dubovik
DETAILS	L. Davis	T. Dubovik
QUANTITIES	J. Sloan	N. Suan

PREPARED FOR THE STATE OF CALIFORNIA DEPARTMENT OF TRANSPORTATION

W. LaFranchi
PROJECT ENGINEER

BRIDGE NO. 28-0394
KILOMETER POST 38.8

LOVERIDGE ROAD OC (REPLACE)
DECK DRAIN DETAILS NO. 1

DESIGN DETAIL SHEET (METRIC) (REV. 10/27/05)

ORIGINAL SCALE IN MILLIMETERS FOR REDUCED PLANS 0 10 20 30 40 50 60 70 80 90 100

CU 04275
EA 228591

DISREGARD PRINTS BEARING EARLIER REVISION DATES

REVISION DATES (PRELIMINARY STAGE ONLY): 03/04/05 05/04/05 10/04/05 01/06/06 02/14/07 05/04/07 12/14/07 02/22/08 04/18/08

SHEET 33 OF 43

FILE => 28-0394-r-ddet01.add

USERNAME => trlenard DATE PLOTTED => 29-DEC-2009 TIME PLOTTED => 07:25

DIST	COUNTY	ROUTE	KILOMETER POST TOTAL PROJECT	SHEET No	TOTAL SHEETS
04	CC	4	37.9/41.3	963	1086

REGISTERED CIVIL ENGINEER 2/22/08 DATE

9-21-09
PLANS APPROVAL DATE

REGISTERED PROFESSIONAL ENGINEER James Carldon Hall Jr. No. C49144 Exp. 9/30/08 CIVIL STATE OF CALIFORNIA

The State of California or its officers or agents shall not be responsible for the accuracy or completeness of electronic copies of this plan sheet.

CONTRA COSTA TRANSPORTATION AUTHORITY
3478 BUSKIRK AVENUE, SUITE 100
PLEASANT HILL, CA 94523

URS CORPORATION
3440 VINCENT ROAD
PLEASANT HILL, CA 94523

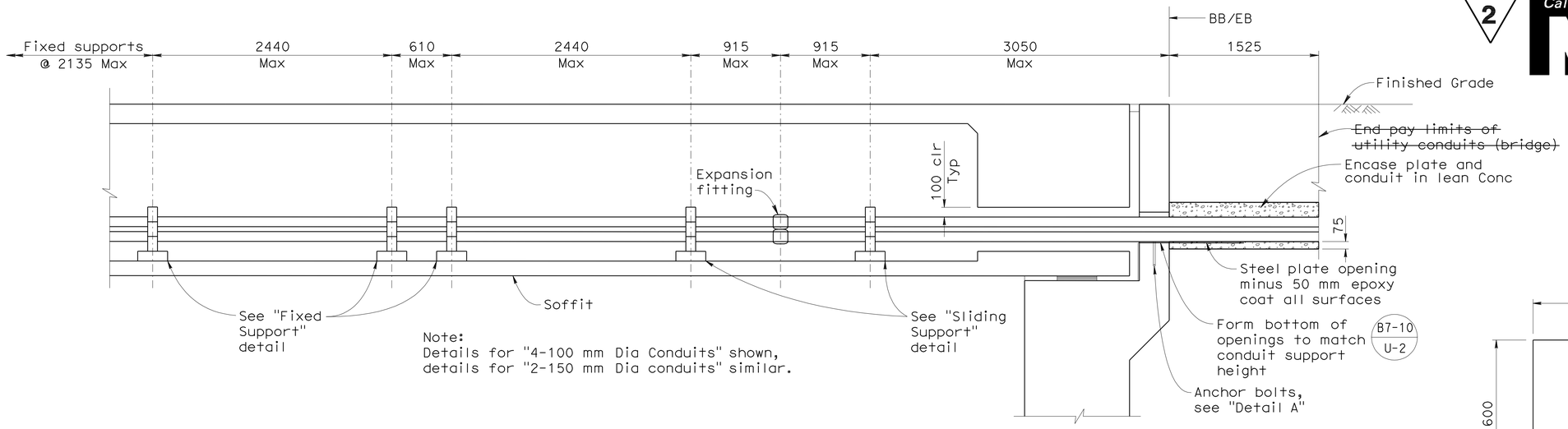

Note:
Details for "4-100 mm Dia Conduits" shown, details for "2-150 mm Dia conduits" similar.

UTILITY INSTALLATION DETAIL
No Sacle

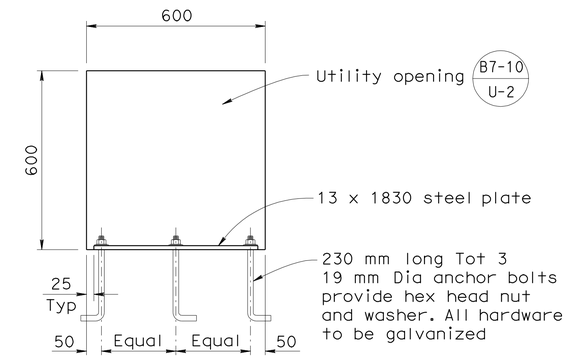

DETAIL A
No Sacle

NOTES:

1. Conduits to be placed before top deck, support shall be centered (horizontally) in utility opening.
2. All hardware shall be galvanized or stainless steel.
3. Epoxy coating shall be performed after all welding is complete.
4. Alternative style supports are acceptable upon approval by Engineer.

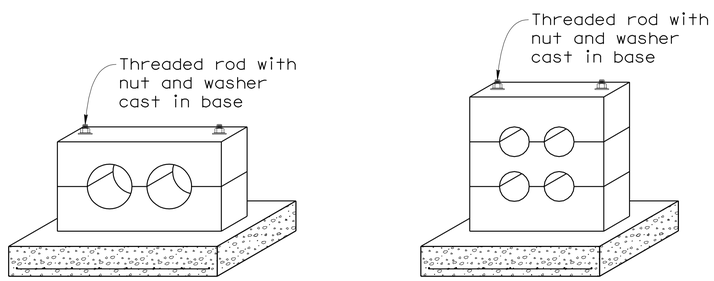

Note:
For details not shown, see "Sliding Support" details

2-150 mm PG&E CONDUITS **4-100 mm SBC CONDUITS**

FIXED SUPPORT
No Sacle

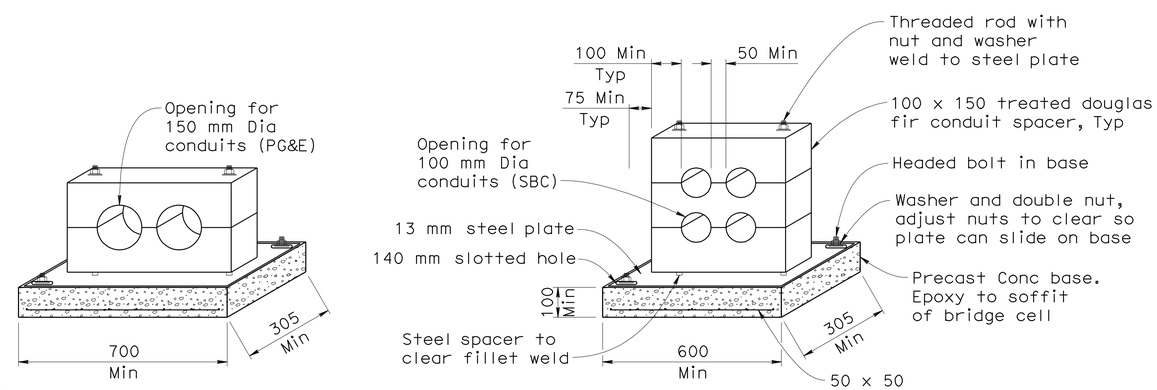

Note:
For details not shown, see "Sliding Support" details for 4-100 mm dia conduits

2-150 mm DIA CONDUITS **4-100 mm DIA CONDUITS**

SLIDING SUPPORT
No Sacle

2 REVISED PER ADDENDUM No. 2 DATED DECEMBER 30, 2009

ALL DIMENSIONS ARE IN MILLIMETERS UNLESS OTHERWISE SHOWN

DESIGN OVERSIGHT Emil A. Vergara Jr.
12-1-09
SIGN OFF DATE

DESIGN	BY J. Hall	CHECKED T. Dubovik	
DETAILS	BY L. Davis	CHECKED T. Dubovik	
QUANTITIES	BY J. Sloan	CHECKED N. Suan	

PREPARED FOR THE STATE OF CALIFORNIA DEPARTMENT OF TRANSPORTATION

W. LaFranchi
PROJECT ENGINEER

BRIDGE NO. 28-0394
KILOMETER POST 38.8

LOVERIDGE ROAD OC (REPLACE)
MISCELLANEOUS UTILITY DETAILS NO. 2

DESIGN DETAIL SHEET (METRIC) (REV. 10/27/05)

ORIGINAL SCALE IN MILLIMETERS FOR REDUCED PLANS 0 10 20 30 40 50 60 70 80 90 100

CU 04275
EA 228591

DISREGARD PRINTS BEARING EARLIER REVISION DATES

REVISION DATES (PRELIMINARY STAGE ONLY) 03/04/05 05/24/05 10/24/05 01/26/06 02/14/07 05/30/07 12/10/07 02/22/08

SHEET 38 OF 43

FILE => 28-0394-u-miscudt02.add

USERNAME => friemard DATE PLOTTED => 29-DEC-2009 TIME PLOTTED => 07:25

DIST	COUNTY	ROUTE	KILOMETER POST TOTAL PROJECT	SHEET No	TOTAL SHEETS
04	CC	4	37.9/41.3	993	1086

REGISTERED CIVIL ENGINEER — DATE 07/18/08

9-21-09
PLANS APPROVAL DATE

REGISTERED PROFESSIONAL ENGINEER — JAMES C. S. KWONG — No. C36732 — Exp. 06/30/10 — CIVIL — STATE OF CALIFORNIA

The State of California or its officers or agents shall not be responsible for the accuracy or completeness of electronic copies of this plan sheet.

CONTRA COSTA TRANSPORTATION AUTHORITY
3478 BUSKIRK AVENUE, SUITE 100
PLEASANT HILL, CA 94523

BEYAZ & PATEL, INC.
800 SOUTH BROADWAY, SUITE 200
WALNUT CREEK, CA 94596-5218

2 Caltrans Metric

PVI Sta = "eBART" Line 79+06.054
PVI Elev = 25.390
K = 101.047

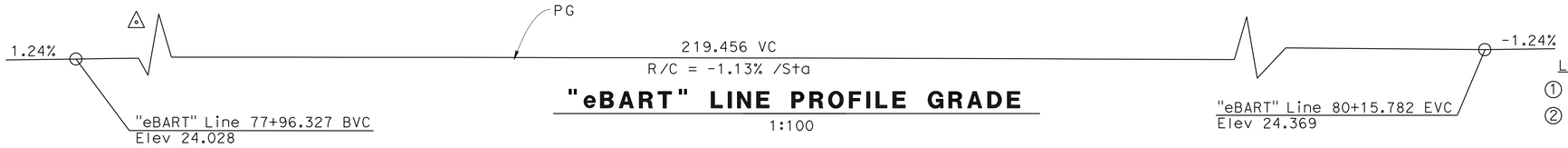

"eBART" LINE PROFILE GRADE

1:100

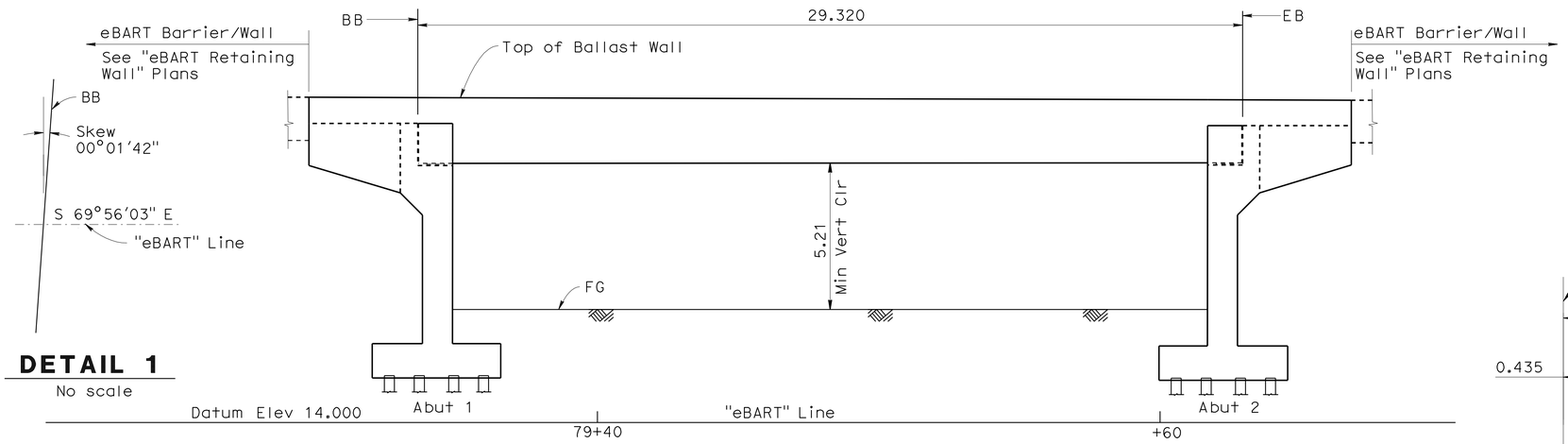

DETAIL 1

No scale

ELEVATION

1:100

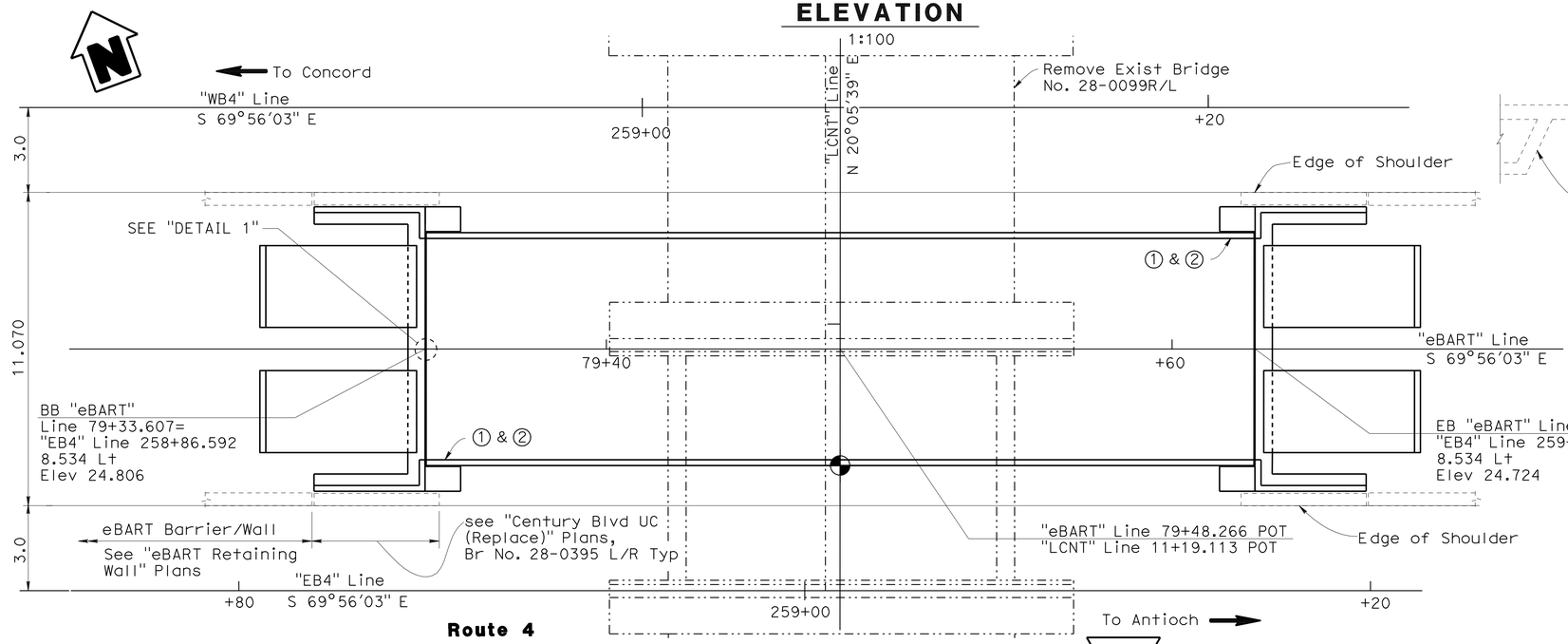

PLAN

1:100

Legend:

- ① Paint "Century Blvd UP"
- ② Paint Bridge No. and Year Completed
- Denotes existing structure
- ~~Denotes future construction~~
- Denotes direction of traffic
- Denotes min vertical clearance

Notes:

1. For "Sheet Index", "General Notes" and "Standard Plans" see "Index To Plans" sheet.
2. For "Pile Data Table" see "Foundation Plan" sheet.

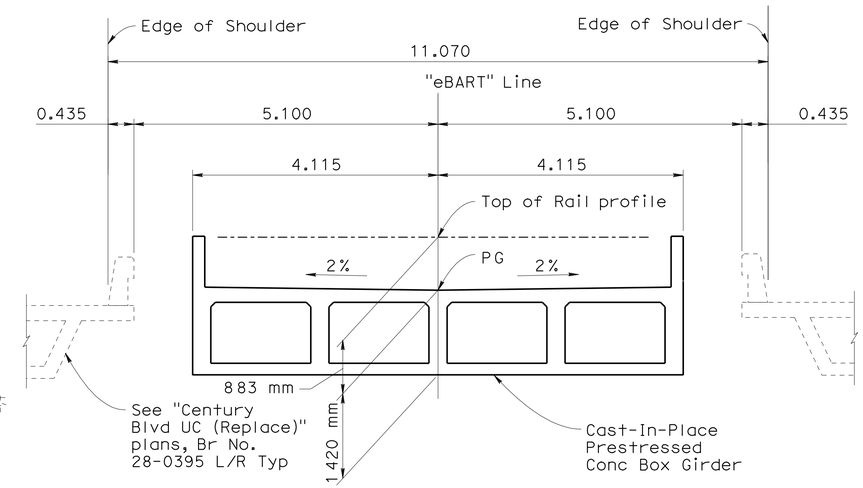

TYPICAL SECTION

1:50

EBART-CENTURY BOULEVARD UP BR NO 28-C0484

QUANTITIES

STRUCTURE EXCAVATION (BRIDGE)	560	m^3
STRUCTURE BACKFILL (BRIDGE)	290	m^3
FURNISH PILING (CLASS 900 MODIFIED)	1162	m
DRIVE PILE (CLASS 900 MODIFIED)	64	EA
PRESTRESSING CAST-IN-PLACE CONCRETE	LUMP	SUM
STRUCTURAL CONCRETE, BRIDGE FOOTING	112	m^3
STRUCTURAL CONCRETE, BRIDGE	390	m^3
STRUCTURAL CONCRETE, APPROACH SLAB	28	m^3
FRACTURED RIB TEXTURE	79	m^2
JOINT SEAL (MR 25 MM)	28	m
BAR REINFORCING STEEL (BRIDGE)	39 300	kg

ALL DIMENSIONS ARE IN METERS UNLESS OTHERWISE SHOWN

2 **REVISED PER ADDENDUM No. 2 DATED DECEMBER 30, 2009**

DESIGN OVERSIGHT Emil A. Vergara Jr.
12-1-09
SIGN OFF DATE

	BY	CHECKED
DESIGN	M. Hsiao	B. Kattula / R. Hancock
DETAILS	E. Posadas	B. Kattula / R. Hancock
QUANTITIES	T. Palmerino	J. Melillo

LOAD FACTOR DESIGN — LIVE LOADING: HS25-44 AND 2-CAR DOUBLE DECK DMU TRAIN AND 10-CAR BART TRAIN LOADS

	BY	CHECKED
LAYOUT	M. Hsiao	J. Kwong
SPECIFICATIONS	D. Harnagel	PLANS AND SPECS COMPARED T. Palmerino

PREPARED FOR THE STATE OF CALIFORNIA DEPARTMENT OF TRANSPORTATION

James C.S. Kwong
PROJECT ENGINEER

BRIDGE NO. 28C0484
KILOMETER POST 40.0(24.9)

eBART-CENTURY BLVD UP
GENERAL PLAN

DESIGN GENERAL PLAN SHEET (METRIC) (REV. 10/27/05)

ORIGINAL SCALE IN MILLIMETERS FOR REDUCED PLANS 0 10 20 30 40 50 60 70 80 90 100

CU 04275
EA 228591

DISREGARD PRINTS BEARING EARLIER REVISION DATES — REVISION DATES (PRELIMINARY STAGE ONLY) 12/17/07 02/18/08 04/29/08 07/18/08

SHEET 1 OF 10

FILE => 28C0484-a-gp01.add

USERNAME => friehard DATE PLOTTED => 29-DEC-2009 TIME PLOTTED => 07:25

DIST	COUNTY	ROUTE	KILOMETER POST TOTAL PROJECT	SHEET No	TOTAL SHEETS
04	CC	4	37.9/41.3	994	1086

REGISTERED CIVIL ENGINEER 07/18/08 DATE

9-21-09
PLANS APPROVAL DATE

REGISTERED PROFESSIONAL ENGINEER JAMES C. S. KWONG No. C36732 Exp. 06/30/10 CIVIL STATE OF CALIFORNIA

The State of California or its officers or agents shall not be responsible for the accuracy or completeness of electronic copies of this plan sheet.

CONTRA COSTA TRANSPORTATION AUTHORITY
3478 BUSKIRK AVENUE, SUITE 100
PLEASANT HILL, CA 94523

BEYAZ & PATEL, INC.
800 SOUTH BROADWAY, SUITE 200
WALNUT CREEK, CA 94596-5218

2 Caltrans Metric

GENERAL NOTES LOAD FACTOR DESIGN

DESIGN: BART Facilities Standard, version 1.2, released August 18, 2004
CALTRANS BRIDGE DESIGN SPECIFICATIONS - LFD Version April 2000
(1996 AASHTO with interims and revisions by CALTRANS)

SEISMIC DESIGN: BART Facilities Standards, Facility Design-Criteria, Structural-Seismic Design
Caltrans Seismic Design Criteria (SDC) version 1.4, June 2006.

LIVE LOADING: DMU -Colorado Rail Car, Double Deck 2-Car Train, AW3 loading
BART - Standard BART train loading, minimum of 2 cars to maximum of 10 cars

SEISMIC LOADING: See ARS curve below

REINFORCED CONCRETE: fy = 420 Mpa
f'c = 28 Mpa
n = 8

PILES: See "Pile Data Table" on "Foundation Plan" sheet

INDEX TO PLANS

SHEET No.	TITLE
1	GENERAL PLAN
2	INDEX TO PLANS
2A	DECK CONTOURS
3	FOUNDATION PLAN
4	ABUTMENT 1 LAYOUT
5	ABUTMENT 2 LAYOUT
6	ABUTMENT DETAILS No. 1
7	ABUTMENT DETAILS No. 2
7A	ABUTMENT DETAILS No. 3
7B	TYPICAL SECTION
7C	GIRDER LAYOUT
8	LOG OF TEST BORINGS 1 OF 3
9	LOG OF TEST BORINGS 2 OF 3
10	LOG OF TEST BORINGS 3 OF 3

STANDARD PLANS DATED JULY 2004

A10A	ACRONYMS AND ABBREVIATIONS (A-L)
A10B	ACRONYMS AND ABBREVIATIONS (M-Z)
A10C	SYMBOLS (SHEET 1 OF 2)
A10D	SYMBOLS (SHEET 2 OF 2)
A62C	LIMITS OF PAYMENT FOR EXCAVATION AND BACKFILL, BRIDGE
A85	CHAIN LINK FENCE
B0-5	BRIDGE DETAILS
B0-13	BRIDGE DETAILS
RSP B6-21	JOINT SEALS (MAXIMUM MOVEMENT RATING = 50 mm)
B7-1	BOX GIRDER DETAILS
RSP B8-5	CAST-IN-PLACE PRESTRESSED GIRDER DETAILS
B11-55	CONCRETE BARRIER TYPE 732

Standard Plan Sheet No.
Detail No.
- Section Identification

ARS CURVE

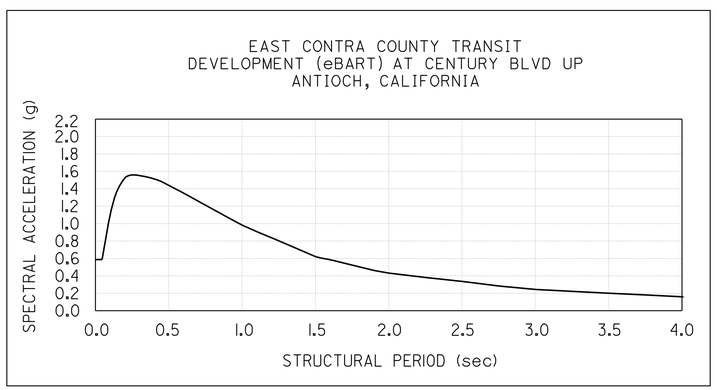

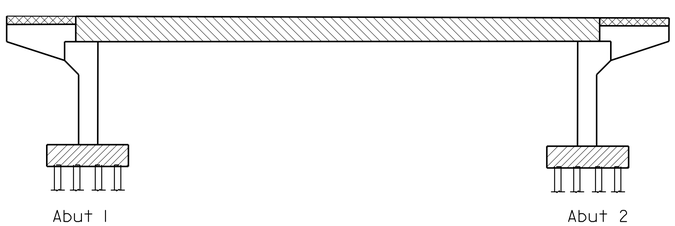

CONCRETE STRENGTH AND TYPE LIMITS

No Scale

- Structural Concrete, Bridge Footing (28 MPa @ 28 days)
- Structural Concrete, Bridge (28 MPa @ 28 days)
- Structural Concrete, Bridge see "Girder Layout"
- Structural Concrete, Structure Approach (28 MPa @ 28 days)

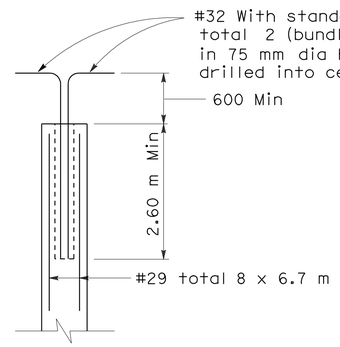

ALTERNATIVE PILE ANCHOR

No Scale

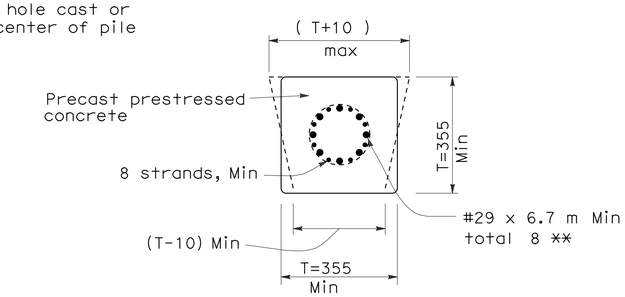

SECTION A-A

No Scale

** To be in place when pile is cast

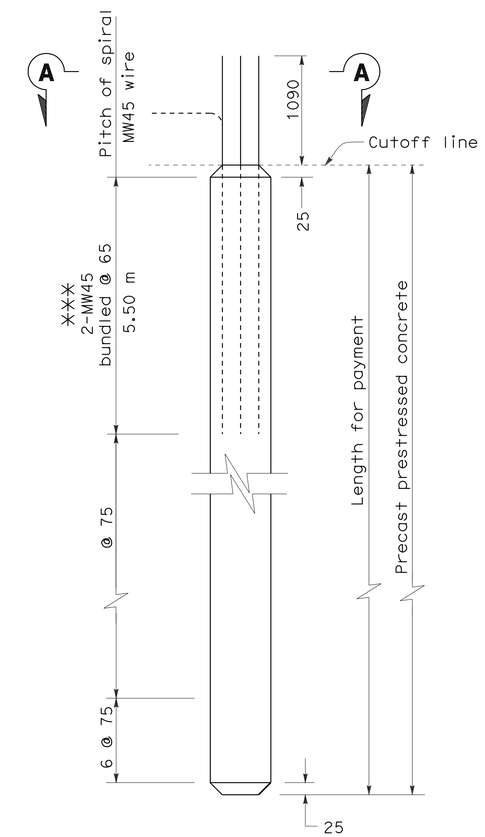

PILE DETAILS

No Scale

*** MW 70 at 50 may be substituted

Notes:

1. Pf = Prestressing force (after losses) shall provide 7 Mpa Minimum.
2. Concrete Strength: f'c @ 28 days = 52.5 Mpa
3. Lapped splices in spiral pile reinforcement shall be lapped 80 wire diameters minimum. Spiral pile reinforcement at splices and at ends shall be terminated by a 135° hook with 150 mm tail hooked around a longitudinal bar or strand.
4. 50 mm clearance to spiral reinforcement shall be maintained.
5. Maximum cutoff length at the top of the Piles is three (3) meters.
6. For longitudinal reinforcement and prestressing for anchor piles and load test piles, see "Load Test Pile Details (2)", Standard Plan B2-10.

2 **REVISED PER ADDENDUM No. 2 DATED DECEMBER 30, 2009**

ALL DIMENSIONS ARE IN MILLIMETERS UNLESS OTHERWISE SHOWN

DESIGN OVERSIGHT Emil A. Vergara Jr.
12-1-09
SIGN OFF DATE

	BY	CHECKED
DESIGN	T. Palmerino	B. Kattula / R. Hancock
DETAILS	E. Posadas	B. Kattula / R. Hancock
QUANTITIES	T. Palmerino	J. Melillo

PREPARED FOR THE STATE OF CALIFORNIA DEPARTMENT OF TRANSPORTATION

James C.S. Kwong
PROJECT ENGINEER

BRIDGE NO. 28C0484
KILOMETER POST 40.0(24.9)

eBART-CENTURY BLVD UP
INDEX TO PLANS

DESIGN DETAIL SHEET (METRIC) (REV. 10/27/05)

ORIGINAL SCALE IN MILLIMETERS FOR REDUCED PLANS 0 10 20 30 40 50 60 70 80 90 100

CU 04275
EA 228591

DISREGARD PRINTS BEARING EARLIER REVISION DATES

REVISION DATES (PRELIMINARY STAGE ONLY) 12/17/07 02/14/08 04/29/08 07/18/08

SHEET 2 OF 10

FILE => 28C0484-a-itp.add

USERNAME => rfriemard DATE PLOTTED => 29-DEC-2009 TIME PLOTTED => 07:25

DIST	COUNTY	ROUTE	KILOMETER POST TOTAL PROJECT	SHEET No	TOTAL SHEETS
04	CC	4	37.9/41.3	994A	1086

REGISTERED CIVIL ENGINEER 11/16/09 DATE

9-21-09
PLANS APPROVAL DATE

REGISTERED PROFESSIONAL ENGINEER
JAMES C. S. KWONG
No. C36732
Exp. 06/30/10
CIVIL
STATE OF CALIFORNIA

The State of California or its officers or agents shall not be responsible for the accuracy or completeness of electronic copies of this plan sheet.

CONTRA COSTA TRANSPORTATION AUTHORITY
3478 BUSKIRK AVENUE, SUITE 100
PLEASANT HILL, CA 94523

BEYAZ & PATEL, INC.
800 SOUTH BROADWAY, SUITE 200
WALNUT CREEK, CA 94596-5218

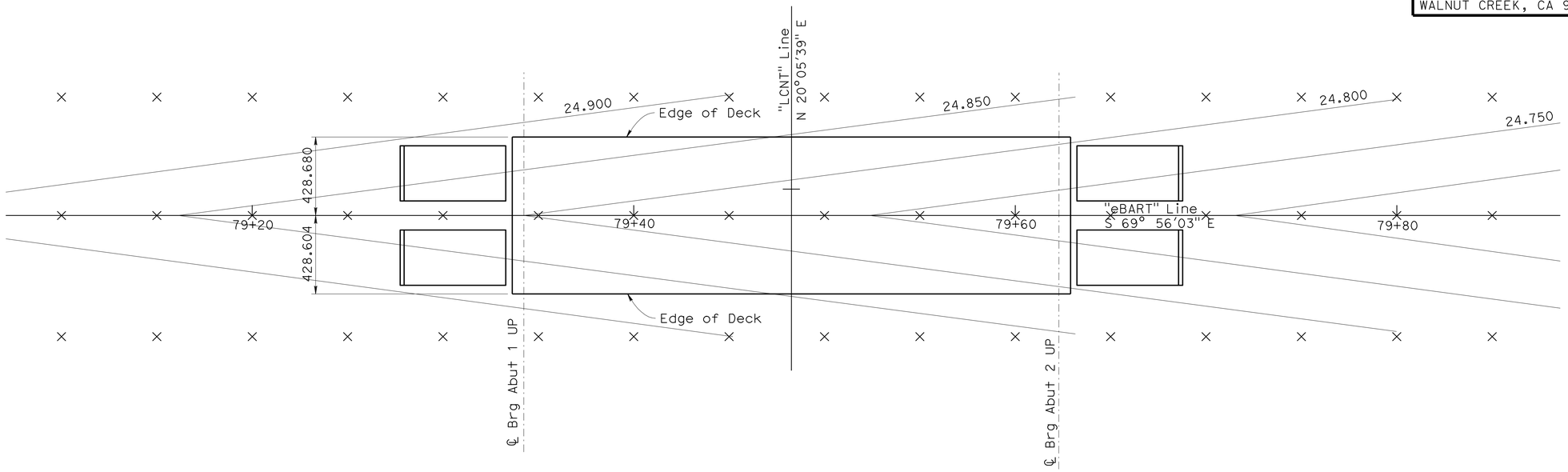

PLAN
1:125

Notes:

1. Contours do not include Camber
2. Contour interval = 0.05 m

Legend:

× Indicates 5 m interval measured along "eBART" Line

2 **ADDED PER ADDENDUM No. 2 DATED DECEMBER 30, 2009**

ALL DIMENSIONS ARE IN METERS UNLESS OTHERWISE SHOWN

DESIGN OVERSIGHT Emil A. Vergara Jr.
12-1-09
SIGN OFF DATE

	BY	CHECKED
DESIGN	T. Palmerino	B. Kattula / R. Hancock
DETAILS	E. Posadas	B. Kattula / R. Hancock
QUANTITIES	T. Palmerino	J. Melillo

PREPARED FOR THE STATE OF CALIFORNIA DEPARTMENT OF TRANSPORTATION

James C.S. Kwong
PROJECT ENGINEER

BRIDGE NO. 28C0484
KILOMETER POST 40.0(24.9)

eBART-CENTURY BLVD UP
DECK CONTOURS

DESIGN DETAIL SHEET (METRIC) (REV. 10/27/05)

ORIGINAL SCALE IN MILLIMETERS FOR REDUCED PLANS 0 10 20 30 40 50 60 70 80 90 100

CU 04275
EA 228591

DISREGARD PRINTS BEARING EARLIER REVISION DATES

REVISION DATES (PRELIMINARY STAGE ONLY) 11/16/09

SHEET 2A OF 10

FILE => 28C0484-d-dc01.dgn

USERNAME => friemard DATE PLOTTED => 30-DEC-2009 TIME PLOTTED => 05:39

DIST	COUNTY	ROUTE	KILOMETER POST TOTAL PROJECT	SHEET No	TOTAL SHEETS
04	CC	4	37.9/41.3	996	1086

REGISTERED CIVIL ENGINEER 07/18/08 DATE

9-21-09
PLANS APPROVAL DATE

REGISTERED PROFESSIONAL ENGINEER JAMES C. S. KWONG No. C36732 Exp. 06/30/10 CIVIL STATE OF CALIFORNIA

The State of California or its officers or agents shall not be responsible for the accuracy or completeness of electronic copies of this plan sheet.

CONTRA COSTA TRANSPORTATION AUTHORITY
3478 BUSKIRK AVENUE, SUITE 100
PLEASANT HILL, CA 94523

BEYAZ & PATEL, INC.
800 SOUTH BROADWAY, SUITE 200
WALNUT CREEK, CA 94596-5218

Caltrans Metric

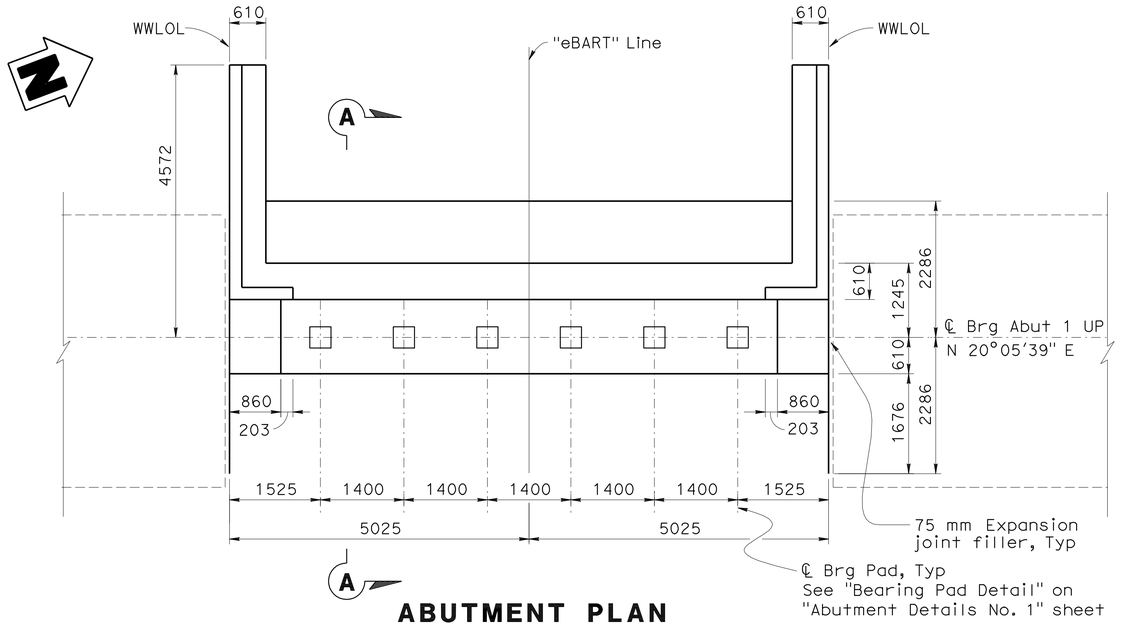

ABUTMENT PLAN

1:50

Legend:

Indicates vertical pile

~~Indicates future construction~~

Notes:

1. For "Section A-A", see "Abutment Details No. 1" sheet.
2. For Shear Key Details, see "Abutment Details No. 1" sheet.
3. For Wingwall Details, see "Abutment Details No. 2" sheet.
4. For Fractured Rib Texture, see "Century Blvd UC (Replace)" Plans
5. For Century Blvd. UC Abutment Details, see "Century Blvd UC (Replace)" Plans".
6. For Approach Slab Details, see "Abutment Details No. 3" sheet.

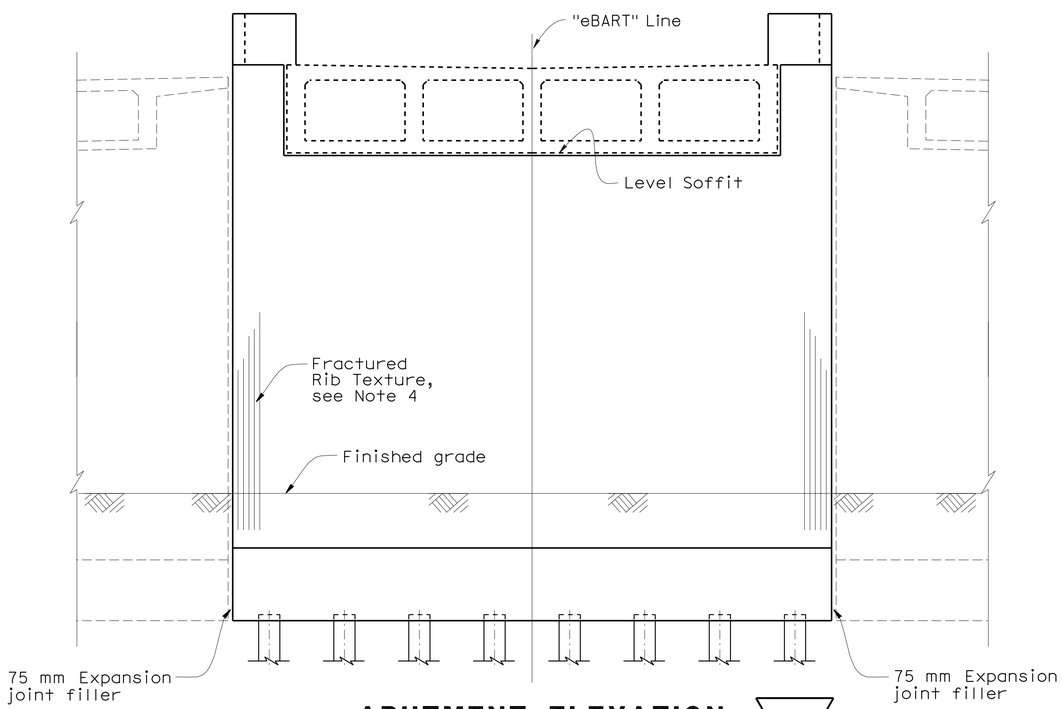

ABUTMENT ELEVATION

1:50

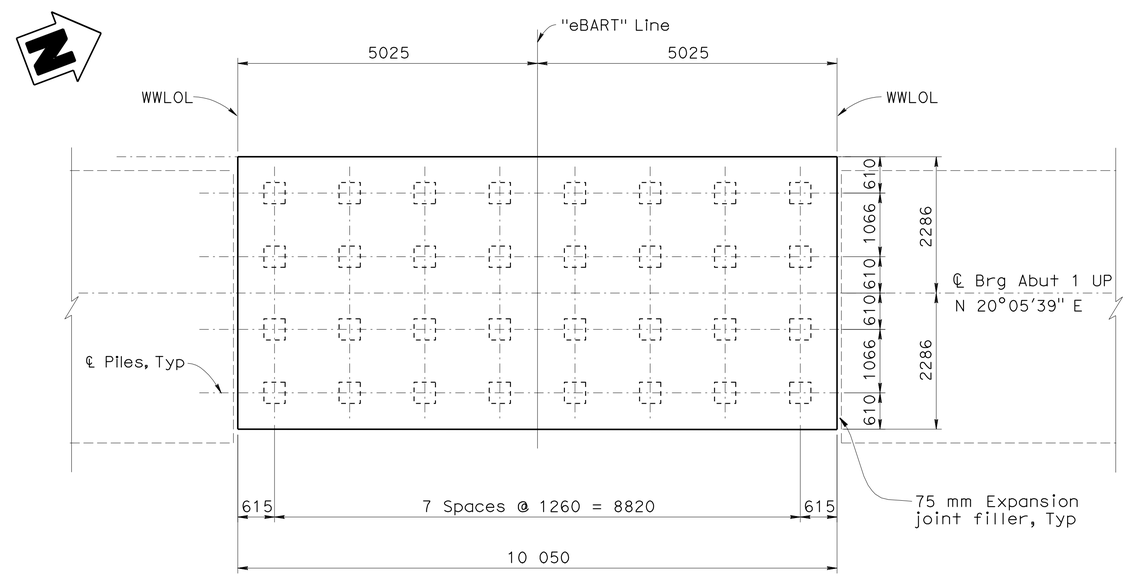

PILE LAYOUT

1:50

2 **REVISED PER ADDENDUM No. 2 DATED DECEMBER 30, 2009**

ALL DIMENSIONS ARE IN MILLIMETERS UNLESS OTHERWISE SHOWN

DESIGN OVERSIGHT Emil A. Vergara Jr.
12-1-09
SIGN OFF DATE

	BY	CHECKED
DESIGN	T. Palmerino	B. Kattula / R. Hancock
DETAILS	E. Posadas	B. Kattula / R. Hancock
QUANTITIES	T. Palmerino	J. Melillo

PREPARED FOR THE STATE OF CALIFORNIA DEPARTMENT OF TRANSPORTATION

James C.S. Kwong
PROJECT ENGINEER

BRIDGE NO. 28C0484
KILOMETER POST 40.0(24.9)

eBART-CENTURY BLVD UP

ABUTMENT 1 LAYOUT

DESIGN DETAIL SHEET (METRIC) (REV. 10/27/05)

ORIGINAL SCALE IN MILLIMETERS FOR REDUCED PLANS 0 10 20 30 40 50 60 70 80 90 100

CU 04275
EA 228591

DISREGARD PRINTS BEARING EARLIER REVISION DATES

REVISION DATES (PRELIMINARY STAGE ONLY) 12/17/07 02/25/08 04/29/08 07/18/08

SHEET 4 OF 10

FILE => 28C0484-f-a01_lo1.add

USERNAME => trienard DATE PLOTTED => 29-DEC-2009 TIME PLOTTED => 07:26

DIST	COUNTY	ROUTE	KILOMETER POST TOTAL PROJECT	SHEET No	TOTAL SHEETS
04	CC	4	37.9/41.3	997	1086

REGISTERED CIVIL ENGINEER 07/18/08 DATE

9-21-09
PLANS APPROVAL DATE

REGISTERED PROFESSIONAL ENGINEER JAMES C. S. KWONG No. C36732 Exp. 06/30/10 CIVIL STATE OF CALIFORNIA

The State of California or its officers or agents shall not be responsible for the accuracy or completeness of electronic copies of this plan sheet.

CONTRA COSTA TRANSPORTATION AUTHORITY
3478 BUSKIRK AVENUE, SUITE 100
PLEASANT HILL, CA 94523

BEYAZ & PATEL, INC.
800 SOUTH BROADWAY, SUITE 200
WALNUT CREEK, CA 94596-5218

2 Caltrans Metric

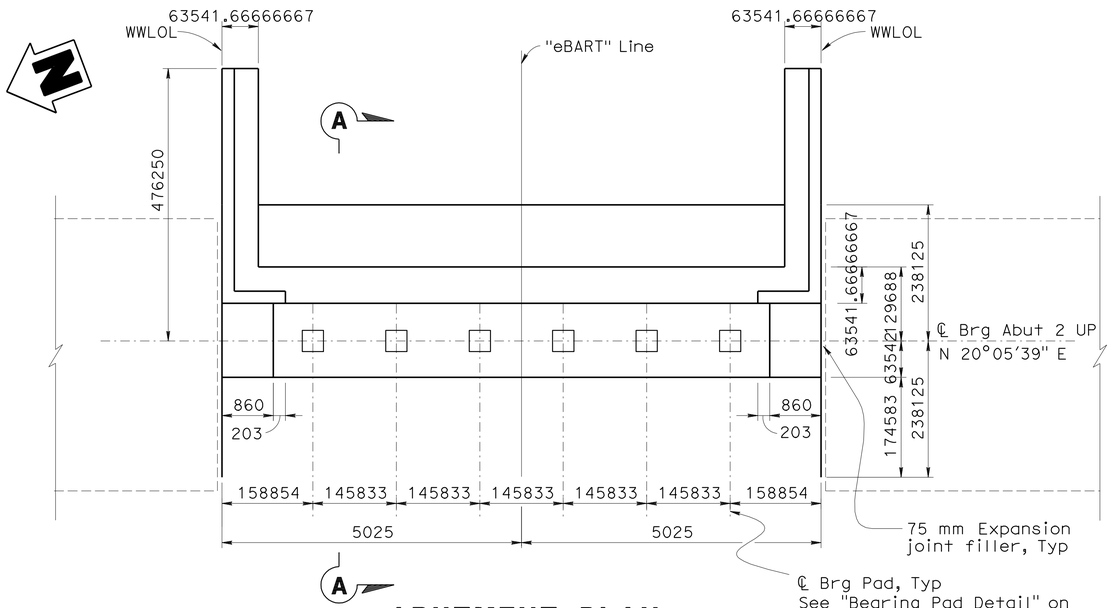

ABUTMENT PLAN
1:50

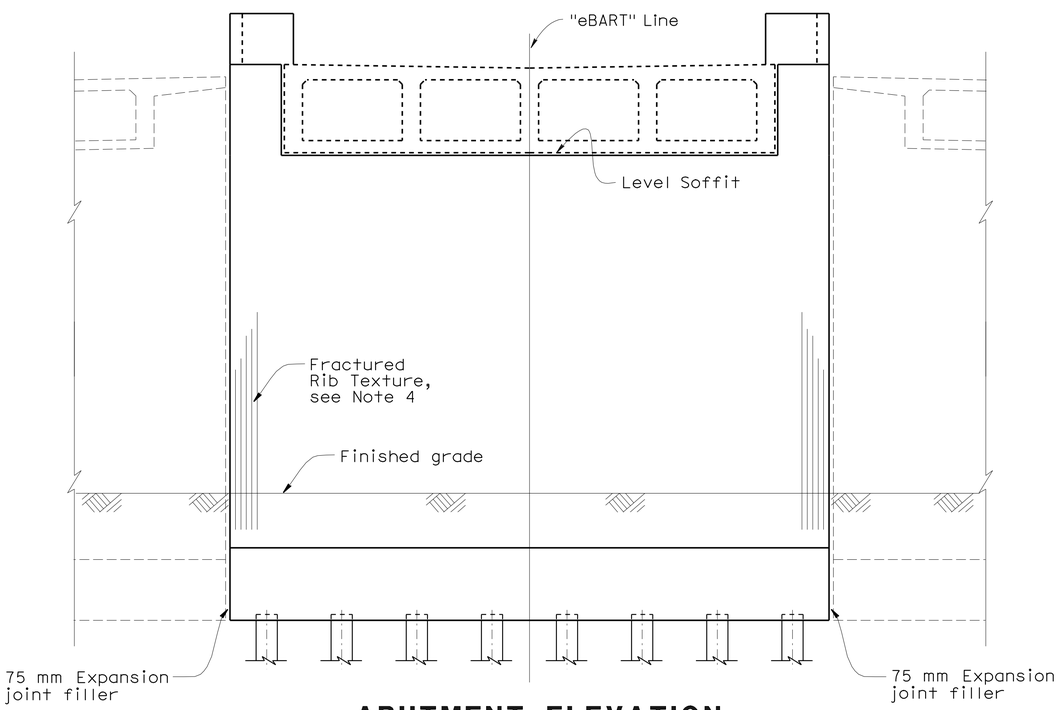

ABUTMENT ELEVATION
1:50

Legend:

Indicates vertical pile

~~Indicates future construction~~

Notes:

1. For "Section A-A", see "Abutment Details No. 1" sheet.
2. For Shear Key Details, see "Abutment Details No. 1" sheet.
3. For Wingwall Details, see "Abutment Details No. 2" sheet.
4. For Fractured Rib Texture, see "Century Blvd UC (Replace)" Plans
5. For Century Blvd. UC Abutment Details, see "Century Blvd UC (Replace)" Plans".
6. For Approach Slab Details, see "Abutment Details No. 3" sheet.

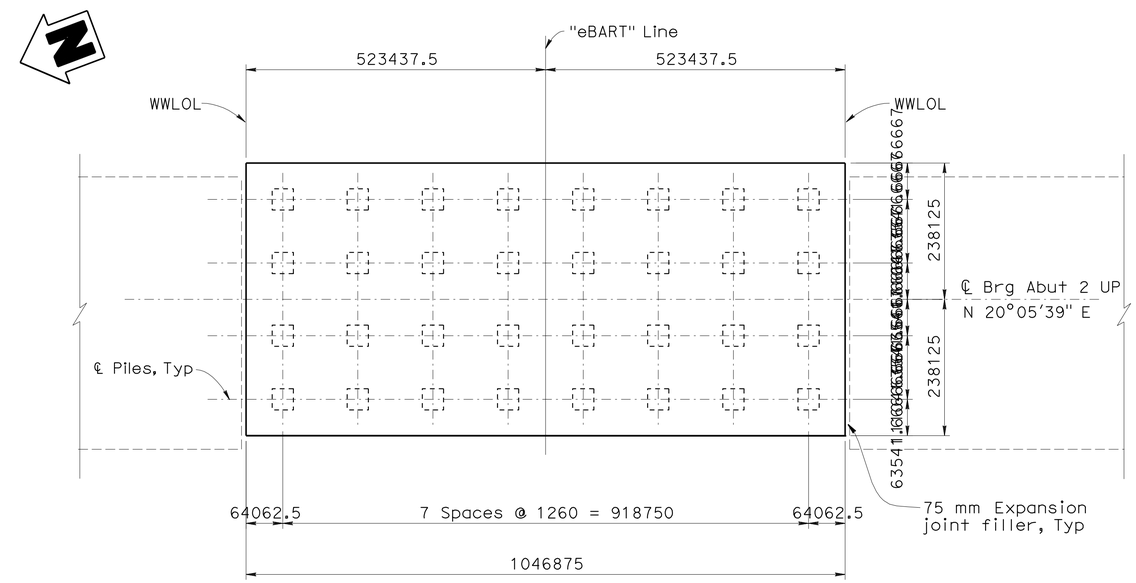

PILE LAYOUT
1:50

2 **REVISED PER ADDENDUM No. 2 DATED DECEMBER 30, 2009**

ALL DIMENSIONS ARE IN MILLIMETERS UNLESS OTHERWISE SHOWN

DESIGN OVERSIGHT Emil A. Vergara Jr.
12-1-09
SIGN OFF DATE

	BY	CHECKED
DESIGN	T. Palmerino	B. Kattula / R. Hancock
DETAILS	E. Posadas	B. Kattula / R. Hancock
QUANTITIES	T. Palmerino	J. Melillo

PREPARED FOR THE STATE OF CALIFORNIA DEPARTMENT OF TRANSPORTATION

James C.S. Kwong
PROJECT ENGINEER

BRIDGE NO. 28C0484
KILOMETER POST 40.0(24.9)

eBART-CENTURY BLVD UP
ABUTMENT 2 LAYOUT

DESIGN DETAIL SHEET (METRIC) (REV. 10/27/05)

ORIGINAL SCALE IN MILLIMETERS FOR REDUCED PLANS 0 10 20 30 40 50 60 70 80 90 100

CU 04275
EA 228591

DISREGARD PRINTS BEARING EARLIER REVISION DATES

REVISION DATES (PRELIMINARY STAGE ONLY) 12/17/07 02/15/08 04/29/08 07/18/08

SHEET 5 OF 10

FILE => 28C0484-f-a01_1o2.add

USERNAME => trienard DATE PLOTTED => 29-DEC-2009 TIME PLOTTED => 07:26

DIST	COUNTY	ROUTE	KILOMETER POST TOTAL PROJECT	SHEET No	TOTAL SHEETS
04	CC	4	37.9/41.3	998	1086

REGISTERED CIVIL ENGINEER 07/18/08 DATE

9-21-09
PLANS APPROVAL DATE

REGISTERED PROFESSIONAL ENGINEER JAMES C. S. KWONG No. C36732 Exp. 06/30/10 CIVIL STATE OF CALIFORNIA

The State of California or its officers or agents shall not be responsible for the accuracy or completeness of electronic copies of this plan sheet.

CONTRA COSTA TRANSPORTATION AUTHORITY
3478 BUSKIRK AVENUE, SUITE 100
PLEASANT HILL, CA 94523

BEYAZ & PATEL, INC.
800 SOUTH BROADWAY, SUITE 200
WALNUT CREEK, CA 94596-5218

Caltrans Metric

2

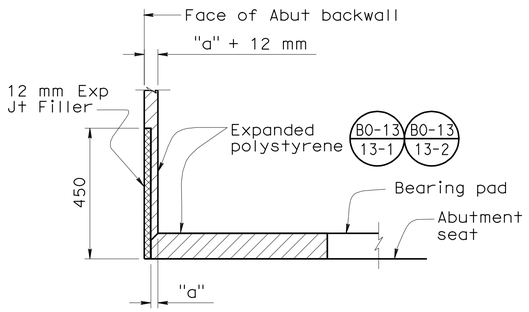

DETAIL A
NO SCALE

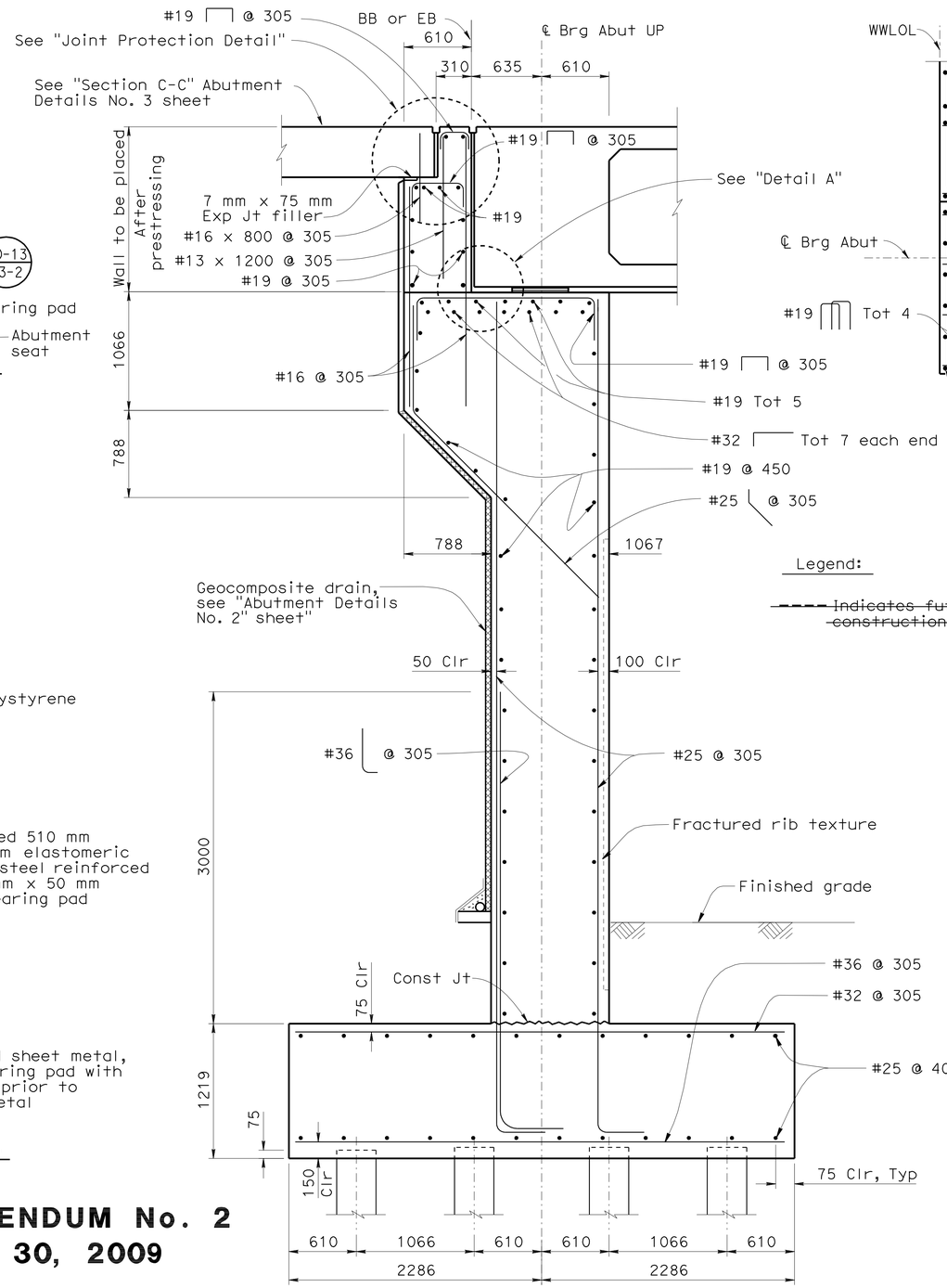

SECTION A-A
1:25

Legend:

~~----- Indicates future construction~~

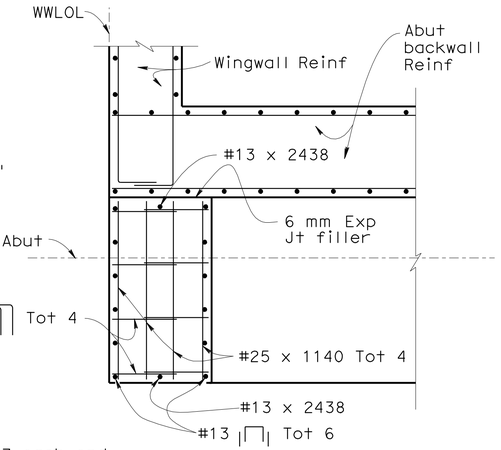

SECTION E-E
1:25

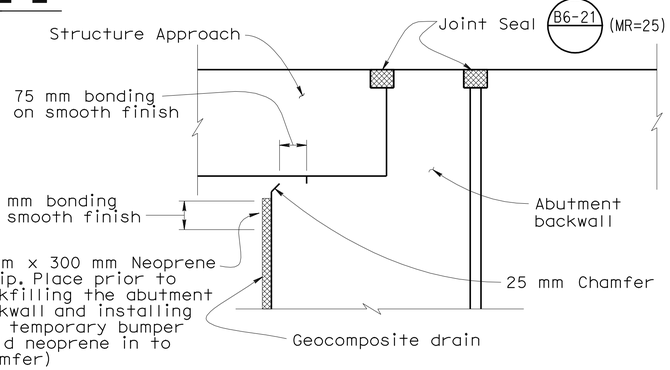

JOINT PROTECTION DETAIL
NO SCALE

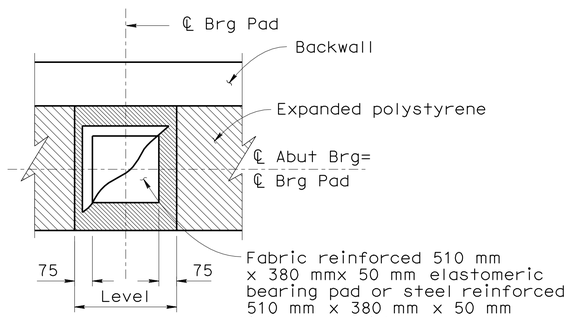

PLAN

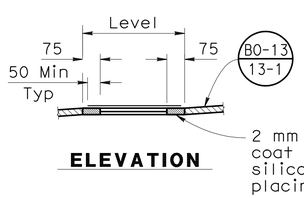

ELEVATION

BEARING PAD DETAIL
NO SCALE

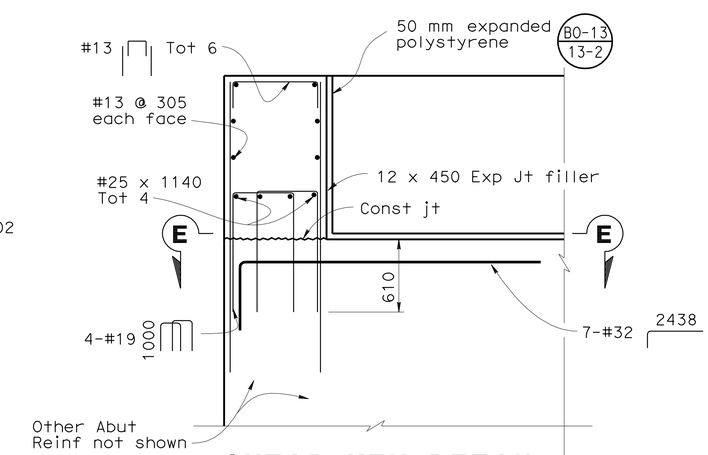

SHEAR KEY DETAIL
1:25

ALL DIMENSIONS ARE IN MILLIMETERS UNLESS OTHERWISE SHOWN

2 **REVISED PER ADDENDUM No. 2 DATED DECEMBER 30, 2009**

DESIGN OVERSIGHT Emil A. Vergara Jr.
12-1-09
SIGN OFF DATE

	BY	CHECKED
DESIGN	T. Palmerino	B. Kattula / R. Hancock
DETAILS	E. Posadas	B. Kattula / R. Hancock
QUANTITIES	T. Palmerino	J. Melillo

PREPARED FOR THE STATE OF CALIFORNIA DEPARTMENT OF TRANSPORTATION

James C.S. Kwong
PROJECT ENGINEER

BRIDGE NO. 28C0484
KILOMETER POST 40.0(24.9)

eBART-CENTURY BLVD UP
ABUTMENT DETAILS NO. 1

DESIGN DETAIL SHEET (METRIC) (REV. 10/27/05)

ORIGINAL SCALE IN MILLIMETERS FOR REDUCED PLANS 0 10 20 30 40 50 60 70 80 90 100

CU 04275
EA 228591

DISREGARD PRINTS BEARING EARLIER REVISION DATES

REVISION DATES (PRELIMINARY STAGE ONLY) 12/17/07 02/15/08 04/29/08 07/18/08

SHEET 6 OF 10

FILE => 28C0484-f-a01dt01.add

USERNAME => friehard DATE PLOTTED => 29-DEC-2009 TIME PLOTTED => 07:26

DIST	COUNTY	ROUTE	KILOMETER POST TOTAL PROJECT	SHEET No	TOTAL SHEETS
04	CC	4	37.9/41.3	999	1086

2

Caltrans Metric

REGISTERED CIVIL ENGINEER — DATE 07/18/08

9-21-09
PLANS APPROVAL DATE

REGISTERED PROFESSIONAL ENGINEER — JAMES C. S. KWONG — No. C36732 — Exp. 06/30/10 — CIVIL — STATE OF CALIFORNIA

The State of California or its officers or agents shall not be responsible for the accuracy or completeness of electronic copies of this plan sheet.

CONTRA COSTA TRANSPORTATION AUTHORITY
3478 BUSKIRK AVENUE, SUITE 100
PLEASANT HILL, CA 94523

BEYAZ & PATEL, INC.
800 SOUTH BROADWAY, SUITE 200
WALNUT CREEK, CA 94596-5218

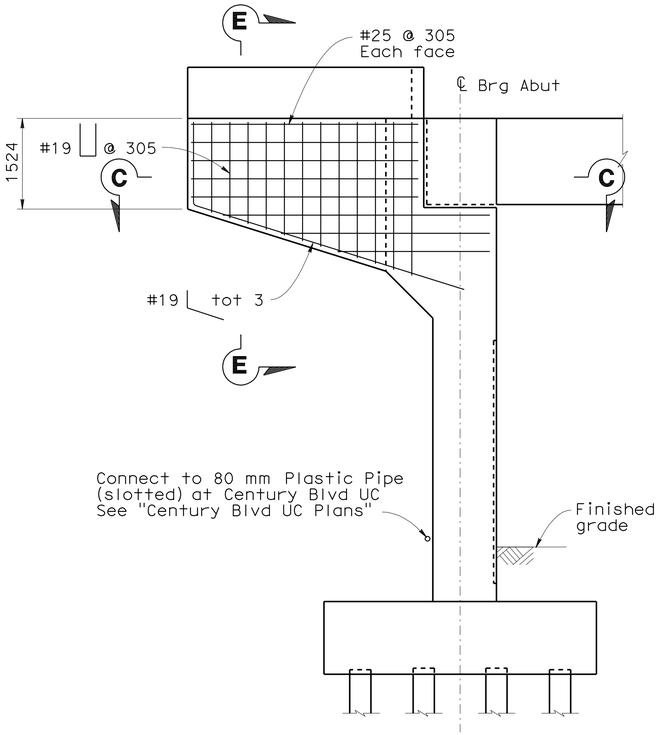

WINGWALL ELEVATION
1:50

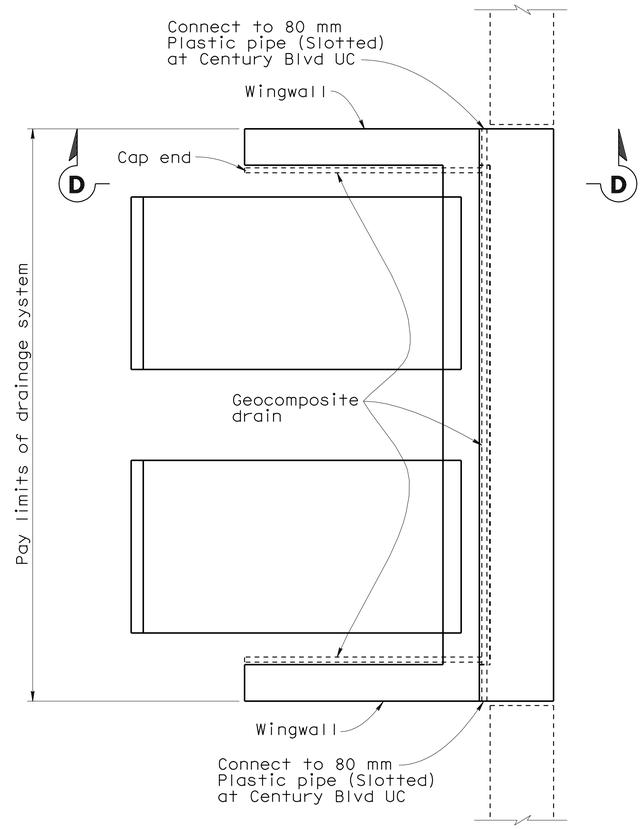

TYPICAL PLAN
1:50

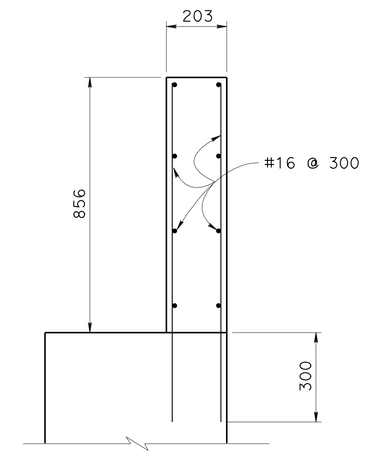

SECTION E-E
1:10

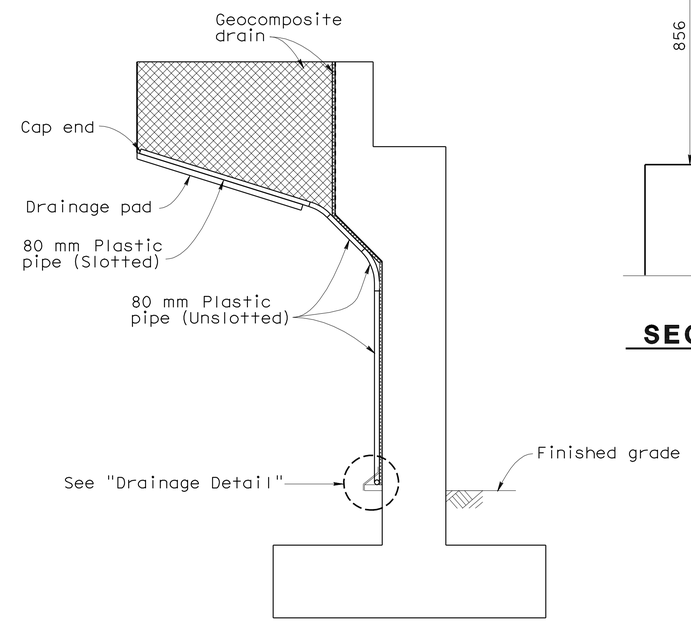

NOTE: Bends and junctions in 80 mm plastic pipe are 750 mm radius min.

DRAINAGE SYSTEM

SECTION D-D
1:50

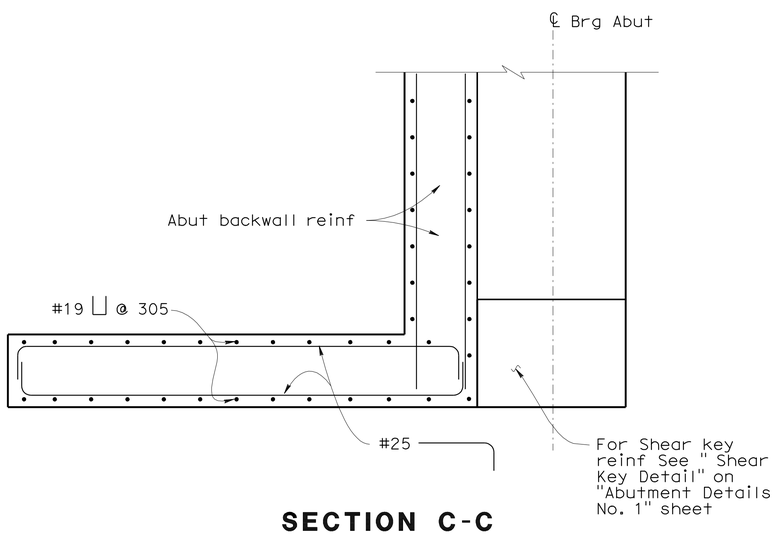

SECTION C-C
1:25

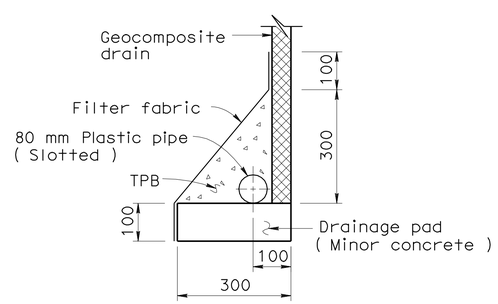

DRAINAGE DETAIL
No scale

2 **REVISED PER ADDENDUM No. 2 DATED DECEMBER 30, 2009**

ALL DIMENSIONS ARE IN MILLIMETERS UNLESS OTHERWISE SHOWN

DESIGN OVERSIGHT — Emil A. Vergara Jr.
12-1-09
SIGN OFF DATE

	BY	CHECKED
DESIGN	T. Palmerino	B. Kattula / R. Hancock
DETAILS	E. Posadas	B. Kattula / R. Hancock
QUANTITIES	T. Palmerino	J. Melillo

PREPARED FOR THE STATE OF CALIFORNIA DEPARTMENT OF TRANSPORTATION

James C.S. Kwong
PROJECT ENGINEER

BRIDGE NO. 28C0484
KILOMETER POST 40.0(24.9)

eBART-CENTURY BLVD UP
ABUTMENT DETAILS NO. 2

DESIGN DETAIL SHEET (METRIC) (REV. 10/27/05)

ORIGINAL SCALE IN MILLIMETERS FOR REDUCED PLANS 0 10 20 30 40 50 60 70 80 90 100

CU 04275
EA 228591

DISREGARD PRINTS BEARING EARLIER REVISION DATES

REVISION DATES (PRELIMINARY STAGE ONLY) 12/17/07 02/25/08 04/29/08 07/18/08

SHEET 7 OF 10

FILE => 28C0484-f-a01dt02.add

USERNAME => friemard DATE PLOTTED => 29-DEC-2009 TIME PLOTTED => 07:26

DIST	COUNTY	ROUTE	KILOMETER POST TOTAL PROJECT	SHEET No	TOTAL SHEETS
04	CC	4	37.9/41.3	999A	1086

REGISTERED CIVIL ENGINEER 11/16/09 DATE

PLANS APPROVAL DATE

REGISTERED PROFESSIONAL ENGINEER JAMES C. S. KWONG No. C36732 Exp. 06/30/10 CIVIL STATE OF CALIFORNIA

The State of California or its officers or agents shall not be responsible for the accuracy or completeness of electronic copies of this plan sheet.

CONTRA COSTA TRANSPORTATION AUTHORITY
3478 BUSKIRK AVENUE, SUITE 100
PLEASANT HILL, CA 94523

BEYAZ & PATEL, INC.
800 SOUTH BROADWAY, SUITE 200
WALNUT CREEK, CA 94596-5218

2 Caltrans Metric

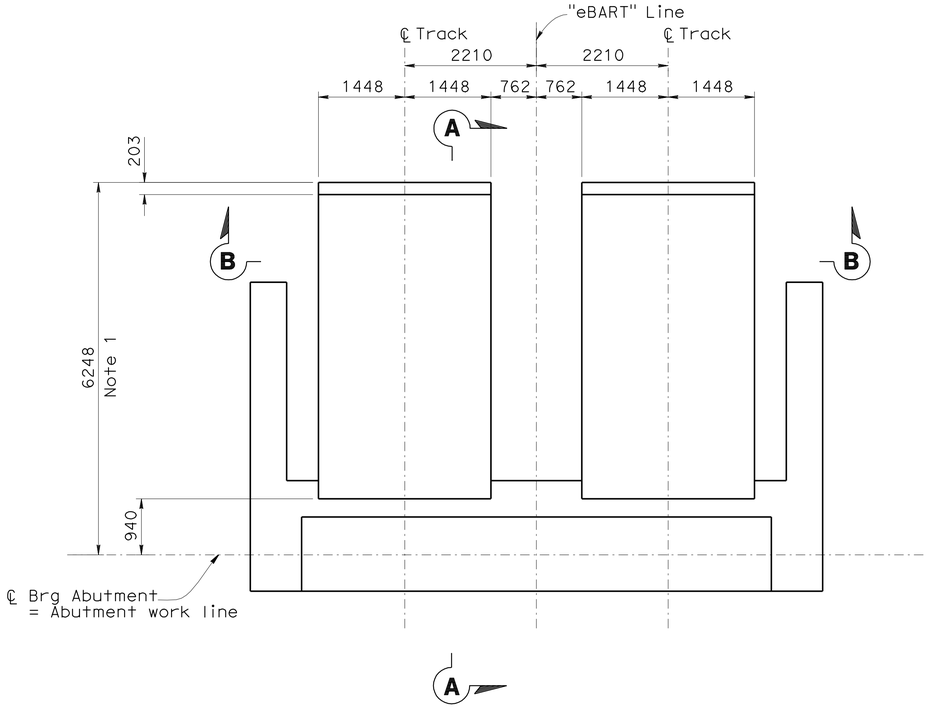

PLAN - APPROACH SLAB

1:50

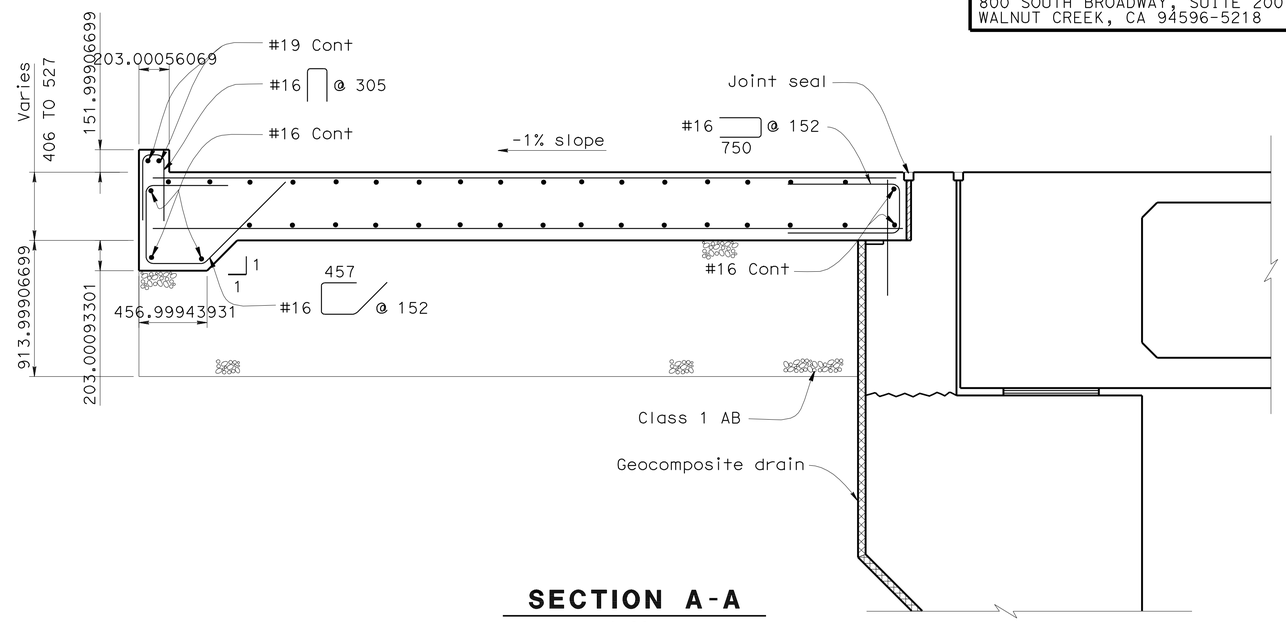

SECTION A-A

1:20

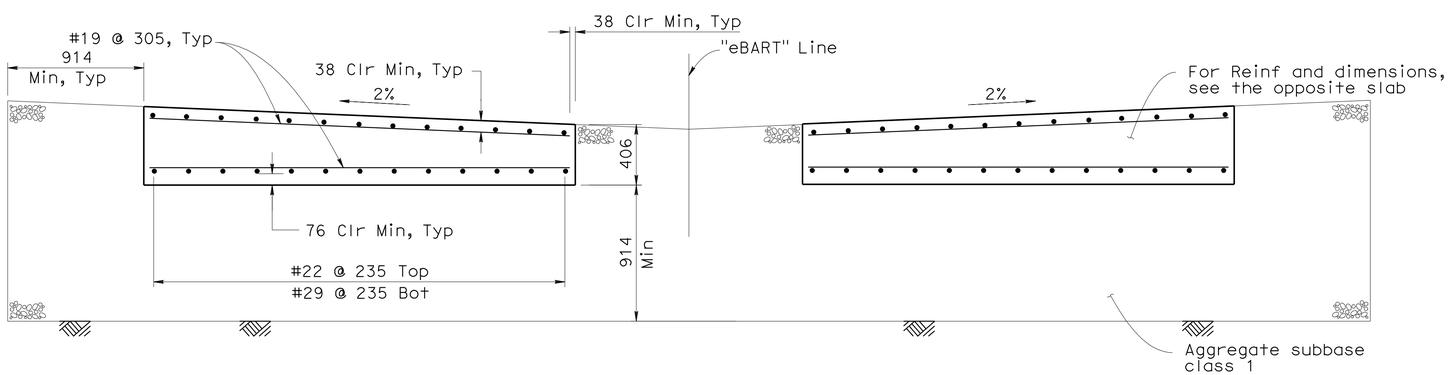

SECTION B-B

1:20

Notes:

1. The 6248 dimension is a distance between track station point at abutment and slab free end point centerline measured along centerline of track.
2. Ballast Wall and Barrier not shown for clarity.

2 **ADDED PER ADDENDUM No. 2 DATED DECEMBER 30, 2009**

ALL DIMENSIONS ARE IN MILLIMETERS UNLESS OTHERWISE SHOWN

DESIGN OVERSIGHT Emil A. Vergara Jr.
12-1-09
SIGN OFF DATE

DESIGN	BY T. Palmerino	CHECKED B. Kattula / R. Hancock	
DETAILS	BY E. Posadas	CHECKED B. Kattula / R. Hancock	
QUANTITIES	BY T. Palmerino	CHECKED J. Melillo	

PREPARED FOR THE STATE OF CALIFORNIA DEPARTMENT OF TRANSPORTATION

James C.S. Kwong
PROJECT ENGINEER

BRIDGE NO. 28C0484
KILOMETER POST 40.0(24.9)

eBART-CENTURY BLVD UP
ABUTMENT DETAILS NO. 3

DESIGN DETAIL SHEET (METRIC) (REV. 10/27/05)

ORIGINAL SCALE IN MILLIMETERS FOR REDUCED PLANS 0 10 20 30 40 50 60 70 80 90 100

CU 04275
EA 228591

DISREGARD PRINTS BEARING EARLIER REVISION DATES

REVISION DATES (PRELIMINARY STAGE ONLY) 11/16/09

SHEET 7A OF 10

FILE => 28C0484-f-a01dt03.add

USERNAME => friemard DATE PLOTTED => 29-DEC-2009 TIME PLOTTED => 07:26

DIST	COUNTY	ROUTE	KILOMETER POST TOTAL PROJECT	SHEET No	TOTAL SHEETS
04	CC	4	37.9/41.3	999B	1086

REGISTERED CIVIL ENGINEER 11/16/09 DATE

PLANS APPROVAL DATE

REGISTERED PROFESSIONAL ENGINEER JAMES C. S. KWONG No. C36732 Exp. 06/30/10 CIVIL STATE OF CALIFORNIA

The State of California or its officers or agents shall not be responsible for the accuracy or completeness of electronic copies of this plan sheet.

CONTRA COSTA TRANSPORTATION AUTHORITY
3478 BUSKIRK AVENUE, SUITE 100
PLEASANT HILL, CA 94523

BEYAZ & PATEL, INC.
800 SOUTH BROADWAY, SUITE 200
WALNUT CREEK, CA 94596-5218

2

Caltrans Metric

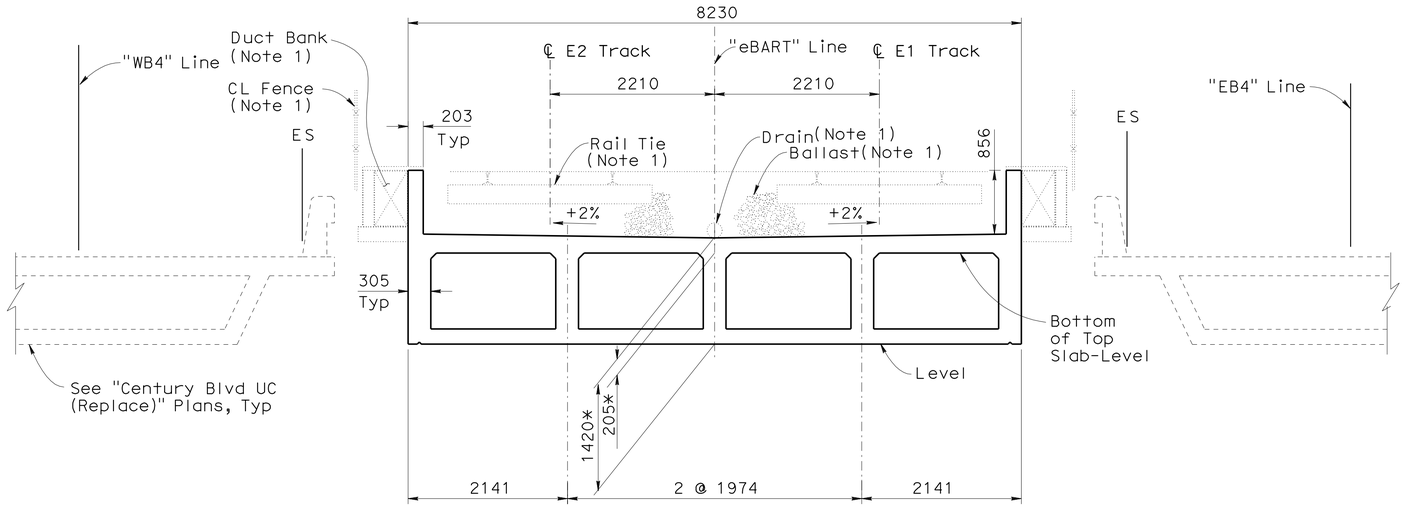

* Min & varies

eBART TRACKWAY

TYPICAL SECTION

1:40

Note:

1. The following items are not included in this Contract:

   -CL Fence
   -Duct Bank
   -Rail Tie and Rail
   -Ballast
   -Drain

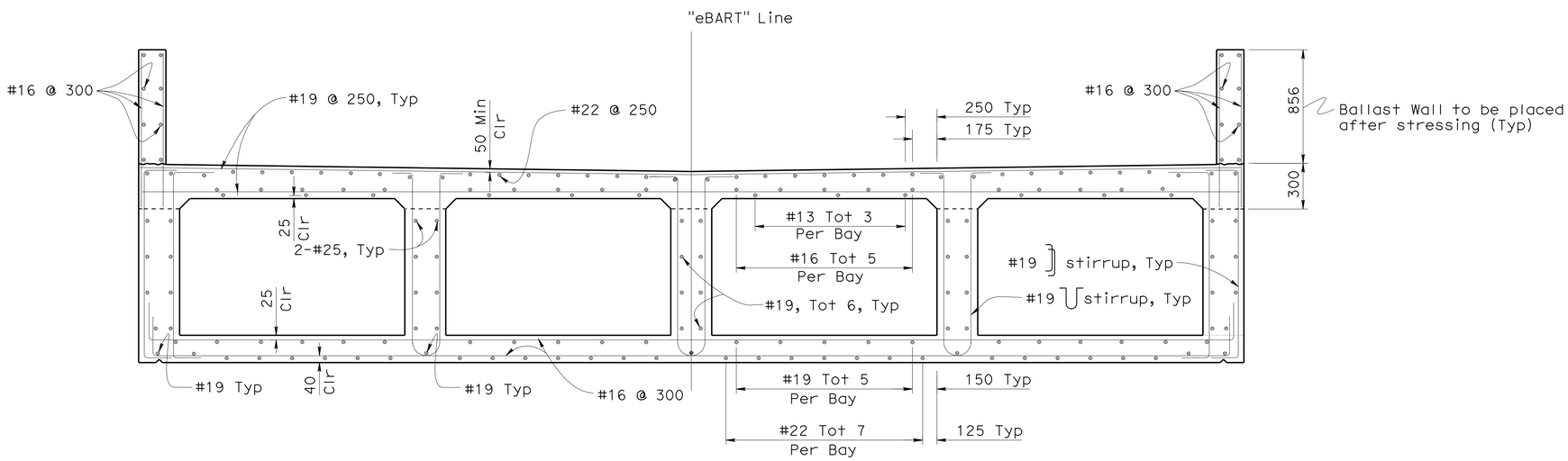

TYPICAL SECTION

1:20

B0-5 B7-1 B8-5

2 **ADDED PER ADDENDUM No. 2 DATED DECEMBER 30, 2009**

ALL DIMENSIONS ARE IN MILLIMETERS UNLESS OTHERWISE SHOWN

DESIGN OVERSIGHT Emil A. Vergara Jr.
12-1-09
SIGN OFF DATE

	BY	CHECKED
DESIGN	W. Lau	B. Kattula / R. Hancock
DETAILS	E. Posadas	B. Kattula / R. Hancock
QUANTITIES	T. Palmerino	J. Melillo

PREPARED FOR THE STATE OF CALIFORNIA DEPARTMENT OF TRANSPORTATION

James C.S. Kwong
PROJECT ENGINEER

BRIDGE NO. 28C0484
KILOMETER POST 40.0(24.9)

eBART-CENTURY BLVD UP

TYPICAL SECTION

DESIGN DETAIL SHEET (METRIC) (REV. 10/27/05)

ORIGINAL SCALE IN MILLIMETERS FOR REDUCED PLANS 0 10 20 30 40 50 60 70 80 90 100

CU 04275
EA 228591

DISREGARD PRINTS BEARING EARLIER REVISION DATES

REVISION DATES (PRELIMINARY STAGE ONLY) 11/16/09

SHEET 7B OF 10

FILE => 28C0484-k-ts01.dgn

USERNAME => friemard DATE PLOTTED => 29-DEC-2009 TIME PLOTTED => 07:27

DIST	COUNTY	ROUTE	KILOMETER POST TOTAL PROJECT	SHEET No	TOTAL SHEETS
04	CC	4	37.9/41.3	999C	1086

REGISTERED CIVIL ENGINEER — DATE 11/16/09

PLANS APPROVAL DATE

REGISTERED PROFESSIONAL ENGINEER — JAMES C. S. KWONG — No. C36732 — Exp. 06/30/10 — CIVIL — STATE OF CALIFORNIA

The State of California or its officers or agents shall not be responsible for the accuracy or completeness of electronic copies of this plan sheet.

CONTRA COSTA TRANSPORTATION AUTHORITY
3478 BUSKIRK AVENUE, SUITE 100
PLEASANT HILL, CA 94523

BEYAZ & PATEL, INC.
800 SOUTH BROADWAY, SUITE 200
WALNUT CREEK, CA 94596-5218

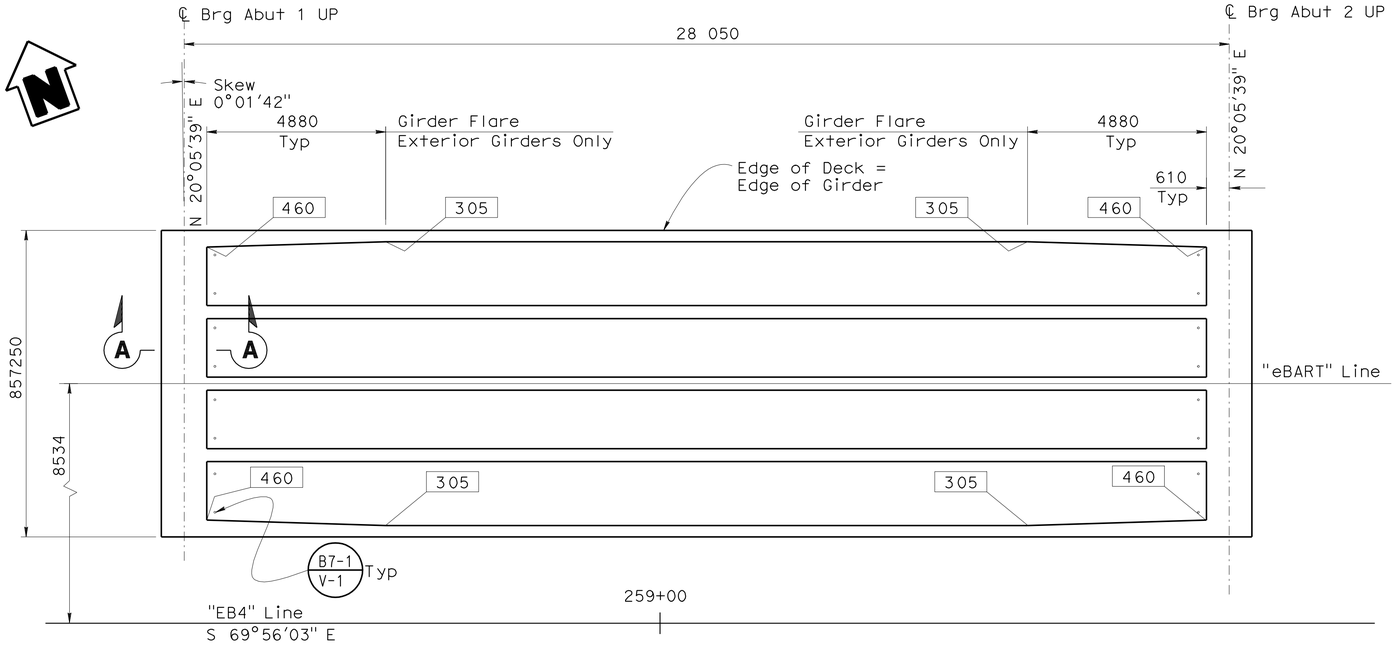

PLAN
1:80

PRESTRESSING NOTES

1860 MPa Low Relaxation Strand:

P_{jack} = 49600 kN

Anchor Set = 9.5 mm

Friction Curvature Coefficient, u = 0.15

Friction Wobble Coefficient, k = 6.6 x 10^{-7}/mm

Total Number of Girders = 5

Distribution of prestress force (Pjack) between girders shall not exceed the ratio of 3:2. Maximum final force variation between girders shall not exceed 3200 kN.

Concrete: f'_c = 43 MPa @ 28 days

f'_{ci} = 28 MPa @ time of stressing

Contractor shall submit elongation calculations based on initial stress at

⊠ = 0.949 times jacking stress.

One end stressing shall be performed from Abutment 1.

Legend:

Indicates Girder web thickness

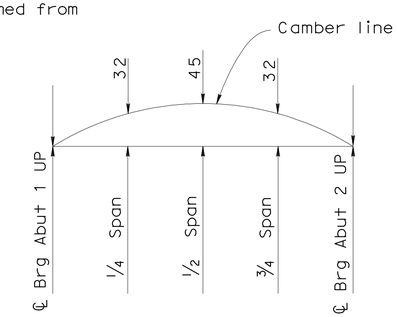

CAMBER DIAGRAM
No scale

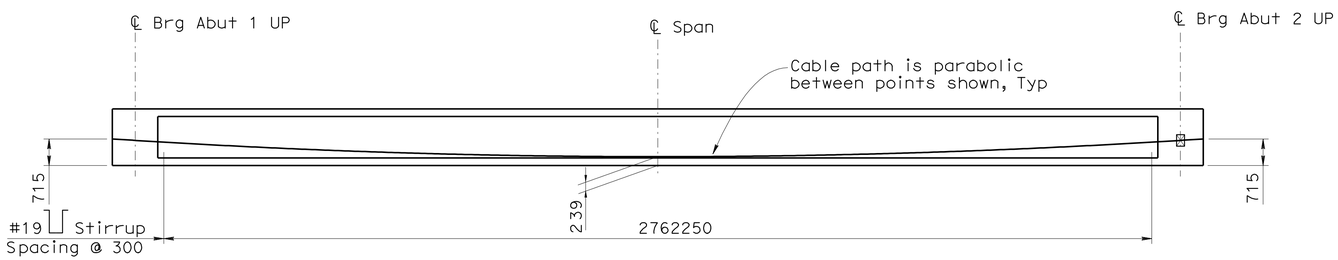

ELEVATION
1:80

B0-5 B7-1 B8-5

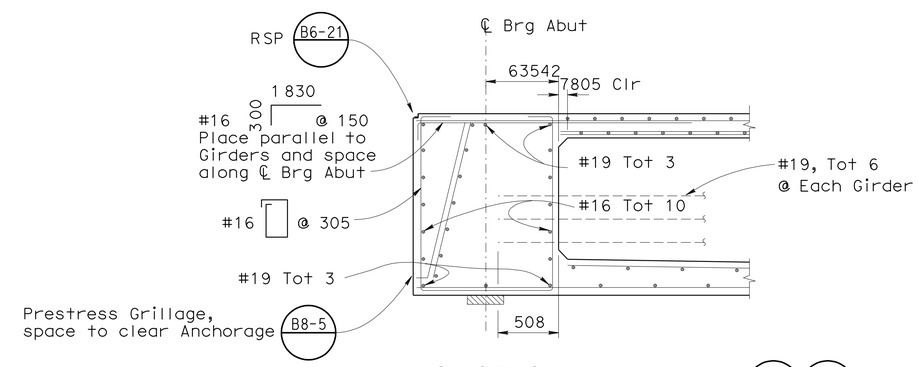

SECTION A-A
1:25

RSP B6-21 B8-5

2 ADDED PER ADDENDUM No. 2 DATED DECEMBER 30, 2009

ALL DIMENSIONS ARE IN MILLIMETERS UNLESS OTHERWISE SHOWN

DESIGN OVERSIGHT Emil A. Vergara Jr. 12-1-09 SIGN OFF DATE	DESIGN	BY W. Lau	CHECKED B. Kattula / R. Hancock
	DETAILS	BY E. Posadas	CHECKED B. Kattula / R. Hancock
	QUANTITIES	BY T. Palmerino	CHECKED J. Melillo

PREPARED FOR THE STATE OF CALIFORNIA DEPARTMENT OF TRANSPORTATION

James C.S. Kwong — PROJECT ENGINEER

BRIDGE NO. 28C0484 — KILOMETER POST 40.0(24.9)

eBART-CENTURY BLVD UP
GIRDER LAYOUT

DESIGN DETAIL SHEET (METRIC) (REV. 10/27/05)

ORIGINAL SCALE IN MILLIMETERS FOR REDUCED PLANS 0 10 20 30 40 50 60 70 80 90 100

CU 04275
EA 228591

DISREGARD PRINTS BEARING EARLIER REVISION DATES — REVISION DATES (PRELIMINARY STAGE ONLY) 11/16/09

SHEET 7C OF 10

FILE => 28C0484-1-g_1o01.add

USERNAME => friehard DATE PLOTTED => 29-DEC-2009 TIME PLOTTED => 07:27

DIST	COUNTY	ROUTE	KILOMETER POST TOTAL PROJECT	SHEET No	TOTAL SHEETS
04	CC	4	37.9/41.3	1003	1086

REGISTERED CIVIL ENGINEER 07/18/08 DATE

9-21-09
PLANS APPROVAL DATE

The State of California or its officers or agents shall not be responsible for the accuracy or completeness of electronic copies of this plan sheet.

REGISTERED PROFESSIONAL ENGINEER GEORGE K. LO No. C18434 Exp. 06/30/09 CIVIL STATE OF CALIFORNIA

CONTRA COSTA TRANSPORTATION AUTHORITY
3478 BUSKIRK AVENUE, SUITE 100
PLEASANT HILL, CA 94523

BEYAZ & PATEL, INC.
800 SOUTH BROADWAY, SUITE 200
WALNUT CREEK, CA 94596-5218

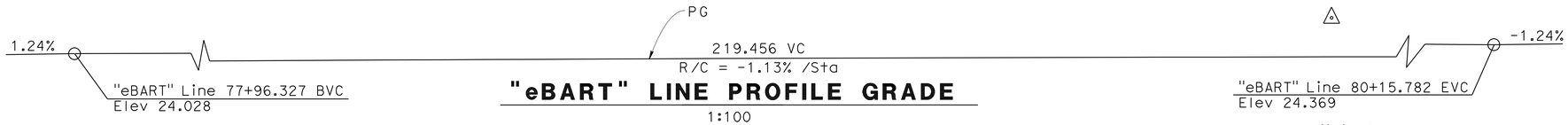

"eBART" LINE PROFILE GRADE

1:100

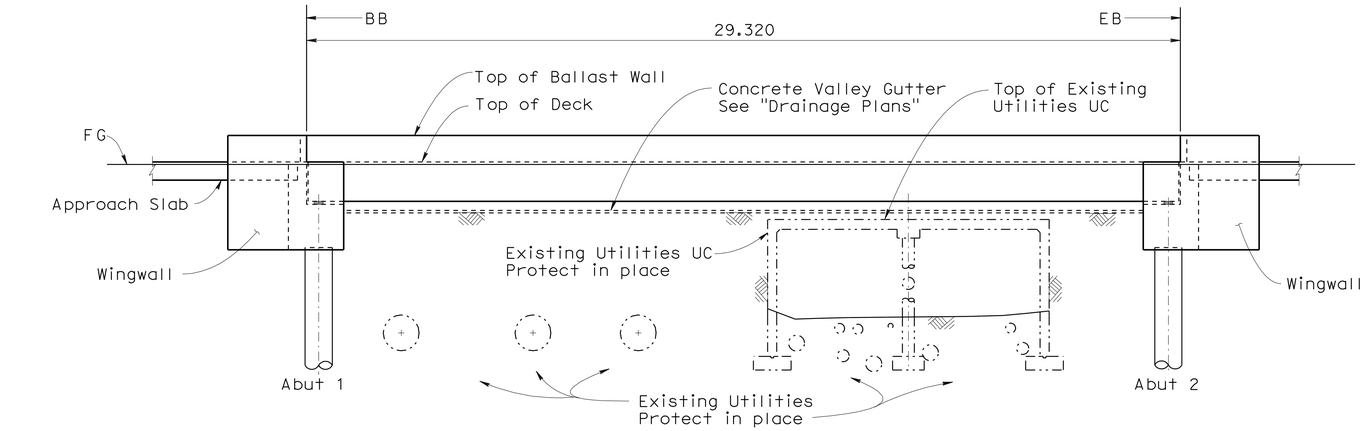

ELEVATION

1:100

Notes:

1. For "Sheet Index", "General Notes" and "Standard Plans" see "Index To Plans" sheet.
2. For "Pile Data Table" see "Foundation Plan" sheet.
3. For Existing Utilities, see "Foundation Plan" sheet.
4. ~~For requirements related to protection of Existing Utilites UC and Existing Utilities, see Special Provisions.~~

Legend:

(1) Paint Bridge No. 28X0483

(2) Paint Bridge Name and Year Completed

Denotes existing structure

Denotes direction of traffic

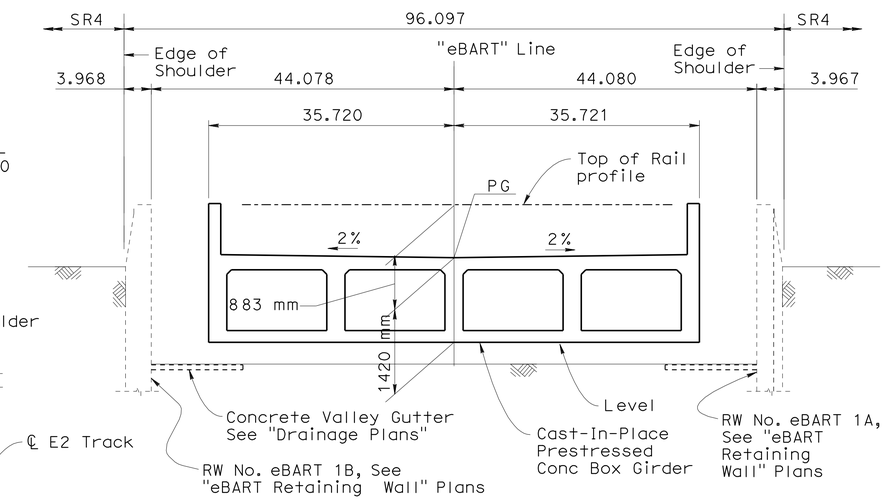

TYPICAL SECTION

1:50

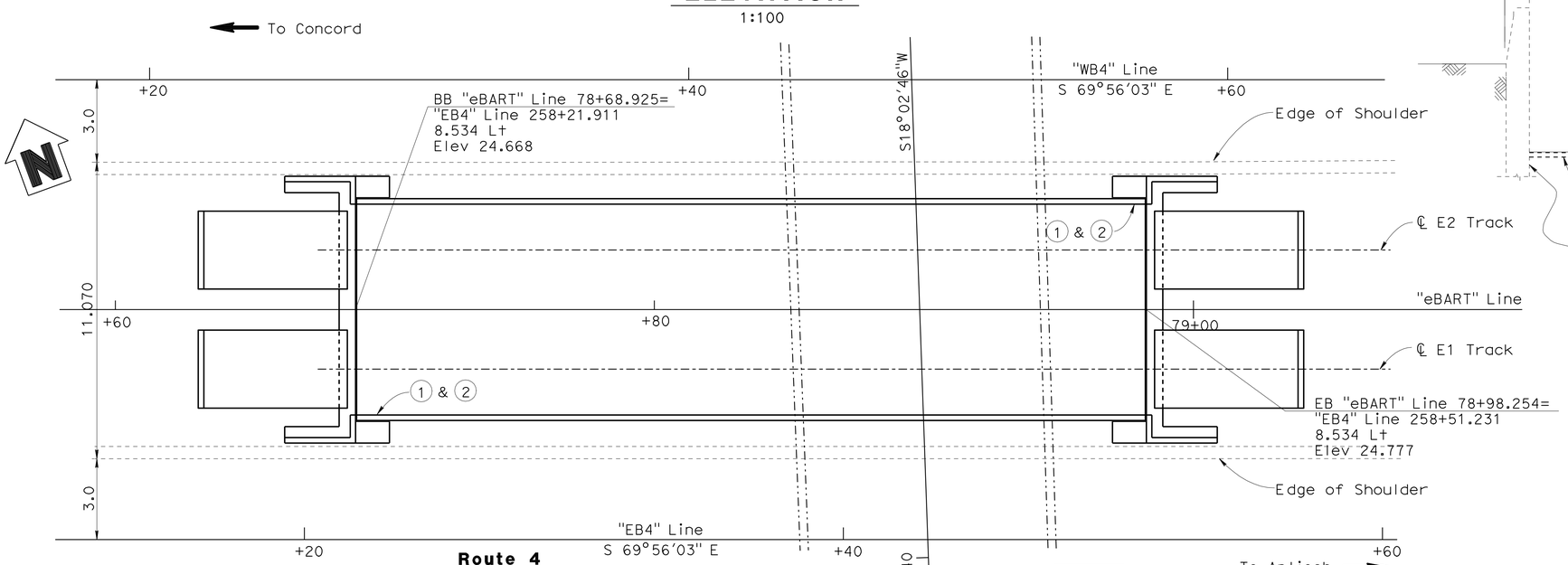

PLAN

1:100

QUANTITIES

JACKING SUPERSTRUCTURE (LOCATION A)	LUMP	SUM
STRUCTURE EXCAVATION (BRIDGE)	100	m^3
STRUCTURE BACKFILL (BRIDGE)	30	m^3
900 MM CAST-IN-DRILLED-HOLE CONCRETE PILING	211	m
PRESTRESSING CAST-IN-PLACE CONCRETE	LUMP	SUM
STRUCTURAL CONCRETE, BRIDGE FOOTING	56	m^3
STRUCTURAL CONCRETE, BRIDGE	225	m^3
STRUCTURAL CONCRETE, APPROACH SLAB	28	m^3
JOINT SEAL (MR 25 MM)	28	m
BAR REINFORCING STEEL (BRIDGE)	65 700	kg

Note:

THE CONTRACTOR SHALL VERIFY ALL CONTROLLING FIELD DIMENSIONS BEFORE ORDERING OR FABRICATING ANY MATERIAL.

2 REVISED PER ADDENDUM No. 2 DATED DECEMBER 30, 2009

ALL DIMENSIONS ARE IN METERS UNLESS OTHERWISE SHOWN

DESIGN OVERSIGHT Emil A. Vergara Jr. 12-1-09 SIGN OFF DATE	DESIGN	BY M. Hsiao	CHECKED B. Kattula / R. Hancock	LOAD FACTOR DESIGN	LIVE LOADING: HS25-44 AND 2-CAR DOUBLE DECK DMU TRAIN AND 10-CAR BART TRAIN LOADS	
	DETAILS	BY E. Posadas	CHECKED B. Kattula / R. Hancock	LAYOUT	BY M. Hsiao	CHECKED J. Kwong
	QUANTITIES	BY T. Palmerino	CHECKED J. Melillo	SPECIFICATIONS	BY D. Harnagel	PLANS AND SPECS COMPARED T. Palmerino

PREPARED FOR THE STATE OF CALIFORNIA DEPARTMENT OF TRANSPORTATION

George K. Lo
PROJECT ENGINEER

CU 04275
EA 228591

BRIDGE NO. 28X0483
KILOMETER POST 39.9(24.8)

eBART UTILITY CORRIDOR UP

GENERAL PLAN

DESIGN GENERAL PLAN SHEET (METRIC) (REV. 10/27/05)

ORIGINAL SCALE IN MILLIMETERS FOR REDUCED PLANS 0 10 20 30 40 50 60 70 80 90 100

DISREGARD PRINTS BEARING EARLIER REVISION DATES

REVISION DATES (PRELIMINARY STAGE ONLY) 12/17/07 02/15/08 04/29/08 07/18/08

SHEET 1 OF 15

FILE => 28X0483-a-gp01.dgn

USERNAME => rtleonard DATE PLOTTED => 29-DEC-2009 TIME PLOTTED => 07:27

DIST	COUNTY	ROUTE	KILOMETER POST TOTAL PROJECT	SHEET No	TOTAL SHEETS
04	CC	4	37.9/41.3	1009	1086

REGISTERED CIVIL ENGINEER 1/30/09 DATE

9-21-09
PLANS APPROVAL DATE

REGISTERED PROFESSIONAL ENGINEER GEORGE K. LO No. C18434 Exp. 06/30/09 CIVIL STATE OF CALIFORNIA

The State of California or its officers or agents shall not be responsible for the accuracy or completeness of electronic copies of this plan sheet.

CONTRA COSTA TRANSPORTATION AUTHORITY
3478 BUSKIRK AVENUE, SUITE 100
PLEASANT HILL, CA 94523

BEYAZ & PATEL, INC.
800 SOUTH BROADWAY, SUITE 200
WALNUT CREEK, CA 94596-5218

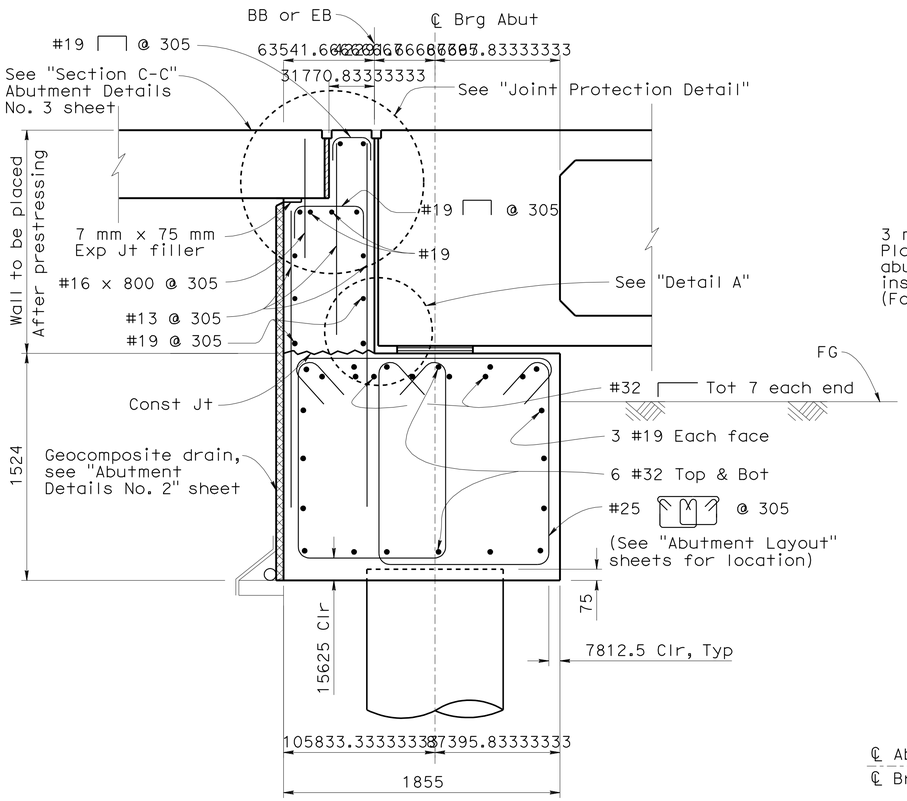

SECTION A-A
1:20

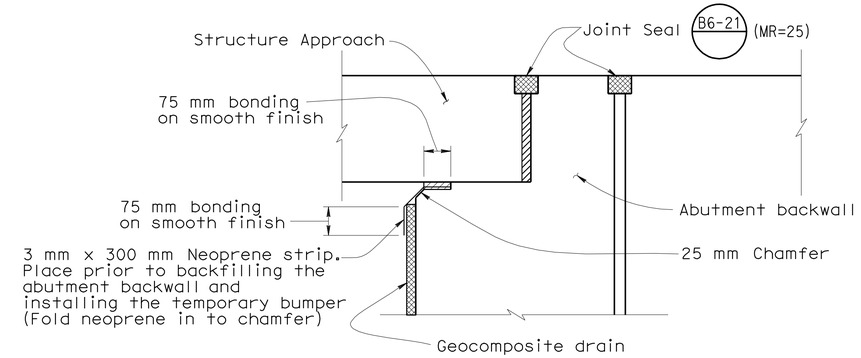

JOINT PROTECTION DETAIL
NO SCALE

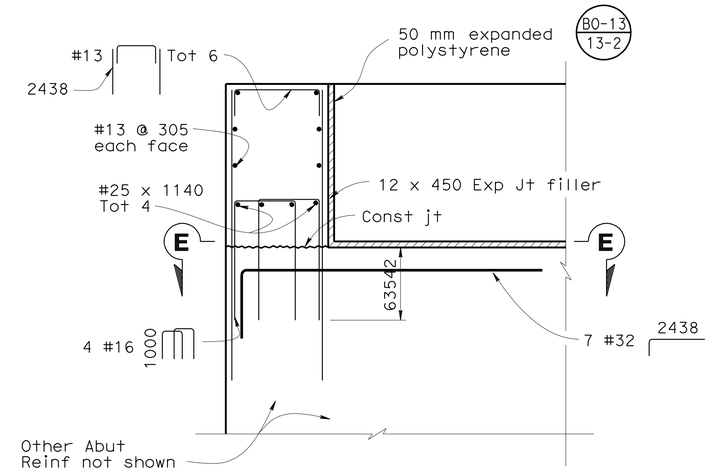

SHEAR KEY DETAIL
1:25

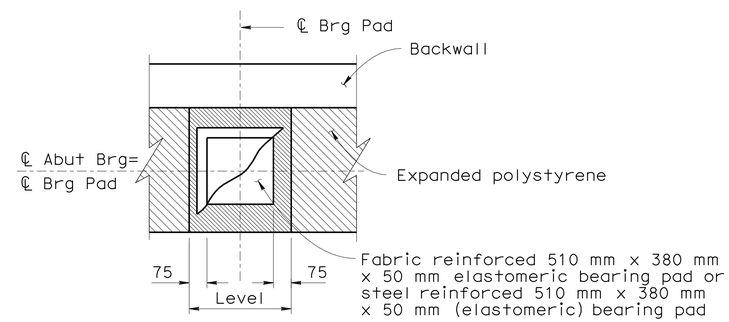

PLAN

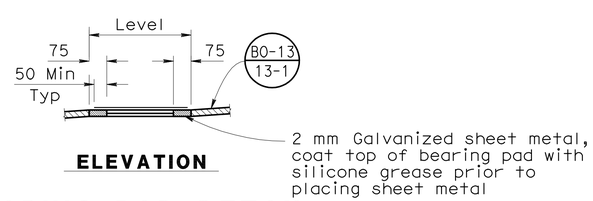

ELEVATION

BEARING PAD DETAIL
NO SCALE

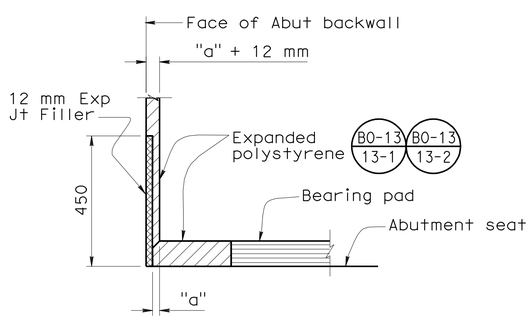

DETAIL A
NO SCALE

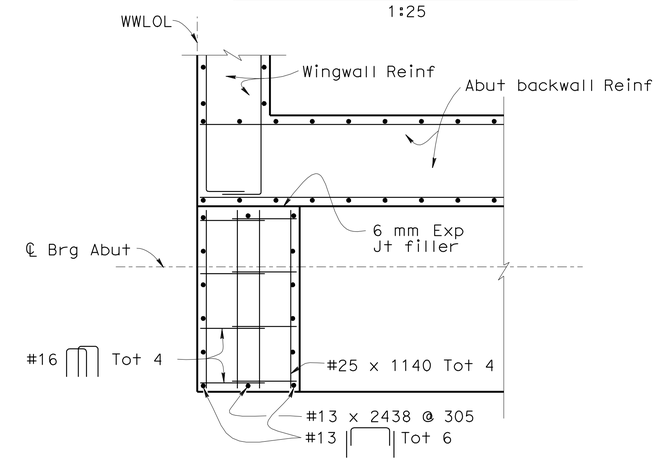

SECTION E-E
1:25

ALL DIMENSIONS ARE IN MILLIMETERS UNLESS OTHERWISE SHOWN

Note:
THE CONTRACTOR SHALL VERIFY ALL CONTROLLING FIELD DIMENSIONS BEFORE ORDERING OR FABRICATING ANY MATERIAL.

2 **REVISED PER ADDENDUM No. 2 DATED DECEMBER 30, 2009**

DESIGN	BY T. Palmerino	CHECKED B. Kattula / R. Hancock	
DETAILS	BY E. Posadas	CHECKED B. Kattula / R. Hancock	
QUANTITIES	BY T. Palmerino	CHECKED J. Melillo	

DESIGN OVERSIGHT Emil A. Vergara Jr.
12-1-09
SIGN OFF DATE

PREPARED FOR THE STATE OF CALIFORNIA DEPARTMENT OF TRANSPORTATION

George K. Lo
PROJECT ENGINEER

BRIDGE NO. 28X0483
KILOMETER POST 39.9(24.8)

eBART UTILITY CORRIDOR UP
ABUTMENT DETAILS NO. 1

DESIGN DETAIL SHEET (METRIC) (REV. 10/27/05)

ORIGINAL SCALE IN MILLIMETERS FOR REDUCED PLANS 0 10 20 30 40 50 60 70 80 90 100

CU 04275
EA 228591

DISREGARD PRINTS BEARING EARLIER REVISION DATES

REVISION DATES (PRELIMINARY STAGE ONLY) 12/17/07 02/15/08 04/29/08 01/16/08 01/30/09

SHEET 7 OF 15

FILE => 28X0483-f-a01dt01.dgn

USERNAME => friehard DATE PLOTTED => 29-DEC-2009 TIME PLOTTED => 07:27

DIST	COUNTY	ROUTE	KILOMETER POST TOTAL PROJECT	SHEET No	TOTAL SHEETS
04	CC	4	37.9/41.3	1010	1086

REGISTERED CIVIL ENGINEER 07/18/08 DATE

9-21-09
PLANS APPROVAL DATE

REGISTERED PROFESSIONAL ENGINEER GEORGE K. LO No. C18434 Exp. 06/30/09 CIVIL STATE OF CALIFORNIA

The State of California or its officers or agents shall not be responsible for the accuracy or completeness of electronic copies of this plan sheet.

CONTRA COSTA TRANSPORTATION AUTHORITY
3478 BUSKIRK AVENUE, SUITE 100
PLEASANT HILL, CA 94523

BEYAZ & PATEL, INC.
800 SOUTH BROADWAY, SUITE 200
WALNUT CREEK, CA 94596-5218

2 Caltrans Metric

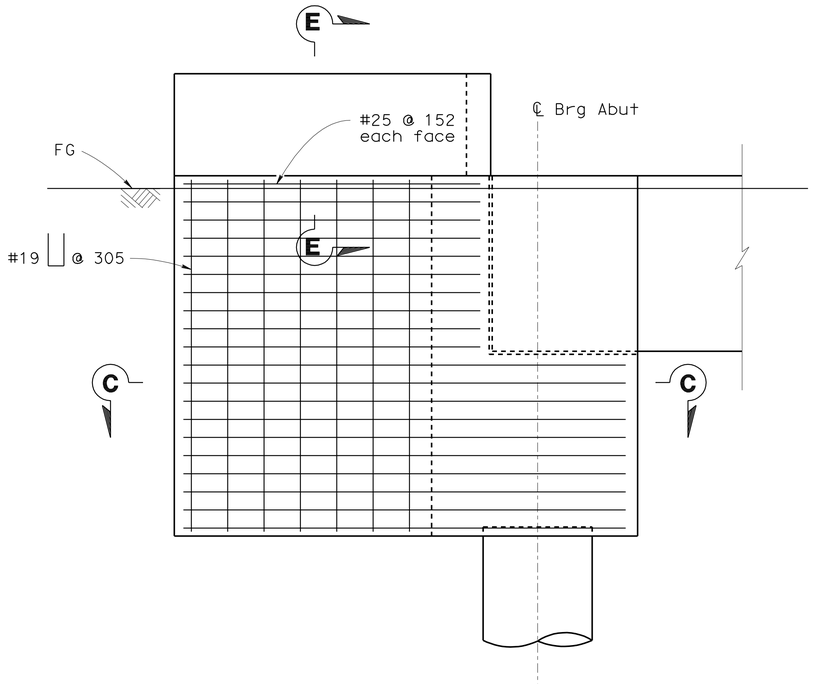

WINGWALL ELEVATION
1:25

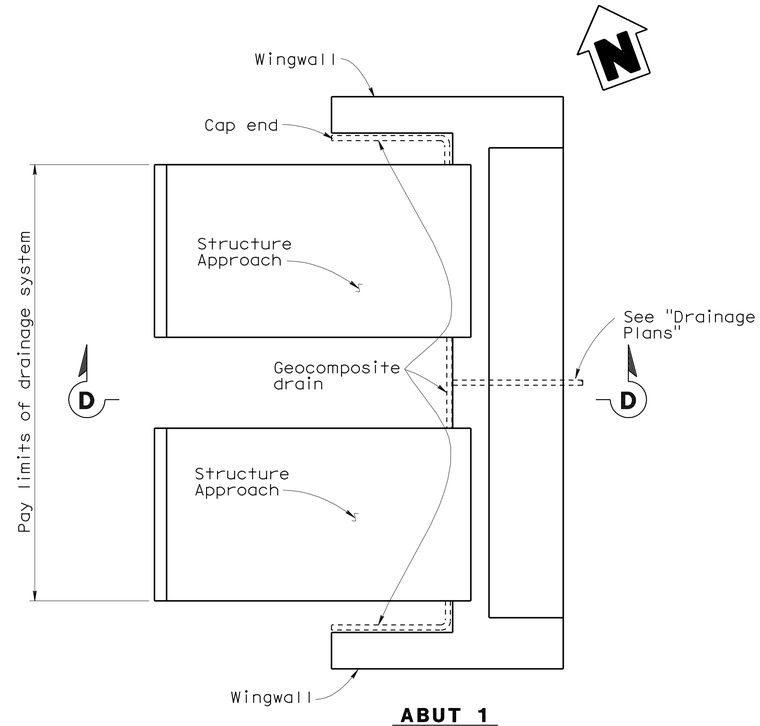

ABUT 1

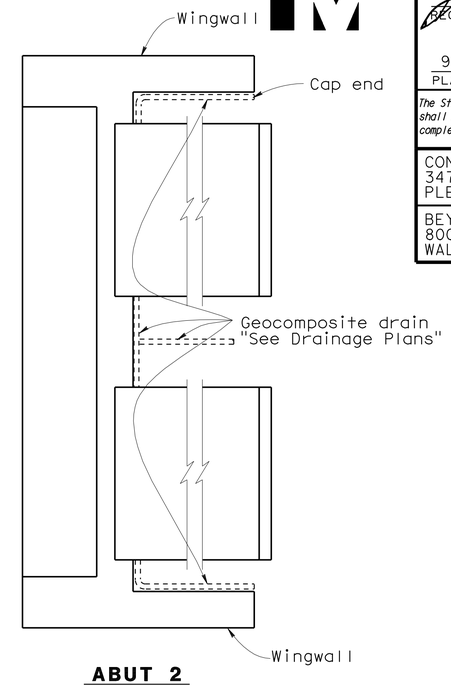

ABUT 2

TYPICAL PLAN
1:50

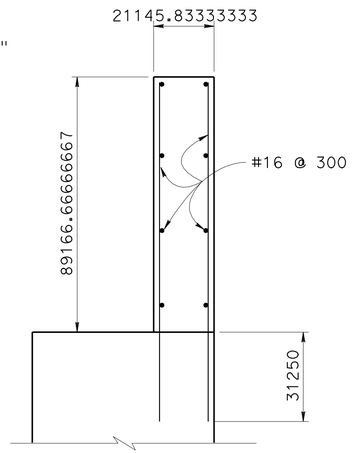

SECTION E-E
1:10

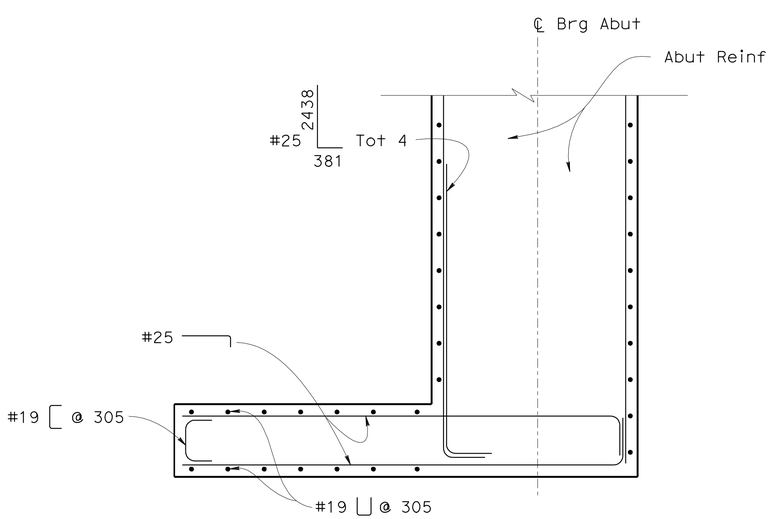

SECTION C-C
1:25

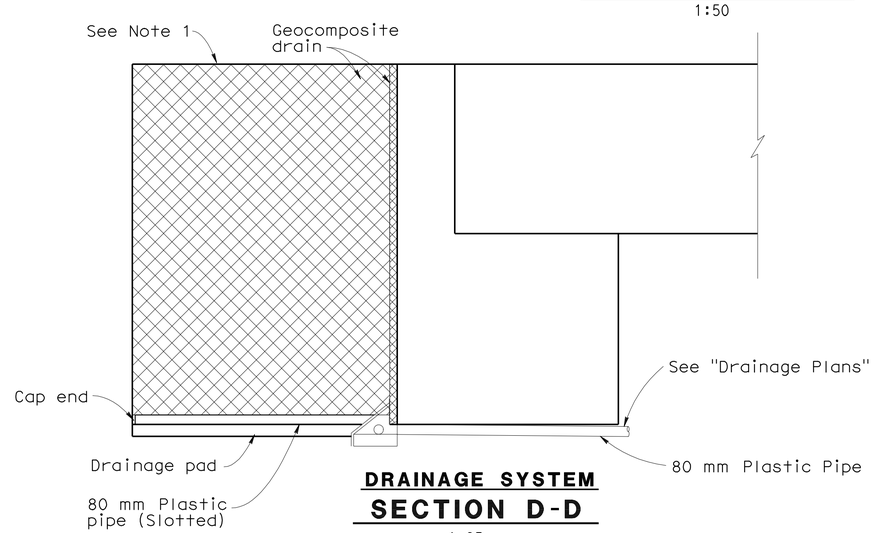

DRAINAGE SYSTEM
SECTION D-D
1:25

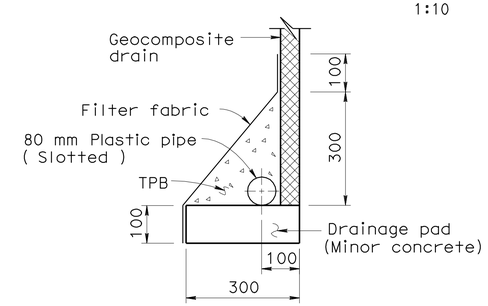

DRAINAGE DETAIL
No scale

1. Ballast Walls and Barriers not shown for clarity.

Note:
THE CONTRACTOR SHALL VERIFY ALL CONTROLLING FIELD DIMENSIONS BEFORE ORDERING OR FABRICATING ANY MATERIAL.

2 **REVISED PER ADDENDUM No. 2 DATED DECEMBER 30, 2009**

ALL DIMENSIONS ARE IN MILLIMETERS UNLESS OTHERWISE SHOWN

DESIGN OVERSIGHT Emil A. Vergara Jr.
12-1-09
SIGN OFF DATE

	BY	CHECKED
DESIGN	T. Palmerino	B. Kattula / R. Hancock
DETAILS	E. Posadas	B. Kattula / R. Hancock
QUANTITIES	T. Palmerino	J. Melillo

PREPARED FOR THE STATE OF CALIFORNIA DEPARTMENT OF TRANSPORTATION

George K. Lo
PROJECT ENGINEER

BRIDGE NO. 28X0483
KILOMETER POST 39.9(24.8)

eBART UTILITY CORRIDOR UP
ABUTMENT DETAILS NO. 2

DESIGN DETAIL SHEET (METRIC) (REV. 10/27/05)

ORIGINAL SCALE IN MILLIMETERS FOR REDUCED PLANS 0 10 20 30 40 50 60 70 80 90 100

CU 04275
EA 228591

DISREGARD PRINTS BEARING EARLIER REVISION DATES

REVISION DATES (PRELIMINARY STAGE ONLY) 12/27/07 02/25/08 04/29/08 07/18/08

SHEET 8 OF 15

FILE => 28X0483-f-a01dt02.add

USERNAME => trienard DATE PLOTTED => 29-DEC-2009 TIME PLOTTED => 07:27

DIST	COUNTY	ROUTE	KILOMETER POST TOTAL PROJECT	SHEET No	TOTAL SHEETS
04	CC	4	37.9/41.3	1011	1086

REGISTERED CIVIL ENGINEER 07/18/08 DATE

9-21-09
PLANS APPROVAL DATE

REGISTERED PROFESSIONAL ENGINEER GEORGE K. LO No. C18434 Exp. 06/30/09 CIVIL STATE OF CALIFORNIA

The State of California or its officers or agents shall not be responsible for the accuracy or completeness of electronic copies of this plan sheet.

CONTRA COSTA TRANSPORTATION AUTHORITY
3478 BUSKIRK AVENUE, SUITE 100
PLEASANT HILL, CA 94523

BEYAZ & PATEL, INC.
800 SOUTH BROADWAY, SUITE 200
WALNUT CREEK, CA 94596-5218

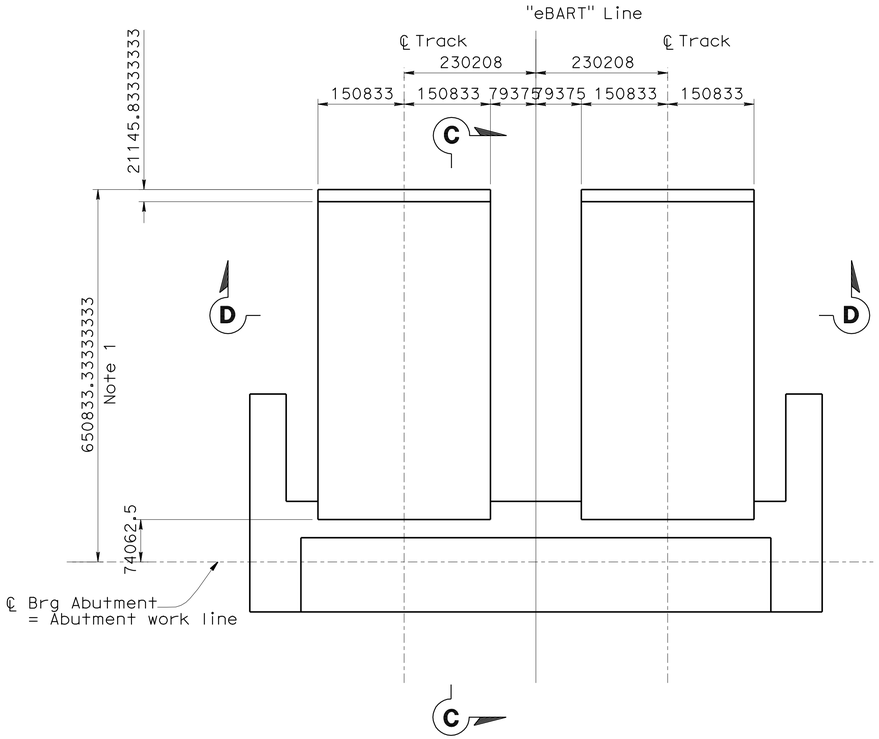

PLAN - APPROACH SLAB

1:50

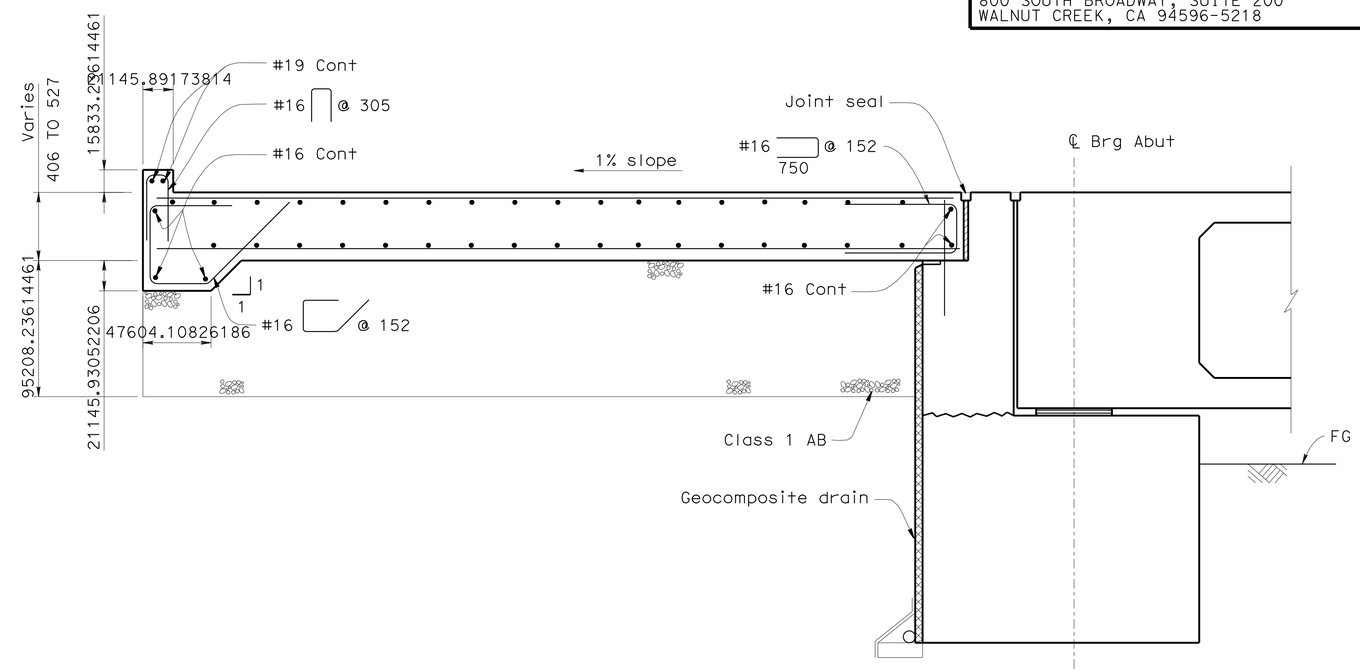

SECTION C-C

1:20

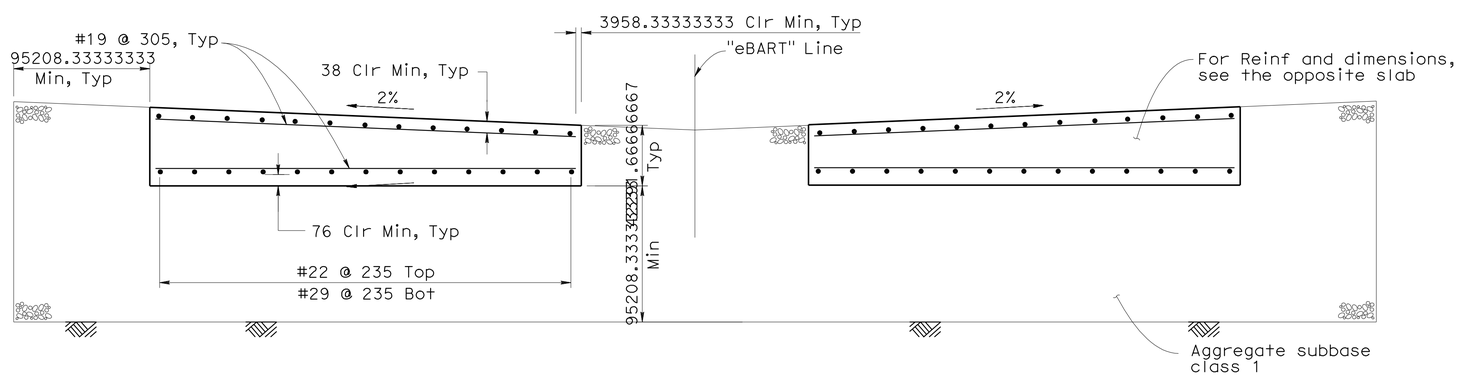

SECTION D-D

1:20

Notes:

1. The 6248 dimension is a distance between track station point at Abutment and Slab free end point centerline measured along centerline of Track.
2. Ballast Wall and Barrier not shown for clarity.

Note:

THE CONTRACTOR SHALL VERIFY ALL CONTROLLING FIELD DIMENSIONS BEFORE ORDERING OR FABRICATING ANY MATERIAL.

2 **REVISED PER ADDENDUM No. 2 DATED DECEMBER 30, 2009**

ALL DIMENSIONS ARE IN MILLIMETERS UNLESS OTHERWISE SHOWN

DESIGN OVERSIGHT Emil A. Vergara Jr.
12-1-09
SIGN OFF DATE

	BY	CHECKED
DESIGN	T. Palmerino	B. Kattula / R. Hancock
DETAILS	E. Posadas	B. Kattula / R. Hancock
QUANTITIES	T. Palmerino	J. Melillo

PREPARED FOR THE STATE OF CALIFORNIA DEPARTMENT OF TRANSPORTATION

George K. Lo
PROJECT ENGINEER

BRIDGE NO. 28X0483
KILOMETER POST 39.9(24.8)

eBART UTILITY CORRIDOR UP
ABUTMENT DETAILS NO. 3

DESIGN DETAIL SHEET (METRIC) (REV. 10/27/05)

ORIGINAL SCALE IN MILLIMETERS FOR REDUCED PLANS 0 10 20 30 40 50 60 70 80 90 100

CU 04275
EA 228591

DISREGARD PRINTS BEARING EARLIER REVISION DATES

REVISION DATES (PRELIMINARY STAGE ONLY) 12/17/07 02/13/08 04/29/08 07/18/08

SHEET 9 OF 15

FILE => 28X0483-f-a01dt03.add

USERNAME => trlenard DATE PLOTTED => 29-DEC-2009 TIME PLOTTED => 07:27

DIST	COUNTY	ROUTE	KILOMETER POST TOTAL PROJECT	SHEET No	TOTAL SHEETS
04	CC	4	37.9/41.3	1012	1086

REGISTERED CIVIL ENGINEER 07/18/08 DATE

9-21-09
PLANS APPROVAL DATE

REGISTERED PROFESSIONAL ENGINEER GEORGE K. LO No. C18434 Exp. 06/30/09 CIVIL STATE OF CALIFORNIA

The State of California or its officers or agents shall not be responsible for the accuracy or completeness of electronic copies of this plan sheet.

CONTRA COSTA TRANSPORTATION AUTHORITY
3478 BUSKIRK AVENUE, SUITE 100
PLEASANT HILL, CA 94523

BEYAZ & PATEL, INC.
800 SOUTH BROADWAY, SUITE 200
WALNUT CREEK, CA 94596-5218

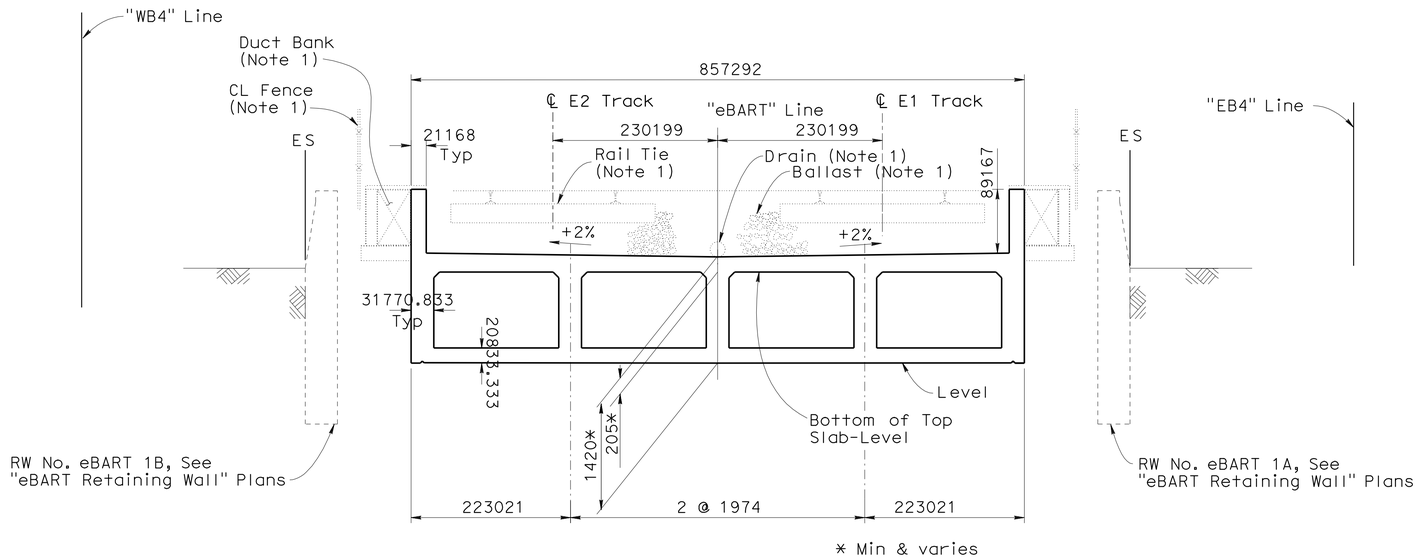

eBART TRACKWAY

TYPICAL SECTION

1:40

Note:

1. The following items are not included in this Contract:

   -CL Fence
   -Duct Bank
   -Rail Tie and Rail
   -Ballast
   -Drain

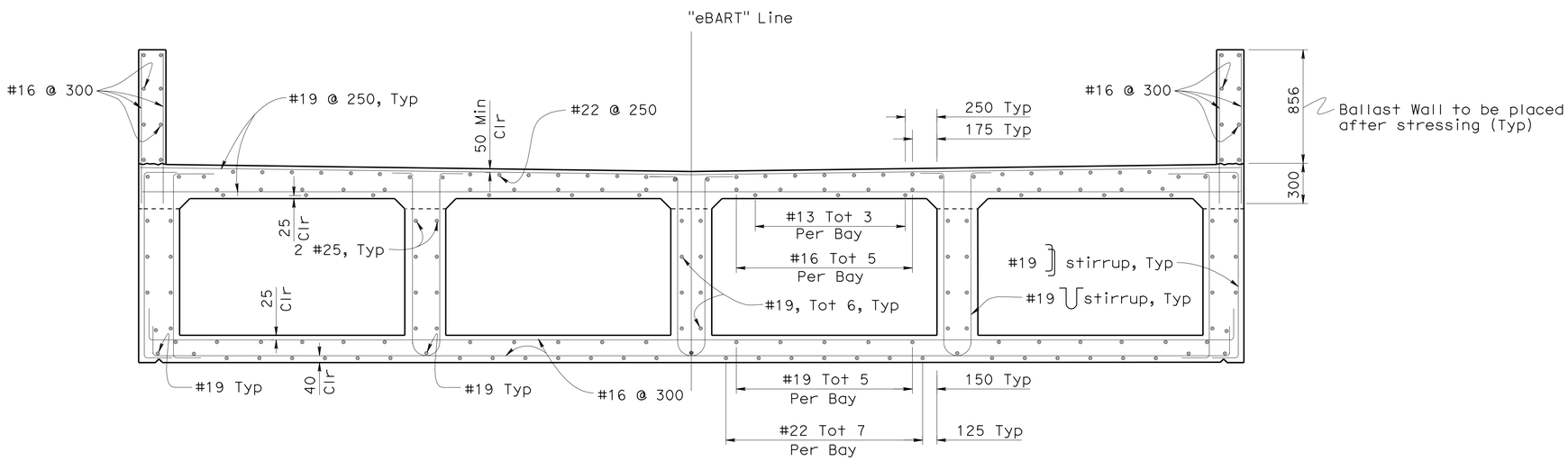

TYPICAL SECTION

1:20

B0-5 B7-1 B8-5

Note:

THE CONTRACTOR SHALL VERIFY ALL CONTROLLING FIELD DIMENSIONS BEFORE ORDERING OR FABRICATING ANY MATERIAL.

REVISED PER ADDENDUM No. 2 DATED DECEMBER 30, 2009

ALL DIMENSIONS ARE IN MILLIMETERS UNLESS OTHERWISE SHOWN

DESIGN OVERSIGHT Emil A. Vergara Jr.
12-1-09
SIGN OFF DATE

	BY	CHECKED
DESIGN	W. Lau	B. Kattula / R. Hancock
DETAILS	E. Posadas	B. Kattula / R. Hancock
QUANTITIES	T. Palmerino	J. Melillo

PREPARED FOR THE STATE OF CALIFORNIA DEPARTMENT OF TRANSPORTATION

George K. Lo
PROJECT ENGINEER

BRIDGE NO. 28X0483
KILOMETER POST 39.9(24.8)

eBART UTILITY CORRIDOR UP

TYPICAL SECTION

DESIGN DETAIL SHEET (METRIC) (REV. 10/27/05)

ORIGINAL SCALE IN MILLIMETERS FOR REDUCED PLANS 0 10 20 30 40 50 60 70 80 90 100

CU 04275
EA 228591

DISREGARD PRINTS BEARING EARLIER REVISION DATES

REVISION DATES (PRELIMINARY STAGE ONLY) 12/13/07 02/15/08 04/24/08 07/18/08

SHEET 10 OF 15

FILE => 28X0483-k-ts01.dgn

USERNAME => friemard DATE PLOTTED => 29-DEC-2009 TIME PLOTTED => 07:28

DIST	COUNTY	ROUTE	KILOMETER POST TOTAL PROJECT	SHEET No	TOTAL SHEETS
04	CC	4	37.9/41.3	1013	1086

REGISTERED CIVIL ENGINEER 07/18/08 DATE

9-21-09
PLANS APPROVAL DATE

REGISTERED PROFESSIONAL ENGINEER GEORGE K. LO No. C18434 Exp. 06/30/09 CIVIL STATE OF CALIFORNIA

The State of California or its officers or agents shall not be responsible for the accuracy or completeness of electronic copies of this plan sheet.

CONTRA COSTA TRANSPORTATION AUTHORITY
3478 BUSKIRK AVENUE, SUITE 100
PLEASANT HILL, CA 94523

BEYAZ & PATEL, INC.
800 SOUTH BROADWAY, SUITE 200
WALNUT CREEK, CA 94596-5218

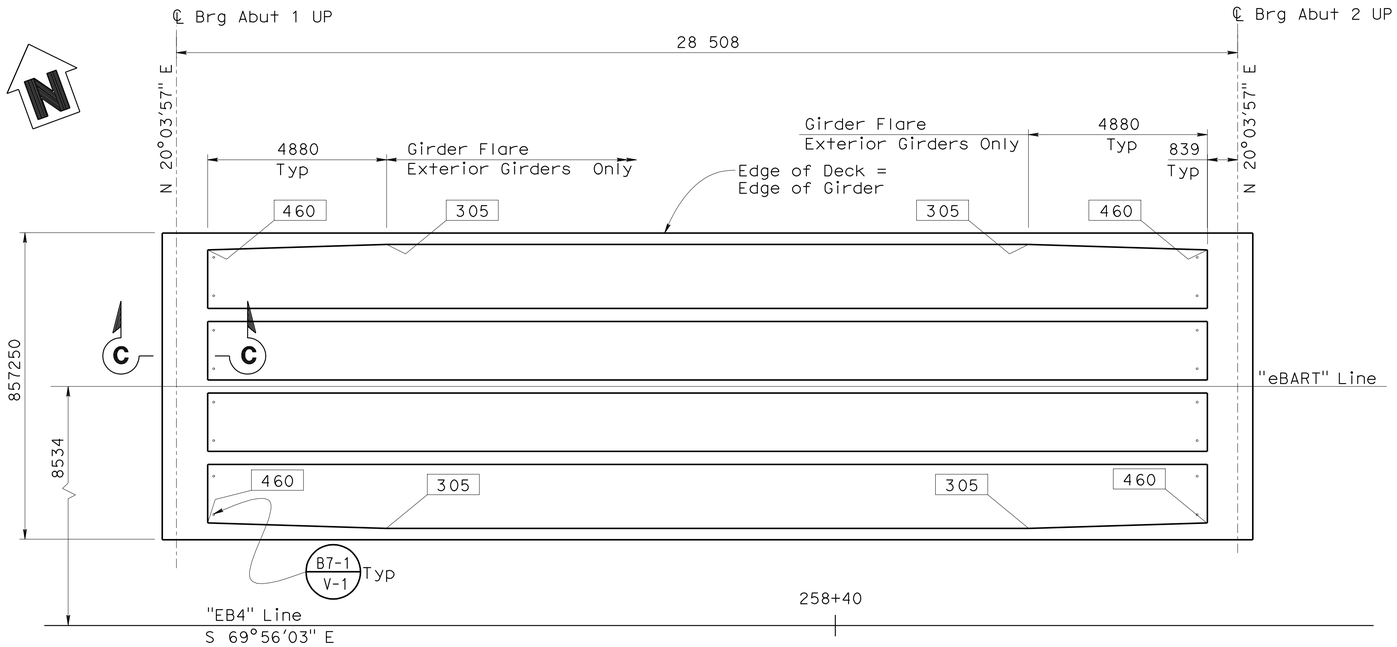

PLAN
1:80

PRESTRESSING NOTES

1860 MPa Low Relaxation Strand:

P_{jack} = 51,000 kN

Anchor Set = 9.5 mm

Friction Curvature Coefficient, u = 0.15

Friction Wobble Coefficient, k = 6.6 x 10^{-7}/mm

Total Number of Girders = 5

Distribution of prestress force (Pjack) between girders shall not exceed the ratio of 3:2. Maximum final force variation between girders shall not exceed 3200 kN.

Concrete: f'_{ci} = 28 MPa @ time of stressing

f'_c = 43 MPa @ 28 days

Contractor shall submit elongation calculations based on initial stress at

[X] = 0.949 times jacking stress.

One end stressing shall be performed from Abutment 1.

Legend:

Indicates Girder stem width, see B7-1 / S-3

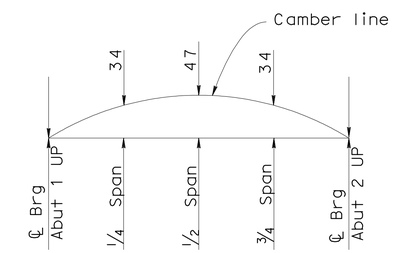

CAMBER DIAGRAM
No scale

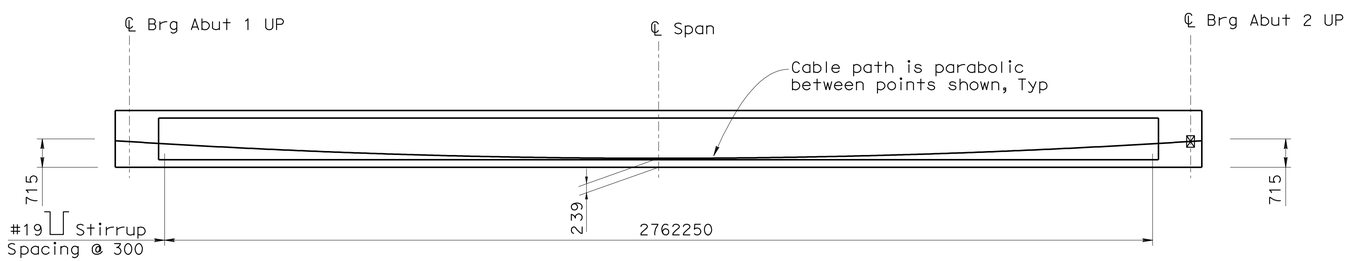

ELEVATION
1:80

B0-5 B7-1 B8-5

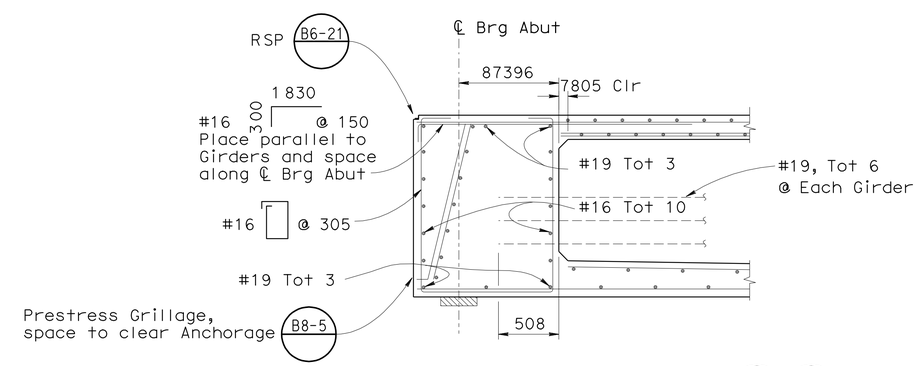

SECTION C-C
1:25

RSP B6-21 B8-5

Note:
THE CONTRACTOR SHALL VERIFY ALL CONTROLLING FIELD DIMENSIONS BEFORE ORDERING OR FABRICATING ANY MATERIAL.

2 REVISED PER ADDENDUM No. 2 DATED DECEMBER 30, 2009

ALL DIMENSIONS ARE IN MILLIMETERS UNLESS OTHERWISE SHOWN

DESIGN OVERSIGHT Emil A. Vergara Jr.
12-1-09
SIGN OFF DATE

	BY	CHECKED
DESIGN	W. Lau	B. Kattula / R. Hancock
DETAILS	E. Posadas	B. Kattula / R. Hancock
QUANTITIES	T. Palmerino	J. Melillo

PREPARED FOR THE STATE OF CALIFORNIA DEPARTMENT OF TRANSPORTATION

George K. Lo
PROJECT ENGINEER

BRIDGE NO. 28X0483
KILOMETER POST 39.9(24.8)

eBART UTILITY CORRIDOR UP
GIRDER LAYOUT

DESIGN DETAIL SHEET (METRIC) (REV. 10/27/05)

ORIGINAL SCALE IN MILLIMETERS FOR REDUCED PLANS 0 10 20 30 40 50 60 70 80 90 100

CU 04275
EA 228591

DISREGARD PRINTS BEARING EARLIER REVISION DATES

REVISION DATES (PRELIMINARY STAGE ONLY) 12/27/07 02/25/08 04/29/08 07/18/08

SHEET 11 OF 15

FILE => 28X0483-1-g_lo01.add

USERNAME => friemard DATE PLOTTED => 29-DEC-2009 TIME PLOTTED => 07:28

DIST	COUNTY	ROUTE	KILOMETER POST TOTAL PROJECT	SHEET No	TOTAL SHEETS
04	CC	4	37.9/41.3	1024	1086

REGISTERED CIVIL ENGINEER 02/08/08 DATE

9-21-09
PLANS APPROVAL DATE

The State of California or its officers or agents shall not be responsible for the accuracy or completeness of electronic copies of this plan sheet.

REGISTERED PROFESSIONAL ENGINEER CHAO GONG No. C53837 Exp. 09/30/09 CIVIL STATE OF CALIFORNIA

CONTRA COSTA TRANSPORTATION AUTHORITY
3478 BUSKIRK AVENUE, SUITE 100
PLEASANT HILL, CA 94523

URS
3440 VINCENT ROAD
PLEASANT HILL, CA 94523

Notes:

1. See "RW-8" and "RW-12 "sheet for Typical Sections.
2. See "RW-15" sheet for Barrier Transition Details
3. For additional information on Existing/ New Utilities, see "Utility Plans".
4. For additional information on Drainage and Sanitary Sewer System, see "Drainage Plans" and "Sanitary Sewer Plans".
5. For PC Panels A thru E Weld Wire Mat Schedule, see "RW-43" sheet.
6. For "Architectural Treatment Details", see "RW-46" sheet.

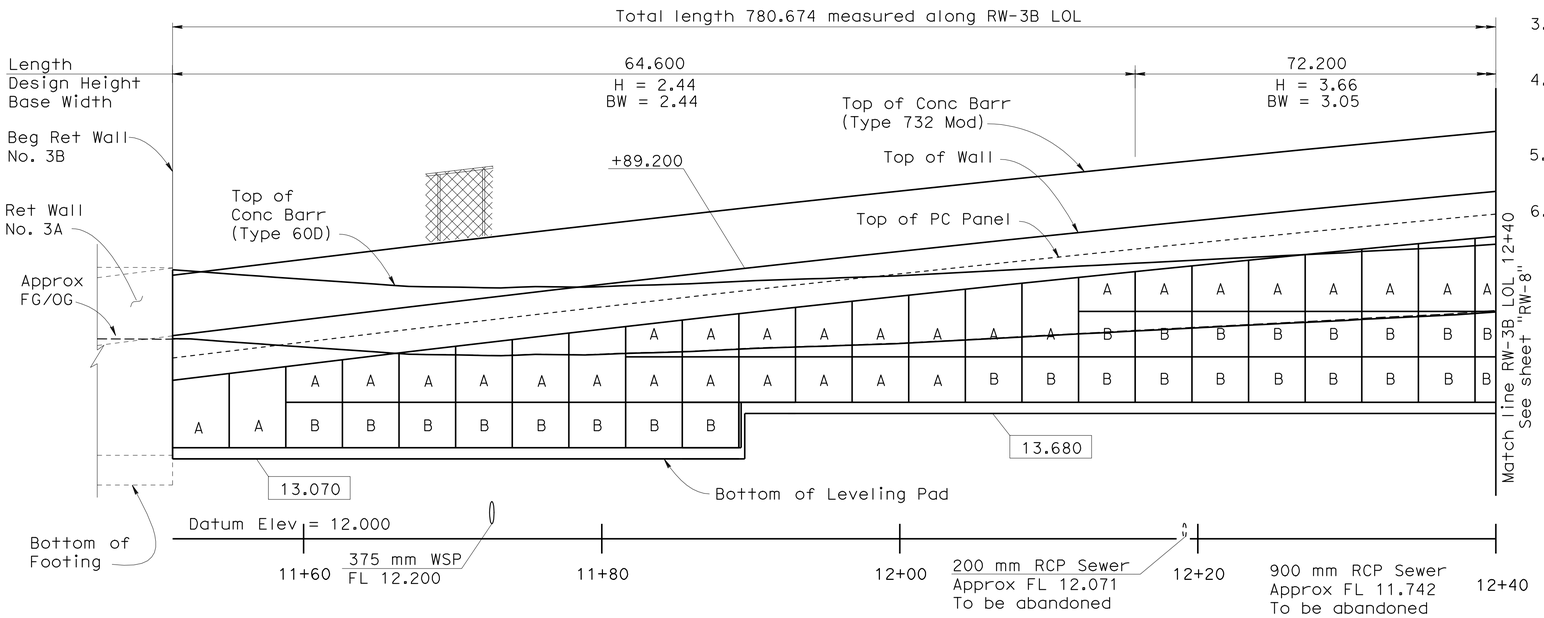

MIRRORED ELEVATION

Horiz 1:200
Vert 1:40

TOP OF WALL Elev

STA	Elev
11+51.202	14.726
11+60.000	14.939
11+70.000	15.175
11+80.000	15.412
11+90.000	15.634
12+00.000	15.857
12+10.000	16.065
12+20.000	16.273
12+30.000	16.467
12+40.000	16.661

GENERAL NOTES:

1. DESIGN: ~~Design Bridge Specification 1983 AASHTO with interims and revisions by Caltrans~~
   Caltrans Bridge Design Specifications - April 2000 (LFD)
   (1996 AASHTO with interims and revisions by Caltrans)
2. DESIGN LOAD:
   Soil Pressure: 5.6 kPa/m Equivalent Fluid Pressure
   Live Load: 11.5 kPa surcharge
3. MATERIAL: fc′ = 25 MPa
   fy = 420 MPa
4. ALLOWABLE BEARING PRESSURE: 200 kPa
   FRICTION FACTOR: 0.35

CURVE DATA

Curve	R	Δ	T	L
1	84 978.565	0°06′45″	83.454	166.908

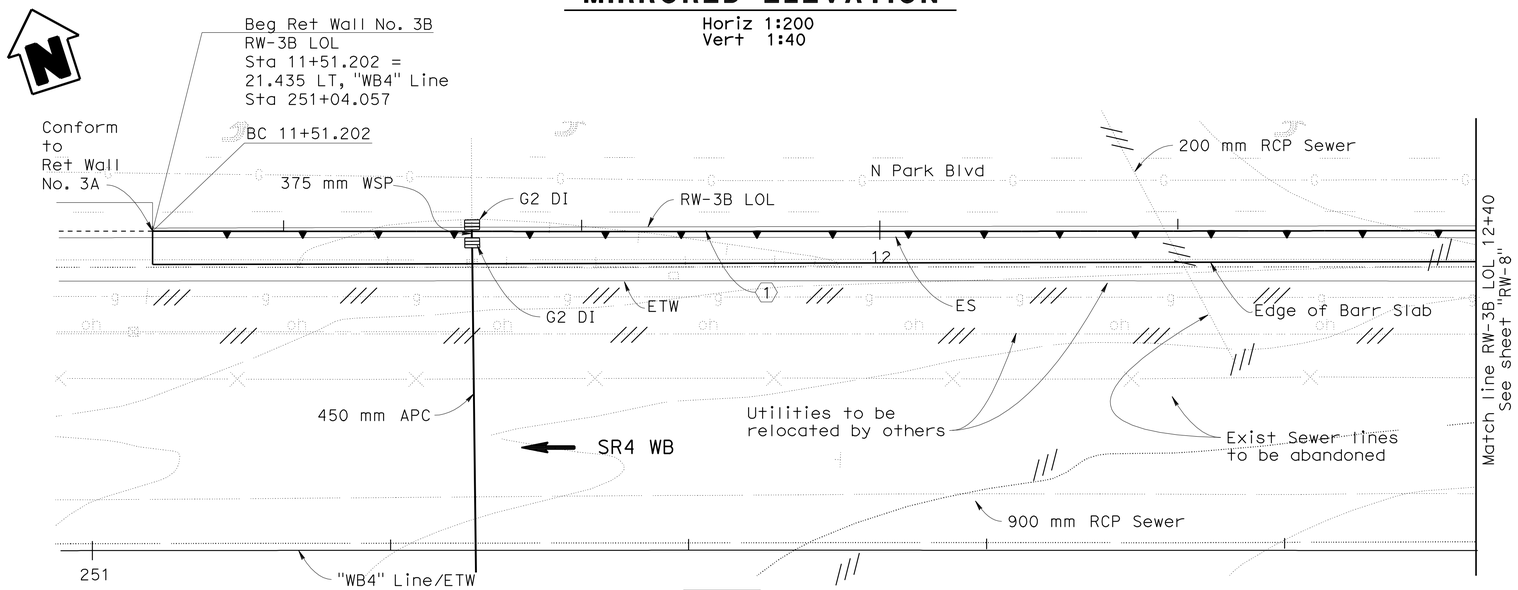

Legend:

Barr	= Barrier
15.400	= Elevation at bottom of Leveling Pad
XX+X.XXX	= Station along LOL
(XX.XXX)	= (Elevation)

QUANTITIES

EARTH RETAINING STRUCTURE, LOCATION A	3500	m^2
STRUCTURAL CONCRETE, BARRIER SLAB	920	m^3
BAR REINFORCING STEEL (BARRIER SLAB)	55 500	kg
CHAIN LINK FENCE (TYPE CL-0.9 BLACK VINYL-CLAD)	781	m
CONCRETE BARRIER (TYPE 60D)	538	m
CONCRETE BARRIER (TYPE 732 MODIFIED)	766	m

PLAN
Scale 1:200

2 REVISED PER ADDENDUM No. 2 DATED DECEMBER 30, 2009

THIS PLAN ACCURATE FOR RETAINING WALL WORK ONLY

ALL DIMENSIONS ARE IN METERS UNLESS OTHERWISE SHOWN

RW-7

DESIGN OVERSIGHT Emil A. Vergara Jr.
12-1-09
SIGN OFF DATE

	BY	CHECKED
DESIGN	M. Lee	A. Maldonado
DETAILS	C. Somera	A. Maldonado
QUANTITIES	P. Smith	G. Esper

PREPARED FOR THE STATE OF CALIFORNIA DEPARTMENT OF TRANSPORTATION

T. Johnson
PROJECT ENGINEER

BRIDGE NO. 28-E0021
KILOMETER POST 37.9/41.3

RETAINING WALL No. 3B
STRUCTURE PLAN No. 1

DESIGN DETAIL SHEET (METRIC) (REV. 10/27/05)

ORIGINAL SCALE IN MILLIMETERS FOR REDUCED PLANS 0 10 20 30 40 50 60 70 80 90 100

CU 04275
EA 228591

DISREGARD PRINTS BEARING EARLIER REVISION DATES

REVISION DATES (PRELIMINARY STAGE ONLY) 10/14/05 01/02/06 08/01/06 02/16/07 05/14/07 10/25/07 02/08/08 05/09/08

SHEET 7 OF 69

FILE => 28-0021-c-sp01.add

USERNAME => trlenard DATE PLOTTED => 29-DEC-2009 TIME PLOTTED => 07:28

DIST	COUNTY	ROUTE	KILOMETER POST TOTAL PROJECT	SHEET No	TOTAL SHEETS
04	CC	4	37.9/41.3	1040	1086

REGISTERED CIVIL ENGINEER 02/08/08

9-21-09
PLANS APPROVAL DATE

REGISTERED PROFESSIONAL ENGINEER CHAO GONG No. C53837 Exp. 09/30/09 CIVIL STATE OF CALIFORNIA

The State of California or its officers or agents shall not be responsible for the accuracy or completeness of electronic copies of this plan sheet.

CONTRA COSTA TRANSPORTATION AUTHORITY
3478 BUSKIRK AVENUE, SUITE 100
PLEASANT HILL, CA 94523

URS
3440 VINCENT ROAD
PLEASANT HILL, CA 94523

2 Caltrans Metric

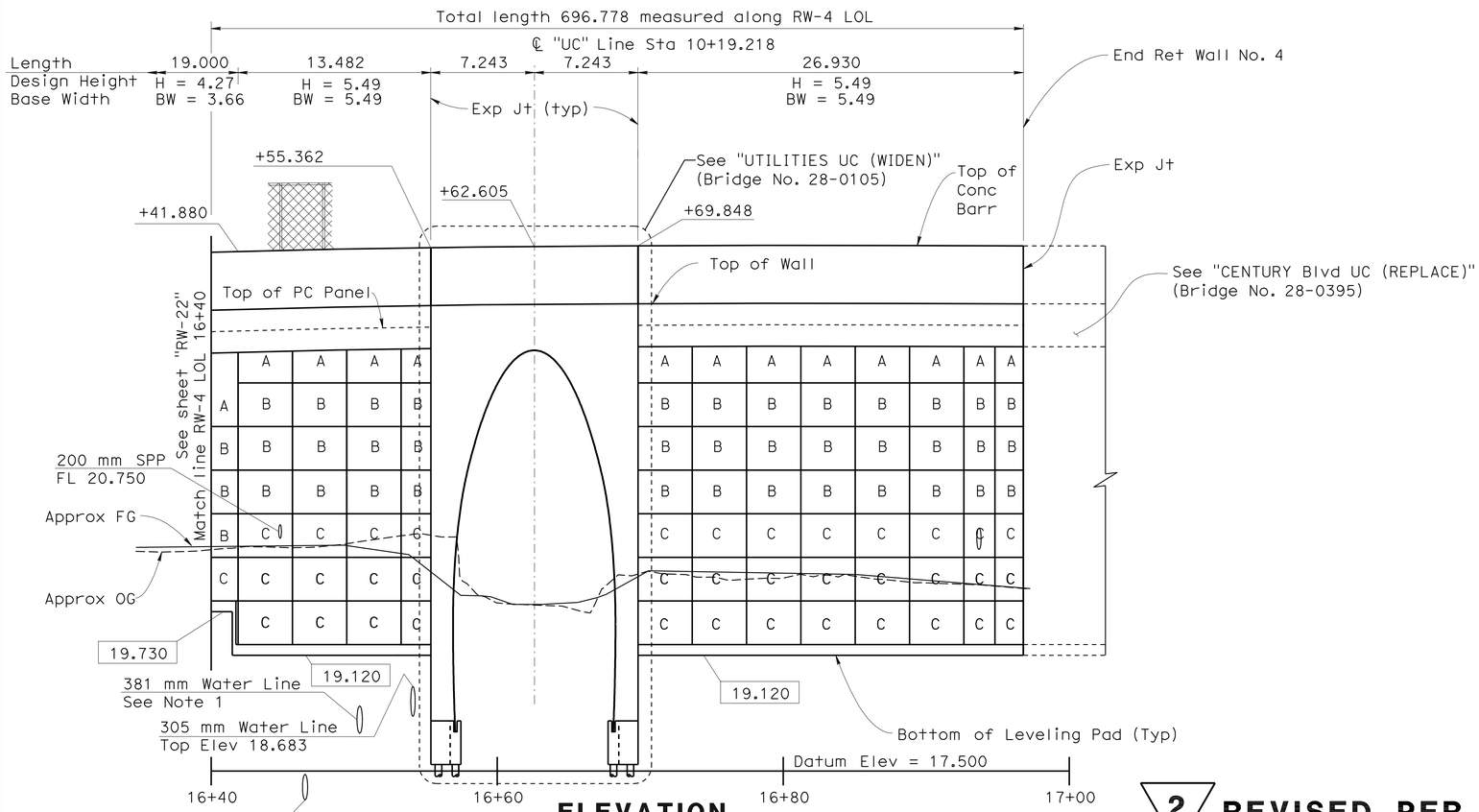

ELEVATION
Horiz 1:200
Vert 1:40

TOP OF WALL Elev

STA	Elev
16+40.000	23.946
16+50.000	23.993
16+60.000	24.022
16+70.000	24.035
16+80.000	24.041
16+90.000	24.039
16+96.778	24.034

2 **REVISED PER ADDENDUM No. 2 DATED DECEMBER 30, 2009**

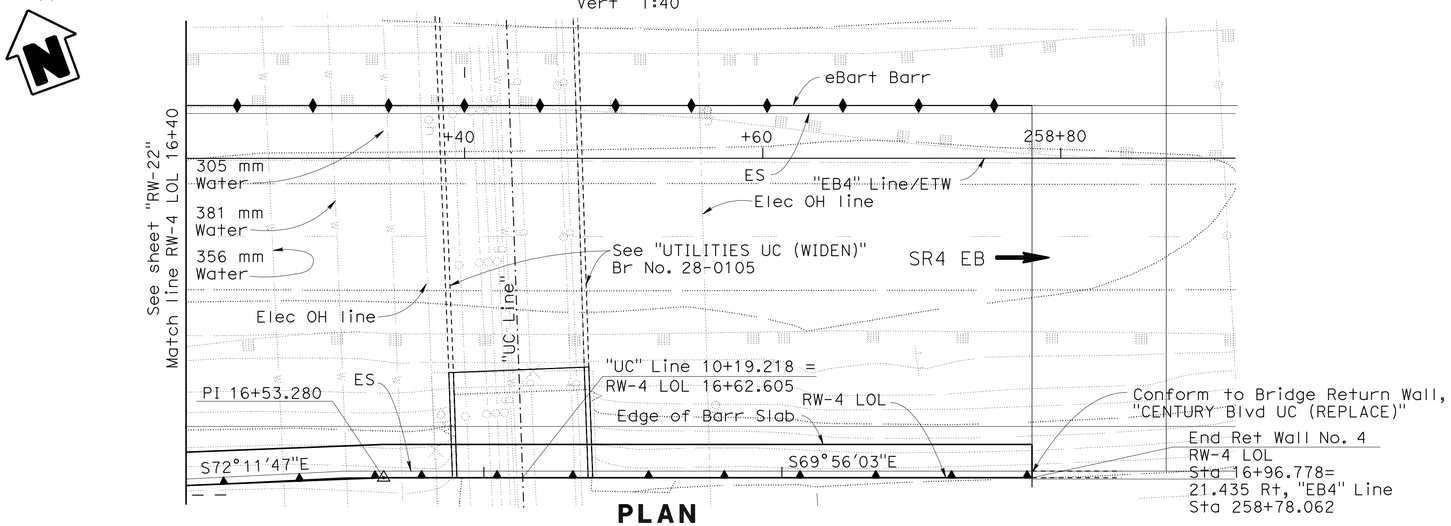

PLAN
Scale 1:200

Note:

1. Prior to start of construction of Retaining Wall, Contractor shall excavate to locate existing Waterline and determine size, depth and condition of Pipe. If location of Pipe is in conflict with Retaining Wall construction, the Engineer shall be notified.

THIS PLAN ACCURATE FOR RETAINING WALL WORK ONLY

ALL DIMENSIONS ARE IN METERS UNLESS OTHERWISE SHOWN

RW-23

DESIGN OVERSIGHT Emil A. Vergara Jr.
12-1-09
SIGN OFF DATE

	BY	CHECKED
DESIGN	M. Lee	A. Maldonado
DETAILS	C. Somera	A. Maldonado
QUANTITIES	P. Smith	G. Esper

PREPARED FOR THE STATE OF CALIFORNIA DEPARTMENT OF TRANSPORTATION

T. Johnson
PROJECT ENGINEER

BRIDGE NO. 28-E0022
KILOMETER POST 37.9/41.3

RETAINING WALL No. 4
STRUCTURE PLAN No. 8

DESIGN DETAIL SHEET (METRIC) (REV. 10/27/05)

ORIGINAL SCALE IN MILLIMETERS FOR REDUCED PLANS 0 10 20 30 40 50 60 70 80 90 100

CU 04275
EA 228591

DISREGARD PRINTS BEARING EARLIER REVISION DATES

REVISION DATES (PRELIMINARY STAGE ONLY) 10/14/05 01/02/06 08/01/06 02/14/07 05/14/07 10/29/07 02/08/08 05/09/08

SHEET 23 OF 69

FILE => 28-0022-c-sp08.add

USERNAME => trlenard DATE PLOTTED => 29-DEC-2009 TIME PLOTTED => 07:28

DIST	COUNTY	ROUTE	KILOMETER POST TOTAL PROJECT	SHEET No	TOTAL SHEETS
04	CC	4	37.9/41.3	1055	1086

REGISTERED CIVIL ENGINEER 02/08/08 DATE

9-21-09
PLANS APPROVAL DATE

REGISTERED PROFESSIONAL ENGINEER CHAO GONG No. C53837 Exp. 09/30/09 CIVIL STATE OF CALIFORNIA

The State of California or its officers or agents shall not be responsible for the accuracy or completeness of electronic copies of this plan sheet.

CONTRA COSTA TRANSPORTATION AUTHORITY
3478 BUSKIRK AVENUE, SUITE 100
PLEASANT HILL, CA 94523

URS
3440 VINCENT ROAD
PLEASANT HILL, CA 94523

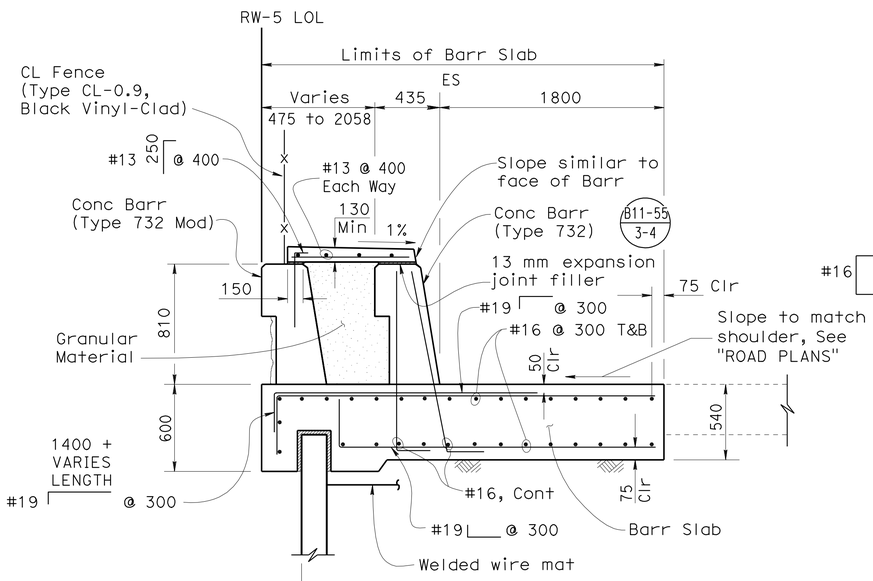

SECTION B-B
NO SCALE

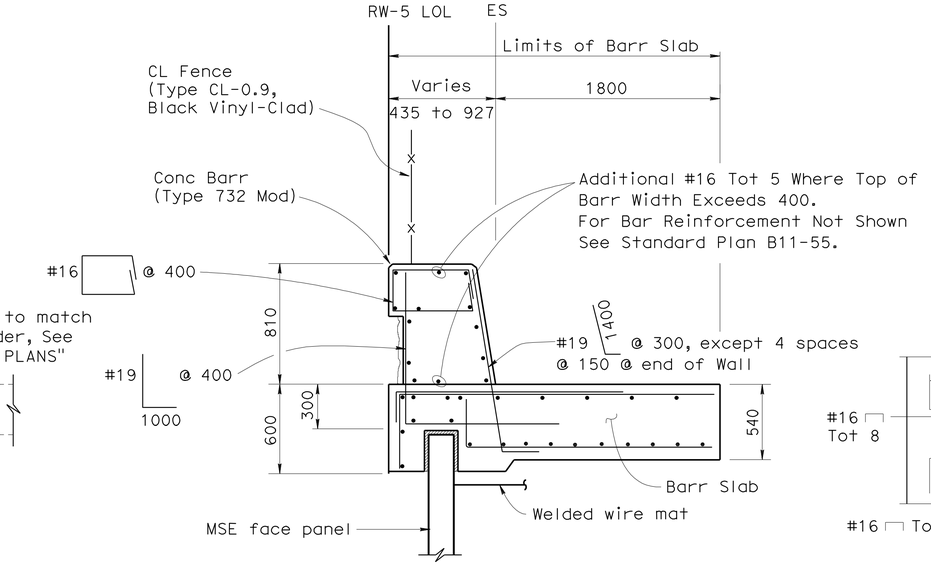

SECTION C-C
NO SCALE

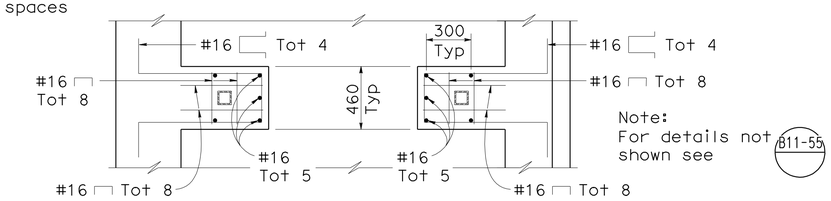

VIEW E-E
NO SCALE

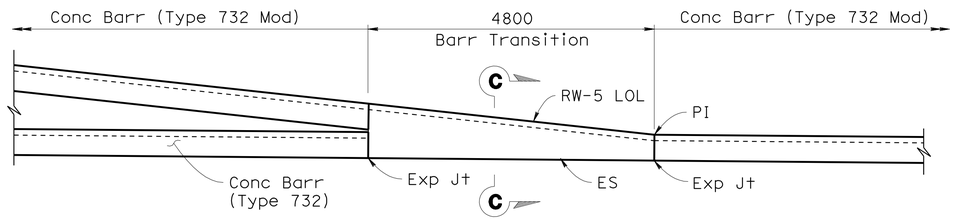

CONCRETE BARRIER TRANSITION (TYP)
NO SCALE

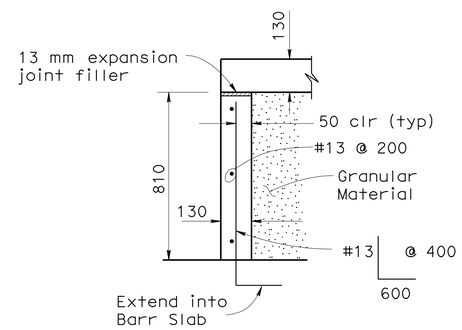

SECTION A-A
NO SCALE

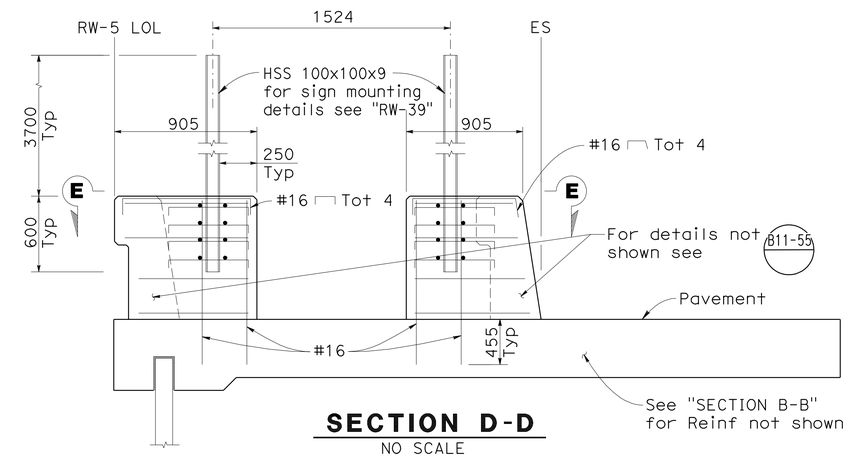

SECTION D-D
NO SCALE

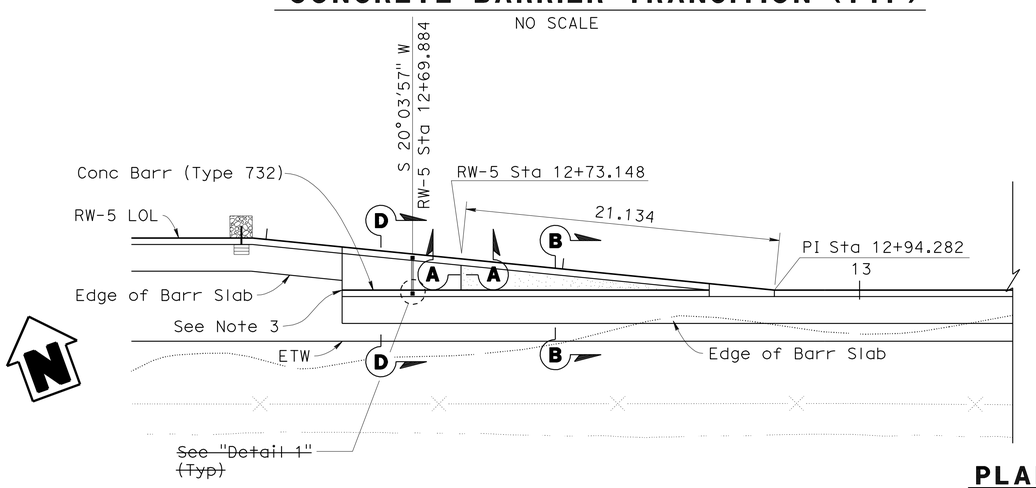

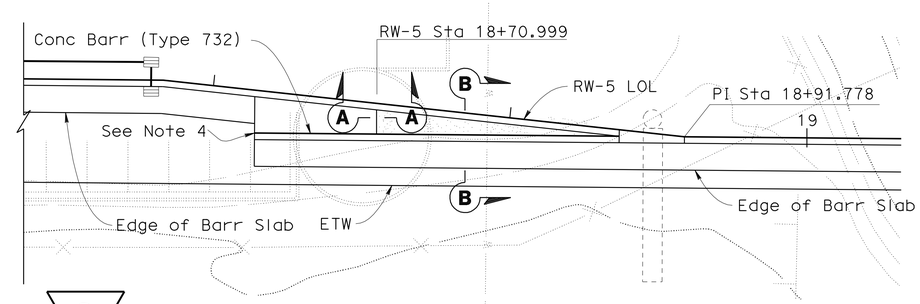

Notes:

1. For details not shown, see "RW-40" sheet.
2. For HSS section, see American Institute of Steel Construction, Inc (AISC) Manual 13th edition.
3. For beginning of the Barrier, see "RW-30 sheet.
4. For Beginning of the Barrier, see "RW-37" sheet.

PLAN 2
1:200

2 REVISED PER ADDENDUM No. 2 DATED DECEMBER 30, 2009

THIS PLAN ACCURATE FOR RETAINING WALL WORK ONLY

ALL DIMENSIONS ARE IN METERS UNLESS OTHERWISE SHOWN

RW-38

DESIGN OVERSIGHT Emil A. Vergara Jr.
12-1-09
SIGN OFF DATE

DESIGN	BY M. Lee	CHECKED A. Maldonado	
DETAILS	BY C. Somera	CHECKED A. Maldonado	
QUANTITIES	BY P. Smith	CHECKED G. Esper	

PREPARED FOR THE STATE OF CALIFORNIA DEPARTMENT OF TRANSPORTATION

T. Johnson
PROJECT ENGINEER

BRIDGE NO. 28-E0023
KILOMETER POST 37.9/41.3

RETAINING WALL No. 5
MAINTENANCE VEHICLE PULLOUT DETAILS

DESIGN DETAIL SHEET (METRIC) (REV. 10/27/05)

ORIGINAL SCALE IN MILLIMETERS FOR REDUCED PLANS 0 10 20 30 40 50 60 70 80 90 100

CU 04275
EA 228591

DISREGARD PRINTS BEARING EARLIER REVISION DATES

REVISION DATES (PRELIMINARY STAGE ONLY) 10/14/05 01/02/06 08/01/06 02/14/07 05/16/07 10/29/07 02/08/08 05/09/08

SHEET 38 OF 69

FILE => 28-0023-g-rwdt01.add

USERNAME => trlenard DATE PLOTTED => 29-DEC-2009 TIME PLOTTED => 07:28

DIST	COUNTY	ROUTE	KILOMETER POST TOTAL PROJECT	SHEET No	TOTAL SHEETS
04	CC	4	37.9/41.3	1056	1086

REGISTERED CIVIL ENGINEER 02/08/08

9-21-09
PLANS APPROVAL DATE

REGISTERED PROFESSIONAL ENGINEER CHAO GONG No. C53837 Exp. 09/30/09 CIVIL STATE OF CALIFORNIA

The State of California or its officers or agents shall not be responsible for the accuracy or completeness of electronic copies of this plan sheet.

CONTRA COSTA TRANSPORTATION AUTHORITY
3478 BUSKIRK AVENUE, SUITE 100
PLEASANT HILL, CA 94523

URS
3440 VINCENT ROAD
PLEASANT HILL, CA 94523

2

Caltrans Metric

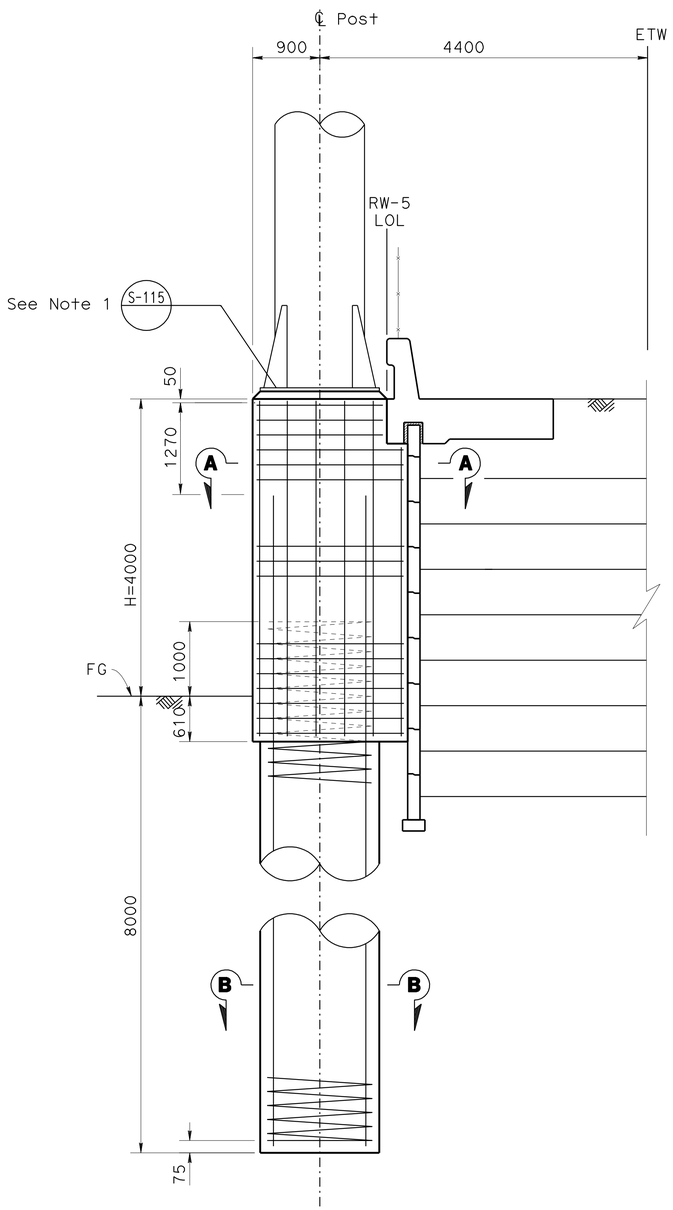

SIGN POST
1:40

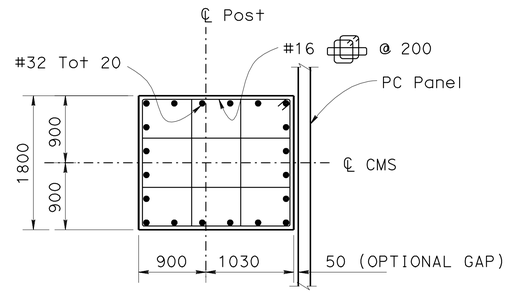

SECTION A-A
1:40

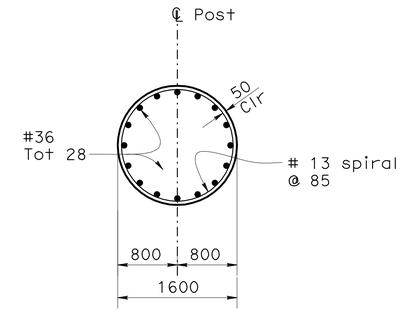

SECTION B-B
1:40

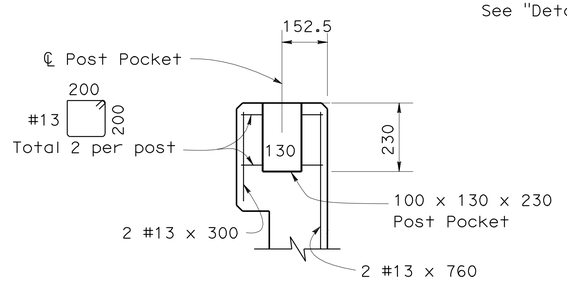

CHAIN LINK FENCE POST POCKET DETAIL
No Scale

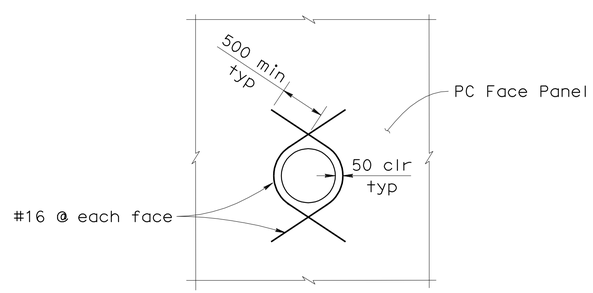

UTILITY PIPE THROUGH PANEL OF MSE WALL DETAIL
No scale

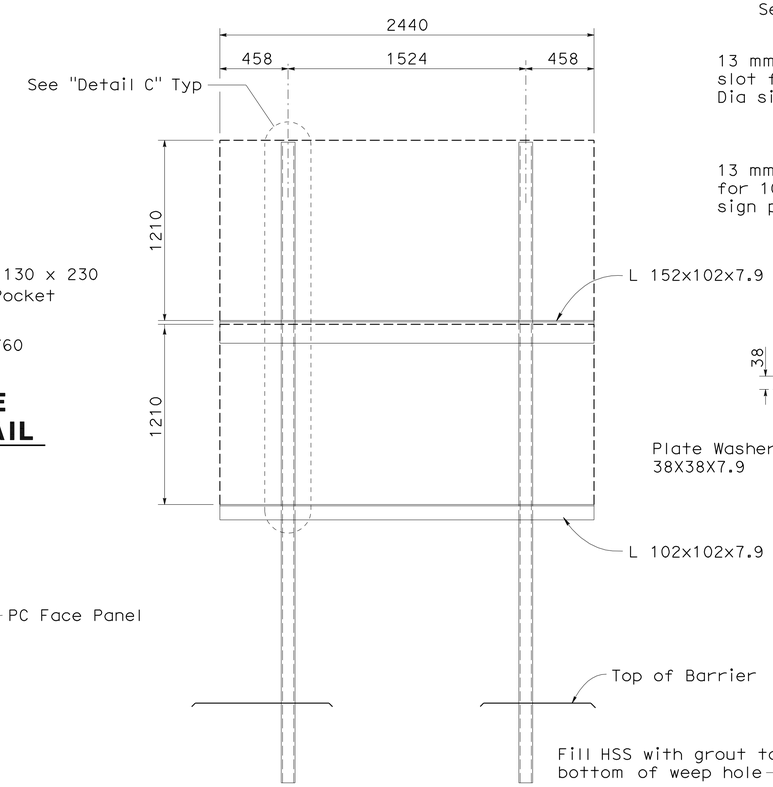

ELEVATION

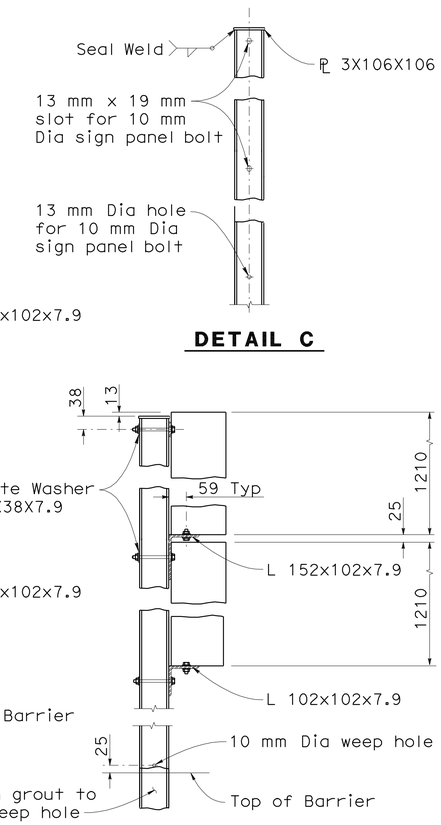

DETAIL C

SIDE VIEW

SIGN MOUNTING DETAILS
NO SCALE

ES-14C

Note:

1. For Anchor Bolts, see "Standard Plans" No. S115 and RSP S116

2 REVISED PER ADDENDUM No. 2 DATED DECEMBER 30, 2009

* Bridge No. 28-E0020
28-E0021
28-E0022
28-E0023

ALL DIMENSIONS ARE IN MILLIMETERS UNLESS OTHERWISE SHOWN

RW-39

DESIGN OVERSIGHT Emil A. Vergara Jr.
12-1-09
SIGN OFF DATE

	BY	CHECKED
DESIGN	M. Lee	A. Maldonado
DETAILS	C. Somera	A. Maldonado
QUANTITIES	P. Smith	G. Esper

PREPARED FOR THE STATE OF CALIFORNIA DEPARTMENT OF TRANSPORTATION

T. Johnson
PROJECT ENGINEER

BRIDGE NO. *
KILOMETER POST 37.9/41.3

RETAINING WALL No. 3A, 3B, 4 AND 5
MISCELLANEOUS DETAILS

DESIGN DETAIL SHEET (METRIC) (REV. 10/27/05)

ORIGINAL SCALE IN MILLIMETERS FOR REDUCED PLANS 0 10 20 30 40 50 60 70 80 90 100

CU 04275
EA 228591

DISREGARD PRINTS BEARING EARLIER REVISION DATES

REVISION DATES (PRELIMINARY STAGE ONLY) 10/31/05 01/02/06 08/01/06 02/16/07 02/14/07 05/30/07 10/25/07 02/08/08 05/09/08

SHEET 39 OF 69

FILE => 28-0023-g-rwdt02.dwg

USERNAME => friemard DATE PLOTTED => 29-DEC-2009 TIME PLOTTED => 07:28

DIST	COUNTY	ROUTE	KILOMETER POST TOTAL PROJECT	SHEET No	TOTAL SHEETS
04	CC	4	37.9/41.3	1066	1086

REGISTERED CIVIL ENGINEER 07/16/08 DATE

9-21-09
PLANS APPROVAL DATE

The State of California or its officers or agents shall not be responsible for the accuracy or completeness of electronic copies of this plan sheet.

REGISTERED PROFESSIONAL ENGINEER David K. Brown No. C30008 Exp. 9-30-09 CIVIL STATE OF CALIFORNIA

CONTRA COSTA TRANSPORTATION AUTHORITY
3478 BUSKIRK AVENUE, SUITE 100
PLEASANT HILL, CA 94523

PGH WONG ENGINEERING INC.
182 2nd Street, Suite 500
SAN FRANCISCO, CA 94105

2 Caltrans Metric

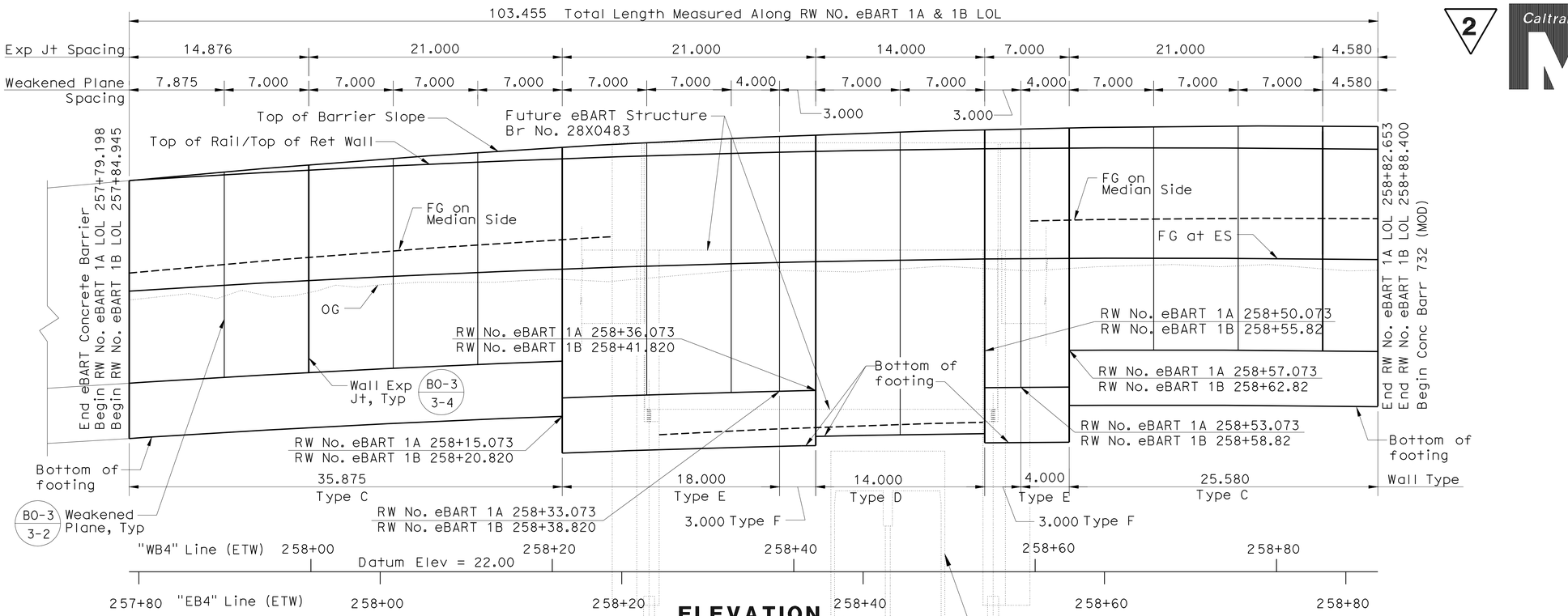

ELEVATION

Vert 1:20
Horiz 1:200

Note:
1. For cross sections see "Structure Details" sheet.

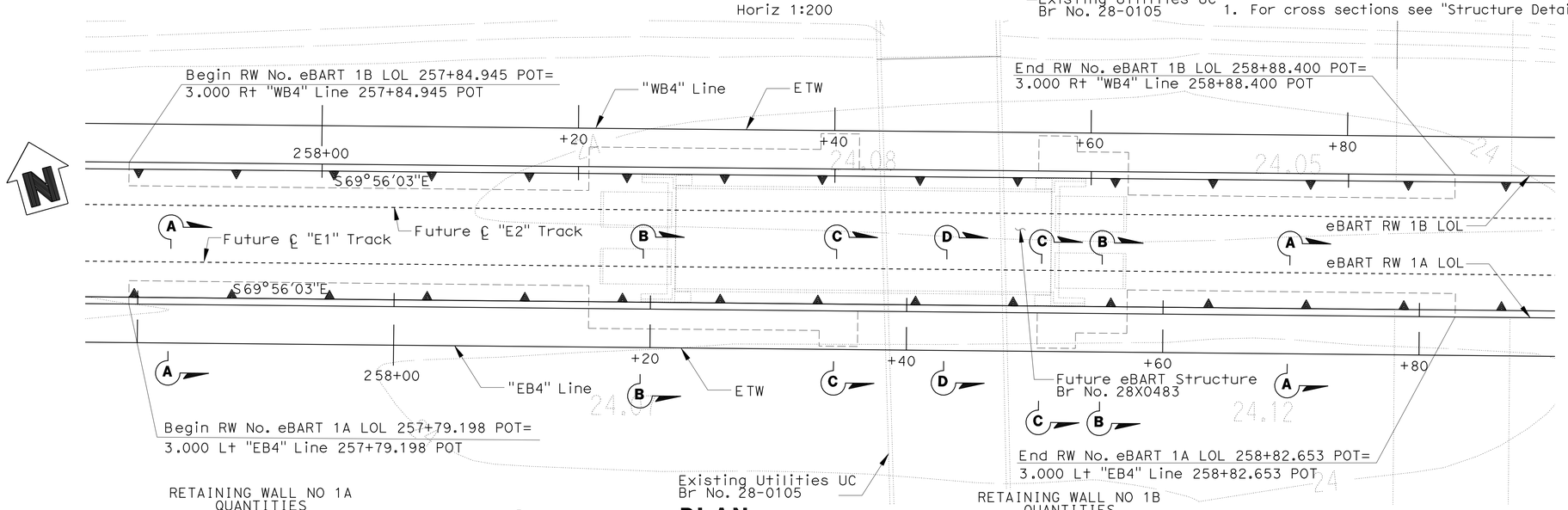

PLAN

Scale 1:200

RETAINING WALL NO 1A QUANTITIES

STRUCTURE EXCAVATION (RETAINING WALL)	690	m^3
STRUCTURE BACKFILL (RETAINING WALL)	610	m^3
STRUCTURAL CONCRETE, RETAINING WALL	169	m^3
BAR REINFORCING STEEL (RETAINING WALL)	11 500	kg

RETAINING WALL NO 1B QUANTITIES

STRUCTURE EXCAVATION (RETAINING WALL)	690	m^3
STRUCTURE BACKFILL (RETAINING WALL)	610	m^3
STRUCTURAL CONCRETE, RETAINING WALL	169	m^3
BAR REINFORCING STEEL (RETAINING WALL)	11 500	kg

Note:
Section taken on RW 1A, RW 1B similar.
THIS PLAN ACCURATE FOR RETAINING WALL WORK ONLY

TOP OF WALL & BOTTOM OF FOOTING ELEV

RW eBART 1A "EB4" Line			
Station	Type	Top Elev	Bottom
257+79.198	C	25.243	23.104
257+80.000	C	25.250	23.110
257+90.000	C	25.340	23.170
258+00.000	C	25.417	23.223
258+10.000	C	25.486	23.269
258+15.073	C	25.518	23.288
258+15.073	E	25.518	22.983
258+20.000	E	25.546	23.002
258+30.000	E	25.596	23.032
258+33.073	E/F	25.608	23.039
258+36.073	F	25.620	23.046
258+36.073	D	25.620	23.122
258+40.000	D	25.634	23.130
258+50.000	D	25.663	23.145
258+50.073	D	25.663	23.145
258+50.073	F	25.663	23.069
258+53.073	F/E	25.671	23.071
258+57.073	E	25.679	23.073
258+57.073	C	25.679	23.378
258+60.000	C	25.684	23.380
258+70.000	C	25.693	23.379
258+82.653	C	25.693	23.372
RW eBART 1B "WB4" Line			
Station	Type	Top Elev	Bottom
257+84.945	C	25.243	23.104
257+90.000	C	25.288	23.136
258+00.000	C	25.373	23.193
258+10.000	C	25.450	23.243
258+20.000	C	25.513	23.285
258+20.820	C	25.518	23.288
258+20.820	E	25.518	22.983
258+30.000	E	25.567	23.014
258+38.820	E/F	25.590	23.028
258+40.000	F	25.613	23.042
258+41.820	F	25.620	23.046
258+41.820	D	25.620	23.122
258+50.000	D	25.649	23.136
258+55.820	D	25.663	23.145
258+55.820	F	25.663	23.069
258+58.820	F/E	25.668	23.070
258+60.000	E	25.673	23.071
258+62.820	E	25.679	23.073
258+62.820	C	25.679	23.378
258+70.000	C	25.688	23.380
258+80.000	C	25.695	23.376
258+88.400	C	25.693	23.372

ALL DIMENSIONS ARE IN METERS UNLESS OTHERWISE SHOWN

2 REVISED PER ADDENDUM No. 2 DATED DECEMBER 30, 2009

RW-49

DESIGN OVERSIGHT Emil A. Vergara Jr.
12-1-09
SIGN OFF DATE

	BY	CHECKED
DESIGN	D. Brown	B. Kattula
DETAILS	J. Hurley	R. Hancock
QUANTITIES	S. C. Lin	R. Hancock

Jeff Hurley
PROJECT ENGINEER

BRIDGE NO.	RETAINING WALL No. eBART 1A AND 1B
28E0110	
KILOMETER POST	STRUCTURE PLAN
40.1/40.2	

DISREGARD PRINTS BEARING EARLIER REVISION DATES
REVISION DATES (PRELIMINARY STAGE ONLY) 10/14/05 01/02/06 08/07/06 02/14/07 05/14/07 07/16/08
SHEET 49 OF 69

DESIGN DETAIL SHEET (METRIC) (REV. 10/27/05)

ORIGINAL SCALE IN MILLIMETERS FOR REDUCED PLANS 0 10 20 30 40 50 60 70 80 90 100

CU 04275
EA 228591

FILE => 28E0110-c-sp01.add

USERNAME => t-leonard DATE PLOTTED => 29-DEC-2009 TIME PLOTTED => 07:29

DIST	COUNTY	ROUTE	KILOMETER POST TOTAL PROJECT	SHEET No	TOTAL SHEETS
04	CC	4	37.9/41.3	1067	1086

2

Caltrans Metric

REGISTERED CIVIL ENGINEER 07/16/08 DATE

9-21-09
PLANS APPROVAL DATE

REGISTERED PROFESSIONAL ENGINEER David K. Brown No. C30008 Exp. 9-30-09 CIVIL STATE OF CALIFORNIA

The State of California or its officers or agents shall not be responsible for the accuracy or completeness of electronic copies of this plan sheet.

CONTRA COSTA TRANSPORTATION AUTHORITY
3478 BUSKIRK AVENUE, SUITE 100
PLEASANT HILL, CA 94523

PGH WONG ENGINEERING INC.
182 2nd Street, Suite 500
SAN FRANCISCO, CA 94105

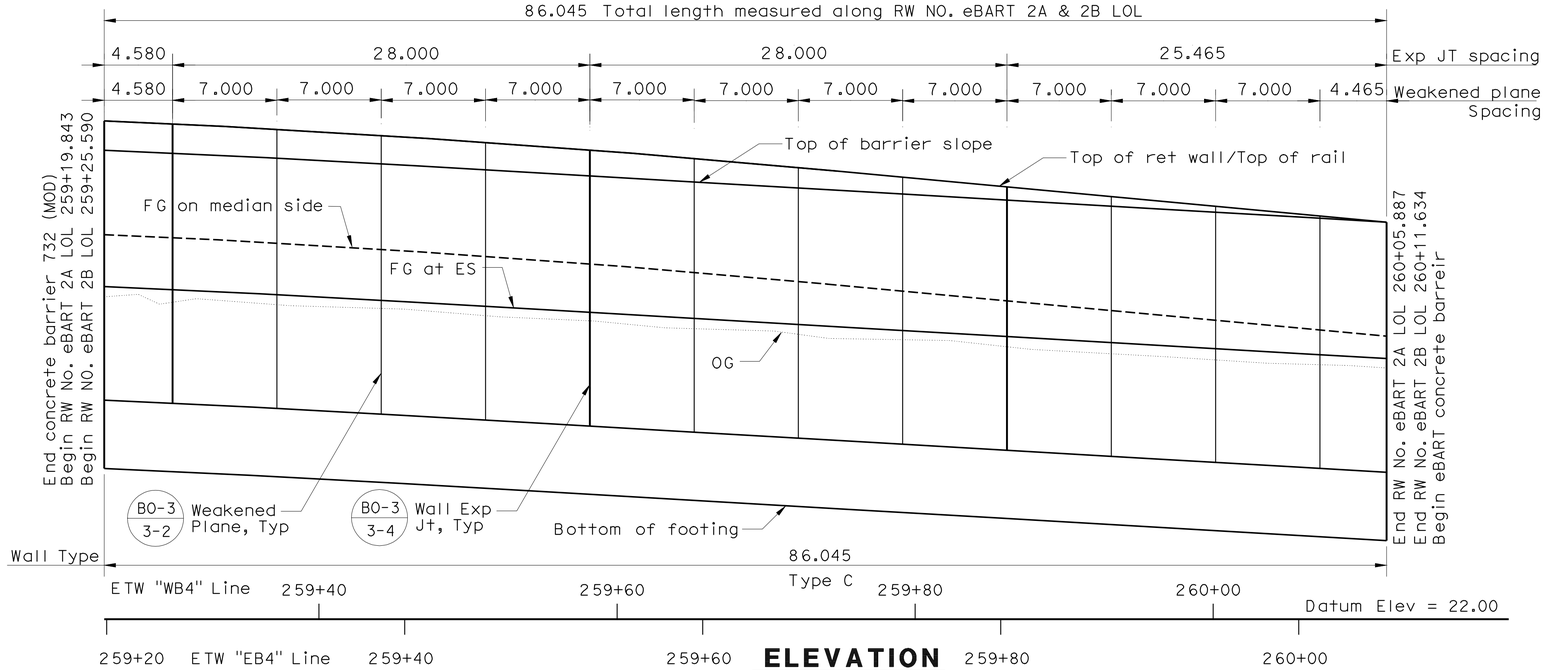

ELEVATION

Vert 1:20
Horiz 1:200

TOP OF WALL & BOTTOM OF FOOTING ELEV

RW eBART 2A "EB4" Line			RW eBART 2B "WB4" Line		
Station	Top Elev	Bottom	Station	Top Elev	Bottom
259+19.843	25.573	23.240	--	--	--
259+30.000	25.544	23.214	259+25.590	25.594	23.261
259+40.000	25.485	23.160	259+40.000	25.519	23.191
259+50.000	25.415	23.102	259+50.000	25.457	23.135
259+60.000	25.336	23.044	259+60.000	25.384	23.077
259+70.000	25.249	22.986	259+70.000	25.299	23.018
259+80.000	25.156	22.928	259+80.000	25.209	22.961
259+90.000	25.062	22.870	259+90.000	25.116	22.903
260+00.000	24.969	22.812	260+00.000	25.023	22.845
260+05.887	24.915	22.777	260+10.000	24.930	22.787
--	--	--	260+11.634	24.915	22.777

RETAINING WALL NO 2A
QUANTITIES

STRUCTURE EXCAVATION (RETAINING WALL)	565	m^3
STRUCTURE BACKFILL (RETAINING WALL)	480	m^3
STRUCTURAL CONCRETE, RETAINING WALL	135	m^3
BAR REINFORCING STEEL (RETAINING WALL)	8650	kg

2 **REVISED PER ADDENDUM No. 2 DATED DECEMBER 30, 2009**

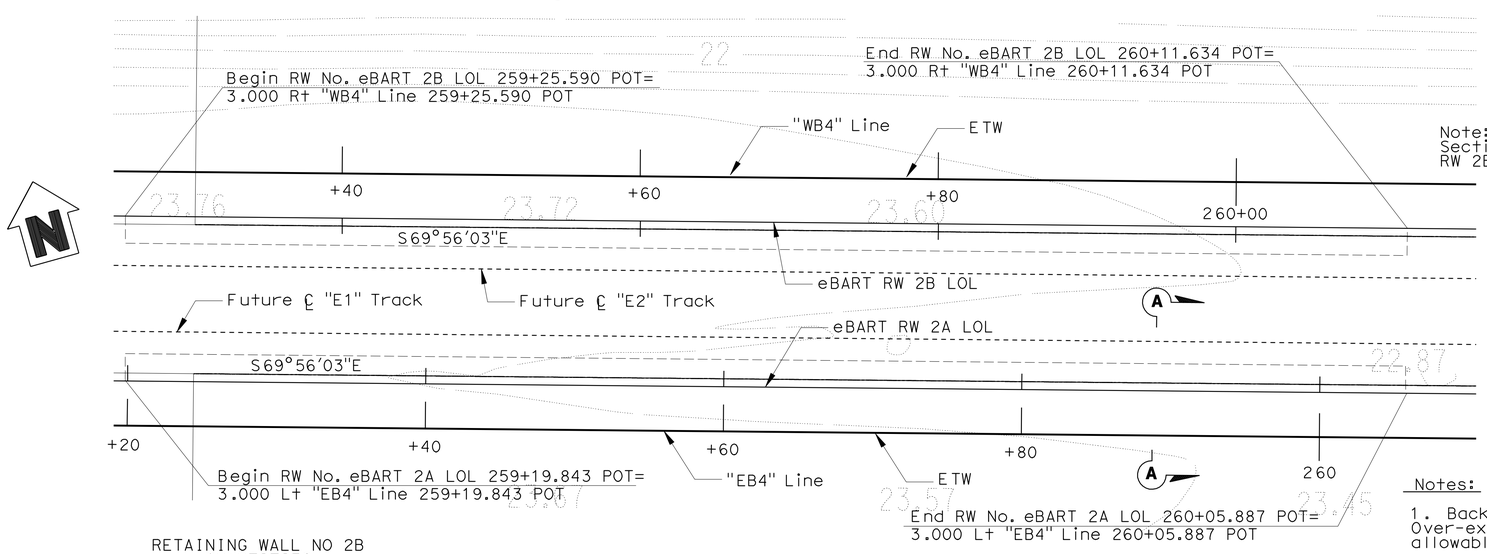

Note:
Section taken on RW 2A, RW 2B similar.

PLAN

Scale 1:200

RETAINING WALL NO 2B
QUANTITIES

STRUCTURE EXCAVATION (RETAINING WALL)	565	m3
STRUCTURE BACKFILL (RETAINING WALL)	480	m3
STRUCTURAL CONCRETE, RETAINING WALL	135	m3
BAR REINFORCING STEEL (RETAINING WALL)	8650	kg

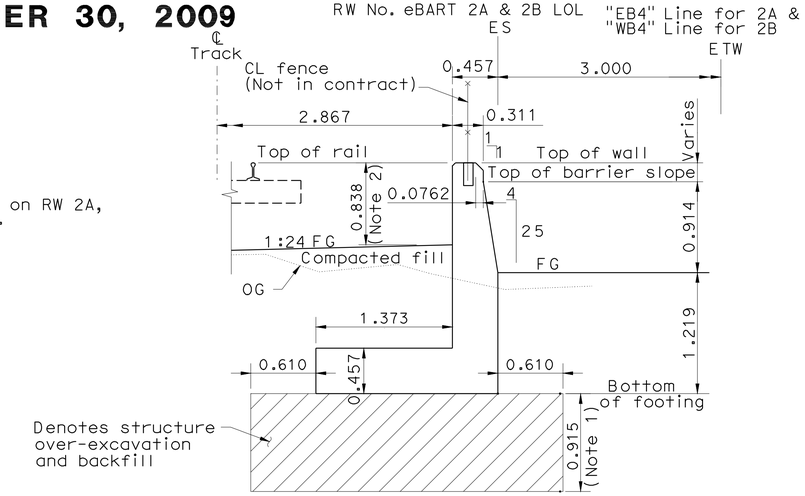

TYPICAL SECTION

No scale

Notes:

1. Backfill and compacted fill to have a minimum allowable bearing capacity of 3000 psf. Over-excavation is not required when a compacted embankment meets this minimum allowable bearing capacity.
2. Top of compacted fill measured from top of rail profile as shown in elevation view.
3. For cross sections see "Structure Details" sheet.

ALL DIMENSIONS ARE IN METERS UNLESS OTHERWISE SHOWN

RW-50

THIS PLAN ACCURATE FOR RETAINING WALL WORK ONLY

DESIGN OVERSIGHT Emil A. Vergara Jr.
12-1-09
SIGN OFF DATE

	BY	CHECKED
DESIGN	D. Brown	B. Kattula
DETAILS	J. Hurley	R. Hancock
QUANTITIES	S.C. Lin	R. Hancock

Jeff Hurley
PROJECT ENGINEER

BRIDGE NO. 28E0111
KILOMETER POST 40.2/40.3

RETAINING WALL No. eBART 2A AND 2B
STRUCTURE PLAN

DESIGN DETAIL SHEET (METRIC) (REV. 10/27/05)

ORIGINAL SCALE IN MILLIMETERS FOR REDUCED PLANS 0 10 20 30 40 50 60 70 80 90 100

CU 04275
EA 228591

DISREGARD PRINTS BEARING EARLIER REVISION DATES

REVISION DATES (PRELIMINARY STAGE ONLY) 10/27/05 01/06/06 08/07/06 02/26/07 05/10/07 07/16/08

SHEET 50 OF 69

FILE => 28E0111-c-sp01.add

USERNAME => tylenard DATE PLOTTED => 29-DEC-2009 TIME PLOTTED => 07:29

DIST	COUNTY	ROUTE	KILOMETER POST TOTAL PROJECT	SHEET No	TOTAL SHEETS
04	CC	4	37.9/41.3	1068	1086

REGISTERED CIVIL ENGINEER 07/16/08 DATE

9-21-09
PLANS APPROVAL DATE

The State of California or its officers or agents shall not be responsible for the accuracy or completeness of electronic copies of this plan sheet.

REGISTERED PROFESSIONAL ENGINEER David K. Brown No. C30008 Exp. 9-30-09 CIVIL STATE OF CALIFORNIA

CONTRA COSTA TRANSPORTATION AUTHORITY
3478 BUSKIRK AVENUE, SUITE 100
PLEASANT HILL, CA 94523

PGH WONG ENGINEERING INC.
182 2nd Street, Suite 500
SAN FRANCISCO, CA 94105

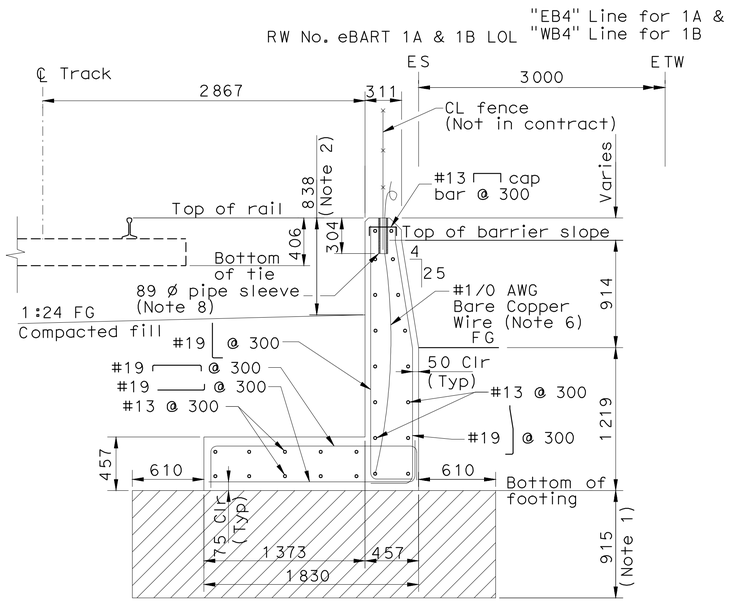

SECTION A-A
TYPE C
Scale: 1=20

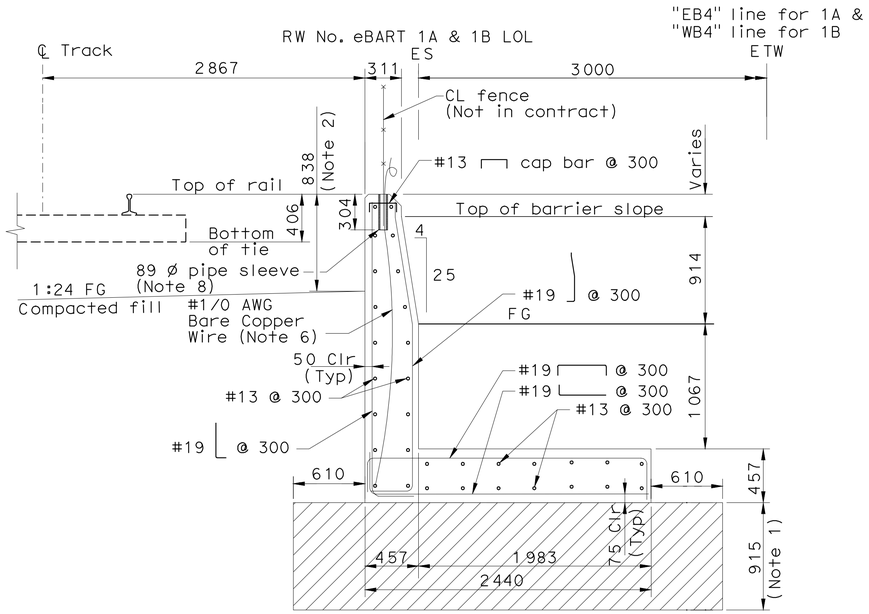

SECTION B-B
TYPE E (Note 4)
SCALE: 1=20

Notes:

1. Backfill and compacted fill to have a minimum allowable bearing capacity of 3000 psf. Over-excavation is not required when a compacted embankment meets this minimum allowable bearing capacity.

2. Top of compacted fill measured from top of rail profile as shown in elevation view.

3. Do not over-excavate or compact fill for the type D retaining wall at new utility crossing bridge structure. This special footing is designed to eliminate any additional loads on the underlying, existing utility box culvert.

4. Portions of Type E and Type F walls will be adjacent to utility crossing bridge structure and not next to compacted fill.

5. Type D longitudinal reinforcement should be extended 915 mm into each adjacent wall.

6. Install #1/0 AWG bare copper grounding wire @ 46 m intervals. Stub out 300 mm pig tail for connection to fence post. Coil and protect until fence post is installed. Exothermic weld to 6 m of continuous re-bar at foundation footing.

7. For concrete valley gutter detail, see UDD-3 "Underdrain Details"

8. Install 89 mm dia pipe sleeve at 2438 mm on center for future fence post.

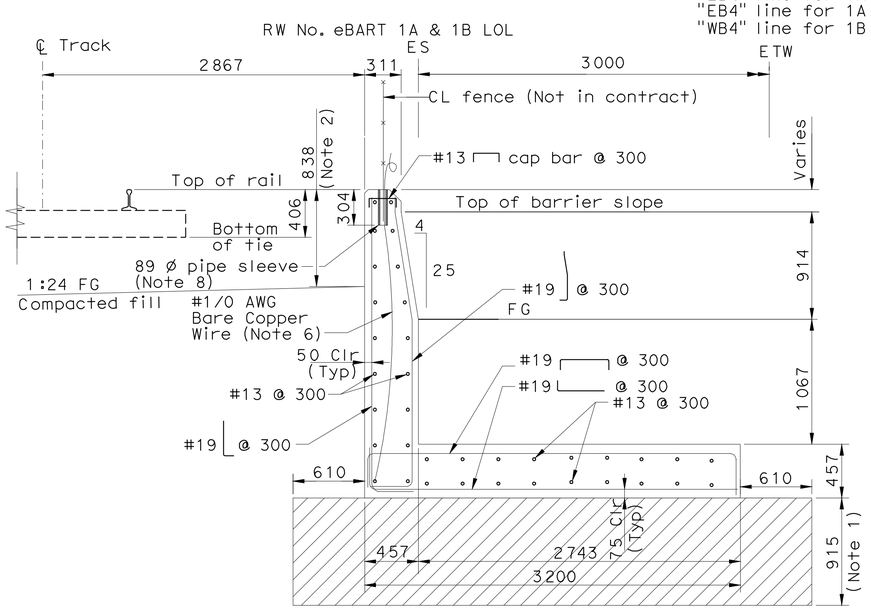

SECTION C-C
TYPE F (Note 4)
Scale: 1=20

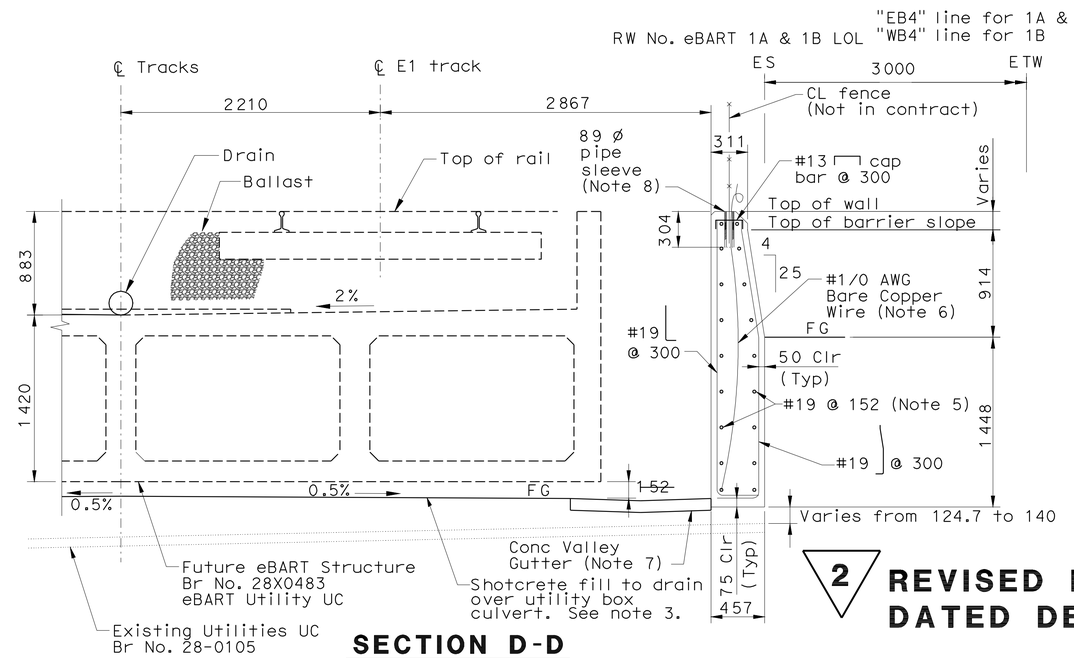

SECTION D-D
TYPE D
Scale: 1=20

Denotes structure over-excavation and backfill

2 **REVISED PER ADDENDUM No. 2 DATED DECEMBER 30, 2009**

THIS PLAN ACCURATE FOR RETAINING WALL WORK ONLY

ALL DIMENSIONS ARE IN MILLIMETERS UNLESS OTHERWISE SHOWN

RW-51

DESIGN OVERSIGHT Emil A. Vergara Jr.
12-1-09
SIGN OFF DATE

	BY	CHECKED
DESIGN	D. Brown	B. Kattula
DETAILS	J. Hurley	R. Hancock
QUANTITIES	S. C. Lin	R. Hancock

Jeff Hurley
PROJECT ENGINEER

BRIDGE NO. 28E0110 28E0111
KILOMETER POST 40.1/40.3

RETAINING WALL No. eBART 1A, 1B, 2A, 2B
STRUCTURE DETAILS

DESIGN DETAIL SHEET (METRIC) (REV. 10/27/05)

ORIGINAL SCALE IN MILLIMETERS FOR REDUCED PLANS 0 10 20 30 40 50 60 70 80 90 100

CU 04275
EA 228591

DISREGARD PRINTS BEARING EARLIER REVISION DATES

REVISION DATES (PRELIMINARY STAGE ONLY) 10/14/05 01/20/06 02/20/06 02/16/07 05/10/07 07/16/08

SHEET 51 OF 69

FILE => 28E0111-g-rwdt01.add

USERNAME => tvlenard DATE PLOTTED => 29-DEC-2009 TIME PLOTTED => 07:29