Dist	COUNTY	ROUTE	POST MILES TOTAL PROJECT	SHEET No.	TOTAL SHEETS
04	Mrn	580	2.7	1	30

INDEX OF PLANS

SHEET No.	DESCRIPTION
1	TITLE SHEET AND LOCATION MAP
2	TYPICAL CROSS SECTIONS
3	LAYOUT
4	CONSTRUCTION DETAILS
5 - 6	TEMPORARY WATER POLLUTION CONTROL PLAN AND QUANTITIES
7 - 11	DRAINAGE PLAN, PROFILES, DETAILS AND QUANTITIES
12	UTILITY PLAN
13 - 16	CONSTRUCTION AREA SIGNS
17	STAGE CONSTRUCTION PLAN
18 - 19	PAVEMENT DELINEATION PLAN AND QUANTITIES
20	SUMMARY OF QUANTITIES
21 - 23	EROSION CONTROL LEGEND, PLAN AND QUANTITIES
24 - 30	REVISED STANDARD PLANS

THE STANDARD PLANS LIST APPLICABLE TO THIS CONTRACT IS INCLUDED IN THE NOTICE TO BIDDERS AND SPECIAL PROVISIONS BOOK.

STATE OF CALIFORNIA

DEPARTMENT OF TRANSPORTATION

PROJECT PLANS FOR CONSTRUCTION ON

STATE HIGHWAY

IN MARIN COUNTY
NEAR SAN QUENTIN
AT SAN QUENTIN STREET UNDERCROSSING

TO BE SUPPLEMENTED BY STANDARD PLANS DATED 2010

LOCATION MAP

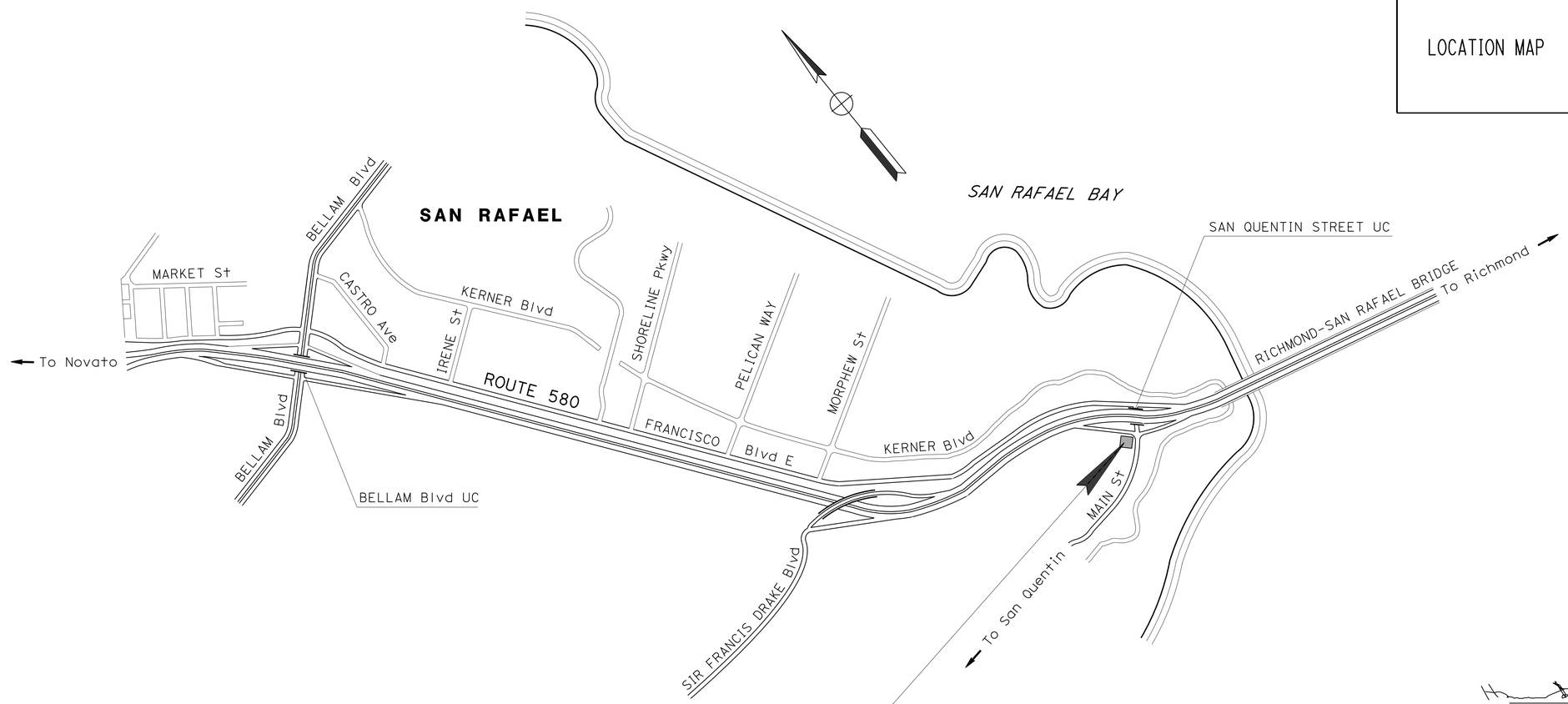

LOCATION OF CONSTRUCTION
PM 2.7

NO SCALE

THE CONTRACTOR SHALL POSSESS THE CLASS (OR CLASSES) OF LICENSE AS SPECIFIED IN THE "NOTICE TO BIDDERS."

PROJECT MANAGER WAJAHAT NYAZ

DESIGN MANAGER HILLAL HAMDAN

10/2/15
PROJECT ENGINEER REGISTERED CIVIL ENGINEER — DATE

REGISTERED PROFESSIONAL ENGINEER — Hassen Bolanos — No. 76522 — Exp. 12-31-16 — CIVIL — STATE OF CALIFORNIA

October 26, 2015
PLANS APPROVAL DATE

THE STATE OF CALIFORNIA OR ITS OFFICERS OR AGENTS SHALL NOT BE RESPONSIBLE FOR THE ACCURACY OR COMPLETENESS OF SCANNED COPIES OF THIS PLAN SHEET.

CONTRACT No.	04-1SS594
PROJECT ID	0412000636

LAST REVISION 10-26-15

DATE PLOTTED => 30-NOV-2015
TIME PLOTTED => 09:40

Dist	COUNTY	ROUTE	POST MILES TOTAL PROJECT	SHEET No.	TOTAL SHEETS
04	Mrn	580	2.7	2	30

REGISTERED CIVIL ENGINEER 10/2/15 DATE

10-26-15
PLANS APPROVAL DATE

REGISTERED PROFESSIONAL ENGINEER Hassen Bolanos No. 76522 Exp. 12-31-16 CIVIL STATE OF CALIFORNIA

THE STATE OF CALIFORNIA OR ITS OFFICERS OR AGENTS SHALL NOT BE RESPONSIBLE FOR THE ACCURACY OR COMPLETENESS OF SCANNED COPIES OF THIS PLAN SHEET.

NOTES:

1. DIMENSIONS OF THE PAVEMENT STRUCTURES (STRUCTURAL SECTIONS) ARE SUBJECT TO TOLERANCES SPECIFIED IN THE STANDARD SPECIFICATIONS.
2. FOR LOCATION AND LIMITS OF TFESA, SEE SHEET L-1. FOR TFESA, DETAILS, SEE STANDARD PLAN T65.
3. FOR UNDERDRAIN LOCATION AND DETAILS, SEE SHEETS L-1, C-1 AND STANDARD PLAN D102.
4. FOR LOCATION AND DETAILS OF RSP, SEE SHEETS L-1 AND C-1.
5. EXCAVATION CAN BE TERMINATED AT DEPTH SMALLER THAN THE ESTIMATED AVERAGE OF 3.5′ WITH THE ENGINEERS APPROVAL WHERE A HARD INTACT ROCK IS ENCOUNTERED.

ABBREVIATIONS:

TCA	TEMPORARY CONSTRUCTION AREA (UNDER PERMIT)
TFESA	TEMPORARY FENCE ENVIRONMENTALLY SENSITIVE AREA

PAVEMENT CLIMATE REGION:

NORTH COAST

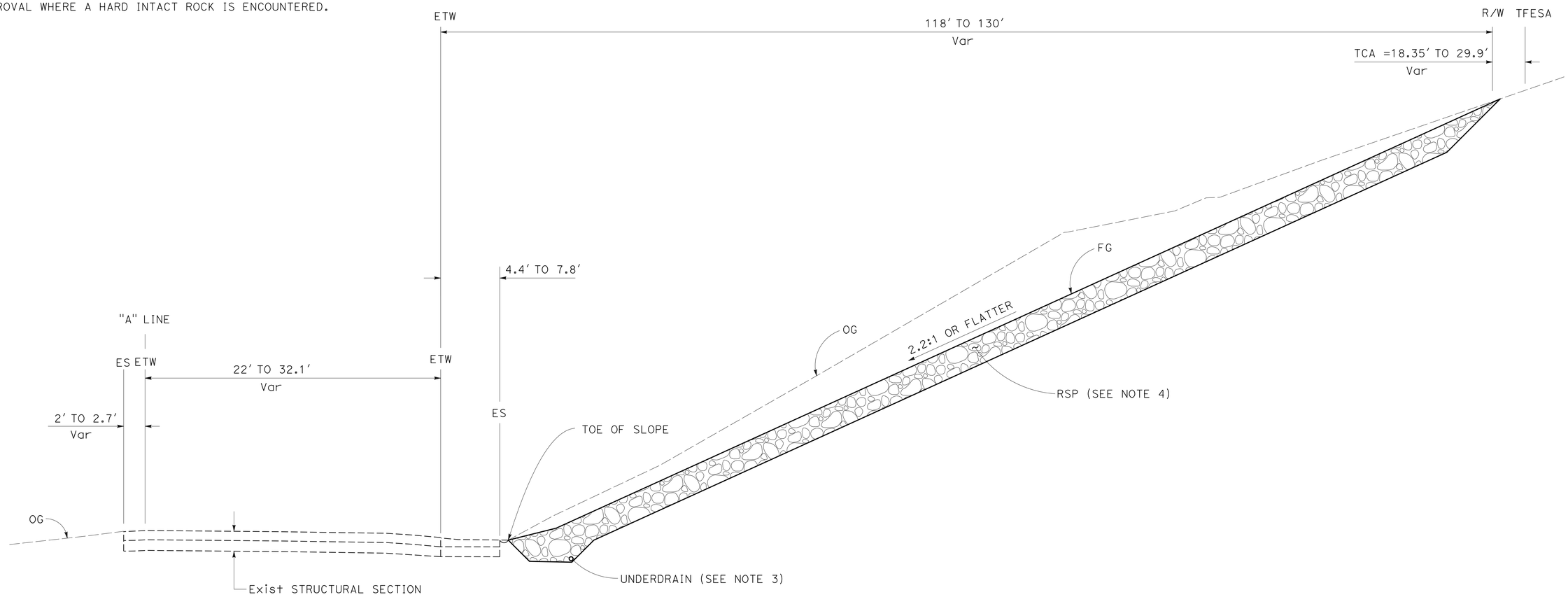

EASTBOUND OFF-RAMP
"A" 22+17 TO 22+47

TYPICAL CROSS SECTIONS
NO SCALE

X-1

STATE OF CALIFORNIA - DEPARTMENT OF TRANSPORTATION
Caltrans
DESIGN

FUNCTIONAL SUPERVISOR: HILLAL HAMDAN
CALCULATED-DESIGNED BY: HASSEN BOLANOS
CHECKED BY: HILLAL HAMDAN
REVISED BY: HB
DATE REVISED: 8/5/15

LAST REVISION 10-26-15
DATE PLOTTED => 30-NOV-2015
TIME PLOTTED => 09:40

Dist	COUNTY	ROUTE	POST MILES TOTAL PROJECT	SHEET No.	TOTAL SHEETS
04	Mrn	580	2.7	3	30

REGISTERED CIVIL ENGINEER 10/2/15 DATE

10-26-15
PLANS APPROVAL DATE

REGISTERED PROFESSIONAL ENGINEER Hassen Bolanos No. 76522 Exp. 12-31-16 CIVIL STATE OF CALIFORNIA

THE STATE OF CALIFORNIA OR ITS OFFICERS OR AGENTS SHALL NOT BE RESPONSIBLE FOR THE ACCURACY OR COMPLETENESS OF SCANNED COPIES OF THIS PLAN SHEET.

NOTE:

FOR ACCURATE RIGHT OF WAY DATA, CONTACT RIGHT OF WAY ENGINEERING AT THE DISTRICT OFFICE.

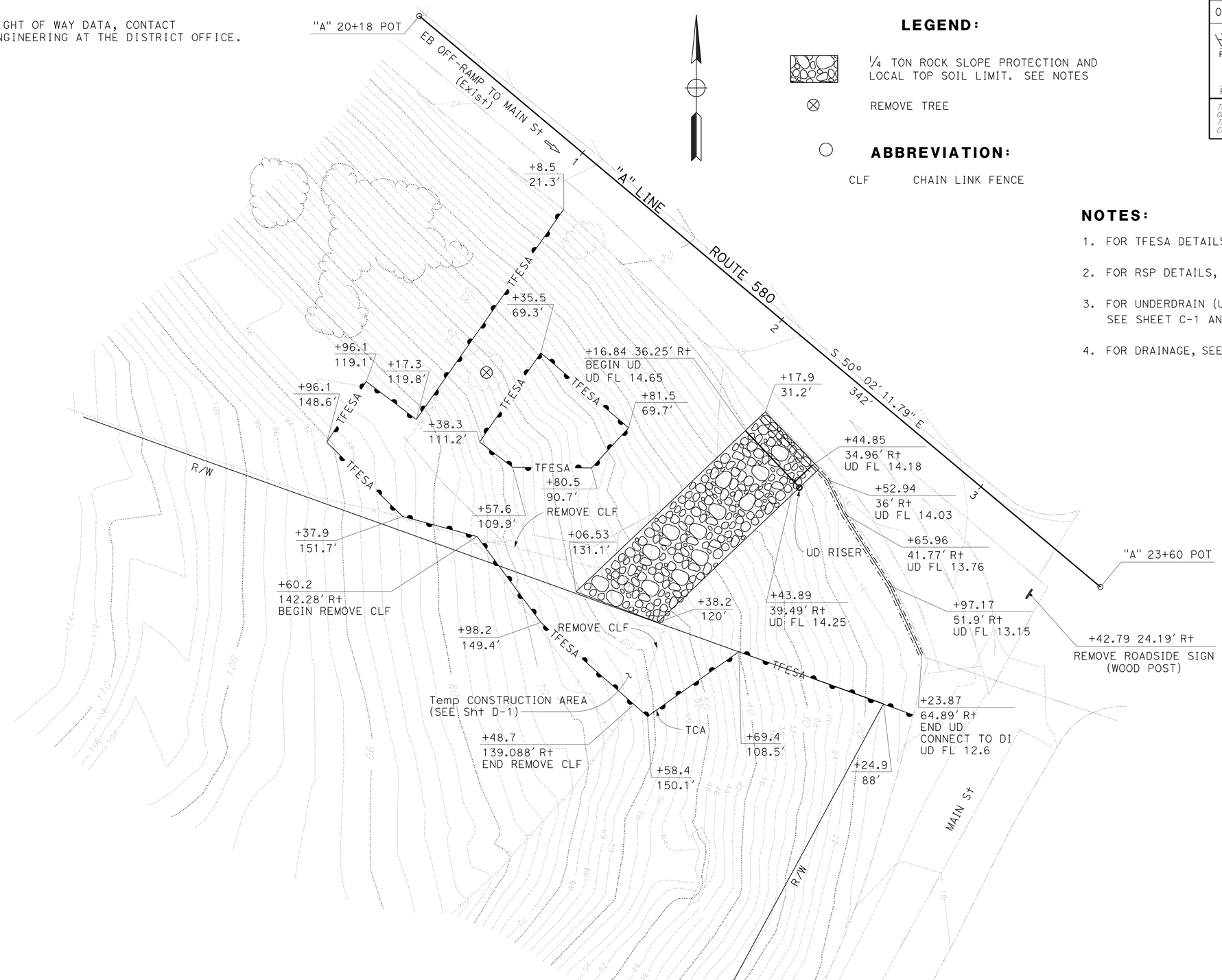

LEGEND:

¼ TON ROCK SLOPE PROTECTION AND LOCAL TOP SOIL LIMIT. SEE NOTES

REMOVE TREE

ABBREVIATION:

CLF CHAIN LINK FENCE

NOTES:

1. FOR TFESA DETAILS, SEE STANDARD PLAN T65.
2. FOR RSP DETAILS, SEE SHEET C-1.
3. FOR UNDERDRAIN (UD) AND UNDERDRAIN RISER DETAILS, SEE SHEET C-1 AND STANDARD PLAN D102.
4. FOR DRAINAGE, SEE SHEET D-1.

LAYOUT

SCALE: 1" = 20'

L-1

REVISED BY	DATE REVISED
HB	10/15/15

HASSEN BOLANOS — CALCULATED-DESIGNED BY
HILLAL HAMDAN — CHECKED BY
FUNCTIONAL SUPERVISOR: HILLAL HAMDAN

STATE OF CALIFORNIA - DEPARTMENT OF TRANSPORTATION
Caltrans
DESIGN

LAST REVISION 10-26-15 | DATE PLOTTED => 30-NOV-2015 | TIME PLOTTED => 09:40

Dist	COUNTY	ROUTE	POST MILES TOTAL PROJECT	SHEET No.	TOTAL SHEETS
04	Mrn	580	2.7	4	30

REGISTERED CIVIL ENGINEER 10/2/15 DATE

PLANS APPROVAL DATE 10-26-15

REGISTERED PROFESSIONAL ENGINEER Hassen Bolanos No. 76522 Exp. 12-31-16 CIVIL STATE OF CALIFORNIA

THE STATE OF CALIFORNIA OR ITS OFFICERS OR AGENTS SHALL NOT BE RESPONSIBLE FOR THE ACCURACY OR COMPLETENESS OF SCANNED COPIES OF THIS PLAN SHEET.

NOTES:

1. FROM AREAS EXCAVATED FOR RSP PLACEMENT, STOCKPILE THE EXISTING TOP 18" OF LOCAL TOP-SOIL AND SEPARATELY STOCKPILE THE REMAINING SUBSOIL (ROADWAY EXCAVATION) TO BE LATER USED TO FILL VOIDS OF RSP PER DETAILS THIS SHEET.
2. PLACE RSP IN LAYERS. FOR EACH LAYER OF RSP, FILL IN VOIDS BETWEEN ROCKS TO ENSURE ONLY ENOUGH NATIVE MATERIAL IS ADDED SO THAT SUCCESSIVE LAYERS OF RSP HAVE ADEQUATE ROCK TO ROCK CONTACT (DURING PLACEMENT) TO ENSURE MAXIMUM POSSIBLE FRICTION BETWEEN ROCK LAYERS AS DETERMINED BY THE ENGINEER IN THE FIELD.
3. EXCAVATION AND PLACEMENT OF RSP SHALL OCCUR IN STAGES (20' MAXIMUM SECTIONS) SO AS TO MINIMIZE THE AREA OF OPEN CUT. EXCAVATED AREAS SHALL NOT BE LEFT UNSUPPORTED FOR MORE THAN 48 HOURS.
4. DO NOT GENERATE CUT SLOPES STEEPER THAN 2H:1V.
5. RSP SHALL BE TAN/BROWN IN COLOR AS DIRECTED BY THE ENGINEER.
6. ABOVE GROUND CORRUGATED STEEL PIPE SHALL BE PAINTED TAN/BROWN IN COLOR AS DIRECTED BY THE ENGINEER.

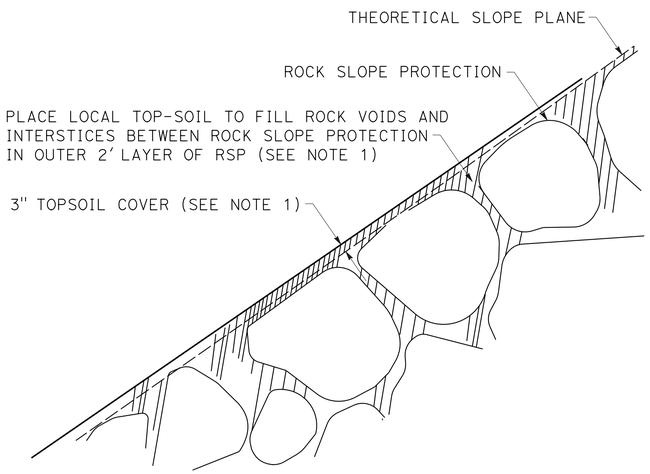

RSP DETAIL No. 1
SOIL PLACEMENT ON ROCK SLOPE PROTECTION

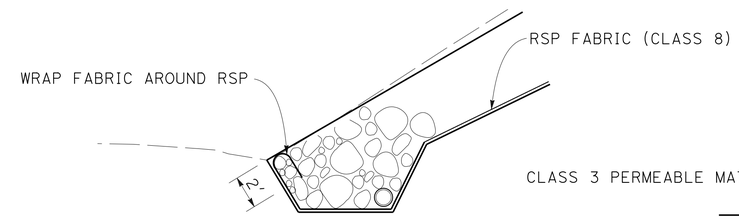

RSP FABRIC DETAIL

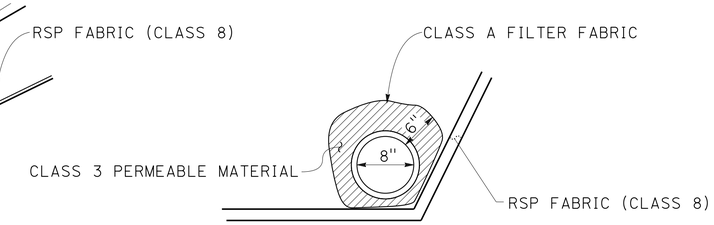

8" PERFORATED PLASTIC PIPE

RSP UNDERDRAIN DETAIL No. 1

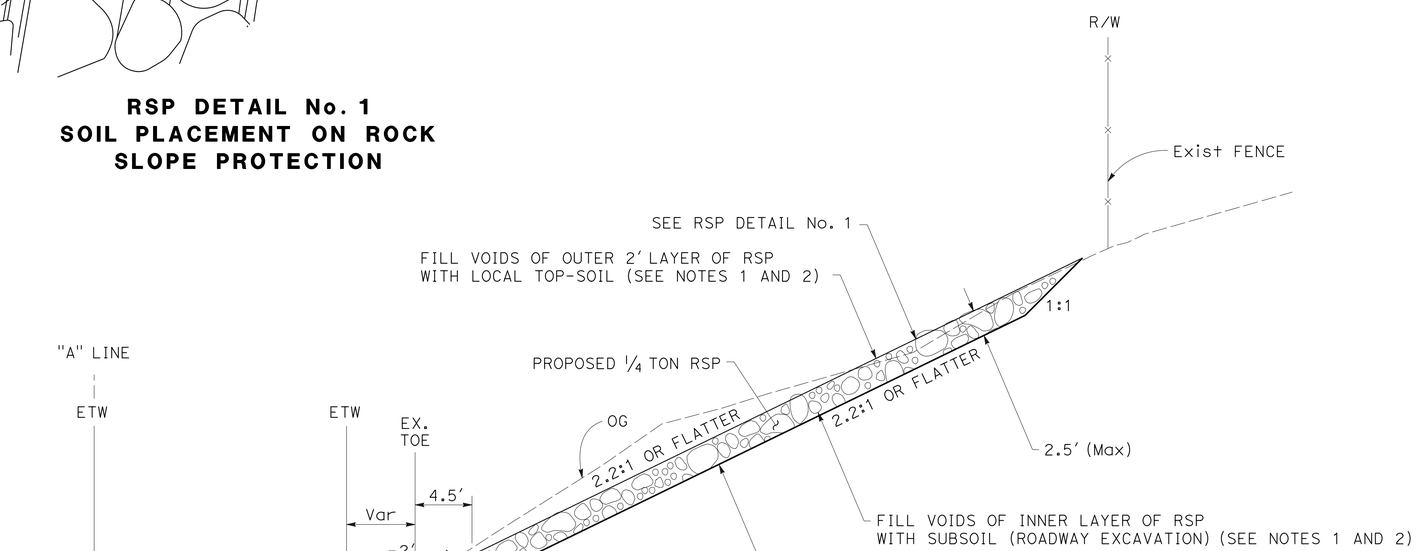

1/4 TON ROCK SLOPE PROTECTION (METHOD B)
"A" 22+17 TO 22+47

CONSTRUCTION DETAILS
NO SCALE

C-1

STATE OF CALIFORNIA - DEPARTMENT OF TRANSPORTATION
Caltrans DESIGN

FUNCTIONAL SUPERVISOR: HILLAL HAMDAN
CALCULATED-DESIGNED BY: HASSEN BOLANOS
CHECKED BY: HILLAL HAMDAN
REVISED BY: HB
DATE REVISED: 8/5/15

LAST REVISION 10-26-15 | DATE PLOTTED => 30-NOV-2015 | TIME PLOTTED => 09:40

Dist	COUNTY	ROUTE	POST MILES TOTAL PROJECT	SHEET No.	TOTAL SHEETS
04	Mrn	580	2.7	5	30

REGISTERED CIVIL ENGINEER DATE 10/26/15

PLANS APPROVAL DATE 10-26-15

REGISTERED PROFESSIONAL ENGINEER Ganga D. Tripathi No. 78447 Exp. 9-30-17 CIVIL STATE OF CALIFORNIA

THE STATE OF CALIFORNIA OR ITS OFFICERS OR AGENTS SHALL NOT BE RESPONSIBLE FOR THE ACCURACY OR COMPLETENESS OF SCANNED COPIES OF THIS PLAN SHEET.

NOTE:

FOR ACCURATE RIGHT OF WAY DATA, CONTACT RIGHT OF WAY ENGINEERING AT THE DISTRICT OFFICE.

LEGEND:

TEMPORARY HYDRAULIC MULCH (BFM)

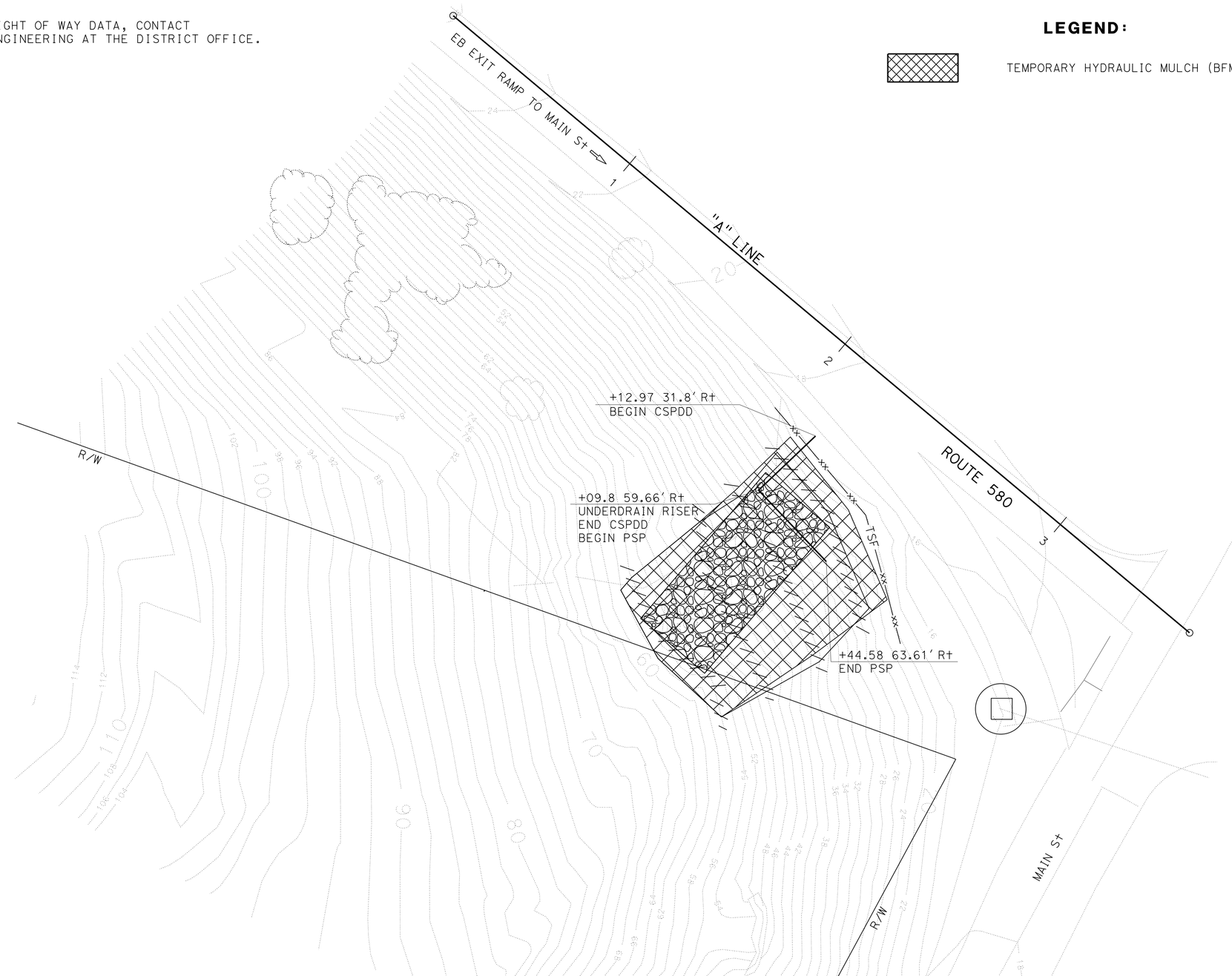

TEMPORARY WATER POLLUTION CONTROL PLAN

SCALE: 1" = 20'

APPROVED FOR TEMPORARY WATER POLLUTION CONTROL WORK ONLY

WPC-1

STATE OF CALIFORNIA - DEPARTMENT OF TRANSPORTATION

Caltrans® **WATER QUALITY**

FUNCTIONAL SUPERVISOR: KAMRAN NAKHJIRI

CALCULATED-DESIGNED BY: GANGA TRIPATHI

CHECKED BY: KAMRAN NAKHJIRI

REVISED BY: GT

DATE REVISED: 9/8/15

LAST REVISION 10-26-15

DATE PLOTTED => 30-NOV-2015

TIME PLOTTED => 09:40

Dist	COUNTY	ROUTE	POST MILES TOTAL PROJECT	SHEET No.	TOTAL SHEETS
04	Mrn	580	2.7	6	30

REGISTERED CIVIL ENGINEER 8/7/15 DATE

10-26-15
PLANS APPROVAL DATE

REGISTERED PROFESSIONAL ENGINEER
Ganga D. Tripathi
No. 78447
Exp. 9-30-17
CIVIL
STATE OF CALIFORNIA

THE STATE OF CALIFORNIA OR ITS OFFICERS OR AGENTS SHALL NOT BE RESPONSIBLE FOR THE ACCURACY OR COMPLETENESS OF SCANNED COPIES OF THIS PLAN SHEET.

TEMPORARY WATER POLLUTION CONTROL QUANTITIES

ITEM	UNIT	STATION	QUANTITY
TEMPORARY DRAINAGE INLET PROTECTION	EA	R+ "A" 21+00 TO 23+00	1
TEMPORARY FIBER ROLL	LF	R+ "A" 21+00 TO 23+00	300
TEMPORARY SILT FENCE	LF	R+ "A" 21+00 TO 23+00	100
TEMPORARY HYDRAULIC MULCH (BONDED FIBER MATRIX)	SQYD	R+ "A" 21+00 TO 23+00	600

TEMPORARY WATER POLLUTION CONTROL QUANTITIES

WPCQ-1

STATE OF CALIFORNIA - DEPARTMENT OF TRANSPORTATION
Caltrans
WATER QUALITY

FUNCTIONAL SUPERVISOR: KAMRAN NAKHJIRI
CALCULATED-DESIGNED BY: JIANGFAN CHEN
CHECKED BY: KAMRAN NAKHJIRI
REVISED BY: JC
DATE REVISED: 9/8/15

LAST REVISION 10-26-15 | DATE PLOTTED => 30-NOV-2015 | TIME PLOTTED => 09:40

Dist	COUNTY	ROUTE	POST MILES TOTAL PROJECT	SHEET No.	TOTAL SHEETS
04	Mrn	580	2.7	7	30

REGISTERED CIVIL ENGINEER 10/2/15 DATE

10-26-15
PLANS APPROVAL DATE

REGISTERED PROFESSIONAL ENGINEER Hassen Bolanos No. 76522 Exp. 12-31-16 CIVIL STATE OF CALIFORNIA

THE STATE OF CALIFORNIA OR ITS OFFICERS OR AGENTS SHALL NOT BE RESPONSIBLE FOR THE ACCURACY OR COMPLETENESS OF SCANNED COPIES OF THIS PLAN SHEET.

NOTE:

FOR ACCURATE RIGHT OF WAY DATA, CONTACT RIGHT OF WAY ENGINEERING AT THE DISTRICT OFFICE.

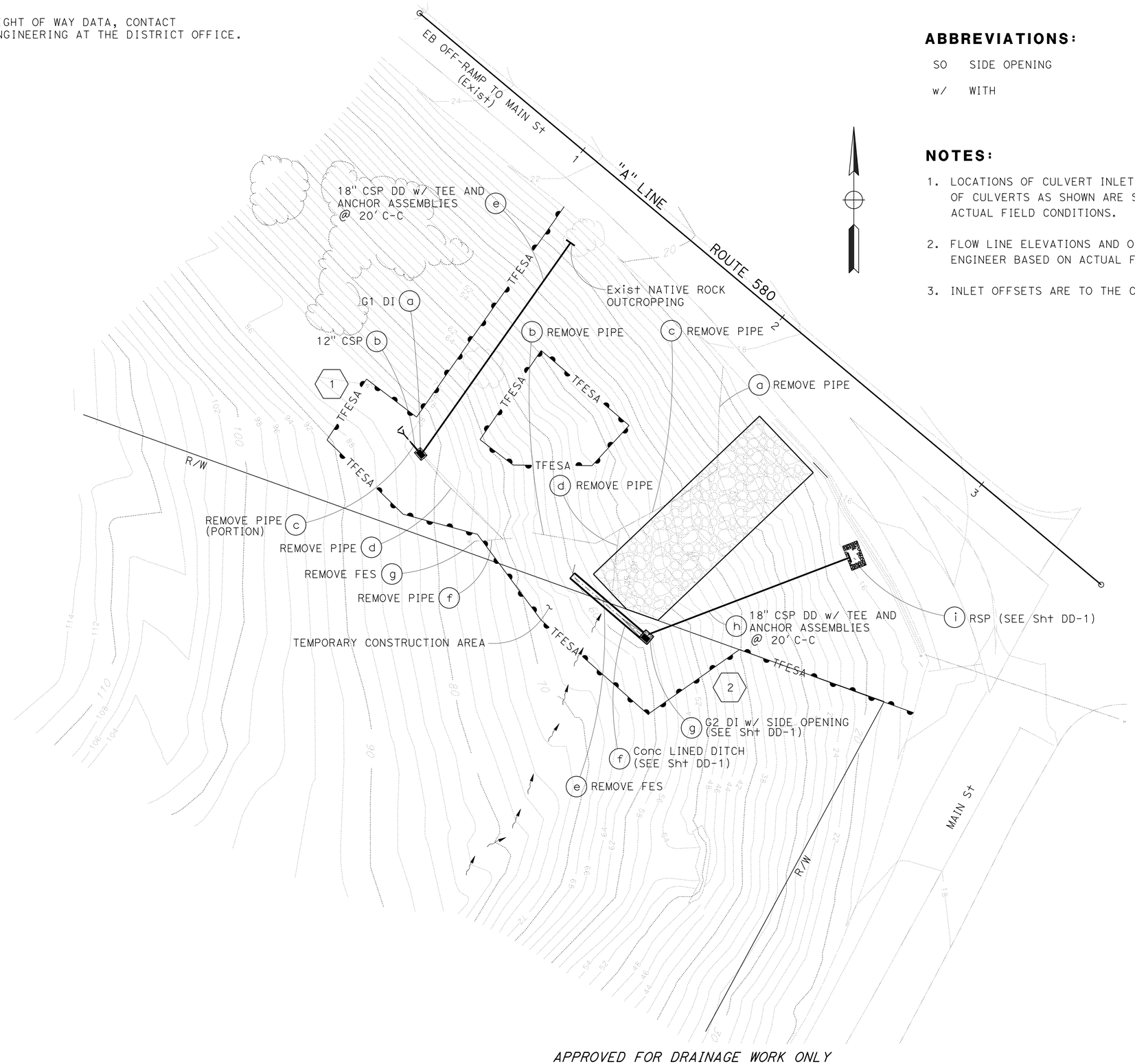

ABBREVIATIONS:

SO SIDE OPENING

w/ WITH

NOTES:

1. LOCATIONS OF CULVERT INLETS, OUTLETS, TOP OF GRATE ELEVATIONS AND LENGTHS OF CULVERTS AS SHOWN ARE SUBJECT TO CHANGE BY THE ENGINEER BASED ON ACTUAL FIELD CONDITIONS.
2. FLOW LINE ELEVATIONS AND OFFSETS AS SHOWN ARE SUBJECT TO CHANGE BY THE ENGINEER BASED ON ACTUAL FIELD CONDITIONS.
3. INLET OFFSETS ARE TO THE CENTER OF THE BASE.

DRAINAGE PLAN

SCALE: 1" = 20'

APPROVED FOR DRAINAGE WORK ONLY

D-1

STATE OF CALIFORNIA - DEPARTMENT OF TRANSPORTATION
Caltrans
DESIGN

FUNCTIONAL SUPERVISOR: HILLAL HAMDAN
CALCULATED-DESIGNED BY: HASSEN BOLANOS
CHECKED BY: HILLAL HAMDAN
REVISED BY: HB
DATE REVISED: 10/15/15

LAST REVISION 10-26-15 | DATE PLOTTED => 30-NOV-2015 | TIME PLOTTED => 09:40

Dist	COUNTY	ROUTE	POST MILES TOTAL PROJECT	SHEET No.	TOTAL SHEETS
04	Mrn	580	2.7	8	30

REGISTERED CIVIL ENGINEER 10/2/15 DATE

10-26-15
PLANS APPROVAL DATE

REGISTERED PROFESSIONAL ENGINEER Hassen Bolanos No. 76522 Exp. 12-31-16 CIVIL STATE OF CALIFORNIA

THE STATE OF CALIFORNIA OR ITS OFFICERS OR AGENTS SHALL NOT BE RESPONSIBLE FOR THE ACCURACY OR COMPLETENESS OF SCANNED COPIES OF THIS PLAN SHEET.

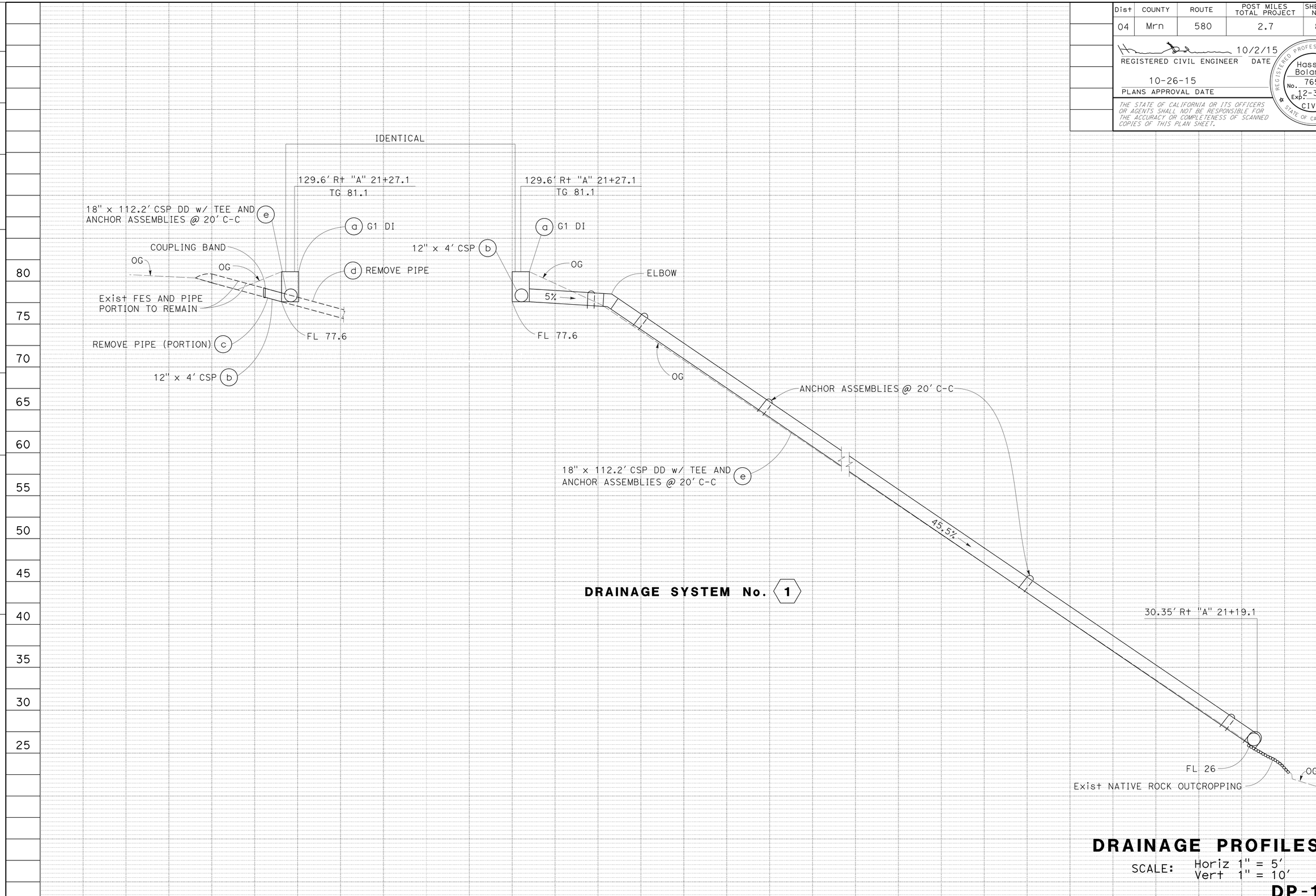

DRAINAGE PROFILES

SCALE: Horiz 1" = 5'
Vert 1" = 10'

DP-1

STATE OF CALIFORNIA - DEPARTMENT OF TRANSPORTATION
Caltrans
DESIGN

FUNCTIONAL SUPERVISOR: HILLAL HAMDAN
CALCULATED-DESIGNED BY: HASSEN BOLANOS
CHECKED BY: HILLAL HAMDAN
REVISED BY: HB
DATE REVISED: 3/26/15

LAST REVISION 10-26-15
DATE PLOTTED => 30-NOV-2015
TIME PLOTTED => 09:40

Dist	COUNTY	ROUTE	POST MILES TOTAL PROJECT	SHEET No.	TOTAL SHEETS
04	Mrn	580	2.7	9	30

REGISTERED CIVIL ENGINEER DATE 10/2/15

PLANS APPROVAL DATE 10-26-15

REGISTERED PROFESSIONAL ENGINEER Hassen Bolanos No. 76522 Exp. 12-31-16 CIVIL STATE OF CALIFORNIA

THE STATE OF CALIFORNIA OR ITS OFFICERS OR AGENTS SHALL NOT BE RESPONSIBLE FOR THE ACCURACY OR COMPLETENESS OF SCANNED COPIES OF THIS PLAN SHEET.

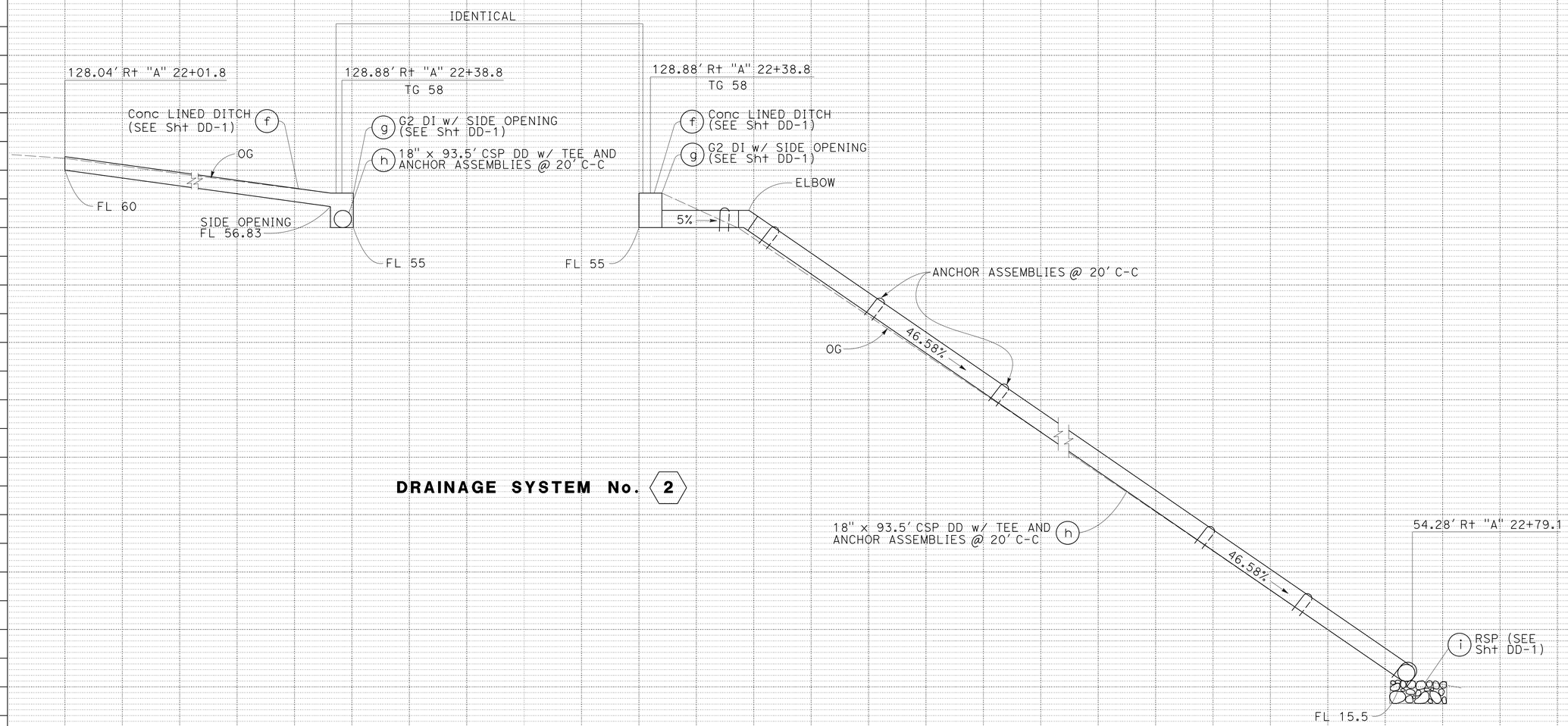

DRAINAGE SYSTEM No. 2

DRAINAGE PROFILES

SCALE: Horiz 1" = 5'
Vert 1" = 10'

DP-2

STATE OF CALIFORNIA - DEPARTMENT OF TRANSPORTATION

Caltrans DESIGN

FUNCTIONAL SUPERVISOR: HILLAL HAMDAN

CALCULATED-DESIGNED BY: KANWARJIT GONDARA

CHECKED BY: HILLAL HAMDAN

REVISED BY: GK

DATE REVISED: 7/23/15

LAST REVISION DATE PLOTTED => 30-NOV-2015
TIME PLOTTED => 09:40

Dist	COUNTY	ROUTE	POST MILES TOTAL PROJECT	SHEET No.	TOTAL SHEETS
04	Mrn	580	2.7	10	30

REGISTERED CIVIL ENGINEER 10/2/15 DATE

10-26-15
PLANS APPROVAL DATE

REGISTERED PROFESSIONAL ENGINEER Hassen Bolanos No. 76522 Exp. 12-31-16 CIVIL STATE OF CALIFORNIA

THE STATE OF CALIFORNIA OR ITS OFFICERS OR AGENTS SHALL NOT BE RESPONSIBLE FOR THE ACCURACY OR COMPLETENESS OF SCANNED COPIES OF THIS PLAN SHEET.

NOTE:

FOR DETAILS NOT SHOWN, SEE STANDARD PLAN D73A AND REVISED STANDARD PLAN RSP D73.

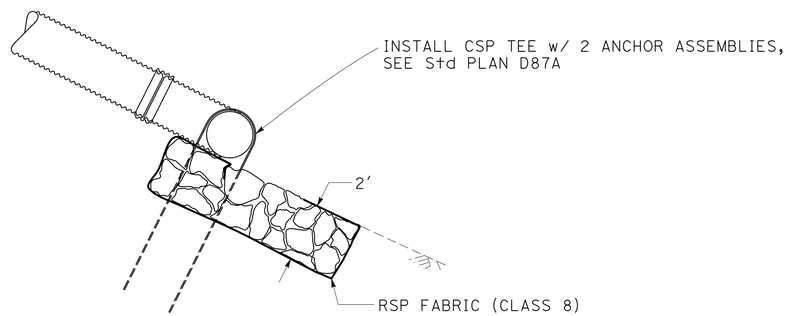

SECTION D-D

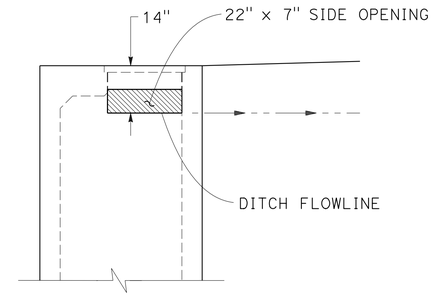

G2 INLET WITH SIDE OPENING

2 g

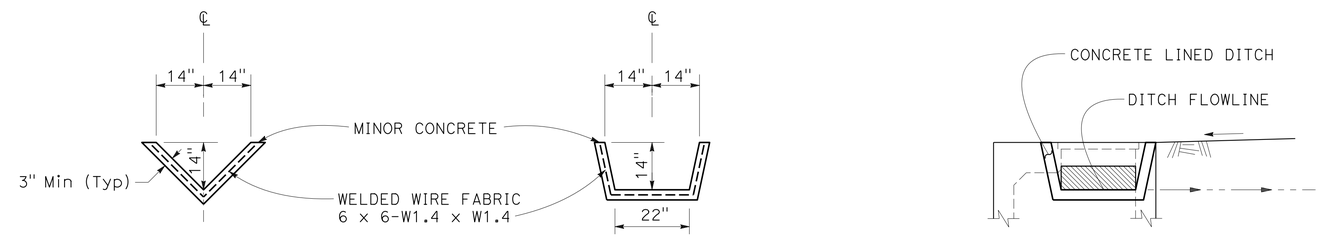

SECTION A-A SECTION B-B SECTION C-C

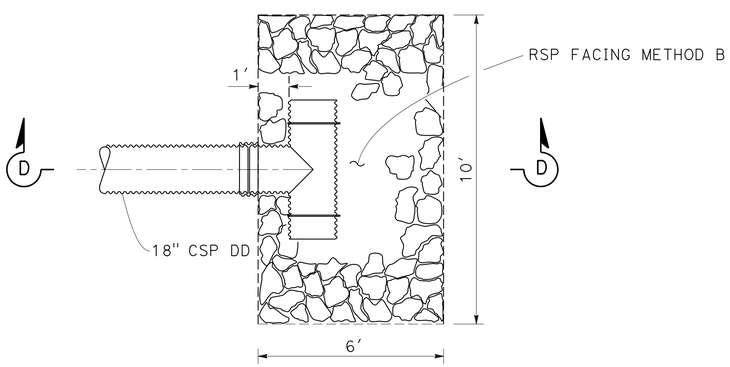

PLAN VIEW

RSP AT DOWNDRAIN OUTFALL

2 i

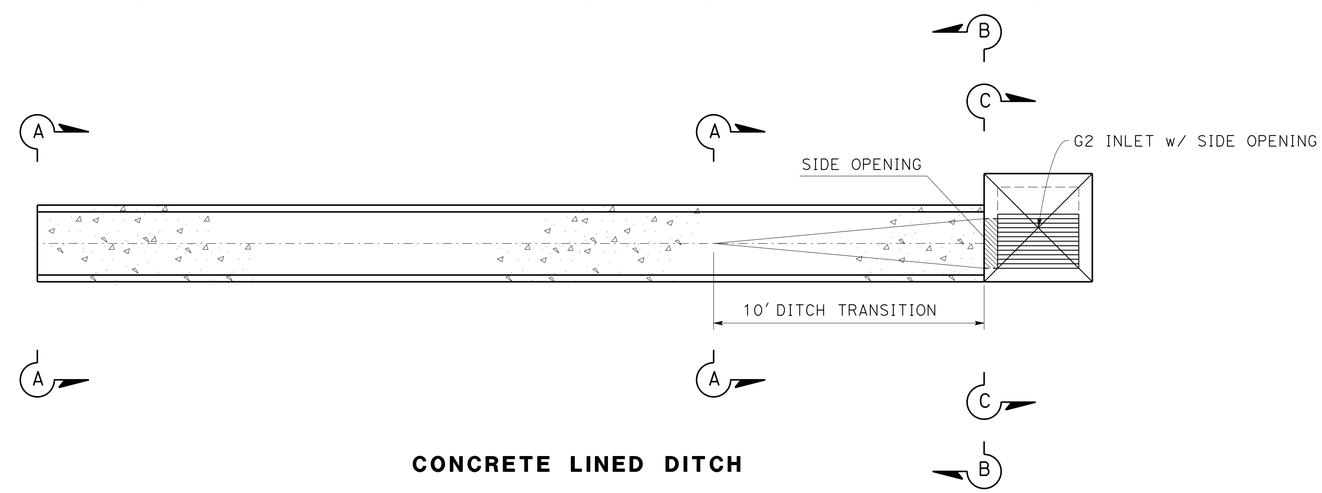

CONCRETE LINED DITCH

2 f

DRAINAGE DETAILS

NO SCALE

DD-1

STATE OF CALIFORNIA - DEPARTMENT OF TRANSPORTATION
Caltrans DESIGN

FUNCTIONAL SUPERVISOR: HILLAL HAMDAN
CALCULATED-DESIGNED BY: KANWARJIT GONDARA
CHECKED BY: HILLAL HAMDAN
REVISED BY: HB
DATE REVISED: 7/23/15

LAST REVISION 10-26-15
DATE PLOTTED => 30-NOV-2015
TIME PLOTTED => 09:40

Dist	COUNTY	ROUTE	POST MILES TOTAL PROJECT	SHEET No.	TOTAL SHEETS
04	Mrn	580	2.7	11	30

REGISTERED CIVIL ENGINEER 10/2/15 DATE

10-26-15
PLANS APPROVAL DATE

REGISTERED PROFESSIONAL ENGINEER Hassen Bolanos No. 76522 Exp. 12-31-16 CIVIL STATE OF CALIFORNIA

THE STATE OF CALIFORNIA OR ITS OFFICERS OR AGENTS SHALL NOT BE RESPONSIBLE FOR THE ACCURACY OR COMPLETENESS OF SCANNED COPIES OF THIS PLAN SHEET.

ABBREVIATIONS:

D DOWNDRAIN JOINT TYPE
S STANDARD JOINT TYPE
w/ WITH

DRAINAGE QUANTITIES

DRAINAGE SHEET No.	DRAINAGE SYSTEM No. ⬡	DRAINAGE UNIT ○	REMOVE CULVERT (LF)	REMOVE FES (EA)	DITCH EXCAVATION (CY)	MINOR CONCRETE (MINOR STRUCTURE) (CY)	CONCRETE (DITCH LINING) (CY)	MISCELLANEOUS IRON AND STEEL (LB)	12" CSP 0.064" THICK (LF)	18" CSP 0.064" THICK WITH POLYMERIC SHEET COATING (LF)	RSP FACING METHOD B (CY)	RSP FABRIC (CLASS 8) (SF)	18" ANCHOR ASSEMBLIES (EA)	TYPE 24-9 FRAME AND GRATE (N) (EA)	PIPE JOINT CLASSIFICATION (N) (EA)	HEIGHT OF INLET (N) (LF)	DESCRIPTION	STATION	DRAINAGE SYSTEM No. ⬡	DRAINAGE UNIT ○
D-1	1	a				1.1		263						1		3.50	G1 DI	R† "A" 21+27.1	1	a
		b							4.0						S		12" x 4' CSP	R† "A" 21+21 TO 129.24' R† "A" 21+25		b
		c	10.0														REMOVE PIPE (PORTION)	R† "A" 21+21		c
		d	50.8														REMOVE PIPE	R† "A" 21+21 TO 134.34' R† "A" 21+72		d
		e								112.2			10		D		18" x 112.2' CSP DD w/ TEE AND ANCHOR ASSEMBLIES @ 20' C-C	R† "A" 21+27.1 TO 30.35' R† "A" 21+19		e
		f	15.6														REMOVE PIPE	R† "A" 21+64 TO 131.56' R† "A" 21+74		f
		g		1													REMOVE FES	R† "A" 21+64		g
D-1	2	a	40.1														REMOVE PIPE	R† "A" 21+94 TO 61.27' R† "A" 22+18	2	a
		b	37.5														REMOVE PIPE	R† "A" 27+79 TO 112.94' R† "A" 22+00		b
		c	54.8														REMOVE PIPE	R† "A" 22+00 TO 61.27' R† "A" 22+18		c
		d	25.6														REMOVE PIPE	R† "A" 22+03 TO 124.15' R† "A" 22+17		d
		e		1													REMOVE FES	R† "A" 22+17		e
		f			4.75		1.1										Conc LINED DITCH	R† "A" 22+01 TO 127.86' R† "A" 22+36		f
		g				1.31		263						1		3.00	G2 DI w/ SIDE OPENING	R† "A" 22+38		g
		h								93.5			9		D		18" x 93.5' CSP DD w/ TEE AND ANCHOR ASSEMBLIES @ 20' C-C	R† "A" 22+38 TO 54.28' R† "A" 22+79		h
		i									4.45	168					RSP	R† "A" 22+79		i
SHEET TOTAL			234.4	2	4.75	2.4	1.1	526	4.0	205.7	4.45	168	19	2			SHEET TOTAL			

(N) NOT A SEPARATE PAY ITEM, FOR INFORMATION ONLY

CALCULATED-DESIGNED BY HASSEN BOLANOS
CHECKED BY HILLAL HAMDAN
REVISED BY HB
DATE REVISED 8/6/15
FUNCTIONAL SUPERVISOR HILLAL HAMDAN

STATE OF CALIFORNIA - DEPARTMENT OF TRANSPORTATION
Caltrans DESIGN

DRAINAGE QUANTITIES DQ-1

LAST REVISION 10-26-15 DATE PLOTTED => 30-NOV-2015 TIME PLOTTED => 09:40

Dist	COUNTY	ROUTE	POST MILES TOTAL PROJECT	SHEET No.	TOTAL SHEETS
04	Mrn	580	2.7	12	30

10/2/15
REGISTERED CIVIL ENGINEER DATE

10-26-15
PLANS APPROVAL DATE

REGISTERED PROFESSIONAL ENGINEER
Hassen Bolanos
No. 76522
Exp. 12-31-16
CIVIL
STATE OF CALIFORNIA

THE STATE OF CALIFORNIA OR ITS OFFICERS OR AGENTS SHALL NOT BE RESPONSIBLE FOR THE ACCURACY OR COMPLETENESS OF SCANNED COPIES OF THIS PLAN SHEET.

NOTE:

FOR ACCURATE RIGHT OF WAY DATA, CONTACT RIGHT OF WAY ENGINEERING AT THE DISTRICT OFFICE.

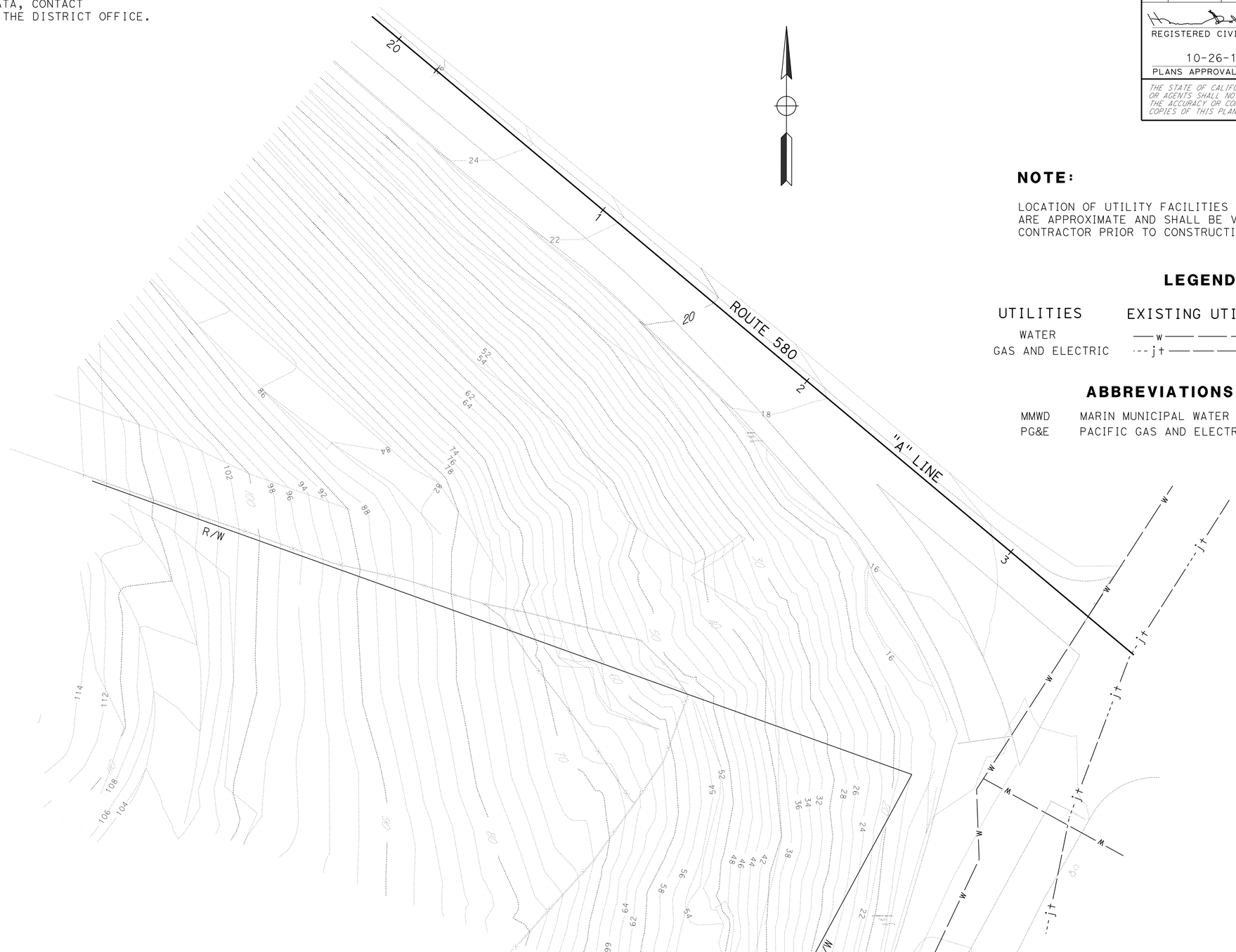

NOTE:

LOCATION OF UTILITY FACILITIES SHOWN ON THESE PLANS ARE APPROXIMATE AND SHALL BE VERIFIED BY THE CONTRACTOR PRIOR TO CONSTRUCTION.

LEGEND:

UTILITIES	EXISTING UTILITIES	OWNERSHIP
WATER	—— w —— —— —— w ——	MMWD
GAS AND ELECTRIC	--- jt —— —— —— --- jt —	PG&E

ABBREVIATIONS:

MMWD	MARIN MUNICIPAL WATER DISTRICT
PG&E	PACIFIC GAS AND ELECTRIC

UTILITY PLAN

SCALE: 1" = 20'

THIS PLAN TO BE USED FOR UTILITY INFORMATION ONLY

U-1

REVISED BY	HB
DATE REVISED	3/26/15
HASSEN BOLANOS	
HILLAL HAMDAN	
CALCULATED-DESIGNED BY	
CHECKED BY	
FUNCTIONAL SUPERVISOR	
HILLAL HAMDAN	

STATE OF CALIFORNIA - DEPARTMENT OF TRANSPORTATION
Caltrans
DESIGN

LAST REVISION 10-26-15
DATE PLOTTED => 30-NOV-2015
TIME PLOTTED => 09:41

Dist	COUNTY	ROUTE	POST MILES TOTAL PROJECT	SHEET No.	TOTAL SHEETS
04	Mrn	580	2.7	13	30

REGISTERED CIVIL ENGINEER 8/19/15 DATE

10-26-15
PLANS APPROVAL DATE

REGISTERED PROFESSIONAL ENGINEER
Jerilyn L. Struven
No. 49964
Exp. 12-31-16
CIVIL
STATE OF CALIFORNIA

THE STATE OF CALIFORNIA OR ITS OFFICERS OR AGENTS SHALL NOT BE RESPONSIBLE FOR THE ACCURACY OR COMPLETENESS OF SCANNED COPIES OF THIS PLAN SHEET.

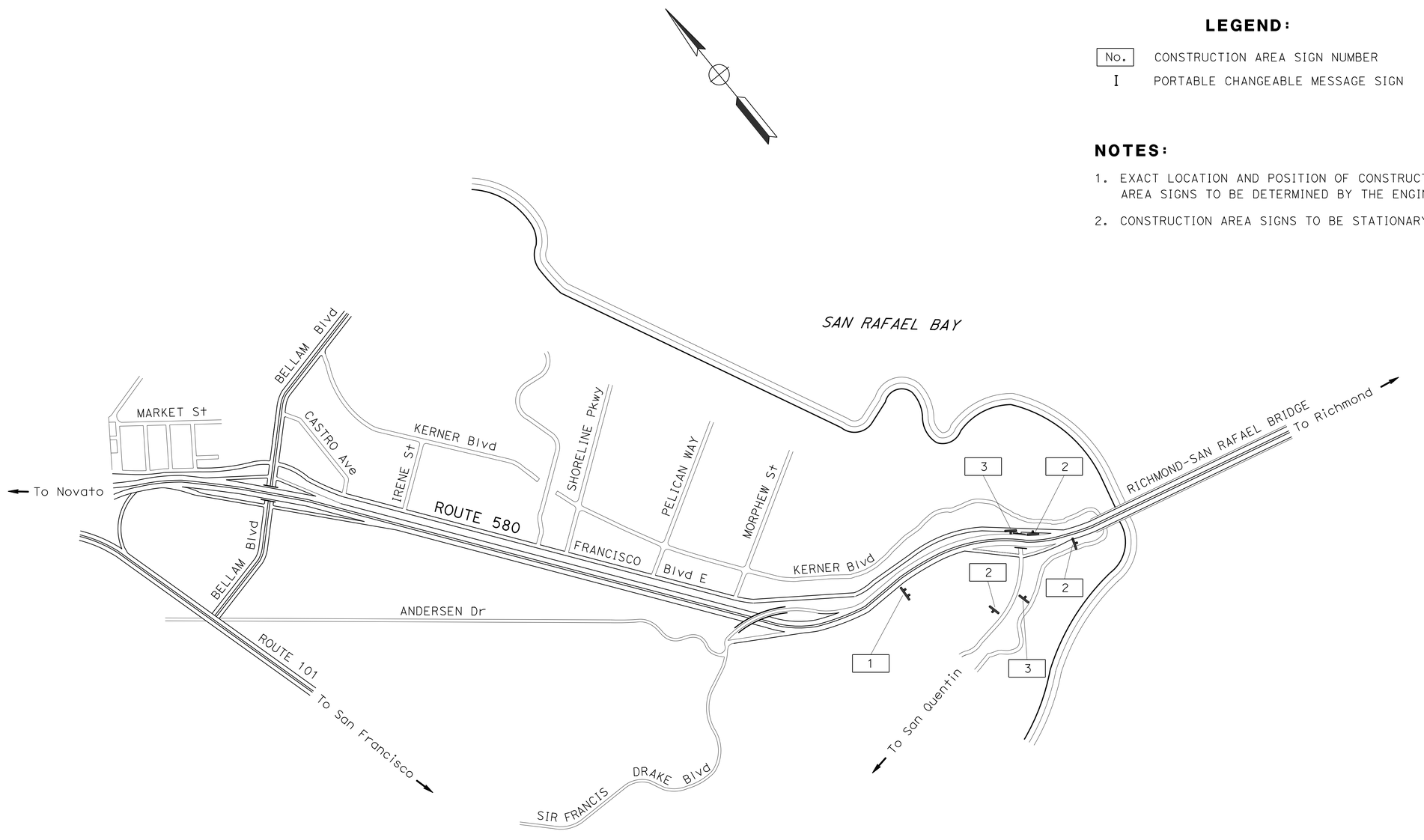

LEGEND:

No.	CONSTRUCTION AREA SIGN NUMBER
I	PORTABLE CHANGEABLE MESSAGE SIGN

NOTES:

1. EXACT LOCATION AND POSITION OF CONSTRUCTION AREA SIGNS TO BE DETERMINED BY THE ENGINEER.
2. CONSTRUCTION AREA SIGNS TO BE STATIONARY MOUNTED.

CONSTRUCTION AREA SIGNS

NO SCALE

APPROVED FOR CONSTRUCTION AREA SIGN WORK ONLY

CS-1

STATE OF CALIFORNIA - DEPARTMENT OF TRANSPORTATION
Caltrans®
TRAFFIC

FUNCTIONAL SUPERVISOR: ROLAND AU-YEUNG

CALCULATED-DESIGNED BY: HERMINIO S. RUIDERA
CHECKED BY: JERILYN L. STRUVEN

REVISED BY: HR
DATE REVISED: 10/15/15

LAST REVISION 10-26-15 | DATE PLOTTED => 30-NOV-2015 | TIME PLOTTED => 09:41

Dist	COUNTY	ROUTE	POST MILES TOTAL PROJECT	SHEET No.	TOTAL SHEETS
04	Mrn	580	2.7	14	30

REGISTERED CIVIL ENGINEER 8/19/15 DATE

10-26-15
PLANS APPROVAL DATE

REGISTERED PROFESSIONAL ENGINEER Jerilyn L. Struven No. 49964 Exp. 12-31-16 CIVIL STATE OF CALIFORNIA

THE STATE OF CALIFORNIA OR ITS OFFICERS OR AGENTS SHALL NOT BE RESPONSIBLE FOR THE ACCURACY OR COMPLETENESS OF SCANNED COPIES OF THIS PLAN SHEET.

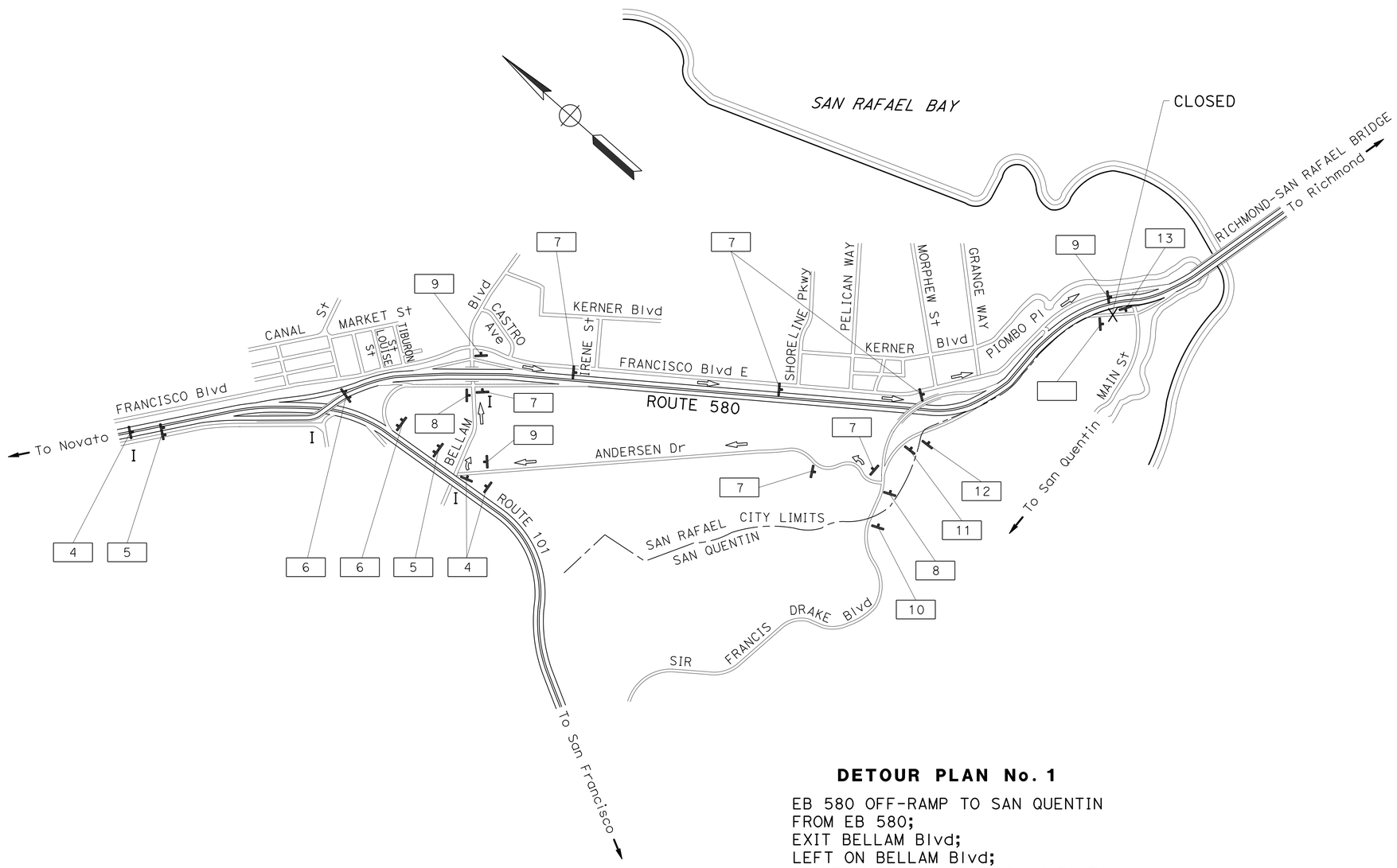

DETOUR PLAN No. 1

EB 580 OFF-RAMP TO SAN QUENTIN
FROM EB 580;
EXIT BELLAM Blvd;
LEFT ON BELLAM Blvd;
RIGHT ONTO FRANCISCO Blvd EAST;
RIGHT ONTO SAN QUENTIN TERRACE;
CONTINUE TO MAIN St

CONSTRUCTION AREA SIGNS

NO SCALE

APPROVED FOR CONSTRUCTION AREA SIGN WORK ONLY

FOR NOTES, ABBREVIATIONS AND LEGEND, SEE SHEET CS-1

CS-2

STATE OF CALIFORNIA - DEPARTMENT OF TRANSPORTATION
Caltrans
TRAFFIC

FUNCTIONAL SUPERVISOR: ROLAND AU-YEUNG
CALCULATED-DESIGNED BY: HERMINIO S. RUIDERA
CHECKED BY: JERILYN L. STRUVEN
REVISED BY: HR
DATE REVISED: 8/31/15

LAST REVISION | DATE PLOTTED => 30-NOV-2015
10-26-15 | TIME PLOTTED => 09:41

Dist	COUNTY	ROUTE	POST MILES TOTAL PROJECT	SHEET No.	TOTAL SHEETS
04	Mrn	580	2.7	15	30

REGISTERED CIVIL ENGINEER 8/19/15 DATE

10-26-15
PLANS APPROVAL DATE

REGISTERED PROFESSIONAL ENGINEER Jerilyn L. Struven No. 49964 Exp. 12-31-16 CIVIL STATE OF CALIFORNIA

THE STATE OF CALIFORNIA OR ITS OFFICERS OR AGENTS SHALL NOT BE RESPONSIBLE FOR THE ACCURACY OR COMPLETENESS OF SCANNED COPIES OF THIS PLAN SHEET.

CONSTRUCTION AREA SIGNS

SIGN No.	SIGN CODE	MESSAGE	PANEL SIZE	NUMBER OF POST AND SIZE	No. OF SIGNS	REMARKS
1	W20-2	ROAD WORK AHEAD	60" x 60"	2 - 4" x 6"	1	
2	G20-2	END ROAD WORK	36" x 18"	1 - 4" x 4"	3	
3	W20-2	ROAD WORK AHEAD	48" x 48"	1 - 4" x 6"	2	
4	W20-2	DETOUR AHEAD	48" x 48"	1 - 4" x 6"	3	
5	G83 (CA)		96" x 54"	2 - 4" x 6"	2	SEE DETAILS
6	M4-8	DETOUR	30" x 15"	2 - 4" x 6"	2	SEE DETAILS
	G8 (CA)		96" x 42"			
7	M4-8	DETOUR	24" x 12"	1 - 4" x 6"	6	SEE DETAILS
	G8 (CA)		44" x 18"			
	M4-9C (L OR R)	BICYCLE DETOUR	24" x 18"			
8	M4-8	DETOUR	24" x 12"	1 - 4" x 6"	2	SEE DETAILS
	G8 (CA)		44" x 18"			
	M4-9C (L OR R)	BICYCLE DETOUR	24" x 18"			
9	M4-8	DETOUR	24" x 12"	1 - 4" x 6"	3	SEE DETAILS
	G8 (CA)		44" x 18"			
	M4-9C (L OR R)	BICYCLE DETOUR	24" x 12"			
10	W20-3	RAMP CLOSED AHEAD	48" x 48"	1 - 4" x 6"	1	SEE DETAILS
	D3-1	MAIN ST	30" x 24"			
	R5-6	(NO BICYBLE)	24" x 18"			
11	R5-6	(NO BICYBLE)	24" x 18"	1 - 4" x 4"	1	
12	M4-9C (L OR R)	BICYCLE DETOUR			1	COVERED
	D6-2	↗				
13	M4-8a	END DETOUR	24" x 12"	1 - 4" x 4"	1	
A	SC6-4 (CA)	RAMP CLOSED DATE - TIME	48" x 60"	1 - 4" x 6"	1	

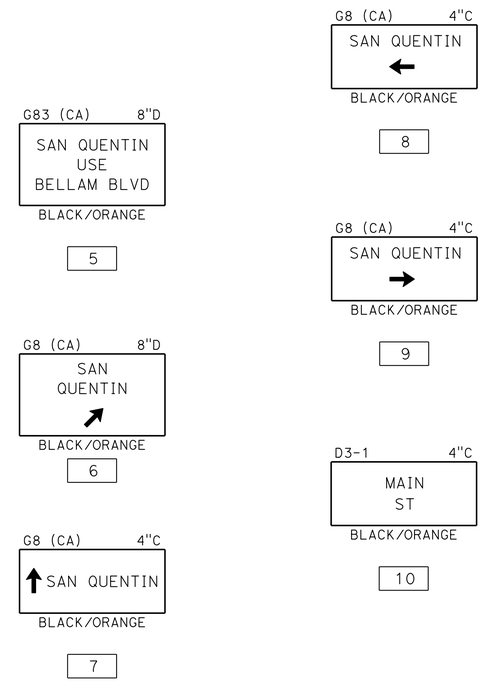

DETAILS

CONSTRUCTION AREA SIGNS

NO SCALE

APPROVED FOR CONSTRUCTION AREA SIGN WORK ONLY

CS-3

STATE OF CALIFORNIA - DEPARTMENT OF TRANSPORTATION
Caltrans® TRAFFIC

FUNCTIONAL SUPERVISOR: ROLAND AU-YEUNG
CALCULATED-DESIGNED BY: HERMINIO S. RUIDERA
CHECKED BY: JERILYN L. STRUVEN
REVISED BY: HR
DATE REVISED: 10/15/15

LAST REVISION 10-26-15
DATE PLOTTED => 30-NOV-2015
TIME PLOTTED => 09:41

Dist	COUNTY	ROUTE	POST MILES TOTAL PROJECT	SHEET No.	TOTAL SHEETS
04	Mrn	580	2.7	16	30

REGISTERED CIVIL ENGINEER 8/19/15 DATE

10-26-15
PLANS APPROVAL DATE

REGISTERED PROFESSIONAL ENGINEER
Jerilyn L. Struven
No. 49964
Exp. 12-31-16
CIVIL
STATE OF CALIFORNIA

THE STATE OF CALIFORNIA OR ITS OFFICERS OR AGENTS SHALL NOT BE RESPONSIBLE FOR THE ACCURACY OR COMPLETENESS OF SCANNED COPIES OF THIS PLAN SHEET.

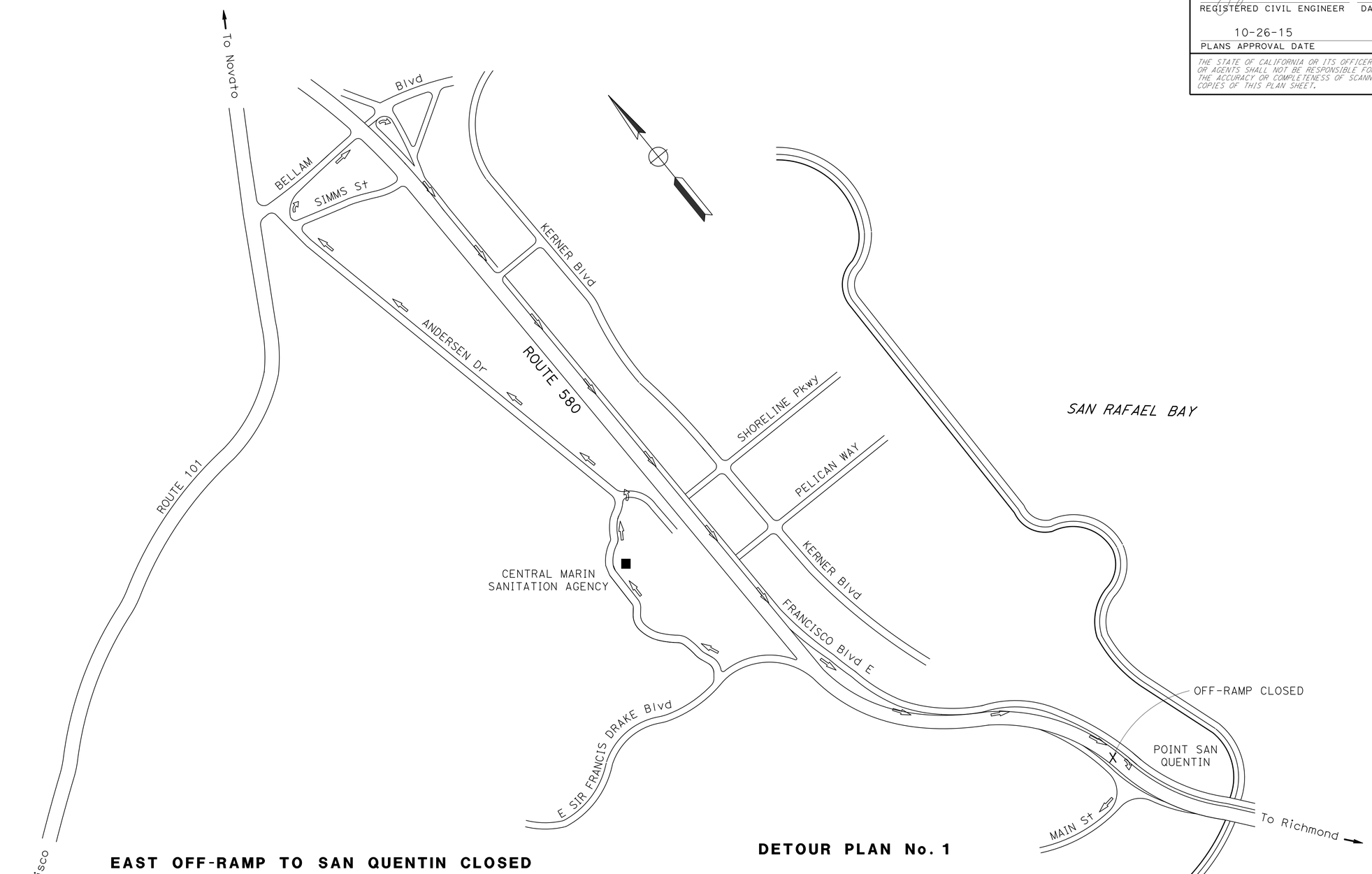

DETOUR PLAN No. 1

EAST OFF-RAMP TO SAN QUENTIN CLOSED

FROM EAST SIR FRANCIS DRAKE Blvd
LEFT ON ANDERSON Dr
RIGHT ON BELLAM Blvd
RIGHT ONTO FRANCISCO Blvd E
RIGHT ONTO SAN QUENTIN TERRACE
CONTINUE TO MAIN St

CONSTRUCTION AREA SIGNS

NO SCALE

APPROVED FOR CONSTRUCTION AREA SIGN WORK ONLY

CS-4

STATE OF CALIFORNIA - DEPARTMENT OF TRANSPORTATION
Caltrans®
TRAFFIC

FUNCTIONAL SUPERVISOR: ROLAND AU-YEUNG
CALCULATED-DESIGNED BY: HERMINIO S. RUIDERA
CHECKED BY: JERILYN L. STRUVEN
REVISED BY: HR
DATE REVISED: 8/5/15

LAST REVISION 10-26-15
DATE PLOTTED => 30-NOV-2015
TIME PLOTTED => 09:41

Dist	COUNTY	ROUTE	POST MILES TOTAL PROJECT	SHEET No.	TOTAL SHEETS
04	Mrn	580	2.7	17	30

REGISTERED CIVIL ENGINEER 10/2/15 DATE

10-26-15
PLANS APPROVAL DATE

REGISTERED PROFESSIONAL ENGINEER Hassen Bolanos No. 76522 Exp. 12-31-16 CIVIL STATE OF CALIFORNIA

THE STATE OF CALIFORNIA OR ITS OFFICERS OR AGENTS SHALL NOT BE RESPONSIBLE FOR THE ACCURACY OR COMPLETENESS OF SCANNED COPIES OF THIS PLAN SHEET.

NOTE:

FOR ACCURATE RIGHT OF WAY DATA, CONTACT RIGHT OF WAY ENGINEERING AT THE DISTRICT OFFICE.

NOTES:

1. REFER TO MUTCD PART 6, FIGURE 6H-5 (CA) FOR TEMPORARY RAILING LAYOUT WITH SURFACE MOUNTED CHANNELIZERS AND ADVANCED WARNING SIGNS.
2. PLACE CHANNELIZERS EVERY 15'.

LEGEND:

● CHANNELIZERS

TACC TEMPORARY ALTERNATIVE CRASH CUSHION

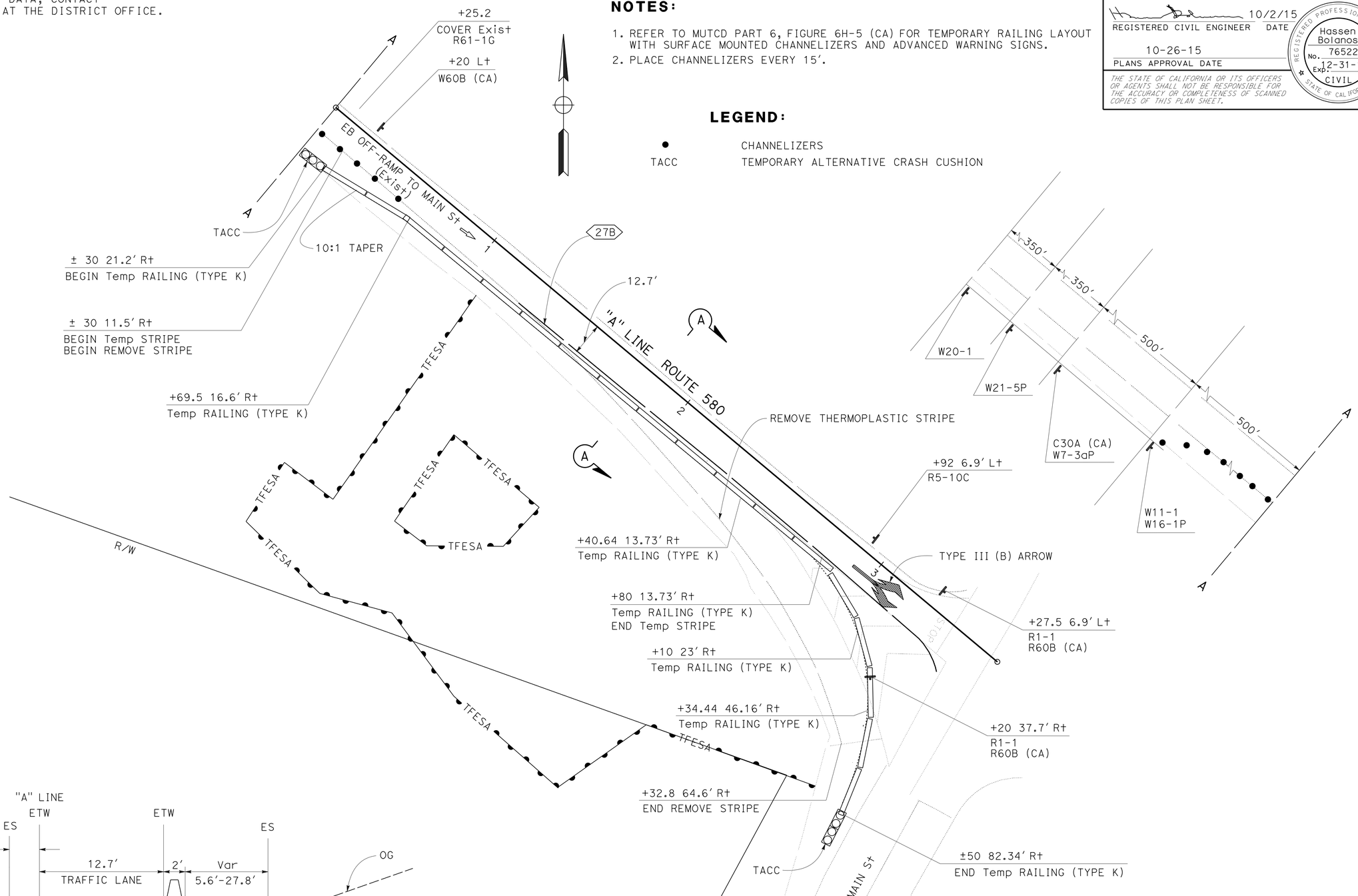

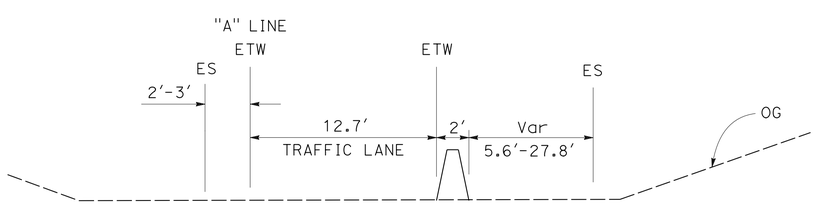

SECTION A-A
"A" 21+40 TO 22+20

STAGE CONSTRUCTION PLAN
STAGE 1
SCALE: 1" = 20'

APPROVED FOR STAGE CONSTRUCTION WORK ONLY

SC-1

STATE OF CALIFORNIA - DEPARTMENT OF TRANSPORTATION
Caltrans
DESIGN

FUNCTIONAL SUPERVISOR: HILLAL HAMDAN

CALCULATED-DESIGNED BY: HASSEN BOLANOS
CHECKED BY: HILLAL HAMDAN

REVISED BY: HB
DATE REVISED: 10/15/15

LAST REVISION 10-26-15
DATE PLOTTED => 30-NOV-2015
TIME PLOTTED => 09:41

Dist	COUNTY	ROUTE	POST MILES TOTAL PROJECT	SHEET No.	TOTAL SHEETS
04	Mrn	580	2.7	18	30

REGISTERED CIVIL ENGINEER 9/23/15 DATE

10-26-15
PLANS APPROVAL DATE

REGISTERED PROFESSIONAL ENGINEER Hung Q. Tran No. 51897 Exp. 6-30-16 CIVIL STATE OF CALIFORNIA

THE STATE OF CALIFORNIA OR ITS OFFICERS OR AGENTS SHALL NOT BE RESPONSIBLE FOR THE ACCURACY OR COMPLETENESS OF SCANNED COPIES OF THIS PLAN SHEET.

NOTE:

FOR ACCURATE RIGHT OF WAY DATA, CONTACT RIGHT OF WAY ENGINEERING AT THE DISTRICT OFFICE.

LEGEND:

- I DELINEATOR
- F CLASS 1 DELINEATOR (TYPE F)
- G CLASS 1 DELINEATOR (TYPE G)
- ROADSIDE SIGN (WOOD POST)

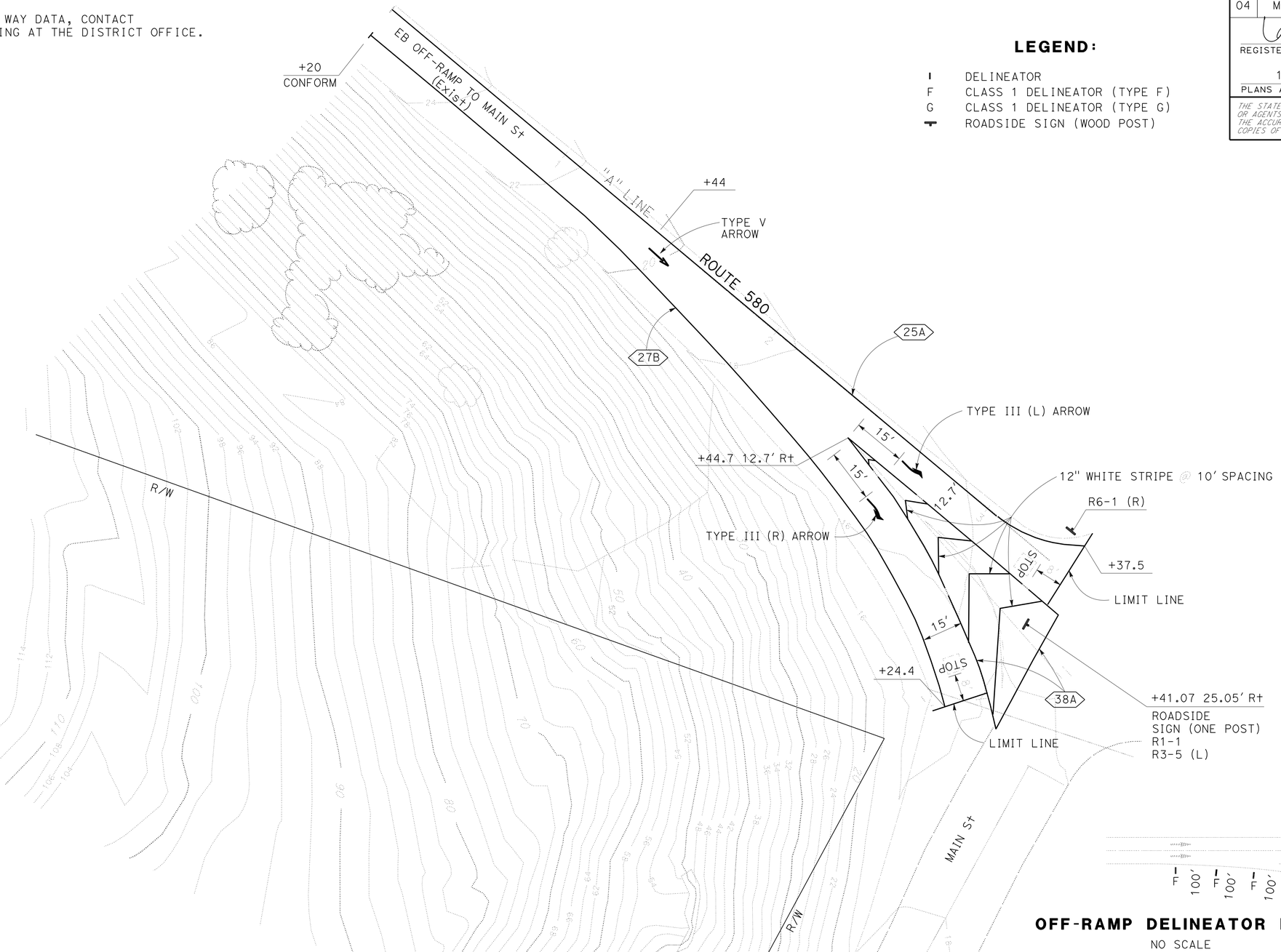

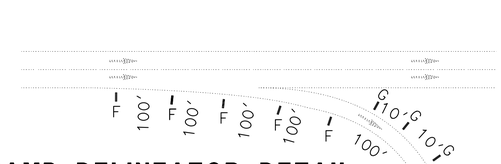

OFF-RAMP DELINEATOR DETAIL

NO SCALE

PAVEMENT DELINEATION PLAN

SCALE: 1" = 20'

APPROVED FOR PAVEMENT DELINEATION WORK ONLY

PD-1

STATE OF CALIFORNIA - DEPARTMENT OF TRANSPORTATION	Caltrans®
DESIGN	
FUNCTIONAL SUPERVISOR	HILLAL HAMDAN
CALCULATED-DESIGNED BY	HASSEN BOLANOS
CHECKED BY	HILLAL HAMDAN
REVISED BY	HB
DATE REVISED	9/25/15

LAST REVISION 10-26-15 | DATE PLOTTED => 30-NOV-2015 | TIME PLOTTED => 09:41

Dist	COUNTY	ROUTE	POST MILES TOTAL PROJECT	SHEET No.	TOTAL SHEETS
04	Mrn	580	2.7	19	30

REGISTERED CIVIL ENGINEER 10/2/15 DATE

10-26-15
PLANS APPROVAL DATE

REGISTERED PROFESSIONAL ENGINEER Hassen Bolanos No. 76522 Exp. 12-31-16 CIVIL STATE OF CALIFORNIA

THE STATE OF CALIFORNIA OR ITS OFFICERS OR AGENTS SHALL NOT BE RESPONSIBLE FOR THE ACCURACY OR COMPLETENESS OF SCANNED COPIES OF THIS PLAN SHEET.

TRAFFIC STRIPES, PAVEMENT MARKINGS AND PAVEMENT MARKERS (STAGE CONSTRUCTION)

SHEET No.	STATION LIMITS	DETAIL No. OR DESCRIPTION	REMOVE THERMOPLASTIC TRAFFIC STRIPE		TEMPORARY TRAFFIC STRIPE (PAINT)	TEMPORARY PAVEMENT MARKING (PAINT)	REMOVE THERMO-PLASTIC PAVEMENT MARKING	REMOVE PAVEMENT MARKER
			4" YELLOW (HAZARDOUS WASTE)	4" WHITE	4" WHITE			
			LF			SQFT		EA
PD-1	"A" 22+44 TO 23+55	38A		534				
	"A" 20+20 TO 23+55	27B		320				
	"A" 20+20 TO 23+55	25A	325					13
	"A" 23+37	LIMIT LINE					30	
	"A" 23+37	LIMIT LINE					21	
	"A" 22+73 TO 23+37	"CHEVRONS"					135	
	"A" 21+57	TYPE V ARROW					33	
	"A" 23+02	TYPE V ARROW					33	
	"A" 23+60	TYPE III (L) ARROW					42	
	"A" 23+27	STOP					22	
	"A" 23+27	STOP					22	
	"A" 20+20 TO 22+40				227			
	"A" 21+57	TYPE V ARROW				33		
TOTAL			325	854	227	33	338	13

TRAFFIC STRIPES, PAVEMENT MARKINGS AND PAVEMENT MARKERS

SHEET No.	STATION LIMITS	DETAIL No. OR DESCRIPTION	THERMOPLASTIC TRAFFIC STRIPE			PAVEMENT MARKER RETROREFLECTIVE	THERMOPLASTIC PAVEMENT MARKING	DELINEATOR (CLASS 1)	
			4" YELLOW	4" WHITE	8" WHITE	TYPE H		TYPE F	TYPE G
			LF			EA	SQFT	EA	
PD-1	"A" 22+44 TO 23+55	38A			267				
	"A" 20+20 TO 23+55	27B		320					
	"A" 20+20 TO 23+55	25A	325			13			
	"A" 23+37	LIMIT LINE					30		
	"A" 23+37	LIMIT LINE					21		
	"A" 22+73 TO 23+37	"CHEVRONS"					135		
	"A" 21+57	TYPE V ARROW					33		
	"A" 23+02	TYPE V ARROW					33		
	"A" 23+60	TYPE III (L) ARROW					42		
	"A" 23+27	STOP					22		
	"A" 23+27	STOP					22		
	SEE DETAIL 2 (SHEET PD-1)							6	
	SEE DETAIL 2 (SHEET PD-1)								3
SUBTOTAL			325	320	267	13	338	6	3
TOTAL			645		267	13	338	9	

PAVEMENT DELINEATION QUANTITIES

PDQ-1

STATE OF CALIFORNIA - DEPARTMENT OF TRANSPORTATION
Caltrans
DESIGN

FUNCTIONAL SUPERVISOR: HILLAL HAMDAN
CALCULATED-DESIGNED BY: HASSEN BOLANOS
CHECKED BY: HILLAL HAMDAN
REVISED BY: HB
DATE REVISED: 10/15/15

LAST REVISION 10-26-15
DATE PLOTTED => 30-NOV-2015
TIME PLOTTED => 09:41

Dist	COUNTY	ROUTE	POST MILES TOTAL PROJECT	SHEET No.	TOTAL SHEETS
04	Mrn	580	2.7	20	30

REGISTERED CIVIL ENGINEER DATE 10/2/15

PLANS APPROVAL DATE 10-26-15

REGISTERED PROFESSIONAL ENGINEER Hassen Bolanos No. 76522 Exp. 12-31-16 CIVIL STATE OF CALIFORNIA

THE STATE OF CALIFORNIA OR ITS OFFICERS OR AGENTS SHALL NOT BE RESPONSIBLE FOR THE ACCURACY OR COMPLETENESS OF SCANNED COPIES OF THIS PLAN SHEET.

TEMPORARY CRASH CUSHION (ABSORB 350)

SHEET No.	STATION LIMITS	DIRECTION	TEMPORARY IN-LINE CRASH CUSHION
			EA
SC-1	R† "A" 20+20	EB	1
SC-1	R† "A" 23+50	EB	1
TOTAL			2

UNDERDRAIN QUANTITIES

SHEET No.	STATION LIMITS*	DIRECTION	8" PSP UNDERDRAIN (0.064" THICK)	CLASS 3 PERMEABLE MATERIAL (BLANKET)
			LF	CY
L-1	R† "A" 22+16 TO 23+24	EB	135	14.8
TOTAL			135	14.8

* EXACT LOCATION TO BE DETERMINED BY THE ENGINEER.

REMOVE CHAIN LINK FENCE

SHEET No.	STATION LIMITS	LF
L-1	R† "A" 21+60 TO 22+48	121
TOTAL		121

TEMPORARY FENCE (TYPE ESA)

STATION LIMITS	LF
"A" 20+80 TO 23+50	460
TOTAL	460

ROADSIDE SIGN QUANTITY

SHEET No.	STATION LIMITS	REMOVE ROADSIDE SIGN	ROADSIDE SIGN (ONE POST)
		EA	
SC-1	R† "A" 23+42.8	1	
PD-1	R† "A" 23+42.8		1
TOTAL		1	1

EARTHWORK QUANTITY

SHEET No.	STATION LIMITS	LOCATION	ROADWAY EXCAVATION	LOCAL TOPSOIL (N)
			CY	
L-1	"A" 22+00 TO 22+40	R†	494.5	158
TOTAL			652.5	158

(N) NOT A SEPARATE PAY ITEM, FOR INFORMATION ONLY

TRAFFIC CONTROL

SHEET No.	STATION LIMITS	DIRECTION	TEMPORARY RAILING (TYPE K)	CHANNELIZERS (SURFACE MOUNTED)
			LF	EA
SC-1	"A" 20+30± TO 23+50±	EB	330	38
TOTAL			330	38

ROCK SLOPE PROTECTION

SHEET No.	STATION LIMITS	LOCATION	(FABRIC CLASS 8)	(1/4 TON FACING METHOD B)
			SQYD	CY
L-1	"A" 22+00 TO 22+40	R†	327	397.9
DQ-1	"A" 22+79	R†	168	
TOTAL			495	397.9

SUMMARY OF QUANTITIES

Q-1

STATE OF CALIFORNIA - DEPARTMENT OF TRANSPORTATION

Caltrans® DESIGN

FUNCTIONAL SUPERVISOR HILLAL HAMDAN

CALCULATED-DESIGNED BY HASSEN BOLANOS | CHECKED BY HILLAL HAMDAN

REVISED BY HB | DATE REVISED 10/15/15

LAST REVISION 10-26-15 | DATE PLOTTED => 30-NOV-2015 | TIME PLOTTED => 09:41

Dist	COUNTY	ROUTE	POST MILES TOTAL PROJECT	SHEET No.	TOTAL SHEETS
04	Mrn	580	2.7	21	30

LICENSED LANDSCAPE ARCHITECT

10-26-15
PLANS APPROVAL DATE

LICENSED LANDSCAPE ARCHITECT
CHRIS PADICK No. 4255
Signature
11-30-16
Renewal Date
07-16-15
Date
STATE OF CALIFORNIA

THE STATE OF CALIFORNIA OR ITS OFFICERS OR AGENTS SHALL NOT BE RESPONSIBLE FOR THE ACCURACY OR COMPLETENESS OF SCANNED COPIES OF THIS PLAN SHEET.

EROSION CONTROL TYPE 1

SEQUENCE	ITEM	MATERIAL DESCRIPTION	MATERIAL TYPE	APPLICATION RATE
STEP 1	COMPOST	COMPOST	MEDIUM	124 CY/ACRE
STEP 2	HYDROSEED	SEED	MIX 1	64 LB/ACRE
		FIBER	WOOD	2000 LB/ACRE
STEP 3	HYDROMULCH	FIBER	WOOD	2000 LB/ACRE
		TACKIFIER	PSYLLIUM	200 LB/ACRE

EROSION CONTROL TYPE 2

SEQUENCE	ITEM	MATERIAL DESCRIPTION	MATERIAL TYPE	APPLICATION RATE
STEP 1	COMPOST	COMPOST	MEDIUM	124 CY/ACRE
STEP 2	ROLLED EROSION CONTROL PRODUCT (NETTING)		A	
STEP 3	HYDROSEED	SEED	MIX 1	64 LB/ACRE
		FIBER	WOOD	2000 LB/ACRE
STEP 4	HYDROMULCH	FIBER	WOOD	2000 LB/ACRE
		TACKIFIER	PSYLLIUM	200 LB/ACRE

FIBER ROLLS

SEQUENCE	ITEM	MATERIAL DESCRIPTION	MATERIAL TYPE	REMARKS
FIBER ROLLS MUST BE INSTALLED BEFORE HYDROSEEDING AND AFTER COMPOST AND ROLLED EROSION CONTROL PRODUCT (NETTING)	FIBER ROLLS	FIBER ROLL	TYPE B 8" TO 10" Dia	TYPE 2 FIBER ROLL INSTALLATION

SEED MIX TYPE 1

SEED	BOTANICAL NAME (COMMON NAME)	PERCENT GERMINATION (MINIMUM)	POUNDS PURE LIVE SEED PER ACRE (SLOPE MEASUREMENT)
MIX 1	ACHILLEA MILLEFOLIUM[1] (WESTERN YARROW)	56	7
	BROMUS CARINATUS[1] (CALIFORNIA BROME)	75	9
	ELYMUS GLAUCUS, BERKELEY[1] (BLUE WILDRYE, BERKELEY)	56	10
	HORDEUM BRACHYANTHERUM[1] (MEADOW BARLEY)	53	10
	NASSELLA CERNUA (NODDING NEEDLEGRASS)	46	8
	NASSELLA PULCHRA (PURPLE NEEDLEGRASS)	53	10
	TRIFOLIUM WILDENOVII (TOMCAT CLOVER)	53	5
	VULPIA MICROSTACHYS (SMALL FESCUE)	53	5
	TOTALS		64

[1] SEED PRODUCED IN CALIFORNIA ONLY.

EROSION CONTROL LEGEND
ECL-1

REVISED BY	DATE REVISED
CP	11/3/15

CHRIS PADICK
ALEX MCDONALD

CALCULATED-DESIGNED BY
CHECKED BY

SENIOR LANDSCAPE ARCHITECT
DAVID YAM

STATE OF CALIFORNIA - DEPARTMENT OF TRANSPORTATION
Caltrans
WATER QUALITY

LAST REVISION 10-26-15
DATE PLOTTED => 30-NOV-2015
TIME PLOTTED => 09:41

Dist	COUNTY	ROUTE	POST MILES TOTAL PROJECT	SHEET No.	TOTAL SHEETS
04	Mrn	580	2.7	22	30

Chris Padick 10/2/15
LICENSED LANDSCAPE ARCHITECT

10-26-15
PLANS APPROVAL DATE

LICENSED LANDSCAPE ARCHITECT
CHRIS PADICK No. 4255
Signature
11-30-16
Renewal Date
07-16-15
Date
STATE OF CALIFORNIA

THE STATE OF CALIFORNIA OR ITS OFFICERS OR AGENTS SHALL NOT BE RESPONSIBLE FOR THE ACCURACY OR COMPLETENESS OF SCANNED COPIES OF THIS PLAN SHEET.

NOTE:

FOR ACCURATE RIGHT OF WAY DATA, CONTACT RIGHT OF WAY ENGINEERING AT THE DISTRICT OFFICE.

LEGEND:

EROSION CONTROL (TYPE 1)

COMPOST
HYDROSEED (SEED MIX 1)
HYDROMULCH
FIBER ROLLS

EROSION CONTROL (TYPE 2)

COMPOST
ROLLED EROSION CONTROL PRODUCE (NETTING)
HYDROSEED (SEED MIX 1)
HYDROMULCH

APPROVED FOR EROSION CONTROL WORK ONLY

EROSION CONTROL PLAN

SCALE: 1" = 20'

EC-1

STATE OF CALIFORNIA - DEPARTMENT OF TRANSPORTATION
Caltrans
WATER QUALITY

SENIOR LANDSCAPE ARCHITECT: DAVID YAM
CALCULATED-DESIGNED BY: CHRIS PADICK
CHECKED BY: ALEX MCDONALD
REVISED BY: CP
DATE REVISED: 11/3/15

LAST REVISION 10-26-15
DATE PLOTTED => 30-NOV-2015
TIME PLOTTED => 09:41

Dist	COUNTY	ROUTE	POST MILES TOTAL PROJECT	SHEET No.	TOTAL SHEETS
04	Mrn	580	2.7	23	30

LICENSED LANDSCAPE ARCHITECT

10-26-15
PLANS APPROVAL DATE

LICENSED LANDSCAPE ARCHITECT
CHRIS PADICK No. 4255
Signature
11-30-16
Renewal Date
07-16-15
Date
STATE OF CALIFORNIA

THE STATE OF CALIFORNIA OR ITS OFFICERS OR AGENTS SHALL NOT BE RESPONSIBLE FOR THE ACCURACY OR COMPLETENESS OF SCANNED COPIES OF THIS PLAN SHEET.

EROSION CONTROL QUANTITIES

SHEET	LOCATION	TYPE	HYDROSEED	HYDROMULCH	COMPOST	ROLLED EROSION CONTROL PRODUCT (NETTING)	FIBER ROLL
			SQFT				LF
EC-1	"A" 21+00 TO 23+50	1	20,000	20,000	20,000		900
EC-1	"A" 22+10 TO 22+50	2	3,700	3,700	3,700	3,700	
TOTAL			23,700	23,700	23,700	3,700	900

CALCULATED-DESIGNED BY CHRIS PADICK
CHECKED BY ALEX MCDONALD
REVISED BY CP
DATE REVISED 11/3/15
SENIOR LANDSCAPE ARCHITECT DAVID YAM

STATE OF CALIFORNIA - DEPARTMENT OF TRANSPORTATION
Caltrans
WATER QUALITY

EROSION CONTROL QUANTITIES
ECQ-1

LAST REVISION 10-26-15
DATE PLOTTED => 30-NOV-2015
TIME PLOTTED => 09:41

M

Maint	MAINTENANCE
Max	MAXIMUM
MB	METAL BEAM
MBB	METAL BEAM BARRIER
MBGR	METAL BEAM GUARD RAILING
Med	MEDIAN
MGS	MIDWEST GUARDRAIL SYSTEM
MH	MANHOLE
Min	MINIMUM
Misc	MISCELLANEOUS
Misc I & S	MISCELLANEOUS IRON AND STEEL
Mkr	MARKER
Mod	MODIFIED,
	MODIFY
Mon	MONUMENT
MP	METAL PLATE
MPGR	METAL PLATE GUARD RAILING
MR	MOVEMENT RATING
MSE	MECHANICALLY STABILIZED EMBANKMENT
Mt	MOUNTAIN, MOUNT
Mtl	MATERIAL
MVP	MAINTENANCE VEHICLE PULLOUT

N

N	NORTH
NB	NORTHBOUND
No.	NUMBER (MUST HAVE PERIOD)
Nos.	NUMBERS (MUST HAVE PERIOD)
NPS	NOMINAL PIPE SIZE
NS	NEAR SIDE
NSP	NEW STANDARD PLAN
NTS	NOT TO SCALE

O

Oblr	OBLITERATE
OC	OVERCROSSING
OD	OUTSIDE DIAMETER
OF	OUTSIDE FACE
OG	ORIGINAL GROUND
OGAC	OPEN GRADED ASPHALT CONCRETE
OGFC	OPEN GRADED FRICTION COURSE
OH	OVERHEAD
OHWM	ORDINARY HIGH WATER MARK
O-O	OUT TO OUT
Opp	OPPOSITE
OSD	OVERSIDE DRAIN

P

P	PAGE
PAP	PERFORATED ALUMINUM PIPE
PB	PULL BOX
PC	POINT OF CURVATURE,
	PRECAST
PCC	POINT OF COMPOUND CURVE,
	PORTLAND CEMENT CONCRETE
PCMS	PORTABLE CHANGEABLE MESSAGE SIGN
PCP	PERFORATED CONCRETE PIPE,
	PRESTRESSED CONCRETE PIPE
PCVC	POINT OF COMPOUND VERTICAL CURVE
PEC	PERMIT TO ENTER AND CONSTRUCT
Ped	PEDESTRIAN
Ped OC	PEDESTRIAN OVERCROSSING
Ped UC	PEDESTRIAN UNDERCROSSING
Perm Mtl	PERMEABLE MATERIAL

P continued

PG	PROFILE GRADE
PI	POINT OF INTERSECTION
PJP	PARTIAL JOINT PENETRATION
Pkwy	PARKWAY
ℙ,PL	PLATE
P/L	PROPERTY LINE
PM	POST MILE,
	TIME FROM NOON TO MIDNIGHT
PN	PAVING NOTCH
POC	POINT OF HORIZONTAL CURVE
POT	POINT OF TANGENT
POVC	POINT OF VERTICAL CURVE
PP	PIPE PILE,
	PLASTIC PIPE,
	POWER POLE
PPL	PREFORMED PERMEABLE LINER
PPP	PERFORATED PLASTIC PIPE
PRC	POINT OF REVERSE CURVE
PRF	PAVEMENT REINFORCING FABRIC
PRVC	POINT OF REVERSE VERTICAL CURVE
PS&E	PLANS, SPECIFICATIONS AND ESTIMATES
PS, P/S	PRESTRESSED
PSP	PERFORATED STEEL PIPE
PT	POINT OF TANGENCY
PVC	POLYVINYL CHLORIDE
Pvmt	PAVEMENT

Q

Qty	QUANTITY

R

R	RADIUS
R & D	REMOVE AND DISPOSE
R & S	REMOVE AND SALVAGE
R/C	RATE OF CHANGE
RCA	REINFORCED CONCRETE ARCH
RCB	REINFORCED CONCRETE BOX
RCP	REINFORCED CONCRETE PIPE
RCPA	REINFORCED CONCRETE PIPE ARCH
Rd	ROAD
Reinf	REINFORCED,
	REINFORCEMENT,
	REINFORCING
Rel	RELOCATE
Repl	REPLACEMENT
Ret	RETAINING
Rev	REVISED, REVISION
Rdwy	ROADWAY
RHMA	RUBBERIZED HOT MIX ASPHALT
Riv	RIVER
RM	ROAD-MIXED
RP	RADIUS POINT,
	REFERENCE POINT
RR	RAILROAD
RSP	ROCK SLOPE PROTECTION,
	REVISED STANDARD PLAN
Rt	RIGHT
Rte	ROUTE
RW	REDWOOD,
	RETAINING WALL
R/W	RIGHT OF WAY
Rwy	RAILWAY

S

S	SOUTH,
	SUPPLEMENT
SAE	STRUCTURE APPROACH EMBANKMENT
Salv	SALVAGE
SAPP	STRUCTURAL ALUMINUM PLATE PIPE
SB	SOUTHBOUND
SC	SAND CUSHION
SCSP	SLOTTED CORRUGATED STEEL PIPE
SD	STORM DRAIN
Sec	SECOND,
	SECTION
Sep	SEPARATION
SG	SUBGRADE
Shld	SHOULDER
Sht	SHEET
Sim	SIMILAR
℄	STATION LINE
SM	SELECTED MATERIAL
Spec	SPECIAL,
	SPECIFICATIONS
SPP	SLOTTED PLASTIC PIPE
SS	SLOPE STAKE
SSBM	STRAP AND SADDLE BRACKET METHOD
SSD	STRUCTURAL SECTION DRAIN
SSPA	STRUCTURAL STEEL PLATE ARCH
SSPP	STRUCTURAL STEEL PLATE PIPE
SSPPA	STRUCTURAL STEEL PLATE PIPE ARCH
SSRP	STEEL SPIRAL RIB PIPE
St	STREET
Sta	STATION
STBB	SINGLE THRIE BEAM BARRIER
Std	STANDARD
Str	STRUCTURE
Surf	SURFACING
SW	SIDEWALK,
	SOUND WALL
Swr	SEWER
Sym	SYMMETRICAL
S4S	SURFACE 4 SIDES

T

T	SEMI-TANGENT
Tan	TANGENT
TBB	THRIE BEAM BARRIER
Tbr	TIMBER
TC	TOP OF CURB
TCB	TRAFFIC CONTROL BOX
TCE	TEMPORARY CONSTRUCTION EASEMENT
Tel	TELEPHONE
Temp	TEMPORARY
TG	TOP OF GRADE
Tot	TOTAL
TP	TELEPHONE POLE
TPB	TREATED PERMEABLE BASE
TPM	TREATED PERMEABLE MATERIAL
Trans	TRANSITION

T continued

TS	TRANSVERSE,
	TRAFFIC SIGNAL,
	TUBULAR STEEL
Typ	TYPICAL

U

UC	UNDERCROSSING
UD	UNDERDRAIN
UG	UNDERGROUND
UON	UNLESS OTHERWISE NOTED
UP	UNDERPASS

V

V	VALVE,
	DESIGN SPEED
Var	VARIABLE,
	VARIES
VC	VERTICAL CURVE
VCP	VITRIFIED CLAY PIPE
Vert	VERTICAL
Via	VIADUCT
Vol	VOLUME

W

W	WEST,
	WIDTH
WB	WESTBOUND
WH	WEEP HOLE
WM	WIRE MESH
WS	WATER SURFACE
WSP	WELDED STEEL PIPE
Wt	WEIGHT
WV	WATER VALVE
WW	WINGWALL
WWLOL	WINGWALL LAYOUT LINE

X

X Sec	CROSS SECTION
Xing	CROSSING

Y

Yr	YEAR
Yrs	YEARS

Dist	COUNTY	ROUTE	POST MILES TOTAL PROJECT	SHEET No.	TOTAL SHEETS
04	Mrn	580	2.7	24	30

Grace M. Tsushima
REGISTERED CIVIL ENGINEER

April 20, 2012
PLANS APPROVAL DATE

REGISTERED PROFESSIONAL ENGINEER
Grace M. Tsushima
No. C49814
Exp. 9-30-14
CIVIL
STATE OF CALIFORNIA

THE STATE OF CALIFORNIA OR ITS OFFICERS OR AGENTS SHALL NOT BE RESPONSIBLE FOR THE ACCURACY OR COMPLETENESS OF SCANNED COPIES OF THIS PLAN SHEET.

TO ACCOMPANY PLANS DATED 10-26-15

UNIT OF MEASUREMENT SYMBOLS:

Some of the symbols used in the project plan quantity tables and in the Bid Item List are:

TABLE A

SYMBOL USED	DEFINITIONS
ACRE	ACRE
CF	CUBIC FOOT
CY	CUBIC YARD
EA	EACH
GAL	GALLON
LB	POUND
LF	LINEAR FOOT
SQFT	SQUARE FOOT
SQYD	SQUARE YARD
STA	100 FEET
TAB	TABLET
TON	2,000 POUNDS

Some of the symbols used in the plans other than in the project plan quantity tables are:

TABLE B

SYMBOL USED	DEFINITIONS
ksi	KIPS PER SQUARE INCH
ksf	KIPS PER SQUARE FOOT
psi	POUNDS PER SQUARE INCH
psf	POUNDS PER SQUARE FOOT
lb/ft^3, pcf	POUNDS PER CUBIC FOOT
tsf	TONS PER SQUARE FOOT
mph, MPH *	MILES PER HOUR
ø	NOMINAL DIAMETER
oz	OUNCE
lb	POUND
kip	1,000 POUNDS
cal	CALORIE
ft	FOOT OR FEET
gal	GALLON

* For use on a sign panel only

STATE OF CALIFORNIA
DEPARTMENT OF TRANSPORTATION

ABBREVIATIONS (SHEET 2 OF 2)

NO SCALE

RSP A10B DATED JULY 19, 2013 SUPERSEDES STANDARD PLAN A10B DATED MAY 20, 2011 - PAGE 2 OF THE STANDARD PLANS BOOK DATED 2010.

REVISED STANDARD PLAN RSP A10B

2010 REVISED STANDARD PLAN RSP A10B

6-7-13

Dist	COUNTY	ROUTE	POST MILES TOTAL PROJECT	SHEET No.	TOTAL SHEETS
04	Mrn	580	2.7	25	30

REGISTERED CIVIL ENGINEER

April 20, 2012
PLANS APPROVAL DATE

REGISTERED PROFESSIONAL ENGINEER
Roberta L. McLaughlin
No. C40375
Exp. 3-31-13
CIVIL
STATE OF CALIFORNIA

THE STATE OF CALIFORNIA OR ITS OFFICERS OR AGENTS SHALL NOT BE RESPONSIBLE FOR THE ACCURACY OR COMPLETENESS OF SCANNED COPIES OF THIS PLAN SHEET.

TO ACCOMPANY PLANS DATED 10-26-15

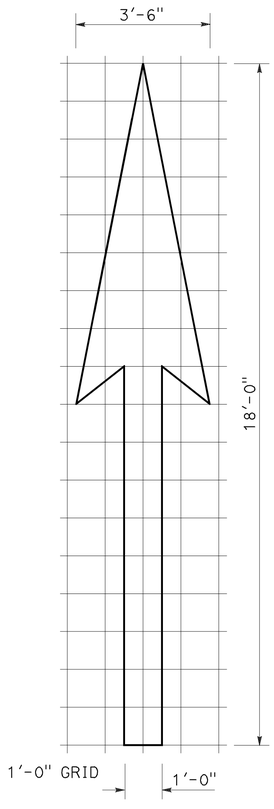

A=25 ft^2

TYPE I 18'-0" ARROW

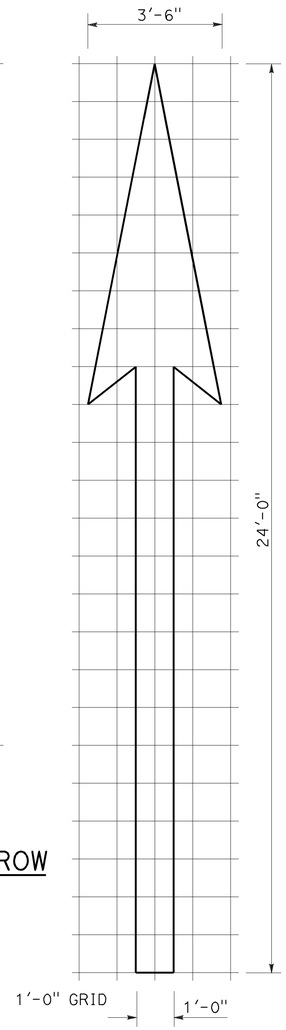

A=31 ft^2

TYPE I 24'-0" ARROW

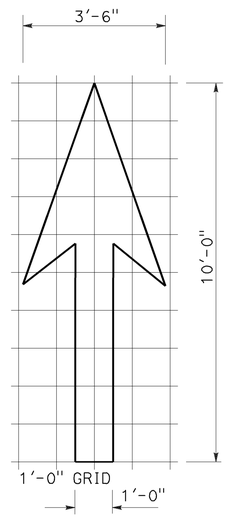

A=14 ft^2

TYPE I 10'-0" ARROW

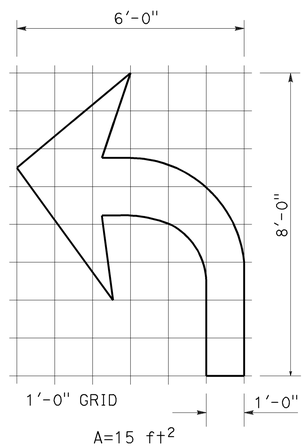

A=15 ft^2

TYPE IV (L) ARROW

(For Type IV (R) arrow, use mirror image)

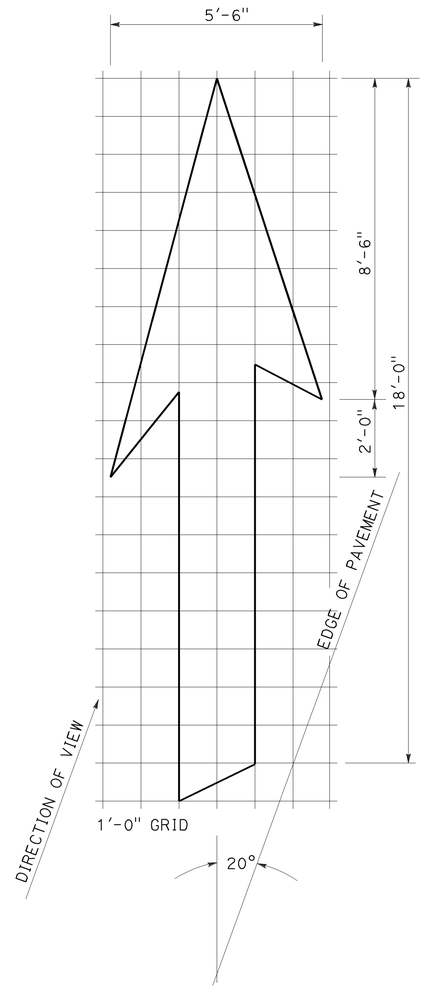

A=42 ft^2

TYPE VI ARROW

Right lane drop arrow
(For left lane, use mirror image)

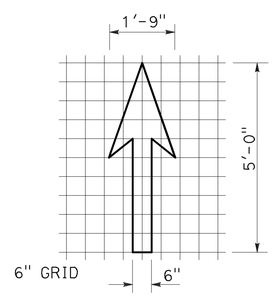

A=3.5 ft^2

BIKE LANE ARROW

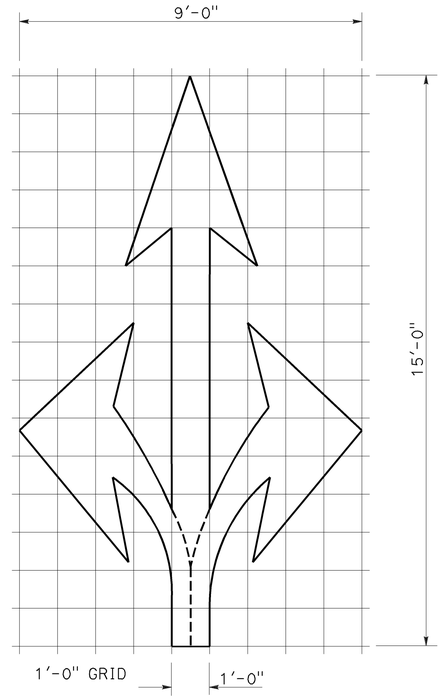

A=36 ft^2

TYPE VIII ARROW

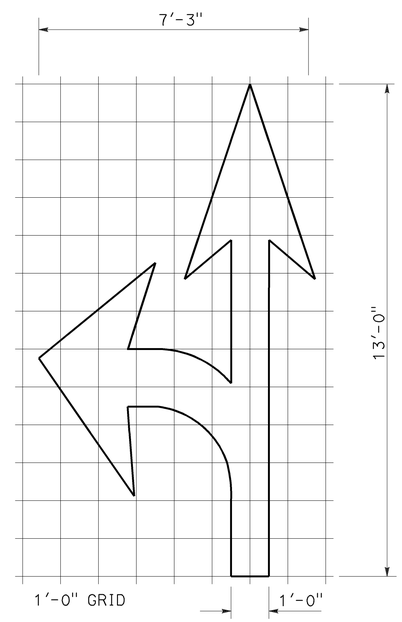

A=27 ft^2

TYPE VII (L) ARROW

(For Type VII (R) arrow, use mirror image)

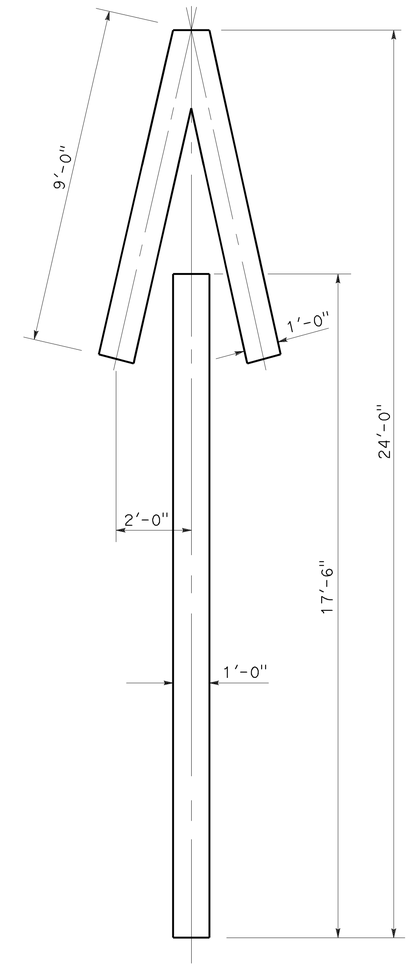

A=33 ft^2

TYPE V ARROW

NOTE:
Minor variations in dimensions may be accepted by the Engineer.

STATE OF CALIFORNIA
DEPARTMENT OF TRANSPORTATION

PAVEMENT MARKINGS ARROWS

NO SCALE

RSP A24A DATED APRIL 20, 2012 SUPERSEDES STANDARD PLAN A24A DATED MAY 20, 2011 - PAGE 13 OF THE STANDARD PLANS BOOK DATED 2010.

REVISED STANDARD PLAN RSP A24A

2010 REVISED STANDARD PLAN RSP A24A

3-14-12

Dist	COUNTY	ROUTE	POST MILES TOTAL PROJECT	SHEET No.	TOTAL SHEETS
04	Mrn	580	2.7	26	30

REGISTERED CIVIL ENGINEER

July 20, 2012
PLANS APPROVAL DATE

REGISTERED PROFESSIONAL ENGINEER
Roberta L. McLaughlin
No. C40375
Exp. 3-31-13
CIVIL
STATE OF CALIFORNIA

THE STATE OF CALIFORNIA OR ITS OFFICERS OR AGENTS SHALL NOT BE RESPONSIBLE FOR THE ACCURACY OR COMPLETENESS OF SCANNED COPIES OF THIS PLAN SHEET.

TO ACCOMPANY PLANS DATED 10-26-15

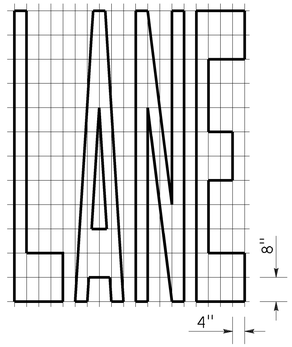

A=24 ft^2

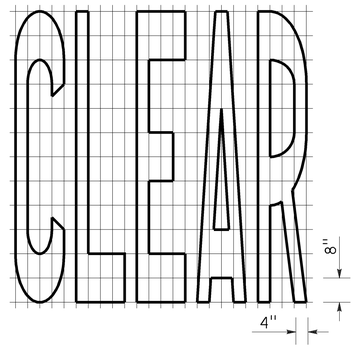

A=27 ft^2

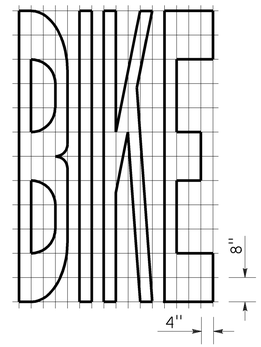

A=21 ft^2

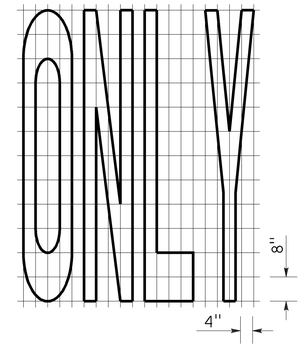

A=22 ft^2

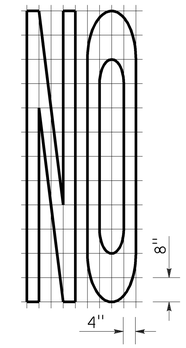

A=14 ft^2

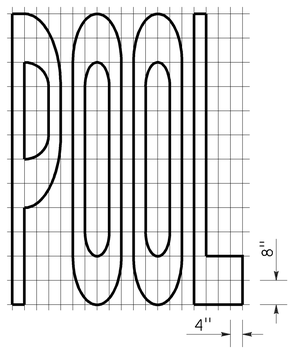

A=23 ft^2

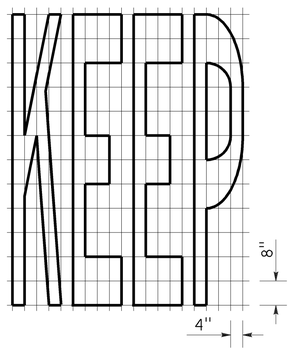

A=24 ft^2

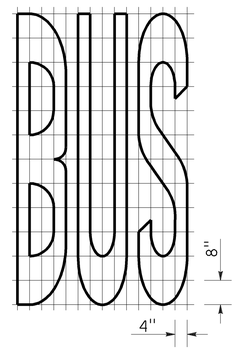

A=20 ft^2

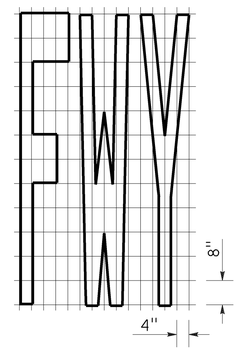

A=16 ft^2

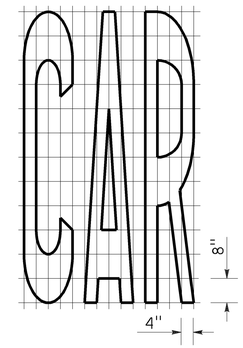

A=17 ft^2

WORD MARKINGS			
ITEM	ft^2	ITEM	ft^2
LANE	24	NO	14
POOL	23	BIKE	21
CAR	17	BUS	20
CLEAR	27	ONLY	22
KEEP	24	FWY	16

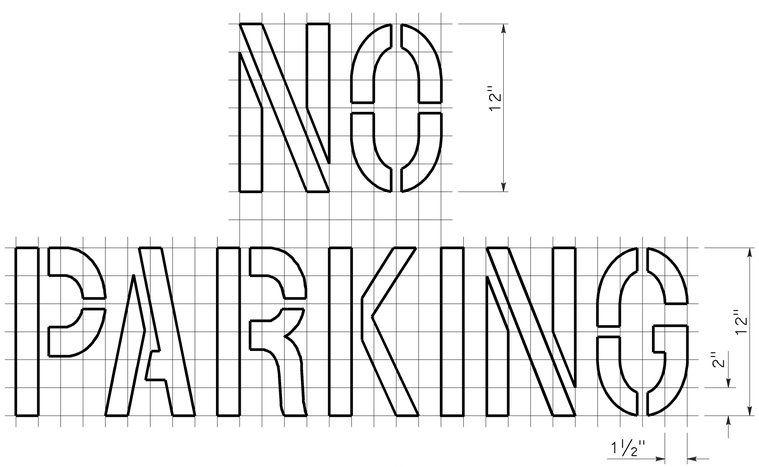

A=2 ft^2
See Notes 6 and 7

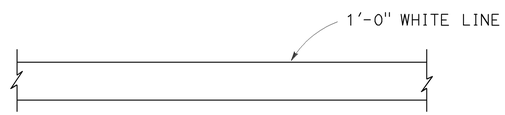

LIMIT LINE (STOP LINE)

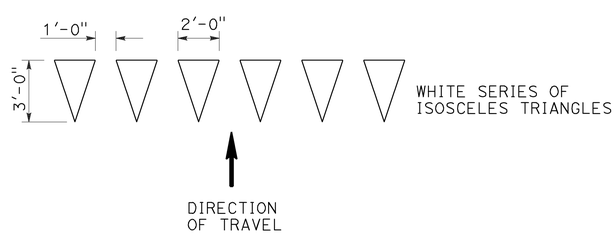

YIELD LINE

NOTES:

1. If a message consists of more than one word, it should read "UP", i.e., the first word should be nearest the driver.
2. The space between words should be at least four times the height of the characters for low speed roads, but not more than ten times the height of the characters. The space may be reduced appropriately where there is limited space because of local conditions.
3. Minor variations in dimensions may be accepted by the Engineer.
4. Portions of a letter, number or symbol may be separated by connecting segments not to exceed 2" in width.
5. The words "NO PARKING" pavement marking is to be used for parking facilities. For typical locations of markings, see Standard Plans A90A and A90B.
6. The words "NO PARKING", shall be painted in white letters no less than 1'-0" high on a contrasting background and located so that it is visible to traffic enforcement officials.

STATE OF CALIFORNIA
DEPARTMENT OF TRANSPORTATION

PAVEMENT MARKINGS WORDS, LIMIT AND YIELD LINES

NO SCALE

RSP A24E DATED JULY 20, 2012 SUPERSEDES STANDARD PLAN A24E
DATED MAY 20, 2011 - PAGE 17 OF THE STANDARD PLANS BOOK DATED 2010.

REVISED STANDARD PLAN RSP A24E

2010 REVISED STANDARD PLAN RSP A24E

6-12-12

TO ACCOMPANY PLANS DATED 10-26-15

Dist	COUNTY	ROUTE	POST MILES TOTAL PROJECT	SHEET No.	TOTAL SHEETS
04	Mrn	580	2.7	27	30

REGISTERED CIVIL ENGINEER

October 19, 2012
PLANS APPROVAL DATE

Glenn DeCou No. C34547 Exp. 9-30-13 CIVIL STATE OF CALIFORNIA REGISTERED PROFESSIONAL ENGINEER

THE STATE OF CALIFORNIA OR ITS OFFICERS OR AGENTS SHALL NOT BE RESPONSIBLE FOR THE ACCURACY OR COMPLETENESS OF SCANNED COPIES OF THIS PLAN SHEET.

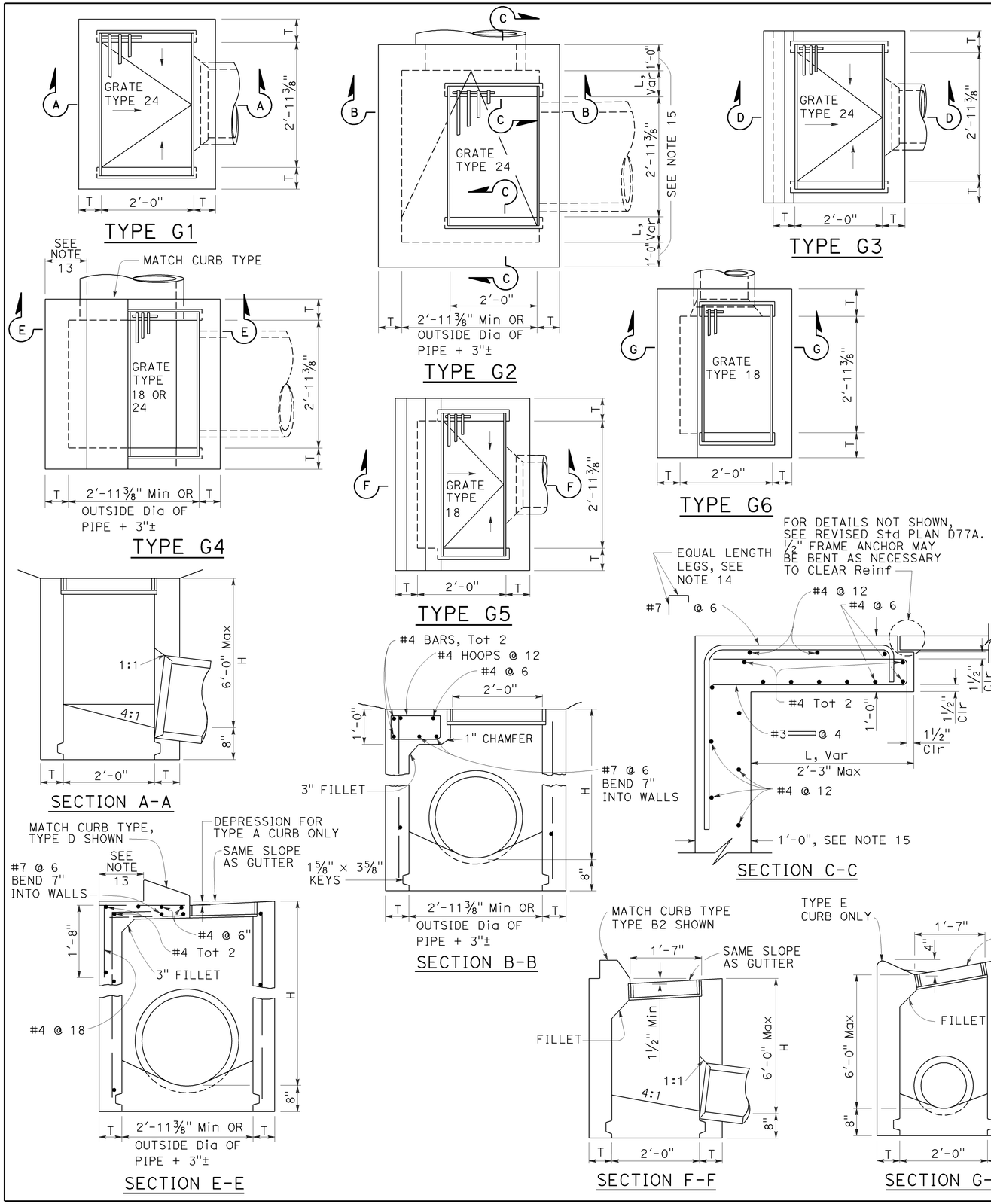

NOTES:

1. "H" is the difference in elevation between the outlet pipe flow line and the normal gutter grade line undepressed.
2. For "T" wall thickness, see Table A below.
3. Wall reinforcing not required when "H" is 8'-0" or less and the unsupported width or length is 7'-0" or less. Walls exceeding these limits shall be reinforced with #4 bars @ 1'-6" ± centers placed 1½" clear to inside of box unless otherwise shown.
4. Inlet bottom reinforcing not required. See Standard Plan D74C for alternative reinforced bottom and alternative half round bottom.
5. Steps-None required where "H" is less than 2'-6". Where "H" is 2'-6" or more, install steps with lowest rung 1'-0" above the floor and highest rung not more than 6" below top of inlet. The distance between steps shall not exceed 1'-0" and shall be uniform throughout the length of the wall. Place steps in the wall without an opening. Steps inserts may be substituted for the bar steps. Step inserts shall comply with State Industrial Safety requirements. See Standard Plan D74C for step details.
6. Details shown apply to both metal and concrete pipe.
7. Pipe(s) can be placed in any wall.
8. Curb section shall match adjacent curb.
9. Basin floors shall have wood trowel finish and a minimum slope of 12:3 from all directions toward outlet pipe.
10. Set inlet so that grate bars are parallel to direction of principal surface flow.
11. See Revised Standard Plans D77A and D77B for grate and frame details and weights of miscellaneous iron and steel.
12. See Standard Plan D78A for gutter depression details.
13. This dimenison will vary with different grates, curbs types, box width and wall thickness.
14. Bar may be rotated as necessary to clear opening. Where "L" is 6" or less, bar may be omitted.
15. Where "L" is 6" or less, wall thickness shall be as shown in Table A.
16. Cast-in-place inlets to be formed around all pipes/stubs intersecting the inlet, and concrete poured in one continuous operation. Precast inlets shall have mortared connections conforming to details for Type GCP Inlet shown on Standard Plan D75B. See Standard Specifications for mortar composition.

TABLE A

CONCRETE QUANTITIES				
TYPE	H=3'-0" TO 8'-0" (T=6")		H=8'-1" TO 20'-0" (T=8")	
	H=3'-0" (CY)	ADDITIONAL PCC PER FOOT (CY)	H=8'-1" (CY)	ADDITIONAL PCC PER FOOT (CY)
G-1	0.95	0.220	See Note A	SEE NOTE A
G-2*	1.31	0.255	3.50	0.357
G-3	1.03	0.220	See Note A	SEE NOTE A
G-4* (TYPE 24)	1.27	0.255	3.48	0.357
G-4* (TYPE 18)	1.30	0.255	3.50	0.357
G-5	1.02	0.220	SEE NOTE A	SEE NOTE A
G-6	1.04	0.220	SEE NOTE A	SEE NOTE A

TABLE BASED ON 8" FLOOR SLAB. NO DEDUCTIONS ARE TO BE MADE TO THESE QUANTITIES BECAUSE OF PIPE OPENINGS, DIFFERENT FLOOR ALTERNATIVES OR DIFFERENT CURB TYPES. * QUANTITIES FOR TYPE G-2 AND G-4 INLETS BASED ON THE MINIMUM INTERIOR DIMENSIONS.

NOTE A:

Maximum allowable height 6'-0".

STATE OF CALIFORNIA
DEPARTMENT OF TRANSPORTATION

DRAINAGE INLETS

NO SCALE

RSP D73 DATED OCTOBER 19, 2012 SUPERSEDES STANDARD PLAN D73 DATED MAY 20, 2011 - PAGE 156 OF THE STANDARD PLANS BOOK DATED 2010.

REVISED STANDARD PLAN RSP D73

2010 REVISED STANDARD PLAN RSP D73

7-19-12

Dist	COUNTY	ROUTE	POST MILES TOTAL PROJECT	SHEET No.	TOTAL SHEETS
04	Mrn	580	2.7	28	30

Raymond Don Tsztoo
REGISTERED CIVIL ENGINEER

April 19, 2013
PLANS APPROVAL DATE

REGISTERED PROFESSIONAL ENGINEER
Raymond Don Tsztoo
No. C37332
Exp. 6-30-14
CIVIL
STATE OF CALIFORNIA

THE STATE OF CALIFORNIA OR ITS OFFICERS OR AGENTS SHALL NOT BE RESPONSIBLE FOR THE ACCURACY OR COMPLETENESS OF SCANNED COPIES OF THIS PLAN SHEET.

TO ACCOMPANY PLANS DATED 10-26-15

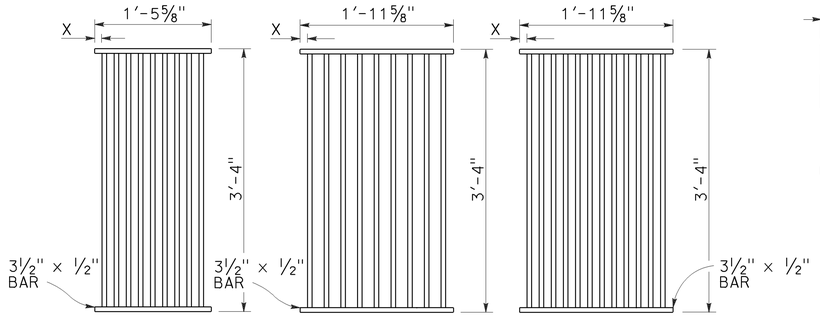

TYPE 18-9

1⅜" Clear spacing. Use within the roadbed on highways where bicycles and pedestrians are excluded.

TYPE 24-9

2" Clear spacing. Use in locations off the roadbed on all types of highways.

TYPE 24-12

1⅜" Clear spacing. Use within the roadbed on highways where bicycles and pedestrians are excluded.

RECTANGULAR GRATE DETAILS

(See table below)

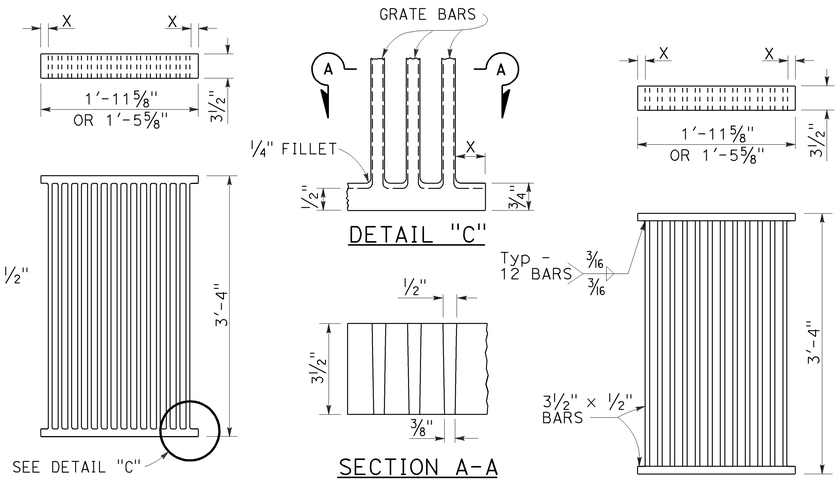

ALTERNATIVE CAST DUCTILE IRON GRATE OR CAST CARBON STEEL GRATE

ALTERNATIVE WELDED GRATE

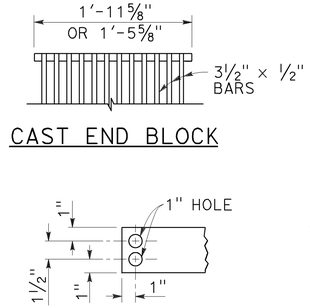

CAST END BLOCK

END OF BAR

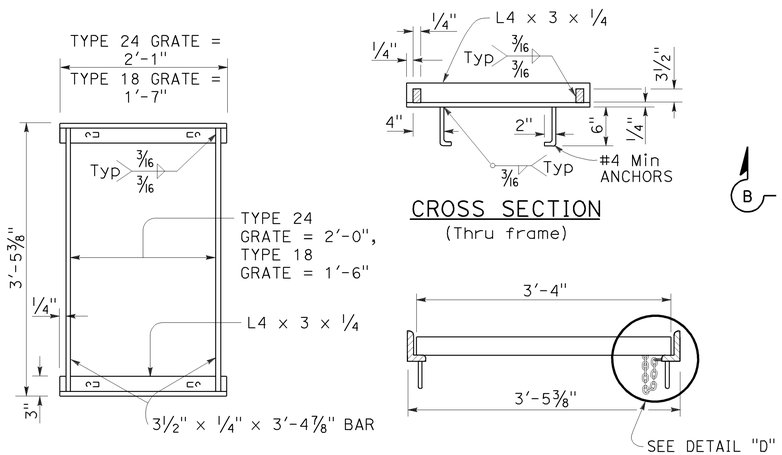

TYPICAL FRAME

CROSS SECTION
(Thru frame)

LONGITUDINAL SECTION
(Thru frame and grate)

RECTANGULAR FRAME DETAILS

(For all rectangular grates)

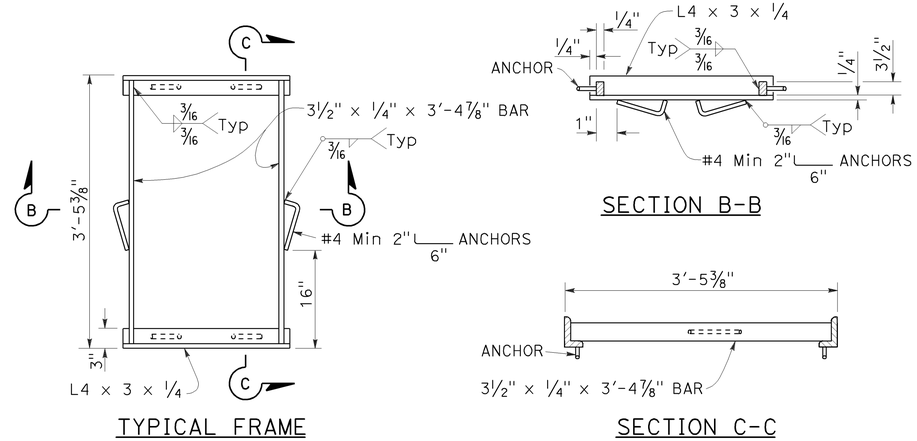

TYPICAL FRAME

SECTION B-B

SECTION C-C

ALTERNATIVE ANCHOR FOR RECTANGULAR FRAME

(For details not shown, See Rectangular Frame Details)

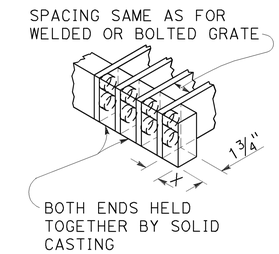

ALTERNATIVE CAST DUCTILE IRON OR CAST CARBON STEEL END BLOCK GRATE

NOTES:

1. Grate type numbers refer to approximate width of grate in inches and number of bars, respectively.
2. Contractor has the option of using cast ductile iron, cast carbon steel, welded, bolted, or cast end block grate.
3. Rounded top of bars optional on all grates.
4. Pipe inlets with a grate shall be placed so that bars parallel direction of principle surface flow.
5. Complete joint penetration butt welds may be substituted for the fillet welds on all anchors.
6. Standard square, hexagon, round or equivalent headed anchors may be substituted for the right angle hooks on the anchors shown on this plan.
7. Grate and frame weights are based on welded grates (weights of face angles, steps, protection bars, etc. are not included).
8. Connect chain to grate and frame only at locations shown on the plans. When chain is required, do not use cast ductile iron grates.

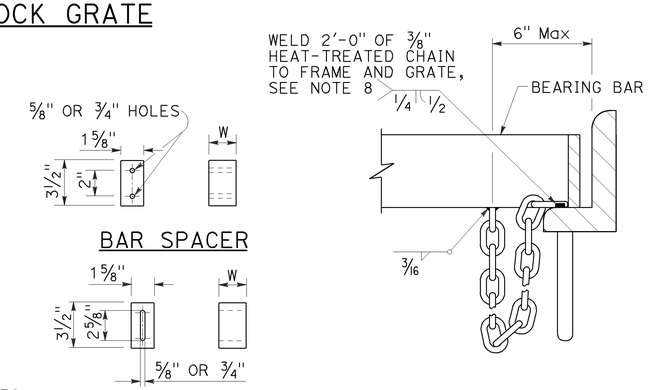

GRATE BAR SPACING TABLE

TYPE	No. OF BARS	CLEAR BAR SPACING	X
18-9	9	1⅜"	1 1/16"
24-9	9	2"	1 9/16"
24-12	12	1⅜"	1¼"

INLET TYPE	COVER TYPE	WEIGHT LB
OS	PLATE	174
OL-7	PLATE	170
OL-10	PLATE	170
OL-14	PLATE	170
OL-21	PLATE	170
OCP	PLATE	112
OCPI	PLATE	112
OCPI	REDWOOD	42
OMP	PLATE	177
OMPI	PLATE	177

INLET TYPE	GRATE TYPE	No. OF GRATES	WEIGHT LB
GDO	24-12	2	634
GOL-7	24-12	1	326
GOL-10	24-12	1	326
GO,G1,G2,G3,G4 (TYPE 24)	24-9	1	263
	24-12	1	326
G4 (TYPE 18),G5,G6	18-9	1	249
GT1	18-9	2	498
GT2	18-9	2	498
GT3	24-12	2	652
GT4	24-12	2	652
TRASH RACK			22
GRATE CHAIN			3

BASIS FOR Misc IRON & STEEL FINAL PAY WEIGHTS FOR DRAINAGE INLETS

(See Note 7)

STATE OF CALIFORNIA
DEPARTMENT OF TRANSPORTATION

GRATE DETAILS No. 1

NO SCALE

RSP D77A DATED APRIL 19, 2013 SUPERSEDES RSP D77A DATED JULY 20, 2012 AND STANDARD PLAN D77A DATED MAY 20, 2011 - PAGE 164 OF THE STANDARD PLANS BOOK DATED 2010.

REVISED STANDARD PLAN RSP D77A

2010 REVISED STANDARD PLAN RSP D77A

4-4-13

Dist	COUNTY	ROUTE	POST MILES TOTAL PROJECT	SHEET No.	TOTAL SHEETS
04	Mrn	580	2.7	29	30

LICENSED LANDSCAPE ARCHITECT

July 19, 2013
PLANS APPROVAL DATE

THE STATE OF CALIFORNIA OR ITS OFFICERS OR AGENTS SHALL NOT BE RESPONSIBLE FOR THE ACCURACY OR COMPLETENESS OF SCANNED COPIES OF THIS PLAN SHEET.

LICENSED LANDSCAPE ARCHITECT — Gregory A. Balzer — 2516 — 10-26-15 Renewal Date — 2-28-15 Renewal Date — 7-19-13 Date — STATE OF CALIFORNIA

TO ACCOMPANY PLANS DATED 10-26-15

A

AB	AGGREGATE BASE
ABS	ACRYLONITRILE-BUTADIENE-STYRENE
AC	ASPHALT CONCRETE
ACC	ARMOR-CLAD CONDUCTORS
Adj	ADJACENT/ADJUSTABLE
AIC	AUXILIARY IRRIGATION CONTROLLER
Alt	ALTERNATIVE
AMEND	AMENDMENT
ARV	AIR RELEASE VALVE
AUTO	AUTOMATIC
AUX	AUXILIARY
AVB	ATMOSPHERIC VACUUM BREAKER

B

B&B	BALLED AND BURLAPPED
B/B	BRASS/BRONZE
B/B/PL	BRASS/BRONZE/PLASTIC
B/PL	BRASS/PLASTIC
BFM	BONDED FIBER MATRIX
Bit Ctd	BITUMINOUS COATED
BP	BOOSTER PUMP
BPA	BACKFLOW PREVENTER ASSEMBLY
BPE	BACKFLOW PREVENTER ENCLOSURE
BV	BALL VALVE

C

C	CONDUIT
CAP	CORRUGATED ALUMINUM PIPE
CARV	COMBINATION AIR RELEASE VALVE
CB	COUPLING BAND
CCA	CAM COUPLER ASSEMBLY
CEC	CONTROLLER ENCLOSURE CABINET
CHDPE	CORRUGATED HIGH DENSITY POLYETHYLENE
CL	CHAIN LINK
CNC	CONTROL AND NEUTRAL CONDUCTORS
Conc	CONCRETE
CP	COPPER PIPE
CS	COMPOST SOCK
CSP	CORRUGATED STEEL PIPE
CST	CENTER STRIP
CV	CHECK VALVE

D

Dia	DIAMETER
DIP	DUCTILE IRON PIPE
DIT	DRIP IRRIGATION TUBING
DG	DECOMPOSED GRANITE
DN	DIAMETER NOMINAL
DVA	DRIP VALVE ASSEMBLY

E

EC	EROSION CONTROL
ECTC	EROSION CONTROL TECHNOLOGY COUNCIL
Elect	ELECTRIC/ELECTRICAL
Elev	ELEVATION
ELL	ELBOW
ENCL	ENCLOSURE
EP	EDGE OF PAVEMENT
ES	EDGE OF SHOULDER
EST	END STRIP
ESTB	ESTABLISHMENT
ETW	EDGE OF TRAVELED WAY

F

F	FULL CIRCLE
F/P	FULL/PART CIRCLE
FCV	FLOW CONTROL VALVE
FERT	FERTILIZER
FG	FINISHED GRADE
FH	FLEXIBLE HOSE
FIPT	FEMALE IRON PIPE THREAD
FIS	FERTILIZER INJECTOR SYSTEM
FL	FLOW LINE
FR	FIBER ROLL
FS	FLOW SENSOR
FSC	FLOW SENSOR CABLE
FV	FLUSH VALVE

G

Galv	GALVANIZED
GARV	GARDEN VALVE
GARVA	GARDEN VALVE ASSEMBLY
GM	GRAVEL MULCH
GPH	GALLONS PER HOUR
GPM	GALLONS PER MINUTE
GSP	GALVANIZED STEEL PIPE
GV	GATE VALVE

H

H	HALF CIRCLE
HDPE	HIGH DENSITY POLYETHYLENE
HP	HORSEPOWER/HINGE POINT
HPL	HIGH PRESSURE LINE
Hwy	HIGHWAY

I

IC	IRRIGATION CONTROLLER
ICC	IRRIGATION CONTROLLER(S) IN CONTROLLER ENCLOSURE CABINET
ID	INSIDE DIAMETER
IFS	IRRIGATION FILTRATION SYSTEM
IPS	IRON PIPE SIZE
IPT	IRON PIPE THREAD
Irr	IRRIGATION

L

L	LENGTH

M

Max	MAXIMUM
MBGR	METAL BEAM GUARD RAILING
MCV	MANUAL CONTROL VALVE
MIC	MASTER IRRIGATION CONTROLLER
Min	MINIMUM
MIPT	MALE IRON PIPE THREAD
Misc	MISCELLANEOUS
Mtl	MATERIAL
MVP	MAINTENANCE VEHICLE PULLOUT

N

NCN	NO COMMON NAME
NL	NOZZLE LINE
No.	NUMBER
NPT	NATIONAL PIPE THREAD

O

O/C	ON CENTER
OD	OUTSIDE DIAMETER
OL	OVERLAP

P

P	PART CIRCLE
PB	PULL BOX
PCC	PORTLAND CEMENT CONCRETE
PE	POLYETHYLENE
Pkt	PACKET
PL	PLASTIC
PLS	PURE LIVE SEED
PLT	PLANT/PLANTING
PLT ESTB	PLANT ESTABLISHMENT
PM	POST MILE
PR	PRESSURE RATED
PRLV	PRESSURE RELIEF VALVE
PRV	PRESSURE REGULATING VALVE
PVC	POLYVINYL CHLORIDE
Pvmt	PAVEMENT

Q

Q	QUARTER CIRCLE
QCV	QUICK COUPLING VALVE

R

R	RADIUS
RCP	REINFORCED CONCRETE PIPE
RCV	REMOTE CONTROL VALVE
RCVM	REMOTE CONTROL VALVE (MASTER)
RCVMF	REMOTE CONTROL VALVE (MASTER) W/FLOW SENSOR
RCVP	REMOTE CONTROL VALVE W/PRESSURE REGULATOR
RCW	RECYCLED WATER
RECP	ROLLED EROSION CONTROL PRODUCT
REQ	REQUIRED
RICS	REMOTE IRRIGATION CONTROL SYSTEM
R/W	RIGHT OF WAY

S

S	SLIP
SCH	SCHEDULE
SF	STATE-FURNISHED
Shld	SHOULDER
Sq	SQUARE
SST	SIDE STRIP
Sta	STATION
Std	STANDARD
SW	SIDEWALK/SOUND WALL

T

T	THIRD CIRCLE/THREAD
TLS	TRUCK LOADING STANDPIPE
TQ	THREE QUARTER CIRCLE
TRM	TURF REINFORCEMENT MAT
TT	TWO-THIRDS CIRCLE
TWSA	TREE WELL SPRINKLER ASSEMBLY
Typ	TYPICAL

U

UG	UNDERGROUND

W

W	WIDTH
W/	WITH
WM	WATER METER
WS	WYE STRAINER
WSA	WYE STRAINER ASSEMBLY
WSP	WELDED STEEL PIPE
WWM	WELDED WIRE MESH

NOTE:

For additional abbreviations, see Standard Plans A10A and A10B.

STATE OF CALIFORNIA
DEPARTMENT OF TRANSPORTATION

LANDSCAPE AND EROSION CONTROL ABBREVIATIONS

NO SCALE

RSP H1 DATED JULY 19, 2013 SUPERSEDES STANDARD PLAN H1 DATED MAY 20, 2011 - PAGE 218 OF THE STANDARD PLANS BOOK DATED 2010.

REVISED STANDARD PLAN RSP H1

2010 REVISED STANDARD PLAN RSP H1

6-28-13

Dist	COUNTY	ROUTE	POST MILES TOTAL PROJECT	SHEET No.	TOTAL SHEETS
04	Mrn	580	2.7	30	30

REGISTERED CIVIL ENGINEER

April 19, 2013
PLANS APPROVAL DATE

REGISTERED PROFESSIONAL ENGINEER Gurinderpal Bhullar No. C48815 Exp. 9-30-14 CIVIL STATE OF CALIFORNIA

THE STATE OF CALIFORNIA OR ITS OFFICERS OR AGENTS SHALL NOT BE RESPONSIBLE FOR THE ACCURACY OR COMPLETENESS OF SCANNED COPIES OF THIS PLAN SHEET.

TO ACCOMPANY PLANS DATED 10-26-15

TYPICAL RAMP CLOSURES

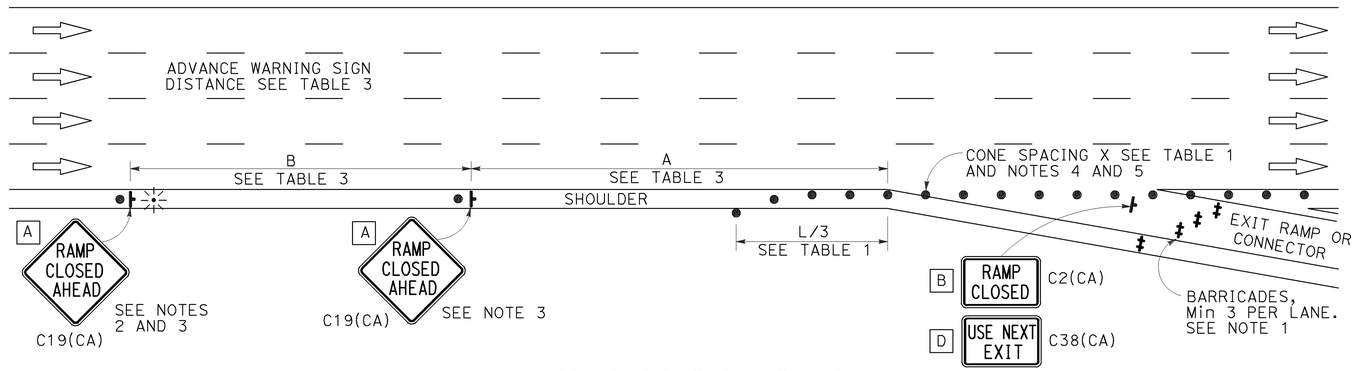

EXIT RAMP OR CONNECTOR

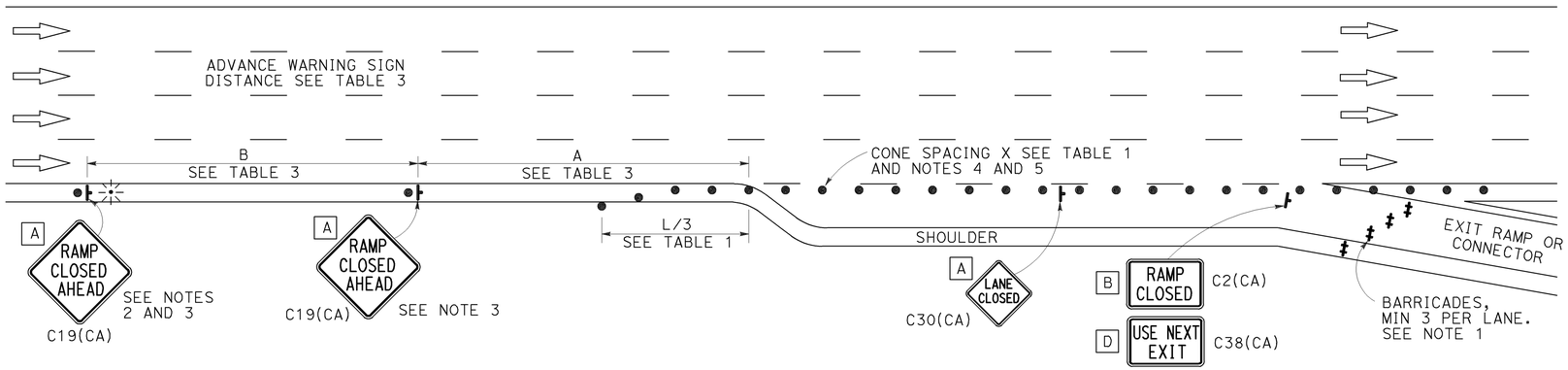

EXIT RAMP OR CONNECTOR WITH ADDITIONAL LANE

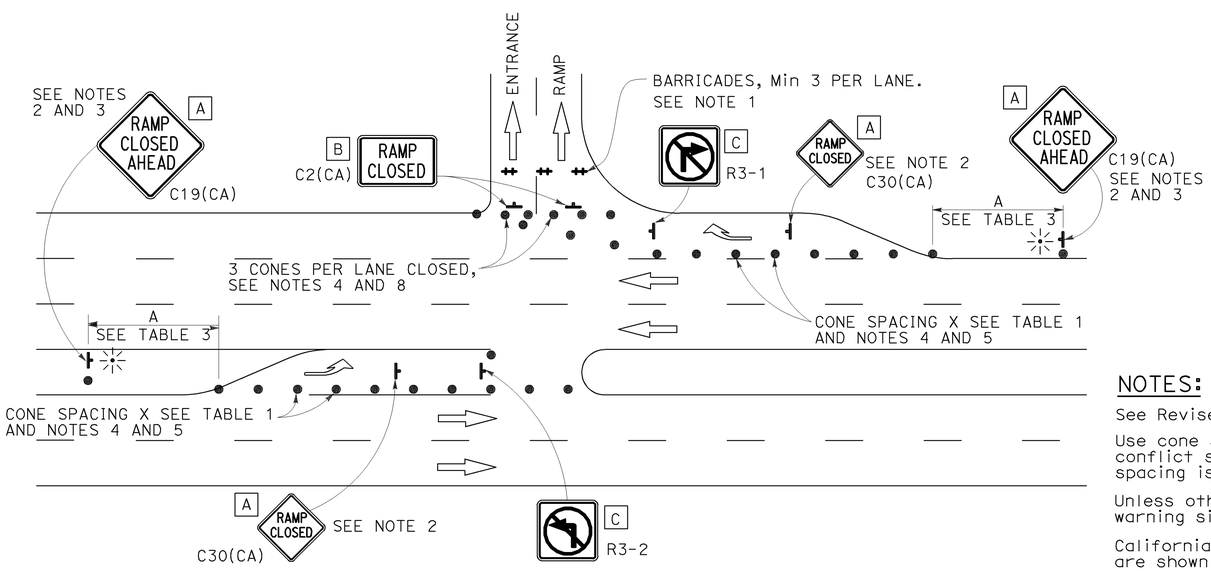

ENTRANCE RAMP WITH TURNING POCKETS

SIGN PANEL SIZE (Min)

- A 48" × 48"
- B 48" × 30"
- C 36" × 36"
- D 48" × 36"

LEGEND

- TRAFFIC CONE
- TEMPORARY TRAFFIC CONTROL SIGN
- BARRICADES
- PORTABLE FLASHING BEACON

NOTES:

1. Barricades shall be Type I, II, or III for closures lasting one week or less and Type III for closures lasting longer than one week.
2. In addition to placing the C19(CA) "RAMP CLOSED AHEAD" and C30(CA) "RAMP CLOSED" signs, black on orange overlay plates with the word "CLOSED" may be mounted, as directed by the Engineer, on all guide signs that refer to the closed ramp. The letter size on the overlay shall be the same as the guide sign.
3. Each advance C19(CA) "RAMP CLOSED AHEAD" sign shall be equipped with at least two flags for daytime closure. Each flag shall be at least 16" × 16" in size and shall be orange or fluorescent red-orange in color. A flashing beacon shall be placed on top of the first C19(CA) sign during hours of darkness.
4. All cones used for ramp closures during the hours of darkness shall be fitted with retroreflective bands (or sleeves) as specified in the specifications.
5. Portable delineators, placed at one-half the spacing indicated for traffic cones, may be used instead of cones for daytime ramp closures only.
6. At least one person shall be assigned to provide full time maintenance of traffic control devices, unless otherwise directed by the Engineer.
7. The existing "EXIT" signs shall be covered during ramp closures.
8. A minimum of 3 cones shall be placed transversely across each closed lane and shoulder.

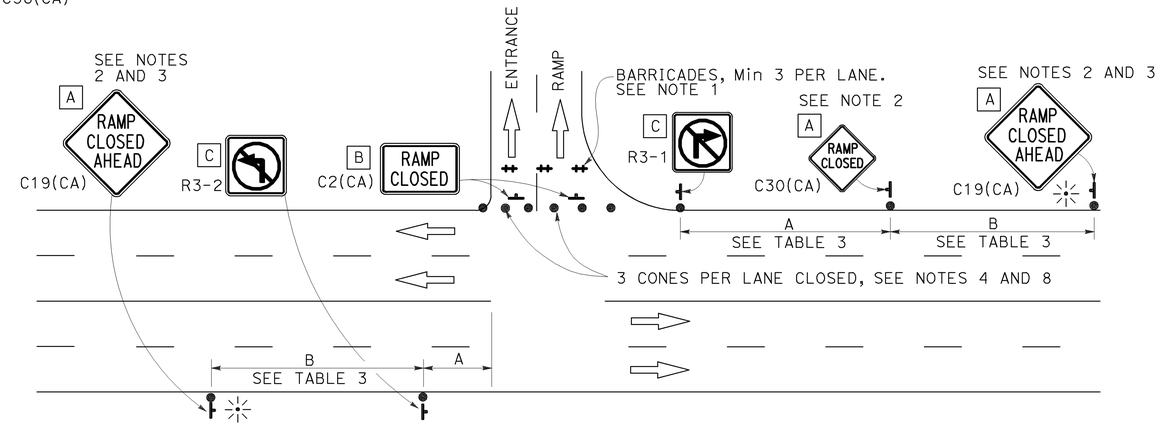

ENTRANCE RAMP WITHOUT TURNING POCKETS

NOTES:

See Revised Standard Plan RSP T9 for tables.

Use cone spacing X for taper segment, Y for tangent segment or Z for conflict situations, as approriate, per Table 1, unless X, Y, or Z cone spacing is shown on this sheet.

Unless otherwise specified in the special provisions, all temporary warning signs shall have black legend on fluorescent orange background.

California codes are designated by (CA). Otherwise, Federal (MUTCD) codes are shown.

STATE OF CALIFORNIA
DEPARTMENT OF TRANSPORTATION

TRAFFIC CONTROL SYSTEM FOR RAMP CLOSURE

NO SCALE

RSP T14 DATED APRIL 19, 2013 SUPERSEDES STANDARD PLAN T14 DATED MAY 20, 2011 - PAGE 242 OF THE STANDARD PLANS BOOK DATED 2010.

REVISED STANDARD PLAN RSP T14

2010 REVISED STANDARD PLAN RSP T14

12-18-12