Dist	COUNTY	ROUTE	POST MILES TOTAL PROJECT	SHEET No.	TOTAL SHEETS
04	Sol	80	19.6	3	14

REGISTERED CIVIL ENGINEER 8/4/14 DATE

8-11-14
PLANS APPROVAL DATE

REGISTERED PROFESSIONAL ENGINEER Adrian S. Custodio No. 46570 Exp. 6-30-15 CIVIL STATE OF CALIFORNIA

THE STATE OF CALIFORNIA OR ITS OFFICERS OR AGENTS SHALL NOT BE RESPONSIBLE FOR THE ACCURACY OR COMPLETENESS OF SCANNED COPIES OF THIS PLAN SHEET.

ABBREVIATIONS:

RHMA-G	RUBBERIZED HOT MIX ASPHALT (GAP GRADED)
~~HMA OG~~	~~HOT MIX ASPHALT (OPEN GRADED)~~
HMAOG-OGFC	HOT MIX ASPHALT OPEN GRADED (OPEN GRADED FRICTION COURSE)

2

TYPICAL PAVEMENT STRUCTURE SECTIONS:

1
- HMAOG-OGFC
- 0.10' ~~HMA OG~~
- 1.00' HMA (TYPE A)
- 0.50' CI 2 AB
- CI 3 PERMEABLE MATERIAL
- 8" PPP UNDERDRAIN
- FILTER FABRIC

2
- HMAOG-OGFC
- 0.10' ~~HMA OG~~
- 1.00' HMA (TYPE A)
- 0.50' CI 2 AB

3
- BLAST WITH AIR TO CLEAN EXISTING HOLES IN PAVEMENT.
- FILL HOLES WITH HMA (TYPE A) AND COMPACT.

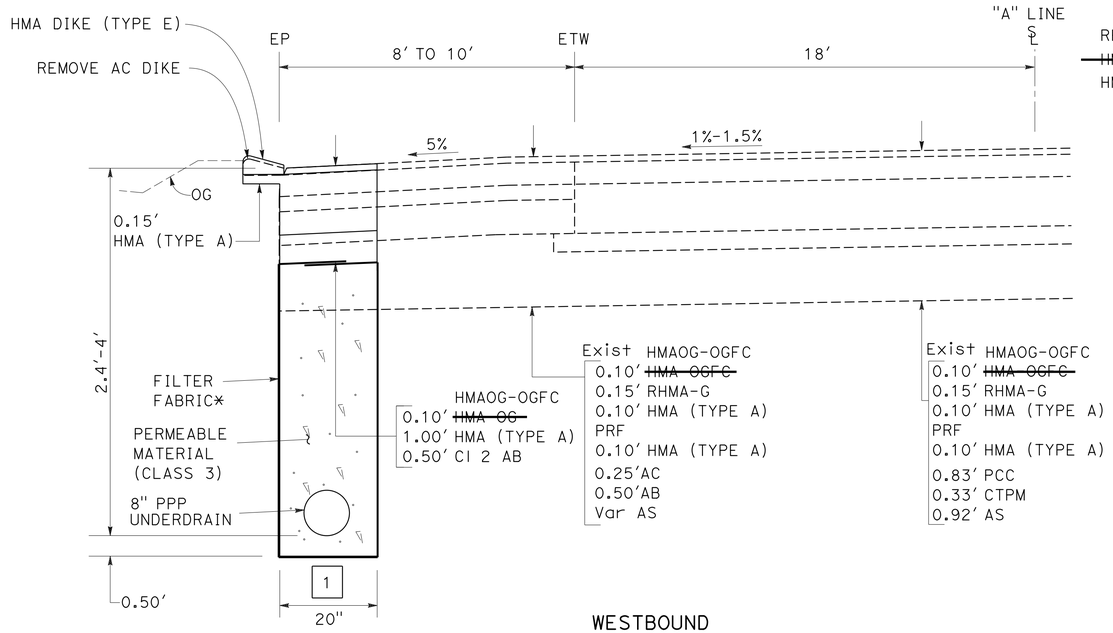

WESTBOUND
"A" 101+57 TO 105+50

*MAKE THE OVERLAP 0.50' Min

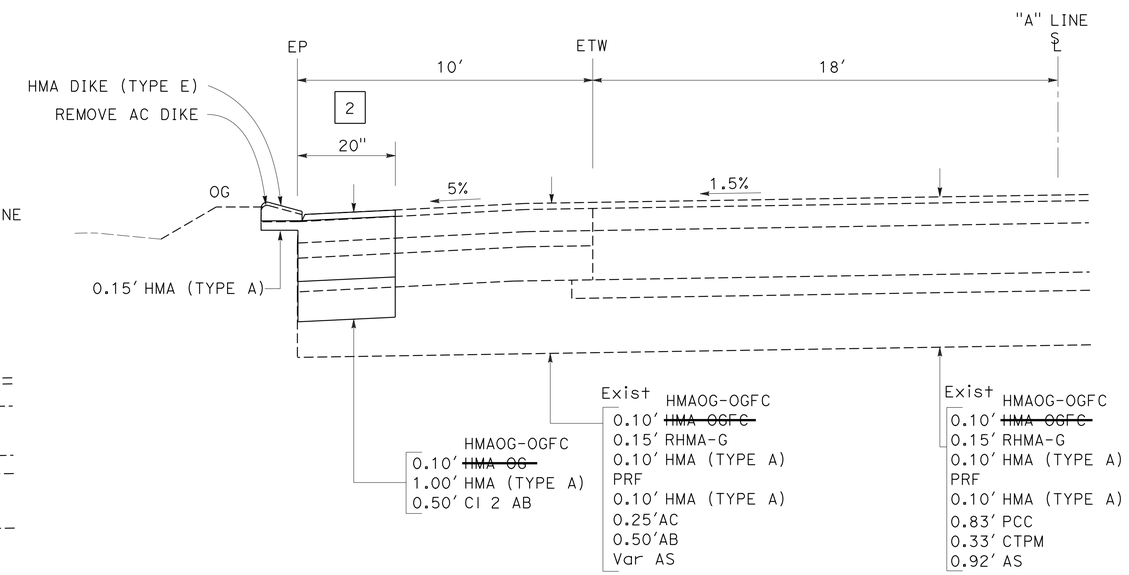

WESTBOUND
"A" 105+50 TO 105+70

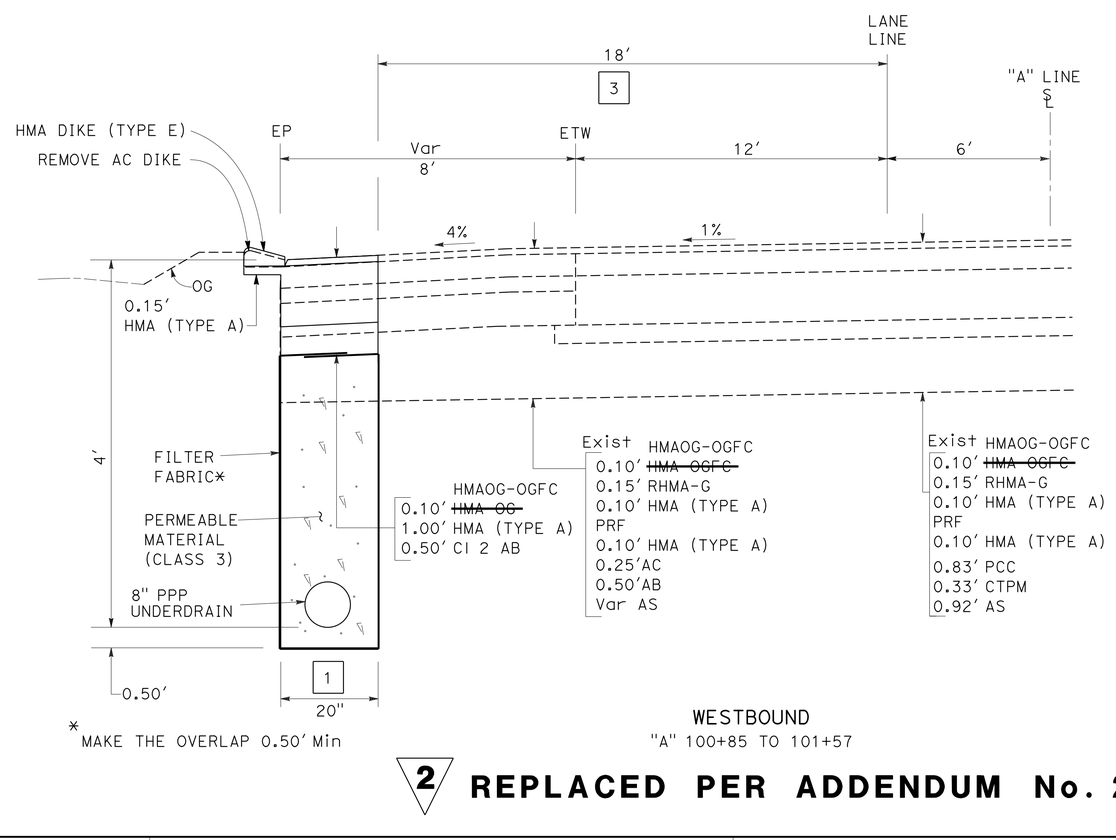

*MAKE THE OVERLAP 0.50' Min

WESTBOUND
"A" 100+85 TO 101+57

2 **REPLACED PER ADDENDUM No. 2 DATED JANUARY 8, 2015**

TYPICAL CROSS SECTIONS
NO SCALE

X-2

REVISED BY	DATE REVISED
ASC	7/29/14

ADRIAN CUSTODIO — CALCULATED-DESIGNED BY
TAM LY — CHECKED BY
TAM LY — FUNCTIONAL SUPERVISOR

STATE OF CALIFORNIA - DEPARTMENT OF TRANSPORTATION
Caltrans®
DESIGN

LAST REVISION 08-04-14 | DATE PLOTTED => 08-JAN-2015 | TIME PLOTTED => 08:40

Dist	COUNTY	ROUTE	POST MILES TOTAL PROJECT	SHEET No.	TOTAL SHEETS
04	Sol	80	19.6	8	14

REGISTERED CIVIL ENGINEER DATE 8/4/14

8-11-14
PLANS APPROVAL DATE

REGISTERED PROFESSIONAL ENGINEER Trang Doan Nguyen-Le No. 81015 Exp. 9-30-15 CIVIL STATE OF CALIFORNIA

THE STATE OF CALIFORNIA OR ITS OFFICERS OR AGENTS SHALL NOT BE RESPONSIBLE FOR THE ACCURACY OR COMPLETENESS OF SCANNED COPIES OF THIS PLAN SHEET.

2

2 2

ROADWAY QUANTITIES

STATION LIMITS	REMOVE ASPHALT CONCRETE DIKE	~~LIQUID ASPHALT~~ *PRIME COAT*	HOT MIX ASPHALT (TYPE A)	HOT MIX ASPHALT OPEN GRADED (OPEN GRADED FRICTION COURSE)	CLASS 2 AGGREGATE BASE	PLACE HOT MIX ASPHALT DIKE (TYPE E)	HOT MIX ASPHALT (TYPE A) *
	LF	TON			CY	LF	TON
"A" 100+85 TO 105+70	490	0.5	66	7	15	490	12.89
TOTAL	490	0.5	66	7	15	490	12.89

* FROM HOT MIX ASPHALT DIKE

UNDERDRAIN

STATION LIMITS	TRENCH EXCAVATION (N)	8" PERFORATED PLASTIC PIPE UNDERDRAIN	8" PLASTIC PIPE (SCHEDULE 40) (SUPPLY LINE)	FILTER FABRIC (N)	CLASS 3 PERMEABLE MATERIAL (N)	UNDERDRAIN RISER (N)
	CY	LF		SQYD	CY	EA
"A" 100+85 TO 105+50	117	465		403	50	5
"A" 105+50 TO 105+70	2		56			
TOTAL	119	465	56	403	50	5

(N) - NOT A SEPARATE PAY ITEM, FOR INFORMATION ONLY

TEMPORARY FENCE (TYPE ESA)

STATION LIMITS	LF
"A" 107+50 TO 110+50	280
TOTAL	280

2

TEMPORARY TRAFFIC CONTROL QUANTITIES

STATION LIMITS	TEMPORARY RAILING (TYPE K)	TEMPORARY CRASH CUSHION ~~(SANDFILLED)~~	
		ARRAY TB14	ARRAY TS14
	LF	EA	
"A" 99+70 TO 107+20	680	1	1
TOTAL	680	1	1

TEMPORARY WATER POLLUTION CONTROL QUANTITIES

STATION LIMITS	TEMPORARY HYDRAULIC MULCH (BONDED FIBER MATRIX)	TEMPORARY FIBER ROLL	TEMPORARY SILT FENCE
	SQYD	LF	
"A" 100+85 TO 105+70	250	550	50
TOTAL	250	550	50

2 **REPLACED PER ADDENDUM No. 2 DATED JANUARY 8, 2015**

SUMMARY OF QUANTITIES

Q-1

STATE OF CALIFORNIA - DEPARTMENT OF TRANSPORTATION
Caltrans DESIGN
FUNCTIONAL SUPERVISOR: TAM LY
CALCULATED-DESIGNED BY: TRANG NGUYEN-LE
CHECKED BY: ADRIAN CUSTODIO
REVISED BY: AC
DATE REVISED: 7/29/14

LAST REVISION 08-04-14
DATE PLOTTED => 08-JAN-2015
TIME PLOTTED => 08:40