Dist	COUNTY	ROUTE	POST MILES TOTAL PROJECT	SHEET No.	TOTAL SHEETS
04	SCI	280	R2.6	1	30

STATE OF CALIFORNIA

DEPARTMENT OF TRANSPORTATION

ACHNPI-2801(141)E

PROJECT PLANS FOR CONSTRUCTION ON

STATE HIGHWAY

IN SANTA CLARA COUNTY
IN SAN JOSE
AT MINOR AVENUE UNDERCROSSING

TO BE SUPPLEMENTED BY STANDARD PLANS DATED 2010

INDEX OF PLANS

SHEET No.	DESCRIPTION
1	TITLE SHEET AND LOCATION MAP
2	TYPICAL CROSS SECTIONS
3	LAYOUT
4	CONSTRUCTION DETAILS
5 - 6	WATER POLLUTION CONTROL PLAN
7 - 10	DRAINAGE PLAN, PROFILES, DETAILS AND QUANTITIES
11 - 13	CONSTRUCTION AREA SIGNS
14 - 16	STAGE CONSTRUCTION PLAN AND QUANTITIES
17 - 18	PAVEMENT DELINEATION PLAN, AND QUANTITIES
19	SUMMARY OF QUANTITIES
20 - 21	LOG OF TEST BORINGS
22 - 28	REVISED STANDARD PLANS
	STRUCTURE PLANS
29	GENERAL PLAN
30	STRUCTURE APPROACH TYPE R(30)

THE STANDARD PLANS LIST APPLICABLE TO THIS CONTRACT IS INCLUDED IN THE NOTICE TO BIDDERS AND SPECIAL PROVISIONS BOOK.

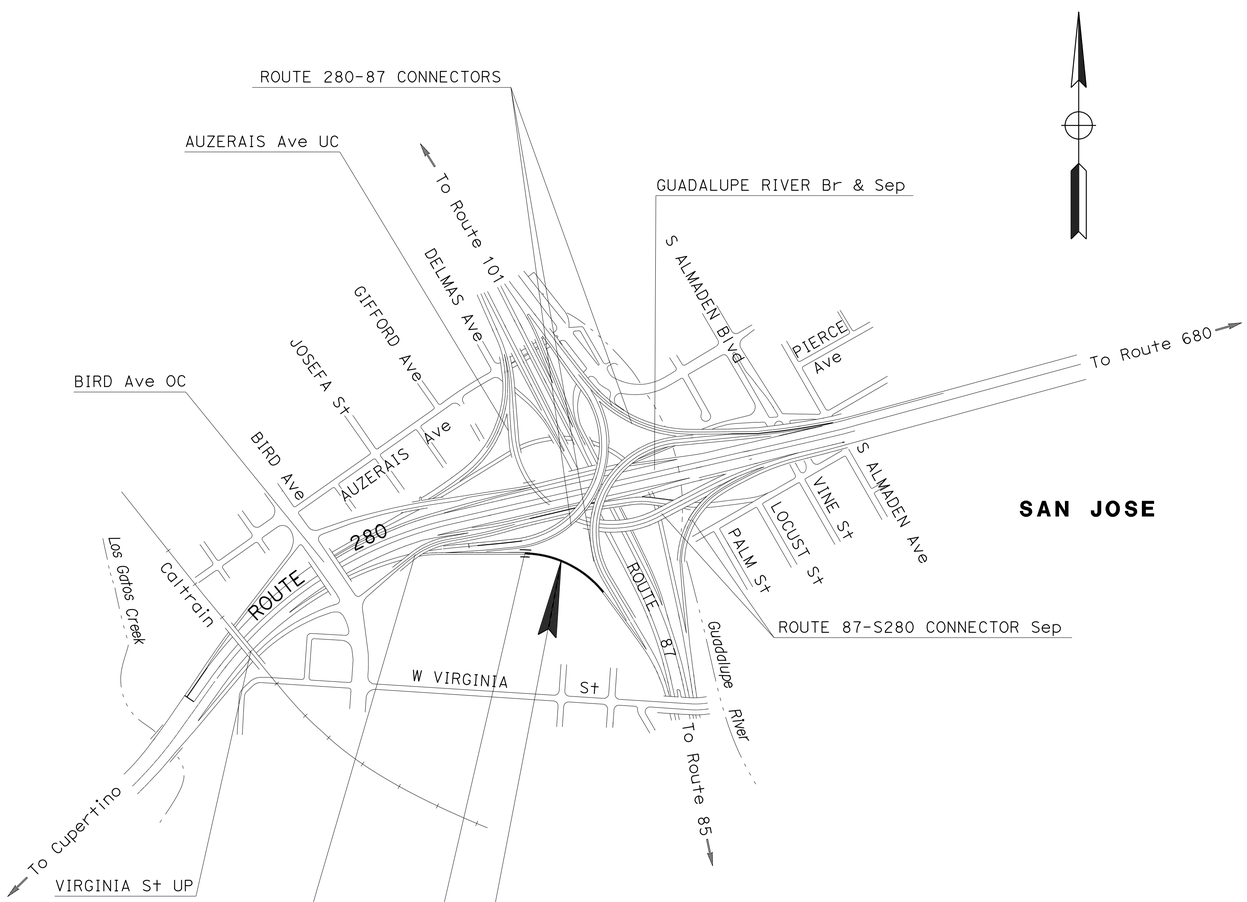

LOCATION OF CONSTRUCTION
PM R2.6

NO SCALE

LOCATION MAP

Zora S. Mangat 9/17/14
PROJECT ENGINEER DATE
REGISTERED CIVIL ENGINEER

October 13, 2014
PLANS APPROVAL DATE

REGISTERED PROFESSIONAL ENGINEER
Zora Mangat
No. 44843
Exp. 3-31-16
CIVIL
STATE OF CALIFORNIA

THE STATE OF CALIFORNIA OR ITS OFFICERS OR AGENTS SHALL NOT BE RESPONSIBLE FOR THE ACCURACY OR COMPLETENESS OF SCANNED COPIES OF THIS PLAN SHEET.

THE CONTRACTOR SHALL POSSESS THE CLASS (OR CLASSES) OF LICENSE AS SPECIFIED IN THE "NOTICE TO BIDDERS."

PROJECT MANAGER FRANK FUK NYAN KURNIAWAN
DESIGN MANAGER SINDHU KURUP

CONTRACT No.	04-1SS524
PROJECT ID	0412000543

LAST REVISION 09-16-14
DATE PLOTTED => 08-DEC-2014
TIME PLOTTED => 11:18

Dist	COUNTY	ROUTE	POST MILES TOTAL PROJECT	SHEET No.	TOTAL SHEETS
04	SCI	280	R2.6	2	30

Zora S. Mangat 9/17/14
REGISTERED CIVIL ENGINEER DATE

10-13-14
PLANS APPROVAL DATE

REGISTERED PROFESSIONAL ENGINEER Zora Mangat No. 44843 Exp. 3-31-16 CIVIL STATE OF CALIFORNIA

THE STATE OF CALIFORNIA OR ITS OFFICERS OR AGENTS SHALL NOT BE RESPONSIBLE FOR THE ACCURACY OR COMPLETENESS OF SCANNED COPIES OF THIS PLAN SHEET.

NOTES:

1. FOR LIMITS OF CONCRETE BARRIER (TYPE 60), SEE LAYOUT PLAN.
2. DIMENSIONS OF THE PAVEMENT STRUCTURES (STRUCTURAL SECTIONS) ARE SUBJECT TO TOLERANCES SPECIFIED IN THE STANDARD SPECIFICATIONS.

ABBREVIATION:

GPI GEOSYNTHETIC PAVEMENT INTERLAYER

TYPICAL PAVEMENT STRUCTURAL SECTIONS

1
- 0.25' HMA (TYPE A)
- GPI (PAVING GRID)
- 0.30' HMA (TYPE A)
- 0.95' CI 2 AB

2
- Exist
- 0.50' AC (TYPE A)
- 0.25' ATPB
- 0.55' CI A CTB
- 0.80' CI 4 AS

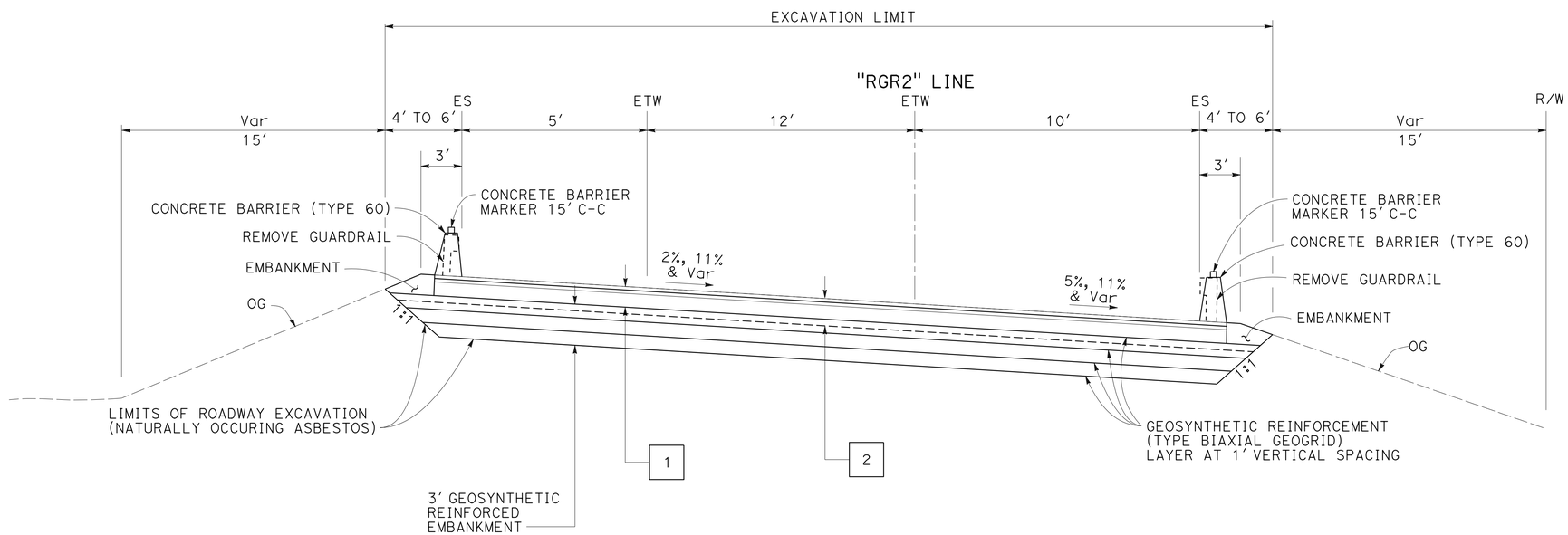

SB 280 TO SB 87 CONNECTOR
"RGR2" 14+44 TO 19+95

TYPICAL CROSS SECTIONS

NO SCALE

X-1

REVISED BY	DATE REVISED
ZM	9/9/14

ZORA MANGAT — PETER LAC
CALCULATED-DESIGNED BY — CHECKED BY
FUNCTIONAL SUPERVISOR — SINDHU KURUP

STATE OF CALIFORNIA - DEPARTMENT OF TRANSPORTATION
Caltrans
DESIGN

LAST REVISION 09-16-14 | DATE PLOTTED => 08-DEC-2014 | TIME PLOTTED => 11:18

Dist	COUNTY	ROUTE	POST MILES TOTAL PROJECT	SHEET No.	TOTAL SHEETS
04	SCI	280	R2.6	3	30

Zora S. Mangat 9/17/14
REGISTERED CIVIL ENGINEER DATE

10-13-14
PLANS APPROVAL DATE

REGISTERED PROFESSIONAL ENGINEER Zora Mangat No. 44843 Exp. 3-31-16 CIVIL STATE OF CALIFORNIA

THE STATE OF CALIFORNIA OR ITS OFFICERS OR AGENTS SHALL NOT BE RESPONSIBLE FOR THE ACCURACY OR COMPLETENESS OF SCANNED COPIES OF THIS PLAN SHEET.

NOTE:

RIGHT OF WAY LIMITS ARE INDETERMINATE, AND ARE NOT SHOWN. THE CONTRACTOR MUST CONTACT RIGHT OF WAY ENGINEERING AT THE DISTRICT OFFICE FOR CONDITIONS OF USE PRIOR TO COMMENCING WORK.

CURVE DATA

No. (B)	R	Δ	T	L	N-COORDINATE	E-COORDINATE
1	690′	53° 48′ 39"	350.14′	648.03′	1942276.93	6156366.10
2	1750′	08° 29′ 55"	130.03′	259.58′	1941527.03	6155602.77

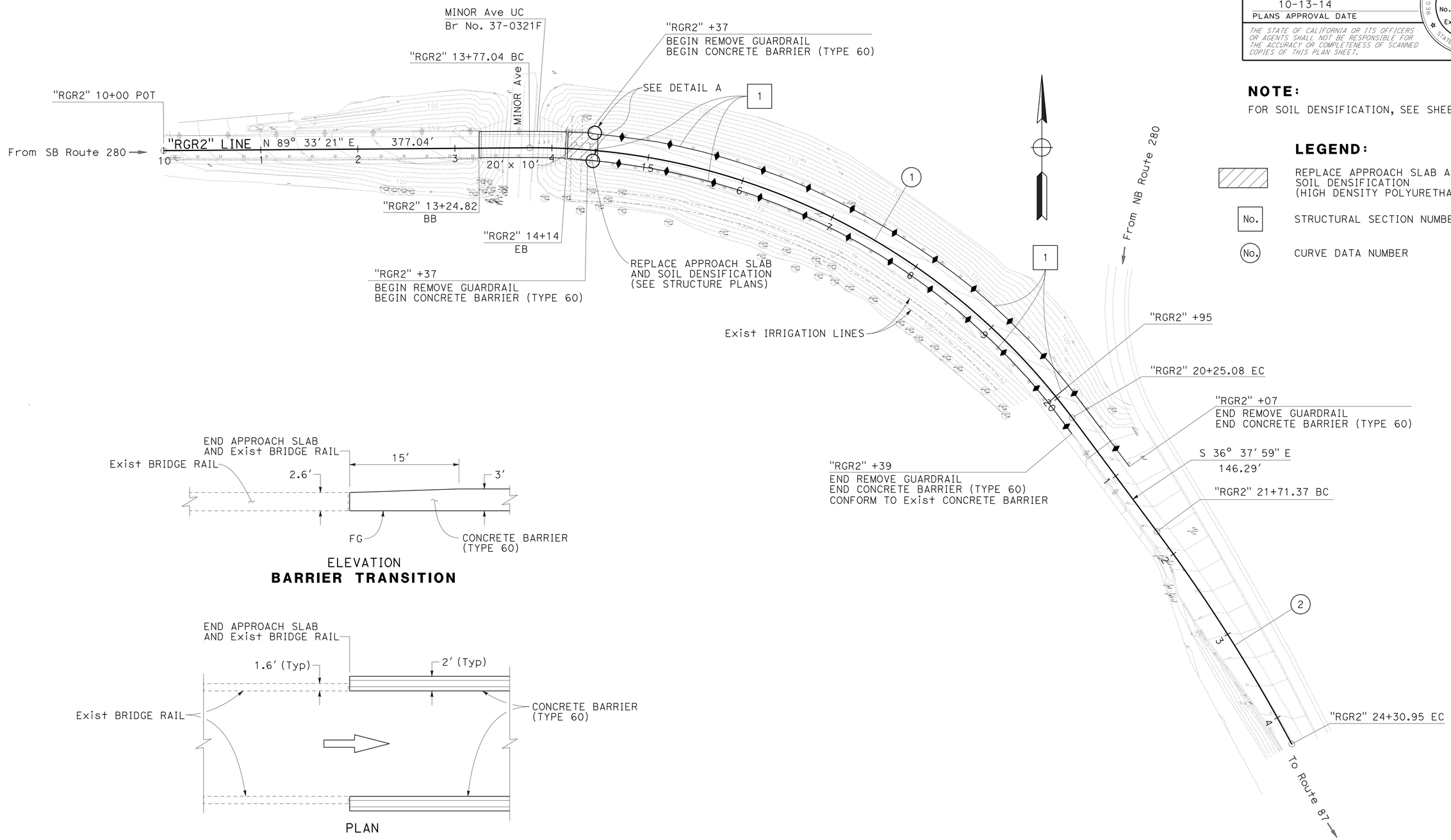

NOTE:

FOR SOIL DENSIFICATION, SEE SHEET C-1

LEGEND:

REPLACE APPROACH SLAB AND SOIL DENSIFICATION (HIGH DENSITY POLYURETHANE)

No. STRUCTURAL SECTION NUMBER

(No.) CURVE DATA NUMBER

ELEVATION
BARRIER TRANSITION

PLAN
DETAIL A
NO SCALE

LAYOUT
SCALE: 1" = 50′

L-1

ZM 9/9/14 REVISED BY DATE REVISED
ZORA MANGAT PETER LAC CALCULATED-DESIGNED BY CHECKED BY
FUNCTIONAL SUPERVISOR SINDHU KURUP
STATE OF CALIFORNIA - DEPARTMENT OF TRANSPORTATION
Caltrans DESIGN

LAST REVISION 09-16-14 DATE PLOTTED => 08-DEC-2014 TIME PLOTTED => 11:18

Dist	COUNTY	ROUTE	POST MILES TOTAL PROJECT	SHEET No.	TOTAL SHEETS
04	SCI	280	R2.6	4	30

Zora S. Mangat 9/17/14
REGISTERED CIVIL ENGINEER DATE

10-13-14
PLANS APPROVAL DATE

REGISTERED PROFESSIONAL ENGINEER Zora Mangat No. 44843 Exp. 3-31-16 CIVIL STATE OF CALIFORNIA

THE STATE OF CALIFORNIA OR ITS OFFICERS OR AGENTS SHALL NOT BE RESPONSIBLE FOR THE ACCURACY OR COMPLETENESS OF SCANNED COPIES OF THIS PLAN SHEET.

LEGEND:

SOIL DENSIFICATION (HIGH DENSITY POLYURETHANE)

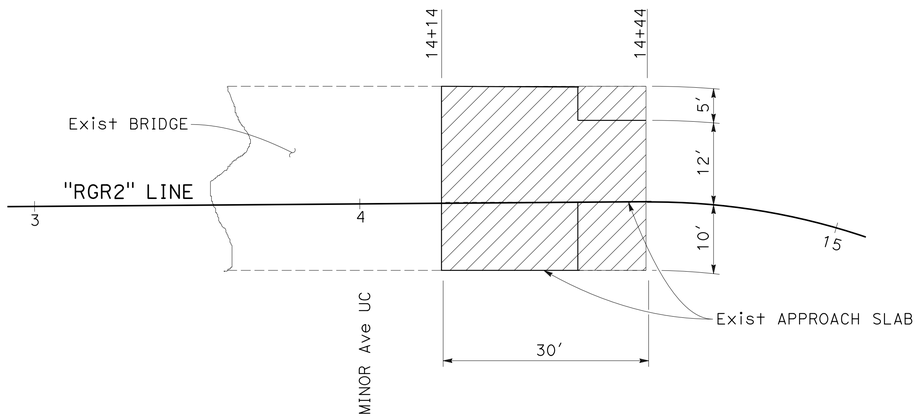

PLAN
SOIL DENSIFICATION AREA

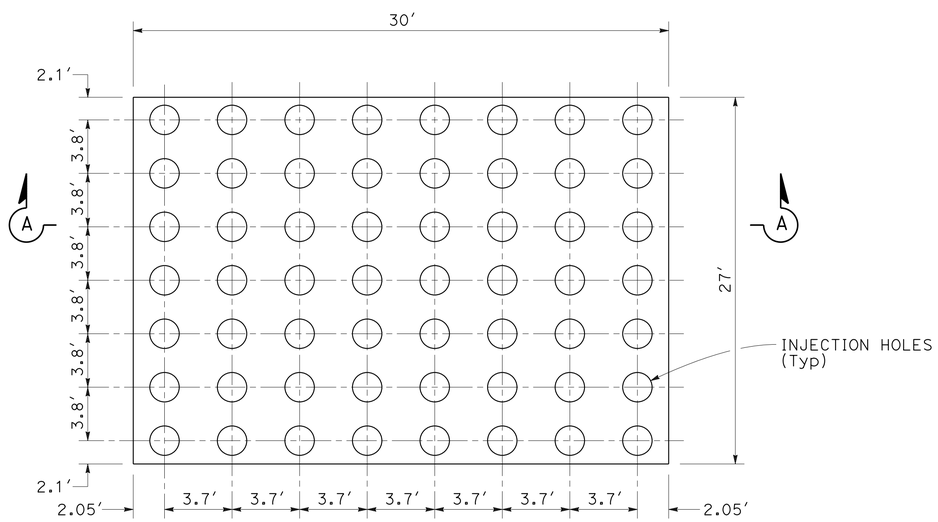

PLAN
SOIL DENSIFICATION INJECTION HOLES

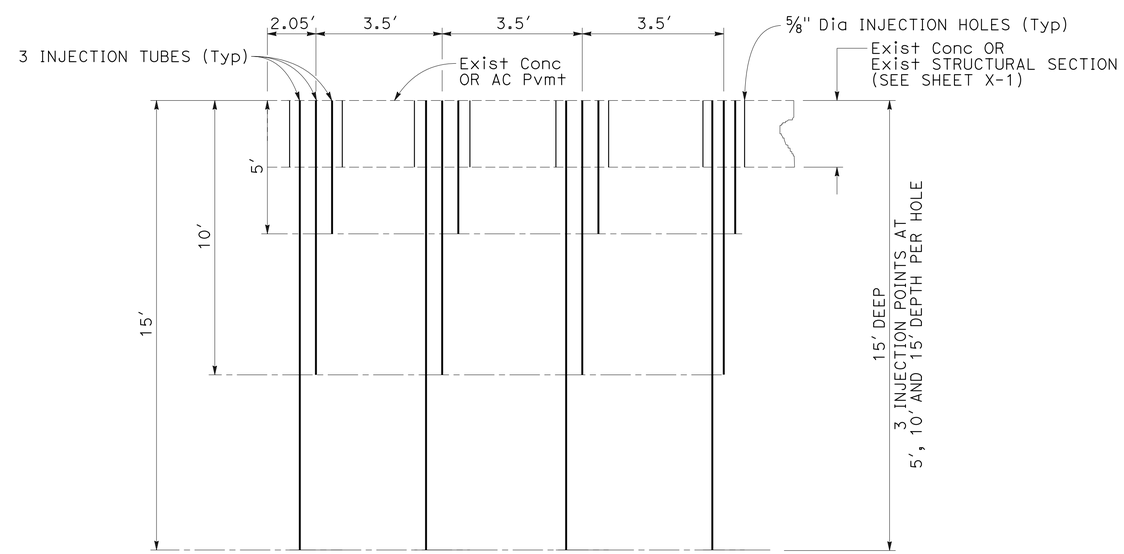

SECTION A-A

CONSTRUCTION DETAILS
NO SCALE

C-1

STATE OF CALIFORNIA - DEPARTMENT OF TRANSPORTATION
Caltrans® DESIGN
FUNCTIONAL SUPERVISOR: SINDHU KURUP
CALCULATED-DESIGNED BY: ZORA MANGAT
CHECKED BY: PETER LAC
REVISED BY: ZM
DATE REVISED: 9/9/14

LAST REVISION 09-17-14
DATE PLOTTED => 08-DEC-2014
TIME PLOTTED => 11:18

Dist	COUNTY	ROUTE	POST MILES TOTAL PROJECT	SHEET No.	TOTAL SHEETS
04	SCI	280	R2.6	5	30

Zora S. Mangat 9/17/14
REGISTERED CIVIL ENGINEER DATE

10-13-14
PLANS APPROVAL DATE

REGISTERED PROFESSIONAL ENGINEER
Zora Mangat
No. 44843
Exp. 3-31-16
CIVIL
STATE OF CALIFORNIA

THE STATE OF CALIFORNIA OR ITS OFFICERS OR AGENTS SHALL NOT BE RESPONSIBLE FOR THE ACCURACY OR COMPLETENESS OF SCANNED COPIES OF THIS PLAN SHEET.

NOTE:

RIGHT OF WAY LIMITS ARE INDETERMINATE, AND ARE NOT SHOWN.
THE CONTRACTOR MUST CONTACT RIGHT OF WAY ENGINEERING AT THE DISTRICT OFFICE FOR CONDITIONS OF USE PRIOR TO COMMENCING WORK.

LEGEND:

- TEMPORARY DRAINAGE INLET PROTECTION
- TEMPORARY CONSTRUCTION ENTRANCE
- TEMPORARY HYDRAULIC MULCH (BFM)

TEMPORARY WATER POLLUTION CONTROL PLAN
(STAGE CONSTRUCTION)
STAGE 1

SCALE: 1" = 50'

APPROVED FOR TEMPORARY WATER POLLUTION CONTROL WORK ONLY

WPC-1

REVISED BY	DATE REVISED
JC	9/9/14

CALCULATED-DESIGNED BY	CHECKED BY
JENNIFER CHEN	KAMRAN NAKHJIRI

FUNCTIONAL SUPERVISOR: KAMRAN NAKHJIRI

STATE OF CALIFORNIA - DEPARTMENT OF TRANSPORTATION
Caltrans® WATER QUALITY

LAST REVISION 09-16-14 | DATE PLOTTED => 08-DEC-2014 | TIME PLOTTED => 11:18

Dist	COUNTY	ROUTE	POST MILES TOTAL PROJECT	SHEET No.	TOTAL SHEETS
04	SCI	280	R2.6	6	30

Zora S. Mangat 9/17/14
REGISTERED CIVIL ENGINEER DATE

10-13-14
PLANS APPROVAL DATE

REGISTERED PROFESSIONAL ENGINEER
Zora Mangat
No. 44843
Exp. 3-31-16
CIVIL
STATE OF CALIFORNIA

THE STATE OF CALIFORNIA OR ITS OFFICERS OR AGENTS SHALL NOT BE RESPONSIBLE FOR THE ACCURACY OR COMPLETENESS OF SCANNED COPIES OF THIS PLAN SHEET.

NOTE:

RIGHT OF WAY LIMITS ARE INDETERMINATE, AND ARE NOT SHOWN.
THE CONTRACTOR MUST CONTACT RIGHT OF WAY ENGINEERING AT THE DISTRICT OFFICE FOR CONDITIONS OF USE PRIOR TO COMMENCING WORK.

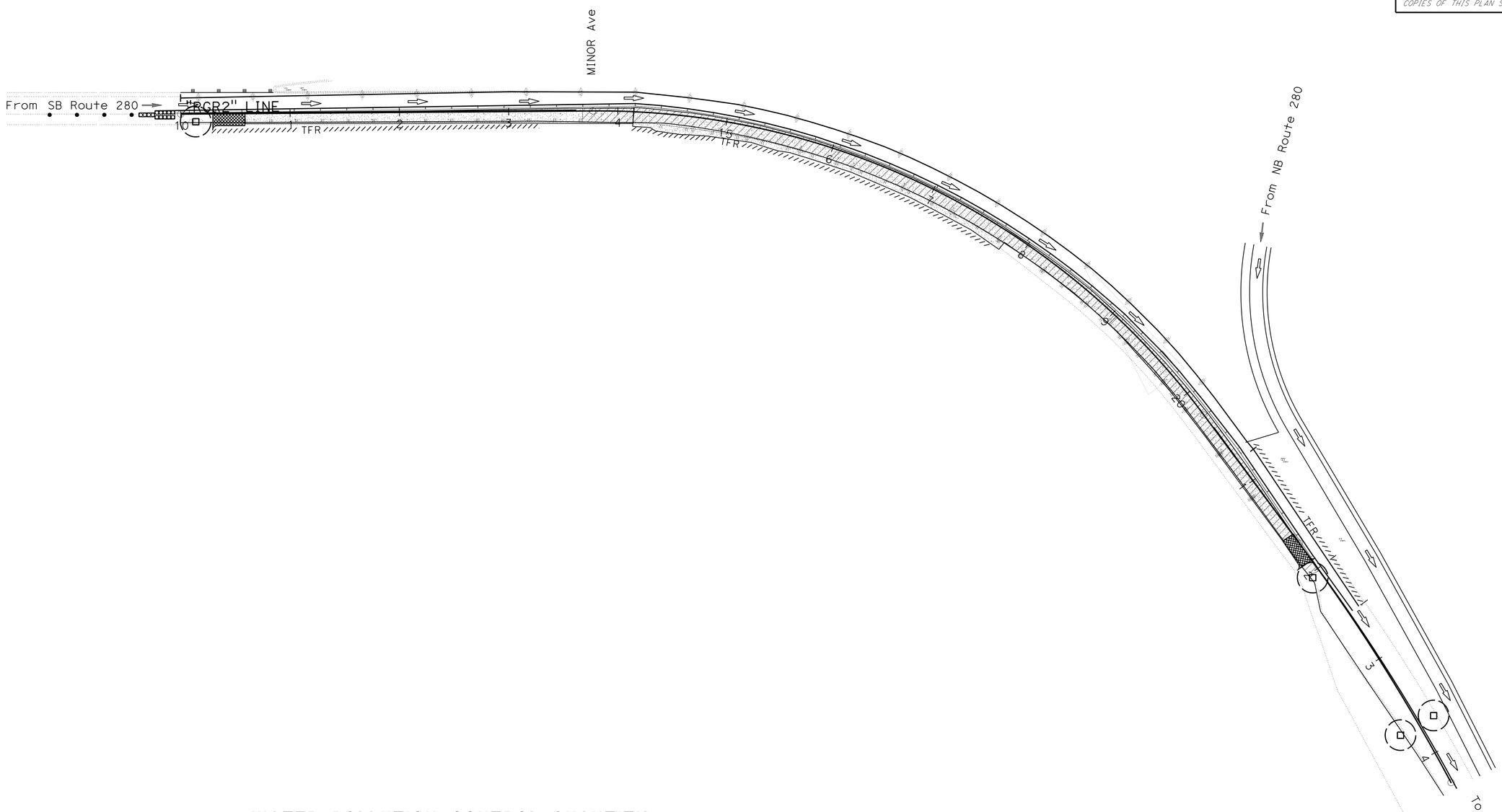

WATER POLLUTION CONTROL QUANTITY

ITEMS	STAGE 1	STAGE 2	TOTAL
TEMPORARY HYDRAULIC MULCH (BFM) (SQYD)	2300	1700	4000
TEMPORARY DRAINAGE INLET PROTECTION (EA)	4		4
TEMPORARY CONSTRUCTION ENTRANCE (EA)	2	2	4
TEMPORARY FIBER ROLL (LF)	1000	1000	2000

APPROVED FOR WATER POLLUTION CONTROL WORK ONLY

TEMPORARY WATER POLLUTION CONTROL PLAN
(STAGE CONSTRUCTION)
STAGE 2
SCALE: 1" = 50'

FOR NOTES, ABBREVIATIONS AND LEGEND, SEE SHEET WPC-1

WPC-2

JENNIFER CHEN	JC
KAMRAN NAKHJIRI	9/9/14
REVISED BY	DATE REVISED
CALCULATED-DESIGNED BY	
CHECKED BY	
FUNCTIONAL SUPERVISOR	
KAMRAN NAKHJIRI	

STATE OF CALIFORNIA - DEPARTMENT OF TRANSPORTATION
Caltrans
WATER QUALITY

LAST REVISION 09-16-14 | DATE PLOTTED => 08-DEC-2014 | TIME PLOTTED => 11:18

Dist	COUNTY	ROUTE	POST MILES TOTAL PROJECT	SHEET No.	TOTAL SHEETS
04	SCI	280	R2.6	7	30

Dominic Chin 9/17/14
REGISTERED CIVIL ENGINEER DATE

10-13-14
PLANS APPROVAL DATE

REGISTERED PROFESSIONAL ENGINEER Dominic W. Chin No. 69060 Exp. 6-30-16 CIVIL STATE OF CALIFORNIA

THE STATE OF CALIFORNIA OR ITS OFFICERS OR AGENTS SHALL NOT BE RESPONSIBLE FOR THE ACCURACY OR COMPLETENESS OF SCANNED COPIES OF THIS PLAN SHEET.

NOTE:

RIGHT OF WAY LIMITS ARE INDETERMINATE, AND ARE NOT SHOWN.
THE CONTRACTOR MUST CONTACT RIGHT OF WAY ENGINEERING AT THE DISTRICT OFFICE FOR CONDITIONS OF USE PRIOR TO COMMENCING WORK.

ABBREVIATIONS:

SGD STANDARD GUTTER DEPRESSION
w/ WITH

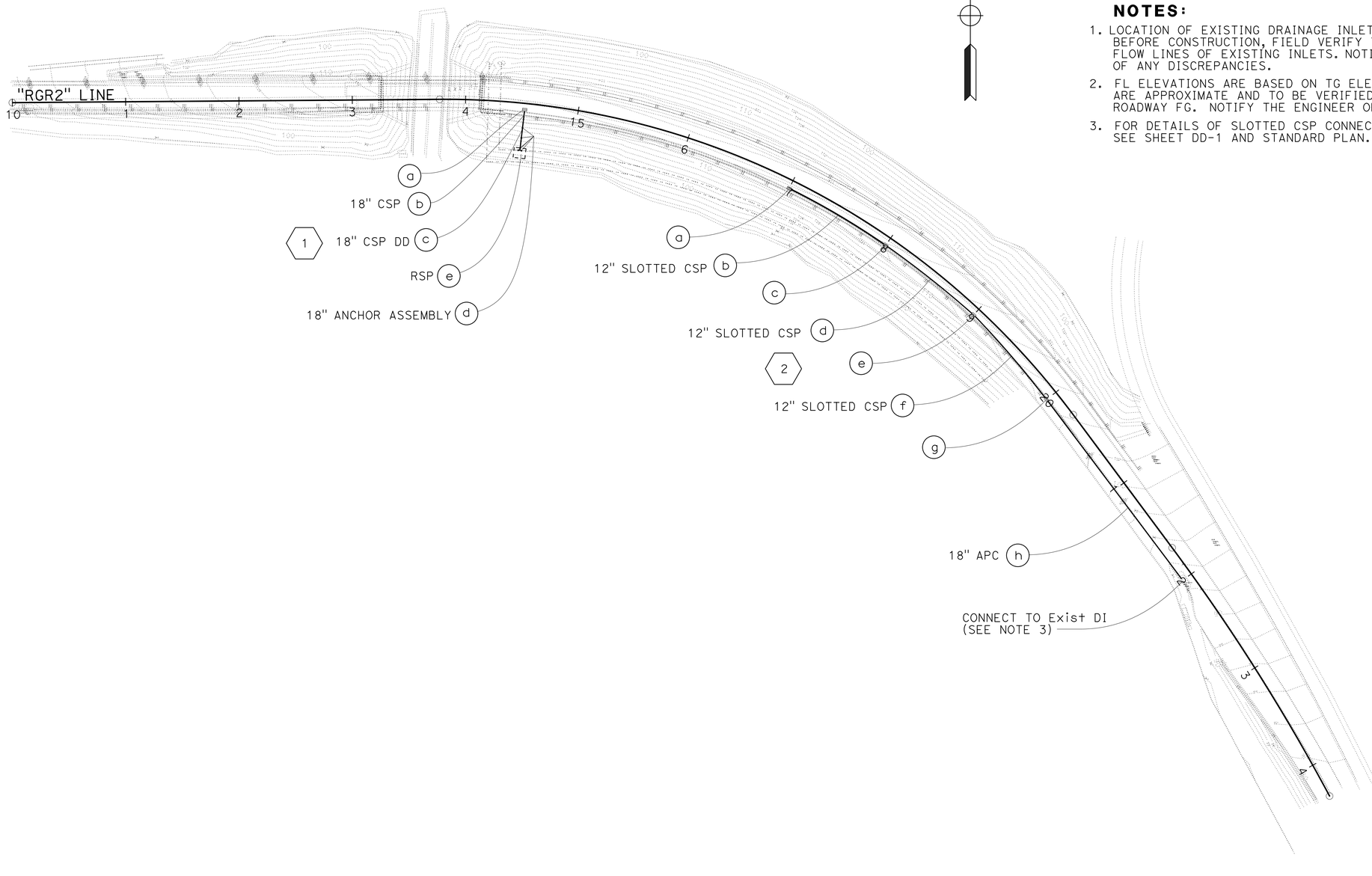

NOTES:

1. LOCATION OF EXISTING DRAINAGE INLET IS APPROXIMATE. BEFORE CONSTRUCTION, FIELD VERIFY THE LOCATIONS AND FLOW LINES OF EXISTING INLETS. NOTIFY THE ENGINEER OF ANY DISCREPANCIES.
2. FL ELEVATIONS ARE BASED ON TG ELEVATIONS. TG ELEVATIONS ARE APPROXIMATE AND TO BE VERIFIED AND ADJUSTED BASED ON ROADWAY FG. NOTIFY THE ENGINEER OF ANY DISCREPANCIES.
3. FOR DETAILS OF SLOTTED CSP CONNECTION TO DRAINAGE INLET, SEE SHEET DD-1 AND STANDARD PLAN.

DRAINAGE PLAN

SCALE: 1" = 50'

APPROVED FOR DRAINAGE WORK ONLY

D-1

REVISED BY	DATE REVISED
DC	9/5/14

CALCULATED-DESIGNED BY: DOMINIC CHIN
CHECKED BY: YUANZHENG GE
FUNCTIONAL SUPERVISOR: YUANZHENG GE

STATE OF CALIFORNIA - DEPARTMENT OF TRANSPORTATION
Caltrans
HYDRAULICS

LAST REVISION 08-28-14 | DATE PLOTTED => 08-DEC-2014 | TIME PLOTTED => 11:18

Dist	COUNTY	ROUTE	POST MILES TOTAL PROJECT	SHEET No.	TOTAL SHEETS
04	SCI	280	R2.6	8	30

REGISTERED CIVIL ENGINEER DATE 9/17/14

PLANS APPROVAL DATE 10-13-14

REGISTERED PROFESSIONAL ENGINEER Dominic W. Chin No. 69060 Exp. 6-30-16 CIVIL STATE OF CALIFORNIA

THE STATE OF CALIFORNIA OR ITS OFFICERS OR AGENTS SHALL NOT BE RESPONSIBLE FOR THE ACCURACY OR COMPLETENESS OF SCANNED COPIES OF THIS PLAN SHEET.

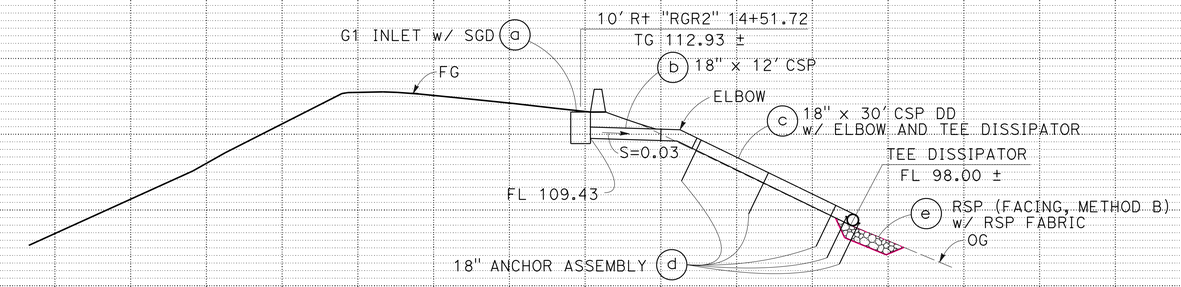

DRAINAGE SYSTEM No. 1

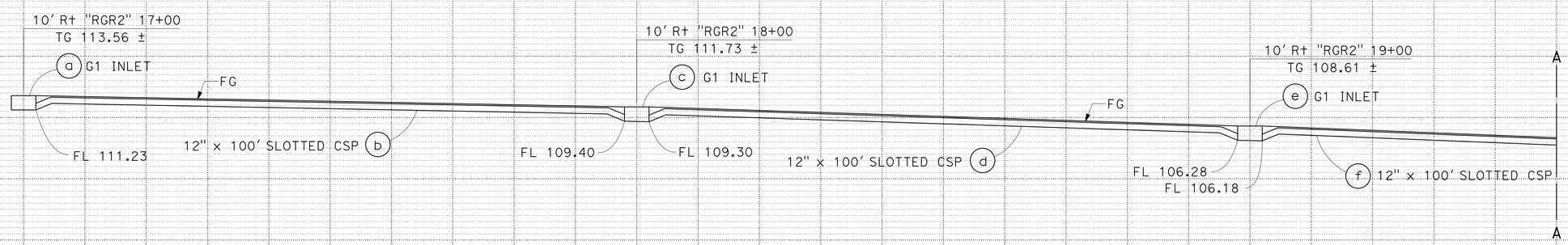

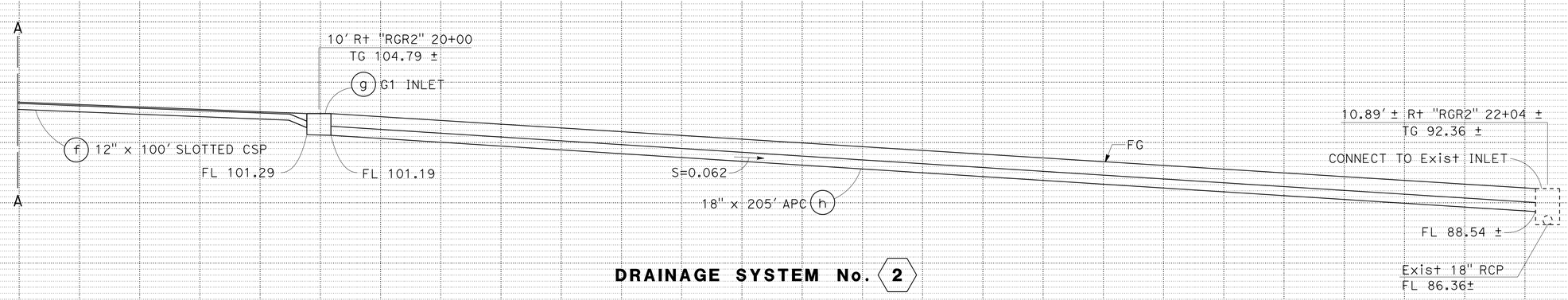

DRAINAGE SYSTEM No. 2

DRAINAGE PROFILES

SCALE: Horiz 1" = 10'
Vert 1" = 10'

DP-1

REVISED BY	DATE REVISED
DC	9/5/14

DOMINIC CHIN — CALCULATED-DESIGNED BY
YUANZHENG GE — CHECKED BY
YUANZHENG GE — FUNCTIONAL SUPERVISOR

STATE OF CALIFORNIA - DEPARTMENT OF TRANSPORTATION
Caltrans
HYDRAULICS

LAST REVISION 09-09-14
DATE PLOTTED => 08-DEC-2014
TIME PLOTTED => 11:18

Dist	COUNTY	ROUTE	POST MILES TOTAL PROJECT	SHEET No.	TOTAL SHEETS
04	SCI	280	R2.6	9	30

REGISTERED CIVIL ENGINEER 9/17/14 DATE

10-13-14
PLANS APPROVAL DATE

REGISTERED PROFESSIONAL ENGINEER Dominic W. Chin No. 69060 Exp. 6-30-16 CIVIL STATE OF CALIFORNIA

THE STATE OF CALIFORNIA OR ITS OFFICERS OR AGENTS SHALL NOT BE RESPONSIBLE FOR THE ACCURACY OR COMPLETENESS OF SCANNED COPIES OF THIS PLAN SHEET.

NOTE:
FOR 12" SLOTTED CSP, USE 2-½" TAPERED SPACER FOR GRATE SLOT. FOR DETAILS NOT SHOWN, SEE Std PLAN D98A AND D98B.

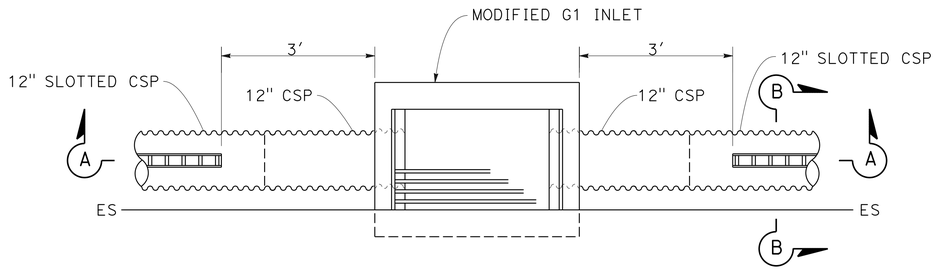

PLAN

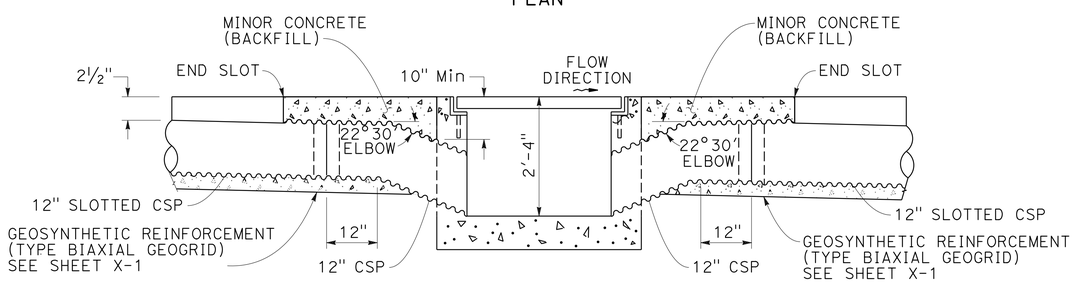

SECTION A-A

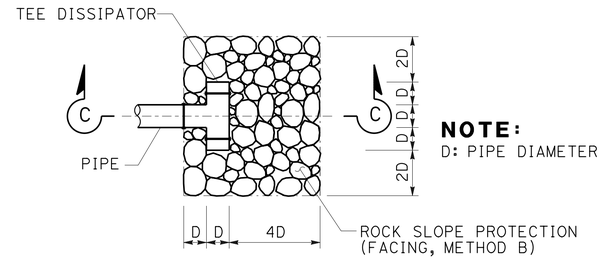

PLAN

NOTE:
D: PIPE DIAMETER

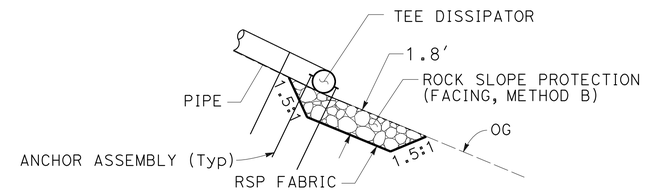

SECTION C-C

ROCK SLOPE PROTECTION DETAIL

1 e

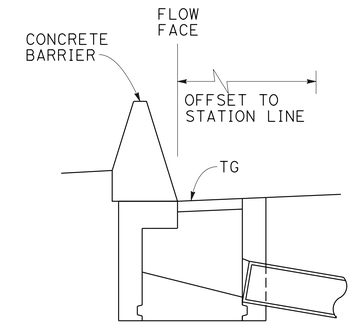

ELEVATION

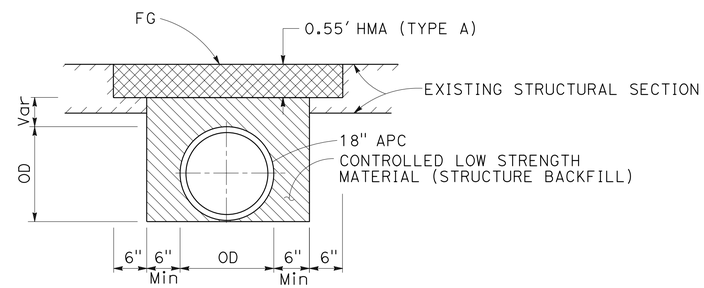

TRENCH PAVING DETAIL

2 h

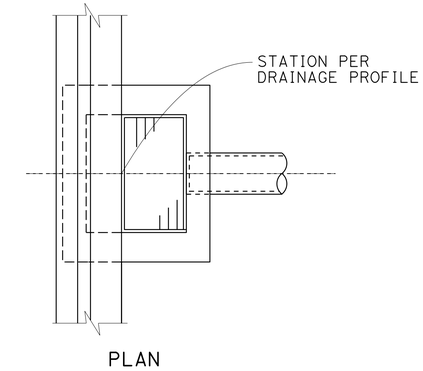

PLAN

INLET ADJACENT TO CONCRETE BARRIER

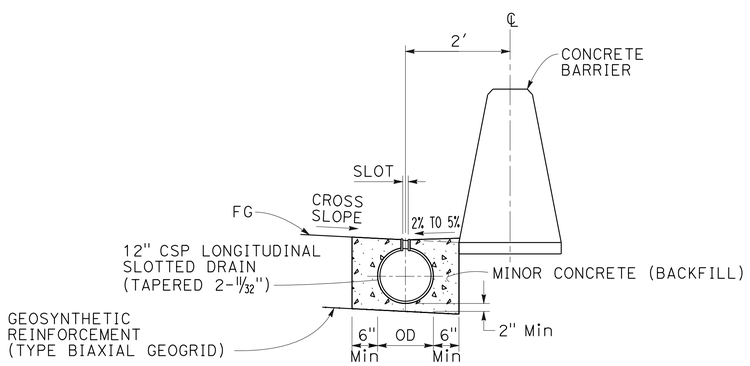

MINOR CONCRETE (BACKFILL) FOR SLOTTED CORRUGATED STEEL PIPE

SECTION B-B

G1 INLET WITH SLOTTED PIPE CONNECTION

2 a-f

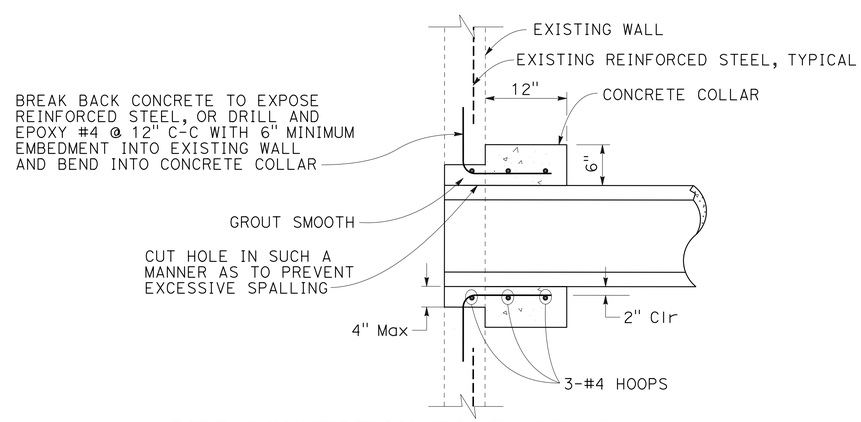

PIPE CONNECTION TO EXISTING DRAINAGE INLET

DRAINAGE DETAILS

NO SCALE

DD-1

DOMINIC CHIN	DC		
YUANZHENG GE	9/5/14		
CALCULATED-DESIGNED BY	REVISED BY		
CHECKED BY	DATE REVISED		
FUNCTIONAL SUPERVISOR			
YUANZHENG GE			

STATE OF CALIFORNIA - DEPARTMENT OF TRANSPORTATION
Caltrans
HYDRAULICS

LAST REVISION 09-17-14 | DATE PLOTTED => 08-DEC-2014 | TIME PLOTTED => 11:18

Dist	COUNTY	ROUTE	POST MILES TOTAL PROJECT	SHEET No.	TOTAL SHEETS
04	SCI	280	R2.6	10	30

Dominic Chin 9/17/14
REGISTERED CIVIL ENGINEER DATE

10-13-14
PLANS APPROVAL DATE

REGISTERED PROFESSIONAL ENGINEER Dominic W. Chin No. 69060 Exp. 6-30-16 CIVIL STATE OF CALIFORNIA

THE STATE OF CALIFORNIA OR ITS OFFICERS OR AGENTS SHALL NOT BE RESPONSIBLE FOR THE ACCURACY OR COMPLETENESS OF SCANNED COPIES OF THIS PLAN SHEET.

ABBREVIATIONS:

D - DOWNDRAIN JOINT
S - STANDARD JOINT

ALTERNATIVE PIPE CULVERTS
ALLOWABLE PIPE MATERIAL

DESIGNATION	RCP	PLASTIC PIPE	
	SIZE	SIZE	TYPE
18" APC	18"	18"	SMOOTH INTERIOR WALL

DRAINAGE QUANTITIES

DRAINAGE SHEET No.	DRAINAGE SYSTEM No. ⬡	DRAINAGE UNIT ○	MINOR CONCRETE (MINOR STRUCTURE) CY	MINOR CONCRETE (BACKFILL) CY	MINOR CONCRETE (Misc CONSTRUCTION) CY	Misc IRON & STEEL LB	CONTROLLED LOW STRENGTH MATERIAL (STRUCTURE BACKFILL) CY	18" APC LF	12" SLOTTED CSP (0.079" THICK) LF	18" CSP DD (0.109" THICK) LF	18" CSP (0.109" THICK) LF	18" ANCHOR ASSEMBLY EA	24-12 FRAME & GRATE (N) EA	RSP (FACING, METHOD B) CY	RSP FABRIC (CLASS 8) SQYD	PIPE JOINT CLASSIFICATION (N)	HEIGHT OF INLET (N) FT	Max PIPE COVER (N) FT	DESCRIPTION	STATION	DRAINAGE SYSTEM No. ⬡	DRAINAGE UNIT ○
D-1	1	a	1.06		1.15	326							1				3.5		G1 INLET w/SGD	10' Rt "RGR2" 14+51.72	1	a
		b									12					S			18" CSP			b
		c								30						D			18" CSP DD w/ ELBOW & TEE DISSIPATOR			c
		d										5							18" ANCHOR ASSEMBLY			d
		e												6.3	21				RSP			e
D-1	2	a	0.95			326							1				2.4		G1 INLET	10' Rt "RGR2" 17+00	2	a
		b		8.67					100							S			12" SLOTTED CSP			b
		c	0.95			326							1				2.4		G1 INLET	10' Rt "RGR2" 18+00		c
		d		8.67					100							S			12" SLOTTED CSP			d
		e	0.95			326							1				2.4		G1 INLET	10' Rt "RGR2" 19+00		e
		f		8.67					100							S			12" SLOTTED CSP			f
		g	1.06			326							1				3.5		G1 INLET	10' Rt "RGR2" 20+00		g
		h					47	205								S		2.32	18" APC			h
SHEET TOTAL			4.97	26.01	1.15	1630	47	205	300	30	12	5		6.3	21			2.32	SHEET TOTAL			

(N) - NOT A SEPARATE PAY ITEM, FOR INFORMATION ONLY

DOMINIC CHIN	REVISED BY	DC
YUANZHENG GE	DATE REVISED	9/5/14

CALCULATED-DESIGNED BY
CHECKED BY

FUNCTIONAL SUPERVISOR
YUANZHENG GE

STATE OF CALIFORNIA - DEPARTMENT OF TRANSPORTATION
Caltrans
HYDRAULICS

LAST REVISION 09-09-14
DATE PLOTTED => 08-DEC-2014
TIME PLOTTED => 11:18

DRAINAGE QUANTITIES DQ-1

Dist	COUNTY	ROUTE	POST MILES TOTAL PROJECT	SHEET No.	TOTAL SHEETS
04	SCI	280	R2.6	11	30

REGISTERED CIVIL ENGINEER 9/17/14 DATE

10-13-14
PLANS APPROVAL DATE

REGISTERED PROFESSIONAL ENGINEER Jerilyn L. Struven No. 49964 Exp. 12-31-14 CIVIL STATE OF CALIFORNIA

THE STATE OF CALIFORNIA OR ITS OFFICERS OR AGENTS SHALL NOT BE RESPONSIBLE FOR THE ACCURACY OR COMPLETENESS OF SCANNED COPIES OF THIS PLAN SHEET.

LEGEND:

X RAMP CLOSED

No. CONSTRUCTION AREA SIGN NUMBER

NOTE:

1. LOCATION OF CONSTRUCTION AREA SIGNS SHOWN ARE APPROXIMATE, EXACT LOCATION TO BE DETERMINED BY THE ENGINEER.

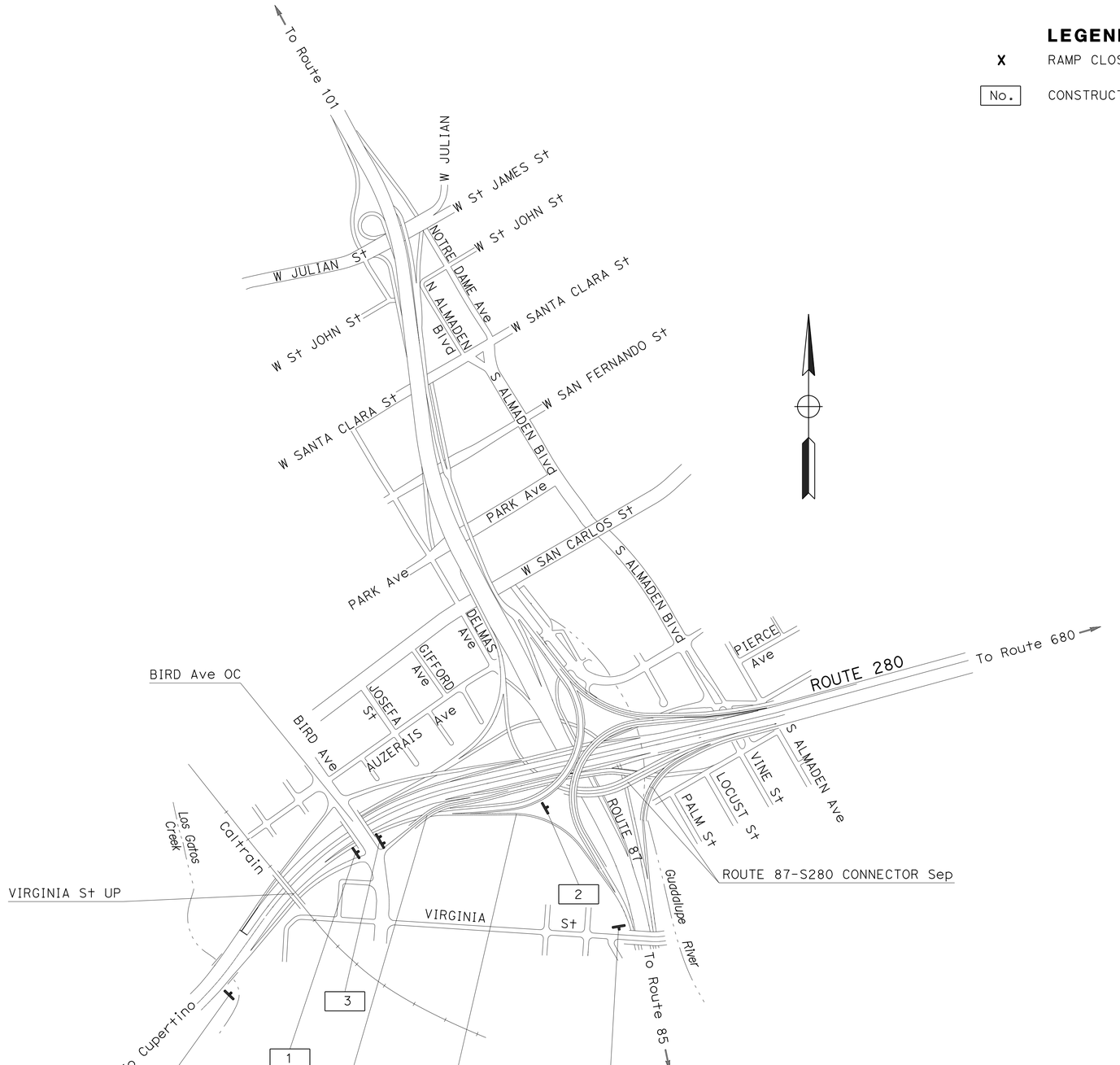

PORTABLE CHANGEABLE MESSAGE SIGN (PCMS) TWO WEEKS BEFORE CLOSURE

1ST FLASH	2ND FLASH
ON-RAMP TO SB 87 CLOSED	JULY XX XX:00 XX:00

PORTABLE CHANGEABLE MESSAGE SIGN (PCMS) DURING CLOSURE

1ST FLASH	2ND FLASH
ON-RAMP TO SB 87 CLOSED	USE NB 87 DETOUR

CONSTRUCTION AREA SIGNS

NO SCALE

APPROVED FOR CONSTRUCTION AREA SIGN WORK ONLY

CS-1

REVISED BY	RY
DATE REVISED	9/5/14
CALCULATED-DESIGNED BY	ROY YUAN
CHECKED BY	JERILYN STRUVEN
FUNCTIONAL SUPERVISOR	ROLAND AU-YEUNG

STATE OF CALIFORNIA - DEPARTMENT OF TRANSPORTATION

Caltrans

TRAFFIC

LAST REVISION 09-17-14 | DATE PLOTTED => 08-DEC-2014 | TIME PLOTTED => 11:18

Dist	COUNTY	ROUTE	POST MILES TOTAL PROJECT	SHEET No.	TOTAL SHEETS
04	SCI	280	R2.6	12	30

REGISTERED CIVIL ENGINEER 9/17/14 DATE

10-13-14
PLANS APPROVAL DATE

REGISTERED PROFESSIONAL ENGINEER
Jerilyn L. Struven
No. 49964
Exp. 12-31-14
CIVIL
STATE OF CALIFORNIA

THE STATE OF CALIFORNIA OR ITS OFFICERS OR AGENTS SHALL NOT BE RESPONSIBLE FOR THE ACCURACY OR COMPLETENESS OF SCANNED COPIES OF THIS PLAN SHEET.

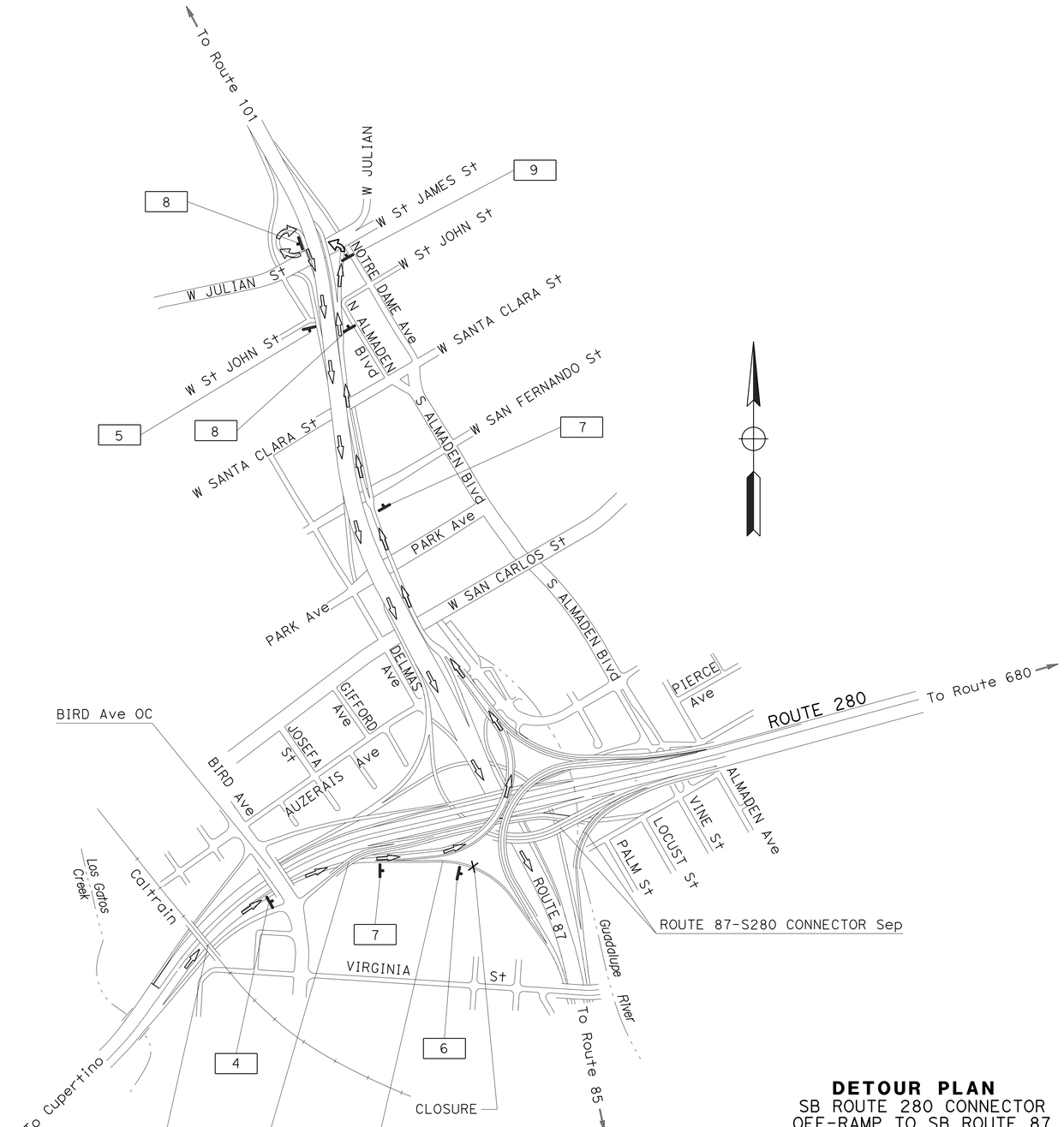

DETOUR PLAN

SB ROUTE 280 CONNECTOR
OFF-RAMP TO SB ROUTE 87
CLOSED

SB ROUTE 280 CONNECTOR OFF-RAMP TO NB ROUTE 87
NB OFF-RAMP TO JULIAN St
WB JULIAN St
ON-RAMP TO SB ROUTE 87

CONSTRUCTION AREA SIGNS

NO SCALE

APPROVED FOR CONSTRUCTION AREA SIGN WORK ONLY

FOR NOTES, ABBREVIATIONS AND LEGEND, SEE SHEET CS-1

CS-2

REVISED BY	RY
DATE REVISED	9/5/14
CALCULATED-DESIGNED BY	ROY YUAN
CHECKED BY	JERILYN STRUVEN
FUNCTIONAL SUPERVISOR	ROLAND AU-YEUNG

STATE OF CALIFORNIA - DEPARTMENT OF TRANSPORTATION
Caltrans
TRAFFIC

LAST REVISION 09-09-14 | DATE PLOTTED => 08-DEC-2014 | TIME PLOTTED => 11:18

Dist	COUNTY	ROUTE	POST MILES TOTAL PROJECT	SHEET No.	TOTAL SHEETS
04	SCI	280	R2.6	13	30

REGISTERED CIVIL ENGINEER 9/17/14 DATE

10-13-14
PLANS APPROVAL DATE

REGISTERED PROFESSIONAL ENGINEER Jerilyn L. Struven No. 49964 Exp. 12-31-14 CIVIL STATE OF CALIFORNIA

THE STATE OF CALIFORNIA OR ITS OFFICERS OR AGENTS SHALL NOT BE RESPONSIBLE FOR THE ACCURACY OR COMPLETENESS OF SCANNED COPIES OF THIS PLAN SHEET.

STATIONARY MOUNTED CONSTRUCTION AREA SIGNS

SIGN No.	MUTCD CODE	PANEL SIZE	SIGN MESSAGE	NUMBER OF POSTS AND SIZE	No. OF SIGNS
1	W20-1	48" x 48"	ROAD WORK AHEAD	(ONE) 4" x 6"	1
2	G20-2	48" x 24"	END ROAD WORK	(ONE) 4" x 4"	2
3	C40(CA)	72" x 36"	TRAFFIC FINES DOUBLED IN CONSTRUCTION ZONES	(TWO) 4" x 6"	1
4	W20-2	48" x 48"	DETOUR AHEAD	(ONE) 4" x 6"	1
5	M4-8a	24" x 18"	END DETOUR	(ONE) 4" x 4"	1
6	SC6-4(CA)	48" x 60"	RAMP CLOSED (DATE & TIME)	(ONE) 6" x 6"	1
7	M4-8	21" x 9"	DETOUR	(ONE) 4" x 6"	2
	G28-2(87)(CA)	24" x 25"	ROUTE SHIELD		
	M3-3	21" x 9"	SOUTH		
	M6-2(↖)	21" x 15"	DETOUR (DIAGONAL ARROW)		
8	M4-8	21" x 9"	DETOUR	(ONE) 4" x 6"	2
	G28-2(87)(CA)	24" x 25"	ROUTE SHIELD		
	M3-3	21" x 9"	SOUTH		
	M6-2(↗)	21" x 15"	DETOUR (DIAGONAL ARROW)		
9	M4-10(L+)	48" x 18"	DETOUR (LEFT)	(ONE) 4" x 6"	1
	G28-2(87)(CA)	24" x 25"	ROUTE SHIELD		
	M3-3	21" x 9"	SOUTH		

CONSTRUCTION AREA SIGNS
CS-3

STATE OF CALIFORNIA - DEPARTMENT OF TRANSPORTATION
Caltrans® TRAFFIC

FUNCTIONAL SUPERVISOR: ROLAND AU-YEUNG
CALCULATED-DESIGNED BY: ROY YUAN
CHECKED BY: JERILYN STRUVEN
REVISED BY: RY
DATE REVISED: 9/5/14

LAST REVISION 09-09-14
DATE PLOTTED => 08-DEC-2014
TIME PLOTTED => 11:18

Dist	COUNTY	ROUTE	POST MILES TOTAL PROJECT	SHEET No.	TOTAL SHEETS
04	SCI	280	R2.6	14	30

Zora S. Mangat 9/17/14
REGISTERED CIVIL ENGINEER DATE

10-13-14
PLANS APPROVAL DATE

REGISTERED PROFESSIONAL ENGINEER Zora Mangat No. 44843 Exp. 3-31-16 CIVIL STATE OF CALIFORNIA

THE STATE OF CALIFORNIA OR ITS OFFICERS OR AGENTS SHALL NOT BE RESPONSIBLE FOR THE ACCURACY OR COMPLETENESS OF SCANNED COPIES OF THIS PLAN SHEET.

NOTE:

RIGHT OF WAY LIMITS ARE INDETERMINATE, AND ARE NOT SHOWN.
THE CONTRACTOR MUST CONTACT RIGHT OF WAY ENGINEERING AT THE DISTRICT OFFICE FOR CONDITIONS OF USE PRIOR TO COMMENCING WORK.

LEGEND:

CONSTRUCT THIS STAGE

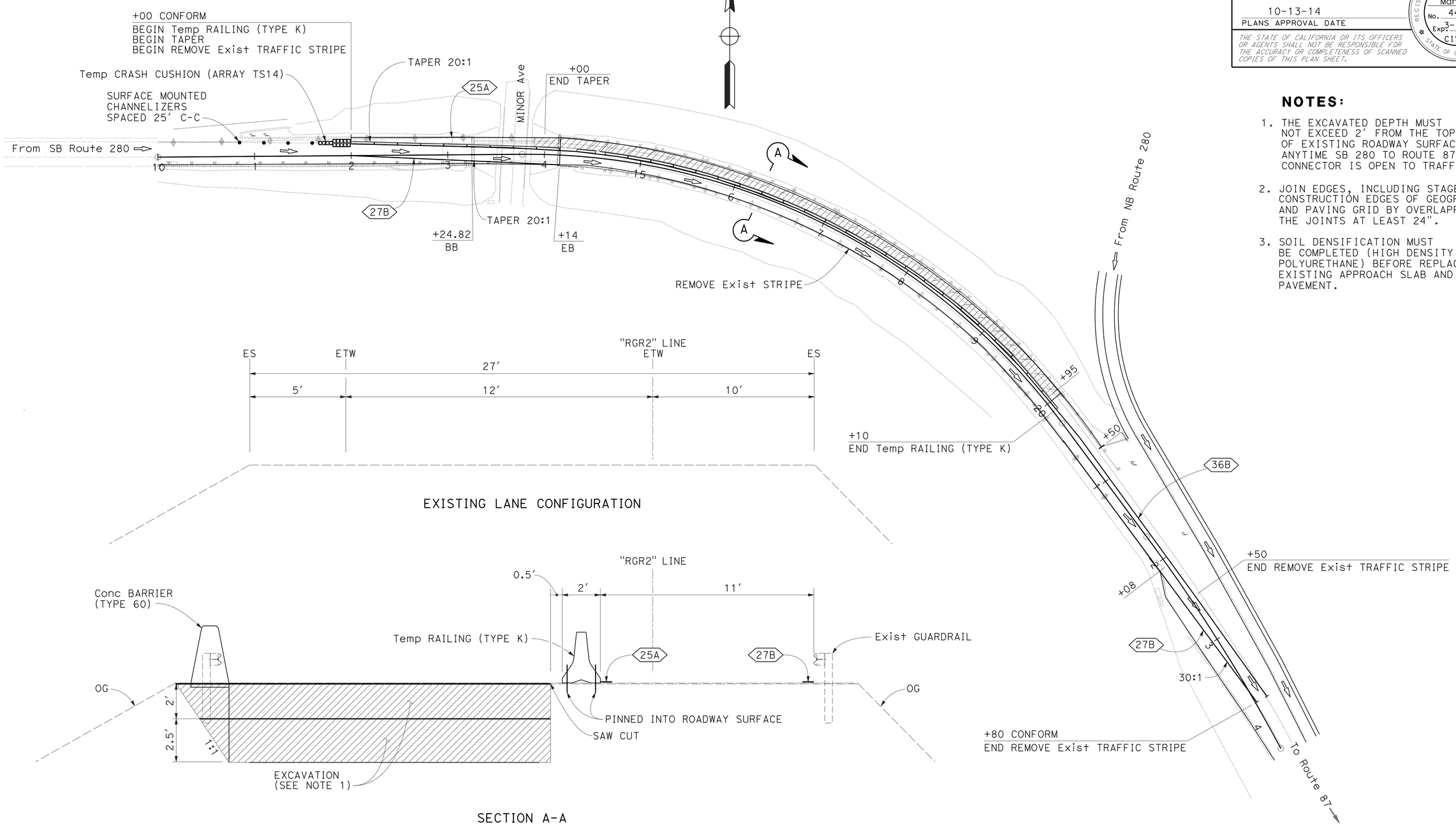

NOTES:

1. THE EXCAVATED DEPTH MUST NOT EXCEED 2' FROM THE TOP OF EXISTING ROADWAY SURFACE ANYTIME SB 280 TO ROUTE 87 CONNECTOR IS OPEN TO TRAFFIC.
2. JOIN EDGES, INCLUDING STAGE CONSTRUCTION EDGES OF GEOGRID AND PAVING GRID BY OVERLAPPING THE JOINTS AT LEAST 24".
3. SOIL DENSIFICATION MUST BE COMPLETED (HIGH DENSITY POLYURETHANE) BEFORE REPLACING EXISTING APPROACH SLAB AND AC PAVEMENT.

STAGE CONSTRUCTION PLAN
STAGE 1
SCALE: 1" = 50'

APPROVED FOR STAGE CONSTRUCTION WORK ONLY

SC-1

STATE OF CALIFORNIA - DEPARTMENT OF TRANSPORTATION
Caltrans
DESIGN
FUNCTIONAL SUPERVISOR: SINDHU KURUP
CALCULATED-DESIGNED BY: ZORA MANGAT
CHECKED BY: PETER LAC
REVISED BY: ZM
DATE REVISED: 9/9/14

LAST REVISION 09-17-14
DATE PLOTTED => 08-DEC-2014
TIME PLOTTED => 11:18

Dist	COUNTY	ROUTE	POST MILES TOTAL PROJECT	SHEET No.	TOTAL SHEETS
04	SCI	280	R2.6	15	30

Zora S. Mangat 9/17/14
REGISTERED CIVIL ENGINEER DATE

10-13-14
PLANS APPROVAL DATE

REGISTERED PROFESSIONAL ENGINEER Zora Mangat No. 44843 Exp. 3-31-16 CIVIL STATE OF CALIFORNIA

THE STATE OF CALIFORNIA OR ITS OFFICERS OR AGENTS SHALL NOT BE RESPONSIBLE FOR THE ACCURACY OR COMPLETENESS OF SCANNED COPIES OF THIS PLAN SHEET.

NOTE:

RIGHT OF WAY LIMITS ARE INDETERMINATE, AND ARE NOT SHOWN.
THE CONTRACTOR MUST CONTACT RIGHT OF WAY ENGINEERING AT THE DISTRICT OFFICE FOR CONDITIONS OF USE PRIOR TO COMMENCING WORK.

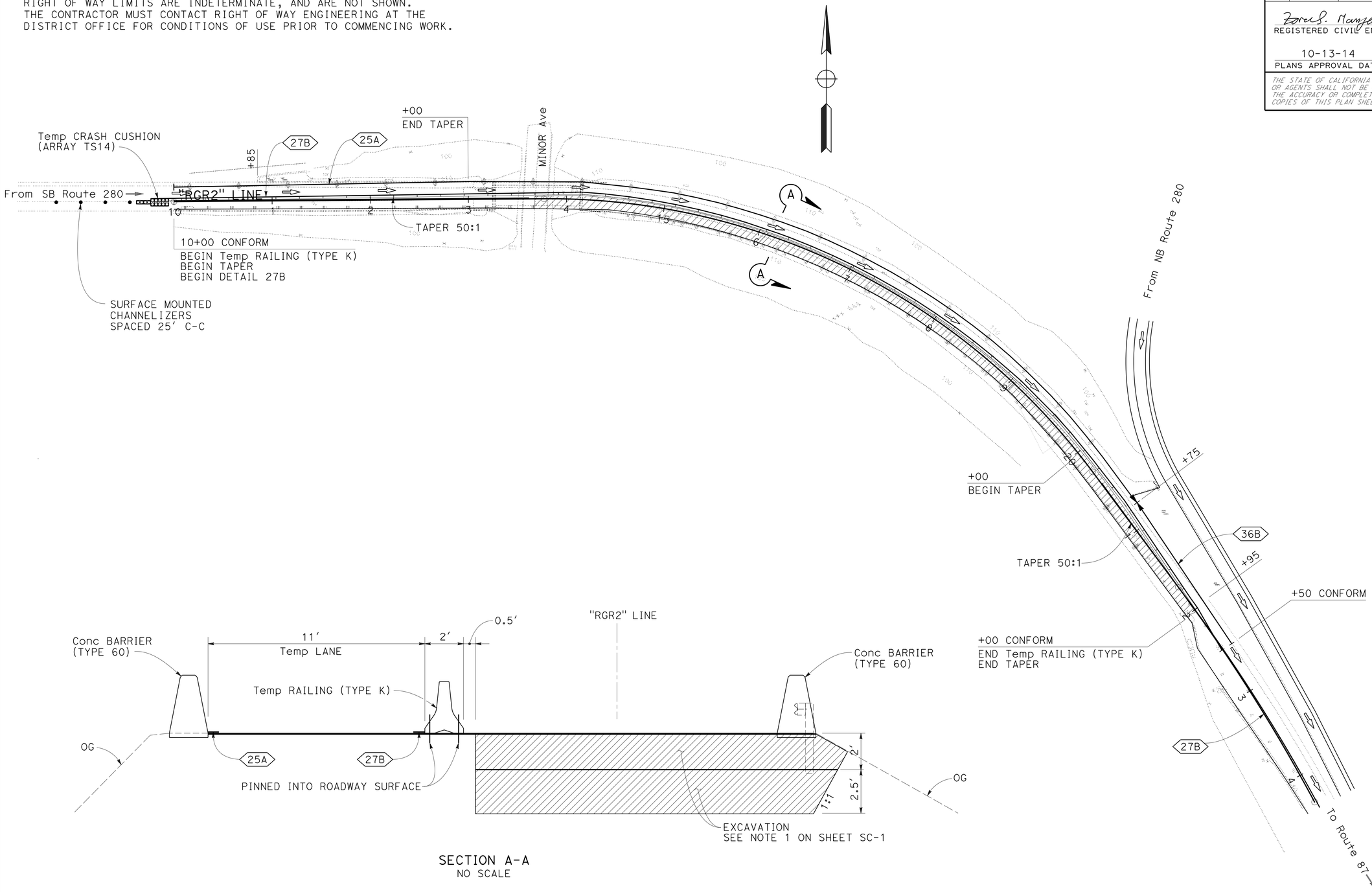

SECTION A-A
NO SCALE

STAGE CONSTRUCTION PLAN
STAGE 2
SCALE: 1" = 50'

APPROVED FOR STAGE CONSTRUCTION WORK ONLY

FOR NOTES, ABBREVIATIONS AND LEGEND, SEE SHEET SC-1

SC-2

STATE OF CALIFORNIA - DEPARTMENT OF TRANSPORTATION
Caltrans
DESIGN

FUNCTIONAL SUPERVISOR: SINDHU KURUP
CALCULATED-DESIGNED BY: ZORA MANGAT
CHECKED BY: PETER LAC
REVISED BY: ZM
DATE REVISED: 9/9/14

LAST REVISION 09-17-14
DATE PLOTTED => 08-DEC-2014
TIME PLOTTED => 11:18

Dist	COUNTY	ROUTE	POST MILES TOTAL PROJECT	SHEET No.	TOTAL SHEETS
04	SCI	280	R2.6	16	30

Zora S. Mangat 9/17/14
REGISTERED CIVIL ENGINEER DATE

10-13-14
PLANS APPROVAL DATE

REGISTERED PROFESSIONAL ENGINEER Zora Mangat No. 44843 Exp. 3-31-16 CIVIL STATE OF CALIFORNIA

THE STATE OF CALIFORNIA OR ITS OFFICERS OR AGENTS SHALL NOT BE RESPONSIBLE FOR THE ACCURACY OR COMPLETENESS OF SCANNED COPIES OF THIS PLAN SHEET.

TEMPORARY PAVEMENT DELINEATION QUANTITIES

SHEET No.	STATION LIMITS	DETAIL No.	REMOVE YELLOW THERMOPLASTIC TRAFFIC STRIPE (HAZARDOUS WASTE)	REMOVE THERMOPLASTIC TRAFFIC STRIPE 4" WHITE	REMOVE THERMOPLASTIC TRAFFIC STRIPE 8" WHITE	REMOVE PAVEMENT MARKER	TEMPORARY TRAFFIC STRIPE (PAINT) 4" YELLOW	TEMPORARY TRAFFIC STRIPE (PAINT) 4" WHITE	TEMPORARY TRAFFIC STRIPE (PAINT) 8" WHITE	REMOVE PAINTED TRAFFIC STRIPE 4" YELLOW	REMOVE PAINTED TRAFFIC STRIPE 4" WHITE	REMOVE PAINTED TRAFFIC STRIPE 8" WHITE	PAVEMENT MARKER (RETROREFLECTIVE) TYPE H
			LF			EA	LF						EA
SC-1	"RGR2" 10+00 TO 14+14	25A	414			4							
	"RGR2" 12+00 TO 22+50	27B		1050									
	"RGR2" 12+00 TO 20+50	25A					850						38
	"RGR2" 12+00 TO 23+80	27B						1180					
	"RGR2" 20+50 TO 23+80	36B			660	15							
	"RGR2" 19+95 TO 20+50	27B	55			4							
	"RGR2" 20+50 TO 23+80	36B				8			660				15
SC-2	"RGR2" 10+00 TO 20+75	25A					1075			1075			47
	"RGR2" 20+75 TO 22+50	36B				10						350	
	"RGR2" 10+00 TO 14+14	27B								414	414		
	"RGR2" 20+75 TO 22+50	36B							350				8
	"RGR2" 10+00 TO 23+80	27B						1338			1338		
SUBTOTAL			469	1050	660	41	1925	2518	1010	1489	1752	350	
TOTAL			469	1710		41	5453			3591			108*

*ADDED TO SHEET PDQ-1

STAGE CONSTRUCTION QUANTITIES

SHEET No.	STATION LIMITS	TEMPORARY RAILING (TYPE K)	TEMPORARY CRASH CUSHION MODULE (ARRAY TS14)	CHANNELIZER (SURFACE MOUNTED)
		LF	EA	
SC-1	"RGR2" 10+00 TO 21+10	1110	14	10
SC-2	"RGR2" 10+00 TO 22+00	1200	14	14
TOTAL		2310	28	24

STAGE CONSTRUCTION QUANTITIES

SCQ-1

STATE OF CALIFORNIA - DEPARTMENT OF TRANSPORTATION
Caltrans DESIGN

FUNCTIONAL SUPERVISOR: SINDHU KURUP
CALCULATED-DESIGNED BY: ZORA MANGAT
CHECKED BY: PETER LAC
REVISED BY: ZM
DATE REVISED: 9/9/14

LAST REVISION 09-24-14
DATE PLOTTED => 08-DEC-2014
TIME PLOTTED => 11:18

Dist	COUNTY	ROUTE	POST MILES TOTAL PROJECT	SHEET No.	TOTAL SHEETS
04	SCI	280	R2.6	17	30

Zora S. Mangat 9/17/14
REGISTERED CIVIL ENGINEER DATE

10-13-14
PLANS APPROVAL DATE

REGISTERED PROFESSIONAL ENGINEER
Zora Mangat
No. 44843
Exp. 3-31-16
CIVIL
STATE OF CALIFORNIA

THE STATE OF CALIFORNIA OR ITS OFFICERS OR AGENTS SHALL NOT BE RESPONSIBLE FOR THE ACCURACY OR COMPLETENESS OF SCANNED COPIES OF THIS PLAN SHEET.

NOTE:

RIGHT OF WAY LIMITS ARE INDETERMINATE, AND ARE NOT SHOWN.
THE CONTRACTOR MUST CONTACT RIGHT OF WAY ENGINEERING AT THE DISTRICT OFFICE FOR CONDITIONS OF USE PRIOR TO COMMENCING WORK.

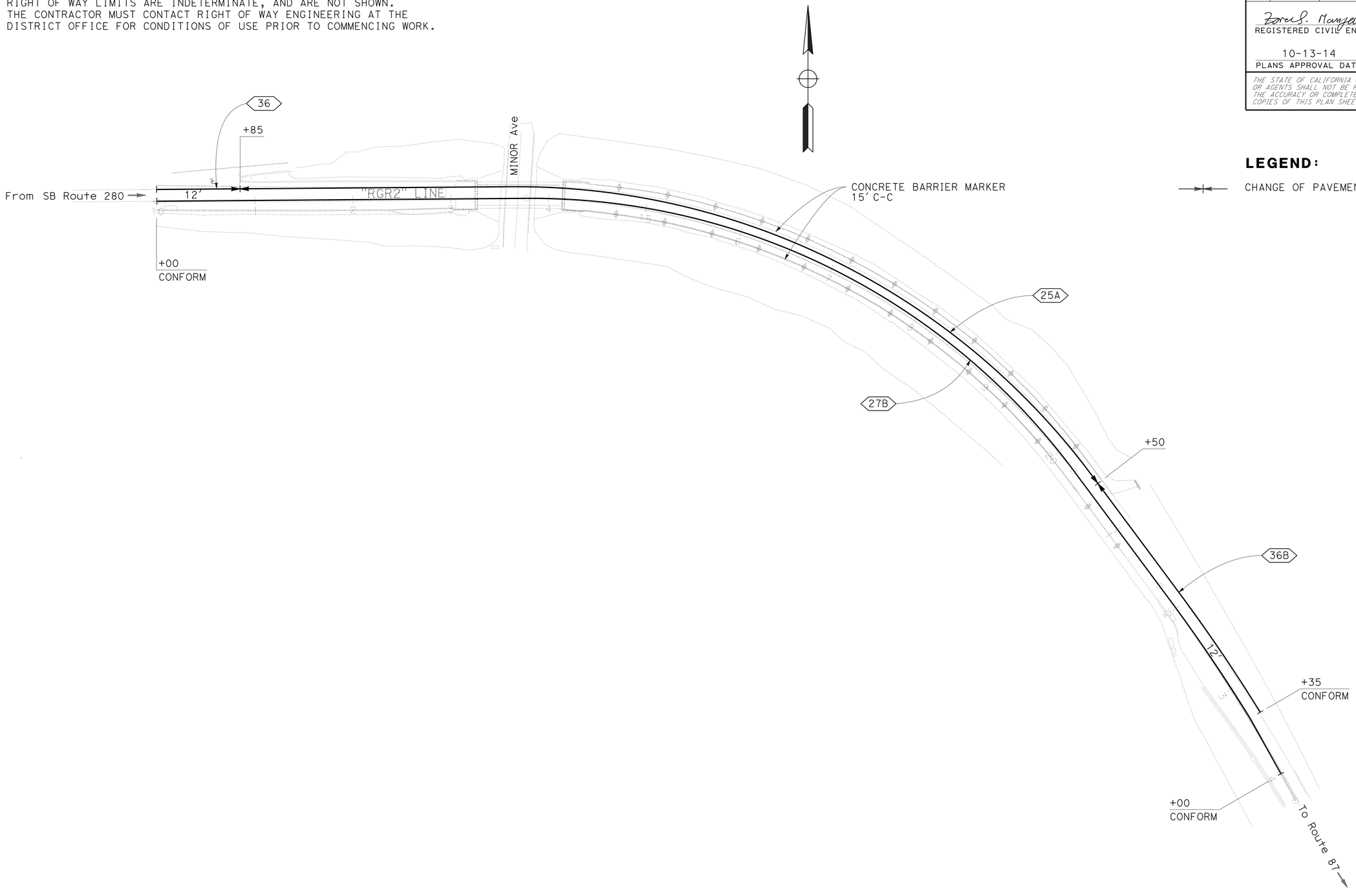

LEGEND:

CHANGE OF PAVEMENT DELINEATION DETAILS

PAVEMENT DELINEATION PLAN

SCALE: 1" = 50'

APPROVED FOR PAVEMENT DELINEATION WORK ONLY

PD-1

REVISED BY	DATE REVISED
ZM	9/9/14

ZORA MANGAT — CALCULATED-DESIGNED BY
PETER LAC — CHECKED BY
SINDHU KURUP — FUNCTIONAL SUPERVISOR

STATE OF CALIFORNIA - DEPARTMENT OF TRANSPORTATION
Caltrans
DESIGN

LAST REVISION 09-23-14 | DATE PLOTTED => 08-DEC-2014 | TIME PLOTTED => 11:18

Dist	COUNTY	ROUTE	POST MILES TOTAL PROJECT	SHEET No.	TOTAL SHEETS
04	SCI	280	R2.6	18	30

Zora S. Mangat 9/17/14
REGISTERED CIVIL ENGINEER DATE

10-13-14
PLANS APPROVAL DATE

REGISTERED PROFESSIONAL ENGINEER
Zora Mangat
No. 44843
Exp. 3-31-16
CIVIL
STATE OF CALIFORNIA

THE STATE OF CALIFORNIA OR ITS OFFICERS OR AGENTS SHALL NOT BE RESPONSIBLE FOR THE ACCURACY OR COMPLETENESS OF SCANNED COPIES OF THIS PLAN SHEET.

TRAFFIC STRIPES, PAVEMENT MARKINGS AND PAVEMENT MARKERS

SHEET No.	STATION LIMITS	DETAIL No.	THERMOPLASTIC TRAFFIC STRIPE 4" YELLOW	THERMOPLASTIC TRAFFIC STRIPE 4" WHITE	THERMOPLASTIC TRAFFIC STRIPE 8" WHITE	PAVEMENT MARKER (RETROREFLECTIVE) TYPE H	CONCRETE BARRIER MARKER
			LF			EA	
PD-1	RGR2 10+00 TO 10+85	36			85	5	
	RGR2 10+85 TO 20+50	25A	965			42	46
	RGR2 10+00 TO 24+00	27B		1400			42
	RGR2 20+50 TO 23+35	36B			285	15	
SCQ-1						108	
SUBTOTAL			965	1400	370	170	88
TOTAL			2365		370	170	88

PAVEMENT DELINEATION QUANTITIES

PDQ-1

STATE OF CALIFORNIA - DEPARTMENT OF TRANSPORTATION
Caltrans
DESIGN

FUNCTIONAL SUPERVISOR: SINDHU KURUP
CALCULATED-DESIGNED BY: ZORA MANGAT
CHECKED BY: PETER LAC
REVISED BY: ZM
DATE REVISED: 9/9/14

LAST REVISION 09-23-14
DATE PLOTTED => 08-DEC-2014
TIME PLOTTED => 11:18

Dist	COUNTY	ROUTE	POST MILES TOTAL PROJECT	SHEET No.	TOTAL SHEETS
04	SCI	280	R2.6	19	30

Zora S. Mangat 9/17/14
REGISTERED CIVIL ENGINEER DATE

10-13-14
PLANS APPROVAL DATE

REGISTERED PROFESSIONAL ENGINEER Zora Mangat No. 44843 Exp. 3-31-16 CIVIL STATE OF CALIFORNIA

THE STATE OF CALIFORNIA OR ITS OFFICERS OR AGENTS SHALL NOT BE RESPONSIBLE FOR THE ACCURACY OR COMPLETENESS OF SCANNED COPIES OF THIS PLAN SHEET.

ROADWAY QUANTITIES

SHEET No.	STATION LIMITS	ROADWAY EXCAVATION (NATURALLY OCCURING ASBESTOS)	IMPORTED BORROW	CLASS 2 AGGREGATE BASE	GEOSYNTHETIC REINFORCEMENT (TYPE BIAXIAL GEOGRID)	HOT MIX ASPHALT (TYPE A)	GEOSYNTHETIC PAVEMENT INTERLAYER (PAVING GRID)	TACK COAT	SOIL DENSIFICATION (HIGH DENSITY POLYURETHANE)	LIQUID ASPHALT (PRIME COAT)
		CY			SQYD	TON	SQYD	TON	LB	TON
L-1	"RGR2" 14+14 TO 19+95	3512	2800	750	9100	797	2150	2.4	5500	1.5
	"RGR2" 19+95 TO 22+05	68				22		0.1		
TOTAL		3580	2800	750	9100	819	2150	2.5	5500	1.5

CONCRETE BARRIER AND GUARDRAIL

SHEET No.	STATION LIMITS	SIDE	REMOVE GUARDRAIL	CONCRETE BARRIER (TYPE 60)	TREATED WOOD WASTE
			LF		LB
L-1	"RGR2" 14+37 TO 21+07	L†	670	670	20000
	"RGR2" 14+37 TO 20+39	R†	602	602	
TOTAL			1272	1272	20000

SUMMARY OF QUANTITIES

Q-1

ZM 9/9/14 REVISED BY DATE REVISED
ZORA MANGAT PETER LAC CALCULATED-DESIGNED BY CHECKED BY
SINDHU KURUP FUNCTIONAL SUPERVISOR
STATE OF CALIFORNIA - DEPARTMENT OF TRANSPORTATION
Caltrans DESIGN

LAST REVISION 09-17-14 DATE PLOTTED => 08-DEC-2014 TIME PLOTTED => 11:18

DIST	COUNTY	ROUTE	POST MILES TOTAL PROJECT	SHEET No	TOTAL SHEETS
04	SCI	280	R2.6	20	30

Ali Kaddoura 12-06-13
REGISTERED CIVIL ENGINEER

10-13-14
PLANS APPROVAL DATE

REGISTERED PROFESSIONAL ENGINEER Ali K. Kaddoura No. 55710 Exp. 12-31-14 CIVIL STATE OF CALIFORNIA

The State of California or its officers or agents shall not be responsible for the accuracy or completeness of electronic copies of this plan sheet.

This LOTB sheet was prepared in accordance with the Caltrans Soil & Rock Logging, Classification, & Presentation Manual (2010 Edition).

NOTE: PP=unconfined compressive strength (tsf) as measured by pocket penetrometer.

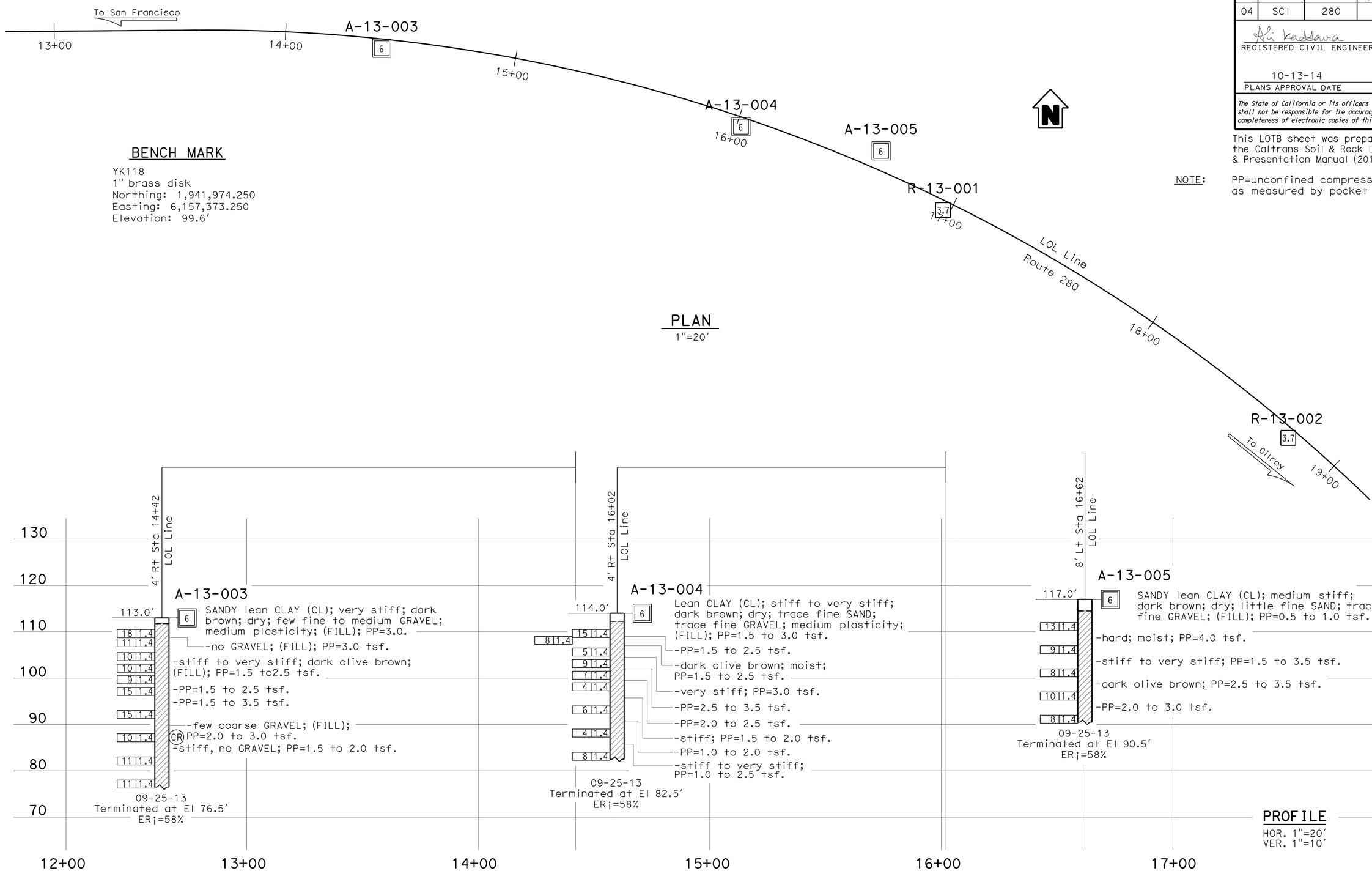

BENCH MARK

YK118
1" brass disk
Northing: 1,941,974.250
Easting: 6,157,373.250
Elevation: 99.6'

PLAN

1"=20'

PROFILE

HOR. 1"=20'
VER. 1"=10'

ENGINEERING SERVICES		GEOTECHNICAL SERVICES	STATE OF CALIFORNIA DEPARTMENT OF TRANSPORTATION	DIVISION OF ENGINEERING SERVICES OFFICE OF GEOTECHNICAL DESIGN BRANCH	BRIDGE NO. / POST MILES 2.6	ROADWAY SETTLEMENT LOG OF TEST BORINGS 1 of 2
FUNCTIONAL SUPERVISOR NAME: H. Nikoui	DRAWN BY: M.I Reynolds 11/13 CHECKED BY: R. Nashed	FIELD INVESTIGATION BY: A. Kaddoura				

OGS CIVIL LOG OF TEST BORINGS SHEET

ORIGINAL SCALE IN INCHES FOR REDUCED PLANS 0 1 2 3

UNIT: 3660
PROJECT NUMBER & PHASE: 04120005430 CONTRACT NO.: 04-1SS521

DISREGARD PRINTS BEARING EARLIER REVISION DATES

REVISION DATES | SHEET | OF

FILE => 0412000543ul001.dgn

USERNAME => s127688 DATE PLOTTED => 08-DEC-2014 TIME PLOTTED => 11:18

DIST	COUNTY	ROUTE	POST MILES TOTAL PROJECT	SHEET No	TOTAL SHEETS
04	SCI	280	R2.6	21	30

Ali Kaddoura 12-06-13
REGISTERED CIVIL ENGINEER

10-13-14
PLANS APPROVAL DATE

REGISTERED PROFESSIONAL ENGINEER
Ali K. Kaddoura
No. 55710
Exp. 12-31-14
CIVIL
STATE OF CALIFORNIA

The State of California or its officers or agents shall not be responsible for the accuracy or completeness of electronic copies of this plan sheet.

This LOTB sheet was prepared in accordance with the Caltrans Soil & Rock Logging, Classification, & Presentation Manual (2010 Edition).

NOTE: PP=unconfined compressive strength (tsf) as measured by pocket penetrometer.

(For Boring Location See Plan, LOTB Sheet 1 of 2)

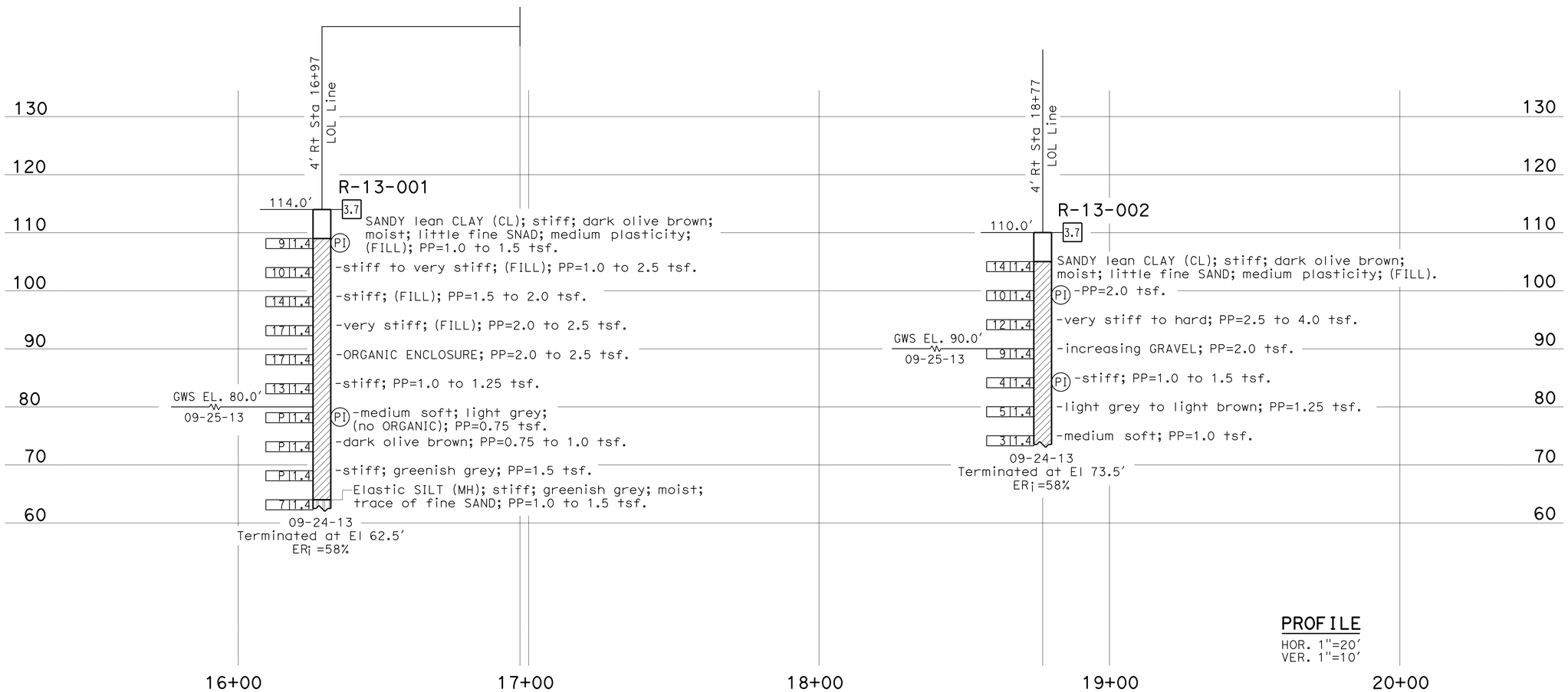

ENGINEERING SERVICES		GEOTECHNICAL SERVICES	STATE OF CALIFORNIA DEPARTMENT OF TRANSPORTATION	BRIDGE NO.	ROADWAY SETTLEMENT
FUNCTIONAL SUPERVISOR	DRAWN BY: M. Reynolds 11/13	FIELD INVESTIGATION BY:		POST MILES 2.6	LOG OF TEST BORINGS 2 of 2
NAME: H. Nikoui	CHECKED BY: R. Nashed	A. Kaddoura			

OGS CIVIL LOG OF TEST BORINGS SHEET

ORIGINAL SCALE IN INCHES FOR REDUCED PLANS 0 1 2 3

UNIT: 3660
PROJECT NUMBER & PHASE: 04120005430 CONTRACT NO.: 04-1SS521

DISREGARD PRINTS BEARING EARLIER REVISION DATES

REVISION DATES | SHEET | OF

FILE => 0412000543u1002.dgn

USERNAME => s127688 DATE PLOTTED => 08-DEC-2014 TIME PLOTTED => 11:18

DIST	COUNTY	ROUTE	POST MILES TOTAL PROJECT	SHEET No.	TOTAL SHEETS
04	SCI	280	R2.6	29	30

Muthanna S. Omran 06-03-14
REGISTERED CIVIL ENGINEER DATE

10-13-14
PLANS APPROVAL DATE

REGISTERED PROFESSIONAL ENGINEER MUTHANNA S. OMRAN No. 61637 Exp. 06-30-15 CIVIL STATE OF CALIFORNIA

The State of California or its officers or agents shall not be responsible for the accuracy or completeness of scanned copies of this plan sheet.

INDEX TO PLANS

SHEET No.	TITLE
1.	GENERAL PLAN
2.	STRUCTURE APPROACH TYPE R(30)

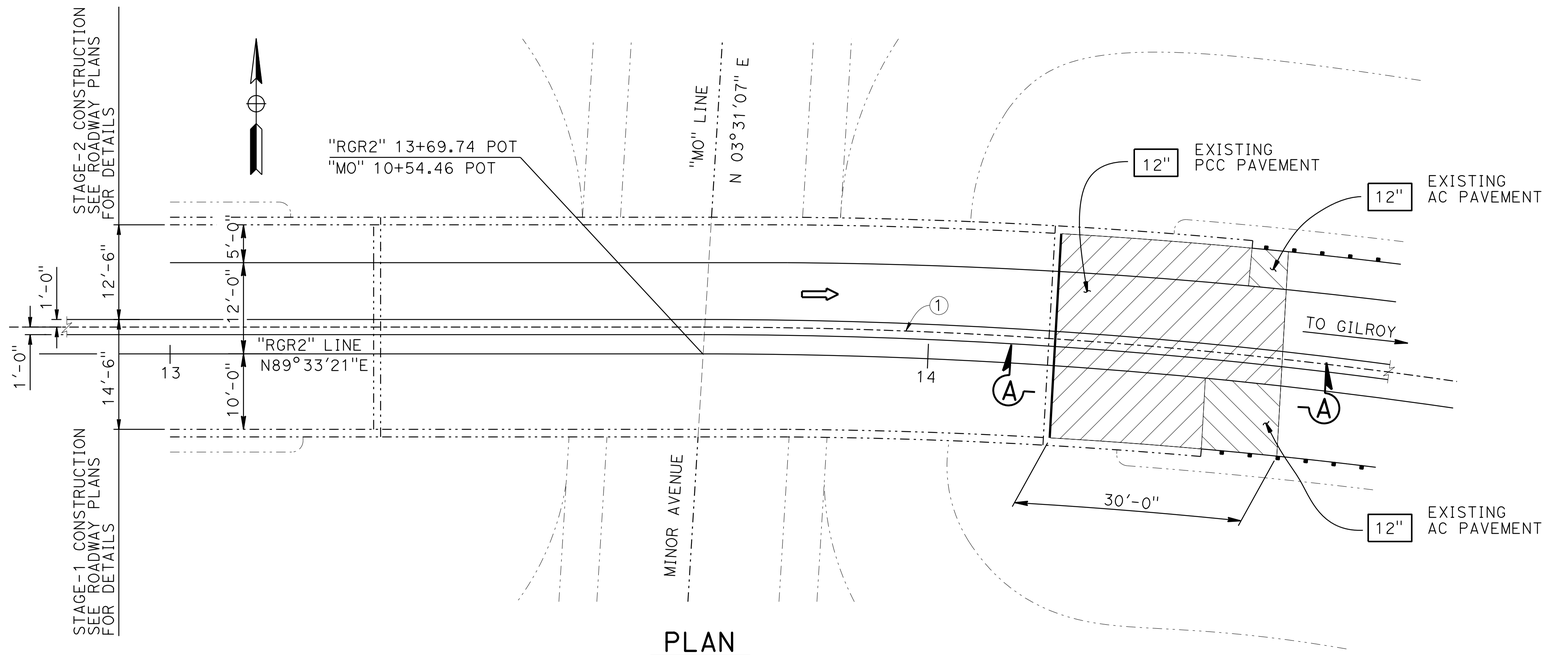

PLAN

1"=10'

LEGEND:

Indicates New Structure

Indicates Existing Structure

Indicates limits of removal of existing AC Pavement and replacement with new structure approach type R(30D)

Indicates limits of removal of Existing PCC pavement and replacement with new structure approach type R(30D)

(1) ℄ OF Temporary Railing Type "K", See "ROADWAY PLANS"

Indicates limits of:

1. New paving notch extension
2. Existing joint seal removal and placement of new joint seal or Silicon Joint Seal 3" up into barrier on the low side of the deck where deck joint alignes with barrier rail joint for details not shown, see RSP B6-21 sheet
3. Remove existing abutment drainage and place new abutment drainage See "NEW WEEPHOLE AND PERVIOUS BACKFILL" detail on "STRUCTURE APPROACH TYPE R(30)" sheet.

Indicates depths of existing roadway materials to be removed

JOINT SEAL TABLE

BRIDGE NAME	BRIDGE No.	LOCATION		NEW APPROACH SLAB	Approx LENGTH (FEET)	MINIMUM "MR" (INCHES)	NEED PAVING NOTCH EXTENSION
MINOR AVE UC	37-0321	ABUTMENT 3	EB	YES	28	1 *	YES

* JOINT SEAL TYPE "A"

QUANTITIES

CORE CONCRETE (5")	5	LF
STRUCTURE EXCAVATION (BRIDGE)	8	CY
STRUCTURE BACKFILL (BRIDGE)	8	CY
AGGREGATE BASE (APPROACH SLAB)	3	CY
STRUCTURAL CONCRETE, APPROACH SLAB (TYPE R)	30	CY
PAVING NOTCH EXTENSION	20	CF
JOINT SEAL (MR 1")	28	LF

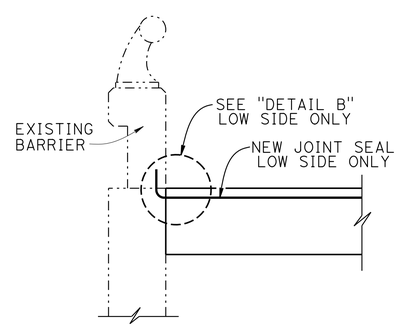

JOINT SEAL AT LOW SIDE OF THE DECK

3/4" = 1'-0"

STANDARD PLANS DATED 2010

B6-21	JOINT SEALS (MAXIMUM MOVEMENT RATING = 2")
B0-3	BRIDGE DETAILS
RSP A10A	ABREVIATIONS (1-2)
RSP A10B	ABREVIATIONS (2-2)

STANDARD PLAN SHEET NO.

DETAIL NO.

NOTE:
THE CONTRACTOR MUST VERIFY ALL CONTROLLING FIELD DIMENSIONS BEFORE ORDERING OR FABRICATING ANY MATERIAL.

Muthanna S. Omran
DESIGN ENGINEER

	BY	CHECKED
DESIGN	P. Wang	M. Omran
DETAILS	S. Daplas, T. Cotton	M. Omran
QUANTITIES	S. Kotalawala	M. Omran

LOAD & RESISTANCE FACTOR DESIGN — LIVE LOADING: HL93 W/"LOW-BOY": PERMIT DESIGN VEHICLE

LAYOUT: P. Wang — CHECKED: M. Omran

SPECIFICATIONS: BY Tina Chen — PLANS AND SPECS COMPARED X

ORIGINAL SCALE IN INCHES FOR REDUCED PLANS 0 1 2 3

STATE OF CALIFORNIA
DEPARTMENT OF TRANSPORTATION

DIVISION OF ENGINEERING SERVICES
STRUCTURE DESIGN
DESIGN BRANCH 16

BRIDGE NO. 37-0321F
POST MILE R2.6

MINOR AVENUE UC APPROACH SLAB
GENERAL PLAN

UNIT: 3617
PROJECT NUMBER & PHASE: 04120005431
CONTRACT NO.: 04-1SS524

DISREGARD PRINTS BEARING EARLIER REVISION DATES

REVISION DATES: 5-1-14 10-01-14 09-25-14 — SHEET 1 OF 2

USERNAME => s127688 DATE PLOTTED => 08-DEC-2014 TIME PLOTTED => 11:18

FILE => 0412000543we001.dgn

DIST	COUNTY	ROUTE	POST MILES TOTAL PROJECT	SHEET No.	TOTAL SHEETS
04	SCI	280	R2.6	30	30

Muthanna S. Omran 06-03-14
REGISTERED CIVIL ENGINEER DATE

10-13-14
PLANS APPROVAL DATE

REGISTERED PROFESSIONAL ENGINEER MUTHANNA S. OMRAN No. 61637 Exp. 06-30-15 CIVIL STATE OF CALIFORNIA

The State of California or its officers or agents shall not be responsible for the accuracy or completeness of electronic copies of this plan sheet.

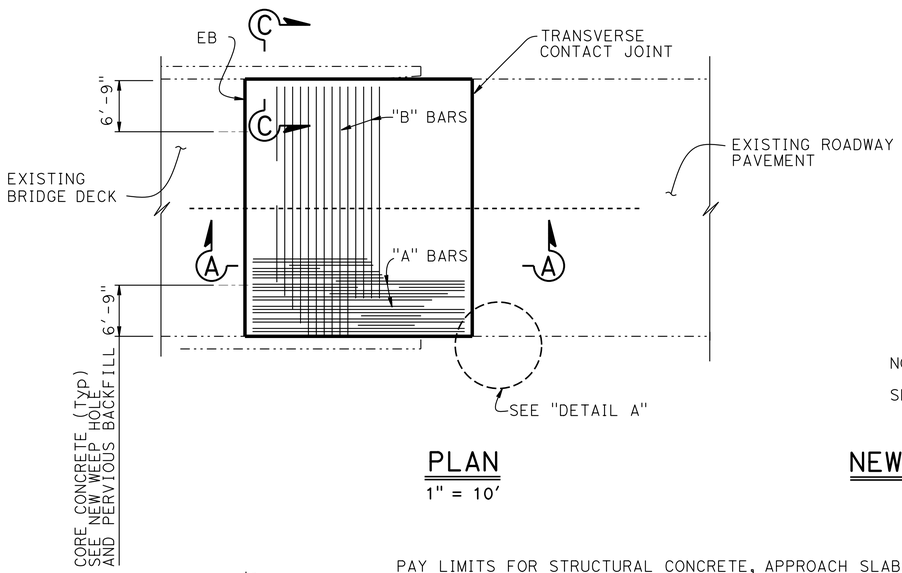

PLAN
1" = 10'

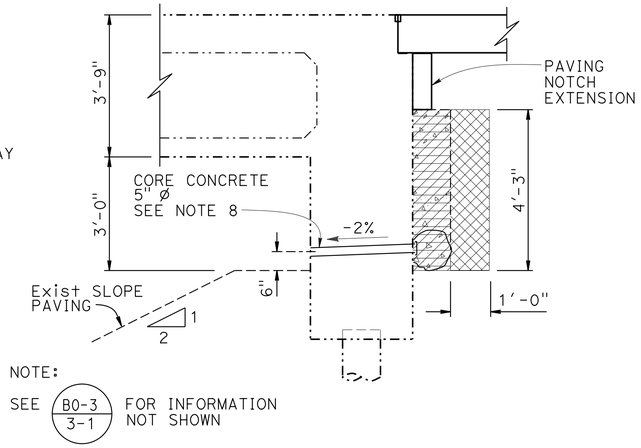

NOTE:
SEE B0-3 / 3-1 FOR INFORMATION NOT SHOWN

NEW WEEP HOLE AND PERVIOUS BACKFILL
½" = 1'-0"

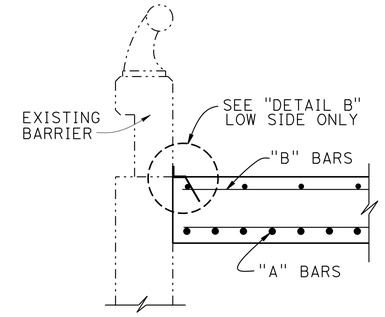

SECTION C-C
¾" = 1'-0"

LIMITS OF EXCAVATION

STRUCTURE EXCAVATION

STRUCTURE BACKFILL

PERVIOUS MATERIAL BACKFILL

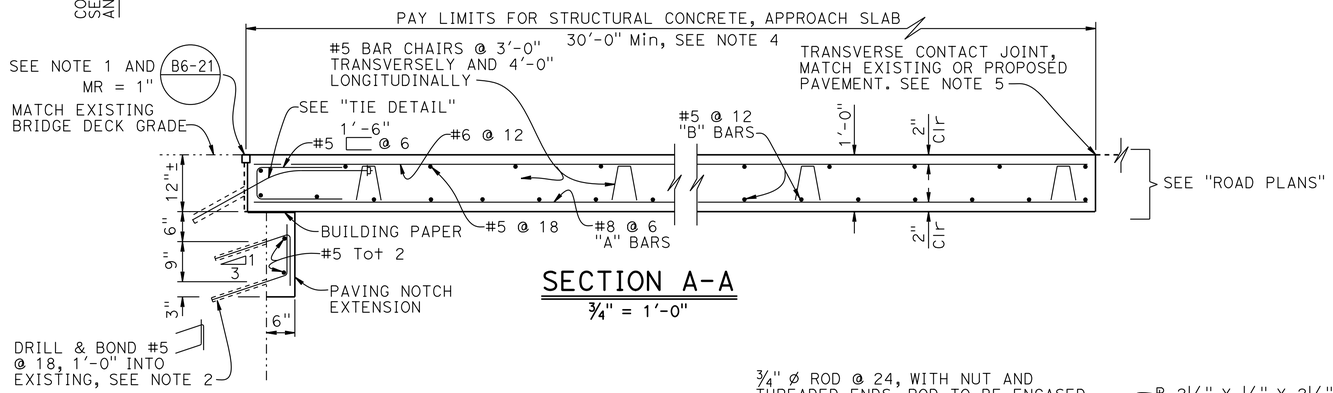

SECTION A-A
¾" = 1'-0"

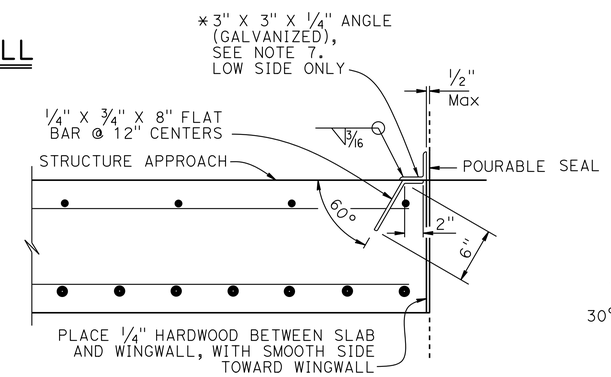

*(TO BE USED WITH CONCRETE BARRIER WITH VERTICAL FACE)

DETAIL B
1½" = 1'-0"

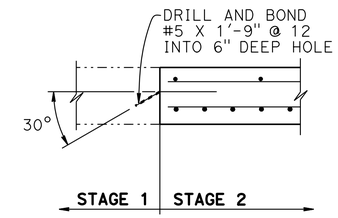

LONGITUDINAL CONSTRUCTION JOINT ALTERNATIVES
¾" = 1'-0"

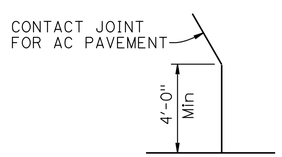

DETAIL A
No Scale

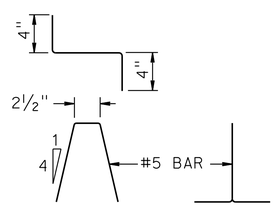

BAR CHAIR DETAIL
1½" = 1'-0"

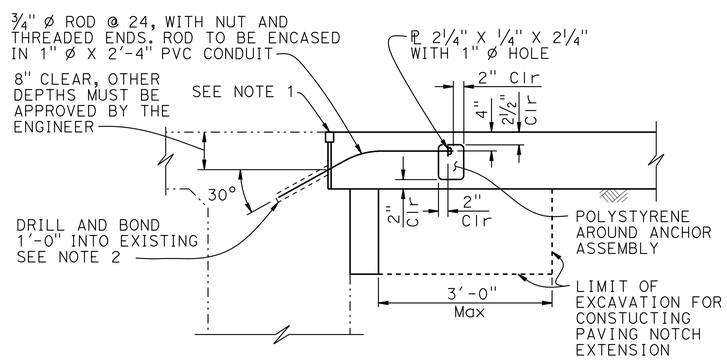

TIE DETAIL
¾" = 1'-0"

NOTES:

1. For details not shown or noted, see Structure Plans. Adjust bar reinforcement to clear a sawcut for sealed joint, when required
2. Space to avoid existing prestress anchorages and main reinforcement
3. Longitudinal construction joints, when permitted by the Engineer, shall be located on lane lines
4. Transverse contact joint shall be a minimum of 5'-0" from an existing or constructed weakened plane joint
5. For transverse contact joint with PCC paving. refer to Standard Plan P10
6. Couplers are required for stage construction
7. End angle or plate at beginning of barrier transition, end of wingwall or end of structure approach as applicable
8. Fill space between concrete and pipe with non-shrink grout

NOTE:
THE CONTRACTOR MUST VERIFY ALL CONTROLLING FIELD DIMENSIONS BEFORE ORDERING OR FABRICATING ANY MATERIAL.

	BY	CHECKED
DESIGN	P. Wang	M. Omran
DETAILS	S. Daplas, T. Cotton	M. Omran
QUANTITIES	S. Kotalawala	M. Omran

STATE OF CALIFORNIA
DEPARTMENT OF TRANSPORTATION

DIVISION OF ENGINEERING SERVICES
STRUCTURE DESIGN
DESIGN BRANCH 16

BRIDGE NO. 37-0321F
POST MILE R2.6

MINOR AVENUE UC APPROACH SLAB
STRUCTURE APPROACH TYPE R(30)

STRUCTURES DESIGN DETAIL SHEET (ENGLISH) (REV. 09-01-10)

ORIGINAL SCALE IN INCHES FOR REDUCED PLANS 0 1 2 3

UNIT: 3617
PROJECT NUMBER & PHASE: 04120005431
CONTRACT NO.: 04-1SS524

DISREGARD PRINTS BEARING EARLIER REVISION DATES

REVISION DATES: 5-1-14 10-01-14 10-13-14

SHEET 2 OF 2

FILE => 0412000543we002.dgn

USERNAME => s127688 DATE PLOTTED => 08-DEC-2014 TIME PLOTTED => 11:11:8