Dist	COUNTY	ROUTE	POST MILES TOTAL PROJECT	SHEET No.	TOTAL SHEETS
04	Ala	580	R31.7/R31.9	2	86

REGISTERED CIVIL ENGINEER 3/26/14 DATE

4-7-14
PLANS APPROVAL DATE

REGISTERED PROFESSIONAL ENGINEER V.L. Sibal No. 49712 Exp. 9-30-14 CIVIL STATE OF CALIFORNIA

THE STATE OF CALIFORNIA OR ITS OFFICERS OR AGENTS SHALL NOT BE RESPONSIBLE FOR THE ACCURACY OR COMPLETENESS OF SCANNED COPIES OF THIS PLAN SHEET.

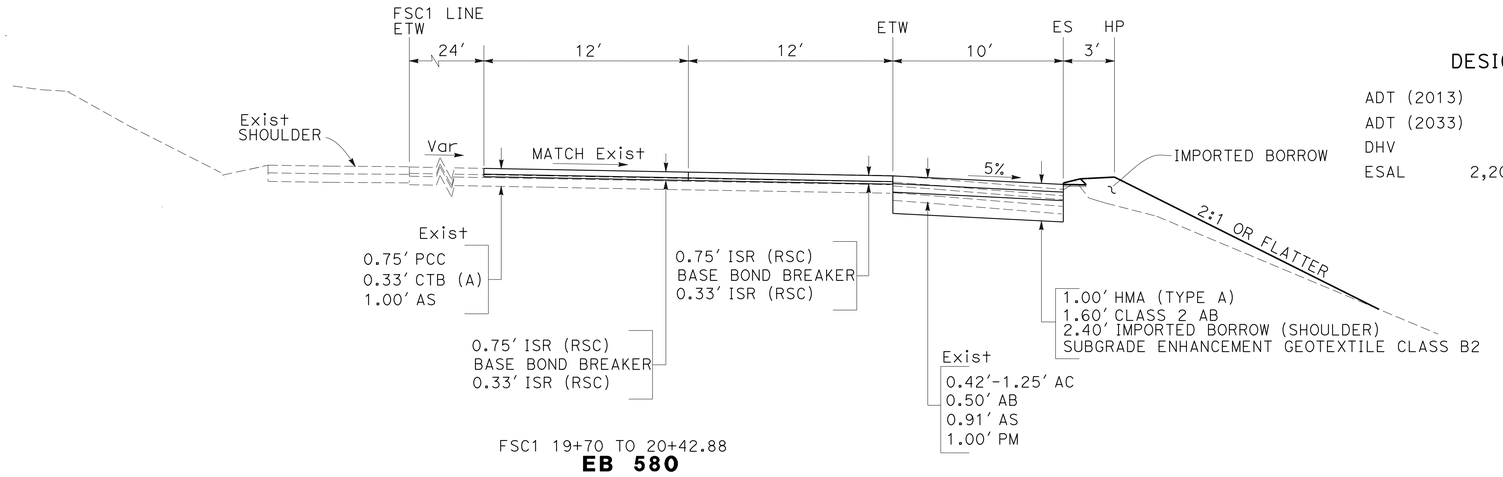

FSC1 19+70 TO 20+42.88
EB 580

DESIGN DESIGNATION

ADT (2013)	77,000	D	56%
ADT (2033)	96,000	T	1.1%
DHV	10,100	V	70 MPH
ESAL	2,206,000	TI_{20}	10

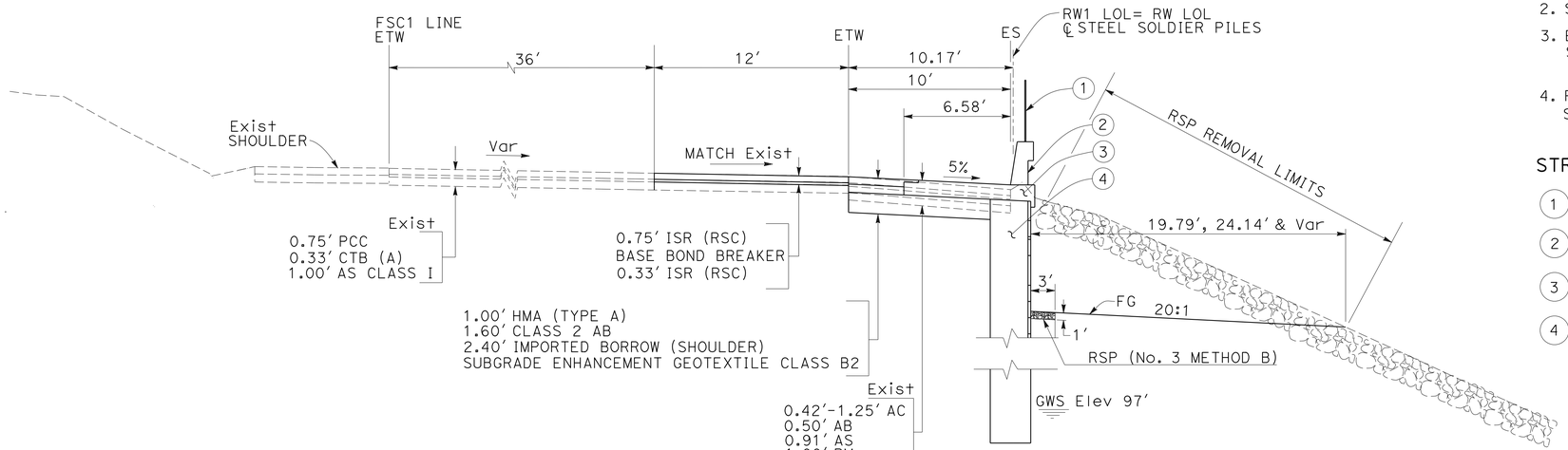

FSC1 18+69.15 TO 19+70
EB 580

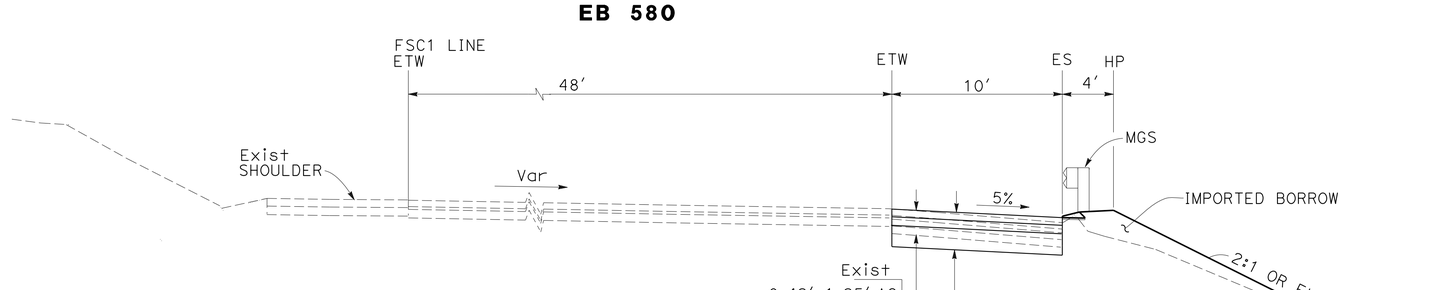

FSC1 14+50 TO 18+69.15
FSC1 20+42.88 TO ~~24+50~~ 25+00 2
EB 580

ABBREVIATIONS:

GWS GROUND WATER SURFACE
ISR (RSC) INDIVIDUAL SLAB REPLACEMENT (RAPID STRENGTH CONCRETE)

NOTES:

1. DIMENSIONS OF THE PAVEMENT STRUCTURES (STRUCTURAL SECTIONS) ARE SUBJECT TO TOLERANCES SPECIFIED IN THE STANDARD SPECIFICATIONS.
2. SUPERELEVATIONS AS SHOWN.
3. EXACT LOCATIONS AND TYPES OF HMA DIKE AND MGS ARE SHOWN ON THE LAYOUT AND IN THE SUMMARY OF QUANTITIES.
4. FOR CONSTRUCTING FINAL LIFT 0.20′ HMA (TYPE A), SEE STAGE CONSTRUCTION AND TRAFFIC HANDLING PLAN.

STRUCTURAL ITEMS (SEE STRUCTURE PLANS)

1. CHAIN LINK RAILING TYPE 7
2. CONCRETE BARRIER TYPE 732
3. STRUCTURAL CONCRETE BARRIER SLAB
4. STEEL SOLDIER PILE

2 **REPLACED PER ADDENDUM No.2 DATED SEPTEMBER 11, 2014**

TYPICAL CROSS SECTIONS
NO SCALE

X-1

STATE OF CALIFORNIA - DEPARTMENT OF TRANSPORTATION
Caltrans® **DESIGN**

FUNCTIONAL SUPERVISOR: NESTOR P. PEREZ
CALCULATED-DESIGNED BY: VALENTIN L. SIBAL
CHECKED BY: LIN KYAIN
REVISED BY: VS
DATE REVISED: 3/26/14

LAST REVISION 04-04-14
DATE PLOTTED => 11-SEP-2014
TIME PLOTTED => 12:39

Dist	COUNTY	ROUTE	POST MILES TOTAL PROJECT	SHEET No.	TOTAL SHEETS
04	Ala	580	R31.7/R31.9	27	86

REGISTERED CIVIL ENGINEER 3/26/14 DATE

4-7-14
PLANS APPROVAL DATE

REGISTERED PROFESSIONAL ENGINEER V.L. Sibal No. 49712 Exp. 9-30-14 CIVIL STATE OF CALIFORNIA

THE STATE OF CALIFORNIA OR ITS OFFICERS OR AGENTS SHALL NOT BE RESPONSIBLE FOR THE ACCURACY OR COMPLETENESS OF SCANNED COPIES OF THIS PLAN SHEET.

ROADWAY QUANTITIES

2 1

SHEET No.	STATION	HMA (TYPE A)	HMA (TYPE A) DIKE	CLASS 2 AGGREGATE BASE	SUBGRADE ENHANCEMENT GEOTEXTILE (CLASS B2)	INDIVIDUAL SLAB REPLACEMENT (RAPID STRENGTH CONCRETE)	BASE BOND BREAKER (N)	DRILL AND BOND (DOWEL BAR)	REMOVE CONCRETE PAVEMENT (N)
		TON		CY	SQYD	CY	SQYD	EA	CY
L-1,L-2	FSC1 14+50 TO 25+00	~~70~~ 738.75	6.77	~~399~~ 601.69	1166.67				
L-1	FSC1 19+61.26 TO 20+42.88					80	158.15	117	80
SUBTOTAL		~~70~~ 738.75	6.77						
TOTAL		~~76.77~~ 745.52		~~399~~ 601.69	1166.67	80	158.15	117	80

(N) FOR INFORMATION ONLY, NOT A SEPARATE PAY ITEM.

2 2

MIDWEST GUARDRAIL SYSTEM (WOOD POSTS)

SHEET No.	STATION	ALTERNATIVE IN-LINE TERMINAL SYSTEM	TRANSITION RAILING (TYPE WB)	MGS	END ANCHOR ASSEMBLY (TYPE SFT)	VEGETATION CONTROL (MINOR CONCRETE)
		EA		LF	EA	SQYD
L-1	FSC1 17+00 TO 18+25	1	1	125	1	133
TOTAL		1	1	125	1	133

PLACE HMA DIKE

SHEET No.	STATION	TYPE C	TYPE E	TYPE F
		LF		
L-1	FSC1 14+50 TO 16+25		175	
	FSC1 16+25 TO 18+25	200		
	FSC1 18+25 TO 18+49.99			24.99
L-1,L-2	FSC1 19+74.03 TO 25+00		525.97	
TOTAL		200	700.97	24.99

EARTHWORK QUANTITIES

SHEET No.	STATION	ROADWAY EXCAVATION	EMBANKMENT (N)	IMPORTED BORROW	IMPORTED BORROW (SHOULDER)
		CY			
L-1,L-2	FSC1 14+50 TO 25+00	1991	~~5175~~ 1092.07	~~4241.67~~ 158.14	933.33
TOTAL		1991	~~5175~~ 1092.07	~~4241.67~~ 158.14	933.33

(N) FOR INFORMATION ONLY, NOT A SEPARATE PAY ITEM.

2 2

ROCK SLOPE PROTECTION QUANTITIES

SHEET No.	STATION	ROCK SLOPE PROTECTION (No. 3 METHOD B)	ROCK SLOPE PROTECTION FABRIC (CLASS 8)
		CY	SQYD
X-1	RW1 10+00 TO 11+22.50	~~195~~ 12	36.11
TOTAL		~~195~~ 12	36.11

2

TEMPORARY WATER POLLUTION CONTROL

1

SHEET No.	STATION	TEMPORARY FIBER ROLL	TEMPORARY SILT FENCE	~~TEMPORARY HYDROSEED MULCH~~ Temp HYDRAULIC MULCH (BONDED FIBER MATRIX)	TEMPORARY DRAINAGE INLET PROTECTION	TEMPORARY CONSTRUCTION ENTRANCE
		LF		SQYD	EA	
L-1,L-2	FSC1 14+50 TO 25+00	2000	800	1500	14	2
TOTAL		2000	800	1500	14	2

TEMPORARY REINFORCED SILT FENCE

1

SHEET No.	TYPE 1
	LF
L-1	210
TOTAL	210

2 **REPLACED PER ADDENDUM No.2 DATED SEPTEMBER 11, 2014**

1 **REPLACED PER ADDENDUM No.1 DATED SEPTEMBER 5, 2014**

SUMMARY OF QUANTITIES

Q-1

STATE OF CALIFORNIA - DEPARTMENT OF TRANSPORTATION
Caltrans® DESIGN
FUNCTIONAL SUPERVISOR NESTOR P. PEREZ
CALCULATED-DESIGNED BY VALENTIN L. SIBAL
CHECKED BY LIN KYAIN
REVISED BY VS
DATE REVISED 3/26/14

LAST REVISION 04-04-14
DATE PLOTTED => 11-SEP-2014
TIME PLOTTED => 12:40