Dist	COUNTY	ROUTE	POST MILES TOTAL PROJECT	SHEET No.	TOTAL SHEETS
04	SM,Ala	84	R28.8/R29.3, R0.5	1	83

INDEX OF PLANS

SHEET No.	DESCRIPTION
1	TITLE SHEET AND LOCATION MAP
2	TYPICAL CROSS SECTIONS
3-5	LAYOUTS
6-19	CONSTRUCTION DETAILS
20-23	TEMPORARY WATER POLLUTION CONTROL PLAN AND QUANTITIES
24-25	CONTOUR GRADING
26	DRAINAGE PLANS, DETAILS AND QUANTITIES
27-28	UTILITY PLANS
29-30	CONSTRUCTION AREA SIGNS
31-34	PAVEMENT DELINEATION AND SIGN PLAN AND QUANTITIES
35	SUMMARY OF QUANTITIES
36-41	IRRIGATION SPRINKLER SCHEDULE, PLANS, DETAILS AND QUANTITIES
42-46	PLANT LIST, PLANTING PLANS AND DETAILS
47-54	LANSCAPE DETAILS AND QUANTITIES
55-58	EROSION CONTROL PLANS AND QUANTITIES
59-81	REVISED STANDARD PLANS
82-83	MECHANICAL PLANS

THE STANDARD PLANS LIST APPLICABLE TO THIS CONTRACT IS INCLUDED IN THE NOTICE TO BIDDERS AND SPECIAL PROVISIONS BOOK.

STATE OF CALIFORNIA

DEPARTMENT OF TRANSPORTATION

PROJECT PLANS FOR CONSTRUCTION ON

STATE HIGHWAY

IN SAN MATEO AND ALAMEDA COUNTY IN MENLO PARK AND FREMONT FROM 0.6 MILES EAST OF ROUTE 109 TO BEGINNING OF DUMBARTON BRIDGE AND AT END OF DUMBARTON BRIDGE

TO BE SUPPLEMENTED BY STANDARD PLANS DATED 2010

LOCATION MAP

COYOTE HILLS REGIONAL PARK

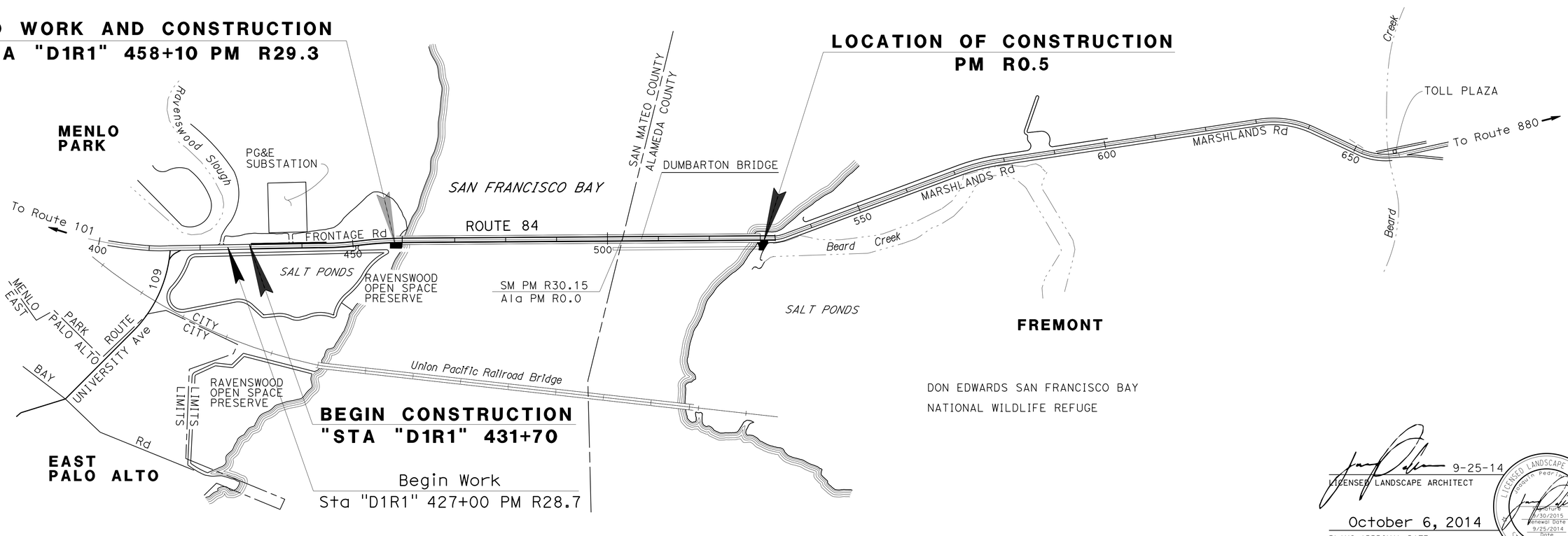

NO SCALE

9-25-14
LICENSED LANDSCAPE ARCHITECT

October 6, 2014
PLANS APPROVAL DATE

THE STATE OF CALIFORNIA OR ITS OFFICERS OR AGENTS SHALL NOT BE RESPONSIBLE FOR THE ACCURACY OR COMPLETENESS OF SCANNED COPIES OF THIS PLAN SHEET.

THE CONTRACTOR SHALL POSSESS THE CLASS (OR CLASSES) OF LICENSE AS SPECIFIED IN THE "NOTICE TO BIDDERS."

CONTRACT No.	04-1J5204
PROJECT ID	0414000249

PROJECT MANAGER: MO PAZOOKI
SENIOR LANDSCAPE ARCHITECT: SUSAN LINDSAY

LAST REVISION 09-25-14
DATE PLOTTED => 23-OCT-2014
TIME PLOTTED => 14:12

Dist	COUNTY	ROUTE	POST MILES TOTAL PROJECT	SHEET No.	TOTAL SHEETS
04	SM,Ala	84	R28.8/R29.3, R0.5	2	83

REGISTERED CIVIL ENGINEER 8-14-14 DATE

10-6-14
PLANS APPROVAL DATE

REGISTERED PROFESSIONAL ENGINEER Chi-Chung Ho No. 62495 Exp. 9-30-15 CIVIL STATE OF CALIFORNIA

THE STATE OF CALIFORNIA OR ITS OFFICERS OR AGENTS SHALL NOT BE RESPONSIBLE FOR THE ACCURACY OR COMPLETENESS OF SCANNED COPIES OF THIS PLAN SHEET.

NOTES:

1. DIMENSIONS OF THE PAVEMENT STRUCTURES (STRUCTURAL SECTIONS) ARE SUBJECT TO TOLERANCES SPECIFIED IN THE STANDARD SPECIFICATIONS.
2. SUPERELEVATION AS SHOWN OR AS DIRECTED BY THE ENGINEER.
3. FOR WEST VIEWING AREA SECTION ("WV1" 10+00 TO 11+14) AND EAST VIEWING AREA SECTION ("EV1" 10+08 TO 10+75.9), SEE CONSTRUCTION DETAILS SHEET.

LEGEND:

IMPORTED TOPSOIL

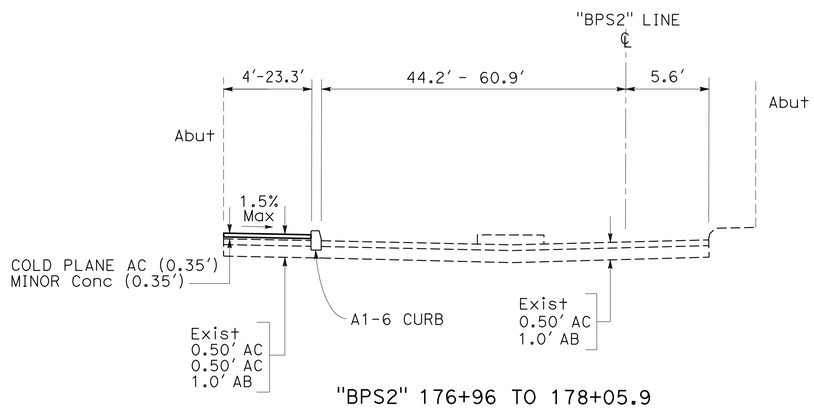

"BPS2" 176+96 TO 178+05.9

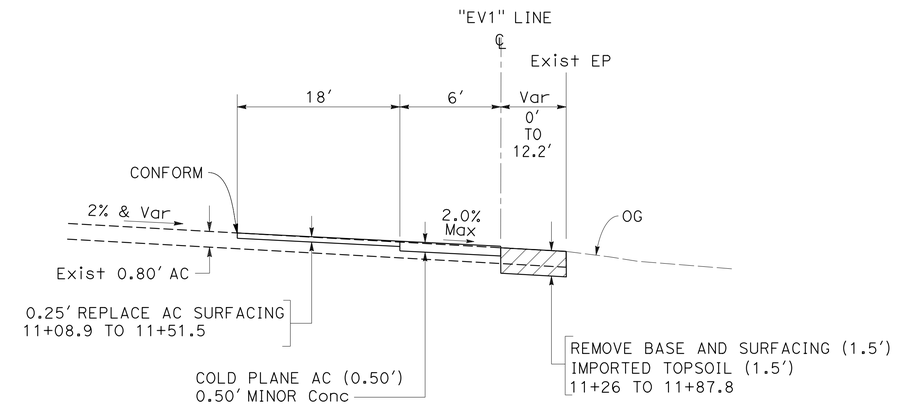

"EV1" 10+75.9 TO 11+51.5

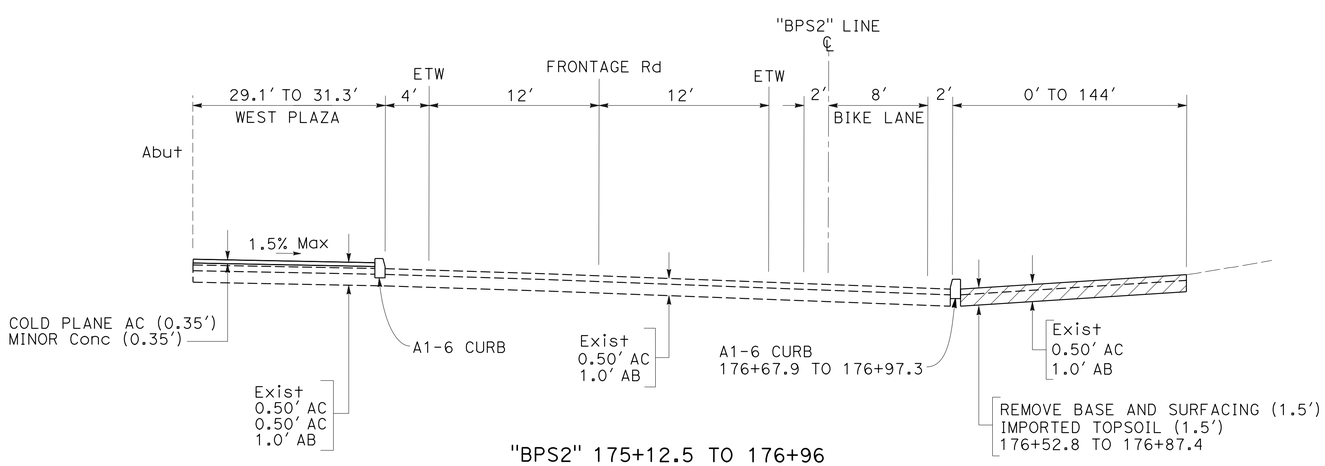

"BPS2" 175+12.5 TO 176+96

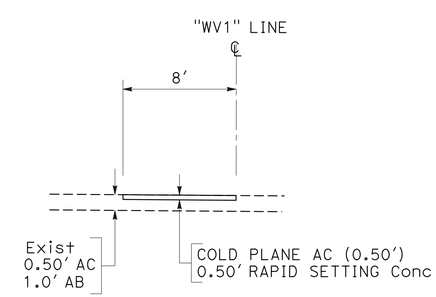

"WV1" 9+39.4 TO 10+00

TYPICAL CROSS SECTIONS

NO SCALE

X-1

CH	REVISED BY
9/23/14	DATE REVISED
CHI-CHUNG HO	CALCULATED-DESIGNED BY
JAIME GUTIERREZ	CHECKED BY
JAIME GUTIERREZ	FUNCTIONAL SUPERVISOR

STATE OF CALIFORNIA - DEPARTMENT OF TRANSPORTATION
Caltrans
DESIGN

LAST REVISION 09-23-14 | DATE PLOTTED => 23-OCT-2014 | TIME PLOTTED => 14:12

Dist	COUNTY	ROUTE	POST MILES TOTAL PROJECT	SHEET No.	TOTAL SHEETS
04	SM,Ala	84	R28.8/R29.3, R0.5	3	83

REGISTERED CIVIL ENGINEER 8-18-14 DATE

10-6-14
PLANS APPROVAL DATE

REGISTERED PROFESSIONAL ENGINEER Humayun R. Syed No. 39950 Exp. 12-31-15 CIVIL STATE OF CALIFORNIA

THE STATE OF CALIFORNIA OR ITS OFFICERS OR AGENTS SHALL NOT BE RESPONSIBLE FOR THE ACCURACY OR COMPLETENESS OF SCANNED COPIES OF THIS PLAN SHEET.

NOTE:

FOR ACCURATE RIGHT OF WAY DATA, CONTACT RIGHT OF WAY ENGINEERING AT THE DISTRICT OFFICE.

LEGEND:

- (No.) CURVE DATA NUMBER
- REMOVE BASE AND SURFACING
- COLD PLANE AC Pvmt
- REPLACE AC SURFACING

NOTES:

1. COORDINATE VALUES SHOWN ARE CCS 83 ZONE 3.
2. DATUM VALUES SHOWN ARE NGVD 1929.
3. EXISTING METAL BEAM GUARD RAILING SHALL BE MODIFIED TO DOUBLE METAL BEAM GUARD RAILING AS SHOWN ON CONSTRUCTION DETAILS AND AS DIRECTED BY THE ENGINEER.
4. ACCESS TO LEVEE Rd FROM MARSHLANDS Rd MUST BE MAINTAINED DURING CONSTRUCTION.
5. STATION OFFSET SHOWN ARE AT THE FLOW LINE UNLESS OTHERWISE NOTED.
6. FOR CURB RETURN INFORMATION, SEE CONSTRUCTION DETAILS SHEET.

ABBREVIATION:

BCDC = BAY AREA CONSERVATION AND DEVELOPMENT COMMISSION

CURVE DATA

No. ⊕	R	Δ	T	L	N-COORDINATE	E-COORDINATE
1	10000′	04° 11′ 01″	365.25′	730.18′	2013293.731	6080257.655

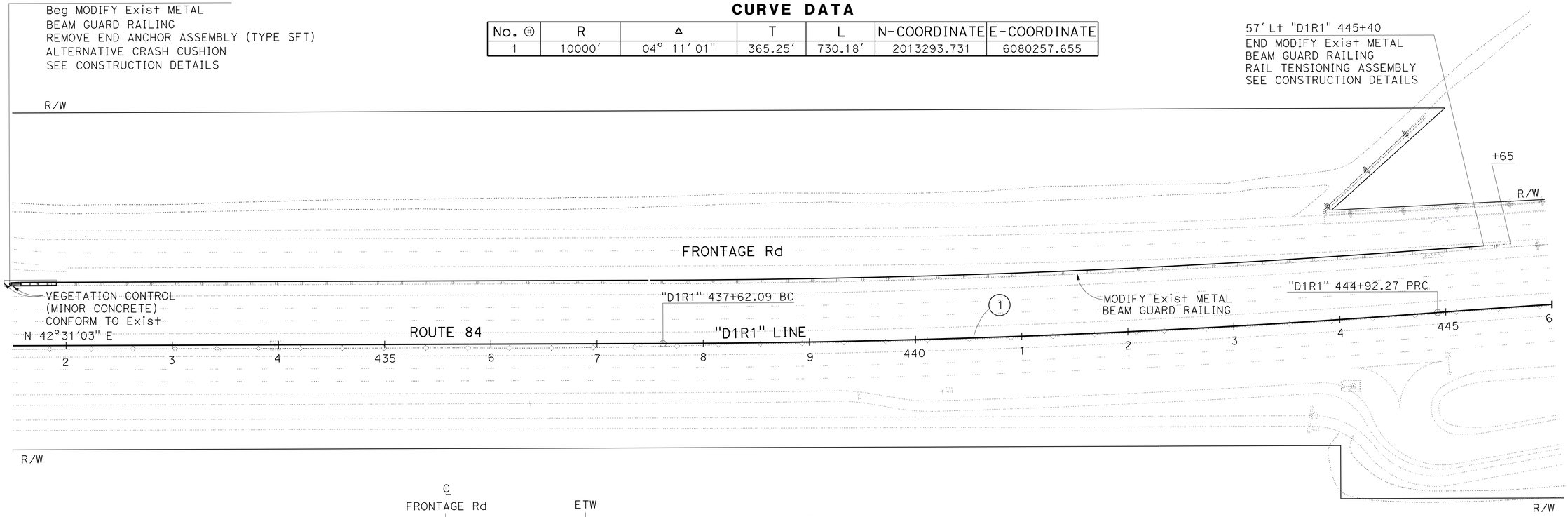

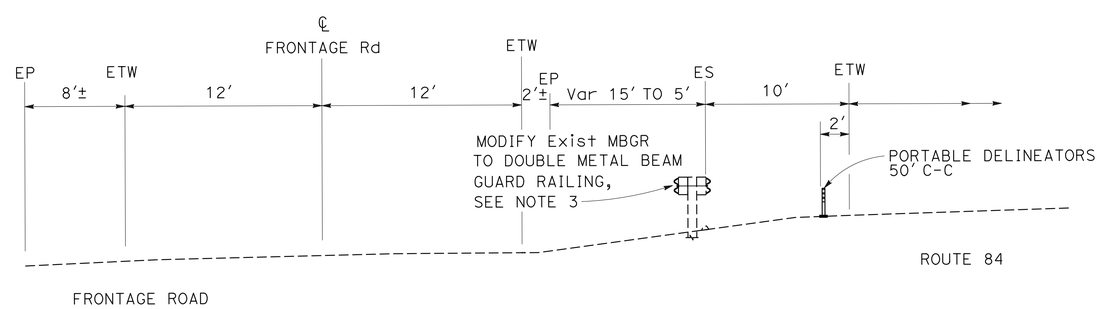

MODIFY METAL BEAM GUARD RAILING

57′ Lt "D1R1" 431+47 TO 57′ Lt "D1R1" 445+65

LAYOUT

SCALE: 1" = 50′

L-1

HS	9/24/14	REVISED BY	DATE REVISED
HUMAYUN R. SYED	JAIME GUTIERREZ	CALCULATED-DESIGNED BY	CHECKED BY
JAIME GUTIERREZ		FUNCTIONAL SUPERVISOR	

STATE OF CALIFORNIA - DEPARTMENT OF TRANSPORTATION

DESIGN

Caltrans

LAST REVISION 09-24-14 DATE PLOTTED => 23-OCT-2014 TIME PLOTTED => 14:12

Dist	COUNTY	ROUTE	POST MILES TOTAL PROJECT	SHEET No.	TOTAL SHEETS
04	SM,Ala	84	R28.8/R29.3, R0.5	4	83

REGISTERED CIVIL ENGINEER 8-14-14 DATE

10-6-14
PLANS APPROVAL DATE

REGISTERED PROFESSIONAL ENGINEER Chi-Chung Ho No. 62495 Exp. 9-30-15 CIVIL STATE OF CALIFORNIA

THE STATE OF CALIFORNIA OR ITS OFFICERS OR AGENTS SHALL NOT BE RESPONSIBLE FOR THE ACCURACY OR COMPLETENESS OF SCANNED COPIES OF THIS PLAN SHEET.

NOTE:

FOR ACCURATE RIGHT OF WAY DATA, CONTACT RIGHT OF WAY ENGINEERING AT THE DISTRICT OFFICE.

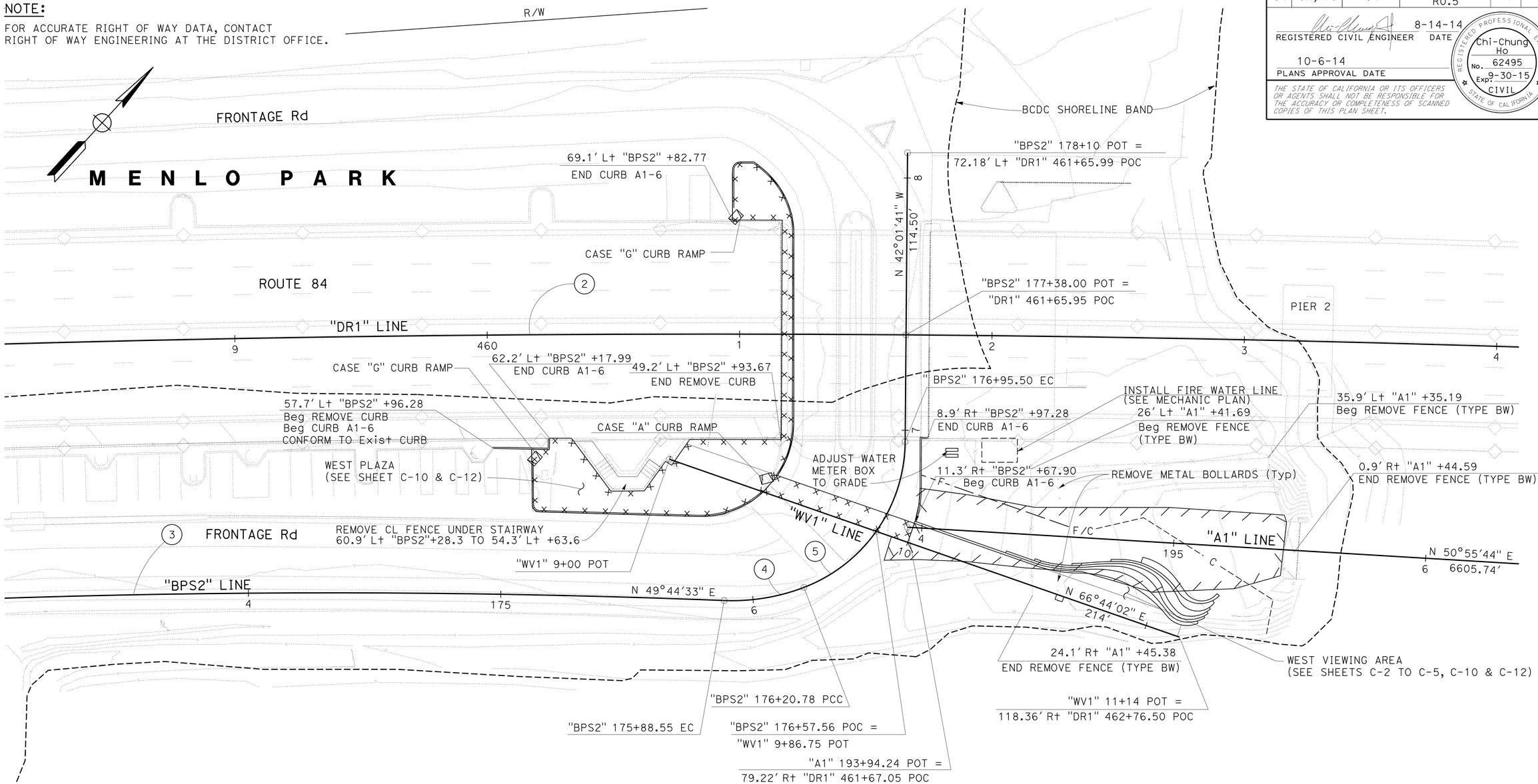

CURVE DATA

No. ⑬	R	Δ	T	L	N-COORDINATE	E-COORDINATE
2	9999.98′	06° 21′ 11"	554.98′	1108.83′	2000883.550	6095946.814
3	3972.19′	07° 12′ 55"	250.44′	500.22′	2005150.443	6091832.833
4	79.71′	23° 09′ 36"	16.33′	32.22′	2008242.648	6089214.406
5	62.40′	68° 36′ 38"	42.57′	74.72′	2008234.900	6089229.892

FOR NOTES, ABBREVIATIONS AND LEGEND, SEE SHEET L-1

LAYOUT

SCALE: 1" = 20′

L-2

REVISED BY	DATE REVISED
HS	9/30/14

CALCULATED-DESIGNED BY: HUMAYUN R. SYED
CHECKED BY: JAIME GUTIERREZ
FUNCTIONAL SUPERVISOR: JAIME GUTIERREZ

STATE OF CALIFORNIA - DEPARTMENT OF TRANSPORTATION
Caltrans
DESIGN

LAST REVISION 09-30-14 | DATE PLOTTED => 23-OCT-2014 | TIME PLOTTED => 14:12

Dist	COUNTY	ROUTE	POST MILES TOTAL PROJECT	SHEET No.	TOTAL SHEETS
04	SM,Ala	84	R28.8/R29.3, R0.5	5	83

REGISTERED CIVIL ENGINEER 8-14-14 DATE

10-6-14
PLANS APPROVAL DATE

REGISTERED PROFESSIONAL ENGINEER Chi-Chung Ho No. 62495 Exp. 9-30-15 CIVIL STATE OF CALIFORNIA

THE STATE OF CALIFORNIA OR ITS OFFICERS OR AGENTS SHALL NOT BE RESPONSIBLE FOR THE ACCURACY OR COMPLETENESS OF SCANNED COPIES OF THIS PLAN SHEET.

NOTE:

FOR ACCURATE RIGHT OF WAY DATA, CONTACT RIGHT OF WAY ENGINEERING AT THE DISTRICT OFFICE.

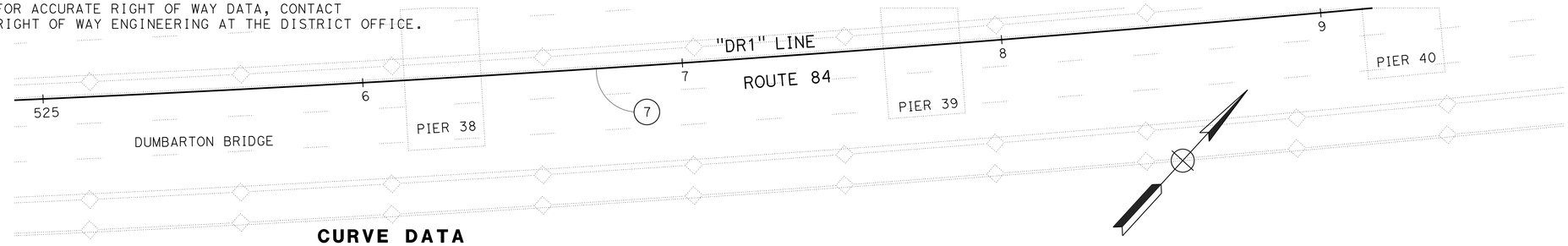

CURVE DATA

No. ⊕	R	Δ	T	L	N-COORDINATE	E-COORDINATE
6	1900′	20° 29′ 30"	343.43′	679.53′	2013890.838	6093230.698
7	9000′	16° 40′ 13"	1318.61′	2618.58′	2018703.052	6087750.783

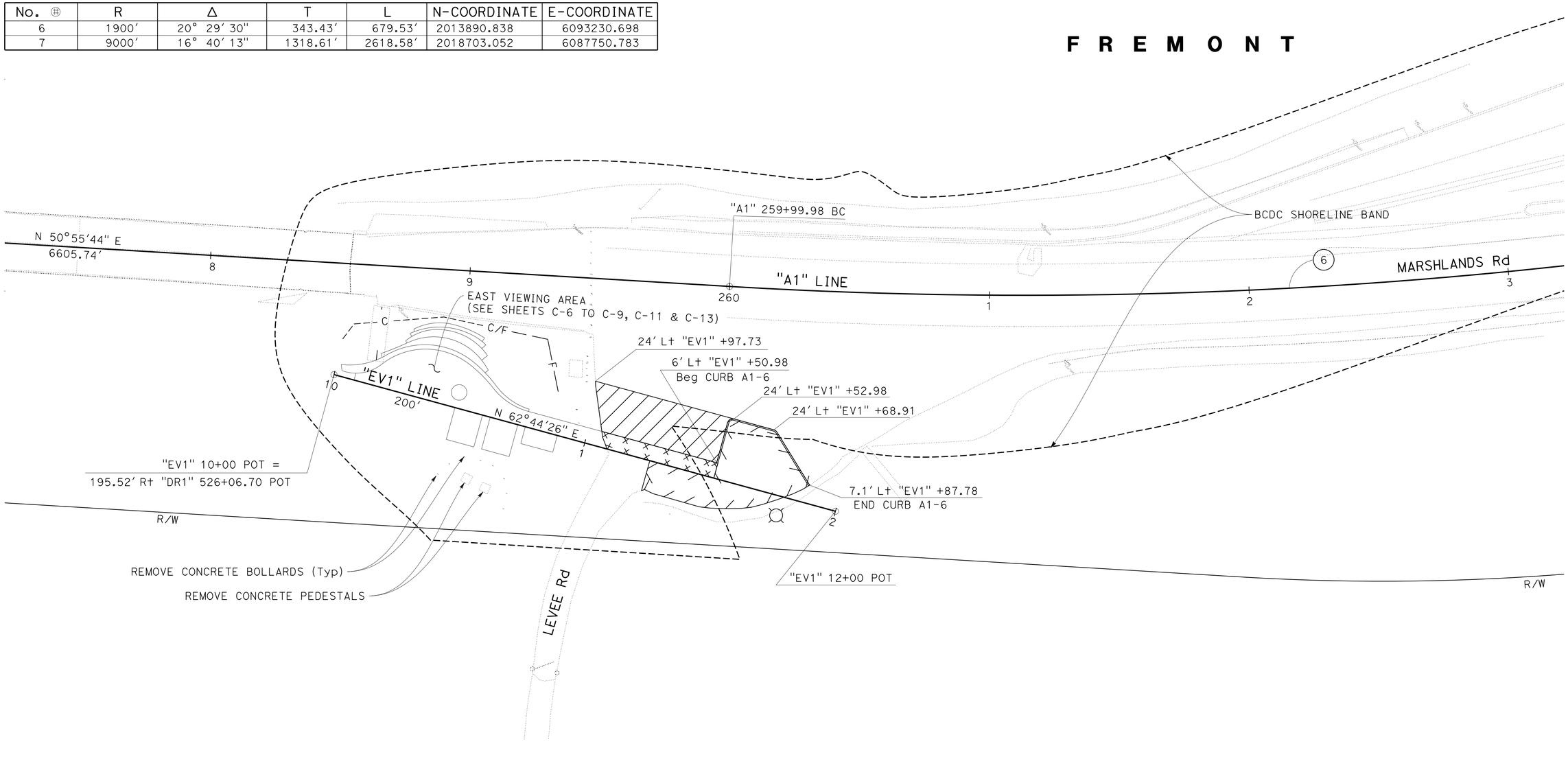

FOR NOTES, ABBREVIATIONS AND LEGEND, SEE SHEET L-1

LAYOUT

SCALE: 1" = 20′

L-3

STATE OF CALIFORNIA - DEPARTMENT OF TRANSPORTATION

Caltrans

DESIGN

FUNCTIONAL SUPERVISOR: JAIME GUTIERREZ

CALCULATED-DESIGNED BY: HUMAYUN R. SYED

CHECKED BY: JAIME GUTIERREZ

REVISED BY: HS

DATE REVISED: 9/30/14

LAST REVISION 09-30-14 | DATE PLOTTED => 23-OCT-2014 | TIME PLOTTED => 14:12

Dist	COUNTY	ROUTE	POST MILES TOTAL PROJECT	SHEET No.	TOTAL SHEETS
04	SM,Ala	84	R28.8/R29.3, R0.5	6	83

REGISTERED CIVIL ENGINEER 8-18-14 DATE

10-6-14
PLANS APPROVAL DATE

REGISTERED PROFESSIONAL ENGINEER Humayun R. Syed No. 39950 Exp. 12-31-15 CIVIL STATE OF CALIFORNIA

THE STATE OF CALIFORNIA OR ITS OFFICERS OR AGENTS SHALL NOT BE RESPONSIBLE FOR THE ACCURACY OR COMPLETENESS OF SCANNED COPIES OF THIS PLAN SHEET.

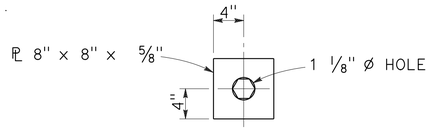

DETAIL A

CABLE CONNECTION END PLATE

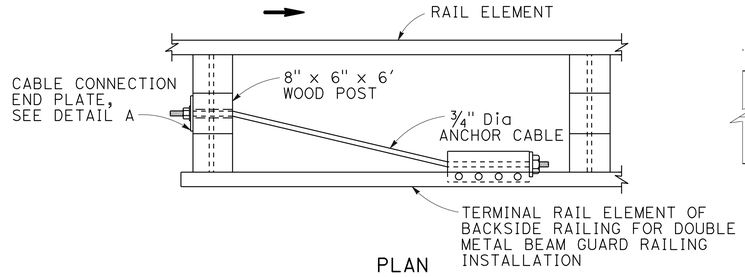

PLAN

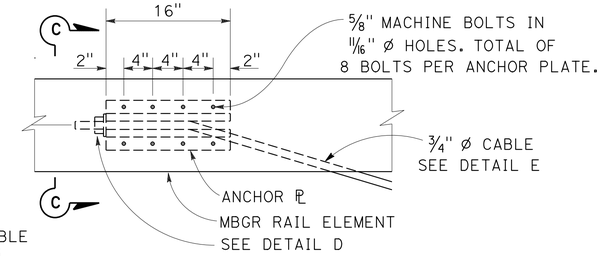

ANCHOR PLATE DETAIL

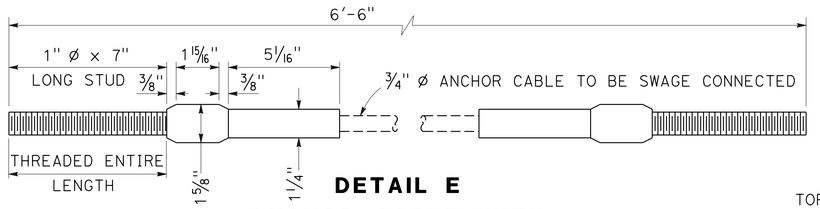

DETAIL E

ANCHOR CABLE WITH SWAGED FITTING AND STUD

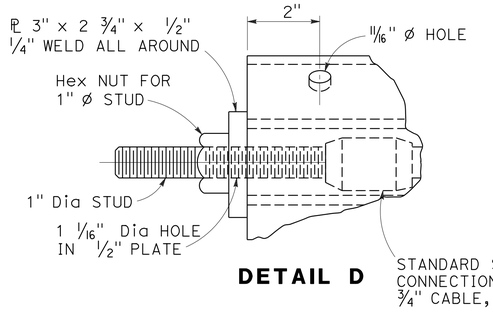

DETAIL D

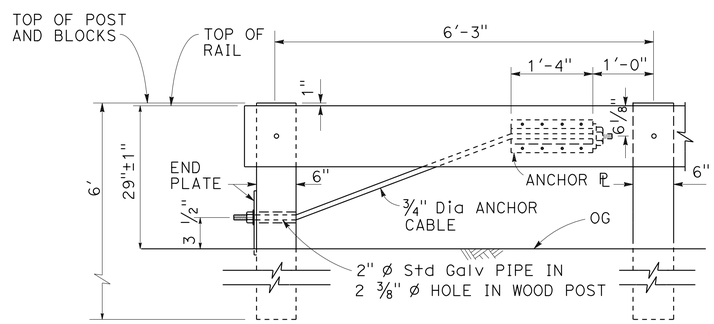

ELEVATION

RAIL TENSIONING ASSEMBLY

NOTE: DIMENSIONING APPLIES TO BOTH TYPES.

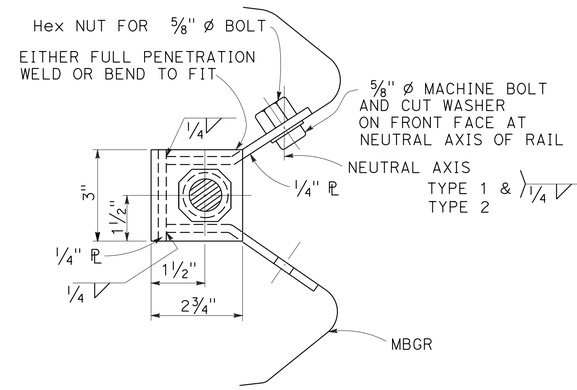

SECTION C-C

(ALTERNATIVE TYPE 1)

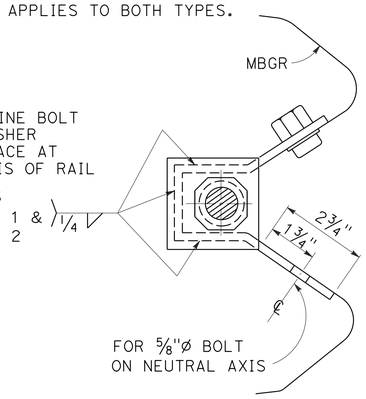

SECTION C-C

(ALTERNATIVE TYPE 2)

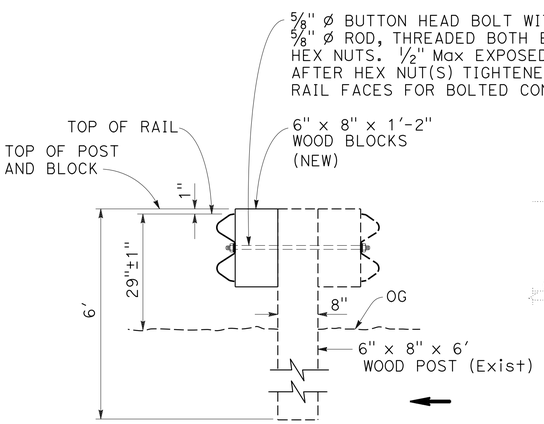

SECTION A-A

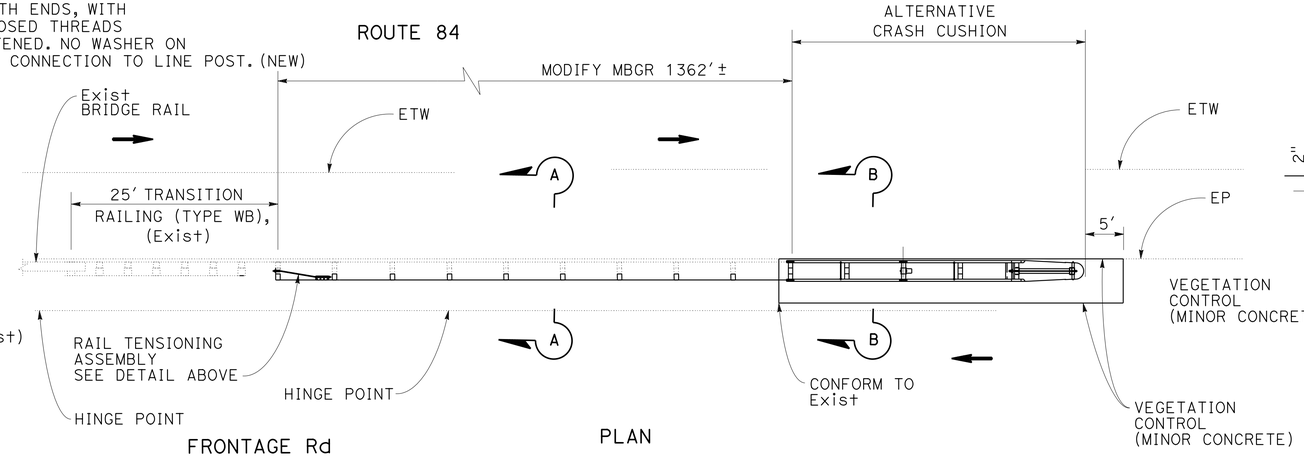

FRONTAGE Rd

PLAN

MODIFY METAL BEAM GUARD RAILING TO DOUBLE METAL BEAM GUARD RAILING

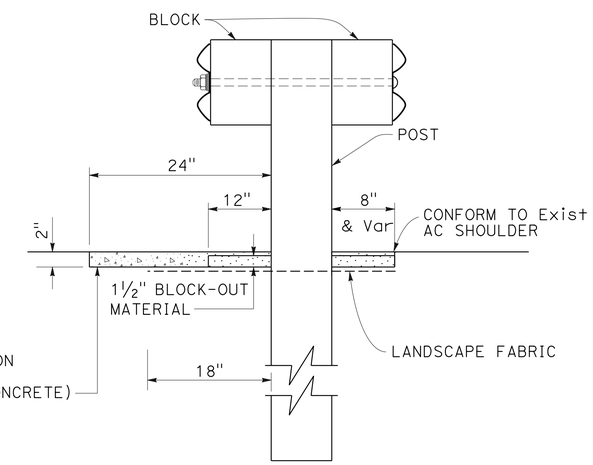

SECTION B-B

CONSTRUCTION DETAILS

NO SCALE

C-1

REVISED BY	HS
DATE REVISED	9/23/14
CALCULATED-DESIGNED BY	HUMAYUN R. SYED
CHECKED BY	JAIME GUTIERREZ
FUNCTIONAL SUPERVISOR	JAIME GUTIERREZ

STATE OF CALIFORNIA - DEPARTMENT OF TRANSPORTATION

DESIGN

Caltrans

LAST REVISION 09-23-14 | DATE PLOTTED => 23-OCT-2014 | TIME PLOTTED => 14:12

Dist	COUNTY	ROUTE	POST MILES TOTAL PROJECT	SHEET No.	TOTAL SHEETS
04	SM,Ala	84	R28.8/R29.3, R0.5	7	83

John Peterson 8-15-14
REGISTERED CIVIL ENGINEER DATE

10-6-14
PLANS APPROVAL DATE

REGISTERED PROFESSIONAL ENGINEER
John E. Peterson
No. 60724
Exp. 12-31-14
CIVIL
STATE OF CALIFORNIA

THE STATE OF CALIFORNIA OR ITS OFFICERS OR AGENTS SHALL NOT BE RESPONSIBLE FOR THE ACCURACY OR COMPLETENESS OF SCANNED COPIES OF THIS PLAN SHEET.

CURVE DATA TABLE

ALIGNMENT	No. ⓡ	R	Δ	T	L	BC	EC
"WV2" Elev 9.55	1	52′	19° 10′ 19"	8.78′	17.40′	10+51	10+68.40
	2	44′	51° 45′ 40"	21.35′	39.75′	10+68.40	11+08.15
	3	10.50′	76° 23′ 36"	8.26′	14′	11+08.15	11+22.15
"WV3" Elev 10.38	4	33′	09° 06′ 55"	2.63′	5.25′	10+51	10+56.25
	5	65′	13° 39′ 46"	7.79′	15.50′	10+56.25	10+71.75
	6	42′	15° 41′ 17"	5.79′	11.50′	10+71.75	10+83.25
	7	21′	27° 17′ 01"	5.10′	10′	10+83.25	10+93.25
	8	62′	14° 47′ 10"	8.04′	16′	10+93.25	11+09.25
	9	10′	50° 08′ 02"	4.68′	8.75′	11+09.25	11+18
	10	13′	34° 09′ 26"	3.99′	7.75′	11+18	11+25.75
"WV4" Elev 11.21	11	16′	06° 16′ 00"	0.88′	1.75′	10+14	10+15.75
	12	55′	17° 58′ 12"	8.70′	17.25′	10+15.75	10+33
	13	85′	08° 05′ 20"	6.01′	12′	10+33	10+45
	14	20′	63° 01′ 31"	12.26′	22′	10+45	10+67
	15	20′	29° 21′ 51"	5.24′	10.25′	10+67	10+77.25
	16	5′	22° 55′ 06"	1.01′	2′	10+77.25	10+79.25
	17	13.25′	47° 59′ 55"	5.90′	11.10′	10+79.25	10+90.35
"WV5" Elev 12.04	18	20′	07° 09′ 43"	1.25′	2.50′	10+02.50	10+05
	19	52′	17° 37′ 46"	8.06′	16′	10+05	10+21
	20	112′	06° 23′ 41"	6.26′	12.50′	10+21	10+33.50
	21	25′	30° 56′ 23"	6.92′	13.50′	10+33.50	10+47
	22	11′	40° 22′ 03"	4.04′	7.75′	10+47	10+54.75
	23	23′	26° 46′ 46"	15.48′	10.75′	10+54.75	10+65.50
	24	7′	38° 52′ 45"	2.47′	4.75′	10+65.50	10+70.25
	25	12′	46° 33′ 10"	5.16′	9.75′	10+70.25	10+80
"WV6" Elev 12.87	26	76′	05° 05′ 20"	3.38′	6.75′	10+00	10+06.75
	27	127′	05° 31′ 36"	6.13′	12.25′	10+06.75	10+19
	28	26′	63° 54′ 25"	16.22′	29′	10+19	10+48
	29	8.50′	114° 35′ 30"	13.24′	17′	10+48	10+65
"WV7" Elev 13.70	30	27.75′	57° 48′ 43"	15.32′	28′	10+03	10+31
	31	10.50′	103° 40′ 41"	13.36′	19′	10+31	10+50
"WV8"	32	22.75′	36° 31′ 05"	7.506′	14.50′	10+01	10+15.50
	33	89′	04° 30′ 23"	3.50′	7′	10+15.50	10+22.50
	34	7.75′	108° 18′ 27"	10.73′	14.65′	10+22.50	10+37.15

NOTES:

1. ROUND ALL EXPOSED CORNERS ½" RADIUS.
2. ALL Reinf SHALL BE EPOXY COATED EXCEPT OTHERWISE NOTED.
3. PROVIDE 3" Min COVER TO ALL Reinf.

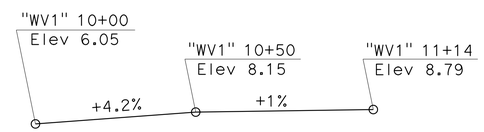

PROFILE

NO SCALE

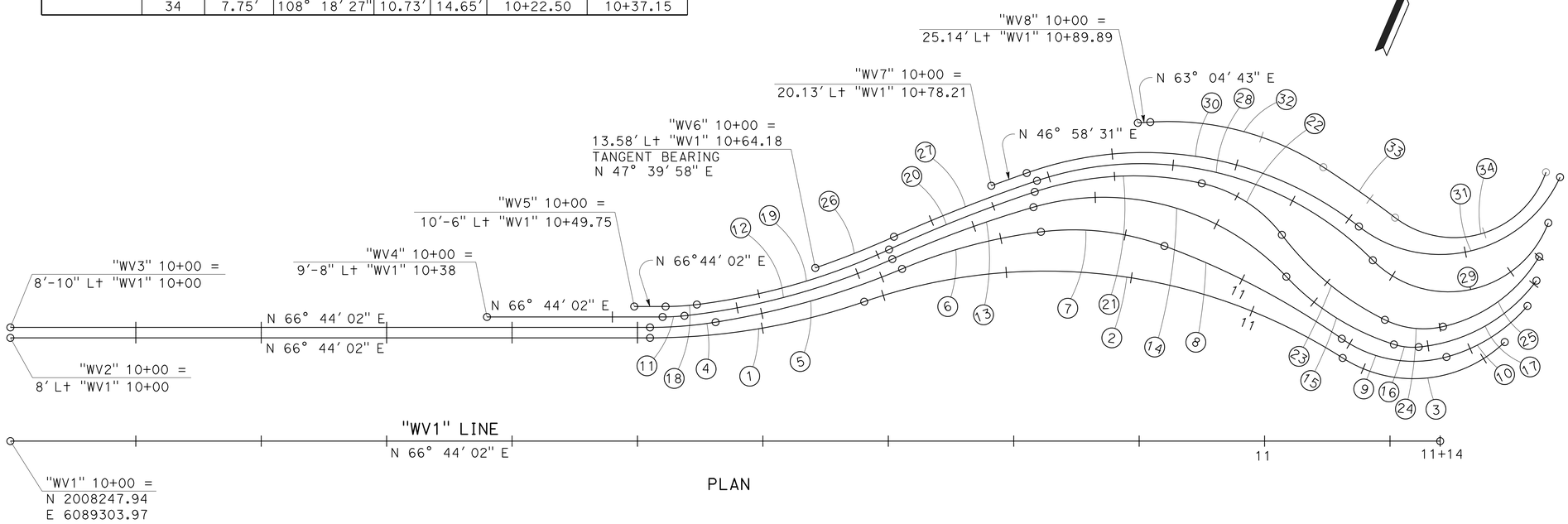

PLAN

CONSTRUCTION DETAILS
WEST VIEWING AREA DETAIL No. 1

SCALE: 1" = 5′

C-2

STATE OF CALIFORNIA - DEPARTMENT OF TRANSPORTATION
Caltrans
DESIGN

FUNCTIONAL SUPERVISOR: KELLY HOLDEN
CALCULATED-DESIGNED BY: JOHN E. PETERSON
CHECKED BY: MUTHANNA OMRAN
REVISED BY: JEP
DATE REVISED: 9/3/14

LAST REVISION 09-03-14
DATE PLOTTED => 23-OCT-2014
TIME PLOTTED => 14:12

Dist	COUNTY	ROUTE	POST MILES TOTAL PROJECT	SHEET No.	TOTAL SHEETS
04	SM,Ala	84	R28.8/R29.3, R0.5	8	83

REGISTERED CIVIL ENGINEER 8-15-14 DATE

10-6-14
PLANS APPROVAL DATE

REGISTERED PROFESSIONAL ENGINEER
John E. Peterson
No. 60724
Exp. 12-31-14
CIVIL
STATE OF CALIFORNIA

THE STATE OF CALIFORNIA OR ITS OFFICERS OR AGENTS SHALL NOT BE RESPONSIBLE FOR THE ACCURACY OR COMPLETENESS OF SCANNED COPIES OF THIS PLAN SHEET.

NOTE:

SEE SHEET C-12 FOR SCORE JOINT LAYOUT AND DETAILS.

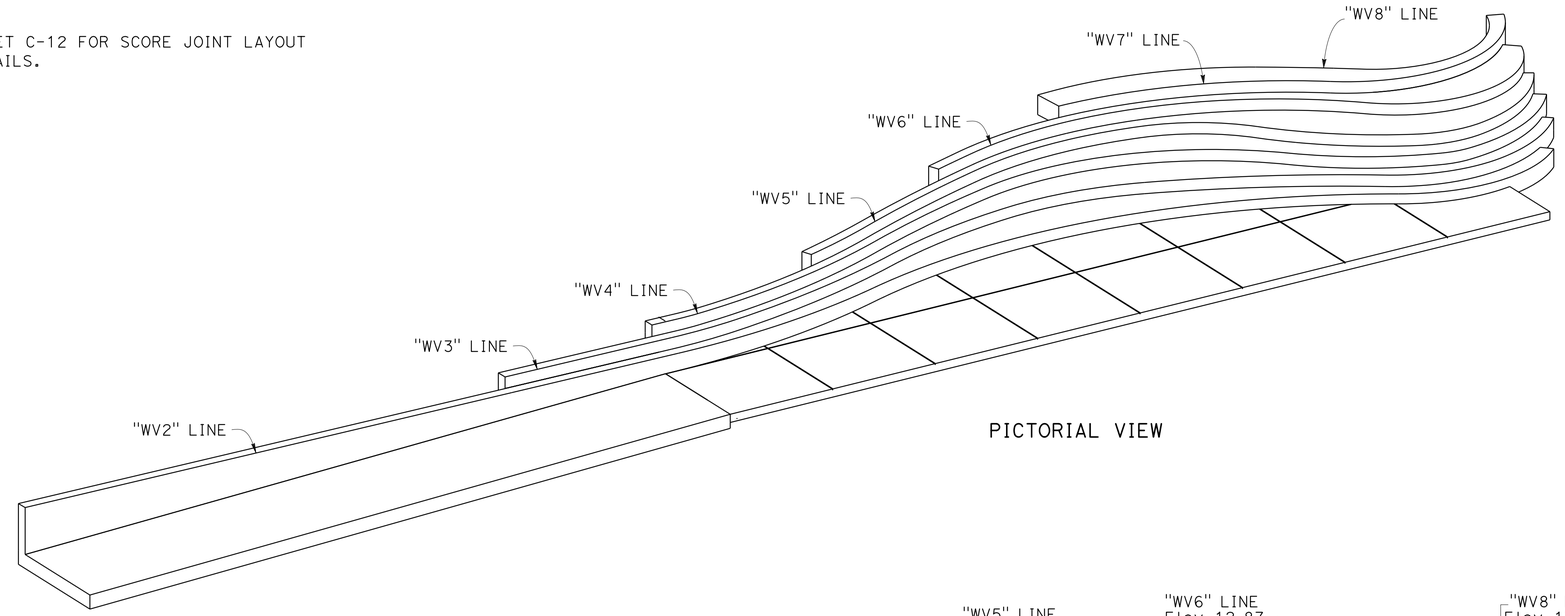

PICTORIAL VIEW

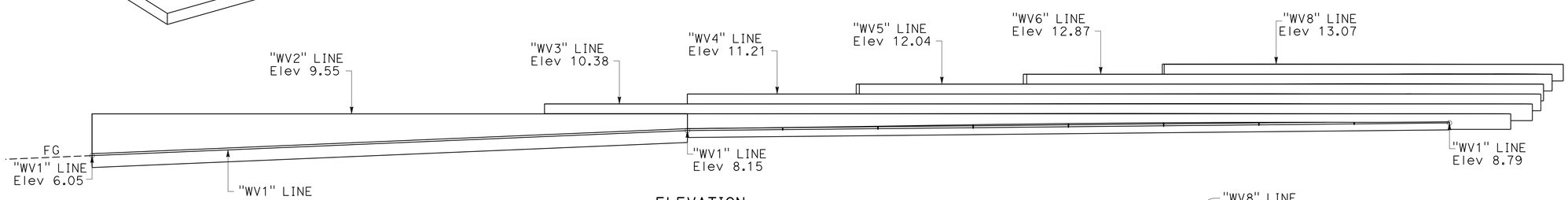

ELEVATION

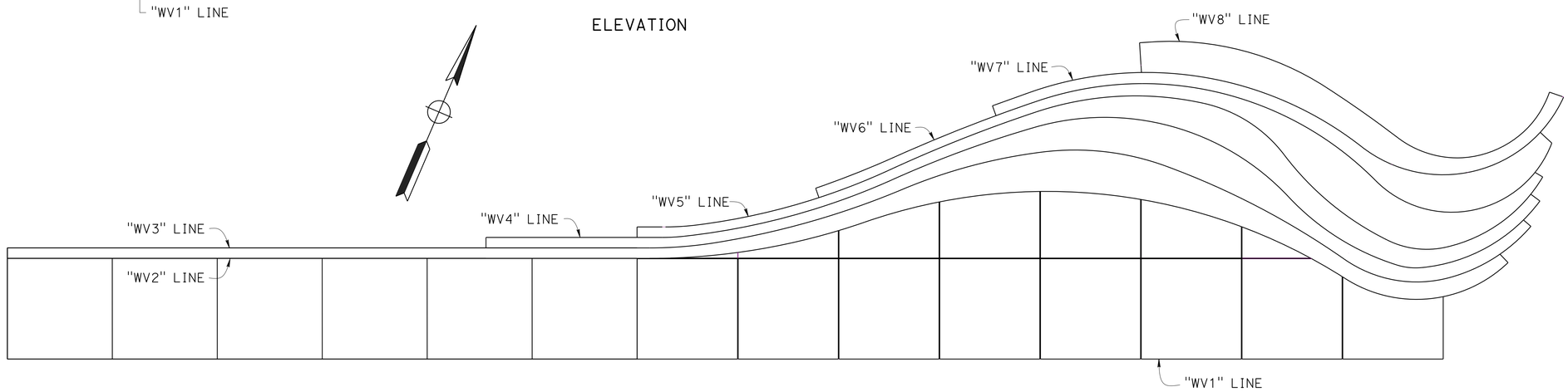

PLAN

CONSTRUCTION DETAILS
WEST VIEWING AREA DETAIL No. 2

SCALE: 1" = 5'

C-3

JEP	8/28/14
REVISED BY	DATE REVISED
JOHN E. PETERSON	MUTHANNA OMRAN
CALCULATED-DESIGNED BY	CHECKED BY
FUNCTIONAL SUPERVISOR	KELLY HOLDEN

STATE OF CALIFORNIA - DEPARTMENT OF TRANSPORTATION
Caltrans
DESIGN

LAST REVISION 08-28-14 | DATE PLOTTED => 23-OCT-2014 | TIME PLOTTED => 14:12

Dist	COUNTY	ROUTE	POST MILES TOTAL PROJECT	SHEET No.	TOTAL SHEETS
04	SM,Ala	84	R28.8/R29.3, R0.5	9	83

REGISTERED CIVIL ENGINEER 8-15-14 DATE

10-6-14
PLANS APPROVAL DATE

REGISTERED PROFESSIONAL ENGINEER John E. Peterson No. 60724 Exp. 12-31-14 CIVIL STATE OF CALIFORNIA

THE STATE OF CALIFORNIA OR ITS OFFICERS OR AGENTS SHALL NOT BE RESPONSIBLE FOR THE ACCURACY OR COMPLETENESS OF SCANNED COPIES OF THIS PLAN SHEET.

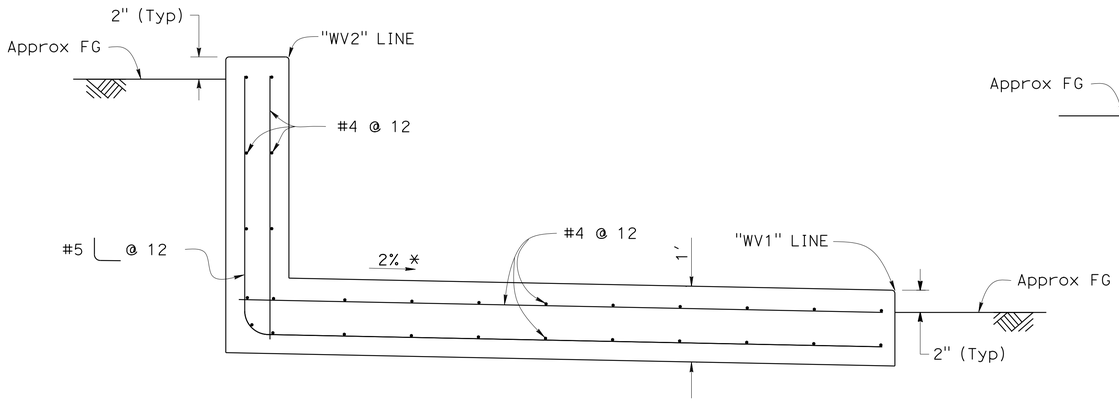

SECTION "WV1" 10+10

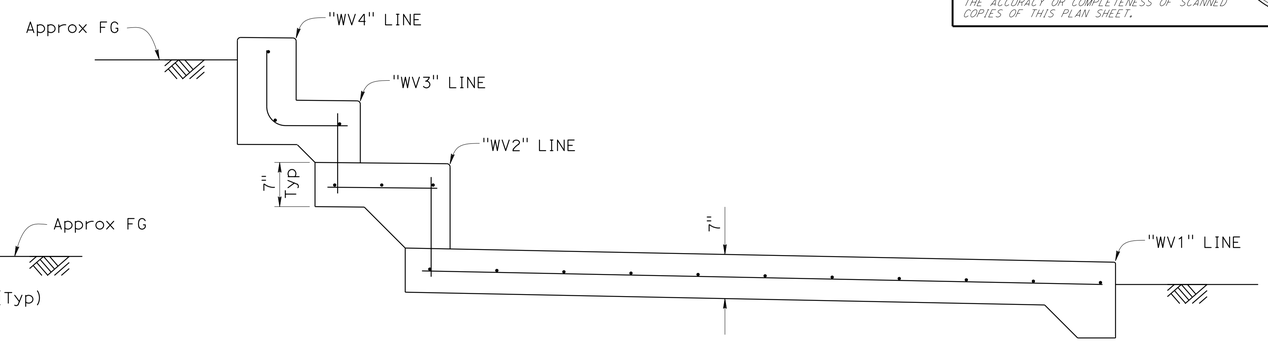

SECTION "WV1" 10+60

SEE "SECTION "WV1" 10+80" FOR Reinf DETAILS

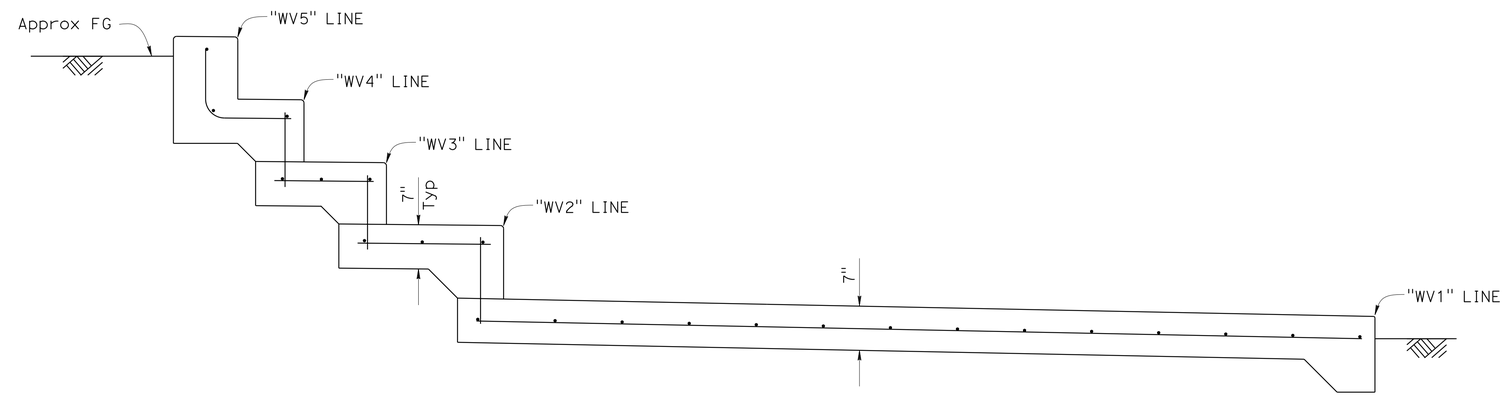

SECTION "WV1" 10+70

SEE "SECTION "WV1" 10+80" FOR Reinf DETAILS

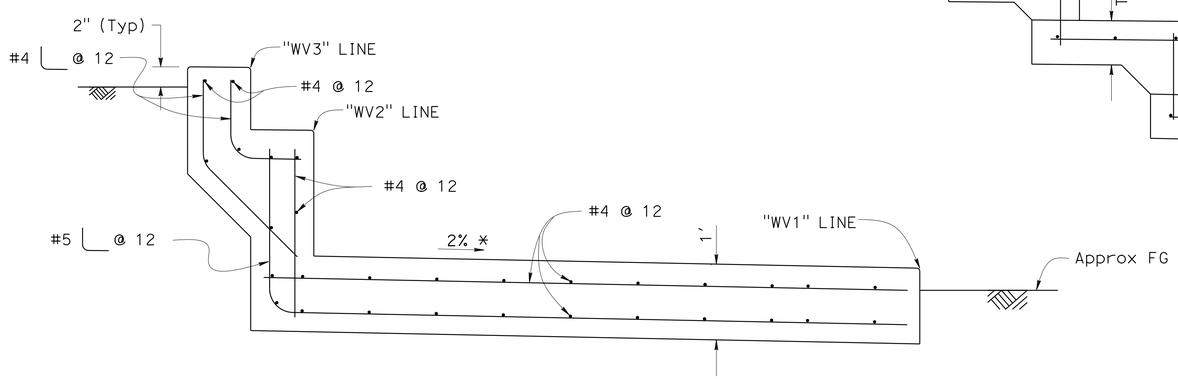

SECTION "WV1" 10+40

* MEASURED NORMAL TO PROFILE LINE

CONSTRUCTION DETAILS
WEST VIEWING AREA DETAIL No. 3
SCALE: 1" = 1'

C-4

STATE OF CALIFORNIA - DEPARTMENT OF TRANSPORTATION
Caltrans
DESIGN

FUNCTIONAL SUPERVISOR: KELLY HOLDEN
CALCULATED-DESIGNED BY: JOHN E. PETERSON
CHECKED BY: MUTHANNA OMRAN
REVISED BY: JEP
DATE REVISED: 8/12/14

LAST REVISION 09-05-14
DATE PLOTTED => 23-OCT-2014
TIME PLOTTED => 14:12

Dist	COUNTY	ROUTE	POST MILES TOTAL PROJECT	SHEET No.	TOTAL SHEETS
04	SM,Ala	84	R28.8/R29.3, R0.5	10	83

REGISTERED CIVIL ENGINEER 8-15-14 DATE

10-6-14
PLANS APPROVAL DATE

REGISTERED PROFESSIONAL ENGINEER
John E. Peterson
No. 60724
Exp. 12-31-14
CIVIL
STATE OF CALIFORNIA

THE STATE OF CALIFORNIA OR ITS OFFICERS OR AGENTS SHALL NOT BE RESPONSIBLE FOR THE ACCURACY OR COMPLETENESS OF SCANNED COPIES OF THIS PLAN SHEET.

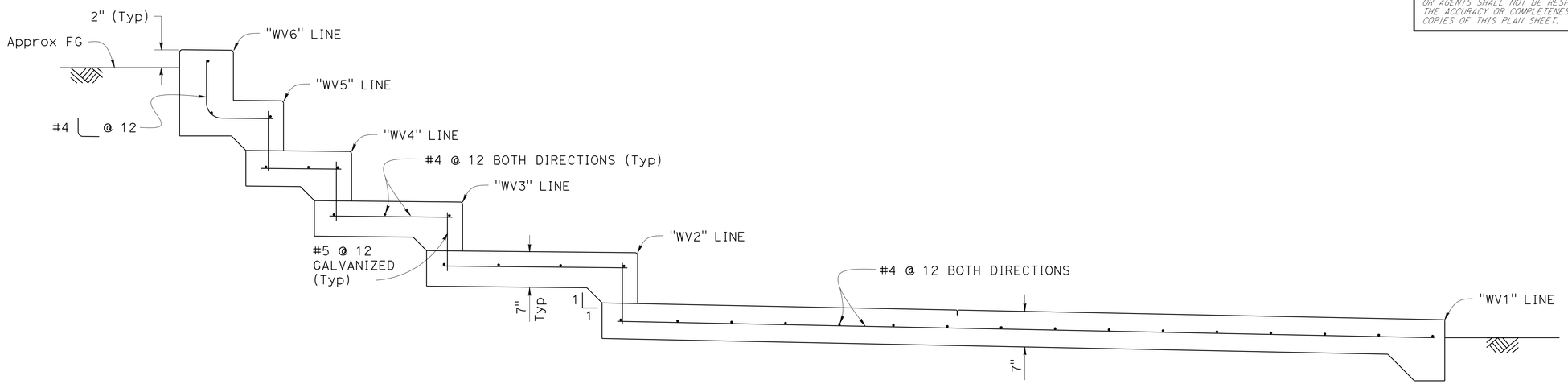

SECTION "WV1" 10+80

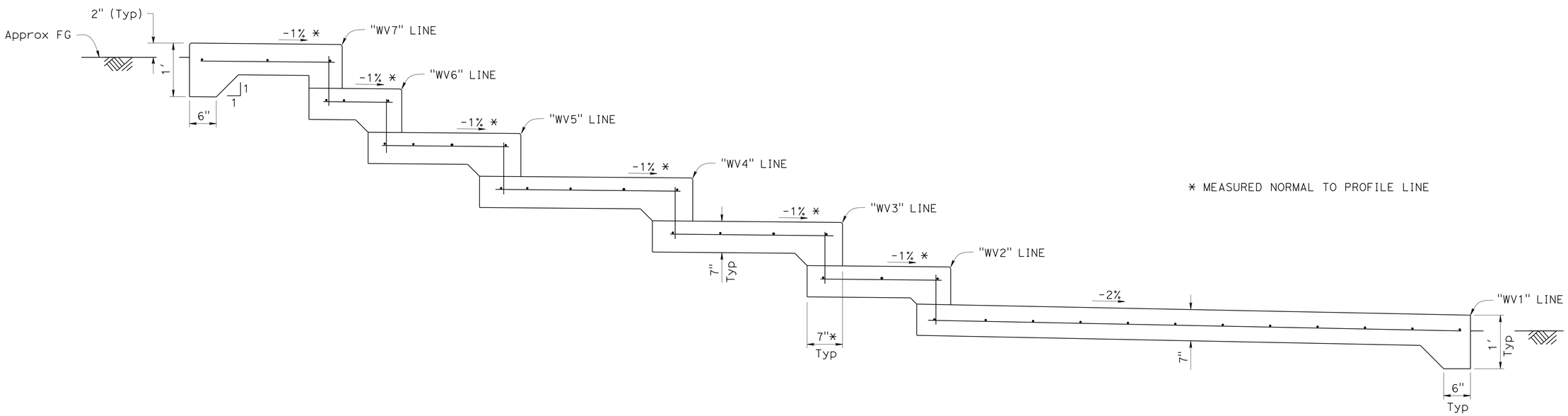

* MEASURED NORMAL TO PROFILE LINE

SECTION "WV1" 11+00
SEE "SECTION "WV1" 10+80"
FOR Reinf DETAILS

CONSTRUCTION DETAILS
WEST VIEWING AREA DETAIL No. 4
SCALE: 1" = 1'

C-5

JEP	9/5/14
REVISED BY	DATE REVISED
JOHN E. PETERSON	MUTHANNA OMRAN
CALCULATED-DESIGNED BY	CHECKED BY
FUNCTIONAL SUPERVISOR	KELLY HOLDEN

STATE OF CALIFORNIA - DEPARTMENT OF TRANSPORTATION
Caltrans
DESIGN

LAST REVISION 09-05-14 | DATE PLOTTED => 23-OCT-2014 | TIME PLOTTED => 14:12

Dist	COUNTY	ROUTE	POST MILES TOTAL PROJECT	SHEET No.	TOTAL SHEETS
04	SM,Ala	84	R28.8/R29.3, R0.5	11	83

REGISTERED CIVIL ENGINEER 8-15-14 DATE

10-6-14
PLANS APPROVAL DATE

REGISTERED PROFESSIONAL ENGINEER
John E. Peterson
No. 60724
Exp. 12-31-14
CIVIL
STATE OF CALIFORNIA

THE STATE OF CALIFORNIA OR ITS OFFICERS OR AGENTS SHALL NOT BE RESPONSIBLE FOR THE ACCURACY OR COMPLETENESS OF SCANNED COPIES OF THIS PLAN SHEET.

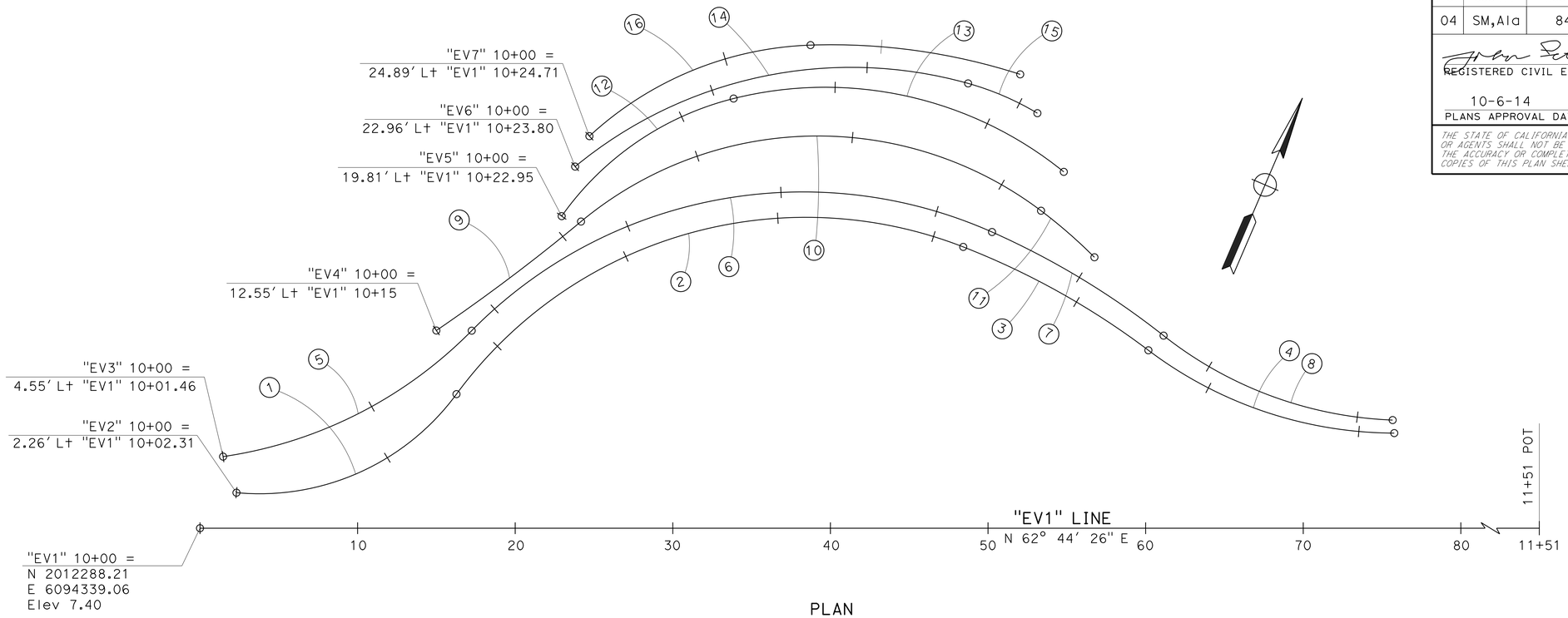

PLAN

CURVE DATA TABLE

ALIGNMENT	CURVE No.	R	Δ	T	L	BC	EC
"EV2" Elev 8.69	1	15.50'	59° 08' 38.51"	8.7952'	16'	10+00	10+16
	2	27.50'	75° 00' 19.38"	21.1035'	36'	10+16	10+52
	3	49'	15° 47' 08.06"	6.793'	13.50'	10+52	10+65.50
	4	26'	36° 54' 42.13"	8.6772'	16.75'	10+65.50	10+82.25
"EV3" Elev 9.52	5	27.75'	37° 09' 53.39"	9.3294'	18'	10+00	10+18
	6	29.50'	69° 26' 04.98"	20.44'	35.75'	10+18	10+53.75
	7	51'	14° 19' 26.20"	6.4084'	12.75'	10+53.75	10+66.50
	8	25'	36° 05' 46.83"	8.1462'	15.75'	10+66.50	10+82.25
"EV4" Elev 10.35	9	120'	05° 29' 27.04"	5.7544'	11.50'	10+00	10+11.50
	10	23.50'	76° 48' 02.61"	18.6261'	31.50'	10+11.50	10+43
	11	32'	08° 03' 25.99"	2.2537'	4.50'	10+43	10+47.50
"EV5" Elev 11.18	12	19'	40° 42' 36.57"	7.0491'	13.50'	10+00	10+13.50
	13	24'	53° 07' 04.66"	11.9968'	22.25'	10+13.50	10+35.75
"EV6" Elev 12.01	14	27.50'	55° 12' 44.27"	14.3804'	26.50'	10+00	10+26.50
	15	18'	15° 16' 43.95"	2.4143'	4.80'	10+26.50	10+31.30
"EV7"	16	21.75'	40° 49' 53.31"	8.0956'	15.50'	10+00	10+15.50
	17	39'	19° 49' 59.36"	6.8182'	13.50'	10+15.50	10+29

CONSTRUCTION DETAILS
EAST VIEWING AREA DETAIL No. 1
SCALE: 1" = 4'

C-6

STATE OF CALIFORNIA - DEPARTMENT OF TRANSPORTATION
Caltrans
DESIGN
FUNCTIONAL SUPERVISOR: KELLY HOLDEN
CALCULATED-DESIGNED BY: JOHN E. PETERSON
CHECKED BY: MUTHANNA OMRAN
REVISED BY: JEP
DATE REVISED: 8/13/14

LAST REVISION 08-13-14
DATE PLOTTED => 23-OCT-2014
TIME PLOTTED => 14:12

Dist	COUNTY	ROUTE	POST MILES TOTAL PROJECT	SHEET No.	TOTAL SHEETS
04	SM,Ala	84	R28.8/R29.3, R0.5	12	83

REGISTERED CIVIL ENGINEER 8-15-14 DATE

10-6-14
PLANS APPROVAL DATE

REGISTERED PROFESSIONAL ENGINEER
John E. Peterson
No. 60724
Exp. 12-31-14
CIVIL
STATE OF CALIFORNIA

THE STATE OF CALIFORNIA OR ITS OFFICERS OR AGENTS SHALL NOT BE RESPONSIBLE FOR THE ACCURACY OR COMPLETENESS OF SCANNED COPIES OF THIS PLAN SHEET.

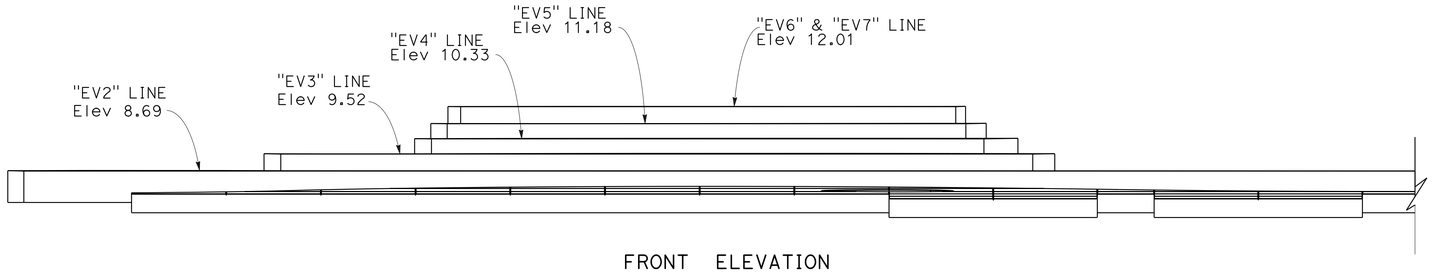

FRONT ELEVATION

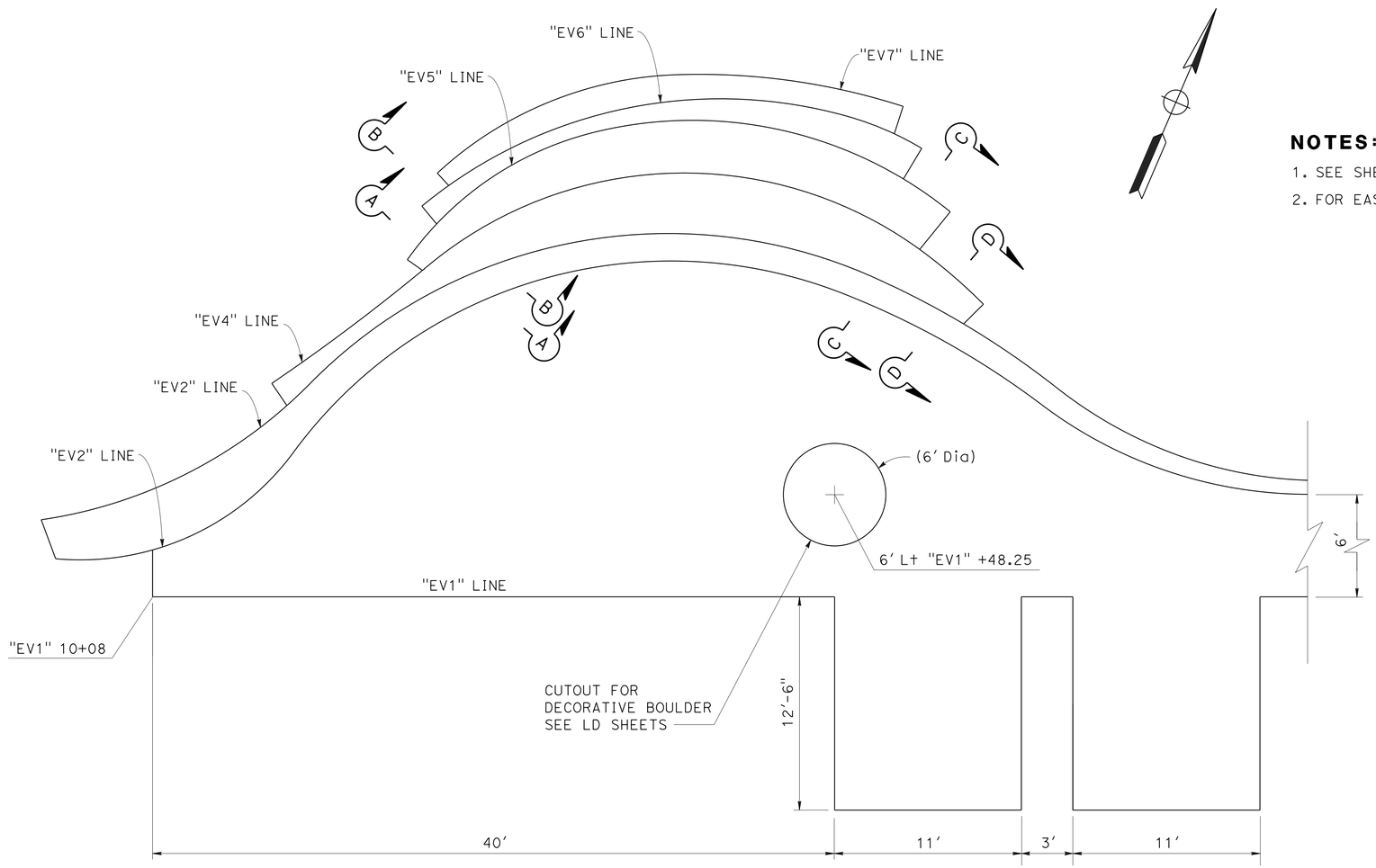

PLAN

NOTES:

1. SEE SHEET C-13 FOR SCORE JOINT LAYOUT AND DETAILS.
2. FOR EAST SEATING AREA DETAILS No. 3 AND No. 4, SEE SHEETS C-8 AND C-9.

CONSTRUCTION DETAILS
EAST VIEWING AREA DETAIL No. 2
SCALE: 1" = 4'

C-7

JEP	9/8/14
REVISED BY	DATE REVISED
JOHN E. PETERSON	MUTHANNA OMRAN
CALCULATED-DESIGNED BY	CHECKED BY
FUNCTIONAL SUPERVISOR	KELLY HOLDEN

STATE OF CALIFORNIA - DEPARTMENT OF TRANSPORTATION
Caltrans
DESIGN

LAST REVISION 09-08-14 | DATE PLOTTED => 23-OCT-2014 | TIME PLOTTED => 14:12

Dist	COUNTY	ROUTE	POST MILES TOTAL PROJECT	SHEET No.	TOTAL SHEETS
04	SM,Ala	84	R28.8/R29.3, R0.5	13	83

REGISTERED CIVIL ENGINEER 8-15-14 DATE

10-6-14
PLANS APPROVAL DATE

REGISTERED PROFESSIONAL ENGINEER
John E. Peterson
No. 60724
Exp. 12-31-14
CIVIL
STATE OF CALIFORNIA

THE STATE OF CALIFORNIA OR ITS OFFICERS OR AGENTS SHALL NOT BE RESPONSIBLE FOR THE ACCURACY OR COMPLETENESS OF SCANNED COPIES OF THIS PLAN SHEET.

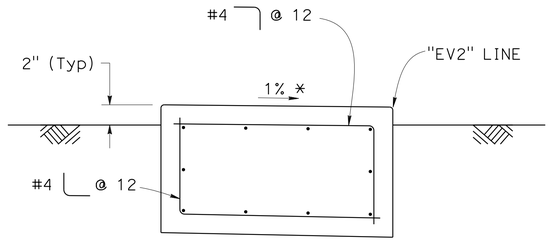

SECTION "EV1" 10+05

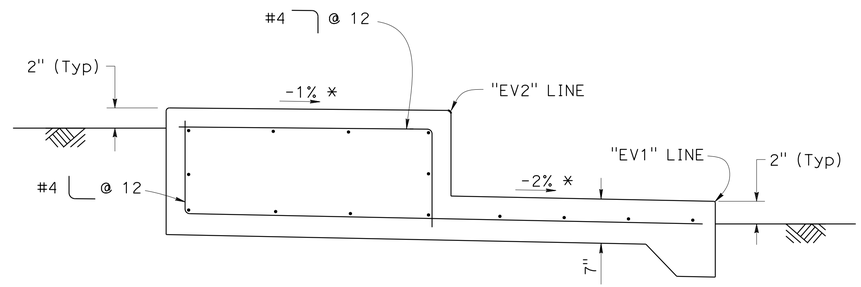

SECTION "EV1" 10+10

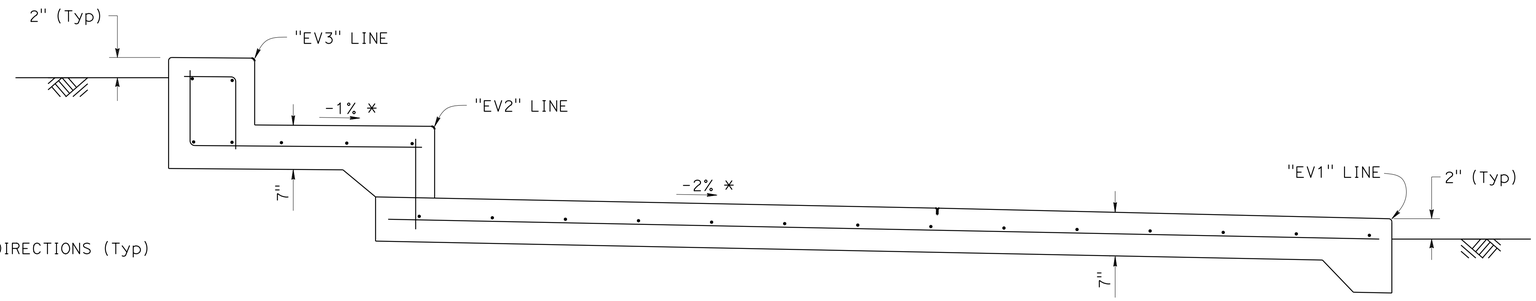

SECTION "EV1" 10+20

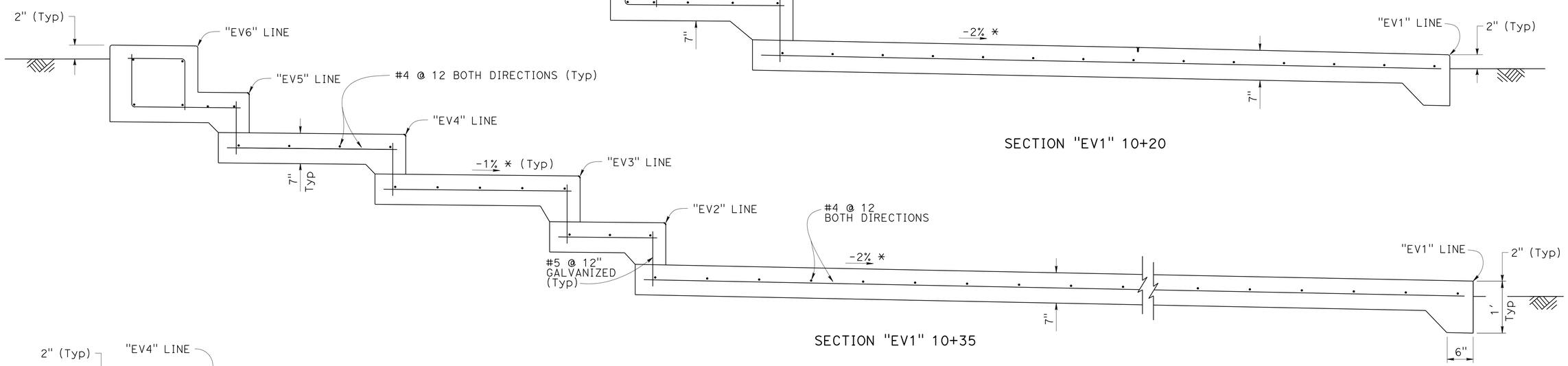

SECTION "EV1" 10+35

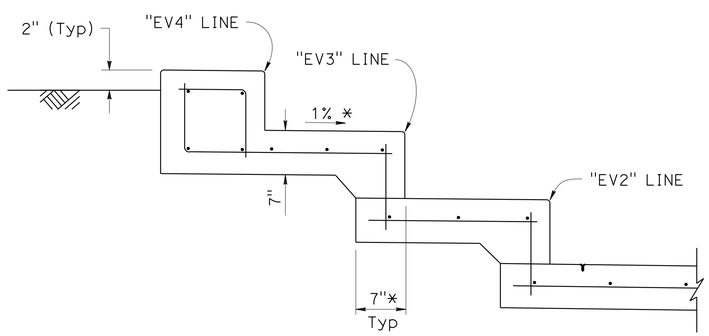

SECTION A-A

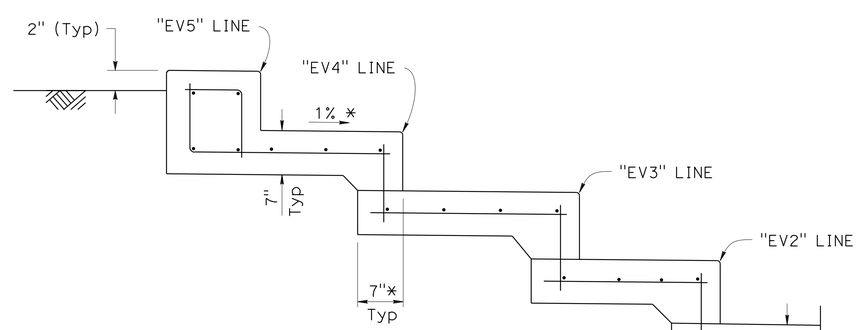

SECTION B-B

* MEASURED NORMAL TO PROFILE LINE

CONSTRUCTION DETAILS
EAST VIEWING AREA DETAIL No. 3
SCALE: 1" = 1'

C-8

STATE OF CALIFORNIA - DEPARTMENT OF TRANSPORTATION
Caltrans®
DESIGN

FUNCTIONAL SUPERVISOR: KELLY HOLDEN
CALCULATED-DESIGNED BY: JOHN E. PETERSON
CHECKED BY: MUTHANNA OMRAN
REVISED BY: JEP
DATE REVISED: 9/5/14

LAST REVISION 09-05-14
DATE PLOTTED => 23-OCT-2014
TIME PLOTTED => 14:12

Dist	COUNTY	ROUTE	POST MILES TOTAL PROJECT	SHEET No.	TOTAL SHEETS
04	SM,Ala	84	R28.8/R29.3, R0.5	14	83

REGISTERED CIVIL ENGINEER 8-15-14 DATE

10-6-14
PLANS APPROVAL DATE

REGISTERED PROFESSIONAL ENGINEER
John E. Peterson
No. 60724
Exp. 12-31-14
CIVIL
STATE OF CALIFORNIA

THE STATE OF CALIFORNIA OR ITS OFFICERS OR AGENTS SHALL NOT BE RESPONSIBLE FOR THE ACCURACY OR COMPLETENESS OF SCANNED COPIES OF THIS PLAN SHEET.

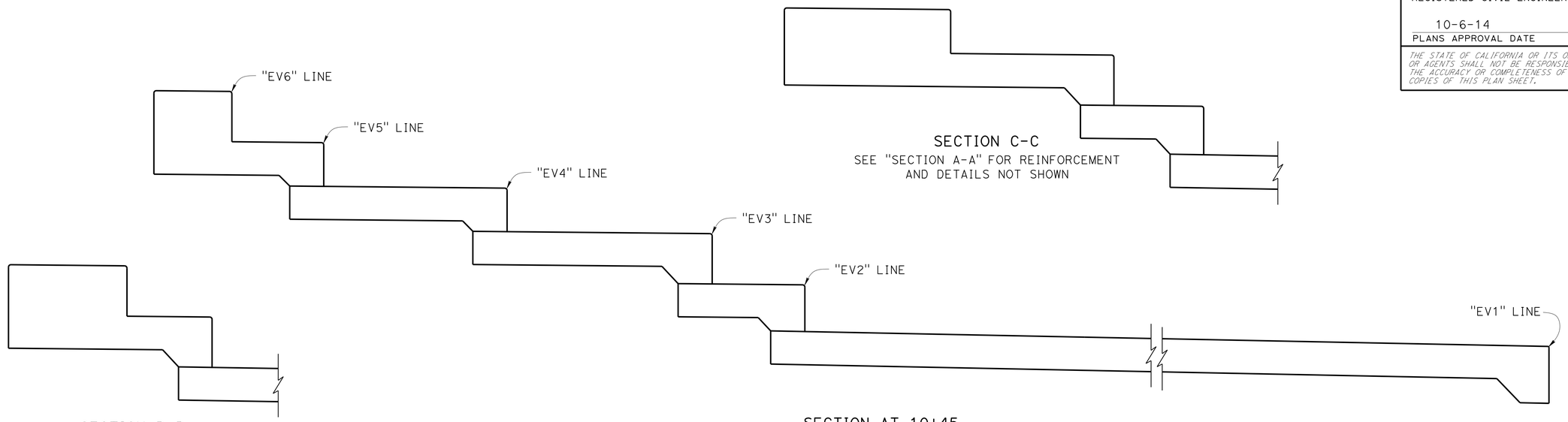

SECTION C-C
SEE "SECTION A-A" FOR REINFORCEMENT AND DETAILS NOT SHOWN

SECTION D-D
SEE "SECTION "EV1" 10+20" FOR REINFORCEMENT AND DETAILS NOT SHOWN

SECTION AT 10+45
SEE "SECTION "EV1" 10+35" FOR REINFORCEMENT AND DETAILS NOT SHOWN

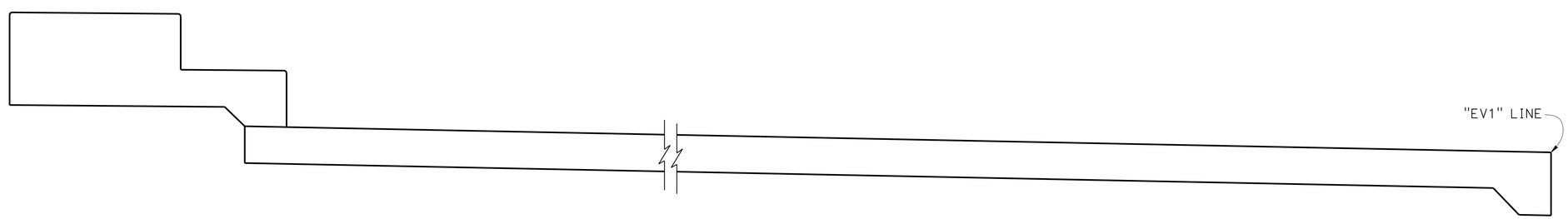

SECTION AT 10+55
SEE "SECTION "EV1" 10+20" FOR REINFORCEMENT AND DETAILS NOT SHOWN

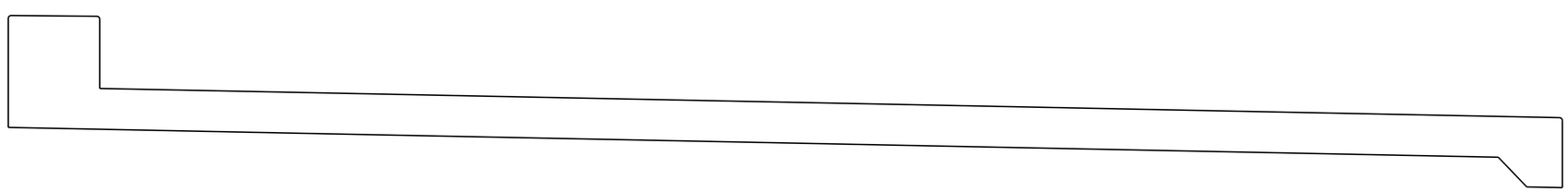

SECTION "EV1" 10+65
SEE "SECTION "EV1" 10+10" FOR REINFORCEMENT AND DETAILS NOT SHOWN

CONSTRUCTION DETAILS
EAST VIEWING AREA DETAIL No. 4
SCALE: 1" = 1'

C-9

REVISED BY	DATE REVISED
JEP	9/25/14

JOHN E. PETERSON
MUTHANNA OMRAN
CALCULATED-DESIGNED BY
CHECKED BY
FUNCTIONAL SUPERVISOR
KELLY HOLDEN

STATE OF CALIFORNIA - DEPARTMENT OF TRANSPORTATION
Caltrans
DESIGN

LAST REVISION 09-25-14
DATE PLOTTED => 23-OCT-2014
TIME PLOTTED => 14:12

Dist	COUNTY	ROUTE	POST MILES TOTAL PROJECT	SHEET No.	TOTAL SHEETS
04	SM,Ala	84	R28.8/R29.3, R0.5	15	83

REGISTERED CIVIL ENGINEER 8-14-14 DATE

10-6-14
PLANS APPROVAL DATE

REGISTERED PROFESSIONAL ENGINEER Chi-Chung Ho No. 62495 Exp. 9-30-15 CIVIL STATE OF CALIFORNIA

THE STATE OF CALIFORNIA OR ITS OFFICERS OR AGENTS SHALL NOT BE RESPONSIBLE FOR THE ACCURACY OR COMPLETENESS OF SCANNED COPIES OF THIS PLAN SHEET.

PAVEMENT ELEVATIONS

No.	LOCATION	ELEVATION
1	47.22′ Lt; 175+11.90;TOP OF CURB RAMP	6.50
2	33.44′ Lt; 175+14.73; TOP OF CURB	6.35
3	33.30′ Lt; 175+42.33; TOP OF CURB	6.41
4	33.30′ Lt; 175+55.49; TOP OF CURB	6.44
5	33.84′ Lt; 175+99.98; TOP OF CURB	6.50
6	45.25′ Lt; 176+95.72; TOP OF CURB	6.50
7	45.12′ Lt; 177+56.68; TOP OF CURB	6.50
8	45.79′ Lt; 177+83.07; TOP OF CURB	6.50
9	61.05′ Lt; 178+05.38; TOP OF CURB	6.40
10	68.66′ Lt; 177+94.06; TOP OF CURB	6.50
11	61.60′ Lt; 177+82.87; TOP OF CURB RAMP	6.50
12	58.21′ Lt; 175+17.51; TOP OF CURB RAMP	6.50
13	61.89′ Lt; 175+26.85; Bot OF Conc SLAB	6.50
14	41.79′ Lt; 175+42.46; Bot OF Conc SLAB	6.50
15	42.33′ Lt; 175+55.62; Bot OF Conc SLAB	6.53
16	54.38′ Lt; 175+63.54; Bot OF Conc SLAB	6.66
17	61.48′ Lt; 175+71.54; TOE OF Exist STAIR	6.56
18	52.04′ Lt; 176+14.35; TOP OF CURB RAMP	6.55
19	41.05′ Lt; 176+17.63 AT FL	6.05
20	44.10′ Lt; 176+41.87 AT FL	6.05
21	"WV1" 10+00; TOP OF Conc Pvmt	6.05
22	8′ Lt; "WV1" 10+00; TOE OF WALL	6.20
23	"WV1" 10+50; TOP OF Conc Pvmt	8.15
24	"WV1" 11+14; TOP OF Conc Pvmt	8.79

LEGEND:

[No.] PAVEMENT ELEVATION NUMBER

(No.) CURVE DATA NUMBER

NOTES:

1. THIS PLAN IS ACCURATE FOR PAVEMENT ELEVATION WORK ONLY.
2. STATION CALLOUTS AND CURVE DATA ARE AT THE BACK OF CURB UNLESS OTHERWISE NOTED.
3. ALL STATION-OFFSET ARE TAKEN FROM BPS2 LINE UNLESS OTHERWISE NOTED.
4. VERIFY ALL SLOPE ON PEDESTRIAN WALKWAY THAT ARE LESS THAN 2% MEASURED IN ALL DIRECTIONS.
5. CURVE DATA ARE AT THE BACK OF CURB UNLESS OTHERWISE NOTED.

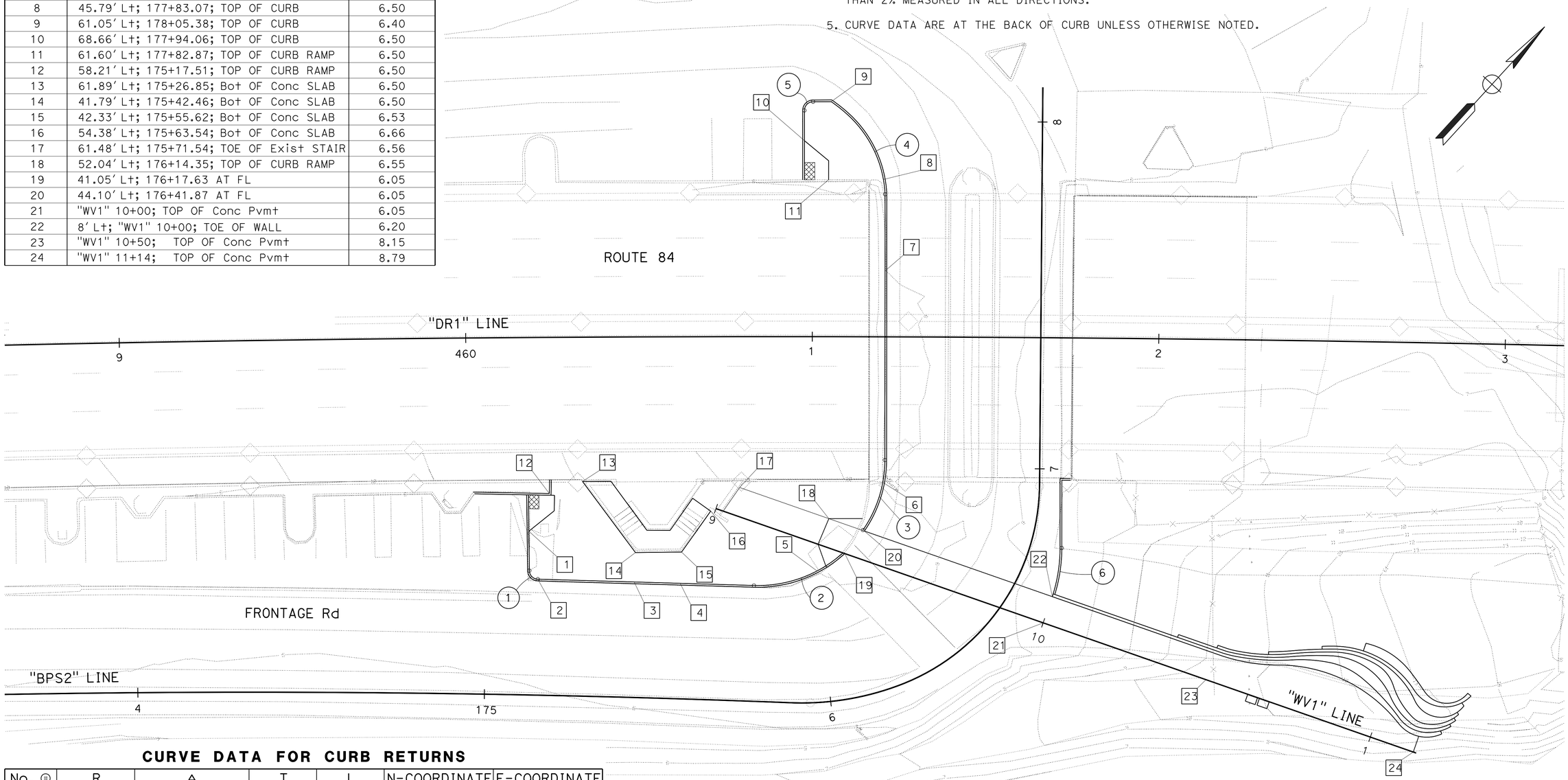

CURVE DATA FOR CURB RETURNS

No. (R)	R	Δ	T	L	N-COORDINATE	E-COORDINATE
1	2.50′	87° 35′ 42"	2.397′	3.822′	2008160.586	6089186.302
2	36.68′	43° 46′ 20"	14.736′	28.023′	2008227.311	6089211.241
3	35.50′	34° 52′ 57"	11.153′	21.613′	2008227.721	6089212.376
4	33.03′	43° 46′ 34"	13.271′	25.238′	2008284.815	6089163.551
5	2.50′	89° 39′ 55"	2.485′	3.912′	2008312.034	6089155.186
6	45.50′	17° 06′ 54"	6.847′	13.591′	2008236.752	6089259.804

CONSTRUCTION DETAILS
PAVEMENT ELEVATION AT WEST PLAZA AND VIEWING AREA
NO SCALE

C-10

STATE OF CALIFORNIA - DEPARTMENT OF TRANSPORTATION
Caltrans DESIGN

FUNCTIONAL SUPERVISOR: JAIME GUTIERREZ

CALCULATED-DESIGNED BY: CHI-CHUNG HO
CHECKED BY: JAIME GUTIERREZ

REVISED BY: CH
DATE REVISED: 9/4/14

LAST REVISION 09-23-14
DATE PLOTTED => 23-OCT-2014
TIME PLOTTED => 14:12

Dist	COUNTY	ROUTE	POST MILES TOTAL PROJECT	SHEET No.	TOTAL SHEETS
04	SM,Ala	84	R28.8/R29.3, R0.5	16	83

REGISTERED CIVIL ENGINEER 8-14-14 DATE

10-6-14
PLANS APPROVAL DATE

REGISTERED PROFESSIONAL ENGINEER Chi-Chung Ho No. 62495 Exp. 9-30-15 CIVIL STATE OF CALIFORNIA

THE STATE OF CALIFORNIA OR ITS OFFICERS OR AGENTS SHALL NOT BE RESPONSIBLE FOR THE ACCURACY OR COMPLETENESS OF SCANNED COPIES OF THIS PLAN SHEET.

NOTE:

FOR ACCURATE RIGHT OF WAY DATA, CONTACT RIGHT OF WAY ENGINEERING AT THE DISTRICT OFFICE.

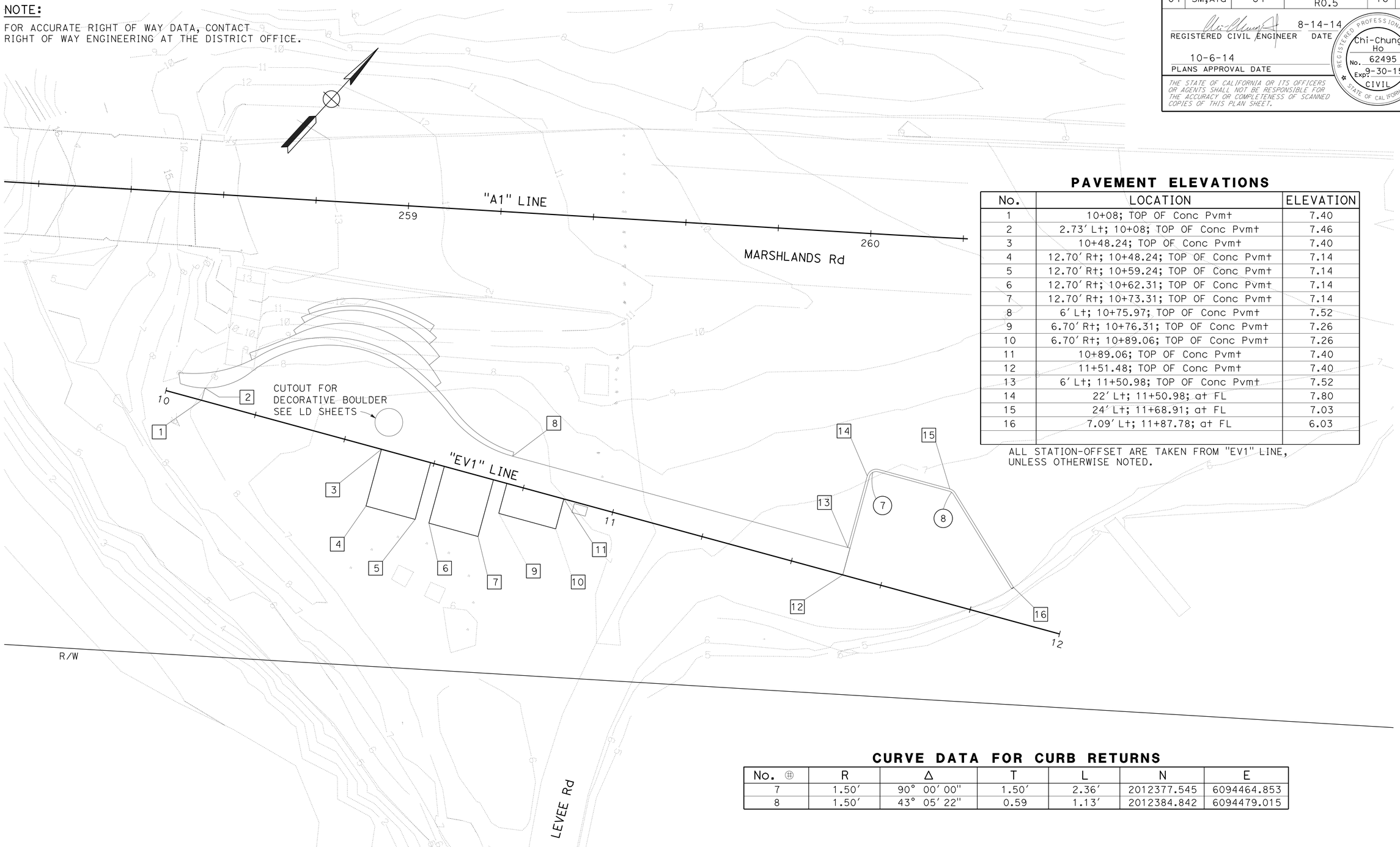

PAVEMENT ELEVATIONS

No.	LOCATION	ELEVATION
1	10+08; TOP OF Conc Pvmt	7.40
2	2.73′ Lt; 10+08; TOP OF Conc Pvmt	7.46
3	10+48.24; TOP OF Conc Pvmt	7.40
4	12.70′ Rt; 10+48.24; TOP OF Conc Pvmt	7.14
5	12.70′ Rt; 10+59.24; TOP OF Conc Pvmt	7.14
6	12.70′ Rt; 10+62.31; TOP OF Conc Pvmt	7.14
7	12.70′ Rt; 10+73.31; TOP OF Conc Pvmt	7.14
8	6′ Lt; 10+75.97; TOP OF Conc Pvmt	7.52
9	6.70′ Rt; 10+76.31; TOP OF Conc Pvmt	7.26
10	6.70′ Rt; 10+89.06; TOP OF Conc Pvmt	7.26
11	10+89.06; TOP OF Conc Pvmt	7.40
12	11+51.48; TOP OF Conc Pvmt	7.40
13	6′ Lt; 11+50.98; TOP OF Conc Pvmt	7.52
14	22′ Lt; 11+50.98; at FL	7.80
15	24′ Lt; 11+68.91; at FL	7.03
16	7.09′ Lt; 11+87.78; at FL	6.03

ALL STATION-OFFSET ARE TAKEN FROM "EV1" LINE, UNLESS OTHERWISE NOTED.

CURVE DATA FOR CURB RETURNS

No. ⊕	R	Δ	T	L	N	E
7	1.50′	90° 00′ 00"	1.50′	2.36′	2012377.545	6094464.853
8	1.50′	43° 05′ 22"	0.59	1.13′	2012384.842	6094479.015

CONSTRUCTION DETAILS
PAVEMENT ELEVATION PLAN AT EAST SEATING AREA

SCALE: 1" = 10′

FOR NOTES AND LEGEND, SEE SHEET C-10

C-11

CH	9/8/14	REVISED BY	DATE REVISED
CHI-CHUNG HO	JAIME GUTIERREZ	CALCULATED-DESIGNED BY	CHECKED BY
FUNCTIONAL SUPERVISOR	JAIME GUTIERREZ		

STATE OF CALIFORNIA - DEPARTMENT OF TRANSPORTATION
Caltrans
DESIGN

LAST REVISION 09-23-14 DATE PLOTTED => 23-OCT-2014 TIME PLOTTED => 14:12

Dist	COUNTY	ROUTE	POST MILES TOTAL PROJECT	SHEET No.	TOTAL SHEETS
04	SM,Ala	84	R28.8/R29.3 R0.5	17	83

9-25-14
LICENSED LANDSCAPE ARCHITECT

10-6-14
PLANS APPROVAL DATE

LICENSED LANDSCAPE ARCHITECT Joaquin Pedrin Signature 9/30/2015 Renewal Date 9/25/2014 Date STATE OF CALIFORNIA

THE STATE OF CALIFORNIA OR ITS OFFICERS OR AGENTS SHALL NOT BE RESPONSIBLE FOR THE ACCURACY OR COMPLETENESS OF SCANNED COPIES OF THIS PLAN SHEET.

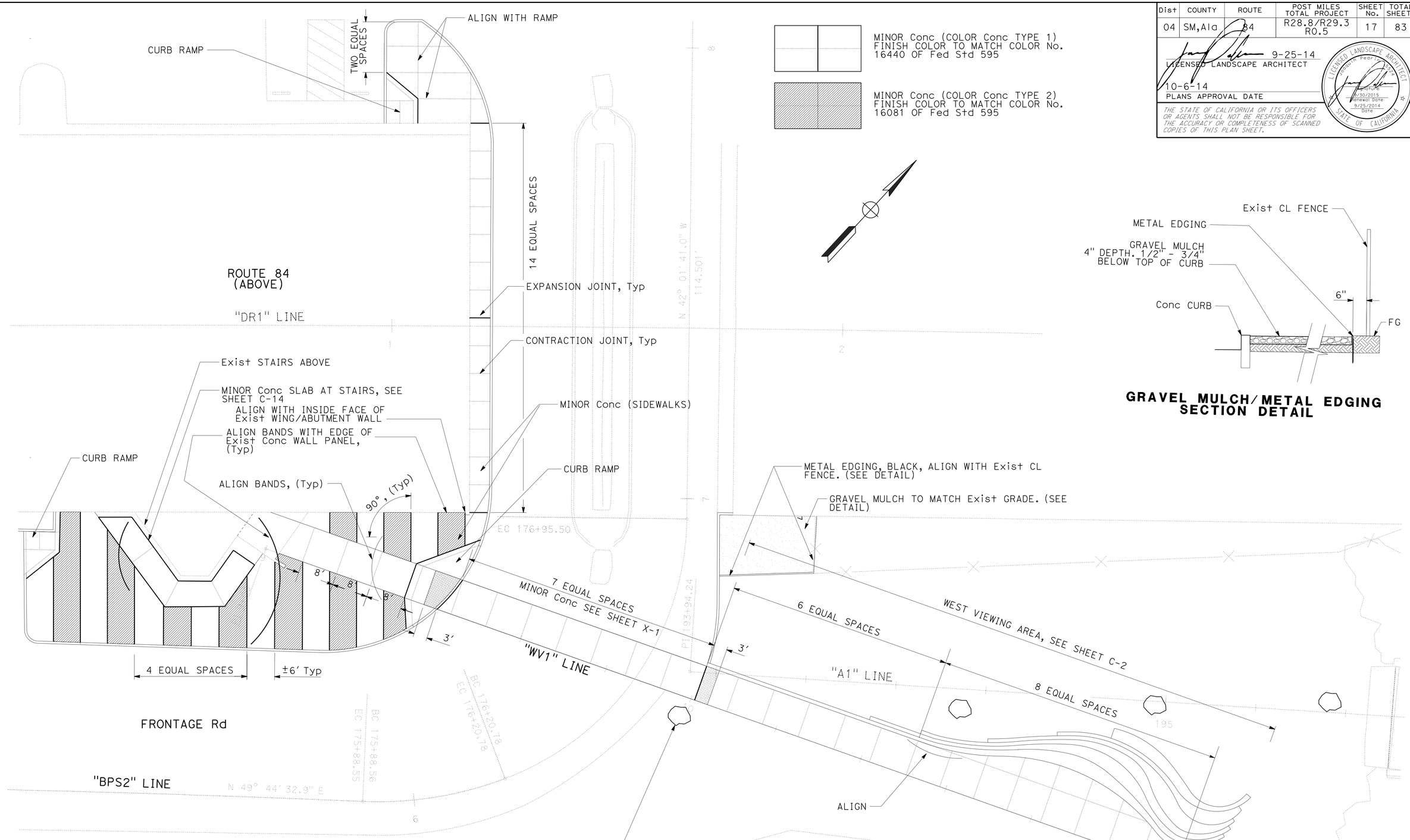

GRAVEL MULCH/METAL EDGING SECTION DETAIL

CONSTRUCTION DETAILS
(WEST PLAZA AND VIEWING AREA)

SCALE: 1" = 10'

C-12

JOAQUIN PEDRIN	REVISED BY: JP
SUSAN LINDSAY	DATE REVISED: 9/25/14
CALCULATED-DESIGNED BY	
CHECKED BY	
SENIOR LANDSCAPE ARCHITECT: SUSAN LINDSAY	

STATE OF CALIFORNIA - DEPARTMENT OF TRANSPORTATION
Caltrans® LANDSCAPE ARCHITECTURE

LAST REVISION 09-25-14 | DATE PLOTTED => 23-OCT-2014 | TIME PLOTTED => 14:12

Dist	COUNTY	ROUTE	POST MILES TOTAL PROJECT	SHEET No.	TOTAL SHEETS
04	SM,Ala	84	R28.8/R29.3 R0.5	18	83

9-25-14
LICENSED LANDSCAPE ARCHITECT

10-6-14
PLANS APPROVAL DATE

THE STATE OF CALIFORNIA OR ITS OFFICERS OR AGENTS SHALL NOT BE RESPONSIBLE FOR THE ACCURACY OR COMPLETENESS OF SCANNED COPIES OF THIS PLAN SHEET.

LICENSED LANDSCAPE ARCHITECT
Joaquin Pedrin
Signature
9/30/2015
Renewal Date
9/25/2014
Date
STATE OF CALIFORNIA

CONSTRUCTION DETAILS
(EAST VIEWING AREA)
SCALE: 1" = 10'

C-13

REVISED BY	JP
DATE REVISED	9/25/14
JOAQUIN PEDRIN	
SUSAN LINDSAY	
CALCULATED-DESIGNED BY	
CHECKED BY	
SENIOR LANDSCAPE ARCHITECT	SUSAN LINDSAY

STATE OF CALIFORNIA - DEPARTMENT OF TRANSPORTATION
Caltrans® LANDSCAPE ARCHITECTURE

LAST REVISION 09-25-14
DATE PLOTTED => 23-OCT-2014
TIME PLOTTED => 14:12

Dist	COUNTY	ROUTE	POST MILES TOTAL PROJECT	SHEET No.	TOTAL SHEETS
04	SM,Ala	84	R28.8/R29.3 R0.5	19	83

9-25-14
LICENSED LANDSCAPE ARCHITECT

10-6-14
PLANS APPROVAL DATE

THE STATE OF CALIFORNIA OR ITS OFFICERS OR AGENTS SHALL NOT BE RESPONSIBLE FOR THE ACCURACY OR COMPLETENESS OF SCANNED COPIES OF THIS PLAN SHEET.

LICENSED LANDSCAPE ARCHITECT
Joaquin Pedrin
Signature
9/30/2015
Renewal Date
9/25/2014
Date
STATE OF CALIFORNIA

NOTES:

1. OVERFILLING OF SEALANT WILL NOT BE ALLOWED.
2. DOWEL REINFORCEMENT MUST BE PERPENDICULAR TO JOINT AND LEVEL WITH TOP OF PCC.
3. 1/2" PREMOLDED EXPANSION JOINT FILLER PER Std PLAN 6-21.
4. SEE C-12/C-13 FOR Conc COLOR/ FINISHES.

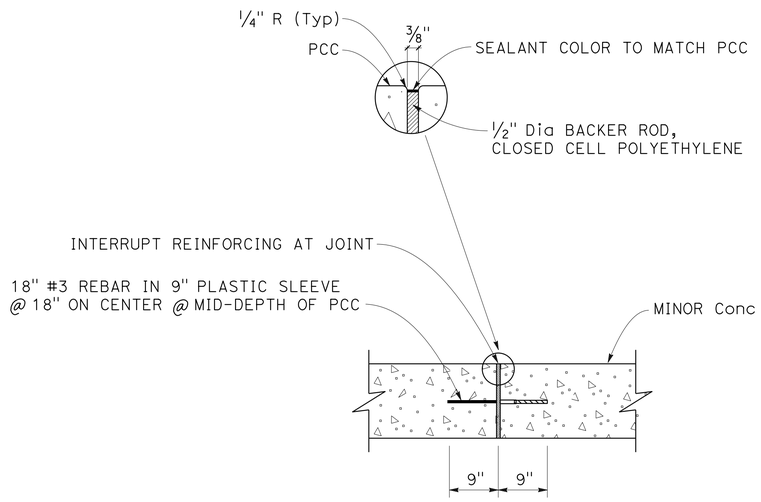

SECTION

EXPANSION JOINT

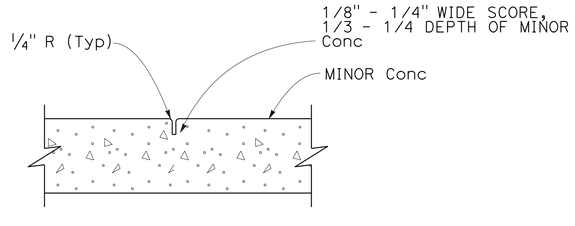

SECTION

CONTRACTION JOINT

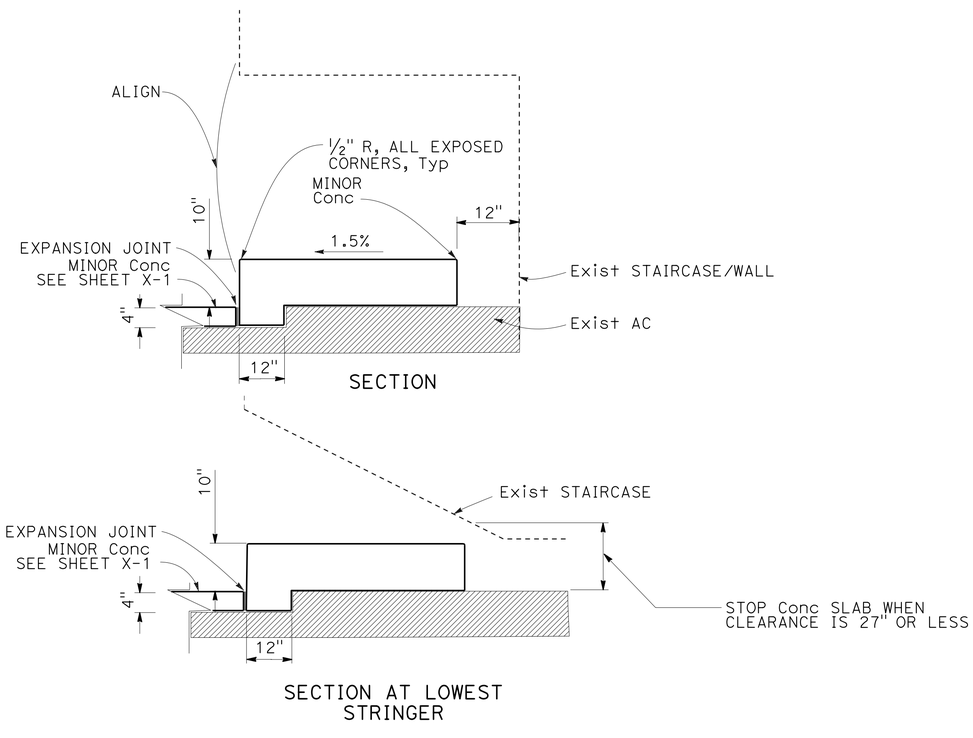

MINOR CONCRETE PAVING SLAB AT STAIRCASE

CONSTRUCTION DETAILS
PAVEMENT DETAILS
NO SCALE

C-14

STATE OF CALIFORNIA - DEPARTMENT OF TRANSPORTATION
Caltrans® LANDSCAPE ARCHITECTURE

SENIOR LANDSCAPE ARCHITECT: SUSAN LINDSAY
CALCULATED-DESIGNED BY: JOAQUIN PEDRIN
CHECKED BY: SUSAN LINDSAY
REVISED BY: JP
DATE REVISED: 9/25/14

LAST REVISION 09-25-14
DATE PLOTTED => 23-OCT-2014
TIME PLOTTED => 14:12

Dist	COUNTY	ROUTE	POST MILES TOTAL PROJECT	SHEET No.	TOTAL SHEETS
04	SM,Ala	84	R28.8/R29.3, R0.5	20	83

9-8-14
REGISTERED CIVIL ENGINEER DATE

10-6-14
PLANS APPROVAL DATE

REGISTERED PROFESSIONAL ENGINEER
Jiangfan Chen
No. 77248
Exp. 6-30-15
CIVIL
STATE OF CALIFORNIA

THE STATE OF CALIFORNIA OR ITS OFFICERS OR AGENTS SHALL NOT BE RESPONSIBLE FOR THE ACCURACY OR COMPLETENESS OF SCANNED COPIES OF THIS PLAN SHEET.

NOTE:

1. TEMPORARY BMP LOCATIONS ARE SUGGESTIONS ONLY, AND THE CONTRACTOR IS ULTIMATELY RESPONSIBLE FOR DEVELOPING A SWPPP THAT COMPLIES WITH THE PERMITS, LICENSES, AGREEMENTS, AND CERTFICATIONS (PLACS).

LEGEND:

TEMPORARY FIBER ROLL — TFR

TEMPORARY REINFORCED SILT FENCE — TRSF

TEMPORARY DRAINAGE INLET PROTECTION

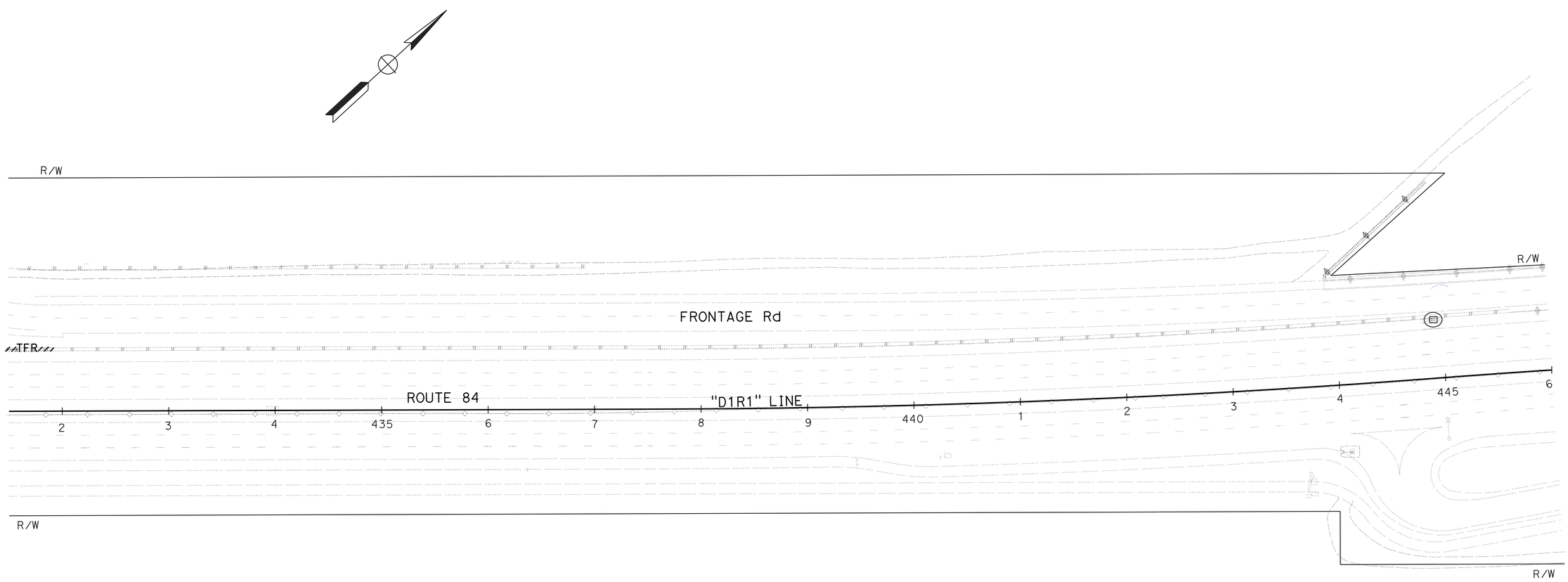

TEMPORARY WATER POLLUTION CONTROL PLAN

NO SCALE

WPC-1

REVISED BY	DATE REVISED
NT	9/9/14

CALCULATED-DESIGNED BY: NGOCCHAU TRAN
CHECKED BY: KAMRAN NAKHIJIRI
FUNCTIONAL SUPERVISOR: KAMRAN NAKHIJIRI

STATE OF CALIFORNIA - DEPARTMENT OF TRANSPORTATION
Caltrans
WATER QUALITY

LAST REVISION 09-09-14 | DATE PLOTTED => 23-OCT-2014 | TIME PLOTTED => 14:12

Dist	COUNTY	ROUTE	POST MILES TOTAL PROJECT	SHEET No.	TOTAL SHEETS
04	SM,Ala	84	R28.8/R29.3, R0.5	21	83

9-8-14
REGISTERED CIVIL ENGINEER DATE

10-6-14
PLANS APPROVAL DATE

REGISTERED PROFESSIONAL ENGINEER
Jiangfan Chen
No. 77248
Exp. 6-30-15
CIVIL
STATE OF CALIFORNIA

THE STATE OF CALIFORNIA OR ITS OFFICERS OR AGENTS SHALL NOT BE RESPONSIBLE FOR THE ACCURACY OR COMPLETENESS OF SCANNED COPIES OF THIS PLAN SHEET.

NOTE:

FOR ACCURATE RIGHT OF WAY DATA, CONTACT RIGHT OF WAY ENGINEERING AT THE DISTRICT OFFICE.

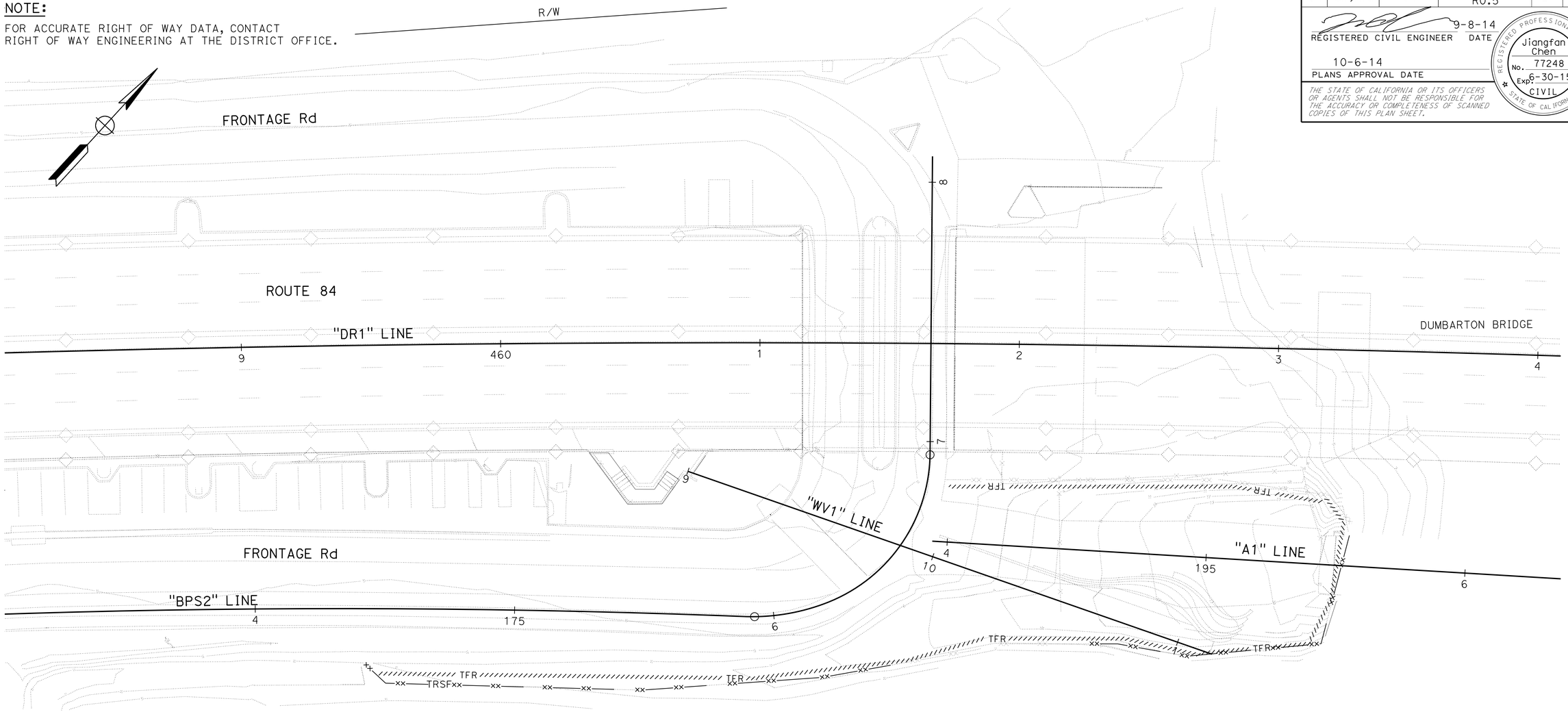

R/W

FOR NOTES, ABBREVIATIONS AND LEGEND, SEE SHEET WPC-1

APPROVED FOR WATER POLLUTION CONTROL WORK ONLY

TEMPORARY WATER POLLUTION CONTROL PLAN

NO SCALE

WPC-2

NGOCCHAU TRAN	REVISED BY
9/9/14	DATE REVISED
KAMRAN NAHIJIRI	CALCULATED-DESIGNED BY
NT	CHECKED BY
KAMRAN NAKHIJIRI	FUNCTIONAL SUPERVISOR

STATE OF CALIFORNIA - DEPARTMENT OF TRANSPORTATION
Caltrans
WATER QUALITY

LAST REVISION 09-09-14 | DATE PLOTTED => 23-OCT-2014 | TIME PLOTTED => 14:12

Dist	COUNTY	ROUTE	POST MILES TOTAL PROJECT	SHEET No.	TOTAL SHEETS
04	SM,Ala	84	R28.8/R29.3, R0.5	22	83

REGISTERED CIVIL ENGINEER 9-8-14 DATE

10-6-14
PLANS APPROVAL DATE

REGISTERED PROFESSIONAL ENGINEER Jiangfan Chen No. 77248 Exp. 6-30-15 CIVIL STATE OF CALIFORNIA

THE STATE OF CALIFORNIA OR ITS OFFICERS OR AGENTS SHALL NOT BE RESPONSIBLE FOR THE ACCURACY OR COMPLETENESS OF SCANNED COPIES OF THIS PLAN SHEET.

NOTE
FOR ACCURATE RIGHT OF WAY DATA, CONTACT RIGHT OF WAY ENGINEERING AT THE DISTRICT OFFICE.

TEMPORARY WATER POLLUTION CONTROL PLAN

NO SCALE

FOR NOTES, ABBREVIATIONS AND LEGEND, SEE SHEET WPC-1

APPROVED FOR WATER POLLUTION CONTROL WORK ONLY

WPC-3

STATE OF CALIFORNIA - DEPARTMENT OF TRANSPORTATION
Caltrans® **WATER QUALITY**

FUNCTIONAL SUPERVISOR: KAMRAN NAKHIJIRI

CALCULATED-DESIGNED BY: NGOCCHAU TRAN
CHECKED BY: KAMRAN NAKHIJIRI

REVISED BY: NT
DATE REVISED: 9/9/14

LAST REVISION 09-09-14
DATE PLOTTED => 23-OCT-2014
TIME PLOTTED => 14:12

Dist	COUNTY	ROUTE	POST MILES TOTAL PROJECT	SHEET No.	TOTAL SHEETS
04	SM,Ala	84	R28.8/R29.3, R0.5	23	83

9-8-14
REGISTERED CIVIL ENGINEER DATE

10-6-14
PLANS APPROVAL DATE

REGISTERED PROFESSIONAL ENGINEER
Jiangfan Chen
No. 77248
Exp. 6-30-15
CIVIL
STATE OF CALIFORNIA

THE STATE OF CALIFORNIA OR ITS OFFICERS OR AGENTS SHALL NOT BE RESPONSIBLE FOR THE ACCURACY OR COMPLETENESS OF SCANNED COPIES OF THIS PLAN SHEET.

TEMPORARY WATER POLLUTION CONTROL QUANTITIES

ITEM	UNIT	SHEET No.	QUANTITY
TEMPORARY DRAINAGE INLET PROTECTION	EA	WPC-1	1
TEMPORARY FIBER ROLL	LF	WPC-1, WPC-2, WPC-3	1500
TEMPORARY REINFORCED SILT FENCE	LF	WPC-2, WPC-3	1500

TEMPORARY WATER POLLUTION CONTROL QUANTITIES

WPCQ-1

STATE OF CALIFORNIA - DEPARTMENT OF TRANSPORTATION
Caltrans® WATER QUALITY

FUNCTIONAL SUPERVISOR: KAMRAN NAKHJIRI
CALCULATED-DESIGNED BY: NGOCCHAU TRAN
CHECKED BY: KAMRAN NAKHJIRI
REVISED BY: NT
DATE REVISED: 9/9/14

LAST REVISION 09-09-14
DATE PLOTTED => 23-OCT-2014
TIME PLOTTED => 14:12

Dist	COUNTY	ROUTE	POST MILES TOTAL PROJECT	SHEET No.	TOTAL SHEETS
04	SM,Ala	84	R28.8/R29.3, R0.5	24	83

REGISTERED CIVIL ENGINEER 8-14-14 DATE

10-6-14
PLANS APPROVAL DATE

REGISTERED PROFESSIONAL ENGINEER Chi-Chung Ho No. 62495 Exp. 9-30-15 CIVIL STATE OF CALIFORNIA

THE STATE OF CALIFORNIA OR ITS OFFICERS OR AGENTS SHALL NOT BE RESPONSIBLE FOR THE ACCURACY OR COMPLETENESS OF SCANNED COPIES OF THIS PLAN SHEET.

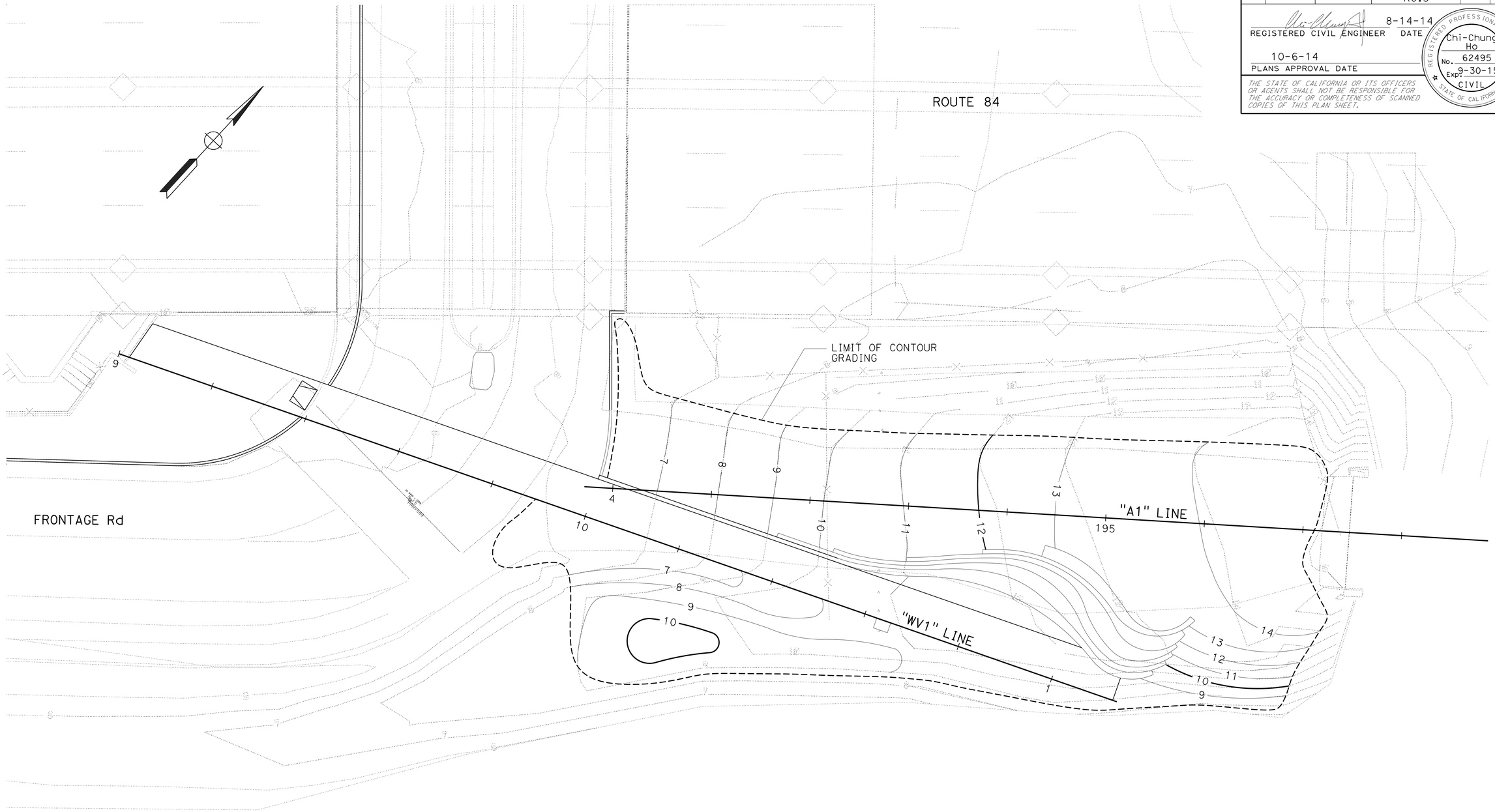

CONTOUR GRADING

SCALE: 1" = 10'

APPROVED FOR CONTOUR GRADING WORK ONLY

G-1

REVISED BY	CH
DATE REVISED	9/25/14
CHI-CHUNG HO	JAIME GUTIERREZ
CALCULATED-DESIGNED BY	
CHECKED BY	
FUNCTIONAL SUPERVISOR	JAIME GUTIERREZ

STATE OF CALIFORNIA - DEPARTMENT OF TRANSPORTATION

Caltrans® **DESIGN**

LAST REVISION 09-25-14 | DATE PLOTTED => 23-OCT-2014 TIME PLOTTED => 14:12

Dist	COUNTY	ROUTE	POST MILES TOTAL PROJECT	SHEET No.	TOTAL SHEETS
04	SM,Ala	84	R28.8/R29.3, R0.5	25	83

REGISTERED CIVIL ENGINEER 8-14-14 DATE

10-6-14
PLANS APPROVAL DATE

REGISTERED PROFESSIONAL ENGINEER Chi-Chung Ho No. 62495 Exp. 9-30-15 CIVIL STATE OF CALIFORNIA

THE STATE OF CALIFORNIA OR ITS OFFICERS OR AGENTS SHALL NOT BE RESPONSIBLE FOR THE ACCURACY OR COMPLETENESS OF SCANNED COPIES OF THIS PLAN SHEET.

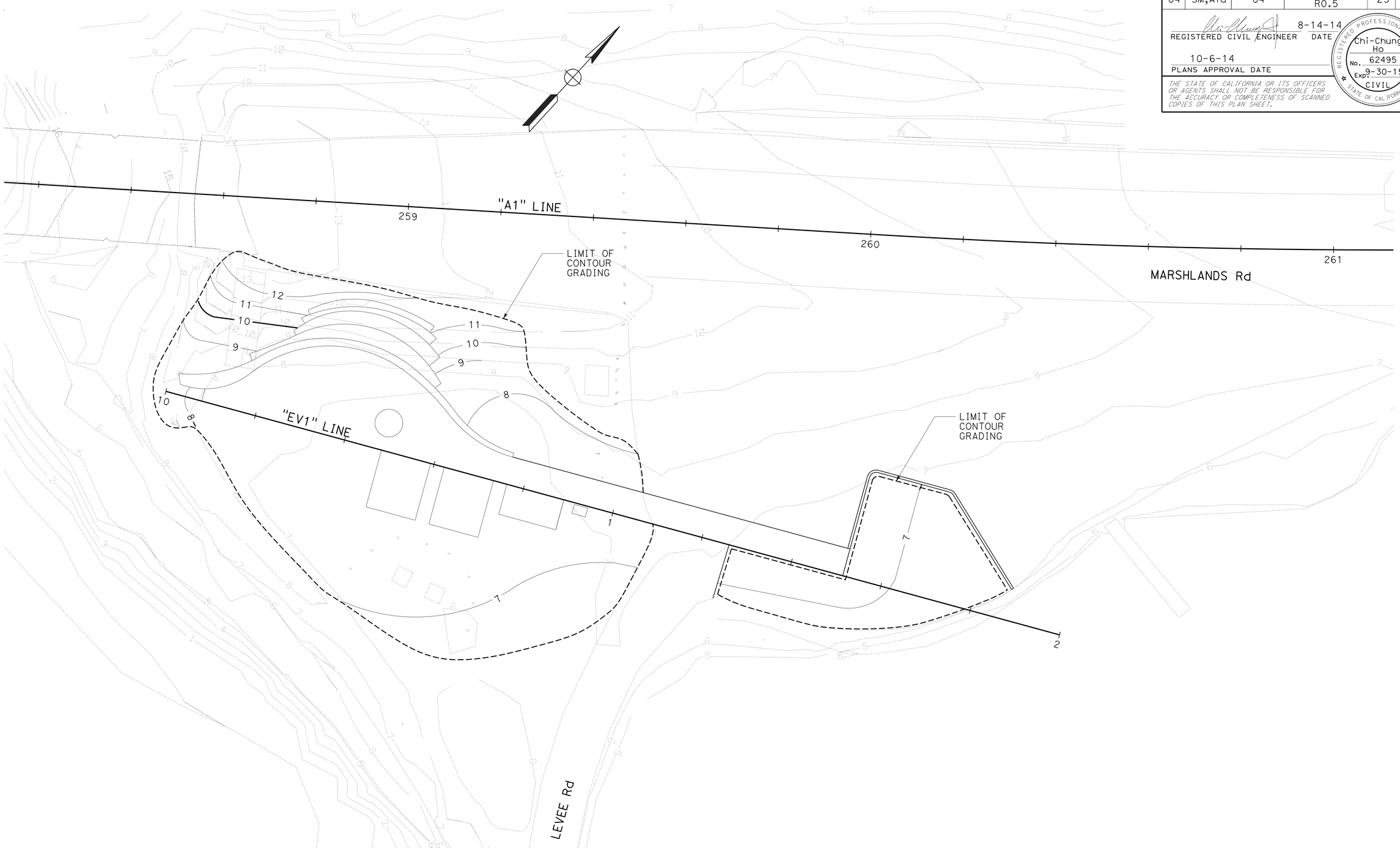

CONTOUR GRADING

SCALE: 1" = 10'

APPROVED FOR CONTOUR GRADING WORK ONLY

G-2

REVISED BY	DATE REVISED
CH	9/25/14

CHI-CHUNG HO — JAIME GUTIERREZ

CALCULATED-DESIGNED BY / CHECKED BY

FUNCTIONAL SUPERVISOR: JAIME GUTIERREZ

STATE OF CALIFORNIA - DEPARTMENT OF TRANSPORTATION

Caltrans® **DESIGN**

LAST REVISION 09-25-14 | DATE PLOTTED => 23-OCT-2014 | TIME PLOTTED => 14:12

Dist	COUNTY	ROUTE	POST MILES TOTAL PROJECT	SHEET No.	TOTAL SHEETS
04	SM,Ala	84	R28.8/R29.3, R0.5	26	83

REGISTERED CIVIL ENGINEER DATE 7-25-14

PLANS APPROVAL DATE 10-6-14

REGISTERED PROFESSIONAL ENGINEER Po-Tin Leung No. 67632 Exp. 6-30-15 CIVIL STATE OF CALIFORNIA

THE STATE OF CALIFORNIA OR ITS OFFICERS OR AGENTS SHALL NOT BE RESPONSIBLE FOR THE ACCURACY OR COMPLETENESS OF SCANNED COPIES OF THIS PLAN SHEET.

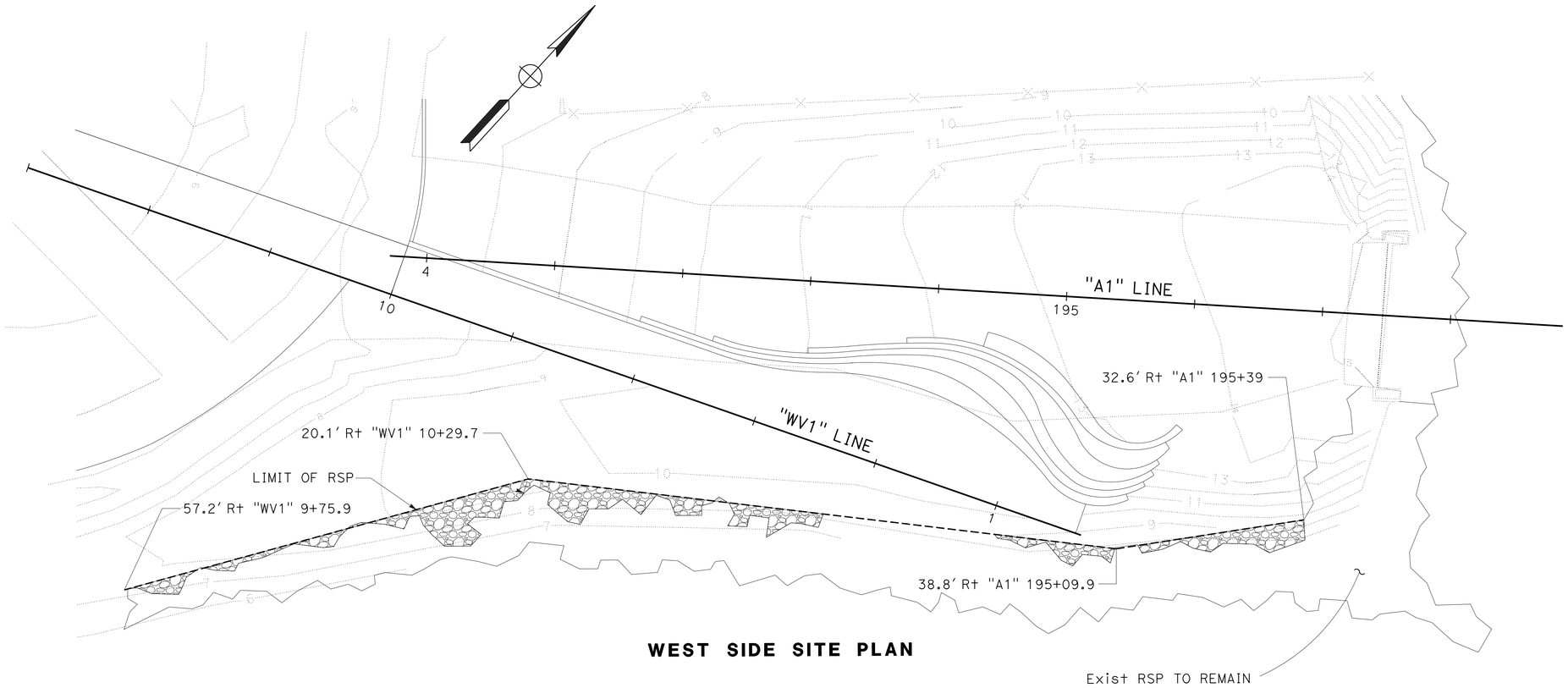

WEST SIDE SITE PLAN

LEGEND:

- RSP, SEE MODIFIED RSP DETAIL
- Exist RSP TO REMAIN IN PLACE
- RSP

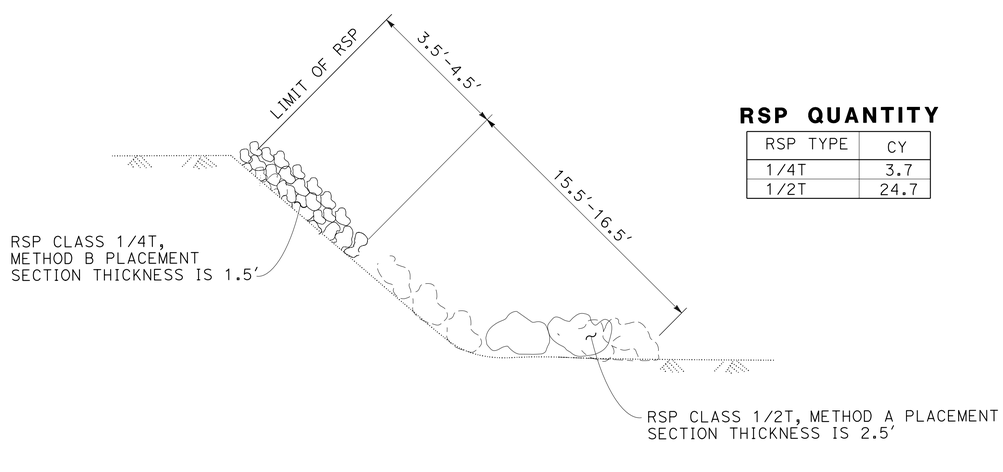

RSP QUANTITY

RSP TYPE	CY
1/4T	3.7
1/2T	24.7

MODIFIED RSP DETAIL

NO SCALE

DRAINAGE PLAN, DETAILS AND QUANTITIES

SCALE: 1" = 10′

D-1

REVISED BY	PL
DATE REVISED	9/24/14
CALCULATED-DESIGNED BY	POTIN LEUNG
CHECKED BY	DIXON LAU
FUNCTIONAL SUPERVISOR	JOSEPH PETERSON

STATE OF CALIFORNIA - DEPARTMENT OF TRANSPORTATION

Caltrans

HYDRAULICS

LAST REVISION 09-24-14 | DATE PLOTTED => 23-OCT-2014 | TIME PLOTTED => 14:12

Dist	COUNTY	ROUTE	POST MILES TOTAL PROJECT	SHEET No.	TOTAL SHEETS
04	SM/Ala	84	R28.8/R29.3, R0.5	27	83

REGISTERED CIVIL ENGINEER 8-15-14 DATE

10-6-14
PLANS APPROVAL DATE

REGISTERED PROFESSIONAL ENGINEER Cheuk Hong Wong No. 60145 Exp. 6-30-16 CIVIL STATE OF CALIFORNIA

THE STATE OF CALIFORNIA OR ITS OFFICERS OR AGENTS SHALL NOT BE RESPONSIBLE FOR THE ACCURACY OR COMPLETENESS OF SCANNED COPIES OF THIS PLAN SHEET.

NOTES:

1. FOR ACCURATE RIGHT OF WAY DATA, CONTACT RIGHT OF WAY ENGINEERING AT THE DISTRICT OFFICE.
2. ELEVATIONS SHOWN REFER TO TOP OF PIPE OR CONDUIT, UNLESS OTHERWISE STATED.
3. LOCATION OF UTILITY FACILITIES SHOWN ON UTILITY PLANS ARE APPROXIMATE AND SHALL BE VERIFIED BY THE CONTRACTOR PRIOR TO CONSTRUCTION.
4. UTILITY OWNERSHIP:
   ELECTRICAL - CALTRANS (U-1)
   ELECTRICAL - PACIFIC GAS & ELECTRIC (PG&E) (U-2)
   WATER - CITY OF MENLO PARK (U-1)
   WATER - EAST BAY MUNICIPAL UTILITY DISTRICT
   FIBER OPTIC - AMERICAN TELEPHONE & TELEGRAPH (AT&T)

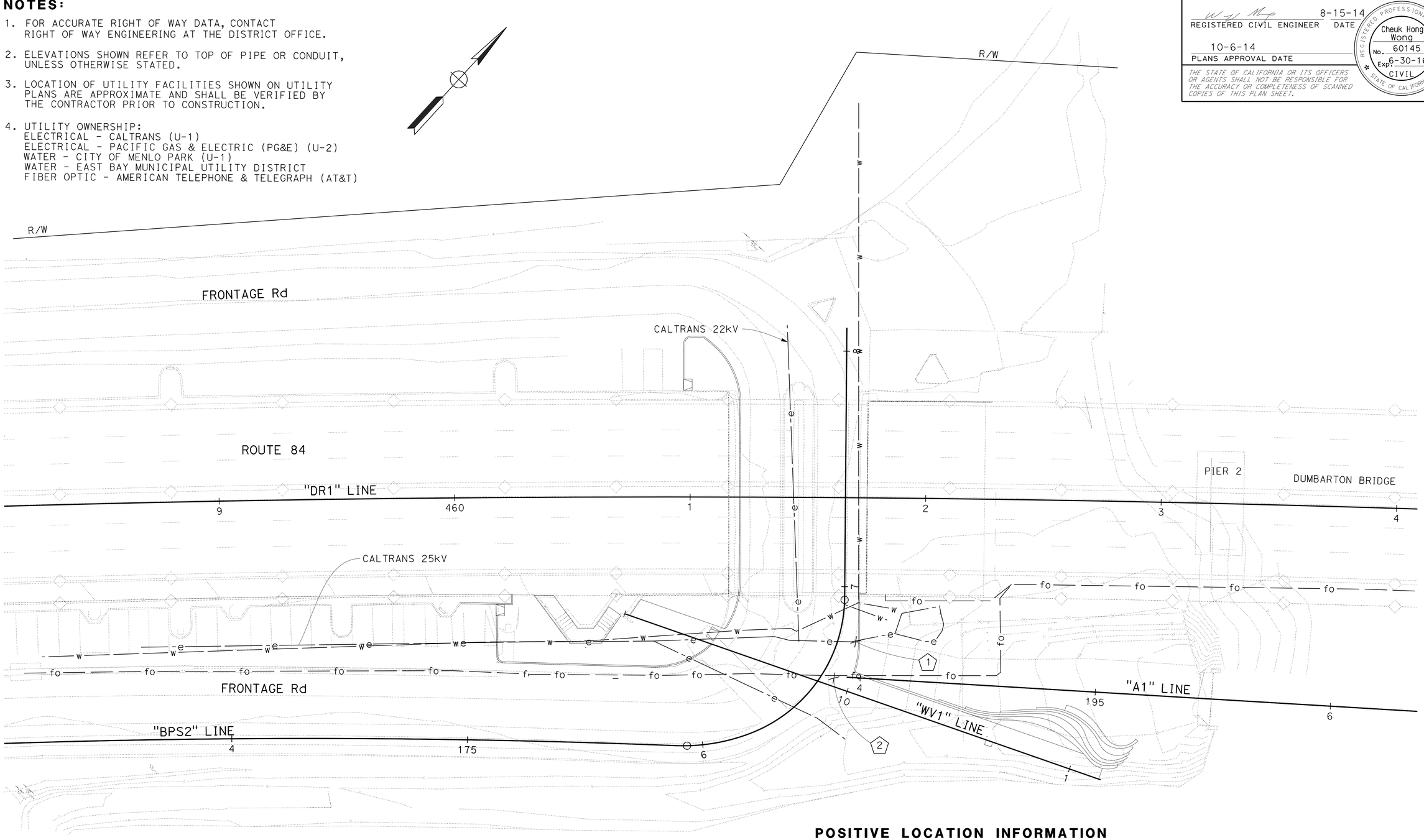

POSITIVE LOCATION INFORMATION

No.	NORTHING	EASTING	ELEVATION	METHOD
1	2008265.897	6089292.439	2.66	POTHOLE
2	2008248.302	6089296.058	2.97	POTHOLE

UTILITY PLAN

SCALE: 1" = 20'

THIS PLAN TO BE USED FOR UTILITY WORK ONLY

U-1

REVISED BY	DATE REVISED
CHW	9/8/14

CHEUK H. WONG — THOMAS HOKTCHEU
CALCULATED-DESIGNED BY — CHECKED BY
FUNCTIONAL SUPERVISOR — BOB ZANDIPOUR

STATE OF CALIFORNIA - DEPARTMENT OF TRANSPORTATION
Caltrans
DESIGN

LAST REVISION 09-08-14 | DATE PLOTTED => 23-OCT-2014 | TIME PLOTTED => 14:13

Dist	COUNTY	ROUTE	POST MILES TOTAL PROJECT	SHEET No.	TOTAL SHEETS
04	SM/Ala	84	R28.8/R29.3, R0.5	28	83

REGISTERED CIVIL ENGINEER 8-15-14 DATE

10-6-14
PLANS APPROVAL DATE

REGISTERED PROFESSIONAL ENGINEER Cheuk Hong Wong No. 60145 Exp. 6-30-16 CIVIL STATE OF CALIFORNIA

THE STATE OF CALIFORNIA OR ITS OFFICERS OR AGENTS SHALL NOT BE RESPONSIBLE FOR THE ACCURACY OR COMPLETENESS OF SCANNED COPIES OF THIS PLAN SHEET.

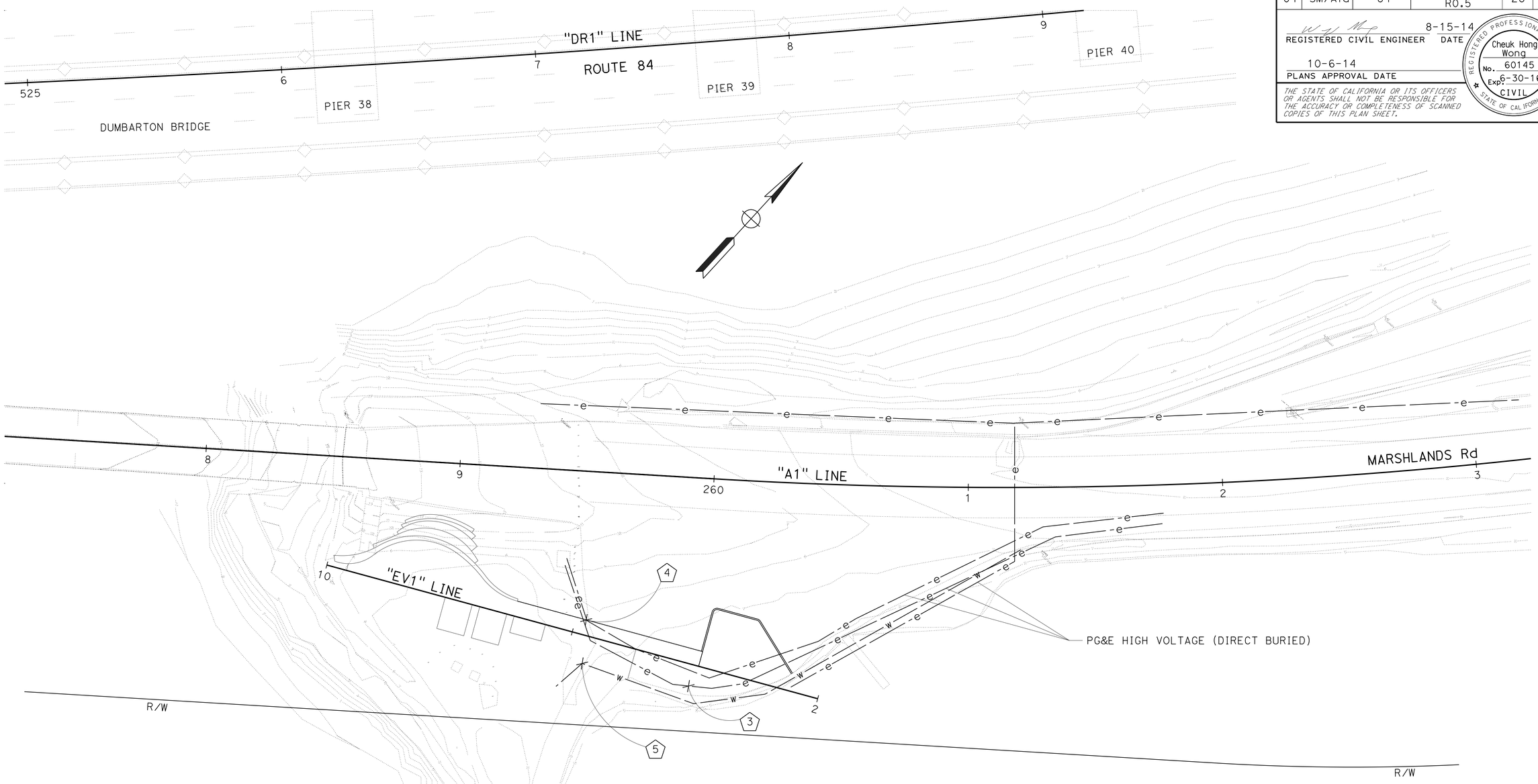

POSITIVE LOCATION INFORMATION

No. ⬠	NORTHING	EASTING	ELEVATION	METHOD
3	2012340.844	6094428.731	5.52	POTHOLE
4	2012348.843	6094475.942	2.77	POTHOLE
5	2012327.196	6094439.089	4.92	POTHOLE

UTILITY PLAN

SCALE: 1" = 20'

THIS PLAN TO BE USED FOR UTILITY WORK ONLY

FOR NOTES, SEE SHEET U-1

U-2

CHW	9/8/14	REVISED BY / DATE REVISED
CHEUK H. WONG	BOB ZANDIPOUR	CALCULATED-DESIGNED BY / CHECKED BY
BOB ZANDIPOUR		FUNCTIONAL SUPERVISOR

STATE OF CALIFORNIA - DEPARTMENT OF TRANSPORTATION
Caltrans
DESIGN

LAST REVISION 09-08-14 | DATE PLOTTED => 23-OCT-2014 | TIME PLOTTED => 14:13

Dist	COUNTY	ROUTE	POST MILES TOTAL PROJECT	SHEET No.	TOTAL SHEETS
04	SM,Ala	84	R28.8/R29.3, R0.5	29	83

Parwin W. Sarwary 8-5-14
REGISTERED CIVIL ENGINEER DATE

10-6-14
PLANS APPROVAL DATE

REGISTERED PROFESSIONAL ENGINEER
Parwin W. Sarwary
No. 79545
Exp. 9-30-16
CIVIL
STATE OF CALIFORNIA

THE STATE OF CALIFORNIA OR ITS OFFICERS OR AGENTS SHALL NOT BE RESPONSIBLE FOR THE ACCURACY OR COMPLETENESS OF SCANNED COPIES OF THIS PLAN SHEET.

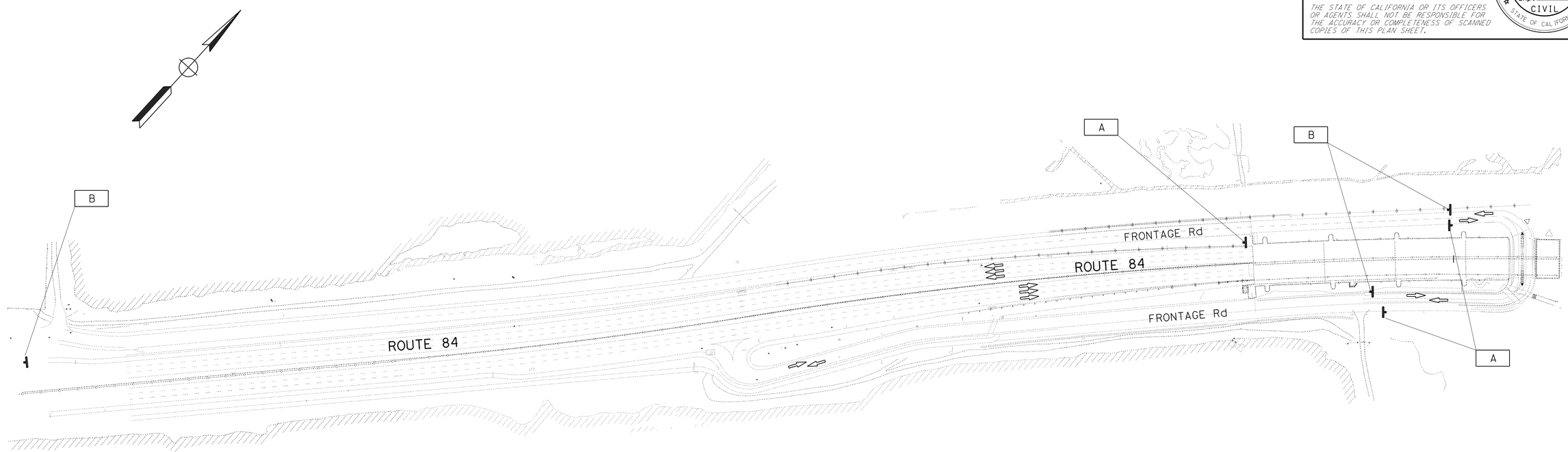

LEGEND:

☐ CONSTRUCTION AREA SIGNS

STATIONARY MOUNTED CONSTRUCTION AREA SIGNS

AREA SIGN ☐	SIGN CODE	SIGN MESSAGE	PANEL SIZE (INCH x INCH)	No. OF POSTS & SIZE (EA-INCH x INCH)	No. OF SIGNS	REMARKS
A	W20-1	ROAD WORK AHEAD	30 x 30	1-4 x 4	4	
B	G20-2	END ROAD WORK	48 x 18	1-4 x 4	4	

NOTES:

1. EXACT LOCATION AND POSITION OF CONSTRUCTION AREA SIGNS TO BE DETERMINED BY THE ENGINEER.
2. FOR ADDITIONAL CONSTRUCTION AREA SIGNS, SEE SHEET CS-2.

CONSTRUCTION AREA SIGNS

NO SCALE

APPROVED FOR CONSTRUCTION AREA SIGN WORK ONLY

CS-1

STATE OF CALIFORNIA - DEPARTMENT OF TRANSPORTATION
Caltrans
TRAFFIC

CALCULATED-DESIGNED BY	PARWIN SARWARY
CHECKED BY	LOURDES DAVID
REVISED BY	PS
DATE REVISED	9/23/14
FUNCTIONAL SUPERVISOR	LOURDES DAVID

LAST REVISION 09-23-14
DATE PLOTTED => 23-OCT-2014
TIME PLOTTED => 14:13

Dist	COUNTY	ROUTE	POST MILES TOTAL PROJECT	SHEET No.	TOTAL SHEETS
04	SM,Ala	84	R28.8/R29.3, R0.5	30	83

Parwin W. Sarwary 8-5-14
REGISTERED CIVIL ENGINEER DATE

10-6-14
PLANS APPROVAL DATE

REGISTERED PROFESSIONAL ENGINEER
Parwin W. Sarwary
No. 79545
Exp. 9-30-16
CIVIL
STATE OF CALIFORNIA

THE STATE OF CALIFORNIA OR ITS OFFICERS OR AGENTS SHALL NOT BE RESPONSIBLE FOR THE ACCURACY OR COMPLETENESS OF SCANNED COPIES OF THIS PLAN SHEET.

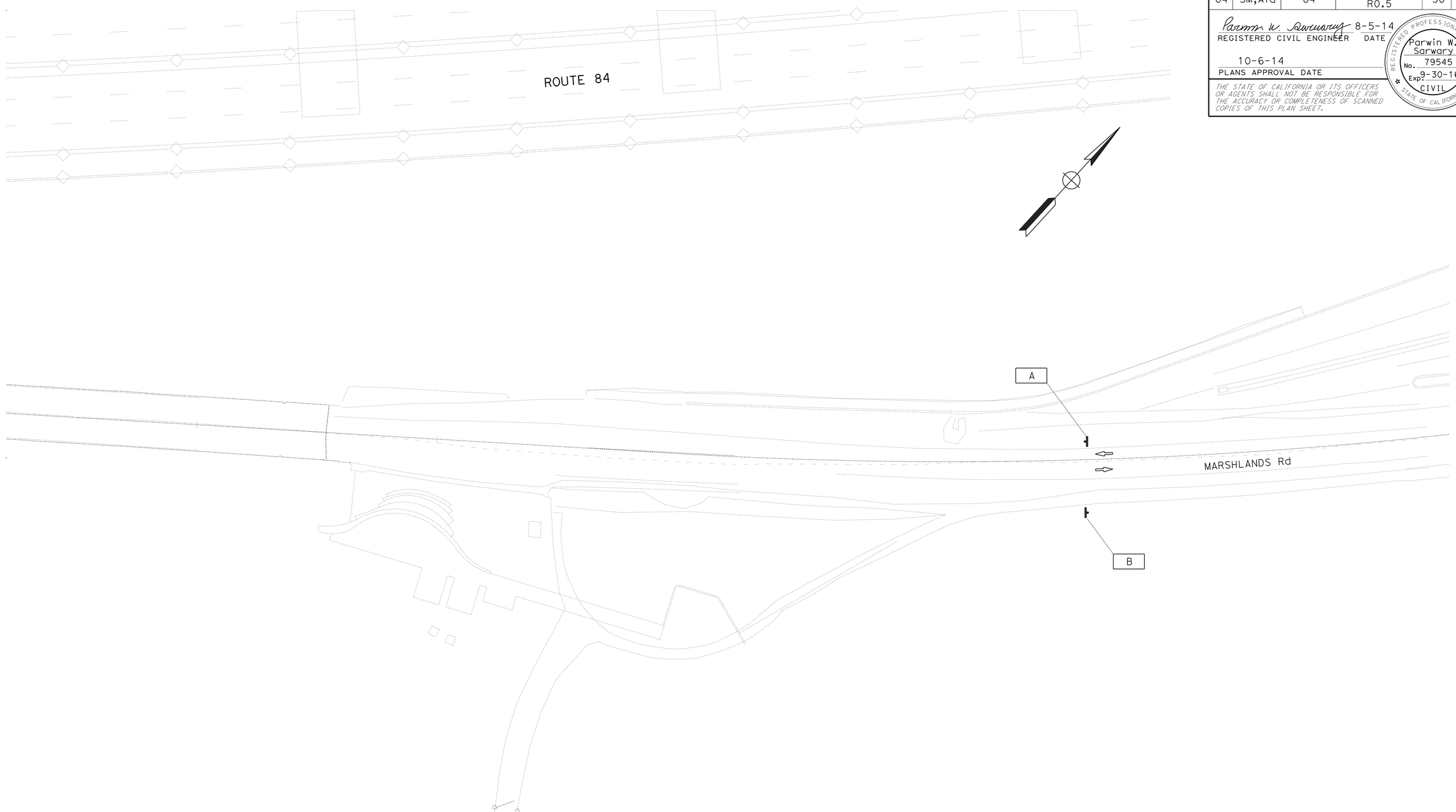

CONSTRUCTION AREA SIGNS

NO SCALE

APPROVED FOR CONSTRUCTION AREA SIGN WORK ONLY

FOR NOTES AND LEGEND, SEE SHEET CS-1

CS-2

REVISED BY	PS
DATE REVISED	8/14/14
PARWIN SARWARY	
LOURDES DAVID	
CALCULATED-DESIGNED BY	
CHECKED BY	
FUNCTIONAL SUPERVISOR	
LOURDES DAVID	

STATE OF CALIFORNIA - DEPARTMENT OF TRANSPORTATION
Caltrans
TRAFFIC

LAST REVISION 08-14-14
DATE PLOTTED => 23-OCT-2014
TIME PLOTTED => 14:13

Dist	COUNTY	ROUTE	POST MILES TOTAL PROJECT	SHEET No.	TOTAL SHEETS
04	SM,Ala	84	R28.8/R29.3, R0.5	31	83

REGISTERED CIVIL ENGINEER 8-1-14 DATE

10-6-14
PLANS APPROVAL DATE

REGISTERED PROFESSIONAL ENGINEER Saif Mamoon No. 53427 Exp. 6-30-15 CIVIL STATE OF CALIFORNIA

THE STATE OF CALIFORNIA OR ITS OFFICERS OR AGENTS SHALL NOT BE RESPONSIBLE FOR THE ACCURACY OR COMPLETENESS OF SCANNED COPIES OF THIS PLAN SHEET.

NOTE:

FOR ACCURATE RIGHT OF WAY DATA, CONTACT RIGHT OF WAY ENGINEERING AT THE DISTRICT OFFICE.

NOTES:

1. ALL PARKING STALLS ARE 18′ LONG AND 9′ WIDE USING 4" STRIPE UNLESS NOTED.
2. SEE RSP A90A FOR ACCESSIBLE PARKING DETAILS.
3. EXACT LOCATION AND POSITION OF ROADSIDE SIGNS TO BE DETERMINED BY THE ENGINEER.
4. CROSSWALK MARKING SHALL BE BASIC PER RSP A24F, USING 1′ MARKING WITH 8′ CLEAR WIDTH BETWEEN LINES.

LEGEND:

- (No.) PAVEMENT DELINEATION DETAIL NUMBER
- (No.) ROADSIDE SIGN NUMBER
- ▲ RELOCATE ROADSIDE SIGN
- ✱ ROADSIDE SIGN TO REMAIN
- ■ REMOVE ROADSIDE SIGN
- # INSTALL SIGN PANEL ON Exist POST

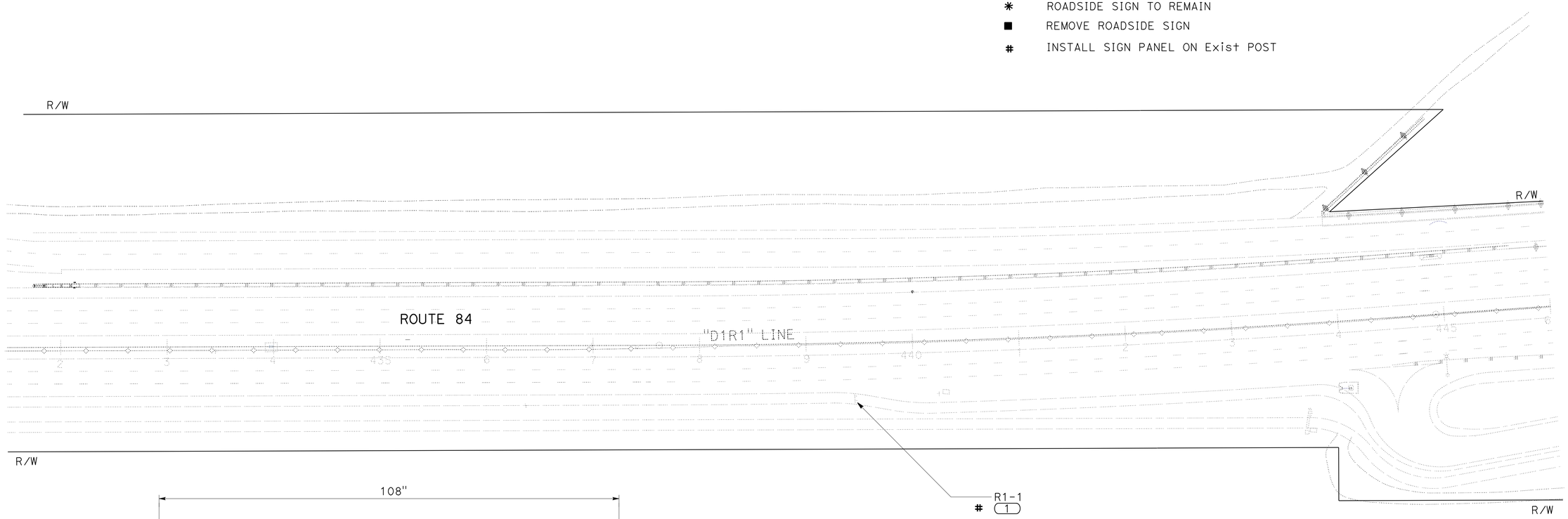

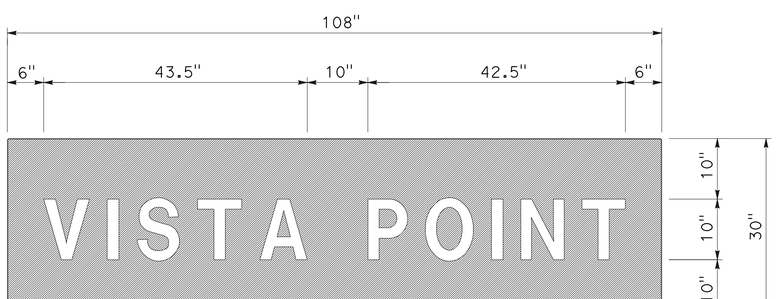

3.0" RADIUS, 1.0" BORDER, WHITE ON BLUE;
"VISTA POINT" E

1

PAVEMENT DELINEATION AND SIGN PLAN

SCALE: 1" = 50′

APPROVED FOR PAVEMENT DELINEATION AND SIGN WORK ONLY

PD-1

STATE OF CALIFORNIA - DEPARTMENT OF TRANSPORTATION
Caltrans
DESIGN

FUNCTIONAL SUPERVISOR: EMILY TANG
CALCULATED-DESIGNED BY: SAIF MAMOON
CHECKED BY: EMILY TANG
REVISED BY: SM
DATE REVISED: 7/23/14

LAST REVISION 08-14-14
DATE PLOTTED => 23-OCT-2014
TIME PLOTTED => 14:13

Dist	COUNTY	ROUTE	POST MILES TOTAL PROJECT	SHEET No.	TOTAL SHEETS
04	SM,Ala	84	R28.8/R29.3, R0.5	32	83

REGISTERED CIVIL ENGINEER 8-1-14 DATE

10-6-14
PLANS APPROVAL DATE

REGISTERED PROFESSIONAL ENGINEER Saif Mamoon No. 53427 Exp. 6-30-15 CIVIL STATE OF CALIFORNIA

THE STATE OF CALIFORNIA OR ITS OFFICERS OR AGENTS SHALL NOT BE RESPONSIBLE FOR THE ACCURACY OR COMPLETENESS OF SCANNED COPIES OF THIS PLAN SHEET.

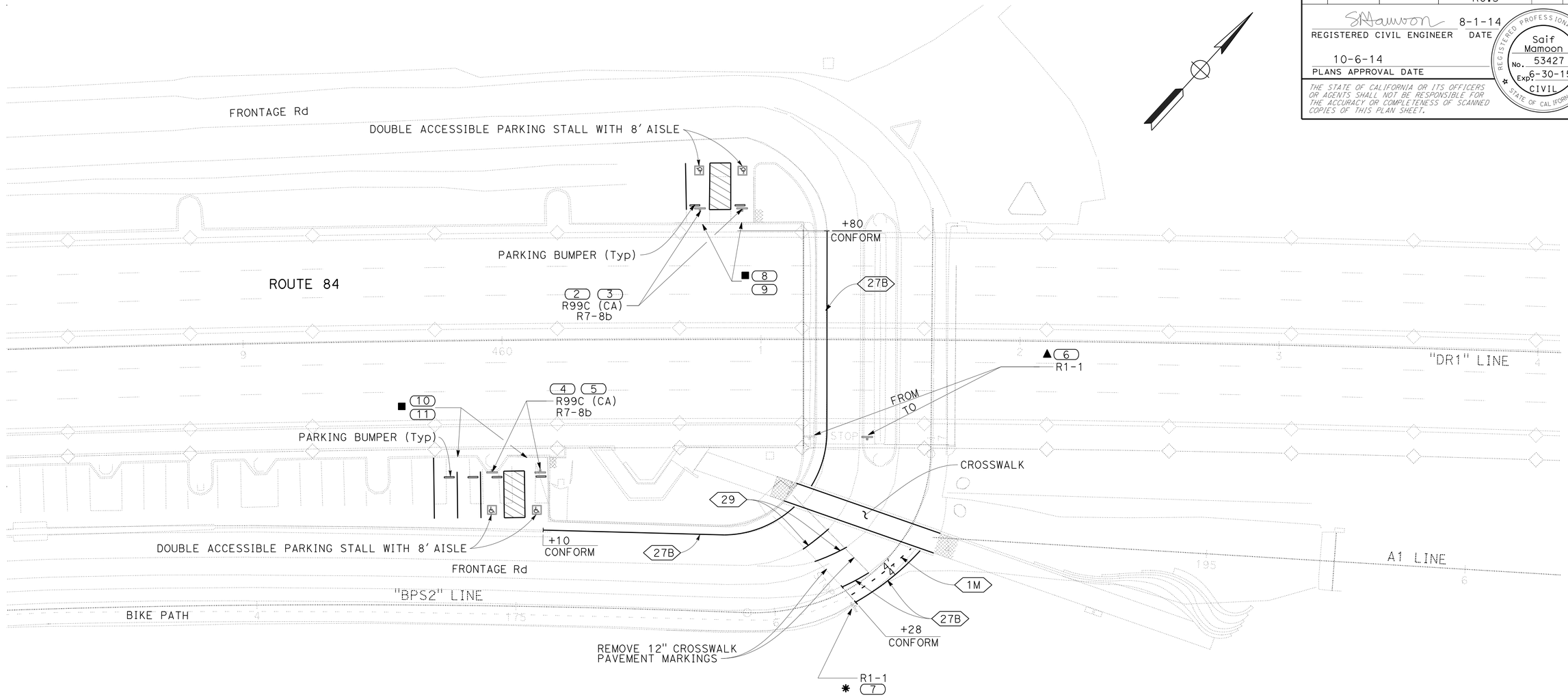

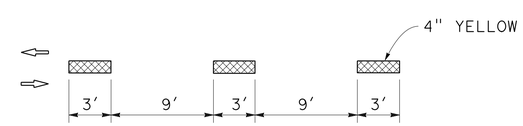

DETAIL 1M
NO SCALE

PAVEMENT DELINEATION AND SIGN PLAN

SCALE: 1" = 20'

PD-2

APPROVED FOR PAVEMENT DELINEATION AND SIGN WORK ONLY

FOR NOTES AND LEGEND, SEE SHEET PD-1

STATE OF CALIFORNIA - DEPARTMENT OF TRANSPORTATION
Caltrans
DESIGN

FUNCTIONAL SUPERVISOR: EMILY TANG
CALCULATED-DESIGNED BY: SAIF MAMOON
CHECKED BY: EMILY TANG
REVISED BY: SM
DATE REVISED: 8/14/14

LAST REVISION 08-14-14
DATE PLOTTED => 23-OCT-2014
TIME PLOTTED => 14:13

Dist	COUNTY	ROUTE	POST MILES TOTAL PROJECT	SHEET No.	TOTAL SHEETS
04	SM,Ala	84	R28.8/R29.3, R0.5	33	83

REGISTERED CIVIL ENGINEER 8-1-14 DATE

10-6-14
PLANS APPROVAL DATE

REGISTERED PROFESSIONAL ENGINEER Saif Mamoon No. 53427 Exp. 6-30-11 CIVIL STATE OF CALIFORNIA

THE STATE OF CALIFORNIA OR ITS OFFICERS OR AGENTS SHALL NOT BE RESPONSIBLE FOR THE ACCURACY OR COMPLETENESS OF SCANNED COPIES OF THIS PLAN SHEET.

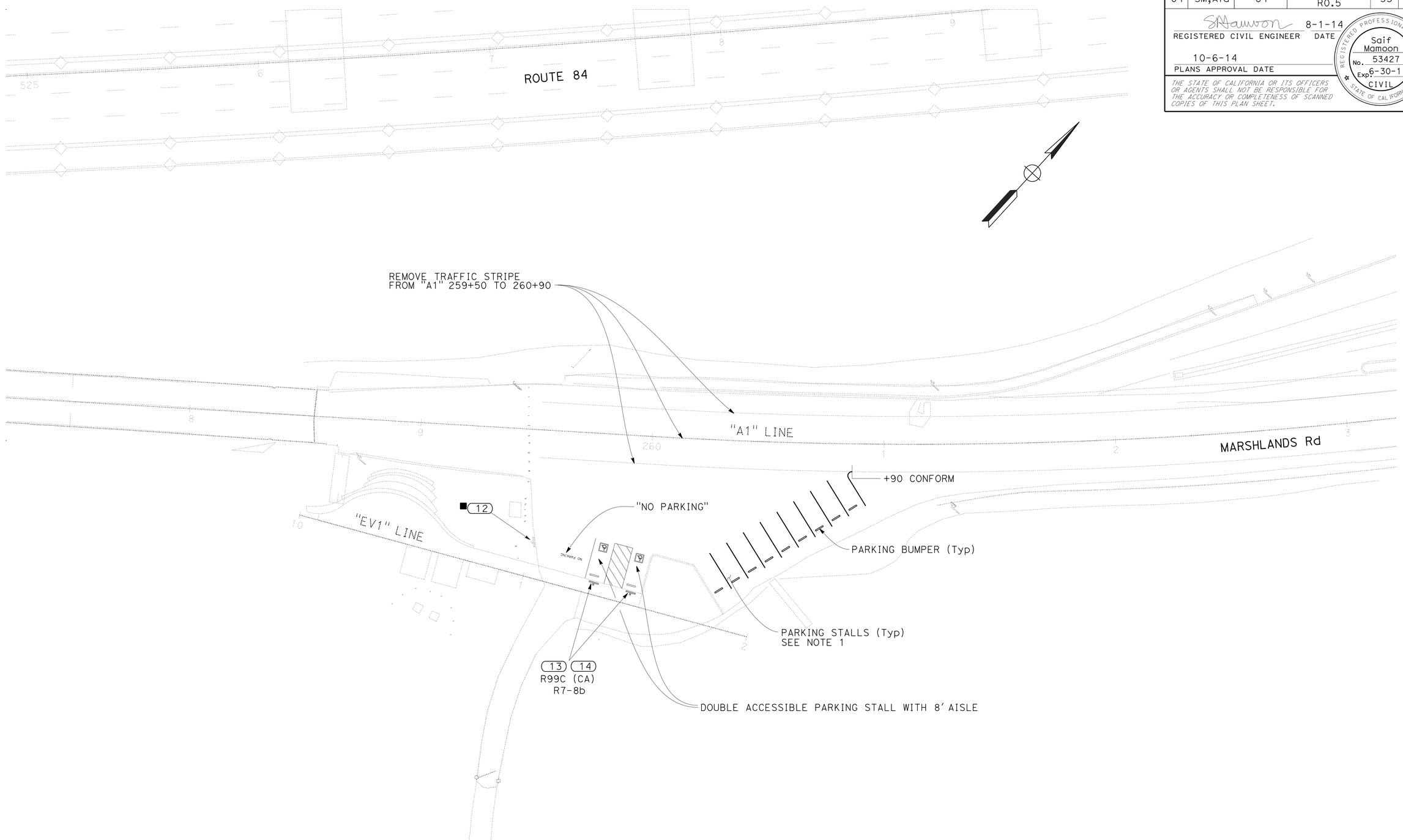

PAVEMENT DELINEATION AND SIGN PLAN

SCALE: 1" = 20'

APPROVED FOR PAVEMENT DELINEATION AND SIGN WORK ONLY

FOR NOTES AND LEGEND, SEE SHEET PD-1

PD-3

STATE OF CALIFORNIA - DEPARTMENT OF TRANSPORTATION
Caltrans
DESIGN

FUNCTIONAL SUPERVISOR: EMILY TANG
CALCULATED-DESIGNED BY: SAIF MAMOON
CHECKED BY: EMILY TANG
REVISED BY: SM
DATE REVISED: 8/29/14

LAST REVISION 08-29-14
DATE PLOTTED => 23-OCT-2014
TIME PLOTTED => 14:13

Dist	COUNTY	ROUTE	POST MILES TOTAL PROJECT	SHEET No.	TOTAL SHEETS
04	SM,Ala	84	R28.8/R29.3, R0.5	34	83

REGISTERED CIVIL ENGINEER 8-14-14 DATE

10-6-14
PLANS APPROVAL DATE

REGISTERED PROFESSIONAL ENGINEER Chi-Chung Ho No. 62495 Exp. 9-30-15 CIVIL STATE OF CALIFORNIA

THE STATE OF CALIFORNIA OR ITS OFFICERS OR AGENTS SHALL NOT BE RESPONSIBLE FOR THE ACCURACY OR COMPLETENESS OF SCANNED COPIES OF THIS PLAN SHEET.

ROADSIDE SIGN QUANTITIES

SHEET No.	SIGN No.	SIGN CODE FEDERAL	SIGN CODE CALIFORNIA	SIGN PANEL SIZE INCHES	ROADSIDE SIGN ONE POST	REMOVE ROADSIDE SIGN ONE POST	REMOVE ROADSIDE SIGN PANEL	RELOCATE ROADSIDE SIGN ONE POST	INSTALL SIGN PANEL	REMARKS
					EA					
PD-1	1		SPECIAL	30 x 108					1	ON Exist POST
PD-2	2	R7-8b	R99C	6 x 12; 18 x 12	1					
	3		R99C	18 x 12	1					
	4		R99C	18 x 12	1					
	5	R7-8b	R99C	6 x12 ; 18 x 12	1					
	6		R1-1					1		
	7		R1-1							TO REMAIN
	8	R7-8b	R99C	6 x 12; 18 x 12			2			FROM WALL
	9		R99C	18 x 12			1			FROM WALL
	10		R99C	18 x 12			1			FROM WALL
	11	R7-8b	R99C	6 x 12; 18 x 12			2			FROM WALL
PD-3	12					1				"NO PARKING"
	13	R7-8b	R99C	6 x 12; 18 x 12	1					
	14		R99C	18 x 12	1					
SHEET TOTAL					6	1	6	1	1	

REMOVE TRAFFIC STRIPE

SHEET No.	STATION LIMITS OR LOCATION	REMOVE THERMOPLASTIC TRAFFIC STRIPE SOLID	REMOVE THERMOPLASTIC TRAFFIC STRIPE BROKEN	REMOVE THERMOPLASTIC PAVEMENT MARKING
		LF		SQFT
PD-2	ACCESSIBLE PARKING NORTH	100		39
	ACCESSIBLE PARKING SOUTH	308		59
	FRONTAGE ROAD	288		
PD-3	MARSHALL ROAD FROM "A1" 259+50 TO 260+90	280	42	
SUBTOTAL		976	42	98
TOTAL		1018		98

PAVEMENT DELINEATION QUANTITIES

SHEET No.	LOCATION/DESCRIPTION	THERMOPLASTIC TRAFFIC STRIPE 4" YELLOW	WHITE	BLUE	THERMOPLASTIC PAVEMENT MARKING WHITE	BLUE	PARKING BUMPER (PRECAST CONCRETE)
		LF			SQFT		
PD-2	YELLOW	75					
	WHITE		438				
	BLUE			104			
	ACCESSIBLE PARKING (ISA)				36		
	ACCESSIBLE PARKING (ISA)					56	
	NO PARKING				4		
	PARKING BUMPER						6
PD-3	WHITE		268				
	BLUE			52			
	ACCESSIBLE PARKING (ISA)				18		
	ACCESSIBLE PARKING (ISA)					28	
	NO PARKING				4		
	PARKING BUMPER						11
SUBTOTAL		75	706	156	62	84	17
TOTAL		937			146		17

PAVEMENT DELINEATION AND SIGN QUANTITIES

PDQ-1

STATE OF CALIFORNIA - DEPARTMENT OF TRANSPORTATION
Caltrans DESIGN
FUNCTIONAL SUPERVISOR JAIME GUTIERREZ
CALCULATED-DESIGNED BY CHI-CHUNG HO
CHECKED BY JAIME GUTIERREZ
REVISED BY CH
DATE REVISED 8/14/14

LAST REVISION 08-14-14
DATE PLOTTED => 23-OCT-2014
TIME PLOTTED => 14:13

Dist	COUNTY	ROUTE	POST MILES TOTAL PROJECT	SHEET No.	TOTAL SHEETS
04	SM,Ala	84	R28.8/R29.3, R0.5	35	83

REGISTERED CIVIL ENGINEER 8-14-14 DATE

10-6-14
PLANS APPROVAL DATE

REGISTERED PROFESSIONAL ENGINEER Chi-Chung Ho No. 62495 Exp. 9-30-15 CIVIL STATE OF CALIFORNIA

THE STATE OF CALIFORNIA OR ITS OFFICERS OR AGENTS SHALL NOT BE RESPONSIBLE FOR THE ACCURACY OR COMPLETENESS OF SCANNED COPIES OF THIS PLAN SHEET.

EARTHWORK QUANTITIES SUMMARY

SHEET No.	STATION LIMITS /LOCATION	ROADWAY EXCAVATION	EMBANKMENT (N)
		CY	
L-2	WEST VIEWING AREA	139	39
L-3	EAST VIEWING AREA	33	23
TOTAL		172	62

(N) NOT A SEPARATE PAY ITEM, FOR INFORMATION ONLY

MODIFY METAL BEAM GUARD RAILING

SHEET No.	ITEM	STATION LIMITS /LOCATION	Qty
L-1	MODIFY METAL BEAM GUARDRAIL	"D1R1" 431+78 TO 445+40	1362 LF
L-1	REMOVE END ANCHOR ASSEMBLY (TYPE SFT)	57′ L+ "D1R1" 431+72	1 EA
L-1	ALTERNATIVE CRASH CUSHION	57′ L+ "D1R1" 431+47	1 EA
L-1	RAIL TENSIONING ASSEMBLY	57′ L+ "D1R1" 445+40	1 EA

REMOVE BASE AND SURFACING

SHEET No.	STATION LIMITS/LOCATION	CY
L-2	"A1" 193+95 TO 195+45	234
L-3	"A1" 259+50 TO 260+33 R+	68
TOTAL		302

REMOVE FENCE (TYPE BW)

SHEET No.	STATION LIMITS/LOCATION	LF
L-2	"A1" 26′ L+ 194+41.7 TO 24.1′ R+ 104+45.4	51
	"A1" 35.9′ L+ 194+35.2 TO 0.9′ R+ 104+44.6	39
TOTAL		90

REPLACE ASPHALT CONCRETE SURFACING

SHEET No.	STATION LIMITS	SQYD
L-3	"A1" 259+50 TO 260+00 R+	8.3
TOTAL		8.3

COLD PLANE ASPHALT CONCRETE PAVEMENT

SHEET No.	STATION LIMITS/LOCATION	SQYD
L-2	"BPS2" 175+05 TO 178+10 L+; PLAZA & SW	334
	"WV1" 9+39 TO 10+00 L+; CROSSWALK	53
L-3	"EV1" 11+09 TO 11+52; SW	30
TOTAL		417

REMOVE CHAIN LINK FENCE

SHEET No.	STATION LIMITS/LOCATION	LF
L-2	"BPS2" 60.9′ L+ 175+28.29 TO 54.3′ L+ 175+63.6	49
TOTAL		49

VEGETATION CONTROL (MINOR CONCRETE)

SHEET No.	STATION LIMITS	VEGETATION CONTROL
		SQYD
L-1	L+ "D1R1" 431+42 TO 431+80	25
TOTAL		25

REMOVE CONCRETE CURB

SHEET No.	STATION LIMITS/LOCATION	SQYD
L-2	"BPS2" 175+96 TO 176+94 L+	157
TOTAL	TOTAL	157

STRUCTURAL CONCRETE

SHEET No.	LOCATION	STATION LIMITS	STRUCTURAL Conc	BAR Reinf STEEL
			CY	LB
C-2 TO C-5	WEST VIEWING AREA	"WV1" 10+00 TO 11+13.2	57	3591
C-6 TO C-9	EAST VIEWING AREA	"EV1" 10+08 TO 10+75.9	44	2772
TOTAL			101	6363

PORTABLE DELINEATOR

SHEET No.	STATION LIMITS	EA
L-1	"D1R1" 431+00 TO 451+00	50
TOTAL		50

MINOR CONCRETE (CURB, SIDEWALK AND CURB RAMP)

SHEET No.	LOCATION	STATION LIMITS	CY
L-2	CURB	"BPS2" 174+96.3 TO 177+82.8 L+	7.82
	CURB	"BPS2" 176+67.9 TO 176+97.3 R+	0.93
	PLAZA & SW	"BPS2" 175+05 TO 178+10 L+	37.1
	10" SLAB AT STAIRCASE	"BPS2" 175+27.3 TO 175+61.8 L+	7.39
L-3	CURB	"EV1" 11+51 TO 11+87.8	1.56
	SW	"EV1" 10+75.9 TO 11+51.5	8.4
TOTAL			63.2

EXISTING FACILITIES

SHEET No.	ITEM	STATION	EA
L-2	ADJUST WATER METER BOX TO GRADE	18.28′ R+ "BPS2" 176+91	2

DETECTABLE WARNING SURFACE

SHEET No.	STATION/LOCATION	SQFT
L-2	55′ L+ "BPS2" 175+15	12
	"WV1" 9+39	36
	"WV1" 10+00	24
	67′ L+ "BPS2" 177+86	12
TOTAL		84

CONCRETE (RAPID SETTING)

SHEET No.	LOCATION	STATION LIMITS	CY
L-2	CROSSWALK	"WV1" 9+39 TO 10+00	8.76

SUMMARY OF QUANTITIES

Q-1

REVISED BY	DATE REVISED
CH	10/6/14

CHI-CHUNG HO — JAIME GUTIERREZ

CALCULATED-DESIGNED BY — CHECKED BY

FUNCTIONAL SUPERVISOR: JAIME GUTIERREZ

STATE OF CALIFORNIA - DEPARTMENT OF TRANSPORTATION — DESIGN

Caltrans

LAST REVISION 10-06-14 | DATE PLOTTED => 23-OCT-2014 | TIME PLOTTED => 14:13

Dist	COUNTY	ROUTE	POST MILES TOTAL PROJECT	SHEET No.	TOTAL SHEETS
04	SM,Alq	84	R28.8/R29.3 R0.5	36	83

9-25-14
LICENSED LANDSCAPE ARCHITECT

10-6-14
PLANS APPROVAL DATE

LICENSED LANDSCAPE ARCHITECT Susan Pearl Lindsay 9/30/2015 Renewal Date 9/25/2014 Date STATE OF CALIFORNIA

THE STATE OF CALIFORNIA OR ITS OFFICERS OR AGENTS SHALL NOT BE RESPONSIBLE FOR THE ACCURACY OR COMPLETENESS OF SCANNED COPIES OF THIS PLAN SHEET.

IRRIGATION SPRINKLER SCHEDULE

SYMBOL	ITEM DESCRIPTION	SPRINKLER TYPE	SPRAY PATTERN	OPERATING PRESSURE (psi)	PRESSURE COMPENSATING	PLUS/MINUS 5% ② DISCHARGE: GALLONS PER MINUTE (GPM)	GALLONS PER HOUR (GPH)	RADIUS (ft)	WIDTH x LENGTH (ft)	MATERIAL	INLET CONNECTION (NPT INCH)	POSITIVE-LOCKING Adj ARC STOP IMPACT	BACKSPLASH PREV. IMPACT	DIFFUSER PIN	DISTANCE CONTROL FLAP	Adj DISCHARGE	FLOW SHUTOFF DEVICE	ROOT INHIBITOR	RISER: ASSEMBLY (TYPE)	MATERIAL: PLASTIC	GALVANIZED	SIZE (IPS INCH)	HEIGHT (INCH)	SWING JOINT (TYPE)	POP-UP: ASSEMBLY (TYPE)	HEIGHT (INCH)	SPRINKLER PROTECTOR (TYPE) ④	TREE WELL: HEIGHT (INCH)	SWING JOINT (TYPE)	REMARKS
	DRIP IRRIGATION TUBING	ID	–	40	X	–	0.6	–	–	PL	5/8	–	–	–	–	–	–	X	–	–	–	–	–	–	–	–	–	–	–	(12)

X IN BOX DENOTES REQUIREMENT

APPLICABLE WHEN CIRCLED BELOW:

1 - SEE SPECIAL PROVISIONS.
(2) - IF A PRESSURE COMPENSATING DEVICE IS SPECIFIED, THE DISCHARGE AND RADII SHOWN REFLECT ITS USE.
3 - ARC STOP MUST BE FITTED WITH A NUT AND BOLT
4 - VINYL-COATED CAST IRON HOUSING.
5 - SPRINKLER PROTECTORS REQUIRED ADJACENT TO SHOULDERS, CURBS, SIDEWALKS, AND DIKES.
6 - UNLESS OTHERWISE SHOWN ON PLANS.
7 - INSTALL ON UPHILL SIDE OF PLANT BASIN
8 - INSTALL TWO SPRINKLERS PER PLANT. LOCATE ON OPPOSITE SIDES OF ROOTBALL
9 - INSTALL AT LOWEST POINT OF PLANT BASIN
10 - BUILT-IN CHECK VALVE
11 - EXTERNAL CHECK VALVE
(12) - IN-LINE EMITTER SPACING 18" ON CENTER
13 - LENGTH AS NECESSARY BETWEEN SWING JOINT AND POP-UP INLET

SPRINKLER TYPE ABBREVIATIONS

DE - DRIP EMITTER
FB - FLOOD BUBBLER
GD - GEAR DRIVEN ROTOR
ID - IN -LINE DRIP EMITTER
IM - IMPACT
MS - MICRO SPRAY
SP - SPRAY

IRRIGATION SPRINKLER SCHEDULE

ISS-1

REVISED BY	JP
DATE REVISED	9/25/14
JOAQUIN PEDRIN	
SUSAN LINDSAY	
CALCULATED-DESIGNED BY	
CHECKED BY	
SENIOR LANDSCAPE ARCHITECT	SUSAN LINDSAY

STATE OF CALIFORNIA - DEPARTMENT OF TRANSPORTATION
Caltrans® LANDSCAPE ARCHITECTURE

LAST REVISION 09-25-14 | DATE PLOTTED => 23-OCT-2014 | TIME PLOTTED => 14:13

Dist	COUNTY	ROUTE	POST MILES TOTAL PROJECT	SHEET No.	TOTAL SHEETS
04	SM,Ala	84	R28.8/R29.3 R0.5	37	83

9-25-14
LICENSED LANDSCAPE ARCHITECT

10-6-14
PLANS APPROVAL DATE

THE STATE OF CALIFORNIA OR ITS OFFICERS OR AGENTS SHALL NOT BE RESPONSIBLE FOR THE ACCURACY OR COMPLETENESS OF SCANNED COPIES OF THIS PLAN SHEET.

LICENSED LANDSCAPE ARCHITECT
Joaquin Pedrin
Signature
9/30/2015
Renewal Date
9/25/2014
Date
STATE OF CALIFORNIA

NOTE:

FOR ACCURATE RIGHT OF WAY DATA, CONTACT RIGHT OF WAY ENGINEERING AT THE DISTRICT OFFICE.

IRRIGATION NOTES:

1. IRRIGATION SUPPLY LINE LATERAL MUST BE 1½" SCH 40 PLASTIC PIPE SUPPLY LINE, UNLESS OTHERWISE NOTED.
2. FLUSH VALVES (FV) MUST BE ¾" UNLESS OTHERWISE NOTED
3. COMBINATION AIR RELEASE VALVE (CARV) MUST BE ½", UNLESS OTHERWISE NOTED.
4. QUICK COUPLING VALVE (QVC) MUST BE ¾", UNLESS OTHERWISE NOTED.
5. MAXIMUM LENGTH OF DRIP IRRIGATION TUBING MUST NOT EXCEED MANUFACTURERS RECOMMENDATION.
6. SPACE DRIP IRRIGATION TUBING 18" ON CENTER.

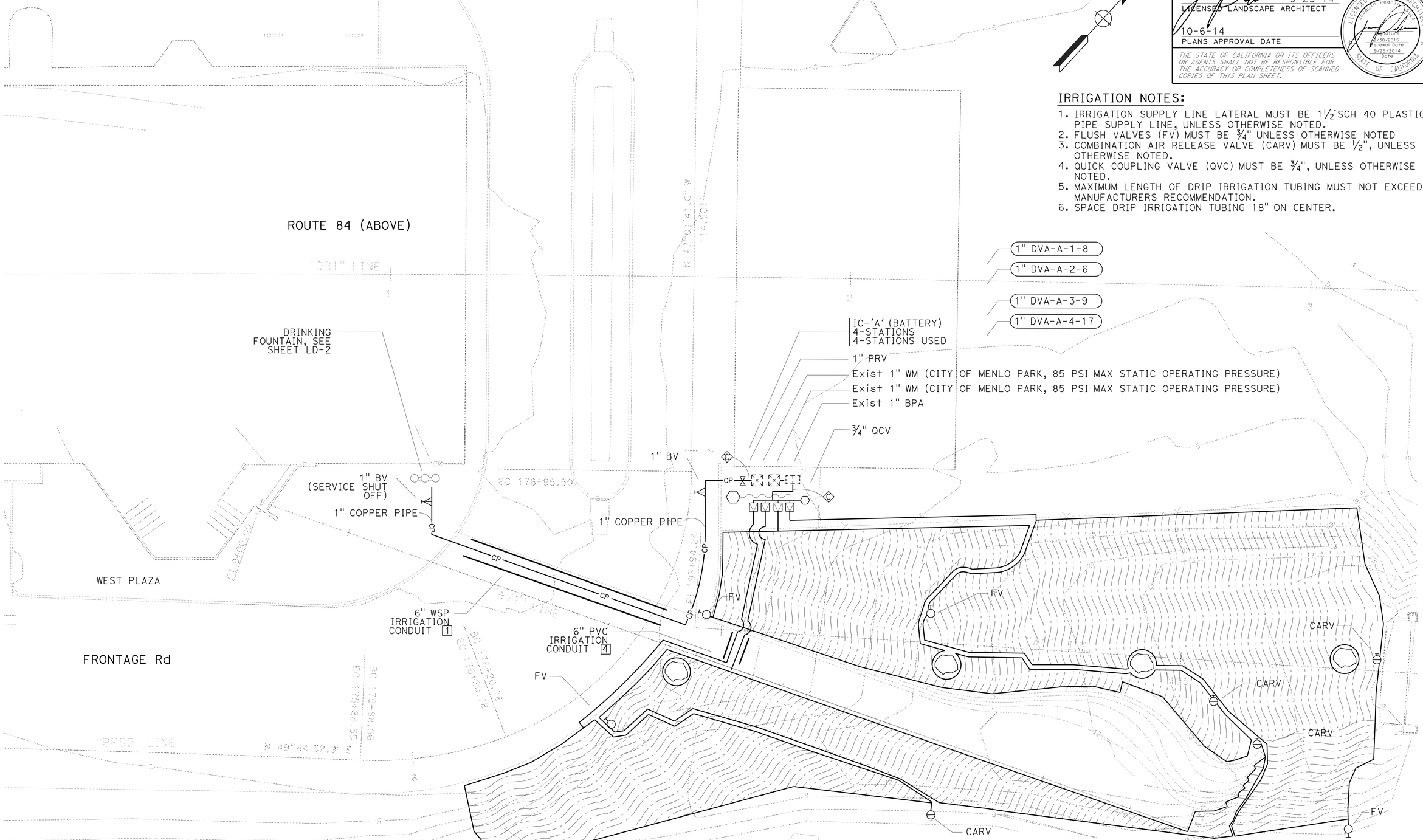

IRRIGATION PLAN
(WEST VIEWING AREA)
SCALE 1" = 10'

IP-1

APPROVED FOR IRRIGATION WORK ONLY

STATE OF CALIFORNIA - DEPARTMENT OF TRANSPORTATION
Caltrans® LANDSCAPE ARCHITECTURE

SENIOR LANDSCAPE ARCHITECT: SUSAN LINDSAY
CALCULATED-DESIGNED BY: JOAQUIN PEDRIN
CHECKED BY: SUSAN LINDSAY
REVISED BY: JP
DATE REVISED: 9/25/14

LAST REVISION 09-25-14
DATE PLOTTED => 23-OCT-2014
TIME PLOTTED => 14:13

Dist	COUNTY	ROUTE	POST MILES TOTAL PROJECT	SHEET No.	TOTAL SHEETS
04	SM,Ala	84	R28.8/R29.3 R0.5	38	83

9-25-14
LICENSED LANDSCAPE ARCHITECT

10-6-14
PLANS APPROVAL DATE

THE STATE OF CALIFORNIA OR ITS OFFICERS OR AGENTS SHALL NOT BE RESPONSIBLE FOR THE ACCURACY OR COMPLETENESS OF SCANNED COPIES OF THIS PLAN SHEET.

LICENSED LANDSCAPE ARCHITECT
Joaquin Pedrin
Signature
9/30/2015
Renewal Date
9/25/2014
Date
STATE OF CALIFORNIA

NOTE:

FOR ACCURATE RIGHT OF WAY DATA, CONTACT RIGHT OF WAY ENGINEERING AT THE DISTRICT OFFICE.

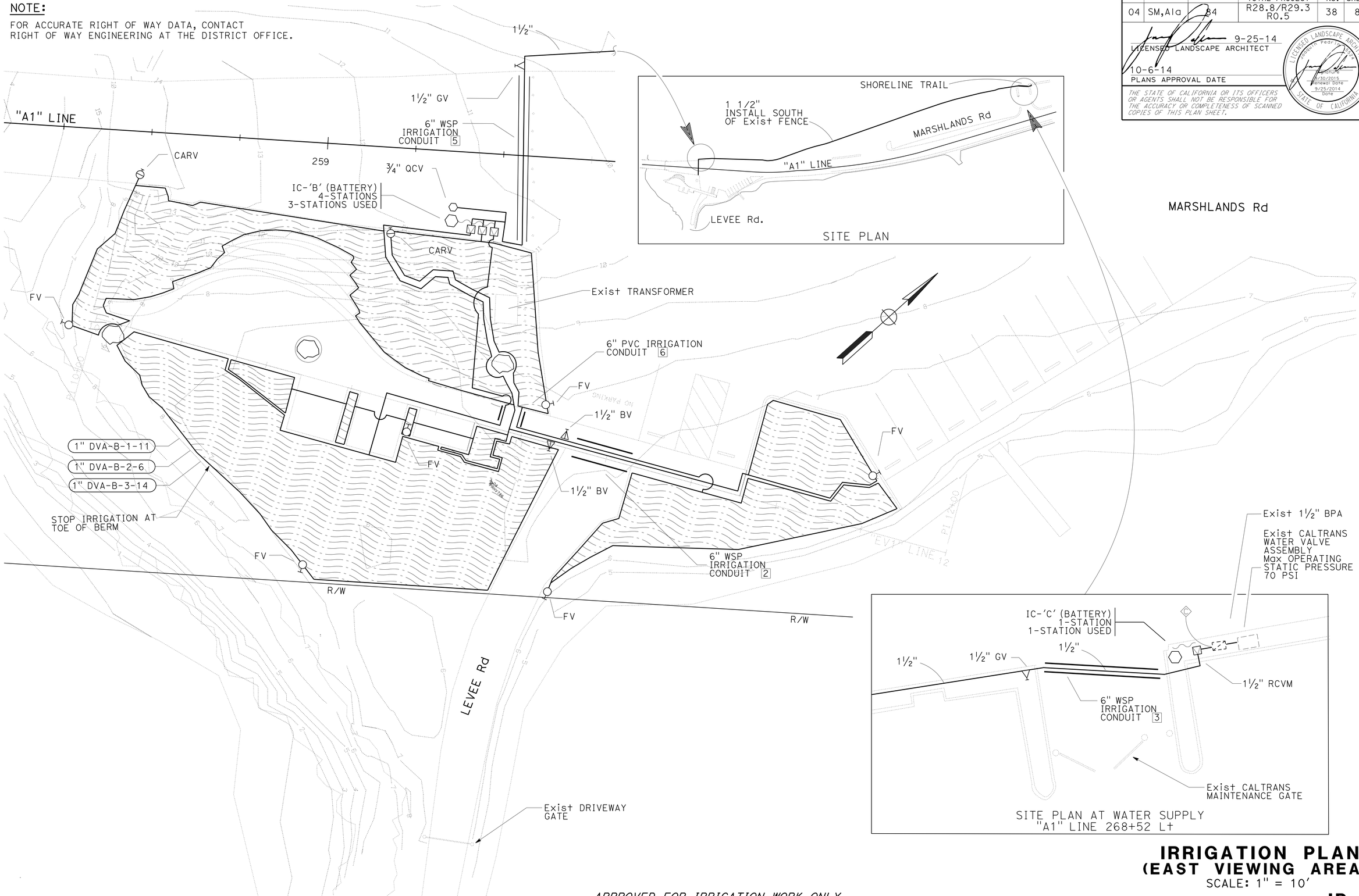

APPROVED FOR IRRIGATION WORK ONLY

IRRIGATION PLAN (EAST VIEWING AREA)

SCALE: 1" = 10'

IP-2

JOAQUIN PEDRIN	REVISED BY: JP
SUSAN LINDSAY	DATE REVISED: 9/25/14
CALCULATED-DESIGNED BY	
CHECKED BY	
SENIOR LANDSCAPE ARCHITECT: SUSAN LINDSAY	

STATE OF CALIFORNIA - DEPARTMENT OF TRANSPORTATION
Caltrans® LANDSCAPE ARCHITECTURE

LAST REVISION 09-25-14 | DATE PLOTTED => 23-OCT-2014 | TIME PLOTTED => 14:13

Dist	COUNTY	ROUTE	POST MILES TOTAL PROJECT	SHEET No.	TOTAL SHEETS
04	SM,Ala	84	R28.8/R29.3 R0.5	39	83

9-25-14
LICENSED LANDSCAPE ARCHITECT

10-6-14
PLANS APPROVAL DATE

LICENSED LANDSCAPE ARCHITECT Susan Pearl Lindsay Signature 9/30/2015 Renewal Date 9/25/2014 Date STATE OF CALIFORNIA

THE STATE OF CALIFORNIA OR ITS OFFICERS OR AGENTS SHALL NOT BE RESPONSIBLE FOR THE ACCURACY OR COMPLETENESS OF SCANNED COPIES OF THIS PLAN SHEET.

NOTE: THE TOTAL LENGTH OF ALL INTERCONNECTED DRIP IRRIGATION TUBING MUST NOT EXCEED THE MAXIMUM RUN LENGTH RECOMMENDED BY THE MANUFACTURER.

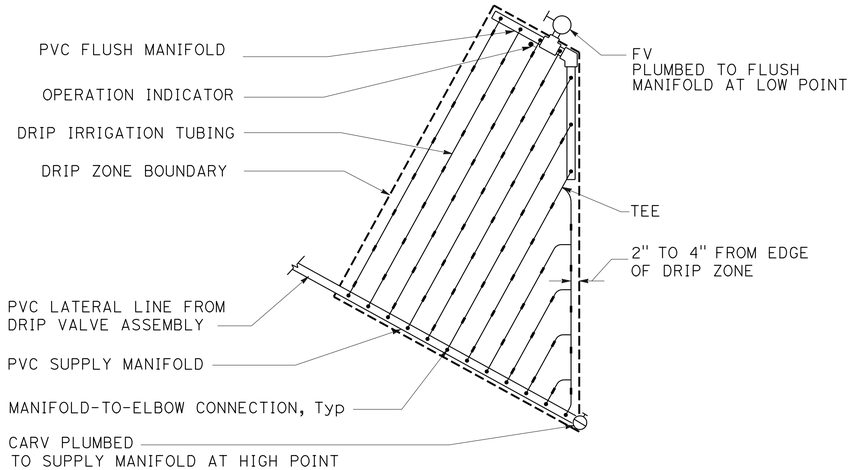

DRIP IRRIGATION TUBING - TRIANGULAR LAYOUT

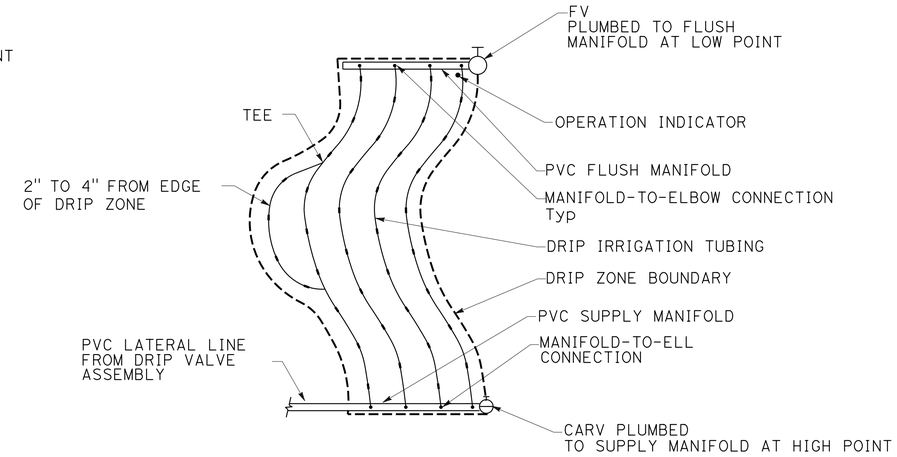

DRIP IRRIGATION TUBING - ODD CURVE LAYOUT

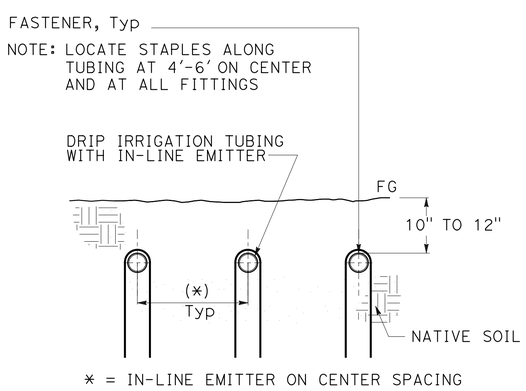

DRIP IRRIGATION TUBING (SUB-SURFACE INSTALLATION)

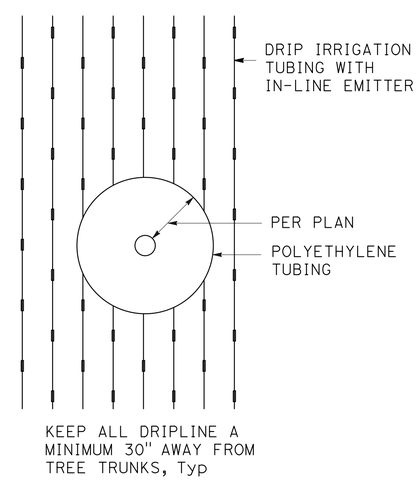

DRIP IRRIGATION TUBING AROUND DECORATIVE BOULDERS

IRRIGATION DETAILS

NO SCALE

ID-1

STATE OF CALIFORNIA - DEPARTMENT OF TRANSPORTATION
Caltrans® LANDSCAPE ARCHITECTURE

SENIOR LANDSCAPE ARCHITECT: SUSAN LINDSAY
CALCULATED-DESIGNED BY: JOAQUIN PEDRIN
CHECKED BY: SUSAN LINDSAY
REVISED BY: JP
DATE REVISED: 9/25/14

LAST REVISION 09-25-14
DATE PLOTTED => 23-OCT-2014
TIME PLOTTED => 14:13

Dist	COUNTY	ROUTE	POST MILES TOTAL PROJECT	SHEET No.	TOTAL SHEETS
04	SM,Ala	84	R28.8/R29.3 R0.5	40	83

9-25-14
LICENSED LANDSCAPE ARCHITECT

10-6-14
PLANS APPROVAL DATE

LICENSED LANDSCAPE ARCHITECT JOAQUIN PEDRIN SIGNATURE 9/30/2015 Renewal Date 9/25/2014 Date STATE OF CALIFORNIA

THE STATE OF CALIFORNIA OR ITS OFFICERS OR AGENTS SHALL NOT BE RESPONSIBLE FOR THE ACCURACY OR COMPLETENESS OF SCANNED COPIES OF THIS PLAN SHEET.

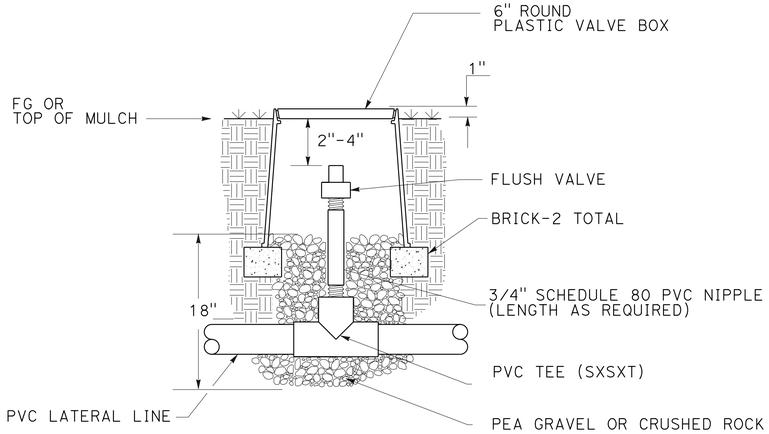

FLUSH VALVE ON PVC LATERAL

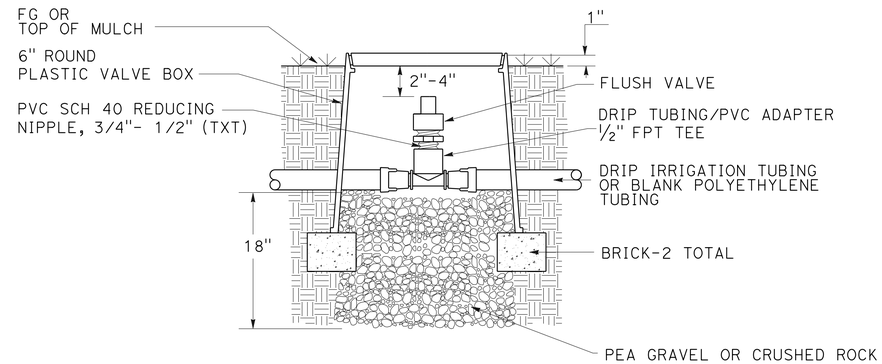

FLUSH VALVE ON DRIP IRRIGATION TUBING

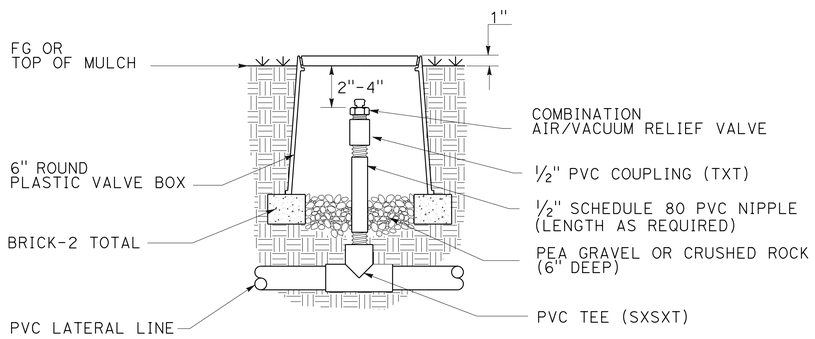

COMBINATION AIR/VACUUM RELEASE VALVE ON PVC LATERAL

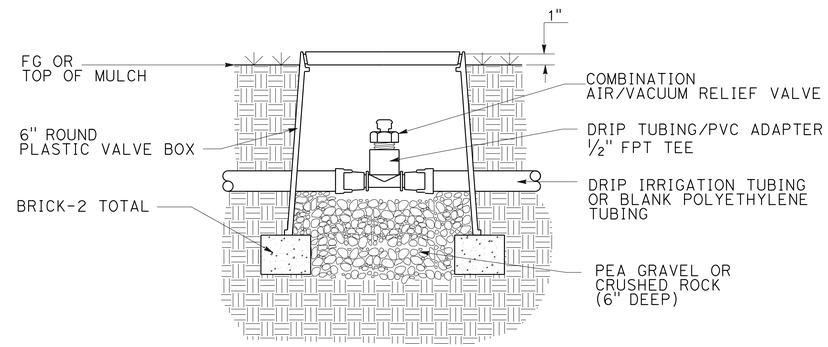

COMBINATION AIR/VACUUM RELEASE VALVE ON DRIP IRRIGATION TUBING

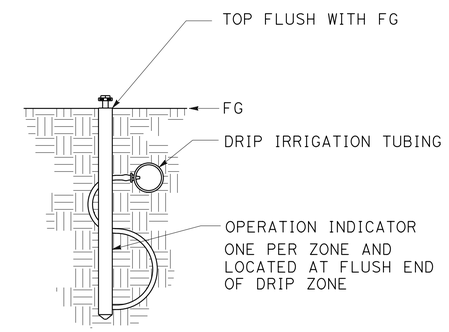

POP-UP OPERATION INDICATOR

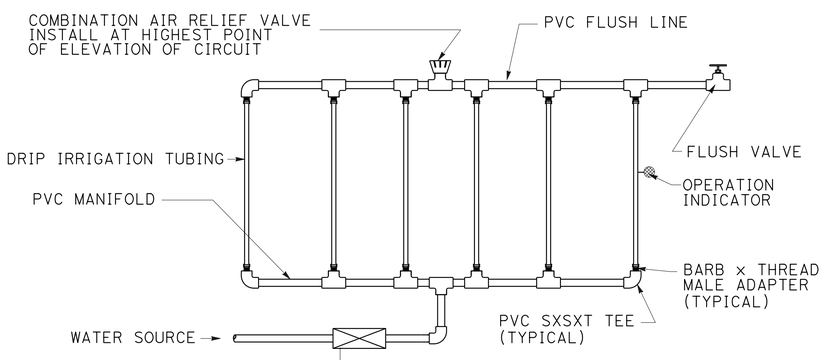

DRIP IRRIGATION TUBING TYPICAL SCHEMATIC

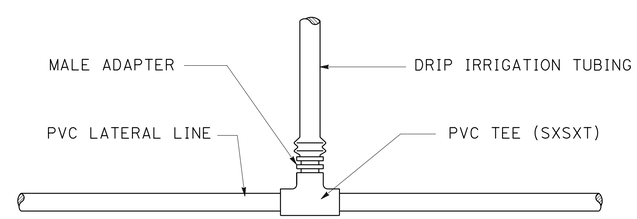

DRIP IRRIGATION TUBING TO PVC CONNECTION

IRRIGATION DETAILS
NO SCALE

ID-2

STATE OF CALIFORNIA - DEPARTMENT OF TRANSPORTATION
Caltrans® LANDSCAPE ARCHITECTURE

SENIOR LANDSCAPE ARCHITECT: SUSAN LINDSAY
CALCULATED-DESIGNED BY: JOAQUIN PEDRIN
CHECKED BY: SUSAN LINDSAY
REVISED BY: JP
DATE REVISED: 9/25/14

LAST REVISION 09-25-14
DATE PLOTTED => 23-OCT-2014
TIME PLOTTED => 14:13

Dist	COUNTY	ROUTE	POST MILES TOTAL PROJECT	SHEET No.	TOTAL SHEETS
04	SM,Ala	84	R28.8/R29.3 R0.5	41	83

9-25-14
LICENSED LANDSCAPE ARCHITECT

10-6-14
PLANS APPROVAL DATE

LICENSED LANDSCAPE ARCHITECT Joaquin Pedrin Jr. Signature 9/30/2015 Renewal Date 9/25/2014 Date STATE OF CALIFORNIA

THE STATE OF CALIFORNIA OR ITS OFFICERS OR AGENTS SHALL NOT BE RESPONSIBLE FOR THE ACCURACY OR COMPLETENESS OF SCANNED COPIES OF THIS PLAN SHEET.

IRRIGATION QUANTITIES

	CONTROLLER ID	VALVE NUMBER	SHEET NUMBER	IRRIGATION CONTROLLER 4 STATION (BATTERY)	IRRIGATION CONTROLLER 1 STATION (BATTERY)	IRRIGATION CONTROLLER TWO WIRE	WM	VALVES AND ASSEMBLIES: BPA	BPA (N) ENCLOSURE	BPA (N) BLANKET	CCA	PRV	RCV	RCV	RCV	DVA	DVA	FS	FV	FV	FV	CARV	CARV	CARV	BV	BV	GV	QCV	CV	CV
								-- "			1½"	1"	1"	1½"	2"	1"	1½"	1½"	¾"	2"	3"	½"	1½"	2"	1"	1½"	1½"	¾"	1½"	2"
				EA	EA	EA	EA	EA	EA	EA	EA	EA	EA	EA	EA	EA	EA	EA	EA	EA	EA	EA	EA	EA	EA	EA	EA	EA	EA	EA
SUBTOTALS PER VALVE ON LATERAL SUPPLY SIDE OF CONTROL VALVE	A	1	-	-	-	-	-	-	-	-	-	-	-	-	-	-	-	-	1	-	-	1	-	-	-	-	-	-	-	-
		2	-	-	-	-	-	-	-	-	-	-	-	-	-	-	-	-	1	-	-	1	-	-	-	-	-	-	-	-
		3	-	-	-	-	-	-	-	-	-	-	-	-	-	-	-	-	1	-	-	1	-	-	-	-	-	-	-	-
		4	-	-	-	-	-	-	-	-	-	-	-	-	-	-	-	-	2	-	-	1	-	-	-	-	-	-	-	-
	B	1	-	-	-	-	-	-	-	-	-	-	-	-	-	-	-	-	3	-	-	1	-	-	-	1	-	-	-	-
		2	-	-	-	-	-	-	-	-	-	-	-	-	-	-	-	-	2	-	-	1	-	-	-	1	-	-	-	-
		3	-	-	-	-	-	-	-	-	-	-	-	-	-	-	-	-	1	-	-	1	-	-	-	-	-	-	-	-
SUBTOTALS PER SHEET ON MAIN SUPPLY SIDE OF CONTROL VALVE			IP-1	1	-	-	-	-	-	-	-	1	-	-	-	4	-	-	-	-	-	-	-	-	2	-	-	1	-	-
			IP-2	1	1	-	-	-	-	-	-	-	-	1	-	3	-	-	-	-	-	-	-	-	-	-	2	1	-	-
TOTAL				2	1	-	-	-	-	-	-	1	-	1	-	7	-	-	11	-	-	7	-	-	2	2	2	2	-	-

	VALVE NUMBER	IRRIGATION SUPPLY LINE: COPPER PIPE (SUPPLY LINE) 1"	COPPER PIPE 3"	PLASTIC PIPE (SCHEDULE 40) (SUPPLY LINE) ¾"	PLASTIC PIPE 1"	PLASTIC PIPE 1¼"	PLASTIC PIPE 1½"	PLASTIC PIPE (CLASS 315) (SUPPLY LINE) 2"	PLASTIC PIPE 2½"	PLASTIC PIPE 3"	DIT ⅝"	SPRINKLER ASSEMBLY: RISER GEAR DRIVEN	POP-UP GEAR DRIVEN	RISER BUBBLER	RISER SPRAY	POP-UP	TREE WELL
		LF	LF	LF	LF	LF	LF	LF	LF	LF	LF	EA	EA	EA	EA	EA	EA
SUBTOTALS PER VALVE ON LATERAL SUPPLY SIDE OF CONTROL VALVE	A 1	-	-	-	-	-	307	-	-	-	1,058	-	-	-	-	-	-
	A 2	-	-	-	-	-	376	-	-	-	820	-	-	-	-	-	-
	A 3	-	-	-	-	-	360	-	-	-	1,249	-	-	-	-	-	-
	A 4	-	-	-	-	-	377	-	-	-	2,542	-	-	-	-	-	-
	B 1	-	-	-	-	-	651	-	-	-	1,597	-	-	-	-	-	-
	B 2	-	-	-	-	-	397	-	-	-	891	-	-	-	-	-	-
	B 3	-	-	-	-	-	373	-	-	-	2,031	-	-	-	-	-	-
SUBTOTALS PER SHEET ON MAIN SUPPLY SIDE OF CONTROL VALVE	IP-1	110	-	-	-	-	20	-	-	-	-	-	-	-	-	-	-
	IP-2	-	-	-	-	-	1,000	-	-	-	-	-	-	-	-	-	-
TOTAL		110	-	-	-	-	3,861	-	-	-	10,188	-	-	-	-	-	-

IRRIGATION CONDUIT

SHEET No.	IRRIGATION CONDUIT No.	LOCATION: LINE	LOCATION: STATION	SIDE: L†	SIDE: R†	EXTENSION CONNECTION TYPE: CB	EXTENSION CONNECTION TYPE: OL	(N) IRRIGATION SUPPLY LINE SIZE (INCH)	(N) ELECTRICAL CONDUIT SIZE (INCH)	WELDED STEEL PIPE CONDUIT SIZE (INCH): XX"	WELDED STEEL PIPE 6"	WELDED STEEL PIPE XX"	SCHEDULE 40 PVC PIPE 6"	SCHEDULE 40 PVC PIPE XX"	SCHEDULE 40 PVC PIPE XX"
										LENGTH (LF)					
IP-1	1	WV1	9+70	X	-	-	-	1"	-	-	60′	-	-	-	-
IP-2	2	EV1	11+17	X	X	-	-	(2X) 1½"	-	-	16′	-	-	-	-
IP-2	3	A1	268+52	X	-	-	-	1½"	-	-	15′	-	-	-	-
IP-1	4	WV1	10+07	X	-	-	-	(2X) 1½"	-	-	-	-	10′	-	-
IP-2	5	A1	259+48	X	X	-	-	1½"	-	-	50′	-	-	-	-
IP-2	6	EV1	10+97	X	-	-	-	(3X) 1½"	-	-	-	-	10′	-	-
									TOTAL	-	141′	-	20′	-	-

X - DENOTES REQUIREMENT
(N) - NOT A SEPARATE PAY ITEM, FOR INFORMATION ONLY

ABBREVIATIONS:
CB - COUPLING BAND
OL - OVERLAP

IRRIGATION QUANTITIES
IQ-1

STATE OF CALIFORNIA - DEPARTMENT OF TRANSPORTATION
LANDSCAPE ARCHITECTURE
SENIOR LANDSCAPE ARCHITECT SUSAN LINDSAY
CALCULATED-DESIGNED BY JOAQUIN PEDRIN
CHECKED BY SUSAN LINDSAY
REVISED BY JP
DATE REVISED 9/25/14

LAST REVISION 09-25-14
DATE PLOTTED => 23-OCT-2014
TIME PLOTTED => 14:13

Dist	COUNTY	ROUTE	POST MILES TOTAL PROJECT	SHEET No.	TOTAL SHEETS
04	SM,Ala	84	R28.8/R29.3 R0.5	42	83

9-25-14
LICENSED LANDSCAPE ARCHITECT

10-6-14
PLANS APPROVAL DATE

LICENSED LANDSCAPE ARCHITECT
Joaquin Pedrin
Signature
9/30/2015
Renewal Date
9/25/2014
Date
STATE OF CALIFORNIA

THE STATE OF CALIFORNIA OR ITS OFFICERS OR AGENTS SHALL NOT BE RESPONSIBLE FOR THE ACCURACY OR COMPLETENESS OF SCANNED COPIES OF THIS PLAN SHEET.

PLANT LIST AND PLANTING SPECIFICATIONS

PLANT GROUP	PLANT No.	SYMBOL	BOTANICAL NAME	COMMON NAME	SIZE	QUANTITY EACH	HOLE SIZE (INCH) Dia	HOLE SIZE (INCH) DEPTH	BASIN TYPE	IRON SULFATE ①	SOIL AMEND ①	COMMERCIAL FERTILIZER ① PLANTING	COMMERCIAL FERTILIZER ① PLT ESTB	BASIN MULCH (CY) ②	STAKING	PLANTING LIMITS MINIMUM DISTANCE (ft) FROM ETW	Pvmt	FENCE	WALL	PAVED DITCH	EARTH DITCH	ON CENTER (ft)	REMARKS
A		○	FRANKENIA SALINA	ALKALI HEATH	No. 1	744	③	③	I	--	--	--	--	0.06	--	--	2	2	2	2	4	1	GROUND COVER SPACING
		◉	BACCHARIS SALICIFOLIA	MULE FAT	No. 1	46	③	③	I	--	--	--	--	0.06	--	--	5	5	5	5	8	6	⑦
		◎	BACCHARIS PILULARIS 'TWIN PEAKS II'	DWARF COYOTE BRUSH 'TWIN PEAKS'	No. 1	172	③	③	I	--	--	--	--	0.06	--	--	3	3	3	3	5	5	⑦

APPLICABLE WHEN CIRCLED:

① - QUANTITIES SHOWN ARE "PER PLANT" UNLESS SHOWN AS SQFT OR SQYD APPLICATION RATES
② - BASIN MULCH IS INCLUDED WITH MULCH AREA QUANTITIES SHOWN ON PLANTING PLAN
③ - SUFFICIENT TO RECEIVE ROOT BALL AND AMENDMENTS IF REQUIRED
4 - SEE DETAIL
5 - SEE SPECIAL PROVISIONS
6 - SEE STANDARD SPECIFICATIONS
⑦ - AS SHOWN ON PLANS
8 - UNLESS OTHERWISE SHOWN ON PLANS
9 - FOLIAGE PROTECTOR REQUIRED
10 - ROOT PROTECTOR REQUIRED
11 - ROOT BARRIER REQUIRED
12 - STATE-FURNISHED

NOTE:
UNDERLINED PORTIONS OF BOTANICAL NAME INDICATE ABBREVIATIONS USED ON PLANTING PLANS.

PLANT LIST
PL-1

REVISED BY JP | DATE REVISED 9/25/14
JOAQUIN PEDRIN | SUSAN LINDSAY
CALCULATED-DESIGNED BY | CHECKED BY
SENIOR LANDSCAPE ARCHITECT SUSAN LINDSAY
STATE OF CALIFORNIA - DEPARTMENT OF TRANSPORTATION
Caltrans® LANDSCAPE ARCHITECTURE

LAST REVISION 09-25-14 | DATE PLOTTED => 23-OCT-2014 | TIME PLOTTED => 14:13

Dist	COUNTY	ROUTE	POST MILES TOTAL PROJECT	SHEET No.	TOTAL SHEETS
04	SM,Ala	84	R28.8/R29.3 R0.5	43	83

9-25-14
LICENSED LANDSCAPE ARCHITECT

10-6-14
PLANS APPROVAL DATE

THE STATE OF CALIFORNIA OR ITS OFFICERS OR AGENTS SHALL NOT BE RESPONSIBLE FOR THE ACCURACY OR COMPLETENESS OF SCANNED COPIES OF THIS PLAN SHEET.

LICENSED LANDSCAPE ARCHITECT
Joaquin Pedrin
Signature
9/30/2015
Renewal Date
9/25/2014
Date
STATE OF CALIFORNIA

NOTE:

FOR ACCURATE RIGHT OF WAY DATA, CONTACT RIGHT OF WAY ENGINEERING AT THE DISTRICT OFFICE.

LEGEND:

HYDROSEED AREA, SEE EROSION CONTROL PLAN SHEETS

MULCH AREA LIMITS

CULTIVATION AREA LIMITS

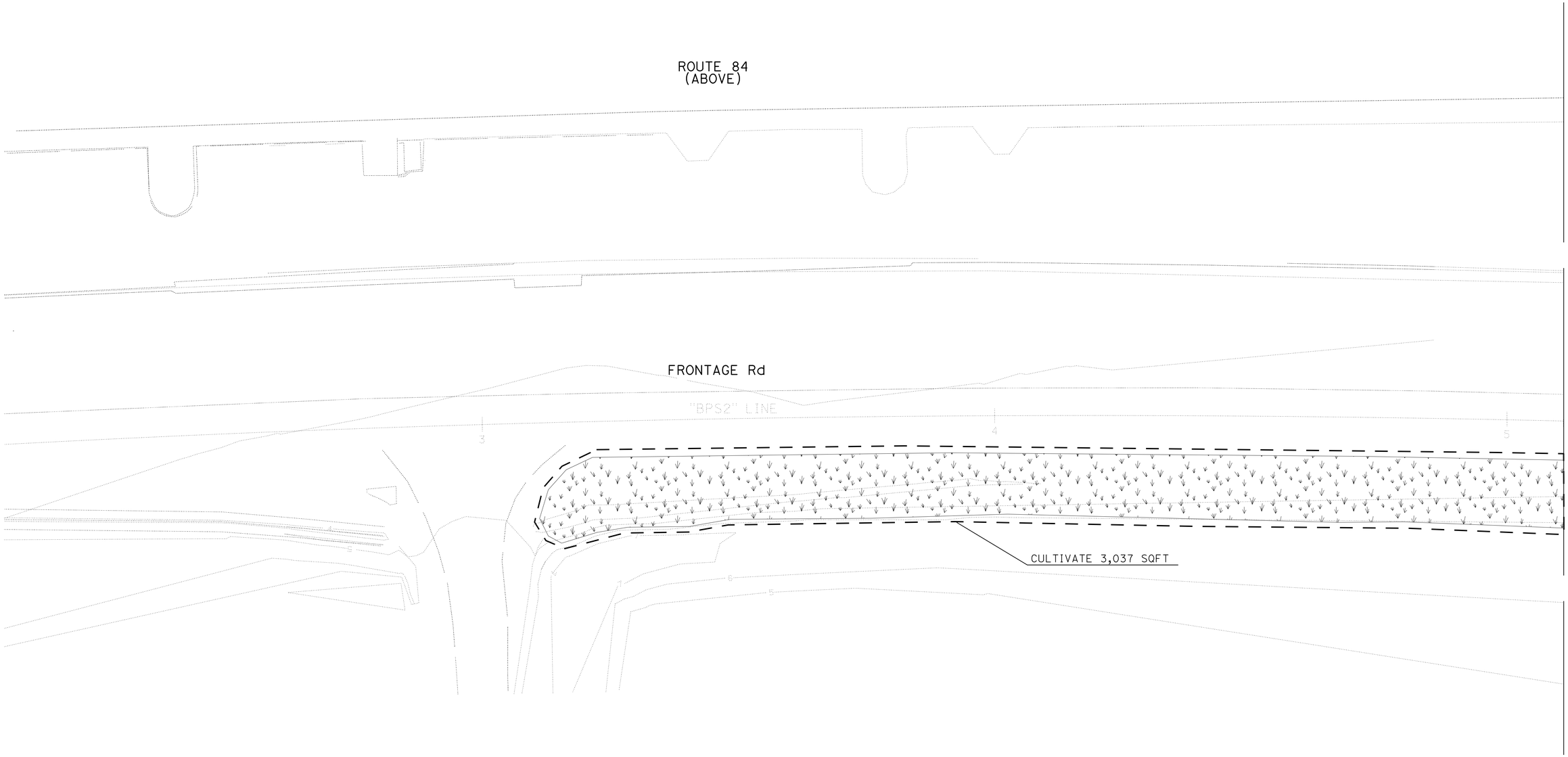

PLANTING PLAN
(WEST SWALE)
SCALE: 1" = 10'

APPROVED FOR PLANTING WORK ONLY

PP-1

REVISED BY	JP
DATE REVISED	9/25/14
CALCULATED-DESIGNED BY	JOAQUIN PEDRIN
CHECKED BY	SUSAN LINDSAY
SENIOR LANDSCAPE ARCHITECT	SUSAN LINDSAY

STATE OF CALIFORNIA - DEPARTMENT OF TRANSPORTATION
Caltrans® LANDSCAPE ARCHITECTURE

LAST REVISION 09-25-14
DATE PLOTTED => 23-OCT-2014
TIME PLOTTED => 14:13

Dist	COUNTY	ROUTE	POST MILES TOTAL PROJECT	SHEET No.	TOTAL SHEETS
04	SM,Ala	84	R28.8/R29.3 R0.5	44	83

9-25-14
LICENSED LANDSCAPE ARCHITECT

10-6-14
PLANS APPROVAL DATE

THE STATE OF CALIFORNIA OR ITS OFFICERS OR AGENTS SHALL NOT BE RESPONSIBLE FOR THE ACCURACY OR COMPLETENESS OF SCANNED COPIES OF THIS PLAN SHEET.

LICENSED LANDSCAPE ARCHITECT
Joaquin Pedrin
Signature
9/30/2015
Renewal Date
9/25/2014
Date
STATE OF CALIFORNIA

NOTE:

FOR ACCURATE RIGHT OF WAY DATA, CONTACT RIGHT OF WAY ENGINEERING AT THE DISTRICT OFFICE.

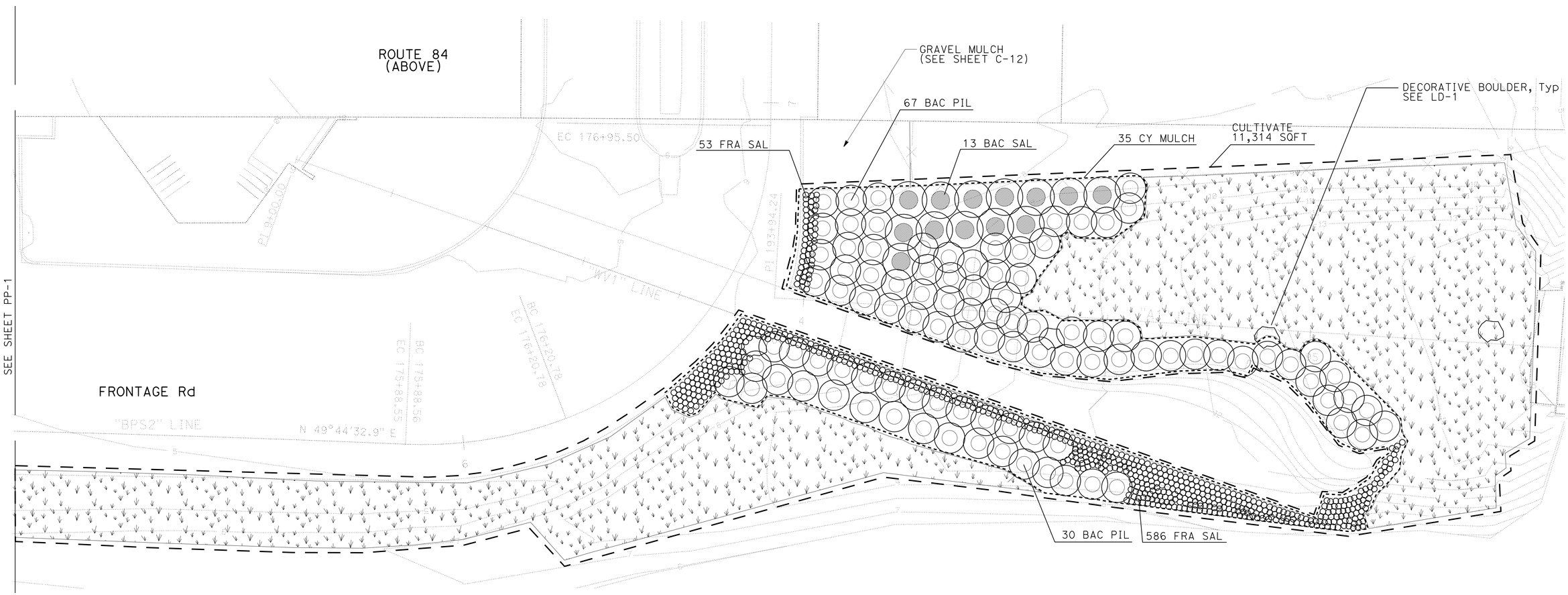

PLANTING PLAN
(WEST VIEWING AREA)
SCALE: 1" = 10'

APPROVED FOR PLANTING WORK ONLY

PP-2

STATE OF CALIFORNIA - DEPARTMENT OF TRANSPORTATION
Caltrans® LANDSCAPE ARCHITECTURE

SENIOR LANDSCAPE ARCHITECT: SUSAN LINDSAY
CALCULATED-DESIGNED BY: JOAQUIN PEDRIN
CHECKED BY: SUSAN LINDSAY
REVISED BY: JP
DATE REVISED: 9/25/14

LAST REVISION 09-25-14
DATE PLOTTED => 23-OCT-2014
TIME PLOTTED => 14:13

Dist	COUNTY	ROUTE	POST MILES TOTAL PROJECT	SHEET No.	TOTAL SHEETS
04	SM,Ala	84	R28.8/R29.3 R0.5	45	83

9-25-14
LICENSED LANDSCAPE ARCHITECT

10-6-14
PLANS APPROVAL DATE

LICENSED LANDSCAPE ARCHITECT
Joaquin Pedrin
Signature
9/30/2015
Renewal Date
9/25/2014
Date
STATE OF CALIFORNIA

THE STATE OF CALIFORNIA OR ITS OFFICERS OR AGENTS SHALL NOT BE RESPONSIBLE FOR THE ACCURACY OR COMPLETENESS OF SCANNED COPIES OF THIS PLAN SHEET.

NOTE:

FOR ACCURATE RIGHT OF WAY DATA, CONTACT RIGHT OF WAY ENGINEERING AT THE DISTRICT OFFICE.

PLANTING PLAN
(EAST VIEWING AREA)

SCALE: 1" = 10'

APPROVED FOR PLANTING WORK ONLY

PP-3

STATE OF CALIFORNIA - DEPARTMENT OF TRANSPORTATION
Caltrans® LANDSCAPE ARCHITECTURE

SENIOR LANDSCAPE ARCHITECT: SUSAN LINDSAY
CALCULATED-DESIGNED BY: JOAQUIN PEDRIN
CHECKED BY: SUSAN LINDSAY
REVISED BY: JP
DATE REVISED: 9/25/14

LAST REVISION 09-25-14
DATE PLOTTED => 23-OCT-2014
TIME PLOTTED => 14:13

Dist	COUNTY	ROUTE	POST MILES TOTAL PROJECT	SHEET No.	TOTAL SHEETS
04	SM,Ala	84	R28.8/R29.3 R0.5	46	83

9-25-14
LICENSED LANDSCAPE ARCHITECT

10-6-14
PLANS APPROVAL DATE

LICENSED LANDSCAPE ARCHITECT
Joaquin Pedrin
Signature
9/30/2015
Renewal Date
9/25/2014
Date
STATE OF CALIFORNIA

THE STATE OF CALIFORNIA OR ITS OFFICERS OR AGENTS SHALL NOT BE RESPONSIBLE FOR THE ACCURACY OR COMPLETENESS OF SCANNED COPIES OF THIS PLAN SHEET.

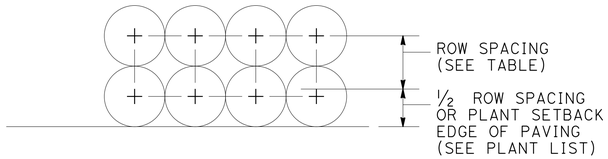

SQUARE PLANT SPACING

NOTE:
PERIMETER OF CURVED PLANTING AREAS SHALL BE PLANTED AS SHOWN, WITH SPACING AS NOTED ON THE PLANT LIST. INTERIOR ROWS SHALL BE FILLED AS CLOSE TO THE DIMENSIONS SHOWN IN THE DETAIL ABOVE.

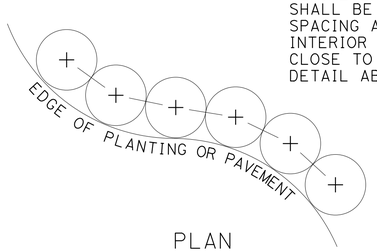

PLAN

SPACING TABLE

12'' ON CENTER SPACING = 10-1/2'' ROW SPACING = 105 PLANTS PER / 100 SQFT
60'' ON CENTER SPACING = 26'' ROW SPACING
72'' ON CENTER SPACING = 28'' ROW SPACING

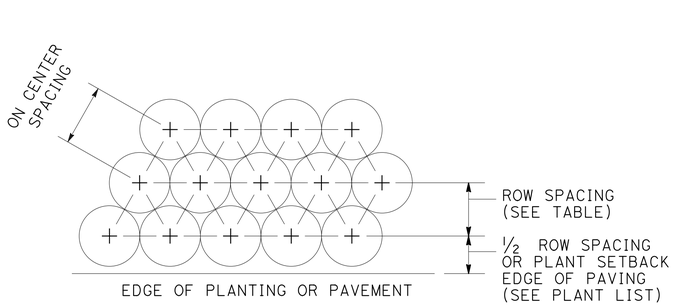

PLAN

TRIANGULAR PLANT SPACING

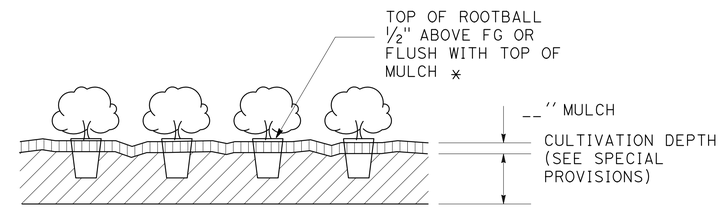

* NOTE:
WHEN PLANTING AREA IS ADJACENT TO CURBS, DKIES, AND PAVED AREAS, TOP OF MULCH SHALL BE 1'' BELOW TOP OF CURB, DIKE AND PAVED AREAS

ELEVATION

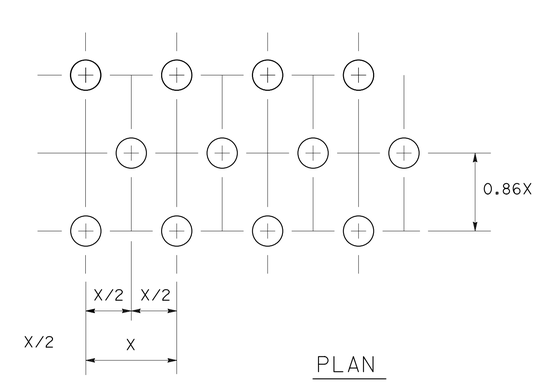

PLAN

X = ON CENTER SPACING (SEE PLANT LIST)

GROUND COVER PLANT SPACING

PLANTING DETAILS
NO SCALE

PD-1

STATE OF CALIFORNIA - DEPARTMENT OF TRANSPORTATION
Caltrans® LANDSCAPE ARCHITECTURE
SENIOR LANDSCAPE ARCHITECT: SUSAN LINDSAY
CALCULATED-DESIGNED BY: JOAQUIN PEDRIN
CHECKED BY: SUSAN LINDSAY
REVISED BY: JP
DATE REVISED: 9/25/14

LAST REVISION 09-25-14
DATE PLOTTED => 23-OCT-2014
TIME PLOTTED => 14:13

Dist	COUNTY	ROUTE	POST MILES TOTAL PROJECT	SHEET No.	TOTAL SHEETS
04	SM,Ala	84	R28.8/R29.3 R0.5	47	83

9-25-14
LICENSED LANDSCAPE ARCHITECT

10-6-14
PLANS APPROVAL DATE

THE STATE OF CALIFORNIA OR ITS OFFICERS OR AGENTS SHALL NOT BE RESPONSIBLE FOR THE ACCURACY OR COMPLETENESS OF SCANNED COPIES OF THIS PLAN SHEET.

LICENSED LANDSCAPE ARCHITECT
Joaquin Pedrin
Signature
9/30/2015
Renewal Date
9/25/2014
Date
STATE OF CALIFORNIA

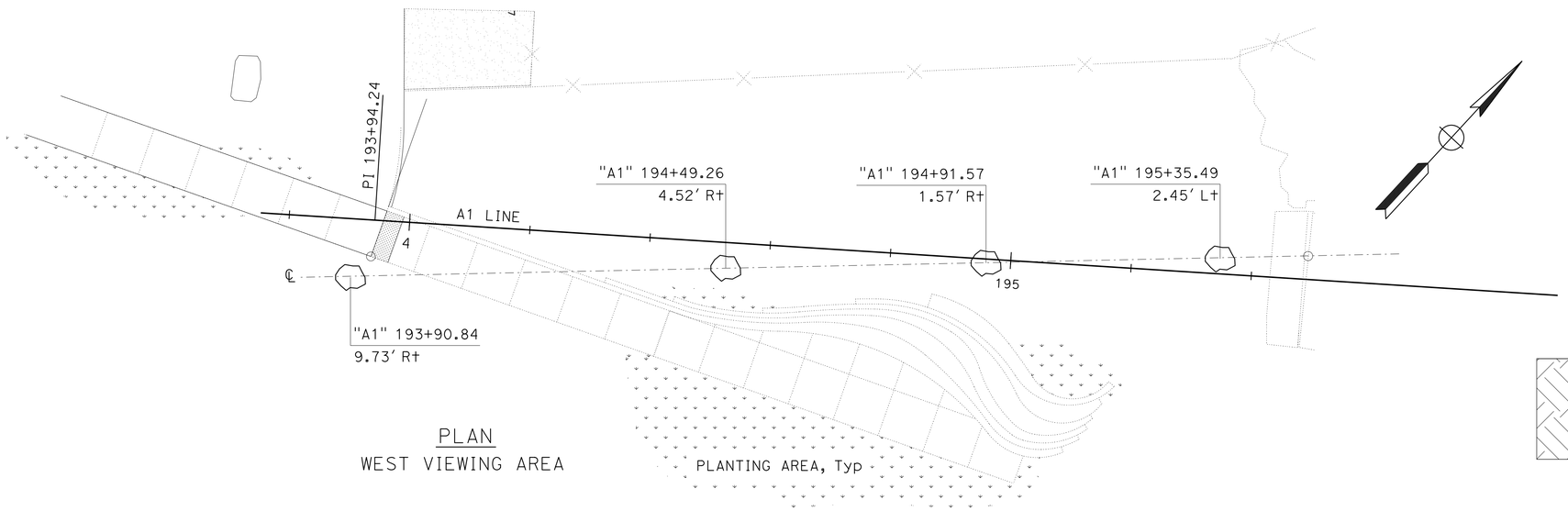

PLAN
WEST VIEWING AREA

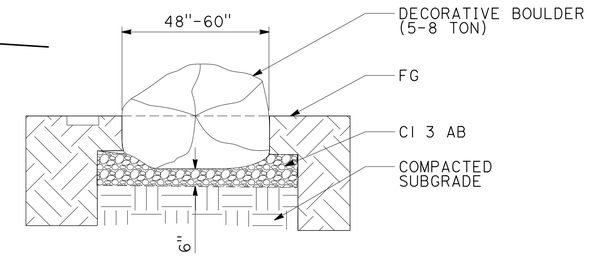

SECTION
DECORATIVE BOULDER IN PLANTING AREA

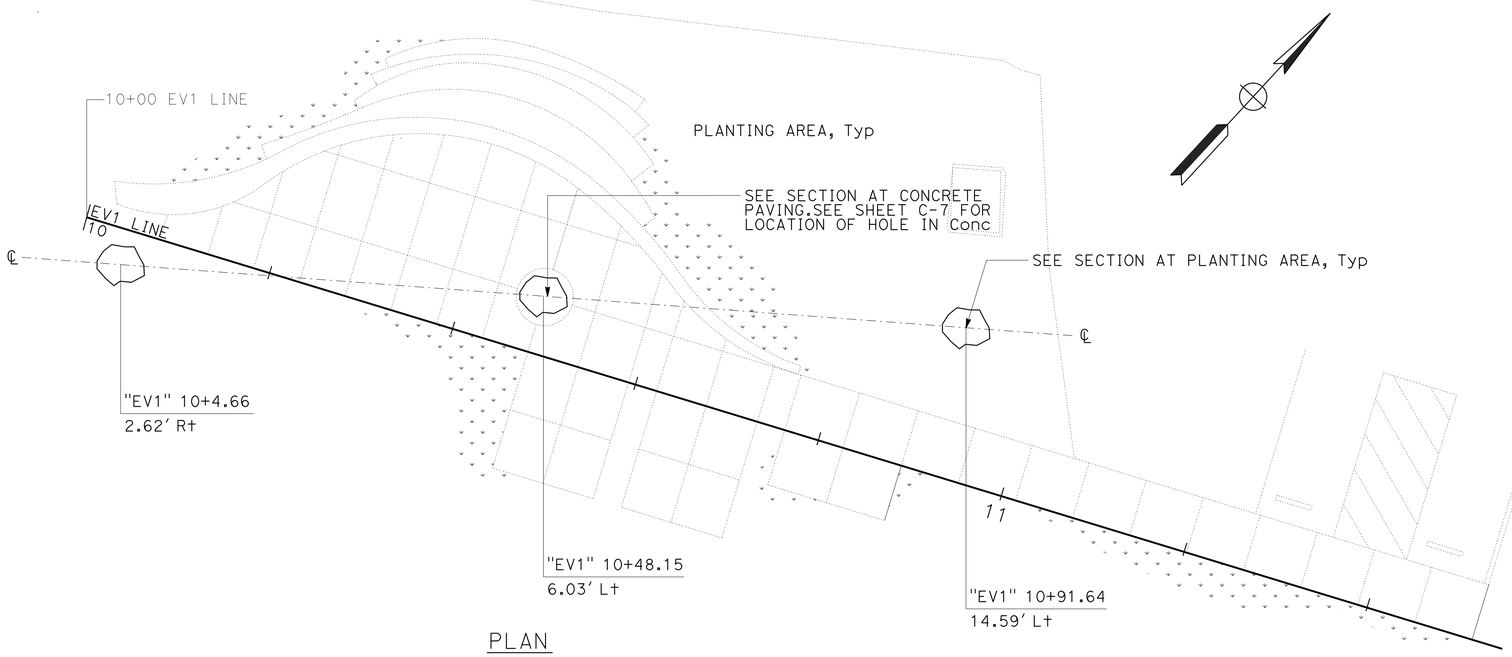

PLAN
EAST VIEWING AREA

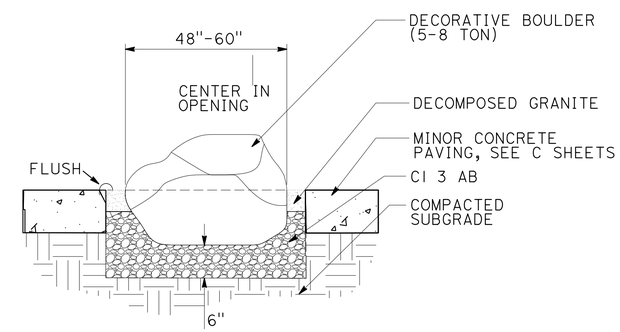

SECTION
DECORATIVE BOULDER AT CONCRETE PAVING

DECORATIVE BOULDER LOCATION

LANDSCAPE DETAILS
NO SCALE

LD-1

REVISED BY	JP
DATE REVISED	9/25/14
CALCULATED-DESIGNED BY	JOAQUIN PEDRIN
CHECKED BY	SUSAN LINDSAY
SENIOR LANDSCAPE ARCHITECT	SUSAN LINDSAY

STATE OF CALIFORNIA - DEPARTMENT OF TRANSPORTATION
Caltrans® LANDSCAPE ARCHITECTURE

LAST REVISION 09-25-14
DATE PLOTTED => 23-OCT-2014
TIME PLOTTED => 14:13

Dist	COUNTY	ROUTE	POST MILES TOTAL PROJECT	SHEET No.	TOTAL SHEETS
04	SM,Ala	84	R28.8/R29.3 R0.5	48	83

9-25-14
LICENSED LANDSCAPE ARCHITECT

10-6-14
PLANS APPROVAL DATE

LICENSED LANDSCAPE ARCHITECT Joaquin Pedrin Jr. Signature 9/30/2015 Renewal Date 9/25/2014 Date STATE OF CALIFORNIA

THE STATE OF CALIFORNIA OR ITS OFFICERS OR AGENTS SHALL NOT BE RESPONSIBLE FOR THE ACCURACY OR COMPLETENESS OF SCANNED COPIES OF THIS PLAN SHEET.

NOTES:

1. POWDER COAT FINISH OF DRINKING FOUNTAIN WITH WATER BOTTLE FILLING STATION TO MATCH COLOR No. 16440 OF Fed Std 595 (LIGHT GRAY).

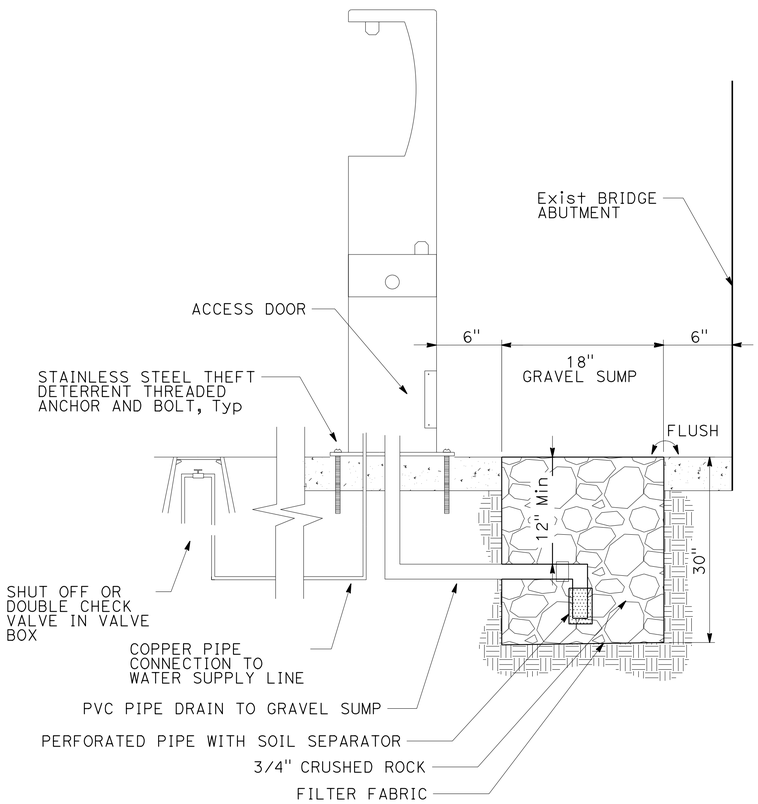

SECTION

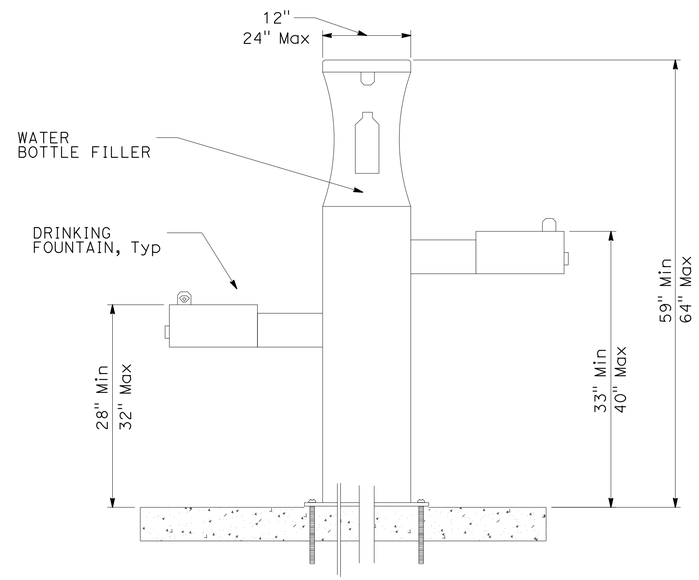

FRONT ELEVATION

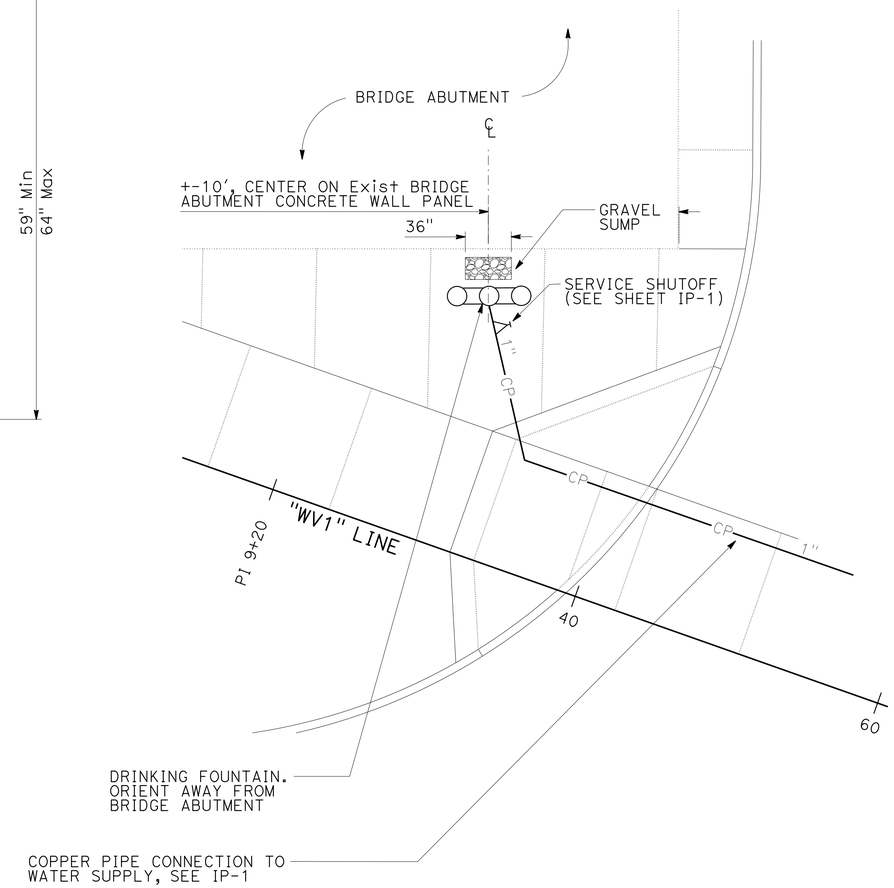

PLAN

DRINKING FOUNTAIN

LANDSCAPE DETAILS
(SITE FURNISHINGS)
NO SCALE

LD-2

JOAQUIN PEDRIN	REVISED BY JP
SUSAN LINDSAY	DATE REVISED 9/25/14
CALCULATED-DESIGNED BY	
CHECKED BY	
SENIOR LANDSCAPE ARCHITECT	
SUSAN LINDSAY	

STATE OF CALIFORNIA - DEPARTMENT OF TRANSPORTATION
Caltrans® LANDSCAPE ARCHITECTURE

LAST REVISION 09-25-14 DATE PLOTTED => 23-OCT-2014 TIME PLOTTED => 14:13

Dist	COUNTY	ROUTE	POST MILES TOTAL PROJECT	SHEET No.	TOTAL SHEETS
04	SM,Ala	84	R28.8/R29.3 R0.5	49	83

9-25-14
LICENSED LANDSCAPE ARCHITECT

10-6-14
PLANS APPROVAL DATE

THE STATE OF CALIFORNIA OR ITS OFFICERS OR AGENTS SHALL NOT BE RESPONSIBLE FOR THE ACCURACY OR COMPLETENESS OF SCANNED COPIES OF THIS PLAN SHEET.

LICENSED LANDSCAPE ARCHITECT — Joaquin Pedrin — Signature — 9/30/2015 Renewal Date — 9/25/2014 Date — STATE OF CALIFORNIA

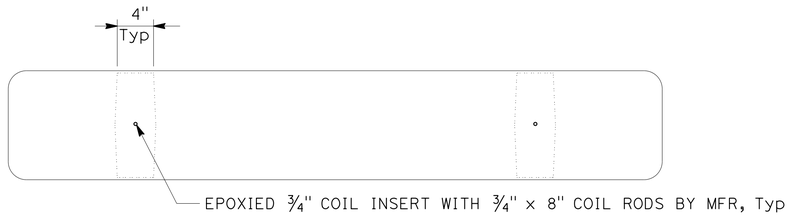

PLAN

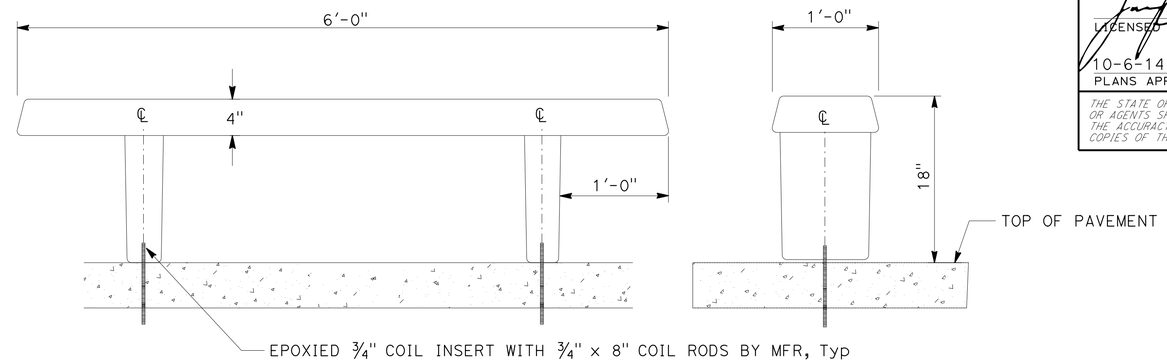

ELEVATIONS

ABBREVIATION:

MFR-MANUFACTURER

NOTES:

1. INTEGRAL COLOR PRECAST CONCRETE BENCH TO MATCH COLOR No. 16440 OF Fed Std 595 (LIGHT GRAY).
2. ROUND ALL EDGES TO ½"R AND GRIND TO SMOOTH FINISH.

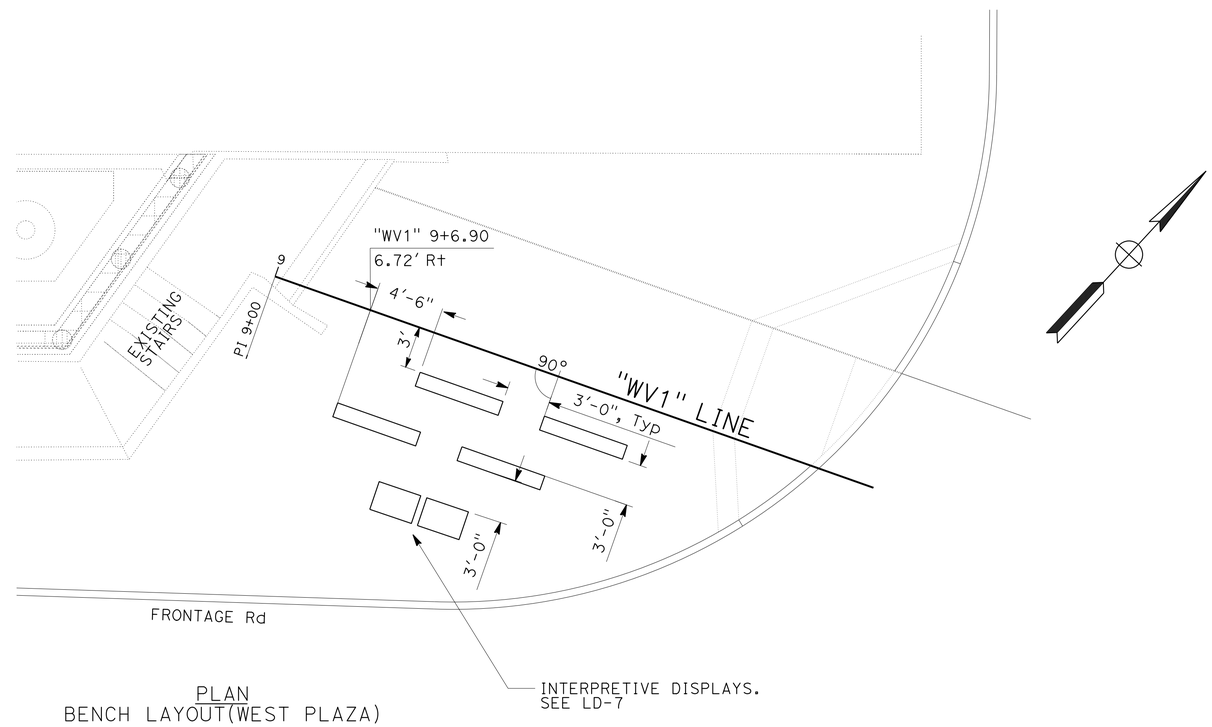

PLAN
BENCH LAYOUT(WEST PLAZA)

PRECAST CONCRETE BENCH

LANDSCAPE DETAILS (SITE FURNISHING)

NO SCALE

LD-3

REVISED BY	DATE REVISED
JP	9/25/14

JOAQUIN PEDRIN — CALCULATED-DESIGNED BY
SUSAN LINDSAY — CHECKED BY
SUSAN LINDSAY — SENIOR LANDSCAPE ARCHITECT

STATE OF CALIFORNIA - DEPARTMENT OF TRANSPORTATION
Caltrans® LANDSCAPE ARCHITECTURE

LAST REVISION 09-25-14 | DATE PLOTTED => 23-OCT-2014 | TIME PLOTTED => 14:13

Dist	COUNTY	ROUTE	POST MILES TOTAL PROJECT	SHEET No.	TOTAL SHEETS
04	SM,Ala	84	R28.8/R29.3 R0.5	50	83

9-25-14
LICENSED LANDSCAPE ARCHITECT

10-6-14
PLANS APPROVAL DATE

THE STATE OF CALIFORNIA OR ITS OFFICERS OR AGENTS SHALL NOT BE RESPONSIBLE FOR THE ACCURACY OR COMPLETENESS OF SCANNED COPIES OF THIS PLAN SHEET.

LICENSED LANDSCAPE ARCHITECT
Joaquin Pedrin
Signature
9/30/2015
Renewal Date
9/25/2014
Date
STATE OF CALIFORNIA

NOTE:

1. INTEGRAL COLOR PRECAST CONCRETE PICNIC TABLE WITH BENCH TO MATCH COLOR No. 16440 OF Fed Std 595 (LIGHT GRAY).

ABBREVIATION:

MFR-MANUFACTURER

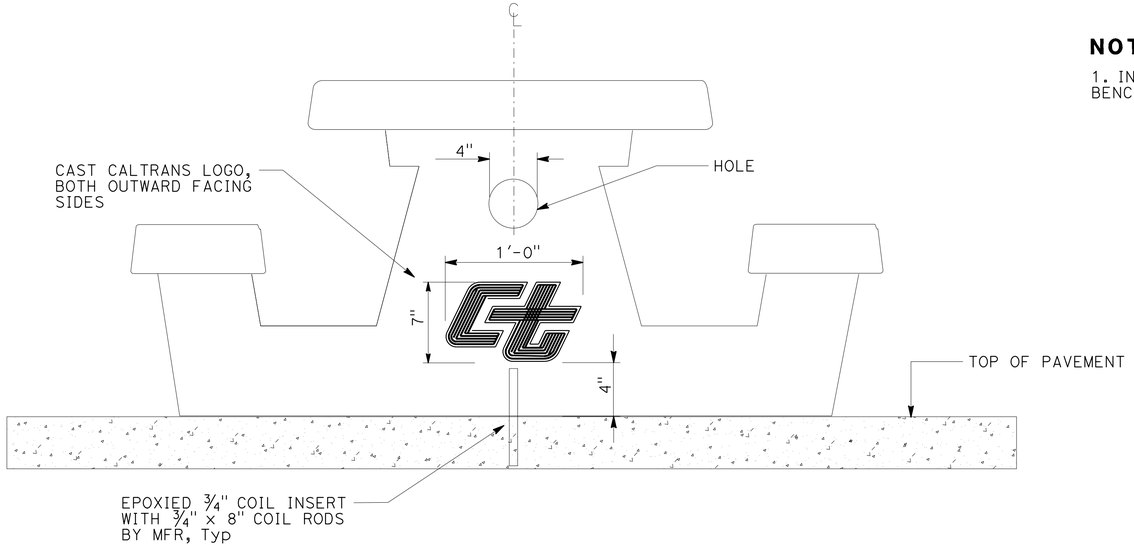

FRONT ELEVATION

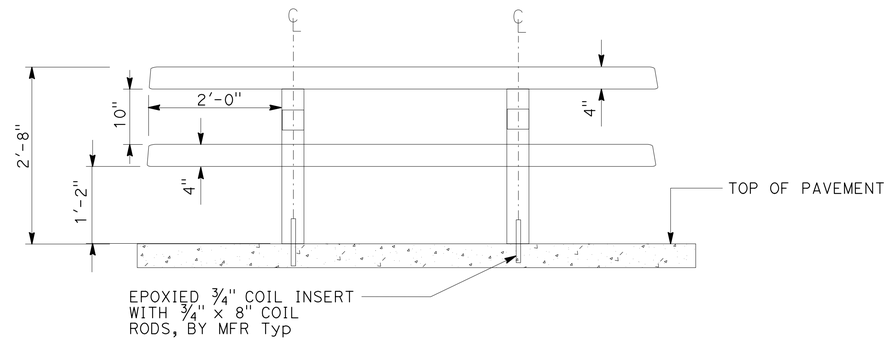

SIDE ELEVATION

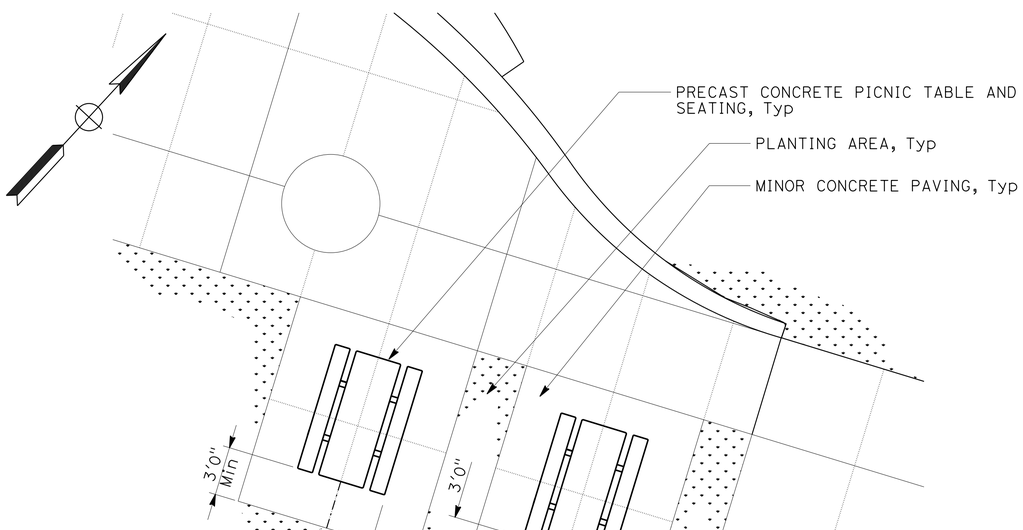

PLAN
PICNIC TABLE LAYOUT(EAST SEATING AREA)

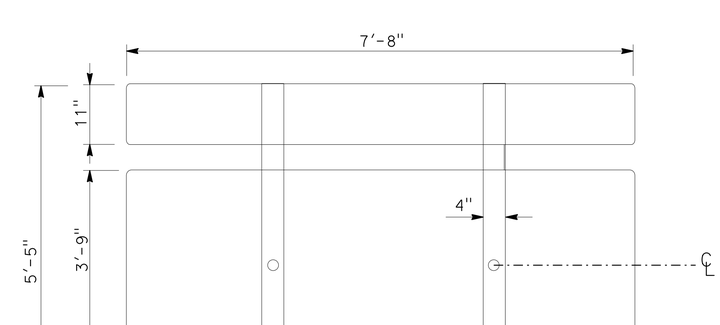

PLAN

PRECAST CONCRETE PICNIC TABLE WITH BENCH

LANDSCAPE DETAILS (SITE FURNISHINGS)

NO SCALE

LD-4

STATE OF CALIFORNIA - DEPARTMENT OF TRANSPORTATION
Caltrans® LANDSCAPE ARCHITECTURE

SENIOR LANDSCAPE ARCHITECT: SUSAN LINDSAY

CALCULATED-DESIGNED BY: JOAQUIN PEDRIN
CHECKED BY: SUSAN LINDSAY

REVISED BY: JP
DATE REVISED: 9/25/14

LAST REVISION: 09-25-14
DATE PLOTTED => 23-OCT-2014
TIME PLOTTED => 14:13

Dist	COUNTY	ROUTE	POST MILES TOTAL PROJECT	SHEET No.	TOTAL SHEETS
04	SM,Ala	84	R28.8/R29.3 R0.5	51	83

9-25-14
LICENSED LANDSCAPE ARCHITECT

10-6-14
PLANS APPROVAL DATE

LICENSED LANDSCAPE ARCHITECT
Joaquin Pedrin
Signature
9/30/2015
Renewal Date
9/25/2014
Date
STATE OF CALIFORNIA

THE STATE OF CALIFORNIA OR ITS OFFICERS OR AGENTS SHALL NOT BE RESPONSIBLE FOR THE ACCURACY OR COMPLETENESS OF SCANNED COPIES OF THIS PLAN SHEET.

NOTE:
1. POWDER COAT OF TRASH RECEPTACLE FINISH TO MATCH COLOR No. 16440 OF Fed Std 595 (LIGHT GRAY).

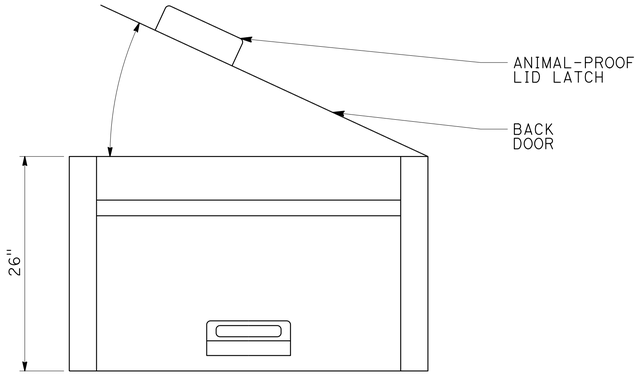

TOP

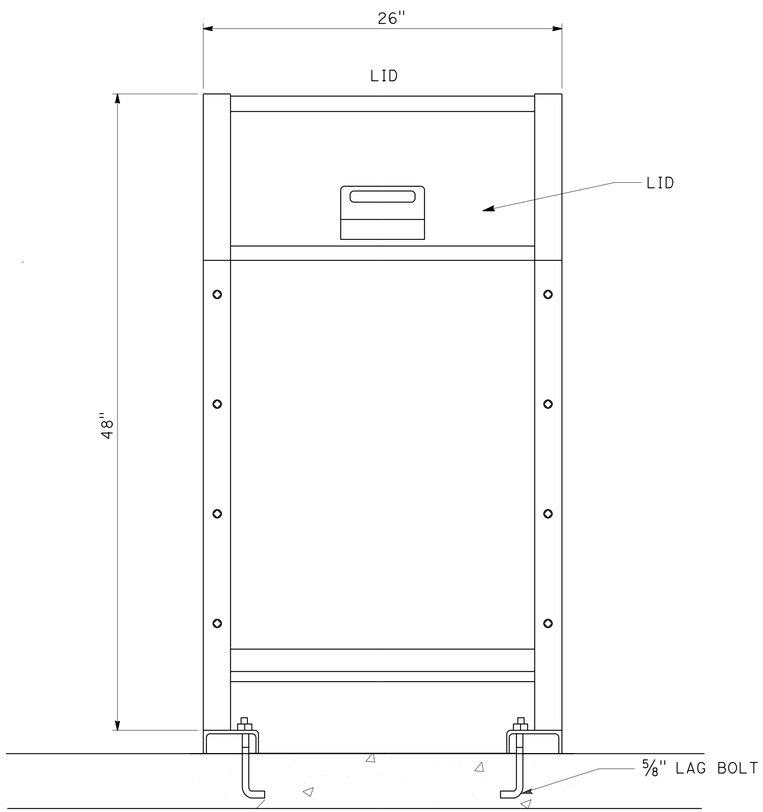

FRONT ELEVATION

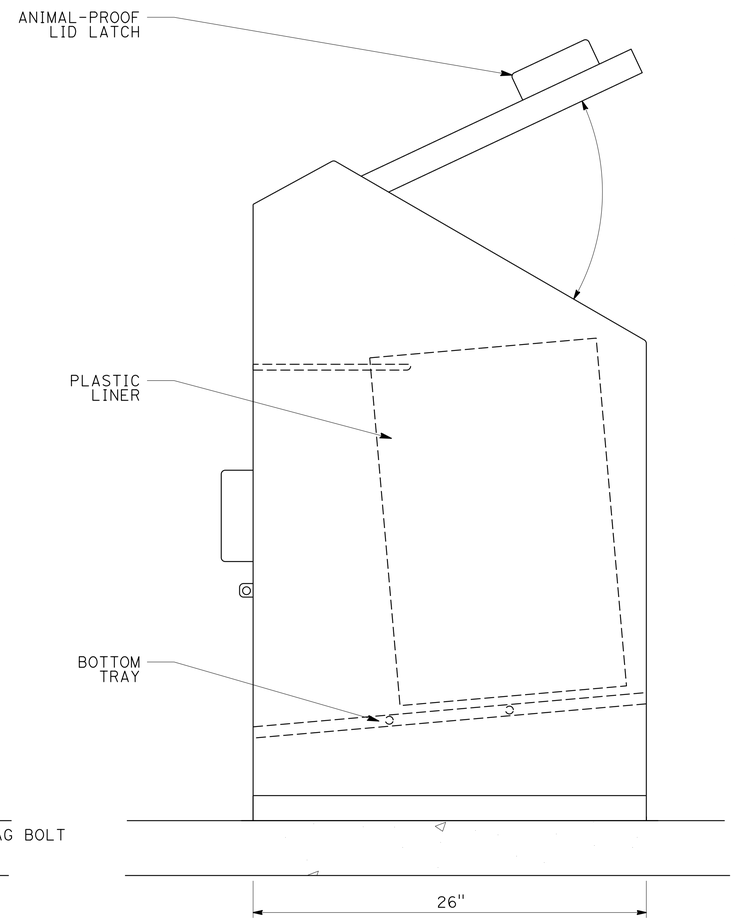

SIDE ELEVATION

TRASH RECEPTACLE

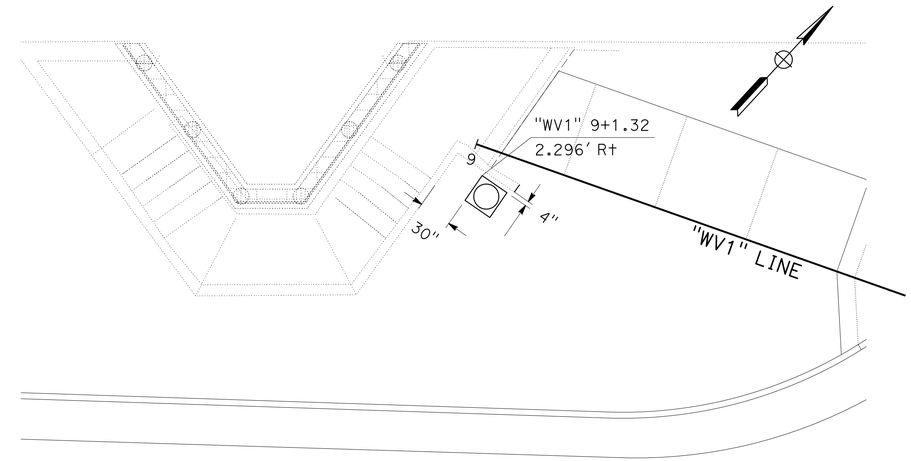

PLAN
(WEST PLAZA AREA)

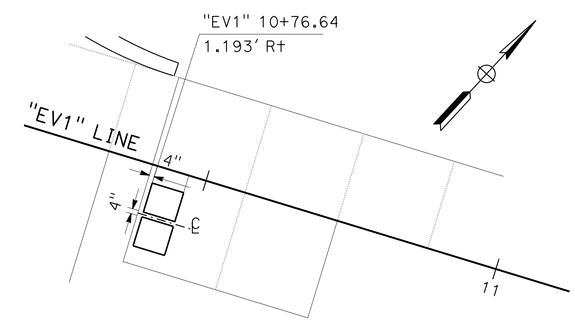

PLAN
(EAST VIEWING AREA)

LANDSCAPE DETAILS
(SITE FURNISHINGS)
NO SCALE

LD-5

STATE OF CALIFORNIA - DEPARTMENT OF TRANSPORTATION
Caltrans® LANDSCAPE ARCHITECTURE

SENIOR LANDSCAPE ARCHITECT: SUSAN LINDSAY

CALCULATED-DESIGNED BY: JOAQUIN PEDRIN
CHECKED BY: SUSAN LINDSAY

REVISED BY: JP
DATE REVISED: 9/25/14

LAST REVISION
DATE PLOTTED => 23-OCT-2014
TIME PLOTTED => 14:13
09-25-14

Dist	COUNTY	ROUTE	POST MILES TOTAL PROJECT	SHEET No.	TOTAL SHEETS
04	SM,Ala	84	R28.8/R29.3 R0.5	52	83

9-25-14
LICENSED LANDSCAPE ARCHITECT

10-6-14
PLANS APPROVAL DATE

LICENSED LANDSCAPE ARCHITECT Joaquin Pedrin Jr. Signature 9/30/2015 Renewal Date 9/25/2014 Date STATE OF CALIFORNIA

THE STATE OF CALIFORNIA OR ITS OFFICERS OR AGENTS SHALL NOT BE RESPONSIBLE FOR THE ACCURACY OR COMPLETENESS OF SCANNED COPIES OF THIS PLAN SHEET.

NOTE:
1. POWDER COAT BICYCLE PARKING POST FINISH TO MATCH COLOR No. 16440 OF Fed Std 595

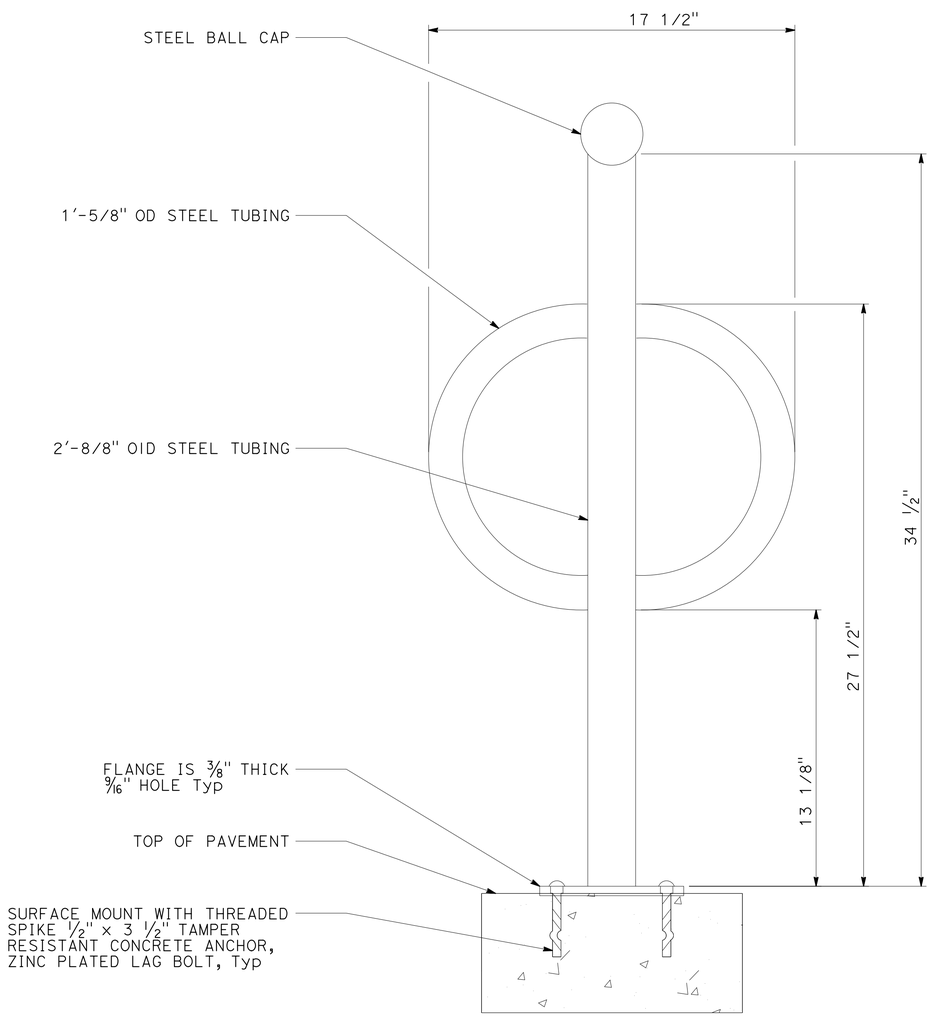

SECTION

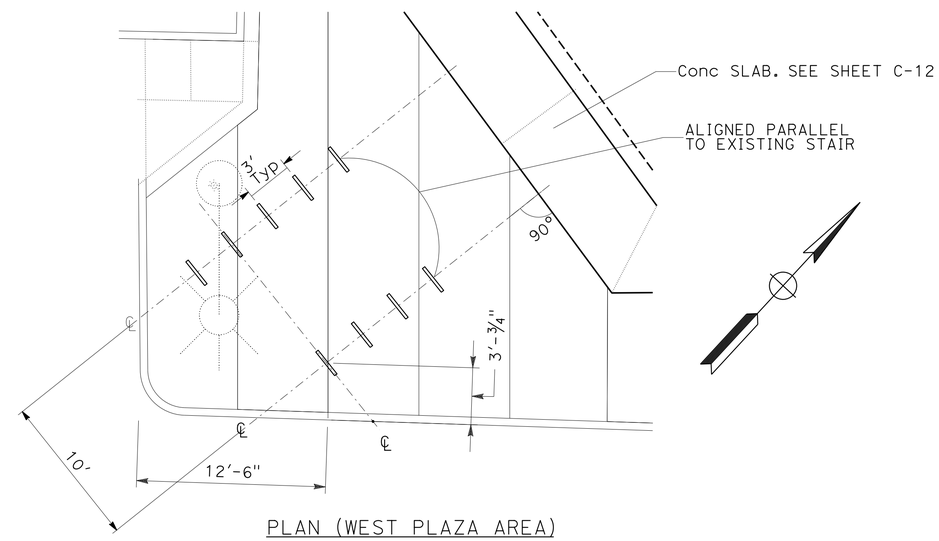

PLAN (WEST PLAZA AREA)

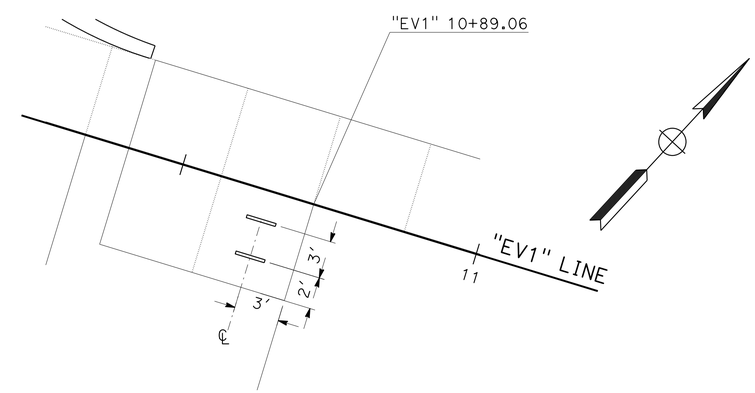

PLAN (EAST VIEWING AREA)

BICYCLE PARKING RACK

LANDSCAPE DETAILS
(SITE FURNISHINGS)
NO SCALE

LD-6

STATE OF CALIFORNIA - DEPARTMENT OF TRANSPORTATION
Caltrans® LANDSCAPE ARCHITECTURE

SENIOR LANDSCAPE ARCHITECT: SUSAN LINDSAY
CALCULATED-DESIGNED BY: JOAQUIN PEDRIN
CHECKED BY: SUSAN LINDSAY
REVISED BY: JP
DATE REVISED: 9/25/14

LAST REVISION: 09-25-14
DATE PLOTTED => 23-OCT-2014
TIME PLOTTED => 14:13

Dist	COUNTY	ROUTE	POST MILES TOTAL PROJECT	SHEET No.	TOTAL SHEETS
04	SM,Ala	84	R28.8/R29.3 R0.5	53	83

9-25-14
LICENSED LANDSCAPE ARCHITECT

10-6-14
PLANS APPROVAL DATE

LICENSED LANDSCAPE ARCHITECT Susan Pearl Lindsay Signature 9/30/2015 Renewal Date 9/25/2014 Date STATE OF CALIFORNIA

THE STATE OF CALIFORNIA OR ITS OFFICERS OR AGENTS SHALL NOT BE RESPONSIBLE FOR THE ACCURACY OR COMPLETENESS OF SCANNED COPIES OF THIS PLAN SHEET.

NOTES:

1. 1/2" THICK HIGH DENSITY LAMINATE SIGN PANEL. COORDINATE IMAGE SELECTION WITH PROJECT ENGINEER.
2. POWDER COAT FINISH OF DISPLAY FRAME TO MATCH COLOR No. 16440 OF Fed Std 595 (LIGHT GRAY).

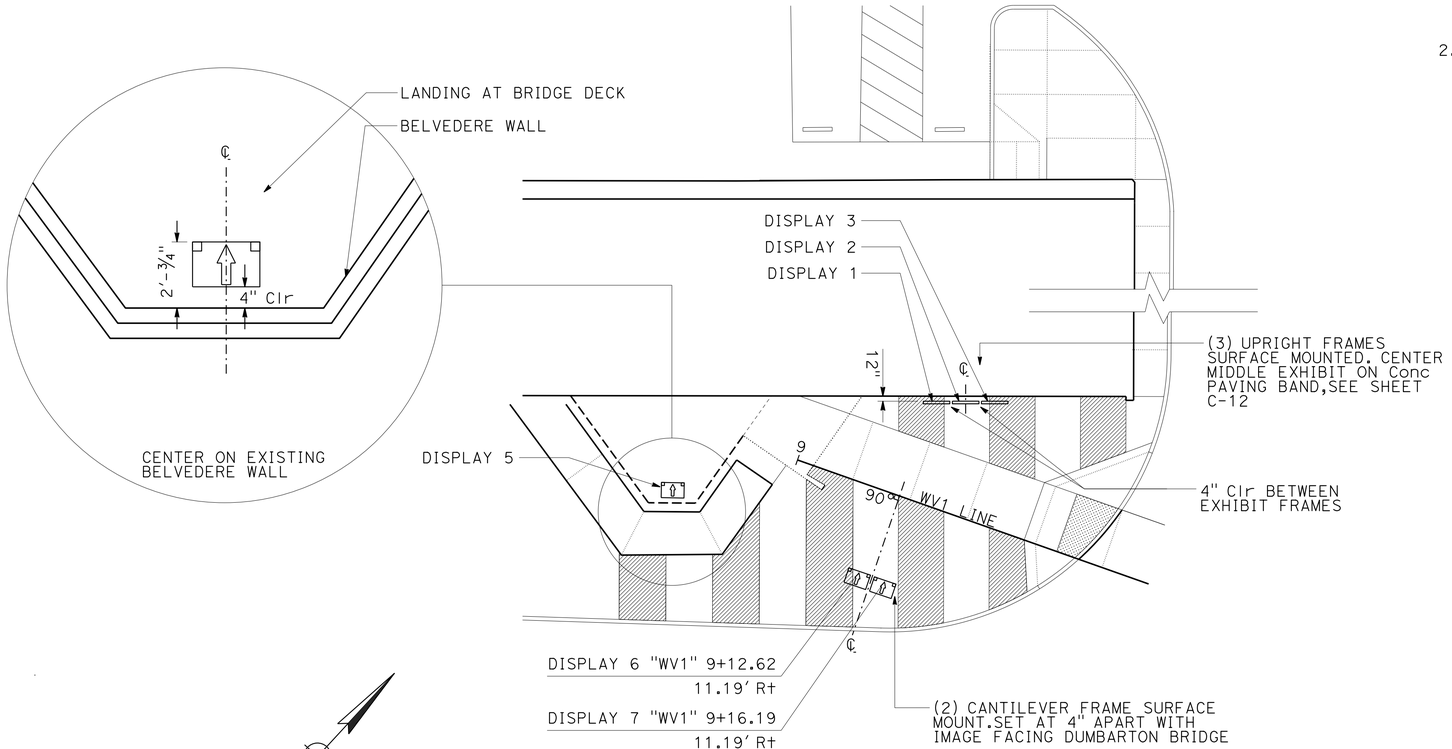

PLAN
WEST PLAZA AREA

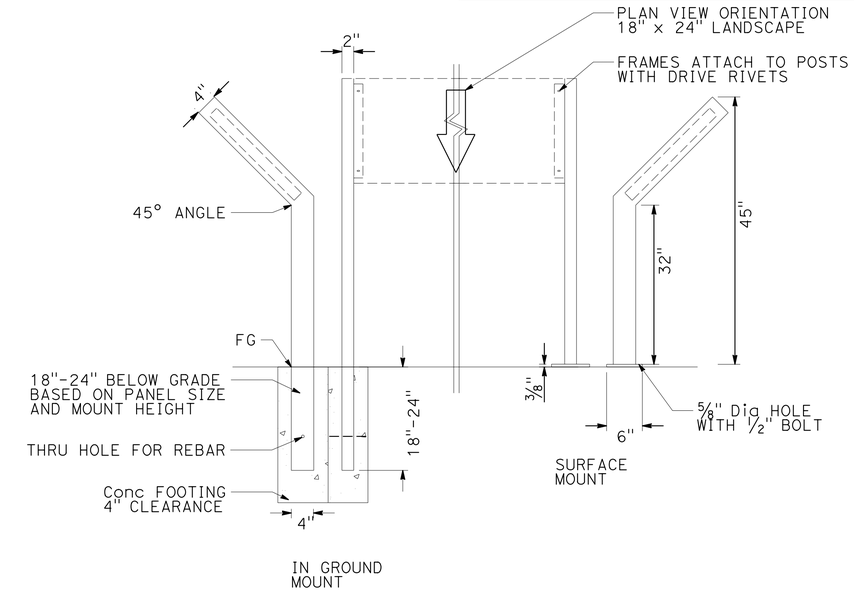

WAYSIDE INTERPRETIVE EXHIBIT (TYPE 1)

WAYSIDE INTERPRETIVE DISPLAY PANEL

DISPLAY No.	TYPE	PANEL SIZE(IN)	MOUNTING TYPE
1	2	42" x 36"	IN GROUND
2	2	42" x 36"	IN GROUND
3	2	42" x 36"	IN GROUND
4	1	18" x 24"	IN GROUND
5	1	18" x 24"	SURFACE
6	1	18" x 24"	SURFACE
7	1	18" x 24"	SURFACE
8	2	42" x 36"	IN GROUND

PLAN
EAST PLAZA AREA

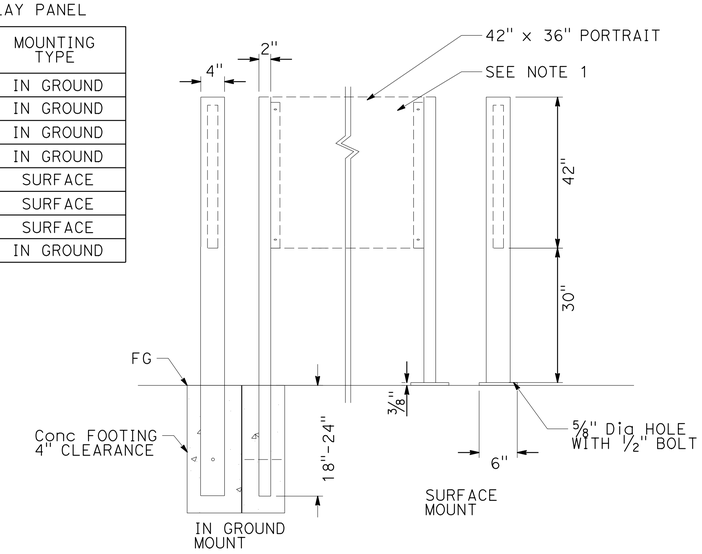

WAYSIDE INTERPRETIVE EXHIBIT (TYPE 2)

WAYSIDE INTERPRETIVE EXHIBIT

LANDSCAPE DETAILS
(SITE FURNISHINGS)
NO SCALE

LD-7

CALCULATED-DESIGNED BY	JOAQUIN PEDRIN	REVISED BY	JP
CHECKED BY	SUSAN LINDSAY	DATE REVISED	9/25/14
SENIOR LANDSCAPE ARCHITECT	SUSAN LINDSAY		

STATE OF CALIFORNIA - DEPARTMENT OF TRANSPORTATION
Caltrans® LANDSCAPE ARCHITECTURE

LAST REVISION 09-25-14 | DATE PLOTTED => 23-OCT-2014 | TIME PLOTTED => 14:13

Dist	COUNTY	ROUTE	POST MILES TOTAL PROJECT	SHEET No.	TOTAL SHEETS
04	SM,Ala	84	R28.8/R29.3 R0.5	54	83

9-25-14
LICENSED LANDSCAPE ARCHITECT

10-6-14
PLANS APPROVAL DATE

THE STATE OF CALIFORNIA OR ITS OFFICERS OR AGENTS SHALL NOT BE RESPONSIBLE FOR THE ACCURACY OR COMPLETENESS OF SCANNED COPIES OF THIS PLAN SHEET.

LICENSED LANDSCAPE ARCHITECT
Susan Pearl Lindsay
Signature
9/30/2015
Renewal Date
9/25/2014
Date
STATE OF CALIFORNIA

EDGING

SHEET No.	LOCATION	HEADER BOARD	CONCRETE	METAL	HDPE
		LF			
C-12	15' Lt "WV1" 10+00			20	
TOTAL				20	

GRAVEL MULCH

SHEET No.	LOCATION	AREA	ROADWAY EXCAVATION (N)
		SQFT	CY
C-12	15' Lt "WV1" 10+00	400	4
TOTAL		400	4

(N) - NOT A SEPARATE PAY ITEM, FOR INFORMATION ONLY

DECORATIVE BOULDERS

SHEET No.	TYPE	QTY	EARTH WORK (N)	AB CL 3 (N)
		EA	CY	TON
LD-1	SONOMA FIELDSTONE Approx 5-8 TONS EA	7	10	2
	TOTAL	7	10	2

(N) - NOT A SEPARATE PAY ITEM, FOR INFORMATION ONLY

SITE FURNISHINGS

SHEET No.	PICNIC TABLE WITH BENCH	BENCH	DRINKING FOUNTAIN	TRASH RECEPTACLE	BIKE PARKING RACK	WAYSIDE INTERPRETIVE EXHIBIT (TYPE 1)	WAYSIDE INTERPRETIVE EXHIBIT (TYPE 2)
LD-2			1				
LD-3		4					
LD-4	2						
LD-5				3			
LD-6					10		
LD-7						4	
LD-7							4
TOTAL	2	4	1	3	10	4	4

WOOD MULCH

SHEET No.	TYPE	① BASIN (CY)	② AREA (CY)	SUBTOTAL PER SHEET (CY)
PP-1	SB	--	35	35
PP-2	SB	--	24	24
			TOTAL	59

①- QUANTITIES SHOWN ARE TOTAL "PER PLANT" OUTSIDE OF MULCH AREAS

②- BASIN MULCH WITHIN MULCH AREAS IS INCLUDED WITH MULCH AREA QUANTITIES SHOWN ON PLANTING PLAN

MULCH TYPES:

C - COMPOST
N - NITROLIZED FIR BARK
SB - SHREDDED BARK
TB - TREE BARK
TT - TREE TRIMMING
WC - WOOD CHIP

PLANT QUANTITIES

TYPE	UNIT	QUANTITY	IRON SULFATE	SOIL AMENDMENT	COMMERCIAL FERTILIZER	
					PACKET	SLOW RELEASE
			LB	CY	EA	LB
PLANT (GROUP A)	EA	962	--	--	--	--
TOTAL		962	--	--	--	--

CULTIVATE

SHEET No.	LOCATION	CULTIVATE AREA	WEED GERMINATION	IRON SULFATE	COMPOST (TYPE MED) 2" DEPTH	COMMERCIAL FERTILIZER (SLOW RELEASE)
		SQFT	SQYD	LB	SQFT	LB
PP-1	PLANTING AND EROSION CONTROL AREAS	3,037	337		3,037	
PP-2	PLANTING AND EROSION CONTROL AREAS	11,314	1,257		11,314	
PP-3	PLANTING AND EROSION CONTROL AREAS	8,071	897		8,071	
TOTAL		22,422	2,491		22,422	

LANDSCAPE QUANTITIES

LQ-1

STATE OF CALIFORNIA - DEPARTMENT OF TRANSPORTATION
Caltrans® LANDSCAPE ARCHITECTURE
SENIOR LANDSCAPE ARCHITECT SUSAN LINDSAY
CALCULATED-DESIGNED BY JOAQUIN PEDRIN
CHECKED BY SUSAN LINDSAY
REVISED BY JP
DATE REVISED 9/25/14

LAST REVISION 09-25-14
DATE PLOTTED => 23-OCT-2014
TIME PLOTTED => 14:13

Dist	COUNTY	ROUTE	POST MILES TOTAL PROJECT	SHEET No.	TOTAL SHEETS
04	SM,Ala	84	R28.8/R29.3, R0.5	55	83

9-25-14
LICENSED LANDSCAPE ARCHITECT

10-6-14
PLANS APPROVAL DATE

THE STATE OF CALIFORNIA OR ITS OFFICERS OR AGENTS SHALL NOT BE RESPONSIBLE FOR THE ACCURACY OR COMPLETENESS OF SCANNED COPIES OF THIS PLAN SHEET.

LICENSED LANDSCAPE ARCHITECT
BART VAN DER ZEEUW No. 3696
Signature
09-30-15
Renewal Date
09-08-14
Date
STATE OF CALIFORNIA

EROSION CONTROL TYPE 1

SEQUENCE	ITEM	MATERIAL DESCRIPTION	MATERIAL TYPE	APPLICATION RATE	DEPTH (IN)
STEP 1	COMPOST			SEE PP-1, PP-2, PP-3	
STEP 2	CULTIVATE			SEE PP-1, PP-2, PP-3	
STEP 3	HYDROSEED	SEED	MIX 1	36.75 LB/ACRE	
		FIBER	COMBINATION	285 LB/ACRE	
STEP 4	HYDROMULCH	FIBER	WOOD	285 LB/ACRE	
		TACKIFIER	GUAR	125 LB/ACRE	

SEED MIX

SEED	BOTANICAL NAME (COMMON NAME)	PERCENT GERMINATION (MINIMUM)	POUNDS PURE LIVE SEED PER ACRE (SLOPE MEASUREMENT)
MIX 1	ACMISPON AMERICANUS (LUTUS PURSHIANUS)	50	4.0
	ACHILLEA MILLEFOLIUM (WHITE YARROW)	60	0.5
	BROMUS CARINATUS (SONOMA COASTAL CALIFORNIA BROME)	50	8.0
	DESCHAMPSIA CAESPITOSA VAR. HOLCIFORMIS (COAST TUFTED HAIRGRASS)	50	4.0
	ESCHSCHOLZIA CALIFORNICA VAR MARITIMA (COASTAL CALIFORNIA POPPY)	60	1.5
	FRANKENIA SALINA (ALKALI HEATH)	50	0.25
	GRINDELIA STRICTA [1] (GUM PLANT)	25	1.5
	HELIOTROPIUM CURASSAVICUM (HELIOTROPE)	45	0.5
	STIPA PULCHRA (PURPLE NEEDLEGRASS)	50	10
	VULPIA MICROSTACHYS [1] (SMALL FESCUE)	50	6.5

[1] SEED PRODUCED IN CALIFORNIA ONLY.
[2] SEED SOURCE FROM (*Enter County Name*) COUNTY ONLY.
[3] SEED SOURCE FROM (*Enter* "ABOVE" *or* "BELOW") THE (*Enter Elevation*) FOOT ELEVATION LEVEL.

EROSION CONTROL LEGEND

ECL-1

STATE OF CALIFORNIA - DEPARTMENT OF TRANSPORTATION
Caltrans®
WATER QUALITY

SENIOR LANDSCAPE ARCHITECT: DAVID YAM
CALCULATED-DESIGNED BY: SALLY BANG
CHECKED BY: BART VAN DER ZEEUW
REVISED BY: SB
DATE REVISED: 9/25/14

LAST REVISION 09-25-14
DATE PLOTTED => 23-OCT-2014
TIME PLOTTED => 14:13

Dist	COUNTY	ROUTE	POST MILES TOTAL PROJECT	SHEET No.	TOTAL SHEETS
04	SM,Ala	84	R28.8/R29.3, R0.5	56	83

9-25-14
LICENSED LANDSCAPE ARCHITECT

10-6-14
PLANS APPROVAL DATE

THE STATE OF CALIFORNIA OR ITS OFFICERS OR AGENTS SHALL NOT BE RESPONSIBLE FOR THE ACCURACY OR COMPLETENESS OF SCANNED COPIES OF THIS PLAN SHEET.

LICENSED LANDSCAPE ARCHITECT
BART VAN DER ZEEUW No. 3803
Signature
09-30-15
Renewal Date
09-08-14
Date
STATE OF CALIFORNIA

NOTE:

FOR ACCURATE RIGHT OF WAY DATA, CONTACT RIGHT OF WAY ENGINEERING AT THE DISTRICT OFFICE.

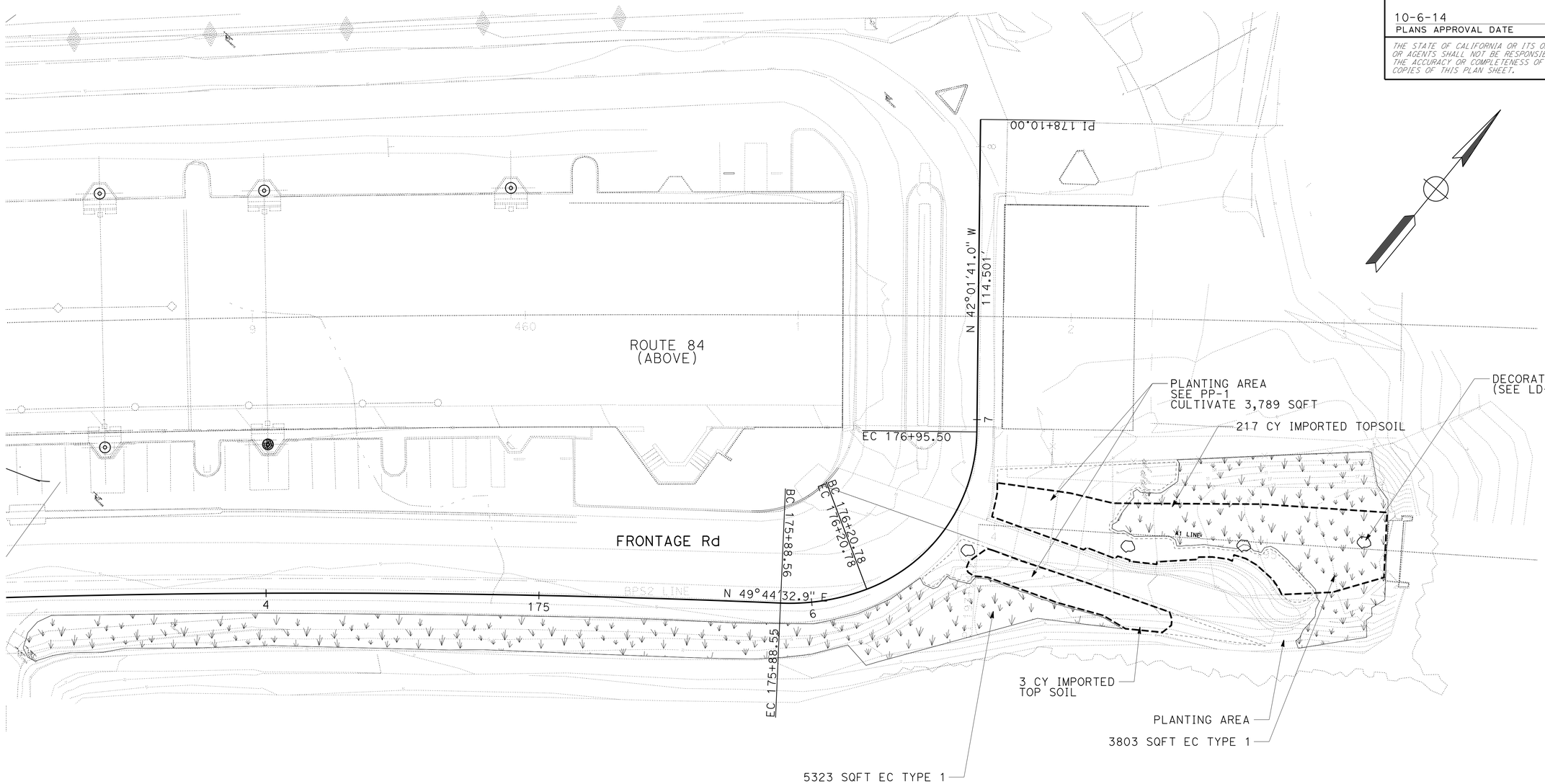

LEGEND:

EROSION CONTROL (TYPE 1)

IMPORTED TOP SOIL

EROSION CONTROL PLAN (WEST VIEWING AREA)

SCALE 1"=20'

EC-1

APPROVED FOR EROSION CONTROL WORK ONLY

REVISED BY	SB
DATE REVISED	9/25/14
CALCULATED-DESIGNED BY	SALLY BANG
CHECKED BY	BART VAN DER ZEEUW
SENIOR LANDSCAPE ARCHITECT	DAVID YAM

STATE OF CALIFORNIA - DEPARTMENT OF TRANSPORTATION
Caltrans®
WATER QUALITY

LAST REVISION 09-25-14
DATE PLOTTED => 23-OCT-2014
TIME PLOTTED => 14:13

Dist	COUNTY	ROUTE	POST MILES TOTAL PROJECT	SHEET No.	TOTAL SHEETS
04	SM,Ala	84	R28.8/R29.3, R0.5	57	83

9-25-14
LICENSED LANDSCAPE ARCHITECT

10-6-14
PLANS APPROVAL DATE

LICENSED LANDSCAPE ARCHITECT
BART VAN DER ZEEUW No. 3696
Signature
09-30-15
Renewal Date
09-08-14
Date
STATE OF CALIFORNIA

THE STATE OF CALIFORNIA OR ITS OFFICERS OR AGENTS SHALL NOT BE RESPONSIBLE FOR THE ACCURACY OR COMPLETENESS OF SCANNED COPIES OF THIS PLAN SHEET.

NOTE:

FOR ACCURATE RIGHT OF WAY DATA, CONTACT
RIGHT OF WAY ENGINEERING AT THE DISTRICT OFFICE.

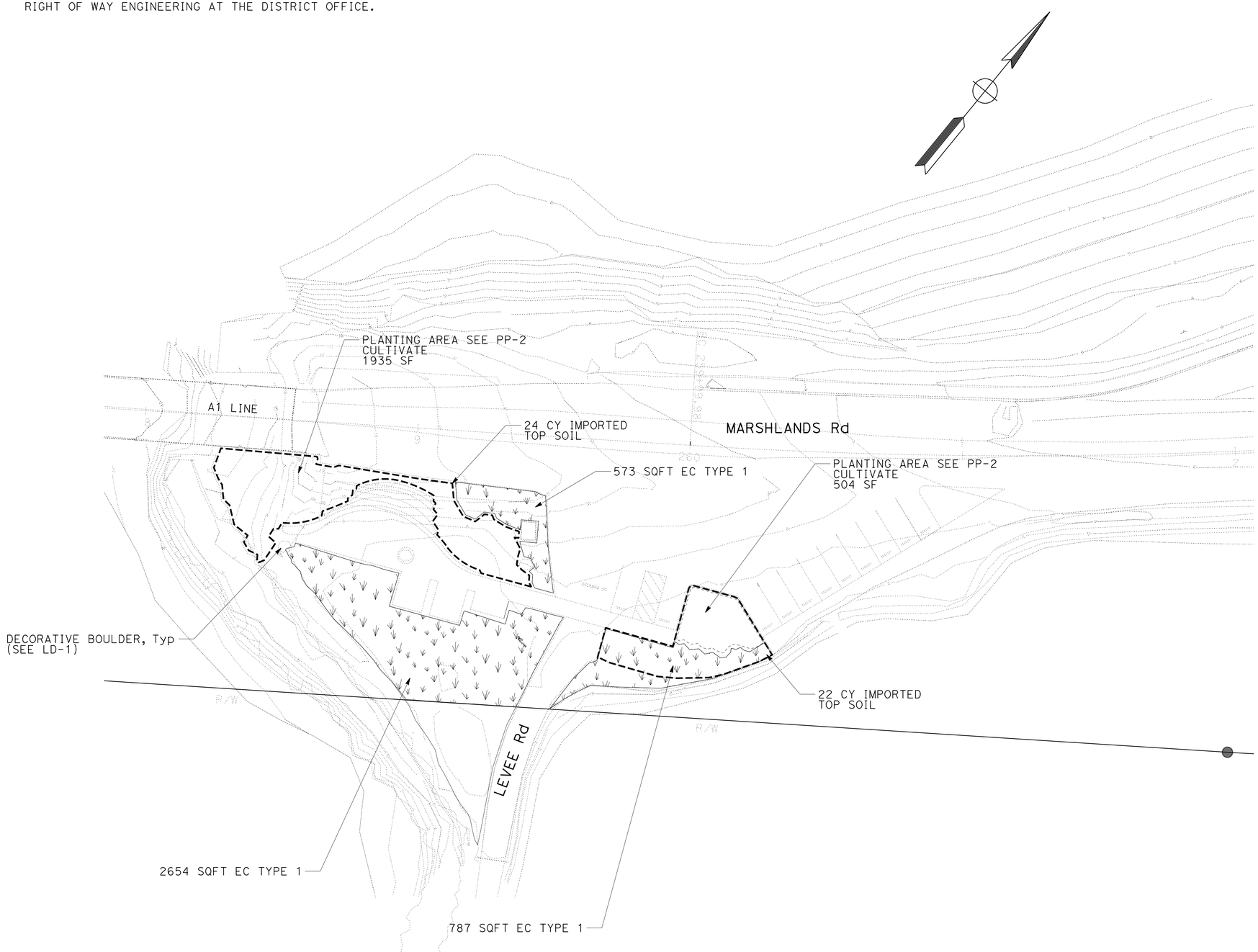

EROSION CONTROL PLAN (EAST VIEWING AREA)

SCALE 1"=20'

EC-2

APPROVED FOR EROSION CONTROL WORK ONLY

STATE OF CALIFORNIA - DEPARTMENT OF TRANSPORTATION
Caltrans
WATER QUALITY

SENIOR LANDSCAPE ARCHITECT: DAVID YAM
CALCULATED-DESIGNED BY: SALLY BANG
CHECKED BY: BART VAN DER ZEEUW
REVISED BY: SB
DATE REVISED: 9/25/14

LAST REVISION 09-25-14
DATE PLOTTED => 23-OCT-2014
TIME PLOTTED => 14:13

Dist	COUNTY	ROUTE	POST MILES TOTAL PROJECT	SHEET No.	TOTAL SHEETS
04	SM,Ala	84	R28.8/R29.3, R0.5	58	83

9-25-14
LICENSED LANDSCAPE ARCHITECT

10-6-14
PLANS APPROVAL DATE

LICENSED LANDSCAPE ARCHITECT
BART VAN DER ZEEUW No. 3898
Signature
09-30-15
Renewal Date
09-08-14
Date
STATE OF CALIFORNIA

THE STATE OF CALIFORNIA OR ITS OFFICERS OR AGENTS SHALL NOT BE RESPONSIBLE FOR THE ACCURACY OR COMPLETENESS OF SCANNED COPIES OF THIS PLAN SHEET.

IMPORTED TOP SOIL

SHEET	LOCATION	IMPORTED TOPSOIL
		CY
EC-1	AS SHOWN	220
EC-2	AS SHOWN	46
	TOTAL	266

EROSION CONTROL

SHEET	DESCRIPTION	HYDROSEED	HYDROMULCH
		SQFT	SQFT
EC-1	EROSION CONTROL TYPE 1	9,126	9,126
EC-2	EROSION CONTROL TYPE 1	4,014	4,014
	TOTAL	13,140	13,140

EROSION CONTROL QUANTITIES

ECQ-1

STATE OF CALIFORNIA - DEPARTMENT OF TRANSPORTATION	
Caltrans®	WATER QUALITY
SENIOR LANDSCAPE ARCHITECT	DAVID YAM
CALCULATED-DESIGNED BY	SALLY BANG
CHECKED BY	BART VAN DER ZEEUW
REVISED BY	SB
DATE REVISED	9/25/14

LAST REVISION 09-25-14 | DATE PLOTTED => 23-OCT-2014 | TIME PLOTTED => 14:13

M

Maint	MAINTENANCE
Max	MAXIMUM
MB	METAL BEAM
MBB	METAL BEAM BARRIER
MBGR	METAL BEAM GUARD RAILING
Med	MEDIAN
MGS	MIDWEST GUARDRAIL SYSTEM
MH	MANHOLE
Min	MINIMUM
Misc	MISCELLANEOUS
Misc I & S	MISCELLANEOUS IRON AND STEEL
Mkr	MARKER
Mod	MODIFIED,
	MODIFY
Mon	MONUMENT
MP	METAL PLATE
MPGR	METAL PLATE GUARD RAILING
MR	MOVEMENT RATING
MSE	MECHANICALLY STABILIZED EMBANKMENT
Mt	MOUNTAIN, MOUNT
Mtl	MATERIAL
MVP	MAINTENANCE VEHICLE PULLOUT

N

N	NORTH
NB	NORTHBOUND
No.	NUMBER (MUST HAVE PERIOD)
Nos.	NUMBERS (MUST HAVE PERIOD)
NPS	NOMINAL PIPE SIZE
NS	NEAR SIDE
NSP	NEW STANDARD PLAN
NTS	NOT TO SCALE

O

Oblr	OBLITERATE
OC	OVERCROSSING
OD	OUTSIDE DIAMETER
OF	OUTSIDE FACE
OG	ORIGINAL GROUND
OGAC	OPEN GRADED ASPHALT CONCRETE
OGFC	OPEN GRADED FRICTION COURSE
OH	OVERHEAD
OHWM	ORDINARY HIGH WATER MARK
O-O	OUT TO OUT
Opp	OPPOSITE
OSD	OVERSIDE DRAIN

P

p	PAGE
PAP	PERFORATED ALUMINUM PIPE
PB	PULL BOX
PC	POINT OF CURVATURE,
	PRECAST
PCC	POINT OF COMPOUND CURVE,
	PORTLAND CEMENT CONCRETE
PCMS	PORTABLE CHANGEABLE MESSAGE SIGN
PCP	PERFORATED CONCRETE PIPE,
	PRESTRESSED CONCRETE PIPE
PCVC	POINT OF COMPOUND VERTICAL CURVE
PEC	PERMIT TO ENTER AND CONSTRUCT
Ped	PEDESTRIAN
Ped OC	PEDESTRIAN OVERCROSSING
Ped UC	PEDESTRIAN UNDERCROSSING
Perm Mtl	PERMEABLE MATERIAL

P continued

PG	PROFILE GRADE
PI	POINT OF INTERSECTION
PJP	PARTIAL JOINT PENETRATION
Pkwy	PARKWAY
ℙ,PL	PLATE
P/L	PROPERTY LINE
PM	POST MILE,
	TIME FROM NOON TO MIDNIGHT
PN	PAVING NOTCH
POC	POINT OF HORIZONTAL CURVE
POT	POINT OF TANGENT
POVC	POINT OF VERTICAL CURVE
PP	PIPE PILE,
	PLASTIC PIPE,
	POWER POLE
PPL	PREFORMED PERMEABLE LINER
PPP	PERFORATED PLASTIC PIPE
PRC	POINT OF REVERSE CURVE
PRF	PAVEMENT REINFORCING FABRIC
PRVC	POINT OF REVERSE VERTICAL CURVE
PS&E	PLANS, SPECIFICATIONS AND ESTIMATES
PS, P/S	PRESTRESSED
PSP	PERFORATED STEEL PIPE
PT	POINT OF TANGENCY
PVC	POLYVINYL CHLORIDE
Pvmt	PAVEMENT

Q

Qty	QUANTITY

R

R	RADIUS
R & D	REMOVE AND DISPOSE
R & S	REMOVE AND SALVAGE
R/C	RATE OF CHANGE
RCA	REINFORCED CONCRETE ARCH
RCB	REINFORCED CONCRETE BOX
RCP	REINFORCED CONCRETE PIPE
RCPA	REINFORCED CONCRETE PIPE ARCH
Rd	ROAD
Reinf	REINFORCED,
	REINFORCEMENT,
	REINFORCING
Rel	RELOCATE
Repl	REPLACEMENT
Ret	RETAINING
Rev	REVISED, REVISION
Rdwy	ROADWAY
RHMA	RUBBERIZED HOT MIX ASPHALT
Riv	RIVER
RM	ROAD-MIXED
RP	RADIUS POINT,
	REFERENCE POINT
RR	RAILROAD
RSP	ROCK SLOPE PROTECTION,
	REVISED STANDARD PLAN
Rt	RIGHT
Rte	ROUTE
RW	REDWOOD,
	RETAINING WALL
R/W	RIGHT OF WAY
Rwy	RAILWAY

S

S	SOUTH,
	SUPPLEMENT
SAE	STRUCTURE APPROACH EMBANKMENT
Salv	SALVAGE
SAPP	STRUCTURAL ALUMINUM PLATE PIPE
SB	SOUTHBOUND
SC	SAND CUSHION
SCSP	SLOTTED CORRUGATED STEEL PIPE
SD	STORM DRAIN
Sec	SECOND,
	SECTION
Sep	SEPARATION
SG	SUBGRADE
Shld	SHOULDER
Sht	SHEET
Sim	SIMILAR
℄	STATION LINE
SM	SELECTED MATERIAL
Spec	SPECIAL,
	SPECIFICATIONS
SPP	SLOTTED PLASTIC PIPE
SS	SLOPE STAKE
SSBM	STRAP AND SADDLE BRACKET METHOD
SSD	STRUCTURAL SECTION DRAIN
SSPA	STRUCTURAL STEEL PLATE ARCH
SSPP	STRUCTURAL STEEL PLATE PIPE
SSPPA	STRUCTURAL STEEL PLATE PIPE ARCH
SSRP	STEEL SPIRAL RIB PIPE
St	STREET
Sta	STATION
STBB	SINGLE THRIE BEAM BARRIER
Std	STANDARD
Str	STRUCTURE
Surf	SURFACING
SW	SIDEWALK,
	SOUND WALL
Swr	SEWER
Sym	SYMMETRICAL
S4S	SURFACE 4 SIDES

T

T	SEMI-TANGENT
Tan	TANGENT
TBB	THRIE BEAM BARRIER
Tbr	TIMBER
TC	TOP OF CURB
TCB	TRAFFIC CONTROL BOX
TCE	TEMPORARY CONSTRUCTION EASEMENT
Tel	TELEPHONE
Temp	TEMPORARY
TG	TOP OF GRADE
Tot	TOTAL
TP	TELEPHONE POLE
TPB	TREATED PERMEABLE BASE
TPM	TREATED PERMEABLE MATERIAL
Trans	TRANSITION

T continued

TS	TRANSVERSE,
	TRAFFIC SIGNAL,
	TUBULAR STEEL
Typ	TYPICAL

U

UC	UNDERCROSSING
UD	UNDERDRAIN
UG	UNDERGROUND
UON	UNLESS OTHERWISE NOTED
UP	UNDERPASS

V

V	VALVE,
	DESIGN SPEED
Var	VARIABLE,
	VARIES
VC	VERTICAL CURVE
VCP	VITRIFIED CLAY PIPE
Vert	VERTICAL
Via	VIADUCT
Vol	VOLUME

W

W	WEST,
	WIDTH
WB	WESTBOUND
WH	WEEP HOLE
WM	WIRE MESH
WS	WATER SURFACE
WSP	WELDED STEEL PIPE
Wt	WEIGHT
WV	WATER VALVE
WW	WINGWALL
WWLOL	WINGWALL LAYOUT LINE

X

X Sec	CROSS SECTION
Xing	CROSSING

Y

Yr	YEAR
Yrs	YEARS

Dist	COUNTY	ROUTE	POST MILES TOTAL PROJECT	SHEET No.	TOTAL SHEETS
04	SM, Ala	84	R28.8/R29.3, R0.5	59	83

Grace M. Tsushima
REGISTERED CIVIL ENGINEER

July 19, 2013
PLANS APPROVAL DATE

REGISTERED PROFESSIONAL ENGINEER
Grace M. Tsushima
No. C49814
Exp. 9-30-14
CIVIL
STATE OF CALIFORNIA

THE STATE OF CALIFORNIA OR ITS OFFICERS OR AGENTS SHALL NOT BE RESPONSIBLE FOR THE ACCURACY OR COMPLETENESS OF SCANNED COPIES OF THIS PLAN SHEET.

TO ACCOMPANY PLANS DATED 10-6-14

UNIT OF MEASUREMENT SYMBOLS:

Some of the symbols used in the project plan quantity tables and in the Bid Item List are:

TABLE A

SYMBOL USED	DEFINITIONS
ACRE	ACRE
CF	CUBIC FOOT
CY	CUBIC YARD
EA	EACH
GAL	GALLON
LB	POUND
LF	LINEAR FOOT
SQFT	SQUARE FOOT
SQYD	SQUARE YARD
STA	100 FEET
TAB	TABLET
TON	2,000 POUNDS

Some of the symbols used in the plans other than in the project plan quantity tables are:

TABLE B

SYMBOL USED	DEFINITIONS
ksi	KIPS PER SQUARE INCH
ksf	KIPS PER SQUARE FOOT
psi	POUNDS PER SQUARE INCH
psf	POUNDS PER SQUARE FOOT
lb/ft^3, pcf	POUNDS PER CUBIC FOOT
tsf	TONS PER SQUARE FOOT
mph, MPH *	MILES PER HOUR
ø	NOMINAL DIAMETER
oz	OUNCE
lb	POUND
kip	1,000 POUNDS
cal	CALORIE
ft	FOOT OR FEET
gal	GALLON

* For use on a sign panel only

STATE OF CALIFORNIA
DEPARTMENT OF TRANSPORTATION

ABBREVIATIONS (SHEET 2 OF 2)

NO SCALE

RSP A10B DATED JULY 19, 2013 SUPERSEDES STANDARD PLAN A10B DATED MAY 20, 2011 - PAGE 2 OF THE STANDARD PLANS BOOK DATED 2010.

REVISED STANDARD PLAN RSP A10B

2010 REVISED STANDARD PLAN RSP A10B

6-7-13

Dist	COUNTY	ROUTE	POST MILES TOTAL PROJECT	SHEET No.	TOTAL SHEETS
04	SM, Ala	84	R28.8/R29.3, R0.5	60	83

REGISTERED CIVIL ENGINEER

July 19, 2013
PLANS APPROVAL DATE

REGISTERED PROFESSIONAL ENGINEER Roberta L. McLaughlin No. C40375 Exp. 3-31-15 CIVIL STATE OF CALIFORNIA

THE STATE OF CALIFORNIA OR ITS OFFICERS OR AGENTS SHALL NOT BE RESPONSIBLE FOR THE ACCURACY OR COMPLETENESS OF SCANNED COPIES OF THIS PLAN SHEET.

TO ACCOMPANY PLANS DATED 10-6-14

EXIT RAMP NEUTRAL AREA (GORE) TREATMENT

DETAIL 36

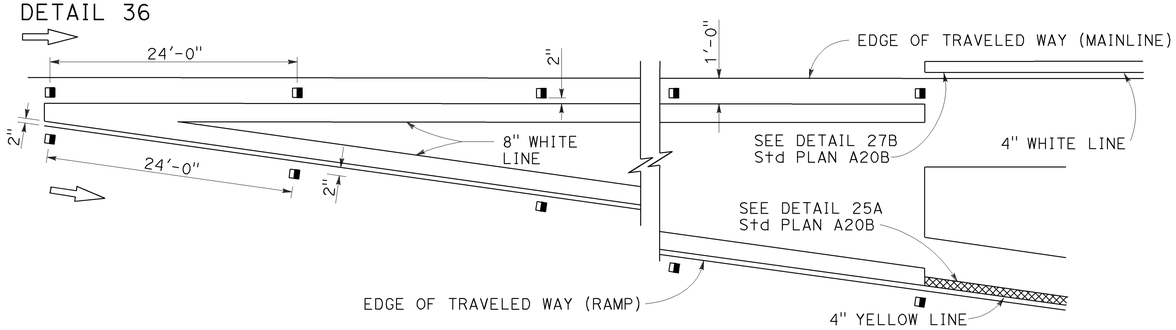

ENTRANCE RAMP NEUTRAL AREA (MERGE) TREATMENT

DETAIL 36A

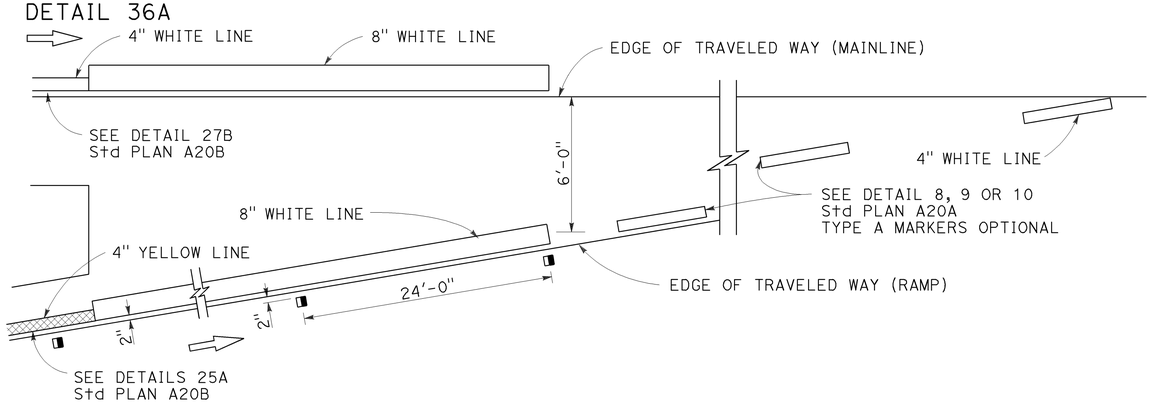

ENTRANCE RAMP NEUTRAL AREA (ACCELERATION LANE) TREATMENT

DETAIL 36B

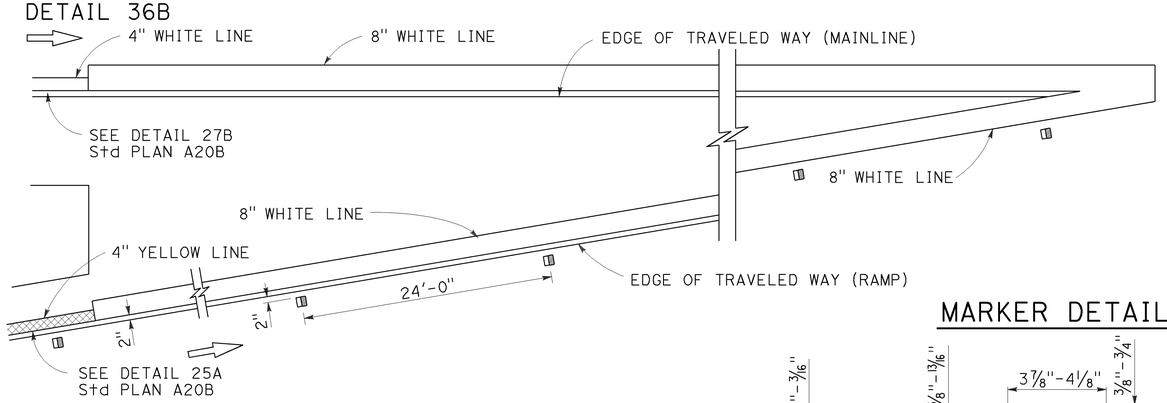

LANE DROP AT EXIT RAMPS

DETAIL 37

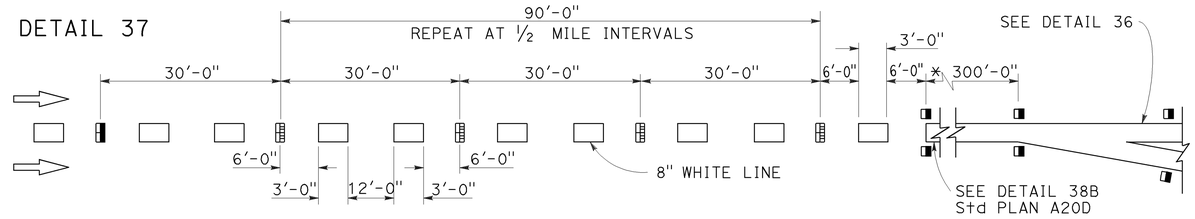

DETAIL 37A

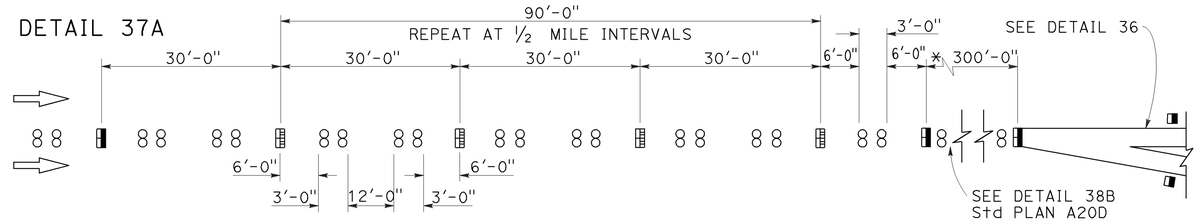

* The solid channelizing line shown may be omitted on short auxiliary lanes where weaving length is critical.

LANE DROP AT INTERSECTIONS

DETAIL 37B

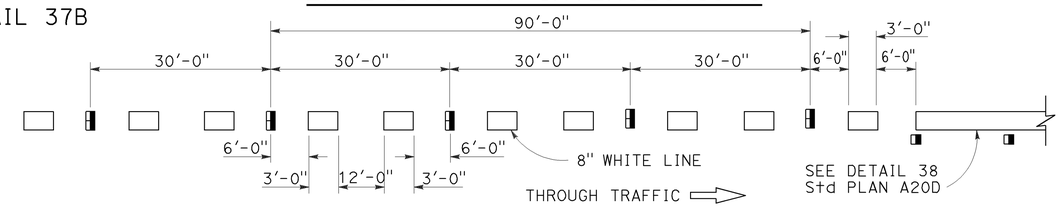

DETAIL 37C

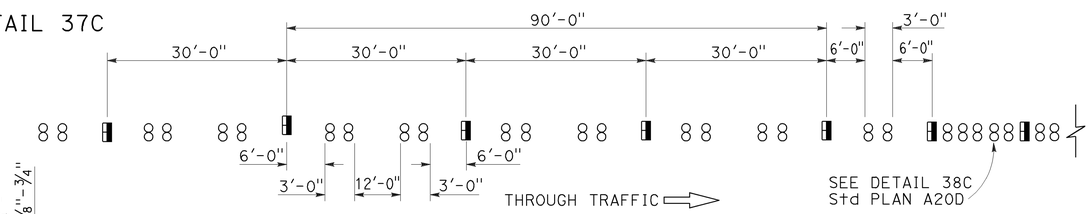

MARKER DETAILS

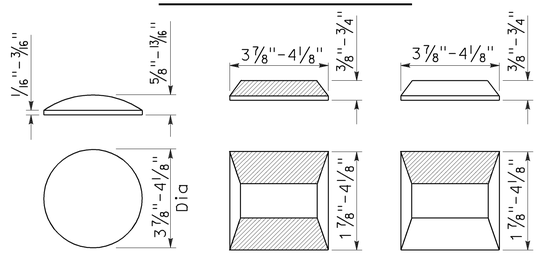

RETROREFLECTIVE FACE

LEGEND:

MARKERS

- ○ TYPE A WHITE NON-REFLECTIVE
- ⊟ TYPE C RED-CLEAR RETROREFLECTIVE
- ◨ TYPE G ONE-WAY CLEAR RETROREFLECTIVE

STATE OF CALIFORNIA
DEPARTMENT OF TRANSPORTATION

PAVEMENT MARKERS AND TRAFFIC LINE TYPICAL DETAILS

NO SCALE

RSP A20C DATED JULY 19, 2013 SUPERSEDES STANDARD PLAN A20C DATED MAY 20, 2011 - PAGE 11 OF THE STANDARD PLANS BOOK DATED 2010.

REVISED STANDARD PLAN RSP A20C

2010 REVISED STANDARD PLAN RSP A20C

4-29-13

Dist	COUNTY	ROUTE	POST MILES TOTAL PROJECT	SHEET No.	TOTAL SHEETS
04	SM, Ala	84	R28.8/R29.3, R0.5	61	83

REGISTERED CIVIL ENGINEER

October 19, 2012
PLANS APPROVAL DATE

REGISTERED PROFESSIONAL ENGINEER Roberta L. McLaughlin No. C40375 Exp. 3-31-13 CIVIL STATE OF CALIFORNIA

THE STATE OF CALIFORNIA OR ITS OFFICERS OR AGENTS SHALL NOT BE RESPONSIBLE FOR THE ACCURACY OR COMPLETENESS OF SCANNED COPIES OF THIS PLAN SHEET.

NOTE: TO ACCOMPANY PLANS DATED 10-6-14

Minor variations in dimensions may be accepted by the Engineer.

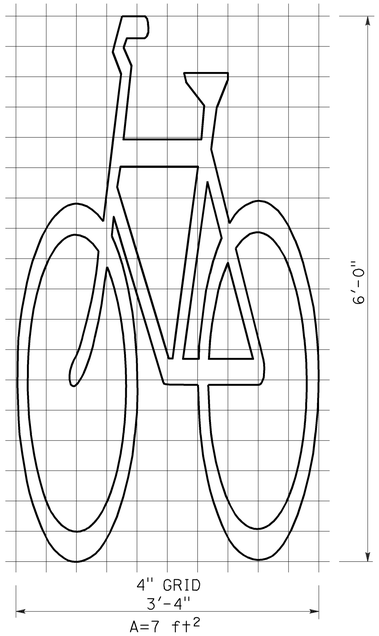

BIKE LANE SYMBOL WITHOUT PERSON

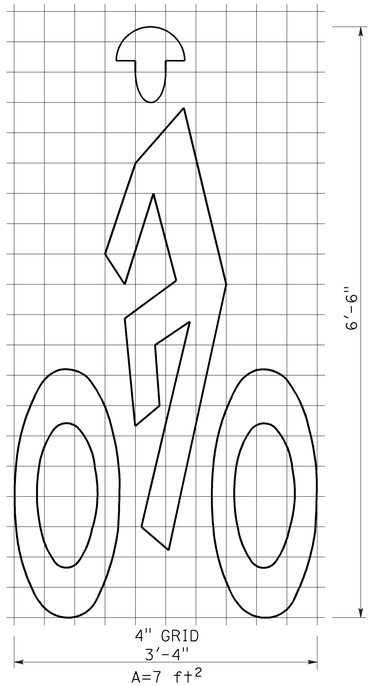

BIKE LANE SYMBOL WITH PERSON

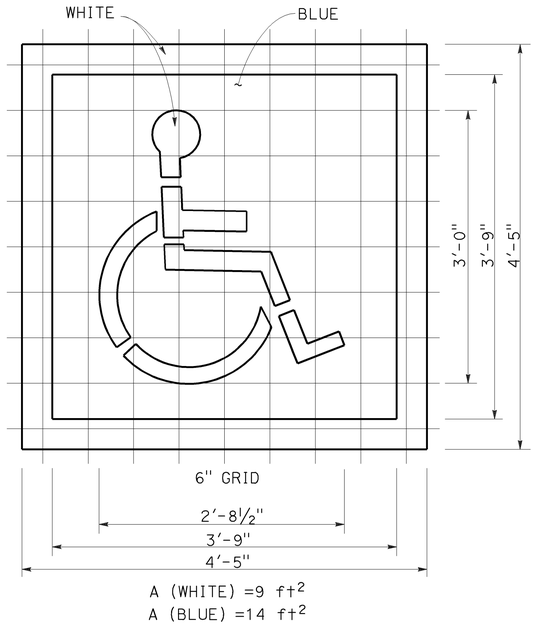

INTERNATIONAL SYMBOL OF ACCESSIBILITY (ISA) MARKING

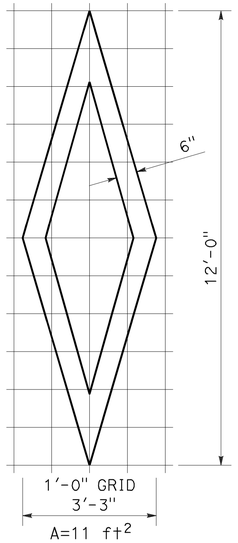

DIAMOND SYMBOL

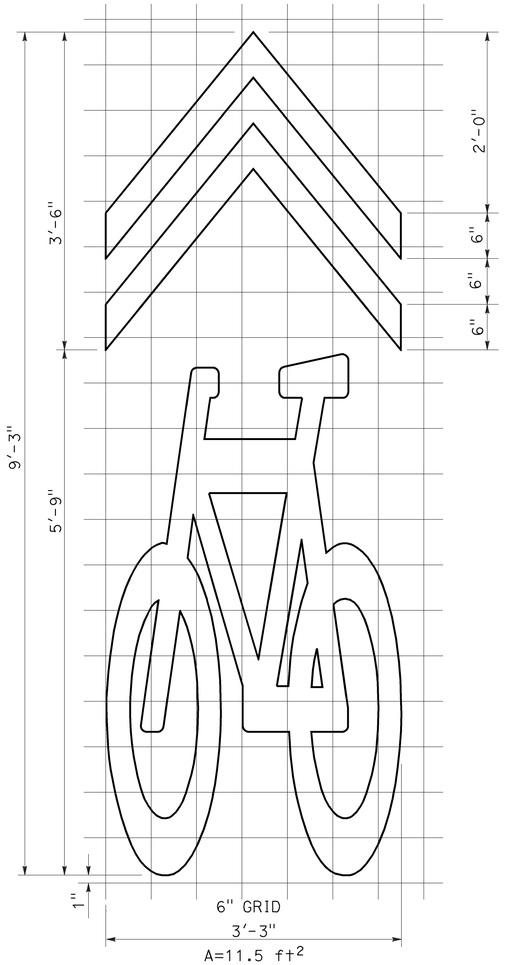

SHARED ROADWAY BICYCLE MARKING

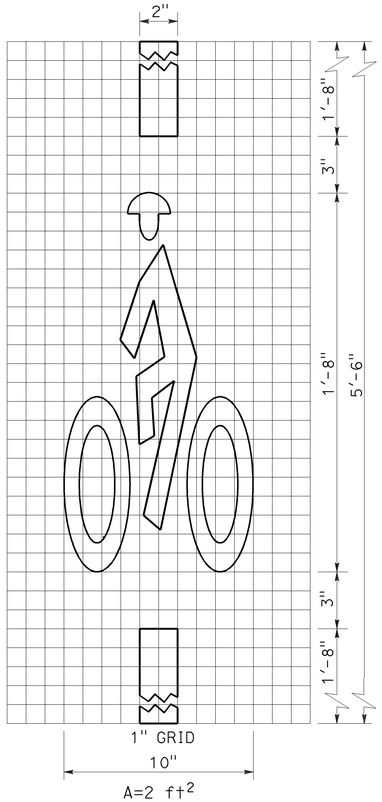

BICYCLE LOOP DETECTOR SYMBOL

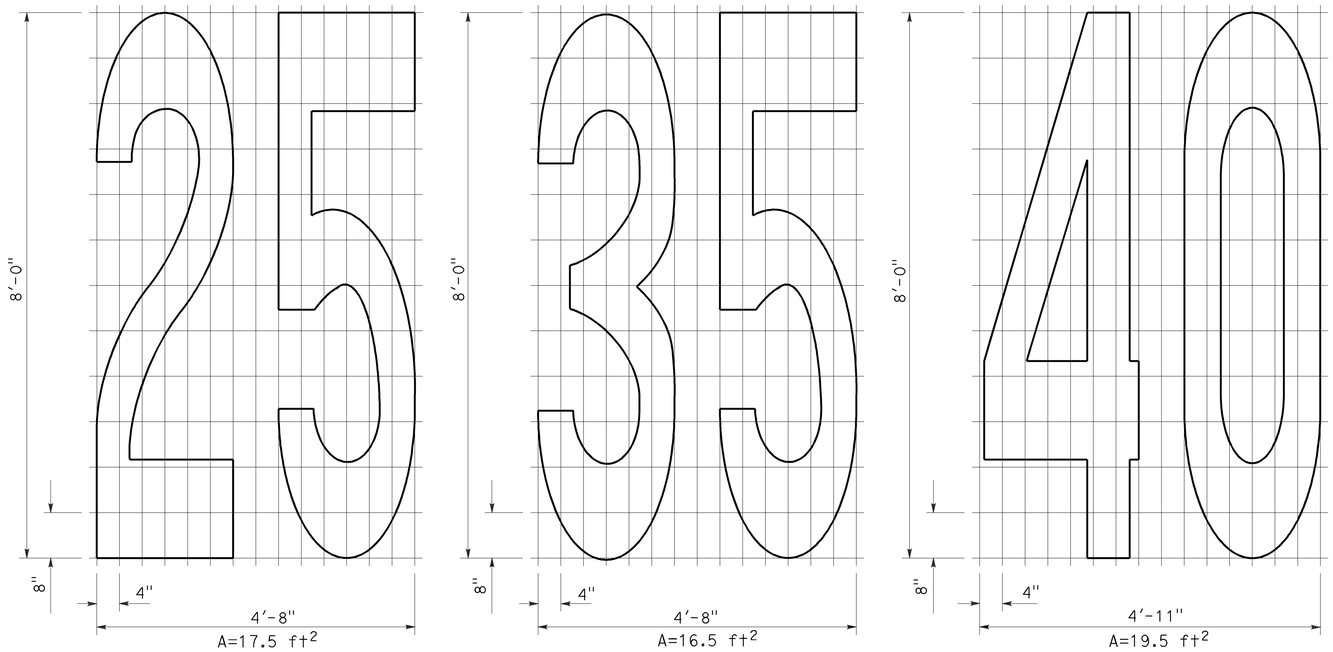

NUMERALS

STATE OF CALIFORNIA
DEPARTMENT OF TRANSPORTATION

PAVEMENT MARKINGS SYMBOLS AND NUMERALS

NO SCALE

RSP A24C DATED OCTOBER 19, 2012 SUPERSEDES STANDARD PLAN A24C DATED MAY 20, 2011 - PAGE 15 OF THE STANDARD PLANS BOOK DATED 2010.

REVISED STANDARD PLAN RSP A24C

2010 REVISED STANDARD PLAN RSP A24C

6-28-12

Dist	COUNTY	ROUTE	POST MILES TOTAL PROJECT	SHEET No.	TOTAL SHEETS
04	SM, Ala	84	R28.8/R29.3, R0.5	62	83

Roberta L. McLaughlin
REGISTERED CIVIL ENGINEER

July 20, 2012
PLANS APPROVAL DATE

REGISTERED PROFESSIONAL ENGINEER
Roberta L. McLaughlin
No. C40375
Exp. 3-31-13
CIVIL
STATE OF CALIFORNIA

THE STATE OF CALIFORNIA OR ITS OFFICERS OR AGENTS SHALL NOT BE RESPONSIBLE FOR THE ACCURACY OR COMPLETENESS OF SCANNED COPIES OF THIS PLAN SHEET.

TO ACCOMPANY PLANS DATED 10-6-14

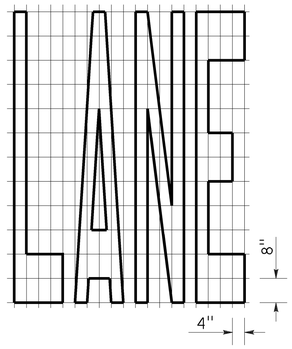

A=24 ft^2

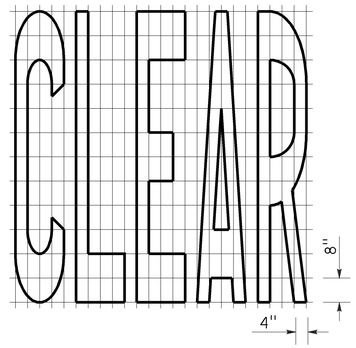

A=27 ft^2

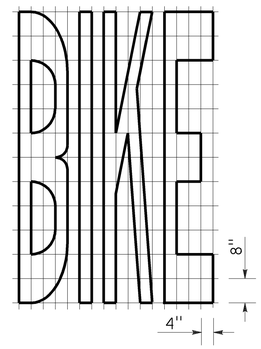

A=21 ft^2

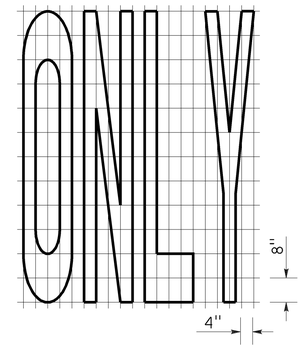

A=22 ft^2

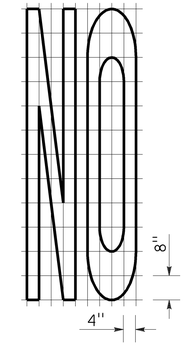

A=14 ft^2

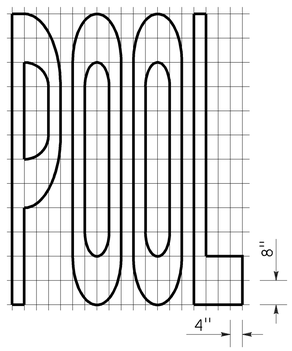

A=23 ft^2

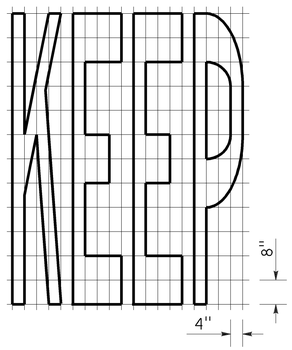

A=24 ft^2

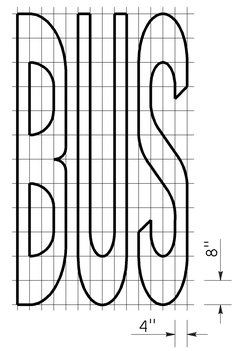

A=20 ft^2

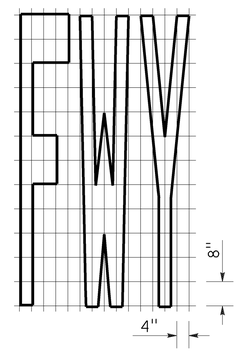

A=16 ft^2

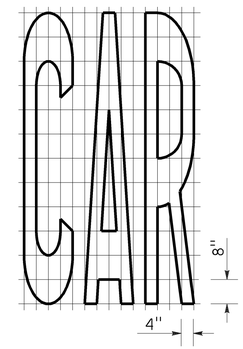

A=17 ft^2

WORD MARKINGS			
ITEM	ft^2	ITEM	ft^2
LANE	24	NO	14
POOL	23	BIKE	21
CAR	17	BUS	20
CLEAR	27	ONLY	22
KEEP	24	FWY	16

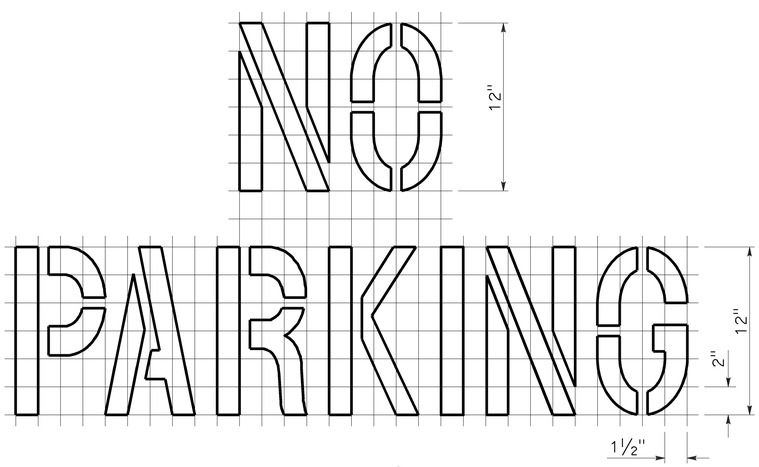

A=2 ft^2

See Notes 6 and 7

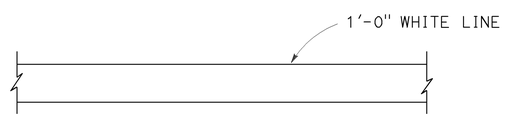

LIMIT LINE (STOP LINE)

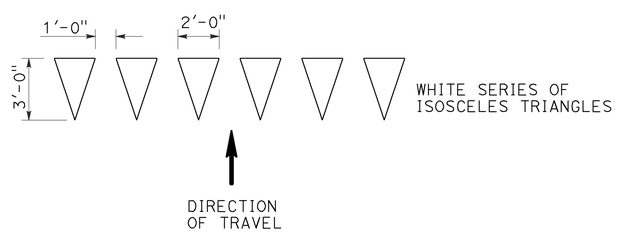

YIELD LINE

NOTES:

1. If a message consists of more than one word, it should read "UP", i.e., the first word should be nearest the driver.
2. The space between words should be at least four times the height of the characters for low speed roads, but not more than ten times the height of the characters. The space may be reduced appropriately where there is limited space because of local conditions.
3. Minor variations in dimensions may be accepted by the Engineer.
4. Portions of a letter, number or symbol may be separated by connecting segments not to exceed 2" in width.
5. The words "NO PARKING" pavement marking is to be used for parking facilities. For typical locations of markings, see Standard Plans A90A and A90B.
6. The words "NO PARKING", shall be painted in white letters no less than 1'-0" high on a contrasting background and located so that it is visible to traffic enforcement officials.

STATE OF CALIFORNIA
DEPARTMENT OF TRANSPORTATION

PAVEMENT MARKINGS WORDS, LIMIT AND YIELD LINES

NO SCALE

RSP A24E DATED JULY 20, 2012 SUPERSEDES STANDARD PLAN A24E DATED MAY 20, 2011 - PAGE 17 OF THE STANDARD PLANS BOOK DATED 2010.

REVISED STANDARD PLAN RSP A24E

2010 REVISED STANDARD PLAN RSP A24E

6-12-12

Dist	COUNTY	ROUTE	POST MILES TOTAL PROJECT	SHEET No.	TOTAL SHEETS
04	SM, Ala	84	R28.8/R29.3, R0.5	63	83

Roberta L. McLaughlin
REGISTERED CIVIL ENGINEER

July 20, 2012
PLANS APPROVAL DATE

REGISTERED PROFESSIONAL ENGINEER
Roberta L. McLaughlin
No. C40375
Exp. 3-31-13
CIVIL
STATE OF CALIFORNIA

THE STATE OF CALIFORNIA OR ITS OFFICERS OR AGENTS SHALL NOT BE RESPONSIBLE FOR THE ACCURACY OR COMPLETENESS OF SCANNED COPIES OF THIS PLAN SHEET.

TO ACCOMPANY PLANS DATED 10-6-14

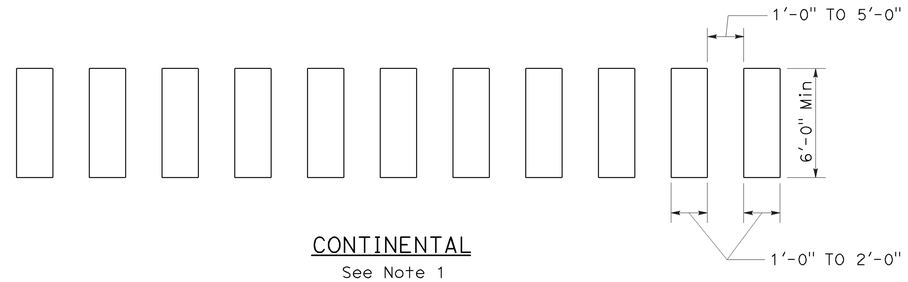

CONTINENTAL
See Note 1

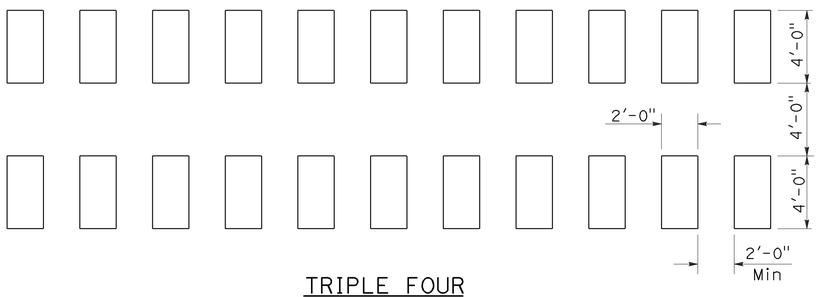

TRIPLE FOUR
See Note 1

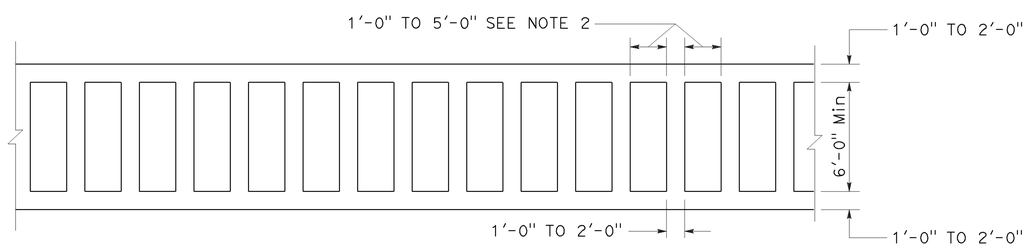

LADDER

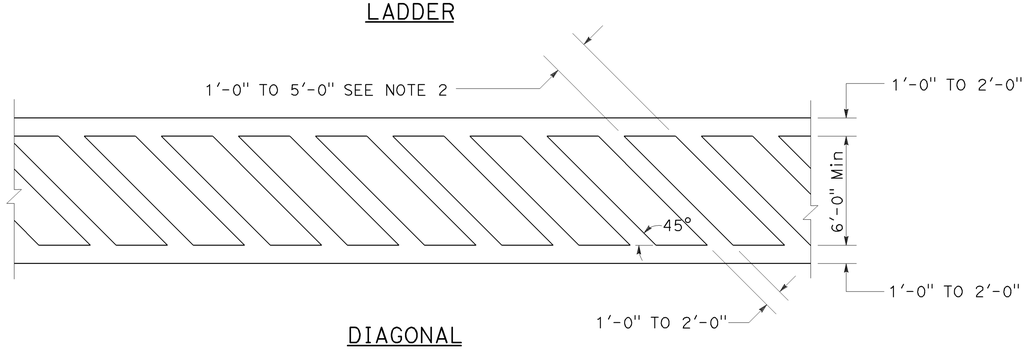

DIAGONAL

HIGHER VISIBILITY CROSSWALKS

NOTES:

1. Spaces between markings should be placed in wheel tracks of each lane.
2. Spacings not to exceed 2.5 times width of longitudinal line.
3. All crosswalk markings must be white except for those near schools must be yellow.

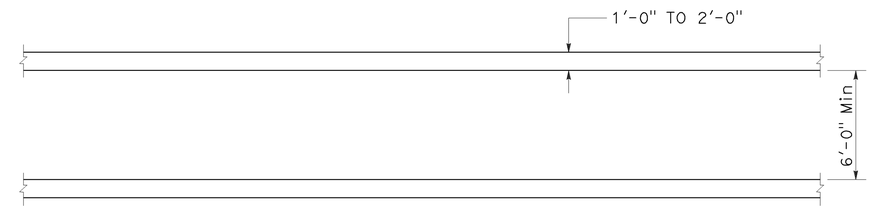

BASIC

STATE OF CALIFORNIA
DEPARTMENT OF TRANSPORTATION

PAVEMENT MARKINGS CROSSWALKS

NO SCALE

RSP A24F DATED JULY 20, 2012 SUPPLEMENTS THE STANDARD PLANS BOOK DATED 2010.

REVISED STANDARD PLAN RSP A24F

2010 REVISED STANDARD PLAN RSP A24F

6-28-12

Dist	COUNTY	ROUTE	POST MILES TOTAL PROJECT	SHEET No.	TOTAL SHEETS
04	SM, Ala	84	R28.8/R29.3, R0.5	64	83

REGISTERED CIVIL ENGINEER

July 19, 2013
PLANS APPROVAL DATE

REGISTERED PROFESSIONAL ENGINEER Michael Janzen No. 44788 Exp. 03-31-14 CIVIL STATE OF CALIFORNIA

THE STATE OF CALIFORNIA OR ITS OFFICERS OR AGENTS SHALL NOT BE RESPONSIBLE FOR THE ACCURACY OR COMPLETENESS OF SCANNED COPIES OF THIS PLAN SHEET.

TO ACCOMPANY PLANS DATED 10-6-14

2010 REVISED STANDARD PLAN RSP A87A

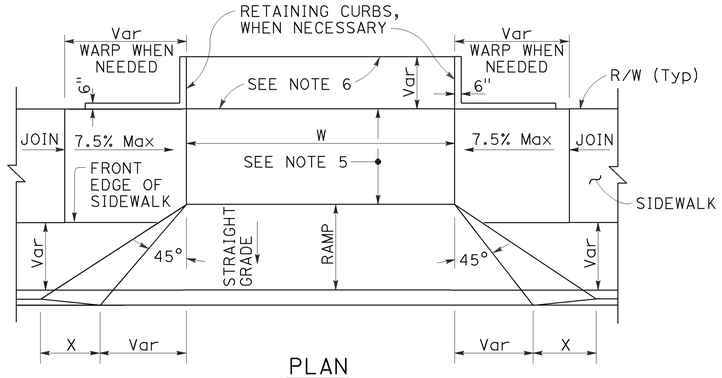

PLAN

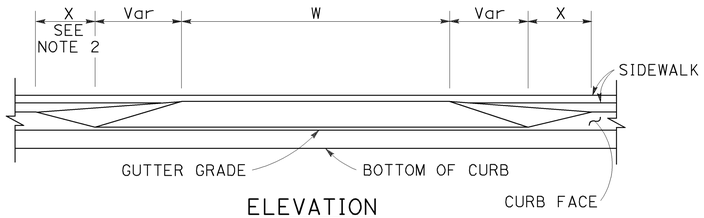

ELEVATION

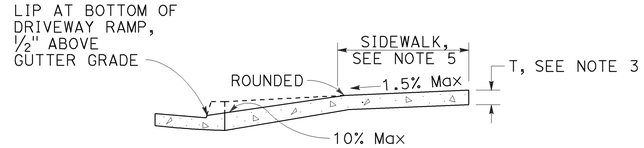

CASE A

Typical driveway, sidewalk not depressed

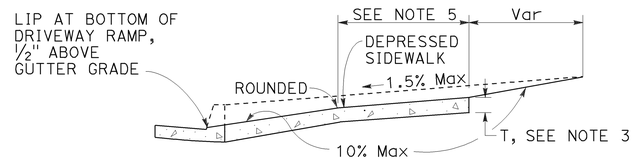

CASE B

Driveway with depressed sidewalk

SECTIONS

DRIVEWAYS

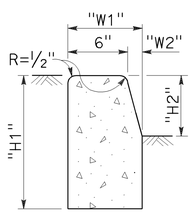

TYPE A1 CURBS

See Table A

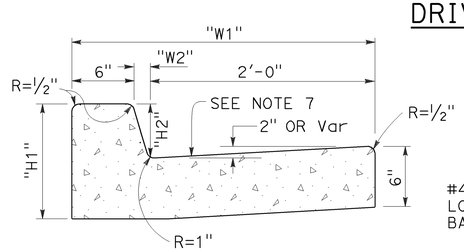

TYPE A2 CURBS

See Table A

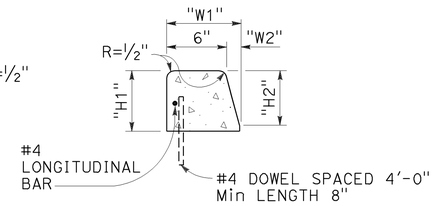

TYPE A3 CURBS

Superimposed on existing pavement
See Table A

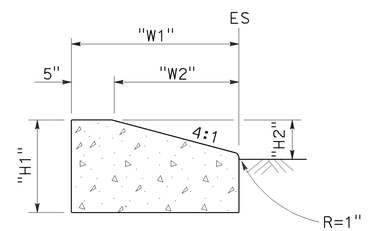

TYPE D CURBS

See Table A

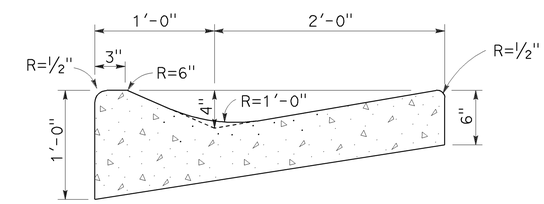

TYPE E CURB

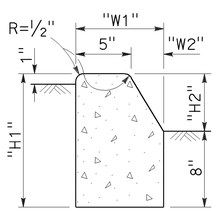

TYPE B1 CURBS

See Table A

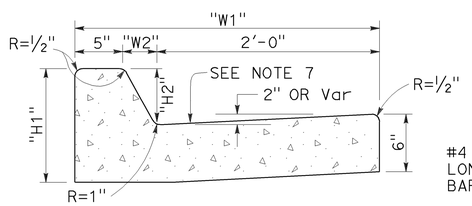

TYPE B2 CURBS

See Table A

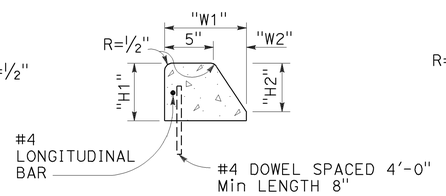

TYPE B3 CURBS

Superimposed on existing pavement
See Table A

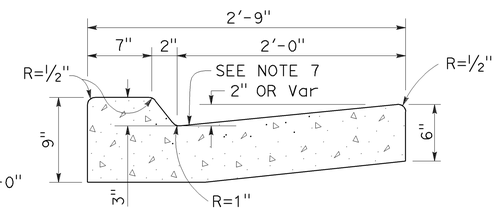

TYPE B4 CURBS

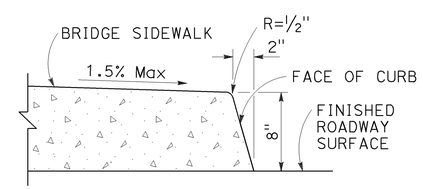

TYPE H CURB

On Bridges

CURBS

TABLE A

CURB TYPE	DIMENSIONS			
	"H1"	"H2"	"W1"	"W2"
A1-6	1'-2"	6"	7½"	1½"
A1-8	1'-4"	8"	8"	2"
A2-6	1'-0"	6"	2'-7½"	1½"
A2-8	1'-2"	8"	2'-8"	2"
A3-6	6"	5"	7¼"	1¼"
A3-8	8"	7"	7¾"	1¾"
B1-4	1'-0"	4"	7½"	2½"
B1-6	1'-2"	6"	9"	4"
B2-4	10"	4"	2'-7½"	2½"
B2-6	1'-0"	6"	2'-9"	4"
B3-4	4"	3"	7"	2"
B3-6	6"	5"	8½"	3½"
D-4	10"	4"	1'-6"	1'-1"
D-6	1'-0"	6"	2'-2"	1'-9"

CURB QUANTITIES

TYPE	CUBIC YARDS PER LINEAR FOOT
A1-6	0.02585
A1-8	0.03084
A2-6	0.05903
A2-8	0.06379
A3-6	0.01036
A3-8	0.01435
B1-4	0.02185
B1-6	0.02930
B2-4	0.05515
B2-6	0.06171
B3-4	0.00641
B3-6	0.01074
B4	0.05709
D-4	0.04083
D-6	0.06804
E	0.06661

NOTES:

1. Case A driveway section typically applies.
2. X=3'-0" except for curb heights over 10" where 4:1 slopes shall be used on curb slope.
3. Sidewalk and ramp thickness "T" at driveway shall be 4" for residental and 6" for commercial.
4. Difference in slope of the driveway ramp and the slope of a line between the gutter and a point on the roadway 5'-0" from gutter line shall not exceed 15%. Reduce driveway ramp slope, not gutter slope, where required.
5. Minimum width of clear passageway for sidewalk shall be 4'-2".
6. Retaining curbs and acquisition of construction easement may be necessary for narrow sidewalks or curb heights in excess of 6".
7. Across the pedestrian route at curb ramp locations, the gutter pan slope shall not exceed 1" of depth for each 2'-0" of width.

STATE OF CALIFORNIA
DEPARTMENT OF TRANSPORTATION

CURBS AND DRIVEWAYS

NO SCALE

RSP A87A DATED JULY 19, 2013 SUPERSEDES STANDARD PLAN A87A
DATED MAY 20, 2011 - PAGE 119 OF THE STANDARD PLANS BOOK DATED 2010.

REVISED STANDARD PLAN RSP A87A

Dist	COUNTY	ROUTE	POST MILES TOTAL PROJECT	SHEET No.	TOTAL SHEETS
04	SM, Ala	84	R28.8/R29.3, R0.5	65	83

REGISTERED CIVIL ENGINEER

March 21, 2014
PLANS APPROVAL DATE

REGISTERED PROFESSIONAL ENGINEER Hector David Cordova No. C41957 Exp. 3-31-14 CIVIL STATE OF CALIFORNIA

THE STATE OF CALIFORNIA OR ITS OFFICERS OR AGENTS SHALL NOT BE RESPONSIBLE FOR THE ACCURACY OR COMPLETENESS OF SCANNED COPIES OF THIS PLAN SHEET.

TO ACCOMPANY PLANS DATED 10-6-14

2010 REVISED STANDARD PLAN RSP A88A

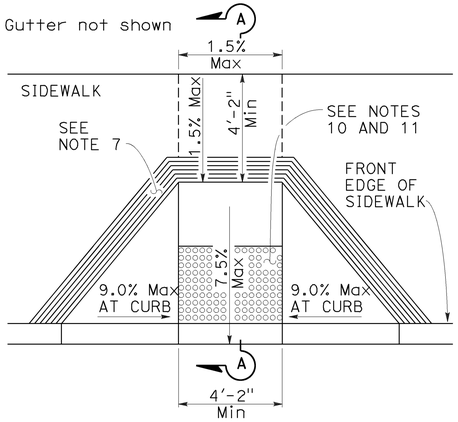

CASE A

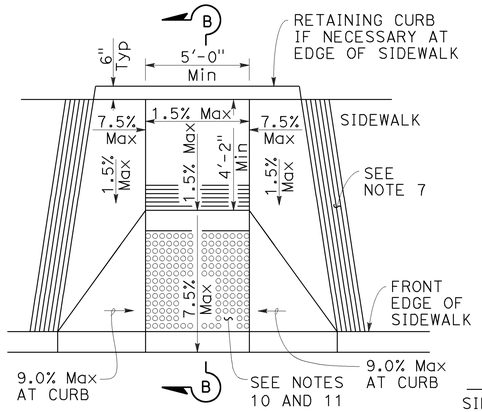

CASE B

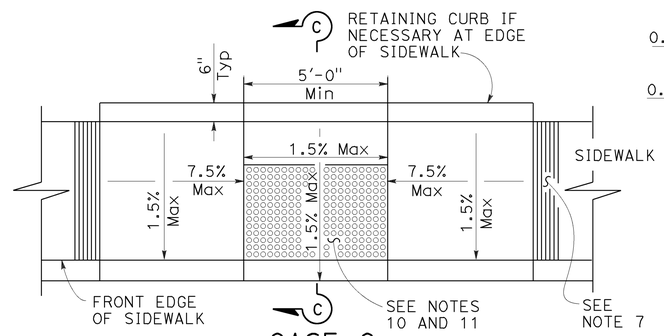

CASE C

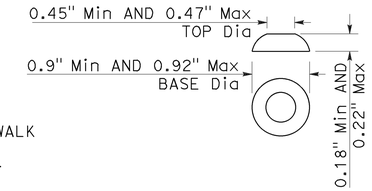

RAISED TRUNCATED DOME

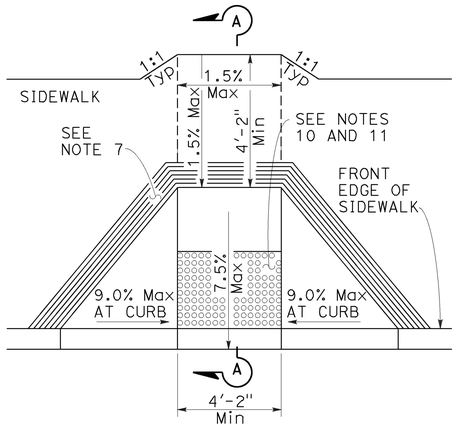

CASE D

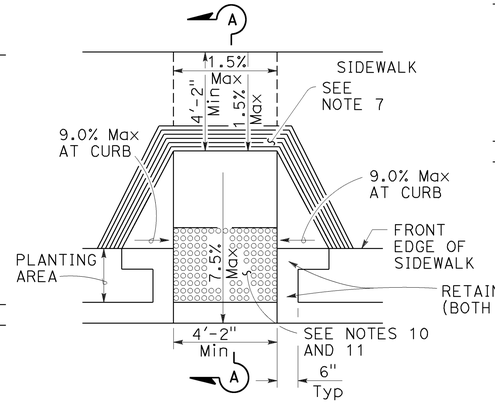

CASE E

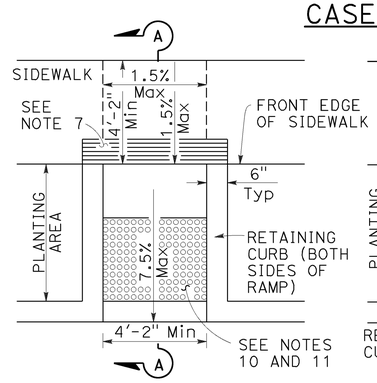

CASE F

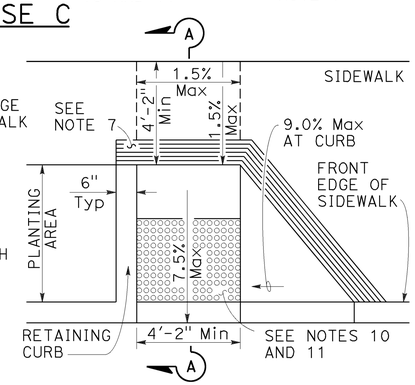

CASE G

See Note 4

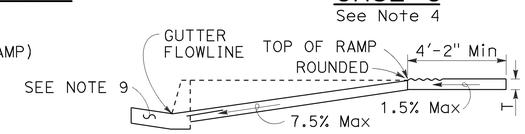

SECTION A-A

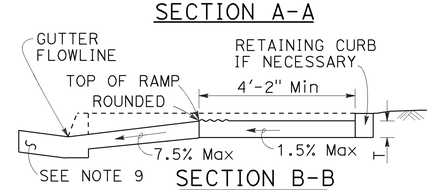

SECTION B-B

Depress entire sidewalk as required

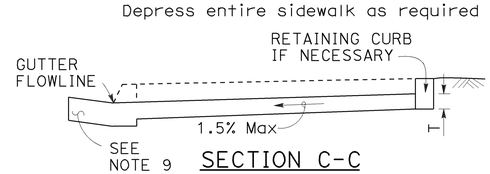

SECTION C-C

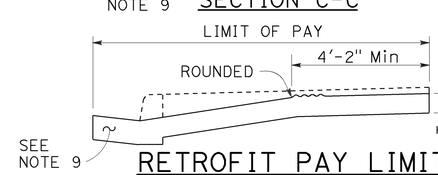

RETROFIT PAY LIMITS

Existing curb and sidewalk

RAISED TRUNCATED DOME PATTERN (IN-LINE)

DETECTABLE WARNING SURFACE

See Note 10

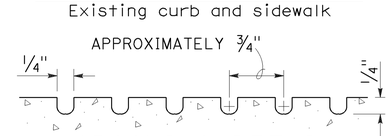

GROOVING DETAIL

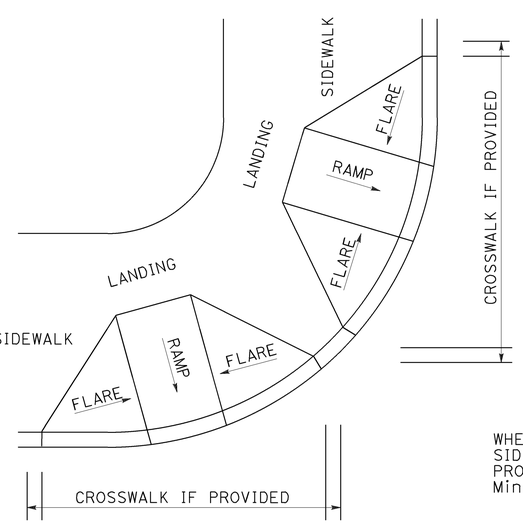

DETAIL A

TYPICAL TWO-RAMP CORNER INSTALLATION

See Note 1

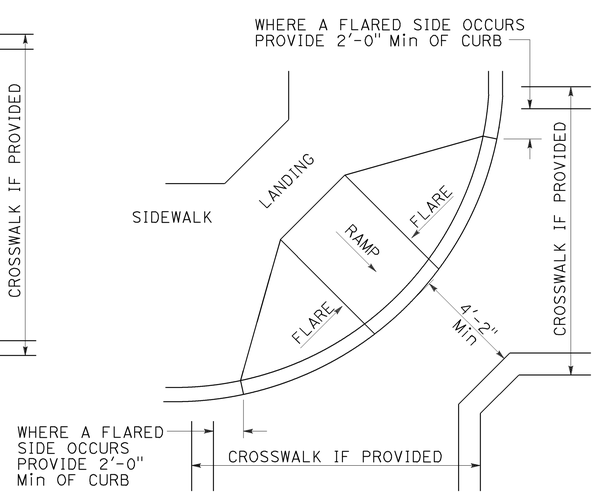

DETAIL B

TYPICAL ONE-RAMP CORNER INSTALLATION

See Notes 1 and 3

NOTES:

1. As site conditions dictate, Case A through Case G curb ramps may be used for corner installations similar to those shown in Detail A and Detail B. The case of curb ramps used in Detail A do not have to be the same. Case A through Case G curb ramps also may be used at mid block locations, as site conditions dictate.
2. If distance from curb to back of sidewalk is too short to accommodate ramp and 4'-2" platform (landing) as shown in Case A, the sidewalk may be depressed longitudinally as in Case B, or C or may be widened as in Case D.
3. When ramp is located in center of curb return, crosswalk configuration must be similar to that shown for Detail B.
4. As site conditions dictate, the retaining curb side and the flared side of the Case G ramp shall be constructed in reversed position.
5. If located on a curve, the sides of the ramp need not be parallel, but the minimum width of the ramp shall be 4'-2".
6. Side slope of ramp flares vary uniformly from a maximum of 9.0% at curb to conform with longitudinal sidewalk slope adjacent to top of the ramp, except in Case C and Case F.
7. The curb ramp shall be outlined, as shown, with a 1'-0" wide border with 1/4" grooves approximately 3/4" on center. See grooving detail.
8. Transitions from ramps and landing to walks, gutters or streets shall be flush (no lip) and free of abrupt changes.
9. Counter slopes of adjoining gutters and road surfaces immediately adjacent to and within 24 inches of the curb ramp shall not be steeper than 1:20 (5.0%). Gutter pan slope shall not exceed 1" of depth for each 2'-0" of width.
10. Curb ramps shall have a detectable warning surface that extends the full width and 3'-0" depth of the ramp. A 4'-0" wide detectable warning surface may be used on a 4'-2" wide curb ramp. Detectable Warning Surfaces shall conform to the requirements in the Standard Specifications.
11. The edge of the detectable warning surface nearest the street shall be between 6" and 8" from the gutter flowline.
12. Sidewalk and ramp thickness, "T", shall be 3½" minimum.
13. Utility pull boxes, manholes, vaults and all other utility facilities within the boundaries of the curb ramp will be relocated or adjusted to grade by the owner prior to, or in conjunction with, curb ramp construction.
14. Detectable warning surface may have to be cut to allow removal of utility covers while maintaining full detectable warning width and depth.

STATE OF CALIFORNIA
DEPARTMENT OF TRANSPORTATION

CURB RAMP DETAILS

NO SCALE

RSP A88A DATED MARCH 21, 2014 SUPERSEDES RSP A88A DATED JULY 19, 2013 AND STANDARD PLAN A88A DATED MAY 20, 2011 - PAGE 121 OF THE STANDARD PLANS BOOK DATED 2010.

REVISED STANDARD PLAN RSP A88A

2-25-14

Dist	COUNTY	ROUTE	POST MILES TOTAL PROJECT	SHEET No.	TOTAL SHEETS
04	SM, Ala	84	R28.8/R29.3, R0.5	66	83

REGISTERED CIVIL ENGINEER

July 19, 2013
PLANS APPROVAL DATE

REGISTERED PROFESSIONAL ENGINEER Hector David Cordova No. C41957 Exp. 3-31-14 CIVIL STATE OF CALIFORNIA

THE STATE OF CALIFORNIA OR ITS OFFICERS OR AGENTS SHALL NOT BE RESPONSIBLE FOR THE ACCURACY OR COMPLETENESS OF SCANNED COPIES OF THIS PLAN SHEET.

TO ACCOMPANY PLANS DATED 10-6-14

2010 REVISED STANDARD PLAN RSP A90A

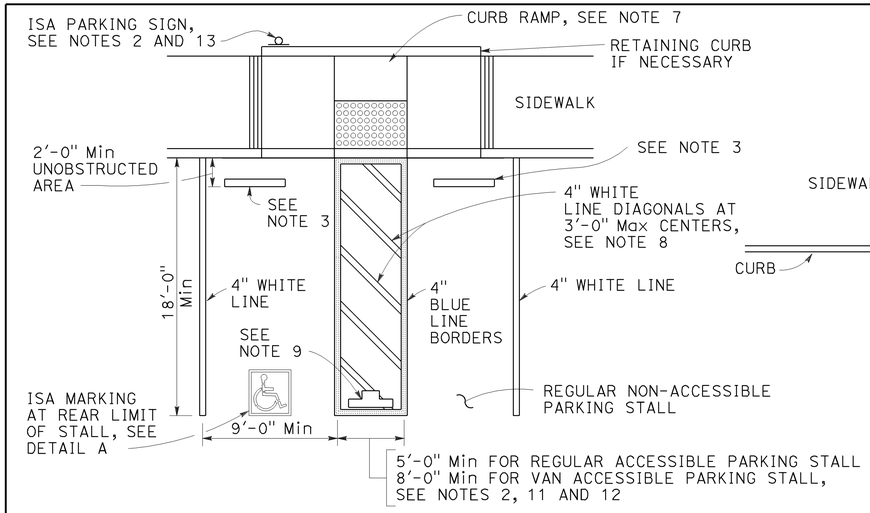

SINGLE PARKING STALL

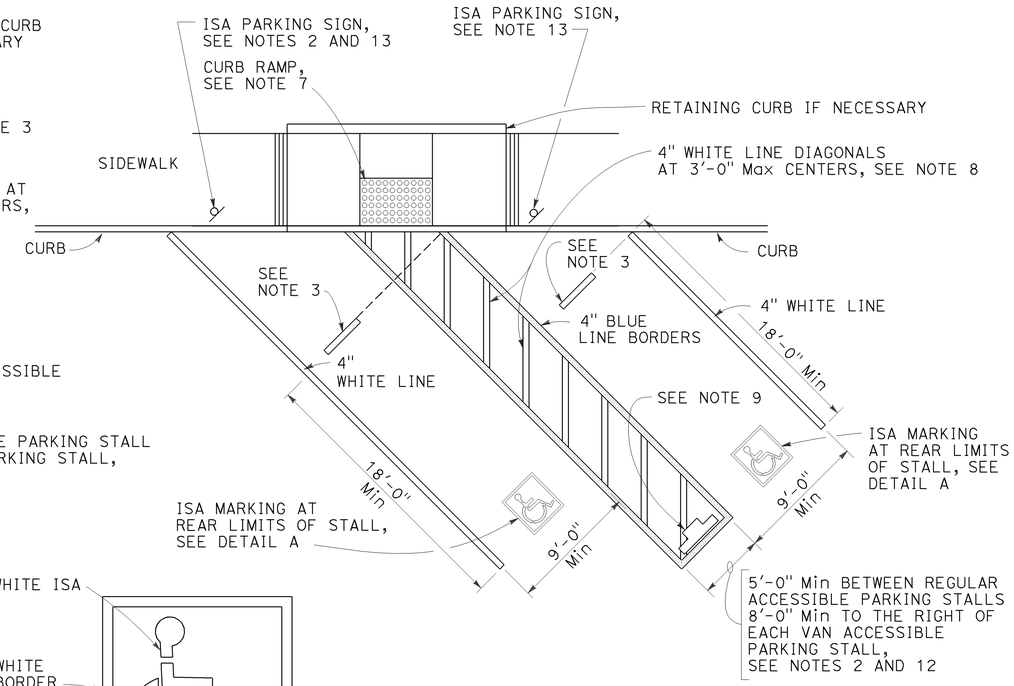

DIAGONAL DOUBLE PARKING STALLS

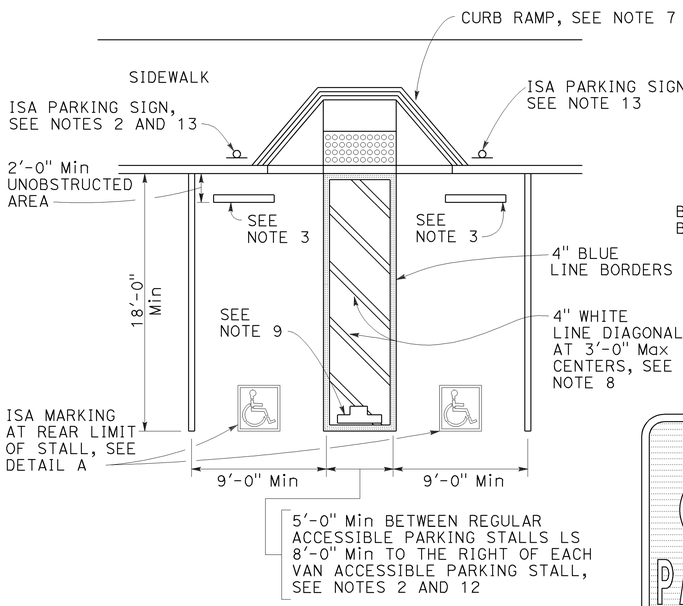

DOUBLE PARKING STALL

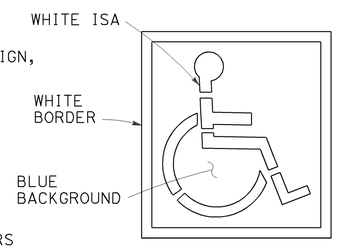

ISA MARKING
See Revised Std Plan RSP A24C

DETAIL A

TABLE A

TOTAL NUMBER OF PARKING SPACES PROVIDED IN PARKING FACILITY	MINIMUM NUMBER OF REQUIRED ACCESSIBLE PARKING SPACES
1-25	1
26-50	2
51-75	3
76-100	4
101-150	5
151-200	6
201-300	7
301-400	8
401-500	9
501-1000	2 PERCENT OF TOTAL
1001 AND OVER	20 PLUS 1 FOR EACH 100 OR FRACTION THEREOF OVER 1000

SIGN R99 (CA)

SIGN R99C (CA)
See Note 6

PLAQUE R99B (CA)

SIGN R99 (CA) with PLAQUE R99B (CA)
See Note 6

SIGN R100B (CA)
See Note 10

SIGN R7-8b
See Notes 2 and 6

OFF-STREET PARKING SIGNS
(Parking lot or garage)
See Note 6

NOTES:

1. Accessible parking spaces serving a particular building shall be located on the shortest accessible route of travel from adjacent parking to an accessible entrance. In parking facilities that do not serve a particular building, accessible parking shall be located on the shortest accessible route of travel to an accessible pedestrian entrance of the parking facility.
2. One in every six accessible off-street parking stalls, but not less than one, shall be served by an accessible aisle of 8'-0" minimum width and shall be signed van accessible. The R7-8b sign shall be mounted below the R99B (CA) plaque or the R99C (CA) sign.
3. In each parking stall, a curb or parking bumper shall be provided if required to prevent encroachment of vehicles over the required width of walkways. Parking stalls shall be so located that persons with disabilities are not compelled to wheel or walk behind parked vehicles other than their own. For more parking bumper requirements, see the Special Provisions.
4. Parking spaces and access aisles shall be level with surface slopes not exceeding 1.5% in all directions.
5. Table A shall be used to determine the required number of accessible parking stalls in each parking lot or garage.
6. Where Plaque R99B (CA), Sign R99C (CA) or Sign R7-8b are installed, the bottom of the sign or plaque panel shall be a minimum of 7'-0" above the surrounding surface.
7. Curb ramps shall conform to the details shown on Revised Standard Plan RSP A88A.
8. Blue paint, instead of white may be used for marking accessibility aisles in areas where snow may cause white markings to not be visible.
9. The words "NO PARKING", shall be painted in white letters no less than 1'-0" high and located so that it is visible to traffic enforcement officials. See Revised Standard Plan RSP A90B for details of the "NO PARKING" pavement marking.
10. A R100B (CA) sign shall be posted in a conspicuous place at each entrance to off-street parking facilities or immediately adjacent to and visible from each stall. The sign shall include the address where the towed vehicle may be reclaimed and the telephone number of the local traffic law enforcement agency.
11. Where a single (non-van) accessible parking space is provided, the loading and unloading access aisle shall be on the passenger side of the vehicle as the vehicle is going forward into the parking space.
12. Where a van accessible parking space is provided, the loading and unloading access aisle shall be 8'-0" wide minimum, and shall be on the passenger side of the vehicle as the vehicle is going forward into the parking space.
13. Accessible Parking Only Sign shall be Sign R99C (CA) or Sign R99 (CA) with Plaque R99B (CA).

LEGEND

ISA = International Symbol of Accessibility

STATE OF CALIFORNIA
DEPARTMENT OF TRANSPORTATION

ACCESSIBLE PARKING OFF-STREET

NO SCALE

RSP A90A DATED JULY 19, 2013 SUPERSEDES STANDARD PLAN A90A
DATED MAY 20, 2011 - PAGE 123 OF THE STANDARD PLANS BOOK DATED 2010.

REVISED STANDARD PLAN RSP A90A

DIST	COUNTY	ROUTE	POST MILES TOTAL PROJECT	SHEET No.	TOTAL SHEETS
04	SM, Ala	84	R28.8/R29.3, R0.5	67	83

REGISTERED CIVIL ENGINEER

November 15, 2013
PLANS APPROVAL DATE

REGISTERED PROFESSIONAL ENGINEER Cornelis M. Hakim No. C55610 Exp. 12-31-14 CIVIL STATE OF CALIFORNIA

THE STATE OF CALIFORNIA OR ITS OFFICERS OR AGENTS SHALL NOT BE RESPONSIBLE FOR THE ACCURACY OR COMPLETENESS OF SCANNED COPIES OF THIS PLAN SHEET.

TO ACCOMPANY PLANS DATED 10-6-14

ABBREVIATIONS:

SE SAFETY EDGE

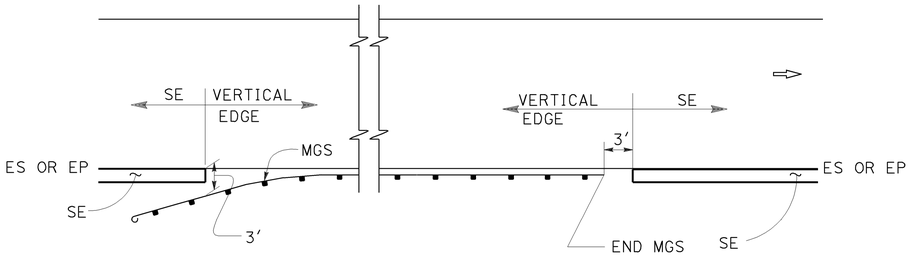

MGS

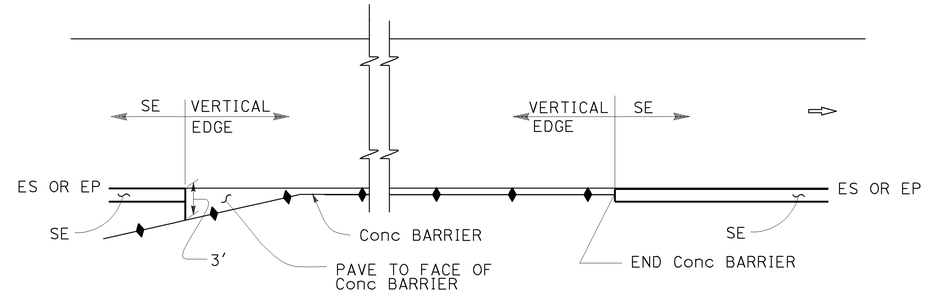

CONCRETE BARRIER

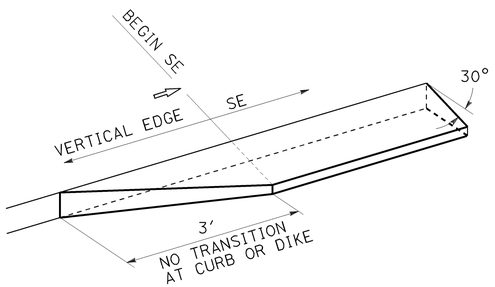

TRANSITION DETAIL FOR CONCRETE ONLY

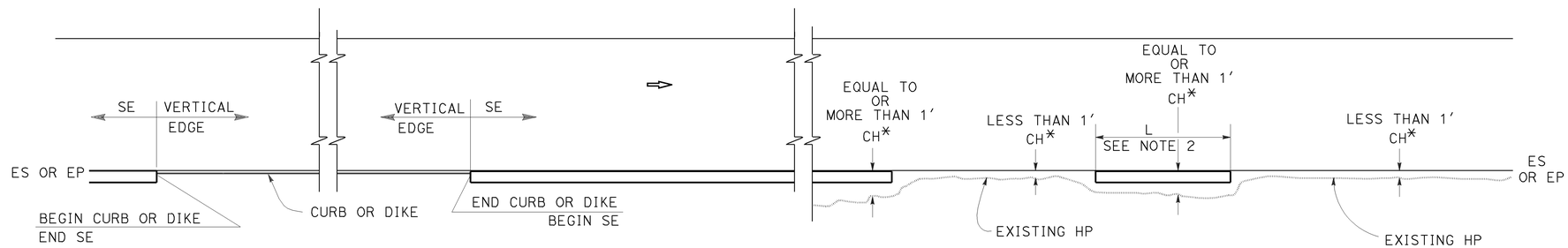

CURB OR DIKE

NARROW SIDE SLOPE

* CH = Distance from ES or EP to existing HP.

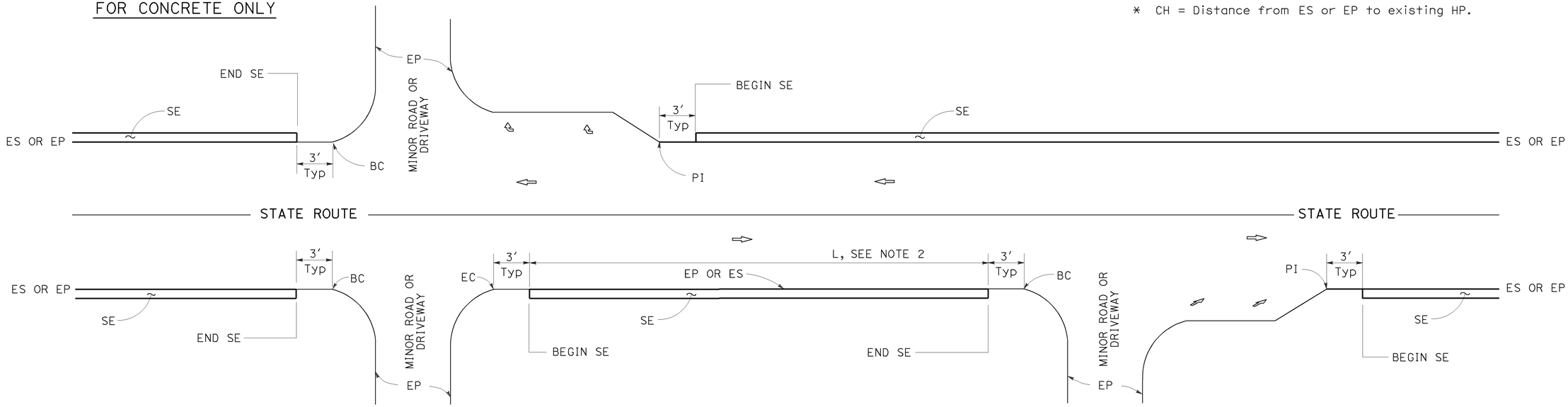

INTERSECTION

MINOR ROADWAY OR DRIVEWAY

DRIVEWAY AND INTERSECTION

NOTES:

1. For details not shown, see Revised Standard Plans RSP P75 and RSP P76.
2. Safety edge is optional when L is less than 30′.

STATE OF CALIFORNIA
DEPARTMENT OF TRANSPORTATION

PAVEMENT EDGE TREATMENTS

NO SCALE

RSP P74 DATED NOVEMBER 15, 2013 SUPERSEDES RSP P74 DATED JANUARY 20, 2012 THAT SUPPLEMENTS THE STANDARD PLANS BOOK DATED 2010.

REVISED STANDARD PLAN RSP P74

2010 REVISED STANDARD PLAN RSP P74

10-11-13

DIST	COUNTY	ROUTE	POST MILES TOTAL PROJECT	SHEET No.	TOTAL SHEETS
04	SM, Ala	84	R28.8/R29.3, R0.5	68	83

REGISTERED CIVIL ENGINEER

November 15, 2013
PLANS APPROVAL DATE

REGISTERED PROFESSIONAL ENGINEER Cornelis M. Hakim No. C55610 Exp. 12-31-14 CIVIL STATE OF CALIFORNIA

THE STATE OF CALIFORNIA OR ITS OFFICERS OR AGENTS SHALL NOT BE RESPONSIBLE FOR THE ACCURACY OR COMPLETENESS OF SCANNED COPIES OF THIS PLAN SHEET.

TO ACCOMPANY PLANS DATED 10-6-14

2010 REVISED STANDARD PLAN RSP P75

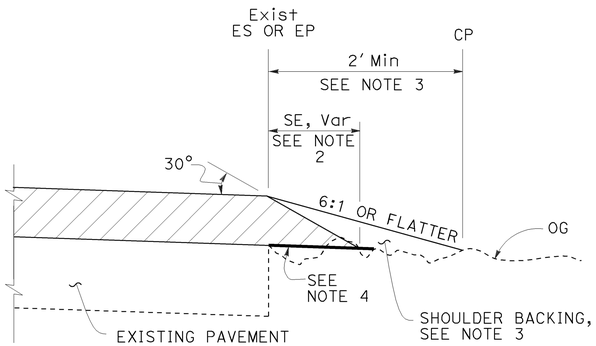

CASE A
Safety Edge

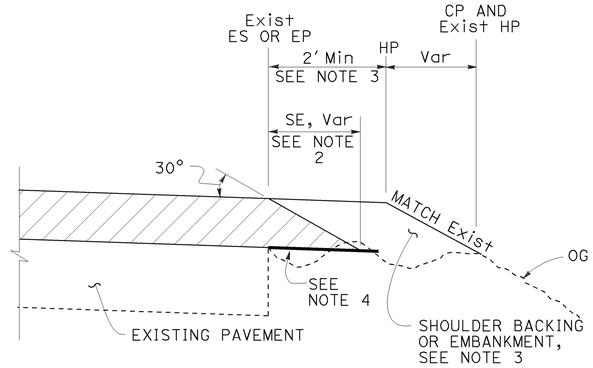

CASE B
Safety Edge

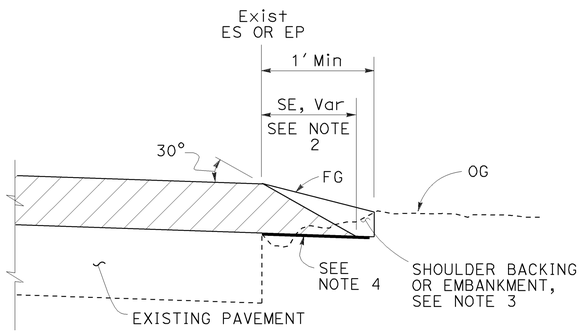

CASE C
Safety Edge

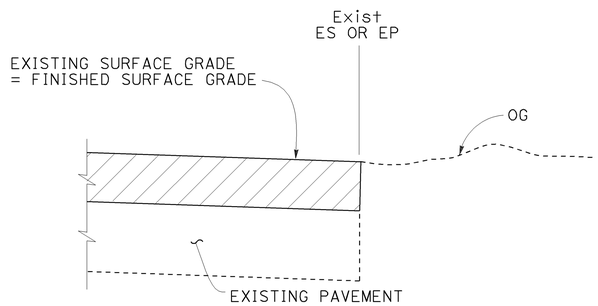

CASE D
Vertical Edge

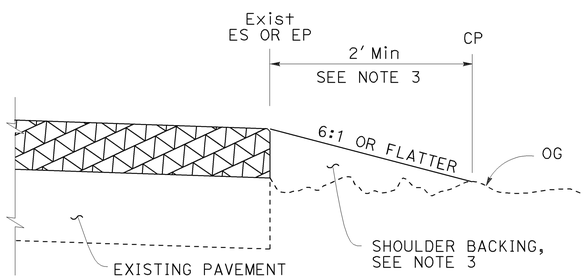

CASE E
Vertical Edge

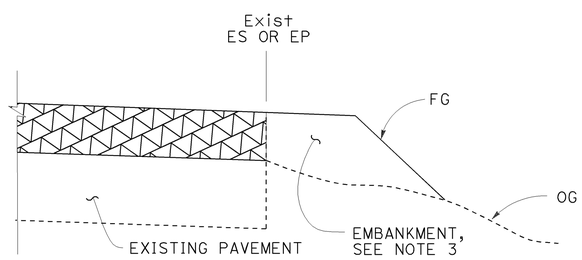

CASE F
Vertical Edge
* See Table A and Revised Std Plan RSP P74

LEGEND:

- HMA OVERLAY
- HMA OR CONCRETE OVERLAY
- CONCRETE OVERLAY

ABBREVIATIONS:

SE SAFETY EDGE
TT TOTAL THICKNESS OF SE

TABLE A
EDGE TREATMENT FOR VARIOUS OVERLAY THICKNESS AND CONDITIONS

	OVERLAY THICKNESS	
FIELD CONDITION	LESS THAN 0.15′	0.15′ OR MORE
Exist SLOPE 6:1 OR FLATTER	CASE E	CASE A
Exist SLOPE 3:1 TO 6:1	CASE E	CASE B
Exist SLOPE STEEPER THAN 3:1	CASE F	CASE F
CUT SECTION (REPLACE, COLD PLANE, MILL PAVEMENT)	CASE D	CASE C

ADDITIONAL HMA OR CONCRETE QUANTITIES FOR SE/SIDE/MILE

TYPICAL CROSS SECTION	TT	TOTAL ADDITIONAL MATERIAL FOR SE/SIDE/MILE		
		HMA (TON)	CONCRETE (CY)*	CONCRETE (CY)**
TT	0.15′	NA	NA	NA
	0.20′	13.7	NA	NA
	0.30′	30.9	NA	NA
	0.40′	54.9	NA	NA
	0.45′	69.4	NA	NA
TT 0.43′	0.50′	84.2	NA	NA
	0.60′	113.9	NA	NA
	0.70′	143.6	70.9	94.2
	0.80′	173.3	85.6	112.2
	0.90′	203.0	100.3	130.2
	1.00′	232.7	114.9	148.2
	1.10′	262.4	129.6	166.2
	1.20′	292.1	144.3	184.2

* For Detail "A"
** For Optional Detail "A"

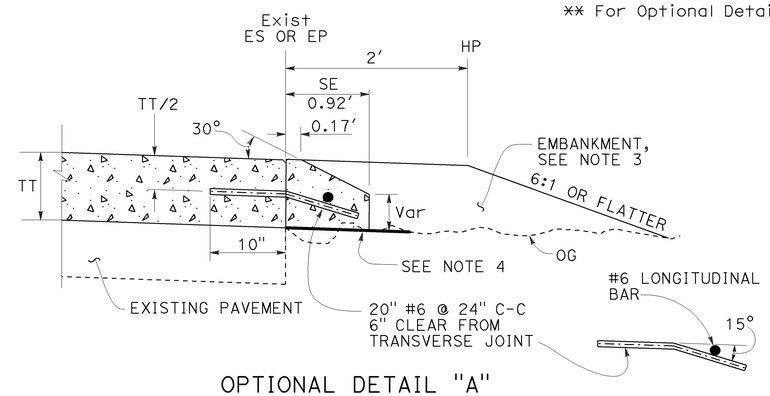

OPTIONAL DETAIL "A"
For concrete overlay
See Note 5

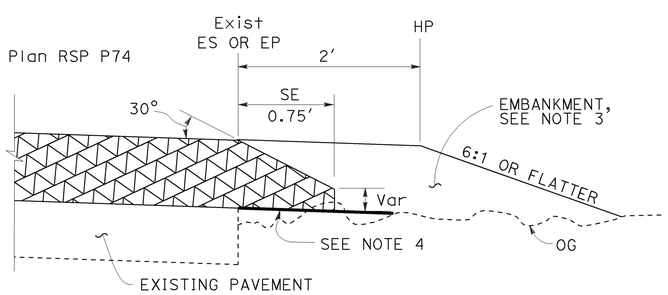

DETAIL "A"
For HMA overlay thickness more than 0.43′ or concrete overlay

NOTES:

1. For limits of safety edge and vertical edge treatments, see Revised Standard Plan RSP P74.
2. Details shown for HMA overlay thickness less than 0.43′. See Detail "A" for HMA overlay thickness more than 0.43′ or concrete overlay.
3. For locations and limits of shoulder backing or embankment see project plans.
4. Grade existing ground to place safety edge. 1′ minimum width
5. Safety edge transverse joint must match overlay transverse joint. End of #6 longitudinal bar must be 2" ±½" clear from transverse joint.
6. Safety edge is not needed in the area of MGS, barrier, right turn lane and acceleration lane. See Revised Standard Plan RSP P74.

STATE OF CALIFORNIA
DEPARTMENT OF TRANSPORTATION

PAVEMENT EDGE TREATMENTS-OVERLAYS

NO SCALE

RSP P75 DATED NOVEMBER 15, 2013 SUPERSEDES RSP P75 DATED JANUARY 20, 2012 THAT SUPPLEMENTS THE STANDARD PLANS BOOK DATED 2010.

REVISED STANDARD PLAN RSP P75

10-4-13

DIST	COUNTY	ROUTE	POST MILES TOTAL PROJECT	SHEET No.	TOTAL SHEETS
04	SM, Ala	84	R28.8/R29.3, R0.5	69	83

REGISTERED CIVIL ENGINEER

November 15, 2013
PLANS APPROVAL DATE

REGISTERED PROFESSIONAL ENGINEER
Cornelis M. Hakim
No. C55610
Exp. 12-31-14
CIVIL
STATE OF CALIFORNIA

THE STATE OF CALIFORNIA OR ITS OFFICERS OR AGENTS SHALL NOT BE RESPONSIBLE FOR THE ACCURACY OR COMPLETENESS OF SCANNED COPIES OF THIS PLAN SHEET.

TO ACCOMPANY PLANS DATED 10-6-14

LEGEND:

- HMA PAVEMENT
- HMA OR CONCRETE PAVEMENT
- CONCRETE PAVEMENT

ABBREVIATIONS:

SE SAFETY EDGE
TT TOTAL THICKNESS OF SE
HW HINGE WIDTH, DISTANCE FROM ES OR EP TO HP

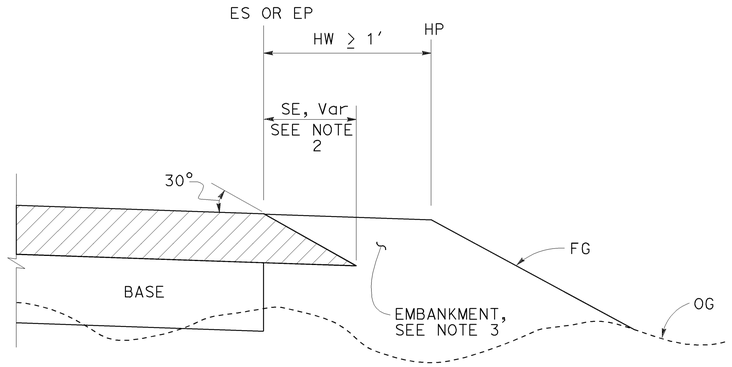

CASE K
Safety Edge - Fill Section, HW ≥ 1′

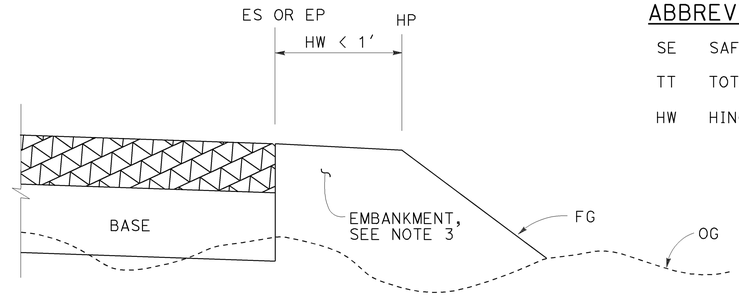

CASE L
Vertical Edge - Fill Section, HW < 1′

FILL SECTION

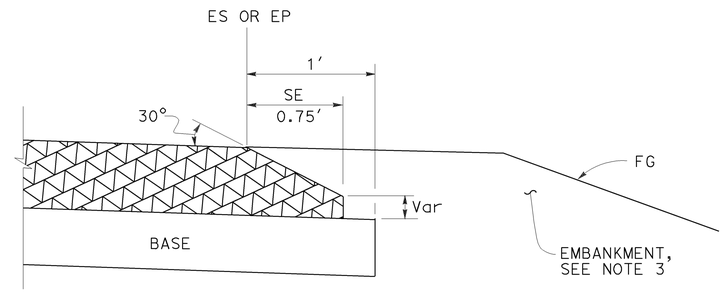

DETAIL "B"
For HMA pavement thickness more than 0.43′ or concrete pavement

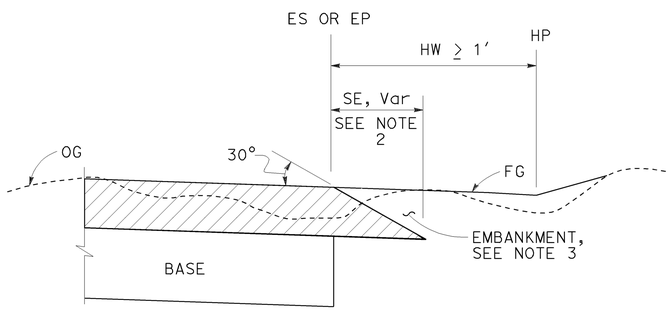

CASE M
Safety Edge - Cut Section, HW ≥ 1′

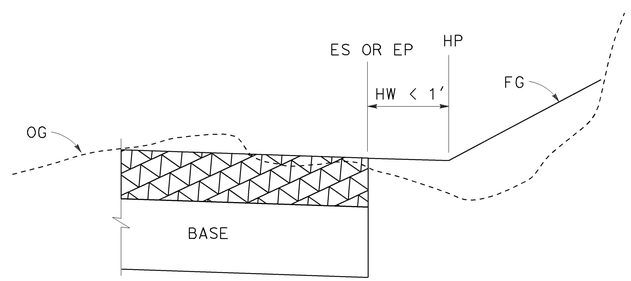

CASE N
Vertical Edge - Cut Section, HW < 1′

CUT SECTION

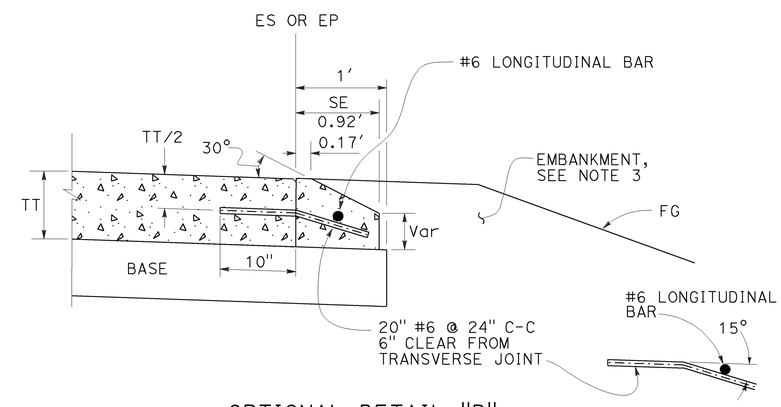

OPTIONAL DETAIL "B"
For concrete pavement
See Note 4

NOTES:

1. For limits of safety edge and vertical edge treatments, see Revised Standard Plan RSP P74
2. Details shown for HMA pavement thickness less than 0.43′. See Detail "B" for HMA pavement thickness more than 0.43′ or concrete pavement.
3. For locations and limits of embankment see project plans.
4. Safety edge transverse joint must match pavement transverse joint. End of #6 longitudinal bar must be 2" ±½" clear from transverse joint.
5. Safety edge is not needed in the area of MGS, barrier, right turn lane and acceleration lane. See Revised Standard Plan RSP P74.

STATE OF CALIFORNIA
DEPARTMENT OF TRANSPORTATION

PAVEMENT EDGE TREATMENTS-NEW CONSTRUCTION

NO SCALE

RSP P76 DATED NOVEMBER 15, 2013 SUPERSEDES RSP P76 DATED JANUARY 20, 2012 THAT SUPPLEMENTS THE STANDARD PLANS BOOK DATED 2010.

REVISED STANDARD PLAN RSP P76

2010 REVISED STANDARD PLAN RSP P76

10-4-13

Dist	COUNTY	ROUTE	POST MILES TOTAL PROJECT	SHEET No.	TOTAL SHEETS
04	SM, Ala	84	R28.8/R29.3, R0.5	70	83

LICENSED LANDSCAPE ARCHITECT

July 19, 2013
PLANS APPROVAL DATE

THE STATE OF CALIFORNIA OR ITS OFFICERS OR AGENTS SHALL NOT BE RESPONSIBLE FOR THE ACCURACY OR COMPLETENESS OF SCANNED COPIES OF THIS PLAN SHEET.

LICENSED LANDSCAPE ARCHITECT — Gregory A. Balzer — 2015 — 02-28-15 Renewal Date — 7-19-13 Date — STATE OF CALIFORNIA

TO ACCOMPANY PLANS DATED 10-6-14

2010 REVISED STANDARD PLAN RSP H1

A

AB	AGGREGATE BASE
ABS	ACRYLONITRILE-BUTADIENE-STYRENE
AC	ASPHALT CONCRETE
ACC	ARMOR-CLAD CONDUCTORS
Adj	ADJACENT/ADJUSTABLE
AIC	AUXILIARY IRRIGATION CONTROLLER
Alt	ALTERNATIVE
AMEND	AMENDMENT
ARV	AIR RELEASE VALVE
AUTO	AUTOMATIC
AUX	AUXILIARY
AVB	ATMOSPHERIC VACUUM BREAKER

B

B&B	BALLED AND BURLAPPED
B/B	BRASS/BRONZE
B/B/PL	BRASS/BRONZE/PLASTIC
B/PL	BRASS/PLASTIC
BFM	BONDED FIBER MATRIX
Bit Ctd	BITUMINOUS COATED
BP	BOOSTER PUMP
BPA	BACKFLOW PREVENTER ASSEMBLY
BPE	BACKFLOW PREVENTER ENCLOSURE
BV	BALL VALVE

C

C	CONDUIT
CAP	CORRUGATED ALUMINUM PIPE
CARV	COMBINATION AIR RELEASE VALVE
CB	COUPLING BAND
CCA	CAM COUPLER ASSEMBLY
CEC	CONTROLLER ENCLOSURE CABINET
CHDPE	CORRUGATED HIGH DENSITY POLYETHYLENE
CL	CHAIN LINK
CNC	CONTROL AND NEUTRAL CONDUCTORS
Conc	CONCRETE
CP	COPPER PIPE
CS	COMPOST SOCK
CSP	CORRUGATED STEEL PIPE
CST	CENTER STRIP
CV	CHECK VALVE

D

Dia	DIAMETER
DIP	DUCTILE IRON PIPE
DIT	DRIP IRRIGATION TUBING
DG	DECOMPOSED GRANITE
DN	DIAMETER NOMINAL
DVA	DRIP VALVE ASSEMBLY

E

EC	EROSION CONTROL
ECTC	EROSION CONTROL TECHNOLOGY COUNCIL
Elect	ELECTRIC/ELECTRICAL
Elev	ELEVATION
ELL	ELBOW
ENCL	ENCLOSURE
EP	EDGE OF PAVEMENT
ES	EDGE OF SHOULDER
EST	END STRIP
ESTB	ESTABLISHMENT
ETW	EDGE OF TRAVELED WAY

F

F	FULL CIRCLE
F/P	FULL/PART CIRCLE
FCV	FLOW CONTROL VALVE
FERT	FERTILIZER
FG	FINISHED GRADE
FH	FLEXIBLE HOSE
FIPT	FEMALE IRON PIPE THREAD
FIS	FERTILIZER INJECTOR SYSTEM
FL	FLOW LINE
FR	FIBER ROLL
FS	FLOW SENSOR
FSC	FLOW SENSOR CABLE
FV	FLUSH VALVE

G

Galv	GALVANIZED
GARV	GARDEN VALVE
GARVA	GARDEN VALVE ASSEMBLY
GM	GRAVEL MULCH
GPH	GALLONS PER HOUR
GPM	GALLONS PER MINUTE
GSP	GALVANIZED STEEL PIPE
GV	GATE VALVE

H

H	HALF CIRCLE
HDPE	HIGH DENSITY POLYETHYLENE
HP	HORSEPOWER/HINGE POINT
HPL	HIGH PRESSURE LINE
Hwy	HIGHWAY

I

IC	IRRIGATION CONTROLLER
ICC	IRRIGATION CONTROLLER(S) IN CONTROLLER ENCLOSURE CABINET
ID	INSIDE DIAMETER
IFS	IRRIGATION FILTRATION SYSTEM
IPS	IRON PIPE SIZE
IPT	IRON PIPE THREAD
Irr	IRRIGATION

L

L	LENGTH

M

Max	MAXIMUM
MBGR	METAL BEAM GUARD RAILING
MCV	MANUAL CONTROL VALVE
MIC	MASTER IRRIGATION CONTROLLER
Min	MINIMUM
MIPT	MALE IRON PIPE THREAD
Misc	MISCELLANEOUS
Mtl	MATERIAL
MVP	MAINTENANCE VEHICLE PULLOUT

N

NCN	NO COMMON NAME
NL	NOZZLE LINE
No.	NUMBER
NPT	NATIONAL PIPE THREAD

O

O/C	ON CENTER
OD	OUTSIDE DIAMETER
OL	OVERLAP

P

P	PART CIRCLE
PB	PULL BOX
PCC	PORTLAND CEMENT CONCRETE
PE	POLYETHYLENE
Pkt	PACKET
PL	PLASTIC
PLS	PURE LIVE SEED
PLT	PLANT/PLANTING
PLT ESTB	PLANT ESTABLISHMENT
PM	POST MILE
PR	PRESSURE RATED
PRLV	PRESSURE RELIEF VALVE
PRV	PRESSURE REGULATING VALVE
PVC	POLYVINYL CHLORIDE
Pvmt	PAVEMENT

Q

Q	QUARTER CIRCLE
QCV	QUICK COUPLING VALVE

R

R	RADIUS
RCP	REINFORCED CONCRETE PIPE
RCV	REMOTE CONTROL VALVE
RCVM	REMOTE CONTROL VALVE (MASTER)
RCVMF	REMOTE CONTROL VALVE (MASTER) W/FLOW SENSOR
RCVP	REMOTE CONTROL VALVE W/PRESSURE REGULATOR
RCW	RECYCLED WATER
RECP	ROLLED EROSION CONTROL PRODUCT
REQ	REQUIRED
RICS	REMOTE IRRIGATION CONTROL SYSTEM
R/W	RIGHT OF WAY

S

S	SLIP
SCH	SCHEDULE
SF	STATE-FURNISHED
Shld	SHOULDER
Sq	SQUARE
SST	SIDE STRIP
Sta	STATION
Std	STANDARD
SW	SIDEWALK/SOUND WALL

T

T	THIRD CIRCLE/THREAD
TLS	TRUCK LOADING STANDPIPE
TQ	THREE QUARTER CIRCLE
TRM	TURF REINFORCEMENT MAT
TT	TWO-THIRDS CIRCLE
TWSA	TREE WELL SPRINKLER ASSEMBLY
Typ	TYPICAL

U

UG	UNDERGROUND

W

W	WIDTH
W/	WITH
WM	WATER METER
WS	WYE STRAINER
WSA	WYE STRAINER ASSEMBLY
WSP	WELDED STEEL PIPE
WWM	WELDED WIRE MESH

NOTE:

For additional abbreviations, see Standard Plans A10A and A10B.

STATE OF CALIFORNIA
DEPARTMENT OF TRANSPORTATION

LANDSCAPE AND EROSION CONTROL ABBREVIATIONS

NO SCALE

RSP H1 DATED JULY 19, 2013 SUPERSEDES STANDARD PLAN H1 DATED MAY 20, 2011 - PAGE 218 OF THE STANDARD PLANS BOOK DATED 2010.

REVISED STANDARD PLAN RSP H1

Dist	COUNTY	ROUTE	POST MILES TOTAL PROJECT	SHEET No.	TOTAL SHEETS
04	SM, Ala	84	R28.8/R29.3, R0.5	71	83

LICENSED LANDSCAPE ARCHITECT

November 15, 2013
PLANS APPROVAL DATE

LICENSED LANDSCAPE ARCHITECT
Gregory A. Balzer 2576
02-28-15
Renewal Date
11-15-13
Date
STATE OF CALIFORNIA

THE STATE OF CALIFORNIA OR ITS OFFICERS OR AGENTS SHALL NOT BE RESPONSIBLE FOR THE ACCURACY OR COMPLETENESS OF SCANNED COPIES OF THIS PLAN SHEET.

TO ACCOMPANY PLANS DATED 10-6-14

2010 REVISED STANDARD PLAN RSP H2

EXISTING	NEW	ITEM DESCRIPTION
		WATER METER (WM)
		BACKFLOW PREVENTER ASSEMBLY (BPA)
		BACKFLOW PREVENTER ENCLOSURE (BPE)
		BOOSTER PUMP (BP)
		TRUCK LOADING STANDPIPE (TLS)
	FS	FLOW SENSOR (FS)
		MASTER IRRIGATION CONTROLLER (MIC)
		AUXILIARY IRRIGATION CONTROLLER (AIC)
		IRRIGATION CONTROLLER (IC) IRRIGATION CONTROLLER (IC) (BATTERY) IRRIGATION CONTROLLER (IC) (SOLAR) IRRIGATION CONTROLLER (IC) (TWO WIRE) IRRIGATION CONTROLLER(S) IN CONTROLLER ENCLOSURE CABINET (ICC)
acc	ACC	ARMOR-CLAD CONDUCTORS (ACC)
cnc	CNC	CONTROL AND NEUTRAL CONDUCTORS (CNC)
		IRRIGATION CONDUIT
		EXTEND IRRIGATION CONDUIT
dip	DIP	DUCTILE IRON PIPE (SUPPLY LINE) (MAIN) (DIP)
		GALVANIZED STEEL PIPE (SUPPLY LINE) (MAIN) (GSP)
		GALVANIZED STEEL PIPE (SUPPLY LINE) (LATERAL) (GSP)
		PLASTIC PIPE (SUPPLY LINE) (MAIN)
		PLASTIC PIPE (SUPPLY LINE) (LATERAL)
cp	CP	COPPER PIPE (SUPPLY LINE)
dit	DIT	DRIP IRRIGATION TUBING
		REMOTE CONTROL VALVE (RCV) REMOTE CONTROL VALVE (MASTER) (RCVM) REMOTE CONTROL VALVE (MASTER) W/FLOW METER (RCVMF)
P	P	REMOTE CONTROL VALVE W/PRESSURE REGULATOR (RCVP)
		EXISTING MANUAL CONTROL VALVE (MCV)
	V	DRIP VALVE ASSEMBLY (DVA)
	Y	WYE STRAINER ASSEMBLY (WSA)

EXISTING	NEW	ITEM DESCRIPTION
		GATE VALVE (GV)
		BALL VALVE (BV)
		QUICK COUPLING VALVE (QCV)
		CAM COUPLER ASSEMBLY (CCA)
		GARDEN VALVE ASSEMBLY (GARVA)
		PRESSURE REGULATING VALVE (PRV)
		PRESSURE RELIEF VALVE (PRLV)
		FLOW CONTROL VALVE (FCV)
		COMBINATION AIR RELEASE VALVE (CARV)
		CHECK VALVE (CV)
		FLUSH VALVE (FV)
		EXISTING NOZZLE LINE W/TURNING UNION
		EXISTING IRRIGATION SYSTEM
		EXISTING IRRIGATION SYSTEM TO BE REMOVED
		CHAIN LINK GATE
		QUICK COUPLING VALVE W/SPRINKLER PROTECTOR
3	3	SPRINKLER W/SPRINKLER PROTECTOR
	C	CONNECT TO EXISTING SYSTEM
		CAP
		CAP EXISTING
	\\\FR\\\	FIBER ROLL
	\\\CS\\\	COMPOST SOCK

- RCV SIZE
- IRRIGATION CONTROLLER
- CONTROLLER STATION
- VALVE IN PARALLEL (IF APPLICABLE)
- GPM
- QUANTITY OF SPRINKLERS (WHEN SHOWN)

* 2½"-A-2b-40-60

VALVE CODE

* VALVE CODES FOR EXISTING VALVES ARE SHOWN IN A DASHED ENCLOSURE.

STATE OF CALIFORNIA
DEPARTMENT OF TRANSPORTATION

LANDSCAPE AND EROSION CONTROL SYMBOLS

NO SCALE

RSP H2 DATED NOVEMBER 15, 2013 SUPERSEDES RSP H2 DATED JULY 19, 2013 AND STANDARD PLAN H2 DATED MAY 20, 2011 - PAGE 219 OF THE STANDARD PLANS BOOK DATED 2010.

REVISED STANDARD PLAN RSP H2

10-9-13

Dist	COUNTY	ROUTE	POST MILES TOTAL PROJECT	SHEET No.	TOTAL SHEETS
04	SM, Ala	84	R28.8/R29.3, R0.5	72	83

LICENSED LANDSCAPE ARCHITECT

July 19, 2013
PLANS APPROVAL DATE

THE STATE OF CALIFORNIA OR ITS OFFICERS OR AGENTS SHALL NOT BE RESPONSIBLE FOR THE ACCURACY OR COMPLETENESS OF SCANNED COPIES OF THIS PLAN SHEET.

LICENSED LANDSCAPE ARCHITECT — Gregory A. Balzer — 2576 — 09 REGISTRATION — 2-28-15 Renewal Date — 7-19-13 Date — STATE OF CALIFORNIA

TO ACCOMPANY PLANS DATED 10-6-14

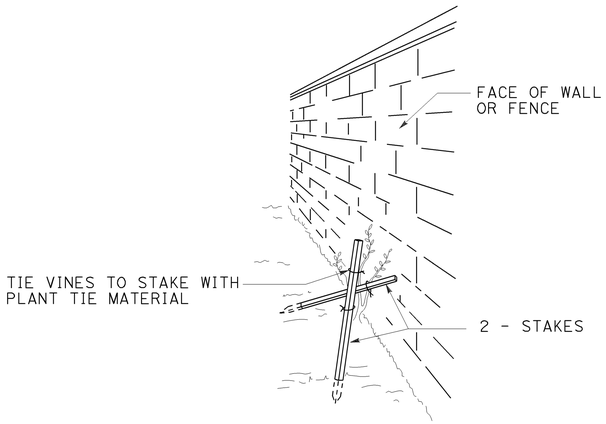

PERSPECTIVE
VINE STAKING

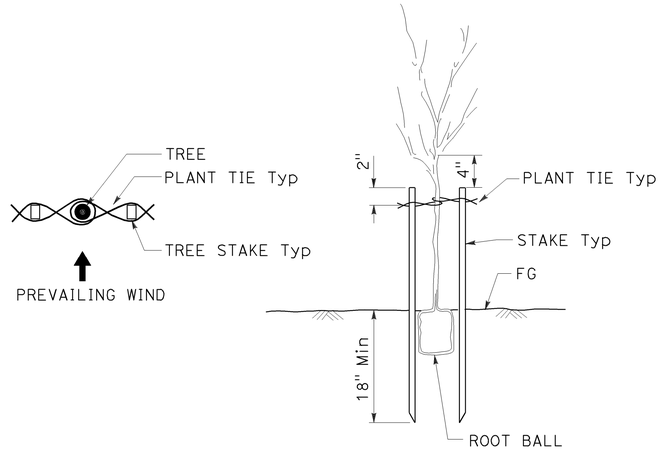

TREE STAKING

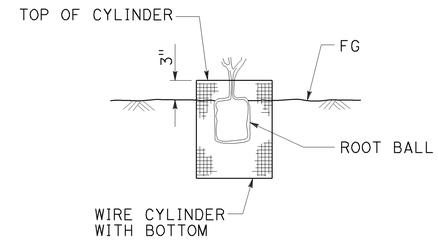

SECTION
ROOT PROTECTOR

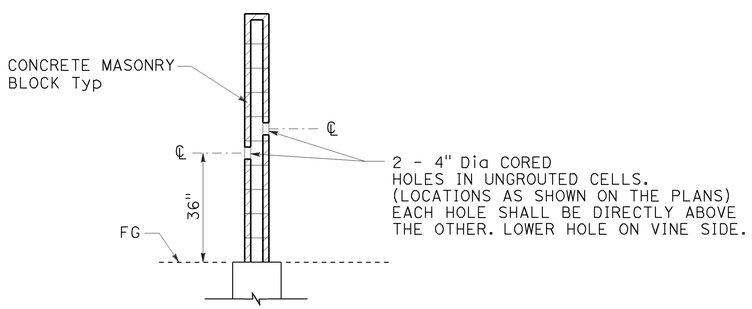

SECTION
CORE HOLE (VINE)

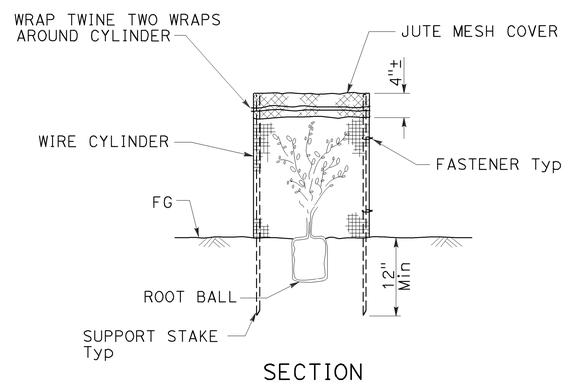

SECTION
FOLIAGE PROTECTOR

STATE OF CALIFORNIA
DEPARTMENT OF TRANSPORTATION

LANDSCAPE DETAILS

NO SCALE

RSP H4 DATED JULY 19, 2013 SUPERSEDES STANDARD PLAN H4
DATED MAY 20, 2011 - PAGE 221 OF THE STANDARD PLANS BOOK DATED 2010.

REVISED STANDARD PLAN RSP H4

2010 REVISED STANDARD PLAN RSP H4

6-28-13

Dist	COUNTY	ROUTE	POST MILES TOTAL PROJECT	SHEET No.	TOTAL SHEETS
04	SM, Ala	84	R28.8/R29.3, R0.5	73	83

LICENSED LANDSCAPE ARCHITECT

July 19, 2013
PLANS APPROVAL DATE

THE STATE OF CALIFORNIA OR ITS OFFICERS OR AGENTS SHALL NOT BE RESPONSIBLE FOR THE ACCURACY OR COMPLETENESS OF SCANNED COPIES OF THIS PLAN SHEET.

LICENSED LANDSCAPE ARCHITECT — Gregory A. Belzer — 2516 — 02-28-15 Renewal Date — 7-19-13 Date — STATE OF CALIFORNIA

TO ACCOMPANY PLANS DATED 10-6-14

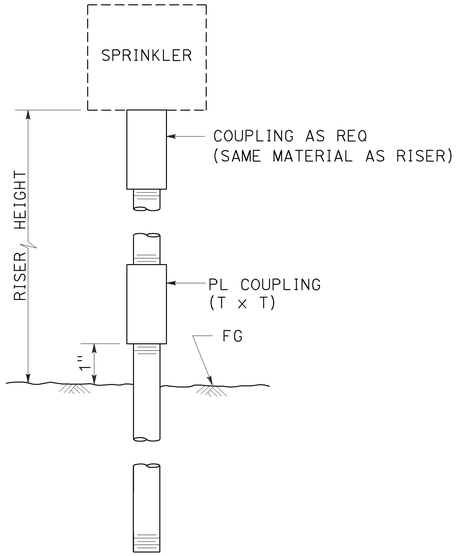

ELEVATION

RISER SPRINKLER ASSEMBLY TYPE I

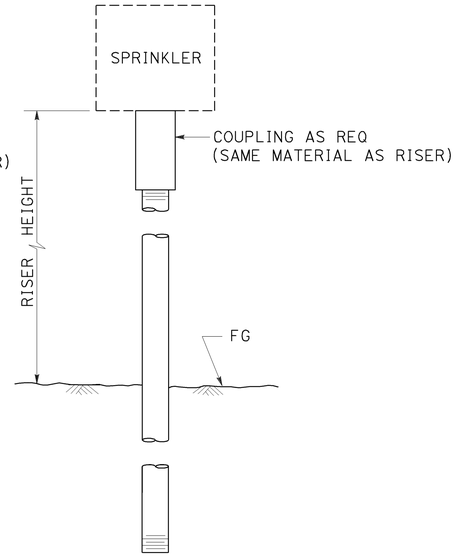

ELEVATION

RISER SPRINKLER ASSEMBLY TYPE II

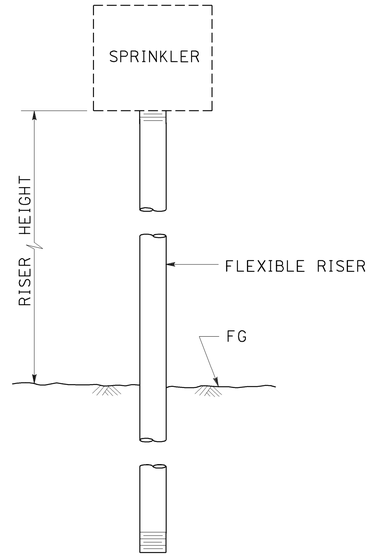

ELEVATION

RISER SPRINKLER ASSEMBLY TYPE III

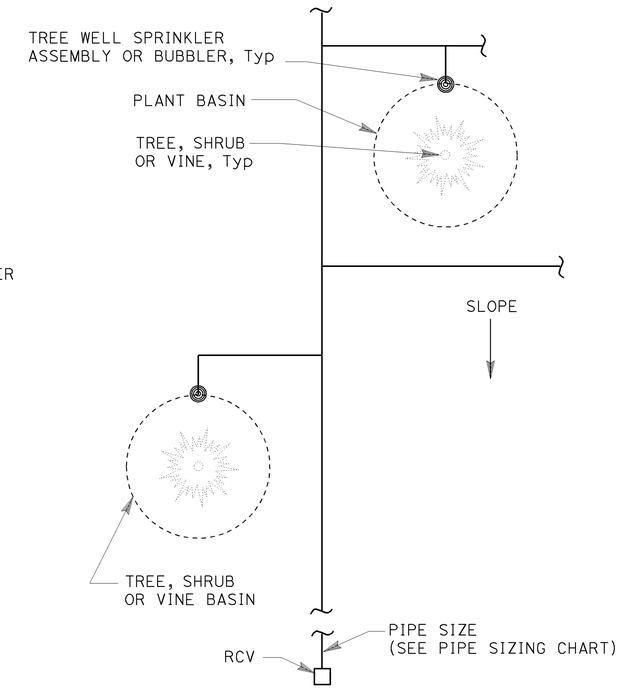

PLAN

NOTES:

1. Install tree well sprinkler assembly on up-hill side of plant when on slope.
2. Install bubbler within basin.

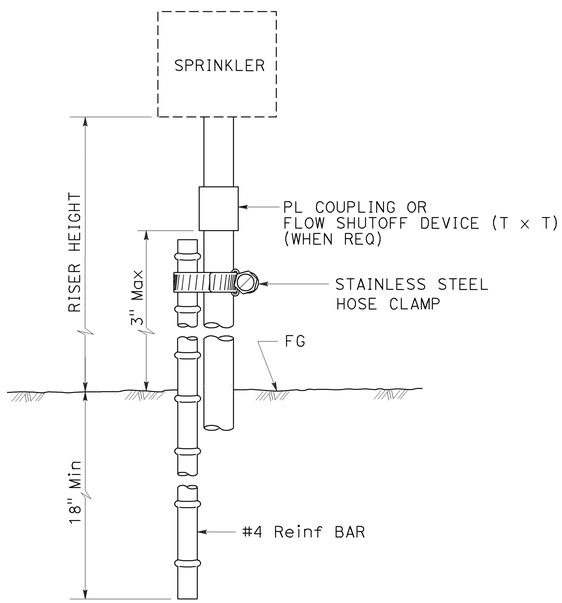

ELEVATION

RISER SPRINKLER ASSEMBLY TYPE IV

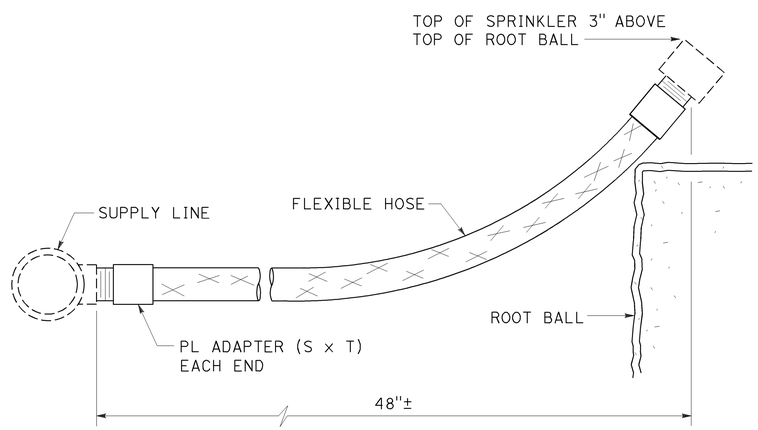

ELEVATION

RISER SPRINKLER ASSEMBLY TYPE V

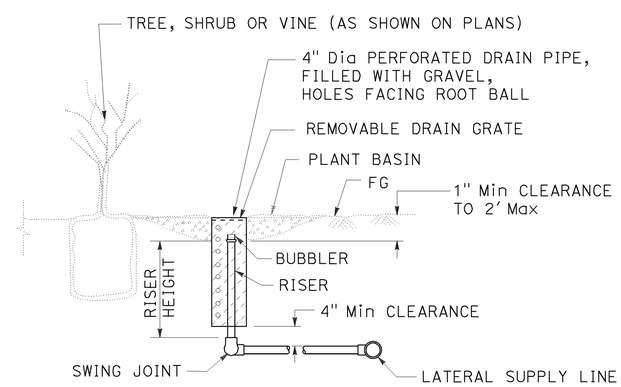

SECTION

TREE WELL SPRINKLER ASSEMBLY

STATE OF CALIFORNIA
DEPARTMENT OF TRANSPORTATION

LANDSCAPE DETAILS

NO SCALE

RSP H5 DATED JULY 19, 2013 SUPERSEDES STANDARD PLAN H5
DATED MAY 20, 2011 - PAGE 222 OF THE STANDARD PLANS BOOK DATED 2010.

REVISED STANDARD PLAN RSP H5

2010 REVISED STANDARD PLAN RSP H5

6-28-13

Dist	COUNTY	ROUTE	POST MILES TOTAL PROJECT	SHEET No.	TOTAL SHEETS
04	SM, Ala	84	R28.8/R29.3, R0.5	74	83

Gregory A. Balzer
LICENSED LANDSCAPE ARCHITECT

10-6-14
PLANS APPROVAL DATE

LICENSED LANDSCAPE ARCHITECT Gregory A. Balzer 2576 STATE OF CALIFORNIA 02-28-15 Renewal Date 7-19-13 Date

THE STATE OF CALIFORNIA OR ITS OFFICERS OR AGENTS SHALL NOT BE RESPONSIBLE FOR THE ACCURACY OR COMPLETENESS OF SCANNED COPIES OF THIS PLAN SHEET.

TO ACCOMPANY PLANS DATED 10-6-14

2010 REVISED STANDARD PLAN RSP H7

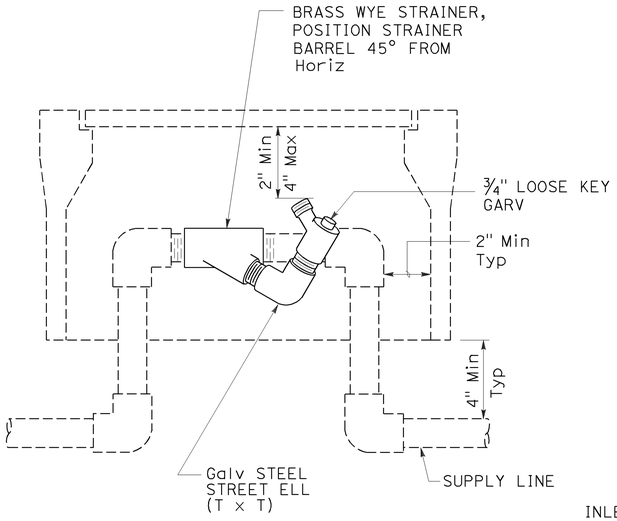

ELEVATION
WYE STRAINER ASSEMBLY

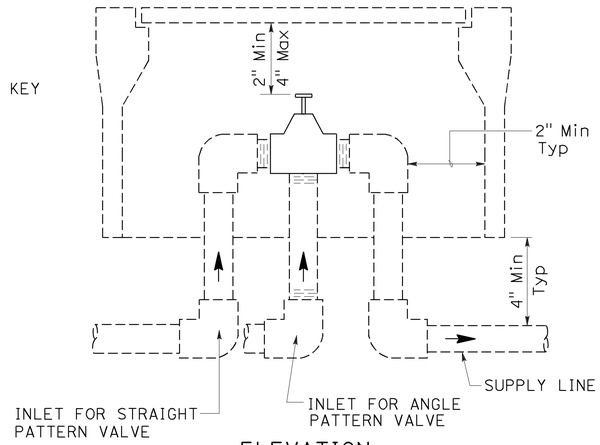

ELEVATION
VALVE

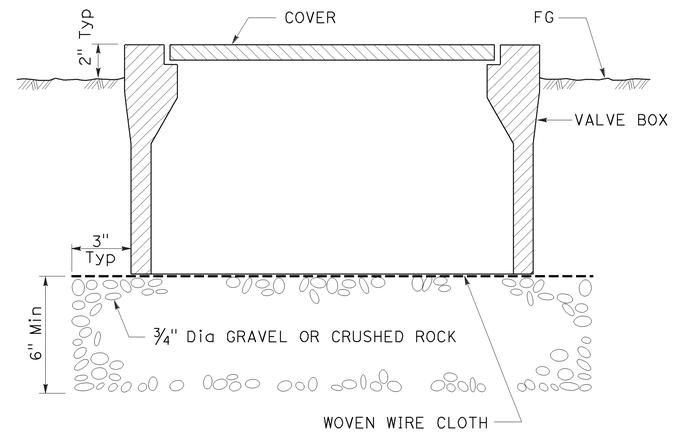

SECTION
VALVE BOX

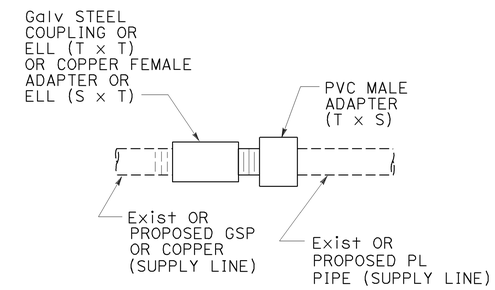

GALVANIZED OR COPPER PIPE CONNECTION TO PLASTIC PIPE

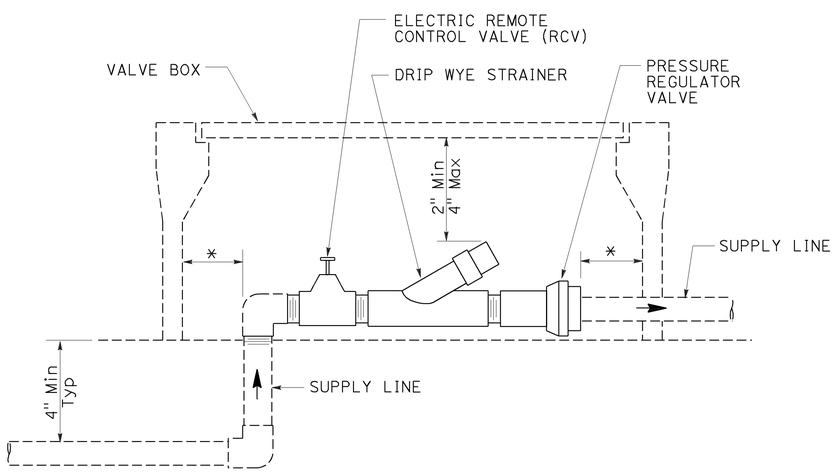

* 2" CLEARANCE ON ALL SIDES

ELEVATION
DRIP VALVE ASSEMBLY

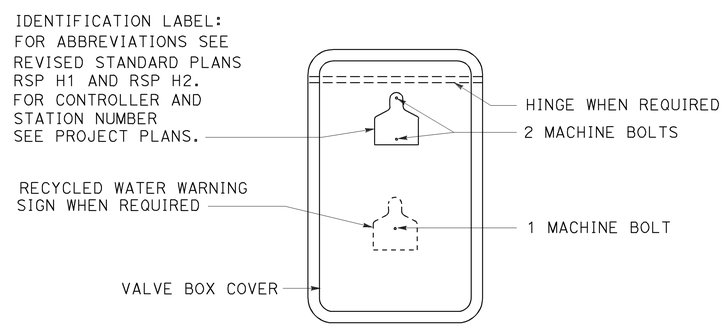

PLAN

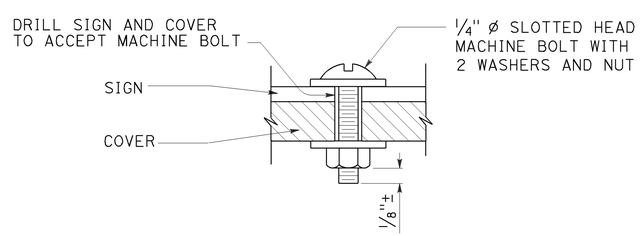

SECTION
VALVE BOX IDENTIFICATION

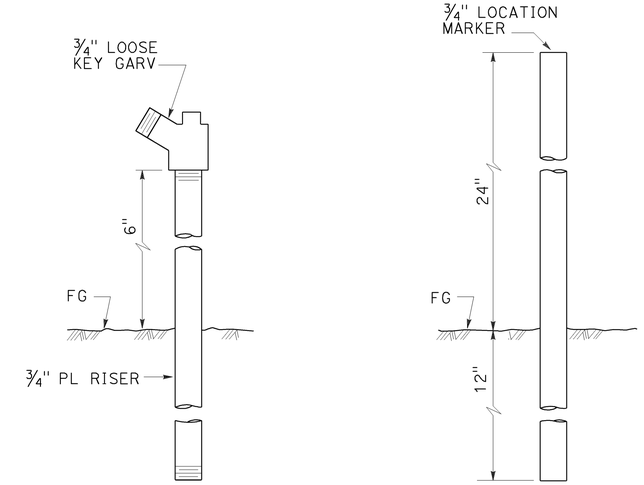

ELEVATION
GARDEN VALVE ASSEMBLY

ELEVATION
LOCATION MARKER

GARDEN VALVE ASSEMBLY

STATE OF CALIFORNIA
DEPARTMENT OF TRANSPORTATION

LANDSCAPE DETAILS

NO SCALE

RSP H7 DATED JULY 19, 2013 SUPERSEDES STANDARD PLAN H7
DATED MAY 20, 2011 - PAGE 224 OF THE STANDARD PLANS BOOK DATED 2010.

REVISED STANDARD PLAN RSP H7

6-20-13

Dist	COUNTY	ROUTE	POST MILES TOTAL PROJECT	SHEET No.	TOTAL SHEETS
04	SM, Ala	84	R28.8/R29.3, R0.5	75	83

Gregory A. Balzer
LICENSED LANDSCAPE ARCHITECT

July 19, 2013
PLANS APPROVAL DATE

LICENSED LANDSCAPE ARCHITECT
Gregory A. Balzer 2576
Gregory A. Balzer
10 Expires
2-28-15
Renewal Date
7-19-13
Date
STATE OF CALIFORNIA

THE STATE OF CALIFORNIA OR ITS OFFICERS OR AGENTS SHALL NOT BE RESPONSIBLE FOR THE ACCURACY OR COMPLETENESS OF SCANNED COPIES OF THIS PLAN SHEET.

TO ACCOMPANY PLANS DATED 10-6-14

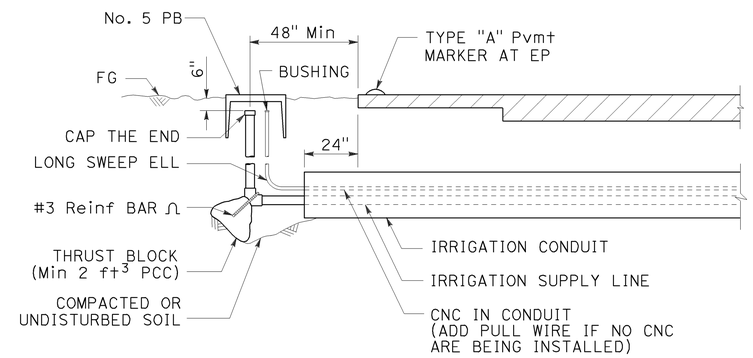

SECTION

IRRIGATION CONDUIT

UNDER TRAVELED WAY

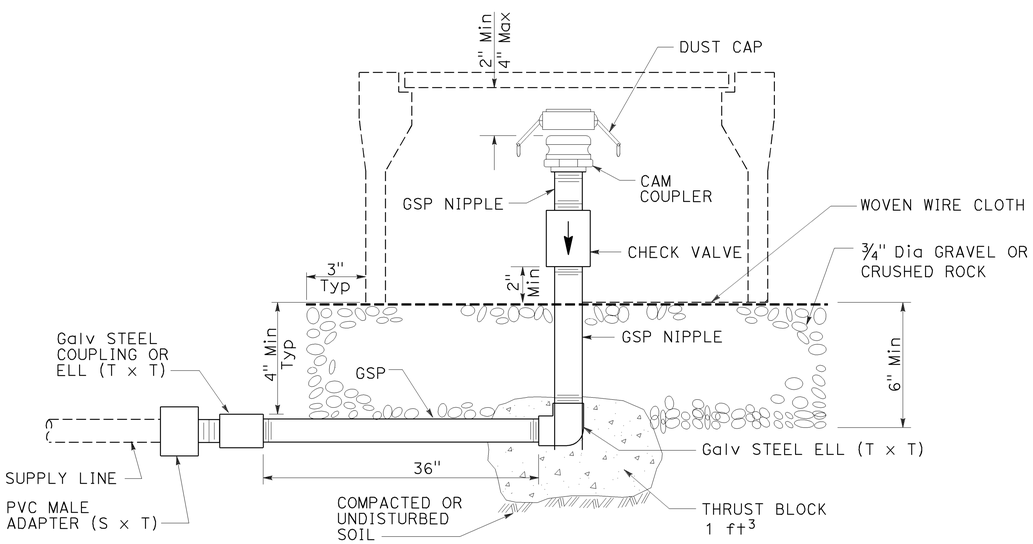

ELEVATION

CAM COUPLER ASSEMBLY

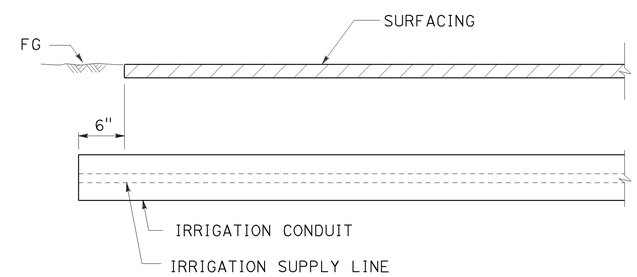

SECTION

IRRIGATION CONDUIT

UNDER SIDEWALKS, DRIVEWAYS AND PATHS

STATE OF CALIFORNIA
DEPARTMENT OF TRANSPORTATION

LANDSCAPE DETAILS

NO SCALE

RSP H9 DATED JULY 19, 2013 SUPERSEDES STANDARD PLAN H9
DATED MAY 20, 2011 - PAGE 226 OF THE STANDARD PLANS BOOK DATED 2010.

REVISED STANDARD PLAN RSP H9

2010 REVISED STANDARD PLAN RSP H9

6-28-13

Dist	COUNTY	ROUTE	POST MILES TOTAL PROJECT	SHEET No.	TOTAL SHEETS
04	SM, Ala	84	R28.8/R29.3, R0.5	76	83

Gregory A. Balzer
LICENSED LANDSCAPE ARCHITECT

July 19, 2013
PLANS APPROVAL DATE

LICENSED LANDSCAPE ARCHITECT
Gregory A. Balzer 2576
Renewal Date 2-28-15
7-19-13
Date
STATE OF CALIFORNIA

THE STATE OF CALIFORNIA OR ITS OFFICERS OR AGENTS SHALL NOT BE RESPONSIBLE FOR THE ACCURACY OR COMPLETENESS OF SCANNED COPIES OF THIS PLAN SHEET.

TO ACCOMPANY PLANS DATED 10-6-14

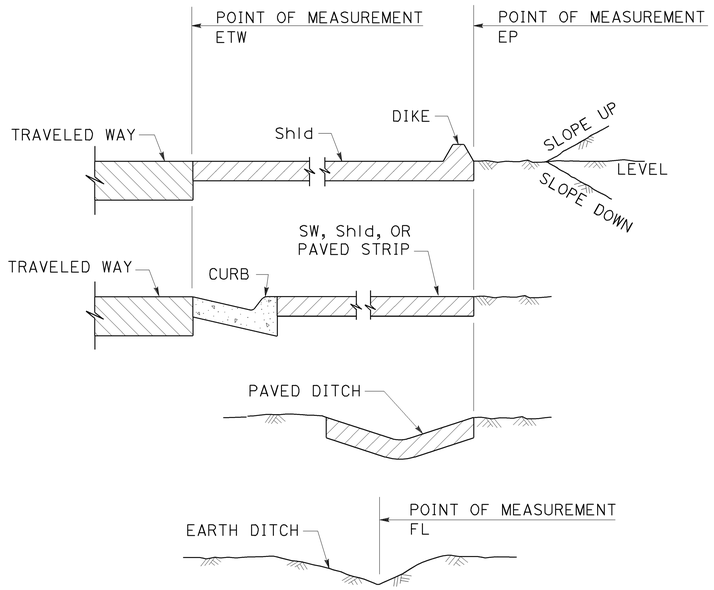

SECTION
POINTS OF MEASUREMENT

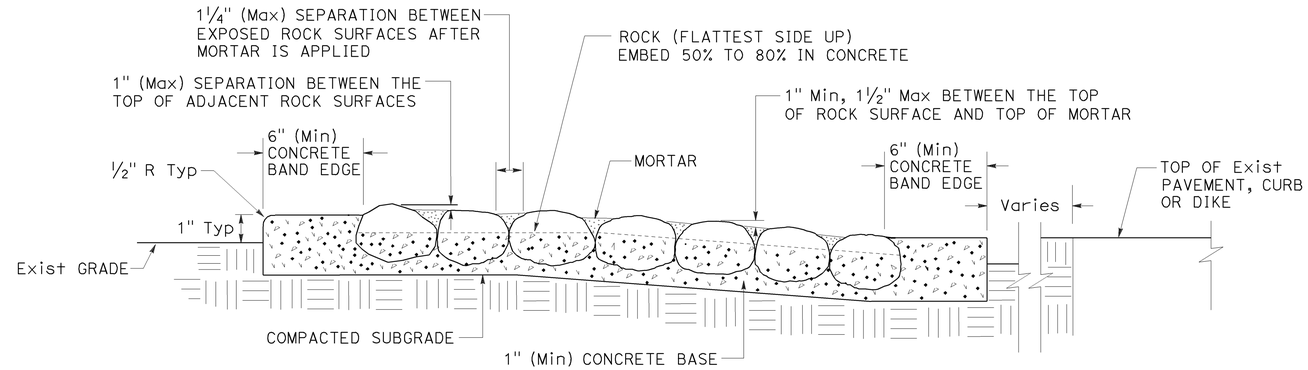

SECTION
ROCK BLANKET

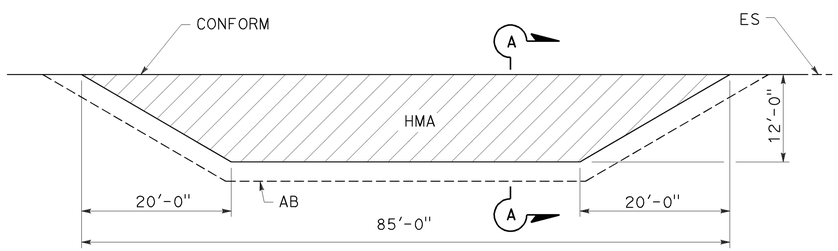

PLAN

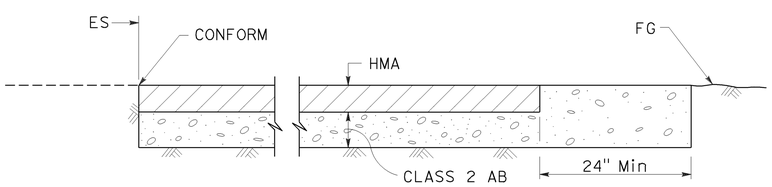

SECTION A-A
MAINTENANCE VEHICLE PULLOUT

STATE OF CALIFORNIA
DEPARTMENT OF TRANSPORTATION

LANDSCAPE DETAILS

NO SCALE

RSP H9A DATED JULY 19, 2013 SUPPLEMENTS THE STANDARD PLANS BOOK DATED 2010.

REVISED STANDARD PLAN RSP H9A

2010 REVISED STANDARD PLAN RSP H9A

6-21-13

Dist	COUNTY	ROUTE	POST MILES TOTAL PROJECT	SHEET No.	TOTAL SHEETS
04	SM, Ala	84	R28.8/R29.3, R0.5	77	83

REGISTERED CIVIL ENGINEER

July 19, 2013
PLANS APPROVAL DATE

REGISTERED PROFESSIONAL ENGINEER Gurinderpal Bhullar No. C48815 Exp. 9-30-14 CIVIL STATE OF CALIFORNIA

THE STATE OF CALIFORNIA OR ITS OFFICERS OR AGENTS SHALL NOT BE RESPONSIBLE FOR THE ACCURACY OR COMPLETENESS OF SCANNED COPIES OF THIS PLAN SHEET.

TO ACCOMPANY PLANS DATED 10-6-14

2010 REVISED STANDARD PLAN RSP T9

TABLE 1

TAPER LENGTH CRITERIA AND CHANNELIZING DEVICE SPACING

SPEED (S)	MINIMUM TAPER LENGTH * FOR WIDTH OF OFFSET 12 FEET (W)				MAXIMUM CHANNELIZING DEVICE SPACING		
					X	Y	Z **
	TANGENT 2L	MERGING L	SHIFTING L/2	SHOULDER L/3	TAPER	TANGENT	CONFLICT
mph	ft	ft	ft	ft	ft	ft	ft
20	160	80	40	27	20	40	10
25	250	125	63	42	25	50	12
30	360	180	90	60	30	60	15
35	490	245	123	82	35	70	17
40	640	320	160	107	40	80	20
45	1080	540	270	180	45	90	22
50	1200	600	300	200	50	100	25
55	1320	660	330	220	55	110	27
60	1440	720	360	240	60	120	30
65	1560	780	390	260	65	130	32
70	1680	840	420	280	70	140	35

* - For other offsets, use the following merging taper length formula for L:
For speed of 40 mph or less, $L = WS^2/60$
For speed of 45 mph or more, $L = WS$

Where: L = Taper length in feet
W = Width of offset in feet
S = Posted speed limit, off-peak 85th-percentile speed prior to work starting, or the anticipated operating speed in mph

** - Use for taper and tangent sections where there are no pavement markings or where there is a conflict between existing pavement markings and channelizers (CA).

TABLE 2

LONGITUDINAL BUFFER SPACE AND FLAGGER STATION SPACING

SPEED *	Min D **	DOWNGRADE Min D ***		
		-3%	-6%	-9%
mph	ft	ft	ft	ft
20	115	116	120	126
25	155	158	165	173
30	200	205	215	227
35	250	257	271	287
40	305	315	333	354
45	360	378	400	427
50	425	446	474	507
55	495	520	553	593
60	570	598	638	686
65	645	682	728	785
70	730	771	825	891

* - Speed is posted speed limit, off-peak 85th-percentile speed prior to work starting, or the anticipated operating speed in mph

** - Longitudinal buffer space or flagger station spacing

*** - Use on sustained downgrade steeper than -3 percent and longer than 1 mile.

TABLE 3

ADVANCE WARNING SIGN SPACING

ROAD TYPE	DISTANCE BETWEEN SIGNS *		
	A	B	C
	ft	ft	ft
URBAN - 25 mph OR LESS	100	100	100
URBAN - MORE THAN 25 mph TO 40 mph	250	250	250
URBAN - MORE THAN 40 mph	350	350	350
RURAL	500	500	500
EXPRESSWAY / FREEWAY	1000	1500	2640

* - The distances are approximate, are intended for guidance purposes only, and should be applied with engineering judgment. These distances should be adjusted by the Engineer for field conditions, if necessary, by increasing or decreasing the recommmended distances.

STATE OF CALIFORNIA
DEPARTMENT OF TRANSPORTATION

TRAFFIC CONTROL SYSTEM TABLES FOR LANE AND RAMP CLOSURES

NO SCALE

RSP T9 DATED JULY 19, 2013 SUPERSEDES RSP T9 DATED APRIL 19, 2013 THAT SUPPLEMENTS THE STANDARD PLANS BOOK DATED 2010.

REVISED STANDARD PLAN RSP T9

TO ACCOMPANY PLANS DATED 10-6-14

Dist	COUNTY	ROUTE	POST MILES TOTAL PROJECT	SHEET No.	TOTAL SHEETS
04	SM, Ala	84	R28.8/R29.3, R0.5	78	83

REGISTERED CIVIL ENGINEER

April 19, 2013
PLANS APPROVAL DATE

REGISTERED PROFESSIONAL ENGINEER Gurinderpal Bhullar No. C48815 Exp. 9-30-14 CIVIL STATE OF CALIFORNIA

THE STATE OF CALIFORNIA OR ITS OFFICERS OR AGENTS SHALL NOT BE RESPONSIBLE FOR THE ACCURACY OR COMPLETENESS OF SCANNED COPIES OF THIS PLAN SHEET.

NOTES:

See Revised Standard Plan RSP T9 for tables.

Use cone spacing X for taper segment, Y for tangent segment or Z for conflict situations, as approriate, per Table 1, unless X, Y, or Z cone spacing is shown on this sheet.

Unless otherwise specified in the special provisions, all temporary warning signs shall have black legend on fluorescent orange background.

California codes are designated by (CA). Otherwise, Federal (MUTCD) codes are shown.

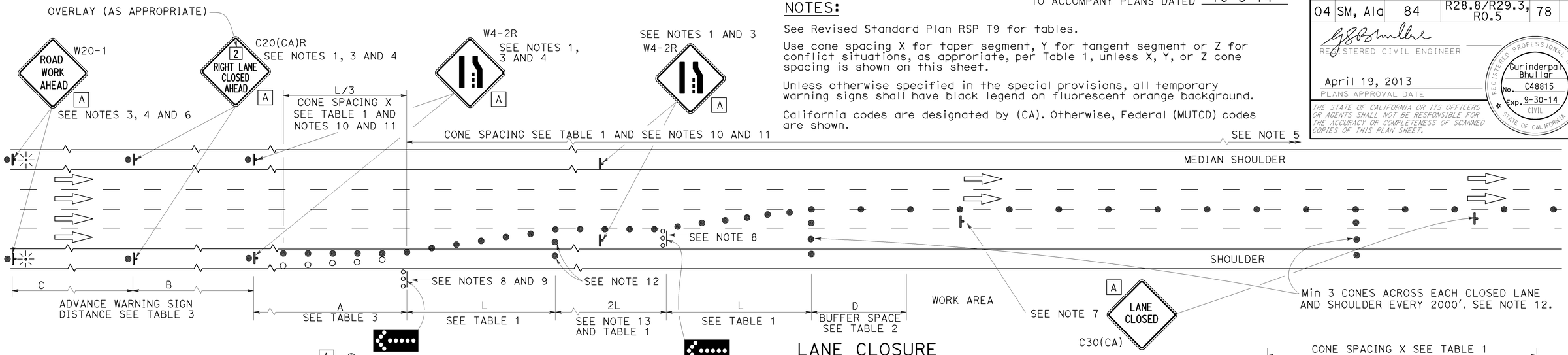

LANE CLOSURE

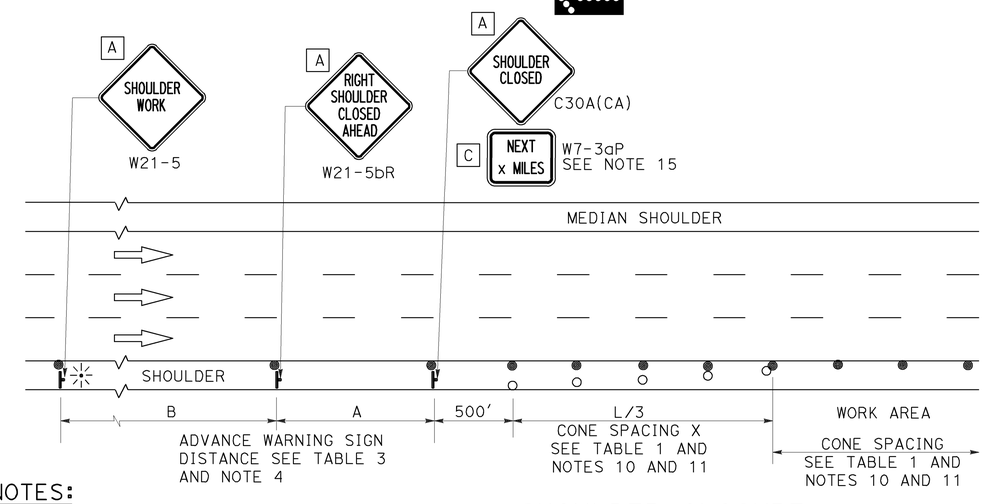

SHOULDER CLOSURE

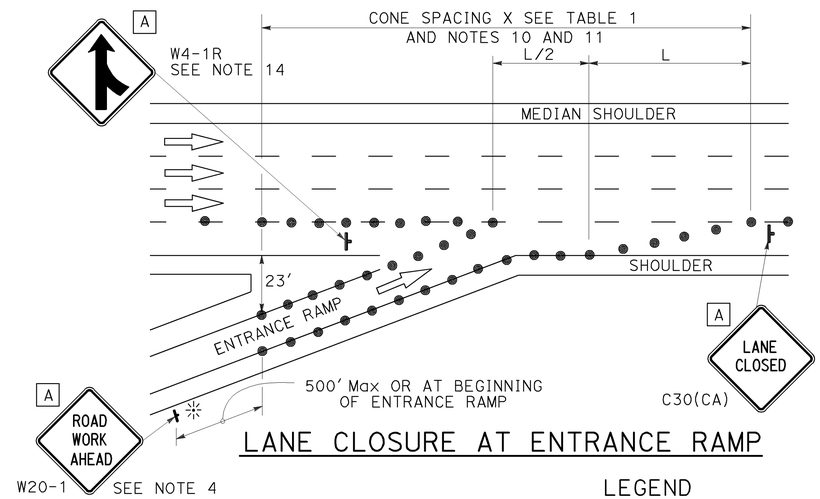

LANE CLOSURE AT ENTRANCE RAMP

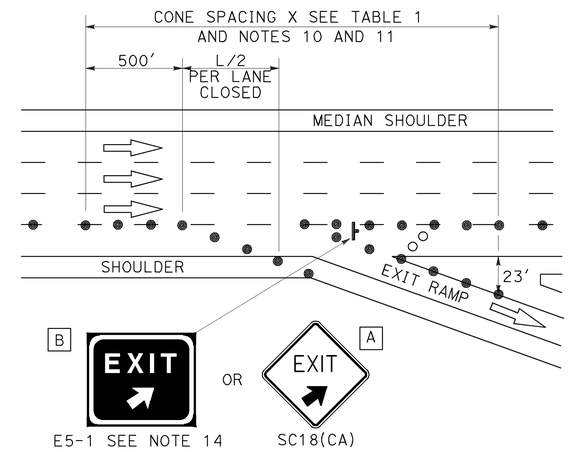

LANE CLOSURE AT EXIT RAMP

NOTES:

1. Median lane closures shall conform to the details as shown except that C20(CA)L and W4-2L signs shall be used.
2. At least one person shall be assigned to provide full time maintenance of traffic control devices for lane closures.
3. Duplicate sign installations are not required:
   a) On opposite shoulder if at least one-half of the available lanes remain open to traffic.
   b) In the median if the width of the median shoulder is less than 8' and the outside lanes are to be closed.
4. Each advance warning sign on each side of the roadway shall be equipped with at least two flags for daytime closure. Each flag shall be at least 16" x 16" in size and shall be orange or fluorescent red-orange in color. Flashing beacons shall be placed at the locations indicated for lane closure during hours of darkness.
5. A G20-2 "END ROAD WORK" sign, with minimum size of 48" x 24" as appropriate, shall be placed at the end of the lane closure unless the end of work area is obvious or ends within a larger project's limits.
6. If the W20-1 sign would follow within 2000' of a stationary W20-1 or G20-1 "ROAD WORK NEXT _____ MILES", use a C20(CA) sign for the first advance warning sign.
7. Place a C30(CA) sign every 2000' throughout length of lane closure.
8. One flashing arrow sign for each lane closed. The flashing arrow signs shall be Type I.
9. A minimum 1500' of sight distance shall be provided where possible for vehicles approaching the first flashing arrow sign. Lane closures shall not begin at top of crest vertical curve or on a horizontal curve.
10. All cones used for lane closures during the hours of darkness shall be fitted with retroreflective bands (or sleeves) as specified in the specifications.
11. Portable delineators, placed at one-half the spacing indicated for traffic cones may be used instead of cones for daytime closures only.
12. Unless otherwise specified in the special provisions, a minimum of 3 cones shall be placed transversely across each closed lane and shoulder at each location where a taper across a traffic lane ends and every 2000' as shown on the "Lane Closure" detail. Two Type II barricades may be used instead of the 3 cones. The transverse alignment of the cones or barricades on the closed shoulder may be shifted from the transverse alignment to provide access to the work.
13. Unless otherwise specified in the special provisions, the 2L tangent shown along lane lines shall be used between the L tapers required for each closed traffic lane.
14. Unless otherwise specified in the special provisions, the E5-1 or SC18(CA) and W4-1 signs shall be used as shown.
15. A W7-3aP "NEXT____ MILES" plaque must be used if theshoulder closure extends beyond the distance that can be perceived by road users.

LEGEND

- TRAFFIC CONE
- TRAFFIC CONE (OPTIONAL TAPER)
- TEMPORARY TRAFFIC CONTROL SIGN
- FLASHING ARROW SIGN (FAS)
- FAS SUPPORT OR TRAILER
- PORTABLE FLASHING BEACON

SIGN PANEL SIZE (Min)

A	48" x 48"
B	72" x 60"
C	36" x 30"

STATE OF CALIFORNIA
DEPARTMENT OF TRANSPORTATION

TRAFFIC CONTROL SYSTEM FOR LANE CLOSURE ON FREEWAYS AND EXPRESSWAYS

NO SCALE

RSP T10 DATED APRIL 19, 2013 SUPERSEDES STANDARD PLAN T10 DATED MAY 20, 2011 - PAGE 237 OF THE STANDARD PLANS BOOK DATED 2010.

REVISED STANDARD PLAN RSP T10

2010 REVISED STANDARD PLAN RSP T10

12-18-12

Dist	COUNTY	ROUTE	POST MILES TOTAL PROJECT	SHEET No.	TOTAL SHEETS
04	SM, Ala	84	R28.8/R29.3, R0.5	79	83

REGISTERED CIVIL ENGINEER

April 19, 2013
PLANS APPROVAL DATE

REGISTERED PROFESSIONAL ENGINEER Gurinderpal Bhullar No. C48815 Exp. 9-30-14 CIVIL STATE OF CALIFORNIA

THE STATE OF CALIFORNIA OR ITS OFFICERS OR AGENTS SHALL NOT BE RESPONSIBLE FOR THE ACCURACY OR COMPLETENESS OF SCANNED COPIES OF THIS PLAN SHEET.

TO ACCOMPANY PLANS DATED 10-6-14

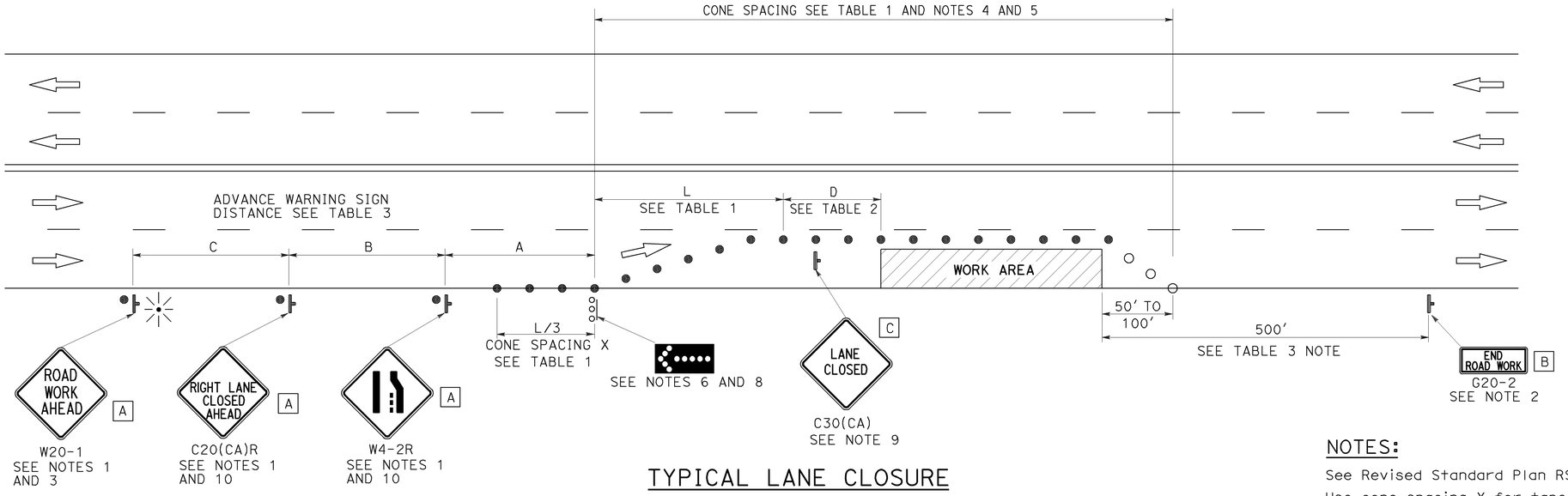

TYPICAL LANE CLOSURE

NOTES:

See Revised Standard Plan RSP T9 for tables.

Use cone spacing X for taper segment, Y for tangent segment or Z for conflict situations, as approriate, per Table 1, unless X, Y, or Z cone spacing is shown on this sheet.

Unless otherwise specified in the special provisions, all temporary warning signs shall have black legend on fluorescent orange background.

California codes are designated by (CA). Otherwise, Federal (MUTCD) codes are shown.

LEGEND

- ● TRAFFIC CONE
- ○ TRAFFIC CONE (OPTIONAL TAPER)
- TEMPORARY TRAFFIC CONTROL SIGN
- FLASHING ARROW SIGN (FAS)
- FAS SUPPORT OR TRAILER
- PORTABLE FLASHING BEACON

SIGN PANEL SIZE (Min)

A	48" × 48"
B	36" × 18"
C	30" × 30"

NOTES:

1. Each advance warning sign shall be equipped with at least two flags for daytime closure. Each flag shall be at least 16" x 16" in size and shall be orange or fluorescent red-orange in color. Flashing beacons shall be placed at the locations indicated for lane closure during hours of darkness.
2. A G20-2 "END ROAD WORK" sign, as appropriate, shall be placed at the end of the lane closure unless the end of work area is obvious, or ends within a larger project's limits.
3. If the W20-1 sign would follow within 2000' of a stationary W20-1 or G20-1 "ROAD WORK NEXT _____ MILES", use a C20(CA) sign for the first advance warning sign.
4. All cones used for lane closures during the hours of darkness shall be fitted with retroreflective bands (or sleeves) as specified in the specifications.
5. Portable delineators, placed at one-half the spacing indicated for traffic cones, may be used instead of cones for daytime closures only.
6. Flashing arrow sign shall be either Type I or Type II.
7. For approach speeds over 50 mph, use the "Traffic Control System for Lane Closure On Freeways And Expressways" plan for lane closure details and requirements.
8. A minimum 1500' of sight distance shall be provided where possible for vehicles approaching the first flashing arrow sign. Lane closures shall not begin at the top of crest vertical curve or on a horizontal curve.
9. Place a C30(CA) sign every 2000' throughout length of lane closure.
10. Median lane closures shall conform to the details as shown except that C20(CA)L and W4-2L signs shall be used.
11. At least one person shall be assigned to provide full time maintenance of traffic control devices for lane closure unless, otherwise directed by the Engineer.

STATE OF CALIFORNIA
DEPARTMENT OF TRANSPORTATION

TRAFFIC CONTROL SYSTEM FOR LANE CLOSURE ON MULTILANE CONVENTIONAL HIGHWAYS

NO SCALE

RSP T11 DATED APRIL 19, 2013 SUPERSEDES STANDARD PLAN T11 DATED MAY 20, 2011 - PAGE 239 OF THE STANDARD PLANS BOOK DATED 2010.

REVISED STANDARD PLAN RSP T11

2010 REVISED STANDARD PLAN RSP T11

4-2-13

Dist	COUNTY	ROUTE	POST MILES TOTAL PROJECT	SHEET No.	TOTAL SHEETS
04	SM, Ala	84	R28.8/R29.3, R0.5	80	83

REGISTERED CIVIL ENGINEER

April 19, 2013
PLANS APPROVAL DATE

REGISTERED PROFESSIONAL ENGINEER Gurinderpal Bhullar No. C48815 Exp. 9-30-14 CIVIL STATE OF CALIFORNIA

THE STATE OF CALIFORNIA OR ITS OFFICERS OR AGENTS SHALL NOT BE RESPONSIBLE FOR THE ACCURACY OR COMPLETENESS OF SCANNED COPIES OF THIS PLAN SHEET.

TO ACCOMPANY PLANS DATED 10-6-14

LEGEND

- TRAFFIC CONE
- TEMPORARY TRAFFIC CONTROL SIGN
- FLASHING ARROW SIGN (FAS)
- FAS SUPPORT OR TRAILER
- PORTABLE FLASHING BEACON

SIGN PANEL SIZE (Min)

- A 48" x 48"
- B 24" x 24"
- C 36" x 18"

NOTES:

See Revised Standard Plan RSP T9 for tables.

Use cone spacing X for taper segment, Y for tangent segment or Z for conflict situations, as approriate, per Table 1, unless X, Y, or Z cone spacing is shown on this sheet.

Unless otherwise specified in the special provisions, all temporary warning signs shall have black legend on fluorescent orange background.

California codes are designated by (CA). Otherwise, Federal (MUTCD) codes are shown.

TYPICAL HALF ROAD CLOSURE

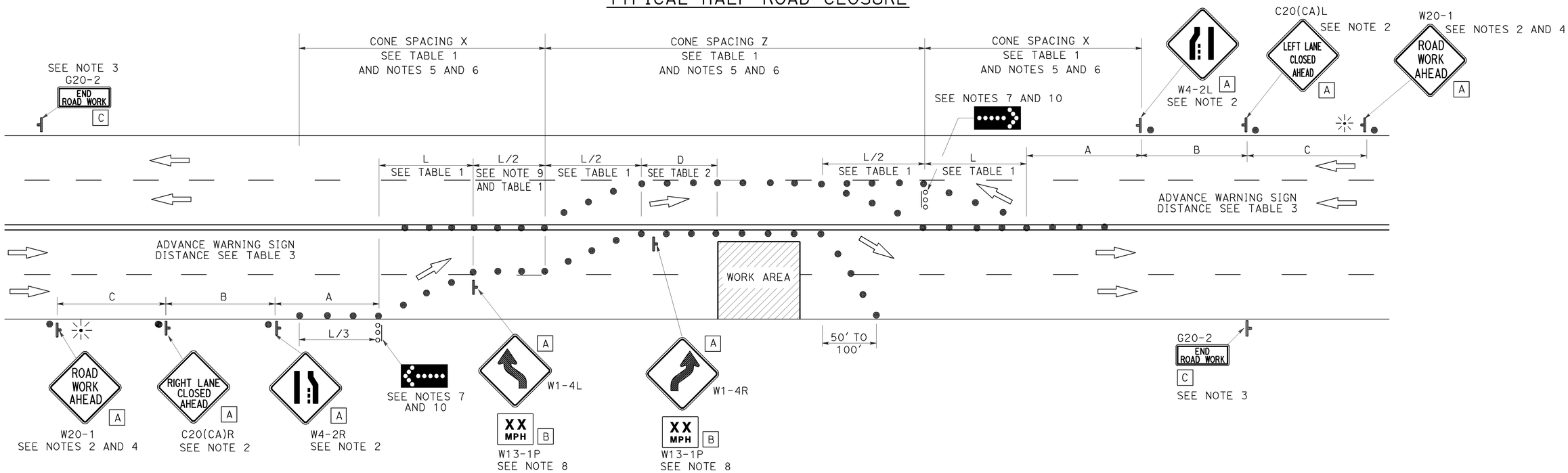

NOTES:

1. At least one person shall be assigned to provide full time maintenance of traffic control devices for lane closure unless, otherwise directed by the Engineer.
2. Each advance warning sign in each direction of travel shall be equipped with at least two flags for daytime closure. Each flag shall be at least 16" x 16" in size and shall be orange or fluorescent red-orange in color. Flashing beacons shall be placed at the locations indicated for lane closure during hours of darkness.
3. A G20-2 "END ROAD WORK" sign, as appropriate, shall be placed at the end of the lane closure unless the end of work area is obvious, or ends within a larger project's limits.
4. If the W20-1 sign would follow within 2000' of a stationary W20-1 or G20-1 "ROAD WORK NEXT _____ MILES", use a C20(CA) sign for the first advance warning sign.
5. All cones used for lane closures during the hours of darkness shall be fitted with retroreflective bands (or sleeves) as specified in the specifications.
6. Portable delineators, placed at one-half the spacing indicated for traffic cones, may be used instead of cones for daytime closures only.
7. Flashing arrow signs shall be either Type I or Type II.
8. Advisory speed will be determined by the Engineer. The W13-1P Plaque will not be required when advisory speed is more than the posted or maximum speed limit.
9. Unless otherwise specified in the special provisions, the tangent (L/2) shall be used.
10. A minimum 1500' of sight distance shall be provided where possible for vehicles approaching the first flashing arrow sign. Lane closures shall not begin at the top of crest vertical curve or on a horizontal curve.

STATE OF CALIFORNIA
DEPARTMENT OF TRANSPORTATION

TRAFFIC CONTROL SYSTEM FOR HALF ROAD CLOSURE ON MULTILANE CONVENTIONAL HIGHWAYS AND EXPRESSWAYS

NO SCALE

RSP T12 DATED APRIL 19, 2013 SUPERSEDES STANDARD PLAN T12
DATED MAY 20, 2011 - PAGE 240 OF THE STANDARD PLANS BOOK DATED 2010.

REVISED STANDARD PLAN RSP T12

2010 REVISED STANDARD PLAN RSP T12

4-2-13

Dist	COUNTY	ROUTE	POST MILES TOTAL PROJECT	SHEET No.	TOTAL SHEETS
04	SM, Ala	84	R28.8/R29.3, R0.5	81	83

REGISTERED CIVIL ENGINEER

July 18, 2014
PLANS APPROVAL DATE

REGISTERED PROFESSIONAL ENGINEER Gurinderpal Bhullar No. C48815 Exp. 9-30-14 CIVIL STATE OF CALIFORNIA

THE STATE OF CALIFORNIA OR ITS OFFICERS OR AGENTS SHALL NOT BE RESPONSIBLE FOR THE ACCURACY OR COMPLETENESS OF SCANNED COPIES OF THIS PLAN SHEET.

TO ACCOMPANY PLANS DATED 10-6-14

NOTES:

See Revised Standard Plan RSP T9 for tables.

Use cone spacing X for taper segment, Y for tangent segment or Z for conflict situations, as approriate, per Table 1, unless X, Y, or Z cone spacing is shown on this sheet.

Unless otherwise specified in the special provisions, all temporary warning signs shall have black legend on fluorescent orange background.

California codes are designated by (CA). Otherwise, Federal (MUTCD) codes are shown.

TYPICAL LANE CLOSURE WITH REVERSIBLE CONTROL

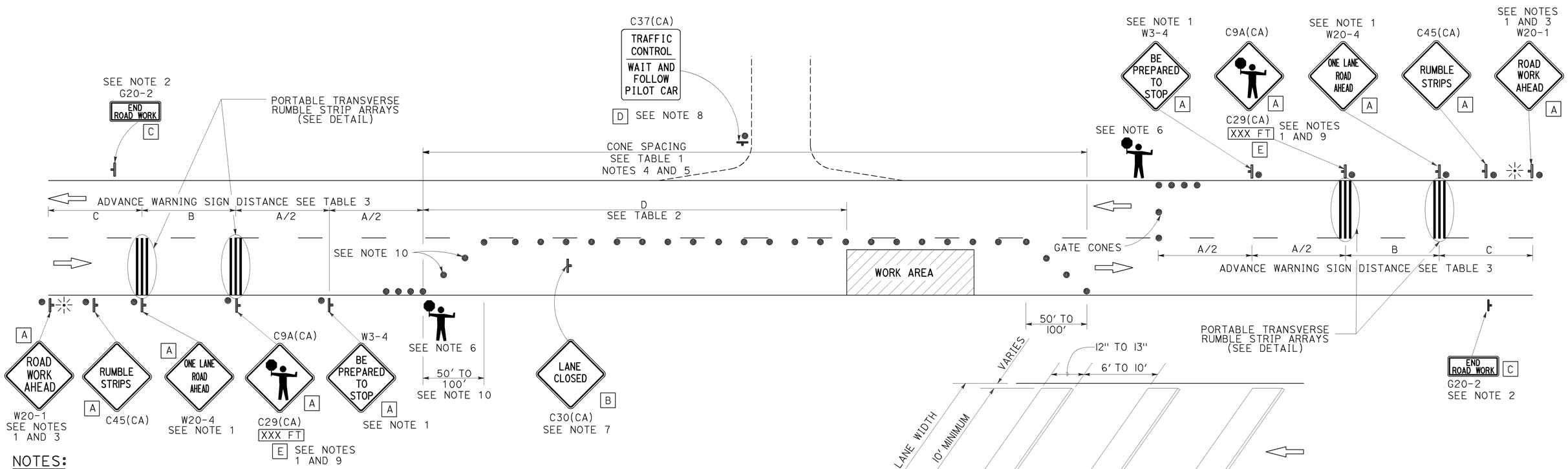

PORTABLE TRANSVERSE RUMBLE STRIP ARRAY DETAIL

NOTES:

1. Each advance warning sign in each direction of travel shall be equipped with at least two flags for daytime closure. Each flag shall be at least 16" x 16" in size and shall be orange or fluorescent red-orange in color. Flashing beacons shall be placed at the locations indicated for lane closure during hours of darkness.
2. A G20-2 "END ROAD WORK" sign, as appropriate, shall be placed at the end of the lane control unless the end of work area is obvious, or ends within a larger project's limits.
3. If the W20-1 sign would follow within 2000' of a stationary W20-1 or G20-1 "ROAD WORK NEXT _____ MILES", use a W20-4 sign for the first advance warning sign.
4. All cones used for lane closures during the hours of darkness shall be fitted with retroreflective bands (or sleeves) as specified in the specifications.
5. Portable delineators, placed at one-half the spacing indicated for traffic cones, may be used instead of cones for daytime closures only.
6. Additional advance flaggers may be required. Flagger should stand in a conspicuous place, be visible to approaching traffic as well as approaching vehicles after the first vehicle has stopped. During the hours of darkness, the flagging-station and flagger shall be illuminated and clearly visible to approaching traffic. The illumination footprint of the lighting on the ground shall be at least 20' in diameter. Place a minimum of four cones at 50' intervals in advance of flagger station as shown.
7. Place C30(CA) "LANE CLOSED" sign at 500' to 1000' intervals throughout extended work areas. They are optional if the work area is visible from the flagger station.
8. When a pilot car is used, place a C37(CA) "TRAFFIC CONTROL-WAIT AND FOLLOW PILOT CAR" sign with black legend on white background at all intersections, driveways and alleys without a flagger within traffic control area. Signs shall be clean and visible at all times. Where traffic can not be effectively self-regulated, at least one flagger shall be used at each intersection within traffic control area.
9. An optional C29(CA) sign may be placed below the C9A(CA) sign.
10. Either traffic cones or barricades shall be placed on the taper. Barricades shall be Type I, II, or III.
11. The color of the portable transverse rumble strips shall be black or orange. Use 2 arrays, each array shall consist of 3 rumble strips.
12. Portable transverse rumble strips shall not be placed on sharp horizontal or vertical curves nor shall they be placed through pedestrian crossings.
13. If the portable transverse rumble strips become out of alignment (skewed) by more than 6 inches, measured from one end to the other, they shall be readjusted to bring the placement back to the original location.

LEGEND

- TRAFFIC CONE
- TEMPORARY TRAFFIC CONTROL SIGN
- PORTABLE FLASHING BEACON
- FLAGGER

SIGN PANEL SIZE (Min)

A	48" x 48"
B	30" x 30"
C	36" x 18"
D	36" x 42"
E	20" x 7"

STATE OF CALIFORNIA
DEPARTMENT OF TRANSPORTATION

TRAFFIC CONTROL SYSTEM FOR LANE CLOSURE ON TWO LANE CONVENTIONAL HIGHWAYS

NO SCALE

RSP T13 DATED JULY 18, 2014 SUPERSEDES RSP T13 DATED APRIL 19, 2013 AND STANDARD PLAN T13 DATED MAY 20, 2011 - PAGE 241 OF THE STANDARD PLANS BOOK DATED 2010.

REVISED STANDARD PLAN RSP T13

2010 REVISED STANDARD PLAN RSP T13

6-19-14

Dist	COUNTY	ROUTE	POST MILES TOTAL PROJECT	SHEET No.	TOTAL SHEETS
04	SM, Ala	84	R28.8/R29.3, R0.5	82	83

Christopher M. Faria 7/29/14
REGISTERED MECHANICAL ENGINEER DATE

10-6-14
PLANS APPROVAL DATE

REGISTERED PROFESSIONAL ENGINEER CHRISTOPHER FARIA No. M30419 Exp. 12-31-15 MECH STATE OF CALIFORNIA

The State of California or its officers or agents shall not be responsible for the accuracy or completeness of scanned copies of this plan sheet.

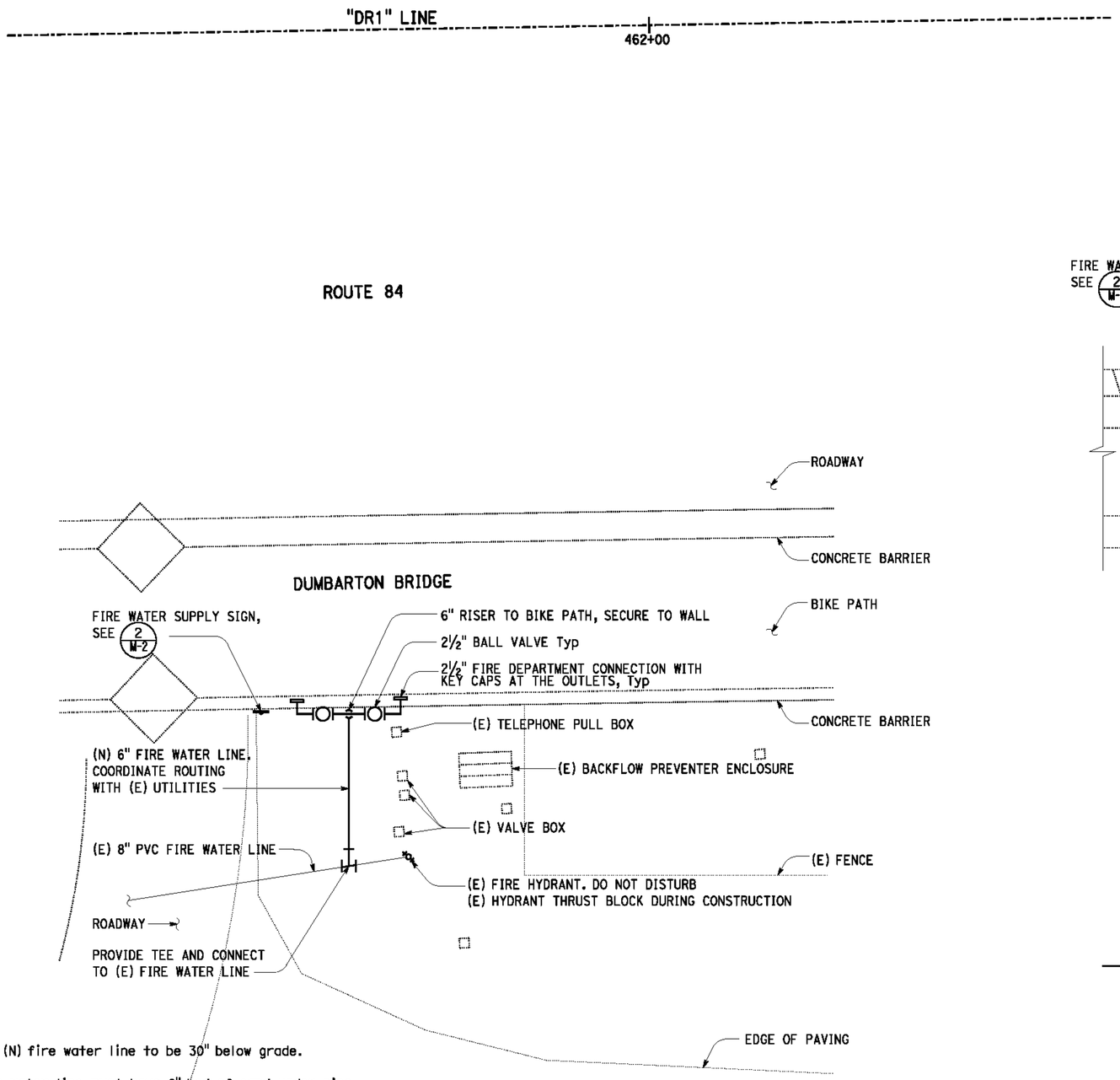

NOTES:

1. Top of (N) fire water line to be 30" below grade.
2. (N) fire water line must have 6" bed of sand under pipe and 6" of sand covery over top of pipe. Remaining trench can be backfilled with clean soil.

PARTIAL PLAN

¼" = 1'-0"

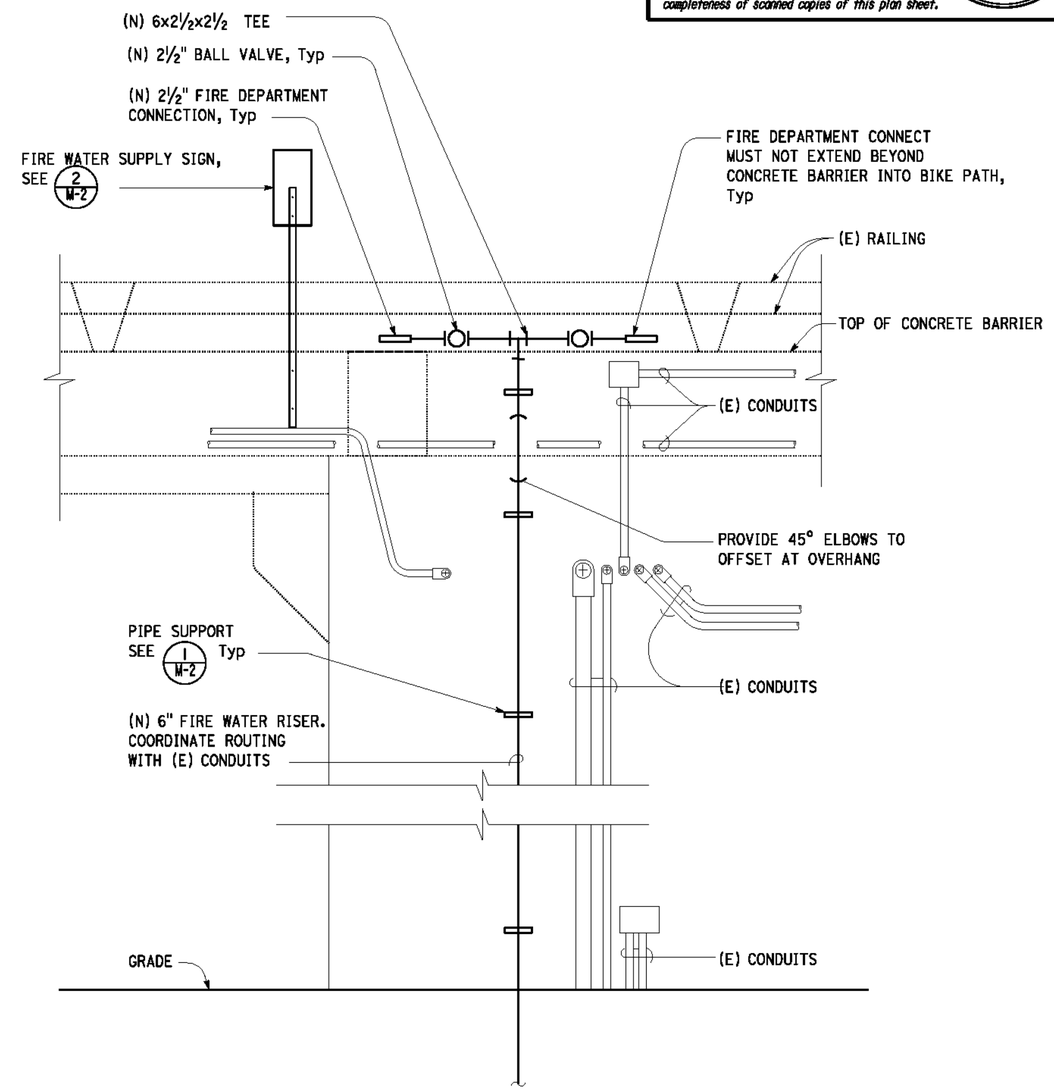

ELEVATION

½" = 1'-0"

APPROVED FOR MECHANICAL WORK ONLY

	BY	CHECKED
DESIGN	Chris Faria	Jack Wheeler
DETAILS	Angela Chen	Jack Wheeler
QUANTITIES	Chris Faria	Jack Wheeler

STATE OF CALIFORNIA
DEPARTMENT OF TRANSPORTATION

DIVISION OF ENGINEERING SERVICES
ELECTRICAL-MECHANICAL-WATER AND WASTEWATER DESIGN

BRIDGE No. 35-0038
POST MILE R28.8/R29.3 R0.5

DUMBARTON BRIDGE-FIREWATER

PLAN / ELEVATION

SHEET **M-1**

TAEMWW Imperial - CCSC Rev. 01/13

ORIGINAL SCALE IN INCHES FOR REDUCED PLANS 0 1 2 3

UNIT: 3615 CONTRACT No.: 04 1J520
PROJECT NUMBER & PHASE: 04140002491

DISREGARD PRINTS BEARING EARLIER REVISION DATES → 4/28/14

REVISION DATES (PRELIMINARY STAGE ONLY) SHEET OF

08-SEP-2014 13:07

P:\dist 04\0414000249 dumbarton bridge firewater\mech\m 1.dgn

Dist	COUNTY	ROUTE	POST MILES TOTAL PROJECT	SHEET No.	TOTAL SHEETS
04	SM, Ala	84	R28.8/R29.3, R0.5	83	83

Christopher M. Faria 7/29/14
REGISTERED MECHANICAL ENGINEER DATE

10-6-14
PLANS APPROVAL DATE

REGISTERED PROFESSIONAL ENGINEER CHRISTOPHER FARIA No. M30419 Exp. 12-31-15 MECH STATE OF CALIFORNIA

The State of California or its officers or agents shall not be responsible for the accuracy or completeness of scanned copies of this plan sheet.

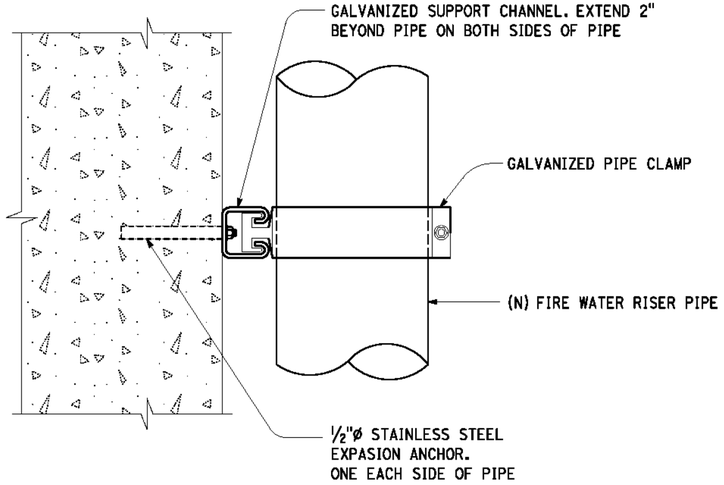

1 DETAIL
NO SCALE

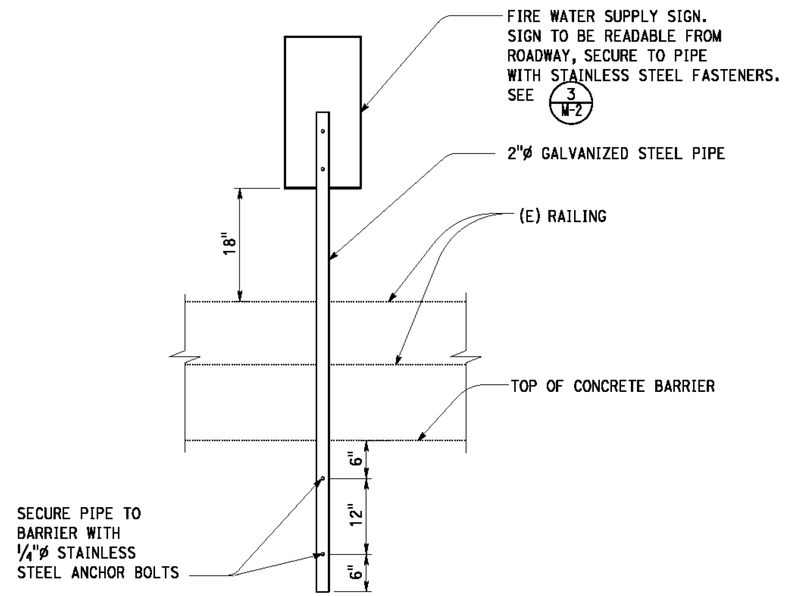

2 DETAIL
NO SCALE

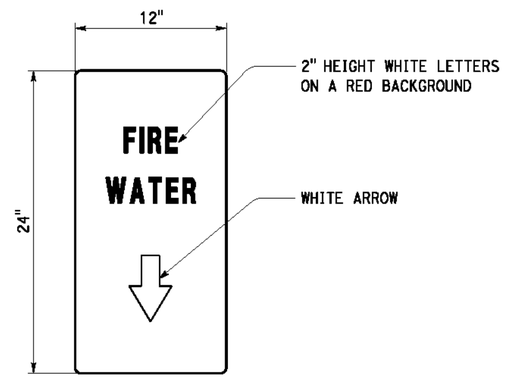

3 DETAIL
NO SCALE

APPROVED FOR MECHANICAL WORK ONLY

	BY	CHECKED
DESIGN	Chris Faria	Jack Wheeler
DETAILS	Angela Chen	Jack Wheeler
QUANTITIES	Chris Faria	Jack Wheeler

STATE OF CALIFORNIA
DEPARTMENT OF TRANSPORTATION

DIVISION OF ENGINEERING SERVICES
ELECTRICAL-MECHANICAL-WATER AND WASTEWATER DESIGN

BRIDGE No. 35-0038
POST MILE R28.8/R29.3 R0.5

DUMBARTON BRIDGE-FIREWATER

DETAILS

SHEET M-2

TAEMWW Imperial - CCSC Rev. 01/13

ORIGINAL SCALE IN INCHES FOR REDUCED PLANS 0 1 2 3

UNIT: 3615 CONTRACT No.: 04 1J520
PROJECT NUMBER & PHASE: 04140002491

DISREGARD PRINTS BEARING EARLIER REVISION DATES → 4/28/14

REVISION DATES (PRELIMINARY STAGE ONLY) SHEET OF

08-SEP-2014 13:07

P:\dist 04\0414000249 dumbarton bridge firewater\mech\m 2.dgn