ACSTP-47C6(004)E

Dist	COUNTY	ROUTE	POST MILES TOTAL PROJECT	SHEET No.	TOTAL SHEETS
04	Son	116	13.7	1	92

STATE OF CALIFORNIA

DEPARTMENT OF TRANSPORTATION

PROJECT PLANS FOR CONSTRUCTION ON

STATE HIGHWAY

IN SONOMA COUNTY
NEAR GUERNEVILLE
AT 1.1 MILES EAST OF MAYS CANYON ROAD

TO BE SUPPLEMENTED BY STANDARD PLANS DATED 2010

INDEX OF PLANS

SHEET No.	DESCRIPTION
1	TITLE AND LOCATION MAP
2-3	TYPICAL CROSS SECTIONS
4	LAYOUTS
5-11	CONSTRUCTION DETAILS
12-13	DRAINAGE PROFILES AND DETAILS
14	UTILITY PLAN
15	CONSTRUCTION AREA SIGNS
16-17	STAGE CONSTRUCTION PLANS AND DETAILS
18-20	TRAFFIC HANDLING PLANS, DETAILS AND QUANTITIES
21	PAVEMENT DELINEATION PLANS AND QUANTITIES
22	SUMMARY OF QUANTITIES
23-29	HIGHWAY PLANTING
30-32	EROSION CONTROL PLAN, DETAILS AND QUANTITIES
33-39	ELECTRICAL PLANS
40-50	SPECIAL DESIGN
51-84	REVISED STANDARD PLANS

STRUCTURE PLANS

85-92	RETAINING WALLS

THE STANDARD PLANS LIST APPLICABLE TO THIS CONTRACT IS INCLUDED IN THE NOTICE TO BIDDERS AND SPECIAL PROVISIONS BOOK.

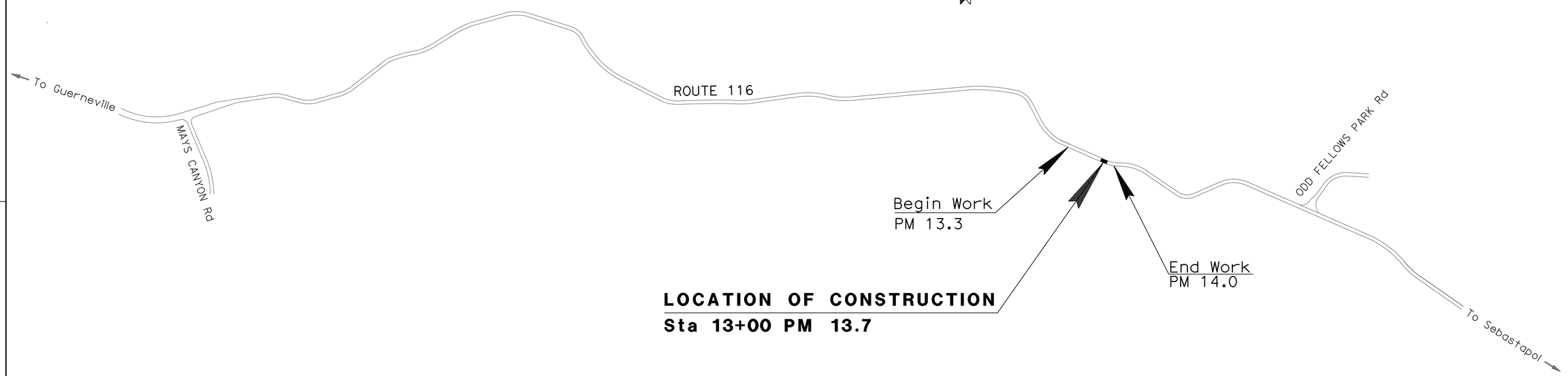

NO SCALE

12-20-13
PROJECT ENGINEER
REGISTERED CIVIL ENGINEER
DATE

REGISTERED PROFESSIONAL ENGINEER
HARPREET BINNING
No. 68470
Exp. 9/30/15
CIVIL
STATE OF CALIFORNIA

September 02, 2014
PLANS APPROVAL DATE

THE STATE OF CALIFORNIA OR ITS OFFICERS OR AGENTS SHALL NOT BE RESPONSIBLE FOR THE ACCURACY OR COMPLETENESS OF SCANNED COPIES OF THIS PLAN SHEET.

PROJECT MANAGER: ROBERT NAVARRO
DESIGN ENGINEER: ARTHUR RAMIREZ

THE CONTRACTOR SHALL POSSESS THE CLASS (OR CLASSES) OF LICENSE AS SPECIFIED IN THE "NOTICE TO BIDDERS."

CONTRACT No.	04-1J3204
PROJECT ID	0414000190

LAST REVISION 04-16-15
DATE PLOTTED => 08-JUL-2015
TIME PLOTTED => 09:17

Dist	COUNTY	ROUTE	POST MILES TOTAL PROJECT	SHEET No.	TOTAL SHEETS
04	Son	116	13.7	2	92

REGISTERED CIVIL ENGINEER 12-20-13 DATE

9-02-14
PLANS APPROVAL DATE

REGISTERED PROFESSIONAL ENGINEER HARPREET BINNING No. 68470 Exp. 9/30/15 CIVIL STATE OF CALIFORNIA

THE STATE OF CALIFORNIA OR ITS OFFICERS OR AGENTS SHALL NOT BE RESPONSIBLE FOR THE ACCURACY OR COMPLETENESS OF SCANNED COPIES OF THIS PLAN SHEET.

NOTES:

1. DIMENSIONS OF THE PAVEMENT STRUCTURES (STRUCTURAL SECTIONS) ARE SUBJECT TO TOLERANCES SPECIFIED IN THE STANDARD SPECIFICATIONS.

LEGEND:

RSP

DESIGN DESIGNATION:

2015 ADT 3,300
DHV 360
CLIMATE REGION NORTH COAST

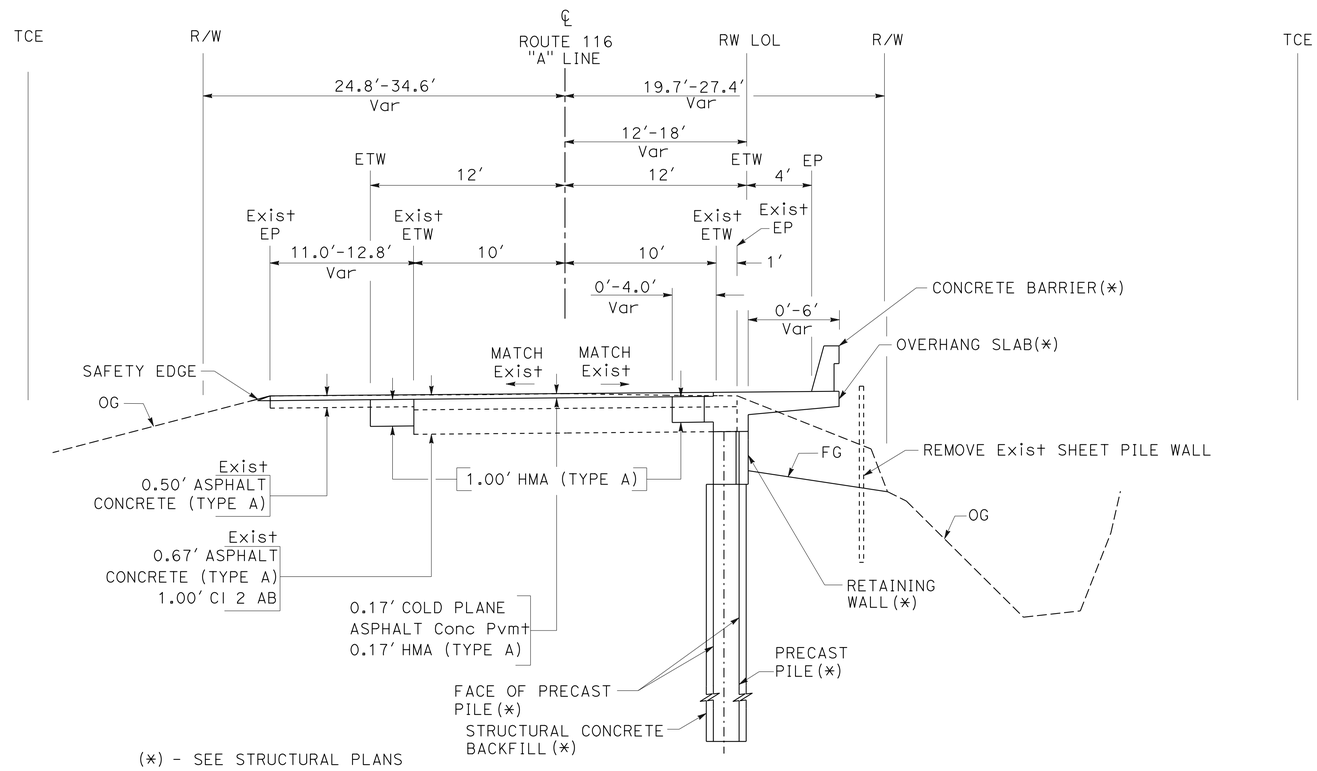

(*) - SEE STRUCTURAL PLANS

ROUTE 116

Sta 12+15 TO Sta 12+25
Sta 13+10 TO Sta 13+45

TYPICAL CROSS SECTIONS

NO SCALE

X-1

STATE OF CALIFORNIA - DEPARTMENT OF TRANSPORTATION
Caltrans
06-DESIGN

FUNCTIONAL SUPERVISOR: ARTHUR RAMIREZ
CALCULATED-DESIGNED BY: HARJINDER CHHINA
CHECKED BY: HARPREET BINNING
REVISED BY: S HANIF
DATE REVISED: 08-29-14

LAST REVISION 03-16-15 | DATE PLOTTED => 23-APR-2015 | TIME PLOTTED => 14:24

Dist	COUNTY	ROUTE	POST MILES TOTAL PROJECT	SHEET No.	TOTAL SHEETS
04	Son	116	13.7	3	92

REGISTERED CIVIL ENGINEER 12-20-13 DATE

9-02-14
PLANS APPROVAL DATE

REGISTERED PROFESSIONAL ENGINEER HARPREET BINNING No. 68470 Exp. 9/30/15 CIVIL STATE OF CALIFORNIA

THE STATE OF CALIFORNIA OR ITS OFFICERS OR AGENTS SHALL NOT BE RESPONSIBLE FOR THE ACCURACY OR COMPLETENESS OF SCANNED COPIES OF THIS PLAN SHEET.

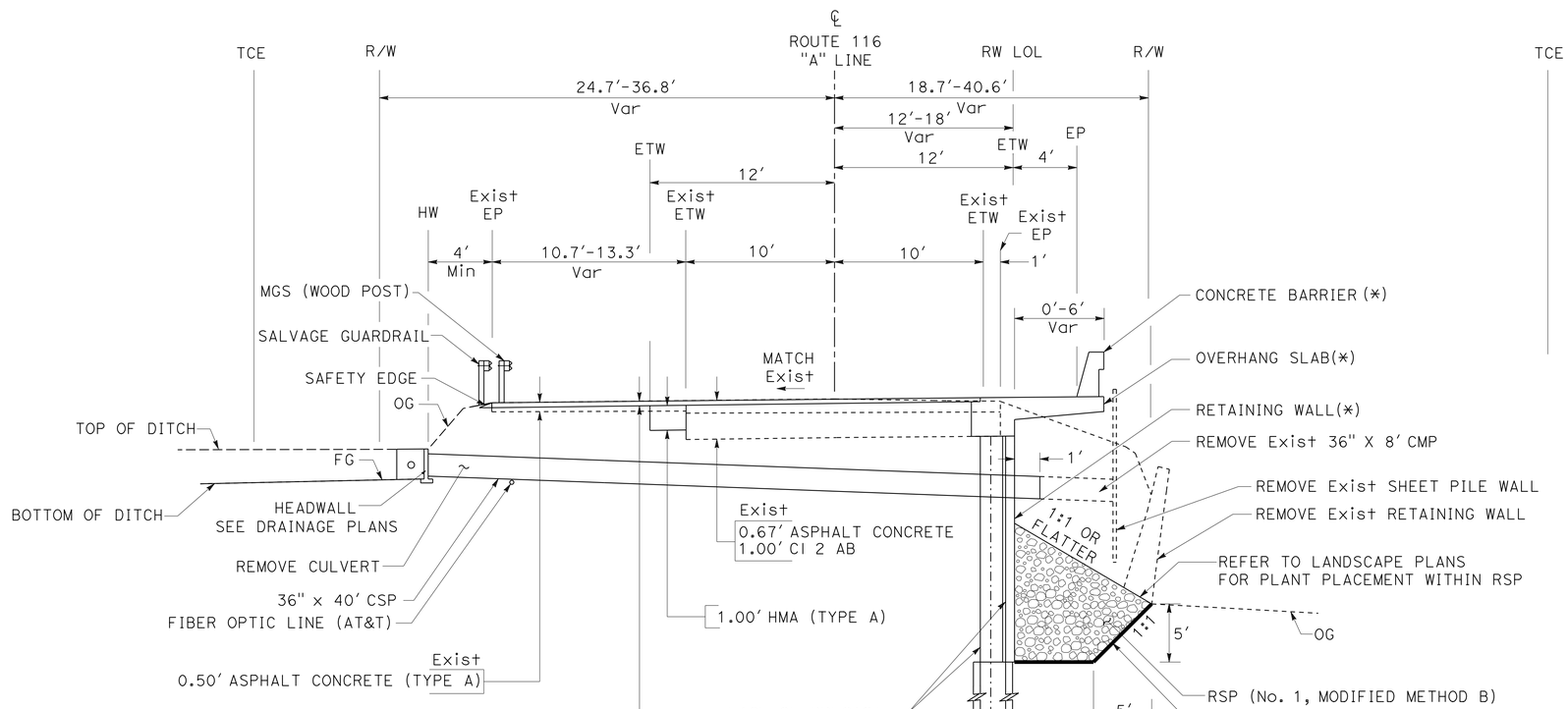

(*) - SEE STRUCTURAL PLANS

ROUTE 116

Sta 12+25 TO Sta 13+10

TYPICAL CROSS SECTIONS

NO SCALE

X-2

STATE OF CALIFORNIA - DEPARTMENT OF TRANSPORTATION
Caltrans
06-DESIGN

FUNCTIONAL SUPERVISOR: ARTHUR RAMIREZ

CALCULATED-DESIGNED BY: HARJINDER CHHINA
CHECKED BY: HARPREET BINNING

REVISED BY: H CHHINA
DATE REVISED: 06-30-14

LAST REVISION 03-16-15 | DATE PLOTTED => 23-APR-2015 | TIME PLOTTED => 14:24

Dist	COUNTY	ROUTE	POST MILES TOTAL PROJECT	SHEET No.	TOTAL SHEETS
04	Son	116	13.7	4	92

REGISTERED CIVIL ENGINEER 12/20/13 DATE

9-02-14
PLANS APPROVAL DATE

REGISTERED PROFESSIONAL ENGINEER HARPREET BINNING No. 68470 Exp. 9/30/15 CIVIL STATE OF CALIFORNIA

THE STATE OF CALIFORNIA OR ITS OFFICERS OR AGENTS SHALL NOT BE RESPONSIBLE FOR THE ACCURACY OR COMPLETENESS OF SCANNED COPIES OF THIS PLAN SHEET.

NOTES:

1. FOR ACCURATE RIGHT OF WAY DATA, CONTACT RIGHT OF WAY ENGINEERING AT THE DISTRICT OFFICE.
2. REFER TO IP AND PP SHEETS FOR IRRIGATION AND PLANTING TO BE INTEGRATED WITH RSP CONSTRUCTION.
3. PLACE MGS SO POSTS STRADDLE CULVERT. POST OMISSION WITH RAIL STRENGTHING OR NESTING IS NOT ALLOWED.

LEGEND:

- 0.17′ COLD PLANE ASPHALT Conc PAVEMENT
  0.17′ HMA (TYPE A)
- 0.5′ HMA (TYPE A)
  1.0′ CLASS 2 AB
- RSP

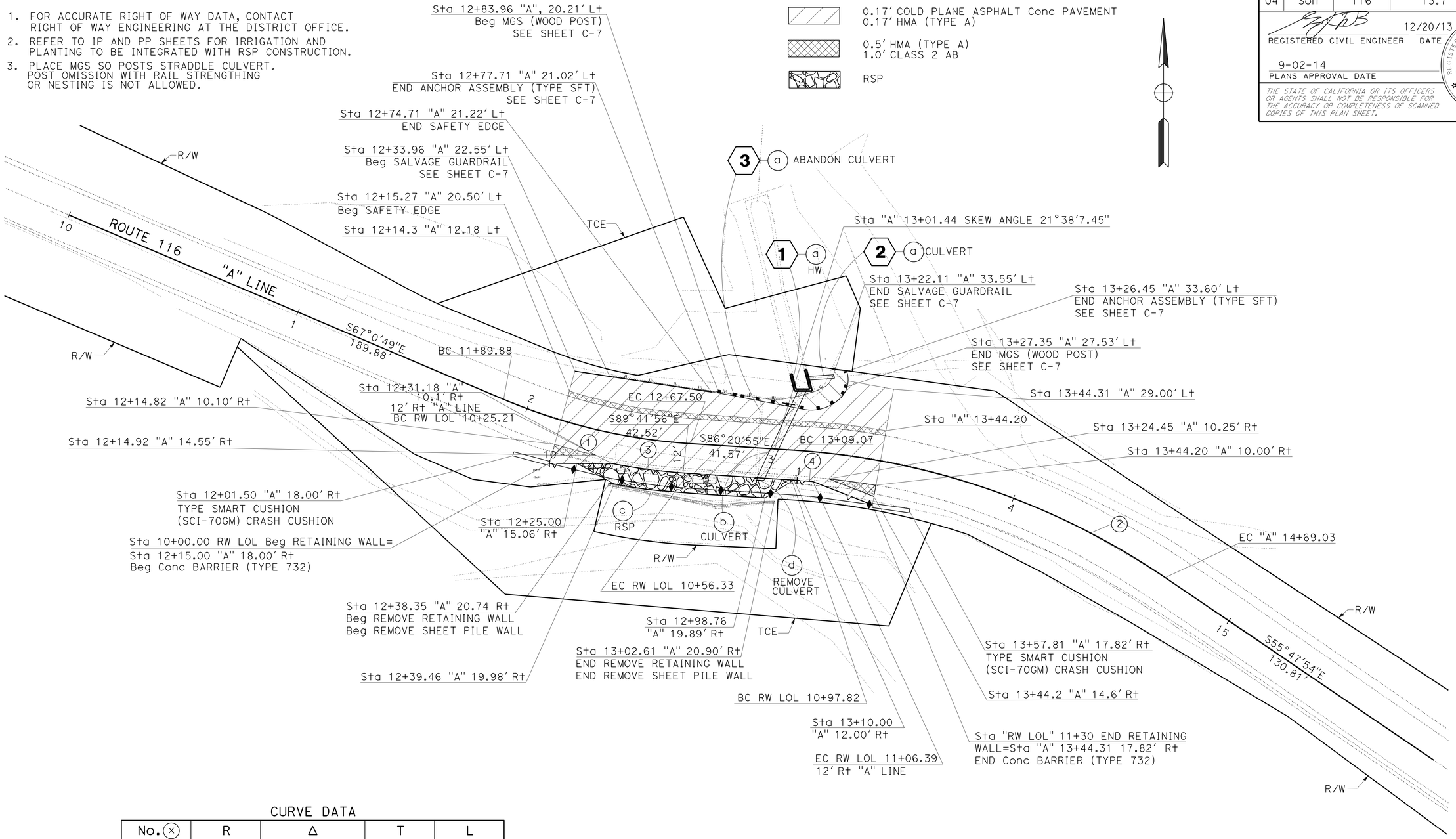

CURVE DATA

No. (×)	R	Δ	T	L
1	230′	19°20′06"	39.18′	77.62′
2	300′	30°33′01"	81.93′	159.96′
3	242′	7°20′54"	15.54′	31.04′
4	288′	1°42′17"	4.29′	8.57′

LAYOUT

SCALE: 1"=20′ **L-1**

STATE OF CALIFORNIA - DEPARTMENT OF TRANSPORTATION
Caltrans
06-DESIGN

FUNCTIONAL SUPERVISOR: ARTHUR RAMIREZ
CALCULATED-DESIGNED BY: AMIT NIJHAWAN
CHECKED BY: HARPREET BINNING
REVISED BY: S HANIF
DATE REVISED: 08-29-14

LAST REVISION 04-14-15 | DATE PLOTTED => 23-APR-2015 | TIME PLOTTED => 14:24

Dist	COUNTY	ROUTE	POST MILES TOTAL PROJECT	SHEET No.	TOTAL SHEETS
04	Son	116	13.7	5	92

REGISTERED CIVIL ENGINEER DATE 12/20/13

9-02-14
PLANS APPROVAL DATE

REGISTERED PROFESSIONAL ENGINEER HARPREET BINNING No. 68470 Exp. 9/30/15 CIVIL STATE OF CALIFORNIA

THE STATE OF CALIFORNIA OR ITS OFFICERS OR AGENTS SHALL NOT BE RESPONSIBLE FOR THE ACCURACY OR COMPLETENESS OF SCANNED COPIES OF THIS PLAN SHEET.

NOTES:

1. SEE CONSTRUCTION DETAILS SHEET C-2 FOR SECTIONS C-C, D-D AND E-E.
2. EXACT LOCATION OF DAMS TO BE DETERMINED BY THE ENGINEER.

LEGEND:

- Temp ACCESS PAD
- TOP OF POCKET CREEK SOUTH BANK
- FLOW LEVEL IN PIPE (VARIES)
- Temp CONSTRUCTION ROADWAY
- POTENTIAL STOCKPILE LOCATION
- COLD PLANE

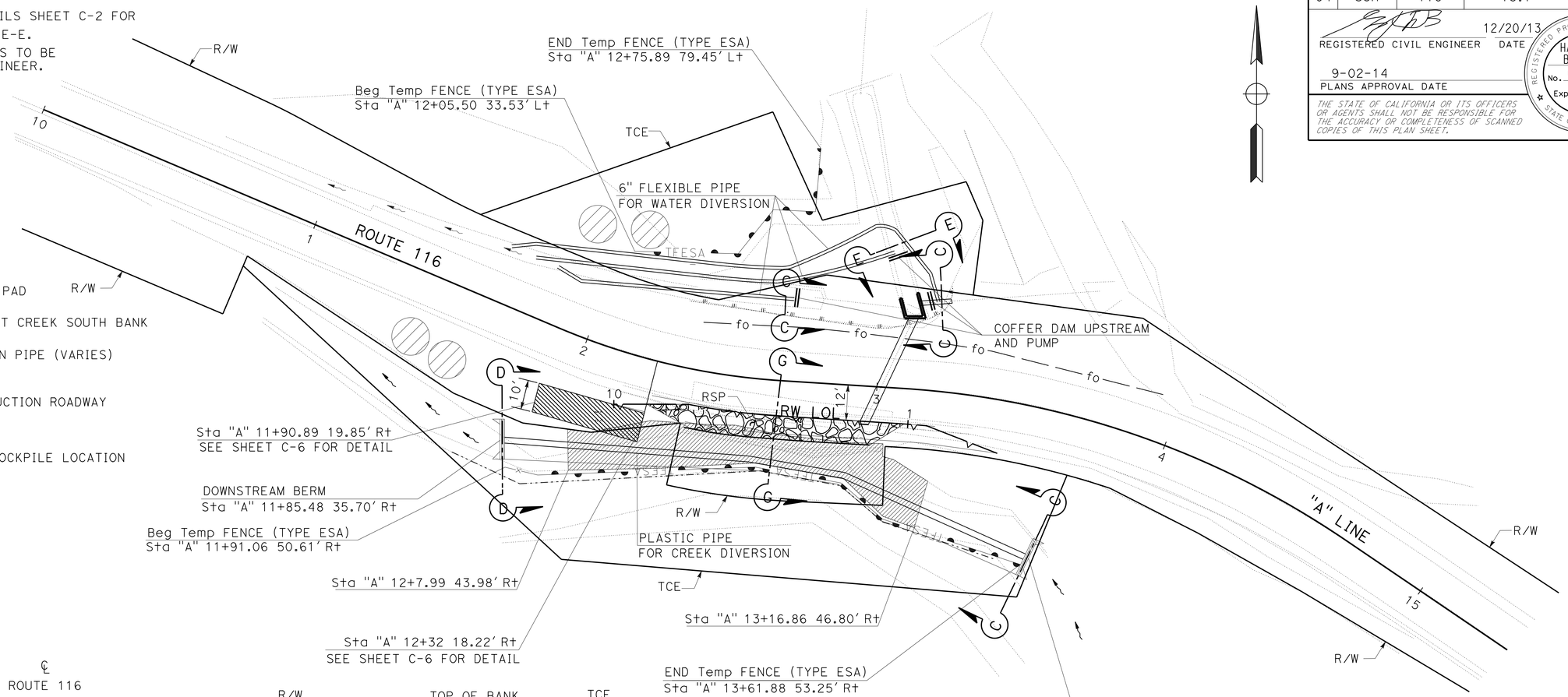

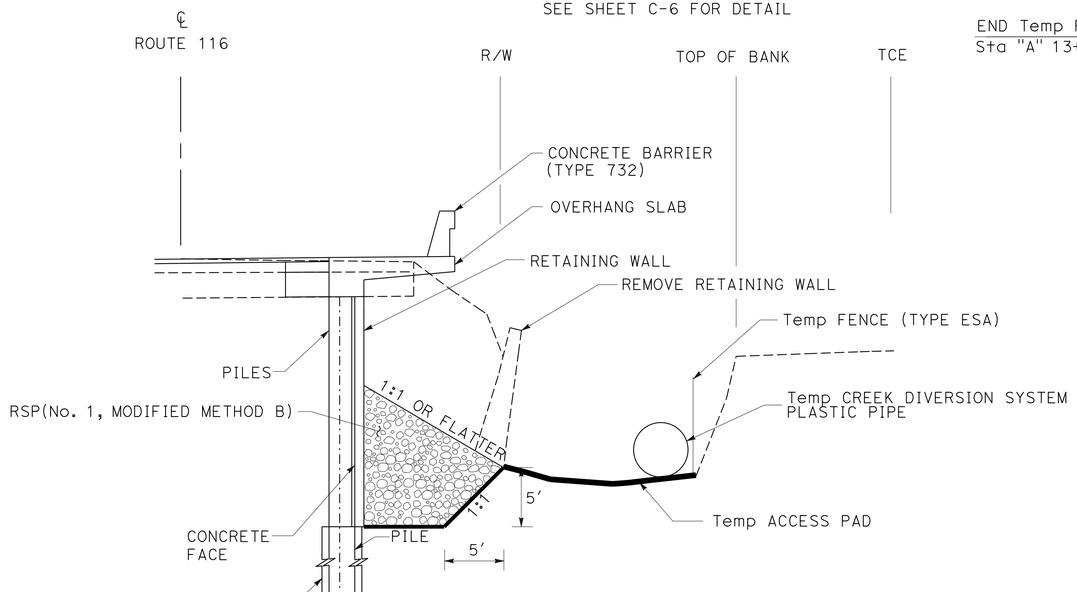

SECTION G-G
NO SCALE

~ TEMPORARY CREEK DIVERSION SYSTEM QUANTITIES

IMPERMEABLE PLASTIC SHEET (N)	6" FLEXIBLE PIPE (N)	PLASTIC PIPE (N)	GRAVEL-FILLED BAGS (N)	PUMP (N)	Temp CONSTRUCTION ROADWAY	STOCKPILE (N)
SQFT	LF	LF	CY	EA	SQYD	CY
1450	420	183	85	3	47	75

(N)=NOT A SEPARATE PAY ITEM, FOR INFORMATION ONLY.

CONSTRUCTION DETAILS AND SUMMARY OF QUANTITIES (TEMPORARY CREEK DIVERSION SYSTEM)

SCALE: 1'=20'

C-1

STATE OF CALIFORNIA - DEPARTMENT OF TRANSPORTATION
Caltrans
06-DESIGN

FUNCTIONAL SUPERVISOR: ARTHUR RAMIREZ
CALCULATED-DESIGNED BY: AMIT NIJHAWAN
CHECKED BY: HARPREET BINNING
REVISED BY: S HANIF
DATE REVISED: 08-29-14

LAST REVISION 06-20-14
DATE PLOTTED => 23-APR-2015
TIME PLOTTED => 14:24

Dist	COUNTY	ROUTE	POST MILES TOTAL PROJECT	SHEET No.	TOTAL SHEETS
04	Son	116	13.7	6	92

REGISTERED CIVIL ENGINEER DATE 12/20/13

9-02-14
PLANS APPROVAL DATE

REGISTERED PROFESSIONAL ENGINEER HARPREET BINNING No. 68470 Exp. 9/30/15 CIVIL STATE OF CALIFORNIA

THE STATE OF CALIFORNIA OR ITS OFFICERS OR AGENTS SHALL NOT BE RESPONSIBLE FOR THE ACCURACY OR COMPLETENESS OF SCANNED COPIES OF THIS PLAN SHEET.

NOTES: (THIS SHEET ONLY)

1. PLACE GRAVEL-FILLED BAGS TIGHTLY.
2. GRAVEL-FILLED BAG ROWS AND LAYERS SHALL BE STAGGERED TO ELIMINATE GAPS.
3. DIMENSIONS MAY VARY TO FIT FIELD CONDITIONS.
4. PIPE IS ONLY FOR CREEK COFFER DAM. NO PIPE FOR COFFER DAM NORTH OF HIGHWAY.

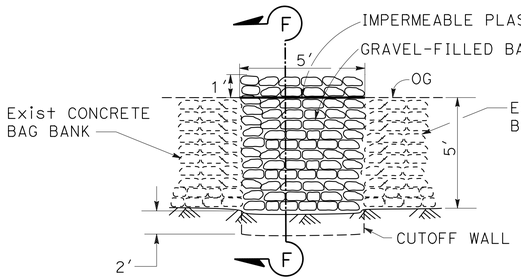

SECTION E-E

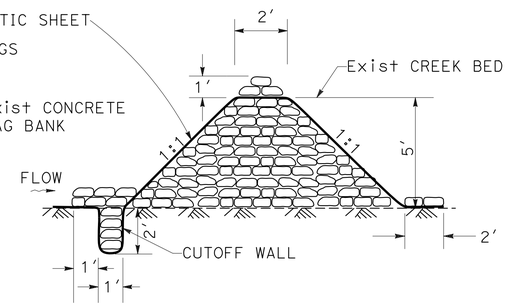

SECTION F-F

TEMPORARY COFFER DAM

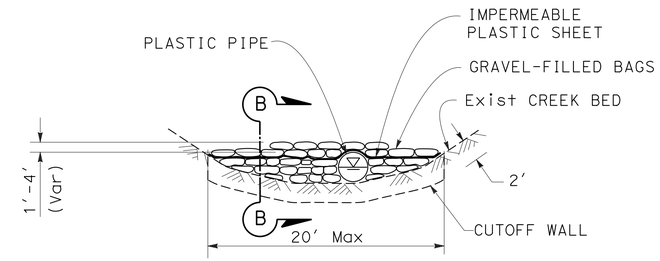

SECTION D-D

TEMPORARY DOWNSTREAM BERM

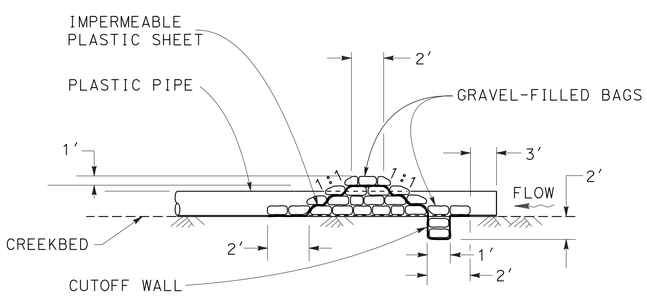

SECTION A-A

TEMPORARY COFFER DAM

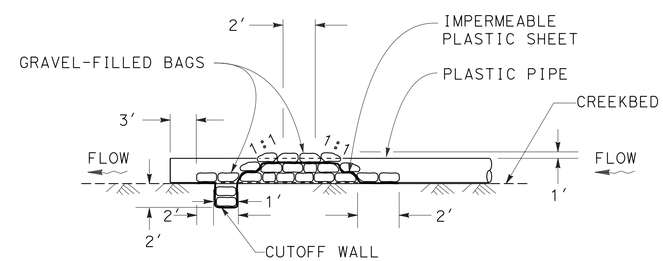

SECTION B-B

TEMPORARY DOWNSTREAM BERM

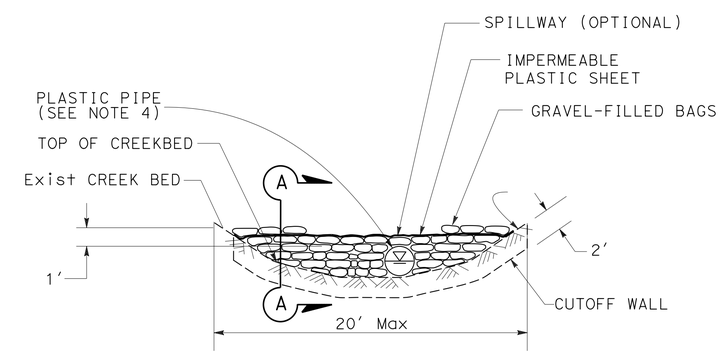

SECTION C-C

TEMPORARY COFFER DAM

CONSTRUCTION DETAILS
(TEMPORARY CREEK DIVERSION SYSTEM)

NO SCALE

C-2

REVISED BY	DATE REVISED
H CHHINA	08-25-14

CALCULATED-DESIGNED BY	CHECKED BY
AMIT NIJHAWAN	HARPREET BINNING

FUNCTIONAL SUPERVISOR: ARTHUR RAMIREZ

STATE OF CALIFORNIA - DEPARTMENT OF TRANSPORTATION

Caltrans

06-DESIGN

LAST REVISION 06-20-14 | DATE PLOTTED => 23-APR-2015 | TIME PLOTTED => 14:24

Dist	COUNTY	ROUTE	POST MILES TOTAL PROJECT	SHEET No.	TOTAL SHEETS
04	Son	116	13.7	7	92

REGISTERED CIVIL ENGINEER 12/20/13 DATE

9-02-14
PLANS APPROVAL DATE

REGISTERED PROFESSIONAL ENGINEER HARPREET BINNING No. 68470 Exp. 9/30/15 CIVIL STATE OF CALIFORNIA

THE STATE OF CALIFORNIA OR ITS OFFICERS OR AGENTS SHALL NOT BE RESPONSIBLE FOR THE ACCURACY OR COMPLETENESS OF SCANNED COPIES OF THIS PLAN SHEET.

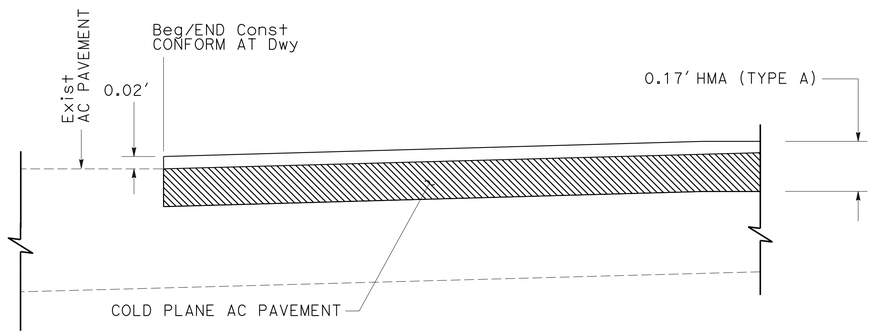

DETAIL A

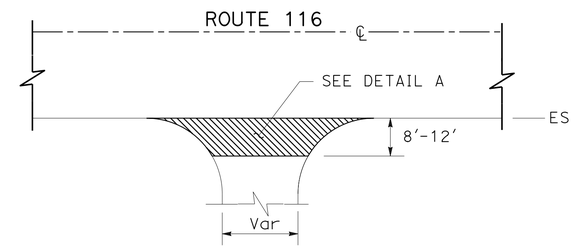

PAVING CONFORM AT DRIVEWAY

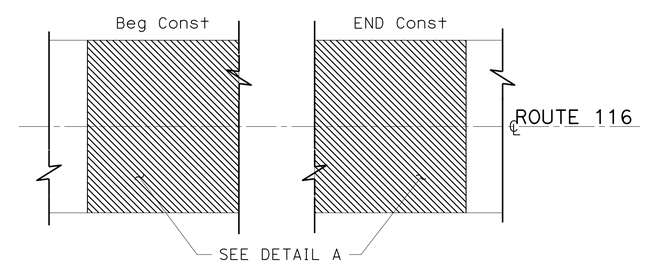

PAVING CONFORM AT BEGIN AND END CONSTRUCTION

CONSTRUCTION DETAILS

NO SCALE

C-3

STATE OF CALIFORNIA - DEPARTMENT OF TRANSPORTATION
Caltrans
06-DESIGN

FUNCTIONAL SUPERVISOR: ARTHUR RAMIREZ
CALCULATED-DESIGNED BY: SHAKILA HANIF
CHECKED BY: HARPREET BINNING
REVISED BY: S HANIF
DATE REVISED: 08-29-14

LAST REVISION 06-20-14
DATE PLOTTED => 23-APR-2015
TIME PLOTTED => 14:24

Dist	COUNTY	ROUTE	POST MILES TOTAL PROJECT	SHEET No.	TOTAL SHEETS
04	Son	116	13.7	8	92

REGISTERED CIVIL ENGINEER 12/20/13 DATE

9-02-14
PLANS APPROVAL DATE

REGISTERED PROFESSIONAL ENGINEER
HARPREET BINNING
No. 68470
Exp. 9/30/15
CIVIL
STATE OF CALIFORNIA

THE STATE OF CALIFORNIA OR ITS OFFICERS OR AGENTS SHALL NOT BE RESPONSIBLE FOR THE ACCURACY OR COMPLETENESS OF SCANNED COPIES OF THIS PLAN SHEET.

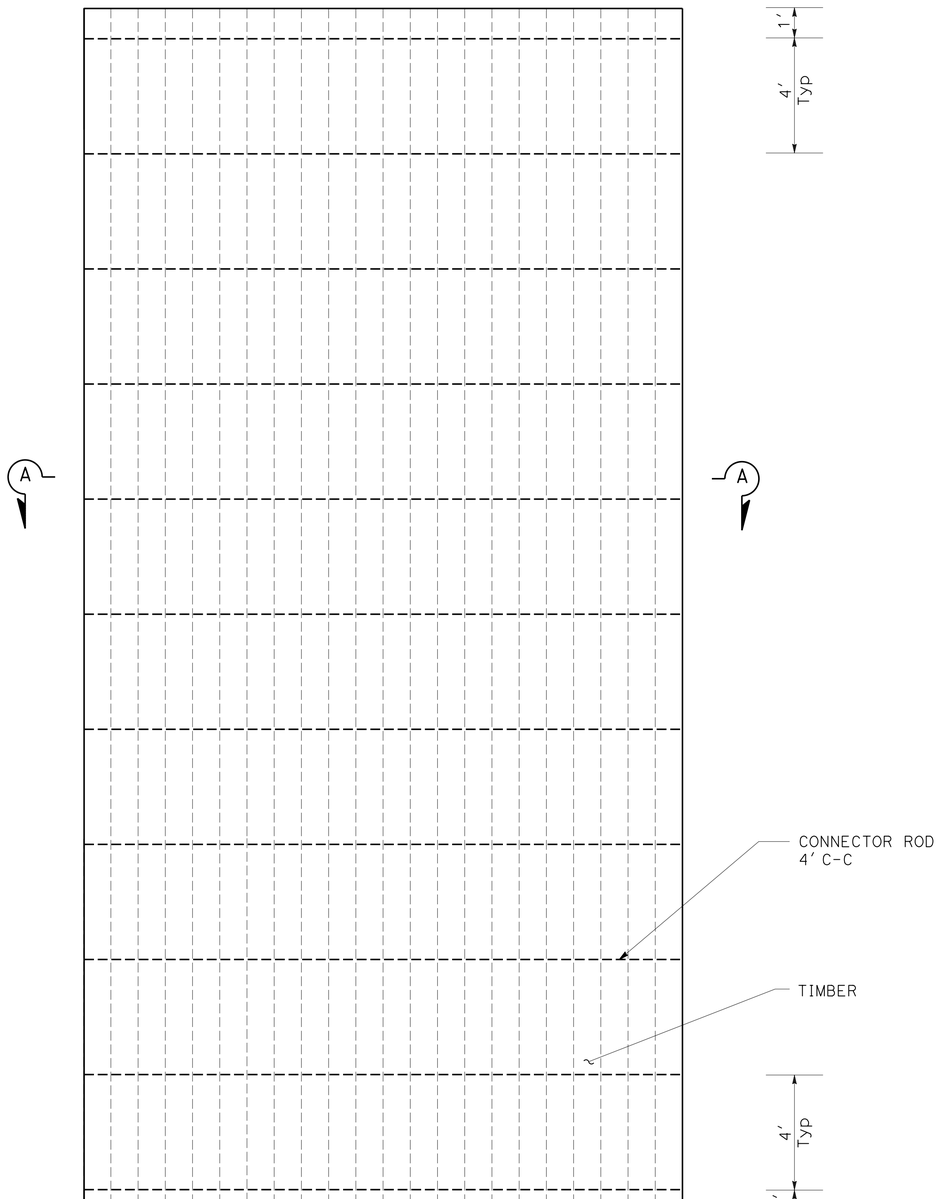

PLAN

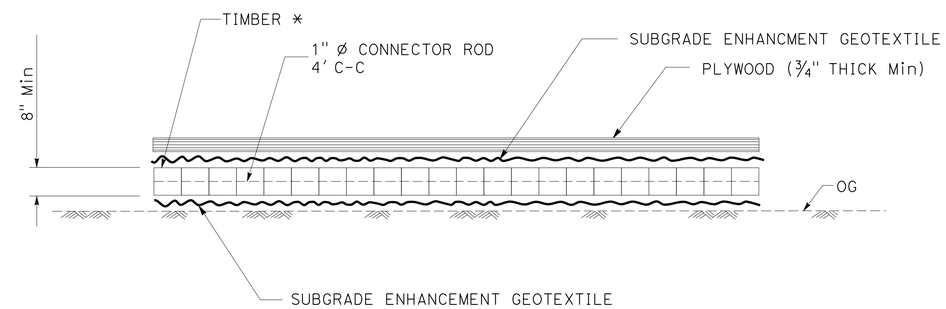

* TIMBER USED IN PAD MUST BE UNIFORM THICKNESS.

SECTION A-A

CONSTRUCTION DETAILS
(TEMPORARY ACCESS PAD)

NO SCALE

C-4

STATE OF CALIFORNIA - DEPARTMENT OF TRANSPORTATION
Caltrans
06-DESIGN

FUNCTIONAL SUPERVISOR: ARTHUR RAMIREZ
CALCULATED-DESIGNED BY: AMIT NIJHAWAN
CHECKED BY: HARPREET BINNING
REVISED BY: S HANIF
DATE REVISED: 08-29-14

LAST REVISION 06-20-14
DATE PLOTTED => 23-APR-2015
TIME PLOTTED => 14:24

Dist	COUNTY	ROUTE	POST MILES TOTAL PROJECT	SHEET No.	TOTAL SHEETS
04	Son	116	13.7	9	92

REGISTERED CIVIL ENGINEER 12/20/13 DATE

9-02-14
PLANS APPROVAL DATE

REGISTERED PROFESSIONAL ENGINEER HARPREET BINNING No. 68470 Exp. 9/30/15 CIVIL STATE OF CALIFORNIA

THE STATE OF CALIFORNIA OR ITS OFFICERS OR AGENTS SHALL NOT BE RESPONSIBLE FOR THE ACCURACY OR COMPLETENESS OF SCANNED COPIES OF THIS PLAN SHEET.

NOTE:

FOR ACCURATE RIGHT OF WAY DATA, CONTACT RIGHT OF WAY ENGINEERING AT THE DISTRICT OFFICE

LEGEND:

REMOVE TREE

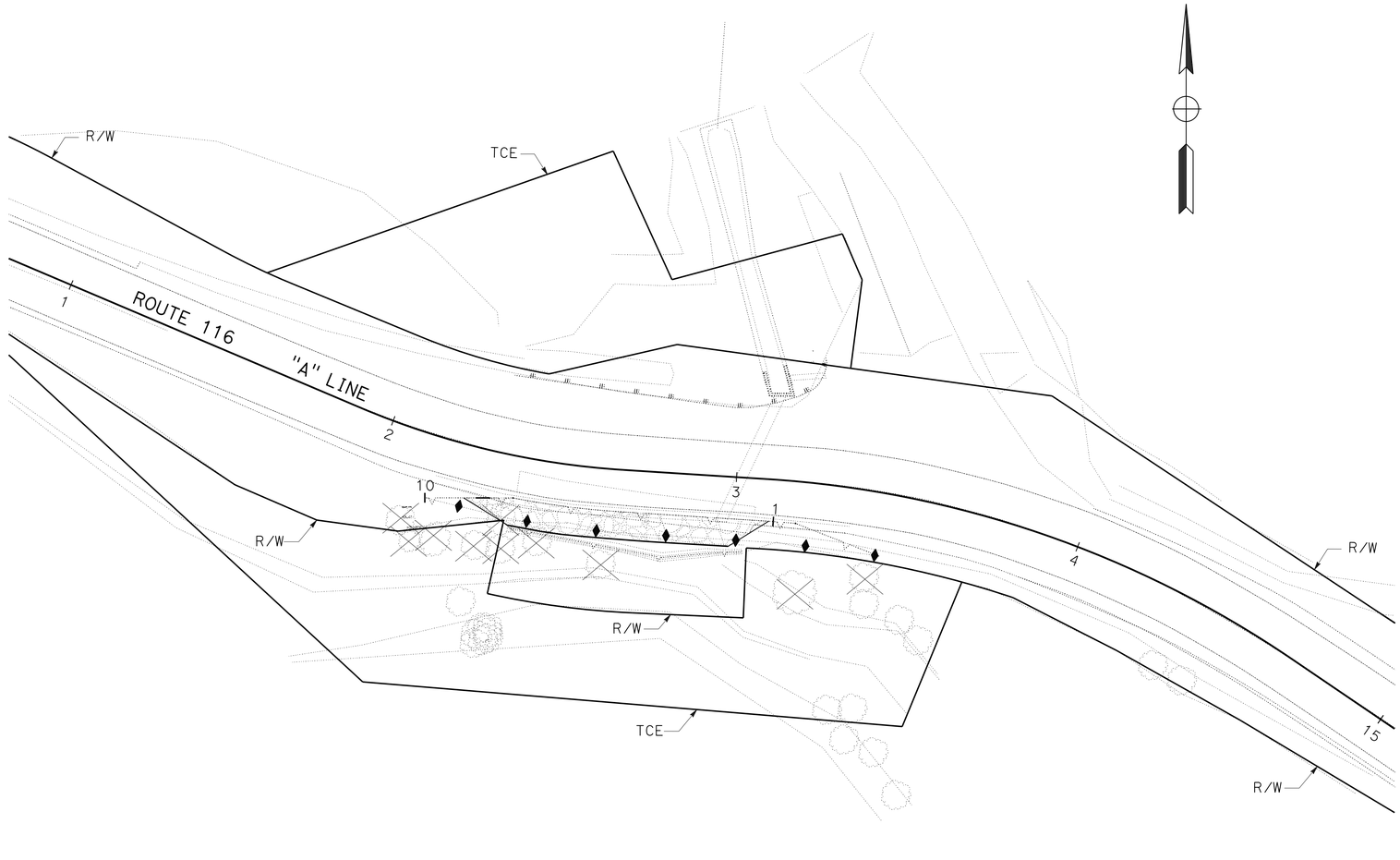

CONSTRUCTION DETAILS
(CLEARING AND GRUBBING)

SCALE: 1"=20'

C-5

REVISED BY	S HANIF
DATE REVISED	08-29-14
CALCULATED-DESIGNED BY	AMIT NIJHAWAN
CHECKED BY	HARPREET BINNING
FUNCTIONAL SUPERVISOR	ARTHUR RAMIREZ

STATE OF CALIFORNIA - DEPARTMENT OF TRANSPORTATION
Caltrans
06-DESIGN

LAST REVISION 08-27-14 | DATE PLOTTED => 23-APR-2015 | TIME PLOTTED => 14:24

Dist	COUNTY	ROUTE	POST MILES TOTAL PROJECT	SHEET No.	TOTAL SHEETS
04	Son	116	13.7	10	92

REGISTERED CIVIL ENGINEER 12/20/13 DATE

9-02-14
PLANS APPROVAL DATE

REGISTERED PROFESSIONAL ENGINEER HARPREET BINNING No. 68470 Exp. 9/30/15 CIVIL STATE OF CALIFORNIA

THE STATE OF CALIFORNIA OR ITS OFFICERS OR AGENTS SHALL NOT BE RESPONSIBLE FOR THE ACCURACY OR COMPLETENESS OF SCANNED COPIES OF THIS PLAN SHEET.

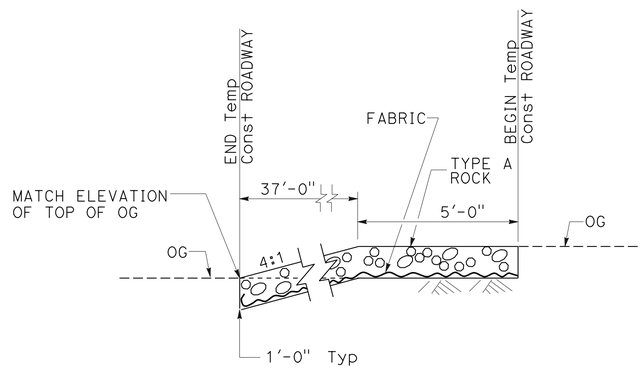

SECTION

CONFORM DETAIL

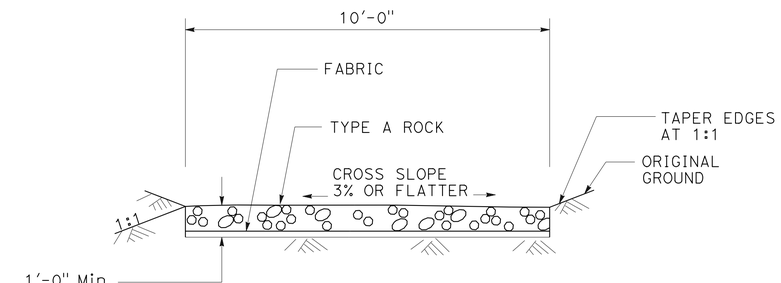

SECTION

TEMPORARY CONSTRUCTION ROADWAY

CONSTRUCTION DETAILS (TEMPORARY WATER POLLUTION CONTROL)

NO SCALE

C-6

STATE OF CALIFORNIA - DEPARTMENT OF TRANSPORTATION
Caltrans 06-DESIGN

FUNCTIONAL SUPERVISOR: ARTHUR RAMIREZ
CALCULATED-DESIGNED BY: SHAKILA HANIF
CHECKED BY: HARPREET BINNING
REVISED BY: H CHHINA
DATE REVISED: 08-27-14

LAST REVISION 08-27-14 | DATE PLOTTED => 23-APR-2015 | TIME PLOTTED => 14:25

Dist	COUNTY	ROUTE	POST MILES TOTAL PROJECT	SHEET No.	TOTAL SHEETS
04	Son	116	13.7	11	92

REGISTERED CIVIL ENGINEER 12/20/13 DATE

9-02-14
PLANS APPROVAL DATE

REGISTERED PROFESSIONAL ENGINEER HARPREET BINNING No. 68470 Exp. 9/30/15 CIVIL STATE OF CALIFORNIA

THE STATE OF CALIFORNIA OR ITS OFFICERS OR AGENTS SHALL NOT BE RESPONSIBLE FOR THE ACCURACY OR COMPLETENESS OF SCANNED COPIES OF THIS PLAN SHEET.

NOTES:

1. RADIUS OF MGS AS DRAWN IS 16′ (APPROX). ADJUST RADIUS AS NEEDED.
2. REMOVE EXCESSIVE AC PAVEMENT TO FACE OF MGS.
3. DISTANCE FROM FACE OF HEADWALL TO FACE OF MGS IS 4′ (Min).
4. Min CLEARANCE FROM WOOD POST TO PIPE CULVERT IS 7" (Min).

LEGEND:

△ INDICATES RAIL SPLICE AT 12′-6" ON CENTER

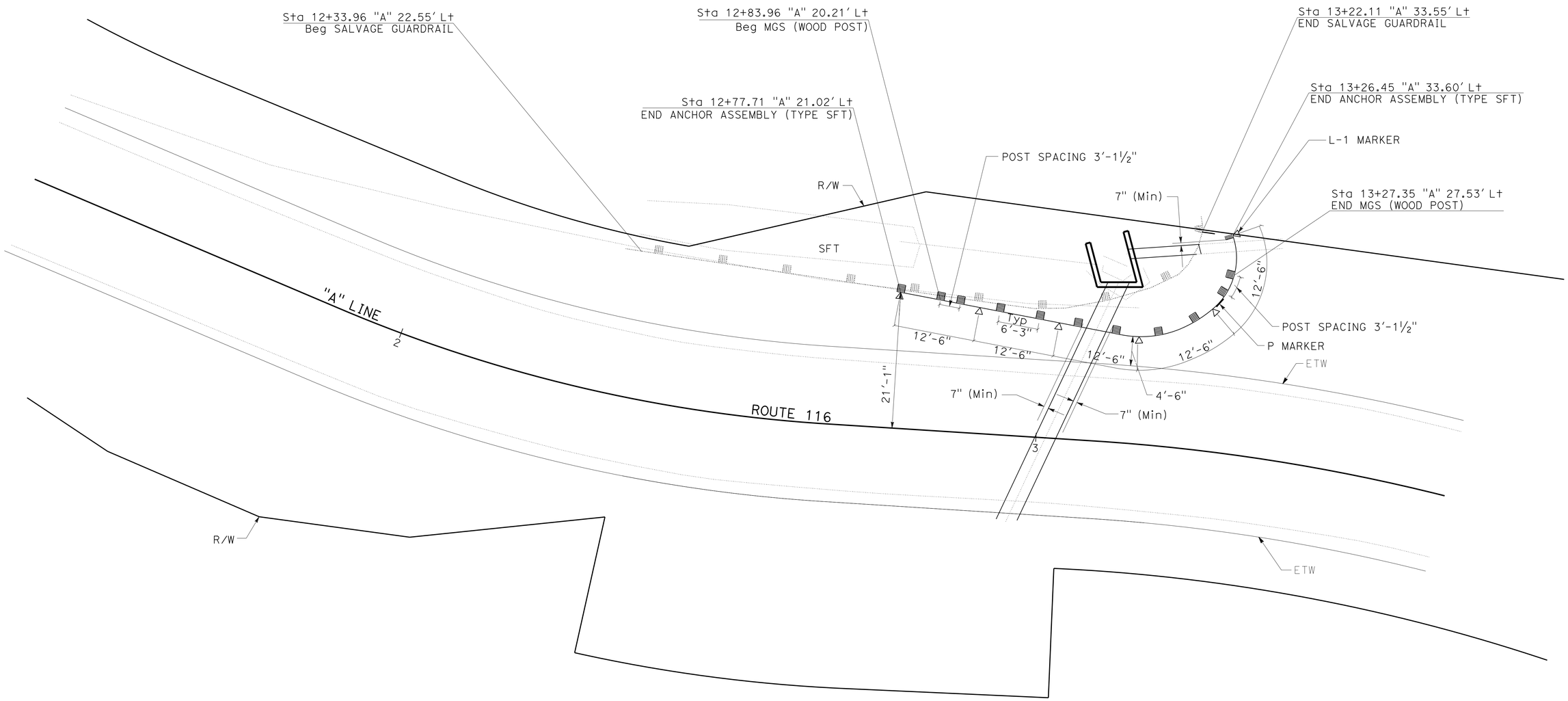

SALVAGE GUARDRAIL AND MGS DETAIL

CONSTRUCTION DETAILS

NO SCALE

C-7

STATE OF CALIFORNIA - DEPARTMENT OF TRANSPORTATION
Caltrans
06-DESIGN

FUNCTIONAL SUPERVISOR: ARTHUR RAMIREZ
CALCULATED-DESIGNED BY: SHAKILA HANIF
CHECKED BY: HARPREET BINNING
REVISED BY: H CHHINA
DATE REVISED: 08-29-14

LAST REVISION 08-27-14
DATE PLOTTED => 23-APR-2015
TIME PLOTTED => 14:25

Dist	COUNTY	ROUTE	POST MILES TOTAL PROJECT	SHEET No.	TOTAL SHEETS
04	Son	116	13.7	12	92

REGISTERED CIVIL ENGINEER 12-20-13 DATE

9-02-14
PLANS APPROVAL DATE

REGISTERED PROFESSIONAL ENGINEER HARPREET BINNING No. 68470 Exp. 9/30/15 CIVIL STATE OF CALIFORNIA

THE STATE OF CALIFORNIA OR ITS OFFICERS OR AGENTS SHALL NOT BE RESPONSIBLE FOR THE ACCURACY OR COMPLETENESS OF SCANNED COPIES OF THIS PLAN SHEET.

NOTE:
REFER TO SHEET PP-1 FOR RSP DETAILS.

ABBREVIATIONS:
AT&T - AMERICAN TELEPHONE AND TELEGRAPH COMPANY

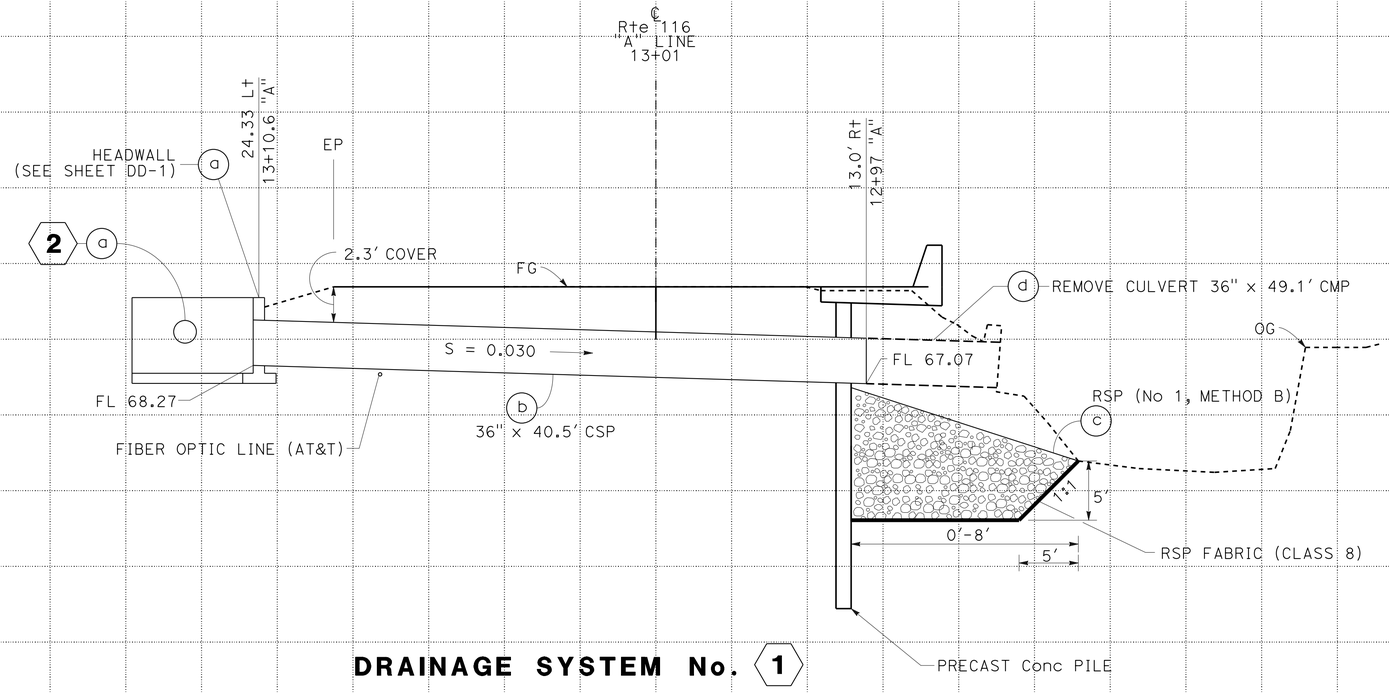

DRAINAGE SYSTEM No. 1

Sta 13+01
SKEW ANGLE 21°38'7.45"

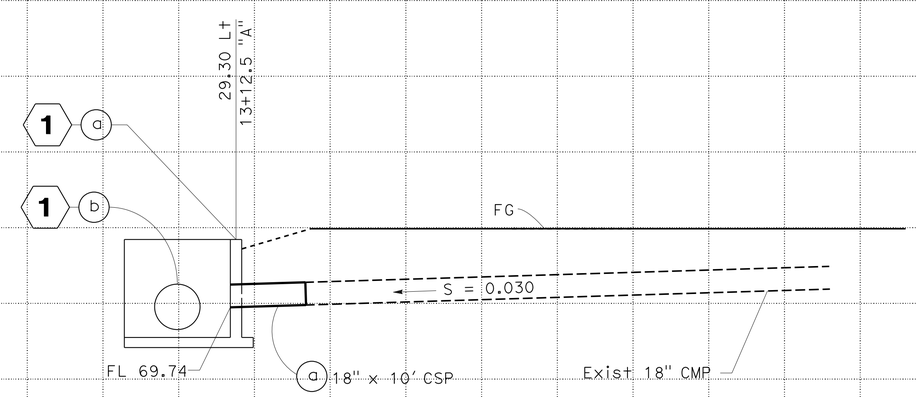

DRAINAGE SYSTEM No. 2

Sta 13+12.5

DRAINAGE PROFILES

SCALE: Horiz 1"=10'
Vert 1"=10'

DP-1

REVISED BY	H CHHINA
DATE REVISED	08-27-14
HARJINDER CHHINA	HARPREET BINNING
CALCULATED-DESIGNED BY	CHECKED BY
FUNCTIONAL SUPERVISOR	ARTHUR RAMIREZ

STATE OF CALIFORNIA - DEPARTMENT OF TRANSPORTATION
Caltrans
06-DESIGN

LAST REVISION 08-27-14 | DATE PLOTTED => 23-APR-2015 | TIME PLOTTED => 14:25

Dist	COUNTY	ROUTE	POST MILES TOTAL PROJECT	SHEET No.	TOTAL SHEETS
04	Son	116	13.7	13	92

REGISTERED CIVIL ENGINEER DATE 12/20/13

9-02-14
PLANS APPROVAL DATE

REGISTERED PROFESSIONAL ENGINEER HARPREET BINNING No. 68470 Exp. 9/30/15 CIVIL STATE OF CALIFORNIA

THE STATE OF CALIFORNIA OR ITS OFFICERS OR AGENTS SHALL NOT BE RESPONSIBLE FOR THE ACCURACY OR COMPLETENESS OF SCANNED COPIES OF THIS PLAN SHEET.

NOTE:

ALL REINFORCING STEEL IS #4 BARS, ALL VERTICAL AND HORIZONTAL SPACING IS AT 1'-6" MAXIMUM.

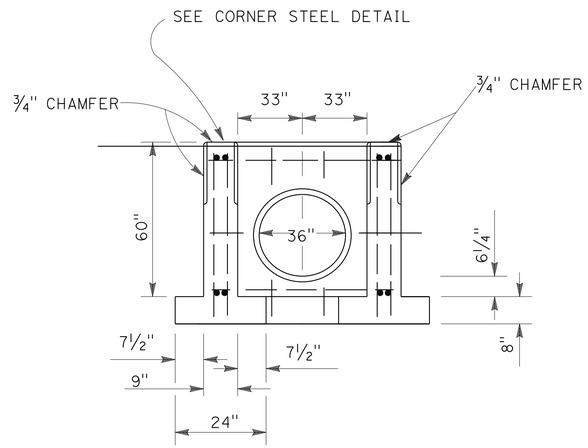

FRONT ELEVATION SECTION A-A

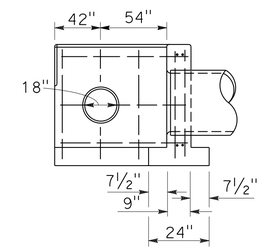

SECTION B-B

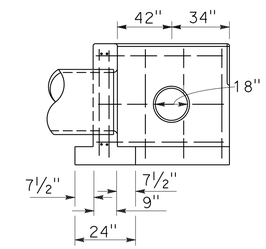

SECTION C-C

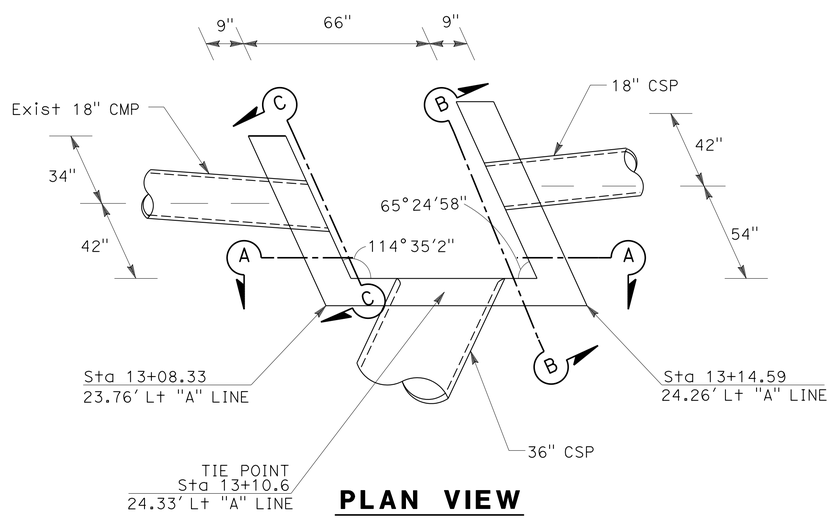

PLAN VIEW

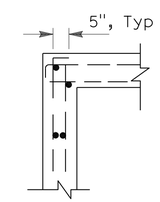

CORNER STEEL DETAIL

DRAINAGE DETAIL
(PIPE CULVERT HEADWALLS "U" SHAPE)

NO SCALE

DD-1

STATE OF CALIFORNIA - DEPARTMENT OF TRANSPORTATION
Caltrans
06-DESIGN

FUNCTIONAL SUPERVISOR: ARTHUR RAMIREZ

CALCULATED-DESIGNED BY: HARJINDER CHHINA
CHECKED BY: HARPREET BINNING

REVISED BY: H CHHINA
DATE REVISED: 08-27-14

LAST REVISION 08-27-14
DATE PLOTTED => 23-APR-2015
TIME PLOTTED => 14:25

Dist	COUNTY	ROUTE	POST MILES TOTAL PROJECT	SHEET No.	TOTAL SHEETS
04	Son	116	13.7	14	92

REGISTERED CIVIL ENGINEER 12-20-13 DATE

9-02-14
PLANS APPROVAL DATE

REGISTERED PROFESSIONAL ENGINEER HARPREET BINNING No. 68470 Exp. 9/30/15 CIVIL STATE OF CALIFORNIA

THE STATE OF CALIFORNIA OR ITS OFFICERS OR AGENTS SHALL NOT BE RESPONSIBLE FOR THE ACCURACY OR COMPLETENESS OF SCANNED COPIES OF THIS PLAN SHEET.

NOTES:

1. LOCATION OF UTILITY FACILITIES SHOWN ON PLANS ARE APPROXIMATE AND SHALL BE VERIFIED BY THE CONTRACTOR PRIOR TO CONSTRUCTION.
2. UTILITY OWNERSHIP ON THIS PROJECT:
   ELECTRIC PACIFIC GAS AND ELECTRIC (PG&E)
   TELEPHONE AMERICAN TELEPHONE AND TELEGRAPH COMPANY (AT&T)
   FIBER OPTIC AMERICAN TELEPHONE AND TELEGRAPH COMPANY (AT&T)
3. ALL DEPTHS SHOWN REFER TO THE TOP OF THE EXISTING PAVEMENT.
4. CALIFORNIA COORDINATE SYSTEM DATUM YEAR: NAD83
   ZONE: 02

LEGEND:

POTHOLE LOCATION

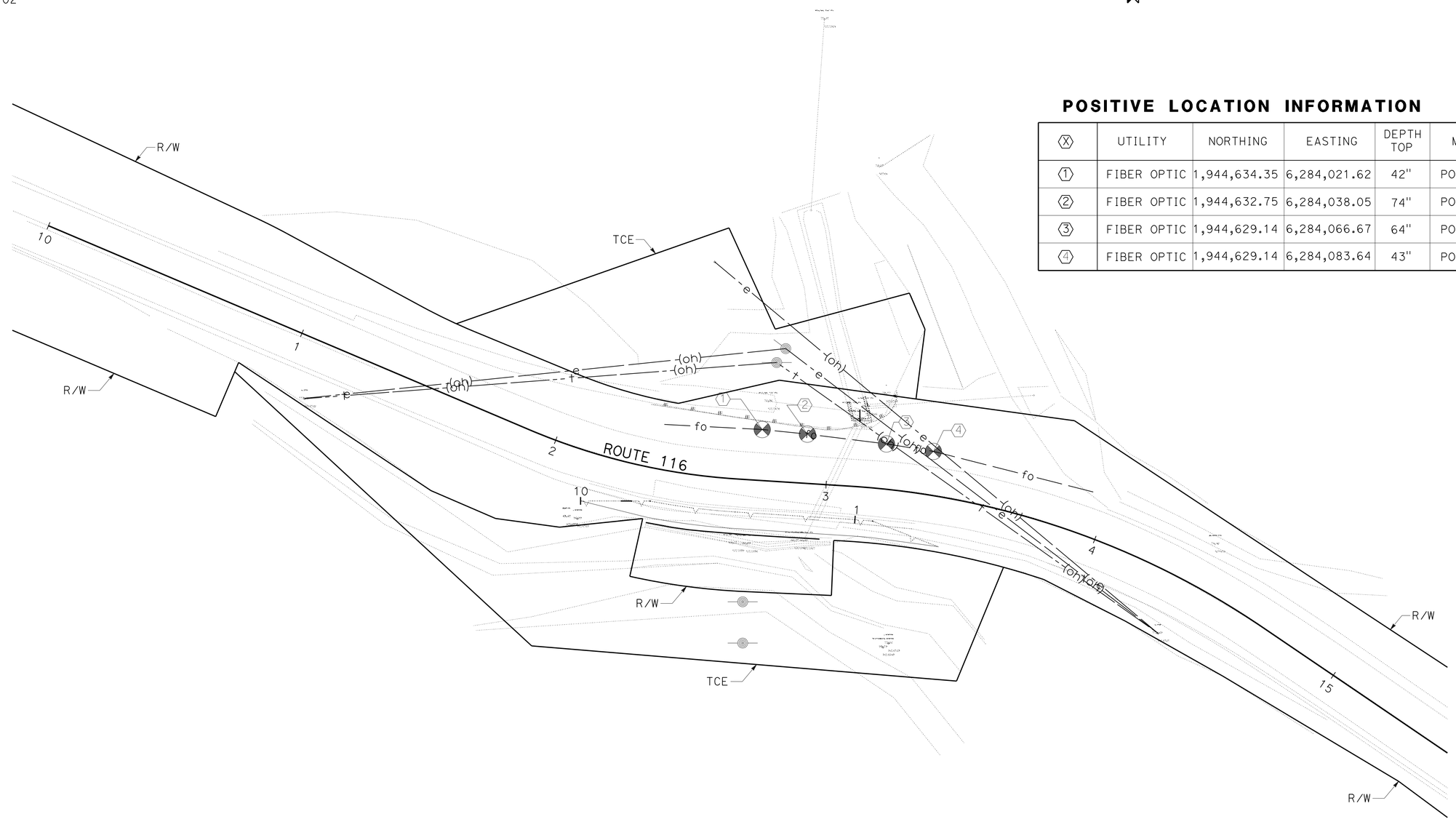

POSITIVE LOCATION INFORMATION

⟨X⟩	UTILITY	NORTHING	EASTING	DEPTH TOP	METHOD
⟨1⟩	FIBER OPTIC	1,944,634.35	6,284,021.62	42"	POTHOLING
⟨2⟩	FIBER OPTIC	1,944,632.75	6,284,038.05	74"	POTHOLING
⟨3⟩	FIBER OPTIC	1,944,629.14	6,284,066.67	64"	POTHOLING
⟨4⟩	FIBER OPTIC	1,944,629.14	6,284,083.64	43"	POTHOLING

UTILITY PLAN

SCALE: 1"=20'

U-1

APPROVED FOR UTILITY INFORMATION ONLY

STATE OF CALIFORNIA - DEPARTMENT OF TRANSPORTATION
Caltrans
06-DESIGN

FUNCTIONAL SUPERVISOR: ARTHUR RAMIREZ
CALCULATED-DESIGNED BY: AMIT NIJHAWAN
CHECKED BY: HARPREET BINNING
REVISED BY: H CHHINA
DATE REVISED: 08-27-14

LAST REVISION 08-27-14
DATE PLOTTED => 23-APR-2015
TIME PLOTTED => 14:25

Dist	COUNTY	ROUTE	POST MILES TOTAL PROJECT	SHEET No.	TOTAL SHEETS
04	Son	116	13.7	15	92

REGISTERED CIVIL ENGINEER 06-02-14 DATE

9-02-14
PLANS APPROVAL DATE

REGISTERED PROFESSIONAL ENGINEER
MAZIN H. AL-ALI
No. 65523
Exp. 9/30/15
CIVIL
STATE OF CALIFORNIA

THE STATE OF CALIFORNIA OR ITS OFFICERS OR AGENTS SHALL NOT BE RESPONSIBLE FOR THE ACCURACY OR COMPLETENESS OF SCANNED COPIES OF THIS PLAN SHEET.

STATIONARY MOUNTED CONSTRUCTION AREA SIGNS

SIGN No.	SIGN CODE	PANEL SIZE	SIGN MESSAGE	No. OF POST AND SIZE	EACH
A	W20-1	36" x 36"	ROAD WORK AHEAD	1-4" x 6"	2
B	G20-2	36" x 18"	END ROAD WORK	1-4" x 4"	2

NOTES:

1. EXACT SIGN LOCATIONS TO BE DETERMINED BY THE ENGINEER.
2. SEE SHEET THQ-1 FOR ADDITIONAL CONSTRUCTION AREA SIGNS.

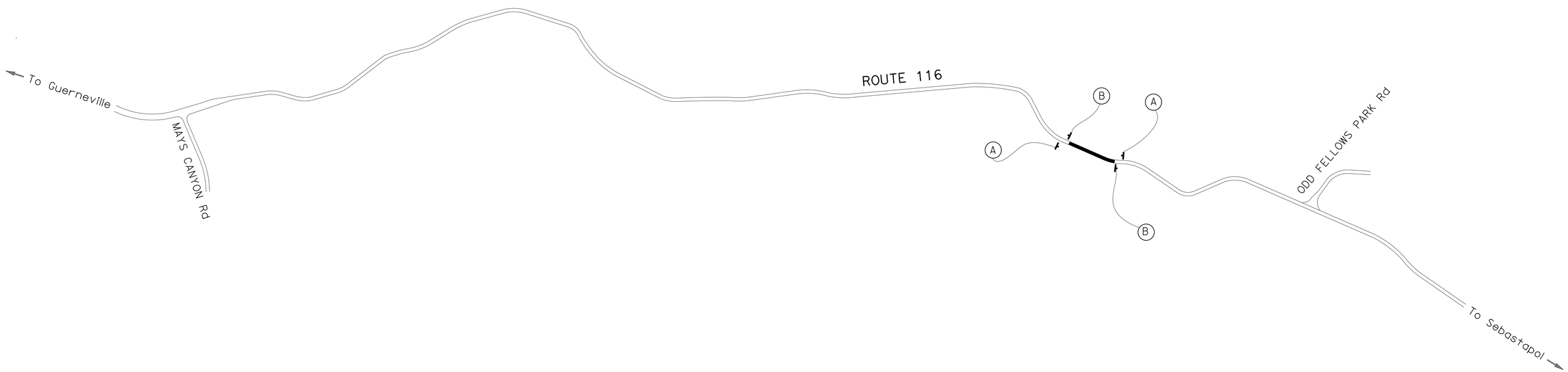

CONSTRUCTION AREA SIGNS

NO SCALE

CS-1

APPROVED FOR CONSTRUCTION AREA SIGN WORK ONLY

STATE OF CALIFORNIA - DEPARTMENT OF TRANSPORTATION
Caltrans 06-TRAFFIC DESIGN

FUNCTIONAL SUPERVISOR: MOHAMMED QATAMI
CALCULATED-DESIGNED BY: RANJIT MONDAL
CHECKED BY: MAZIN AL-ALI
REVISED BY: MAZIN
DATE REVISED: 06-02-14

LAST REVISION 06-24-14 | DATE PLOTTED => 23-APR-2015 | TIME PLOTTED => 14:25

BORDER LAST REVISED 7/2/2010 | USERNAME => s113541 | DGN FILE => 04140001901a001.dgn | RELATIVE BORDER SCALE IS IN INCHES 0 1 2 3 | UNIT 1513 | PROJECT NUMBER & PHASE 04140001901

Dist	COUNTY	ROUTE	POST MILES TOTAL PROJECT	SHEET No.	TOTAL SHEETS
04	Son	116	13.7	16	92

REGISTERED CIVIL ENGINEER 12-20-13 DATE

9-02-14
PLANS APPROVAL DATE

REGISTERED PROFESSIONAL ENGINEER HARPREET BINNING No. 68470 Exp. 9/30/15 CIVIL STATE OF CALIFORNIA

THE STATE OF CALIFORNIA OR ITS OFFICERS OR AGENTS SHALL NOT BE RESPONSIBLE FOR THE ACCURACY OR COMPLETENESS OF SCANNED COPIES OF THIS PLAN SHEET.

LEGEND:

- CONSTRUCTION THIS STAGE
- CONSTRUCTION COMPLETED DURING A PREVIOUS STAGE
- Temp ACCESS PAD

NOTES:

1. REFER TO IP AND PP SHEETS FOR IRRIGATION AND PLANTING TO BE INTEGRATED WITH RSP CONSTRUCTION.
2. FOR ACCURATE RIGHT OF WAY DATA, CONTACT RIGHT OF WAY ENGINEERING AT THE DISTRICT OFFICE

CONSTRUCTION NOTES:

1. CONSTRUCT TCDS, ACCESS PAD AND TEMPORARY CONSTRUCTION ROADWAY
2. CONSTRUCT STRUCTURAL WORK, RSP AND CSP

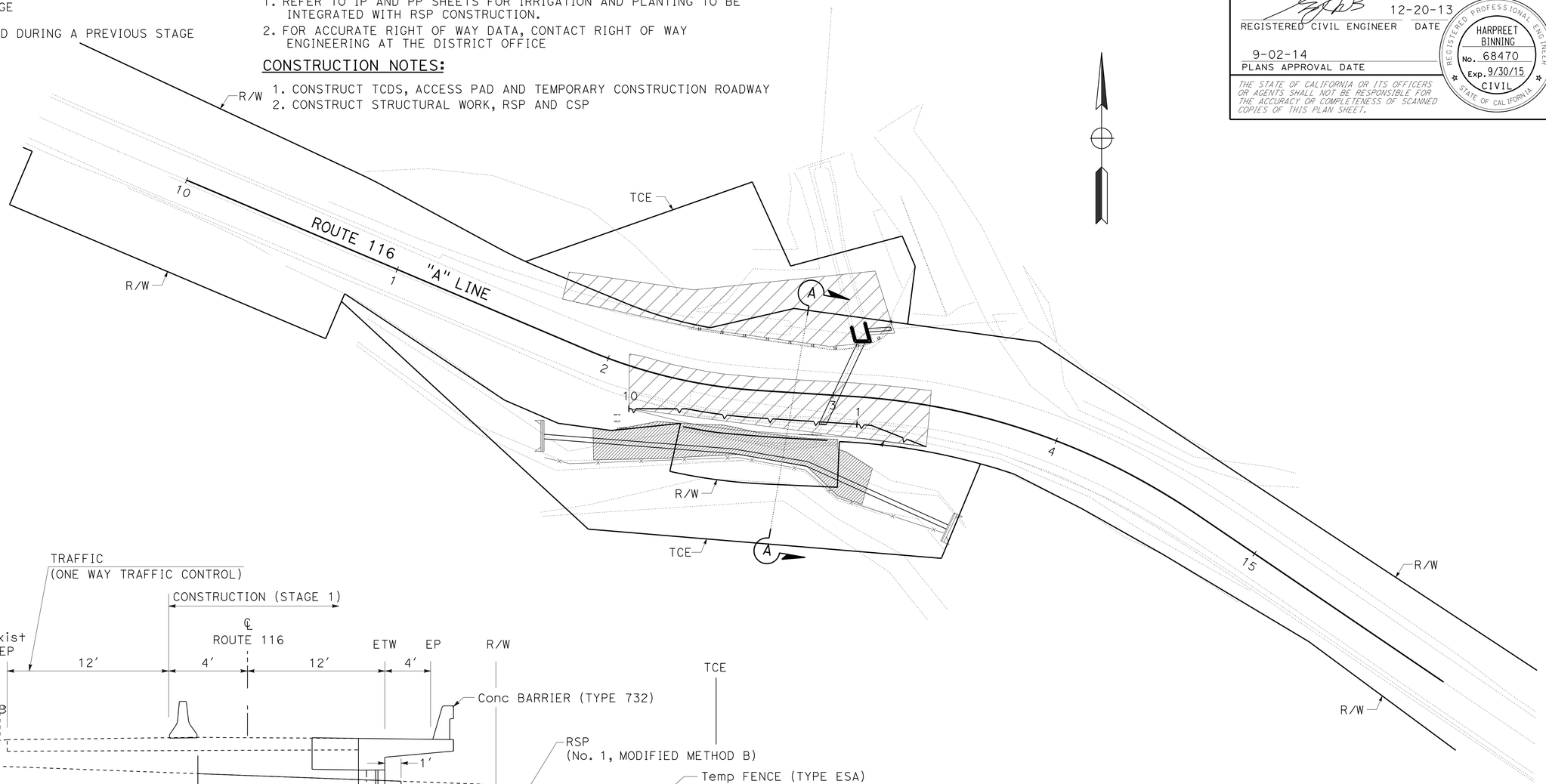

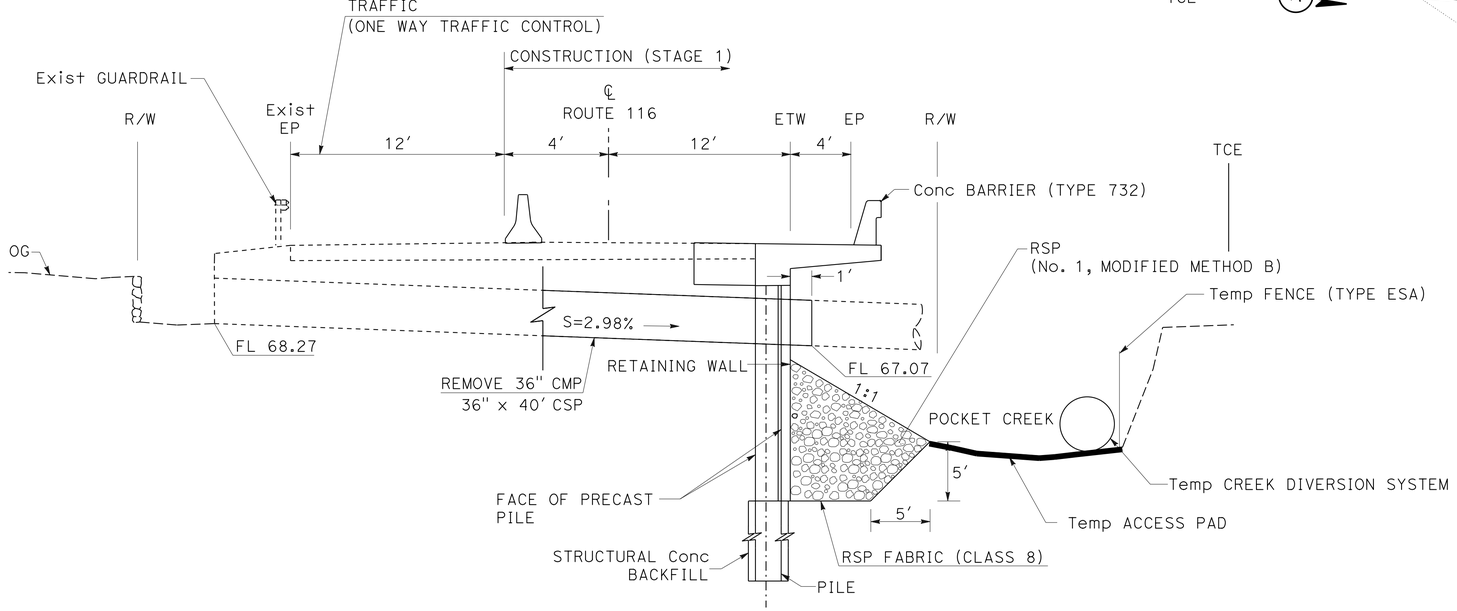

SECTION A-A

NO SCALE

APPROVED FOR STAGE CONSTRUCTION WORK ONLY

STAGE CONSTRUCTION
STAGE 1

NO SCALE

SC-1

REVISED BY	H CHHINA
DATE REVISED	08-29-14
CALCULATED-DESIGNED BY	AMIT NIJHAWAN
CHECKED BY	HARPREET BINNING
FUNCTIONAL SUPERVISOR	ARTHUR RAMIREZ

STATE OF CALIFORNIA - DEPARTMENT OF TRANSPORTATION
Caltrans
06-DESIGN

LAST REVISION 06-20-14
DATE PLOTTED => 23-APR-2015
TIME PLOTTED => 14:25

Dist	COUNTY	ROUTE	POST MILES TOTAL PROJECT	SHEET No.	TOTAL SHEETS
04	Son	116	13.7	17	92

REGISTERED CIVIL ENGINEER 12-20-13 DATE

9-02-14
PLANS APPROVAL DATE

REGISTERED PROFESSIONAL ENGINEER HARPREET BINNING No. 68470 Exp. 9/30/15 CIVIL STATE OF CALIFORNIA

THE STATE OF CALIFORNIA OR ITS OFFICERS OR AGENTS SHALL NOT BE RESPONSIBLE FOR THE ACCURACY OR COMPLETENESS OF SCANNED COPIES OF THIS PLAN SHEET.

CONSTRUCTION NOTES:

1. CONSTRUCT HEADWALL, MGS, AND REPLACE CULVERT.

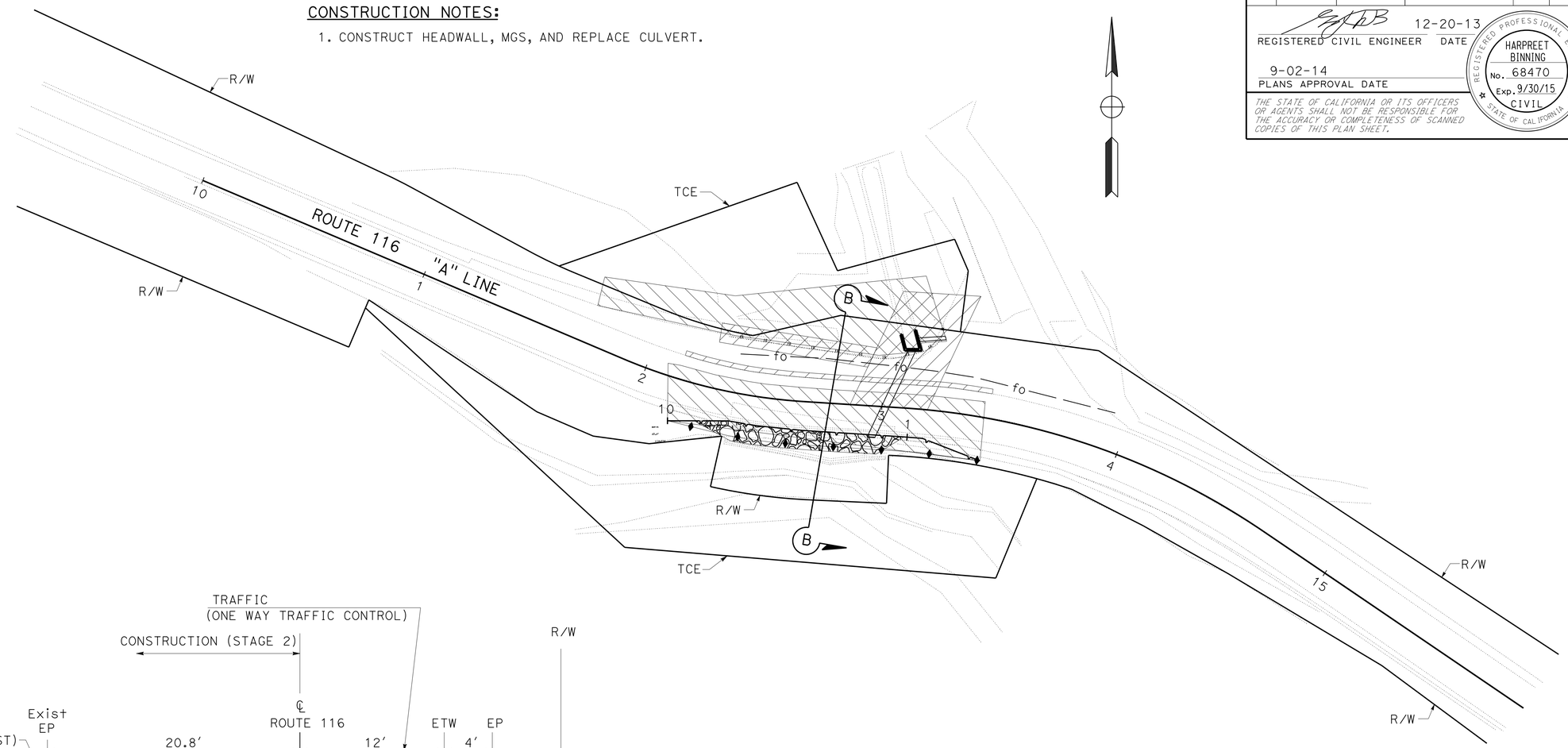

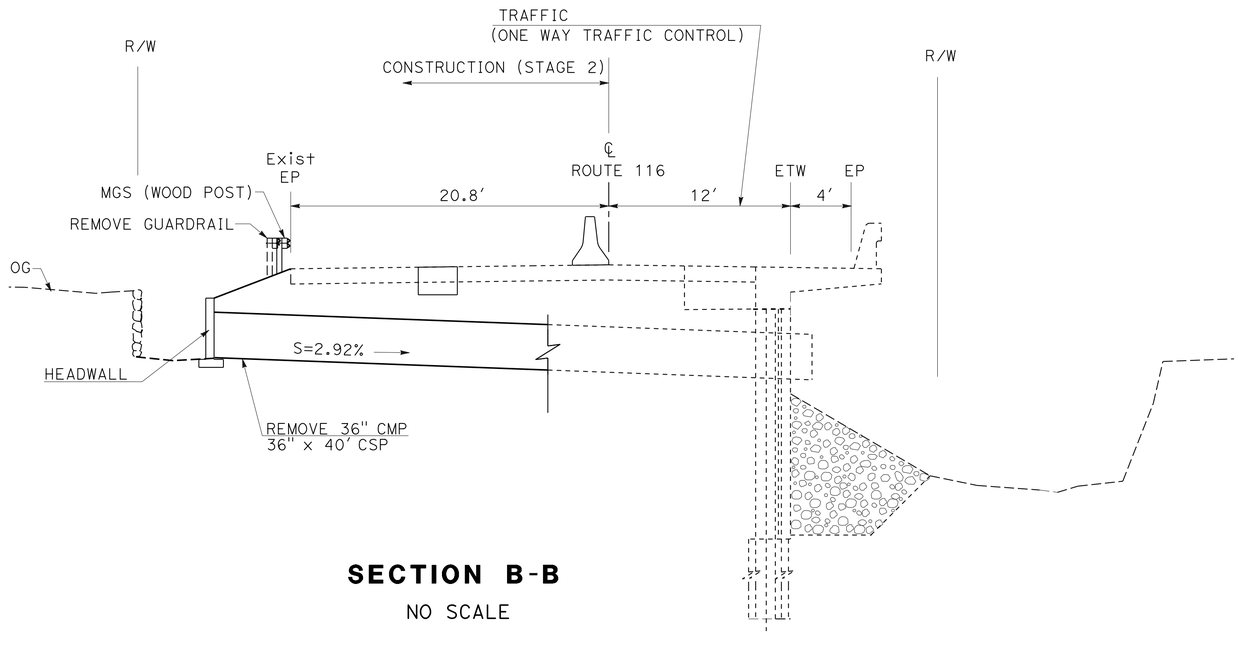

SECTION B-B

NO SCALE

STAGE CONSTRUCTION

STAGE 2

NO SCALE

SC-2

APPROVED FOR STAGE CONSTRUCTION WORK ONLY

CALCULATED-DESIGNED BY	AMIT NIJHAWAN
CHECKED BY	HARPREET BINNING
FUNCTIONAL SUPERVISOR	ARTHUR RAMIREZ
REVISED BY	S HANIF
DATE REVISED	08-29-14

STATE OF CALIFORNIA - DEPARTMENT OF TRANSPORTATION

Caltrans

06-DESIGN

LAST REVISION 06-20-14 | DATE PLOTTED => 23-APR-2015 | TIME PLOTTED => 14:25

Dist	COUNTY	ROUTE	POST MILES TOTAL PROJECT	SHEET No.	TOTAL SHEETS
04	Son	116	13.7	18	92

REGISTERED CIVIL ENGINEER 06-02-14 DATE

9-02-14
PLANS APPROVAL DATE

REGISTERED PROFESSIONAL ENGINEER MAZIN H. AL-ALI No. 65523 Exp. 9/30/15 CIVIL STATE OF CALIFORNIA

THE STATE OF CALIFORNIA OR ITS OFFICERS OR AGENTS SHALL NOT BE RESPONSIBLE FOR THE ACCURACY OR COMPLETENESS OF SCANNED COPIES OF THIS PLAN SHEET.

LEGEND:

- CHANNELIZER (SURFACE MOUNTED)
- Temp CRASH CUSHION MODULE
- CONSTRUCTION AREA
- (xx) TEMPORARY TRAFFIC STRIPE (PAINT) DETAIL NUMBER
- (XX) EXISTING TRAFFIC STRIPE DETAIL No. TO BE REMOVED
- ROADSIDE SIGN SSBM

NOTES:

1. FOR ADDITIONAL CONSTRUCTION AREA SIGNS REFER TO SHEET CS-1.
2. EXACT SIGN LOCATIONS TO BE DETERMINED BY THE ENGINEER.
3. COVER CONFLICTING SIGNS AND REMOVE CONFLICTING STRIPING.

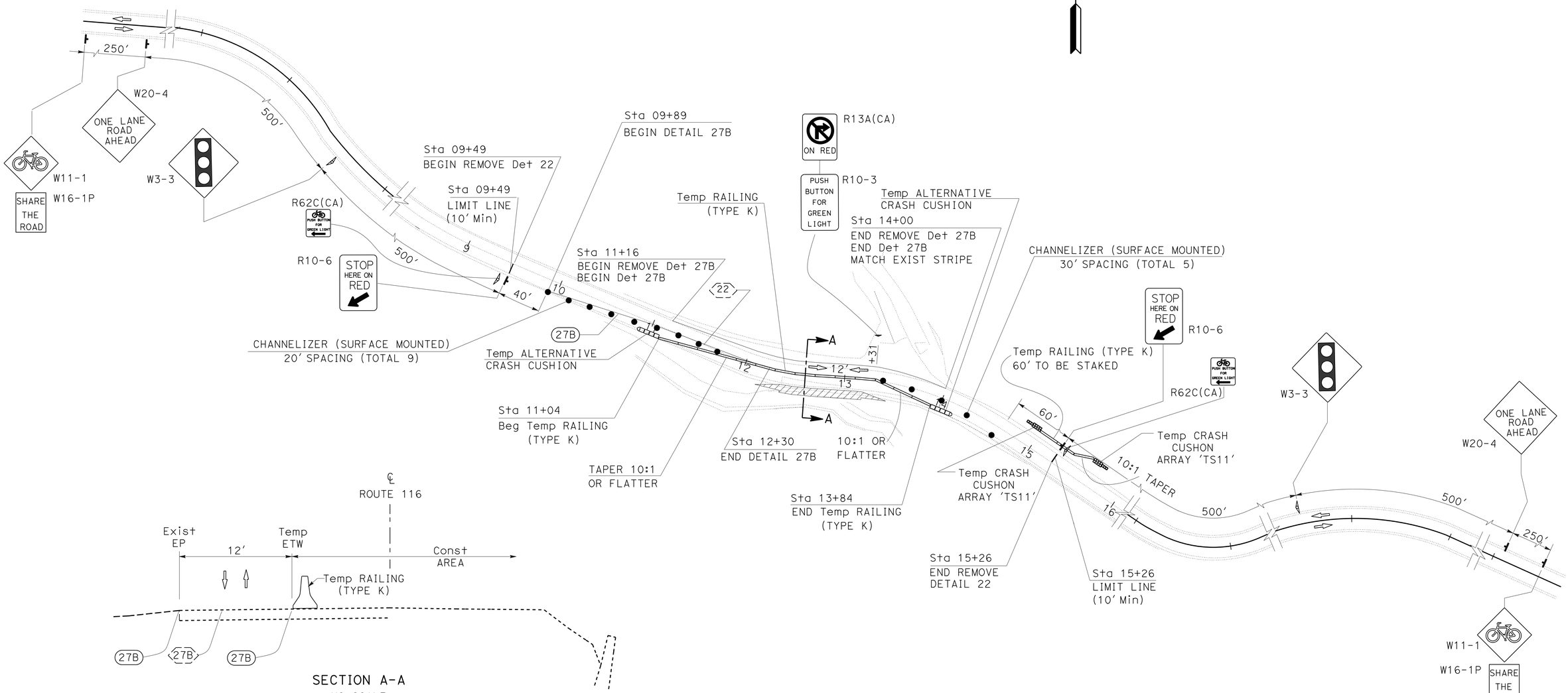

TRAFFIC HANDLING PLAN
(STAGE 1)
SCALE: 1"=50'

TH-1

APPROVED FOR TRAFFIC HANDLING WORK ONLY

STATE OF CALIFORNIA - DEPARTMENT OF TRANSPORTATION
Caltrans® 06-TRAFFIC DESIGN

FUNCTIONAL SUPERVISOR: MOHAMMED QATAMI
CALCULATED-DESIGNED BY: RANJIT K MONDAL
CHECKED BY: MAZIN AL-ALI
REVISED BY: MAZIN
DATE REVISED: 06-24-14

LAST REVISION 08-29-14 | DATE PLOTTED => 23-APR-2015 | TIME PLOTTED => 14:25

Dist	COUNTY	ROUTE	POST MILES TOTAL PROJECT	SHEET No.	TOTAL SHEETS
04	Son	116	13.7	19	92

REGISTERED CIVIL ENGINEER 06-02-14 DATE

9-02-14
PLANS APPROVAL DATE

REGISTERED PROFESSIONAL ENGINEER MAZIN H. AL-ALI No. 65523 Exp. 9/30/15 CIVIL STATE OF CALIFORNIA

THE STATE OF CALIFORNIA OR ITS OFFICERS OR AGENTS SHALL NOT BE RESPONSIBLE FOR THE ACCURACY OR COMPLETENESS OF SCANNED COPIES OF THIS PLAN SHEET.

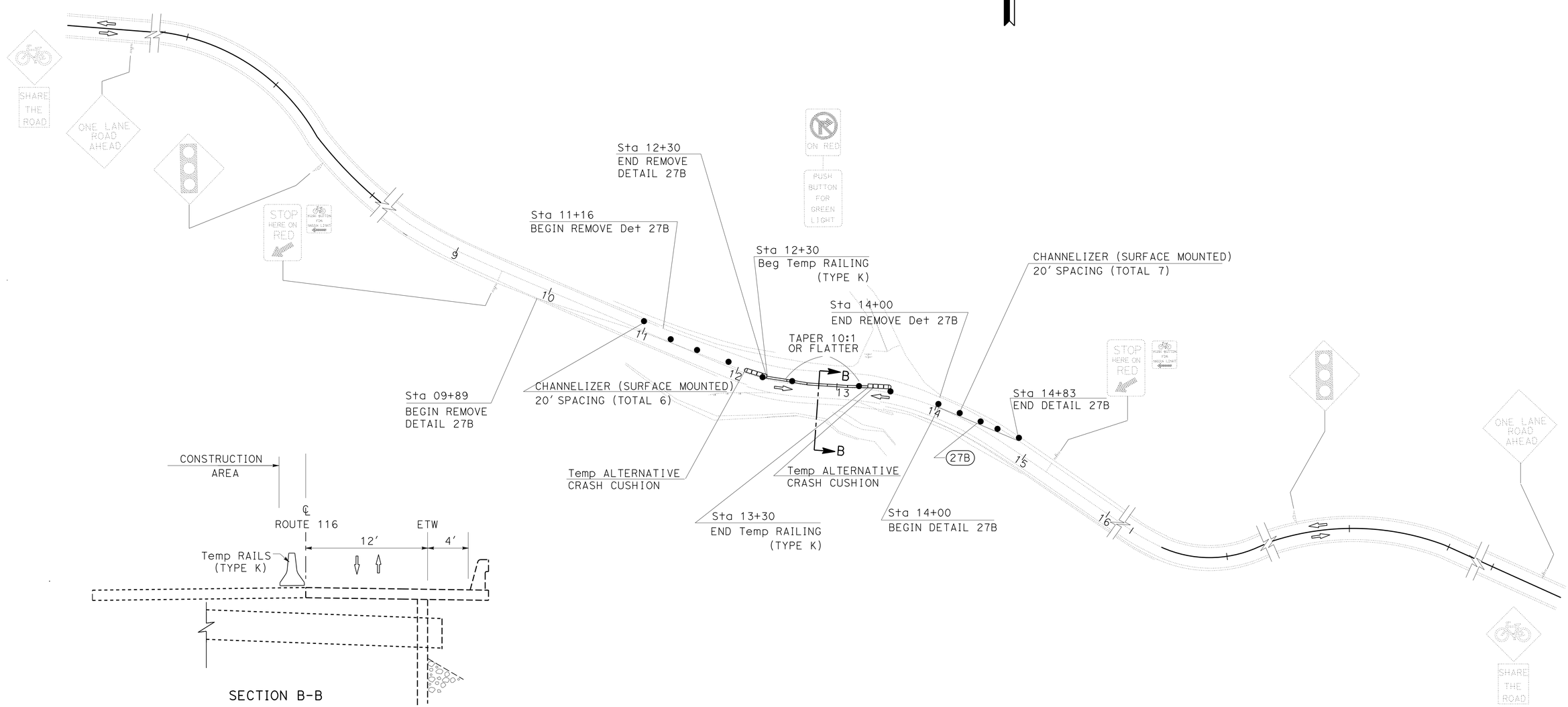

TRAFFIC HANDLING PLAN
(STAGE 2)
SCALE: 1"=50'

TH-2

APPROVED FOR TRAFFIC HANDLING WORK ONLY

STATE OF CALIFORNIA - DEPARTMENT OF TRANSPORTATION
Caltrans
06-TRAFFIC DESIGN

FUNCTIONAL SUPERVISOR: MOHAMMED QATAMI
CALCULATED-DESIGNED BY: RANJIT K MONDAL
CHECKED BY: MAZIN AL-ALI
REVISED BY: MAZIN
DATE REVISED: 06-24-14

LAST REVISION 08-29-14
DATE PLOTTED => 23-APR-2015
TIME PLOTTED => 14:25

Dist	COUNTY	ROUTE	POST MILES TOTAL PROJECT	SHEET No.	TOTAL SHEETS
04	Son	116	13.7	20	92

REGISTERED CIVIL ENGINEER 12-04-12 DATE

9-02-14
PLANS APPROVAL DATE

REGISTERED PROFESSIONAL ENGINEER MAZIN H. AL-ALI No. 65523 Exp. 9/30/15 CIVIL STATE OF CALIFORNIA

THE STATE OF CALIFORNIA OR ITS OFFICERS OR AGENTS SHALL NOT BE RESPONSIBLE FOR THE ACCURACY OR COMPLETENESS OF SCANNED COPIES OF THIS PLAN SHEET.

NOTE:
FOR ADDITIONAL CONSTRUCTION AREA SIGNS SEE CONSTRUCTION AREA SIGN PLAN SHEET.

CHANNELIZER (SURFACE MOUNTED)

SHEET No.	EA
TH-1	14
TH-2	13
TOTAL	27

TEMPORARY ALTERNATIVE CRASH CUSHION

SHEET No.	EA
TH-1	2
TH-2	2
TOTAL	4

TEMPORARY RAILING (TYPE K)

SHEET No.	LOCATION	LF
TH-1	Sta 11+04 TO Sta 13+84	280
TH-1	AS SHOWN ON PLAN	60
TH-2	Sta 12+30 TO Sta 13+30	100
TOTAL		440

TEMPORARY CRASH CUSHION MODULE

SHEET No.	EA
TH-1	22
TOTAL	22

TEMPORARY PAVEMENT DELINEATION

SHEET No.	LOCATION	DETAIL No.	REMOVE PAVEMENT MARKER	REMOVE YELLOW THERMOPLASTIC TRAFFIC STRIPE (HAZARDOUS WASTE)	REMOVE THERMOPLASTIC TRAFFIC STRIPE	TEMPORARY TRAFFIC STRIPE (PAINT)	TEMPORARY PAVEMENT MARKING (PAINT) LIMIT LINES	REMOVE PAINTED TRAFFIC STRIPE	REMOVE PAINTED PAVEMENT MARKING
			EA	LF	LF	LF	SQFT	LF	SQFT
TH-1	Sta 09+49 TO Sta 15+26	22	52	1154			22		
	Sta 09+89 TO Sta 14+00	27B				411			
	Sta 11+16 TO Sta 14+00	27B			284	284			
TH-2	Sta 09+89 TO Sta 12+30	27B						241	22
	Sta 11+16 TO Sta 14+00	27B						284	
	Sta 14+00 TO Sta 14+83	27B				83		83	
TOTAL			52	1154	284	778	22	608	22

STATIONARY MOUNTED CONSTRUCTION AREA SIGNS

SHEET No.	SIGN CODE FEDERAL	SIGN CODE CALIFORNIA	SIGN MESSAGE	PANEL SIZE	No. OF POST AND SIZE	(N) INSTALL ROADSIDE SIGN (SSBM)	No. OF SIGNS
TH-1	W3-3		AS SHOWN ON PLAN	36" x 36"	MOUNT ON FLASHING BEACON	2	
	R10-6		AS SHOWN ON PLAN	36" x 24"	1-4" x 4"		2
	W20-4		AS SHOWN ON PLAN	36" x 36"	1-4" x 6"		2
	R10-3		AS SHOWN ON PLAN	9" x 12"	1-4" x 4"		1
		R13A(CA)	AS SHOWN ON PLAN	18" x 30"			1
		R62C(CA)	AS SHOWN ON PLAN	7.5" x 5.0"	MOUNT ON PUSH BUTTON POLE	2	
	W11-1		AS SHOWN ON PLAN	30" x 30"	1-4" x 4"		2
	W16-1P			18" x 24"			2

(N) NOT A SEPARATE PAY ITEM, FOR INFORMATION ONLY.

TRAFFIC HANDLING QUANTITIES
THQ-1

STATE OF CALIFORNIA - DEPARTMENT OF TRANSPORTATION
Caltrans® 06-TRAFFIC DESIGN

FUNCTIONAL SUPERVISOR: MOHAMMED QATAMI
CALCULATED-DESIGNED BY: HASEEB YOUSAF
CHECKED BY: MAZIN AL-ALI
REVISED BY: MAZIN
DATE REVISED: 06-26-14

LAST REVISION 08-29-14
DATE PLOTTED => 23-APR-2015
TIME PLOTTED => 14:25

Dist	COUNTY	ROUTE	POST MILES TOTAL PROJECT	SHEET No.	TOTAL SHEETS
04	Son	116	13.7	21	92

REGISTERED CIVIL ENGINEER 06-02-14 DATE

9-02-14
PLANS APPROVAL DATE

REGISTERED PROFESSIONAL ENGINEER MAZIN H. AL-ALI No. 65523 Exp. 9/30/15 CIVIL STATE OF CALIFORNIA

THE STATE OF CALIFORNIA OR ITS OFFICERS OR AGENTS SHALL NOT BE RESPONSIBLE FOR THE ACCURACY OR COMPLETENESS OF SCANNED COPIES OF THIS PLAN SHEET.

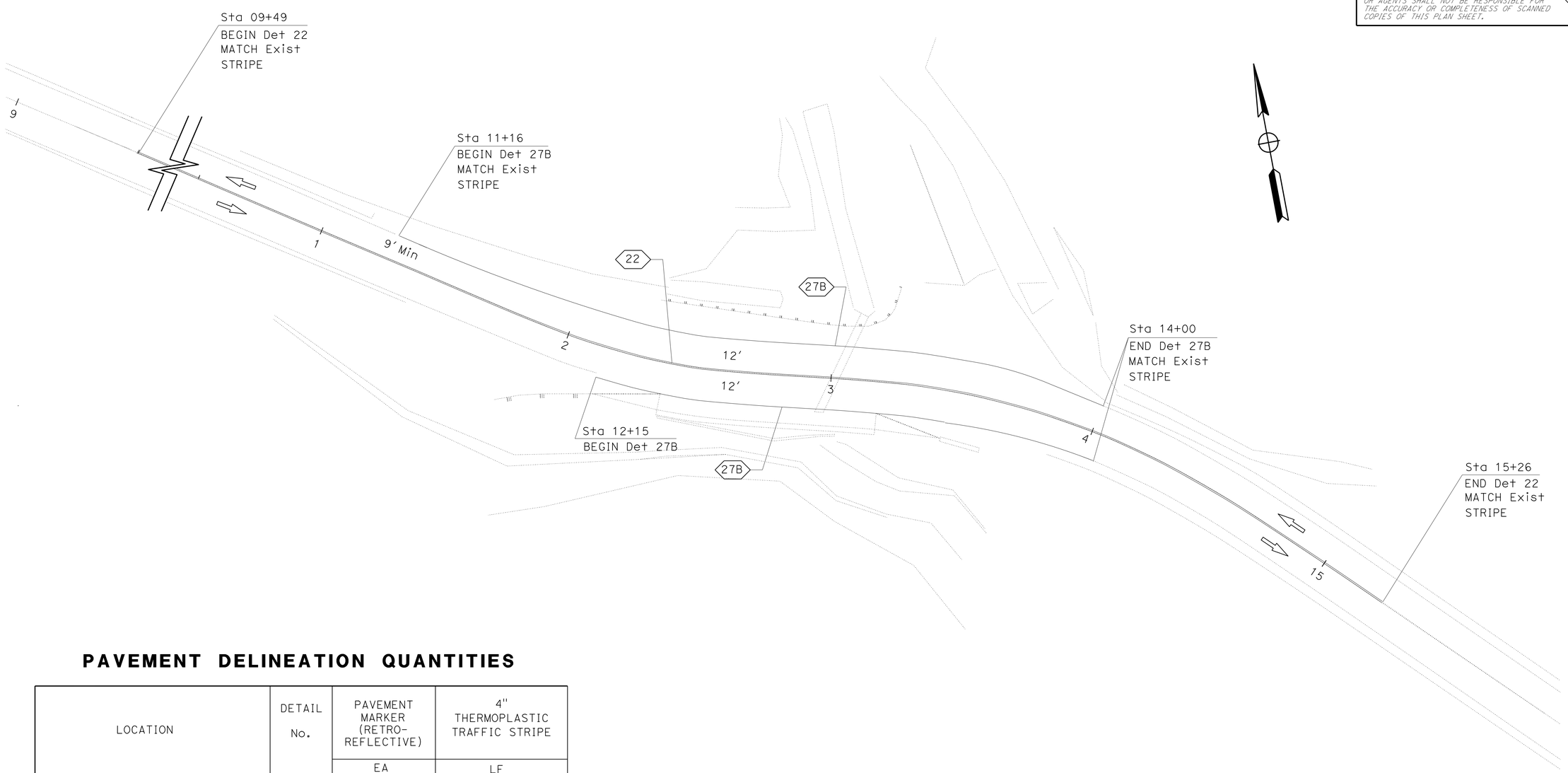

PAVEMENT DELINEATION QUANTITIES

LOCATION	DETAIL No.	PAVEMENT MARKER (RETRO-REFLECTIVE)	4" THERMOPLASTIC TRAFFIC STRIPE
		EA	LF
Sta 09+49 TO Sta 15+26	22	52	1154
Sta 11+16 TO Sta 14+00	27B		284
Sta 12+15 TO Sta 14+00	27B		185
TOTAL		52	1623

PAVEMENT DELINEATION PLAN AND PAVEMENT DELINEATION QUANTITIES

SCALE: 1"=20'

PD-1

FUNCTIONAL SUPERVISOR	MOHAMMED QATAMI
CALCULATED-DESIGNED BY	RANJIT K MONDAL
CHECKED BY	MAZIN AL-ALI
REVISED BY	MAZIN
DATE REVISED	06-26-14

STATE OF CALIFORNIA - DEPARTMENT OF TRANSPORTATION
Caltrans
06-TRAFFIC DESIGN

LAST REVISION 06-24-14 | DATE PLOTTED => 23-APR-2015 | TIME PLOTTED => 14:25

Dist	COUNTY	ROUTE	POST MILES TOTAL PROJECT	SHEET No.	TOTAL SHEETS
04	Son	116	13.7	22	92

REGISTERED CIVIL ENGINEER 12-20-13 DATE

9-02-14
PLANS APPROVAL DATE

REGISTERED PROFESSIONAL ENGINEER HARPREET BINNING No. 68470 Exp. 9/30/15 CIVIL STATE OF CALIFORNIA

THE STATE OF CALIFORNIA OR ITS OFFICERS OR AGENTS SHALL NOT BE RESPONSIBLE FOR THE ACCURACY OR COMPLETENESS OF SCANNED COPIES OF THIS PLAN SHEET.

ROADWAY QUANTITIES

LOCATION	ROADWAY EXCAVATION	HMA (TYPE A)	TYPE SMART CUSHION (SCI-70GM) CRASH CUSHION	COLD PLANE ASPHALT Conc Pvmt	MGS (WOOD POST)	TACK COAT	SALVAGE GUARDRAIL	END ANCHOR ASSEMBLY (TYPE SFT)	OBJECT MARKER (TYPE L-1)	TREATED WOOD WASTE	OBJECT MARKER (TYPE P)
	CY	TON	EA	SQYD	LF	TON	LF	EA	EA	LB	EA
12+14.30 TO 13+44.30	450	79		520		0.1					
12+83.96 TO 13+27.35					50			2	1		1
12+01.50 TO 12+15.00			1								
13+44.31 TO 13+57.81			1								
12+15.27 TO 13+23.34 SAFETY EDGE		0.1									
12+33.96 TO 13+22.11							98			1200	
TOTAL	450	79.1	2	520	50	0.1	98	2	1	1200	1

DRAINAGE QUANTITIES

DRAINAGE PLAN SHEET No.	DRAINAGE SYSTEM No. ⬡	DRAINAGE UNIT No. ○	MINOR CONCRETE (MINOR STRUCTURE)	ROCK SLOPE PROTECTION (No 1, MODIFIED METHOD B)	36" CSP (.109" THICK)	REMOVE CULVERT	ROCK SLOPE PROTECTION FABRIC (CLASS 8)	18" CSP (.109" THICK)	ABANDON CULVERT	DESCRIPTION	LOCATION	DRAINAGE SYSTEM No. ⬡	DRAINAGE UNIT No. ○	DRAINAGE PLAN SHEET No.
			CY	CY	LF	LF	SQYD	LF	LF					
L-1	1	a	3.73							HEAD WALL	13+11.30 24' Lt "A" LINE	1	a	L-1
		b			40.5					36" CSP			b	
		c		170			124			RSP, RSP FABRIC	12+25.00 TO 13+10.00		c	
L-1	1	d				57				REMOVE 36"CMP		1	d	L-1
L-1	2	a						10		18" CSP	13+25.00 TO 13+44.70	2	a	L-1
L-1	3	a							32	ABANDON 12" CULVERT	12+95.00	3	a	L-1
TOTAL			3.73	170	40.5	57	124	10	32					

TEMPORARY WATER POLLUTION CONTROL QUANTITIES

LOCATION	Temp FIBER ROLL	Temp SILT FENCE	Temp GRAVEL BAG BERM	Temp Const ENTRANCE	Temp COVER	Temp HYDRAULIC MULCH (BOND FIBER MATRIX)	Temp FENCE (TYPE ESA)	Temp ACCESS PAD
	LF	LF	LF	EA	SQYD	SQYD	LF	SQYD
Sta 12+00 TO Sta 14+00	100	290	210	2	150	110	275	230

SUMMARY OF QUANTITIES
Q-1

AMIT NIJHAWAN	REVISED BY	H CHHINA	
HARPREET BINNING	DATE REVISED	08-27-14	
CALCULATED-DESIGNED BY			
CHECKED BY			
FUNCTIONAL SUPERVISOR			
ARTHUR RAMIREZ			

STATE OF CALIFORNIA - DEPARTMENT OF TRANSPORTATION
Caltrans
06-DESIGN

LAST REVISION 04-14-15 | DATE PLOTTED => $DATE | TIME PLOTTED => $TIME

Dist	COUNTY	ROUTE	POST MILES TOTAL PROJECT	SHEET No.	TOTAL SHEETS
04	Son	116	13.7	23	92

LICENSED LANDSCAPE ARCHITECT

9-02-14
PLANS APPROVAL DATE

LICENSED LANDSCAPE ARCHITECT
CHRIS PADICK No. 4255
Signature
11-30-14
Renewal Date
08-25-14
Date
STATE OF CALIFORNIA

THE STATE OF CALIFORNIA OR ITS OFFICERS OR AGENTS SHALL NOT BE RESPONSIBLE FOR THE ACCURACY OR COMPLETENESS OF SCANNED COPIES OF THIS PLAN SHEET.

IRRIGATION SPRINKLER SCHEDULE

SYMBOL ⑦	DESCRIPTION	SPRINKLER TYPE	SPRAY PATTERN	OPERATING PRESSURE (psi)	PRESSURE COMPENSATING	PLUS/MINUS 5% ② DISCHARGE: GALLONS PER MINUTE (GPM)	GALLONS PER HOUR (GPH)	RADIUS (ft)	WIDTH x LENGTH (ft)	FLOW SHUTOFF DEVICE	SPRINKLER ASSEMBLY: RISER: TYPE	MATERIAL: PLASTIC	GALVANIZED	SIZE (IPS INCH)	HEIGHT (INCH)	POP-UP: TYPE	INLET CONNECTION (NPT INCH)	SPRINKLER PROTECTOR (TYPE)	EMITTER WELL: HEIGHT (INCH)	REMARKS
◎	RISER SPRINKLER ASSEMBLY	BUBBLER	—	10-30	X	—	4	—	—	—	V	X	—	½"	—	—	—	—	—	CONTINUOUS FLUSHING

X IN BOX DENOTES REQUIREMENT

APPLICABLE WHEN CIRCLED BELOW:

1 - SEE SPECIAL PROVISIONS.
② - IF A PRESSURE COMPENSATING DEVICE IS SPECIFIED, THE DISCHARGE AND RADII SHOWN REFLECT ITS USE.
3 - VINYL-COATED CAST IRON HOUSING.
4 - SWING JOINTS REQUIRED ADJACENT TO SHOULDERS, CURBS, SIDEWALKS, AND DIKES.
5 - UNLESS OTHERWISE SHOWN ON PLANS.
6 - SEE DETAIL
⑦ - IN RSP AREA, 1 SYMBOL REPRESENTS 3 RISER SPRINKLER ASSEMBLIES.

IRRIGATION SPRINKLER SCHEDULE
ISS-1

REVISED BY	DATE REVISED
CP	08-25-14

CHRIS PADICK — CALCULATED-DESIGNED BY
ALEX MCDONALD — CHECKED BY
SENIOR LANDSCAPE ARCHITECT: DAVID YAM

STATE OF CALIFORNIA - DEPARTMENT OF TRANSPORTATION
Caltrans® WATER QUALITY

LAST REVISION 08-25-14
DATE PLOTTED => 23-APR-2015
TIME PLOTTED => 14:25

Dist	COUNTY	ROUTE	POST MILES TOTAL PROJECT	SHEET No.	TOTAL SHEETS
04	Son	116	13.7	24	92

LICENSED LANDSCAPE ARCHITECT

9-02-14
PLANS APPROVAL DATE

LICENSED LANDSCAPE ARCHITECT
CHRIS PADICK No. 4255
Signature
11-30-14
Renewal date
08-25-14
Date
STATE OF CALIFORNIA

THE STATE OF CALIFORNIA OR ITS OFFICERS OR AGENTS SHALL NOT BE RESPONSIBLE FOR THE ACCURACY OR COMPLETENESS OF SCANNED COPIES OF THIS PLAN SHEET.

NOTES:

1. FOR ACCURATE RIGHT OF WAY, CONTACT RIGHT OF WAY ENGINEERING AT THE DISTRICT OFFICE.
2. SEE SHEET LD-1 FOR IRRIGATION IN RSP.
3. PLASTIC PIPE SUPPLY LINE MUST BE ULTRAVIOLET RESISTANT AND INSTALLED ON GRADE. APPROPRIATE ANCHORS SHALL BE USED TO HOLD SYSTEM IN PLACE.
4. PLACE PLASTIC PIPE SUPPLY LINE IN RSP AREA AT TOP OF RSP AND CONNECT TO RETAINING WALL WITH PIPE ANCHOR TYPE 1.
5. INSTALL CCA 10' MIN FROM EP.

LEGEND:

FLEXIBLE HOSE OF RISER TYPE V IN RSP, ADJUST LENGTH AS NEEDED.

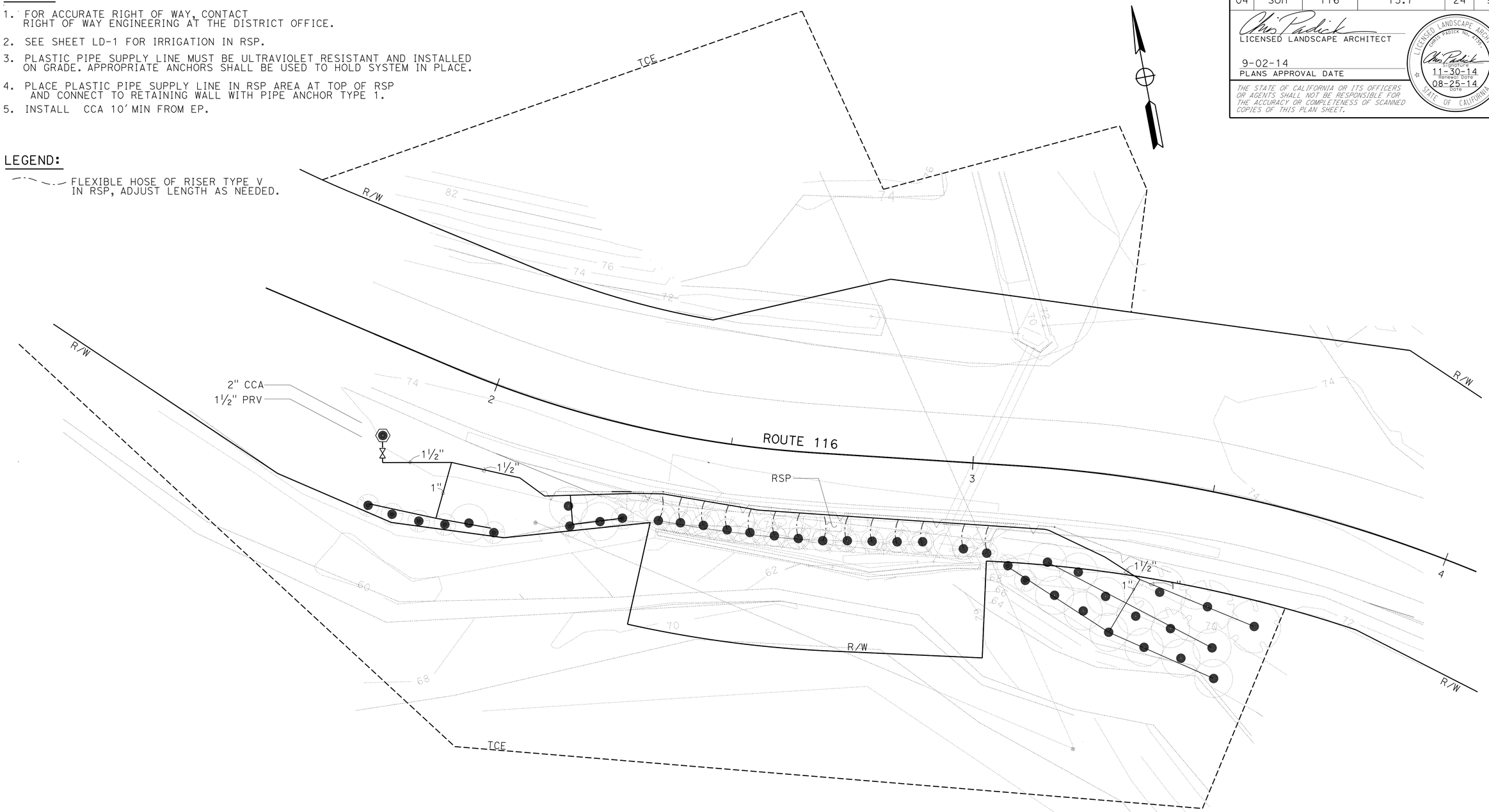

IRRIGATION PLAN

SCALE: 1"=10'

IP-1

APPROVED FOR IRRIGATION WORK ONLY

STATE OF CALIFORNIA - DEPARTMENT OF TRANSPORTATION
Caltrans
WATER QUALITY

SENIOR LANDSCAPE ARCHITECT: DAVID YAM

CALCULATED-DESIGNED BY: CHRIS PADICK
CHECKED BY: ALEX MCDONALD

REVISED BY: CP
DATE REVISED: 08-25-14

LAST REVISION 08-25-14
DATE PLOTTED => 23-APR-2015
TIME PLOTTED => 14:25

Dist	COUNTY	ROUTE	POST MILES TOTAL PROJECT	SHEET No.	TOTAL SHEETS
04	Son	116	13.7	25	92

LICENSED LANDSCAPE ARCHITECT

9-02-14
PLANS APPROVAL DATE

LICENSED LANDSCAPE ARCHITECT — CHRIS PADICK No. 4254 — Signature — 11-30-14 Renewal date — 08-25-14 Renewal date — STATE OF CALIFORNIA

THE STATE OF CALIFORNIA OR ITS OFFICERS OR AGENTS SHALL NOT BE RESPONSIBLE FOR THE ACCURACY OR COMPLETENESS OF SCANNED COPIES OF THIS PLAN SHEET.

SUBTOTALS PER PLAN SHEET

DESCRIPTION			UNIT	SHEET NUMBER					SUBTOTALS
					IP-1				
BPA									
		ENCLOSURE							
BOOSTER PUMP									
IRRIGATION CONTROLLER		STATION							
		STATION							
		STATION							
	CEC	SINGLE							
		DOUBLE							
VALVES AND ASSEMBLIES	CCA	2"	EA		1				1
	PRV	1½"	EA		1				1
	GV								
	QCV								
	FV								
	FAU								
CONDUIT	CSP								
	WSP								
PLASTIC PIPE (SUPPLY LINE)	SCHEDULE 40	1½"	LF		180				180
		1"	LF		250				250
DRIP IRRIGATION TUBING									
RISER SPRINKLER ASSEMBLY		TYPE V	EA		69				69

TOTAL QUANTITIES

TOTALS	UNIT	DESCRIPTION		
				BPA
		ENCLOSURE		
		BOOSTER PUMP		
		STATION		IRRIGATION CONTROLLER
		STATION		
		STATION		
		SINGLE	CEC	
		DOUBLE		
1	EA	2"	CCA	VALVES AND ASSEMBLIES
1	EA	1½"	PRV	
			GV	
			QCV	
			FV	
			FAU	
			CSP	CONDUIT
			WSP	
180	LF	1½"	SCHEDULE 40	PLASTIC PIPE (SUPPLY LINE)
250	LF	1"		
				DRIP IRRIGATION TUBING
69	EA	TYPE V		RISER SPRINKLER ASSEMBLY

IRRIGATION QUANTITIES
IQ-1

STATE OF CALIFORNIA - DEPARTMENT OF TRANSPORTATION
Caltrans® WATER QUALITY

SENIOR LANDSCAPE ARCHITECT: DAVID YAM
CALCULATED-DESIGNED BY: CHRIS PADICK
CHECKED BY: ALEX MCDONALD
REVISED BY: CP
DATE REVISED: 08-25-14

LAST REVISION 08-25-14 | DATE PLOTTED => 23-APR-2015 | TIME PLOTTED => 14:25

Dist	COUNTY	ROUTE	POST MILES TOTAL PROJECT	SHEET No.	TOTAL SHEETS
04	Son	116	13.7	26	92

LICENSED LANDSCAPE ARCHITECT

9-02-14
PLANS APPROVAL DATE

LICENSED LANDSCAPE ARCHITECT — CHRIS PADICK No. 4255 — Signature — Renewal date 11-30-14 — Date 08-25-14 — STATE OF CALIFORNIA

THE STATE OF CALIFORNIA OR ITS OFFICERS OR AGENTS SHALL NOT BE RESPONSIBLE FOR THE ACCURACY OR COMPLETENESS OF SCANNED COPIES OF THIS PLAN SHEET.

PLANTING LEGEND

PLANT GROUP	PLANT No.	SYMBOL	BOTANICAL NAME	COMMON NAME	SIZE	QUANTITY EACH	HOLE SIZE (INCH) Dia	HOLE SIZE (INCH) DEPTH	BASIN TYPE	SOIL AMENDMENT ① TYPE	SOIL AMENDMENT ① RATE	IRON SULFATE ① RATE	COMMERCIAL FERTILIZER ① PLANTING	COMMERCIAL FERTILIZER ① PLT ESTB	BASIN MULCH TYPE	BASIN MULCH CY	STAKING	PLANTING LIMITS MINIMUM DISTANCE (ft) FROM ETW	Pvmt	FENCE	WALL	PAVED DITCH	EARTH DITCH	ON CENTER (ft)	REMARKS
B	1		ALNUS RUBRA	RED ALDER	No. 5	15	24	24	I	C	1 CF	-	-	-	WC	0.06	X	⑦	⑦	⑦	⑦	⑦	⑦	⑦	TREE
	2		UMBELLULARIA CALIFORNICA	CALIFORNIA BAY LAUREL	No. 5	3	24	24	I	C	1 CF	-	-	-	WC	0.06	X	⑦	⑦	⑦	⑦	⑦	⑦	⑦	TREE
H	3		SALIX LAEVIGATA	RED WILLOW	⑤	9	⑥	⑥	I	-	-	-	-	-		-	-	⑦	⑦	⑦	⑦	⑦	⑦	⑦	CUTTING
	4		SALIX LAEVIGATA	RED WILLOW	⑤	42	④	④	④	-	-	-	-	-		-	-	⑦	⑦	⑦	⑦	⑦	⑦	⑦	CUTTING IN RSP LOCATIONS SEE LD-1

APPLICABLE WHEN CIRCLED:

① - QUANTITIES SHOWN ARE "PER PLANT" UNLESS SHOWN AS SQFT OR SQYD APPLICATION RATES
2 - BASIN MULCH IS INCLUDED WITH MULCH QUANTITIES SHOWN ON PLANTING PLAN
3 - SUFFICIENT TO RECEIVE ROOT BALL AND AMENDMENTS IF REQUIRED
④ - SEE DETAIL
⑤ - SEE SPECIAL PROVISIONS
⑥ - SEE STANDARD SPECIFICATIONS
⑦ - AS SHOWN ON PLANS
8 - UNLESS OTHERWISE SHOWN ON PLANS
9 - FOLIAGE PROTECTOR REQUIRED
10 - ROOT PROTECTOR REQUIRED
11 - ROOT BARRIER REQUIRED
12 - DEPARTMENT-FURNISHED

ABBREVIATIONS:

C - COMPOST
S - SPHAGNUM PEAT MOSS
N - NITROLIZED FIR BARK
V - VERMICULITE
P - PERLITE
TB - TREE BARK
WC - WOOD CHIP
SB - SHREDDED BARK
TT - TREE TRIMMING

NOTE:

UNDERLINED PORTIONS OF BOTANICAL NAME INDICATE ABBREVIATIONS USED ON PLANTING PLANS.

PLANTING LEGEND
PL-1

REVISED BY	DATE REVISED
CP	08-25-14

CHRIS PADICK — ALEX MCDONALD — CALCULATED-DESIGNED BY — CHECKED BY — SENIOR LANDSCAPE ARCHITECT — DAVID YAM

STATE OF CALIFORNIA - DEPARTMENT OF TRANSPORTATION — Caltrans — WATER QUALITY

LAST REVISION 08-25-14 — DATE PLOTTED => 23-APR-2015 — TIME PLOTTED => 14:25

Dist	COUNTY	ROUTE	POST MILES TOTAL PROJECT	SHEET No.	TOTAL SHEETS
04	Son	116	13.7	27	92

LICENSED LANDSCAPE ARCHITECT

9-02-14
PLANS APPROVAL DATE

LICENSED LANDSCAPE ARCHITECT
CHRIS PADICK No. 4255
Signature
11-30-14
Renewal Date
08-25-14
Date
STATE OF CALIFORNIA

THE STATE OF CALIFORNIA OR ITS OFFICERS OR AGENTS SHALL NOT BE RESPONSIBLE FOR THE ACCURACY OR COMPLETENESS OF SCANNED COPIES OF THIS PLAN SHEET.

NOTES:

1. FOR ACCURATE RIGHT OF WAY DATA, CONTACT RIGHT OF WAY ENGINEERING AT THE DISTRICT OFFICE.
2. FOR PLANTING IN RSP SEE DETAIL ON LD-1

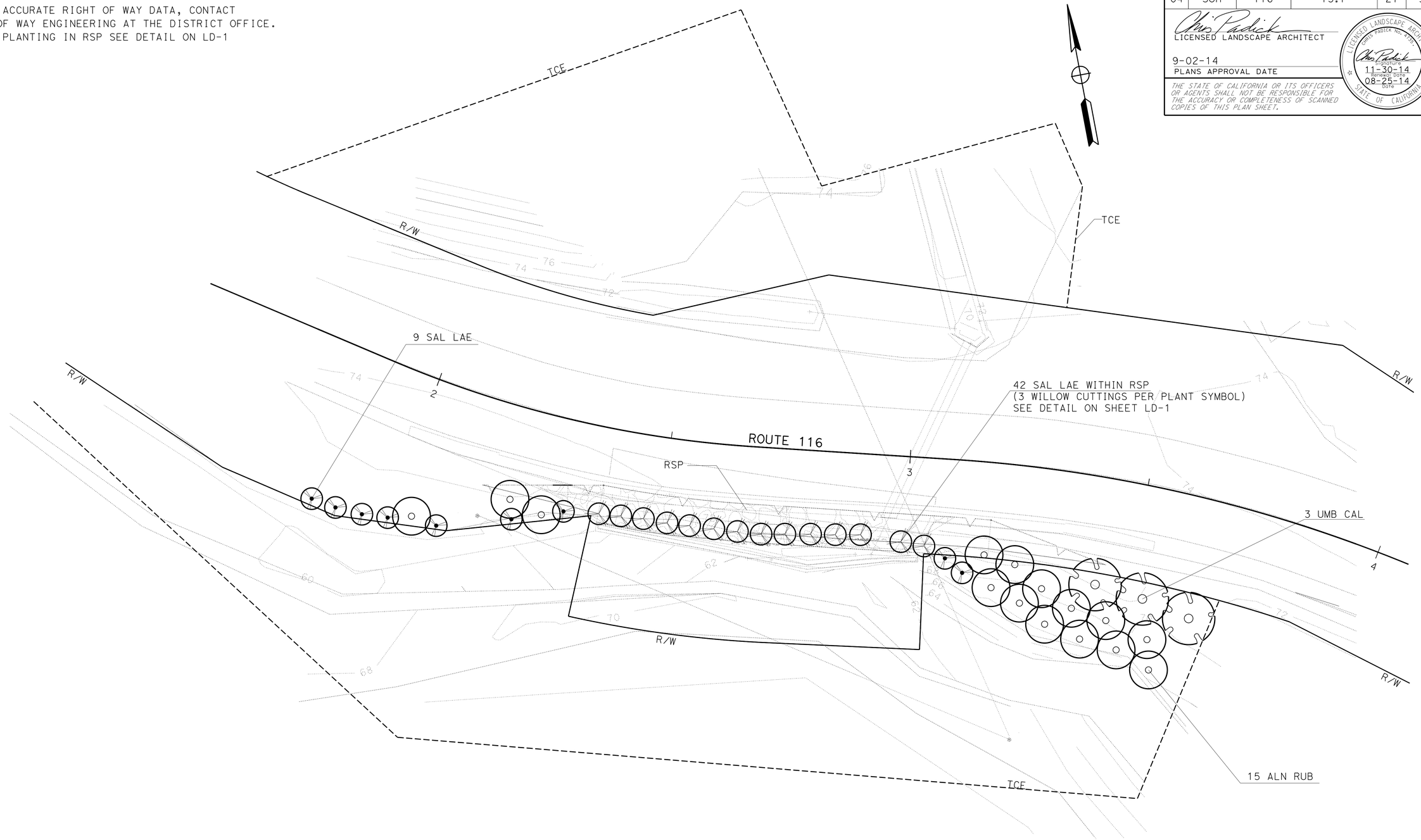

PLANTING PLAN

SCALE: 1"=10'

PP-1

APPROVED FOR PLANTING WORK ONLY

STATE OF CALIFORNIA - DEPARTMENT OF TRANSPORTATION
Caltrans® WATER QUALITY

SENIOR LANDSCAPE ARCHITECT: DAVID YAM
CALCULATED-DESIGNED BY: CHRIS PADICK
CHECKED BY: ALEX MCDONALD
REVISED BY: CP
DATE REVISED: 08-25-14

LAST REVISION 08-25-14
DATE PLOTTED => 23-APR-2015
TIME PLOTTED => 14:25

Dist	COUNTY	ROUTE	POST MILES TOTAL PROJECT	SHEET No.	TOTAL SHEETS
04	Son	116	13.7	28	92

LICENSED LANDSCAPE ARCHITECT

9-02-14
PLANS APPROVAL DATE

LICENSED LANDSCAPE ARCHITECT — CHRIS PADICK No. 4255 — Signature — 11-30-14 Renewal Date — 08-25-14 Date — STATE OF CALIFORNIA

THE STATE OF CALIFORNIA OR ITS OFFICERS OR AGENTS SHALL NOT BE RESPONSIBLE FOR THE ACCURACY OR COMPLETENESS OF SCANNED COPIES OF THIS PLAN SHEET.

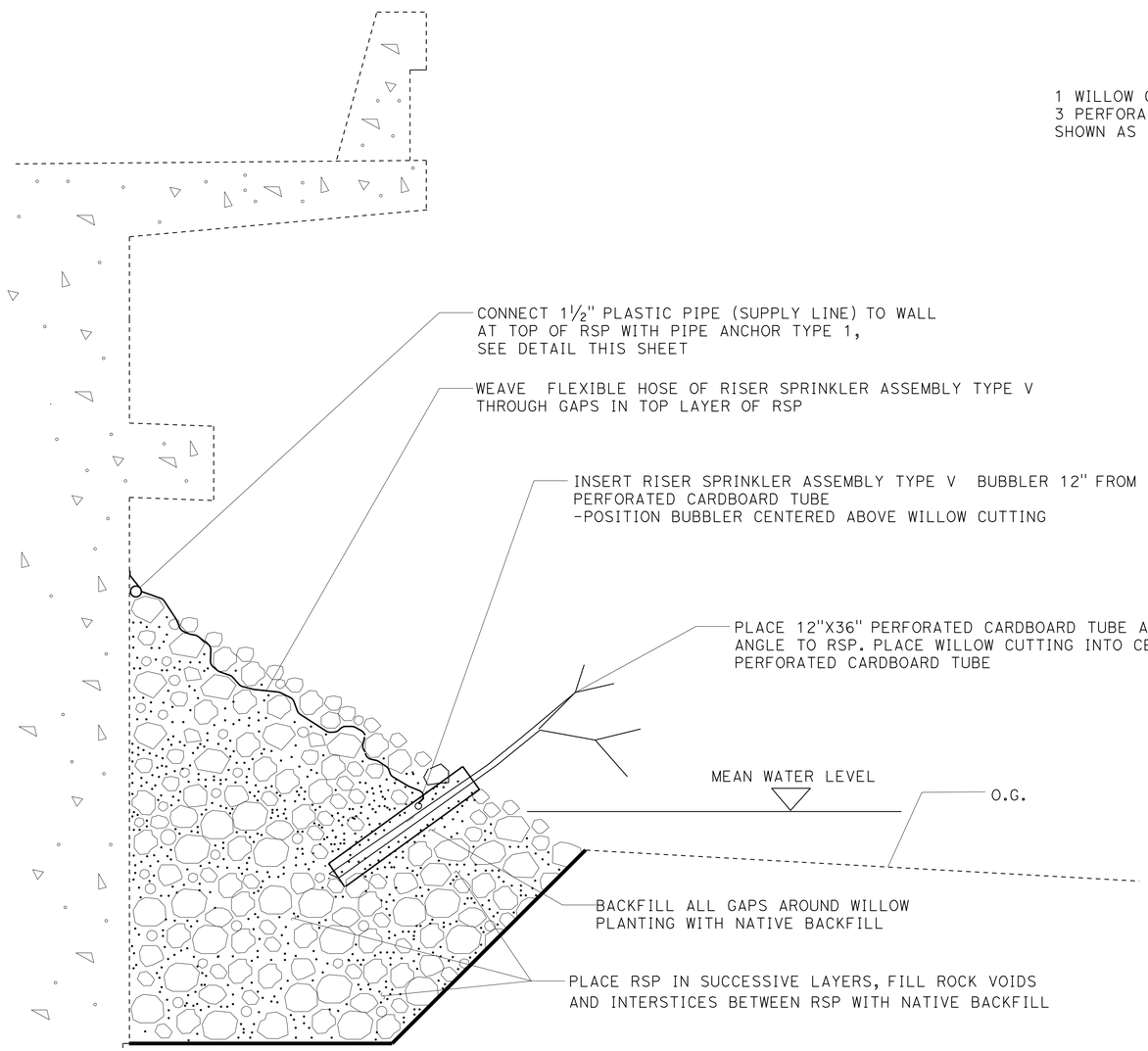

PLANT (GROUP H) WITH IRRIGATION IN RSP

SECTION

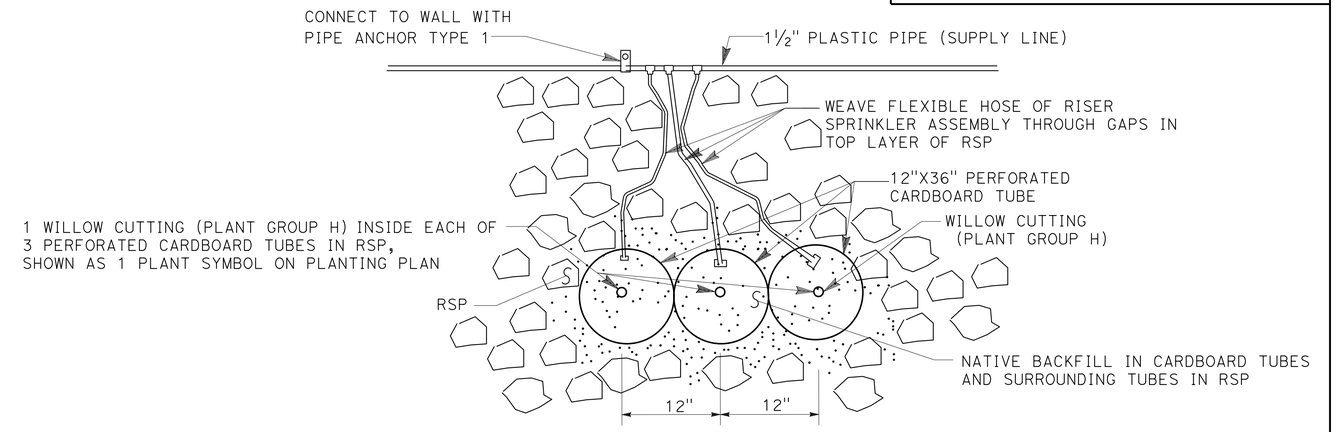

PLANT (GROUP H) WITH IRRIGATION IN RSP

ELEVATION

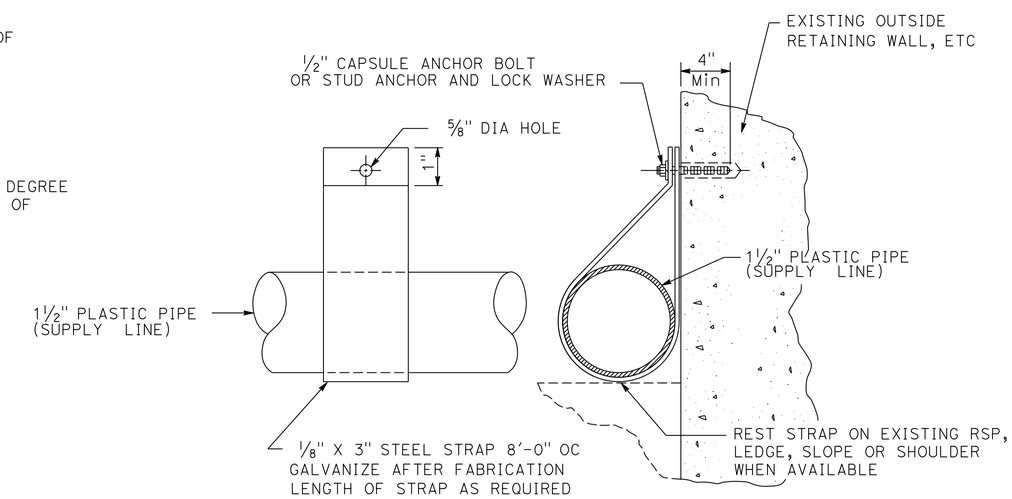

ELEVATION **SECTION**

PIPE ANCHOR TYPE I

LANDSCAPE AND IRRIGATION DETAILS

NO SCALE

LD-1

STATE OF CALIFORNIA - DEPARTMENT OF TRANSPORTATION
Caltrans® WATER QUALITY

SENIOR LANDSCAPE ARCHITECT: DAVID YAM
CALCULATED-DESIGNED BY: CHRIS PADICK
CHECKED BY: ALEX MCDONALD
REVISED BY: CP
DATE REVISED: 08-25-14

LAST REVISION 08-25-14
DATE PLOTTED => 23-APR-2015
TIME PLOTTED => 14:25

Dist	COUNTY	ROUTE	POST MILES TOTAL PROJECT	SHEET No.	TOTAL SHEETS
04	Son	116	13.7	29	92

LICENSED LANDSCAPE ARCHITECT

9-02-14
PLANS APPROVAL DATE

LICENSED LANDSCAPE ARCHITECT
CHRIS PADICK No. 4254
Signature
11-30-14
Renewal date
08-25-14
Date
STATE OF CALIFORNIA

THE STATE OF CALIFORNIA OR ITS OFFICERS OR AGENTS SHALL NOT BE RESPONSIBLE FOR THE ACCURACY OR COMPLETENESS OF SCANNED COPIES OF THIS PLAN SHEET.

SHEET	PLANT (GROUP B)	PLANT (GROUP H)	SOIL AMENDMENT	WOOD MULCH
	EA	EA	CY	CY
PP-1	18	51	0.7	1.08

LANDSCAPE QUANTITIES
LQ-1

STATE OF CALIFORNIA - DEPARTMENT OF TRANSPORTATION
Caltrans® WATER QUALITY

SENIOR LANDSCAPE ARCHITECT: DAVID YAM
CALCULATED-DESIGNED BY: CHRIS PADICK
CHECKED BY: ALEX MCDONALD
REVISED BY: CP
DATE REVISED: 08-25-14

LAST REVISION 08-25-14
DATE PLOTTED => 23-APR-2015
TIME PLOTTED => 14:26

Dist	COUNTY	ROUTE	POST MILES TOTAL PROJECT	SHEET No.	TOTAL SHEETS
04	Son	116	13.7	30	92

LICENSED LANDSCAPE ARCHITECT

9-02-14
PLANS APPROVAL DATE

LICENSED LANDSCAPE ARCHITECT
CHRIS PADICK No. 4255
Signature
11-30-14
Renewal date
08-25-14
Date
STATE OF CALIFORNIA

THE STATE OF CALIFORNIA OR ITS OFFICERS OR AGENTS SHALL NOT BE RESPONSIBLE FOR THE ACCURACY OR COMPLETENESS OF SCANNED COPIES OF THIS PLAN SHEET.

SEED MIX

SEED	BOTANICAL NAME (COMMON NAME)	PERCENT GERMINATION (MINIMUM)	POUNDS PURE LIVE SEED PER ACRE (SLOPE MEASUREMENT)
MIX 1	ACHILLEA MILLEFOLIUM (WESTERN YARROW)	56	8
	ARTEMESIA DOUGLASIANA (DOUGLAS MUGWORT)	33	6
	BROMUS CARINATUS (CALIFORNIA BROME)	75	6
	ELEOCHARIS MACROSTACHYA (CREEPING SPIKE RUSH)	46	6
	ERIOPHYLLUM CONFERTIFLORUM (GOLDEN YARROW)	26	8
	HORDEUM BRACHYANTHERUM (MEADOW BARLEY)	53	8
	JUNCUS BALTICUS (BALTIC RUSH)	40	6
	JUNCUS EFFUSUS (SOFT RUSH)	40	6
	LEYMUS TRITICOIDES (CREEPING WILD RYE)	53	8
	LOTUS SCOPARIUS (DEER LOTUS)	53	8
	NASSELLA PULCHRA (PURPLE NEEDLEGRASS)	53	6
	VULPIA MICROSTACHYS (SMALL FESCUE)	53	6
MIX 2	BROMUS CARINATUS (CALIFORNIA BROME)	75	7
	ESCHSCHOLZIA CALIFORNICA (CALIFORNIA POPPY)	53	7
	LASTHENIA CALIFORNICA (CALIFORNIA GOLDFIELDS)	33	7
	LUPINUS BICOLOR (BICOLOR LUPINE)	56	7
	LAYIA PLATYGLOSSA (COASTAL TIDYTIPS)	46	7
	NASSELLA CERNUA (NODDING NEEDLEGRASS)	46	7
	NASSELLA PULCHRA (PURPLE NEEDLEGRASS)	53	7
	NEMOPHILA MENZIESII (BABY BLUE EYES)	50	7
	TRIFOLIUM WILDENOVII (TOMCAT CLOVER)	53	7

EROSION CONTROL TYPE 1

SEQUENCE	ITEM	MATERIAL		APPLICATION RATE
		DESCRIPTION	TYPE	
STEP 1	COMPOST	COMPOST	FINE	34 CY/ACRE
STEP 2	ROLLED EROSION CONTROL PRODUCT (NETTING)	NETTING	TYPE A	
STEP 3	HYDROSEED*	SEED	MIX 1	82 LB/ACRE
		FIBER	WOOD	1,000 LB/ACRE
STEP 4	HYDROMULCH	FIBER	WOOD	1,000 LB/ACRE
		TACKIFIER	GUAR	125 LB/ACRE

* SEE FIBER ROLL SEQUENCE.

EROSION CONTROL TYPE 2

SEQUENCE	ITEM	MATERIAL		APPLICATION RATE
		DESCRIPTION	TYPE	
STEP 1	COMPOST	COMPOST	FINE	34 CY/ACRE
STEP 2	HYDROSEED*	SEED	MIX 2	63 LB/ACRE
		FIBER	WOOD	500 LB/ACRE
STEP 3	STRAW	STRAW	RICE	2 TON/ACRE
STEP 4	HYDROMULCH	FIBER	WOOD	1,500 LB/ACRE
		TACKIFIER	GUAR	125 LB/ACRE

* SEE FIBER ROLL SEQUENCE.

FIBER ROLLS

SEQUENCE	ITEM	MATERIAL		REMARKS
		DESCRIPTION	TYPE	
FIBER ROLLS MUST BE INSTALLED AFTER RECP (NETTING) AND BEFORE HYDROSEED.	FIBER ROLLS	FIBER ROLL	8" TO 10" Dia	TYPE 2 FIBER ROLL INSTALLATION

EROSION CONTROL LEGEND
ECL-1

STATE OF CALIFORNIA - DEPARTMENT OF TRANSPORTATION
Caltrans® WATER QUALITY

SENIOR LANDSCAPE ARCHITECT: DAVID YAM
CALCULATED-DESIGNED BY: CHRIS PADICK
CHECKED BY: ALEX MCDONALD
REVISED BY: CP
DATE REVISED: 08-25-14

LAST REVISION 08-25-14
DATE PLOTTED => 23-APR-2015
TIME PLOTTED => 14:26

Dist	COUNTY	ROUTE	POST MILES TOTAL PROJECT	SHEET No.	TOTAL SHEETS
04	Son	116	13.7	31	92

Chris Padick
LICENSED LANDSCAPE ARCHITECT

9-02-14
PLANS APPROVAL DATE

LICENSED LANDSCAPE ARCHITECT
CHRIS PADICK No. 4255
Signature
11-30-14
Renewal Date
08-25-14
Date
STATE OF CALIFORNIA

THE STATE OF CALIFORNIA OR ITS OFFICERS OR AGENTS SHALL NOT BE RESPONSIBLE FOR THE ACCURACY OR COMPLETENESS OF SCANNED COPIES OF THIS PLAN SHEET.

NOTE:

FOR ACCURATE RIGHT OF WAY DATA, CONTACT
RIGHT OF WAY ENGINEERING AT THE DISTRICT OFFICE.

LEGEND:

EROSION CONTROL TYPE 1

EROSION CONTROL TYPE 2

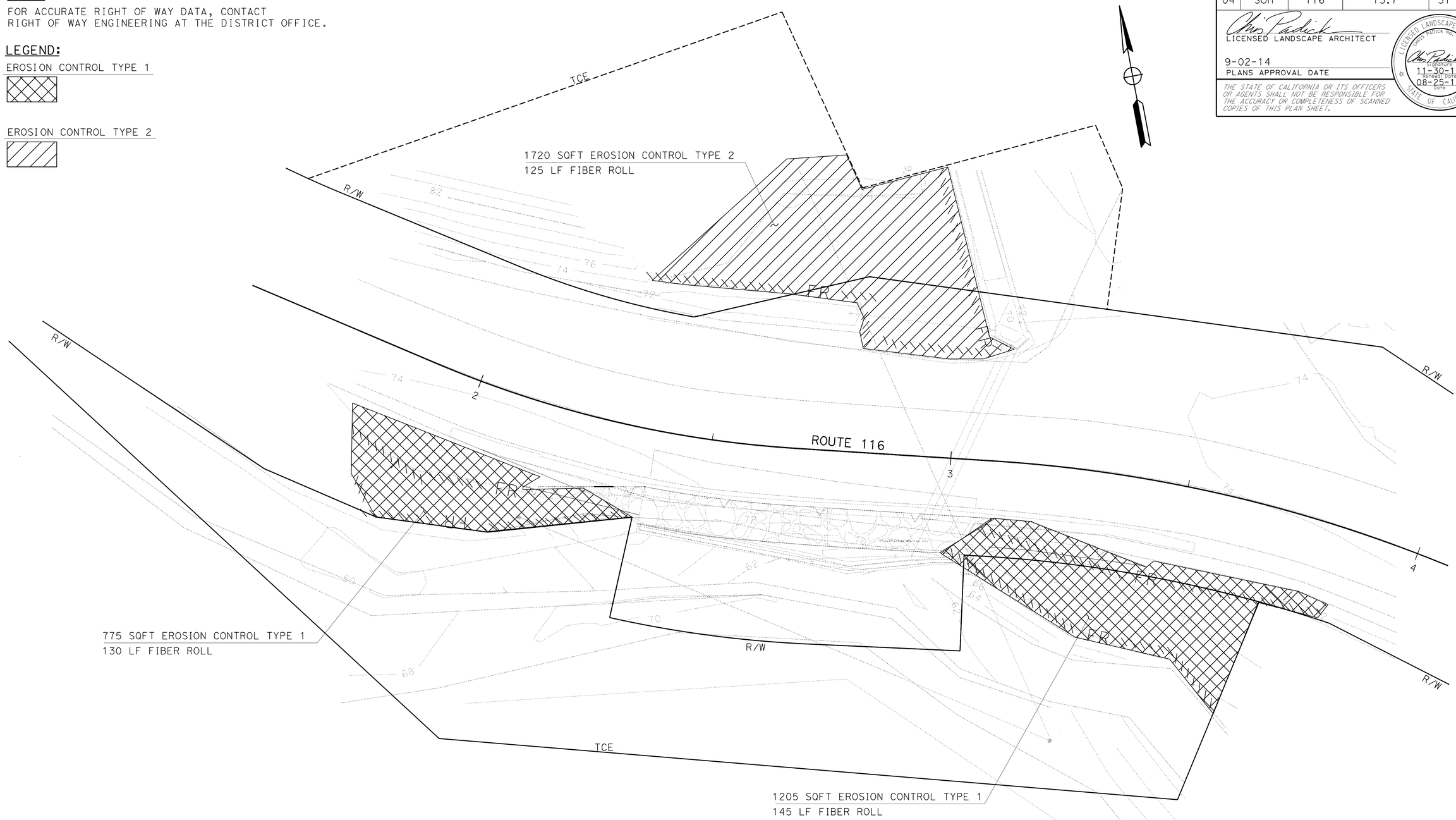

APPROVED FOR EROSION CONTROL WORK ONLY

EROSION CONTROL PLAN

SCALE: 1"=10'

EC-1

CP	REVISED BY
08-25-14	DATE REVISED
CHRIS PADICK	CALCULATED-DESIGNED BY
ALEX MCDONALD	CHECKED BY
DAVID YAM	SENIOR LANDSCAPE ARCHITECT

STATE OF CALIFORNIA - DEPARTMENT OF TRANSPORTATION
Caltrans® WATER QUALITY

LAST REVISION 08-25-14
DATE PLOTTED => 23-APR-2015
TIME PLOTTED => 14:26

Dist	COUNTY	ROUTE	POST MILES TOTAL PROJECT	SHEET No.	TOTAL SHEETS
04	Son	116	13.7	32	92

LICENSED LANDSCAPE ARCHITECT

9-02-14
PLANS APPROVAL DATE

LICENSED LANDSCAPE ARCHITECT
CHRIS PADICK No. 2735
Signature
11-30-14
Renewal Date
08-25-14
Date
STATE OF CALIFORNIA

THE STATE OF CALIFORNIA OR ITS OFFICERS OR AGENTS SHALL NOT BE RESPONSIBLE FOR THE ACCURACY OR COMPLETENESS OF SCANNED COPIES OF THIS PLAN SHEET.

EROSION CONTROL QUANTITIES

SHEET	LOCATION	HYDROSEED	HYDROMULCH	COMPOST	FIBER ROLLS	STRAW	ROLLED EROSION CONTROL PRODUCT (NETTING)
		SQFT	SQFT	SQFT	LF	SQFT	SQFT
EC-1	AS SHOWN ON PLAN, ALL DSA'S	3700	3700	3700	400	1720	1980

STATE OF CALIFORNIA - DEPARTMENT OF TRANSPORTATION
Caltrans® WATER QUALITY

SENIOR LANDSCAPE ARCHITECT: DAVID YAM

CALCULATED-DESIGNED BY: CHRIS PADICK
CHECKED BY: ALEX MCDONALD

REVISED BY: CP
DATE REVISED: 08-25-14

EROSION CONTROL QUANTITIES
ECQ-1

LAST REVISION 08-25-14
DATE PLOTTED => $DATE
TIME PLOTTED => $TIME

Dist	COUNTY	ROUTE	POST MILES TOTAL PROJECT	SHEET No.	TOTAL SHEETS
04	Son	116	13.7	33	92

REGISTERED ELECTRICAL ENGINEER 08-29-14 DATE

9-02-14
PLANS APPROVAL DATE

REGISTERED PROFESSIONAL ENGINEER DANIEL THANH VO No. 17408 Exp. 9-30-14 ELECTRICAL STATE OF CALIFORNIA

THE STATE OF CALIFORNIA OR ITS OFFICERS OR AGENTS SHALL NOT BE RESPONSIBLE FOR THE ACCURACY OR COMPLETENESS OF SCANNED COPIES OF THIS PLAN SHEET.

NOTES:

1. LOWEST SAG POINT OF MESSENGER WIRE MUST BE 25′ MINIMUM CLEARANCE FROM FINISHED GRADE OR ROADWAY.
2. OVERHEAD ENTRANCE CONDUIT FITTING MUST BE INSTALLED SO THAT RAINWATER WILL NOT SEEP INTO ELECTRICAL EQUIPMENT THROUGH THE ENTRANCE FITTING. FORM A DRIP LOOP AT ENTRANCE FITTING.
3. PROVIDE GUY WIRE, GUY GUARDS AND ANCHOR AS REQUIRED. POLE GUY WIRE MUST BE INSTALLED AS DIRECTED BY THE ENGINEER.
4. ESTABLISH CONTINUOUS GROUND WITH SYSTEM GROUND TO ALL METAL PARTS IN SYSTEM BY BONDING JUMPERS AND CONDUITS.
5. GROUNDING ELECTRODE MUST BE INSTALLED IN PULL BOX ADJACENT TO WOOD POLES AND BONDED TO RIGID METAL CONDUIT, UNLESS OTHERWISE NOTED.
6. REFER TO SES SHEETS FOR TEMPORARY WOOD POLE DETAILS AND MAXIMUM SPACING BETWEEN WOOD POLES WITH OVERHEAD CONDUCTORS.
7. SIGNS SHOWN ARE "CONSTRUCTION AREA SIGNS". SEE TRAFFIC HANDLING PLANS FOR DETAILS.

ABBREVIATION:

UPS UNINTERRUPTIBLE POWER SUPPLY

LEGEND:

1. POWER MUST BE PROVIDED BY A GENERATOR WITH BACKUP GENERATOR SYSTEM. SEE DETAIL F ON E-6.
2. INSTALL DEPARTMENT-FURNISHED MODEL 170E CONTROLLER ASSEMBLY. YOU MUST FURNISH AND INSTALL THE TEMPORARY FOUNDATION PLATFORM, PER DETAIL E ON SHEET E-5 AND UPS.
3. 2"C, 3#4 (SERVICE), 1#8 (G)
4. 2"C, 2#6 (Sig), 2#8 (L+g)
   2#8 (WB FB), 2#8 (EB FB), 1#8 (G),
5. 3"C, 2#6 (Sig),
   6#14 (SPARE), 4 DLC,
   2#14 (PBA Ø1), 3#14 (Sig Ø1),
   2#14 (PBA Ø2), 3#14 (Sig Ø2),
   2#14 (PBA Ø4), 3#14 (Sig Ø4),
   1#10 (Sig NEUTRAL), 1#8 (G)
6. 3"C, 2#8 (L+g), 2#8 (WB FB),
   2#8 (EB FB), 6#14 (SPARE), 4 DLC,
   2#14 (PBA Ø1), 3#14 (Sig Ø1),
   2#14 (PBA Ø2), 3#14 (Sig Ø2),
   2#14 (PBA Ø4), 3#14 (Sig Ø4),
   1#10 (Sig NEUTRAL), 1#8 (G)
7. 2#8 (L+g), 2#8 (EB FB),
   3#14 (SPARE), 2 DLC,
   3#14 (Sig Ø1),
   2#14 (PBA Ø2), 3#14 (Sig Ø2),
   2#14 (PBA Ø4), 3#14 (Sig Ø4),
   1#10 (Sig NEUTRAL),
   1#8 (G)
8. 2#8 (L+g), 2#8 (EB FB),
   3#14 (SPARE), 2 DLC,
   2#14 (PBA Ø2), 3#14 (Sig Ø2),
   2#14 (PBA Ø4), 3#14 (Sig Ø4),
   1#10 (Sig NEUTRAL),
   1#8 (G)
9. 2#8 (L+g), 2#8 (EB FB),
   3#14 (SPARE), 2 DLC,
   2#14 (PBA Ø2), 3#14 (Sig Ø2),
   1#10 (Sig NEUTRAL),
   1#8 (G)
10. 1½"C, 2#8 (L+g), 2#8 (EB FB),
    3#14 (SPARE), 2 DLC,
    2#14 (PBA Ø2), 3#14 (Sig Ø2),
    1#10 (Sig NEUTRAL),
    1#8 (G)
11. 2#8 (L+g), 2#8 (EB FB),
    3#14 (SPARE), 2 DLC,
    2#14 (PBA Ø2), 3#14 (Sig Ø2),
    1#10 (Sig NEUTRAL),
    1#8 (G)
12. 1½"C, 2#8 (EB FB),
    1 DLC, 1#8 (G)
13. 1½"C, 2#8 (EB FB),
    1#8 (G)
14. 2#8 (L+g), 2#8 (WB FB),
    2#14 (PBA Ø1), 3#14 (Sig Ø1),
    1#10 (Sig NEUTRAL),
    2 DLC, 1#8 (G)
15. 1½"C, 2#8 (WB FB),
    1 DLC, 1#8 (G)
16. 1½"C, 2#8 (WB FB),
    1#8 (G)
17. LOOP DETECTORS MUST HAVE 5 TURNS.
18. TEMPORARY WOOD POLE SIGNALS WITH PBA. SEE DETAIL B ON SHEET E-5.
19. TEMPORARY WOOD POLE SIGNALS WITH SPAN WIRE. SEE DETAIL D ON SHEET E-5.
20. TEMPORARY WOODPOLE FLASHING BEACON. SEE DETAIL A ON SHEET E-5.
21. LOOP DETECTORS MUST BE SPLICED IN PB AS SHOWN ON SHEET E-6 IN DETAIL I FOR TYPE D AND TYPE A LOOP DETECTORS.
22. 4 SECTION SIGNAL HEAD. SEE DETAIL J ON SHEET E-6.
23. TEMPORARY WOOD POLE SIGNAL SEE DETAIL C ON SHEET E-5.
23. TEMPORARY WOOD POLE SEE DETAIL K ON SHEET E-6.

INDEX TO ELECTRICAL PLANS:

DRAWING No.	TITLE
E-1	NOTES, LEGEND, SYMBOLS AND ABBREVIATIONS
E-2 TO E-4	TEMPORARY SIGNAL SYSTEM
E-5 TO E-6	ELECTRICAL DETAILS
E-7	ELECTRICAL QUANTITIES

SYMBOLS:

Y Y — TEMPORARY WOOD POLE FLASHING BEACON

TEMPORARY WOOD POLE SIGNAL

TEMPORARY WOOD POLE SERVICE ENCLOSURE

G — GENERATOR WITH BACKUP GENERATOR SYSTEM

OH — OVERHEAD MESSENGER WIRE WITH CONDUCTORS AS NOTED.

FUEL — FUEL TANK

—X—X— TEMPORARY CHAIN LINK FENCE (TYPE CL-6) WITH 4′ CHAINK LINK GATE (TYPE CL-6)

—F— FUEL LINE

TEMPORARY WOOD POLE

TEMPORARY WOOD POLE SIGNALS WITH SPAN WIRE

NOTES, LEGEND, SYMBOLS AND ABBREVIATIONS

E-1

STATE OF CALIFORNIA - DEPARTMENT OF TRANSPORTATION
Caltrans 06-ELECTRICAL DESIGN

FUNCTIONAL SUPERVISOR: ALI BAKHDOUD
CALCULATED-DESIGNED BY: DANIEL THANH VO
CHECKED BY: MONA ATTALLAH
REVISED BY: MA
DATE REVISED: 06-30-14

LAST REVISION 06-30-14 | DATE PLOTTED => 23-APR-2015 | TIME PLOTTED => 14:26

Dist	COUNTY	ROUTE	POST MILES TOTAL PROJECT	SHEET No.	TOTAL SHEETS
04	Son	116	13.7	34	92

REGISTERED ELECTRICAL ENGINEER — DATE 08-29-14

PLANS APPROVAL DATE 9-02-14

REGISTERED PROFESSIONAL ENGINEER DANIEL THANH VO No. 17408 Exp 9-30-14 ELECTRICAL STATE OF CALIFORNIA

THE STATE OF CALIFORNIA OR ITS OFFICERS OR AGENTS SHALL NOT BE RESPONSIBLE FOR THE ACCURACY OR COMPLETENESS OF SCANNED COPIES OF THIS PLAN SHEET.

NOTE:

FOR ACCURATE RIGHT OF WAY DATA, CONTACT RIGHT OF WAY ENGINEERING AT THE DISTRICT OFFICE.

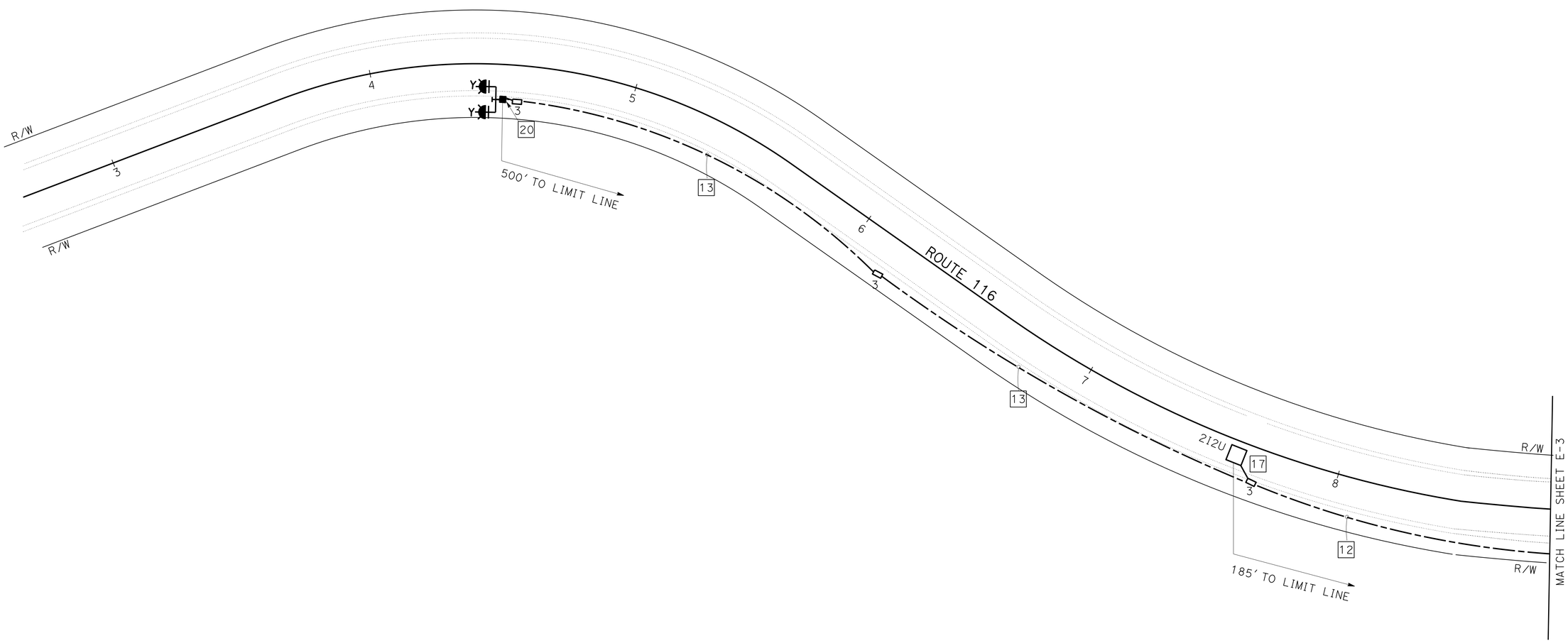

TEMPORARY SIGNAL SYSTEM

SCALE: 1"=20'

E-2

APPROVED FOR ELECTRICAL WORK ONLY

STATE OF CALIFORNIA - DEPARTMENT OF TRANSPORTATION

Caltrans 06-ELECTRICAL DESIGN

FUNCTIONAL SUPERVISOR: ALI BAKHDOUD

CALCULATED-DESIGNED BY: DANIEL VO

CHECKED BY: MONA ATTALLAH

REVISED BY: MA

DATE REVISED: 06-30-14

LAST REVISION 06-30-14 | DATE PLOTTED => 23-APR-2015 | TIME PLOTTED => 14:26

Dist	COUNTY	ROUTE	POST MILES TOTAL PROJECT	SHEET No.	TOTAL SHEETS
04	Son	116	13.7	35	92

REGISTERED ELECTRICAL ENGINEER 08-29-14 DATE

9-02-14
PLANS APPROVAL DATE

REGISTERED PROFESSIONAL ENGINEER
DANIEL THANH VO
No. 17408
Exp 9-30-14
ELECTRICAL
STATE OF CALIFORNIA

THE STATE OF CALIFORNIA OR ITS OFFICERS OR AGENTS SHALL NOT BE RESPONSIBLE FOR THE ACCURACY OR COMPLETENESS OF SCANNED COPIES OF THIS PLAN SHEET.

NOTE:

FOR ACCURATE RIGHT OF WAY DATA, CONTACT RIGHT OF WAY ENGINEERING AT THE DISTRICT OFFICE.

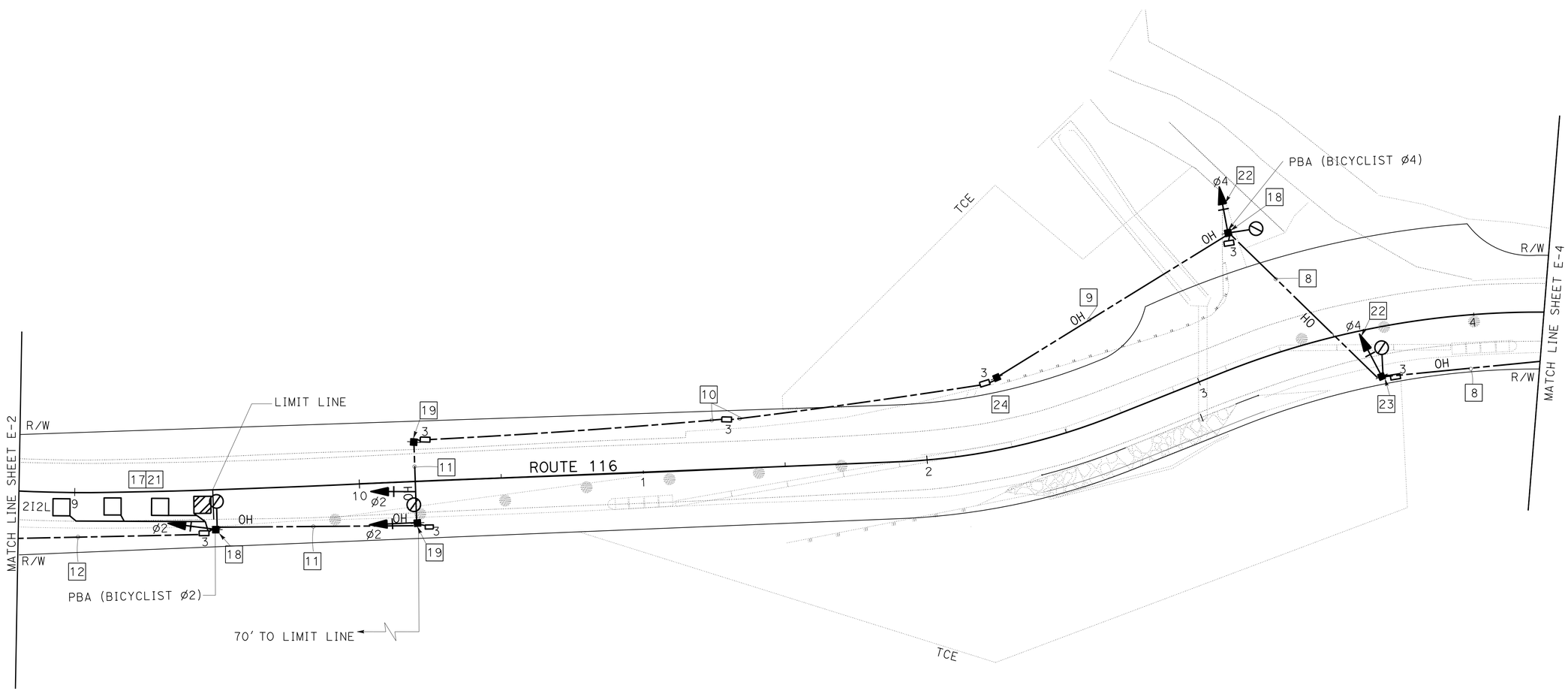

TEMPORARY SIGNAL SYSTEM

SCALE: 1"=20'

E-3

APPROVED FOR ELECTRICAL WORK ONLY

REVISED BY	MA
DATE REVISED	06-30-14
CALCULATED-DESIGNED BY	DANIEL VO
CHECKED BY	MONA ATTALLAH
FUNCTIONAL SUPERVISOR	ALI BAKHDOUD

STATE OF CALIFORNIA - DEPARTMENT OF TRANSPORTATION
Caltrans® 06-ELECTRICAL DESIGN

LAST REVISION 06-30-14
DATE PLOTTED => 23-APR-2015
TIME PLOTTED => 14:26

Dist	COUNTY	ROUTE	POST MILES TOTAL PROJECT	SHEET No.	TOTAL SHEETS
04	Son	116	13.7	36	92

REGISTERED ELECTRICAL ENGINEER — DATE 08-29-14

9-02-14
PLANS APPROVAL DATE

REGISTERED PROFESSIONAL ENGINEER
DANIEL THANH VO
No. 17408
Exp. 9-30-14
ELECTRICAL
STATE OF CALIFORNIA

THE STATE OF CALIFORNIA OR ITS OFFICERS OR AGENTS SHALL NOT BE RESPONSIBLE FOR THE ACCURACY OR COMPLETENESS OF SCANNED COPIES OF THIS PLAN SHEET.

NOTE:

FOR ACCURATE RIGHT OF WAY DATA, CONTACT RIGHT OF WAY ENGINEERING AT THE DISTRICT OFFICE.

PHASE DIAGRAM
STEADY DEMAND SEQUENCE

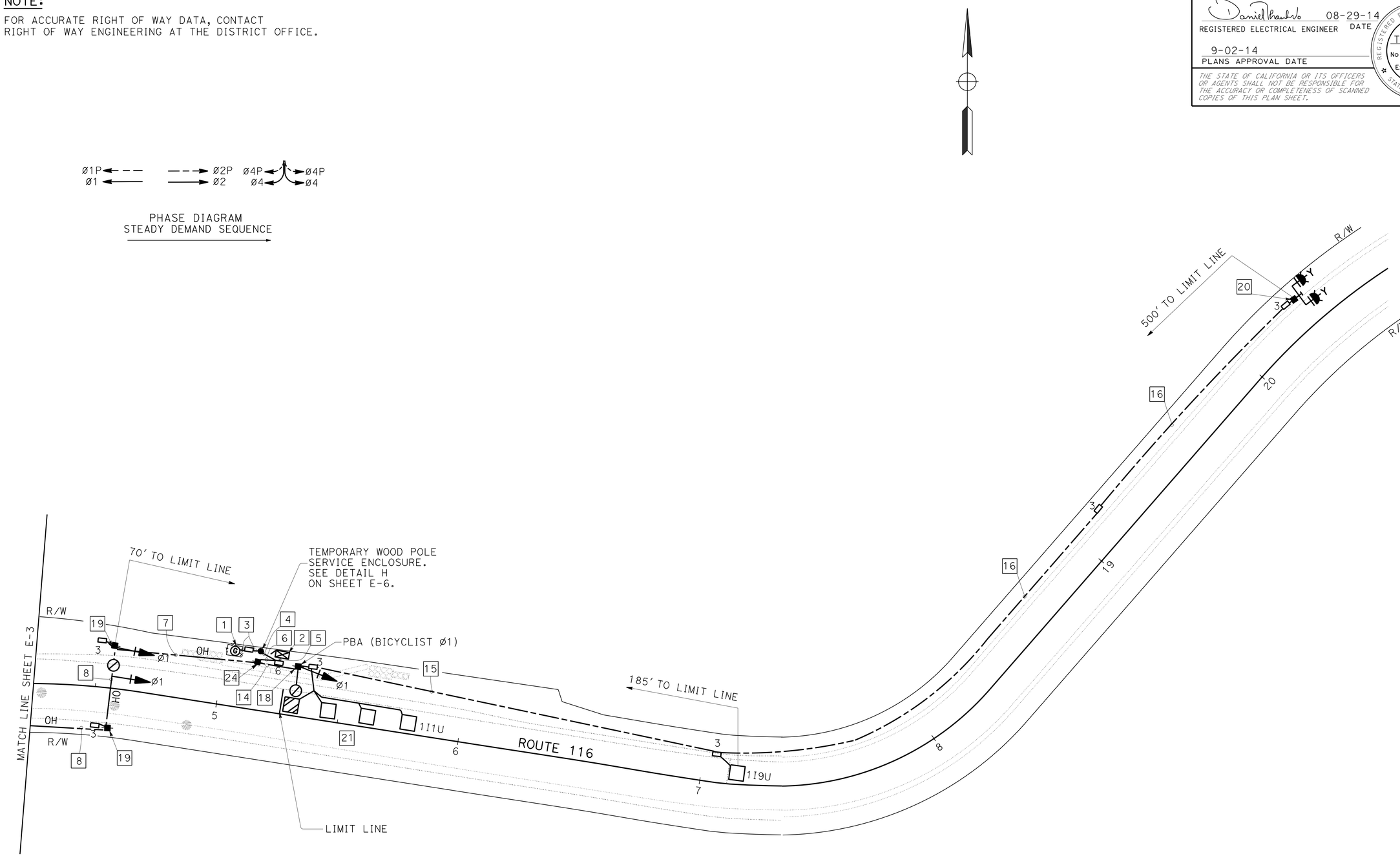

TEMPORARY SIGNAL SYSTEM

SCALE: 1"=20'

E-4

APPROVED FOR ELECTRICAL WORK ONLY

STATE OF CALIFORNIA - DEPARTMENT OF TRANSPORTATION
Caltrans® 06-ELECTRICAL DESIGN

FUNCTIONAL SUPERVISOR: ALI BAKHDOUD
CALCULATED-DESIGNED BY: DANIEL VO
CHECKED BY: MONA ATTALLAH
REVISED BY: MA
DATE REVISED: 06-30-14

LAST REVISION 06-30-14
DATE PLOTTED => 23-APR-2015
TIME PLOTTED => 14:26

Dist	COUNTY	ROUTE	POST MILES TOTAL PROJECT	SHEET No.	TOTAL SHEETS
04	Son	116	13.7	37	92

REGISTERED ELECTRICAL ENGINEER 8-29-14 DATE

9-02-14
PLANS APPROVAL DATE

REGISTERED PROFESSIONAL ENGINEER DANIEL THANH VO No. 17408 Exp. 9-30-14 ELECTRICAL STATE OF CALIFORNIA

THE STATE OF CALIFORNIA OR ITS OFFICERS OR AGENTS SHALL NOT BE RESPONSIBLE FOR THE ACCURACY OR COMPLETENESS OF SCANNED COPIES OF THIS PLAN SHEET.

NOTES:

1. SEE SES SHEETS FOR TEMPORARY WOOD POLE DETAILS.
2. REFER TO TRAFFIC HANDLING PLANS FOR SIGNS DETAILS.

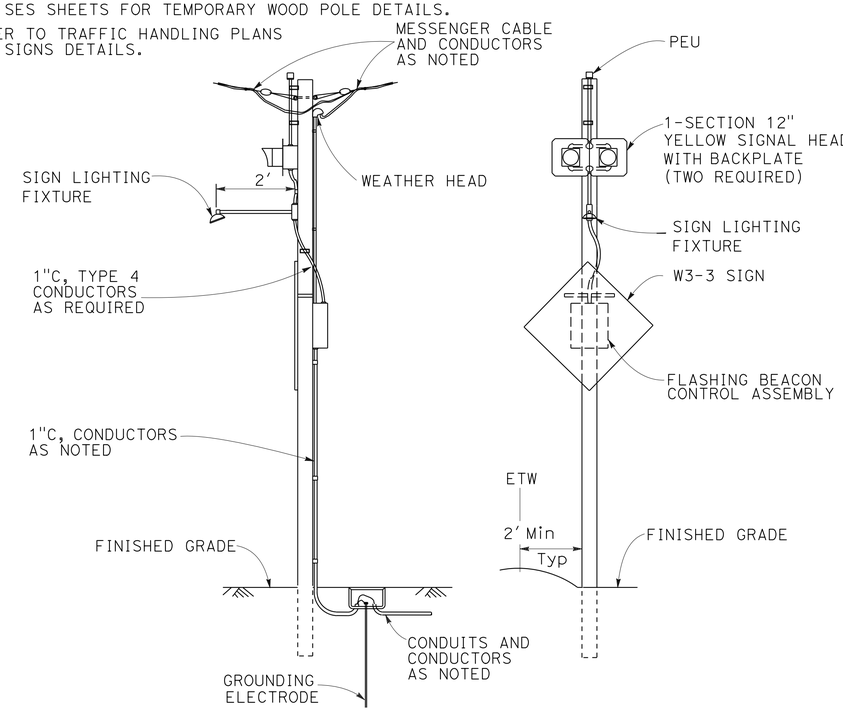

TEMPORARY WOOD POLE FLASHING BEACON

DETAIL A

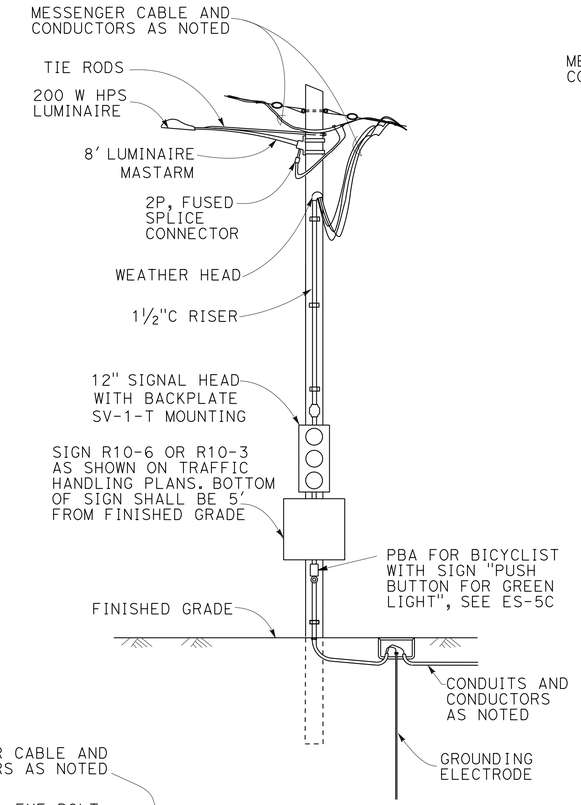

TEMPORARY WOOD POLE SIGNAL WITH PBA

DETAIL B

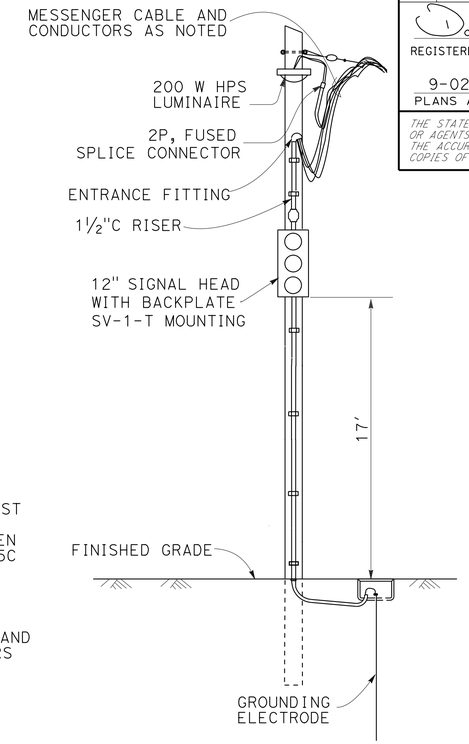

TEMPORARY WOOD POLE SIGNAL

DETAIL C

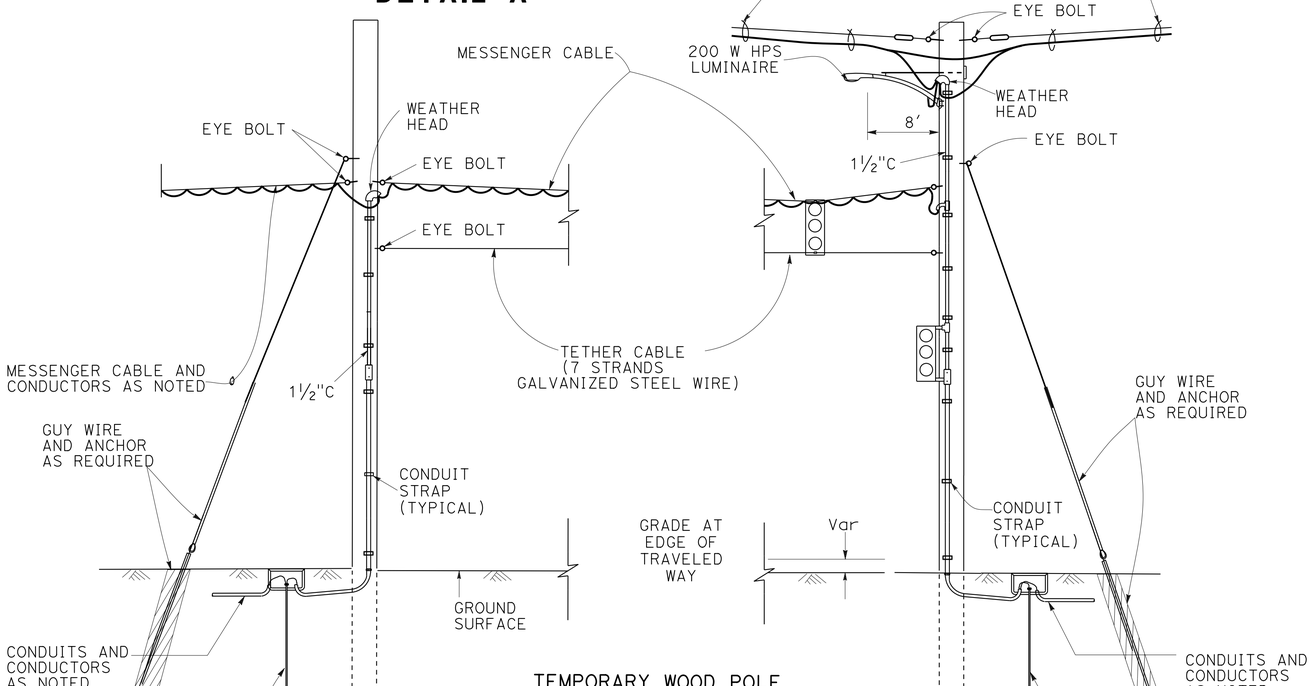

TEMPORARY WOOD POLE SIGNALS WITH SPAN WIRE

DETAIL D

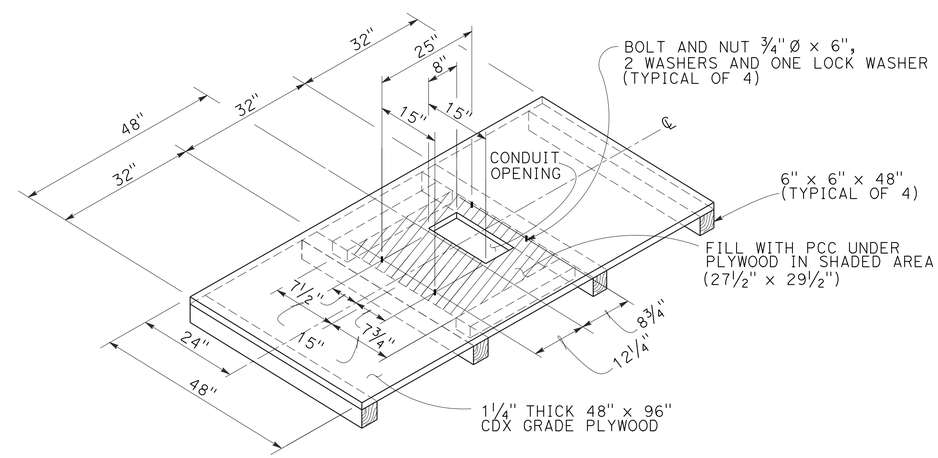

TEMPORARY FOUNDATION PLATFORM

DETAIL E

ELECTRICAL DETAILS

NO SCALE

E-5

APPROVED FOR ELECTRICAL WORK ONLY

REVISED BY	DATE REVISED
MA	06-30-14

DANIEL THANH VO — MONA ATTALLAH — CALCULATED-DESIGNED BY — CHECKED BY — FUNCTIONAL SUPERVISOR: ALI BAKHDOUD

STATE OF CALIFORNIA - DEPARTMENT OF TRANSPORTATION
Caltrans® 06-ELECTRICAL DESIGN

LAST REVISION 06-30-14 — DATE PLOTTED => 23-APR-2015 — TIME PLOTTED => 14:26

Dist	COUNTY	ROUTE	POST MILES TOTAL PROJECT	SHEET No.	TOTAL SHEETS
04	Son	116	13.7	38	92

REGISTERED ELECTRICAL ENGINEER 08-29-14 DATE

9-02-14
PLANS APPROVAL DATE

REGISTERED PROFESSIONAL ENGINEER DANIEL THANH VO No. 17408 Exp 9-30-14 ELECTRICAL STATE OF CALIFORNIA

THE STATE OF CALIFORNIA OR ITS OFFICERS OR AGENTS SHALL NOT BE RESPONSIBLE FOR THE ACCURACY OR COMPLETENESS OF SCANNED COPIES OF THIS PLAN SHEET.

NOTES:

1. SEE SES SHEETS FOR TEMPORARY WOOD POLE DETAIL.

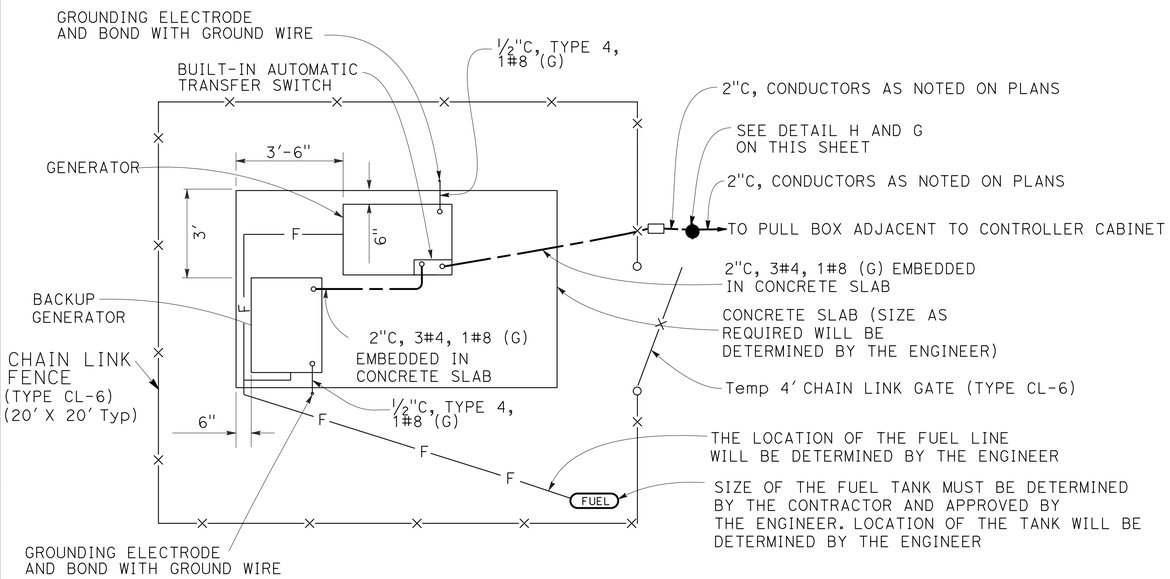

GENERATOR WITH BACKUP GENERATOR SYSTEM

DETAIL F

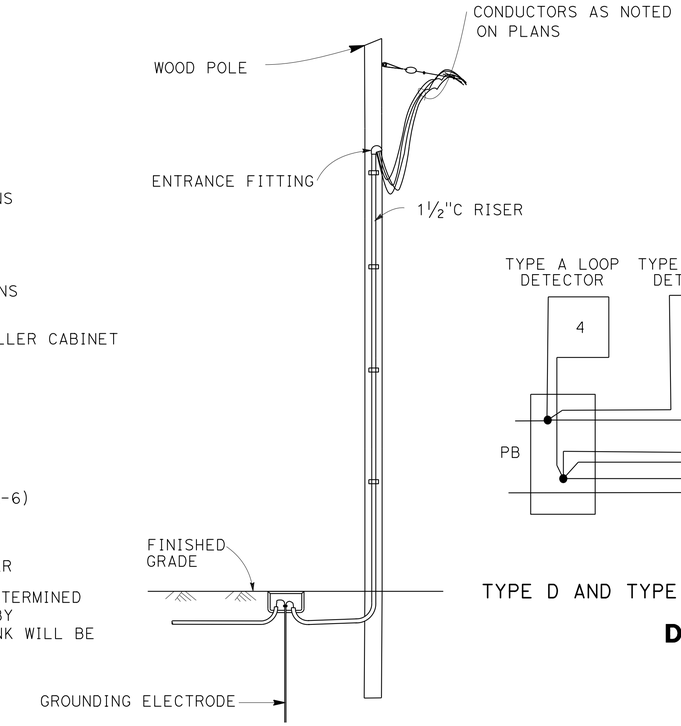

TEMPORARY WOOD POLE

DETAIL K

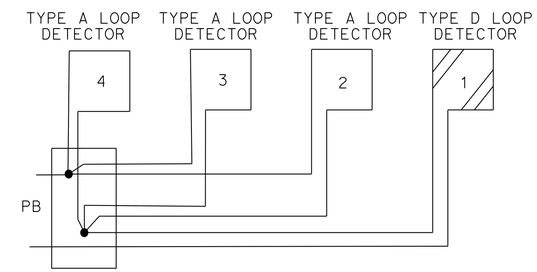

TYPE D AND TYPE A LOOP DETECTOR SPLICING

DETAIL I

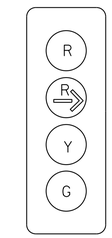

4 SECTION SIGNAL HEAD

DETAIL J

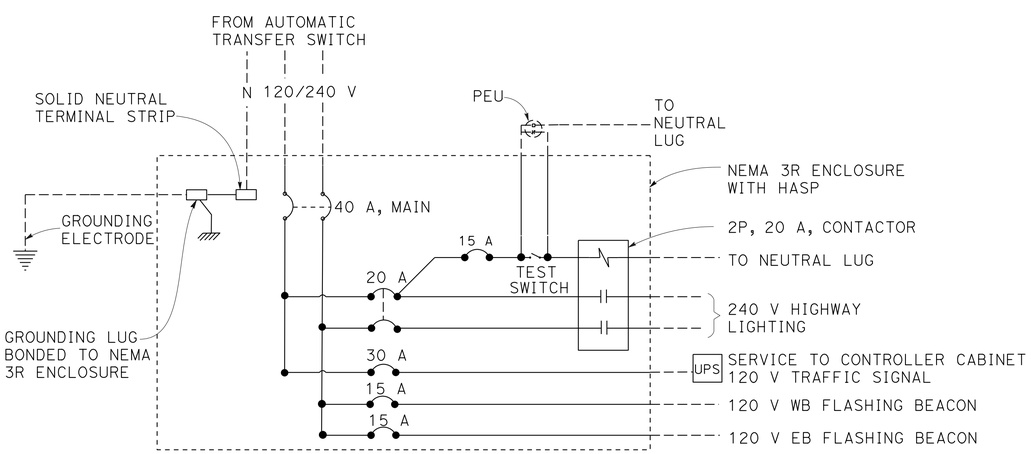

SERVICE ENCLOSURE WIRING DIAGRAM

DETAIL G

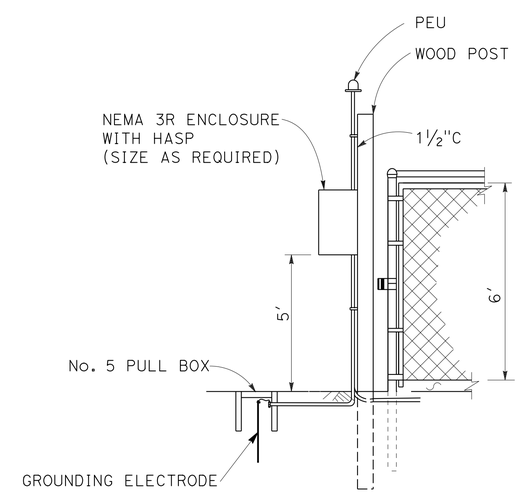

SIDE VIEW

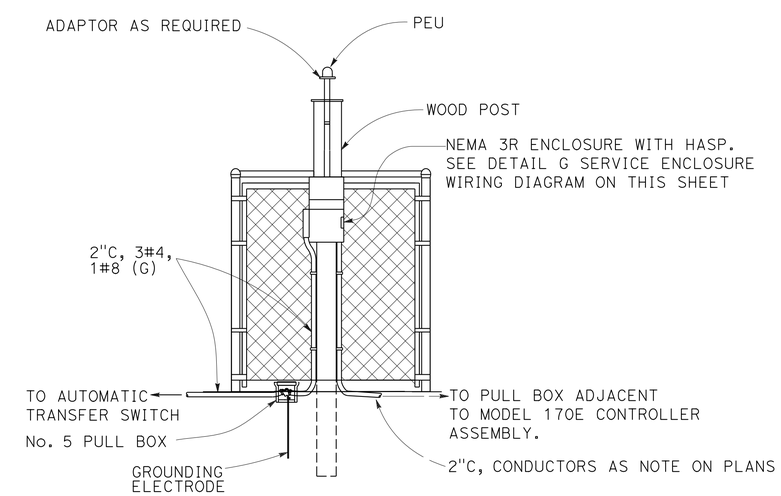

FRONT VIEW

TEMPORARY WOOD POLE SERVICE ENCLOSURE

DETAIL H

ELECTRICAL DETAILS

NO SCALE

E-6

APPROVED FOR ELECTRICAL WORK ONLY

REVISED BY	MA
DATE REVISED	06-30-14
DANIEL THANH VO	MONA ATTALLAH
CALCULATED-DESIGNED BY	CHECKED BY
FUNCTIONAL SUPERVISOR	ALI BAKHDOUD

STATE OF CALIFORNIA - DEPARTMENT OF TRANSPORTATION
Caltrans 06-ELECTRICAL DESIGN

LAST REVISION 06-30-14 | DATE PLOTTED => 23-APR-2015 TIME PLOTTED => 14:26

Dist	COUNTY	ROUTE	POST MILES TOTAL PROJECT	SHEET No.	TOTAL SHEETS
04	Son	116	13.7	39	92

REGISTERED ELECTRICAL ENGINEER DATE 08-29-14

PLANS APPROVAL DATE 9-02-14

REGISTERED PROFESSIONAL ENGINEER DANIEL THANH VO No. 17408 Exp. 9-30-14 ELECTRICAL STATE OF CALIFORNIA

THE STATE OF CALIFORNIA OR ITS OFFICERS OR AGENTS SHALL NOT BE RESPONSIBLE FOR THE ACCURACY OR COMPLETENESS OF SCANNED COPIES OF THIS PLAN SHEET.

NOTE:

THE ITEMS ON THIS SHEET ARE NOT A SEPARATE PAY ITEM, FOR INFORMATION ONLY.

TEMPORARY SIGNAL SYSTEM

SHEET No.	UPS	GENERATOR WITH BACKUP GENERATOR SYSTEM	No. 3 PULL BOX	No. 5 PULL BOX	No. 6 PULL BOX	TTEMPORARY WOOD POLE SIGNAL	TEMPORARY WOOD POLE SIGNALS WITH SPAN WIRE	TEMPORARY WOOD POLE SIGNAL WITH PBA	TEMPORARY WOOD POLE FLASHING BEACON	4' CHAIN LINK GATE (TYPE CL-6)	TYPE D LOOP DETECTOR	TYPE A LOOP DETECTOR	TEMPORARY WOOD POLE SERVICE ENCLOSURE	TEMPORARY FOUNDATION PLATFORM	TEMPORARY WOOD POLE	MESSENGER CABLE	2" C, TYPE 3	DLC	No. 4 CONDUCTORS	No. 6 CONDUCTORS	No. 8 CONDUCTORS	No. 8 CONDUCTORS (G)	No. 10 CONDUCTORS	No. 14 CONDUCTORS	CHAIN LINK FENCE (TYPE CL-6)
	EA															LF									
E-2			3						1			1					420	115			850	420			
E-3			7			2	1	1			1	3			1	260	335	1052			2234	591	526	4863	
E-4	1	1	6	1	1		1	1	1	1	1	4	1	1	1	130	410	560	150	60	1328	535	180	2685	80

ELECTRICAL QUANTITIES
E-7

CALCULATED-DESIGNED BY DANIEL VO
CHECKED BY MONA ATTALLAH
REVISED BY MA
DATE REVISED 06-30-14
FUNCTIONAL SUPERVISOR ALI BAKHDOUD

STATE OF CALIFORNIA - DEPARTMENT OF TRANSPORTATION
Caltrans 06-ELECTRICAL DESIGN

LAST REVISION 06-30-14 DATE PLOTTED => 23-APR-2015 TIME PLOTTED => 14:26

DIST	COUNTY	ROUTE	POST MILES TOTAL PROJECT	SHEET No.	TOTAL SHEETS
04	Son	116	13.7	40	92

REGISTERED CIVIL ENGINEER DATE

9-02-14
PLANS APPROVAL DATE

REGISTERED PROFESSIONAL ENGINEER VICTOR O LOPEZ No. C61373 Exp. 6-30-2015 CIVIL STATE OF CALIFORNIA

The State of California or its officers or agents shall not be responsible for the accuracy or completeness of electronic copies of this plan sheet.

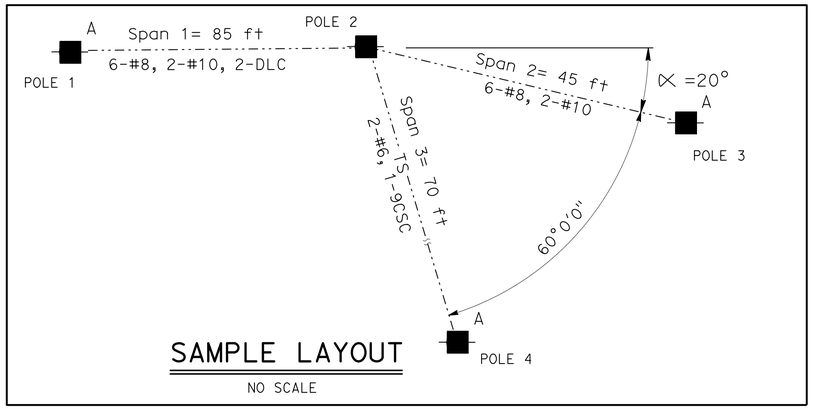

SAMPLE LAYOUT

NO SCALE

LEGEND

- Wood Pole No Attachments
- A — Wood Pole with Attachments
- —··TS—·· OH Conductor with Traffic Signals
- ·—··— OH Conductor
- ∝ Deviation Angle

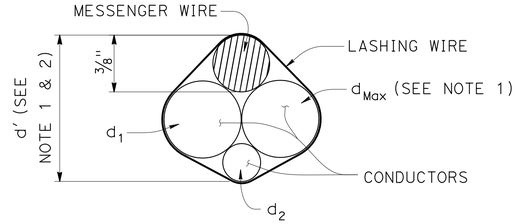

$d' = \frac{3}{8}'' + d_{Max} + 0.45 * (d_1 + d_2 + \ldots d_n)$

GUIDELINE FOR PROJECTED WIND DEPTH CALCULATION, (d')

NOTES:

1. d_{Max} is the conductor with the largest diameter Add d_{Max} to the diameter of the messenger wire & the sum of the diameter of the remaining conductors multiplied by a factor of 0.45
2. Equation used on this sheet to calculate d' is only a guideline. The Engineer may provide a value for d' along with a bundle detail to obtain a smaller projected wind depth.
3. Conductors shall be suspended from messenger wire as follows: Continuous lashing wire. No spare wire conductors allowed except as noted.
4. When selecting a pole supporting more than one span, use the greater d' value of the spans.

POLE SELECTION EXAMPLES

POLE 1

1. CALCULATE d' OF SPAN: See "GUIDELINE FOR PROJECTED WIND DEPTH CALCULATION, (d')", $d' = \frac{3}{8}'' + 0.310'' + 0.45 * [(6 * 0.271) + (2 * 0.210) + (1 * 0.310)] = 1.745''$ 1.5" < 1.745" < 2.0", use 2.0"
2. IDENTIFY POLE TYPE: Using the "POLE SELECTION TABLE & ELEVATIONS" sheets, identify pole options available. For Pole 1 there are three options: From the "NON GUYED TEMORARY WOOD POLES" sheet; " POLE AT DEAD END SPAN WITH ATTACHMENTS" may be used; & from the "GUYED TEMPORARY WOOD POLES" sheet, "POLE AT DEAD END SPAN WITH ATTATCHMENTS" with one or two guy anchors may be used.
3. IDENTIFY POLE SPAN: SPAN 1 = 85', use 100'

   RESULTS: H-3 WITH 11' EMBEDMENT FOR IN-LINE GUY ANCHOR OR CLASS 1 WITH 9' EMBEDMENT FOR TWO GUY ANCHORS OR H-4 WITH 12' EMBEDMENT FOR NON-GUYED POLE

POLE 2

1. CALCULATE d' OF SPAN: See "GUIDELINE FOR PROJECTED WIND DEPTH CALCULATION, (d')" (SEE NOTE 4), $d' = \frac{3}{8}'' + 0.310'' + 0.45 * [(6 * 0.271) + (2 * 0.210) + (1 * 0.310)] = 1.745''$ 1.5" < 1.745" < 2.0", use 2.0"
2. IDENTIFY POLE TYPE: Using the "POLE SELECTION TABLE & ELEVATIONS" sheets, identify pole options available. For Pole 2 there is 1 option: "POLE AT JUNCTION SPAN WITH ATTACHMENTS" (from "OH CONDUCTORS WITH TRAFFIC SIGNAL WITH GUY ANCHOR" - "TEMPORARY WOOD POLES " sheet).
3. IDENTIFY POLE SPAN: SPAN 1 = 85', use 100'

   RESULTS: H-5 WITH 12' EMBEDMENT FOR GUYED POLE

POLE 3

1. CALCULATE d' OF SPAN: See "GUIDELINE FOR PROJECTED WIND DEPTH CALCULATION, (d')", $d' = \frac{3}{8}'' + 0.271 + 0.45 * [(5 * 0.271) + (2 * 0.210)] = 1.445''$ 1.0" < 1.445" < 1.5", use 1.5"
2. IDENTIFY POLE TYPE: Using the "POLE SELECTION TABLE & ELEVATIONS" sheets, identify pole options available. For Pole 3 there are 3 options: From the "NON GUYED TEMORARY WOOD POLES" sheet; " POLE AT DEAD END SPAN WITH ATTACHMENTS" may be used; & from the "GUYED TEMPORARY WOOD POLES" sheet, "POLE AT DEAD END SPAN WITH ATTATCHMENTS" with one or two guy anchors may be used.
3. IDENTIFY POLE SPAN: SPAN 2 = 45', use 50'

   RESULTS: H-1 WITH 10' EMBEDMENT FOR IN-LINE GUY ANCHOR OR CLASS 1 WITH 8' EMBEDMENT FOR TWO GUY ANCHORS H-2 WITH 11' EMBEDMENT FOR NON-GUYED POLE

POLE 4

1. CALCULATE d' OF SPAN: SEE "GUIDELINE FOR PROJECTED WIND DEPTH CALCULATION, (d')", $d' = \frac{3}{8}'' + 0.650'' + 0.45 * (2 * 0.310) = 1.304''$ 1.0" < 1.304" < 1.5", use 1.5"
2. IDENTIFY POLE TYPE: Using the "POLE SELECTION TABLE & ELEVATIONS" sheets, identify pole options available. For Pole 4 there are 2 options: "POLE AT DEAD END SPAN WITH ATTACHMENTS" from "OH CONDUCTORS WITH TRAFFIC SIGNAL WITH GUY ANCHOR-TEMPORARY WOOD POLES" sheet and/or "OH CONDUCTORS WITH TRAFFIC SIGNAL TEMPORARY WOOD POLE" sheet.
3. IDENTIFY POLE SPAN: SPAN 3 = 70', use 100'

   RESULTS: H-3 WITH 11' EMBEDMENT FOR IN-LINE GUY ANCHOR OR H-6 WITH 13' EMBEDMENT FOR NON-GUYED POLE

DIAMETERS & SELF WEIGHT OF CONDUCTORS INCLUDING REQUIRED INSULATION

POWER OR DATA CONDUCTOR TYPE	DIAMETER d (in)	WEIGHT w (plf)
3 CONDUCTOR SIGNAL CABLE	0.400	0.0980
5 CONDUCTOR SIGNAL CABLE	0.500	0.1560
9 CONDUCTOR SIGNAL CABLE	0.650	0.2760
12 CONDUCTOR SIGNAL CABLE	0.800	0.3970
28 CONDUCTOR SIGNAL CABLE	0.900	0.6490
#14	0.166	0.0235
#12	0.185	0.0330
#10	0.210	0.0476
#8	0.271	0.0774
#6	0.310	0.1130
#4	0.359	0.1690
#3	0.388	0.2080
#2	0.420	0.2560
SIC (6-Conductor)	0.350	0.0860
SIC (12-Conductor)	0.500	0.1440
DLC	0.310	0.0440
F048	0.424	0.0600
F072	0.848	0.0770
F096	0.535	0.1050
F0144	0.670	0.1890
3/8" Ø MESSENGER	0.375	0.2730

NOTE:
THE CONTRACTOR SHALL VERIFY ALL CONTROLLING FIELD DIMENSIONS BEFORE ORDERING OR FABRICATING ANY MATERIAL.

BRANCH CHIEF JAMES SAGAR

	BY	CHECKED
DESIGN	VICTOR LOPEZ	LANCE WARREN
DETAILS	PAUL WELLS/SHUMEI JIANG	LANCE WARREN
QUANTITIES	X	X

STATE OF CALIFORNIA DEPARTMENT OF TRANSPORTATION

DIVISION OF ENGINEERING SERVICES STRUCTURE DESIGN SPECIAL DESIGN BRANCH

BRIDGE NO. N/A
POST MILE 13.7

TEMPORARY WOOD POLE NOTES AND POLE I.D.

SES-1

STRUCTURES DESIGN SPECIAL DESIGN SHEET (ENGLISH) (REV. 09-01-10)

ORIGINAL SCALE IN INCHES FOR REDUCED PLANS 0 1 2 3

UNIT: 3619
PROJECT NUMBER & PHASE: 04140001901 CONTRACT NO.: 04-1J3204

DISREGARD PRINTS BEARING EARLIER REVISION DATES → 3-16-12 3-28-12 8-17-12

SHEET 1 OF 11

FILE => 04-1j3201_ses (1).dgn

USERNAME => s113541 DATE PLOTTED => 04-SEP-2014 TIME PLOTTED => 16:04

DIST	COUNTY	ROUTE	POST MILES TOTAL PROJECT	SHEET No.	TOTAL SHEETS
04	Son	116	13.7	41	92

REGISTERED CIVIL ENGINEER DATE

9-02-14
PLANS APPROVAL DATE

The State of California or its officers or agents shall not be responsible for the accuracy or completeness of electronic copies of this plan sheet.

REGISTERED PROFESSIONAL ENGINEER VICTOR O LOPEZ No. C61373 Exp. 6-30-2015 CIVIL STATE OF CALIFORNIA

POLE SELECTION TABLE

LEGEND

- Wood Pole No Attachments
- A Wood Pole with Attachments
- OH Conductor
- Deviation Angle

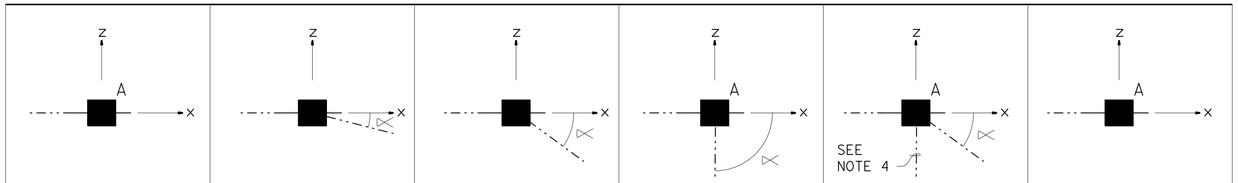

		POLE AT DEAD END SPAN WITH ATTACHMENTS			POLE AT TANGENT SPAN WITHOUT ATTACHMENTS (0° < ⋈ < 15°)			POLE AT CORNER SPAN WITHOUT ATTACHMENTS (15° < ⋈ < 30°)			POLE AT CORNER SPAN WITH ATTACHMENTS (0° < ⋈ < 90°)			POLE AT JUCTION SPAN WITH ATTACHMENTS (-30° < ⋈ < +30°)			POLE WITH CONDUCTORS AND FLASHING BEACON		
	MAXIMUM ALLOWABLE VERTICAL DIMENSION OF CONDUCTORS d'	1"	1.5"	2.0"	1"	1.5"	2.0"	1"	1.5"	2.0"	1"	1.5"	2.0"	1"	1.5"	2.0"	1"	1.5"	2.0"
MAXIMUM OH CONDUCTOR SPAN LENGTH	50' MINIMUM POLE CLASS	H-1	H-2	H-2	4	3	3	3	3	2	H-1	H-1	H-2	H-3	H-3	H-3	H-1	H-2	H-2
	50' POLE EMBEDMENT (E)	11'			9'			11'			11'			11'			11'		
	100' MINIMUM POLE CLASS	H-3	H-3	H-4	2	2	H-1	1	H-1	H-2	H-3	H-3	H-4	H-4	H-4	H-5	H-3	H-3	H-4
	100' POLE EMBEDMENT (E)	12'			10'			12'			12'			12'			12'		
	150' MINIMUM POLE CLASS	H-4	H-5	H-6	1	H-2	H-3	H-1	H-3	H-4	H-4	H-5	H-6	H-5	H-6	H-6	H-4	H-5	H-6
	150' POLE EMBEDMENT (E)	13'			11'			12'			13'			13'			13'		
	200' MINIMUM POLE CLASS	H-5	H-6	N/A	H-2	H-3	H-5	H-3	H-4	H-6	H-5	H-6	N/A	H-6	N/A	N/A	H-5	H-6	N/A
	200' POLE EMBEDMENT (E)	13'			12'			13'			13'			13'			13'		

1. CCTV Camera
2. 3/8" Ø 7 strand messenger wire, (utilities grade), and conductors
3. Luminare with mast arm, L = 12' Max
4. Vehicle detection system
5. Push Button Assembly
6. Single sheet sign panel (4'-x 4' Max) or traffic signal with 3 indicators
7. Traffic signal with 3 indicators
8. Flashing Beacon Control Assembly
9. 2 - section 12" Flashing Beacon

NOTES:

1. The self-weight of the messenger wire and any combination of OH conductors shall not exceed 3.0 lb/ft.
2. For poles with adjacent unbalanced span lengths, the shorter span shall be a minimum 50% of the larger span.
3. Value of d' may vary between adjacent spans and are not to exceed d' selected on the table.
4. Span over roadway (100' maximum) @ 90°±5° with reference to the X axis.
5. Attachments shown represent maximum allowed. If fewer or no attachments are requierd, the poles with attachments on this table may be used.
6. Protect pole from traffic as required by plans.
7. Standard embedment depth is calculated based on level ground assumption, (up to slope 1V:4H). If pole is located on or near a steep slope (1V:4H through 1v:2H) add 2 feet extra embedment.

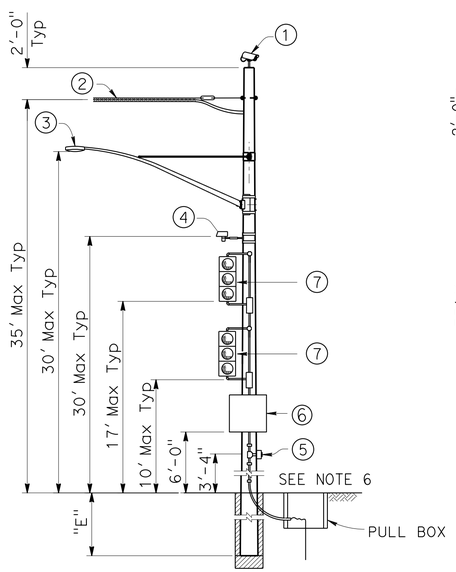

POLE AT DEAD END SPAN WITH ATTACHMENTS

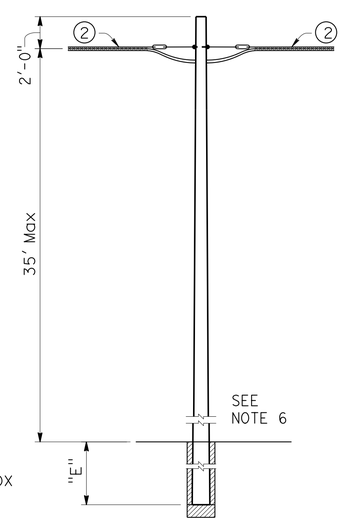

POLE AT TANGENT SPAN WITHOUT ATTACHMENTS

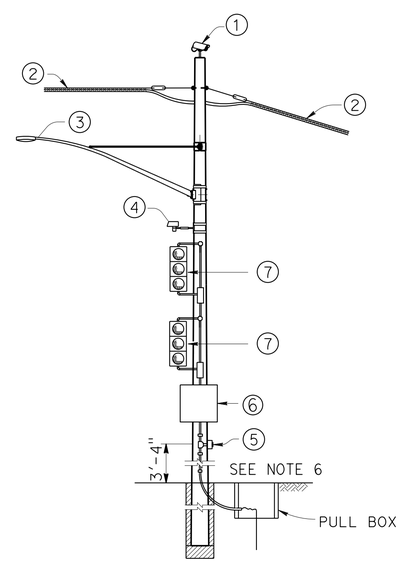

POLE AT CORNER SPAN WITH ATTACHMENTS

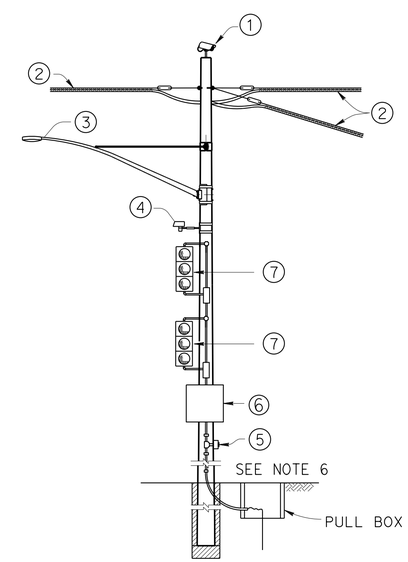

POLE AT JUNCTION SPAN WITH ATTACHMENTS

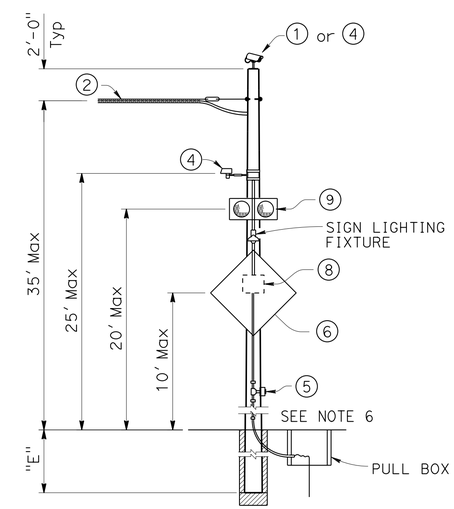

POLE WITH CONDUCTORS AND FLASHING BEACON

NOTE:
THE CONTRACTOR SHALL VERIFY ALL CONTROLLING FIELD DIMENSIONS BEFORE ORDERING OR FABRICATING ANY MATERIAL.

NO SCALE

BRANCH CHIEF JAMES SAGAR	DESIGN	BY VICTOR LOPEZ	CHECKED LANCE WARREN
	DETAILS	BY PAUL WELLS/SHUMEI JIANG	CHECKED LANCE WARREN
	QUANTITIES	BY X	CHECKED X

STATE OF CALIFORNIA DEPARTMENT OF TRANSPORTATION

DIVISION OF ENGINEERING SERVICES STRUCTURE DESIGN SPECIAL DESIGN BRANCH

BRIDGE NO. N/A
POST MILE 13.7

NON GUYED TEMPORARY WOOD POLES
POLE SELECTION TABLE & ELEVATIONS

SES-2

STRUCTURES DESIGN SPECIAL DESIGN SHEET (ENGLISH) (REV. 09-01-10)

ORIGINAL SCALE IN INCHES FOR REDUCED PLANS 0 1 2 3

UNIT: 3619
PROJECT NUMBER & PHASE: 04140001901 CONTRACT NO.: 04-1J3204

DISREGARD PRINTS BEARING EARLIER REVISION DATES

REVISION DATES 7-13-12 8-13-12 9-18-12

SHEET 2 OF 11

FILE => 04-1j3201_ses (2).dgn

USERNAME => s113541 DATE PLOTTED => 04-SEP-2014 TIME PLOTTED => 16:04

DIST	COUNTY	ROUTE	POST MILES TOTAL PROJECT	SHEET No.	TOTAL SHEETS
04	Son	116	13.7	42	92

REGISTERED CIVIL ENGINEER DATE

9-02-14
PLANS APPROVAL DATE

The State of California or its officers or agents shall not be responsible for the accuracy or completeness of electronic copies of this plan sheet.

REGISTERED PROFESSIONAL ENGINEER VICTOR O LOPEZ No. C61373 Exp. 6-30-2015 CIVIL STATE OF CALIFORNIA

LEGEND

- Wood Pole No Attachments
- A — Wood Pole with Attachments
- OH conductor
- Guy Anchor

POLE SELECTION TABLE

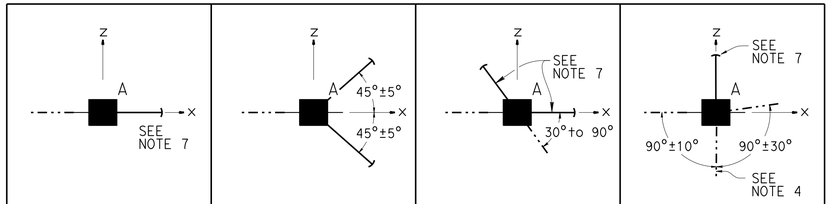

		POLE AT DEAD END SPAN WITH ATTACHMENTS ONE IN-LINE GUY ANCHOR			POLE AT DEAD END SPAN WITH ATTACHMENTS TWO GUY ANCHORS			POLE AT CORNER SPAN WITH ATTACHMENTS TWO IN-LINE GUY ANCHORS			POLE AT JUNCTION SPAN WITH ATTACHMENTS ONE GUY ANCHOR		
	MAXIMUM ALLOWABLE VERTICAL DIMENSION OF CONDUCTORS d'	1"	1.5"	2.0"	1"	1.5"	2.0"	1"	1.5"	2.0"	1"	1.5"	2.0"
MAXIMUM OH CONDUCTOR SPAN LENGTH 50'	MINIMUM POLE CLASS	H-1	H-1	H-2	1	1	1	1	1	1	H-1	H-1	H-2
	POLE EMBEDMENT (E)	10'			8'			8'			11'		
100'	MINIMUM POLE CLASS	H-2	H-2	H-3	1	1	1	1	1	H-1	H-2	H-3	H-3
	POLE EMBEDMENT (E)	11'			9'			9'			12'		
150'	MINIMUM POLE CLASS	H-3	H-3	H-4	1	1	H-1	H-1	H-1	H-2	H-3	H-4	H-4
	POLE EMBEDMENT (E)	11'			9'			9'			12'		
200'	MINIMUM POLE CLASS	H-4	H-4	H-5	H-1	H-1	H-2	H-2	H-2	H-3	H-4	H-5	H-6
	POLE EMBEDMENT (E)	11'			9'			9'			13'		

1. CCTV Camera
2. 3/8" ø 7 strand messenger wire, (utilities grade), and conductors
3. Luminare with mast arm, L = 12' Max
4. Vehicle detection system
5. Push Button Assembly
6. Single sheet sign panel (4' x 4' Max) or traffic signal with 3 indicators
7. Traffic signal with 3 indicators
8. 1/2" ø Guy wire (See note 8)

NOTES:

1. The self-weight of the messenger wire and any combination of OH conductors shall not exceed 3.0 lb/ft.
2. For poles with adjacent unbalanced span lengths, the shorter span shall be a minimum 50% of the larger span.
3. Value of d' may vary between adjacent spans and are not to exceed d' selected on the table.
4. Span over roadway (100' maximum) @ 90°±5° with reference to the X axis.
5. Attachments shown represent maximum allowed. If fewer or no attachments are requierd, the poles with attachments on this table may be used.
6. Protect pole from traffic as required by plans.
7. Guy wires may be installed 5°± in-line with span.
8. Refer to GUY ANCHOR DETAILS
9. Standard embedment depth is calculated based on level ground assumption, (up to slope 1V:4H). If pole is located on or near a steep slope (1V:4H through 1v:2H) add 2 feet extra embedment.

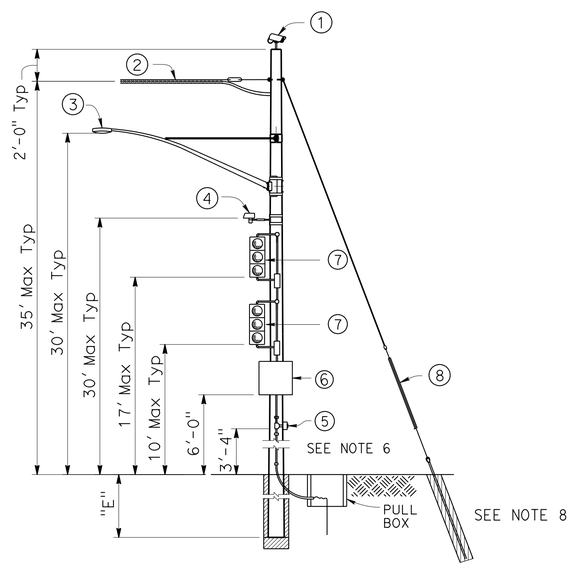

POLE AT DEAD END SPAN WITH ATTACHMENTS

NOTE:
THE CONTRACTOR SHALL VERIFY ALL CONTROLLING FIELD DIMENSIONS BEFORE ORDERING OR FABRICATING ANY MATERIAL.

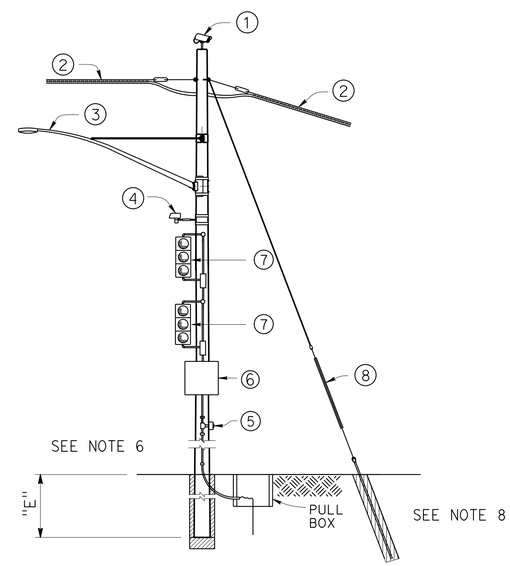

POLE AT CORNER SPAN WITH ATTACHMENTS

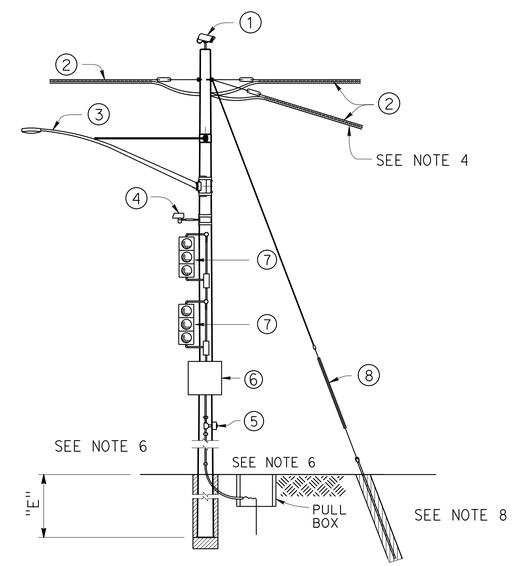

POLE AT JUNCTION SPAN WITH ATTACHMENTS

NO SCALE

BRANCH CHIEF JAMES SAGAR

	BY	CHECKED
DESIGN	VICTOR LOPEZ	LANCE WARREN
DETAILS	PAUL WELLS/SHUMEI JIANG	LANCE WARREN
QUANTITIES	X	X

STATE OF CALIFORNIA DEPARTMENT OF TRANSPORTATION

DIVISION OF ENGINEERING SERVICES STRUCTURE DESIGN SPECIAL DESIGN BRANCH

BRIDGE NO. N/A
POST MILE 13.7

GUYED TEMPORARY WOOD POLES
POLE SELECTION TABLE & ELEVATIONS

SES-3

STRUCTURES DESIGN SPECIAL DESIGN SHEET (ENGLISH) (REV. 09-01-10)

ORIGINAL SCALE IN INCHES FOR REDUCED PLANS 0 1 2 3

UNIT: 3619
PROJECT NUMBER & PHASE: 04140001901 CONTRACT NO.: 04-1J3204

DISREGARD PRINTS BEARING EARLIER REVISION DATES

REVISION DATES: ~~7-13-12~~ 8-17-12

SHEET 3 OF 11

FILE => 04-1j3201_ses (3).dgn

USERNAME => s113541 DATE PLOTTED => 04-SEP-2014 TIME PLOTTED => 16:04

DIST	COUNTY	ROUTE	POST MILES TOTAL PROJECT	SHEET No.	TOTAL SHEETS
04	Son	116	13.7	43	92

REGISTERED CIVIL ENGINEER — DATE

9-02-14
PLANS APPROVAL DATE

The State of California or its officers or agents shall not be responsible for the accuracy or completeness of electronic copies of this plan sheet.

REGISTERED PROFESSIONAL ENGINEER — VICTOR O LOPEZ — No. C61373 — Exp. 6-30-2015 — CIVIL — STATE OF CALIFORNIA

LEGEND

- Wood Pole No Attachments
- A — Wood Pole with Attachments
- —TS— OH Conductor with Traffic Signals (See Note 10)
- OH Conductor
- Guy Anchor

POLE SELECTION TABLE

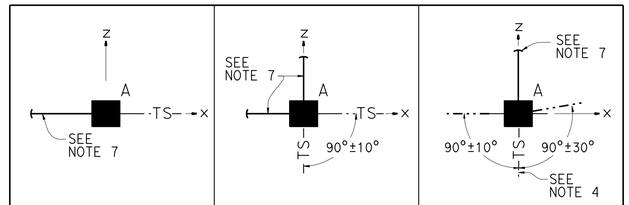

		POLE AT DEAD END SPAN WITH ATTACHMENTS ONE IN-LINE GUY ANCHOR			POLE AT CORNER SPAN WITH ATTACHMENTS TWO GUY ANCHORS			POLE AT JUNCTION SPAN WITH ATTACHMENTS ONE GUY ANCHOR		
	MAXIMUM ALLOWABLE VERTICAL DIMENSION OF CONDUCTORS d'	1"	1.5"	2.0"	1"	1.5"	2.0"	1"	1.5"	2.0"
MAXIMUM SPAN FOR OH COONDUCTOR WITH TRAFFIC SIGNAL 50'	MINIMUM POLE CLASS	H-2	H-2	H-2	H-3	H-3	H-3	H-3	H-4	H-4
	POLE EMBEDMENT (E)	11'			12'			12'		
100'	MINIMUM POLE CLASS	H-3	H-3	H-4	H-3	H-3	H-4	H-4	H-4	H-5
	POLE EMBEDMENT (E)	11'			12'			12'		
150'	MINIMUM POLE CLASS	H-3	H-4	H-4	H-4	H-4	H-4	H-4	H-5	H-5
	POLE EMBEDMENT (E)	11'			12'			12'		

NOTES:

1. The self-weight of the messenger wire and any combination of OH conductors shall not exceed 3.0 lb/ft.
2. For poles with adjacent unbalanced span lengths, the shorter span shall be a minimum 50% of the larger span.
3. Value of d' may vary between adjacent spans and are not to exceed d' selected on the table.
4. Span over roadway (100' maximum) @ 90°±5° with reference to the X axis.
5. Attachments shown represent maximum allowed. If fewer or no attachments are requierd, the poles with attachments on this table may be used.
6. Protect pole from traffic as required by plans.
7. Guy wires may be installed 5°± in-line with span.
8. Refer to GUY ANCHOR DETAILS
9. Standard embedment depth is calculated based on level ground assumption, (up to slope 1V:4H). If pole is located on or near a steep slope (1V:4H through 1v:2H) add 2 feet extra embedment.
10. Maximum of 2 signals per span within the hatched regions indicated by "GUIDELINE FOR LOCATION OF TETHERED SIGNALS".

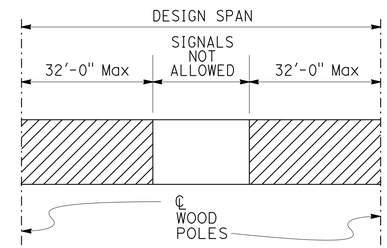

GUIDELINE FOR LOCATION OF TETHERED SIGNALS

(SEE NOTE 10)

1. CCTV Camera
2. 3/8" Ø 7 strand messenger wire, (utilities grade) and conductors
3. Luminare with mast arm, L = 12' Max
4. Vehicle detection system
5. Traffic signal with 3 indicators
6. Pedestrian Signal
7. Push Button Assembly
8. 1/2" Ø Guy wire (See note 8)
9. 3/8" Ø tether wire, 7 strand utilities grade

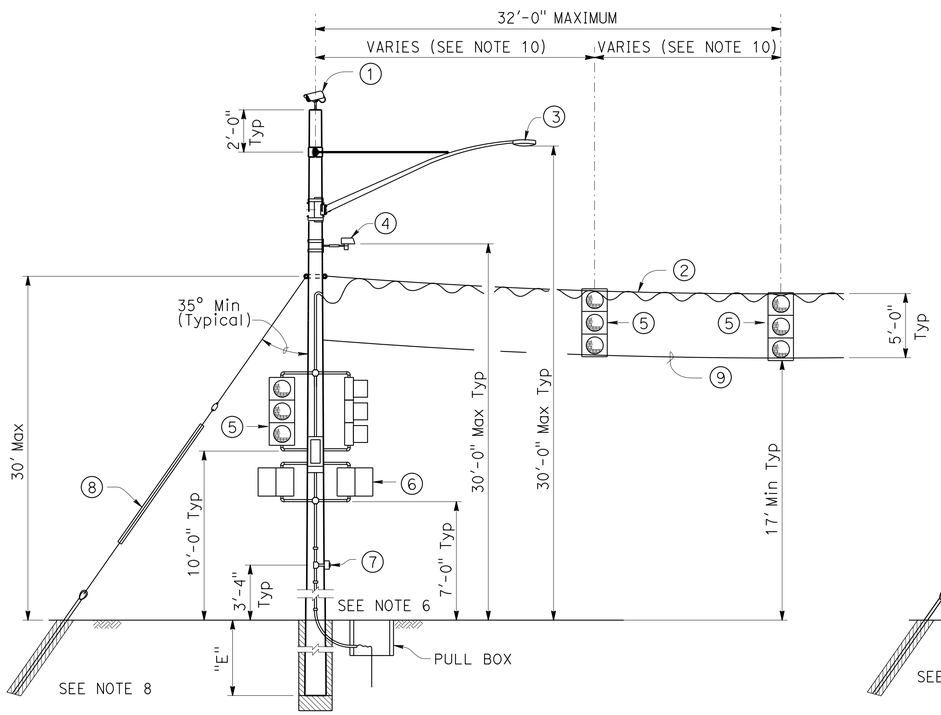

POLE AT DEAD END SPAN WITH ATTACHMENTS

NOTE:
THE CONTRACTOR SHALL VERIFY ALL CONTROLLING FIELD DIMENSIONS BEFORE ORDERING OR FABRICATING ANY MATERIAL.

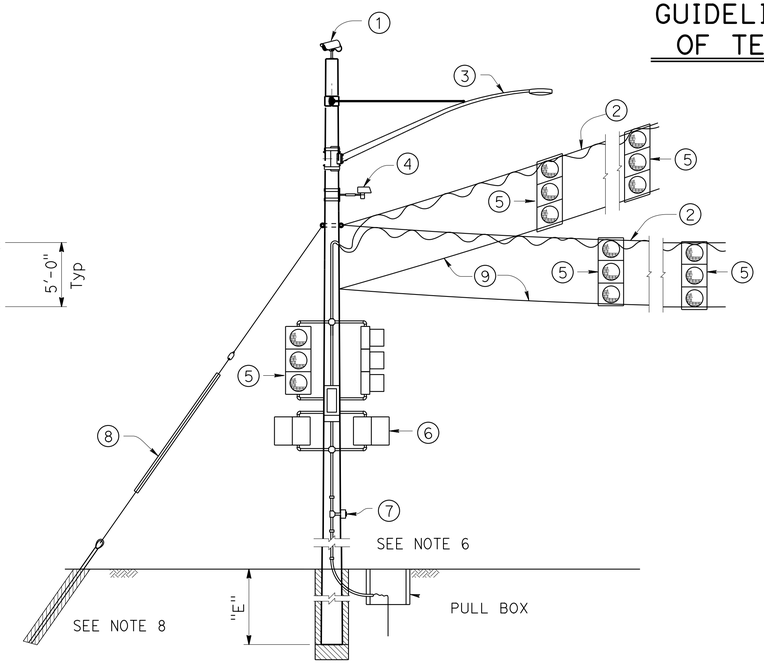

POLE AT CORNER SPAN WITH ATTACHMENTS

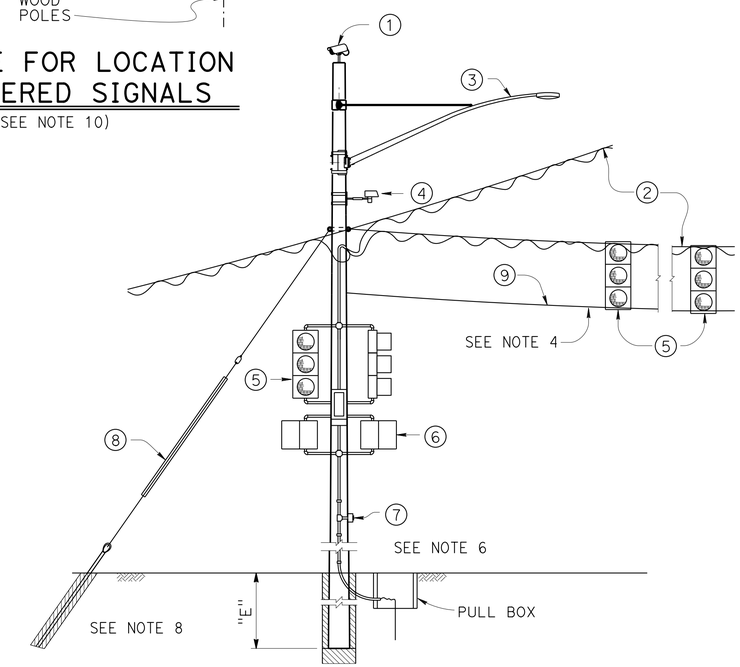

POLE AT JUNCTION SPAN WITH ATTACHMENTS

NO SCALE

OH CONDUCTORS WITH TRAFFIC SIGNAL WITH GUY ANCHOR

BRANCH CHIEF: JAMES SAGAR

	BY	CHECKED
DESIGN	VICTOR LOPEZ	LANCE WARREN
DETAILS	PAUL WELLS/SHUMEI JIANG	LANCE WARREN
QUANTITIES	X	X

STATE OF CALIFORNIA — DEPARTMENT OF TRANSPORTATION

DIVISION OF ENGINEERING SERVICES — STRUCTURE DESIGN — SPECIAL DESIGN BRANCH

BRIDGE NO. N/A — POST MILE 13.7

TEMPORARY WOOD POLES

POLE SELECTION TABLE & ELEVATIONS

SES-4

STRUCTURES DESIGN SPECIAL DESIGN SHEET (ENGLISH) (REV. 09-01-10)

ORIGINAL SCALE IN INCHES FOR REDUCED PLANS 0 1 2 3

UNIT: 3619
PROJECT NUMBER & PHASE: 04140001901
CONTRACT NO.: 04-1J3204

DISREGARD PRINTS BEARING EARLIER REVISION DATES

REVISION DATES: 4-18-12 6-28-12 7-13-12 8-17-12

SHEET 4 OF 11

FILE => 04-1j3201_ses (4).dgn

USERNAME => s113541 DATE PLOTTED => 04-SEP-2014 TIME PLOTTED => 16:04

DIST	COUNTY	ROUTE	POST MILES TOTAL PROJECT	SHEET No.	TOTAL SHEETS
04	Son	116	13.7	44	93

REGISTERED CIVIL ENGINEER DATE

9-02-14
PLANS APPROVAL DATE

REGISTERED PROFESSIONAL ENGINEER VICTOR O LOPEZ No. C61373 Exp. 6-30-2015 CIVIL STATE OF CALIFORNIA

The State of California or its officers or agents shall not be responsible for the accuracy or completeness of electronic copies of this plan sheet.

LEGEND

- Wood Pole No Attachments
- A — Wood Pole with Attachments
- —··TS—··· OH Conductor with Traffic Signals (See Note 7)
- ·—··— OH Conductor
- Guy Anchor

POLE SELECTION TABLE

			POLE AT DEAD END SPAN WITH ATTACHMENTS		
MAXIMUM SPAN FOR CONDUCTORS WITH TRAFFIC SIGNAL	75′	MAXIMUM ALLOWABLE VERTICAL DIMENSION OF CONDUCTORS d′	1"	1.5"	2.0"
		MINIMUM POLE CLASS	H-5	H-6	H-6
		POLE EMBEDMENT (E)		13′	

1. CCTV Camera
2. ⅜" ø 7 strand messenger wire, (utilities grade), and conductors, (see Note 4)
3. Luminare with mast arm, L = 12′ Max
4. Vehicle detection system
5. Traffic signal with 3 indicators (See Note 7)
6. Pedestrian Signal
7. Push Button Assembly
8. ⅜" ø tether wire, 7 strand utilities grade

NOTES:

1. The self-weight of the messenger wire and any combination of OH conductors shall not exceed 3.0 lb/ft.
2. For poles with adjacent unbalanced span lengths, the shorter span shall be a minimum 50% of the larger span.
3. Value of d′ may vary between adjacent spans and are not to exceed d′ selected on the table.
4. Attachments shown represent maximum allowed. If fewer or no attachments are requierd, the poles with attachments on this table may be used.
5. Protect pole from traffic as required by plans.
6. Standard embedment depth is calculated based on level ground assumption, (up to slope 1V:4H). If pole is located on or near a steep slope (1V:4H through 1v:2H) add 2 feet extra embedment.
7. Maximum of 2 signals per span within the hatched regions indicated by "GUIDELINE FOR LOCATION OF TETHERED SIGNALS".

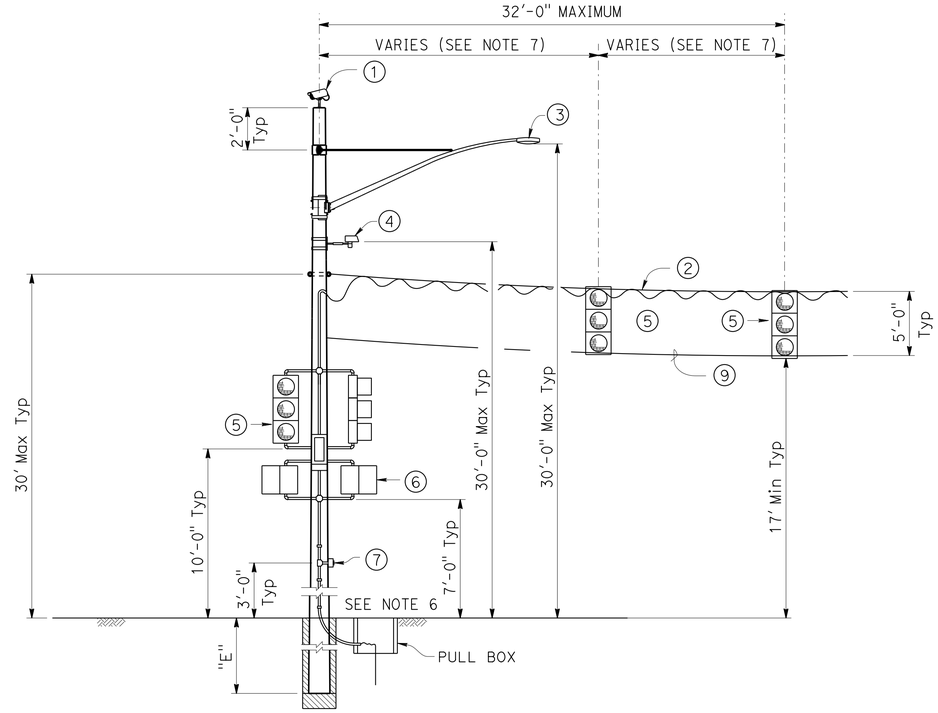

POLE AT DEAD END SPAN WITH ATTACHMENTS

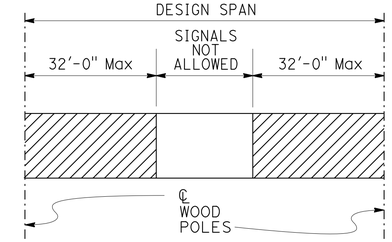

GUIDELINE FOR LOCATION OF TETHERED SIGNALS

(SEE NOTE 7)

NOTE:
THE CONTRACTOR SHALL VERIFY ALL CONTROLLING FIELD DIMENSIONS BEFORE ORDERING OR FABRICATING ANY MATERIAL.

NO SCALE

BRANCH CHIEF JAMES SAGAR

	BY	CHECKED
DESIGN	VICTOR LOPEZ	LANCE WARREN
DETAILS	PAUL WELLS/SHUMEI JIANG	LANCE WARREN
QUANTITIES	X	X

STATE OF CALIFORNIA DEPARTMENT OF TRANSPORTATION

DIVISION OF ENGINEERING SERVICES STRUCTURE DESIGN SPECIAL DESIGN BRANCH

BRIDGE NO. N/A
POST MILE 13.7

OH CONDUCTORS WITH TRAFFIC SIGNAL TEMPORARY WOOD POLE
POLE SELECTION TABLE & ELEVATIONS

SES-5

STRUCTURES DESIGN SPECIAL DESIGN SHEET (ENGLISH) (REV. 09-01-10)

ORIGINAL SCALE IN INCHES FOR REDUCED PLANS 0 1 2 3

UNIT: 3619
PROJECT NUMBER & PHASE: 04140001901 CONTRACT NO.: 04-1J3204

DISREGARD PRINTS BEARING EARLIER REVISION DATES

REVISION DATES 4/18/12 6/22/12 7/13/12

SHEET 5 OF 11

FILE => 04-1j3201_ses (5).dgn

USERNAME => s113541 DATE PLOTTED => 04-SEP-2014 TIME PLOTTED => 16:04

DIST	COUNTY	ROUTE	POST MILES TOTAL PROJECT	SHEET No.	TOTAL SHEETS
04	Son	116	13.7	45	92

REGISTERED CIVIL ENGINEER DATE

9-02-14
PLANS APPROVAL DATE

REGISTERED PROFESSIONAL ENGINEER VICTOR O LOPEZ No. C61373 Exp. 6-30-2015 CIVIL STATE OF CALIFORNIA

The State of California or its officers or agents shall not be responsible for the accuracy or completeness of electronic copies of this plan sheet.

SAG REQUIREMENTS

AMBIENT TEMPERATURE	SAG
ABOVE 121°F	5.2% ± 0.2%
81°F THROUGH 120°F	5.1% ± 0.2%
41°F THROUGH 80°F	5.0% ± 0.2%
1°F THROUGH 40°F	4.9% ± 0.2%
-30°F THROUGH 0°F	4.8% ± 0.2%

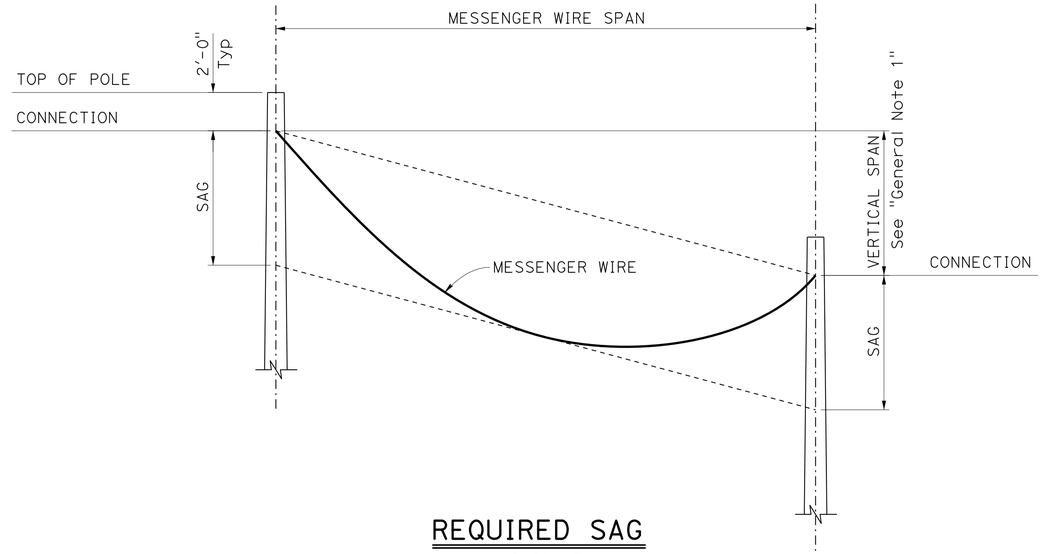

REQUIRED SAG

NO SCALE

DESIGN NOTES:

Design: AASHTO Standard Specifications for Structural Supports for Highway Signs, Luminaires and Traffic Signals, Fifth Edition (LTS-5).

GROUP LOAD COMBINATIONS:

I Dead Load
II Dead Load + Wind Load
III Dead Load + 0.5 (Wind Load) + Ice Load
IV Fatigue: Not used

LOADING:

Wind Loading: 100 mph (3-second gust)
Wind Recurrence Interval: 10 years
Combined height, exposure, and elevated terrain factor = 1.05 (Exposure C, structure is not located on or over the top half of a ridge, hill, or escarpment)

Ice Loading: 3.0 psf on surfaces, 0.60 in radial thickness of ice at a unit weight of 60 pcf on bundles

BASIC DESIGN VALUES:

Timber Poles: Fb = 1850 psi
Fv = 110 psi
Fcp = 230 psi
Fc = 950 psi
E = 1500 x 10^3 psi

DESIGN WIRE BREAKING STRENGTHS:

ASTM A475, Utilities Grade, 7 strand modified by termination efficiency factor of 0.8

FOUNDATION DESIGN NOTES:

1. Pole embedment depth design is based on Broms' approximate procedure as described in Article 13.6 of AASHTO LTS-5.

2. Embedment depth is calculated based on following soil parameters,
Cohesive Soil:
Shear strength of soil c = 1500 psf.
Cohesionless Soil:
ϕ = 30 deg, γ = 120 pcf.
Soil assumed to be unsaturated.

3. An overload factor of 2.0 and an undercapacity factor of 0.7 were used for safety factor of 2.86.

4. Allowable vertical bearing pressure at the end bearing of poles is 3000 psf at 6 feet or more embedment.

GENERAL NOTES:

1. Maximum vertical span is 10% of messenger wire span.

2. Install attachments shown if indicated on the "Project Plans".

3. Overhead line construction not specifically covered here shall conform to the provisions of General Order No. 95 Of Public Utilities Commission.

4. The self-weight of the messenger wire and any combination of OH conductors shall not exceed 3.0 lb/ft.

5. For poles with adjacent unbalanced span lengths, the shorter span shall be a minimum 50% of the larger span.

6. Standard embedment depth is calculated based on level ground assumption (up to slope 1V:4H). If pole is located on or near a steep slope (1V:4H through 1V:2H) add 2 feet extra embedment.

7. Value of "d'" may vary between adjacent spans and are not to exceed "d'" selected on the table.

NOTE:
THE CONTRACTOR SHALL VERIFY ALL CONTROLLING FIELD DIMENSIONS BEFORE ORDERING OR FABRICATING ANY MATERIAL.

BRANCH CHIEF JAMES SAGAR

	BY	CHECKED
DESIGN	VICTOR LOPEZ	LANCE WARREN
DETAILS	PAUL WELLS/SHUMEI JIANG	LANCE WARREN
QUANTITIES	X	X

STATE OF CALIFORNIA
DEPARTMENT OF TRANSPORTATION

DIVISION OF ENGINEERING SERVICES
STRUCTURE DESIGN
SPECIAL DESIGN BRANCH

BRIDGE NO. N/A
POST MILE 13.7

TEMPORARY WOOD POLE GENERAL NOTES

SES-6

STRUCTURES DESIGN SPECIAL DESIGN SHEET (ENGLISH) (REV. 09-01-10)

ORIGINAL SCALE IN INCHES FOR REDUCED PLANS 0 1 2 3

UNIT: 3619
PROJECT NUMBER & PHASE: 04140001901
CONTRACT NO.: 04-1J3204

DISREGARD PRINTS BEARING EARLIER REVISION DATES

REVISION DATES 4/19/12 6/22/12

SHEET 6 OF 11

FILE => 04-1j3201_ses (6).dgn

USERNAME => s113541 DATE PLOTTED => 04-SEP-2014 TIME PLOTTED => 16:04

DIST	COUNTY	ROUTE	POST MILES TOTAL PROJECT	SHEET No.	TOTAL SHEETS
04	Son	116	13.7	46	92

REGISTERED CIVIL ENGINEER DATE

9-02-14
PLANS APPROVAL DATE

The State of California or its officers or agents shall not be responsible for the accuracy or completeness of electronic copies of this plan sheet.

REGISTERED PROFESSIONAL ENGINEER VICTOR O LOPEZ No. C61373 Exp. 6-30-2015 CIVIL STATE OF CALIFORNIA

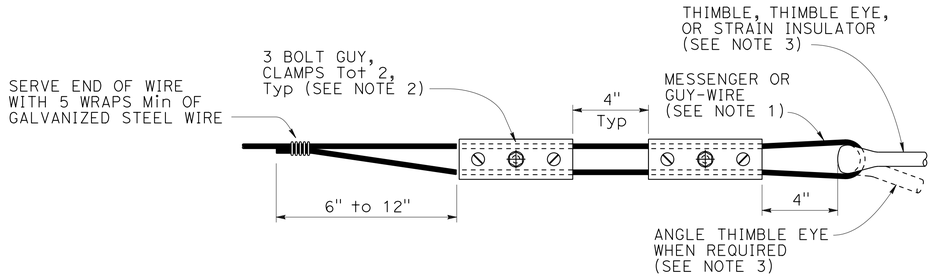

ALTERNATIVE TERMINATION OF MESSENGER WIRES USING GUY CLAMPS

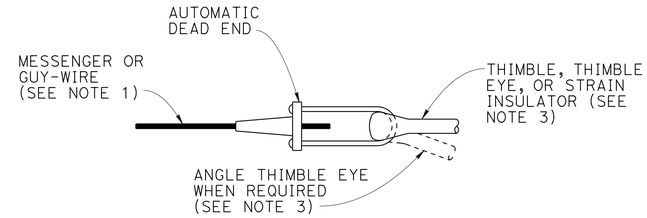

TERMINATION OF WIRES USING AUTOMATIC DEAD END

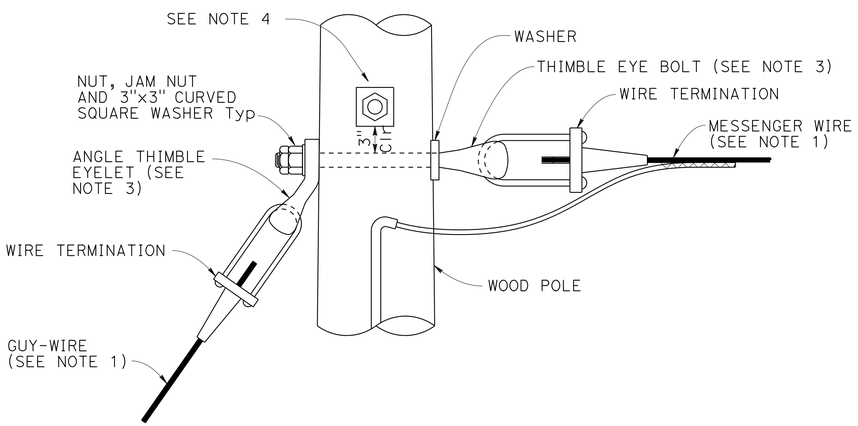

POLE AT DEAD END SPAN WITH GUY-WIRE CONNECTION

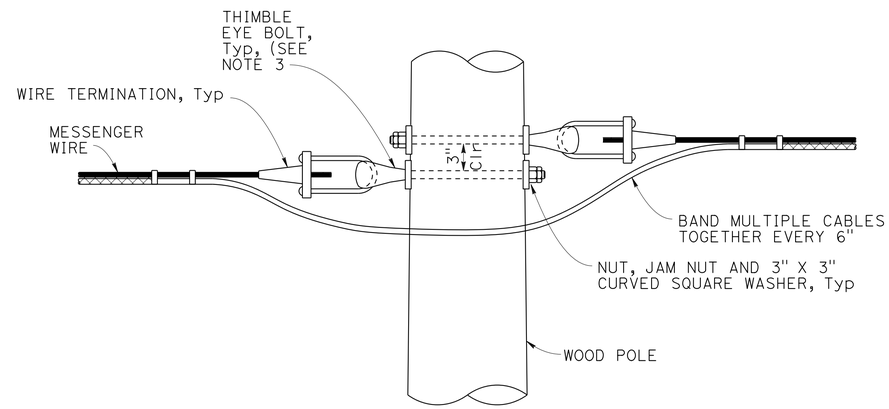

POLE AT TANGENT OR CORNER SPAN CONNECTION

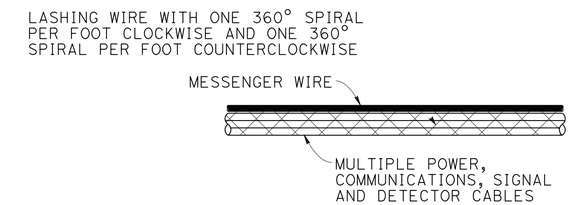

DOUBLE LASHING DETAIL

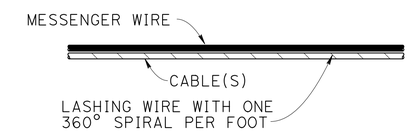

TYPICAL LASHING DETAIL

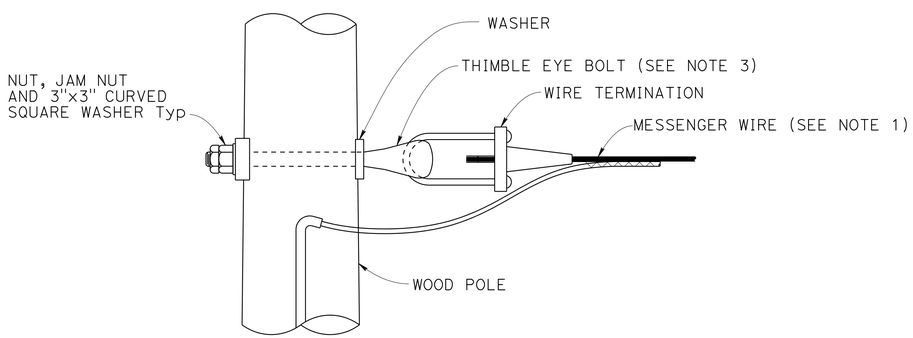

POLE AT DEAD END SPAN CONNECTION

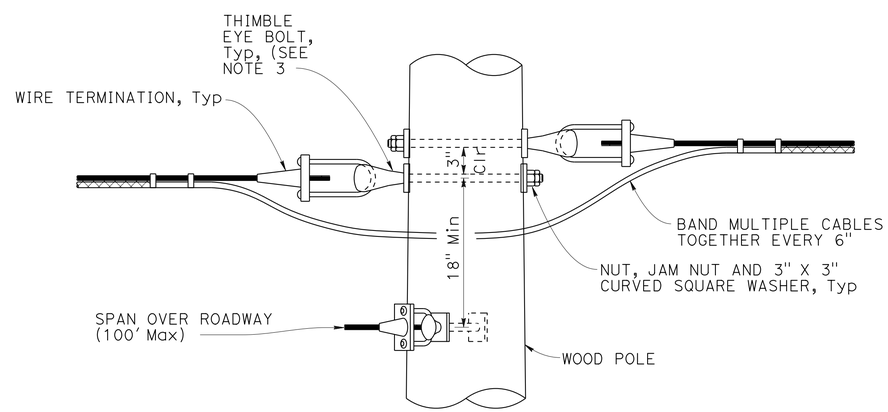

POLE AT JUNCTION SPAN CONNECTION

NOTES:

1. All messenger wires are to be ⅜" ø and guy wires are to be ½" ø.
2. For guy wires use 3 clamps.
3. Use ⅝" ø for non guyed poles & ¾" ø for guyed wires.
4. Install additional angle thimble at poles with two guy anchors.

NOTE:
THE CONTRACTOR SHALL VERIFY ALL CONTROLLING FIELD DIMENSIONS BEFORE ORDERING OR FABRICATING ANY MATERIAL.

BRANCH CHIEF JAMES SAGAR	DESIGN	BY VICTOR LOPEZ	CHECKED LANCE WARREN
	DETAILS	BY PAUL WELLS/SHUMEI JIANG	CHECKED LANCE WARREN
	QUANTITIES	BY X	CHECKED X

STATE OF CALIFORNIA
DEPARTMENT OF TRANSPORTATION

DIVISION OF ENGINEERING SERVICES
STRUCTURE DESIGN
SPECIAL DESIGN BRANCH

BRIDGE NO. N/A
POST MILE 13.7

TEMPORARY WOOD POLE CONNECTION
DETAILS NO. 1

SES-7

STRUCTURES DESIGN SPECIAL DESIGN SHEET (ENGLISH) (REV. 09-01-10)

ORIGINAL SCALE IN INCHES FOR REDUCED PLANS 0 1 2 3

UNIT: 3619
PROJECT NUMBER & PHASE: 04140001901
CONTRACT NO.: 04-1J3204

DISREGARD PRINTS BEARING EARLIER REVISION DATES

REVISION DATES 11/14/11 6/28/12 8/30/12

SHEET 7 OF 11

FILE => 04-1j3201_ses (7).dgn

USERNAME => s113541 DATE PLOTTED => 04-SEP-2014 TIME PLOTTED => 16:04

DIST	COUNTY	ROUTE	POST MILES TOTAL PROJECT	SHEET No.	TOTAL SHEETS
04	Son	116	13.7	47	92

REGISTERED CIVIL ENGINEER DATE

9-02-14
PLANS APPROVAL DATE

REGISTERED PROFESSIONAL ENGINEER VICTOR O LOPEZ No. C61373 Exp. 6-30-2015 CIVIL STATE OF CALIFORNIA

The State of California or its officers or agents shall not be responsible for the accuracy or completeness of electronic copies of this plan sheet.

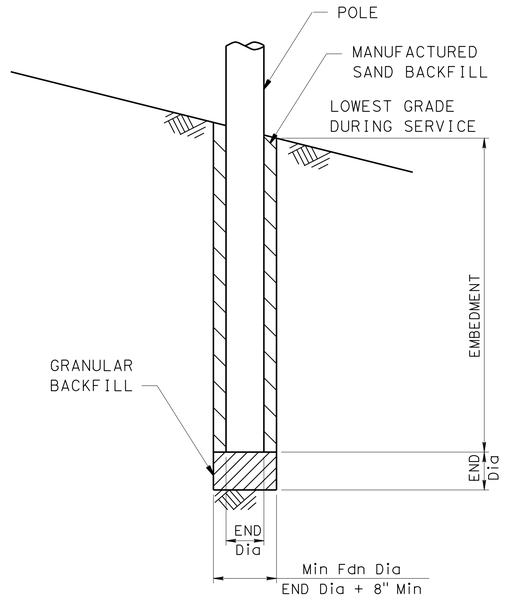

POLE FOUNDATION DETAIL

NOTES:

1. Minimum allowable tension capacity "Qa" = 8900 lbs
2. Minimum installation torque "T" = 1780 ft-lbs

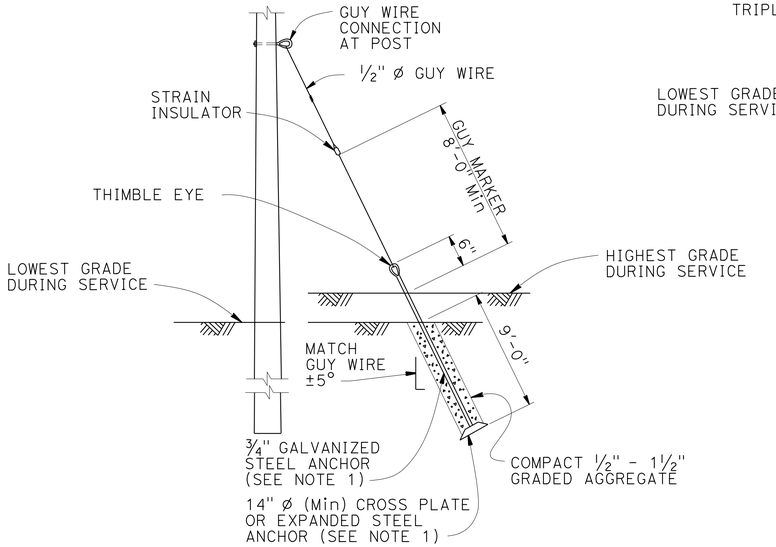

EXPANDED STEEL ANCHOR DETAIL

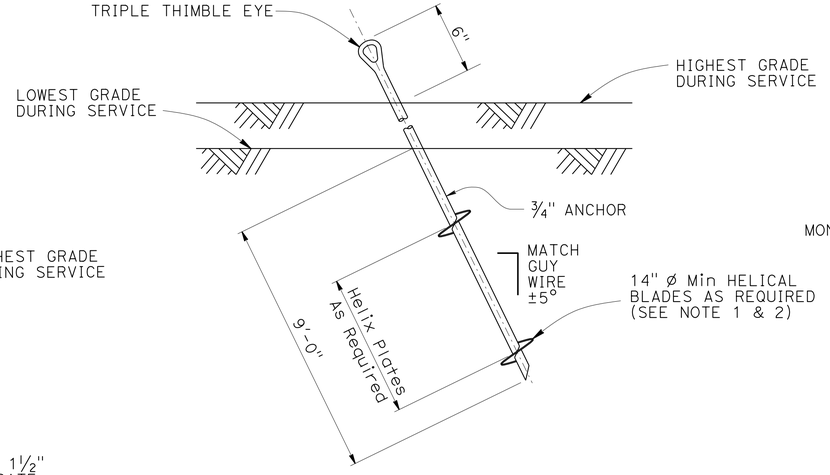

ALTERNATIVE HELICAL ANCHOR DETAIL

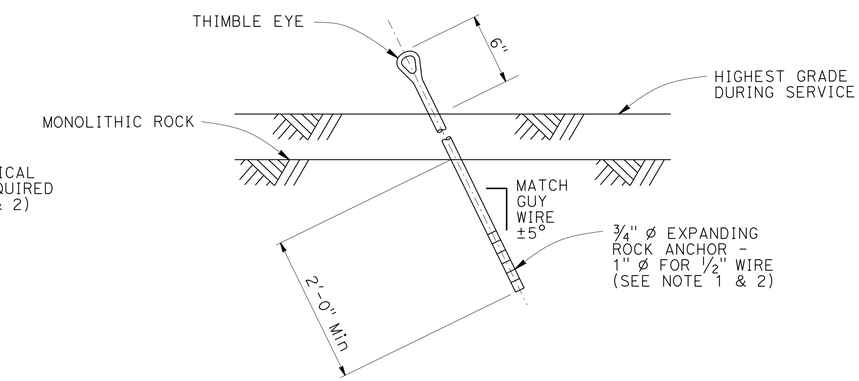

ROCK ANCHOR DETAIL

NOTE:
THE CONTRACTOR SHALL VERIFY ALL CONTROLLING FIELD DIMENSIONS BEFORE ORDERING OR FABRICATING ANY MATERIAL.

NO SCALE

BRANCH CHIEF JAMES SAGAR

	BY	CHECKED
DESIGN	VICTOR LOPEZ	LANCE WARREN
DETAILS	PAUL WELLS/SHUMEI JIANG	LANCE WARREN
QUANTITIES	X	X

STATE OF CALIFORNIA
DEPARTMENT OF TRANSPORTATION

DIVISION OF ENGINEERING SERVICES
STRUCTURE DESIGN
SPECIAL DESIGN BRANCH

BRIDGE NO. N/A
POST MILE 13.7

TEMPORARY WOOD POLE FOUNDATION DETAILS NO. 2

SES-8

STRUCTURES DESIGN SPECIAL DESIGN SHEET (ENGLISH) (REV. 09-01-10)

ORIGINAL SCALE IN INCHES FOR REDUCED PLANS 0 1 2 3

UNIT: 3619
PROJECT NUMBER & PHASE: 04140001901 CONTRACT NO.: 04-1J3204

DISREGARD PRINTS BEARING EARLIER REVISION DATES

REVISION DATES 11/14/11 4/18/12 6/22/12

SHEET 8 OF 11

FILE => 04-1j3201_ses (8).dgn

USERNAME => s113541 DATE PLOTTED => 04-SEP-2014 TIME PLOTTED => 16:04

DIST	COUNTY	ROUTE	POST MILES TOTAL PROJECT	SHEET No.	TOTAL SHEETS
04	Son	116	13.7	48	92

REGISTERED CIVIL ENGINEER — DATE

9-02-14
PLANS APPROVAL DATE

The State of California or its officers or agents shall not be responsible for the accuracy or completeness of electronic copies of this plan sheet.

REGISTERED PROFESSIONAL ENGINEER VICTOR O LOPEZ No. C61373 Exp. 6-30-2015 CIVIL STATE OF CALIFORNIA

NOTES:

1. Arm Base connection details shall be in compliance with Standard Plan ES-6D with noted modifications.
2. The Contractor to verify pole dimensions at tie-rod attachment height. Fabricate 8" flat bar with "L" Dimension to maintain an open gap between encasement in finished installation.

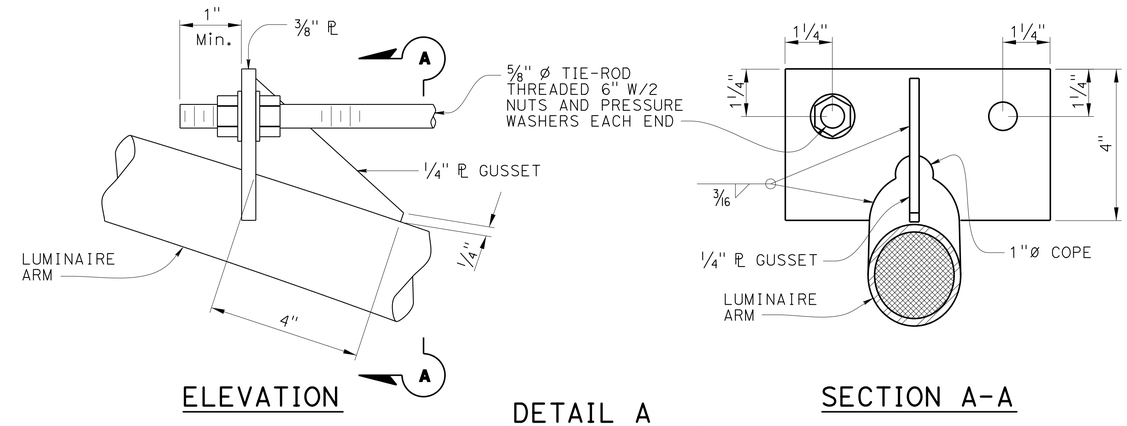

DETAIL A
TIE-ROD DETAIL NO. 1
NO SCALE

NOTE:
MAST ARM NOT SHOWN FOR CLARITY

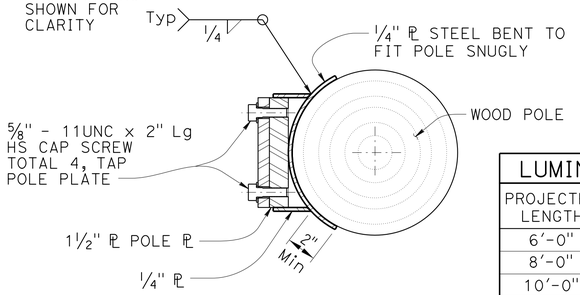

SECTION E-E

LUMINAIRE MAST ARM DATA			
PROJECTED LENGTH	N RISE	Min OD AT POLE	NOMINAL THICKNESS
6'-0"	2'-0"±	3 1/4"	0.1196"
8'-0"	2'-6"±	3 1/2"	
10'-0"	3'-3"±	3 7/8"	
12'-0"	4'-3"±		

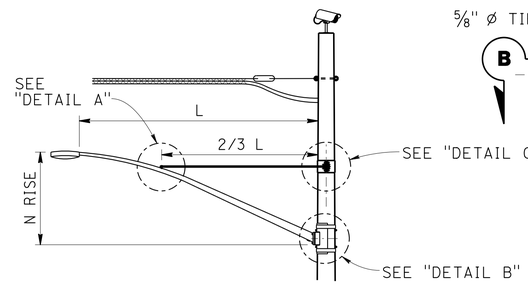

LUMINAIRE MAST ARM

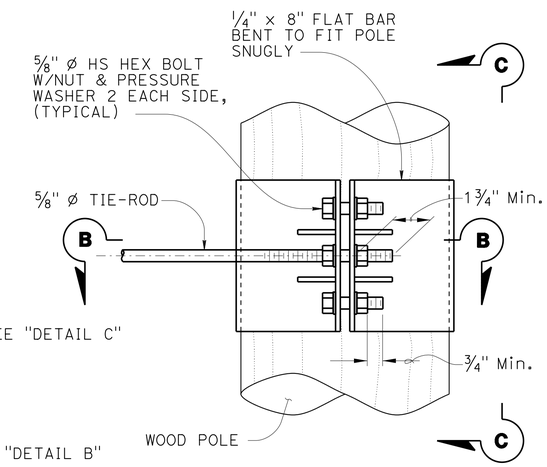

ELEVATION

NOTE:
Not all screw and bolt heads shown for clarity.

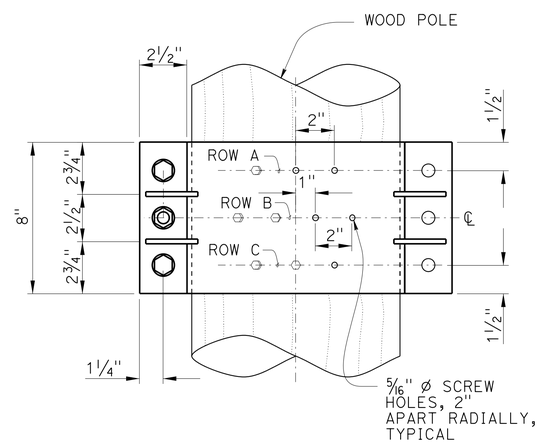

VIEW C-C

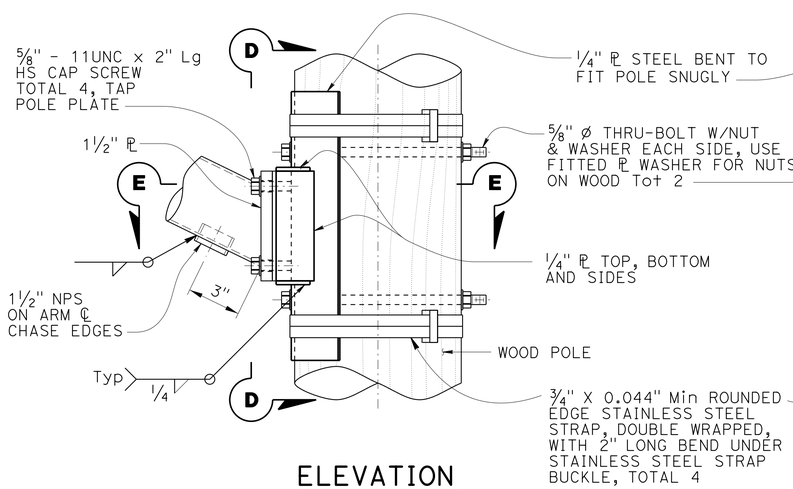

ELEVATION

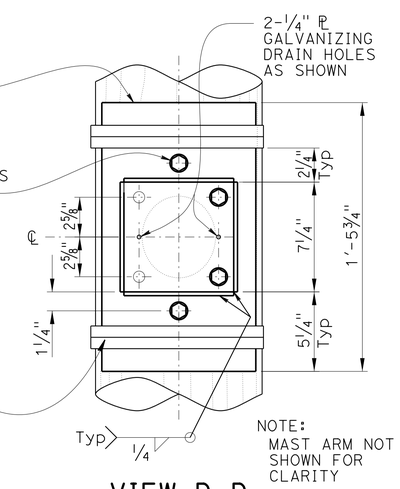

VIEW D-D

DETAIL B
ARM CONNECTION DETAILS
NO SCALE

NOTE:
THE CONTRACTOR SHALL VERIFY ALL CONTROLLING FIELD DIMENSIONS BEFORE ORDERING OR FABRICATING ANY MATERIAL.

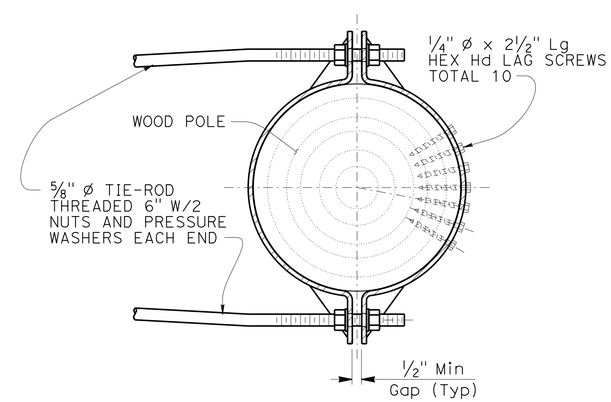

SECTION B-B

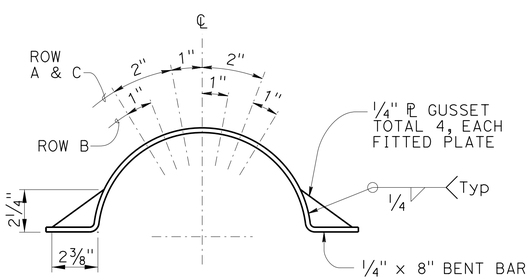

LAG SCREW AND GUSSET PLATE LAYOUT

DETAIL C
TIE-ROD DETAIL NO. 2
NO SCALE

BRANCH CHIEF	JAMES SAGAR	DESIGN	BY VICTOR LOPEZ / CHECKED LANCE WARREN
		DETAILS	BY PAUL WELLS/SHUMEI JIANG / CHECKED LANCE WARREN
		QUANTITIES	BY X / CHECKED X

STATE OF CALIFORNIA
DEPARTMENT OF TRANSPORTATION

DIVISION OF ENGINEERING SERVICES
STRUCTURE DESIGN
SPECIAL DESIGN BRANCH

BRIDGE NO. N/A
POST MILE 13.7

TEMPORARY WOOD POLE ARM CONNECTIONS
DETAILS NO. 3

SES-9

STRUCTURES DESIGN SPECIAL DESIGN SHEET (ENGLISH) (REV. 09-01-10)

ORIGINAL SCALE IN INCHES FOR REDUCED PLANS 0 1 2 3

UNIT: 3619
PROJECT NUMBER & PHASE: 04140001901
CONTRACT NO.: 04-1J3204

DISREGARD PRINTS BEARING EARLIER REVISION DATES

REVISION DATES: 11/14/11 4/18/12 6-22-12

SHEET 9 OF 11

FILE => 04-1j3201_ses (9).dgn

USERNAME => s113541 DATE PLOTTED => 04-SEP-2014 TIME PLOTTED => 16:04

DIST	COUNTY	ROUTE	POST MILES TOTAL PROJECT	SHEET No.	TOTAL SHEETS
04	Son	116	13.7	49	92

REGISTERED CIVIL ENGINEER DATE

9-02-14
PLANS APPROVAL DATE

REGISTERED PROFESSIONAL ENGINEER VICTOR O LOPEZ No. C61373 Exp. 6-30-2015 CIVIL STATE OF CALIFORNIA

The State of California or its officers or agents shall not be responsible for the accuracy or completeness of electronic copies of this plan sheet.

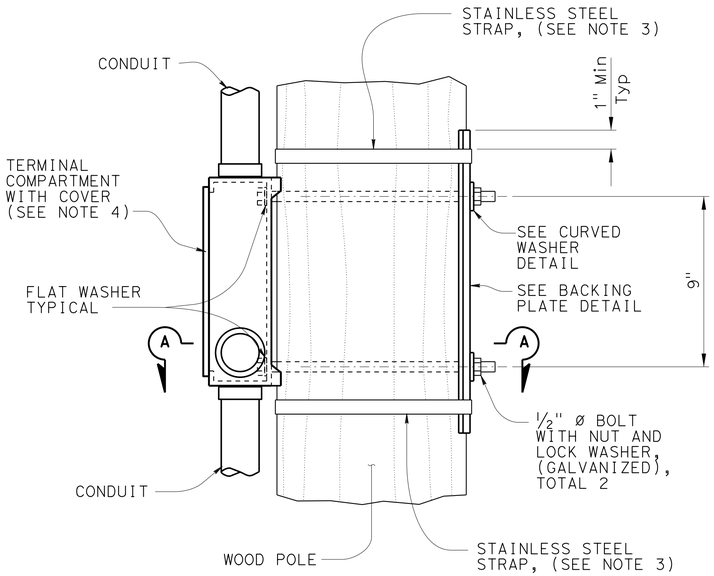

ELEVATION
3" = 1'-0"

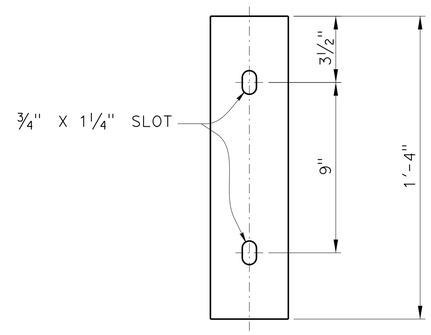

ELEVATION

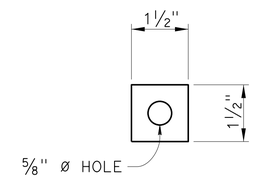

ELEVATION

PLAN

BACKING PLATE DETAIL
3" = 1'-0"

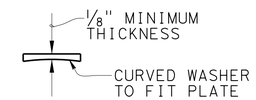

PLAN

CURVED WASHER DETAIL
6" = 1'-0"

NOTES:

1. The contractor to verify pole dimensions at terminal compartment for fabrication of backing plate and curved washer.
2. Backing plate to be galvanized after fabrication.
3. ¾" x 0.044" minimum, rounded edge stainless steel straps, double wrapped with 2" long bend under stainless steel strap buckle.
4. For details not shown see Standard Plan ES-4D.

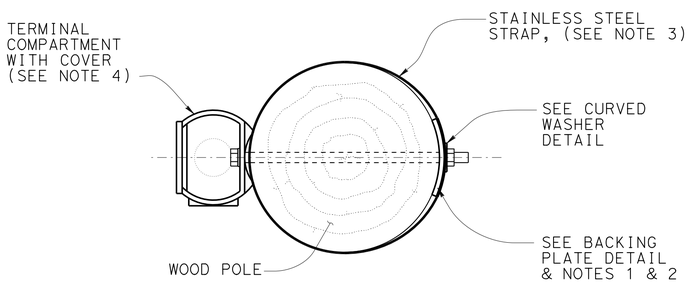

SECTION A-A
3" = 1'-0"

SIDE MOUNTING
TERMINAL COMPARTMENT

NOTE:
THE CONTRACTOR SHALL VERIFY ALL CONTROLLING FIELD DIMENSIONS BEFORE ORDERING OR FABRICATING ANY MATERIAL.

BRANCH CHIEF JAMES SAGAR	DESIGN	BY VICTOR LOPEZ	CHECKED LANCE WARREN
	DETAILS	BY PAUL WELLS/SHUMEI JIANG	CHECKED LANCE WARREN
	QUANTITIES	BY X	CHECKED X

STATE OF CALIFORNIA
DEPARTMENT OF TRANSPORTATION

DIVISION OF ENGINEERING SERVICES
STRUCTURE DESIGN
SPECIAL DESIGN BRANCH

BRIDGE NO. N/A
POST MILE 13.7

TEMPORARY WOOD POLE TERMINAL COMPARTMENT
DETAILS NO. 4

SES-10

STRUCTURES DESIGN SPECIAL DESIGN SHEET (ENGLISH) (REV. 09-01-10)

ORIGINAL SCALE IN INCHES FOR REDUCED PLANS 0 1 2 3

UNIT: 3619
PROJECT NUMBER & PHASE: 04140001901 CONTRACT NO.: 04-1J3204

DISREGARD PRINTS BEARING EARLIER REVISION DATES

REVISION DATES 11/17/11 4/18/12

SHEET 10 OF 11

FILE => 04-1j3201_ses (10).dgn

USERNAME => s113541 DATE PLOTTED => 04-SEP-2014 TIME PLOTTED => 16:04

DIST	COUNTY	ROUTE	POST MILES TOTAL PROJECT	SHEET No.	TOTAL SHEETS
04	Son	116	13.7	50	92

REGISTERED CIVIL ENGINEER DATE

9-02-14
PLANS APPROVAL DATE

REGISTERED PROFESSIONAL ENGINEER VICTOR O LOPEZ No. C61373 Exp. 6-30-2015 CIVIL STATE OF CALIFORNIA

The State of California or its officers or agents shall not be responsible for the accuracy or completeness of electronic copies of this plan sheet.

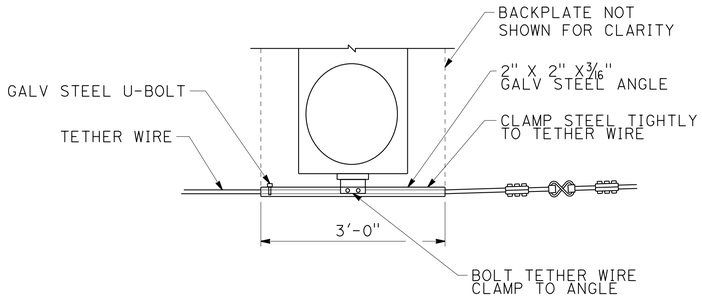

TETHER WIRE ATTACHMENT FOR PROGRAMMED VISIBILITY SIGNAL HEAD

NO SCALE

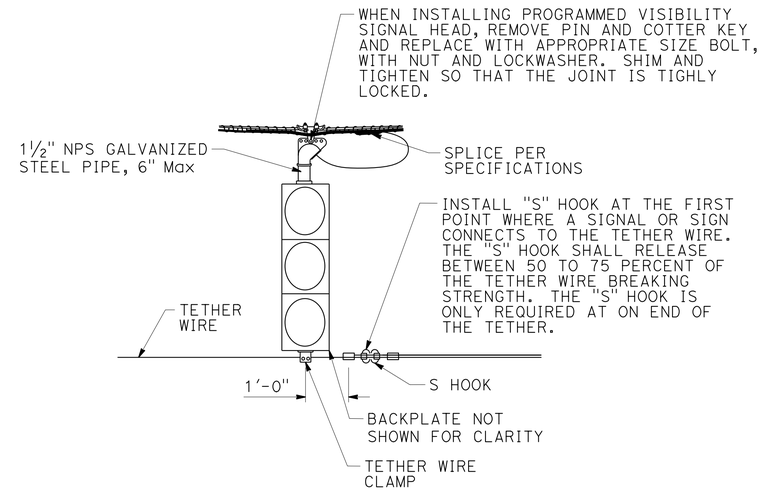

SPAN WIRE INSTALLATION WITH LOWER TETHER WIRE

NO SCALE

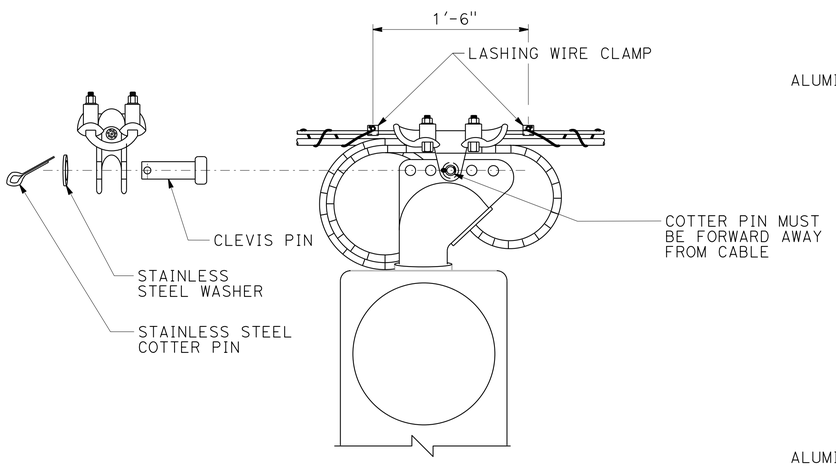

SPAN WIRE CLAMP COTTER PIN DETAIL

NO SCALE

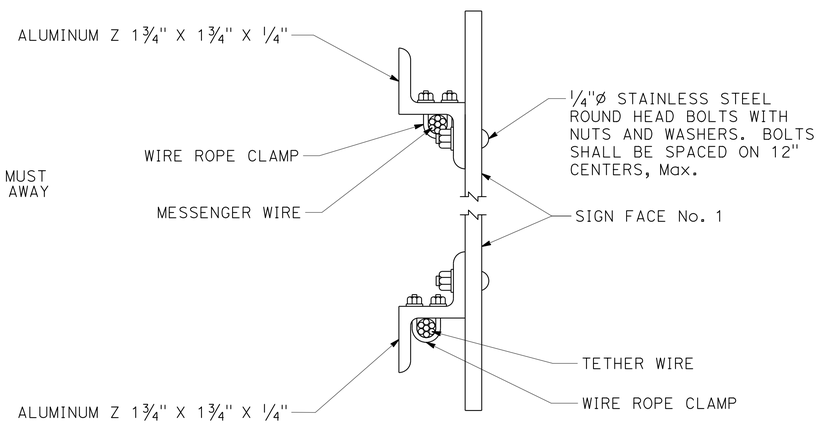

THE OVERLAPPED CONNECTION OF ADJUSTABLE HANGERS SHALL USE A MINIMUM OF 2 BOLTS WITH A MINIMUM SPACING BETWEEN BOLTS OF 2"

SIGN MOUNTING DETAIL

NO SCALE

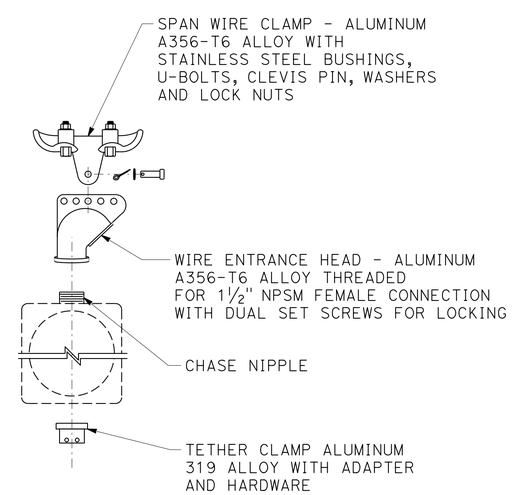

SIGNAL SUPPORT EXPLODED VIEW

NO SCALE

NOTE:
THE CONTRACTOR SHALL VERIFY ALL CONTROLLING FIELD DIMENSIONS BEFORE ORDERING OR FABRICATING ANY MATERIAL.

BRANCH CHIEF JAMES SAGAR	DESIGN	BY VICTOR LOPEZ	CHECKED LANCE WARREN
	DETAILS	BY PAUL WELLS/SHUMEI JIANG	CHECKED LANCE WARREN
	QUANTITIES	BY X	CHECKED X

STATE OF CALIFORNIA
DEPARTMENT OF TRANSPORTATION

DIVISION OF ENGINEERING SERVICES
STRUCTURE DESIGN
SPECIAL DESIGN BRANCH

BRIDGE NO. N/A
POST MILE 13.7

SPAN & TETHER WIRE CONNECTIONS
DETAILS NO. 5

SES-11

STRUCTURES DESIGN SPECIAL DESIGN SHEET (ENGLISH) (REV. 09-01-10)

ORIGINAL SCALE IN INCHES FOR REDUCED PLANS 0 1 2 3

UNIT: 3619
PROJECT NUMBER & PHASE: 04140001901
CONTRACT NO.: 04-1J3204

DISREGARD PRINTS BEARING EARLIER REVISION DATES

REVISION DATES 4/18/12

SHEET 11 OF 11

FILE => 04-1j3201_ses (11).dgn

USERNAME => s113541 DATE PLOTTED => 04-SEP-2014 TIME PLOTTED => 16:04

M

Maint	MAINTENANCE
Max	MAXIMUM
MB	METAL BEAM
MBB	METAL BEAM BARRIER
MBGR	METAL BEAM GUARD RAILING
Med	MEDIAN
MGS	MIDWEST GUARDRAIL SYSTEM
MH	MANHOLE
Min	MINIMUM
Misc	MISCELLANEOUS
Misc I & S	MISCELLANEOUS IRON AND STEEL
Mkr	MARKER
Mod	MODIFIED, MODIFY
Mon	MONUMENT
MP	METAL PLATE
MPGR	METAL PLATE GUARD RAILING
MR	MOVEMENT RATING
MSE	MECHANICALLY STABILIZED EMBANKMENT
Mt	MOUNTAIN, MOUNT
Mtl	MATERIAL
MVP	MAINTENANCE VEHICLE PULLOUT

N

N	NORTH
NB	NORTHBOUND
No.	NUMBER (MUST HAVE PERIOD)
Nos.	NUMBERS (MUST HAVE PERIOD)
NPS	NOMINAL PIPE SIZE
NS	NEAR SIDE
NSP	NEW STANDARD PLAN
NTS	NOT TO SCALE

O

Oblr	OBLITERATE
OC	OVERCROSSING
OD	OUTSIDE DIAMETER
OF	OUTSIDE FACE
OG	ORIGINAL GROUND
OGAC	OPEN GRADED ASPHALT CONCRETE
OGFC	OPEN GRADED FRICTION COURSE
OH	OVERHEAD
OHWM	ORDINARY HIGH WATER MARK
O-O	OUT TO OUT
Opp	OPPOSITE
OSD	OVERSIDE DRAIN

P

P	PAGE
PAP	PERFORATED ALUMINUM PIPE
PB	PULL BOX
PC	POINT OF CURVATURE, PRECAST
PCC	POINT OF COMPOUND CURVE, PORTLAND CEMENT CONCRETE
PCMS	PORTABLE CHANGEABLE MESSAGE SIGN
PCP	PERFORATED CONCRETE PIPE, PRESTRESSED CONCRETE PIPE
PCVC	POINT OF COMPOUND VERTICAL CURVE
PEC	PERMIT TO ENTER AND CONSTRUCT
Ped	PEDESTRIAN
Ped OC	PEDESTRIAN OVERCROSSING
Ped UC	PEDESTRIAN UNDERCROSSING
Perm Mtl	PERMEABLE MATERIAL

P continued

PG	PROFILE GRADE
PI	POINT OF INTERSECTION
PJP	PARTIAL JOINT PENETRATION
Pkwy	PARKWAY
ℙ,PL	PLATE
P/L	PROPERTY LINE
PM	POST MILE, TIME FROM NOON TO MIDNIGHT
PN	PAVING NOTCH
POC	POINT OF HORIZONTAL CURVE
POT	POINT OF TANGENT
POVC	POINT OF VERTICAL CURVE
PP	PIPE PILE, PLASTIC PIPE, POWER POLE
PPL	PREFORMED PERMEABLE LINER
PPP	PERFORATED PLASTIC PIPE
PRC	POINT OF REVERSE CURVE
PRF	PAVEMENT REINFORCING FABRIC
PRVC	POINT OF REVERSE VERTICAL CURVE
PS&E	PLANS, SPECIFICATIONS AND ESTIMATES
PS, P/S	PRESTRESSED
PSP	PERFORATED STEEL PIPE
PT	POINT OF TANGENCY
PVC	POLYVINYL CHLORIDE
Pvmt	PAVEMENT

Q

Qty	QUANTITY

R

R	RADIUS
R & D	REMOVE AND DISPOSE
R & S	REMOVE AND SALVAGE
R/C	RATE OF CHANGE
RCA	REINFORCED CONCRETE ARCH
RCB	REINFORCED CONCRETE BOX
RCP	REINFORCED CONCRETE PIPE
RCPA	REINFORCED CONCRETE PIPE ARCH
Rd	ROAD
Reinf	REINFORCED, REINFORCEMENT, REINFORCING
Rel	RELOCATE
Repl	REPLACEMENT
Ret	RETAINING
Rev	REVISED, REVISION
Rdwy	ROADWAY
RHMA	RUBBERIZED HOT MIX ASPHALT
Riv	RIVER
RM	ROAD-MIXED
RP	RADIUS POINT, REFERENCE POINT
RR	RAILROAD
RSP	ROCK SLOPE PROTECTION, REVISED STANDARD PLAN
Rt	RIGHT
Rte	ROUTE
RW	REDWOOD, RETAINING WALL
R/W	RIGHT OF WAY
Rwy	RAILWAY

S

S	SOUTH, SUPPLEMENT
SAE	STRUCTURE APPROACH EMBANKMENT
Salv	SALVAGE
SAPP	STRUCTURAL ALUMINUM PLATE PIPE
SB	SOUTHBOUND
SC	SAND CUSHION
SCSP	SLOTTED CORRUGATED STEEL PIPE
SD	STORM DRAIN
Sec	SECOND, SECTION
Sep	SEPARATION
SG	SUBGRADE
Shld	SHOULDER
Sht	SHEET
Sim	SIMILAR
₤	STATION LINE
SM	SELECTED MATERIAL
Spec	SPECIAL, SPECIFICATIONS
SPP	SLOTTED PLASTIC PIPE
SS	SLOPE STAKE
SSBM	STRAP AND SADDLE BRACKET METHOD
SSD	STRUCTURAL SECTION DRAIN
SSPA	STRUCTURAL STEEL PLATE ARCH
SSPP	STRUCTURAL STEEL PLATE PIPE
SSPPA	STRUCTURAL STEEL PLATE PIPE ARCH
SSRP	STEEL SPIRAL RIB PIPE
St	STREET
Sta	STATION
STBB	SINGLE THRIE BEAM BARRIER
Std	STANDARD
Str	STRUCTURE
Surf	SURFACING
SW	SIDEWALK, SOUND WALL
Swr	SEWER
Sym	SYMMETRICAL
S4S	SURFACE 4 SIDES

T

T	SEMI-TANGENT
Tan	TANGENT
TBB	THRIE BEAM BARRIER
Tbr	TIMBER
TC	TOP OF CURB
TCB	TRAFFIC CONTROL BOX
TCE	TEMPORARY CONSTRUCTION EASEMENT
Tel	TELEPHONE
Temp	TEMPORARY
TG	TOP OF GRADE
Tot	TOTAL
TP	TELEPHONE POLE
TPB	TREATED PERMEABLE BASE
TPM	TREATED PERMEABLE MATERIAL
Trans	TRANSITION

T continued

TS	TRANSVERSE, TRAFFIC SIGNAL, TUBULAR STEEL
Typ	TYPICAL

U

UC	UNDERCROSSING
UD	UNDERDRAIN
UG	UNDERGROUND
UON	UNLESS OTHERWISE NOTED
UP	UNDERPASS

V

V	VALVE, DESIGN SPEED
Var	VARIABLE, VARIES
VC	VERTICAL CURVE
VCP	VITRIFIED CLAY PIPE
Vert	VERTICAL
Via	VIADUCT
Vol	VOLUME

W

W	WEST, WIDTH
WB	WESTBOUND
WH	WEEP HOLE
WM	WIRE MESH
WS	WATER SURFACE
WSP	WELDED STEEL PIPE
Wt	WEIGHT
WV	WATER VALVE
WW	WINGWALL
WWLOL	WINGWALL LAYOUT LINE

X

X Sec	CROSS SECTION
Xing	CROSSING

Y

Yr	YEAR
Yrs	YEARS

Dist	COUNTY	ROUTE	POST MILES TOTAL PROJECT	SHEET No.	TOTAL SHEETS
04	Son	116	13.7	51	92

Grace M. Tsushima
REGISTERED CIVIL ENGINEER

July 19, 2013
PLANS APPROVAL DATE

REGISTERED PROFESSIONAL ENGINEER
Grace M. Tsushima
No. C49814
Exp. 9-30-14
CIVIL
STATE OF CALIFORNIA

THE STATE OF CALIFORNIA OR ITS OFFICERS OR AGENTS SHALL NOT BE RESPONSIBLE FOR THE ACCURACY OR COMPLETENESS OF SCANNED COPIES OF THIS PLAN SHEET.

TO ACCOMPANY PLANS DATED 9-02-14

UNIT OF MEASUREMENT SYMBOLS:

Some of the symbols used in the project plan quantity tables and in the Bid Item List are:

TABLE A

SYMBOL USED	DEFINITIONS
ACRE	ACRE
CF	CUBIC FOOT
CY	CUBIC YARD
EA	EACH
GAL	GALLON
LB	POUND
LF	LINEAR FOOT
SQFT	SQUARE FOOT
SQYD	SQUARE YARD
STA	100 FEET
TAB	TABLET
TON	2,000 POUNDS

Some of the symbols used in the plans other than in the project plan quantity tables are:

TABLE B

SYMBOL USED	DEFINITIONS
ksi	KIPS PER SQUARE INCH
ksf	KIPS PER SQUARE FOOT
psi	POUNDS PER SQUARE INCH
psf	POUNDS PER SQUARE FOOT
lb/ft^3, pcf	POUNDS PER CUBIC FOOT
tsf	TONS PER SQUARE FOOT
mph, MPH *	MILES PER HOUR
ø	NOMINAL DIAMETER
oz	OUNCE
lb	POUND
kip	1,000 POUNDS
cal	CALORIE
ft	FOOT OR FEET
gal	GALLON

* For use on a sign panel only

STATE OF CALIFORNIA
DEPARTMENT OF TRANSPORTATION

ABBREVIATIONS (SHEET 2 OF 2)

NO SCALE

RSP A10B DATED JULY 19, 2013 SUPERSEDES STANDARD PLAN A10B DATED MAY 20, 2011 - PAGE 2 OF THE STANDARD PLANS BOOK DATED 2010.

REVISED STANDARD PLAN RSP A10B

2010 REVISED STANDARD PLAN RSP A10B

6-7-13

Dist	COUNTY	ROUTE	POST MILES TOTAL PROJECT	SHEET No.	TOTAL SHEETS
04	Son	116	13.7	52	92

REGISTERED CIVIL ENGINEER

July 20, 2012
PLANS APPROVAL DATE

REGISTERED PROFESSIONAL ENGINEER
Roberta L. McLaughlin
No. C40375
Exp. 3-31-13
CIVIL
STATE OF CALIFORNIA

THE STATE OF CALIFORNIA OR ITS OFFICERS OR AGENTS SHALL NOT BE RESPONSIBLE FOR THE ACCURACY OR COMPLETENESS OF SCANNED COPIES OF THIS PLAN SHEET.

TO ACCOMPANY PLANS DATED 9-02-14

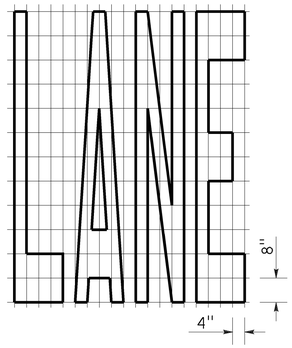

A=24 ft²

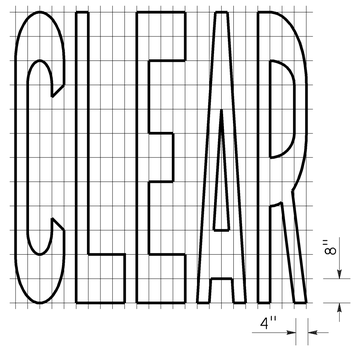

A=27 ft²

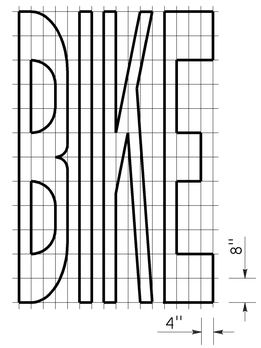

A=21 ft²

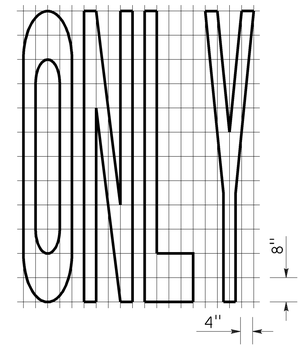

A=22 ft²

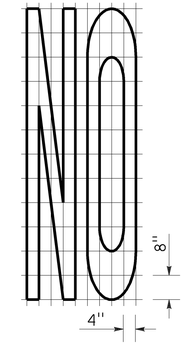

A=14 ft²

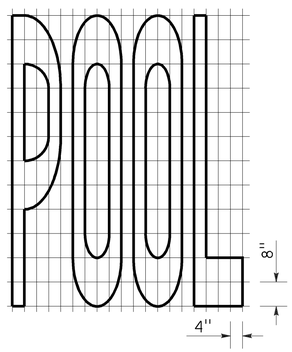

A=23 ft²

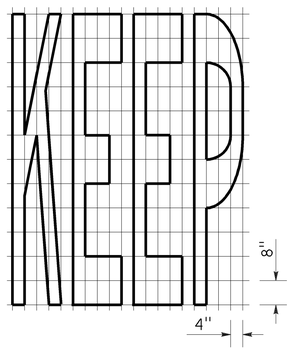

A=24 ft²

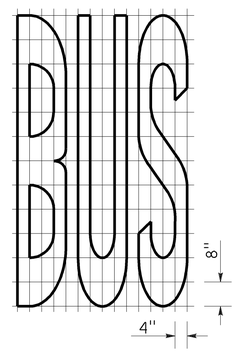

A=20 ft²

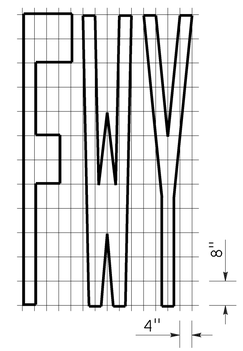

A=16 ft²

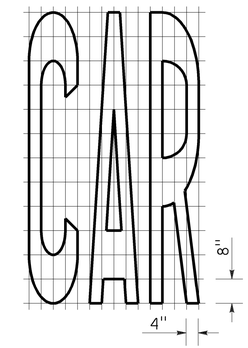

A=17 ft²

WORD MARKINGS			
ITEM	ft²	ITEM	ft²
LANE	24	NO	14
POOL	23	BIKE	21
CAR	17	BUS	20
CLEAR	27	ONLY	22
KEEP	24	FWY	16

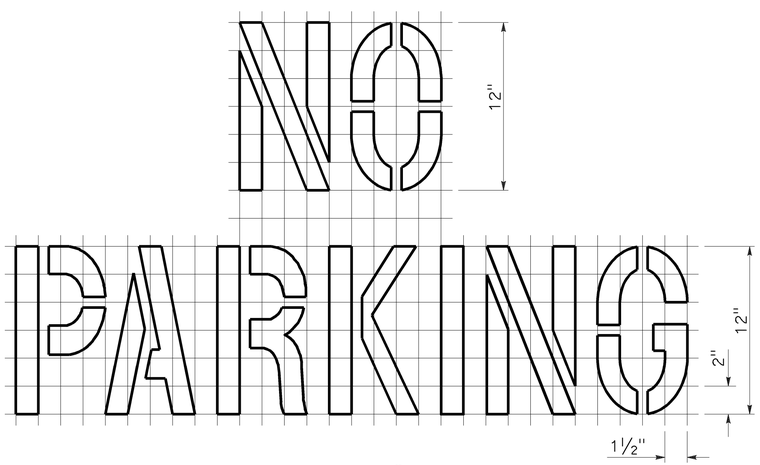

A=2 ft²
See Notes 6 and 7

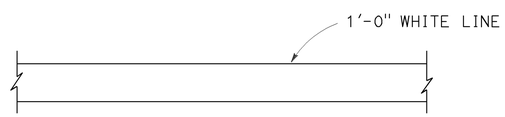

LIMIT LINE (STOP LINE)

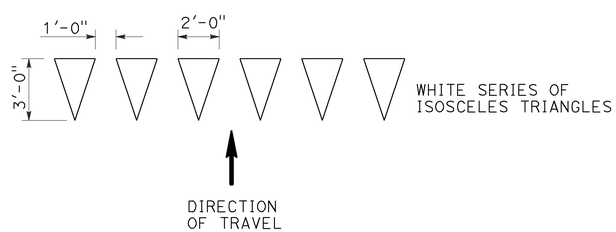

YIELD LINE

NOTES:

1. If a message consists of more than one word, it should read "UP", i.e., the first word should be nearest the driver.
2. The space between words should be at least four times the height of the characters for low speed roads, but not more than ten times the height of the characters. The space may be reduced appropriately where there is limited space because of local conditions.
3. Minor variations in dimensions may be accepted by the Engineer.
4. Portions of a letter, number or symbol may be separated by connecting segments not to exceed 2" in width.
5. The words "NO PARKING" pavement marking is to be used for parking facilities. For typical locations of markings, see Standard Plans A90A and A90B.
6. The words "NO PARKING", shall be painted in white letters no less than 1'-0" high on a contrasting background and located so that it is visible to traffic enforcement officials.

STATE OF CALIFORNIA
DEPARTMENT OF TRANSPORTATION

PAVEMENT MARKINGS WORDS, LIMIT AND YIELD LINES

NO SCALE

RSP A24E DATED JULY 20, 2012 SUPERSEDES STANDARD PLAN A24E
DATED MAY 20, 2011 - PAGE 17 OF THE STANDARD PLANS BOOK DATED 2010.

REVISED STANDARD PLAN RSP A24E

2010 REVISED STANDARD PLAN RSP A24E

6-12-12

Dist	COUNTY	ROUTE	POST MILES TOTAL PROJECT	SHEET No.	TOTAL SHEETS
04	Son	116	13.7	53	92

Randell D. Hiatt
REGISTERED CIVIL ENGINEER

July 19, 2013
PLANS APPROVAL DATE

REGISTERED PROFESSIONAL ENGINEER
Randell D. Hiatt
No. C50200
Exp. 6-30-15
CIVIL
STATE OF CALIFORNIA

THE STATE OF CALIFORNIA OR ITS OFFICERS OR AGENTS SHALL NOT BE RESPONSIBLE FOR THE ACCURACY OR COMPLETENESS OF SCANNED COPIES OF THIS PLAN SHEET.

TO ACCOMPANY PLANS DATED 9-02-14

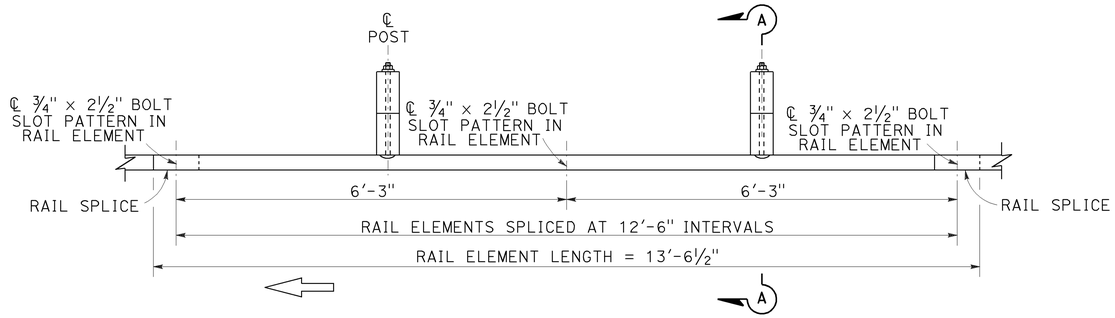

PLAN

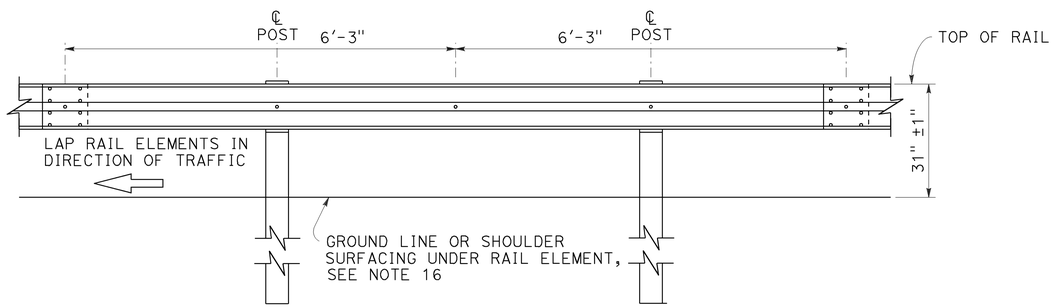

ELEVATION

MIDWEST GUARDRAIL SYSTEM WITH WOOD POST AND BLOCKS

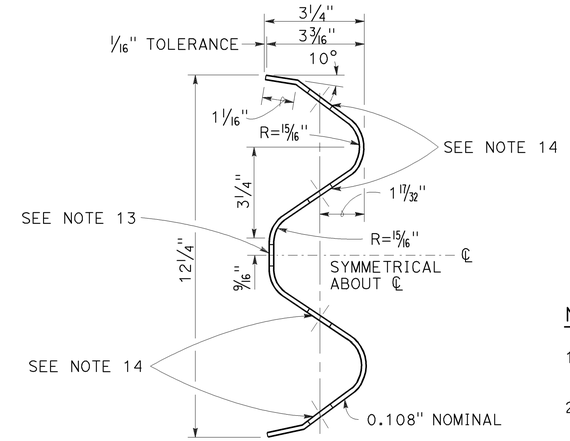

SECTION THRU RAIL ELEMENT

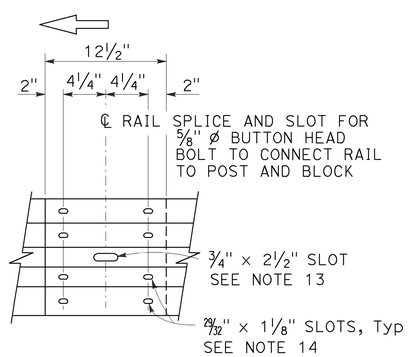

ELEVATION

RAIL ELEMENT SPLICE DETAIL

a) Connect the over lapped end of the rail elements with 5/8" Ø × 1 3/8" button head oval shoulder splice bolts inserted into the 29/32" × 1 1/8" slots and bolted together with 5/8" Ø recessed hex nuts. Recess of hex nut points toward rail element. A total of 8 bolts and nuts are to be used at each rail splice connection.

b) The ends of the rail elements are to be overlapped in the direction of traffic (see details).

c) Where end cap is to be attached to the end of a rail element, a total of 4 of the above described splice bolts and nuts are to be used.

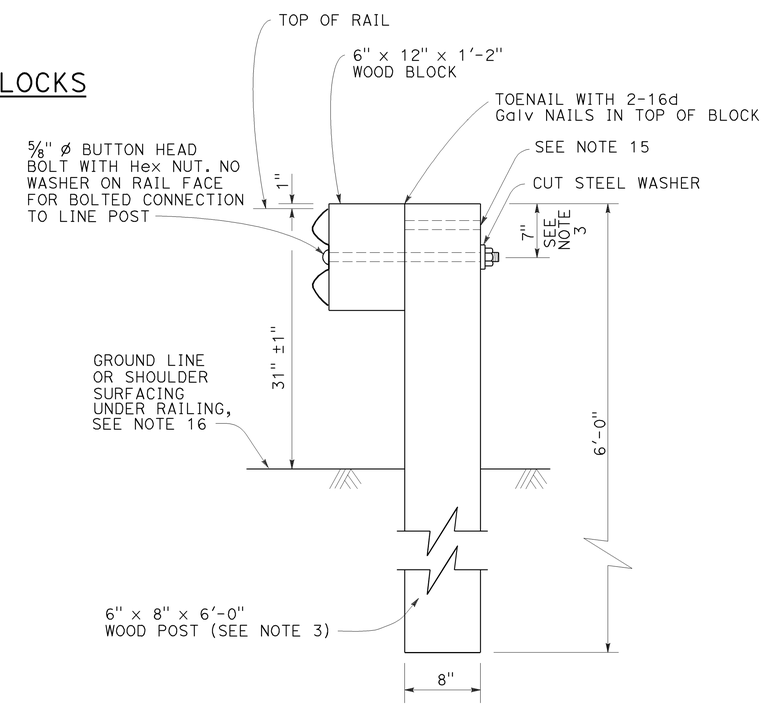

SECTION A-A

TYPICAL WOOD LINE POST INSTALLATION

See Note 4

NOTES:

1. For details of steel post installations, see Revised Standard Plan RSP A77L2.
2. For details of standard hardware used to construct MGS, see Revised Standard Plan RSP A77M1.
3. For details of wood posts and wood blocks used to construct MGS, see Revised Standard Plan RSP A77N1.
4. For additional installation details, see Revised Standard Plan RSP A77N3.
5. MGS post spacing to be 6'-3" center to center, except as otherwise noted.
6. For MGS typical layouts, see the A77P, A77Q and A77R Series of Standard Plans.
7. If railing is connected to terminal system end treatment, use 31" height terminal system end treatment.
8. For MGS end anchor details, see Revised Standard Plans RSP A77S1 and RSP A77T2.
9. For details of MGS transition to bridge railing, see Revised Standard Plan RSP A77U4.
10. For additional details of MSG connection to bridge railing, see Revised Standard Plans RSP A77U1, RSP A77U2 and RSP A77V1.
11. For MGS connection details to abutments and walls, see Revised Standard Plan RSP A77U3.
12. For typical MGS delineation and dike positioning details, see Revised Standard Plan RSP A77N4.
13. Slotted hole for bolted connection of rail element to block and post. See "Section Thru Rail Element".
14. Slotted holes for splice bolts to overlap ends of rail element. See "Section Thru Rail Element".
15. Additional hole in uppermost portion of line post is for potential future adjustments of railing height. See Revised Standard Plan RSP A77N1.
16. Install posts in soil.

STATE OF CALIFORNIA
DEPARTMENT OF TRANSPORTATION

MIDWEST GUARDRAIL SYSTEM STANDARD RAILING SECTION (WOOD POST WITH WOOD BLOCK)

NO SCALE

RSP A77L1 DATED JULY 19, 2013 SUPPLEMENTS STANDARD PLANS BOOK DATED 2010.

REVISED STANDARD PLAN RSP A77L1

2010 REVISED STANDARD PLAN RSP A77L1

7-3-13

Dist	COUNTY	ROUTE	POST MILES TOTAL PROJECT	SHEET No.	TOTAL SHEETS
04	Son	116	13.7	54	92

Randell D. Hiatt
REGISTERED CIVIL ENGINEER

July 19, 2013
PLANS APPROVAL DATE

REGISTERED PROFESSIONAL ENGINEER
Randell D. Hiatt
No. C50200
Exp. 6-30-15
CIVIL
STATE OF CALIFORNIA

THE STATE OF CALIFORNIA OR ITS OFFICERS OR AGENTS SHALL NOT BE RESPONSIBLE FOR THE ACCURACY OR COMPLETENESS OF SCANNED COPIES OF THIS PLAN SHEET.

TO ACCOMPANY PLANS DATED 9-02-14

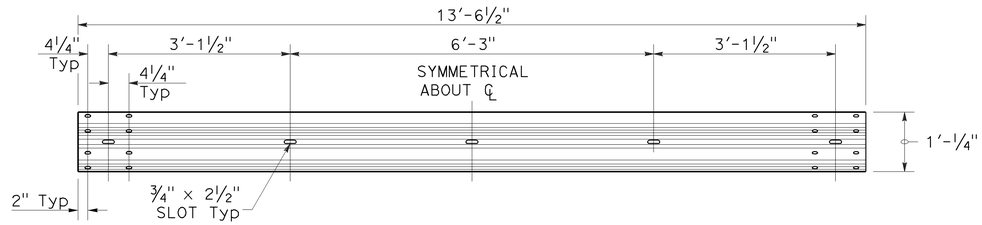

TYPICAL RAIL ELEMENT

NOTE:

1. Slotted holes for splice bolts to overlap ends of rail element.

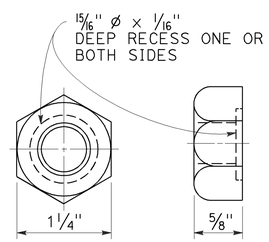

⅝" ø RECESS NUT

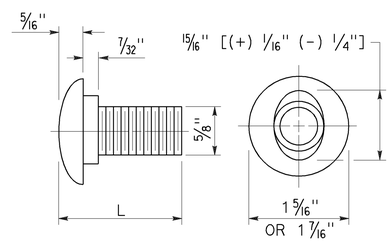

⅝" ø BUTTON HEAD BOLT

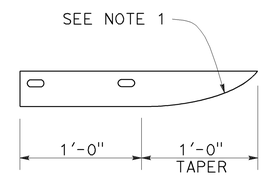

PLAN

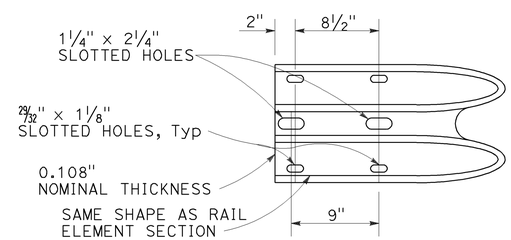

ELEVATION

END CAP
(TYPE A)

BUTTON HEAD BOLT

L	THREAD LENGTH
1⅜"	FULL THREAD LENGTH
2"	FULL THREAD LENGTH
10"	4" Min THREAD LENGTH
18"	4" Min THREAD LENGTH
20"	4" Min THREAD LENGTH
22"	4" Min THREAD LENGTH
26"	4" Min THREAD LENGTH
36"	4" Min THREAD LENGTH
** 2¾"	2" Min THREAD LENGTH
** 19"	4" Min THREAD LENGTH

** For nested rail applications.

STATE OF CALIFORNIA
DEPARTMENT OF TRANSPORTATION

MIDWEST GUARDRAIL SYSTEM STANDARD HARDWARE

NO SCALE

RSP A77M1 DATED JULY 19, 2013 SUPPLEMENTS THE STANDARD PLANS BOOK DATED 2010.

REVISED STANDARD PLAN RSP A77M1

2010 REVISED STANDARD PLAN RSP A77M1

7-3-13

Dist	COUNTY	ROUTE	POST MILES TOTAL PROJECT	SHEET No.	TOTAL SHEETS
04	Son	116	13.7	55	92

Randell D. Hiatt
REGISTERED CIVIL ENGINEER

July 19, 2013
PLANS APPROVAL DATE

REGISTERED PROFESSIONAL ENGINEER
Randell D. Hiatt
No. C50200
Exp. 6-30-15
CIVIL
STATE OF CALIFORNIA

THE STATE OF CALIFORNIA OR ITS OFFICERS OR AGENTS SHALL NOT BE RESPONSIBLE FOR THE ACCURACY OR COMPLETENESS OF SCANNED COPIES OF THIS PLAN SHEET.

TO ACCOMPANY PLANS DATED 9-02-14

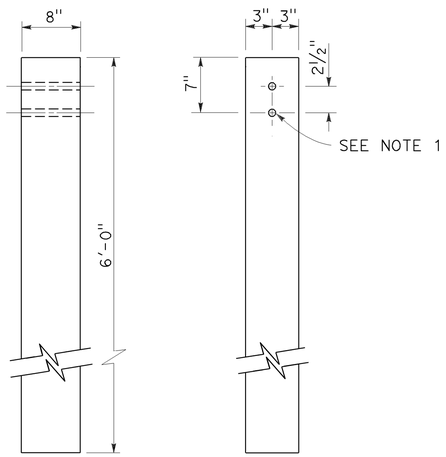

SIDE FRONT

6" x 8" WOOD POST
See Note 3

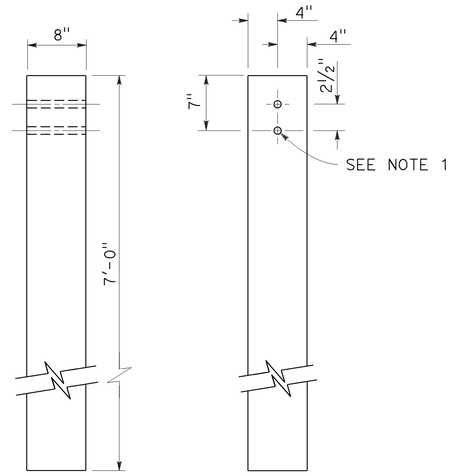

SIDE FRONT

8" x 8" WOOD POST
See Note 4

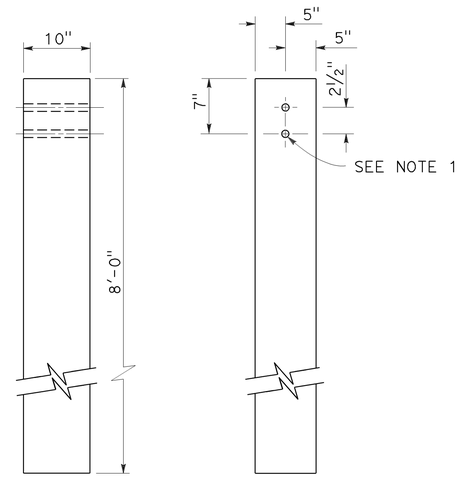

SIDE FRONT

10" x 10" WOOD POST
See Note 5

NOTES:

1. All holes in wood posts and blocks shall be ¾" Dia ± 1/16".
2. Dimensions shown for wood post are nominal.
3. This post and block combination used for standard line post sections of MGS.
4. This post and 8" x 12" block combination used for line post sections of MGS on narrow roadways.
5. This post and 8" x 12" block combination is typically used where strengthened line post sections of MGS are warranted to shield fixed objects.
6. See Revised Standard Plan RSP A77L3 for use of 6" x 8" and 8" x 8" wood blocks.

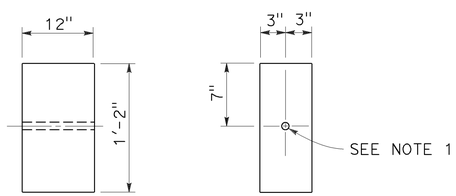

SIDE FRONT

6" x 12" WOOD BLOCK
See Note 3

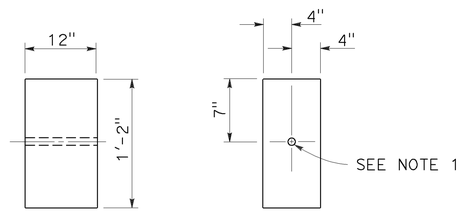

SIDE FRONT

8" x 12" WOOD BLOCK

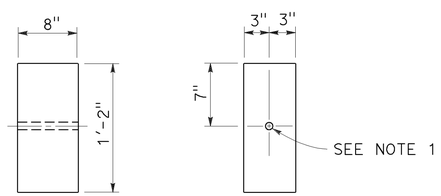

SIDE FRONT

6" x 8" WOOD BLOCK
Only for use with metal beam guard rail see Note 6

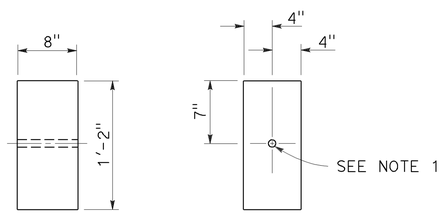

SIDE FRONT

8" x 8" WOOD BLOCK
Only for use with metal beam guard rail see Note 6

STATE OF CALIFORNIA
DEPARTMENT OF TRANSPORTATION

MIDWEST GUARDRAIL SYSTEM WOOD POST AND WOOD BLOCK DETAILS

NO SCALE

RSP A77N1 DATED JULY 19, 2013 SUPPLEMENTS THE STANDARD PLANS BOOK DATED 2010.

REVISED STANDARD PLAN RSP A77N1

2010 REVISED STANDARD PLAN RSP A77N1

7-3-13

Dist	COUNTY	ROUTE	POST MILES TOTAL PROJECT	SHEET No.	TOTAL SHEETS
04	Son	116	13.7	56	92

Randell D. Hiatt
REGISTERED CIVIL ENGINEER

November 15, 2013
PLANS APPROVAL DATE

REGISTERED PROFESSIONAL ENGINEER
Randell D. Hiatt
No. C50200
Exp. 6-30-15
CIVIL
STATE OF CALIFORNIA

THE STATE OF CALIFORNIA OR ITS OFFICERS OR AGENTS SHALL NOT BE RESPONSIBLE FOR THE ACCURACY OR COMPLETENESS OF SCANNED COPIES OF THIS PLAN SHEET.

TO ACCOMPANY PLANS DATED 9-02-14

2010 REVISED STANDARD PLAN RSP A77N3

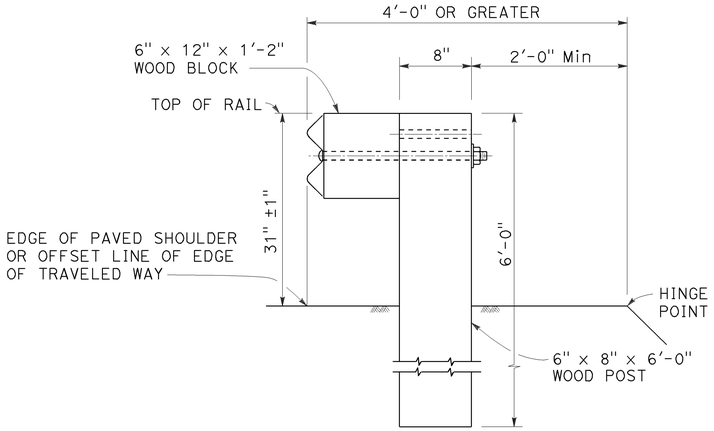

DETAIL A

TYPICAL ROADWAY INSTALLATION

See Note 1

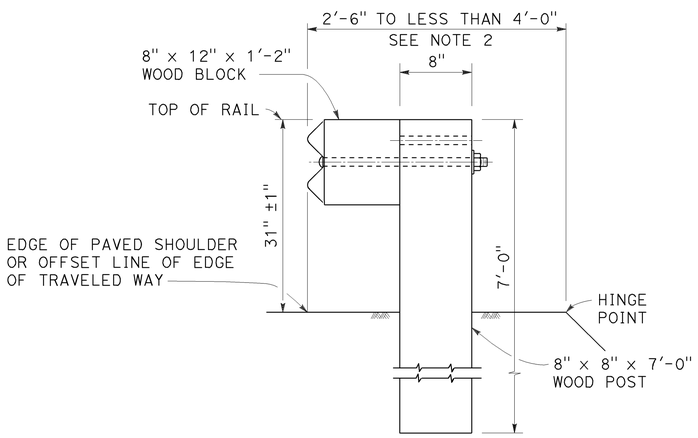

DETAIL B

NARROW ROADWAY INSTALLATION

See Note 1

POST EMBEDMENT

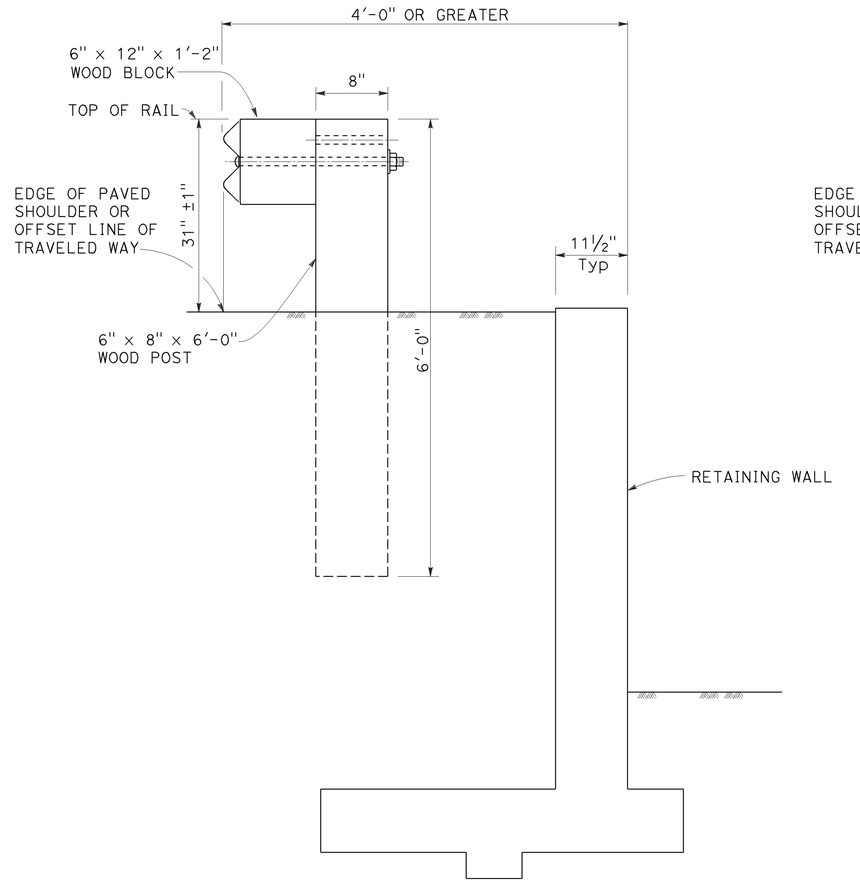

DETAIL C

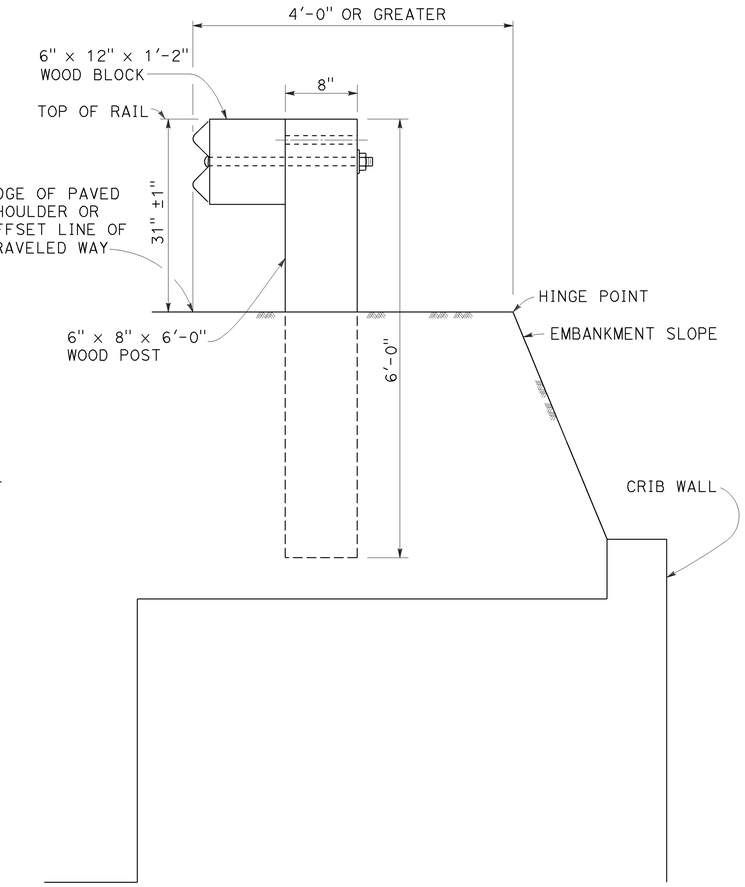

DETAIL D

INSTALLATION AT EARTH RETAINING WALLS

NOTES:

1. These installation details also applicable to steel line post installations. For Detail A, C, and D, where steel line post installations are constructed, W6 x 8.5 or W6 x 9 steel post, 6'-0" in length, with 6" x 12" x 1'-2" notched wood blocks or notched recycled plastic blocks are to be used in place of the size of wood post and wood block shown. For Detail B, where steel line post installations are constructed, W6 x 15 steel post, 8'-0" in length, with 8" x 12" x 1'-2" notched wood blocks or notched recycled plastic blocks are to be used in place of the size of wood post and wood block shown. For additional installation details, see Revised Standard Plan RSP A77L1 and RSP A77L2.
2. Where the distance between the face of the rail and the hinge point is less than 2'-6", see the Project Plans for special details.
3. For dike positioning with MGS installations, see Revised Standard Plan RSP A77N4.

STATE OF CALIFORNIA
DEPARTMENT OF TRANSPORTATION

MIDWEST GUARDRAIL SYSTEM TYPICAL LINE POST EMBEDMENT AND HINGE POINT OFFSET DETAILS

NO SCALE

RSP A77N3 DATED NOVEMBER 15, 2013 SUPERSEDES RSP A77N3
DATED JULY 19, 2013 THAT SUPPLEMENTS THE STANDARD PLANS BOOK DATED 2010.

REVISED STANDARD PLAN RSP A77N3

10-29-13

Dist	COUNTY	ROUTE	POST MILES TOTAL PROJECT	SHEET No.	TOTAL SHEETS
04	Son	116	13.7	57	92

Randell D. Hiatt
REGISTERED CIVIL ENGINEER

July 19, 2013
PLANS APPROVAL DATE

REGISTERED PROFESSIONAL ENGINEER
Randell D. Hiatt
No. C50200
Exp. 6-30-15
CIVIL
STATE OF CALIFORNIA

THE STATE OF CALIFORNIA OR ITS OFFICERS OR AGENTS SHALL NOT BE RESPONSIBLE FOR THE ACCURACY OR COMPLETENESS OF SCANNED COPIES OF THIS PLAN SHEET.

TO ACCOMPANY PLANS DATED 9-02-14

NOTES:

1. When necessary to place dike more than 7" in front of face of MGS, only Type C dike may be used. For dike details, see Revised Standard Plan RSP A87B.
2. For standard railing post embedment, see Revised Standard Plan RSP A77N3.
3. MGS delineation to be used where shown on the Project Plans.
4. When dike or curb is placed under MGS, the maximum height of the dike or curb shall be 6". Mountable dike should not be used. For dike and curb details, see Revised Standard Plans RSP A87A and RSP A87B.
5. For details of typical distance between the face of rail and hinge point, see Revised Standard Plan RSP A77N3.
6. For steel line posts, use 1/4 - 20 self-tapping screws in 0.22" diameter holes or 1/4" bolts in 9/32" diameter holes.

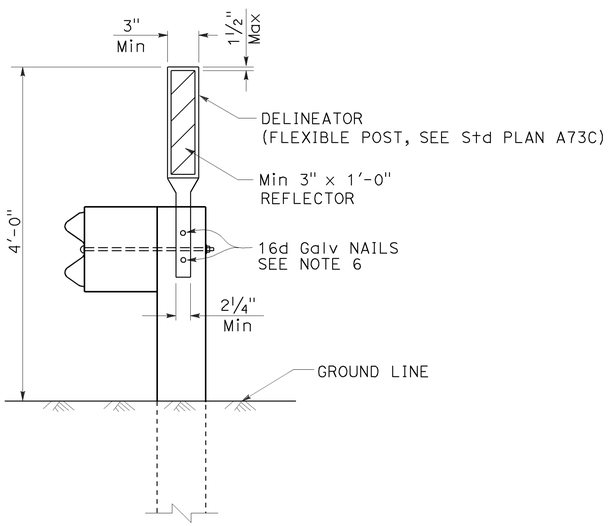

MGS DELINEATION
See Note 3

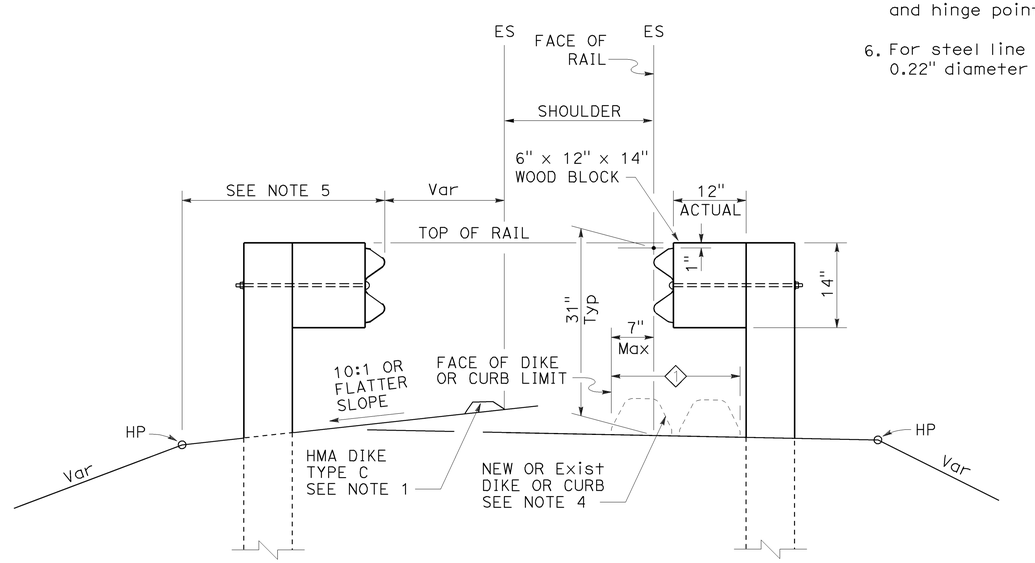

DIKE POSITIONING
See Note 1

1 PERMISSIBLE DIKE OR CURB PLACEMENT AREA

STATE OF CALIFORNIA
DEPARTMENT OF TRANSPORTATION

MIDWEST GUARDRAIL SYSTEM TYPICAL RAILING DELINEATION AND DIKE POSITIONING DETAILS

NO SCALE

RSP A77N4 DATED JULY 19, 2013 SUPPLEMENTS THE STANDARD PLANS BOOK DATED 2010.

REVISED STANDARD PLAN RSP A77N4

2010 REVISED STANDARD PLAN RSP A77N4

7-10-13

Dist	COUNTY	ROUTE	POST MILES TOTAL PROJECT	SHEET No.	TOTAL SHEETS
04	Son	116	13.7	58	92

Randell D. Hiatt
REGISTERED CIVIL ENGINEER

November 15, 2013
PLANS APPROVAL DATE

REGISTERED PROFESSIONAL ENGINEER
Randell D. Hiatt
No. C50200
Exp. 6-30-15
CIVIL
STATE OF CALIFORNIA

THE STATE OF CALIFORNIA OR ITS OFFICERS OR AGENTS SHALL NOT BE RESPONSIBLE FOR THE ACCURACY OR COMPLETENESS OF SCANNED COPIES OF THIS PLAN SHEET.

TO ACCOMPANY PLANS DATED 9-02-14

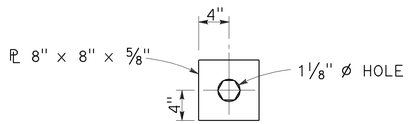

DETAIL "A"
CABLE CONNECTION
END PLATE

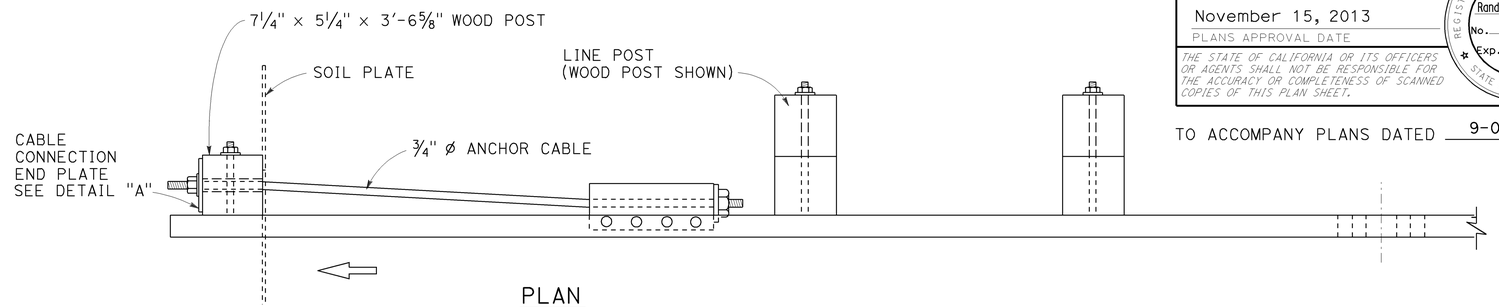

PLAN

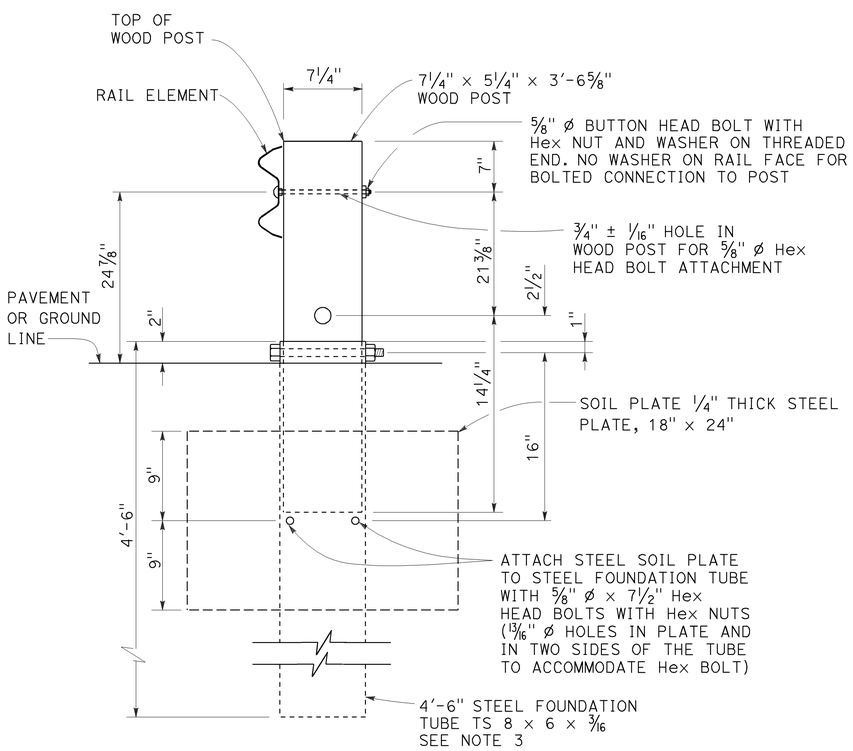

SECTION A-A

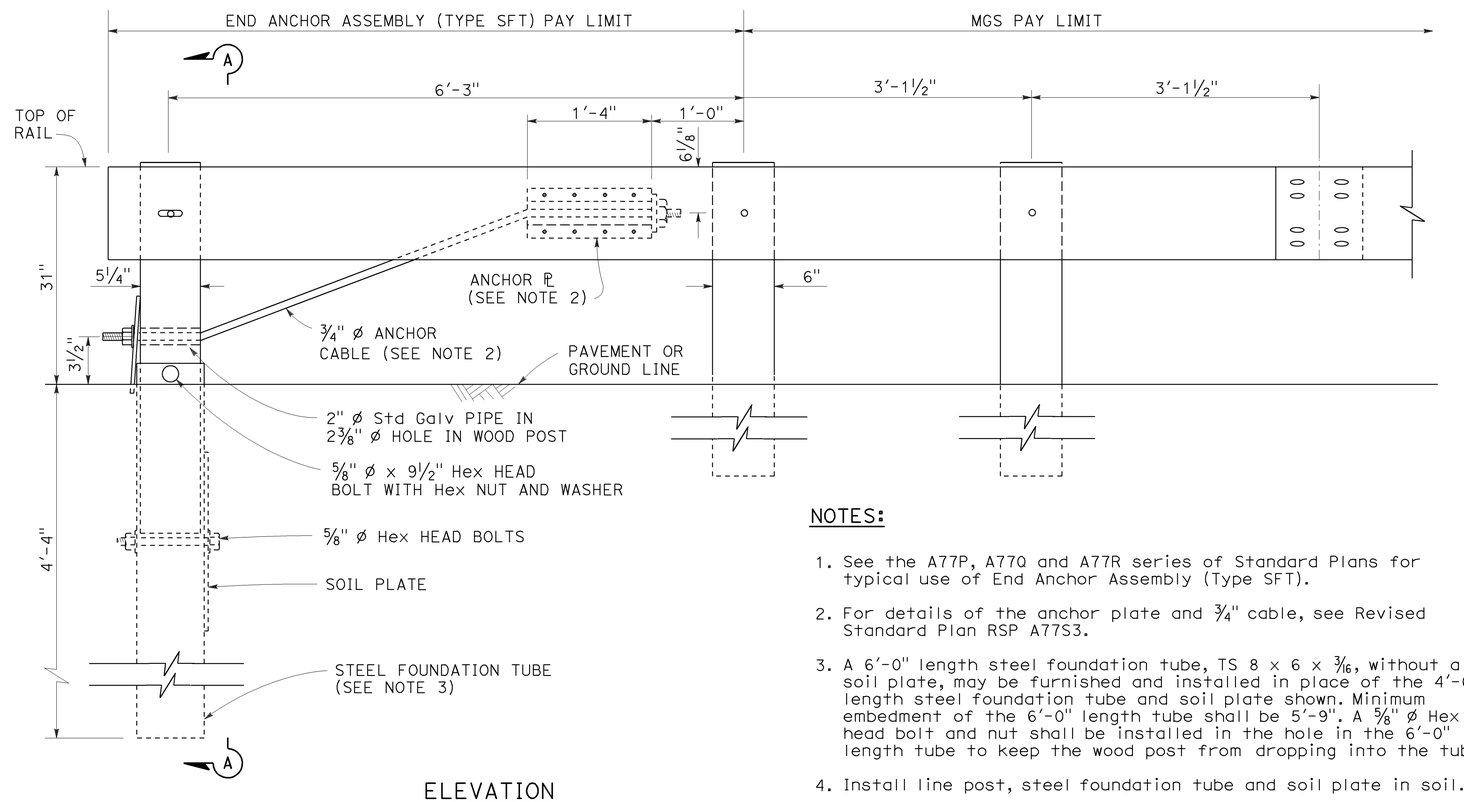

ELEVATION

END ANCHOR
ASSEMBLY (TYPE SFT)
See Note 1

NOTES:

1. See the A77P, A77Q and A77R series of Standard Plans for typical use of End Anchor Assembly (Type SFT).
2. For details of the anchor plate and 3/4" cable, see Revised Standard Plan RSP A77S3.
3. A 6'-0" length steel foundation tube, TS 8 x 6 x 3/16, without a soil plate, may be furnished and installed in place of the 4'-6" length steel foundation tube and soil plate shown. Minimum embedment of the 6'-0" length tube shall be 5'-9". A 5/8" ø Hex head bolt and nut shall be installed in the hole in the 6'-0" length tube to keep the wood post from dropping into the tube.
4. Install line post, steel foundation tube and soil plate in soil.

STATE OF CALIFORNIA
DEPARTMENT OF TRANSPORTATION

MIDWEST GUARDRAIL SYSTEM END ANCHOR ASSEMBLY (TYPE SFT)

NO SCALE

RSP A77S1 DATED NOVEMBER 15, 2013 SUPERSEDES RSP A77S1
DATED JULY 19, 2013 THAT SUPPLEMENTS THE STANDARD PLANS BOOK DATED 2010.

REVISED STANDARD PLAN RSP A77S1

2010 REVISED STANDARD PLAN RSP A77S1

10-4-13

Dist	COUNTY	ROUTE	POST MILES TOTAL PROJECT	SHEET No.	TOTAL SHEETS
04	Son	116	13.7	59	92

Randell D. Hiatt
REGISTERED CIVIL ENGINEER

November 15, 2013
PLANS APPROVAL DATE

REGISTERED PROFESSIONAL ENGINEER
Randell D. Hiatt
No. C50200
Exp. 6-30-15
CIVIL
STATE OF CALIFORNIA

THE STATE OF CALIFORNIA OR ITS OFFICERS OR AGENTS SHALL NOT BE RESPONSIBLE FOR THE ACCURACY OR COMPLETENESS OF SCANNED COPIES OF THIS PLAN SHEET.

TO ACCOMPANY PLANS DATED 9-02-14

NOTE:

See Revised Standard Plans RSP A77S1, RSP A77S2 and RSP A77T1 for typical use of anchor cable and anchor plate.

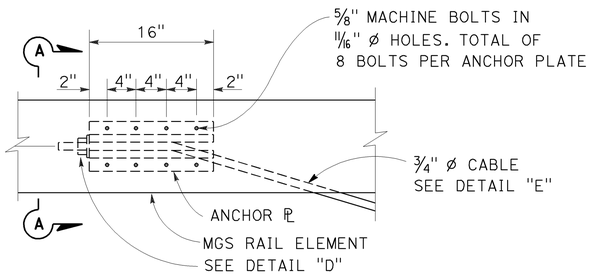

ANCHOR PLATE DETAIL

(MGS shown, TBB similar)

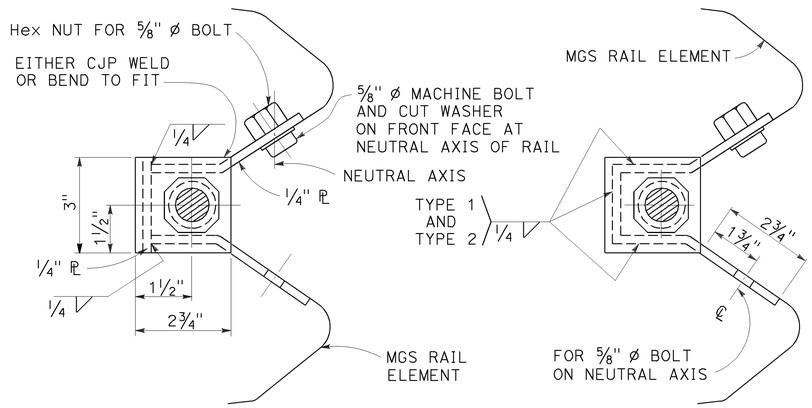

NOTE:

Dimensioning applies to both types.

SECTION A-A
(ALTERNATIVE TYPE 1)

SECTION A-A
(ALTERNATIVE TYPE 2)

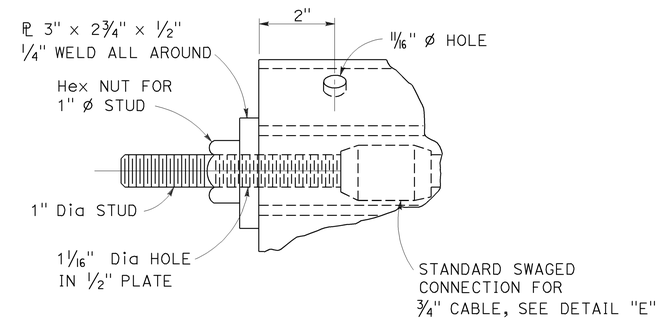

DETAIL "D"

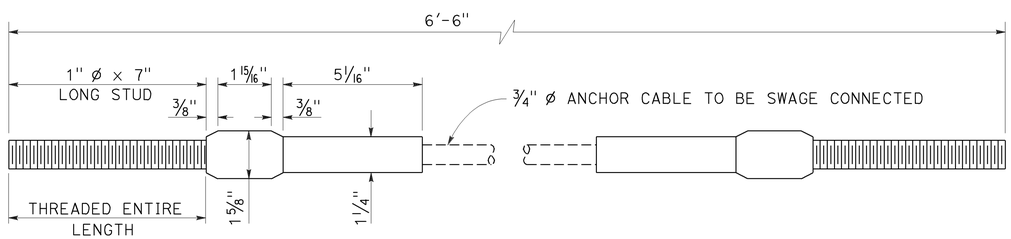

ANCHOR CABLE WITH SWAGED FITTING AND STUD

DETAIL "E"

STATE OF CALIFORNIA
DEPARTMENT OF TRANSPORTATION

METAL RAILING ANCHOR CABLE AND ANCHOR PLATE DETAILS

NO SCALE

RSP A77S3 DATED NOVEMBER 15, 2013 SUPERSEDES RSP A77S3 DATED JULY 19, 2013 THAT SUPPLEMENTS THE STANDARD PLANS BOOK DATED 2010.

REVISED STANDARD PLAN RSP A77S3

2010 REVISED STANDARD PLAN RSP A77S3

10-4-13

Dist	COUNTY	ROUTE	POST MILES TOTAL PROJECT	SHEET No.	TOTAL SHEETS
04	Son	116	13.7	60	92

Glenn DeCou
REGISTERED CIVIL ENGINEER

July 18, 2014
PLANS APPROVAL DATE

REGISTERED PROFESSIONAL ENGINEER Glenn DeCou No. C34547 Exp. 9-30-15 CIVIL STATE OF CALIFORNIA

THE STATE OF CALIFORNIA OR ITS OFFICERS OR AGENTS SHALL NOT BE RESPONSIBLE FOR THE ACCURACY OR COMPLETENESS OF SCANNED COPIES OF THIS PLAN SHEET.

TO ACCOMPANY PLANS DATED 9-02-14

2010 REVISED STANDARD PLAN RSP A85

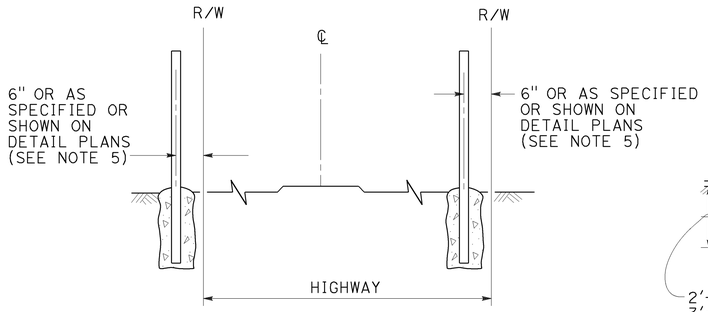

FENCE LOCATION

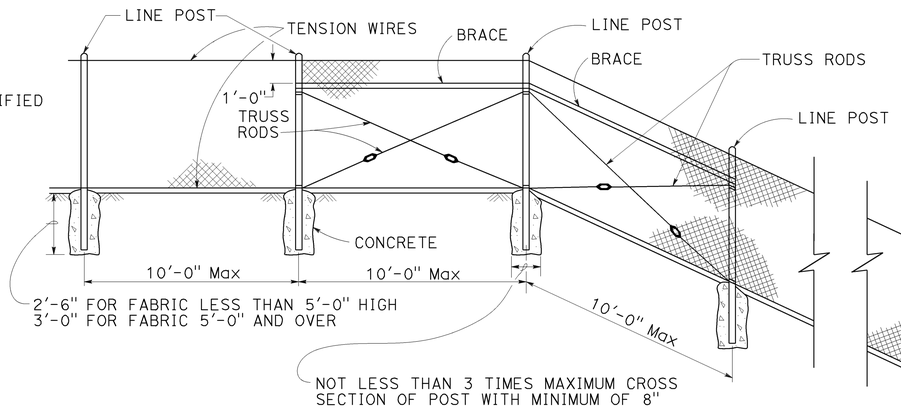

CHAIN LINK FENCE ON SHARP BREAK IN GRADE

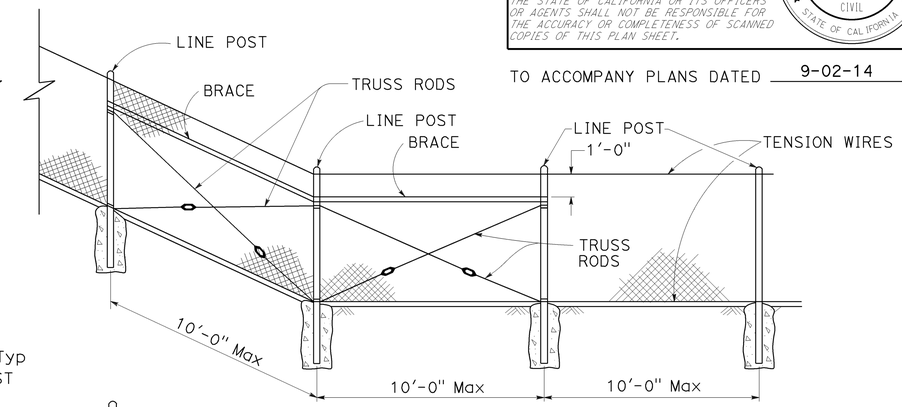

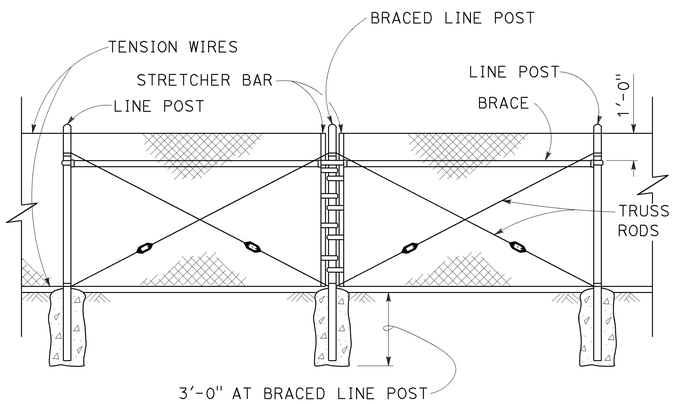

BRACED LINE POST INSTALLATION

Braced line post at intervals not exceeding 1000'

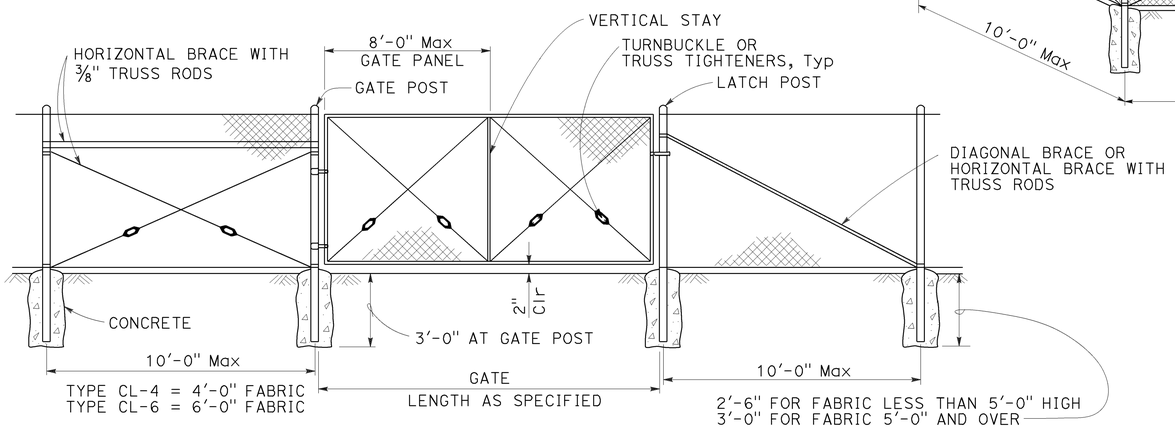

CHAIN LINK GATE INSTALLATION

GATE POST			
FENCE HEIGHT	GATE WIDTHS	ROUND OD PIPE	WEIGHT (lb/ft)
6'-0" AND LESS	UP THRU 6'-0"	2.875"	5.80
	OVER 6'-0" THRU 12'-0"	4.500"	10.80
	OVER 12'-0" THRU 18'-0"	5.563"	14.63
	OVER 18'-0" TO 24'-0" Max	6.625"	18.99
OVER 6'-0" TO 8'-0" Max	UP THRU 6'-0"	3.500"	7.58
	OVER 6'-0" THRU 12'-0"	5.563"	14.63
	OVER 12'-0" THRU 18'-0"	6.625"	18.99
	OVER 18'-0" TO 24'-0" Max	8.625"	28.58

Above post dimensions and weights are minimums. Larger sizes may be used upon approval.

NOTES:

1. The table below shows minimum sized posts and braces complying with the specifications. Larger or heavier post and brace sizes may be used upon approval.
2. Sections shown in the tables must also comply with the strength requirements and other provisions of the Specifications.
3. Other sections which comply with the strength requirements and other provisions of the Specifications may be used upon approval.
4. Options exercised shall be uniform on any one project.
5. Offset to be 2'-0" at monument locations, measured at right angles to R/W lines. Taper to achieve offset to be at least 20'-0" long.
6. See Revised Standard Plan RSP A85B for Brace, Stretcher Bar, and Truss Tightener Details.

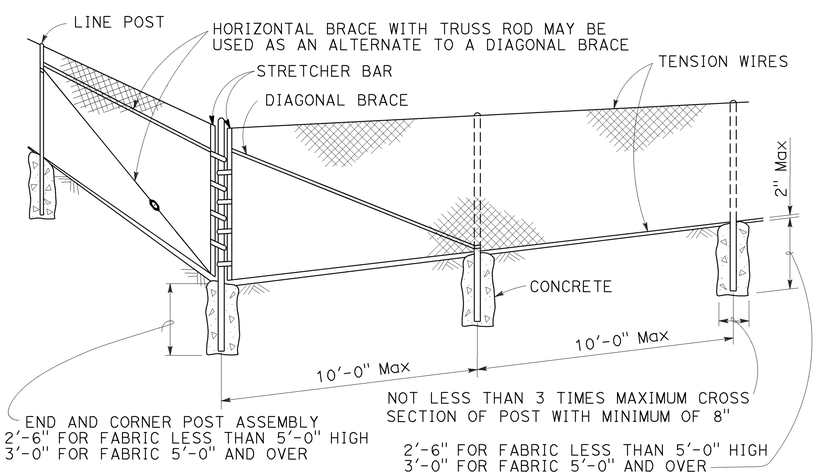

CORNER POST

TYPICAL MEMBER DIMENSIONS (See Notes)										
FENCE HEIGHT	LINE POSTS				END, LATCH AND CORNER POSTS		BRACES			
	ROUND OD PIPE	WEIGHT (lb/ft)	ROLL FORMED		ROUND OD PIPE	WEIGHT (lb/ft)	ROUND OD PIPE	WEIGHT (lb/ft)	ROLL FORMED	
			SECTION	WEIGHT (lb/ft)					SECTION	WEIGHT (lb/ft)
6'-0" AND LESS	1.900"	2.72	1.875" x 1.625"	1.85	2.375"	3.65	1.66"	2.27	1.625" x 1.25"	1.35
OVER 6'-0" TO 8'-0" Max	2.375"	3.65	2.25" x 1.70"	2.78	2.875"	5.80	1.66"	2.27	1.625" x 1.25"	1.35

STATE OF CALIFORNIA
DEPARTMENT OF TRANSPORTATION

CHAIN LINK FENCE

NO SCALE

RSP A85 DATED JULY 18, 2014 SUPERSEDES STANDARD PLAN A85 DATED MAY 20, 2011 - PAGE 112 OF THE STANDARD PLANS BOOK DATED 2010.

REVISED STANDARD PLAN RSP A85

7-1-14

Dist	COUNTY	ROUTE	POST MILES TOTAL PROJECT	SHEET No.	TOTAL SHEETS
04	Son	116	13.7	61	92

REGISTERED CIVIL ENGINEER

October 19, 2012
PLANS APPROVAL DATE

REGISTERED PROFESSIONAL ENGINEER Glenn DeCou No. C34547 Exp. 9-30-13 CIVIL STATE OF CALIFORNIA

THE STATE OF CALIFORNIA OR ITS OFFICERS OR AGENTS SHALL NOT BE RESPONSIBLE FOR THE ACCURACY OR COMPLETENESS OF SCANNED COPIES OF THIS PLAN SHEET.

TO ACCOMPANY PLANS DATED 9-02-14

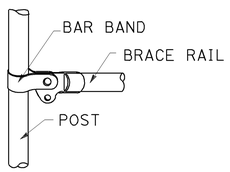

BRACE RAIL

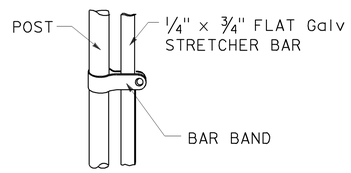

STRETCHER BAR

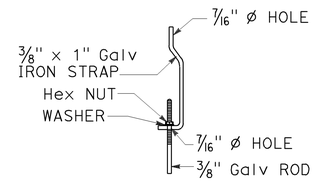

TRUSS TIGHTENER

NOTES:

1. All material for abutment connection to be galvanized.
2. The chain link fabric shall be replaced by barbed wire strands at 12" maximum centers between the double posts.
3. When the width of the culvert makes it necessary to anchor a post to the top of the culvert, a cast iron shoe or other device approved by the Engineer shall be used.
4. Fencing over stream and around headwall may also use Barbed Wire or Wire Mesh fencing with either wood post or steel post installation.
5. See Standard Plan A85 for Chain Link fence dimensions. See Standard Plan A86 for Barbed Wire and Wire Mesh fence dimensions and for wood post and steel post installation.

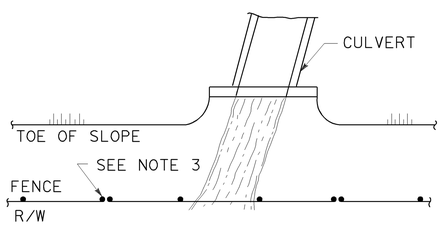

PLAN

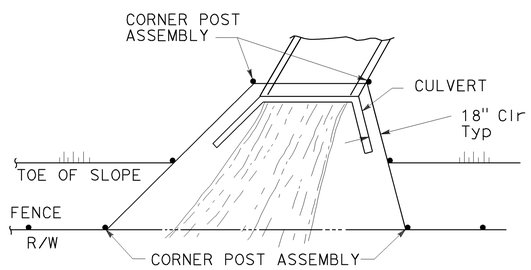

PLAN

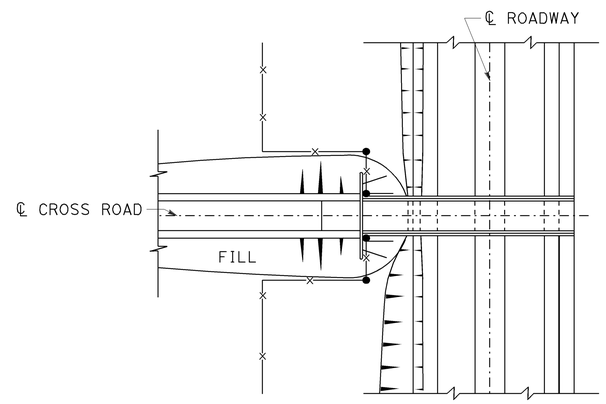

PLAN OF ROADWAY - OVERCROSSING

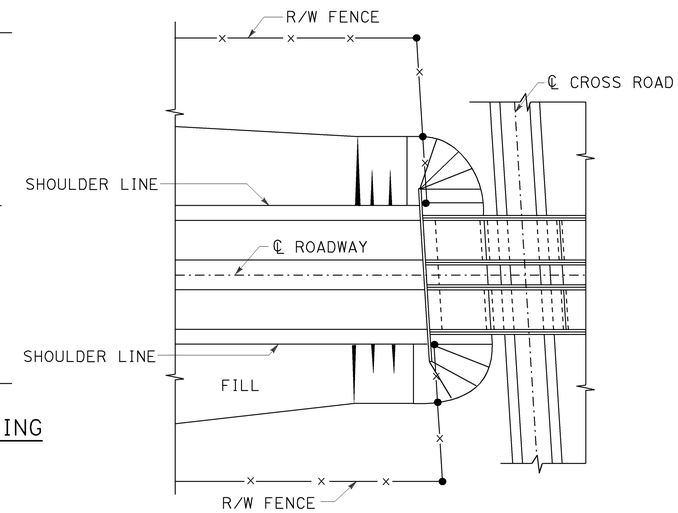

PLAN OF ROADWAY - UNDERCROSSING

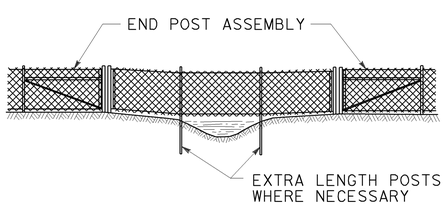

ELEVATION

INSTALLATION OVER STREAM

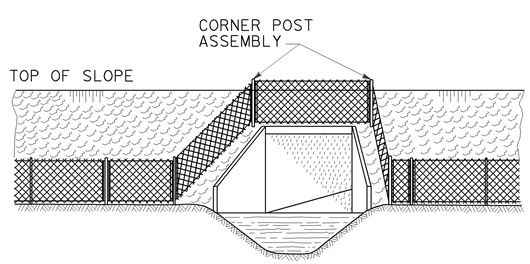

ELEVATION

INSTALLATION AROUND HEADWALL

See Note 4

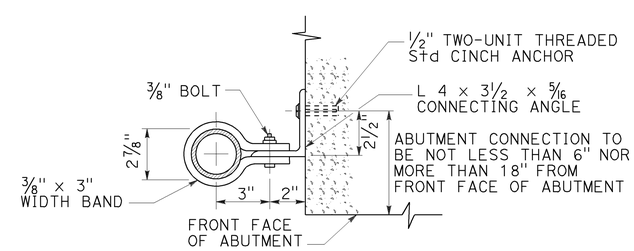

ABUTMENT CONNECTION

TYPICAL INSTALLATION AT BRIDGES

STATE OF CALIFORNIA
DEPARTMENT OF TRANSPORTATION

CHAIN LINK FENCE DETAILS

NO SCALE

RSP A85B DATED OCTOBER 19, 2012 SUPERSEDES STANDARD PLAN A85B DATED MAY 20, 2011 - PAGE 114 OF THE STANDARD PLANS BOOK DATED 2010.

REVISED STANDARD PLAN RSP A85B

2010 REVISED STANDARD PLAN RSP A85B

7-19-12

DIST	COUNTY	ROUTE	POST MILES TOTAL PROJECT	SHEET No.	TOTAL SHEETS
04	Son	116	13.7	62	92

REGISTERED CIVIL ENGINEER

November 15, 2013
PLANS APPROVAL DATE

REGISTERED PROFESSIONAL ENGINEER
Cornelis M. Hakim
No. C55610
Exp. 12-31-14
CIVIL
STATE OF CALIFORNIA

THE STATE OF CALIFORNIA OR ITS OFFICERS OR AGENTS SHALL NOT BE RESPONSIBLE FOR THE ACCURACY OR COMPLETENESS OF SCANNED COPIES OF THIS PLAN SHEET.

TO ACCOMPANY PLANS DATED 9-02-14

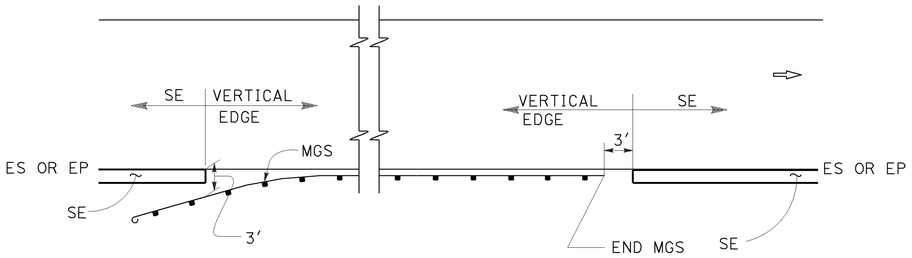

MGS

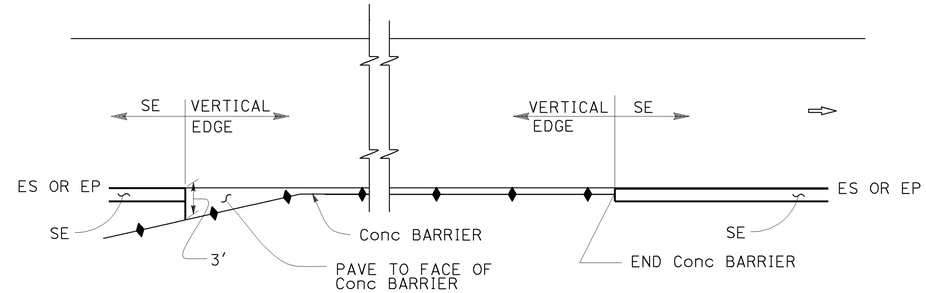

CONCRETE BARRIER

ABBREVIATIONS:

SE SAFETY EDGE

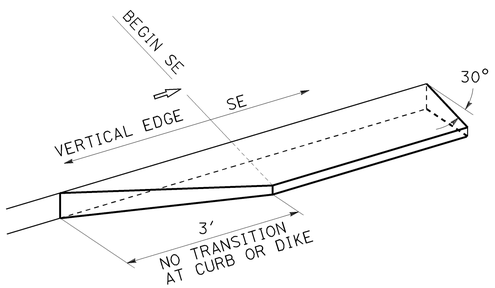

TRANSITION DETAIL
FOR CONCRETE ONLY

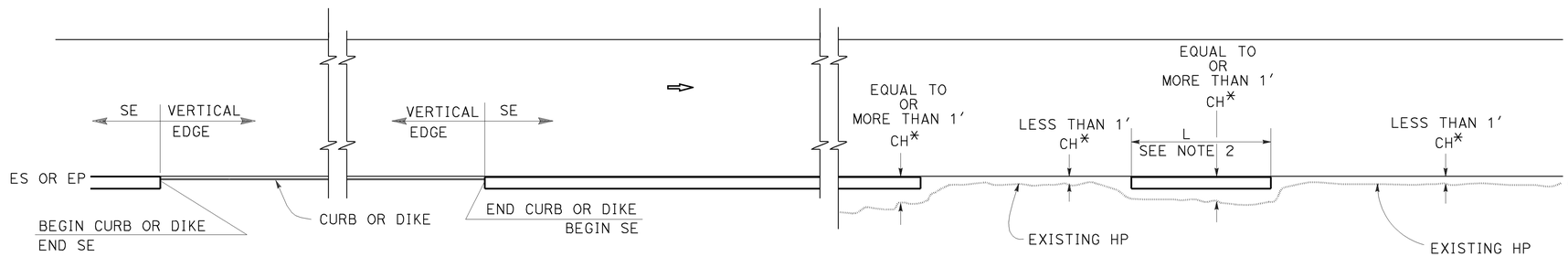

CURB OR DIKE

NARROW SIDE SLOPE

* CH = Distance from ES or EP to existing HP.

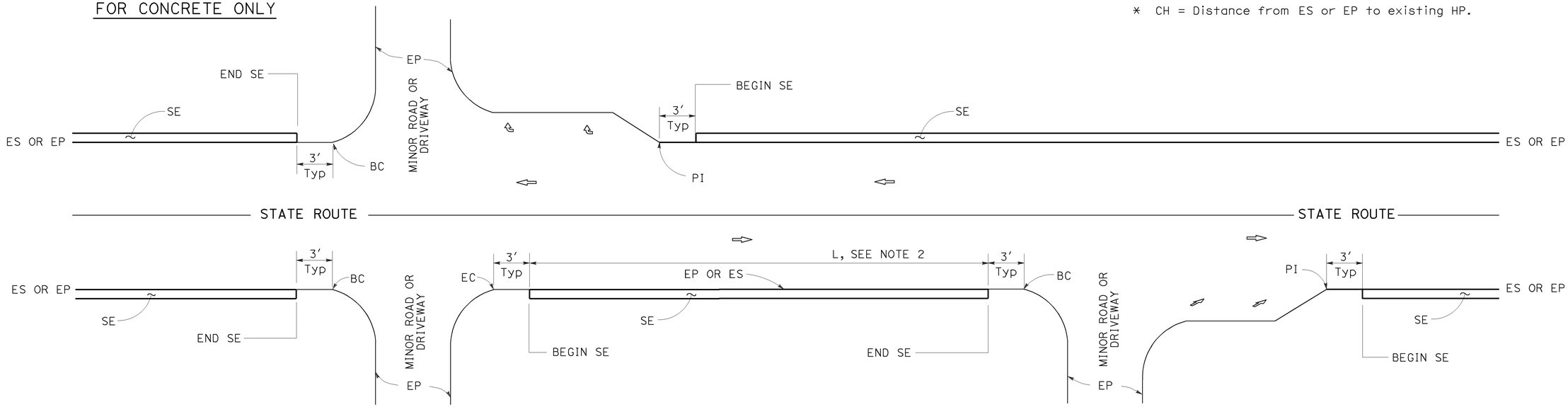

INTERSECTION

MINOR ROADWAY OR DRIVEWAY

DRIVEWAY AND INTERSECTION

NOTES:

1. For details not shown, see Revised Standard Plans RSP P75 and RSP P76.
2. Safety edge is optional when L is less than 30′.

STATE OF CALIFORNIA
DEPARTMENT OF TRANSPORTATION

PAVEMENT EDGE TREATMENTS

NO SCALE

RSP P74 DATED NOVEMBER 15, 2013 SUPERSEDES RSP P74 DATED JANUARY 20, 2012 THAT SUPPLEMENTS THE STANDARD PLANS BOOK DATED 2010.

REVISED STANDARD PLAN RSP P74

2010 REVISED STANDARD PLAN RSP P74

10-11-13

DIST	COUNTY	ROUTE	POST MILES TOTAL PROJECT	SHEET No.	TOTAL SHEETS
04	Son	116	13.7	63	92

REGISTERED CIVIL ENGINEER

November 15, 2013
PLANS APPROVAL DATE

REGISTERED PROFESSIONAL ENGINEER Cornelis M. Hakim No. C55610 Exp. 12-31-14 CIVIL STATE OF CALIFORNIA

THE STATE OF CALIFORNIA OR ITS OFFICERS OR AGENTS SHALL NOT BE RESPONSIBLE FOR THE ACCURACY OR COMPLETENESS OF SCANNED COPIES OF THIS PLAN SHEET.

TO ACCOMPANY PLANS DATED 9-02-14

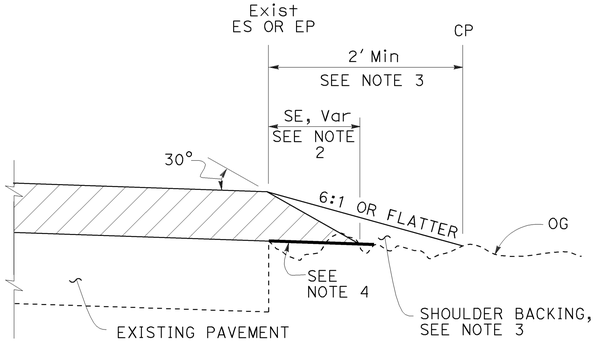

CASE A
Safety Edge

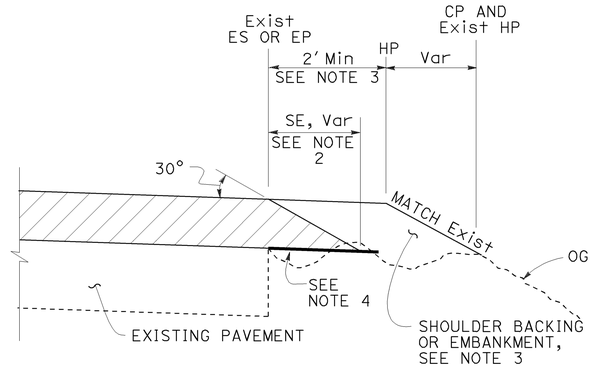

CASE B
Safety Edge

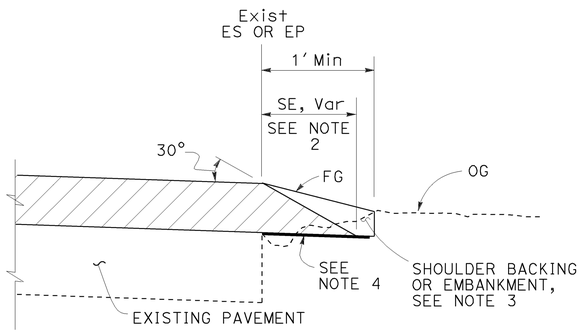

CASE C
Safety Edge

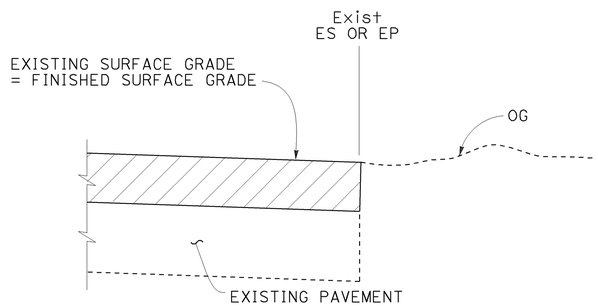

CASE D
Vertical Edge

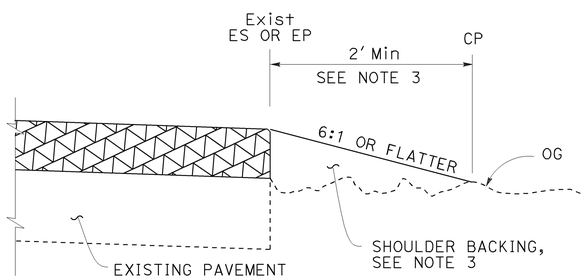

CASE E
Vertical Edge

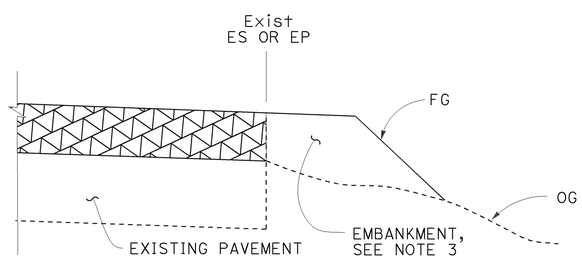

CASE F
Vertical Edge
* See Table A and Revised Std Plan RSP P74

LEGEND:

- HMA OVERLAY
- HMA OR CONCRETE OVERLAY
- CONCRETE OVERLAY

ABBREVIATIONS:

SE SAFETY EDGE
TT TOTAL THICKNESS OF SE

TABLE A
EDGE TREATMENT FOR VARIOUS OVERLAY THICKNESS AND CONDITIONS

	OVERLAY THICKNESS	
FIELD CONDITION	LESS THAN 0.15'	0.15' OR MORE
Exist SLOPE 6:1 OR FLATTER	CASE E	CASE A
Exist SLOPE 3:1 TO 6:1	CASE E	CASE B
Exist SLOPE STEEPER THAN 3:1	CASE F	CASE F
CUT SECTION (REPLACE, COLD PLANE, MILL PAVEMENT)	CASE D	CASE C

ADDITIONAL HMA OR CONCRETE QUANTITIES FOR SE/SIDE/MILE

TYPICAL CROSS SECTION	TT	TOTAL ADDITIONAL MATERIAL FOR SE/SIDE/MILE		
		HMA (TON)	CONCRETE (CY)*	CONCRETE (CY)**
TT	0.15'	NA	NA	NA
	0.20'	13.7	NA	NA
	0.30'	30.9	NA	NA
	0.40'	54.9	NA	NA
	0.45'	69.4	NA	NA
TT 0.43'	0.50'	84.2	NA	NA
	0.60'	113.9	NA	NA
	0.70'	143.6	70.9	94.2
	0.80'	173.3	85.6	112.2
	0.90'	203.0	100.3	130.2
	1.00'	232.7	114.9	148.2
	1.10'	262.4	129.6	166.2
	1.20'	292.1	144.3	184.2

* For Detail "A"
** For Optional Detail "A"

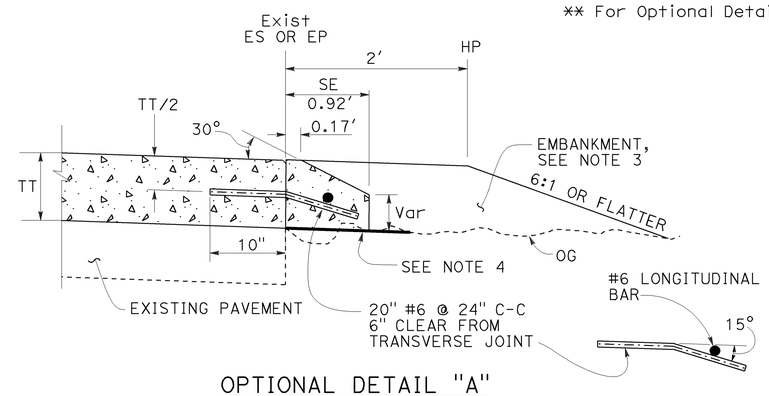

OPTIONAL DETAIL "A"
For concrete overlay
See Note 5

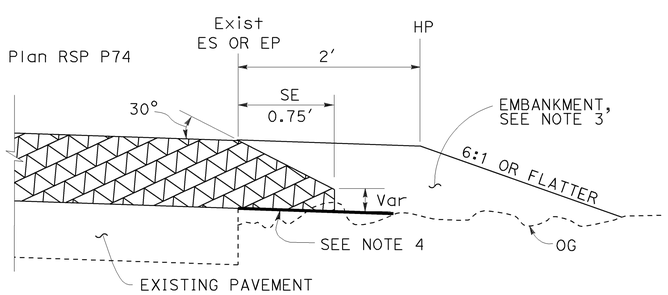

DETAIL "A"
For HMA overlay thickness more than 0.43' or concrete overlay

NOTES:

1. For limits of safety edge and vertical edge treatments, see Revised Standard Plan RSP P74.
2. Details shown for HMA overlay thickness less than 0.43'. See Detail "A" for HMA overlay thickness more than 0.43' or concrete overlay.
3. For locations and limits of shoulder backing or embankment see project plans.
4. Grade existing ground to place safety edge. 1' minimum width
5. Safety edge transverse joint must match overlay transverse joint. End of #6 longitudinal bar must be 2" ±½" clear from transverse joint.
6. Safety edge is not needed in the area of MGS, barrier, right turn lane and acceleration lane. See Revised Standard Plan RSP P74.

STATE OF CALIFORNIA
DEPARTMENT OF TRANSPORTATION

PAVEMENT EDGE TREATMENTS-OVERLAYS

NO SCALE

RSP P75 DATED NOVEMBER 15, 2013 SUPERSEDES RSP P75 DATED JANUARY 20, 2012 THAT SUPPLEMENTS THE STANDARD PLANS BOOK DATED 2010.

REVISED STANDARD PLAN RSP P75

2010 REVISED STANDARD PLAN RSP P75

10-4-13

Dist	COUNTY	ROUTE	POST MILES TOTAL PROJECT	SHEET No.	TOTAL SHEETS
04	Son	116	13.7	64	92

Gregory A. Balzer
LICENSED LANDSCAPE ARCHITECT

July 19, 2013
PLANS APPROVAL DATE

LICENSED LANDSCAPE ARCHITECT
Gregory A. Balzer 2516
Gregory A. Balzer
Renewal Date 2-28-15
Renewal Date 7-19-13
Date
STATE OF CALIFORNIA

THE STATE OF CALIFORNIA OR ITS OFFICERS OR AGENTS SHALL NOT BE RESPONSIBLE FOR THE ACCURACY OR COMPLETENESS OF SCANNED COPIES OF THIS PLAN SHEET.

TO ACCOMPANY PLANS DATED 9-02-14

A

AB	AGGREGATE BASE
ABS	ACRYLONITRILE-BUTADIENE-STYRENE
AC	ASPHALT CONCRETE
ACC	ARMOR-CLAD CONDUCTORS
Adj	ADJACENT/ADJUSTABLE
AIC	AUXILIARY IRRIGATION CONTROLLER
Alt	ALTERNATIVE
AMEND	AMENDMENT
ARV	AIR RELEASE VALVE
AUTO	AUTOMATIC
AUX	AUXILIARY
AVB	ATMOSPHERIC VACUUM BREAKER

B

B&B	BALLED AND BURLAPPED
B/B	BRASS/BRONZE
B/B/PL	BRASS/BRONZE/PLASTIC
B/PL	BRASS/PLASTIC
BFM	BONDED FIBER MATRIX
Bit Ctd	BITUMINOUS COATED
BP	BOOSTER PUMP
BPA	BACKFLOW PREVENTER ASSEMBLY
BPE	BACKFLOW PREVENTER ENCLOSURE
BV	BALL VALVE

C

C	CONDUIT
CAP	CORRUGATED ALUMINUM PIPE
CARV	COMBINATION AIR RELEASE VALVE
CB	COUPLING BAND
CCA	CAM COUPLER ASSEMBLY
CEC	CONTROLLER ENCLOSURE CABINET
CHDPE	CORRUGATED HIGH DENSITY POLYETHYLENE
CL	CHAIN LINK
CNC	CONTROL AND NEUTRAL CONDUCTORS
Conc	CONCRETE
CP	COPPER PIPE
CS	COMPOST SOCK
CSP	CORRUGATED STEEL PIPE
CST	CENTER STRIP
CV	CHECK VALVE

D

Dia	DIAMETER
DIP	DUCTILE IRON PIPE
DIT	DRIP IRRIGATION TUBING
DG	DECOMPOSED GRANITE
DN	DIAMETER NOMINAL
DVA	DRIP VALVE ASSEMBLY

E

EC	EROSION CONTROL
ECTC	EROSION CONTROL TECHNOLOGY COUNCIL
Elect	ELECTRIC/ELECTRICAL
Elev	ELEVATION
ELL	ELBOW
ENCL	ENCLOSURE
EP	EDGE OF PAVEMENT
ES	EDGE OF SHOULDER
EST	END STRIP
ESTB	ESTABLISHMENT
ETW	EDGE OF TRAVELED WAY

F

F	FULL CIRCLE
F/P	FULL/PART CIRCLE
FCV	FLOW CONTROL VALVE
FERT	FERTILIZER
FG	FINISHED GRADE
FH	FLEXIBLE HOSE
FIPT	FEMALE IRON PIPE THREAD
FIS	FERTILIZER INJECTOR SYSTEM
FL	FLOW LINE
FR	FIBER ROLL
FS	FLOW SENSOR
FSC	FLOW SENSOR CABLE
FV	FLUSH VALVE

G

Galv	GALVANIZED
GARV	GARDEN VALVE
GARVA	GARDEN VALVE ASSEMBLY
GM	GRAVEL MULCH
GPH	GALLONS PER HOUR
GPM	GALLONS PER MINUTE
GSP	GALVANIZED STEEL PIPE
GV	GATE VALVE

H

H	HALF CIRCLE
HDPE	HIGH DENSITY POLYETHYLENE
HP	HORSEPOWER/HINGE POINT
HPL	HIGH PRESSURE LINE
Hwy	HIGHWAY

I

IC	IRRIGATION CONTROLLER
ICC	IRRIGATION CONTROLLER(S) IN CONTROLLER ENCLOSURE CABINET
ID	INSIDE DIAMETER
IFS	IRRIGATION FILTRATION SYSTEM
IPS	IRON PIPE SIZE
IPT	IRON PIPE THREAD
Irr	IRRIGATION

L

L	LENGTH

M

Max	MAXIMUM
MBGR	METAL BEAM GUARD RAILING
MCV	MANUAL CONTROL VALVE
MIC	MASTER IRRIGATION CONTROLLER
Min	MINIMUM
MIPT	MALE IRON PIPE THREAD
Misc	MISCELLANEOUS
Mtl	MATERIAL
MVP	MAINTENANCE VEHICLE PULLOUT

N

NCN	NO COMMON NAME
NL	NOZZLE LINE
No.	NUMBER
NPT	NATIONAL PIPE THREAD

O

O/C	ON CENTER
OD	OUTSIDE DIAMETER
OL	OVERLAP

P

P	PART CIRCLE
PB	PULL BOX
PCC	PORTLAND CEMENT CONCRETE
PE	POLYETHYLENE
Pkt	PACKET
PL	PLASTIC
PLS	PURE LIVE SEED
PLT	PLANT/PLANTING
PLT ESTB	PLANT ESTABLISHMENT
PM	POST MILE
PR	PRESSURE RATED
PRLV	PRESSURE RELIEF VALVE
PRV	PRESSURE REGULATING VALVE
PVC	POLYVINYL CHLORIDE
Pvmt	PAVEMENT

Q

Q	QUARTER CIRCLE
QCV	QUICK COUPLING VALVE

R

R	RADIUS
RCP	REINFORCED CONCRETE PIPE
RCV	REMOTE CONTROL VALVE
RCVM	REMOTE CONTROL VALVE (MASTER)
RCVMF	REMOTE CONTROL VALVE (MASTER) W/FLOW SENSOR
RCVP	REMOTE CONTROL VALVE W/PRESSURE REGULATOR
RCW	RECYCLED WATER
RECP	ROLLED EROSION CONTROL PRODUCT
REQ	REQUIRED
RICS	REMOTE IRRIGATION CONTROL SYSTEM
R/W	RIGHT OF WAY

S

S	SLIP
SCH	SCHEDULE
SF	STATE-FURNISHED
Shld	SHOULDER
Sq	SQUARE
SST	SIDE STRIP
Sta	STATION
Std	STANDARD
SW	SIDEWALK/SOUND WALL

T

T	THIRD CIRCLE/THREAD
TLS	TRUCK LOADING STANDPIPE
TQ	THREE QUARTER CIRCLE
TRM	TURF REINFORCEMENT MAT
TT	TWO-THIRDS CIRCLE
TWSA	TREE WELL SPRINKLER ASSEMBLY
Typ	TYPICAL

U

UG	UNDERGROUND

W

W	WIDTH
W/	WITH
WM	WATER METER
WS	WYE STRAINER
WSA	WYE STRAINER ASSEMBLY
WSP	WELDED STEEL PIPE
WWM	WELDED WIRE MESH

NOTE:

For additional abbreviations, see Standard Plans A10A and A10B.

STATE OF CALIFORNIA
DEPARTMENT OF TRANSPORTATION

LANDSCAPE AND EROSION CONTROL ABBREVIATIONS

NO SCALE

RSP H1 DATED JULY 19, 2013 SUPERSEDES STANDARD PLAN H1 DATED MAY 20, 2011 - PAGE 218 OF THE STANDARD PLANS BOOK DATED 2010.

REVISED STANDARD PLAN RSP H1

2010 REVISED STANDARD PLAN RSP H1

6-28-13

Dist	COUNTY	ROUTE	POST MILES TOTAL PROJECT	SHEET No.	TOTAL SHEETS
04	Son	116	13.7	65	92

Gregory A. Balzer
LICENSED LANDSCAPE ARCHITECT

November 15, 2013
PLANS APPROVAL DATE

LICENSED LANDSCAPE ARCHITECT
Gregory A. Balzer 2516
04-30-14
2-28-15
Renewal Date
11-15-13
Date
STATE OF CALIFORNIA

THE STATE OF CALIFORNIA OR ITS OFFICERS OR AGENTS SHALL NOT BE RESPONSIBLE FOR THE ACCURACY OR COMPLETENESS OF SCANNED COPIES OF THIS PLAN SHEET.

TO ACCOMPANY PLANS DATED 9-02-14

EXISTING	NEW	ITEM DESCRIPTION
		WATER METER (WM)
		BACKFLOW PREVENTER ASSEMBLY (BPA)
		BACKFLOW PREVENTER ENCLOSURE (BPE)
		BOOSTER PUMP (BP)
		TRUCK LOADING STANDPIPE (TLS)
	FS	FLOW SENSOR (FS)
		MASTER IRRIGATION CONTROLLER (MIC)
		AUXILIARY IRRIGATION CONTROLLER (AIC)
		IRRIGATION CONTROLLER (IC) IRRIGATION CONTROLLER (IC) (BATTERY) IRRIGATION CONTROLLER (IC) (SOLAR) IRRIGATION CONTROLLER (IC) (TWO WIRE) IRRIGATION CONTROLLER(S) IN CONTROLLER ENCLOSURE CABINET (ICC)
acc	ACC	ARMOR-CLAD CONDUCTORS (ACC)
cnc	CNC	CONTROL AND NEUTRAL CONDUCTORS (CNC)
		IRRIGATION CONDUIT
		EXTEND IRRIGATION CONDUIT
dip	DIP	DUCTILE IRON PIPE (SUPPLY LINE) (MAIN) (DIP)
		GALVANIZED STEEL PIPE (SUPPLY LINE) (MAIN) (GSP)
		GALVANIZED STEEL PIPE (SUPPLY LINE) (LATERAL) (GSP)
		PLASTIC PIPE (SUPPLY LINE) (MAIN)
		PLASTIC PIPE (SUPPLY LINE) (LATERAL)
cp	CP	COPPER PIPE (SUPPLY LINE)
dit	DIT	DRIP IRRIGATION TUBING
		REMOTE CONTROL VALVE (RCV) REMOTE CONTROL VALVE (MASTER) (RCVM) REMOTE CONTROL VALVE (MASTER) W/FLOW METER (RCVMF)
P	P	REMOTE CONTROL VALVE W/PRESSURE REGULATOR (RCVP)
		EXISTING MANUAL CONTROL VALVE (MCV)
	V	DRIP VALVE ASSEMBLY (DVA)
	Y	WYE STRAINER ASSEMBLY (WSA)

EXISTING	NEW	ITEM DESCRIPTION
		GATE VALVE (GV)
		BALL VALVE (BV)
		QUICK COUPLING VALVE (QCV)
		CAM COUPLER ASSEMBLY (CCA)
		GARDEN VALVE ASSEMBLY (GARVA)
		PRESSURE REGULATING VALVE (PRV)
		PRESSURE RELIEF VALVE (PRLV)
		FLOW CONTROL VALVE (FCV)
		COMBINATION AIR RELEASE VALVE (CARV)
		CHECK VALVE (CV)
		FLUSH VALVE (FV)
		EXISTING NOZZLE LINE W/TURNING UNION
		EXISTING IRRIGATION SYSTEM
		EXISTING IRRIGATION SYSTEM TO BE REMOVED
		CHAIN LINK GATE
		QUICK COUPLING VALVE W/SPRINKLER PROTECTOR
3	3	SPRINKLER W/SPRINKLER PROTECTOR
	C	CONNECT TO EXISTING SYSTEM
		CAP
		CAP EXISTING
	FR	FIBER ROLL
	CS	COMPOST SOCK

RCV SIZE
IRRIGATION CONTROLLER
CONTROLLER STATION
VALVE IN PARALLEL (IF APPLICABLE)
GPM
QUANTITY OF SPRINKLERS (WHEN SHOWN)

* 2½"-A-2b-40-60

VALVE CODE

* VALVE CODES FOR EXISTING VALVES ARE SHOWN IN A DASHED ENCLOSURE.

STATE OF CALIFORNIA
DEPARTMENT OF TRANSPORTATION

LANDSCAPE AND EROSION CONTROL SYMBOLS

NO SCALE

RSP H2 DATED NOVEMBER 15, 2013 SUPERSEDES RSP H2 DATED JULY 19, 2013 AND STANDARD PLAN H2 DATED MAY 20, 2011 - PAGE 219 OF THE STANDARD PLANS BOOK DATED 2010.

REVISED STANDARD PLAN RSP H2

2010 REVISED STANDARD PLAN RSP H2

10-9-13

Dist	COUNTY	ROUTE	POST MILES TOTAL PROJECT	SHEET No.	TOTAL SHEETS
04	Son	116	13.7	66	92

LICENSED LANDSCAPE ARCHITECT

July 19, 2013
PLANS APPROVAL DATE

THE STATE OF CALIFORNIA OR ITS OFFICERS OR AGENTS SHALL NOT BE RESPONSIBLE FOR THE ACCURACY OR COMPLETENESS OF SCANNED COPIES OF THIS PLAN SHEET.

LICENSED LANDSCAPE ARCHITECT
Gregory A. Bolzer 2516
Registration
2-28-15
Renewal Date
7-19-13
Date
STATE OF CALIFORNIA

TO ACCOMPANY PLANS DATED 9-02-14

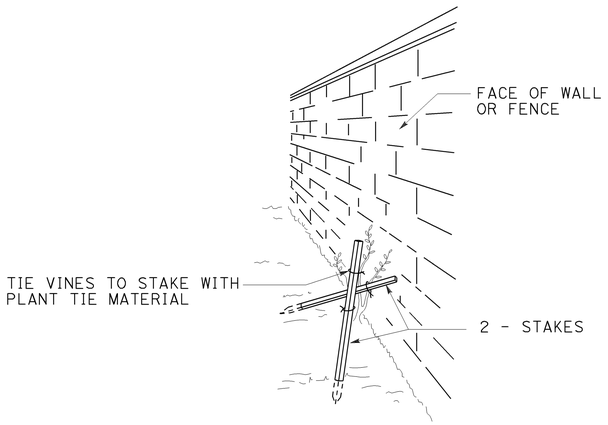

PERSPECTIVE
VINE STAKING

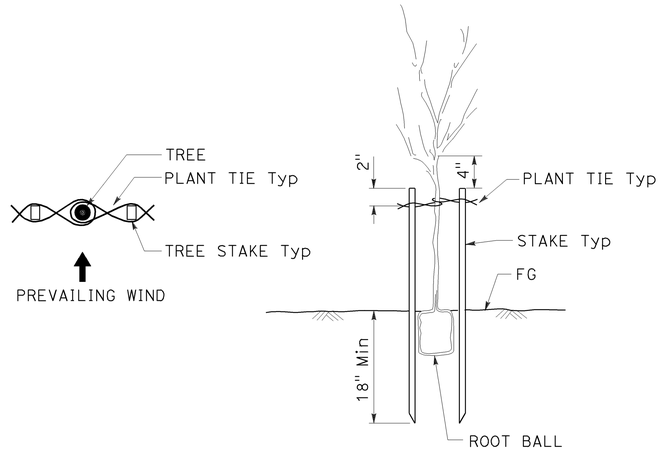

TREE STAKING

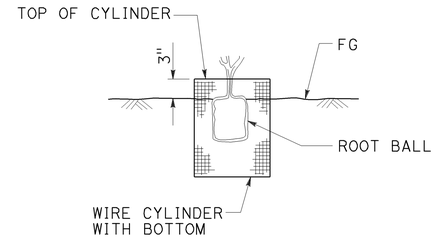

SECTION
ROOT PROTECTOR

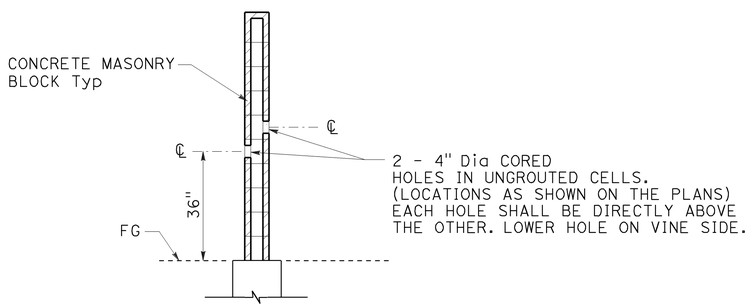

SECTION
CORE HOLE (VINE)

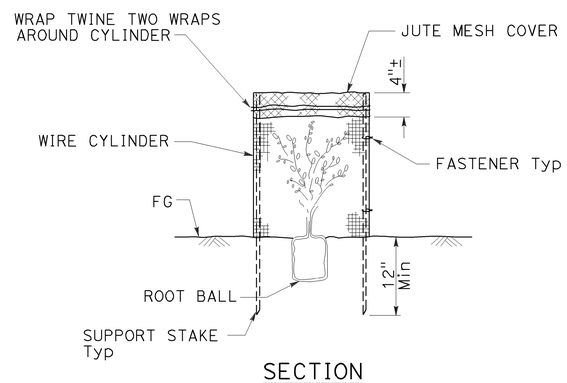

SECTION
FOLIAGE PROTECTOR

STATE OF CALIFORNIA
DEPARTMENT OF TRANSPORTATION

LANDSCAPE DETAILS

NO SCALE

RSP H4 DATED JULY 19, 2013 SUPERSEDES STANDARD PLAN H4
DATED MAY 20, 2011 - PAGE 221 OF THE STANDARD PLANS BOOK DATED 2010.

REVISED STANDARD PLAN RSP H4

2010 REVISED STANDARD PLAN RSP H4

6-28-13

Dist	COUNTY	ROUTE	POST MILES TOTAL PROJECT	SHEET No.	TOTAL SHEETS
04	Son	116	13.7	67	92

LICENSED LANDSCAPE ARCHITECT

July 19, 2013
PLANS APPROVAL DATE

THE STATE OF CALIFORNIA OR ITS OFFICERS OR AGENTS SHALL NOT BE RESPONSIBLE FOR THE ACCURACY OR COMPLETENESS OF SCANNED COPIES OF THIS PLAN SHEET.

LICENSED LANDSCAPE ARCHITECT — Gregory A. Belzer — 2576 — 2-28-15 — 7-19-13 — STATE OF CALIFORNIA

TO ACCOMPANY PLANS DATED 9-02-14

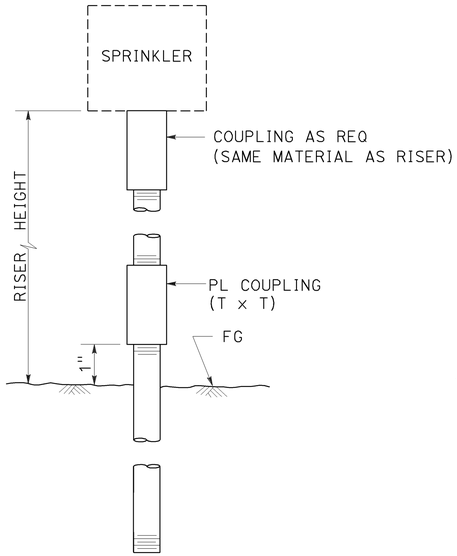

ELEVATION

RISER SPRINKLER ASSEMBLY TYPE I

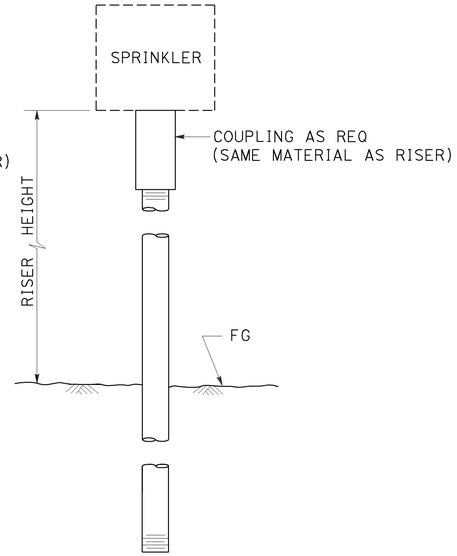

ELEVATION

RISER SPRINKLER ASSEMBLY TYPE II

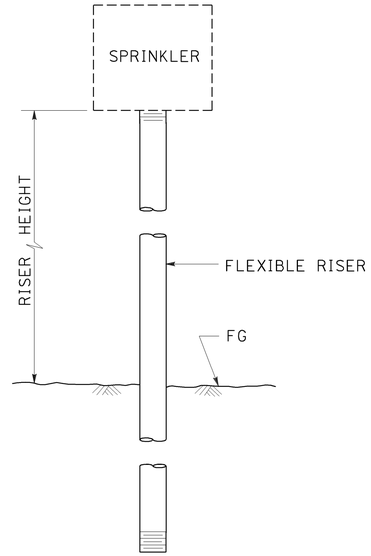

ELEVATION

RISER SPRINKLER ASSEMBLY TYPE III

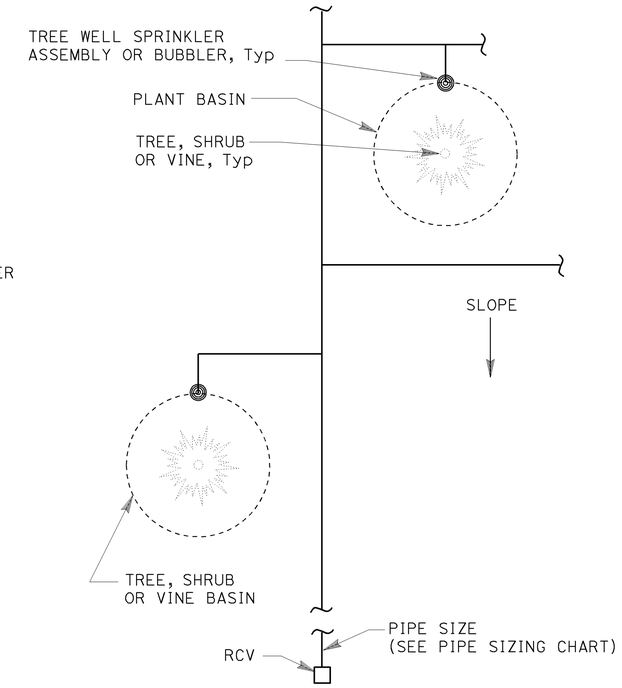

PLAN

NOTES:

1. Install tree well sprinkler assembly on up-hill side of plant when on slope.
2. Install bubbler within basin.

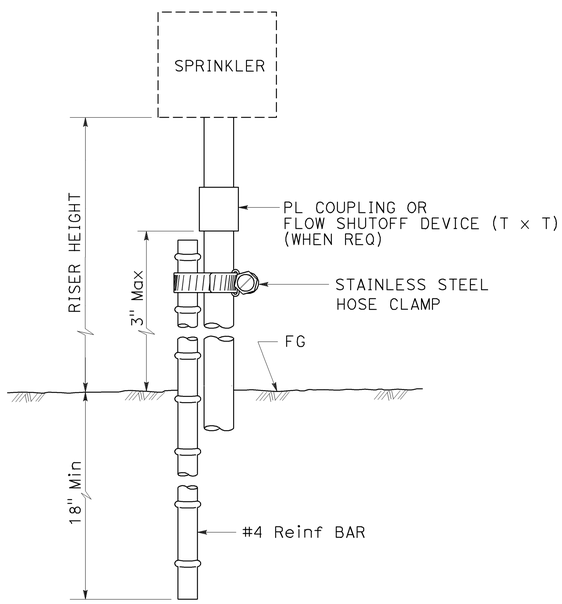

ELEVATION

RISER SPRINKLER ASSEMBLY TYPE IV

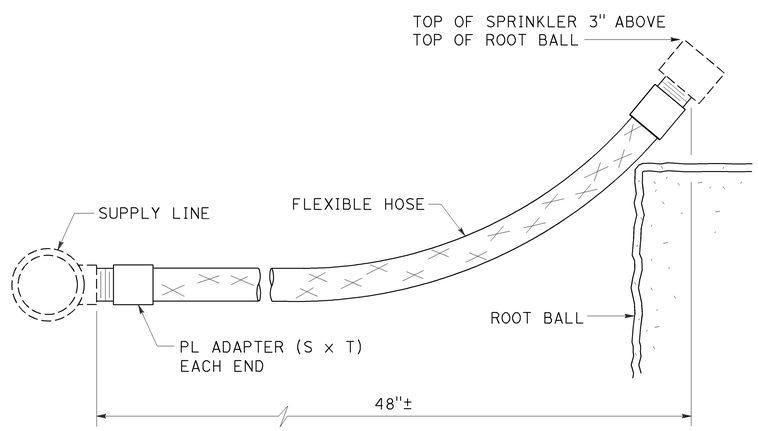

ELEVATION

RISER SPRINKLER ASSEMBLY TYPE V

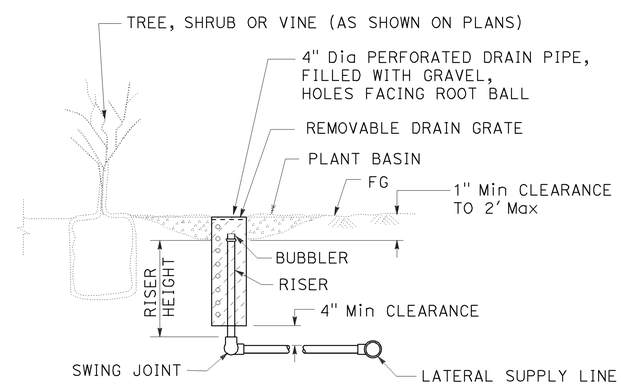

SECTION

TREE WELL SPRINKLER ASSEMBLY

STATE OF CALIFORNIA
DEPARTMENT OF TRANSPORTATION

LANDSCAPE DETAILS

NO SCALE

RSP H5 DATED JULY 19, 2013 SUPERSEDES STANDARD PLAN H5
DATED MAY 20, 2011 - PAGE 222 OF THE STANDARD PLANS BOOK DATED 2010.

REVISED STANDARD PLAN RSP H5

2010 REVISED STANDARD PLAN RSP H5

6-28-13

Dist	COUNTY	ROUTE	POST MILES TOTAL PROJECT	SHEET No.	TOTAL SHEETS
04	Son	116	13.7	68	92

LICENSED LANDSCAPE ARCHITECT

July 19, 2013
PLANS APPROVAL DATE

THE STATE OF CALIFORNIA OR ITS OFFICERS OR AGENTS SHALL NOT BE RESPONSIBLE FOR THE ACCURACY OR COMPLETENESS OF SCANNED COPIES OF THIS PLAN SHEET.

LICENSED LANDSCAPE ARCHITECT — Gregory A. Balzer 2516 — 09-30-14 Expiration Date — 2-28-15 Renewal Date — 7-19-13 Date — STATE OF CALIFORNIA

TO ACCOMPANY PLANS DATED 9-02-14

2010 REVISED STANDARD PLAN RSP H7

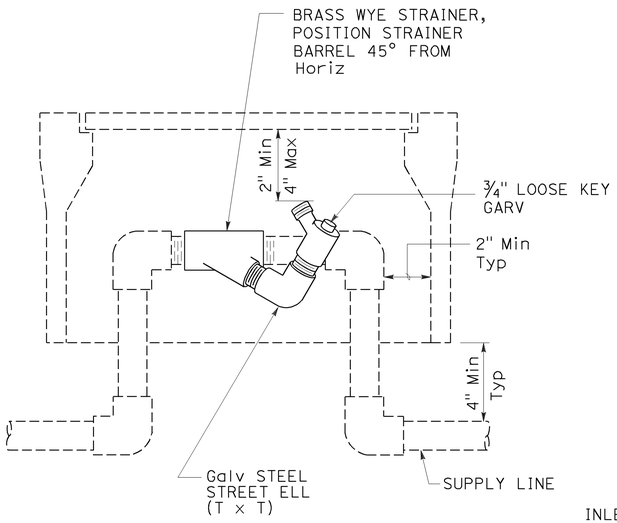

ELEVATION
WYE STRAINER ASSEMBLY

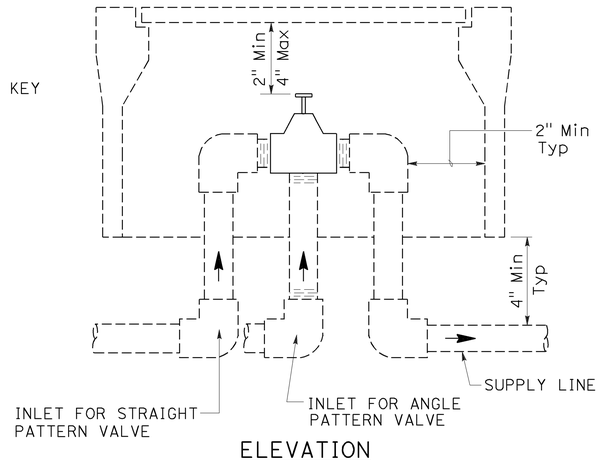

ELEVATION
VALVE

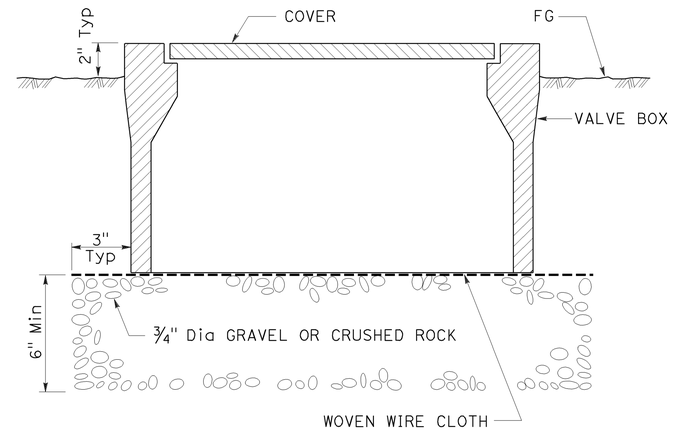

SECTION
VALVE BOX

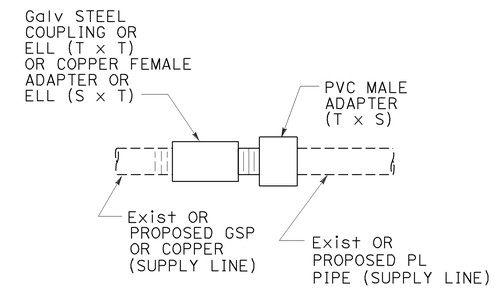

GALVANIZED OR COPPER PIPE CONNECTION TO PLASTIC PIPE

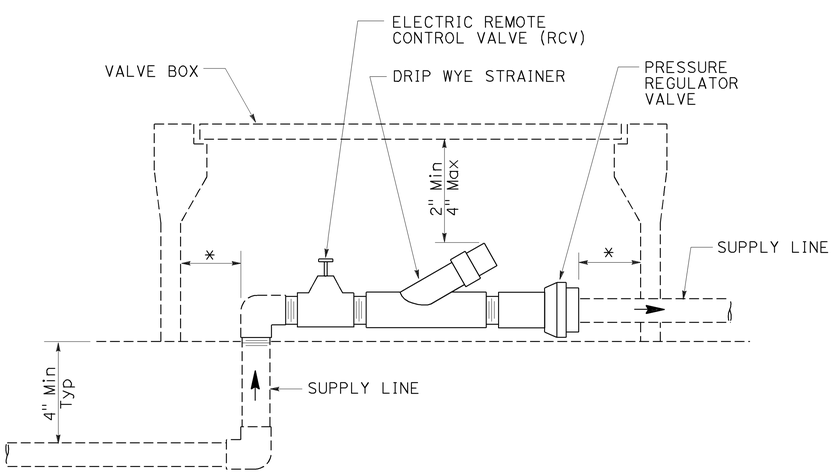

* 2" CLEARANCE ON ALL SIDES

ELEVATION
DRIP VALVE ASSEMBLY

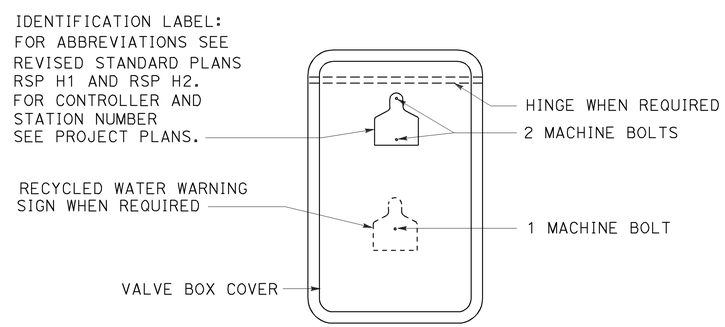

PLAN

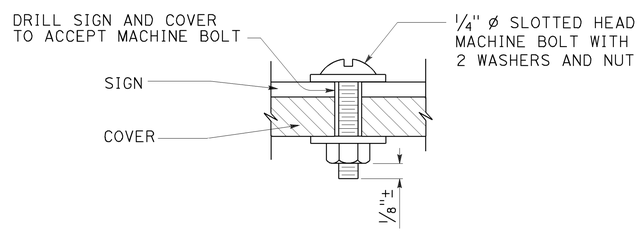

SECTION
VALVE BOX IDENTIFICATION

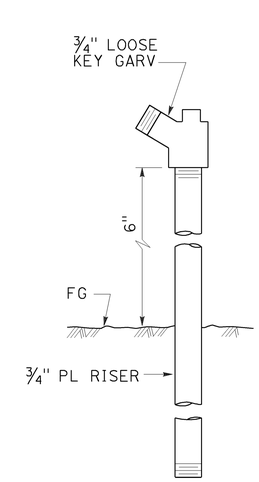

ELEVATION
GARDEN VALVE ASSEMBLY

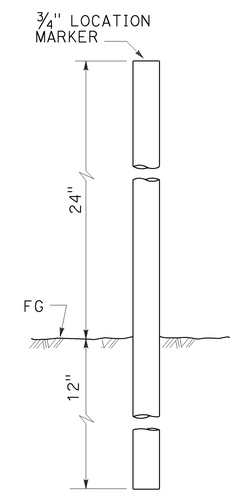

ELEVATION
LOCATION MARKER

GARDEN VALVE ASSEMBLY

STATE OF CALIFORNIA
DEPARTMENT OF TRANSPORTATION

LANDSCAPE DETAILS

NO SCALE

RSP H7 DATED JULY 19, 2013 SUPERSEDES STANDARD PLAN H7 DATED MAY 20, 2011 - PAGE 224 OF THE STANDARD PLANS BOOK DATED 2010.

REVISED STANDARD PLAN RSP H7

6-20-13

Dist	COUNTY	ROUTE	POST MILES TOTAL PROJECT	SHEET No.	TOTAL SHEETS
04	Son	116	13.7	69	92

Gregory A. Balzer
LICENSED LANDSCAPE ARCHITECT

July 19, 2013
PLANS APPROVAL DATE

LICENSED LANDSCAPE ARCHITECT
Gregory A. Balzer 2516
Gregory A. Balzer
Renewal Date
2-28-15
Renewal Date
7-19-13
Date
STATE OF CALIFORNIA

THE STATE OF CALIFORNIA OR ITS OFFICERS OR AGENTS SHALL NOT BE RESPONSIBLE FOR THE ACCURACY OR COMPLETENESS OF SCANNED COPIES OF THIS PLAN SHEET.

TO ACCOMPANY PLANS DATED 9-02-14

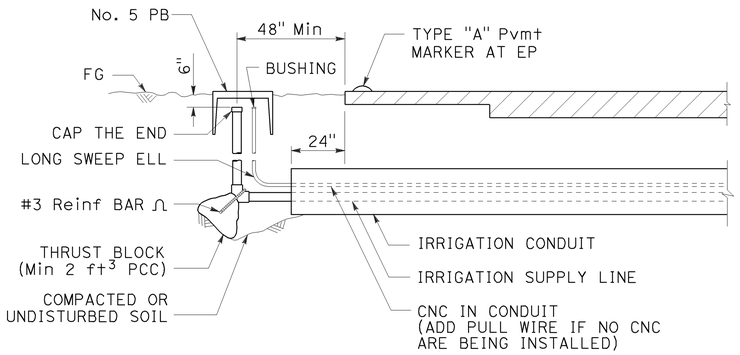

SECTION

IRRIGATION CONDUIT

UNDER TRAVELED WAY

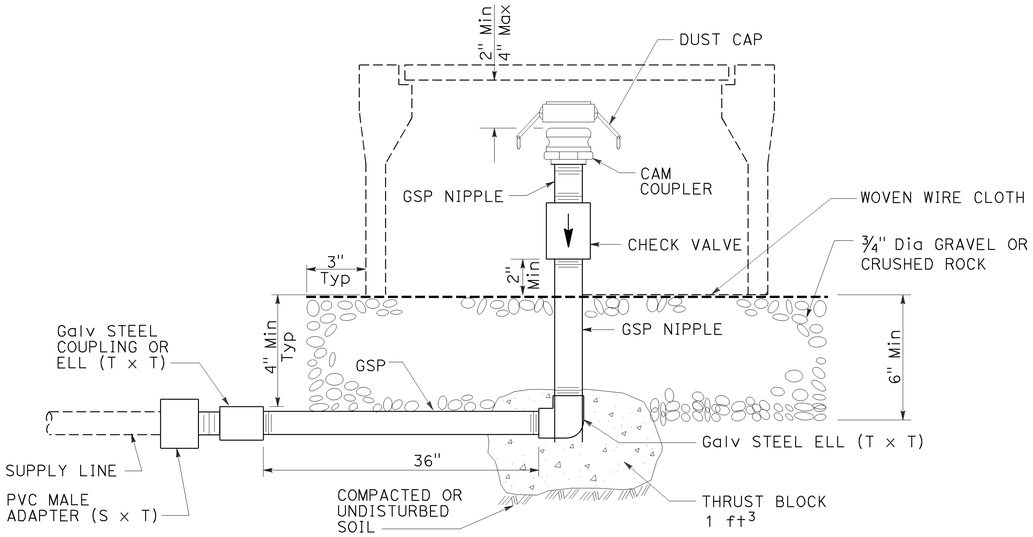

ELEVATION

CAM COUPLER ASSEMBLY

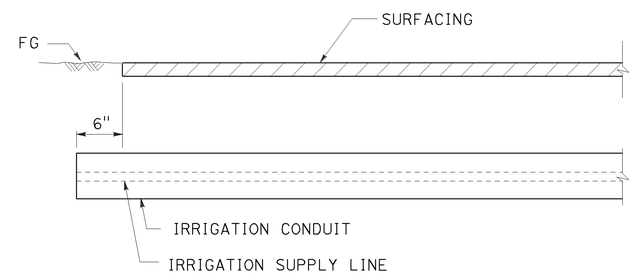

SECTION

IRRIGATION CONDUIT

UNDER SIDEWALKS, DRIVEWAYS AND PATHS

STATE OF CALIFORNIA
DEPARTMENT OF TRANSPORTATION

LANDSCAPE DETAILS

NO SCALE

RSP H9 DATED JULY 19, 2013 SUPERSEDES STANDARD PLAN H9
DATED MAY 20, 2011 - PAGE 226 OF THE STANDARD PLANS BOOK DATED 2010.

REVISED STANDARD PLAN RSP H9

2010 REVISED STANDARD PLAN RSP H9

6-28-13

Dist	COUNTY	ROUTE	POST MILES TOTAL PROJECT	SHEET No.	TOTAL SHEETS
04	Son	116	13.7	70	92

Gregory A. Balzer
LICENSED LANDSCAPE ARCHITECT

July 19, 2013
PLANS APPROVAL DATE

LICENSED LANDSCAPE ARCHITECT
Gregory A. Balzer 2576
Expiration Date
2-28-15
Renewal Date
7-19-13
Date
STATE OF CALIFORNIA

THE STATE OF CALIFORNIA OR ITS OFFICERS OR AGENTS SHALL NOT BE RESPONSIBLE FOR THE ACCURACY OR COMPLETENESS OF SCANNED COPIES OF THIS PLAN SHEET.

TO ACCOMPANY PLANS DATED 9-02-14

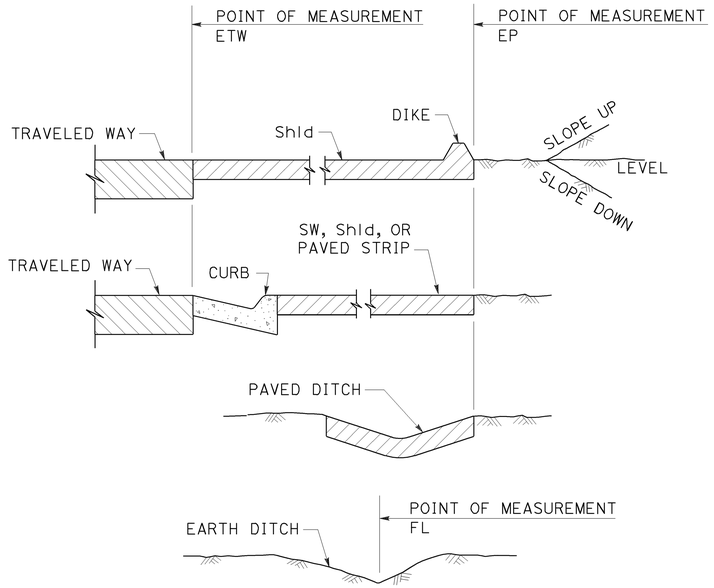

SECTION
POINTS OF MEASUREMENT

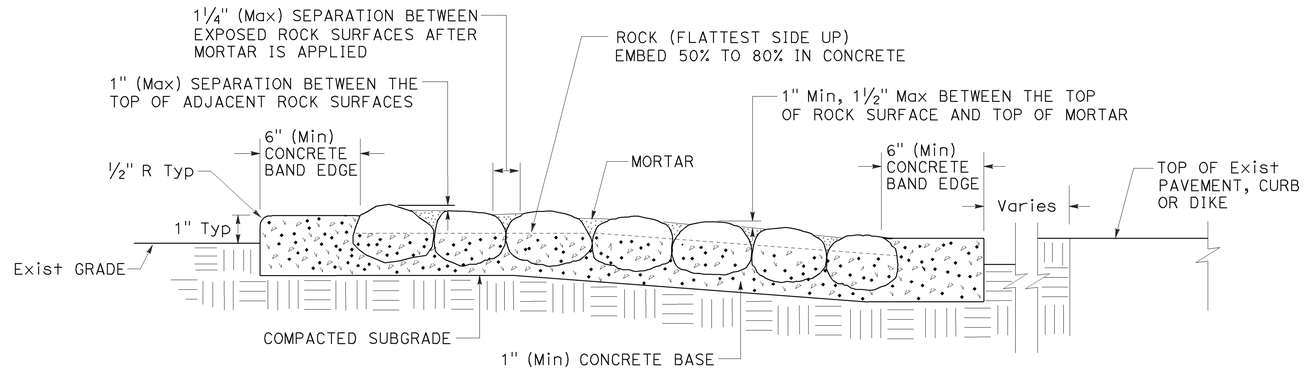

SECTION
ROCK BLANKET

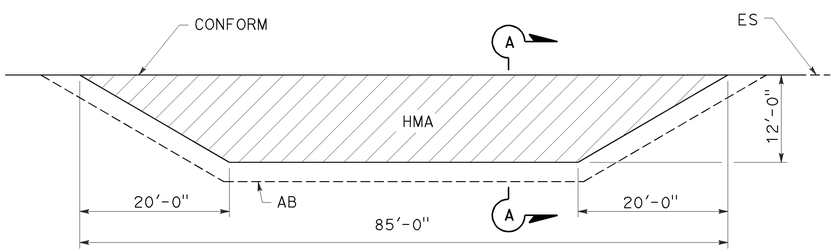

PLAN

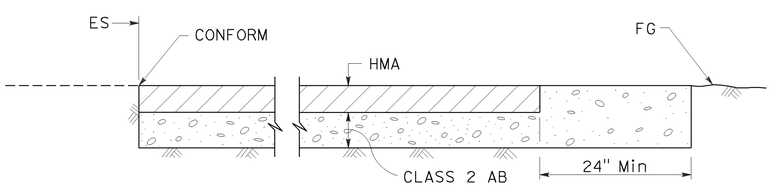

SECTION A-A
MAINTENANCE VEHICLE PULLOUT

STATE OF CALIFORNIA
DEPARTMENT OF TRANSPORTATION

LANDSCAPE DETAILS

NO SCALE

RSP H9A DATED JULY 19, 2013 SUPPLEMENTS THE STANDARD PLANS BOOK DATED 2010.

REVISED STANDARD PLAN RSP H9A

2010 REVISED STANDARD PLAN RSP H9A

6-21-13

Dist	COUNTY	ROUTE	POST MILES TOTAL PROJECT	SHEET No.	TOTAL SHEETS
04	Son	116	13.7	71	92

REGISTERED CIVIL ENGINEER

July 19, 2013
PLANS APPROVAL DATE

REGISTERED PROFESSIONAL ENGINEER
Gurinderpal Bhullar
No. C48815
Exp. 9-30-14
CIVIL
STATE OF CALIFORNIA

THE STATE OF CALIFORNIA OR ITS OFFICERS OR AGENTS SHALL NOT BE RESPONSIBLE FOR THE ACCURACY OR COMPLETENESS OF SCANNED COPIES OF THIS PLAN SHEET.

TO ACCOMPANY PLANS DATED 9-02-14

2010 REVISED STANDARD PLAN RSP T9

TABLE 1

TAPER LENGTH CRITERIA AND CHANNELIZING DEVICE SPACING

SPEED (S)	MINIMUM TAPER LENGTH * FOR WIDTH OF OFFSET 12 FEET (W)				MAXIMUM CHANNELIZING DEVICE SPACING		
					X	Y	Z **
	TANGENT 2L	MERGING L	SHIFTING L/2	SHOULDER L/3	TAPER	TANGENT	CONFLICT
mph	ft	ft	ft	ft	ft	ft	ft
20	160	80	40	27	20	40	10
25	250	125	63	42	25	50	12
30	360	180	90	60	30	60	15
35	490	245	123	82	35	70	17
40	640	320	160	107	40	80	20
45	1080	540	270	180	45	90	22
50	1200	600	300	200	50	100	25
55	1320	660	330	220	55	110	27
60	1440	720	360	240	60	120	30
65	1560	780	390	260	65	130	32
70	1680	840	420	280	70	140	35

* - For other offsets, use the following merging taper length formula for L:
For speed of 40 mph or less, $L = WS^2/60$
For speed of 45 mph or more, $L = WS$

Where: L = Taper length in feet
W = Width of offset in feet
S = Posted speed limit, off-peak 85th-percentile speed prior to work starting, or the anticipated operating speed in mph

** - Use for taper and tangent sections where there are no pavement markings or where there is a conflict between existing pavement markings and channelizers (CA).

TABLE 2

LONGITUDINAL BUFFER SPACE AND FLAGGER STATION SPACING

SPEED *	Min D **	DOWNGRADE Min D ***		
		-3%	-6%	-9%
mph	ft	ft	ft	ft
20	115	116	120	126
25	155	158	165	173
30	200	205	215	227
35	250	257	271	287
40	305	315	333	354
45	360	378	400	427
50	425	446	474	507
55	495	520	553	593
60	570	598	638	686
65	645	682	728	785
70	730	771	825	891

* - Speed is posted speed limit, off-peak 85th-percentile speed prior to work starting, or the anticipated operating speed in mph

** - Longitudinal buffer space or flagger station spacing

*** - Use on sustained downgrade steeper than -3 percent and longer than 1 mile.

TABLE 3

ADVANCE WARNING SIGN SPACING

ROAD TYPE	DISTANCE BETWEEN SIGNS *		
	A	B	C
	ft	ft	ft
URBAN - 25 mph OR LESS	100	100	100
URBAN - MORE THAN 25 mph TO 40 mph	250	250	250
URBAN - MORE THAN 40 mph	350	350	350
RURAL	500	500	500
EXPRESSWAY / FREEWAY	1000	1500	2640

* - The distances are approximate, are intended for guidance purposes only, and should be applied with engineering judgment. These distances should be adjusted by the Engineer for field conditions, if necessary, by increasing or decreasing the recommmended distances.

STATE OF CALIFORNIA
DEPARTMENT OF TRANSPORTATION

TRAFFIC CONTROL SYSTEM TABLES FOR LANE AND RAMP CLOSURES

NO SCALE

RSP T9 DATED JULY 19, 2013 SUPERSEDES RSP T9 DATED APRIL 19, 2013 THAT SUPPLEMENTS THE STANDARD PLANS BOOK DATED 2010.

REVISED STANDARD PLAN RSP T9

4-30-13

Dist	COUNTY	ROUTE	POST MILES TOTAL PROJECT	SHEET No.	TOTAL SHEETS
04	Son	116	13.7	72	92

REGISTERED CIVIL ENGINEER

July 18, 2014
PLANS APPROVAL DATE

REGISTERED PROFESSIONAL ENGINEER Gurinderpal Bhullar No. C48815 Exp. 9-30-14 CIVIL STATE OF CALIFORNIA

THE STATE OF CALIFORNIA OR ITS OFFICERS OR AGENTS SHALL NOT BE RESPONSIBLE FOR THE ACCURACY OR COMPLETENESS OF SCANNED COPIES OF THIS PLAN SHEET.

TO ACCOMPANY PLANS DATED 9-02-14

NOTES:

See Revised Standard Plan RSP T9 for tables.

Use cone spacing X for taper segment, Y for tangent segment or Z for conflict situations, as approriate, per Table 1, unless X, Y, or Z cone spacing is shown on this sheet.

Unless otherwise specified in the special provisions, all temporary warning signs shall have black legend on fluorescent orange background.

California codes are designated by (CA). Otherwise, Federal (MUTCD) codes are shown.

TYPICAL LANE CLOSURE WITH REVERSIBLE CONTROL

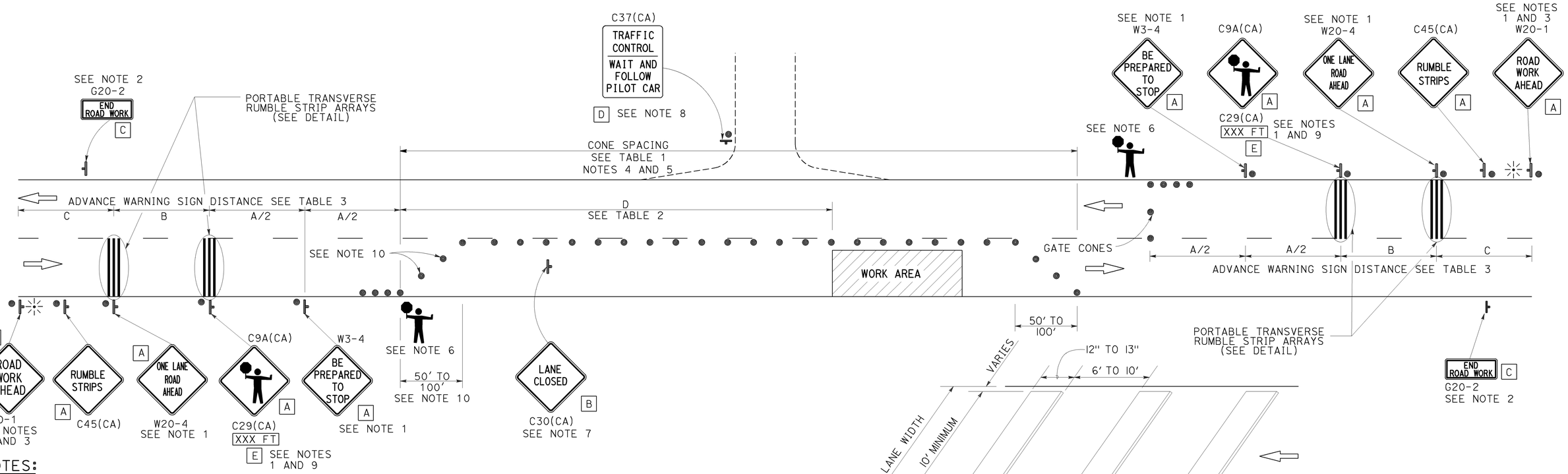

NOTES:

1. Each advance warning sign in each direction of travel shall be equipped with at least two flags for daytime closure. Each flag shall be at least 16" x 16" in size and shall be orange or fluorescent red-orange in color. Flashing beacons shall be placed at the locations indicated for lane closure during hours of darkness.
2. A G20-2 "END ROAD WORK" sign, as appropriate, shall be placed at the end of the lane control unless the end of work area is obvious, or ends within a larger project's limits.
3. If the W20-1 sign would follow within 2000' of a stationary W20-1 or G20-1 "ROAD WORK NEXT _____ MILES", use a W20-4 sign for the first advance warning sign.
4. All cones used for lane closures during the hours of darkness shall be fitted with retroreflective bands (or sleeves) as specified in the specifications.
5. Portable delineators, placed at one-half the spacing indicated for traffic cones, may be used instead of cones for daytime closures only.
6. Additional advance flaggers may be required. Flagger should stand in a conspicuous place, be visible to approaching traffic as well as approaching vehicles after the first vehicle has stopped. During the hours of darkness, the flagging-station and flagger shall be illuminated and clearly visible to approaching traffic. The illumination footprint of the lighting on the ground shall be at least 20' in diameter. Place a minimum of four cones at 50' intervals in advance of flagger station as shown.
7. Place C30(CA) "LANE CLOSED" sign at 500' to 1000' intervals throughout extended work areas. They are optional if the work area is visible from the flagger station.
8. When a pilot car is used, place a C37(CA) "TRAFFIC CONTROL-WAIT AND FOLLOW PILOT CAR" sign with black legend on white background at all intersections, driveways and alleys without a flagger within traffic control area. Signs shall be clean and visible at all times. Where traffic can not be effectively self-regulated, at least one flagger shall be used at each intersection within traffic control area.
9. An optional C29(CA) sign may be placed below the C9A(CA) sign.
10. Either traffic cones or barricades shall be placed on the taper. Barricades shall be Type I, II, or III.
11. The color of the portable transverse rumble strips shall be black or orange. Use 2 arrays, each array shall consist of 3 rumble strips.
12. Portable transverse rumble strips shall not be placed on sharp horizontal or vertical curves nor shall they be placed through pedestrian crossings.
13. If the portable transverse rumble strips become out of alignment (skewed) by more than 6 inches, measured from one end to the other, they shall be readjusted to bring the placement back to the original location.

PORTABLE TRANSVERSE RUMBLE STRIP ARRAY DETAIL

LEGEND

- TRAFFIC CONE
- TEMPORARY TRAFFIC CONTROL SIGN
- PORTABLE FLASHING BEACON
- FLAGGER

SIGN PANEL SIZE (Min)

A	48" x 48"
B	30" x 30"
C	36" x 18"
D	36" x 42"
E	20" x 7"

STATE OF CALIFORNIA
DEPARTMENT OF TRANSPORTATION

TRAFFIC CONTROL SYSTEM FOR LANE CLOSURE ON TWO LANE CONVENTIONAL HIGHWAYS

NO SCALE

RSP T13 DATED JULY 18, 2014 SUPERSEDES RSP T13 DATED APRIL 19, 2013 AND STANDARD PLAN T13 DATED MAY 20, 2011 - PAGE 241 OF THE STANDARD PLANS BOOK DATED 2010.

REVISED STANDARD PLAN RSP T13

2010 REVISED STANDARD PLAN RSP T13

6-19-14

Dist	COUNTY	ROUTE	POST MILES TOTAL PROJECT	SHEET No.	TOTAL SHEETS
04	Son	116	13.7	73	92

REGISTERED CIVIL ENGINEER

November 15, 2013
PLANS APPROVAL DATE

REGISTERED PROFESSIONAL ENGINEER Tillat Satter No. C42892 Exp. 3-31-14 CIVIL STATE OF CALIFORNIA

THE STATE OF CALIFORNIA OR ITS OFFICERS OR AGENTS SHALL NOT BE RESPONSIBLE FOR THE ACCURACY OR COMPLETENESS OF SCANNED COPIES OF THIS PLAN SHEET.

TO ACCOMPANY PLANS DATED 9-02-14

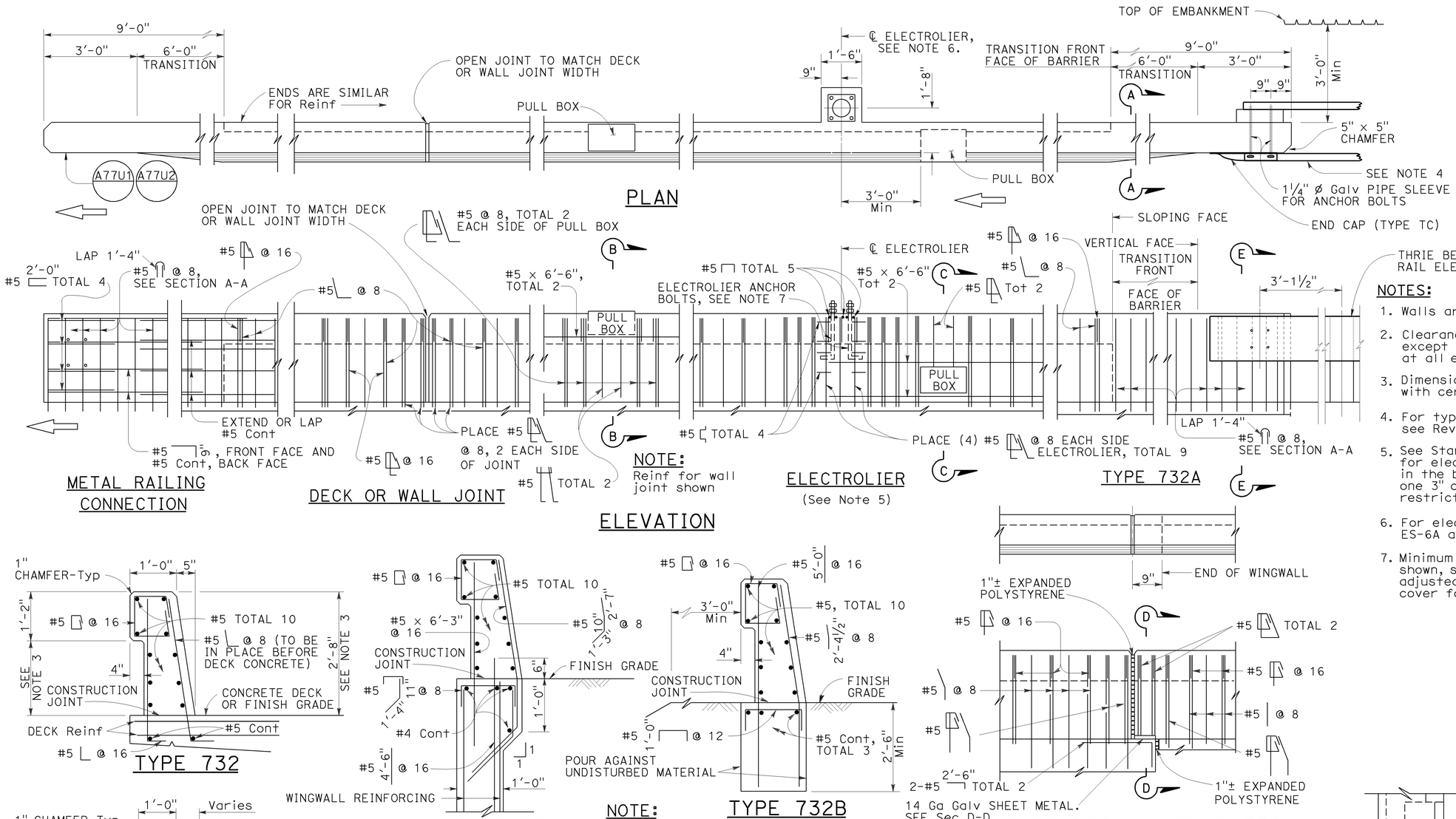

NOTES:

1. Walls are to be backfilled before barrier is placed.
2. Clearance to reinforcing steel in barrier to be 1", except as noted. Longitudinal reinforcement to stop at all expansion joints.
3. Dimensions may vary with roadway cross slope and with certain thickness of surfacing. See Project Plans.
4. For typical metal railing connection details not shown, see Revised Standard Plans RSP A77U1 and RSP A77U2.
5. See Standard Plans ES-9A, ES-9B, ES-9C, ES-9D and ES-9E for electrical details. The maximum number of conduits in the barrier is limited to two 2" conduits along with one 3" conduit. When a 3" conduit is used, it is restricted to the base of the barrier.
6. For electrolier mounting details, See Standard Plans ES-6A and ES-6B.
7. Minimum concrete edge distance, to the reinforcing shown, shall be maintained. Edge distance may be adjusted to accommodate increase in concrete cover for architectual treatment.

NOTE: Types 732A and 732B are similar to Type 732 except as noted.

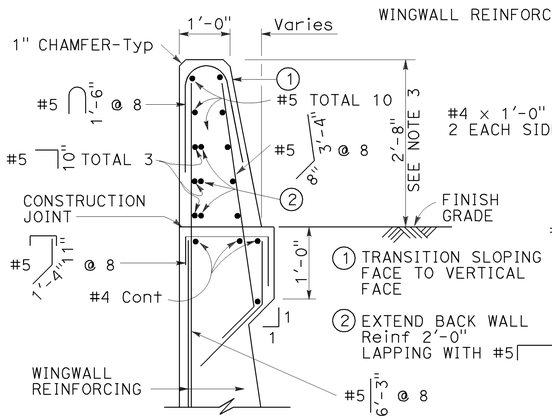

Details shown for barrier anchorage to Type 732A. Anchorage for barrier Types 732 and 732A are similar to their respective details.

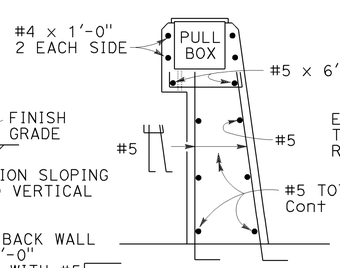

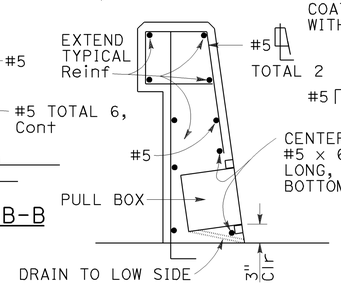

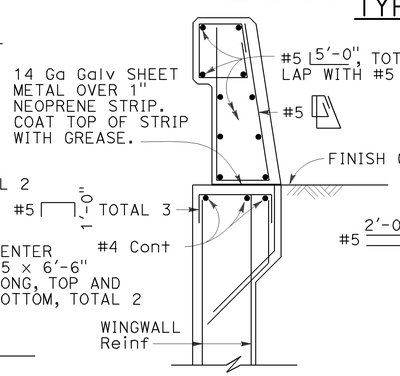

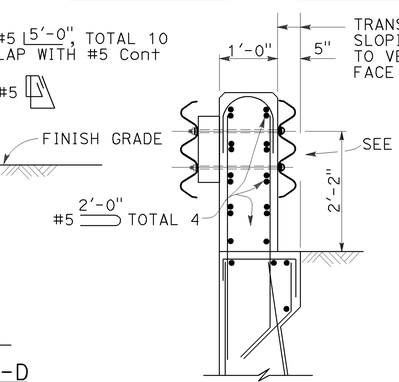

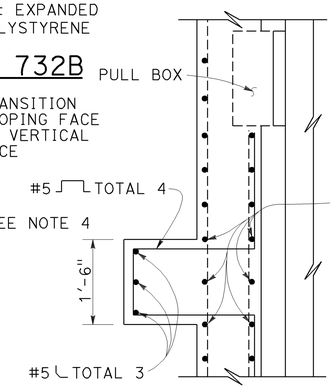

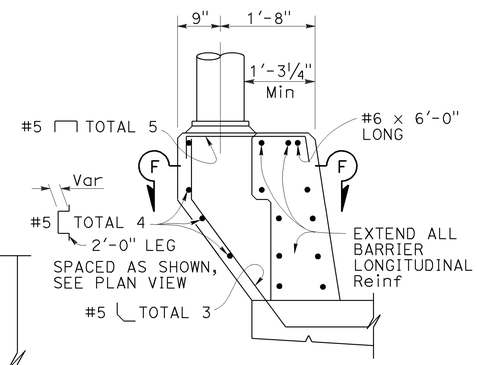

STATE OF CALIFORNIA
DEPARTMENT OF TRANSPORTATION

CONCRETE BARRIER TYPE 732

NO SCALE

RSP B11-55 DATED NOVEMBER 15, 2013 SUPERSEDES RSP B11-55 DATED JULY 19, 2013 AND STANDARD PLAN B11-55 DATED MAY 20, 2011 - PAGE 297 OF THE STANDARD PLANS BOOK DATED 2010.

REVISED STANDARD PLAN RSP B11-55

2010 REVISED STANDARD PLAN RSP B11-55

10-4-13

Dist	COUNTY	ROUTE	POST MILES TOTAL PROJECT	SHEET No.	TOTAL SHEETS
04	Son	116	13.7	74	92

Theresa Gabriel
REGISTERED ELECTRICAL ENGINEER

July 19, 2013
PLANS APPROVAL DATE

REGISTERED PROFESSIONAL ENGINEER
Theresa Aziz Gabriel
No. E15129
Exp. 6-30-14
ELECTRICAL
STATE OF CALIFORNIA

THE STATE OF CALIFORNIA OR ITS OFFICERS OR AGENTS SHALL NOT BE RESPONSIBLE FOR THE ACCURACY OR COMPLETENESS OF SCANNED COPIES OF THIS PLAN SHEET.

TO ACCOMPANY PLANS DATED 9-02-14

LEGEND:

AB	ABANDON. IF APPLIED TO CONDUIT, REMOVE CONDUCTORS
BC	INSTALL PULL BOX IN EXISTING CONDUIT RUN
BP	PEDESTRIAN BARRICADE, TYPE AS INDICATED ON PLAN
CB	INSTALL CONDUIT INTO EXISTING PULL BOX
CC	CONNECT NEW AND EXISTING CONDUIT. REMOVE EXISTING CONDUCTORS AND INSTALL CONDUCTORS AS INDICATED
CF	CONDUIT TO REMAIN FOR FUTURE USE. REMOVE CONDUCTORS. INSTALL PULL TAPE
DH	DETECTOR HANDHOLE
FA	FOUNDATION TO BE ABANDONED
IS	INSTALL SIGN ON SIGNAL MAST ARM
NS	NO SLIP BASE ON STANDARD
PEC	PHOTOELECTRIC CONTROL
PEU	PHOTOELECTRIC UNIT
RC	EQUIPMENT OR MATERIAL TO BE REMOVED AND BECOME THE PROPERTY OF THE CONTRACTOR
RE	REMOVE ELECTROLIER, FUSES AND BALLAST. TAPE ENDS OF CONDUCTORS
RL	RELOCATE EQUIPMENT
RR	REMOVE AND REUSE EQUIPMENT
RS	REMOVE AND SALVAGE EQUIPMENT
SC	SPLICE NEW TO EXISTING CONDUCTORS
SD	SERVICE DISCONNECT
TSP	TELEPHONE SERVICE POINT

ABBREVIATIONS

APS	ACCESSIBLE PEDESTRIAN SIGNAL
BBS	BATTERY BACKUP SYSTEM
BC	BOLT CIRCLE
BPB	BICYCLE PUSH BUTTON
C	CONDUIT
CB	CIRCUIT BREAKER
CCTV	CLOSED CIRCUIT TELEVISION
Ckt	CIRCUIT
CMS	CHANGEABLE MESSAGE SIGN
Ctid	CALTRANS IDENTIFICATION
Comm	COMMUNICATION
DLC	LOOP DETECTOR LEAD-IN CABLE
EMS	EXTINGUISHABLE MESSAGE SIGN
EVUC	EMERGENCY VEHICLE UNIT CABLE
EVUD	EMERGENCY VEHICLE UNIT DETECTOR
FB	FLASHING BEACON
FBCA	FLASHING BEACON CONTROL ASSEMBLY
FBS	FLASHING BEACON WITH SLIP BASE
FO	FIBER OPTIC
G	EQUIPMENT GROUNDING CONDUCTOR
GB	GROUND BUS
GFCI	GROUND FAULT CIRCUIT INTERRUPTER
HAR	HIGHWAY ADVISORY RADIO
Hex	HEXAGONAL
HPS	HIGH PRESSURE SODIUM
IISNS	INTERNALLY ILLUMINATED STREET NAME SIGN
ISL	INDUCTION SIGN LIGHTING
LED	LIGHT EMITTING DIODE
LMA	LUMINAIRE MAST ARM
LPS	LOW PRESSURE SODIUM
Ltg	LIGHTING
Lum	LUMINAIRE
M	METERED
MAT	MAST ARM MOUNTING TOP ATTACHMENT
MAS	MAST ARM MOUNTING SIDE ATTACHMENT
M/M	MULTIPLE TO MULTIPLE TRANSFORMER
Mtg	MOUNTING
MV	MERCURY VAPOR LIGHTING FIXTURE
MVDS	MICROWAVE VEHICLE DETECTION SYSTEM
N	NEUTRAL (GROUNDED CONDUCTOR)
NB	NEUTRAL BUS
NC	NORMALLY CLOSE
NO	NORMALLY OPEN
P	CIRCUIT BREAKER'S POLE
PB	PULL BOX
PBA	PUSH BUTTON ASSEMBLY
PEC	PHOTOELECTRIC CONTROL
Ped	PEDESTRIAN
PEU	PHOTOELECTRIC UNIT
PT	CONDUIT WITH PULL TAPE
RE	RELOCATED EQUIPMENT
RM	RAMP METERING
RWIS	ROADSIDE WEATHER INFORMATION SYSTEM
SB	SLIP BASE
SIC	SIGNAL INTERCONNECT CABLE
Sig	SIGNAL
SMA	SIGNAL MAST ARM
SNS	STREET NAME SIGN
SP	SERVICE POINT
TDC	TELEPHONE DEMARCATION CABINET
TMS	TRAFFIC MONITORING STATION
TOS	TRAFFIC OPERATIONS SYSTEM
Veh	VEHICLE
VIVDS	VIDEO IMAGE VEHICLE DETECTION SYSTEM
WIM	WEIGH-IN-MOTION
Xfmr	TRANSFORMER

SOFFIT AND WALL MOUNTED LUMINAIRES

PENDANT, 70 W HPS UNLESS OTHERWISE SPECIFIED

FLUSH, 70 W HPS UNLESS OTHERWISE SPECIFIED

WALL SURFACE, 70 W HPS UNLESS OTHERWISE SPECIFIED

EXISTING SOFFIT OR WALL LUMINAIRE TO REMAIN UNMODIFIED

EXISTING SOFFIT OR WALL LUMINAIRE TO BE MODIFIED AS SPECIFIED

NOTE:

Arrow indicates "street side" of luminaire.

COMMONLY USED SYMBOLS FOR UNITED STATES CUSTOMARY UNITS OF MEASUREMENT:

SYMBOL USED	DEFINITIONS
Ω	OHMS
min	MINUTE
s	SECOND
bps	BITS PER SECOND
Bps	BYTES PER SECOND
A	AMPERE
V	VOLT
V(dc)	VOLT (DIRECT CURRENT)
V(ac)	VOLT (ALTERNATING CURRENT)
FC	FOOT - CANDLE
W	WATTS
VA	VOLT-AMPERE
M	MEGA
k	KILO
m	MILLI
μ	MICRO
P	PICO
Hz	HERTZ

MISCELLANEOUS ELECTROLIERS

NEW	EXISTING	
		LUMINAIRE ON WOOD POLE
		NON-STANDARD ELECTROLIER (SEE PROJECT NOTES OR PROJECT PLANS)
		CITY ELECTROLIER
		ELECTROLIER FOUNDATION (FUTURE INSTALLATION)

NOTES:

1. HPS luminaires shall be 310 W HPS when installed on Type 21, 21D, 30, 31 and 32 Standards, unless otherwise specified. HPS luminaires shall be 200 W when installed on other type standards or poles, unless otherwise specified.
2. LED luminaires shall be 235 W when installed on Type 21, 21D, 30, 31 and 32 Standards, unless otherwise specified. LED luminaires shall be 165 W when installed on other type standards or poles, unless otherwise specified.
3. Luminaires shall be the cutoff type, ANSI Type III medium cutoff lighting distribution, unless otherwise specified.

STANDARD ELECTROLIER

NEW	EXISTING	STANDARD TYPE
		15
		15D
		15 STRUCTURE
		15D STRUCTURE
		21
		21D
		21 STRUCTURE
		21D STRUCTURE
		30
		31
		32

STATE OF CALIFORNIA
DEPARTMENT OF TRANSPORTATION

ELECTRICAL SYSTEMS (LEGEND AND ABBREVIATIONS)

NO SCALE

RSP ES-1A DATED JULY 19, 2013 SUPERSEDES STANDARD PLAN ES-1A DATED MAY 20, 2011 - PAGE 425 OF THE STANDARD PLANS BOOK DATED 2010.

REVISED STANDARD PLAN RSP ES-1A

2010 REVISED STANDARD PLAN RSP ES-1A

7-15-13

Dist	COUNTY	ROUTE	POST MILES TOTAL PROJECT	SHEET No.	TOTAL SHEETS
04	Son	116	13.7	75	92

Theresa Gabriel
REGISTERED ELECTRICAL ENGINEER

July 19, 2013
PLANS APPROVAL DATE

REGISTERED PROFESSIONAL ENGINEER Theresa Aziz Gabriel No. E15129 Exp. 6-30-14 ELECTRICAL STATE OF CALIFORNIA

THE STATE OF CALIFORNIA OR ITS OFFICERS OR AGENTS SHALL NOT BE RESPONSIBLE FOR THE ACCURACY OR COMPLETENESS OF SCANNED COPIES OF THIS PLAN SHEET.

TO ACCOMPANY PLANS DATED 9-02-14

CONDUIT

NEW	EXISTING	
		LIGHTING CONDUIT, UNLESS OTHERWISE INDICATED OR NOTED
		TRAFFIC SIGNAL CONDUIT
C	c	COMMUNICATION CONDUIT
T	t	TELEPHONE CONDUIT
F	f	FIRE ALARM CONDUIT
FO	fo	FIBER OPTIC CONDUIT
		CONDUIT TERMINATION
R	r	CONDUIT RISER ATTACHED TO THE STRUCTURE OR SERVICE POLE

SERVICE EQUIPMENT

NEW	EXISTING	
OH	oh	OVERHEAD LINES
U	U	WOOD POLE, "U" INDICATES UTILITY OWNED
		POLE GUY WITH ANCHOR
		UTILITY TRANSFORMER - GROUND MOUNTED
III	III	SERVICE EQUIPMENT ENCLOSURE TYPE. DOOR INDICATES FRONT OF ENCLOSURE
T	t	TELEPHONE DEMARCATION CABINET

POLE-MOUNTED SERVICE DESIGNATION

TYPE H SERVICE, 28'-10" — TYPE OF INSTALLATION AND POLE HEIGHT ABOVE GRADE

FLASHING BEACON

NEW	EXISTING	
R	R	FLASHING BEACON (ONE VEHICLE SIGNAL HEAD WITH BACKPLATE AND VISOR) "R" INDICATES RED INDICATION, "Y" INDICATES YELLOW INDICATION
Y Y	Y Y	FLASHING BEACON WITH TYPE 15-FBS STANDARD AND A SIGN.
R R	R R	FLASHING BEACON WITH TYPES 9, 9A OR 9B SIGN UNLESS OTHERWISE SPECIFIED OR INDICATED

SIGNAL EQUIPMENT

NEW	EXISTING	
C	C	PEDESTRIAN SIGNAL HEAD "C" INDICATES COUNTDOWN PEDESTRIAN HEAD
		PUSH BUTTON ASSEMBLY POST
		PEDESTRIAN BARRICADE
		VEHICLE SIGNAL HEAD (WITH BACKPLATE AND 3-SECTIONS: RED, YELLOW AND GREEN)
		VEHICLE SIGNAL HEAD WITH ANGLE VISOR
PV	PV	MODIFICATIONS OF BASIC SYMBOL: "L" INDICATES ALL NON-ARROW SECTIONS LOUVERED "LG" INDICATES LOUVERED GREEN SECTION ONLY "PV" INDICATES ALL 12" SECTIONS PROGRAMMED VISIBILITY "8" INDICATES ALL 8" SECTIONS (ONLY WHEN SPECIFIED)
		VEHICLE SIGNAL HEAD CONSISTING OF RED, YELLOW AND GREEN LEFT ARROW SECTIONS
		VEHICLE SIGNAL HEAD CONSISTING OF RED AND YELLOW SECTIONS WITH AN UP GREEN ARROW SECTION
		VEHICLE SIGNAL HEAD (5 SECTION) CONSISTING OF RED, YELLOW AND GREEN SECTIONS WITH YELLOW AND GREEN RIGHT ARROW SECTIONS
		TYPE 15TS STANDARD WITH VEHICLE SIGNAL HEAD AND LUMINAIRE
		TYPE 21TS STANDARD WITH VEHICLE SIGNAL HEAD AND LUMINAIRE
		STANDARD WITH LUMINAIRE AND SIGNAL MAST ARMS AND ATTACHED VEHICLE SIGNAL HEADS
		TYPE 1 STANDARD WITH ATTACHED VEHICLE SIGNAL HEADS
		STANDARD WITH A SIGNAL MAST ARM, ATTACHED VEHICLE SIGNAL HEADS AND INTERNALLY ILLUMINATED STREET NAME SIGN
		CONTROLLER ASSEMBLY. DOOR INDICATES FRONT OF CABINET

SIGNAL EQUIPMENT Cont

NEW	EXISTING	
		GUARD POST
		TYPE 1 STANDARD WITH RAMP METERING SIGN
		OPTICAL DETECTOR FOR THE EMERGENCY VEHICLE DETECTION SYSTEM

NOTES:

1. All signal sections shall be 12" unless shown otherwise.
2. Signal heads shall be provided with backplates unless shown otherwise.

ILLUMINATED OVERHEAD SIGN

NEW	EXISTING	
		SINGLE POST, SINGLE ILLUMINATED SIGN, BALANCED BUTTERFLY
		SINGLE POST, DOUBLE ILLUMINATED SIGN, BALANCED BUTTERFLY
		SINGLE POST, SINGLE ILLUMINATED SIGN, FULL CANTILEVER
		DOUBLE POST, SINGLE ILLUMINATED SIGN
		SINGLE ILLUMINATED SIGN MOUNTED ON STRUCTURE
		DOUBLE POST, SINGLE ILLUMINATED SIGN WITH ELECTROLIER

STATE OF CALIFORNIA
DEPARTMENT OF TRANSPORTATION

ELECTRICAL SYSTEMS (LEGEND AND ABBREVIATIONS)

NO SCALE

RSP ES-1B DATED JULY 19, 2013 SUPERSEDES STANDARD PLAN ES-1B DATED MAY 20, 2011 - PAGE 426 OF THE STANDARD PLANS BOOK DATED 2010.

REVISED STANDARD PLAN RSP ES-1B

2010 REVISED STANDARD PLAN RSP ES-1B

7-15-13

Dist	COUNTY	ROUTE	POST MILES TOTAL PROJECT	SHEET No.	TOTAL SHEETS
04	Son	116	13.7	76	92

Theresa Gabriel
REGISTERED ELECTRICAL ENGINEER

July 19, 2013
PLANS APPROVAL DATE

REGISTERED PROFESSIONAL ENGINEER
Theresa Aziz Gabriel
No. E15129
Exp. 6-30-14
ELECTRICAL
STATE OF CALIFORNIA

THE STATE OF CALIFORNIA OR ITS OFFICERS OR AGENTS SHALL NOT BE RESPONSIBLE FOR THE ACCURACY OR COMPLETENESS OF SCANNED COPIES OF THIS PLAN SHEET.

TO ACCOMPANY PLANS DATED 9-02-14

EQUIPMENT IDENTIFICATION

ILLUMINATED SIGN IDENTIFICATION NUMBER:

SIGN No. 12345

10 ISL SCI 1.0

- SIGN NUMBER - PLACE ON POST OR STRUCTURE
- TRANSFORMER RATING (kVA)
- LIGHTING CONTROL TYPE
- NUMBER AND TYPE OF FIXTURES

DO NOT PLACE ON STANDARD OR STRUCTURE

ELECTROLIER OR EQUIPMENT IDENTIFICATION NUMBER:

12345 - 15'-0"

- MAST ARM LENGTH, IF SHOWN. DO NOT PLACE ON STANDARD OR STRUCTURE
- EQUIPMENT NUMBER - PLACE ON STANDARD OR STRUCTURE. EXISTING EQUIPMENT NUMBERS ARE SHOWN IN PARENTHESIS

CONDUIT AND CONDUCTOR IDENTIFICATION:

1½"C, 2#10, 15#14, 2 DLC, 12P#18

- PAIR
- NUMBER AND SIZE OF CONDUCTORS AND CABLES
- SIZE OF CONDUIT IN INCHES

ø1, ø2, ø2P, etc.	TRAFFIC PHASE IDENTIFICATION FOR SIGNAL FACES, DETECTORS AND PHASE DIAGRAMS
1 2 3	LEGEND NUMBERS
A B C	EQUIPMENT, SIGNAL POLES, INSTALLATION OR ITEMS
1 2 3	CONDUIT RUN NUMBERS

SIGNAL AND LIGHTING STANDARD (TYPICAL DESIGNATION):

19A - 3 - 100

- WIND VELOCITY = 100 mph
- CASE 3 ARM LOADING
- STANDARD TYPE
- STANDARD PLAN SHEET NUMBER
- DETAIL, NUMBER, SECTION, TYPE OR ELEVATION

MISCELLANEOUS EQUIPMENT

NEW	EXISTING	
CMS	cms	CHANGEABLE MESSAGE SIGN
		CLOSED CIRCUIT TELEVISION CAMERA
		HIGHWAY ADVISORY RADIO POLE AND ANTENNA
EMS	ems	EXTINGUISHABLE MESSAGE SIGN
M V	m v	DETECTION DEVICE M = MICROWAVE SENSOR V = VIDEO IMAGE SENSOR

WIRING DIAGRAM LEGEND

- EXTERNAL CONDUCTOR
- CONDUCTOR OR BUS
- TIE POINT
- CONTACTOR COIL
- CONTACTOR, NO CONTACT
- TERMINAL BLOCKS
- CONTACTOR, NC CONTACT
- ENCLOSURE BOND
- GROUNDING ELECTRODE
- CIRCUIT BREAKER
- RECEPTACLE

PULL BOXES

NEW	EXISTING	
		PULL BOX, No. 5 UNLESS OTHERWISE INDICATED OR NOTED
3	9A(21)	PULL BOX, ADDITIONAL DESIGNATIONS OR DESCRIPTIONS

3 No. 3½ PULL BOX
5 No. 5 PULL BOX
6 No. 6 PULL BOX
7 No. 7 (CEILING PULL BOX)
8 No. 8 (PENDANT SOFFIT PULL BOX)
9 No. 9 PULL BOX
9A No. 9A PULL BOX

(C) COMMUNICATIONS PULL BOX
(E) PULL BOX WITH EXTENSION
(S) SPRINKLER CONTROL PULL BOX
(21) ANCHOR BOLTS AND CONDUIT FOR FUTURE INSTALLATION OF TYPE 21 STANDARD
(T) TRAFFIC PULL BOX

VEHICLE DETECTORS

5 J 9 U

- VEHICLE DETECTOR DESIGNATION
- U = UPPER
  L = LOWER
- SLOT NUMBER IN INPUT FILE
- INPUT FILE (I OR J)
- PHASE

NEW	EXISTING	
		TYPE A DETECTOR LOOP. OUTLINE OF SAWCUT SHOWN
		TYPE B DETECTOR LOOP. OUTLINE OF SAWCUT SHOWN
		TYPE C DETECTOR LOOP. OUTLINE OF SAWCUT SHOWN
		TYPE D DETECTOR LOOP. OUTLINE OF SAWCUT SHOWN
		TYPE E DETECTOR LOOP. OUTLINE OF SAWCUT SHOWN
		TYPE Q DETECTOR LOOP. OUTLINE OF SAWCUT SHOWN
		MAGNETIC DETECTOR
DH	dh	DETECTOR HANDHOLE
		MICROWAVE OR VIDEO DETECTION ZONE

STATE OF CALIFORNIA
DEPARTMENT OF TRANSPORTATION

ELECTRICAL SYSTEMS (LEGEND AND ABBREVIATIONS)

NO SCALE

RSP ES-1C DATED JULY 19, 2013 SUPERSEDES STANDARD PLAN ES-1C DATED MAY 20, 2011 - PAGE 427 OF THE STANDARD PLANS BOOK DATED 2010.

REVISED STANDARD PLAN RSP ES-1C

2010 REVISED STANDARD PLAN RSP ES-1C

7-11-13

Dist	COUNTY	ROUTE	POST MILES TOTAL PROJECT	SHEET No.	TOTAL SHEETS
04	Son	116	13.7	77	92

Theresa Gabriel
REGISTERED ELECTRICAL ENGINEER

July 19, 2013
PLANS APPROVAL DATE

REGISTERED PROFESSIONAL ENGINEER
Theresa Aziz Gabriel
No. E15129
Exp. 6-30-14
ELECTRICAL
STATE OF CALIFORNIA

THE STATE OF CALIFORNIA OR ITS OFFICERS OR AGENTS SHALL NOT BE RESPONSIBLE FOR THE ACCURACY OR COMPLETENESS OF SCANNED COPIES OF THIS PLAN SHEET.

TO ACCOMPANY PLANS DATED 9-02-14

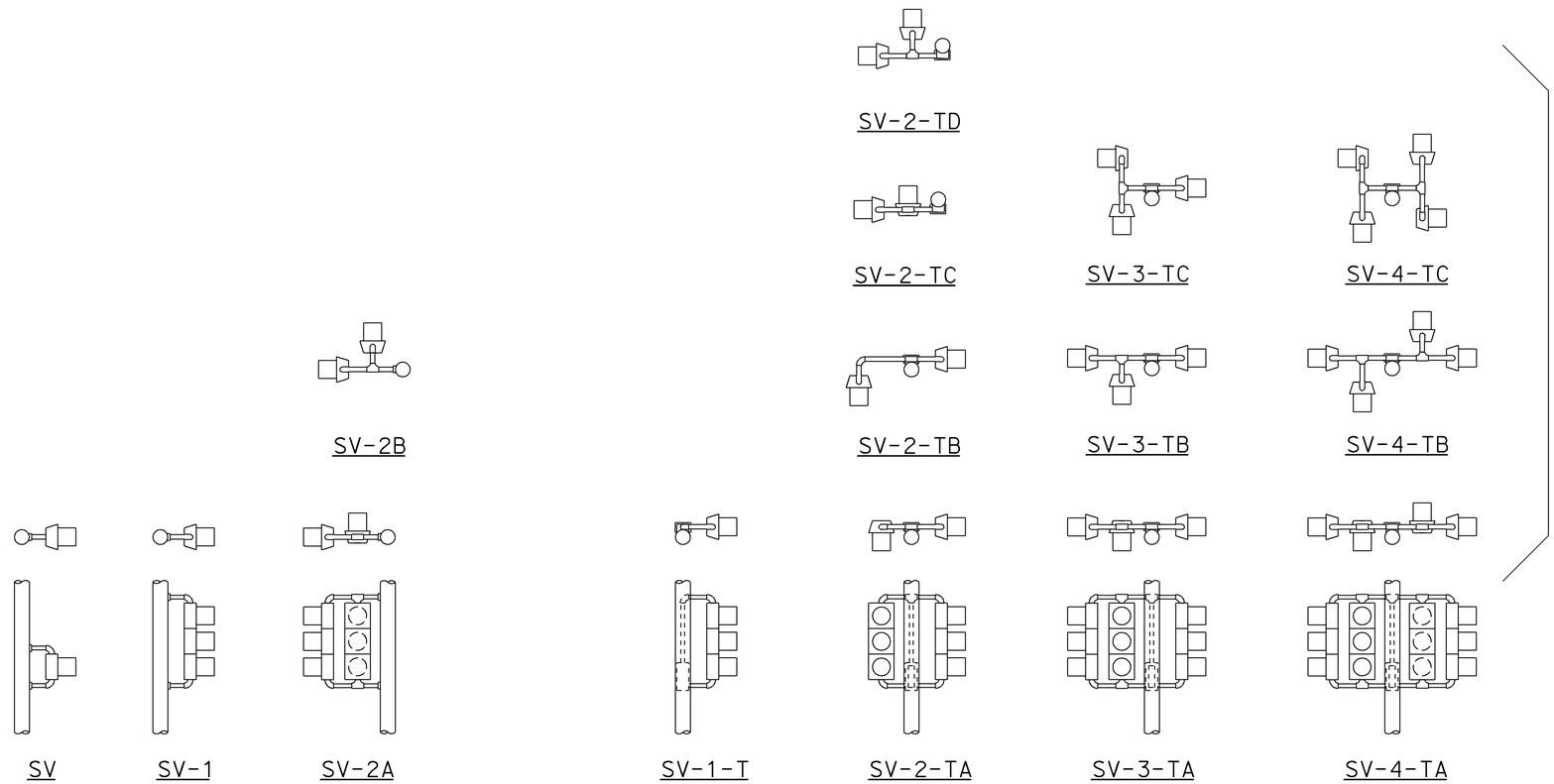

SIDE MOUNTINGS

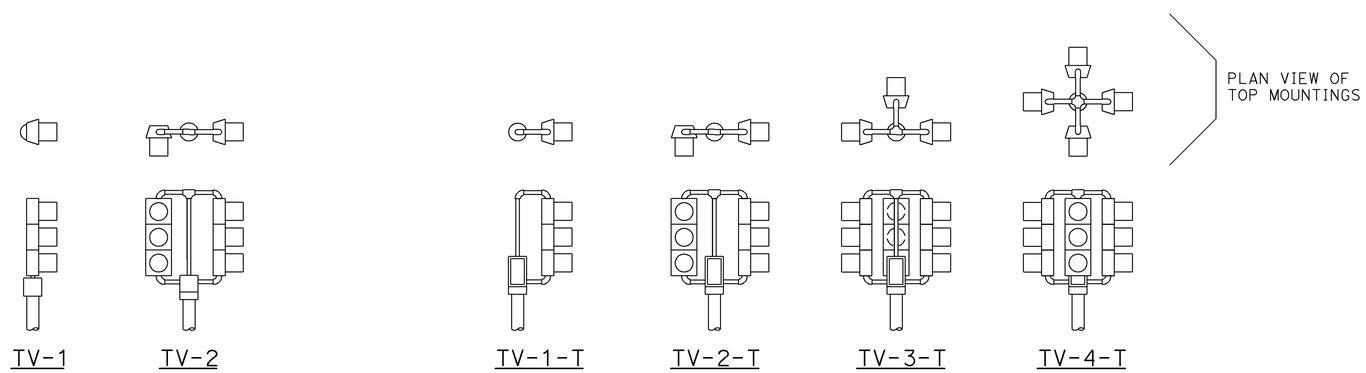

TOP MOUNTINGS

ABBREVIATIONS:

SV	SIDE MOUNTED VEHICLE SIGNALS
T	TERMINAL COMPARTMENT
TV	TOP MOUNTED VEHICLE SIGNALS
1, 2, 3, 4	NUMBER OF SIGNAL FACES (3 - SECTION, UNLESS OTHERWISE INDICATED)
A, B, C, D	CONFIGURATION OF SIGNALS

NOTES:

1. Mountings shall be oriented to provide maximum horizontal clearance to adjacent roadway.
2. Bracket arms shall be long enough to permit proper alignment of signals and backplate installation.
3. See Standard Plans ES-4D and ES-4E for attachment fitting details.

STATE OF CALIFORNIA
DEPARTMENT OF TRANSPORTATION

ELECTRICAL SYSTEMS (VEHICULAR SIGNAL HEADS AND MOUNTINGS)

NO SCALE

RSP ES-4A DATED JULY 19, 2013 SUPERSEDES STANDARD PLAN ES-4A DATED MAY 20, 2011 - PAGE 443 OF THE STANDARD PLANS BOOK DATED 2010.

REVISED STANDARD PLAN RSP ES-4A

2010 REVISED STANDARD PLAN RSP ES-4A

7-9-13

Dist	COUNTY	ROUTE	POST MILES TOTAL PROJECT	SHEET No.	TOTAL SHEETS
04	Son	116	13.7	78	92

Theresa Gabriel
REGISTERED ELECTRICAL ENGINEER

July 19, 2013
PLANS APPROVAL DATE

REGISTERED PROFESSIONAL ENGINEER
Theresa Aziz Gabriel
No. E15129
Exp. 6-30-14
ELECTRICAL
STATE OF CALIFORNIA

THE STATE OF CALIFORNIA OR ITS OFFICERS OR AGENTS SHALL NOT BE RESPONSIBLE FOR THE ACCURACY OR COMPLETENESS OF SCANNED COPIES OF THIS PLAN SHEET.

TO ACCOMPANY PLANS DATED 9-02-14

VISORS

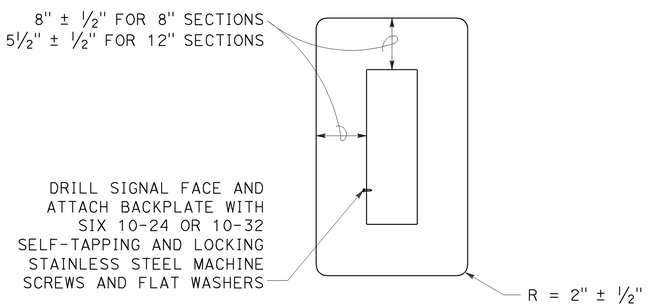

8" AND 12" SECTIONS

BACKPLATE

1/16" minimum thickness
3001-14 aluminum or plastic
when specified

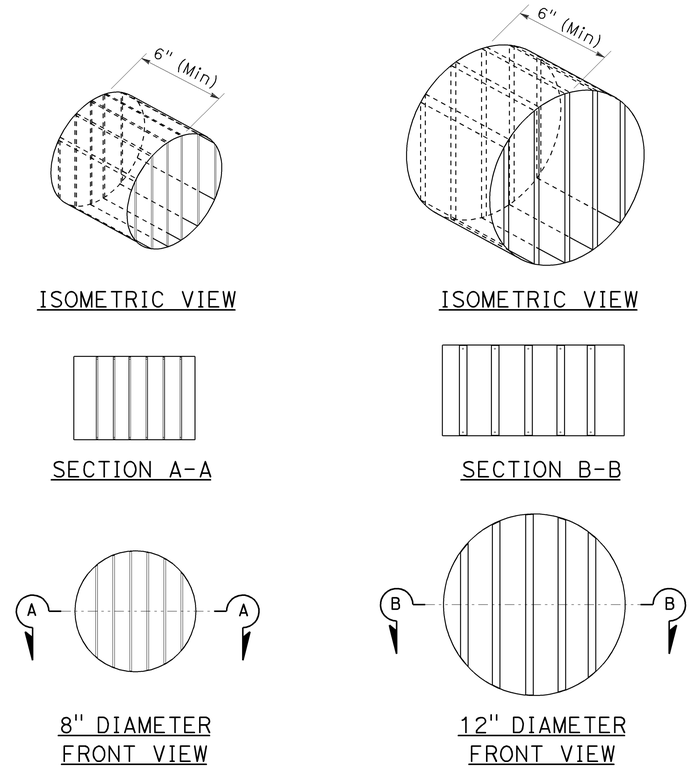

DIRECTIONAL LOUVER

Directional louvers shall be oriented as directed by the Engineer and secured in place with one plated brass machine screw and nut.

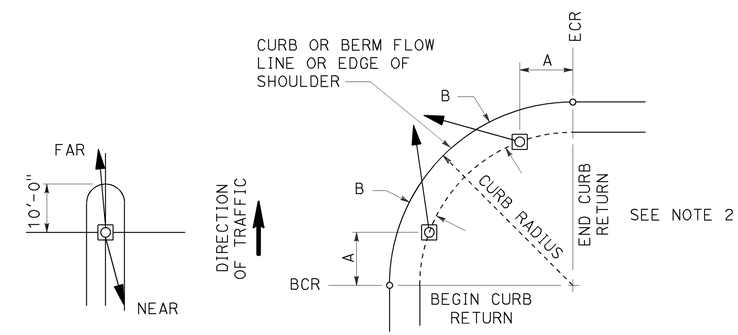

NOTES:

1. Typical signal pole placement unless dimensioned on plans.
2. For A and B dimensions, see Pole Schedule, or as directed by the Engineer.

SIGNAL STANDARD PLACEMENT DIMENSIONS AND EQUIPMENT LOCATIONS

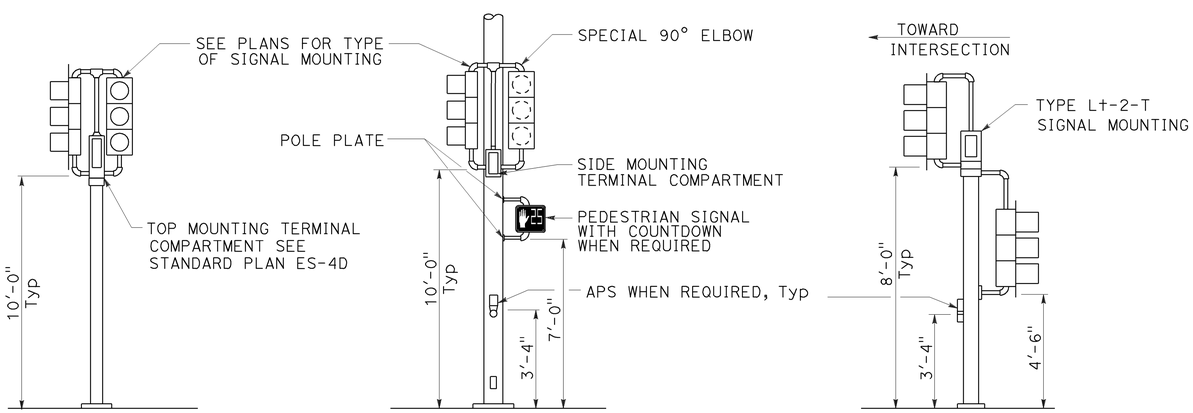

TOP MOUNTED SIGNALS (TV)
Type 1-A, 1-B, 1-C and 1-D standard as indicated on the plans

SIDE MOUNTED SIGNALS (SV AND SP)
Normally used on standards with luminaire or signal mast arm

LEFT TURN LANE SIGNAL
Type 1-A, 1-B, 1-C and 1-D standard as indicated on plans

TYPICAL SIGNAL INSTALLATIONS

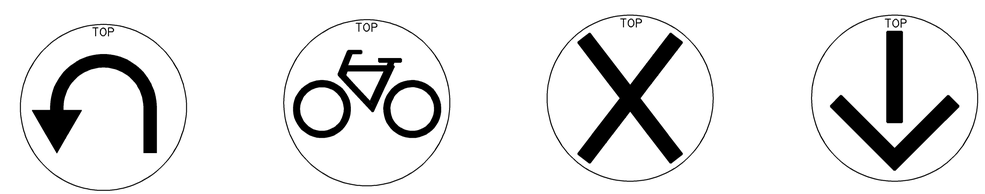

U-TURN | BICYCLE | LANE CONTROL | LANE CONTROL

SIGNAL FACES

STATE OF CALIFORNIA
DEPARTMENT OF TRANSPORTATION

ELECTRICAL SYSTEMS (VEHICULAR SIGNAL HEADS AND MOUNTINGS)

NO SCALE

RSP ES-4C DATED JULY 19, 2013 SUPERSEDES STANDARD PLAN ES-04C DATED MAY 20, 2011 - PAGE 445 OF THE STANDARD PLANS BOOK DATED 2010.

REVISED STANDARD PLAN RSP ES-4C

2010 REVISED STANDARD PLAN RSP ES-4C

7-10-13

Dist	COUNTY	ROUTE	POST MILES TOTAL PROJECT	SHEET No.	TOTAL SHEETS
04	Son	116	13.7	79	92

Theresa Gabriel
REGISTERED ELECTRICAL ENGINEER

July 19, 2013
PLANS APPROVAL DATE

REGISTERED PROFESSIONAL ENGINEER
Theresa Aziz Gabriel
No. E15129
Exp. 6-30-14
ELECTRICAL
STATE OF CALIFORNIA

THE STATE OF CALIFORNIA OR ITS OFFICERS OR AGENTS SHALL NOT BE RESPONSIBLE FOR THE ACCURACY OR COMPLETENESS OF SCANNED COPIES OF THIS PLAN SHEET.

TO ACCOMPANY PLANS DATED 9-02-14

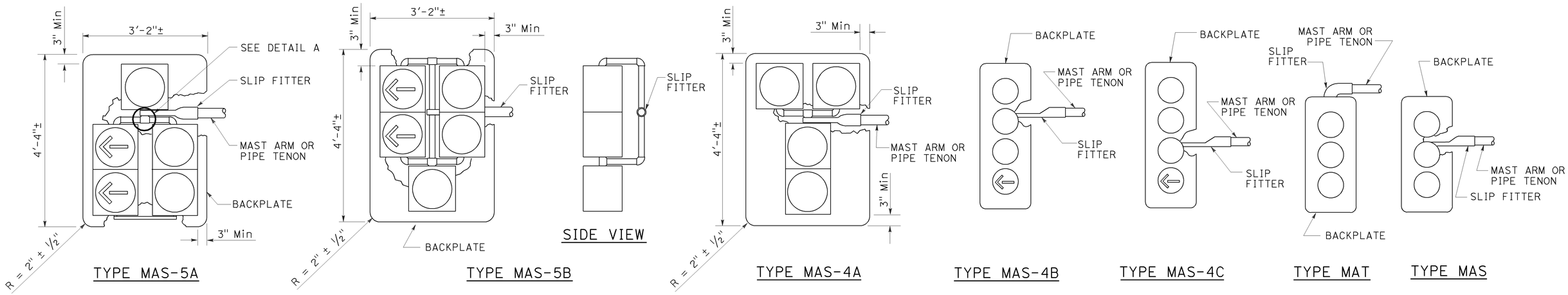

MAST ARM MOUNTINGS

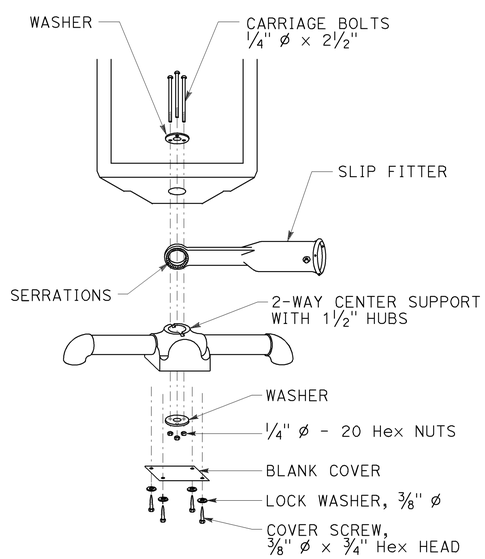

DETAIL A

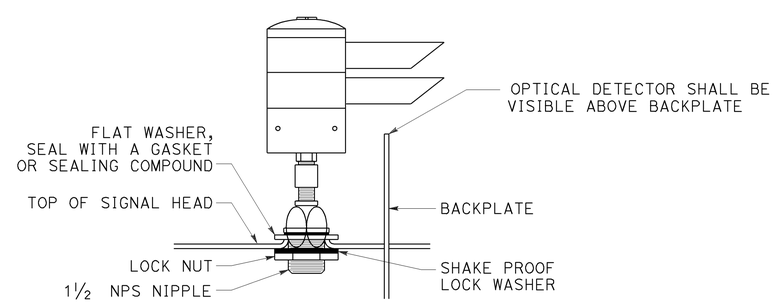

OPTICAL DETECTOR MOUNTING FOR EMERGENCY VEHICLE DETECTION SYSTEM

DETAIL B

STATE OF CALIFORNIA
DEPARTMENT OF TRANSPORTATION

ELECTRICAL SYSTEMS (VEHICULAR SIGNAL HEADS AND OPTICAL DETECTOR MOUNTING)

NO SCALE

RSP ES-4E DATED JULY 19, 2013 SUPERSEDES STANDARD PLAN ES-4E DATED MAY 20, 2011 - 447 OF THE STANDARD PLANS BOOK DATED 2010.

REVISED STANDARD PLAN RSP ES-4E

2010 REVISED STANDARD PLAN RSP ES-4E

7-9-13

Dist	COUNTY	ROUTE	POST MILES TOTAL PROJECT	SHEET No.	TOTAL SHEETS
04	Son	116	13.7	80	92

Theresa Gabriel
REGISTERED ELECTRICAL ENGINEER

July 19, 2013
PLANS APPROVAL DATE

REGISTERED PROFESSIONAL ENGINEER
Theresa Aziz Gabriel
No. E15129
Exp. 6-30-14
ELECTRICAL
STATE OF CALIFORNIA

THE STATE OF CALIFORNIA OR ITS OFFICERS OR AGENTS SHALL NOT BE RESPONSIBLE FOR THE ACCURACY OR COMPLETENESS OF SCANNED COPIES OF THIS PLAN SHEET.

TO ACCOMPANY PLANS DATED 9-02-14

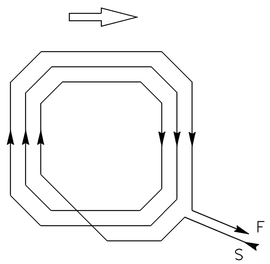

WINDING DETAIL

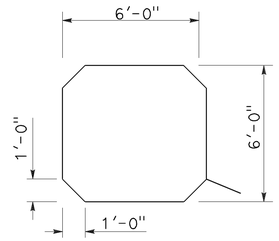

SAWCUT DETAIL

TYPE A LOOP DETECTOR CONFIGURATION

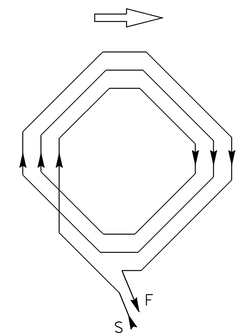

WINDING DETAIL

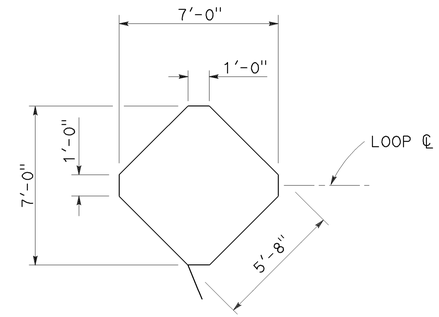

SAWCUT DETAIL

TYPE B LOOP DETECTOR CONFIGURATION

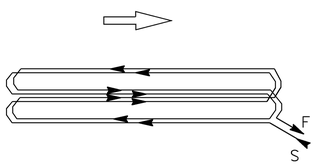

WINDING DETAIL

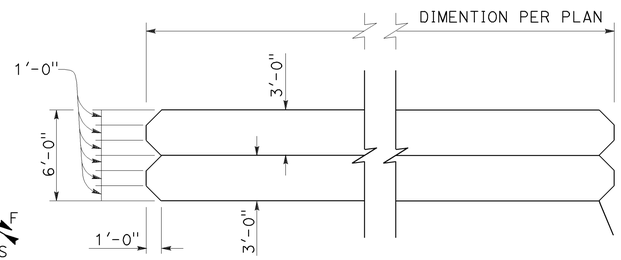

SAWCUT DETAIL

TYPE C LOOP DETECTOR CONFIGURATION

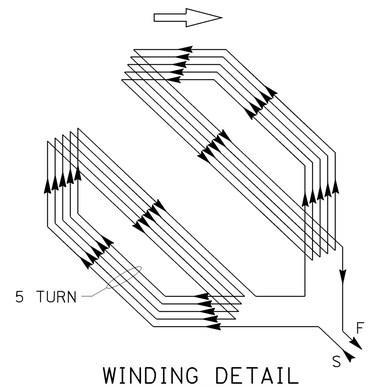

WINDING DETAIL

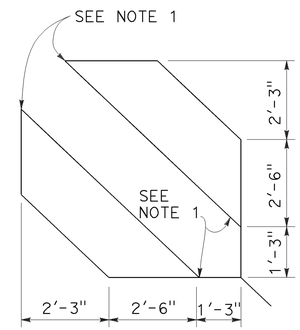

SAWCUT DETAIL

TYPE D LOOP DETECTOR CONFIGURATION

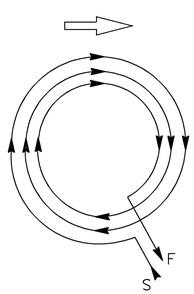

WINDING DETAIL

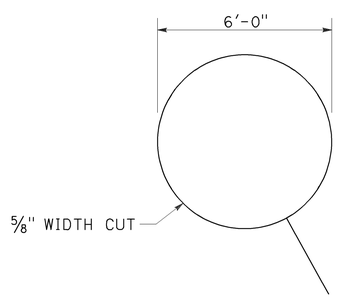

SAWCUT DETAIL

TYPE E LOOP DETECTOR CONFIGURATION

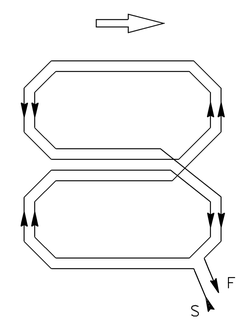

WINDING DETAIL

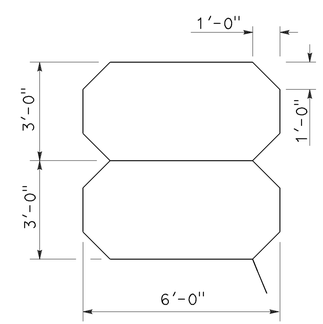

SAWCUT DETAIL

TYPE Q LOOP DETECTOR CONFIGURATION

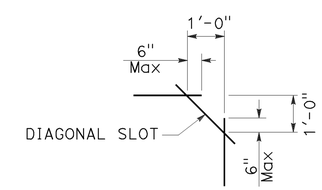

PLAN VIEW OF DIAGONAL SLOT AT CORNERS

NOTES:

1. Round corners of acute angle sawcuts to prevent damage to conductors.
2. Typical distance separating loops from edge to edge is 10' for Type A, B, D and E installation in single lane.

STATE OF CALIFORNIA
DEPARTMENT OF TRANSPORTATION

ELECTRICAL SYSTEMS (DETECTORS)

NO SCALE

RSP ES-5B DATED JULY 19, 2013 SUPERSEDES STANDARD PLAN ES-5B DATED MAY 20, 2011 - PAGE 449 OF THE STANDARD PLANS BOOK DATED 2010.

REVISED STANDARD PLAN RSP ES-5B

2010 REVISED STANDARD PLAN RSP ES-5B

7-9-13

Dist	COUNTY	ROUTE	POST MILES TOTAL PROJECT	SHEET No.	TOTAL SHEETS
04	Son	116	13.7	81	92

Theresa Gabriel
REGISTERED ELECTRICAL ENGINEER

July 19, 2013
PLANS APPROVAL DATE

REGISTERED PROFESSIONAL ENGINEER
Theresa Aziz Gabriel
No. E15129
Exp. 6-30-14
ELECTRICAL
STATE OF CALIFORNIA

THE STATE OF CALIFORNIA OR ITS OFFICERS OR AGENTS SHALL NOT BE RESPONSIBLE FOR THE ACCURACY OR COMPLETENESS OF SCANNED COPIES OF THIS PLAN SHEET.

TO ACCOMPANY PLANS DATED 9-02-14

2010 REVISED STANDARD PLAN RSP ES-5C

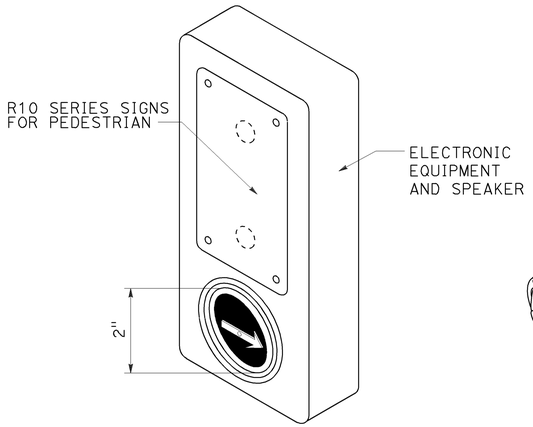

ACCESSIBLE PEDESTRIAN SIGNAL

DETAIL A
(See note 1 to 4)

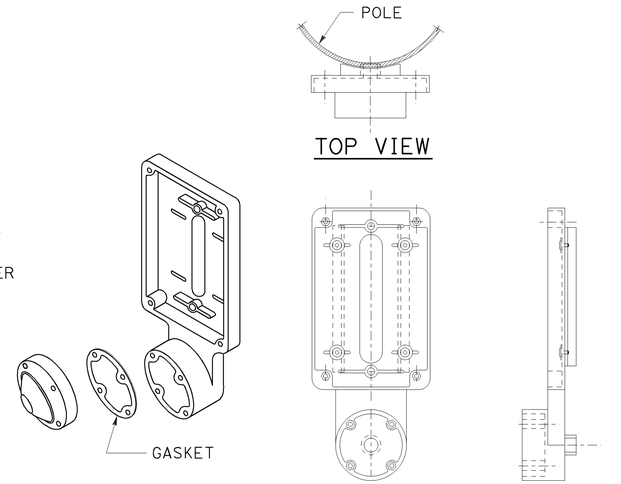

TYPE B PUSH BUTTON ASSEMBLY

DETAIL B
(See note 1 to 4)

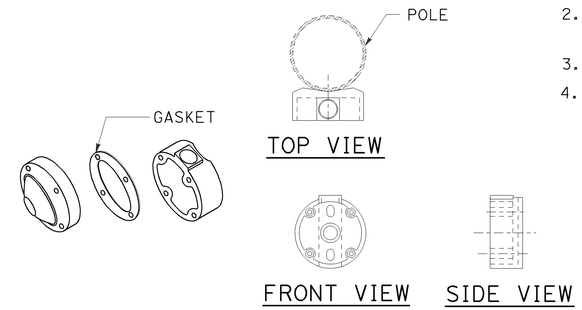

TYPE C PUSH BUTTON ASSEMBLY

DETAIL C
(See note 1 to 4)

NOTES:

1. Back casting shape to fit curvature of pole.
2. Provide cover fitting for top of post, when PBA is mounted on push button assembly post.
3. Install push button on crosswalk side of standard.
4. Use R10 series regulatory signs and plaques for pedestrian and bicycle facilities.

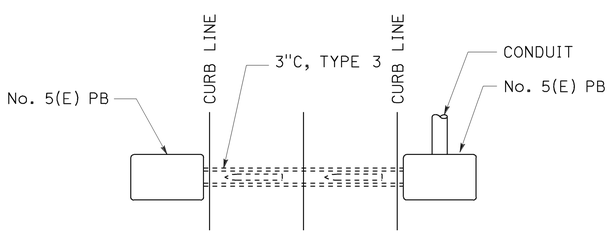

PLAN

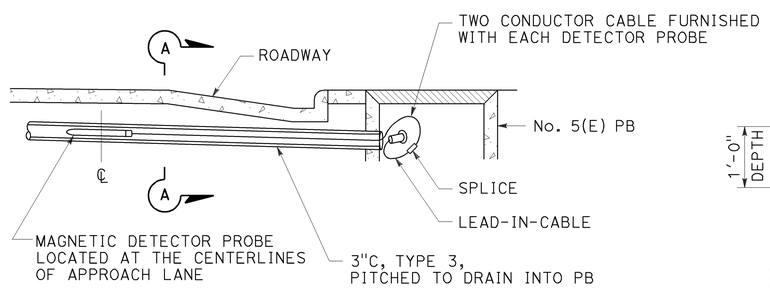

ELEVATION

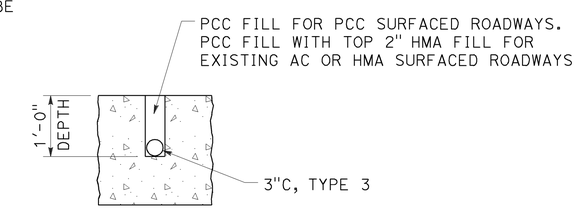

SECTION A-A

MAGNETIC VEHICLE DETECTOR
INSTALLATION DETAILS
DETAIL D

STATE OF CALIFORNIA
DEPARTMENT OF TRANSPORTATION

ELECTRICAL SYSTEMS (ACCESSIBLE PEDESTRIAN SIGNAL, PUSH BUTTON ASSEMBLIES AND MAGNETIC VEHICLE DETECTOR)

NO SCALE

RSP ES-5C DATED JULY 19, 2013 SUPERSEDES STANDARD PLAN ES-5C
DATED MAY 20, 2011 - PAGE 450 OF THE STANDARD PLANS BOOK DATED 2010.

REVISED STANDARD PLAN RSP ES-5C

7-9-13

Dist	COUNTY	ROUTE	POST MILES TOTAL PROJECT	SHEET No.	TOTAL SHEETS
04	Son	116	13.7	82	92

Theresa Gabriel
REGISTERED ELECTRICAL ENGINEER

July 19, 2013
PLANS APPROVAL DATE

REGISTERED PROFESSIONAL ENGINEER Theresa Aziz Gabriel No. E15129 Exp. 6-30-14 ELECTRICAL STATE OF CALIFORNIA

THE STATE OF CALIFORNIA OR ITS OFFICERS OR AGENTS SHALL NOT BE RESPONSIBLE FOR THE ACCURACY OR COMPLETENESS OF SCANNED COPIES OF THIS PLAN SHEET.

TO ACCOMPANY PLANS DATED 9-02-14

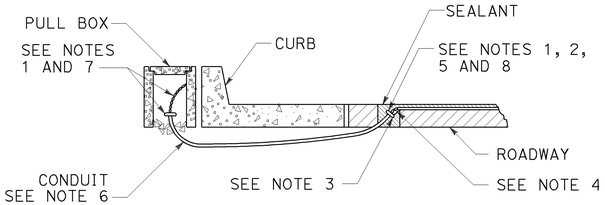

TYPE A
CURB TERMINATION DETAIL

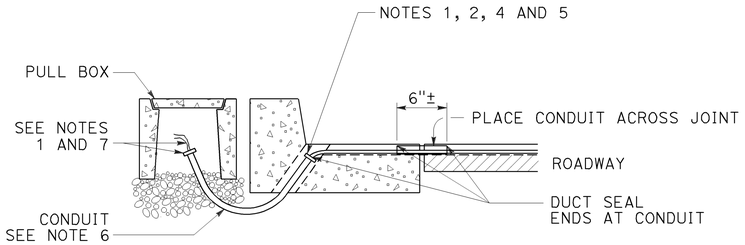

CROSS SECTION

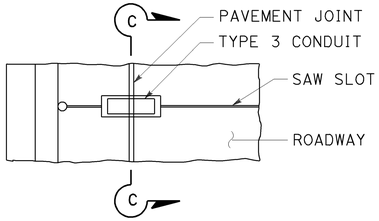

PLAN VIEW

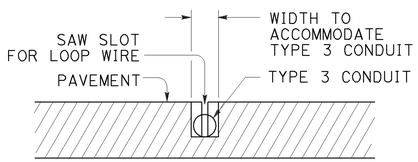

SECTION C-C

TYPE B
CURB TERMINATION DETAIL

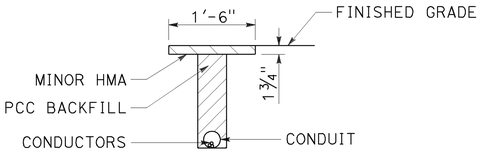

"T" TRENCH
DETAIL T

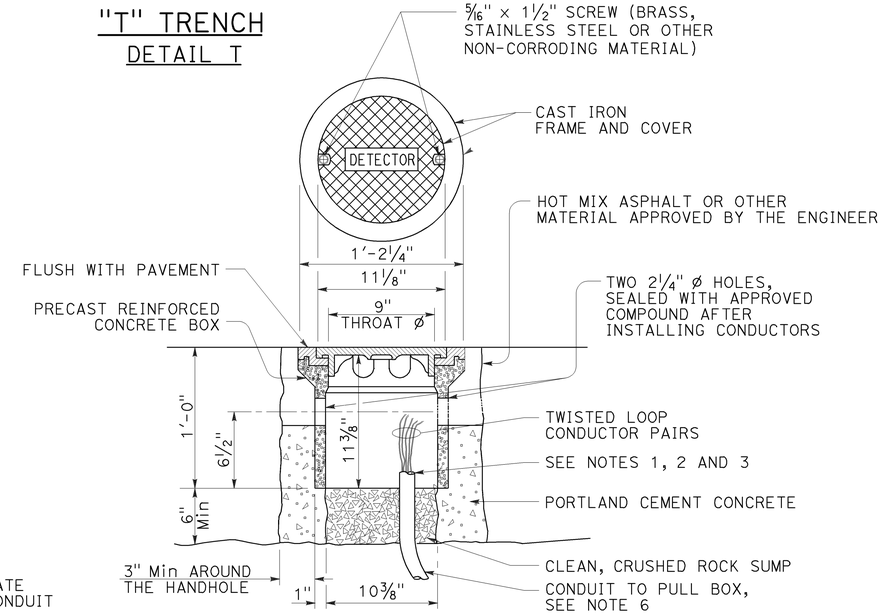

DETECTOR HANDHOLE DETAIL

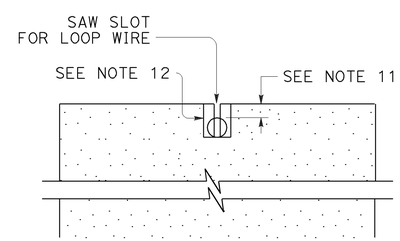

SECTION A-A

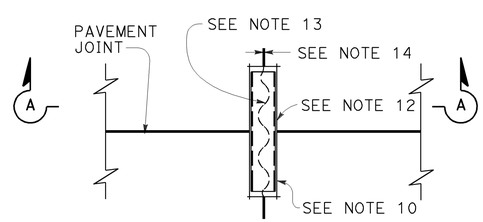

PLAN VIEW
TYPICAL LOOP LEAD-IN DETAIL AT PAVEMENT JOINT

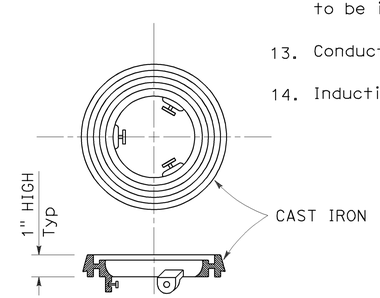

LOCKING GRADE RING

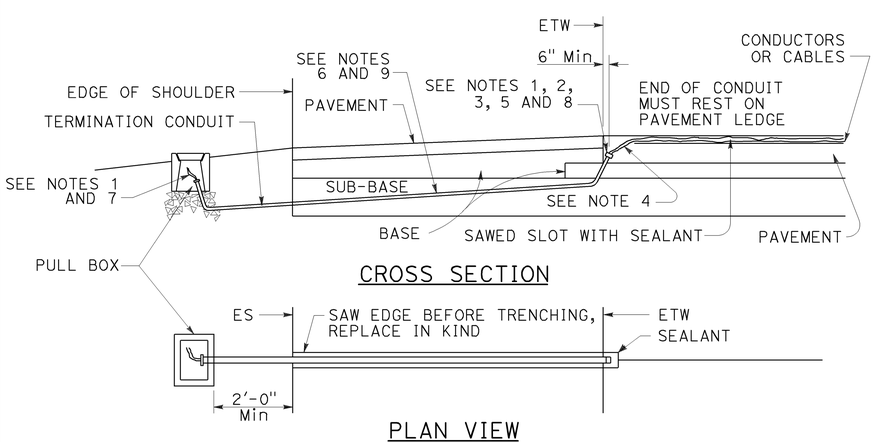

CROSS SECTION

PLAN VIEW
SHOULDER TERMINATION DETAILS

NOTES:

1. Bushing shall be used at end of conduit.
2. Tape detector conductors or cables 3" each side of bushings.
3. Install duct seal compound to each end of termination conduit before installing sealant.
4. Round all sharp edges where detector conductors or cables have to pass.
5. End of conduit shall be 3⅛" below roadway surface.
6.

Conduit size	Loop conductors
1"C minimum	1 to 2 pairs
1½"C minimum	3 to 4 pairs
2"C minimum	5 or more pairs

7. Splice detector conductors or cables to detector lead-in-cable.
8. Location of detector handhole when shown on plans.
9. When the shoulder and traveled way are paved with the same material and there is no joint between them, the conduit shall extend only 2'-0" into the shoulder pavement.
10. ¾"C, Type 3 conduit 6" long minimum, plug both ends with duct compound to keep out sealant.
11. ½" Minimum between top of conduit and pavement surface.
12. Sawcut shall not exceed 1" in width and ⅛" longer than conduit to be installed.
13. Conductors with ½" minimum slack inside conduit.
14. Inductive loop detector saw slot.

STATE OF CALIFORNIA
DEPARTMENT OF TRANSPORTATION

ELECTRICAL SYSTEMS (CURB TERMINATION AND HANDHOLE)

NO SCALE

RSP ES-5D DATED JULY 19, 2013 SUPERSEDES STANDARD PLAN ES-5D DATED MAY 20, 2011 - PAGE 451 OF THE STANDARD PLANS BOOK DATED 2010.

REVISED STANDARD PLAN RSP ES-5D

2010 REVISED STANDARD PLAN RSP ES-5D

7-9-13

DIST	COUNTY	ROUTE	POST MILES TOTAL PROJECT	SHEET NO.	TOTAL SHEETS
04	Son	116	13.7	83	92

Theresa Gabriel
REGISTERED ELECTRICAL ENGINEER

July 19, 2013
PLANS APPROVAL DATE

REGISTERED PROFESSIONAL ENGINEER
Theresa Aziz Gabriel
No. E15129
Exp. 6-30-14
ELECTRICAL
STATE OF CALIFORNIA

THE STATE OF CALIFORNIA OR ITS OFFICERS OR AGENTS SHALL NOT BE RESPONSIBLE FOR THE ACCURACY OR COMPLETENESS OF SCANNED COPIES OF THIS PLAN SHEET.

TO ACCOMPANY PLANS DATED 9-02-14

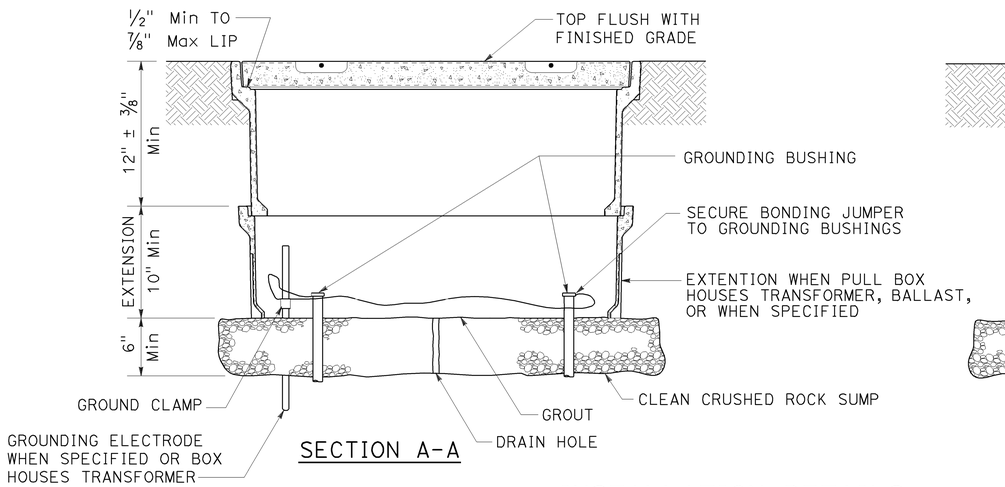

SECTION A-A

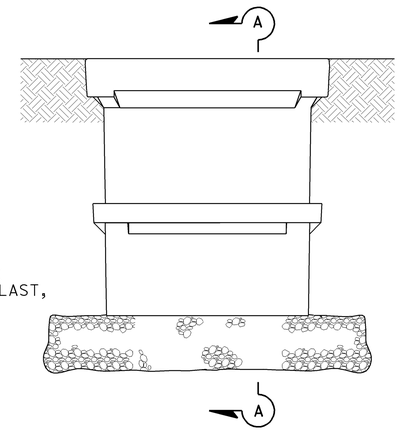

SIDE VIEW

INSTALLATION DETAILS

DETAIL A

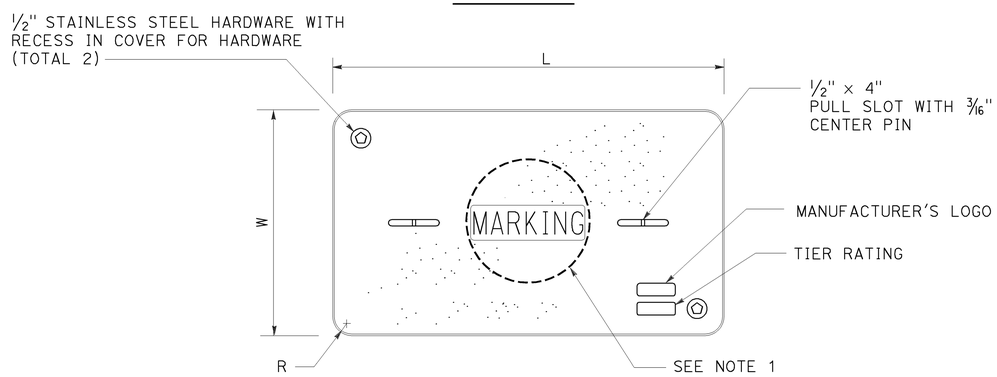

COVER TOP VIEW

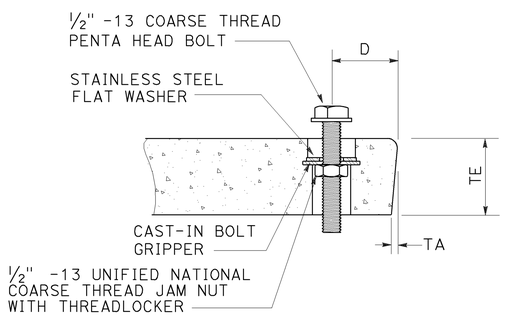

TYPICAL COVER CAPTIVE BOLT

OR SIMILAR

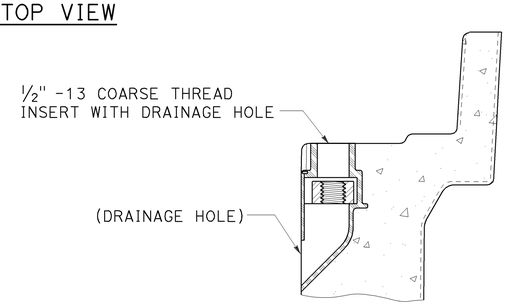

TYPICAL THREADED INSERT

OR SIMILAR

DIMENSION TABLE

PULL BOX	PULL BOX			COVER						
	MINIMUM DEPTH BOX	MINIMUM DEPTH EXTENSION	MAXIMUM WEIGHT	L	W	R	TE	TA	D	MAXIMUM WEIGHT
No. 3½	12"	N/A	40 lb	1′ - 3⅜"	10⅛"	1⅜"	2"	⅛"	1¾"	30 lb
No. 5	12"	10"	55 lb	1′ - 11¼"	1′ - 1¾"	1⅜"	2"	⅛"	1¾"	60 lb
No. 6	12"	10"	70 lb	2′ - 6½"	1′ - 5½"	1⅜"	2"	⅛"	2"	85 lb

NOTES:

1. Pull box covers shall be marked as follows: "SERVICE" Service circuits between service point and service disconnect; "SPRINKLER-CONTROL" sprinkler control circuits, 50 V or less; "CALTRANS" on all pull boxes, except pull boxes marked "SPRINKLER-CONTROL"; and "TELEPHONE" Telephone service;
   - A) No. 3½ pull box.
     - 1) "SIGNAL" - Traffic signal circuits with or without lighting or sign lighting circuits.
     - 2) "LIGHTING" - Lighting or sign lighting circuits where voltage is under 600 V.
   - B) No. 5, 6, 9 or 9A pull box.
     - 1) "TRAFFIC SIGNAL" - Traffic signal circuits with or without lighting or sign lighting circuits.
     - 2) "LIGHTING" - Lighting or sign lighting circuits where voltage is under 600 V.
     - 3) "LIGHTING-HIGH VOLTAGE" - Lighting or sign lighting circuits where voltage is above 600 V.
     - 4) "IRRIGATION" - Circuits to irrigation controller 120 V or more.
     - 5) "RAMP METER" - Ramp meter circuits.
     - 6) "COUNT STATION" - Count or speed monitor circuits.
     - 7) "COMMUNICATIONS" - Communication circuits.
     - 8) "TOS COMMUNICATIONS" - TOS communication line.
     - 9) "TOS POWER" - TOS power.
     - 10) "TDC POWER" - Telephone demarcation cabinet power.
     - 11) "CCTV" - Closed circuit television circuits.
     - 12) "TMS" - Traffic monitoring station circuits.
     - 13) "CMS" - Changeable message sign circuits.
     - 14) "HAR" - Highway advisory radio circuits.
     - 15) "BOOSTER PUMP" - Booster pump circuit.
2. The nominal dimensions of the opening in which the cover sets shall be the same as the cover dimensions except the length and width dimensions shall be ⅛" greater.
3. Covers and boxes shall be interchangeable with California standard male and female gages. When interchanged with a standard male or female gage, the top surfaces shall be flush within ⅛". Top outside radius of covers and pull boxes shall have a ⅛" radius.
4. Pull box extension may be another pull box as long as the bottom edge of the pull box can fit into the cover opening.
5. All dimensions for the cover for non-traffic pull box are nominal values.

STATE OF CALIFORNIA
DEPARTMENT OF TRANSPORTATION

ELECTRICAL SYSTEMS (NON-TRAFFIC PULL BOX)

NO SCALE

RSP ES-8A DATED JULY 19, 2013 SUPERSEDES RSP ES-8A DATED JANUARY 20, 2012 THAT SUPPLEMENTS THE STANDARD PLANS BOOK DATED 2010.

REVISED STANDARD PLAN RSP ES-8A

2010 REVISED STANDARD PLAN RSP ES-8A

7-15-13

Dist	COUNTY	ROUTE	POST MILES TOTAL PROJECT	SHEET No.	TOTAL SHEETS
04	Son	116	13.7	84	92

Theresa Gabriel
REGISTERED ELECTRICAL ENGINEER

July 19, 2013
PLANS APPROVAL DATE

REGISTERED PROFESSIONAL ENGINEER
Theresa Aziz Gabriel
No. E15129
Exp. 6-30-14
ELECTRICAL
STATE OF CALIFORNIA

THE STATE OF CALIFORNIA OR ITS OFFICERS OR AGENTS SHALL NOT BE RESPONSIBLE FOR THE ACCURACY OR COMPLETENESS OF SCANNED COPIES OF THIS PLAN SHEET.

TO ACCOMPANY PLANS DATED 9-02-14

2010 REVISED STANDARD PLAN RSP ES-10A

ISOFOOTCANDLE CURVE - MINIMUM

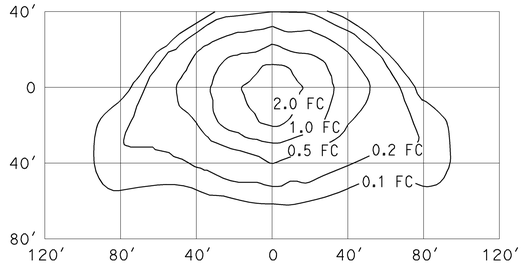

TYPE III MEDIUM CUTOFF

Cutoff Luminaire
34′ Mounting Height
Lamp operated at 22,000 lm
200-W high pressure sodium lamp
ANSI Designation S66

ISOFOOTCANDLE CURVE - MINIMUM

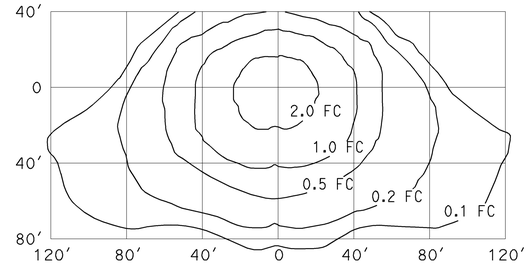

TYPE III MEDIUM CUTOFF

Cutoff Luminaire
40′ Mounting Height
Lamp operated at 37,000 lm
310-W high pressure sodium lamp
ANSI Designation S67

ISOFOOTCANDLE CURVE - MINIMUM

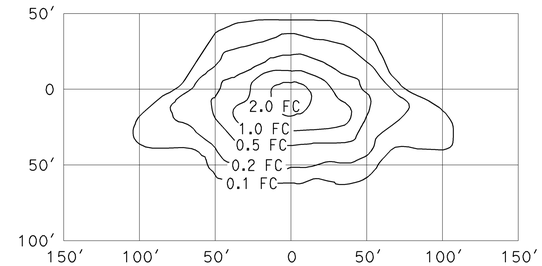

TYPE III MEDIUM CUTOFF

Cutoff Luminaire
30′ Mounting Height
Lamp operated at 16,000 lm
150-W high pressure sodium lamp
ANSI Designation S55

ISOFOOTCANDLE CURVE - MINIMUM

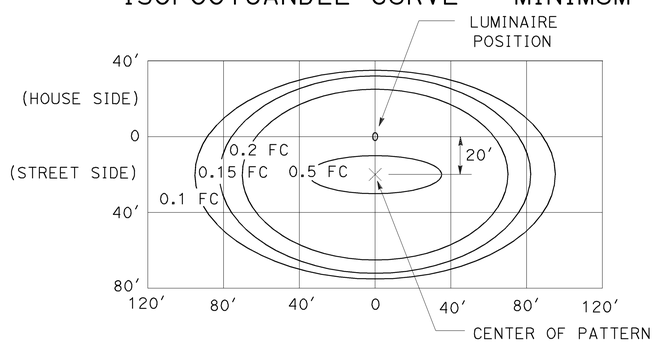

LED LUMINAIRE ROADWAY 1

165-W at 34′ Mounting Height

ISOFOOTCANDLE CURVE - MINIMUM

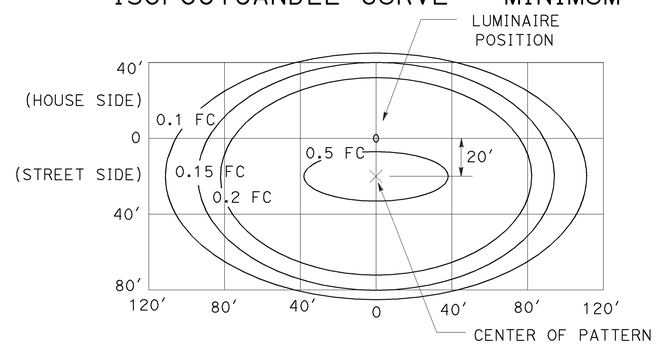

LED LUMINAIRE ROADWAY 2

235-W at 40′ Mounting Height

ISOFOOTCANDLE CURVE - MINIMUM

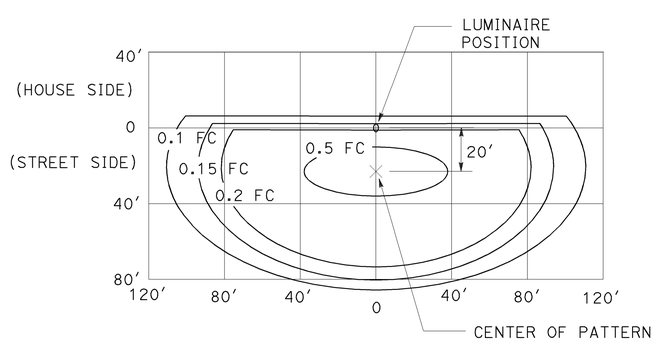

LED LUMINAIRE ROADWAY 3

235-W at 40′ Mounting Height
with back side control

ISOFOOTCANDLE CURVE - MINIMUM

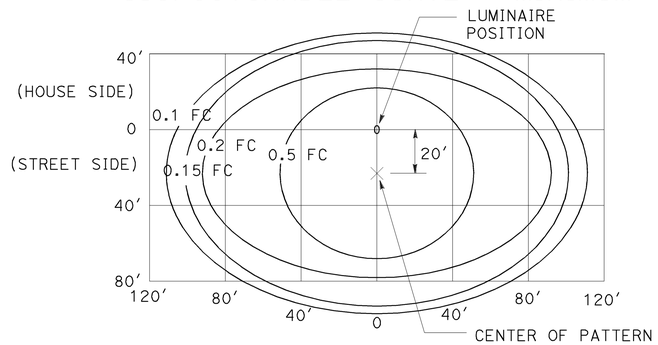

LED LUMINAIRE ROADWAY 4

300-W at 40′ Mounting Height

ISOFOOTCANDLE CURVE - MINIMUM

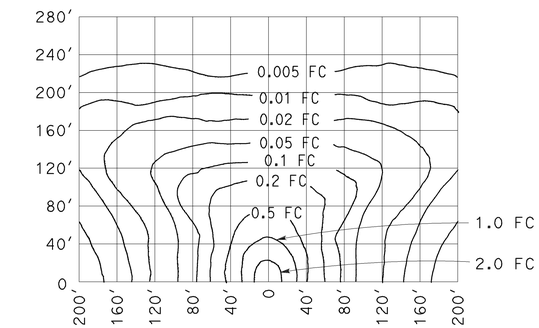

LOW PRESSURE SODIUM LUMINAIRE

40′ Mounting Height
Lamp operated at 33,000 lm
180-W low pressure sodium lamp

STATE OF CALIFORNIA
DEPARTMENT OF TRANSPORTATION

ELECTRICAL SYSTEMS (ISOFOOTCANDLE DIAGRAMS)

NO SCALE

RSP ES-10A DATED JULY 19, 2013 SUPERSEDES RSP ES-10A DATED JULY 20, 2012 THAT SUPPLEMENTS THE STANDARD PLANS BOOK DATED 2010.

REVISED STANDARD PLAN RSP ES-10A

DIST	COUNTY	ROUTE	POST MILES TOTAL PROJECT	SHEET No.	TOTAL SHEETS
04	Son	116	13.7	85	92

REGISTERED CIVIL ENGINEER — DATE 3-6-14

9-02-14
PLANS APPROVAL DATE

PETER W. NORBOE No. C57519 Exp. 12/31/15 CIVIL — REGISTERED PROFESSIONAL ENGINEER — STATE OF CALIFORNIA

The State of California or its officers or agents shall not be responsible for the accuracy or completeness of electronic copies of this plan sheet.

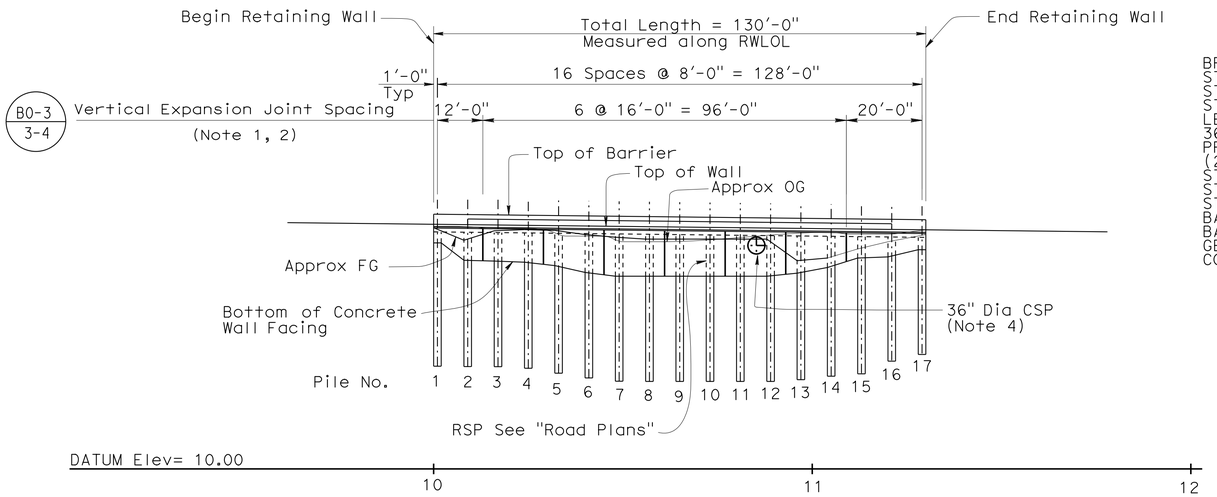

DEVELOPED ELEVATION

1' = 20'

QUANTITIES

BRIDGE REMOVAL (PORTION)	LUMP	SUM
STRUCTURE EXCAVATION (SOLDIER PILE WALL)	87	CY
STRUCTURE EXCAVATION (OVERHANG SLAB)	54	CY
STRUCTURE BACKFILL (OVERHANG SLAB)	9	CY
LEAN CONCRETE BACKFILL	16	CY
36" DRILLED HOLE	567	LF
PRECAST CONCRETE SOLDIER PILE (24" X 24")	544	LF
STRUCTURAL CONCRETE, RETAINING WALL	41	CY
STRUCTURAL CONCRETE, OVERHANG SLAB	41	CY
STRUCTURAL CONCRETE, BACKFILL	48	CY
BAR REINFORCING STEEL (RETAINING WALL)	4,500	LB
BAR REINFORCING STEEL (OVERHANG SLAB)	12,675	LB
GEOCOMPOSITE DRAIN	1,300	SQFT
CONCRETE BARRIER (TYPE 732)	130	LF

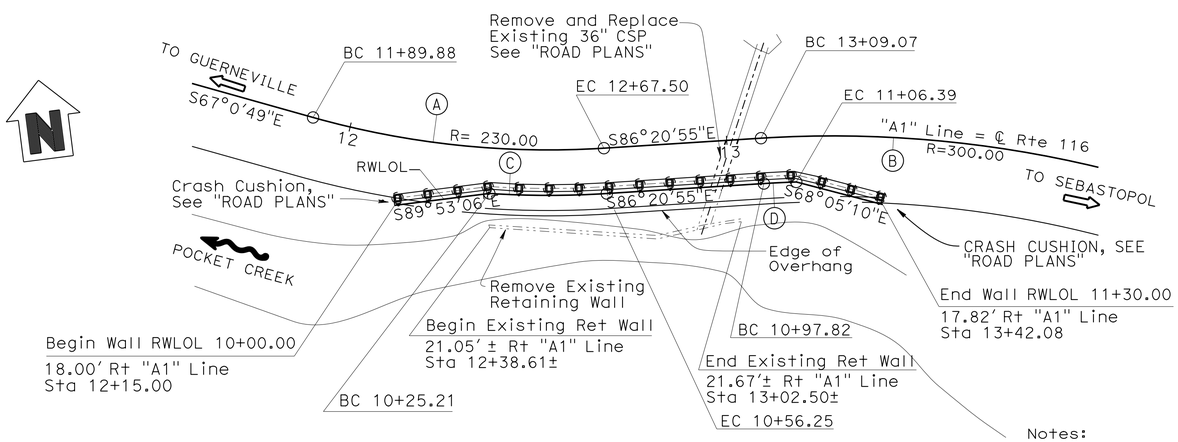

PLAN

1' = 20'

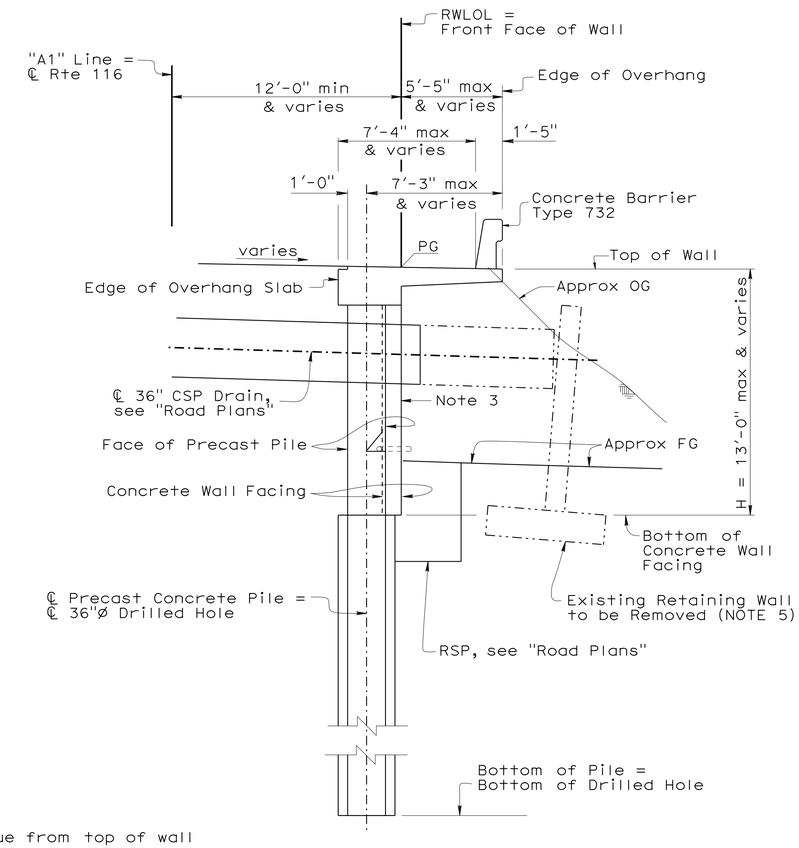

TYPICAL SECTION

1/4" = 1'-0"

CURVE DATA

No.	R	Δ	T	L
Ⓐ	230.00	19°20'06"	39.18	77.62
Ⓑ	300.00	30°33'01"	81.93	159.96
Ⓒ	242.00	07°20'54"	15.54	31.04
Ⓓ	288.00	01°42'18"	4.29	8.57

LEGEND

Denotes Existing Structure

Notes:

1. Vertical expansion joints continue from top of wall to bottom of concrete facing.
2. For vertical expansion joint detail, see B0-3 / 3-4
3. Class 1 surface finish on exposed face of wall.
4. For opening details, see "TYPICAL SECTION" sheet.
5. Existing Geosynthetic Reinforced Fabric emergency wall and existing steel sheet pile wall not shown and to be removed. Plumbness of existing retaining wall approximate and continues to tilt.

Gordon Danke
DESIGN ENGINEER

	BY	CHECKED
DESIGN	Pete Norboe	Isaias Yalan
DETAILS	P. Norboe / R. Heider	Isaias Yalan
QUANTITIES	Pete Norboe	Isaias Yalan

LOAD & RESISTANCE FACTOR DESIGN — LIVE LOADING: HL93 W/"LOW-BOY"; PERMIT DESIGN VEHICLE

	BY	CHECKED
LAYOUT	H. Binning	Pete Norboe
SPECIFICATIONS	D. Klein	PLANS AND SPECS COMPARED P. Norboe / D. Klein

ORIGINAL SCALE IN INCHES FOR REDUCED PLANS 0 1 2 3

STATE OF CALIFORNIA
DEPARTMENT OF TRANSPORTATION

DIVISION OF ENGINEERING SERVICES
STRUCTURE DESIGN
DESIGN BRANCH 9

BRIDGE NO. 20E0076
POST MILE 13.76

POCKET CREEK RETAINING WALL
GENERAL PLAN

UNIT: 3594
PROJECT NUMBER & PHASE: 0414000190-1 CONTRACT NO.: 04-1J3204

DISREGARD PRINTS BEARING EARLIER REVISION DATES

REVISION DATES: 8-26-14 | 3-6-14 | 5-30-14

SHEET 1 OF 8

USERNAME => s113541 DATE PLOTTED => 24-APR-2015 TIME PLOTTED => 10:46

STRUCTURES DESIGN GENERAL PLAN SHEET (ENGLISH) (REV.09-01-10)

FILE => 04-1J3204-1-gp.dgn

DIST	COUNTY	ROUTE	POST MILES TOTAL PROJECT	SHEET No.	TOTAL SHEETS
04	San	116	13.7	86	92

Peter W. Norboe 7-10-14
REGISTERED CIVIL ENGINEER DATE

9-02-14
PLANS APPROVAL DATE

REGISTERED PROFESSIONAL ENGINEER PETER W. NORBOE No. C57519 Exp. 12-31-15 CIVIL STATE OF CALIFORNIA

The State of California or its officers or agents shall not be responsible for the accuracy or completeness of electronic copies of this plan sheet.

CURVE DATA

No.	R	Δ	T	L
Ⓐ	230.00	19°20′06"	39.18	77.62
Ⓑ	300.00	30°33′01"	81.93	159.96
Ⓒ	242.00	07°20′54"	15.54	31.04
Ⓓ	288.00	01°42′18"	4.29	8.57

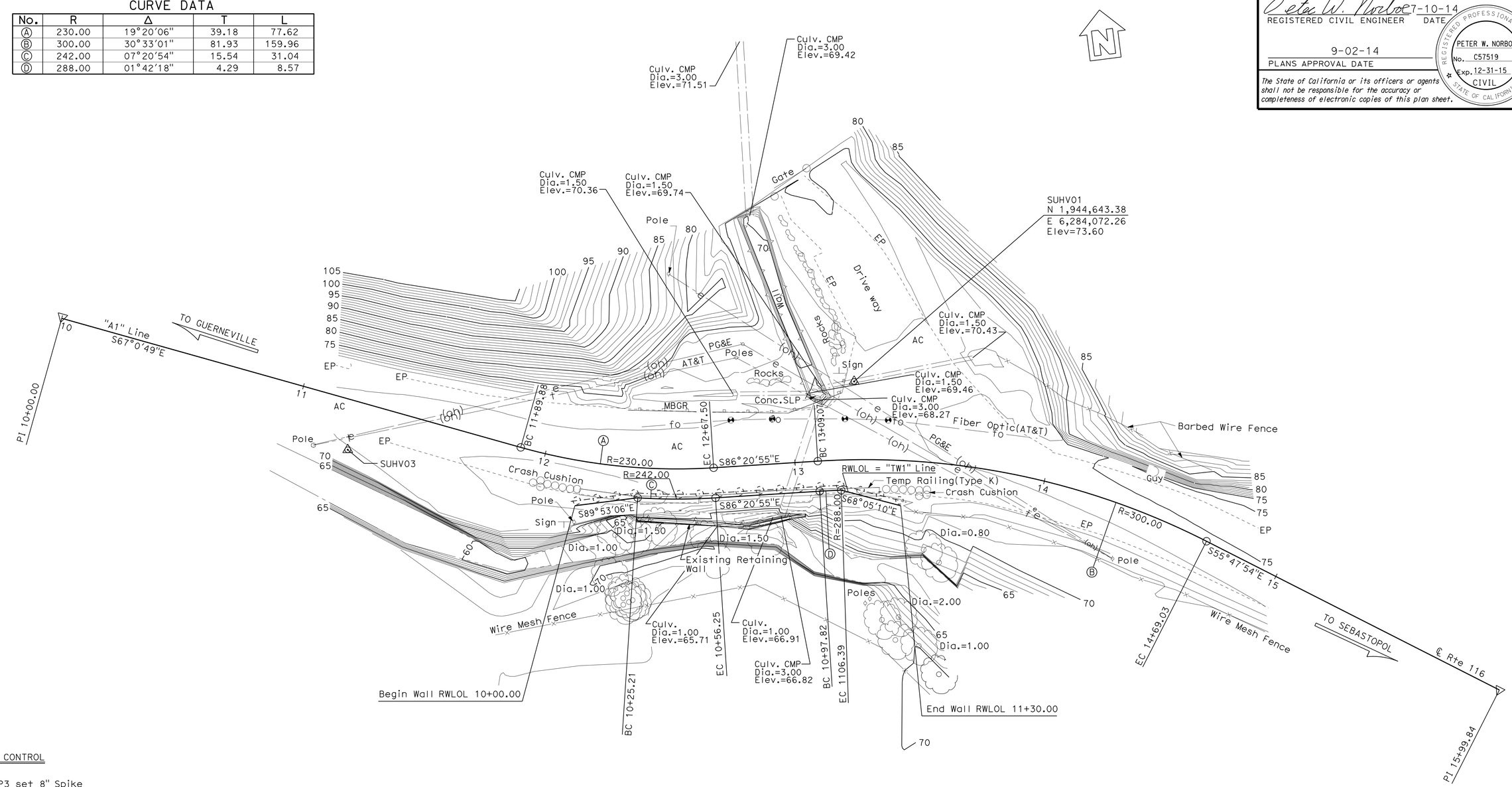

SURVEY CONTROL

SUHV03
Fnd WP3 set 8" Spike
19.55′ Rt. "A1" Line, ℄ Rte 116
Sta. 11+23.81
N 1,944,642.01
E 6,283,868.76
Elev=73.14

SUHV01
Fnd Set PK & shiner in AC Driveway
31.14′ Lt. "A1" Line, ℄ Rte 116
Sta. 13+23.98
N 1,944,643.38
E 6,284,072.26
Elev=73.60

Notes:

Pothole Location, Refer to Utility Plan Sheet for Information.

PRELIMINARY INVESTIGATION SECTION

SCALE	VERT.DATUM NAVD88	PHOTOGRAMMETRY AS OF: X			
1"=20′	HORZ.DATUM NAD83 (1991.35)	SURVEYED	BY X	CHECKED	BY Don Ivy 04/2012
ALIGNMENT TIES Dist. Traverse Sheet		DRAFTED	BY Sharon Zheng 04/2012	CHECKED	BY Tim Schmalz 04/2012

DESIGN	BY Pete Norboe	CHECKED Isaias Yalan
DETAILS	BY Rania Heider	CHECKED Isaias Yalan
QUANTITIES	BY Pete Norboe	CHECKED Isaias Yalan

STATE OF CALIFORNIA
DEPARTMENT OF TRANSPORTATION

DIVISION OF ENGINEERING SERVICES
STRUCTURE DESIGN
DESIGN BRANCH 09

BRIDGE NO. 20E0076
POST MILE 13.76

POCKET CREEK RETAINING WALL
FOUNDATION PLAN

STRUCTURES FOUNDATION PLAN SHEET (ENGLISH) (REV. 09-01-10)

ORIGINAL SCALE IN INCHES FOR REDUCED PLANS 0 1 2 3

UNIT: 3594
PROJECT NUMBER & PHASE: 04 1400 0190-1 CONTRACT NO.: 04-1J3204

DISREGARD PRINTS BEARING EARLIER REVISION DATES

REVISION DATES 8-26-14 9-24-12 7-9-14

SHEET 2 OF 8

FILE => 04-1J3201-2-fpl01.dgn

DIST	COUNTY	ROUTE	POST MILES TOTAL PROJECT	SHEET No.	TOTAL SHEETS
04	Son	116	13.7	87	92

Peter W. Norboe 3-6-14
REGISTERED CIVIL ENGINEER DATE

9-02-14
PLANS APPROVAL DATE

REGISTERED PROFESSIONAL ENGINEER
PETER W. NORBOE
No. C57519
Exp. 12-31-15
CIVIL
STATE OF CALIFORNIA

The State of California or its officers or agents shall not be responsible for the accuracy or completeness of electronic copies of this plan sheet.

GENERAL NOTES
LOAD AND RESISTANCE FACTOR DESIGN

DESIGN:

AASHTO LRFD Bridge Design Specifications, 4th edition with Interims and California Amendments.

SEISMIC DESIGN:

Caltrans Seismic Design Criteria (SDC), Version 1.4 dated June 2006 and 2H psf uniform seismic pressure per Foundation Report.

LIVE LOADING:

HL93 and permit design load (Modeled as 2′ of surcharge to a depth of 10′).

CONCRETE:

fy = 60 ksi
f′c = 5.0 ksi
f′c = 5.0 ksi (Precast pile)
n = 8

STRUCTURAL STEEL:

fy = ASTM A709 Grade 50

SOIL PARAMETERS:

(For determination of design active lateral earth pressures)

ø = 30° γ=120 pcf C= 500psf

STANDARD PLANS 2010

A10A ABBREVIATIONS (SHEET 1 OF 2)
RSP A10B ABBREVIATIONS (SHEET 2 OF 2)
A10C LINES AND SYMBOLS (SHEET 1 OF 3)
A10D LINES AND SYMBOLS (SHEET 2 OF 3)
A10E LINES AND SYMBOLS (SHEET 3 OF 3)
A10F LEGEND - SOIL (SHEET 1 OF 2)
A10G LEGEND - SOIL (SHEET 2 OF 2)
A10H LEGEND - ROCK
B0-3 BRIDGE DETAILS
B3-6 RETAINING WALL DETAILS NO. 2
B7-5 DECK DRAINS
RSP B11-55 CONCRETE BARRIER TYPE 732

STANDARD PLAN SHEET NO.

DETAIL NO.

INDEX TO PLANS

1. GENERAL PLAN
2. FOUNDATION PLAN
3. PILE DATA
4. TYPCAL SECTION
5. WALL DETAILS NO. 1
6. WALL DETAILS NO. 2
7. WALL DETAILS NO. 3
8. LOG OF TEST BORINGS 1 OF 1

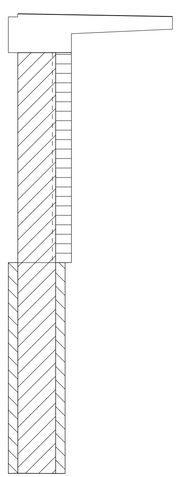

Structural Concrete, Overhang Slab f′c = 5000 psi

Precast Concrete Soldier Pile f′c = 5000 psi

Structural Concrete Retaining Wall f′c = 5000 psi

Structural Concrete Backfill f′c = 5000 psi

CONCRETE STRENGTH AND TYPE LIMITS

PILE DATA TABLE

Pile No.	Station (RWLOL)	Station (A1 Line)	Offset from A1 Line to ℄ Pile (ft)	Top of wall Elevation @ PG (ft)	Approx OG Elev (ft)	FG Elev (ft)	Bottom of Concrete Wall Facing Elev (ft)	Bottom Pile Elev (ft)	Wall Height (ft)	Pile Type	Drilled * Hole Diameter (ft)
1	10+01.00	12+15.41	15.96	74.59	74.6	73.7	69.7	44.70	4.9	24"x24" PCC	3.00
2	10+09.00	12+22.64	13.80	74.47	74.5	70.4	65.1	40.10	9.4	24"x24" PCC	3.00
3	10+17.00	12+30.00	11.90	74.35	74.4	72.9	64.9	39.90	9.5	24"x24" PCC	3.00
4	10+25.00	12+37.47	10.24	74.22	74.2	73.2	64.6	39.60	9.6	24"x24" PCC	3.00
5	10+33.00	12+45.40	10.17	74.09	71.6	73.0	63.7	38.70	10.4	24"x24" PCC	3.00
6	10+41.00	12+53.00	10.17	73.91	71.1	71.9	61.9	36.90	12.0	24"x24" PCC	3.00
7	10+49.00	12+60.56	10.17	73.91	70.0	71.2	60.9	35.90	13.0	24"x24" PCC	3.00
8	10+57.00	12+68.25	10.17	73.70	69.6	70.7	60.9	35.90	12.8	24"x24" PCC	3.00
9	10+65.00	12+76.25	10.17	73.59	70.0	70.7	60.9	35.90	12.7	24"x24" PCC	3.00
10	10+73.00	12+84.25	10.17	73.77	70.4	70.7	60.9	35.90	12.9	24"x24" PCC	3.00
11	10+81.00	12+92.25	10.17	73.38	70.9	70.7	60.9	35.90	12.5	24"x24" PCC	3.00
12	10+89.00	13+00.25	10.17	73.31	71.5	70.7	60.9	35.90	12.4	24"x24" PCC	3.00
13	10+97.00	13+08.25	10.17	73.23	72.1	65.0	61.7	36.70	11.5	24"x24" PCC	3.00
14	11+05.00	13+16.55	10.17	73.26	72.4	65.7	63.2	38.20	10.1	24"x24" PCC	3.00
15	11+13.00	13+25.03	12.02	73.27	72.3	68.1	65.7	40.70	7.6	24"x24" PCC	3.00
16	11+21.00	13+33.13	14.01	73.21	72.8	70.0	66.0	41.00	7.2	24"x24" PCC	3.00
17	11+29.00	13+41.34	15.80	73.15	73.2	71.9	67.9	42.90	5.3	24"x24" PCC	3.00

* Minimum hole diameter below structural concrete wall facing

	BY	CHECKED
DESIGN	Pete Norboe	Isaias Yalan
DETAILS	Rania Heider	Isaias Yalan
QUANTITIES	Pete Norboe	Isaias Yalan

STATE OF CALIFORNIA
DEPARTMENT OF TRANSPORTATION

DIVISION OF ENGINEERING SERVICES
STRUCTURE DESIGN
DESIGN BRANCH 9

BRIDGE NO. 20E0076
POST MILE 13.76

POCKET CREEK RETAINING WALL
PILE DATA

STRUCTURES DESIGN DETAIL SHEET (ENGLISH) (REV. 09-01-10)

ORIGINAL SCALE IN INCHES FOR REDUCED PLANS 0 1 2 3

UNIT: 3594
PROJECT NUMBER & PHASE: 0414000190-1
CONTRACT NO.: 04-1J3204

DISREGARD PRINTS BEARING EARLIER REVISION DATES

REVISION DATES: 8-26-14 | 9-24-12 | 10-11-12
SHEET 3 OF 8

FILE => 04-1J3201-3-pldata.dgn

USERNAME => s113541 DATE PLOTTED => 24-APR-2015 TIME PLOTTED => 10:46

DIST	COUNTY	ROUTE	POST MILES TOTAL PROJECT	SHEET No.	TOTAL SHEETS
04	Son	116	13.7	88	92

REGISTERED CIVIL ENGINEER — DATE 3-6-14

9-02-14
PLANS APPROVAL DATE

REGISTERED PROFESSIONAL ENGINEER — PETER W. NORBOE — No. C57519 — Exp. 12-31-15 — CIVIL — STATE OF CALIFORNIA

The State of California or its officers or agents shall not be responsible for the accuracy or completeness of electronic copies of this plan sheet.

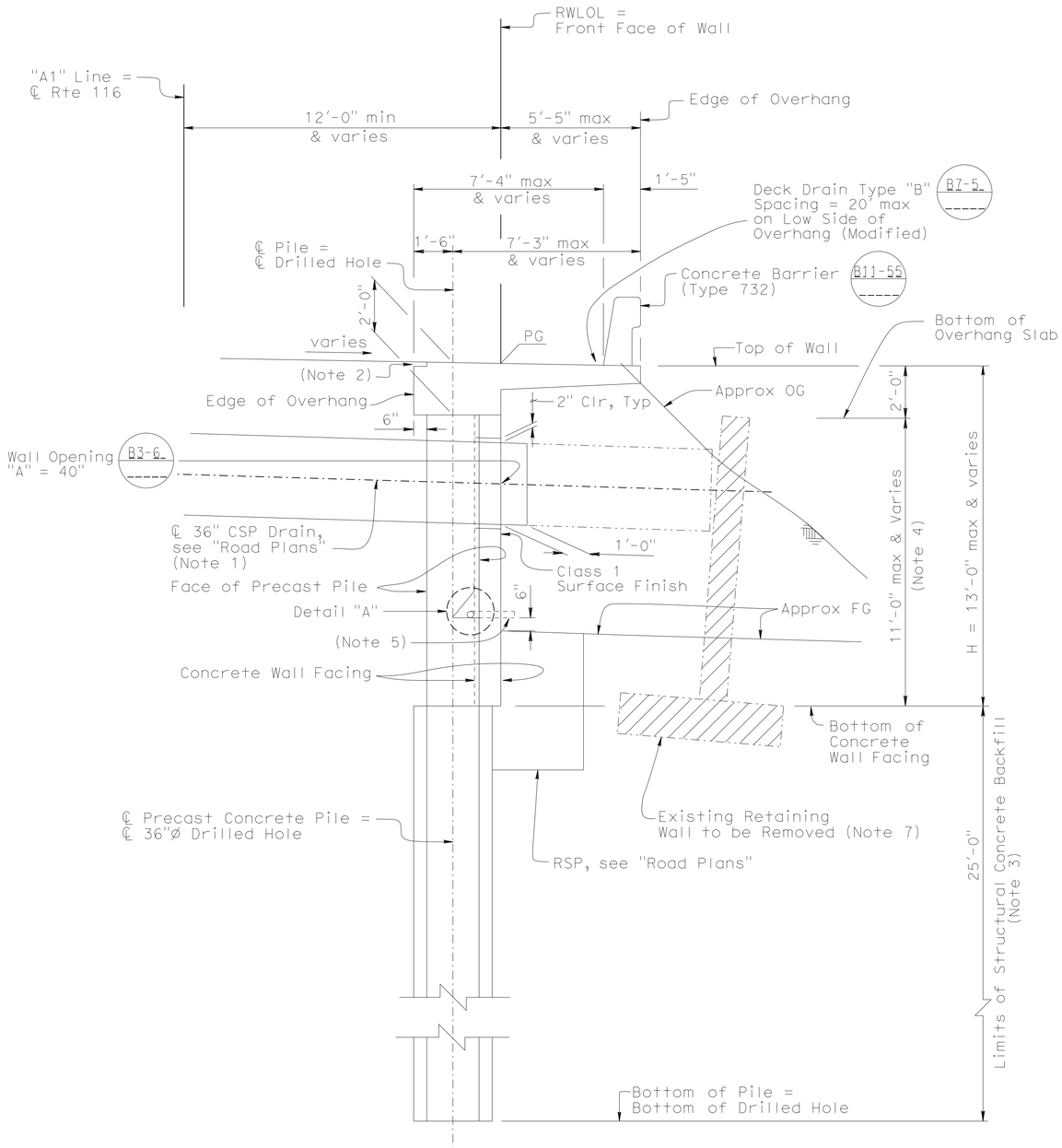

TYPICAL SECTION

3/8" = 1'-0"

B0-3 B3-6 B7-5 B11-55

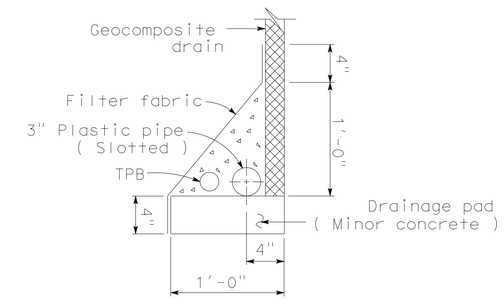

DETAIL A

1½" = 1'-0"

LEGEND

Denotes limits of bridge removal (Portion)

Denotes existing structure

Notes:

1. Existing CSP drain to be removed and replaced, see "ROAD PLANS".
2. Paving notch 6" wide by 2" deep for length of wall.
3. After placing precast concrete soldier piles, place structural concrete backfill to limits shown.
4. Limits of lean concrete backfill.
5. A 3" diameter PVC outlet shall be provided every 8' centered between piles. B0-3
6. If temporary lagging becomes part of the final structure, the geocomposite draining fabric shall be placed between the soil and the temporary lagging to allow drainage of the soil mass. Geocomposite material shall be full width and height of wall.
7. Existing Geosynthetic Reinforced Fabric emergency wall and existing steel sheet pile wall not shown. Plumbness of existing retaining wall approximate and continues to tilt.
8. Note 4 on RSP B11-55 is not applicable. Do not install pipe sleeves for anchor bolts. Ensure 9'-0" transition on each end of the concrete barrier (Type 732) to accomodate installation of smart cushion transition railings.

	BY	CHECKED
DESIGN	Pete Norboe	Isaias Yalan
DETAILS	Rania Heider	Isaias Yalan
QUANTITIES	Pete Norboe	Isaias Yalan

STATE OF CALIFORNIA
DEPARTMENT OF TRANSPORTATION

DIVISION OF ENGINEERING SERVICES
STRUCTURE DESIGN
DESIGN BRANCH 9

BRIDGE NO. 20E0076
POST MILE 13.76

POCKET CREEK RETAINING WALL
TYPICAL SECTION

STRUCTURES DESIGN DETAIL SHEET (ENGLISH) (REV. 09-01-10)

ORIGINAL SCALE IN INCHES FOR REDUCED PLANS 0 1 2 3

UNIT: 3594
PROJECT NUMBER & PHASE: 0414000190-1
CONTRACT NO.: 04-1J3204

DISREGARD PRINTS BEARING EARLIER REVISION DATES

REVISION DATES: 8-13-12 9-24-12 3-6-14 8-26-14

SHEET 4 OF 8

FILE => 04-1J3204-4-ts.dgn

USERNAME => s113541 DATE PLOTTED => 24-APR-2015 TIME PLOTTED => 10:46

DIST	COUNTY	ROUTE	POST MILES TOTAL PROJECT	SHEET No.	TOTAL SHEETS
04	Son	116	13.7	89	92

REGISTERED CIVIL ENGINEER — DATE 3-6-14

PLANS APPROVAL DATE 9-02-14

REGISTERED PROFESSIONAL ENGINEER — PETER W. NORBOE No. C57519 Exp. 12-31-15 CIVIL — STATE OF CALIFORNIA

The State of California or its officers or agents shall not be responsible for the accuracy or completeness of electronic copies of this plan sheet.

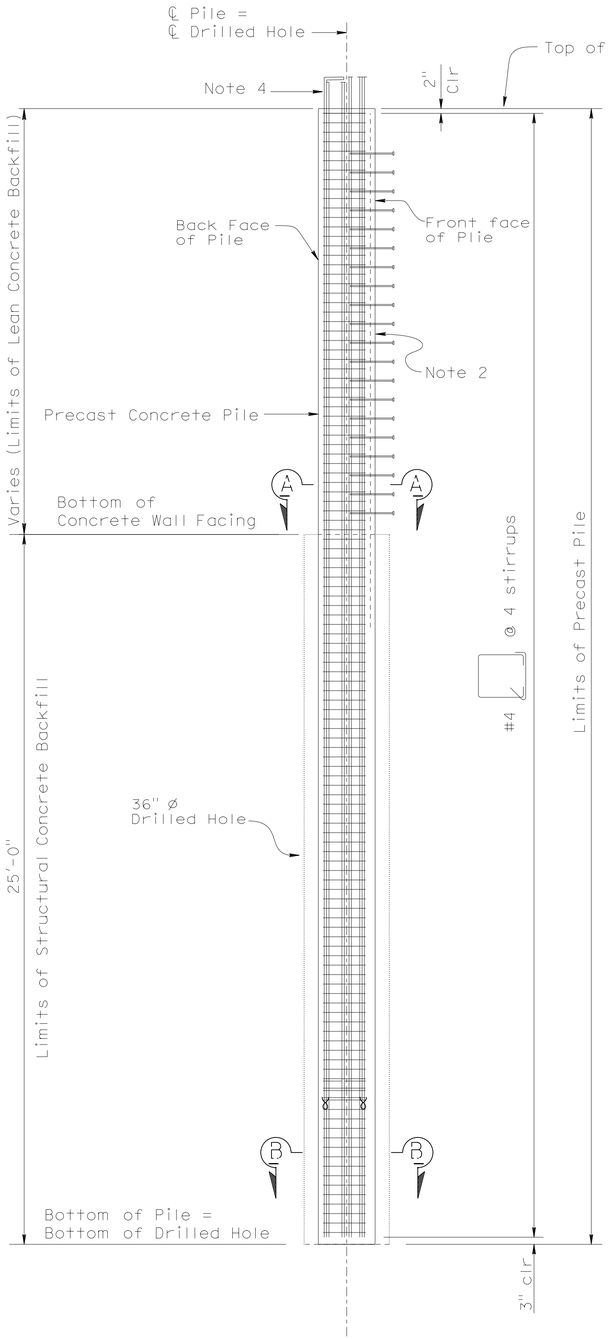

PILE SECTION

3/8" = 1'-0"

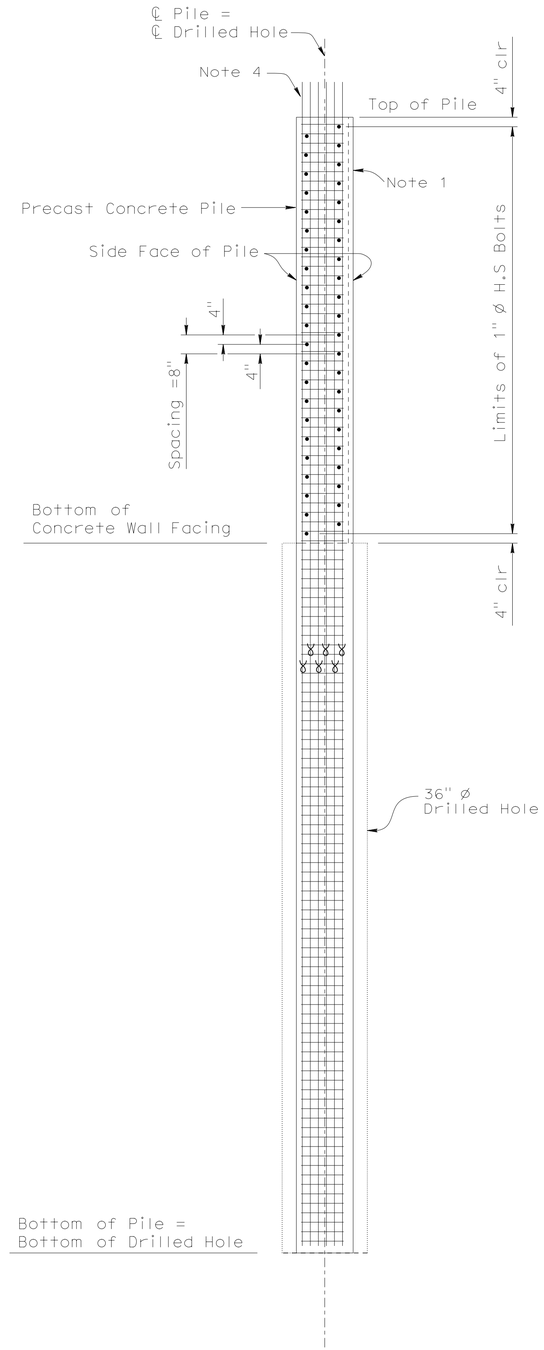

PILE ELEVATION

3/8" = 1'-0"

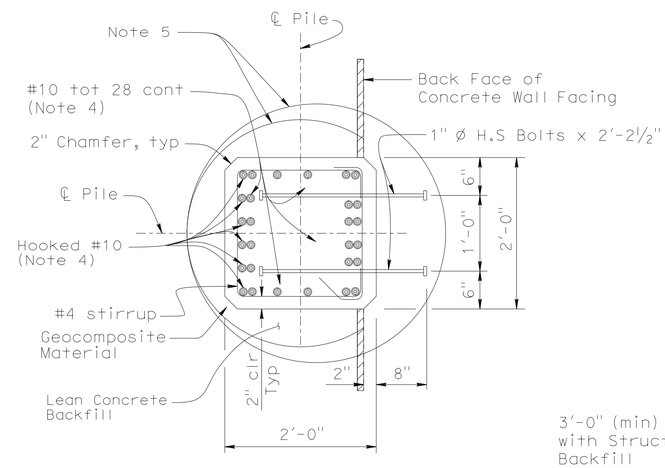

SECTION A-A

1" = 1'-0"

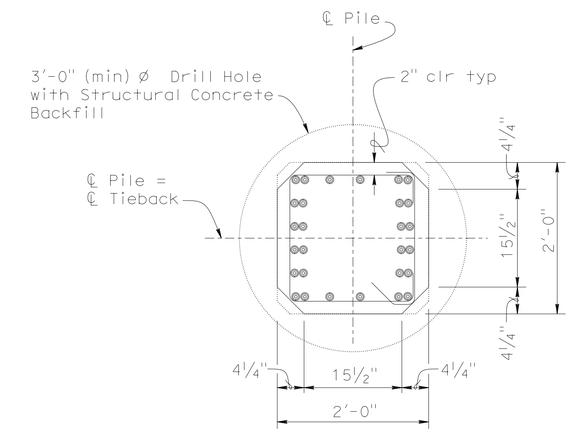

SECTION B-B

1" = 1'-0"

LEGEND

ϒ Denotes bundled reinforcement

NOTES:

1. Stamp "PILE NO.( )" at the top of the pile.
2. Finish with rough texture of ¼" amplitude on face with concrete wall facing.
3. Geocomposite drain fabric shall be placed full height and length of concrete wall facing.
4. Extend all # 10 main pile reinforcement, see "TOP OF WALL DETAIL" on "WALL DETAIL NO. 2" sheet. (#10 bars on back face of pile shall be hooked as shown)
5. It may be necessary to increase the diameter of the drilled hole above the bottom of concrete wall facing elevation to accomodate H.S bolts. The contractor is to determine the diameter of the oversized hole. Align the inside edge of drilled holes as shown.

	BY	CHECKED
DESIGN	Pete Norboe	Isaias Yalan
DETAILS	Rania Heider	Isaias Yalan
QUANTITIES	Pete Norboe	Isaias Yalan

STATE OF CALIFORNIA
DEPARTMENT OF TRANSPORTATION

DIVISION OF ENGINEERING SERVICES
STRUCTURE DESIGN
DESIGN BRANCH 9

BRIDGE NO. 20E0076
POST MILE 13.76

POCKET CREEK RETAINING WALL
WALL DETAILS NO. 1

STRUCTURES DESIGN DETAIL SHEET (ENGLISH) (REV. 09-01-10)

ORIGINAL SCALE IN INCHES FOR REDUCED PLANS 0 1 2 3

UNIT: 3594
PROJECT NUMBER & PHASE: 0414000190-1
CONTRACT NO.: 04-1J3204

DISREGARD PRINTS BEARING EARLIER REVISION DATES

REVISION DATES: 7-30-12 8-14-12 9-24-12 8-26-14

SHEET 5 OF 8

FILE => 04-1J3201-5-wdet1.dgn

USERNAME => s113541 DATE PLOTTED => 24-APR-2015 TIME PLOTTED => 10:46

DIST	COUNTY	ROUTE	POST MILES TOTAL PROJECT	SHEET No.	TOTAL SHEETS
04	Son	116	13.7	90	92

REGISTERED CIVIL ENGINEER 3-6-14 DATE

9-02-14
PLANS APPROVAL DATE

REGISTERED PROFESSIONAL ENGINEER PETER W. NORBOE No. C57519 Exp. 12-31-15 CIVIL STATE OF CALIFORNIA

The State of California or its officers or agents shall not be responsible for the accuracy or completeness of electronic copies of this plan sheet.

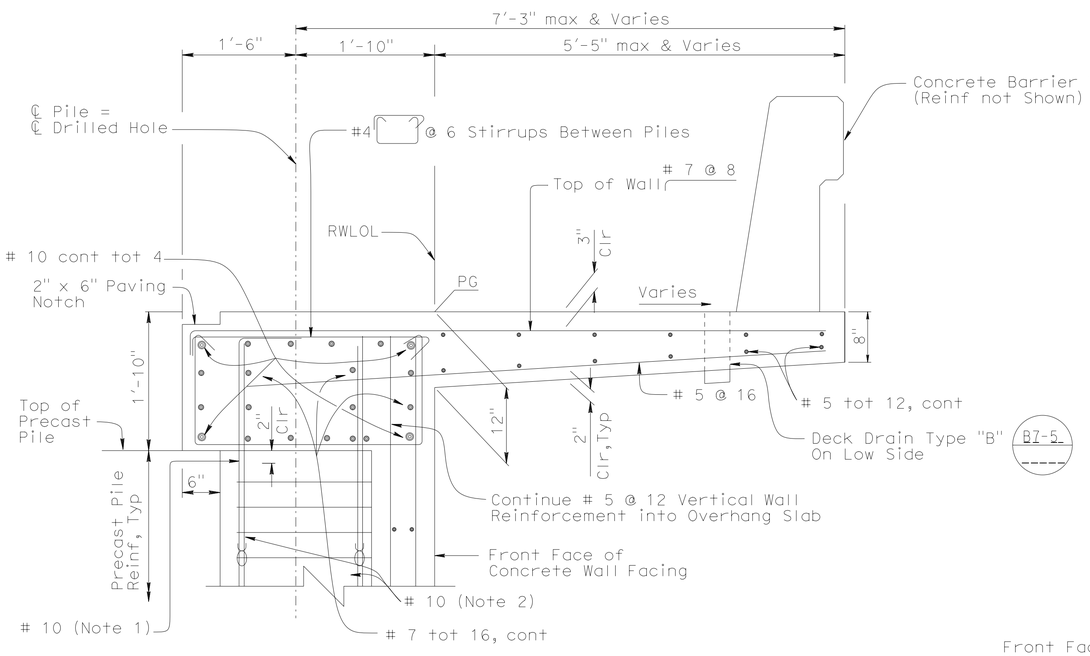

TOP OF WALL DETAIL

1" = 1'-0"

B7-5 B11-55

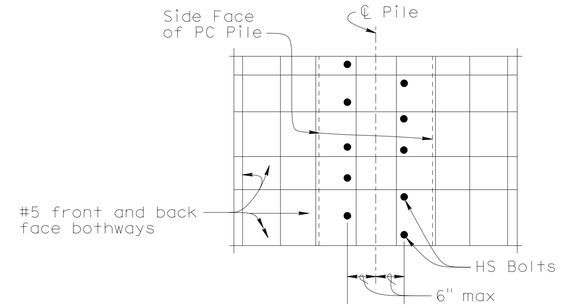

PART WALL ELEVATION

3/4" = 1'-0"

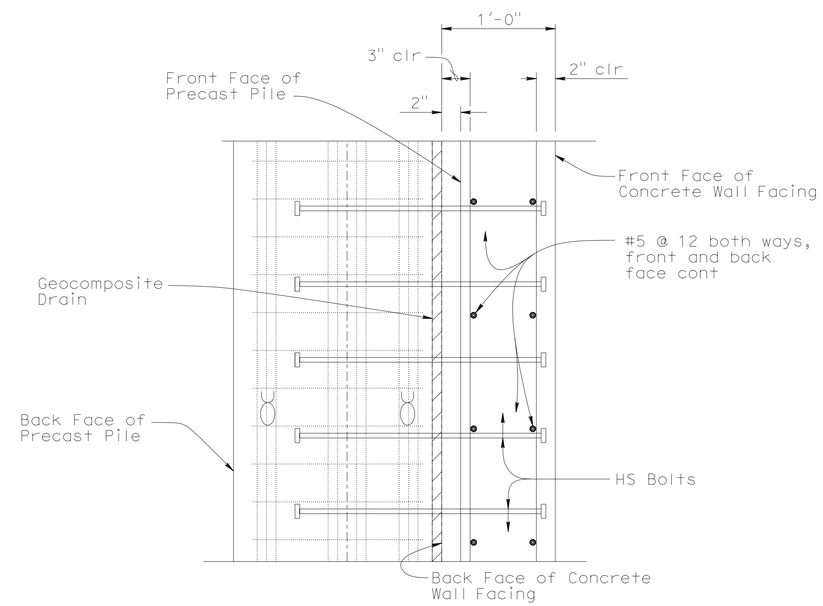

PART SECTION WALL

1 1/2" = 1'-0"

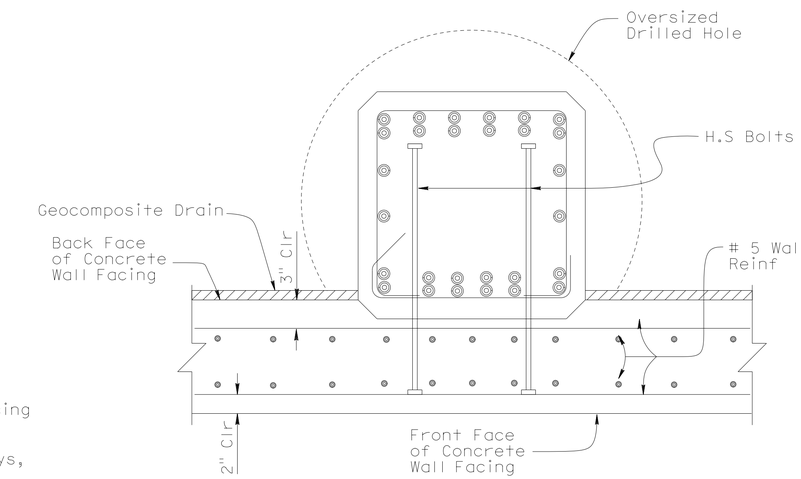

PART SECTION PILE

1 1/2" = 1'-0"

NOTES:

1. Extend 1/2 of back face main # 10 bundled bar pile reinforcement to 3" clr; hooked ends.
2. Extend remaining main # 10 bundled bar reinforcement to 3" clr; straight ends.

LEGEND

Denotes Bundled Bar

Denotes Geocomposite Drain

DESIGN	BY Pete Norboe	CHECKED Isaias Yalan	
DETAILS	BY Rania Heider	CHECKED Isaias Yalan	
QUANTITIES	BY Pete Norboe	CHECKED Isaias Yalan	

STATE OF CALIFORNIA
DEPARTMENT OF TRANSPORTATION

DIVISION OF ENGINEERING SERVICES
STRUCTURE DESIGN
DESIGN BRANCH 9

BRIDGE NO. 20E0076
POST MILE 13.76

POCKET CREEK RETAINING WALL
WALL DETAILS NO. 2

STRUCTURES DESIGN DETAIL SHEET (ENGLISH) (REV. 09-01-10)

ORIGINAL SCALE IN INCHES FOR REDUCED PLANS 0 1 2 3

UNIT: 3594
PROJECT NUMBER & PHASE: 0414000190-1
CONTRACT NO.: 04-1J3204

DISREGARD PRINTS BEARING EARLIER REVISION DATES

REVISION DATES 8-26-14 9-26-12 10-11-12

SHEET 6 OF 8

FILE => 04-1J3201-6-wdet2.dgn

USERNAME => s113541 DATE PLOTTED => 24-APR-2015 TIME PLOTTED => 10:46

DIST	COUNTY	ROUTE	POST MILES TOTAL PROJECT	SHEET No.	TOTAL SHEETS
04	Son	116	13.7	91	92

Peter W. Norboe 3-6-14
REGISTERED CIVIL ENGINEER DATE

9-02-14
PLANS APPROVAL DATE

REGISTERED PROFESSIONAL ENGINEER
PETER W. NORBOE
No. C57519
Exp. 12-31-15
CIVIL
STATE OF CALIFORNIA

The State of California or its officers or agents shall not be responsible for the accuracy or completeness of electronic copies of this plan sheet.

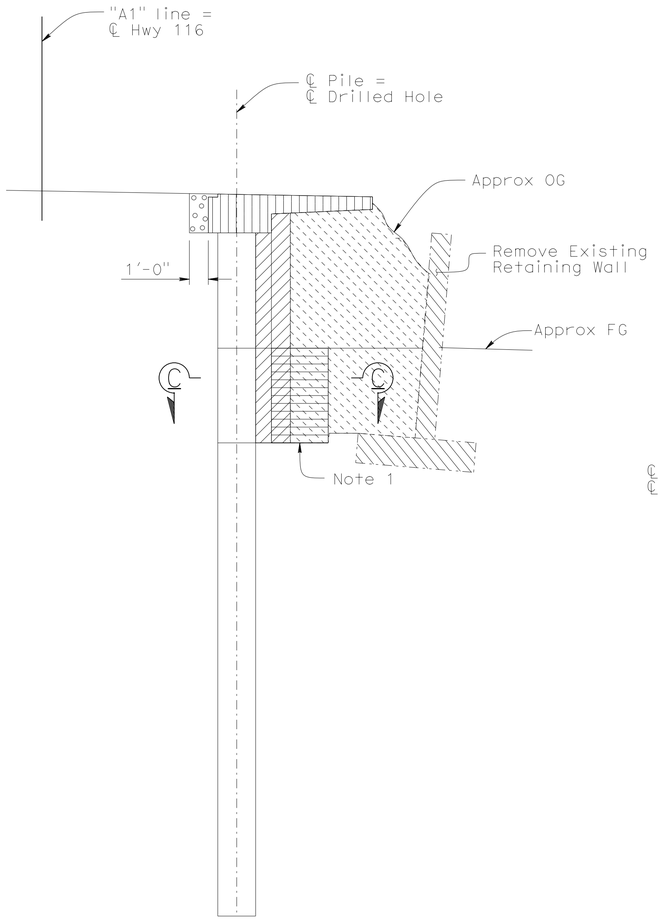

LIMITS OF PAYMENT FOR EXCAVATION AND BACKFILL

1/4" = 1'-0"

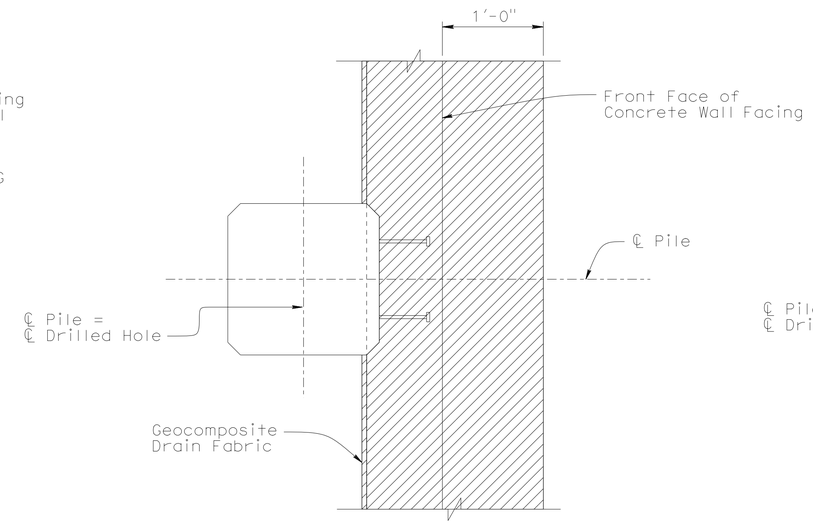

EXCAVATION

SECTION C-C

No Scale

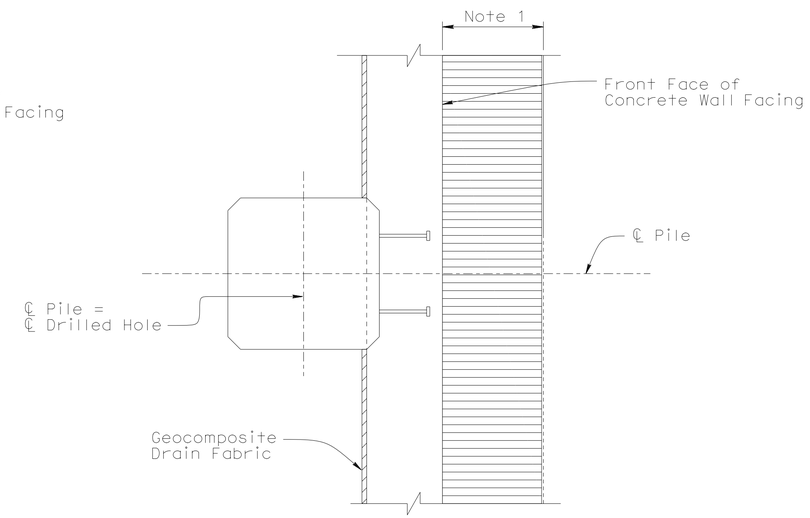

BACKFILL

SECTION C-C

No Scale

LEGEND

- RSP, See "ROAD PLANS"
- Roadway Excavation, See "ROAD PLANS"
- Structure Excavation (Soldier Pile)
- Remove Existing Retaining Wall
- Structure Backfill (Overhang Slab)
- Structure Excavation (Overhang Slab)

Notes:

1. For limits of RSP, see " ROAD PLANS"

DESIGN	BY Pete Norboe	CHECKED Isaias Yalan	
DETAILS	BY Rania Heider	CHECKED Isaias Yalan	
QUANTITIES	BY Pete Norboe	CHECKED Isaias Yalan	

STATE OF CALIFORNIA
DEPARTMENT OF TRANSPORTATION

DIVISION OF ENGINEERING SERVICES
STRUCTURE DESIGN
DESIGN BRANCH 9

BRIDGE NO. 20E0076
POST MILE 13.76

POCKET CREEK RETAINING WALL
WALL DETAIL NO. 3

STRUCTURES DESIGN DETAIL SHEET (ENGLISH) (REV. 09-01-10)

ORIGINAL SCALE IN INCHES FOR REDUCED PLANS 0 1 2 3

UNIT: 3594
PROJECT NUMBER & PHASE: 0414000190-1
CONTRACT NO.: 04-1J3204

DISREGARD PRINTS BEARING EARLIER REVISION DATES

REVISION DATES: 8-26-14 | ~~9-26-12~~ | ~~10-11-12~~ | SHEET 7 | OF 8

FILE => 04-1J3201-7-wdet3.dgn

USERNAME => s113541 DATE PLOTTED => 24-APR-2015 TIME PLOTTED => 10:46

DIST	COUNTY	ROUTE	POST MILES TOTAL PROJECT	SHEET No	TOTAL SHEETS
04	Son	116	13.76	92	92

REGISTERED CIVIL ENGINEER 02-10-14

PLANS APPROVAL DATE 9-02-14

REGISTERED PROFESSIONAL ENGINEER Vahid Khata-O-Khotan No. 66980 Exp. 9-30-14 CIVIL STATE OF CALIFORNIA

The State of California or its officers or agents shall not be responsible for the accuracy or completeness of electronic copies of this plan sheet.

This LOTB sheet was prepared in accordance with the Caltrans Soil & Rock Logging, Classification, & Presentation Manual (2010 Edition).

NOTE: Groundwater was not measured during drilling. Creek level is assumed to be the ground water level.

BENCH MARK

SUHV03

Fnd WP set 8" Spike
19.55' Rt. "A1" Line, ℄ Rte. 116
Sta. 11+23.81
N 1,944,642.01
E 6,283,868.76
Elev.=73.14

SUHV01

Fnd Set PK & shiner in AC Driveway
31.14' Lt. "A1" Line, ℄ Rte. 116
Sta. 13+23.98
N 1,944,643.38
E 6,284,072.26
Elev.=73.60

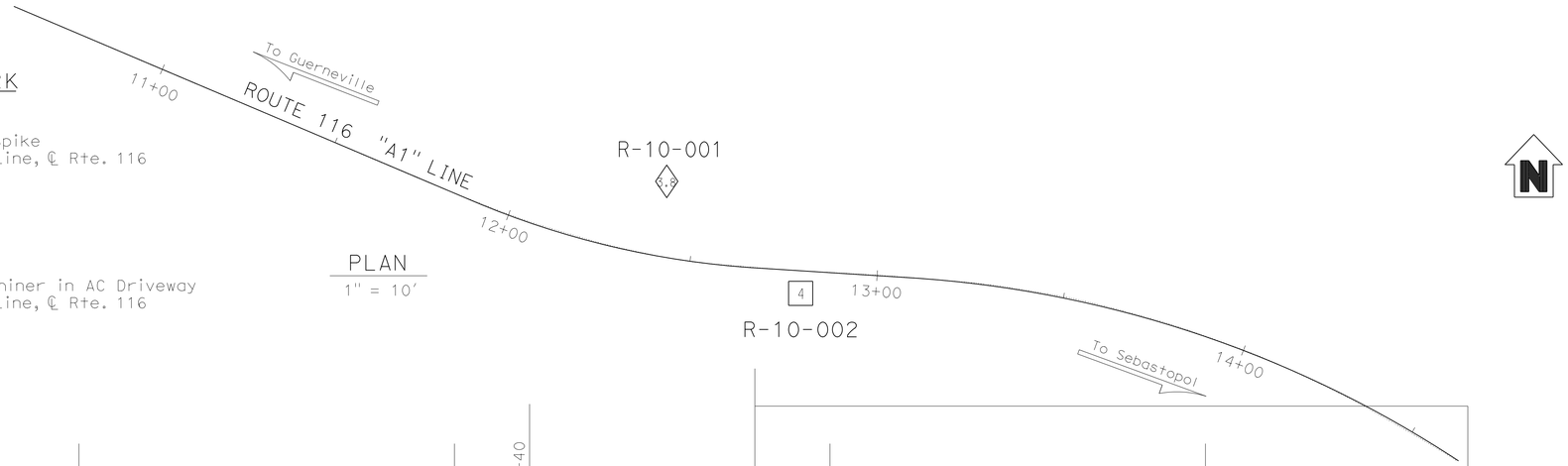

PLAN
1" = 10'

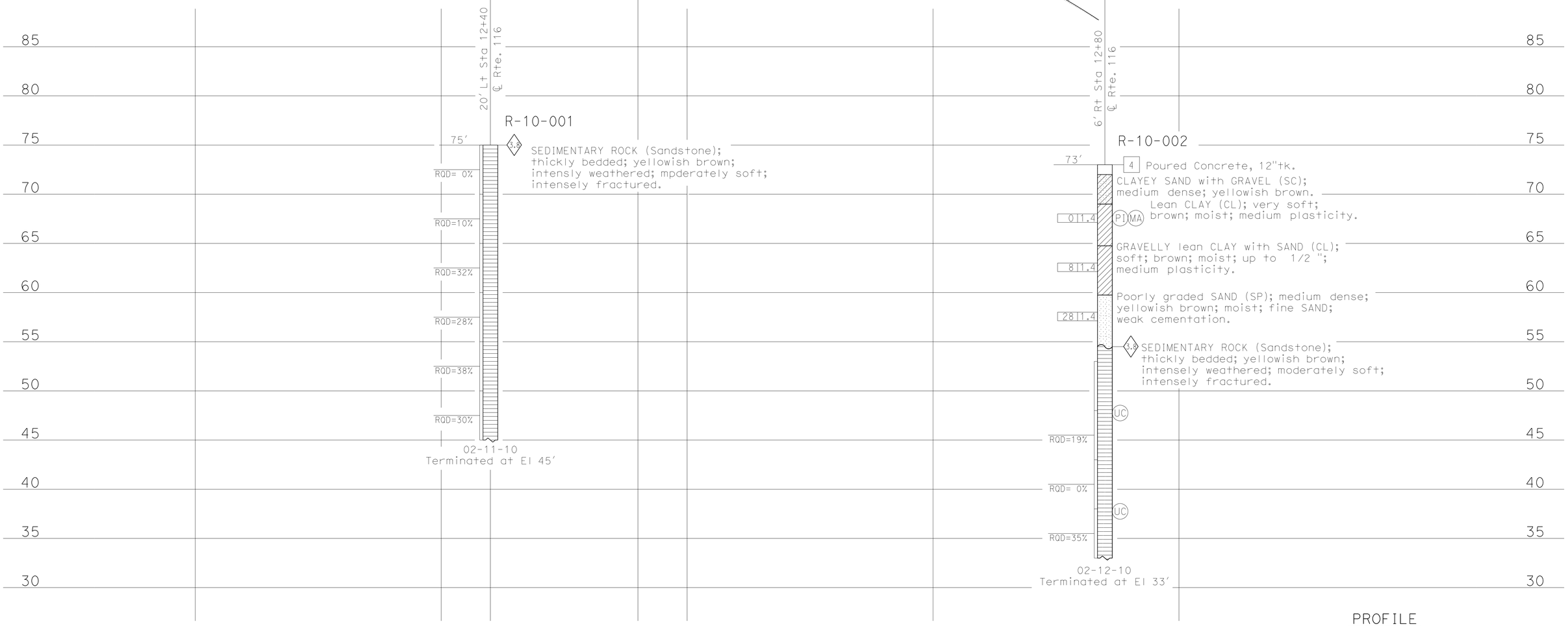

PROFILE
HOR. 1"=10'
VER. 1"= 5'

ENGINEERING SERVICES		GEOTECHNICAL SERVICES	STATE OF CALIFORNIA DEPARTMENT OF TRANSPORTATION	DIVISION OF ENGINEERING SERVICES OFFICE OF GEOTECHNICAL DESIGN BRANCH	BRIDGE NO. 20E0076	POCKET CREEK RETAINING WALL
FUNCTIONAL SUPERVISOR	DRAWN BY: M. Reynolds 01/11	FIELD INVESTIGATION BY: V. Khotan			POST MILES 13.76	LOG OF TEST BORINGS 1 of 1
NAME: H. Nikoui	CHECKED BY: S. Awad					

OGS CIVIL LOG OF TEST BORINGS SHEET

ORIGINAL SCALE IN INCHES FOR REDUCED PLANS 0 1 2 3

UNIT: 3660
PROJECT NUMBER & PHASE: 0414000190-1 CONTRACT NO.: 04-1J3204

DISREGARD PRINTS BEARING EARLIER REVISION DATES

REVISION DATES ----- ----- ----- ----- SHEET 8 OF 8

FILE => 04-1J3201-8-lttb.dgn

USERNAME => s113541 DATE PLOTTED => 24-APR-2015 TIME PLOTTED => 10:46