DIST.	COUNTY	ROUTE	POST MILES TOTAL PROJECT	SHEET NO.	TOTAL SHEETS
04	CC	4	27.3/R29.0	901	950

REGISTERED ENGINEER - CIVIL 11/30/11

1-17-12
PLANS APPROVAL DATE

REGISTERED PROFESSIONAL ENGINEER Odeon M. Li No. C31895 Exp. 12/31/12 CIVIL STATE OF CALIFORNIA

The State of California or its officers or agents shall not be responsible for the accuracy or completeness of electronic copies of this plan sheet.

CONTRA COSTA TRANSPORTATION AUTHORITY
2999 OAK ROAD, SUITE 100
WALNUT CREEK, CA 94597

T.Y. LIN INTERNATIONAL
2010 CROW CANYON PLACE, SUITE 350
SAN RAMON, CA 94583

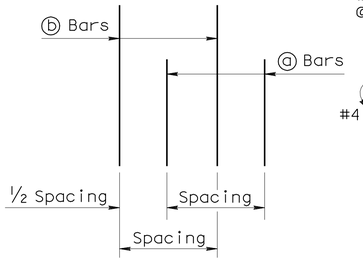

DETAIL B

No Scale

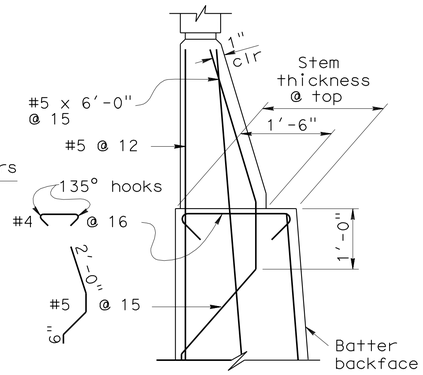

DETAIL A WITHOUT HAUNCH

No Scale

GENERAL NOTES

1. For soundwall and retaining wall architectural finish or texture, see details elsewhere in project plans.
2. For details not shown and drainage notes, see (B3-8)
3. Footing cover, 1'-6" minimum.
4. Limit of no splicing rebars = 3 times the bottom thickness of the stem.
5. Placement of reinforcements :
   - ⓑ & ⓒ bars are spliced together.
   - * ⓐ & ⓑ bars are bundled together.
   - ** Alternate ⓐ & ⓑ bars are shown in "Detail B".
   - Cont = Continuous.
6. For Soundwall & Barrier reinforcement, see "Soundwall Masonry Block on Barriers" sheets in Standard Plans.

TABLE 1: TABLE OF REINFORCING STEEL DIMENSIONS AND DATA

	Stem With Haunch													
Design H	6'	8'	10'	12'	14'	16'	18'	20'	22'	24'	26'	28'	30'	32'
W	7'-9"	8'-0"	8'-9"	9'-9"	10'-9"	12'-0"	13'-0"	14'-3"	15'-3"	16'-6"	18'-6"	19'-9"	21'-3"	22'-6"
C	2'-9"	2'-9"	3'-0"	3'-3"	3'-6"	4'-0"	4'-3"	4'-9"	5'-0"	5'-6"	6'-3"	6'-9"	7'-3"	7'-9"
B	5'-0"	5'-3"	5'-9"	6'-6"	7'-3"	8'-0"	8'-9"	9'-6"	10'-3"	11'-0"	12'-3"	13'-0"	14'-0"	14'-9"
F Spread footing	1'-3"	1'-3"	1'-3"	1'-3"	1'-3"	1'-6"	1'-6"	1'-9"	2'-0"	2'-3"	2'-9"	3'-0"	3'-3"	3'-9"
Batter	0	½:12	½:12	½:12	½:12	½:12	½:12	½:12	½:12	⅝:12	¾:12	⅞:12	1:12	1:12
Stem thickn. @ Haunch	1'-0"	1'-0"	1'-0"	1'-0"	1'-0"	1'-0"	1'-0"	1'-0"	1'-0"	1'-0"	1'-0"	1'-0"	1'-0"	1'-0"
ⓐ Bars				#6 @18**	#7 @18**	#8 @18**	#9 @18**	#10 @18**	#8 @ 9*	#8 @ 9*	#7 @ 6*	#10 @12**	#9 @ 9*	#11@12**
X				Cont	Cont	Cont	Cont	Cont	Cont	Cont	Cont	Cont	Cont	Cont
Y				8'-0"	6'-6"	7'-6"	8'-6"	9'-6"	9'-6"	11'-0"	11'-6"	13'-0"	14'-0"	15'-6"
ⓑ Bars	#5 @12	#5 @12	#5 @ 9	#6 @18**	#7 @18**	#8 @18**	#9 @18**	#10 @18**	#8 @ 9*	#8 @ 9*	#7 @ 6*	#10 @12**	#9 @ 9*	#11@12**
X	Cont	Cont	Cont	Cont	Cont	Cont	Cont	Cont	Cont	5'-6"	6'-6"	7'-0"	8'-0"	8'-6"
Y	Cont	Cont	Cont	Cont	10'-6"	13'-0"	15'-0"	17'-6"	19'-6"	21'-0"	18'-6"	19'-0"	25'-6"	23'-6"
ⓒ Bars					#6 @18	#6 @18	#6 @18	#6 @18	#6 @18	#6 @18	#6 @12	#7 @12	#7 @18	#7 @12
ⓓ Bars	#5 @12	#5 @12	#5 @12	#5 @ 9	#6 @ 9	#6 @ 9	#6 @ 6	#8 @ 9	#8 @ 9	#8 @ 9	#7 @ 6	#7 @ 6	#9 @ 9	#9 @ 9
Ultimate Bearing Capacity Req'd k/sf	4.6	5.5	6.1	6.6	7.3	8.1	9.0	9.9	11.3	12.2	12.5	13.4	14.1	15.4

TABLE 2: TABLE OF REINFORCING STEEL DIMENSIONS AND DATA

	Stem With Haunch						Stem Without Haunch						
Design H	8'	10'	12'	14'	16'	18'	20'	22'	24'	26'	28'	30'	32'
W	8'-0"	8'-6"	9'-3"	10'-3"	11'-3"	13'-0"	13'-9"	16'-0"	16'-6"	18'-6"	20'-0"	20'-6"	21'-9"
C	2'-9"	2'-9"	3'-0"	3'-6"	3'-9"	4'-3"	4'-6"	5'-3"	5'-6"	6'-3"	6'-9"	6'-9"	7'-6"
B	5'-3"	5'-9"	6'-3"	6'-9"	7'-6"	8'-9"	9'-3"	10'-9"	11'-0"	12'-3"	13'-3"	13'-9"	14'-3"
F Spread footing	1'-3"	1'-3"	1'-3"	1'-3"	1'-6"	1'-6"	1'-9"	2'-0"	2'-3"	2'-9"	3'-0"	3'-3"	3'-6"
Batter	0	0	0	0	0	0	0	0	0	¼:12	½:12	½:12	½:12
Stem thickn. @ Haunch	1'-0"	1'-0"	1'-0"	1'-0"	1'-3"	1'-3"							
Stem thickn. @ top							1'-6"	2'-0"	2'-0"	2'-0"	2'-0"	2'-0"	2'-0"
ⓐ Bars			#6 @12**	#5 @ 6*	#9 @18**	#9 @12**	#9 @12**	#9 @12**	#7 @ 6*	#7 @ 6*	#7 @ 6*	#9 @ 9*	#11@12**
X			Cont	Cont	Cont	Cont	Cont	Cont	Cont	Cont	Cont	Cont	Cont
Y			5'-6"	5'-6"	8'-6"	8'-6"	8'-6"	8'-6"	9'-6"	11'-0"	12'-6"	13'-6"	14'-6"
ⓑ Bars	#5 @ 9	#6 @ 9	#6 @12**	#5 @ 6*	#9 @18**	#9 @12**	#9 @12**	#9 @12**	#7 @ 6*	#7 @ 6*	#7 @ 6*	#9 @ 9*	#11@12**
X	Cont	Cont	Cont	Cont	Cont	Cont	Cont	Cont	5'-6"	6'-0"	7'-6"	7'-6"	8'-0"
Y	Cont	Cont	Cont	Cont	11'-6"	11'-6"	12'-0"	12'-0"	17'-6"	20'-0"	21'-6"	24'-0"	24'-0"
ⓒ Bars					#7 @18	#7 @12	#7 @12	#7 @12	#6 @ 12	#6 @ 12	#6 @12	#7 @18	#7 @12
ⓓ Bars	#5 @12	#5 @ 9	#5 @9	#6 @9	#6 @ 9	#9 @12	#9 @12	#7 @#7	6 @ 6	#7 @ 6	#7 @ 6	#9 @ 9	#9 @ 9
Ultimate Bearing Capacity Req'd k/sf	5.5	6.5	7.3	7.6	9.0	9.0	10.6	10.5	12.2	12.6	13.3	15.4	16.0

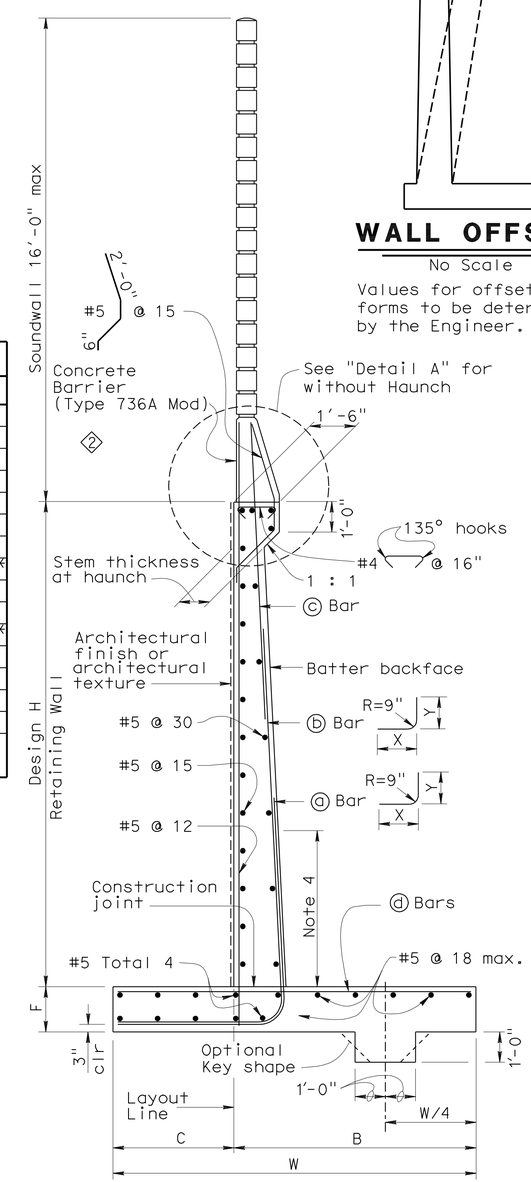

SPREAD FOOTING SECTION

No Scale

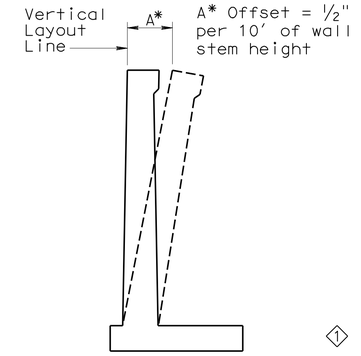

WALL OFFSET

No Scale

Values for offsetting forms to be determined by the Engineer.

1

SPREAD FOOTING DATA TABLE

Location	Nominal Bearing Resistance q_n
RW2 LOL 1+00 to RW2 LOL 7+06	12.5 ksf

DESIGN DATA

DESIGN: Load Factor Design (LFD)

CONCRETE: Reinforced Concrete, f'c = 3600 psi
fy = 60,000 psi

LOADING CASE:
Level ground with 240 psf surcharge and 16' Soundwall

Seismic Load = 0.3 Dead Load
Wind Load = 30 psf
Dead Load of Soundwall = 1414 lb/ft
Dead Load of Barrier = 372 lb/ft

SEISMIC LOAD: SOIL
Kh = 0.3g
Kv = 0.0
Kae : Mononobe-Okabe Method

SOIL: Ø = 34° γ = 120 pcf
Equivalent fluid pressure:
= 36 pcf for determination of toe pressure
= 27 pcf for determination of heel pressure

EXTERNAL STABILITY:
Group 1 : D + E + SC
Group 2 : D + E + SC + W
Group 3 : D + PYM

INTERNAL STABILITY (LFD):
Group A : βD + 1.7E + 1.7SC
Group B : βD + 1.7E + 1.3W
Group C (stem) : 1.0D + 1.0E + 1.0EQD + 1.0EQE
Group C (footing) : D + PYM

Where : β = 1.0 or 1.3 whichever controls design
D = Dead Load
E = Lateral Earth Pressure
SC = Surcharge
W = Wind load
EQD = Seismic Dead Load
EQE = Seismic Lateral Earth Pressure
PYM = Probable Yield Moment (1.3 x Nominal Yield Moment of Stem)

SPECIAL DETAILS

STANDARD DRAWING

RELEASE DATE Revised	DESIGN	BY MADON SAH	CHECKED OVERCOMER HOR	RELEASED BY
	DETAILS	BY R LASAT	CHECKED J.C. MOESE	
FILE NO. xs14-220e	SUBMITTED	BY OVERCOMER HOR	DRAWING DATE 12/1/05	OFFICE CHIEF

1 Added Table
2 Modified Detail

STATE OF CALIFORNIA
DEPARTMENT OF TRANSPORTATION

DIVISION OF ENGINEERING SERVICES

BRIDGE NO.
POST MILE 27.6

RETAINING WALL NO. 2
RETAINING WALL TYPE 1SWB

DS OSD 2147A (REV. X/XX/XX)

ORIGINAL SCALE IN INCHES FOR REDUCED PLANS 0 1 2 3

PROJECT NUMBER & PHASE: 04000210801
CONTRACT NO: 04-1G9404 UNIT: 0750

DISREGARD PRINTS BEARING EARLIER REVISION DATES

REVISION DATES (PRELIMINARY STAGE ONLY) 8/4/08 7/7/09 7/7/10 2/7/11 3/29/11 4/29/11 8/9/11

SHEET 3 OF 9

DATE PLOTTED => 19-JAN-2012 TIME PLOTTED => 07:43

USERNAME => s124496

28Erw2-g-rwdt01.dgn

DIST.	COUNTY	ROUTE	POST MILES TOTAL PROJECT	SHEET NO.	TOTAL SHEETS
04	CC	4	27.3/R29.0	902	950

REGISTERED ENGINEER - CIVIL 11/30/11

1-17-12
PLANS APPROVAL DATE

REGISTERED PROFESSIONAL ENGINEER Odeon M. Li No. C31895 Exp. 12/31/12 CIVIL STATE OF CALIFORNIA

The State of California or its officers or agents shall not be responsible for the accuracy or completeness of electronic copies of this plan sheet.

CONTRA COSTA TRANSPORTATION AUTHORITY
2999 OAK ROAD, SUITE 100
WALNUT CREEK, CA 94597

T.Y. LIN INTERNATIONAL
2010 CROW CANYON PLACE, SUITE 350
SAN RAMON, CA 94583

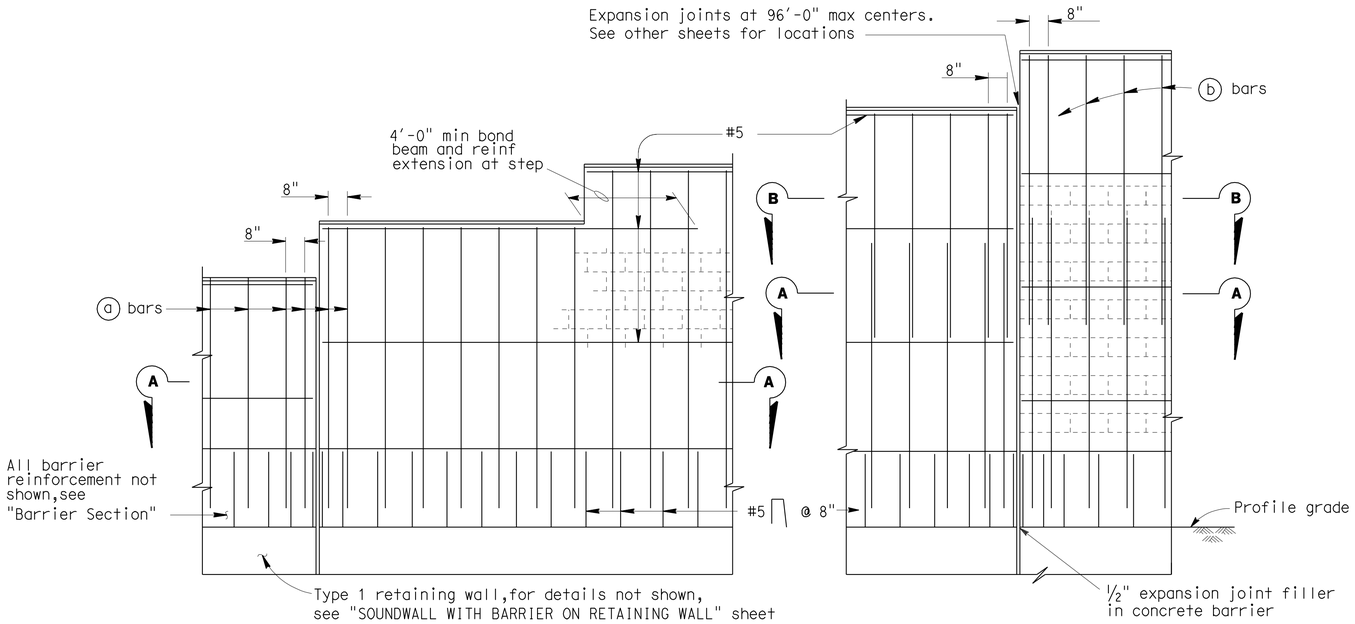

PART ELEVATIONS

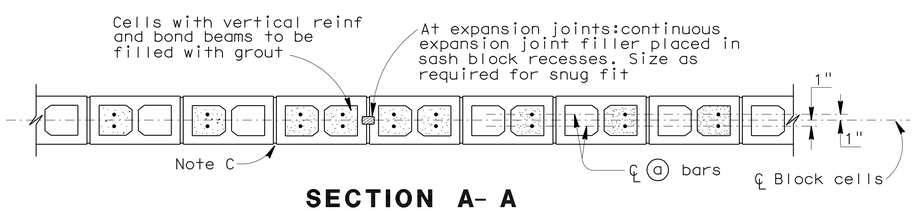

SECTION A- A

For details not shown,see other details

H=6'-4" THRU H=10'-4"

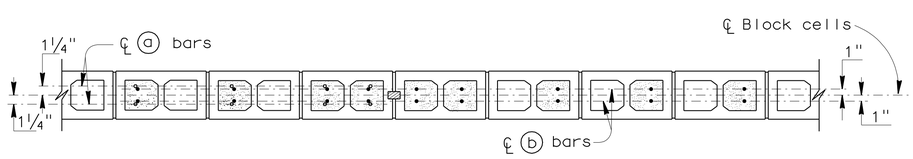

SECTION A- A

SECTION B- B

For details not shown,see other details

H=12'-4" THRU H=16'-4"

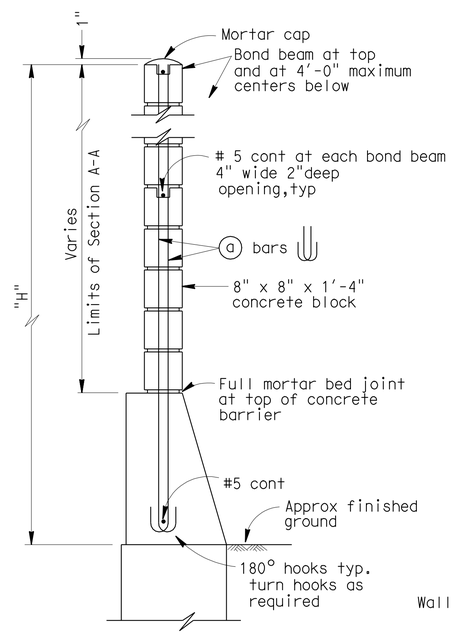

H=6'-4" THRU H=10'-4"

For details not shown,see H=12'-4" thru H=16'-4"

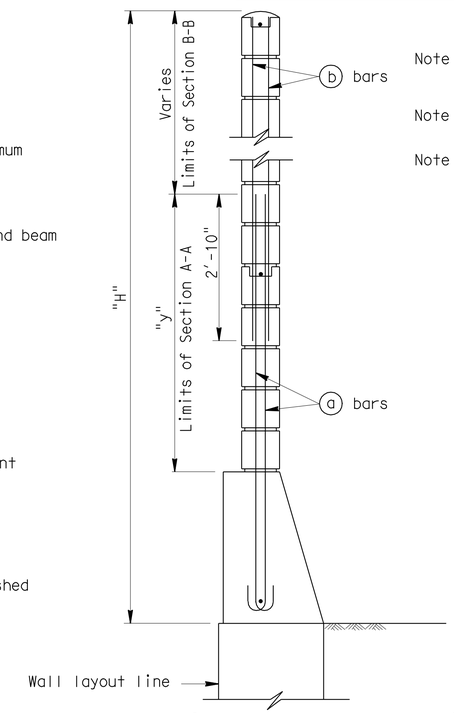

H=12'-4" THRU H=16'-4"

For details not shown,see H=6'-4" thru H=10'-4"

TYPICAL SECTIONS

SOUNDWALL REINFORCEMENT TABLE

Maximum H	ⓐ bars @ 1'-4" max	ⓑ bars @ 1'-4" max	"y"	f'm (KSI)	Compressive Strength of CMU (KSI)	Maximum H
6'-4"	# 4	———	———	1.5	1.9	6'-4"
8'-4"	# 4	———	———	1.5	1.9	8'-4"
10'-4"	# 4	———	———	1.5	1.9	10'-4"
12'-4"	# 5	# 4	5'-0"	1.5	1.9	12'-4"
14'-4"	# 6	# 4	7'-0"	1.5	1.9	14'-4"
16'-4"	# 6	# 4	9'-0"	2.5	3.7	16'-4"

Note I : For details not shown,see "SOUNDWALL WITH BARRIER ON RETAINING WALL - MASONRY BLOCK -- DETAILS NO.2" sheet.

Note II : Slope ground at traffic side of barrier to drain. Maximum slope ±10%.

Note III: See "SOUNDWALL MASONRY BLOCK - MISCELLANEOUS DETAILS" sheet for other details.

GENERAL NOTES

Note A: For type of block and joint finish, see other sheets.

Note B: When blocks are laid in stacked bond, ladder type, galvanized joint reinforcement shall be provided. A minimum of 0.07"-0.14" wire continuous at 4'-0" maximum to be used. Locate reinforcement in joints that are at the approximate midpoint between bond beams.

Note C: Horizontal joints shall be tooled concave or may be weathered.
Vertical joints shall be tooled concave or may be raked.

Note D: For intermediate wall heights that are between the "H's" given. Use the tabular information for the next higher "H".

Note E: Masonry strengths are listed in "SOUNDWALL REINFORCEMENT TABLE".

Note F: Concrete to be used for the barrier shall contain not less than 590 pounds of cementitious material per cubic yard.

STANDARD DRAWING

FILE NO. xs15-130-1e

APPROVED BY T SATTER
RESPONSIBLE TECHNICAL SPECIALIST
APPROVAL DATE 10/22/09

RELEASED BY ROBERTO LACALLE
RESPONSIBLE OFFICE CHIEF
RELEASE DATE 10/22/09

STATE OF CALIFORNIA
DEPARTMENT OF TRANSPORTATION

DIVISION OF ENGINEERING SERVICES

RETAINING WALL NO. 2

BRIDGE NO.

POST MILE 27.6

SOUNDWALL - MASONRY BLOCK WITH BARRIER ON RETAINING WALL

DETAILS NO. 1

DS OSD 2147A (ENGLISH STANDARD DRAWING "XS" BORDER REV. 10/22/09)

ORIGINAL SCALE IN INCHES FOR REDUCED PLANS 0 1 2 3

PROJECT NUMBER & PHASE: 04000210801
CONTRACT NO: 04-1G9404 UNIT: 0750

DISREGARD PRINTS BEARING EARLIER REVISION DATES

REVISION DATES (PRELIMINARY STAGE ONLY) 6/08 5/09 7/09 2/10 3/29/11 4/26/11 8/9/11

SHEET 4 OF 9

USERNAME => s124496

28Erw2-g-rwdt02.dgn

DATE PLOTTED => 19-JAN-2012 TIME PLOTTED => 07:43

DIST.	COUNTY	ROUTE	POST MILES TOTAL PROJECT	SHEET NO.	TOTAL SHEETS
04	CC	4	27.3/R29.0	903	950

REGISTERED ENGINEER - CIVIL 11/30/11

1-17-12
PLANS APPROVAL DATE

REGISTERED PROFESSIONAL ENGINEER Odeon M. Li No. C31895 Exp. 12/31/12 CIVIL STATE OF CALIFORNIA

The State of California or its officers or agents shall not be responsible for the accuracy or completeness of electronic copies of this plan sheet.

CONTRA COSTA TRANSPORTATION AUTHORITY
2999 OAK ROAD, SUITE 100
WALNUT CREEK, CA 94597

T.Y. LIN INTERNATIONAL
2010 CROW CANYON PLACE, SUITE 350
SAN RAMON, CA 94583

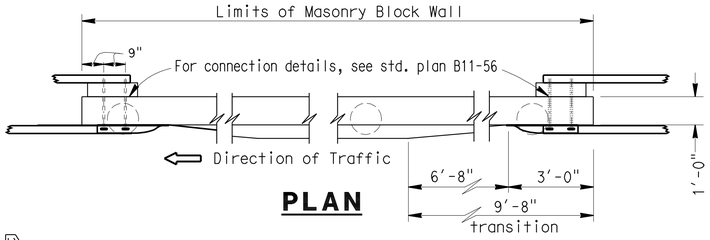

PLAN

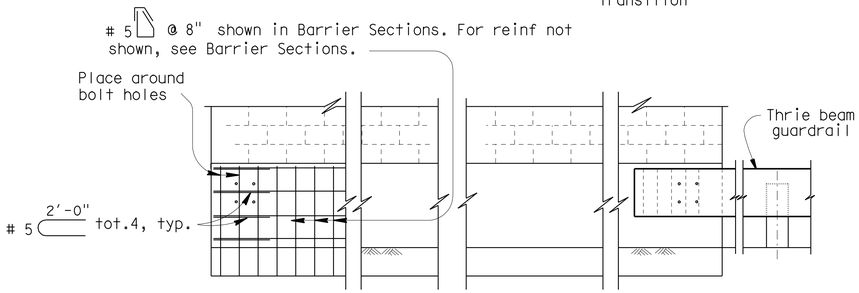

ELEVATION

METAL BEAM GUARDRAIL ANCHORAGE

For details not shown, see std. plan B11-56.

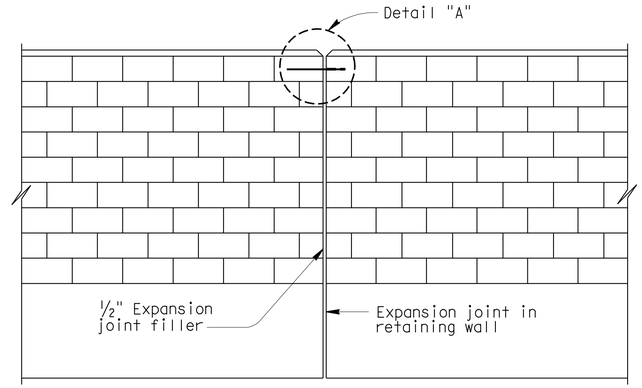

ALIGNMENT KEY DETAIL

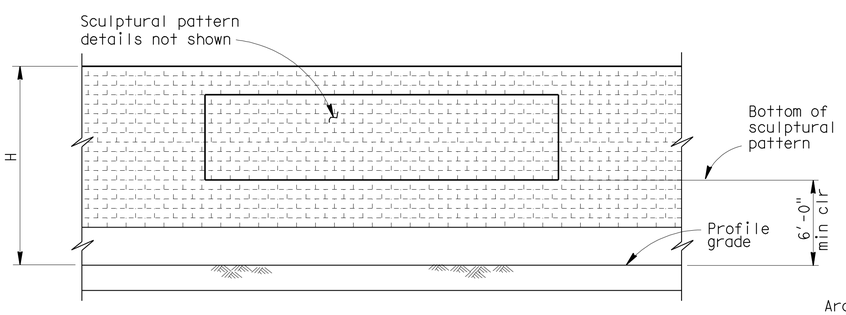

CLEARANCE DETAIL

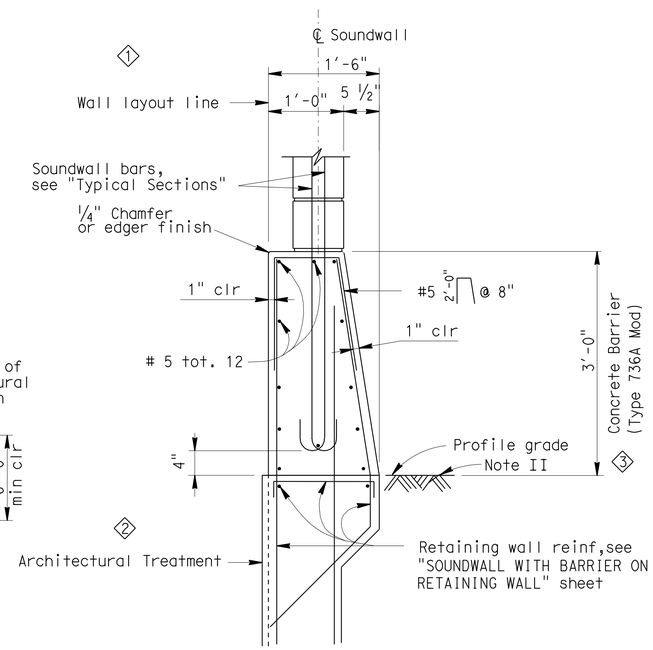

BARRIER SECTION

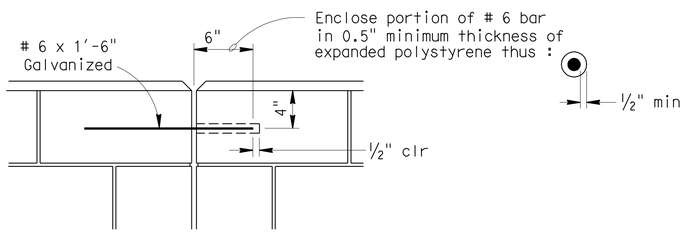

DETAIL A

NOTES:

I : For details not shown,see "RETAINING WALL WITH SOUNDWALL" sheets.

II : Slope ground at traffic side of barrier to drain. Maximum slope ±10%. See Standard Plan B11-56, Note D.

DESIGN NOTES

DESIGN

Uniform Building Code,1997 Edition and the Bridge Design Specifications.

DESIGN WIND LOAD

33 PSF

DESIGN SEISMIC LOAD

0.57 Dead load

REINFORCED CONCRETE

f'c = 3250 PSI
fy = 60 KSI

CONCRETE MASONRY

REGULAR STRENGTH	HIGH STRENGTH	
f'm = 1500 PSI	f'm = 2000 PSI	f'm = 2500 PSI
f_b = 1500 PSI	f_b = 660 PSI	f_b = 830 PSI
fs = 24.0 KSI	fs = 24.0 KSI	fs = 24000 PSI
n = 25.8	n = 19.3	n = 15.5

LOAD FACTORS AND LOAD COMBINATIONS

Working Stress Design (WSD) Percentage of unit stress

Group 1: D + E + SC 100%
Group 2: D + W + SC + E 100%
Group 3: D + 0.71 EQD + E 100%

Where:

D = Dead load
E = Lateral earth pressure
SC = Live load surcharge
W = Wind load
EQD = Seismic dead load

Load Factor Design (LFD)

Group A: βD +1.7 E + 1.7 SC
Group B: βD +1.7 E + 1.3 W
Group C: βD +1.3 E + 1.0 EQE
Group D: βD +1.3 E + 1.0 EQD
Group E: βD +1.1 E + 0.85 (EQE + EQD)

Where : β = 0.9 or 1.2, whichever controls in design
D = Dead load
E = Lateral earth pressure
SC = Live load surcharge
W = Wind load
EQD = Seismic dead load
EQE = Seismic earth load

STRENGTH REDUCTION FACTORS, Ø

Reinforced concrete:
For flexure ---------- Ø=0.90
For shear ---------- Ø=0.85

Concrete masonry:
For flexure ---------- Ø=0.80
For shear ---------- Ø=0.60

Foundations :

See "RETAINING WALL WITH SOUNDWALL" sheets.

SPECIAL DETAILS

STANDARD DRAWING		
FILE NO. xs15-130-2e	APPROVED BY TILLAT SATTER, RESPONSIBLE TECHNICAL SPECIALIST	RELEASED BY ROBERTO LACALLE, RESPONSIBLE OFFICE CHIEF
	APPROVAL DATE 4-15-08	RELEASE DATE Revised

1. Moved wall layout line
2. Added architectural treatment
3. Modified Detail

STATE OF CALIFORNIA
DEPARTMENT OF TRANSPORTATION

DIVISION OF ENGINEERING SERVICES

BRIDGE NO.

POST MILE 27.6

RETAINING WALL NO. 2

SOUNDWALL - MASONRY BLOCK WITH BARRIER ON RETAINING WALL

DETAILS NO. 2

DS OSD 2147A (ENGLISH STANDARD DRAWING "XS" BORDER REV. 01/11/08)

ORIGINAL SCALE IN INCHES FOR REDUCED PLANS 0 1 2 3

PROJECT NUMBER & PHASE: 04000210801
CONTRACT NO: 04-1G9404 UNIT: 0750

DISREGARD PRINTS BEARING EARLIER REVISION DATES

REVISION DATES (PRELIMINARY STAGE ONLY): 6/08 5/09 7/09 2/10 3/29/11 4/29/11 8/9/11

SHEET 5 OF 9

USERNAME => s124496

28Erw2-g-rwdt03.dgn

DATE PLOTTED => 19-JAN-2012 TIME PLOTTED => 07:24:43

DIST	COUNTY	ROUTE	POST MILES TOTAL PROJECT	SHEET No	TOTAL SHEETS
04	CC	4	27.3/R29.0	904	950

REGISTERED CIVIL ENGINEER 11/30/11 DATE

1-17-12
PLANS APPROVAL DATE

REGISTERED PROFESSIONAL ENGINEER Odeon M. Li No. C31895 Exp. 12/31/12 CIVIL STATE OF CALIFORNIA

The State of California or its officers or agents shall not be responsible for the accuracy or completeness of scanned copies of this plan sheet.

CONTRA COSTA TRANSPORTATION AUTHORITY
2999 OAK ROAD, SUITE 100
WALNUT CREEK, CA 94597

T.Y. LIN INTERNATIONAL
2010 CROW CANYON PLACE, SUITE 350
SAN RAMON, CA 94583

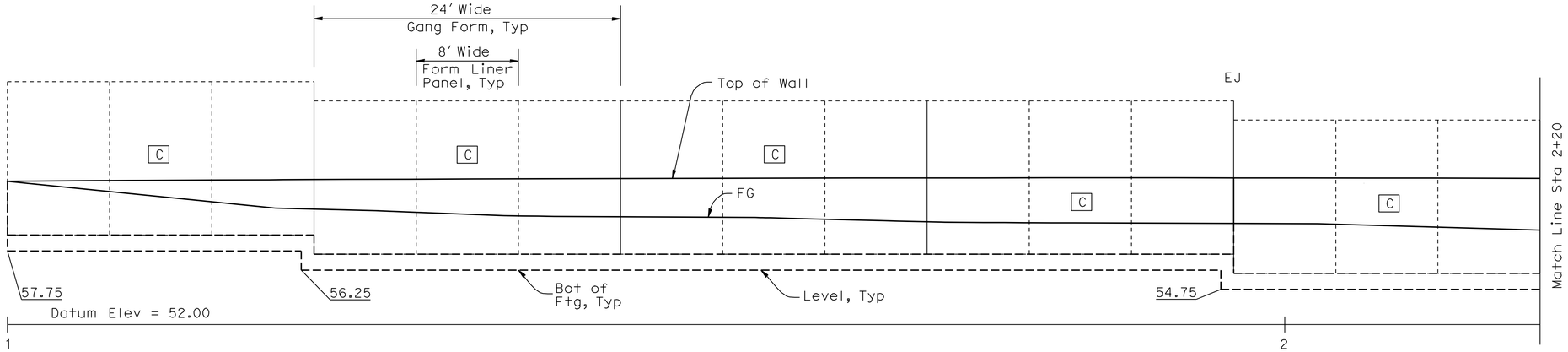

DEVELOPED MIRROR ELEVATION

1" = 5'-0"

Legends:

EJ Wall Expansion Joint

C Form liner group designation

6 Form liner panel designation

Note:
For form liner group and panel details see "Retaining Wall Architectural Treatment Details" sheets in Rd Plans.

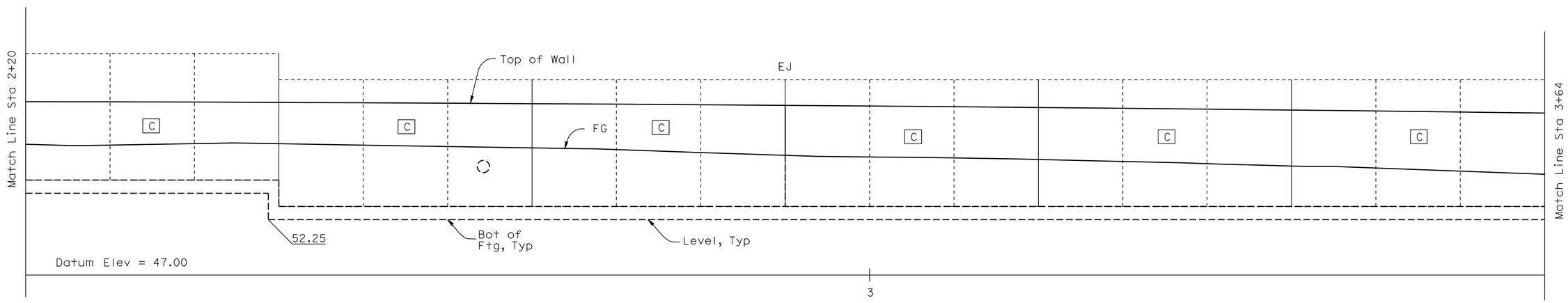

DEVELOPED MIRROR ELEVATION

1" = 5'-0"

Note:
The Contractor shall verify all controlling field dimensions before ordering or fabricating any material.

Overcomer Y. Hor
DESIGN OVERSIGHT Overcomer Y. Hor
12-12-11
SIGN OFF DATE

	BY	CHECKED
DESIGN	Antonio Luo	Odeon M. Li
DETAILS	Jing Zhuo Yu	Odeon M. Li
QUANTITIES	Chin Dang	Kimberly Bowen

PREPARED FOR THE STATE OF CALIFORNIA DEPARTMENT OF TRANSPORTATION

Odeon M. Li
PROJECT ENGINEER

BRIDGE NO.
POST MILE 27.6

RETAINING WALL NO. 2
ARCHITECTURAL TREATMENT LAYOUT NO. 1

DESIGN DETAIL SHEET (ENGLISH) (REV. 06-01-09)

ORIGINAL SCALE IN INCHES FOR REDUCED PLANS 0 1 2 3

PROJECT NUMBER & PHASE: 04000210801
CONTRACT NO: 04-1G9404 UNIT: 0750

DISREGARD PRINTS BEARING EARLIER REVISION DATES

REVISION DATES (PRELIMINARY STAGE ONLY) 6/08 5/09 7/09 2/10 3/9/11 4/29/11 8/9/11

SHEET 6 OF 9

FILE => 28Erw2-y-atlo01.dgn

USERNAME => s124496 DATE PLOTTED => 19-JAN-2012 TIME PLOTTED => 07:43

DIST	COUNTY	ROUTE	POST MILES TOTAL PROJECT	SHEET No	TOTAL SHEETS
04	CC	4	27.3/R29.0	905	950

REGISTERED CIVIL ENGINEER 11/30/11 DATE

1-17-12
PLANS APPROVAL DATE

REGISTERED PROFESSIONAL ENGINEER Odeon M. Li No. C31895 Exp. 12/31/12 CIVIL STATE OF CALIFORNIA

The State of California or its officers or agents shall not be responsible for the accuracy or completeness of scanned copies of this plan sheet.

CONTRA COSTA TRANSPORTATION AUTHORITY
2999 OAK ROAD, SUITE 100
WALNUT CREEK, CA 94597

T.Y. LIN INTERNATIONAL
2010 CROW CANYON PLACE, SUITE 350
SAN RAMON, CA 94583

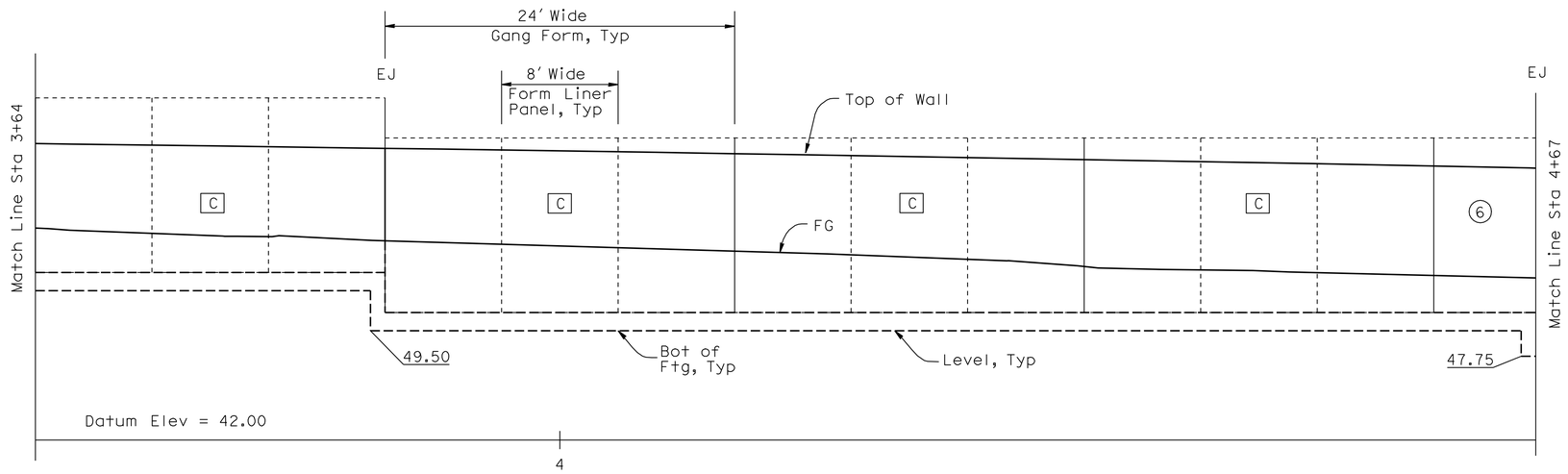

DEVELOPED MIRROR ELEVATION

1" = 5'-0"

Legends:

EJ Wall Expansion Joint

C Form liner group designation

6 Form liner panel designation

Note:
For form liner group and panel details see "Retaining Wall Architectural Treatment Details" sheets in Rd Plans.

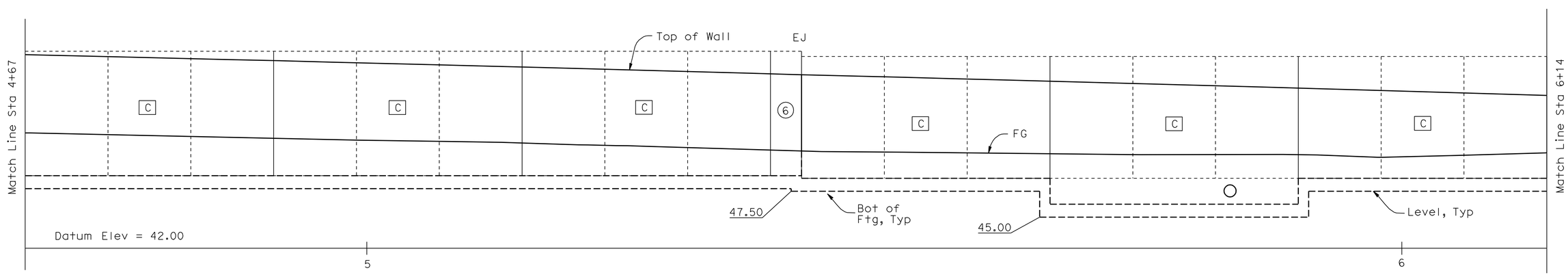

DEVELOPED MIRROR ELEVATION

1" = 5'-0"

Note:
The Contractor shall verify all controlling field dimensions before ordering or fabricating any material.

DESIGN OVERSIGHT Overcomer Y. Hor

12-12-11
SIGN OFF DATE

	BY	CHECKED
DESIGN	Antonio Luo	Odeon M. Li
DETAILS	Jing Zhuo Yu	Odeon M. Li
QUANTITIES	Chin Dang	Kimberly Bowen

PREPARED FOR THE STATE OF CALIFORNIA DEPARTMENT OF TRANSPORTATION

Odeon M. Li
PROJECT ENGINEER

BRIDGE NO.

POST MILE 27.6

RETAINING WALL NO. 2

ARCHITECTURAL TREATMENT LAYOUT NO. 2

DESIGN DETAIL SHEET (ENGLISH) (REV. 06-01-09)

ORIGINAL SCALE IN INCHES FOR REDUCED PLANS 0 1 2 3

PROJECT NUMBER & PHASE: 04000210801
CONTRACT NO: 04-1G9404 UNIT: 0750

DISREGARD PRINTS BEARING EARLIER REVISION DATES

REVISION DATES (PRELIMINARY STAGE ONLY) 6/08 5/09 7/09 2/10 3/9/11 4/29/11 8/9/11

SHEET 7 OF 9

FILE => 28Erw2-y-atlo02.dgn

USERNAME => s124496 DATE PLOTTED => 19-JAN-2012 TIME PLOTTED => 07:43

DIST	COUNTY	ROUTE	POST MILES TOTAL PROJECT	SHEET No	TOTAL SHEETS
04	CC	4	27.3/R29.0	906	950

REGISTERED CIVIL ENGINEER 11/30/11 DATE

1-17-12
PLANS APPROVAL DATE

REGISTERED PROFESSIONAL ENGINEER Odeon M. Li No. C31895 Exp. 12/31/12 CIVIL STATE OF CALIFORNIA

The State of California or its officers or agents shall not be responsible for the accuracy or completeness of scanned copies of this plan sheet.

CONTRA COSTA TRANSPORTATION AUTHORITY
2999 OAK ROAD, SUITE 100
WALNUT CREEK, CA 94597

T.Y. LIN INTERNATIONAL
2010 CROW CANYON PLACE, SUITE 350
SAN RAMON, CA 94583

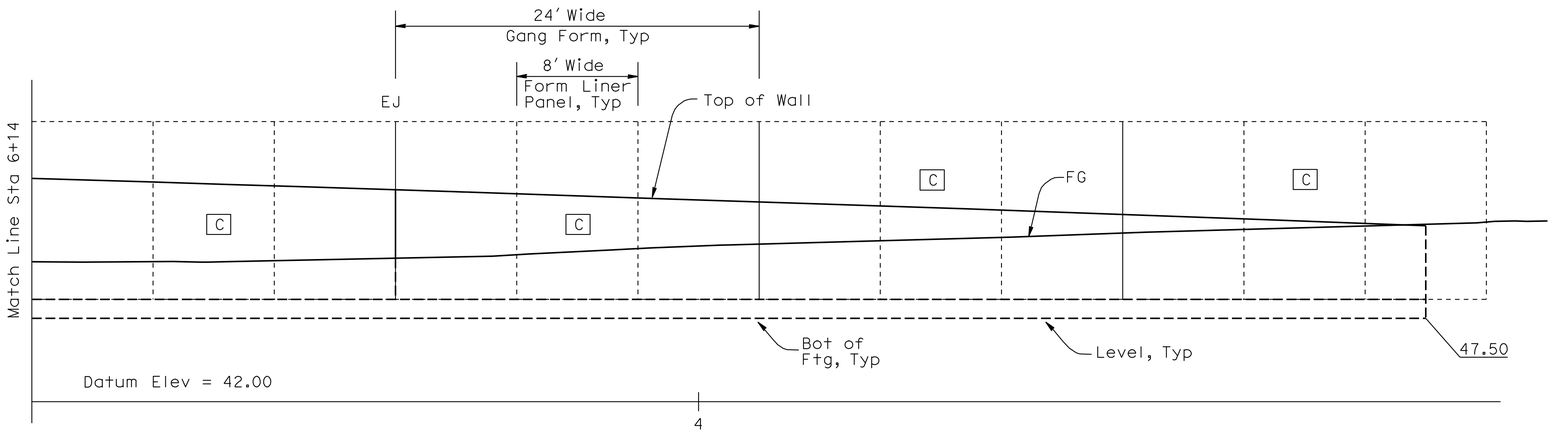

DEVELOPED MIRROR ELEVATION

1" = 5'-0"

Legends:

EJ Wall Expansion Joint

C Form liner group designation

6 Form liner panel designation

Note:
For form liner group and panel details see "Retaining Wall Architectural Treatment Details" sheets in Rd Plans

Note:
The Contractor shall verify all controlling field dimensions before ordering or fabricating any material.

DESIGN OVERSIGHT Overcomer Y. Hor
12-12-11
SIGN OFF DATE

	BY	CHECKED
DESIGN	Antonio Luo	Odeon M. Li
DETAILS	Jing Zhuo Yu	Odeon M. Li
QUANTITIES	Chin Dang	Kimberly Bowen

PREPARED FOR THE STATE OF CALIFORNIA DEPARTMENT OF TRANSPORTATION

Odeon M. Li
PROJECT ENGINEER

BRIDGE NO.
POST MILE 27.6

RETAINING WALL NO. 2
ARCHITECTURAL TREATMENT LAYOUT NO. 3

DESIGN DETAIL SHEET (ENGLISH) (REV. 06-01-09)

ORIGINAL SCALE IN INCHES FOR REDUCED PLANS 0 1 2 3

PROJECT NUMBER & PHASE: 04000210801
CONTRACT NO: 04-1G9404 UNIT: 0750

DISREGARD PRINTS BEARING EARLIER REVISION DATES

REVISION DATES (PRELIMINARY STAGE ONLY) 6/08 5/09 7/09 2/10 3/9/11 4/29/11 8/9/11

SHEET 8 OF 9

FILE => 28Erw2-y-atlo03.dgn

USERNAME => s124936 DATE PLOTTED => 19-JAN-2012 TIME PLOTTED => 07:44

DIST	COUNTY	ROUTE	POST MILES TOTAL PROJECT	SHEET No	TOTAL SHEETS
04	CC	4	27.3/R29.0	907	950

GEOTECHNICAL PROFESSIONAL — DATE 8/9/11

1-17-12
PLANS APPROVAL DATE

REGISTERED PROFESSIONAL ENGINEER — GARY PARIKH — No. G.E. 666 — Exp. 12/31/11 — GEOTECHNICAL — STATE OF CALIFORNIA

The State of California or its officers or agents shall not be responsible for the accuracy or completeness of electronic copies of this plan sheet.

CONTRA COSTA TRANSPORTATION AUTHORITY
2999 OAK ROAD, SUITE 100
WALNUT CREEK, CA 94597

PARIKH CONSULTANTS, INC.
2360 QUME DRIVE, SUITE A
SAN JOSE CA 95131

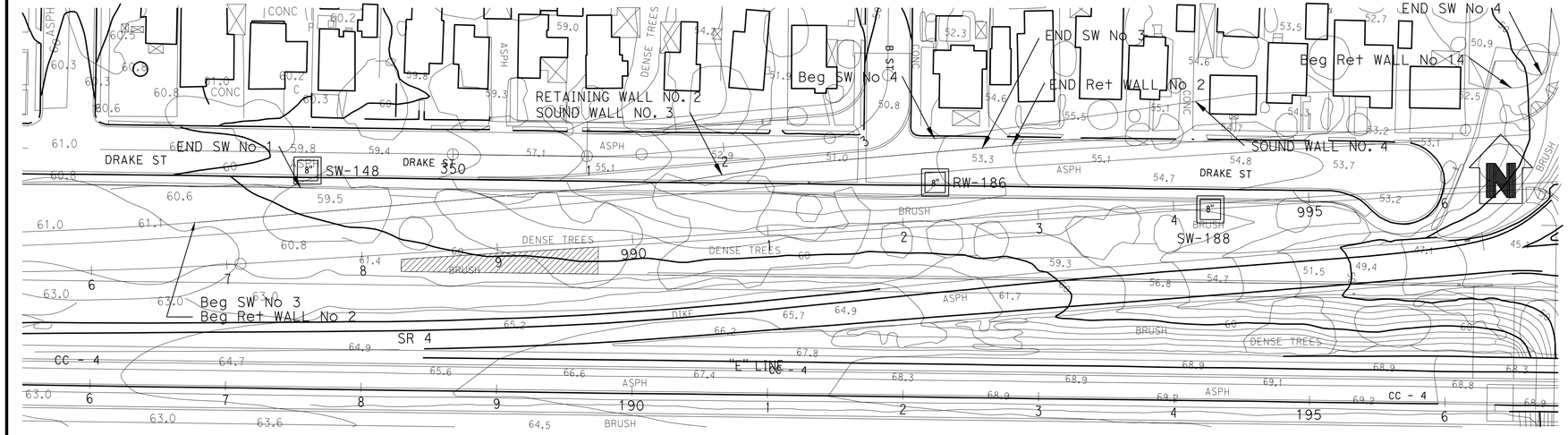

PLAN
1"=50'

Note:
Standard Penetration Test Sampler: I.D. = 1.4"; O.D. = 2"
Modified California Sampler: I.D. = 2.5"; O.D. = 3"
Hammer Assembly: A 140 lb hammer with a 30" drop
(Automatic Hammer)

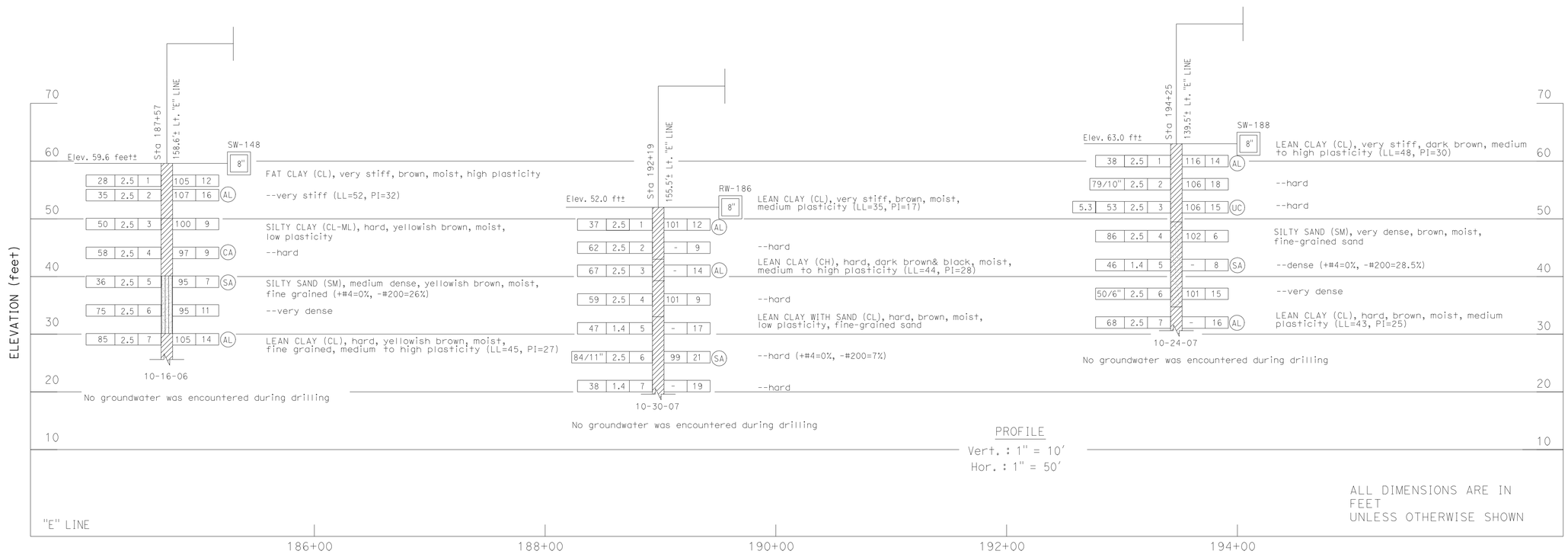

PROFILE
Vert. : 1" = 10'
Hor. : 1" = 50'

ALL DIMENSIONS ARE IN FEET
UNLESS OTHERWISE SHOWN

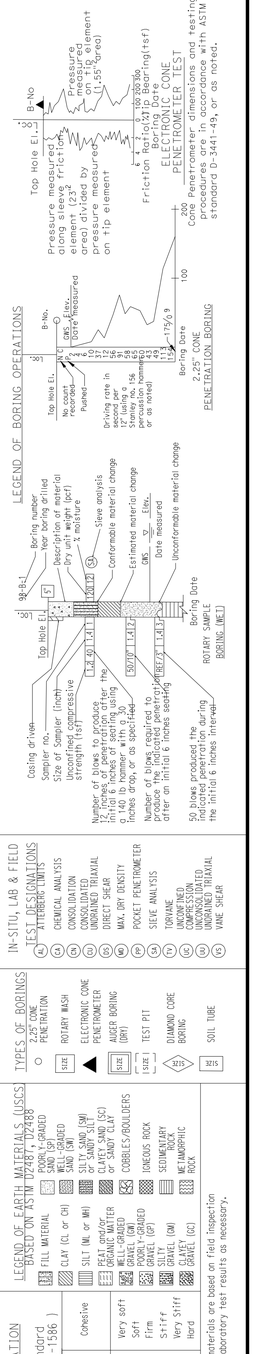

DESIGN OVERSIGHT Overcomer Y. Hor	DRAWN BY	O. GOUTHIER	G. TRIPATHI
12-12-11	CHECKED BY	P. SIRCAR	FIELD INVESTIGATION BY: DATE: 08/2006-07/2009
SIGN OFF DATE			

PREPARED FOR THE STATE OF CALIFORNIA DEPARTMENT OF TRANSPORTATION

P. SIRCAR
PROJECT ENGINEER

BRIDGE NO.
POST MILE 27.6

RETAINING WALL NO. 2
LOG OF TEST BORINGS

OSF GEOTECHNICAL LOG OF TEST BORINGS SHEET (ENGLISH) (REV. 2/25/05)

ORIGINAL SCALE IN INCHES FOR REDUCED PLANS 0 1 2 3

PROJECT NUMBER & PHASE: 04000210801
CONTRACT NO: 04-1G9404 UNIT: 0750

DISREGARD PRINTS BEARING EARLIER REVISION DATES

REVISION DATES (PRELIMINARY STAGE ONLY): 08/14/09 3/18/11 4/28/11 8/9/11

SHEET 9 OF 9

FILE => 28Erw2-z-ltb01.dgn

USERNAME => s124496 DATE PLOTTED => 19-JAN-2012 TIME PLOTTED => 07:44

DIST	COUNTY	ROUTE	POST MILES TOTAL PROJECT	SHEET No	TOTAL SHEETS
04	CC	4	27.3/R29.0	908	950

REGISTERED CIVIL ENGINEER — DATE 11/30/11

1-17-12
PLANS APPROVAL DATE

REGISTERED PROFESSIONAL ENGINEER — Odeon M. Li — No. C31895 — Exp. 12/31/12 — CIVIL — STATE OF CALIFORNIA

The State of California or its officers or agents shall not be responsible for the accuracy or completeness of scanned copies of this plan sheet.

CONTRA COSTA TRANSPORTATION AUTHORITY
2999 OAK ROAD, SUITE 100
WALNUT CREEK, CA 94597

T.Y. LIN INTERNATIONAL
2010 CROW CANYON PLACE, SUITE 350
SAN RAMON, CA 94583

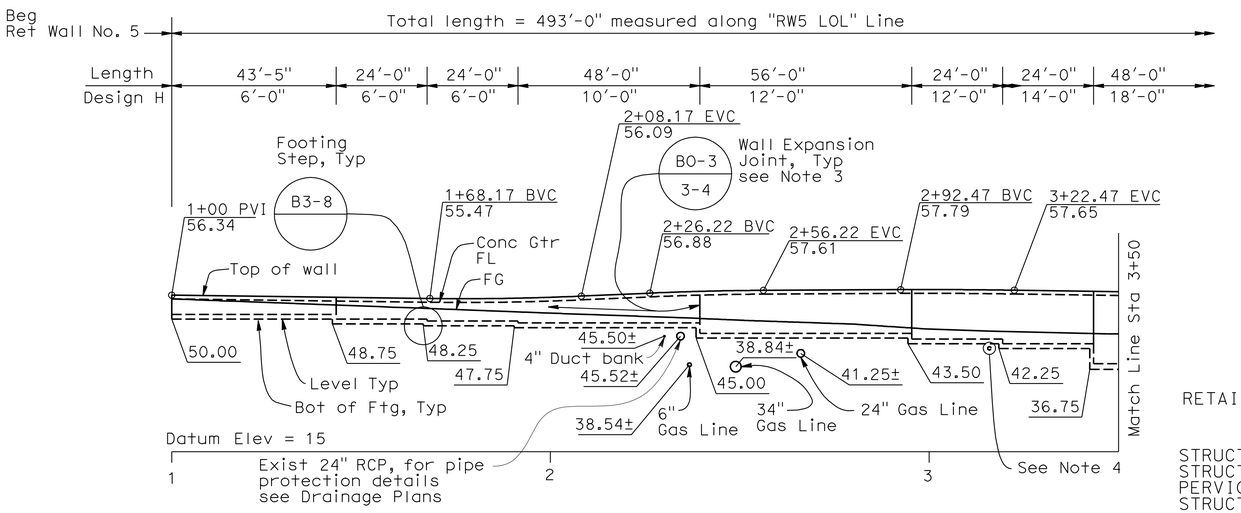

DEVELOPED MIRROR ELEVATION

1"=20'-0"

Legend:

① 1¾" Max. architectural treatment see "Architectural Treatment Layout" sheets and "Retaining Wall Architectural Treatment Details" sheets in Rd Plans.

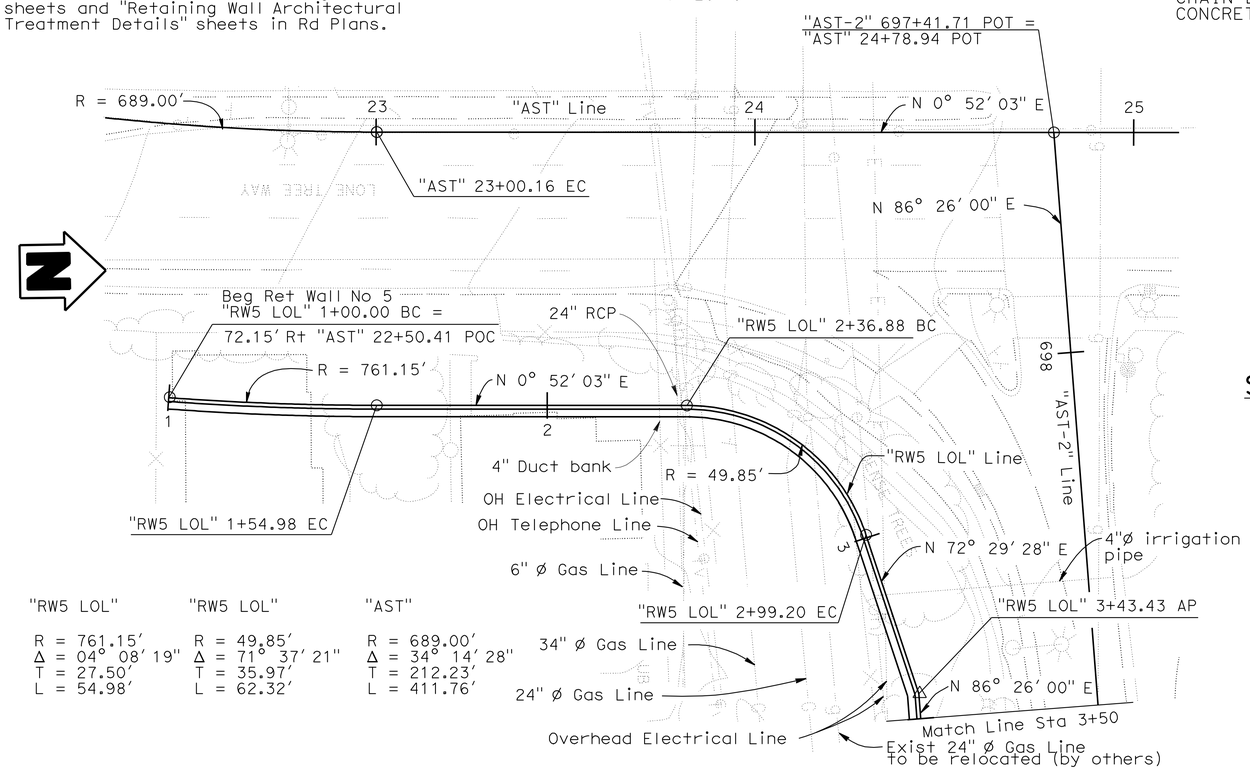

"RW5 LOL"	"RW5 LOL"	"AST"
R = 761.15'	R = 49.85'	R = 689.00'
Δ = 04° 08' 19"	Δ = 71° 37' 21"	Δ = 34° 14' 28"
T = 27.50'	T = 35.97'	T = 212.23'
L = 54.98'	L = 62.32'	L = 411.76'

PLAN

1" = 20'-0"

Note:
The Contractor shall verify all controlling field dimensions before ordering or fabricating any material.

Notes:

1. Conc Barrier (Type 60D), Soundwall and Piles not shown for clarity.
2. For weep holes and weakened planes locations and details see BO-3
3. Stop waterstop 6" above Conc Gutter FL and 1'-0" below lower FG.
4. 8" ø crossover irrigation for 4" ø irrigation pipe, for location see Road Plans. For pipe protection details see Drainage Plans
5. Shoring will be required to avoid any excavation on a 10' clear distance from the existing PG&E facilities.
6. Eliminate footing key where it is within 1'-0" of utilities.

RETAINING WALL NO. 5

QUANTITIES

STRUCTURE EXCAVATION (RETAINING WALL)	2,960	CY
STRUCTURE BACKFILL (RETAINING WALL)	1,775	CY
PERVIOUS BACKFILL MATERIAL (RETAINING WALL)	54	CY
STRUCTURAL CONCRETE, RETAINING WALL	590	CY
ARCHITECTURAL TEXTURE	3,390	SQFT
BAR REINFORCING STEEL (RETAINING WALL)	58,500	LB
MINOR CONCRETE (GUTTER)	493	LF
CHAIN LINK RAILING	195	LF
CONCRETE BARRIER (TYPE 60D)	295	LF

INDEX TO PLANS

Sheet No.	Title
1	GENERAL PLAN NO. 1
2	GENERAL PLAN NO. 2
3	RETAINING WALL TYPE 1SW
4	RETAINING WALL TYPE 7SW - DETAIL NO. 1
5	RETAINING WALL TYPE 7SW - DETAIL NO. 2
6	SOUNDWALL ON RETAINING WALL - MASONRY BLOCK - DETAILS NO. 1
7	SOUNDWALL ON RETAINING WALL - MASONRY BLOCK - DETAILS NO. 2
8	ARCHITECTURAL TREATMENT LAYOUT NO. 1
9	ARCHITECTURAL TREATMENT LAYOUT NO. 2
10	LOG OF TEST BORINGS 1 OF 3
11	LOG OF TEST BORINGS 2 OF 3
12	LOG OF TEST BORINGS 3 OF 3

STANDARD PLANS DATED MAY 2006

A10A	ACRONYMS AND ABBREVIATIONS (SHEET 1 OF 2)
A10B	ACRONYMS AND ABBREVIATIONS (SHEET 2 OF 2)
A10C	SYMBOLS (SHEET 1 OF 2)
A10D	SYMBOLS (SHEET 2 OF 2)
A62B	LIMITS OF PAYMENT FOR EXCAVATION AND BACKFILL BRIDGE SURCHARGE AND WALL
A76A	CONCRETE BARRIER TYPE 60D
BO-1	BRIDGE DETAILS
BO-3	BRIDGE DETAILS
B3-8	RETAINING WALL DETAILS NO. 1
B3-9	RETAINING WALL DETAILS NO. 2
B11-7	CHAIN LINK RAILING

PLAN SYMBOLS

SECTION IDENTIFICATION

STANDARD PLAN (MAY 2006) SHEET NO.

DETAIL NO.

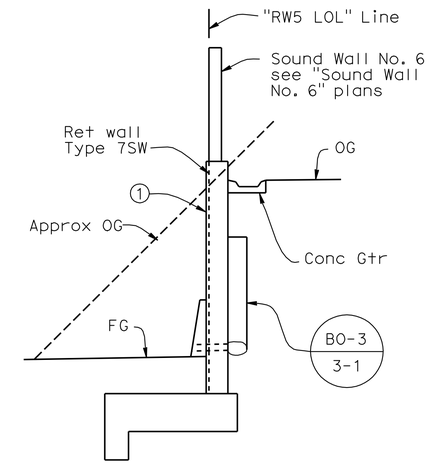

"RW5 LOL" 5+35.42 to "RW5 LOL" 5+93.00

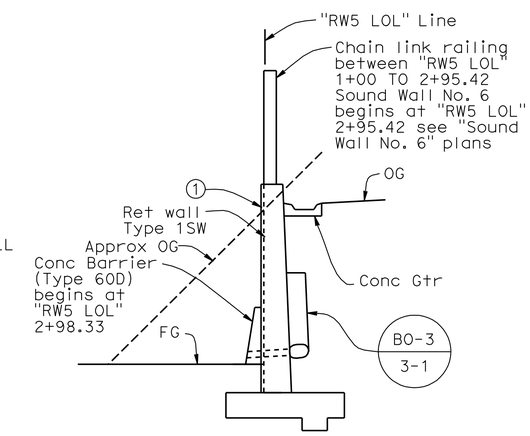

"RW5 LOL" 1+00.00 to "RW5 LOL" 5+35.42, see Note 6

TYPICAL SECTION

¼"=1'-0"

DESIGN OVERSIGHT Overcomer Y. Hor	DESIGN	BY Antonio Luo/DT	CHECKED Odeon M. Li/BM	LOAD FACTOR DESIGN	LIVE LOADING: HS20-44 AND ALTERNATIVE AND PERMIT DESIGN LOADING
12-27-11 SIGN OFF DATE	DETAILS	BY Antonio Luo/YW	CHECKED Odeon M. Li/DT	LAYOUT	BY Antonio Luo — CHECKED Odeon M. Li
	QUANTITIES	BY Ching Dong/DT	CHECKED Kimberly Bowen/BM	SPECIFICATIONS	BY Odeon M. Li — PLANS AND SPECS COMPARED Odeon M. Li

PREPARED FOR THE STATE OF CALIFORNIA DEPARTMENT OF TRANSPORTATION

Odeon M. Li
PROJECT ENGINEER

BRIDGE NO.
POST MILES 27.8

RETAINING WALL NO. 5
GENERAL PLAN NO. 1

DESIGN GENERAL PLAN SHEET (ENGLISH) (REV. 06-01-09)

ORIGINAL SCALE IN INCHES FOR REDUCED PLANS 0 1 2 3

PROJECT NUMBER & PHASE: 04000210801
CONTRACT NO: 04-1G9404 UNIT: 0750

DISREGARD PRINTS BEARING EARLIER REVISION DATES

REVISION DATES (PRELIMINARY STAGE ONLY) 8/9/08 5/9/09 7/9/09 2/9/10 3/9/11 4/29/11 8/9/11 10/31/11 11/16/11 11/30/11

SHEET 1 OF 12

FILE => 28Erw5-a-gp01.dgn

USERNAME => s124496 DATE PLOTTED => 19-JAN-2012 TIME PLOTTED => 07:44

DIST	COUNTY	ROUTE	POST MILES TOTAL PROJECT	SHEET No	TOTAL SHEETS
04	CC	4	27.3/R29.0	909	950

REGISTERED CIVIL ENGINEER — DATE 11/30/11

1-17-12
PLANS APPROVAL DATE

The State of California or its officers or agents shall not be responsible for the accuracy or completeness of scanned copies of this plan sheet.

REGISTERED PROFESSIONAL ENGINEER — Odeon M. Li — No. C31895 — Exp. 12/31/12 — CIVIL — STATE OF CALIFORNIA

CONTRA COSTA TRANSPORTATION AUTHORITY
2999 OAK ROAD, SUITE 100
WALNUT CREEK, CA 94597

T.Y. LIN INTERNATIONAL
2010 CROW CANYON PLACE, SUITE 350
SAN RAMON, CA 94583

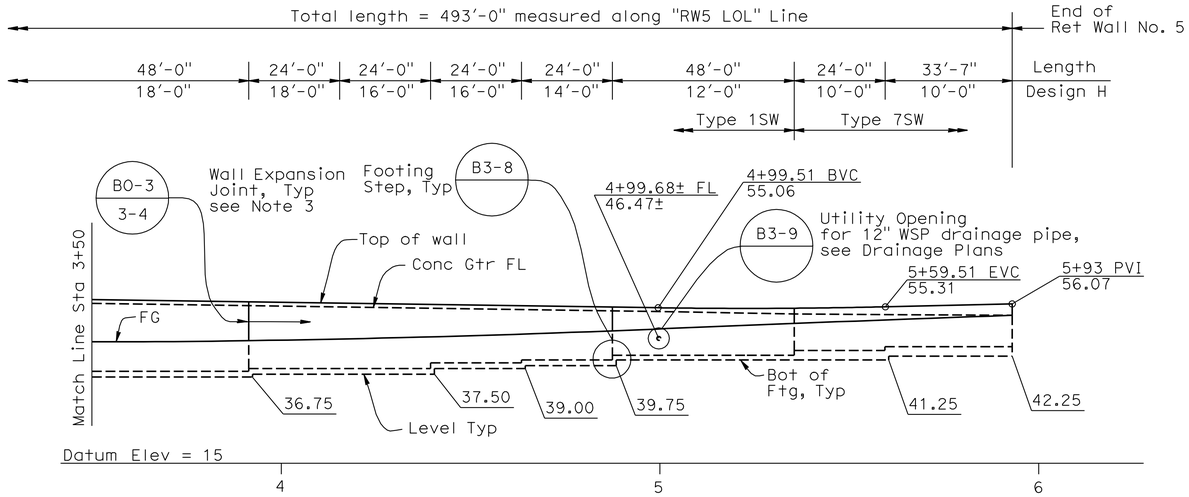

DEVELOPED MIRROR ELEVATION

1"=20'-0"

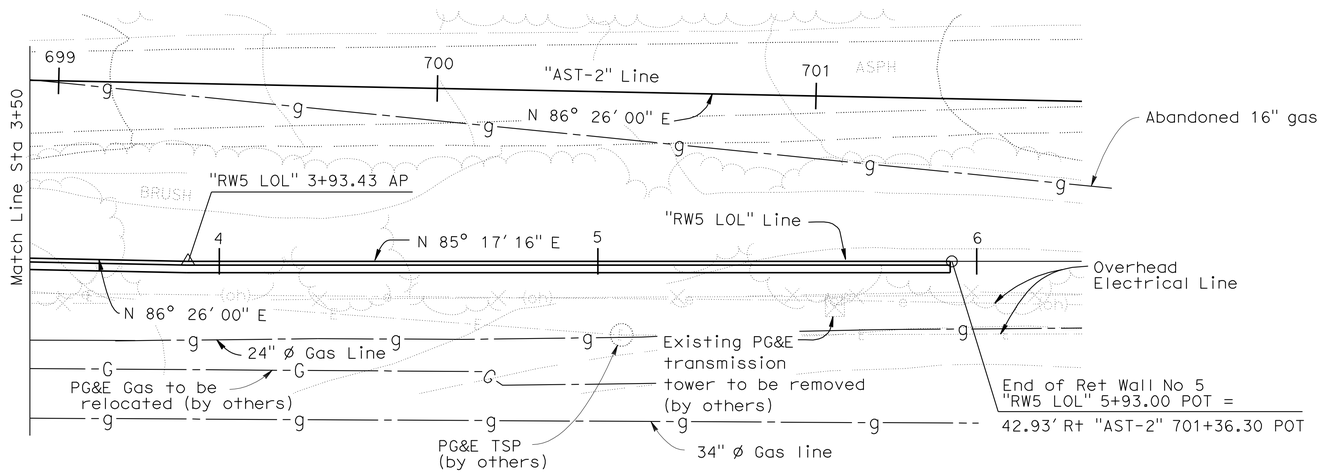

PLAN

1" = 20'-0"

Notes:

1. Conc Barrier (Type 60D), Soundwall and Piles not shown for clarity.
2. For weep holes and weakened planes locations and details see B0-3
3. Stop waterstop 6" above Conc Gutter FL and 1'-0" below lower FG.
4. Shoring will be required to avoid any excavation on a 10' clear distance from the existing PG&E facilities.

Note:
The Contractor shall verify all controlling field dimensions before ordering or fabricating any material.

DESIGN OVERSIGHT — Overcomer Y. Hor
12-12-11
SIGN OFF DATE

	BY	CHECKED
DESIGN	Antonio Luo/DT	Odeon M. Li/BM
DETAILS	Antonio Luo	Odeon M. Li
QUANTITIES	Ching Dong	Kimberly Bowen

LOAD FACTOR DESIGN — LIVE LOADING: HS20-44 AND ALTERNATIVE AND PERMIT DESIGN LOADING
LAYOUT — BY Antonio Luo — CHECKED Odeon M. Li
SPECIFICATIONS — BY Odeon M. Li — PLANS AND SPECS COMPARED Odeon M. Li

PREPARED FOR THE STATE OF CALIFORNIA DEPARTMENT OF TRANSPORTATION

Odeon M. Li
PROJECT ENGINEER

BRIDGE NO.
POST MILES 27.8

RETAINING WALL NO. 5
GENERAL PLAN NO. 2

DESIGN GENERAL PLAN SHEET (ENGLISH) (REV. 06-01-09)

ORIGINAL SCALE IN INCHES FOR REDUCED PLANS 0 1 2 3

PROJECT NUMBER & PHASE: 04000210801
CONTRACT NO: 04-1G9404 UNIT: 0750

DISREGARD PRINTS BEARING EARLIER REVISION DATES
REVISION DATES (PRELIMINARY STAGE ONLY): 6/08 5/09 7/09 2/10 3/8/11 4/20/11 8/9/11 11/16/11 11/30/11

SHEET 2 OF 12

FILE => 28Erw5-a-gp02.dgn

USERNAME => s124496 DATE PLOTTED => 19-JAN-2012 TIME PLOTTED => 07:44

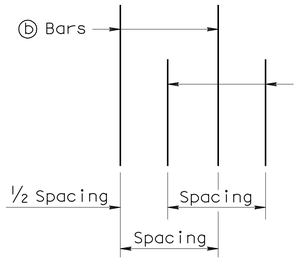

DETAIL B

No Scale

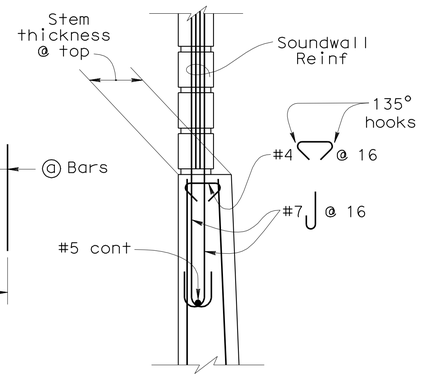

DETAIL A

No Scale

GENERAL NOTES

1. For soundwall and retaining wall architectural finish or texture, see details elsewhere in project plans.
2. For details not shown and drainage notes, see B3-8
3. Footing cover, 1'-6" minimum.
4. Limit of no splicing rebars = 3 times the bottom thickness of the stem.
5. Placement of reinforcements:

   ⓑ & ⓒ bars are spliced together.

   * ⓐ & ⓑ bars are bundled together.

   ** Alternate ⓐ & ⓑ bars are shown in "Detail B".

   Cont = Continuous.
6. For soundwall reinforcements, see "Soundwall Wall Masonry Block" sheets in Standard Plans.

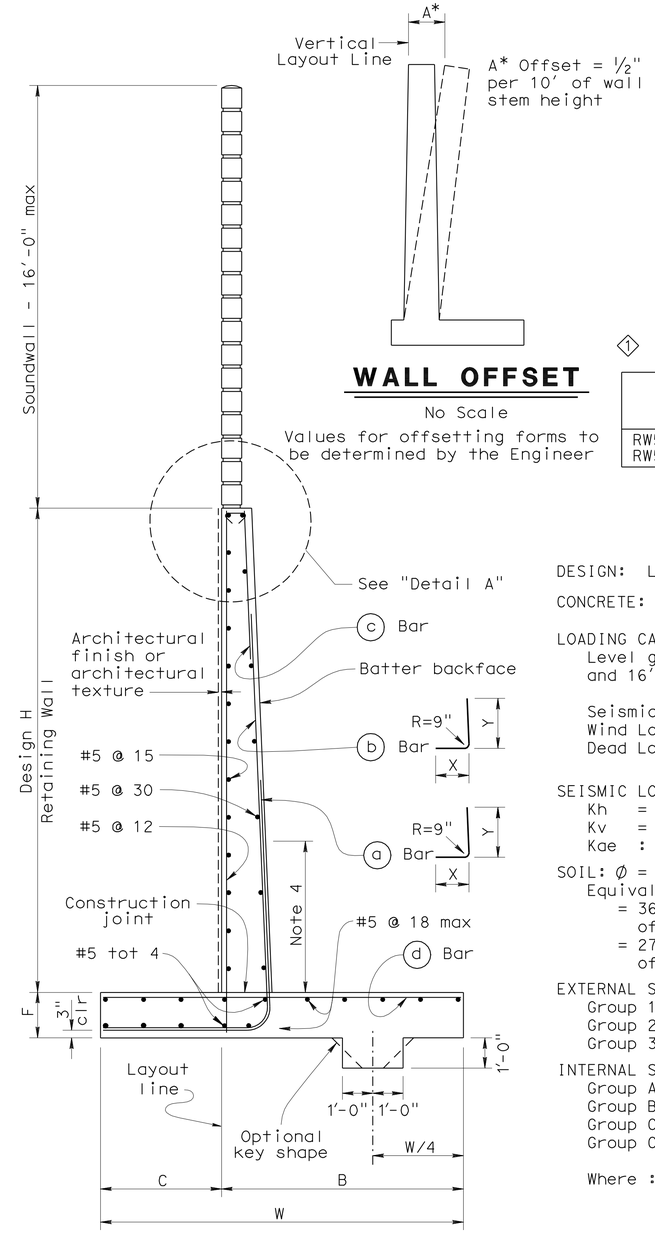

WALL OFFSET

No Scale

Values for offsetting forms to be determined by the Engineer

SPREAD FOOTING SECTION

No Scale

DIST.	COUNTY	ROUTE	POST MILES TOTAL PROJECT	SHEET NO.	TOTAL SHEETS
04	CC	4	27.3/R29.0	910	950

REGISTERED ENGINEER - CIVIL 11/30/11

1-17-12
PLANS APPROVAL DATE

REGISTERED PROFESSIONAL ENGINEER Odeon M. Li No. C31895 Exp. 12/31/12 CIVIL STATE OF CALIFORNIA

The State of California or its officers or agents shall not be responsible for the accuracy or completeness of electronic copies of this plan sheet.

CONTRA COSTA TRANSPORTATION AUTHORITY
2999 OAK ROAD, SUITE 100
WALNUT CREEK, CA 94597

T.Y. LIN INTERNATIONAL
2010 CROW CANYON PLACE, SUITE 350
SAN RAMON, CA 94583

SPREAD FOOTING DATA TABLE

Location	Nominal Bearing Resistance q_n
RW5 LOL 1+00 to RW5 LOL 5+35.42	10 ksf

DESIGN DATA

DESIGN: Load Factor Design (LFD)

CONCRETE: Reinforced Concrete, f'c = 3600 psi
fy = 60,000 psi

LOADING CASE:
Level ground with 240 psf surcharge and 16' Soundwall

Seismic Load = 0.3 Dead Load
Wind Load = 30 psf
Dead Load of Soundwall = 1414 lb/ft

SEISMIC LOAD: SOIL
Kh = 0.3g
Kv = 0.0
Kae : Mononobe-Okabe Method

SOIL: ϕ = 34° γ = 120 pcf
Equivalent fluid pressure:
= 36 pcf for determination of toe pressure
= 27 pcf for determination of heel pressure

EXTERNAL STABILITY:
Group 1 : D + E + SC
Group 2 : D + E + SC + W
Group 3 : D + PYM

INTERNAL STABILITY (LFD):
Group A : βD + 1.7E + 1.7SC
Group B : βD + 1.7E + 1.3W
Group C (stem) : 1.0D + 1.0E + 1.0EQD + 1.0EQE
Group C (footing) : D + PYM

Where : β = 1.0 or 1.3 whichever controls design
D = Dead Load
E = Lateral Earth Pressure
SC = Surcharge
W = Wind load
EQD = Seismic Dead Load
EQE = Seismic Lateral Earth Pressure
PYM = Probable Yield Moment (1.3 x Nominal Yield Moment of Stem)

ALTERNATIVE A: (CONSTANT TOP OF WALL THICKNESS) TABLE OF REINFORCING STEEL DIMENSIONS AND DATA

Design H	6'	8'	10'	12'	14'	16'	18'	20'	22'	24'	26'	28'	30'	32'
W	7'-9"	8'-0"	8'-9"	9'-9"	10'-9"	12'-0"	13'-0"	14'-3"	15'-3"	16'-6"	18'-6"	19'-9"	21'-3"	22'-6"
C	2'-9"	2'-9"	3'-0"	3'-3"	3'-6"	4'-0"	4'-3"	4'-9"	5'-0"	5'-6"	6'-3"	6'-9"	7'-3"	7'-9"
B	5'-0"	5'-3"	5'-9"	6'-6"	7'-3"	8'-0"	8'-9"	9'-6"	10'-3"	11'-0"	12'-3"	13'-0"	14'-0"	14'-9"
F Spread footing	1'-3"	1'-3"	1'-3"	1'-3"	1'-3"	1'-6"	1'-6"	1'-9"	2'-0"	2'-3"	2'-9"	3'-0"	3'-3"	3'-9"
Batter	0	½ :12	½ :12	½ :12	½ :12	½ :12	½ :12	½ :12	½ :12	⅝ :12	¾ :12	⅞ :12	1 :12	1 :12
Stem thcknss @ top	1'-0"	1'-0"	1'-0"	1'-0"	1'-0"	1'-0"	1'-0"	1'-0"	1'-0"	1'-0"	1'-0"	1'-0"	1'-0"	1'-0"
ⓐ Bars				#6 @18[XX]	#7 @18[XX]	#8 @18[XX]	#9 @18[XX]	#10 @18[XX]	#8 @ 9[X]	#8 @ 9[X]	#7 @ 6[X]	#10 @12[XX]	#9 @ 9[X]	#11 @12[XX]
X				Cont	Cont	Cont	Cont	Cont	Cont	Cont	Cont	Cont	Cont	Cont
Y				8'-0"	6'-6"	7'-6"	8'-6"	9'-6"	9'-6"	11'-0"	11'-6"	13'-0"	14'-0"	15'-6"
ⓑ Bars	#5 @12	#5 @12	#5 @ 9	#6 @18[XX]	#7 @18[XX]	#8 @18[XX]	#9 @18[XX]	#10 @18[XX]	#8 @ 9[X]	#8 @ 9[X]	#7 @ 6[X]	#10 @12[XX]	#9 @ 9[X]	#11 @12[XX]
X	Cont	Cont	Cont	Cont	Cont	Cont	Cont	Cont	Cont	5'-6"	6'-6"	7'-0"	8'-0"	8'-6"
Y	Cont	Cont	Cont	Cont	10'-6"	13'-0"	15'-0"	17'-6"	19'-6"	21'-0"	18'-6"	19'-0"	25'-6"	23'-6"
ⓒ Bars					#6 @18	#6 @18	#6 @18	#6 @18	#6 @18	#6 @18	#6 @12	#7 @12	#7 @18	#7 @12
ⓓ Bars	#5 @12	#5 @12	#5 @12	#5 @ 9	#6 @ 9	#6 @ 9	#6 @ 6	#8 @ 9	#8 @ 9	#8 @ 9	#7 @ 6	#7 @ 6	#9 @ 9	#9 @ 9
Ultimate Bearing Capacity Req'd k/sf	4.6	5.5	6.1	6.6	7.3	8.1	9.0	9.9	11.3	12.2	12.5	13.4	14.1	15.4

ALTERNATIVE B: (VARIABLE TOP OF WALL THICKNESS) TABLE OF REINFORCING STEEL DIMENSIONS AND DATA

Design H		8'	10'	12'	14'	16'	18'	20'	22'	24'	26'	28'	30'	32'
W		8'-0"	8'-6"	9'-3"	10'-3"	11'-3"	13'-0"	13'-9"	16'-0"	16'-6"	18'-6"	20'-0"	20'-6"	21'-9"
C		2'-9"	2'-9"	3'-0"	3'-6"	3'-9"	4'-3"	4'-6"	5'-3"	5'-6"	6'-3"	6'-9"	6'-9"	7'-6"
B		5'-3"	5'-9"	6'-3"	6'-9"	7'-6"	8'-9"	9'-3"	10'-9"	11'-0"	12'-3"	13'-3"	13'-9"	14'-3"
F Spread footing		1'-3"	1'-3"	1'-3"	1'-3"	1'-6"	1'-6"	1'-9"	2'-0"	2'-3"	2'-9"	3'-0"	3'-3"	3'-6"
Batter		0	0	0	0	0	0	0	0	0	¼ :12	½ :12	½ :12	½ :12
Stem thcknss @ top		1'-0"	1'-0"	1'-0"	1'-0"	1'-3"	1'-3"	1'-6"	2'-0"	2'-0"	2'-0"	2'-0"	2'-0"	2'-0"
ⓐ Bars				#6 @12[XX]	#5 @ 6[X]	#9 @18[XX]	#9 @12[XX]	#9 @12[XX]	#9 @12[XX]	#7 @ 6[X]	#7 @ 6[X]	#7 @ 6[XX]	#9 @ 9[X]	#11 @12[XX]
X				Cont	Cont	Cont	Cont	Cont	Cont	Cont	Cont	Cont	Cont	Cont
Y				5'-6"	5'-6"	8'-6"	8'-6"	8'-6"	8'-6"	9'-6"	11'-0"	12'-6"	13'-6"	14'-6"
ⓑ Bars		#5 @ 9	#6 @ 9	#6 @12[XX]	#5 @ 6[X]	#9 @18[XX]	#9 @12[XX]	#9 @12[XX]	#9 @12[XX]	#7 @ 6[X]	#7 @ 6[X]	#7 @ 6[XX]	#9 @ 9[X]	#11 @12[XX]
X		Cont	Cont	Cont	Cont	Cont	Cont	Cont	Cont	5'-6"	6'-0"	7'-6"	7'-6"	8'-0"
Y		Cont	Cont	Cont	Cont	11'-6"	11'-6"	12'-0"	12'-0"	17'-6"	20'-0"	21'-6"	24'-0"	24'-0"
ⓒ Bars						#7 @18	#7 @12	#7 @12	#7 @12	#6 @12	#6 @12	#6 @12	#7 @18	#7 @12
ⓓ Bars		#5 @12	#5 @ 9	#5 @ 9	#6 @ 9	#6 @ 9	#9 @12	#9 @12	#7 @ 6	#7 @ 6	#7 @ 6	#7 @ 6	#9 @ 9	#9 @ 9
Ultimate Bearing Capacity Req'd k/sf		5.5	6.5	7.3	7.6	9.0	9.0	10.6	10.5	12.2	12.6	13.3	15.4	16.0

SPECIAL DETAILS

STANDARD DRAWING

RELEASE DATE **Revised** | FILE NO. **xs14-210e**

DESIGN BY MADON SAH CHECKED OVERCOMER HOR
DETAILS BY PHIL SILVA CHECKED J.C. MOESE
SUBMITTED BY OVERCOMER HOR DRAWING DATE 12/1/05
RELEASED BY OFFICE CHIEF

1 Added Table

STATE OF CALIFORNIA DEPARTMENT OF TRANSPORTATION

DIVISION OF ENGINEERING SERVICES

BRIDGE NO.
POST MILE 27.8

RETAINING WALL NO. 5

RETAINING WALL TYPE 1SW

DS OSD 2147A (REV. X/XX/XX)

ORIGINAL SCALE IN INCHES FOR REDUCED PLANS 0 1 2 3

PROJECT NUMBER & PHASE: 04000210801
CONTRACT NO: 04-1G9404 UNIT: 0750

DISREGARD PRINTS BEARING EARLIER REVISION DATES

REVISION DATES (PRELIMINARY STAGE ONLY) 8/08 3/09 2/10 3/29/11 4/28/11 8/9/11

SHEET 3 OF 12

USERNAME => s124496

28Erw5-g-rwdt01.dgn

DATE PLOTTED => 19-JAN-2012 TIME PLOTTED => 07:44

DIST.	COUNTY	ROUTE	POST MILES TOTAL PROJECT	SHEET NO.	TOTAL SHEETS
04	CC	4	27.3/R29.0	911	950

REGISTERED ENGINEER - CIVIL 11/30/11

1-17-12
PLANS APPROVAL DATE

REGISTERED PROFESSIONAL ENGINEER Odeon M. Li No. C31895 Exp. 12/31/12 CIVIL STATE OF CALIFORNIA

The State of California or its officers or agents shall not be responsible for the accuracy or completeness of electronic copies of this plan sheet.

CONTRA COSTA TRANSPORTATION AUTHORITY
2999 OAK ROAD, SUITE 100
WALNUT CREEK, CA 94597

T.Y. LIN INTERNATIONAL
2010 CROW CANYON PLACE, SUITE 350
SAN RAMON, CA 94583

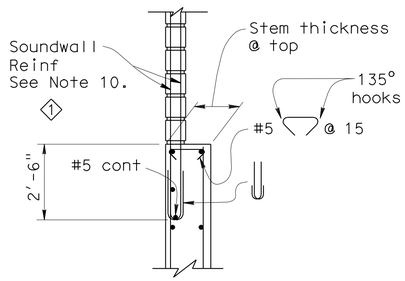

DETAIL A

No Scale

WALL OFFSET

No Scale

Values for offsetting forms to be determined by engineer

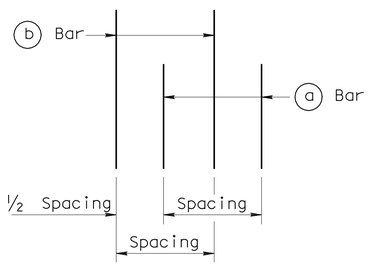

REBAR SPACING

No Scale

3 SPREAD FOOTING DATA TABLE

Location	Nominal Bearing Capacity q_n
RW5 LOL 5+35.42 to RW5 LOL 5+93	10 ksf

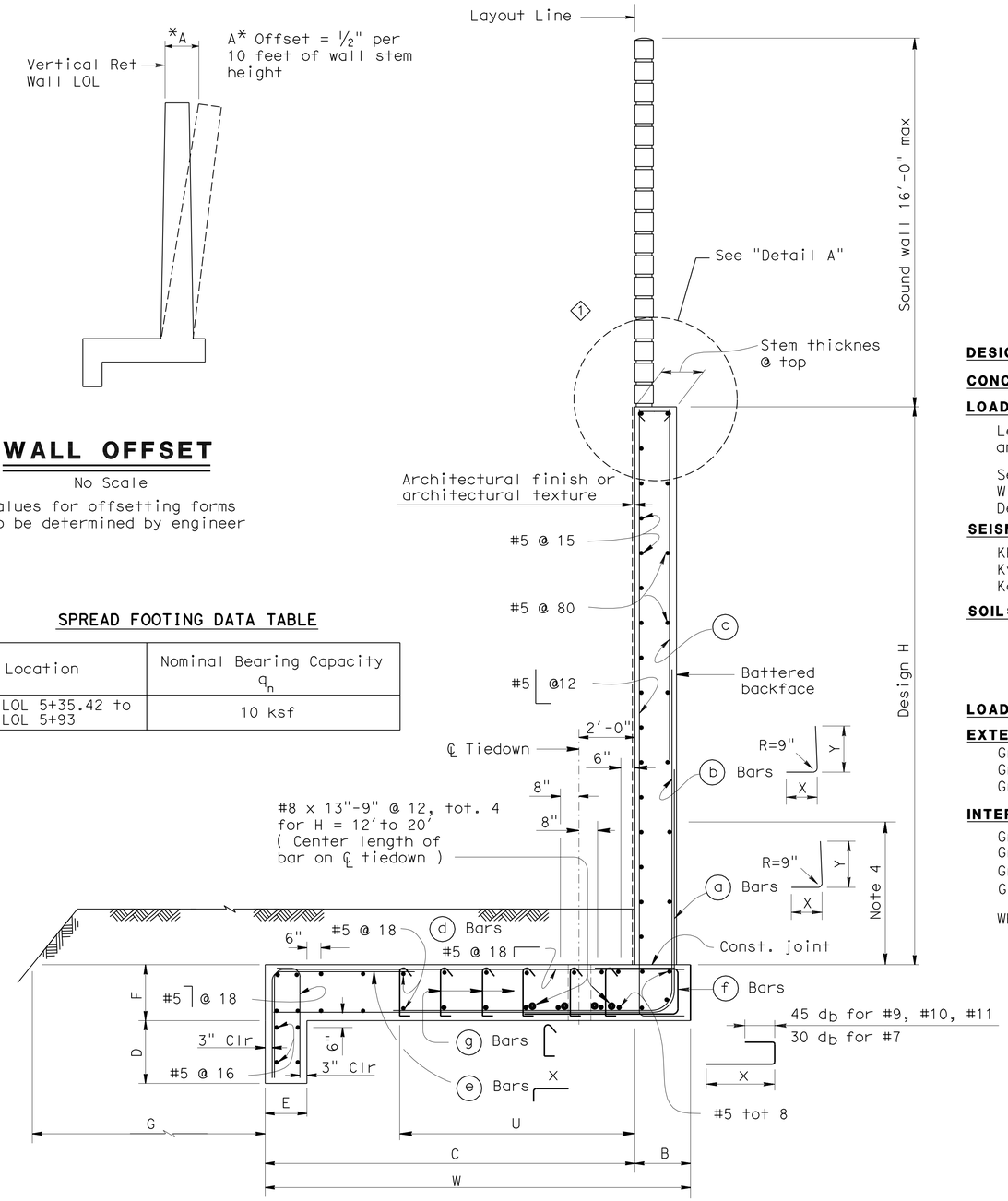

SPREAD FOOTING SECTION

No Scale

GENERAL NOTES

1. For soundwall and retaining wall architectural finish or texture, see details elsewhere in project plans.
2. For details not shown and drainage notes, see B3-8
3. Footing coverage, 2'-0" minimum.
4. Limit of no splicing rebars = H/3.
5. Increasing stem thickness not permitted.
6. Place footing key concrete against undisturbed material.
7. Shift (a) bars, (b) bars, and (c) bars as required to clear formed hole for tiedown.
8. No reinforcements in footing key for H= 8' to H=12'.
9. Maximum distance from ℄ tiedown to edge of footing = 0.4(S).
10. For soundwall reinforcements, see "Soundwall On Retaining Wall-Masonry Block" Sheets. 2

DESIGN DATA

DESIGN: Load Factor Design (LFD)

CONCRETE: Reinforced Concrete, f'c = 3600 psi
fy = 60,000 psi

LOADING CASE:

Level ground with 240 psf live load surcharge and 16' Soundwall

Seismic Load = 0.3 Dead Load
Wind Load = 30 psf
Dead Load of Soundwall = 1414 lb/Lf

SEISMIC LOAD: SOIL

Kh = 0.3g
Kv = 0.0
Kae : Mononobe-Okabe Method

SOIL: $\emptyset = 34°$ $\gamma = 120$ pcf
Equivalent fluid pressure:
STATIC = 36 pcf for determination of toe pressure
SEISMIC = Coulomb's Theory

LOAD COMBINATIONS:

EXTERNAL STABILITY:

Group 1 : D + E + SC + 0.75T (F.S. Sliding > 1.5)
Group 2 : D + E + SC + W + 0.75T (F.S. Sliding > 1.2)
Group 3 : D + PYM + P_{av} + V + 1.0 T (F.S. Sliding > 1.0)

INTERNAL STABILITY: (LFD)

Group A : βD + 1.7 E + 1.7 SC + 0.75 T
Group B : βD + 1.7 E + 1.3 W + 0.75 T
Group C :(Stem) 1.0 D + 1.0 E + 1.0 EQD + 1.0 EQE
Group C :(Footing) D + PYM + P_{av} + V + 1.0 T

Where : β = 1.0 or 1.3 whichever controls design
D = Dead Load
E = Lateral Earth Pressure
P_{av} = Vertical Earth Pressure

SC = Live Load Surcharge
W = Wind Load
EQD = Seismic Dead Load
EQE = Seismic Lateral Earth Pressure
PYM = Probable Yield Moment (1.3 x Nominal Yield Moment of Stem)
V = Possible Shear at Base of Stem associated with Probable Yield Moment
T = Design Force for Vertical Tiedown

SPECIAL DETAILS

STANDARD DRAWING

FILE NO. xs14-380-1e

APPROVED BY G. WANG — RESPONSIBLE TECHNICAL SPECIALIST
APPROVAL DATE 5-13-08

RELEASED BY ROBERTO LACALLE — RESPONSIBLE OFFICE CHIEF
RELEASE DATE Revised

1 Moved sound wall location.
2 Revised Note.
3 Added Table

STATE OF CALIFORNIA DEPARTMENT OF TRANSPORTATION

DIVISION OF ENGINEERING SERVICES

BRIDGE NO.
POST MILE 27.8

RETAINING WALL NO. 5

RETAINING WALL TYPE 7SW - DETAIL NO. 1

DS OSD 2147A (ENGLISH STANDARD DRAWING "XS" BORDER REV. 01/11/08)

ORIGINAL SCALE IN INCHES FOR REDUCED PLANS 0 1 2 3

PROJECT NUMBER & PHASE: 04000210801
CONTRACT NO: 04-1G9404 UNIT: 0750

DISREGARD PRINTS BEARING EARLIER REVISION DATES

REVISION DATES (PRELIMINARY STAGE ONLY) 6/08 5/08 2/10 3/9/11 4/28/11 8/9/11

SHEET 4 OF 12

USERNAME => s124496

28Erw5-g-rwdt02.dgn

DATE PLOTTED => 13-JAN-2012 TIME PLOTTED => 07:44

DIST.	COUNTY	ROUTE	POST MILES TOTAL PROJECT	SHEET NO.	TOTAL SHEETS
04	CC	4	27.3/R29.0	912	950

11/30/11
REGISTERED ENGINEER - CIVIL

1-17-12
PLANS APPROVAL DATE

REGISTERED PROFESSIONAL ENGINEER
Odeon M. Li
No. C31895
Exp. 12/31/12
CIVIL
STATE OF CALIFORNIA

The State of California or its officers or agents shall not be responsible for the accuracy or completeness of electronic copies of this plan sheet.

CONTRA COSTA TRANSPORTATION AUTHORITY
2999 OAK ROAD, SUITE 100
WALNUT CREEK, CA 94597

T.Y. LIN INTERNATIONAL
2010 CROW CANYON PLACE, SUITE 350
SAN RAMON, CA 94583

TABLE 1: TABLE OF DIMENSIONS AND DATA

Design H		8′	10′	12′	14′	16′	18′	20′	22′	24′	26′	28′	30′	32′
W		7′-6"	8′-0"	9′-3"	10′-9"	12′-3"	13′-9"	15′-3"	16′-9"	18′-3"	19′-6"	21′-0"	22′-6"	24′-0"
C		6′-0"	6′-6"	7′-6"	9′-0"	10′-3"	11′-6"	13′-0"	14′-3"	15′-3"	16′-6"	17′-6"	18′-6"	20′-0"
B		1′-6"	1′-6"	1′-9"	1′-9"	2′-0"	2′-3"	2′-3"	2′-6"	3′-0"	3′-0"	3′-6"	4′-0"	4′-0"
F		2′-6"	2′-6"	2′-6"	2′-6"	2′-6"	2′-6"	3′-0"	3′-3"	3′-3"	3′-9"	4′-0"	4′-0"	4′-3"
D (Footing Key Depth)		1′-0"	1′-0"	1′-0"	1′-6"	1′-9"	2′-0"	2′-3"	2′-3"	2′-9"	3′-0"	3′-0"	3′-0"	3′-0"
E		1′-3"	1′-3"	1′-3"	1′-3"	1′-3"	1′-6"	1′-6"	1′-6"	1′-6"	1′-9"	1′-9"	1′-9"	1′-9"
Stem Thickness @ Top		1′-0"	1′-0"	1′-3"	1′-3"	1′-6"	1′-9"	1′-9"	2′-0"	2′-0"	2′-0"	2′-0"	2′-3"	2′-3"
Batter		0	0	0	0	0	0	0	0	1/4:12	1/4:12	1/2:12	1/2:12	1/2:12
G (Minimum)		7′-6"	7′-6"	7′-6"	8′-6"	9′-3"	10′-3"	11′-0"	12′-0"	13′-0"	14′-0"	15′-6"	15′-9"	16′-3"
ⓐ Bars				#7@18	#5@6	#9@18	#9@18	#9@12	#9@12	#7@6	#7@6	#10@12	#10@12	#11@12
X				Cont	Cont	Cont	Cont	Cont	Cont	Cont	Cont	Cont	Cont	Cont
Y				5′-6"	5′-6"	8′-6"	8′-9"	8′-9"	9′-0"	9′-9"	11′-3"	13′-3"	14′-3"	15′-3"
ⓑ Bars		#5@9	#6@9	#7@18	#5@6	#9@18	#9@18	#9@12	#9@12	#7@6	#7@6	#10@12	#10@12	#11@12
X		Cont	Cont	3′-6"	2′-6"	6′-3"	7′-9"	6′-9"	7′-9"	8′-6"	8′-0"	12′-6"	13′-6"	14′-9"
Y		Cont	Cont	Cont	Cont	12′-0"	13′-6"	14′-0"	15′-9"	17′-9"	20′-3"	22′-3"	24′-9"	24′-9"
Placement, ◯				Ⓐ	Ⓑ	Ⓐ	Ⓐ	Ⓐ	Ⓐ	Ⓑ	Ⓑ	Ⓑ	Ⓑ	Ⓐ
ⓒ Bars						#8@18	#8@18	#8@12	#8@12	#6@6	#6@6	#9@12	#9@12	#10@12
Placement, ◯						Ⓒ	Ⓒ	Ⓒ	Ⓒ	Ⓒ	Ⓒ	Ⓒ	Ⓒ	Ⓒ
ⓓ Bars		#5@18	#5@18	#5@18	#5@18	#5@18	#5@18	#5@18	#5@18	#5@18	#5@18	#5@18	#5@18	#5@18
ⓔ Bars								#5@18	#5@18	#5@18	#5@18	#5@18	#5@18	#5@18
X								5′-0"	5′-6"	6′-0"	6′-6"	7′-0"	7′-6"	7′-6"
Placement, ◯								Ⓓ	Ⓓ	Ⓓ	Ⓓ	Ⓓ	Ⓓ	Ⓓ
ⓕ Bars						#9@18	#9@18	#9@18	#9@18	#9@6	#7@6	#10@6	#10@6	#11@6
X						3′-9"	6′-0"	5′-0"	6′-0"	5′-3"	5′-3"	6′-6"	8′-3"	8′-9"
ⓖ Bars										#4@15	#4@15	#4@15	#4@12	#4@12
U										7′-6"	7′-6"	8′-9"	9′-9"	11′-9"
Tie Down Design Force (T) k/ft		0	0	3	3	3	8	8	14	14	21	25	29	34
Tie Down Maximum Spacing (S) ft		0	0	32	32	32	20	20	12	12	9	9	8	7
Ultimate Bearing Capacity Required (ksf)		3.75	4.25	5.50	6.00	5.75	5.25	6.25	6.00	7.75	6.75	7.75	7.75	8.00
H_D (N)	Group 1 k/m (k/ft)	2.21 (8.1)	3.09 (8.74)	4.51 (9.69)	5.29 (11.6)	6.77 (14.44)	8.44 (17.77)	10.29 (21.08)	12.57 (26)	14.55 (29.25)	17.23 (34.66)	20.40 (42.24)	23.25 (47.66)	26.26 (52.42)
	Group 2 k/m (k/ft)	4.54 (10.06)	5.9 (11.16)	7.15 (12.66)	8.9 (15.46)	11.46 (19.38)	15 (24.15)	17.59 (28.77)	23.4 (35.24)	25.6 (40.14)	32.12 (47.36)	38.55 (57.31)	40.96 (64.9)	45.89 (71.93)

LEGEND FOR BAR PLACEMENT:

Ⓐ : Alternate placement of ⓐ bars and ⓑ bars

Ⓑ : Bundle ⓐ bars and ⓑ bars

Ⓒ : Splice ⓒ bars to ⓑ bars

Ⓓ : Bundle ⓓ bars and ⓔ bars

H_D : Horizontal driving force

(N) : Sum of vertical forces

Cont : Continuous

STANDARD DRAWING

FILE NO. xs14-380-2e

APPROVED BY G. WANG
RESPONSIBLE TECHNICAL SPECIALIST
APPROVAL DATE 5-13-08

RELEASED BY ROBERTO LACALLE
RESPONSIBLE OFFICE CHIEF
RELEASE DATE 5-13-08

STATE OF CALIFORNIA
DEPARTMENT OF TRANSPORTATION

DIVISION OF ENGINEERING SERVICES

BRIDGE NO.

POST MILE 27.8

RETAINING WALL NO. 5

RETAINING WALL TYPE 7SW - DETAIL NO. 2

DS OSD 2147A (ENGLISH STANDARD DRAWING "XS" BORDER REV. 01/11/08)

ORIGINAL SCALE IN INCHES FOR REDUCED PLANS 0 1 2 3

PROJECT NUMBER & PHASE: 04000210801
CONTRACT NO: 04-1G9404 UNIT: 0750

DISREGARD PRINTS BEARING EARLIER REVISION DATES

REVISION DATES (PRELIMINARY STAGE ONLY) 6/08 5/08 2/10 3/9/11 4/28/11 8/9/11

SHEET 5 OF 12

USERNAME => s124496

28Erw5-g-rwdt03.dgn

DATE PLOTTED => 19-JAN-2012 TIME PLOTTED => 07:44

DIST.	COUNTY	ROUTE	POST MILES TOTAL PROJECT	SHEET NO.	TOTAL SHEETS
04	CC	4	27.3/R29.0	913	950

REGISTERED ENGINEER - CIVIL 11/30/11

1-17-12
PLANS APPROVAL DATE

REGISTERED PROFESSIONAL ENGINEER Odeon M. Li No. C31895 Exp. 12/31/12 CIVIL STATE OF CALIFORNIA

The State of California or its officers or agents shall not be responsible for the accuracy or completeness of electronic copies of this plan sheet.

CONTRA COSTA TRANSPORTATION AUTHORITY
2999 OAK ROAD, SUITE 100
WALNUT CREEK, CA 94597

T.Y. LIN INTERNATIONAL
2010 CROW CANYON PLACE, SUITE 350
SAN RAMON, CA 94583

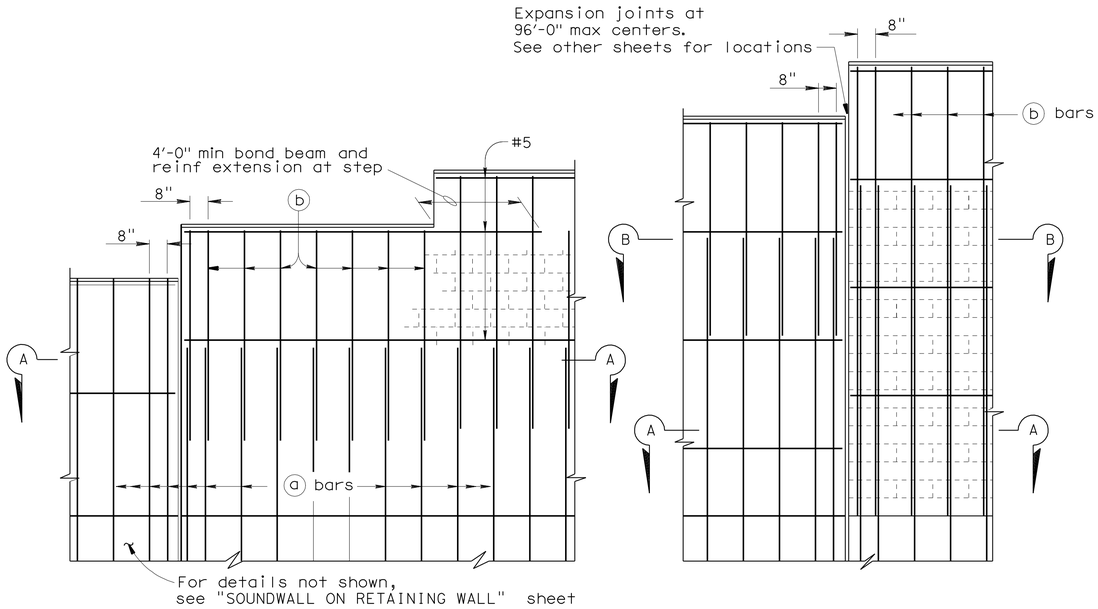

PART ELEVATIONS

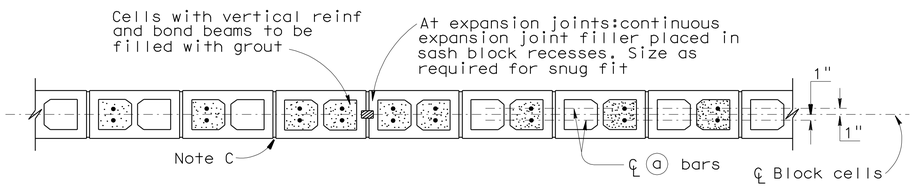

SECTION A- A

For details not shown,see other details

H=6'-0" THRU H= 12'-0"

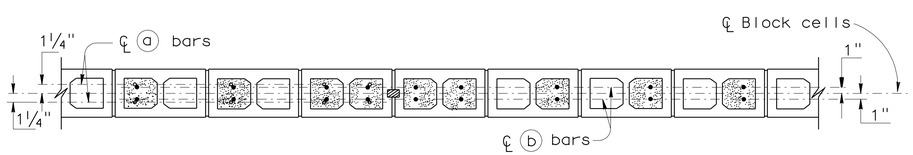

SECTION A- A

SECTION B- B

For details not shown,see other details

H=12'-0" THRU H= 16'-0"

DESIGN NOTES

DESIGN

Uniform Building Code,1997 Edition and the Bridge Design Specifications.

DESIGN WIND LOAD

33 psf

DESIGN SEISMIC LOAD

0.57 Dead load

REINFORCED CONCRETE

f'c = 3.250 ksi
fy = 60 ksi

CONCRETE MASONRY

REGULAR STRENGTH	HIGH STRENGTH	
f'm = 1500 psi	f'm = 2000 psi	f'm = 2500 psi
f_b = 495 psi	f_b = 660 psi	f_b = 830 psi
fs = 24000 psi	fs = 24000 psi	fs = 24000 psi
n = 25.8	n = 19.3	n = 15.5

LOAD FACTORS AND LOAD COMBINATIONS

Working Stress Design (WSD) Percentage of unit stress

Group 1: D + E + SC 100%
Group 2: D + W + SC + E 100%
Group 3: D + 0.71 EQD + E 100%

Where:

D = Dead load
E = Lateral earth pressure
SC = Live load surcharge
W = Wind load
EQD = Seismic dead load

Load Factor Design (LFD)

Group A: βD +1.7 E + 1.7 SC
Group B: βD +1.7 E + 1.3 W +
Group C: βD +1.3 E + 1.0 EQE
Group D: βD +1.3 E + 1.0 EQD
Group E: βD +1.1 E + 0.85 (EQE EQD)

Where : β = 0.9 or 1.2, whichever controls in design
D = Dead load
E = Lateral earth pressure
SC = Live load surcharge
W = Wind load
EQD = Seismic dead load
EQE = Seismic earth load

STRENGTH REDUCTION FACTORS, Ø

Reinforced concrete:
For flexure ——— Ø=0.90
For shear ——— Ø=0.85

Concrete masonry:
For flexure ——— Ø=0.80
For shear ——— Ø=0.60

Foundations:
See "RETAINING WALL WITH SOUNDWALL" sheets

SOUNDWALL REINFORCEMENT TABLE

Maximum H	a bars @ 16" max	b bars @ 16" max	"y"	f'm (psi)	Compressive Strength of CMU (psi)	Maximum H
6'-0"	#4	———	———	1500	1900	6'-0"
8'-0"	#4	———	———	1500	1900	8'-0"
10'-0"	#4	———	———	1500	1900	10'-0"
12'-0"	#5	#4	6'-0"	2000	2800	12'-0"
14'-0"	#6	#4	8'-0"	2500	3750	14'-0"
16'-0"	#6	#4	10'-0"	2500	3750	16'-0"

GENERAL NOTES

Note A: For type of block and joint finish, See other sheets.

Note B: When blocks are laid in stacked bond, ladder type, galvanized joint reinforcement shall be provided. A minimum of 2 - 9 gauge wires continuous at 4'-0" maximum to be used. Locate reinforcement in joints that are at the approximate midpoint between bond beams.

Note C: Horizontal joints shall be tooled concave or may be weathered.
Vertical joints shall be tooled concave or may be raked.

Note D: For intermediate wall heights that are between the "H's" given. Use the tabular information for the next higher "H".

Note E: Masonry strengths are listed in the "SOUNDWALL REINFORCEMENT TABLE".

STANDARD DRAWING

FILE NO. xs15-120-1e

APPROVED BY TILLAT SATTER (RESPONSIBLE TECHNICAL SPECIALIST)
APPROVAL DATE 4-15-08

RELEASED BY ROBERTO LACALLE (RESPONSIBLE OFFICE CHIEF)
RELEASE DATE 4-15-08

STATE OF CALIFORNIA DEPARTMENT OF TRANSPORTATION

DIVISION OF ENGINEERING SERVICES

BRIDGE NO.

POST MILE 27.8

RETAINING WALL NO. 5

SOUNDWALL ON RETAINING WALL-MASONRY BLOCK

DETAILS NO. 1

DS OSD 2147A (ENGLISH STANDARD DRAWING "XS" BORDER REV. 01/11/08)

ORIGINAL SCALE IN INCHES FOR REDUCED PLANS 0 1 2 3

PROJECT NUMBER & PHASE: 04000210801
CONTRACT NO: 04-1G9404 UNIT: 0750

DISREGARD PRINTS BEARING EARLIER REVISION DATES

REVISION DATES (PRELIMINARY STAGE ONLY) 8/8/08 8/8/08 2/2/10 3/9/11 4/29/11 8/9/11

SHEET 6 OF 12

USERNAME => s124496

28Erw5-g-rwdt04.dgn

DATE PLOTTED => 19-JAN-2012 TIME PLOTTED => 07:44

DIST.	COUNTY	ROUTE	POST MILES TOTAL PROJECT	SHEET NO.	TOTAL SHEETS
04	CC	4	27.3/R29.0	914	950

REGISTERED ENGINEER - CIVIL 11/30/11

1-17-12
PLANS APPROVAL DATE

REGISTERED PROFESSIONAL ENGINEER Odeon M. Li No. C31895 Exp. 12/31/12 CIVIL STATE OF CALIFORNIA

The State of California or its officers or agents shall not be responsible for the accuracy or completeness of electronic copies of this plan sheet.

CONTRA COSTA TRANSPORTATION AUTHORITY
2999 OAK ROAD, SUITE 100
WALNUT CREEK, CA 94597

T.Y. LIN INTERNATIONAL
2010 CROW CANYON PLACE, SUITE 350
SAN RAMON, CA 94583

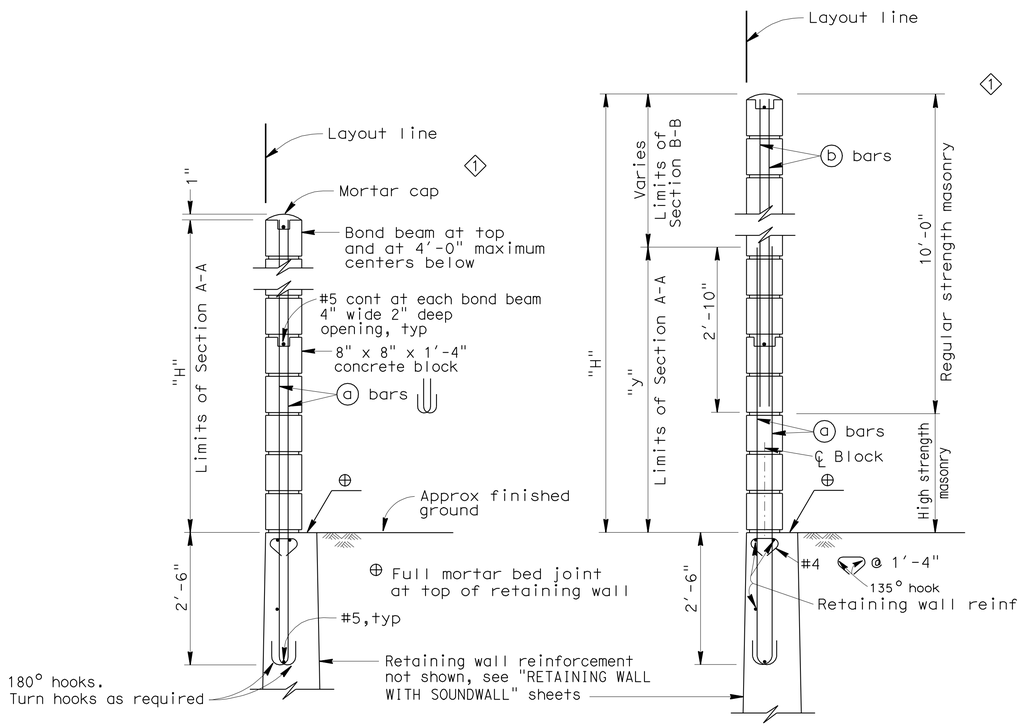

H=6'-0" THRU H=10'-0"

For details not shown,see H=12'-0" thru H=16'-0"

H=12'-0" THRU H=16'-0"

For details not shown,see H=6'-0" thru H=10'-0"

TYPICAL SECTIONS

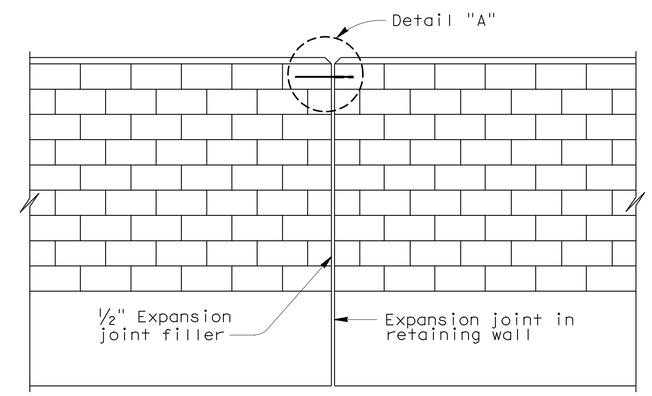

ALIGNMENT KEY DETAIL

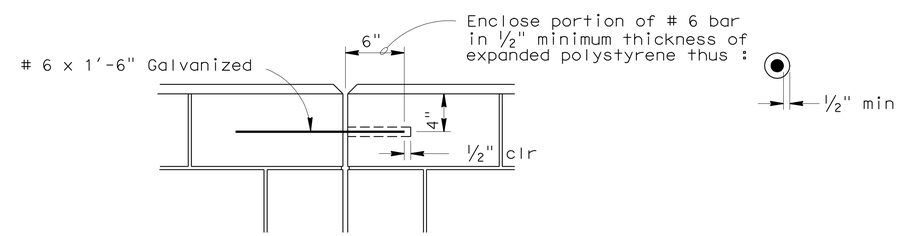

DETAIL A

SPECIAL DETAILS

STANDARD DRAWING

FILE NO. xs15-120-2e

APPROVED BY TILLAT SATTER — RESPONSIBLE TECHNICAL SPECIALIST
APPROVAL DATE 4-15-08

RELEASED BY ROBERTO LACALLE — RESPONSIBLE OFFICE CHIEF
RELEASE DATE Revised

1 Moved sound wall location.

STATE OF CALIFORNIA DEPARTMENT OF TRANSPORTATION

DIVISION OF ENGINEERING SERVICES

BRIDGE NO.

POST MILE 27.8

RETAINING WALL NO. 5

SOUNDWALL ON RETAINING WALL-MASONRY BLOCK

DETAILS NO. 2

DS OSD 2147A (ENGLISH STANDARD DRAWING "XS" BORDER REV. 01/11/08)

ORIGINAL SCALE IN INCHES FOR REDUCED PLANS 0 1 2 3

PROJECT NUMBER & PHASE: 04000210801
CONTRACT NO: 04-1G9404 UNIT: 0750

DISREGARD PRINTS BEARING EARLIER REVISION DATES

REVISION DATES (PRELIMINARY STAGE ONLY) 6/08 9/08 2/10 3/9/11 4/26/11 8/9/11

SHEET 7 OF 12

USERNAME => s124496

28Erw5-g-rwdt05.dgn

DATE PLOTTED => 19-JAN-2012 TIME PLOTTED => 07:44

DIST	COUNTY	ROUTE	POST MILES TOTAL PROJECT	SHEET No	TOTAL SHEETS
04	CC	4	27.3/R29.0	915	950

REGISTERED CIVIL ENGINEER 11/30/11 DATE

1-17-12
PLANS APPROVAL DATE

REGISTERED PROFESSIONAL ENGINEER Odeon M. Li No. C31895 Exp. 12/31/12 CIVIL STATE OF CALIFORNIA

The State of California or its officers or agents shall not be responsible for the accuracy or completeness of scanned copies of this plan sheet.

CONTRA COSTA TRANSPORTATION AUTHORITY
2999 OAK ROAD, SUITE 100
WALNUT CREEK, CA 94597

T.Y. LIN INTERNATIONAL
2010 CROW CANYON PLACE, SUITE 350
SAN RAMON, CA 94583

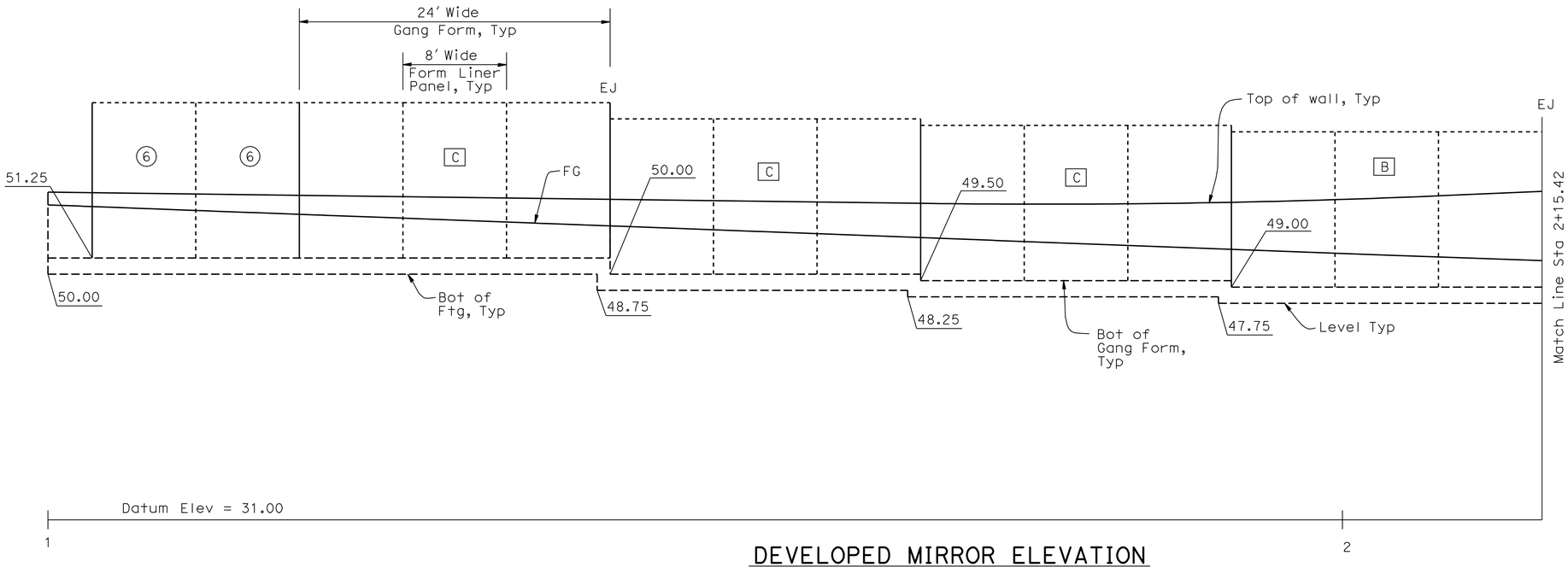

DEVELOPED MIRROR ELEVATION

1"= 5'-0"

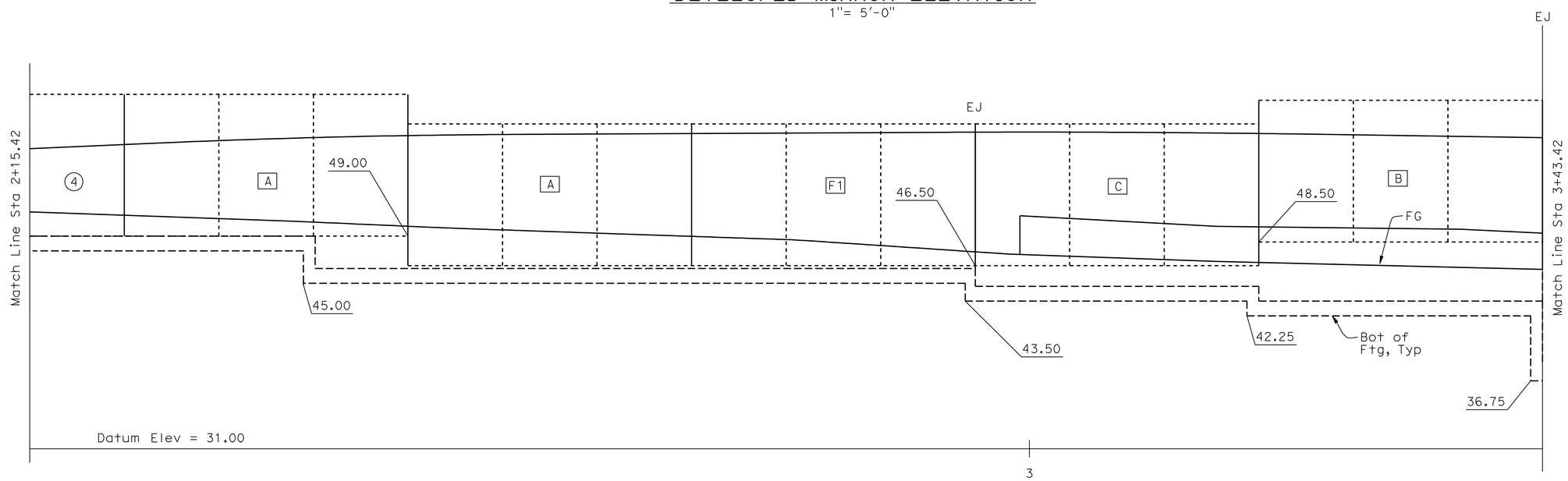

DEVELOPED MIRROR ELEVATION

1"= 5'-0"

Legends:

EJ Wall Expansion Joint

C Form liner group designation

6 Form liner panel designation

Note:
For form liner group and panel details see "Retaining wall Architectural Treatment Details" sheets in Rd plans.

Note:
The Contractor shall verify all controlling field dimensions before ordering or fabricating any material.

DESIGN OVERSIGHT Overcomer Y. Hor
12-12-11
SIGN OFF DATE

	BY	CHECKED
DESIGN	Antonion Luo /DT	Odeon M. Li /BM
DETAILS	Antonion Luo /YW	Odeon M. Li /DT
QUANTITIES	Ching Dang	Kimberly Bowen

PREPARED FOR THE STATE OF CALIFORNIA DEPARTMENT OF TRANSPORTATION

Odeon M. Li
PROJECT ENGINEER

BRIDGE NO.
POST MILE 27.9

RETAINING WALL NO. 5
ARCHITECTURAL TREATMENT LAYOUT NO. 1

DESIGN DETAIL SHEET (ENGLISH) (REV. 06-01-09)

ORIGINAL SCALE IN INCHES FOR REDUCED PLANS 0 1 2 3

PROJECT NUMBER & PHASE: 04000210801
CONTRACT NO: 04-1G9404 UNIT: 0750

DISREGARD PRINTS BEARING EARLIER REVISION DATES

REVISION DATES (PRELIMINARY STAGE ONLY) 6/08 5/09 7/09 2/10 3/30/11 4/29/11 8/29/11 10/31/11

SHEET 8 OF 12

FILE => 28Erw5-y-at1o01.dgn

USERNAME => s124436 DATE PLOTTED => 19-JAN-2012 TIME PLOTTED => 07:44

DIST	COUNTY	ROUTE	POST MILES TOTAL PROJECT	SHEET No	TOTAL SHEETS
04	CC	4	27.3/R29.0	916	950

REGISTERED CIVIL ENGINEER 11/30/11 DATE

1-17-12
PLANS APPROVAL DATE

REGISTERED PROFESSIONAL ENGINEER Odeon M. Li No. C31895 Exp. 12/31/12 CIVIL STATE OF CALIFORNIA

The State of California or its officers or agents shall not be responsible for the accuracy or completeness of scanned copies of this plan sheet.

CONTRA COSTA TRANSPORTATION AUTHORITY
2999 OAK ROAD, SUITE 100
WALNUT CREEK, CA 94597

T.Y. LIN INTERNATIONAL
2010 CROW CANYON PLACE, SUITE 350
SAN RAMON, CA 94583

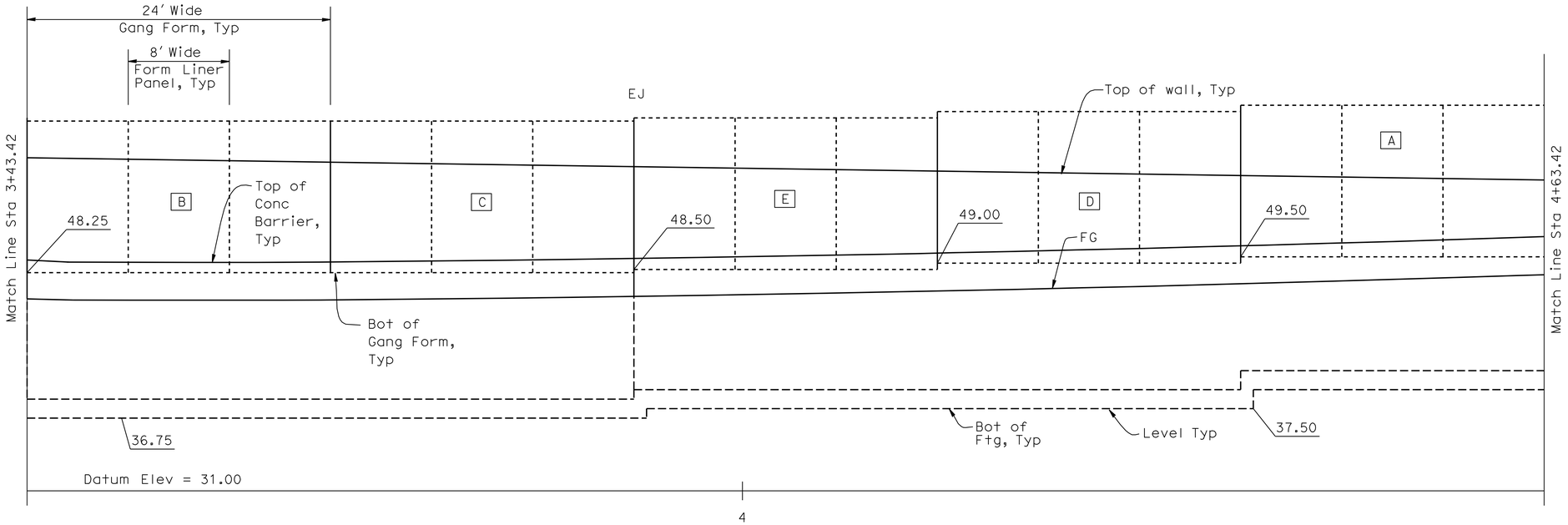

DEVELOPED MIRROR ELEVATION

1"= 5'-0"

Legends:

EJ Wall Expansion Joint

C Form liner group designation

6 Form liner panel designation

Note:
For form liner group and panel details see "Retaining wall Architectural Treatment Details" sheets in Rd plans.

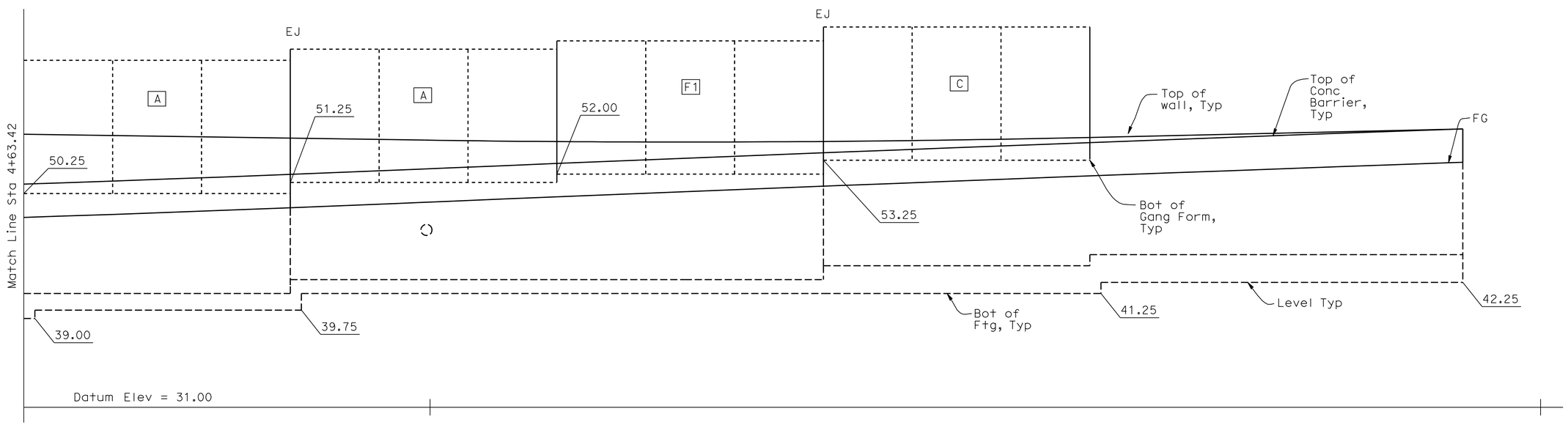

DEVELOPED MIRROR ELEVATION

1"= 5'-0"

Note:
The Contractor shall verify all controlling field dimensions before ordering or fabricating any material.

DESIGN OVERSIGHT Overcomer Y. Hor

12-12-11
SIGN OFF DATE

	BY	CHECKED
DESIGN	Antonion Luo	Odeon M. Li
DETAILS	Antonion Luo	Odeon M. Li
QUANTITIES	Ching Dang	Kimberly Bowen

PREPARED FOR THE STATE OF CALIFORNIA DEPARTMENT OF TRANSPORTATION

Odeon M. Li
PROJECT ENGINEER

BRIDGE NO.

POST MILE 27.8

RETAINING WALL NO. 5

ARCHITECTURAL TREATMENT LAYOUT NO. 2

DESIGN DETAIL SHEET (ENGLISH) (REV. 06-01-09)

ORIGINAL SCALE IN INCHES FOR REDUCED PLANS 0 1 2 3

PROJECT NUMBER & PHASE: 04000210801
CONTRACT NO: 04-1G9404 UNIT: 0750

DISREGARD PRINTS BEARING EARLIER REVISION DATES

REVISION DATES (PRELIMINARY STAGE ONLY) 6/08 5/09 7/09 2/10 3/9/11 4/29/11 8/9/11

SHEET 9 OF 12

FILE => 28Erw5-y-at1o02.dgn

USERNAME => s124496 DATE PLOTTED => 19-JAN-2012 TIME PLOTTED => 07:44

DIST	COUNTY	ROUTE	POST MILES TOTAL PROJECT	SHEET No	TOTAL SHEETS
04	CC	4	27.3/R29.0	917	950

GEOTECHNICAL PROFESSIONAL — DATE 8/9/11

1-17-12
PLANS APPROVAL DATE

REGISTERED PROFESSIONAL ENGINEER — GARY PARIKH — No. G.E. 666 — Exp. 12/31/11 — GEOTECHNICAL — STATE OF CALIFORNIA

The State of California or its officers or agents shall not be responsible for the accuracy or completeness of electronic copies of this plan sheet.

CONTRA COSTA TRANSPORTATION AUTHORITY
2999 OAK ROAD, SUITE 100
WALNUT CREEK, CA 94597

PARIKH CONSULTANTS, INC.
2360 QUME DRIVE, SUITE A
SAN JOSE CA 95131

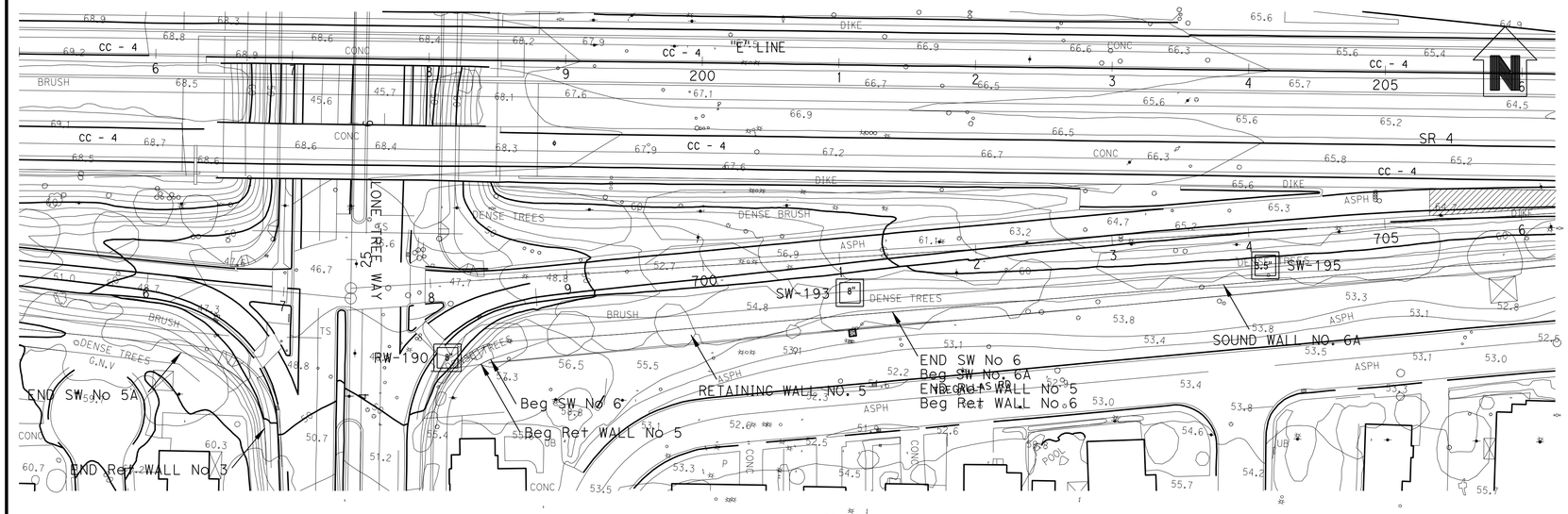

PLAN
1"=50'

Note:
Standard Penetration Test Sampler: I.D. = 1.4"; O.D. = 2"
Modified California Sampler: I.D. = 2.5"; O.D. = 3"
Hammer Assembly: A 140 lb hammer with a 30" drop
(Automatic Hammer)

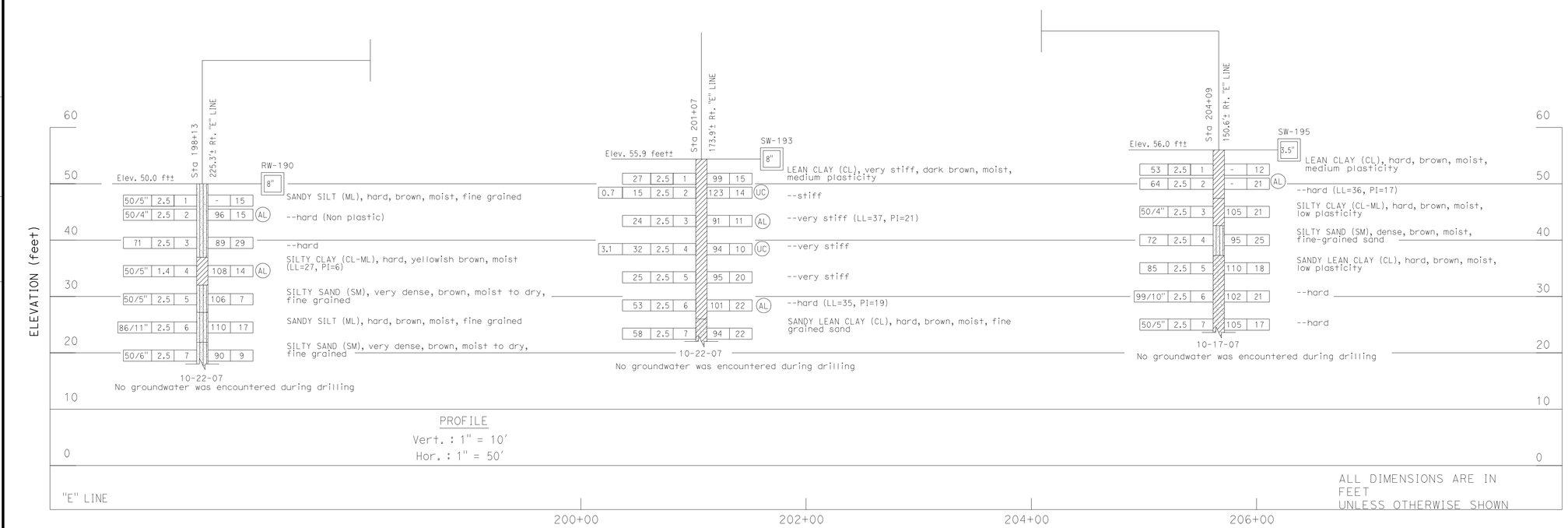

PROFILE
Vert. : 1" = 10'
Hor. : 1" = 50'

ALL DIMENSIONS ARE IN FEET UNLESS OTHERWISE SHOWN

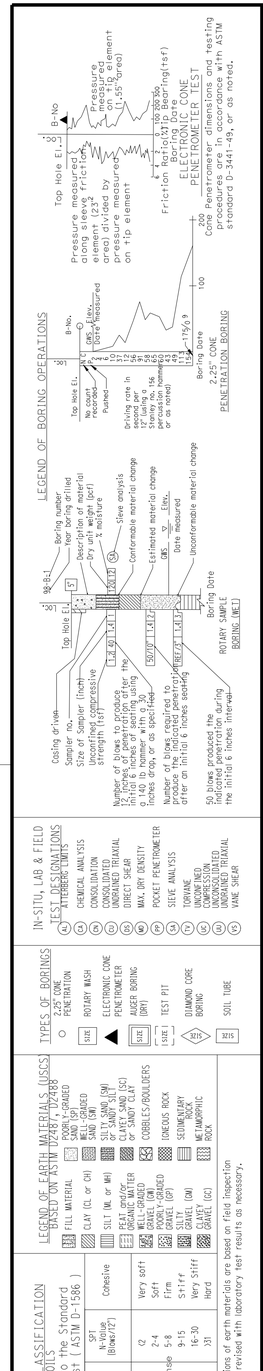

DESIGN OVERSIGHT Overcomer Y. Hor
12-12-11
SIGN OFF DATE

DRAWN BY	O. GOUTHIER
CHECKED BY	P. SIRCAR

G. TRIPATHI
FIELD INVESTIGATION BY:
DATE: 08/2006-07/2009

PREPARED FOR THE STATE OF CALIFORNIA DEPARTMENT OF TRANSPORTATION

P. SIRCAR
PROJECT ENGINEER

BRIDGE NO.
POST MILE 27.8

RETAINING WALL NO. 5
LOG OF TEST BORINGS 1 OF 3

OSF GEOTECHNICAL LOG OF TEST BORINGS SHEET (ENGLISH) (REV. 2/25/05)

ORIGINAL SCALE IN INCHES FOR REDUCED PLANS 0 1 2 3

PROJECT NUMBER & PHASE: 04000210801
CONTRACT NO: 04-1G9404 UNIT: 0750

DISREGARD PRINTS BEARING EARLIER REVISION DATES

REVISION DATES (PRELIMINARY STAGE ONLY): 08/14/09 3/9/11 4/29/11 8/9/11

SHEET 10 OF 12

FILE => 28Erw5-z-1tb01.dgn

USERNAME => s124496 DATE PLOTTED => 19-JAN-2012 TIME PLOTTED => 07:45

DIST	COUNTY	ROUTE	POST MILES TOTAL PROJECT	SHEET No	TOTAL SHEETS
04	CC	4	27.3/R29.0	918	950

GEOTECHNICAL PROFESSIONAL — DATE 8/9/11

1-17-12
PLANS APPROVAL DATE

REGISTERED PROFESSIONAL ENGINEER — GARY PARIKH — No. G.E. 666 — Exp. 12/31/11 — GEOTECHNICAL — STATE OF CALIFORNIA

The State of California or its officers or agents shall not be responsible for the accuracy or completeness of electronic copies of this plan sheet.

CONTRA COSTA TRANSPORTATION AUTHORITY
2999 OAK ROAD, SUITE 100
WALNUT CREEK, CA 94597

PARIKH CONSULTANTS, INC.
2360 QUME DRIVE, SUITE A
SAN JOSE CA 95131

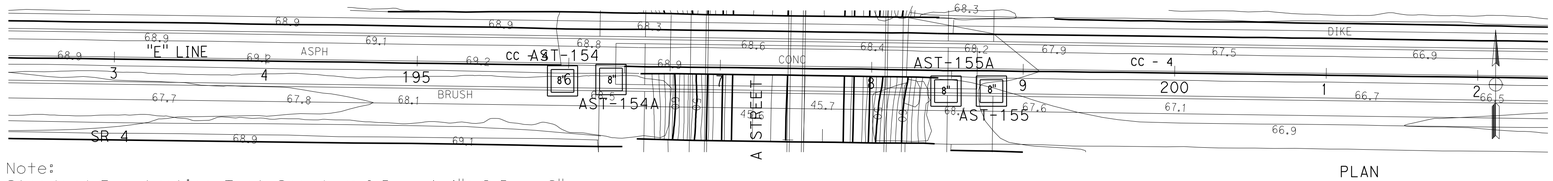

PLAN
1" = 50'

Note:
Standard Penetration Test Sampler: I.D. = 1.4"; O.D. = 2"
Modified California Sampler: I.D. = 2.5"; O.D. = 3"
Hammer Assembly: A 140 lb hammer with a 30" drop
(Automatic Hammer)

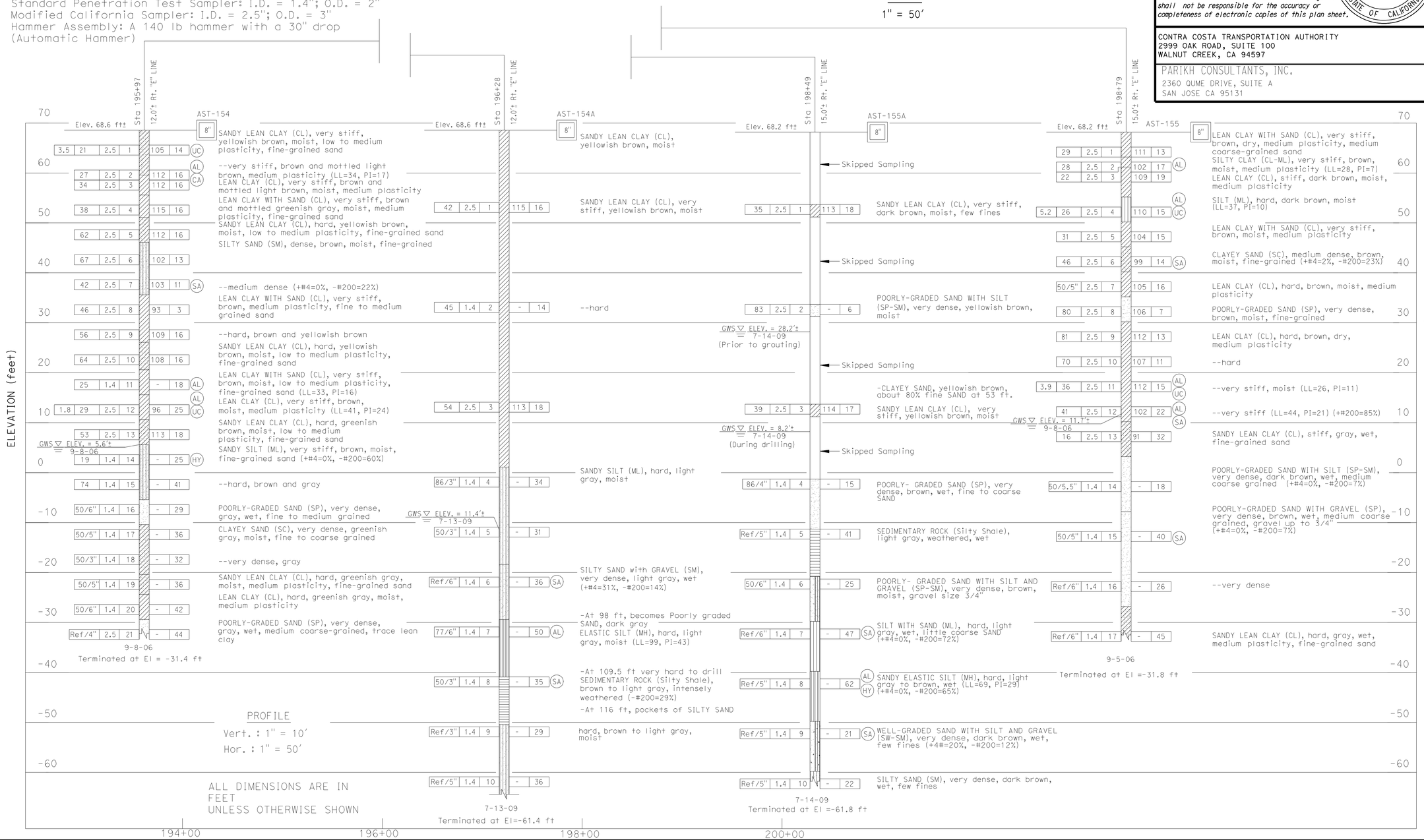

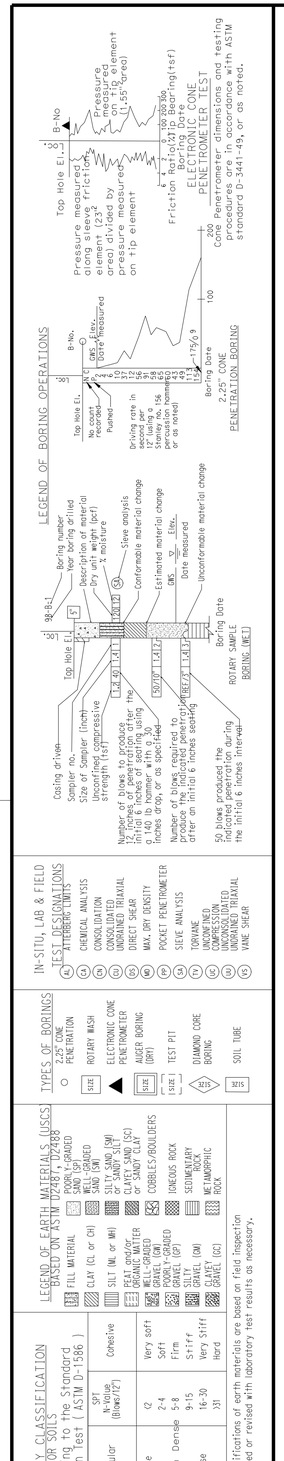

DESIGN OVERSIGHT Overcomer Y. Hor	DRAWN BY O. GOUTHIER	G. TRIPATHI FIELD INVESTIGATION BY:	PREPARED FOR THE STATE OF CALIFORNIA DEPARTMENT OF TRANSPORTATION
12-12-11 SIGN OFF DATE	CHECKED BY P. SIRCAR	DATE: 09/2006-07/2009	P. SIRCAR PROJECT ENGINEER

BRIDGE NO.
POST MILE 27.8

RETAINING WALL NO. 5
LOG OF TEST BORINGS 2 OF 3

OSF GEOTECHNICAL LOG OF TEST BORINGS SHEET (ENGLISH) (REV. 2/25/05)

ORIGINAL SCALE IN INCHES FOR REDUCED PLANS 0 1 2 3

PROJECT NUMBER & PHASE: 04000210801
CONTRACT NO: 04-1G9404 UNIT: 0750

DISREGARD PRINTS BEARING EARLIER REVISION DATES

REVISION DATES (PRELIMINARY STAGE ONLY): 08/14/09 3/9/11 4/29/11 8/9/11

SHEET 11 OF 12

FILE => 28Erw5-z-ltb02.dgn

USERNAME => s124436 DATE PLOTTED -> 19-JAN-2012 TIME PLOTTED -> 07:45

DIST.	COUNTY	ROUTE	POST MILE	SHEET NO.	TOTAL SHEETS
04	CC	4	27.3/R29.0	192	315

John H. Campbell
April 1 1969

DIVISION OF ENGINEERING SERVICES – GEOTECHNICAL SERVICES

As-Built Log of Test Borings sheet is considered an informational document only. As such, the State of California registration seal with signature, license number and registration certificate expiration date confirm that this is a true and accurate copy of the original document. This drawing is available and presented only for the convenience of any bidder, contractor or other interested party.

DIST.	COUNTY	ROUTE	KILOMETER POST–TOTAL PROJECT	Sheet No.	Total Sheets
04	CC	4	27.3/R29.0	919	950

Gary Parikh
REGISTERED CIVIL ENGINEER — DATE 11/03/2008

RETAINING WALL NO. 5

LOG OF TEST BORINGS 3 OF 3

NOTE: A COPY OF THIS LOG OF TEST BORINGS IS AVAILABLE AT OFFICE OF STRUCTURE MAINTENANCE AND INVESTIGATIONS, SACRAMENTO, CALIFORNIA

CU: 04275
EA: 2285F1

BRIDGE No. 28-0401R/L

Sheet 12 of 12

TO ACCOMPANY PLANS DATED 1-17-12

REGISTERED PROFESSIONAL ENGINEER
GARY PARIKH
No. G.E. 666
Exp. 12/31/11
GEOTECHNICAL
STATE OF CALIFORNIA

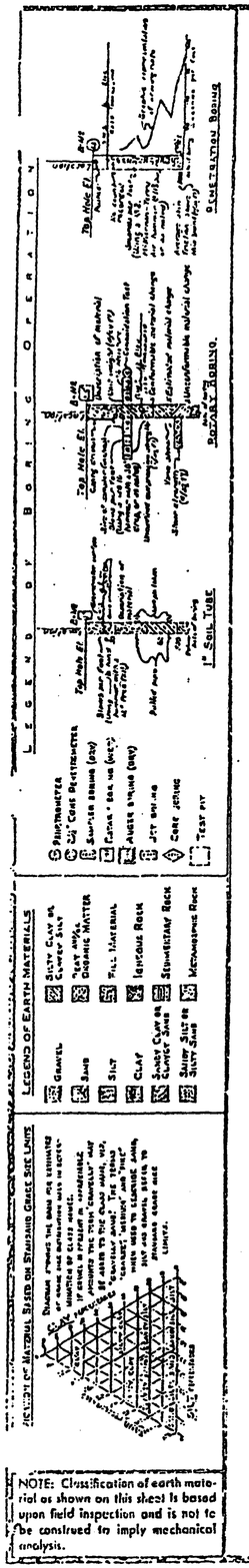

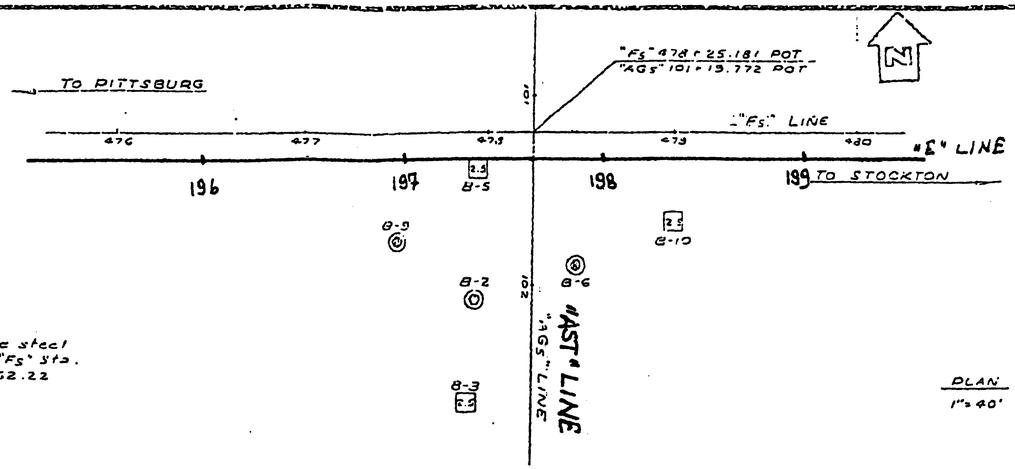

BM #51
Chiseled "O" on N side steel tower base 122' Rt "Fs" Sta. 478+07 Elev. 62.22

Revisions made to this Log of Test Borings from the original 1969 Log of Test Borings are the addition of the following table and notes:

Boring	Station	Offset from "E" LINE
B-9	196+94	20 R Lt
B-3	197+30	58 R Lt
B-2	197+34	35 R Lt
B-5	197+40	3 R Lt
B-1	197+82	83 R Lt
B-6	197+88	28 R Lt
B-10	198+34	15 R Lt

'AGS' Line corresponds to the 'AST' Line
'FS' Line parallels to 'E' Lines
'AGS' Line intersects 'E' Line at Station 197+45 ft

Notes:

1. See the "Log of Test Borings" for stationing.
2. The Division of Structure Design produced the data presented in the table above.
   The data are the English locations for the As-Built Test Borings referenced to the proposed new structure location. This table is presented on the As-Built Log of Test Boring sheet for the convenience of any bidder, contractor or other interested party.

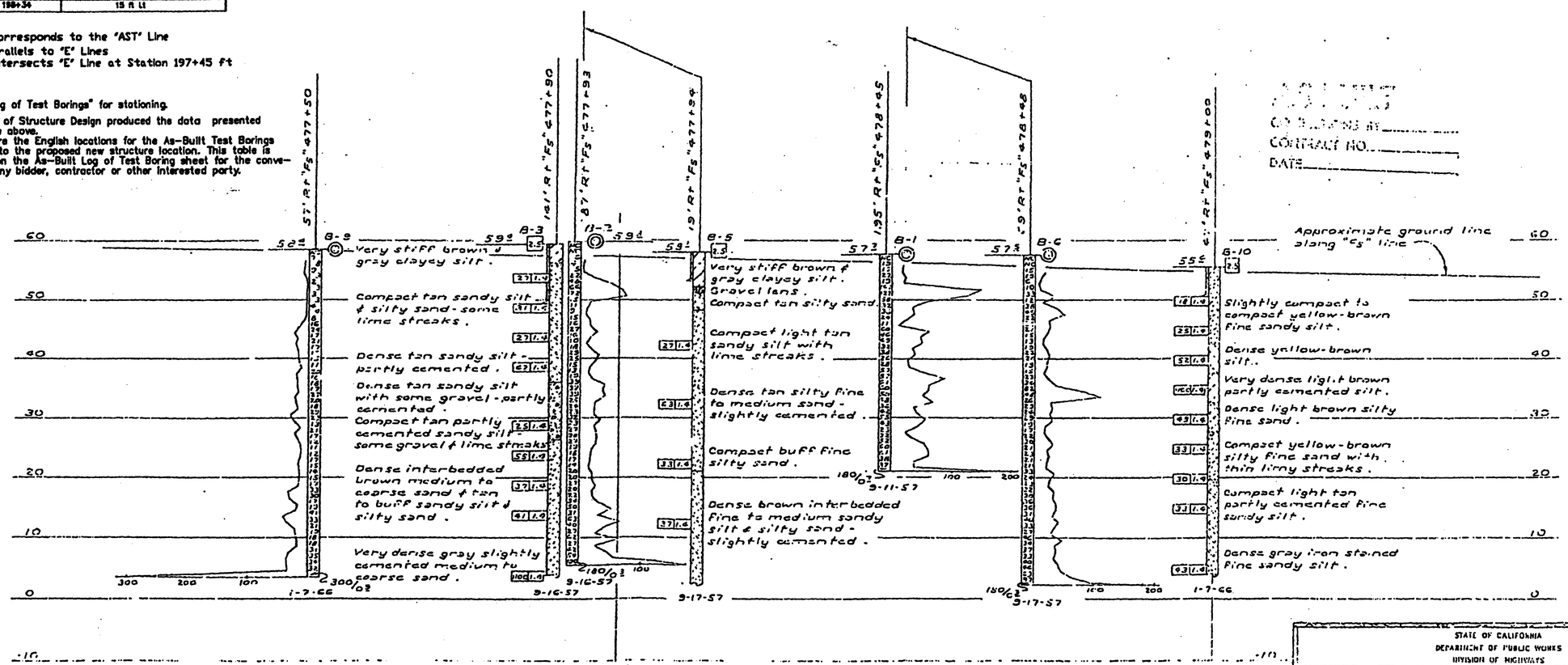

AS BUILT PLANS
CONTRACT NO.
DATE

CONTRACT NO. 04-159704
Date Completed
Document No.

STATE OF CALIFORNIA
DEPARTMENT OF PUBLIC WORKS
DIVISION OF HIGHWAYS

"A" STREET UNDERCROSSING

LOG OF TEST BORINGS

SCALE As Noted | PROJECT 28-46 R/L | FILE | DRAWING 2886-14

PREL. DRAWING NO. PR-

FILENAME => 28Erw5-z-ltb03.tif

209

DIST	COUNTY	ROUTE	POST MILES TOTAL PROJECT	SHEET No	TOTAL SHEETS
04	CC	4	27.3/R29.0	920	950

REGISTERED CIVIL ENGINEER 11/30/11 DATE

1-17-12
PLANS APPROVAL DATE

REGISTERED PROFESSIONAL ENGINEER Odeon M. Li No. C31895 Exp. 12/31/12 CIVIL STATE OF CALIFORNIA

The State of California or its officers or agents shall not be responsible for the accuracy or completeness of scanned copies of this plan sheet.

CONTRA COSTA TRANSPORTATION AUTHORITY
2999 OAK ROAD, SUITE 100
WALNUT CREEK, CA 94597

T.Y. LIN INTERNATIONAL
2010 CROW CANYON PLACE, SUITE 350
SAN RAMON, CA 94583

PLAN SYMBOLS

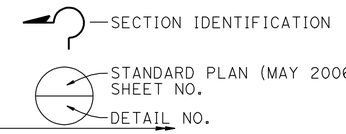

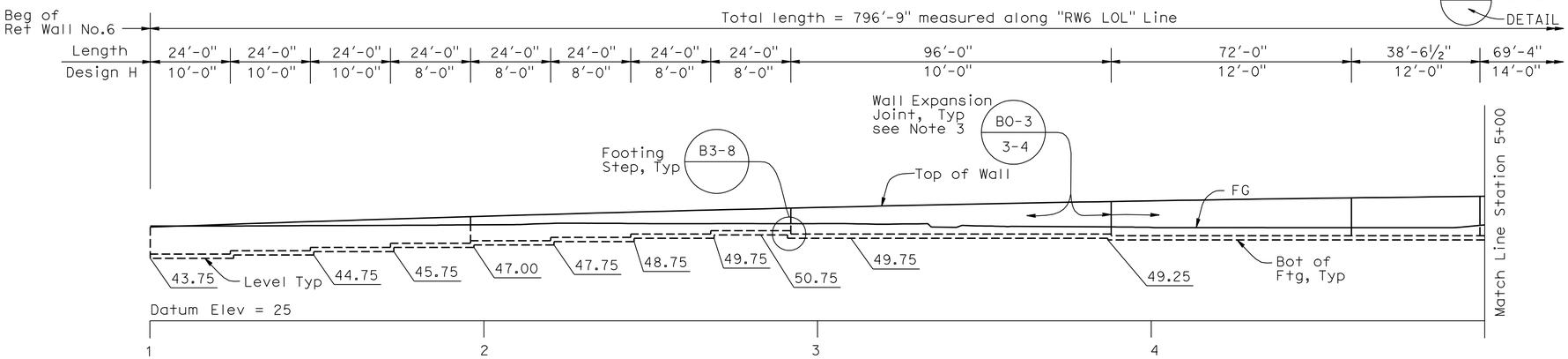

DEVELOPED ELEVATION

1" = 20'-0"

Notes:

1. Concrete Barrier (Type 736A Mod) and Soundwall not shown for clarity.
2. For weep holes and weakened planes locations and details see B0-3
3. Stop waterstop 6" into concrete barrier on top of wall and 1'-0" below lower FG.
4. Shoring will be required to avoid any excavation on a 10' clear distance from the existing PG&E facilities.

INDEX TO PLANS

Sheet No.	Title
1	GENERAL PLAN NO. 1
2	GENERAL PLAN NO. 2
3	RETAINING WALL TYPE 1SWB
4	SOUNDWALL - MASONRY BLOCK WITH BARRIER ON RETAINING WALL - DETAILS NO. 1
5	SOUNDWALL - MASONRY BLOCK WITH BARRIER ON RETAINING WALL - DETAILS NO. 2
6	ARCHITECTURAL TREATMENT LAYOUT NO. 1
7	ARCHITECTURAL TREATMENT LAYOUT NO. 2
8	ARCHITECTURAL TREATMENT LAYOUT NO. 3
9	LOG OF TEST BORINGS

RETAINING WALL NO. 6

QUANTITIES

STRUCTURE EXCAVATION (RETAINING WALL)	1,830	CY
STRUCTURE BACKFILL (RETAINING WALL)	1,790	CY
PERVIOUS BACKFILL MATERIAL (RETAINING WALL)	114	CY
STRUCTURAL CONCRETE, RETAINING WALL	790	CY
ARCHITECTURAL TEXTURE	7,810	SQFT
BAR REINFORCING STEEL (RETAINING WALL)	74,500	LB
CONCRETE BARRIER (TYPE 736A MODIFIED)	797	LF

STANDARD PLANS DATED MAY 2006

A10A	ACRONYMS AND ABBREVIATIONS (SHEET 1 OF 2)
A10B	ACRONYMS AND ABBREVIATIONS (SHEET 2 OF 2)
A10C	SYMBOLS (SHEET 1 OF 2)
A10D	SYMBOLS (SHEET 2 OF 2)
A62B	LIMITS OF PAYMENT FOR EXCAVATION AND BACKFILL BRIDGE SURCHARGE AND WALL
B0-1	BRIDGE DETAILS
B0-3	BRIDGE DETAILS
B3-8	RETAINING WALL DETAILS NO. 1
B3-9	RETAINING WALL DETAILS NO. 2
B11-56	CONCRETE BARRIER TYPE 736

Legend:

(1) 1¾" Max. architectural treatment see "Architectural Treatment Layout" sheets and "Retaining Wall Architectural Treatment Details" sheets in Rd Plans.

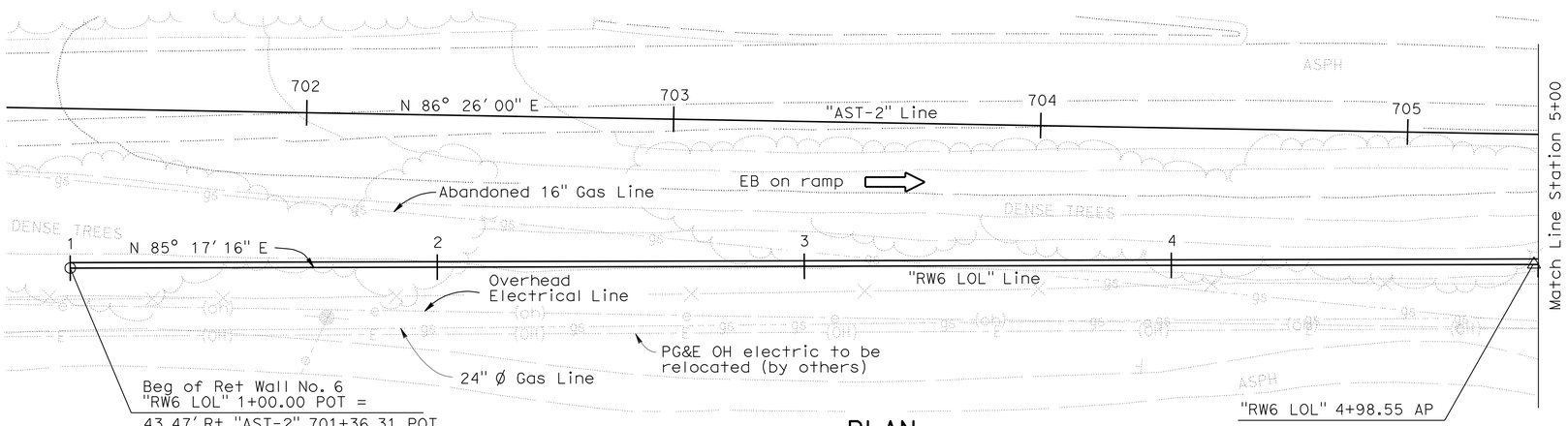

PLAN

1" = 20'-0"

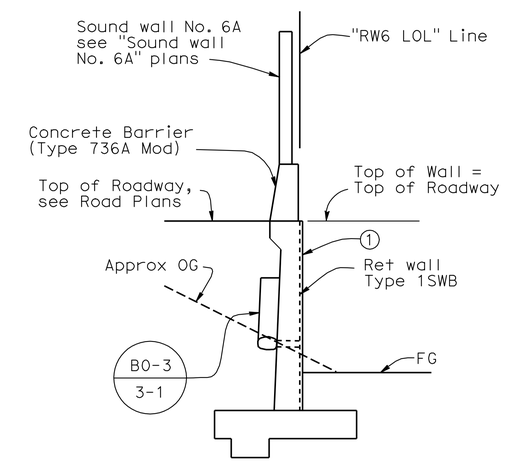

TYPICAL SECTION

¼"=1'-0"

Note:
The Contractor shall verify all controlling field dimensions before ordering or fabricating any material.

DESIGN OVERSIGHT Overcomer Y. Hor	DESIGN	BY Antonio Luo	CHECKED Odeon M. Li	LOAD FACTOR DESIGN	LIVE LOADING: HS20-44 AND ALTERNATIVE AND PERMIT DESIGN LOADING
12-27-11 SIGN OFF DATE	DETAILS	BY Antonio Luo	CHECKED Odeon M. Li	LAYOUT BY Antonio Luo	CHECKED Odeon M. Li
	QUANTITIES	BY Ching Dong	CHECKED Kimberly Bowen	SPECIFICATIONS BY Odeon M. Li	PLANS AND SPECS COMPARED Odeon M. Li

PREPARED FOR THE STATE OF CALIFORNIA DEPARTMENT OF TRANSPORTATION

Odeon M. Li
PROJECT ENGINEER

BRIDGE NO.
POST MILES 27.9

RETAINING WALL NO. 6
GENERAL PLAN NO. 1

DESIGN GENERAL PLAN SHEET (ENGLISH) (REV. 06-01-09)

ORIGINAL SCALE IN INCHES FOR REDUCED PLANS 0 1 2 3

PROJECT NUMBER & PHASE: 04000210801
CONTRACT NO: 04-1G9404 UNIT: 0750

DISREGARD PRINTS BEARING EARLIER REVISION DATES

REVISION DATES (PRELIMINARY STAGE ONLY): 6/08 3/09 7/09 2/10 3/10/11 4/20/11 8/19/11 10/31/11 11/16/11 11/30/11

SHEET 1 OF 9

FILE => 28Erw6-a-gp01.dgn

USERNAME => s6124436 DATE PLOTTED => 19-JAN-2012 TIME PLOTTED => 07:45

DIST	COUNTY	ROUTE	POST MILES TOTAL PROJECT	SHEET No	TOTAL SHEETS
04	CC	4	27.3/R29.0	921	950

REGISTERED CIVIL ENGINEER — DATE 11/30/11

1-17-12
PLANS APPROVAL DATE

REGISTERED PROFESSIONAL ENGINEER — Odeon M. Li — No. C31895 — Exp. 12/31/12 — CIVIL — STATE OF CALIFORNIA

The State of California or its officers or agents shall not be responsible for the accuracy or completeness of scanned copies of this plan sheet.

CONTRA COSTA TRANSPORTATION AUTHORITY
2999 OAK ROAD, SUITE 100
WALNUT CREEK, CA 94597

T.Y. LIN INTERNATIONAL
2010 CROW CANYON PLACE, SUITE 350
SAN RAMON, CA 94583

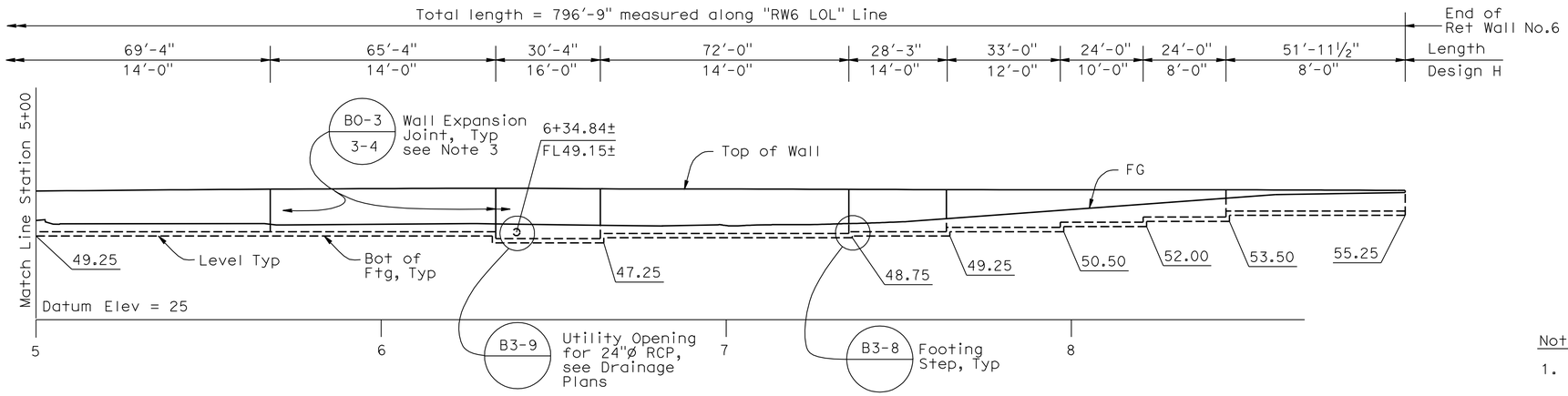

DEVELOPED ELEVATION

1" = 20'-0"

Notes:

1. Concrete Barrier (Type 736A Mod) and Soundwall not shown for clarity.
2. For weep holes and weakened planes locations and details see B0-3
3. Stop waterstop 6" into concrete barrier on top of wall and 1'-0" below lower FG.
4. Shoring will be required to avoid any excavation on a 10' clear distance from the existing PG&E facilities.

N

"AST-2"	"RW6 LOL"	
R = 3000'	R = 3937.68'	R = 2948.98'
Δ = 03° 11' 25"	Δ = 01° 10' 43"	Δ = 01° 00' 33"
T = 83.54'	T = 40.50'	T = 25.97'
L = 167.04'	L = 81.00'	L = 51.94'

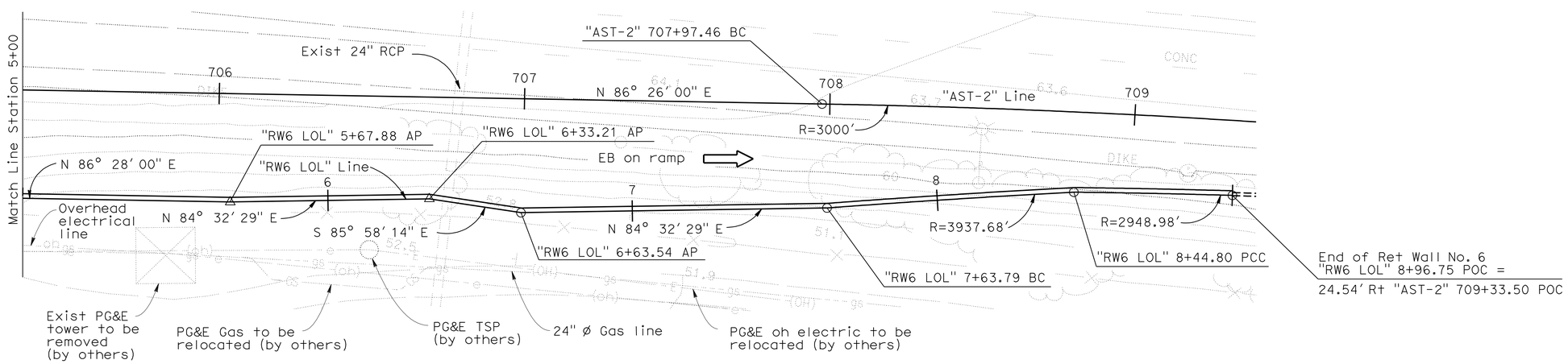

PLAN

1" = 20'-0"

Note:
The Contractor shall verify all controlling field dimensions before ordering or fabricating any material.

DESIGN OVERSIGHT Overcomer Y. Hor	DESIGN	BY Antonio Luo	CHECKED Odeon M. Li	LOAD FACTOR DESIGN	LIVE LOADING: HS20-44 AND ALTERNATIVE AND PERMIT DESIGN LOADING
12-12-11 SIGN OFF DATE	DETAILS	BY Antonio Luo	CHECKED Odeon M. Li	LAYOUT BY Antonio Luo	CHECKED Odeon M. Li
	QUANTITIES	BY Ching Dong	CHECKED Kimberly Bowen	SPECIFICATIONS BY Odeon M. Li	PLANS AND SPECS COMPARED Odeon M. Li

PREPARED FOR THE STATE OF CALIFORNIA DEPARTMENT OF TRANSPORTATION

Odeon M. Li
PROJECT ENGINEER

BRIDGE NO.
POST MILES 27.9

RETAINING WALL NO. 6
GENERAL PLAN NO.2

DESIGN GENERAL PLAN SHEET (ENGLISH) (REV. 06-01-09)

ORIGINAL SCALE IN INCHES FOR REDUCED PLANS 0 1 2 3

PROJECT NUMBER & PHASE: 04000210801
CONTRACT NO: 04-1G9404 UNIT: 0750

DISREGARD PRINTS BEARING EARLIER REVISION DATES

REVISION DATES (PRELIMINARY STAGE ONLY): 6/08 3/09 7/09 2/10 3/9/11 4/20/11 8/9/11 10/31/11 11/16/11 11/30/11

SHEET 2 OF 9

FILE => 28Erw6-a-gp02.gdn

USERNAME => s124496 DATE PLOTTED => 19-JAN-2012 TIME PLOTTED => 07:45

DIST.	COUNTY	ROUTE	POST MILES TOTAL PROJECT	SHEET NO.	TOTAL SHEETS
04	CC	4	27.3/R29.0	922	950

REGISTERED ENGINEER - CIVIL 11/30/11

1-17-12
PLANS APPROVAL DATE

REGISTERED PROFESSIONAL ENGINEER Odeon M. Li No. C31895 Exp. 12/31/12 CIVIL STATE OF CALIFORNIA

The State of California or its officers or agents shall not be responsible for the accuracy or completeness of electronic copies of this plan sheet.

CONTRA COSTA TRANSPORTATION AUTHORITY
2999 OAK ROAD, SUITE 100
WALNUT CREEK, CA 94597

T.Y. LIN INTERNATIONAL
2010 CROW CANYON PLACE, SUITE 350
SAN RAMON, CA 94583

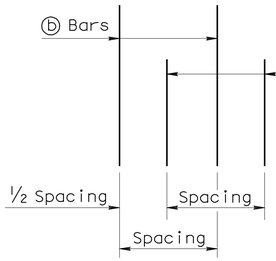

DETAIL B
No Scale

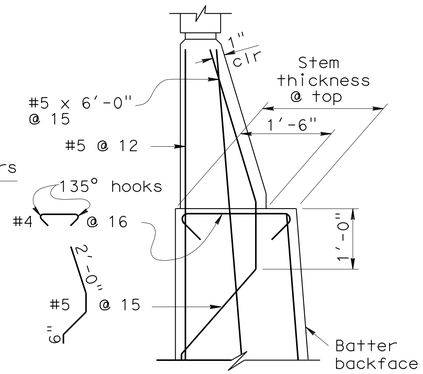

DETAIL A WITHOUT HAUNCH
No Scale

GENERAL NOTES

1. For soundwall and retaining wall architectural finish or texture, see details elsewhere in project plans.
2. For details not shown and drainage notes, see (B3-8)
3. Footing cover, 1'-6" minimum.
4. Limit of no splicing rebars = 3 times the bottom thickness of the stem.
5. Placement of reinforcements :
   - ⓑ & ⓒ bars are spliced together.
   - * ⓐ & ⓑ bars are bundled together.
   - ** Alternate ⓐ & ⓑ bars are shown in "Detail B".
   - Cont = Continuous.
6. For Soundwall & Barrier reinforcement, see "Soundwall Masonry Block on Barriers" sheets in Standard Plans.

TABLE 1: TABLE OF REINFORCING STEEL DIMENSIONS AND DATA

	Stem With Haunch													
Design H	6'	8'	10'	12'	14'	16'	18'	20'	22'	24'	26'	28'	30'	32'
W	7'-9"	8'-0"	8'-9"	9'-9"	10'-9"	12'-0"	13'-0"	14'-3"	15'-3"	16'-6"	18'-6"	19'-9"	21'-3"	22'-6"
C	2'-9"	2'-9"	3'-0"	3'-3"	3'-6"	4'-0"	4'-3"	4'-9"	5'-0"	5'-6"	6'-3"	6'-9"	7'-3"	7'-9"
B	5'-0"	5'-3"	5'-9"	6'-6"	7'-3"	8'-0"	8'-9"	9'-6"	10'-3"	11'-0"	12'-3"	13'-0"	14'-0"	14'-9"
F Spread footing	1'-3"	1'-3"	1'-3"	1'-3"	1'-3"	1'-6"	1'-6"	1'-9"	2'-0"	2'-3"	2'-9"	3'-0"	3'-3"	3'-9"
Batter	0	½:12	½:12	½:12	½:12	½:12	½:12	½:12	½:12	⅝:12	¾:12	⅞:12	1:12	1:12
Stem thickn. @ Haunch	1'-0"	1'-0"	1'-0"	1'-0"	1'-0"	1'-0"	1'-0"	1'-0"	1'-0"	1'-0"	1'-0"	1'-0"	1'-0"	1'-0"
ⓐ Bars				#6 @18**	#7 @18**	#8 @18**	#9 @18**	#10 @18**	#8 @ 9*	#8 @ 9*	#7 @ 6*	#10 @12**	#9 @ 9*	#11@12**
X				Cont	Cont	Cont	Cont	Cont	Cont	Cont	Cont	Cont	Cont	Cont
Y				8'-0"	6'-6"	7'-6"	8'-6"	9'-6"	9'-6"	11'-0"	11'-6"	13'-0"	14'-0"	15'-6"
ⓑ Bars	#5 @12	#5 @12	#5 @ 9	#6 @18**	#7 @18**	#8 @18**	#9 @18**	#10 @18**	#8 @ 9*	#8 @ 9*	#7 @ 6*	#10 @12**	#9 @ 9*	#11@12**
X	Cont	Cont	Cont	Cont	Cont	Cont	Cont	Cont	Cont	5'-6"	6'-6"	7'-0"	8'-0"	8'-6"
Y	Cont	Cont	Cont	Cont	10'-6"	13'-0"	15'-0"	17'-6"	19'-6"	21'-0"	18'-6"	19'-0"	25'-6"	23'-6"
ⓒ Bars					#6 @18	#6 @18	#6 @18	#6 @18	#6 @18	#6 @18	#6 @12	#7 @12	#7 @18	#7 @12
ⓓ Bars	#5 @12	#5 @12	#5 @12	#5 @ 9	#6 @ 9	#6 @ 9	#6 @ 6	#8 @ 9	#8 @ 9	#8 @ 9	#7 @ 6	#7 @ 6	#9 @ 9	#9 @ 9
Ultimate Bearing Capacity Req'd k/sf	4.6	5.5	6.1	6.6	7.3	8.1	9.0	9.9	11.3	12.2	12.5	13.4	14.1	15.4

TABLE 2: TABLE OF REINFORCING STEEL DIMENSIONS AND DATA

	Stem With Haunch						Stem Without Haunch						
Design H	8'	10'	12'	14'	16'	18'	20'	22'	24'	26'	28'	30'	32'
W	8'-0"	8'-6"	9'-3"	10'-3"	11'-3"	13'-0"	13'-9"	16'-0"	16'-6"	18'-6"	20'-0"	20'-6"	21'-9"
C	2'-9"	2'-9"	3'-0"	3'-6"	3'-9"	4'-3"	4'-6"	5'-3"	5'-6"	6'-3"	6'-9"	6'-9"	7'-6"
B	5'-3"	5'-9"	6'-3"	6'-9"	7'-6"	8'-9"	9'-3"	10'-9"	11'-0"	12'-3"	13'-3"	13'-9"	14'-3"
F Spread footing	1'-3"	1'-3"	1'-3"	1'-3"	1'-6"	1'-6"	1'-9"	2'-0"	2'-3"	2'-9"	3'-0"	3'-3"	3'-6"
Batter	0	0	0	0	0	0	0	0	0	¼:12	½:12	½:12	½:12
Stem thickn. @ Haunch	1'-0"	1'-0"	1'-0"	1'-0"	1'-3"	1'-3"							
Stem thickn. @ top							1'-6"	2'-0"	2'-0"	2'-0"	2'-0"	2'-0"	2'-0"
ⓐ Bars			#6 @12**	#5 @ 6*	#9 @18**	#9 @12**	#9 @12**	#9 @12**	#7 @ 6*	#7 @ 6*	#7 @ 6*	#9 @ 9*	#11@12**
X			Cont	Cont	Cont	Cont	Cont	Cont	Cont	Cont	Cont	Cont	Cont
Y			5'-6"	5'-6"	8'-6"	8'-6"	8'-6"	8'-6"	9'-6"	11'-0"	12'-6"	13'-6"	14'-6"
ⓑ Bars	#5 @ 9	#6 @ 9	#6 @12**	#5 @ 6*	#9 @18**	#9 @12**	#9 @12**	#9 @12**	#7 @ 6*	#7 @ 6*	#7 @ 6*	#9 @ 9*	#11@12**
X	Cont	Cont	Cont	Cont	Cont	Cont	Cont	Cont	5'-6"	6'-0"	7'-6"	7'-6"	8'-0"
Y	Cont	Cont	Cont	Cont	11'-6"	11'-6"	12'-0"	12'-0"	17'-6"	20'-0"	21'-6"	24'-0"	24'-0"
ⓒ Bars					#7 @18	#7 @12	#7 @12	#7 @12	#6 @ 12	#6 @ 12	#6 @12	#7 @18	#7 @12
ⓓ Bars	#5 @12	#5 @ 9	#5 @9	#6 @9	#6 @ 9	#9 @12	#9 @12	#7 @#7	6 @ 6	#7 @ 6	#7 @ 6	#9 @ 9	#9 @ 9
Ultimate Bearing Capacity Req'd k/sf	5.5	6.5	7.3	7.6	9.0	9.0	10.6	10.5	12.2	12.6	13.3	15.4	16.0

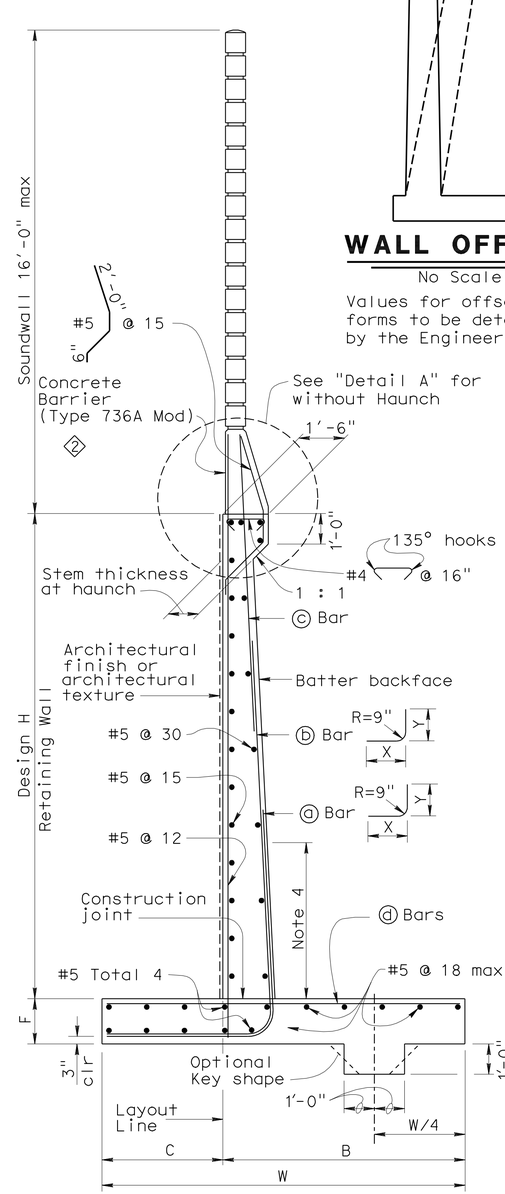

SPREAD FOOTING SECTION
No Scale

SPECIAL DETAILS

Vertical Layout Line — A* — A* Offset = ½" per 10' of wall stem height

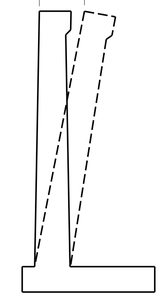

WALL OFFSET ①
No Scale

Values for offsetting forms to be determined by the Engineer.

SPREAD FOOTING DATA TABLE

Location	Nominal Bearing Resistance q_n
RW6 LOL 1+00 to RW6 LOL 8+96.75	15 ksf

DESIGN DATA

DESIGN: Load Factor Design (LFD)

CONCRETE: Reinforced Concrete, f'c = 3600 psi
fy = 60,000 psi

LOADING CASE:
Level ground with 240 psf surcharge and 16' Soundwall

Seismic Load = 0.3 Dead Load
Wind Load = 30 psf
Dead Load of Soundwall = 1414 lb/ft
Dead Load of Barrier = 372 lb/ft

SEISMIC LOAD: SOIL
Kh = 0.3g
Kv = 0.0
Kae : Mononobe-Okabe Method

SOIL: Ø = 34° γ = 120 pcf
Equivalent fluid pressure:
= 36 pcf for determination of toe pressure
= 27 pcf for determination of heel pressure

EXTERNAL STABILITY:
Group 1 : D + E + SC
Group 2 : D + E + SC + W
Group 3 : D + PYM

INTERNAL STABILITY (LFD):
Group A : βD + 1.7E + 1.7SC
Group B : βD + 1.7E + 1.3W
Group C (stem) : 1.0D + 1.0E + 1.0EQD + 1.0EQE
Group C (footing) : D + PYM

Where : β = 1.0 or 1.3 whichever controls design
D = Dead Load
E = Lateral Earth Pressure
SC = Surcharge
W = Wind load
EQD = Seismic Dead Load
EQE = Seismic Lateral Earth Pressure
PYM = Probable Yield Moment (1.3 x Nominal Yield Moment of Stem)

STANDARD DRAWING

RELEASE DATE Revised	DESIGN	BY MADON SAH	CHECKED OVERCOMER HOR	RELEASED BY
	DETAILS	BY R LASAT	CHECKED J.C. MOESE	
FILE NO. xs14-220e	SUBMITTED	BY OVERCOMER HOR	DRAWING DATE 12/1/05	OFFICE CHIEF

① Added Table
② Modified Detail

STATE OF CALIFORNIA
DEPARTMENT OF TRANSPORTATION

DIVISION OF ENGINEERING SERVICES

BRIDGE NO.
POST MILE 27.9

RETAINING WALL NO. 6
RETAINING WALL TYPE 1SWB

DS OSD 2147A (REV. X/XX/XX)

ORIGINAL SCALE IN INCHES FOR REDUCED PLANS 0 1 2 3

PROJECT NUMBER & PHASE: 04000210801
CONTRACT NO: 04-1G9404 UNIT: 0750

DISREGARD PRINTS BEARING EARLIER REVISION DATES

REVISION DATES (PRELIMINARY STAGE ONLY) 6/4/08 7/4/08 7/9/08 2/4/10 1/24/11 4/29/11 8/9/11

SHEET 3 OF 9

USERNAME => s124496

28Erw6-g-rwdt01.dgn

DATE PLOTTED => 19-JAN-2012 TIME PLOTTED => 07:45

DIST.	COUNTY	ROUTE	POST MILES TOTAL PROJECT	SHEET NO.	TOTAL SHEETS
04	CC	4	27.3/R29.0	923	950

REGISTERED ENGINEER - CIVIL 11/30/11

1-17-12
PLANS APPROVAL DATE

REGISTERED PROFESSIONAL ENGINEER Odeon M. Li No. C31895 Exp. 12/31/12 CIVIL STATE OF CALIFORNIA

The State of California or its officers or agents shall not be responsible for the accuracy or completeness of electronic copies of this plan sheet.

CONTRA COSTA TRANSPORTATION AUTHORITY
2999 OAK ROAD, SUITE 100
WALNUT CREEK, CA 94597

T.Y. LIN INTERNATIONAL
2010 CROW CANYON PLACE, SUITE 350
SAN RAMON, CA 94583

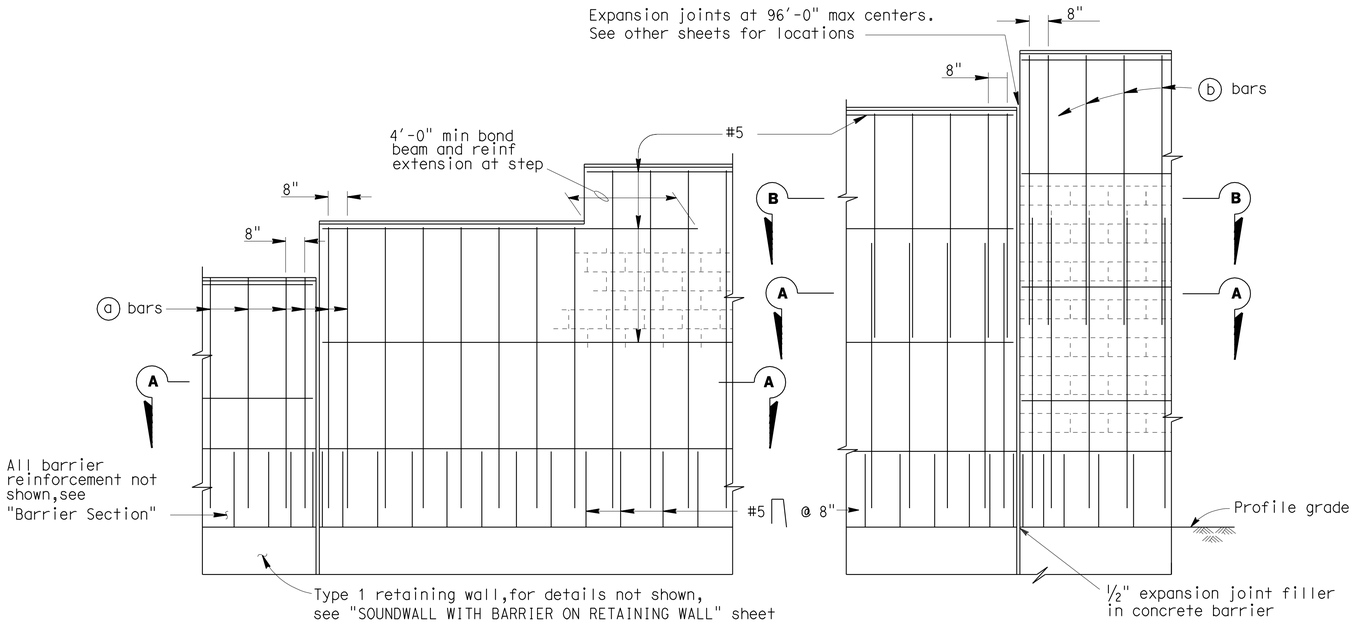

PART ELEVATIONS

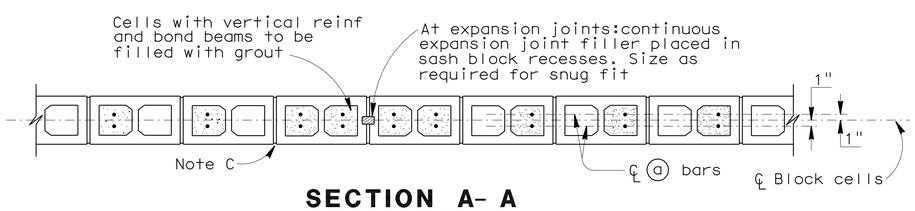

SECTION A- A

For details not shown, see other details

H=6'-4" THRU H=10'-4"

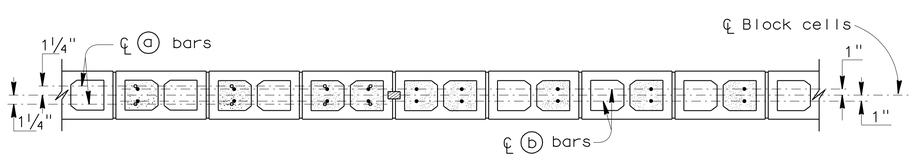

SECTION A- A

SECTION B- B

For details not shown, see other details

H=12'-4" THRU H=16'-4"

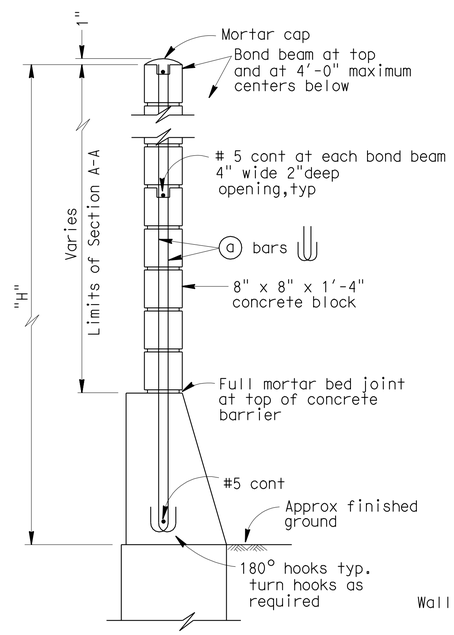

H=6'-4" THRU H=10'-4"

For details not shown, see H=12'-4" thru H=16'-4"

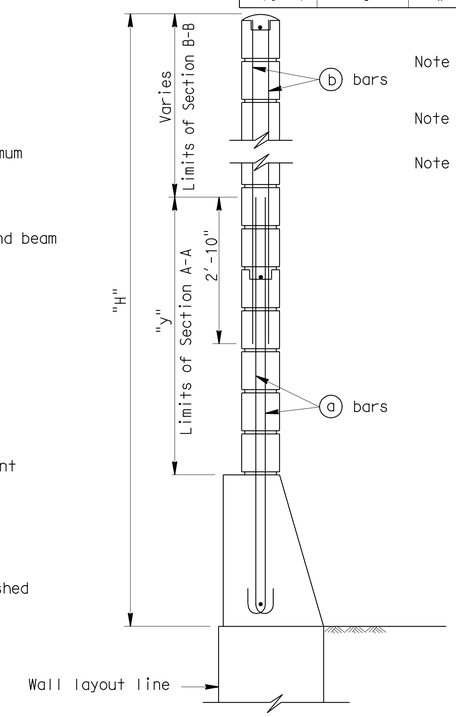

H=12'-4" THRU H=16'-4"

For details not shown, see H=6'-4" thru H=10'-4"

TYPICAL SECTIONS

SOUNDWALL REINFORCEMENT TABLE

Maximum H	(a) bars @ 1'-4" max	(b) bars @ 1'-4" max	"y"	f'm (KSI)	Compressive Strength of CMU (KSI)	Maximum H
6'-4"	# 4	———	———	1.5	1.9	6'-4"
8'-4"	# 4	———	———	1.5	1.9	8'-4"
10'-4"	# 4	———	———	1.5	1.9	10'-4"
12'-4"	# 5	# 4	5'-0"	1.5	1.9	12'-4"
14'-4"	# 6	# 4	7'-0"	1.5	1.9	14'-4"
16'-4"	# 6	# 4	9'-0"	2.5	3.7	16'-4"

Note I : For details not shown, see "SOUNDWALL WITH BARRIER ON RETAINING WALL - MASONRY BLOCK -- DETAILS NO.2" sheet.

Note II : Slope ground at traffic side of barrier to drain. Maximum slope ±10%.

Note III : See "SOUNDWALL MASONRY BLOCK - MISCELLANEOUS DETAILS" sheet for other details.

GENERAL NOTES

Note A: For type of block and joint finish, see other sheets.

Note B: When blocks are laid in stacked bond, ladder type, galvanized joint reinforcement shall be provided. A minimum of 0.07"-0.14" wire continuous at 4'-0" maximum to be used. Locate reinforcement in joints that are at the approximate midpoint between bond beams.

Note C: Horizontal joints shall be tooled concave or may be weathered.
Vertical joints shall be tooled concave or may be raked.

Note D: For intermediate wall heights that are between the "H's" given. Use the tabular information for the next higher "H".

Note E: Masonry strengths are listed in "SOUNDWALL REINFORCEMENT TABLE".

Note F: Concrete to be used for the barrier shall contain not less than 590 pounds of cementitious material per cubic yard.

RETAINING WALL NO. 6

STANDARD DRAWING

FILE NO. xs15-130-1e

APPROVED BY T SATTER
RESPONSIBLE TECHNICAL SPECIALIST
APPROVAL DATE 10/22/09

RELEASED BY ROBERTO LACALLE
RESPONSIBLE OFFICE CHIEF
RELEASE DATE 10/22/09

STATE OF CALIFORNIA
DEPARTMENT OF TRANSPORTATION

DIVISION OF ENGINEERING SERVICES

BRIDGE NO.

POST MILE 27.9

SOUNDWALL - MASONRY BLOCK WITH BARRIER ON RETAINING WALL

DETAILS NO. 1

DS OSD 2147A (ENGLISH STANDARD DRAWING "XS" BORDER REV. 10/22/09)

ORIGINAL SCALE IN INCHES FOR REDUCED PLANS 0 1 2 3

PROJECT NUMBER & PHASE: 04000210801
CONTRACT NO: 04-1G9404 UNIT: 0750

DISREGARD PRINTS BEARING EARLIER REVISION DATES

REVISION DATES (PRELIMINARY STAGE ONLY) 6/08 5/09 7/09 2/10 3/29/11 4/29/11 8/9/11

SHEET 4 OF 9

USERNAME => s124496

28Erw6-g-rwdt02.dgn

DATE PLOTTED => 19-JAN-2012 TIME PLOTTED => 07:45

DIST.	COUNTY	ROUTE	POST MILES TOTAL PROJECT	SHEET NO.	TOTAL SHEETS
04	CC	4	27.3/R29.0	924	950

REGISTERED ENGINEER - CIVIL 11/30/11

1-17-12
PLANS APPROVAL DATE

REGISTERED PROFESSIONAL ENGINEER Odeon M. Li No. C31895 Exp. 12/31/12 CIVIL STATE OF CALIFORNIA

The State of California or its officers or agents shall not be responsible for the accuracy or completeness of electronic copies of this plan sheet.

CONTRA COSTA TRANSPORTATION AUTHORITY
2999 OAK ROAD, SUITE 100
WALNUT CREEK, CA 94597

T.Y. LIN INTERNATIONAL
2010 CROW CANYON PLACE, SUITE 350
SAN RAMON, CA 94583

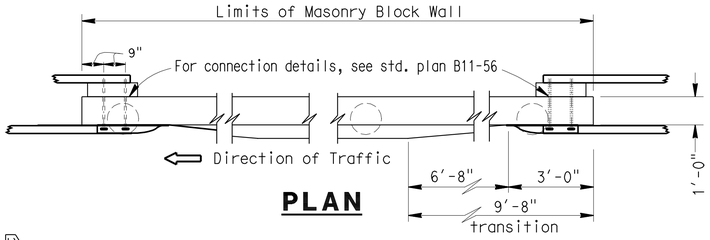

PLAN

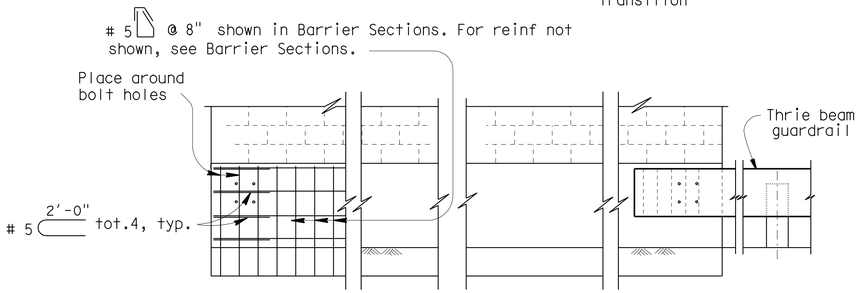

ELEVATION

METAL BEAM GUARDRAIL ANCHORAGE

For details not shown, see std. plan B11-56.

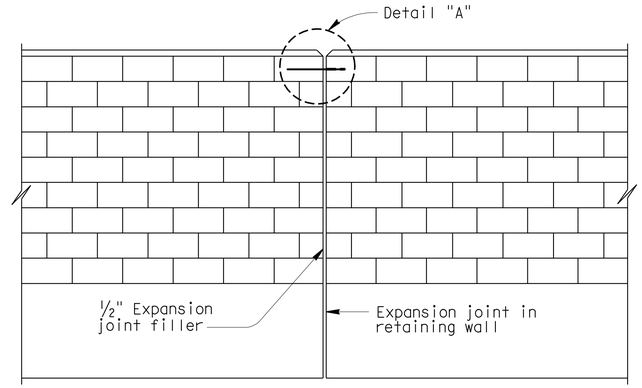

ALIGNMENT KEY DETAIL

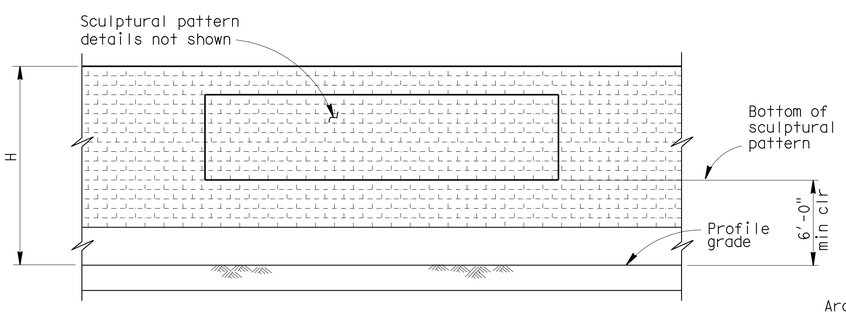

CLEARANCE DETAIL

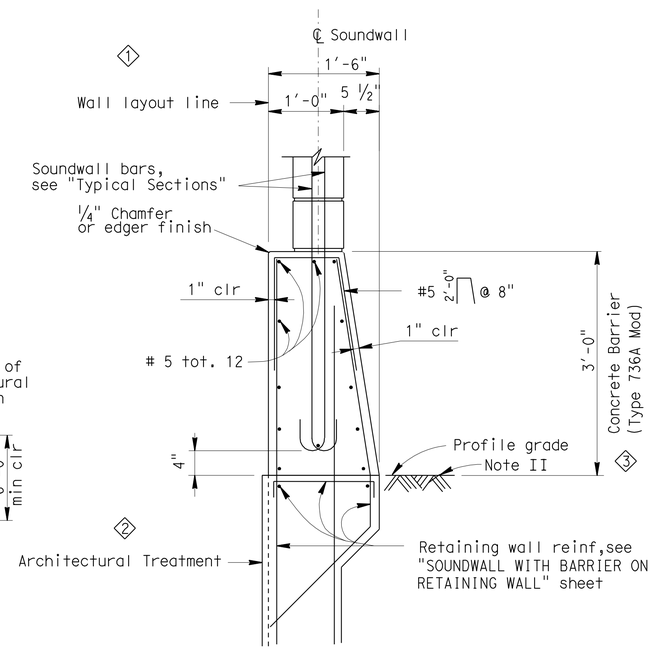

BARRIER SECTION

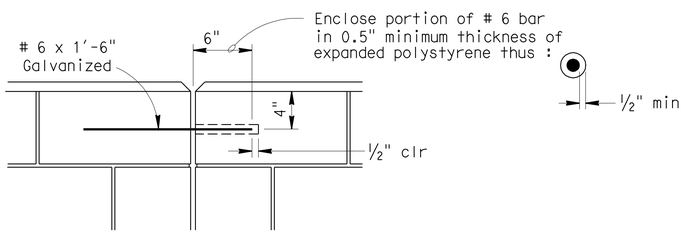

DETAIL A

NOTES:

I : For details not shown,see "RETAINING WALL WITH SOUNDWALL" sheets.

II : Slope ground at traffic side of barrier to drain. Maximum slope ±10%. See Standard Plan B11-56, Note D.

DESIGN NOTES

DESIGN

Uniform Building Code,1997 Edition and the Bridge Design Specifications.

DESIGN WIND LOAD

33 PSF

DESIGN SEISMIC LOAD

0.57 Dead load

REINFORCED CONCRETE

f'c = 3250 PSI
fy = 60 KSI

CONCRETE MASONRY

REGULAR STRENGTH	HIGH STRENGTH	
f'm = 1500 PSI	f'm = 2000 PSI	f'm = 2500 PSI
fb = 1500 PSI	fb = 660 PSI	fb = 830 PSI
fs = 24.0 KSI	fs = 24.0 KSI	fs = 24000 PSI
n = 25.8	n = 19.3	n = 15.5

LOAD FACTORS AND LOAD COMBINATIONS

Working Stress Design (WSD) Percentage of unit stress

Group 1: D + E + SC 100%
Group 2: D + W + SC + E 100%
Group 3: D + 0.71 EQD + E 100%

Where:

D = Dead load
E = Lateral earth pressure
SC = Live load surcharge
W = Wind load
EQD = Seismic dead load

Load Factor Design (LFD)

Group A: βD +1.7 E + 1.7 SC
Group B: βD +1.7 E + 1.3 W
Group C: βD +1.3 E + 1.0 EQE
Group D: βD +1.3 E + 1.0 EQD
Group E: βD +1.1 E + 0.85 (EQE + EQD)

Where : β = 0.9 or 1.2, whichever controls in design
D = Dead load
E = Lateral earth pressure
SC = Live load surcharge
W = Wind load
EQD = Seismic dead load
EQE = Seismic earth load

STRENGTH REDUCTION FACTORS, Ø

Reinforced concrete:
For flexure ---------- Ø=0.90
For shear ---------- Ø=0.85

Concrete masonry:
For flexure ---------- Ø=0.80
For shear ---------- Ø=0.60

Foundations :

See "RETAINING WALL WITH SOUNDWALL" sheets.

SPECIAL DETAILS

STANDARD DRAWING

FILE NO. xs15-130-2e

APPROVED BY TILLAT SATTER
RESPONSIBLE TECHNICAL SPECIALIST
APPROVAL DATE 4-15-08

RELEASED BY ROBERTO LACALLE
RESPONSIBLE OFFICE CHIEF
RELEASE DATE Revised

1 Moved wall layout line
2 Added architectural treatment
3 Modified Detail

STATE OF CALIFORNIA
DEPARTMENT OF TRANSPORTATION

DIVISION OF ENGINEERING SERVICES

BRIDGE NO.
POST MILE 27.9

RETAINING WALL NO. 6

SOUNDWALL - MASONRY BLOCK WITH BARRIER ON RETAINING WALL

DETAILS NO. 2

DS OSD 2147A (ENGLISH STANDARD DRAWING "XS" BORDER REV. 01/11/08)

ORIGINAL SCALE IN INCHES FOR REDUCED PLANS 0 1 2 3

PROJECT NUMBER & PHASE: 04000210801
CONTRACT NO: 04-1G9404 UNIT: 0750

DISREGARD PRINTS BEARING EARLIER REVISION DATES

REVISION DATES (PRELIMINARY STAGE ONLY) 6/08 3/09 2/10 3/29/11 4/28/11 8/9/11

SHEET 5 OF 9

USERNAME => s124496

28Erw6-g-rwdt03.dgn

DATE PLOTTED => 19-JAN-2012 TIME PLOTTED => 07:24:45

DIST	COUNTY	ROUTE	POST MILES TOTAL PROJECT	SHEET No	TOTAL SHEETS
04	CC	4	27.3/R29.0	925	950

REGISTERED CIVIL ENGINEER 11/30/11 DATE

1-17-12
PLANS APPROVAL DATE

REGISTERED PROFESSIONAL ENGINEER Odeon M. Li No. C31895 Exp. 12/31/12 CIVIL STATE OF CALIFORNIA

The State of California or its officers or agents shall not be responsible for the accuracy or completeness of scanned copies of this plan sheet.

CONTRA COSTA TRANSPORTATION AUTHORITY
2999 OAK ROAD, SUITE 100
WALNUT CREEK, CA 94597

T.Y. LIN INTERNATIONAL
2010 CROW CANYON PLACE, SUITE 350
SAN RAMON, CA 94583

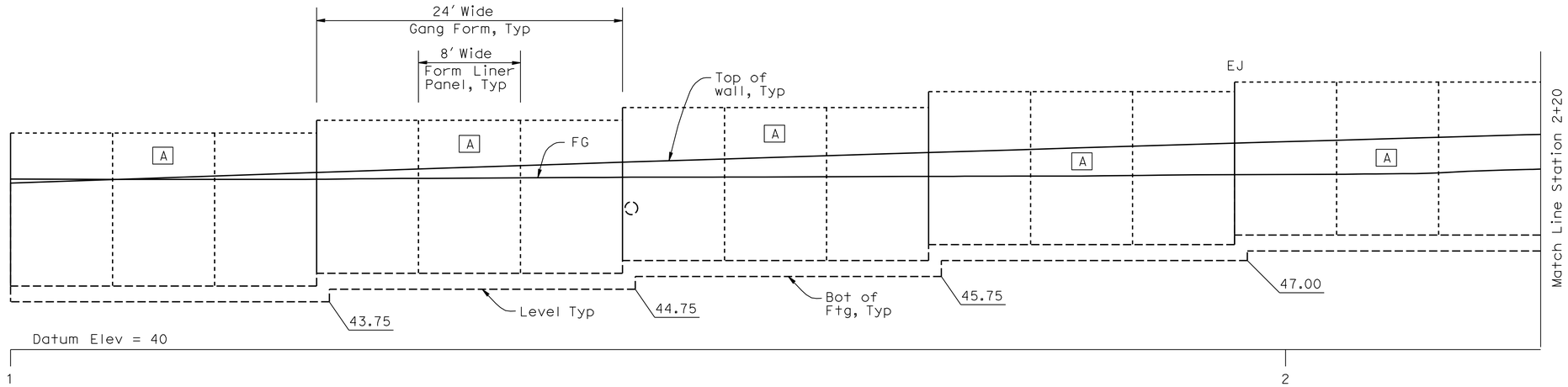

DEVELOPED ELEVATION

1" = 5'-0"

Legends:

EJ Wall Expansion Joint

[C] Form liner group designation

(6) Form liner panel designation

Note:
For form liner group and panel details see "Retaining wall Architectural Treatment Details" sheets in Rd plans.

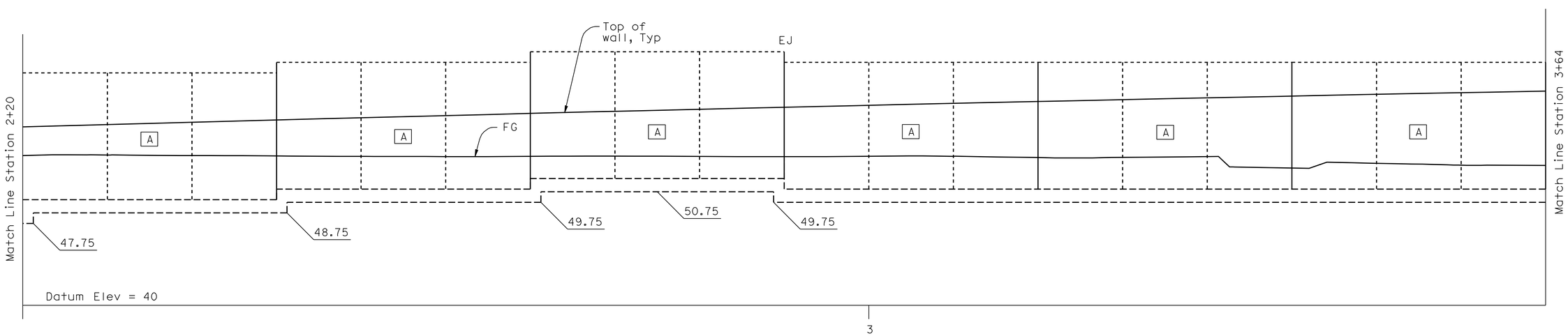

DEVELOPED ELEVATION

1" = 5'-0"

Note:
The Contractor shall verify all controlling field dimensions before ordering or fabricating any material.

Overcomer Y. Hor
DESIGN OVERSIGHT Overcomer Y. Hor

12-12-11
SIGN OFF DATE

	BY	CHECKED
DESIGN	Antonion Luo	Odeon M. Li
DETAILS	Antonion Luo	Odeon M. Li
QUANTITIES	Ching Dang	Kimberly Bowen

PREPARED FOR THE STATE OF CALIFORNIA DEPARTMENT OF TRANSPORTATION

Odeon M. Li
PROJECT ENGINEER

BRIDGE NO.

POST MILE 27.9

RETAINING WALL NO. 6
ARCHITECTURAL TREATMENT LAYOUT NO. 1

DESIGN DETAIL SHEET (ENGLISH) (REV. 06-01-09)

ORIGINAL SCALE IN INCHES FOR REDUCED PLANS 0 1 2 3

PROJECT NUMBER & PHASE: 04000210801
CONTRACT NO: 04-1G9404 UNIT: 0750

DISREGARD PRINTS BEARING EARLIER REVISION DATES

REVISION DATES (PRELIMINARY STAGE ONLY) 6/08 5/09 7/09 2/10 3/9/11 4/29/11 8/9/11

SHEET 6 OF 9

FILE => 28Erw6-y-atlo01.dgn

USERNAME => s124496 DATE PLOTTED => 19-JAN-2012 TIME PLOTTED => 07:45

DIST	COUNTY	ROUTE	POST MILES TOTAL PROJECT	SHEET No	TOTAL SHEETS
04	CC	4	27.3/R29.0	926	950

REGISTERED CIVIL ENGINEER 11/30/11 DATE

1-17-12
PLANS APPROVAL DATE

REGISTERED PROFESSIONAL ENGINEER Odeon M. Li No. C31895 Exp. 12/31/12 CIVIL STATE OF CALIFORNIA

The State of California or its officers or agents shall not be responsible for the accuracy or completeness of scanned copies of this plan sheet.

CONTRA COSTA TRANSPORTATION AUTHORITY
2999 OAK ROAD, SUITE 100
WALNUT CREEK, CA 94597

T.Y. LIN INTERNATIONAL
2010 CROW CANYON PLACE, SUITE 350
SAN RAMON, CA 94583

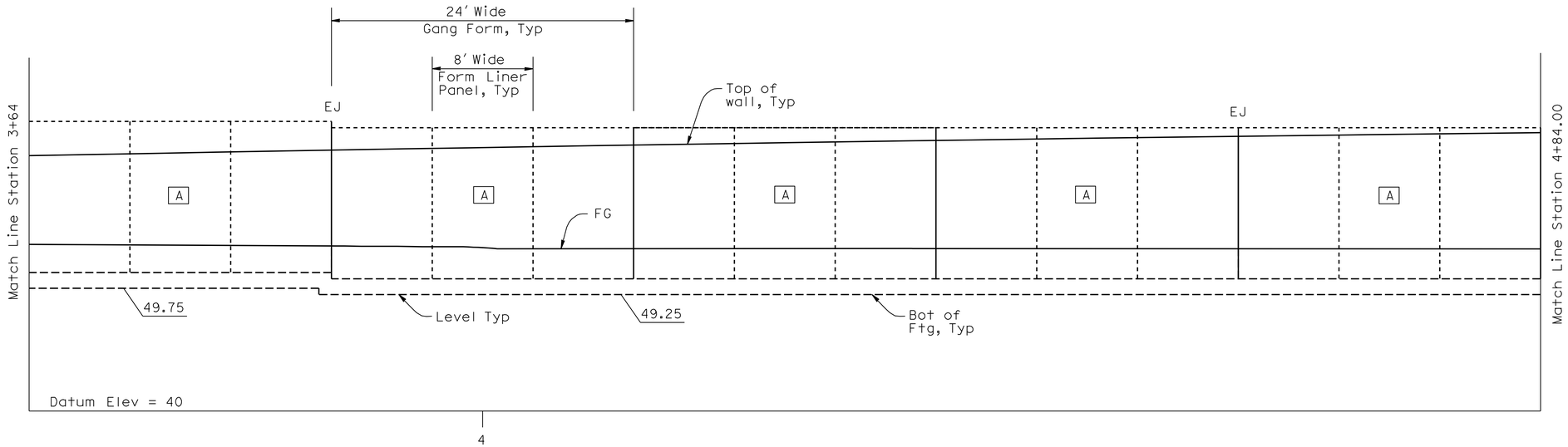

DEVELOPED ELEVATION

1" = 5'-0"

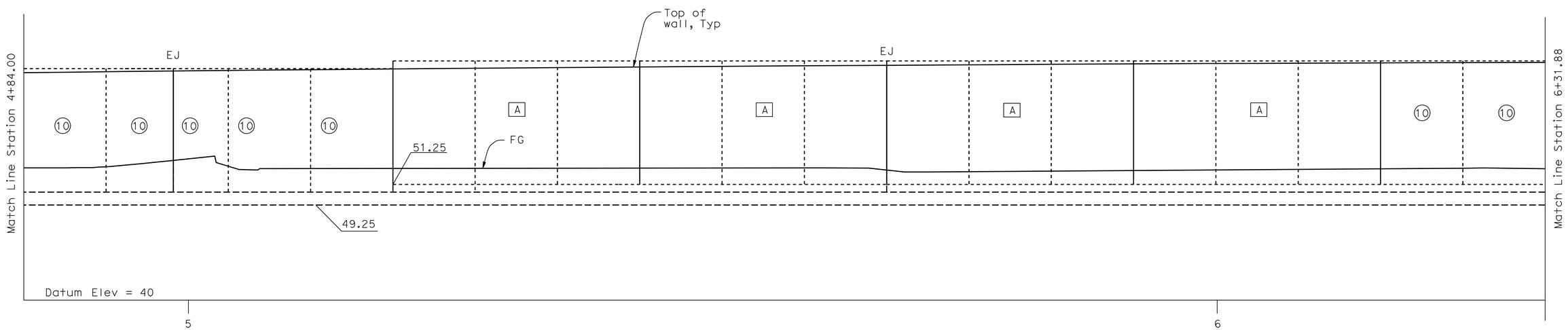

DEVELOPED ELEVATION

1" = 5'-0"

Legends:

EJ Wall Expansion Joint

[C] Form liner group designation

(6) Form liner panel designation

Note:
For form liner group and panel details see "Retaining wall Architectural Treatment Details" sheets in Rd plans.

Note:
The Contractor shall verify all controlling field dimensions before ordering or fabricating any material.

DESIGN OVERSIGHT Overcomer Y. Hor

12-12-11
SIGN OFF DATE

	BY	CHECKED
DESIGN	Antonion Luo	Odeon M. Li
DETAILS	Antonion Luo	Odeon M. Li
QUANTITIES	Ching Dang	Kimberly Bowen

PREPARED FOR THE STATE OF CALIFORNIA DEPARTMENT OF TRANSPORTATION

Odeon M. Li
PROJECT ENGINEER

BRIDGE NO.

POST MILE 27.9

RETAINING WALL NO. 6

ARCHITECTURAL TREATMENT LAYOUT NO. 2

DESIGN DETAIL SHEET (ENGLISH) (REV. 06-01-09)

ORIGINAL SCALE IN INCHES FOR REDUCED PLANS 0 1 2 3

PROJECT NUMBER & PHASE: 04000210801
CONTRACT NO: 04-1G9404 UNIT: 0750

DISREGARD PRINTS BEARING EARLIER REVISION DATES

REVISION DATES (PRELIMINARY STAGE ONLY) 6/08 5/09 7/09 2/10 3/9/11 4/29/11 8/9/11

SHEET 7 OF 9

FILE => 28Erw6-y-atlo02.dgn

USERNAME => s124496 DATE PLOTTED => 19-JAN-2012 TIME PLOTTED => 07:46

DIST	COUNTY	ROUTE	POST MILES TOTAL PROJECT	SHEET No	TOTAL SHEETS
04	CC	4	27.3/R29.0	927	950

REGISTERED CIVIL ENGINEER — DATE 11/30/11

1-17-12
PLANS APPROVAL DATE

The State of California or its officers or agents shall not be responsible for the accuracy or completeness of scanned copies of this plan sheet.

REGISTERED PROFESSIONAL ENGINEER — Odeon M. Li — No. C31895 — Exp. 12/31/12 — CIVIL — STATE OF CALIFORNIA

CONTRA COSTA TRANSPORTATION AUTHORITY
2999 OAK ROAD, SUITE 100
WALNUT CREEK, CA 94597

T.Y. LIN INTERNATIONAL
2010 CROW CANYON PLACE, SUITE 350
SAN RAMON, CA 94583

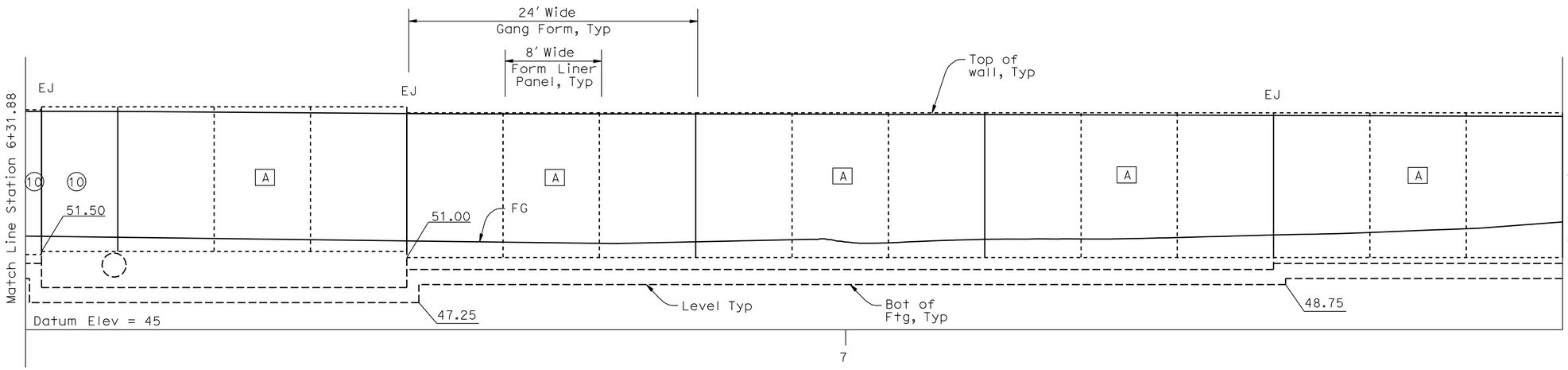

DEVELOPED ELEVATION

1" = 5'-0"

Legends:

EJ Wall Expansion Joint

C Form liner group designation

6 Form liner panel designation

Note:
For form liner group and panel details see "Retaining wall Architectural Treatment Details" sheets in Rd plans.

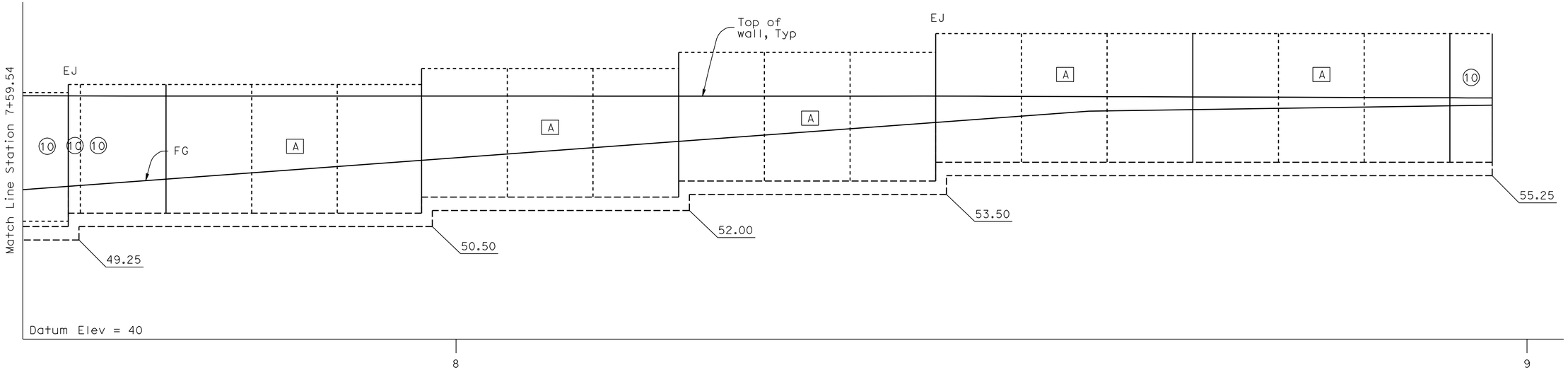

DEVELOPED ELEVATION

1" = 5'-0"

Note:
The Contractor shall verify all controlling field dimensions before ordering or fabricating any material.

DESIGN OVERSIGHT Overcomer Y. Hor
12-12-11
SIGN OFF DATE

	BY	CHECKED
DESIGN	Antonion Luo	Odeon M. Li
DETAILS	Antonion Luo	Odeon M. Li
QUANTITIES	Ching Dang	Kimberly Bowen

PREPARED FOR THE STATE OF CALIFORNIA DEPARTMENT OF TRANSPORTATION

Odeon M. Li
PROJECT ENGINEER

BRIDGE NO.
POST MILE 27.9

RETAINING WALL NO. 6
ARCHITECTURAL TREATMENT LAYOUT NO. 3

DESIGN DETAIL SHEET (ENGLISH) (REV. 06-01-09)

ORIGINAL SCALE IN INCHES FOR REDUCED PLANS 0 1 2 3

PROJECT NUMBER & PHASE: 04000210801
CONTRACT NO: 04-1G9404 UNIT: 0750

DISREGARD PRINTS BEARING EARLIER REVISION DATES

REVISION DATES (PRELIMINARY STAGE ONLY): 6/9/8 5/9/8 7/9/8 2/9/10 3/9/11 4/29/11 8/9/11

SHEET 8 OF 9

FILE => 28Erw6-y-atlo03.dgn

USERNAME => s124496 DATE PLOTTED => 19-JAN-2012 TIME PLOTTED => 07:46

DIST	COUNTY	ROUTE	POST MILES TOTAL PROJECT	SHEET No	TOTAL SHEETS
04	CC	4	27.3/R29.0	928	950

GEOTECHNICAL PROFESSIONAL — DATE 8/9/11

1-17-12
PLANS APPROVAL DATE

REGISTERED PROFESSIONAL ENGINEER — GARY PARIKH — No. G.E. 666 — Exp. 12/31/11 — GEOTECHNICAL — STATE OF CALIFORNIA

The State of California or its officers or agents shall not be responsible for the accuracy or completeness of electronic copies of this plan sheet.

CONTRA COSTA TRANSPORTATION AUTHORITY
2999 OAK ROAD, SUITE 100
WALNUT CREEK, CA 94597

PARIKH CONSULTANTS, INC.
2360 QUME DRIVE, SUITE A
SAN JOSE CA 95131

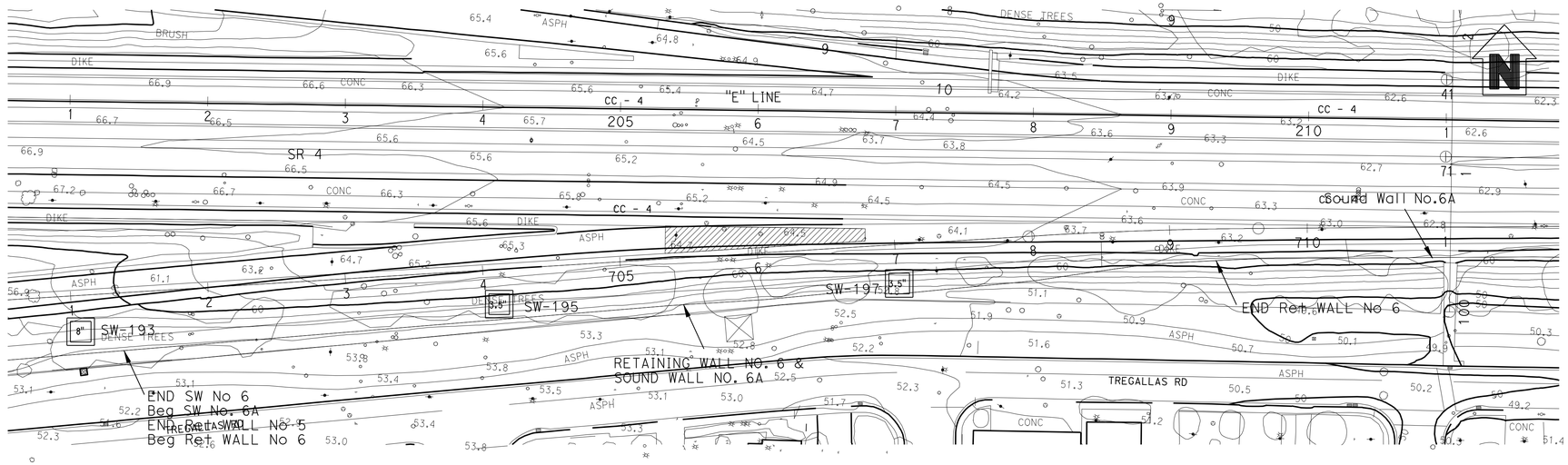

PLAN
1"=50'

Note:
Standard Penetration Test Sampler: I.D. = 1.4"; O.D. = 2"
Modified California Sampler: I.D. = 2.5"; O.D. = 3"
Hammer Assembly: A 140 lb hammer with a 30" drop
(Automatic Hammer)

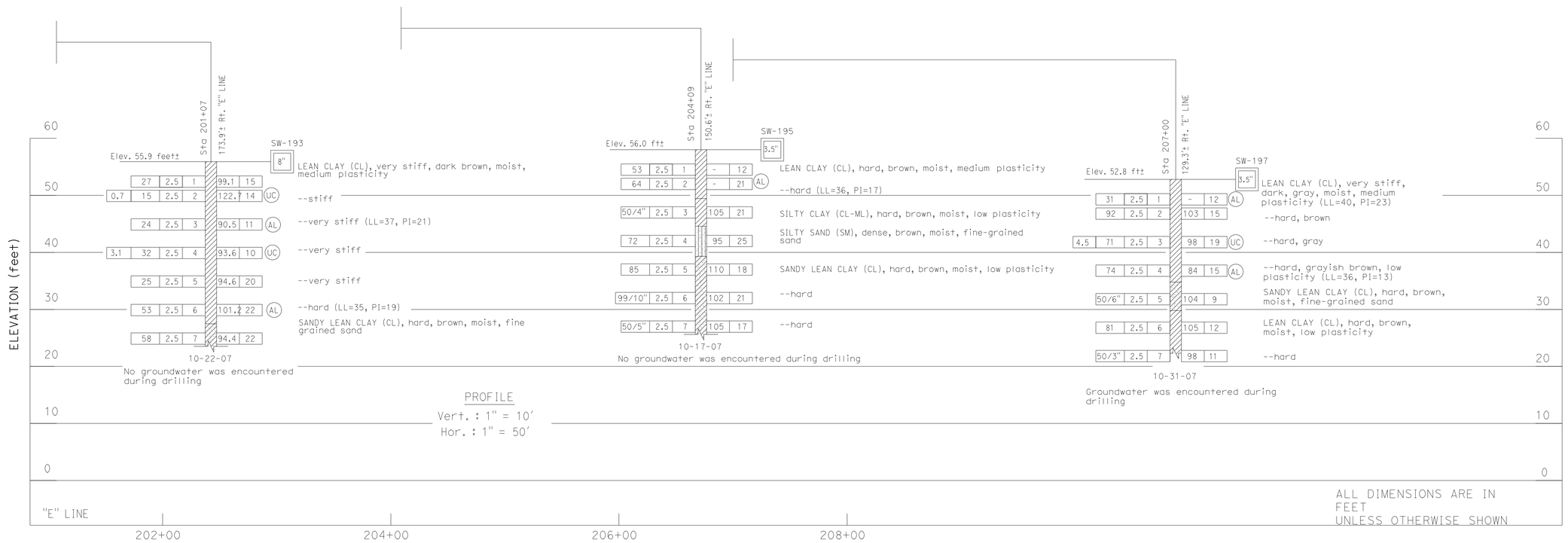

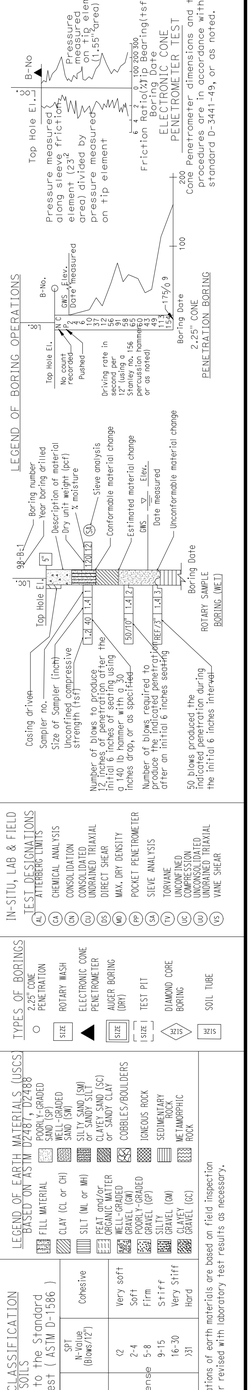

Overcomer Y. Hor — DESIGN OVERSIGHT Overcomer Y. Hor — 12-12-11 — SIGN OFF DATE	DRAWN BY: O. GOUTHIER	G. TRIPATHI — FIELD INVESTIGATION BY: — DATE: 08/2006-07/2009	PREPARED FOR THE STATE OF CALIFORNIA DEPARTMENT OF TRANSPORTATION
	CHECKED BY: P. SIRCAR		P. SIRCAR — PROJECT ENGINEER

BRIDGE NO. — POST MILE 27.9

RETAINING WALL NO. 6
LOG OF TEST BORINGS

PROJECT NUMBER & PHASE: 04000210801
CONTRACT NO: 04-1G9404 UNIT: 0750

ORIGINAL SCALE IN INCHES FOR REDUCED PLANS 0 1 2 3

DISREGARD PRINTS BEARING EARLIER REVISION DATES — REVISION DATES (PRELIMINARY STAGE ONLY): 08/14/09 3/9/11 4/29/11 8/9/11

SHEET 9 OF 9

OSF GEOTECHNICAL LOG OF TEST BORINGS SHEET (ENGLISH) (REV. 2/25/05)

FILE => 28Erw6-z-ltb01.dgn

USERNAME => s124196 DATE PLOTTED => 19-JAN-2012 TIME PLOTTED => 07:46

DIST	COUNTY	ROUTE	POST MILES TOTAL PROJECT	SHEET No	TOTAL SHEETS
04	CC	4	27.3/R29.0	929	950

REGISTERED CIVIL ENGINEER — DATE 11/30/11

1-17-12
PLANS APPROVAL DATE

The State of California or its officers or agents shall not be responsible for the accuracy or completeness of scanned copies of this plan sheet.

REGISTERED PROFESSIONAL ENGINEER — Brett D. Makley No. C66397 Exp. 07/30/12 CIVIL — STATE OF CALIFORNIA

CONTRA COSTA TRANSPORTATION AUTHORITY
2999 OAK ROAD, SUITE 100
WALNUT CREEK, CA 94597

T.Y. LIN INTERNATIONAL
2010 CROW CANYON PLACE, SUITE 350
SAN RAMON, CA 94583

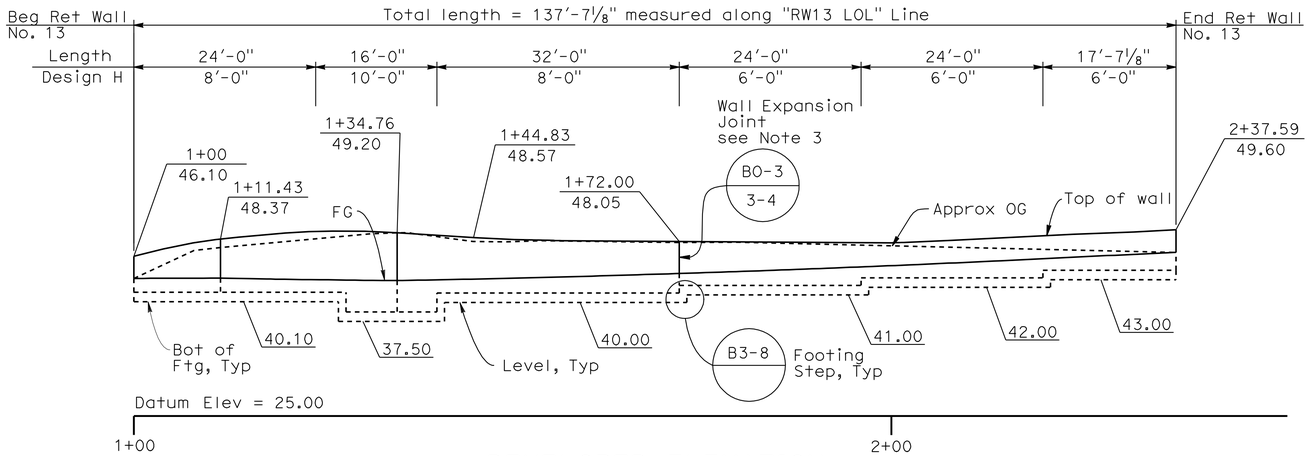

DEVELOPED ELEVATION

1" = 10'-0"

RETAINING WALL NO. 13

QUANTITIES

STRUCTURE EXCAVATION (RETAINING WALL)	875	CY
STRUCTURE BACKFILL (RETAINING WALL)	415	CY
PERVIOUS BACKFILL MATERIAL (RETAINING WALL)	15	CY
STRUCTURAL CONCRETE, RETAINING WALL	240	CY
ARCHITECTURAL TEXTURE	1,546	SQFT
BAR REINFORCING STEEL (RETAINING WALL)	17,400	LB
CHAIN LINK RAILING	166	LF
CONCRETE BARRIER (TYPE 60D)	200	LF

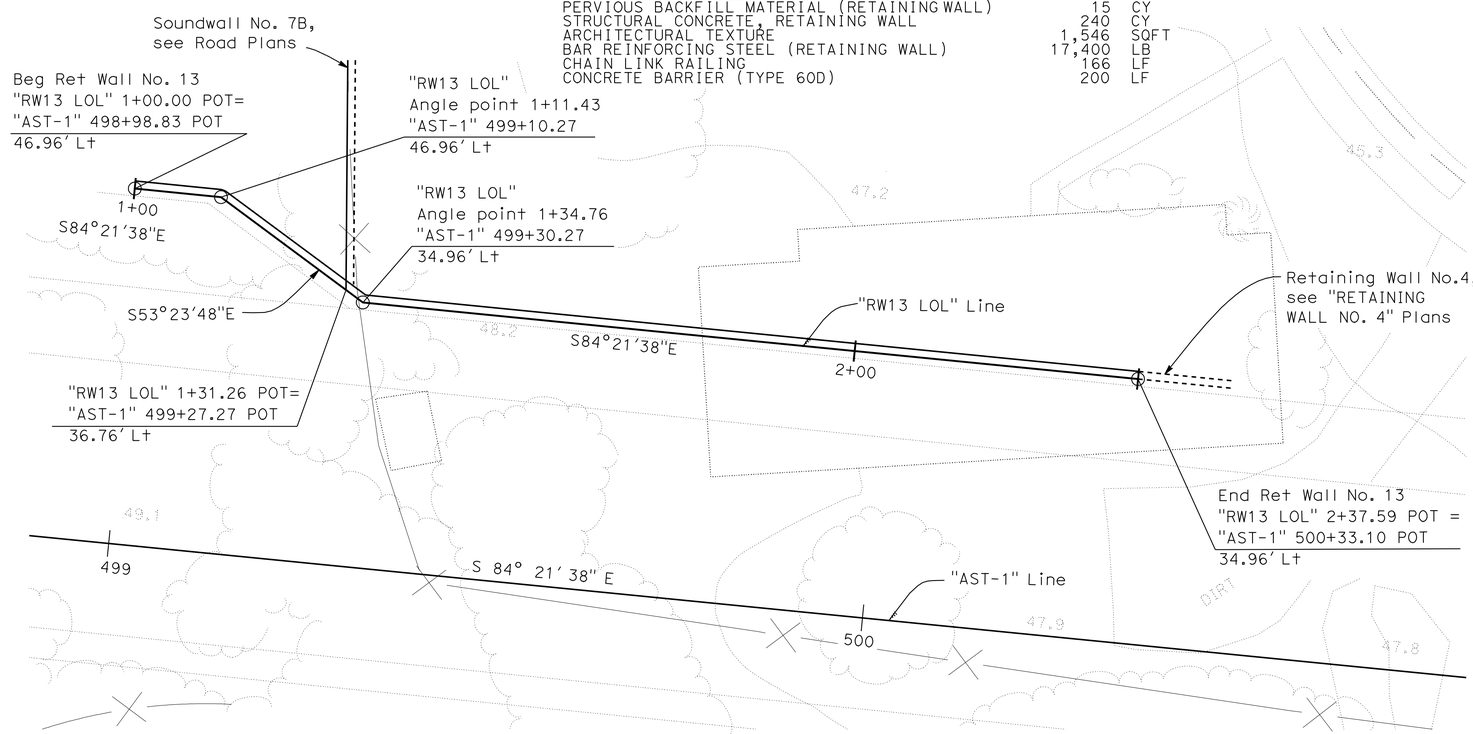

PLAN

1" = 10'-0"

Note:
The Contractor shall verify all controlling field dimensions before ordering or fabricating any material.

Legend:
① 1¾" Max. architectural treatment see "Architectural Treatment Layout" sheets and "Retaining Wall Architectural

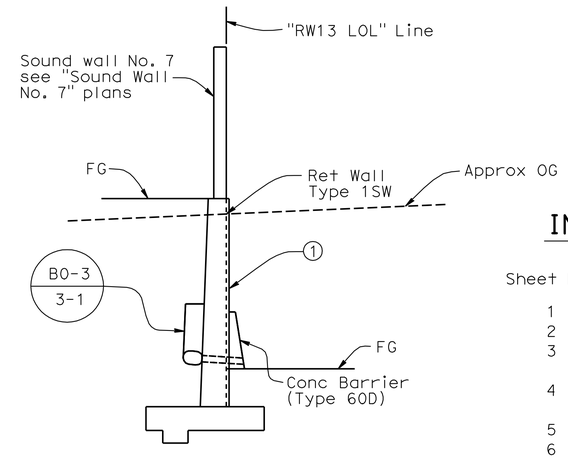

TYPICAL SECTION

¼" = 1'-0"

Sta 1+31.26 to 2+37.59 "RW13 LOL"

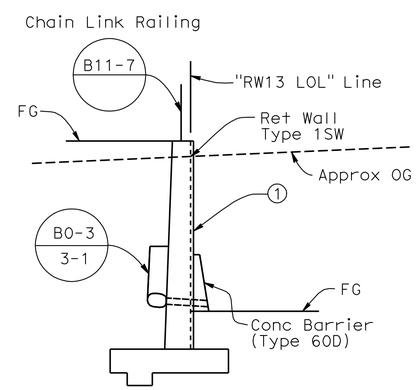

TYPICAL SECTION

¼" = 1'-0"

Sta 1+00.00 to 1+31.26 "RW13 LOL"

INDEX TO PLANS

Sheet No.	Title
1	GENERAL PLAN
2	RETAINING WALL TYPE 1SW
3	SOUNDWALL ON RETAINING WALL - MASONRY BLOCK - DETAILS NO. 1
4	SOUNDWALL ON RETAINING WALL - MASONRY BLOCK - DETAILS NO. 2
5	ARCHITECTURAL TREATMENT LAYOUT
6	LOG OF TEST BORINGS 1 OF 2
7	LOG OF TEST BORINGS 2 OF 2

STANDARD PLANS DATED MAY 2006

A10A	ACRONYMS AND ABBREVIATIONS (SHEET 1 OF 2)
A10B	ACRONYMS AND ABBREVIATIONS (SHEET 2 OF 2)
A10C	SYMBOLS (SHEET 1 OF 2)
A10D	SYMBOLS (SHEET 2 OF 2)
A62B	LIMITS OF PAYMENT FOR EXCAVATION AND BACKFILL BRIDGE SURCHARGE AND WALL
B0-1	BRIDGE DETAILS
B0-3	BRIDGE DETAILS
B3-1	RETAINING WALL TYPE 1 H=4' THROUGH 30'
B3-8	RETAINING WALL DETAILS NO. 1
B11-7	CHAIN LINK RAILING

PLAN SYMBOLS

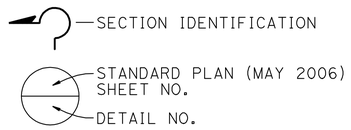

Notes:

1. Concrete Barrier (Type 60D) and Soundwall not shown for clarity.
2. For weep hole and weakened plane locations and details see B0-3
3. Stop waterstop 6" into soundwall and 1'-0" below lower FG.

DESIGN OVERSIGHT Overcomer Y. Hor — 12-12-11 SIGN OFF DATE	DESIGN	BY Dina Tobia	CHECKED Brett Makley	LOAD FACTOR DESIGN	LIVE LOADING: HS20-44 AND ALTERNATIVE AND PERMIT DESIGN LOAD
	DETAILS	BY Yihong Wang	CHECKED Brett Makley	LAYOUT	BY Dina Tobia — CHECKED Brett Makley
	QUANTITIES	BY Ching Dong /DT	CHECKED Kimberly Bowen /YW	SPECIFICATIONS	BY Odeon M. Li — PLANS AND SPECS COMPARED Odeon M. Li

DESIGN GENERAL PLAN SHEET (ENGLISH) (REV. 06-01-09)

ORIGINAL SCALE IN INCHES FOR REDUCED PLANS 0 1 2 3

PREPARED FOR THE STATE OF CALIFORNIA DEPARTMENT OF TRANSPORTATION

Brett Makley
PROJECT ENGINEER

PROJECT NUMBER & PHASE: 04000210801
CONTRACT NO: 04-1G9404 UNIT: 0750

BRIDGE NO.
POST MILES 27.8

RETAINING WALL NO. 13
GENERAL PLAN

DISREGARD PRINTS BEARING EARLIER REVISION DATES

REVISION DATES (PRELIMINARY STAGE ONLY): 8-4-08 3-4-09 2-1-10 12-2-10 3-8-11 4-29-11 8-9-11 10-31-11 11-14-11 11/30/11

SHEET 1 OF 7

FILE => 28Erw13-a-gp01.dgn

USERNAME => s124496 DATE PLOTTED => 19-JAN-2012 TIME PLOTTED => 07:46

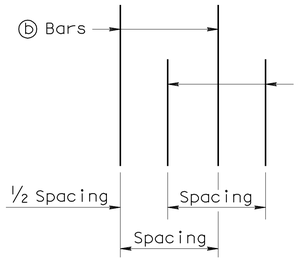

DETAIL B

No Scale

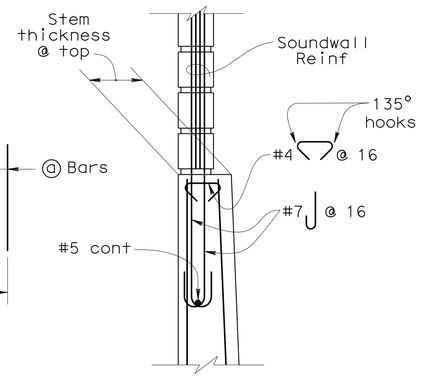

DETAIL A

No Scale

GENERAL NOTES

1. For soundwall and retaining wall architectural finish or texture, see details elsewhere in project plans.
2. For details not shown and drainage notes, see B3-8
3. Footing cover, 1'-6" minimum.
4. Limit of no splicing rebars = 3 times the bottom thickness of the stem.
5. Placement of reinforcements:

   ⓑ & ⓒ bars are spliced together.

   * ⓐ & ⓑ bars are bundled together.

   ** Alternate ⓐ & ⓑ bars are shown in "Detail B".

   Cont = Continuous.
6. For soundwall reinforcements, see "Soundwall Wall Masonry Block" sheets in Standard Plans.

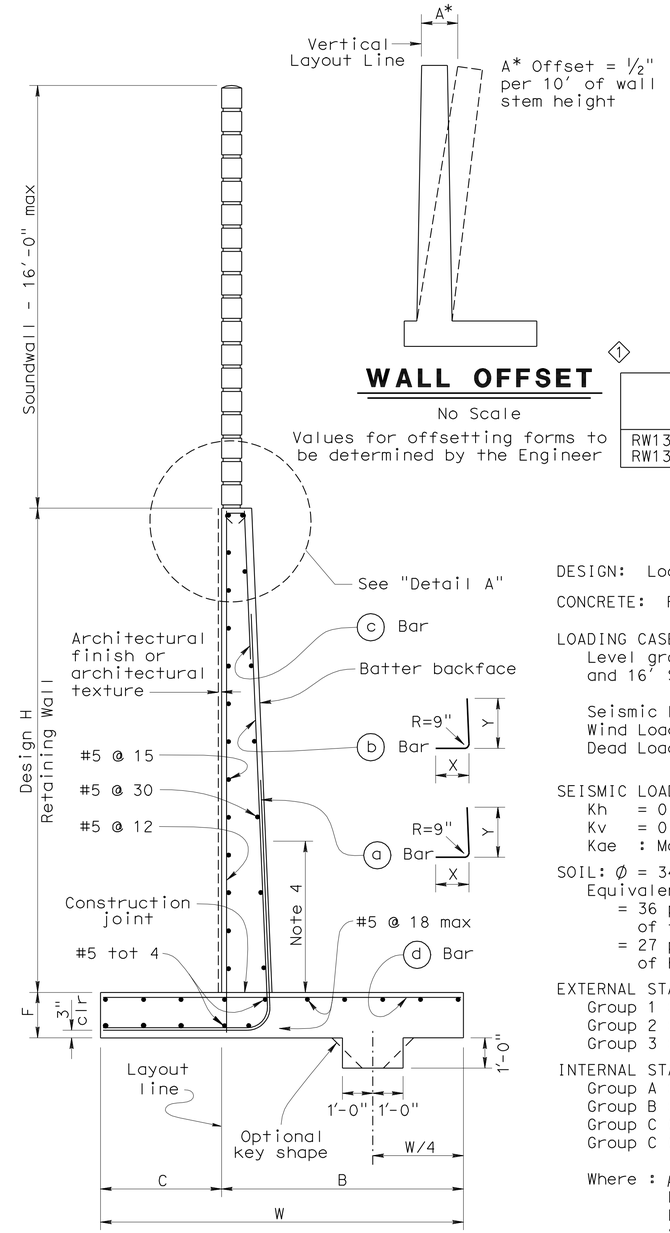

WALL OFFSET

No Scale

Values for offsetting forms to be determined by the Engineer

SPREAD FOOTING SECTION

No Scale

DIST.	COUNTY	ROUTE	POST MILES TOTAL PROJECT	SHEET NO.	TOTAL SHEETS
04	CC	4	27.3/R29.0	930	950

REGISTERED ENGINEER - CIVIL 11/30/11

1-17-12
PLANS APPROVAL DATE

REGISTERED PROFESSIONAL ENGINEER Brett D. Makley No. C66397 Exp. 07/30/12 CIVIL STATE OF CALIFORNIA

The State of California or its officers or agents shall not be responsible for the accuracy or completeness of electronic copies of this plan sheet.

CONTRA COSTA TRANSPORTATION AUTHORITY
2999 OAK ROAD, SUITE 100
WALNUT CREEK, CA 94597

T.Y. LIN INTERNATIONAL
2010 CROW CANYON PLACE, SUITE 350
SAN RAMON, CA 94583

SPREAD FOOTING DATA TABLE

Location	Nominal Bearing Resistance (Allowable Bearing Capacity) q_n (q_{all})
RW13 LOL 1+00 to RW13 LOL 2+37.59	12.5 ksf (4.2 ksf)

DESIGN DATA

DESIGN: Load Factor Design (LFD)

CONCRETE: Reinforced Concrete, f'c = 3600 psi
fy = 60,000 psi

LOADING CASE:
Level ground with 240 psf surcharge and 16' Soundwall

Seismic Load = 0.3 Dead Load
Wind Load = 30 psf
Dead Load of Soundwall = 1414 lb/ft

SEISMIC LOAD: SOIL
Kh = 0.3g
Kv = 0.0
Kae : Mononobe-Okabe Method

SOIL: ϕ = 34° γ = 120 pcf
Equivalent fluid pressure:
= 36 pcf for determination of toe pressure
= 27 pcf for determination of heel pressure

EXTERNAL STABILITY:
Group 1 : D + E + SC
Group 2 : D + E + SC + W
Group 3 : D + PYM

INTERNAL STABILITY (LFD):
Group A : βD + 1.7E + 1.7SC
Group B : βD + 1.7E + 1.3W
Group C (stem) : 1.0D + 1.0E + 1.0EQD + 1.0EQE
Group C (footing) : D + PYM

Where : β = 1.0 or 1.3 whichever controls design
D = Dead Load
E = Lateral Earth Pressure
SC = Surcharge
W = Wind load
EQD = Seismic Dead Load
EQE = Seismic Lateral Earth Pressure
PYM = Probable Yield Moment (1.3 x Nominal Yield Moment of Stem)

ALTERNATIVE A: (CONSTANT TOP OF WALL THICKNESS) TABLE OF REINFORCING STEEL DIMENSIONS AND DATA

Design H	6'	8'	10'	12'	14'	16'	18'	20'	22'	24'	26'	28'	30'	32'
W	7'-9"	8'-0"	8'-9"	9'-9"	10'-9"	12'-0"	13'-0"	14'-3"	15'-3"	16'-6"	18'-6"	19'-9"	21'-3"	22'-6"
C	2'-9"	2'-9"	3'-0"	3'-3"	3'-6"	4'-0"	4'-3"	4'-9"	5'-0"	5'-6"	6'-3"	6'-9"	7'-3"	7'-9"
B	5'-0"	5'-3"	5'-9"	6'-6"	7'-3"	8'-0"	8'-9"	9'-6"	10'-3"	11'-0"	12'-3"	13'-0"	14'-0"	14'-9"
F Spread footing	1'-3"	1'-3"	1'-3"	1'-3"	1'-3"	1'-6"	1'-6"	1'-9"	2'-0"	2'-3"	2'-9"	3'-0"	3'-3"	3'-9"
Batter	0	½:12	½:12	½:12	½:12	½:12	½:12	½:12	½:12	⅝:12	¾:12	⅞:12	1:12	1:12
Stem thcknss @ top	1'-0"	1'-0"	1'-0"	1'-0"	1'-0"	1'-0"	1'-0"	1'-0"	1'-0"	1'-0"	1'-0"	1'-0"	1'-0"	1'-0"
ⓐ Bars				#6 @18XX	#7 @18XX	#8 @18XX	#9 @18XX	#10 @18XX	#8 @ 9X	#8 @ 9X	#7 @ 6X	#10@12XX	#9 @ 9X	#11@12XX
X				Cont	Cont	Cont	Cont	Cont	Cont	Cont	Cont	Cont	Cont	Cont
Y				8'-0"	6'-6"	7'-6"	8'-6"	9'-6"	9'-6"	11'-0"	11'-6"	13'-0"	14'-0"	15'-6"
ⓑ Bars	#5 @12	#5 @12	#5 @ 9	#6 @18XX	#7 @18XX	#8 @18XX	#9 @18XX	#10 @18XX	#8 @ 9X	#8 @ 9X	#7 @ 6X	#10@12XX	#9 @ 9X	#11@12XX
X	Cont	Cont	Cont	Cont	Cont	Cont	Cont	Cont	Cont	5'-6"	6'-6"	7'-0"	8'-0"	8'-6"
Y	Cont	Cont	Cont	Cont	10'-6"	13'-0"	15'-0"	17'-6"	19'-6"	21'-0"	18'-6"	19'-0"	25'-6"	23'-6"
ⓒ Bars					#6 @18	#6 @18	#6 @18	#6 @18	#6 @18	#6 @18	#6 @12	#7 @12	#7 @18	#7 @12
ⓓ Bars	#5 @12	#5 @12	#5 @12	#5 @ 9	#6 @ 9	#6 @ 9	#6 @ 6	#8 @ 9	#8 @ 9	#8 @ 9	#7 @ 6	#7 @ 6	#9 @ 9	#9 @ 9
Ultimate Bearing Capacity Req'd k/sf	4.6	5.5	6.1	6.6	7.3	8.1	9.0	9.9	11.3	12.2	12.5	13.4	14.1	15.4

ALTERNATIVE B: (VARIABLE TOP OF WALL THICKNESS) TABLE OF REINFORCING STEEL DIMENSIONS AND DATA

Design H		8'	10'	12'	14'	16'	18'	20'	22'	24'	26'	28'	30'	32'
W		8'-0"	8'-6"	9'-3"	10'-3"	11'-3"	13'-0"	13'-9"	16'-0"	16'-6"	18'-6"	20'-0"	20'-6"	21'-9"
C		2'-9"	2'-9"	3'-0"	3'-6"	3'-9"	4'-3"	4'-6"	5'-3"	5'-6"	6'-3"	6'-9"	6'-9"	7'-6"
B		5'-3"	5'-9"	6'-3"	6'-9"	7'-6"	8'-9"	9'-3"	10'-9"	11'-0"	12'-3"	13'-3"	13'-9"	14'-3"
F Spread footing		1'-3"	1'-3"	1'-3"	1'-3"	1'-6"	1'-6"	1'-9"	2'-0"	2'-3"	2'-9"	3'-0"	3'-3"	3'-6"
Batter		0	0	0	0	0	0	0	0	0	¼:12	½:12	½:12	½:12
Stem thcknss @ top		1'-0"	1'-0"	1'-0"	1'-0"	1'-3"	1'-3"	1'-6"	2'-0"	2'-0"	2'-0"	2'-0"	2'-0"	2'-0"
ⓐ Bars				#6 @12XX	#5 @ 6X	#9 @18XX	#9 @12XX	#9 @12XX	#9 @12XX	#7 @ 6X	#7 @ 6X	#7 @ 6XX	#9 @ 9X	#11@12XX
X				Cont	Cont	Cont	Cont	Cont	Cont	Cont	Cont	Cont	Cont	Cont
Y				5'-6"	5'-6"	8'-6"	8'-6"	8'-6"	8'-6"	9'-6"	11'-0"	12'-6"	13'-6"	14'-6"
ⓑ Bars		#5 @ 9	#6 @ 9	#6 @12XX	#5 @ 6X	#9 @18XX	#9 @12XX	#9 @12XX	#9 @12XX	#7 @ 6X	#7 @ 6X	#7 @ 6XX	#9 @ 9X	#11@12XX
X		Cont	Cont	Cont	Cont	Cont	Cont	Cont	Cont	5'-6"	6'-0"	7'-6"	7'-6"	8'-0"
Y		Cont	Cont	Cont	Cont	11'-6"	11'-6"	12'-0"	12'-0"	17'-6"	20'-0"	21'-6"	24'-0"	24'-0"
ⓒ Bars						#7 @18	#7 @12	#7 @12	#7 @12	#6 @12	#6 @12	#6 @12	#7 @18	#7 @12
ⓓ Bars		#5 @12	#5 @ 9	#5 @ 9	#6 @ 9	#6 @ 9	#9 @12	#9 @12	#7 @ 6	#7 @ 6	#7 @ 6	#7 @ 6	#9 @ 9	#9 @ 9
Ultimate Bearing Capacity Req'd k/sf		5.5	6.5	7.3	7.6	9.0	9.0	10.6	10.5	12.2	12.6	13.3	15.4	16.0

SPECIAL DETAILS

STANDARD DRAWING				
RELEASE DATE **Revised**	DESIGN	BY MADON SAH	CHECKED OVERCOMER HOR	RELEASED BY
FILE NO. xs14-210e	DETAILS	BY PHIL SILVA	CHECKED J.C. MOESE	OFFICE CHIEF
	SUBMITTED	BY OVERCOMER HOR	DRAWING DATE 12/1/05	

1 Added Table

STATE OF CALIFORNIA
DEPARTMENT OF TRANSPORTATION

DIVISION OF ENGINEERING SERVICES

BRIDGE NO.

POST MILE 27.8

RETAINING WALL NO. 13

RETAINING WALL TYPE 1SW

DS OSD 2147A (REV. X/XX/XX)

ORIGINAL SCALE IN INCHES FOR REDUCED PLANS 0 1 2 3

PROJECT NUMBER & PHASE: 04000210801
CONTRACT NO: 04-1G9404 UNIT: 0750

DISREGARD PRINTS BEARING EARLIER REVISION DATES

REVISION DATES (PRELIMINARY STAGE ONLY) 8/08 3/09 2/10 3/9/11 4/26/11 8/9/11 10/31/11

SHEET 2 OF 7

USERNAME => s124496

28Erw13-g-rwdt01.dgn

DATE PLOTTED => 13-JAN-2012 TIME PLOTTED => 07:46

DIST.	COUNTY	ROUTE	POST MILES TOTAL PROJECT	SHEET NO.	TOTAL SHEETS
04	CC	4	27.3/R29.0	931	950

REGISTERED ENGINEER - CIVIL 11/30/11

1-17-12
PLANS APPROVAL DATE

REGISTERED PROFESSIONAL ENGINEER Brett D. Makley No. C66397 Exp. 07/30/12 CIVIL STATE OF CALIFORNIA

The State of California or its officers or agents shall not be responsible for the accuracy or completeness of electronic copies of this plan sheet.

CONTRA COSTA TRANSPORTATION AUTHORITY
2999 OAK ROAD, SUITE 100
WALNUT CREEK, CA 94597

T.Y. LIN INTERNATIONAL
2010 CROW CANYON PLACE, SUITE 350
SAN RAMON, CA 94583

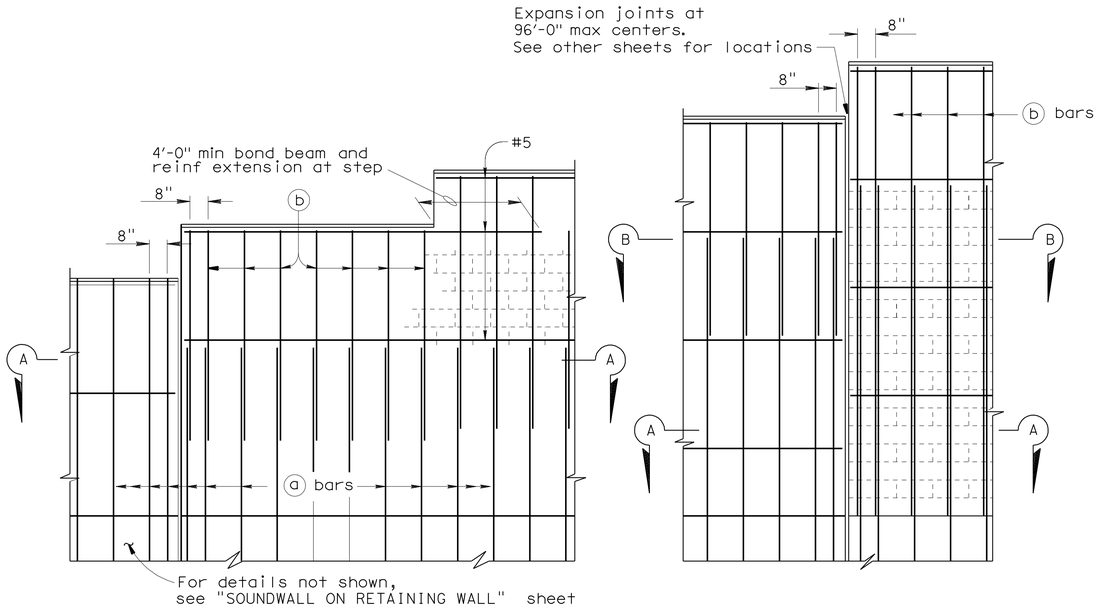

PART ELEVATIONS

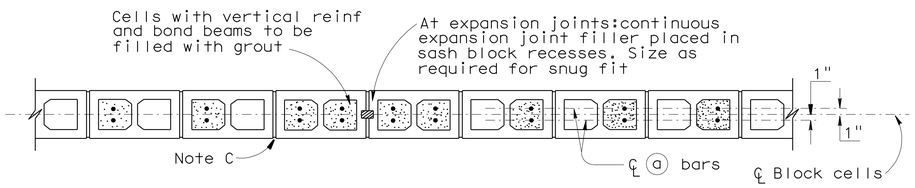

SECTION A- A

For details not shown,see other details

H=6'-0" THRU H= 12'-0"

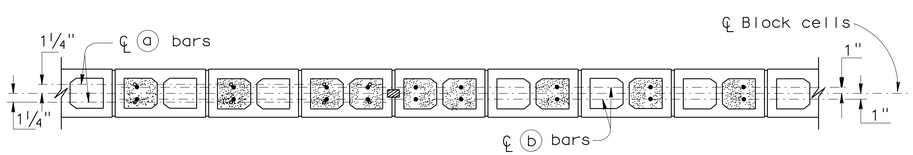

SECTION A- A SECTION B- B

For details not shown,see other details

H=12'-0" THRU H= 16'-0"

DESIGN NOTES

DESIGN

Uniform Building Code,1997 Edition and the Bridge Design Specifications.

DESIGN WIND LOAD

33 psf

DESIGN SEISMIC LOAD

0.57 Dead load

REINFORCED CONCRETE

f'c = 3.250 ksi
fy = 60 ksi

CONCRETE MASONRY

REGULAR STRENGTH	HIGH STRENGTH	
f'm = 1500 psi	f'm = 2000 psi	f'm = 2500 psi
f_b = 495 psi	f_b = 660 psi	f_b = 830 psi
fs = 24000 psi	fs = 24000 psi	fs = 24000 psi
n = 25.8	n = 19.3	n = 15.5

LOAD FACTORS AND LOAD COMBINATIONS

Working Stress Design (WSD) Percentage of unit stress

Group 1: D + E + SC 100%
Group 2: D + W + SC + E 100%
Group 3: D + 0.71 EQD + E 100%

Where:

D = Dead load
E = Lateral earth pressure
SC = Live load surcharge
W = Wind load
EQD = Seismic dead load

Load Factor Design (LFD)

Group A: βD +1.7 E + 1.7 SC
Group B: βD +1.7 E + 1.3 W
Group C: βD +1.3 E + 1.0 EQE
Group D: βD +1.3 E + 1.0 EQD
Group E: βD +1.1 E + 0.85 (EQE + EQD)

Where : β = 0.9 or 1.2, whichever controls in design
D = Dead load
E = Lateral earth pressure
SC = Live load surcharge
W = Wind load
EQD = Seismic dead load
EQE = Seismic earth load

STRENGTH REDUCTION FACTORS, Ø

Reinforced concrete:
For flexure ——— Ø=0.90
For shear ——— Ø=0.85

Concrete masonry:
For flexure ——— Ø=0.80
For shear ——— Ø=0.60

Foundations:
See "RETAINING WALL WITH SOUNDWALL" sheets

SOUNDWALL REINFORCEMENT TABLE

Maximum H	a bars @ 16" max	b bars @ 16" max	"y"	f'm (psi)	Compressive Strength of CMU (psi)	Maximum H
6'-0"	#4	———	———	1500	1.9	6'-0"
8'-0"	#4	———	———	1500	1900	8'-0"
10'-0"	#4	———	———	1500	1900	10'-0"
12'-0"	#5	#4	6'-0"	2000	2800	12'-0"
14'-0"	#6	#4	8'-0"	2500	3750	14'-0"
16'-0"	#6	#4	10'-0"	2500	3750	16'-0"

GENERAL NOTES

Note A: For type of block and joint finish, See other sheets.

Note B: When blocks are laid in stacked bond, ladder type, galvanized joint reinforcement shall be provided. A minimum of 2 - 9 gauge wires continuous at 4'-0" maximum to be used. Locate reinforcement in joints that are at the approximate midpoint between bond beams.

Note C: Horizontal joints shall be tooled concave or may be weathered.
Vertical joints shall be tooled concave or may be raked.

Note D: For intermediate wall heights that are between the "H's" given. Use the tabular information for the next higher "H".

Note E: Masonry strengths are listed in the "SOUNDWALL REINFORCEMENT TABLE".

STANDARD DRAWING

FILE NO. xs15-120-1e

APPROVED BY TILLAT SATTER (RESPONSIBLE TECHNICAL SPECIALIST)
APPROVAL DATE 4-15-08

RELEASED BY ROBERTO LACALLE (RESPONSIBLE OFFICE CHIEF)
RELEASE DATE 4-15-08

STATE OF CALIFORNIA DEPARTMENT OF TRANSPORTATION

DIVISION OF ENGINEERING SERVICES

BRIDGE NO.

POST MILE 27.8

RETAINING WALL NO. 13

SOUNDWALL ON RETAINING WALL-MASONRY BLOCK

DETAILS NO. 1

DS OSD 2147A (ENGLISH STANDARD DRAWING "XS" BORDER REV. 01/11/08)

ORIGINAL SCALE IN INCHES FOR REDUCED PLANS 0 1 2 3

PROJECT NUMBER & PHASE: 04000210801
CONTRACT NO: 04-1G9404 UNIT:0750

DISREGARD PRINTS BEARING EARLIER REVISION DATES

REVISION DATES (PRELIMINARY STAGE ONLY) 8/08 8/08 2/10 3/9/11 4/29/11 8/9/11 10/31/11

SHEET 3 OF 7

USERNAME => s124496

28Erw13-g-rwdt02.dgn

DATE PLOTTED => 19-JAN-2012 TIME PLOTTED => 07:46

DIST.	COUNTY	ROUTE	POST MILES TOTAL PROJECT	SHEET NO.	TOTAL SHEETS
04	CC	4	27.3/R29.0	932	950

REGISTERED ENGINEER - CIVIL 11/30/11

1-17-12
PLANS APPROVAL DATE

REGISTERED PROFESSIONAL ENGINEER Brett D. Makley No. C66397 Exp. 07/30/12 CIVIL STATE OF CALIFORNIA

The State of California or its officers or agents shall not be responsible for the accuracy or completeness of electronic copies of this plan sheet.

CONTRA COSTA TRANSPORTATION AUTHORITY
2999 OAK ROAD, SUITE 100
WALNUT CREEK, CA 94597

T.Y. LIN INTERNATIONAL
2010 CROW CANYON PLACE, SUITE 350
SAN RAMON, CA 94583

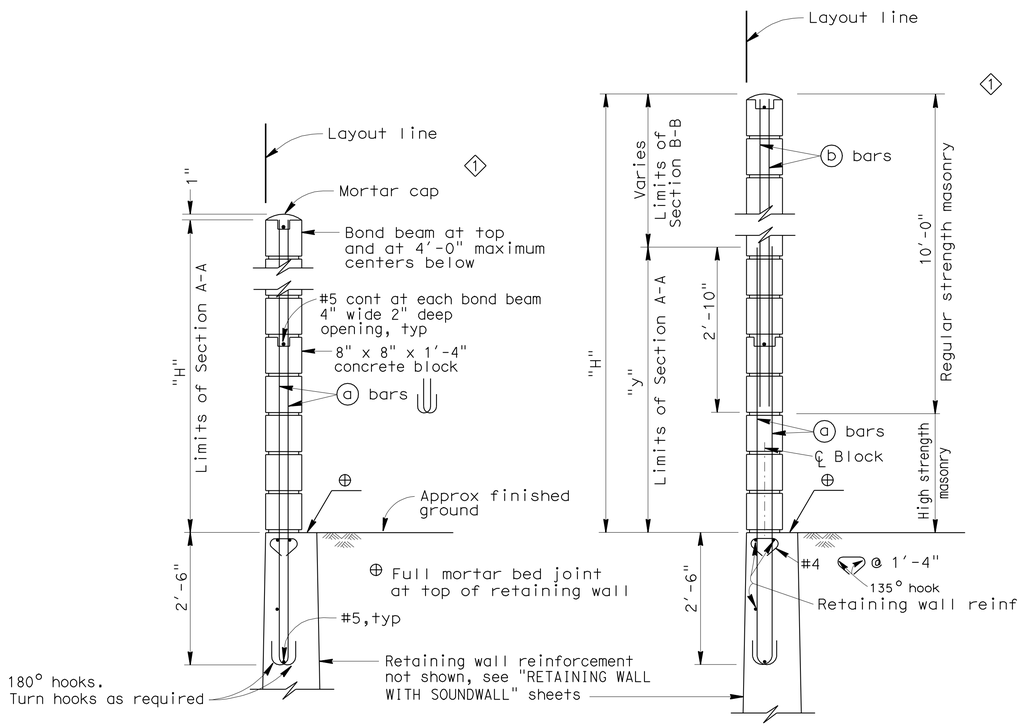

H=6'-0" THRU H=10'-0"

For details not shown,see H=12'-0" thru H=16'-0"

H=12'-0" THRU H=16'-0"

For details not shown,see H=6'-0" thru H=10'-0"

TYPICAL SECTIONS

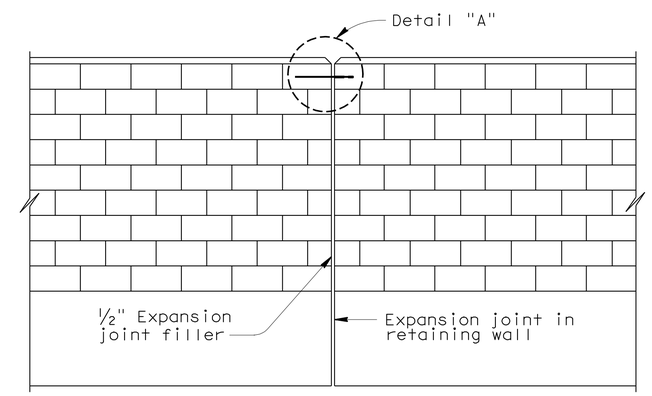

ALIGNMENT KEY DETAIL

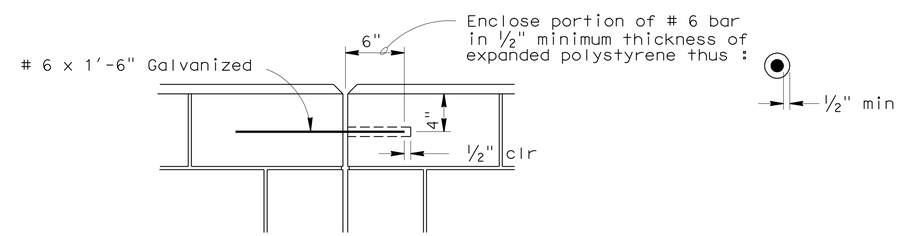

DETAIL A

SPECIAL DETAILS

STANDARD DRAWING		
FILE NO. xs15-120-2e	APPROVED BY TILLAT SATTER (RESPONSIBLE TECHNICAL SPECIALIST)	RELEASED BY ROBERTO LACALLE (RESPONSIBLE OFFICE CHIEF)
	APPROVAL DATE 4-15-08	RELEASE DATE Revised

1 Moved sound wall location.

STATE OF CALIFORNIA DEPARTMENT OF TRANSPORTATION

DIVISION OF ENGINEERING SERVICES

BRIDGE NO.

POST MILE 27.8

RETAINING WALL NO. 13

SOUNDWALL ON RETAINING WALL-MASONRY BLOCK

DETAILS NO. 2

DS OSD 2147A (ENGLISH STANDARD DRAWING "XS" BORDER REV. 01/11/08)

ORIGINAL SCALE IN INCHES FOR REDUCED PLANS 0 1 2 3

PROJECT NUMBER & PHASE: 04000210801
CONTRACT NO: 04-1G9404 UNIT: 0750

DISREGARD PRINTS BEARING EARLIER REVISION DATES

REVISION DATES (PRELIMINARY STAGE ONLY) 8/08 9/08 2/10 3/29/11 4/29/11 8/29/11 10/31/11

SHEET 4 OF 7

USERNAME => s124496

28Erw13-g-rwdt03.dgn

DATE PLOTTED => 19-JAN-2012 TIME PLOTTED => 07:46

DIST	COUNTY	ROUTE	POST MILES TOTAL PROJECT	SHEET No	TOTAL SHEETS
04	CC	4	27.3/R29.0	933	950

REGISTERED CIVIL ENGINEER — DATE 11/30/11

1-17-12
PLANS APPROVAL DATE

REGISTERED PROFESSIONAL ENGINEER — Brett D. Makley — No. C66397 — Exp. 07/30/12 — CIVIL — STATE OF CALIFORNIA

The State of California or its officers or agents shall not be responsible for the accuracy or completeness of scanned copies of this plan sheet.

CONTRA COSTA TRANSPORTATION AUTHORITY
2999 OAK ROAD, SUITE 100
WALNUT CREEK, CA 94597

T.Y. LIN INTERNATIONAL
2010 CROW CANYON PLACE, SUITE 350
SAN RAMON, CA 94583

Legends:

EJ Wall Expansion Joint

[C] Form liner group designation

(6) Form liner panel designation

Note:
For form liner group and panel details see "Retaining wall Architectural Treatment Details" sheets in Rd plans.

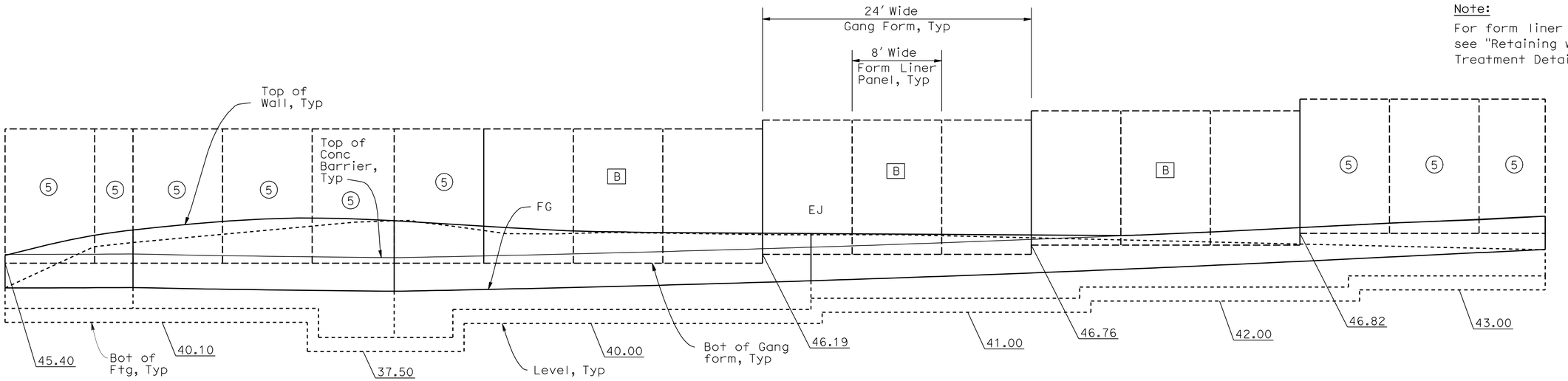

DEVELOPED ELEVATION

1" = 5'-0"

Note:
The Contractor shall verify all controlling field dimensions before ordering or fabricating any material.

DESIGN OVERSIGHT Overcomer Y. Hor
12-12-11
SIGN OFF DATE

	BY	CHECKED
DESIGN	Dina Tobia	Brett Makley
DETAILS	Yihong Wang	Brett Makley
QUANTITIES	Ching Dang/DT	Kimberly Bowen/YW

PREPARED FOR THE STATE OF CALIFORNIA DEPARTMENT OF TRANSPORTATION

Brett Makley
PROJECT ENGINEER

BRIDGE NO.
POST MILE 27.8

RETAINING WALL NO. 13
ARCHITECTURAL TREATMENT LAYOUT

DESIGN DETAIL SHEET (ENGLISH) (REV. 06-01-09)

ORIGINAL SCALE IN INCHES FOR REDUCED PLANS 0 1 2 3

PROJECT NUMBER & PHASE: 04000210801
CONTRACT NO: 04-1G9404 UNIT: 0750

DISREGARD PRINTS BEARING EARLIER REVISION DATES

REVISION DATES (PRELIMINARY STAGE ONLY): 6/08 5/08 2/10 3/9/11 4/29/11 8/9/11 10/31/11 11/30/11

SHEET 5 OF 7

FILE => 28Erw13-y-atlo01.dgn

USERNAME => s8124196 DATE PLOTTED => 19-JAN-2012 TIME PLOTTED => 07:47

DIST	COUNTY	ROUTE	POST MILES TOTAL PROJECT	SHEET No	TOTAL SHEETS
04	CC	4	27.3/R29.0	934	950

GEOTECHNICAL PROFESSIONAL — DATE 8/9/11

1-17-12
PLANS APPROVAL DATE

The State of California or its officers or agents shall not be responsible for the accuracy or completeness of electronic copies of this plan sheet.

REGISTERED PROFESSIONAL ENGINEER — GARY PARIKH — No. G.E. 666 — Exp. 12/31/11 — GEOTECHNICAL — STATE OF CALIFORNIA

CONTRA COSTA TRANSPORTATION AUTHORITY
2999 OAK ROAD, SUITE 100
WALNUT CREEK, CA 94597

PARIKH CONSULTANTS, INC.
2360 QUME DRIVE, SUITE A
SAN JOSE CA 95131

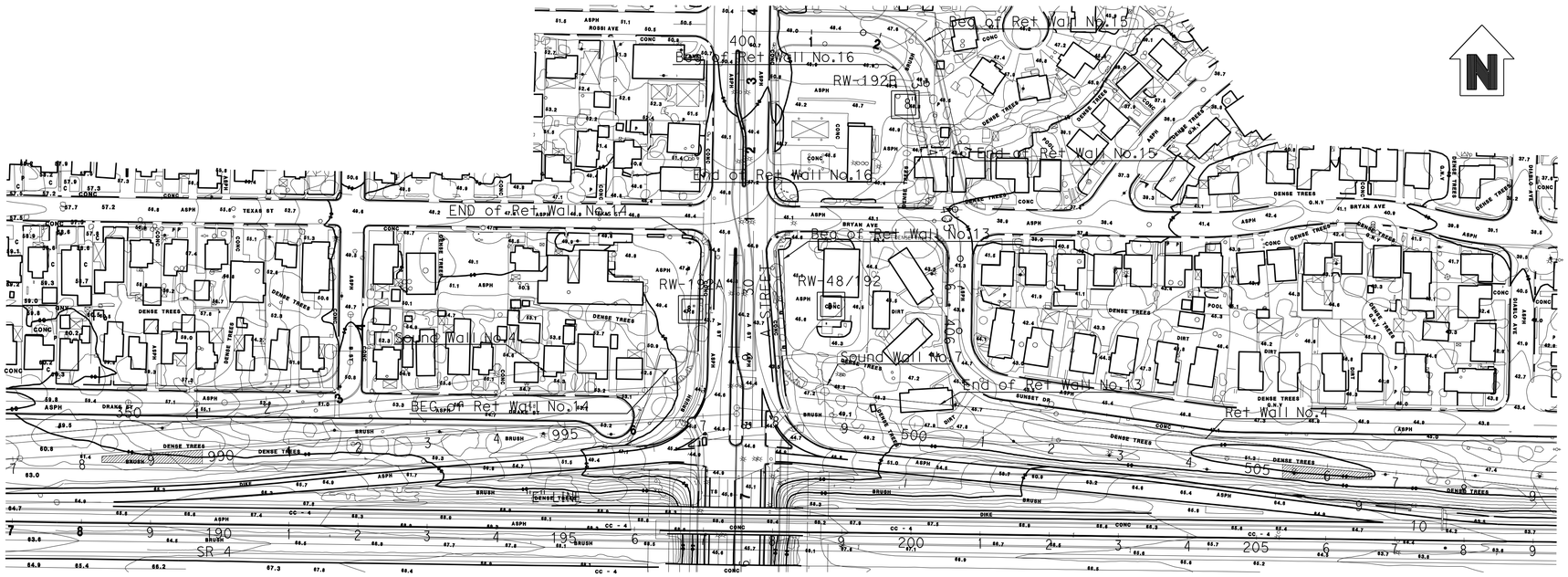

PLAN
1"=100'

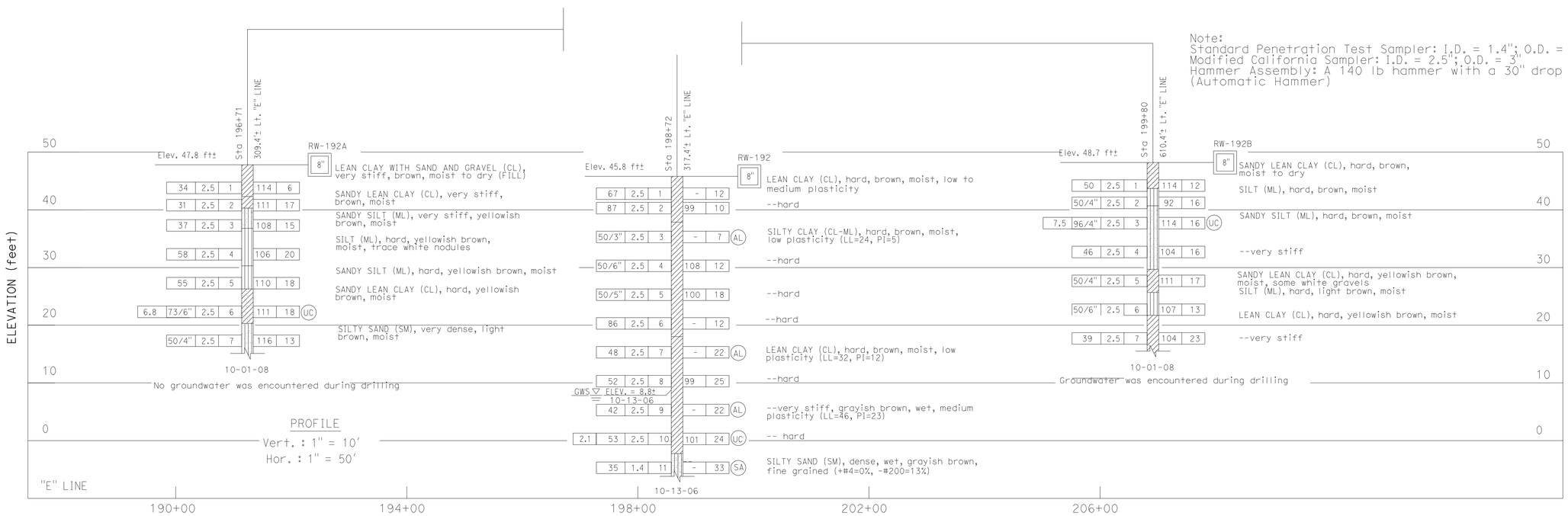

Note:
Standard Penetration Test Sampler: I.D. = 1.4"; O.D. = 2"
Modified California Sampler: I.D. = 2.5"; O.D. = 3"
Hammer Assembly: A 140 lb hammer with a 30" drop (Automatic Hammer)

ALL DIMENSIONS ARE IN FEET
UNLESS OTHERWISE SHOWN

LEGEND OF BORING OPERATIONS

Casing driven — Sampler no. — Size of Sampler (inch) — Uncofined compressive strength (tsf) — Number of blows to produce 12" (mm) of penetration after the initial 6 inches of seating using a 140 lb hammer with a 30 inch drop of an open sampler — Number of blows required to produce the indicated penetration after an initial 6 inches seating — 50 blows produced the indicated penetration during the initial 6 inches interval — Top Hole El. — Boring number — Year being drilled — Description of material — Dry unit weight (pcf) — % moisture — Sieve analysis — Conformable material change — Estimated material change — GWS Elev. — Date measured — Unconformable material change — Boring Date — ROTARY SAMPLE BORING (WET)

Top Hole El. — B-No. — Pressure measured along friction sleeve (23² element area) divided by pressure measured on tip element — Friction Ratio (%) — Boring Date — ELECTRONIC CONE PENETROMETER TEST — Cone Penetrometer dimensions and testing procedures are in accordance with ASTM standard D-3441-86, or as noted.

Top Hole El. — B-No. — Elev. Datum Mean Sea Level — Pushed — Driving rate in blows per second per 12" (using a 140 lb hammer with a percussion hammer of as noted) — Boring Date — 2.25" CONE PENETRATION BORING

IN-SITU, LAB & FIELD TEST DESIGNATIONS

AL ATTERBERG LIMITS	CA CHEMICAL ANALYSIS	CN CONSOLIDATION	CD CONSOLIDATED UNDRAINED TRIAXIAL
DS DIRECT SHEAR	MD MAX. DRY DENSITY	PP POCKET PENETROMETER	SA SIEVE ANALYSIS
TV TORVANE	UC UNCONFINED COMPRESSION	CU CONSOLIDATED UNDRAINED TRIAXIAL	VS VANE SHEAR

TYPES OF BORINGS

2.25" CONE PENETRATION	ROTARY WASH	ELECTRONIC CONE PENETROMETER	AUGER BORING (DRY)
TEST PIT	DIAMOND CORE BORING	SOIL TUBE	

LEGEND OF EARTH MATERIALS (USCS) BASED ON ASTM D2487, D2488

FILL MATERIAL — CLAY (CL or CH) — SILT (ML or MH) — PEAT and/or ORGANIC MATTER — POORLY-GRADED GRAVEL (GP) — WELL-GRADED GRAVEL (GW) — POORLY-GRADED GRAVEL (GP) — SILTY GRAVEL (GM) — CLAYEY GRAVEL (GC) — SILTY SAND (SM) — CLAYEY SAND (SC) or SANDY CLAY — WELL-GRADED SAND (SW) — POORLY-GRADED SAND (SP) — SILTY SAND (SM) or SANDY SILT — COBBLES/BOULDERS — IGNEOUS ROCK — SEDIMENTARY ROCK — METAMORPHIC ROCK

CONSISTENCY CLASSIFICATION FOR SOILS According to the Standard Penetration Test (ASTM D-1586)

SPT N-Value (Blows/FT)	Granular	SPT N-Value (Blows/FT)	Cohesive
0-4	Very loose	<2	Very soft
5-10	Loose	2-4	Soft
11-30	Medium Dense	5-8	Firm
31-50	Dense	9-15	Stiff
>50	Very Dense	16-30	Very Stiff
		>31	Hard

NOTE: Visual classifications of earth materials are based on field inspection and or a confirmed or revised with laboratory test results as necessary.

DESIGN OVERSIGHT Overcomer Y. Hor
12-12-11
SIGN OFF DATE

DRAWN BY O. GOUTHIER
CHECKED BY P. SIRCAR

G. TRIPATHI
FIELD INVESTIGATION BY:
DATE: 08/2006-07/2009

PREPARED FOR THE STATE OF CALIFORNIA DEPARTMENT OF TRANSPORTATION

P. SIRCAR
PROJECT ENGINEER

BRIDGE NO.
POST MILE 27.8

RETAINING WALL NO. 13
LOG OF TEST BORINGS 1 OF 2

OSF GEOTECHNICAL LOG OF TEST BORINGS SHEET (ENGLISH) (REV. 2/25/05)

ORIGINAL SCALE IN INCHES FOR REDUCED PLANS 0 1 2 3

PROJECT NUMBER & PHASE: 04000210801
CONTRACT NO: 04-1G9404 UNIT: 0750

DISREGARD PRINTS BEARING EARLIER REVISION DATES

REVISION DATES (PRELIMINARY STAGE ONLY): 08/14/09 1/9/11 4/20/11 8/9/11

SHEET 6 OF 7

FILE => 28Erw13-z-ltb01.dgn

USERNAME => s124936 DATE PLOTTED => 19-JAN-2012 TIME PLOTTED => 07:47

DIST	COUNTY	ROUTE	POST MILES TOTAL PROJECT	SHEET No	TOTAL SHEETS
04	CC	4	27.3/R29.0	935	950

GEOTECHNICAL PROFESSIONAL — DATE 8/9/11

1-17-12
PLANS APPROVAL DATE

The State of California or its officers or agents shall not be responsible for the accuracy or completeness of electronic copies of this plan sheet.

REGISTERED PROFESSIONAL ENGINEER — GARY PARIKH — No. G.E. 666 — Exp. 12/31/09 — GEOTECHNICAL — STATE OF CALIFORNIA

CONTRA COSTA TRANSPORTATION AUTHORITY
2999 OAK ROAD, SUITE 100
WALNUT CREEK, CA 94597

PARIKH CONSULTANTS, INC.
2360 QUME DRIVE, SUITE A
SAN JOSE CA 95131

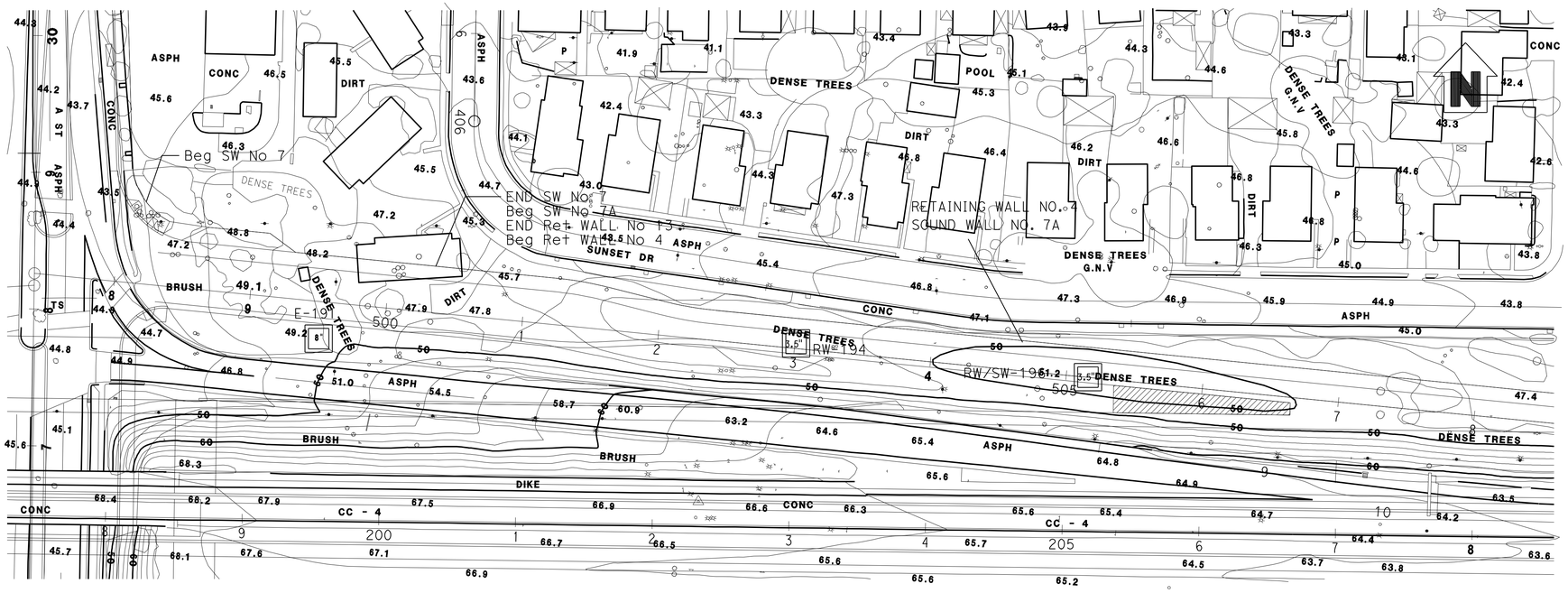

PLAN

1"=50'

Note:
Standard Penetration Test Sampler: I.D. = 1.4"; O.D. = 2"
Modified California Sampler: I.D. = 2.5"; O.D. = 3"
Hammer Assembly: A 140 lb hammer with a 30" drop
(Automatic Hammer)

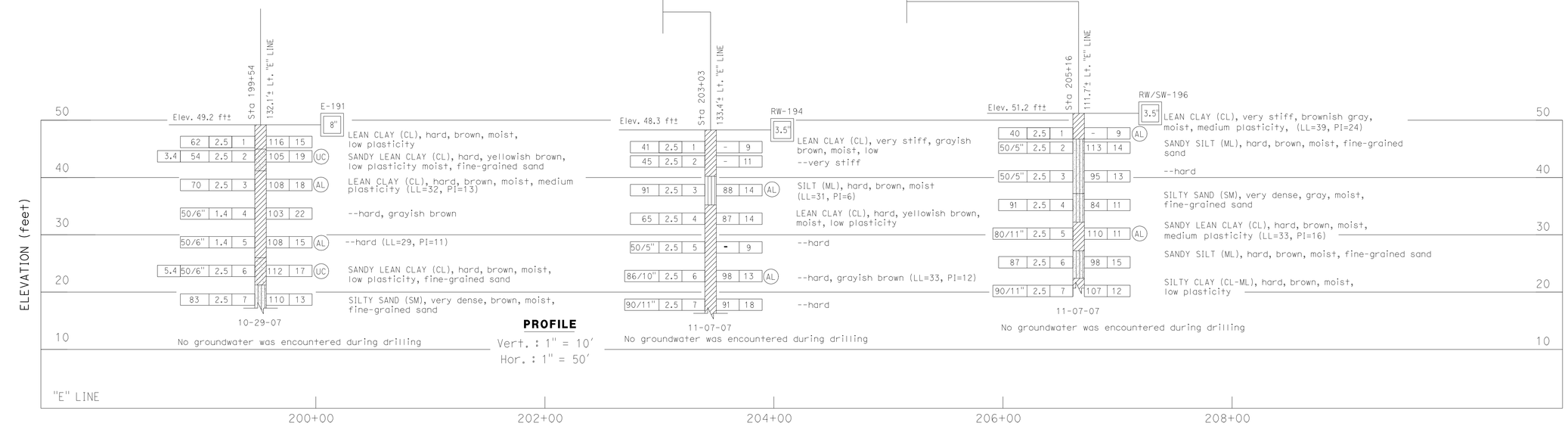

PROFILE

Vert. : 1" = 10'
Hor. : 1" = 50'

ALL DIMENSIONS ARE IN FEET
UNLESS OTHERWISE SHOWN

LEGEND OF BORING OPERATIONS

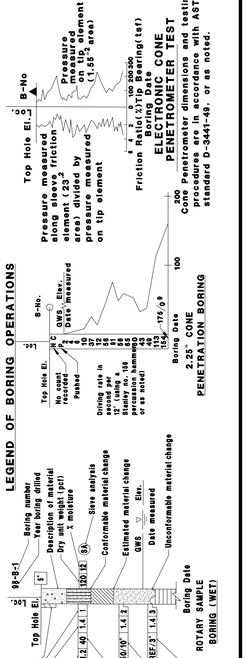

CONSISTENCY CLASSIFICATION FOR SOILS According to the Standard Penetration Test (ASTM D-1586)

SPT N-Value (Blows/FT)	Granular	SPT N-Value (Blows/FT)	Cohesive
0-4	Very loose	<2	Very soft
5-10	Loose	2-4	Soft
11-30	Medium Dense	5-8	Firm
31-50	Dense	9-15	Stiff
>50	Very Dense	16-30	Very Stiff
		>31	Hard

LEGEND OF EARTH MATERIALS (USCS) BASED ON ASTM D2487, D2488

FILL MATERIAL
CLAY (CL or CH)
SILT (ML or MH)
PEAT and/or ORGANIC MATTER
POORLY-GRADED SAND (SP)
WELL-GRADED SAND (SW)
SILTY SAND (SM)
CLAYEY SAND (SC) or SANDY CLAY
COBBLES/BOULDERS
POORLY-GRADED GRAVEL (GP)
WELL-GRADED GRAVEL (GW)
SILTY GRAVEL (GM)
CLAYEY GRAVEL (GC)
IGNEOUS ROCK
SEDIMENTARY ROCK
METAMORPHIC ROCK

NOTE: Visual classifications of earth materials are based on field inspection and or a confirmed or revised with laboratory test results as necessary.

IN-SITU, LAB & FIELD TEST DESIGNATIONS

AL ATTERBERG LIMITS
CA CHEMICAL ANALYSIS
CN CONSOLIDATION
CU CONSOLIDATED UNDRAINED TRIAXIAL
DS DIRECT SHEAR
MD MAX. DRY DENSITY
PP POCKET PENETROMETER
SA SIEVE ANALYSIS
TV TORVANE
UC UNCONFINED COMPRESSION
UU UNCONSOLIDATED UNDRAINED TRIAXIAL
VS VANE SHEAR

TYPES OF BORINGS

2.25" CONE PENETRATION
ROTARY WASH
ELECTRONIC CONE PENETROMETER
AUGER BORING (DRY)
TEST PIT
DIAMOND CORE BORING
SOIL TUBE

3.4	54	2.5	2	105	19	UC	41	2.5	1	-	9	40	2.5	1	-
							45	2.5	2	-	11	50/5"	2.5	2	113
	70	2.5	3	108	18	AL	91	2.5	3	88	14	AL	50/5"	2.5	3
	50/6"	1.4	4	103	22		65	2.5	4	87	14		91	2.5	4
	50/6"	1.4	5	108	15	AL	50/5"	2.5	5	-	9		80/11"	2.5	5
5.4	50/6"	2.5	6	112	17	UC	86/10"	2.5	6	98	13	AL	87	2.5	6
	83	2.5	7	110	13		90/11"	2.5	7	91	18		90/11"	2.5	7

-	9	AL	50	LEAN CLAY (CL), hard, brown, moist, low plasticity											
113	14		40	SANDY SILT (ML), hard, brown, moist, fine-grained sand											
95	13		30	--hard											
84	11		20	SILTY SAND (SM), very dense, gray, moist, fine-grained sand											
110	11	AL	10	SANDY LEAN CLAY (CL), hard, brown, moist, medium plasticity (LL=33, PI=16)											
98	15			SANDY SILT (ML), hard, brown, moist, fine-grained sand											
107	12			SILTY CLAY (CL-ML), hard, brown, moist, low plasticity											

Overcomer Y. Hor
DESIGN OVERSIGHT — Overcomer Y. Hor
12-12-11
SIGN OFF DATE

DRAWN BY: O. GOUTHIER
CHECKED BY: P. SIRCAR

G. TRIPATHI
FIELD INVESTIGATION BY:
DATE: 08/2006-07/2009

PREPARED FOR THE STATE OF CALIFORNIA DEPARTMENT OF TRANSPORTATION

P. SIRCAR
PROJECT ENGINEER

BRIDGE NO.
POST MILE 27.8

RETAINING WALL NO. 13

LOG OF TEST BORINGS 2 OF 2

OSF GEOTECHNICAL LOG OF TEST BORINGS SHEET (ENGLISH) (REV. 2/25/05)

ORIGINAL SCALE IN INCHES FOR REDUCED PLANS: 0 1 2 3

PROJECT NUMBER & PHASE: 04000210801
CONTRACT NO: 04-1G9404 UNIT: 0750

DISREGARD PRINTS BEARING EARLIER REVISION DATES

REVISION DATES (PRELIMINARY STAGE ONLY): 08/14/09 3/9/11 4/20/11 8/9/11

SHEET 7 OF 7

FILE => 28Erw13-z-1tb02.dgn

USERNAME => s124936 DATE PLOTTED => 19-JAN-2012 TIME PLOTTED => 07:47

DIST	COUNTY	ROUTE	POST MILES TOTAL PROJECT	SHEET No	TOTAL SHEETS
04	CC	4	27.3/R29.0	936	950

REGISTERED CIVIL ENGINEER 11/30/11 DATE

1-17-12
PLANS APPROVAL DATE

REGISTERED PROFESSIONAL ENGINEER Brett D. Makley No. C66397 Exp. 07/30/12 CIVIL STATE OF CALIFORNIA

The State of California or its officers or agents shall not be responsible for the accuracy or completeness of scanned copies of this plan sheet.

CONTRA COSTA TRANSPORTATION AUTHORITY
2999 OAK ROAD, SUITE 100
WALNUT CREEK, CA 94597

T.Y. LIN INTERNATIONAL
2010 CROW CANYON PLACE, SUITE 350
SAN RAMON, CA 94583

Notes:

1. Chain link railing and Soundwall not shown for clarity.
2. For weep hole and weakened plane locations and details see Standard Plan B0-3.
3. Stop waterstop 6" above Conc gutter FL and 1'-0" below lower FG.
4. Gutter outlet at Sta 3+00 see Standard Plan B3-9.

Legend:

(1) 1¾" Max. architectural treatment see "Architectural Treatment Layout" sheet and "Retaining Wall Architectural Treatment Details" sheets in Road Plans.
⟨1⟩ LOL Curve Designation

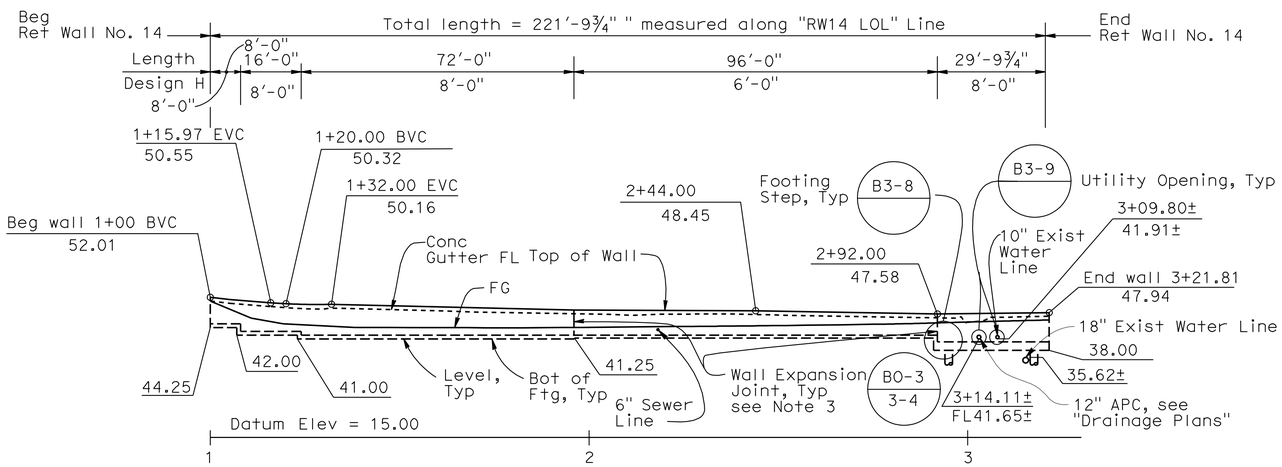

DEVELOPED ELEVATION

1" = 20'-0"

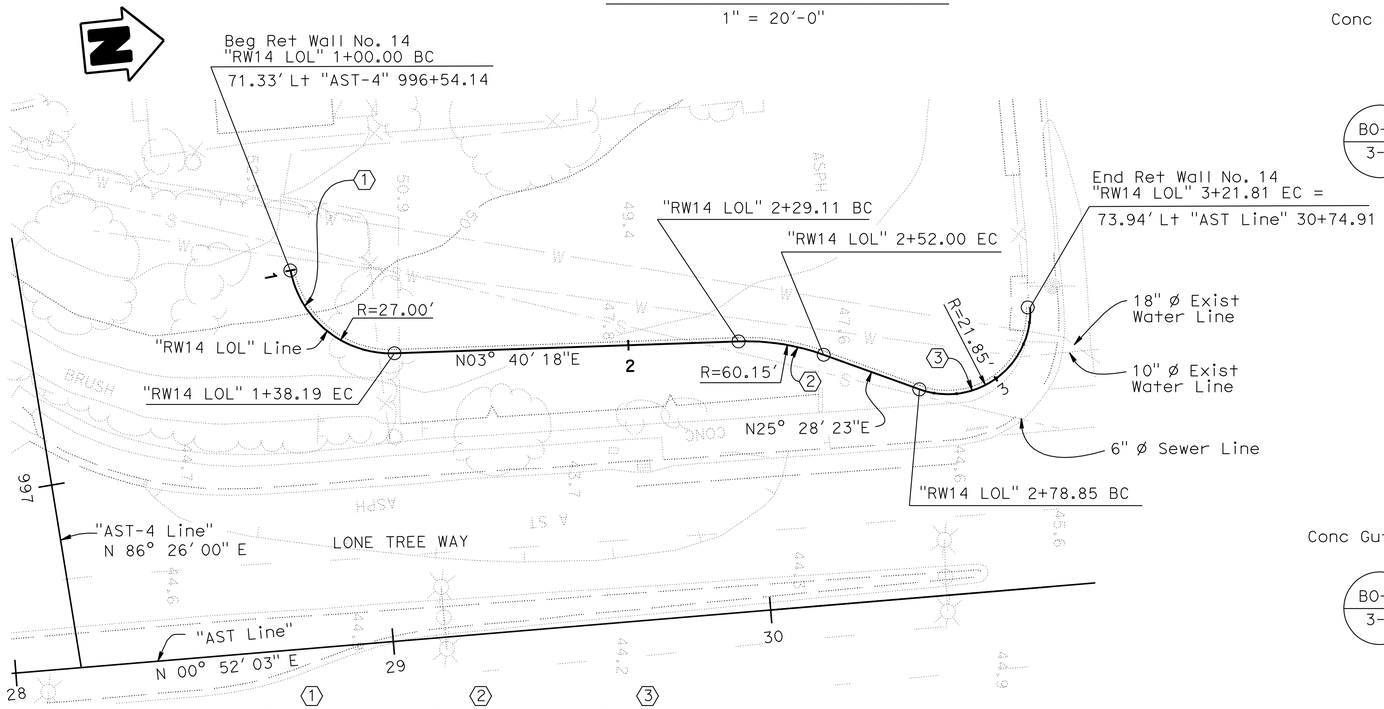

(1) "RW14 LOL"	(2) "RW14 LOL"	(3) "RW14 LOL"
R = 27.00'	R = 60.15'	R = 21.85'
Δ = 81° 02' 15"	Δ = 21° 48' 05"	Δ = 112° 37' 54"
T = 23.07'	T = 11.58'	T = 32.79'
L = 38.19'	L = 22.89'	L = 42.96'

PLAN

1"= 20'-0"

Note:
The Contractor shall verify all controlling field dimensions before ordering or fabricating any material.

Note: For "Index to Plans" and "Standard Plans" list, see "Retaining Wall Details" sheet

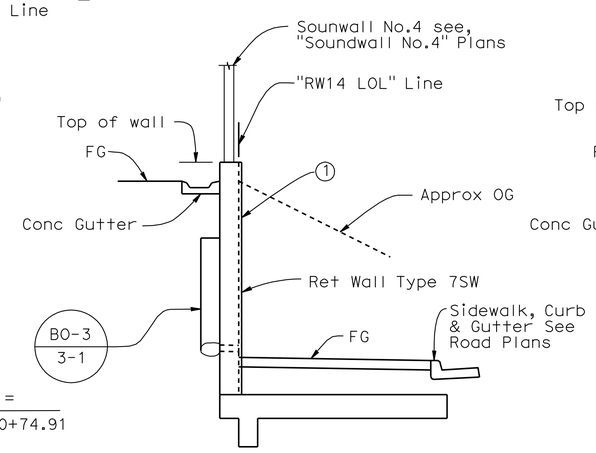

"RW14 LOL" 1+00.00 TO 1+29.31

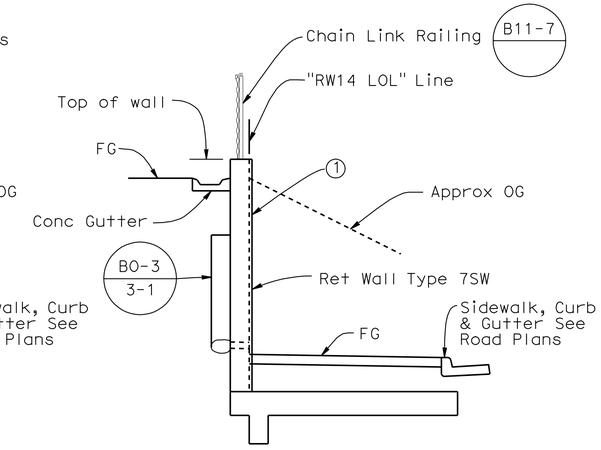

"RW14 LOL" 1+29.31 TO 2+92.00

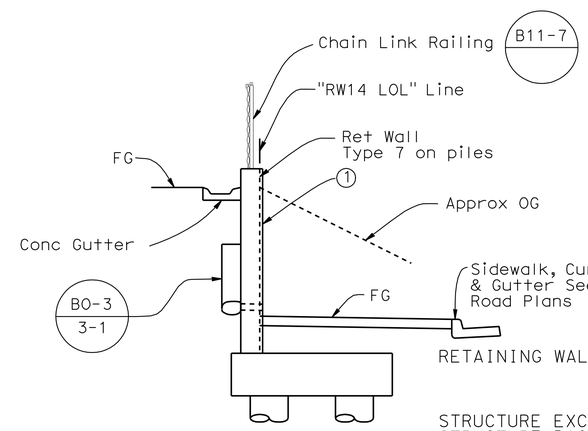

RETAINING WALL NO. 14

"RW14 LOL" 2+92.00 TO 3+21.81

TYPICAL SECTION

¼" = 1'-0"

QUANTITIES

STRUCTURE EXCAVATION (RETAINING WALL)	503	CY
STRUCTURE BACKFILL (RETAINING WALL)	200	CY
PERVIOUS BACKFILL MATERIAL (RETAINING WALL)	4	CY
24" CAST-IN-DRILLED-HOLE CONCRETE PILING	97	LF
STRUCTURAL CONCRETE, RETAINING WALL	146	CY
ARCHITECTURAL TEXTURE	1,468	SQFT
BAR REINFORCING STEEL (RETAINING WALL)	15,480	LB
MINOR CONCRETE (GUTTER)	222	LF
CHAIN LINK RAILING	222	LF

Overcomer Y. Hor
DESIGN OVERSIGHT Overcomer Y. Hor
12-12-11
SIGN OFF DATE

	BY	CHECKED
DESIGN	Dina Tobia	Brett Makley
DETAILS	Tom Fukuhara	Brett Makley
QUANTITIES	Ching Dong /DT	Kim Bowen /OC

LOAD FACTOR DESIGN — LIVE LOADING: HS20-44 AND ALTERNATIVE AND PERMIT DESIGN LOADING

	BY	CHECKED
LAYOUT	Dina Tobia	Brett Makley
SPECIFICATIONS	Odeon M. Li	PLANS AND SPECS COMPARED Odeon M. Li

PREPARED FOR THE STATE OF CALIFORNIA DEPARTMENT OF TRANSPORTATION

Brett Makley
PROJECT ENGINEER

BRIDGE NO.
POST MILES 27.7

RETAINING WALL NO. 14
GENERAL PLAN

DESIGN GENERAL PLAN SHEET (ENGLISH) (REV. 06-01-09)

ORIGINAL SCALE IN INCHES FOR REDUCED PLANS 0 1 2 3

PROJECT NUMBER & PHASE: 04000210801
CONTRACT NO: 04-1G9404 UNIT: 0750

DISREGARD PRINTS BEARING EARLIER REVISION DATES

REVISION DATES (PRELIMINARY STAGE ONLY): 6/08 9/09 2/10 12/10 3/8/11 4/20/11 8/9/11 10/31/11 11/16/11 11/30/11

SHEET 1 OF 7

FILE => 28Erw14-a-gp01.dgn

USERNAME => s124496 DATE PLOTTED => 19-JAN-2012 TIME PLOTTED => 07:47

DIST	COUNTY	ROUTE	POST MILES TOTAL PROJECT	SHEET No	TOTAL SHEETS
04	CC	4	27.3/R29.0	937	950

REGISTERED CIVIL ENGINEER 11/30/11 DATE

1-17-12
PLANS APPROVAL DATE

The State of California or its officers or agents shall not be responsible for the accuracy or completeness of electronic copies of this plan sheet.

REGISTERED PROFESSIONAL ENGINEER Brett D. Makley No. C66397 Exp. 07/30/12 CIVIL STATE OF CALIFORNIA

CONTRA COSTA TRANSPORTATION AUTHORITY
2999 OAK ROAD, SUITE 100
WALNUT CREEK, CA 94597

T.Y. LIN INTERNATIONAL
2010 CROW CANYON PLACE, SUITE 350
SAN RAMON, CA 94583

PILE DATA TABLE

Location	Pile Type	Nominal Resistance Compression	Nominal Resistance Tension	Design Tip Elev. (ft)	Specified Tip Elev. (ft)
RW 14	24" CIDH	180 kips	60 kips	23.00 (a) 27.00 (b) 19.00 (c)	19.0

Design tip elevation is controlled by the following demands:
(a) Compression, (b) Tension, (c) Lateral

Notes:

1. For General Notes, Wall Offset, Details and Design Data not shown, see "Retaining Wall Type 7" sheet.
2. For back row piles design, use 75% Earth Pressure in the following load combinations:
   Loading 1: $\beta D + 0.75 * (1.0E) + 0.75 * (1.0\ P_{av})$
   Loading 2: $\beta D + 0.75 * (1.7E) + 0.75 * (1.7\ P_{av})$
3. Reduction Factors:
   STATIC : $\emptyset = 0.75$
   SEISMIC : $\emptyset = 1.0$
4. Lateral Resistance of Each Pile:
   STATIC = 41 kips
   SEISMIC = 50 kips

STANDARD PLANS DATED MAY 2006

A10A ACRONYMS AND ABBREVIATIONS (SHEET 1 OF 2)
A10B ACRONYMS AND ABBREVIATIONS (SHEET 2 OF 2)
A10C SYMBOLS (SHEET 1 OF 2)
A10D SYMBOLS (SHEET 2 OF 2)
A62B LIMITS OF PAYMENT FOR EXCAVATION AND BACKFILL BRIDGE SURCHARGE AND WALL
B0-1 BRIDGE DETAILS
B0-3 BRIDGE DETAILS
B2-3 16" AND 24" CAST-IN-DRILLED-HOLE CONCRETE PILE
B3-8 RETAINING WALL DETAILS NO. 1
B3-9 RETAINING WALL DETAILS NO. 2
B11-7 CHAIN LINK RAILING

PLAN SYMBOLS

SECTION IDENTIFICATION

STANDARD PLAN (MAY 2006) SHEET NO.

DETAIL NO.

INDEX TO PLANS

Sheet No.	Title
1	GENERAL PLAN
2	RETAINING WALL DETAILS
3	RETAINING WALL TYPE 7SW - DETAIL NO. 1
4	RETAINING WALL TYPE 7SW - DETAIL NO. 2
5	RETAINING WALL TYPE 7
6	ARCHITECTURAL TREATMENT LAYOUT
7	LOG OF TEST BORINGS

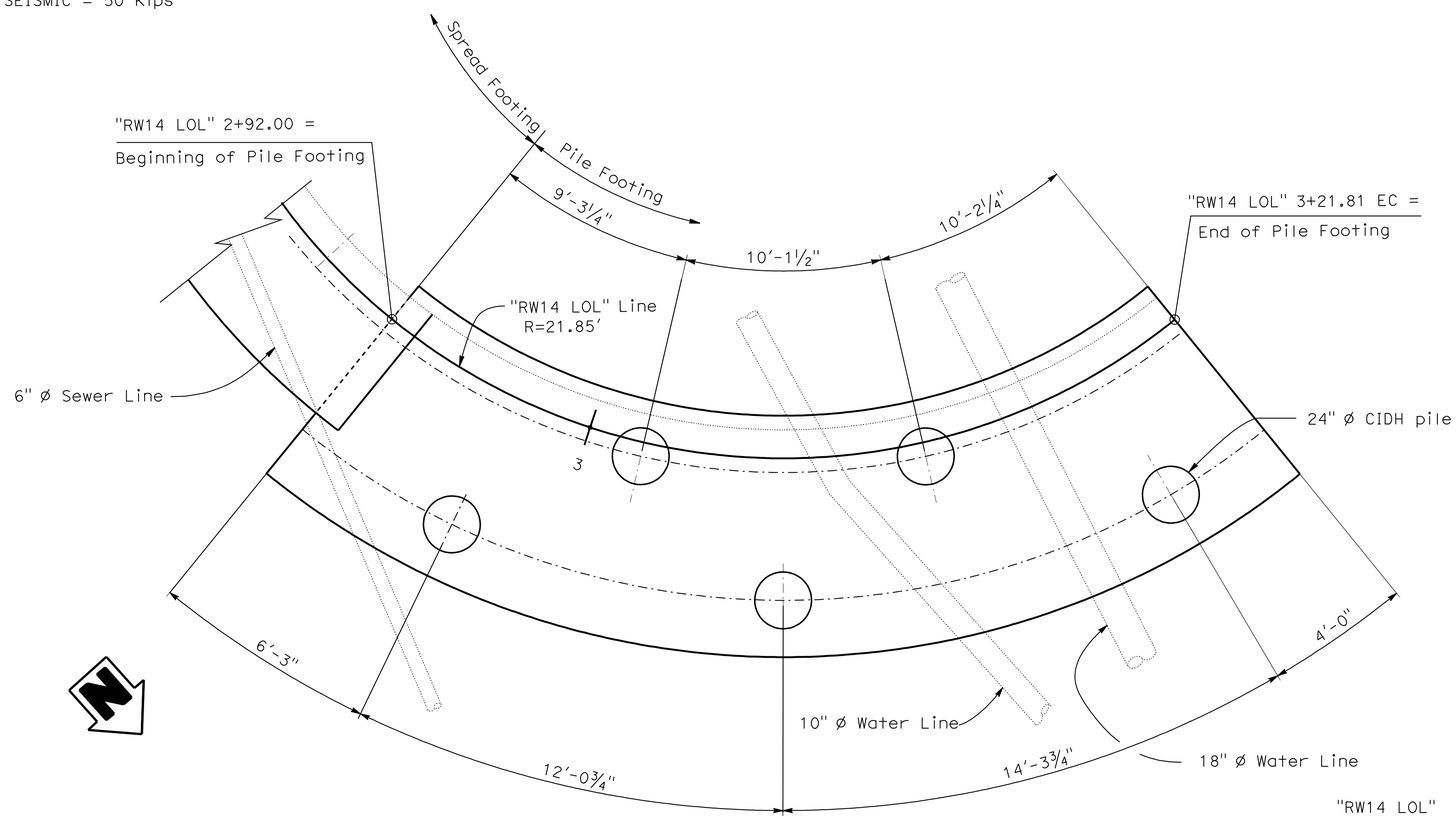

"RW14 LOL"
R = 21.85'
Δ = 112° 37' 54"
T = 32.79'
L = 42.96'

PILE LAYOUT

⅜" = 1'-0"

Note:
Pile spacings are measured along "RW14 LOL".

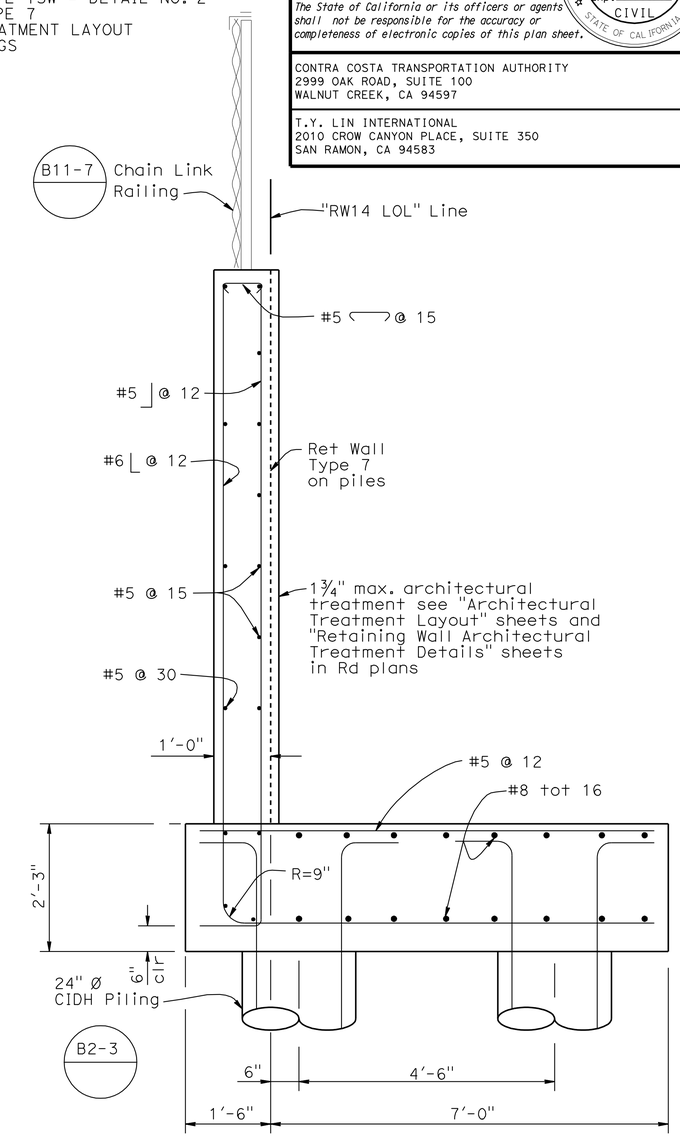

"RW14 LOL" 2+92.00 to 3+21.81

TYPICAL SECTION

¾" = 1'-0"

Note:
The Contractor shall verify all controlling field dimensions before ordering or fabricating any material.

DESIGN OVERSIGHT Overcomer Y. Hor
12-12-11
SIGN OFF DATE

	BY	CHECKED
DESIGN	Dina Tobia	Brett Makley
DETAILS	Tom Fukuhara	Dina Tobia
QUANTITIES	Ching Dang /DT	Kim Bowen /OC

PREPARED FOR THE STATE OF CALIFORNIA DEPARTMENT OF TRANSPORTATION

Brett Makley
PROJECT ENGINEER

BRIDGE NO.
POST MILE 27.7

RETAINING WALL NO. 14
RETAINING WALL DETAILS

DESIGN DETAIL SHEET (ENGLISH) (REV. 2/25/05)

ORIGINAL SCALE IN INCHES FOR REDUCED PLANS 0 1 2 3

PROJECT NUMBER & PHASE: 04000210801
CONTRACT NO: 04-1G9404 UNIT: 0750

DISREGARD PRINTS BEARING EARLIER REVISION DATES

REVISION DATES (PRELIMINARY STAGE ONLY): 6/08 5/08 2/10 3/9/11 4/28/11 8/29/11 10/31/11

SHEET 2 OF 7

FILE => 28Erw14-g-rwdt01.dgn

USERNAME => s124496 DATE PLOTTED => 19-JAN-2012 TIME PLOTTED => 07:47

DIST.	COUNTY	ROUTE	POST MILES TOTAL PROJECT	SHEET NO.	TOTAL SHEETS
04	CC	4	27.3/R29.0	938	950

REGISTERED ENGINEER - CIVIL 11/30/11

1-17-12
PLANS APPROVAL DATE

REGISTERED PROFESSIONAL ENGINEER Brett D. Makley No. C66397 Exp. 07/30/12 CIVIL STATE OF CALIFORNIA

The State of California or its officers or agents shall not be responsible for the accuracy or completeness of electronic copies of this plan sheet.

CONTRA COSTA TRANSPORTATION AUTHORITY
2999 OAK ROAD, SUITE 100
WALNUT CREEK, CA 94597

T.Y. LIN INTERNATIONAL
2010 CROW CANYON PLACE, SUITE 350
SAN RAMON, CA 94583

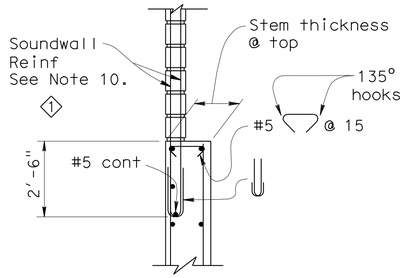

DETAIL A

No Scale

WALL OFFSET

No Scale

Values for offsetting forms to be determined by engineer

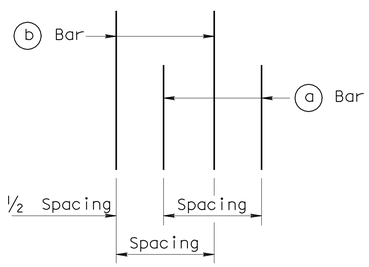

REBAR SPACING

No Scale

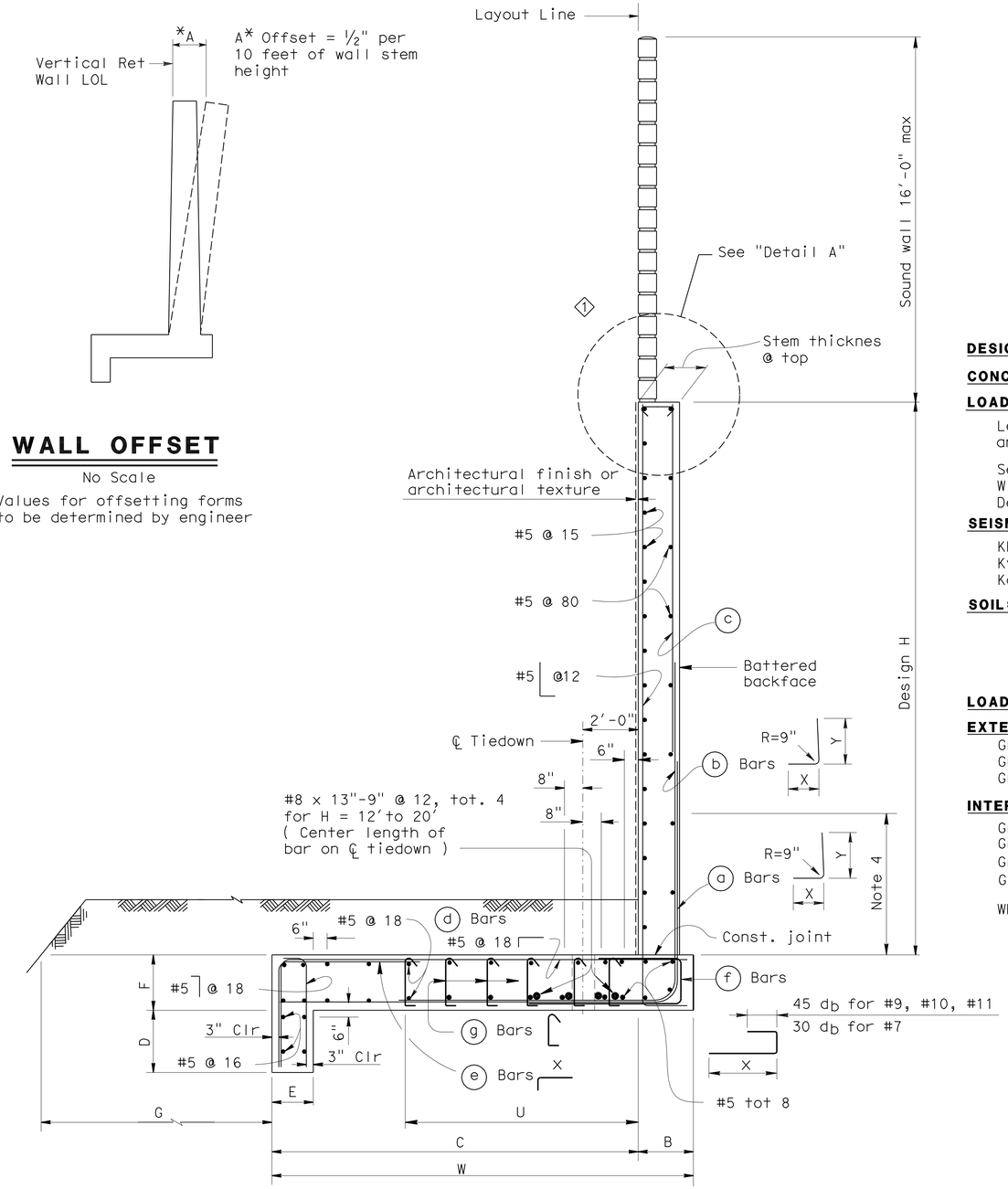

SPREAD FOOTING SECTION

No Scale

GENERAL NOTES

1. For soundwall and retaining wall architectural finish or texture, see details elsewhere in project plans.
2. For details not shown and drainage notes, see B3-8
3. Footing coverage, 2'-0" minimum.
4. Limit of no splicing rebars = H/3.
5. Increasing stem thickness not permitted.
6. Place footing key concrete against undisturbed material.
7. Shift (a) bars, (b) bars, and (c) bars as required to clear formed hole for tiedown.
8. No reinforcements in footing key for H= 8' to H=12'.
9. Maximum distance from ℄ tiedown to edge of footing = 0.4(S). 2
10. For soundwall reinforcements, see "Soundwall On Retaining Wall-Masonry Block" Sheets.

DESIGN DATA

DESIGN: Load Factor Design (LFD)

CONCRETE: Reinforced Concrete, f'c = 3600 psi
fy = 60,000 psi

LOADING CASE:

Level ground with 240 psf live load surcharge and 16' Soundwall

Seismic Load = 0.3 Dead Load
Wind Load = 30 psf
Dead Load of Soundwall = 1414 lb/Lf

SEISMIC LOAD: SOIL

Kh = 0.3g
Kv = 0.0
Kae : Mononobe-Okabe Method

SOIL: $\emptyset = 34°$ $\gamma = 120$ pcf
Equivalent fluid pressure:
STATIC = 36 pcf for determination of toe pressure
SEISMIC = Coulomb's Theory

LOAD COMBINATIONS:

EXTERNAL STABILITY:

Group 1 : D + E + SC + 0.75T (F.S. Sliding > 1.5)
Group 2 : D + E + SC + W + 0.75T (F.S. Sliding > 1.2)
Group 3 : D + PYM + P_{av} + V + 1.0 T (F.S. Sliding > 1.0)

INTERNAL STABILITY: (LFD)

Group A : βD + 1.7 E + 1.7 SC + 0.75 T
Group B : βD + 1.7 E + 1.3 W + 0.75 T
Group C :(Stem) 1.0 D + 1.0 E + 1.0 EQD + 1.0 EQE
Group C :(Footing) D + PYM + P_{av} + V + 1.0 T

Where : β = 1.0 or 1.3 whichever controls design
D = Dead Load
E = Lateral Earth Pressure
P_{av} = Vertical Earth Pressure

SC = Live Load Surcharge
W = Wind Load
EQD = Seismic Dead Load
EQE = Seismic Lateral Earth Pressure
PYM = Probable Yield Moment (1.3 x Nominal Yield Moment of Stem)
V = Possible Shear at Base of Stem associated with Probable Yield Moment
T = Design Force for Vertical Tiedown

SPECIAL DETAILS

STANDARD DRAWING

FILE NO. xs14-380-1e

APPROVED BY G. WANG — RESPONSIBLE TECHNICAL SPECIALIST
APPROVAL DATE 5-13-08

RELEASED BY ROBERTO LACALLE — RESPONSIBLE OFFICE CHIEF
RELEASE DATE Revised

1 Moved sound wall location.
2 Revised Note.

STATE OF CALIFORNIA
DEPARTMENT OF TRANSPORTATION

DIVISION OF ENGINEERING SERVICES

BRIDGE NO.
POST MILE 27.7

RETAINING WALL NO. 14

RETAINING WALL TYPE 7SW - DETAIL NO. 1

DS OSD 2147A (ENGLISH STANDARD DRAWING "XS" BORDER REV. 01/11/08)

ORIGINAL SCALE IN INCHES FOR REDUCED PLANS 0 1 2 3

PROJECT NUMBER & PHASE: 04000210801
CONTRACT NO: 04-1G9404 UNIT: 0750

DISREGARD PRINTS BEARING EARLIER REVISION DATES

REVISION DATES (PRELIMINARY STAGE ONLY) 8/08 3/09 7/09 2/10 3/10/11 4/29/11 8/9/11 10/31/11

SHEET 3 OF 7

USERNAME => s124496

28Erw14-g-rwdt02.dgn

DATE PLOTTED => 19-JAN-2012 TIME PLOTTED => 07:47

DIST.	COUNTY	ROUTE	POST MILES TOTAL PROJECT	SHEET NO.	TOTAL SHEETS
04	CC	4	27.3/R29.0	939	950

REGISTERED ENGINEER - CIVIL 11/30/11

1-17-12
PLANS APPROVAL DATE

REGISTERED PROFESSIONAL ENGINEER Brett D. Makley No. C66397 Exp. 07/30/12 CIVIL STATE OF CALIFORNIA

The State of California or its officers or agents shall not be responsible for the accuracy or completeness of electronic copies of this plan sheet.

CONTRA COSTA TRANSPORTATION AUTHORITY
2999 OAK ROAD, SUITE 100
WALNUT CREEK, CA 94597

T.Y. LIN INTERNATIONAL
2010 CROW CANYON PLACE, SUITE 350
SAN RAMON, CA 94583

TABLE 1: TABLE OF DIMENSIONS AND DATA

Design H		8′	10′	12′	14′	16′	18′	20′	22′	24′	26′	28′	30′	32′
W		7′-6"	8′-0"	9′-3"	10′-9"	12′-3"	13′-9"	15′-3"	16′-9"	18′-3"	19′-6"	21′-0"	22′-6"	24′-0"
C		6′-0"	6′-6"	7′-6"	9′-0"	10′-3"	11′-6"	13′-0"	14′-3"	15′-3"	16′-6"	17′-6"	18′-6"	20′-0"
B		1′-6"	1′-6"	1′-9"	1′-9"	2′-0"	2′-3"	2′-3"	2′-6"	3′-0"	3′-0"	3′-6"	4′-0"	4′-0"
F		2′-6"	2′-6"	2′-6"	2′-6"	2′-6"	2′-6"	3′-0"	3′-3"	3′-3"	3′-9"	4′-0"	4′-0"	4′-3"
D (Footing Key Depth)		1′-0"	1′-0"	1′-0"	1′-6"	1′-9"	2′-0"	2′-3"	2′-3"	2′-9"	3′-0"	3′-0"	3′-0"	3′-0"
E		1′-3"	1′-3"	1′-3"	1′-3"	1′-3"	1′-6"	1′-6"	1′-6"	1′-6"	1′-9"	1′-9"	1′-9"	1′-9"
Stem Thickness @ Top		1′-0"	1′-0"	1′-3"	1′-3"	1′-6"	1′-9"	1′-9"	2′-0"	2′-0"	2′-0"	2′-0"	2′-3"	2′-3"
Batter		0	0	0	0	0	0	0	0	1/4:12	1/4:12	1/2:12	1/2:12	1/2:12
G (Minimum)		7′-6"	7′-6"	7′-6"	8′-6"	9′-3"	10′-3"	11′-0"	12′-0"	13′-0"	14′-0"	15′-6"	15′-9"	16′-3"
ⓐ Bars				#7@18	#5@6	#9@18	#9@18	#9@12	#9@12	#7@6	#7@6	#10@12	#10@12	#11@12
X				Cont	Cont	Cont	Cont	Cont	Cont	Cont	Cont	Cont	Cont	Cont
Y				5′-6"	5′-6"	8′-6"	8′-9"	8′-9"	9′-0"	9′-9"	11′-3"	13′-3"	14′-3"	15′-3"
ⓑ Bars		#5@9	#6@9	#7@18	#5@6	#9@18	#9@18	#9@12	#9@12	#7@6	#7@6	#10@12	#10@12	#11@12
X		Cont	Cont	3′-6"	2′-6"	6′-3"	7′-9"	6′-9"	7′-9"	8′-6"	8′-0"	12′-6"	13′-6"	14′-9"
Y		Cont	Cont	Cont	Cont	12′-0"	13′-6"	14′-0"	15′-9"	17′-9"	20′-3"	22′-3"	24′-9"	24′-9"
Placement, ◯				Ⓐ	Ⓑ	Ⓐ	Ⓐ	Ⓐ	Ⓐ	Ⓑ	Ⓑ	Ⓑ	Ⓑ	Ⓐ
ⓒ Bars						#8@18	#8@18	#8@12	#8@12	#6@6	#6@6	#9@12	#9@12	#10@12
Placement, ◯						Ⓒ	Ⓒ	Ⓒ	Ⓒ	Ⓒ	Ⓒ	Ⓒ	Ⓒ	Ⓒ
ⓓ Bars		#5@18	#5@18	#5@18	#5@18	#5@18	#5@18	#5@18	#5@18	#5@18	#5@18	#5@18	#5@18	#5@18
ⓔ Bars								#5@18	#5@18	#5@18	#5@18	#5@18	#5@18	#5@18
X								5′-0"	5′-6"	6′-0"	6′-6"	7′-0"	7′-6"	7′-6"
Placement, ◯								Ⓓ	Ⓓ	Ⓓ	Ⓓ	Ⓓ	Ⓓ	Ⓓ
ⓕ Bars						#9@18	#9@18	#9@18	#9@18	#9@6	#7@6	#10@6	#10@6	#11@6
X						3′-9"	6′-0"	5′-0"	6′-0"	5′-3"	5′-3"	6′-6"	8′-3"	8′-9"
ⓖ Bars										#4@15	#4@15	#4@15	#4@12	#4@12
U										7′-6"	7′-6"	8′-9"	9′-9"	11′-9"
Tie Down Design Force (T) k/ft		0	0	3	3	3	8	8	14	14	21	25	29	34
Tie Down Maximum Spacing (S) ft		0	0	32	32	32	20	20	12	12	9	9	8	7
Ultimate Bearing Capacity Required (ksf)		3.75	4.25	5.50	6.00	5.75	5.25	6.25	6.00	7.75	6.75	7.75	7.75	8.00
H_D (N)	Group 1 k/m (k/ft)	2.21 (8.1)	3.09 (8.74)	4.51 (9.69)	5.29 (11.6)	6.77 (14.44)	8.44 (17.77)	10.29 (21.08)	12.57 (26)	14.55 (29.25)	17.23 (34.66)	20.40 (42.24)	23.25 (47.66)	26.26 (52.42)
	Group 2 k/m (k/ft)	4.54 (10.06)	5.9 (11.16)	7.15 (12.66)	8.9 (15.46)	11.46 (19.38)	15 (24.15)	17.59 (28.77)	23.4 (35.24)	25.6 (40.14)	32.12 (47.36)	38.55 (57.31)	40.96 (64.9)	45.89 (71.93)

LEGEND FOR BAR PLACEMENT:

Ⓐ : Alternate placement of ⓐ bars and ⓑ bars

Ⓑ : Bundle ⓐ bars and ⓑ bars

Ⓒ : Splice ⓒ bars to ⓑ bars

Ⓓ : Bundle ⓓ bars and ⓔ bars

H_D : Horizontal driving force

(N) : Sum of vertical forces

Cont : Continuous

STANDARD DRAWING

FILE NO. xs14-380-2e

APPROVED BY G. WANG RESPONSIBLE TECHNICAL SPECIALIST
APPROVAL DATE 5-13-08

RELEASED BY ROBERTO LACALLE RESPONSIBLE OFFICE CHIEF
RELEASE DATE 5-13-08

STATE OF CALIFORNIA DEPARTMENT OF TRANSPORTATION

DIVISION OF ENGINEERING SERVICES

BRIDGE NO.

POST MILE 27.7

RETAINING WALL NO. 14

RETAINING WALL TYPE 7SW - DETAIL NO. 2

DS OSD 2147A (ENGLISH STANDARD DRAWING "XS" BORDER REV. 01/11/08)

ORIGINAL SCALE IN INCHES FOR REDUCED PLANS 0 1 2 3

PROJECT NUMBER & PHASE: 04000210801
CONTRACT NO: 04-1G9404 UNIT: 0750

DISREGARD PRINTS BEARING EARLIER REVISION DATES

REVISION DATES (PRELIMINARY STAGE ONLY) 6/08 3/09 7/09 2/10 3/9/11 4/29/11 8/9/11 10/31/11

SHEET 4 OF 7

DATE PLOTTED => 19-JAN-2012 TIME PLOTTED => 07:47

USERNAME => s124496

28Erw14-g-rwdt03.dgn

DIST.	COUNTY	ROUTE	POST MILE TOTAL PROJECT	SHEET NO.	TOTAL SHEETS
04	CC	4	27.3/R29.0	940	950

REGISTERED ENGINEER - CIVIL 11/30/11

1-17-12
PLANS APPROVAL DATE

REGISTERED PROFESSIONAL ENGINEER Brett D. Makley No. C66397 Exp. 07/30/12 CIVIL STATE OF CALIFORNIA

The State of California or its officers or agents shall not be responsible for the accuracy or completeness of electronic copies of this plan sheet.

CONTRA COSTA TRANSPORTATION AUTHORITY
2999 OAK ROAD, SUITE 100
WALNUT CREEK, CA 94597

T.Y. LIN INTERNATIONAL
2010 CROW CANYON PLACE, SUITE 350
SAN RAMON, CA 94583

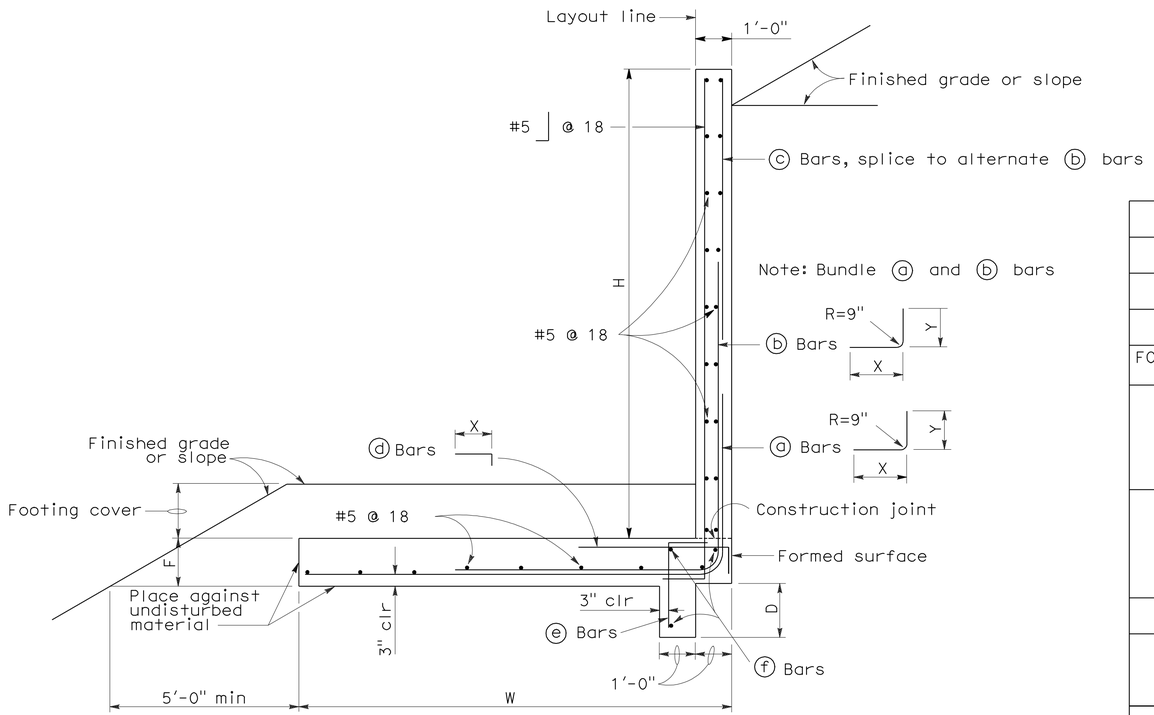

TYPICAL SECTION

Note: For details not shown, see B3-8

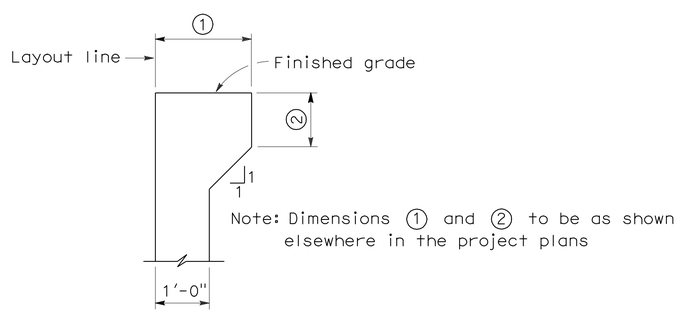

HAUNCH FOR CONCRETE BARRIER

TABLE OF DIMENSIONS AND REINFORCING STEEL

DESIGN H	4'-0"	6'-0"	8'-0"	10'-0"	12'-0"
W	4'-0"	5'-3"	7'-3"	9'-4"	12'-0"
F	1'-0"	1'-0"	1'-3"	1'-3"	1'-3"
D	0'-9"	0'-9"	0'-9"	1'-6"	1'-6"
FOOTING COVER min	1'-0"	1'-0"	1'-6"	1'-6"	1'-6"
ⓐ Bars X Y	#5 @ 18 Cont Cont	#5 @ 12 Cont Cont	#6 @ 12 Cont Cont	#6 @ 12 Cont 5'-0"	#6 @ 9 Cont 5'-0"
ⓑ Bars X Y	——— ——— ———	——— ——— ———	——— ——— ———	#6 @ 12 5'-3" Cont	#6 @ 9 7'-3" 8'-4"
ⓒ Bars	———	———	———	———	#5 @ 18
ⓓ Bars X	——— ———	——— ———	——— ———	#5 @ 12 4'-0"	#5 @ 12 4'-0"
ⓔ Bars	———	———	———	#5 @ 12	#5 @ 12
ⓕ Bars	———	———	———	3-#5	3-#5

Cont = Continuous

GENERAL NOTES

Design: Service load design
Loading case:
1. Level slope with 240 psf surcharge
2. 2:1 unlimited slope

Concrete: n=9, f'_c =3250 psi, f_c = 1300 psi
Reinforcing steel: fy=60,000 psi f_s=24,000 psi
Soil:
Backfill: Ø=34°, γ=120 pcf
Foundation: Ø=34°, c=200 psf, γ=120 pcf
Minimum allowable bearing pressure=2.0 ksf

Lateral earth pressure: Coulomb's theory with δ=0°

Seismic:
1. Level slope, k_h=0.3g
2. 2:1 unlimited slope, k_h=0.1g

SPECIAL DETAILS

STANDARD DRAWING

RELEASE DATE	Revised	DESIGN	BY J.C. MOESE	CHECKED O. HOR	RELEASED BY
		DETAILS	BY R. YEE	CHECKED O. HOR	
FILE NO.	xs14-010	SUBMITTED	BY J.C. MOESE	DRAWING DATE 10/92	OFFICE CHIEF

DS OSD 2147A (METRIC) (REV. 2/25/97)

1 Changed to U.S. Customary Unit

STATE OF CALIFORNIA DEPARTMENT OF TRANSPORTATION

DIVISION OF ENGINEERING SERVICES

BRIDGE NO.
POST MILE 27.7

RETAINING WALL NO. 14
RETAINING WALL TYPE 7

ORIGINAL SCALE IN MILLIMETERS FOR REDUCED PLANS 0 10 20 30 40 50 60 70 80 90 100

PROJECT NUMBER & PHASE: 04000210801
CONTRACT NO: 04-1G9404 UNIT: 0750

DISREGARD PRINTS BEARING EARLIER REVISION DATES

REVISION DATES (PRELIMINARY STAGE ONLY) 6/08 5/09 2/10 1/12/11 3/14/11 4/29/11 8/19/11 10/31/11

SHEET 5 OF 7

USERNAME => s124496

28Erw14-g-rwdt05.dgn

DATE PLOTTED => 19-JAN-2012 TIME PLOTTED => 07:48

DIST	COUNTY	ROUTE	POST MILES TOTAL PROJECT	SHEET No	TOTAL SHEETS
04	CC	4	27.3/R29.0	941	950

REGISTERED CIVIL ENGINEER 11/30/11 DATE

1-17-12
PLANS APPROVAL DATE

The State of California or its officers or agents shall not be responsible for the accuracy or completeness of electronic copies of this plan sheet.

REGISTERED PROFESSIONAL ENGINEER Brett D. Makley No. C66397 Exp. 07/30/12 CIVIL STATE OF CALIFORNIA

CONTRA COSTA TRANSPORTATION AUTHORITY
2999 OAK ROAD, SUITE 100
WALNUT CREEK, CA 94597

T.Y. LIN INTERNATIONAL
2010 CROW CANYON PLACE, SUITE 350
SAN RAMON, CA 94583

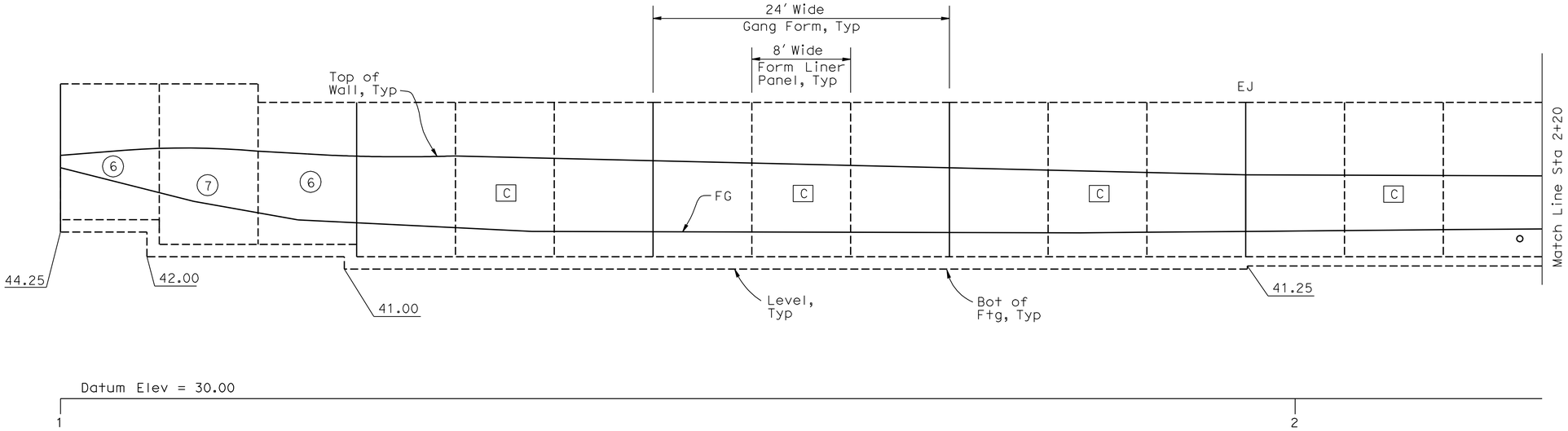

DEVELOPED ELEVATION

1" = 5'-0"

Legends:

EJ Wall Expansion Joint

C Form liner group designation

6 Form liner panel designation

Note:
For form liner group and panel details see "Retaining wall Architectural Treatment Details" sheets in Rd plans.

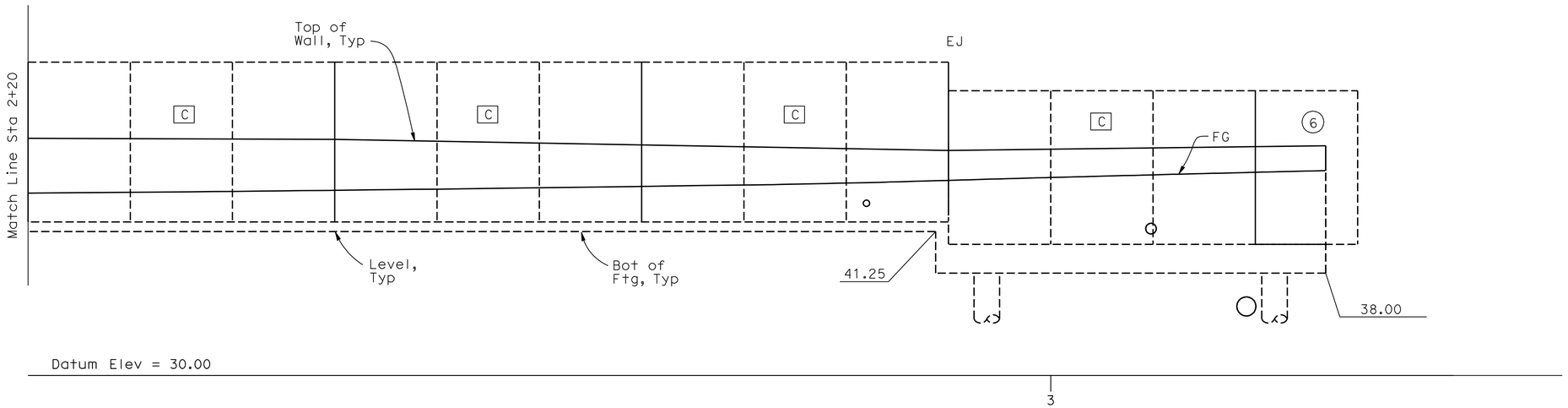

DEVELOPED ELEVATION

1" = 5'-0"

Note:
The Contractor shall verify all controlling field dimensions before ordering or fabricating any material.

Overcomer Y. Hor
DESIGN OVERSIGHT Overcomer Y. Hor

12-12-11
SIGN OFF DATE

	BY	CHECKED
DESIGN	Dina Tobia	Brett Makley
DETAILS	Tom Fukuhara	Brett Makley
QUANTITIES	Ching Dang /DT	Kim Bowen /OC

PREPARED FOR THE STATE OF CALIFORNIA DEPARTMENT OF TRANSPORTATION

Brett Makley
PROJECT ENGINEER

BRIDGE NO.

POST MILE 27.7

RETAINING WALL NO. 14
ARCHITECTURAL TREATMENT LAYOUT

DESIGN DETAIL SHEET (ENGLISH) (REV. 2/25/05)

ORIGINAL SCALE IN INCHES FOR REDUCED PLANS 0 1 2 3

PROJECT NUMBER & PHASE: 04000210801
CONTRACT NO: 04-1G9404 UNIT: 0750

DISREGARD PRINTS BEARING EARLIER REVISION DATES

REVISION DATES (PRELIMINARY STAGE ONLY) 6/08 5/08 2/10 1/18/11 3/9/11 4/29/11 8/9/11 10/31/11

SHEET 6 OF 7

FILE => 28Erw14-y-atlo01.dgn

USERNAME => s124496 DATE PLOTTED => 19-JAN-2012 TIME PLOTTED => 07:48

DIST	COUNTY	ROUTE	POST MILES TOTAL PROJECT	SHEET No	TOTAL SHEETS
04	CC	4	27.3/R29.0	942	950

GEOTECHNICAL PROFESSIONAL — DATE 8/9/11

1-17-12
PLANS APPROVAL DATE

The State of California or its officers or agents shall not be responsible for the accuracy or completeness of electronic copies of this plan sheet.

REGISTERED PROFESSIONAL ENGINEER — GARY PARIKH — No. G.E. 666 — Exp. 12/31/11 — GEOTECHNICAL — STATE OF CALIFORNIA

CONTRA COSTA TRANSPORTATION AUTHORITY
2999 OAK ROAD, SUITE 100
WALNUT CREEK, CA 94597

PARIKH CONSULTANTS, INC.
2360 QUME DRIVE, SUITE A
SAN JOSE CA 95131

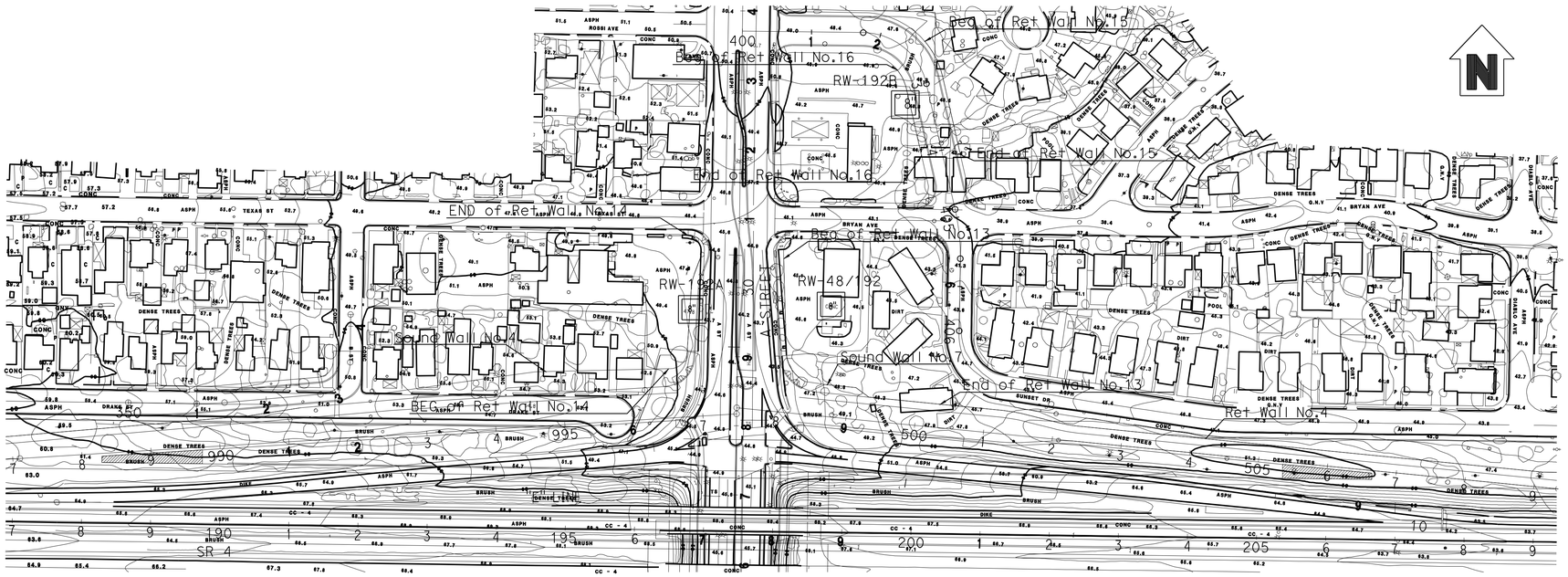

PLAN

1" =100'

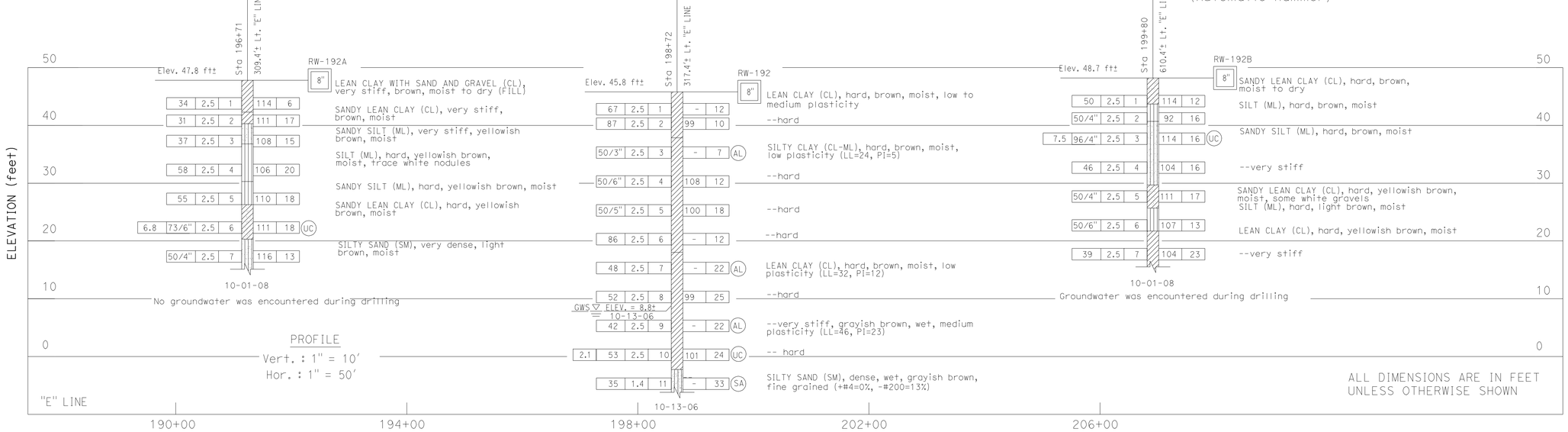

PROFILE
Vert. : 1" = 10'
Hor. : 1" = 50'

Note:
Standard Penetration Test Sampler: I.D. = 1.4"; O.D. = 2"
Modified California Sampler: I.D. = 2.5"; O.D. = 3"
Hammer Assembly: A 140 lb hammer with a 30" drop (Automatic Hammer)

ALL DIMENSIONS ARE IN FEET UNLESS OTHERWISE SHOWN

LEGEND OF BORING OPERATIONS

Casing driven — Sampler no. — Size of Sampler (inch) — Uncofined compressive strength (tsf) — Number of blows to produce 12" inches of penetration after the initial 6 inches of seating using a 140 lb hammer with a 30 inches drop of an automatic hammer — Number of blows required to produce the indicated penetration after an initial 6 inches seating — 50 blows produced the indicated penetration during the initial 6 inches interval — Top Hole El. — Boring number — Year being drilled — Description of material — Dry unit weight (pcf) — % moisture — Sieve analysis — Conformable material change — Estimated material change — GWS Elev. — Date measured — Unconformable material change — Boring Date — ROTARY SAMPLE BORING (WET)

Top Hole El. — B-No. — Pressure measured along friction element (23.2" area) divided by pressure measured on tip element — Friction Relief (3.1" to 100-300 ft) — Boring Date — ELECTRONIC CONE PENETROMETER TEST — Cone Penetrometer dimensions and testing procedures are in accordance with ASTM standard D-3441-49, or as noted.

Top Hole El. — B-No. — GWS Elev. — Date Measured — Driving rate in blows per second per 12" (using a 140 lb hammer with a percussion hammer of as noted) — Boring Date — 2.25" CONE PENETRATION BORING

CONSISTENCY CLASSIFICATION FOR SOILS According to the Standard Penetration Test (ASTM D-1586)

SPT N-Value (Blows/FT)	Granular	SPT N-Value (Blows/FT)	Cohesive
0-4	Very loose	<2	Very soft
5-10	Loose	2-4	Soft
11-30	Medium Dense	5-8	Firm
31-50	Dense	9-15	Stiff
>50	Very Dense	16-30	Very Stiff
		>31	Hard

NOTE: Visual classifications of earth materials are based on field inspection and or a confirmed or revised with laboratory test results as necessary.

LEGEND OF EARTH MATERIALS (USCS) BASED ON ASTM D2487, D2488

FILL MATERIAL — CLAY (CL or CH) — SILT (ML or MH) — PEAT and/or ORGANIC MATTER — WELL-GRADED GRAVEL (GW) — POORLY-GRADED GRAVEL (GP) — SILT GRAVEL (GM) — CLAYEY GRAVEL (GC) — WELL-GRADED SAND (SW) — POORLY-GRADED SAND (SP) — SILTY SAND (SM) — CLAYEY SAND (SC) — COBBLES/BOULDERS — IGNEOUS ROCK — SEDIMENTARY ROCK — METAMORPHIC ROCK

TYPES OF BORINGS

2.25" CONE PENETRATION — ROTARY WASH — ELECTRONIC CONE PENETROMETER — AUGER BORING (DRY) — TEST PIT — DIAMOND CORE BORING — SOIL TUBE

IN-SITU, LAB & FIELD TEST DESIGNATIONS

AL ATTERBERG LIMITS — CA CHEMICAL ANALYSIS — CN CONSOLIDATION — CD CONSOLIDATED UNDRAINED TRIAXIAL — DS DIRECT SHEAR — MD MAX. DRY DENSITY — PP POCKET PENETROMETER — SA SIEVE ANALYSIS — TV TORVANE — UC UNCONFINED COMPRESSION — UU UNCONSOLIDATED UNDRAINED TRIAXIAL — VS VANE SHEAR

DESIGN OVERSIGHT Overcomer Y. Hor
12-12-11
SIGN OFF DATE

DRAWN BY O. GOUTHIER
CHECKED BY P. SIRCAR

G. TRIPATHI
FIELD INVESTIGATION BY:
DATE: 08/2006-07/2009

PREPARED FOR THE STATE OF CALIFORNIA DEPARTMENT OF TRANSPORTATION

P. SIRCAR
PROJECT ENGINEER

BRIDGE NO.
POST MILE 27.7

RETAINING WALL NO. 14

LOG OF TEST BORINGS

OSF GEOTECHNICAL LOG OF TEST BORINGS SHEET (ENGLISH) (REV. 2/25/05)

ORIGINAL SCALE IN INCHES FOR REDUCED PLANS 0 1 2 3

PROJECT NUMBER & PHASE: 04000210801
CONTRACT NO: 04-1G9404 UNIT: 0750

DISREGARD PRINTS BEARING EARLIER REVISION DATES

REVISION DATES (PRELIMINARY STAGE ONLY) 08/14/09 7/9/11 4/29/11 8/9/11

SHEET 7 OF 7

FILE => 28Erw14-z-ltb01.dgn

USERNAME => s124496 DATE PLOTTED => 19-JAN-2012 TIME PLOTTED => 07:48

DIST	COUNTY	ROUTE	POST MILES TOTAL PROJECT	SHEET No	TOTAL SHEETS
04	CC	4	27.3/R29.0	943	950

REGISTERED CIVIL ENGINEER 11/30/11 DATE

1-17-12
PLANS APPROVAL DATE

The State of California or its officers or agents shall not be responsible for the accuracy or completeness of scanned copies of this plan sheet.

REGISTERED PROFESSIONAL ENGINEER Brett D. Makley No. C66397 Exp. 07/30/12 CIVIL STATE OF CALIFORNIA

CONTRA COSTA TRANSPORTATION AUTHORITY
2999 OAK ROAD, SUITE 100
WALNUT CREEK, CA 94597

T.Y. LIN INTERNATIONAL
2010 CROW CANYON PLACE, SUITE 350
SAN RAMON, CA 94583

Notes:

1. Chain link railing not shown for clarity.
2. For weep hole and weakened plane locations and details see Standard Plan B0-3.
3. Stop waterstop 6" above upper FG and 1'-0" below lower FG.

Legend:

(1) 1¾" Max. architectural treatment see "Architectural Treatment Layout" and "Architectural Treatment Details" sheets in Road Plans

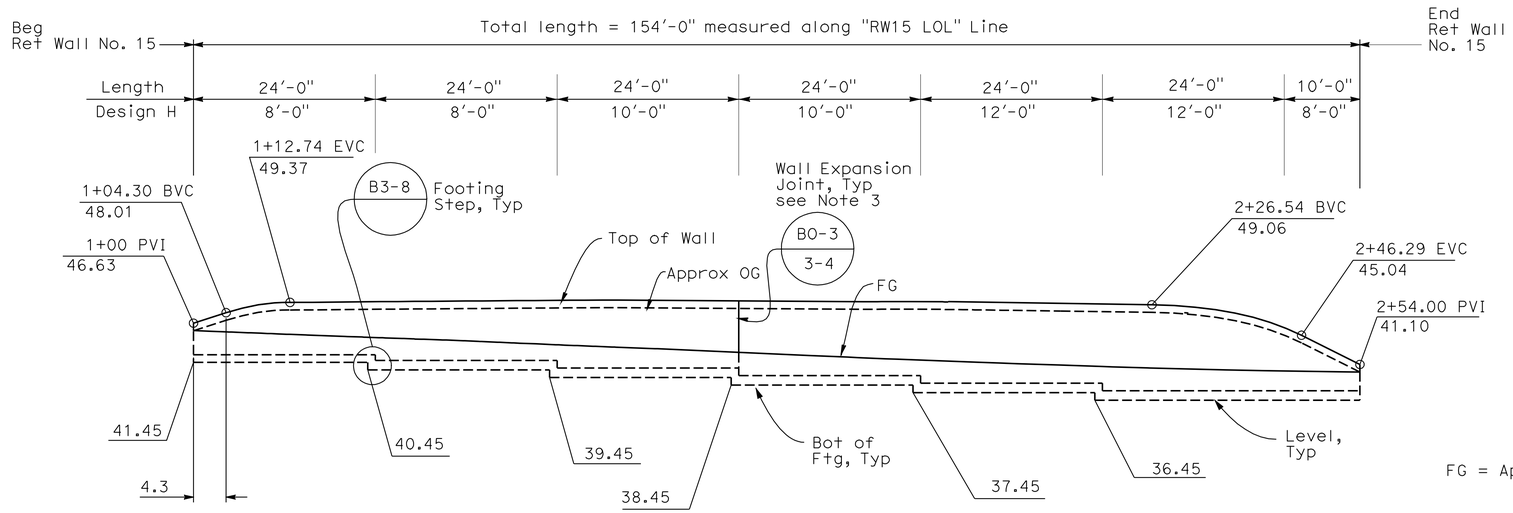

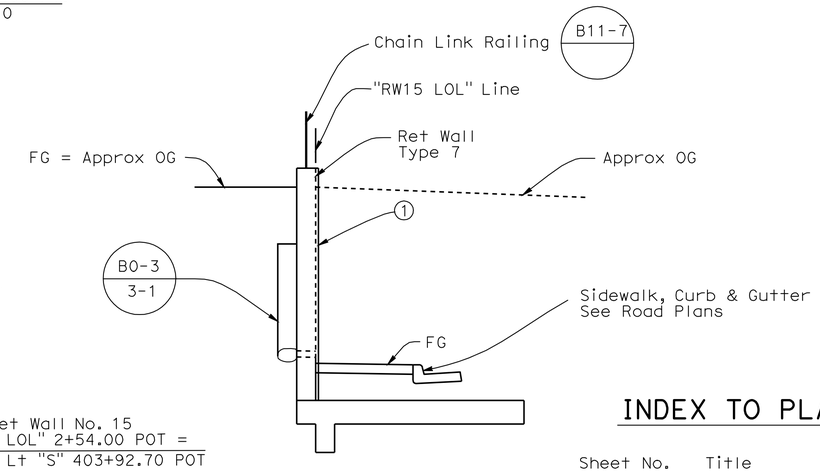

TYPICAL SECTION

¼" = 1'-0"

Datum Elev = 10.00

DEVELOPED ELEVATION

1" = 10'-0"

PLAN SYMBOLS

SECTION IDENTIFICATION

STANDARD PLAN (MAY 2006) SHEET NO.

DETAIL NO.

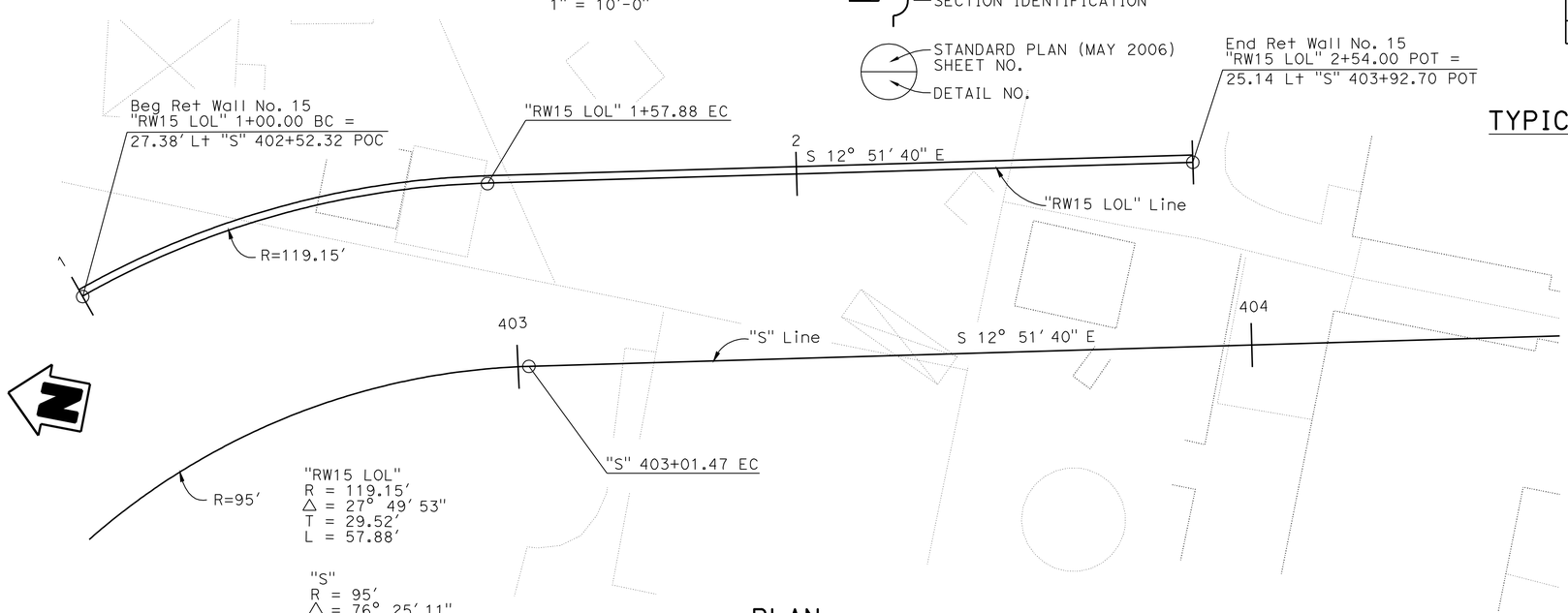

PLAN

1"= 10'-0"

INDEX TO PLANS

Sheet No.	Title
1	GENERAL PLAN
2	RETAINING WALL TYPE 7
3	ARCHITECTURAL TREATMENT LAYOUT
4	LOG OF TEST BORINGS

STANDARD PLANS DATED MAY 2006

A10A	ACRONYMS AND ABBREVIATIONS (SHEET 1 OF 2)
A10B	ACRONYMS AND ABBREVIATIONS (SHEET 2 OF 2)
A10C	SYMBOLS (SHEET 1 OF 2)
A10D	SYMBOLS (SHEET 2 OF 2)
A62B	LIMITS OF PAYMENT FOR EXCAVATION AND BACKFILL BRIDGE SURCHARGE AND WALL
B0-1	BRIDGE DETAILS
B0-3	BRIDGE DETAILS
B3-8	RETAINING WALL DETAILS No. 1
B3-9	RETAINING WALL DETAILS NO. 2
B11-7	CHAIN LINK FENCE

RETAINING WALL NO. 15

QUANTITIES

STRUCTURE EXCAVATION (RETAINING WALL)	870	CY
STRUCTURE BACKFILL (RETAINING WALL)	275	CY
PERVIOUS BACKFILL MATERIAL (RETAINING WALL)	17	CY
STRUCTURAL CONCRETE, RETAINING WALL	184	CY
ARCHITECTURAL TEXTURE	1,945	SQFT
BAR REINFORCING STEEL (RETAINING WALL)	18,070	LB
CHAIN LINK RAILING	243	LF

Note:
The Contractor shall verify all controlling field dimensions before ordering or fabricating any material.

Overcomer Y. Hor
DESIGN OVERSIGHT Overcomer Y. Hor
12-12-11
SIGN OFF DATE

	BY	CHECKED
DESIGN	Dina Tobia	Brett Makley
DETAILS	Tom Fukuhara	Brett Makley
QUANTITIES	Ching Dong/DT	Kimberly Bowen/OC

LOAD FACTOR DESIGN — LIVE LOADING: HS20-44 AND ALTERNATIVE AND PERMIT DESIGN LOAD

	BY	CHECKED
LAYOUT	Dina Tobia	Brett Makley
SPECIFICATIONS	Odeon M. Li	PLANS AND SPECS COMPARED Odeon M. Li

PREPARED FOR THE STATE OF CALIFORNIA DEPARTMENT OF TRANSPORTATION

Brett Makley
PROJECT ENGINEER

BRIDGE NO.
POST MILES 27.8

RETAINING WALL NO. 15
GENERAL PLAN

DESIGN GENERAL PLAN SHEET (ENGLISH) (REV. 06-01-09)

ORIGINAL SCALE IN INCHES FOR REDUCED PLANS 0 1 2 3

PROJECT NUMBER & PHASE: 04000210801
CONTRACT NO: 04-1G9404 UNIT: 0750

DISREGARD PRINTS BEARING EARLIER REVISION DATES

REVISION DATES (PRELIMINARY STAGE ONLY): 8/8/8 3/8/8 2/1/0 3/9/11 4/28/11 8/9/11 10/31/11 11/16/11 11/30/11

SHEET 1 OF 4

FILE => 28Erw15-a-gp01.dgn

USERNAME => s121614 DATE PLOTTED => 30-JAN-2012 TIME PLOTTED => 03:59

DIST.	COUNTY	ROUTE	POST MILE TOTAL PROJECT	SHEET NO.	TOTAL SHEETS
04	CC	4	27.3/R29.0	944	950

REGISTERED ENGINEER - CIVIL 11/30/11

1-17-12
PLANS APPROVAL DATE

REGISTERED PROFESSIONAL ENGINEER Brett D. Makley No. C66397 Exp. 07/30/12 CIVIL STATE OF CALIFORNIA

The State of California or its officers or agents shall not be responsible for the accuracy or completeness of electronic copies of this plan sheet.

CONTRA COSTA TRANSPORTATION AUTHORITY
2999 OAK ROAD, SUITE 100
WALNUT CREEK, CA 94597

T.Y. LIN INTERNATIONAL
2010 CROW CANYON PLACE, SUITE 350
SAN RAMON, CA 94583

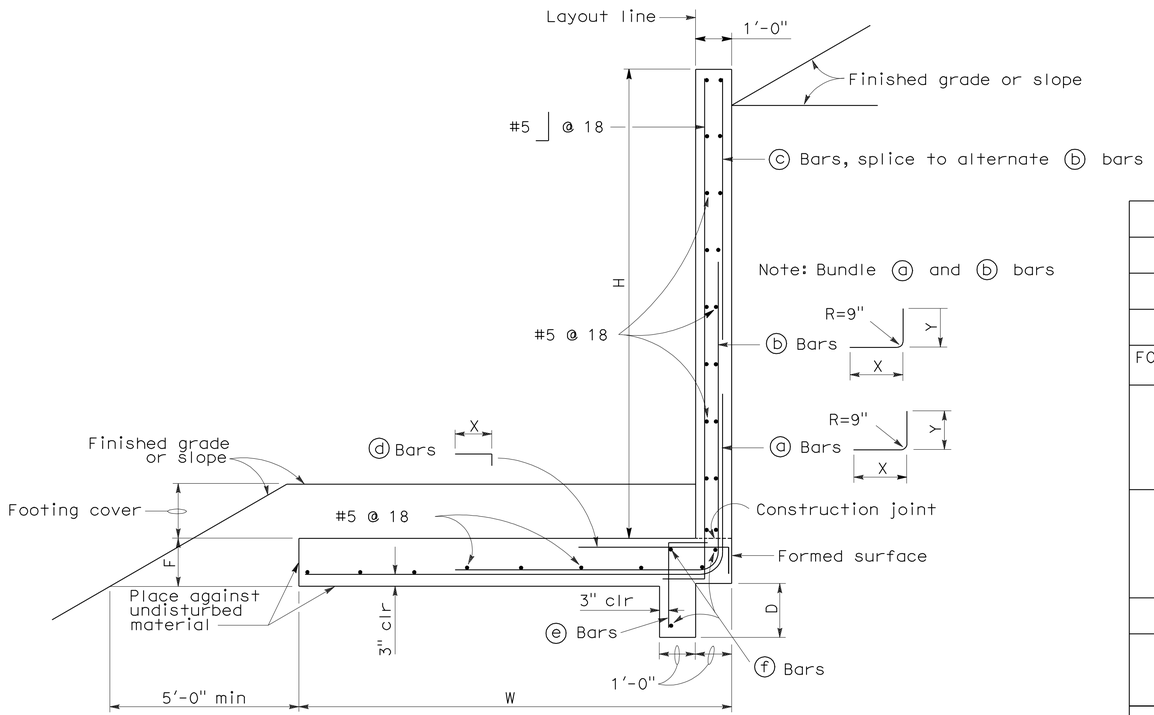

TYPICAL SECTION

Note: For details not shown, see B3-8

TABLE OF DIMENSIONS AND REINFORCING STEEL

DESIGN H	4'-0"	6'-0"	8'-0"	10'-0"	12'-0"
W	4'-0"	5'-3"	7'-3"	9'-4"	12'-0"
F	1'-0"	1'-0"	1'-3"	1'-3"	1'-3"
D	0'-9"	0'-9"	0'-9"	1'-6"	1'-6"
FOOTING COVER min	1'-0"	1'-0"	1'-6"	1'-6"	1'-6"
ⓐ Bars	#5 @ 18	#5 @ 12	#6 @ 12	#6 @ 12	#6 @ 9
X	Cont	Cont	Cont	Cont	Cont
Y	Cont	Cont	Cont	5'-0"	5'-0"
ⓑ Bars	———	———	———	#6 @ 12	#6 @ 9
X	———	———	———	5'-3"	7'-3"
Y	———	———	———	Cont	8'-4"
ⓒ Bars	———	———	———	———	#5 @ 18
ⓓ Bars	———	———	———	#5 @ 12	#5 @ 12
X	———	———	———	4'-0"	4'-0"
ⓔ Bars	———	———	———	#5 @ 12	#5 @ 12
ⓕ Bars	———	———	———	3-#5	3-#5

Cont = Continuous

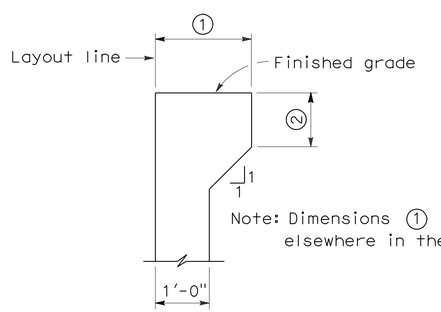

HAUNCH FOR CONCRETE BARRIER

GENERAL NOTES

Design: Service load design
Loading case:
1. Level slope with 240 psf surcharge
2. 2:1 unlimited slope

Concrete: n=9, f'_c =3250 psi, f_c = 1300 psi
Reinforcing steel: fy=60,000 psi f_s=24,000 psi
Soil:
Backfill: Ø=34°, γ=120 pcf
Foundation: Ø=34°, c=200 psf, γ=120 pcf
Minimum allowable bearing pressure=2.0 ksf

Lateral earth pressure: Coulomb's theory with δ=0°

Seismic:
1. Level slope, k_h=0.3g
2. 2:1 unlimited slope, k_h=0.1g

SPECIAL DETAILS

STANDARD DRAWING

RELEASE DATE	Revised	DESIGN	BY J.C. MOESE	CHECKED O. HOR	RELEASED BY
		DETAILS	BY R. YEE	CHECKED O. HOR	
FILE NO.	xs14-010	SUBMITTED	BY J.C. MOESE	DRAWING DATE 10/92	OFFICE CHIEF

DS OSD 2147A (METRIC) (REV. 2/25/97)

1 Changed to U.S. Customary Unit

STATE OF CALIFORNIA DEPARTMENT OF TRANSPORTATION

DIVISION OF ENGINEERING SERVICES

BRIDGE NO.

POST MILE 27.8

RETAINING WALL NO. 15

RETAINING WALL TYPE 7

ORIGINAL SCALE IN MILLIMETERS FOR REDUCED PLANS 0 10 20 30 40 50 60 70 80 90 100

PROJECT NUMBER & PHASE: 04000210801
CONTRACT NO: 04-1G9404 UNIT: 0750

DISREGARD PRINTS BEARING EARLIER REVISION DATES

REVISION DATES (PRELIMINARY STAGE ONLY) 3/9/11 4/20/11 8/9/11 10/31/11

SHEET 2 OF 4

USERNAME => s124496

28Erw15-g-rwdt01.dgn

DATE PLOTTED => 19-JAN-2012 TIME PLOTTED => 07:48

DIST	COUNTY	ROUTE	POST MILES TOTAL PROJECT	SHEET No	TOTAL SHEETS
04	CC	4	27.3/R29.0	945	950

REGISTERED CIVIL ENGINEER 11/30/11 DATE

1-17-12
PLANS APPROVAL DATE

REGISTERED PROFESSIONAL ENGINEER Brett D. Makley No. C66397 Exp. 07/30/12 CIVIL STATE OF CALIFORNIA

The State of California or its officers or agents shall not be responsible for the accuracy or completeness of electronic copies of this plan sheet.

CONTRA COSTA TRANSPORTATION AUTHORITY
2999 OAK ROAD, SUITE 100
WALNUT CREEK, CA 94597

T.Y. LIN INTERNATIONAL
2010 CROW CANYON PLACE, SUITE 350
SAN RAMON, CA 94583

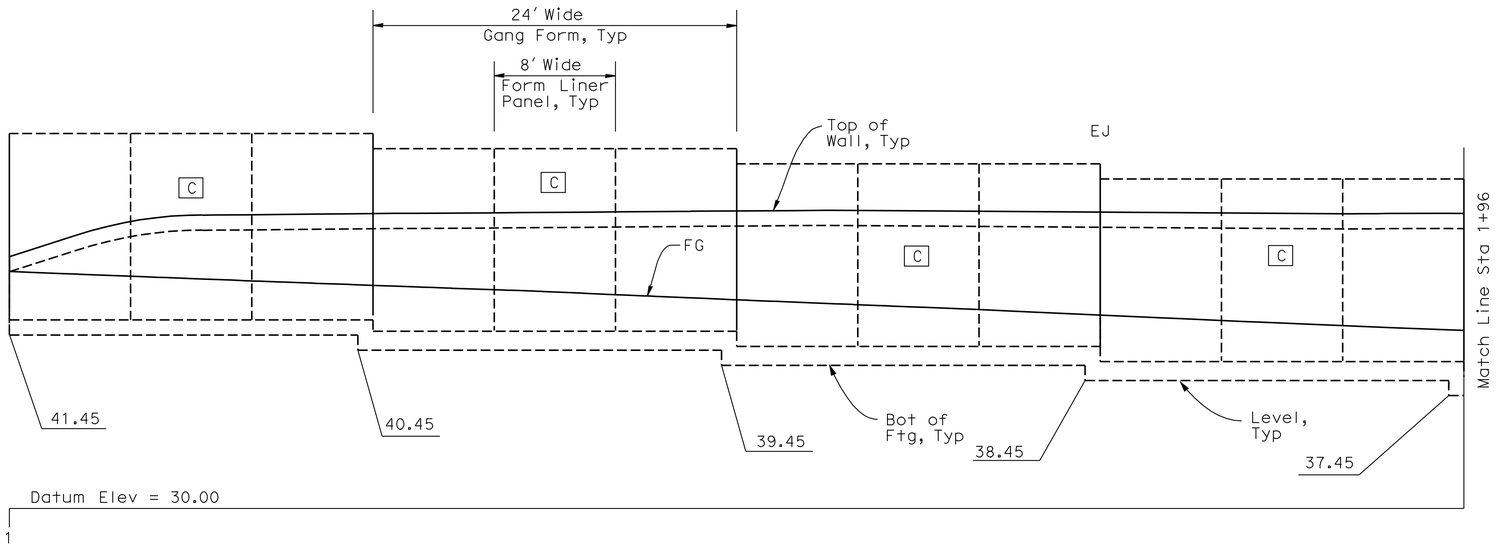

DEVELOPED ELEVATION

1" = 5'-0"

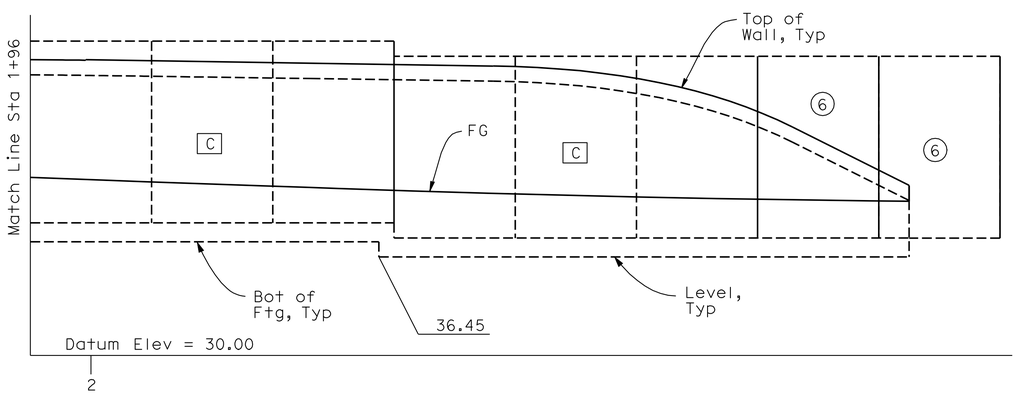

DEVELOPED ELEVATION

1" = 5'-0"

Legends:

EJ Wall Expansion Joint

C Form liner group designation

6 Form liner panel designation

Note:
For form liner group and panel details see "Retaining wall Architectural Treatment Details" sheets in Rd plans.

Note:
The Contractor shall verify all controlling field dimensions before ordering or fabricating any material.

DESIGN OVERSIGHT Overcomer Y. Hor

12-12-11
SIGN OFF DATE

DESIGN DETAIL SHEET (ENGLISH) (REV. 2/25/05)

	BY	CHECKED
DESIGN	Dina Tobia	Brett Makley
DETAILS	Tom Fukuhara	Brett Makley
QUANTITIES	Ching Dang /DT	Kimberly Bowen/OC

ORIGINAL SCALE IN INCHES FOR REDUCED PLANS 0 1 2 3

PREPARED FOR THE STATE OF CALIFORNIA DEPARTMENT OF TRANSPORTATION

Brett Makley
PROJECT ENGINEER

PROJECT NUMBER & PHASE: 04000210801
CONTRACT NO: 04-1G9404 UNIT: 0750

BRIDGE NO.

POST MILE 27.8

RETAINING WALL NO. 15
ARCHITECTURAL TREATMENT LAYOUT

DISREGARD PRINTS BEARING EARLIER REVISION DATES

REVISION DATES (PRELIMINARY STAGE ONLY) 6/08 5/09 2/10 3/29/11 4/28/11 8/29/11 10/31/11 11/30/11

SHEET 3 OF 4

FILE => 28Erw15-y-atlo01.dgn

USERNAME => s124496 DATE PLOTTED => 19-JAN-2012 TIME PLOTTED => 07:48

DIST	COUNTY	ROUTE	POST MILES TOTAL PROJECT	SHEET No	TOTAL SHEETS
04	CC	4	27.3/R29.0	946	950

GEOTECHNICAL PROFESSIONAL — DATE 8/9/11

1-17-12
PLANS APPROVAL DATE

The State of California or its officers or agents shall not be responsible for the accuracy or completeness of electronic copies of this plan sheet.

REGISTERED PROFESSIONAL ENGINEER — GARY PARIKH — No. G.E. 666 — Exp. 12/31/11 — GEOTECHNICAL — STATE OF CALIFORNIA

CONTRA COSTA TRANSPORTATION AUTHORITY
2999 OAK ROAD, SUITE 100
WALNUT CREEK, CA 94597

PARIKH CONSULTANTS, INC.
2360 QUME DRIVE, SUITE A
SAN JOSE CA 95131

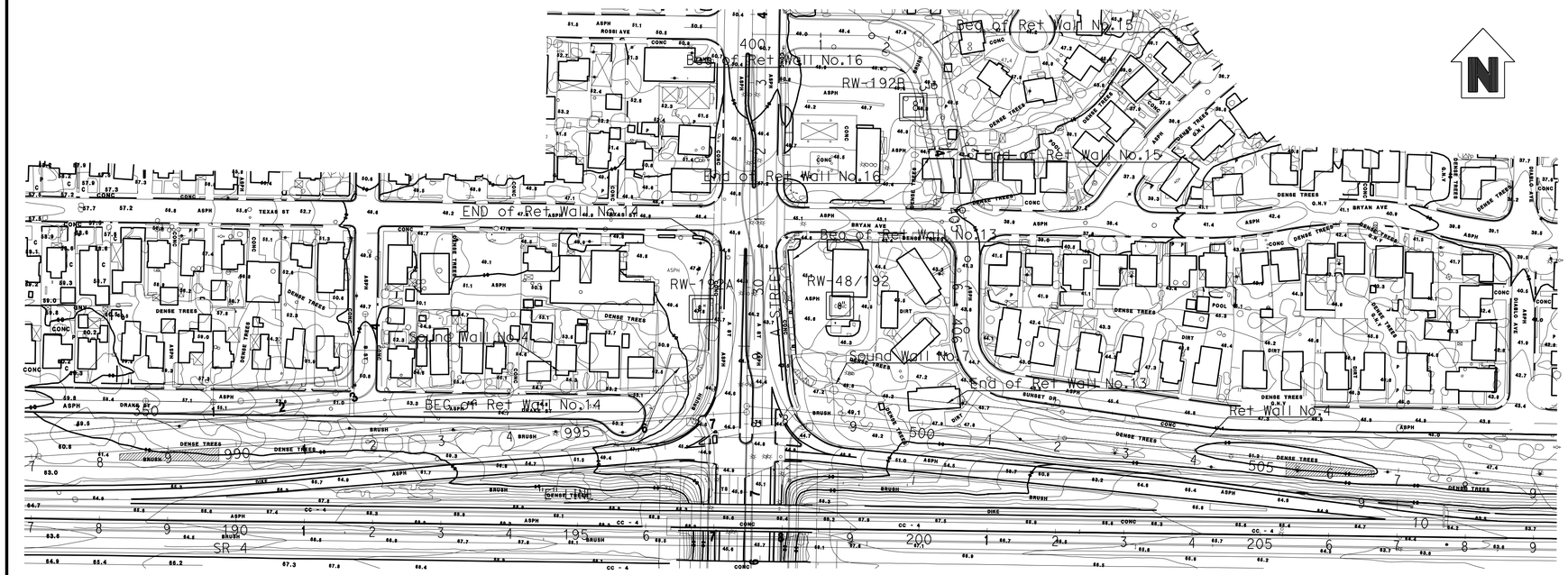

PLAN

1" =100'

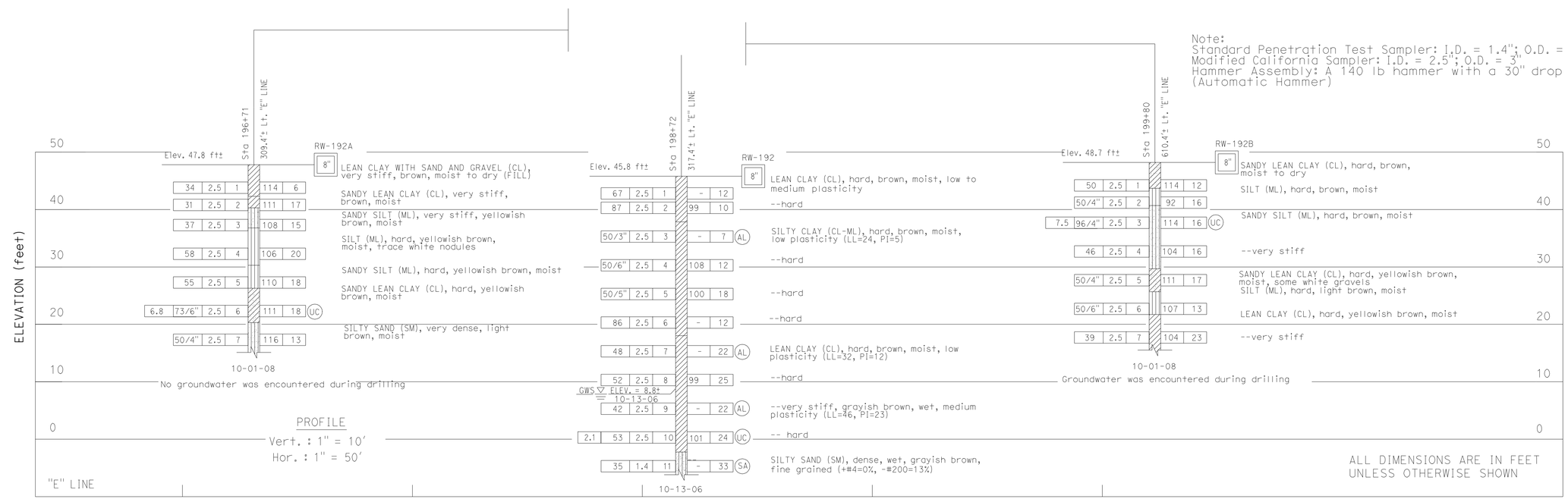

PROFILE

Vert. : 1" = 10'
Hor. : 1" = 50'

Note:
Standard Penetration Test Sampler: I.D. = 1.4"; O.D. = 2"
Modified California Sampler: I.D. = 2.5"; O.D. = 3"
Hammer Assembly: A 140 lb hammer with a 30" drop (Automatic Hammer)

ALL DIMENSIONS ARE IN FEET UNLESS OTHERWISE SHOWN

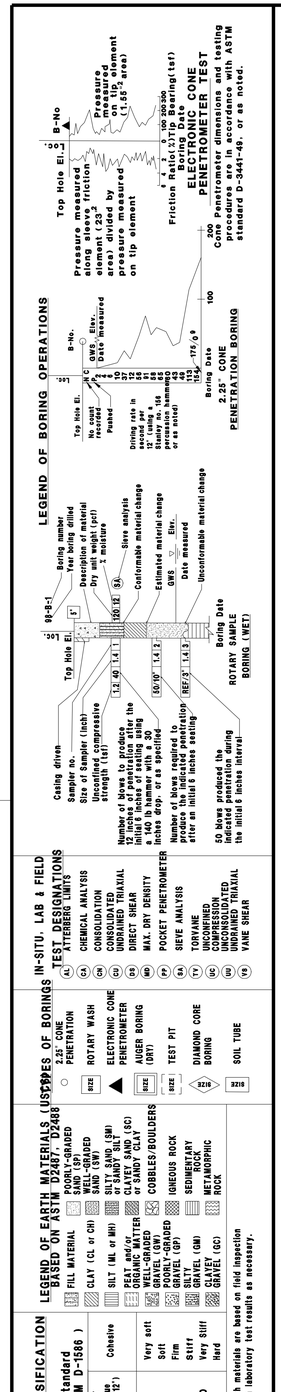

DESIGN OVERSIGHT Overcomer Y. Hor
12-12-11
SIGN OFF DATE

DRAWN BY O. GOUTHIER
CHECKED BY P. SIRCAR

G. TRIPATHI
FIELD INVESTIGATION BY:
DATE: 08/2006-07/2009

PREPARED FOR THE STATE OF CALIFORNIA DEPARTMENT OF TRANSPORTATION

P. SIRCAR
PROJECT ENGINEER

BRIDGE NO.
POST MILE 27.8

RETAINING WALL NO. 15

LOG OF TEST BORINGS

OSF GEOTECHNICAL LOG OF TEST BORINGS SHEET (ENGLISH) (REV. 2/25/05)

ORIGINAL SCALE IN INCHES FOR REDUCED PLANS 0 1 2 3

PROJECT NUMBER & PHASE: 04000210801
CONTRACT NO: 04-1G9404 UNIT: 0750

DISREGARD PRINTS BEARING EARLIER REVISION DATES

REVISION DATES (PRELIMINARY STAGE ONLY) 08/14/09 7/9/11 4/29/11 8/9/11

SHEET 4 OF 4

FILE => 28Erw15-z-ltb01.dgn

USERNAME => s124496 DATE PLOTTED => 19-JAN-2012 TIME PLOTTED => 07:48

DIST	COUNTY	ROUTE	POST MILES TOTAL PROJECT	SHEET No	TOTAL SHEETS
04	CC	4	27.3/R29.0	947	950

REGISTERED CIVIL ENGINEER — DATE 11/30/11

1-17-12
PLANS APPROVAL DATE

The State of California or its officers or agents shall not be responsible for the accuracy or completeness of scanned copies of this plan sheet.

REGISTERED PROFESSIONAL ENGINEER — Odeon M. Li — No. C31895 — Exp. 12/31/12 — CIVIL — STATE OF CALIFORNIA

CONTRA COSTA TRANSPORTATION AUTHORITY
2999 OAK ROAD, SUITE 100
WALNUT CREEK, CA 94597

T.Y. LIN INTERNATIONAL
2010 CROW CANYON PLACE, SUITE 350
SAN RAMON, CA 94583

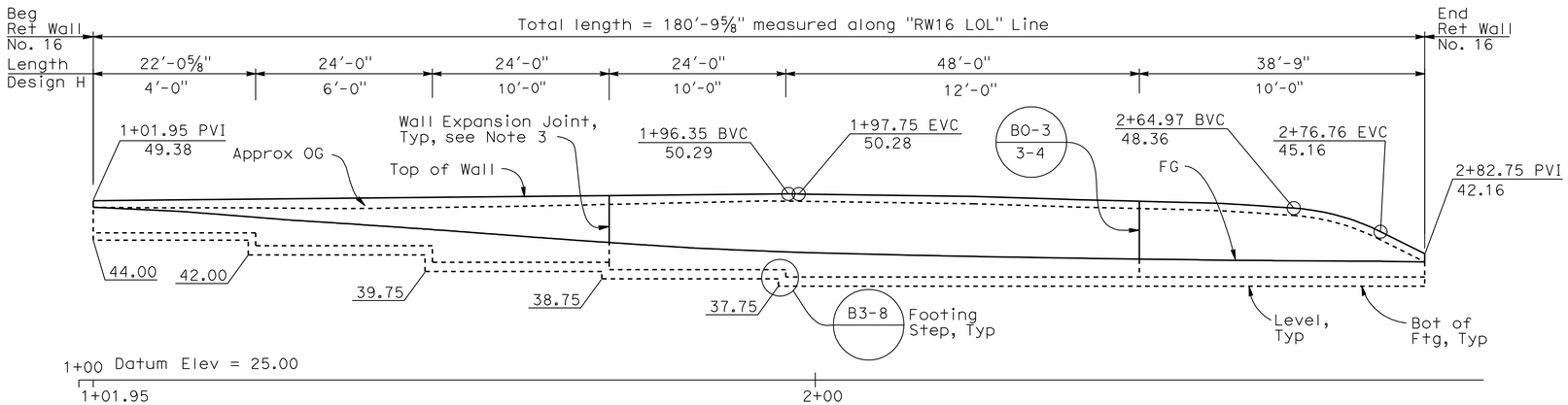

DEVELOPED MIRROR ELEVATION

1" = 10'-0"

Notes:

1. Chain link railing not shown for clarity.
2. For weep hole and weakened plane locations and details see Standard Plan B0-3.
3. Stop waterstop 6" above Conc gutter FL and 1'-0" below lower FG.
4. Gutter outlet at Sta 1+36, see Std Plan B3-9.

Legend:

(1) 1¾" Max. architectural treatment see "Architectural Treatment Layout" and "Retaining Wall Architectural Treatment Details" sheets in Road Plans.

INDEX TO PLANS

Sheet No.	Title
1	GENERAL PLAN
2	RETAINING WALL TYPE 7
3	ARCHITECTURAL TREATMENT LAYOUT
4	LOG OF TEST BORINGS

STANDARD PLANS DATED MAY 2006

A10A	ACRONYMS AND ABBREVIATIONS (SHEET 1 OF 2)
A10B	ACRONYMS AND ABBREVIATIONS (SHEET 2 OF 2)
A10C	SYMBOLS (SHEET 1 OF 2)
A10D	SYMBOLS (SHEET 2 OF 2)
A62B	LIMITS OF PAYMENT FOR EXCAVATION AND BACKFILL BRIDGE SURCHARGE AND WALL
B0-1	BRIDGE DETAILS
B0-3	BRIDGE DETAILS
B3-8	RETAINING WALL DETAILS NO. 1
B3-9	RETAINING WALL DETAILS NO. 2
B11-7	CHAIN LINK RAILING

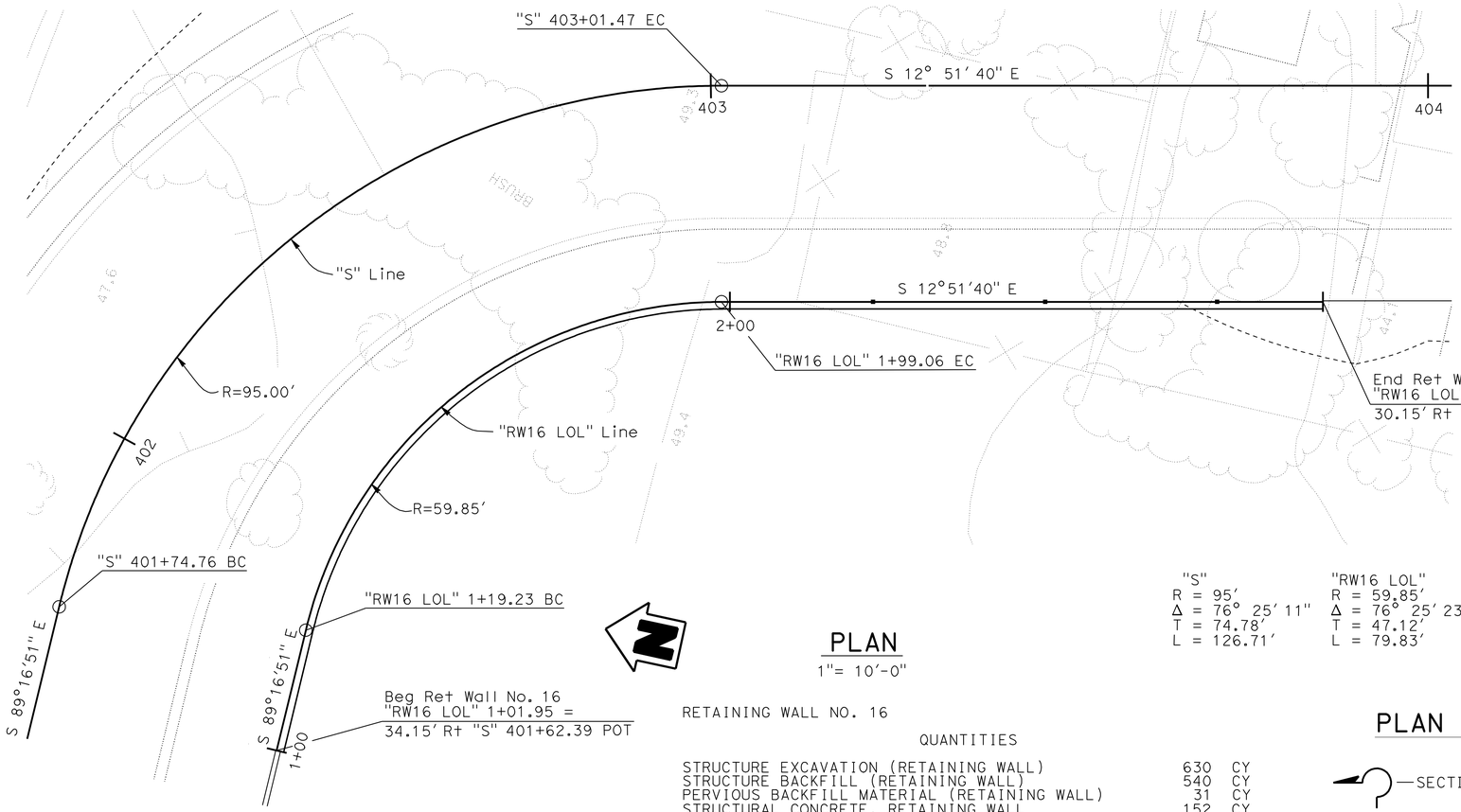

"S"	"RW16 LOL"
R = 95'	R = 59.85'
Δ = 76° 25' 11"	Δ = 76° 25' 23"
T = 74.78'	T = 47.12'
L = 126.71'	L = 79.83'

PLAN

1"= 10'-0"

RETAINING WALL NO. 16

QUANTITIES

STRUCTURE EXCAVATION (RETAINING WALL)	630	CY
STRUCTURE BACKFILL (RETAINING WALL)	540	CY
PERVIOUS BACKFILL MATERIAL (RETAINING WALL)	31	CY
STRUCTURAL CONCRETE, RETAINING WALL	152	CY
ARCHITECTURAL TEXTURE	1,681	SQFT
BAR REINFORCING STEEL (RETAINING WALL)	15,075	LB
MINOR CONCRETE (GUTTER)	183	LF
CHAIN LINK RAILING	183	LF

PLAN SYMBOLS

SECTION IDENTIFICATION

STANDARD PLAN (MAY 2006) SHEET NO.

DETAIL NO.

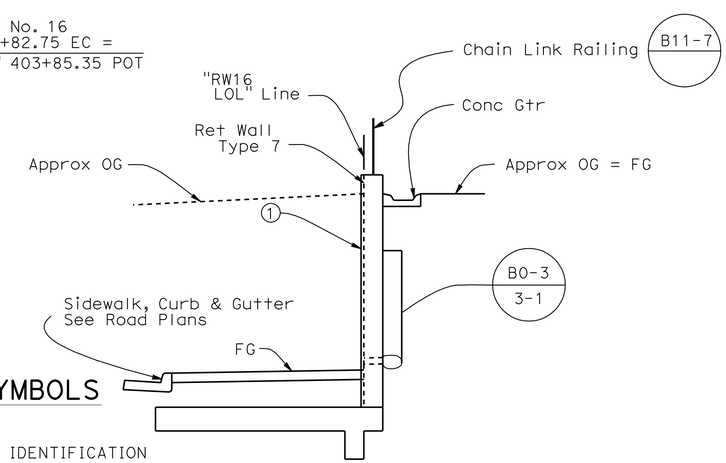

TYPICAL SECTION

¼" = 1'-0"

Note:
The Contractor shall verify all controlling field dimensions before ordering or fabricating any material.

DESIGN OVERSIGHT — Overcomer Y. Hor
12-27-11
SIGN OFF DATE

	BY	CHECKED
DESIGN	Antonio Luo /DT	Odeon M. Li /BM
DETAILS	Antonio Luo /TF	Odeon M. Li /BM
QUANTITIES	Ching Dong /DT	Kimberly Bowen /OC

LOAD FACTOR DESIGN — LIVE LOADING: HS20-44 AND ALTERNATIVE AND PERMIT DESIGN LOAD

	BY	CHECKED
LAYOUT	Antonio Luo /DT	Odeon M. Li /BM
SPECIFICATIONS	Odeon M. Li	PLANS AND SPECS COMPARED Odeon M. Li

PREPARED FOR THE STATE OF CALIFORNIA DEPARTMENT OF TRANSPORTATION

Odeon M. Li
PROJECT ENGINEER

BRIDGE NO.
POST MILES 27.8

RETAINING WALL NO. 16
GENERAL PLAN

DESIGN GENERAL PLAN SHEET (ENGLISH) (REV. 06-01-09)

ORIGINAL SCALE IN INCHES FOR REDUCED PLANS 0 1 2 3

PROJECT NUMBER & PHASE: 04000210801
CONTRACT NO: 04-1G9404 UNIT: 0750

DISREGARD PRINTS BEARING EARLIER REVISION DATES

REVISION DATES (PRELIMINARY STAGE ONLY): 6/08 9/08 2/10 12/10 3/11 4/20/11 8/19/11 11/16/11 11/30/11

SHEET 1 OF 4

FILE => 28Erw16-a-gp01.dgn

USERNAME => s124436 DATE PLOTTED => 19-JAN-2012 TIME PLOTTED => 07:48

DIST.	COUNTY	ROUTE	POST MILE TOTAL PROJECT	SHEET NO.	TOTAL SHEETS
04	CC	4	27.3/R29.0	948	950

REGISTERED ENGINEER - CIVIL 11/30/11

1-17-12
PLANS APPROVAL DATE

REGISTERED PROFESSIONAL ENGINEER Odeon M. Li No. C31895 Exp. 12/31/12 CIVIL STATE OF CALIFORNIA

The State of California or its officers or agents shall not be responsible for the accuracy or completeness of electronic copies of this plan sheet.

CONTRA COSTA TRANSPORTATION AUTHORITY
2999 OAK ROAD, SUITE 100
WALNUT CREEK, CA 94597

T.Y. LIN INTERNATIONAL
2010 CROW CANYON PLACE, SUITE 350
SAN RAMON, CA 94583

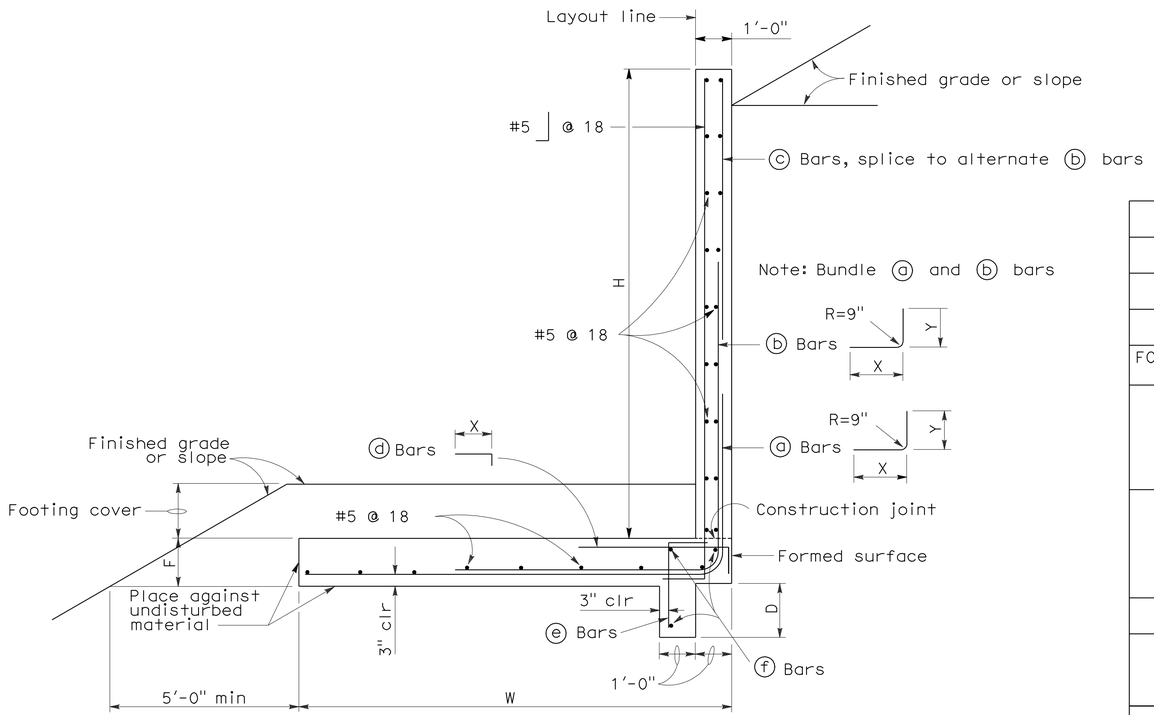

TYPICAL SECTION

Note: For details not shown, see B3-8

TABLE OF DIMENSIONS AND REINFORCING STEEL

DESIGN H	4'-0"	6'-0"	8'-0"	10'-0"	12'-0"
W	4'-0"	5'-3"	7'-3"	9'-4"	12'-0"
F	1'-0"	1'-0"	1'-3"	1'-3"	1'-3"
D	0'-9"	0'-9"	0'-9"	1'-6"	1'-6"
FOOTING COVER min	1'-0"	1'-0"	1'-6"	1'-6"	1'-6"
ⓐ Bars	#5 @ 18	#5 @ 12	#6 @ 12	#6 @ 12	#6 @ 9
X	Cont	Cont	Cont	Cont	Cont
Y	Cont	Cont	Cont	5'-0"	5'-0"
ⓑ Bars	———	———	———	#6 @ 12	#6 @ 9
X	———	———	———	5'-3"	7'-3"
Y	———	———	———	Cont	8'-4"
ⓒ Bars	———	———	———	———	#5 @ 18
ⓓ Bars	———	———	———	#5 @ 12	#5 @ 12
X	———	———	———	4'-0"	4'-0"
ⓔ Bars	———	———	———	#5 @ 12	#5 @ 12
ⓕ Bars	———	———	———	3-#5	3-#5

Cont = Continuous

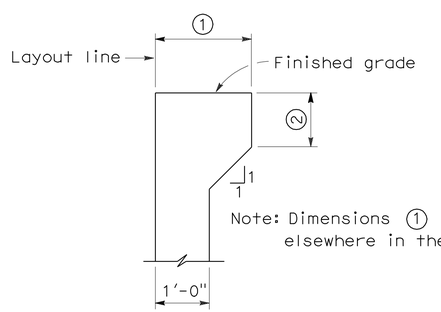

HAUNCH FOR CONCRETE BARRIER

GENERAL NOTES

Design: Service load design
Loading case:
1. Level slope with 240 psf surcharge
2. 2:1 unlimited slope

Concrete: n=9, f'_c =3250 psi, f_c = 1300 psi
Reinforcing steel: fy=60,000 psi f_s=24,000 psi
Soil:
Backfill: Ø=34°, γ=120 pcf
Foundation: Ø=34°, c=200 psf, γ=120 pcf
Minimum allowable bearing pressure=2.0 ksf

Lateral earth pressure: Coulomb's theory with δ=0°

Seismic:
1. Level slope, k_h=0.3g
2. 2:1 unlimited slope, k_h=0.1g

SPECIAL DETAILS

STANDARD DRAWING

RELEASE DATE	Revised	DESIGN	BY J.C. MOESE	CHECKED O. HOR	RELEASED BY
		DETAILS	BY R. YEE	CHECKED O. HOR	
FILE NO.	xs14-010	SUBMITTED	BY J.C. MOESE	DRAWING DATE 10/92	OFFICE CHIEF

DS OSD 2147A (METRIC) (REV. 2/25/97)

1 Changed to U.S. Customary Unit

STATE OF CALIFORNIA DEPARTMENT OF TRANSPORTATION

DIVISION OF ENGINEERING SERVICES

BRIDGE NO.

POST MILE 27.8

RETAINING WALL NO. 16
RETAINING WALL TYPE 7

ORIGINAL SCALE IN MILLIMETERS FOR REDUCED PLANS 0 10 20 30 40 50 60 70 80 90 100

PROJECT NUMBER & PHASE: 04000210801
CONTRACT NO: 04-1G9404 UNIT: 0750

DISREGARD PRINTS BEARING EARLIER REVISION DATES

REVISION DATES (PRELIMINARY STAGE ONLY) 3/9/11 4/29/11 8/9/11

SHEET 2 OF 4

DATE PLOTTED => 19-JAN-2012 TIME PLOTTED => 07:49

USERNAME => s124496

28Erw16-g-rwdt01.dgn

DIST	COUNTY	ROUTE	POST MILES TOTAL PROJECT	SHEET No	TOTAL SHEETS
04	CC	4	27.3/R29.0	949	950

REGISTERED CIVIL ENGINEER 11/30/11 DATE

1-17-12
PLANS APPROVAL DATE

REGISTERED PROFESSIONAL ENGINEER Odeon M. Li No. C31895 Exp. 12/31/12 CIVIL STATE OF CALIFORNIA

The State of California or its officers or agents shall not be responsible for the accuracy or completeness of scanned copies of this plan sheet.

CONTRA COSTA TRANSPORTATION AUTHORITY
2999 OAK ROAD, SUITE 100
WALNUT CREEK, CA 94597

T.Y. LIN INTERNATIONAL
2010 CROW CANYON PLACE, SUITE 350
SAN RAMON, CA 94583

Legends:

EJ Wall Expansion Joint

[C] Form liner group designation

(6) Form liner panel designation

Note:

For form liner group and panel details see "Architectural Treatment Details" sheets in Road Plans.

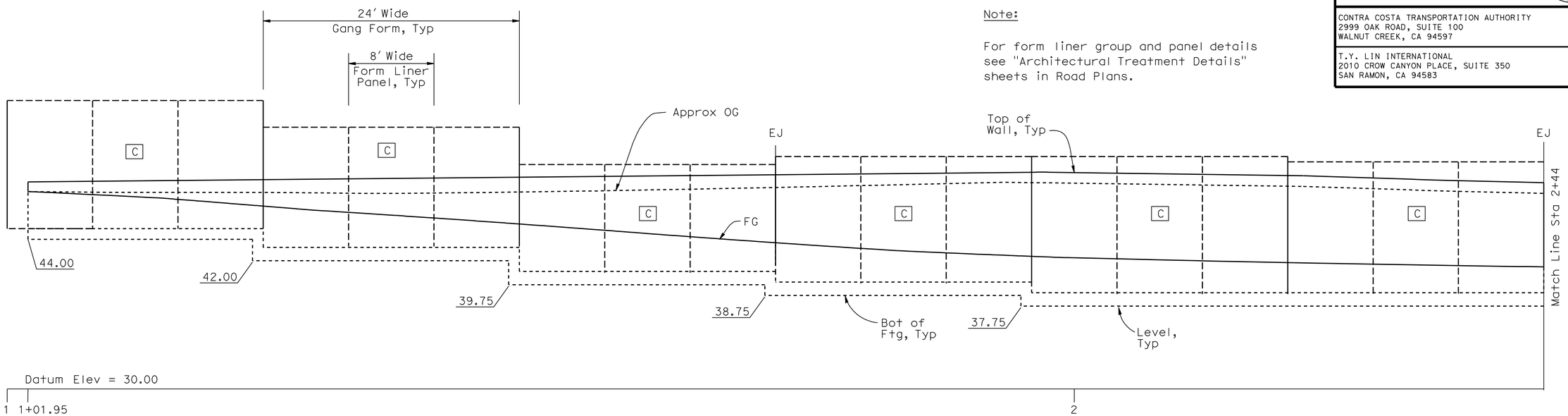

DEVELOPED MIRROR ELEVATION

1" = 5'-0"

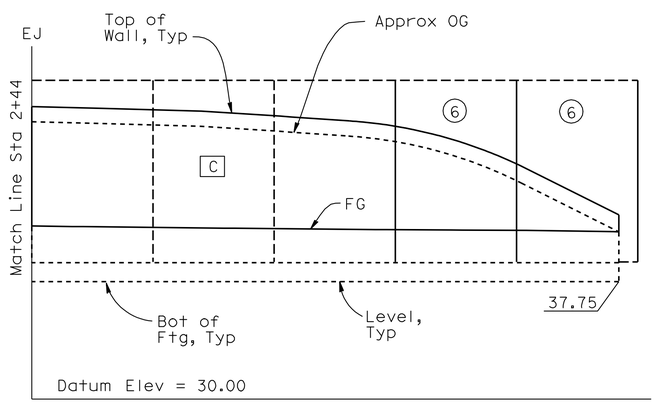

DEVELOPED MIRROR ELEVATION

1" = 5'-0"

Note:
The Contractor shall verify all controlling field dimensions before ordering or fabricating any material.

DESIGN OVERSIGHT Overcomer Y. Hor

12-12-11
SIGN OFF DATE

	BY	CHECKED
DESIGN	Antonion Luo /DT	Odeon M. Li /BM
DETAILS	Antonion Luo /TF	Odeon M. Li /BM
QUANTITIES	Ching Dang /DT	Kimberly Bowen/OC

PREPARED FOR THE STATE OF CALIFORNIA DEPARTMENT OF TRANSPORTATION

Odeon M. Li /BM
PROJECT ENGINEER

BRIDGE NO.

POST MILE 27.8

RETAINING WALL NO. 16
ARCHITECTURAL TREATMENT LAYOUT

DESIGN DETAIL SHEET (ENGLISH) (REV. 06-01-09)

ORIGINAL SCALE IN INCHES FOR REDUCED PLANS 0 1 2 3

PROJECT NUMBER & PHASE: 04000210801
CONTRACT NO: 04-1G9404 UNIT: 0750

DISREGARD PRINTS BEARING EARLIER REVISION DATES

REVISION DATES (PRELIMINARY STAGE ONLY) 6/08 5/08 2/10 3/24/11 4/28/11 8/9/11

SHEET 3 OF 4

FILE => 28Erw16-y-atlo01.dgn

USERNAME => s124496 DATE PLOTTED => 19-JAN-2012 TIME PLOTTED => 07:49

DIST	COUNTY	ROUTE	POST MILES TOTAL PROJECT	SHEET No	TOTAL SHEETS
04	CC	4	27.3/R29.0	950	950

GEOTECHNICAL PROFESSIONAL — DATE 8/9/11

1-17-12
PLANS APPROVAL DATE

The State of California or its officers or agents shall not be responsible for the accuracy or completeness of electronic copies of this plan sheet.

REGISTERED PROFESSIONAL ENGINEER — GARY PARIKH — No. G.E. 666 — Exp. 12/31/11 — GEOTECHNICAL — STATE OF CALIFORNIA

CONTRA COSTA TRANSPORTATION AUTHORITY
2999 OAK ROAD, SUITE 100
WALNUT CREEK, CA 94597

PARIKH CONSULTANTS, INC.
2360 QUME DRIVE, SUITE A
SAN JOSE CA 95131

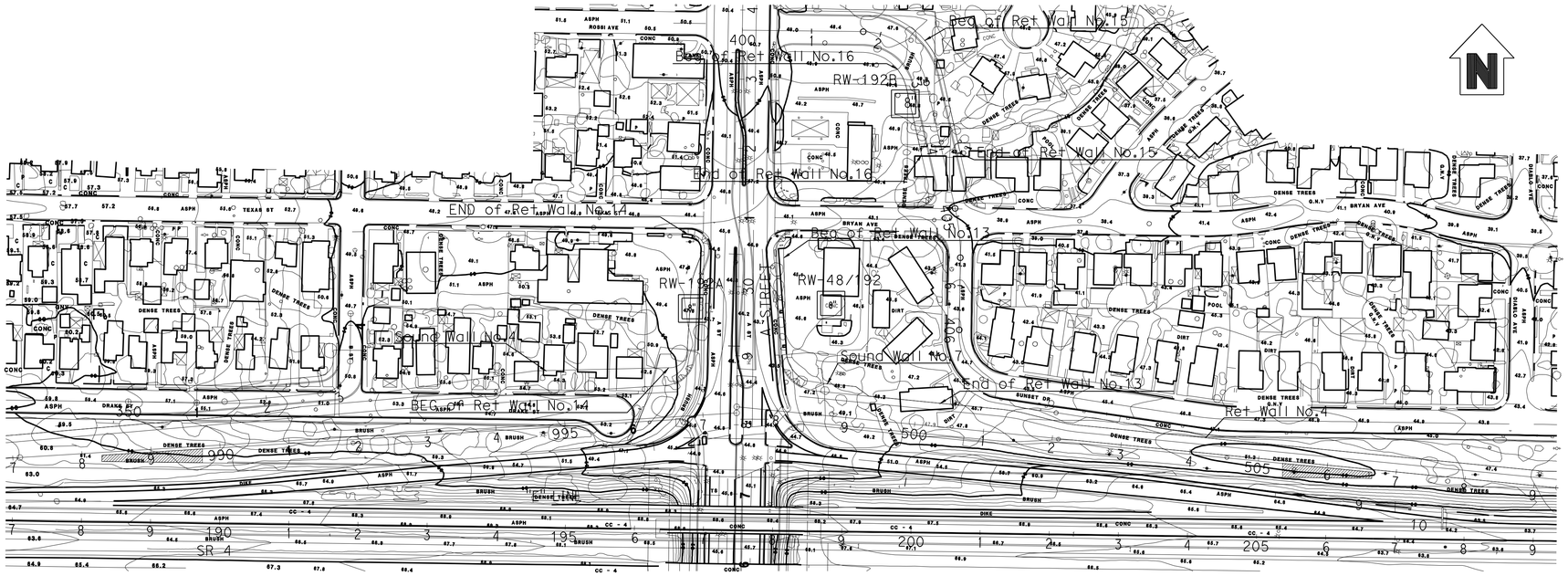

PLAN
1" =100'

Note:
Standard Penetration Test Sampler: I.D. = 1.4"; O.D. = 2"
Modified California Sampler: I.D. = 2.5"; O.D. = 3"
Hammer Assembly: A 140 lb hammer with a 30" drop (Automatic Hammer)

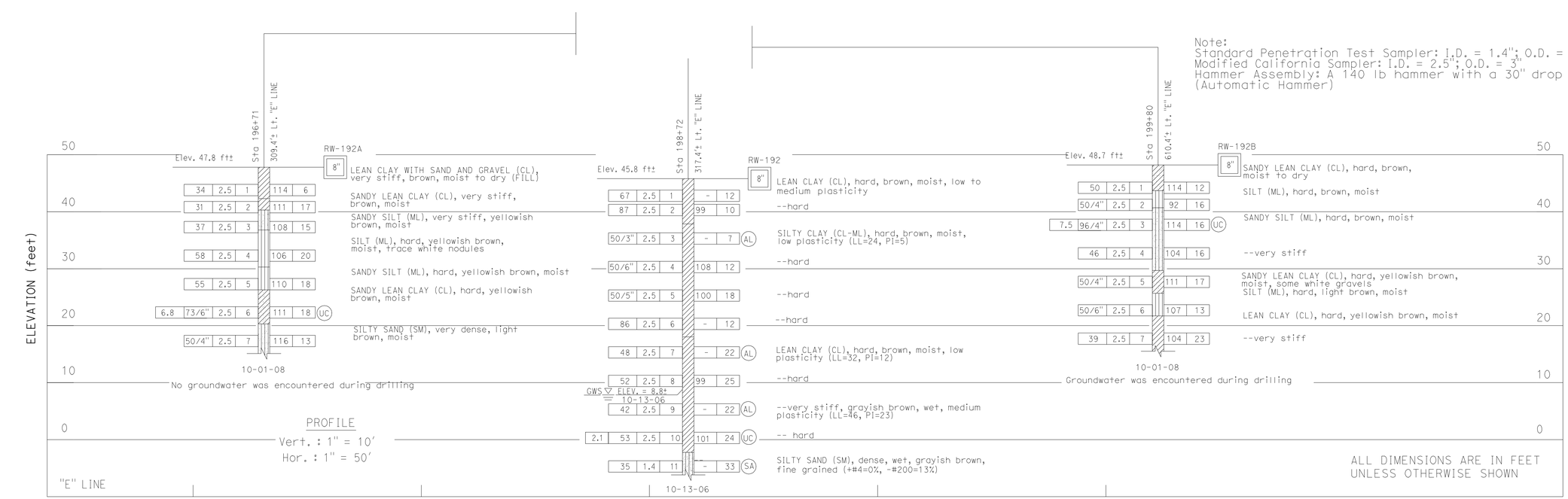

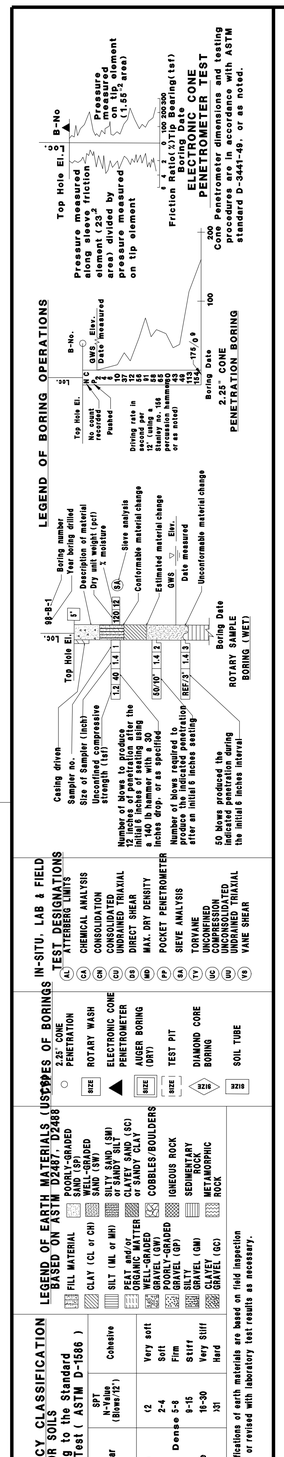

DESIGN OVERSIGHT Overcomer Y. Hor
12-12-11
SIGN OFF DATE

DRAWN BY O. GOUTHIER
CHECKED BY P. SIRCAR

G. TRIPATHI
FIELD INVESTIGATION BY:
DATE: 08/2006-07/2009

PREPARED FOR THE STATE OF CALIFORNIA DEPARTMENT OF TRANSPORTATION

P. SIRCAR
PROJECT ENGINEER

BRIDGE NO.
POST MILE 27.8

RETAINING WALL NO. 16
LOG OF TEST BORINGS

OSF GEOTECHNICAL LOG OF TEST BORINGS SHEET (ENGLISH) (REV. 2/25/05)

ORIGINAL SCALE IN INCHES FOR REDUCED PLANS 0 1 2 3

PROJECT NUMBER & PHASE: 04000210801
CONTRACT NO: 04-1G9404 UNIT: 0750

DISREGARD PRINTS BEARING EARLIER REVISION DATES
REVISION DATES (PRELIMINARY STAGE ONLY) 08/11/09 12/9/11 4/29/11 8/9/11

SHEET 4 OF 4

FILE => 28Erw16-z-ltb01.dgn

USERNAME => s124496 DATE PLOTTED => 19-JAN-2012 TIME PLOTTED => 07:49