Dist	COUNTY	ROUTE	POST MILES TOTAL PROJECT	SHEET No.	TOTAL SHEETS
04	SCI	101	31.8/34.3	57	515

Chester C. Ballesteros 1/25/10
REGISTERED CIVIL ENGINEER DATE

11-23-09
PLANS APPROVAL DATE

REGISTERED PROFESSIONAL ENGINEER CHESTER C. BALLESTEROS No. 70706 Exp. 6-30-11 CIVIL STATE OF CALIFORNIA

THE STATE OF CALIFORNIA OR ITS OFFICERS OR AGENTS SHALL NOT BE RESPONSIBLE FOR THE ACCURACY OR COMPLETENESS OF SCANNED COPIES OF THIS PLAN SHEET.

HMH
1570 OAKLAND ROAD
SAN JOSE, CA 95131

SANTA CLARA VALLEY
TRANSPORTATION AUTHORITY
3331 N. FIRST STREET
SAN JOSE, CA 95134

2

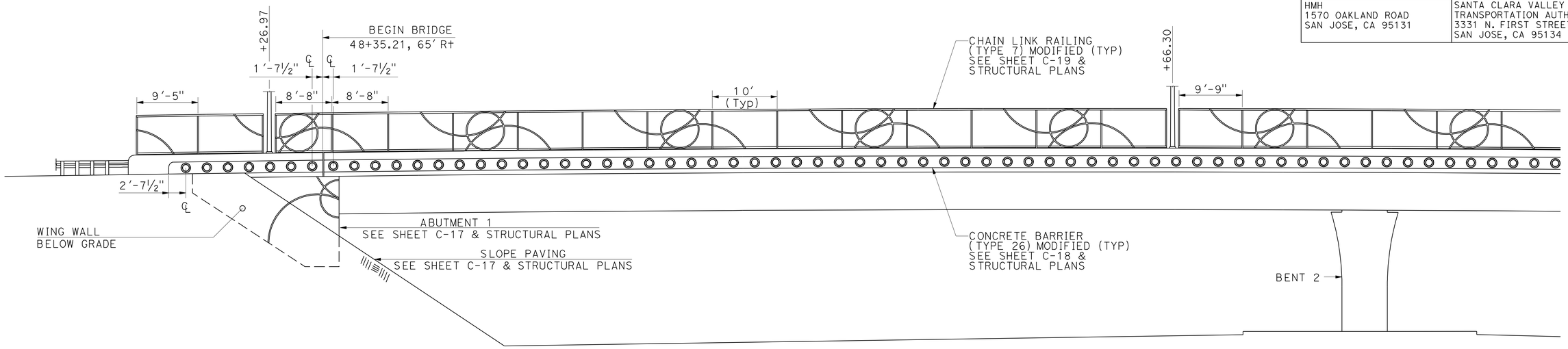

48 49 50

SOUTH ELEVATION TULLY ROAD OC

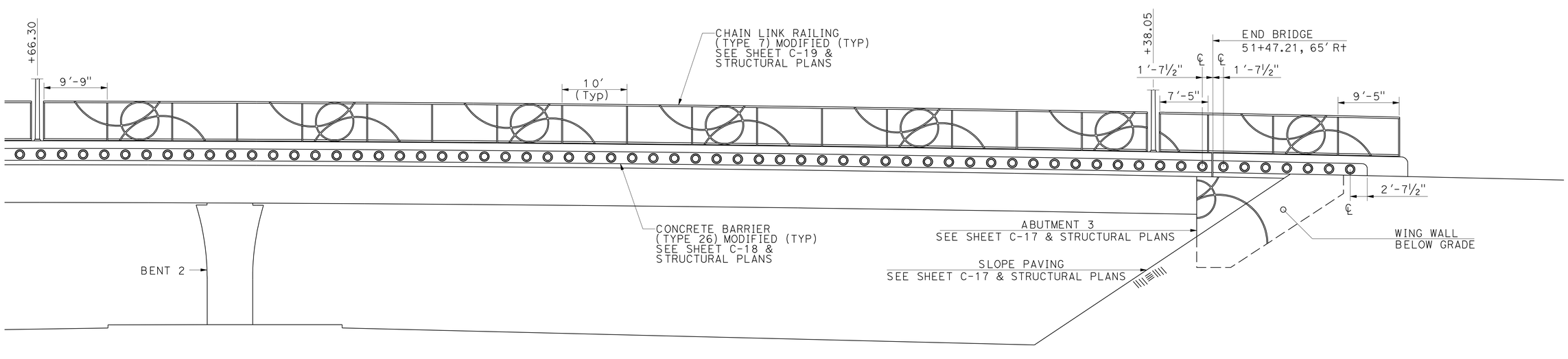

50 51

SOUTH ELEVATION TULLY ROAD OC

2 **REVISED PER ADDENDUM No. 2 DATED JULY 8, 2010**

CONSTRUCTION DETAILS
NO SCALE

C-15

REVISED BY	DATE REVISED
CHESTER C. BALLESTEROS	MICHAEL L. MORSILLI
CALCULATED-DESIGNED BY	CHECKED BY
CONSULTANT FUNCTIONAL SUPERVISOR	WILLIAM J. WAGNER

STATE OF CALIFORNIA - DEPARTMENT OF TRANSPORTATION
Caltrans

LAST REVISION 01-25-10 | DATE PLOTTED => 08-JUL-2010 | TIME PLOTTED => 07:53

Dist	COUNTY	ROUTE	POST MILES TOTAL PROJECT	SHEET No.	TOTAL SHEETS
04	SCI	101	31.8/34.3	58	515

Chester C. Ballesteros 1/25/10
REGISTERED CIVIL ENGINEER DATE

11-23-09
PLANS APPROVAL DATE

REGISTERED PROFESSIONAL ENGINEER CHESTER C. BALLESTEROS No. 70706 Exp. 6-30-11 CIVIL STATE OF CALIFORNIA

THE STATE OF CALIFORNIA OR ITS OFFICERS OR AGENTS SHALL NOT BE RESPONSIBLE FOR THE ACCURACY OR COMPLETENESS OF SCANNED COPIES OF THIS PLAN SHEET.

HMH
1570 OAKLAND ROAD
SAN JOSE, CA 95131

SANTA CLARA VALLEY
TRANSPORTATION AUTHORITY
3331 N. FIRST STREET
SAN JOSE, CA 95134

2

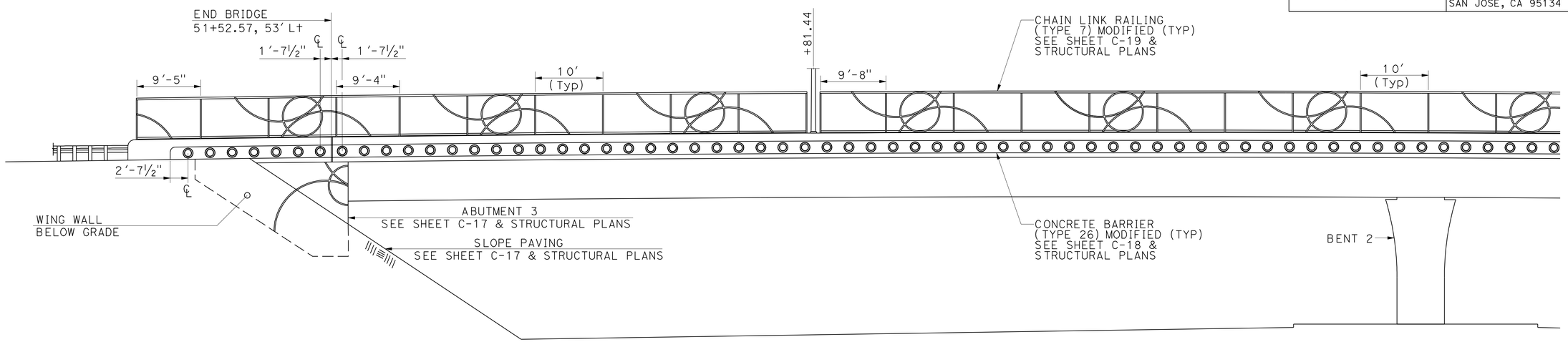

52 **NORTH ELEVATION** 51 **TULLY ROAD OC** 50

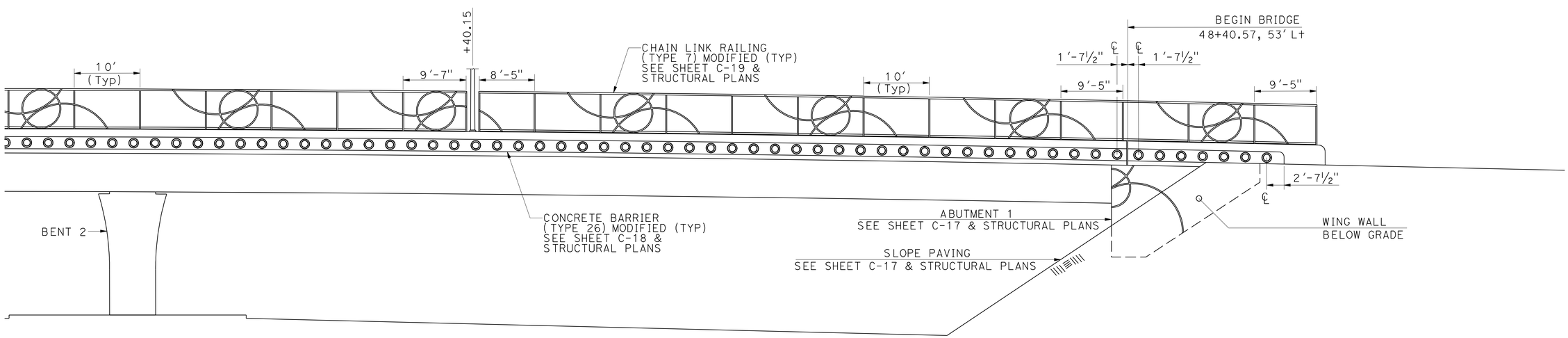

50 **NORTH ELEVATION** 49 **TULLY ROAD OC** 48

2 **REVISED PER ADDENDUM No. 2 DATED JULY 8, 2010**

CONSTRUCTION DETAILS
NO SCALE

C-16

STATE OF CALIFORNIA - DEPARTMENT OF TRANSPORTATION
Caltrans

CONSULTANT FUNCTIONAL SUPERVISOR: WILLIAM J. WAGNER
CALCULATED-DESIGNED BY: CHESTER C. BALLESTEROS
CHECKED BY: MICHAEL L. MORSILLI
REVISED BY
DATE REVISED

LAST REVISION 01-25-10
DATE PLOTTED => 08-JUL-2010
TIME PLOTTED => 07:54

Dist	COUNTY	ROUTE	POST MILES TOTAL PROJECT	SHEET No.	TOTAL SHEETS
04	SCI	101	31.8/34.3	59	515

Chester C. Ballesteros 1/25/10
REGISTERED CIVIL ENGINEER DATE

11-23-09
PLANS APPROVAL DATE

REGISTERED PROFESSIONAL ENGINEER CHESTER C. BALLESTEROS No. 70706 Exp. 6-30-11 CIVIL STATE OF CALIFORNIA

THE STATE OF CALIFORNIA OR ITS OFFICERS OR AGENTS SHALL NOT BE RESPONSIBLE FOR THE ACCURACY OR COMPLETENESS OF SCANNED COPIES OF THIS PLAN SHEET.

HMH
1570 OAKLAND ROAD
SAN JOSE, CA 95131

SANTA CLARA VALLEY
TRANSPORTATION AUTHORITY
3331 N. FIRST STREET
SAN JOSE, CA 95134

2

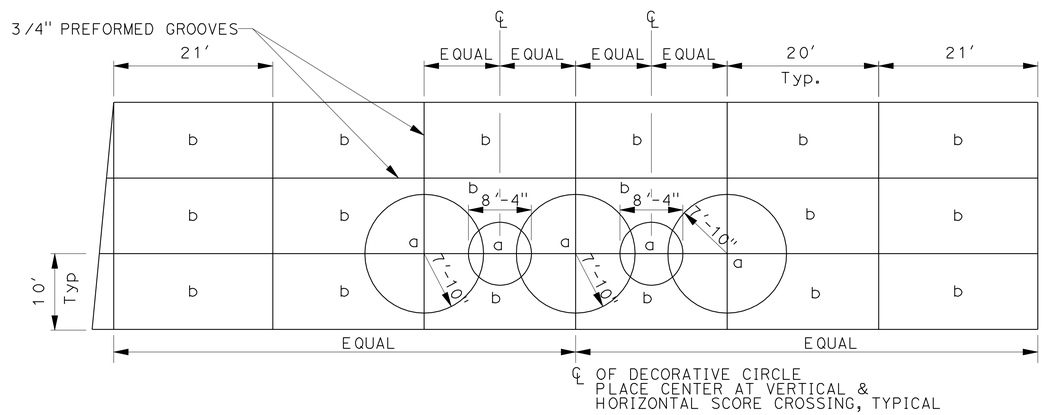

NOTES:

1. USE 3/4" SCORED GROOVES TO FORM DECORATIVE CIRCLES INTO THE SLOPE PAVING TO FRAME HEAVY SAND BLAST REGIONS
2. SEE ABBREVIATIONS FOR TEXTURED REGIONS

TYPICAL ELEVATION OF SLOPE PAVING

ABBREVIATIONS:

"a" HEAVY SAND BLAST TEXTURE
"b" NATURAL CONCRETE
"c" CHIPPED TEXTURE

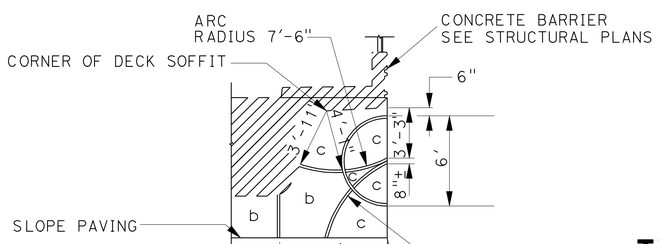

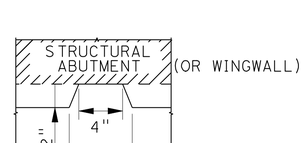

TYPICAL ARC SECTION

NOTES:

1. FORM DECORATIVE ARCHES IN ABUTMENT & SLOPE PAVING TO FRAME TEXTURE REGIONS
2. SEE ARC SECTION FOR DIMENSIONS

TYPICAL ABUTMENT ELEVATION

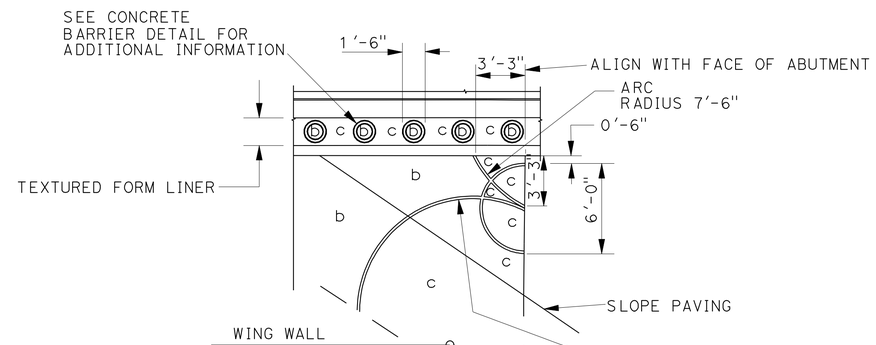

TYPICAL WING WALL ELEVATION

2 **REVISED PER ADDENDUM No. 2 DATED JULY 8, 2010**

CONSTRUCTION DETAILS
NO SCALE

C-17

STATE OF CALIFORNIA - DEPARTMENT OF TRANSPORTATION
Caltrans
CONSULTANT FUNCTIONAL SUPERVISOR WILLIAM J. WAGNER
CHESTER C. BALLESTEROS MICHAEL L. MORSILLI
REVISED BY DATE REVISED
CALCULATED-DESIGNED BY CHECKED BY

LAST REVISION 01-25-10 DATE PLOTTED => 08-JUL-2010 TIME PLOTTED => 07:54

Dist	COUNTY	ROUTE	POST MILES TOTAL PROJECT	SHEET No.	TOTAL SHEETS
04	SCI	101	31.8/34.3	60	515

Chester C. Ballesteros 1/25/10
REGISTERED CIVIL ENGINEER DATE

11-23-09
PLANS APPROVAL DATE

REGISTERED PROFESSIONAL ENGINEER
CHESTER C. BALLESTEROS
No. 70706
Exp. 6-30-11
CIVIL
STATE OF CALIFORNIA

THE STATE OF CALIFORNIA OR ITS OFFICERS OR AGENTS SHALL NOT BE RESPONSIBLE FOR THE ACCURACY OR COMPLETENESS OF SCANNED COPIES OF THIS PLAN SHEET.

HMH
1570 OAKLAND ROAD
SAN JOSE, CA 95131

SANTA CLARA VALLEY
TRANSPORTATION AUTHORITY
3331 N. FIRST STREET
SAN JOSE, CA 95134

2

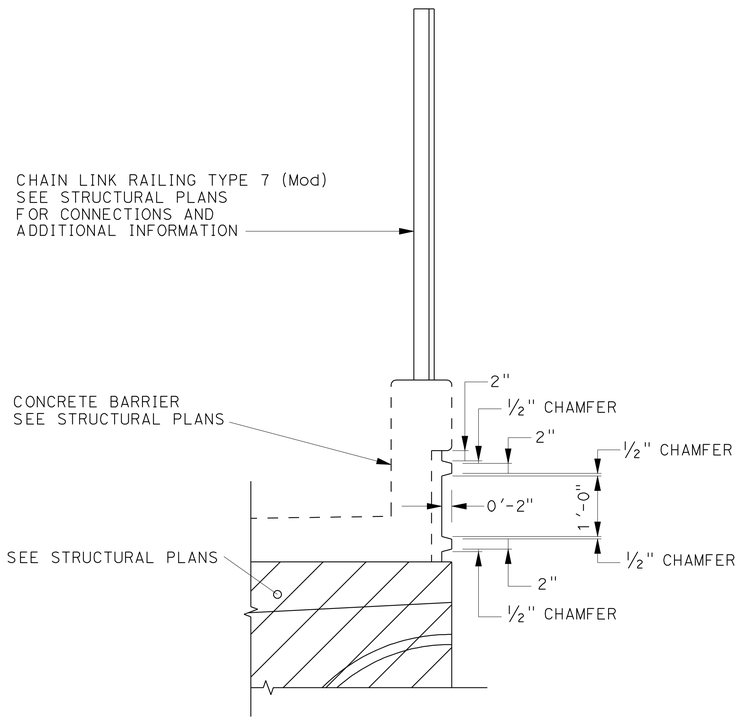

TYPICAL SECTION

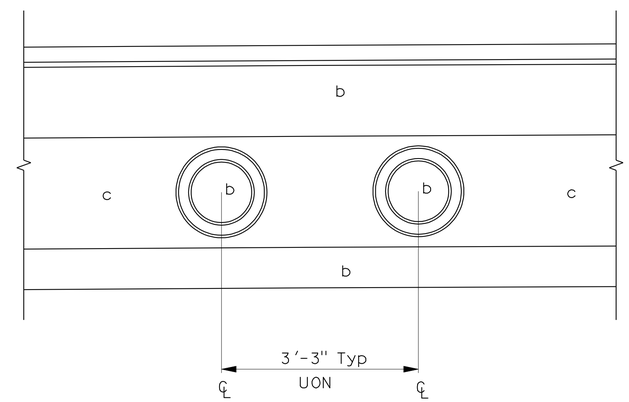

ELEVATION

CONCRETE BARRIER TYPE 26 (MODIFIED)

NOTES:

1. SEE TYPICAL ABUTMENT ELEVATION (SHEET C-17) FOR TEXT ABBREVIATION
2. SEE TO NORTH AND SOUTH TULLY ROAD OC ELEVATIONS FOR ADDITIONAL SPACING DIMENSIONS

2 **REVISED PER ADDENDUM No. 2 DATED JULY 8, 2010**

CONSTRUCTION DETAILS
NO SCALE

C-18

STATE OF CALIFORNIA - DEPARTMENT OF TRANSPORTATION
Caltrans

CONSULTANT FUNCTIONAL SUPERVISOR: WILLIAM J. WAGNER
CALCULATED-DESIGNED BY: CHESTER C. BALLESTEROS
CHECKED BY: MICHAEL L. MORSILLI
REVISED BY
DATE REVISED

LAST REVISION 01-25-10
DATE PLOTTED => 08-JUL-2010
TIME PLOTTED => 07:54

Dist	COUNTY	ROUTE	POST MILES TOTAL PROJECT	SHEET No.	TOTAL SHEETS
04	SCI	101	31.8/34.3	61	515

Chester C. Ballesteros 1/25/10
REGISTERED CIVIL ENGINEER DATE

2

11-23-09
PLANS APPROVAL DATE

REGISTERED PROFESSIONAL ENGINEER
CHESTER C. BALLESTEROS
No. 70706
Exp. 6-30-11
CIVIL
STATE OF CALIFORNIA

THE STATE OF CALIFORNIA OR ITS OFFICERS OR AGENTS SHALL NOT BE RESPONSIBLE FOR THE ACCURACY OR COMPLETENESS OF SCANNED COPIES OF THIS PLAN SHEET.

HMH
1570 OAKLAND ROAD
SAN JOSE, CA 95131

SANTA CLARA VALLEY
TRANSPORTATION AUTHORITY
3331 N. FIRST STREET
SAN JOSE, CA 95134

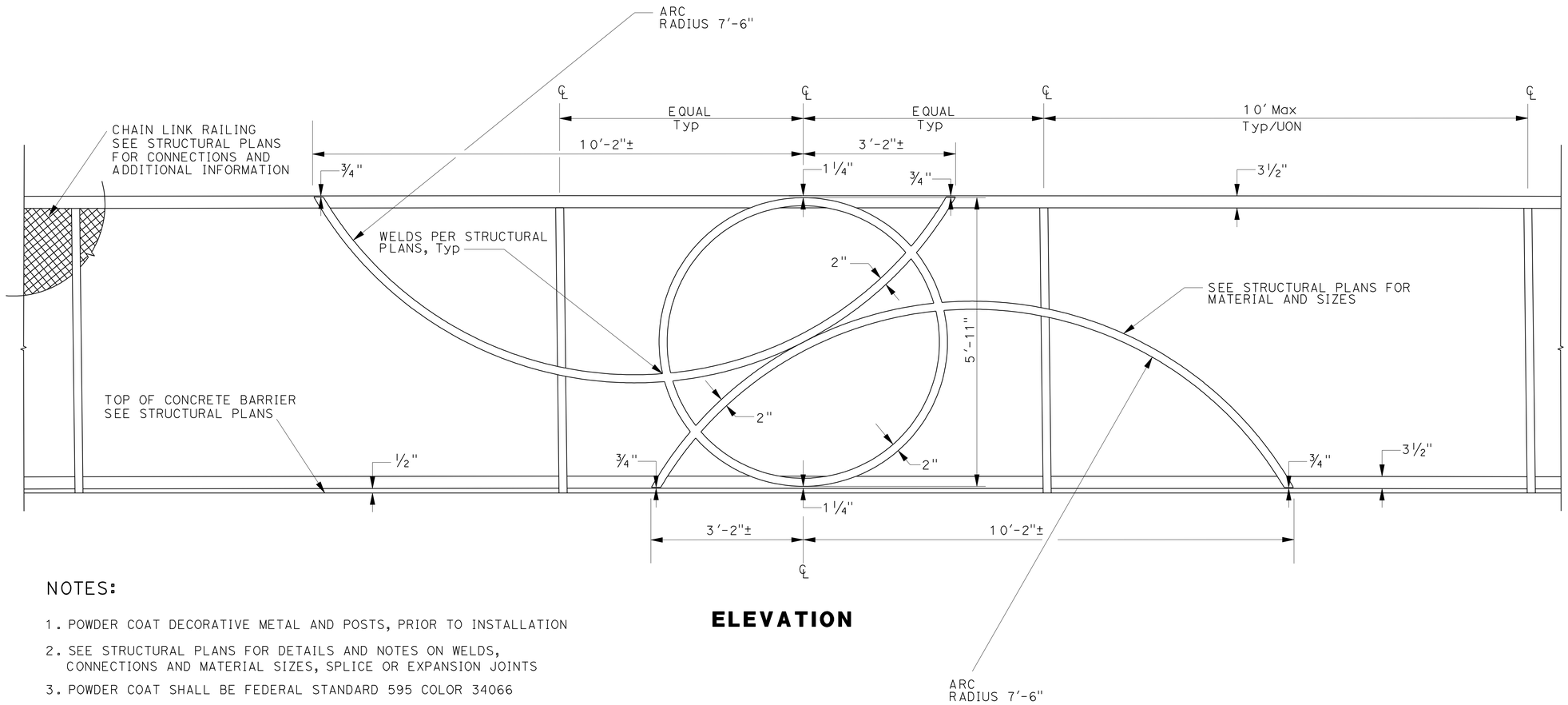

ELEVATION

NOTES:

1. POWDER COAT DECORATIVE METAL AND POSTS, PRIOR TO INSTALLATION
2. SEE STRUCTURAL PLANS FOR DETAILS AND NOTES ON WELDS, CONNECTIONS AND MATERIAL SIZES, SPLICE OR EXPANSION JOINTS
3. POWDER COAT SHALL BE FEDERAL STANDARD 595 COLOR 34066
4. SEE NORTH AND SOUTH TULLY ROAD OC ELEVATIONS FOR ADDITIONAL SPACING DIMENSIONS
5. PRIOR TO FABRICATION OF DECORATIVE METAL, VERIFY THAT POST HOLES ARE ADEQUATELY SPACED TO MEET DETAIL DIMENSIONS OF DECORATIVE METAL

CHAIN LINK RAILING TYPE 7 (MODIFIED)

2 **REVISED PER ADDENDUM No. 2 DATED JULY 8, 2010**

CONSTRUCTION DETAILS
NO SCALE

C-19

STATE OF CALIFORNIA - DEPARTMENT OF TRANSPORTATION
Caltrans
CONSULTANT FUNCTIONAL SUPERVISOR: WILLIAM J. WAGNER
CALCULATED-DESIGNED BY: CHESTER C. BALLESTEROS
CHECKED BY: MICHAEL L. MORSILLI
REVISED BY
DATE REVISED

LAST REVISION 01-25-10
DATE PLOTTED => 08-JUL-2010
TIME PLOTTED => 07:54

Dist	COUNTY	ROUTE	POST MILES TOTAL PROJECT	SHEET No.	TOTAL SHEETS
04	SCI	101	31.8/34.3	96	515

Chester C. Ballesteros 10/19/09
REGISTERED CIVIL ENGINEER DATE

11-23-09
PLANS APPROVAL DATE

REGISTERED PROFESSIONAL ENGINEER
CHESTER C. BALLESTEROS
No. 70706
Exp. 6-30-11
CIVIL
STATE OF CALIFORNIA

THE STATE OF CALIFORNIA OR ITS OFFICERS OR AGENTS SHALL NOT BE RESPONSIBLE FOR THE ACCURACY OR COMPLETENESS OF SCANNED COPIES OF THIS PLAN SHEET.

HMH
1570 OAKLAND ROAD
SAN JOSE, CA 95131

SANTA CLARA VALLEY
TRANSPORTATION AUTHORITY
3331 N. FIRST STREET
SAN JOSE, CA 95134

NOTES:

1. PAVEMENTS ELEVATIONS ALONG THE CONTROL LINE ARE AT 50 FOOT INTERVALS, COINCIDING WITH FULL TICK MARKS.
2. ELEVATIONS SHOWN ARE TOP OF PAVEMENT, SPOT GRADES AND FACE OF GUTTER FOR RETAINING WALL No. 1 (MSE).
3. FOR SLOPE ROUNDING AT TOE OF FILL SLOPE AND TOP OF CUT SLOPE, SEE CONSTRUCTION DETAILS.
4. FOR ACCURATE RIGHT OF WAY AND ACCESS DATA, CONTACT RIGHT OF WAY ENGINEERING AT THE DISTRICT OFFICE.

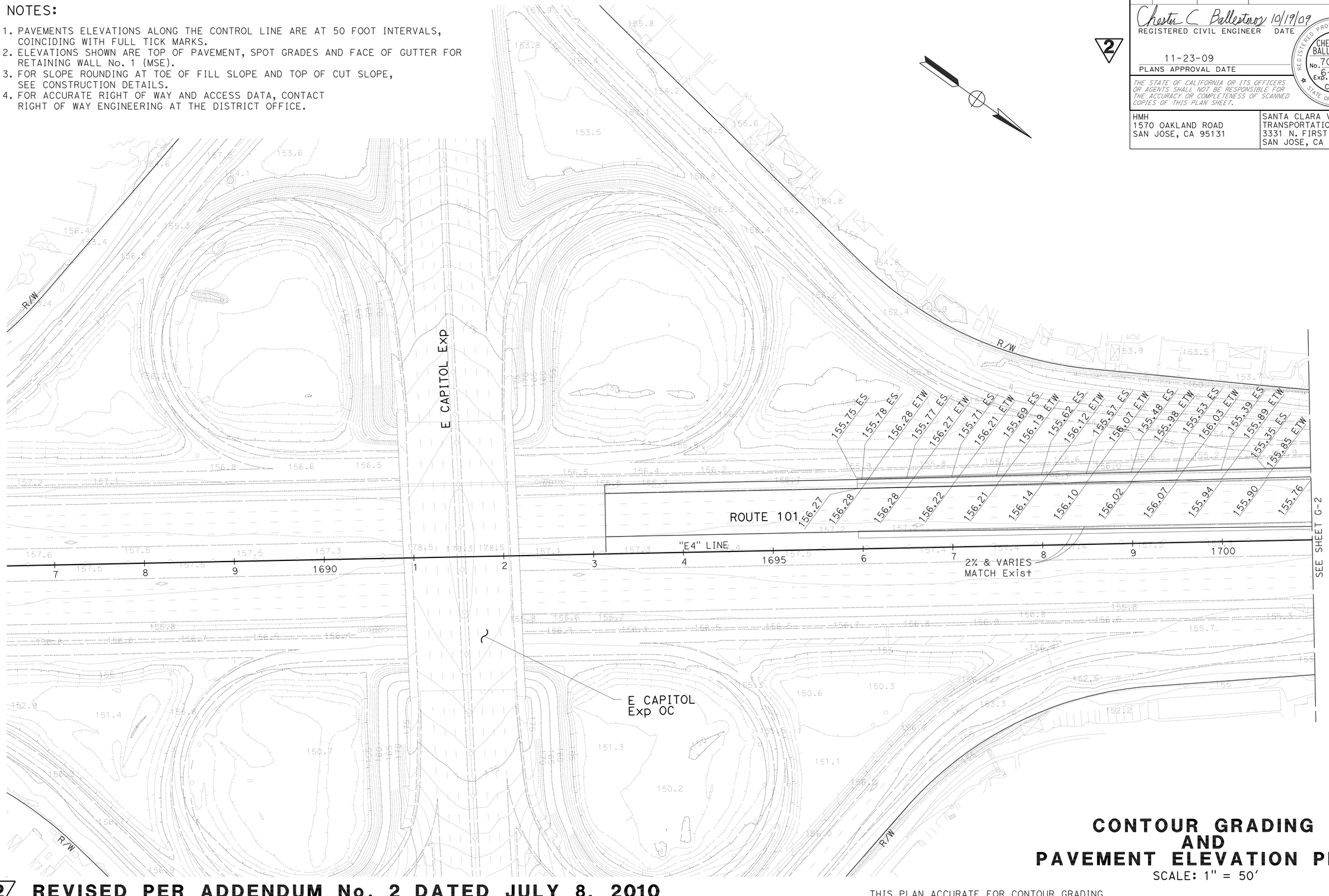

CONTOUR GRADING AND PAVEMENT ELEVATION PLAN

SCALE: 1" = 50'

G-1

2 REVISED PER ADDENDUM No. 2 DATED JULY 8, 2010

THIS PLAN ACCURATE FOR CONTOUR GRADING AND PAVEMENT ELEVATION ONLY

STATE OF CALIFORNIA - DEPARTMENT OF TRANSPORTATION
Caltrans

CONSULTANT FUNCTIONAL SUPERVISOR: WILLIAM J. WAGNER
CALCULATED-DESIGNED BY: CHESTER C. BALLESTEROS
CHECKED BY: MICHAEL L. MORSILLI
REVISED BY
DATE REVISED

LAST REVISION 05-20-10
DATE PLOTTED => 08-JUL-2010
TIME PLOTTED => 07:54

Dist	COUNTY	ROUTE	POST MILES TOTAL PROJECT	SHEET No.	TOTAL SHEETS
04	SCI	101	31.8/34.3	97	515

Chester C. Ballesteros 10/19/09
REGISTERED CIVIL ENGINEER DATE

11-23-09
PLANS APPROVAL DATE

REGISTERED PROFESSIONAL ENGINEER
CHESTER C. BALLESTEROS
No. 70706
Exp. 6-30-11
CIVIL
STATE OF CALIFORNIA

THE STATE OF CALIFORNIA OR ITS OFFICERS OR AGENTS SHALL NOT BE RESPONSIBLE FOR THE ACCURACY OR COMPLETENESS OF SCANNED COPIES OF THIS PLAN SHEET.

HMH
1570 OAKLAND ROAD
SAN JOSE, CA 95131

SANTA CLARA VALLEY
TRANSPORTATION AUTHORITY
3331 N. FIRST STREET
SAN JOSE, CA 95134

2

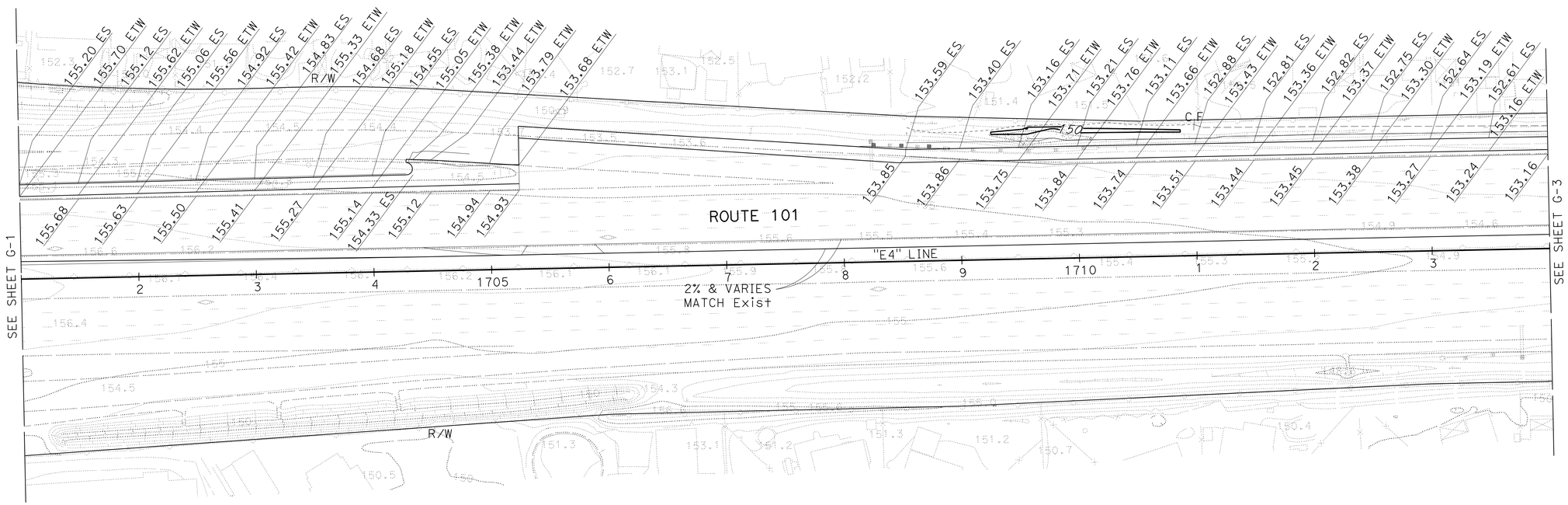

FOR NOTES, ABBREVIATIONS &/OR LEGEND, SEE SHEET G-1

CONTOUR GRADING AND PAVEMENT ELEVATION PLAN

SCALE: 1" = 50'

G-2

2 **REVISED PER ADDENDUM No. 2 DATED JULY 8, 2010**

THIS PLAN ACCURATE FOR CONTOUR GRADING AND PAVEMENT ELEVATION ONLY

STATE OF CALIFORNIA - DEPARTMENT OF TRANSPORTATION
Caltrans

CONSULTANT FUNCTIONAL SUPERVISOR: WILLIAM J. WAGNER

CALCULATED-DESIGNED BY: CHESTER C. BALLESTEROS
CHECKED BY: MICHAEL L. MORSILLI

REVISED BY
DATE REVISED

LAST REVISION 05-20-10
DATE PLOTTED => 08-JUL-2010
TIME PLOTTED => 07:54

Dist	COUNTY	ROUTE	POST MILES TOTAL PROJECT	SHEET No.	TOTAL SHEETS
04	SCI	101	31.8/34.3	98	515

Chester C. Ballesteros 10/19/09
REGISTERED CIVIL ENGINEER DATE

11-23-09
PLANS APPROVAL DATE

REGISTERED PROFESSIONAL ENGINEER
CHESTER C. BALLESTEROS
No. 70706
Exp. 6-30-11
CIVIL
STATE OF CALIFORNIA

THE STATE OF CALIFORNIA OR ITS OFFICERS OR AGENTS SHALL NOT BE RESPONSIBLE FOR THE ACCURACY OR COMPLETENESS OF SCANNED COPIES OF THIS PLAN SHEET.

HMH
1570 OAKLAND ROAD
SAN JOSE, CA 95131

SANTA CLARA VALLEY
TRANSPORTATION AUTHORITY
3331 N. FIRST STREET
SAN JOSE, CA 95134

2

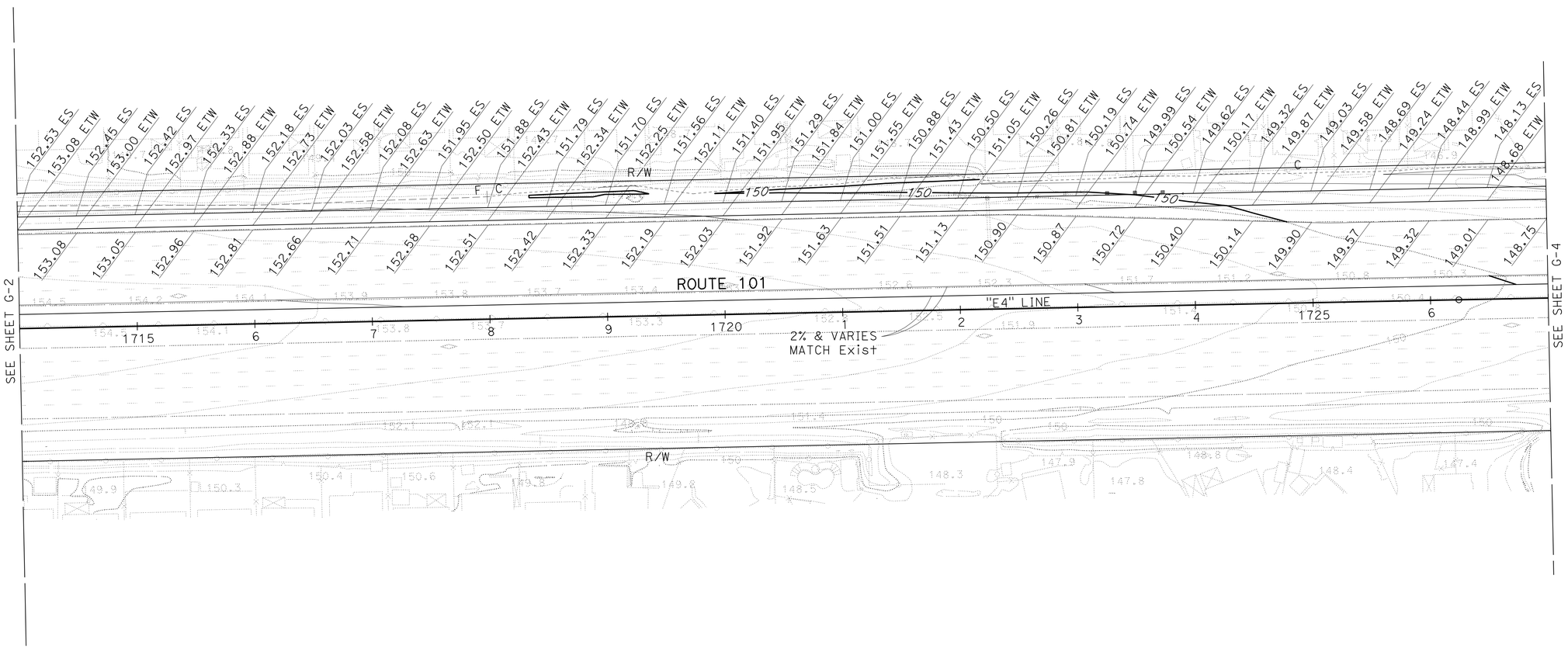

FOR NOTES, ABBREVIATIONS &/OR LEGEND, SEE SHEET G-1

CONTOUR GRADING AND PAVEMENT ELEVATION PLAN

SCALE: 1" = 50'

THIS PLAN ACCURATE FOR CONTOUR GRADING AND PAVEMENT ELEVATION ONLY

G-3

2 **REVISED PER ADDENDUM No. 2 DATED JULY 8, 2010**

STATE OF CALIFORNIA - DEPARTMENT OF TRANSPORTATION
Caltrans

CONSULTANT FUNCTIONAL SUPERVISOR: WILLIAM J. WAGNER

CALCULATED-DESIGNED BY: CHESTER C. BALLESTEROS
CHECKED BY: MICHAEL L. MORSILLI

REVISED BY
DATE REVISED

LAST REVISION 05-20-10
DATE PLOTTED => 08-JUL-2010
TIME PLOTTED => 07:54

Dist	COUNTY	ROUTE	POST MILES TOTAL PROJECT	SHEET No.	TOTAL SHEETS
04	SCI	101	31.8/34.3	99	515

Chester C. Ballesteros 10/19/09
REGISTERED CIVIL ENGINEER DATE

11-23-09
PLANS APPROVAL DATE

REGISTERED PROFESSIONAL ENGINEER
CHESTER C. BALLESTEROS
No. 70706
Exp. 6-30-11
CIVIL
STATE OF CALIFORNIA

THE STATE OF CALIFORNIA OR ITS OFFICERS OR AGENTS SHALL NOT BE RESPONSIBLE FOR THE ACCURACY OR COMPLETENESS OF SCANNED COPIES OF THIS PLAN SHEET.

HMH
1570 OAKLAND ROAD
SAN JOSE, CA 95131

SANTA CLARA VALLEY
TRANSPORTATION AUTHORITY
3331 N. FIRST STREET
SAN JOSE, CA 95134

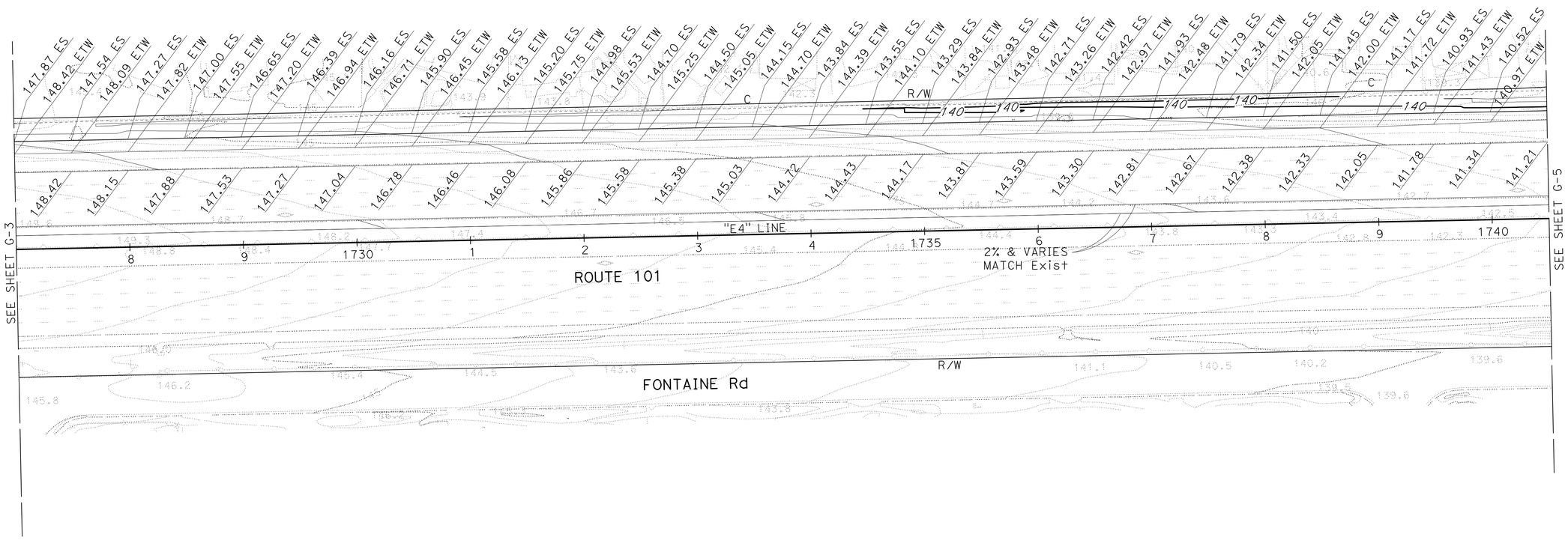

FOR NOTES, ABBREVIATIONS &/OR LEGEND, SEE SHEET G-1

CONTOUR GRADING AND PAVEMENT ELEVATION PLAN

SCALE: 1" = 50'

THIS PLAN ACCURATE FOR CONTOUR GRADING AND PAVEMENT ELEVATION ONLY

G-4

2 **REVISED PER ADDENDUM No. 2 DATED JULY 8, 2010**

STATE OF CALIFORNIA - DEPARTMENT OF TRANSPORTATION
Caltrans

CONSULTANT FUNCTIONAL SUPERVISOR: WILLIAM J. WAGNER
CALCULATED-DESIGNED BY: CHESTER C. BALLESTEROS
CHECKED BY: MICHAEL L. MORSILLI
REVISED BY
DATE REVISED

LAST REVISION 05-20-10 | DATE PLOTTED => 08-JUL-2010 | TIME PLOTTED => 07:54

Dist	COUNTY	ROUTE	POST MILES TOTAL PROJECT	SHEET No.	TOTAL SHEETS
04	SCI	101	31.8/34.3	100	515

Chester C. Ballesteros 10/19/09
REGISTERED CIVIL ENGINEER DATE

11-23-09
PLANS APPROVAL DATE

REGISTERED PROFESSIONAL ENGINEER
CHESTER C. BALLESTEROS
No. 70706
Exp. 6-30-11
CIVIL
STATE OF CALIFORNIA

THE STATE OF CALIFORNIA OR ITS OFFICERS OR AGENTS SHALL NOT BE RESPONSIBLE FOR THE ACCURACY OR COMPLETENESS OF SCANNED COPIES OF THIS PLAN SHEET.

HMH
1570 OAKLAND ROAD
SAN JOSE, CA 95131

SANTA CLARA VALLEY
TRANSPORTATION AUTHORITY
3331 N. FIRST STREET
SAN JOSE, CA 95134

2

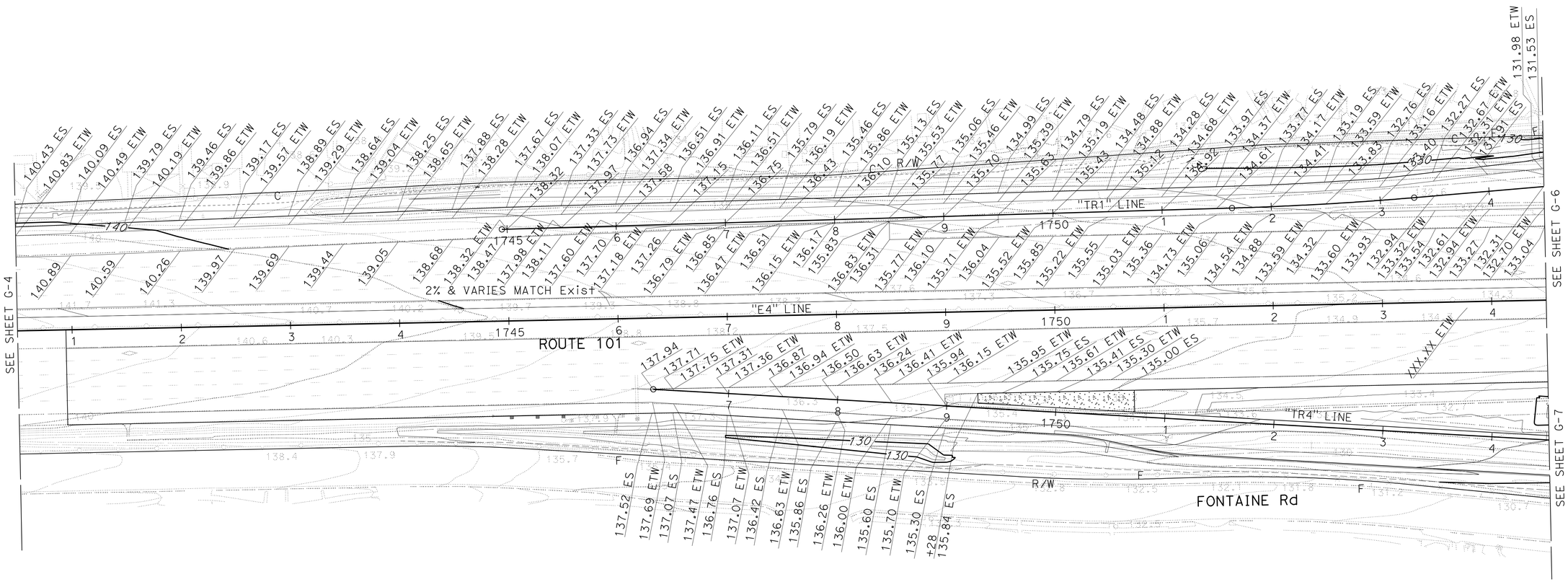

FOR NOTES, ABBREVIATIONS &/OR LEGEND, SEE SHEET G-1

THIS PLAN ACCURATE FOR CONTOUR GRADING AND PAVEMENT ELEVATION ONLY

CONTOUR GRADING AND PAVEMENT ELEVATION PLAN

SCALE: 1" = 50'

G-5

2 **REVISED PER ADDENDUM No. 2 DATED JULY 8, 2010**

STATE OF CALIFORNIA - DEPARTMENT OF TRANSPORTATION

Caltrans

CONSULTANT FUNCTIONAL SUPERVISOR: WILLIAM J. WAGNER

CALCULATED-DESIGNED BY: MICHAEL L. MORSILLI

CHECKED BY: CHESTER C. BALLESTEROS

REVISED BY

DATE REVISED

LAST REVISION 05-20-10

DATE PLOTTED => 08-JUL-2010
TIME PLOTTED => 07:54

Dist	COUNTY	ROUTE	POST MILES TOTAL PROJECT	SHEET No.	TOTAL SHEETS
04	SCI	101	31.8/34.3	101	515

Chester C. Ballesteros 10/19/09
REGISTERED CIVIL ENGINEER DATE

11-23-09
PLANS APPROVAL DATE

REGISTERED PROFESSIONAL ENGINEER CHESTER C. BALLESTEROS No. 70706 Exp. 6-30-11 CIVIL STATE OF CALIFORNIA

THE STATE OF CALIFORNIA OR ITS OFFICERS OR AGENTS SHALL NOT BE RESPONSIBLE FOR THE ACCURACY OR COMPLETENESS OF SCANNED COPIES OF THIS PLAN SHEET.

HMH
1570 OAKLAND ROAD
SAN JOSE, CA 95131

SANTA CLARA VALLEY
TRANSPORTATION AUTHORITY
3331 N. FIRST STREET
SAN JOSE, CA 95134

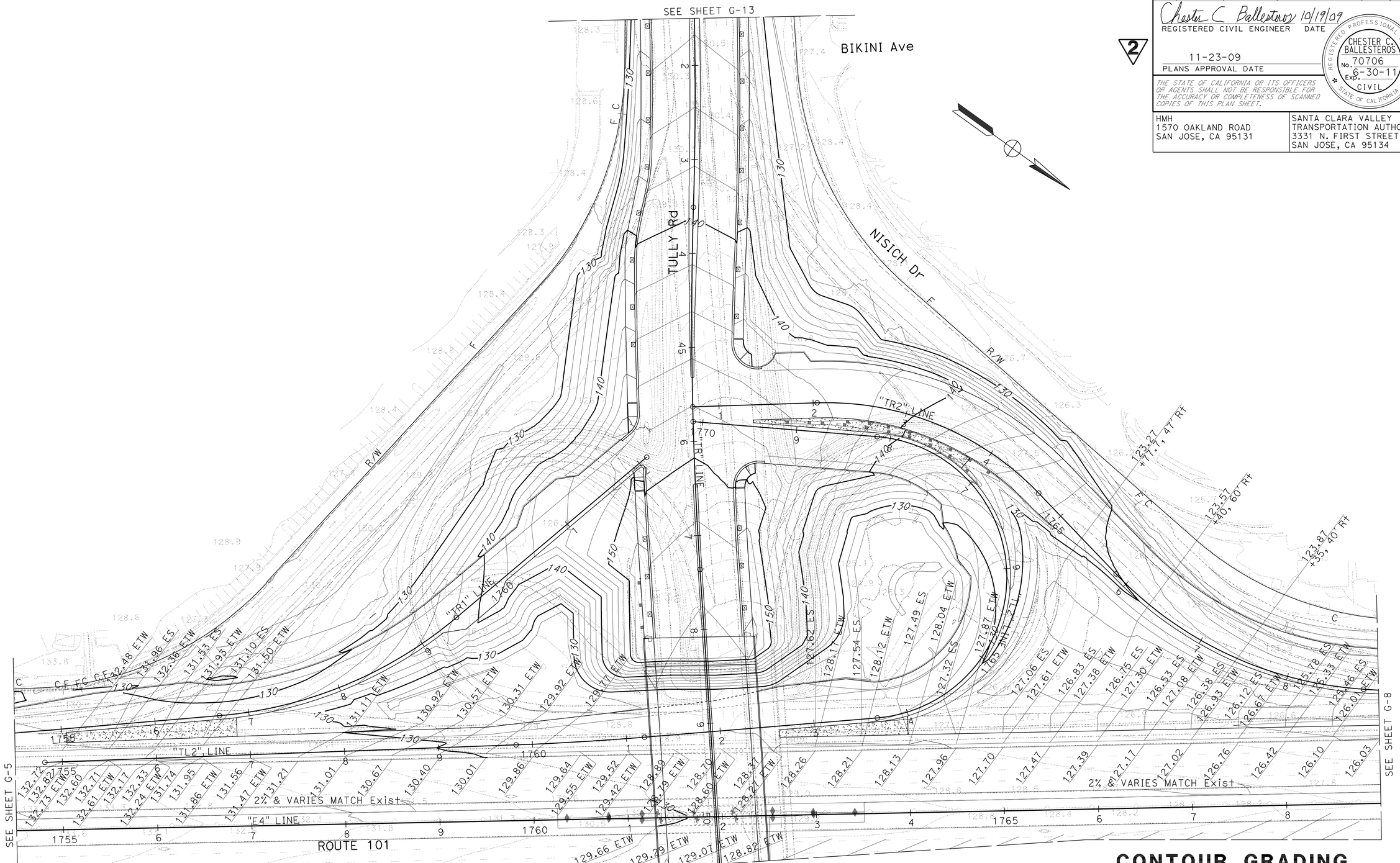

FOR NOTES, ABBREVIATIONS &/OR LEGEND, SEE SHEET G-1

CONTOUR GRADING AND PAVEMENT ELEVATION PLAN

SCALE: 1" = 50'

THIS PLAN ACCURATE FOR CONTOUR GRADING AND PAVEMENT ELEVATION ONLY

G-6

2 **REVISED PER ADDENDUM No. 2 DATED JULY 8, 2010**

STATE OF CALIFORNIA - DEPARTMENT OF TRANSPORTATION
Caltrans

CONSULTANT FUNCTIONAL SUPERVISOR: WILLIAM J. WAGNER

CALCULATED-DESIGNED BY: CHESTER C. BALLESTEROS
CHECKED BY: MICHAEL L. MORSILLI

REVISED BY
DATE REVISED

LAST REVISION 05-20-10
DATE PLOTTED => 08-JUL-2010
TIME PLOTTED => 07:55

Dist	COUNTY	ROUTE	POST MILES TOTAL PROJECT	SHEET No.	TOTAL SHEETS
04	SCI	101	31.8/34.3	102	515

Chester C. Ballesteros 10/19/09
REGISTERED CIVIL ENGINEER DATE

11-23-09
PLANS APPROVAL DATE

REGISTERED PROFESSIONAL ENGINEER
CHESTER C. BALLESTEROS
No. 70706
Exp. 6-30-11
CIVIL
STATE OF CALIFORNIA

THE STATE OF CALIFORNIA OR ITS OFFICERS OR AGENTS SHALL NOT BE RESPONSIBLE FOR THE ACCURACY OR COMPLETENESS OF SCANNED COPIES OF THIS PLAN SHEET.

HMH
1570 OAKLAND ROAD
SAN JOSE, CA 95131

SANTA CLARA VALLEY
TRANSPORTATION AUTHORITY
3331 N. FIRST STREET
SAN JOSE, CA 95134

2

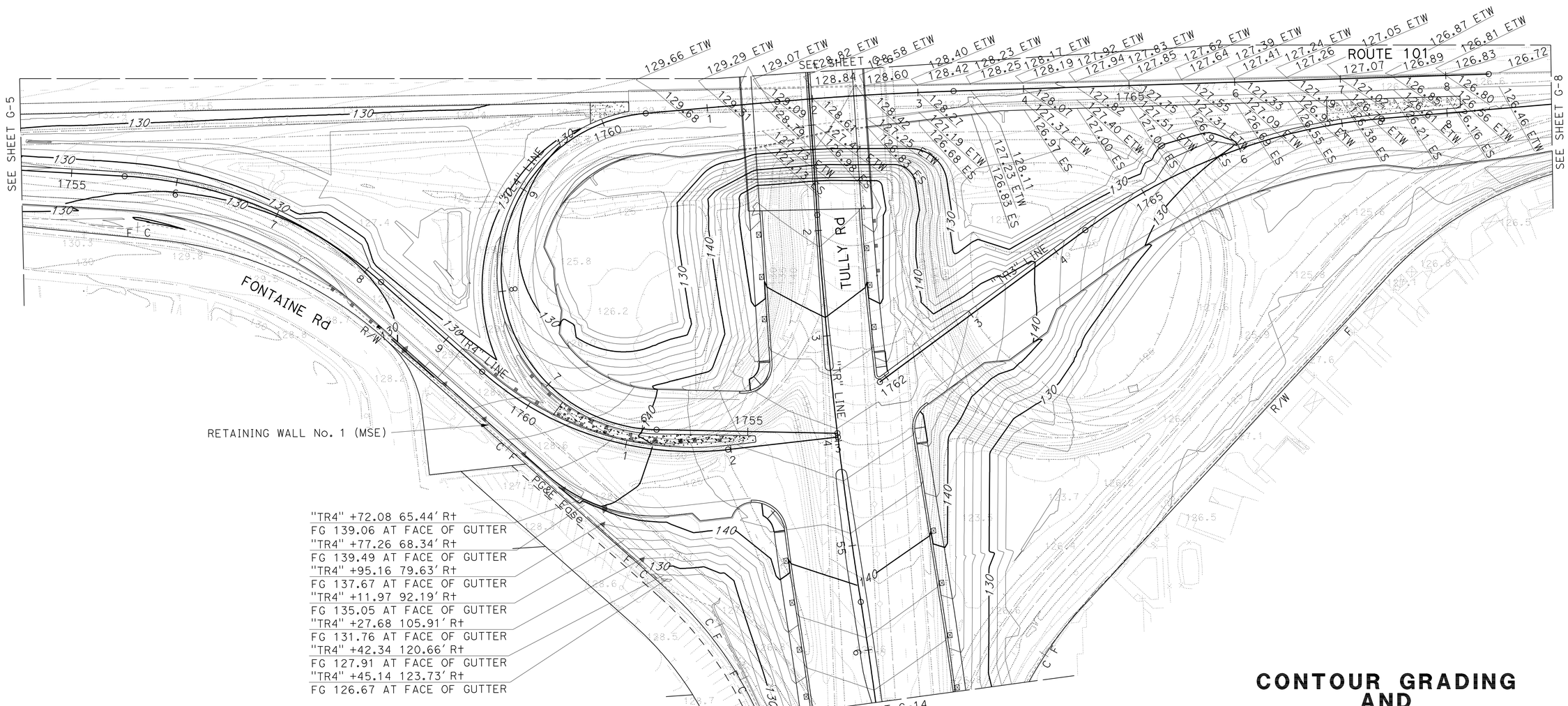

"TR4" +72.08 65.44′ Rt
FG 139.06 AT FACE OF GUTTER
"TR4" +77.26 68.34′ Rt
FG 139.49 AT FACE OF GUTTER
"TR4" +95.16 79.63′ Rt
FG 137.67 AT FACE OF GUTTER
"TR4" +11.97 92.19′ Rt
FG 135.05 AT FACE OF GUTTER
"TR4" +27.68 105.91′ Rt
FG 131.76 AT FACE OF GUTTER
"TR4" +42.34 120.66′ Rt
FG 127.91 AT FACE OF GUTTER
"TR4" +45.14 123.73′ Rt
FG 126.67 AT FACE OF GUTTER

2 **REVISED PER ADDENDUM No. 2 DATED JULY 8, 2010**

FOR NOTES, ABBREVIATIONS &/OR LEGEND, SEE SHEET G-1

THIS PLAN ACCURATE FOR CONTOUR GRADING AND PAVEMENT ELEVATION ONLY

CONTOUR GRADING AND PAVEMENT ELEVATION PLAN

SCALE: 1" = 50′

G-7

STATE OF CALIFORNIA - DEPARTMENT OF TRANSPORTATION
Caltrans

CONSULTANT FUNCTIONAL SUPERVISOR: WILLIAM J. WAGNER
CALCULATED-DESIGNED BY: MICHAEL L. MORSILLI
CHECKED BY: CHESTER C. BALLESTEROS
REVISED BY
DATE REVISED

LAST REVISION 05-20-10
DATE PLOTTED => 08-JUL-2010
TIME PLOTTED => 07:55

Dist	COUNTY	ROUTE	POST MILES TOTAL PROJECT	SHEET No.	TOTAL SHEETS
04	SCI	101	31.8/34.3	103	515

Chester C. Ballesteros 10/19/09
REGISTERED CIVIL ENGINEER DATE

11-23-09
PLANS APPROVAL DATE

REGISTERED PROFESSIONAL ENGINEER
CHESTER C. BALLESTEROS
No. 70706
Exp. 6-30-11
CIVIL
STATE OF CALIFORNIA

THE STATE OF CALIFORNIA OR ITS OFFICERS OR AGENTS SHALL NOT BE RESPONSIBLE FOR THE ACCURACY OR COMPLETENESS OF SCANNED COPIES OF THIS PLAN SHEET.

HMH
1570 OAKLAND ROAD
SAN JOSE, CA 95131

SANTA CLARA VALLEY
TRANSPORTATION AUTHORITY
3331 N. FIRST STREET
SAN JOSE, CA 95134

2

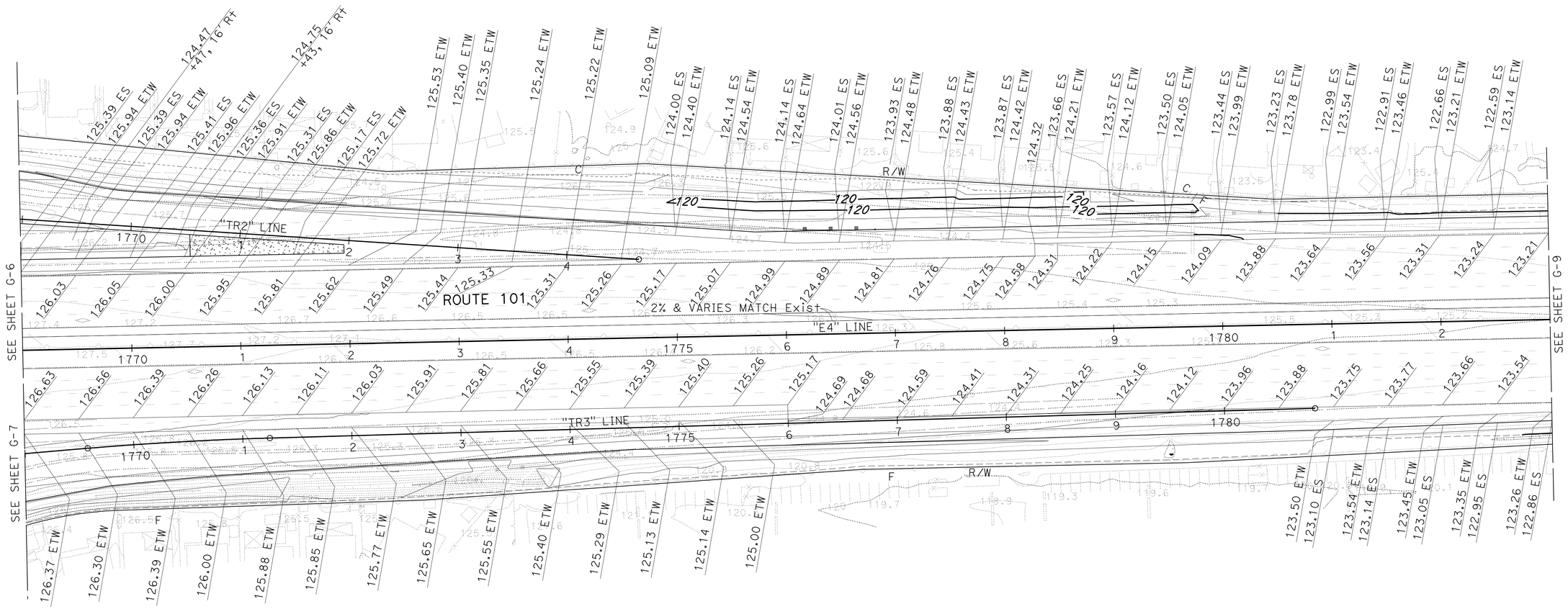

2 REVISED PER ADDENDUM No. 2 DATED JULY 8, 2010

FOR NOTES, ABBREVIATIONS &/OR LEGEND, SEE SHEET G-1

THIS PLAN ACCURATE FOR CONTOUR GRADING AND PAVEMENT ELEVATION ONLY

CONTOUR GRADING AND PAVEMENT ELEVATION PLAN

SCALE: 1" = 50'

G-8

STATE OF CALIFORNIA - DEPARTMENT OF TRANSPORTATION
Caltrans

CONSULTANT FUNCTIONAL SUPERVISOR: WILLIAM J. WAGNER

CALCULATED-DESIGNED BY: CHESTER C. BALLESTEROS
CHECKED BY: MICHAEL L. MORSILLI

REVISED BY
DATE REVISED

LAST REVISION 05-20-10
DATE PLOTTED => 08-JUL-2010
TIME PLOTTED => 07:55

Dist	COUNTY	ROUTE	POST MILES TOTAL PROJECT	SHEET No.	TOTAL SHEETS
04	SCI	101	31.8/34.3	104	515

Chester C. Ballesteros 10/19/09
REGISTERED CIVIL ENGINEER DATE

11-23-09
PLANS APPROVAL DATE

REGISTERED PROFESSIONAL ENGINEER
CHESTER C. BALLESTEROS
No. 70706
Exp. 6-30-11
CIVIL
STATE OF CALIFORNIA

THE STATE OF CALIFORNIA OR ITS OFFICERS OR AGENTS SHALL NOT BE RESPONSIBLE FOR THE ACCURACY OR COMPLETENESS OF SCANNED COPIES OF THIS PLAN SHEET.

HMH
1570 OAKLAND ROAD
SAN JOSE, CA 95131

SANTA CLARA VALLEY
TRANSPORTATION AUTHORITY
3331 N. FIRST STREET
SAN JOSE, CA 95134

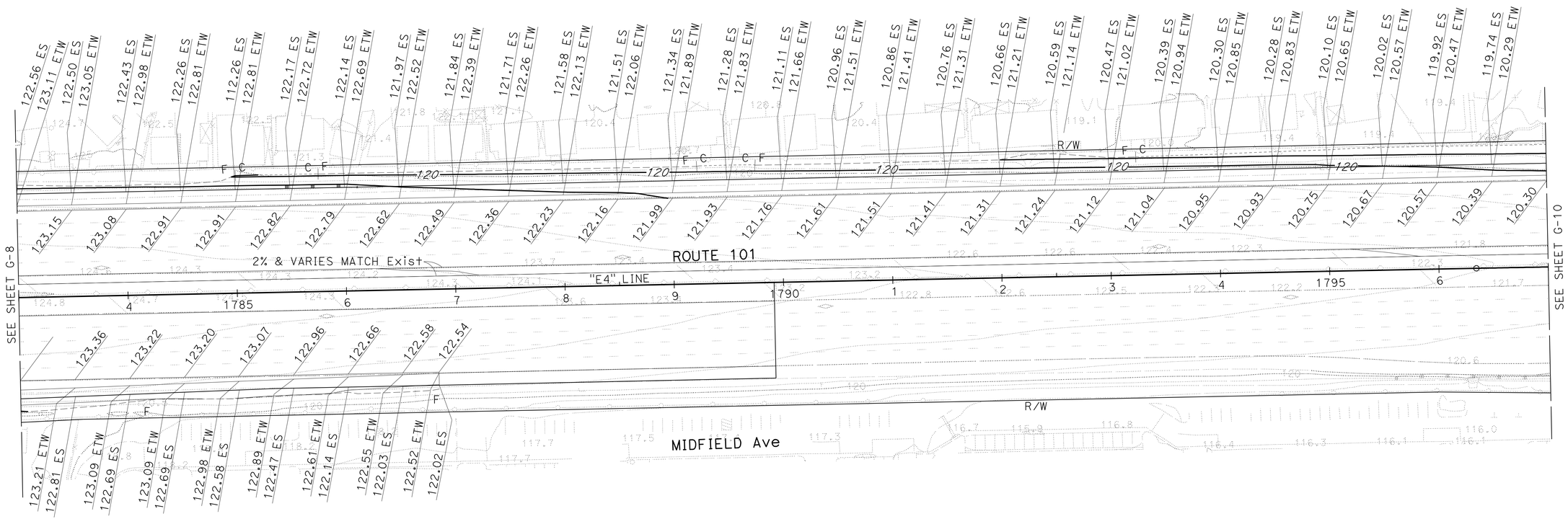

2 REVISED PER ADDENDUM No. 2 DATED JULY 8, 2010

FOR NOTES, ABBREVIATIONS &/OR LEGEND, SEE SHEET G-1

THIS PLAN ACCURATE FOR CONTOUR GRADING AND PAVEMENT ELEVATION ONLY

CONTOUR GRADING AND PAVEMENT ELEVATION PLAN

SCALE: 1" = 50'

G-9

STATE OF CALIFORNIA - DEPARTMENT OF TRANSPORTATION
Caltrans

CONSULTANT FUNCTIONAL SUPERVISOR: WILLIAM J. WAGNER
CALCULATED-DESIGNED BY: CHESTER C. BALLESTEROS
CHECKED BY: MICHAEL L. MORSILLI
REVISED BY
DATE REVISED

LAST REVISION 05-20-10
DATE PLOTTED => 08-JUL-2010
TIME PLOTTED => 07:55

Dist	COUNTY	ROUTE	POST MILES TOTAL PROJECT	SHEET No.	TOTAL SHEETS
04	SCI	101	31.8/34.3	105	515

Chester C. Ballesteros 10/19/09
REGISTERED CIVIL ENGINEER DATE

11-23-09
PLANS APPROVAL DATE

REGISTERED PROFESSIONAL ENGINEER CHESTER C. BALLESTEROS No. 70706 Exp. 6-30-11 CIVIL STATE OF CALIFORNIA

THE STATE OF CALIFORNIA OR ITS OFFICERS OR AGENTS SHALL NOT BE RESPONSIBLE FOR THE ACCURACY OR COMPLETENESS OF SCANNED COPIES OF THIS PLAN SHEET.

HMH
1570 OAKLAND ROAD
SAN JOSE, CA 95131

SANTA CLARA VALLEY
TRANSPORTATION AUTHORITY
3331 N. FIRST STREET
SAN JOSE, CA 95134

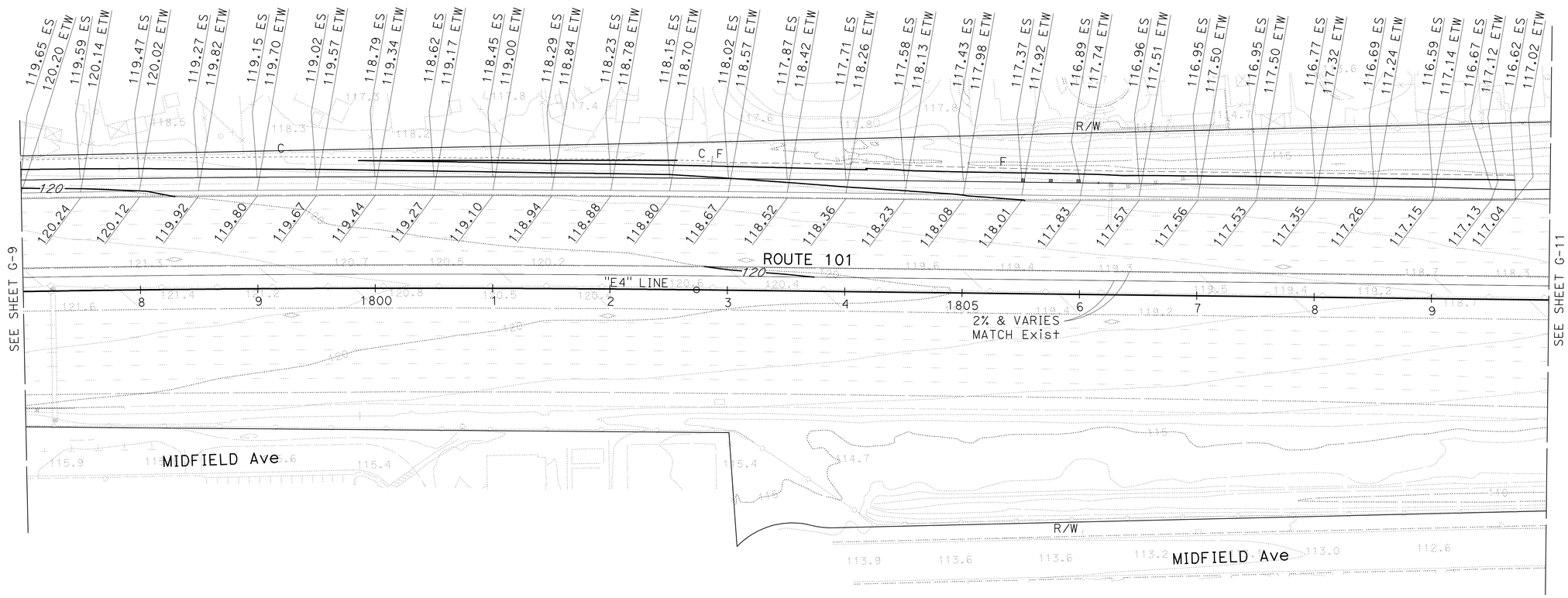

FOR NOTES, ABBREVIATIONS &/OR LEGEND, SEE SHEET G-1

THIS PLAN ACCURATE FOR CONTOUR GRADING AND PAVEMENT ELEVATION ONLY

CONTOUR GRADING AND PAVEMENT ELEVATION PLAN

SCALE: 1" = 50'

G-10

2 REVISED PER ADDENDUM No. 2 DATED JULY 8, 2010

STATE OF CALIFORNIA - DEPARTMENT OF TRANSPORTATION

Caltrans

CONSULTANT FUNCTIONAL SUPERVISOR: WILLIAM J. WAGNER

CALCULATED-DESIGNED BY: CHESTER C. BALLESTEROS

CHECKED BY: MICHAEL L. MORSILLI

REVISED BY

DATE REVISED

LAST REVISION 05-20-10

DATE PLOTTED => 08-JUL-2010
TIME PLOTTED => 07:55

Dist	COUNTY	ROUTE	POST MILES TOTAL PROJECT	SHEET No.	TOTAL SHEETS
04	SCI	101	31.8/34.3	106	515

Chester C. Ballesteros 10/19/09
REGISTERED CIVIL ENGINEER DATE

11-23-09
PLANS APPROVAL DATE

REGISTERED PROFESSIONAL ENGINEER
CHESTER C. BALLESTEROS
No. 70706
Exp. 6-30-11
CIVIL
STATE OF CALIFORNIA

THE STATE OF CALIFORNIA OR ITS OFFICERS OR AGENTS SHALL NOT BE RESPONSIBLE FOR THE ACCURACY OR COMPLETENESS OF SCANNED COPIES OF THIS PLAN SHEET.

HMH
1570 OAKLAND ROAD
SAN JOSE, CA 95131

SANTA CLARA VALLEY
TRANSPORTATION AUTHORITY
3331 N. FIRST STREET
SAN JOSE, CA 95134

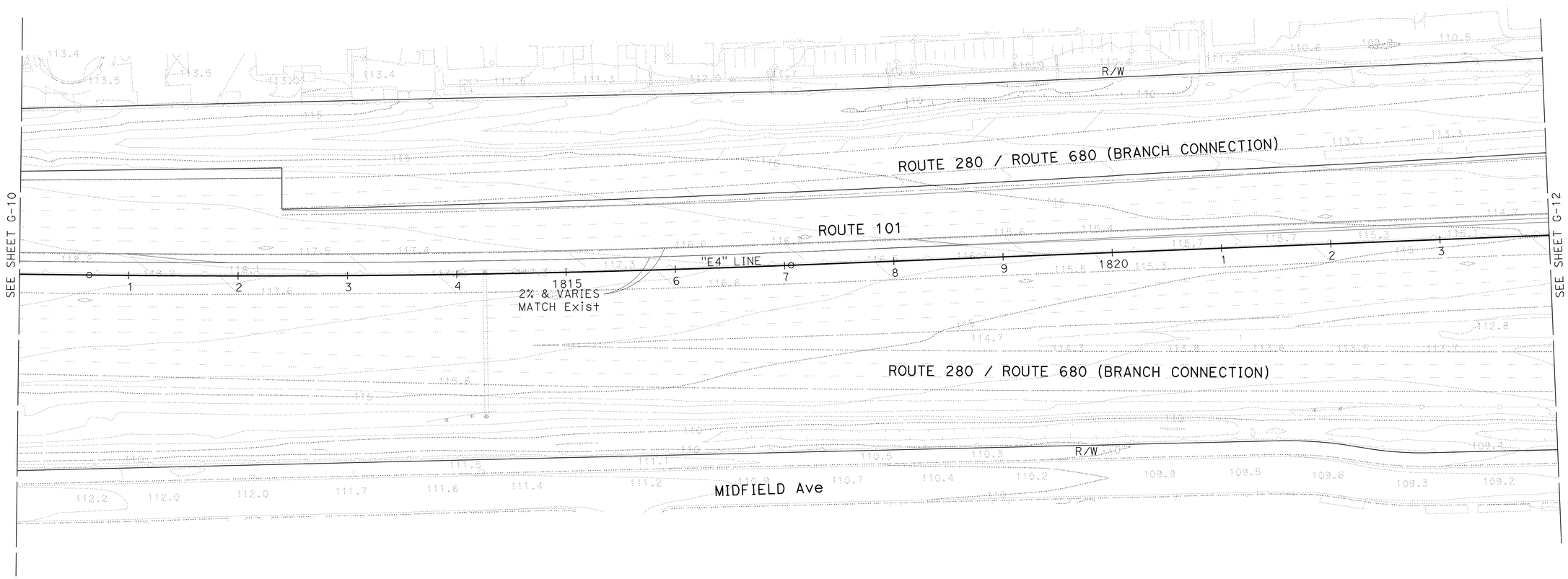

2 **REVISED PER ADDENDUM No. 2 DATED JULY 8, 2010**

FOR NOTES, ABBREVIATIONS &/OR LEGEND, SEE SHEET G-1

THIS SHEET IS FOR INFORMATION ONLY
THIS PLAN ACCURATE FOR CONTOUR GRADING AND PAVEMENT ELEVATION ONLY

CONTOUR GRADING AND PAVEMENT ELEVATION PLAN

SCALE: 1" = 50'

G-11

STATE OF CALIFORNIA - DEPARTMENT OF TRANSPORTATION
Caltrans

CONSULTANT FUNCTIONAL SUPERVISOR: WILLIAM J. WAGNER
CALCULATED-DESIGNED BY: MICHAEL L. MORSILLI
CHECKED BY: CHESTER C. BALLESTEROS
REVISED BY
DATE REVISED

LAST REVISION 05-20-10
DATE PLOTTED => 08-JUL-2010
TIME PLOTTED => 07:55

Dist	COUNTY	ROUTE	POST MILES TOTAL PROJECT	SHEET No.	TOTAL SHEETS
04	SCI	101	31.8/34.3	107	515

Chester C. Ballesteros 10/19/09
REGISTERED CIVIL ENGINEER DATE

11-23-09
PLANS APPROVAL DATE

REGISTERED PROFESSIONAL ENGINEER
CHESTER C. BALLESTEROS
No. 70706
Exp. 6-30-11
CIVIL
STATE OF CALIFORNIA

THE STATE OF CALIFORNIA OR ITS OFFICERS OR AGENTS SHALL NOT BE RESPONSIBLE FOR THE ACCURACY OR COMPLETENESS OF SCANNED COPIES OF THIS PLAN SHEET.

HMH
1570 OAKLAND ROAD
SAN JOSE, CA 95131

SANTA CLARA VALLEY
TRANSPORTATION AUTHORITY
3331 N. FIRST STREET
SAN JOSE, CA 95134

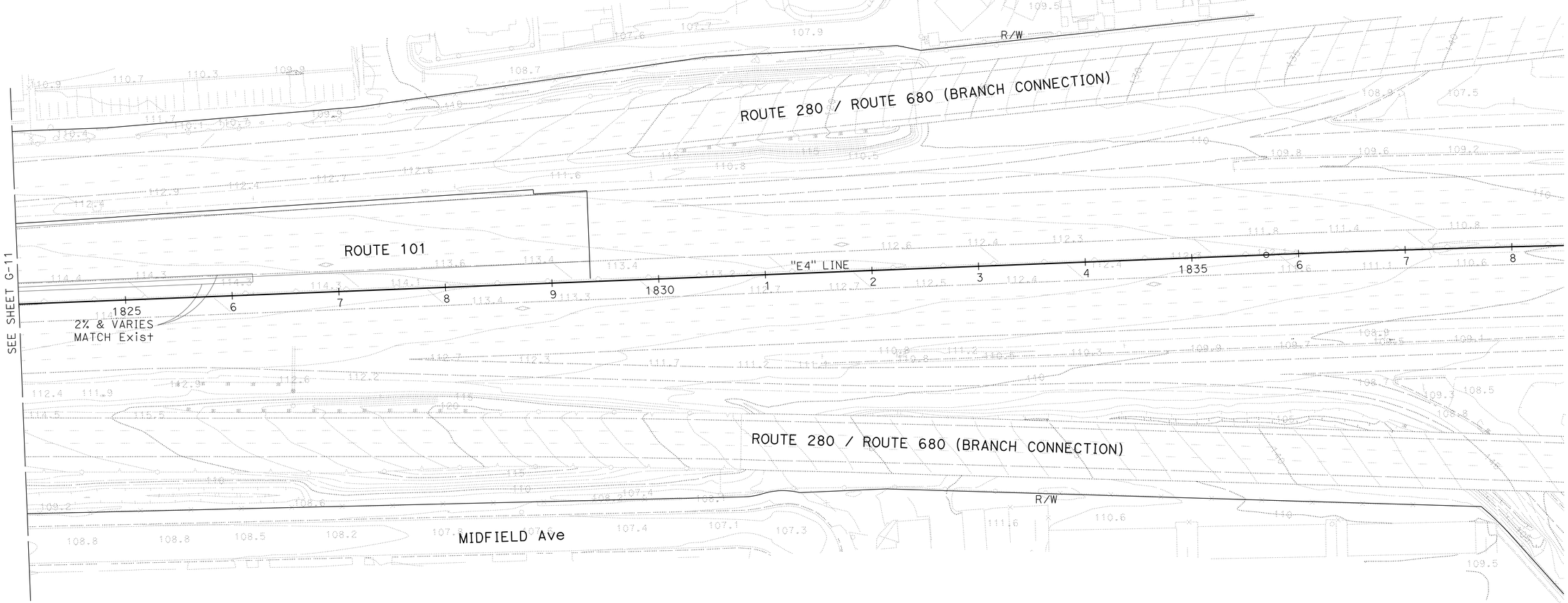

FOR NOTES, ABBREVIATIONS &/OR LEGEND, SEE SHEET G-1

THIS SHEET IS FOR INFORMATION ONLY
THIS PLAN ACCURATE FOR CONTOUR GRADING AND PAVEMENT ELEVATION ONLY

CONTOUR GRADING AND PAVEMENT ELEVATION PLAN

SCALE: 1" = 50'

G-12

2 REVISED PER ADDENDUM No. 2 DATED JULY 8, 2010

STATE OF CALIFORNIA - DEPARTMENT OF TRANSPORTATION
Caltrans

CONSULTANT FUNCTIONAL SUPERVISOR: WILLIAM J. WAGNER

CHESTER C. BALLESTEROS — MICHAEL L. MORSILLI

CALCULATED-DESIGNED BY
CHECKED BY

REVISED BY
DATE REVISED

LAST REVISION 05-20-10
DATE PLOTTED => 08-JUL-2010
TIME PLOTTED => 07:55

Dist	COUNTY	ROUTE	POST MILES TOTAL PROJECT	SHEET No.	TOTAL SHEETS
04	SCI	101	31.8/34.3	108	515

Chester C. Ballesteros 10/19/09
REGISTERED CIVIL ENGINEER DATE

11-23-09
PLANS APPROVAL DATE

REGISTERED PROFESSIONAL ENGINEER
CHESTER C. BALLESTEROS
No. 70706
Exp. 6-30-11
CIVIL
STATE OF CALIFORNIA

THE STATE OF CALIFORNIA OR ITS OFFICERS OR AGENTS SHALL NOT BE RESPONSIBLE FOR THE ACCURACY OR COMPLETENESS OF SCANNED COPIES OF THIS PLAN SHEET.

HMH
1570 OAKLAND ROAD
SAN JOSE, CA 95131

SANTA CLARA VALLEY
TRANSPORTATION AUTHORITY
3331 N. FIRST STREET
SAN JOSE, CA 95134

2

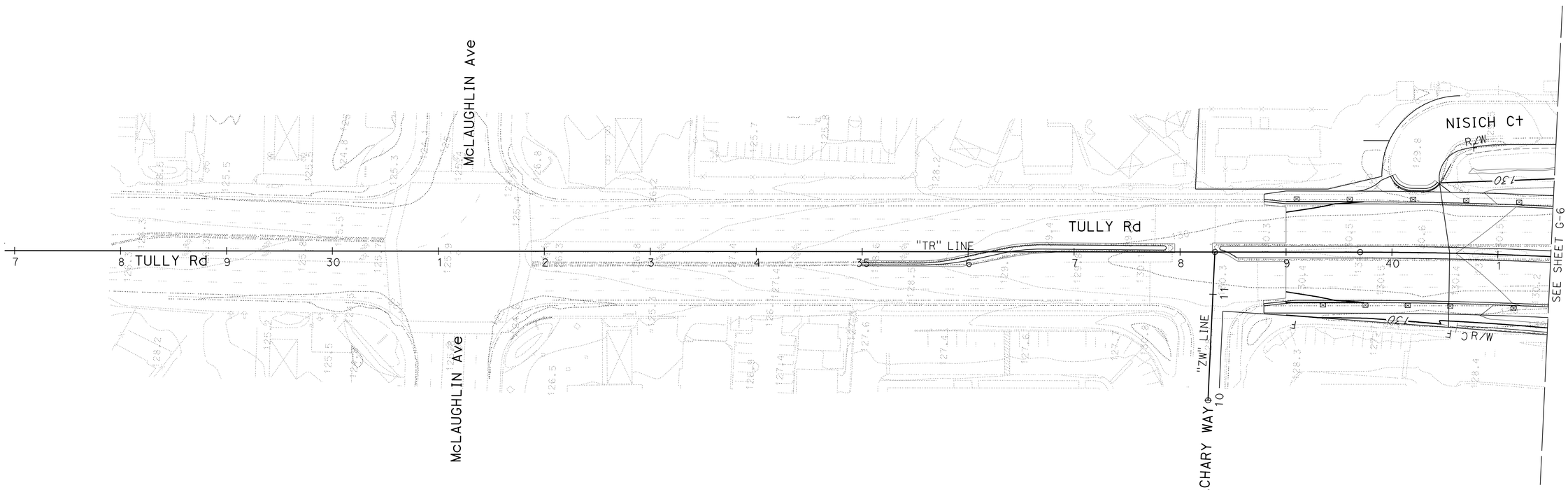

FOR NOTES, ABBREVIATIONS &/OR LEGEND, SEE SHEET G-1

CONTOUR GRADING AND PAVEMENT ELEVATION PLAN

SCALE: 1" = 50'

THIS PLAN ACCURATE FOR CONTOUR GRADING AND PAVEMENT ELEVATION ONLY

G-13

2 **REVISED PER ADDENDUM No. 2 DATED JULY 8, 2010**

CHESTER C. BALLESTEROS	REVISED BY
MICHAEL L. MORSILLI	DATE REVISED
CALCULATED-DESIGNED BY	
CHECKED BY	
CONSULTANT FUNCTIONAL SUPERVISOR	
WILLIAM J. WAGNER	

STATE OF CALIFORNIA - DEPARTMENT OF TRANSPORTATION
Caltrans

LAST REVISION 05-20-10 | DATE PLOTTED => 08-JUL-2010 | TIME PLOTTED => 07:56

Dist	COUNTY	ROUTE	POST MILES TOTAL PROJECT	SHEET No.	TOTAL SHEETS
04	SCI	101	31.8/34.3	109	515

Chester C. Ballesteros 10/19/09
REGISTERED CIVIL ENGINEER DATE

11-23-09
PLANS APPROVAL DATE

REGISTERED PROFESSIONAL ENGINEER
CHESTER C. BALLESTEROS
No. 70706
Exp. 6-30-11
CIVIL
STATE OF CALIFORNIA

THE STATE OF CALIFORNIA OR ITS OFFICERS OR AGENTS SHALL NOT BE RESPONSIBLE FOR THE ACCURACY OR COMPLETENESS OF SCANNED COPIES OF THIS PLAN SHEET.

HMH
1570 OAKLAND ROAD
SAN JOSE, CA 95131

SANTA CLARA VALLEY
TRANSPORTATION AUTHORITY
3331 N. FIRST STREET
SAN JOSE, CA 95134

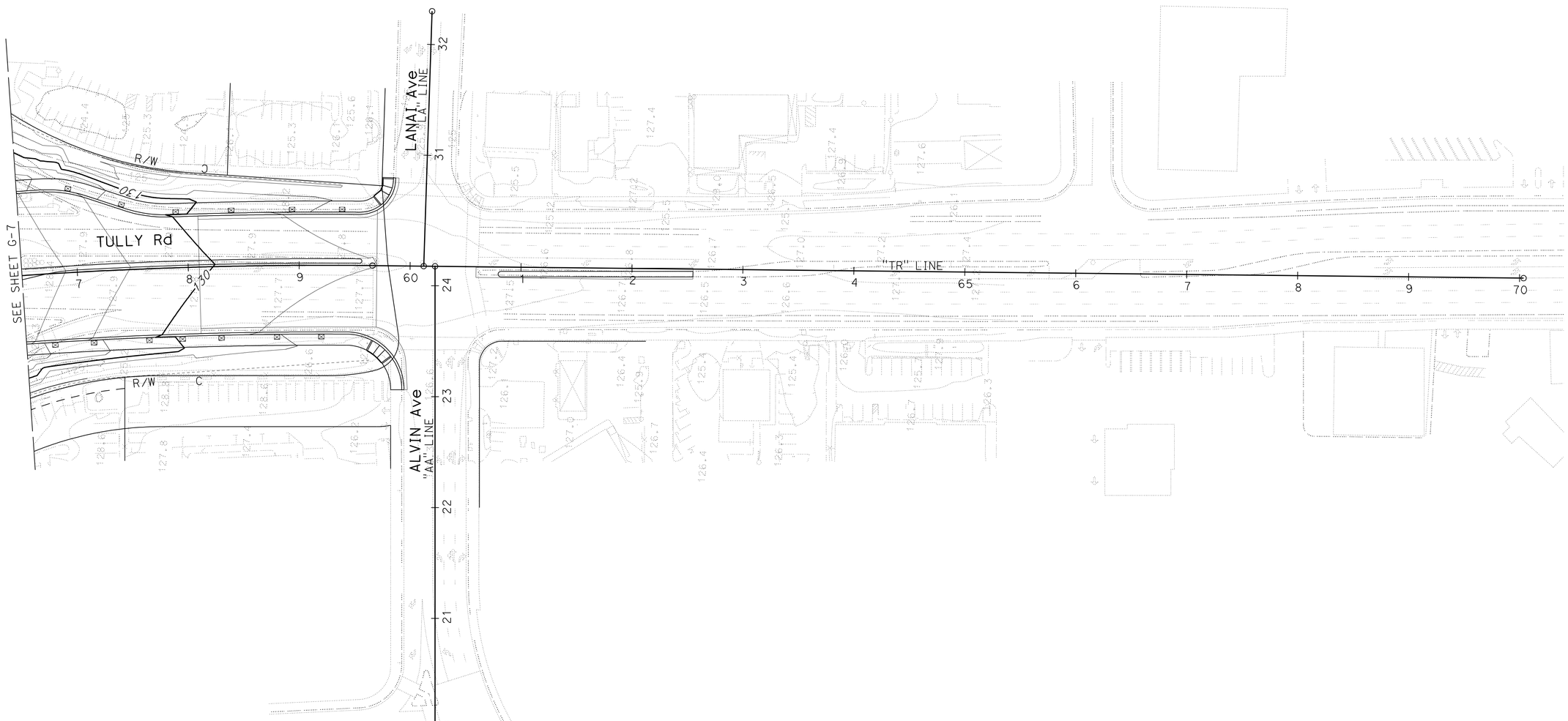

FOR NOTES, ABBREVIATIONS &/OR LEGEND, SEE SHEET G-1

CONTOUR GRADING AND PAVEMENT ELEVATION PLAN

SCALE: 1" = 50'

THIS PLAN ACCURATE FOR CONTOUR GRADING AND PAVEMENT ELEVATION ONLY

G-14

2 REVISED PER ADDENDUM No. 2 DATED JULY 8, 2010

STATE OF CALIFORNIA - DEPARTMENT OF TRANSPORTATION
Caltrans

CONSULTANT FUNCTIONAL SUPERVISOR: WILLIAM J. WAGNER
CALCULATED-DESIGNED BY: CHESTER C. BALLESTEROS
CHECKED BY: MICHAEL L. MORSILLI
REVISED BY
DATE REVISED

LAST REVISION 05-20-10
DATE PLOTTED => 08-JUL-2010
TIME PLOTTED => 07:56

Dist	COUNTY	ROUTE	POST MILES TOTAL PROJECT	SHEET No.	TOTAL SHEETS
04	SCI	101	31.8/34.3	170	515

Chester C. Ballesteros 1/25/10
REGISTERED CIVIL ENGINEER DATE

11-23-09
PLANS APPROVAL DATE

REGISTERED PROFESSIONAL ENGINEER CHESTER C. BALLESTEROS No. 70706 Exp. 6-30-11 CIVIL STATE OF CALIFORNIA

THE STATE OF CALIFORNIA OR ITS OFFICERS OR AGENTS SHALL NOT BE RESPONSIBLE FOR THE ACCURACY OR COMPLETENESS OF SCANNED COPIES OF THIS PLAN SHEET.

HMH
1570 OAKLAND ROAD
SAN JOSE, CA 95131

SANTA CLARA VALLEY
TRANSPORTATION AUTHORITY
3331 N. FIRST STREET
SAN JOSE, CA 95134

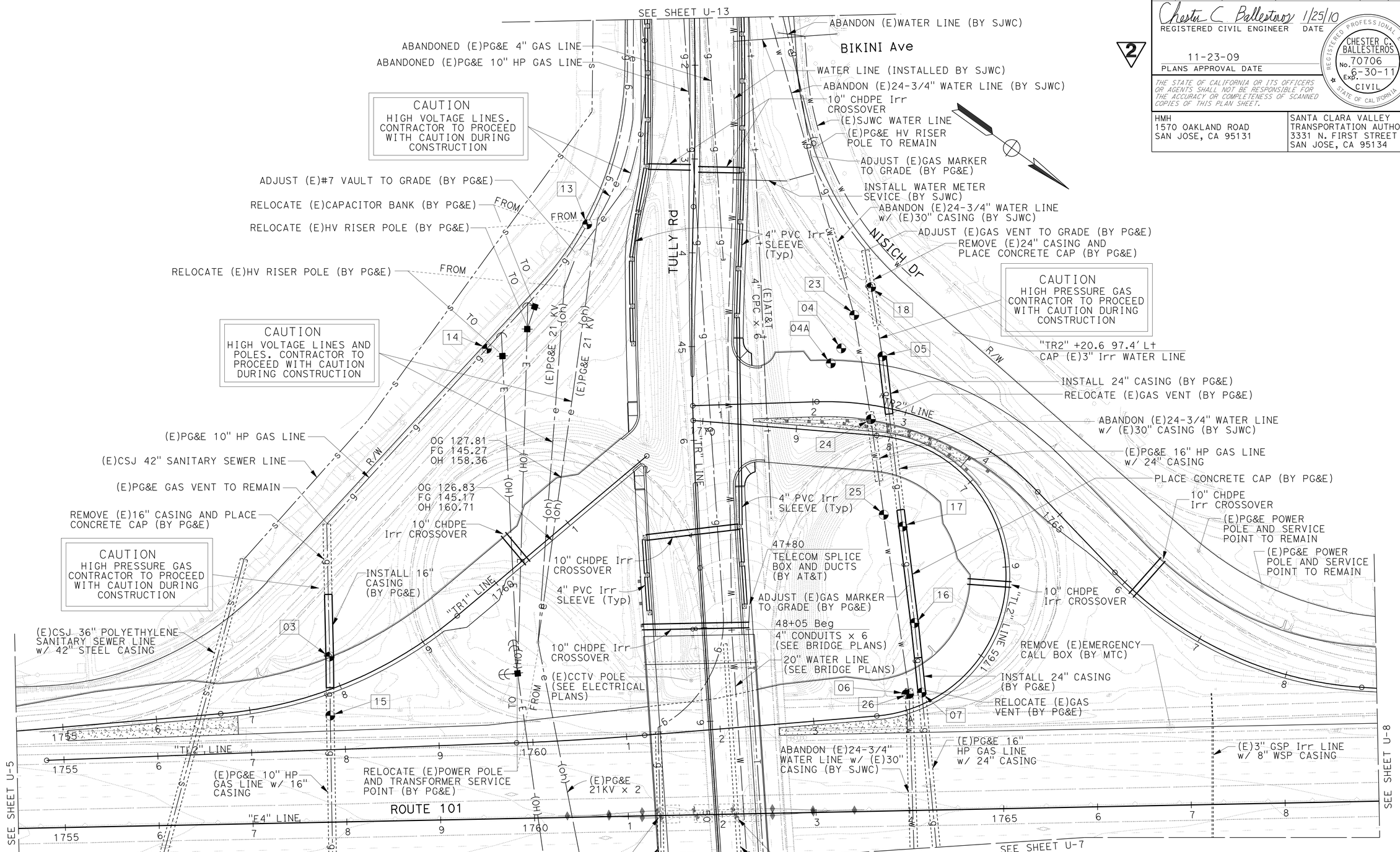

FOR NOTES, ABBREVIATIONS &/OR LEGEND, SEE SHEET U-1

UTILITY PLAN

SCALE: 1" = 50'

U-6

THIS PLAN ACCURATE FOR UTILITY WORK ONLY

2 **REVISED PER ADDENDUM No. 2 DATED JULY 8, 2010**

STATE OF CALIFORNIA - DEPARTMENT OF TRANSPORTATION
Caltrans

CONSULTANT FUNCTIONAL SUPERVISOR: WILLIAM J. WAGNER
CHESTER C. BALLESTEROS
CALCULATED-DESIGNED BY
CHECKED BY
REVISED BY
DATE REVISED

LAST REVISION 01-25-10
DATE PLOTTED => 08-JUL-2010
TIME PLOTTED => 07:56

Dist	COUNTY	ROUTE	POST MILES TOTAL PROJECT	SHEET No.	TOTAL SHEETS
04	SCI	101	31.8/34.3	171	515

Chester C. Ballesteros 1/25/10
REGISTERED CIVIL ENGINEER DATE

11-23-09
PLANS APPROVAL DATE

REGISTERED PROFESSIONAL ENGINEER CHESTER C. BALLESTEROS No. 70706 Exp. 6-30-11 CIVIL STATE OF CALIFORNIA

THE STATE OF CALIFORNIA OR ITS OFFICERS OR AGENTS SHALL NOT BE RESPONSIBLE FOR THE ACCURACY OR COMPLETENESS OF SCANNED COPIES OF THIS PLAN SHEET.

HMH
1570 OAKLAND ROAD
SAN JOSE, CA 95131

SANTA CLARA VALLEY
TRANSPORTATION AUTHORITY
3331 N. FIRST STREET
SAN JOSE, CA 95134

2

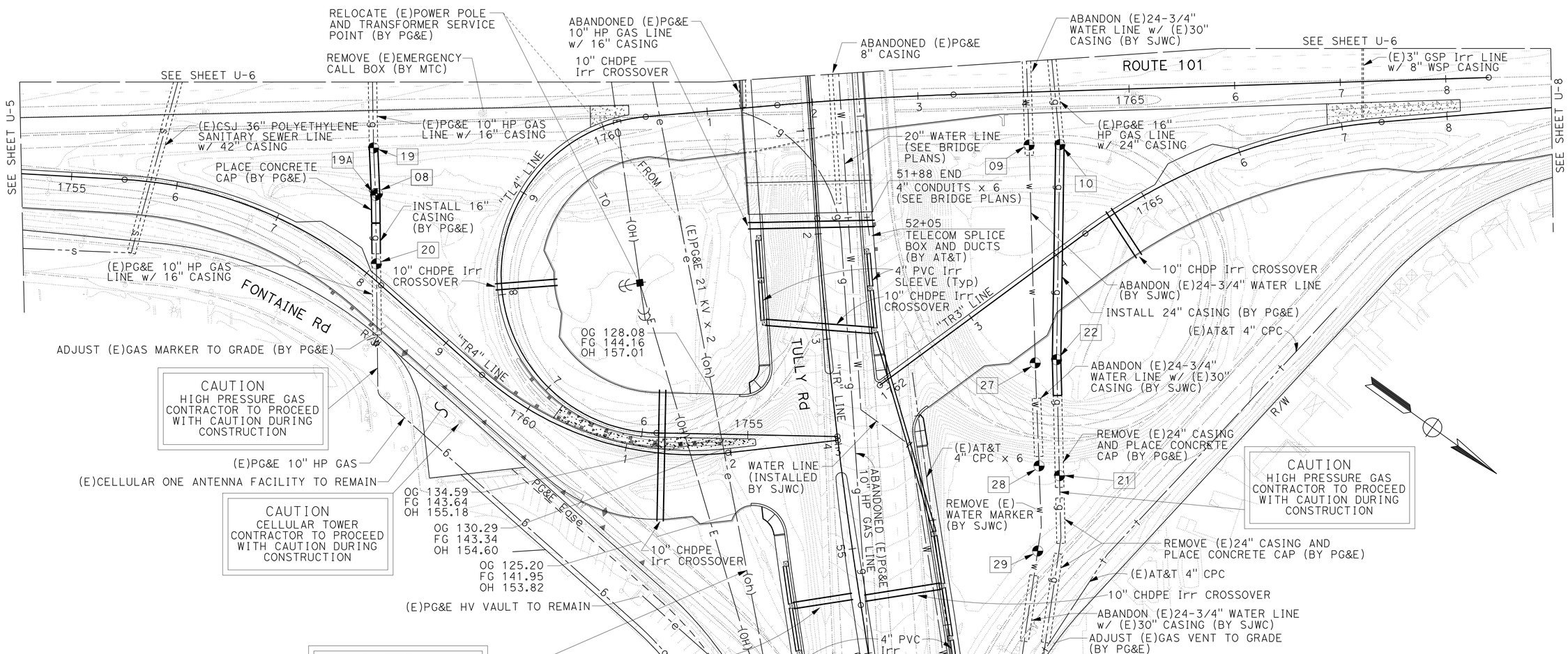

FOR NOTES, ABBREVIATIONS &/OR LEGEND, SEE SHEET U-1

UTILITY PLAN

SCALE: 1" = 50'

U-7

2 **REVISED PER ADDENDUM No. 2 DATED JULY 8, 2010**

THIS PLAN ACCURATE FOR UTILITY WORK ONLY

STATE OF CALIFORNIA - DEPARTMENT OF TRANSPORTATION
Caltrans

CONSULTANT FUNCTIONAL SUPERVISOR: WILLIAM J. WAGNER
CALCULATED-DESIGNED BY: CHESTER C. BALLESTEROS
CHECKED BY: MICHAEL L. MORSILLI
REVISED BY
DATE REVISED

LAST REVISION DATE PLOTTED => 08-JUL-2010
TIME PLOTTED => 07:56
01-25-10

Dist	COUNTY	ROUTE	POST MILES TOTAL PROJECT	SHEET No.	TOTAL SHEETS
04	SCI	101	31.8/34.3	177	515

Chester C. Ballesteros 1/25/10
REGISTERED CIVIL ENGINEER DATE

11-23-09
PLANS APPROVAL DATE

REGISTERED PROFESSIONAL ENGINEER CHESTER C. BALLESTEROS No. 70706 Exp. 6-30-11 CIVIL STATE OF CALIFORNIA

THE STATE OF CALIFORNIA OR ITS OFFICERS OR AGENTS SHALL NOT BE RESPONSIBLE FOR THE ACCURACY OR COMPLETENESS OF SCANNED COPIES OF THIS PLAN SHEET.

HMH
1570 OAKLAND ROAD
SAN JOSE, CA 95131

SANTA CLARA VALLEY
TRANSPORTATION AUTHORITY
3331 N. FIRST STREET
SAN JOSE, CA 95134

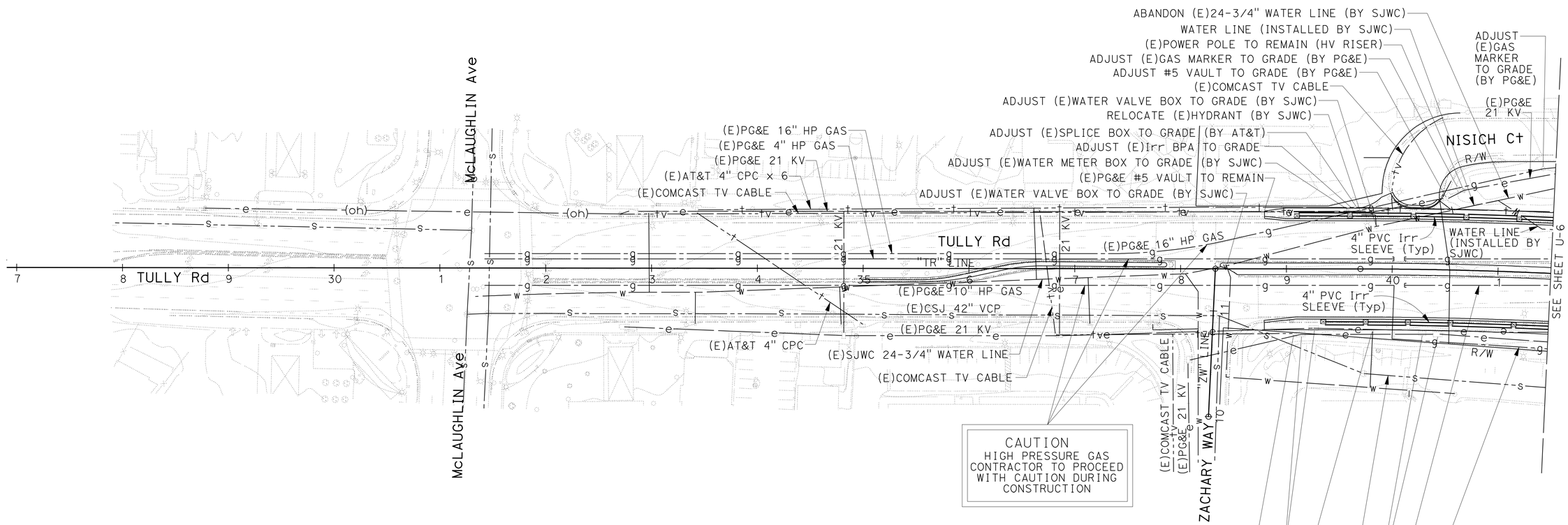

FOR NOTES, ABBREVIATIONS &/OR LEGEND, SEE SHEET U-1

UTILITY PLAN

SCALE: 1" = 50'

U-13

THIS PLAN ACCURATE FOR UTILITY WORK ONLY

2 **REVISED PER ADDENDUM No. 2 DATED JULY 8, 2010**

STATE OF CALIFORNIA - DEPARTMENT OF TRANSPORTATION
Caltrans

CONSULTANT FUNCTIONAL SUPERVISOR: WILLIAM J. WAGNER
CALCULATED-DESIGNED BY: MICHAEL L. MORSILLI
CHECKED BY: CHESTER C. BALLESTEROS
REVISED BY
DATE REVISED

LAST REVISION 01-25-10
DATE PLOTTED => 08-JUL-2010
TIME PLOTTED => 07:56

Dist	COUNTY	ROUTE	POST MILES TOTAL PROJECT	SHEET No.	TOTAL SHEETS
04	SCI	101	31.8/34.3	178	515

Chester C. Ballesteros 1/25/10
REGISTERED CIVIL ENGINEER DATE

11-23-09
PLANS APPROVAL DATE

REGISTERED PROFESSIONAL ENGINEER CHESTER C. BALLESTEROS No. 70706 Exp. 6-30-11 CIVIL STATE OF CALIFORNIA

THE STATE OF CALIFORNIA OR ITS OFFICERS OR AGENTS SHALL NOT BE RESPONSIBLE FOR THE ACCURACY OR COMPLETENESS OF SCANNED COPIES OF THIS PLAN SHEET.

HMH
1570 OAKLAND ROAD
SAN JOSE, CA 95131

SANTA CLARA VALLEY
TRANSPORTATION AUTHORITY
3331 N. FIRST STREET
SAN JOSE, CA 95134

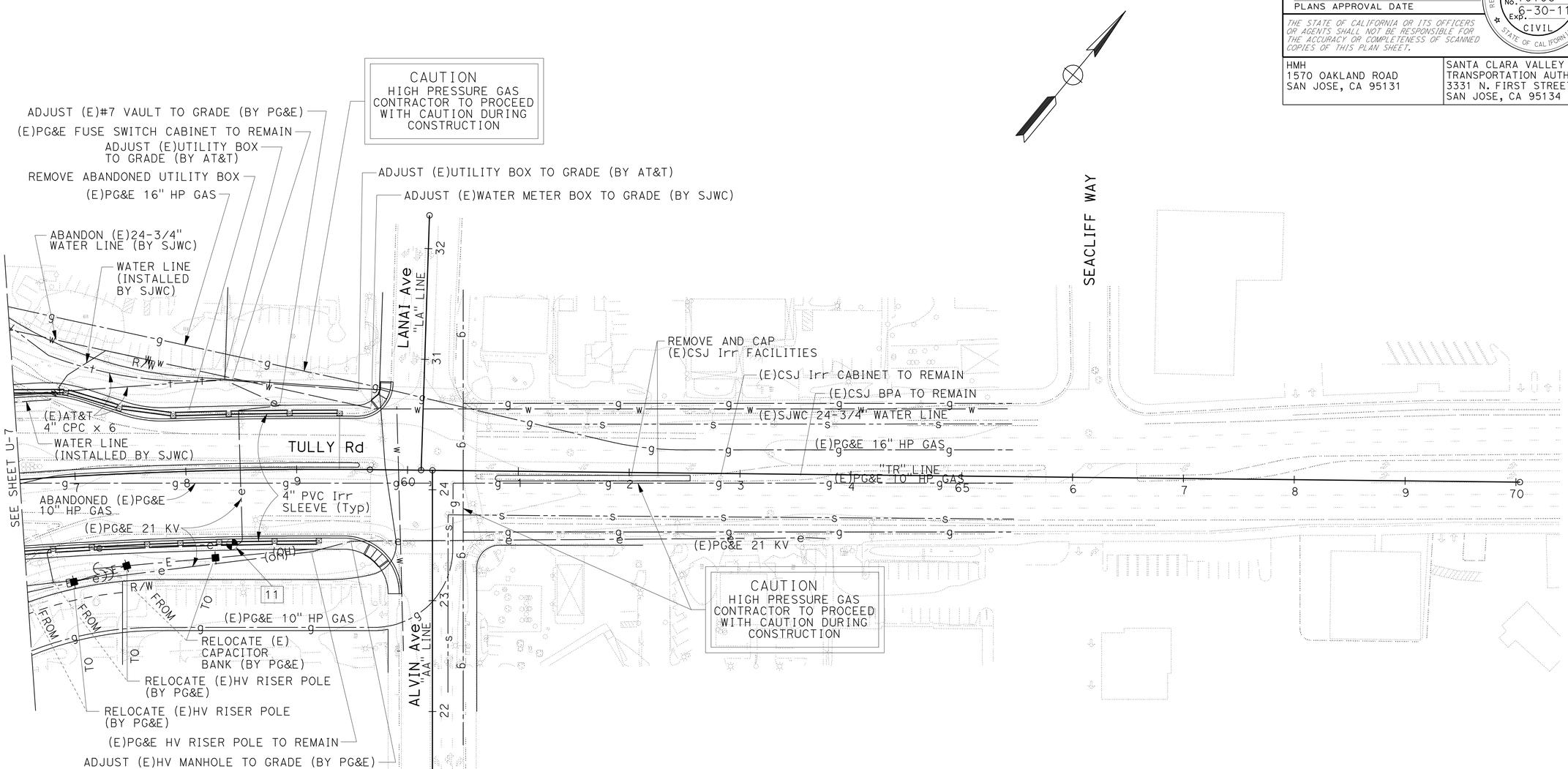

FOR NOTES, ABBREVIATIONS &/OR LEGEND, SEE SHEET U-1

UTILITY PLAN

SCALE: 1" = 50'

U-14

THIS PLAN ACCURATE FOR UTILITY WORK ONLY

2 REVISED PER ADDENDUM No. 2 DATED JULY 8, 2010

STATE OF CALIFORNIA - DEPARTMENT OF TRANSPORTATION

Caltrans

CONSULTANT FUNCTIONAL SUPERVISOR: WILLIAM J. WAGNER

CHESTER C. BALLESTEROS / MICHAEL L. MORSILLI

REVISED BY / DATE REVISED

CALCULATED-DESIGNED BY / CHECKED BY

LAST REVISION 01-25-10

DATE PLOTTED => 08-JUL-2010
TIME PLOTTED => 07:56

Dist	COUNTY	ROUTE	POST MILES TOTAL PROJECT	SHEET No.	TOTAL SHEETS
04	SCI	101	31.8/34.3	194	515

Chester C. Ballesteros 6/17/09
REGISTERED CIVIL ENGINEER DATE

11-23-09
PLANS APPROVAL DATE

REGISTERED PROFESSIONAL ENGINEER CHESTER C. BALLESTEROS No. 70706 Exp. 6-30-11 CIVIL STATE OF CALIFORNIA

THE STATE OF CALIFORNIA OR ITS OFFICERS OR AGENTS SHALL NOT BE RESPONSIBLE FOR THE ACCURACY OR COMPLETENESS OF SCANNED COPIES OF THIS PLAN SHEET.

HMH
1570 OAKLAND ROAD
SAN JOSE, CA 95131

SANTA CLARA VALLEY
TRANSPORTATION AUTHORITY
3331 N. FIRST STREET
SAN JOSE, CA 95134

LEGEND

CONSTRUCTION THIS PHASE

TEMPORARY PAVEMENT CONSTRUCTION THIS PHASE

(No.) CONSTRUCTION ITEM NUMBER

CONSTRUCTION THIS PHASE

1. REMOVE MEDIAN ISLAND, CB & CRASH CUSHIONS ON TULLY Rd AND CONSTRUCT TEMPORARY PAVEMENT ALONG DETOUR D1.
2. REMOVE CB AND PATCH DECK ON TULLY Rd OVERCROSSING ALONG DETOUR D1.
3. CONSTRUCT DETOUR D2 FOR SB ROUTE 101 OFF-RAMP.
4. CONSTRUCT DETOUR D3 FOR NB ROUTE 101 ON-RAMP.
5. CONSTRUCT SB ROUTE 101 WIDENING IN MEDIAN BETWEEN Sta E4 1695+95 AND 1826+20, EXCEPT TOP LIFT OF HMA (OG).

TRAFFIC

1. MAINTAIN FREEWAY MAINLINE AND RAMP LANES.
2. RESTRICT ZACHARY WAY TO TULLY Rd TRAFFIC MOVEMENT TO RIGHT TURN ONLY.
3. SEE TRAFFIC HANDLING PLANS FOR TEMPORARY SIGNING AND STRIPING.

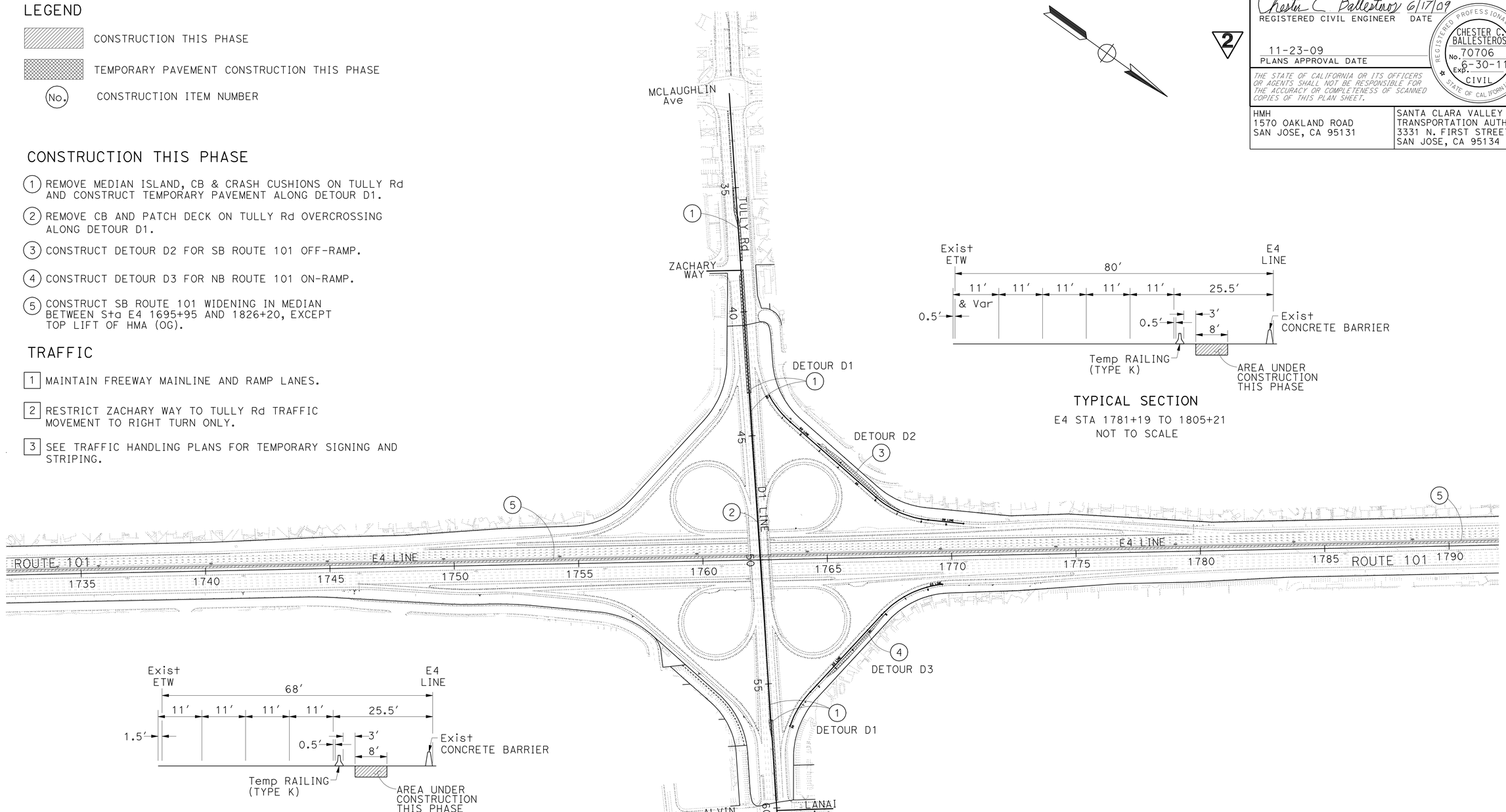

TYPICAL SECTION
E4 STA 1781+19 TO 1805+21
NOT TO SCALE

TYPICAL SECTION
E4 STA 1695+95 TO 1707+76
E4 STA 1725+00 TO 1741+00
E4 STA 1749+00 TO 1779+50
NOT TO SCALE

2 **REVISED PER ADDENDUM No. 2 DATED JULY 8, 2010**

STAGE CONSTRUCTION
STAGE 1 - PHASE 1
SCALE: 1" = 200′

SC-1

THIS PLAN ACCURATE FOR STAGE CONSTRUCTION ONLY

STATE OF CALIFORNIA - DEPARTMENT OF TRANSPORTATION
Caltrans

CONSULTANT FUNCTIONAL SUPERVISOR: WILLIAM J. WAGNER
CALCULATED-DESIGNED BY: CHESTER C. BALLESTEROS
CHECKED BY: MICHAEL L. MORSILLI
REVISED BY
DATE REVISED

LAST REVISION 06-17-09
DATE PLOTTED => 08-JUL-2010
TIME PLOTTED => 07:56

BORDER LAST REVISED 4/11/2008
RELATIVE BORDER SCALE IS IN INCHES 0 1 2 3
USERNAME => trstrk
DGN FILE => 41A980ma001.add
CU 04239
EA 1A9801

Dist	COUNTY	ROUTE	POST MILES TOTAL PROJECT	SHEET No.	TOTAL SHEETS
04	SCI	101	31.8/34.3	203	515

Chester C. Ballesteros 6/17/09
REGISTERED CIVIL ENGINEER DATE

11-23-09
PLANS APPROVAL DATE

REGISTERED PROFESSIONAL ENGINEER CHESTER C. BALLESTEROS No. 70706 Exp. 6-30-11 CIVIL STATE OF CALIFORNIA

THE STATE OF CALIFORNIA OR ITS OFFICERS OR AGENTS SHALL NOT BE RESPONSIBLE FOR THE ACCURACY OR COMPLETENESS OF SCANNED COPIES OF THIS PLAN SHEET.

HMH
1570 OAKLAND ROAD
SAN JOSE, CA 95131

SANTA CLARA VALLEY
TRANSPORTATION AUTHORITY
3331 N. FIRST STREET
SAN JOSE, CA 95134

NOTES

1. ALL STATIONING AND OFFSETS OF TEMPORARY RAILING (TYPE K) CORRESPOND TO CENTERLINE OF THE TEMPORARY RAILING.
2. ALL CROSSWALKS AND LIMIT LINES SHALL BE 8 INCH SOLID WHITE STRIPE.
3. CONTRACTOR SHALL REMOVE EXISTING PAVEMENT DELINEATION WHICH CONFLICT WITH TRAFFIC HANDLING PLANS.
4. LOCATION OF CONSTRUCTION AREA SIGNS ARE APPROXIMATE. EXACT LOCATIONS ARE TO BE DETERMINED BY THE ENGINEER.
5. EXISTING SIGNS SHOWN TO BE RELOCATED ON TRAFFIC HANDLING PLANS ARE FOR STAGE CONSTRUCTION ONLY.
6. CONSTRUCTION AREA SIGNS ARE STATIONARY MOUNTED UNLESS OTHERWISE NOTED.
7. FOR ADDITIONAL CONSTRUCTION AREA SIGNS NOT SHOWN, SEE CONSTRUCTION AREA SIGN PLANS.
8. FOR ACCURATE RIGHT OF WAY AND ACCESS DATA, CONTACT RIGHT OF WAY ENGINEERING AT THE DISTRICT OFFICE.
9. ALL Temp PAVEMENT DELINEATION FOR STAGE 1 PHASE 1 IS TO DONE BY OTHERS.

LEGEND

- CONSTRUCTION THIS PHASE
- TEMPORARY PAVEMENT CONSTRUCTION THIS PHASE
- AP ANGLE POINT
- w/ WITH
- & AND
- DIRECTION OF TRAFFIC
- TEMPORARY RAILING (TYPE K)
- TEMPORARY RETAINING WALL (MSE)
- TEMPORARY CRASH CUSHION
- LIMIT OF DESIGNATED TRAFFIC STRIPE
- TEMPORARY CHANNELIZER
- CONSTRUCTION AREA SIGN
- TYPE "P" OR "R" MARKER
- TYPE III BARRICADE
- (1) PAVEMENT DELINEATION DETAIL
- (1) CONSTRUCTION AREA SIGN NUMBER
- TYPE II ARROW (LT OR RT)
- TYPE III ARROW (LT OR RT)
- TYPE IV ARROW (LT OR RT)
- TYPE V ARROW (LT OR RT)
- TYPE V ARROW (LT OR RT)
- TYPE VII ARROW (LT OR RT)

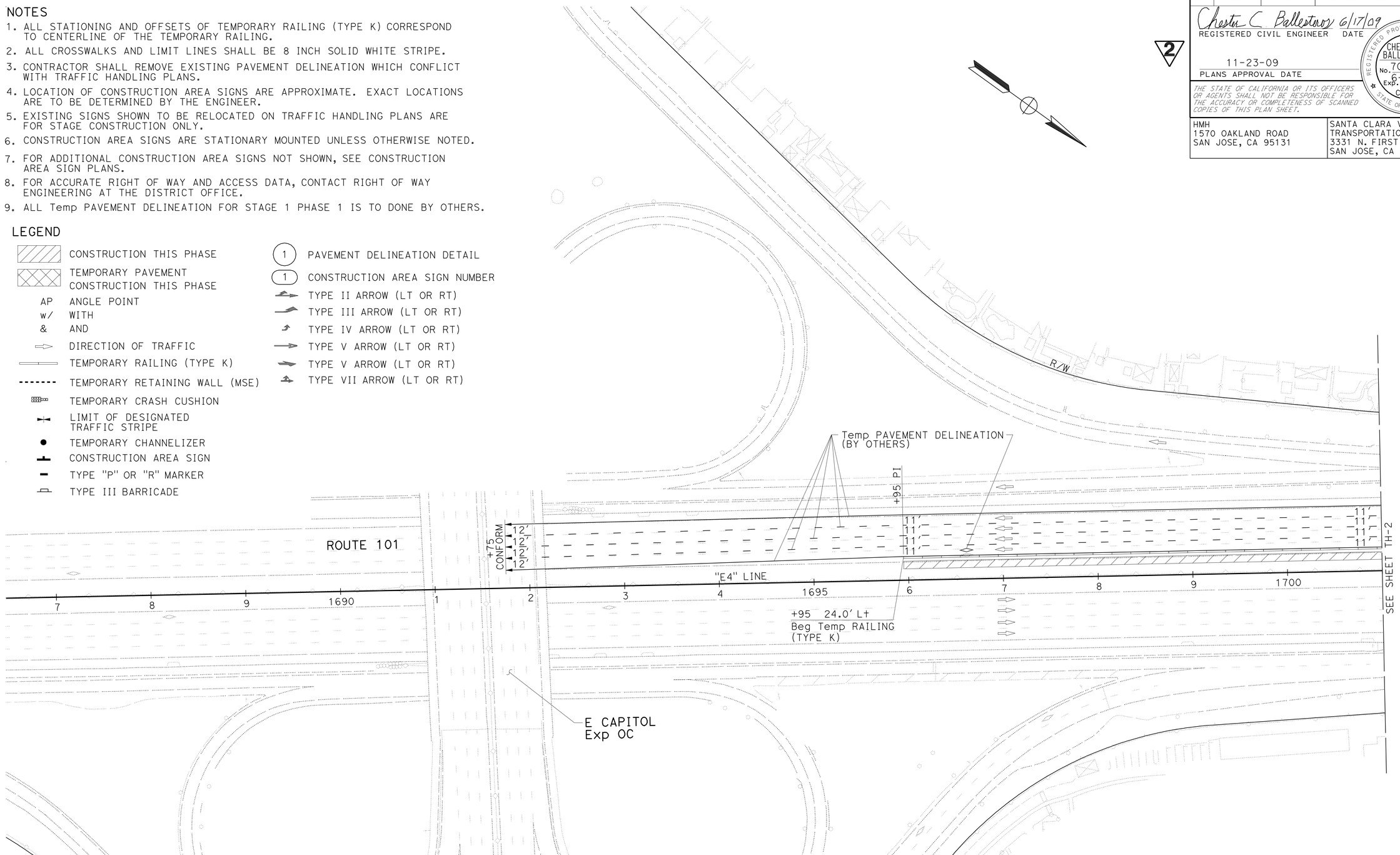

2 **REVISED PER ADDENDUM No. 2 DATED JULY 8, 2010**

TRAFFIC HANDLING PLAN
STAGE 1 - PHASE 1
SCALE: 1" = 50'

THIS PLAN ACCURATE FOR TRAFFIC HANDLING WORK ONLY

TH-1

STATE OF CALIFORNIA - DEPARTMENT OF TRANSPORTATION
Caltrans
CONSULTANT FUNCTIONAL SUPERVISOR: WILLIAM J. WAGNER
CHESTER C. BALLESTEROS | MICHAEL L. MORSILLI
CALCULATED-DESIGNED BY | CHECKED BY
REVISED BY | DATE REVISED

LAST REVISION 06-16-09 | DATE PLOTTED => 08-JUL-2010 | TIME PLOTTED => 07:57

BORDER LAST REVISED 4/11/2008 | RELATIVE BORDER SCALE IS IN INCHES 0 1 2 3 | USERNAME => trstrk | DGN FILE => 41A980md001.add | CU 04239 | EA 1A9801

Dist	COUNTY	ROUTE	POST MILES TOTAL PROJECT	SHEET No.	TOTAL SHEETS
04	SCI	101	31.8/34.3	204	515

Chester C. Ballesteros 6/17/09
REGISTERED CIVIL ENGINEER DATE

11-23-09
PLANS APPROVAL DATE

REGISTERED PROFESSIONAL ENGINEER CHESTER C. BALLESTEROS No. 70706 Exp. 6-30-11 CIVIL STATE OF CALIFORNIA

THE STATE OF CALIFORNIA OR ITS OFFICERS OR AGENTS SHALL NOT BE RESPONSIBLE FOR THE ACCURACY OR COMPLETENESS OF SCANNED COPIES OF THIS PLAN SHEET.

HMH
1570 OAKLAND ROAD
SAN JOSE, CA 95131

SANTA CLARA VALLEY
TRANSPORTATION AUTHORITY
3331 N. FIRST STREET
SAN JOSE, CA 95134

2

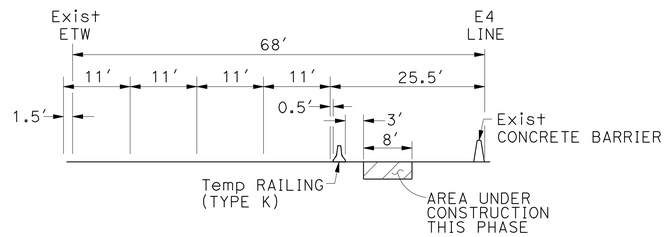

TYPICAL SECTION
E4 STA 1695+95 TO 1707+76
E4 STA 1725+00 TO 1741+00
E4 STA 1749+00 TO 1779+50
NOT TO SCALE

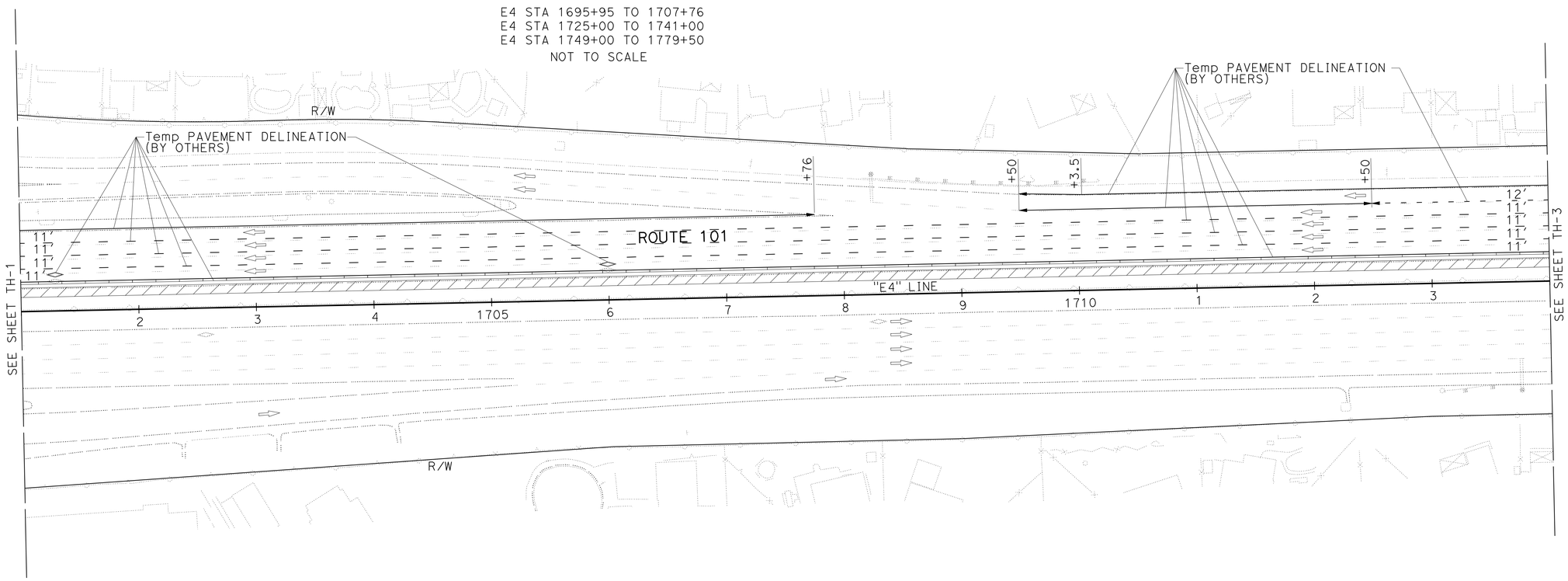

FOR NOTES, ABBREVIATIONS &/OR LEGEND, SEE SHEET TH-1

TRAFFIC HANDLING PLAN
STAGE 1 - PHASE 1
SCALE: 1" = 50′

2 **REVISED PER ADDENDUM No. 2 DATED JULY 8, 2010**

THIS PLAN ACCURATE FOR TRAFFIC HANDLING WORK ONLY

TH-2

STATE OF CALIFORNIA - DEPARTMENT OF TRANSPORTATION
Caltrans

CONSULTANT FUNCTIONAL SUPERVISOR: WILLIAM J. WAGNER
CALCULATED-DESIGNED BY: CHESTER C. BALLESTEROS
CHECKED BY: MICHAEL L. MORSILLI
REVISED BY / DATE REVISED

LAST REVISION 06-17-09
DATE PLOTTED => 08-JUL-2010
TIME PLOTTED => 07:57

Dist	COUNTY	ROUTE	POST MILES TOTAL PROJECT	SHEET No.	TOTAL SHEETS
04	SCI	101	31.8/34.3	205	515

Chester C. Ballesteros 6/17/09
REGISTERED CIVIL ENGINEER DATE

11-23-09
PLANS APPROVAL DATE

REGISTERED PROFESSIONAL ENGINEER CHESTER C. BALLESTEROS No. 70706 Exp. 6-30-11 CIVIL STATE OF CALIFORNIA

THE STATE OF CALIFORNIA OR ITS OFFICERS OR AGENTS SHALL NOT BE RESPONSIBLE FOR THE ACCURACY OR COMPLETENESS OF SCANNED COPIES OF THIS PLAN SHEET.

HMH
1570 OAKLAND ROAD
SAN JOSE, CA 95131

SANTA CLARA VALLEY
TRANSPORTATION AUTHORITY
3331 N. FIRST STREET
SAN JOSE, CA 95134

2

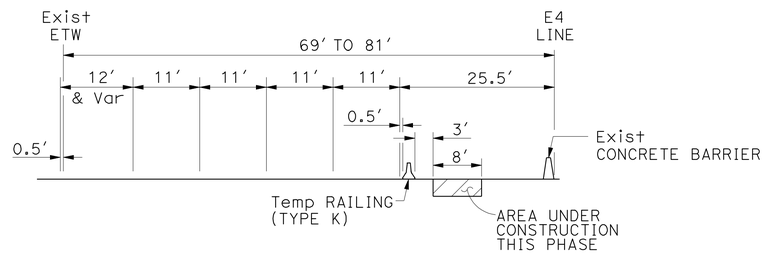

TYPICAL SECTION

E4 Sta 1709+50 TO 1725+00

NOT TO SCALE

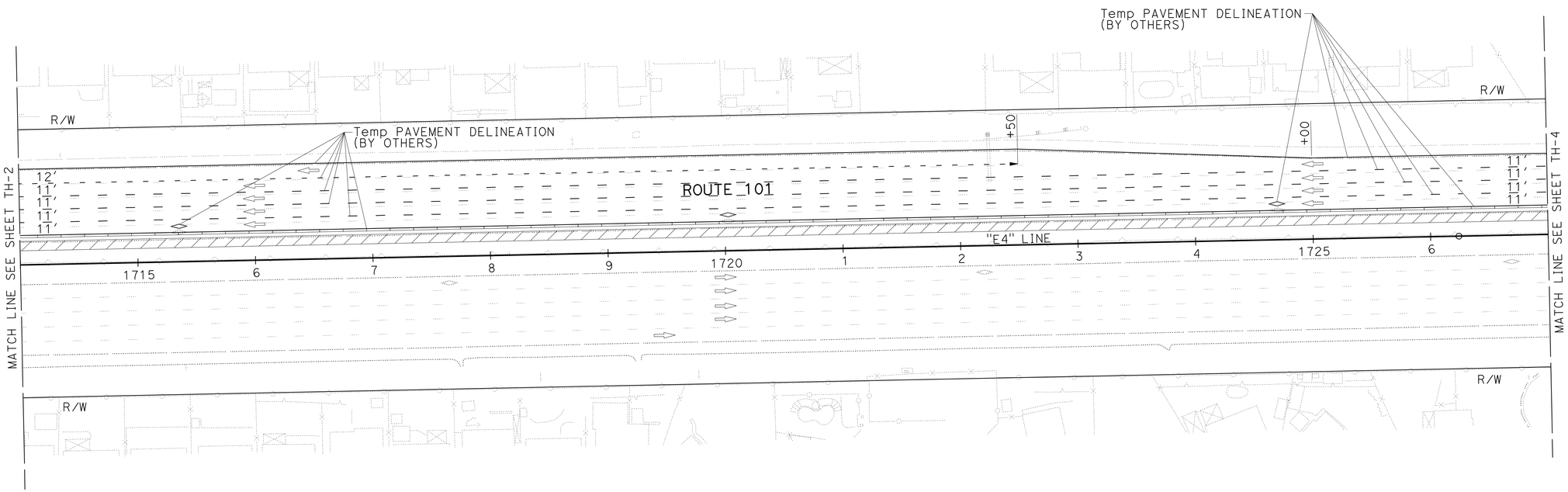

FOR NOTES, ABBREVIATIONS &/OR LEGEND, SEE SHEET TH-1

TRAFFIC HANDLING PLAN

STAGE 1 - PHASE 1

SCALE: 1" = 50'

THIS PLAN ACCURATE FOR TRAFFIC HANDLING WORK ONLY.

TH-3

2 **REVISED PER ADDENDUM No. 2 DATED JULY 8, 2010**

STATE OF CALIFORNIA - DEPARTMENT OF TRANSPORTATION

Caltrans

CONSULTANT FUNCTIONAL SUPERVISOR: WILLIAM J. WAGNER

CALCULATED-DESIGNED BY: CHESTER C. BALLESTEROS

CHECKED BY: MICHAEL L. MORSILLI

REVISED BY

DATE REVISED

LAST REVISION 06-17-09

DATE PLOTTED => 08-JUL-2010
TIME PLOTTED => 08:10

Dist	COUNTY	ROUTE	POST MILES TOTAL PROJECT	SHEET No.	TOTAL SHEETS
04	SCI	101	31.8/34.3	206	515

Chester C. Ballesteros 6/17/09
REGISTERED CIVIL ENGINEER DATE

11-23-09
PLANS APPROVAL DATE

REGISTERED PROFESSIONAL ENGINEER
CHESTER C. BALLESTEROS
No. 70706
Exp. 6-30-11
CIVIL
STATE OF CALIFORNIA

THE STATE OF CALIFORNIA OR ITS OFFICERS OR AGENTS SHALL NOT BE RESPONSIBLE FOR THE ACCURACY OR COMPLETENESS OF SCANNED COPIES OF THIS PLAN SHEET.

HMH
1570 OAKLAND ROAD
SAN JOSE, CA 95131

SANTA CLARA VALLEY
TRANSPORTATION AUTHORITY
3331 N. FIRST STREET
SAN JOSE, CA 95134

2

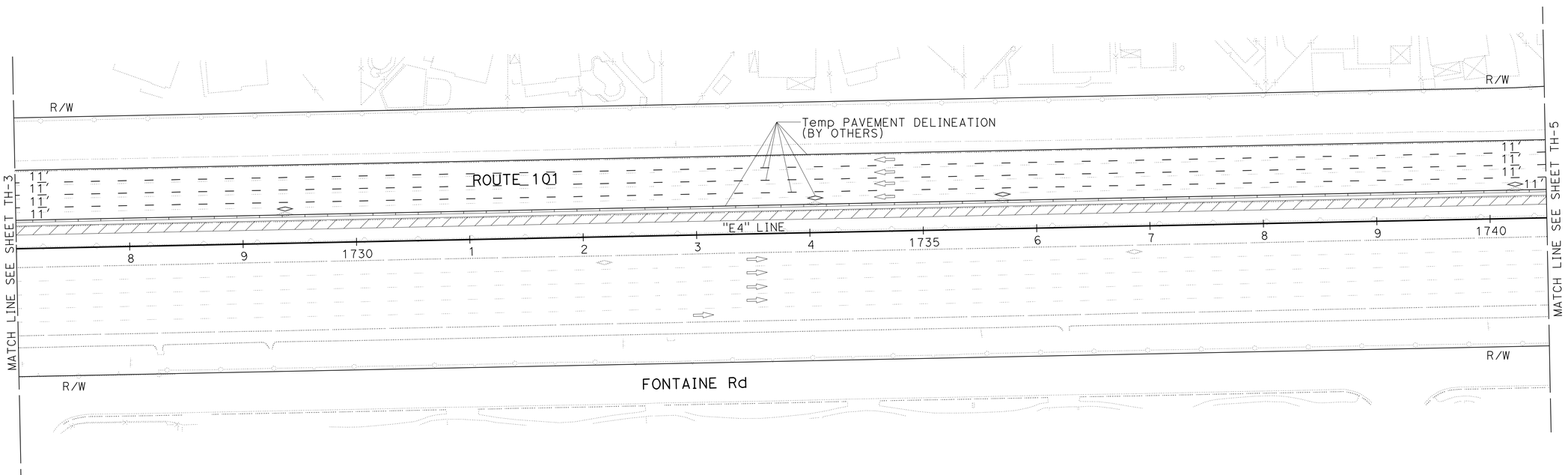

FOR NOTES, ABBREVIATIONS &/OR LEGEND, SEE SHEET TH-1

TRAFFIC HANDLING PLAN
STAGE 1 - PHASE 1
SCALE: 1" = 50'

2 REVISED PER ADDENDUM No. 2 DATED JULY 8, 2010

THIS PLAN ACCURATE FOR TRAFFIC HANDLING WORK ONLY.

TH-4

STATE OF CALIFORNIA - DEPARTMENT OF TRANSPORTATION
Caltrans

CONSULTANT FUNCTIONAL SUPERVISOR: WILLIAM J. WAGNER
CALCULATED-DESIGNED BY: CHESTER C. BALLESTEROS
CHECKED BY: MICHAEL L. MORSILLI
REVISED BY
DATE REVISED

LAST REVISION 06-17-09
DATE PLOTTED => 08-JUL-2010
TIME PLOTTED => 08:10

Dist	COUNTY	ROUTE	POST MILES TOTAL PROJECT	SHEET No.	TOTAL SHEETS
04	SCI	101	31.8/34.3	207	515

Chester C. Ballesteros 6/17/09
REGISTERED CIVIL ENGINEER DATE

11-23-09
PLANS APPROVAL DATE

REGISTERED PROFESSIONAL ENGINEER
CHESTER C. BALLESTEROS
No. 70706
Exp. 6-30-11
CIVIL
STATE OF CALIFORNIA

THE STATE OF CALIFORNIA OR ITS OFFICERS OR AGENTS SHALL NOT BE RESPONSIBLE FOR THE ACCURACY OR COMPLETENESS OF SCANNED COPIES OF THIS PLAN SHEET.

HMH
1570 OAKLAND ROAD
SAN JOSE, CA 95131

SANTA CLARA VALLEY
TRANSPORTATION AUTHORITY
3331 N. FIRST STREET
SAN JOSE, CA 95134

2

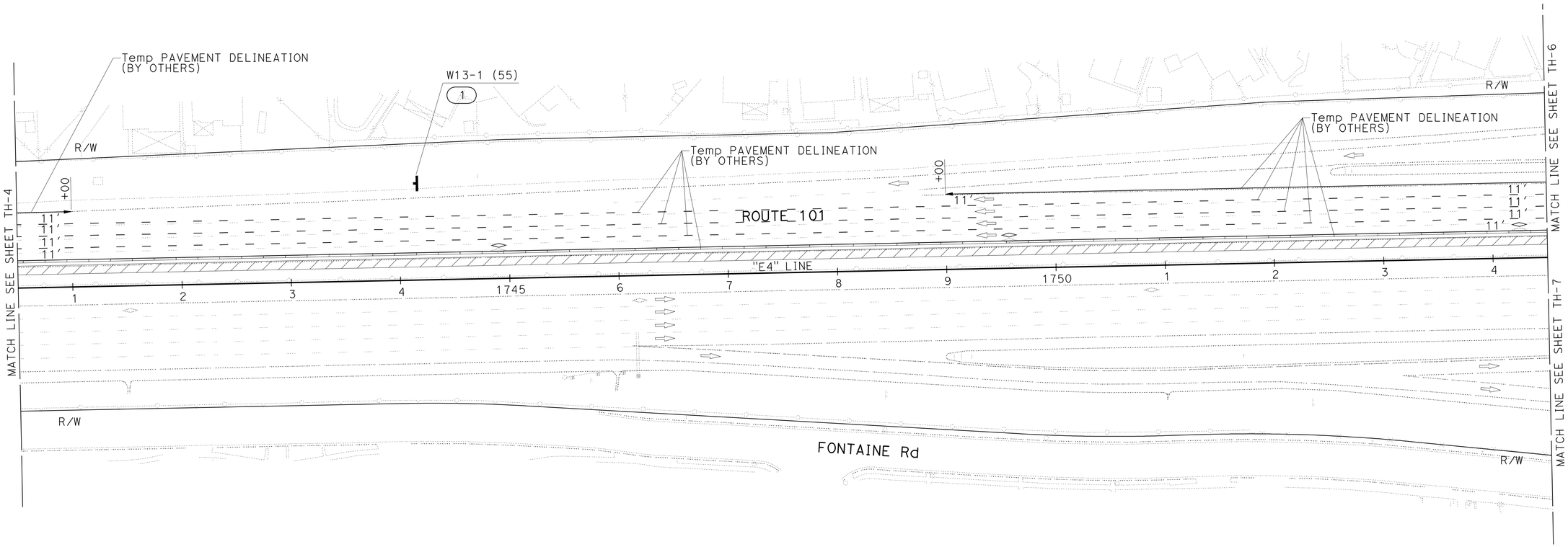

FOR NOTES, ABBREVIATIONS &/OR LEGEND, SEE SHEET TH-1

TRAFFIC HANDLING PLAN
STAGE 1 - PHASE 1
SCALE: 1" = 50'

TH-5

2 **REVISED PER ADDENDUM No. 2 DATED JULY 8, 2010**

THIS PLAN ACCURATE FOR TRAFFIC HANDLING WORK ONLY

STATE OF CALIFORNIA - DEPARTMENT OF TRANSPORTATION
Caltrans

CONSULTANT FUNCTIONAL SUPERVISOR: WILLIAM J. WAGNER
CALCULATED-DESIGNED BY: CHESTER C. BALLESTEROS
CHECKED BY: MICHAEL L. MORSILLI
REVISED BY
DATE REVISED

LAST REVISION 06-17-09
DATE PLOTTED => 08-JUL-2010
TIME PLOTTED => 08:11

Dist	COUNTY	ROUTE	POST MILES TOTAL PROJECT	SHEET No.	TOTAL SHEETS
04	SCI	101	31.8/34.3	208	515

Chester C. Ballesteros 6/17/09
REGISTERED CIVIL ENGINEER DATE

11-23-09
PLANS APPROVAL DATE

REGISTERED PROFESSIONAL ENGINEER CHESTER C. BALLESTEROS No. 70706 Exp. 6-30-11 CIVIL STATE OF CALIFORNIA

THE STATE OF CALIFORNIA OR ITS OFFICERS OR AGENTS SHALL NOT BE RESPONSIBLE FOR THE ACCURACY OR COMPLETENESS OF SCANNED COPIES OF THIS PLAN SHEET.

HMH
1570 OAKLAND ROAD
SAN JOSE, CA 95131

SANTA CLARA VALLEY
TRANSPORTATION AUTHORITY
3331 N. FIRST STREET
SAN JOSE, CA 95134

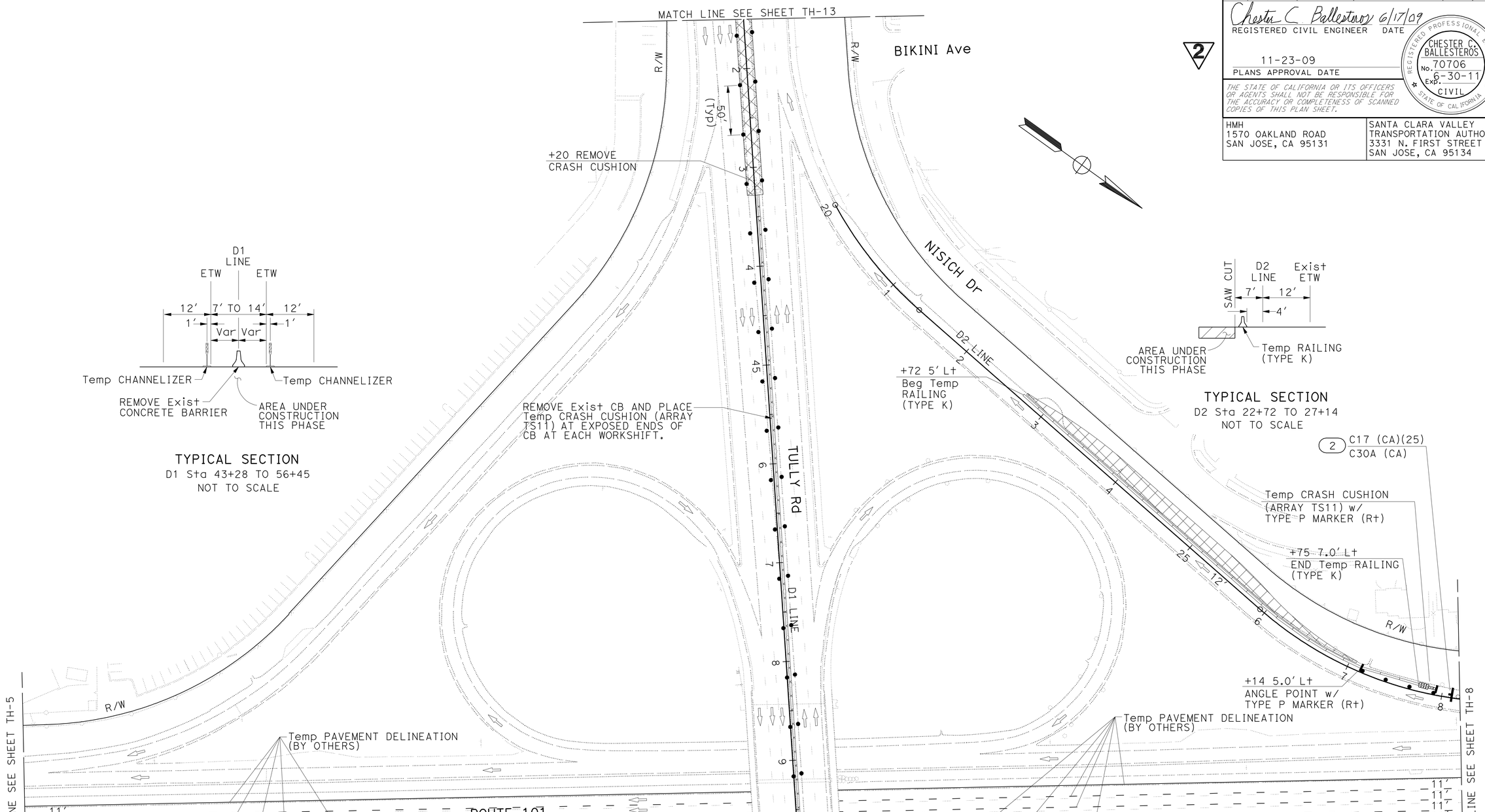

TYPICAL SECTION
D1 Sta 43+28 TO 56+45
NOT TO SCALE

TYPICAL SECTION
D2 Sta 22+72 TO 27+14
NOT TO SCALE

FOR NOTES, ABBREVIATIONS &/OR LEGEND, SEE SHEET TH-1

TRAFFIC HANDLING PLAN
STAGE 1 - PHASE 1
SCALE: 1" = 50'

TH-6

2 REVISED PER ADDENDUM No. 2 DATED JULY 8, 2010

THIS PLAN ACCURATE FOR TRAFFIC HANDLING WORK ONLY.

STATE OF CALIFORNIA - DEPARTMENT OF TRANSPORTATION
Caltrans
CONSULTANT FUNCTIONAL SUPERVISOR: WILLIAM J. WAGNER
CALCULATED-DESIGNED BY: CHESTER C. BALLESTEROS
CHECKED BY: MICHAEL L. MORSILLI
REVISED BY
DATE REVISED

LAST REVISION 06-17-09
DATE PLOTTED => 08-JUL-2010
TIME PLOTTED => 08:11

Dist	COUNTY	ROUTE	POST MILES TOTAL PROJECT	SHEET No.	TOTAL SHEETS
04	SCI	101	31.8/34.3	210	515

Chester C. Ballesteros 6/17/09
REGISTERED CIVIL ENGINEER DATE

11-23-09
PLANS APPROVAL DATE

REGISTERED PROFESSIONAL ENGINEER
CHESTER C. BALLESTEROS
No. 70706
Exp. 6-30-11
CIVIL
STATE OF CALIFORNIA

THE STATE OF CALIFORNIA OR ITS OFFICERS OR AGENTS SHALL NOT BE RESPONSIBLE FOR THE ACCURACY OR COMPLETENESS OF SCANNED COPIES OF THIS PLAN SHEET.

HMH
1570 OAKLAND ROAD
SAN JOSE, CA 95131

SANTA CLARA VALLEY
TRANSPORTATION AUTHORITY
3331 N. FIRST STREET
SAN JOSE, CA 95134

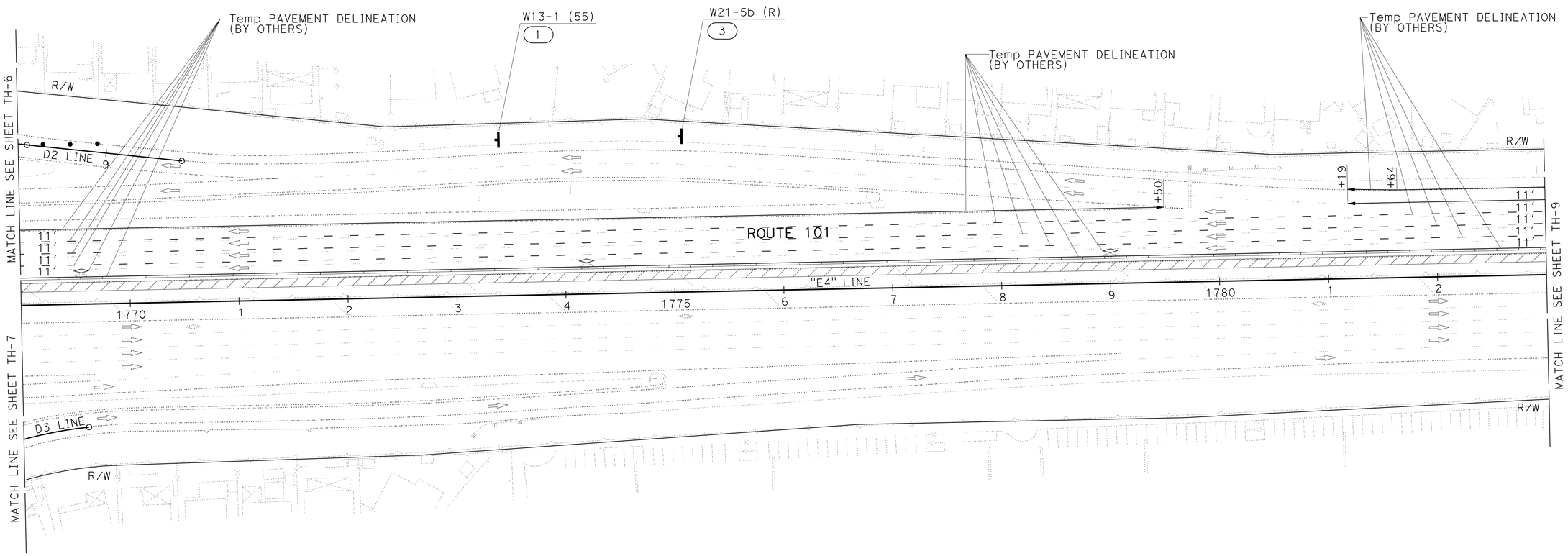

FOR NOTES, ABBREVIATIONS &/OR LEGEND, SEE SHEET TH-1

TRAFFIC HANDLING PLAN
STAGE 1 - PHASE 1
SCALE: 1" = 50'

TH-8

2 **REVISED PER ADDENDUM No. 2 DATED JULY 8, 2010**

THIS PLAN ACCURATE FOR TRAFFIC HANDLING WORK ONLY.

STATE OF CALIFORNIA - DEPARTMENT OF TRANSPORTATION
Caltrans

CONSULTANT FUNCTIONAL SUPERVISOR: WILLIAM J. WAGNER
CHESTER C. BALLESTEROS / MICHAEL L. MORSILLI
REVISED BY / DATE REVISED
CALCULATED-DESIGNED BY / CHECKED BY

LAST REVISION 06-17-09 | DATE PLOTTED => 08-JUL-2010 | TIME PLOTTED => 08:11

BORDER LAST REVISED 4/11/2008 | RELATIVE BORDER SCALE IS IN INCHES 0 1 2 3 | USERNAME => trstrk | DGN FILE => 41A980md008.add | CU 04239 | EA 1A9801

Dist	COUNTY	ROUTE	POST MILES TOTAL PROJECT	SHEET No.	TOTAL SHEETS
04	SCI	101	31.8/34.3	211	515

Chester C. Ballesteros 6/17/09
REGISTERED CIVIL ENGINEER DATE

11-23-09
PLANS APPROVAL DATE

REGISTERED PROFESSIONAL ENGINEER CHESTER C. BALLESTEROS No. 70706 Exp. 6-30-11 CIVIL STATE OF CALIFORNIA

THE STATE OF CALIFORNIA OR ITS OFFICERS OR AGENTS SHALL NOT BE RESPONSIBLE FOR THE ACCURACY OR COMPLETENESS OF SCANNED COPIES OF THIS PLAN SHEET.

HMH
1570 OAKLAND ROAD
SAN JOSE, CA 95131

SANTA CLARA VALLEY
TRANSPORTATION AUTHORITY
3331 N. FIRST STREET
SAN JOSE, CA 95134

2

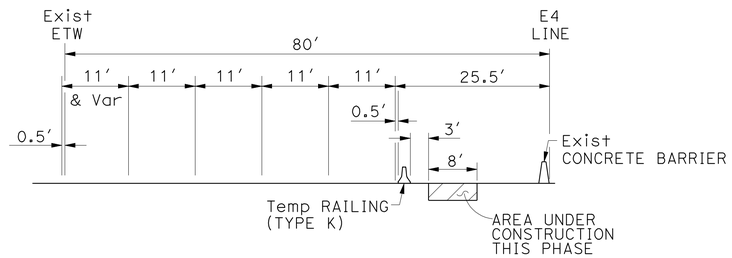

TYPICAL SECTION
E4 Sta 1781+19 TO 1805+21
NOT TO SCALE

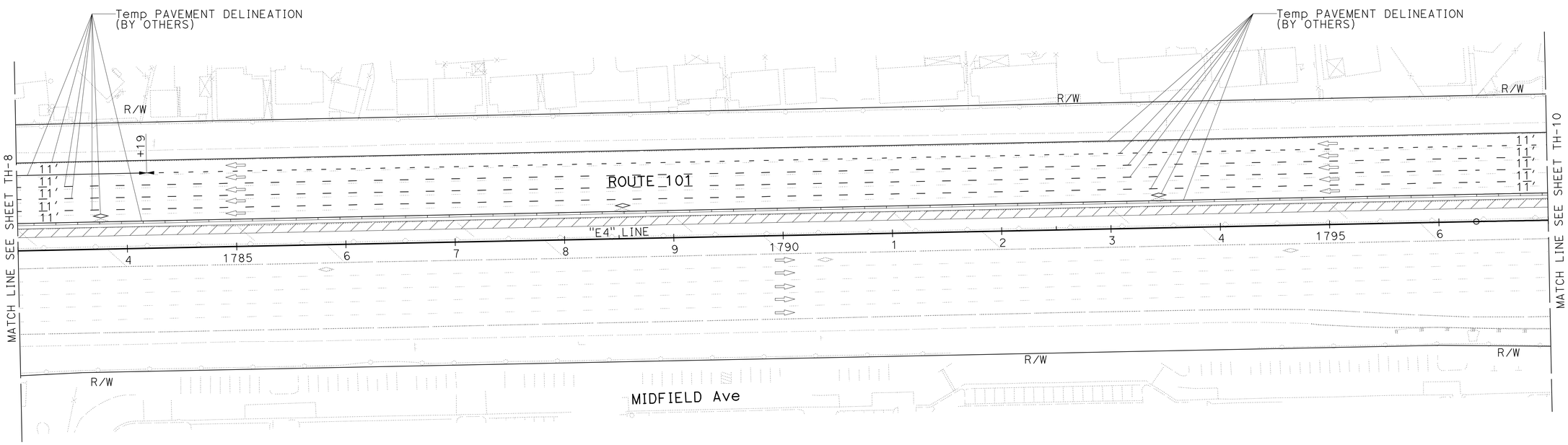

FOR NOTES, ABBREVIATIONS
&/OR LEGEND, SEE SHEET TH-1

TRAFFIC HANDLING PLAN
STAGE 1 - PHASE 1
SCALE: 1" = 50'

2 **REVISED PER ADDENDUM No. 2 DATED JULY 8, 2010**

THIS PLAN ACCURATE FOR TRAFFIC HANDLING WORK ONLY.

TH-9

REVISED BY	DATE REVISED

CHESTER C. BALLESTEROS — MICHAEL L. MORSILLI
CALCULATED-DESIGNED BY — CHECKED BY
CONSULTANT FUNCTIONAL SUPERVISOR — WILLIAM J. WAGNER
STATE OF CALIFORNIA - DEPARTMENT OF TRANSPORTATION
Caltrans

LAST REVISION 06-17-09 | DATE PLOTTED => 08-JUL-2010 | TIME PLOTTED => 08:11

Dist	COUNTY	ROUTE	POST MILES TOTAL PROJECT	SHEET No.	TOTAL SHEETS
04	SCI	101	31.8/34.3	212	515

Chester C. Ballesteros 6/17/09
REGISTERED CIVIL ENGINEER DATE

11-23-09
PLANS APPROVAL DATE

REGISTERED PROFESSIONAL ENGINEER
CHESTER C. BALLESTEROS
No. 70706
Exp. 6-30-11
CIVIL
STATE OF CALIFORNIA

THE STATE OF CALIFORNIA OR ITS OFFICERS OR AGENTS SHALL NOT BE RESPONSIBLE FOR THE ACCURACY OR COMPLETENESS OF SCANNED COPIES OF THIS PLAN SHEET.

HMH
1570 OAKLAND ROAD
SAN JOSE, CA 95131

SANTA CLARA VALLEY
TRANSPORTATION AUTHORITY
3331 N. FIRST STREET
SAN JOSE, CA 95134

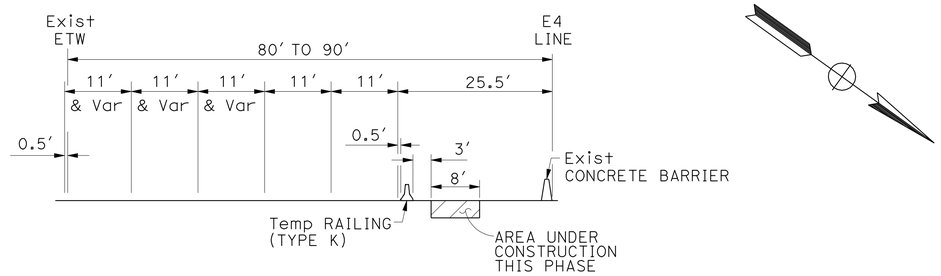

TYPICAL SECTION

E4 Sta 1805+21 TO 1812+40
NOT TO SCALE

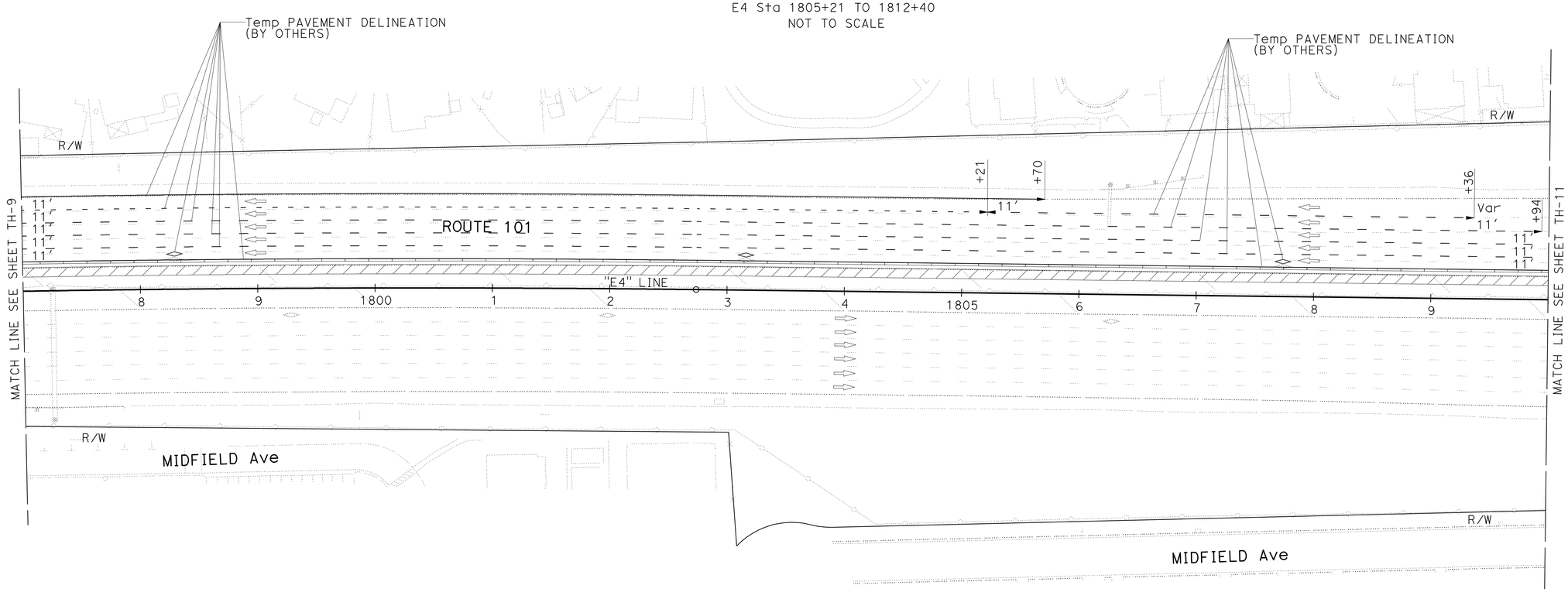

FOR NOTES, ABBREVIATIONS
&/OR LEGEND, SEE SHEET TH-1

TRAFFIC HANDLING PLAN
STAGE 1 - PHASE 1
SCALE: 1" = 50'

TH-10

2 **REVISED PER ADDENDUM No. 2 DATED JULY 8, 2010**

THIS PLAN ACCURATE FOR TRAFFIC HANDLING WORK ONLY.

STATE OF CALIFORNIA - DEPARTMENT OF TRANSPORTATION
Caltrans

CONSULTANT FUNCTIONAL SUPERVISOR: WILLIAM J. WAGNER
CALCULATED-DESIGNED BY: CHESTER C. BALLESTEROS
CHECKED BY: MICHAEL L. MORSILLI
REVISED BY
DATE REVISED

LAST REVISION DATE PLOTTED => 08-JUL-2010
06-17-09 TIME PLOTTED => 08:11

Dist	COUNTY	ROUTE	POST MILES TOTAL PROJECT	SHEET No.	TOTAL SHEETS
04	SCI	101	31.8/34.3	213	515

Chester C. Ballesteros 6/17/09
REGISTERED CIVIL ENGINEER DATE

11-23-09
PLANS APPROVAL DATE

REGISTERED PROFESSIONAL ENGINEER CHESTER C. BALLESTEROS No. 70706 Exp. 6-30-11 CIVIL STATE OF CALIFORNIA

THE STATE OF CALIFORNIA OR ITS OFFICERS OR AGENTS SHALL NOT BE RESPONSIBLE FOR THE ACCURACY OR COMPLETENESS OF SCANNED COPIES OF THIS PLAN SHEET.

HMH
1570 OAKLAND ROAD
SAN JOSE, CA 95131

SANTA CLARA VALLEY
TRANSPORTATION AUTHORITY
3331 N. FIRST STREET
SAN JOSE, CA 95134

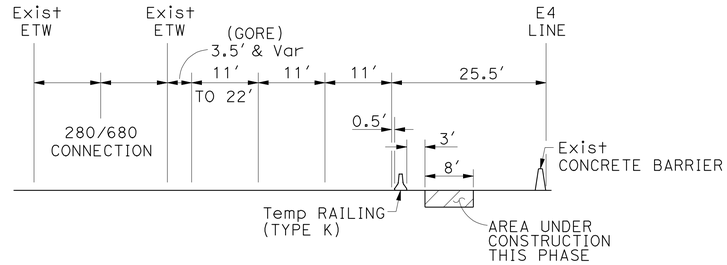

TYPICAL SECTION
E4 Sta 1812+40 TO 1823+28
NOT TO SCALE

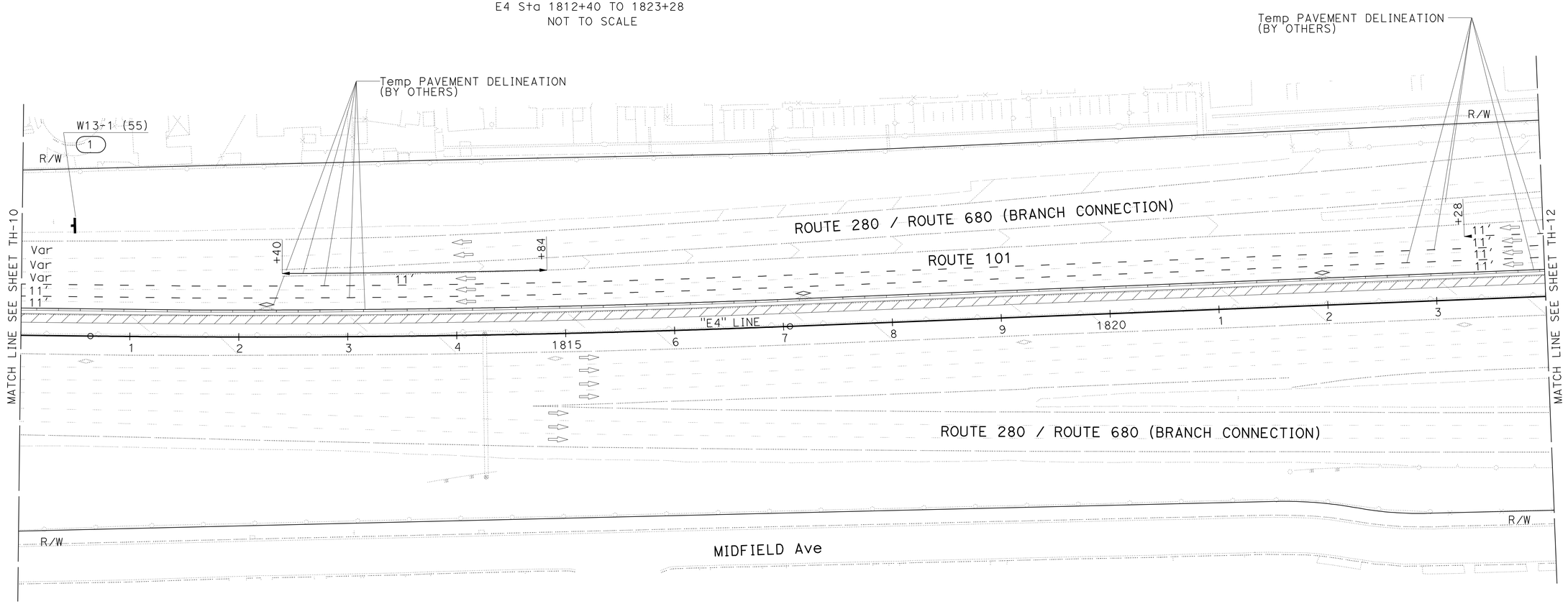

FOR NOTES, ABBREVIATIONS &/OR LEGEND, SEE SHEET TH-1

TRAFFIC HANDLING PLAN
STAGE 1 - PHASE 1
SCALE: 1" = 50′

TH-11

2 **REVISED PER ADDENDUM No. 2 DATED JULY 8, 2010**

THIS PLAN ACCURATE FOR TRAFFIC HANDLING WORK ONLY.

STATE OF CALIFORNIA - DEPARTMENT OF TRANSPORTATION
Caltrans

CONSULTANT FUNCTIONAL SUPERVISOR: WILLIAM J. WAGNER
CALCULATED-DESIGNED BY: CHESTER C. BALLESTEROS
CHECKED BY: MICHAEL L. MORSILLI
REVISED BY
DATE REVISED

LAST REVISION 06-17-09
DATE PLOTTED => 08-JUL-2010
TIME PLOTTED => 08:11

Dist	COUNTY	ROUTE	POST MILES TOTAL PROJECT	SHEET No.	TOTAL SHEETS
04	SCI	101	31.8/34.3	214	515

Chester C. Ballesteros 6/17/09
REGISTERED CIVIL ENGINEER DATE

11-23-09
PLANS APPROVAL DATE

REGISTERED PROFESSIONAL ENGINEER
CHESTER C. BALLESTEROS
No. 70706
Exp. 6-30-11
CIVIL
STATE OF CALIFORNIA

THE STATE OF CALIFORNIA OR ITS OFFICERS OR AGENTS SHALL NOT BE RESPONSIBLE FOR THE ACCURACY OR COMPLETENESS OF SCANNED COPIES OF THIS PLAN SHEET.

HMH
1570 OAKLAND ROAD
SAN JOSE, CA 95131

SANTA CLARA VALLEY
TRANSPORTATION AUTHORITY
3331 N. FIRST STREET
SAN JOSE, CA 95134

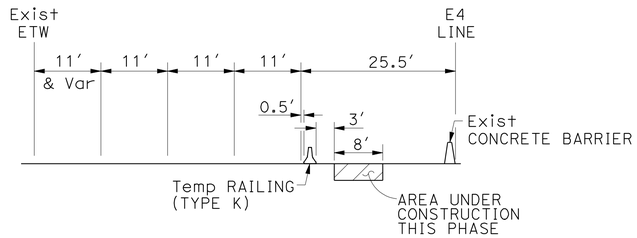

TYPICAL SECTION
E4 Sta 1823+28 TO 1826+36
NOT TO SCALE

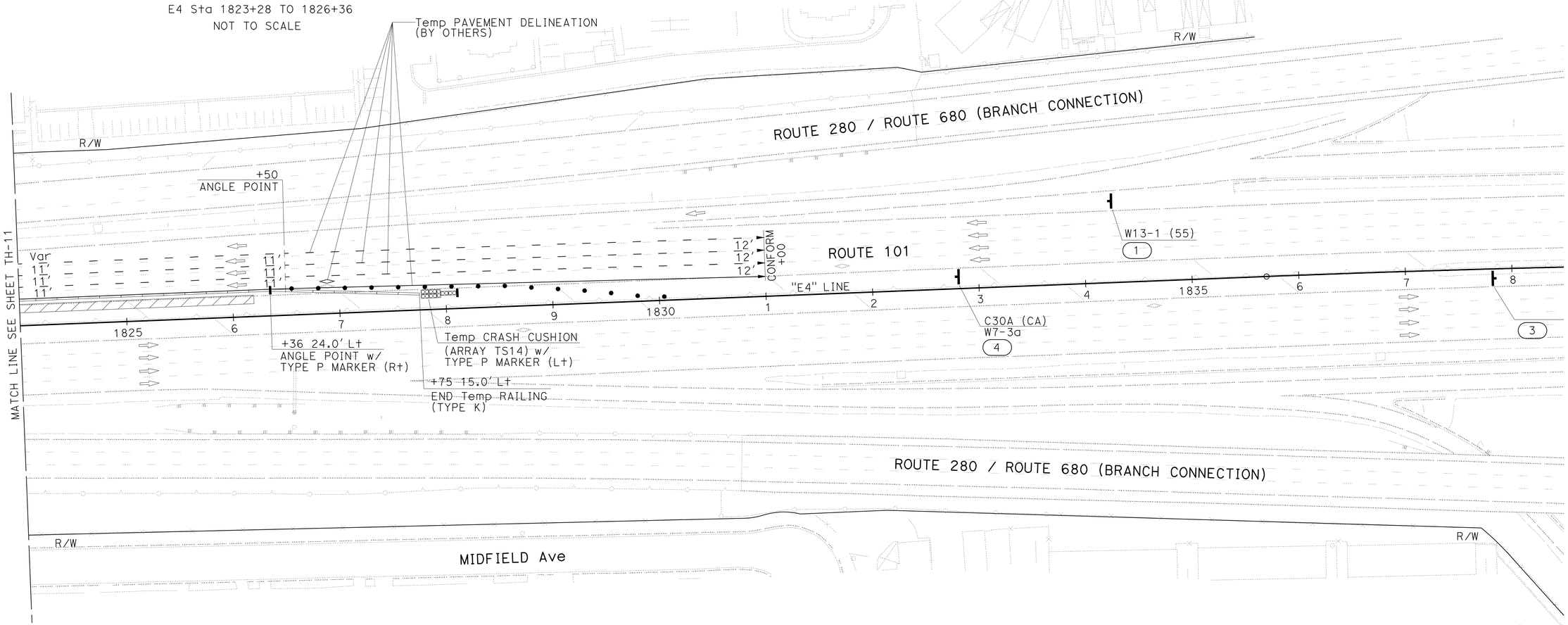

FOR NOTES, ABBREVIATIONS &/OR LEGEND, SEE SHEET TH-1

TRAFFIC HANDLING PLAN
STAGE 1 - PHASE 1
SCALE: 1" = 50′

TH-12

2 **REVISED PER ADDENDUM No. 2 DATED JULY 8, 2010**

THIS PLAN ACCURATE FOR TRAFFIC HANDLING WORK ONLY.

STATE OF CALIFORNIA - DEPARTMENT OF TRANSPORTATION
Caltrans

CONSULTANT FUNCTIONAL SUPERVISOR: WILLIAM J. WAGNER
CALCULATED-DESIGNED BY: CHESTER C. BALLESTEROS
CHECKED BY: MICHAEL L. MORSILLI
REVISED BY / DATE REVISED

LAST REVISION: DATE PLOTTED => 08-JUL-2010
06-17-09 TIME PLOTTED => 08:11

Dist	COUNTY	ROUTE	POST MILES TOTAL PROJECT	SHEET No.	TOTAL SHEETS
04	SCI	101	31.8/34.3	253	515

Chester C. Ballesteros 6/17/09
REGISTERED CIVIL ENGINEER DATE

11-23-09
PLANS APPROVAL DATE

REGISTERED PROFESSIONAL ENGINEER CHESTER C. BALLESTEROS No. 70706 Exp. 6-30-11 CIVIL STATE OF CALIFORNIA

THE STATE OF CALIFORNIA OR ITS OFFICERS OR AGENTS SHALL NOT BE RESPONSIBLE FOR THE ACCURACY OR COMPLETENESS OF SCANNED COPIES OF THIS PLAN SHEET.

HMH
1570 OAKLAND ROAD
SAN JOSE, CA 95131

SANTA CLARA VALLEY
TRANSPORTATION AUTHORITY
3331 N. FIRST STREET
SAN JOSE, CA 95134

TEMPORARY PAVEMENT DELINEATION

SHEET No.	DETAIL No.	TRAFFIC STRIPE (PAINT)	PAVEMENT MARKING (PAINT)			PAVEMENT MARKER
		LF	DESCRIPTION	EA (N)	SQFT	EA
* TH-1						
* TH-2						
* TH-3						
* TH-4						
* TH-5						
* TH-6						
* TH-8						
* TH-9						
* TH-10						
* TH-11						
* TH-12						
TH-15	24	1532				
	27B	1470				
TH-16	24	1152				
	27B	1145				
TH-17	24	385				
	27B	245				
	36	151				7
TH-18	13					246
	25	787				17
	27B	787				
TH-19	10	472				71
	13					436
	25	1490				32
	27B	1450				
	36	620				27
	38B	295				26
			DIAMOND SYMBOL	2	22	
TH-20	13					496
	25	1300				28
	27B	8950				
			DIAMOND SYMBOL	3	33	
TH-21	13					421
	25	1350				29
	27B	1350				
	37A	1000				332
			DIAMOND SYMBOL	2	22	
TH-22	8	270				
	13					441
	25	1400				30
	27B	3346				
	36A	356				16
	37A	280				92
	38B	300				28
			DIAMOND SYMBOL	1	11	
	SUBTOTAL	31,883		8	88	2775

(N) = NOT A SEPARATE PAY ITEM, FOR INFORMATION ONLY.
* STAGE 1-PHASE 1 Temp PAVEMENT DELINEATION TO BE DONE BY OTHERS.

TEMPORARY PAVEMENT DELINEATION (CONTINUED)

SHEET No.	DETAIL No.	TRAFFIC STRIPE (PAINT)	PAVEMENT MARKING (PAINT)			PAVEMENT MARKER
		LF	DESCRIPTION	EA (N)	SQFT	EA
TH-23	9	3066				65
	13					601
	22	650				30
	25	2381				51
	25A	700				30
	27B	2831				
	28	908				13
	38	297				4
	38B	35				
			CROSSWALK	2	110	
			LIMIT LINE	2	134	
			TYPE III ARROW	4	168	
TH-24	9	1620				35
	13					121
	22	630				28
	25A	1260				54
	27B	2720				
	28	240				
	38	315				14
			CROSSWALK	2	145	
			LIMIT LINE	2	90	
			TYPE III ARROW	3	126	
TH-25	9	520				12
	10	290				43
	13					771
	25A	700				30
	25	2460				52
	27B	3140				
	36	710				31
	38B	570				50
			DIAMOND SYMBOL	1	11	
TH-26	13					571
	25	1400				30
	27B	1400				
	38B	135				14
			DIAMOND SYMBOL	2	22	
TH-27	13					546
	25	1300				28
	27B	1300				
			DIAMOND SYMBOL	2	22	
TH-28	13					476
	25	1400				30
	27B	1275				
			DIAMOND SYMBOL	3	33	
	SUBTOTAL	34,253		23	861	3730

2 **REVISED PER ADDENDUM No. 2 DATED JULY 8, 2010**

TRAFFIC HANDLING QUANTITIES
THQ-1

REVISED BY | DATE REVISED
CHESTER C. BALLESTEROS | MICHAEL L. MORSILLI
CALCULATED-DESIGNED BY | CHECKED BY
CONSULTANT FUNCTIONAL SUPERVISOR | WILLIAM J. WAGNER
STATE OF CALIFORNIA - DEPARTMENT OF TRANSPORTATION
Caltrans

LAST REVISION 06-17-09 | DATE PLOTTED => 08-JUL-2010 | TIME PLOTTED => 08:13

Dist	COUNTY	ROUTE	POST MILES TOTAL PROJECT	SHEET No.	TOTAL SHEETS
04	SCI	101	31.8/34.3	254	515

Chester C. Ballesteros 6/17/09
REGISTERED CIVIL ENGINEER DATE

11-23-09
PLANS APPROVAL DATE

REGISTERED PROFESSIONAL ENGINEER CHESTER C. BALLESTEROS No. 70706 Exp. 6-30-11 CIVIL STATE OF CALIFORNIA

THE STATE OF CALIFORNIA OR ITS OFFICERS OR AGENTS SHALL NOT BE RESPONSIBLE FOR THE ACCURACY OR COMPLETENESS OF SCANNED COPIES OF THIS PLAN SHEET.

HMH
1570 OAKLAND ROAD
SAN JOSE, CA 95131

SANTA CLARA VALLEY
TRANSPORTATION AUTHORITY
3331 N. FIRST STREET
SAN JOSE, CA 95134

2

TEMPORARY PAVEMENT DELINEATION (CONTINUED)

SHEET No.	DETAIL No.	TRAFFIC STRIPE (PAINT)	PAVEMENT MARKING (PAINT)			PAVEMENT MARKER
		LF	DESCRIPTION	EA (N)	SQFT	EA
TH-29	8	240				
	13					71
	25	460				11
	27B	460				
			DIAMOND SYMBOL	1	11	
TH-30	9	1000				22
	22	460				22
	28	380				
	27B	350				
	38	590				26
	38A	70				
			TYPE IV ARROW	4	60	
			LIMIT LINE	1	30	
TH-31	9	1700				36
	22	340				16
	27B	330				
	28	360				
	38	770				33
	38A	760				
			TYPE IV ARROW	4	60	
			TYPE VII ARROW	1	27	
			LIMIT LINE	1	40	
TH-32	9	750				17
	22	600				28
	24	450				
	38	60				4
			TYPE IV ARROW	2	84	
TH-33	9	760				17
	22	1520				66
	38B	500				44
			LIMIT LINE	1	35	
			CROSSWALK	2	140	
TH-34	9	410				10
	22	820				36
	38B	410				36
			LIMIT LINE	1	35	
TH-35	9	320				8
	22	640				28
	38B	320				28
			TYPE IV ARROW (R†)	2	30	
			LIMIT LINE	1	40	
TH-37	9	180				5
	25A	500				22
	27B	670				
	36	170				8
TH-38	9	1630				35
	10	210				29
	24	610				
	27B	2290				
	38B	340				30
			TYPE III ARROW (L†)	1	42	
			TYPE III ARROW (R†)	1	42	
			TYPE III ARROW (B)	1	73	
			LIMIT LINE	1	22	
	SUBTOTAL	22,430		25	771	688

(N) = NOT A SEPARATE PAY ITEM, FOR INFORMATION ONLY.

TEMPORARY PAVEMENT DELINEATION (CONTINUED)

SHEET No.	DETAIL No.	TRAFFIC STRIPE (PAINT)	PAVEMENT MARKING (PAINT)			PAVEMENT MARKER
		LF	DESCRIPTION	EA (N)	SQFT	EA
TH-39	9	410				10
	24	890				
	27B	1530				
TH-40	9	550				12
	13					71
	27B	580				
TH-41	9	570				13
	24	420				
	27B	570				
TH-42	9	830				18
	22	200				10
	24	620				
	27B	650				
	28	320				
	38	510				22
	40A	180				46
			CROSSWALK	2	228	
TH-43	25	290				7
	27B	440				8
	36A	170				
TH-44	27B	800				
	36A	150				7
TH-45	27B	740				
TH-46	13					66
	25	210				5
	27B	1290				
TH-47	10	100				15
	13					456
	25	1450				31
	25A	100				5
	27B	1540				
TH-49	10	1030				148
	13					311
	25	350				8
	25A	940				40
	27B	1790				
	36	150				7
TH-50	13					291
	27B	700				
	SUBTOTAL	21,070		2	228	1607
	TOTAL	109,636		58	1948	8800

2 **REVISED PER ADDENDUM No. 2 DATED JULY 8, 2010**

TRAFFIC HANDLING QUANTITIES
THQ-2

STATE OF CALIFORNIA - DEPARTMENT OF TRANSPORTATION
Caltrans
CONSULTANT FUNCTIONAL SUPERVISOR: WILLIAM J. WAGNER
CHESTER C. BALLESTEROS — MICHAEL L. MORSILLI
REVISED BY — DATE REVISED
CALCULATED-DESIGNED BY — CHECKED BY

LAST REVISION 06-17-09
DATE PLOTTED => 08-JUL-2010
TIME PLOTTED => 08:14

Dist	COUNTY	ROUTE	POST MILES TOTAL PROJECT	SHEET No.	TOTAL SHEETS
04	SCI	101	31.8/34.3	256	515

Chester C. Ballesteros 6/17/09
REGISTERED CIVIL ENGINEER DATE

11-23-09
PLANS APPROVAL DATE

REGISTERED PROFESSIONAL ENGINEER CHESTER C. BALLESTEROS No. 70706 Exp. 6-30-11 CIVIL STATE OF CALIFORNIA

THE STATE OF CALIFORNIA OR ITS OFFICERS OR AGENTS SHALL NOT BE RESPONSIBLE FOR THE ACCURACY OR COMPLETENESS OF SCANNED COPIES OF THIS PLAN SHEET.

HMH
1570 OAKLAND ROAD
SAN JOSE, CA 95131

SANTA CLARA VALLEY
TRANSPORTATION AUTHORITY
3331 N. FIRST STREET
SAN JOSE, CA 95134

TRAFFIC CONTROL DEVICES (CONTINUED)

SHEET No.	STATION	LOCATION	STAGE	TEMPORARY RAILING (TYPE K)	BARRICADE (TYPE III)	OBJECT MARKERS (N)	TEMPORARY CRASH CUSHION MODULE	CHANNELIZER (SURFACE MOUNTED)
				LF	EA			
TH-32	"TR" 39+10 TO 41+50	R†	STAGE 2-PHASE 2	240				
TH-32	"TR" 34+20 TO 41+50	L† & R†	STAGE 2-PHASE 2		1			42
TH-33	"D2" 25+75 TO 28+00	L† & R†	STAGE 2-PHASE 2	80	1	1		9
TH-33	"TR" 41+50 TO 50+50	L† & R†	STAGE 2-PHASE 2	900				46
TH-33	"TR" 45+50 TO 46+29	R†	STAGE 2-PHASE 2	80	1	1		
TH-33	"TR" 46+65	R†	STAGE 2-PHASE 2		1			
TH-34	"TR" 50+50 TO 56+50	L† & R†	STAGE 2-PHASE 2	600				30
TH-34	"TR" 53+47 TO 54+45	R†	STAGE 2-PHASE 2	98	1	1		
TH-34	"TR" 55+10	R†	STAGE 2-PHASE 2		1			
TH-34	"D6" 62+40 TO 65+51	L† & R†	STAGE 2-PHASE 2	80	1	1		15
TH-35	"TR" 56+50 TO 59+70	L† & R†	STAGE 2-PHASE 2	320		1		11
TH-35	"TR" 59+75	R†	STAGE 2-PHASE 2		1			
TH-37	"TR4" 1748+00 TO 1750+68	L† & R†	STAGE 3-PHASE 1			4		
TH-37	"TR4" 1748+28 TO 1750+68	L†	STAGE 3-PHASE 1	250				
TH-37	"TR4" 1748+22 TO 1753+02	R†	STAGE 3-PHASE 1					
TH-37	"TR4" 1752+20	L†	STAGE 3-PHASE 1		1			
TH-37	"TR4" 1748+00	L†	STAGE 3-PHASE 1				14	
TH-38	"D8" 80+68 TO "D4" 42+02	L†	STAGE 3-PHASE 1	420				
TH-38	"D4" 42+02	L†	STAGE 3-PHASE 1			1	11	
TH-38	"D4" 45+22 TO 46+00	L†	STAGE 3-PHASE 1	100				
TH-39	"TR" 56+29 TO 57+00	R†	STAGE 3-PHASE 1	20				
TH-39	"D3" 30+40 TO 30+55	L†	STAGE 3-PHASE 1	20				
TH-39	"D3" 36+35	L†	STAGE 3-PHASE 1			1		
TH-39	"D3" 36+35	L†	STAGE 3-PHASE 1				11	
TH-39	"D3" 36+35 TO 38+00	L†	STAGE 3-PHASE 1	180				
TH-39	"TL4" 1763+00	R†	STAGE 3-PHASE 1			1		
TH-39	"TL4" 1763+00	R†	STAGE 3-PHASE 1				11	
TH-39	"TL4" 1763+00 TO 1769+00	R†	STAGE 3-PHASE 1	600				
TH-39	"TL4" 1765+00	R†	STAGE 3-PHASE 1		1			
TH-40	"TR2" 1769+00 TO 1774+58	L†	STAGE 3-PHASE 1	550		3	11	
TH-40	"TR3" 1769+00 TO 1779+42	L†	STAGE 3-PHASE 1	40				
TH-40	"D3" 1769+00 TO 1769+60	L†	STAGE 3-PHASE 1	60				
TH-41	"TR" 34+53 TO 41+50	L† & R†	STAGE 3-PHASE 1	120	3	1		8
TH-42	"TR" 56+50 TO 63+90	L† & R†	STAGE 3-PHASE 1	540	2	3	11	24
TH-43	"TR3" 1762+00 TO 1768+00	R†	STAGE 3-PHASE 2					24
TH-43	"TR" 54+00 TO 56+50	L†	STAGE 3-PHASE 2		1			4
TH-43	"TL4" 1759+73 TO 1763+34	L† & R†	STAGE 3-PHASE 2	350		4	11	
TH-45	"TR" 56+70 TO 64+73	L†	STAGE 3-PHASE 2		4	2		31
TH-46	"E4" 1748+37 TO 1754+50	R†	STAGE 4	610				
TH-47	"E4" 1754+50 TO 1769+00	L†	STAGE 4	1450				
TH-47	"TR" 43+65 TO 48+61	R†	STAGE 4	460	1		11	6
TH-47	"TR" 45+82 TO 46+23	L†	STAGE 4	40				
TH-47	"TR" 47+00	L†	STAGE 4		1			
TH-47	"TR" 48+10	L†	STAGE 4		1			
TH-47	"TR" 50+30	L†	STAGE 4		1			
TH-48	"TL4" 1760+13 TO 1766+00	L† & R†	STAGE 4	500			14	8
TH-48	"TR" 59+50 TO 60+70	R†	STAGE 4		2			
TH-48	"TR3" 1767+00 TO 1769+00	R†	STAGE 4	175			14	11
TH-48	"TR" 51+56 TO 53+50	R†	STAGE 4	160		1	11	7
TH-48	"TR" 54+85 TO 60+00	R†	STAGE 4	240				21
TH-49	"E4" 1769+00 TO 1780+80	R†	STAGE 4	2000	1			
TH-49	"E4" 1769+00 TO 1779+40	L†	STAGE 4	1100		1	14	
TH-49	"TR2" 1769+00 TO 1774+56	L†	STAGE 4	500				
TH-49	"E4" 1775+00 TO 1779+40	L†	STAGE 4	450				
TH-50	"E4" 1783+00 TO 1788+00	L† & R†	STAGE 4	380	2			
			SUBTOTAL	13,753	30	27	144	297
			TOTAL	47,909	32	74	415	464

2 REVISED PER ADDENDUM No. 2 DATED JULY 8, 2010

TEMPORARY CHAINLINK FENCE (TYPE CL-6)

SHEET No.	STATION	LOCATION	STAGE	LENGTH
				LF
TH-33	"TR" 48+05 TO 50+50	R†	STAGE 2-PHASE 2	245
TH-34	"TR" 50+50 TO 51+77	R†	STAGE 2-PHASE 2	127
			TOTAL	372

TRAFFIC HANDLING QUANTITIES
THQ-4

STATE OF CALIFORNIA - DEPARTMENT OF TRANSPORTATION
Caltrans
CONSULTANT FUNCTIONAL SUPERVISOR: WILLIAM J. WAGNER
CALCULATED-DESIGNED BY: CHESTER C. BALLESTEROS
CHECKED BY: MICHAEL L. MORSILLI
REVISED BY / DATE REVISED

LAST REVISION 06-17-09 | DATE PLOTTED => 08-JUL-2010 | TIME PLOTTED => 08:14

Dist	COUNTY	ROUTE	POST MILES TOTAL PROJECT	SHEET No.	TOTAL SHEETS
04	SCI	101	31.8/34.3	298	515

Linda M. Grevera 6/17/09
REGISTERED CIVIL ENGINEER DATE

11-23-09
PLANS APPROVAL DATE

REGISTERED PROFESSIONAL ENGINEER
LINDA M. GREVERA
No. 43591
Exp. 12-31-10
CIVIL
STATE OF CALIFORNIA

THE STATE OF CALIFORNIA OR ITS OFFICERS OR AGENTS SHALL NOT BE RESPONSIBLE FOR THE ACCURACY OR COMPLETENESS OF SCANNED COPIES OF THIS PLAN SHEET.

HMH
1570 OAKLAND ROAD
SAN JOSE, CA 95131

SANTA CLARA VALLEY
TRANSPORTATION AUTHORITY
3331 N. FIRST STREET
SAN JOSE, CA 95134

REMOVE THERMOPLASTIC TRAFFIC STRIPE AND PAVEMENT MARKING

SHEET No.	WHITE TRAFFIC STRIPE	YELLOW TRAFFIC STRIPE (HAZARDOUS WASTE)	PAVEMENT MARKER	PAVEMENT MARKING
	LF	LF	EA	SQFT
PD-2	1798	290	79	
PD-5	6988	2100	637	33
PD-6	10,131	7715	667	241
PD-7	10,862	5135	470	172
PD-8	8169	2800	742	33
PD-9	1444	690	321	11
PD-10	443		6	
PD-11	1275		51	
PD-12	984		5	
PD-13	2716	1300	91	272
PD-14	8137	2170	193	1041
TOTAL	52,947	22,200	3262	1803

OBJECT MARKERS AND DELINEATORS

SHEET No.	STATION	DELINEATOR (CLASS I) TYPE		OBJECT MARKER TYPE					GUARD RAILING DELINEATOR TYPE	
		F	G	K-1	L-1	N-1	N-2	R	F	G
		EA								
PD-2	"E4" 1708+90 SB				1				2	
PD-3	"E4" 1723+13 TO 1723+90 SB				1				2	
PD-5	"TR1" 1750+30 TO 1754+30	3								
	"E4" 1742+38 TO 1753+25	8							2	
	"TR4" 1752+40 TO 1754+30		2							
	"TR4" 1749+15							1		
	"E4" 1744+85				1					
PD-6	"TR" 47+43 TO 48+05				1				2	
	"TR" 45+30 TO 46+47					3				
	"TR1" 1757+00 TO 1761+50	9								
	"TR1" 1757+30 TO 1761+70		9							
	"TR2" 1762+20 TO 1768+60	16								
	"TR2" 1762+30 TO 1768+50		11							3
	"TL2" 1760+00 TO 1768+25	13								
	"TL2" 1764+25 TO 1768+90		10							5
PD-7	"TR" 51+85 TO 52+50				1				2	
	"TR" 53+43 TO 54+41					3				
	"TR3" 1762+70 TO 1766+50		7							
	"TR3" 1762+80 TO 1767+30	9								
	"TR4" 1755+60 TO 1761+85		15							
	"TR4" 1755+25 TO 1758+47	6							2	
	"TR4" 1757+75				1					
	"TL4" 1755+70 TO 1759+70		9							6
	"TL4" 1755+20 TO 1760+20	11							3	
PD-8	"TR2" 1769+49 TO 1770+49		2							
	"TR2" 1769+70 TO "E4" 1778+75	4							2	
	"TR3" 1769+60 TO 1773+65	3								
	"E4" 1776+68				1					
	"TR2" 1771+95							1		
PD-9	"E4" 1785+36 TO 1786+10				1				2	
PD-10	"E4" 1805+39 TO 1806+25				1				2	
PD-13	"TR" 37+90 TO 38+39			2						
	"TR" 40+16 TO 40+32						3			
PD-14	"TR" 59+63 TO 66+61			2						
	SUB TOTAL	82	65	4	9	6	3	2	21	14
	TOTAL	147		24					35	

REMOVE PAINTED TRAFFIC STRIPE AND PAVEMENT MARKING

LOCATION	DETAIL No.	WHITE PAINTED TRAFFIC STRIPE	YELLOW PAINTED TRAFFIC STRIPE	PAVEMENT MARKER	PAVEMENT MARKING
		LF		EA	SQFT
STAGE 1-PHASE 1	13			4206	
STAGE 1-PHASE 1	25		13,923	291	
STAGE 1-PHASE 1	27B	10,498			
STAGE 1-PHASE 1	37	1080		182	
STAGE 1-PHASE 1	38B	1200		52	
STAGE 1-PHASE 1					308
STAGE 1-PHASE 2	24		3069		
STAGE 1-PHASE 2	27B	2860			
STAGE 1-PHASE 2	36	302		7	
STAGE 2-PHASE 1	8	147			
STAGE 2-PHASE 1	9	2310		166	
STAGE 2-PHASE 1	10			113	
STAGE 2-PHASE 1	13			5181	
STAGE 2-PHASE 1	22		2080	88	
STAGE 2-PHASE 1	25		15,728	329	
STAGE 2-PHASE 1	25A		2660	112	
STAGE 2-PHASE 1	27B	29,689			
STAGE 2-PHASE 1	28		7552		
STAGE 2-PHASE 1	36	2660		56	
STAGE 2-PHASE 1	36A	712		16	
STAGE 2-PHASE 1	37A			432	
STAGE 2-PHASE 1	38	3944		83	
STAGE 2-PHASE 1	38A	1660			
STAGE 2-PHASE 1	38B	2670		114	
STAGE 2-PHASE 1					1177
STAGE 2-PHASE 2	9	658		48	
STAGE 2-PHASE 2	22		4480	188	
STAGE 2-PHASE 2	24		450		
STAGE 2-PHASE 2	38	120		4	
STAGE 2-PHASE 2	38B	2460		104	
STAGE 2-PHASE 2					364
STAGE 3-PHASE 1	9	1218		88	
STAGE 3-PHASE 1	10			29	
STAGE 3-PHASE 1	13			71	
STAGE 3-PHASE 1	22		200	10	
STAGE 3-PHASE 1	24		2540		
STAGE 3-PHASE 1	25A		500	22	
STAGE 3-PHASE 1	27B	6290			
STAGE 3-PHASE 1	28		1280		
STAGE 3-PHASE 1	36	340		8	
STAGE 3-PHASE 1	38	1020		22	
STAGE 3-PHASE 1	38B	680		30	
STAGE 3-PHASE 1	40A			46	
STAGE 3-PHASE 1					407
STAGE 3-PHASE 2	25		290	7	
STAGE 3-PHASE 2	27B	1980			
STAGE 3-PHASE 2	36A	640		14	
STAGE 4	10			169	
STAGE 4	13			1116	
STAGE 4	25		2010	43	
STAGE 4	25A		1040	44	
STAGE 4	27B	5320			
STAGE 4	36	300		7	
				* 3262	
TOTAL		80,758	57,802	16,760	2256

*TOTAL FROM REMOVE THERMOPLASTIC TRAFFIC STRIPE AND PAVEMENT MARKING TABLE ABOVE.

2 REVISED PER ADDENDUM No. 2 DATED JULY 8, 2010

PAVEMENT DELINEATION QUANTITIES

PDQ-10

LAST REVISION 06-17-09 | DATE PLOTTED => 08-JUL-2010 | TIME PLOTTED => 08:14

STATE OF CALIFORNIA - DEPARTMENT OF TRANSPORTATION
Caltrans

CONSULTANT FUNCTIONAL SUPERVISOR: WILLIAM J. WAGNER
CALCULATED-DESIGNED BY: LINDA M. GREVERA
CHECKED BY: MICHAEL L. MORSILLI
REVISED BY / DATE REVISED

Dist	COUNTY	ROUTE	POST MILES TOTAL PROJECT	SHEET No.	TOTAL SHEETS
04	SCI	101	31.8/34.3	317A	515

REGISTERED CIVIL ENGINEER 5/13/09 DATE

11-23-09
PLANS APPROVAL DATE

REGISTERED PROFESSIONAL ENGINEER RONALD L OEN No. 46945 Exp. 9/30/09 CIVIL STATE OF CALIFORNIA

THE STATE OF CALIFORNIA OR ITS OFFICERS OR AGENTS SHALL NOT BE RESPONSIBLE FOR THE ACCURACY OR COMPLETENESS OF ELECTRONIC COPIES OF THIS PLAN SHEET.

BIGGS CARDOSA ASSOCIATES INC.
865 THE ALAMEDA
SAN JOSE, CA 95126

SANTA CLARA VALLEY TRANSPORTATION AUTHORITY
3331 N. FIRST STREET
SAN JOSE, CA 95134

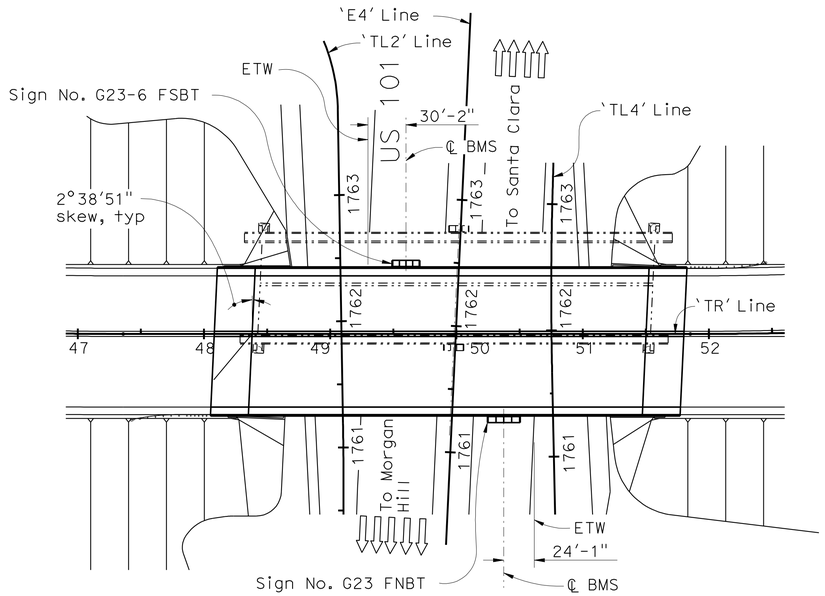

PLAN
1" = 60'

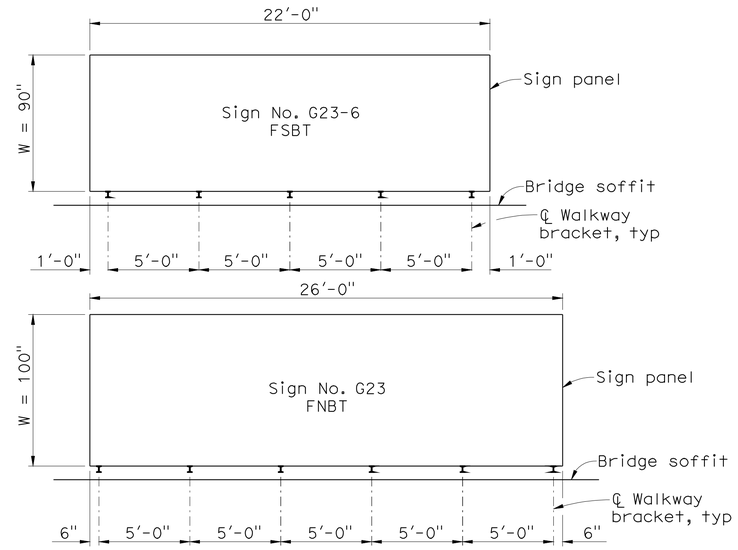

MOUNTING BRACKET ASSEMBLY SPACING
NO SCALE

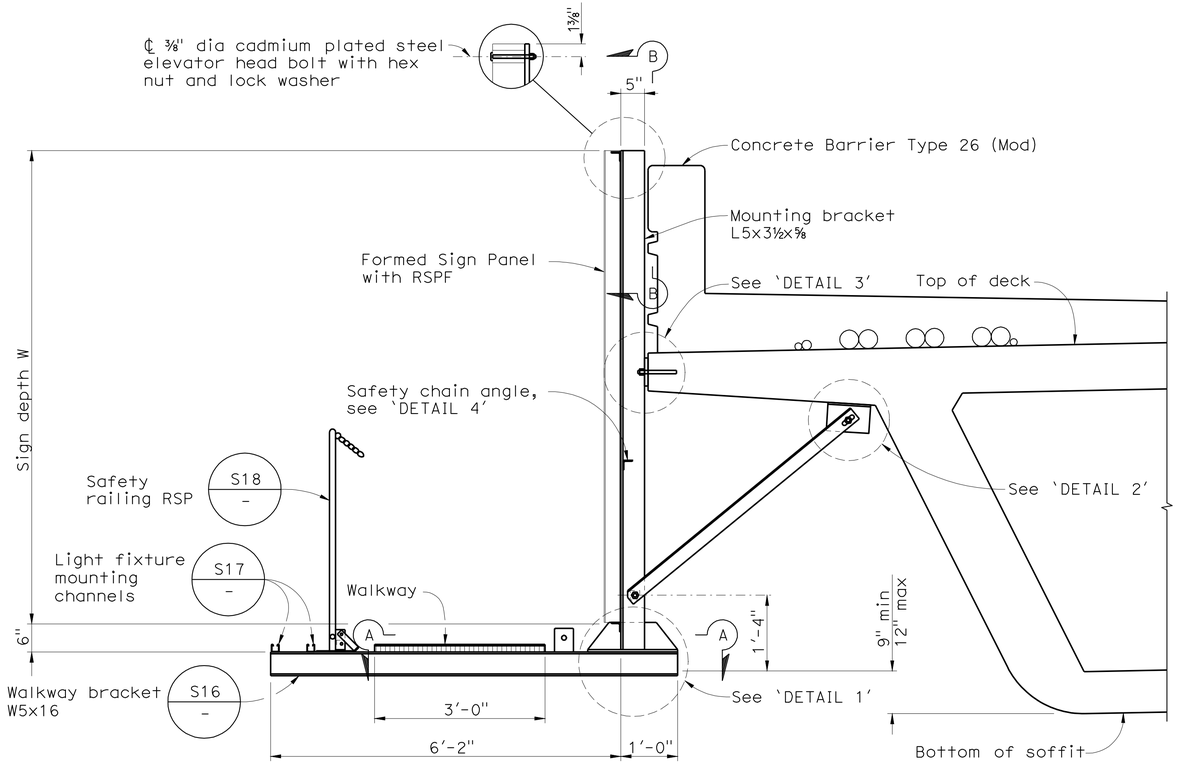

TYPICAL MOUNTING BRACKET ASSEMBLY
3/4" = 1'-0"

GENERAL NOTES FOR BRIDGE MOUNTED SIGNS

DESIGN: AASHTO Standard Specifications for Structural Supports for Highway Signs, Luminaires and Traffic Signals, dated 2001 with 2003 Interims.

LOADING: WIND LOADING:
Normal to face of sign: 40 psf
Transverse to face of sign: 20% of normal force
WALKWAY LOADING:
Dead load + 500 LB concentrated live load

UNIT STRESSES: STRUCTURAL STEEL: fs = 17.4 ksi
REINFORCED CONCRETE: fs = 24 ksi
fc = 1,200 psi

WELDING: All welding shall be continuous unless otherwise noted on the plans.
All welding shall be done in accordance with the Standard Specifications.

S10 — Standard Plan Sheet No.
– — Detail No.

Notes:

1. The exterior mounting bracket to face outward to accommodate the walkway chain angle.
2. Galvanize all assemblies after fabrication. Contractor may add ¾" dia holes in underside of tubing to permit draining of galvanizing.
3. All high strength (HS) bolts shall be pretensioned per AISC requirements.
4. Minimum size fillet weld is ¼" or thinner piece thickness unless noted otherwise.
5. Contractor to provide anchor bolt layout for review by Engineer before anchor bolts are placed.
6. See sheet SD-7 for sections and details noted.
7. See sheets S-6, S-7 & SQ-13 for Sign Panel callouts.

2 **ADDED PER ADDENDUM No. 2 DATED JULY 8, 2010**

TULLY ROAD OVERCROSSING
SIGN DETAILS
SCALE AS SHOWN

SD-6

LAST REVISION | DATE PLOTTED => 10/17/08 | TIME PLOTTED => 10:00 AM

STATE OF CALIFORNIA - DEPARTMENT OF TRANSPORTATION | Caltrans

CONSULTANT FUNCTIONAL SUPERVISOR: RONALD L. OEN

CALCULATED-DESIGNED BY: RKY | CHECKED BY: SEM

REVISED BY | DATE REVISED

BORDER LAST REVISED 3/1/2007

RELATIVE BORDER SCALE IS IN INCHES 0 1 2 3

USERNAME => trstrk
DGN FILE => 41A980ob006.add

CU 04329 | EA

Dist	COUNTY	ROUTE	POST MILES TOTAL PROJECT	SHEET No.	TOTAL SHEETS
04	SCI	101	31.8/34.3	317B	515

REGISTERED CIVIL ENGINEER 5/13/09 DATE

11-23-09
PLANS APPROVAL DATE

REGISTERED PROFESSIONAL ENGINEER RONALD L OEN No. 46945 Exp. 9/30/09 CIVIL STATE OF CALIFORNIA

THE STATE OF CALIFORNIA OR ITS OFFICERS OR AGENTS SHALL NOT BE RESPONSIBLE FOR THE ACCURACY OR COMPLETENESS OF ELECTRONIC COPIES OF THIS PLAN SHEET.

BIGGS CARDOSA ASSOCIATES INC.
865 THE ALAMEDA
SAN JOSE, CA 95126

SANTA CLARA VALLEY TRANSPORTATION AUTHORITY
3331 N. FIRST STREET
SAN JOSE, CA 95134

2

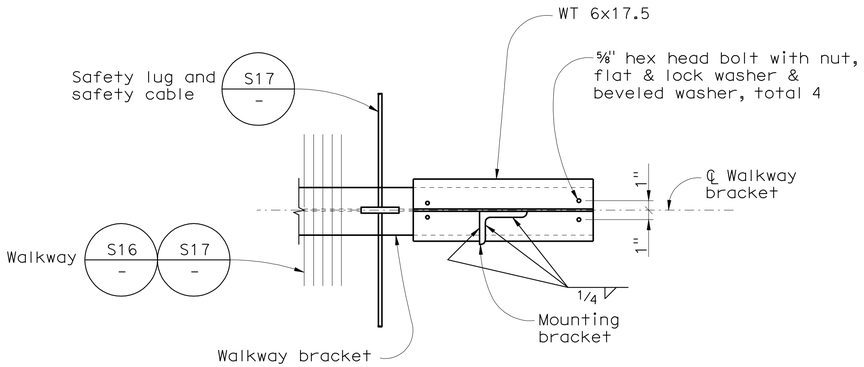

SECTION A-A
1½" = 1'-0"

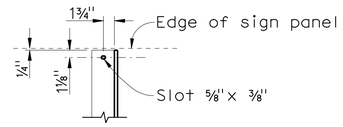

SECTION B-B
NO SCALE

Note:

1. The exterior mounting bracket to face outward to accommodate the walkway chain angle.

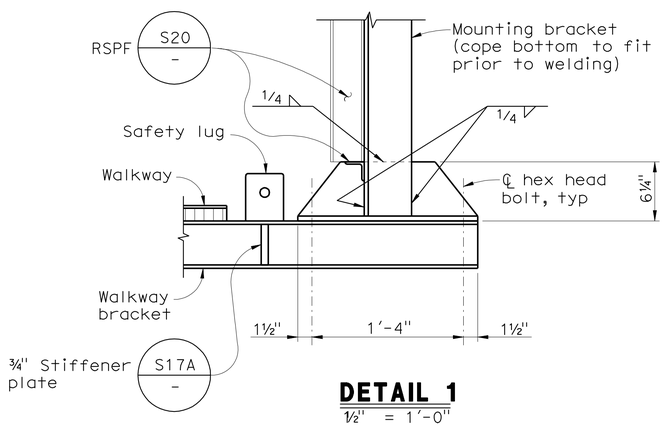

DETAIL 1
1½" = 1'-0"

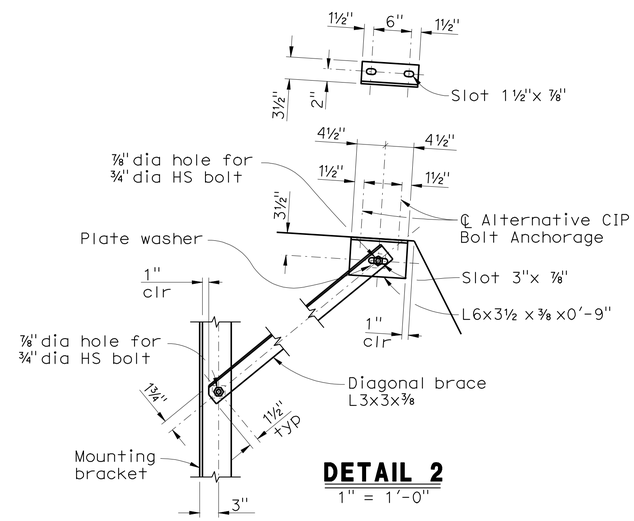

DETAIL 2
1" = 1'-0"

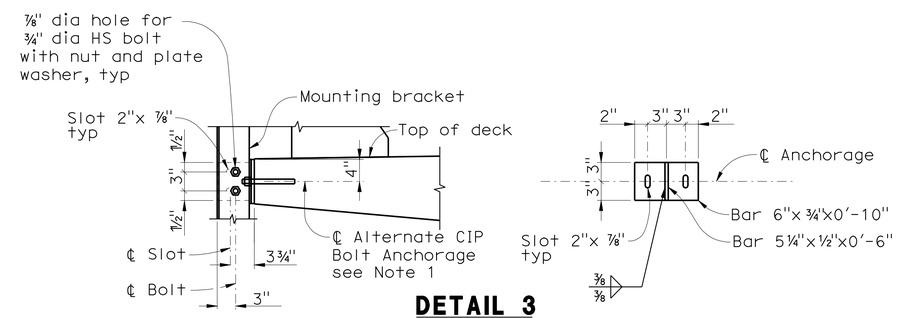

DETAIL 3
1" = 1'-0"

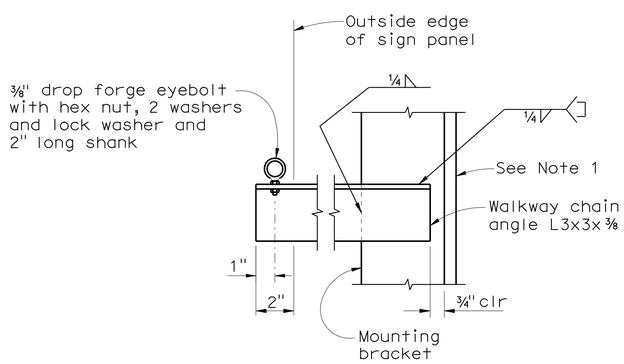

DETAIL 4
NO SCALE

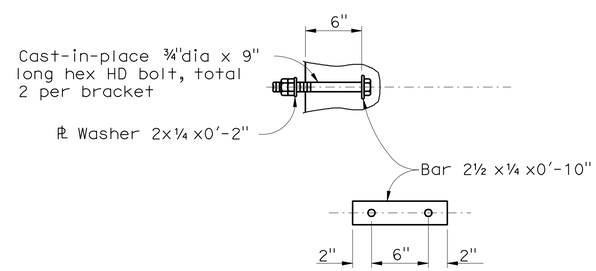

ALTERNATIVE CIP BOLT ANCHORAGE
1 1/2" = 1'-0"

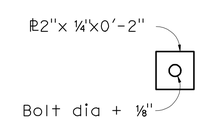

PLATE WASHER
For all slotted holes

TULLY ROAD OVERCROSSING SIGN DETAILS
SCALE AS SHOWN

2 ADDED PER ADDENDUM No. 2 DATED JULY 8, 2010

SD-7

REVISED BY	DATE REVISED

CALCULATED-DESIGNED BY	CHECKED BY
RKY	SEM

SUPERVISOR RONALD L. OEN
CONSULTANT FUNCTIONAL SUPERV

STATE OF CALIFORNIA - DEPARTMENT OF TRANSPORTATION
Caltrans

LAST REVISION DATE PLOTTED => 10/17/08 TIME PLOTTED => 10:00 AM

Dist	COUNTY	ROUTE	POST MILES TOTAL PROJECT	SHEET No.	TOTAL SHEETS
04	SCI	101	31.8/34.3	331	515

Joe Streeper 6/17/09
REGISTERED CIVIL ENGINEER DATE

11-23-09
PLANS APPROVAL DATE

REGISTERED PROFESSIONAL ENGINEER JOE STREEPER No. 64445 Exp. 6-30-11 CIVIL STATE OF CALIFORNIA

THE STATE OF CALIFORNIA OR ITS OFFICERS OR AGENTS SHALL NOT BE RESPONSIBLE FOR THE ACCURACY OR COMPLETENESS OF SCANNED COPIES OF THIS PLAN SHEET.

HMH
1570 OAKLAND ROAD
SAN JOSE, CA 95131

SANTA CLARA VALLEY
TRANSPORTATION AUTHORITY
3331 N. FIRST STREET
SAN JOSE, CA 95134

2

PLACE HOT MIX ASPHALT DIKE

STATION/LOCATION	TYPE A	TYPE C	TYPE D (MOD)	TYPE E	TYPE E (MOD)	TYPE F
	LF					
"E4" 1695+95.00 TO 1704+34.83			848			
"TR1" 1754+50.00 TO 1762+01.60				680	54	
"TR2" 1761+46.51 TO 1774+66.30		238		772		
"TL2" 1762+43.10 TO 1778+80.00				515		
"TR3" 1762+16.89 TO 1774+45.00				574	630	
"TR4" 1749+00.00 TO 1762+13.30		291		1024		25
"TL4" 1755+61.00 TO "TL2" 1763+85.00				360	337	
FROM DETOUR QUANTITIES	225			907		
TOTAL	225	529	848	4832	1021	25

EARTHWORK SUMMARY

STATION/LOCATION	ROADWAY EXCAVATION (NATURALLY OCCURRING ASBESTOS) *	ROADWAY EXCAVATION (TYPE Y-1) (AERIALLY DEPOSITED LEAD) (NATURALLY OCCURRING ASBESTOS) *	ROADWAY EXCAVATION (TYPE Y-2) (AERIALLY DEPOSITED LEAD) (NATURALLY OCCURRING ASBESTOS) *	EMBANKMENT (N)	IMPORTED BORROW	IMPORTED BORROW (SPECIAL HANDLING)
	CY					
DETOUR "D2"		260		50		
DETOUR "D3"		150		10		
DETOUR "D4"		340		10		
DETOUR "D5"		300		1610		
DETOUR "D6"		190		1160		
DETOUR "D7"		70		1340		
DETOUR "D8"		30		11,170		
DETOUR "D9"		390		60		
"TR" 38+50.00 TO 60+00.00		1900		78,200		
"TR1" 1744+95.30 TO 1762+10.21	2550	650		15,830		
"TR2" 1760+72.01 TO 1774+66.28	3650	1670		12,800		
"TL2" 1754+81.45 TO 1770+10.33		4800		8560		
"TR3" 1761+92.53 TO 1780+83.17		4900		13,490		
"TR4" 1746+30.93 TO 1763+01.90		5400		8300		
"TL4 1754+15.06 TO 1768+40.72		3900		7300		
"E4" 1693+13.90 TO 1829+36.00	20,270	18,990	667	1900		
ADDITIONAL CONTOUR GRADING (TULLY INTERCHANGE AREA)		19,400		3700		
SUBTOTAL	26,470	63,340	667	165,490		
ADJUSTMENT FOR SUBSIDENCE OF EMBANKMENTS				5000		
GRADING FACTOR ADJUSTMENT FOR ROADWAY EXCAVATION				14,000		
TOTAL	26,470	63,340	667	184,490	39,013	55,000 **

(N) = NOT A SEPARATE PAY ITEM, FOR INFORMATION ONLY

* = INCLUDES QUANTITY OF REMOVE BASE AND SURFACING

** FROM SANTA TERESA STOCKPILE SITE

CONCRETE BARRIER

STATION	TYPE 60	TYPE 60C	TYPE 60R
	LF		
"E4" 1760+25.00 TO 1760+60.00	35		
"E4" 1760+60.00 TO 1763+16.00			256
"E4" 1763+16.00 TO 1763+51.00	35		
"TR4" 1758+47.10 TO 1759+02.10		55	
"TR4" 1760+73.85 TO 1761+15.00	50		
TOTAL	120	55	256

PLACE HOT MIX ASPHALT (MISC AREA)

STATION/LOCATION	OVERSIDE DRAIN	OVERSIDE DRAIN (Mod)	DITCH LINING	SIDEWALK	CASE C CURB RAMP
	SQYD				
"TR1" 1757+16		3			
"TL2" 1764+65		3			
"TR2" 1768+00	3				
"TR2" 1771+17		3			
"TR3" 1765+60	3				
"TR4" 1750+50	3				
"TL4" 1759+60		3			
"TL4" 1763+80	3				
SUBTOTAL FROM DRAINAGE QUANTITIES			125		
SUBTOTAL FROM DETOUR QUANTITIES				113	66
SUBTOTAL	12	12	125	113	66
TOTAL	328				

SURVEY MONUMENT

STATION	EA
"TR" 42+73.68	1
"TR" 56+13.32	1
"TR3" 1768+39.53	1
"TL4" 1762+74.09	1
TOTAL	4

FENCE

STATION	TUBULAR STEEL FENCE
	LF
"TR" 39+98.10 TO 40+53.90	70
TOTAL	70

2 **REVISED PER ADDENDUM No. 2 DATED JULY 8, 2010**

SUMMARY OF QUANTITIES

Q-1

REVISED BY | DATE REVISED
JOE STREEPER | MICHAEL L. MORSILLI
CALCULATED-DESIGNED BY | CHECKED BY
CONSULTANT FUNCTIONAL SUPERVISOR | WILLIAM J. WAGNER
STATE OF CALIFORNIA - DEPARTMENT OF TRANSPORTATION
Caltrans

LAST REVISION 06-17-09 | DATE PLOTTED => 08-JUL-2010 | TIME PLOTTED => 08:14

Dist	COUNTY	ROUTE	POST MILES TOTAL PROJECT	SHEET No.	TOTAL SHEETS
04	SCI	101	31.8/34.3	334	515

Joe Streeper 6/17/09
REGISTERED CIVIL ENGINEER DATE

11-23-09
PLANS APPROVAL DATE

REGISTERED PROFESSIONAL ENGINEER JOE STREEPER No. 64445 Exp. 6-30-11 CIVIL STATE OF CALIFORNIA

THE STATE OF CALIFORNIA OR ITS OFFICERS OR AGENTS SHALL NOT BE RESPONSIBLE FOR THE ACCURACY OR COMPLETENESS OF SCANNED COPIES OF THIS PLAN SHEET.

HMH
1570 OAKLAND ROAD
SAN JOSE, CA 95131

SANTA CLARA VALLEY
TRANSPORTATION AUTHORITY
3331 N. FIRST STREET
SAN JOSE, CA 95134

2

STRUCTURAL SECTION

LOCATION/STATION	HOT MIX ASPHALT (OPEN GRADED)	HOT MIX ASPHALT (TYPE A)	LEAN CONCRETE BASE	CLASS 3 AGGREGATE BASE	CLASS 4 AGGREGATE SUBBASE	ASPHALT TREATED PERMEABLE BASE	TACK COAT	SCREENINGS (COARSE)
	TON		CY				TON	
"TR" 38+40 TO 60+00		8097		11,198				70
"TR1" 1744+95 TO 1762+10	152	2380	392	719	2448	196		
"TR2" 1761+50 TO 1774+66	65	2539	242	1373	2816			
"TL2" 1754+81 TO 1770+10	152	2742	562	1246	2674			
"TR3" 1762+00 TO 1780+83	225	2977	834	889	3338			
"TL4" 1755+00 TO 1768+41	149	2884	418	659	2316	166		
"TR4" 1746+31 TO 1763+02		2565		1272	2110		0.5	
"E4" 1693+13.90 TO 1829+36.00	11,099	18,327	7574	44	20,458	1079	36.4	
FROM DETOUR QUANTITIES		2369		3397				
HOT MIX ASPHALT DIKE		222						
HOT MIX ASPHALT (Misc AREA)		55						
TOTAL	11,842	45,157	10,022	20,797	36,160	1441	36.9	70

IRRIGATION CROSSOVERS

LOCATION		SIDE		10" CORRUGATED HIGH DENSITY POLYETHYLENE PIPE CONDUIT	(N) WATER LINE CROSSOVER	(N) SPRINKLER CONTROL CROSSOVER
LINE	STATION	R†	L†	LENGTH (LF)	SIZE (INCH)	SIZE (INCH)
"TR"	43+09	X		46	3"	4"
"TR"	43+11		X	45	3"	4"
"TR"	46+97	X	X	99	3"	4"
"TR"	47+98	X	X	120	3"	4"
"TR"	51+91	X	X	120	3"	4"
"TR"	52+88	X	X	102	3"	4"
"TR"	55+44	X		57	3"	4"
"TR"	55+48		X	73	3"	4"
"TR1"	1760+40	X	X	41	3"	4"
"TR2"	1766+15	X	X	52	3"	4"
"TL2"	1765+80	X	X	47	3"	4"
"TL4"	1758+10	X	X	59	3"	4"
"TR3"	1764+65	X	X	53	3"	4"
"TR4"	1761+35	X	X	125	3"	4"
	TOTAL			1039		

(N) - NOT A SEPARATE PAY ITEM FOR INFORMATION ONLY
X - DENOTES REQUIREMENT

CONDUIT TYPE
(Applicable when circled below and shown under the 'CONDUIT TYPE' column heading)

1 BITUMINOUS COATED CORRUGATED STEEL PIPE (0.064 INCH THICK)
2 CORRUGATED STEEL PIPE (0.064 INCH THICK)
3 CORRUGATED HIGH DENSITY POLYETHYLENE PIPE
4 ALTERNATIVE CONDUIT

RETAINING CURB

LOCATION	CLASS 2 CONCRETE (RETAINING CURB)	BAR REINFORCING STEEL (RETAINING CURB)
	CY	LB
"TR" 40+02 TO 40+43 L†	8	542
TOTAL	8	542

VEGETATION CONTROL (MINOR CONCRETE)

SHEET No.	STATION	SQYD
L-2	"E4" 1708+04 TO "E4" 1709+01	18
L-3	"E4" 1723+04 TO "E4" 1724+01	18
L-5	"E4" 1744+74 TO "E4" 1745+71	18
L-6	"TL2" 1766+64 TO "TL2" 1767+18	28
L-7	"TR4" 1757+73.60 TO "TR4" 1758+47.10	14
	"TL4" 1756+79 TO "TL4" 1757+36	30
L-8	"E4" 1775+96 TO "E4" 1776+93	18
L-9	"E4" 1785+24.50 TO "E4" 1786+21.50	18
L-10	"E4" 1805+28 TO "E4" 1806+25	18
C-3	"TR" 47+31.70 TO "TR" 48+05.21	14
C-4	"TR" 51+82.11 TO "TR" 52+55.61	14
	TOTAL	208

IRRIGATION SLEEVES

LOCATION		SIDE		4" PLASTIC PIPE
LINE	STATION	R†	L†	LENGTH (LF)
"TR"	39+10 TO 59+39	X	X	2575
	TOTAL			2575

REMOVE PIPE

SHEET No.	STATION	LF
U-6	"E4" 1761+35	20
U-6	"E4" 1762+15	20
	TOTAL	40

2 **REVISED PER ADDENDUM No. 2 DATED JULY 8, 2010**

SUMMARY OF QUANTITIES

Q-4

REVISED BY | DATE REVISED
JOE STREEPER | MICHAEL L. MORSILLI
CALCULATED-DESIGNED BY | CHECKED BY
CONSULTANT FUNCTIONAL SUPERVISOR | WILLIAM J. WAGNER
STATE OF CALIFORNIA - DEPARTMENT OF TRANSPORTATION
Caltrans

LAST REVISION 06-17-09 | DATE PLOTTED => 08-JUL-2010 | TIME PLOTTED => 08:15

DIST	COUNTY	ROUTE	POST MILES TOTAL PROJECT	SHEET No	TOTAL SHEETS
04	SCI	101	31.8/34.3	478	515

REISTERED CIVIL ENGINEER 5/18/10 DATE

11-23-09
PLANS APPROVAL DATE

REGISTERED PROFESSIONAL ENGINEER RONALD L OEN No. 46945 Exp. 9/30/11 CIVIL STATE OF CALIFORNIA

The State of California or its officers or agents shall not be responsible for the accuracy or completeness of electronic copies of this plan sheet.

SANTA CLARA VALLEY TRANSPORTATION AUTHORITY
3331 N. FIRST STREET
SAN JOSE, CALIFORNIA 95134-1906
SPONSORING AGENCY

BIGGS CARDOSA ASSOCIATES INC.
865 THE ALAMEDA
SAN JOSE, CALIFORNIA 95126

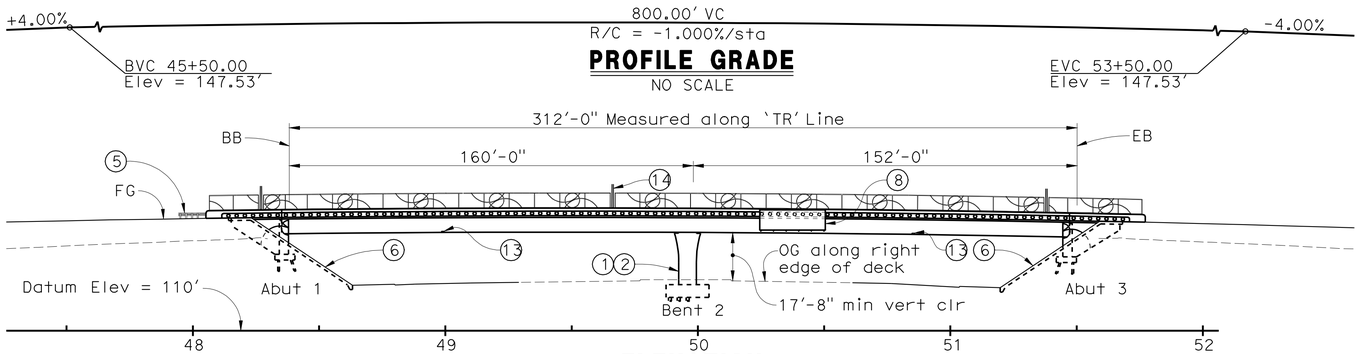

PROFILE GRADE
NO SCALE

ELEVATION
1" = 30'

Legend:
- Indicates point of minimum vertical clearance
- Indicates bridge removal
- Indicates existing structure
- Indicates new construction
- Indicates bridge electrolier
- Indicates deck drain, see 'DECK DRAIN LOCATION TABLE' on 'DECK DRAIN DETAILS' sheet
- Indicates soffit lighting, see Electrical Plans

2

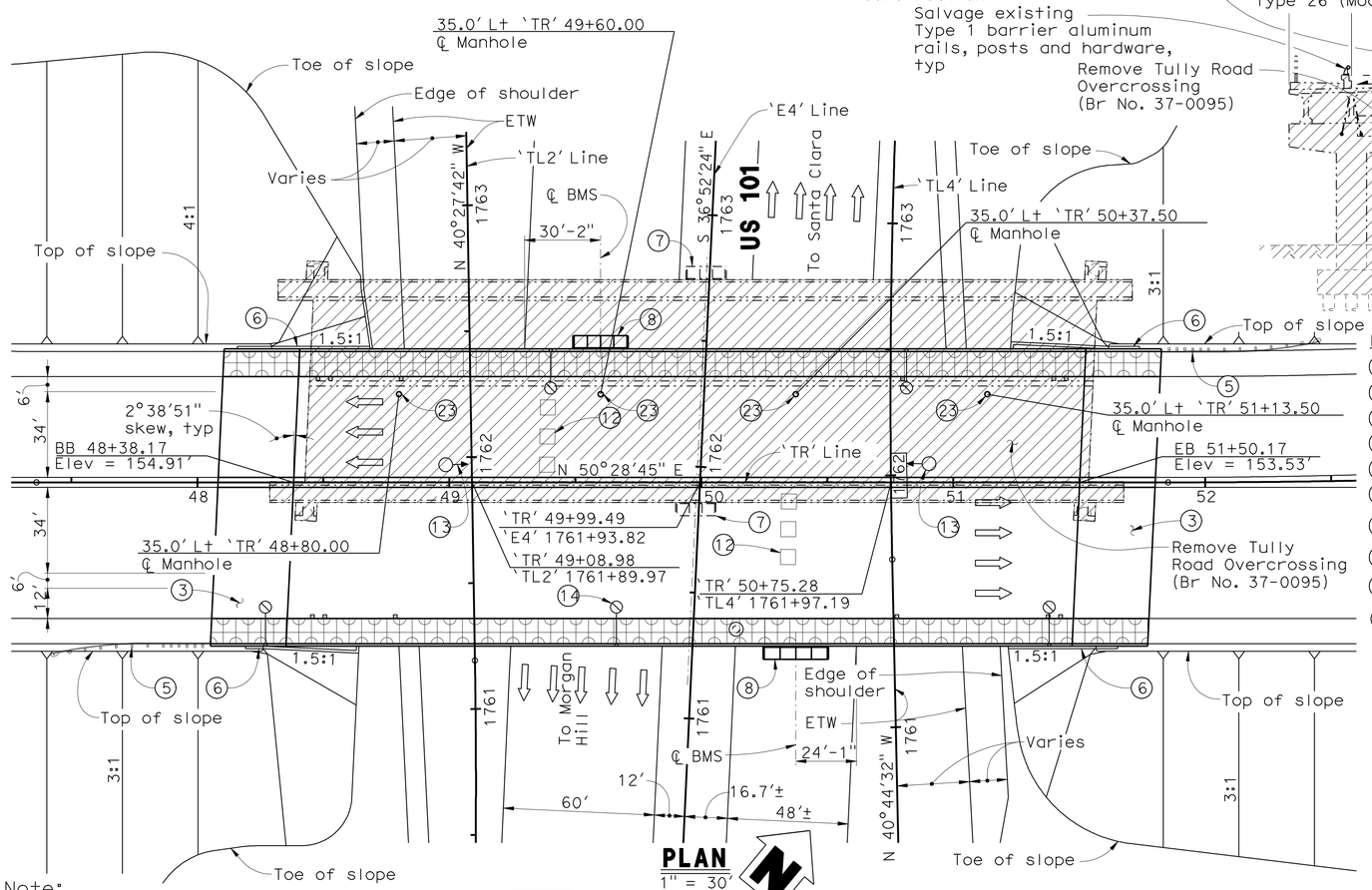

PLAN
1" = 30'

Note:
The Contractor shall verify all controlling field dimensions before ordering or fabricating any material.

2 **REVISED PER ADDENDUM No. 2 DATED JULY 8, 2010**

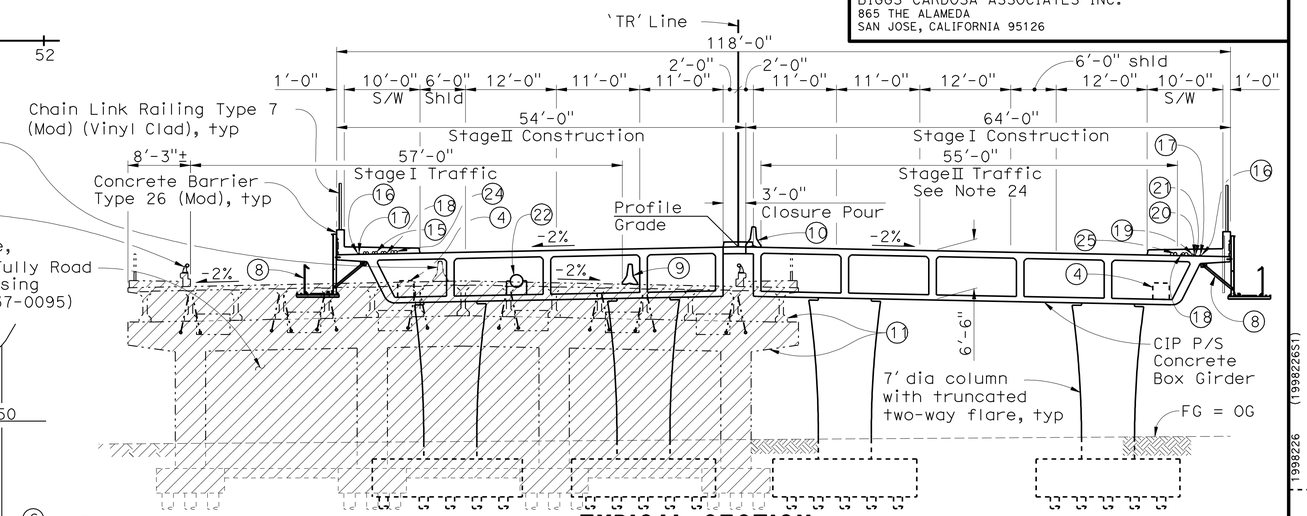

TYPICAL SECTION
1" = 10'

Notes:
1. Paint 'Bridge No. 37-0668'
2. Paint 'Tully Road OC'
3. Structure Approach Slab N(30S)
4. Future utility opening
5. Metal Beam Guard Railing, see Road Plans
6. Slope Paving-Full Slope
7. Remove bridge mounted sign structure, see Road Plans
8. Bridge mounted sign structure, see Road Plans
9. Temporary Railing Type K, see Road Plans
10. Temporary Railing Type K (Anchored), see Road Plans
11. Remove portion of bridge superstructure and bent cap prior to Stage I Construction, see 'DETAIL 1' on 'TYPICAL SECTION No. 1' sheet
12. Loop detectors, see Electrical Plans
13. Soffit Lighting, see Electrical Plans and ES-9B, ES-9E, ES-9F
14. Electrolier on barrier, see B11-54, ES-9A, ES-9B, ES-9C, ES-9D for anchorage details and Electrical Plans for type, location, bolt circle dia, and details.
15. 4" dia conduits (AT&T), total 6
16. 1½" dia conduit (City Lighting), see Electrical Plans
17. 2" dia conduit (Spare), see Electrical Plans
18. 1½" dia conduit (Traffic Loop Detectors), see Electrical Plans
19. 3" dia conduit (Signal Interconnect), see Electrical Plans
20. 2" dia conduit (Spare), see Electrical Plans
21. 1½" dia conduit (Caltrans Lighting), see Electrical Plans
22. 20" dia Water main (San Jose Water Company), see Road Plans
23. Deck access opening, see B7-11
24. 5" dia opening (City of San Jose), total 2
25. 5" dia opening (City of San Jose)
26. For General Notes and Index to Bridge Plans, see 'DECK CONTOURS' sheet
27. For Pile Data Table and Standard Plan List, see 'FOUNDATION PLAN' sheet
28. Concrete Barrier Type 26 (Mod) and Chain Link Railing Type 7 (Mod) (Vinyl Clad) shown in Stage I Construction shall be constructed after Stage II Construction is completed, see 'DETAIL 3' on 'TYPICAL SECTION No. 2' sheet.

DESIGN OVERSIGHT Emil A. Vergara Jr. 5-20-10 SIGN OFF DATE	DESIGN BY J. ALCIATI	CHECKED S. MOYLES	LOAD & RESISTANCE FACTOR DESIGN	LIVE LOADING: HL93 W/"LOW-BOY"; PERMIT DESIGN VEHICLE	
	DETAILS BY R. YAMANE	CHECKED S. MOYLES	LAYOUT BY J. ALCIATI	CHECKED S. MOYLES	
	QUANTITIES BY D. UPADHYAY	CHECKED Y. LIN	SPECIFICATIONS BY J. ALCIATI	PLANS AND SPECS COMPARED S. MOYLES	

PREPARED FOR THE STATE OF CALIFORNIA DEPARTMENT OF TRANSPORTATION

JOHN A. ALCIATI
PROJECT ENGINEER

BRIDGE NO. 37-0668
POST MILES 33.0

TULLY ROAD OVERCROSSING
GENERAL PLAN

DESIGN GENERAL PLAN SHEET (ENGLISH) (REV. 2/25/05)

ORIGINAL SCALE IN INCHES FOR REDUCED PLANS 0 1 2 3

CU 04329
EA 1A9801

DISREGARD PRINTS BEARING EARLIER REVISION DATES

REVISION DATES (PRELIMINARY STAGE ONLY) 1/30/08 11/28/08 2/2/09 3/20/09 5/1/09 5/13/09 1/22/10 5/3/10

SHEET 1 OF 28

FILE => 37-0668-a-gp01.add

USERNAME => trrstrk DATE PLOTTED => 08-JUL-2010 TIME PLOTTED => 08:17

1998226 (1998226S1)

DIST	COUNTY	ROUTE	POST MILES TOTAL PROJECT	SHEET No	TOTAL SHEETS
04	SCI	101	31.8/34.3	479	515

REGISTERED CIVIL ENGINEER 5/18/10 DATE

11-23-09
PLANS APPROVAL DATE

REGISTERED PROFESSIONAL ENGINEER RONALD L OEN No. 46945 Exp. 9/30/11 CIVIL STATE OF CALIFORNIA

The State of California or its officers or agents shall not be responsible for the accuracy or completeness of electronic copies of this plan sheet.

SANTA CLARA VALLEY TRANSPORTATION AUTHORITY
3331 N. FIRST STREET
SAN JOSE, CALIFORNIA 95134-1906
SPONSORING AGENCY

BIGGS CARDOSA ASSOCIATES INC.
865 THE ALAMEDA
SAN JOSE, CALIFORNIA 95126

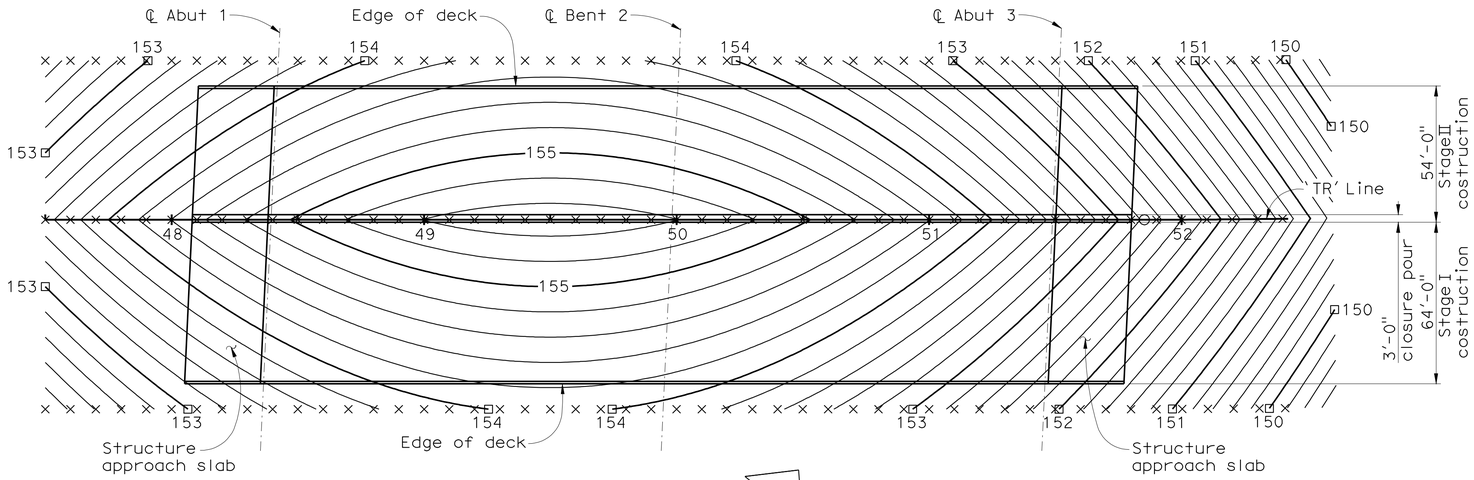

PLAN
1" = 30'

Notes:
1. Contours indicate top of deck elevation.
2. □ Indicates even foot contours.
3. × Indicates 10 foot intervals measured along 'TR' Line.
4. Contour interval = 0.2'
5. Contours do not include camber or falsework settlement.

INDEX TO BRIDGE PLANS

Sheet No.	Title
1	GENERAL PLAN
2	DECK CONTOURS
3	FOUNDATION PLAN
4	ABUTMENT 1 PLAN & ELEVATION
5	ABUTMENT 3 PLAN & ELEVATION
6	ABUTMENT DETAILS No. 1
7	ABUTMENT DETAILS No. 2
8	ABUTMENT DETAILS No. 3
9	BENT DETAILS No. 1
10	BENT DETAILS No. 2
11	BENT DETAILS No. 3
12	TYPICAL SECTION No. 1
13	TYPICAL SECTION No. 2
14	GIRDER LAYOUT
15	GIRDER DETAILS No. 1
16	GIRDER DETAILS No. 2
17	UTILITY DETAILS No. 1
18	UTILITY DETAILS No. 2
19	DECK DRAIN DETAILS
20	CHAIN LINK RAILING TYPE 7 (MOD) No. 1
21	CHAIN LINK RAILING TYPE 7 (MOD) No. 2
22	STRUCTURE APPROACH SLAB TYPE N(30S)
23	STRUCTURE APPROACH DRAINAGE DETAILS
24	SLOPE PAVING - FULL SLOPE
25	SOIL LEGEND 1 OF 2-LOG OF TEST BORINGS
26	SOIL LEGEND 2 OF 2-LOG OF TEST BORINGS
27	LOG OF TEST BORINGS 1 OF 2
28	LOG OF TEST BORINGS 2 OF 2

2

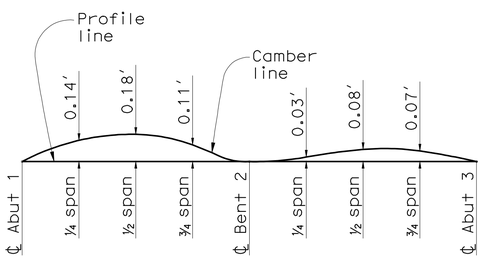

(Does not include allowance for falsework settlement)

CAMBER DIAGRAM - LEFT BRIDGE
NO SCALE

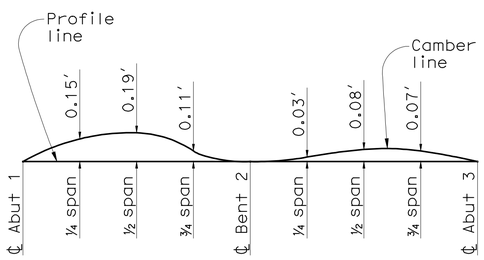

(Does not include allowance for falsework settlement)

CAMBER DIAGRAM - RIGHT BRIDGE
NO SCALE

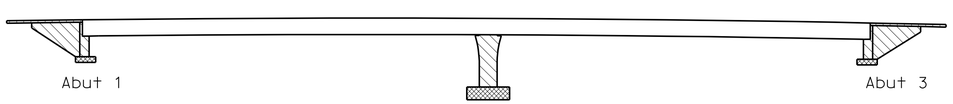

- Structural Concrete, Bridge (f'c = 4000 psi at 28 days)
- Structural Concrete, Bridge (f'c = 3600 psi at 28 days)
- Structural Concrete, Bridge footing (f'c = 3600 psi at 28 days)
- Structural Concrete, Approach Slab (f'c = 3600 psi at 28 days)

CONCRETE STRENGTH AND TYPE LIMITS
NO SCALE

GENERAL NOTES
LOAD & RESISTANCE FACTOR DESIGN

DESIGN: AASHTO LRFD Bridge Design Specifications, 3rd Edition, 2006, and Caltrans Amendments v3.06.01; except that abutments and wingwalls are designed using Bridge Design Specifications ('96 AASHTO w/ Revisions by Caltrans)

SEISMIC DESIGN: Caltrans Seismic Design Criteria (SDC) Version 1.4, dated June 2006

DEAD LOAD: Includes 35 psf for future wearing surface

LIVE LOAD: HL93 w/ "LOW-BOY" and permit design vehicle

SEISMIC LOAD: Site Specific ARS Curve as shown

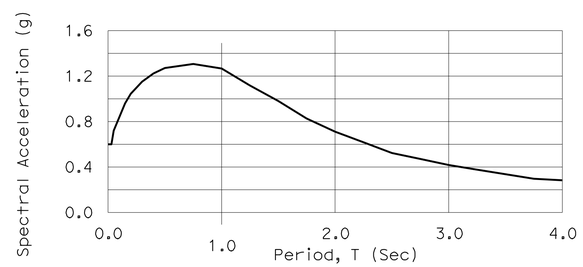

REINFORCED CONCRETE: fy = 60 ksi
f'c = 3.6 ksi (Except as shown on Concrete Strength & Type Limits Diagram)
n = 8

PRESTRESSED CONCRETE: See 'Prestressing Notes' on 'GIRDER LAYOUT' sheet

TULLY ROAD OVERCROSSING BR NO 37-0668

QUANTITIES

BRIDGE REMOVAL	LUMP	SUM
ASBESTOS COMPLIANCE PLAN	LUMP	SUM
STRUCTURE EXCAVATION (NATURALLY OCCURRING ASBESTOS)	445	CY
STRUCTURE EXCAVATION (TYPE Y-1) (AERIALLY DEPOSITED LEAD & NATURALLY OCCURRING ASBESTOS	730	CY
STRUCTURE BACKFILL (BRIDGE)	735	CY
FURNISH PILING (CLASS 200) (ALTERNATIVE W)	18,303	LF
DRIVE PILE (CLASS 200) (ALTERNATIVE W)	186	EA
PRESTRESSING CAST-IN-PLACE CONCRETE	LUMP	SUM
STRUCTURAL CONCRETE, BRIDGE FOOTING	405	CY
STRUCTURAL CONCRETE, BRIDGE	3,340	CY
STRUCTURAL CONCRETE, APPROACH SLAB (TYPE N)	265	CY
MINOR CONCRETE (MEDIAN PAVING)	37	CY
ARCHITECTURAL TEXTURE (ARCHES)	770	SQFT
JOINT SEAL (MR 2")	236	LF
BAR REINFORCING STEEL (BRIDGE)	971,200	LB
24" WELDED STEEL PIPE CASING (BRIDGE)	154	LF
SLOPE PAVING (CONCRETE)	125	CY
BRIDGE DECK DRAINAGE SYSTEM	11,300	LB
CHAIN LINK RAILING (TYPE 7 MODIFIED)(VINYL CLAD)	741	LF
CONCRETE BARRIER (TYPE 26 MODIFIED)	744	LF

2 **REVISED PER ADDENDUM No. 2 DATED JULY 8, 2010**

DESIGN OVERSIGHT Emil A. Vergara Jr.
5-20-10
SIGN OFF DATE

	BY	CHECKED
DESIGN	J. ALCIATI	S. MOYLES
DETAILS	R. YAMANE	S. MOYLES
QUANTITIES	D. UPADHYAY	Y. LIN

PREPARED FOR THE STATE OF CALIFORNIA DEPARTMENT OF TRANSPORTATION

JOHN A. ALCIATI
PROJECT ENGINEER

BRIDGE NO. 37-0668
POST MILE 33.0

TULLY ROAD OVERCROSSING
DECK CONTOURS

DESIGN DETAIL SHEET (ENGLISH) (REV. 2/25/05)

ORIGINAL SCALE IN INCHES FOR REDUCED PLANS 0 1 2 3

CU 04329
EA 1A9801

DISREGARD PRINTS BEARING EARLIER REVISION DATES

REVISION DATES (PRELIMINARY STAGE ONLY) 11/26/08 2/2/09 3/26/09 5/1/09 5/13/09 1/22/10 5/3/10

SHEET 2 OF 28

FILE => 37-0668-d-dc01.add

USERNAME => trstrk DATE PLOTTED => 08-JUL-2010 TIME PLOTTED => 08:17

(1998226652) 1998226

DIST	COUNTY	ROUTE	POST MILES TOTAL PROJECT	SHEET No	TOTAL SHEETS
04	SCI	101	31.8/34.3	480	515

REGISTERED CIVIL ENGINEER — DATE 5/18/10

11-23-09
PLANS APPROVAL DATE

REGISTERED PROFESSIONAL ENGINEER RONALD L OEN No. 46945 Exp. 9/30/11 CIVIL STATE OF CALIFORNIA

The State of California or its officers or agents shall not be responsible for the accuracy or completeness of electronic copies of this plan sheet.

SANTA CLARA VALLEY TRANSPORTATION AUTHORITY
3331 N. FIRST STREET
SAN JOSE, CALIFORNIA 95134-1906
SPONSORING AGENCY

BIGGS CARDOSA ASSOCIATES INC.
865 THE ALAMEDA
SAN JOSE, CALIFORNIA 95126

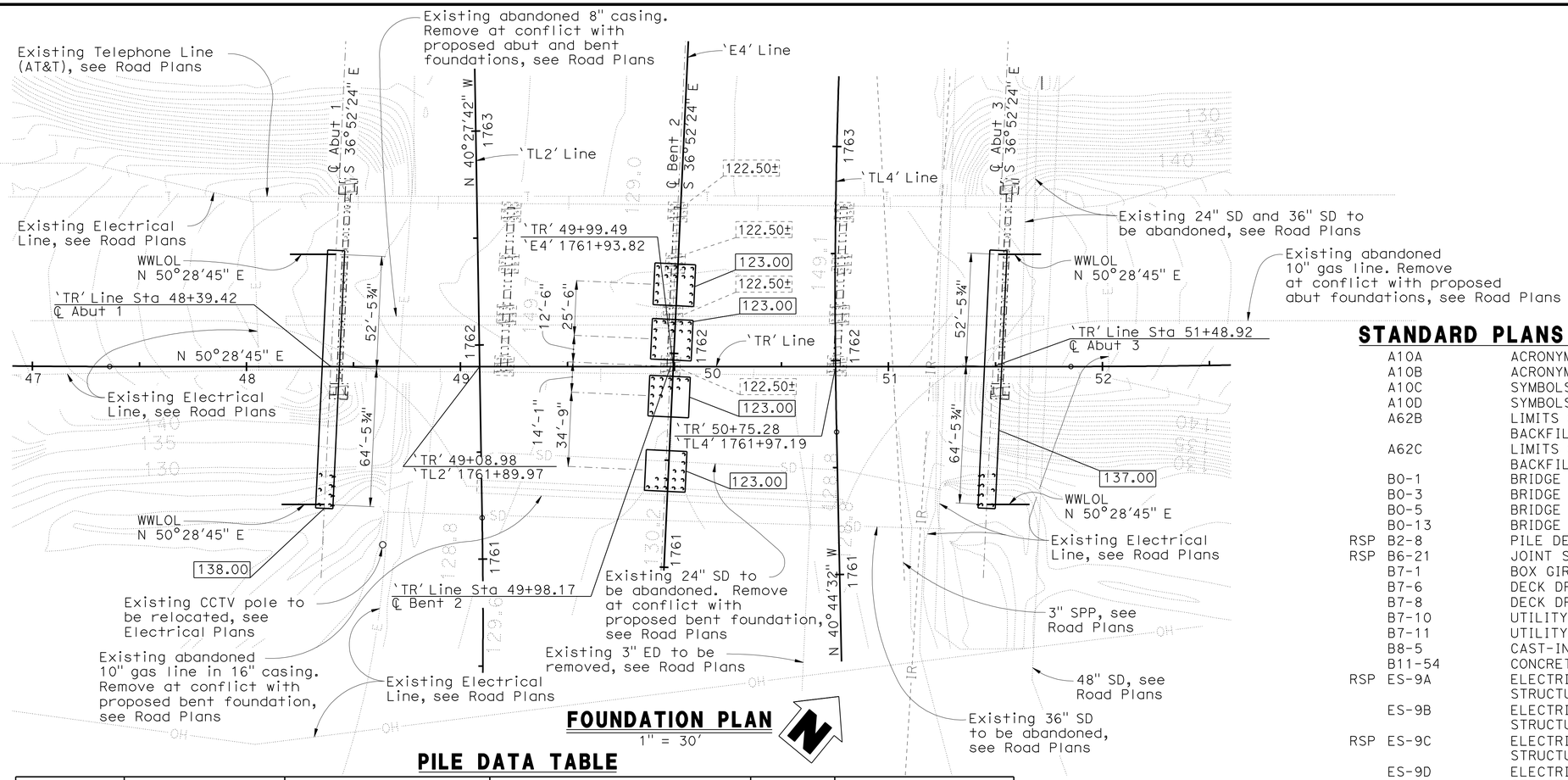

FOUNDATION PLAN
1" = 30'

PILE DATA TABLE

Location	Type	Nominal Resistance		Design Tip Elev	Specified Tip Elev	Nominal Driving Resistance Required
		Compression	Tension			
Abutment 1	Class 200 Alt 'W'	280 Kips	-	32.0'(a); 50.0'(b)	32.0'	408 Kips
Bent 2	Class 200 Alt 'W'	280 Kips	50 Kips	34.0'(a); 60.0'(b); 50.0'(c)	34.0'	380 Kips
Abutment 3	Class 200 Alt 'W'	280 Kips	-	32.0'(a); 50.0'(b)	32.0'	408 Kips

Notes:
1. Design tip elevations for Abutments are controlled by (a) Compression, (b) Lateral Load.
2. Design tip elevations for Bent are controlled by (a) Compression, (b) Tension, (c) Lateral Load.
3. The specified tip elevation shall not be raised above the design tip elevation for tension load and lateral load.
4. Unsuitable soil layers (liquefaction potential) that do not contribute to the design nominal resistance exist at the site extending to Elev 77 ft. The estimated down drag loads are 64 kips per pile at the Abuts and 50 kips at Bent.
5. The Nominal Driving Resistance Required is equal to the Nominal Resistance needed to support the factored load plus driving resistance from the unsuitable penetrated soil layers. The Nominal Driving Resistance Required = Nominal Resistance + 2xF to account for driving resistance through the unsuitable soil layers, where F is the estimated down drag load.

BENCH MARK AND DATUM

Monument	Coordinates		Elev (NAVD 88)	Description/Location
	Northing	Easting		
1006	1,942,226.252	6,175,704.825	127.50'	Brass pin monument in well at the intersection of Tully Road and Seacliff Way
673	1,941,278.824	6,174,492.858		L673-BD

Note: For design purposes, the elevations shown on the as-built plans and as-built log of test boring sheets were increased by 0.5'± to adjust to the project vertical datum.

Note:
The Contractor shall verify all controlling field dimensions before ordering or fabricating any material

GEOTECHNICAL PROFESSIONAL APPROVAL DATE 5/13/09

STANDARD PLANS DATED MAY 2006

	A10A	ACRONYMS AND ABBREVIATIONS (SHEET 1 OF 2)
	A10B	ACRONYMS AND ABBREVIATIONS (SHEET 2 OF 2)
	A10C	SYMBOLS (SHEET 1 OF 2)
	A10D	SYMBOLS (SHEET 2 OF 2)
	A62B	LIMITS OF PAYMENT FOR EXCAVATION AND BACKFILL BRIDGE SURCHARGE AND WALL
	A62C	LIMITS OF PAYMENT FOR EXCAVATION AND BACKFILL - BRIDGE
	B0-1	BRIDGE DETAILS
	B0-3	BRIDGE DETAILS
	B0-5	BRIDGE DETAILS
	B0-13	BRIDGE DETAILS
RSP	B2-8	PILE DETAILS - CLASS 200
RSP	B6-21	JOINT SEALS (MAXIMUM MOVEMENT RATING = 2")
	B7-1	BOX GIRDER DETAILS
	B7-6	DECK DRAINS - TYPES D-1 & D-2
	B7-8	DECK DRAINAGE DETAILS
	B7-10	UTILITY OPENING-BOX GIRDER
	B7-11	UTILITY DETAILS
	B8-5	CAST-IN-PLACE PRESTRESSED GIRDER DETAILS
	B11-54	CONCRETE BARRIER TYPE 26
RSP	ES-9A	ELECTRICAL SYSTEMS (ELECTRICAL DETAILS, STRUCTURE INSTALLATIONS)
	ES-9B	ELECTRICAL SYSTEMS (ELECTRICAL DETAILS, STRUCTURE INSTALLATIONS)
RSP	ES-9C	ELECTRICAL SYSTEMS (ELECTRICAL DETAILS, STRUCTURE INSTALLATIONS)
	ES-9D	ELECTRICAL SYSTEMS (ELECTRICAL DETAILS, STRUCTURE INSTALLATIONS)
	ES-9E	ELECTRICAL SYSTEMS (ELECTRICAL DETAILS, STRUCTURE INSTALLATIONS)
	ES-9F	ELECTRICAL SYSTEMS (FLUSH SOFFIT LUMINAIRE, MODIFICATION DETAILS, STRUCTURE INSTALLATIONS)

- Indicates Standard Plan Sheet No.
- Indicates detail No.

Notes:
1. XXX.XX — Indicates bottom of footing elevation.
2. XXX.XX± — Indicates bottom of existing footing elevation.
3. XXX.X — Indicates spot elevation.
4. Indicates pile, not all piles shown, see 'ABUTMENT PLAN & ELEVATION' sheets.
5. For exact locations and depths of utilities, see Road Plans.
6. Indicates existing bridge foundation to be removed.

2 **REVISED PER ADDENDUM No. 2 DATED JULY 8, 2010**

DESIGN OVERSIGHT Emil A. Vergara Jr. 5-20-10 SIGN OFF DATE

SCALE: AS SHOWN	VERT.DATUM NAVD 1988	HORZ.DATUM CCS 1983	DESIGN BY J. ALCIATI	CHECKED S. MOYLES	PREPARED FOR THE STATE OF CALIFORNIA DEPARTMENT OF TRANSPORTATION
PHOTOGRAMMETRY AS OF:	ALIGNMENT TIES		DETAILS BY R. YAMANE	CHECKED S. MOYLES	
SURVEYED BY RUTH & GOING, INC.	DRAFTED BY RADMAN AERIAL		QUANTITIES BY D. UPADHYAY	CHECKED Y. LIN	
FIELD CHECKED BY	CHECKED BY				

JOHN A. ALCIATI
PROJECT ENGINEER

BRIDGE NO. 37-0668
POST MILE 33.0

TULLY ROAD OVERCROSSING
FOUNDATION PLAN

FOUNDATION PLAN SHEET (ENGLISH) (REV. 2-25-05)

ORIGINAL SCALE IN INCHES FOR REDUCED PLANS 0 1 2 3

CU 04329
EA 1A9801

DISREGARD PRINTS BEARING EARLIER REVISION DATES

REVISION DATES (PRELIMINARY STAGE ONLY) 11/20/08 2/2/09 3/20/09 5/1/09 5/13/09 1/22/10 5/3/10

SHEET 3 OF 28

FILE => 37-0668-e-fdp01.add

USERNAME => trstrk DATE PLOTTED => 08-JUL-2010 TIME PLOTTED => 08:17

1998226 (1998226S3)

DIST	COUNTY	ROUTE	POST MILES TOTAL PROJECT	SHEET No	TOTAL SHEETS
04	SCI	101	31.8/34.3	481	515

REGISTERED CIVIL ENGINEER 5/18/10 DATE

11-23-09
PLANS APPROVAL DATE

REGISTERED PROFESSIONAL ENGINEER RONALD L OEN No. 46945 Exp. 9/30/11 CIVIL STATE OF CALIFORNIA

The State of California or its officers or agents shall not be responsible for the accuracy or completeness of electronic copies of this plan sheet.

SANTA CLARA VALLEY TRANSPORTATION AUTHORITY
3331 N. FIRST STREET
SAN JOSE, CALIFORNIA 95134-1906
SPONSORING AGENCY

BIGGS CARDOSA ASSOCIATES INC.
865 THE ALAMEDA
SAN JOSE, CALIFORNIA 95126

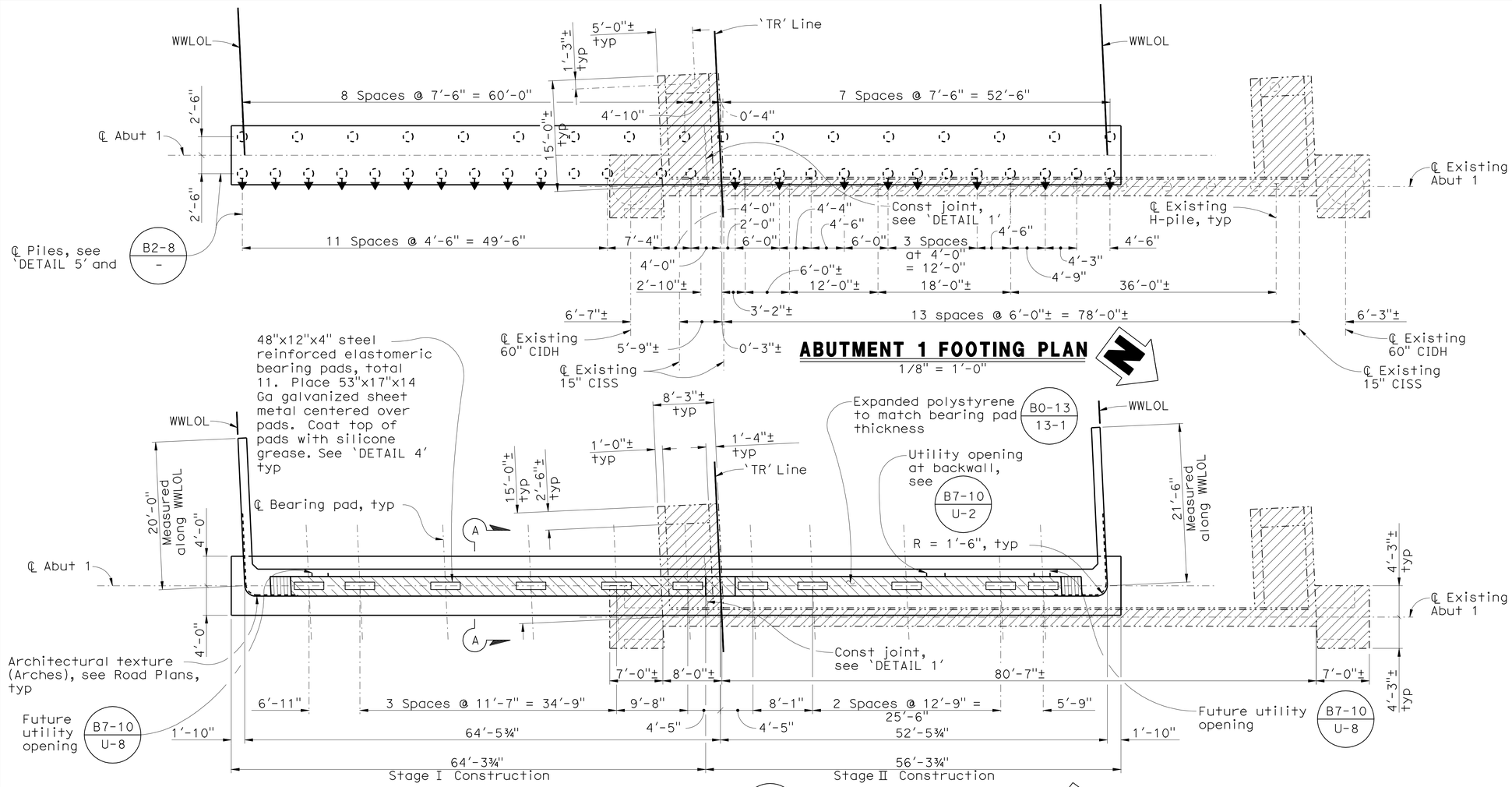

ABUTMENT 1 FOOTING PLAN

1/8" = 1'-0"

ABUTMENT 1 PLAN

1/8" = 1'-0"

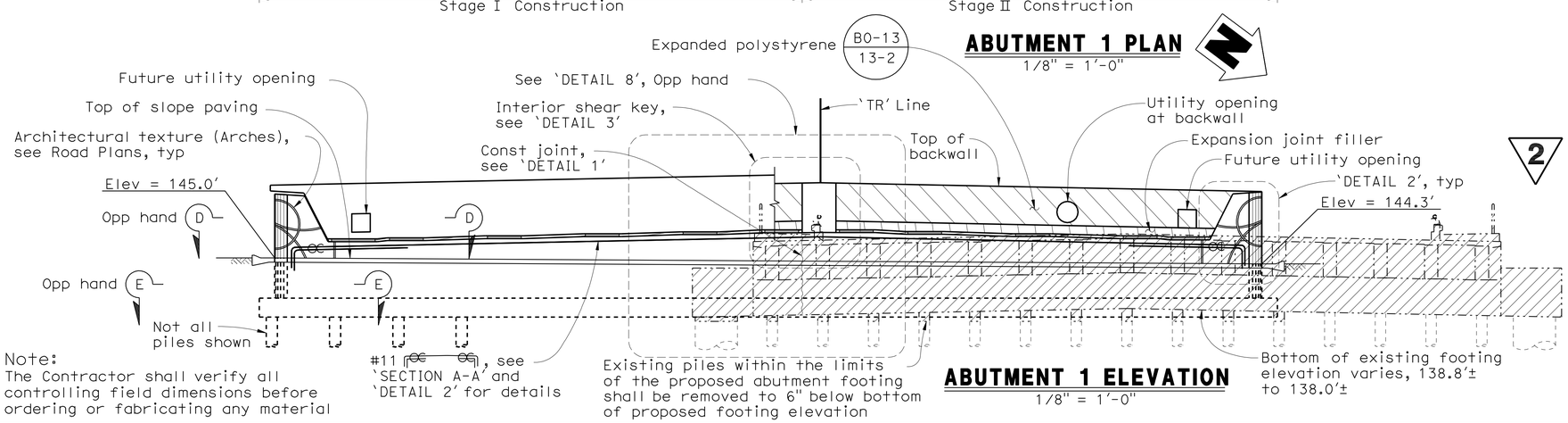

ABUTMENT 1 ELEVATION

1/8" = 1'-0"

Note:
The Contractor shall verify all controlling field dimensions before ordering or fabricating any material

Notes:

1. Indicates vertical steel pipe pile
2. Indicates 1:3 battered steel pipe pile
3. Indicates approx. location of existing vertical H-pile
4. Indicates approx. location of existing vertical 15" CISS
5. Indicates existing structure to be removed
6. Barriers not shown for clarity
7. Structure approach not shown for clarity
8. For 'SECTION A-A' and 'DETAIL 1', see 'ABUTMENT DETAILS No. 1' sheet
9. For 'SECTION D-D', 'SECTION E-E', 'DETAIL 2' and 'DETAIL 3', see 'ABUTMENT DETAILS No. 2' sheet.
10. For 'DETAIL 4', 'DETAIL 5' and 'DETAIL 8', see 'ABUTMENT DETAILS No. 3' sheet
11. Contractor shall submit to Engineer for approval pile spacings that differ to those shown on plans.
12. The Contractor shall expose all existing piles prior to driving proposed abutment piles.

2 **REVISED PER ADDENDUM No. 2 DATED JULY 8, 2010**

DESIGN OVERSIGHT Emil A. Vergara Jr.
5-20-10
SIGN OFF DATE

DESIGN	BY J. ALCIATI	CHECKED S. MOYLES	
DETAILS	BY R. YAMANE	CHECKED S. MOYLES	
QUANTITIES	BY D. UPADHYAY	CHECKED Y. LIN	

PREPARED FOR THE STATE OF CALIFORNIA DEPARTMENT OF TRANSPORTATION

JOHN A. ALCIATI
PROJECT ENGINEER

BRIDGE NO. 37-0668
POST MILE 33.0

TULLY ROAD OVERCROSSING
ABUTMENT 1 PLAN & ELEVATION

DESIGN DETAIL SHEET (ENGLISH) (REV. 2/25/05)

ORIGINAL SCALE IN INCHES FOR REDUCED PLANS 0 1 2 3

CU 04329
EA 1A9801

DISREGARD PRINTS BEARING EARLIER REVISION DATES

REVISION DATES (PRELIMINARY STAGE ONLY) 11/26/08 2/27/09 3/20/09 5/1/09 5/13/09 1/22/10 5/3/10

SHEET 4 OF 28

FILE => 37-0668-f-a01-lol.dds

USERNAME => rtrstrk DATE PLOTTED => 08-JUL-2010 TIME PLOTTED => 08:18

(1998226S4) 1998226

DIST	COUNTY	ROUTE	POST MILES TOTAL PROJECT	SHEET No	TOTAL SHEETS
04	SCI	101	31.8/34.3	482	515

REGISTERED CIVIL ENGINEER 5/18/10 DATE

11-23-09
PLANS APPROVAL DATE

REGISTERED PROFESSIONAL ENGINEER RONALD L OEN No. 46945 Exp. 9/30/11 CIVIL STATE OF CALIFORNIA

The State of California or its officers or agents shall not be responsible for the accuracy or completeness of electronic copies of this plan sheet.

SANTA CLARA VALLEY TRANSPORTATION AUTHORITY
3331 N. FIRST STREET
SAN JOSE, CALIFORNIA 95134-1906
SPONSORING AGENCY

BIGGS CARDOSA ASSOCIATES INC.
865 THE ALAMEDA
SAN JOSE, CALIFORNIA 95126

2

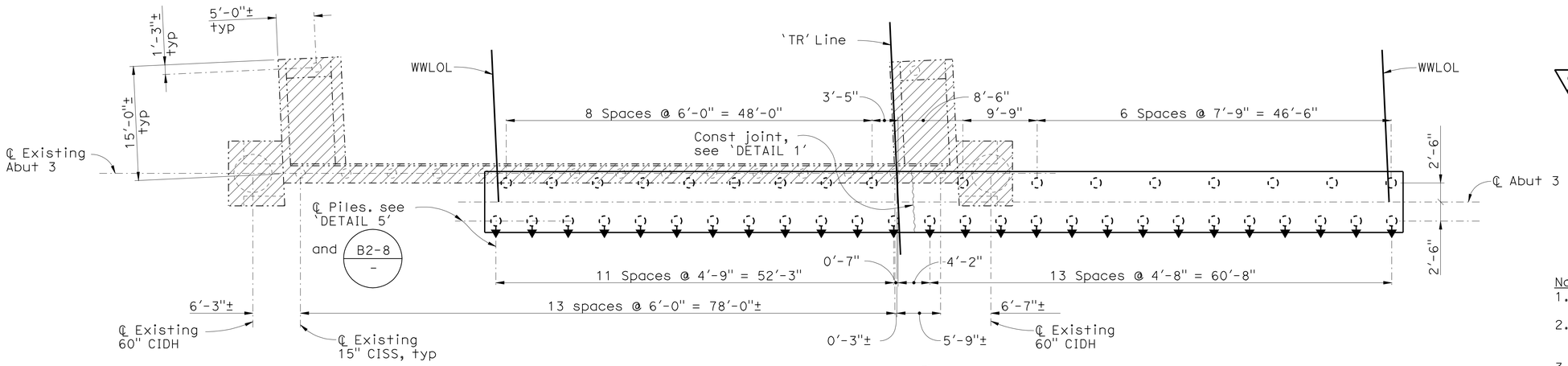

ABUTMENT 3 FOOTING PLAN

1/8" = 1'-0"

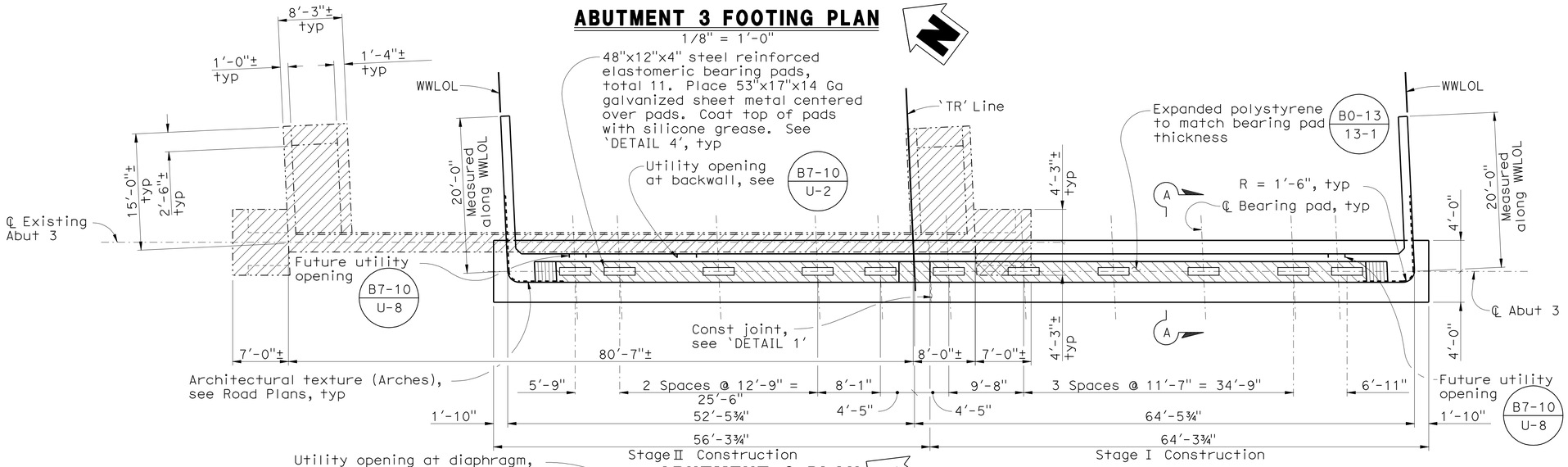

ABUTMENT 3 PLAN

1/8" = 1'-0"

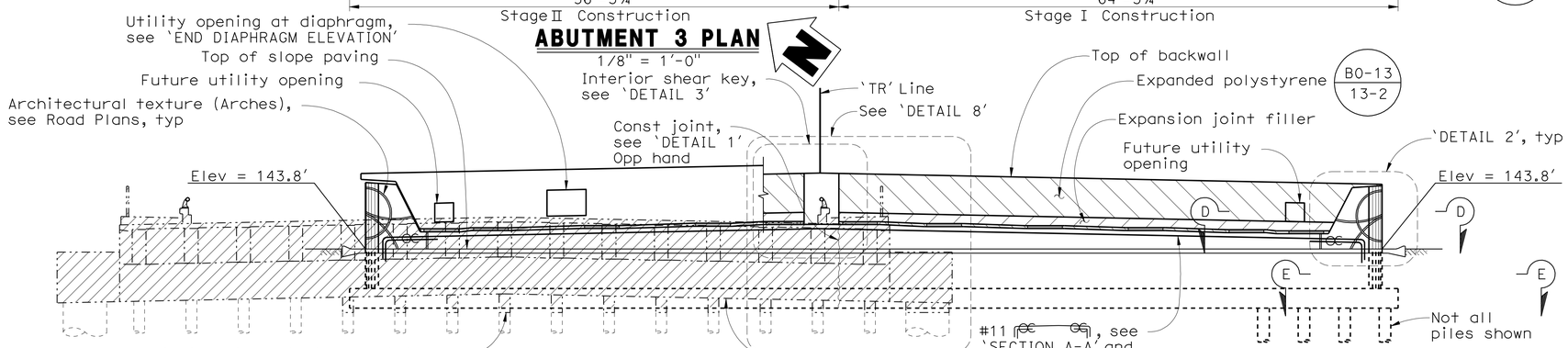

ABUTMENT 3 ELEVATION

1/8" = 1'-0"

Note:
The Contractor shall verify all controlling field dimensions before ordering or fabricating any material

Notes:

1. Indicates vertical steel pipe pile
2. Indicates 1:3 battered steel pipe pile
3. Indicates approx. location of existing vertical 15" CISS
4. Indicates existing structure to be removed
5. Barriers not shown for clarity
6. Structure approach not shown for clarity
7. For 'SECTION A-A' and 'DETAIL 1', see 'ABUTMENT DETAILS No. 1' sheet
8. For 'SECTION D-D', 'SECTION E-E', 'DETAIL 2' and 'DETAIL 3', see 'ABUTMENT DETAILS No. 2' sheet.
9. For 'DETAIL 4', 'DETAIL 5', and 'DETAIL 8', see 'ABUTMENT DETAILS No. 3' sheet
10. For 'END DIAPHRAGM ELEVATION', see 'UTILITY DETAILS No. 1' sheet.
11. Contractor shall submit to Engineer for approval pile spacings that differ to those shown on plans.
12. The Contractor shall expose all existing piles prior to driving proposed abutment piles.

2 **REVISED PER ADDENDUM No. 2 DATED JULY 8, 2010**

DESIGN OVERSIGHT Emil A. Vergara Jr.
5-20-10
SIGN OFF DATE

	BY	CHECKED
DESIGN	J. ALCIATI	S. MOYLES
DETAILS	R. YAMANE	S. MOYLES
QUANTITIES	D. UPADHYAY	Y. LIN

PREPARED FOR THE STATE OF CALIFORNIA DEPARTMENT OF TRANSPORTATION

JOHN A. ALCIATI
PROJECT ENGINEER

BRIDGE NO. 37-0668
POST MILE 33.0

TULLY ROAD OVERCROSSING
ABUTMENT 3 PLAN & ELEVATION

DESIGN DETAIL SHEET (ENGLISH) (REV. 2/25/05)

ORIGINAL SCALE IN INCHES FOR REDUCED PLANS 0 1 2 3

CU 04329
EA 1A9801

DISREGARD PRINTS BEARING EARLIER REVISION DATES

REVISION DATES (PRELIMINARY STAGE ONLY) 11/26/08 2/27/09 3/20/09 5/1/09 5/13/09 1/22/10 5/3/10

SHEET 5 OF 28

FILE => 37-0668-f-a02-lol.dgn

USERNAME => rrestrk DATE PLOTTED => 08-JUL-2010 TIME PLOTTED => 08:18 (1998226S5)

DIST	COUNTY	ROUTE	POST MILES TOTAL PROJECT	SHEET No	TOTAL SHEETS
04	SCl	101	31.8/34.3	483	515

REGISTERED CIVIL ENGINEER — DATE 5/18/10

11-23-09
PLANS APPROVAL DATE

REGISTERED PROFESSIONAL ENGINEER RONALD L OEN No. 46945 Exp. 9/30/11 CIVIL STATE OF CALIFORNIA

The State of California or its officers or agents shall not be responsible for the accuracy or completeness of electronic copies of this plan sheet.

SANTA CLARA VALLEY TRANSPORTATION AUTHORITY
3331 N. FIRST STREET
SAN JOSE, CALIFORNIA 95134-1906
SPONSORING AGENCY

BIGGS CARDOSA ASSOCIATES INC.
865 THE ALAMEDA
SAN JOSE, CALIFORNIA 95126

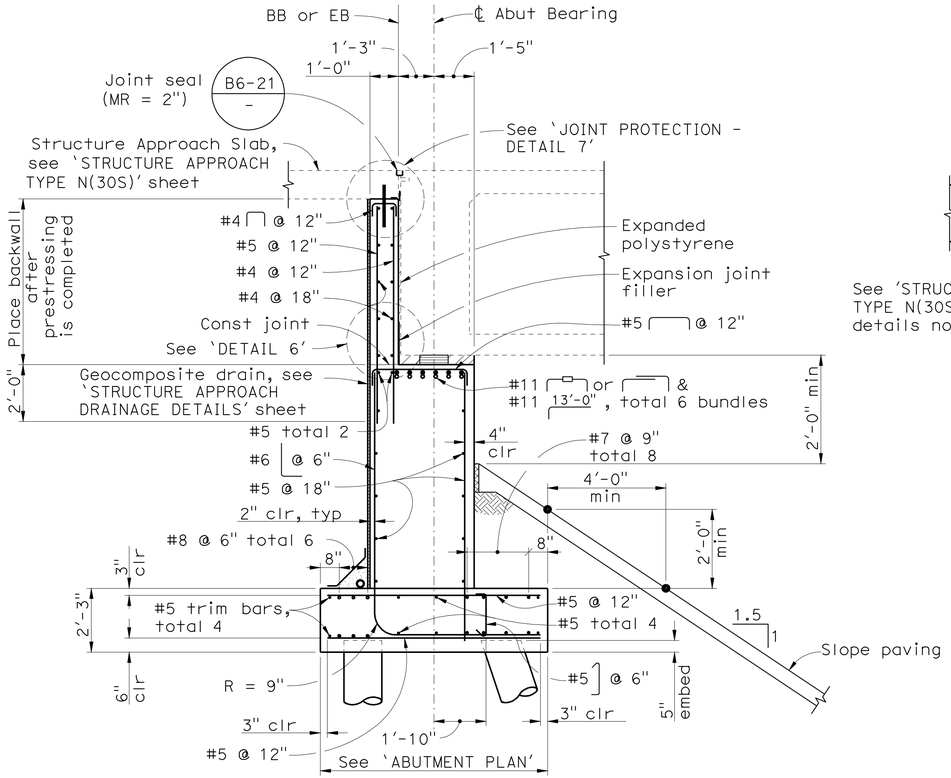

SECTION A-A
3/8" = 1'-0"

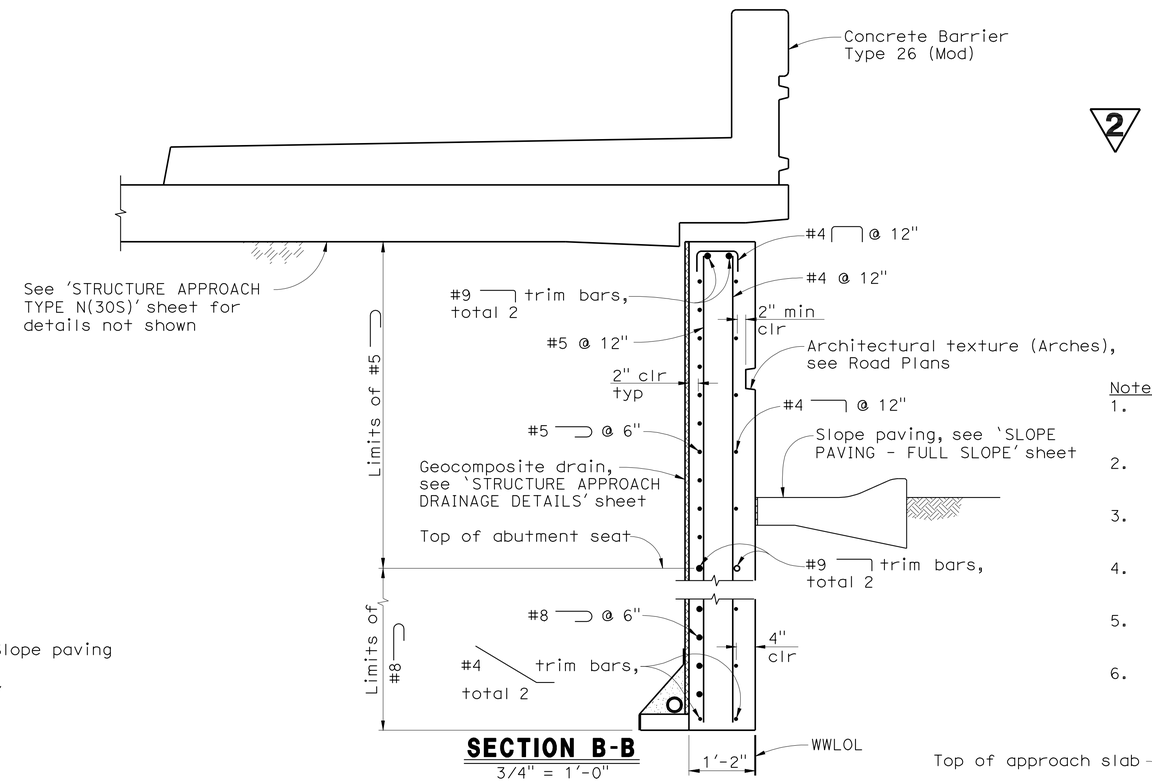

SECTION B-B
3/4" = 1'-0"

Notes:
1. For 'DETAIL 6' and 'DETAIL 7', see 'ABUTMENT DETAILS No. 3' sheet
2. For 'ABUTMENT 1 ELEVATION' see 'ABUTMENT 1 PLAN & ELEVATION' sheet
3. For 'ABUTMENT 3 ELEVATION' see 'ABUTMENT 3 PLAN & ELEVATION' sheet
4. For 'ABUTMENT 1 PLAN' see 'ABUTMENT 1 PLAN & ELEVATION' sheet
5. For 'ABUTMENT 3 PLAN' see 'ABUTMENT 3 PLAN & ELEVATION' sheet
6. —▭— Indicates service butt splice

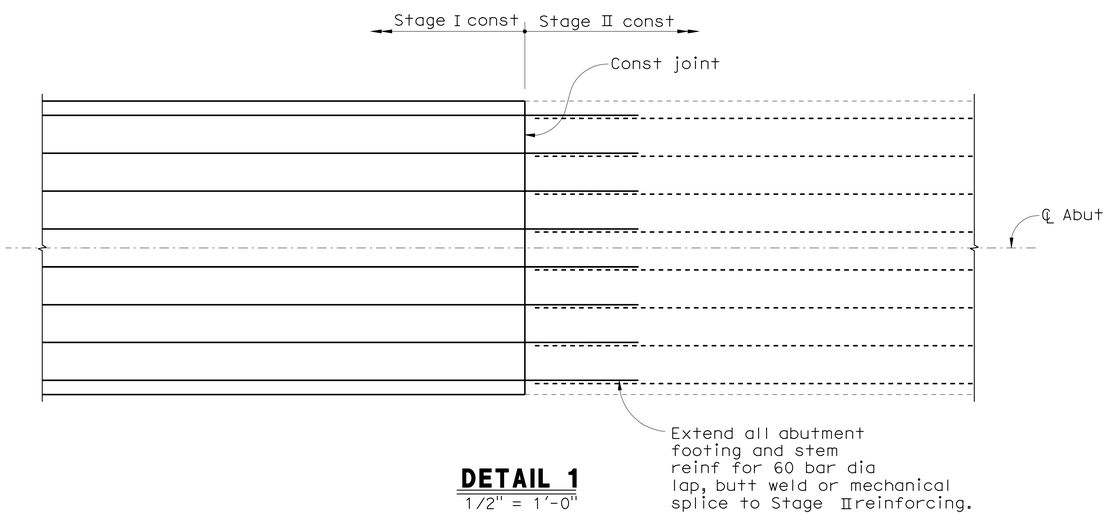

DETAIL 1
1/2" = 1'-0"

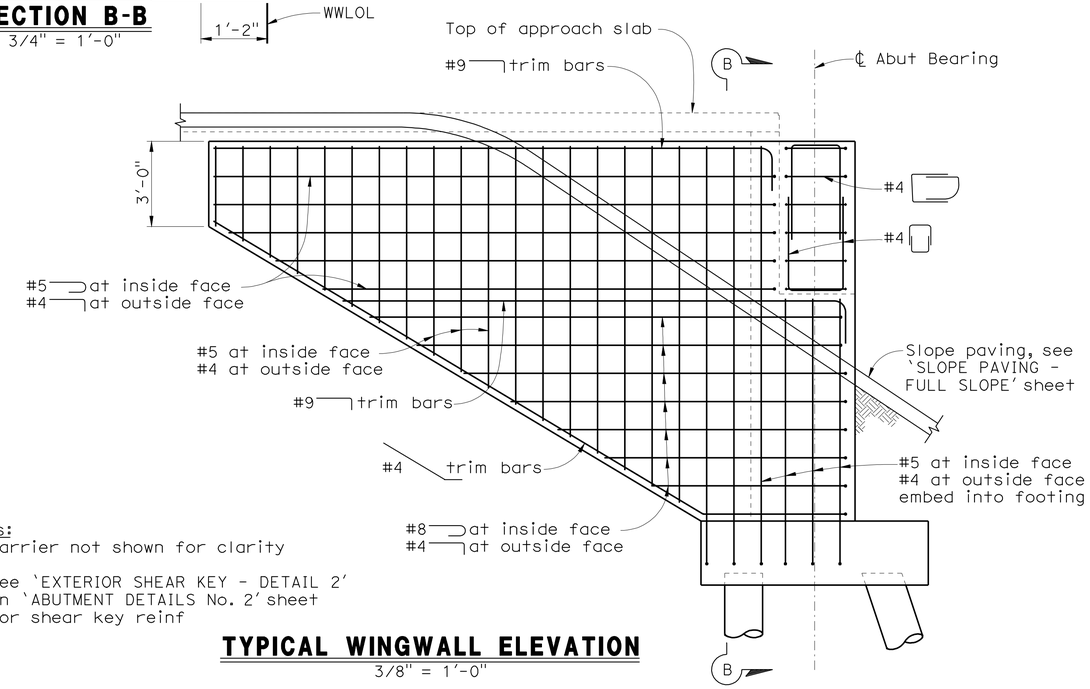

Notes:
1. Barrier not shown for clarity
2. See 'EXTERIOR SHEAR KEY - DETAIL 2' on 'ABUTMENT DETAILS No. 2' sheet for shear key reinf

TYPICAL WINGWALL ELEVATION
3/8" = 1'-0"

2 REVISED PER ADDENDUM No. 2 DATED JULY 8, 2010

DESIGN OVERSIGHT — Emil A. Vergara Jr.
5-20-10
SIGN OFF DATE

	BY	CHECKED
DESIGN	J. ALCIATI	S. MOYLES
DETAILS	R. YAMANE	S. MOYLES
QUANTITIES	D. UPADHYAY	Y. LIN

PREPARED FOR THE STATE OF CALIFORNIA DEPARTMENT OF TRANSPORTATION

JOHN A. ALCIATI
PROJECT ENGINEER

BRIDGE NO. 37-0668
POST MILE 33.0

TULLY ROAD OVERCROSSING
ABUTMENT DETAILS No. 1

DESIGN DETAIL SHEET (ENGLISH) (REV. 2/25/05)

ORIGINAL SCALE IN INCHES FOR REDUCED PLANS 0 1 2 3

CU 04329
EA 1A9801

DISREGARD PRINTS BEARING EARLIER REVISION DATES

REVISION DATES (PRELIMINARY STAGE ONLY): 11/26/08 2/2/09 3/20/09 5/1/09 5/13/09 1/22/10 5/3/10

SHEET 6 OF 28

FILE => 37-0668-f-a01dt01.add

USERNAME => trsttk DATE PLOTTED => 08-JUL-2010 TIME PLOTTED => 08:18

(1998226) 1998226

DIST	COUNTY	ROUTE	POST MILES TOTAL PROJECT	SHEET No	TOTAL SHEETS
04	SCI	101	31.8/34.3	484	515

REGISTERED CIVIL ENGINEER — DATE 5/18/10

11-23-09
PLANS APPROVAL DATE

REGISTERED PROFESSIONAL ENGINEER RONALD L OEN No. 46945 Exp. 9/30/11 CIVIL STATE OF CALIFORNIA

The State of California or its officers or agents shall not be responsible for the accuracy or completeness of electronic copies of this plan sheet.

SANTA CLARA VALLEY TRANSPORTATION AUTHORITY
3331 N. FIRST STREET
SAN JOSE, CALIFORNIA 95134-1906
SPONSORING AGENCY

BIGGS CARDOSA ASSOCIATES INC.
865 THE ALAMEDA
SAN JOSE, CALIFORNIA 95126

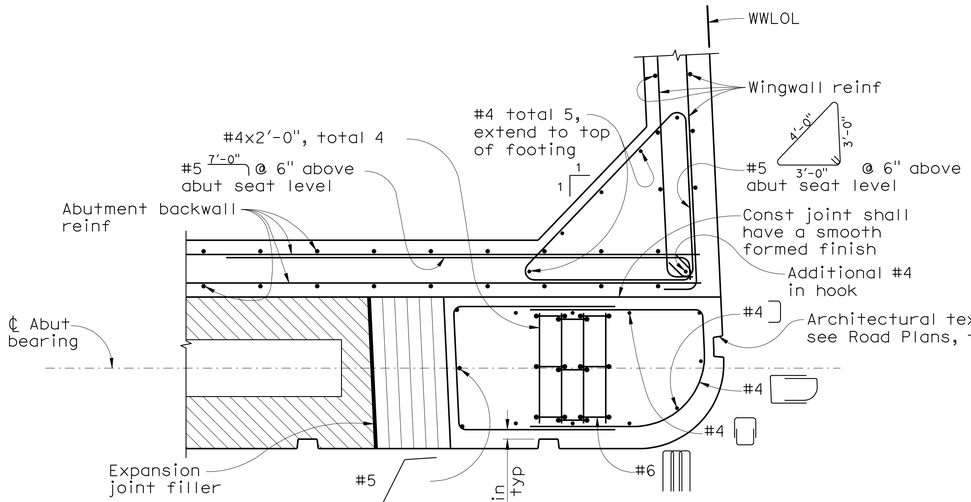

SECTION D-D
3/4" = 1'-0"

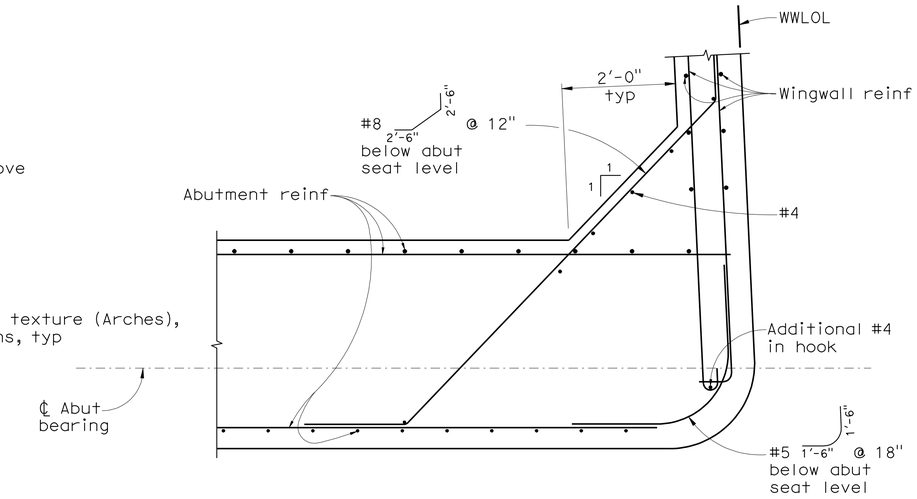

SECTION E-E
3/4" = 1'-0"

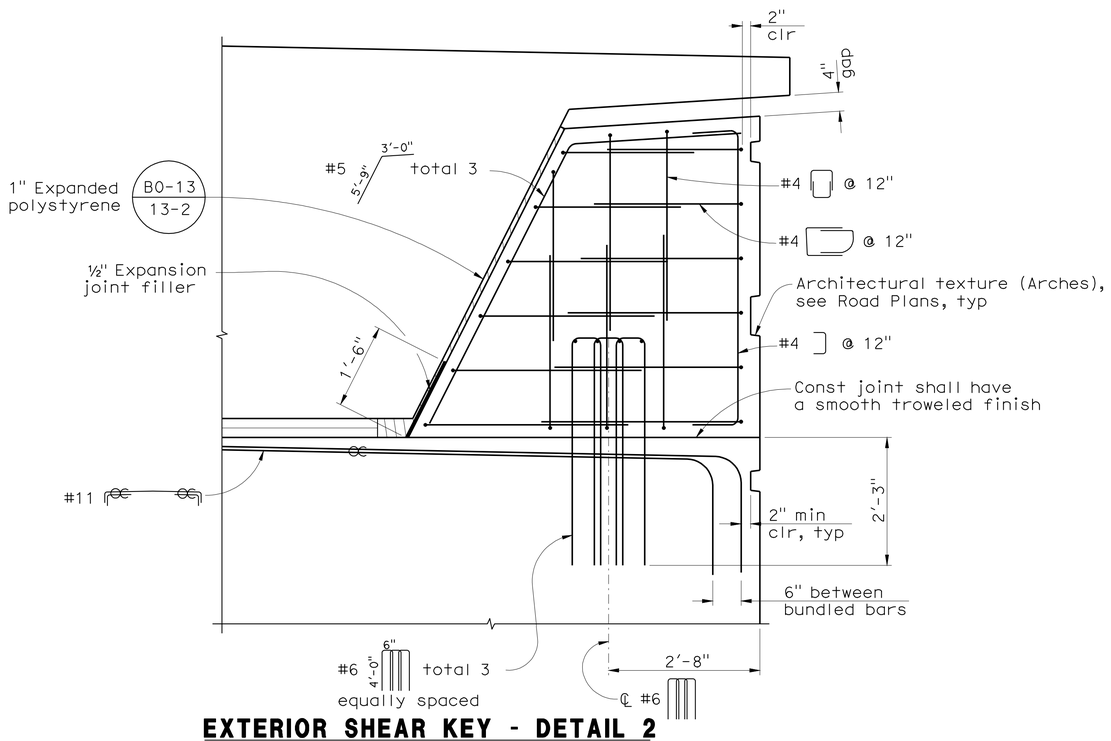

EXTERIOR SHEAR KEY - DETAIL 2
3/4" = 1'-0"

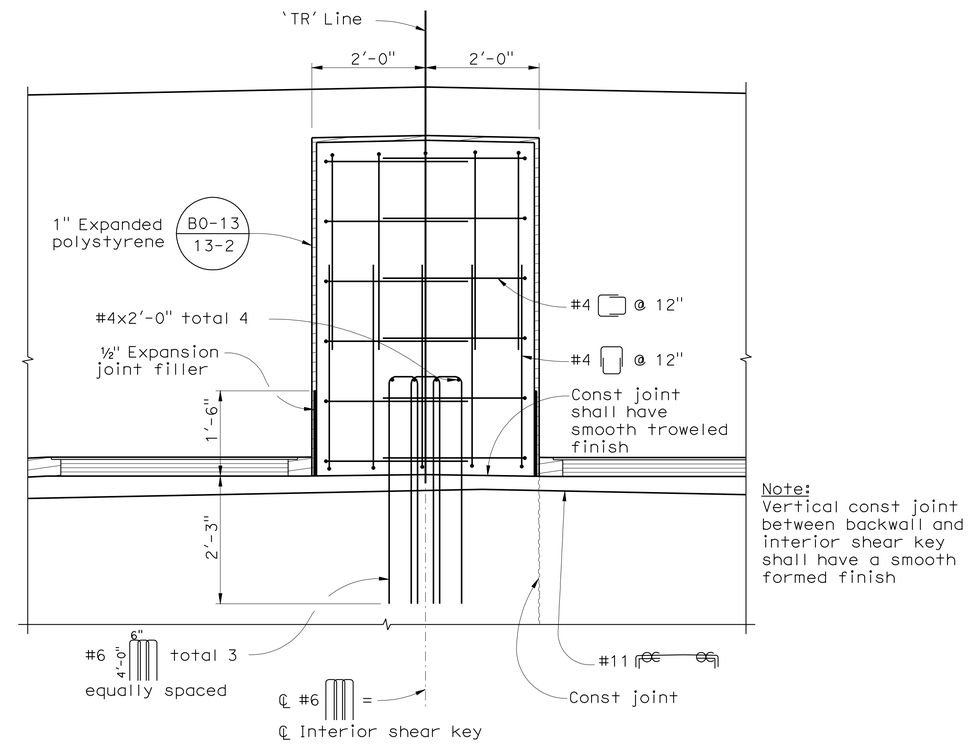

Note:
Vertical const joint between backwall and interior shear key shall have a smooth formed finish

INTERIOR SHEAR KEY - DETAIL 2
3/4" = 1'-0"

2 **REVISED PER ADDENDUM No. 2 DATED JULY 8, 2010**

DESIGN OVERSIGHT Emil A. Vergara Jr.
5-20-10
SIGN OFF DATE

	BY	CHECKED
DESIGN	J. ALCIATI	S. MOYLES
DETAILS	R. YAMANE	S. MOYLES
QUANTITIES	D. UPADHYAY	Y. LIN

PREPARED FOR THE STATE OF CALIFORNIA DEPARTMENT OF TRANSPORTATION

JOHN A. ALCIATI
PROJECT ENGINEER

BRIDGE NO. 37-0668
POST MILE 33.0

TULLY ROAD OVERCROSSING
ABUTMENT DETAILS No. 2

DESIGN DETAIL SHEET (ENGLISH) (REV. 2/25/05)

ORIGINAL SCALE IN INCHES FOR REDUCED PLANS 0 1 2 3

CU 04329
EA 1A9801

DISREGARD PRINTS BEARING EARLIER REVISION DATES

REVISION DATES (PRELIMINARY STAGE ONLY) 11/26/08 2/2/09 3/20/09 5/1/09 5/13/09 1/22/10 5/3/10

SHEET 7 OF 28

FILE => 37-0668-f-a01dt02.add

USERNAME => trsttrk DATE PLOTTED => 08-JUL-2010 TIME PLOTTED => 08:18 1998226 (1998226S7)

DIST	COUNTY	ROUTE	POST MILES TOTAL PROJECT	SHEET No	TOTAL SHEETS
04	SCI	101	31.8/34.3	485	515

REGISTERED CIVIL ENGINEER 5/18/10 DATE

11-23-09
PLANS APPROVAL DATE

REGISTERED PROFESSIONAL ENGINEER RONALD L OEN No. 46945 Exp. 9/30/11 CIVIL STATE OF CALIFORNIA

The State of California or its officers or agents shall not be responsible for the accuracy or completeness of electronic copies of this plan sheet.

SANTA CLARA VALLEY TRANSPORTATION AUTHORITY
3331 N. FIRST STREET
SAN JOSE, CALIFORNIA 95134-1906
SPONSORING AGENCY

BIGGS CARDOSA ASSOCIATES INC.
865 THE ALAMEDA
SAN JOSE, CALIFORNIA 95126

2

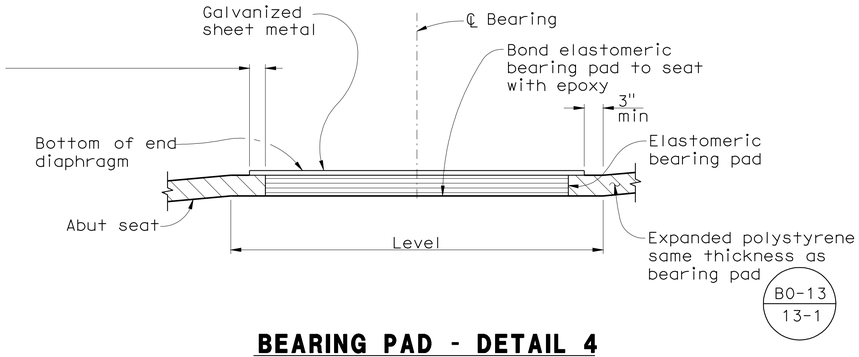

BEARING PAD - DETAIL 4
NO SCALE

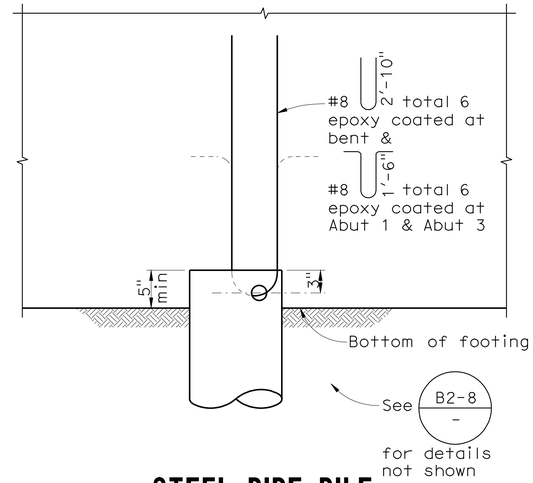

STEEL PIPE PILE ANCHORAGE - DETAIL 5
NO SCALE

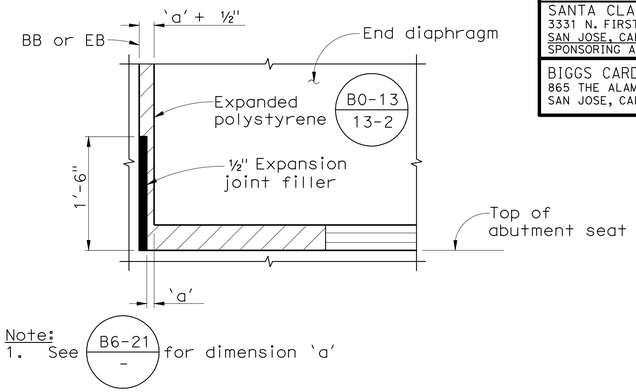

DETAIL 6
NO SCALE

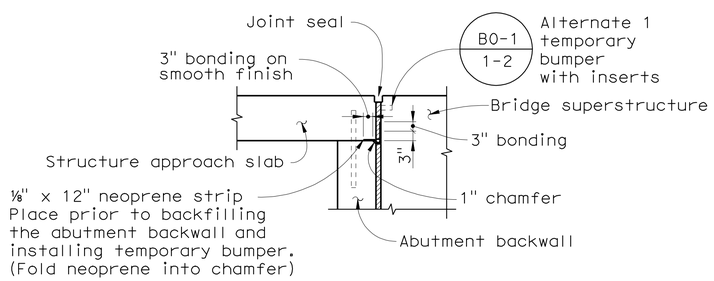

JOINT PROTECTION - DETAIL 7
1/2" = 1'-0"

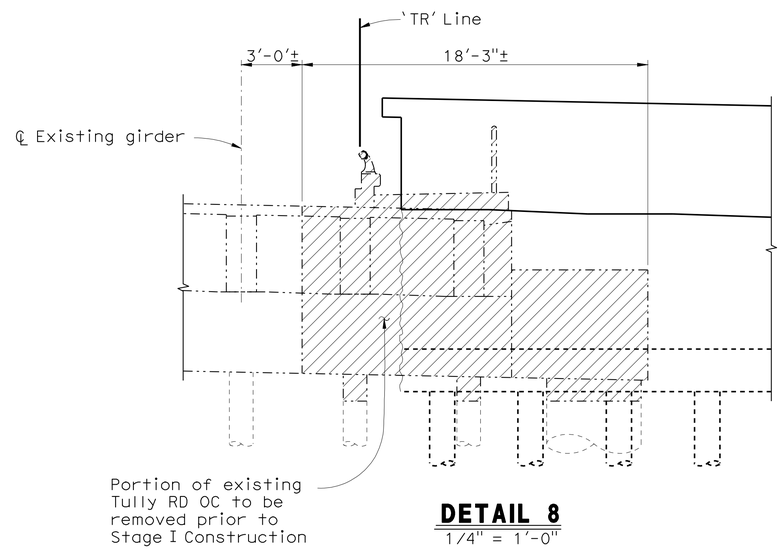

DETAIL 8
1/4" = 1'-0"

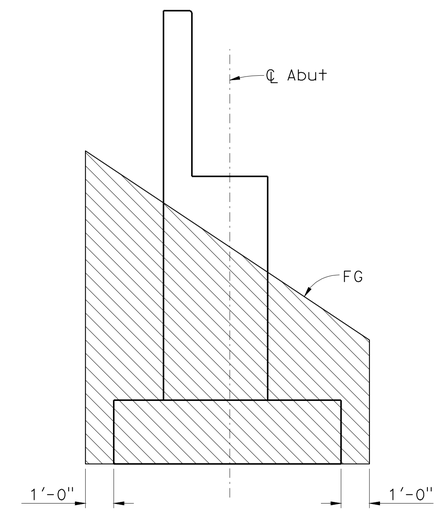

Structure Excavation (Type Y1) (Aerially Deposited Lead & Naturally Occurring Asbestos). Applicable to Abut 1 and Abut 3.

LIMITS OF STRUCTURE EXCAVATION (NOA & ADL TYPE Y-1) - DETAIL 9
NO SCALE

2 **REVISED PER ADDENDUM No. 2 DATED JULY 8, 2010**

DESIGN OVERSIGHT Emil A. Vergara Jr.
5-20-10
SIGN OFF DATE

	BY	CHECKED
DESIGN	J. ALCIATI	S. MOYLES
DETAILS	R. YAMANE	S. MOYLES
QUANTITIES	D. UPADHYAY	Y. LIN

PREPARED FOR THE STATE OF CALIFORNIA DEPARTMENT OF TRANSPORTATION

JOHN A. ALCIATI
PROJECT ENGINEER

BRIDGE NO. 37-0668
POST MILE 33.0

TULLY ROAD OVERCROSSING
ABUTMENT DETAILS No. 3

DESIGN DETAIL SHEET (ENGLISH) (REV. 2/25/05)

ORIGINAL SCALE IN INCHES FOR REDUCED PLANS 0 1 2 3

CU 04329
EA 1A9801

DISREGARD PRINTS BEARING EARLIER REVISION DATES

REVISION DATES (PRELIMINARY STAGE ONLY): 11/26/08 2/27/09 3/26/09 5/11/09 5/13/09 1/22/10 5/3/10 5/18/10

SHEET 8 OF 28

FILE => 37-0668-f-a01dt03.add

USERNAME => trsthk DATE PLOTTED => 08-JUL-2010 TIME PLOTTED => 08:18

(1998226) 1998226

DIST	COUNTY	ROUTE	POST MILES TOTAL PROJECT	SHEET No	TOTAL SHEETS
04	SCI	101	31.8/34.3	486	515

REGISTERED CIVIL ENGINEER — DATE 5/18/10

11-23-09
PLANS APPROVAL DATE

REGISTERED PROFESSIONAL ENGINEER RONALD L OEN No. 46945 Exp. 9/30/11 CIVIL STATE OF CALIFORNIA

The State of California or its officers or agents shall not be responsible for the accuracy or completeness of electronic copies of this plan sheet.

SANTA CLARA VALLEY TRANSPORTATION AUTHORITY
3331 N. FIRST STREET
SAN JOSE, CALIFORNIA 95134-1906
SPONSORING AGENCY

BIGGS CARDOSA ASSOCIATES INC.
865 THE ALAMEDA
SAN JOSE, CALIFORNIA 95126

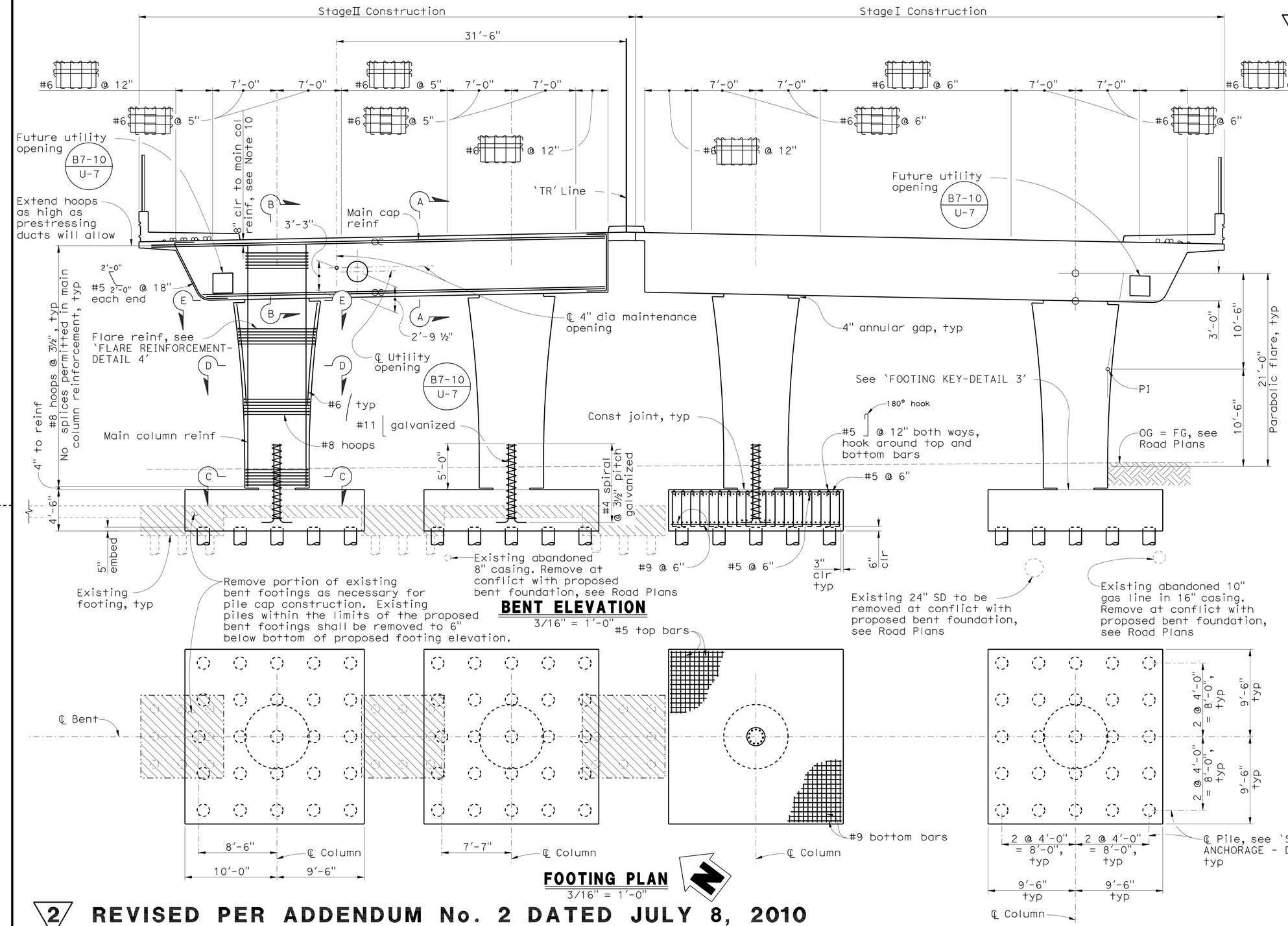

Notes:

1. No splices permitted in the main cap reinforcement.
2. ⊙ Indicates pile.
3. For 'SECTION A-A', 'SECTION B-B' and STITCH TIE PLACING DIAGRAM - DETAIL 2, see 'BENT DETAILS No. 2' sheet.
4. For 'SECTION C-C', 'SECTION D-D', 'SECTION E-E' and 'FOOTING KEY - DETAIL 3', and 'FLARE REINFORCEMENT - DETAIL 4', see 'BENT DETAILS No. 3' sheet.
5. For 'STEEL PIPE PILE ANCHORAGE-DETAIL 5' see 'ABUTMENT DETAILS No. 3' sheet.
6. Column hoops shall utilize ultimate butt splices.
7. ═OG═ Indicates bundled bars.
8. Bent stirrups shall be placed parallel to ℄ Girder and spaced along CLBent.
9. Indicates existing structure to be removed.
10. Main column reinforcement embedment into the bent cap may be adjusted as required to avoid conflict with prestressing ducts, maximum of 6 bars per column, see 'SECTION E-E' on 'BENT DETAILS No. 3' sheet. Main column reinforcement conflicting with prestressing ducts shall have a minimum embedment into the bent cap of 4'-0".
11. Contractor shall submit to Engineer for approval pile spacings that differ to those shown on plans.
12. The Contractor shall expose all existing piles prior to driving proposed bent piles.

2 REVISED PER ADDENDUM No. 2 DATED JULY 8, 2010

DESIGN OVERSIGHT — Emil A. Vergara Jr.
5-20-10
SIGN OFF DATE

	BY	CHECKED
DESIGN	J. ALCIATI	S. MOYLES
DETAILS	R. YAMANE	S. MOYLES
QUANTITIES	D. UPADHYAY	Y. LIN

PREPARED FOR THE STATE OF CALIFORNIA DEPARTMENT OF TRANSPORTATION

JOHN A. ALCIATI
PROJECT ENGINEER

BRIDGE NO. 37-0668
POST MILE 33.0

TULLY ROAD OVERCROSSING
BENT DETAILS No. 1

DESIGN DETAIL SHEET (ENGLISH) (REV. 2/25/05)

ORIGINAL SCALE IN INCHES FOR REDUCED PLANS 0 1 2 3

CU 04329
EA 1A9801

DISREGARD PRINTS BEARING EARLIER REVISION DATES

REVISION DATES (PRELIMINARY STAGE ONLY): 11/26/08 2/2/09 3/20/09 5/11/09 5/13/09 1/22/10 5/3/10

SHEET 9 OF 28

FILE => 37-0668-h-b01dt.add

USERNAME => trsttk DATE PLOTTED => 08-JUL-2010 TIME PLOTTED => 08:18

(1998226659) 1998226

DIST	COUNTY	ROUTE	POST MILES TOTAL PROJECT	SHEET No	TOTAL SHEETS
04	SCI	101	31.8/34.3	487	515

REGISTERED CIVIL ENGINEER 5/18/10 DATE

11-23-09
PLANS APPROVAL DATE

REGISTERED PROFESSIONAL ENGINEER RONALD L OEN No. 46945 Exp. 9/30/11 CIVIL STATE OF CALIFORNIA

The State of California or its officers or agents shall not be responsible for the accuracy or completeness of electronic copies of this plan sheet.

SANTA CLARA VALLEY TRANSPORTATION AUTHORITY
3331 N. FIRST STREET
SAN JOSE, CALIFORNIA 95134-1906
SPONSORING AGENCY

BIGGS CARDOSA ASSOCIATES INC.
865 THE ALAMEDA
SAN JOSE, CALIFORNIA 95126

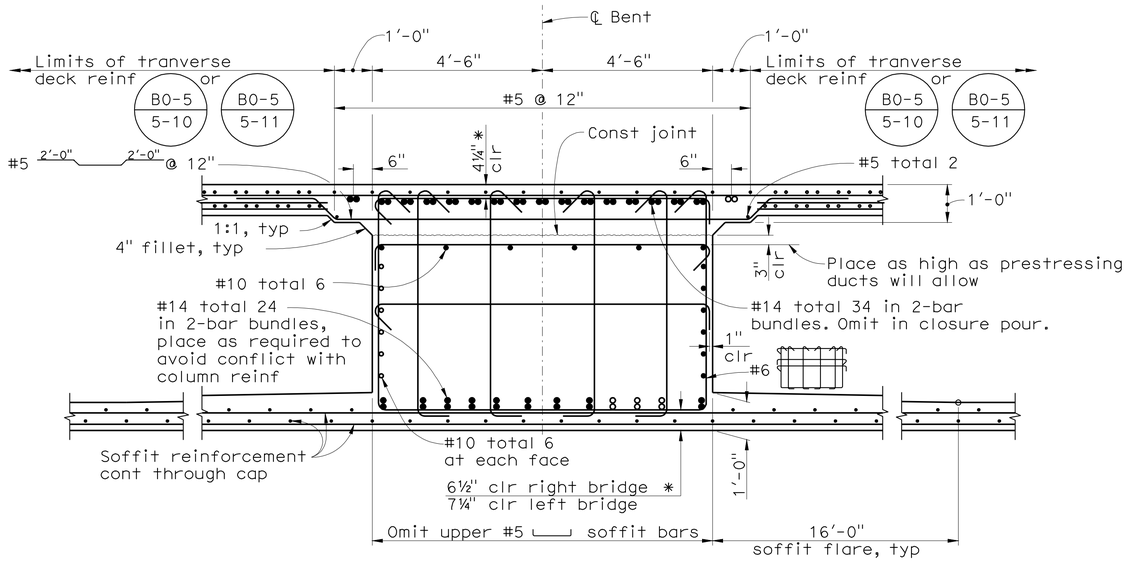

SECTION A-A
1/2" = 1'-0"

* Indicates clearance to main cap reinforcement

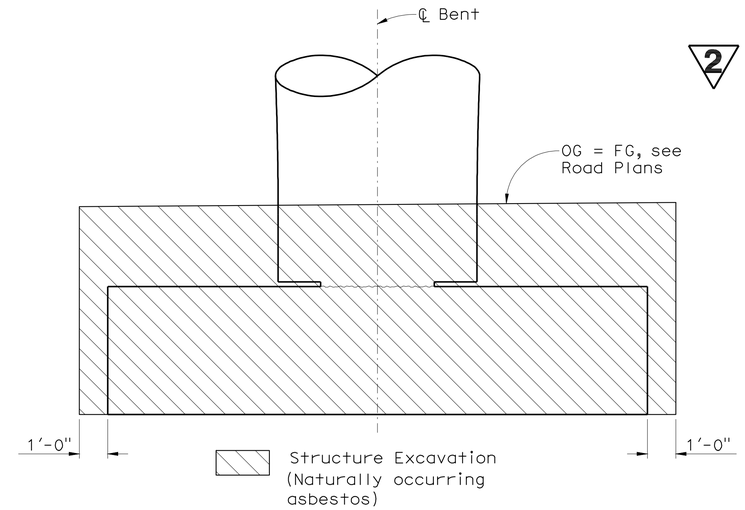

LIMITS OF STRUCTURE EXCAVATION (NATURALLY OCCURING ASBESTOS) - DETAIL 1
NO SCALE

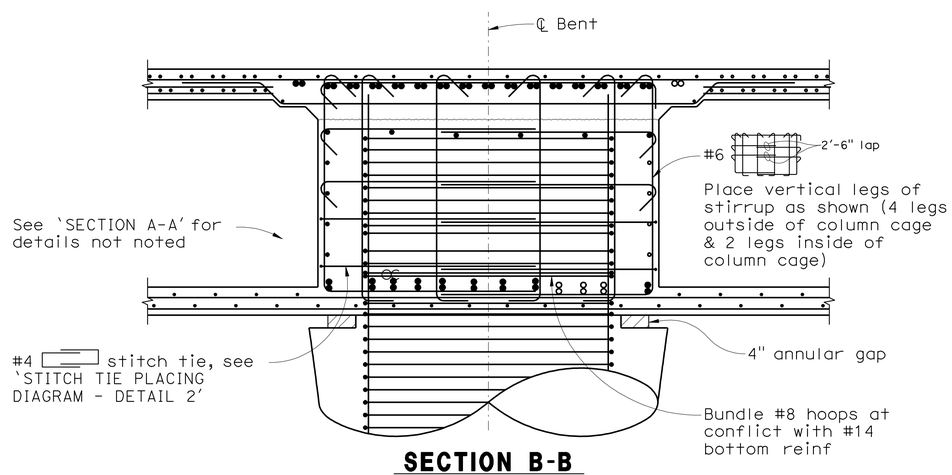

SECTION B-B
1/2" = 1'-0"

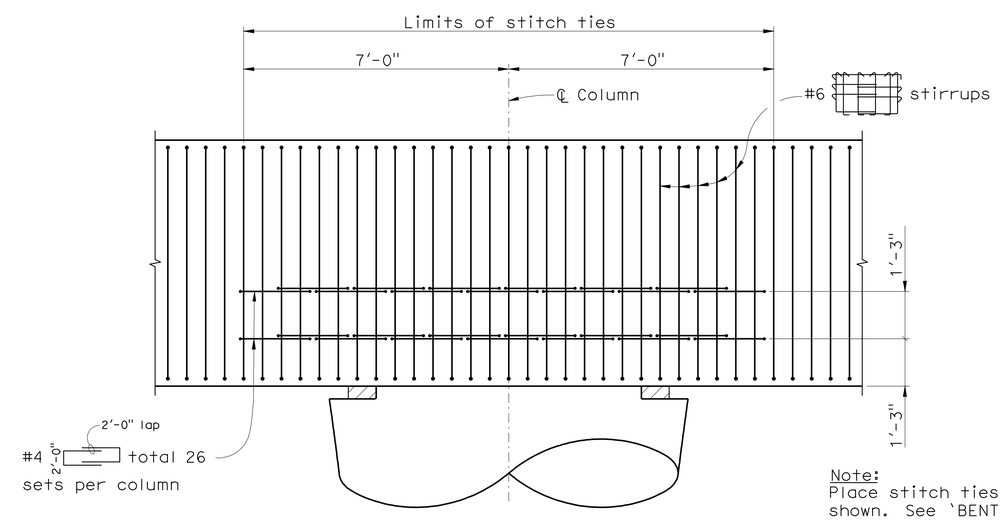

STITCH TIE PLACING DIAGRAM - DETAIL 2
NO SCALE

Note:
Place stitch ties at stirrups shown. See 'BENT ELEVATION' on 'BENT DETAILS No. 1' sheet for stirrup spacing.

2 REVISED PER ADDENDUM No. 2 DATED JULY 8, 2010

DESIGN OVERSIGHT Emil A. Vergara Jr.
5-20-10
SIGN OFF DATE

	BY	CHECKED
DESIGN	J. ALCIATI	S. MOYLES
DETAILS	R. YAMANE	S. MOYLES
QUANTITIES	D. UPADHYAY	Y. LIN

PREPARED FOR THE STATE OF CALIFORNIA DEPARTMENT OF TRANSPORTATION

JOHN A. ALCIATI
PROJECT ENGINEER

BRIDGE NO. 37-0668
POST MILE 33.0

TULLY ROAD OVERCROSSING
BENT DETAILS No. 2

DESIGN DETAIL SHEET (ENGLISH) (REV. 2/25/05)

ORIGINAL SCALE IN INCHES FOR REDUCED PLANS 0 1 2 3

CU 04329
EA 1A9801

DISREGARD PRINTS BEARING EARLIER REVISION DATES

REVISION DATES (PRELIMINARY STAGE ONLY) 11/26/08 2/2/09 3/20/09 5/11/09 5/13/09 1/22/10 5/3/10

SHEET 10 OF 28

FILE => 37-0668-h-b01dt01.add

USERNAME => trsttk DATE PLOTTED => 08-JUL-2010 TIME PLOTTED => 08:19

1998226 (1998226510)

DIST	COUNTY	ROUTE	POST MILES TOTAL PROJECT	SHEET No	TOTAL SHEETS
04	SCI	101	31.8/34.3	488	515

REGISTERED CIVIL ENGINEER — DATE 5/18/10

11-23-09
PLANS APPROVAL DATE

REGISTERED PROFESSIONAL ENGINEER RONALD L OEN No. 46945 Exp. 9/30/11 CIVIL STATE OF CALIFORNIA

The State of California or its officers or agents shall not be responsible for the accuracy or completeness of electronic copies of this plan sheet.

SANTA CLARA VALLEY TRANSPORTATION AUTHORITY
3331 N. FIRST STREET
SAN JOSE, CALIFORNIA 95134-1906
SPONSORING AGENCY

BIGGS CARDOSA ASSOCIATES INC.
865 THE ALAMEDA
SAN JOSE, CALIFORNIA 95126

2

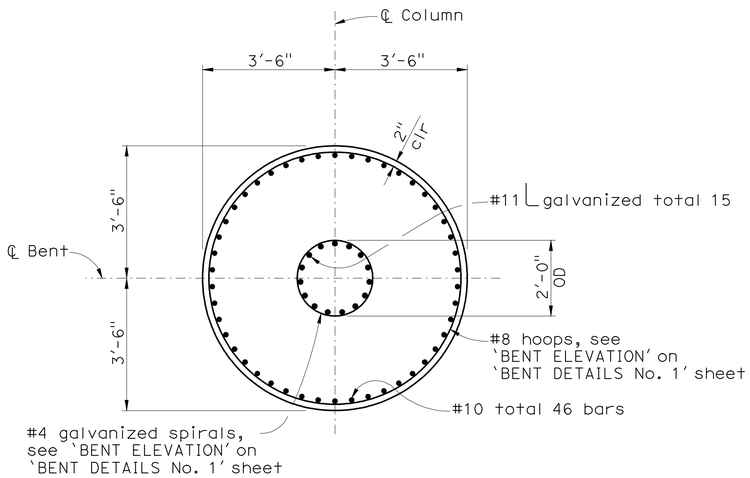

SECTION C-C
1/2" = 1'-0"

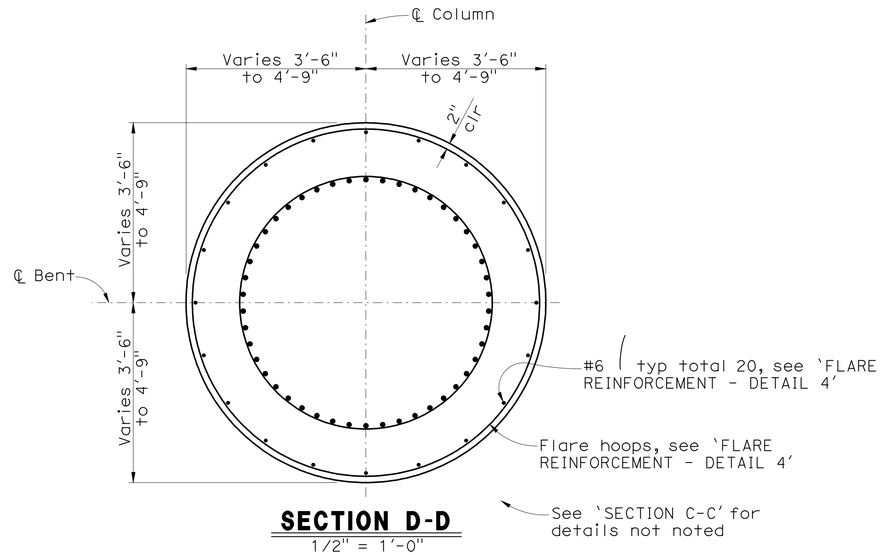

SECTION D-D
1/2" = 1'-0"

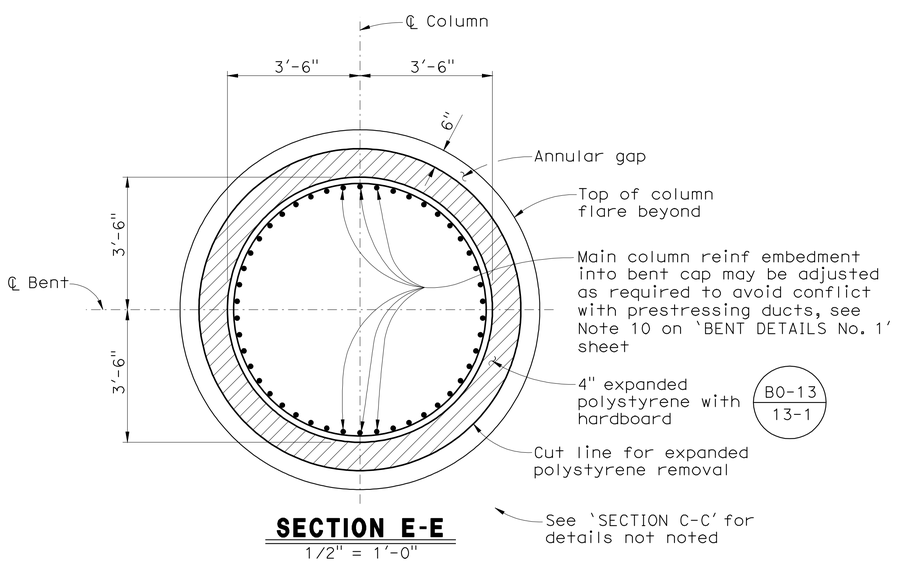

SECTION E-E
1/2" = 1'-0"

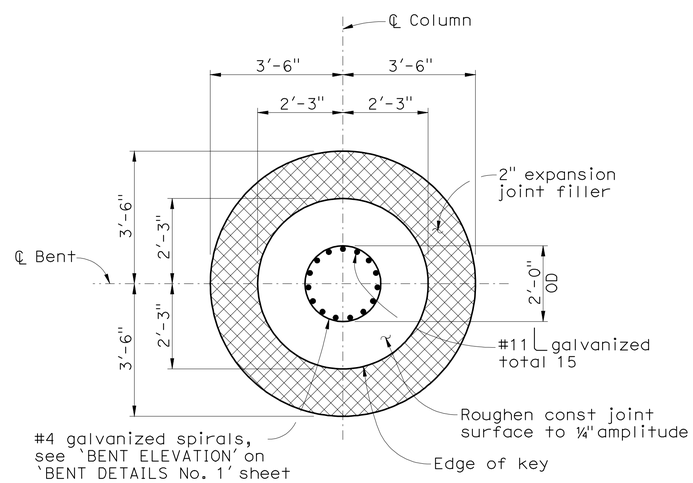

FOOTING KEY - DETAIL 3
1/2" = 1'-0"

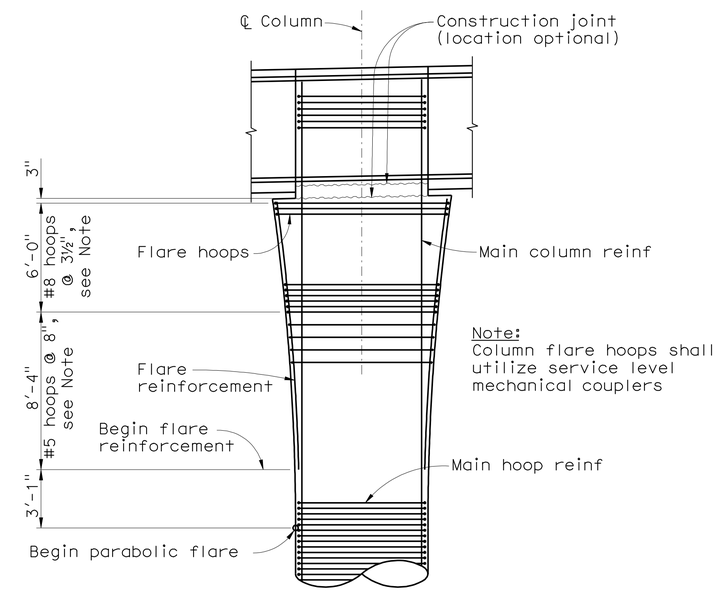

FLARE REINFORCEMENT - DETAIL 4
1/4" = 1'-0"

2 **REVISED PER ADDENDUM No. 2 DATED JULY 8, 2010**

DESIGN OVERSIGHT — Emil A. Vergara Jr.
5-20-10
SIGN OFF DATE

	BY	CHECKED
DESIGN	J. ALCIATI	S. MOYLES
DETAILS	R. YAMANE	S. MOYLES
QUANTITIES	D. UPADHYAY	Y. LIN

PREPARED FOR THE STATE OF CALIFORNIA DEPARTMENT OF TRANSPORTATION

JOHN A. ALCIATI
PROJECT ENGINEER

BRIDGE NO. 37-0668
POST MILE 33.0

TULLY ROAD OVERCROSSING
BENT DETAILS No. 3

DESIGN DETAIL SHEET (ENGLISH) (REV. 2/25/05)

ORIGINAL SCALE IN INCHES FOR REDUCED PLANS 0 1 2 3

CU 04329
EA 1A9801

DISREGARD PRINTS BEARING EARLIER REVISION DATES

REVISION DATES (PRELIMINARY STAGE ONLY): 11/26/08 2/27/09 3/20/09 5/1/09 5/13/09 1/22/10 5/3/10

SHEET 11 OF 28

FILE => 37-0668-h-bt01dt02.add

USERNAME => rtrstrk DATE PLOTTED => 08-JUL-2010 TIME PLOTTED => 08:19 (1998226511) 1998226

DIST	COUNTY	ROUTE	POST MILES TOTAL PROJECT	SHEET No	TOTAL SHEETS
04	SCI	101	31.8/34.3	489	515

REGISTERED CIVIL ENGINEER 5/18/10 DATE

11-23-09
PLANS APPROVAL DATE

REGISTERED PROFESSIONAL ENGINEER RONALD L OEN No. 46945 Exp. 9/30/11 CIVIL STATE OF CALIFORNIA

The State of California or its officers or agents shall not be responsible for the accuracy or completeness of electronic copies of this plan sheet.

SANTA CLARA VALLEY TRANSPORTATION AUTHORITY
3331 N. FIRST STREET
SAN JOSE, CALIFORNIA 95134-1906
SPONSORING AGENCY

BIGGS CARDOSA ASSOCIATES INC.
865 THE ALAMEDA
SAN JOSE, CALIFORNIA 95126

2

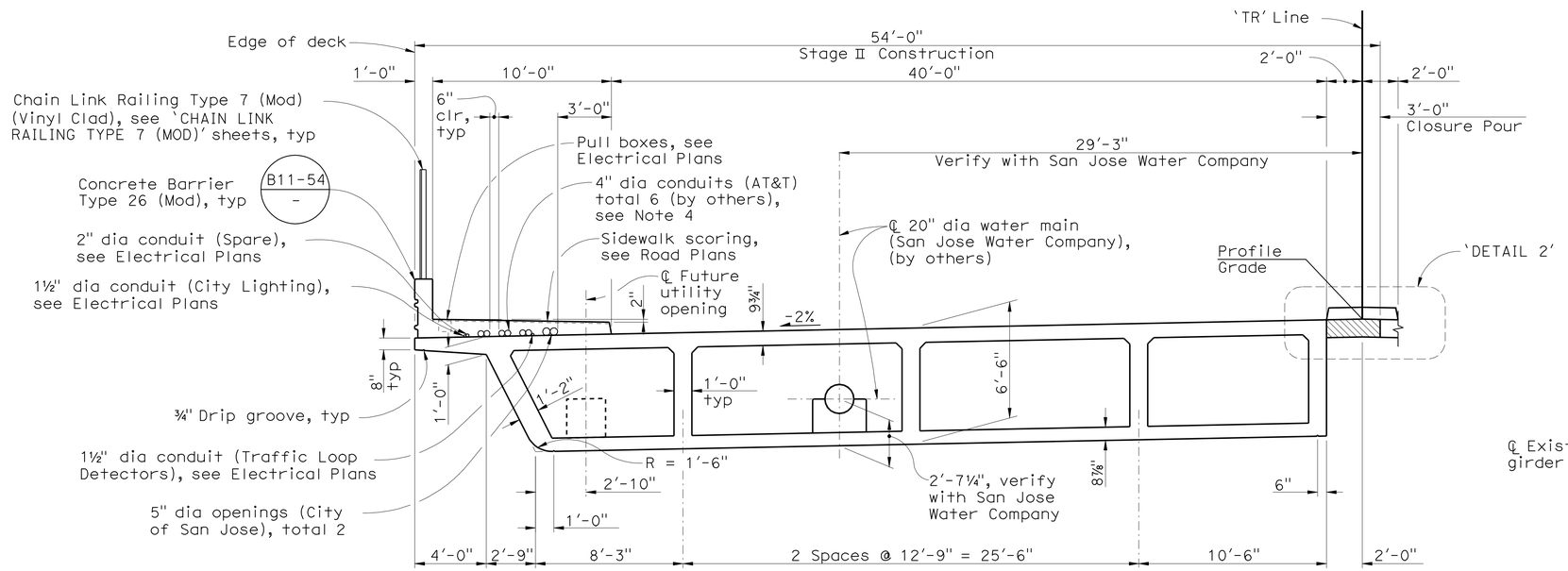

TYPICAL SECTION
1/4" = 1'-0"

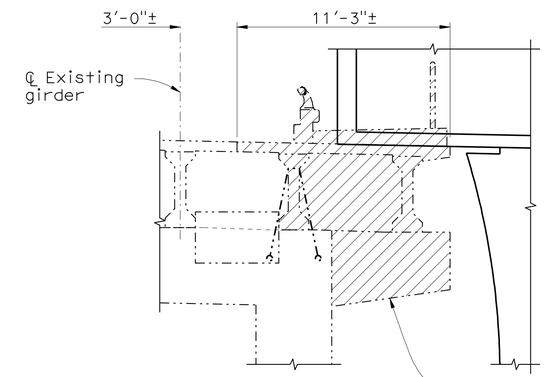

DETAIL 1
1/4" = 1'-0"

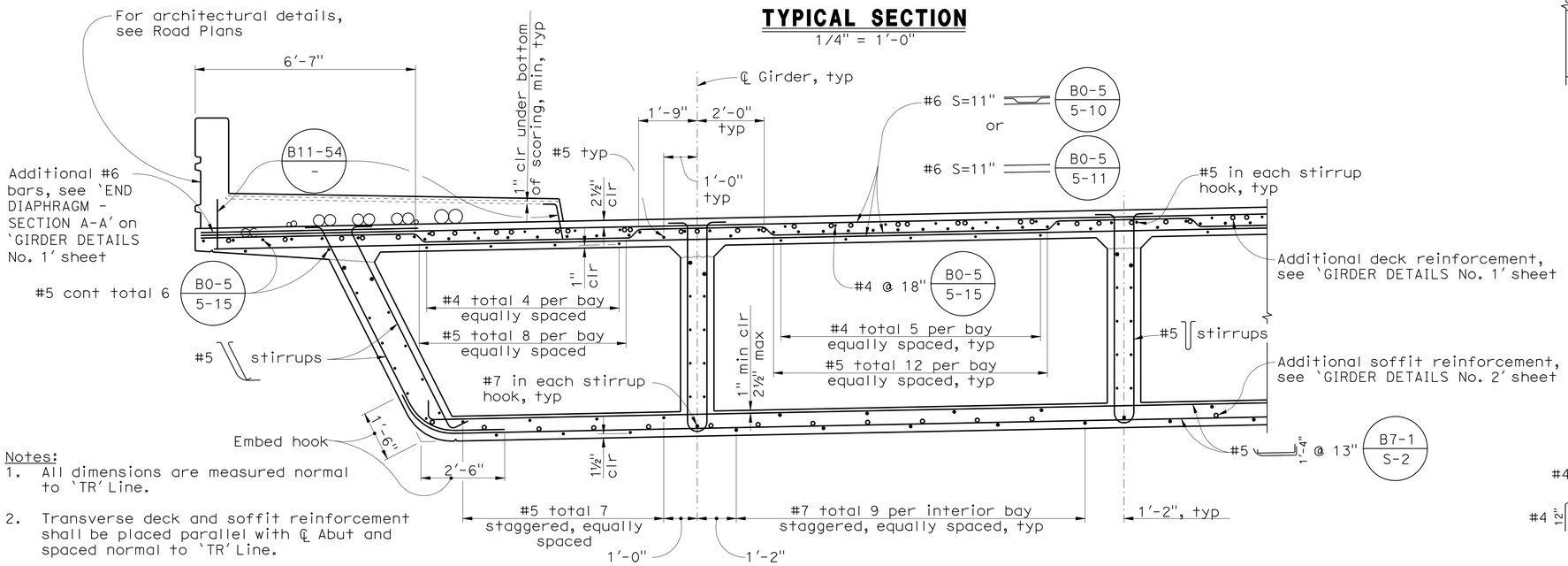

PARTIAL TYPICAL SECTION
1/2" = 1'-0"

B0-5 - B7-1 - B8-5 -

Notes:

1. All dimensions are measured normal to 'TR' Line.
2. Transverse deck and soffit reinforcement shall be placed parallel with ℄ Abut and spaced normal to 'TR' Line.
3. Falsework shall be removed as soon as permitted by the specifications. Closure pour shall not be placed sooner than 60 days after the falsework has been released.
4. Conduit expansion fittings (by others) shall be provided at the bridge expansion joints, see ES-9B -

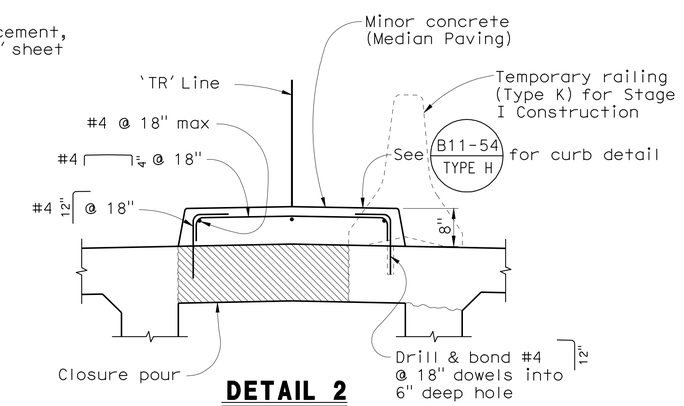

DETAIL 2
3/4" = 1'-0"

2 **REVISED PER ADDENDUM No. 2 DATED JULY 8, 2010**

DESIGN OVERSIGHT Emil A. Vergara Jr.
5-20-10
SIGN OFF DATE

	BY	CHECKED
DESIGN	J. ALCIATI	S. MOYLES
DETAILS	R. YAMANE	S. MOYLES
QUANTITIES	D. UPADHYAY	Y. LIN

PREPARED FOR THE STATE OF CALIFORNIA DEPARTMENT OF TRANSPORTATION

JOHN A. ALCIATI
PROJECT ENGINEER

BRIDGE NO. 37-0668
POST MILE 33.0

TULLY ROAD OVERCROSSING
TYPICAL SECTION No. 1

DESIGN DETAIL SHEET (ENGLISH) (REV. 2/25/05)

ORIGINAL SCALE IN INCHES FOR REDUCED PLANS 0 1 2 3

CU 04329
EA 1A9801

FILE => 37-0668-i-ts01.add

DISREGARD PRINTS BEARING EARLIER REVISION DATES

REVISION DATES (PRELIMINARY STAGE ONLY) 11/26/08 2/27/09 3/26/09 5/11/09 5/13/09 1/22/10 5/3/10 5/18/10

SHEET 12 OF 28

USERNAME => trsttk DATE PLOTTED => 08-JUL-2010 TIME PLOTTED => 08:19

(1998226512) 1998226

DIST	COUNTY	ROUTE	POST MILES TOTAL PROJECT	SHEET No	TOTAL SHEETS
04	SCI	101	31.8/34.3	490	515

REGISTERED CIVIL ENGINEER — DATE 5/18/10

11-23-09
PLANS APPROVAL DATE

REGISTERED PROFESSIONAL ENGINEER RONALD L OEN No. 46945 Exp. 9/30/11 CIVIL STATE OF CALIFORNIA

The State of California or its officers or agents shall not be responsible for the accuracy or completeness of electronic copies of this plan sheet.

SANTA CLARA VALLEY TRANSPORTATION AUTHORITY
3331 N. FIRST STREET
SAN JOSE, CALIFORNIA 95134-1906
SPONSORING AGENCY

BIGGS CARDOSA ASSOCIATES INC.
865 THE ALAMEDA
SAN JOSE, CALIFORNIA 95126

2

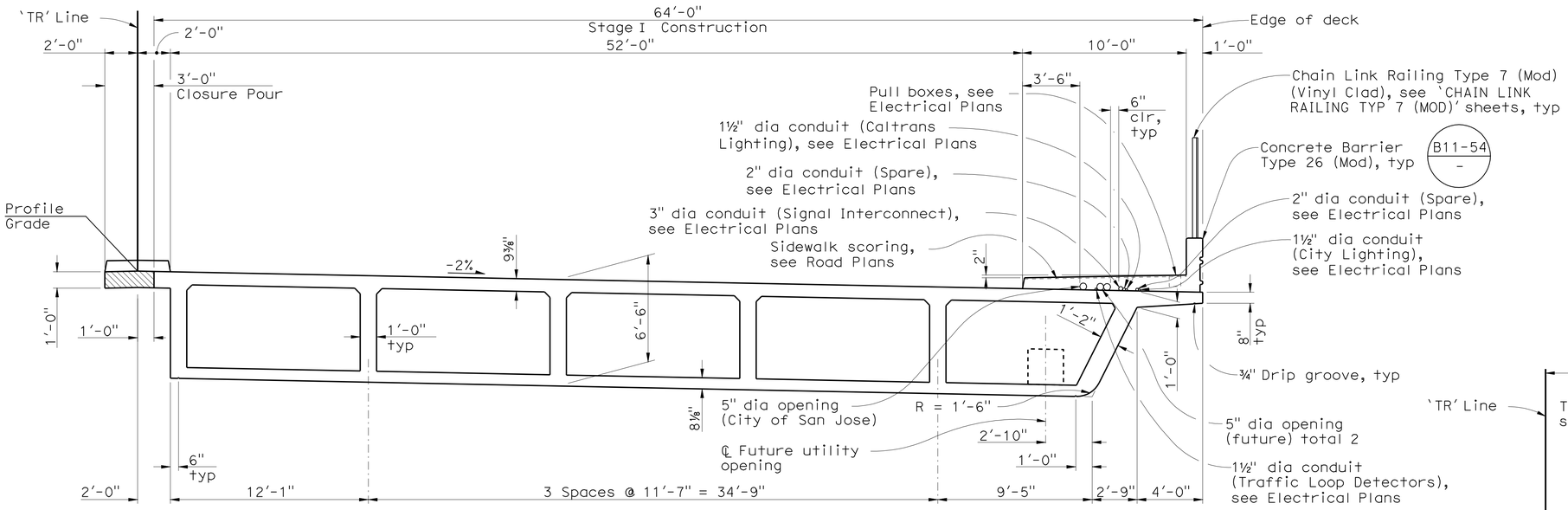

TYPICAL SECTION
1/4" = 1'-0"

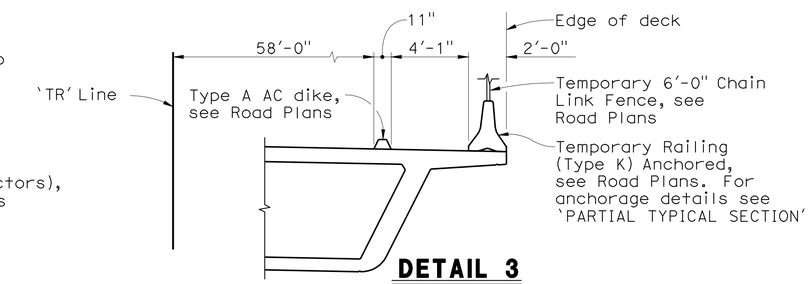

DETAIL 3
1/4" = 1'-0"

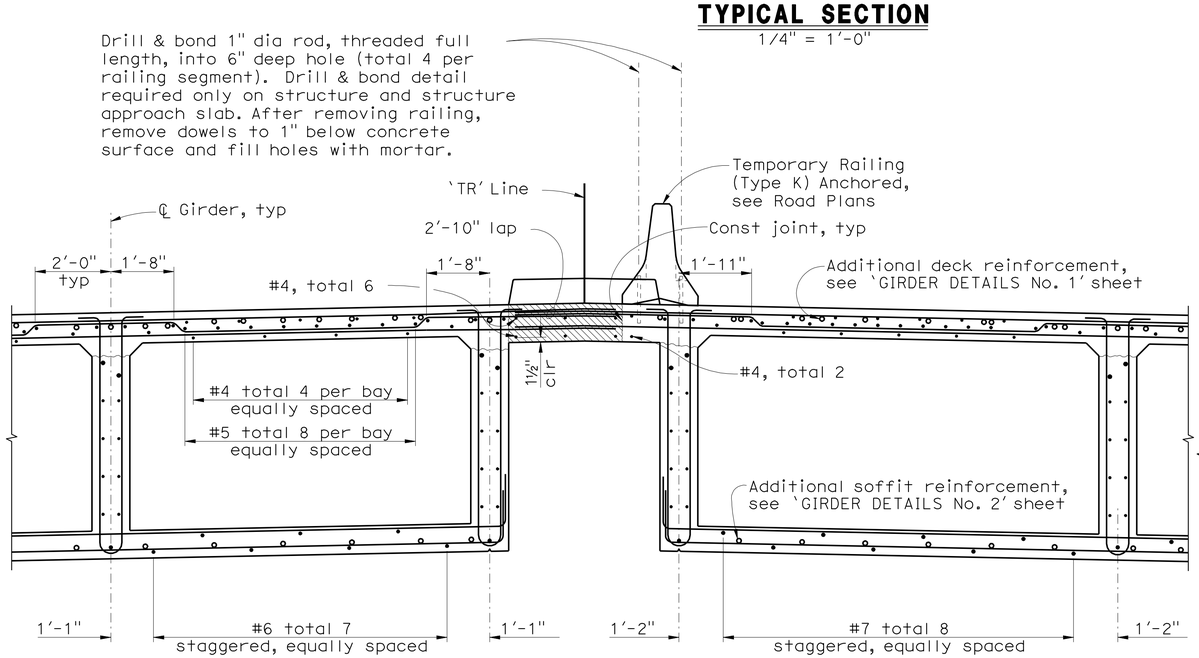

PARTIAL TYPICAL SECTION
1/2" = 1'-0"

B0-5 / - | B7-1 / - | B8-5 / -

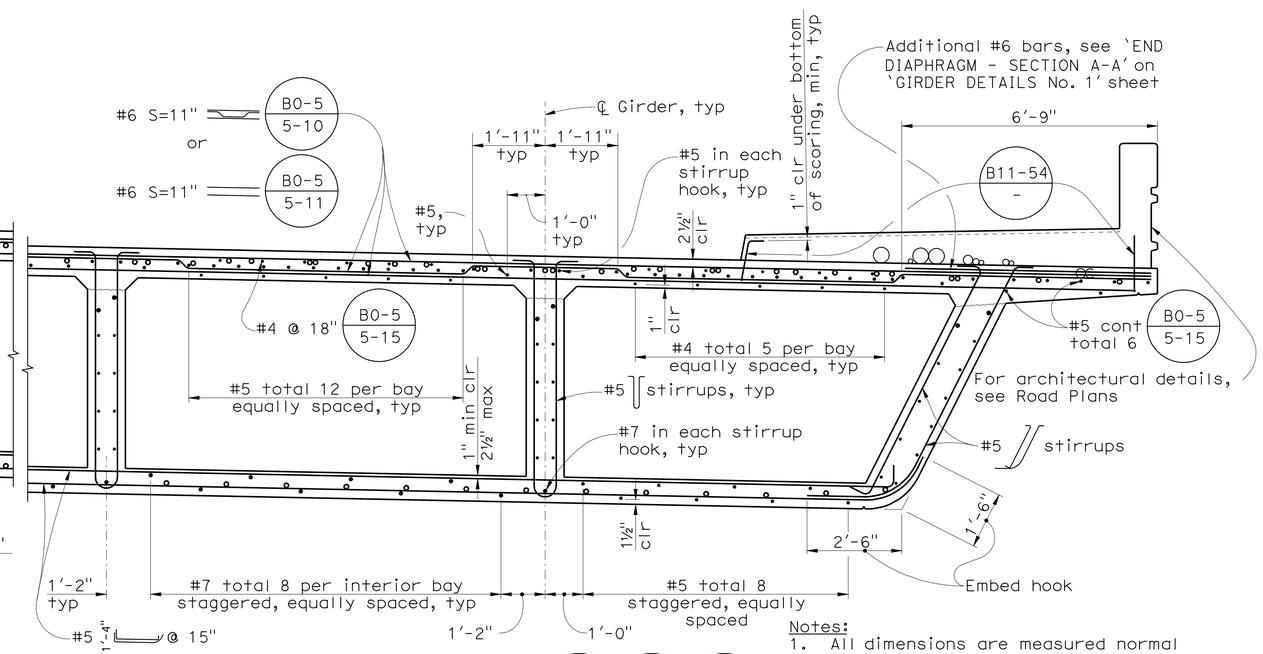

B7-1 / S-2

PARTIAL TYPICAL SECTION
1/2" = 1'-0"

B0-5 / - | B7-1 / - | B8-5 / -

Notes:
1. All dimensions are measured normal to 'TR' Line.
2. Transverse deck and soffit reinforcement shall be placed parallel with ℄ Abut and spaced normal to 'TR' Line.

2 **REVISED PER ADDENDUM No. 2 DATED JULY 8, 2010**

DESIGN OVERSIGHT — Emil A. Vergara Jr.
5-20-10
SIGN OFF DATE

	BY	CHECKED
DESIGN	J. ALCIATI	S. MOYLES
DETAILS	R. YAMANE	S. MOYLES
QUANTITIES	D. UPADHYAY	Y. LIN

PREPARED FOR THE STATE OF CALIFORNIA DEPARTMENT OF TRANSPORTATION

JOHN A. ALCIATI
PROJECT ENGINEER

BRIDGE NO. 37-0668
POST MILE 33.0

TULLY ROAD OVERCROSSING
TYPICAL SECTION No. 2

DESIGN DETAIL SHEET (ENGLISH) (REV. 2/25/05)

ORIGINAL SCALE IN INCHES FOR REDUCED PLANS 0 1 2 3

CU 04329
EA 1A9801

DISREGARD PRINTS BEARING EARLIER REVISION DATES

REVISION DATES (PRELIMINARY STAGE ONLY): 11/26/08 2/2/09 3/20/09 5/1/09 5/13/09 1/22/10 5/3/10

SHEET 13 OF 28

FILE => 37-0668-i-ts02.add

USERNAME => trstrk DATE PLOTTED => 08-JUL-2010 TIME PLOTTED => 08:26

(1998226513) 1998226

DIST	COUNTY	ROUTE	POST MILES TOTAL PROJECT	SHEET No	TOTAL SHEETS
04	SCI	101	31.8/34.3	491	515

REGISTERED CIVIL ENGINEER 5/18/10 DATE

11-23-09
PLANS APPROVAL DATE

REGISTERED PROFESSIONAL ENGINEER RONALD L OEN No. 46945 Exp. 9/30/11 CIVIL STATE OF CALIFORNIA

The State of California or its officers or agents shall not be responsible for the accuracy or completeness of electronic copies of this plan sheet.

SANTA CLARA VALLEY TRANSPORTATION AUTHORITY
3331 N. FIRST STREET
SAN JOSE, CALIFORNIA 95134-1906
SPONSORING AGENCY

BIGGS CARDOSA ASSOCIATES INC.
865 THE ALAMEDA
SAN JOSE, CALIFORNIA 95126

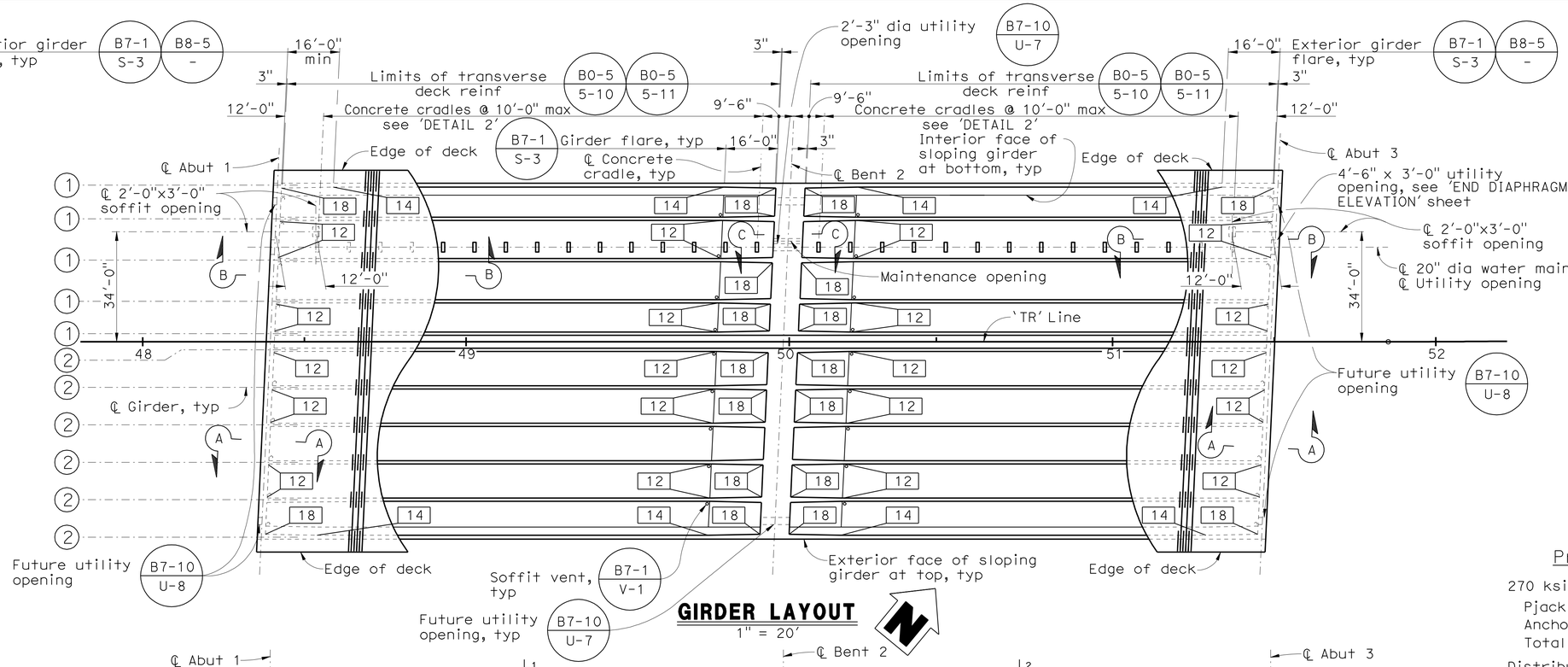

GIRDER LAYOUT
1" = 20'

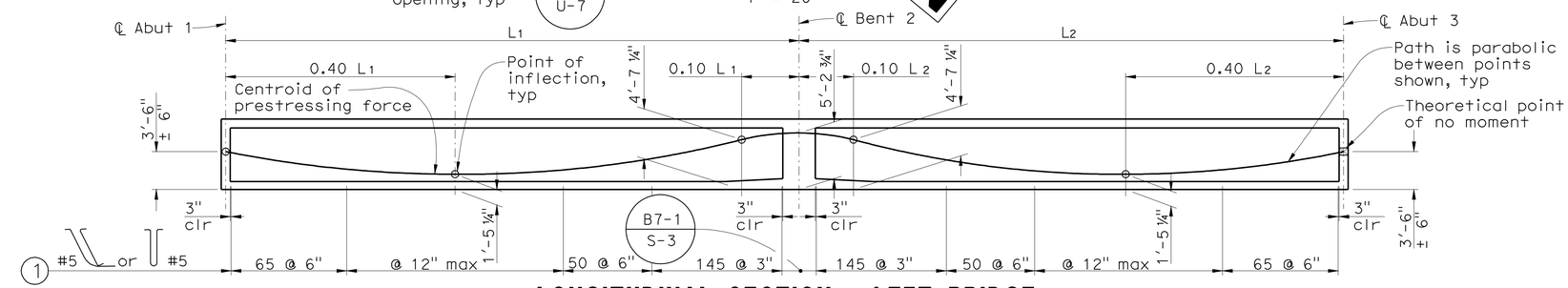

LONGITUDINAL SECTION - LEFT BRIDGE
NO SCALE

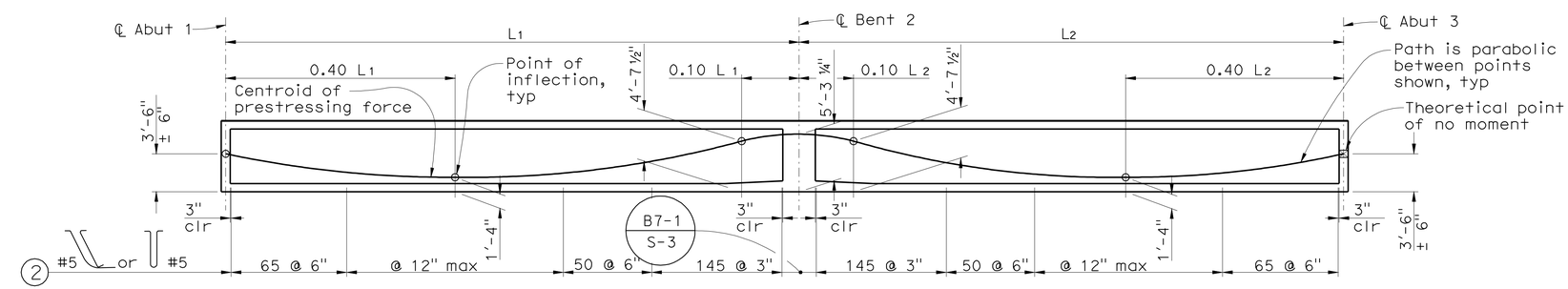

LONGITUDINAL SECTION - RIGHT BRIDGE
NO SCALE

Notes:

1. Indicates girder stem width in inches
2. Indicates stirrup designation
3. For 'CAMBER DIAGRAM' and 'CONCRETE STRENGTH AND TYPE LIMITS', see 'DECK CONTOURS' sheet
4. For 'SECTION A-A' see 'GIRDER DETAILS No. 1' sheet
5. For 'DETAIL 2' and 'END DIAPHRAGM ELEVATION', see 'UTILITY DETAILS No. 1' sheet
6. L_1 and L_2 are measured along the ℄ of each girder

Prestressing Notes (Left Bridge)

270 ksi Low Relaxation Strand:

Pjack = 15,950 kips
Anchor set = 3/8 in
Total No. of girders = 5

Distribution of prestress force (Pjack) between girders shall not exceed the ratio of 3:2. Maximum final force variation between girders shall not exceed 725k

Concrete: f'c = 4000 psi @ 28 days
f'ci = 3500 psi @ time of stressing

Contractor shall submit elongation calculations based on initial stress at ☒ 0.875 times jacking stress

☒ Denotes theoretical point of no movement

Stressing shall be performed from Abutment 1 end only

Prestress force design is based on friction coefficient 11/32 = 0.15 and friction wobble coefficient k=0.0002/ft and modified for curvature

Prestressing Notes (Right Bridge)

270 ksi Low Relaxation Strand:

Pjack = 17,400 kips
Anchor set = 3/8 in
Total No. of girders = 6

Distribution of prestress force (Pjack) between girders shall not exceed the ratio of 3:2. Maximum final force variation between girders shall not exceed 725k

Concrete: f'c = 4000 psi @ 28 days
f'ci = 3500 psi @ time of stressing

Contractor shall submit elongation calculations based on initial stress at ☒ 0.872 times jacking stress

☒ Denotes theoretical point of no movement

Stressing shall be performed from Abutment 1 end only

Prestress force design is based on friction coefficient 11/32 = 0.15 and friction wobble coefficient k=0.0002/ft and modified for curvature

2 REVISED PER ADDENDUM No. 2 DATED JULY 8, 2010

DESIGN OVERSIGHT Emil A. Vergara Jr.
5-20-10
SIGN OFF DATE

	BY	CHECKED
DESIGN	J. ALCIATI	S. MOYLES
DETAILS	R. YAMANE	S. MOYLES
QUANTITIES	D. UPADHYAY	Y. LIN

PREPARED FOR THE STATE OF CALIFORNIA DEPARTMENT OF TRANSPORTATION

JOHN A. ALCIATI
PROJECT ENGINEER

BRIDGE NO. 37-0668
POST MILE 33.0

TULLY ROAD OVERCROSSING
GIRDER LAYOUT

DESIGN DETAIL SHEET (ENGLISH) (REV. 2/25/05)

ORIGINAL SCALE IN INCHES FOR REDUCED PLANS 0 1 2 3

CU 04329
EA 1A9801

DISREGARD PRINTS BEARING EARLIER REVISION DATES

REVISION DATES (PRELIMINARY STAGE ONLY) 11/26/08 2/2/09 3/20/09 5/1/09 5/13/09 10/28/09 1/22/10 5/3/10

SHEET 14 OF 28

FILE => 37-0668-k-g_lo01.add

USERNAME => trestrk DATE PLOTTED => 08-JUL-2010 TIME PLOTTED => 08:19 (1998226514) 1998226

DIST	COUNTY	ROUTE	POST MILES TOTAL PROJECT	SHEET No	TOTAL SHEETS
04	SCI	101	31.8/34.3	492	515

REGISTERED CIVIL ENGINEER — DATE 5/18/10

11-23-09
PLANS APPROVAL DATE

REGISTERED PROFESSIONAL ENGINEER RONALD L OEN No. 46945 Exp. 9/30/11 CIVIL STATE OF CALIFORNIA

The State of California or its officers or agents shall not be responsible for the accuracy or completeness of electronic copies of this plan sheet.

SANTA CLARA VALLEY TRANSPORTATION AUTHORITY
3331 N. FIRST STREET
SAN JOSE, CALIFORNIA 95134-1906
SPONSORING AGENCY

BIGGS CARDOSA ASSOCIATES INC.
865 THE ALAMEDA
SAN JOSE, CALIFORNIA 95126

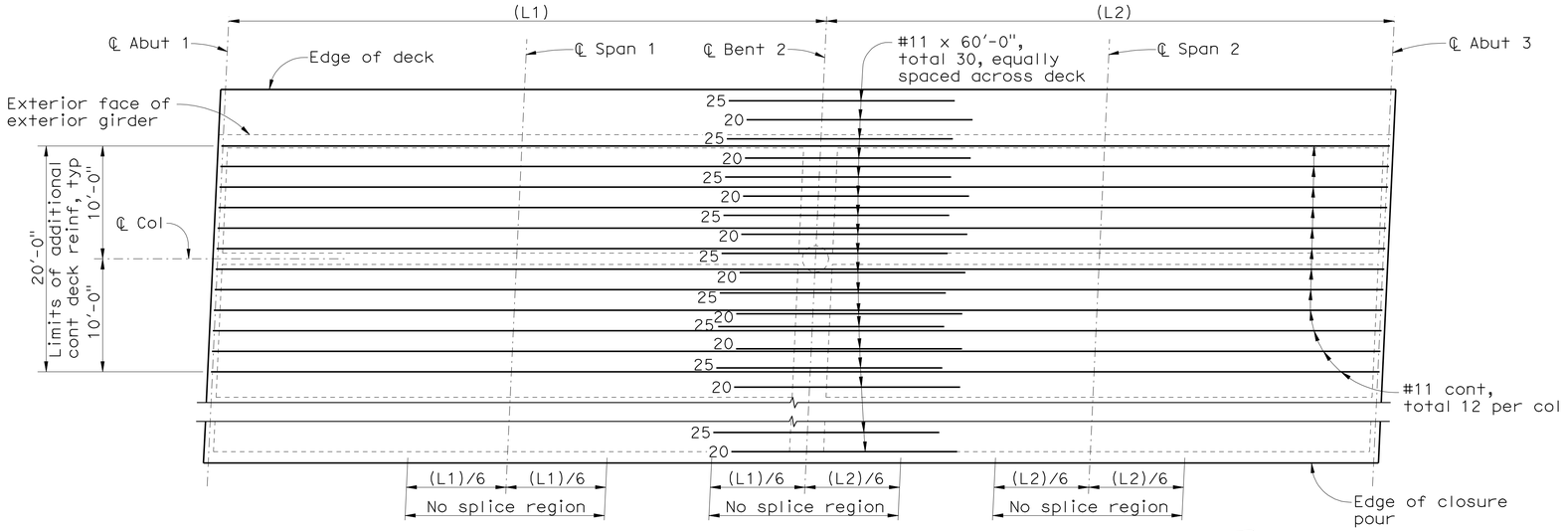

ADDITIONAL DECK REINFORCEMENT - LEFT BRIDGE

NO SCALE

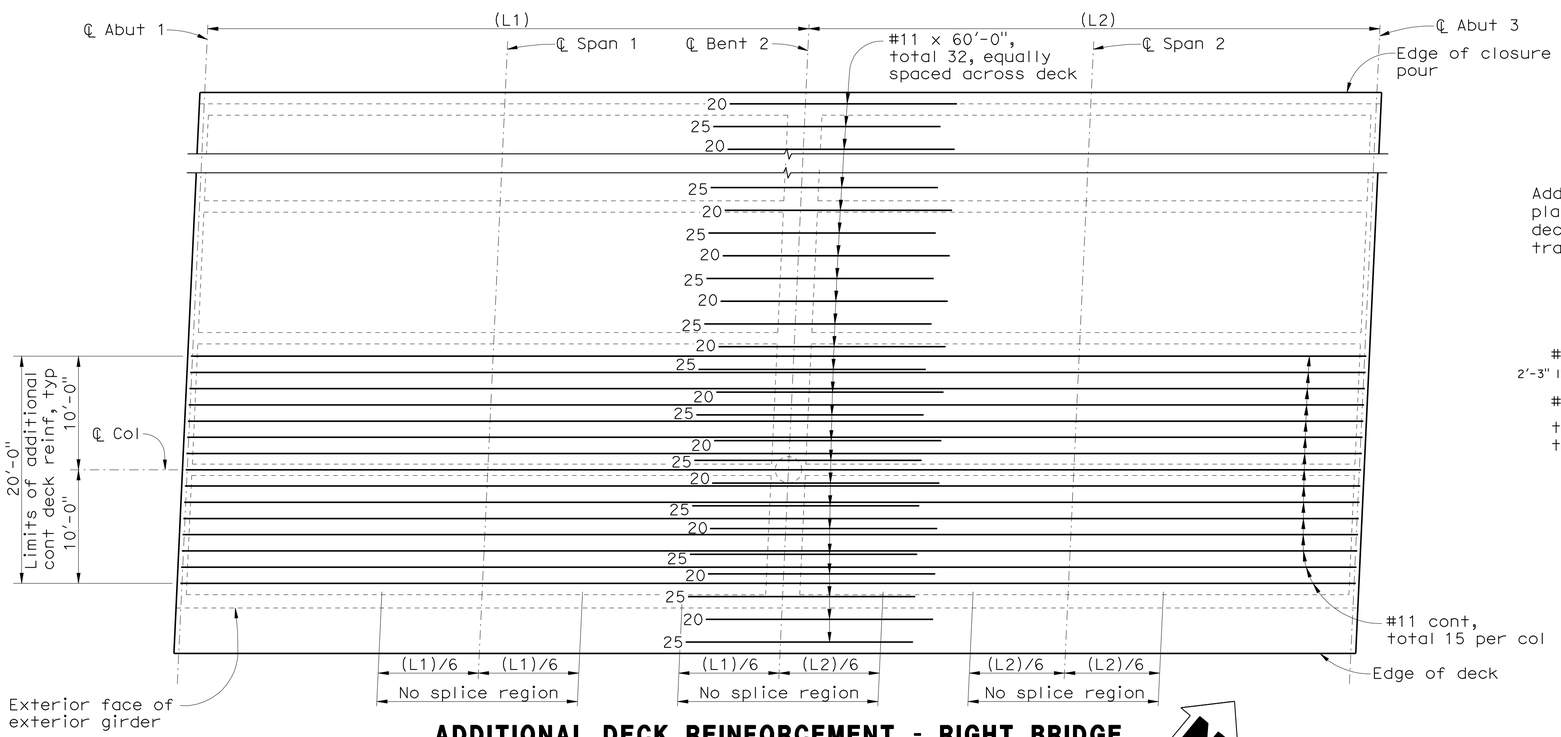

ADDITIONAL DECK REINFORCEMENT - RIGHT BRIDGE

NO SCALE

Notes:

1. Space bars approximately equal within limits shown. Arrange bars to avoid column reinforcement.
2. Reinforcement shall be placed parallel to ℄ bridge
3. Additional continuous deck reinforcement shall be spliced with service butt splices staggered at 7'-6" min. Lap splices equal to two times the standard lap may be substituted for the service butt splices.
4. Splices for continuous bars shall be located outside the 'No splice region' indicated.
5. Number at end of bar indicates distance in feet from the ℄ bent.
6. ~~OC~~ Indicates bundled bars

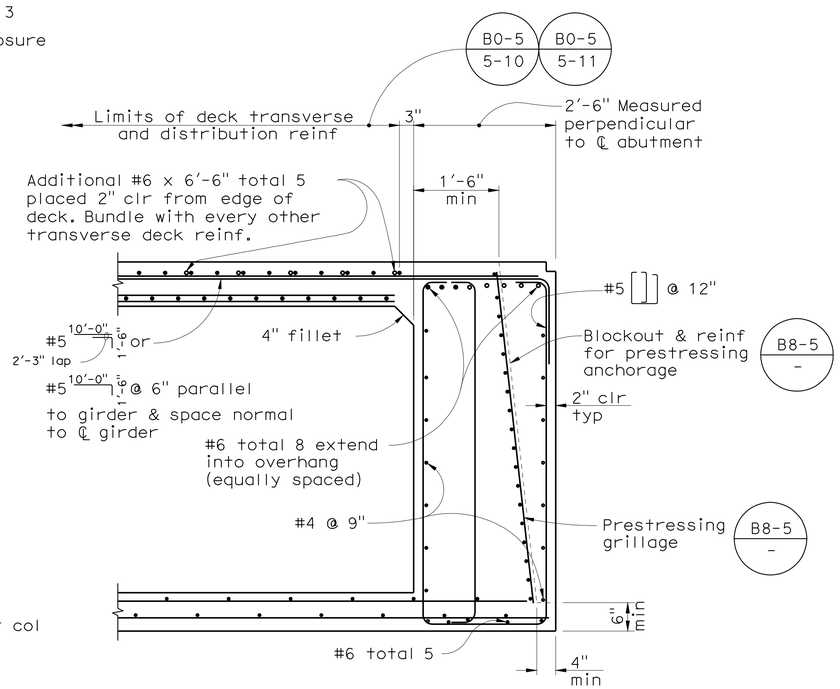

END DIAPHRAGM - SECTION A-A

3/4" = 1'-0"

2 REVISED PER ADDENDUM No. 2 DATED JULY 8, 2010

DESIGN OVERSIGHT — Emil A. Vergara Jr.
5-20-10
SIGN OFF DATE

	BY	CHECKED
DESIGN	J. ALCIATI	S. MOYLES
DETAILS	R. YAMANE	S. MOYLES
QUANTITIES	D. UPADHYAY	Y. LIN

PREPARED FOR THE STATE OF CALIFORNIA DEPARTMENT OF TRANSPORTATION

JOHN A. ALCIATI
PROJECT ENGINEER

BRIDGE NO. 37-0668
POST MILE 33.0

TULLY ROAD OVERCROSSING
GIRDER DETAILS No. 1

DESIGN DETAIL SHEET (ENGLISH) (REV. 2/25/05)

ORIGINAL SCALE IN INCHES FOR REDUCED PLANS 0 1 2 3

CU 04329
EA 1A9801

DISREGARD PRINTS BEARING EARLIER REVISION DATES

REVISION DATES (PRELIMINARY STAGE ONLY): 11/26/08 2/2/09 3/26/09 5/1/09 5/13/09 10/26/09 1/22/10 5/3/10

SHEET 15 OF 28

FILE => 37-0668-k-gdt01.add

USERNAME => trsthk DATE PLOTTED => 08-JUL-2010 TIME PLOTTED => 08:27

(1998226515) 1998226

DIST	COUNTY	ROUTE	POST MILES TOTAL PROJECT	SHEET No	TOTAL SHEETS
04	SCI	101	31.8/34.3	493	515

REGISTERED CIVIL ENGINEER — DATE 5/18/10

REGISTERED PROFESSIONAL ENGINEER RONALD L OEN No. 46945 Exp. 9/30/11 CIVIL STATE OF CALIFORNIA

11-23-09
PLANS APPROVAL DATE

The State of California or its officers or agents shall not be responsible for the accuracy or completeness of electronic copies of this plan sheet.

SANTA CLARA VALLEY TRANSPORTATION AUTHORITY
3331 N. FIRST STREET
SAN JOSE, CALIFORNIA 95134-1906
SPONSORING AGENCY

BIGGS CARDOSA ASSOCIATES INC.
865 THE ALAMEDA
SAN JOSE, CALIFORNIA 95126

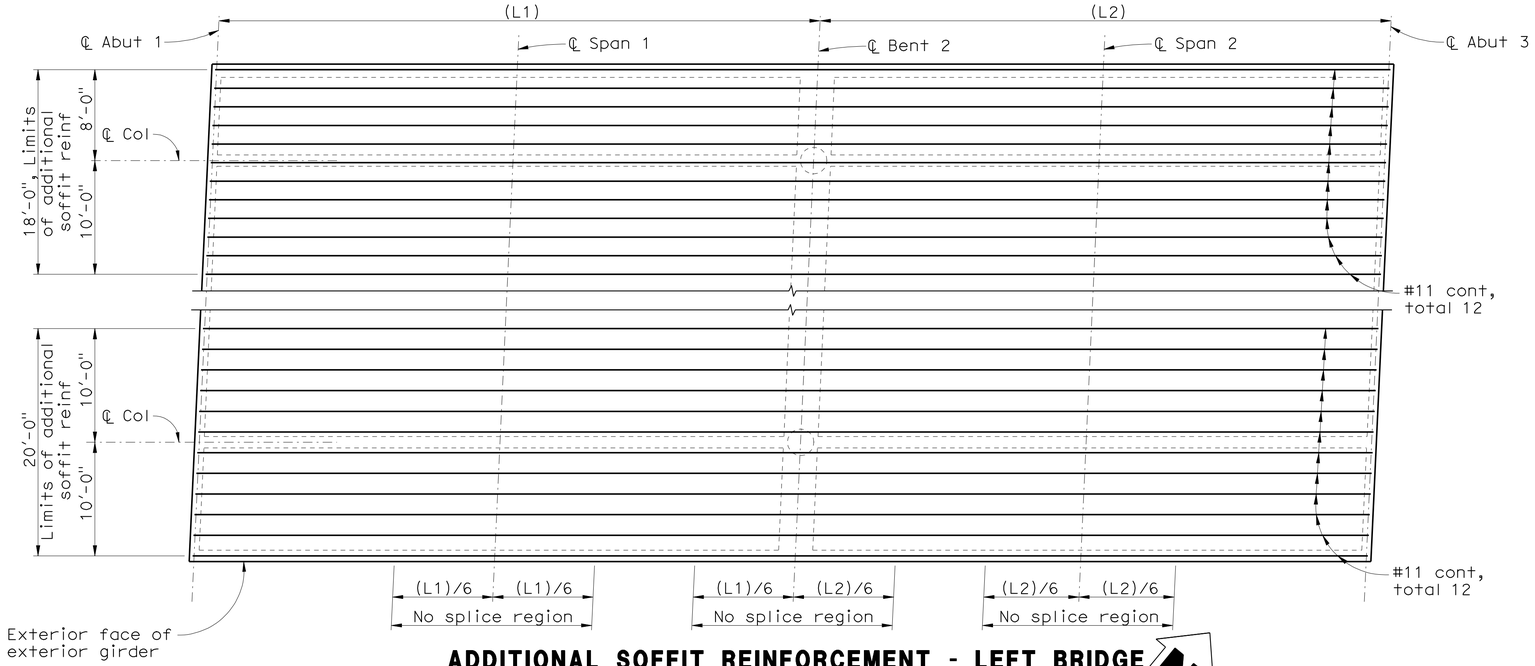

ADDITIONAL SOFFIT REINFORCEMENT - LEFT BRIDGE

NO SCALE

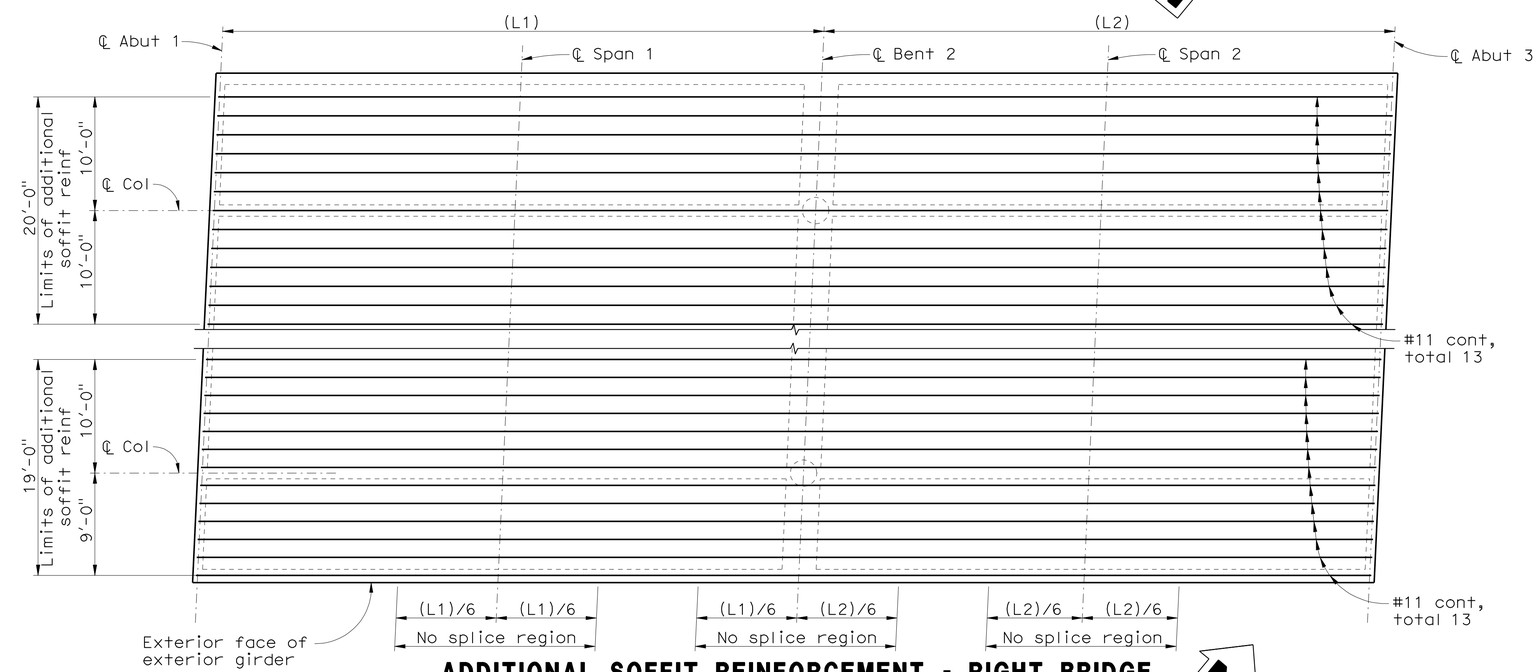

ADDITIONAL SOFFIT REINFORCEMENT - RIGHT BRIDGE

NO SCALE

Notes:

1. Space bars approximately equal within limits. Arrange to avoid column reinforcement
2. Reinforcement shall be placed parallel to C bridge
3. Additional soffit reinforcement shall be spliced with service butt splices staggered at 7'-6" min. Lap splices equal to two times the standard lap may be substituted for the service butt splices.
4. Splices shall be located outside the 'No splice region' indicated.

2 **REVISED PER ADDENDUM No. 2 DATED JULY 8, 2010**

DESIGN OVERSIGHT — Emil A. Vergara Jr.
5-20-10
SIGN OFF DATE

	BY	CHECKED
DESIGN	J. ALCIATI	S. MOYLES
DETAILS	R. YAMANE	S. MOYLES
QUANTITIES	D. UPADHYAY	Y. LIN

PREPARED FOR THE STATE OF CALIFORNIA DEPARTMENT OF TRANSPORTATION

JOHN A. ALCIATI
PROJECT ENGINEER

BRIDGE NO. 37-0668
POST MILE 33.0

TULLY ROAD OVERCROSSING
GIRDER DETAILS No. 2

DESIGN DETAIL SHEET (ENGLISH) (REV. 2/25/05)

ORIGINAL SCALE IN INCHES FOR REDUCED PLANS 0 1 2 3

CU 04329
EA 1A9801

DISREGARD PRINTS BEARING EARLIER REVISION DATES

REVISION DATES (PRELIMINARY STAGE ONLY): 11/26/08 2/2/09 3/26/09 5/1/09 5/13/09 10/28/09 1/22/10 5/3/10

SHEET 16 OF 28

FILE => 37-0668-k-gdt02.add

USERNAME => trstrk DATE PLOTTED => 08-JUL-2010 TIME PLOTTED => 08:20

1998226 (1998226516)

DIST	COUNTY	ROUTE	POST MILES TOTAL PROJECT	SHEET No	TOTAL SHEETS
04	SCI	101	31.8/34.3	493A	515

REGISTERED CIVIL ENGINEER — DATE 5/18/10

11-23-10
PLANS APPROVAL DATE

REGISTERED PROFESSIONAL ENGINEER RONALD L OEN No. 46945 Exp. 9/30/11 CIVIL STATE OF CALIFORNIA

The State of California or its officers or agents shall not be responsible for the accuracy or completeness of electronic copies of this plan sheet.

SANTA CLARA VALLEY TRANSPORTATION AUTHORITY
3331 N. FIRST STREET
SAN JOSE, CALIFORNIA 95134-1906
SPONSORING AGENCY

BIGGS CARDOSA ASSOCIATES INC.
865 THE ALAMEDA
SAN JOSE, CALIFORNIA 95126

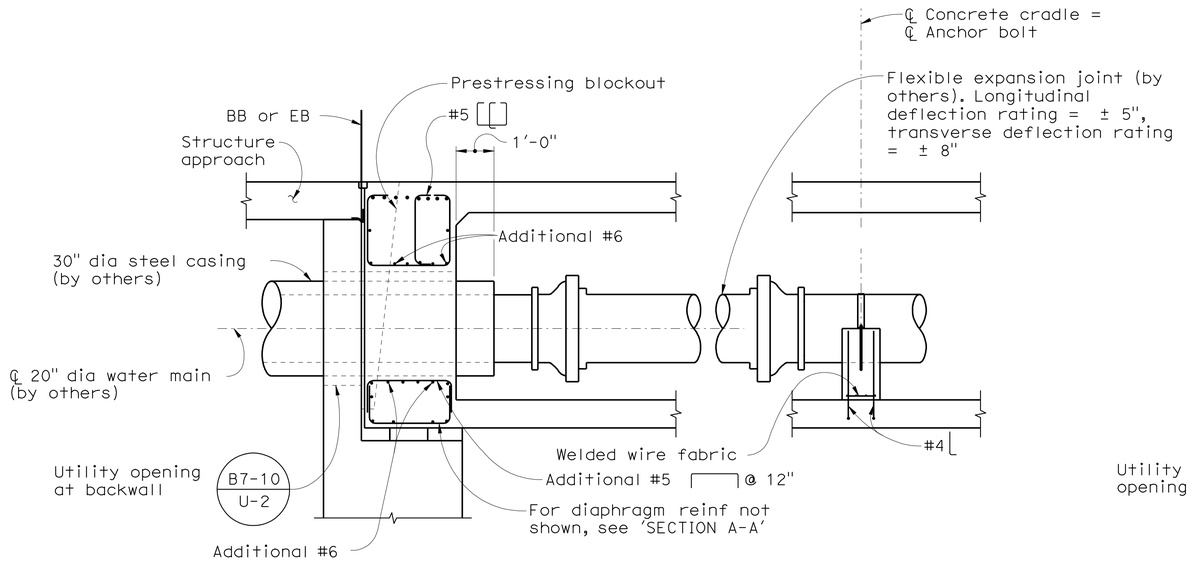

SECTION B-B
1/2" = 1'-0"

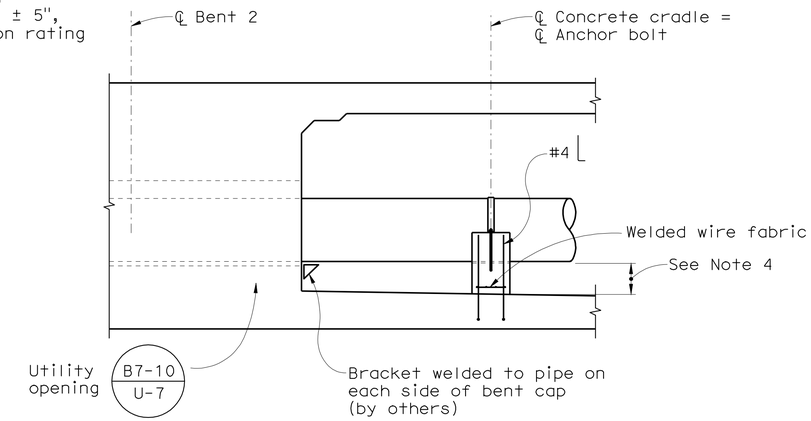

SECTION C-C
1/2" = 1'-0"

2 **ADDED PER ADDENDUM No. 2 DATED JULY 8, 2010**

Notes:

1. For 'SECTION A-A', see 'GIRDER DETAILS No. 1' sheet.
2. All utility work performed by others shall be done after the diaphragm openings are constructed and prior to forming the bridge deck
3. Concrete cradles to be placed after pipe placement
4. Distance from bottom of pipe to top of soffit shall be 12" min and 14" max. Dimension is permitted to be less than 12" near Bent 2 only due to soffit flare
5. Two layers of building paper shall be wrapped around utility to allow utility the freedom to slide within the cradle.
6. The Contractor shall remove all formwork and debris from inside the box girder cell where water line will be installed.
7. Water main shall be installed parallel with bridge deck.
8. Water main shall be tightly clamped at the first pipe support on each side of the Bent 2 diaphragm. At all other pipe supports, the pipe clamp shall be shimmed with steel washer plates to provide ¼" clearance between the water main and pipe clamp.

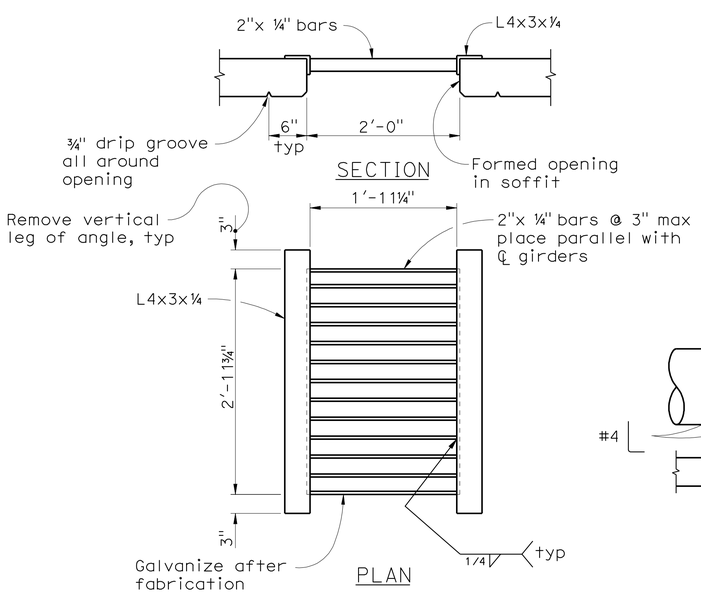

SOFFIT GRATE - DETAIL 1
1" = 1'-0'

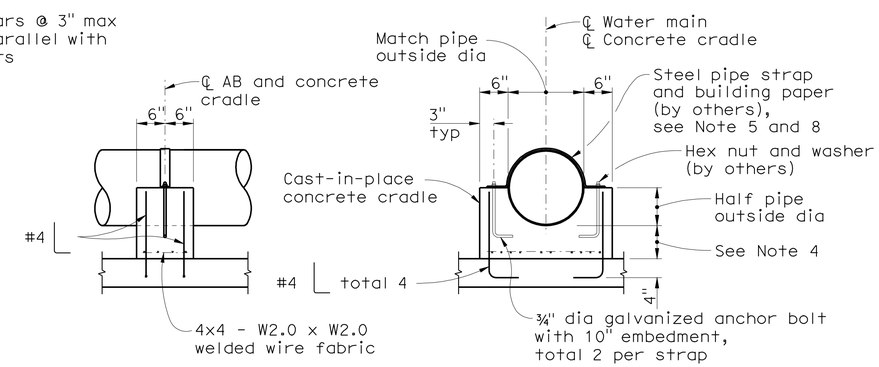

CONCRETE CRADLE - DETAIL 2
NO SCALE

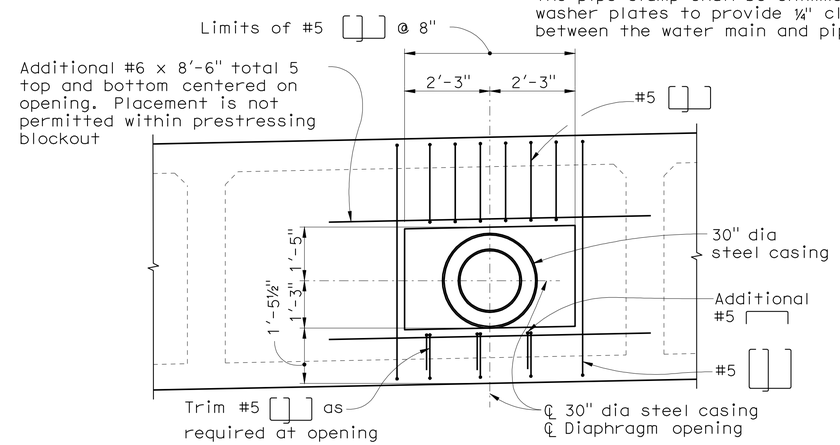

END DIAPHRAGM ELEVATION
1/2" = 1'-0"

DESIGN OVERSIGHT — Emil A. Vergara Jr.
5-20-10
SIGN OFF DATE

	BY	CHECKED
DESIGN	J. ALCIATI	S. MOYLES
DETAILS	R. YAMANE	S. MOYLES
QUANTITIES	D. UPADHYAY	Y. LIN

PREPARED FOR THE STATE OF CALIFORNIA DEPARTMENT OF TRANSPORTATION

JOHN A. ALCIATI
PROJECT ENGINEER

BRIDGE NO. 37-0668
POST MILE 33.0

TULLY ROAD OVERCROSSING
UTILITY DETAILS No. 1

DESIGN DETAIL SHEET (ENGLISH) (REV. 2/25/05)

ORIGINAL SCALE IN INCHES FOR REDUCED PLANS 0 1 2 3

CU 04329
EA 1A9801

DISREGARD PRINTS BEARING EARLIER REVISION DATES

REVISION DATES (PRELIMINARY STAGE ONLY) 10/20/09 1/22/10 5/3/10 5/18/10

SHEET 17 OF 28

FILE => 37-0668-m-udet01.add

USERNAME => trsthk DATE PLOTTED => 08-JUL-2010 TIME PLOTTED => 08:20 1998226 (1998226517)

DIST	COUNTY	ROUTE	POST MILES TOTAL PROJECT	SHEET No	TOTAL SHEETS
04	SCI	101	31.8/34.3	493B	515

REGISTERED CIVIL ENGINEER — DATE 5/18/10

REGISTERED PROFESSIONAL ENGINEER RONALD L OEN No. 46945 Exp. 9/30/11 CIVIL STATE OF CALIFORNIA

11-23-10
PLANS APPROVAL DATE

The State of California or its officers or agents shall not be responsible for the accuracy or completeness of electronic copies of this plan sheet.

SANTA CLARA VALLEY TRANSPORTATION AUTHORITY
3331 N. FIRST STREET
SAN JOSE, CALIFORNIA 95134-1906
SPONSORING AGENCY

BIGGS CARDOSA ASSOCIATES INC.
865 THE ALAMEDA
SAN JOSE, CALIFORNIA 95126

2

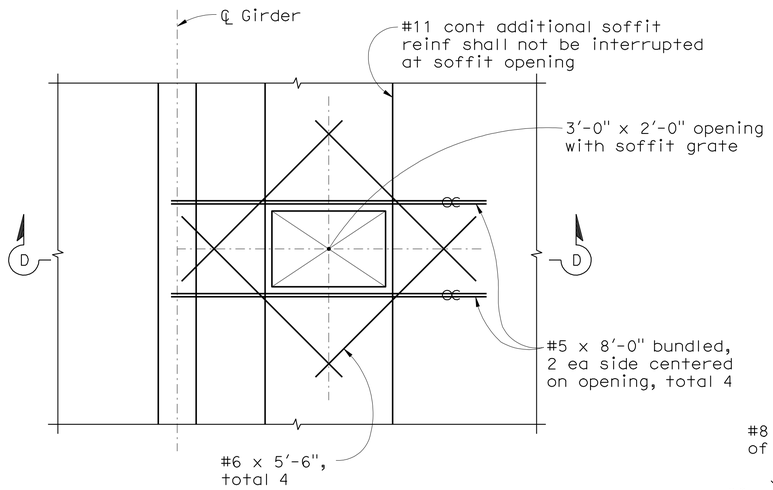

SOFFIT OPENING - PARTIAL PLAN
1/2" = 1'-0"

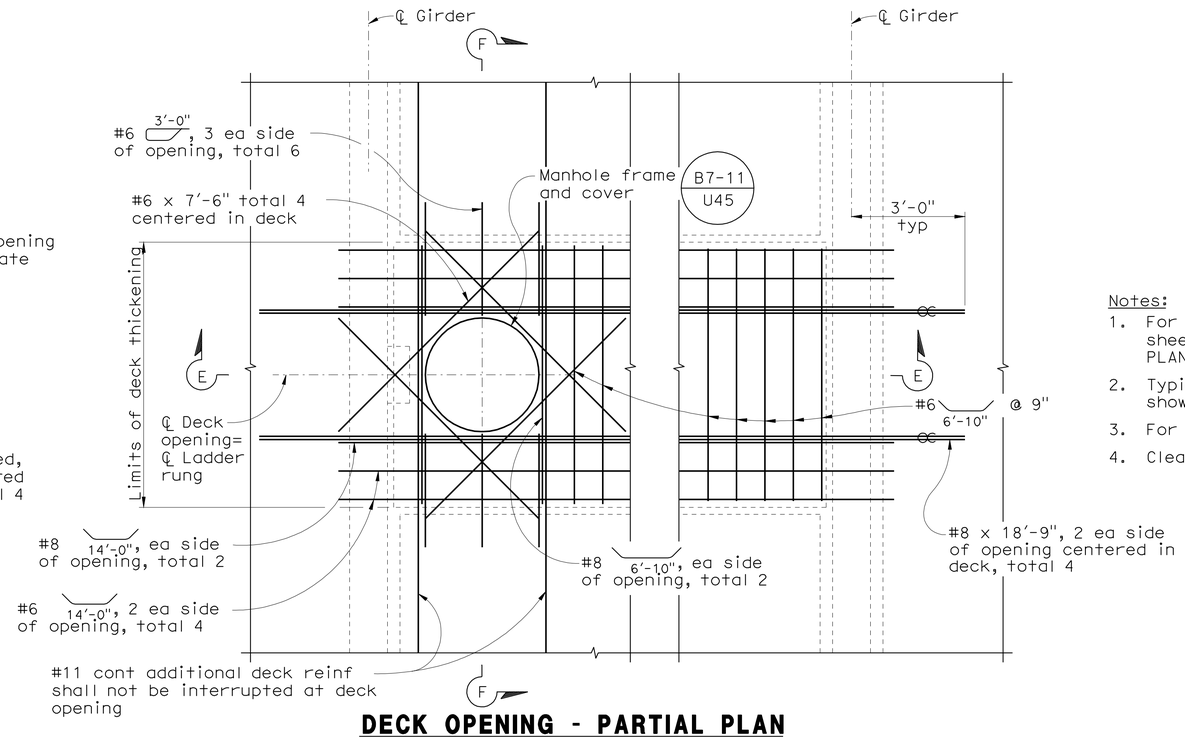

DECK OPENING - PARTIAL PLAN
1/2" = 1'-0"

Notes:

1. For locations of soffit openings, see 'GIRDER LAYOUT' sheet. For locations of deck openings, see 'GENERAL PLAN' sheet.
2. Typical and additional soffit reinforcement not shown for clarity, except as noted.
3. For 'DETAIL 1', see 'UTILITY DETAILS No. 1' sheet.
4. Clearance to opening reinforcement shall be 1" min.

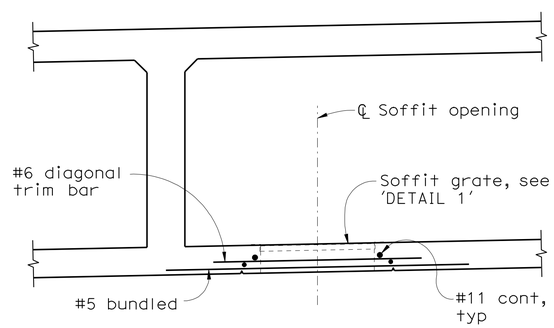

SECTION D-D
1/2" = 1'-0"

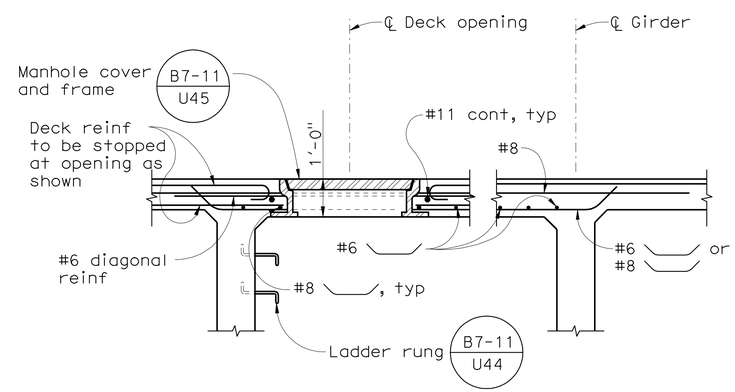

SECTION E-E
1/2" = 1'-0"

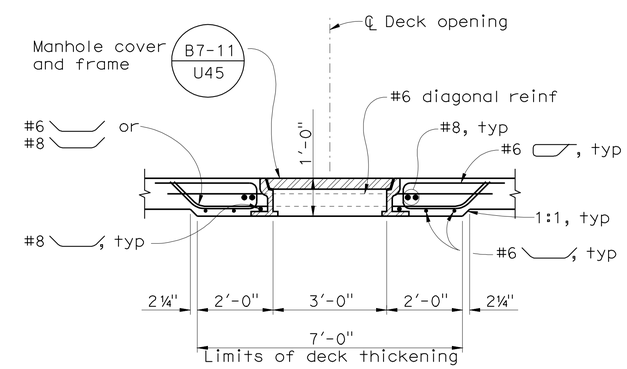

SECTION F-F
1/2" = 1'-0"

2 ADDED PER ADDENDUM No. 2 DATED JULY 8, 2010

DESIGN OVERSIGHT — Emil A. Vergara Jr.
5-20-10
SIGN OFF DATE

	BY	CHECKED
DESIGN	J. ALCIATI	S. MOYLES
DETAILS	R. YAMANE	S. MOYLES
QUANTITIES	D. UPADHYAY	Y. LIN

PREPARED FOR THE STATE OF CALIFORNIA DEPARTMENT OF TRANSPORTATION

JOHN A. ALCIATI
PROJECT ENGINEER

BRIDGE NO. 37-0668
POST MILE 33.0

TULLY ROAD OVERCROSSING
UTILITY DETAILS No. 2

DESIGN DETAIL SHEET (ENGLISH) (REV. 2/25/05)

ORIGINAL SCALE IN INCHES FOR REDUCED PLANS 0 1 2 3

CU 04329
EA 1A9801

DISREGARD PRINTS BEARING EARLIER REVISION DATES — REVISION DATES (PRELIMINARY STAGE ONLY) 10/20/09 1/22/10 5/3/10

SHEET 18 OF 28

FILE => 37-0668-m-udet02.add

USERNAME => trstrk DATE PLOTTED => 08-JUL-2010 TIME PLOTTED => 08:20

(19982265 18) 19982265

DIST	COUNTY	ROUTE	POST MILES TOTAL PROJECT	SHEET No	TOTAL SHEETS
04	SCl	101	31.8/34.3	494	515

REGISTERED CIVIL ENGINEER 5/18/10 DATE

11-23-09
PLANS APPROVAL DATE

REGISTERED PROFESSIONAL ENGINEER RONALD L OEN No. 46945 Exp. 9/30/11 CIVIL STATE OF CALIFORNIA

The State of California or its officers or agents shall not be responsible for the accuracy or completeness of electronic copies of this plan sheet.

SANTA CLARA VALLEY TRANSPORTATION AUTHORITY
3331 N. FIRST STREET
SAN JOSE, CALIFORNIA 95134-1906
SPONSORING AGENCY

BIGGS CARDOSA ASSOCIATES INC.
865 THE ALAMEDA
SAN JOSE, CALIFORNIA 95126

2

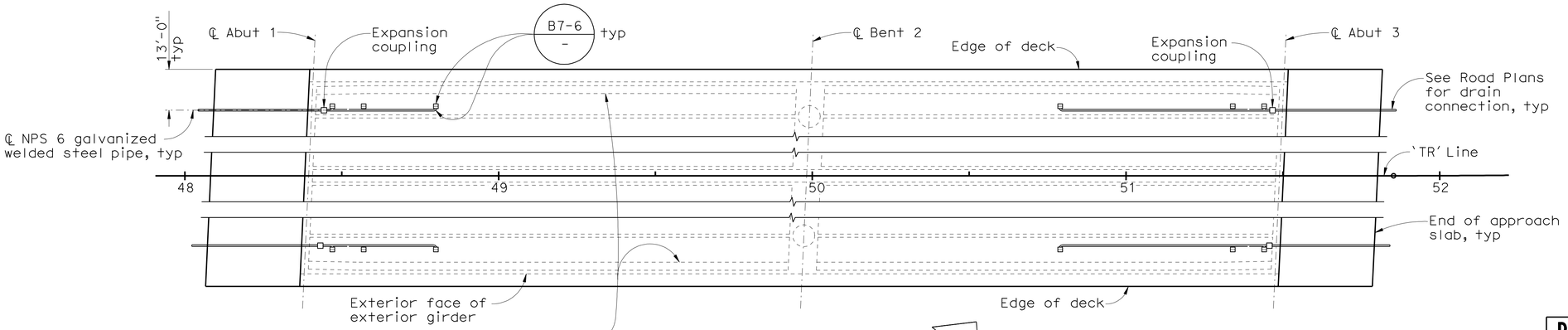

DECK DRAIN LAYOUT
1" = 20'

DECK DRAIN LOCATION TABLE	
℄ Deck Drain	
Left Bridge	Right Bridge
Sta 48+47	Sta 48+47
Sta 48+57	Sta 48+57
Sta 48+80	Sta 48+80
Sta 50+79	Sta 50+79
Sta 51+34	Sta 51+34
Sta 51+44	Sta 51+44

Notes:
1. Stationing is along 'TR' Line.
2. Place drains perpendicular to 'TR' Line.

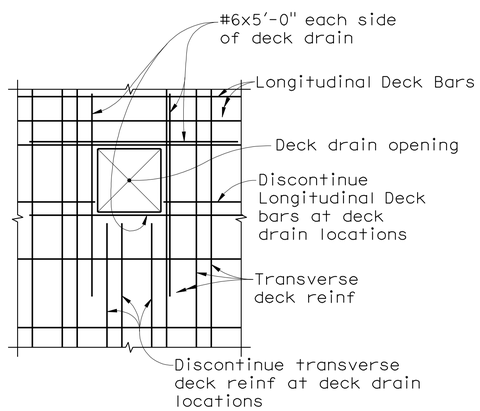

DECK REINF AT DECK DRAIN - DETAIL 1
NO SCALE

Legend:
⊟ Indicates Deck Drain Type D-1

Notes:
1. All pipes in the deck are NPS 6x0.135" galvanized welded steel pipe.
2. All pipes in the deck and bents shall be installed with a down slope of 2% minimum.
3. Final deck drain & pipe locations may be adjusted in the field (by 12" max longitudinally) to avoid bridge reinforcement & PS ducts.
4. See B7-6 and B7-8 for details not noted.

2 **REVISED PER ADDENDUM No. 2 DATED JULY 8, 2010**

DESIGN OVERSIGHT Emil A. Vergara Jr.
5-20-10
SIGN OFF DATE

DESIGN DETAIL SHEET (ENGLISH) (REV. 2/25/05)

	BY	CHECKED
DESIGN	J. ALCIATI	S. MOYLES
DETAILS	R. YAMANE	S. MOYLES
QUANTITIES	D. UPADHYAY	Y. LIN

ORIGINAL SCALE IN INCHES FOR REDUCED PLANS 0 1 2 3

PREPARED FOR THE STATE OF CALIFORNIA DEPARTMENT OF TRANSPORTATION

JOHN A. ALCIATI
PROJECT ENGINEER

CU 04329
EA 1A9801

BRIDGE NO. 37-0668
POST MILE 33.0

TULLY ROAD OVERCROSSING
DECK DRAIN DETAILS

DISREGARD PRINTS BEARING EARLIER REVISION DATES

REVISION DATES (PRELIMINARY STAGE ONLY) 11/26/08 2/2/09 3/26/09 5/1/09 5/13/09 10/26/09 1/22/10 5/3/10

SHEET 19 OF 28

FILE => 37-0668-r-ddet01.add

USERNAME => trstrk DATE PLOTTED => 08-JUL-2010 TIME PLOTTED => 08:20

(19982265 17) 19982265

DIST	COUNTY	ROUTE	POST MILES TOTAL PROJECT	SHEET No	TOTAL SHEETS
04	SCI	101	31.8/34.3	495	515

REGISTERED CIVIL ENGINEER — DATE 5/18/10

11-23-09
PLANS APPROVAL DATE

REGISTERED PROFESSIONAL ENGINEER RONALD L OEN No. 46945 Exp. 9/30/11 CIVIL STATE OF CALIFORNIA

The State of California or its officers or agents shall not be responsible for the accuracy or completeness of electronic copies of this plan sheet.

SANTA CLARA VALLEY TRANSPORTATION AUTHORITY
3331 N. FIRST STREET
SAN JOSE, CALIFORNIA 95134-1906
SPONSORING AGENCY

BIGGS CARDOSA ASSOCIATES INC.
865 THE ALAMEDA
SAN JOSE, CALIFORNIA 95126

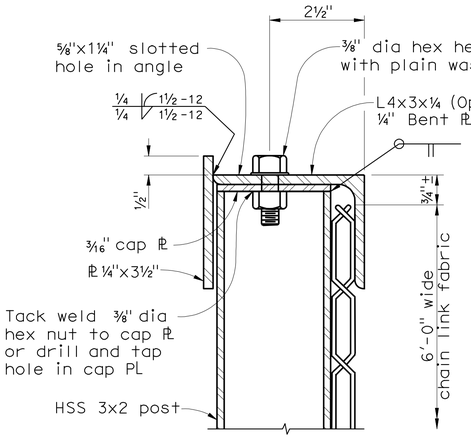

SECTION A-A
NO SCALE

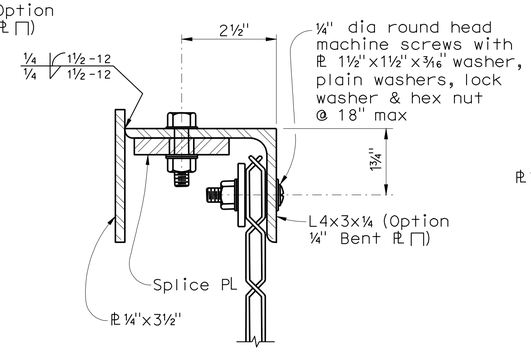

SECTION B-B
NO SCALE

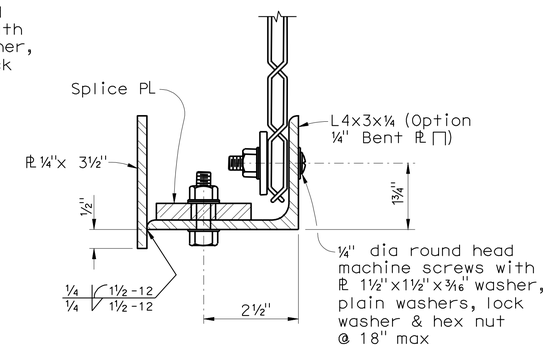

SECTION C-C
NO SCALE

Notes:

1. Railing assembly except chain link fabric to be galvanized after fabrication.
2. Posts shall be vertical.
3. Railing shall conform to horizontal and vertical alignment. When railing is placed on a curved horizontal alignment with radius of 148'-0" or less, thread the 5/16" dia cable through 3/8" dia welded eye rods embedded 4" into the top of the concrete parapet and equally spaced to limit the midordinate distance between the 5/16" dia cable and the curve to 1" maximum. Horizontal angle shall be bent to conform to horizontal alignment if radius is 148'-0" or less and may be on 10'-0" chords if radius is over 148'-0"
4. Horizontal angle shall be continuous over not less than two intermediate posts, except that a shorter length is permitted at expansion joints, electroliers and other rail discontinuities.
5. When rail is on slope, place fabric parallel to slope.
6. Alternative details may be submitted by Contractor for Engineer's approval.
7. For details and reinforcement not shown see Standatd Plan B11-54.
8. See Road Plans for limits of Chain Link Railing Type 7.
9. Provide thimbles at all cable loops.
10. Expansion joint in railing same dimension as expansion joint in deck or wall. Increase slotted hole length and splice bar length correspondingly.
11. All rail elements including decorative plate elements shall be powder coated after fabrication. Chain Link Fabric shall not to be Powder Coated.
12. For 'SECTION D-D', 'SECTION E-E', 'SECTION F-F', 'SPLICE OR EXPANSION JOINT - DETAIL 1', 'DETAIL 2', 'POST ANCHORAGE - DETAIL 3', 'DETAIL 4', 'DETAIL 5', and 'DETAIL 6', see 'CHAIN LINK RAILING TYPE 7 (MOD) No. 2' sheet.

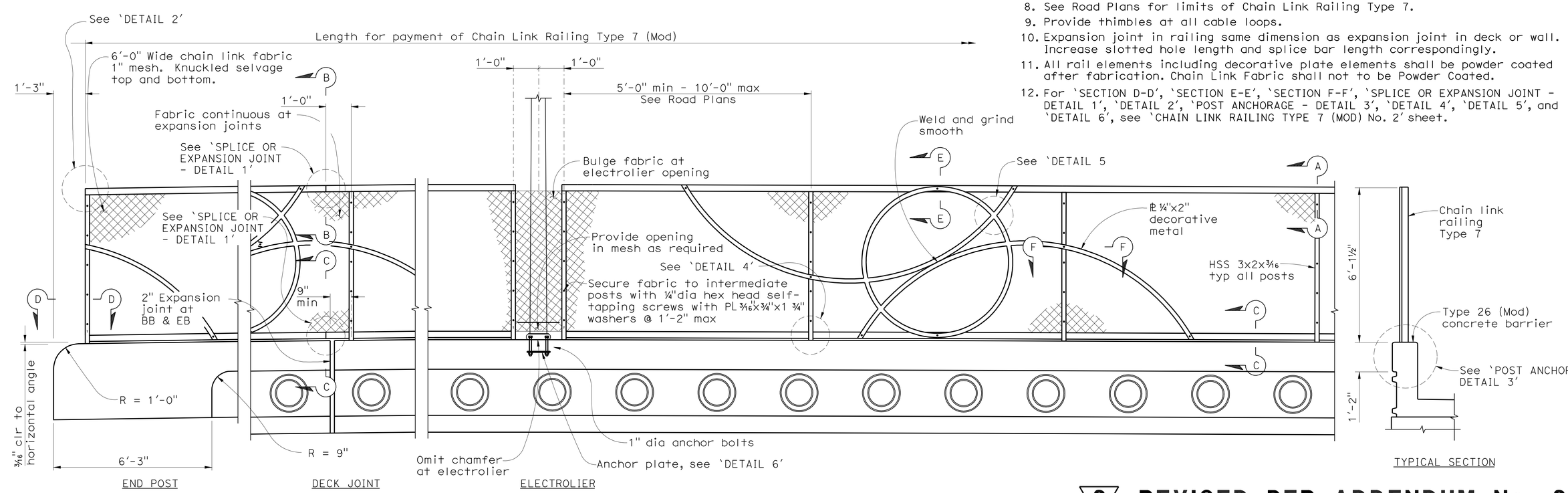

TYPICAL ELEVATION-TYPE 26 (MOD) BARRIER
NO SCALE

2 **REVISED PER ADDENDUM No. 2 DATED JULY 8, 2010**

DESIGN OVERSIGHT — Emil A. Vergara Jr.
5-25-10
SIGN OFF DATE

	BY	CHECKED
DESIGN	J. ALCIATI	S. MOYLES
DETAILS	R. YAMANE	S. MOYLES
QUANTITIES	D. UPADHYAY	Y. LIN

PREPARED FOR THE STATE OF CALIFORNIA DEPARTMENT OF TRANSPORTATION

JOHN A. ALCIATI
PROJECT ENGINEER

BRIDGE NO. 37-0668
POST MILE 33.0

TULLY ROAD OVERCROSSING
CHAIN LINK RAILING TYPE 7 (MOD) No. 1

DESIGN DETAIL SHEET (ENGLISH) (REV. 2/25/05)

ORIGINAL SCALE IN INCHES FOR REDUCED PLANS 0 1 2 3

CU 04329
EA 1A9801

DISREGARD PRINTS BEARING EARLIER REVISION DATES

REVISION DATES (PRELIMINARY STAGE ONLY): 11/26/08 2/2/09 3/26/09 5/1/09 5/13/09 10/28/10 1/22/10 5/3/10

SHEET 20 OF 28

FILE => 37-0668-s-clnk-dt01.add

USERNAME => trstrk DATE PLOTTED => 08-JUL-2010 TIME PLOTTED => 08:20 (1998226518)

DIST	COUNTY	ROUTE	POST MILES TOTAL PROJECT	SHEET No	TOTAL SHEETS
04	SCI	101	31.8/34.3	496	515

REGISTERED CIVIL ENGINEER 5/18/10 DATE

11-23-09
PLANS APPROVAL DATE

REGISTERED PROFESSIONAL ENGINEER RONALD L OEN No. 46945 Exp. 9/30/11 CIVIL STATE OF CALIFORNIA

The State of California or its officers or agents shall not be responsible for the accuracy or completeness of electronic copies of this plan sheet.

SANTA CLARA VALLEY TRANSPORTATION AUTHORITY
3331 N. FIRST STREET
SAN JOSE, CALIFORNIA 95134-1906
SPONSORING AGENCY

BIGGS CARDOSA ASSOCIATES INC.
865 THE ALAMEDA
SAN JOSE, CALIFORNIA 95126

2

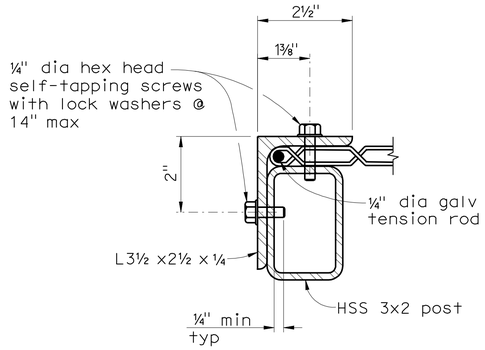

SECTION D-D
NO SCALE

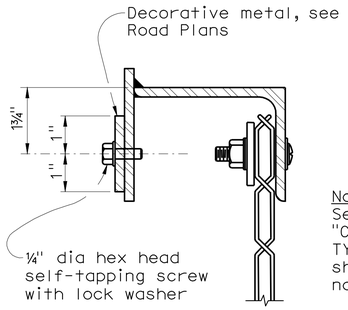

Note:
See 'SECTION B-B' on "CHAIN LINK RAILING TYPE 7 (MOD) No. 1" sheet, for detail not shown

SECTION E-E
NO SCALE

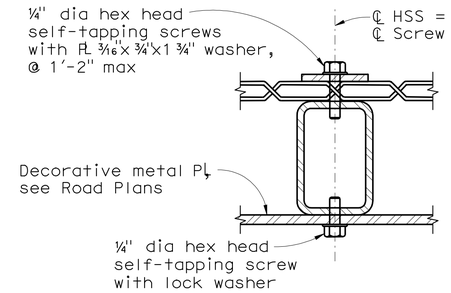

SECTION F-F
NO SCALE

Notes:
1. For sections A-A & B-B's additional notes see 'CHAIN LINK RAILING TYPE 7 (MOD) No. 1' sheet

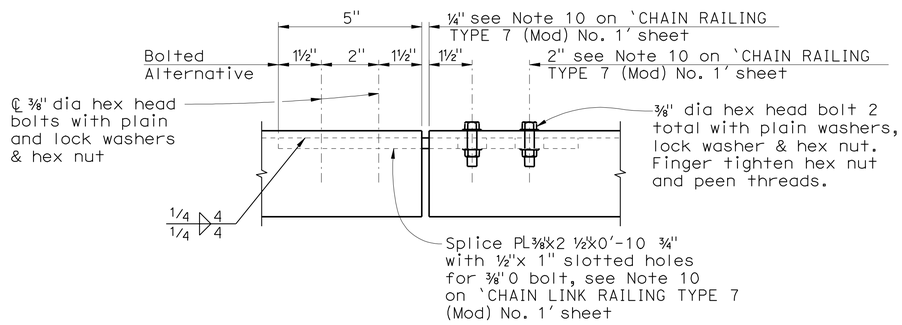

SPLICE OR EXPANSION JOINT - DETAIL 1
NO SCALE

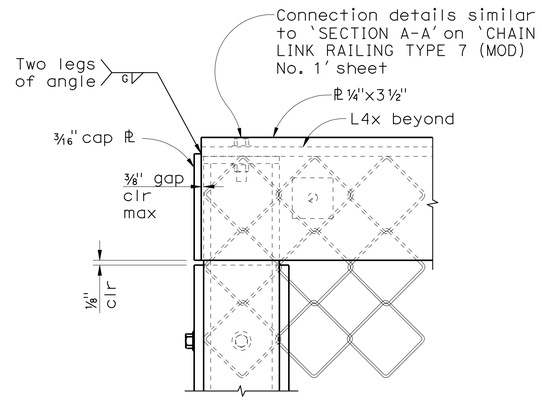

DETAIL 2
NO SCALE

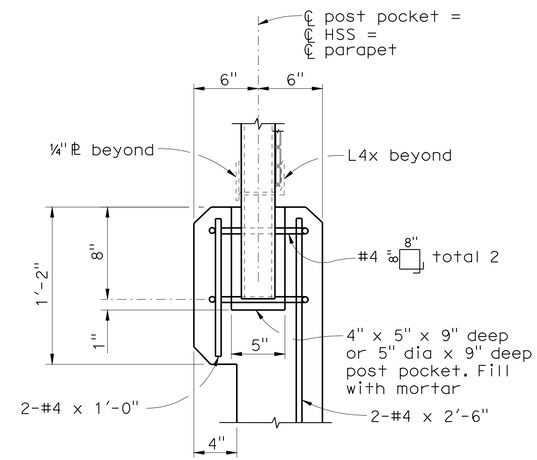

POST ANCHORAGE - DETAIL 3
NO SCALE

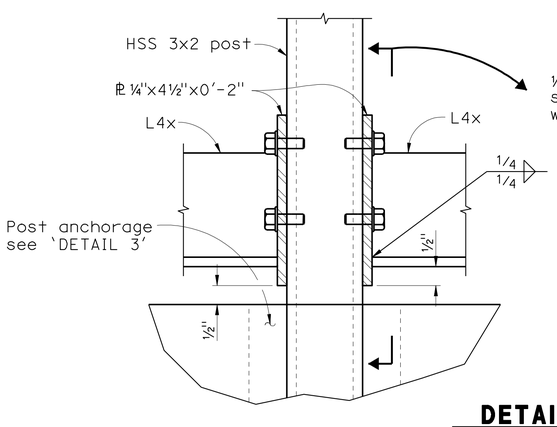

DETAIL 4
NO SCALE

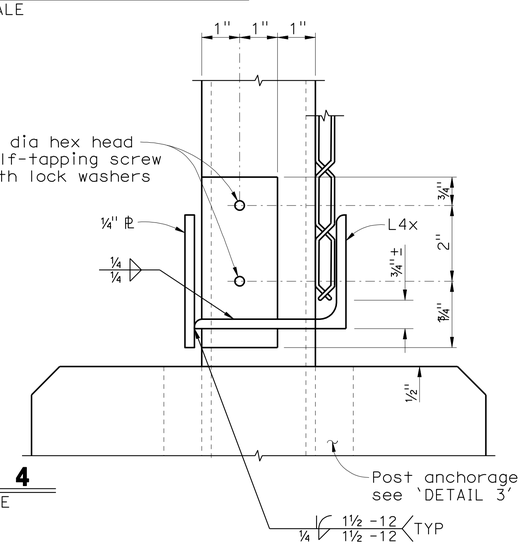

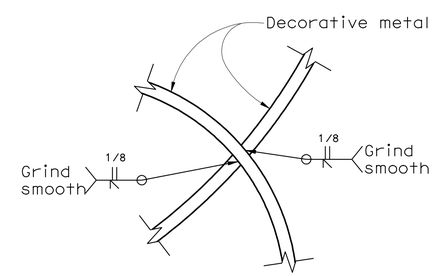

DETAIL 5
NO SCALE

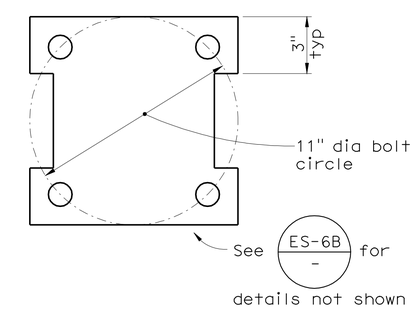

DETAIL 6
NO SCALE

2 **REVISED PER ADDENDUM No. 2 DATED JULY 8, 2010**

DESIGN OVERSIGHT Emil A. Vergara Jr.
5-20-10
SIGN OFF DATE

	BY	CHECKED
DESIGN	J. ALCIATI	S. MOYLES
DETAILS	R. YAMANE	S. MOYLES
QUANTITIES	D. UPADHYAY	Y. LIN

PREPARED FOR THE STATE OF CALIFORNIA DEPARTMENT OF TRANSPORTATION

JOHN A. ALCIATI
PROJECT ENGINEER

BRIDGE NO. 37-0668
POST MILE 33.0

TULLY ROAD OVERCROSSING
CHAIN LINK RAILING TYPE 7 (MOD) No. 2

DESIGN DETAIL SHEET (ENGLISH) (REV. 2/25/05)

ORIGINAL SCALE IN INCHES FOR REDUCED PLANS 0 1 2 3

CU 04329
EA 1A9801

DISREGARD PRINTS BEARING EARLIER REVISION DATES

REVISION DATES (PRELIMINARY STAGE ONLY) 11/26/08 2/27/09 3/26/09 5/1/09 5/13/09 10/26/09 1/22/10 5/3/10

SHEET 21 OF 28

FILE => 37-0668-s-clnk-dt02.add

USERNAME => trsthk DATE PLOTTED => 08-JUL-2010 TIME PLOTTED => 08:20

(1998226519) 1998226

DIST	COUNTY	ROUTE	POST MILES TOTAL PROJECT	SHEET NO.	TOTAL SHEETS
04	SCI	101	31.8/34.3	497	515

REGISTERED CIVIL ENGINEER 5/18/10

11-23-09
PLANS APPROVAL DATE

REGISTERED PROFESSIONAL ENGINEER RONALD L OEN No. 46945 Exp. 9/30/11 CIVIL STATE OF CALIFORNIA

The State of California or its officers or agents shall not be responsible for the accuracy or completeness of electronic copies of this plan sheet.

SANTA CLARA VALLEY TRANSPORTATION AUTHORITY
3331 N. FIRST STREET
SAN JOSE, CALIFORNIA 95134-1906
SPONSORING AGENCY

BIGGS CARDOSA ASSOCIATES INC.
865 THE ALAMEDA
SAN JOSE, CALIFORNIA 95126

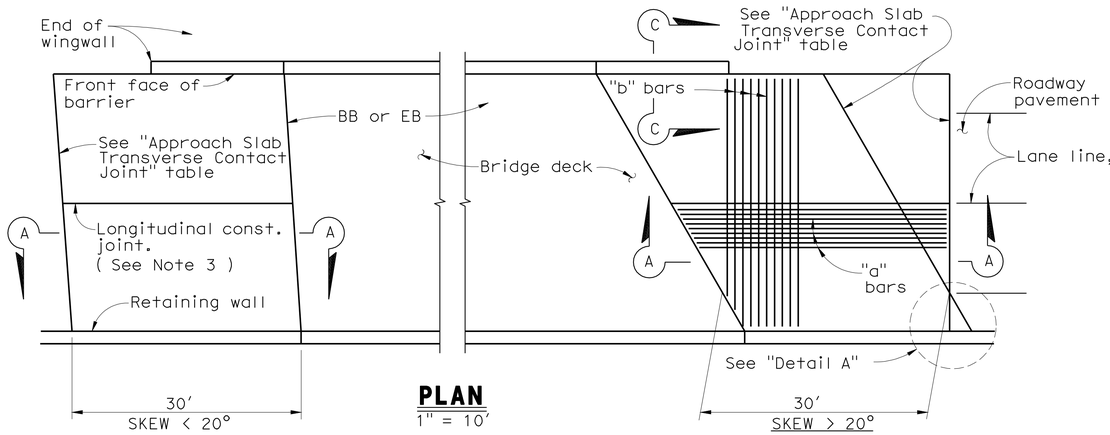

PLAN
1" = 10′

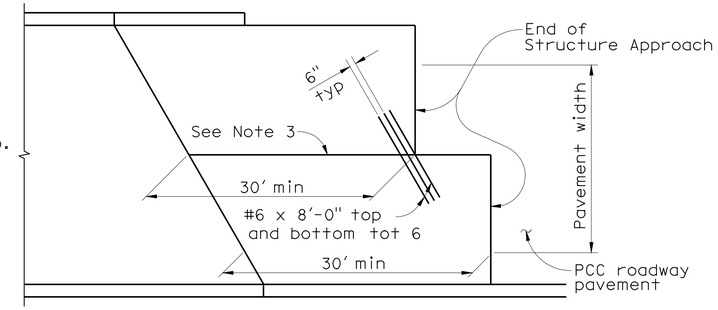

STRUCTURE APPROACH - END STAGGER DETAIL
No Scale

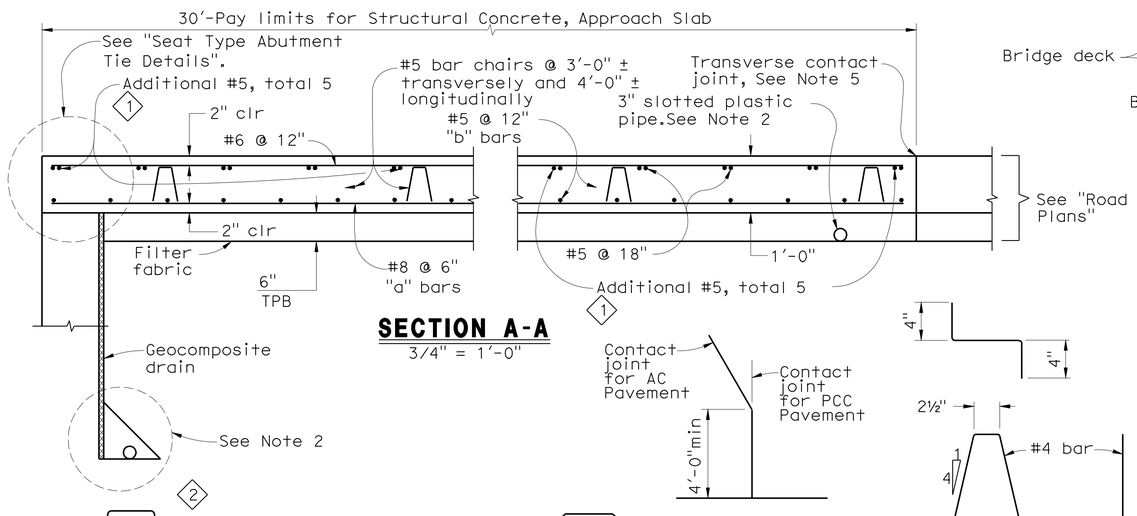

SECTION A-A
3/4" = 1′-0"

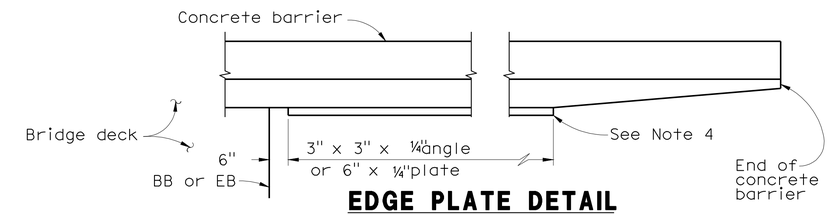

EDGE PLATE DETAIL
1/2" = 1′-0"

APPROACH SLAB TRANSVERSE CONTACT JOINT		
APPROACH SKEW	WITH AC ROADWAY PAVEMENT	WITH PCC ROADWAY PAVEMENT
< 20°	Parallel to face of paving notch	Parallel to face of paving notch
20° - 45°	Parallel to face of P N use (Detail A)	Stagger lines 24′ to 36′ apart.
> 45°	Parallel to face of P N use (Detail A)	Stagger at each lane line.

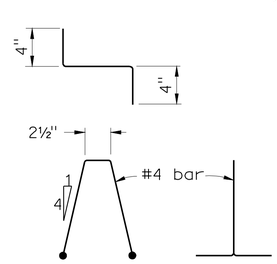

DETAIL A
No Scale

BAR CHAIR DETAIL
1-1/2" = 1′-0"

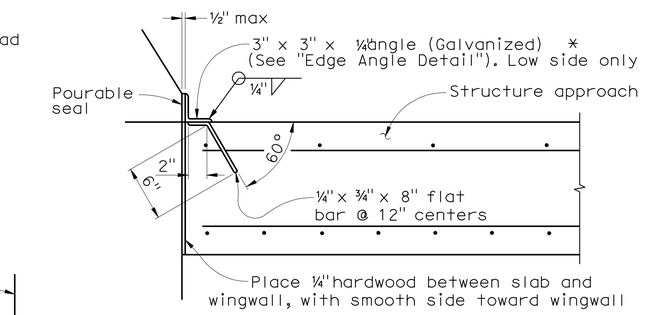

*(TO BE USED WITH TYPE 25 OR TYPE 27 CONCRETE BARRIER

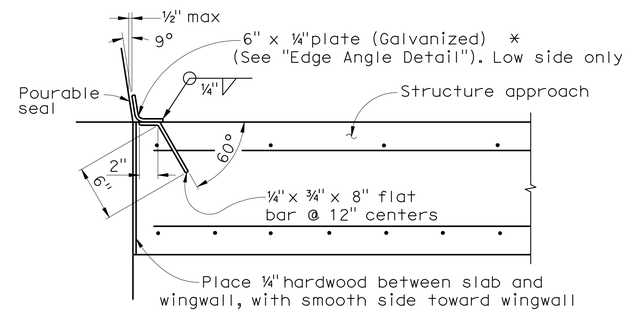

*(TO BE USED WITH TYPE 732 OR TYPE 736 CONCRETE BARRIER

DETAIL B
1-1/2" = 1′-0"

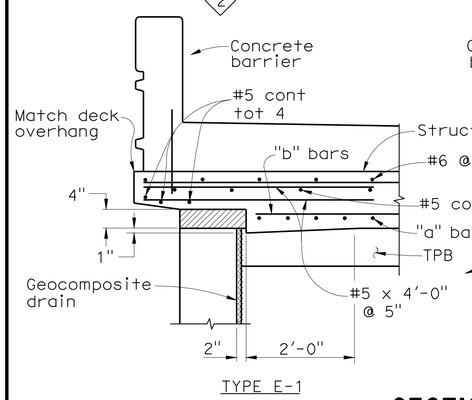

TYPE E-1

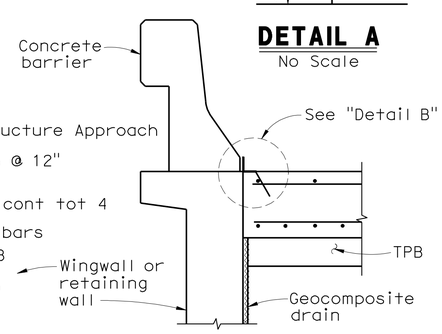

TYPE E-2

SECTION C-C
3/4" = 1′-0"

(Type E-1 to be used,unless otherwise shown on plans)

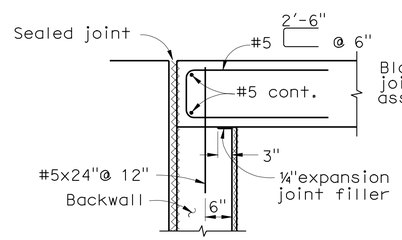

MR < 2"

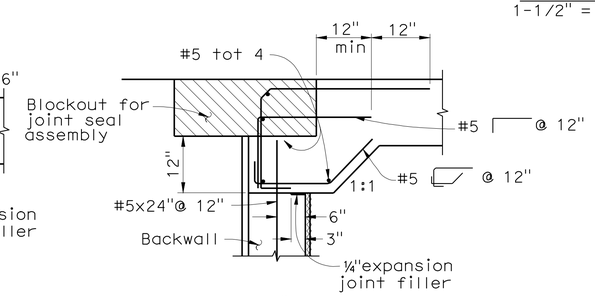

MR > 2"

SEAT TYPE ABUTMENT TIE DETAILS (SEE NOTE 1)
3/4" = 1′-0"

NOTES:

1. For details not shown,see Structure Plans. For MR ≤ 2",adjust bar reinforcement to clear a sawcut for sealed joint,when required.
2. For drainage details,see "Structure Approach Drainage Details" sheet.
3. Longitudinal construction joints,when permitted by the Engineer, shall be located on lane lines.
4. End angle or plate at beginning of barrier transition, end of wingwall or end of structure approach as applicable.
5. For transverse contact joint with new PCC paving, refer to Standard Plan P10.
6. At the contractor's option, approach slab transverse reinforcement may be placed parallel to paving notch. Spacing of transverse reinforcement is measured along CL roadway.

Remove all polystyrene.

2 REVISED PER ADDENDUM No. 2 DATED JULY 8, 2010

STANDARD DRAWING

RELEASE DATE 3/14/05	DESIGN	BY M. TRAFFALIS	CHECKED E. THORKILDSEN	RELEASED BY
FILE NO. xs3-120e	DETAILS	BY R. YEE	CHECKED E. THORKILDSEN	
	SUBMITTED	BY M. HA	DRAWING DATE 4/98	OFFICE CHIEF

1 Additional reinforcement
2 Concrete Barrier Type 26 (Mod)

STATE OF CALIFORNIA
DEPARTMENT OF TRANSPORTATION

DIVISION OF ENGINEERING SERVICES

BRIDGE NO. 37-0668
POST MILE 33.0

TULLY ROAD OVERCROSSING
STRUCTURE APPROACH TYPE N(30S)

ORIGINAL SCALE IN INCHES FOR REDUCED PLANS 0 1 2 3

CU 04329
EA 1A9801

DISREGARD PRINTS BEARING EARLIER REVISION DATES
REVISION DATES (PRELIMINARY STAGE ONLY) 11/26/08 2/2/09 3/26/09 5/1/09 5/13/09 10/28/09 1/22/10 5/3/10

SHEET 22 OF 28

USERNAME => trstrk

37-0668-t-sa01.dgn

DATE PLOTTED => 08-JUL-2010 TIME PLOTTED => 08:21

DIST	COUNTY	ROUTE	POST MILES TOTAL PROJECT	SHEET NO.	TOTAL SHEETS
04	SCI	101	31.8/34.3	498	515

REGISTERED CIVIL ENGINEER 5/18/10

PLANS APPROVAL DATE 11-23-09

REGISTERED PROFESSIONAL ENGINEER RONALD L OEN No. 46945 Exp. 9/30/11 CIVIL STATE OF CALIFORNIA

The State of California or its officers or agents shall not be responsible for the accuracy or completeness of electronic copies of this plan sheet.

SANTA CLARA VALLEY TRANSPORTATION AUTHORITY
3331 N. FIRST STREET
SAN JOSE, CALIFORNIA 95134-1906
SPONSORING AGENCY

BIGGS CARDOSA ASSOCIATES INC.
865 THE ALAMEDA
SAN JOSE, CALIFORNIA 95126

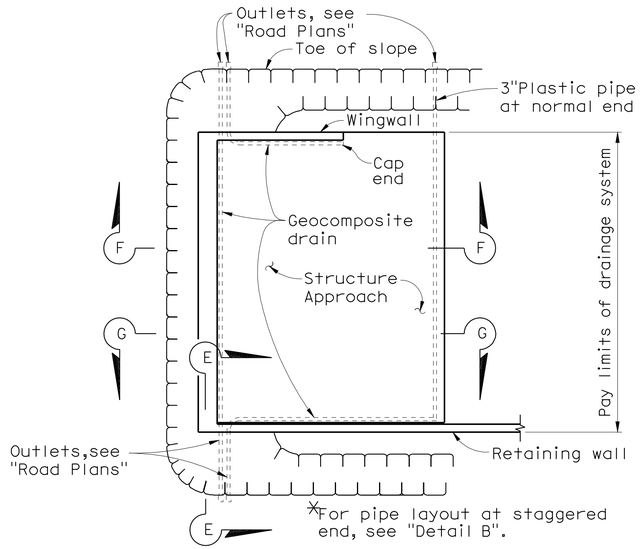

TYPICAL PLAN
1" = 10'

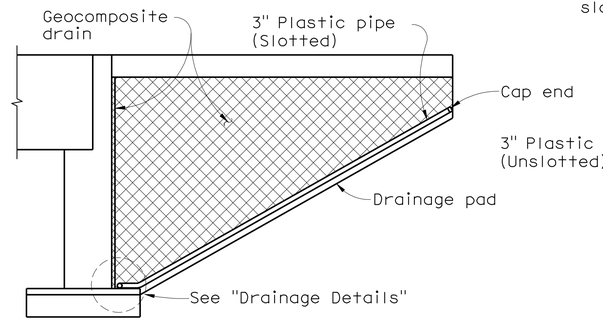

CANTILEVER WINGWALL
SECTION F-F
1/4" = 1'-0"

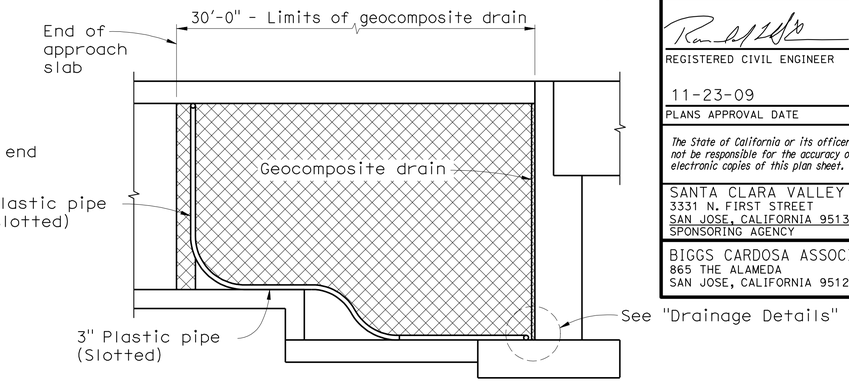

RETAINING WALL WINGWALL
SECTION G-G
1/4" = 1'-0"

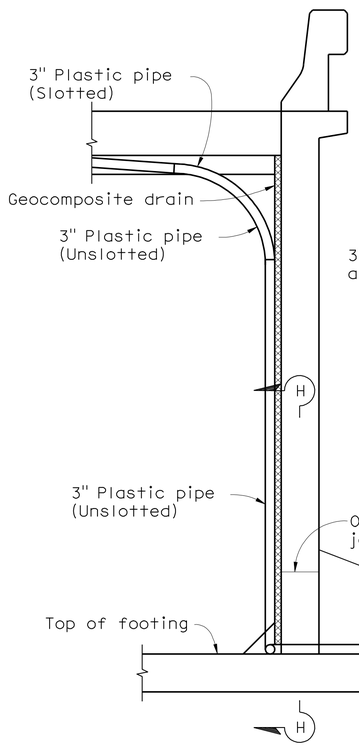

SECTION E-E
1/2" = 1'-0"

Note: Bends and junctions in 3" plastic pipe are 30" radius min.

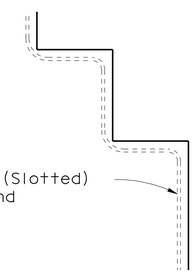

DETAIL B
NO SCALE

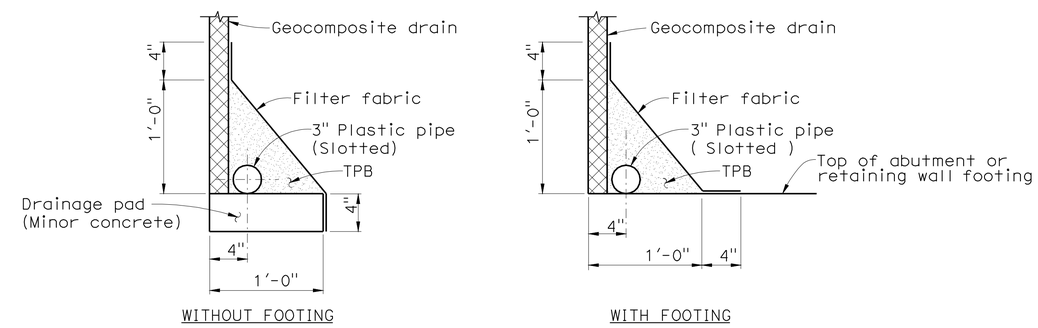

DRAINAGE DETAILS
1 1/2" = 1'-0"

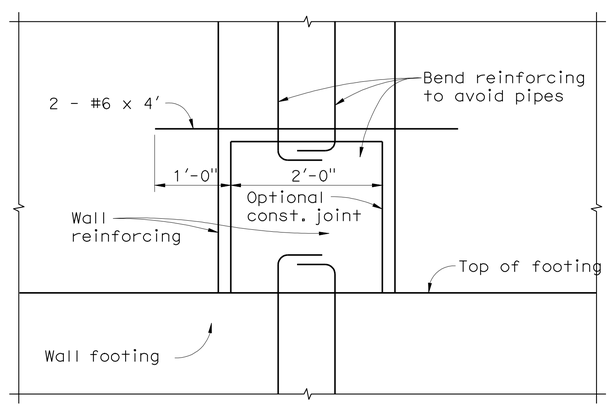

SECTION H-H
1" = 1'-0"

2 **REVISED PER ADDENDUM No. 2 DATED JULY 8, 2010**

STANDARD DRAWING				
RELEASE DATE 4/23/98	DESIGN	BY M. TRAFFALIS	CHECKED E. THORKILDSEN	RELEASED BY
FILE NO. xs3-110e	DETAILS	BY R. YEE	CHECKED E. THORKILDSEN	OFFICE CHIEF
	SUBMITTED	BY M. HA	DRAWING DATE 4/98	

STATE OF CALIFORNIA
DEPARTMENT OF TRANSPORTATION

DIVISION OF ENGINEERING SERVICES

BRIDGE NO. 37-0668
POST MILE 33.0

TULLY ROAD OVERCROSSING
STRUCTURE APPROACH DRAINAGE DETAILS

ORIGINAL SCALE IN INCHES FOR REDUCED PLANS 0 1 2 3

CU 04329
EA 1A9801

DISREGARD PRINTS BEARING EARLIER REVISION DATES

REVISION DATES (PRELIMINARY STAGE ONLY) 11/26/08 2/2/09 3/26/09 5/11/09 5/13/09 10/26/09 1/22/10 5/3/10

SHEET 23 OF 28

USERNAME => trstrk

37-0668-t-sadd.dgn

DATE PLOTTED => 08-JUL-2010 TIME PLOTTED => 08:21 1998226 (1938225217)

2 **REVISED PER ADDENDUM No. 2 DATED JULY 8, 2010**

DIST	COUNTY	ROUTE	POST MILES TOTAL PROJECT	SHEET NO.	TOTAL SHEETS
04	SCI	101	31.8/34.3	499	515

REGISTERED CIVIL ENGINEER 5/18/10

11-23-09
PLANS APPROVAL DATE

REGISTERED PROFESSIONAL ENGINEER RONALD L OEN No. 46945 Exp. 9/30/11 CIVIL STATE OF CALIFORNIA

The State of California or its officers or agents shall not be responsible for the accuracy or completeness of electronic copies of this plan sheet.

SANTA CLARA VALLEY TRANSPORTATION AUTHORITY
3331 N. FIRST STREET
SAN JOSE, CALIFORNIA 95134-1906
SPONSORING AGENCY

BIGGS CARDOSA ASSOCIATES INC.
865 THE ALAMEDA
SAN JOSE, CALIFORNIA 95126

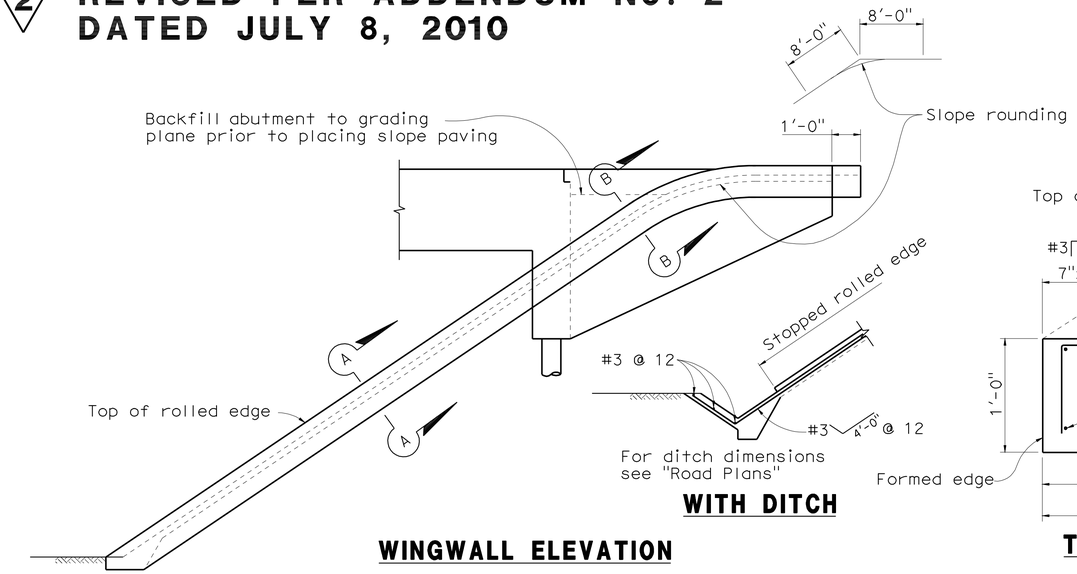

WITH DITCH

WINGWALL ELEVATION

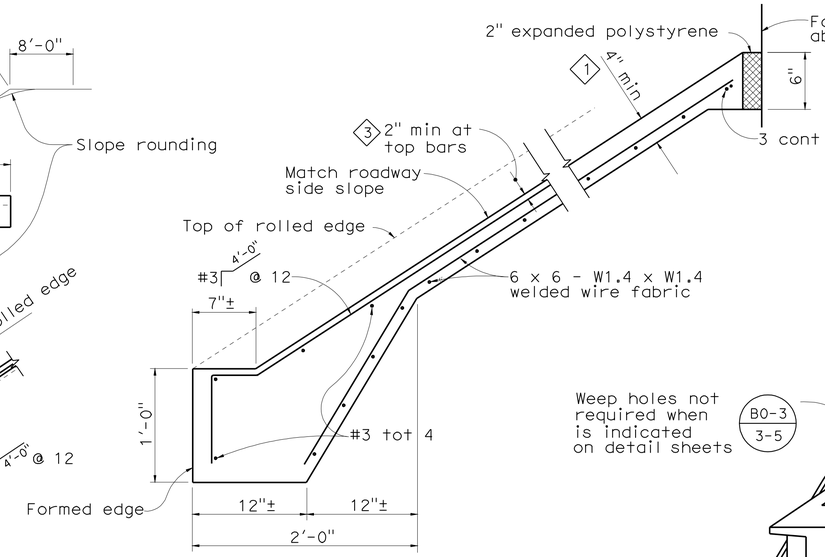

TYPICAL SECTION - CONCRETE PAVING

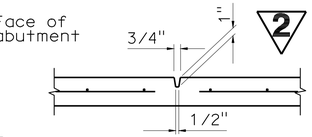

PREFORMED GROOVE

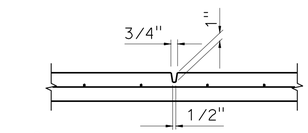

3 **SCORED GROOVE**

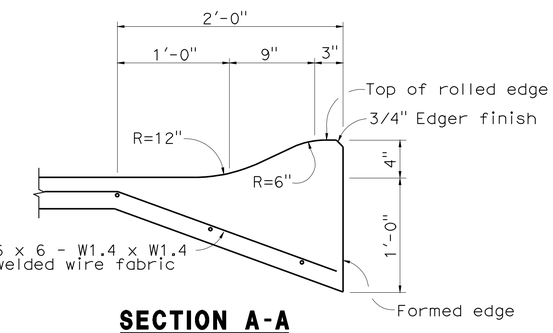

SECTION A-A

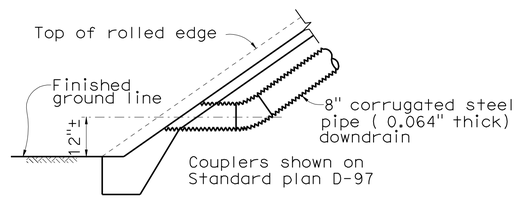

TYPICAL - NO CURB

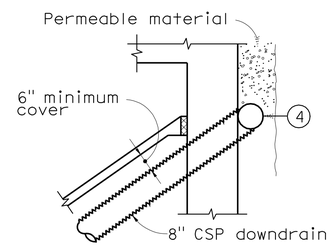

TYPICAL - DRAIN CONNECTION

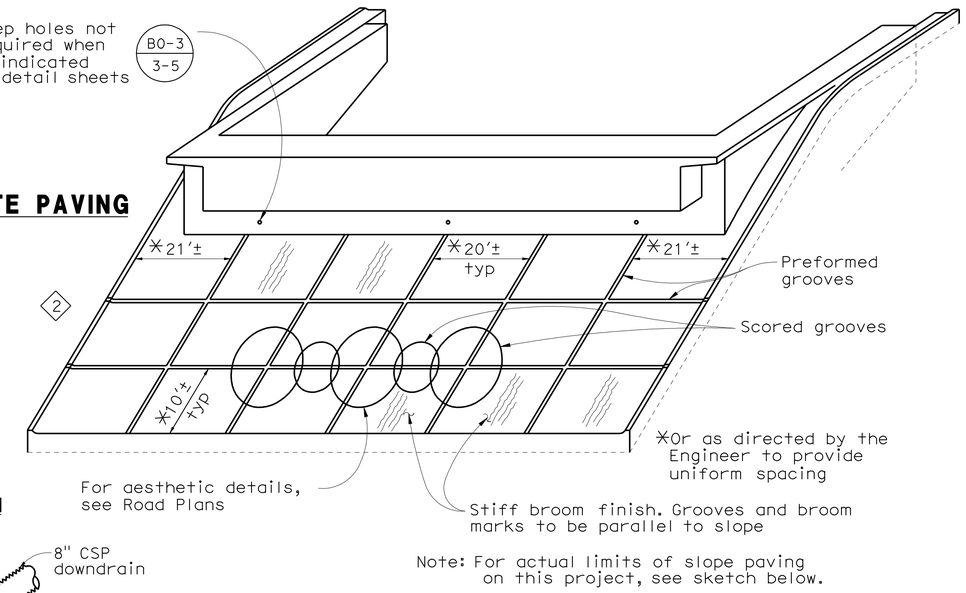

Note: For actual limits of slope paving on this project, see sketch below.

PICTORIAL VIEW OF TYPICAL INSTALLATION

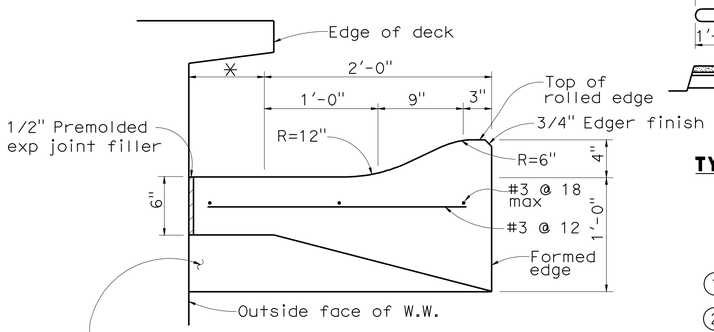

SECTION B-B

*This dimension becomes zero when edge of deck is at outside face of W.W.

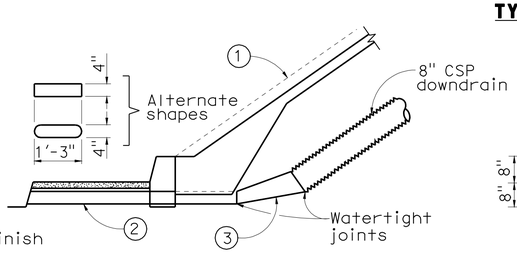

TYPICAL - WITH SIDEWALK

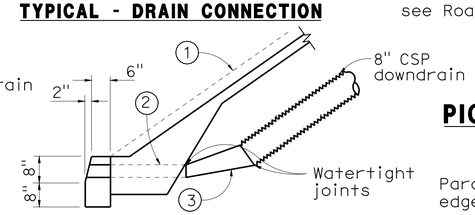

TYPICAL - WITH CURB

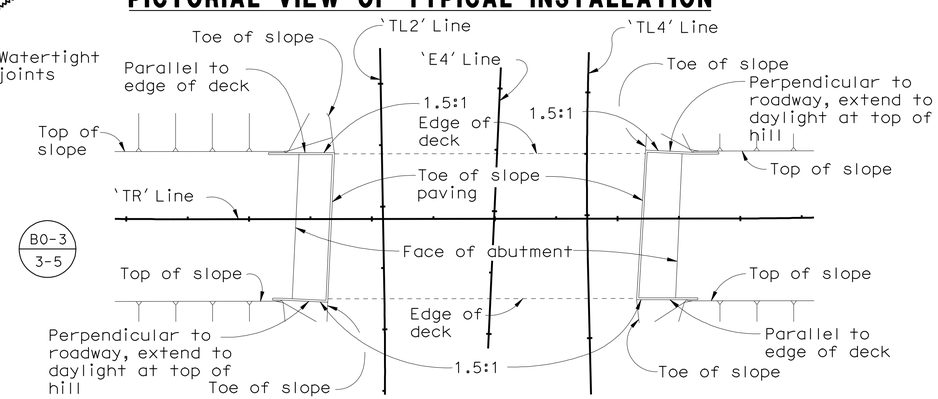

LIMITS OF SLOPE PAVING & DRAINAGE LAYOUT

DRAINAGE DETAILS

Note: Drainage details are only applicable when is indicated on detail sheets.

1. Top of rolled edge
2. Conduit: 0.064" galv corrugated steel or 0.109" smooth galv steel
3. Taper: 0.064" galv corrugated steel or 0.109" smooth galv steel
4. 8" perforated steel pipe (0.064" thick) underdrain behind abutment. Connect to downdrain as shown on limits of Slope Paving & Drainage layout.

STANDARD DRAWING				
RELEASE DATE 4/20/00	DESIGN	BY	CHECKED	RELEASED BY
FILE NO. xs4-210	DETAILS	BY R. YEE	CHECKED	OFFICE CHIEF
	SUBMITTED	BY C.W. PURKISS	DRAWING DATE 3/89	

1 Revised typical section
2 Revised pictorial view
3 Added detail

STATE OF CALIFORNIA
DEPARTMENT OF TRANSPORTATION

DIVISION OF ENGINEERING SERVICES

BRIDGE NO. 37-0668
POST MILE 33.0

TULLY ROAD OVERCROSSING
SLOPE PAVING - FULL SLOPE

ORIGINAL SCALE IN INCHES FOR REDUCED PLANS 0 1 2 3

CU 04329
EA 1A9801

DISREGARD PRINTS BEARING EARLIER REVISION DATES → 11/26/08 2/2/09 3/20/09 5/1/09 5/13/09 10/20/09 1/22/10 5/3/10

SHEET 24 OF 28

USERNAME => trstrk

37-0668-t-slp01.dgn

DATE PLOTTED => 08-JUL-2010 TIME PLOTTED => 08:21 USERNAME => trstrk 1998226 (1938226922)

REFERENCE: CALTRANS SOIL & ROCK LOGGING, CLASSIFICATION, AND PRESENTATION MANUAL (JUNE 2007)

DIST	COUNTY	ROUTE	POST MILES TOTAL PROJECT	SHEET No	TOTAL SHEETS
04	SCI	101	31.8/34.3	500	515

2

REGISTERED GEOTECHNICAL ENGINEER — DATE 5-18-10

11-23-09
PLANS APPROVAL DATE

REGISTERED PROFESSIONAL ENGINEER — GARY PARIKH — No. G.E. 666 — Exp. 12/31/11 — GEOTECHNICAL — STATE OF CALIFORNIA

The State of California or its officers or agents shall not be responsible for the accuracy or completeness of electronic copies of this plan sheet.

CEMENTATION

Description	Criteria
Weak	Crumbles or breaks with handling or little finger pressure.
Moderate	Crumbles or breaks with considerable finger pressure.
Strong	Will not crumble or break with finger pressure.

CONSISTENCY OF COHESIVE SOILS

Description	Unconfined Compressive Strength (tsf)	Pocket Penetrometer Measurement (tsf)	Torvane Measurement (tsf)	Field Approximation
Very Soft	< 0.25	< 0.25	< 0.12	Easily penetrated several inches by fist
Soft	0.25 to 0.50	0.25 to 0.50	0.12 to 0.25	Easily penetrated several inches by thumb
Medium Stiff	0.50 to 1.0	0.50 to 1.0	0.25 to 0.50	Penetrated several inches by thumb with moderate effort
Stiff	1 to 2	1 to 2	0.50 to 1.0	Readily indented by thumb but penetrated only with great effort
Very Stiff	2 to 4	2 to 4	1.0 to 2.0	Readily indented by thumbnail
Hard	> 4.0	> 4.0	> 2.0	Indented by thumbnail with difficulty

BOREHOLE IDENTIFICATION

Symbol	Hole Type	Description
Size	A	Auger Boring
Size	R P	Rotary drilled boring Rotary percussion boring (air)
Size	R	Rotary drilled diamond core
Size	HD HA	Hand driven (1-inch soil tube) Hand Auger
●	D	Dynamic Cone Penetration Boring
▲	CPT	Cone Penetration Test (ASTM D 5778-95)
⬚	O	Other

Note: Size in inches.

PLASTICITY OF FINE-GRAINED SOILS

Description	Criteria
Nonplastic	A 1/8-inch thread cannot be rolled at any water content.
Low	The thread can barely be rolled and the lump cannot be formed when drier than the plastic limit.
Medium	The thread is easy to roll and not much time is required to reach the plastic limit. The thread cannot be rerolled after reaching the plastic limit. The lump crumbles when drier than the plastic limit.
High	It takes considerable time rolling and kneading to reach the plastic limit. The thread can be rerolled several times after reaching the plastic limit. The lump can be formed without crumbling when drier than the plastic limit.

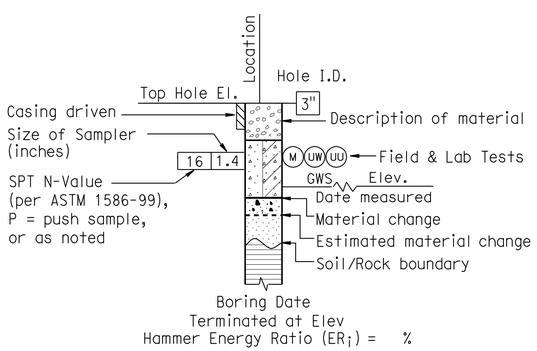

ROTARY BORING

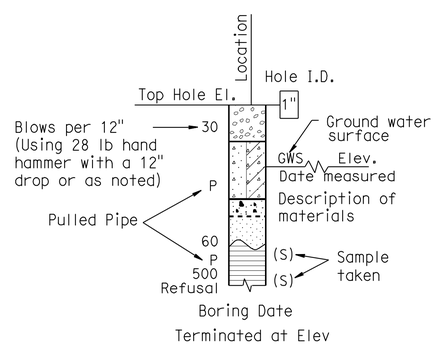

HAND BORING

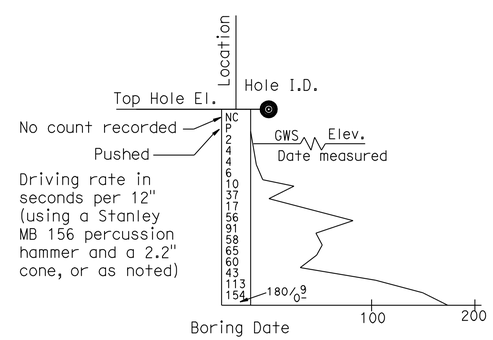

DYNAMIC CONE PENETRATION BORING

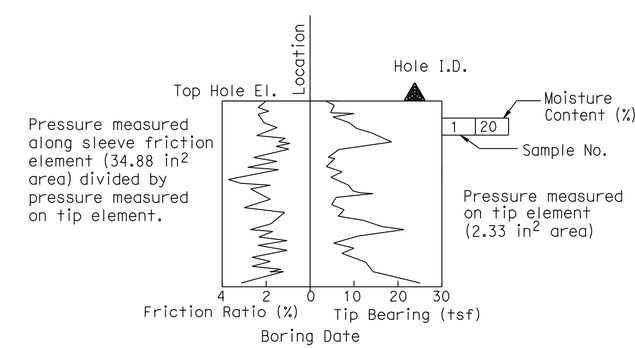

CONE PENETRATION TEST (CPT) SOUNDING

2 **REVISED PER ADDENDUM No. 2 DATED JULY 8, 2010**

TULLY ROAD OVERCROSSING

ENGINEERING SERVICES	GEOTECHNICAL SERVICES	STATE OF CALIFORNIA DEPARTMENT OF TRANSPORTATION	DIVISION OF ENGINEERING SERVICES STRUCTURE DESIGN DESIGN BRANCH	BRIDGE NO. 37-0668 / POST MILE 33.0	SOIL LEGEND 1 OF 2 LOG OF TEST BORINGS
DESIGN OVERSIGHT Emil A. Vergara Jr. — SIGN OFF DATE 5-20-10	PREPARED BY L. TRAN CHECKED BY D. WANG				

GS LOTB SOIL LEGEND

ORIGINAL SCALE IN INCHES FOR REDUCED PLANS 0 1 2 3

CU 04239
EA 1A9801

DISREGARD PRINTS BEARING EARLIER REVISION DATES — REVISION DATES 11/30/09 2/27/09 3/30/09 5/3/09 8/3/10

SHEET 25 OF 28

FILE => 37-0668-z-ltb01.add

USERNAME => ttstrk DATE PLOTTED => 08-JUL-2010 TIME PLOTTED => 08:21

REFERENCE: CALTRANS SOIL & ROCK LOGGING, CLASSIFICATION, AND PRESENTATION MANUAL (JUNE 2007)

DIST	COUNTY	ROUTE	POST MILES TOTAL PROJECT	SHEET No	TOTAL SHEETS
04	SCI	101	31.8/34.3	501	515

REGISTERED GEOTECHNICAL ENGINEER — DATE 5-18-10

11-23-09
PLANS APPROVAL DATE

REGISTERED PROFESSIONAL ENGINEER — GARY PARIKH — No. G.E. 666 — Exp. 12/31/11 — GEOTECHNICAL — STATE OF CALIFORNIA

The State of California or its officers or agents shall not be responsible for the accuracy or completeness of electronic copies of this plan sheet.

2

GROUP SYMBOLS AND NAMES

Graphic/Symbol	Group Names	Graphic/Symbol	Group Names
GW	Well-graded GRAVEL Well-graded GRAVEL with SAND	CL	Lean CLAY Lean CLAY with SAND Lean CLAY with GRAVEL SANDY lean CLAY SANDY lean CLAY with GRAVEL GRAVELLY lean CLAY GRAVELLY lean CLAY with SAND
GP	Poorly graded GRAVEL Poorly graded GRAVEL with SAND		
GW-GM	Well-graded GRAVEL with SILT Well-graded GRAVEL with SILT and SAND	CL-ML	SILTY CLAY SILTY CLAY with SAND SILTY CLAY with GRAVEL SANDY SILTY CLAY SANDY SILTY CLAY with GRAVEL GRAVELLY SILTY CLAY GRAVELLY SILTY CLAY with SAND
GW-GC	Well-graded GRAVEL with CLAY (or SILTY CLAY) Well-graded GRAVEL with CLAY and SAND (or SILTY CLAY and SAND)		
GP-GM	Poorly graded GRAVEL with SILT Poorly graded GRAVEL with SILT and SAND	ML	SILT SILT with SAND SILT with GRAVEL SANDY SILT SANDY SILT with GRAVEL GRAVELLY SILT GRAVELLY SILT with SAND
GP-GC	Poorly graded GRAVEL with CLAY (or SILTY CLAY) Poorly graded GRAVEL with CLAY and SAND (or SILTY CLAY and SAND)		
GM	SILTY GRAVEL SILTY GRAVEL with SAND	OL	ORGANIC lean CLAY ORGANIC lean CLAY with SAND ORGANIC lean CLAY with GRAVEL SANDY ORGANIC lean CLAY SANDY ORGANIC lean CLAY with GRAVEL GRAVELLY ORGANIC lean CLAY GRAVELLY ORGANIC lean CLAY with SAND
GC	CLAYEY GRAVEL CLAYEY GRAVEL with SAND		
GC-GM	SILTY, CLAYEY GRAVEL SILTY, CLAYEY GRAVEL with SAND	OL	ORGANIC SILT ORGANIC SILT with SAND ORGANIC SILT with GRAVEL SANDY ORGANIC SILT SANDY ORGANIC SILT with GRAVEL GRAVELLY ORGANIC SILT GRAVELLY ORGANIC SILT with SAND
SW	Well-graded SAND Well-graded SAND with GRAVEL		
SP	Poorly graded SAND Poorly graded SAND with GRAVEL	CH	Fat CLAY Fat CLAY with SAND Fat CLAY with GRAVEL SANDY fat CLAY SANDY fat CLAY with GRAVEL GRAVELLY fat CLAY GRAVELLY fat CLAY with SAND
SW-SM	Well-graded SAND with SILT Well-graded SAND with SILT and GRAVEL		
SW-SC	Well-graded SAND with CLAY (or SILTY CLAY) Well-graded SAND with CLAY and GRAVEL (or SILTY CLAY and GRAVEL)	MH	Elastic SILT Elastic SILT with SAND Elastic SILT with GRAVEL SANDY elastic SILT SANDY elastic SILT with GRAVEL GRAVELLY elastic SILT GRAVELLY elastic SILT with SAND
SP-SM	Poorly graded SAND with SILT Poorly graded SAND with SILT and GRAVEL		
SP-SC	Poorly graded SAND with CLAY (or SILTY CLAY) Poorly graded SAND with CLAY and GRAVEL (or SILTY CLAY and GRAVEL)	OH	ORGANIC fat CLAY ORGANIC fat CLAY with SAND ORGANIC fat CLAY with GRAVEL SANDY ORGANIC fat CLAY SANDY ORGANIC fat CLAY with GRAVEL GRAVELLY ORGANIC fat CLAY GRAVELLY ORGANIC fat CLAY with SAND
SM	SILTY SAND SILTY SAND with GRAVEL		
SC	CLAYEY SAND CLAYEY SAND with GRAVEL	OH	ORGANIC elastic SILT ORGANIC elastic SILT with SAND ORGANIC elastic SILT with GRAVEL SANDY ORGANIC elastic SILT SANDY ORGANIC elastic SILT with GRAVEL GRAVELLY ORGANIC elastic SILT GRAVELLY ORGANIC elastic SILT with SAND
SC-SM	SILTY, CLAYEY SAND SILTY, CLAYEY SAND with GRAVEL		
PT	PEAT	OL/OH	ORGANIC SOIL ORGANIC SOIL with SAND ORGANIC SOIL with GRAVEL SANDY ORGANIC SOIL SANDY ORGANIC SOIL with GRAVEL GRAVELLY ORGANIC SOIL GRAVELLY ORGANIC SOIL with SAND
	COBBLES COBBLES and BOULDERS BOULDERS		

FIELD AND LABORATORY TESTING

- (C) Consolidation (ASTM D 2435)
- (CL) Collapse Potential (ASTM D 5333)
- (CP) Compaction Curve (CTM 216)
- (CR) Corrosivity Testing (CTM 643, CTM 422, CTM 417)
- (CU) Consolidated Undrained Triaxial (ASTM D 4767)
- (DS) Direct Shear (ASTM D 3080)
- (EI) Expansion Index (ASTM D 4829)
- (M) Moisture Content (ASTM D 2216)
- (OC) Organic Content-% (ASTM D 2974)
- (P) Permeability (CTM 220)
- (PA) Particle Size Analysis (ASTM D 422)
- (PI) Plasticity Index (AASHTO T 90) Liquid Limit (AASHTO T 89)
- (PL) Point Load Index (ASTM D 5731)
- (PM) Pressure Meter
- (PP) Pocket Penetrometer
- (R) R-Value (CTM 301)
- (SE) Sand Equivalent (CTM 217)
- (SG) Specific Gravity (AASHTO T 100)
- (SL) Shrinkage Limit (ASTM D 427)
- (SW) Swell Potential (ASTM D 4546)
- (TV) Pocket Torvane
- (UC) Unconfined Compression-Soil (ASTM D 2166) Unconfined Compression-Rock (ASTM D 2938)
- (UU) Unconsolidated Undrained Triaxial (ASTM D 2850)
- (UW) Unit Weight (ASTM D 4767)
- (VS) Vane Shear (AASHTO T 223)

APPARENT DENSITY OF COHESIONLESS SOILS

Description	SPT N_{60} (Blows / 12 inches)
Very loose	0 - 4
Loose	5 - 10
Medium Dense	11 - 30
Dense	31 - 50
Very Dense	> 50

MOISTURE

Description	Criteria
Dry	Absence of moisture, dusty, dry to the touch
Moist	Damp but no visible water
Wet	Visible free water, usually soil is below water table

PERCENT OR PROPORTION OF SOILS

Description	Criteria
Trace	Particles are present but estimated to be less than 5%
Few	5 to 10%
Little	15 to 25%
Some	30 to 45%
Mostly	50 to 100%

PARTICLE SIZE

Description		Size
Boulder		> 12"
Cobble		3" to 12"
Gravel	Coarse	3/4" to 3"
	Fine	No. 4 to 3/4"
Sand	Coarse	No. 10 to No. 4
	Medium	No. 40 to No. 10
	Fine	No. 200 to No. 40

2 **REVISED PER ADDENDUM No. 2 DATED JULY 8, 2010**

TULLY ROAD OVERCROSSING

ENGINEERING SERVICES		GEOTECHNICAL SERVICES
DESIGN OVERSIGHT Emil A. Vergara Jr. — 5-20-10 SIGN OFF DATE	PREPARED BY	L. TRAN
	CHECKED BY	D. WANG

STATE OF CALIFORNIA DEPARTMENT OF TRANSPORTATION

DIVISION OF ENGINEERING SERVICES STRUCTURE DESIGN — DESIGN BRANCH

BRIDGE NO. 37-0668 — POST MILE 33.0

SOIL LEGEND 2 of 2
LOG OF TEST BORINGS

GS LOTB SOIL LEGEND

ORIGINAL SCALE IN INCHES FOR REDUCED PLANS 0 1 2 3

CU 04239
EA 1A9801

DISREGARD PRINTS BEARING EARLIER REVISION DATES

REVISION DATES: 11/28/08 3/4/09 3/30/09 5/1/09 5/28/09 5/3/10

SHEET 26 OF 28

FILE => 37-0668-z-ltb02.add

USERNAME => trstrk DATE PLOTTED => 08-JUL-2010 TIME PLOTTED => 08:21

DIST	COUNTY	ROUTE	POST MILES TOTAL PROJECT	SHEET No	TOTAL SHEETS
04	SCI	101	31.8/34.3	502	515

REGISTERED GEOTECHNICAL ENGINEER 5-18-10 DATE

11-23-09
PLANS APPROVAL DATE

REGISTERED PROFESSIONAL ENGINEER GARY PARIKH No. G.E. 666 Exp. 12/31/11 GEOTECHNICAL STATE OF CALIFORNIA

The State of California or its officers or agents shall not be responsible for the accuracy or completeness of electronic copies of this plan sheet.

2

Approximately as-built boring locations per Caltrans 1962 As-built Plan Set

NOTE:
BENCHMARK IS SHOWN ON FOUNDATION PLAN SHEET

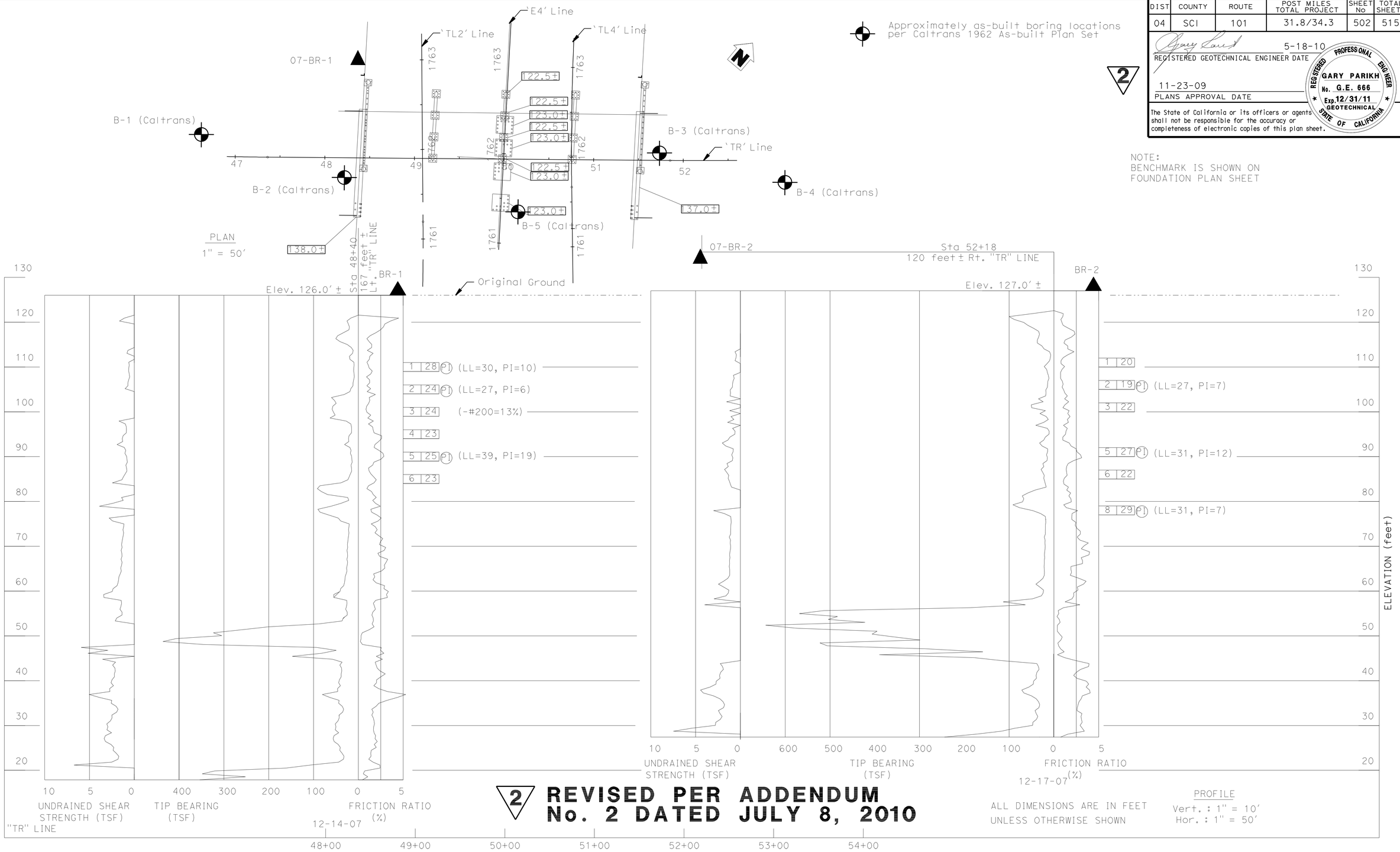

2 REVISED PER ADDENDUM No. 2 DATED JULY 8, 2010

ALL DIMENSIONS ARE IN FEET UNLESS OTHERWISE SHOWN

PROFILE
Vert. : 1" = 10'
Hor. : 1" = 50'

ENGINEERING SERVICES	GEOTECHNICAL SERVICES	STATE OF CALIFORNIA DEPARTMENT OF TRANSPORTATION	DIVISION OF ENGINEERING SERVICES STRUCTURE DESIGN DESIGN BRANCH	BRIDGE NO. 37-0668 POST MILES 33.0	TULLY ROAD OVERCROSSING LOG OF TEST BORINGS 1 OF 2
DESIGN OVERSIGHT Eeli A. Vergara Jr. 5-20-10 SIGN OFF DATE	DRAWN BY: L. TRAN CHECKED BY: D. WANG	FIELD INVESTIGATION BY: G. TRIPATHI			

OGS CIVIL LOG OF TEST BORINGS SHEET

ORIGINAL SCALE IN INCHES FOR REDUCED PLANS 0 1 2 3

CU 04239
EA 1A9801

DISREGARD PRINTS BEARING EARLIER REVISION DATES

REVISION DATES: 11/28/08 2/2/09 3/20/09 5/1/09 5/13/09 5/3/10

SHEET 27 OF 28

FILE => 37-0668-z-1tb03.add

USERNAME => trstrk DATE PLOTTED => 08-JUL-2010 TIME PLOTTED => 08:22