Dist	COUNTY	ROUTE	POST MILES TOTAL PROJECT	SHEET No.	TOTAL SHEETS
04	Ala	880	28.2/29.9	101	183

REGISTERED CIVIL ENGINEER 3-23-11 DATE

6-20-11
PLANS APPROVAL DATE

REGISTERED PROFESSIONAL ENGINEER K.D. Nhieu No. 55948 Exp. 12-31-12 CIVIL STATE OF CALIFORNIA

THE STATE OF CALIFORNIA OR ITS OFFICERS OR AGENTS SHALL NOT BE RESPONSIBLE FOR THE ACCURACY OR COMPLETENESS OF SCANNED COPIES OF THIS PLAN SHEET.

NOTE:

FOR ACCURATE RIGHT OF WAY DATA, CONTACT RIGHT OF WAY ENGINEERING AT THE DISTRICT OFFICE.

NOTE:

FOR TYPICAL CROSS SECTION, SEE SHEET SC-9.

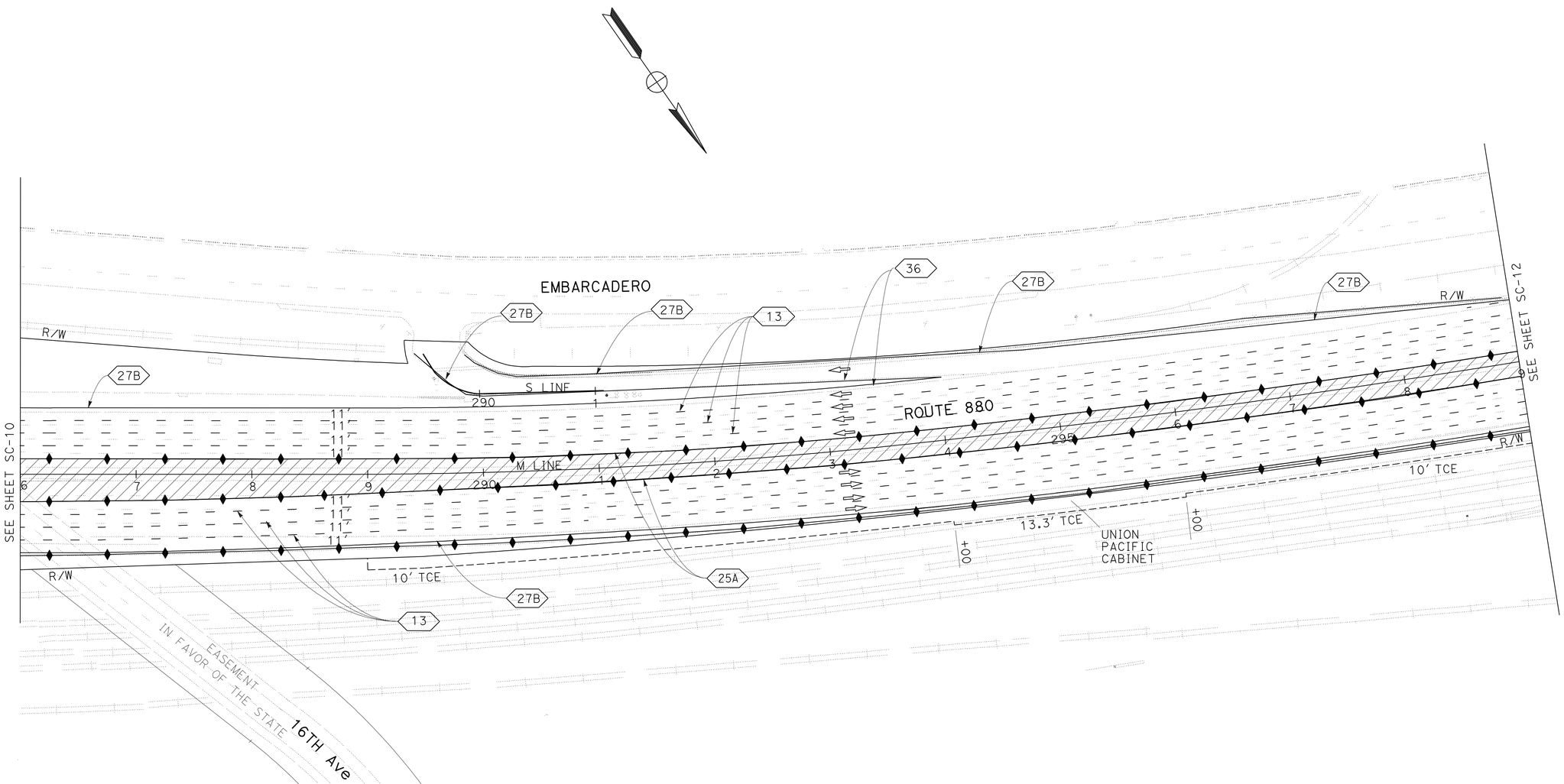

STAGE CONSTRUCTION AND TRAFFIC HANDLING PLAN

STAGE 2

SCALE: 1" = 50'

SC-11

FOR NOTES, ABBREVIATIONS AND LEGEND, SEE SHEET SC-1

THIS PLAN ACCURATE FOR STAGE CONSTRUCTION AND TRAFFIC HANDLING WORK ONLY

STATE OF CALIFORNIA - DEPARTMENT OF TRANSPORTATION

Caltrans

DESIGN

FUNCTIONAL SUPERVISOR: EDMUND CHOY

CALCULATED-DESIGNED BY: THANH DOAN

CHECKED BY: KENNETH D. NHIEU

REVISED BY

DATE REVISED

LAST REVISION 03-28-11

DATE PLOTTED => 22-JUN-2011

TIME PLOTTED => 13:07

Dist	COUNTY	ROUTE	POST MILES TOTAL PROJECT	SHEET No.	TOTAL SHEETS
04	Ala	880	28.2/29.9	102	183

REGISTERED CIVIL ENGINEER 3-23-11 DATE

6-20-11
PLANS APPROVAL DATE

REGISTERED PROFESSIONAL ENGINEER K.D. Nhieu No. 55948 Exp. 12-31-12 CIVIL STATE OF CALIFORNIA

THE STATE OF CALIFORNIA OR ITS OFFICERS OR AGENTS SHALL NOT BE RESPONSIBLE FOR THE ACCURACY OR COMPLETENESS OF SCANNED COPIES OF THIS PLAN SHEET.

NOTE:

FOR ACCURATE RIGHT OF WAY DATA, CONTACT RIGHT OF WAY ENGINEERING AT THE DISTRICT OFFICE.

NOTE:

FOR TYPICAL CROSS SECTION, SEE SHEET SC-9.

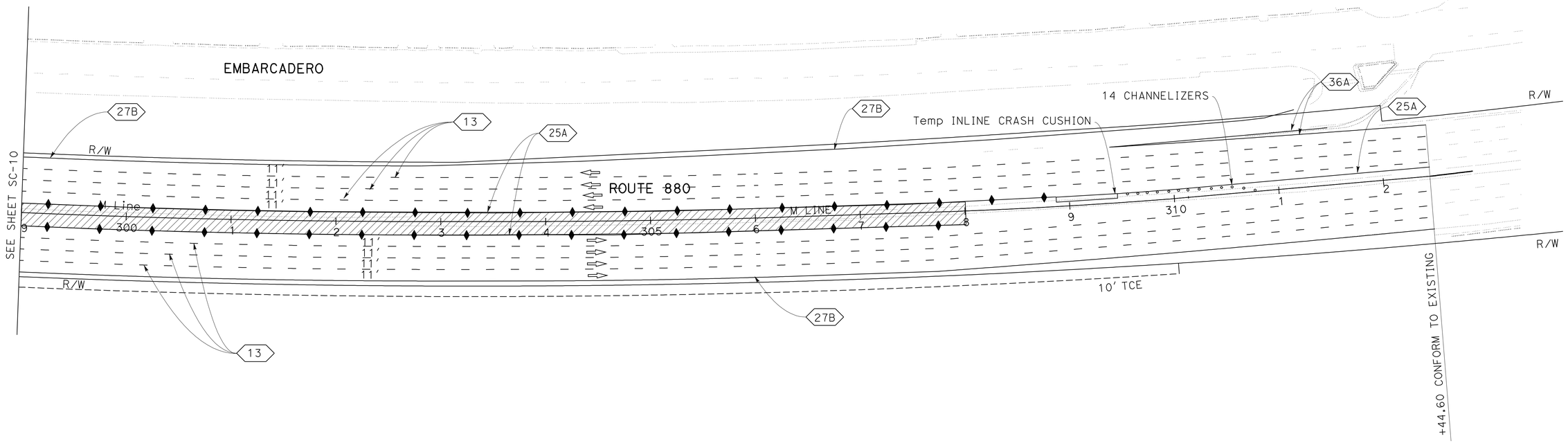

FOR NOTES, ABBREVIATIONS AND LEGEND, SEE SHEET SC-1

THIS PLAN ACCURATE FOR STAGE CONSTRUCTION AND TRAFFIC HANDLING WORK ONLY

STAGE CONSTRUCTION AND TRAFFIC HANDLING PLAN

STAGE 2

SCALE: 1" = 50'

SC-12

STATE OF CALIFORNIA - DEPARTMENT OF TRANSPORTATION
Caltrans® DESIGN

FUNCTIONAL SUPERVISOR: EDMUND CHOY
CALCULATED-DESIGNED BY: THANH DOAN
CHECKED BY: KENNETH D. NHIEU
REVISED BY
DATE REVISED

LAST REVISION DATE PLOTTED => 22-JUN-2011
04-05-11 TIME PLOTTED => 13:07

Dist	COUNTY	ROUTE	POST MILES TOTAL PROJECT	SHEET No.	TOTAL SHEETS
04	Ala	880	28.2/29.9	103	183

REGISTERED CIVIL ENGINEER 3-23-11 DATE

6-20-11
PLANS APPROVAL DATE

REGISTERED PROFESSIONAL ENGINEER K.D. Nhieu No. 55948 Exp. 12-31-12 CIVIL STATE OF CALIFORNIA

THE STATE OF CALIFORNIA OR ITS OFFICERS OR AGENTS SHALL NOT BE RESPONSIBLE FOR THE ACCURACY OR COMPLETENESS OF SCANNED COPIES OF THIS PLAN SHEET.

STAGE CONSTRUCION PAVEMENT DELINEATION QUANTITIES

STAGE No.	STATION LIMITS	LOCATION	DETAIL No.	LENGTH	PAINT TRAFFIC STRIPE 4" WHITE SOLID	PAINT TRAFFIC STRIPE 4" YELLOW BROKEN	PAINT TRAFFIC STRIPE 4" YELLOW SOLID	PAINT TRAFFIC STRIPE 8" WHITE BROKEN	PAINT TRAFFIC STRIPE 8" WHITE SOLID	TEMPORARY PAVEMENT MARKER NON-REFLECTIVE TYPE A	TEMPORARY PAVEMENT MARKER RETROELECTIVE TYPE C	TEMPORARY PAVEMENT MARKER RETROELECTIVE TYPE G	TEMPORARY PAVEMENT MARKER RETROELECTIVE TYPE H
					LF					EA			
STAGE 1	M 250+85 TO 258+00	Lt & Rt	13	4290						476		90	
	M 250+85 TO 258+00	Lt & Rt	27B	1430	1430								
	M 250+85 TO 258+00	Lt & Rt	36B	450	225		450		225			9	
	M 250+85 TO 258+00	Lt & Rt	25A	250			250						11
	M 258+00 TO 272+00	Lt & Rt	13	8400						933		175	
	M 258+00 TO 272+00	Lt & Rt	27B	2800	2800								
	M 258+00 TO 272+00	Lt	36	200					200			9	
	M 272+00 TO 286+00	Lt & Rt	13	8400						933		175	
	M 272+00 TO 286+00	Lt & Rt	27B	2800	2800								
	M 286+00 TO 299+00	Lt & Rt	13	7800						867		163	
	M 286+00 TO 299+00	Lt & Rt	27B	1675	1675								
	M 286+00 TO 299+00	Lt	36	200					200			9	
	M 299+00 TO 312+44	Lt & Rt	13	8064						896		168	
	M 299+00 TO 312+44	Lt & Rt	27B	2683	2683								
	M 299+00 TO 312+44	Lt & Rt	36	200					200			9	
	M 299+00 TO 312+44	Lt	25A	200			200						9
	M 202+30 TO 217+00	Lt & Rt	13	7764						980		184	
	M 202+30 TO 217+00	Lt & Rt	27B	2588	2588								
	M 202+30 TO 217+00	Lt & Rt	25A	2588			2588						
	M 202+30 TO 217+00	Lt & Rt	5	2004		2004							
TOTAL					14,201	2004	3488		825	5085		991	20
GRAND TOTAL					20,518					6096			

REMOVE TRAFFIC STRIPE

STATION LIMITS	PAINTED TRAFFIC STRIPE (LF)
M 202+30 TO 217+00	5176
M 250+85 TO 312+44	13338
TOTAL	18514

TEMPORARY RAILING (TYPE K)

STAGE	STATION	LOCATION	LENGTH LF
STAGE 1	M 255+00 TO 258+00	Rt, Lt	616
	M 258+00 TO 272+00	Rt, Lt	2833
	M 272+00 TO 286+00	Rt, Lt	2800
	M 286+00 TO 299+00	Rt, Lt	2696
	M 299+00 TO 311+40	Rt, Lt	2447
	M 203+47 TO 210+31	Rt, Lt	1814
STAGE 2	M 251+00 TO 258+00	Rt	693
	M 258+00 TO 272+00	Rt, Lt	3052
	M 272+00 TO 286+00	Rt, Lt	4200
	M 286+00 TO 299+00	Rt, Lt	4004
	M 299+00 TO 309+18	Rt, Lt	2518
	TOTAL		27671

TEMPORARY CRASH CUSHION MODULE

STAGE	STATION	LOCATION	ARRAY	EA
STAGE 1	M 255+80	Rt	TS14	14
	TOTAL			14

TEMPORARY TERMINAL SECTION (TYPE K)

STAGE	STATION	LOCATION	EA
STAGE 1	M 269+52	Rt	1
	TOTAL		1

STAGE CONSTRUCTION QUANTITIES

SCQ-1

REVISED BY | DATE REVISED
THANH DOAN | KENNETH D. NHIEU
CALCULATED-DESIGNED BY | CHECKED BY
FUNCTIONAL SUPERVISOR | EDMUND CHOY
STATE OF CALIFORNIA - DEPARTMENT OF TRANSPORTATION
Caltrans DESIGN

LAST REVISION 04-04-11 | DATE PLOTTED => 22-JUN-2011 | TIME PLOTTED => 13:07

Dist	COUNTY	ROUTE	POST MILES TOTAL PROJECT	SHEET No.	TOTAL SHEETS
04	Ala	880	28.2/29.9	104	183

REGISTERED CIVIL ENGINEER 3-23-11 DATE

6-20-11
PLANS APPROVAL DATE

REGISTERED PROFESSIONAL ENGINEER K.D. Nhieu No. 55948 Exp. 12-31-12 CIVIL STATE OF CALIFORNIA

THE STATE OF CALIFORNIA OR ITS OFFICERS OR AGENTS SHALL NOT BE RESPONSIBLE FOR THE ACCURACY OR COMPLETENESS OF SCANNED COPIES OF THIS PLAN SHEET.

STAGE CONSTRUCION PAVEMENT DELINEATION QUANTITIES

STAGE No.	STATION LIMITS	LOCATION	DETAIL No.	LENGTH	TEMPORARY TRAFFIC STRIPE (PAINT) 4" WHITE SOLID	4" YELLOW BROKEN	4" YELLOW SOLID	8" WHITE BROKEN	8" WHITE SOLID	TEMPORARY PAVEMENT MARKER NON-REFLECTIVE TYPE A	RETROELECTIVE TYPE C	RETROELECTIVE TYPE G	RETROELECTIVE TYPE H
					LF					EA			
STAGE 2	M 244+10 TO 258+00	Lt & Rt	13	5631						626		117	
	M 244+10 TO 258+00	Rt	27B	890	890								
	M 244+10 TO 258+00	Rt	25A	700			700						29
	M 244+10 TO 258+00	Lt & Rt	36B	400	200				200			9	
	M 258+00 TO 272+00	Lt & Rt	13	8400						933		175	
	M 258+00 TO 272+00	Lt & Rt	27B	2800	2800								
	M 258+00 TO 272+00	Lt & Rt	25A	2800			2800						117
	M 258+00 TO 272+00	Lt	36	200					200			9	
	M 272+00 TO 286+00	Lt & Rt	13	8400						933		175	
	M 272+00 TO 286+00	Lt & Rt	27B	2800	2800								
	M 272+00 TO 286+00	Lt & Rt	25A	2800			2800						117
	M 286+00 TO 299+00	Lt & Rt	13	7800						867		163	
	M 286+00 TO 299+00	Lt & Rt	27B	2600	2600								
	M 286+00 TO 299+00	Lt & Rt	25A	2600			2600						108
	M 286+00 TO 299+00	Lt	36	200					200			9	
	M 299+00 TO 312+44	Lt & Rt	13	6977						775		145	
	M 299+00 TO 312+44	Lt & Rt	27B	2332	2332								
	M 299+00 TO 312+44	Lt & Rt	25A	1400			1400						58
	M 299+00 TO 312+44	Lt	36	200					200				
	M 203+00 TO 213+00	Lt & Rt	13	6000						667		125	
	M 203+00 TO 213+00	Lt & Rt	27B	2000	2000								
	M 203+00 TO 213+00	Lt & Rt	25A	2000			2000						
TOTAL					13,622		12,300		800	4801		927	429
GRAND TOTAL					26,722					12,253			

TEMPORARY FENCE (TYPE CL-6)

STAGE	STATION	LOCATION	LENGTH (LF)
STAGE 1	M 267+60 TO 312+45	Rt	4533

TEMPORARY ALTERNATIVE CRASH CUSHION

STAGE	STATION	LOCATION	EA
STAGE 1	M 203+40 TO 210+30	Lt & Rt	4
	M 292+00	Lt	2
	M 301+00	Lt	1
STAGE 2	M 203+40 TO 210+30	Lt & Rt	2
	M 251+00	Rt	1
	M 309+18	Lt	1
TOTAL			11

CHANNELIZER (SURFACE MOUNTED)

STAGE	STATION	LOCATION	QUANTITY (EA)
STAGE 2	M 249+00	Rt	14
	M 309+00	Lt	14
	M 203+00	Rt	14
	M 210+00	Lt	14
	TOTAL		48

STAGE CONSTRUCTION QUANTITIES

SCQ-2

STATE OF CALIFORNIA - DEPARTMENT OF TRANSPORTATION
DESIGN
Caltrans

FUNCTIONAL SUPERVISOR: EDMUND CHOY
CALCULATED-DESIGNED BY: THANH DOAN
CHECKED BY: KENNETH D. NHIEU
REVISED BY
DATE REVISED

LAST REVISION 03-25-11
DATE PLOTTED => 22-JUN-2011
TIME PLOTTED => 13:07

Dist	COUNTY	ROUTE	POST MILES TOTAL PROJECT	SHEET No.	TOTAL SHEETS
04	Ala	880	28.2/29.9	105	183

REGISTERED CIVIL ENGINEER DATE 3-28-11

PLANS APPROVAL DATE 6-20-11

REGISTERED PROFESSIONAL ENGINEER Saif Mamoon No. 53427 Exp. 6-30-11 CIVIL STATE OF CALIFORNIA

THE STATE OF CALIFORNIA OR ITS OFFICERS OR AGENTS SHALL NOT BE RESPONSIBLE FOR THE ACCURACY OR COMPLETENESS OF SCANNED COPIES OF THIS PLAN SHEET.

NOTE:

FOR ACCURATE RIGHT OF WAY DATA, CONTACT RIGHT OF WAY ENGINEERING AT THE DISTRICT OFFICE.

LEGEND:

PAVEMENT DELINEATION DETAIL

CHANGE OF PAVEMENT DELINEATION DETAILS

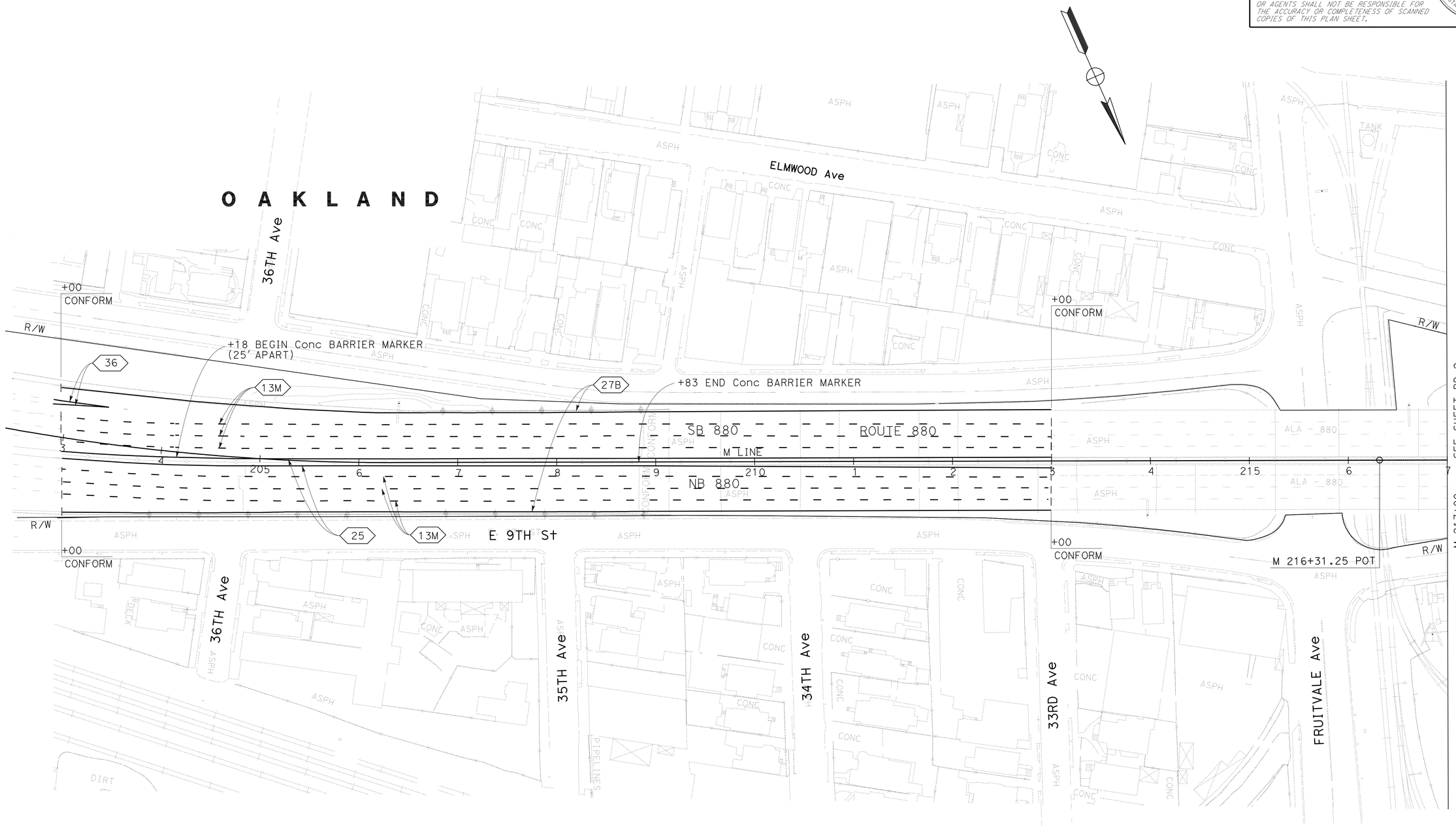

PAVEMENT DELINEATION PLAN

SCALE: 1" = 50'

THIS PLAN ACCURATE FOR PAVEMENT DELINEATION WORK ONLY

PD-1

REVISED BY	DATE REVISED

CALCULATED-DESIGNED BY: TAN TARUONG

CHECKED BY: SAIF MAMOON

FUNCTIONAL SUPERVISOR: EMILY TANG

STATE OF CALIFORNIA - DEPARTMENT OF TRANSPORTATION

Caltrans

TRAFFIC

LAST REVISION 04-05-11

DATE PLOTTED => 22-JUN-2011
TIME PLOTTED => 13:07

Dist	COUNTY	ROUTE	POST MILES TOTAL PROJECT	SHEET No.	TOTAL SHEETS
04	Ala	880	28.2/29.9	106	183

REGISTERED CIVIL ENGINEER DATE 3-28-11

PLANS APPROVAL DATE 6-20-11

REGISTERED PROFESSIONAL ENGINEER Saif Mamoon No. 53427 Exp 6-30-11 CIVIL STATE OF CALIFORNIA

THE STATE OF CALIFORNIA OR ITS OFFICERS OR AGENTS SHALL NOT BE RESPONSIBLE FOR THE ACCURACY OR COMPLETENESS OF SCANNED COPIES OF THIS PLAN SHEET.

NOTE:

FOR ACCURATE RIGHT OF WAY DATA, CONTACT RIGHT OF WAY ENGINEERING AT THE DISTRICT OFFICE.

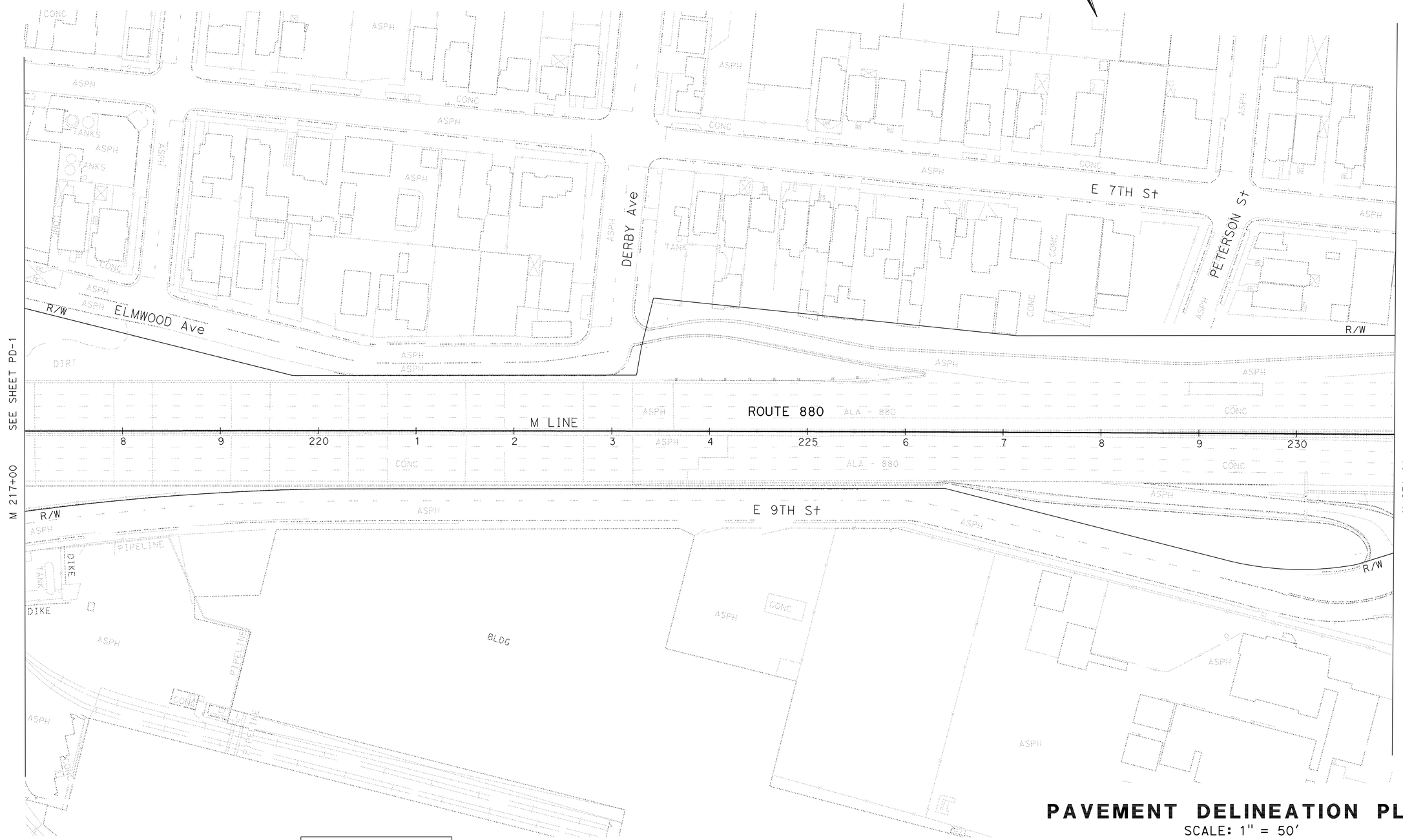

FOR NOTES, ABBREVIATIONS AND LEGEND, SEE SHEET PD-1

THIS PLAN ACCURATE FOR PAVEMENT DELINEATION WORK ONLY

PAVEMENT DELINEATION PLAN

SCALE: 1" = 50'

PD-2

REVISED BY	DATE REVISED

CALCULATED-DESIGNED BY: TAN TRUONG

CHECKED BY: SAIF MAMOON

FUNCTIONAL SUPERVISOR: EMILY TANG

STATE OF CALIFORNIA - DEPARTMENT OF TRANSPORTATION

Caltrans

TRAFFIC

LAST REVISION 01-12-11

DATE PLOTTED => 22-JUN-2011

TIME PLOTTED => 13:07

Dist	COUNTY	ROUTE	POST MILES TOTAL PROJECT	SHEET No.	TOTAL SHEETS
04	Ala	880	28.2/29.9	107	183

REGISTERED CIVIL ENGINEER DATE 3-28-11

PLANS APPROVAL DATE 6-20-11

REGISTERED PROFESSIONAL ENGINEER Saif Mamoon No. 53427 Exp. 6-30-11 CIVIL STATE OF CALIFORNIA

THE STATE OF CALIFORNIA OR ITS OFFICERS OR AGENTS SHALL NOT BE RESPONSIBLE FOR THE ACCURACY OR COMPLETENESS OF SCANNED COPIES OF THIS PLAN SHEET.

NOTE:

FOR ACCURATE RIGHT OF WAY DATA, CONTACT RIGHT OF WAY ENGINEERING AT THE DISTRICT OFFICE.

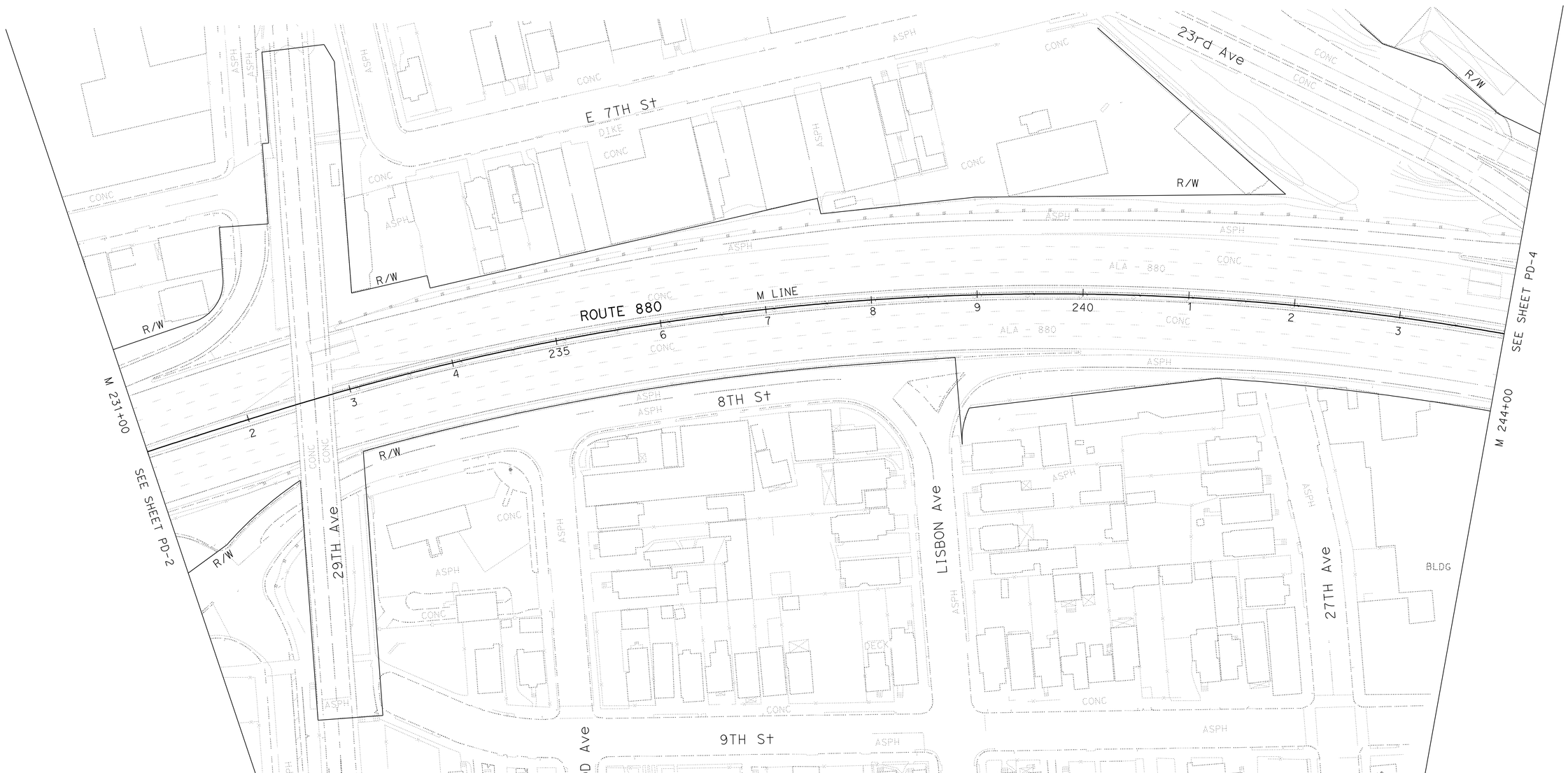

PAVEMENT DELINEATION PLAN

SCALE: 1" = 50'

FOR NOTES, ABBREVIATIONS AND LEGEND, SEE SHEET PD-1

THIS PLAN ACCURATE FOR PAVEMENT DELINEATION WORK ONLY

PD-3

STATE OF CALIFORNIA - DEPARTMENT OF TRANSPORTATION

Caltrans

TRAFFIC

FUNCTIONAL SUPERVISOR: EMILY TANG

CALCULATED-DESIGNED BY: TAN TRUONG

CHECKED BY: SAIF MAMOON

REVISED BY

DATE REVISED

LAST REVISION | DATE PLOTTED => 22-JUN-2011 | TIME PLOTTED => 13:07

01-12-11

Dist	COUNTY	ROUTE	POST MILES TOTAL PROJECT	SHEET No.	TOTAL SHEETS
04	Ala	880	28.2/29.9	108	183

REGISTERED CIVIL ENGINEER 3-28-11 DATE

6-20-11
PLANS APPROVAL DATE

REGISTERED PROFESSIONAL ENGINEER Saif Mamoon No. 53427 Exp 6-30-11 CIVIL STATE OF CALIFORNIA

THE STATE OF CALIFORNIA OR ITS OFFICERS OR AGENTS SHALL NOT BE RESPONSIBLE FOR THE ACCURACY OR COMPLETENESS OF SCANNED COPIES OF THIS PLAN SHEET.

NOTE:

FOR ACCURATE RIGHT OF WAY DATA, CONTACT RIGHT OF WAY ENGINEERING AT THE DISTRICT OFFICE.

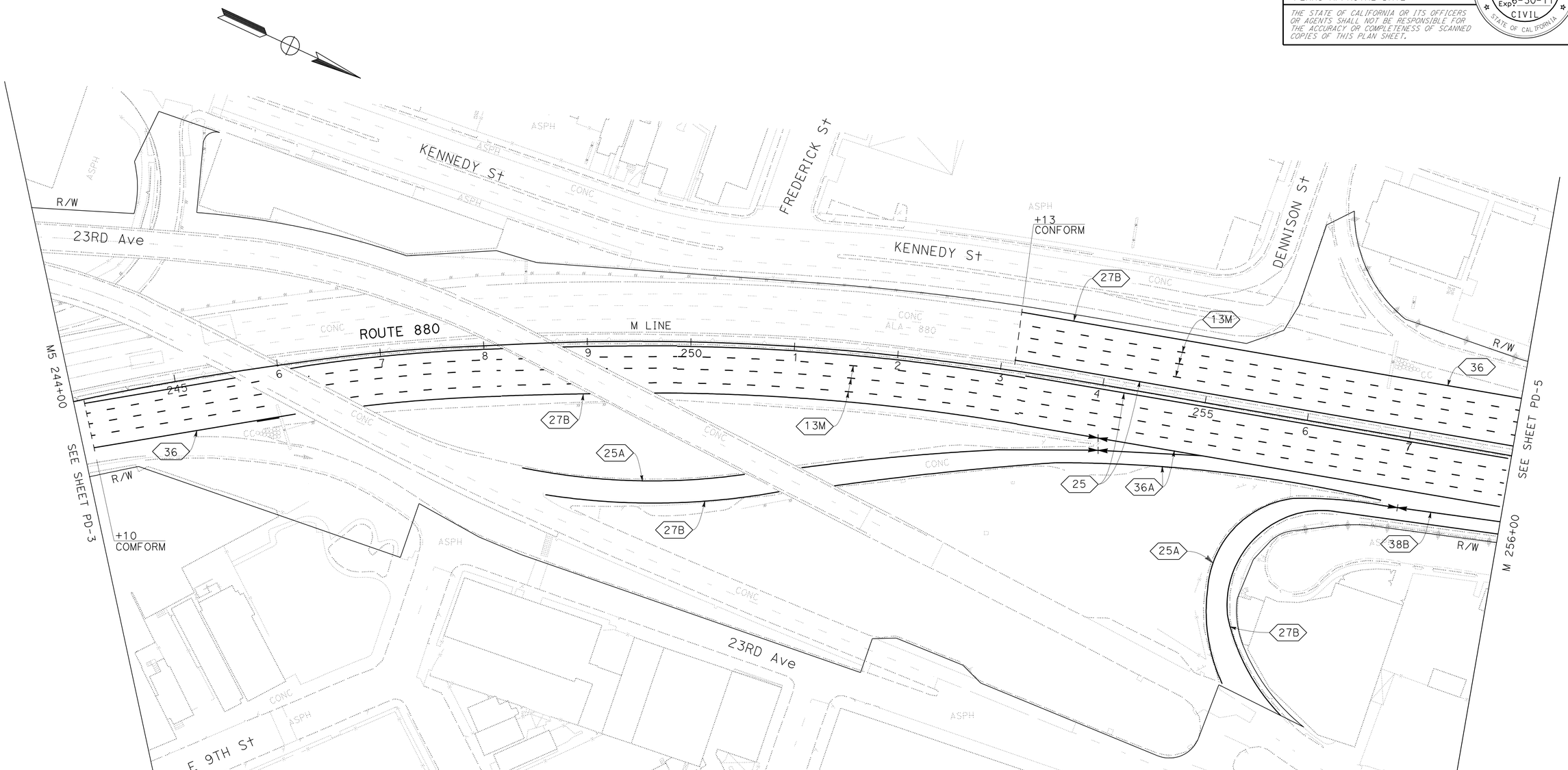

PAVEMENT DELINEATION PLAN

SCALE: 1" = 50'

FOR NOTES, ABBREVIATIONS AND LEGEND, SEE SHEET PD-1

THIS PLAN ACCURATE FOR PAVEMENT DELINEATION WORK ONLY

PD-4

REVISED BY	DATE REVISED
TAN TRUONG	SAIF MAMOON
CALCULATED-DESIGNED BY	CHECKED BY
FUNCTIONAL SUPERVISOR	EMILY TANG

STATE OF CALIFORNIA - DEPARTMENT OF TRANSPORTATION

Caltrans

TRAFFIC

LAST REVISION 04-05-11 | DATE PLOTTED => 22-JUN-2011 | TIME PLOTTED => 13:07

Dist	COUNTY	ROUTE	POST MILES TOTAL PROJECT	SHEET No.	TOTAL SHEETS
04	Ala	880	28.2/29.9	109	183

REGISTERED CIVIL ENGINEER 3-28-11 DATE

6-20-11
PLANS APPROVAL DATE

REGISTERED PROFESSIONAL ENGINEER Saif Mamoon No. 53427 Exp. 6-30-11 CIVIL STATE OF CALIFORNIA

THE STATE OF CALIFORNIA OR ITS OFFICERS OR AGENTS SHALL NOT BE RESPONSIBLE FOR THE ACCURACY OR COMPLETENESS OF SCANNED COPIES OF THIS PLAN SHEET.

NOTE:

FOR ACCURATE RIGHT OF WAY DATA, CONTACT RIGHT OF WAY ENGINEERING AT THE DISTRICT OFFICE.

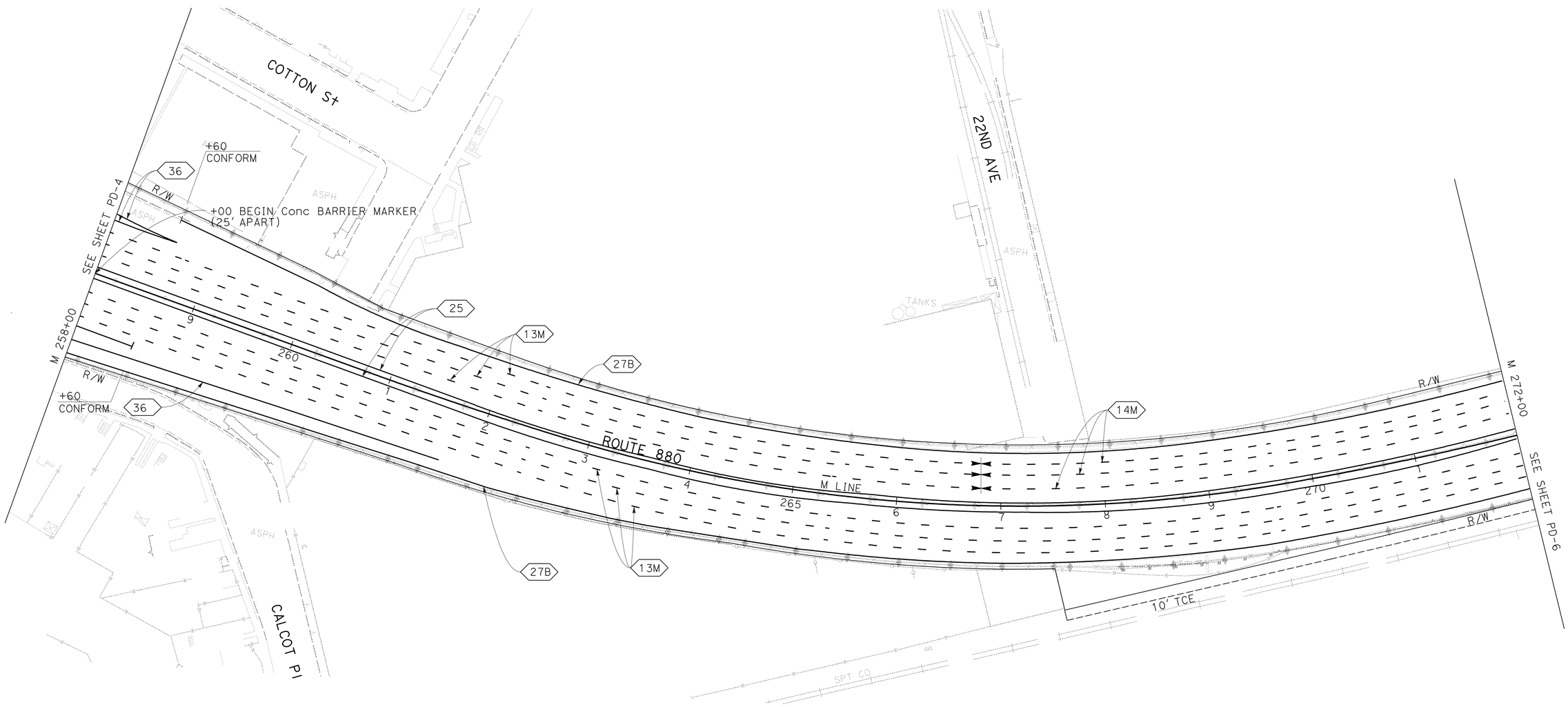

PAVEMENT DELINEATION PLAN

SCALE: 1" = 50'

FOR NOTES, ABBREVIATIONS AND LEGEND, SEE SHEET PD-1

THIS PLAN ACCURATE FOR PAVEMENT DELINEATION WORK ONLY

PD-5

STATE OF CALIFORNIA - DEPARTMENT OF TRANSPORTATION

Caltrans

TRAFFIC

FUNCTIONAL SUPERVISOR: EMILY TANG

CALCULATED-DESIGNED BY: TAN TRUONG

CHECKED BY: SAIF MAMOON

REVISED BY

DATE REVISED

LAST REVISION DATE PLOTTED => 22-JUN-2011
04-05-11 TIME PLOTTED => 13:07

NOTE:

FOR ACCURATE RIGHT OF WAY DATA, CONTACT
RIGHT OF WAY ENGINEERING AT THE DISTRICT OFFICE.

Dist	COUNTY	ROUTE	POST MILES TOTAL PROJECT	SHEET No.	TOTAL SHEETS
04	Ala	880	28.2/29.9	110	183

REGISTERED CIVIL ENGINEER 3-28-11 DATE

6-20-11
PLANS APPROVAL DATE

REGISTERED PROFESSIONAL ENGINEER
Saif Mamoon
No. 53427
Exp 6-30-11
CIVIL
STATE OF CALIFORNIA

THE STATE OF CALIFORNIA OR ITS OFFICERS OR AGENTS SHALL NOT BE RESPONSIBLE FOR THE ACCURACY OR COMPLETENESS OF SCANNED COPIES OF THIS PLAN SHEET.

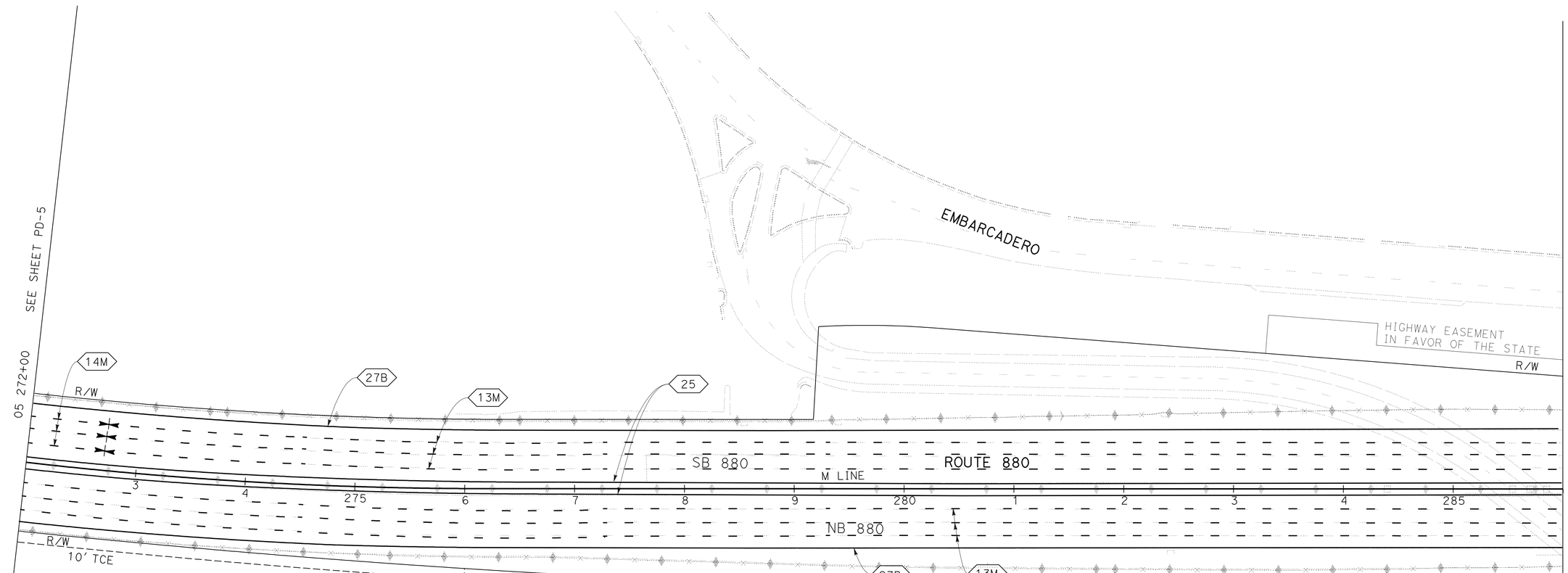

PAVEMENT DELINEATION PLAN

SCALE: 1" = 50'

FOR NOTES, ABBREVIATIONS AND LEGEND, SEE SHEET PD-1

THIS PLAN ACCURATE FOR PAVEMENT DELINEATION WORK ONLY

PD-6

STATE OF CALIFORNIA - DEPARTMENT OF TRANSPORTATION
Caltrans
TRAFFIC

FUNCTIONAL SUPERVISOR: EMILY TANG
CALCULATED-DESIGNED BY: TAN TRUONG
CHECKED BY: SAIF MAMOON
REVISED BY
DATE REVISED

LAST REVISION 04-05-11
DATE PLOTTED => 22-JUN-2011
TIME PLOTTED => 13:07

Dist	COUNTY	ROUTE	POST MILES TOTAL PROJECT	SHEET No.	TOTAL SHEETS
04	Ala	880	28.2/29.9	111	183

REGISTERED CIVIL ENGINEER 3-28-11 DATE

6-20-11
PLANS APPROVAL DATE

REGISTERED PROFESSIONAL ENGINEER
Saif Mamoon
No. 53427
Exp 6-30-11
CIVIL
STATE OF CALIFORNIA

THE STATE OF CALIFORNIA OR ITS OFFICERS OR AGENTS SHALL NOT BE RESPONSIBLE FOR THE ACCURACY OR COMPLETENESS OF SCANNED COPIES OF THIS PLAN SHEET.

NOTE:

FOR ACCURATE RIGHT OF WAY DATA, CONTACT RIGHT OF WAY ENGINEERING AT THE DISTRICT OFFICE.

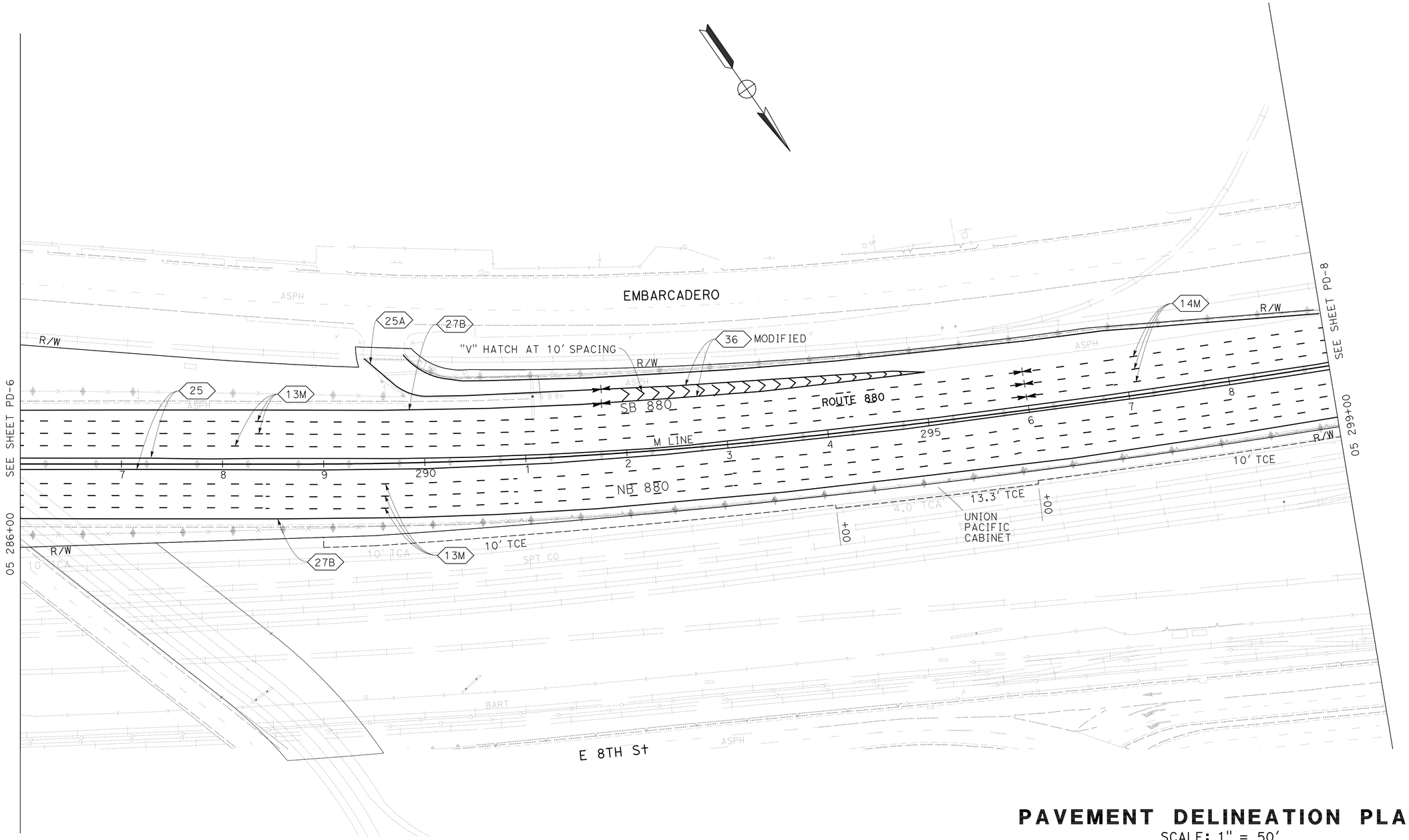

FOR NOTES, ABBREVIATIONS AND LEGEND, SEE SHEET PD-1

THIS PLAN ACCURATE FOR PAVEMENT DELINEATION WORK ONLY

PAVEMENT DELINEATION PLAN

SCALE: 1" = 50'

PD-7

STATE OF CALIFORNIA - DEPARTMENT OF TRANSPORTATION

Caltrans

TRAFFIC

FUNCTIONAL SUPERVISOR: EMILY TANG

CALCULATED-DESIGNED BY: TAN TRUONG

CHECKED BY: SAIF MAMOON

REVISED BY

DATE REVISED

LAST REVISION 04-05-11

DATE PLOTTED => 22-JUN-2011
TIME PLOTTED => 13:00

Dist	COUNTY	ROUTE	POST MILES TOTAL PROJECT	SHEET No.	TOTAL SHEETS
04	Ala	880	28.2/29.9	112	183

REGISTERED CIVIL ENGINEER 3-28-11 DATE

6-20-11
PLANS APPROVAL DATE

REGISTERED PROFESSIONAL ENGINEER Saif Mamoon No. 53427 Exp 6-30-11 CIVIL STATE OF CALIFORNIA

THE STATE OF CALIFORNIA OR ITS OFFICERS OR AGENTS SHALL NOT BE RESPONSIBLE FOR THE ACCURACY OR COMPLETENESS OF SCANNED COPIES OF THIS PLAN SHEET.

NOTE:

FOR ACCURATE RIGHT OF WAY DATA, CONTACT RIGHT OF WAY ENGINEERING AT THE DISTRICT OFFICE.

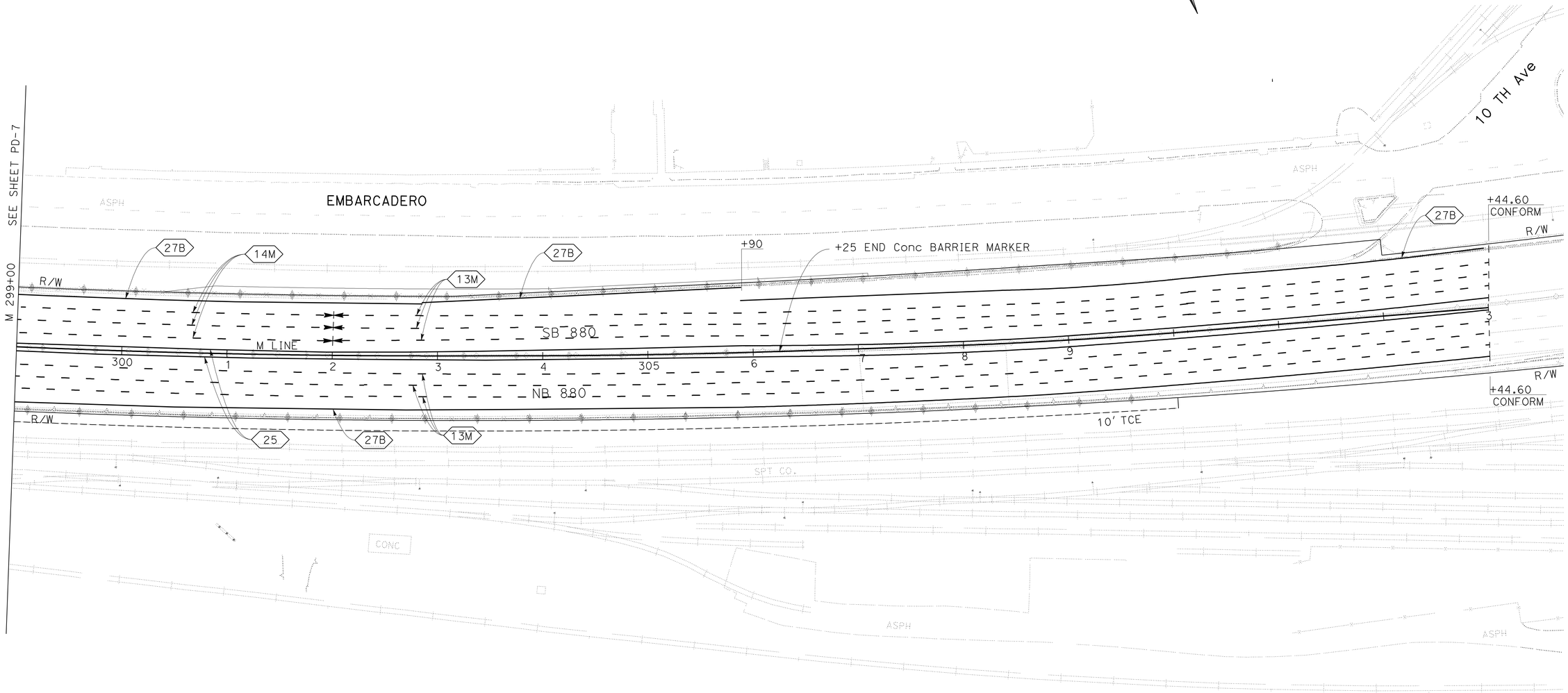

PAVEMENT DELINEATION PLAN

SCALE: 1" = 50'

PD-8

FOR NOTES, ABBREVIATIONS AND LEGEND, SEE SHEET PD-1

THIS PLAN ACCURATE FOR PAVEMENT DELINEATION WORK ONLY

STATE OF CALIFORNIA - DEPARTMENT OF TRANSPORTATION

Caltrans

TRAFFIC

FUNCTIONAL SUPERVISOR: EMILY TANG

CALCULATED-DESIGNED BY: TAN TRUONG

CHECKED BY: SAIF MAMOON

REVISED BY

DATE REVISED

LAST REVISION 04-05-11

DATE PLOTTED => 22-JUN-2011

TIME PLOTTED => 13:00

Dist	COUNTY	ROUTE	POST MILES TOTAL PROJECT	SHEET No.	TOTAL SHEETS
04	Ala	880	28.2/29.9	113	183

REGISTERED CIVIL ENGINEER 3-28-11 DATE

6-20-11
PLANS APPROVAL DATE

REGISTERED PROFESSIONAL ENGINEER Saif Mamoon No. 53427 Exp 6-30-11 CIVIL STATE OF CALIFORNIA

THE STATE OF CALIFORNIA OR ITS OFFICERS OR AGENTS SHALL NOT BE RESPONSIBLE FOR THE ACCURACY OR COMPLETENESS OF SCANNED COPIES OF THIS PLAN SHEET.

NOTES:

1. DETAIL 13M IS MODIFIED PAVEMENT DELINEATION DETAIL 13.
2. DETAIL 14M IS MODIFIED PAVEMENT DELINEATION DETAIL 14.
3. FOR DETAILS NOT SHOWN, SEE STANDARD PLAN A20A.
4. INSTALL 4" WHITE AFTER INSTALLING PAVEMENT MARKERS.

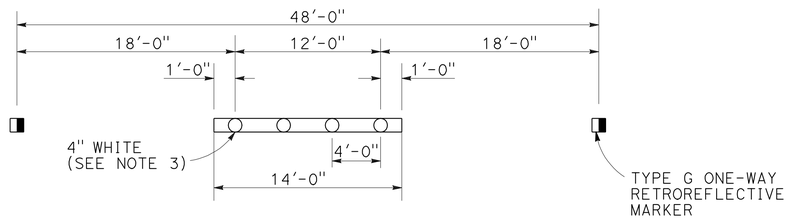

DETAIL 13M

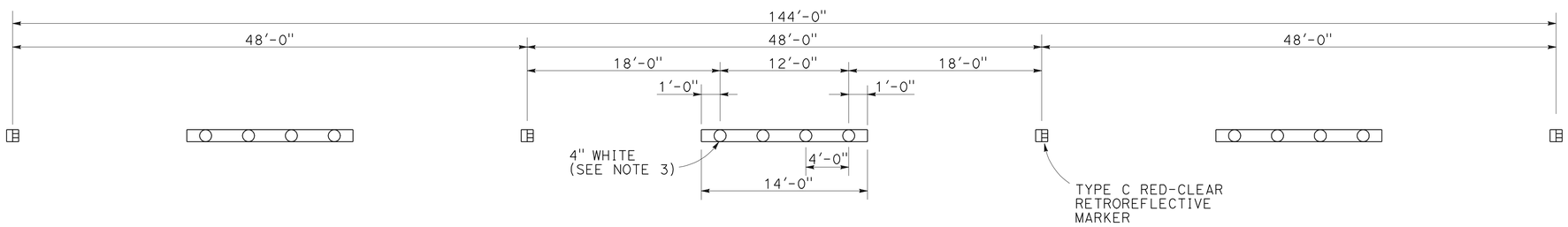

DETAIL 14M

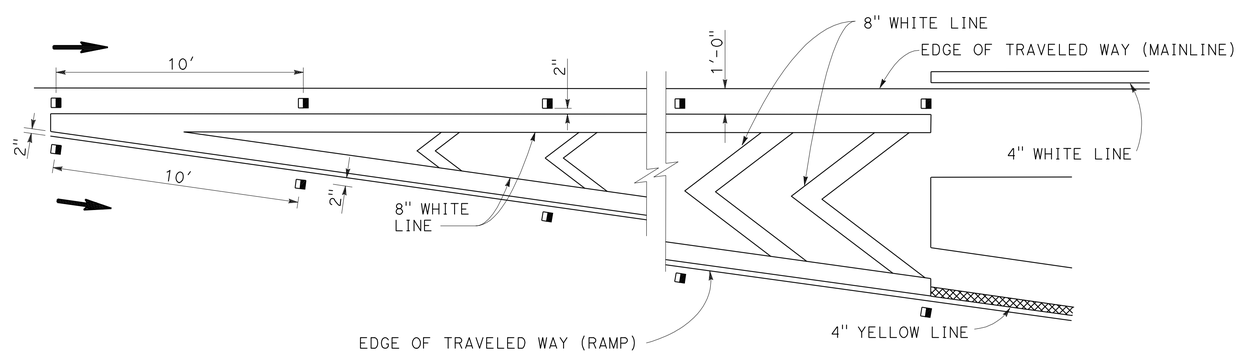

MODIFIED DETAIL 36

EXIT RAMP NEUTRAL AREA (GORE) TREATMENT

PAVEMENT DELINEATION DETAILS

NO SCALE

PDD-1

STATE OF CALIFORNIA - DEPARTMENT OF TRANSPORTATION
Caltrans
TRAFFIC

FUNCTIONAL SUPERVISOR: EMILY TANG
CALCULATED-DESIGNED BY: SAIF MAMOON
CHECKED BY: TAN TRUONG
REVISED BY
DATE REVISED

LAST REVISION 04-05-11
DATE PLOTTED => 22-JUN-2011
TIME PLOTTED => 13:00

Dist	COUNTY	ROUTE	POST MILES TOTAL PROJECT	SHEET No.	TOTAL SHEETS
04	Ala	880	28.2/29.9	114	183

REGISTERED CIVIL ENGINEER 3-28-11 DATE

6-20-11
PLANS APPROVAL DATE

REGISTERED PROFESSIONAL ENGINEER Saif Mamoon No. 53427 Exp. 6-30-11 CIVIL STATE OF CALIFORNIA

THE STATE OF CALIFORNIA OR ITS OFFICERS OR AGENTS SHALL NOT BE RESPONSIBLE FOR THE ACCURACY OR COMPLETENESS OF SCANNED COPIES OF THIS PLAN SHEET.

TRAFFIC STRIPES, PAVEMENT MARKINGS AND PAVEMENT MARKERS

SHEET No.	DIRECTION	STATION LIMITS	LOCATION	DETAIL No. OR PAVEMENT MARKING	THERMOPLASTIC TRAFFIC STRIPE 4'' WHITE BROKEN 34-14	THERMOPLASTIC TRAFFIC STRIPE 4'' WHITE SOLID	THERMOPLASTIC TRAFFIC STRIPE 4'' YELLOW	THERMOPLASTIC TRAFFIC STRIPE 8'' WHITE	PAVEMENT MARKER NON-REFLECTIVE TYPE A	PAVEMENT MARKER RETROREFLECTIVE TYPE C	PAVEMENT MARKER RETROREFLECTIVE TYPE G	PAVEMENT MARKER RETROREFLECTIVE TYPE H	REMOVE PAINTED TRAFFIC STRIPE	REMOVE PAVEMENT MARKER	CONCRETE BARRIER MARKER
					LF	LF	LF	LF	EA				LF	EA	EA
PD-1	NB	ML203+00 TO 213+00	R†	13M	875				254		64		875	318	19
	NB	"	R†	25			1000					22	1000	22	
	NB	"	R†	27B		1000							1000		
	SB	"	L†	13M	875				254		64		875	318	
	SB	"	L†	25			1000					22	1000	22	
	SB	"	L†	27B		1000							1000		
	NB	ML203+00 TO 203+40	R†	36				80			2		80	2	
PD-4	NB	ML244+00 TO 258+00	R†	13M	1225				354		89		1225	443	
	NB	"	R†	25			1400					30	1400	30	
	NB	ML244+00 TO 246+20	R†	36				220			6		220	6	
	NB	ML246+40 TO 254+00	R†	27B		760							760		
	NB	ML254+00 TO 255+30	R†	36A				260			7		260	7	
	NB	ML248+30 TO 254+00	RAMP	25A			570					25	570	25	
	NB	ML248+30 TO 257+00	"	27B		870							870		
	NB	APPROXIMATE 350'	"	25A			350					16	350	16	
	NB	APPROXIMATE 400'	"	27B		400							400		
	NB	ML257+00 TO 258+00	GORE	38A				100			5		100	5	
	SB	ML253+13 TO 258+00	L†	13M	426				125		31		426	156	
	SB	"	L†	25			487					11	487	11	
	SB	ML253+13 TO 256+70	L†	27B		357							357		
	SB	ML256+70 TO 258+00	L†	36				130			7		130	7	
PD-5	NB	ML258+60 TO 272+00	R†	13M	1017				339		85		1017	424	
	NB	"	R†	25			1340					29	1340	29	54
	NB	"	R†	27B		1340							1340		
	NB	ML258+00 TO 261+75	ON-RAMP	36				315		32			315	32	
	SB	ML258+00 TO 266+75	L†	13M	624				208		52		624	260	
	SB	ML266+75 TO 272+00	L†	14M	430				108	36			430	144	
	SB	ML258+00 TO 272+00	L†	25			1340					29	1340	29	
	SB	ML257+75 TO 258+00	L†	27B		1340							1340		
	SB	ML257+75 TO 258+60	OFF-RAMP	36				85		9			85	9	
PD-6	NB	ML272+00 TO 286+00	R†	13M	1062				354		89		1062	443	
	NB	"	R†	25			1400					31	1400	31	56
	NB	"	R†	27B		1400							1400		
	SB	ML272+00 TO 272+60	L†	14M	81				21	7			81	28	
	SB	ML272+60 TO 286+00	L†	13M	1017				339		85		1017	424	
	SB	ML272+00 TO 286+00	L†	25			1400					31	1400	31	
	SB	"	L†	27B		1400							1400		
				SUBTOTAL	7632	9867	10287	1190	2356	84	584	246	28976	3272	129

PAVEMENT DELINEATION QUANTITIES

PDQ-1

STATE OF CALIFORNIA - DEPARTMENT OF TRANSPORTATION
Caltrans
TRAFFIC

FUNCTIONAL SUPERVISOR: EMILY TANG
CALCULATED-DESIGNED BY: TAN TRUONG
CHECKED BY: SAIF MAMOON
REVISED BY
DATE REVISED

LAST REVISION 06-09-11
DATE PLOTTED => 22-JUN-2011
TIME PLOTTED => 13:00

Dist	COUNTY	ROUTE	POST MILES TOTAL PROJECT	SHEET No.	TOTAL SHEETS
04	Ala	880	28.2/29.9	115	183

REGISTERED CIVIL ENGINEER 3-28-11 DATE

6-20-11
PLANS APPROVAL DATE

REGISTERED PROFESSIONAL ENGINEER Saif Mamoon No. 53427 Exp. 6-30-11 CIVIL STATE OF CALIFORNIA

THE STATE OF CALIFORNIA OR ITS OFFICERS OR AGENTS SHALL NOT BE RESPONSIBLE FOR THE ACCURACY OR COMPLETENESS OF SCANNED COPIES OF THIS PLAN SHEET.

TRAFFIC STRIPES, PAVEMENT MARKINGS AND PAVEMENT MARKERS

SHEET No.	DIRECTION	STATION LIMITS	LOCATION	DETAIL No. OR PAVEMENT MARKING	THERMOPLASTIC TRAFFIC STRIPE 4" WHITE BROKEN 34-14	THERMOPLASTIC TRAFFIC STRIPE 4" WHITE SOLID	THERMOPLASTIC TRAFFIC STRIPE 4" YELLOW	THERMOPLASTIC TRAFFIC STRIPE 8" WHITE	PAVEMENT MARKER NON-REFLECTIVE TYPE A	PAVEMENT MARKER RETROREFLECTIVE TYPE C	PAVEMENT MARKER RETROREFLECTIVE TYPE G	PAVEMENT MARKER RETROREFLECTIVE TYPE H	REMOVE PAINTED TRAFFIC STRIPE	REMOVE PAVEMENT MARKER	CONCRETE BARRIER MARKER
					LF	LF	LF	LF	EA				LF	EA	EA
PD-7	NB	ML286+00 TO 299+00	R†	13M	987				329		83		987	412	
	NB	"	R†	25			1300					28	1300	28	52
	NB	"	R†	27B		1300							1300		
	SB	ML286+00 TO 296+00	L†	13M	762				254		64		762	318	
	SB	ML296+00 TO 299+00	L†	14M	261				66	22			261	88	
	SB	ML286+00 TO 299+00	L†	25			1300					28	1300	28	
	SB	ML286+00 TO 291+00	L†	27B		1300							1300		
	SB	ML290+00 TO 299+00	L†	27B		900							900		
	SB	ML291+00 TO 294+30	L†	36				330		34			330	34	
PD-8	NB	ML299+00 TO 312+45	R†	13M	1177				340		85		1177	425	29
	NB	"	R†	25			1345					29	1345	29	
	NB	"	R†	27B		1345							1345		
	SB	ML299+00 TO 302+00	L†	14M	263				80	20			263	100	
	SB	ML302+00 TO 312+45	L†	13M	915				265		66		915	331	
	SB	ML299+00 TO 312+45	L†	25			1345					29	1345	29	
	SB	ML299+00 TO 312+45	L†	27B		1345							1345		
*NOTE		FROM STAGING SCQ											20518		
				SUBTOTAL	4365	6190	5290	330	1334	76	298	114	36693	1822	81
				GRAND TOTAL	11997	31634		1520	3690	1404			65669	5094	210

PAVEMENT DELINEATION QUANTITIES

PDQ-2

STATE OF CALIFORNIA - DEPARTMENT OF TRANSPORTATION
Caltrans
TRAFFIC

FUNCTIONAL SUPERVISOR: EMILY TANG
CALCULATED-DESIGNED BY: TAN TRUONG
CHECKED BY: SAIF MAMOON
REVISED BY
DATE REVISED

LAST REVISION 06-10-11
DATE PLOTTED => 22-JUN-2011
TIME PLOTTED => 13:00

Dist	COUNTY	ROUTE	POST MILES TOTAL PROJECT	SHEET No.	TOTAL SHEETS
04	Ala	880	28.2/29.9	116	183

REGISTERED CIVIL ENGINEER 3-23-11 DATE

6-20-11
PLANS APPROVAL DATE

REGISTERED PROFESSIONAL ENGINEER Florante P. Perez No. 41030 Exp 3-31-13 CIVIL STATE OF CALIFORNIA

THE STATE OF CALIFORNIA OR ITS OFFICERS OR AGENTS SHALL NOT BE RESPONSIBLE FOR THE ACCURACY OR COMPLETENESS OF SCANNED COPIES OF THIS PLAN SHEET.

NOTES:

1. EXACT LOCATION OF SIGNS TO BE DETERMINED BY THE ENGINEER.
2. POST SIZE AND LENGTH GIVEN ARE APPROXIMATE. EXACT SIZE AND LENGTH TO BE DETERMINED BY THE ENGINEER.

LEGEND:

- OVERHEAD SIGN LETTER
- (No) ROADSIDE SIGN NUMBER
- ■ REMOVE ROADSIDE SIGN
- ✳ EXISTING SIGN TO REMAIN

SIGN PLAN
NO SCALE

THIS PLAN ACCURATE FOR SIGN WORK ONLY

S-1

STATE OF CALIFORNIA - DEPARTMENT OF TRANSPORTATION
Caltrans
TRAFFIC

FUNCTIONAL SUPERVISOR: LOURDES DAVID
CALCULATED-DESIGNED BY: PARWIN SARWARY
CHECKED BY: FLOR P. PEREZ
REVISED BY
DATE REVISED

LAST REVISION 04-05-11
DATE PLOTTED => 22-JUN-2011
TIME PLOTTED => 13:00

Dist	COUNTY	ROUTE	POST MILES TOTAL PROJECT	SHEET No.	TOTAL SHEETS
04	Ala	880	28.2/29.9	117	183

REGISTERED CIVIL ENGINEER — DATE 3-23-11

6-20-11
PLANS APPROVAL DATE

REGISTERED PROFESSIONAL ENGINEER — Florante P. Perez — No. 41030 — Exp. 3-31-13 — CIVIL — STATE OF CALIFORNIA

THE STATE OF CALIFORNIA OR ITS OFFICERS OR AGENTS SHALL NOT BE RESPONSIBLE FOR THE ACCURACY OR COMPLETENESS OF SCANNED COPIES OF THIS PLAN SHEET.

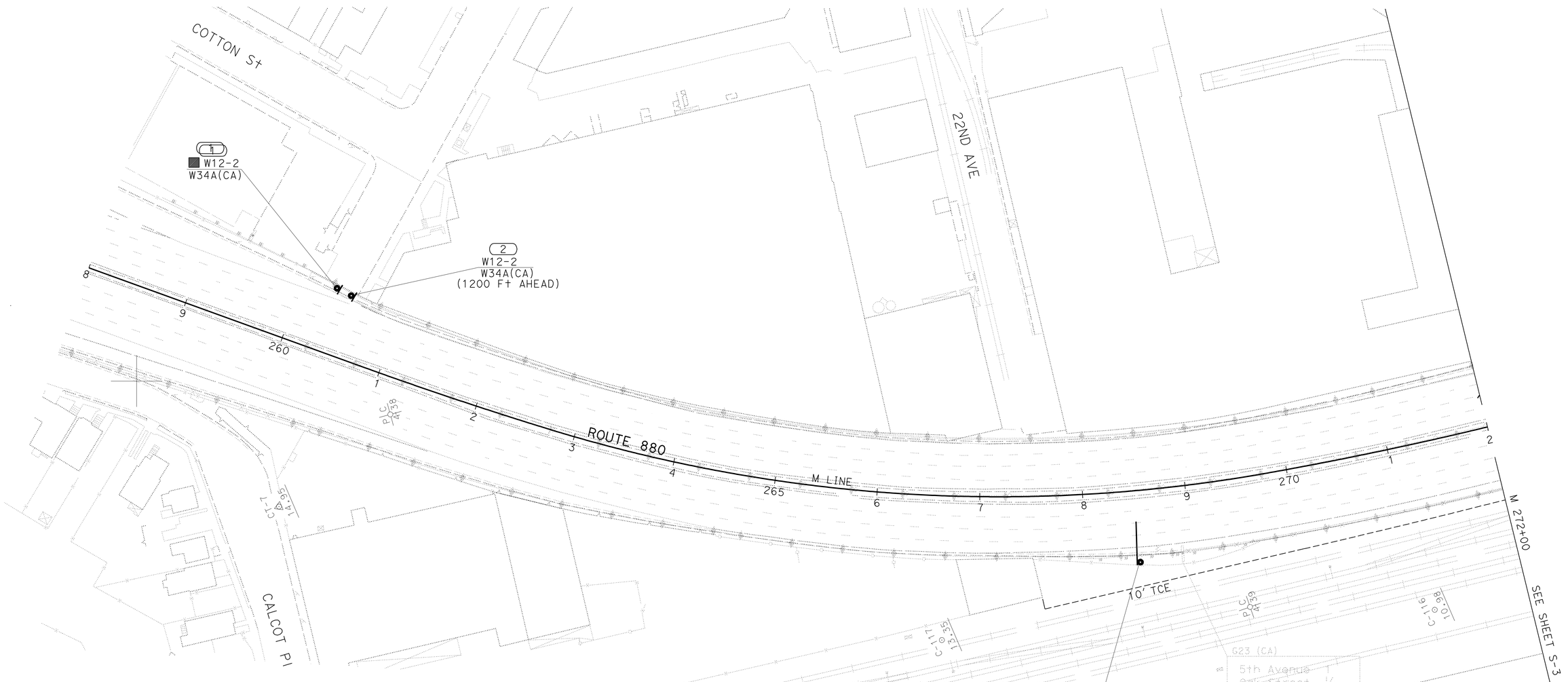

FOR NOTES, ABBREVIATIONS AND LEGEND, SEE SHEET S-1

THIS PLAN ACCURATE FOR SIGN WORK ONLY

SIGN PLAN
NO SCALE

S-2

STATE OF CALIFORNIA - DEPARTMENT OF TRANSPORTATION
Caltrans
TRAFFIC

FUNCTIONAL SUPERVISOR: LOURDES DAVID
CALCULATED-DESIGNED BY: PARWIN SARWARY
CHECKED BY: FLOR P. PEREZ
REVISED BY
DATE REVISED

LAST REVISION 03-19-11
DATE PLOTTED => 22-JUN-2011
TIME PLOTTED => 13:00

Dist	COUNTY	ROUTE	POST MILES TOTAL PROJECT	SHEET No.	TOTAL SHEETS
04	Ala	880	28.2/29.9	118	183

Florante P. Perez 3-23-11
REGISTERED CIVIL ENGINEER DATE

6-20-11
PLANS APPROVAL DATE

REGISTERED PROFESSIONAL ENGINEER
Florante P. Perez
No. 41030
Exp. 3-31-13
CIVIL
STATE OF CALIFORNIA

THE STATE OF CALIFORNIA OR ITS OFFICERS OR AGENTS SHALL NOT BE RESPONSIBLE FOR THE ACCURACY OR COMPLETENESS OF SCANNED COPIES OF THIS PLAN SHEET.

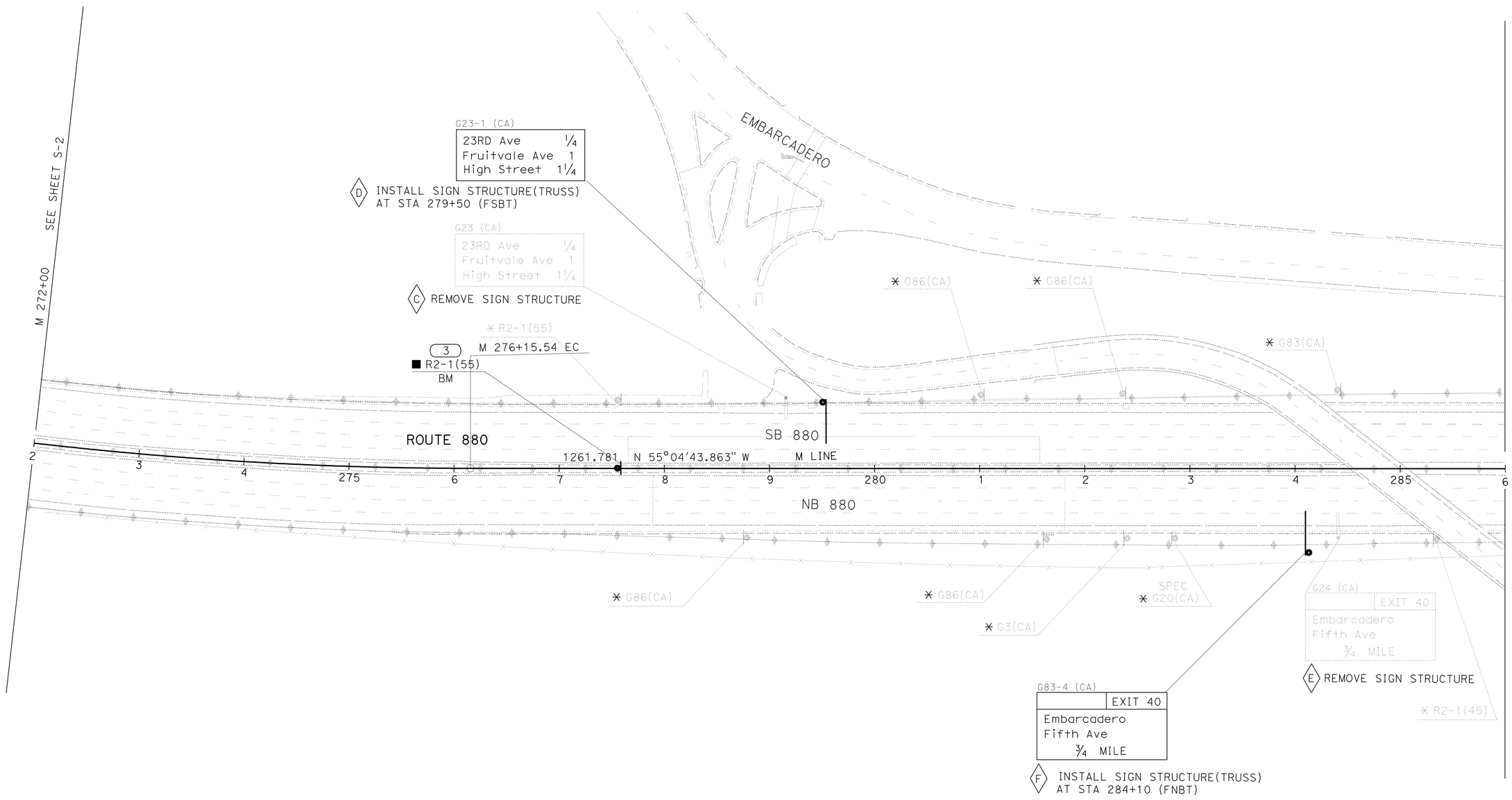

SIGN PLAN

NO SCALE

FOR NOTES, ABBREVIATIONS AND LEGEND, SEE SHEET S-1

THIS PLAN ACCURATE FOR SIGN WORK ONLY

S-3

STATE OF CALIFORNIA - DEPARTMENT OF TRANSPORTATION
Caltrans
TRAFFIC

FUNCTIONAL SUPERVISOR: LOURDES DAVID
CALCULATED-DESIGNED BY: PARWIN SARWARY
CHECKED BY: FLOR P. PEREZ
REVISED BY
DATE REVISED

LAST REVISION 03-24-11
DATE PLOTTED => 22-JUN-2011
TIME PLOTTED => 13:00

Dist	COUNTY	ROUTE	POST MILES TOTAL PROJECT	SHEET No.	TOTAL SHEETS
04	Ala	880	28.2/29.9	119	183

REGISTERED CIVIL ENGINEER 3-23-11 DATE

6-20-11
PLANS APPROVAL DATE

REGISTERED PROFESSIONAL ENGINEER
Florante P. Perez
No. 41030
Exp. 3-31-13
CIVIL
STATE OF CALIFORNIA

THE STATE OF CALIFORNIA OR ITS OFFICERS OR AGENTS SHALL NOT BE RESPONSIBLE FOR THE ACCURACY OR COMPLETENESS OF SCANNED COPIES OF THIS PLAN SHEET.

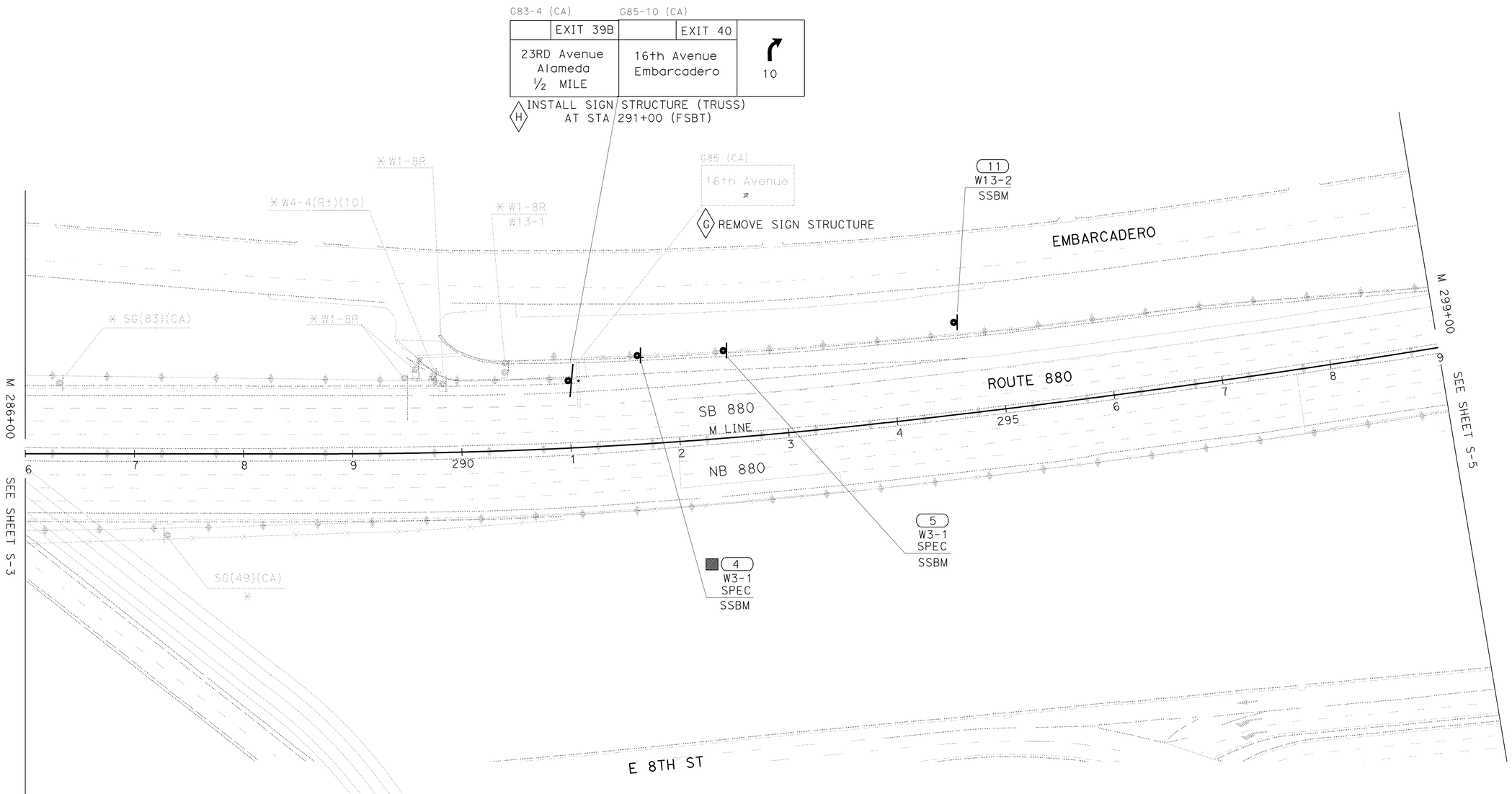

SIGN PLAN
NO SCALE

FOR NOTES, ABBREVIATIONS AND LEGEND, SEE SHEET S-1

THIS PLAN ACCURATE FOR SIGN WORK ONLY

S-4

STATE OF CALIFORNIA - DEPARTMENT OF TRANSPORTATION
Caltrans
TRAFFIC

FUNCTIONAL SUPERVISOR: LOURDES DAVID

CALCULATED-DESIGNED BY: PARWIN SARWARY
CHECKED BY: FLOR P. PEREZ

REVISED BY
DATE REVISED

LAST REVISION 04-05-11
DATE PLOTTED => 22-JUN-2011
TIME PLOTTED => 13:01

Dist	COUNTY	ROUTE	POST MILES TOTAL PROJECT	SHEET No.	TOTAL SHEETS
04	Ala	880	28.2/29.9	120	183

REGISTERED CIVIL ENGINEER 3-23-11 DATE

6-20-11
PLANS APPROVAL DATE

REGISTERED PROFESSIONAL ENGINEER
Florante P. Perez
No. 41030
Exp. 3-31-13
CIVIL
STATE OF CALIFORNIA

THE STATE OF CALIFORNIA OR ITS OFFICERS OR AGENTS SHALL NOT BE RESPONSIBLE FOR THE ACCURACY OR COMPLETENESS OF SCANNED COPIES OF THIS PLAN SHEET.

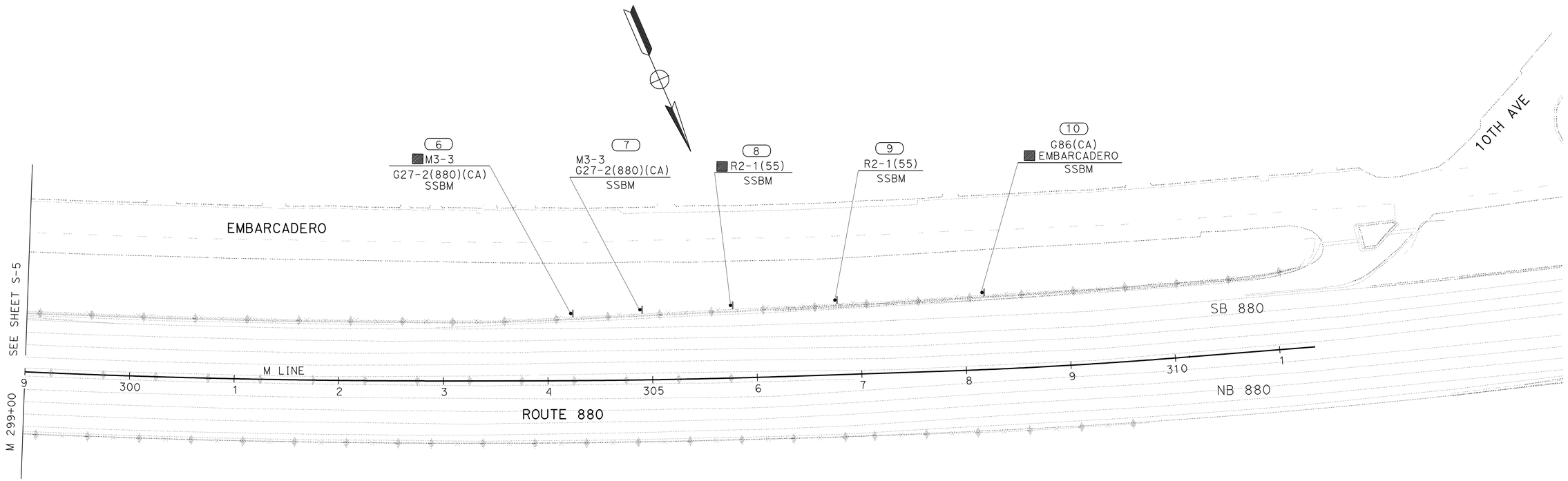

FOR NOTES, ABBREVIATIONS AND LEGEND, SEE SHEET S-1

THIS PLAN ACCURATE FOR SIGN WORK ONLY

SIGN PLAN
NO SCALE

S-5

STATE OF CALIFORNIA - DEPARTMENT OF TRANSPORTATION
Caltrans
TRAFFIC

FUNCTIONAL SUPERVISOR: LOURDES DAVID
CALCULATED-DESIGNED BY: PARWIN SARWARY
CHECKED BY: FLOR P. PEREZ
REVISED BY
DATE REVISED

LAST REVISION 02-24-11
DATE PLOTTED => 22-JUN-2011
TIME PLOTTED => 13:01

Dist	COUNTY	ROUTE	POST MILES TOTAL PROJECT	SHEET No.	TOTAL SHEETS
04	Ala	880	28.2/29.9	121	183

Florante P. Perez 3-23-11
REGISTERED CIVIL ENGINEER DATE

6-20-11
PLANS APPROVAL DATE

REGISTERED PROFESSIONAL ENGINEER
Florante P. Perez
No. 41030
Exp. 3-31-13
CIVIL
STATE OF CALIFORNIA

THE STATE OF CALIFORNIA OR ITS OFFICERS OR AGENTS SHALL NOT BE RESPONSIBLE FOR THE ACCURACY OR COMPLETENESS OF SCANNED COPIES OF THIS PLAN SHEET.

G23-1 (CA)

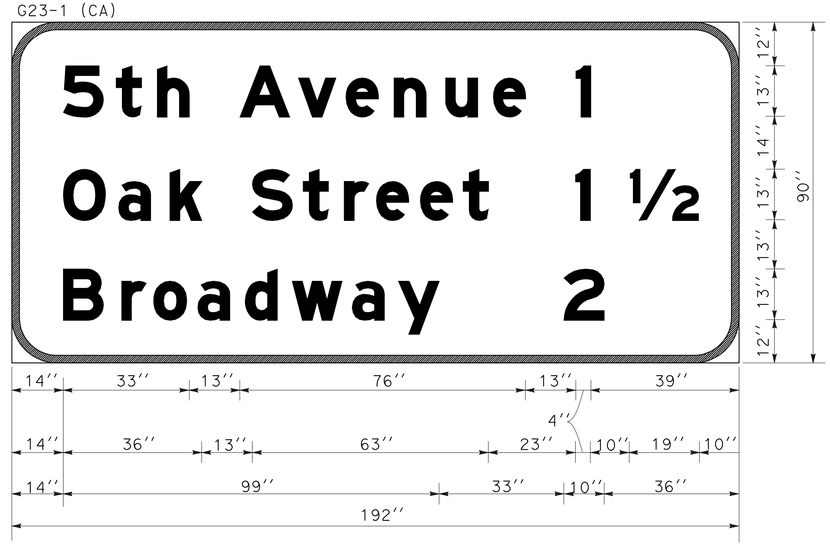

12'' RADIUS, 2" BORDER WHITE ON GREEN;
"5th AVENUE" E Mod; "1" E Mod; "OAK STREET E Mod;
"1 1/2'' E Mod; "BROADWAY" E Mod; "2" E Mod;

SIGN B OF SHEET S-2

G23-1 (CA)

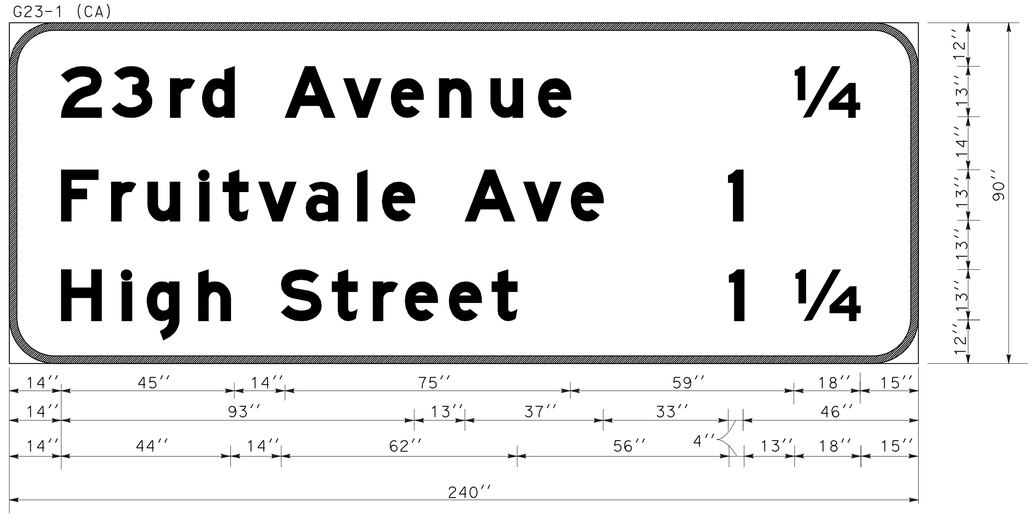

12'' RADIUS, 2" BORDER, WHITE ON GREEN;
"23rd Avenue" E Mod; "1/4'' E Mod; "FRUITVALE Ave" E Mod; "1" E Mod; "HIGH STREET" E Mod;
"1 1/4'' E Mod;

SIGN D OF SHEET S-3

SIGN DETAILS
NO SCALE

SD-1

STATE OF CALIFORNIA - DEPARTMENT OF TRANSPORTATION
Caltrans®
TRAFFIC

FUNCTIONAL SUPERVISOR: LOURDES DAVID
CALCULATED-DESIGNED BY: PARWIN SARWARY
CHECKED BY: FLOR P. PEREZ
REVISED BY
DATE REVISED

LAST REVISION 02-24-11
DATE PLOTTED => 22-JUN-2011
TIME PLOTTED => 13:01

Dist	COUNTY	ROUTE	POST MILES TOTAL PROJECT	SHEET No.	TOTAL SHEETS
04	Ala	880	28.2/29.9	122	183

Florante P. Perez 23-11
REGISTERED CIVIL ENGINEER DATE

6-20-11
PLANS APPROVAL DATE

REGISTERED PROFESSIONAL ENGINEER
Florante P. Perez
No. 41030
Exp. 3-31-13
CIVIL
STATE OF CALIFORNIA

THE STATE OF CALIFORNIA OR ITS OFFICERS OR AGENTS SHALL NOT BE RESPONSIBLE FOR THE ACCURACY OR COMPLETENESS OF SCANNED COPIES OF THIS PLAN SHEET.

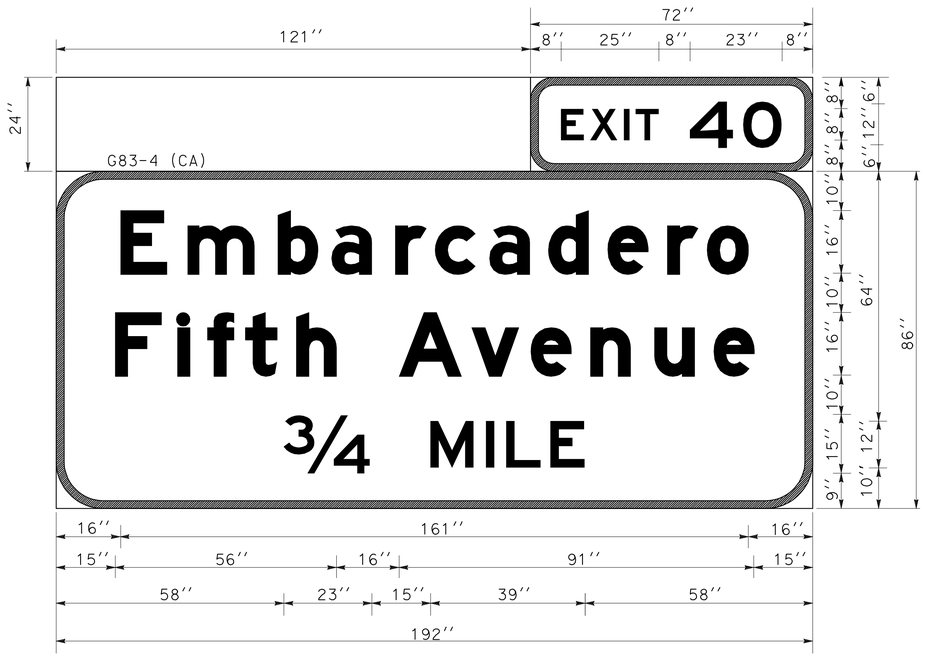

NO BORDER, WHITE ON GREEN;
6'' RADIUS, 2" BORDER, WHITE ON GREEN;
"EXIT" E; "40" E;
12'' RADIUS, 2" BORDER, WHITE ON GREEN;
"EMBARCADERO" E Mod; "FIFTH AVENUE" E Mod; " 3/4 MILE" E;

SIGN F OF SHEET S-3

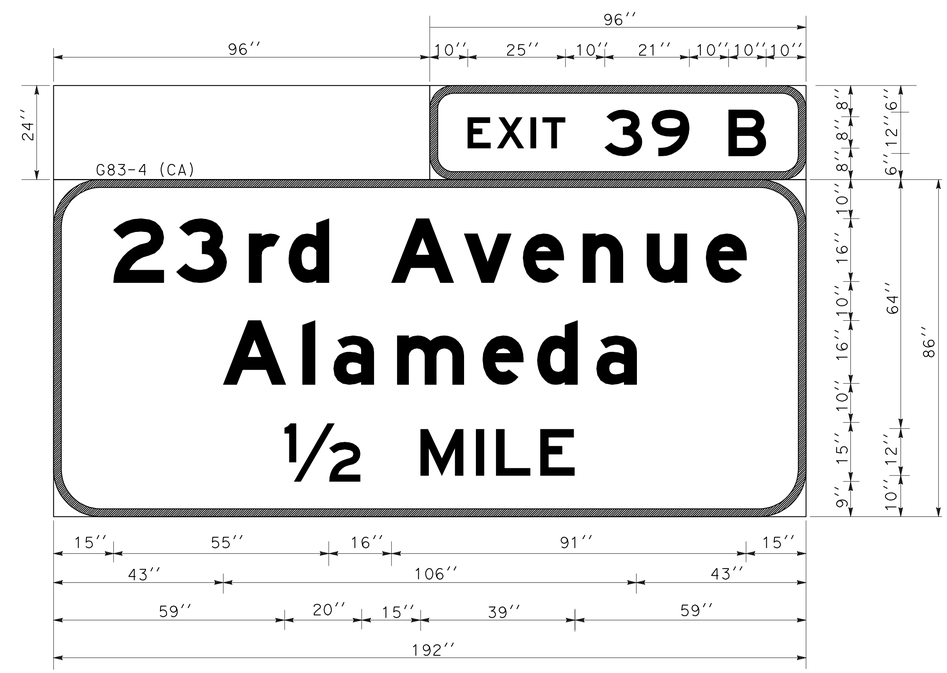

NO BORDER, WHITE ON GREEN;
6'' RADIUS, 2" BORDER, WHITE ON GREN;
"EXIT" E; "39 B" E;
12'' RADIUS 2" BORDER, WHITE ON GREEN;
"23rd AVENUE" E Mod; "ALAMEDA" E Mod; "1/2 MILE" E;

SIGN H OF SHEET S-4

SIGN DETAILS
NO SCALE

SD-2

REVISED BY	DATE REVISED
PARWIN SARWARY	FLOR P. PEREZ
CALCULATED-DESIGNED BY	CHECKED BY
FUNCTIONAL SUPERVISOR	LOURDES DAVID

STATE OF CALIFORNIA - DEPARTMENT OF TRANSPORTATION
Caltrans
TRAFFIC

LAST REVISION 02-24-11 | DATE PLOTTED => 22-JUN-2011 | TIME PLOTTED => 13:01

Dist	COUNTY	ROUTE	POST MILES TOTAL PROJECT	SHEET No.	TOTAL SHEETS
04	Ala	880	28.2/29.9	123	183

REGISTERED CIVIL ENGINEER 3-23-11 DATE

6-20-11
PLANS APPROVAL DATE

REGISTERED PROFESSIONAL ENGINEER
Florante P. Perez
No. 41030
Exp. 3-31-13
CIVIL
STATE OF CALIFORNIA

THE STATE OF CALIFORNIA OR ITS OFFICERS OR AGENTS SHALL NOT BE RESPONSIBLE FOR THE ACCURACY OR COMPLETENESS OF SCANNED COPIES OF THIS PLAN SHEET.

NO BORDER, WHITE ON GREEN;
6" RADIUS, 2" BORDER, WHITE ON GREEN;
"EXIT" E; "40" E;
12" RADIUS, 2" BORDER, WHITE ON GREEN;
"16th AVENUE" E Mod; "EMBARCADERO" E Mod;
Arrow 10.67UC-2LH - 17" 45{;

SIGN H OF SHEET S-4

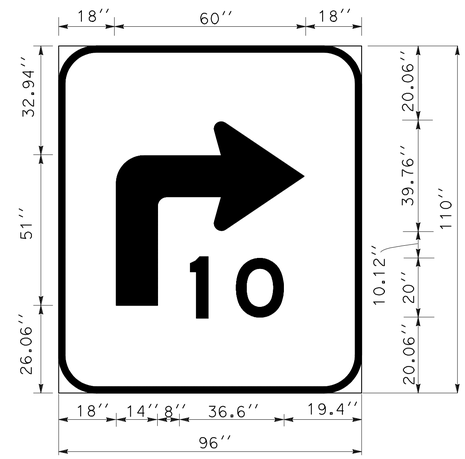

12.0" RADIUS, 2.0" BORDER, WHITE ON YELLOW;
"20" E

SIGN H OF SHEET S-4

SIGN DETAILS
NO SCALE

SD-3

STATE OF CALIFORNIA - DEPARTMENT OF TRANSPORTATION
Caltrans
TRAFFIC

FUNCTIONAL SUPERVISOR: LOURDES DAVID
CALCULATED-DESIGNED BY: PARWIN SARWARY
CHECKED BY: FLOR P. PEREZ
REVISED BY
DATE REVISED

LAST REVISION 04-05-11
DATE PLOTTED => 22-JUN-2011
TIME PLOTTED => 13:01

Dist	COUNTY	ROUTE	POST MILES TOTAL PROJECT	SHEET No.	TOTAL SHEETS
04	Ala	880	28.2/29.9	124	183

REGISTERED CIVIL ENGINEER — DATE 3-23-11

6-20-11
PLANS APPROVAL DATE

REGISTERED PROFESSIONAL ENGINEER — Florante P. Perez — No. 41030 — Exp. 3-31-13 — CIVIL — STATE OF CALIFORNIA

THE STATE OF CALIFORNIA OR ITS OFFICERS OR AGENTS SHALL NOT BE RESPONSIBLE FOR THE ACCURACY OR COMPLETENESS OF SCANNED COPIES OF THIS PLAN SHEET.

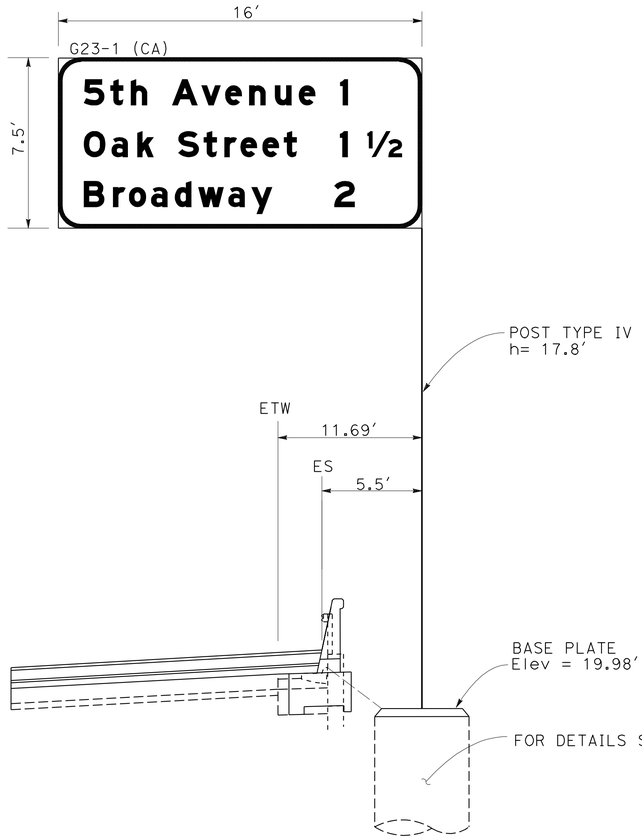

B INSTALL SIGN STRUCTURE (TRUSS)
AT Sta 268+50 (FNBT)

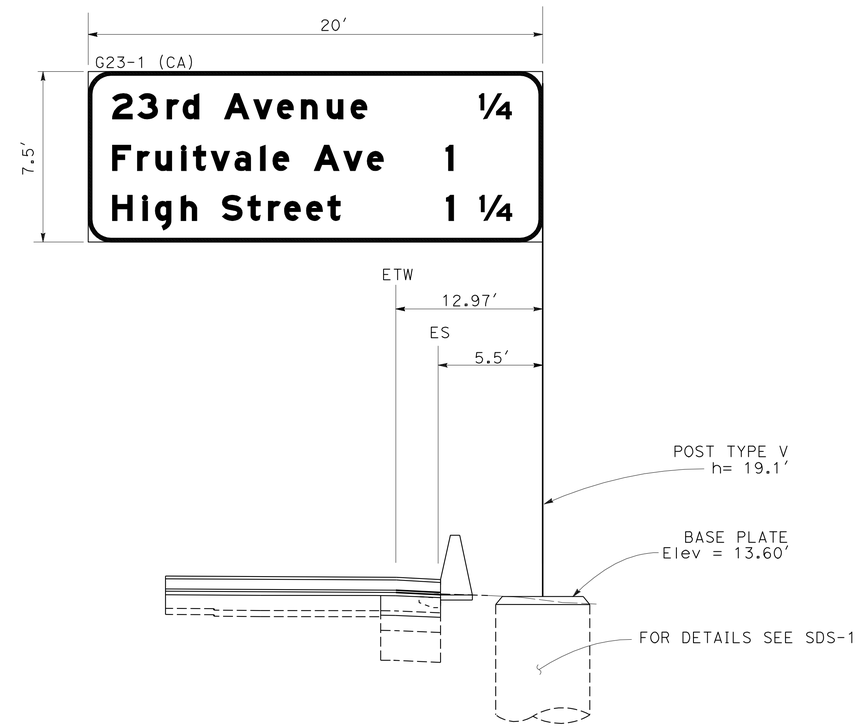

D INSTALL SIGN STRUCTURE (TRUSS)
AT Sta 279+50 (FSBT)

SIGN DETAILS
NO SCALE

SD-4

STATE OF CALIFORNIA - DEPARTMENT OF TRANSPORTATION
Caltrans
TRAFFIC

FUNCTIONAL SUPERVISOR: LOURDES DAVID
CALCULATED-DESIGNED BY: PARWIN SARWARY
CHECKED BY: FLOR P. PEREZ
REVISED BY
DATE REVISED

LAST REVISION 03-23-11
DATE PLOTTED => 22-JUN-2011
TIME PLOTTED => 13:01

Dist	COUNTY	ROUTE	POST MILES TOTAL PROJECT	SHEET No.	TOTAL SHEETS
04	Ala	880	28.2/29.9	125	183

Florante P. Perez 3-23-11
REGISTERED CIVIL ENGINEER DATE

6-20-11
PLANS APPROVAL DATE

REGISTERED PROFESSIONAL ENGINEER
Florante P. Perez
No. 41030
Exp. 3-31-13
CIVIL
STATE OF CALIFORNIA

THE STATE OF CALIFORNIA OR ITS OFFICERS OR AGENTS SHALL NOT BE RESPONSIBLE FOR THE ACCURACY OR COMPLETENESS OF SCANNED COPIES OF THIS PLAN SHEET.

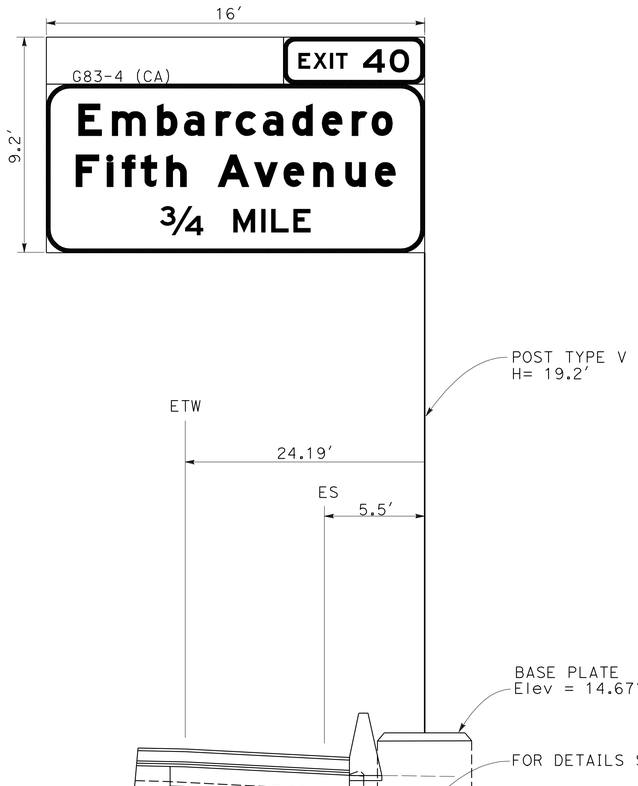

F INSTALL SIGN STRUCTURE (TRUSS)
AT Sta 284+10 (FNBT)

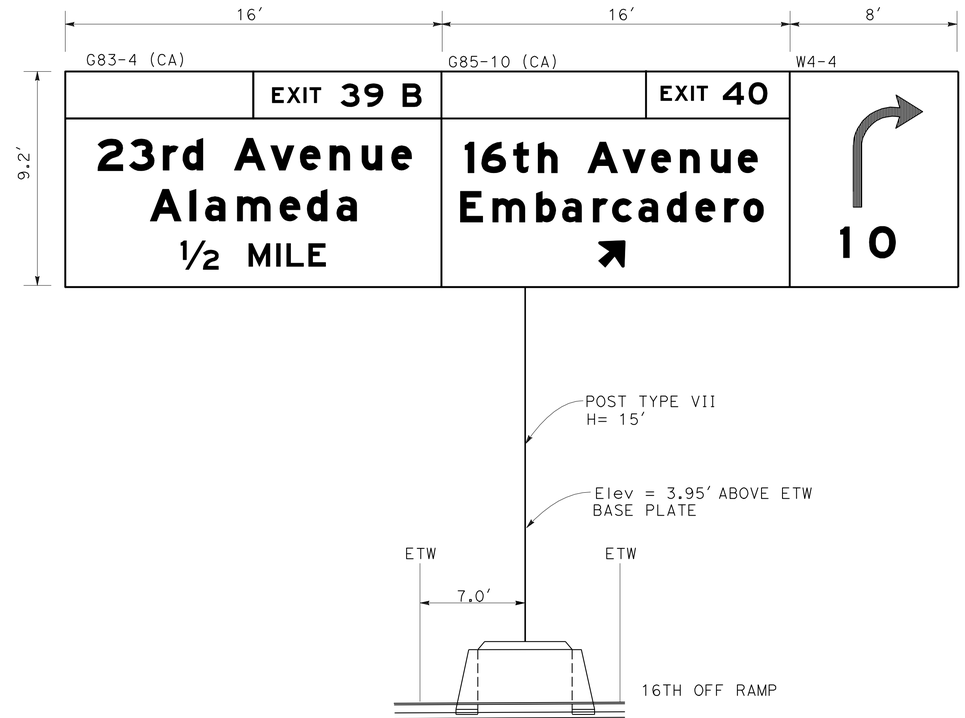

H INSTALL SIGN STRUCTURE (TRUSS)
AT Sta 291+00 (FSBT)

SIGN DETAILS
NO SCALE

SD-5

STATE OF CALIFORNIA - DEPARTMENT OF TRANSPORTATION
Caltrans
TRAFFIC

FUNCTIONAL SUPERVISOR: LOURDES DAVID
CALCULATED-DESIGNED BY: PARWIN SARWARY
CHECKED BY: FLOR P. PEREZ
REVISED BY
DATE REVISED

LAST REVISION 03-15-11
DATE PLOTTED => 22-JUN-2011
TIME PLOTTED => 13:01

DIST	COUNTY	ROUTE	POST MILES TOTAL PROJECT	SHEET No	TOTAL SHEETS
04	Ala	880	28.2/29.9	126	183

K. C. Liu 4/14/11
REGISTERED CIVIL ENGINEER DATE

6-20-11
PLANS APPROVAL DATE

REGISTERED PROFESSIONAL ENGINEER K.C. LIU No. C50291 Exp. 6-30-13 CIVIL STATE OF CALIFORNIA

The State of California or its officers or agents shall not be responsible for the accuracy or completeness of electronic copies of this plan sheet.

PILE DATA TABLE

SIGN NUMBER	PILE TYPE	WSD DESIGN LOADING		PERMANENT STEEL CASING LENGTH	CIDH CONCRETE PILING (ROCK SOCKET)
		COMPRESSION	TENSION		
B D F H	60" Ø CIDH Conc piling with 60" ID permanent steel casing and 48" Ø CIDH Conc piling (Rock socket)	13 kip	0 kip	25'-0"	8'-0"

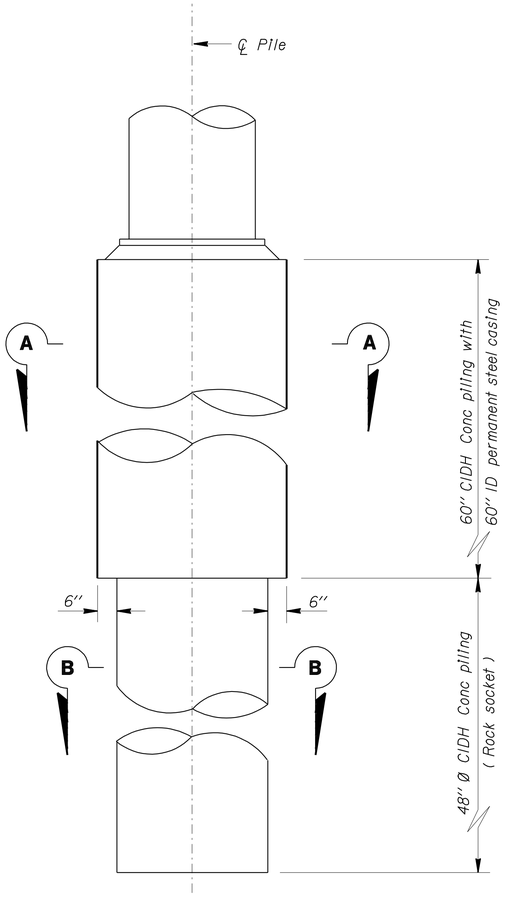

ELEVATION

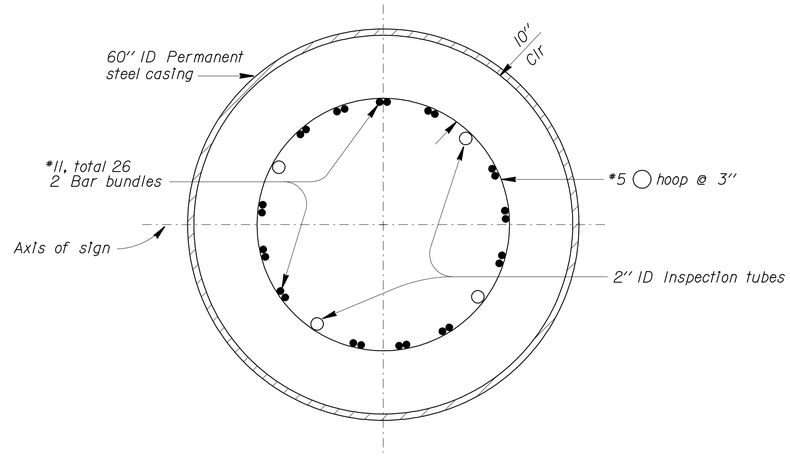

SECTION A-A

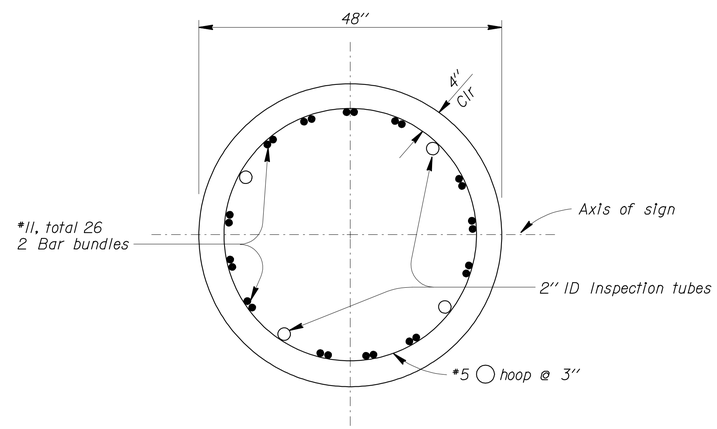

SECTION B-B

NOTES:

1. For sign locations, see "SIGN DETAILS" sheets.
2. No splice allowed in all vertical CIDH concrete pile reinforcement.
3. For sign foundation quantities, see sheet SQ-1.

NOTE:
THE CONTRACTOR SHALL VERIFY ALL CONTROLLING FIELD DIMENSIONS BEFORE ORDERING OR FABRICATING ANY MATERIAL.

NO SCALE

BRANCH CHIEF JEFF WOODY

	BY	CHECKED
DESIGN	K. C. LIU	
DETAILS	R. YEE	K. C. LIU
QUANTITIES		

STATE OF CALIFORNIA
DEPARTMENT OF TRANSPORTATION

DIVISION OF ENGINEERING SERVICES
DESIGN AND TECHNICAL SERVICES
SPECIAL DESIGNS BRANCH A

BRIDGE NO.
POST MILE

OVERHEAD SIGNS
SPECIAL FOUNDATION

SDS-1

(ENGLISH) SPECIAL DESIGNS BRANCH BORDER SHEET (REV. 7-1-09)

ORIGINAL SCALE IN INCHES FOR REDUCED PLANS 0 1 2 3

UNIT: 3619
PROJECT NUMBER & PHASE: 0400020137 - 1 CONTRACT NO.: 04-1A6821

DISREGARD PRINTS BEARING EARLIER REVISION DATES

REVISION DATES 6/8/11 4/13/11 4/14/11 4/14/11

SHEET OF

FILE => /2011sd/04-1a6821/sds1.dgn

USERNAME => trrichf DATE PLOTTED => 22-JUN-2011 TIME PLOTTED => 13:14

Dist	COUNTY	ROUTE	POST MILES TOTAL PROJECT	SHEET No.	TOTAL SHEETS
04	Ala	880	28.2/29.9	127	183

REGISTERED CIVIL ENGINEER 3-23-11 DATE

6-20-11
PLANS APPROVAL DATE

REGISTERED PROFESSIONAL ENGINEER K.D. Nhieu No. 55948 Exp. 12-31-12 CIVIL STATE OF CALIFORNIA

THE STATE OF CALIFORNIA OR ITS OFFICERS OR AGENTS SHALL NOT BE RESPONSIBLE FOR THE ACCURACY OR COMPLETENESS OF SCANNED COPIES OF THIS PLAN SHEET.

OVERHEAD SIGN QUANTITIES

SHEET No.	SIGN LETTER	SIGN CODE	PANEL SIZE (Inch x Inch)	SINGLE FACE	DOUBLE FACE	FURNISH SIGN STRUCTURE TRUSS	INSTALL SIGN STRUCTURE (TRUSS)	CIDH Conc PILING (SIGN FOUNDATION) 60" Dia	STEEL CASING (60" INSIDE Dia)	CIDH Conc PILING (ROCK SOCKET) 48" Dia	BAR Reinf STEEL (ROCK SOCKET)	REMOVE SIGN STRUCTURE	BACKGROUND		LEGEND		PROTECTIVE OVERLAY	PANEL AREA (FORMED W/O RSPF)	REMARKS
						LB		LF	LF	LF	lb	EA	SHEETING COLOR	RETRO-FLECTIVE ASTM TYPE	SHEETING COLOR	RETRO-FLECTIVE ASTM TYPE	PREMIUM	SQFT	
S-2	A	G23(CA)										1							
	B	G23-1(CA)	192 x 90	X		9783	9783	25	25	8	1473		GREEN	IV	WHITE	IX	X	120.0	SEE SHEET SDS-1 AND SD-4 FOR DETAILS
S-3	C	G23(CA)										1							
	D	G23-1(CA)	240 x 90	X		11428	11428	25	25	8	1473		GREEN	V	WHITE	IX	X	150.0	SEE SHEET SDS-1 AND SD-4 FOR DETAILS
	E	G24(CA)										1							
	F	G83-4	192 x 110	X		10661	10661	25	25	8	1473		GREEN	V	WHITE	IX	X	146.7	SEE SHEET SDS-1 AND SD-5 FOR DETAILS
S-4	G	G85(CA)										1							
	H	G85-10(CA)	192 x 110	X		19949	19949	25	25	8	1473		GREEN	VII	WHITE	IX	X	137.5	SEE SHEET SDS-1 AND SD- 5 FOR DETAILS
		G83-4(CA)	192 x 110	X														146.7	
		SPECIAL	96 x 110	X									YELLOW	IV	BLACK	IX		73.3	
TOTAL						51821	51821	100	100	32	5892	4						774.2	

SIGN QUANTITIES

SQ-1

STATE OF CALIFORNIA - DEPARTMENT OF TRANSPORTATION
DESIGN
Caltrans

FUNCTIONAL SUPERVISOR: EDMUND CHOY
CALCULATED-DESIGNED BY: ERIC K. WONG
CHECKED BY: KENNETH D. NHIEU
REVISED BY
DATE REVISED

LAST REVISION 06-10-11
DATE PLOTTED => 22-JUN-2011
TIME PLOTTED => 13:01

Dist	COUNTY	ROUTE	POST MILES TOTAL PROJECT	SHEET No.	TOTAL SHEETS
04	Ala	880	28.2/29.9	128	183

REGISTERED CIVIL ENGINEER 3-23-11 DATE

6-20-11
PLANS APPROVAL DATE

REGISTERED PROFESSIONAL ENGINEER K.D. Nhieu No. 55948 Exp. 12-31-12 CIVIL STATE OF CALIFORNIA

THE STATE OF CALIFORNIA OR ITS OFFICERS OR AGENTS SHALL NOT BE RESPONSIBLE FOR THE ACCURACY OR COMPLETENESS OF SCANNED COPIES OF THIS PLAN SHEET.

ROADSIDE SIGN QUANTITIES

SIGN No.	SIGN CODE	PANEL SIZE	WOOD POST SIZE & LENGTH 4" x 6"	ROADSIDE SIGN		REMOVE ROADSIDE SIGN		SINGLE FACE	BACKGROUND		LEGEND		PREMIUM PROTECTIVE FILM	FURNISH SINGLE SHEET ALUMINUM SIGN		REMARKS
									SHEETING COLOR	RETROREFLECTIVE ASTM TYPE	SHEETING COLOR	RETROREFLECTIVE ASTM TYPE		FRAMED		
				TWO POST	SSBM	WOOD POST	SSBM							0.063"	0.080"	
		INCHES x INCHES		EA										SQFT		
1	W12-2					1										
	W34A(CA)					1										
2	W12-2	48 x 48	21.4	1				X	YELLOW	III	BLACK	PLAIN	X		16	14'11"
	W34A(CA)	48 x 36						X	YELLOW	III	BLACK	PLAIN	X		12	1200 FT AHEAD
3	R2-1(55)					1										BM
4	W3-1						1									
	SPEC						1									
5	W3-1	48 x 48			1			X	YELLOW	III	BLACK	PLAIN	X	16		
6	M3-3						1									
	G27-2(880)(CA)						1									
7	M3-3	30 x 15			1			X	BLUE	IV	WHITE	IV	X	3.12		
	G27-2(880)(CA)	30 x 25			1			X	BLUE	IV	WHITE	IV	X	5.21		
8	R2-1(55)						1									
9	R2-1(55)	48 x 60			1			X	WHITE	III	BLACK	PLAIN	X	20		
10	G86(CA)						1									
	SPEC						1									
11	W13-2	48 x 60			1			X	YELLOW	III	BLACK	PLAIN	X	20		
		TOTAL	21.4	1	5	3	7							64.33	28	

SIGN QUANTITIES

SQ-2

STATE OF CALIFORNIA - DEPARTMENT OF TRANSPORTATION
DESIGN

FUNCTIONAL SUPERVISOR: EDMUND CHOY
CALCULATED-DESIGNED BY: ERIC K. WONG
CHECKED BY: KENNETH D. NHIEU
REVISED BY
DATE REVISED

LAST REVISION DATE PLOTTED => 22-JUN-2011
03-24-11 TIME PLOTTED => 13:01

Dist	COUNTY	ROUTE	POST MILES TOTAL PROJECT	SHEET No.	TOTAL SHEETS
04	Ala	880	28.2/29.9	129	183

REGISTERED CIVIL ENGINEER 3-23-11 DATE

6-20-11
PLANS APPROVAL DATE

REGISTERED PROFESSIONAL ENGINEER K.D. Nhieu No. 55948 Exp. 12-31-12 CIVIL STATE OF CALIFORNIA

THE STATE OF CALIFORNIA OR ITS OFFICERS OR AGENTS SHALL NOT BE RESPONSIBLE FOR THE ACCURACY OR COMPLETENESS OF SCANNED COPIES OF THIS PLAN SHEET.

REMOVE CONCRETE BARRIER

SHEET No.	STATION LIMITS	LOCATION	LF
L-1	M 204+18 TO 206+60	L+	242
L-1	M 204+00 TO 208+88	℄	488
L-5 TO L-8	M 258+40 TO 307+05	℄	4811
L-7	M 289+53 TO 291+06	L+	164
TOTAL			5705

REMOVE CONCRETE CURB AND GUTTER

SHEET No.	STATION LIMITS	LOCATION	LF
L-5 TO L-6	M 260+81 TO 279+12	L+	1794.40
L-5	M 262+27 TO 270+43	℄	816.10
L-4 TO L-5	M 256+43 TO 269+73	R+	1340.00
L-6	M 275+52 TO 276+28	R+	76.00
L-7 TO L-8	M 290+42 TO 311+18	L+	2061.00
TOTAL			6087.50

REMOVE METAL BEAM GUARD RAILING

SHEET No.	STATION LIMITS	LOCATION	LF
L-5	M 257+00 TO 260+56	L+	377.00
L-6	M 273+98 TO 279+88	L+	586.60
L-5	M 267+93 TO 269+73	R+	181.00
L-6 TO L-7	M 284+24 TO 286+84	R+	260.00
L-7	M 290+34 TO 290+90	R+	57.00
TOTAL			1461.60

REMOVE CHAIN LINK FENCE

SHEET No.	STATION LIMITS	LOCATION	LF
L-4 TO L-5	M 256+43 TO 260+51	R+	409.60
L-5 TO L-8	M 267+50 to 307+00	R+	3989.80
L-6	M 273+67 TO 279+12	L+	541.40
L-7 TO L-8	M 290+42 TO 311+18	L+	2061.00
TOTAL			7001.80

REMOVE ASPHALT CONCRETE DIKE

SHEET No.	STATION LIMITS	LOCATION	LF
L-5	M 257+00 TO 260+81	L+	377
L-6 TO L-7	M 279+12 TO 289+84	L+	1072
L-6	M 289+87 TO 290+42	L+	59
L-6 TO L-7	M 276+28 TO 290+90	R+	1465
TOTAL			2973

CONCRETE BARRIER (TYPE 60)

SHEET No.	STATION LIMITS	LOCATION	LF	HMA TON
L-5 TO L-6	M 260+81 TO 273+67	L+	1251	122.60
L-6 TO L-7	M 279+20 TO 289+84	L+	1063	104.17
L-8	M 306+25 TO 310+88	L+	377.30	36.98
L-5	M 256+43 TO 269+73	R+	1033.20	101.25
L-6 TO L-7	M 275+52 TO 288+00	R+	1251	122.60
L-5	M 262+27 TO 270+43	℄	816	79.97
TOTAL			5791.50	567.57 (*)

(*) - FOR GRAND TOTAL OF HMA SEE THE ROADWAY QUANTITIES

CONCRETE BARRIER (TYPE 60D)

SHEET No.	STATION LIMIT	LOCATION	LF	HMA TON
L-5	M 262+27 TO 270+43	R+	816	35.99
TOTAL			816	35.99 (*)

(*) - FOR GRAND TOTAL OF HMA SEE THE ROADWAY QUANTITIES

CONCRETE BARRIER (TYPE 60R)

SHEET No.	STATION LIMITS	LOCATION	LF	HMA TON
L-5	M 256+85 TO 257+68	R+	80.00	11.96
L-5	M 258+65 TO 259+48	R+	80.00	11.96
L-5	M 260+44 TO 261+27	R+	80.00	11.96
L-5	M 262+21 TO 263+04	R+	80.00	11.96
L-5	M 257+51 TO 258+34	L+	80.00	3.74
L-5	M 259+30 TO 260+13	L+	80.00	3.74
L-7	M 292+79 TO 293+62	L+	80.00	3.74
L-7	M 294+61 TO 295+44	L+	80.00	3.74
L-8	M 304+63 TO 305+46	L+	80.00	3.74
L-8	M 306+44 TO 307+27	L+	80.00	10.47
TOTAL			800.00	77.01 (*)

(*) - FOR GRAND TOTAL OF HMA SEE THE ROADWAY QUANTITIES

CONCRETE BARRIER (TYPE 60C)

SHEET No.	STATION LIMITS	LOCATION	LF	HMA TON
L-1	M 204+18 TO 206+60	L+	244	9.61
L-1	M 204+00 to 208+83	℄	483	53.25
L-5	M 258+40 TO 262+27	℄	387.20	42.69
L-5 TO L-6	M 270+43 TO 283+69	℄	1326	323.71
L-6 TO L-8	M 286+55 TO 307+05	℄	2050	500.46
L-7	M 288+00 TO 290+90	R+	292.20	11.51
L-4 TO L-5	M 257+00 TO 260+81	L+	211.60	8.33
L-6	M 273+67 TO 279+20	L+	548.70	21.61
L-7	M 289+53 TO 290+33	L+	87.20	3.43
L-7 TO L-8	M 290+80 TO 306+25	L+	1285.60	50.62
TOTAL			6915.50	1025.22 (*)

(*) - FOR GRAND TOTAL OF HMA SEE THE ROADWAY QUANTITIES

CONCRETE BARRIER (TYPE 60E)

SHEET No.	STATION LIMITS	LOCATION	LF	HMA TON
L-6 TO L-7	M 283+69 TO 286+55	℄	286	25.23
L-7	M 290+33 TO 291+61	L+	126	11.11
TOTAL			412	36.24 (*)

(*) - FOR GRAND TOTAL OF HMA SEE THE ROADWAY QUANTITIES

SUMMARY OF QUANTITIES

Q-1

REVISED BY | DATE REVISED
ERIC K. WONG | KENNETH D. NHIEU
CALCULATED-DESIGNED BY | CHECKED BY
FUNCTIONAL SUPERVISOR: EDMUND CHOY
STATE OF CALIFORNIA - DEPARTMENT OF TRANSPORTATION
Caltrans® DESIGN

LAST REVISION 06-09-11 | DATE PLOTTED => 22-JUN-2011 | TIME PLOTTED => 13:01

Dist	COUNTY	ROUTE	POST MILES TOTAL PROJECT	SHEET No.	TOTAL SHEETS
04	Ala	880	28.2/29.9	130	183

REGISTERED CIVIL ENGINEER 3-23-11 DATE

6-20-11
PLANS APPROVAL DATE

REGISTERED PROFESSIONAL ENGINEER K.D. Nhieu No. 55948 Exp. 12-31-12 CIVIL STATE OF CALIFORNIA

THE STATE OF CALIFORNIA OR ITS OFFICERS OR AGENTS SHALL NOT BE RESPONSIBLE FOR THE ACCURACY OR COMPLETENESS OF SCANNED COPIES OF THIS PLAN SHEET.

ROADWAY QUANTITIES FOR SHOULDER AND RAMP

SHEET No.	STATION LIMITS	LOCATION	CLASS 2 AGGREGATE SUBBASE		PORTLAND CEMENT CONCRETE BASE		HOT MIX ASPHALT	ROADWAY EXCAVATION	EMBANKMENT [N]
			MEDIAN Shld	OUTSIDE Shld	MEDIAN Shld	OUTSIDE Shld			
			CY	CY	CY	CY	TON	CY	CY
L-5	M 260+00 TO 272+00	L†	51.08	148.80	138.63	148.80		487.31	34.87
L-5	M 256+43 TO 268+00	R†				71.71		71.71	41.25
L-5	M 268+00 TO 269+73	R†				43.98		43.98	29.47
L-5	M 260+00 TO 272+00	R†	83.77		227.39			311.16	
L-5	M 256+43 TO 269+73	R†		115.67				115.67	
L-6	M 272+00 TO 275+00	L†				79.59		79.59	
L-6	M 275+00 TO 286+00	L†				462.11		462.11	77.16
L-6	M 272+00 TO 286+00	L†	77.95	541.70	211.57			831.22	
L-6	M 272+00 TO 286+00	R†	78.11		212.02			290.13	
L-6	M 275+52 TO 286+00	R†		577.01		577.01		1154.02	108.11
L-7	M 286+00 TO 299+00	L†	53.18	341.28	144.34	341.28		880.08	33.07
L-7	M 286+00 TO 288+64	R†	14.99		40.67			55.66	
L-7	M 288+64 TO 299+00	R†					307.02	152.00	
L-7	M 286+00 TO 290+90	R†		207.00		207.00		414.00	21.62
L-8	M 299+00 TO 306+25	L†	36.93		100.23			137.16	
L-8	M 299+00 TO 311+18	R†		155.94		155.94		311.88	
L-8	M 299+00 TO 306+25	R†					215.23	106.55	
SUB TOTAL			396.01	2087.40	1074.85	2087.42	522.25	5904.23	345.55
			16TH Ave OFF-RAMP						
L-7	M 289+41 TO 290+25	L†					166.65	82.50	
L-7	M 290+25 TO 291+61	L†					76.86		
SUB TOTAL							243.51	82.50	
TOTAL			2483.41		3162.27		765.76 (*)	5986.73	345.55

(*) - FOR GRAND TOTAL OF HMA, SEE THE ROADWAY QUANTITIES
[N] NOT A SEPARATE PAY ITEM, FOR INFORMATION ONLY

PREPARE AND PAINT POST MILE MARKING ON CONCRETE BARRIER

SHEET No.	STATION LIMITS	LOCATION	SQFT
L-1	M 203+42 TO 208+83	℄	2.58
L-5 TO L-8	M 258+40 TO 307+05	℄	25.80
TOTAL			28.38

CRASH CUSHION

SHEET No.	STATION LIMITS	LOCATION	TYPE ADIEM
			EA
L-4	M 256+32	R†	1
L-7	M 291+61	L†	1
L-8	M 311+18	L†	1
TOTAL			3

GRIND EXISTING CONCRETE PAVEMENT (CONFORM)

SHEET No.	STATION LIMITS	SQYD
L-1	207+43 TO 208+83	85.33
L-5	258+40 TO 260+00	85.33
TOTAL		170.66

CHAIN LINK FENCE (TYPE CL-6)

SHEET No.	STATION LIMITS	LOCATION	LF	REMARKS
L-4	M 256+43	R†	7.5	CONFORM TO Exist FENCE
L-5	M 260+51	R†	3.5	CONFORM TO Exist Bldg
L-5	M 267+50	R†	3	CONFORM TO Exist Str
L-6	M 275+52	R†	9	CONFORM TO RAILING
L-6 TO L-7	M 275+52 TO 290+90	R†	1548	
L-7	M 290+90	R†	5	CONFORM TO RAILING
L-8	M 307+00	R†	5	CONFORM TO Exist FENCE
L-6	M 273+67	L†	2	CONFORM TO Exist Bldg
L-6	M 279+12	L†	4	CONFORM TO Exist FENCE
L-7	M 290+42 TO 290+80	L†	38	
TOTAL			1625	

COLD PLANE ASPHALT CONCRETE PAVEMENT

SHEET No.	STATION LIMITS	LOCATION	MAXIMUM DEPTH, FT	SQYD
L-1	M 204+18 TO 205+58	L†	0.1	850.11
L-1	M 203+42 TO 204+82	R†	0.1	795.78
L-5	M 258+40 TO 264+58	R†	0.1	947.56
L-5	M 258+40 TO 260+81	L†	0.1	344.89
L-7	M 290+25 TO 299+00	L†	0.1	1709.88
L-8	M 303+40 TO 307+05	L†	0.1	817.60
L-8	M 306+25 TO 307+05	R† & L†	0.1	453.67
TOTAL				5919.49

CHAIN LINK FENCE (TYPE CL-4)

SHEET No.	STATION LIMITS	LOCATION	LF
L-4 TO L-5	M 256+43 TO 260+51	R†	410
L-5	M 267+50 TO 269+73	R†	231
L-6	M 273+67 TO 279+12	L†	542
L-7 TO L-8	M 290+80 TO 310+88	L†	1994
TOTAL			3177

CRACK CONCRETE BASE AND EXISTING CONCRETE PAVEMENT

SHEET No.	STATION LIMITS	LOCATION	SQYD
L-1	M 204+82 TO 208+43	R†	1346.00
L-1	M 205+58 TO 208+43	L†	996.00
L-5 TO L-8	M 268+00 TO 306+25	R†	23925.00
L-6 TO L-8	M 275+00 TO 306+25	L†	20833.00
TOTAL			47100.00

PLACE HOT MIXED ASPHALT DIKE

SHEET No.	STATION LIMITS	LOCATION	TYPE	LF	HMA
					TON
L-7	M 289+87 TO 290+80	L†	E	83	2.04
TOTAL				83	2.04 (*)

(*) - FOR GRAND TOTAL OF HMA, SEE THE ROADWAY QUANTITIES

SUMMARY OF QUANTITIES

Q-2

REVISED BY | DATE REVISED
ERIC K. WONG | KENNETH D. NHIEU
CALCULATED-DESIGNED BY | CHECKED BY
FUNCTIONAL SUPERVISOR: EDMUND CHOY
STATE OF CALIFORNIA - DEPARTMENT OF TRANSPORTATION
Caltrans® DESIGN

LAST REVISION 06-08-11 | DATE PLOTTED => 22-JUN-2011 | TIME PLOTTED => 13:02

Dist	COUNTY	ROUTE	POST MILES TOTAL PROJECT	SHEET No.	TOTAL SHEETS
04	Ala	880	28.2/29.9	131	183

REGISTERED CIVIL ENGINEER 3-23-11 DATE

6-20-11
PLANS APPROVAL DATE

REGISTERED PROFESSIONAL ENGINEER K.D. Nhieu No. 55948 Exp. 12-31-12 CIVIL STATE OF CALIFORNIA

THE STATE OF CALIFORNIA OR ITS OFFICERS OR AGENTS SHALL NOT BE RESPONSIBLE FOR THE ACCURACY OR COMPLETENESS OF SCANNED COPIES OF THIS PLAN SHEET.

ROADWAY QUANTITIES

SHEET No.	STATION LIMITS	LOCATION	HOT MIX ASPHALT	PAVING ASPHALT (BINDER, GEOSYNTHETIC PAVEMENT INTERLAYER)	GEOSYNTHETIC PAVEMENT INTERLAYER	HOT MIX ASPHALT PAVING & SLOPE CORRECTION	HOT MIX ASPHALT (OPEN GRADED)	TACK COAT	REMARKS
			TON	TON	SQYD	TON	TON	TON	
L-1	M 204+18 TO 205+58	SB				160.40	49.87	3.04	PAVING CONFORM
L-1	M 203+42 TO 204+82	NB				161.47	50.20	3.06	PAVING CONFORM
L-1	M 205+58 TO 207+48	SB	74.81	1.18	1111	374.06	58.15	7.08	
L-1	M 204+82 TO 207+43	NB	97.66	1.54	1451	488.29	75.90	9.24	
L-1	M 207+43 TO 208+83	SB				137.22	42.66	2.60	PAVING CONFORM
L-1	M 207+43 TO 208+83	NB				134.83	41.92	2.55	PAVING CONFORM
L-5	M 258+40 TO 260+00	SB				258.87	67.07	4.08	PAVING CONFORM
L-5	M 258+40 TO 260+00	NB				271.55	70.35	4.28	PAVING CONFORM
L-5	M 260+00 TO 272+00	SB	580.00	9.15	8614	3255.23	450.79	54.89	
L-5	M 260+00 TO 272+00	NB	618.12	9.75	9180	3409.56	480.42	58.49	
L-6	M 272+00 TO 286+00	SB	684.78	10.80	10170	5953.08	532.23	106.79	
L-6	M 272+00 TO 286+00	NB	691.18	10.90	10265	5694.00	537.21	107.79	
L-7	M 286+00 TO 299+00	SB	626.20	9.88	9300	5122.92	486.70	66.10	
L-7	M 286+00 TO 299+00	NB	644.60	10.17	9573	4315.00	501.00	68.04	
L-8	M 299+00 TO 307+00	SB	343.64	5.42	5104	2313.53	267.09	32.52	
L-8	M 299+00 TO 307+00	NB	346.33	5.46	5144	2312.62	269.18	32.77	
L-8	M 307+00 TO 308+00	SB				50.70	29.22	1.78	PAVING CONFORM
L-8	M 307+00 TO 308+00	NB				47.11	25.93	1.58	PAVING CONFORM
Q-1			567.57						Conc BARRIER (TYPE 60)
Q-1			1025.22						Conc BARRIER (TYPE 60C)
Q-1			35.99						Conc BARRIER (TYPE 60D)
Q-1			36.24						Conc BARRIER (TYPE 60E)
Q-1			77.01						Conc BARRIER (TYPE 60R)
Q-2			2.04						PLACE HMA DIKE
Q-2			765.76						16TH Ave OFF-RAMP
Q-3			34460.44						HMA (PAVING & SLOPE CORRECTION)
		TOTAL	41677.59	74.25	69912	34460.44 (*)	4035.89	566.68	

(*) - FOR GRAND TOTAL OF HMA SEE HOT MIXED ASPHALT COLUMN

SEAL JOINT (EXISTING CONCRETE PAVEMENT)

SHEET No.	STATION LIMITS	LOCATION	LF
L-2	M 223+63 TO 231+00	SB	6085
L-2	M 223+77 TO 231+00	NB	5967
L-3	M 231+00 TO 244+00	SB	10676
L-3	M 231+00 TO 244+00	NB	10676
L-4	M 244+00 TO 258+00	SB	11464
L-4	M 244+00 TO 258+00	NB	11464
L-5	M 258+00 TO 258+40	SB	344
L-5	M 258+00 TO 258+40	NB	344
		TOTAL	57020

REPLACE CONCRETE PAVEMENT (RAPID STRENGTH CONCRETE)

SHEET No.	STATION LIMITS	LOCATION	No. OF SLABS [N]				LENGTH OF SLAB [N]	RAPID STRENGTH CONCRETE	DOWEL BAR (DRILL AND BOND)
			LANE 1	LANE 2	LANE 3	LANE 4	LF	CY	EA
L-1	M 208+68 TO 208+83	SB	1	1	1	1	15	31.20	
L-1	M 208+68 TO 208+83	NB	1	1	1	1	15	31.20	
L-2	M 228+95 TO 229+70	SB				5	15	39.00	
L-3	M 232+70 TO 233+15	SB			3	3	15	46.80	
L-3	M 243+65 TO 243+95	SB			2	2	15	31.20	
L-4	M 244+55 TO 244+85	SB		2			15	15.60	
L-4	M 245+30 TO 245+60	SB			2	2	15	31.20	
L-4	M 251+75 TO 252+20	NB			3	3	15	46.80	
L-5	M 258+40 to 258+55	SB	1	1	1	1	15	31.20	
L-5	M 258+40 to 258+55	NB	1	1	1	1	15	31.20	
L-5	M 260+00 TO 266+60	SB				44	15	343.20	96
L-5 TO L-6	M 267+80 TO 275+00	SB				48	15	374.40	96
L-5	M 260+00 TO 263+15	SB			21		15	163.80	48
L-5 TO L-6	M 270+80 TO 272+15	SB			9		15	70.20	36
L-6	M 274+10 TO 275+00	SB			6		15	46.80	24
L-5	M 260+00 TO 268+10	NB				54	15	421.20	108
L-5	M 260+00 TO 260+30	NB			2		15	15.60	24
L-5	M 260+60 TO 266+00	NB			36		15	280.80	84
L-5	M 266+90 TO 267+05	NB			1		15	7.80	24
L-5	M 267+50 TO 268+10	NB			4		15	31.20	24
		TOTAL	4	6	93	165		2090.40	564

[N] NOT A SEPARATE PAY ITEM, FOR INFORMATION ONLY

REMOVE CRASH CUSHION

SHEET No.	STATION	LOCATION	EA
L-7	S 291+28	Lt	1

REMOVE EDGE DRAIN

SHEET No.	STATION LIMITS	LF
L-7 TO L-8	M 290+90 TO 309+71	1895

SUMMARY OF QUANTITIES

Q-3

REVISED BY | DATE REVISED
ERIC K. WONG | KENNETH D. NHIEU
CALCULATED-DESIGNED BY | CHECKED BY
FUNCTIONAL SUPERVISOR: EDMUND CHOY
STATE OF CALIFORNIA - DEPARTMENT OF TRANSPORTATION
Caltrans DESIGN

LAST REVISION 06-09-11 | DATE PLOTTED => 22-JUN-2011 | TIME PLOTTED => 13:02

Dist	COUNTY	ROUTE	POST MILES TOTAL PROJECT	SHEET No.	TOTAL SHEETS
04	Ala	880	28.2/29.9	132	183

REGISTERED ELECTRICAL ENGINEER 3-24-11 DATE

6-20-11
PLANS APPROVAL DATE

REGISTERED PROFESSIONAL ENGINEER Mahmood Noii No. 13717 Exp. 6-30-11 ELECT STATE OF CALIFORNIA

THE STATE OF CALIFORNIA OR ITS OFFICERS OR AGENTS SHALL NOT BE RESPONSIBLE FOR THE ACCURACY OR COMPLETENESS OF SCANNED COPIES OF THIS PLAN SHEET.

NOTE:

FOR ACCURATE RIGHT OF WAY DATA, CONTACT RIGHT OF WAY ENGINEERING AT THE DISTRICT OFFICE.

ELECTRICAL INDEX OF PLANS

SHEET No.	DESCRIPTION
E-1 TO E-5	LIGHTING AND SIGN ILLUMINATION

PROJECT NOTES

1. INSTALL CONDUIT IN CONCRETE BARRIER.
2. INSTALL TYPE 21 LIGHTING STANDARD IN OPENING (TYPE 60R TRANSITION) OF TYPE 60 CONCRETE BARRIER PER CONSTRUCTION DETAILS ON SHEET C-7. HANDHOLE SHALL BE LOCATED ON SAME SIDE OF STANDARD AS LUMINAIRE MAST ARM.
3. INSTALL TYPE 21 LIGHTING STANDARD IN OPENING (TYPE 60R TRANSITION) OF TYPE 60C CONCRETE BARRIER PER CONSTRUCTION DETAILS ON SHEET C-7. HANDHOLE SHALL BE LOCATED ON SAME SIDE OF STANDARD AS LUMINAIRE MAST ARM.
4. RC EXISTING TYPE 15 LIGHTING STANDARD AND ABANDON EXISTING FOUNDATION.
5. RC EXISTING TYPE 10 LIGHTING STANDARD AND ABANDON EXISTING FOUNDATION.

ELECTRICAL SYMBOLS AND ABBREVIATIONS

(FOR OTHER ELECTRICAL SYMBOLS AND ABBREVIATIONS SEE RSP ES-1A, RSP ES-1B, AND RSP ES-1C)

NON-ILLUMINATED OVERHEAD SIGN

CT ID CALTRANS IDENTIFICATION

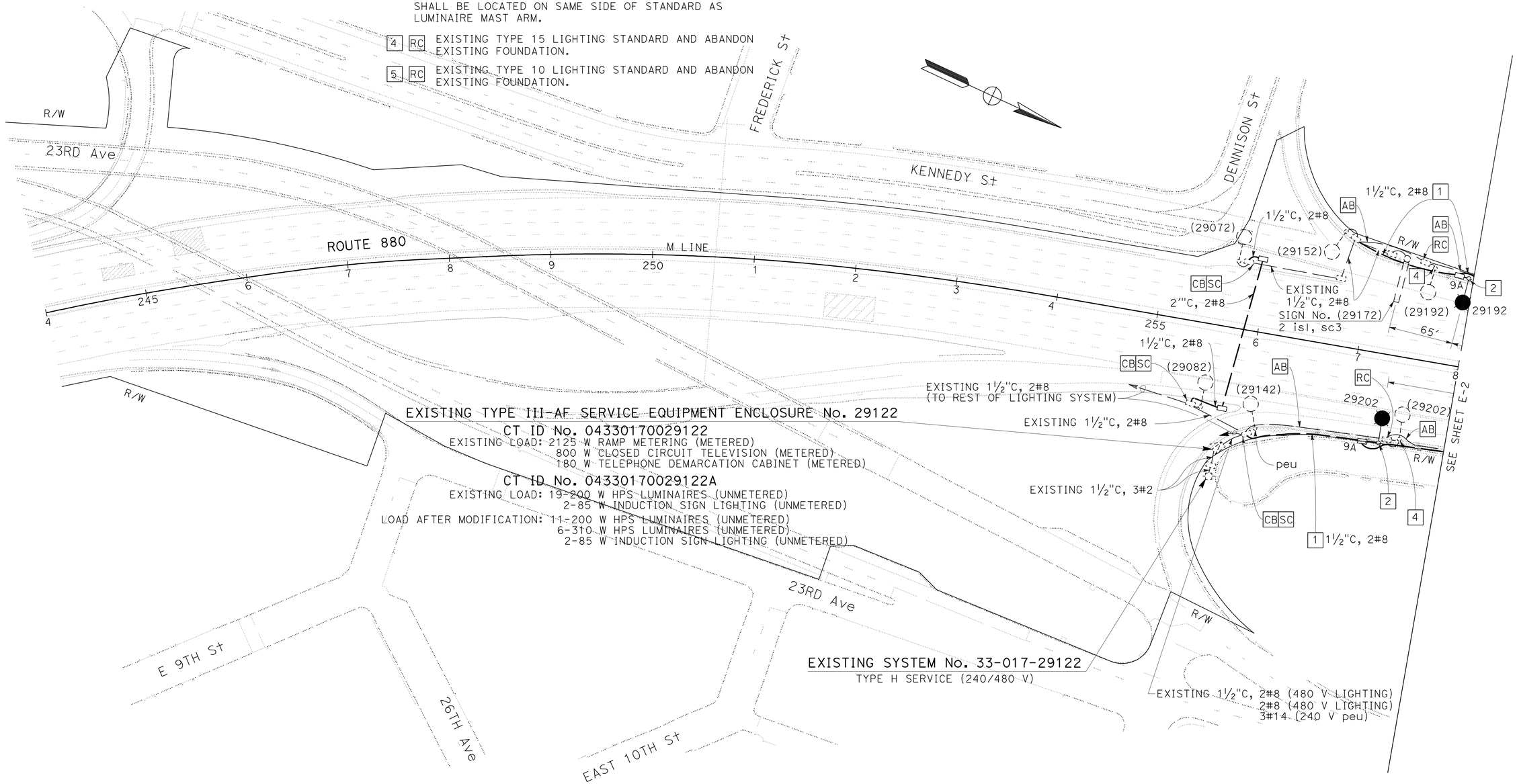

LIGHTING AND SIGN ILLUMINATION

SCALE: 1'' = 50'

THIS PLAN IS ACCURATE FOR ELECTRICAL WORK ONLY.

E-1

REVISED BY	DATE REVISED	BY
		3/25/11

CALCULATED-DESIGNED BY: BARON G. OW YEONG
CHECKED BY: MAHMOOD NOII
FUNCTIONAL SUPERVISOR: LAI HONG CHIU

STATE OF CALIFORNIA - DEPARTMENT OF TRANSPORTATION
Caltrans
ELECTRICAL

LAST REVISION 06-02-11
DATE PLOTTED => 22-JUN-2011
TIME PLOTTED => 13:02

Dist	COUNTY	ROUTE	POST MILES TOTAL PROJECT	SHEET No.	TOTAL SHEETS
04	Ala	880	28.2/29.9	133	183

REGISTERED ELECTRICAL ENGINEER 3-24-11 DATE

6-20-11
PLANS APPROVAL DATE

REGISTERED PROFESSIONAL ENGINEER Mahmood Noii No. 13717 Exp. 6-30-11 ELECT STATE OF CALIFORNIA

THE STATE OF CALIFORNIA OR ITS OFFICERS OR AGENTS SHALL NOT BE RESPONSIBLE FOR THE ACCURACY OR COMPLETENESS OF SCANNED COPIES OF THIS PLAN SHEET.

NOTE:

FOR ACCURATE RIGHT OF WAY DATA, CONTACT RIGHT OF WAY ENGINEERING AT THE DISTRICT OFFICE.

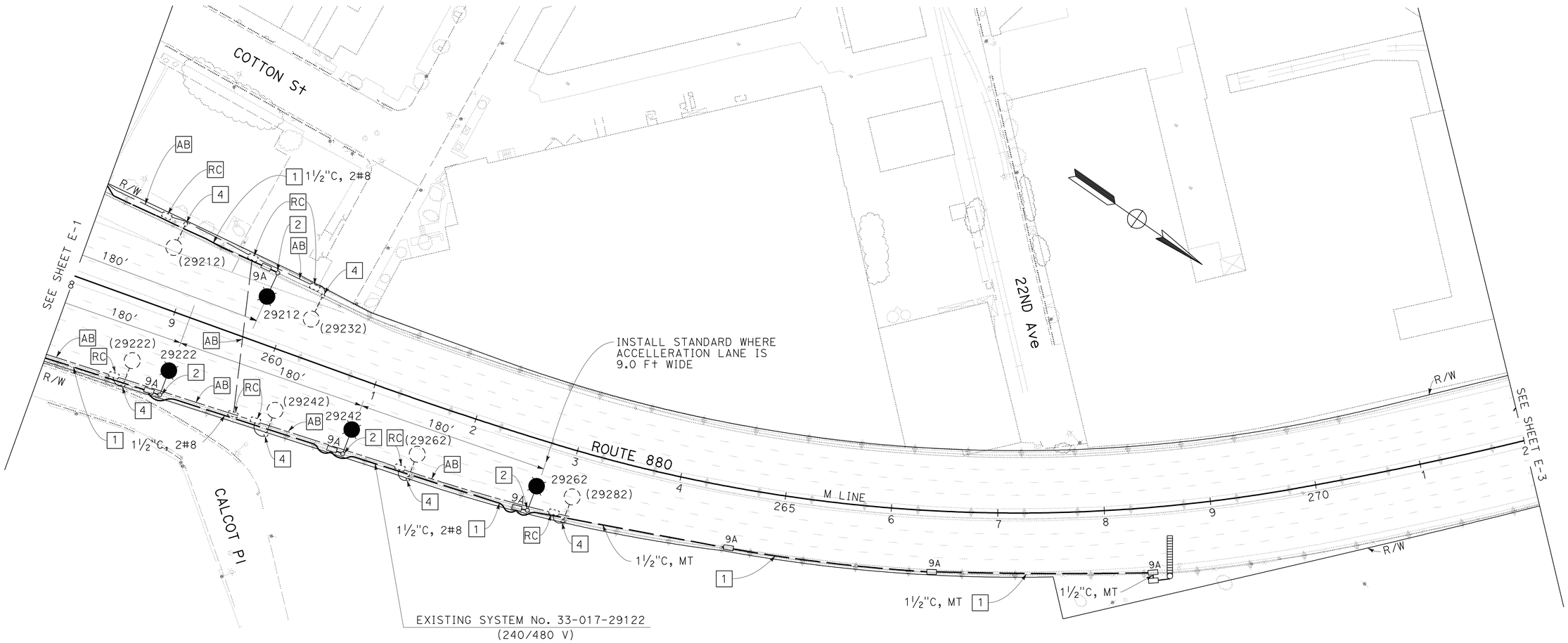

LIGHTING AND SIGN ILLUMINATION

SCALE: 1'' = 50'

E-2

FOR NOTES, ABBREVIATIONS AND LEGEND, SEE SHEET E-1

THIS PLAN IS ACCURATE FOR ELECTRICAL WORK ONLY.

STATE OF CALIFORNIA - DEPARTMENT OF TRANSPORTATION

Caltrans

ELECTRICAL

FUNCTIONAL SUPERVISOR: LAI HONG CHIU

CALCULATED-DESIGNED BY: BARON G. OW YEONG

CHECKED BY: MAHMOOD NOII

REVISED BY / DATE REVISED: BY / 3/25/11

LAST REVISION DATE PLOTTED => 22-JUN-2011 TIME PLOTTED => 13:16

06-02-11

BORDER LAST REVISED 7/2/2010

USERNAME => trmariak
DGN FILE => 0400020137ua002.dgn

RELATIVE BORDER SCALE IS IN INCHES 0 1 2 3

UNIT 0721

PROJECT NUMBER & PHASE 04000201371

Dist	COUNTY	ROUTE	POST MILES TOTAL PROJECT	SHEET No.	TOTAL SHEETS
04	Ala	880	28.2/29.9	134	183

REGISTERED ELECTRICAL ENGINEER 3-24-11 DATE

6-20-11
PLANS APPROVAL DATE

REGISTERED PROFESSIONAL ENGINEER Mahmood Noii No. 13717 Exp. 6-30-11 ELECT STATE OF CALIFORNIA

THE STATE OF CALIFORNIA OR ITS OFFICERS OR AGENTS SHALL NOT BE RESPONSIBLE FOR THE ACCURACY OR COMPLETENESS OF SCANNED COPIES OF THIS PLAN SHEET.

NOTE:

FOR ACCURATE RIGHT OF WAY DATA, CONTACT RIGHT OF WAY ENGINEERING AT THE DISTRICT OFFICE.

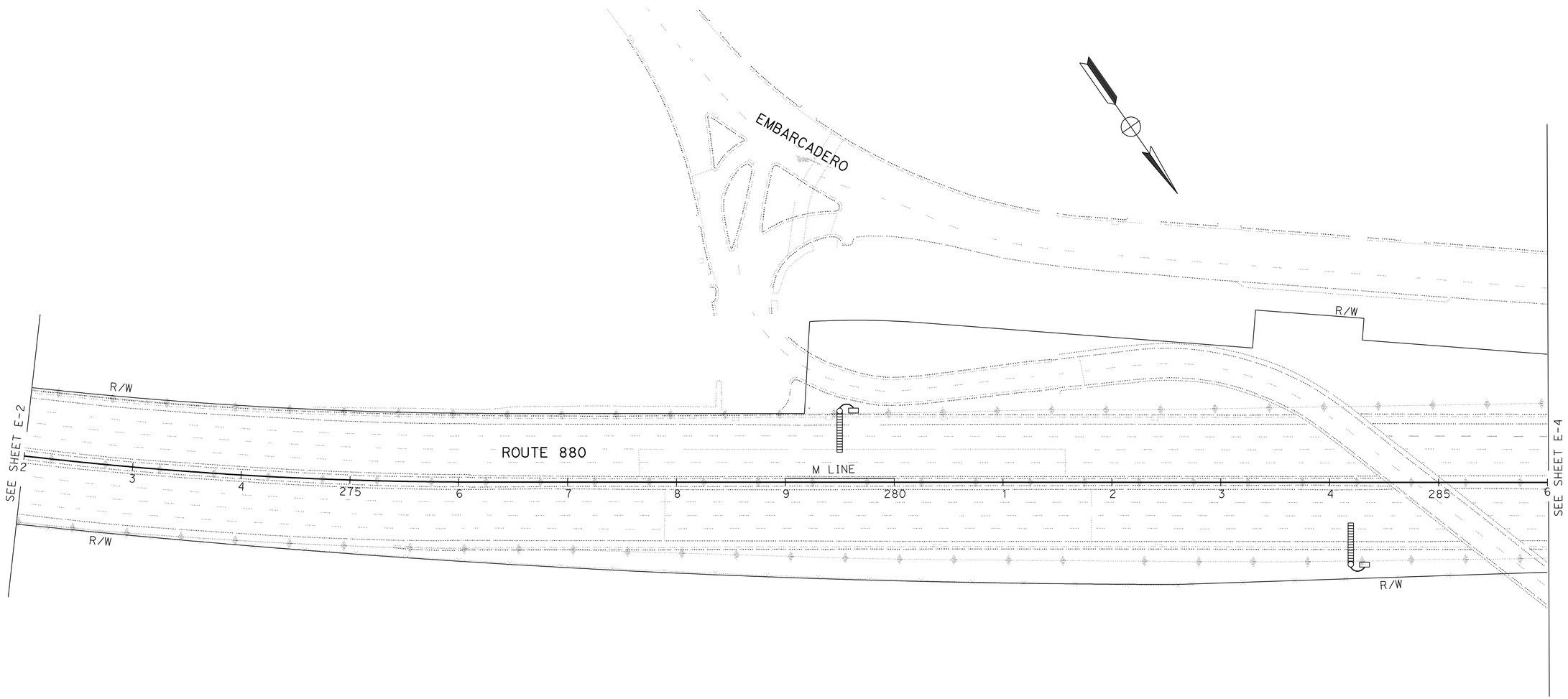

LIGHTING AND SIGN ILLUMINATION

SCALE: 1'' = 50'

FOR NOTES, ABBREVIATIONS AND LEGEND, SEE SHEET E-1

THIS PLAN IS ACCURATE FOR ELECTRICAL WORK ONLY.

E-3

CALCULATED-DESIGNED BY	BARON G. OW YEONG
CHECKED BY	MAHMOOD NOII
REVISED BY	BY
DATE REVISED	3/25/11
FUNCTIONAL SUPERVISOR	LAI HONG CHIU

STATE OF CALIFORNIA - DEPARTMENT OF TRANSPORTATION

Caltrans®

ELECTRICAL

LAST REVISION 03-23-11 | DATE PLOTTED => 22-JUN-2011 TIME PLOTTED => 13:16

Dist	COUNTY	ROUTE	POST MILES TOTAL PROJECT	SHEET No.	TOTAL SHEETS
04	Ala	880	28.2/29.9	135	183

REGISTERED ELECTRICAL ENGINEER DATE 3-24-11

PLANS APPROVAL DATE 6-20-11

REGISTERED PROFESSIONAL ENGINEER Mahmood Noii No. 13717 Exp. 6-30-11 ELECT STATE OF CALIFORNIA

THE STATE OF CALIFORNIA OR ITS OFFICERS OR AGENTS SHALL NOT BE RESPONSIBLE FOR THE ACCURACY OR COMPLETENESS OF SCANNED COPIES OF THIS PLAN SHEET.

NOTE:

FOR ACCURATE RIGHT OF WAY DATA, CONTACT RIGHT OF WAY ENGINEERING AT THE DISTRICT OFFICE.

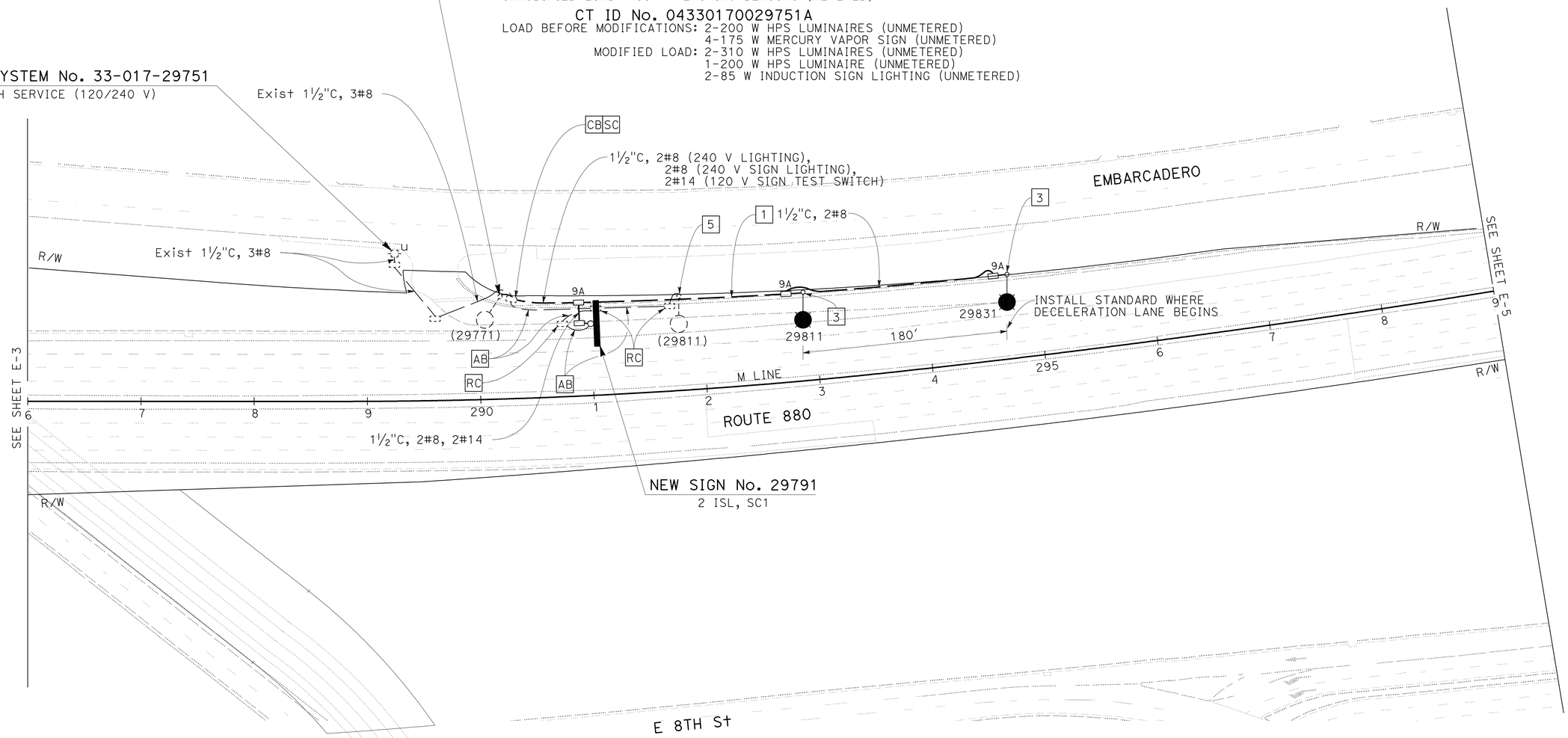

LIGHTING AND SIGN ILLUMINATION

SCALE: 1'' = 50'

FOR NOTES, ABBREVIATIONS AND LEGEND, SEE SHEET E-1

THIS PLAN IS ACCURATE FOR ELECTRICAL WORK ONLY.

E-4

	BY	REVISED BY	BARON G. OW YEONG	CALCULATED-DESIGNED BY	FUNCTIONAL SUPERVISOR
	3/25/11	DATE REVISED	MAHMOOD NOII	CHECKED BY	LAI HONG CHIU

STATE OF CALIFORNIA - DEPARTMENT OF TRANSPORTATION

Caltrans

ELECTRICAL

LAST REVISION 03-25-11 | DATE PLOTTED => 22-JUN-2011 | TIME PLOTTED => 13:16

Dist	COUNTY	ROUTE	POST MILES TOTAL PROJECT	SHEET No.	TOTAL SHEETS
04	Ala	880	28.2/29.9	136	183

REGISTERED ELECTRICAL ENGINEER 3-24-11 DATE

6-20-11
PLANS APPROVAL DATE

REGISTERED PROFESSIONAL ENGINEER Mahmood Noii No. 13717 Exp. 6-30-11 ELECT STATE OF CALIFORNIA

THE STATE OF CALIFORNIA OR ITS OFFICERS OR AGENTS SHALL NOT BE RESPONSIBLE FOR THE ACCURACY OR COMPLETENESS OF SCANNED COPIES OF THIS PLAN SHEET.

NOTE:

FOR ACCURATE RIGHT OF WAY DATA, CONTACT RIGHT OF WAY ENGINEERING AT THE DISTRICT OFFICE.

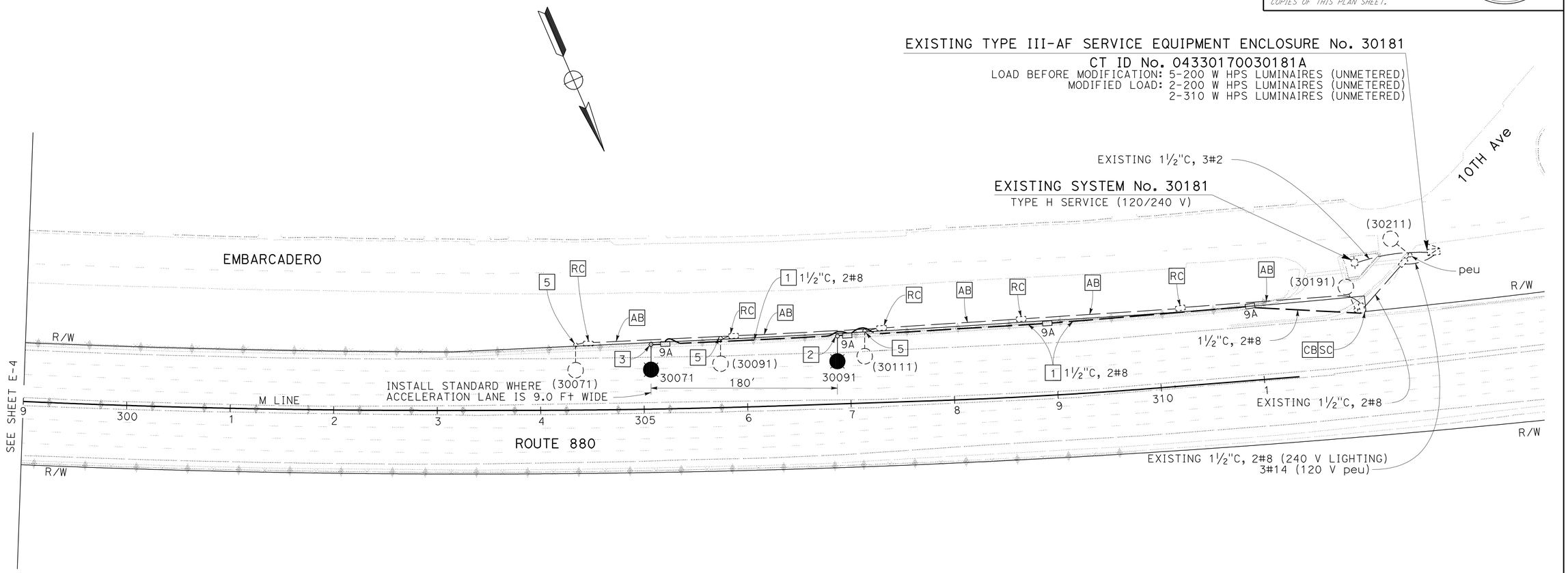

FOR NOTES, ABBREVIATIONS AND LEGEND, SEE SHEET E-1

THIS PLAN IS ACCURATE FOR ELECTRICAL WORK ONLY.

LIGHTING AND SIGN ILLUMINATION

SCALE: 1'' = 50'

E-5

CALCULATED-DESIGNED BY	BARON G. OW YEONG
CHECKED BY	MAHMOOD NOII
FUNCTIONAL SUPERVISOR	LAI HONG CHIU
REVISED BY	BY
DATE REVISED	3/25/11

STATE OF CALIFORNIA - DEPARTMENT OF TRANSPORTATION

Caltrans

ELECTRICAL

LAST REVISION 03-28-11 | DATE PLOTTED => 22-JUN-2011 | TIME PLOTTED => 13:16

FED. ROAD DIV. NO.	STATE	PROJ. No.	FISCAL YEAR	SHEET NO.	TOTAL SHEETS
7	CAL.			243	277

U-341 (18)

Dist.	County	Route	Section	Sheet No.	Total Sheets
04	Ala	880	Oak	16	17

IV-Ala-17

Bridge Engineer — Civil Engineer—License 5382

DATE APPROVED FEB 21 1961

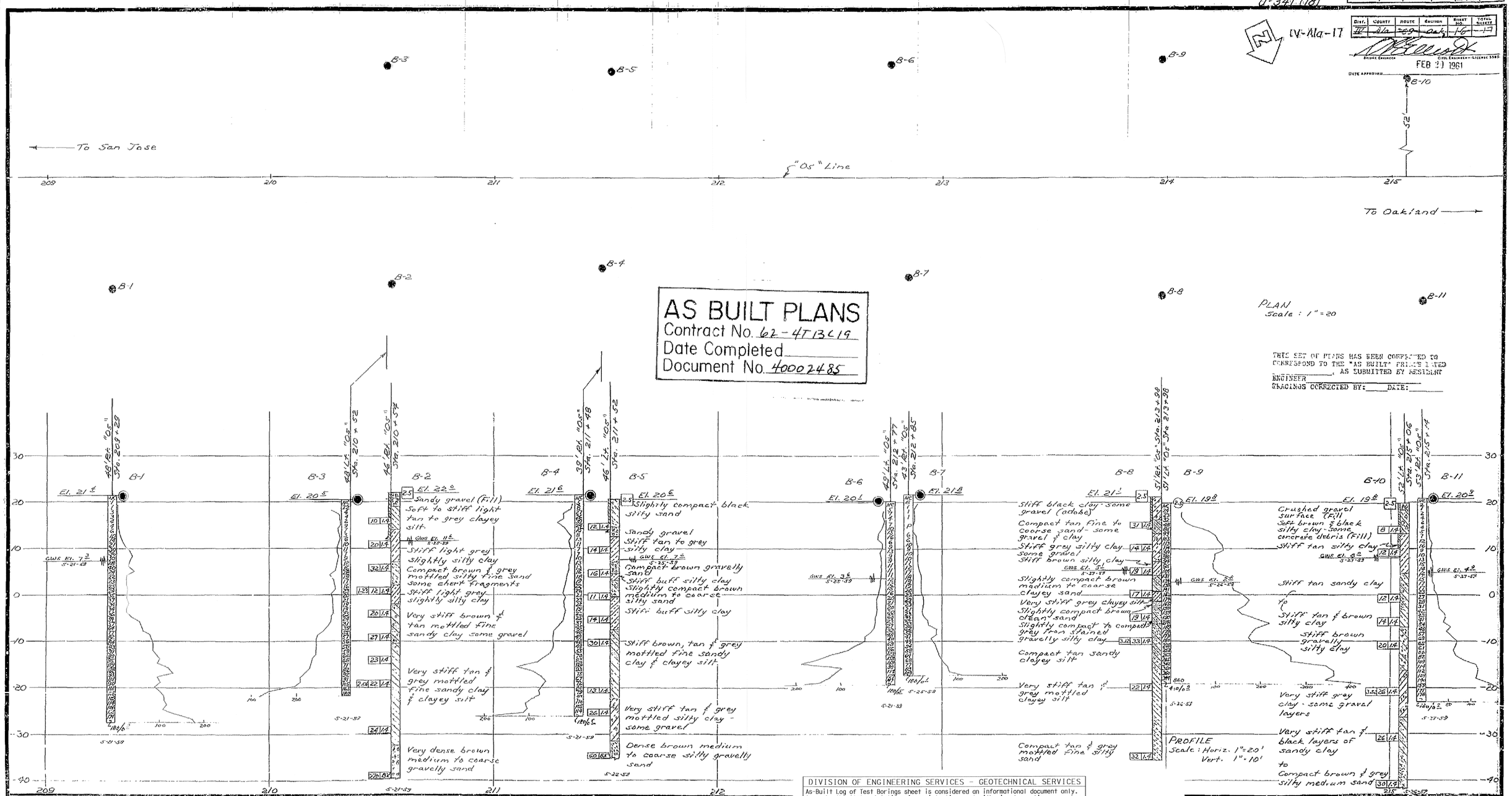

AS BUILT PLANS
Contract No. 62-4T13C19
Date Completed
Document No. 40002485

THIS SET OF PLANS HAS BEEN CORRECTED TO CORRESPOND TO THE "AS BUILT" PRINTS FILED _____, AS SUBMITTED BY RESIDENT ENGINEER _____
TRACINGS CORRECTED BY: _____ DATE: _____

BRIDGE DEPARTMENT

FIELD STUDY by: J. Hall
DRAWN by: M. Manner 6-29-59
CHECKED by: J. Hall 8-12-59
Approved for Immediate Use by: T. L. Smith 8-24-59
Engineering Geologist
Lab. Geo. Engr. Mater. Lab.
Materials Engineer

CLASSIFICATION OF MATERIAL BASED ON STANDARD GRADE SIZE LIMITS:

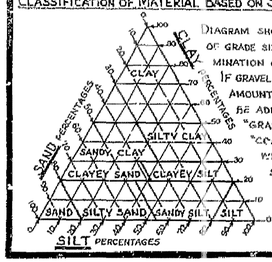

DIAGRAM SHOWING THE BASIS FOR ESTIMATES OF GRADE SIZE DISTRIBUTION USED IN DETERMINATION OF CLASS NAMES.

IF GRAVEL IS PRESENT IN APPRECIABLE AMOUNTS THE TERM "GRAVELLY" MAY BE ADDED TO THE CLASS NAME, VIZ. "GRAVELLY SAND". THE TERMS "COARSE", "MEDIUM" AND "FINE" WHEN USED TO DESCRIBE SAND, SILT AND GRAVEL REFER TO STANDARD GRADE SIZE LIMITS.

LEGEND OF EARTH MATERIALS

- GRAVEL
- SAND
- SILT
- CLAY
- SANDY CLAY OR CLAYEY SAND
- SANDY SILT OR SILTY SAND
- SILTY CLAY OR CLAYEY SILT
- PEAT AND/OR ORGANIC MATTER
- FILL MATERIAL
- IGNEOUS ROCK
- SEDIMENTARY ROCK
- METAMORPHIC ROCK

LEGEND OF B

- PLAN OF ANY BORING
- PENETROMETER
- 2¼" CONE PENETROMETER
- SAMPLER BORING (DRY)
- ROTARY BORING (WET)
- AUGER BORING (DRY)
- JET BORING
- CORE BORING
- TEST PIT

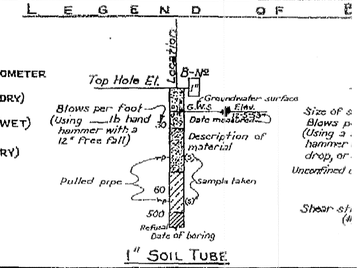

DIVISION OF ENGINEERING SERVICES - GEOTECHNICAL SERVICES

As-Built Log of Test Borings sheet is considered an informational document only. As such, the State of California registration seal with signature, license number and registration certificate expiration date confirm that this is a true and accurate copy of the original document. It does not attest to the accuracy or validity of the information contained in the original document. This drawing is available and presented only for the convenience of any bidder, contractor or other interested party.

DIST.	COUNTY	ROUTE	POST MILE-TOTAL PROJECT	Sheet No.	Total Sheets
04	Ala	880	28.2/29.9	137	183

M. Momenzadeh. 12/29/2010
REGISTERED GEOTECHNICAL ENGINEER — DATE

REGISTERED PROFESSIONAL ENGINEER — Mahmood Momenzadeh — No. GE2685 — Exp. 12-31-11 — GEOTECHNICAL — STATE OF CALIFORNIA

I-880 ROADWAY REHAB BETWEEN HIGH ST AND 5TH AVE

LOG OF TEST BORINGS 6 OF 7

NOTE: A COPY OF THIS LOG OF TEST BORINGS IS AVAILABLE AT OFFICE OF STRUCTURE MAINTENANCE AND INVESTIGATIONS, SACRAMENTO, CALIFORNIA

CU: 04
EA: 1A6821

BRIDGE No.
Sheet of

TO ACCOMPANY PLANS DATED 6-20-11

NOTES

~~The contractor's attention is directed to Section 2, Article (a) of the Standard Specifications and to the Special Provisions accompanying this set of plans.~~

Classification of earth material as shown on this sheet is based upon field inspection and is not to be construed to imply mechanical analysis.

STATE OF CALIFORNIA
DEPARTMENT OF PUBLIC WORKS
DIVISION OF HIGHWAYS

FRUITVALE AVE. OH. WIDENING

LOG OF TEST BORINGS (1 of 2)

SCALE As Noted | BRIDGE 33-41 | FILE | DRAWING 8-1331-116

PREL. DRAWING NO. P. 1331 | 3

FILENAME => 0400020137-z-itb001.tif

243

187

FED. ROAD DIV. NO.	STATE	PROJ. No.	FISCAL YEAR	SHEET No.	TOTAL SHEETS
7	CAL.			244	277

(4-341 /18)

IV-Ala-17

DIST.	COUNTY	ROUTE	SECTION	SHEET NO.	TOTAL SHEETS
IV	Ala	880	Oak.	17	17

BRIDGE ENGINEER — CIVIL ENGINEER—LICENSE 5585

DATE APPRV./ED. FEB 29 1961

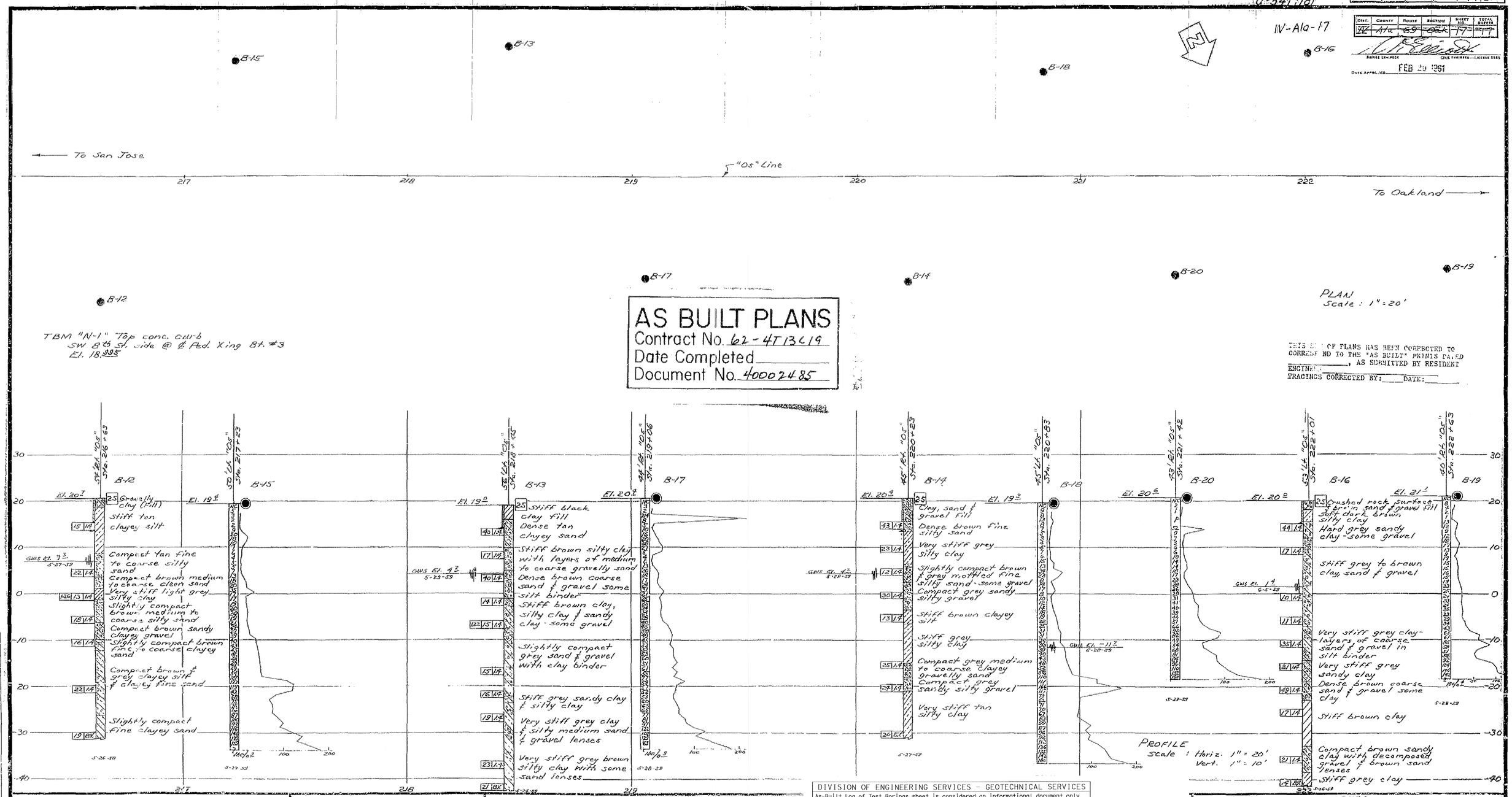

AS BUILT PLANS
Contract No. 62-4T13C19
Date Completed
Document No. 40002485

THIS SET OF PLANS HAS BEEN CORRECTED TO CORRESPOND TO THE "AS BUILT" PRINTS DATED _____, AS SUBMITTED BY RESIDENT ENGINEER.
TRACINGS CORRECTED BY: _____ DATE: _____

BRIDGE DEPARTMENT

DRAWN	M. Heeney	6-26-59
CHECKED	J. Hall	6-26-59

Approval Recommended by: Bridge Engineer; Materials Engineer

CLASSIFICATION OF MATERIAL BASED ON STANDARD GRADE SIZE LIMITS

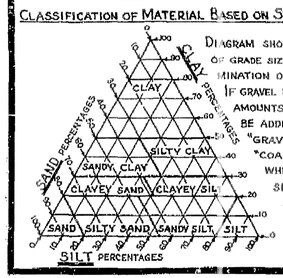

DIAGRAM SHOWING THE BASIS FOR ESTIMATES OF GRADE SIZE DISTRIBUTION USED IN DETERMINATION OF CLASS NAMES.

IF GRAVEL IS PRESENT IN APPRECIABLE AMOUNTS THE TERM "GRAVELLY" MAY BE ADDED TO THE CLASS NAME, VIZ. "GRAVELLY SAND." THE TERMS "COARSE", "MEDIUM" AND "FINE" WHEN USED TO DESCRIBE SAND, SILT AND GRAVEL REFER TO STANDARD GRADE SIZE LIMITS.

LEGEND OF EARTH MATERIALS

- GRAVEL
- SAND
- SILT
- CLAY
- SANDY CLAY OR CLAYEY SAND
- SANDY SILT OR SILTY SAND
- SILTY CLAY OR CLAYEY SILT
- PEAT AND/OR ORGANIC MATTER
- FILL MATERIAL
- IGNEOUS ROCK
- SEDIMENTARY ROCK
- METAMORPHIC ROCK

LEGEND OF

- PLAN OF ANY BORING
- PENETROMETER
- 2¼" CONE PENETROMETER
- SAMPLER BORING (DRY)
- ROTARY BORING (WET)
- AUGER BORING (DRY)
- JET BORING
- CORE BORING
- TEST PIT

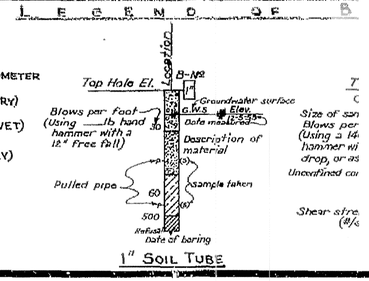

DIVISION OF ENGINEERING SERVICES – GEOTECHNICAL SERVICES

As-Built Log of Test Borings sheet is considered an informational document only. As such, the State of California registration seal with signature, license number and registration certificate expiration date confirm that this is a true and accurate copy of the original document. It does not attest to the accuracy or validity of the information contained in the original document. This drawing is available and presented only for the convenience of any bidder, contractor or other interested party.

DIST.	COUNTY	ROUTE	POST MILE-TOTAL PROJECT	Sheet No.	Total Sheets
04	Ala	880	28.2/29.9	138	183

M. Momenzadeh 12/29/2010
REGISTERED GEOTECHNICAL ENGINEER — DATE

REGISTERED PROFESSIONAL ENGINEER — Mahmood Momenzadeh — No. GE2685 — Exp. 12-31-11 — GEOTECHNICAL — STATE OF CALIFORNIA

I-880 ROADWAY REHAB BETWEEN HIGH ST AND 5TH AVE

LOG OF TEST BORINGS 7 OF 7

NOTE: A COPY OF THIS LOG OF TEST BORINGS IS AVAILABLE AT OFFICE OF STRUCTURE MAINTENANCE AND INVESTIGATIONS, SACRAMENTO, CALIFORNIA

CU: 04
EA: 1A6821

BRIDGE No.
Sheet of

TO ACCOMPANY PLANS DATED 6-20-11

NOTES

~~The geotechnical work involved is outlined in Section 17-1.02 (c) of the Standard Specifications and the Special Provisions accompanying this set of plans.~~

Classification of earth material as shown on this sheet is based upon field inspection and is not to be construed to imply mechanical analysis.

STATE OF CALIFORNIA
DEPARTMENT OF PUBLIC WORKS
DIVISION OF HIGHWAYS

FRUITVALE AVE. OH. WIDENING

LOG OF TEST BORINGS (2 of 2)

SCALE	BRIDGE	FILE	DRAWING
As Noted	33-41		8-1331-117

PREL. DRAWING NO. P-1331 13

FILENAME => 0400020137-z-1tb002.tif

24

188

DIST.	COUNTY	ROUTE	POST MILES TOTAL PROJECT	SHEET NO.	TOTAL SHEETS
04	Ala	880	29.7	129	136

CERTIFIED ENGINEERING GEOLOGIST

REGISTERED GEOLOGIST — R. W. FOX — No. 78 — Exp. 6-30-94 — CERTIFIED ENGINEERING GEOLOGIST — STATE OF CALIFORNIA

6-28-95
PLANS APPROVAL DATE

The State of California or its officers or agents shall not be responsible for the accuracy or completeness of electronic copies of this plan sheet.

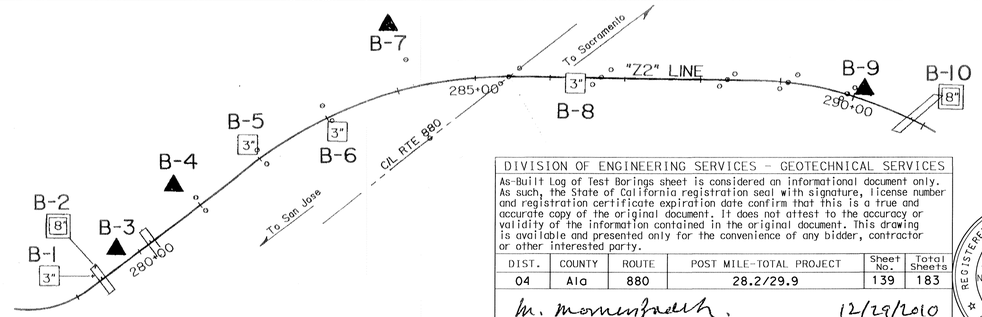

BENCH MARK

BM: CDH A-109 ELEV. 9.28'
FD. CALIFORNIA DIVISION OF HIGHWAYS BRASS DISK @ SOUTHWEST CORNER OF SIDEWALK OF 16TH AVE. O.C.

BM: CDH A-111 ELEV. 25.40'
FD. CALIFORNIA DIVISION OF HIGHWAYS BRASS DISK @ NORTH SIDEWALK OF CONNECTOR RAMP FROM EASTBOUND EAST 12TH STREET TO SOUTHBOUND 16TH AVE.

DIVISION OF ENGINEERING SERVICES - GEOTECHNICAL SERVICES

As-Built Log of Test Borings sheet is considered an informational document only. As such, the State of California registration seal with signature, license number and registration certificate expiration date confirm that this is a true and accurate copy of the original document. It does not attest to the accuracy or validity of the information contained in the original document. This drawing is available and presented only for the convenience of any bidder, contractor or other interested party.

DIST.	COUNTY	ROUTE	POST MILE-TOTAL PROJECT	Sheet No.	Total Sheets
04	Ala	880	28.2/29.9	139	183

M. Momenzadeh. 12/29/2010
REGISTERED GEOTECHNICAL ENGINEER — DATE

REGISTERED PROFESSIONAL ENGINEER — Mahmood Momenzadeh — No. GE2685 — Exp. 12-31-11 — GEOTECHNICAL — STATE OF CALIFORNIA

I-880 ROADWAY REHAB BETWEEN HIGH ST AND 5TH AVE

LOG OF TEST BORINGS 1 OF 7

NOTE: A COPY OF THIS LOG OF TEST BORINGS IS AVAILABLE AT OFFICE OF STRUCTURE MAINTENANCE AND INVESTIGATIONS, SACRAMENTO, CALIFORNIA

CU: 04
EA: 1A6821

BRIDGE No.
Sheet of

TO ACCOMPANY PLANS DATED 6-20-11

NO CORRECTIONS THIS SHEET
GS 3-26-01
CORRECTIONS BY L.S. Miyashiro
CONTRACT NO. 04-131534
DATE 4-28-98

NOTE:
1. E = BLOW COUNT FOR ONE FOOT PENETRATION EXTRAPOLATED FROM BLOW COUNT FOR LESS THAN ONE FOOT (DUE TO CHANGE IN MATERIAL OR HARD DRIVING).
2. UNCONFINED COMPRESSIVE STRENGTH DETERMINED BY "POCKET PENETROMETER".

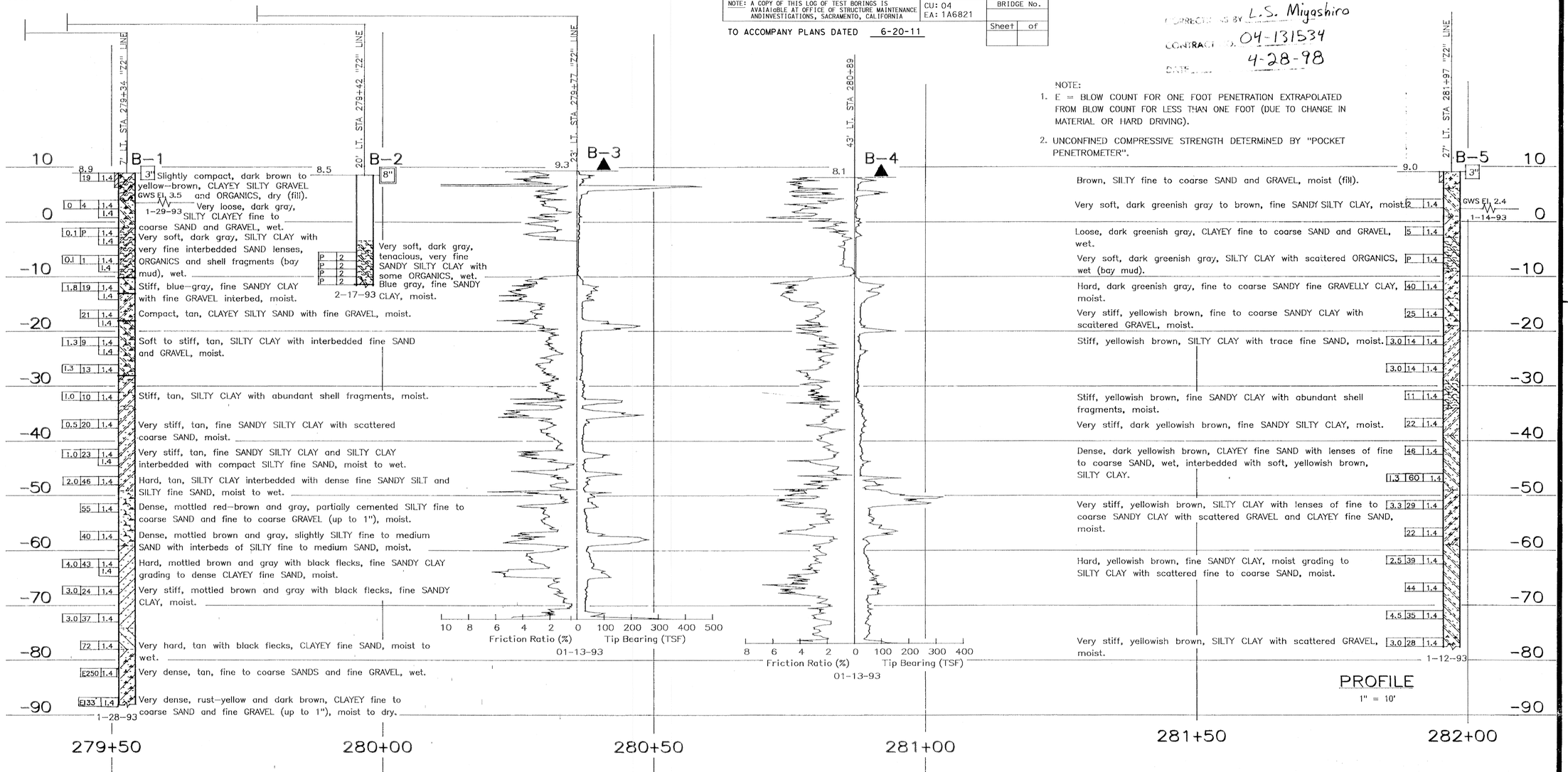

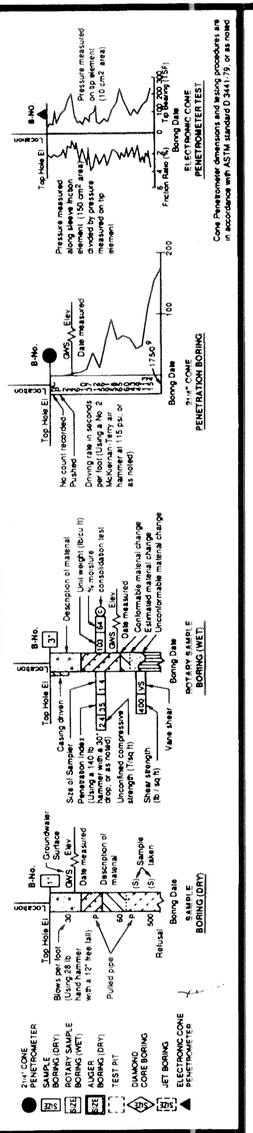

LEGEND OF EARTH MATERIALS

GRAVEL, SAND, SILT, CLAY, SANDY CLAY or CLAYEY SAND, SANDY SILT or SILTY SAND, SILTY CLAY, CLAYEY SILT, PEAT and/or ORGANIC MATTER, FILL MATERIAL, IGNEOUS ROCK, SEDIMENTARY ROCK, METAMORPHIC ROCK

CONSISTENCY CLASSIFICATION FOR SOILS

According to the Standard Penetration Test

Penetration Resistance (Blows / Ft)	Granular	Cohesive
0-4	Very loose	Very soft
5-9	Loose	Soft
10-19	Slightly compact	Stiff
20-34	Compact	Very stiff
35-69	Dense	Hard
>70	Very dense	Very hard

NOTE: Classification of earth material as shown on this sheet is based upon field inspection and is not to be construed to imply mechanical analysis.

DIVISION OF NEW TECHNOLOGY, MATERIALS AND RESEARCH	OFFICE OF ENGINEERING GEOLOGY
DRAWN BY K. WAHL 4-93	
CHECKED BY	

FIELD INVESTIGATION BY: J. THORNE

State of CALIFORNIA DEPARTMENT OF TRANSPORTATION

DIVISION OF STRUCTURES
STRUCTURE DESIGN 9

BRIDGE NO. 33-137
POST MILE 29.6/29.7

16TH AVENUE OVERCROSSING
LOG OF TEST BORINGS 1 OF 5

ORIGINAL SCALE IN INCHES FOR REDUCED PLANS 0 1 2 3

CU 04173
EA 131531

DISREGARD PRINTS BEARING EARLIER REVISION DATES 7-18-94

REVISION DATES (PRELIMINARY STAGE ONLY)

SHEET 68 OF 72

TL 6051 REV. 2/92 92 64584

FILENAME => 0400020137-z-1tb003.tif

DIST	COUNTY	ROUTE	POST MILES TOTAL PROJECT	SHEET NO.	TOTAL SHEETS
04	Ala	880	29.7	130	136

CERTIFIED ENGINEERING GEOLOGIST

REGISTERED GEOLOGIST R. W. FOX No. 78 Exp. 6-30-94 CERTIFIED ENGINEERING GEOLOGIST STATE OF CALIFORNIA

6-26-95
PLANS APPROVAL DATE

The State of California or its officers or agents shall not be responsible for the accuracy or completeness of electronic copies of this plan sheet.

NO CORRECTIONS THIS SHEET

AS-BUILT GS 3-26-01
CORRECTIONS BY L.S. Miyashiro
CONTRACT NO. 04-131534
4-28-98

FOR PLAN VIEW, SEE "LOG OF TEST BORINGS", SHEET 1 OF 5.

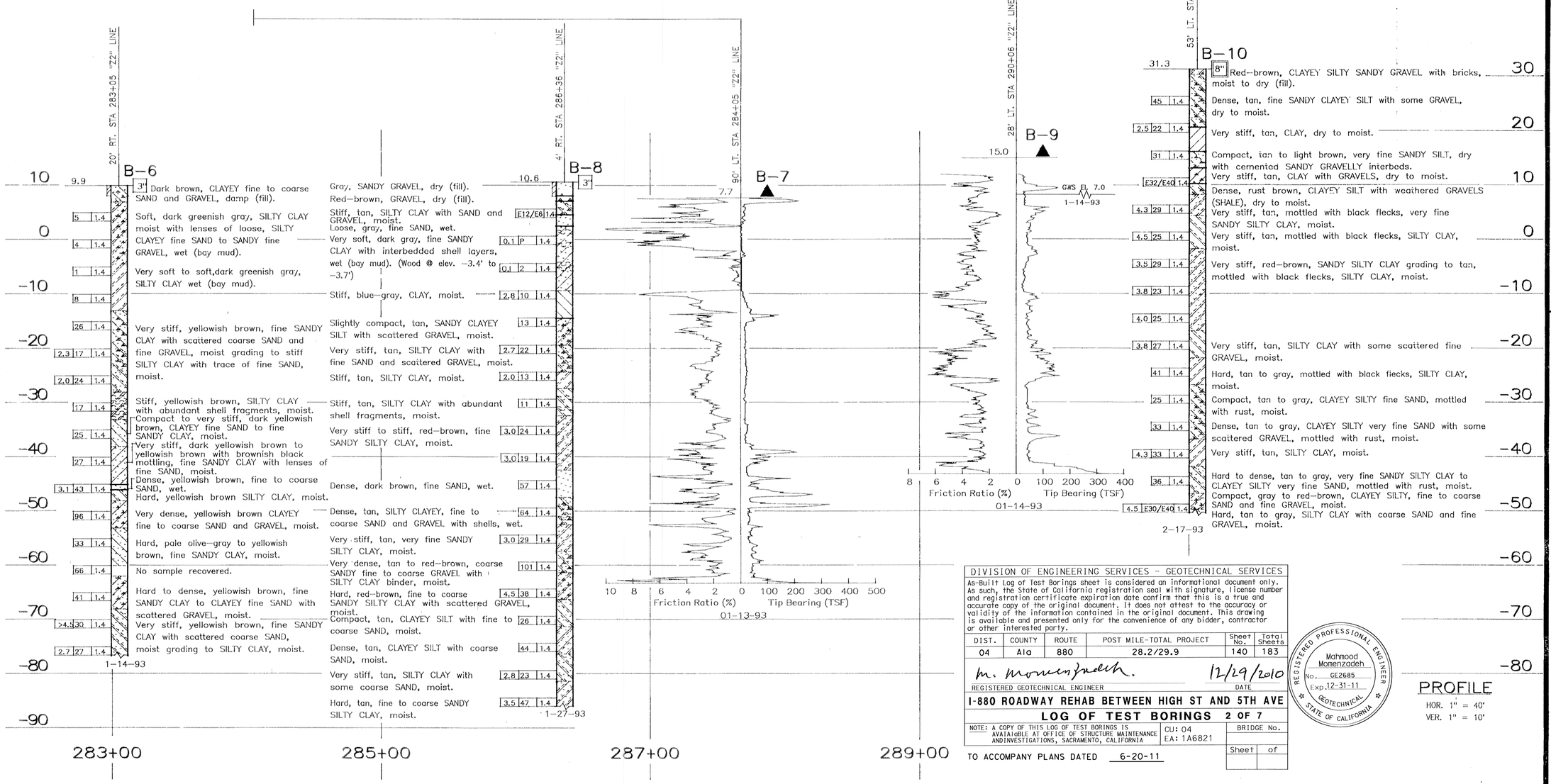

PROFILE
HOR. 1" = 40'
VER. 1" = 10'

DIVISION OF ENGINEERING SERVICES - GEOTECHNICAL SERVICES

As-Built Log of Test Borings sheet is considered an informational document only. As such, the State of California registration seal with signature, license number and registration certificate expiration date confirm that this is a true and accurate copy of the original document. It does not attest to the accuracy or validity of the information contained in the original document. This drawing is available and presented only for the convenience of any bidder, contractor or other interested party.

DIST.	COUNTY	ROUTE	POST MILE-TOTAL PROJECT	Sheet No.	Total Sheets
04	Ala	880	28.2/29.9	140	183

M. Momenzadeh. 12/29/2010
REGISTERED GEOTECHNICAL ENGINEER — DATE

REGISTERED PROFESSIONAL ENGINEER Mahmood Momenzadeh No. GE2685 Exp. 12-31-11 GEOTECHNICAL STATE OF CALIFORNIA

I-880 ROADWAY REHAB BETWEEN HIGH ST AND 5TH AVE

LOG OF TEST BORINGS 2 OF 7

NOTE: A COPY OF THIS LOG OF TEST BORINGS IS AVAILABLE AT OFFICE OF STRUCTURE MAINTENANCE AND INVESTIGATIONS, SACRAMENTO, CALIFORNIA

CU: 04
EA: 1A6821

BRIDGE No.
Sheet of

TO ACCOMPANY PLANS DATED 6-20-11

LEGEND OF BORING OPERATIONS

Pile Cone Penetrometer Sounding (DRY) — 205
Rotary Sample Boring (DRY) — RS
Rotary Sample Boring (WET) — RS
Test Pit — TP
Diamond Core Boring — 205
Jet Boring — 205
Electronic Cone Penetrometer — 205

Rotary Sample Boring (WET)
B-No. | Elev. | Top Hole El. | Casing drawn | Sample | Groundwater Surface | Description of material | Unit weight (lb/cu ft) | Consolidation test | Unconfined compressive strength (ksf) | Vane shear | Shear strength (lb/sq ft) | Penetration Index (Blows/Ft) | Size of Sampler | Date measured | Compressible material change | Expansive material change | Unconfortable material change | Unconformable material change

Rotary Sample Boring (DRY)
B-No. | Elev. | Top Hole El. | Groundwater Surface | Date measured | Description of material | Sample taken | Refusal | Bottom Hole El. | Bottom Date | Boring Date

Test Pit
Top Hole El. | Bottom Hole El. | Bottom Date | Boring Date | Bottom Hole El. | Bottom Date | Boring Date

Diamond Core Boring
Top Hole El. | Bottom Hole El. | Bottom Date | Boring Date

Jet Boring
Top Hole El. | Bottom Hole El. | Bottom Date | Boring Date

Electronic Cone Penetrometer
Top Hole El. | Bottom Hole El. | Bottom Date | Boring Date

Pile Cone Penetrometer Sounding
Top Hole El. | Bottom Hole El. | Bottom Date | Boring Date

Cone Penetrometer dimensions and sounding procedures are in accordance with ASTM standard D 3441-79 or as noted

LEGEND OF EARTH MATERIALS

GRAVEL | SAND | SILT | CLAY | CLAYEY SILT | SANDY CLAY or CLAYEY SAND | SANDY SILT or SILTY SAND | SILTY CLAY | PEAT and/or ORGANIC MATTER | FILL MATERIAL | SEDIMENTARY ROCK | METAMORPHIC ROCK | IGNEOUS ROCK

CONSISTENCY CLASSIFICATION FOR SOILS

According to the Standard Penetration Test

Penetration Index (Blows / Ft)	Granular	Cohesive
0-4	Very loose	Very soft
5-9	Loose	Soft
10-19	Slightly compact	Stiff
20-34	Compact	Very stiff
35-69	Dense	Hard
>70	Very dense	Very hard

NOTE: Classification of earth material as shown on this sheet is based upon field inspection and is not to be construed to imply mechanical analysis.

DIVISION OF NEW TECHNOLOGY, MATERIALS AND RESEARCH	OFFICE OF ENGINEERING GEOLOGY
DRAWN BY K. WAHL 4-93	
CHECKED BY	

FIELD INVESTIGATION BY: J. THORNE

State of CALIFORNIA DEPARTMENT OF TRANSPORTATION

DIVISION OF STRUCTURES STRUCTURE DESIGN 9

BRIDGE NO. 33-137
POST MILE 29.6/29.7

16TH AVENUE OVERCROSSING
LOG OF TEST BORINGS 2 OF 5

ORIGINAL SCALE IN INCHES FOR REDUCED PLANS 0 1 2 3

CU 04173
EA 131531

DISREGARD PRINTS BEARING EARLIER REVISION DATES

REVISION DATES (PRELIMINARY STAGE ONLY) | SHEET 69 OF 72

FILENAME => 0400020137-z-1tb004.tif

DIST.	COUNTY	ROUTE	POST MILES TOTAL PROJECT	SHEET NO.	TOTAL SHEETS
04	Ala	880	29.7	131	136

CERTIFIED ENGINEERING GEOLOGIST

REGISTERED GEOLOGIST R. W. FOX No. 78 Exp. 6-30-94 CERTIFIED ENGINEERING GEOLOGIST STATE OF CALIFORNIA

6-26-95
PLANS APPROVAL DATE

The State of California or its officers or agents shall not be responsible for the accuracy or completeness of electronic copies of this plan sheet.

DIVISION OF ENGINEERING SERVICES - GEOTECHNICAL SERVICES

As-Built Log of Test Borings sheet is considered an informational document only. As such, the State of California registration seal with signature, license number and registration certificate expiration date confirm that this is a true and accurate copy of the original document. It does not attest to the accuracy or validity of the information contained in the original document. This drawing is available and presented only for the convenience of any bidder, contractor or other interested party.

DIST.	COUNTY	ROUTE	POST MILE-TOTAL PROJECT	Sheet No.	Total Sheets
04	Ala	880	28.2/29.9	141	183

REGISTERED GEOTECHNICAL ENGINEER — DATE 12/29/2010

REGISTERED PROFESSIONAL ENGINEER Mahmood Momenzadeh No. GE2685 Exp. 12-31-11 GEOTECHNICAL STATE OF CALIFORNIA

I-880 ROADWAY REHAB BETWEEN HIGH ST AND 5TH AVE

LOG OF TEST BORINGS 3 OF 7

NOTE: A COPY OF THIS LOG OF TEST BORINGS IS AVAIlABLE AT OFFICE OF STRUCTURE MAINTENANCE AND INVESTIGATIONS, SACRAMENTO, CALIFORNIA — CU: 04 EA: 1A6821 — BRIDGE No. — Sheet of

TO ACCOMPANY PLANS DATED 6-20-11

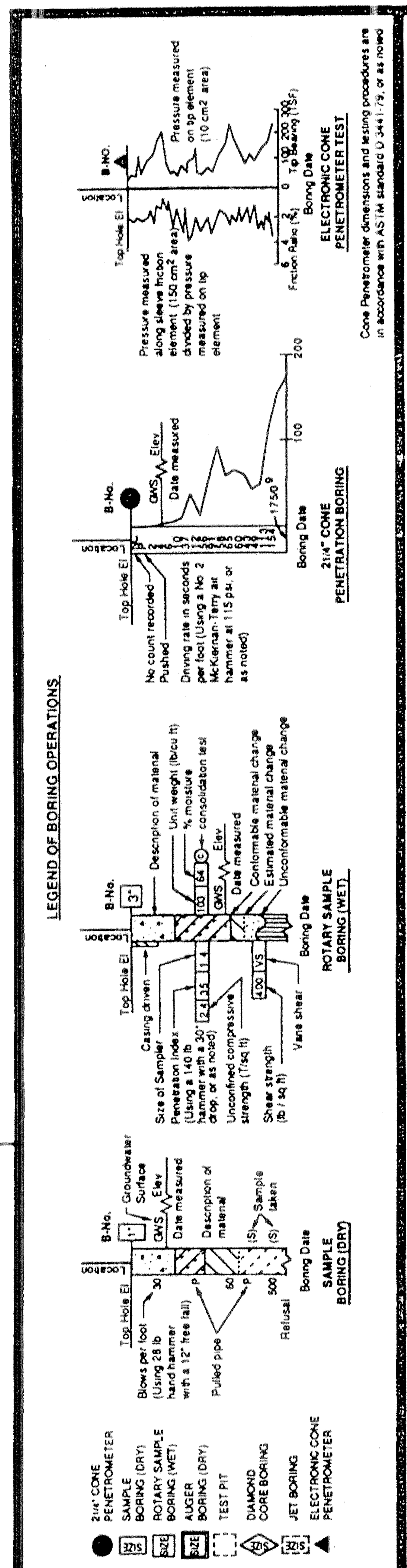

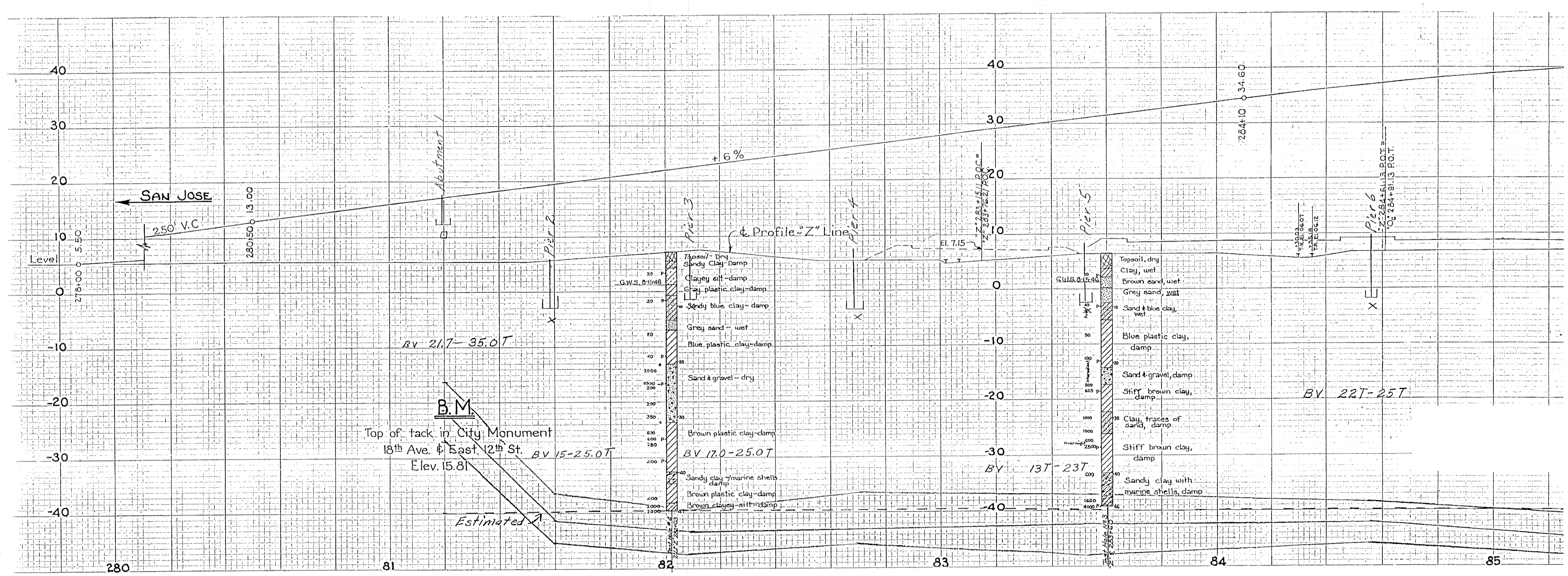

NO CORRECTIONS THIS SHEET
GS 3-26-01
L.S. Miyashiro
04-131534
4-28-98

DATUM
C.H.C. 0.0 = City of Oakland 0.0 = 2.935 above Mean Sea Level.
BV 21T-25T

NOTE:
These boring logs are being provided for general information. They are in the vicinity of the proposed structure and were completed between 1944 and 1946, making the actual location of some borings unknown.

LEGEND OF EARTH MATERIALS

GRAVEL	SAND	SILT	CLAY
SANDY CLAY or CLAYEY SAND	SANDY SILT or SILTY SAND	SILTY CLAY	CLAYEY SILT
PEAT and/or ORGANIC MATTER	FILL MATERIAL	IGNEOUS ROCK	SEDIMENTARY ROCK
METAMORPHIC ROCK			

CONSISTENCY CLASSIFICATION FOR SOILS
According to the Standard Penetration Test

Penetration Index (Blows / Ft)	Granular	Cohesive
0-4	Very loose	Very soft
5-9	Loose	Soft
10-19	Slightly compact	Stiff
20-34	Compact	Very stiff
35-69	Dense	Hard
>70	Very dense	Very hard

NOTE: Classification of earth material as shown on this sheet is based upon field inspection and is not to be construed to imply mechanical analysis.

DIVISION OF NEW TECHNOLOGY, MATERIALS AND RESEARCH	OFFICE OF ENGINEERING GEOLOGY	FIELD INVESTIGATION BY: J. THORNE
DRAWN BY		
CHECKED BY		

State of CALIFORNIA DEPARTMENT OF TRANSPORTATION

DIVISION OF STRUCTURES — STRUCTURE DESIGN 9

BRIDGE NO. 33-137 — POST MILE 29.68

16TH AVENUE OVERCROSSING

LOG OF TEST BORINGS 3 OF 5

ORIGINAL SCALE IN INCHES FOR REDUCED PLANS 0 1 2 3

CU 04173 EA 131531

DISREGARD PRINTS BEARING EARLIER REVISION DATES — REVISION DATES (PRELIMINARY STAGE ONLY) — SHEET 70 OF 72

TL 6051 REV. 2/92

FILENAME => 0400020137-z-ltb005.tif

The State of California or its officers or agents shall not be responsible for the accuracy or completeness of electronic copies of this plan sheet.

DIST.	COUNTY	ROUTE	POST MILES TOTAL PROJECT	SHEET NO.	TOTAL SHEETS
04	Ala	880	29.7	132	136

CERTIFIED ENGINEERING GEOLOGIST

REGISTERED GEOLOGIST R. W. FOX No. 78 Exp. 6-30-94 CERTIFIED ENGINEERING GEOLOGIST STATE OF CALIFORNIA

6-26-95
PLANS APPROVAL DATE

IV-Ala-69-Oak

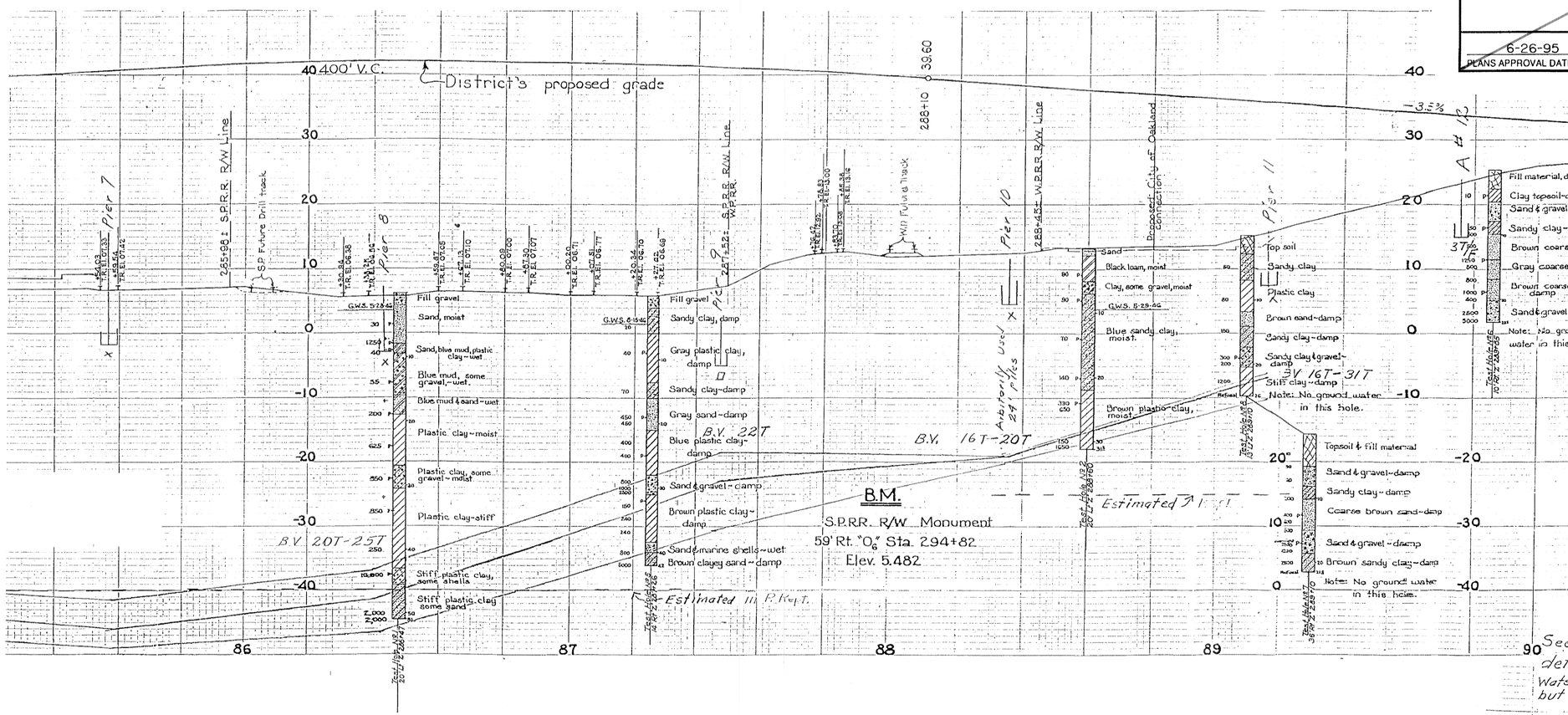

See Final Report for details of handling ground water. A tremie was recommended but not used at Piers 2-10.

Timber test piles @ B3, 5, 7, & 9 driven with 3140# drop hammer
x - piles driven by Vulcan #1.
□ - piles driven by Vulcan #2.
10" BR #2 used at A#1, P10, & P11.
U.D.F. piles at other piers.

As built Foundation Data Plotted by E.G.P. 4/49

NO CORRECTIONS THIS SHEET

GS 3-26-01
L.S. Miyashiro
CONTRACT 04-131534
4-28-98

DIVISION OF ENGINEERING SERVICES - GEOTECHNICAL SERVICES					
As-Built Log of Test Borings sheet is considered an informational document only. As such, the State of California registration seal with signature, license number and registration certificate expiration date confirm that this is a true and accurate copy of the original document. It does not attest to the accuracy or validity of the information contained in the original document. This drawing is available and presented only for the convenience of any bidder, contractor or other interested party.					
DIST.	COUNTY	ROUTE	POST MILE-TOTAL PROJECT	Sheet No.	Total Sheets
04	Ala	880	28.2/29.9	142	183

M. Momenzadeh 12/29/2010
REGISTERED GEOTECHNICAL ENGINEER — DATE

REGISTERED PROFESSIONAL ENGINEER Mahmood Momenzadeh No. GE2685 Exp. 12-31-11 GEOTECHNICAL STATE OF CALIFORNIA

I-880 ROADWAY REHAB BETWEEN HIGH ST AND 5TH AVE

LOG OF TEST BORINGS 4 OF 7

NOTE: A COPY OF THIS LOG OF TEST BORINGS IS AVAILABLE AT OFFICE OF STRUCTURE MAINTENANCE AND INVESTIGATIONS, SACRAMENTO, CALIFORNIA

CU: 04
EA: 1A6821

BRIDGE No. Sheet of

TO ACCOMPANY PLANS DATED 6-20-11

19th AVENUE OVERCROSSING
PROFILE & TEST HOLES

SCALE Horiz. 1"=40' Vert. 1"=10' — FILE No. E-33
BRIDGE No. 33-137 — DRAWING No. P-1436-10
Surveyed by F.C.L. 8-46
Drawn by J.O.D. 8-46
291

NOTE:
These boring logs are being provided for general information. They are in the vicinity of the proposed structure and were completed between 1944 and 1946, making the actual location of some borings unknown.

LEGEND OF BORING OPERATIONS

ROTARY SAMPLE BORING (WET)
Casing Driven — Top Hole El. — Size of Sampler — Penetration Index (Using a 140 lb. hammer with a 30" drop, or as noted) — Uncofined compressive strength (TSF) — Shear strength (lb. per sq. ft.) — Vane shear — Groundwater Surface — Elev. — Date measured — Description of material — Sample (S) taken — Refusal — Boring Date
Description of material — Unit weight (lbs/cu ft) — % moisture — % consolidation (est) — Elev. — Date measured — Conformable material change — Estimated material change — Unconformable material change — Boring Date
B-No. — Location — Top Hole El. — Blows per foot (Using 28 lb. hand hammer with a 12" free fall) — Pulled pipe — Refusal — Boring Date
SAMPLE BORING (DRY)
B-No. — Location — Top Hole El. — No count recorded — Drive pipe a seconds per foot (Using a No. 2 McKiernan-Terry air hammer at 115 psi, or as noted) — Boring Date
21/4" CONE PENETROMETER
B-No. — Location — Top Hole El. — Pressure measured along sleeve friction element (150 cm² area) divided by pressure measured on tip element — Pressure measured on tip element (10 cm² area) — Friction Ratio (%) — Boring Date — Top Bearing (TSF)
ELECTRONIC CONE PENETROMETER TEST
Cone Penetrometer dimensions and sizing procedures are in accordance with ASTM standard D-2441-73, as noted.

LEGEND OF EARTH MATERIALS
GRAVEL — SAND — SILT — CLAY — SANDY CLAY or CLAYEY SAND — SANDY SILT or SILTY SAND — SILTY CLAY — CLAYEY SILT — PEAT and/or ORGANIC MATTER — FILL MATERIAL — IGNEOUS ROCK — SEDIMENTARY ROCK — METAMORPHIC ROCK

CONSISTENCY CLASSIFICATION FOR SOILS
According to the Standard Penetration Test

Penetration Index (Blows/Ft)	Granular	Cohesive
0-4	Very loose	Very soft
5-9	Loose	Soft
10-19	Slightly compact	Stiff
20-34	Compact	Very stiff
35-69	Dense	Hard
>70	Very dense	Very hard

NOTE: Classification of earth material as shown on this sheet is based upon field inspection and is not to be construed to imply mechanical analysis.

DIVISION OF NEW TECHNOLOGY, MATERIALS AND RESEARCH	OFFICE OF ENGINEERING GEOLOGY
DRAWN BY	
CHECKED BY	

FIELD INVESTIGATION BY: J. THORNE

State of CALIFORNIA DEPARTMENT OF TRANSPORTATION

DIVISION OF STRUCTURES STRUCTURE DESIGN 9

BRIDGE NO. 33-137
POST MILE 29.68

16TH AVENUE OVERCROSSING
LOG OF TEST BORINGS 4 OF 5

ORIGINAL SCALE IN INCHES FOR REDUCED PLANS 0 1 2 3

CU 04173
EA 131531

DISREGARD PRINTS BEARING EARLIER REVISION DATES

REVISION DATES (PRELIMINARY STAGE ONLY)

SHEET 71 OF 72

FILENAME => 0400020137-z-1tb006.tif

TL 6051 REV. 2/92 92 54014

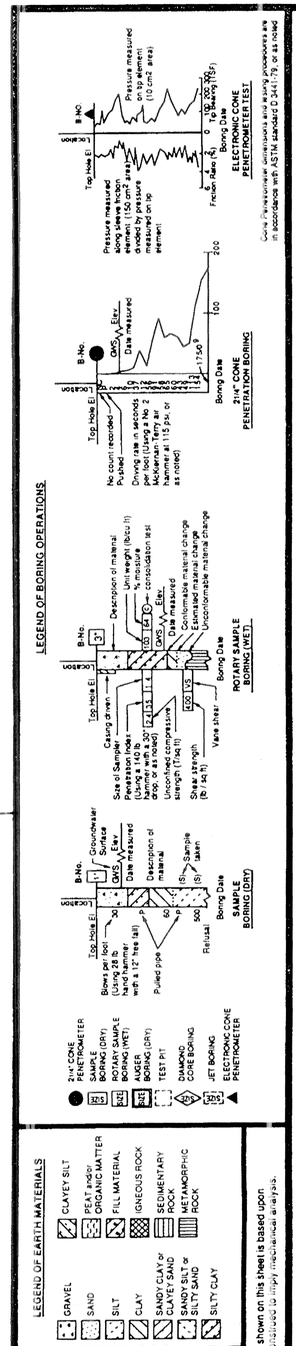

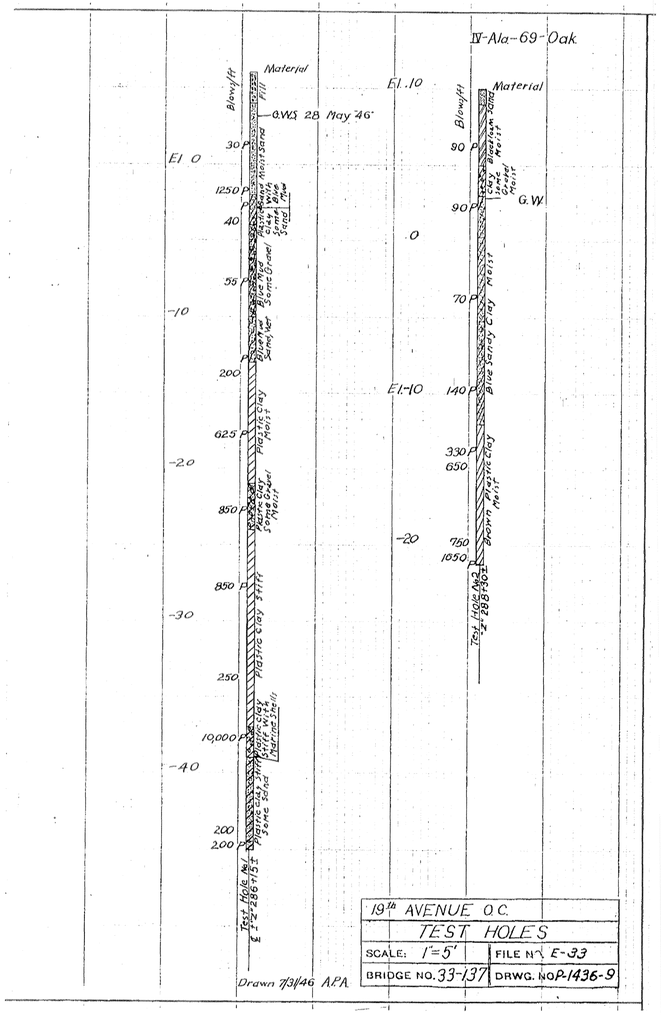

NOTE:
These boring logs are being provided for general information. They are in the vicinity of the proposed structure and were completed between 1944 and 1946, making the actual location of some borings unknown.

DIVISION OF ENGINEERING SERVICES - GEOTECHNICAL SERVICES

As-Built Log of Test Borings sheet is considered an informational document only. As such, the State of California registration seal with signature, license number and registration certificate expiration date confirm that this is a true and accurate copy of the original document. It does not attest to the accuracy or validity of the information contained in the original document. This drawing is available and presented only for the convenience of any bidder, contractor or other interested party.

DIST.	COUNTY	ROUTE	POST MILE-TOTAL PROJECT	Sheet No.	Total Sheets
04	Ala	880	28.2/29.9	143	183

M. Momenzadeh. 12/29/2010
REGISTERED GEOTECHNICAL ENGINEER — DATE

REGISTERED PROFESSIONAL ENGINEER Mahmood Momenzadeh No. GE2685 Exp. 12-31-11 GEOTECHNICAL STATE OF CALIFORNIA

I-880 ROADWAY REHAB BETWEEN HIGH ST AND 5TH AVE

LOG OF TEST BORINGS 5 OF 7

NOTE: A COPY OF THIS LOG OF TEST BORINGS IS AVAILABLE AT OFFICE OF STRUCTURE MAINTENANCE AND INVESTIGATIONS, SACRAMENTO, CALIFORNIA

CU: 04
EA: 1A6821

BRIDGE No.
Sheet of

TO ACCOMPANY PLANS DATED 6-20-11

DIST.	COUNTY	ROUTE	POST MILES TOTAL PROJECT	SHEET NO.	TOTAL SHEETS
04	Ala	880	29.7	133	136

CERTIFIED ENGINEERING GEOLOGIST

REGISTERED GEOLOGIST R. W. FOX No. 78 Exp. 6-30-94 CERTIFIED ENGINEERING GEOLOGIST STATE OF CALIFORNIA

6-26-95
PLANS APPROVAL DATE

The State of California or its officers or agents shall not be responsible for the accuracy or completeness of electronic copies of this plan sheet.

DRAWN BY F.C.L. DATE 10-44
CHECKED BY
APPROVED Driven 10-10-44 F.C.L.

STATE OF CALIFORNIA
DEPARTMENT OF PUBLIC WORKS
DIVISION OF HIGHWAYS
BRIDGE DEPARTMENT

DIST.	COUNTY	ROUTE	SECTION
IV	Ala.	69	Oak.

JOB 19th AVE AT EAST SHORE FREEWAY
Br. No. 33-137 L.D.-4-398

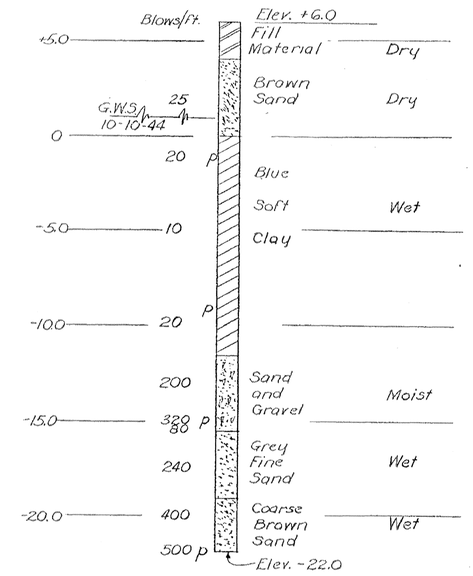

FORM DD-93, EXT. 1944 37987 10-43 1M SPO

DRAWING No. P-1436-4

NO CORRECTIONS THIS SHEET

GS 3-26-01
CORRECTED BY L.S. Miyashiro
CONTRACT 04-131534
DATE 4-28-98

DIVISION OF NEW TECHNOLOGY, MATERIALS AND RESEARCH	OFFICE OF ENGINEERING GEOLOGY
DRAWN BY	
CHECKED BY	

FIELD INVESTIGATION BY: J. THORNE

State of CALIFORNIA DEPARTMENT OF TRANSPORTATION

DIVISION OF STRUCTURES
STRUCTURE DESIGN 9

BRIDGE NO. 33-137
POST MILE 29.68

16TH AVENUE OVERCROSSING
LOG OF TEST BORINGS 5 OF 5

ORIGINAL SCALE IN INCHES FOR REDUCED PLANS 0 1 2 3

CU 04173
EA 131531

DISREGARD PRINTS BEARING EARLIER REVISION DATES

REVISION DATES (PRELIMINARY STAGE ONLY)

SHEET 72 OF 72

FILENAME => 0400020137-z-1tb007.tif

TL 6051 REV. 2/92 92 64014

DIST	COUNTY	ROUTE	POST MILES TOTAL PROJECT	SHEET NO.	TOTAL SHEETS
04	Ala	880	28.2/29.9	144	183

REGISTERED CIVIL ENGINEER

November 17, 2006
PLANS APPROVAL DATE

REGISTERED PROFESSIONAL ENGINEER Dallas Forester No. C37765 Exp. 12-31-06 CIVIL STATE OF CALIFORNIA

The State of California or its officers or agents shall not be responsible for the accuracy or completeness of electronic copies of this plan sheet.

To accompany plans dated 6-20-11

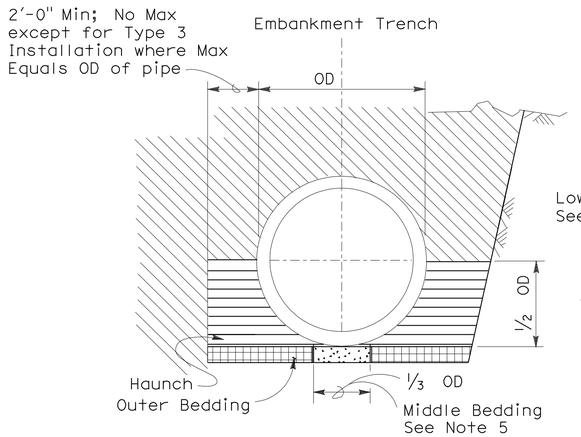

BACKFILL

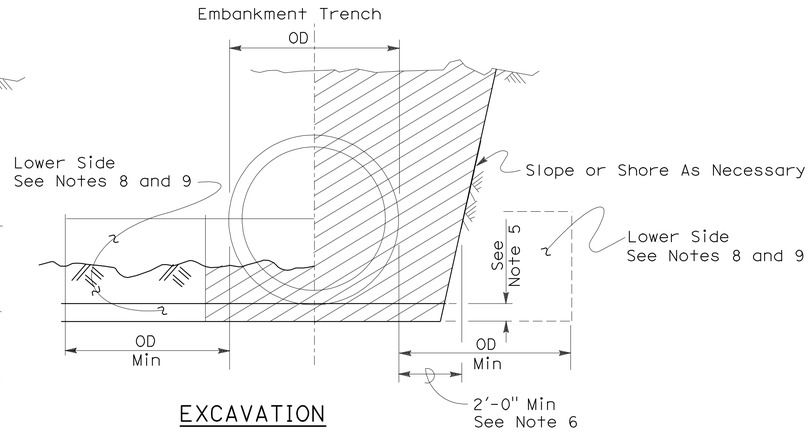

EXCAVATION

Roadway Embankment

Structure Backfill (Culvert) See Note 6

Structure Backfill (Culvert) See Note 6

Loose Backfill

Excavation Structure (Culvert)

TYPE 1 INSTALLATION:

The haunch and outer bedding shall be compacted to a minimum 90 percent relative compaction. In addition, the minimum sand equivalent in these areas shall be 30 and the maximum percentage passing the 75 μm sieve size shall be 12.

TYPE 2 INSTALLATION:

The haunch and outer bedding shall be compacted to a minimum 90 percent relative compaction. In addition, the minimum sand equivalent in these areas shall be 25.

TYPE 3 INSTALLATION:

The haunch and outer bedding shall be compacted to a minimum 85 percent relative compaction. 90 percent relative compaction will be required where the fill over the pipe is less than 4'-0" or 1/2 OD.

NOTES:

1. Unless otherwise shown on the plans or specified in the special provision, the Contractor shall have the option of selecting the class of RCP and the type of installation to be used, provided the height of cover does not exceed the value shown for the RCP selected.
   Example: 24" RCP culvert with maximum cover of 19'-0" the options are:
   a) Class II or stronger with Installation Type 1.
   b) Class III Special or stronger with Installation Type 2.
   c) Class IV Special or stronger with Installation Type 3.
   Cover is defined as the maximum vertical distance from top of the pipe to finished grade within the length of any given culvert.
2. The class of RCP and Installation Type selected shall be the same throughout the length of any given culvert.
3. The "length of any culvert" is defined as the culvert between:
   a) Successive drainage structure (inlets, junction boxes, headwalls, etc.).
   b) A drainage structure and the inlet or outlet end of the culvert.
   c) The inlet and outlet end of the culvert when there are no intervening drainage structures.
4. Oval and arch shaped RCP shall not be used.
5. 1/25 OD Min, not less than 3".
6. Slurry cement backfill may be substituted for backfill in the outer bedding and haunch areas. If slurry is used the outer and middle beddings shall be omitted. Prior to installation the soil under the middle 1/3 of the outside diameter of the pipe shall be softened by scarifying or other means to a minimum depth of 1/25 OD, but not less than 3". Where slurry cement backfill is used clear distance to trench wall may be reduced as set forth in Section 19-3.062 of the Standard Specifications.
7. Backfill shall be placed full width of excavation except where dimensions are shown for backfill width or thickness. Dimensions shown are minimums.
8. Lower side shall be suitable material as determined by the Engineer. Otherwise it shall be considered unsuitable as set forth in Section 19-2.02 of the Standard Specifications. See Note 9.
9. Where the pipe is placed in a trench, if the trench walls are sloped at 5 vertical to 1 horizontal or steeper for at least 90 percent of the trench height or up to not less than 12" from the grading plane, the firmness of the soil in the lower side need not be considered.
10. Non-reinforced precast concrete pipe sizes 3'-0" or smaller may be placed under installation Types 1, 2 or 3.

INSTALLATION TYPE 1

MINIMUM CLASS AND D-LOAD	COVER	
	108" Dia AND SMALLER	OVER 108" Dia
Class II 1000D	14.9'	12.9'
Class III 1350D	15.0' - 20.9'	13.0' - 18.9'
Class III Special 1700D	21.0' - 26.9'	19.0' - 24.9'
Class IV 2000D	27.0' - 31.9'	25.0' - 29.9'
Class IV Special 2500D	32.0' - 40.9'	30.0' - 38.9'
Class V 3000D	41.0' - 49.9'	39.0' - 46.9'
Class V Special 3600D	50.0' - 59.0'	47.0' - 58.0'

INSTALLATION TYPE 2

MINIMUM CLASS AND D-LOAD	COVER
Class II 1000D	9.9'
Class III 1350D	10.0'- 14.9'
Class III Special 1700D	15.0' - 19.9'
Class IV 2000D	20.0' - 24.9'
Class IV Special 2500D	25.0' - 31.9'
Class V 3000D	32.0' - 38.9'
Class V Special 3600D	39.0' - 47.0'

INSTALLATION TYPE 3

MINIMUM CLASS AND D-LOAD	COVER	
	48" Dia AND SMALLER	OVER 48" Dia
Class II 1000D	7.9'	5.9'
Class III 1350D	8.0' - 10.9'	6.0' - 8.9'
Class III Special 1700D	11.0' - 14.9'	9.0' - 12.9'
Class IV 2000D	15.0' - 17.9'	13.0' - 15.9'
Class IV Special 2500D	18.0' - 21.9'	16.0' - 19.9'
Class V 3000D	22.0' - 26.9'	20.0' - 24.9'
Class V Special 3600D	30.0' - 33.0'	25.0' - 31.0'

STATE OF CALIFORNIA
DEPARTMENT OF TRANSPORTATION

EXCAVATION AND BACKFILL CONCRETE PIPE CULVERTS

NO SCALE

RSP A62DA DATED NOVEMBER 17, 2006 SUPERSEDES STANDARD PLAN A62DA DATED MAY 1, 2006 - PAGE 20 OF THE STANDARD PLANS BOOK DATED MAY 2006.

REVISED STANDARD PLAN RSP A62DA

2006 REVISED STANDARD PLAN RSP A62DA

10-26-06

DIST	COUNTY	ROUTE	POST MILES TOTAL PROJECT	SHEET NO.	TOTAL SHEETS
04	Ala	880	28.2/29.9	145	183

Randell D. Hiatt
REGISTERED CIVIL ENGINEER

June 6, 2008
PLANS APPROVAL DATE

REGISTERED PROFESSIONAL ENGINEER
Randell D. Hiatt
No. C50200
Exp. 6-30-09
CIVIL
STATE OF CALIFORNIA

The State of California or its officers or agents shall not be responsible for the accuracy or completeness of electronic copies of this plan sheet.

To accompany plans dated 6-20-11

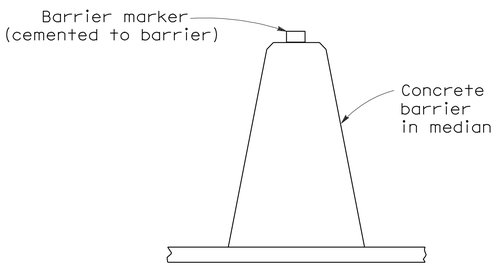

CONCRETE BARRIER TYPE 60 DELINEATION

See Notes 7 and 8

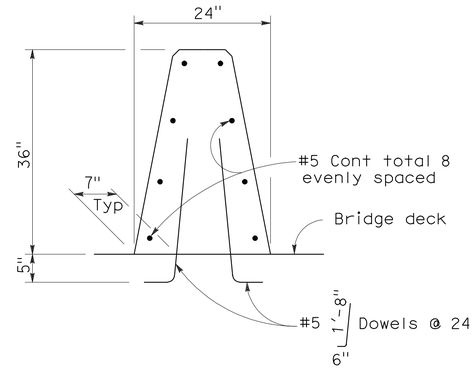

CONCRETE BARRIER TYPE 60A

Details similar to Type 60 except as noted.

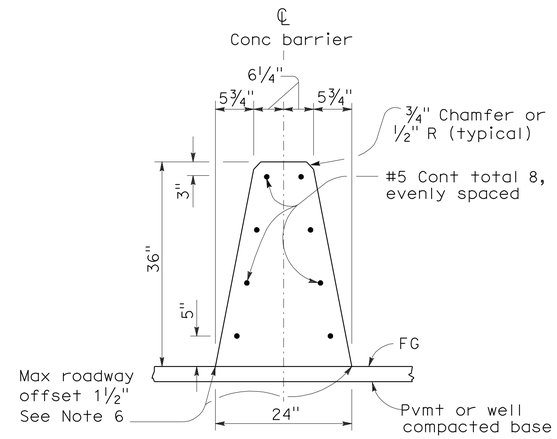

CONCRETE BARRIER TYPE 60

NOTES:

1. See Standard Plan A76B for details of Concrete Barrier Type 60 end anchors, connection to structures and transitions to Concrete Barrier Type 50 and Concrete Barrier Type 60S.
2. See Standard Plan A76C for Concrete Barrier Type 60 transitions at bridge column and sign pedestals.
3. Where glare screen is required on Concrete Barrier Type 60, use Concrete Barrier Type 60G.
4. Where the concrete barrier is added to the face of existing concrete structure, match existing weep holes.
5. Expansion joints in concrete barrier shall be located at all deck, pavement and principal wall joints. Expansion joint filler material shall be the same size as joint or ½" minimum.
6. Where roadway offset is greater than 1½", see Concrete Barrier Type 60C.
7. Barrier delineation to be used when required by the Special Provisions.
8. Spacing of barrier markers to match spacing of raised pavement markers on the adjacent median edgeline pavement delineation.
9. Reinforcing stirrup not required for roadway offsets less than 1'-0".
10. For roadway surfaces offset greater than 1½" to 3", no rebars required. For roadway surfaces offset greater than 3" to 8" use two #4 rebars at 3" above the lower roadway surface. For roadway surfaces offset greater than 8" to 12", use two #4 rebars at 3" above the lower roadway surface and two #4 rebars at 8" above the lower roadway surface. For roadway surfaces offset greater than 12" to 36", use two #4 rebars at 3" above the lower roadway surface and two #4 rebars at every 8" increment vertical spacing above the first two #4 rebars.

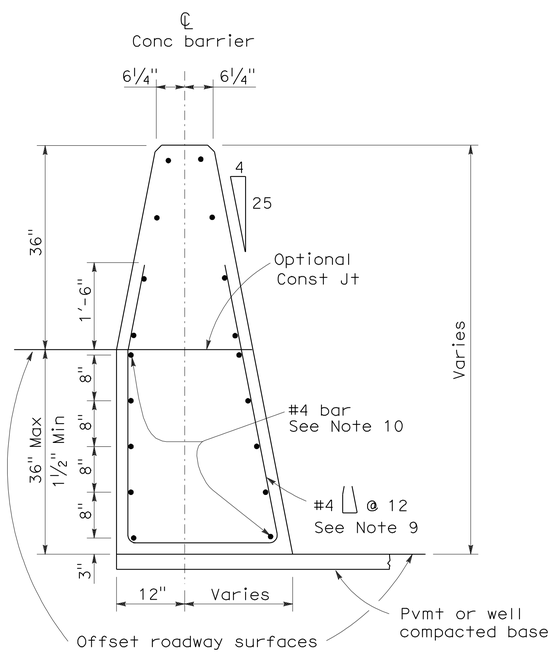

CONCRETE BARRIER TYPE 60C

Details similar to Type 60 except as noted.
Concrete barrier end anchor when necessary.
36" roadway surfaces offset shown.

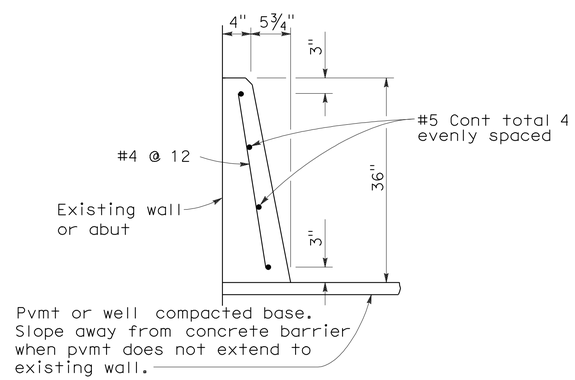

CONCRETE BARRIER TYPE 60D

STATE OF CALIFORNIA
DEPARTMENT OF TRANSPORTATION

CONCRETE BARRIER TYPE 60

NO SCALE

RSP A76A DATED JUNE 6, 2008 SUPERSEDES STANDARD PLAN A76A
DATED MAY 1, 2006 - PAGE 29 OF THE STANDARD PLANS BOOK DATED MAY 2006.

REVISED STANDARD PLAN RSP A76A

2006 REVISED STANDARD PLAN RSP A76A

5-21-08

Dist	COUNTY	ROUTE	POST MILES TOTAL PROJECT	SHEET No.	TOTAL SHEETS
04	Ala	880	28.2/29.9	146	183

Randell D. Hiatt
REGISTERED CIVIL ENGINEER

May 20, 2011
PLANS APPROVAL DATE

REGISTERED PROFESSIONAL ENGINEER
Randell D. Hiatt
No. C50200
Exp. 6-30-11
CIVIL
STATE OF CALIFORNIA

The State of California or its officers or agents shall not be responsible for the accuracy or completeness of electronic copies of this plan sheet.

To accompany plans dated 6-20-11

NOTES:

1. When necessary to place dike in front of face of guard railing, only Type C dike may be used. For dike details, see Standard Plan A87B.
2. For standard railing post embedment, see Standard Plans A77C3.
3. Guard railing delineation to be used where shown on the Project Plans.
4. When dike or curb is placed under guard railing, the maximum height of the dike or curb shall be 4". Mountable dike should not be used. For dike and curb details, see Standard Plans A87A and A87B.
5. For details of typical distance between the face of rail and hinge point, see Standard Plan A77C3.
6. For steel line posts, use ¼ - 20 self-tapping screws in 0.22" diameter holes or ¼" bolts in 9/32" diameter holes.

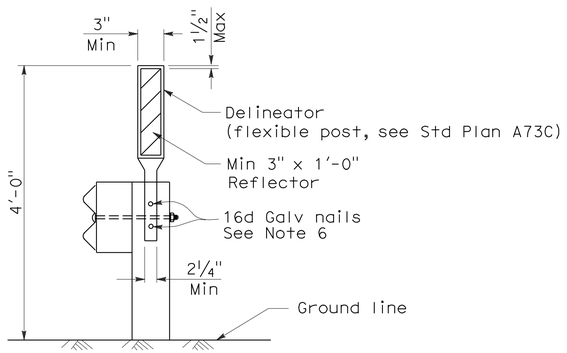

GUARD RAILING DELINEATION

See Note 3

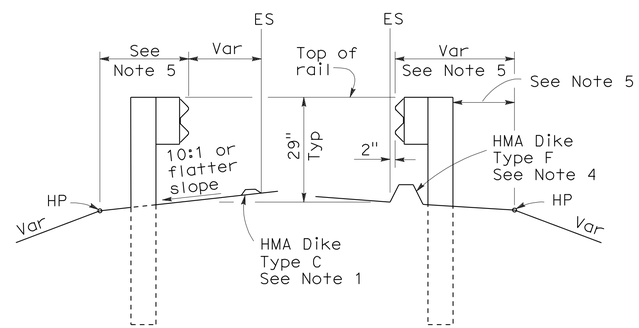

DIKE POSITIONING

See Note 1

STATE OF CALIFORNIA
DEPARTMENT OF TRANSPORTATION

METAL BEAM GUARD RAILING TYPICAL RAILING DELINEATION AND DIKE POSITIONING DETAILS

NO SCALE

RSP A77C4 DATED MAY 20, 2011 SUPERSEDES RSP A77C4 DATED JUNE 6, 2008 AND STANDARD PLAN A77C4 DATED MAY 1, 2006 - PAGE 47 OF THE STANDARD PLANS BOOK DATED MAY 2006.

REVISED STANDARD PLAN RSP A77C4

2006 REVISED STANDARD PLAN RSP A77C4

3-10-11

DIST	COUNTY	ROUTE	POST MILES TOTAL PROJECT	SHEET NO.	TOTAL SHEETS
04	Ala	880	28.2/29.9	147	183

Randell D. Hiatt
REGISTERED CIVIL ENGINEER

June 6, 2008
PLANS APPROVAL DATE

REGISTERED PROFESSIONAL ENGINEER
Randell D. Hiatt
No. C50200
Exp. 6-30-09
CIVIL
STATE OF CALIFORNIA

The State of California or its officers or agents shall not be responsible for the accuracy or completeness of electronic copies of this plan sheet.

To accompany plans dated 6-20-11

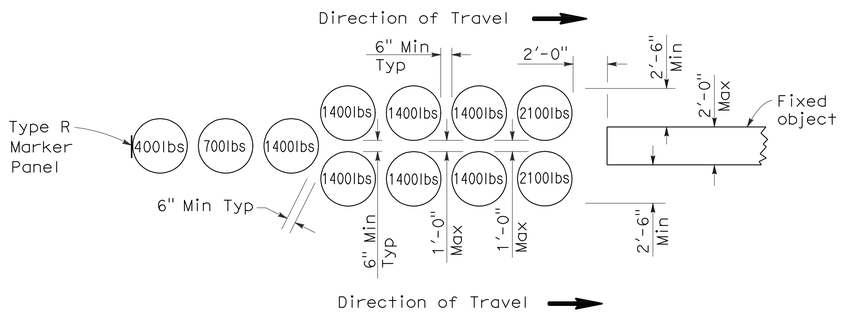

ARRAY 'U11'

Approach speed less than 45 mph

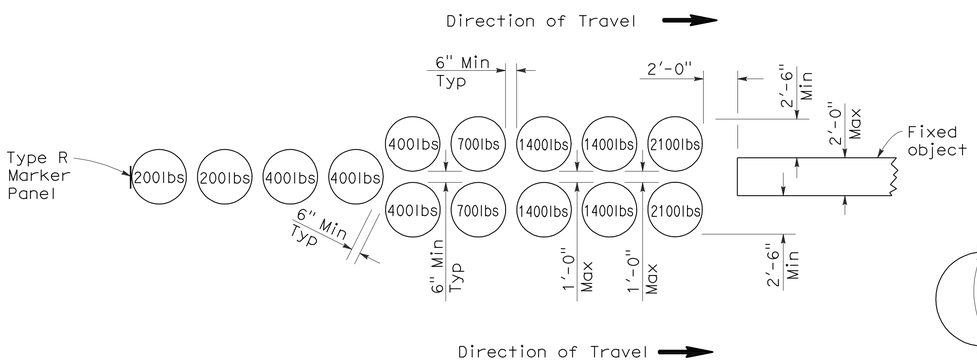

ARRAY 'U14'

Approach speed 45 mph or more

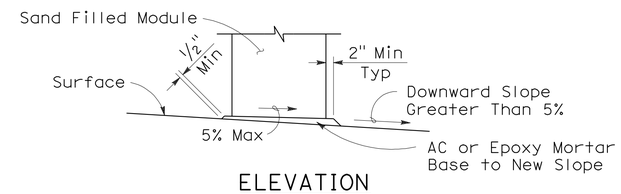

ELEVATION

SLOPED SEAT DETAIL

(See Note 4)

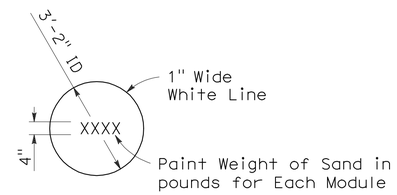

PAINTING DETAIL

(See Note 5)

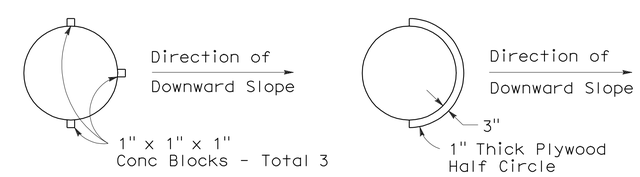

ALTERNATIVE 1 ALTERNATIVE 2

PLAN

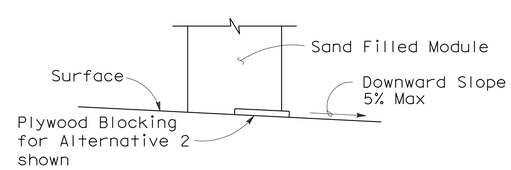

ELEVATION

BRIDGE DECK MODULE BLOCKING DETAILS

(See Note 6)

NOTES:

1. (XXX) Indicates module location and mass of sand in pounds for each module. Module spacing is based on the greater diameter of the modules.
2. All sand weights are nominal.
3. Each module is to contain amount of sand indicated, supported according to the manufacturer's instructions.
4. Modules shall be placed on asphalt concrete, epoxy mortar or concrete surface. Modules to be placed on surfacing with greater than 5% downward slope shall be seated as shown.
5. Mass of sand and outline of each module shall be painted on the surface at each module location.
6. Module blocking, epoxied to the deck surface, is required for all modules placed on bridge decks. Two acceptable alternatives are shown. Other alternatives recommended by the manufacturer and approved by the Engineer will be accepted.
7. Place the top of the Type R marker panel 1" below the module lid.
8. Approach speeds indicated conform to NCHRP Report criteria.

STATE OF CALIFORNIA
DEPARTMENT OF TRANSPORTATION

CRASH CUSHION, SAND FILLED (UNIDIRECTIONAL)

NO SCALE

RSP A81A DATED JUNE 6, 2008 SUPERSEDES STANDARD PLAN A81A
DATED MAY 1, 2006 - PAGE 99 OF THE STANDARD PLANS BOOK DATED MAY 2006.

REVISED STANDARD PLAN RSP A81A

2006 REVISED STANDARD PLAN RSP A81A

5-15-08

DIST	COUNTY	ROUTE	POST MILES TOTAL PROJECT	SHEET NO.	TOTAL SHEETS
04	Ala	880	28.2/29.9	148	183

REGISTERED CIVIL ENGINEER

June 5, 2009
PLANS APPROVAL DATE

REGISTERED PROFESSIONAL ENGINEER Glenn DeCou No. C34547 Exp. 9-30-09 CIVIL STATE OF CALIFORNIA

The State of California or its officers or agents shall not be responsible for the accuracy or completeness of electronic copies of this plan sheet.

To accompany plans dated 6-20-11

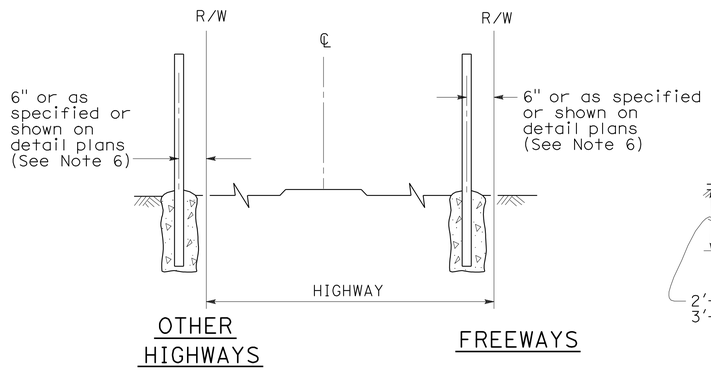

FENCE LOCATION

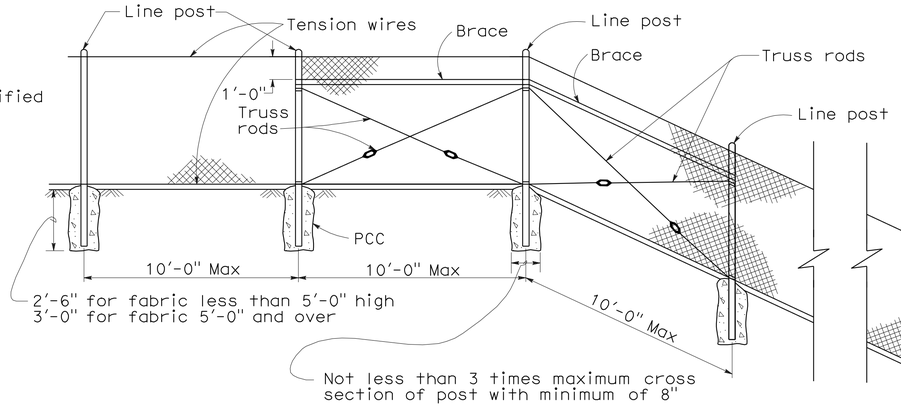

CHAIN LINK FENCE ON SHARP BREAK IN GRADE

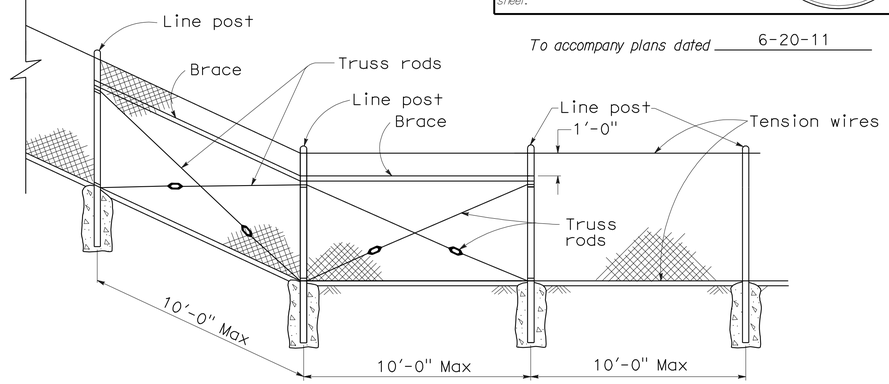

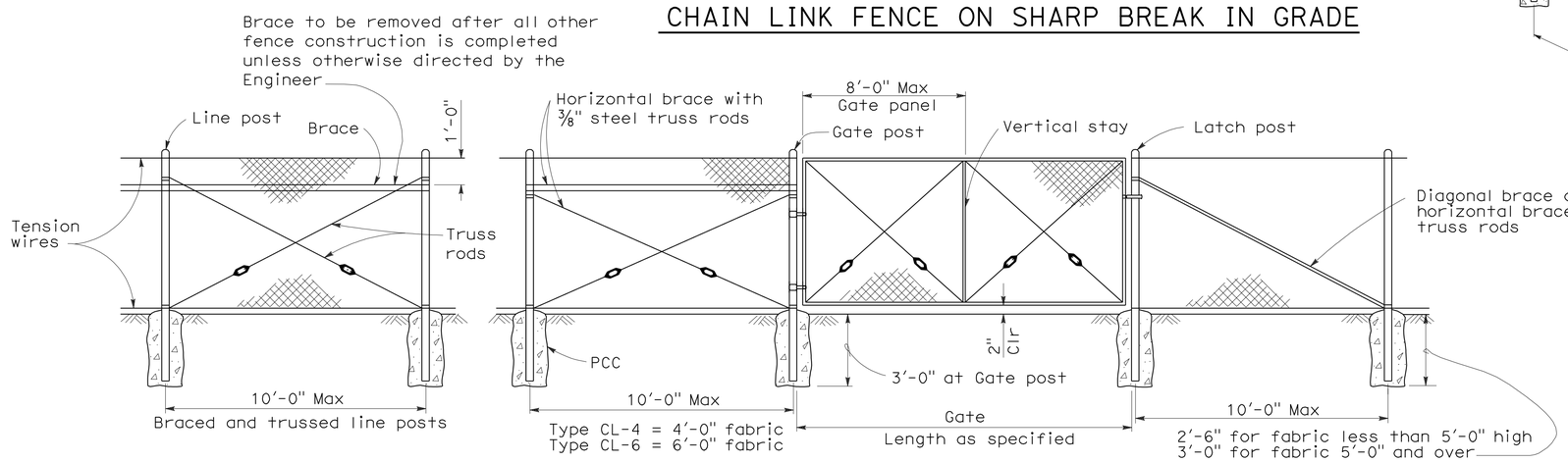

CHAIN LINK GATE INSTALLATION

GATE POST			
FENCE HEIGHT	GATE WIDTHS	NOMINAL ID	WEIGHT PER FOOT
6'-0" and Less	Up thru 6'-0"	2½"	4.95 LB
	Over 6'-0" thru 12'-0"	4"	10.79 LB
	Over 12'-0" thru 18'-0"	5"	14.62 LB
	Over 18'-0" to 24'-0" Max	6"	18.97 LB
Over 6'-0"	Up thru 6'-0"	3"	7.58 LB
	Over 6'-0" thru 12'-0"	5"	14.62 LB
	Over 12'-0" thru 18'-0"	6"	18.97 LB
	Over 18'-0" to 24'-0" Max	8"	28.55 LB

Above post dimensions and weights are minimums. Larger sizes may be used on approval of the Engineer.

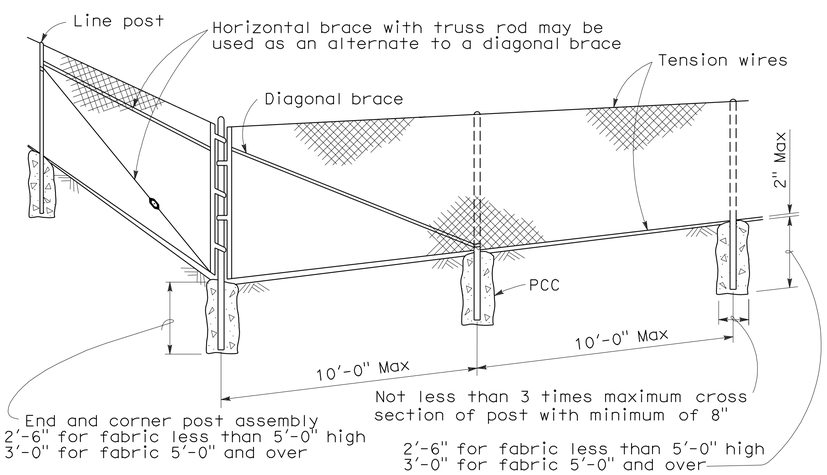

CORNER POST

NOTES:

1. The below table shows examples of post and brace sections which may comply with the Specifications.
2. Sections shown in the tables must also comply with the strength requirements and other provisions of the Specifications.
3. Other sections which comply with the strength requirements and other provisions of the Specifications may be used on approval of the Engineer.
4. Options exercised shall be uniform on any one project.
5. Dimensions shown are nominal.
6. Offset to be 2'-0" at monument locations, measured at right angles to R/W lines. Taper to achieve offset to be at least 20'-0" long.

TYPICAL MEMBER DIMENSIONS (See Notes)											
FENCE HEIGHT	LINE POSTS			END, LATCH & CORNER POSTS			BRACES				
	ROUND ID	H	ROLL FORMED	ROUND ID	ROLL FORMED		ROUND ID	H	ROLL FORMED		
6' & less	1½"	1⅞" × 1⅝"	1⅞" × 1⅝"	2"	3½" × 3½"	2" × 1¾"	1¼"	1½" × 1 5/16"	1⅝" × 1¼"	1¾" × 1¼"	
Over 6'	2"	2¼" × 2"	2" × 1¾"	2½"	3½" × 3½"	2½" × 2½"	1¼"	1½" × 1 5/16"	1⅝" × 1¼"	1¾" × 1¼"	

STATE OF CALIFORNIA
DEPARTMENT OF TRANSPORTATION

CHAIN LINK FENCE

NO SCALE

RSP A85 DATED JUNE 5, 2009 SUPERSEDES STANDARD PLAN A85
DATED MAY 1, 2006 - PAGE 111 OF THE STANDARD PLANS BOOK DATED MAY 2006.

REVISED STANDARD PLAN RSP A85

2006 REVISED STANDARD PLAN RSP A85

5-7-09

DIST	COUNTY	ROUTE	POST MILES TOTAL PROJECT	SHEET NO.	TOTAL SHEETS
04	Ala	880	28.2/29.9	149	183

REGISTERED CIVIL ENGINEER

June 5, 2009
PLANS APPROVAL DATE

REGISTERED PROFESSIONAL ENGINEER Glenn DeCou No. C34547 Exp. 9-30-09 CIVIL STATE OF CALIFORNIA

The State of California or its officers or agents shall not be responsible for the accuracy or completeness of electronic copies of this plan sheet.

To accompany plans dated 6-20-11

NOTES:

1. H is 2'-6" for fabric less than 5'-0" high. H is 3'-0" for fabric 5'-0" and over.
2. T is not less than 3 times maximum cross section of post with minimum of 8".
3. Arms with barbed wire to be used where shown on plans.
4. See Revised Standard Plan RSP A85 for Chain Link Fencing dimensions.
5. Reinforcing must comply with ASTM A 706.
6. See Detail A on New Standard Plan NSP A86B for connection at headwall.

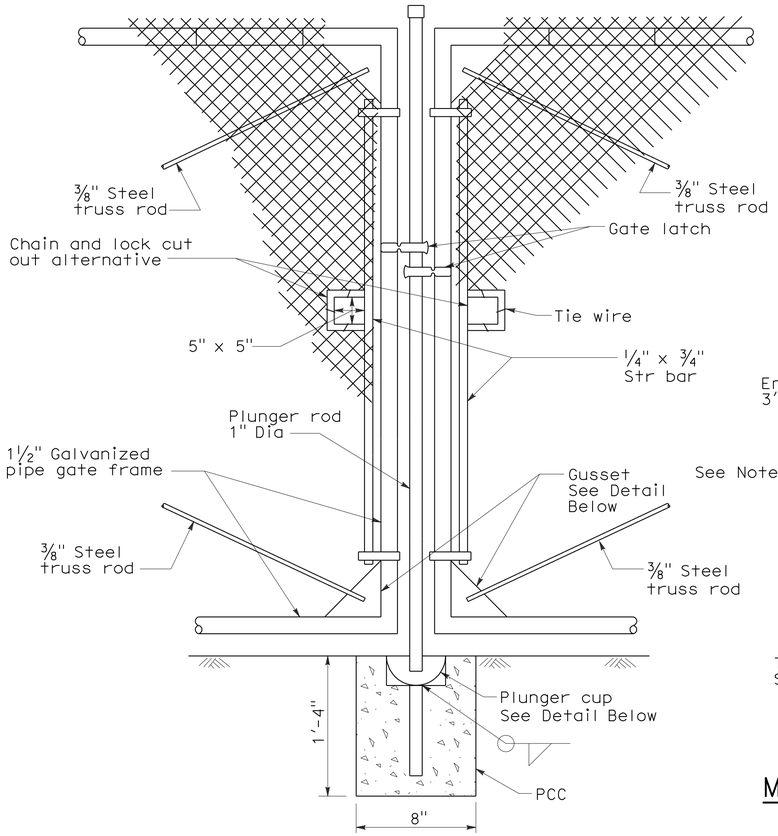

TYPICAL DOUBLE GATE REMOVABLE CENTER POST

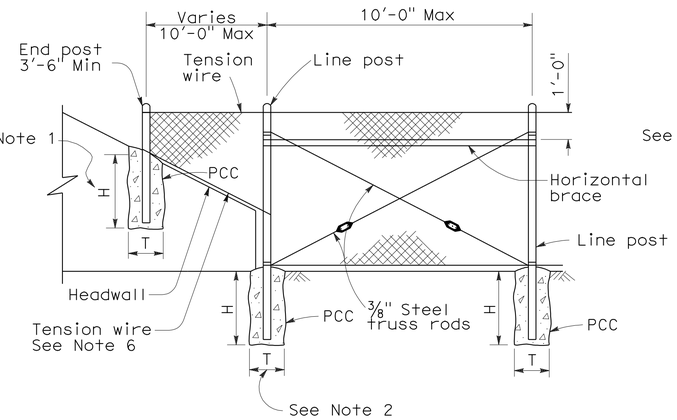

METHOD OF TYING FENCE TO HEADWALL

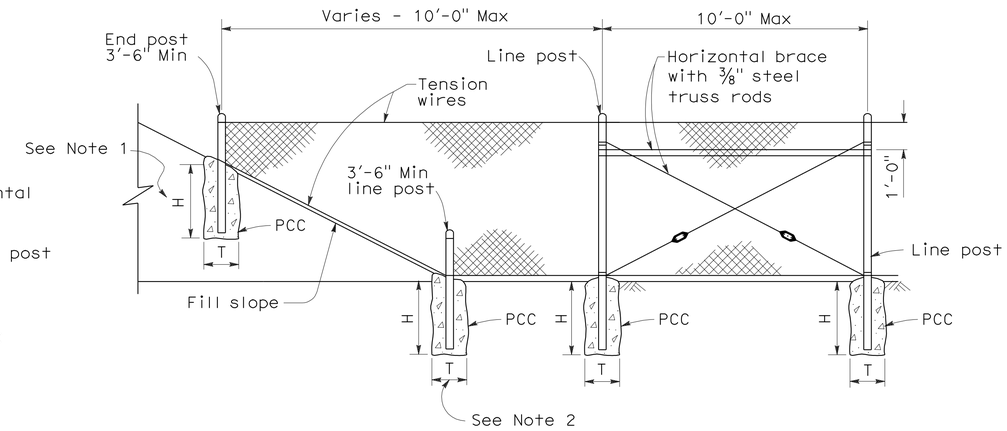

METHOD OF ERECTING FENCE FOR FILL SLOPE

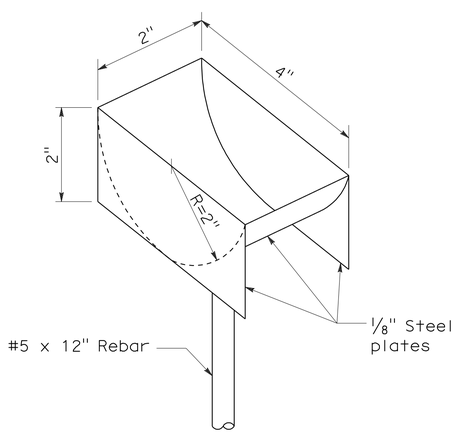

PLUNGER CUP DETAIL

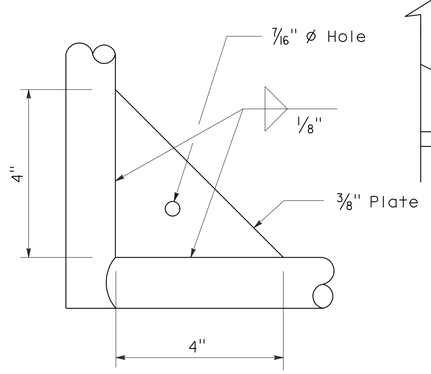

GUSSET DETAIL

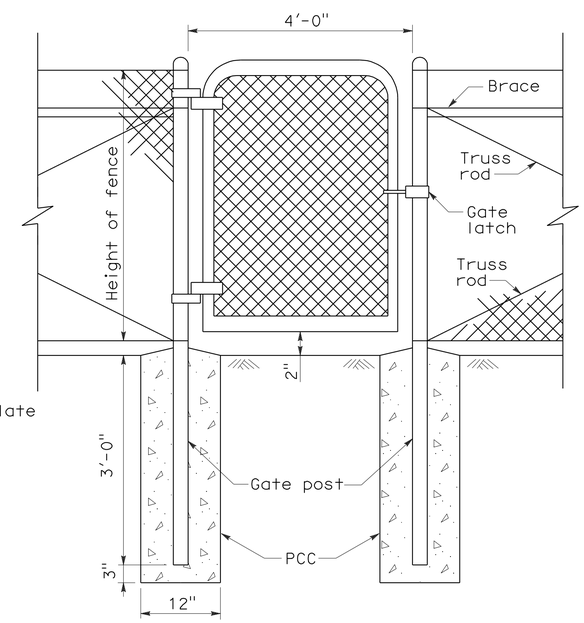

WALK GATE

POST TOP END

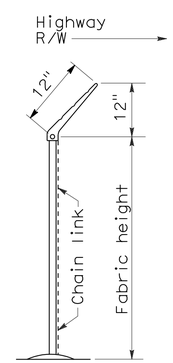

END ELEVATION

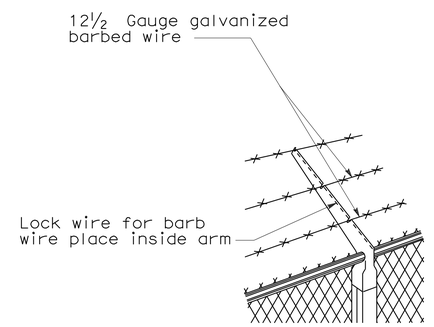

LINE POST TOP
Vertical arms when desired

BARBED WIRE POST TOP
See Note 3

STATE OF CALIFORNIA
DEPARTMENT OF TRANSPORTATION

CHAIN LINK FENCE DETAILS

NO SCALE

NSP A85A DATED JUNE 5, 2009 SUPPLEMENTS THE STANDARD PLANS BOOK DATED MAY 2006.

NEW STANDARD PLAN NSP A85A

2006 NEW STANDARD PLAN NSP A85A

5-7-09

DIST	COUNTY	ROUTE	POST MILES TOTAL PROJECT	SHEET NO.	TOTAL SHEETS
04	Ala	880	28.2/29.9	150	183

REGISTERED CIVIL ENGINEER

June 5, 2009
PLANS APPROVAL DATE

REGISTERED PROFESSIONAL ENGINEER Glenn DeCou No. C34547 Exp. 9-30-09 CIVIL STATE OF CALIFORNIA

The State of California or its officers or agents shall not be responsible for the accuracy or completeness of electronic copies of this plan sheet.

To accompany plans dated 6-20-11

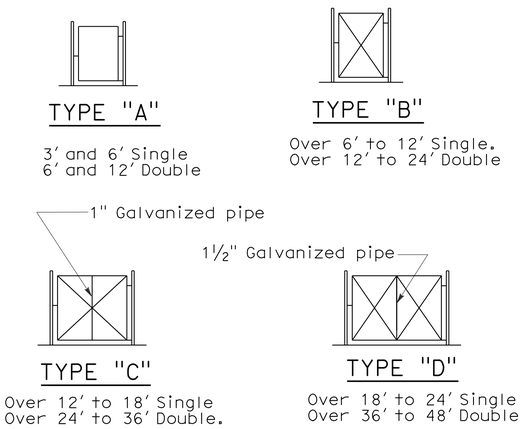

TYPICAL FRAMEWORK SHOWING NUMBER OF BAYS IN GATE

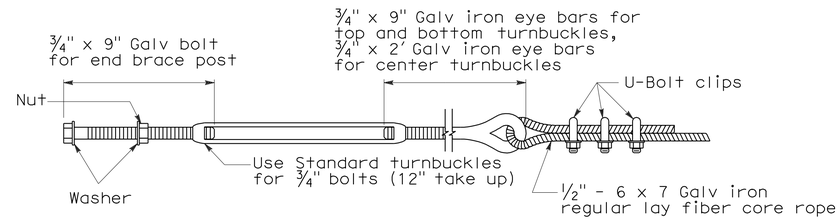

TURNBUCKLE A

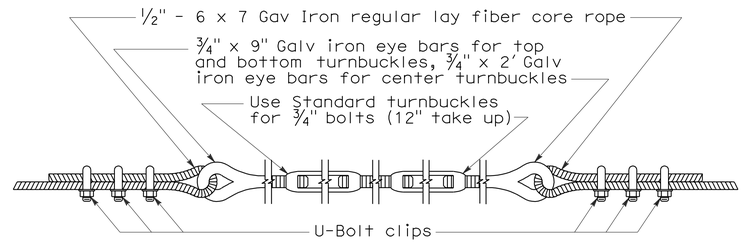

TURNBUCKLE B

NOTES:

1. All material for abutment connection to be galvanized.
2. The chain link fabric shall be replaced by barbed wire strands at 12" maximum centers between the double posts.
3. When the width of the culvert makes it necessary to anchor a post to the top of the culvert, a cast iron shoe or other device approved by the Engineer shall be used.
4. Fencing over stream and around headwall may also use Barbed Wire or Wire Mesh fencing with either wood post or steel post installation.
5. See Revised Standard Plan RSP A85 for Chain Link fence dimensions. See Standard Plan A86 for Barbed Wire and Wire Mesh fence dimensions and for wood post and steel post installation.

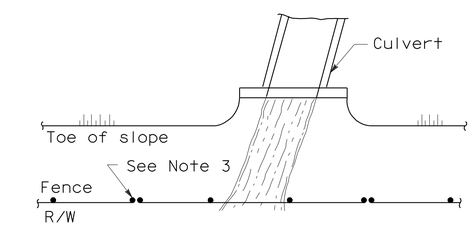

PLAN

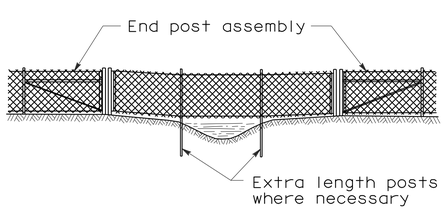

ELEVATION

INSTALLATION OVER STREAM

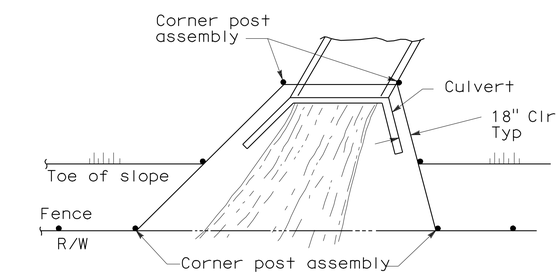

PLAN

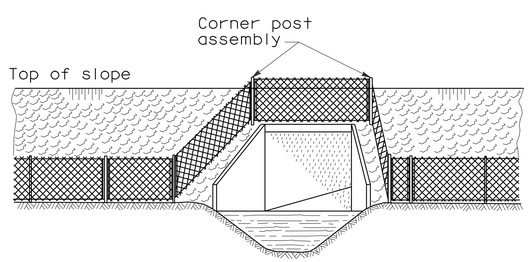

ELEVATION

INSTALLATION AROUND HEADWALL

See Note 4

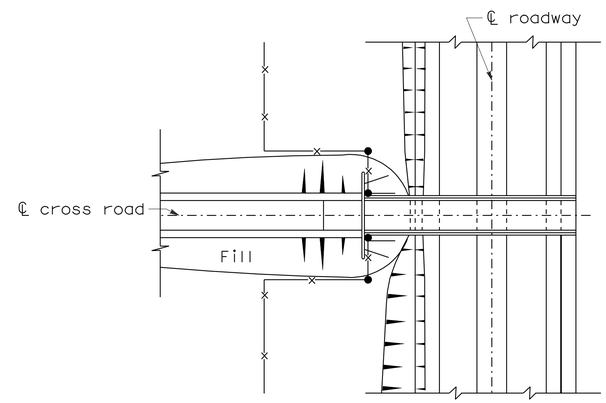

PLAN OF ROADWAY - UNDERPASS

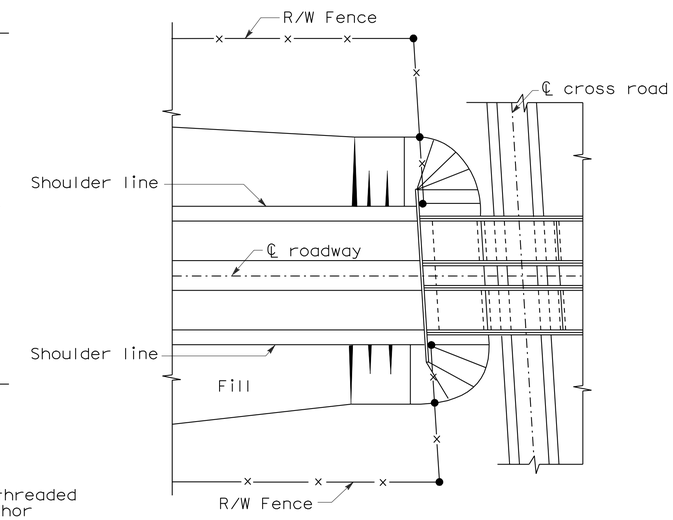

PLAN OF ROADWAY - OVERPASS

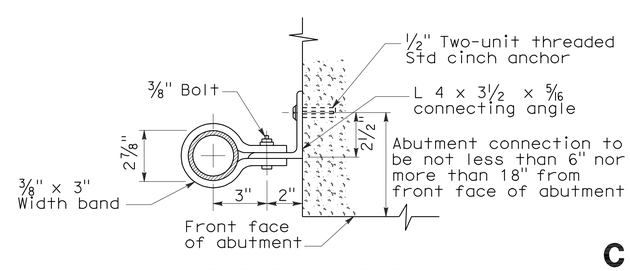

ABUTMENT CONNECTION

TYPICAL INSTALLATION AT BRIDGES

STATE OF CALIFORNIA
DEPARTMENT OF TRANSPORTATION

CHAIN LINK FENCE DETAILS

NO SCALE

NSP A85B DATED JUNE 5, 2009 SUPPLEMENTS THE STANDARD PLANS BOOK DATED MAY 2006.

NEW STANDARD PLAN NSP A85B

2006 NEW STANDARD PLAN NSP A85B

5-12-09

DIST	COUNTY	ROUTE	POST MILES TOTAL PROJECT	SHEET NO.	TOTAL SHEETS
04	Ala	880	28.2/29.9	151	183

William K. Farnbach
REGISTERED CIVIL ENGINEER

May 15, 2009
PLANS APPROVAL DATE

REGISTERED PROFESSIONAL ENGINEER
William K. Farnbach
No. C49042
Exp. 9-30-10
CIVIL
STATE OF CALIFORNIA

The State of California or its officers or agents shall not be responsible for the accuracy or completeness of electronic copies of this plan sheet.

To accompany plans dated 6-20-11

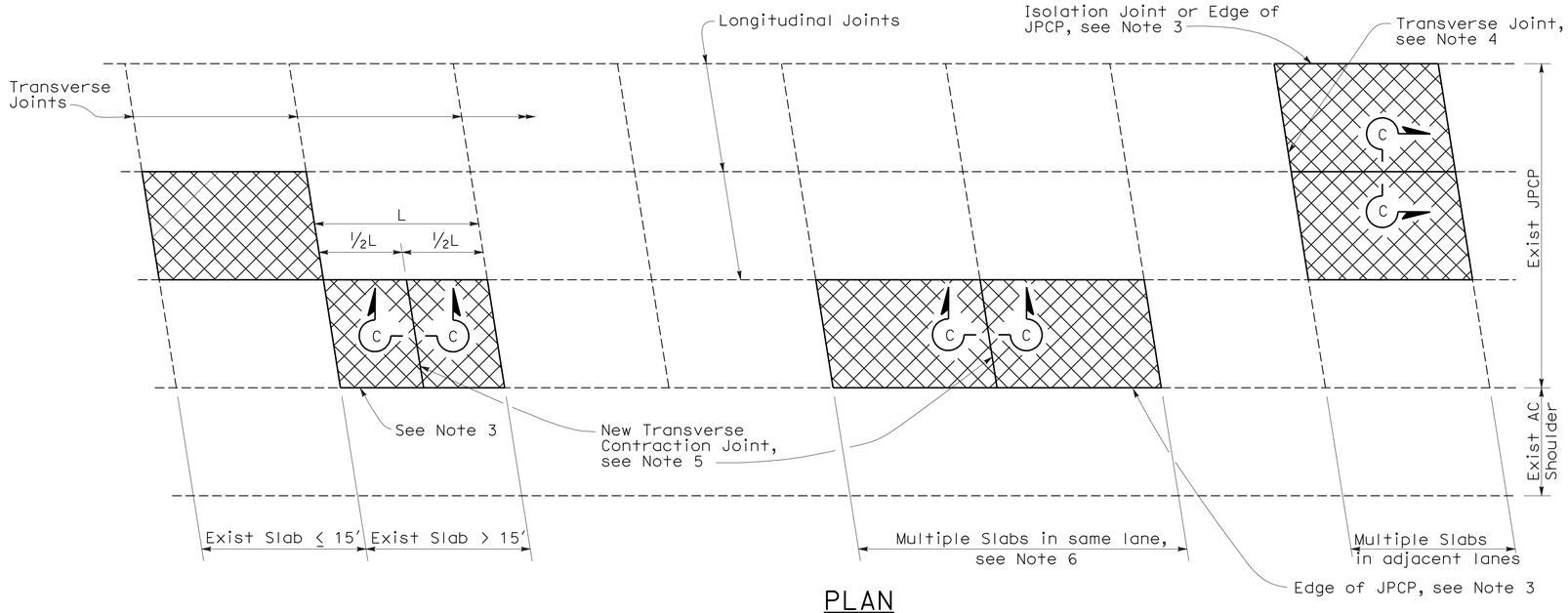

PLAN

NOTES:

1. For details not shown, see Revised Standard Plan RSP P10.
2. Where the existing outer shoulder pavement is asphalt concrete pavement, the "a" dimension shall be 1′-0" and the "b" dimension shall be 2′-0".
3. Side forms shall be used where edge of pavement is adjacent to asphalt concrete.
4. For detail, see Transverse Construction Joint for existing concrete pavement detail on Revised Standard Plan RSP P10.
5. Transverse joint to match skew of existing joint. Omit dowel bars.
6. This Standard Plan only applicable when replacing multiple slabs in the same lane is less than 100′.

LEGEND

Replace Concrete Pavement (See Slab Layout Detail)

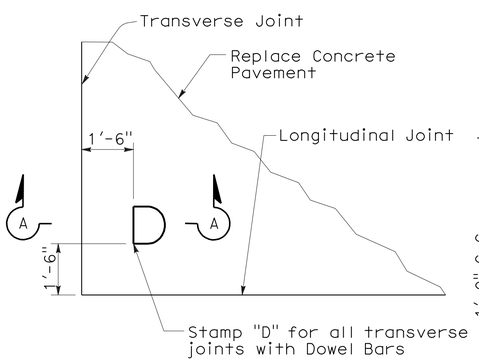

DOWEL STAMP DETAIL

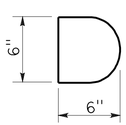

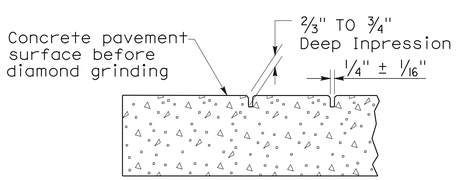

SECTION A-A

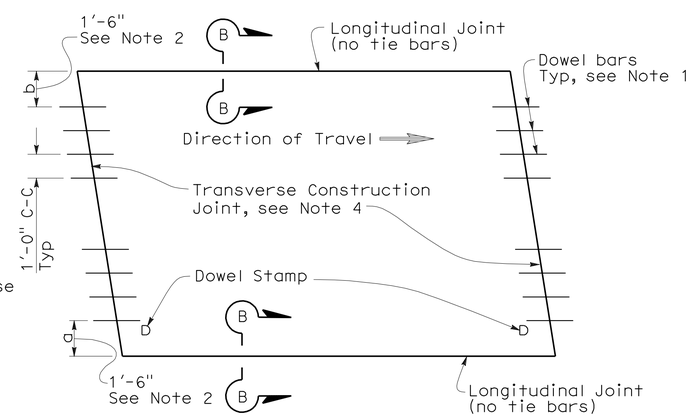

TYPE I
(traffic lane lines match longitudinal joints)

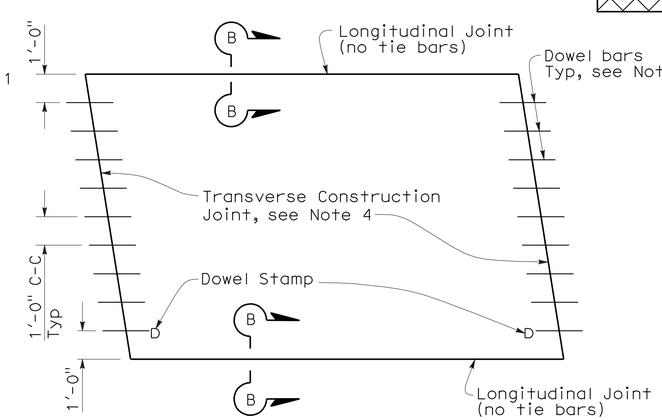

TYPE II
(traffic lane lines do not match longitudinal joints)

SLAB LAYOUT

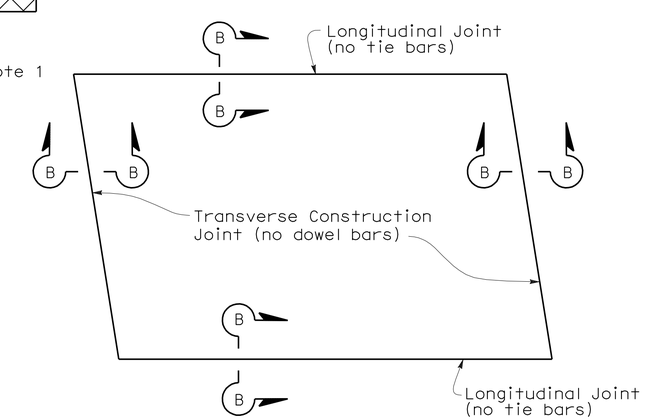

TYPE III
(for short term repairs < 5 yrs design life or for slab replacements with a cracking and seating operation)

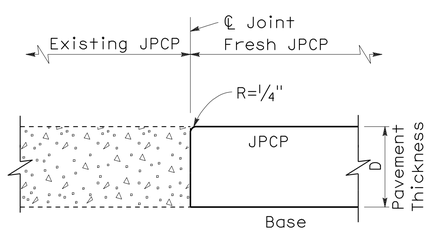

SECTION B-B

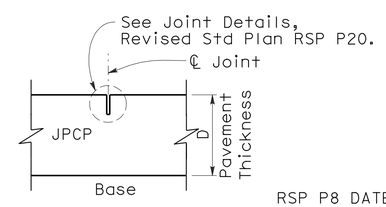

SECTION C-C

STATE OF CALIFORNIA
DEPARTMENT OF TRANSPORTATION

JOINTED PLAIN CONCRETE PAVEMENT-INDIVIDUAL SLAB REPLACEMENT

NO SCALE

RSP P8 DATED MAY 15, 2009 SUPERSEDES RSP P8 DATED SEPTEMBER 1, 2006 AND STANDARD PLAN P8 DATED MAY 1, 2006 - PAGE 123 OF THE STANDARD PLANS BOOK DATED MAY 2006.

REVISED STANDARD PLAN RSP P8

2006 REVISED STANDARD PLAN RSP P8

5-8-09

DIST	COUNTY	ROUTE	POST MILES TOTAL PROJECT	SHEET NO.	TOTAL SHEETS
04	Ala	880	28.2/29.9	152	183

REGISTERED CIVIL ENGINEER

May 15, 2009
PLANS APPROVAL DATE

REGISTERED PROFESSIONAL ENGINEER William K. Farnbach No. C49042 Exp. 9-30-10 CIVIL STATE OF CALIFORNIA

The State of California or its officers or agents shall not be responsible for the accuracy or completeness of electronic copies of this plan sheet.

To accompany plans dated 6-20-11

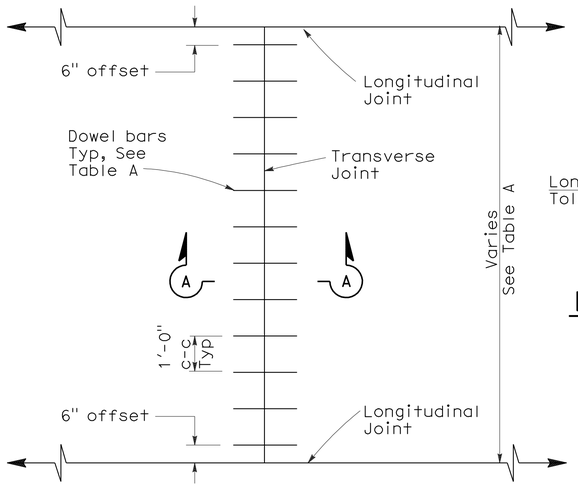

TRANSVERSE JOINT DOWEL BAR LAYOUT

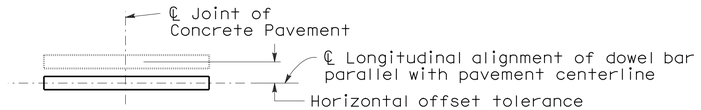

PLAN

HORIZONTAL OFFSET TOLERANCE

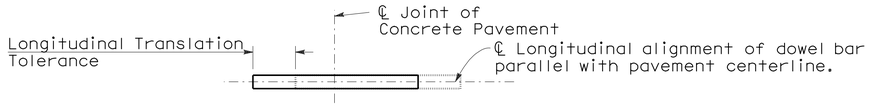

PLAN

LONGITUDINAL TRANSLATION TOLERANCE

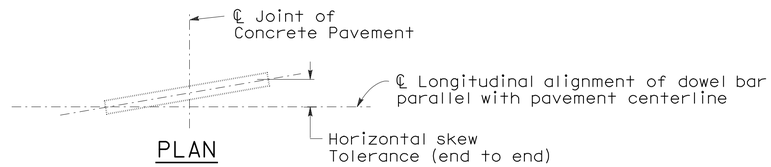

PLAN

HORIZONTAL SKEW TOLERANCE

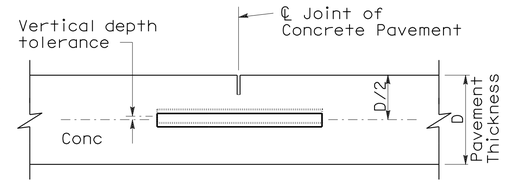

ELEVATION

VERTICAL DEPTH TOLERANCE

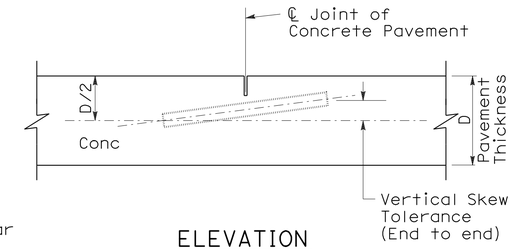

ELEVATION

VERTICAL SKEW TOLERANCE

NOTES:

1. See Revised Standard Plan RSP P1 for typical dowel bar placement and locations.
2. 1½" Dia smooth dowel bars are to be used with a pavement thickness, D, equal to or greater than 0.70 feet. For pavement thickness, D, less than 0.70 feet, use 1¼" Dia smooth dowel bars.
3. For widths not shown, see Project Plans.
4. If fresh concrete pavement is placed adjacent to existing concrete pavement, the top corner of the existing concrete pavement does not need to be rounded to the ¼" radius, as shown.

TABLE A (See Note 3)

Dowel Bar Transverse Spacing Table	
Width between Longitudinal Joints	Number of Dowels between Longitudinal Joints
14'-0"	14
13'-0"	13
12'-0"	12
11'-0"	11
10'-0"	10
8'-0"	8
5'-0"	5
4'-0"	4

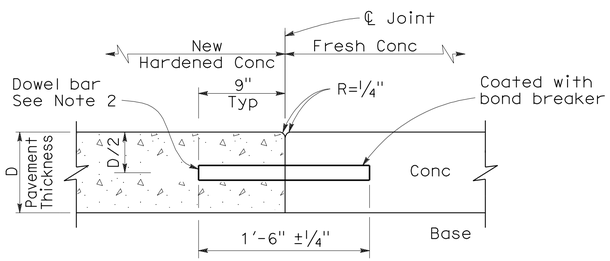

SECTION A-A

TRANSVERSE CONSTRUCTION JOINT DETAIL

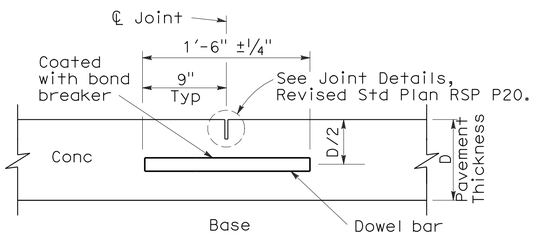

TRANSVERSE CONTRACTION JOINT

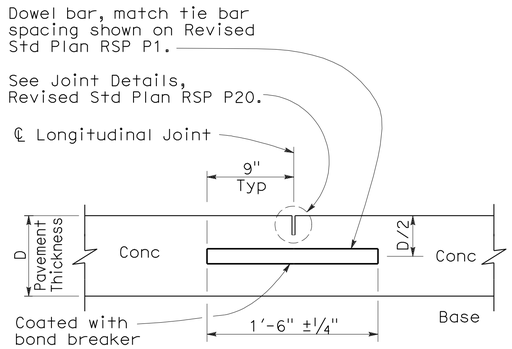

LONGITUDINAL CONTRACTION JOINT WITH DOWEL BARS

(See Revised Std Plan RSP P18)

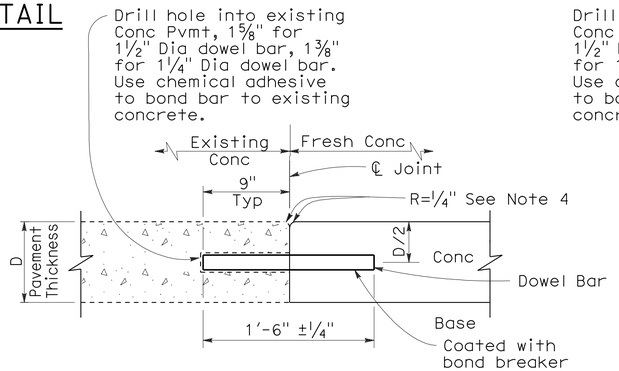

TRANSVERSE CONSTRUCTION JOINT FOR EXISTING CONCRETE PAVEMENT

(Drill and bond locations)

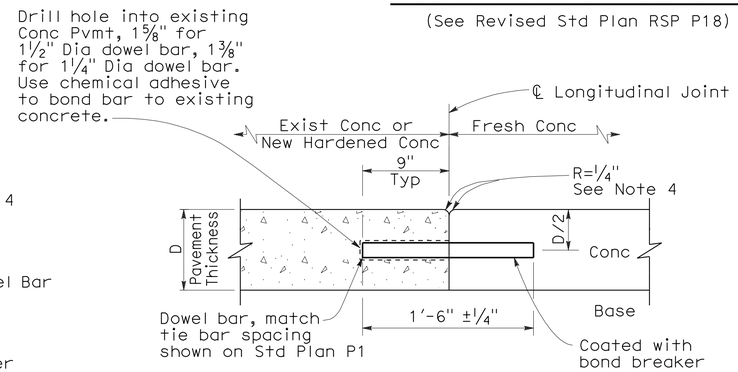

LONGITUDINAL CONSTRUCTION JOINT WITH DOWEL BARS

(See Revised Std Plan RSP P18)

STATE OF CALIFORNIA
DEPARTMENT OF TRANSPORTATION

CONCRETE PAVEMENT-DOWEL BAR DETAILS

NO SCALE

RSP P10 DATED MAY 15, 2009 SUPERSEDES STANDARD PLAN P10 DATED MAY 1, 2006 - PAGE 124 OF THE STANDARD PLANS BOOK DATED MAY 2006.

REVISED STANDARD PLAN RSP P10

2006 REVISED STANDARD PLAN RSP P10

5-8-09

DIST	COUNTY	ROUTE	POST MILES TOTAL PROJECT	SHEET NO.	TOTAL SHEETS
04	Ala	880	28.2/29.9	153	183

William K. Farnbach
REGISTERED CIVIL ENGINEER

May 15, 2009
PLANS APPROVAL DATE

REGISTERED PROFESSIONAL ENGINEER
William K. Farnbach
No. C49042
Exp. 9-30-10
CIVIL
STATE OF CALIFORNIA

The State of California or its officers or agents shall not be responsible for the accuracy or completeness of electronic copies of this plan sheet.

To accompany plans dated 6-20-11

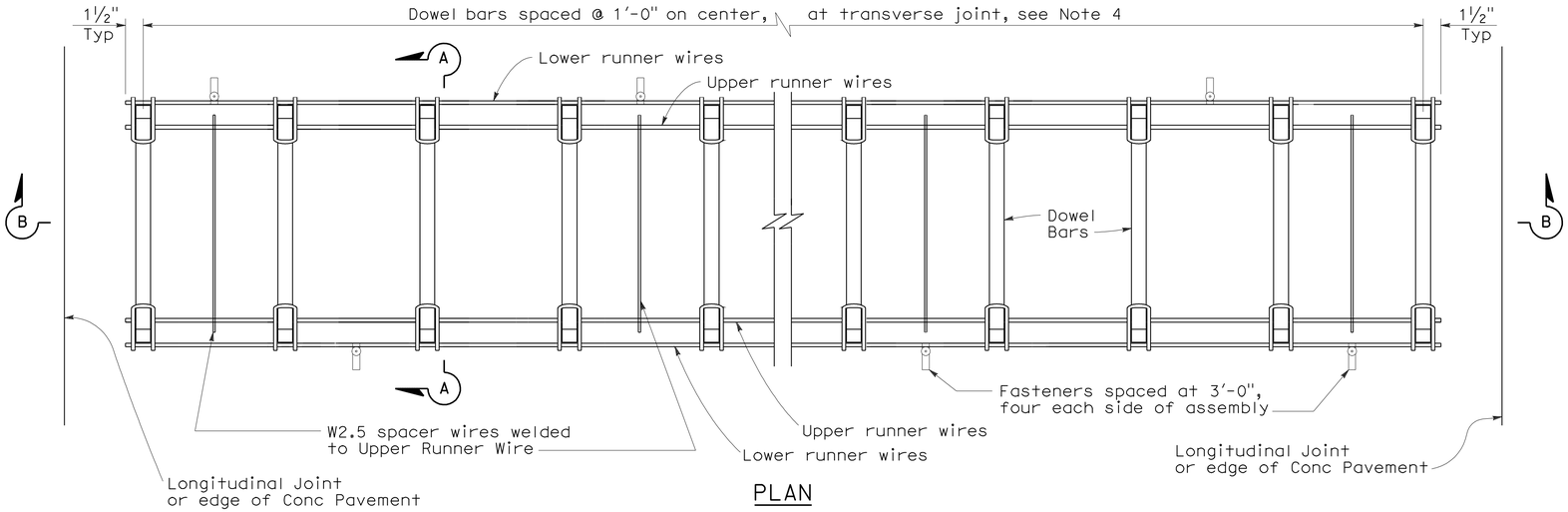

PLAN

DOWEL BAR BASKET (TRANSVERSE JOINT)

See Note 1

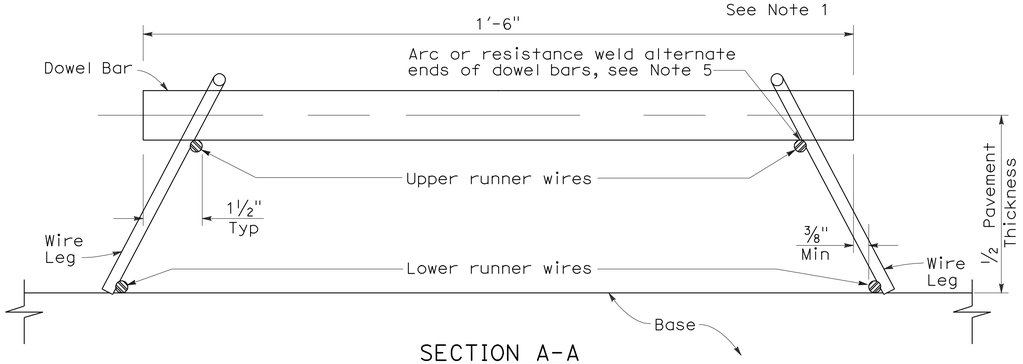

SECTION A-A

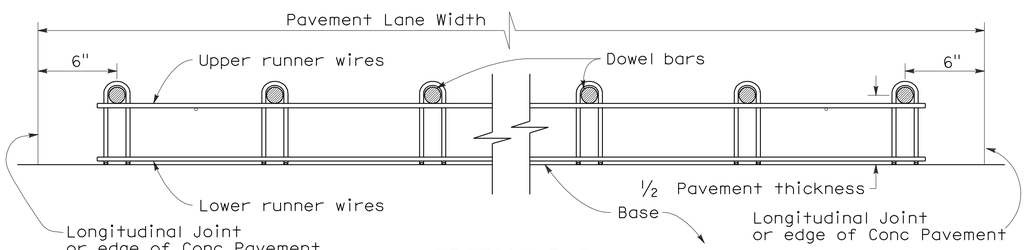

SECTION B-B

See Note 1

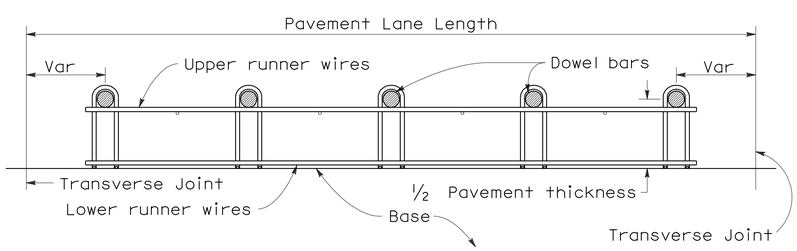

SECTION C-C

See Notes 1 and 4

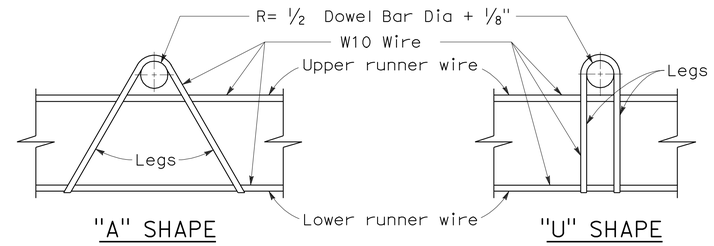

"A" SHAPE "U" SHAPE

ASSEMBLY FRAME DETAILS

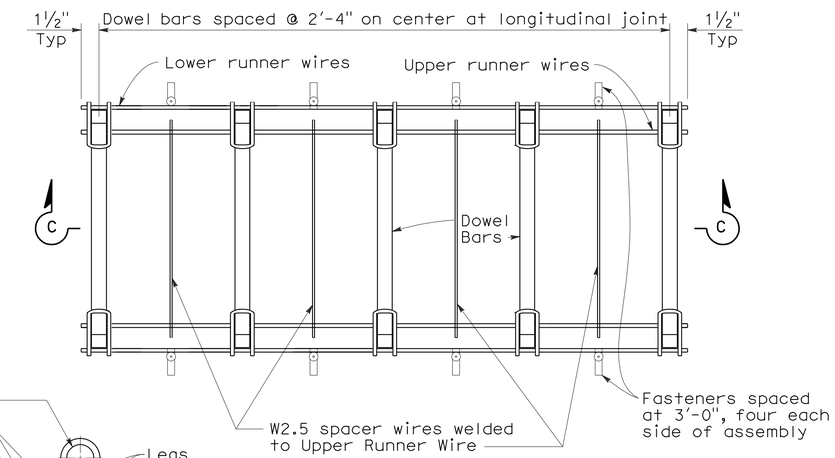

PLAN

DOWEL BAR BASKET (LONGITUDINAL JOINT)

See Note 1

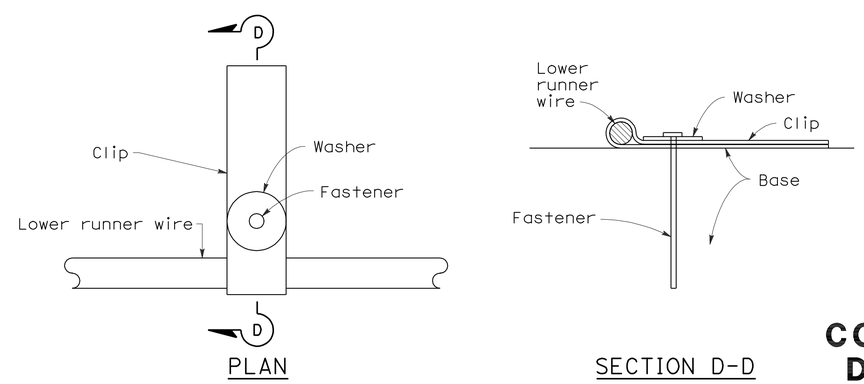

PLAN SECTION D-D

FASTENER DETAIL

NOTES:

1. "U" frame shape assembly shown. "U" frame shape or "A" frame shape are acceptable.
2. Wire sizes shown are minimum required.
3. All wire intersections are to be resistance welded.
4. Use tie bar spacing for longitudinal dowel bar locations. See Revised Std Plans RSPs P1, P2, and P3 for tie bar requirements.
5. Weld may be at top or bottom of dowel bar.

STATE OF CALIFORNIA
DEPARTMENT OF TRANSPORTATION

CONCRETE PAVEMENT-DOWEL BAR BASKET DETAILS

NO SCALE

RSP P12 DATED MAY 15, 2009 SUPERSEDES RSP P12 DATED NOVEMBER 17, 2006 AND STANDARD PLAN P12 DATED MAY 1, 2006 - PAGE 125 OF THE STANDARD PLANS BOOK DATED MAY 2006.

REVISED STANDARD PLAN RSP P12

2006 REVISED STANDARD PLAN RSP P12

5-8-09

NOTE:

1. Tie bars, dowel bars, and reinforcement are not shown in joint seal details, see Revised Standard Plans RSP P1, RSP P3, RSP P10, RSP P35, RSP P45, or RSP P46 as applicable.

DIST	COUNTY	ROUTE	POST MILES TOTAL PROJECT	SHEET NO.	TOTAL SHEETS
04	Ala	880	28.2/29.9	154	183

William K. Farnbach
REGISTERED CIVIL ENGINEER

May 15, 2009
PLANS APPROVAL DATE

REGISTERED PROFESSIONAL ENGINEER William K. Farnbach No. C49042 Exp. 9-30-10 CIVIL STATE OF CALIFORNIA

The State of California or its officers or agents shall not be responsible for the accuracy or completeness of electronic copies of this plan sheet.

To accompany plans dated 6-20-11

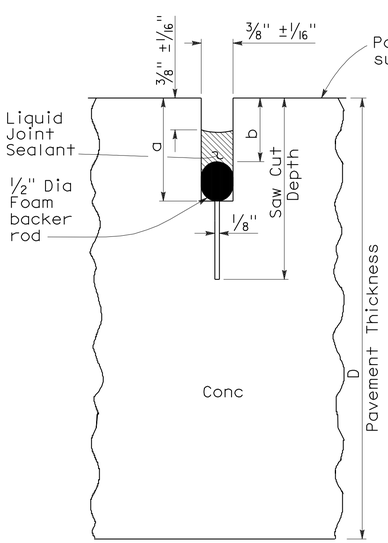

LIQUID SEALANT

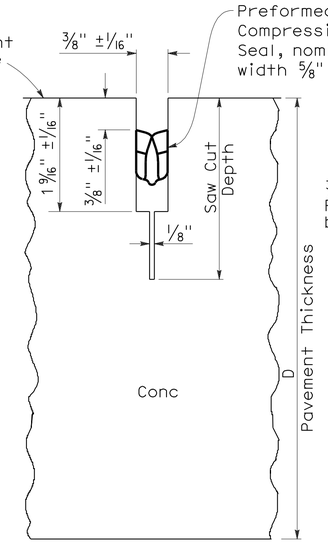

COMPRESSION SEAL

TYPE A1

Transverse Contraction Joints

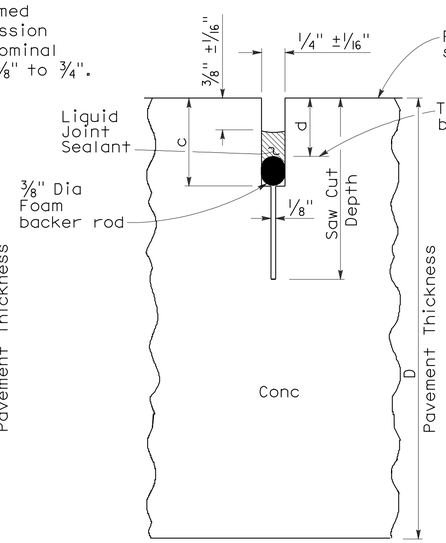

LIQUID SEALANT

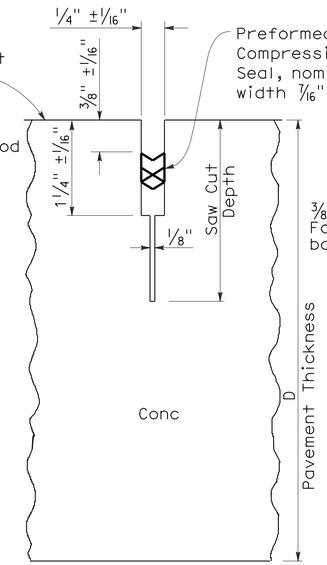

COMPRESSION SEAL

TYPE A2

Longitudinal Contraction Joints

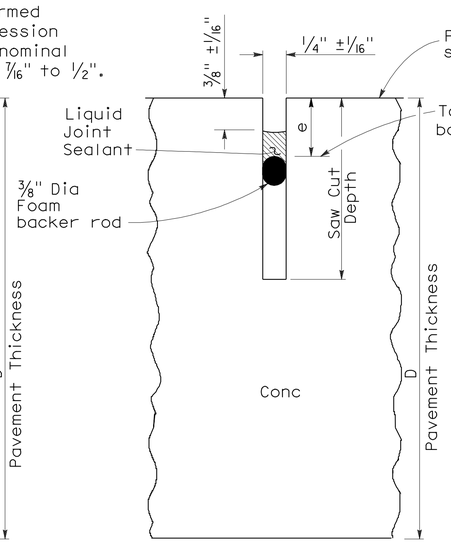

LIQUID SEALANT

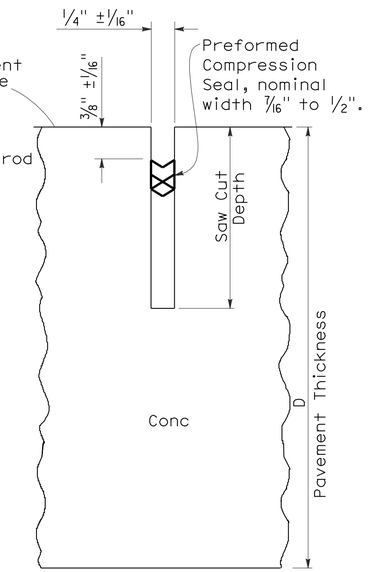

COMPRESSION SEAL

TYPE B

Longitudinal or Transverse Contraction Joint

LIQUID SEALANT RESERVOIR DEPTH

LIQUID SEALANT MATERIAL	3/8" Joint Width Type A1		1/4" Joint Width Type A2		1/4" Joint Width Type B
	DIMENSION		DIMENSION		DIMENSION
	a	b	c	d	e
SILCONE	1" ±1/16"	5/8" ±1/16"	15/16" ±1/16"	9/16" ±1/16"	9/16" ±1/16"
ASPHALT RUBBER	1 3/16" ±1/16"	3/4" ±1/16"	1 1/16" ±1/16"	11/16" ±1/16"	11/16" ±1/16"

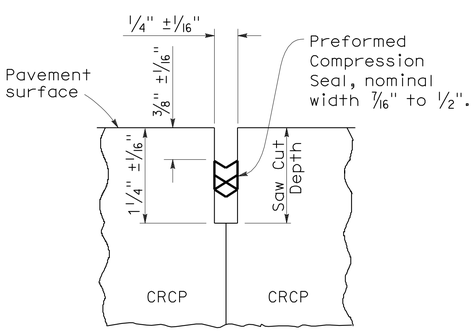

COMPRESSION SEAL

TYPE C

Transverse and Longitudinal Construction Joints (For CRCP)

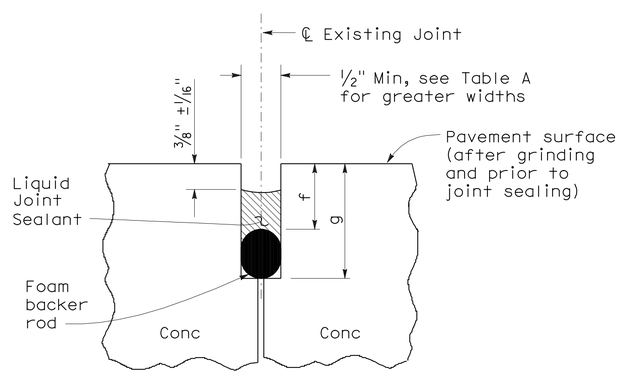

LIQUID SEALANT

TYPE R

Retrofit Transverse and Longitudinal Joints

TABLE A (TYPE R JOINT)

Sawn Joint Width	Backer Rod Diameter ± 1/16"	DIMENSION "f"	DIMENSION "g"
1"	1 5/16"	7/8"	2 1/4"
7/8"	1 3/16"	13/16"	2"
3/4"	1"	3/4"	1 3/4"
5/8"	7/8"	11/16"	1 1/2"
1/2"	11/16"	5/8"	1 1/4"

STATE OF CALIFORNIA
DEPARTMENT OF TRANSPORTATION

CONCRETE PAVEMENT-JOINT DETAILS

NO SCALE

RSP P20 DATED MAY 15, 2009 SUPERSEDES STANDARD PLAN P20
DATED MAY 1, 2006 - PAGE 128 OF THE STANDARD PLANS BOOK DATED MAY 2006.

REVISED STANDARD PLAN RSP P20

2006 REVISED STANDARD PLAN RSP P20

5-8-09

DIST	COUNTY	ROUTE	POST MILES TOTAL PROJECT	SHEET NO.	TOTAL SHEETS
04	Ala	880	28.2/29.9	155	183

REGISTERED CIVIL ENGINEER

June 5, 2009
PLANS APPROVAL DATE

REGISTERED PROFESSIONAL ENGINEER Glenn DeCou No. C34547 Exp. 9-30-09 CIVIL STATE OF CALIFORNIA

The State of California or its officers or agents shall not be responsible for the accuracy or completeness of electronic copies of this plan sheet.

To accompany plans dated 6-20-11

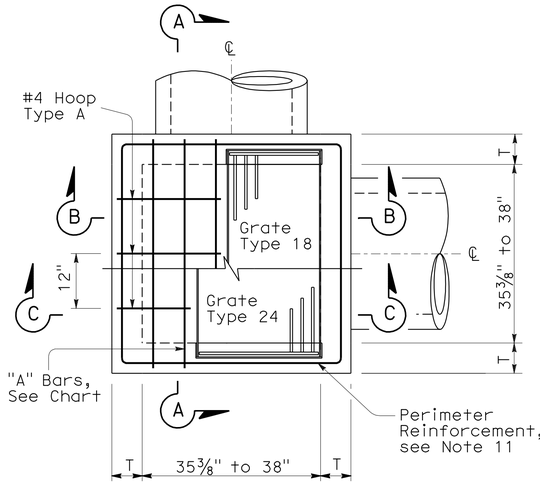

STANDARD TYPE G2 OR G4

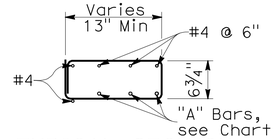

TYPICAL SECTION
(HOOP TYPE A)

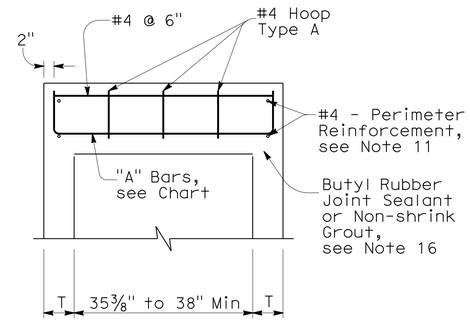

SECTION A-A

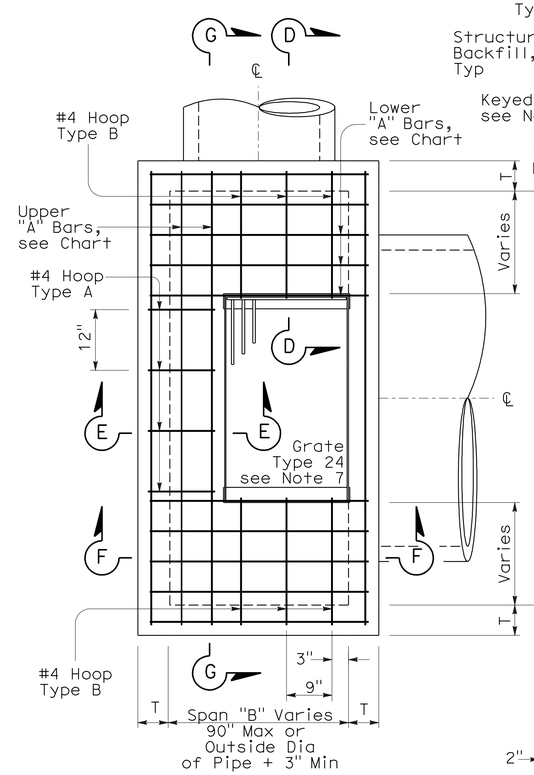

EXPANDED TYPE G2 OR G4
(Top Rebar Not Shown)

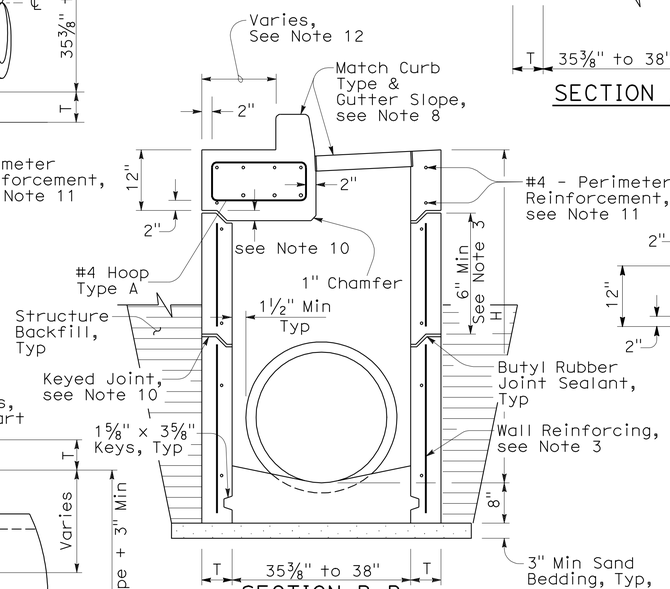

SECTION B-B
(with G4 Top)

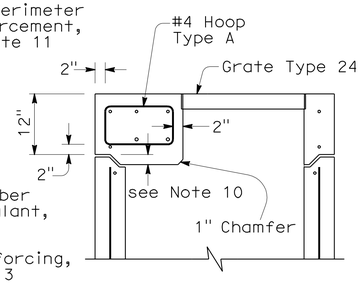

SECTION C-C
(with G2 Top)

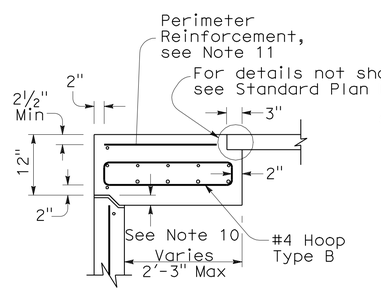

SECTION D-D

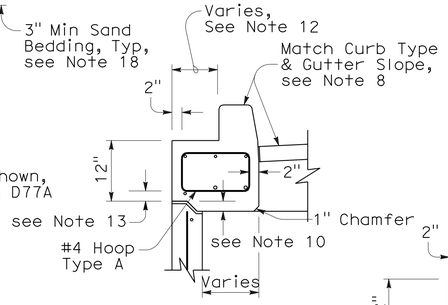

SECTION E-E
(with G4 Top)

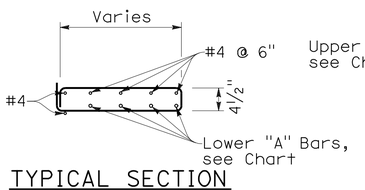

TYPICAL SECTION
(HOOP TYPE B)

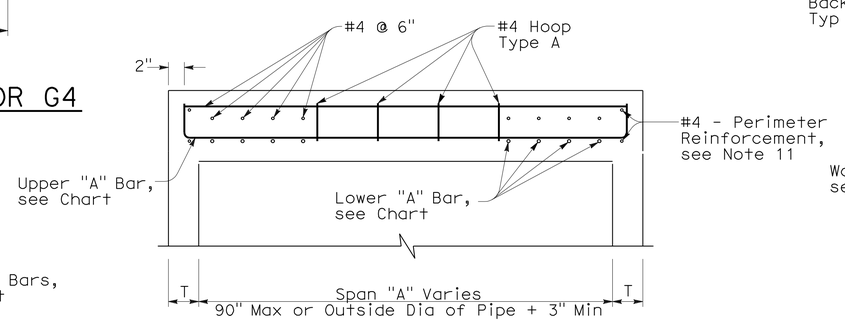

SECTION G-G

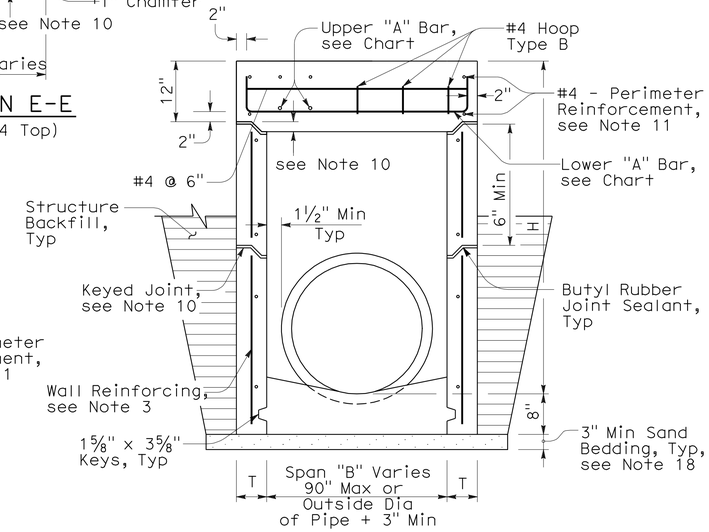

SECTION F-F
(with G2 Top)

NOTES:

1. "H" is the difference in elevation between the outlet pipe flow line and the normal gutter grade line undepressed.
2. For "T" wall thickness: T=6" when "H" is 8' or less. T=8" when "H" is over 8'.
3. Wall reinforcing not required when "H" is 8' or less and the unsupported width or length is 6'-0" or less. Reinforce wall exceeding these limits with #4 bars @ 1'-6" ± centers placed 2" clear to the inside of inlet unless otherwise shown. Short independent wall sections or height adjustment rings 6" to 24" high must have a minimum of two #4 horizontal bars.
4. Seal pre-cast inlets connection openings between wall and pipe with non-shrink grout or resilient connectors as specified in the Special Provisions.
5. Steps - None required where "H" is less than 2'-6". Where "H" is 2'-6" or more, install steps with lowest rung 1'-0" above the floor and highest rung not more than 6" below bottom of lid. The distance between steps must not exceed 1'-0" and be uniform throughout the length of the wall. Place steps in the wall without an opening. Steps inserts may be substituted for the bar steps. Step inserts must comply with State Industrial Safety Requirements. See Standard Plan D74C for step details.
6. Pipe(s) can be placed in any wall.
7. Set inlet so that grate bars are parallel to direction of principal surface flow.
8. Type G4 inlet can use Grate Type 18 or 24. Type G2 inlet uses Grate Type 24. See Revised Standard Plan RSP D77A and Standard Plan D77B for grate and frame details and weights of miscellaneous Iron and Steel.
9. G4 inlet details are the same as the G2 with the addition of a curb and sloped grate that matches the adjacent curb and gutter depression. See Standard Plans D78A & D78B for gutter and inlet depresssion details. See Revised Standard Plan RSP A87A & Standard Plan A87B for Curb and Dike Details.
10. Provide pre-cast inlets with separate top sections for final grade adjustment under Standard Specifcation Section 51-1.02. Provide keyed joints between the top and wall and multiple wall sections. Joint design may vary but must be 1" to 3" in depth.
11. Perimeter reinforcement serves as a rigid frame to position and attach the required structural reinforcement and may be tack welded at outer corners when using ASTM A706 weldable bars.
12. This dimension will vary with different grates, curbs types, box width and wall thickness.
13. 2" unless inlet is expanded in the Span "A" direction, then clearance is 2" plus the diameter of the lower "A" bar.
14. Place "A" Bars at an angle so hooked ends will maintain 2" clear coverage.
15. Refer to Standard Plan D73, Table A for concrete quantities.
16. Non-shrink grout can be used for upper most joint to facilitate final top grade adjustment.
17. Slope inlet floors 4:1 towards the outlet pipe. Pre-cast inlets may have monolithic sloped floors, flat floors, or no floors in which case a sloped floor must be cast in the field. Inlet floors do not require reinforcing.
18. Extend sand bedding under all structure backfill.

TOP REINFORCEMENT CHART

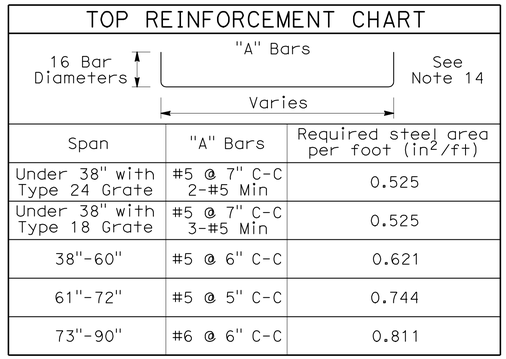

Span	"A" Bars	Required steel area per foot (in^2/ft)
Under 38" with Type 24 Grate	#5 @ 7" C-C 2-#5 Min	0.525
Under 38" with Type 18 Grate	#5 @ 7" C-C 3-#5 Min	0.525
38"-60"	#5 @ 6" C-C	0.621
61"-72"	#5 @ 5" C-C	0.744
73"-90"	#6 @ 6" C-C	0.811

STATE OF CALIFORNIA
DEPARTMENT OF TRANSPORTATION

DRAINAGE INLETS (PRECAST)

NO SCALE

NSP D73A DATED JUNE 5, 2009 SUPPLEMENTS THE STANDARD PLANS BOOK DATED MAY 2006.

NEW STANDARD PLAN NSP D73A

2006 NEW STANDARD PLAN NSP D73A

3-16-09

DIST	COUNTY	ROUTE	POST MILES TOTAL PROJECT	SHEET NO.	TOTAL SHEETS
04	Ala	880	28.2/29.9	156	183

REGISTERED CIVIL ENGINEER

June 15, 2007
PLANS APPROVAL DATE

REGISTERED PROFESSIONAL ENGINEER Glenn DeCou No. C34547 Exp. 9-30-07 CIVIL STATE OF CALIFORNIA

The State of California or its officers or agents shall not be responsible for the accuracy or completeness of electronic copies of this plan sheet.

To accompany plans dated 6-20-11

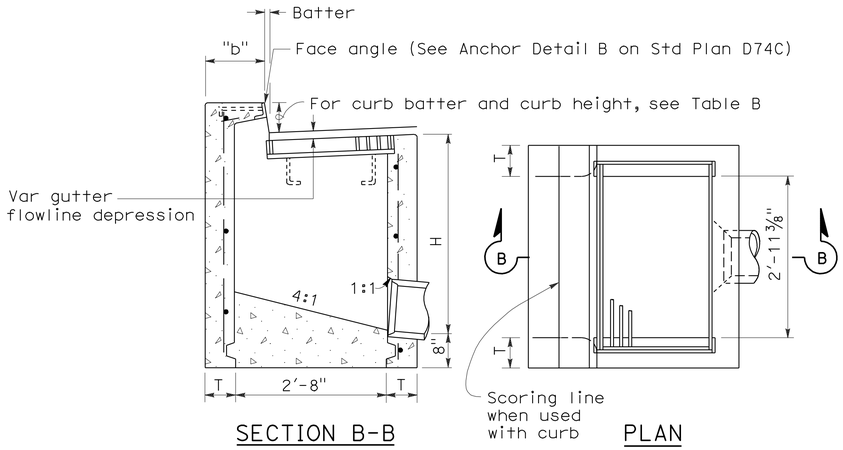

SECTION B-B PLAN

TYPE GO

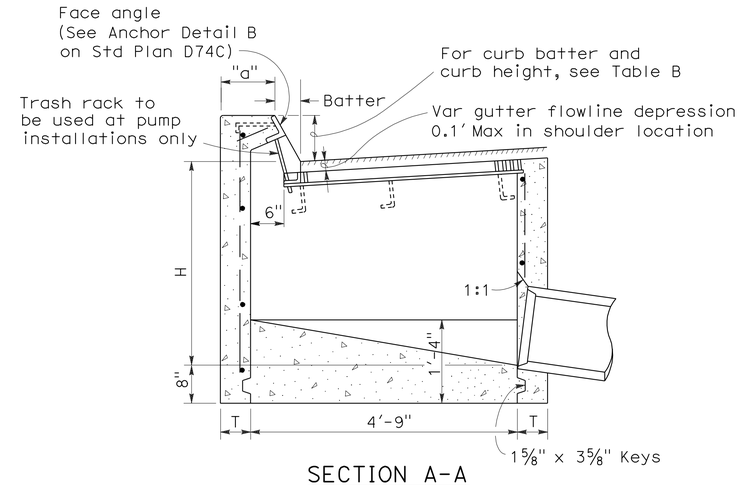

SECTION A-A

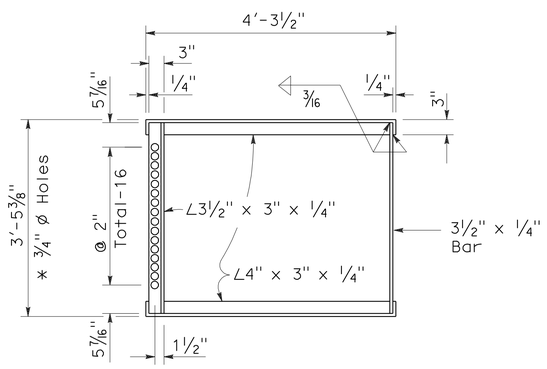

* 3/4" ø Holes required only with trash rack

GRATE FRAME FOR TYPE GDO INLET

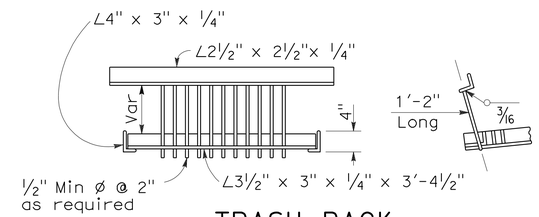

TRASH RACK

(For use with pump installation)

TABLE A

CONCRETE QUANTITIES				
	H=3'-0" TO 8'-0" (T=6")		H=8'-1" TO 20'-0" (T=8")	
TYPE	H=3'-0" (CY)	ADDITIONAL PCC PER FOOT (CY)	H=8'-1" (CY)	ADDITIONAL PCC PER FOOT (CY)
GO	1.24	0.245	3.39	0.346
GDO	1.62	0.322	4.36	0.446

Table based on 8" floor slab, no deduction for pipe openings, and curb type giving highest quantity of concrete. No deductions or adjustments are to be made to these quantities because of pipe openings, different floor alternatives or different curb type.

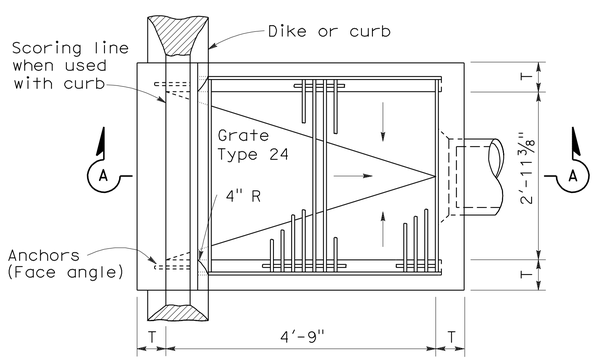

PLAN

TYPE GDO

TABLE B

CURB TYPE	NORMAL CURB HEIGHT	CURB BATTER	"a" DIMENSION	"b" DIMENSION
A1-6	6"	1 1/2"	T+7 1/2"	T+6 1/2"
A1-8	8"	2"	T+7"	T+6"
B1-6	6"	4"	T+5"	T+4"
Type A Dike	6"	3"	T+6"	T+5"

NOTES:

1. "H" is the difference in elevation between the outlet pipe flow line and the normal gutter grade line undepressed.
2. For "T" wall thickness, see Table A below.
3. Wall reinforcing not required when "H" is 8'-0" or less and the unsupported width or length is 7'-0" or less. Walls exceeding these limits shall be reinforced with #4 @ 18"± centers placed 1 1/2" clear to inside of box unless otherwise shown.
4. Inlet bottom reinforcing not required. See Standard Plan D74C for alternative reinforced bottom.
5. Steps - None required where "H" is less than 2'-6" Where "H" is 2'-6" or more, install steps with lowest rung 1'-0" above the floor and highest rung not more than 6" below top of inlet. The distance between steps shall not exceed 1'-0" and shall be uniform throughout the length of the wall. Place steps in the wall without an opening. Step inserts may be substituted for the bar steps. Step Inserts shall comply with State Industrial Safety requirements. See Standard Plan D74C for step details.
6. When shown on the project plans, place a 3/4" plain round protection bar horizontally across the length of the opening and bend back 4" into the inlet wall on each side.
7. Pipe(s) can be placed in any wall.
8. Curb section shall match adjacent curb.
9. Basin floors shall have wood trowel finish and shall slope toward the outlet pipe as shown.
10. Galvanizing - See Standard Specifications or Special Provisions.
11. See Standard Plan D77A and D77B for grate and frame details and weights of miscellaneous iron and Steel.
12. See Standard Plan D78A for gutter depression details.
13. Full penetration butt welds may be substituted for the fillet welds on all anchors.
14. Standard square, hexagon, round or equivalent headed anchors may be substituted for the right angle hooks on the anchors shown on this plan.
15. Cast-in-place or precast alternative is optional with contractor. See Standard Specifications.
16. Cast-in-place inlets to be formed around all pipes/stubs intersecing the inlet and concrete poured in one continuous operation. Precast inlets shall have mortared pipe connections conforming to details for Type GCP inlets on Standard Plan D75B. See Standard Specifications for mortar composition.

STATE OF CALIFORNIA
DEPARTMENT OF TRANSPORTATION

DRAINAGE INLETS

NO SCALE

RSP D74B DATED JUNE 15, 2007 SUPERSEDES STANDARD PLAN D74B DATED MAY 1, 2006 - PAGE 150 OF THE STANDARD PLANS BOOK DATED MAY 2006.

REVISED STANDARD PLAN RSP D74B

2006 REVISED STANDARD PLAN RSP D74B

4-16-07

DIST	COUNTY	ROUTE	POST MILES TOTAL PROJECT	SHEET NO.	TOTAL SHEETS
04	Ala	880	28.2/29.9	157	183

Raymond Don Tsztoo
REGISTERED CIVIL ENGINEER

January 18, 2008
PLANS APPROVAL DATE

REGISTERED PROFESSIONAL ENGINEER
Raymond Don Tsztoo
No. C37332
Exp. 6-30-08
CIVIL
STATE OF CALIFORNIA

The State of California or its officers or agents shall not be responsible for the accuracy or completeness of electronic copies of this plan sheet.

To accompany plans dated 6-20-11

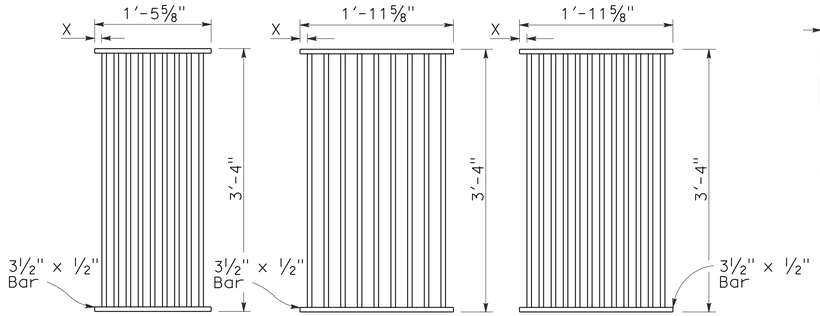

TYPE 18-9

1⅜" Clear spacing. Use within the roadbed on highways where bicycles and pedestrians are excluded.

TYPE 24-9

2" Clear spacing. Use in locations off the roadbed on all types of highways.

TYPE 24-12

1⅜" Clear spacing. Use within the roadbed on highways where bicycles and pedestrians are excluded.

RECTANGULAR GRATE DETAILS

(See table below)

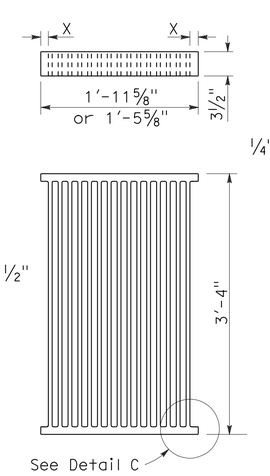

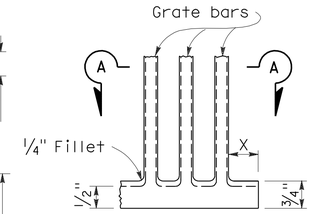

DETAIL C

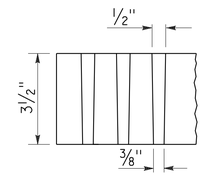

SECTION A-A

ALTERNATIVE CAST NODULAR IRON GRATE OR CAST STEEL GRATE

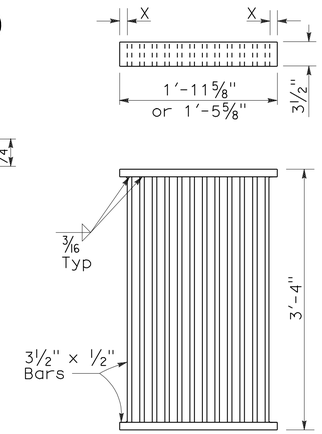

ALTERNATIVE WELDED GRATE

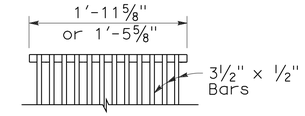

CAST END BLOCK

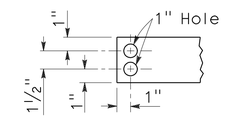

END OF BAR

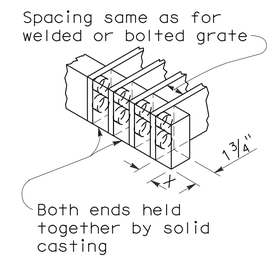

ALTERNATIVE CAST NODULAR IRON OR CAST STEEL END BLOCK GRATE

NOTES:

1. Grate type numbers refer to approximate width of grate in inches and number of bars, respectively.
2. Contractor has the option of using cast nodular iron, cast steel, welded, bolted, or cast end block grate.
3. See Special Provisions for requirements pertaining to galvanizing or asphalt dipping of grates and frames.
4. Rounded top of bars optional on all grates.
5. Pipe inlets with a grate shall be placed so that bars parallel direction of principle surface flow.
6. Full penetration butt welds may be substituted for the fillet welds on all anchors.
7. Standard square, hexagon, round or equivalent headed anchors may be substituted for the right angle hooks on the anchors shown on this plan.
8. Grate and frame weights are based on welded grates (weights of face angles, steps, protection bars, etc. are not included).

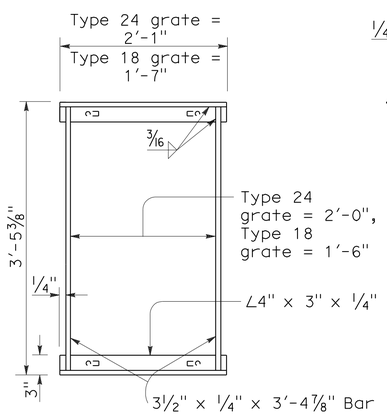

TYPICAL FRAME

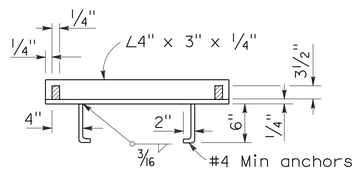

CROSS SECTION

(Thru frame)

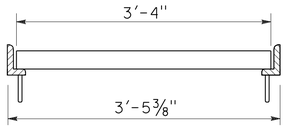

LONGITUDINAL SECTION

(Thru frame and grate)

RECTANGULAR FRAME DETAILS

(For all rectangular grates)

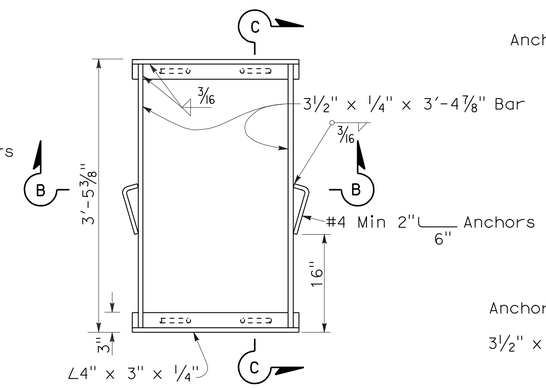

TYPICAL FRAME

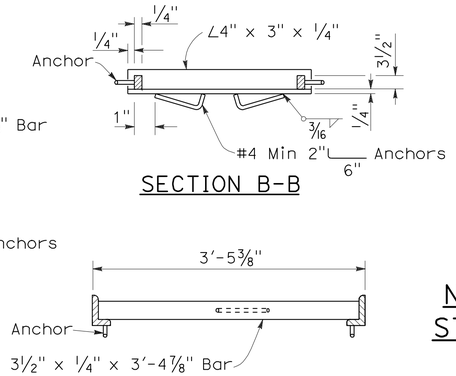

SECTION B-B

SECTION C-C

ALTERNATIVE ANCHOR FOR RECTANGULAR FRAME

(For details not shown, See Rectangular Frame Details)

INLET TYPE	GRATE TYPE	No. OF GRATES	WEIGHT LB
GDO	24-12	2	634
GOL-7	24-12	1	326
GOL-10	24-12	1	326
GO,G1,G2,G3,G4 (TYPE 24)	24-9	1	263
	24-12	1	326
G4 (TYPE 18),G5,G6	18-9	1	249
GT1	18-9	2	498
GT2	18-9	2	498
GT3	24-12	2	652
GT4	24-12	2	652
TRASH RACK			22

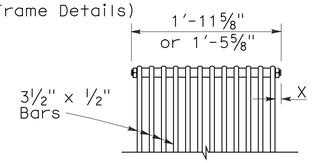

BOLTED END BLOCK

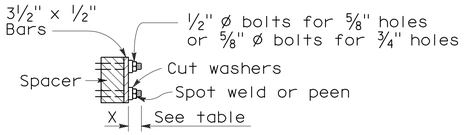

BOLTING DETAIL

ALTERNATIVE BOLTED GRATE

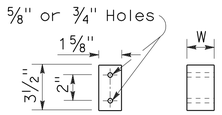

BAR SPACER

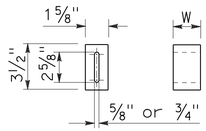

ALTERNATIVE SPACER

W = 1⅜" or 2"

GRATE BAR SPACING TABLE

TYPE	No. OF BARS	CLEAR BAR SPACING	X
18-9	9	1⅜"	1 1/16"
24-9	9	2"	1 9/16"
24-12	12	1⅜"	1¼"

INLET TYPE	COVER TYPE	WEIGHT LB
OS	PLATE	174
OL-7	PLATE	170
OL-10	PLATE	170
OL-14	PLATE	170
OL-21	PLATE	170
OCP	PLATE	112
OCPI	PLATE	112
OCPI	REDWOOD	42
OMP	PLATE	177
OMPI	PLATE	177

BASIS FOR MISC IRON & STEEL FINAL PAY WEIGHTS FOR DRAINAGE INLETS

(See General Notes, No 8)

STATE OF CALIFORNIA
DEPARTMENT OF TRANSPORTATION

GRATE DETAILS

NO SCALE

RSP D77A DATED JANUARY 18, 2008 SUPERSEDES STANDARD PLAN D77A DATED MAY 1, 2006 - PAGE 155 OF THE STANDARD PLANS BOOK DATED MAY 2006.

REVISED STANDARD PLAN RSP D77A

2006 REVISED STANDARD PLAN RSP D77A

12-14-07

DIST	COUNTY	ROUTE	POST MILES TOTAL PROJECT	SHEET NO.	TOTAL SHEETS
04	Ala	880	28.2/29.9	158	183

Raymond Don Tsztoo
REGISTERED CIVIL ENGINEER

March 7, 2008
PLANS APPROVAL DATE

REGISTERED PROFESSIONAL ENGINEER
Raymond Don Tsztoo
No. C37332
Exp. 6-30-08
CIVIL
STATE OF CALIFORNIA

The State of California or its officers or agents shall not be responsible for the accuracy or completeness of electronic copies of this plan sheet.

To accompany plans dated 6-20-11

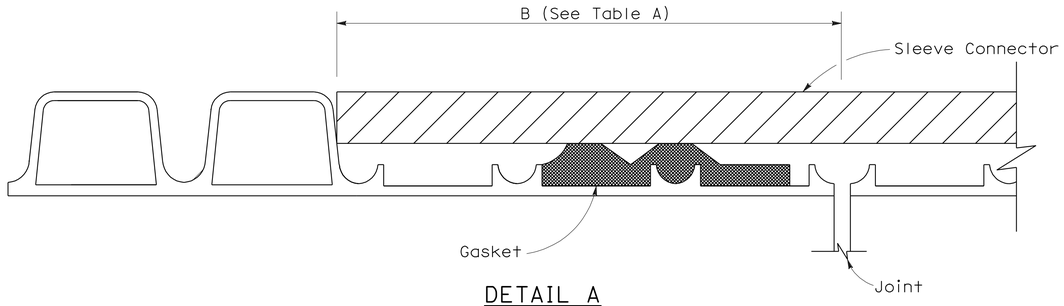

DETAIL A

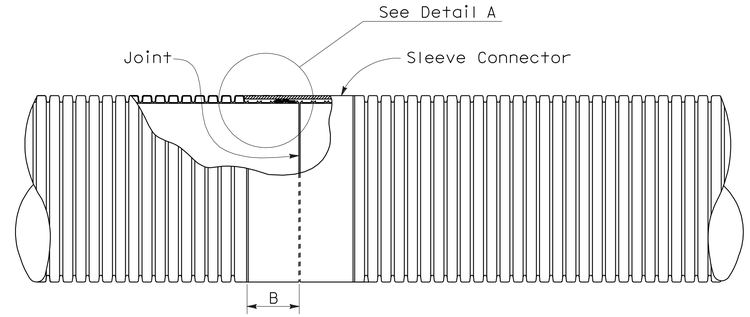

PLAN VIEW
Liner Insert
See Note 4

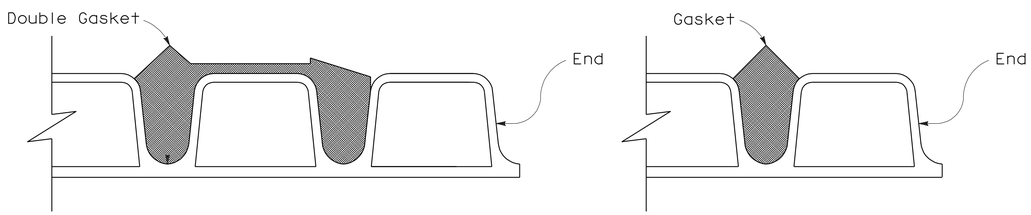

Double Gasket

Single Gasket

DETAIL B

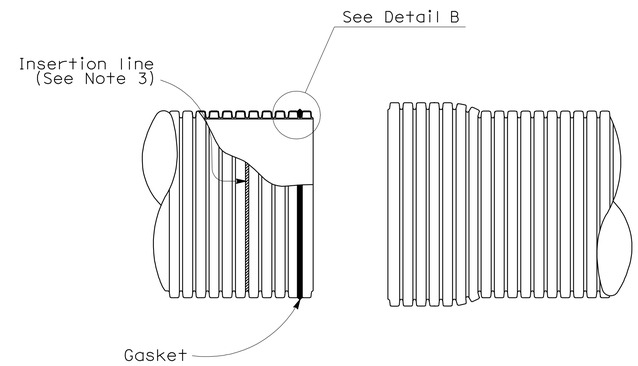

SPIGOT

BELL

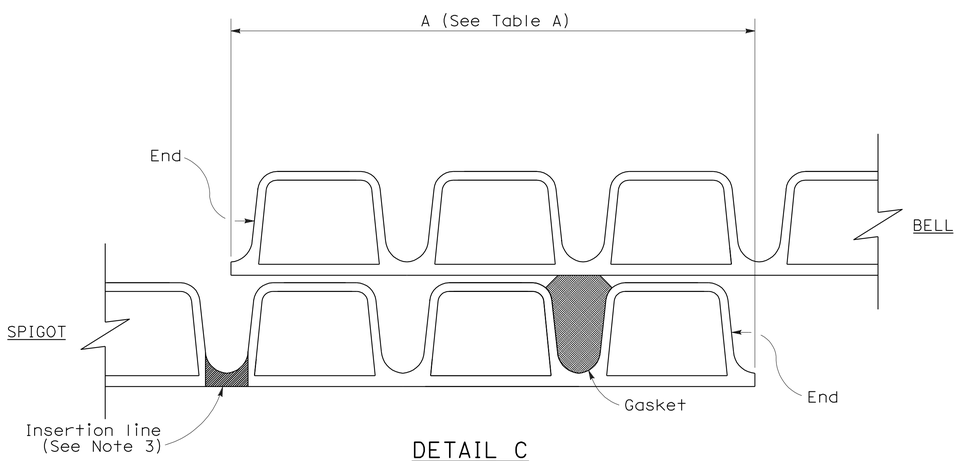

DETAIL C
(Single gasket shown)

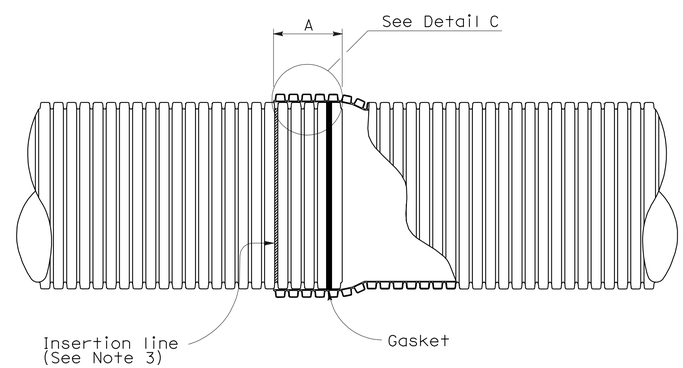

BELL AND SPIGOT JOINT

NOTES:

1. For pipe sections installed on straight alignment, the pipe sections shall be joined to achieve maxium joint overlap at all points on the periphery as indicated in Table A where the plans call for positive or watertight joints. Maxium joint overlap is recommended where the plans call for standard joints, but in no case shall the joint overlap be less than 3½".
2. For pipe sections installed on curved alignment, the maxium angle of deflection from straight alignment at any joint shall not exceed two degrees. Where the plans call for watertightness, field testing for compliance is required. Where plans call for positive joints, the pipe sections shall be joined to achieve Table A Dimensions on one side of the joint. Joints classified as standard shall have no less than 3½" joint overlap at any point on the periphery.
3. Factory applied insertion line limit shall be placed on spigot.
4. Liner insert to be used inside of existing pipe.

TABLE A

JOINT OVERLAP DIMENSIONS		
PIPE Dia (NOMINAL)	A	B
12"	5¾"	4¼"
15"	6¾"	5⅝"
18"	6¾"	5⅝"
21"	8½"	5⅝"
24"	8½"	6⅛"
30"	8½"	7⅛"
36"	8½"	8⅛"

STATE OF CALIFORNIA
DEPARTMENT OF TRANSPORTATION

CORRUGATED POLYVINYL CHLORIDE PIPE WITH SMOOTH INTERIOR STANDARD AND POSITIVE JOINTS

NO SCALE

NSP D97I DATED MARCH 7, 2008 SUPPLEMENTS THE STANDARD PLANS BOOK DATED MAY 2006.

NEW STANDARD PLAN NSP D97I

2006 NEW STANDARD PLAN NSP D97I

2-13-08

DIST	COUNTY	ROUTE	POST MILES TOTAL PROJECT	SHEET NO.	TOTAL SHEETS
04	Ala	880	28.2/29.9	159	183

Gregory A. Balzer
LICENSED LANDSCAPE ARCHITECT

June 5, 2009
PLANS APPROVAL DATE

LICENSED LANDSCAPE ARCHITECT
Gregory A. Balzer 2516
10 January
2-28-11
Renewal Date
5-14-09
Date
STATE OF CALIFORNIA

The State of California or its officers or agents shall not be responsible for the accuracy or completeness of electronic copies of this plan sheet.

To accompany plans dated 6-20-11

A

AB	aggregate base
ABS	acrylonitrile-butadiene-styrene
AC	asphalt concrete
Adj	adjacent/adjustable
AIC	auxiliary irrigation controller
Alt	alternative
AMEND	amendment
ARV	air release valve
AUTO	automatic
AUX	auxiliary
AVB	atmospheric vacuum breaker

B

B&B	balled and burlapped
B/B	brass/bronze
B/B/PL	brass/bronze/plastic
B/PL	brass/plastic
BFM	bonded fiber matrix
Bit Ctd	bituminous coated
BP	booster pump
BPA	backflow preventer assembly
BPAE	backflow preventer assembly in enclosure
BPE	backflow preventer enclosure
BV	ball valve

C

CAP	corrugated aluminum pipe
CARV	combination air release valve
CCA	cam coupler assembly
CEC	controller enclosure cabinet
CHDPE	corrugated high density polyethylene
CL	chain link
CNC	control and neutral conductors
Conc	concrete
Cond	conduit
CSP	corrugated steel pipe
CST	center strip
CV	check valve

D

Dia	diameter
DIP	ductile iron pipe
DN	diameter nominal

E

EA	each
Elect	electric/electrical
Elev	elevation
ENCL	enclosure
EP	edge of pavement
ES	edge of shoulder
EST	end strip
ESTB	establishment
ETW	edge of traveled way

F

F	full circle
F/P	full/part circle
FAU	filter assembly unit
FCV	flow control valve
FERT	fertilizer
FG	finished grade
FIPT	female iron pipe thread
FIS	fertilizer injector system
FL	flow line
FM	flow monitor
FS	flow sensor
Ft	foot/feet
FV	flush valve

G

GAL	Gallon(s)
Galv	galvanized
GARV	garden valve
GPH	gallons per hour
GPM	gallons per minute
GSP	galvanized steel pipe
GV	gate valve

H

H	half circle
HB	hose bib
HDPE	high density polyethylene
HP	horsepower/hinge point
HPL	high pressure line
Hwy	highway

I

IC	irrigation controller
ICC	irrigation controller(s) in controller enclosure cabinet
ID	inside diameter
In	inches
IFS	irrigation filtration system
IPS	iron pipe size
IPT	iron pipe thread
Irr	irrigation

L

L	length
LF	linear foot

M

Max	maximum
MBGR	metal beam guard railing
MCV	manual control valve
MIC	master irrigation controller
Min	minimum
MIPT	male iron pipe thread
Misc	miscellaneous
Mtl	material
MVP	maintenance vehicle pullout

N

NCN	no common name
NL	nozzle line
No.	number
NPT	national pipe thread

O

O/C	on center
OD	outside diameter
Oz	ounce

P

P	part circle
PB	pull box
PCC	portland cement concrete
PE	polyethylene
Pkt	packet
PL	plastic
PLT	plant/planting
PLT ESTB	plant establishment
PM	post mile
PR	pressure rated
PRLV	pressure relief valve
PSFM	polymer stabilized fiber matrix
PSI	pounds per square inch
PRV	pressure reducing valve
PVC	polyvinyl chloride
Pvmt	pavement

Q

Q	quarter circle
QCV	quick coupling valve

R

R	radius
RCP	reinforced concrete pipe
RCV	remote control valve
RCVM	remote control valve (master)
RCVMF	remote control valve (master) w/ flow meter
RCW	recycled/reclaimed water
RECP	rolled erosion control product
REQ	required
R/W	right of way

S

S	slip
SCC	sprinkler control conduit
SCH	schedule
SF	state-furnished
Shld	shoulder
SQFT	square foot/feet
SQYD	square yard(s)
SST	side strip
Sta	station
Std	standard
SW	sidewalk/sound wall

T

T	third circle/thread
TLS	truck loading standpipe
TQ	three quarter circle
TRM	turf reinforcement mat
TRVD	traveled
TT	two third circle
Typ	typical

U

UG	underground

V

VAU	valve assembly unit

W

W	width
W/	with
WM	water meter
WS	wye strainer
WSP	welded steel pipe
WWM	welded wire mesh

NOTE:

FOR ADDITIONAL ABBREVIATIONS, SEE STANDARD PLANS A10A AND A10B.

STATE OF CALIFORNIA
DEPARTMENT OF TRANSPORTATION

PLANTING AND IRRIGATION ABBREVIATIONS

NO SCALE

RSP H1 DATED JUNE 5, 2009 SUPERSEDES STANDARD PLAN H1
DATED MAY 1, 2006 - PAGE 201 OF THE STANDARD PLANS BOOK DATED MAY 2006.

REVISED STANDARD PLAN RSP H1

2006 REVISED STANDARD PLAN RSP H1

DIST	COUNTY	ROUTE	POST MILES TOTAL PROJECT	SHEET NO.	TOTAL SHEETS
04	Ala	880	28.2/29.9	160	183

LICENSED LANDSCAPE ARCHITECT

June 5, 2009
PLANS APPROVAL DATE

The State of California or its officers or agents shall not be responsible for the accuracy or completeness of electronic copies of this plan sheet.

Gregory A. Balzer 2016 — 10-28-11 (renewal date) — 5-14-09 (date) — STATE OF CALIFORNIA

To accompany plans dated 6-20-11

EXISTING	PROPOSED	ITEM DESCRIPTION
		WATER METER (WM)
		BACKFLOW PREVENTER ASSEMBLY (BPA)
		BACKFLOW PREVENTER ASSEMBLY IN ENCLOSURE (BPAE)
		BACKFLOW PREVENTER ENCLOSURE (BPE)
		BOOSTER PUMP (BP)
		TRUCK LOADING STANDPIPE (TLS)
FS	FS	FLOW SENSOR (FS)
X	X	MASTER IRRIGATION CONTROLLER (MIC)
		AUXILIARY IRRIGATION CONTROLLER (AIC)
		IRRIGATION CONTROLLER (IC)/ IRRIGATION CONTROLLER (IC) (BATTERY) IRRIGATION CONTROLLER (IC) (SOLAR)
		IRRIGATION CONTROLLER(S) IN CONTROLLER ENCLOSURE CABINET (ICC)
		CONTROL AND NEUTRAL CONDUCTORS (CNC)
SCC	SCC	SPRINKLER CONTROL CONDUIT (SCC)
		IRRIGATION CROSSOVER
		EXTEND IRRIGATION CROSSOVER
		IRRIGATION SLEEVE
dip	DIP	DUCTILE IRON PIPE (SUPPLY LINE) (MAIN) (DIP)
		GALVANIZED STEEL PIPE (SUPPLY LINE) (MAIN) (GSP)
		GALVANIZED STEEL PIPE (SUPPLY LINE) (LATERAL) (GSP)
		PLASTIC PIPE (PR 200) (SUPPLY LINE) (MAIN)
		PLASTIC PIPE (PR 200) (SUPPLY LINE) (LATERAL)
		PLASTIC PIPE (IRRIGATION LINE)
		REMOTE CONTROL VALVE (RCV) REMOTE CONTROL VALVE (MASTER) (RCVM) REMOTE CONTROL VALVE (MASTER) W/FLOW METER (RCVMF)
		MANUAL CONTROL VALVE (MCV)
		VALVE ASSEMBLY UNIT (VAU)
		WYE STRAINER (WS)
		FILTER ASSEMBLY UNIT (FAU)
		GATE VALVE (GV)
		BALL VALVE (BV)

EXISTING	PROPOSED	ITEM DESCRIPTION
		QUICK COUPLING VALVE (QCV)
		CAM COUPLER ASSEMBLY (CCA)
		PRESSURE REDUCING VALVE (PRV)
		PRESSURE RELIEF VALVE (PRLV)
		FLOW CONTROL VALVE (FCV)
		COMBINATION AIR RELEASE VALVE (CARV)
		CHECK VALVE (CV)
		FLUSH VALVE (FV)
		NOZZLE LINE W/TURNING UNION
		IRRIGATION SYSTEM
		IRRIGATION SYSTEM TO BE REMOVED
		CHAIN LINK GATE
		QUICK COUPLING VALVE W/SPRINKLER PROTECTOR
3	3	SPRINKLER W/SPRINKLER PROTECTOR
	C	CONNECT TO EXISTING SYSTEM
		CAP
		CAP EXISTING

VALVE CODE

RCV SIZE
IRRIGATION CONTROLLER
CONTROLLER STATION
VALVE IN PARALLEL (IF APPLICABLE)
GPM
QUANTITY OF SPRINKLERS (WHEN SHOWN)

* 2½"-A-2b-40 -60

MCV SIZE
VALVE NUMBER
GPM
QUANTITY OF TYPE SPRINKLERS (WHEN SHOWN)

* 2"-3-30 -50

* VALVE CODES FOR EXISTING VALVES ARE SHOWN IN A DASHED ENCLOSURE.

STATE OF CALIFORNIA
DEPARTMENT OF TRANSPORTATION

PLANTING AND IRRIGATION SYMBOLS

NO SCALE

RSP H2 DATED JUNE 5, 2009 SUPERSEDES RSP H2 DATED MARCH 7, 2008 AND STANDARD PLAN H2 DATED MAY 1, 2006 - PAGE 202 OF THE STANDARD PLANS BOOK DATED MAY 2006.

REVISED STANDARD PLAN RSP H2

2006 REVISED STANDARD PLAN RSP H2

5-11-09

DIST	COUNTY	ROUTE	POST MILES TOTAL PROJECT	SHEET NO.	TOTAL SHEETS
04	Ala	880	28.2/29.9	161	183

LICENSED LANDSCAPE ARCHITECT

June 5, 2009
PLANS APPROVAL DATE

The State of California or its officers or agents shall not be responsible for the accuracy or completeness of electronic copies of this plan sheet.

LICENSED LANDSCAPE ARCHITECT
Gregory A. Balzer 2516
10-01-11
Renewal Date
5-14-09
Date
STATE OF CALIFORNIA

To accompany plans dated 6-20-11

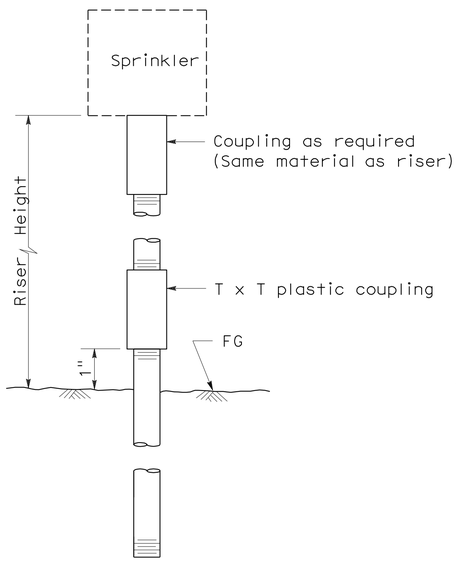

ELEVATION
RISER TYPE I

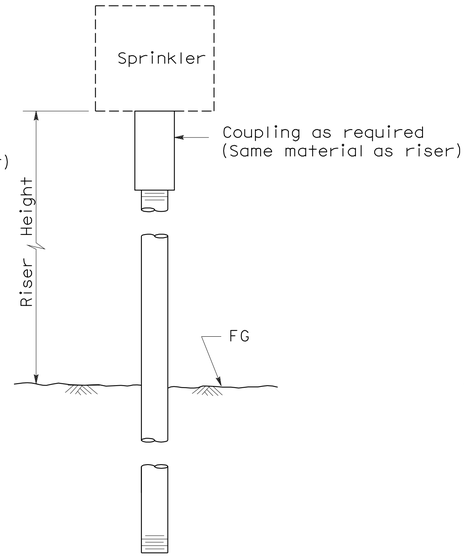

ELEVATION
RISER TYPE II

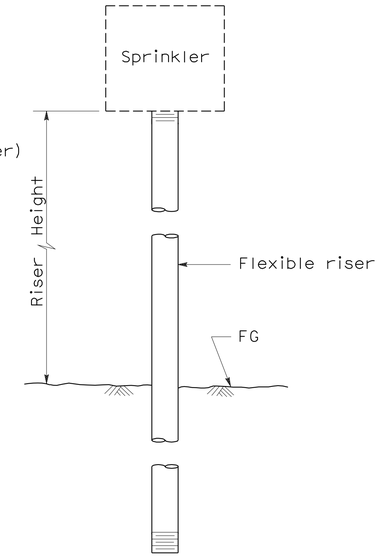

ELEVATION
RISER TYPE III

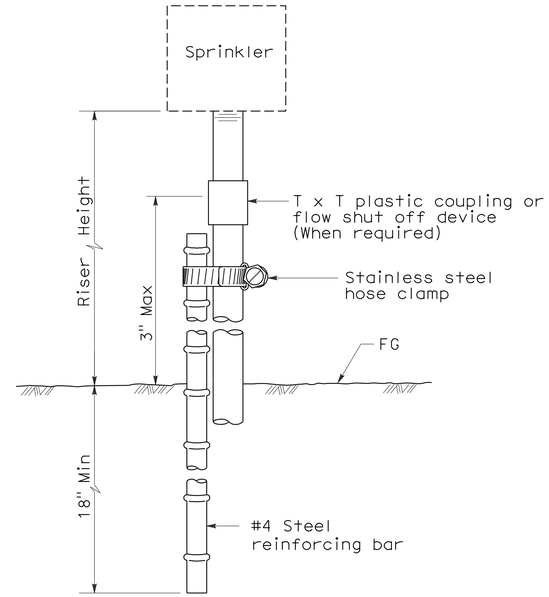

ELEVATION
RISER TYPE IV

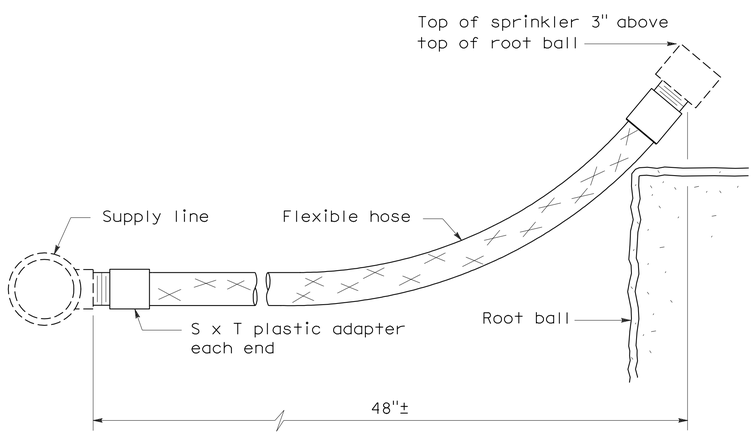

ELEVATION
RISER TYPE V

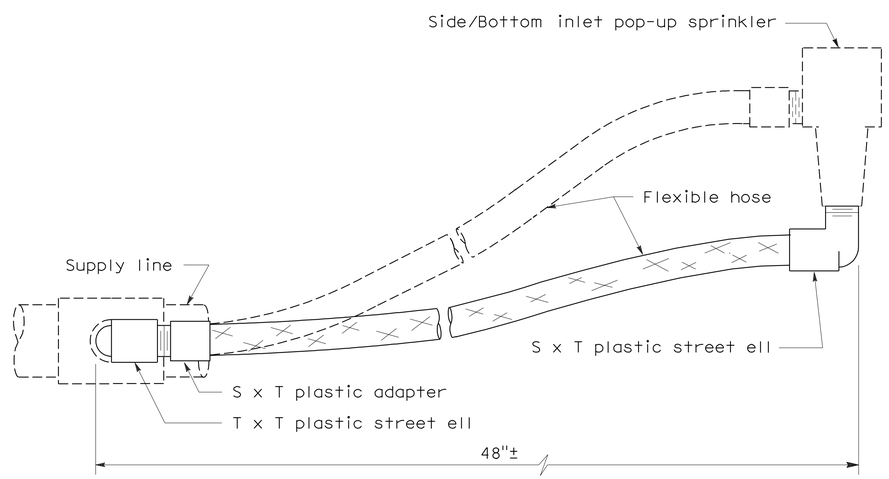

ELEVATION
RISER TYPE VI

STATE OF CALIFORNIA
DEPARTMENT OF TRANSPORTATION

PLANTING AND IRRIGATION DETAILS

NO SCALE

RSP H5 DATED JUNE 5, 2009 SUPERSEDES STANDARD PLAN H5
DATED MAY 1, 2006 - PAGE 205 OF THE STANDARD PLANS BOOK DATED MAY 2006.

REVISED STANDARD PLAN RSP H5

2006 REVISED STANDARD PLAN RSP H5

5-28-09

DIST	COUNTY	ROUTE	POST MILES TOTAL PROJECT	SHEET NO.	TOTAL SHEETS
04	Ala	880	28.2/29.9	162	183

Gregory A. Balzer
LICENSED LANDSCAPE ARCHITECT

June 5, 2009
PLANS APPROVAL DATE

The State of California or its officers or agents shall not be responsible for the accuracy or completeness of electronic copies of this plan sheet.

LICENSED LANDSCAPE ARCHITECT Gregory A. Balzer 2576 STATE OF CALIFORNIA
10-01-11 Renewal Date
2-28-11 Renewal Date
5-14-09 Date

To accompany plans dated 6-20-11

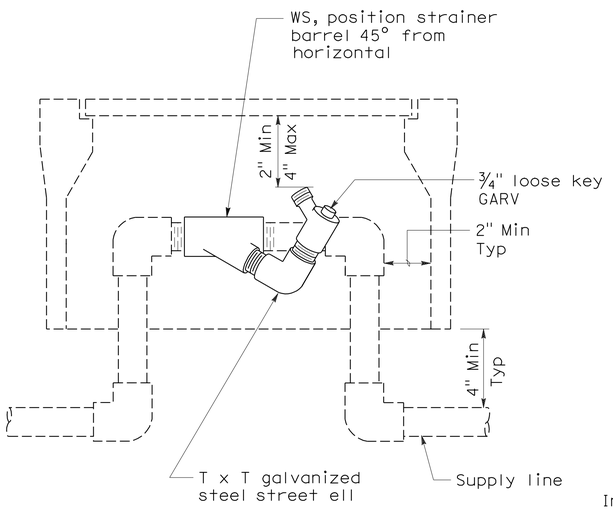

ELEVATION
WYE STRAINER

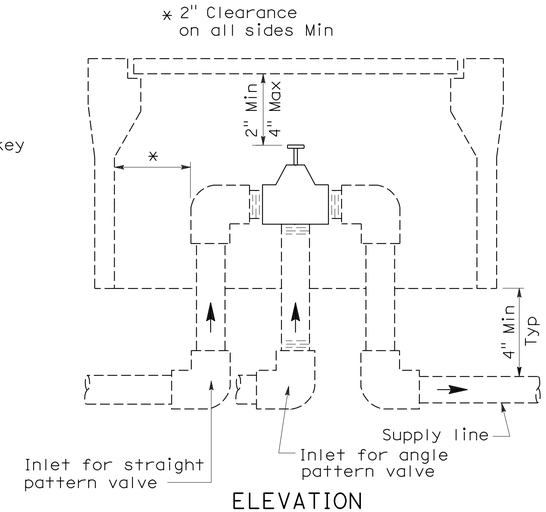

ELEVATION
VALVE

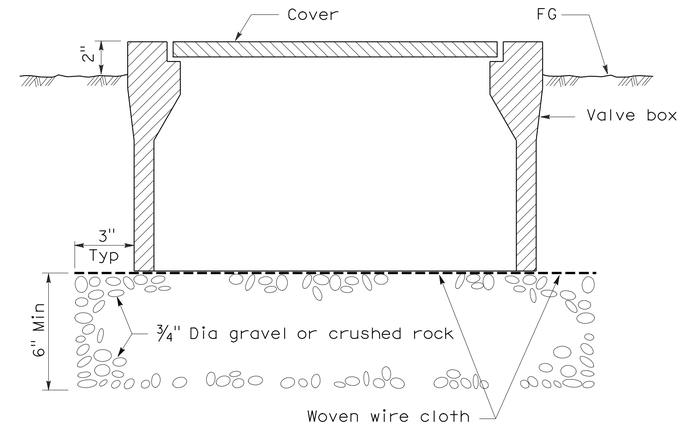

SECTION
VALVE BOX

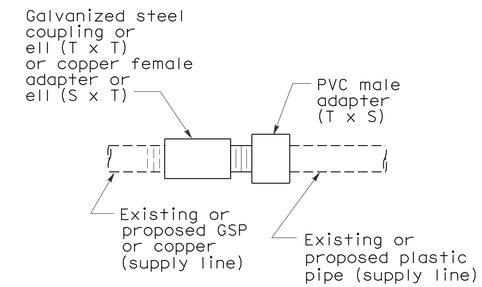

PLAN
GALVANIZED OR COPPER PIPE CONNECTION TO PLASTIC PIPE

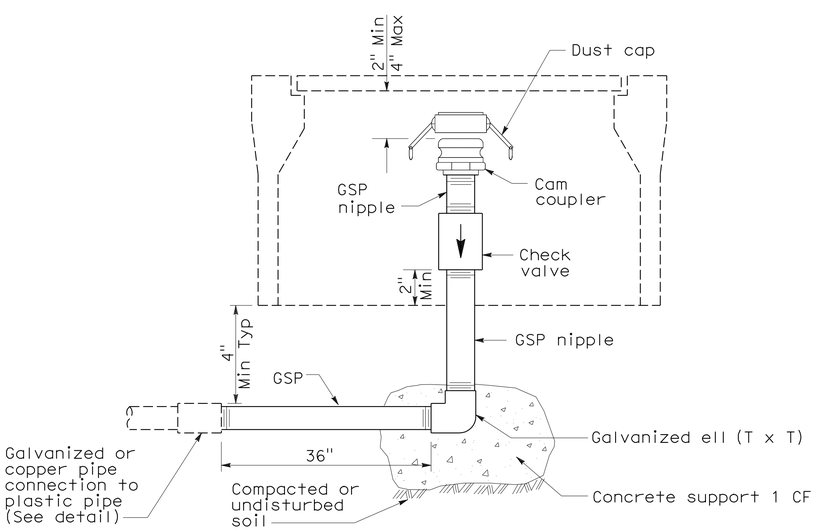

ELEVATION
CAM COUPLER ASSEMBLY

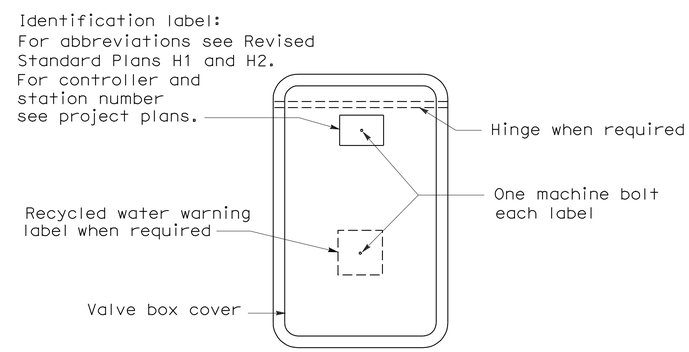

PLAN

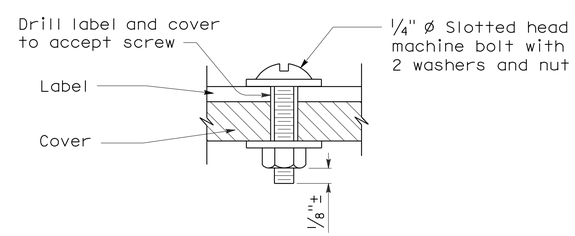

SECTION
VALVE BOX IDENTIFICATION

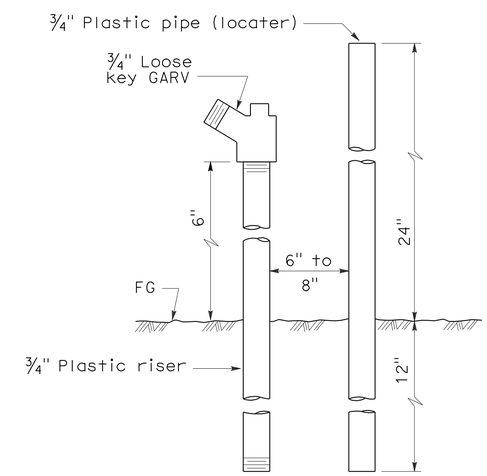

ELEVATION
FLUSH VALVE

STATE OF CALIFORNIA
DEPARTMENT OF TRANSPORTATION

PLANTING AND IRRIGATION DETAILS

NO SCALE

RSP H7 DATED JUNE 5, 2009 SUPERSEDES STANDARD PLAN H7
DATED MAY 1, 2006 - PAGE 207 OF THE STANDARD PLANS BOOK DATED MAY 2006.

REVISED STANDARD PLAN RSP H7

2006 REVISED STANDARD PLAN RSP H7

5-28-09

DIST	COUNTY	ROUTE	POST MILES TOTAL PROJECT	SHEET NO.	TOTAL SHEETS
04	Ala	880	28.2/29.9	163	183

Gregory A. Balzer
LICENSED LANDSCAPE ARCHITECT

June 5, 2009
PLANS APPROVAL DATE

LICENSED LANDSCAPE ARCHITECT Gregory A. Balzer 2576 10-31-11 Expiration date 2-28-11 Renewal date 5-14-09 Date STATE OF CALIFORNIA

The State of California or its officers or agents shall not be responsible for the accuracy or completeness of electronic copies of this plan sheet.

To accompany plans dated 6-20-11

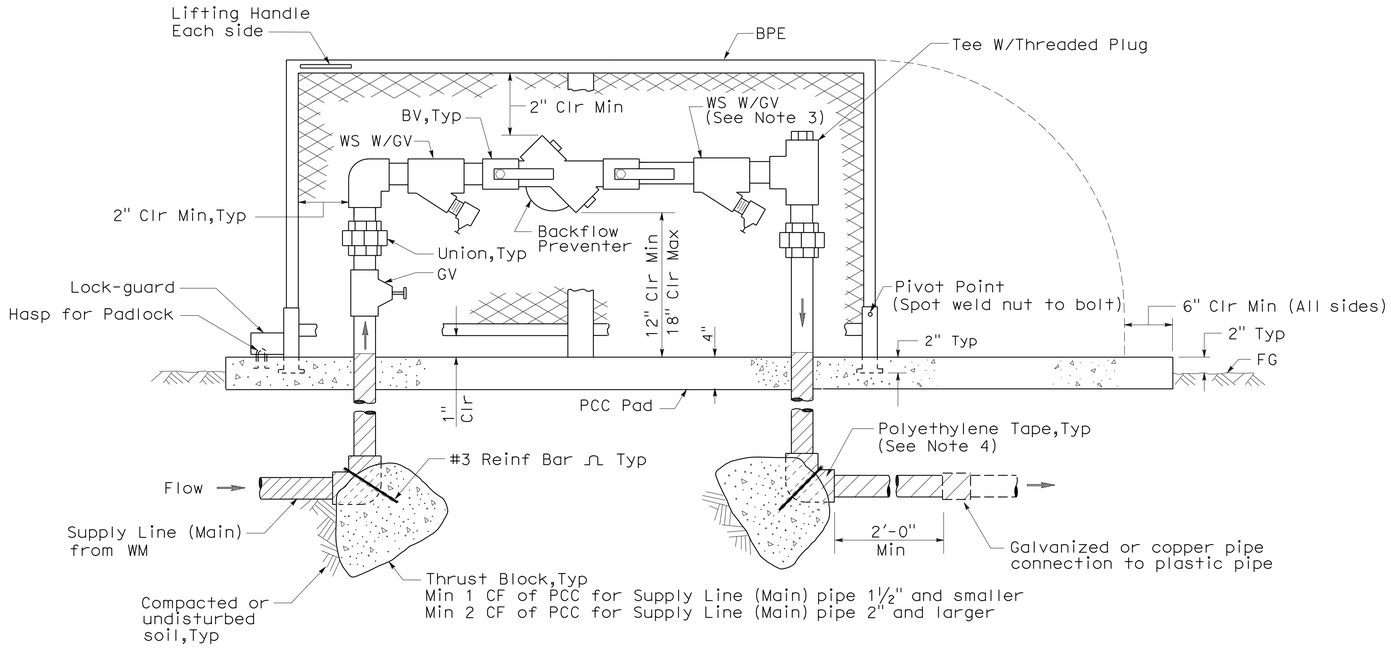

ELEVATION

BACKFLOW PREVENTER ASSEMBLY IN ENCLOSURE (ONE PIECE)

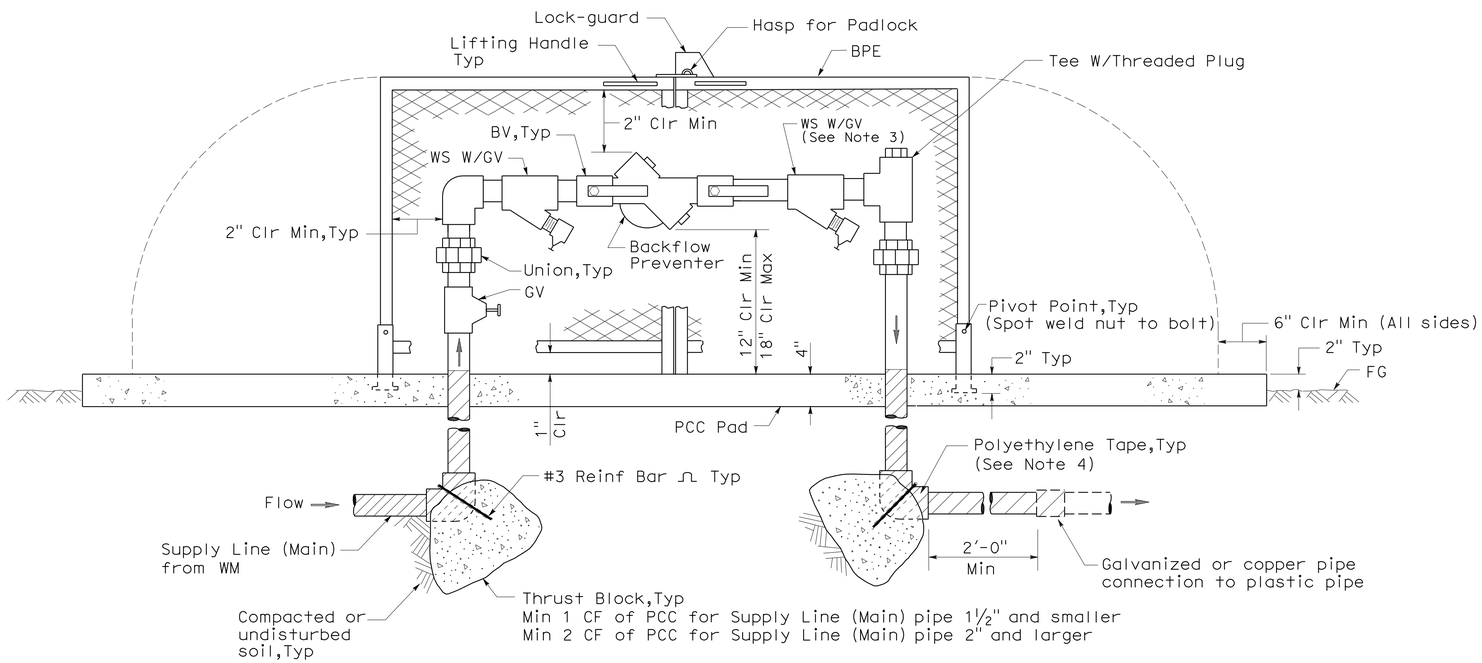

ELEVATION

BACKFLOW PREVENTER ASSEMBLY IN ENCLOSURE (TWO PIECE)

NOTES:

1. Wye strainer and fittings must be the same size as the backflow preventer shown on the plans.
2. Backflow preventer assembly manifold pipe must be the same pipe as the supply line (main) pipe to be installed from the water meter to the backflow preventer assembly.
3. Wye strainer location shown downstream of the backflow preventer is for District 11 projects only.
4. All metal in contact with soil and Portland Cement Concrete must be polyethylene wrapped using 2" wide plastic backed adhesive tape 20 mil thick with ½" overlap.

STATE OF CALIFORNIA
DEPARTMENT OF TRANSPORTATION

PLANTING AND IRRIGATION DETAILS

NO SCALE

RSP H8 DATED JUNE 5, 2009 SUPERSEDES STANDARD PLAN H8
DATED MAY 1, 2006 - PAGE 208 OF THE STANDARD PLANS BOOK DATED MAY 2006.

REVISED STANDARD PLAN RSP H8

2006 REVISED STANDARD PLAN RSP H8

5-28-09

DIST	COUNTY	ROUTE	POST MILES TOTAL PROJECT	SHEET NO.	TOTAL SHEETS
04	Ala	880	28.2/29.9	164	183

Randell D. Hiatt
REGISTERED CIVIL ENGINEER

June 6, 2008
PLANS APPROVAL DATE

REGISTERED PROFESSIONAL ENGINEER
Randell D. Hiatt
No. C50200
Exp. 6-30-09
CIVIL
STATE OF CALIFORNIA

The State of California or its officers or agents shall not be responsible for the accuracy or completeness of electronic copies of this plan sheet.

To accompany plans dated 6-20-11

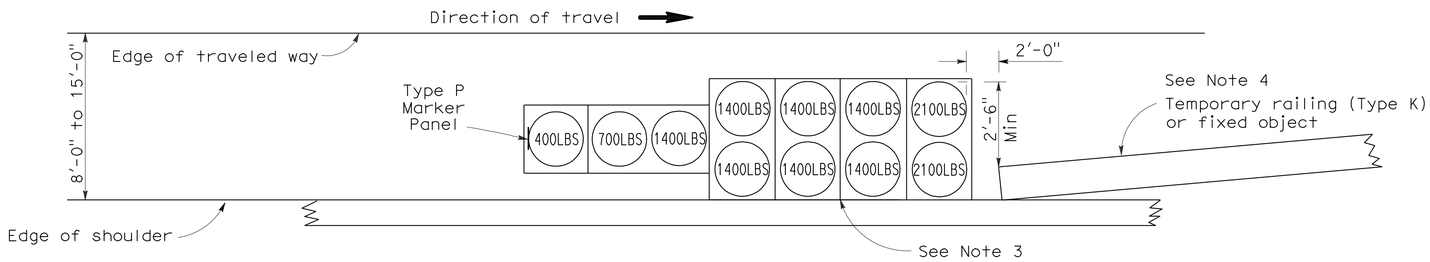

ARRAY 'TS11'

Approach speed less than 45 mph
See Note 9

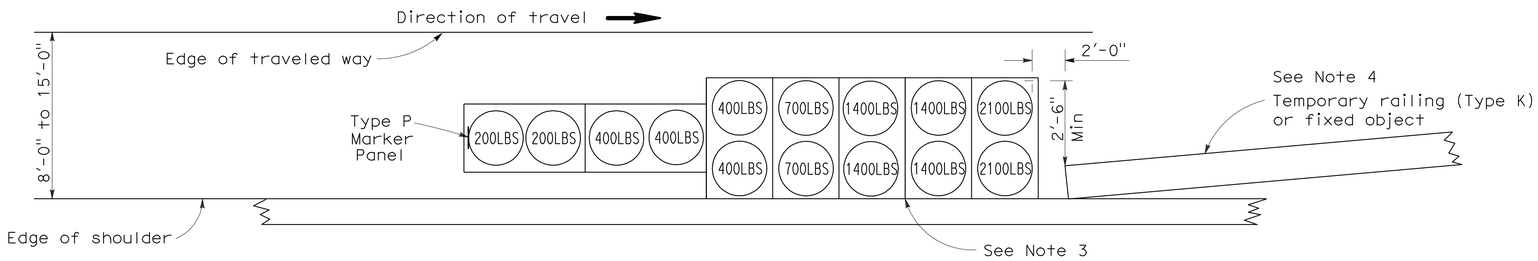

ARRAY 'TS14'

Approach speed 45 mph or more
See Note 9

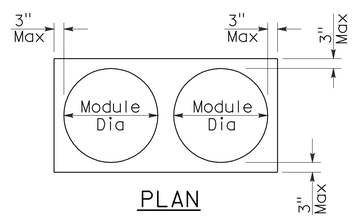

PLAN

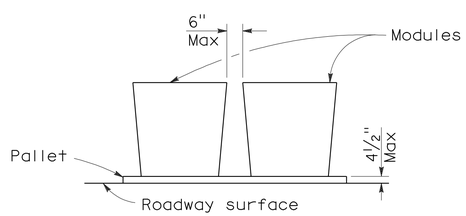

ELEVATION

CRASH CUSHION PALLET DETAIL

See Note 11

NOTES:

1. (XXX) Indicates sand filled module location and weight of sand in pounds for each module. Module spacing is based on the greater diameter of the module.
2. All sand weights are nominal.
3. The temporary crash cushion arrays shown on this plan shall be used only in locations where there will be traffic on one side of the temporary crash cushion array.
4. If the fixed object or approach end of the temporary railing is less than 15'-0" from the edge of traveled way, a temporary crash cushion is required in a construction or work zone.
5. Temporary crash cushion arrays shall not encroach on the traveled way.
6. Arrays for median shoulders shall conform to details shown on this plan for outside shoulders.
7. Place the Type P marker panel so that the bottom of the panel rests upon the pallet and faces traffic.
8. Refer to Standard Plan A73B for marker details.
9. For shoulder widths less than 8'-0", appropriate approved crash cushion protection, other than sand filled modules, shall be provided at fixed objects and at approach ends of temporary railing. The specific type of crash cushion shall be as shown on the project plans or as specified in the Special Provisions, or if not shown on the project plans or specified in the Special Provisions, shall be as approved by the Engineer.
10. Approach speeds indicated conform to NCHRP 350 Report criteria.
11. Use of pallets is optional.

STATE OF CALIFORNIA
DEPARTMENT OF TRANSPORTATION

TEMPORARY CRASH CUSHION, SAND FILLED (SHOULDER INSTALLATIONS)

NO SCALE

RSP T2 DATED JUNE 6, 2008 SUPERSEDES STANDARD PLAN T2
DATED MAY 1, 2006 - PAGE 213 OF THE STANDARD PLANS BOOK DATED MAY 2006.

REVISED STANDARD PLAN RSP T2

2006 REVISED STANDARD PLAN RSP T2

5-15-08

DIST	COUNTY	ROUTE	POST MILES TOTAL PROJECT	SHEET NO.	TOTAL SHEETS
04	Ala	880	28.2/29.9	165	181

REGISTERED CIVIL ENGINEER

November 17, 2006
PLANS APPROVAL DATE

Greg W. Edwards
No. C36386
Exp. 6-30-08
CIVIL
REGISTERED PROFESSIONAL ENGINEER
STATE OF CALIFORNIA

The State of California or its officers or agents shall not be responsible for the accuracy or completeness of electronic copies of this plan sheet.

To accompany plans dated 6-20-11

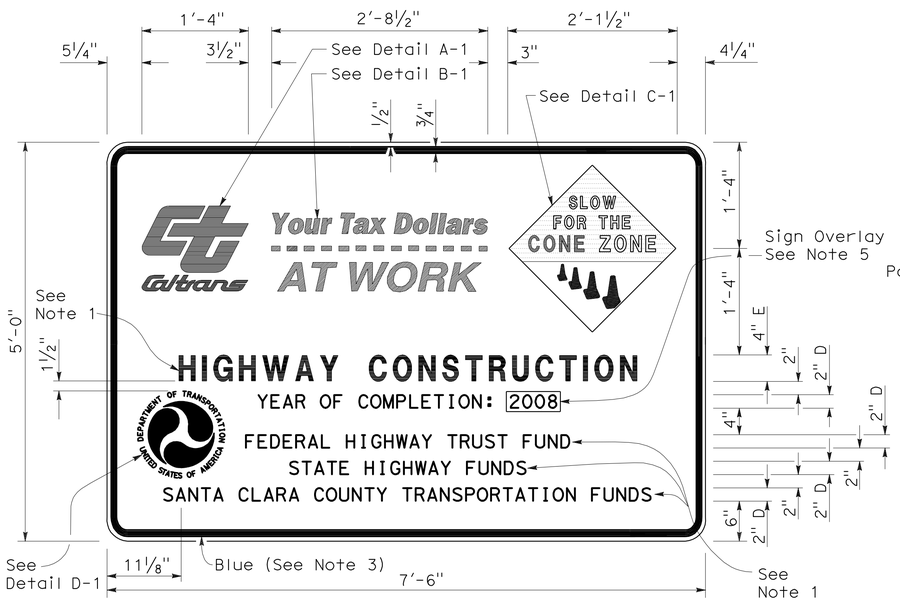

TYPE 1

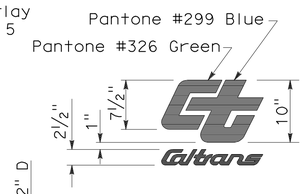

DETAIL A-1

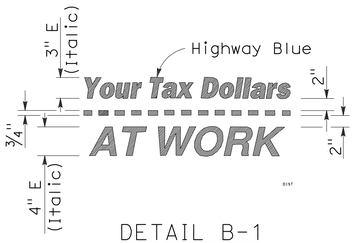

DETAIL B-1
(See Note 3)

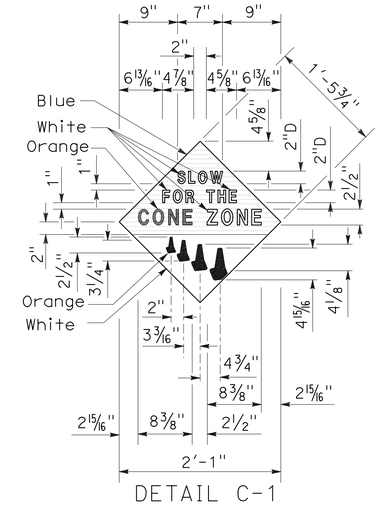

DETAIL C-1
(See Note 4)

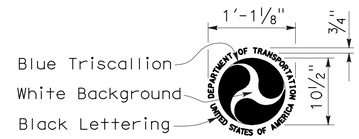

DETAIL D-1
(See Note 6)

NOTES:

1. The sign messages shown for type of project and fund types are examples only. See the Special Provisions for the applicable type of project and fund type messages to be used.
2. Except as otherwise shown, the legend of sign shall be black on a white background (non-reflective).
3. The border of the signs and details "B-1" and "B-2" shall be blue (non-reflective).
4. The diamond in details "C-1" and "C-2" shall be blue for the background of message, " SLOW FOR THE CONE ZONE", and white background for the orange cones. The color and type of font for the "SLOW FOR THE CONE ZONE" message shall be: "SLOW" white D; "FOR THE" white D; "CONE" orange Arial font; "ZONE" white Arial font.
5. Year of completion of project construction shown on the overlay is an example only. See the Special Provisions.
6. Use when the Project involves Federal Highway Trust Fund.

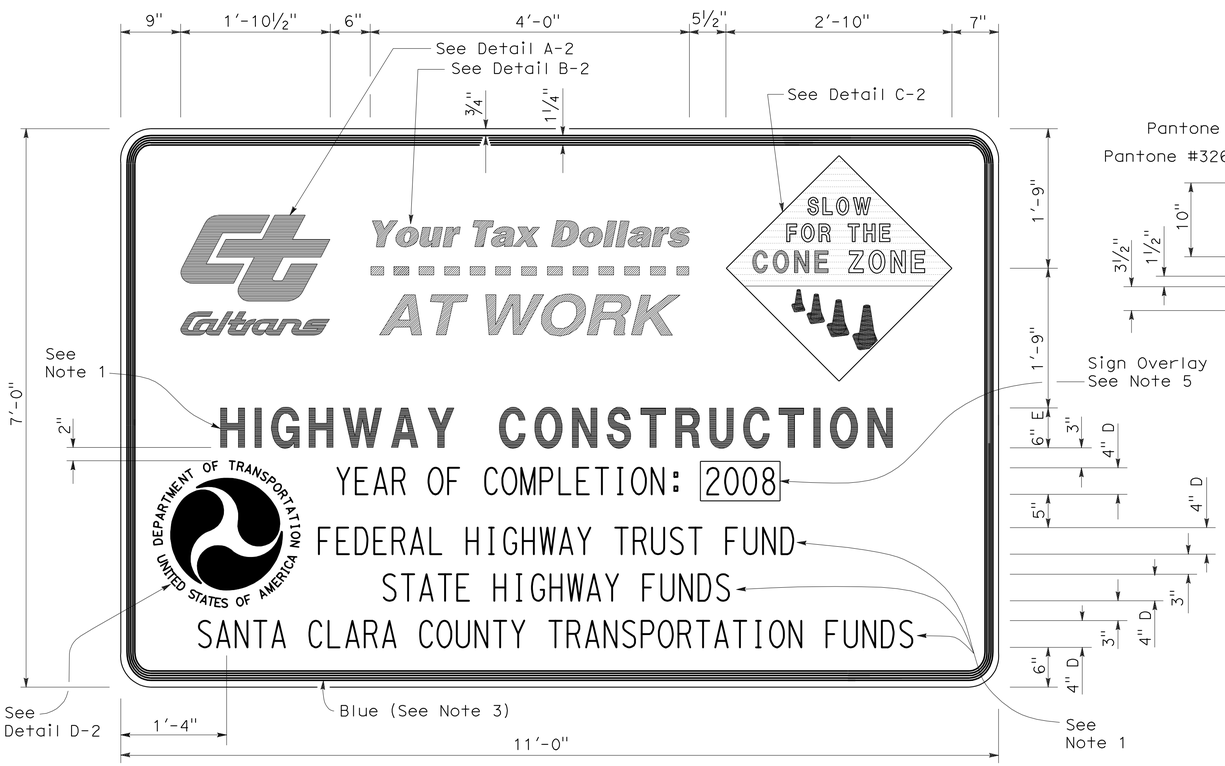

TYPE 2

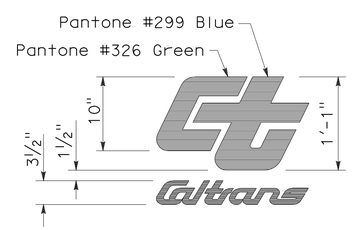

DETAIL A-2

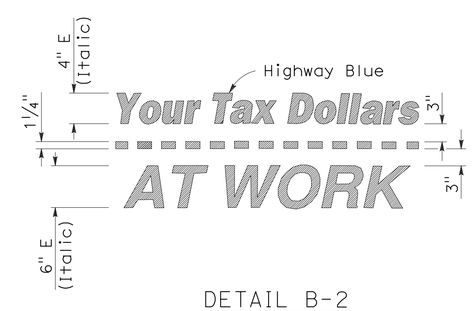

DETAIL B-2
(See Note 3)

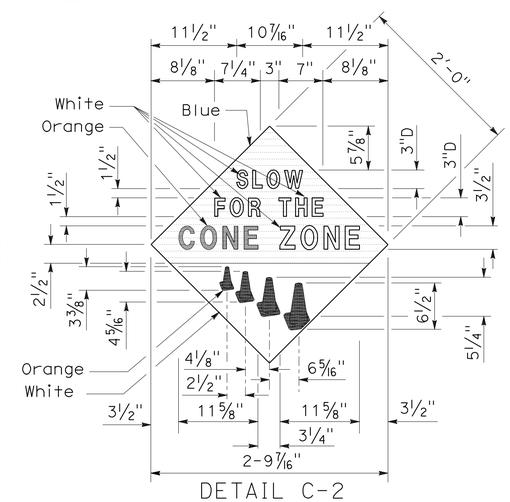

DETAIL C-2
(See Note 4)

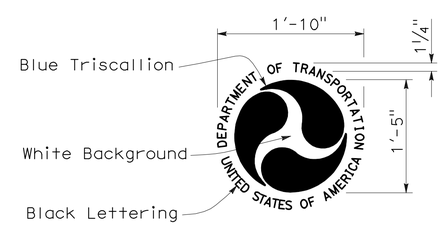

DETAIL D-2
(See Note 6)

STATE OF CALIFORNIA
DEPARTMENT OF TRANSPORTATION

CONSTRUCTION PROJECT FUNDING IDENTIFICATION SIGNS

NO SCALE

RSP T7 DATED NOVEMBER 17, 2006 SUPERSEDES STANDARD PLAN T7
DATED MAY 1, 2006 - PAGE 217 OF THE STANDARD PLANS BOOK DATED MAY 2006.

REVISED STANDARD PLAN RSP T7

2006 REVISED STANDARD PLAN RSP T7

9-7-06

DIST	COUNTY	ROUTE	POST MILES TOTAL PROJECT	SHEET NO.	TOTAL SHEETS
04	Ala	880	28.2/29.9	166	183

LICENSED LANDSCAPE ARCHITECT

August 15, 2008
PLANS Approval DATE

The State of California or its officers or agents shall not be responsible for the accuracy or completeness of electronic copies of this plan sheet.

LICENSED LANDSCAPE ARCHITECT — Robert B. Schott — Signature — 11-04-08 Renewal Date — 08-11-08 Date — STATE OF CALIFORNIA

To accompany plans dated 6-20-11

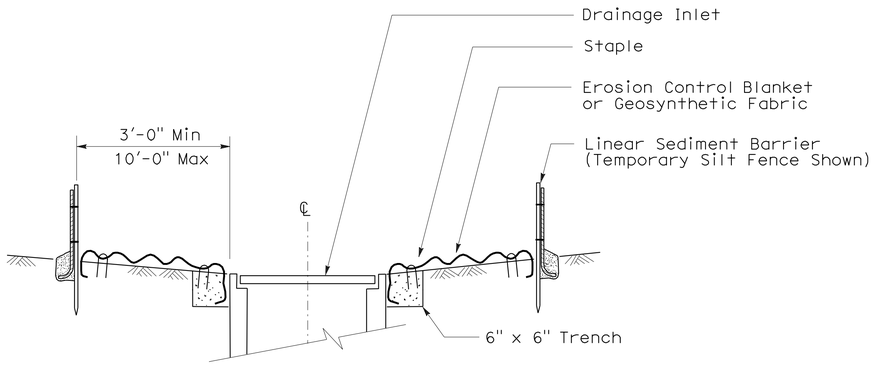

SECTION A-A

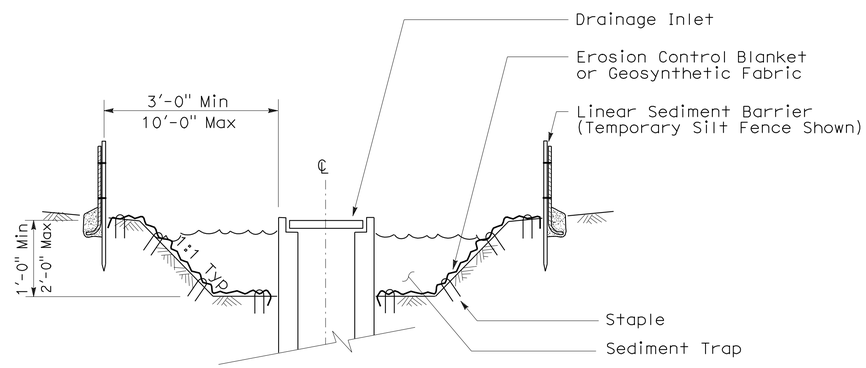

SECTION B-B

NOTES:

1. See Standard Plan T51 for Temporary Silt Fence.
2. Dimensions may vary to fit field conditions.

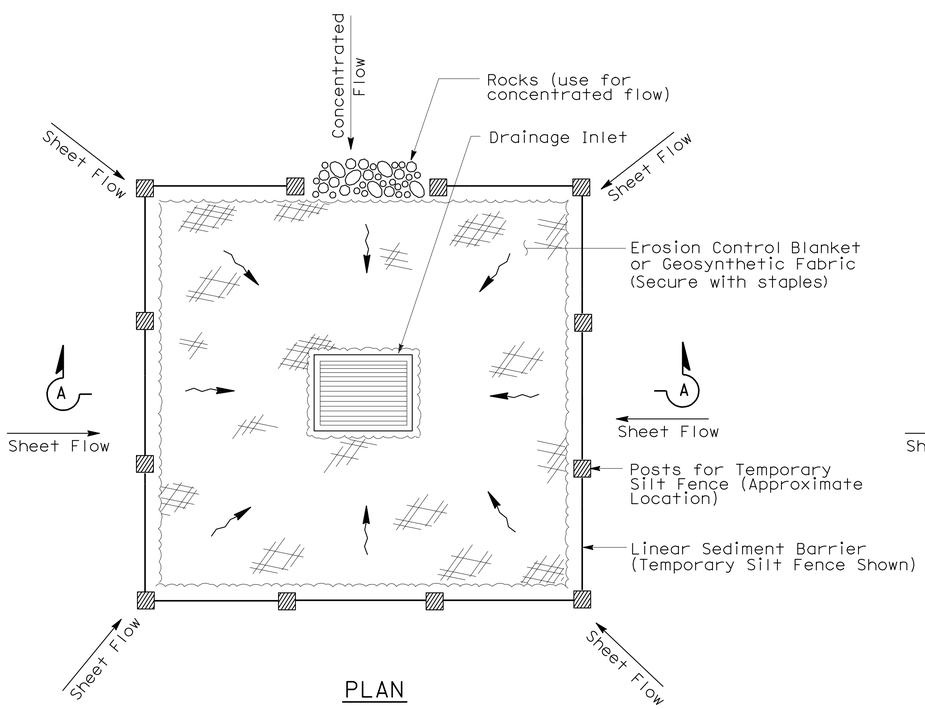

PLAN

TEMPORARY DRAINAGE INLET PROTECTION (TYPE 1)

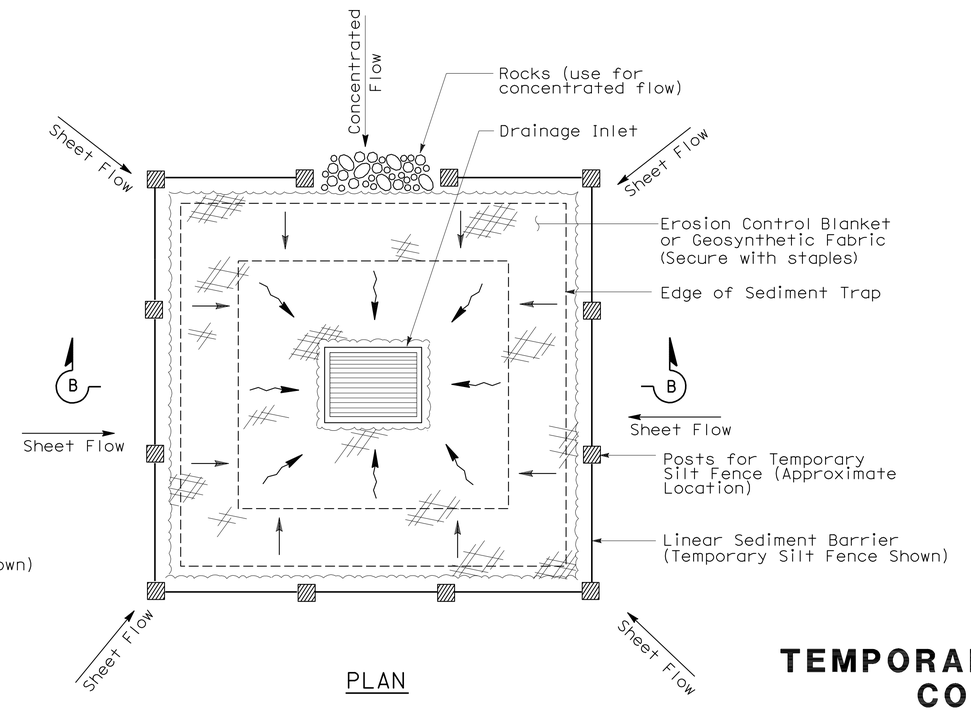

PLAN

TEMPORARY DRAINAGE INLET PROTECTION (TYPE 2) (EXCAVATED SEDIMENT TRAP)

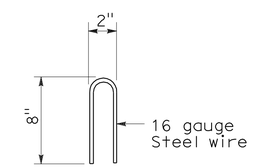

STAPLE DETAIL

STATE OF CALIFORNIA
DEPARTMENT OF TRANSPORTATION

TEMPORARY WATER POLLUTION CONTROL DETAILS (TEMPORARY DRAINAGE INLET PROTECTION)

NO SCALE

NSP T61 DATED AUGUST 15, 2008 SUPPLEMENTS THE STANDARD PLANS BOOK DATED MAY 2006.

NEW STANDARD PLAN NSP T61

2006 NEW STANDARD PLAN NSP T61

7-11-08

DIST	COUNTY	ROUTE	POST MILES TOTAL PROJECT	SHEET NO.	TOTAL SHEETS
04	Ala	880	28.2/29.9	167	183

LICENSED LANDSCAPE ARCHITECT

August 15, 2008
PLANS APPROVAL DATE

LICENSED LANDSCAPE ARCHITECT Robert B. Schott 3625 Signature 11-04-08 Renewal Date 08-11-08 Date STATE OF CALIFORNIA

The State of California or its officers or agents shall not be responsible for the accuracy or completeness of electronic copies of this plan sheet.

To accompany plans dated 6-20-11

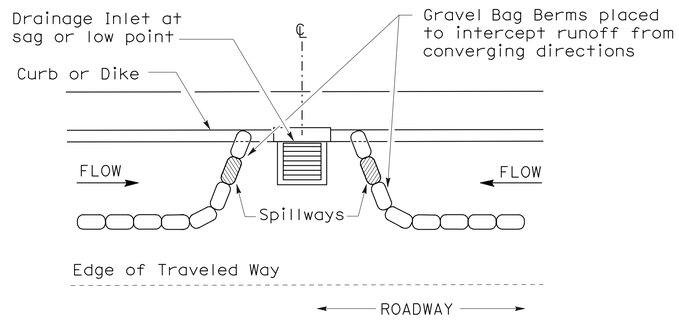

PLAN

CONFIGURATION FOR SAG POINT INLET (GRAVEL BAG BERM)

GRAVEL BAG BERM (TYPE 3A) SPACING TABLE

SLOPE OF ROADWAY (PERCENT)	1 to 3.9	4 to 5.9	6 to 7.9	8 to 10	10+
INTERVAL BETWEEN BERM	100′	75′	50′	25′	12′

For slope of less than 1%, install barriers only if erosion/sediment is prevalent

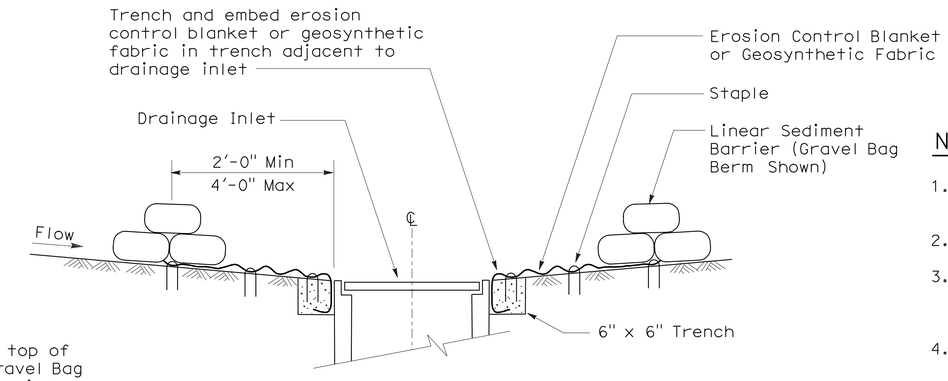

SECTION A-A

NOTES:

1. Place safety cones adjacent to drainage inlet protection.
2. Dimensions may vary to fit field conditions.
3. Install a minimum of 3 gravel bag berms upstream of each drainage inlet to be protected.
4. Position erosion control blanket or geosynthetic fabric at edge of concrete apron and secure in trench.
5. Erosion control blanket or geosynthetic fabric is not required if the area adjacent to the drainage inlet is vegetated or paved.

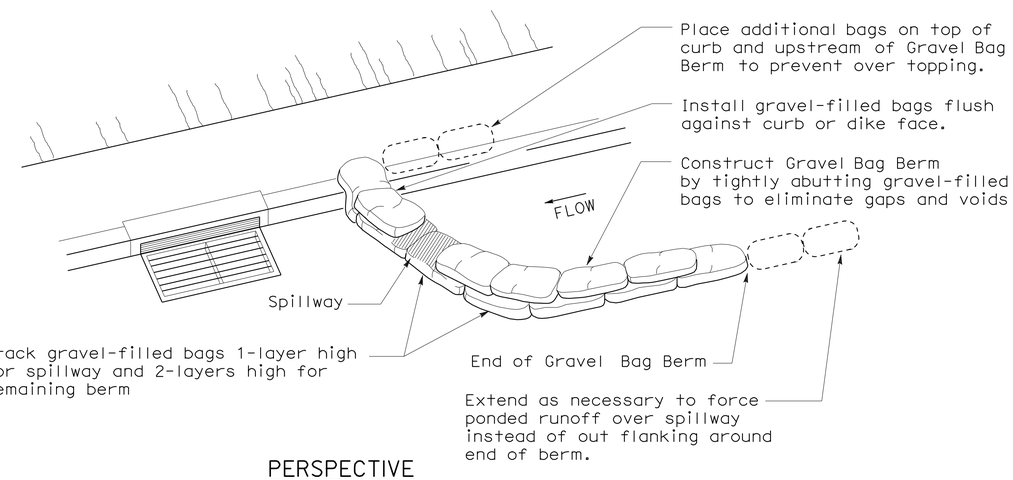

PERSPECTIVE

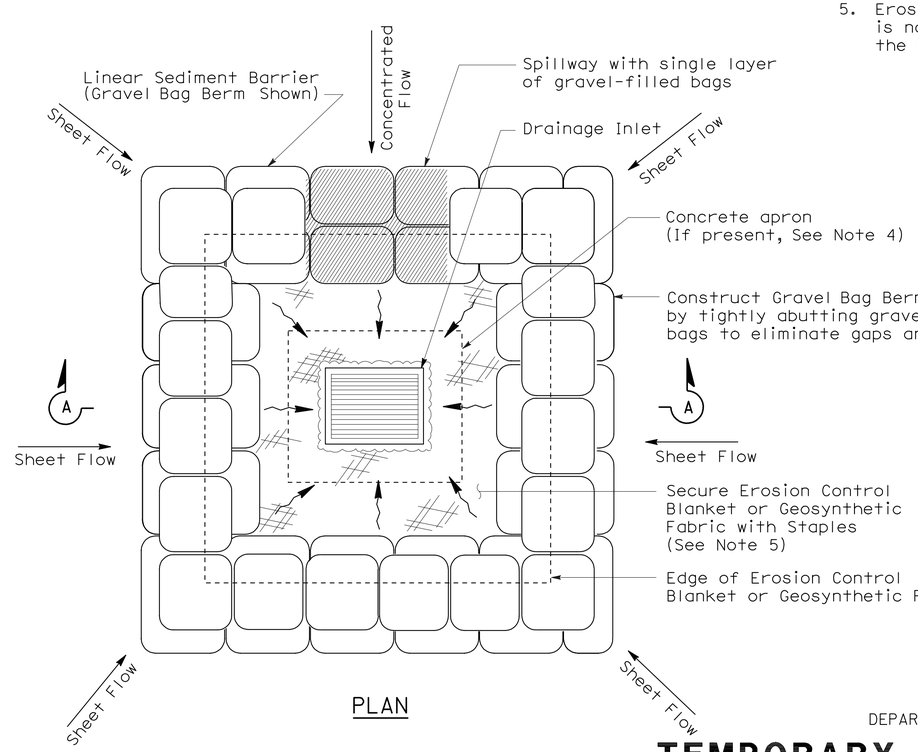

PLAN

TEMPORARY DRAINAGE INLET PROTECTION (TYPE 3B)

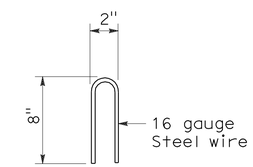

STAPLE DETAIL

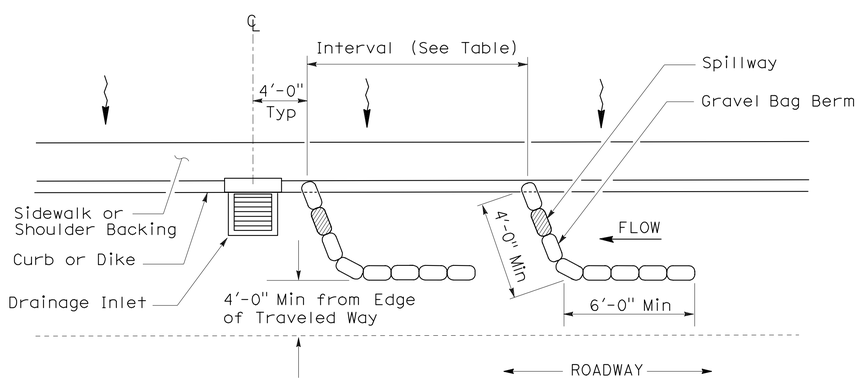

PLAN

TEMPORARY DRAINAGE INLET PROTECTION (TYPE 3A) (GRAVEL BAG BERM)

STATE OF CALIFORNIA
DEPARTMENT OF TRANSPORTATION

TEMPORARY WATER POLLUTION CONTROL DETAILS (TEMPORARY DRAINAGE INLET PROTECTION)

NO SCALE

NSP T62 DATED AUGUST 15, 2008 SUPPLEMENTS THE STANDARD PLANS BOOK DATED MAY 2006.

NEW STANDARD PLAN NSP T62

2006 NEW STANDARD PLAN NSP T62

7-11-08

DIST	COUNTY	ROUTE	POST MILES TOTAL PROJECT	SHEET NO.	TOTAL SHEETS
04	Ala	880	28.2/29.9	168	183

Robert B Schott
LICENSED LANDSCAPE ARCHITECT

August 15, 2008
PLANS APPROVAL DATE

LICENSED LANDSCAPE ARCHITECT Robert B. Schott 3025 Signature 11-04-08 Renewal Date 08-11-08 Date STATE OF CALIFORNIA

The State of California or its officers or agents shall not be responsible for the accuracy or completeness of electronic copies of this plan sheet.

To accompany plans dated 6-20-11

FLEXIBLE SEDIMENT BARRIER SPACING TABLE

SLOPE OF ROADWAY (PERCENT)	0 to 0.9	1 to 1.9	2 to 2.9	3 to 4	5+
INTERVAL BETWEEN BARRIERS	50′	35′	30′	25′	20′
ANGLE FROM FACE OF CURB	70°	70°	70°	45°	45°
SUGGESTED BARRIER LENGTH	6′	6′	6′	6′	6′

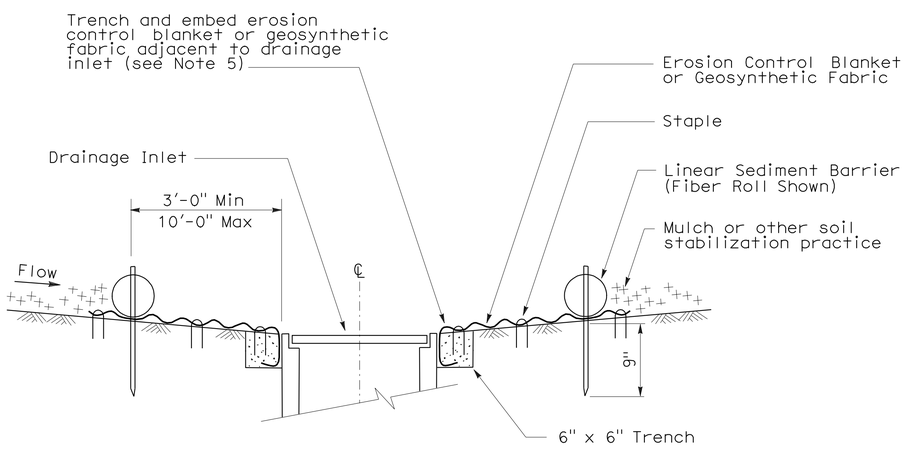

SECTION A-A

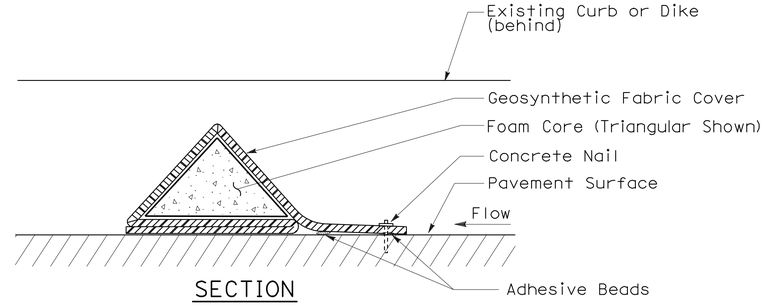

SECTION

FLEXIBLE SEDIMENT BARRIER DETAIL (FOAM BARRIER SHOWN)

NOTES:

1. See Standard Plan T51 for Temporary Silt Fence.
2. Dimensions may vary to fit field conditions.
3. Install a minimum of 3 flexible sediment barriers upstream of each drainage inlet to be protected.
4. Position erosion control blanket or geosynthetic fabric at edge of concrete apron and secure in trench.
5. Erosion control blanket or geosynthetic fabric is not required if the area adjacent to the drainage inlet is vegetated.

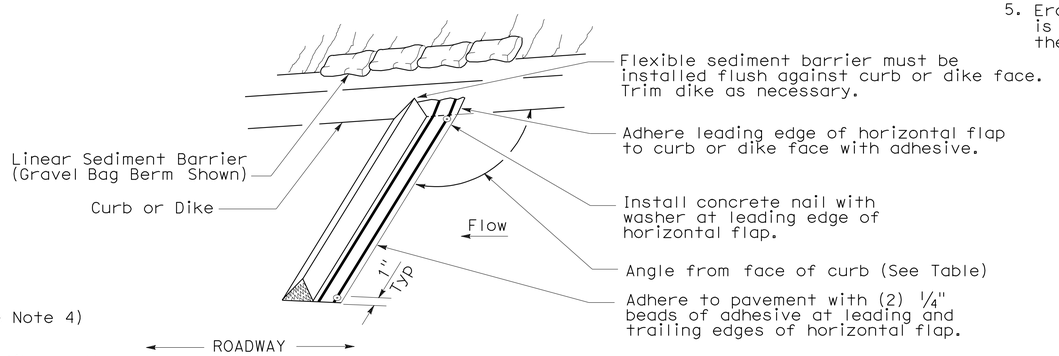

PERSPECTIVE

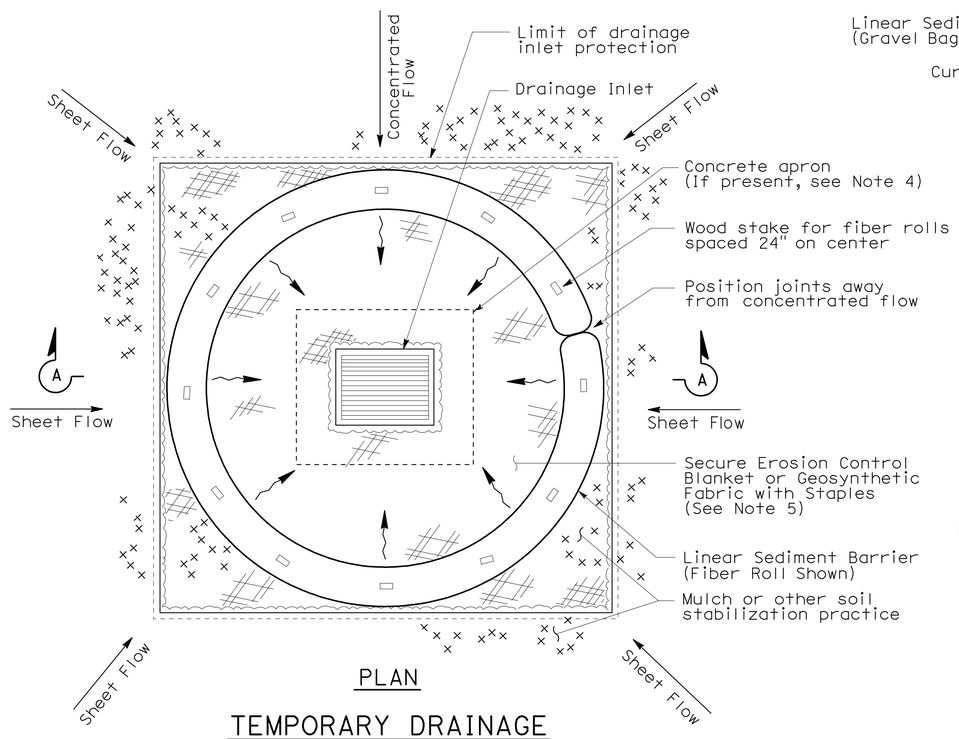

PLAN

TEMPORARY DRAINAGE INLET PROTECTION (TYPE 4A)

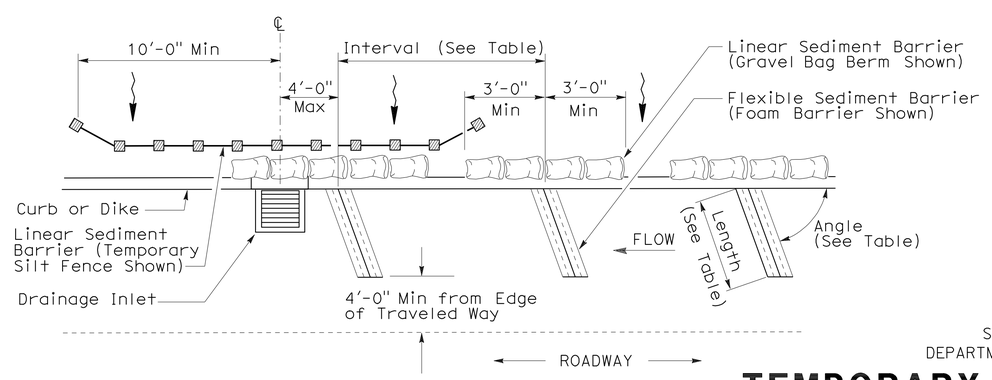

PLAN

TEMPORARY DRAINAGE INLET PROTECTION (TYPE 4B) FLEXIBLE SEDIMENT BARRIER

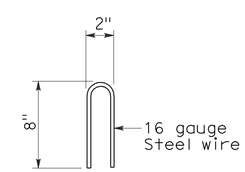

STAPLE DETAIL

STATE OF CALIFORNIA
DEPARTMENT OF TRANSPORTATION

TEMPORARY WATER POLLUTION CONTROL DETAILS (TEMPORARY DRAINAGE INLET PROTECTION)

NO SCALE

NSP T63 DATED AUGUST 15, 2008 SUPPLEMENTS THE STANDARD PLANS BOOK DATED MAY 2006.

NEW STANDARD PLAN NSP T63

2006 NEW STANDARD PLAN NSP T63

7-11-08

DIST	COUNTY	ROUTE	POST MILES TOTAL PROJECT	SHEET NO.	TOTAL SHEETS
04	Ala	880	28.2/29.9	169	183

Robert B Schott
LICENSED LANDSCAPE ARCHITECT

August 15, 2008
PLANS APPROVAL DATE

LICENSED LANDSCAPE ARCHITECT
Robert B. Schott 3625
Signature
11-04-08
Renewal Date
08-11-08
Date
STATE OF CALIFORNIA

The State of California or its officers or agents shall not be responsible for the accuracy or completeness of electronic copies of this plan sheet.

To accompany plans dated 6-20-11

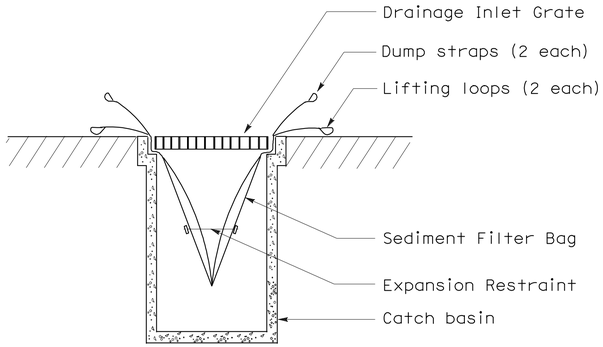

SECTION B-B

SEDIMENT FILTER BAG DETAIL

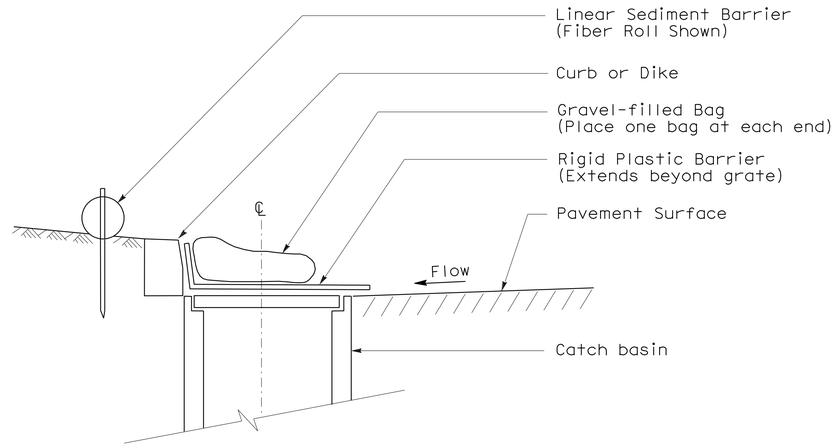

SECTION

TEMPORARY DRAINAGE INLET PROTECTION (TYPE 6A) (CATCH BASIN WITH GRATE)

NOTES:

1. See Standard Plan T51 for Temporary Silt Fence.
2. Dimensions may vary to fit field conditions.

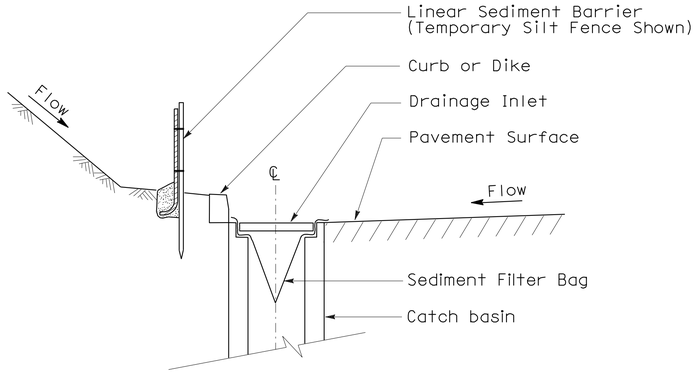

SECTION A-A

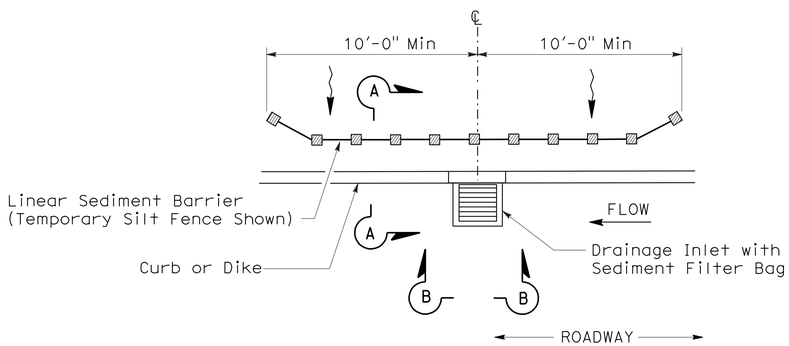

PLAN

TEMPORARY DRAINAGE INLET PROTECTION (TYPE 5) (SEDIMENT FILTER BAG)

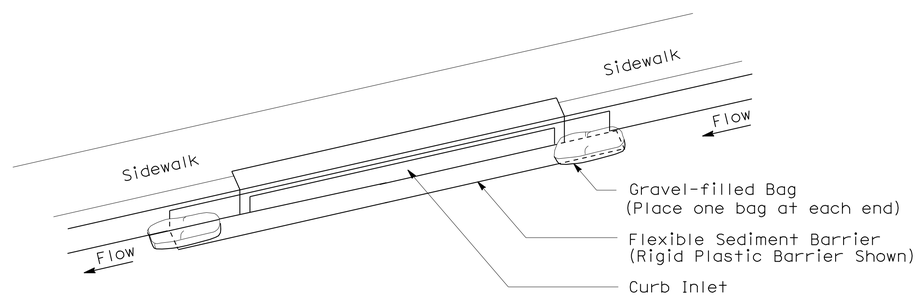

PERSPECTIVE

TEMPORARY DRAINAGE INLET PROTECTION (TYPE 6B) (CURB INLET WITHOUT GRATE)

STATE OF CALIFORNIA
DEPARTMENT OF TRANSPORTATION

TEMPORARY WATER POLLUTION CONTROL DETAILS (TEMPORARY DRAINAGE INLET PROTECTION)

NO SCALE

NSP T64 DATED AUGUST 15, 2008 SUPPLEMENTS
THE STANDARD PLANS BOOK DATED MAY 2006.

NEW STANDARD PLAN NSP T64

2006 NEW STANDARD PLAN NSP T64

7-11-08

DIST	COUNTY	ROUTE	POST MILES TOTAL PROJECT	SHEET NO.	TOTAL SHEETS
04	Ala	880	28.2/29.9	170	183

REGISTERED ELECTRICAL ENGINEER

October 5, 2007
PLANS APPROVAL DATE

REGISTERED PROFESSIONAL ENGINEER Jeffery G. McRae No. E14512 Exp. 6-30-08 ELECTRICAL STATE OF CALIFORNIA

The State of California or its officers or agents shall not be responsible for the accuracy or completeness of electronic copies of this plan sheet.

To accompany plans dated 6-20-11

2006 REVISED STANDARD PLAN RSP ES-1A

ELECTROLIERS

STANDARD TYPES
15, 15D
15 STRUCTURE
21, 21D STRUCTURE
30
31
32
35
36-20A

High mast light pole

Double Arm lighting standard

Existing electrolier

Electrolier foundation (Future installation)

NOTES:

1. Luminaires shall be 310 W HPS when installed on Type 21, 21D, 30, 31, 32, 35 and 36-20A Standards, unless otherwise specified. Luminaires shall be 200 W HPS when installed on other type standards or poles, unless otherwise specified.
2. Luminaires shall be the cutoff type, ANSI Type Ⅲ medium cutoff lighting distribution, unless otherwise specified.
3. Variations noted adjacent to symbol on project plans.

Electrolier (see project notes or project plans)

Luminaire on wood pole

STANDARD NOTES:

- AB — Abandon. If applied to conduit, remove conductors.
- BC — Install pull box in existing conduit run.
- BP — Pedestrian barricade, type as indicated on plan.
- CB — Install conduit into existing pull box.
- CC — Connect new and existing conduit. Remove existing conductors and install conductors as indicated.
- CF — Conduit to remain for future use. Remove conductors. Install pull wire or rope.
- DH — Detector handhole.
- FA — Foundation to be abandoned.
- IS — Install sign on signal mast arm.
- NS — No slip base on standard.
- PEC — Photoelectric control.
- PEU — Photoelectric unit.
- RC — Equipment or material to be removed and become the property of the Contractor.
- RE — Remove electrolier, fuses and ballast. Tape ends of conductors.
- RL — Relocate equipment.
- RR — Remove and reuse equipment.
- RS — Remove and salvage equipment.
- SC — Splice new to existing conductors.
- SD — Service disconnect.
- SF — Standard to remain for future use. Remove luminaire, pole conductors, fuses and ballast.
- TSP — Telephone service point.

ABBREVIATIONS AND EQUIPMENT DESIGNATIONS

PROPOSED	EXISTING	
BBS	bbs	Battery backup system
BC	bc	Bolt circle
C	C	Conduit
CCTV	cctv	Closed circuit television
CKT	ckt	Circuit
CMS	cms	Changeable message sign
DLC	dlc	Loop detector lead-in cable
EMS	ems	Extinguishable message sign
EVC	evc	Emergency vehicle cable
EVD	evd	Emergency vehicle detector
FB	fb	Flashing beacon
FBCA	fbca	Flashing beacon control assembly
FBS	fbs	Flashing beacon with slip base
FO	fo	Fiber optic
G	G	Ground (Equipment Grounding Conductor)
GFCI	GFCI	Ground fault circuit interrupt
HAR	har	Highway advisory radio
HEX	hex	Hexagonal
HPS	hps	High pressure sodium
IISNS	iisns	Internally illuminated street name sign
ISL	isl	Induction sign lighting
LED	led	Light emitting diode
LMA	lma	Luminaire mast arm
LPS	lps	Low pressure sodium
LTG	ltg	Lighting
LUM	lum	Luminaire
MAT	mat	Mast arm mounting vehicle signal faces, top attachment
MAS	mas	Mast arm mounting vehicle signal faces, side attachment
MAS-4A	mas-4A	Mast arm mounting vehicle signal faces, side attachment - 4 signal section
MAS-4B	mas-4B	
MAS-4C	mas-4C	
MAS-5A	mas-5A	Mast arm mounting vehicle signal faces, side attachment - 5 signal section
MAS-5B	mas-5B	
MC	mc	Mercury contactor
M/M	m/m	Multiple to multiple transformer
MT	mt	Conduit with pull wire or rope only
MTG	mtg	Mounting
	mv	Mercury vapor lighting fixture
N	N	Neutral (Grounded Conductor)
NC	NC	Normally closed
NO	NO	Normally open
PB	pb	Pull box
PEC	pec	Photoelectric control (Type Ⅰ, Ⅱ, Ⅲ, Ⅳ or Ⅴ as shown)
PED	ped	Pedestrian
PEU	peu	Photoelectric unit
PPB	ppb	Pedestrian push button
RL		Relocated equipment
RM	rm	Ramp metering
SB	sb	Slip base
SIC	sic	Signal interconnect cable
SIG	sig	Signal
SMA	sma	Signal mast arm
SNS	sns	Street name sign
SP	sp	Service point
TDC	tdc	Telephone demarcation cabinet
TMS	tms	Traffic monitoring station
TOS	tos	Traffic Operations System
VEH	veh	Vehicle
XFMR	xfmr	Transformer
COMM	comm	Communication
RWIS	rwis	Roadway weather information system

SOFFIT AND WALL MOUNTED LUMINAIRES

Pendant, 70 W HPS unless otherwise specified.

Flush, 70 W HPS unless otherwise specified.

Wall surface, 70 W HPS unless otherwise specified.

Existing soffit or wall luminaire to remain unmodified.

Existing soffit or wall luminaire to be modified as specified.

NOTE:

Arrow indicates "street side" of luminaire.

STATE OF CALIFORNIA
DEPARTMENT OF TRANSPORTATION

ELECTRICAL SYSTEMS (SYMBOLS AND ABBREVIATIONS)

NO SCALE

RSP ES-1A DATED OCTOBER 5, 2007 SUPERSEDES STANDARD PLAN ES-1A DATED MAY 1, 2006 - PAGE 400 OF THE STANDARD PLANS BOOK DATED MAY 2006.

REVISED STANDARD PLAN RSP ES-1A

DIST	COUNTY	ROUTE	POST MILES TOTAL PROJECT	SHEET NO.	TOTAL SHEETS
04	Ala	880	28.2/29.9	171	183

REGISTERED ELECTRICAL ENGINEER

October 5, 2007
PLANS APPROVAL DATE

REGISTERED PROFESSIONAL ENGINEER
Jeffery G. McRae
No. E14512
Exp. 6-30-08
ELECTRICAL
STATE OF CALIFORNIA

The State of California or its officers or agents shall not be responsible for the accuracy or completeness of electronic copies of this plan sheet.

To accompany plans dated 6-20-11

CONDUIT

PROPOSED	EXISTING	
		Lighting Conduit, unless otherwise indicated or noted
		Traffic signal conduit
C	c	Communication conduit
T	t	Telephone conduit
F	f	Fire alarm conduit
FO	fo	Fiber optic conduit
		Conduit termination (RSP ES-9A C)
R	r	Conduit riser in/on structure or service pole

SERVICE EQUIPMENT

PROPOSED	EXISTING	
OH	oh	Overhead lines
U	U	Wood pole "U" indicates utility owned
		Pole guy with anchor
		Utility transformer - ground mounted
III		Service equipment enclosure type
		Service equipment enclosure door indicates front of enclosure
T	t	Telephone demarcation cabinet

POLE-MOUNTED SERVICE DESIGNATION

Type of installation

TYPE H SERVICE - 28'-10" ← Pole height above grade

ILLUMINATED OVERHEAD SIGN

PROPOSED	EXISTING	
		Overhead sign - Single post
		Overhead sign - Two post
		Overhead sign - Mounted on structure
		Overhead sign with electrolier

SIGNAL EQUIPMENT

PROPOSED	EXISTING	
		Pedestrian signal face
		Pedestrian push button post
		Pedestrian barricade
		Vehicle signal face (with backplate, 3-Section: red, yellow and green)
		Vehicle signal face with angle visors
PV	PV	Modifications of basic symbols: "L" indicates all non-arrow sections louvered "LG" indicates louvered green section only "PV" indicates 12" programmed visibility sections "8" indicates all 8" sections (only when specified)
		Type 15TS and Vehicle signal face
		Vehicle signal face with red, yellow and green left arrow sections
		Vehicle signal face with red and yellow sections and up green arrow
		Vehicle signal face (5 Section) with red, yellow and green sections and yellow and green right arrows
		Type 1 Standard and attached vehicle signal faces
		Standard with signal mast arm only and attached vehicle signal faces and internally illuminated street name sign
		Type 33 Standard, Left-turn vehicle signal face and sign
		Standard with luminaire and signal mast arms and attached vehicle signal faces
		Cantilever flashing beacon Type 9 Frame, with a sign unless otherwise specified or indicated
		Type 15-FBS Standard with two vehicle signal face sections with lens, backplate and visor with a sign
R	Y	Flashing beacon. One vehicle signal face section with lens, backplate and visor. "R" indicates red indication, "Y" indicates yellow indication
		Controller assembly. Door indicates front of cabinet

SIGNAL EQUIPMENT Cont

PROPOSED	EXISTING	
		Guard post
		Type 1 Standard with "Meter On" sign
		Emergency Vehicle detector

NOTES:

1. All signal sections shall be 12" unless shown otherwise.
2. Signal heads shall be provided with backplates unless shown otherwise.
3. Signal indication shall be LED.

STATE OF CALIFORNIA
DEPARTMENT OF TRANSPORTATION

ELECTRICAL SYSTEMS (SYMBOLS AND ABBREVIATIONS)

NO SCALE

RSP ES-1B DATED OCTOBER 5, 2007 SUPERCEDES STANDARD PLAN ES-1B DATED MAY 1, 2006 - PAGE 401 OF THE STANDARD PLANS BOOK DATED MAY 2006.

REVISED STANDARD PLAN RSP ES-1B

2006 REVISED STANDARD PLAN RSP ES-1B

DIST	COUNTY	ROUTE	POST MILES TOTAL PROJECT	SHEET NO.	TOTAL SHEETS
04	Ala	880	28.2/29.9	172	183

REGISTERED ELECTRICAL ENGINEER

October 5, 2007
PLANS APPROVAL DATE

REGISTERED PROFESSIONAL ENGINEER Jeffery G. McRae No. E14512 Exp. 6-30-08 ELECTRICAL STATE OF CALIFORNIA

The State of California or its officers or agents shall not be responsible for the accuracy or completeness of electronic copies of this plan sheet.

To accompany plans dated 6-20-11

EQUIPMENT IDENTIFICATION

ILLUMINATED SIGN IDENTIFICATION NUMBER:

Sign No. 12345

10 ISL SCI 1.0

- Sign number - Place on post or structure
- Transformer rating (kVA)
- Lighting control type
- Number and type of fixtures

Do NOT place on standard or structure

ELECTROLIER OR EQUIPMENT IDENTIFICATION NUMBER:

12345 - 15'-0"

- Mast arm length, if shown. Do not place on standard or structure.
- Equipment number - Place on standard or structure. Existing equipment numbers are shown in parenthesis

CONDUIT AND CONDUCTOR IDENTIFICATION:

1½"C, 2#10, 15#14, 2 DLC

- Number and size of conductors and cables
- Size of conduit in inches

Ø1, Ø2, Ø2P, etc.	Traffic phase identification for signal faces, detectors and phase diagrams
1 2 3	Project note numbers
A B C	Equipment description, installation or item numbers
1 2 3	Conduit run numbers

SIGNAL AND LIGHTING STANDARD (TYPICAL DESIGNATION):

19A - 3 - 100

- Wind velocity = 100 mph
- Case 3 arm loading
- Standard type
- Standard Plan sheet number
- Detail number or letter

MISCELLANEOUS EQUIPMENT

PROPOSED	EXISTING	
CMS	cms	Changeable message sign
		Closed circuit television camera
		Highway advisory radio pole and antenna
EMS	ems	Extinguishable message sign
M V	m v	Detection device M = Microwave sensor V = Video image sensor

WIRING DIAGRAM LEGEND

P	Pole
CB	Circuit breaker
A	Ampere
V	Volt
M	Metered
UM	Unmetered
NB	Neutral bus
GB	Ground bus
G	Equipment grounding conductor
N	Grounded conductor (Neutral)

- External conductor
- Conductor or bus
- Tie point
- Contactor coil
- Contactor, Contact NO
- Terminal blocks
- Contactor, Contact NC
- Enclosure bond
- Grounding electrode
- Circuit breaker
- Receptacle

PULL BOXES

PROPOSED EXISTING

Pull box-No. 5 unless otherwise indicated or noted.

3 9A(21)

Pull box-Additional designations or descriptions

3	= No. 3½ pull box
5	= No. 5 pull box
6	= No. 6 pull box
7	= No. 7 (Ceiling pull box)
8	= No. 8 (Pendant soffit pull box)
9	= No. 9 pull box
9A	= No. 9A pull box

(C)	= Communications pull box
(E)	= Pull box with extension
(S)	= Sprinkler control pull box
(21)	= Anchor bolts and conduit for future installation of Type 21 Standard
(T)	= Traffic pull box

VEHICLE DETECTORS

5 J 9 U

- Vehicle detector designation
- U = Upper
  L = Lower
- Slot number in input file
- Input file (I or J)
- Phase

PROPOSED EXISTING

	Type A detector loop. Outline of sawcut shown.
	Type B detector loop. Outline of sawcut shown.
	Type C detector loop. Outline of sawcut shown.
	Type D detector loop. Outline of sawcut shown.
	Type E detector loop. Outline of sawcut shown.
	Type Q detector loop. Outline of sawcut shown.
	Magnetic detector
DH dh	Detector handhole
	Microwave or video detection zone

STATE OF CALIFORNIA
DEPARTMENT OF TRANSPORTATION

ELECTRICAL SYSTEMS (SYMBOLS AND ABBREVIATIONS)

NO SCALE

RSP ES-1C DATED OCTOBER 5, 2007 SUPERCEDES STANDARD PLAN ES-1C DATED MAY 1, 2006 - PAGE 402 OF THE STANDARD PLANS BOOK DATED MAY 2006.

REVISED STANDARD PLAN RSP ES-1C

2006 REVISED STANDARD PLAN RSP ES-1C

7-10-07

DIST	COUNTY	ROUTE	POST MILES TOTAL PROJECT	SHEET NO.	TOTAL SHEETS
04	Ala	880	28.2/29.9	173	183

REGISTERED CIVIL ENGINEER

October 5, 2007
PLANS APPROVAL DATE

REGISTERED PROFESSIONAL ENGINEER
Stanley P. Johnson
No. C57793
Exp. 3-31-08
CIVIL
STATE OF CALIFORNIA

The State of California or its officers or agents shall not be responsible for the accuracy or completeness of electronic copies of this plan sheet.

To accompany plans dated 6-20-11

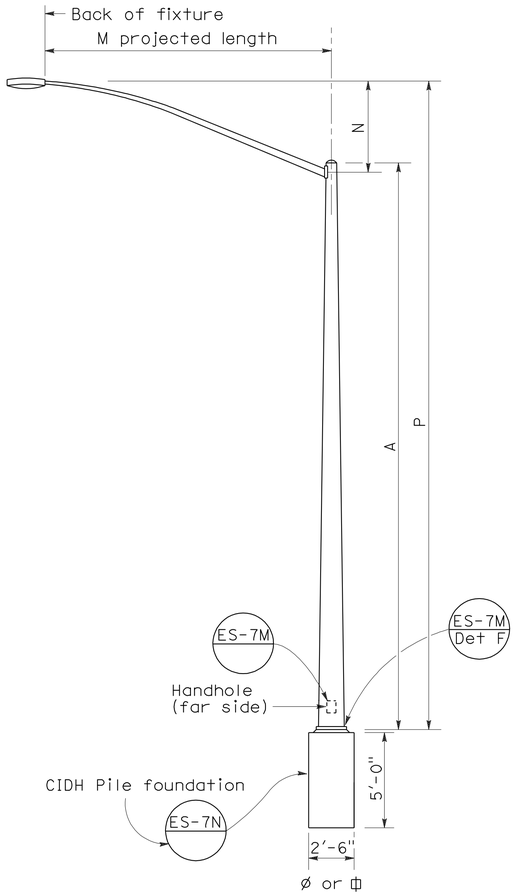

ELEVATION
TYPE 15 AND TYPE 21

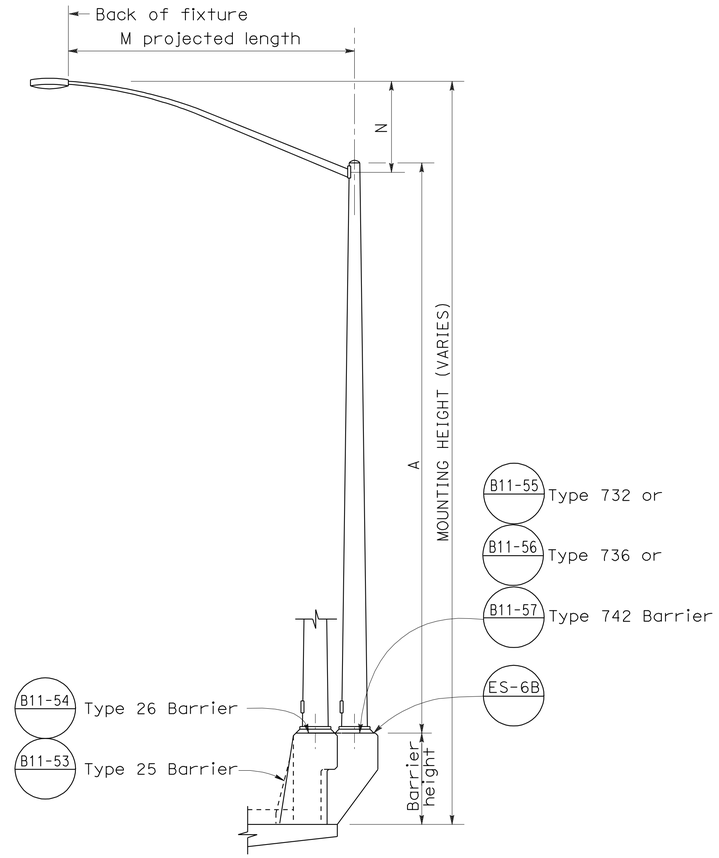

ELEVATION
TYPE 15 AND TYPE 21 BARRIER RAIL MOUNTED

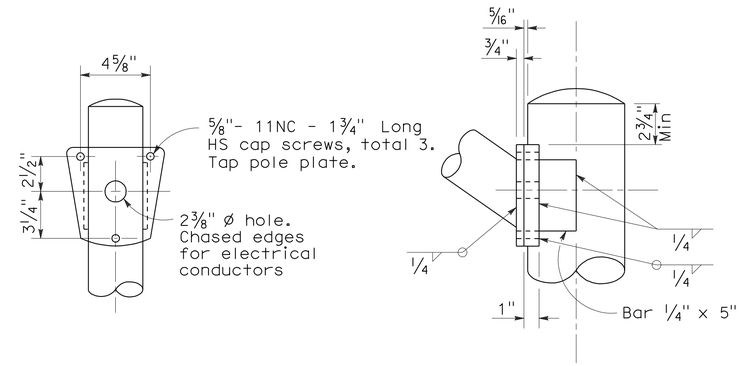

DETAIL R
LUMINAIRE ARM CONNECTION

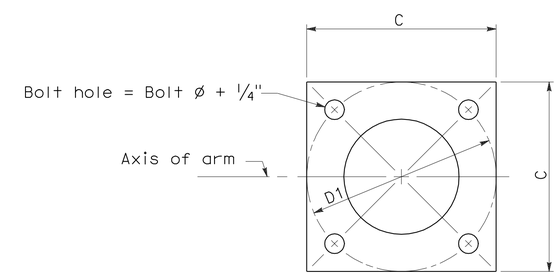

BASE PLATE

POLE TYPE	POLE DATA				BASE PLATE DATA				LUMINAIRE ARM
	A Height	Min OD Base	Min OD Top	Wall Thickness	C	D1 Bolt Circle	Thick-ness	Anchor Bolts Size	
15	30'	8"	3 7/8"	0.1196"	1'-0"	1'-0"	1"	1" ø x 3'-0" x 4"*	6' - 15' [12']
21	35'	8 5/8"	3 7/8"	0.1196"	1'-0"	1'-0"	1"	1 1/4"ø x 3'-0" x 4"*	6' - 15' [12']

* For barrier rail bolts, see Standard Plan ES-6B.

LUMINAIRE ARM DATA					
M Projected Length	N Rise	Min OD At Pole	Nominal Thickness	P Type 15	P Type 21
6'-0"	2'-0"±	3 1/4"	0.1196"	31'-6"±	36'-6"±
8'-0"	2'-6"±	3 1/2"	0.1196"	32'-0"±	37'-0"±
10'-0"	3'-3"±	3 7/8"	0.1196"	32'-9"±	37'-9"±
12'-0"	4'-3"±	3 7/8"	0.1196"	33'-9"±	38'-9"±
15'-0"	4'-9"±	4 1/4"	0.1196"	34'-3"±	39'-3"±

NOTES:

1. ☐ Indicates arm length to be used unless otherwise noted on the plans.
2. For Type 15-SB, use Type 15 standard with Type 30 slip base plate details, see Standard Plan ES-6F.
3. For additional notes, see Standard Plan ES-7M and ES-7N.

STATE OF CALIFORNIA
DEPARTMENT OF TRANSPORTATION

ELECTRICAL SYSTEMS (LIGHTING STANDARD TYPES 15 AND 21)

NO SCALE

RSP ES-6A DATED OCTOBER 5, 2007 SUPERCEDES STANDARD PLAN ES-6A DATED MAY 1, 2006 - PAGE 427 OF THE STANDARD PLANS BOOK DATED MAY 2006.

REVISED STANDARD PLAN RSP ES-6A

2006 REVISED STANDARD PLAN RSP ES-6A

DIST	COUNTY	ROUTE	POST MILES TOTAL PROJECT	SHEET NO.	TOTAL SHEETS
04	Ala	880	28.2/29.9	174	183

REGISTERED ELECTRICAL ENGINEER

October 5, 2007
PLANS APPROVAL DATE

REGISTERED PROFESSIONAL ENGINEER Jeffery G. McRae No. E14512 Exp. 6-30-08 ELECTRICAL STATE OF CALIFORNIA

The State of California or its officers or agents shall not be responsible for the accuracy or completeness of electronic copies of this plan sheet.

To accompany plans dated 6-20-11

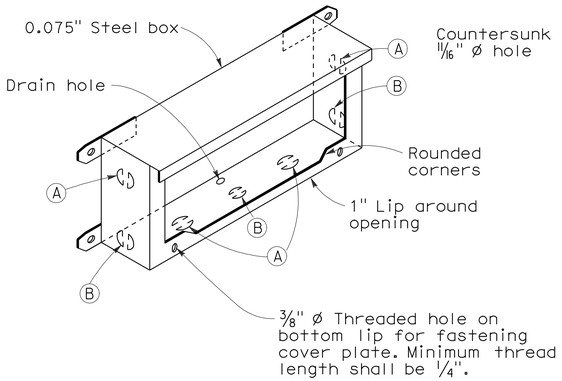

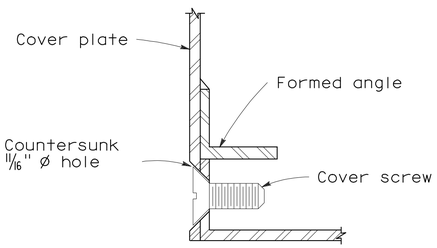

DETAIL J

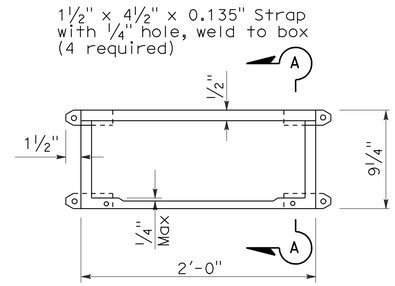

PLAN

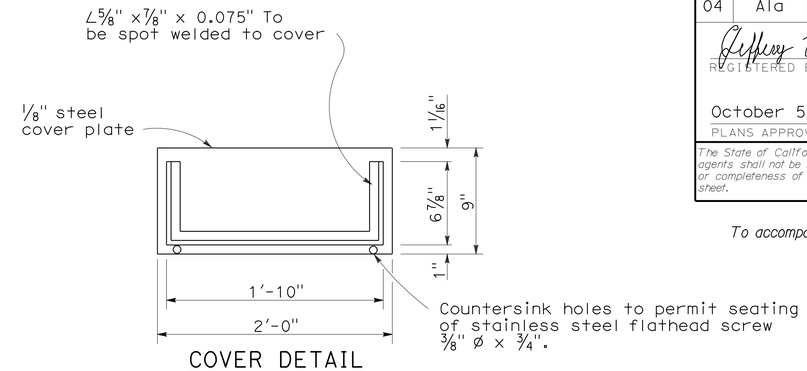

COVER DETAIL

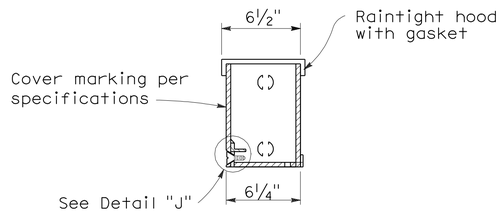

SECTION A-A

INSTALLATION NOTE:

Box shall be parallel to top of railing. Close cover box during pouring with 1/4" plywood of sufficient size to provide 1:1 chamfer on 3 sides of cover. Upper edge of plywood shall fit against lower edge of raintight hood.

No. 9 STRUCTURE PULL BOX

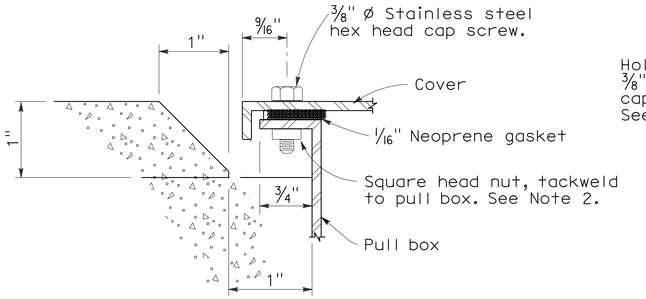

SECTION C-C

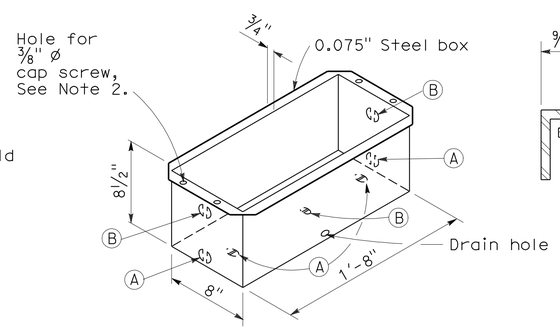

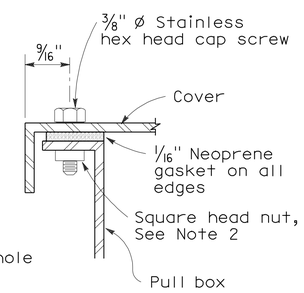

DETAIL A

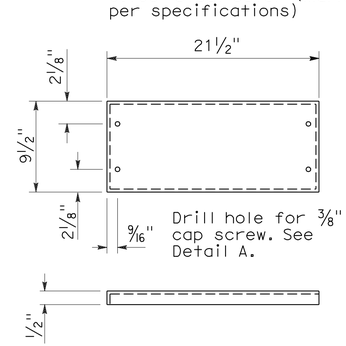

COVER DETAIL

NOTES: No. 9 and 9A Pull Box

1. Corner joints shall be lapped and secured by spot welding or riveting.
2. Where cap screws are used to attach cover to box, either of the following methods of providing adequate threading may be used:
   a. Tack weld square nut to bottom of flange (Total 4), or
   b. Tack weld a 1/4" x 5/8" x 8" bar beneath flange (Total 2).
3. Pound knockouts flat after punching.
4. Multiple size knockouts shall not be permitted.
5. Pull box covers shall be marked as shown on Standard Plan ES-8.

No. 9A STRUCTURE PULL BOX

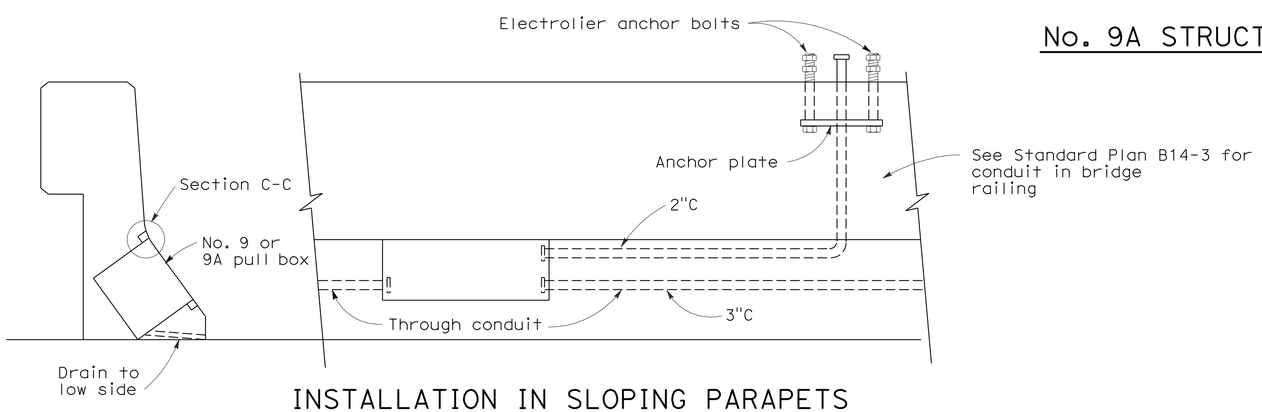

INSTALLATION IN SLOPING PARAPETS

For reinforcement in area of electrolier, see railing sheets. For electrolier anchor bolts, see Standard Plan ES-6B.

KNOCKOUT SCHEDULE
No. 9 AND 9A PULL BOX

(A) 2"C, 1 each end, 2 on bottom.

(B) 3"C, 1 each end, 1 on bottom.

STATE OF CALIFORNIA
DEPARTMENT OF TRANSPORTATION

ELECTRICAL SYSTEMS (ELECTRICAL DETAILS STRUCTURE INSTALLATIONS)

NO SCALE

RSP ES-9C DATED OCTOBER 5, 2007 SUPERCEDES STANDARD PLAN ES-9C DATED MAY 1, 2006 - PAGE 456 OF THE STANDARD PLANS BOOK DATED MAY 2006.

REVISED STANDARD PLAN RSP ES-9C

2006 REVISED STANDARD PLAN RSP ES-9C

7-26-07

DIST	COUNTY	ROUTE	POST MILES TOTAL PROJECT	SHEET NO.	TOTAL SHEETS
04	Ala	880	28.2/29.9	175	183

REGISTERED ELECTRICAL ENGINEER

October 5, 2007
PLANS APPROVAL DATE

REGISTERED PROFESSIONAL ENGINEER
Jeffery G. McRae
No. E14512
Exp. 6-30-08
ELECTRICAL
STATE OF CALIFORNIA

The State of California or its officers or agents shall not be responsible for the accuracy or completeness of electronic copies of this plan sheet.

To accompany plans dated 6-20-11

NOTES: (FOR LIGHTING AND SIGN ILLUMINATION CONTROL)

1. The ballast voltages of lighting fixtures and luminaires shall match line service voltages.
2. Voltage rating of photoelectric controls shall conform to the service voltage indicated on the plans.
3. Terminal strip shall be provided for wiring to fixtures.
4. Type SC1A, SC2A, SC3A controls are similar to Types SC1, SC2 and SC3 controls respectively except test switch and wiring are not required.

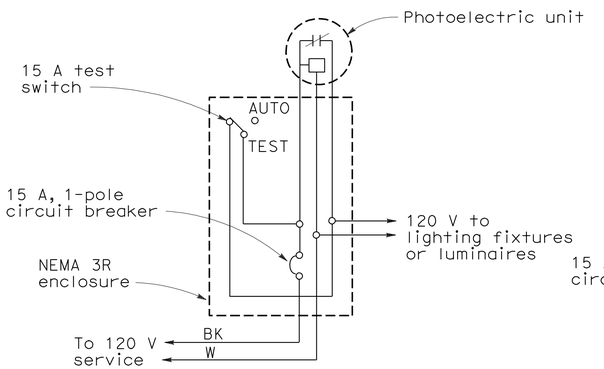

TYPE LC1 CONTROL

For 120 V unswitched circuit with no more than 800 W load.

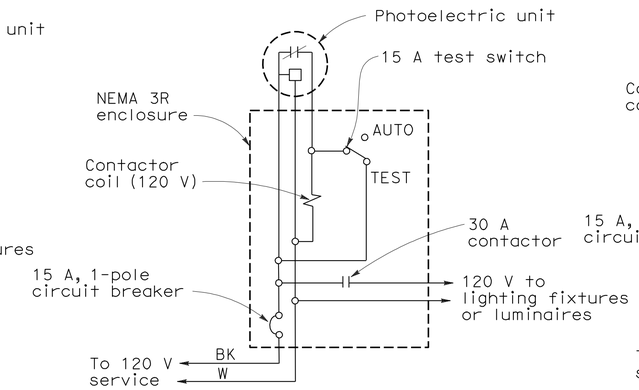

TYPE LC2 CONTROL

For 120 V unswitched circuit

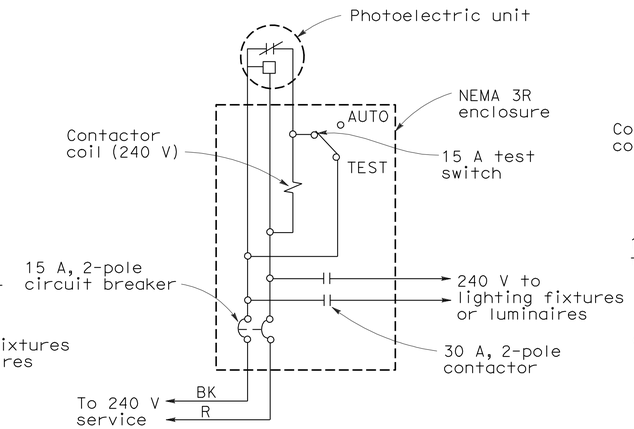

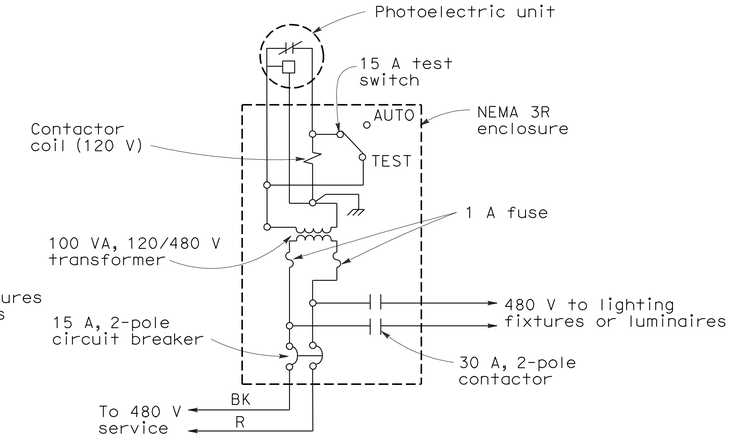

TYPE LC3 CONTROL

For 240 V and 480 V unswitched circuits

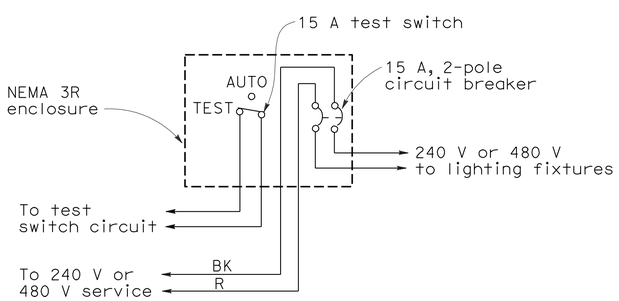

TYPE SC1 CONTROL

For 240 V or 480 V switched circuit, see Note 4 for Type SC1A

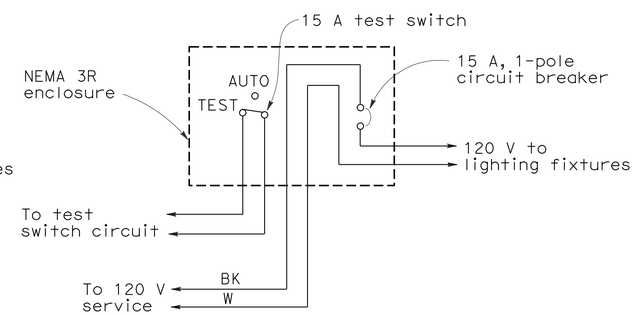

TYPE SC2 CONTROL

For 120 V switched circuit, see Note 4 for Type SC2A

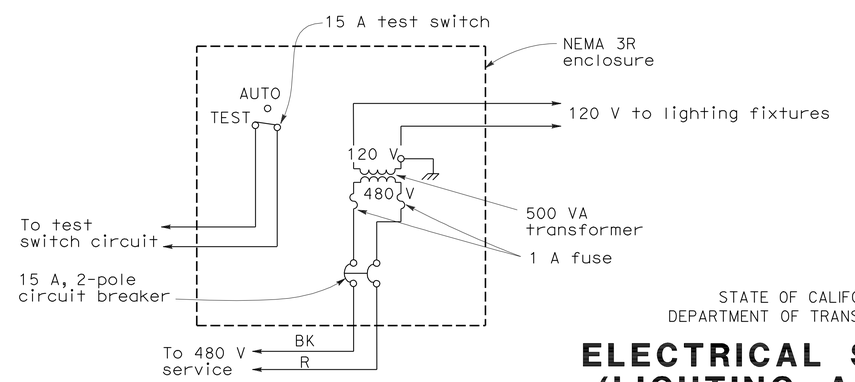

TYPE SC3 CONTROL

For 480 V switched sign circuit, see Note 4 for Type SC3A

STATE OF CALIFORNIA
DEPARTMENT OF TRANSPORTATION

ELECTRICAL SYSTEMS (LIGHTING AND SIGN ILLUMINATION CONTROL)

NO SCALE

RSP ES-15D DATED OCTOBER 5, 2007 SUPERCEDES STANDARD PLAN ES-15D DATED MAY 1, 2006 - PAGE 472 OF THE STANDARD PLANS BOOK DATED MAY 2006.

REVISED STANDARD PLAN RSP ES-15D

2006 REVISED STANDARD PLAN RSP ES-15D

DIST	COUNTY	ROUTE	POST MILES TOTAL PROJECT	SHEET No.	TOTAL SHEETS
04	Ala	880	28.2/29.9	176	183

REGISTERED CIVIL ENGINEER 3-4-11 DATE

6-20-11
PLANS APPROVAL DATE

REGISTERED PROFESSIONAL ENGINEER KHANH HA No. C57995 Exp. 06/30/12 CIVIL STATE OF CALIFORNIA

The State of California or its officers or agents shall not be responsible for the accuracy or completeness of electronic copies of this plan sheet.

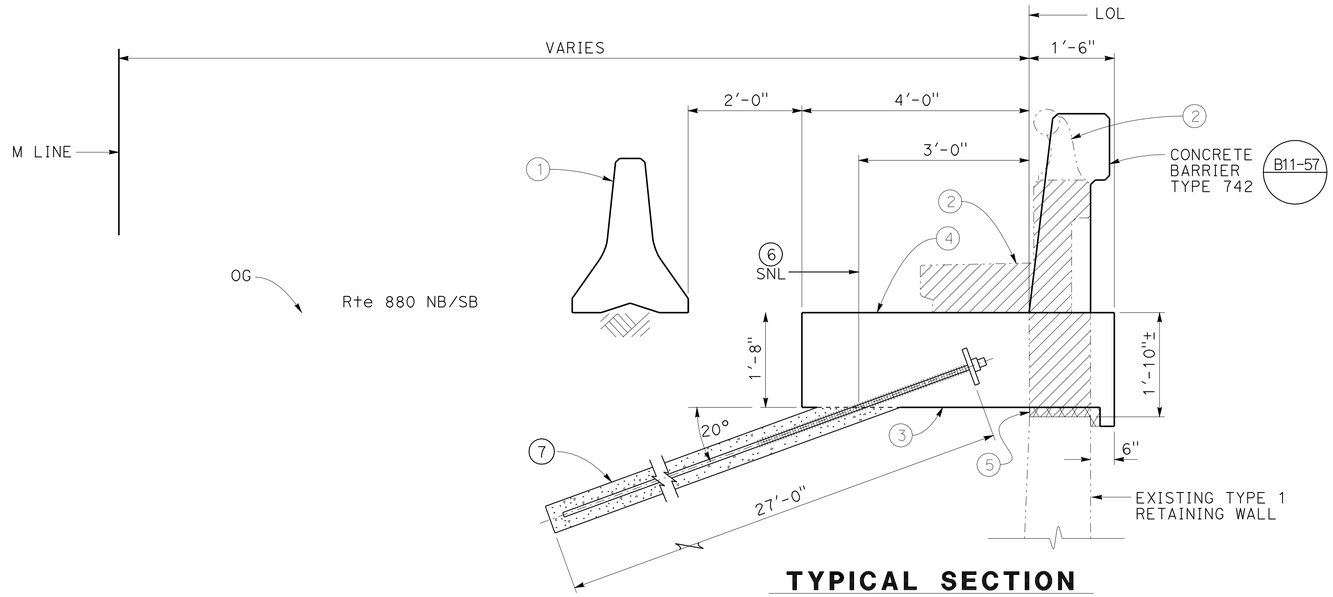

TYPICAL SECTION

3/4" = 1'-0"

QUANTITIES

TYPE 2 BARRIER REPLACEMENT

BRIDGE REMOVAL (PORTION), LOCATION A	LUMP	SUM
BRIDGE REMOVAL (PORTION), LOCATION B	LUMP	SUM
SOIL NAIL ASSEMBLY	4,617	LF
STRUCTURAL CONCRETE, BARRIER SLAB	285	CY
CONCRETE BARRIER (TYPE 742)	810	LF

LEGEND:

Indicates existing structure

Indicates concrete removal

INDEX TO PLANS

SHEET	TITLE
1	GENERAL PLAN
2	SOIL NAIL LAYOUT
3	TYPICAL SECTION DETAILS
4	SOIL NAIL DETAILS

STANDARD PLANS DATED MAY 2006

PLAN NO.	PLAN TITLE
A10A	ACRONYMS AND ABBREVIATIONS (SHEET 1 OF 2)
A10B	ACRONYMS AND ABBREVIATIONS (SHEET 2 OF 2)
A10C	SYMBOLS (SHEET 1 OF 2)
A10D	SYMBOLS (SHEET 2 OF 2)
B11-57	CONCRETE BARRIER TYPE 742

STANDARD PLAN NO.

DETAIL NO.

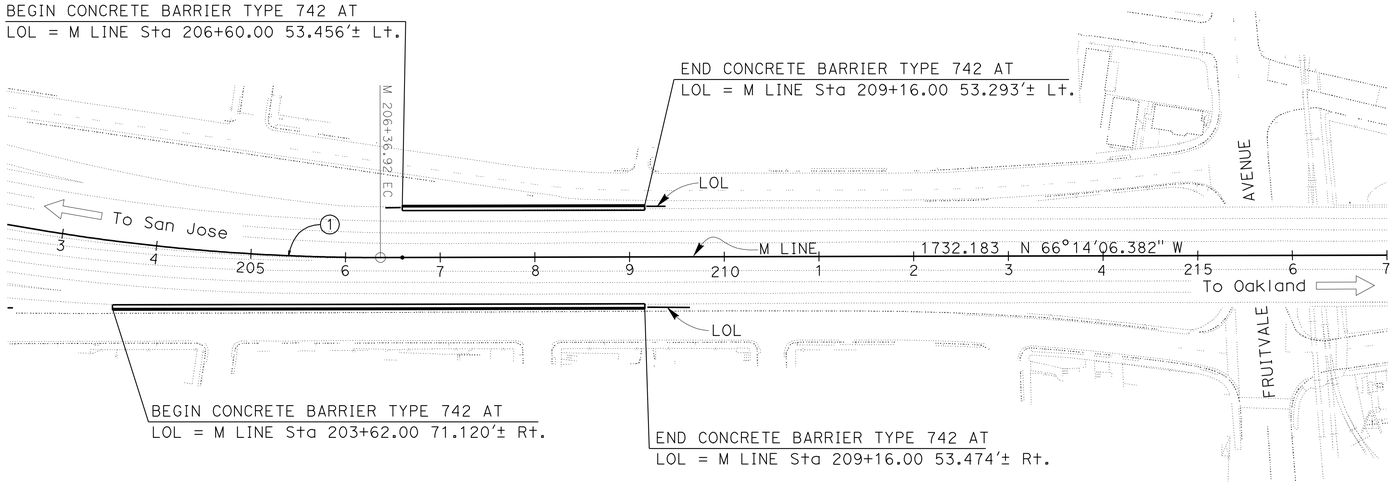

CURVE DATA

No.	R	Δ	T	L
1	2179.374'	19°06'9.610"	366.709'	726.613'

PLAN

1" = 80'

NOTES:

1. Temporary railing, Type K, see "Roadway Plans"
2. Existing Type 2 Barrier removal.
3. Structural concrete, Barrier Slab.
4. Match existing grade, see "Roadway Plans"
5. 2" Expanded Polystyrene.
6. Soil Nail Line "SNL"
7. Soil Nail. The contractor shall field locate all existing utilities before drilling the soil nails.

NOTE:
THE CONTRACTOR SHALL VERIFY ALL CONTROLLING FIELD DIMENSIONS BEFORE ORDERING OR FABRICATING ANY MATERIAL.

X
DESIGN ENGINEER

	BY	CHECKED
DESIGN	Nirav Shah	Khanh Ha
DETAILS	Carlo Cancino	Nirav Shah
QUANTITIES	Nirav Shah	Bichvan Thach

LOAD & RESISTANCE FACTOR DESIGN — LIVE LOADING: HL93 W/"LOW-BOY": PERMIT DESIGN VEHICLE

	BY	CHECKED
LAYOUT	Nirav Shah	Khanh Ha
SPECIFICATIONS	Xiahong Li	PLANS AND SPECS COMPARED Xiahong Li

ORIGINAL SCALE IN INCHES FOR REDUCED PLANS 0 1 2 3

STATE OF CALIFORNIA
DEPARTMENT OF TRANSPORTATION

DIVISION OF ENGINEERING SERVICES
STRUCTURE DESIGN
DESIGN BRANCH 8

BRIDGE NO. X
POST MILE 28.2/29.9

TYPE 2 BARRIER REPLACEMENT
GENERAL PLAN

UNIT: 3593
PROJECT NUMBER & PHASE: 04000201371
CONTRACT NO.: 04-1A6821

DISREGARD PRINTS BEARING EARLIER REVISION DATES

REVISION DATES 3-4-11 | SHEET 1 | OF 4

USERNAME => trphnis DATE PLOTTED => 22-JUN-2011 TIME PLOTTED => 14:08

STRUCTURES DESIGN GENERAL PLAN SHEET (ENGLISH) (REV.09-01-10)

FILE => 04-barr_01gp01.dgn

DIST	COUNTY	ROUTE	POST MILES TOTAL PROJECT	SHEET No.	TOTAL SHEETS
04	Ala	880	28.2/29.9	177	183

REGISTERED CIVIL ENGINEER — DATE 3-4-11

6-20-11
PLANS APPROVAL DATE

REGISTERED PROFESSIONAL ENGINEER — KHANH HA — No. C57995 — Exp. 06/30/12 — CIVIL — STATE OF CALIFORNIA

The State of California or its officers or agents shall not be responsible for the accuracy or completeness of electronic copies of this plan sheet.

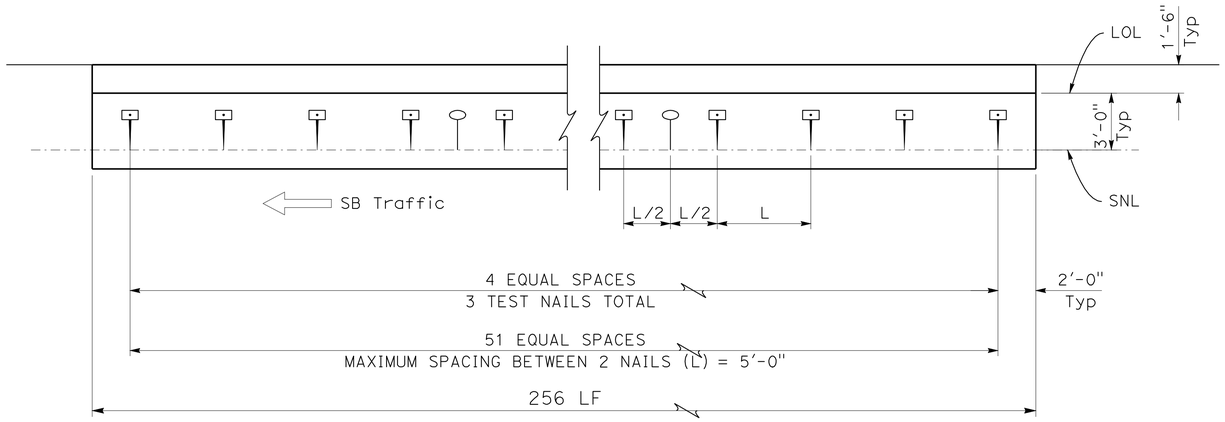

PLAN SB
1/4" = 1'-0"

LEGEND:

Indicates Soil Nail Assembly

Indicates Proof Test Nail

NOTES:

1. For Soil Nail assembly, see "TYPICAL SECTION DETAILS" sheet.
2. The exact location of the Proof Test Soil Nails to be determined by the Engineer. Test Nails can be relocated at the Engineer's discretion.

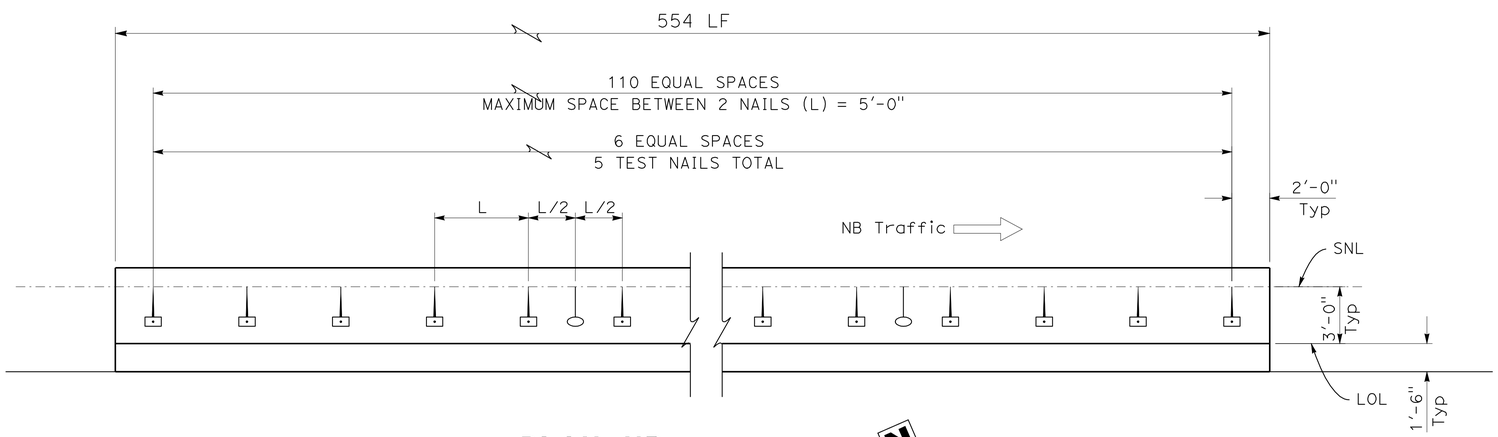

PLAN NB
1/4" = 1'-0"

NOTE:
THE CONTRACTOR SHALL VERIFY ALL CONTROLLING FIELD DIMENSIONS BEFORE ORDERING OR FABRICATING ANY MATERIAL.

	BY	CHECKED
DESIGN	Nirav Shah	Khanh Ha
DETAILS	JFCasarino	Nirav Shah
QUANTITIES	Nirav Shah	Bichvan Thach

STATE OF CALIFORNIA
DEPARTMENT OF TRANSPORTATION

DIVISION OF ENGINEERING SERVICES
STRUCTURE DESIGN
DESIGN BRANCH 8

BRIDGE NO. X
POST MILE 28.2/29.9

TYPE 2 BARRIER REPLACEMENT
SOIL NAIL LAYOUT

STRUCTURES DESIGN DETAIL SHEET (ENGLISH) (REV. 09-01-10)

ORIGINAL SCALE IN INCHES FOR REDUCED PLANS 0 1 2 3

UNIT: 3593
PROJECT NUMBER & PHASE: 04000201371
CONTRACT NO.: 04-1A6821

DISREGARD PRINTS BEARING EARLIER REVISION DATES

REVISION DATES: 03-8-11

SHEET 2 OF 4

FILE => 04-barr_02layo.dgn

USERNAME => trphils DATE PLOTTED => 22-JUN-2011 TIME PLOTTED => 14:08

DIST	COUNTY	ROUTE	POST MILES TOTAL PROJECT	SHEET No.	TOTAL SHEETS
04	Ala	880	28.2/29.9	178	183

REGISTERED CIVIL ENGINEER — DATE 3-4-11

6-20-11
PLANS APPROVAL DATE

REGISTERED PROFESSIONAL ENGINEER — KHANH HA — No. C57995 — Exp. 06/30/12 — CIVIL — STATE OF CALIFORNIA

The State of California or its officers or agents shall not be responsible for the accuracy or completeness of electronic copies of this plan sheet.

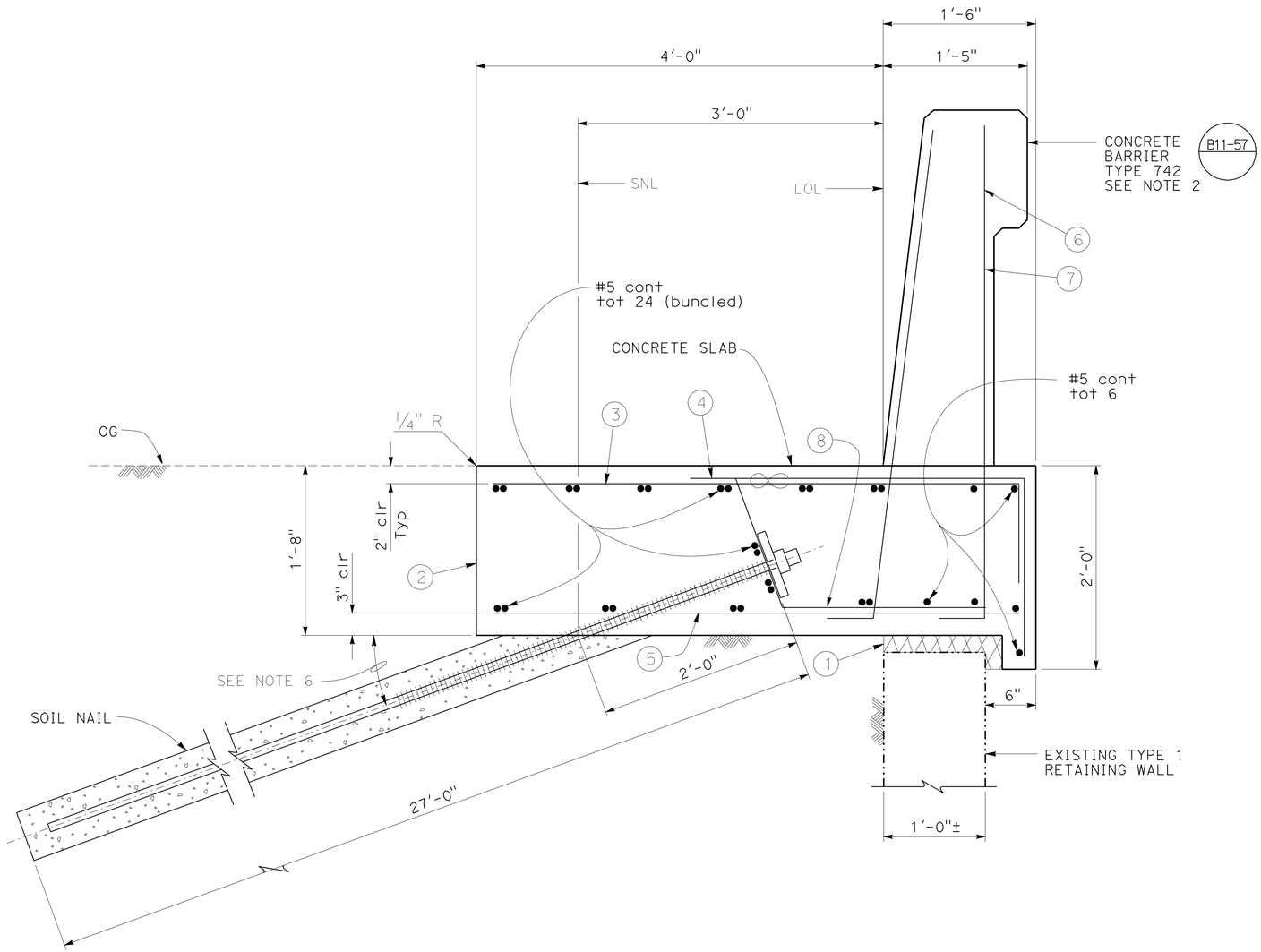

LEGEND:

- Indictes bundled bars.
- (1) 2" Expanded Polystyrene.
- (2) Contact Joint.
- (3) #5 1'-0" @ 12
- (4) #5 4'-0" @ 12
- (5) #5 @ 12
- (6) #5 6 1/4" @ 16
- (7) #5 6 1/4" @ 8
- (8) #5 1'-4" 2'-0" tot 8 @ 6, at each soil nail, 4 per side

NOTES:

1. Clearance to reinforcing steel in Concrete Barrier to be 1".
2. For Barrier Reinforcement not shown, see Standard Plans B11-57.
3. No Expansion Joints in Concrete Barrier or Barrier Slab within project limits.
4. Minimum moment slab length = 60'
5. Top of the existing Retaining Wall Elevation shall be verified in the field.
6. Soil Nail inclination = 20°.
7. For Soil Nail assembly and test soil nails, see "SOIL NAIL DETAILS" sheet.

SECTION AT TOP OF WALL WITH BARRIER SLAB AND CONCRETE BARRIER

1 1/2" = 1'-0"

NOTE:
THE CONTRACTOR SHALL VERIFY ALL CONTROLLING FIELD DIMENSIONS BEFORE ORDERING OR FABRICATING ANY MATERIAL.

	BY	CHECKED
DESIGN	Nirav Shah	Khanh Ha
DETAILS	JFCasarino	Nirav Shah
QUANTITIES	Nirav Shah	Bichvan Thach

STATE OF CALIFORNIA
DEPARTMENT OF TRANSPORTATION

DIVISION OF ENGINEERING SERVICES
STRUCTURE DESIGN
DESIGN BRANCH 8

BRIDGE NO. X
POST MILE 28.2/29.9

TYPE 2 BARRIER REPLACEMENT
TYPICAL SECTION DETAILS

STRUCTURES DESIGN DETAIL SHEET (ENGLISH) (REV. 09-01-10)

ORIGINAL SCALE IN INCHES FOR REDUCED PLANS 0 1 2 3

UNIT: 3593
PROJECT NUMBER & PHASE: 04000201371
CONTRACT NO.: 04-1A6821

DISREGARD PRINTS BEARING EARLIER REVISION DATES

REVISION DATES: 3-8-11

SHEET 3 OF 4

FILE => 04-barr_03typs.dgn

USERNAME => trphilis DATE PLOTTED => 22-JUN-2011 TIME PLOTTED => 14:08

DIST	COUNTY	ROUTE	POST MILES TOTAL PROJECT	SHEET No.	TOTAL SHEETS
04	Ala	880	28.2/29.9	179	183

REGISTERED CIVIL ENGINEER 3-4-11 DATE

6-20-11
PLANS APPROVAL DATE

REGISTERED PROFESSIONAL ENGINEER
KHANH HA
No. C57995
Exp. 06/30/12
CIVIL
STATE OF CALIFORNIA

The State of California or its officers or agents shall not be responsible for the accuracy or completeness of electronic copies of this plan sheet.

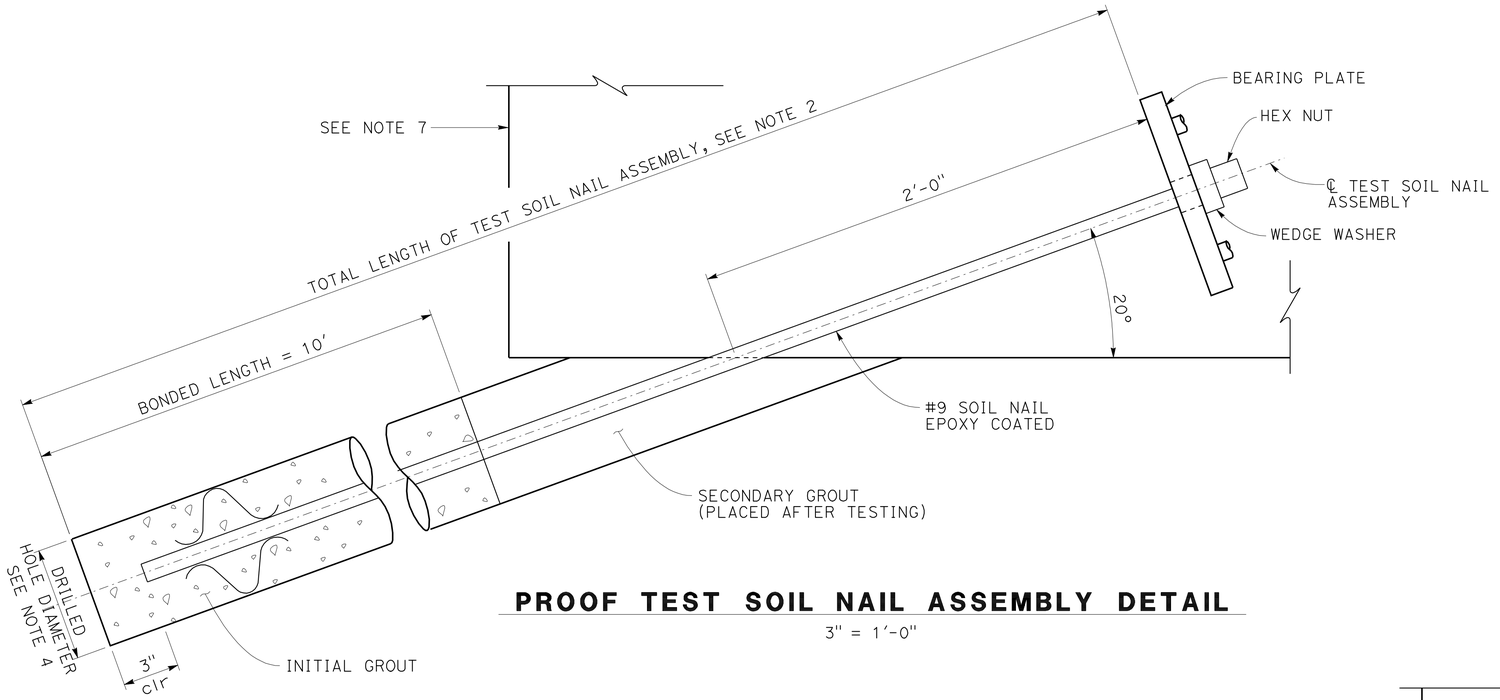

PROOF TEST SOIL NAIL ASSEMBLY DETAIL

3" = 1'-0"

NOTES:

1. Total length of production soil nail assembly = 27 ft.
2. Total length of test soil nail assembly should not be less than 2/3 of adjacent production soil nail assemblies.
3. For location of test soil nail assemblies, see "SOIL NAIL LAYOUT" sheet.
4. Contractor to determine drilled hole diameter.
5. For soil nail layout, see "SOIL NAIL LAYOUT" sheet.
6. For reinforcement not shown, see "TYPICAL SECTION" sheet.
7. Structural concrete, barrier slab.
8. Soil nails shall conform to ASTM Designation A615/A615M, Grade 60, fs = 60 ksi, #9 bars.
   Soil Nail Design Parameters within Project Limits:
   Design Pullout Load = 1.35 kips/ft
   Friction Angle = 30°
   Unit Weight = 125 lb/ft^3
   Cohesion = 0 lb/ft^2

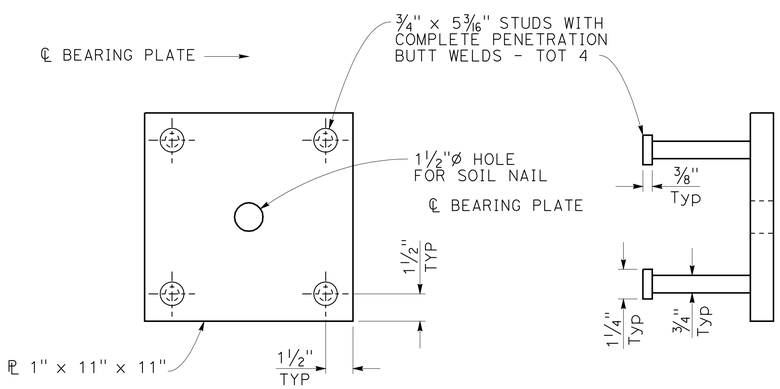

BEARING PLATE DETAIL

3" = 1'-0"

NOTE:
THE CONTRACTOR SHALL VERIFY ALL CONTROLLING FIELD DIMENSIONS BEFORE ORDERING OR FABRICATING ANY MATERIAL.

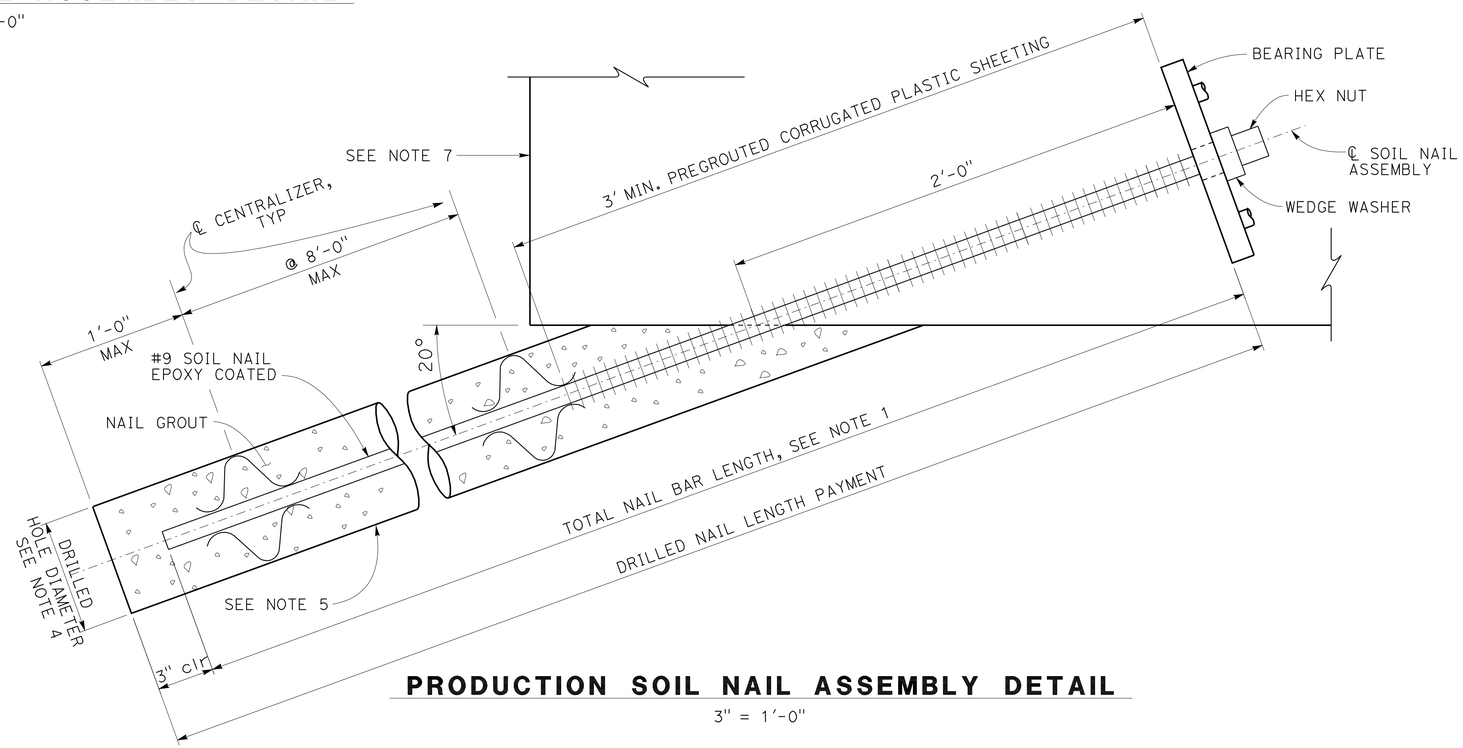

PRODUCTION SOIL NAIL ASSEMBLY DETAIL

3" = 1'-0"

DESIGN	BY Nirav Shah	CHECKED Khanh Ha	
DETAILS	BY JFCasarino	CHECKED Nirav Shah	
QUANTITIES	BY Nirav Shah	CHECKED Bichvan Thach	

STATE OF CALIFORNIA
DEPARTMENT OF TRANSPORTATION

DIVISION OF ENGINEERING SERVICES
STRUCTURE DESIGN
DESIGN BRANCH 8

BRIDGE NO. X
POST MILE 28.2/29.9

TYPE 2 BARRIER REPLACEMENT
SOIL NAIL DETAILS

STRUCTURES DESIGN DETAIL SHEET (ENGLISH) (REV. 09-01-10)

ORIGINAL SCALE IN INCHES FOR REDUCED PLANS 0 1 2 3

UNIT: 3593
PROJECT NUMBER & PHASE: 04000201371
CONTRACT NO.: 04-1A6821

DISREGARD PRINTS BEARING EARLIER REVISION DATES

REVISION DATES: 3-08-11

SHEET 4 OF 4

FILE => 04-barr_04soil.dgn

USERNAME => trphilis DATE PLOTTED => 22-JUN-2011 TIME PLOTTED => 14:08

DIST	COUNTY	ROUTE	POST MILES TOTAL PROJECT	SHEET No	TOTAL SHEETS
04	Ala	880	28.2/29.9	180	181

REGISTERED CIVIL ENGINEER 3-4-11 DATE

6-20-11
PLANS APPROVAL DATE

REGISTERED PROFESSIONAL ENGINEER KHANH HA No. C57995 Exp. 6/30/12 CIVIL STATE OF CALIFORNIA

The State of California or its officers or agents shall not be responsible for the accuracy or completeness of electronic copies of this plan sheet.

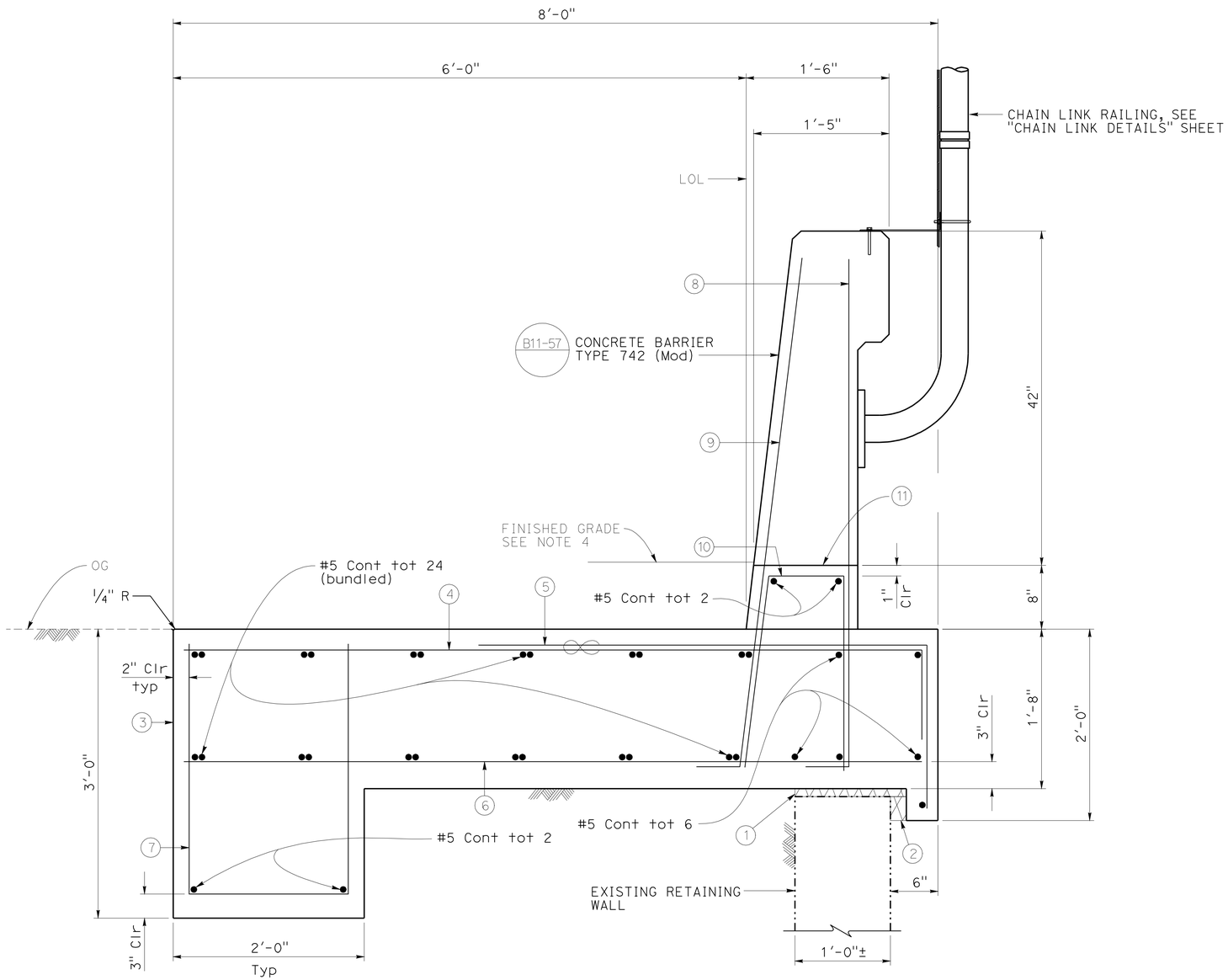

SECTION AT TOP OF WALL WITH BARRIER SLAB AND CONCRETE BARRIER

1½" = 1'-0"

NOTES:

1. Clearance to reinforcing steel in concrete barrier and concrete block to be 1".
2. For barrier reinforcement not shown, see Standard Plans B11-57.
3. No expansion joints in concrete barrier or barrier slab within project limits.
4. For finished grade, see "Roadway Plans"

LEGEND:

- Indicates bundled bars
- (1) 1" Expanded polystyrene.
- (2) 2" Expanded polystyrene.
- (3) Contact joint.
- (4) #5 1'-0" @ 12"
- (5) #5 5'-6" @ 12"
- (6) #5 @ 12"
- (7) #5 @ 12"
- (8) #5 6¼" @ 1'-4" (To be placed prior to barrier slab concrete).
- (9) #5 6¼" @ 8" (To be placed prior to barrier slab concrete).
- (10) #5 2'-0" 2'-0" @ 8"
- (11) 8" Cast-in-place concrete block.

DESIGN	BY Nirav Shah	CHECKED Khanh Ha	
DETAILS	BY JFCasarino / CCancino	CHECKED Nirav Shah	
QUANTITIES	BY Nirav Shah	CHECKED Khanh Ha	

STATE OF CALIFORNIA
DEPARTMENT OF TRANSPORTATION

DIVISION OF ENGINEERING SERVICES
STRUCTURE DESIGN
DESIGN BRANCH 8

BRIDGE NO.
POST MILE 28.2/29.9

BARRIER & CHAIN LINK RAILING REPLACEMENT
TYPICAL SECTION

STRUCTURES DESIGN DETAIL SHEET (ENGLISH) (REV. 10/25/05)

ORIGINAL SCALE IN INCHES FOR REDUCED PLANS 0 1 2 3

CU 04
EA 1A6821

DISREGARD PRINTS BEARING EARLIER REVISION DATES

REVISION DATES: 11-2-10 12-8-10 12-16-10 02-02-11

SHEET 3 OF 4

FILE => 04e0000_03typ.dgn

USERNAME => trphilis DATE PLOTTED => 22-JUN-2011 TIME PLOTTED => 14:08

DIST	COUNTY	ROUTE	POST MILES TOTAL PROJECT	SHEET No	TOTAL SHEETS
04	Ala	880	28.2/29.9	181	183

REGISTERED CIVIL ENGINEER 3-4-11 DATE

6-20-11
PLANS APPROVAL DATE

REGISTERED PROFESSIONAL ENGINEER KHANH HA No. C57995 Exp. 6/30/12 CIVIL STATE OF CALIFORNIA

The State of California or its officers or agents shall not be responsible for the accuracy or completeness of electronic copies of this plan sheet.

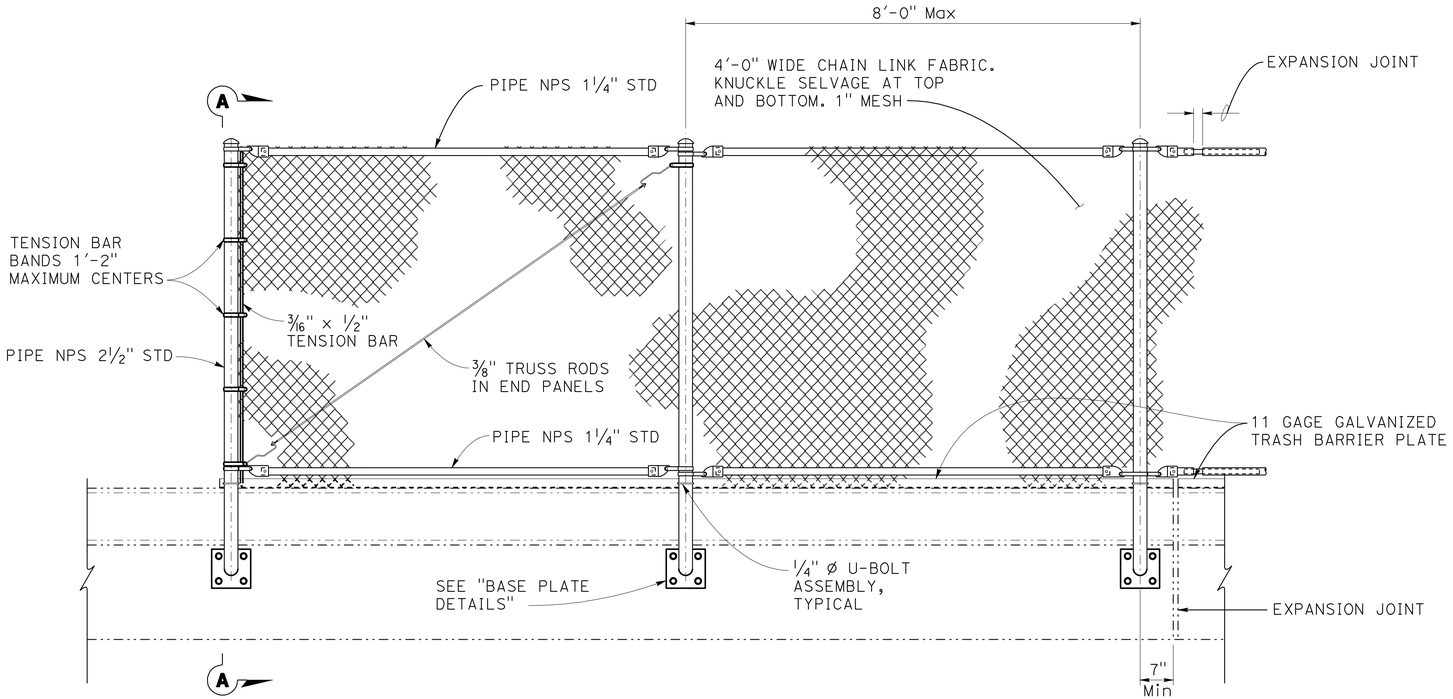

ELEVATION

¾" = 1'-0"
(at back side of barrier)

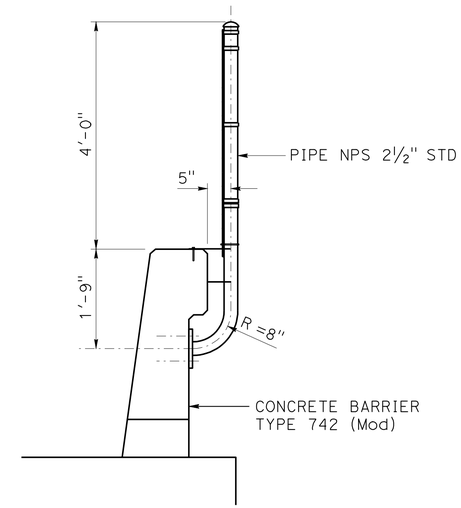

SECTION A-A

¾" = 1'-0"

NOTES:

1. Begin railing @ Sta 269+73 to Sta 275+52 for Retaining Wall 4 and @ Sta 290+90 to Sta 309+71 for Retaining Wall 5.
2. 0.148" * steel wire ties @ 1'-0" to all pipes
3. See Standard Plans May 2006 B11-7 for more details

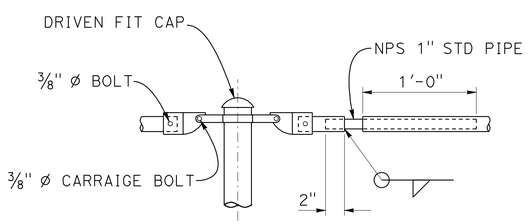

TYPICAL CONNECTION DETAILS

1½" = 1'-0"

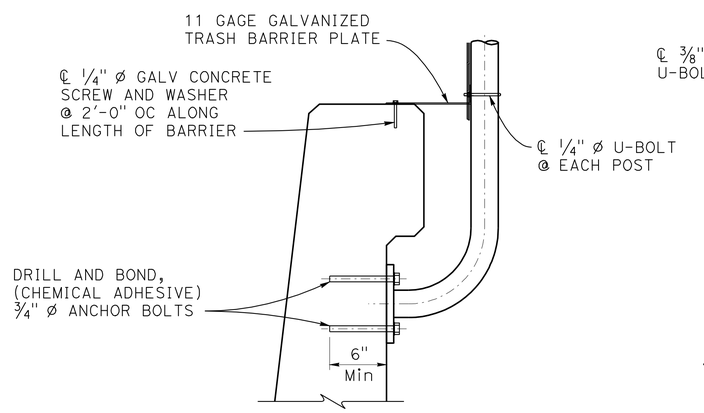

SECTION VIEW

NO SCALE

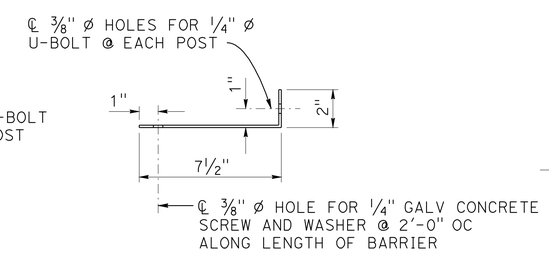

TRASH BARRIER PLATE

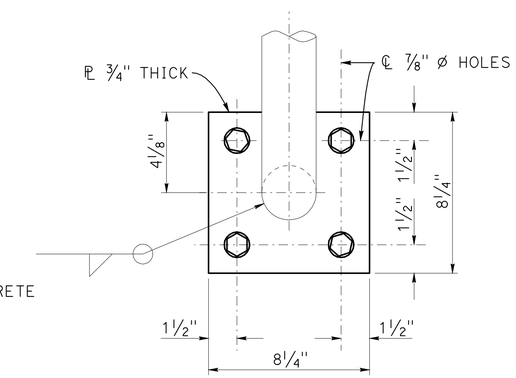

POST TO BASE PLATE

BASE PLATE DETAILS

NO SCALE

	BY	CHECKED
DESIGN	Nirav Shah	Khanh Ha
DETAILS	JFCasarino / CCancino	Nirav Shah
QUANTITIES	Nirav Shah	Khanh Ha

STATE OF CALIFORNIA
DEPARTMENT OF TRANSPORTATION

DIVISION OF ENGINEERING SERVICES
STRUCTURE DESIGN
DESIGN BRANCH 8

BRIDGE NO.
POST MILE 28.2/29.9

BARRIER & CHAIN LINK RAILING REPLACEMENT
CHAIN LINK DETAILS

STRUCTURES DESIGN DETAIL SHEET (ENGLISH) (REV. 10/25/05)

ORIGINAL SCALE IN INCHES FOR REDUCED PLANS 0 1 2 3

CU 04
EA 1A6821

DISREGARD PRINTS BEARING EARLIER REVISION DATES

REVISION DATES: 11-1-10 12-14-10 02-02-11

SHEET 4 OF 4

FILE => 04e0000_04det.dgn

USERNAME => trphnis DATE PLOTTED => 22-JUN-2011 TIME PLOTTED => 14:08

DIST	COUNTY	ROUTE	POST MILES TOTAL PROJECT	SHEET No	TOTAL SHEETS
04	Ala	880	28.2/29.9	182	183

REGISTERED CIVIL ENGINEER 3-4-11 DATE

6-20-11
PLANS APPROVAL DATE

REGISTERED PROFESSIONAL ENGINEER KHANH HA No. C57995 Exp. 6/30/12 CIVIL STATE OF CALIFORNIA

The State of California or its officers or agents shall not be responsible for the accuracy or completeness of electronic copies of this plan sheet.

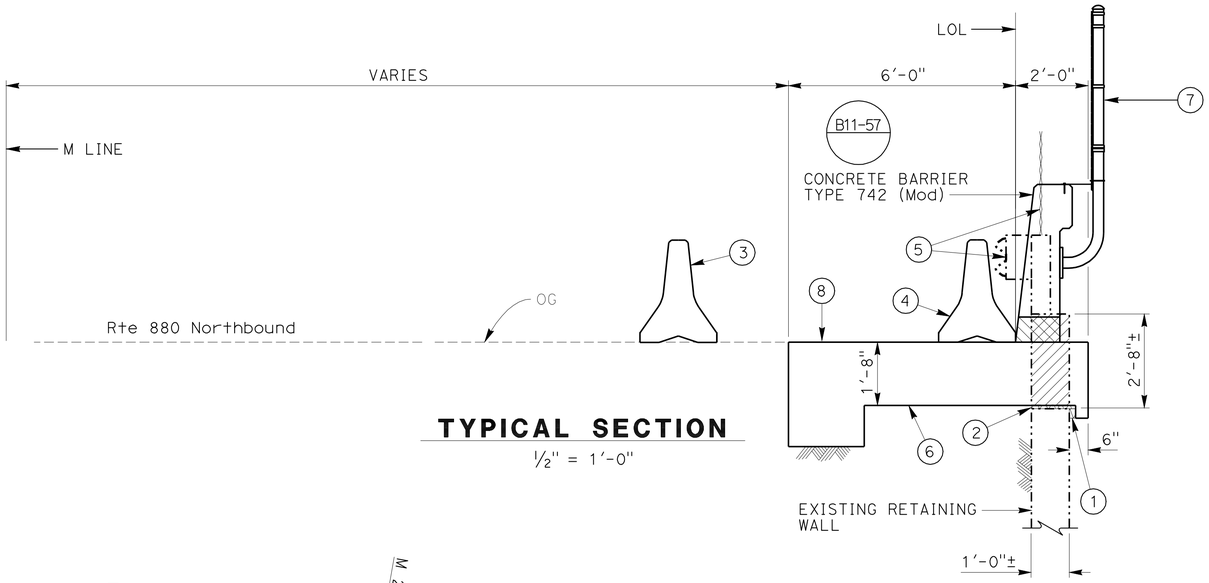

TYPICAL SECTION

½" = 1'-0"

INDEX TO PLANS

SHEET	TITLE
1	GENERAL PLAN 1
2	GENERAL PLAN 2
3	TYPICAL SECTION
4	CHAIN LINK DETAILS

STANDARD PLANS DATED MAY 2006

PLAN NO.	PLAN TITLE
A10A	ACRONYMS AND ABBREVIATIONS (SHEET 1 OF 2)
A10B	ACRONYMS AND ABBREVIATIONS (SHEET 2 OF 2)
A10C	SYMBOLS (SHEET 1 OF 2)
A10D	SYMBOLS (SHEET 2 OF 2)
B11-7	CHAIN LINK RAILING
B11-57	CONCRETE BARRIER TYPE 742

STANDARD PLAN NO.

DETAIL NO.

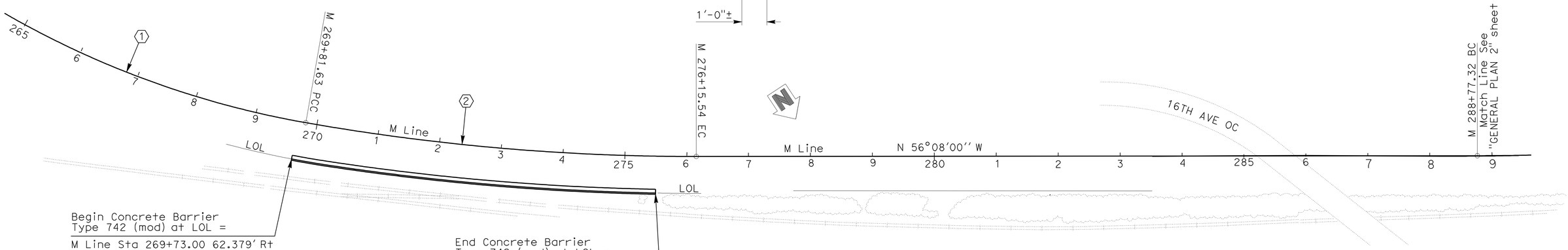

PLAN

1" = 80'

CURVE DATA

No.	R	Δ	T	L
1	1490.00'	27°10'32.434"	360.134'	706.714'
2	3630.17'	10°0'18.473"	317.762'	633.909'

NOTES:

1. 2" Expanded Polystyrene.
2. 1" Expanded Polystyrene.
3. Stage 1 construction - Temporary Railing Type K to be placed before construction work begins. Refer to Roadway Plans for the K Rail placement.
4. Stage 2 construction - Temporary Railing Type K to be placed after construction when the concrete slab is opened to live traffic.
5. Existing MBGR & Chain Link removal.
6. Structural Concrete, Barrier Slab.
7. Install Chain Link Railing.
8. Match existing grade.

LEGEND:

Indicates existing structure

Indicates limits of concrete removal

Indicates 8" concrete block

QUANTITIES

RETAINING WALL NO. 4

BRIDGE REMOVAL (PORTION), LOCATION C	LUMP	SUM
STRUCTURAL CONCRETE, BARRIER SLAB	370	CY
CHAIN LINK RAILING	577	LF
CONCRETE BARRIER (TYPE 742)	577	LF

RETAINING WALL 4

BARRIER & CHAIN LINK RAILING REPLACEMENT

GENERAL PLAN 1

BRIAN MORI
DESIGN ENGINEER

	BY	CHECKED
DESIGN	Nirav Shah	Khanh Ha
DETAILS	JFCasarino / CCancino	Nirav Shah
QUANTITIES	Nirav Shah	Khanh Ha

LOAD & RESISTANCE FACTOR DESIGN — LIVE LOADING: HL93 W/"LOW-BOY"; PERMIT DESIGN VEHICLE

	BY	CHECKED
LAYOUT	Nirav Shah	Khanh Ha
SPECIFICATIONS	Xiahong Li	PLANS AND SPECS COMPARED Xiahong Li

ORIGINAL SCALE IN INCHES FOR REDUCED PLANS 0 1 2 3

STATE OF CALIFORNIA
DEPARTMENT OF TRANSPORTATION

DIVISION OF ENGINEERING SERVICES
STRUCTURE DESIGN
DESIGN BRANCH 8

CU 04
EA 1A6821

BRIDGE NO.

POST MILE 28.2/29.9

DISREGARD PRINTS BEARING EARLIER REVISION DATES

REVISION DATES: 6-22-10 8-18-10 9-15-10 11-1-10 02-08-11 02-08-11 02-24-11

SHEET 1 OF 4

USERNAME => TFDBT16 DATE PLOTTED => 22-JUN-2011 TIME PLOTTED => 14:03

STRUCTURES DESIGN GENERAL PLAN SHEET (ENGLISH) (REV.07-24-06)

FILE => 04e0000_01gp.dgn

DIST	COUNTY	ROUTE	POST MILES TOTAL PROJECT	SHEET No	TOTAL SHEETS
04	Ala	880	28.2/29.9	183	183

REGISTERED CIVIL ENGINEER 3-4-11 DATE

6-20-11
PLANS APPROVAL DATE

REGISTERED PROFESSIONAL ENGINEER KHANH HA No. C57995 Exp. 6/30/12 CIVIL STATE OF CALIFORNIA

The State of California or its officers or agents shall not be responsible for the accuracy or completeness of electronic copies of this plan sheet.

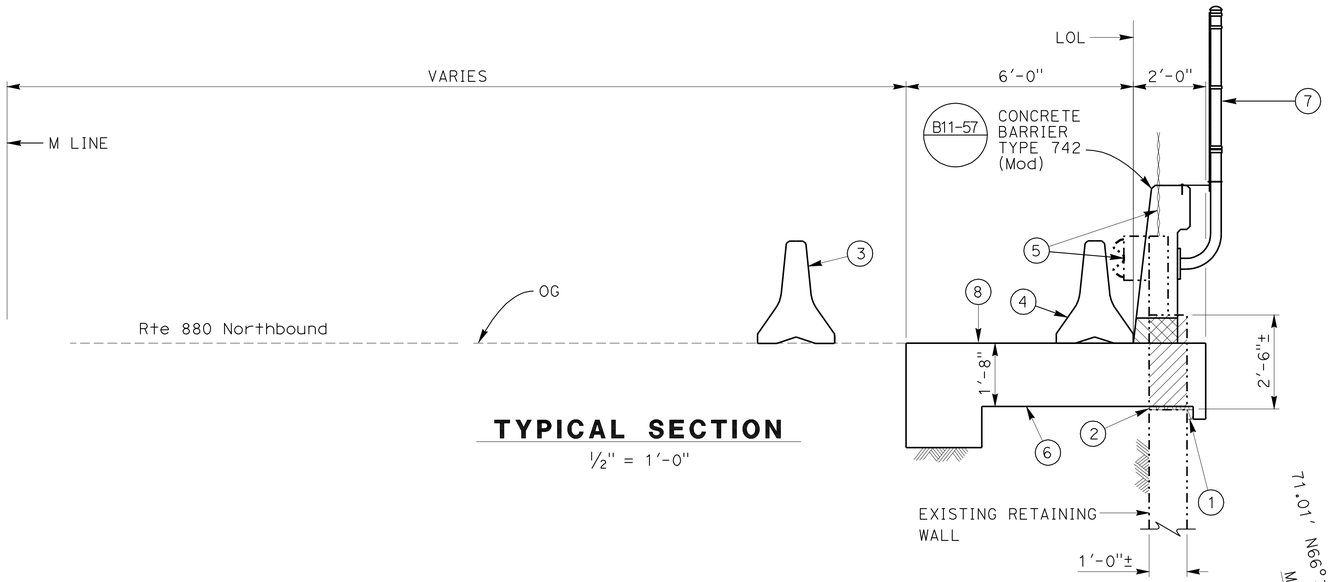

TYPICAL SECTION

½" = 1'-0"

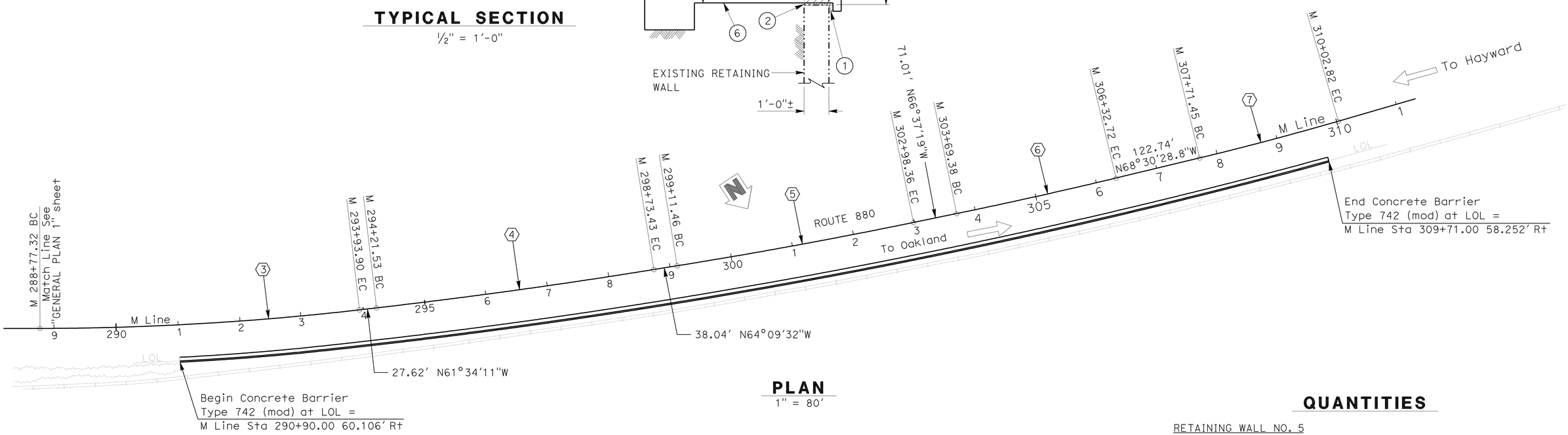

PLAN

1" = 80'

QUANTITIES

RETAINING WALL NO. 5

BRIDGE REMOVAL (PORTION), LOCATION D	LUMP	SUM
STRUCTURAL CONCRETE, BARRIER SLAB	1,195	CY
CHAIN LINK RAILING	1,881	LF
CONCRETE BARRIER (TYPE 742)	1,881	LF

CURVE DATA

No.	R	Δ	T	L
3	4560.00'	6°29'26.716"	258.57'	516.58'
4	10000.00'	2°35'21.166"	225.99'	451.90'
5	9000.00'	2°27'47.078"	193.48'	386.90'
6	8000.00'	1°53'9.952"	131.69'	263.35'
7	4982.90'	2°39'37.520"	115.71'	231.37'

NOTE: For "INDEX TO PLANS", "NOTES" and "LEGEND", see "GENERAL PLAN 1" sheet.

RETAINING WALL 5

BARRIER & CHAIN LINK RAILING REPLACEMENT

GENERAL PLAN 2

BRIAN MORI
DESIGN ENGINEER

	BY	CHECKED
DESIGN	Nirav Shah	Khanh Ha
DETAILS	JFCasarino / CCancino	Nirav Shah
QUANTITIES	Nirav Shah	Khanh Ha

LOAD & RESISTANCE FACTOR DESIGN — LIVE LOADING: HL93 W/"LOW-BOY"; PERMIT DESIGN VEHICLE

	BY	CHECKED
LAYOUT	Nirav Shah	Khanh Ha
SPECIFICATIONS	Xiahong Li	PLANS AND SPECS COMPARED Xiahong Li

STATE OF CALIFORNIA
DEPARTMENT OF TRANSPORTATION

DIVISION OF ENGINEERING SERVICES
STRUCTURE DESIGN
DESIGN BRANCH 8

BRIDGE NO.
POST MILE 28.2/29.9

ORIGINAL SCALE IN INCHES FOR REDUCED PLANS 0 1 2 3

CU 04
EA 1A6821

DISREGARD PRINTS BEARING EARLIER REVISION DATES
REVISION DATES 11-12-10 02-02-11 02-08-11 02-24-11
SHEET 2 OF 4

STRUCTURES DESIGN GENERAL PLAN SHEET (ENGLISH) (REV.07-24-06)

FILE => 04e0000_02gp.dgn

USERNAME => trphtis DATE PLOTTED => 22-JUN-2011 TIME PLOTTED => 14:09