Dist	COUNTY	ROUTE	POST MILES TOTAL PROJECT	SHEET No.	TOTAL SHEETS
04	SF	101,280	1.5/1.8 R4.1/R4.4	1	76

ACNHP-X075(042)E

STATE OF CALIFORNIA
DEPARTMENT OF TRANSPORTATION

PROJECT PLANS FOR CONSTRUCTION ON
STATE HIGHWAY
IN THE CITY AND COUNTY OF SAN FRANCISCO
ON ROUTE 101 AND ROUTE 280
AT ROUTE 101/280 SEPARATION

TO BE SUPPLEMENTED BY STANDARD PLANS DATED 2010

INDEX OF PLANS

1	TITLE SHEET AND LOCATION MAP
2,3	CONSTRUCTION DETAILS
4	CONSTRUCTION AREA SIGNS
5	TRAFFIC HANDLING PLAN
6-12	PAVEMENT DELINEATION PLAN AND QUANTITIES
13, 14	SIGN PLAN, QUANTITIES AND DETAILS
15	SUMMARY OF QUANTITIES
16-26	ELECTRICAL PLANS
27-28	TEMPORARY WOOD POLES
29-48	REVISED STANDARD PLANS

STRUCTURE PLANS

49	GENERAL PLAN
50-51	INDEX TO PLANS
52-61	STRUCTURE PLANS
62-63	BARRIER DETAILS
64-67	BARRIER SLAB DETAILS
68	CARBON FIBER REINFORCED OVERHANG
69	STEEL PLATE BARRIER TRANSITION
70	JOINT SEAL REPLACEMENT DETAILS
71	DECK DRAINS TABLE
72	JOINT SEAL ASSEMBLY
73	TYPE 21 POLE ON TYPE 732 BARRIER (MOD)
74	MISC DETAILS
75	ANCHORAGE, PIPE AND BASEPLATE DETAILS
76	SIGN CONNECTION DETAILS

THE STANDARD PLANS LIST APPLICABLE TO THIS CONTRACT IS INCLUDED IN THE NOTICE TO BIDDERS AND SPECIAL PROVISIONS BOOK.

LOCATION MAP

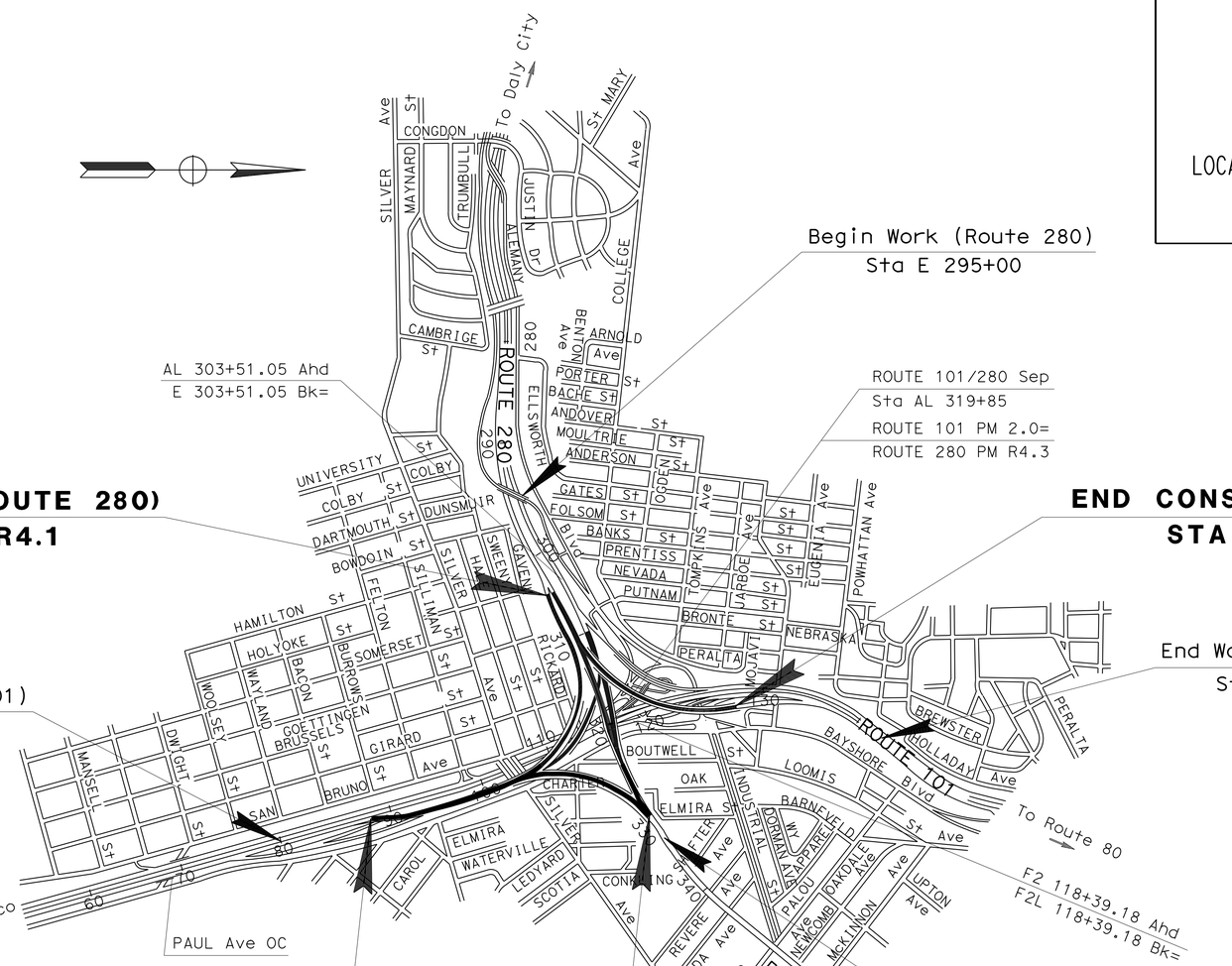

NO SCALE

THE CONTRACTOR SHALL POSSESS THE CLASS (OR CLASSES) OF LICENSE AS SPECIFIED IN THE "NOTICE TO BIDDERS."

PROJECT ENGINEER REGISTERED CIVIL ENGINEER — DATE 8/1/13

September 30, 2013
PLANS APPROVAL DATE

REGISTERED PROFESSIONAL ENGINEER — Hung H. Do — No. 55485 — Exp. 12-31-14 — CIVIL — STATE OF CALIFORNIA

THE STATE OF CALIFORNIA OR ITS OFFICERS OR AGENTS SHALL NOT BE RESPONSIBLE FOR THE ACCURACY OR COMPLETENESS OF SCANNED COPIES OF THIS PLAN SHEET.

CONTRACT No.	04-1A5514
PROJECT ID	0400000496

PROJECT MANAGER: JOON KANG
DESIGN MANAGER: GORDON W. JEONG

LAST REVISION 03-18-13 | DATE PLOTTED => 20-FEB-2014 | TIME PLOTTED => 13:01

Dist	COUNTY	ROUTE	POST MILES TOTAL PROJECT	SHEET No.	TOTAL SHEETS
04	SF	101,280	1.5/1.8 R4.1/R4.4	2	76

REGISTERED CIVIL ENGINEER 8/1/13 DATE

9-30-13
PLANS APPROVAL DATE

REGISTERED PROFESSIONAL ENGINEER Hung H. Do No. 55485 Exp. 12-31-14 CIVIL STATE OF CALIFORNIA

THE STATE OF CALIFORNIA OR ITS OFFICERS OR AGENTS SHALL NOT BE RESPONSIBLE FOR THE ACCURACY OR COMPLETENESS OF SCANNED COPIES OF THIS PLAN SHEET.

NOTE:

FOR ACCURATE RIGHT OF WAY DATA, CONTACT RIGHT OF WAY ENGINEERING AT THE DISTRICT OFFICE.

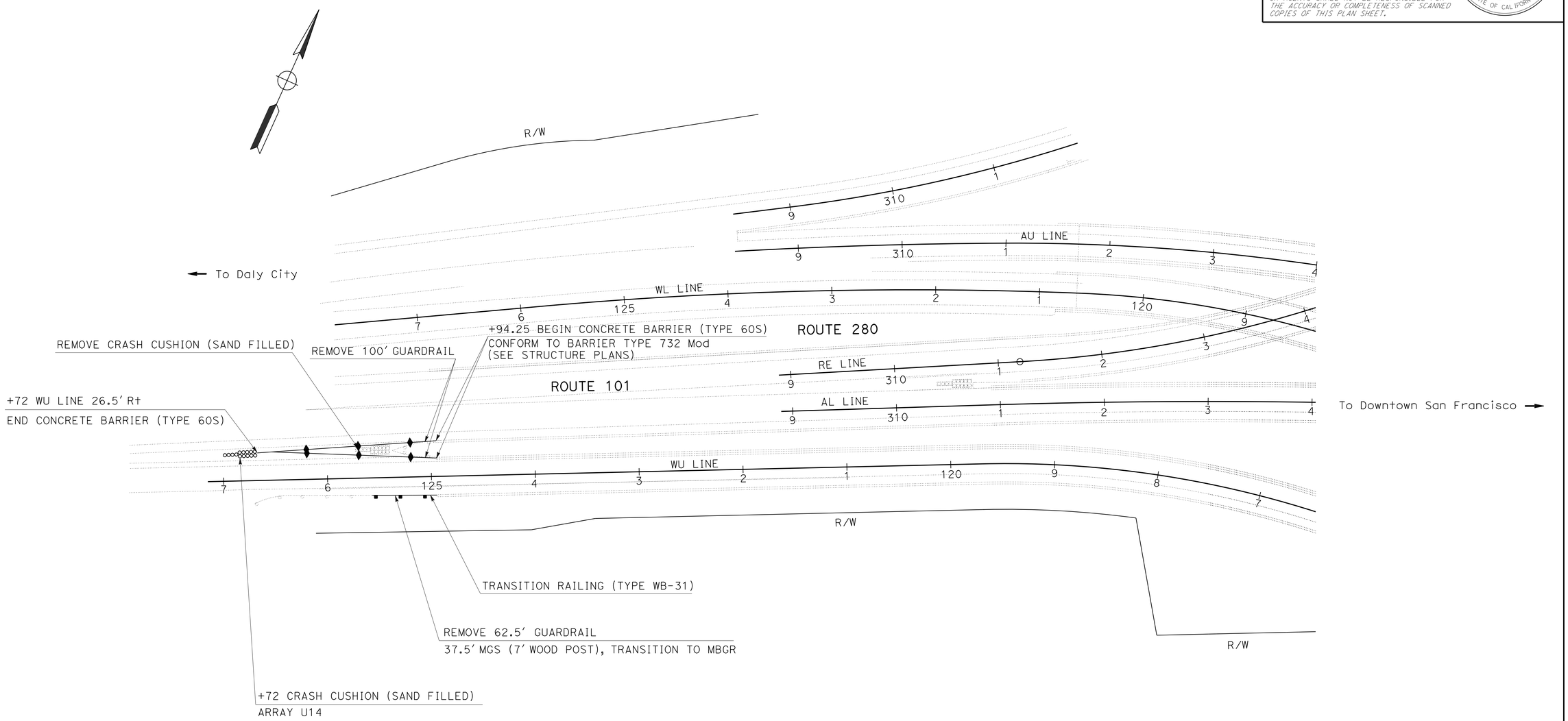

CONSTRUCTION DETAILS

NO SCALE

C-1

REVISED BY	DATE REVISED
TL	9/23/13

TIM LE — HUNG H. DO — CALCULATED-DESIGNED BY / CHECKED BY

FUNCTIONAL SUPERVISOR: GORDON W. JEONG

STATE OF CALIFORNIA - DEPARTMENT OF TRANSPORTATION — Caltrans — DESIGN

LAST REVISION 08-05-13 | DATE PLOTTED => 20-FEB-2014 | TIME PLOTTED => 13:02

Dist	COUNTY	ROUTE	POST MILES TOTAL PROJECT	SHEET No.	TOTAL SHEETS
04	SF	101,280	1.5/1.8 R4.1/R4.4	3	76

REGISTERED CIVIL ENGINEER 8/1/13 DATE

9-30-13
PLANS APPROVAL DATE

REGISTERED PROFESSIONAL ENGINEER Hung H. Do No. 55485 Exp. 12-31-14 CIVIL STATE OF CALIFORNIA

THE STATE OF CALIFORNIA OR ITS OFFICERS OR AGENTS SHALL NOT BE RESPONSIBLE FOR THE ACCURACY OR COMPLETENESS OF SCANNED COPIES OF THIS PLAN SHEET.

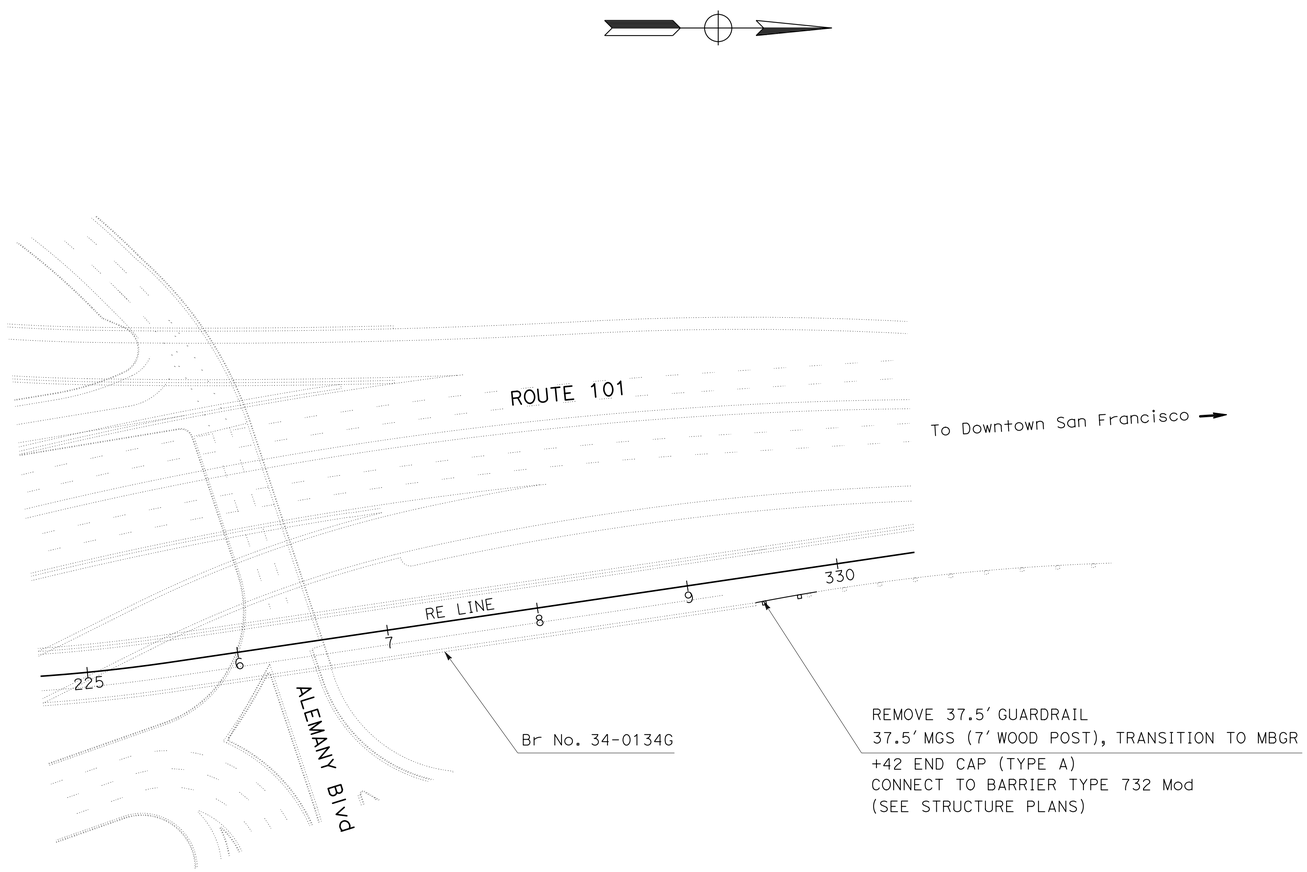

CONSTRUCTION DETAILS

NO SCALE

C-2

REVISED BY	DATE REVISED
TL	9/23/13

CALCULATED-DESIGNED BY: TIM LE
CHECKED BY: HUNG H. DO

FUNCTIONAL SUPERVISOR: GORDON W. JEONG

STATE OF CALIFORNIA - DEPARTMENT OF TRANSPORTATION
Caltrans
DESIGN

LAST REVISION 07-05-13 | DATE PLOTTED => 20-FEB-2014 | TIME PLOTTED => 13:02

Dist	COUNTY	ROUTE	POST MILES TOTAL PROJECT	SHEET No.	TOTAL SHEETS
04	SF	101,280	1.5/1.8 R4.1/R4.4	4	76

REGISTERED CIVIL ENGINEER 8/2/13 DATE

9-30-13
PLANS APPROVAL DATE

REGISTERED PROFESSIONAL ENGINEER Jerilyn L. Struven No. 49964 Exp. 12-31-14 CIVIL STATE OF CALIFORNIA

THE STATE OF CALIFORNIA OR ITS OFFICERS OR AGENTS SHALL NOT BE RESPONSIBLE FOR THE ACCURACY OR COMPLETENESS OF SCANNED COPIES OF THIS PLAN SHEET.

LEGEND:

[No.] CONSTRUCTION AREA SIGN

NOTES:

1. LOCATION OF CONSTRUCTION AREA SIGNS ARE APPROXIMATE. EXACT LOCATION WILL BE DETERMINED BY THE ENGINEER.
2. CONSTRUCTION AREA SIGNS ARE STATIONARY MOUNTED.

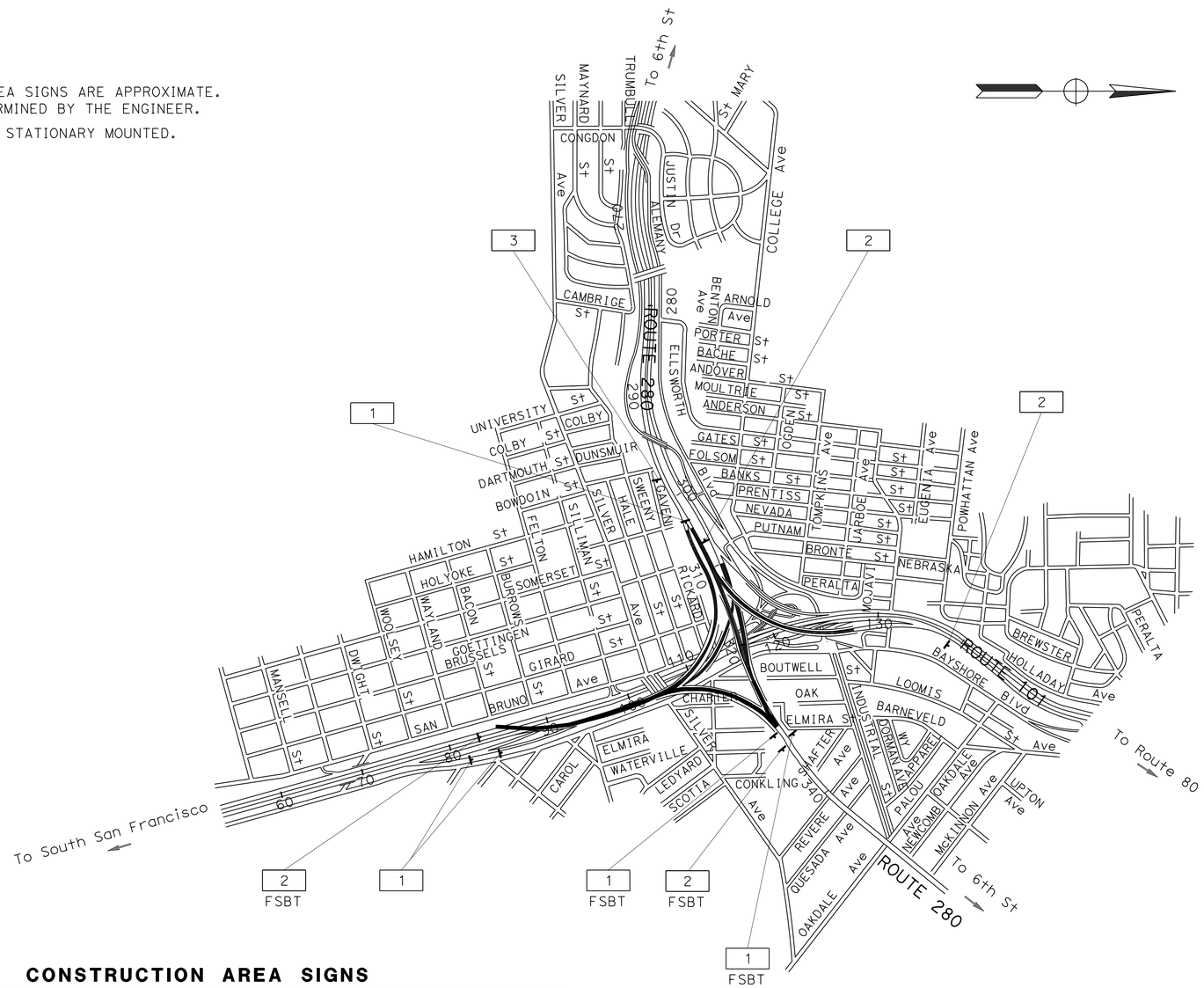

CONSTRUCTION AREA SIGNS

SIGN No.	MUTCD CODE	MESSAGE	PANEL SIZE	No. OF POST AND SIZE	No. OF SIGNS
1	W20-1	ROAD WORK AHEAD	48" x 48"	(ONE) 4" x 6"	5
2	G20-2	END WORK AHEAD	48" x 24"	(ONE) 4" x 6"	4
3	W20-1	ROAD WORK AHEAD	60" x 60"	(TWO) 4" x 6"	1

CONSTRUCTION AREA SIGNS

NO SCALE

APPROVED FOR CONSTRUCTION AREA SIGN WORK ONLY

CS-1

CALCULATED-DESIGNED BY	REVISED BY	UV
CHECKED BY	DATE REVISED	9/23/13
FUNCTIONAL SUPERVISOR: ROLAND AU-YEUNG	ULICES VEGA	
	JERILYN L. STRUVEN	

STATE OF CALIFORNIA - DEPARTMENT OF TRANSPORTATION

Caltrans® TRAFFIC

LAST REVISION 07-18-13 | DATE PLOTTED => 20-FEB-2014 | TIME PLOTTED => 13:02

Dist	COUNTY	ROUTE	POST MILES TOTAL PROJECT	SHEET No.	TOTAL SHEETS
04	SF	101,280	1.5/1.8 R4.1/R4.4	5	76

REGISTERED CIVIL ENGINEER — DATE 8/1/13

9-30-13
PLANS APPROVAL DATE

REGISTERED PROFESSIONAL ENGINEER — Hung H. Do — No. 55485 — Exp. 12-31-14 — CIVIL — STATE OF CALIFORNIA

THE STATE OF CALIFORNIA OR ITS OFFICERS OR AGENTS SHALL NOT BE RESPONSIBLE FOR THE ACCURACY OR COMPLETENESS OF SCANNED COPIES OF THIS PLAN SHEET.

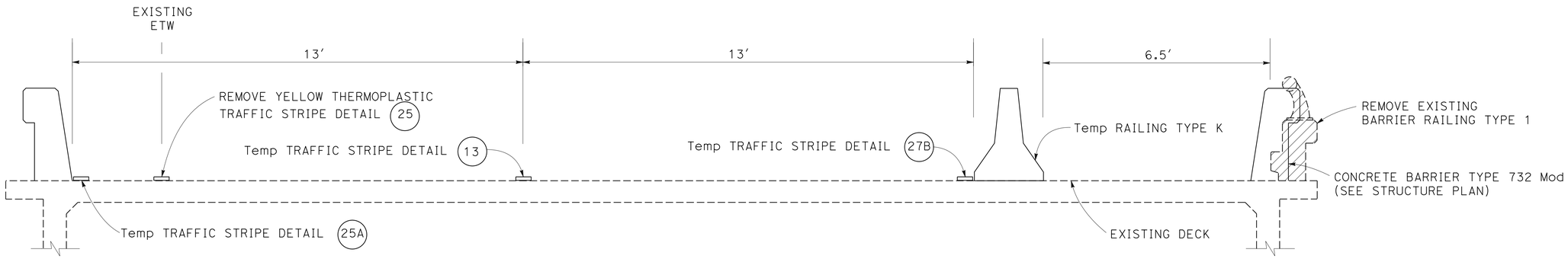

STAGE 2

TYPICAL

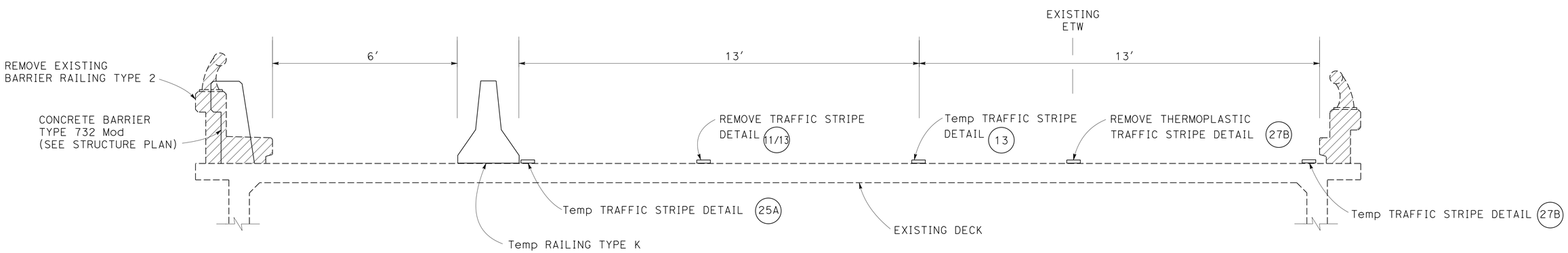

STAGE 1

TYPICAL

TRAFFIC HANDLING PLAN

SCALE: 1" = 50′

APPROVED FOR TRAFFIC HANDLING WORK ONLY

TH-1

STATE OF CALIFORNIA - DEPARTMENT OF TRANSPORTATION
Caltrans®
DESIGN
FUNCTIONAL SUPERVISOR: GORDON W. JEONG
CALCULATED-DESIGNED BY: TIM LE
CHECKED BY: HUNG H. DO
REVISED BY: TL
DATE REVISED: 9/23/13

LAST REVISION 08-13-13
DATE PLOTTED => 20-FEB-2014
TIME PLOTTED => 13:02

Dist	COUNTY	ROUTE	POST MILES TOTAL PROJECT	SHEET No.	TOTAL SHEETS
04	SF	101,280	1.5/1.8 R4.1/R4.4	6	76

REGISTERED CIVIL ENGINEER 8/1/13 DATE

9-30-13
PLANS APPROVAL DATE

REGISTERED PROFESSIONAL ENGINEER Hung H. Do No. 55485 Exp. 12-31-14 CIVIL STATE OF CALIFORNIA

THE STATE OF CALIFORNIA OR ITS OFFICERS OR AGENTS SHALL NOT BE RESPONSIBLE FOR THE ACCURACY OR COMPLETENESS OF SCANNED COPIES OF THIS PLAN SHEET.

LEGEND:

- No. PAVEMENT DELINEATION DETAIL
- BEGIN/END OF PAVEMENT DELINEATION DETAIL
- CHANGE OF PAVEMENT DELINEATION DETAIL

NOTE:

FOR DETAIL 11/13, PLACE DETAIL 13 THEN PLACE DETAIL 11 DIRECTLY ON TOP OF PAVEMENT MARKERS (TYPE A)

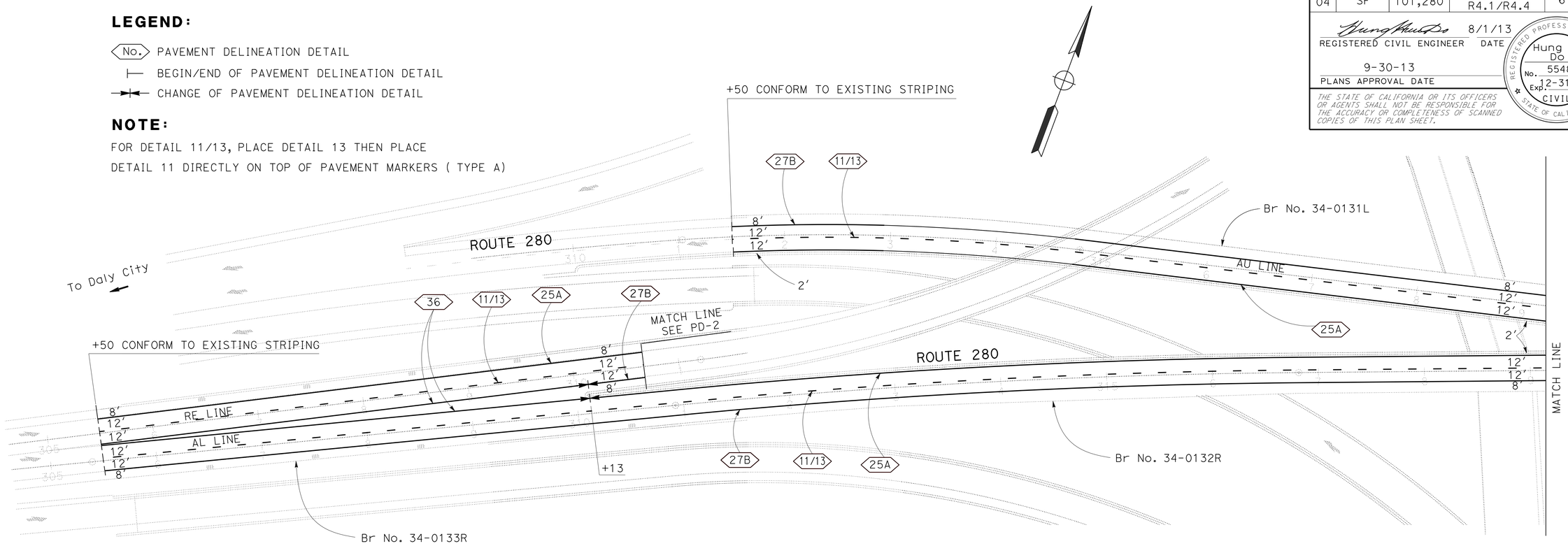

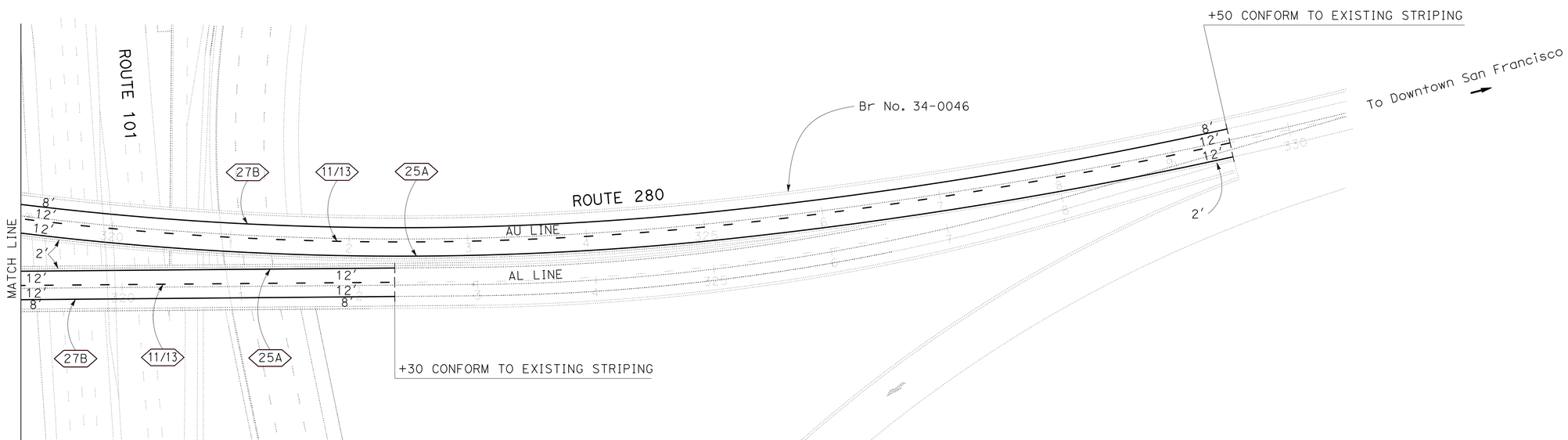

PAVEMENT DELINEATION PLAN

SCALE: 1" = 50′

APPROVED FOR PAVEMENT DELINEATION WORK ONLY

PD-1

REVISED BY	DATE REVISED
TL	9/23/13

CALCULATED-DESIGNED BY: TIM LE
CHECKED BY: HUNG H. DO
FUNCTIONAL SUPERVISOR: GORDON W. JEONG

STATE OF CALIFORNIA - DEPARTMENT OF TRANSPORTATION
Caltrans
DESIGN

LAST REVISION 09-30-13 | DATE PLOTTED => 20-FEB-2014 | TIME PLOTTED => 13:02

Dist	COUNTY	ROUTE	POST MILES TOTAL PROJECT	SHEET No.	TOTAL SHEETS
04	SF	101,280	1.5/1.8 R4.1/R4.4	7	76

REGISTERED CIVIL ENGINEER 8/1/13 DATE

9-30-13
PLANS APPROVAL DATE

REGISTERED PROFESSIONAL ENGINEER Hung H. Do No. 55485 Exp. 12-31-14 CIVIL STATE OF CALIFORNIA

THE STATE OF CALIFORNIA OR ITS OFFICERS OR AGENTS SHALL NOT BE RESPONSIBLE FOR THE ACCURACY OR COMPLETENESS OF SCANNED COPIES OF THIS PLAN SHEET.

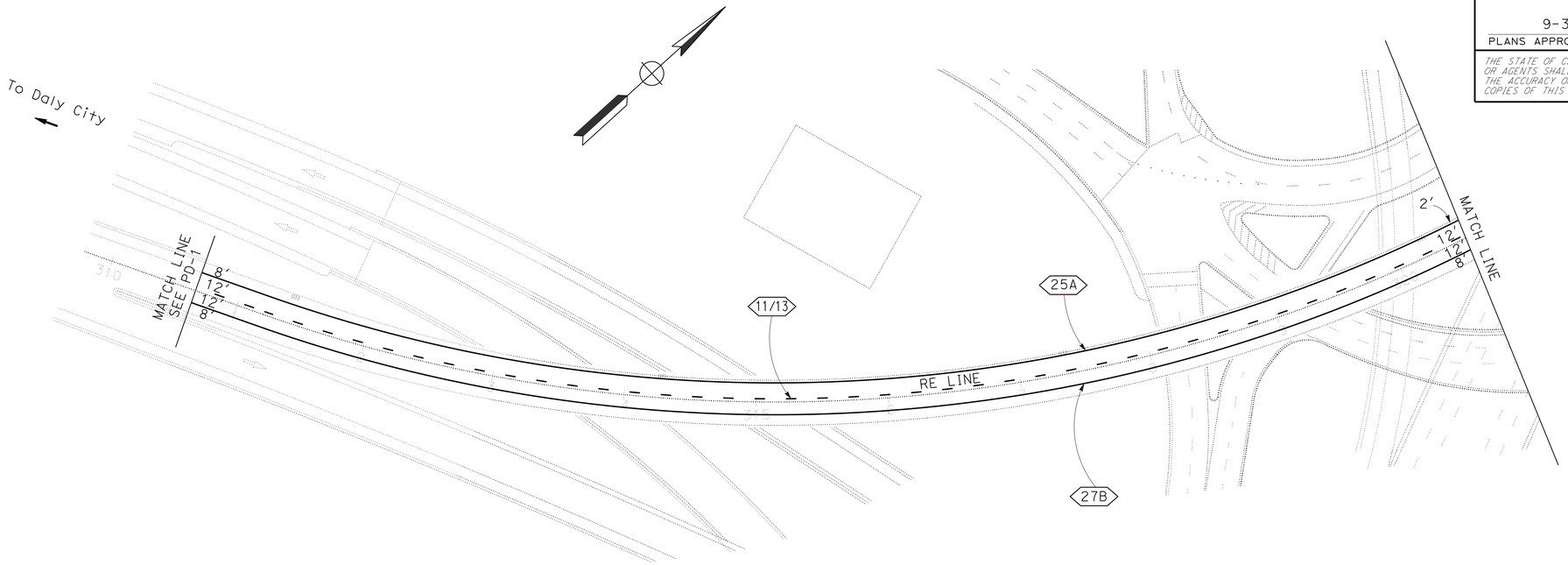

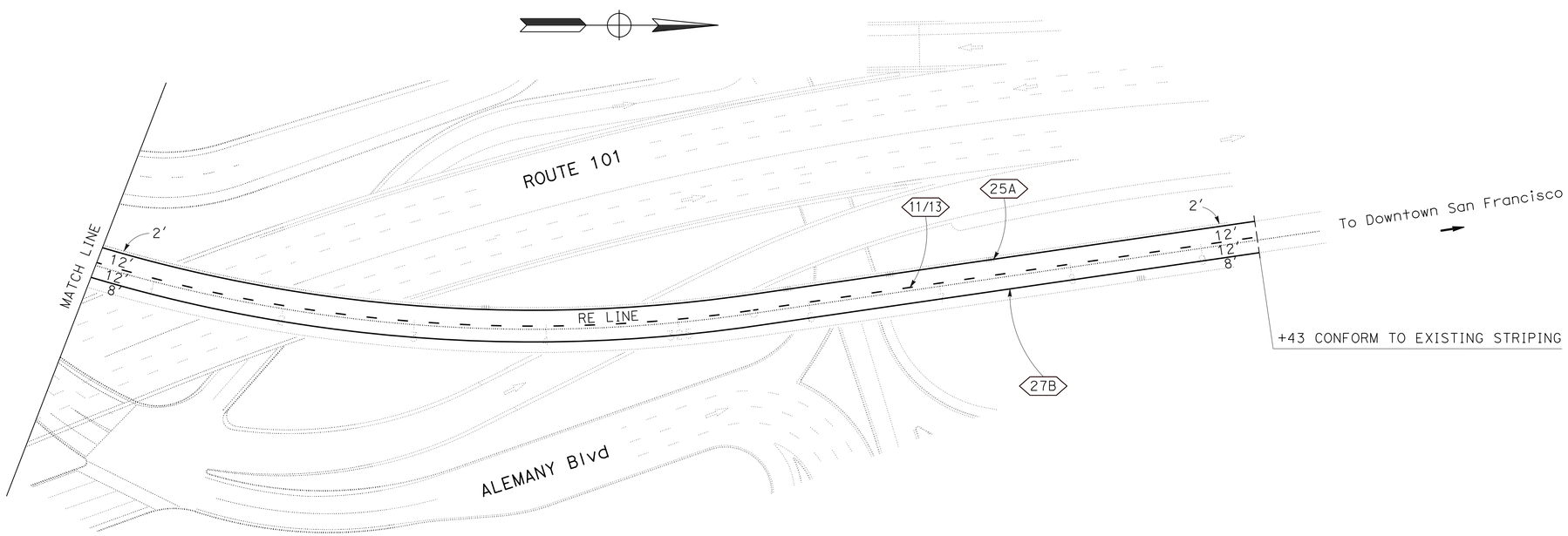

PAVEMENT DELINEATION PLAN

SCALE: 1" = 50'

FOR NOTES, ABBREVIATIONS AND LEGEND, SEE SHEET PD-1

APPROVED FOR PAVEMENT DELINEATION WORK ONLY

PD-2

REVISED BY	TL
DATE REVISED	9/23/13
TIM LE	HUNG H. DO
CALCULATED-DESIGNED BY	
CHECKED BY	
FUNCTIONAL SUPERVISOR	GORDON W. JEONG

STATE OF CALIFORNIA - DEPARTMENT OF TRANSPORTATION

Caltrans®

DESIGN

LAST REVISION 09-23-13 | DATE PLOTTED => 20-FEB-2014 | TIME PLOTTED => 13:02

Dist	COUNTY	ROUTE	POST MILES TOTAL PROJECT	SHEET No.	TOTAL SHEETS
04	SF	101,280	1.5/1.8 R4.1/R4.4	8	76

REGISTERED CIVIL ENGINEER 8/1/13 DATE

9-30-13
PLANS APPROVAL DATE

REGISTERED PROFESSIONAL ENGINEER
Hung H. Do
No. 55485
Exp. 12-31-14
CIVIL
STATE OF CALIFORNIA

THE STATE OF CALIFORNIA OR ITS OFFICERS OR AGENTS SHALL NOT BE RESPONSIBLE FOR THE ACCURACY OR COMPLETENESS OF SCANNED COPIES OF THIS PLAN SHEET.

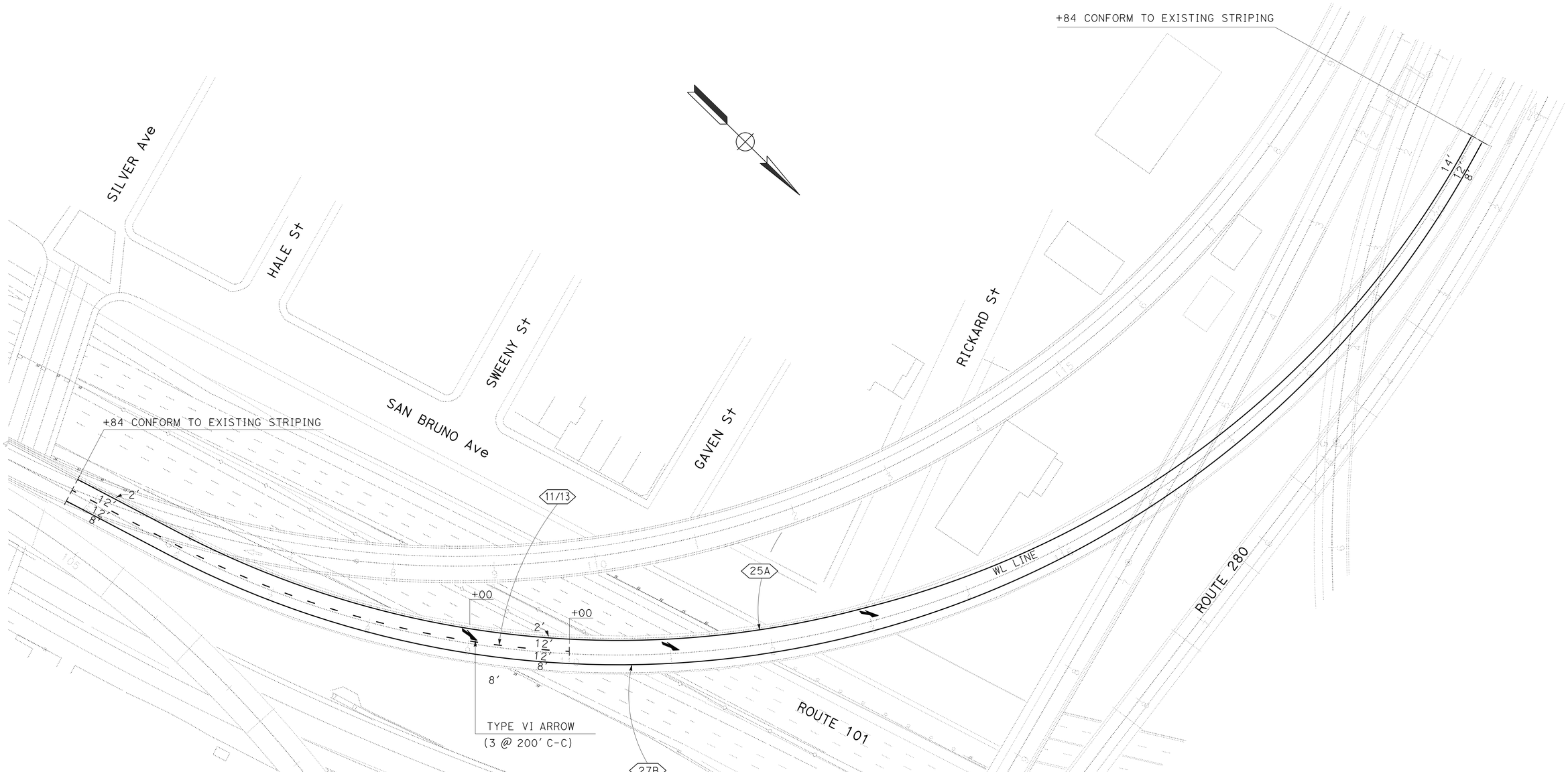

PAVEMENT DELINEATION PLAN

SCALE: 1" = 50'

FOR NOTES, ABBREVIATIONS AND LEGEND, SEE SHEET PD-1

APPROVED FOR PAVEMENT DELINEATION WORK ONLY

PD-3

CALCULATED-DESIGNED BY	TIM LE	REVISED BY	TL
CHECKED BY	HUNG H. DO	DATE REVISED	9/23/13

FUNCTIONAL SUPERVISOR: GORDON W. JEONG

STATE OF CALIFORNIA - DEPARTMENT OF TRANSPORTATION

Caltrans

DESIGN

LAST REVISION 09-23-13 | DATE PLOTTED => 20-FEB-2014 | TIME PLOTTED => 13:02

Dist	COUNTY	ROUTE	POST MILES TOTAL PROJECT	SHEET No.	TOTAL SHEETS
04	SF	101,280	1.5/1.8 R4.1/R4.4	9	76

REGISTERED CIVIL ENGINEER 8/1/13 DATE

9-30-13
PLANS APPROVAL DATE

REGISTERED PROFESSIONAL ENGINEER Hung H. Do No. 55485 Exp. 12-31-14 CIVIL STATE OF CALIFORNIA

THE STATE OF CALIFORNIA OR ITS OFFICERS OR AGENTS SHALL NOT BE RESPONSIBLE FOR THE ACCURACY OR COMPLETENESS OF SCANNED COPIES OF THIS PLAN SHEET.

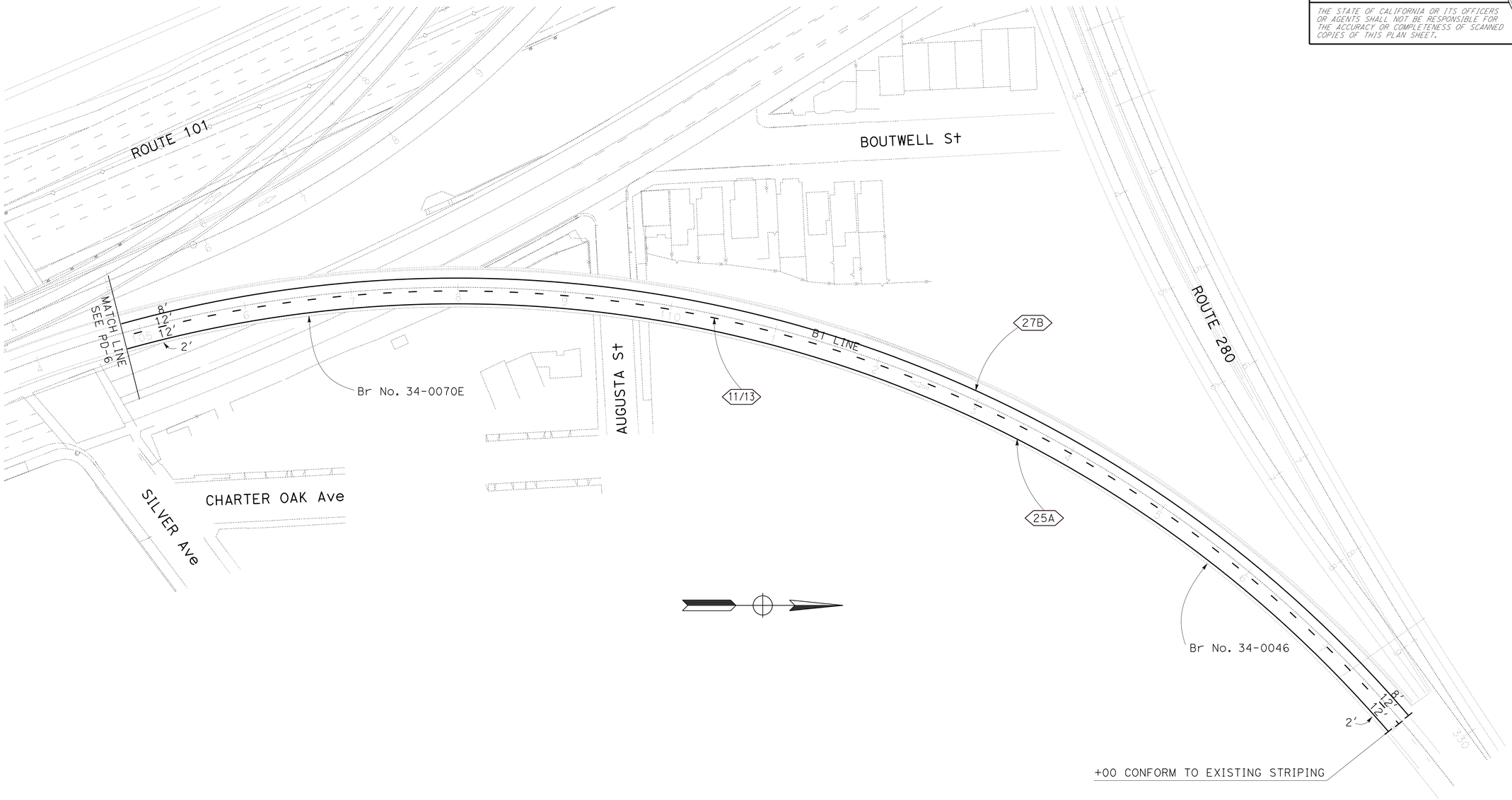

PAVEMENT DELINEATION PLAN

SCALE: 1" = 50'

FOR NOTES, ABBREVIATIONS AND LEGEND, SEE SHEET PD-1

APPROVED FOR PAVEMENT DELINEATION WORK ONLY

PD-4

CALCULATED-DESIGNED BY	TIM LE	REVISED BY	TL
CHECKED BY	HUNG H. DO	DATE REVISED	9/23/13

FUNCTIONAL SUPERVISOR: GORDON W. JEONG

STATE OF CALIFORNIA - DEPARTMENT OF TRANSPORTATION

Caltrans®

DESIGN

LAST REVISION 09-23-13 | DATE PLOTTED => 20-FEB-2014 | TIME PLOTTED => 13:02

Dist	COUNTY	ROUTE	POST MILES TOTAL PROJECT	SHEET No.	TOTAL SHEETS
04	SF	101,280	1.5/1.8 R4.1/R4.4	10	76

REGISTERED CIVIL ENGINEER 8/1/13 DATE

9-30-13
PLANS APPROVAL DATE

REGISTERED PROFESSIONAL ENGINEER Hung H. Do No. 55485 Exp. 12-31-14 CIVIL STATE OF CALIFORNIA

THE STATE OF CALIFORNIA OR ITS OFFICERS OR AGENTS SHALL NOT BE RESPONSIBLE FOR THE ACCURACY OR COMPLETENESS OF SCANNED COPIES OF THIS PLAN SHEET.

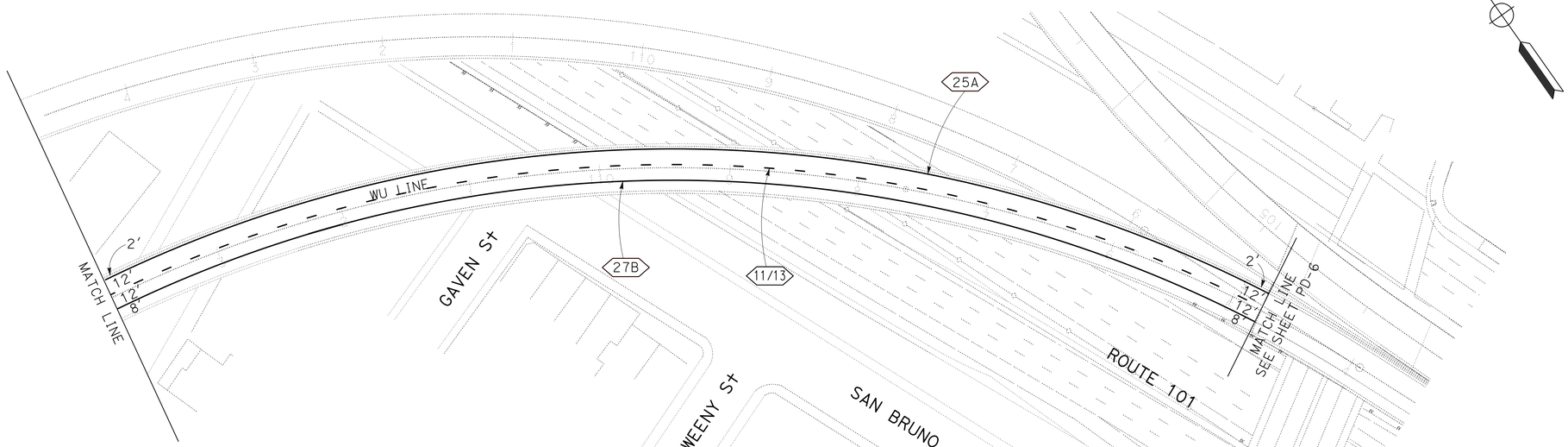

PAVEMENT DELINEATION PLAN

SCALE: 1" = 50'

FOR NOTES, ABBREVIATIONS AND LEGEND, SEE SHEET PD-1

APPROVED FOR PAVEMENT DELINEATION WORK ONLY

PD-5

CALCULATED-DESIGNED BY	TIM LE	REVISED BY	TL
CHECKED BY	HUNG H. DO	DATE REVISED	9/23/13
FUNCTIONAL SUPERVISOR	GORDON W. JEONG		

STATE OF CALIFORNIA - DEPARTMENT OF TRANSPORTATION
Caltrans
DESIGN

LAST REVISION 09-23-13 | DATE PLOTTED => 20-FEB-2014 | TIME PLOTTED => 13:02

Dist	COUNTY	ROUTE	POST MILES TOTAL PROJECT	SHEET No.	TOTAL SHEETS
04	SF	101,280	1.5/1.8 R4.1/R4.4	11	76

REGISTERED CIVIL ENGINEER 8/1/13 DATE

9-30-13
PLANS APPROVAL DATE

REGISTERED PROFESSIONAL ENGINEER Hung H. Do No. 55485 Exp. 12-31-14 CIVIL STATE OF CALIFORNIA

THE STATE OF CALIFORNIA OR ITS OFFICERS OR AGENTS SHALL NOT BE RESPONSIBLE FOR THE ACCURACY OR COMPLETENESS OF SCANNED COPIES OF THIS PLAN SHEET.

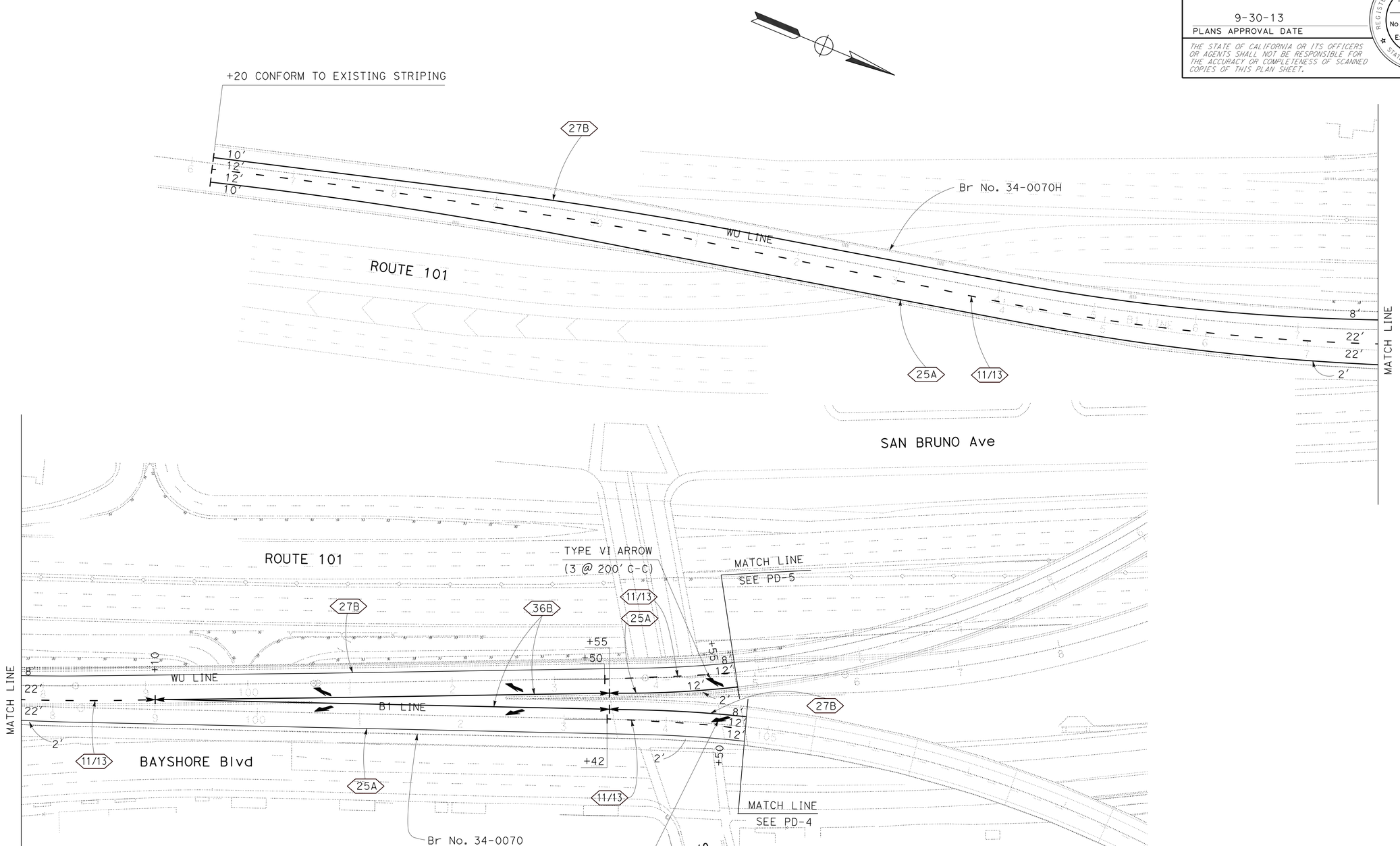

PAVEMENT DELINEATION PLAN

SCALE: 1" = 50'

FOR NOTES, ABBREVIATIONS AND LEGEND, SEE SHEET PD-1

APPROVED FOR PAVEMENT DELINEATION WORK ONLY

PD-6

REVISED BY	DATE REVISED
TL	9/23/13

CALCULATED-DESIGNED BY: TIM LE
CHECKED BY: HUNG H. DO
FUNCTIONAL SUPERVISOR: GORDON W. JEONG

STATE OF CALIFORNIA - DEPARTMENT OF TRANSPORTATION
Caltrans
DESIGN

LAST REVISION 09-23-13 | DATE PLOTTED => 20-FEB-2014 | TIME PLOTTED => 13:02

Dist	COUNTY	ROUTE	POST MILES TOTAL PROJECT	SHEET No.	TOTAL SHEETS
04	SF	101,280	1.5/1.8 R4.1/R4.4	12	76

REGISTERED CIVIL ENGINEER 8/1/13 DATE

9-30-13
PLANS APPROVAL DATE

REGISTERED PROFESSIONAL ENGINEER Hung H. Do No. 55485 Exp. 12-31-14 CIVIL STATE OF CALIFORNIA

THE STATE OF CALIFORNIA OR ITS OFFICERS OR AGENTS SHALL NOT BE RESPONSIBLE FOR THE ACCURACY OR COMPLETENESS OF SCANNED COPIES OF THIS PLAN SHEET.

TRAFFIC STRIPES, PAVEMENT MARKINGS AND PAVEMENT MARKERS

SHEET No.	STATION LIMITS	DETAIL No.	REMOVE THERMOPLASTIC TRAFFIC STRIPE	REMOVE YELLOW THERMOPLASTIC TRAFFIC STRIPE (HAZARDOUS WASTE)	THERMOPLASTIC TRAFFIC STRIPE		4" THERMOPLASTIC TRAFFIC STRIPE (BROKEN 36-12)	REMOVE THERMO-PLASTIC PAVEMENT MARKING	THERMO-PLASTIC PAVEMENT MARKING	REMOVE PAVEMENT MARKER	PAVEMENT MARKER		
					4"	8"					(NON-REFLECTIVE)	(RETRO REFLECTIVE)	
											TYPE A	TYPE G	TYPE H
			LF					SQFT			EA		
PD-1	AU 311+50 TO 329+50	11/13	456				1824			230	152	39	
PD-1	AL 305+50 TO 322+30	11/13	420				1680			176	140	36	
PD-1, 2	RE 305+50 TO 329+43	11/13	600				2400			302	200	51	
PD-3	WL 104+84 TO 110+00	11/13	132				528			86	44	12	
PD-4, 6	B1 103+42 TO 118+00	11/13	372				1488			186	124	32	
PD-5, 6	WU 103+50 TO 127+00	11/13	588				2350			260	196	50	
PD-6	WU 85+70 TO 99+10	11/13	336				1340			136	112	29	
PD-1	AU 311+50 TO 329+50	25A		1800	1800					39			75
PD-1	AL 310+50 TO 322+30	25A		1180	1180					27			50
PD-1, 2	RE 305+50 TO 329+43	25A		2393	2393					51			100
PD-3	WL 104+84 TO 120+84	25A		1600	1600					35			67
PD-4, 6	WU 85+70 TO B1 118+00	25A		3230	3230					68			135
PD-5, 6	WU 103+55 TO 127+00	25A		2345	2345					49			98
PD-1	AU 311+50 TO 329+50	27B	1800		1800								
PD-1	AL 305+50 TO 322+30	27B	1680		1680								
PD-1, 2	RE 310+10 TO 329+43	27B	1933		1933								
PD-3	WL 104+84 TO 120+84	27B	1600		1600								
PD-4, 6	B1 103+45 TO 118+00	27B	1455		1455								
PD-5, 6	WU 85+70 TO 127+00	27B	4130		4130								
PD-6	WU 99+10 TO 103+55	36B	890			890				20		20	
PD-1	RE 305+50 TO 310+10	36	920			460				21		21	
PD-1	AL 305+50 TO 310+10	36	920			460				21		21	
PD-3	WL 109+00 TO 113+00	TYPE VI ARROW						126	126				
PD-6	B1 100+42 TO 104+50	TYPE VI ARROW						126	126				
PD-6	WU 100+50 TO 104+55	TYPE VI ARROW						126	126				
SUBTOTAL			18232	12548	25146	1810	11610	378	378	1707	968	311	525
SHEET TOTAL			18232	12548	25146	1810	11610	378	378	1707	968	836	

PAVEMENT DELINEATION QUANTITIES

PDQ-1

STATE OF CALIFORNIA - DEPARTMENT OF TRANSPORTATION
Caltrans® DESIGN

FUNCTIONAL SUPERVISOR: GORDON W. JEONG
CALCULATED-DESIGNED BY: TIM LE
CHECKED BY: HUNG H. DO
REVISED BY: TL
DATE REVISED: 9/23/13

LAST REVISION 09-23-13 | DATE PLOTTED => 20-FEB-2014 | TIME PLOTTED => 13:02

Dist	COUNTY	ROUTE	POST MILES TOTAL PROJECT	SHEET No.	TOTAL SHEETS
04	SF	101,280	1.5/1.8 R4.1/R4.4	13	76

REGISTERED CIVIL ENGINEER 8/2/13 DATE

9-30-13
PLANS APPROVAL DATE

REGISTERED PROFESSIONAL ENGINEER Jerilyn L. Struven No. 49964 Exp. 12-31-14 CIVIL STATE OF CALIFORNIA

THE STATE OF CALIFORNIA OR ITS OFFICERS OR AGENTS SHALL NOT BE RESPONSIBLE FOR THE ACCURACY OR COMPLETENESS OF SCANNED COPIES OF THIS PLAN SHEET.

NOTES:

1. LOCATION OF ROADSIDE SIGN ARE APPROXIMATE.
2. EXACT LOCATION WILL BE DETERMINED BY THE ENGINEER.

LEGEND:

(No.) ROADSIDE SIGN NUMBER
■ REMOVE ROADSIDE SIGN

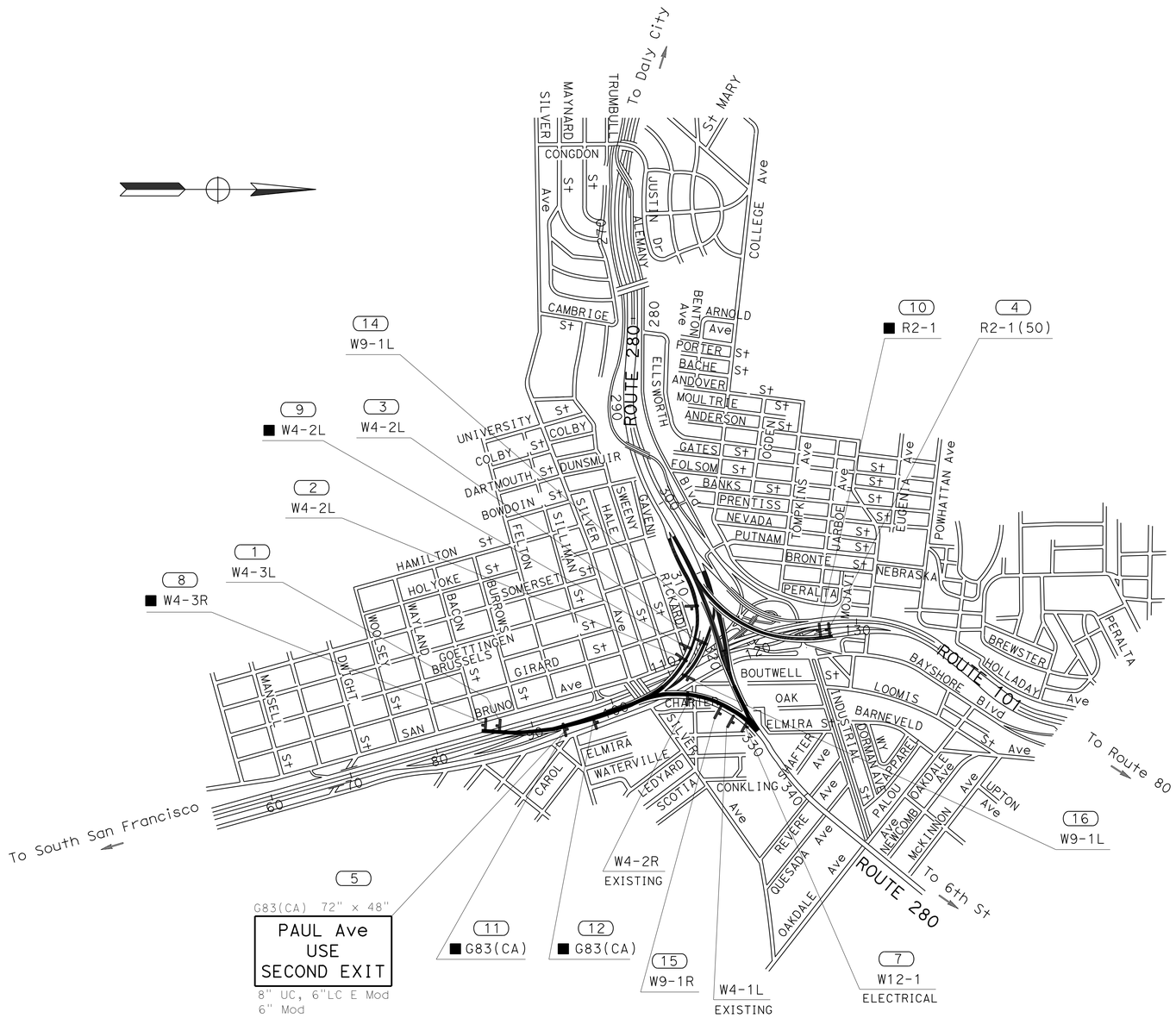

SIGN PLAN
NO SCALE

APPROVED FOR SIGN WORK ONLY

S-1

CALCULATED-DESIGNED BY	ULICES VEGA	REVISED BY	UV
CHECKED BY	JERILYN L. STRUVEN	DATE REVISED	7/23/13
FUNCTIONAL SUPERVISOR	ROLAND AU-YEUNG		

STATE OF CALIFORNIA - DEPARTMENT OF TRANSPORTATION
Caltrans
TRAFFIC

LAST REVISION 09-30-13 | DATE PLOTTED => 20-FEB-2014 | TIME PLOTTED => 13:02

Dist	COUNTY	ROUTE	POST MILES TOTAL PROJECT	SHEET No.	TOTAL SHEETS
04	SF	101,280	1.5/1.8 R4.1/R4.4	14	76

REGISTERED CIVIL ENGINEER 8/2/13 DATE

9-30-13
PLANS APPROVAL DATE

REGISTERED PROFESSIONAL ENGINEER Jerilyn L. Struven No. 49964 Exp. 12-31-14 CIVIL STATE OF CALIFORNIA

THE STATE OF CALIFORNIA OR ITS OFFICERS OR AGENTS SHALL NOT BE RESPONSIBLE FOR THE ACCURACY OR COMPLETENESS OF SCANNED COPIES OF THIS PLAN SHEET.

ABBREVIATIONS:

ASTM AMERICAN STANDARD TESTING MATERIAL
w/ WITH

ROADSIDE SIGN QUANTITIES

SIGN No.	CODE	PANEL SIZE	METAL (BARRIER MOUNTED SIGN)	REMOVE ROADSIDE SIGN	REMARKS
		INCH x INCH	LB	EA	
1	W4-3L	48 x 48	272		SB 101 AT MERGE w/ CONNECTOR FROM NB 280
2	W4-2L	48 x 48	272		NB 280 TO SB 101 CONNECTOR LEFT SIDE
3	W4-2L	48 x 48	272		NB 101 TO SB 280 CONNECTOR LEFT SIDE
4	R2-1(50)	48 x 60	256		NB 280 TO NB 101 CONNECTOR LEFT SIDE
5	G83(CA)	72 x 48	337		NB 280 TO SB 101 CONNECTOR LEFT SIDE
6	DELETED				
7	W12-1	48 x 48			SB 280 TO SB 101/SB 280 SPLIT ELECTRICAL ITEM
8	W4-3 R			1	SB 101 AT MERGE w/ CONNECTOR FROM NB 280
9	W4-2 L			1	
10	R2-1			1	
11	G83(CA)			1	
12	G83(CA)			1	
13	DELETED				
14	W9-1L	48 x 48	272		NB 280 TO SB 101 CONNECTOR LEFT SIDE
15	W9-1R	48 x 48	272		SB 280 TO SB 101 CONNECTOR RIGHT SIDE
16	W9-1L	48 x 48	272		NB 280 TO SB 101 CONNECTOR LEFT SIDE
TOTAL			2,225	5	

G83 72" x 48"

PAUL Ave
USE
SECOND EXIT

8" UC, 6" LC E Mod
6" Mod

MATERIAL SUMMARY

NUMBER	SIGN CODE	PANEL SIZE	SIGN AREA	SINGLE FACED	BACKGROUND		LEGEND		PROTECTIVE OVERLAY	ROADSIDE SIGNS SINGLE SHEET UNFRAMED ALUMINUM 0.080"	DESCRIPTION
					SHEETING COLOR	RETROEFLECTIVE ASTM TYPE	SHEETING COLOR	RETROEFLECTIVE ASTM TYPE	PREMIUM		
		INCH x INCH	SQFT							SQFT	
1	W4-3R	48 x 48	16	X	YELLOW	III	BLACK	0	X	16	
2	W4-2L	48 x 48	16	X	YELLOW	III	BLACK	0	X	16	
3	W4-2L	48 x 48	16	X	YELLOW	III	BLACK	0	X	16	
4	R2-1(50)	48 x 60	20	X	WHITE	III	BLACK	0	X	20	
5	G83(CA)	72 x 48	55	X	GREEN	III	WHITE	1X	X	53	
6	DELETED										
7	W12-1	48 x 48	16	X	YELLOW	III	BLACK	0	X	16	ELECTRICAL ITEM
14	W9-1L	48 x 48	16	X	YELLOW	III	BLACK	0	X	16	
15	W9-1R	48 x 48	16	X	YELLOW	III	BLACK	0	X	16	
16	W9-1L	48 x 48	16	X	YELLOW	III	BLACK	0	X	16	
TOTAL										185	

SIGN QUANTITIES, SIGN DETAILS
(CONTRACTOR FURNISHED SIGNS)

SQ-1

REVISED BY	DATE REVISED
UV	7/23/13

ULICES VEGA — JERILYN L. STRUVEN
CALCULATED-DESIGNED BY — CHECKED BY
FUNCTIONAL SUPERVISOR: ROLAND AU-YEUNG

STATE OF CALIFORNIA - DEPARTMENT OF TRANSPORTATION
Caltrans
TRAFFIC

LAST REVISION 09-30-13 | DATE PLOTTED => 20-FEB-2014 TIME PLOTTED => 13:02

Dist	COUNTY	ROUTE	POST MILES TOTAL PROJECT	SHEET No.	TOTAL SHEETS
04	SF	101,280	1.5/1.8 R4.1/R4.4	15	76

REGISTERED CIVIL ENGINEER 8/1/13 DATE

9-30-13
PLANS APPROVAL DATE

REGISTERED PROFESSIONAL ENGINEER Hung H. Do No. 55485 Exp. 12-31-14 CIVIL STATE OF CALIFORNIA

THE STATE OF CALIFORNIA OR ITS OFFICERS OR AGENTS SHALL NOT BE RESPONSIBLE FOR THE ACCURACY OR COMPLETENESS OF SCANNED COPIES OF THIS PLAN SHEET.

ROADWAY QUANTITIES

SHEET No.	STATION LIMITS	REMOVE GUARDRAIL	MIDWEST GUARDRAIL SYSTEM (7' WOOD POST)	TRANSITION RAILING (TYPE WB-31)	END CAP (TYPE A)	CONCRETE BARRIER (TYPE 60S)	REMOVE CRASH CUSHION (SAND FILLED)	CRASH CUSHION SAND FILLED ARRAY U14
		LF		EA		LF	EA	
C-1	WU 124+94.25 TO 126+72 (R)	100				355	1	1
C-1	WU 124+94.25 TO 125+56.75 (L)	62.5	37.5	1				
C-2	RE 329+42 TO 329+79.5	37.5	37.5		1			
TOTAL		200	75	1	1	355	1	1

TEMPORARY FACILITIES

CONNECTOR	STATION LIMITS	TEMPORARY RAILING (TYPE K)	TEMPORARY TRAFFIC SCREEN	TEMPORARY CRASH CUSHION MODULE
		LF		EA
280 NB TO 101 SB	WU 85+70 TO 127+00	9100	9100	28
280 SB TO 101 SB	B1 104+77 TO 118+00	2886	2886	28
280 NB	AL 305+50 TO 322+30	3712	3712	28
280 SB	AU 311+70 TO 329+49	3798	3798	28
280 NB TO 101 NB	RE 310+67 TO 329+23	3712	3712	28
101 NB TO 280 SB	WL 104+85 TO 120+64	3399	3399	28
TOTAL		26607	26607	168

TEMPORARY STRIPINGS

CONNECTOR	STATION LIMITS	DETAIL No.	TEMPORARY TRAFFIC STRIPE (TAPE)	TEMPORARY PAVEMENT MARKER	TEMPORARY PAVEMENT MARKING (TAPE)
			LF	EA	SQFT
280 NB TO 101 SB	WU 85+70 TO 127+00	13		734	
		25A	4290	170	
		27B	7860		
		36B	3560	40	
		TYPE VI ARROW			252
280 SB TO 101 SB	B1 104+77 TO 118+00	13		312	
		25A	6460	270	
		27B	2910		
		TYPE VI ARROW			252
280 NB	AL 305+50 TO 322+30	13		352	
		25A	2360	100	
		27B	3360		
		36	1840	42	
280 SB	AU 311+70 TO 329+49	13		382	
		25A	3600	150	
		27B	3600		
280 NB TO 101 NB	RE 310+67 TO 329+23	13		502	
		25A	4786	200	
		27B	3866		
		36	1840	42	
101 NB TO 280 SB	WL 104+85 TO 120+64	13		112	
		25A	3200	134	
		27B	3200		
		TYPE VI ARROW			252
TOTAL			56732	3542	756

SUMMARY OF QUANTITIES

Q-1

REVISED BY	DATE REVISED	CALCULATED-DESIGNED BY	CHECKED BY	FUNCTIONAL SUPERVISOR
TL	9/23/13	TIM LE	HUNG H. DO	GORDON W. JEONG

STATE OF CALIFORNIA - DEPARTMENT OF TRANSPORTATION
Caltrans DESIGN

LAST REVISION 09-23-13 | DATE PLOTTED => 20-FEB-2014 | TIME PLOTTED => 13:02

Dist	COUNTY	ROUTE	POST MILES TOTAL PROJECT	SHEET No.	TOTAL SHEETS
04	SF	101,280	1.5/1.8 R4.1/R4.4	16	76

REGISTERED ELECTRICAL ENGINEER 8/12/13 DATE

9-30-13
PLANS APPROVAL DATE

REGISTERED PROFESSIONAL ENGINEER Lindy F. Cabugao No. 17232 Exp. 6-30-14 ELECTRICAL STATE OF CALIFORNIA

THE STATE OF CALIFORNIA OR ITS OFFICERS OR AGENTS SHALL NOT BE RESPONSIBLE FOR THE ACCURACY OR COMPLETENESS OF SCANNED COPIES OF THIS PLAN SHEET.

ELECTRICAL INDEX:

E-1	ELECTRICAL INDEX, GENERAL NOTES AND PROJECT NOTES
E-2 TO E-9	LIGHTING AND SIGN ILLUMINATION
E-10	LIGHTING (STAGE CONSTRUCTION)
E-11	ELECTRICAL QUANTITIES

GENERAL NOTES:

1. NO ABOVE GROUND ELECTRICAL WORK MUST BE PERFORMED ON ANY SYSTEM WITHIN THE PROJECT SITE UNTIL ALL CONTRACTOR - FURNISHED ELECTRICAL MATERIALS FOR THAT INDIVIDUAL SYSTEM HAVE BEEN TESTED AND DELIVERED TO CONTRACTOR.
2. THE CLEARANCE BETWEEN THE BOTTOM OF THE LOWEST CIRCUIT BREAKER AND THE BOTTOM OF THE SERVICE EQUIPMENT ENCLOSURE FOR A TYPE III-A SERIES MUST BE 24 INCHES MINIMUM.
3. DIMENSIONS SHOWN FOR EXISTING STRUCTURES ARE APPROXIMATE.
4. SOME EXISTING CONDUITS AND EQUIPMENT ARE NOT SHOWN IN PLANS.
5. FOR THE SYSTEMS REQUIRING CONTINUITY OF OPERATION OR LIMITED/MAXIMUM DOWN TIME, THE REMOVAL OR MODIFICATION OF EXISTING CONDUITS, CONDUCTORS OR EQUIPMENT WILL BE PERFORMED ONLY WHEN NEW CONDUITS, CONDUCTORS OR EQUIPMENT ARE INSTALLED AND READY TO REPLACE OR SPLICE TO EXISTING SYSTEMS.
6. MINIMUM 48 HOURS ADVANCE NOTICE SHALL BE GIVEN TO THE ENGINEER PRIOR TO WORKING ON ANY TOS SYSTEM.
7. TEMPORARY ELECTRICAL EQUIPMENT SHALL BE REMOVED AND BECOME PROPERTY OF THE CONTRACTOR WHEN NO LONGER REQUIRED FOR TEMPORARY USE. THE SERVICE ENCLOSURE SHALL REMAIN IN USE.
8. UNLESS OTHERWISE NOTED, ALL No. 9A PULL BOXES MUST BE TOP MOUNTED.

PROJECT NOTES:

1. INSTALL 2" C, 3#2.
2. Exist 1½" C, 2#8 (240 V, LIGHTING).
3. RC TYPE A SERVICE EQUIPMENT ENCLOSURE AND PEU ON TYPE 1-B POLE. INSTALL PEU.
4. ExisT 1½" C, RC ALL CONDUCTORS, INSTALL 3#14 (PEU).
5. INSTALL 2" C, 2#8 (240 V, LIGHTING).
6. INSTALL 2" C, MT.
7. INSTALL 2" C, TYPE 4, 2#8 (240 V, LIGHTING).
8. INSTALL 200 W HPS LUMINAIRE ON WOODEN POLE WITH 12' LMA SEE SES-1 FOR WOOD POLES DETAILS.
9. ExisT 1½" C, 3#2. RC 3#2, INSTALL 3#2.
10. RC Exist PULL BOX. INSTALL PULL BOX SIZE IN KIND.
11. RC Exist TYPE III-AF SERVICE EQUIPMENT ENCLOSURE, INSTALL TYPE III-AF SERVICE EQUIPMENT ENCLOSURE ON EXISTING FOUNDATION. SEE ES-2C AND ES-2D FOR SERVICE EQUIPMENT NOTES AND ENCLOSURE DETAILS. (SEE SHEET ES-2D FOR SERVICE WIRING DIAGRAM AND BASE DETAILS, AND PROVIDE ALL EQUIPMENT ITEMS INDICATED). VERIFY TO FIT FOUNDATION BOLTS.
12. Exist 1½" C, RC ALL CONDUCTORS.
    INSTALL 2#8 (240 V, LIGHTING),
    2#8 (240 V, SIGN ILLUMINATION),
    2#12 (120 V, SIGN TEST SWITCH),
    2#8 (120 V, FLASHING BEACON),
    5#14 (PEU)
13. Exist 1½" C, RC ALL CONDUCTORS, INSTALL 5#14 (PEU).
14. RC Exist DUAL PEU ON TYPE 1-B POLE. INSTALL DUAL PEU.
15. INSTALL 2" C, 2#8 (240 V, LIGHTING),
    2#8 (240 V, SIGN ILLUMINATION),
    2#12 (120 V, SIGN TEST SWITCH),
    2#8 (120 V, FLASHING BEACON).
16. INSTALL 2" C, 2#8 (240 V, LIGHTING),
    2#8 (240 V, SIGN ILLUMINATION),
    2#12 (120 V, SIGN TEST SWITCH).
17. INSTALL 2" C, 2#8 (240 V, LIGHTING),
    2#8 (120 V, FLASHING BEACON).
18. INSTALL 2" C, 2#8 (240 V, LIGHTING).
19. Exist 1½" C, 2#8 (120 V, FLASHING BEACON).
20. Exist 1½" C, RC ALL CONDUCTORS,
    INSTALL 2#8 (240 V, LIGHTING),
    2#8 (240 V, SIGN ILLUMINATION),
    2#12 (120 V, SIGN TEST SWITCH).
21. TO Exist LIGHTING AND SIGN ILLUMINATION.
22. RC Exist 5-175 W SIGN LIGHTING.
    INSTALL 5-85 W INDUCTION SIGN LIGHTING.
23. Exist 1½" C,
    4#8 (240 V, LIGHTING), 3#14 (PEU).
    RC 3#14 (PEU).
24. TO Exist LIGHTING.
25. INSTALL 2" C,
    4#8 (240 V, LIGHTING AND SIGN ILLUMINATION),
    3#14 (PEU).
26. INSTALL TYPE III-AF SERVICE EQUIPMENT ENCLOSURE. SEE ES-2C AND ES-2D FOR SERVICE EQUIPMENT NOTES AND ENCLOSURE DETAILS. (SEE SHEET ES-2D FOR SERVICE WIRING DIAGRAM AND BASE DETAILS, AND PROVIDE ALL EQUIPMENT ITEMS INDICATED).
27. SEE DETAIL B ON SHEET E-8 FOR No. 9 PULL BOX INSTALLATION.
28. SEE DETAIL C ON SHEET E-8 FOR TYPE 4 CONDUIT TO NEMA 3R ENCLOSURE INSTALLATION.
29. SEE DETAIL A ON SHEET E-8 FOR EXTERNAL MOUNT CONDUIT TO No. 9A PULL BOX INSTALLATION.
30. INSTALL No. 9 PULL BOX PER DETAIL B ON SHEET E-8. CORE DRILL RAILING AND INSTALL 2" C. CONNECT CONDUIT BETWEEN THE EXISTING PULL BOX AND No. 9 PULL BOX.

ELECTRICAL INDEX, GENERAL NOTES AND PROJECT NOTES

E-1

STATE OF CALIFORNIA - DEPARTMENT OF TRANSPORTATION
Caltrans
ELECTRICAL

FUNCTIONAL SUPERVISOR: BEHZAD GOLEMOHAMMADI
CALCULATED-DESIGNED BY: LINDY CABUGAO
CHECKED BY: KENNETH Y. XU
REVISED BY: LC
DATE REVISED: 9/23/13

LAST REVISION 09-26-13 | DATE PLOTTED => 20-FEB-2014 | TIME PLOTTED => 13:02

Dist	COUNTY	ROUTE	POST MILES TOTAL PROJECT	SHEET No.	TOTAL SHEETS
04	SF	101,280	1.5/1.8 R4.1/R4.4	17	76

REGISTERED ELECTRICAL ENGINEER 8/12/13 DATE

9-30-13
PLANS APPROVAL DATE

REGISTERED PROFESSIONAL ENGINEER Lindy F. Cabugao No. 17232 Exp. 6-30-14 ELECTRICAL STATE OF CALIFORNIA

THE STATE OF CALIFORNIA OR ITS OFFICERS OR AGENTS SHALL NOT BE RESPONSIBLE FOR THE ACCURACY OR COMPLETENESS OF SCANNED COPIES OF THIS PLAN SHEET.

26 TYPE III-AF SERVICE EQUIPMENT ENCLOSURE No. 04013 (240/480 V), A6

NEW CT ID No. 04342800004013
PROVIDE EQUIPMENT ITEMS No. 1 TO 8, 15, 16, 20, 22 AND 23. USE 240 V CIRCUIT BREAKER AND PEU.

EXISTING SYSTEM No. 34-280-04013 (PG&E)

TYPE H SERVICE (240/480 V)
EXISTING LOAD:
9-310 W LIGHTING
9-200 W LIGHTING
14-175 W SIGN ILLUMINATION

MODIFIED LOAD:
9-310 W LIGHTING
9-200 W LIGHTING
9-175 W SIGN ILLUMINATION
5-85 W SIGN ILLUMINATION

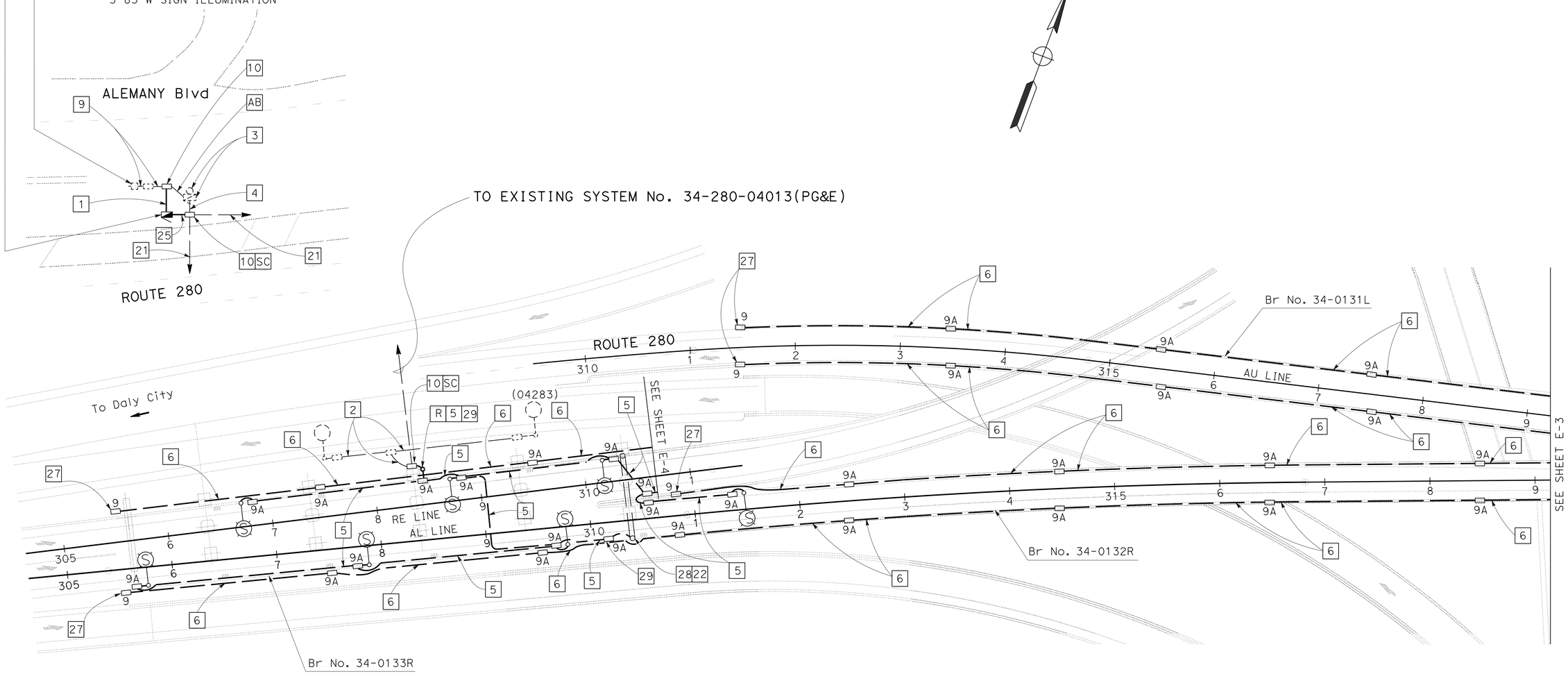

LIGHTING AND SIGN ILLUMINATION

SCALE: 1" = 50'

APPROVED FOR ELECTRICAL WORK ONLY

FOR NOTES, ABBREVIATIONS AND LEGEND, SEE SHEET E-1

E-2

STATE OF CALIFORNIA - DEPARTMENT OF TRANSPORTATION
Caltrans
ELECTRICAL
FUNCTIONAL SUPERVISOR: BEHZAD GOLEMOHAMMADI
CALCULATED-DESIGNED BY: LINDY CABUGAO
CHECKED BY: KENNETH Y. XU
REVISED BY
DATE REVISED 9/23/13

LAST REVISION 09-26-13
DATE PLOTTED => 20-FEB-2014
TIME PLOTTED => 13:02

Dist	COUNTY	ROUTE	POST MILES TOTAL PROJECT	SHEET No.	TOTAL SHEETS
04	SF	101,280	1.5/1.8 R4.1/R4.4	18	76

REGISTERED ELECTRICAL ENGINEER 8/12/13 DATE

9-30-13
PLANS APPROVAL DATE

REGISTERED PROFESSIONAL ENGINEER Lindy F. Cabugao No. 17232 Exp. 6-30-14 ELECTRICAL STATE OF CALIFORNIA

THE STATE OF CALIFORNIA OR ITS OFFICERS OR AGENTS SHALL NOT BE RESPONSIBLE FOR THE ACCURACY OR COMPLETENESS OF SCANNED COPIES OF THIS PLAN SHEET.

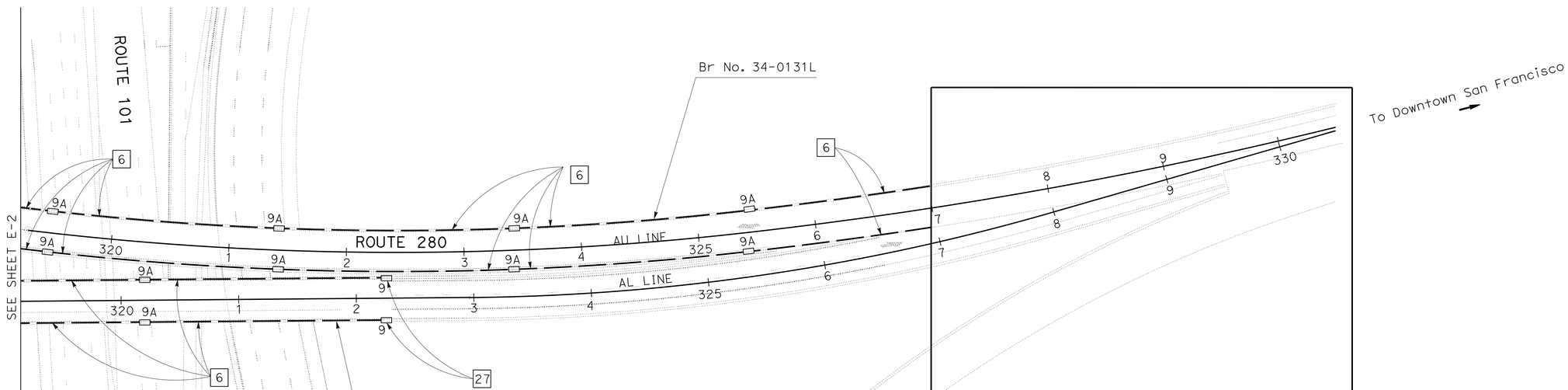

LIGHTING AND SIGN ILLUMINATION

SCALE: 1" = 50'

FOR NOTES, ABBREVIATIONS AND LEGEND, SEE SHEET E-1

APPROVED FOR ELECTRICAL WORK ONLY

E-3

STATE OF CALIFORNIA - DEPARTMENT OF TRANSPORTATION
Caltrans
ELECTRICAL

FUNCTIONAL SUPERVISOR: BEHZAD GOLEMOHAMMADI
CALCULATED-DESIGNED BY: LINDY CABUGAO
CHECKED BY: KENNETH Y. XU
REVISED BY: LC
DATE REVISED: 9/23/13

LAST REVISION 09-26-13
DATE PLOTTED => 20-FEB-2014
TIME PLOTTED => 13:02

Dist	COUNTY	ROUTE	POST MILES TOTAL PROJECT	SHEET No.	TOTAL SHEETS
04	SF	101,280	1.5/1.8 R4.1/R4.4	19	76

REGISTERED ELECTRICAL ENGINEER 8/12/13 DATE

9-30-13
PLANS APPROVAL DATE

REGISTERED PROFESSIONAL ENGINEER Lindy F. Cabugao No. 17232 Exp. 6-30-14 ELECTRICAL STATE OF CALIFORNIA

THE STATE OF CALIFORNIA OR ITS OFFICERS OR AGENTS SHALL NOT BE RESPONSIBLE FOR THE ACCURACY OR COMPLETENESS OF SCANNED COPIES OF THIS PLAN SHEET.

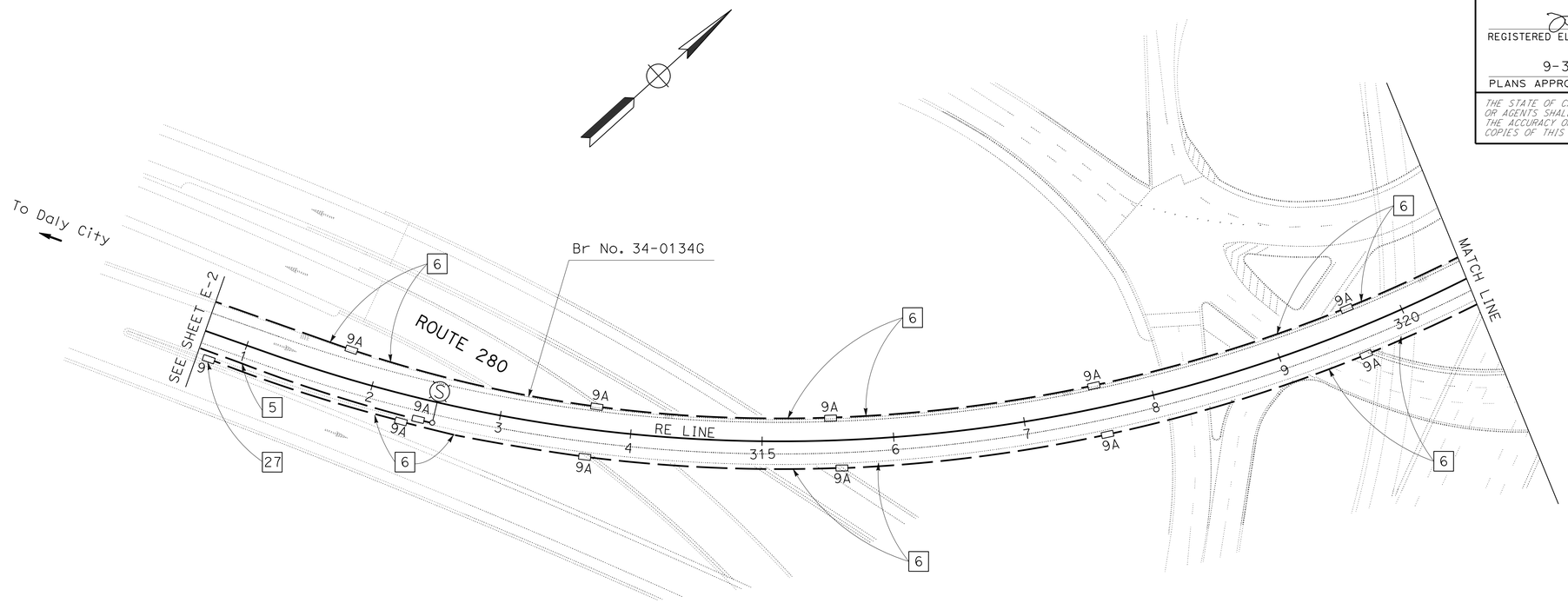

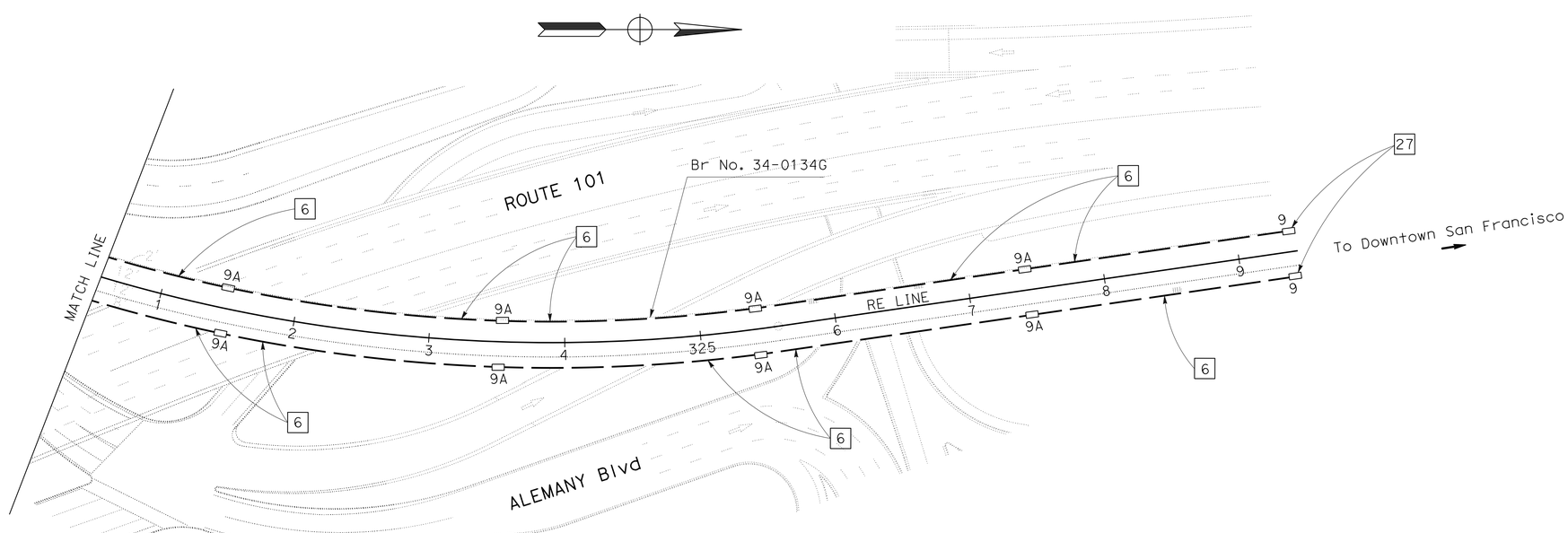

LIGHTING AND SIGN ILLUMINATION

SCALE: 1" = 50'

APPROVED FOR ELECTRICAL WORK ONLY

FOR NOTES, ABBREVIATIONS AND LEGEND, SEE SHEET E-1

E-4

STATE OF CALIFORNIA - DEPARTMENT OF TRANSPORTATION
Caltrans
ELECTRICAL

FUNCTIONAL SUPERVISOR: BEHZAD GOLEMOHAMMADI
CALCULATED-DESIGNED BY: LINDY CABUGAO
CHECKED BY: KENNETH Y. XU
REVISED BY: LC
DATE REVISED: 9/23/13

LAST REVISION 09-26-13
DATE PLOTTED => 20-FEB-2014
TIME PLOTTED => 13:02

Dist	COUNTY	ROUTE	POST MILES TOTAL PROJECT	SHEET No.	TOTAL SHEETS
04	SF	101,280	1.5/1.8 R4.1/R4.4	20	76

REGISTERED ELECTRICAL ENGINEER 8/12/13 DATE

9-30-13
PLANS APPROVAL DATE

REGISTERED PROFESSIONAL ENGINEER
Lindy F. Cabugao
No. 17232
Exp. 6-30-14
ELECTRICAL
STATE OF CALIFORNIA

THE STATE OF CALIFORNIA OR ITS OFFICERS OR AGENTS SHALL NOT BE RESPONSIBLE FOR THE ACCURACY OR COMPLETENESS OF SCANNED COPIES OF THIS PLAN SHEET.

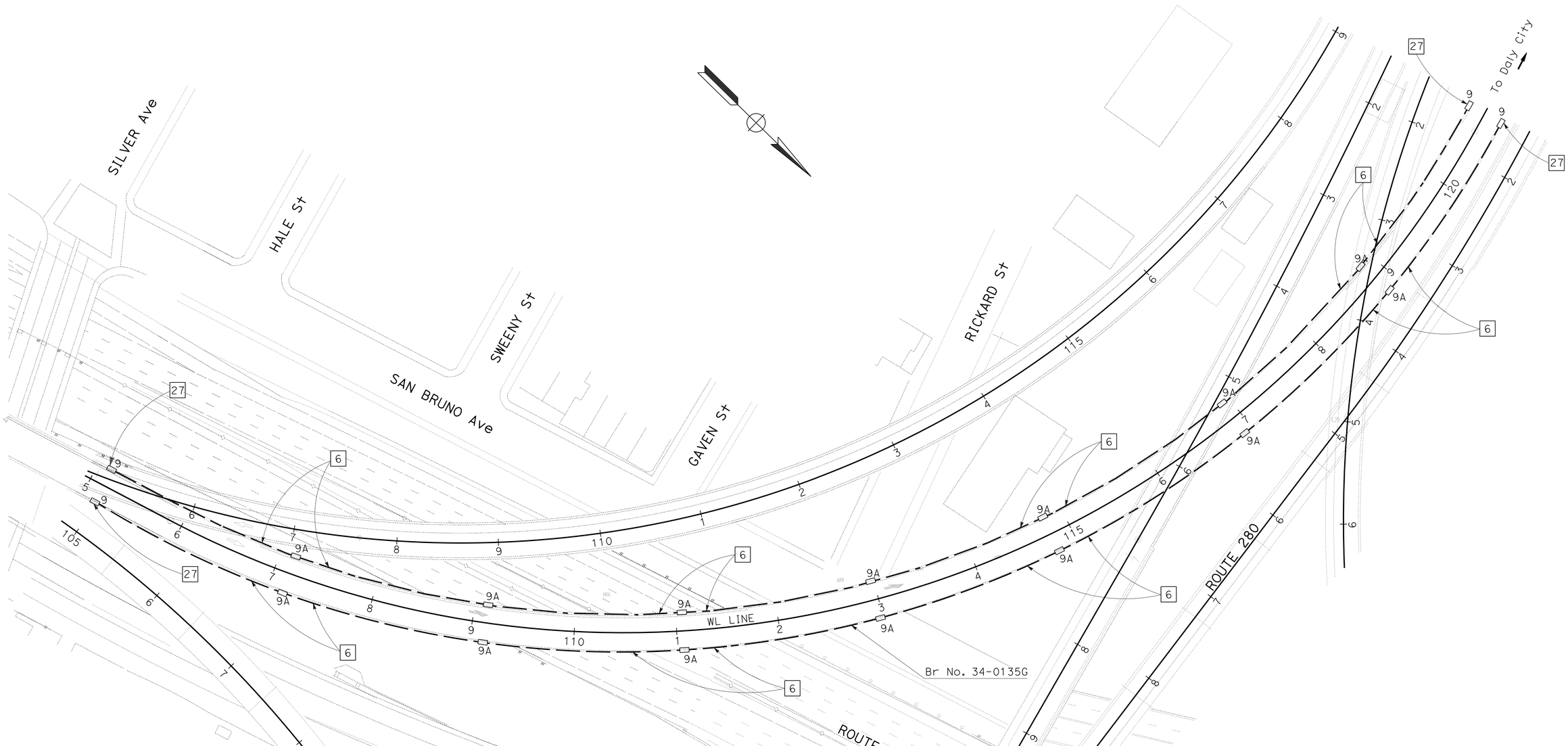

LIGHTING AND SIGN ILLUMINATION

SCALE: 1" = 50'

FOR NOTES, ABBREVIATIONS AND LEGEND, SEE SHEET E-1

APPROVED FOR ELECTRICAL WORK ONLY

E-5

FUNCTIONAL SUPERVISOR	BEHZAD GOLEMOHAMMADI
CALCULATED-DESIGNED BY	LINDY CABUGAO
CHECKED BY	KENNETH Y. XU
REVISED BY	LC
DATE REVISED	9/23/13

STATE OF CALIFORNIA - DEPARTMENT OF TRANSPORTATION
Caltrans
ELECTRICAL

LAST REVISION 09-26-13 | DATE PLOTTED => 20-FEB-2014 | TIME PLOTTED => 13:02

Dist	COUNTY	ROUTE	POST MILES TOTAL PROJECT	SHEET No.	TOTAL SHEETS
04	SF	101,280	1.5/1.8 R4.1/R4.4	21	76

REGISTERED ELECTRICAL ENGINEER 8/12/13 DATE

9-30-13
PLANS APPROVAL DATE

REGISTERED PROFESSIONAL ENGINEER Lindy F. Cabugao No. 17232 Exp. 6-30-14 ELECTRICAL STATE OF CALIFORNIA

THE STATE OF CALIFORNIA OR ITS OFFICERS OR AGENTS SHALL NOT BE RESPONSIBLE FOR THE ACCURACY OR COMPLETENESS OF SCANNED COPIES OF THIS PLAN SHEET.

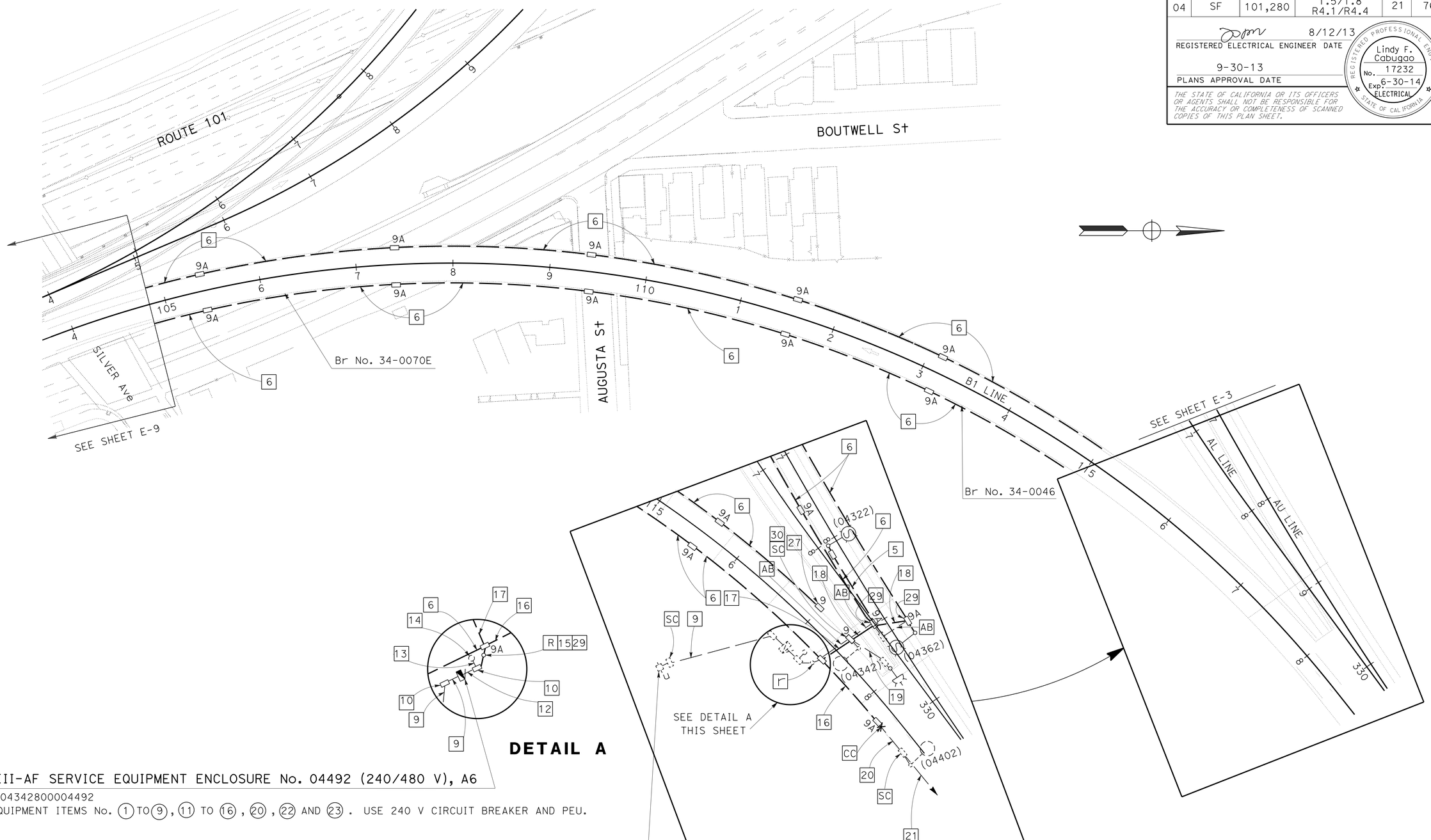

11 TYPE III-AF SERVICE EQUIPMENT ENCLOSURE No. 04492 (240/480 V), A6

CT ID No. 04342800004492
PROVIDE EQUIPMENT ITEMS No. 1 TO 9, 11 TO 16, 20, 22 AND 23. USE 240 V CIRCUIT BREAKER AND PEU.

EXISTING SYSTEM No. 34-280-04492 (PG&E)

TYPE H SERVICE (240/480 V)
EXISTING LOAD:
5-200 W LIGHTING
10-100 W CEILING MOUNTED LUMINAIRES
5-175 W SIGN LIGHTING
150 W FLASHING BEACON

LIGHTING AND SIGN ILLUMINATION

SCALE: 1" = 50'

APPROVED FOR ELECTRICAL WORK ONLY

FOR NOTES, ABBREVIATIONS AND LEGEND, SEE SHEET E-1

E-6

STATE OF CALIFORNIA - DEPARTMENT OF TRANSPORTATION
Caltrans
ELECTRICAL

FUNCTIONAL SUPERVISOR: BEHZAD GOLEMOHAMMADI
CALCULATED-DESIGNED BY: LINDY CABUGAO
CHECKED BY: KENNETH Y. XU
REVISED BY: LC
DATE REVISED: 9/23/13

LAST REVISION 09-26-13
DATE PLOTTED => 20-FEB-2014
TIME PLOTTED => 13:02

Dist	COUNTY	ROUTE	POST MILES TOTAL PROJECT	SHEET No.	TOTAL SHEETS
04	SF	101,280	1.5/1.8 R4.1/R4.4	22	76

REGISTERED ELECTRICAL ENGINEER 8/12/13 DATE

9-30-13
PLANS APPROVAL DATE

REGISTERED PROFESSIONAL ENGINEER Lindy F. Cabugao No. 17232 Exp. 6-30-14 ELECTRICAL STATE OF CALIFORNIA

THE STATE OF CALIFORNIA OR ITS OFFICERS OR AGENTS SHALL NOT BE RESPONSIBLE FOR THE ACCURACY OR COMPLETENESS OF SCANNED COPIES OF THIS PLAN SHEET.

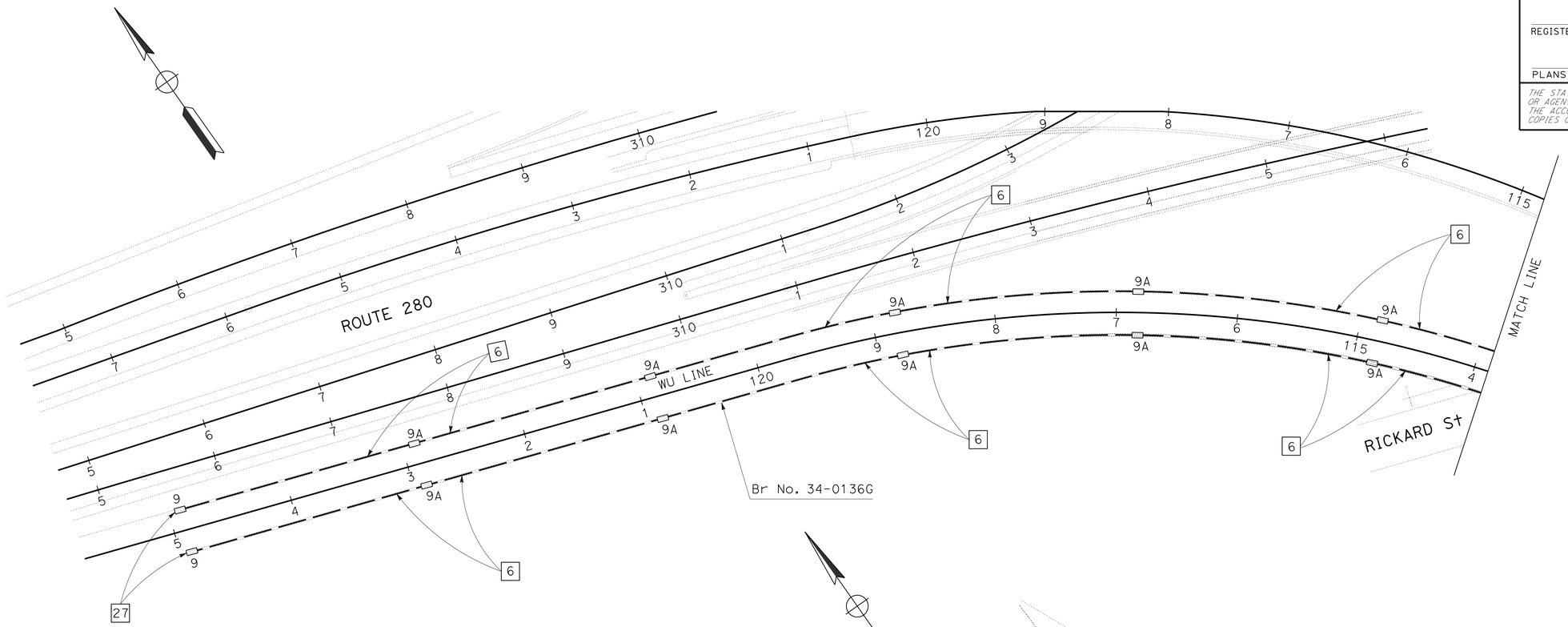

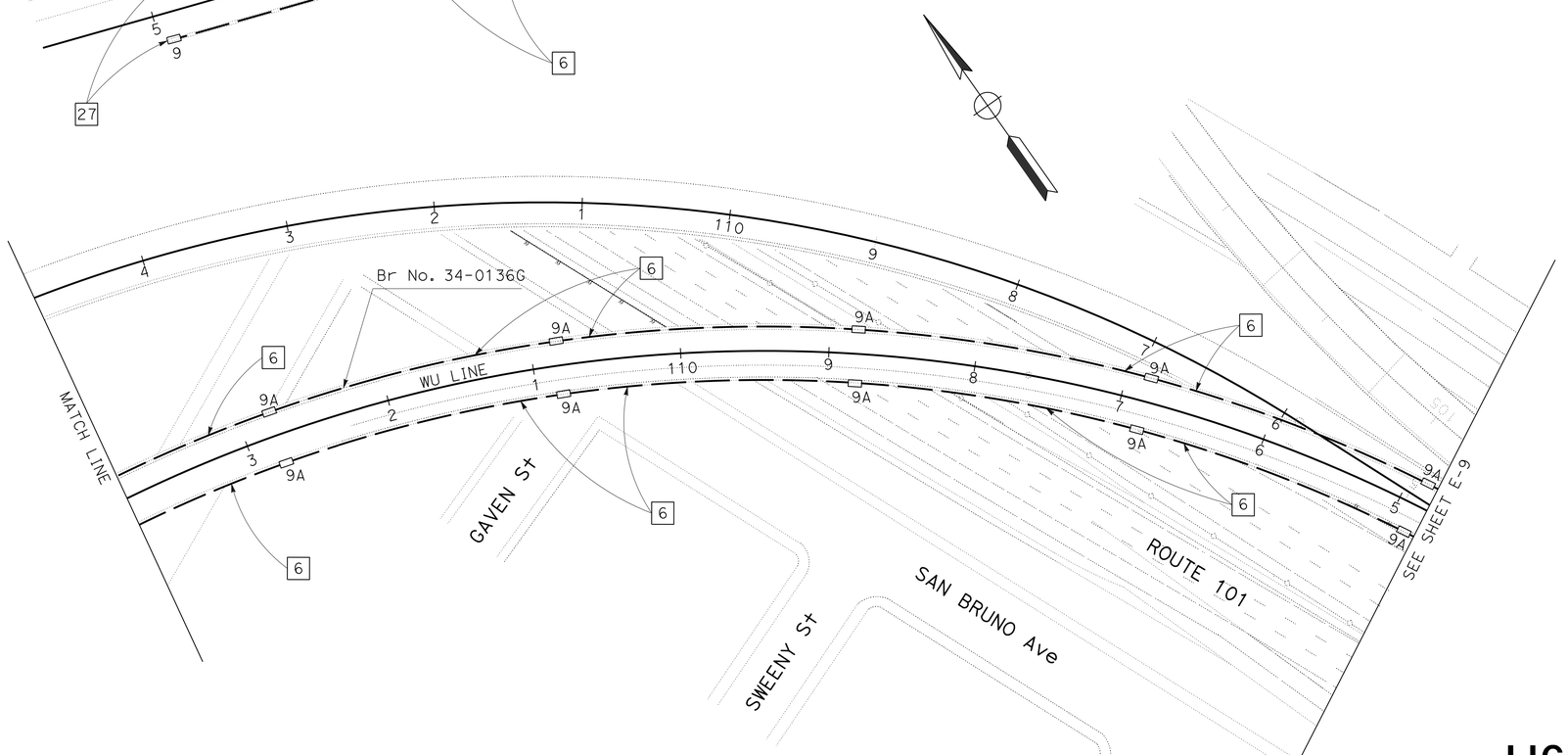

LIGHTING AND SIGN ILLUMINATION

SCALE: 1" = 50'

FOR NOTES, ABBREVIATIONS AND LEGEND, SEE SHEET E-1

APPROVED FOR ELECTRICAL WORK ONLY

E-7

LC	9/23/13
REVISED BY	DATE REVISED
LINDY CABUGAO	KENNETH Y. XU
CALCULATED-DESIGNED BY	CHECKED BY
FUNCTIONAL SUPERVISOR	BEHZAD GOLEMOHAMMADI

STATE OF CALIFORNIA - DEPARTMENT OF TRANSPORTATION
Caltrans
ELECTRICAL

LAST REVISION 09-26-13 | DATE PLOTTED => 20-FEB-2014 TIME PLOTTED => 13:02

Dist	COUNTY	ROUTE	POST MILES TOTAL PROJECT	SHEET No.	TOTAL SHEETS
04	SF	101,280	1.5/1.8 R4.1/R4.4	23	76

REGISTERED ELECTRICAL ENGINEER 8/12/13 DATE

9-30-13
PLANS APPROVAL DATE

REGISTERED PROFESSIONAL ENGINEER Lindy F. Cabugao No. 17232 Exp. 6-30-14 ELECTRICAL STATE OF CALIFORNIA

THE STATE OF CALIFORNIA OR ITS OFFICERS OR AGENTS SHALL NOT BE RESPONSIBLE FOR THE ACCURACY OR COMPLETENESS OF SCANNED COPIES OF THIS PLAN SHEET.

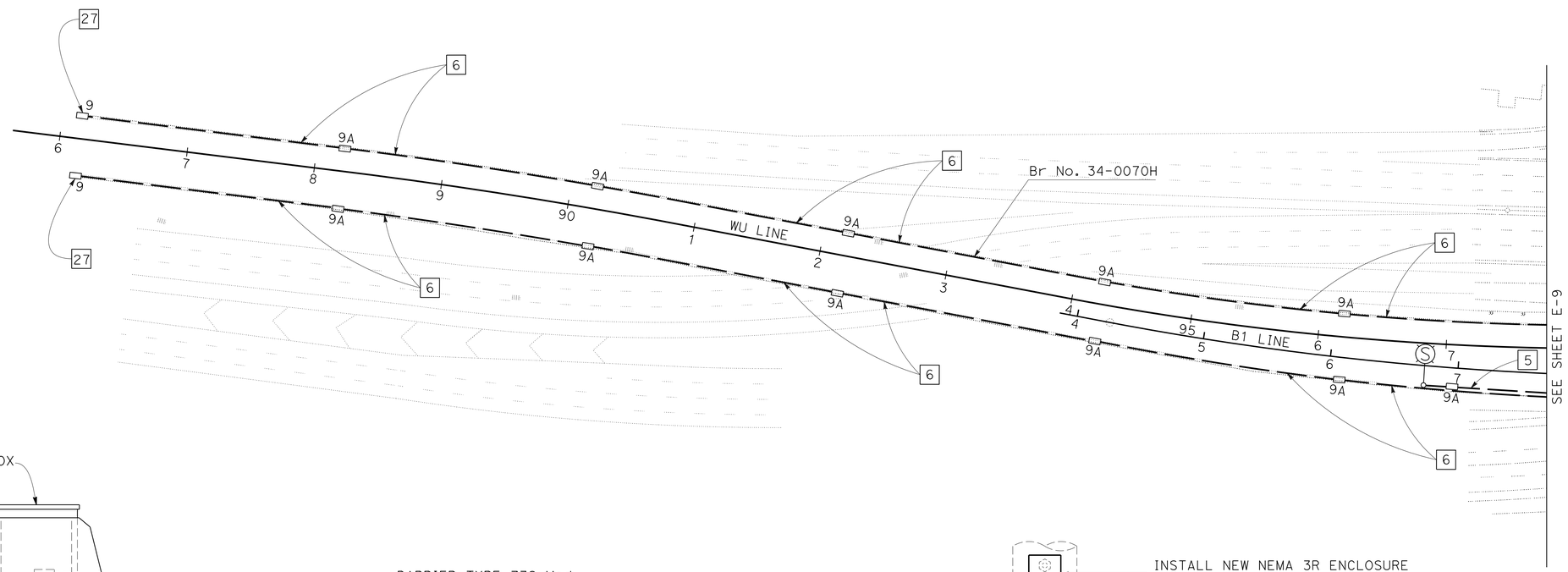

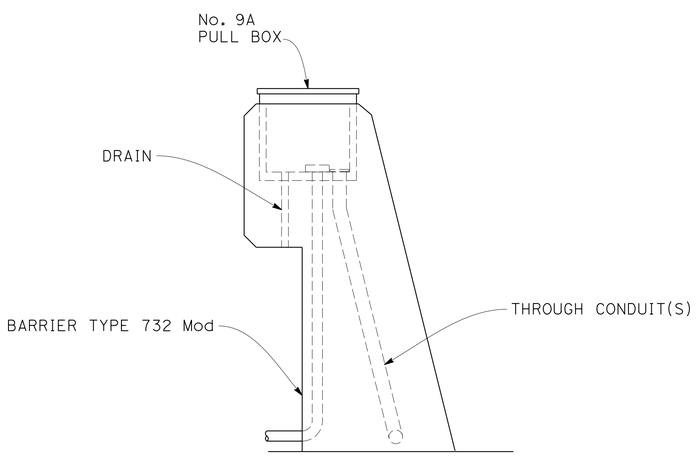

DETAIL A
NO SCALE

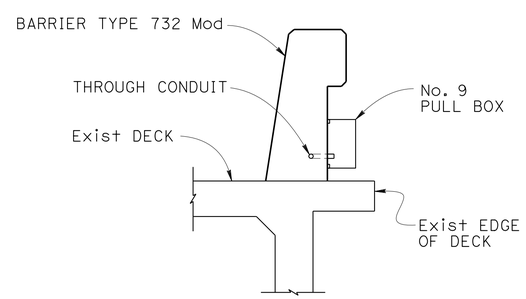

DETAIL B
NO SCALE

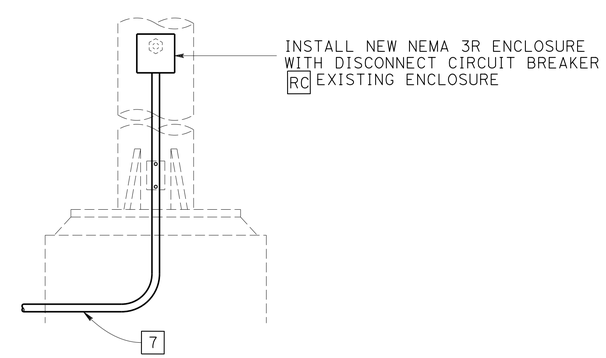

DETAIL C
NO SCALE

LIGHTING AND SIGN ILLUMINATION

SCALE: 1" = 50'

APPROVED FOR ELECTRICAL WORK ONLY

FOR NOTES, ABBREVIATIONS AND LEGEND, SEE SHEET E-1

E-8

LINDY CABUGAO	REVISED BY
KENNETH Y. XU	DATE REVISED
	LC
	9/23/13
CALCULATED-DESIGNED BY	FUNCTIONAL SUPERVISOR
CHECKED BY	BEHZAD GOLEMOHAMMADI

STATE OF CALIFORNIA - DEPARTMENT OF TRANSPORTATION
Caltrans
ELECTRICAL

LAST REVISION 09-26-13 | DATE PLOTTED => 20-FEB-2014 | TIME PLOTTED => 13:02

Dist	COUNTY	ROUTE	POST MILES TOTAL PROJECT	SHEET No.	TOTAL SHEETS
04	SF	101,280	1.5/1.8 R4.1/R4.4	24	76

REGISTERED ELECTRICAL ENGINEER 8/12/13 DATE

9-30-13
PLANS APPROVAL DATE

REGISTERED PROFESSIONAL ENGINEER Lindy F. Cabugao No. 17232 Exp. 6-30-14 ELECTRICAL STATE OF CALIFORNIA

THE STATE OF CALIFORNIA OR ITS OFFICERS OR AGENTS SHALL NOT BE RESPONSIBLE FOR THE ACCURACY OR COMPLETENESS OF SCANNED COPIES OF THIS PLAN SHEET.

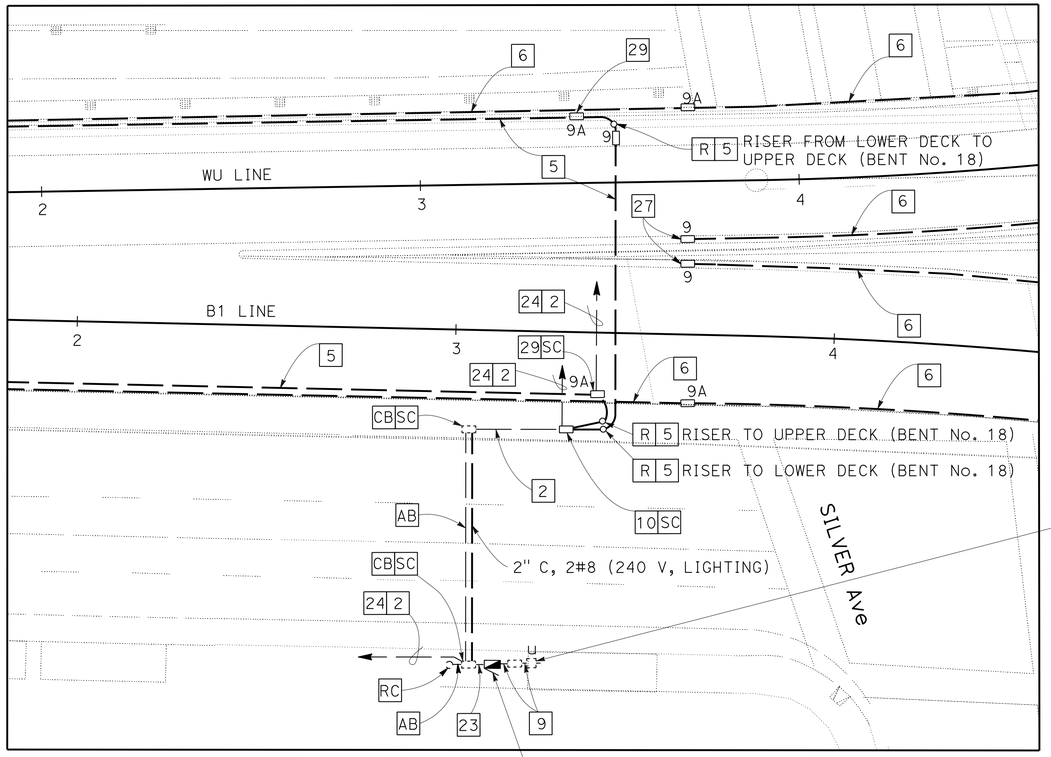

DETAIL A
SCALE: 1" = 20'

EXISTING SYSTEM No. 34-101-01560 (PG&E)

TYPE H SERVICE (240/480 V)
EXISTING LOAD:
6-200 W LIGHTING
10-100 W CEILING MOUNTED LUMINAIRES

11 TYPE III-AF SERVICE EQUIPMENT ENCLOSURE No. 01560 (240/480 V), A6

CT ID No. 04341010001560
PROVIDE EQUIPMENT ITEMS No. 1 TO 8, 10, 15, 16, 20, 22 AND 23. USE 240 V CIRCUIT BREAKER AND PEU.
PEU MUST FACE NORTH.

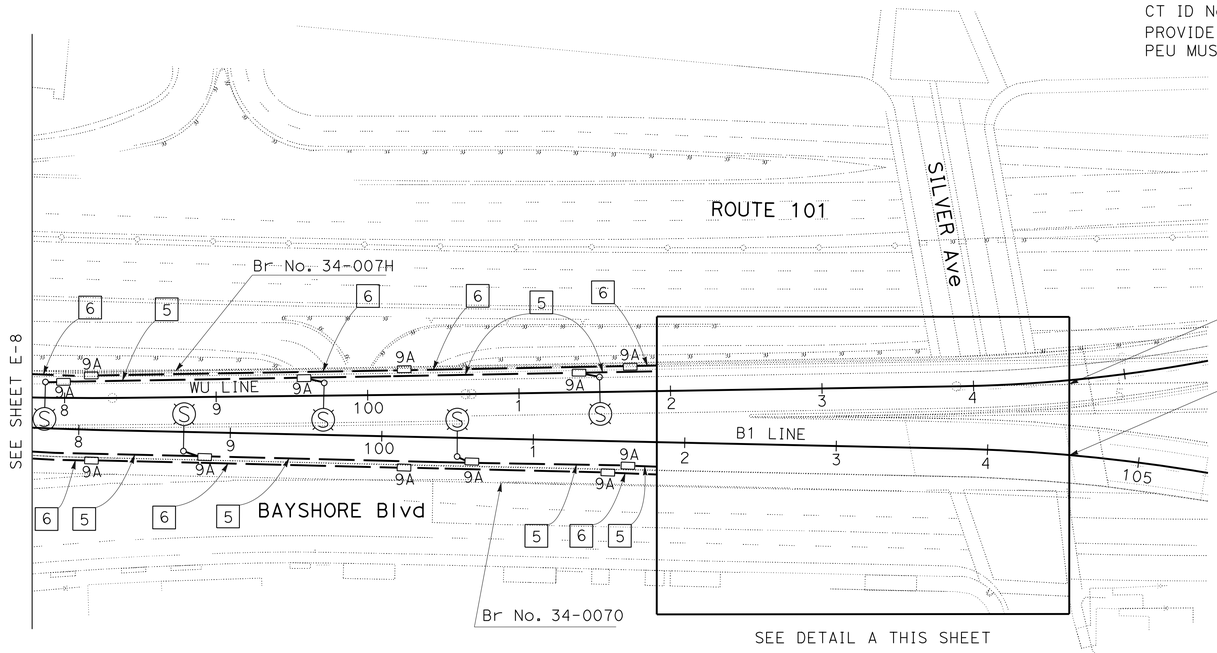

SEE SHEET E-7 FOR Br No. 34-0136G

SEE SHEET E-6 FOR Br No. 34-0070E

LIGHTING AND SIGN ILLUMINATION

SCALE: 1" = 50'

APPROVED FOR ELECTRICAL WORK ONLY

FOR NOTES, ABBREVIATIONS AND LEGEND, SEE SHEET E-1

E-9

STATE OF CALIFORNIA - DEPARTMENT OF TRANSPORTATION
Caltrans
ELECTRICAL

FUNCTIONAL SUPERVISOR: BEHZAD GOLEMOHAMMADI
CALCULATED-DESIGNED BY: LINDY CABUGAO
CHECKED BY: KENNETH Y. XU
REVISED BY: LC
DATE REVISED: 9/23/13

LAST REVISION DATE PLOTTED => 20-FEB-2014
09-26-13 TIME PLOTTED => 13:02

Dist	COUNTY	ROUTE	POST MILES TOTAL PROJECT	SHEET No.	TOTAL SHEETS
04	SF	101,280	1.5/1.8 R4.1/R4.4	25	76

REGISTERED ELECTRICAL ENGINEER 8/12/13 DATE

9-30-13
PLANS APPROVAL DATE

REGISTERED PROFESSIONAL ENGINEER Lindy F. Cabugao No. 17232 Exp. 6-30-14 ELECTRICAL STATE OF CALIFORNIA

THE STATE OF CALIFORNIA OR ITS OFFICERS OR AGENTS SHALL NOT BE RESPONSIBLE FOR THE ACCURACY OR COMPLETENESS OF SCANNED COPIES OF THIS PLAN SHEET.

TO SYSTEM No. 34-280-04013(PG&E).

SERVICE POINT LOCATED AT 600' NORTH OF ALEMANY Blvd
SEE SHEET E-2.

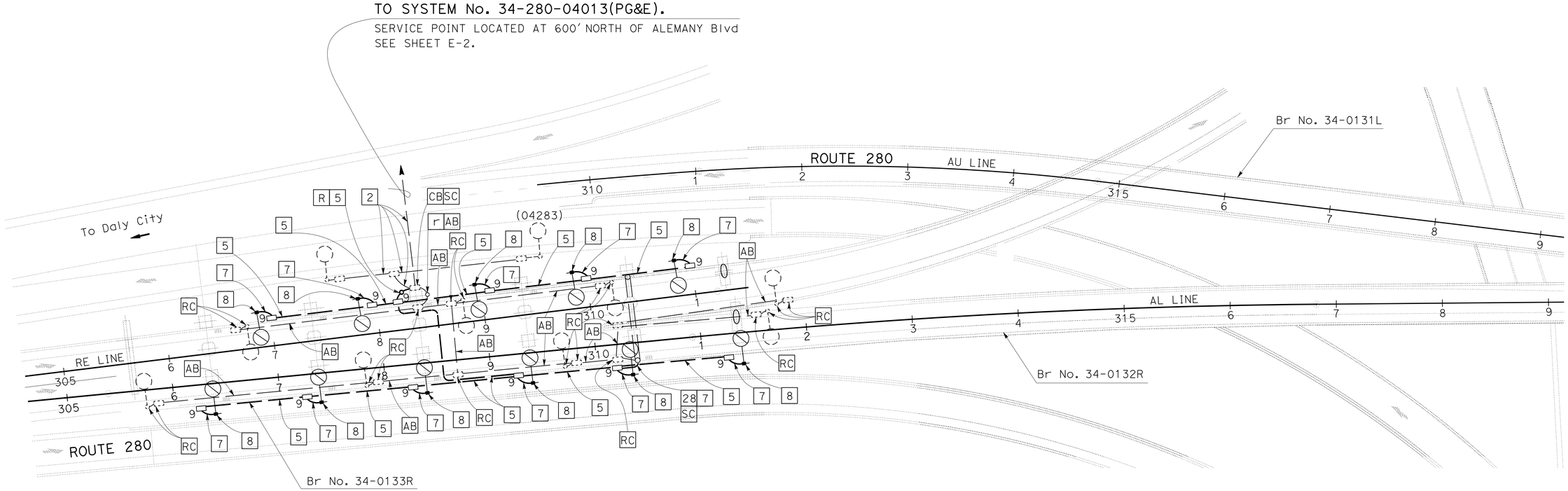

LIGHTING (STAGE CONSTRUCTION)

SCALE: 1" = 50'

FOR NOTES, ABBREVIATIONS AND LEGEND, SEE SHEET E-1

APPROVED FOR ELECTRICAL WORK ONLY

E-10

STATE OF CALIFORNIA - DEPARTMENT OF TRANSPORTATION
Caltrans
ELECTRICAL

FUNCTIONAL SUPERVISOR: BEHZAD GOLEMOHAMMADI

CALCULATED-DESIGNED BY: LINDY CABUGAO
CHECKED BY: KENNETH Y. XU

REVISED BY: LC
DATE REVISED: 9/23/13

LAST REVISION 09-26-13 | DATE PLOTTED => 20-FEB-2014 | TIME PLOTTED => 13:02

Dist	COUNTY	ROUTE	POST MILES TOTAL PROJECT	SHEET No.	TOTAL SHEETS
04	SF	101,280	1.5/1.8 R4.1/R4.4	26	76

REGISTERED ELECTRICAL ENGINEER 8/12/13 DATE

9-30-13
PLANS APPROVAL DATE

REGISTERED PROFESSIONAL ENGINEER Lindy F. Cabugao No. 17232 Exp. 6-30-14 ELECTRICAL STATE OF CALIFORNIA

THE STATE OF CALIFORNIA OR ITS OFFICERS OR AGENTS SHALL NOT BE RESPONSIBLE FOR THE ACCURACY OR COMPLETENESS OF SCANNED COPIES OF THIS PLAN SHEET.

LIGHTING (STAGE CONSTRUCTION)

SHEET No.	No. 9 PULL BOX	LUMINAIRE ON WOOD POLE	CONDUIT (2")		CONDUCTOR
			TYPE 4	TYPE 1	No. 8
	EA		ft		
E-10	12	11	200	1100	2500

ITEMS SHOWN ABOVE - NOT A SEPARATE PAY ITEM, FOR INFORMATION ONLY

LIGHTING AND SIGN ILLUMINATION

SHEET No.	PULL BOX			TYPE 15 STANDARD	TYPE III-AF SERVICE CABINET	PEU	CONDUIT (2")	CONDUCTOR		
	No. 5	No. 9	No. 9A				TYPE 1	No. 2	No. 8	No. 12
	EA						ft			
E-2	3	4	34	7	1	1	4900		2500	
E-3		2	12				2200			
E-4		3	19	1			4000		400	
E-5		2	14				3200			
E-6	2	2	18	2	1	1	2700	200	700	200
E-7		2	20				4000			
E-8		2	11	1			2500		200	
E-9	1	3	16	5	1	1	2900		3200	

ITEMS SHOWN ABOVE - NOT A SEPARATE PAY ITEM, FOR INFORMATION ONLY

ELECTRICAL QUANTITIES

E-11

REVISED BY LC
DATE REVISED 9/23/13
LINDY CABUGAO
KENNETH Y. XU
CALCULATED-DESIGNED BY
CHECKED BY
FUNCTIONAL SUPERVISOR
BEHZAD GOLEMOHAMMADI
STATE OF CALIFORNIA - DEPARTMENT OF TRANSPORTATION
Caltrans
ELECTRICAL

LAST REVISION 09-26-13
DATE PLOTTED => 20-FEB-2014
TIME PLOTTED => 13:02

DIST	COUNTY	ROUTE	POST MILES TOTAL PROJECT	SHEET No.	TOTAL SHEETS
04	SF	101,280	1.5/1.8 R4.1/R4.4	27	76

REGISTERED CIVIL ENGINEER 1/7/13 DATE

9-30-13
PLANS APPROVAL DATE

REGISTERED PROFESSIONAL ENGINEER RICHARD LANCE WARREN No. C78431 Exp. 9/30/15 CIVIL STATE OF CALIFORNIA

The State of California or its officers or agents shall not be responsible for the accuracy or completeness of electronic copies of this plan sheet.

Design: AASHTO Standard Specifications for Structural Supports for Highway Signs, Luminaires and Traffic Signals, Fifth Edition (LTS-5).

GROUP LOAD COMBINATIONS:

I Dead Load
II Dead Load + Wind Load
III Dead Load + 0.5 (Wind Load) + Ice Load
IV Fatigue: Not used

LOADING:

Wind Loading: 85 mph (3-second gust)
Wind Recurrence Interval: 10 years
Combined height, exposure, and elevated terrain factor = 1.12
(Exposure C, structure is not located on or over the top half of a ridge, hill, or escarpment)

BASIC DESIGN VALUES:

Timber Poles: Fb = 1850 psi
Fv = 110 psi
Fcp = 230 psi
Fc = 950 psi
E = 1500 x 10^3 psi

FOUNDATION DESIGN NOTES:

1. Pole embedment depth design is based on Broms' approximate procedure as described in Article 13.6 of AASHTO LTS-5.

2. Embedment depth is calculated based on following soil parameter assumptions.

   Cohesionless Soil:
   ϕ = 30 deg, γ = 120 pcf.
   Soil assumed to be unsaturated and have an allowable vertical bearing pressure at the end bearing of poles of 3000 psf at 6 feet or more embedment. Contractor to verify field conditions.

3. An overload factor of 3.0 and an undercapacity factor of 0.7 were used for safety factor of 4.29.

4. Add 2'-0" for slopes above 1V:4H. Max slope 1V:2H.

5. Contractor to verify if any underground utilities conflict with pole installation.

POLE INFORMATION TABLE

HEIGHT OF POLE ABOVE FG "h" = (ft)	MINIMUM EMBEDMENT "E" (ft)	WOOD POLE TYPE
h ≤ 27'-0"	8'-0"	H-1
27'-0" < h ≤ 46'-0"	9'-0"	H-1
h > 46'-0"	10'-0"	H-2

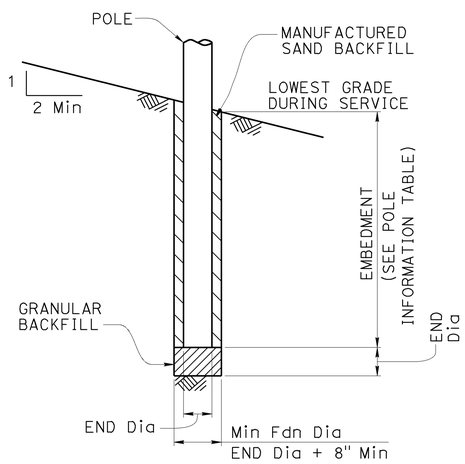

POLE FOUNDATION

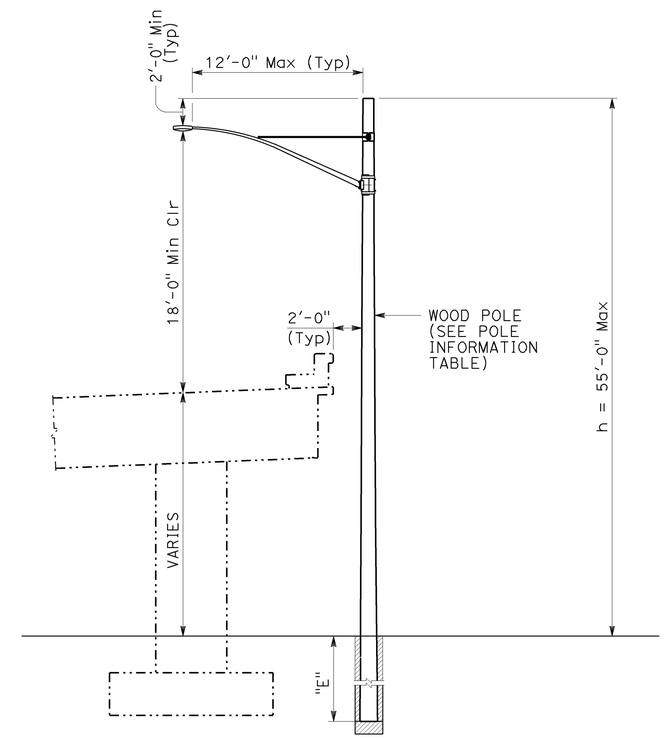

TYPICAL ELEVATION

THE CONTRACTOR SHALL VERIFY ALL CONTROLLING FIELD DIMENSIONS BEFORE ORDERING OR FABRICATING ANY MATERIAL.

NO SCALE

BRANCH CHIEF JOEL MAGANA

	BY	CHECKED
DESIGN	LANCE WARREN	TAMARA MARCHENKO
DETAILS	BOB EDWARDS	LANCE WARREN
QUANTITIES	X	X

STATE OF CALIFORNIA
DEPARTMENT OF TRANSPORTATION

DIVISION OF ENGINEERING SERVICES
STRUCTURE DESIGN
SPECIAL DESIGN BRANCH

BRIDGE NO. ×
POST MILE ×

TEMPORARY WOOD POLES
GENERAL NOTES

SES-1

STRUCTURES DESIGN SPECIAL DESIGN SHEET (ENGLISH) (REV. 09-01-10)

ORIGINAL SCALE IN INCHES FOR REDUCED PLANS 0 1 2 3

UNIT: 3619
PROJECT NUMBER & PHASE: 040000496
CONTRACT NO.: 04-1A5511

DISREGARD PRINTS BEARING EARLIER REVISION DATES

REVISION DATES

SHEET 1 OF 2

FILE => 041A5511umiscdt01.dgn

USERNAME => s136236 DATE PLOTTED => 10-OCT-2013 TIME PLOTTED => 07:29

DIST	COUNTY	ROUTE	POST MILES TOTAL PROJECT	SHEET No.	TOTAL SHEETS
04	SF	101/280	1.5/1.8 R4.1/R4.4	28	76

REGISTERED CIVIL ENGINEER — DATE 1/7/13

9-30-13
PLANS APPROVAL DATE

REGISTERED PROFESSIONAL ENGINEER RICHARD LANCE WARREN No. C78431 Exp. 9/30/15 CIVIL STATE OF CALIFORNIA

The State of California or its officers or agents shall not be responsible for the accuracy or completeness of electronic copies of this plan sheet.

NOTES:

1. Luminaire mast arms must be in compliance with Standard Plan ES-6D with noted modifications.
2. Verify pole dimensions at tie-rod attachment height. Fabricate 8" flat bar with "L" Dimension to maintain an open gap between flanges in finished installation.
3. Not all screw heads and bolt heads are shown for clarity.
4. Mast arm not shown for clarity.

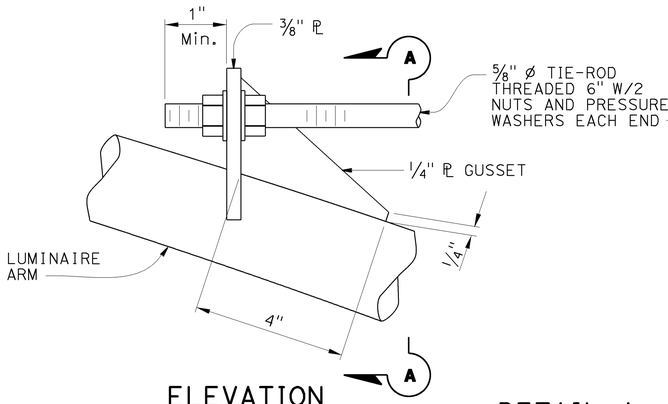

ELEVATION

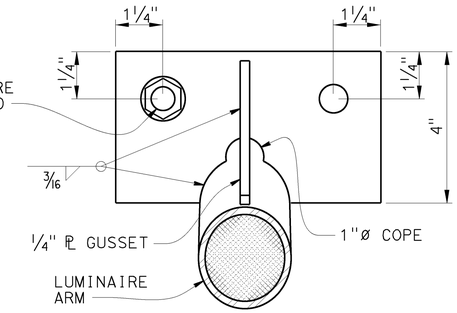

SECTION A-A

DETAIL A
TIE-ROD AT LUMINAIRE ARM
NO SCALE

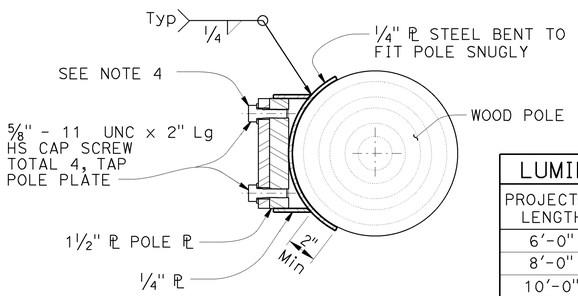

SECTION E-E

LUMINAIRE MAST ARM DATA			
PROJECTED LENGTH	N RISE	Min OD AT POLE	NOMINAL THICKNESS
6'-0"	2'-0"±	3 1/4"	0.1196"
8'-0"	2'-6"±	3 1/2"	
10'-0"	3'-3"±	3 7/8"	
12'-0"	4'-3"±		

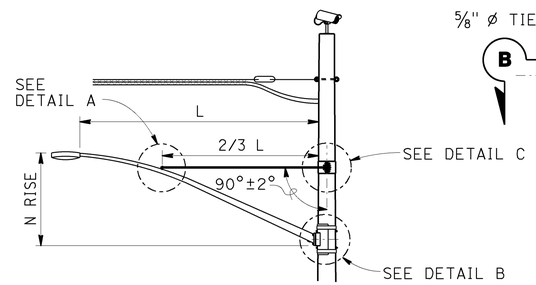

LUMINAIRE MAST ARM

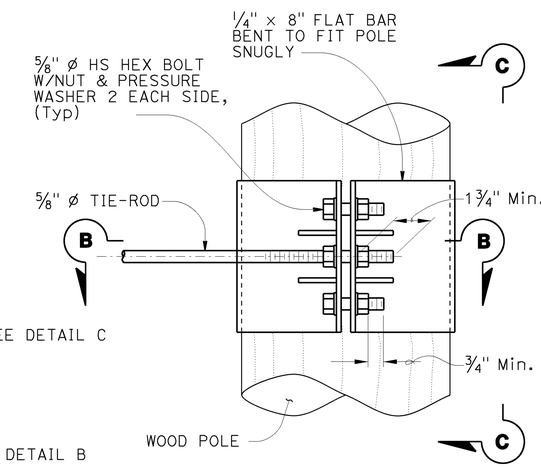

ELEVATION

NOTE:
Not all screw and bolt heads shown for clarity.

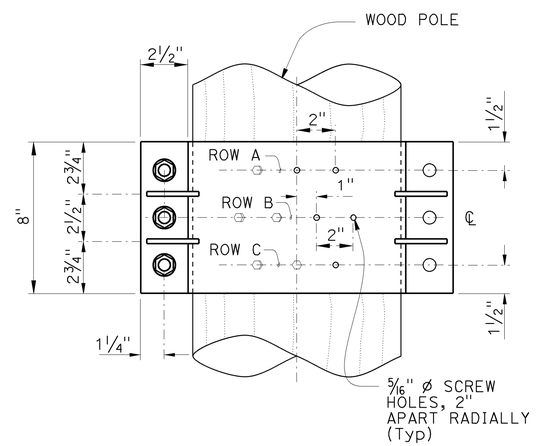

VIEW C-C

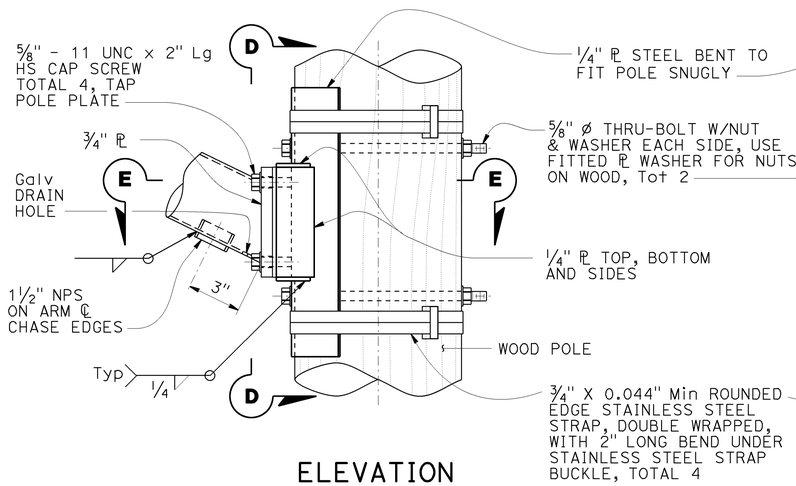

ELEVATION

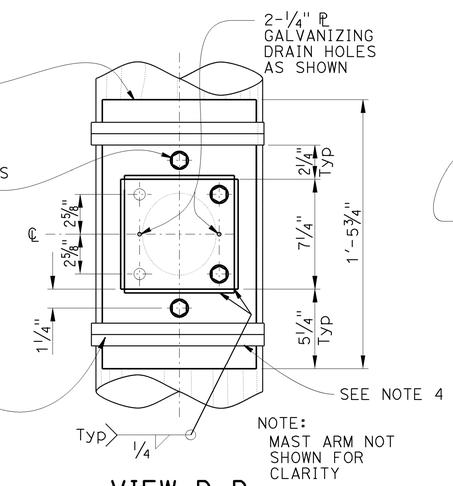

VIEW D-D

DETAIL B
ARM CONNECTION DETAILS
NO SCALE

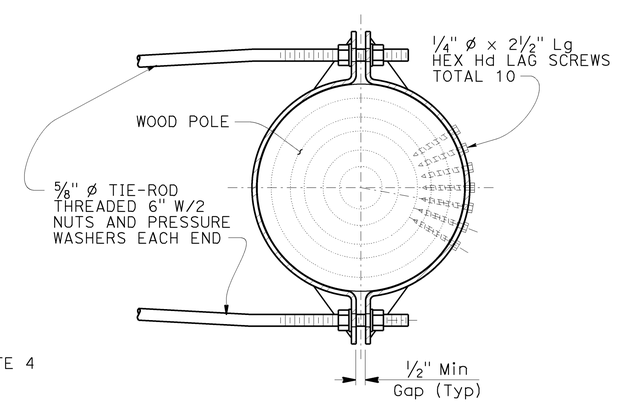

SECTION B-B

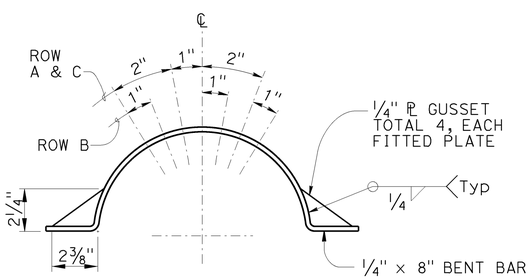

LAG SCREW AND
GUSSET PLATE LAYOUT

DETAIL C
TIE-ROD AT POLE
NO SCALE

BRANCH CHIEF JOEL MAGANA	DESIGN	BY LANCE WARREN	CHECKED TAMARA MARCHENKO
	DETAILS	BY BOB EDWARDS	CHECKED LANCE WARREN
	QUANTITIES	BY X	CHECKED X

STATE OF CALIFORNIA
DEPARTMENT OF TRANSPORTATION

DIVISION OF ENGINEERING SERVICES
STRUCTURE DESIGN
SPECIAL DESIGN BRANCH

BRIDGE NO. ×
POST MILE ×

TEMPORARY WOOD POLES
LUMINAIRE MOUNTING DETAILS

SES-2

STRUCTURES DESIGN SPECIAL DESIGN SHEET (ENGLISH) (REV. 09-01-10)

ORIGINAL SCALE IN INCHES FOR REDUCED PLANS 0 1 2 3

UNIT: 3619
PROJECT NUMBER & PHASE: 040000496
CONTRACT NO.: 04-1A5511

DISREGARD PRINTS BEARING EARLIER REVISION DATES

REVISION DATES

SHEET 2 OF 2

FILE => 041a5511umiscdt02.dgn

USERNAME => s136236 DATE PLOTTED => 10-OCT-2013 TIME PLOTTED => 07:35

M

Maint	MAINTENANCE
Max	MAXIMUM
MB	METAL BEAM
MBB	METAL BEAM BARRIER
MBGR	METAL BEAM GUARD RAILING
Med	MEDIAN
MGS	MIDWEST GUARDRAIL SYSTEM
MH	MANHOLE
Min	MINIMUM
Misc	MISCELLANEOUS
Misc I & S	MISCELLANEOUS IRON AND STEEL
Mkr	MARKER
Mod	MODIFIED,
	MODIFY
Mon	MONUMENT
MP	METAL PLATE
MPGR	METAL PLATE GUARD RAILING
MR	MOVEMENT RATING
MSE	MECHANICALLY STABILIZED EMBANKMENT
Mt	MOUNTAIN, MOUNT
Mtl	MATERIAL
MVP	MAINTENANCE VEHICLE PULLOUT

N

N	NORTH
NB	NORTHBOUND
No.	NUMBER (MUST HAVE PERIOD)
Nos.	NUMBERS (MUST HAVE PERIOD)
NPS	NOMINAL PIPE SIZE
NS	NEAR SIDE
NSP	NEW STANDARD PLAN
NTS	NOT TO SCALE

O

Oblr	OBLITERATE
OC	OVERCROSSING
OD	OUTSIDE DIAMETER
OF	OUTSIDE FACE
OG	ORIGINAL GROUND
OGAC	OPEN GRADED ASPHALT CONCRETE
OGFC	OPEN GRADED FRICTION COURSE
OH	OVERHEAD
OHWM	ORDINARY HIGH WATER MARK
O-O	OUT TO OUT
Opp	OPPOSITE
OSD	OVERSIDE DRAIN

P

P	PAGE
PAP	PERFORATED ALUMINUM PIPE
PB	PULL BOX
PC	POINT OF CURVATURE,
	PRECAST
PCC	POINT OF COMPOUND CURVE,
	PORTLAND CEMENT CONCRETE
PCMS	PORTABLE CHANGEABLE MESSAGE SIGN
PCP	PERFORATED CONCRETE PIPE,
	PRESTRESSED CONCRETE PIPE
PCVC	POINT OF COMPOUND VERTICAL CURVE
PEC	PERMIT TO ENTER AND CONSTRUCT
Ped	PEDESTRIAN
Ped OC	PEDESTRIAN OVERCROSSING
Ped UC	PEDESTRIAN UNDERCROSSING
Perm Mtl	PERMEABLE MATERIAL

P continued

PG	PROFILE GRADE
PI	POINT OF INTERSECTION
PJP	PARTIAL JOINT PENETRATION
Pkwy	PARKWAY
ℙ,PL	PLATE
P/L	PROPERTY LINE
PM	POST MILE,
	TIME FROM NOON TO MIDNIGHT
PN	PAVING NOTCH
POC	POINT OF HORIZONTAL CURVE
POT	POINT OF TANGENT
POVC	POINT OF VERTICAL CURVE
PP	PIPE PILE,
	PLASTIC PIPE,
	POWER POLE
PPL	PREFORMED PERMEABLE LINER
PPP	PERFORATED PLASTIC PIPE
PRC	POINT OF REVERSE CURVE
PRF	PAVEMENT REINFORCING FABRIC
PRVC	POINT OF REVERSE VERTICAL CURVE
PS&E	PLANS, SPECIFICATIONS AND ESTIMATES
PS, P/S	PRESTRESSED
PSP	PERFORATED STEEL PIPE
PT	POINT OF TANGENCY
PVC	POLYVINYL CHLORIDE
Pvmt	PAVEMENT

Q

Qty	QUANTITY

R

R	RADIUS
R & D	REMOVE AND DISPOSE
R & S	REMOVE AND SALVAGE
R/C	RATE OF CHANGE
RCA	REINFORCED CONCRETE ARCH
RCB	REINFORCED CONCRETE BOX
RCP	REINFORCED CONCRETE PIPE
RCPA	REINFORCED CONCRETE PIPE ARCH
Rd	ROAD
Reinf	REINFORCED,
	REINFORCEMENT,
	REINFORCING
Rel	RELOCATE
Repl	REPLACEMENT
Ret	RETAINING
Rev	REVISED, REVISION
Rdwy	ROADWAY
RHMA	RUBBERIZED HOT MIX ASPHALT
Riv	RIVER
RM	ROAD-MIXED
RP	RADIUS POINT,
	REFERENCE POINT
RR	RAILROAD
RSP	ROCK SLOPE PROTECTION,
	REVISED STANDARD PLAN
Rt	RIGHT
Rte	ROUTE
RW	REDWOOD,
	RETAINING WALL
R/W	RIGHT OF WAY
Rwy	RAILWAY

S

S	SOUTH,
	SUPPLEMENT
SAE	STRUCTURE APPROACH EMBANKMENT
Salv	SALVAGE
SAPP	STRUCTURAL ALUMINUM PLATE PIPE
SB	SOUTHBOUND
SC	SAND CUSHION
SCSP	SLOTTED CORRUGATED STEEL PIPE
SD	STORM DRAIN
Sec	SECOND,
	SECTION
Sep	SEPARATION
SG	SUBGRADE
Shld	SHOULDER
Sht	SHEET
Sim	SIMILAR
℄	STATION LINE
SM	SELECTED MATERIAL
Spec	SPECIAL,
	SPECIFICATIONS
SPP	SLOTTED PLASTIC PIPE
SS	SLOPE STAKE
SSBM	STRAP AND SADDLE BRACKET METHOD
SSD	STRUCTURAL SECTION DRAIN
SSPA	STRUCTURAL STEEL PLATE ARCH
SSPP	STRUCTURAL STEEL PLATE PIPE
SSPPA	STRUCTURAL STEEL PLATE PIPE ARCH
SSRP	STEEL SPIRAL RIB PIPE
St	STREET
Sta	STATION
STBB	SINGLE THRIE BEAM BARRIER
Std	STANDARD
Str	STRUCTURE
Surf	SURFACING
SW	SIDEWALK,
	SOUND WALL
Swr	SEWER
Sym	SYMMETRICAL
S4S	SURFACE 4 SIDES

T

T	SEMI-TANGENT
Tan	TANGENT
TBB	THRIE BEAM BARRIER
Tbr	TIMBER
TC	TOP OF CURB
TCB	TRAFFIC CONTROL BOX
TCE	TEMPORARY CONSTRUCTION EASEMENT
Tel	TELEPHONE
Temp	TEMPORARY
TG	TOP OF GRADE
Tot	TOTAL
TP	TELEPHONE POLE
TPB	TREATED PERMEABLE BASE
TPM	TREATED PERMEABLE MATERIAL
Trans	TRANSITION

T continued

TS	TRANSVERSE,
	TRAFFIC SIGNAL,
	TUBULAR STEEL
Typ	TYPICAL

U

UC	UNDERCROSSING
UD	UNDERDRAIN
UG	UNDERGROUND
UON	UNLESS OTHERWISE NOTED
UP	UNDERPASS

V

V	VALVE,
	DESIGN SPEED
Var	VARIABLE,
	VARIES
VC	VERTICAL CURVE
VCP	VITRIFIED CLAY PIPE
Vert	VERTICAL
Via	VIADUCT
Vol	VOLUME

W

W	WEST,
	WIDTH
WB	WESTBOUND
WH	WEEP HOLE
WM	WIRE MESH
WS	WATER SURFACE
WSP	WELDED STEEL PIPE
Wt	WEIGHT
WV	WATER VALVE
WW	WINGWALL
WWLOL	WINGWALL LAYOUT LINE

X

X Sec	CROSS SECTION
Xing	CROSSING

Y

Yr	YEAR
Yrs	YEARS

Dist	COUNTY	ROUTE	POST MILES TOTAL PROJECT	SHEET No.	TOTAL SHEETS
04	SF	101,280	1.5/1.8 R4.1/R4.4	29	76

Grace M. Tsushima
REGISTERED CIVIL ENGINEER

July 19, 2013
PLANS APPROVAL DATE

REGISTERED PROFESSIONAL ENGINEER Grace M. Tsushima No. C49814 Exp. 9-30-14 CIVIL STATE OF CALIFORNIA

THE STATE OF CALIFORNIA OR ITS OFFICERS OR AGENTS SHALL NOT BE RESPONSIBLE FOR THE ACCURACY OR COMPLETENESS OF SCANNED COPIES OF THIS PLAN SHEET.

TO ACCOMPANY PLANS DATED 9-30-13

UNIT OF MEASUREMENT SYMBOLS:

Some of the symbols used in the project plan quantity tables and in the Bid Item List are:

TABLE A

SYMBOL USED	DEFINITIONS
ACRE	ACRE
CF	CUBIC FOOT
CY	CUBIC YARD
EA	EACH
GAL	GALLON
LB	POUND
LF	LINEAR FOOT
SQFT	SQUARE FOOT
SQYD	SQUARE YARD
STA	100 FEET
TAB	TABLET
TON	2,000 POUNDS

Some of the symbols used in the plans other than in the project plan quantity tables are:

TABLE B

SYMBOL USED	DEFINITIONS
ksi	KIPS PER SQUARE INCH
ksf	KIPS PER SQUARE FOOT
psi	POUNDS PER SQUARE INCH
psf	POUNDS PER SQUARE FOOT
lb/ft^3, pcf	POUNDS PER CUBIC FOOT
tsf	TONS PER SQUARE FOOT
mph, MPH *	MILES PER HOUR
ø	NOMINAL DIAMETER
oz	OUNCE
lb	POUND
kip	1,000 POUNDS
cal	CALORIE
ft	FOOT OR FEET
gal	GALLON

* For use on a sign panel only

STATE OF CALIFORNIA
DEPARTMENT OF TRANSPORTATION

ABBREVIATIONS (SHEET 2 OF 2)

NO SCALE

RSP A10B DATED JULY 19, 2013 SUPERSEDES STANDARD PLAN A10B DATED MAY 20, 2011 - PAGE 2 OF THE STANDARD PLANS BOOK DATED 2010.

REVISED STANDARD PLAN RSP A10B

2010 REVISED STANDARD PLAN RSP A10B

6-7-13

Dist	COUNTY	ROUTE	POST MILES TOTAL PROJECT	SHEET No.	TOTAL SHEETS
04	SF	101,280	1.5/1.8 R4.1/R4.4	30	76

Roberta L. McLaughlin
REGISTERED CIVIL ENGINEER

July 19, 2013
PLANS APPROVAL DATE

REGISTERED PROFESSIONAL ENGINEER Roberta L. McLaughlin No. C40375 Exp. 3-31-15 CIVIL STATE OF CALIFORNIA

THE STATE OF CALIFORNIA OR ITS OFFICERS OR AGENTS SHALL NOT BE RESPONSIBLE FOR THE ACCURACY OR COMPLETENESS OF SCANNED COPIES OF THIS PLAN SHEET.

TO ACCOMPANY PLANS DATED 9-30-13

EXIT RAMP NEUTRAL AREA (GORE) TREATMENT

DETAIL 36

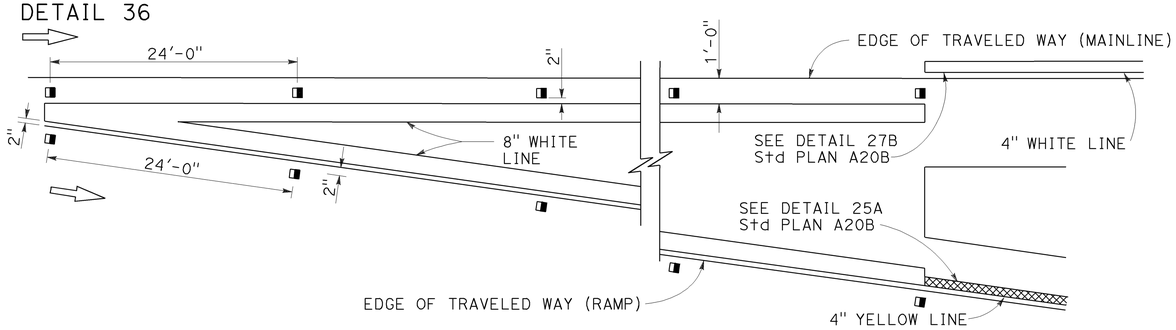

ENTRANCE RAMP NEUTRAL AREA (MERGE) TREATMENT

DETAIL 36A

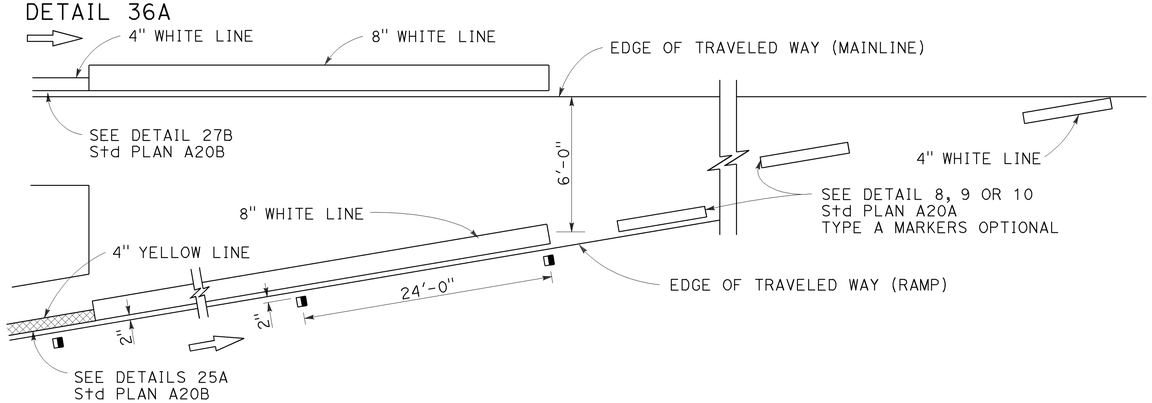

ENTRANCE RAMP NEUTRAL AREA (ACCELERATION LANE) TREATMENT

DETAIL 36B

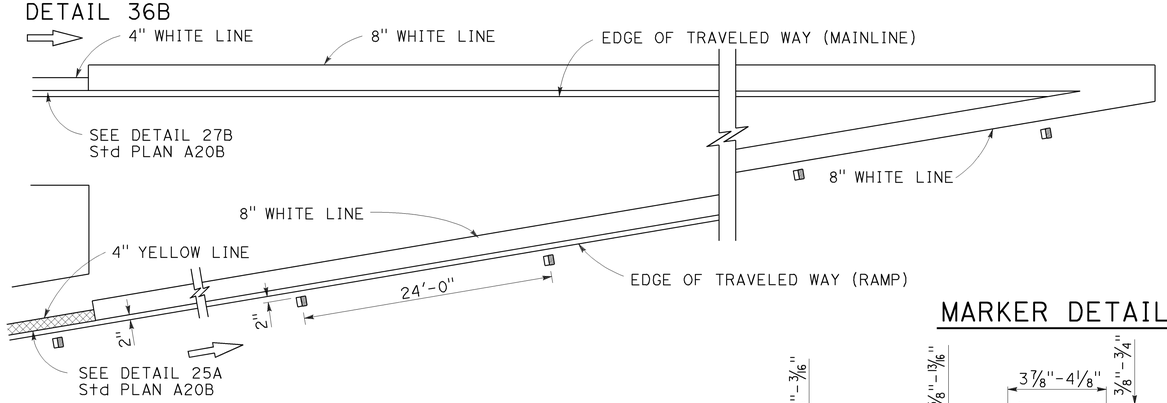

LANE DROP AT EXIT RAMPS

DETAIL 37

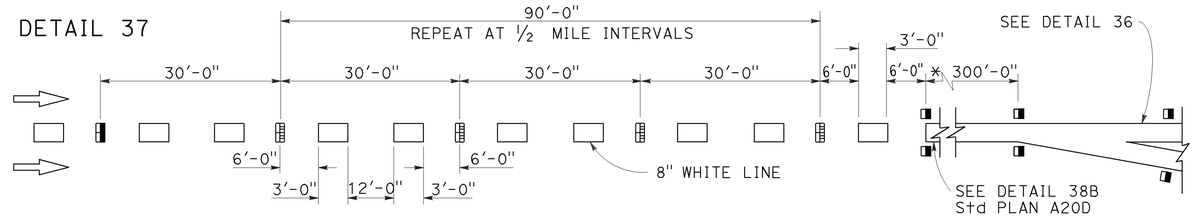

DETAIL 37A

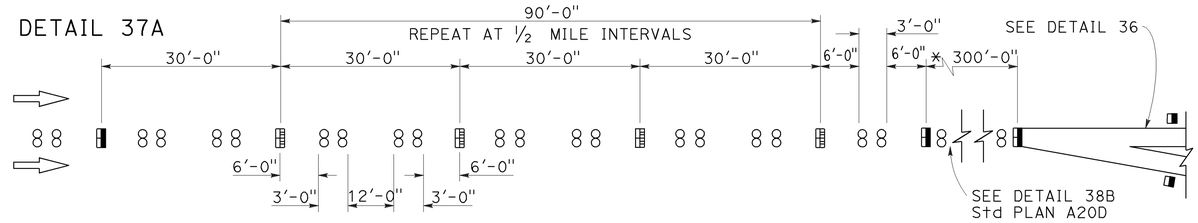

* The solid channelizing line shown may be omitted on short auxiliary lanes where weaving length is critical.

LANE DROP AT INTERSECTIONS

DETAIL 37B

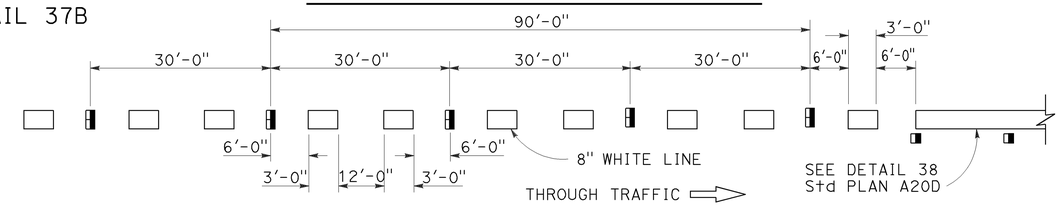

DETAIL 37C

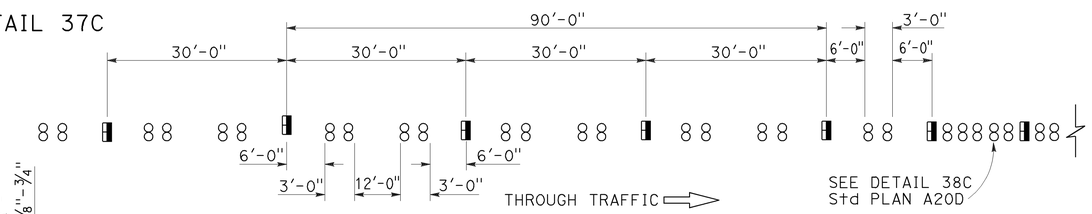

MARKER DETAILS

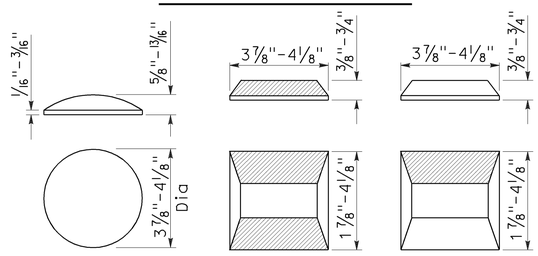

RETROREFLECTIVE FACE

LEGEND:

MARKERS

- ○ TYPE A WHITE NON-REFLECTIVE
- ⊟ TYPE C RED-CLEAR RETROREFLECTIVE
- ◨ TYPE G ONE-WAY CLEAR RETROREFLECTIVE

STATE OF CALIFORNIA
DEPARTMENT OF TRANSPORTATION

PAVEMENT MARKERS AND TRAFFIC LINE TYPICAL DETAILS

NO SCALE

RSP A20C DATED JULY 19, 2013 SUPERSEDES STANDARD PLAN A20C DATED MAY 20, 2011 - PAGE 11 OF THE STANDARD PLANS BOOK DATED 2010.

REVISED STANDARD PLAN RSP A20C

2010 REVISED STANDARD PLAN RSP A20C

4-29-13

Dist	COUNTY	ROUTE	POST MILES TOTAL PROJECT	SHEET No.	TOTAL SHEETS
04	SF	101,280	1.5/1.8 R4.1/R4.4	31	76

REGISTERED CIVIL ENGINEER

April 20, 2012
PLANS APPROVAL DATE

Roberta L. McLaughlin No. C40375 Exp. 3-31-13 CIVIL STATE OF CALIFORNIA REGISTERED PROFESSIONAL ENGINEER

THE STATE OF CALIFORNIA OR ITS OFFICERS OR AGENTS SHALL NOT BE RESPONSIBLE FOR THE ACCURACY OR COMPLETENESS OF SCANNED COPIES OF THIS PLAN SHEET.

TO ACCOMPANY PLANS DATED 9-30-13

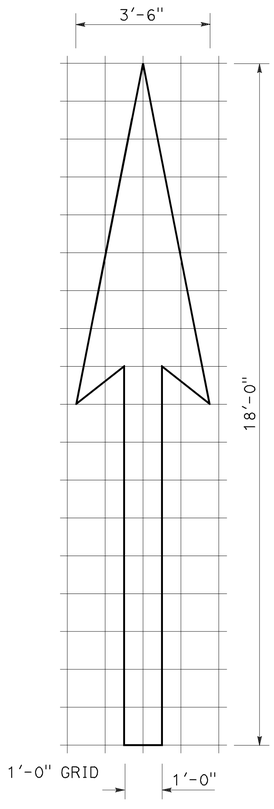

A=25 ft^2

TYPE I 18'-0" ARROW

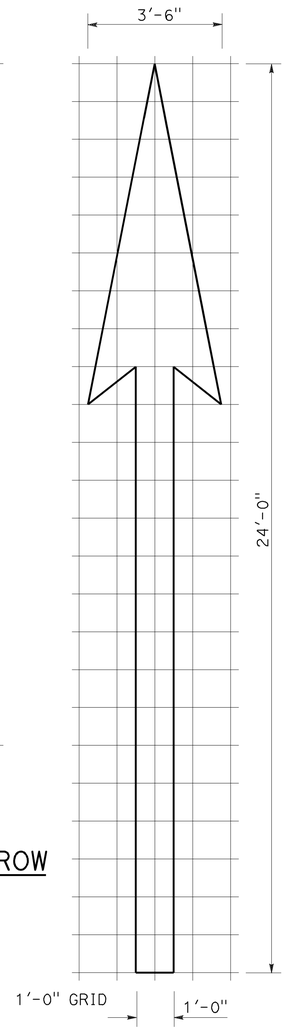

A=31 ft^2

TYPE I 24'-0" ARROW

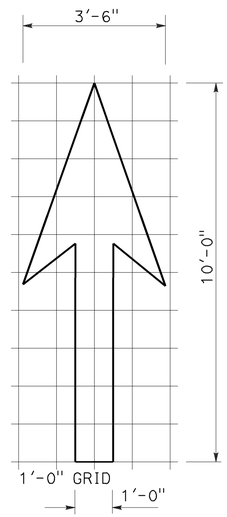

A=14 ft^2

TYPE I 10'-0" ARROW

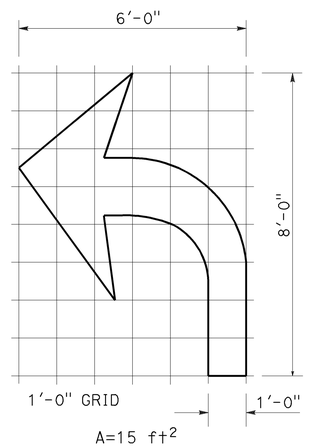

A=15 ft^2

TYPE IV (L) ARROW

(For Type IV (R) arrow, use mirror image)

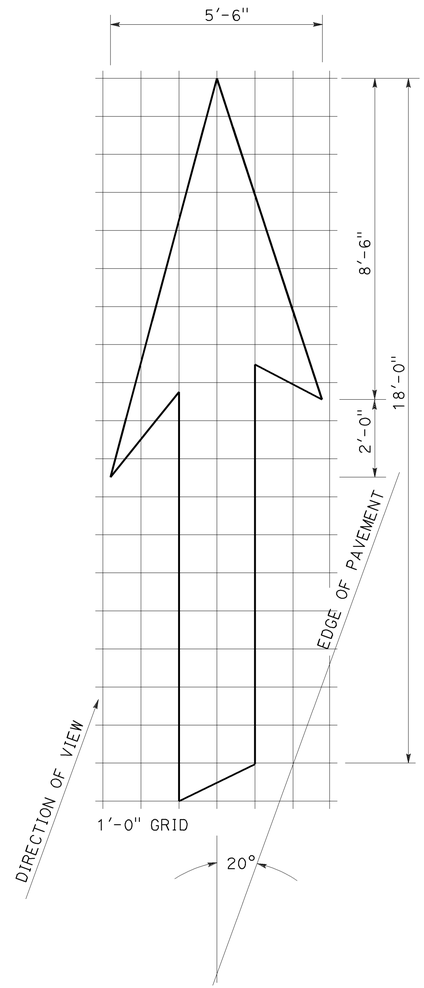

A=42 ft^2

TYPE VI ARROW

Right lane drop arrow (For left lane, use mirror image)

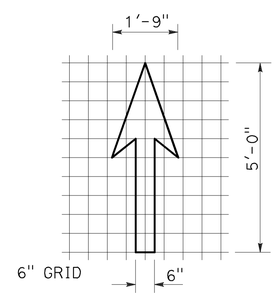

A=3.5 ft^2

BIKE LANE ARROW

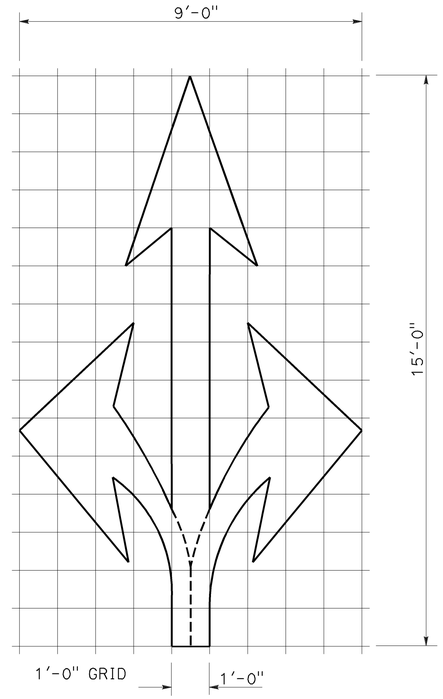

A=36 ft^2

TYPE VIII ARROW

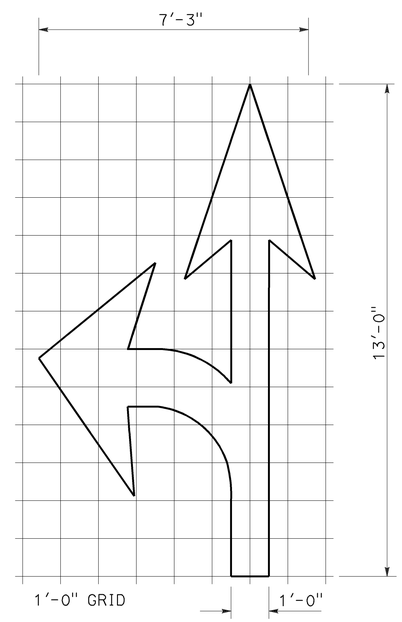

A=27 ft^2

TYPE VII (L) ARROW

(For Type VII (R) arrow, use mirror image)

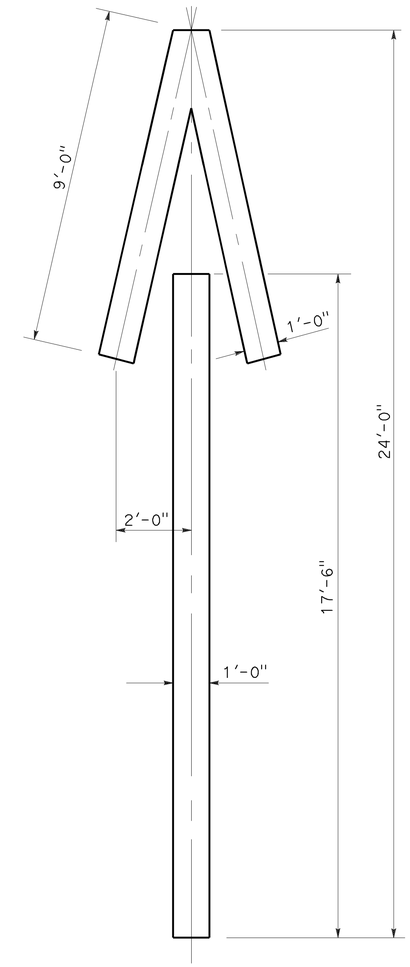

A=33 ft^2

TYPE V ARROW

NOTE:
Minor variations in dimensions may be accepted by the Engineer.

STATE OF CALIFORNIA
DEPARTMENT OF TRANSPORTATION

PAVEMENT MARKINGS ARROWS

NO SCALE

RSP A24A DATED APRIL 20, 2012 SUPERSEDES STANDARD PLAN A24A DATED MAY 20, 2011 - PAGE 13 OF THE STANDARD PLANS BOOK DATED 2010.

REVISED STANDARD PLAN RSP A24A

2010 REVISED STANDARD PLAN RSP A24A

3-14-12

Dist	COUNTY	ROUTE	POST MILES TOTAL PROJECT	SHEET No.	TOTAL SHEETS
04	SF	101,280	1.5/1.8 R4.1/R4.4	32	76

Randell D. Hiatt
REGISTERED CIVIL ENGINEER

July 19, 2013
PLANS APPROVAL DATE

REGISTERED PROFESSIONAL ENGINEER Randell D. Hiatt No. C50200 Exp. 6-30-15 CIVIL STATE OF CALIFORNIA

THE STATE OF CALIFORNIA OR ITS OFFICERS OR AGENTS SHALL NOT BE RESPONSIBLE FOR THE ACCURACY OR COMPLETENESS OF SCANNED COPIES OF THIS PLAN SHEET.

TO ACCOMPANY PLANS DATED 9-30-13

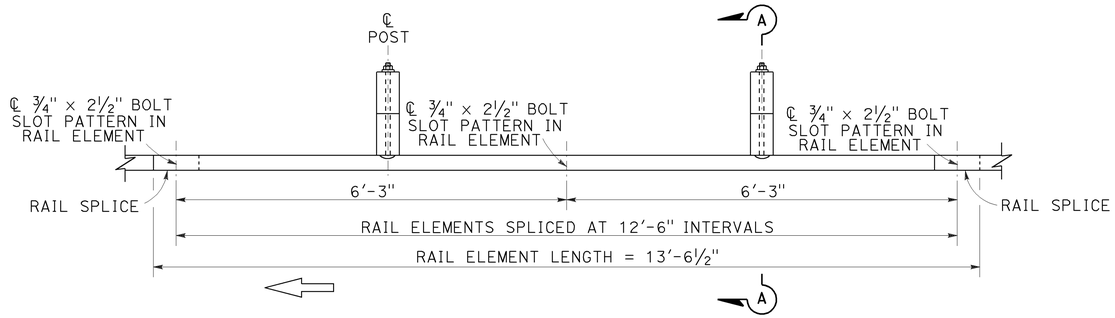

PLAN

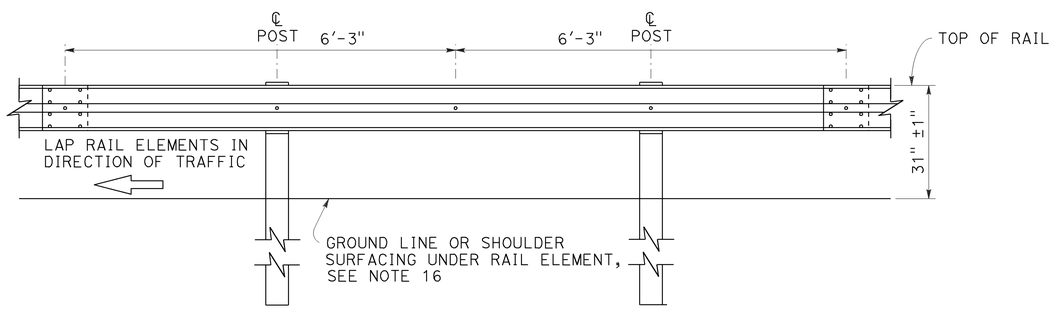

ELEVATION

MIDWEST GUARDRAIL SYSTEM WITH WOOD POST AND BLOCKS

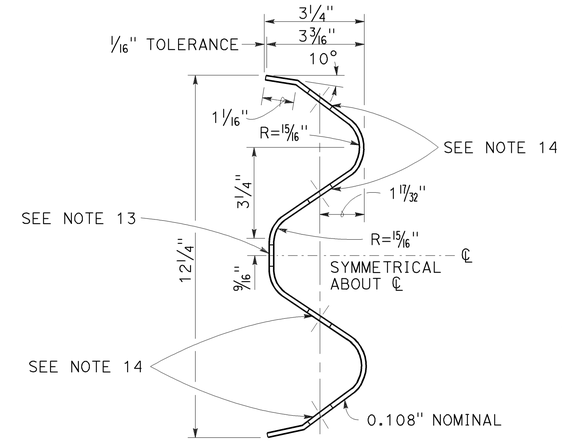

SECTION THRU RAIL ELEMENT

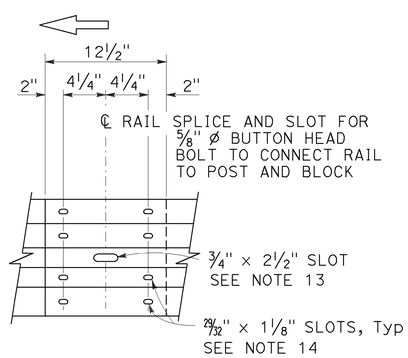

ELEVATION

RAIL ELEMENT SPLICE DETAIL

a) Connect the over lapped end of the rail elements with ⅝" ø × 1⅜" button head oval shoulder splice bolts inserted into the 29⁄32" × 1⅛" slots and bolted together with ⅝" ø recessed hex nuts. Recess of hex nut points toward rail element. A total of 8 bolts and nuts are to be used at each rail splice connection.

b) The ends of the rail elements are to be overlapped in the direction of traffic (see details).

c) Where end cap is to be attached to the end of a rail element, a total of 4 of the above described splice bolts and nuts are to be used.

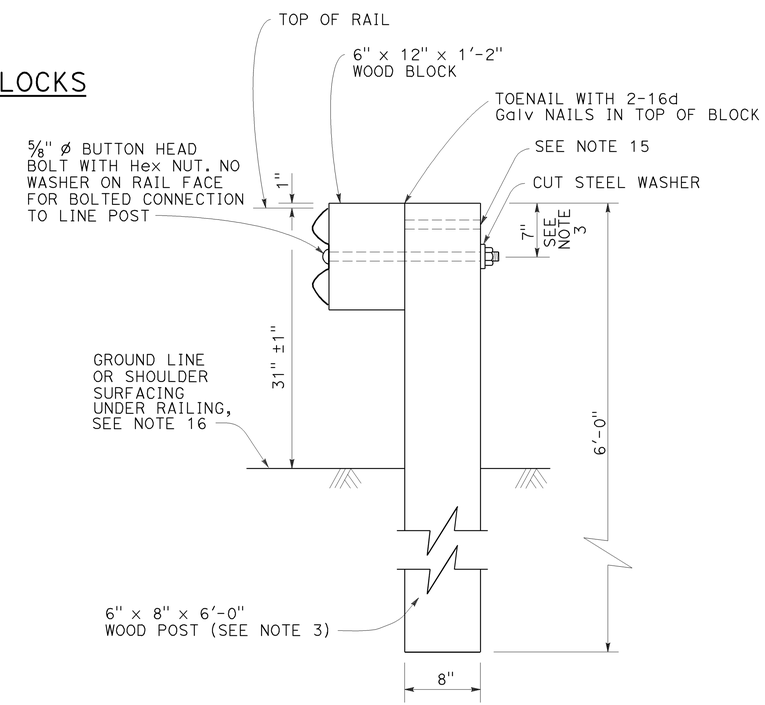

SECTION A-A

TYPICAL WOOD LINE POST INSTALLATION

See Note 4

NOTES:

1. For details of steel post installations, see Revised Standard Plan RSP A77L2.
2. For details of standard hardware used to construct MGS, see Revised Standard Plan RSP A77M1.
3. For details of wood posts and wood blocks used to construct MGS, see Revised Standard Plan RSP A77N1.
4. For additional installation details, see Revised Standard Plan RSP A77N3.
5. MGS post spacing to be 6'-3" center to center, except as otherwise noted.
6. For MGS typical layouts, see the A77P, A77Q and A77R Series of Standard Plans.
7. If railing is connected to terminal system end treatment, use 31" height terminal system end treatment.
8. For MGS end anchor details, see Revised Standard Plans RSP A77S1 and RSP A77T2.
9. For details of MGS transition to bridge railing, see Revised Standard Plan RSP A77U4.
10. For additional details of MSG connection to bridge railing, see Revised Standard Plans RSP A77U1, RSP A77U2 and RSP A77V1.
11. For MGS connection details to abutments and walls, see Revised Standard Plan RSP A77U3.
12. For typical MGS delineation and dike positioning details, see Revised Standard Plan RSP A77N4.
13. Slotted hole for bolted connection of rail element to block and post. See "Section Thru Rail Element".
14. Slotted holes for splice bolts to overlap ends of rail element. See "Section Thru Rail Element".
15. Additional hole in uppermost portion of line post is for potential future adjustments of railing height. See Revised Standard Plan RSP A77N1.
16. Install posts in soil.

STATE OF CALIFORNIA
DEPARTMENT OF TRANSPORTATION

MIDWEST GUARDRAIL SYSTEM STANDARD RAILING SECTION (WOOD POST WITH WOOD BLOCK)

NO SCALE

RSP A77L1 DATED JULY 19, 2013 SUPPLEMENTS STANDARD PLANS BOOK DATED 2010.

REVISED STANDARD PLAN RSP A77L1

2010 REVISED STANDARD PLAN RSP A77L1

Dist	COUNTY	ROUTE	POST MILES TOTAL PROJECT	SHEET No.	TOTAL SHEETS
04	SF	101,280	1.5/1.8 R4.1/R4.4	33	76

Randell D. Hiatt
REGISTERED CIVIL ENGINEER

July 19, 2013
PLANS APPROVAL DATE

REGISTERED PROFESSIONAL ENGINEER
Randell D. Hiatt
No. C50200
Exp. 6-30-15
CIVIL
STATE OF CALIFORNIA

THE STATE OF CALIFORNIA OR ITS OFFICERS OR AGENTS SHALL NOT BE RESPONSIBLE FOR THE ACCURACY OR COMPLETENESS OF SCANNED COPIES OF THIS PLAN SHEET.

TO ACCOMPANY PLANS DATED 9-30-13

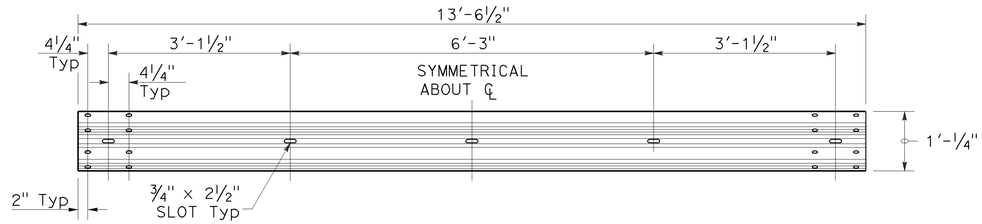

TYPICAL RAIL ELEMENT

NOTE:

1. Slotted holes for splice bolts to overlap ends of rail element.

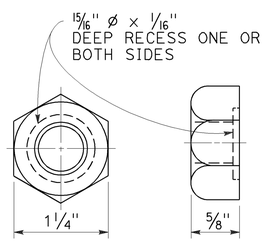

⅝" ø RECESS NUT

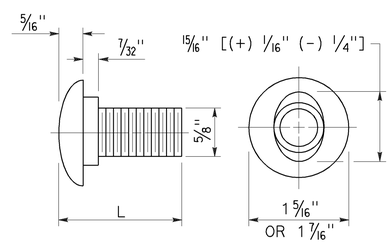

⅝" ø BUTTON HEAD BOLT

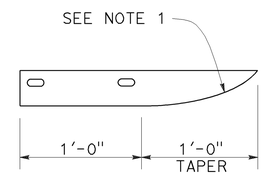

PLAN

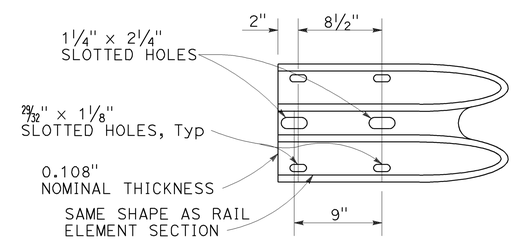

ELEVATION

END CAP
(TYPE A)

BUTTON HEAD BOLT

L	THREAD LENGTH
1⅜"	FULL THREAD LENGTH
2"	FULL THREAD LENGTH
10"	4" Min THREAD LENGTH
18"	4" Min THREAD LENGTH
20"	4" Min THREAD LENGTH
22"	4" Min THREAD LENGTH
26"	4" Min THREAD LENGTH
36"	4" Min THREAD LENGTH
** 2¾"	2" Min THREAD LENGTH
** 19"	4" Min THREAD LENGTH

** For nested rail applications.

STATE OF CALIFORNIA
DEPARTMENT OF TRANSPORTATION

MIDWEST GUARDRAIL SYSTEM STANDARD HARDWARE

NO SCALE

RSP A77M1 DATED JULY 19, 2013 SUPPLEMENTS THE STANDARD PLANS BOOK DATED 2010.

REVISED STANDARD PLAN RSP A77M1

2010 REVISED STANDARD PLAN RSP A77M1

Dist	COUNTY	ROUTE	POST MILES TOTAL PROJECT	SHEET No.	TOTAL SHEETS
04	SF	101,280	1.5/1.8 R4.1/R4.4	34	76

Randell D. Hiatt
REGISTERED CIVIL ENGINEER

July 19, 2013
PLANS APPROVAL DATE

REGISTERED PROFESSIONAL ENGINEER
Randell D. Hiatt
No. C50200
Exp. 6-30-15
CIVIL
STATE OF CALIFORNIA

THE STATE OF CALIFORNIA OR ITS OFFICERS OR AGENTS SHALL NOT BE RESPONSIBLE FOR THE ACCURACY OR COMPLETENESS OF SCANNED COPIES OF THIS PLAN SHEET.

TO ACCOMPANY PLANS DATED 9-30-13

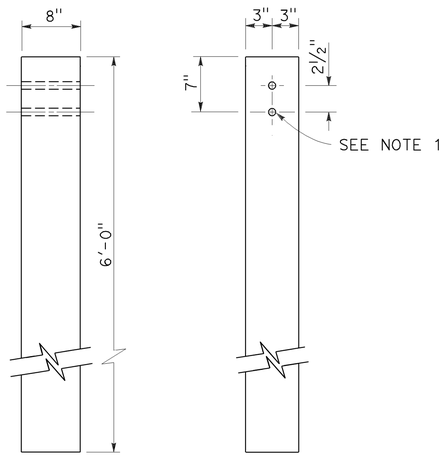

SIDE FRONT

6" x 8" WOOD POST
See Note 3

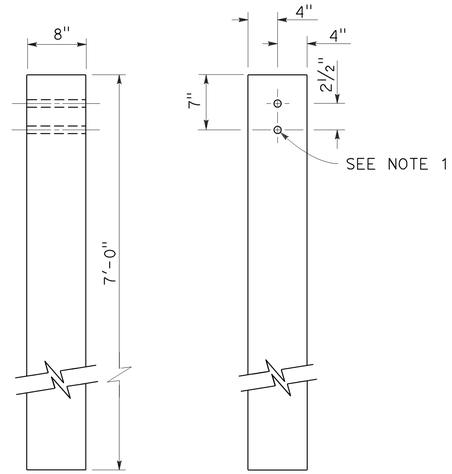

SIDE FRONT

8" x 8" WOOD POST
See Note 4

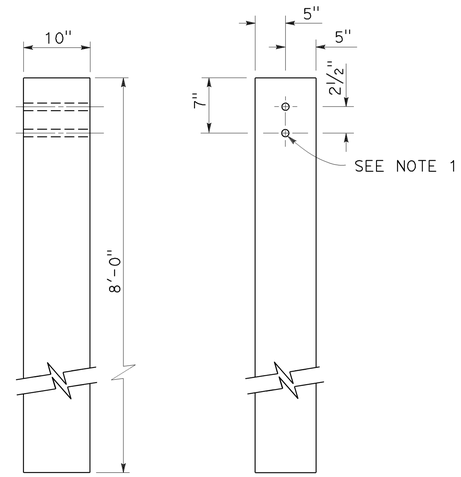

SIDE FRONT

10" x 10" WOOD POST
See Note 5

NOTES:

1. All holes in wood posts and blocks shall be ¾" Dia ± 1/16".
2. Dimensions shown for wood post are nominal.
3. This post and block combination used for standard line post sections of MGS.
4. This post and 8" x 12" block combination used for line post sections of MGS on narrow roadways.
5. This post and 8" x 12" block combination is typically used where strengthened line post sections of MGS are warranted to shield fixed objects.
6. See Revised Standard Plan RSP A77L3 for use of 6" x 8" and 8" x 8" wood blocks.

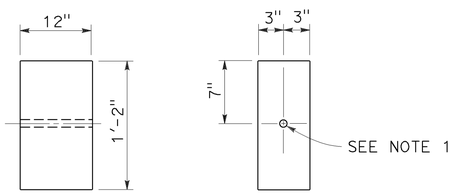

SIDE FRONT

6" x 12" WOOD BLOCK
See Note 3

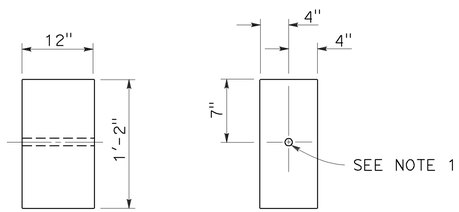

SIDE FRONT

8" x 12" WOOD BLOCK

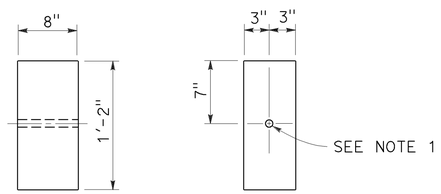

SIDE FRONT

6" x 8" WOOD BLOCK
Only for use with metal beam guard rail see Note 6

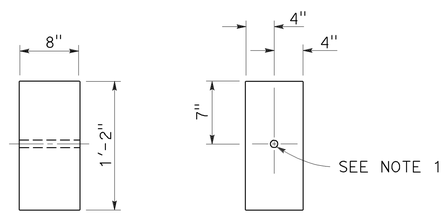

SIDE FRONT

8" x 8" WOOD BLOCK
Only for use with metal beam guard rail see Note 6

STATE OF CALIFORNIA
DEPARTMENT OF TRANSPORTATION

MIDWEST GUARDRAIL SYSTEM WOOD POST AND WOOD BLOCK DETAILS

NO SCALE

RSP A77N1 DATED JULY 19, 2013 SUPPLEMENTS THE STANDARD PLANS BOOK DATED 2010.

REVISED STANDARD PLAN RSP A77N1

2010 REVISED STANDARD PLAN RSP A77N1

7-3-13

Dist	COUNTY	ROUTE	POST MILES TOTAL PROJECT	SHEET No.	TOTAL SHEETS
04	SF	101,280	1.5/1.8 R4.1/R4.4	35	76

Randell D. Hiatt
REGISTERED CIVIL ENGINEER

July 19, 2013
PLANS APPROVAL DATE

REGISTERED PROFESSIONAL ENGINEER Randell D. Hiatt No. C50200 Exp. 6-30-15 CIVIL STATE OF CALIFORNIA

THE STATE OF CALIFORNIA OR ITS OFFICERS OR AGENTS SHALL NOT BE RESPONSIBLE FOR THE ACCURACY OR COMPLETENESS OF SCANNED COPIES OF THIS PLAN SHEET.

TO ACCOMPANY PLANS DATED 9-30-13

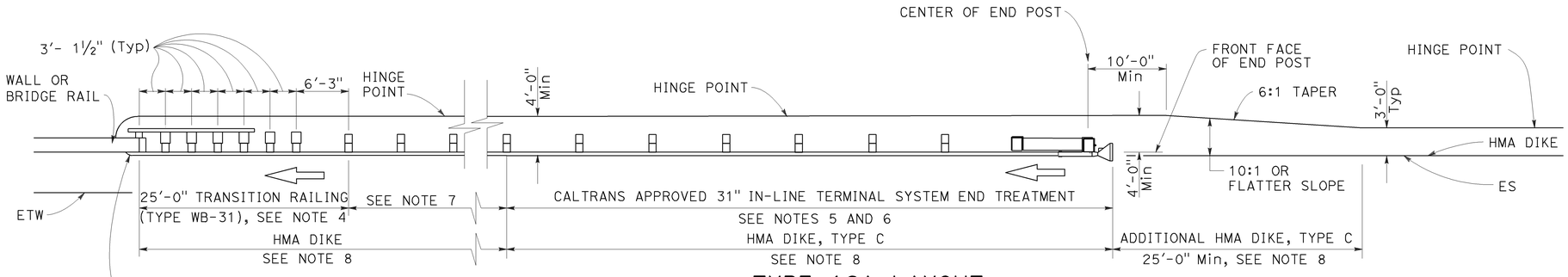

TYPE 12A LAYOUT

(MGS installation at structure approach with
31" In-line end treatment at traffic approach end of railing)
See Notes 9

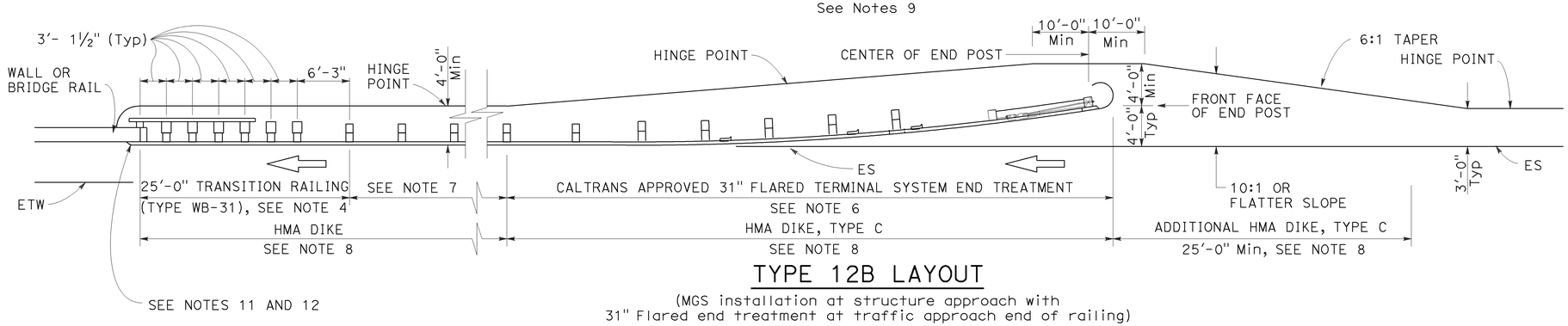

TYPE 12B LAYOUT

(MGS installation at structure approach with
31" Flared end treatment at traffic approach end of railing)
See Notes 9

NOTES:

1. Line post, blocks and hardware to be used are shown on Revised Standard Plans RSP A77L1, RSP A77L2, RSP A77M1, RSP A77N1 and RSP A77N2.
2. MGS post spacing to be 6'-3" center to center, except as otherwise noted.
3. Except as noted, line posts are 6" x 8" x 6'-0" wood with 6" x 12" x 1'-2" wood blocks. W6 x 8.5 or W6 x 9 steel posts, 6'-0" in length, with 6" x 12" x 1'-2" notched wood blocks or plastic blocks may be used for 6" x 8" x 6'-0" wood posts with 6" x 12" x 1'-2" wood blocks where applicable and when specified.
4. For Transition Railing (Type WB-31) details for Types 12A and 12B Layouts, see Revised Standard Plan RSP A77U4.
5. 31" in-line terminal system end treatments are used where site conditions will not accommodate a 31" flared end treatment.
6. The type 31" of terminal system end treatment to be used will be shown on the Project Plans.
7. Dependent on site conditions (embankment height, side slopes, or other fixed objects), it may be advisable to construct additional guard railing (a length equal to multiples of 12'-6" with 6'-3" post spacing) between the transition railing and end treatment. A 12.5 degree angle of departure can be drawn on the Project Plans from the edge of traveled way through the outer most point of the fixed object to determine the additional length of railing needed.
8. Where placement of dike is required with guard railing installations, see Revised Standard Plan RSP A77N4 for dike positioning details.
9. Type 12A or Type 12B Layouts are typically used:
   a. To the right of approaching traffic, at the end of a structure, on two-lane conventional highway where the roadbed width across the structure is less than 40 feet.
   b. To the left of approaching traffic, at the end of a structure, on two-lane conventional highway where the roadbed width across the structure is less than 40 feet.
   c. To the right of approaching traffic at the end of each structure on multilane freeways or expressways with separate adjacent or parallel bridges.
   d. To the right of approaching traffic at the end of the structure on multilane freeways or expressways with decked median on the bridge.
10. See Revised Standard Plan RSP A77Q3 for typical layout used left of approaching traffic at the ends of each structure on multilane freeways or expressways with separate adjacent or parallel bridges.
11. For additional details of typical connections to bridge rail, see Connection Detail AA on Revised Standard Plans RSP A77U1 and RSP A77U2 and Connection Detail FF on Revised Standard Plans RSP A77V1 and RSP A77V2.
12. For additional details of a typical connection to walls or abutments, see Revised Standard Plan RSP A77U3.

STATE OF CALIFORNIA
DEPARTMENT OF TRANSPORTATION

MIDWEST GUARDRAIL SYSTEM TYPICAL LAYOUTS FOR STRUCTURE APPROACH

NO SCALE

RSP A77Q1 DATED JULY 19, 2013 SUPPLEMENTS THE STANDARD PLANS BOOK DATED 2010.

REVISED STANDARD PLAN RSP A77Q1

2010 REVISED STANDARD PLAN RSP A77Q1

Dist	COUNTY	ROUTE	POST MILES TOTAL PROJECT	SHEET No.	TOTAL SHEETS
04	SF	101,280	1.5/1.8 R4.1/R4.4	36	76

Randell D. Hiatt
REGISTERED CIVIL ENGINEER

July 19, 2013
PLANS APPROVAL DATE

REGISTERED PROFESSIONAL ENGINEER Randell D. Hiatt No. C50200 Exp. 6-30-15 CIVIL STATE OF CALIFORNIA

THE STATE OF CALIFORNIA OR ITS OFFICERS OR AGENTS SHALL NOT BE RESPONSIBLE FOR THE ACCURACY OR COMPLETENESS OF SCANNED COPIES OF THIS PLAN SHEET.

TO ACCOMPANY PLANS DATED 9-30-13

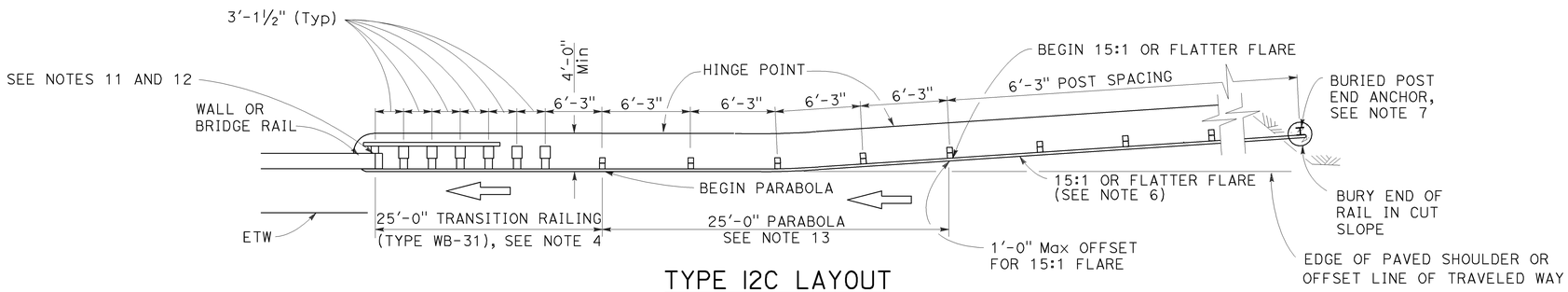

TYPE 12C LAYOUT

(MGS installation at structure approach with a Buried end anchor treatment at traffic approach end of railing)
See Notes 8 and 9

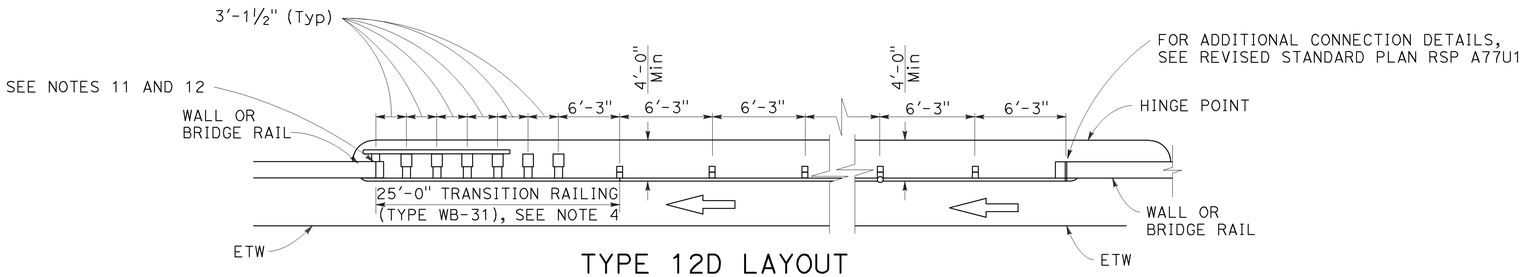

TYPE 12D LAYOUT

(Continuous MGS installation between structures)
See Notes 5 and 9

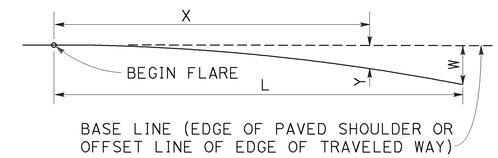

$$Y = \frac{WX^2}{L^2}$$

Y = OFFSET FROM BASE LINE
W = MAXIMUM OFFSET
X = DISTANCE ALONG BASE LINE
L = LENGTH OF FLARE

PARABOLIC FLARE OFFSETS

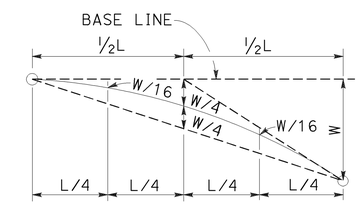

TYPICAL PARABOLIC LAYOUT

NOTES:

1. Line post, blocks and hardware to be used are shown on Revised Standard Plans RSP A77L1, RSP A77L2, RSP A77M1, RSP A77N1 and RSP A77N2.
2. MGS post spacing to be 6'-3" center to center, except as otherwise noted.
3. Except as noted, line posts are 6" x 8" x 6'-0" m wood with 6" x 12" x 1'-2" wood blocks. W6 x 8.5 or W6 x 9 steel posts, 6'-0" in length, with 6" x 12" x 1'-2" notched wood blocks or plastic blocks may be used for 6" x 8" x 6'-0" wood posts with 6" x 12" x 1'-2" wood blocks where applicable and when specified.
4. For Transition Railing (Type WB-31) details for Types 12C and 12D Layouts, see Revised Standard Plan RSP A77U4.
5. Type 12D layout is typically used where continous MGS is recommended between structures.
6. The 15:1 or flatter flare for Type 12C Layout is based on the edge of the paved shoulder or offset line of edge of the traveled way. The length of MGS with the 15:1 or flatter flare is based on site conditions and should be a length equal to multiples of 12'-6".
7. For details of the buried post end anchor used with Type 12C Layout, see Revised Standard Plan RSP A77T2.
8. Where placement of dike is required with MGS installations, see Revised Standard Plan RSP A77N4 for dike positioning details.
9. Type 12C Layout is typically used:
   a. To the right of approaching traffic, at the end of the structure, on two-lane conventional highway where the roadbed width across the structure is less than 40 feet.
   b. To the left of approaching traffic, at each of a structure, on two-lane conventional highway where the roadbed width across the structure is less than 40 feet.
   c. To the right of approaching traffic at the end of each structure on multilane freeways or expressways with separate adjacent or parallel bridges.
   d. To the right of approaching traffic at the end of the structure on multilane freeways or expressways with decked median on the bridge.
10. See Revised Standard Plan RSP A77Q3 for typical layout used left of approaching traffic at the ends of each structure on multilane freeways or expressways with separate adjacent or parallel bridges.
11. For additional details of typical connections to bridge rail, see Connection Detail AA on Revised Standard Plans RSP A77U1 and RSP A77U2 and Connection Detail FF on Revised Standard Plans RSP A77V1 and RSP A77V2.
12. For additional details of a typical connection to walls or abutments, see Revised Standard Plan RSP A77U3.
13. For typical flare offsets for 25'-0" length parabola with maximum offset of 1'-0", see Revised Standard Plan RSP A77P1.

STATE OF CALIFORNIA
DEPARTMENT OF TRANSPORTATION

MIDWEST GUARDRAIL SYSTEM TYPICAL LAYOUTS FOR STRUCTURE APPROACH AND BETWEEN STRUCTURES

NO SCALE

RSP A77Q2 DATED JULY 19, 2013 SUPPLEMENTS THE STANDARD PLANS BOOK DATED 2010.

REVISED STANDARD PLAN RSP A77Q2

2010 REVISED STANDARD PLAN RSP A77Q2

7-8-13

Dist	COUNTY	ROUTE	POST MILES TOTAL PROJECT	SHEET No.	TOTAL SHEETS
04	SF	101,280	1.5/1.8 R4.1/R4.4	37	76

Randell D. Hiatt
REGISTERED CIVIL ENGINEER

July 19, 2013
PLANS APPROVAL DATE

REGISTERED PROFESSIONAL ENGINEER
Randell D. Hiatt
No. C50200
Exp. 6-30-15
CIVIL
STATE OF CALIFORNIA

THE STATE OF CALIFORNIA OR ITS OFFICERS OR AGENTS SHALL NOT BE RESPONSIBLE FOR THE ACCURACY OR COMPLETENESS OF SCANNED COPIES OF THIS PLAN SHEET.

TO ACCOMPANY PLANS DATED 9-30-13

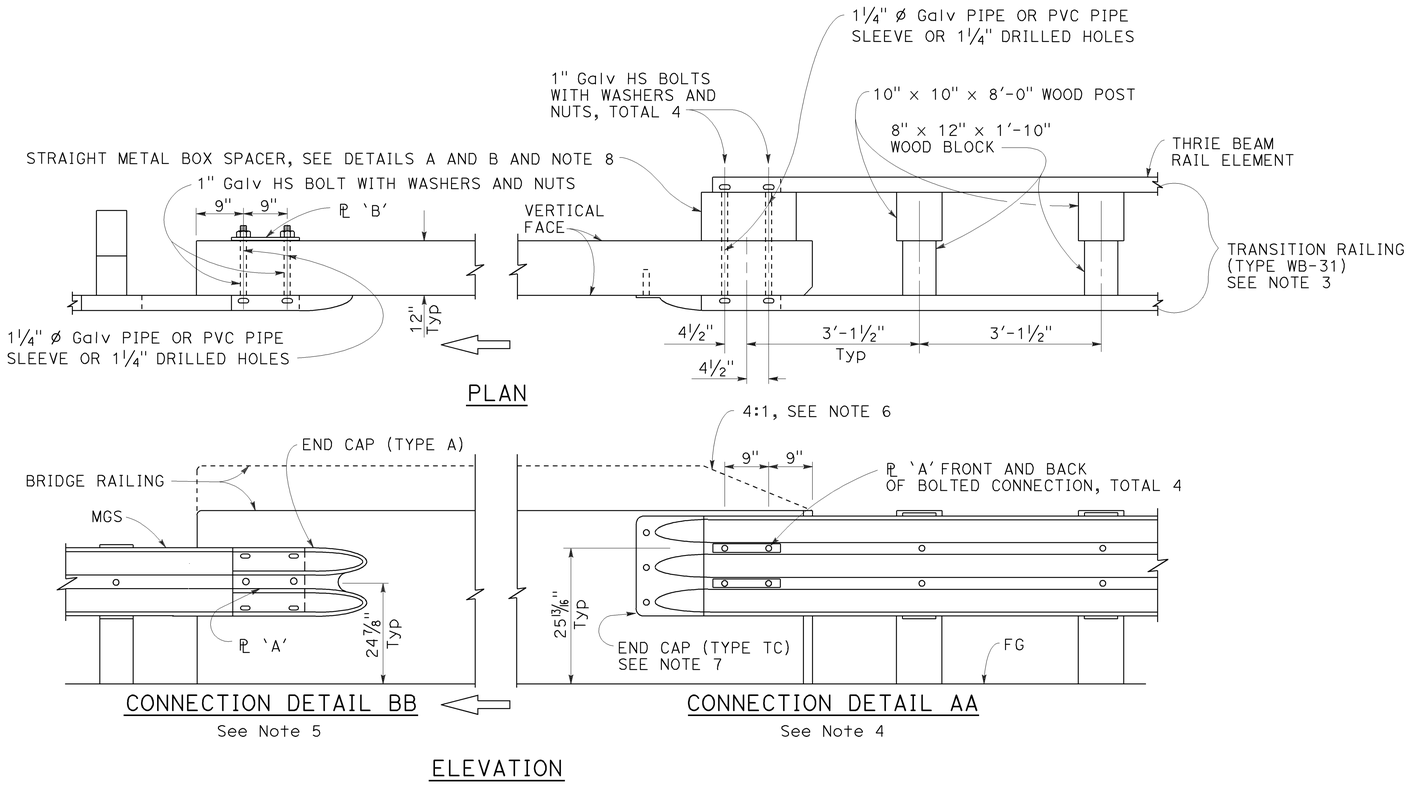

MIDWEST GUARDRAIL SYSTEM CONNECTION TO BRIDGE RAILING WITHOUT SIDEWALK

NOTES:

1. See Revised Standard Plan RSP A77U2 for additional connection details to bridges without sidewalks.
2. Additional details of posts, blocks and hardware are shown on Revised Standard Plans RSP A77M1, RSP A77N1 and RSP A77N2.
3. For additional details of Transition Railing (Type WB-31), see Revised Standard Plan RSP A77U4. Transition Railing (Type WB-31) transitions the 12 gauge MGS railing section to a heavier gage nested thrie beam railing section which is connected to the concrete bridge railing.
4. For typical use of Connection Detail AA, see Layout Types 12A and 12B on Revised Standard Plan RSP A77Q1, Layout Types 12C and 12D on Revised Standard Plan RSP A77Q2, and Layout Type 12E on Revised Standard Plan RSP A77Q3.
5. For typical use of Connection Detail BB, see Layout Type 12D (structure departure railing connection) on Revised Standard Plan RSP A77Q2 and Layout Type 12DD on Revised Standard Plan RSP A77Q5.
6. Where the height of the bridge railing exceeds the height of the thrie beam railing by more than 1" at Connection Detail AA, taper the top of the end of the bridge railing at 4:1 to match the top elevation of the thrie beam rail.
7. For details of End Cap (Type TC), see Revised Standard Plan RSP A77U4.
8. See Revised Standard Plan RSP A77U4 for additional details regarding depth dimension for straight metal box spacer.

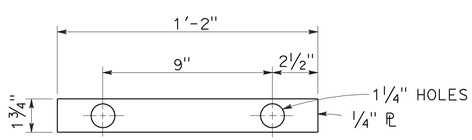

PLATE 'A'

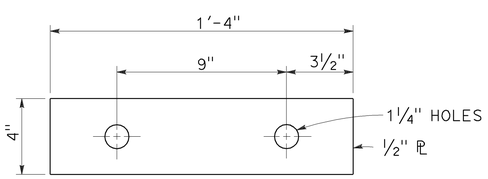

PLATE 'B'
(For backside of connection BB)

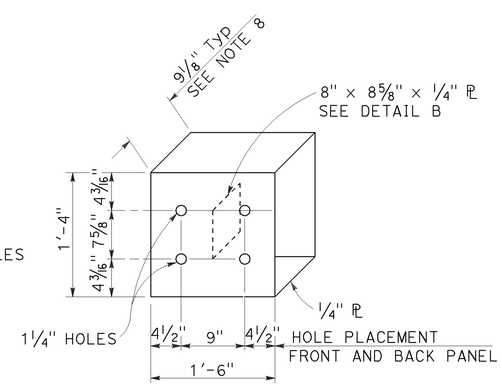

DETAIL A

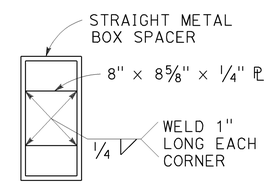

DETAIL B

STRAIGHT METAL BOX SPACER

STATE OF CALIFORNIA
DEPARTMENT OF TRANSPORTATION

MIDWEST GUARDRAIL SYSTEM CONNECTIONS TO BRIDGE RAILINGS WITHOUT SIDEWALKS DETAILS No. 1

NO SCALE

RSP A77U1 DATED JULY 19, 2013 SUPPLEMENTS THE STANDARD PLANS BOOK DATED 2010.

REVISED STANDARD PLAN RSP A77U1

2010 REVISED STANDARD PLAN RSP A77U1

7-8-13

Dist	COUNTY	ROUTE	POST MILES TOTAL PROJECT	SHEET No.	TOTAL SHEETS
04	SF	101,280	1.5/1.8 R4.1/R4.4	38	76

Randell D. Hiatt
REGISTERED CIVIL ENGINEER

November 15, 2013
PLANS APPROVAL DATE

REGISTERED PROFESSIONAL ENGINEER Randell D. Hiatt No. C50200 Exp. 6-30-15 CIVIL STATE OF CALIFORNIA

THE STATE OF CALIFORNIA OR ITS OFFICERS OR AGENTS SHALL NOT BE RESPONSIBLE FOR THE ACCURACY OR COMPLETENESS OF SCANNED COPIES OF THIS PLAN SHEET.

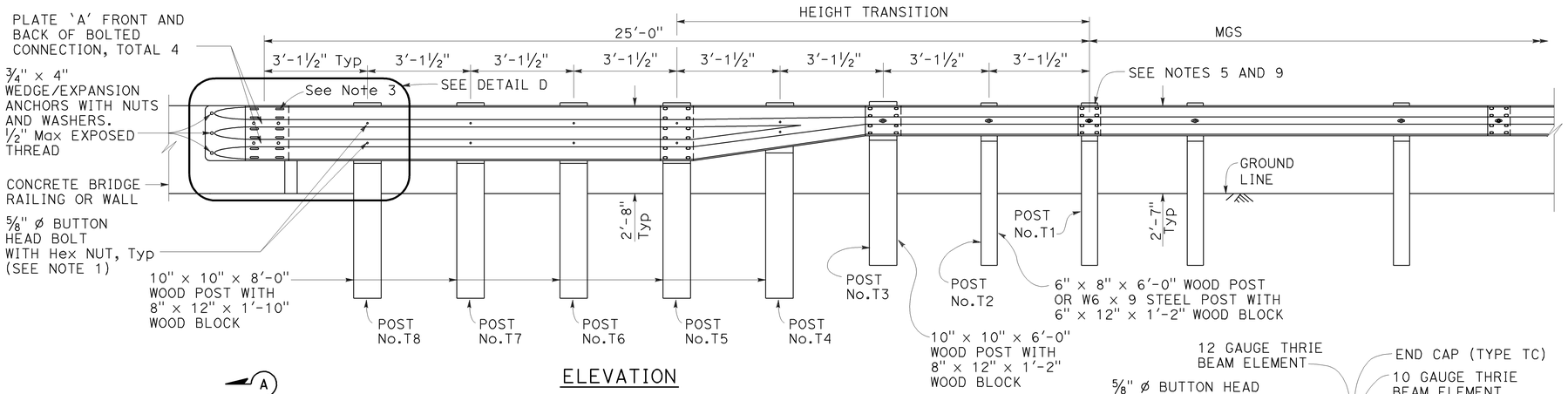

ELEVATION

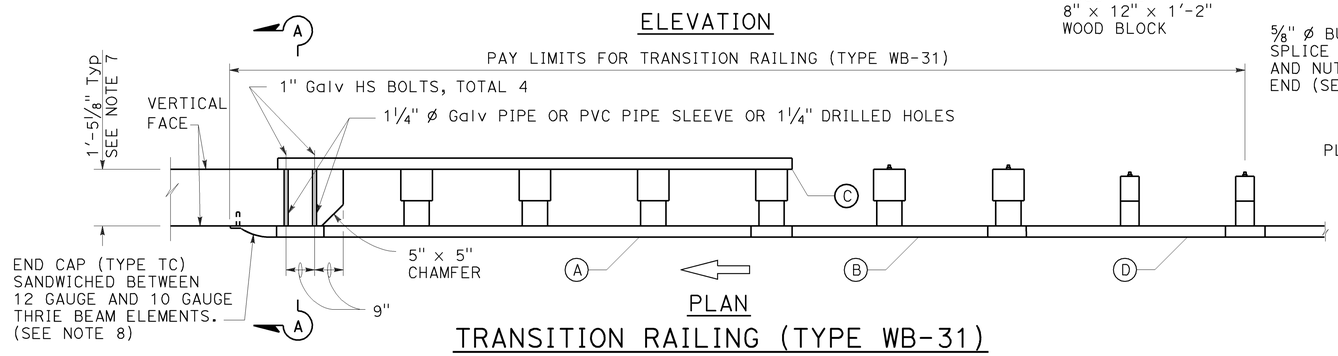

PLAN

TRANSITION RAILING (TYPE WB-31)

(No Blockout Attachment)

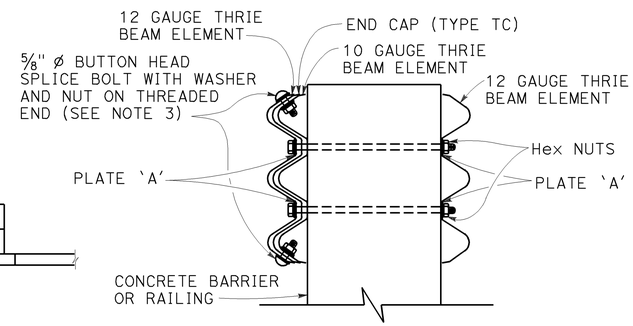

SECTION A-A

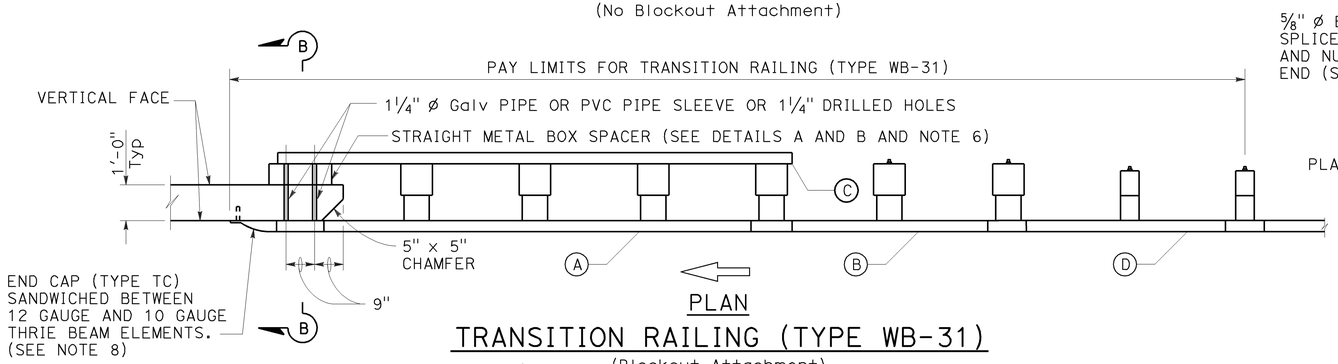

PLAN

TRANSITION RAILING (TYPE WB-31)

(Blockout Attachment)

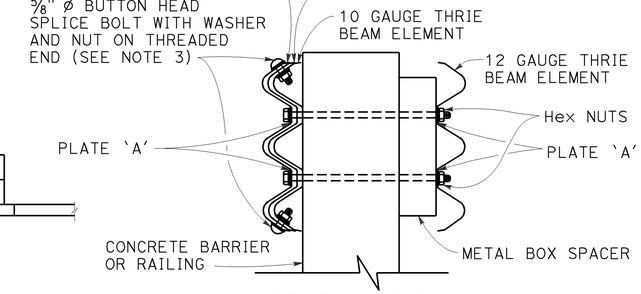

SECTION B-B

NOTES:

TO ACCOMPANY PLANS DATED 9-30-13

1. Use 5/8" ø Button head bolts and hex nuts for connections to posts. No washer on rail face for bolted connections to post.
2. The nested rail elements, end cap, and 'W' beam to thrie beam element may be spliced together prior to bolting the elements to the wood post and concrete barrier or railing.
3. Exterior splice bolt holes for rail element splices at Post No. T5 and the connection to the concrete barrier or railing shall be the standard 29/32" x 1 1/8" slot size. Interior splice bolt holes at these locations may be increased up to 1 1/4" ø. Only the top 4 and the bottom 4 splice bolts with washers and nuts are required for rail splices at Post No. T5 and the connection to the concrete barrier or railing.
4. The top elevation of Posts No. T2 through No. T7 shall not project more than 1" above the top elevation of the rail element.
5. Typically, the railing connected to Transition Railing (Type WB-31) will be either standard railing section of MGS with height transition ratio of 150:1 or a Caltrans approved 31" end treatment attached to Post No. T1.
6. The depth of the metal box spacer varies from the 9 1/8" to 1 1/2" and is dependent on the width of the concrete railing or wall. The combined dimension for the depth of the metal box spacer plus the width of railing or wall is typically 21 1/8". Where the space between the backside of the concrete railing or wall and the rear thrie beam element is less than 1 1/2", metal plates similar to Plate 'A' are to be used as spacers.
7. Where the width of the concrete railing or wall is greater than 17 1/8", wood blocks are to be used to fill the space created between the backside of Posts No. T5 through No. T8 and the rear thrie beam element. These wood blocks shall be 8" in width and 1'-2" in length. The dimension between the front thrie beam element and the rear thrie beam element is to match the width of the concrete railing or wall.
8. End cap may be installed over 12 gauge and 10 gauge thrie beam elements where transition railing is installed on the departure end of bridge railing.
9. Conform standard railing section height to 31" at Post No. T1 using height transition ratio of 150:1.

LEGEND:

(A) NESTED THRIE BEAM ELEMENTS (ONE 12 GAUGE ELEMENT NESTED OVER ONE 10 GAUGE ELEMENT).

(B) ONE ASYMMETRICAL 10 GAUGE "W" BEAM TO THRIE BEAM ELEMENT.

(C) ONE 12 GAUGE THRIE BEAM ELEMENT.

(D) ONE 10 GAUGE "W" BEAM RAIL ELEMENT (7'-3 1/2" LENGTH)

10 GAUGE = 0.138" THICK
12 GAUGE = 0.108" THICK

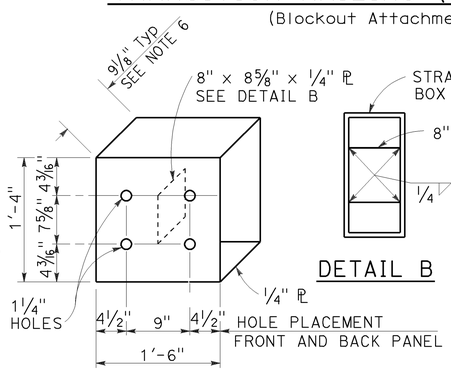

DETAIL A

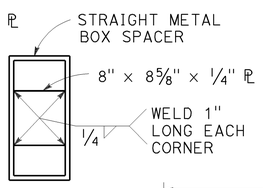

DETAIL B

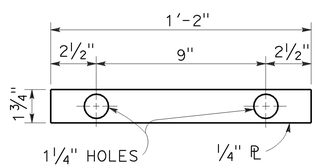

DETAIL C

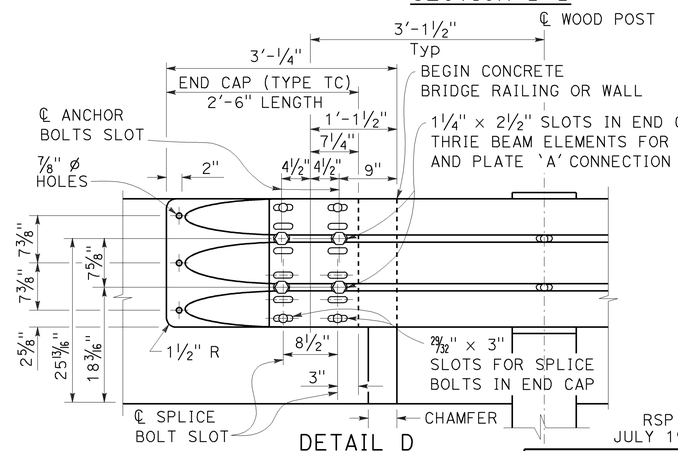

DETAIL D

STRAIGHT METAL BOX SPACER

PLATE 'A'

STATE OF CALIFORNIA
DEPARTMENT OF TRANSPORTATION

MIDWEST GUARDRAIL SYSTEM TRANSITION RAILING (TYPE WB-31)

NO SCALE

RSP A77U4 DATED NOVEMBER 15, 2013 SUPERSEDES RSP A77U4 DATED JULY 19, 2013 THAT SUPPLEMENTS THE STANDARD PLANS BOOK DATED 2010.

REVISED STANDARD PLAN RSP A77U4

2010 REVISED STANDARD PLAN RSP A77U4

10-4-13

Dist	COUNTY	ROUTE	POST MILES TOTAL PROJECT	SHEET No.	TOTAL SHEETS
04	SF	101,280	1.5/1.8 R4.1/R4.4	39	76

Randell D. Hiatt
REGISTERED CIVIL ENGINEER

July 19, 2013
PLANS APPROVAL DATE

REGISTERED PROFESSIONAL ENGINEER
Randell D. Hiatt
No. C50200
Exp. 6-30-15
CIVIL
STATE OF CALIFORNIA

THE STATE OF CALIFORNIA OR ITS OFFICERS OR AGENTS SHALL NOT BE RESPONSIBLE FOR THE ACCURACY OR COMPLETENESS OF SCANNED COPIES OF THIS PLAN SHEET.

TO ACCOMPANY PLANS DATED 9-30-13

NOTES:

1. Refer to Revised Standard Plans RSP A77L1 and RSP A77L2 for component details for MGS not shown on this plan.
2. All posts for any standard barrier run shall be of the same type: Wood or Steel.
3. Install posts in soil.

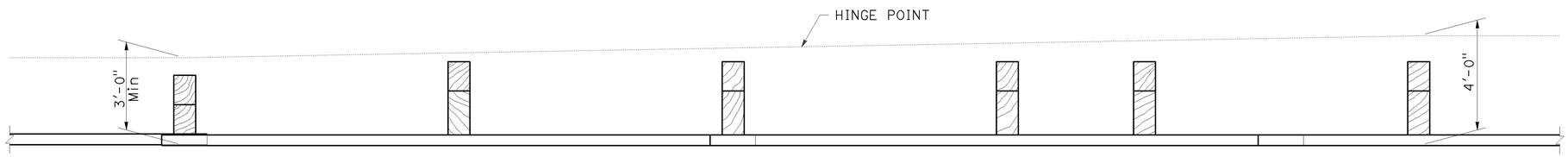

PLAN

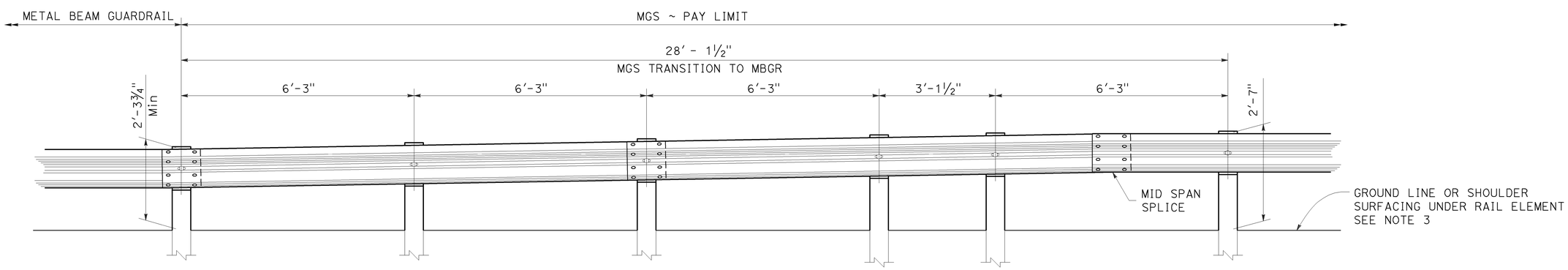

ELEVATION

STATE OF CALIFORNIA
DEPARTMENT OF TRANSPORTATION

MIDWEST GUARDRAIL SYSTEM TRANSITION TO METAL BEAM GUARDRAIL

NO SCALE

RSP A77U5 DATED JULY 19, 2013 SUPPLEMENTS THE STANDARD PLANS BOOK DATED 2010.

REVISED STANDARD PLAN RSP A77U5

2010 REVISED STANDARD PLAN RSP A77U5

6-20-13

Dist	COUNTY	ROUTE	POST MILES TOTAL PROJECT	SHEET No.	TOTAL SHEETS
04	SF	101,280	1.5/1.8 R4.1/R4.4	40	76

REGISTERED CIVIL ENGINEER

November 15, 2013
PLANS APPROVAL DATE

REGISTERED PROFESSIONAL ENGINEER
Tillat Satter
No. C42892
Exp. 3-31-14
CIVIL
STATE OF CALIFORNIA

THE STATE OF CALIFORNIA OR ITS OFFICERS OR AGENTS SHALL NOT BE RESPONSIBLE FOR THE ACCURACY OR COMPLETENESS OF SCANNED COPIES OF THIS PLAN SHEET.

TO ACCOMPANY PLANS DATED 9-30-13

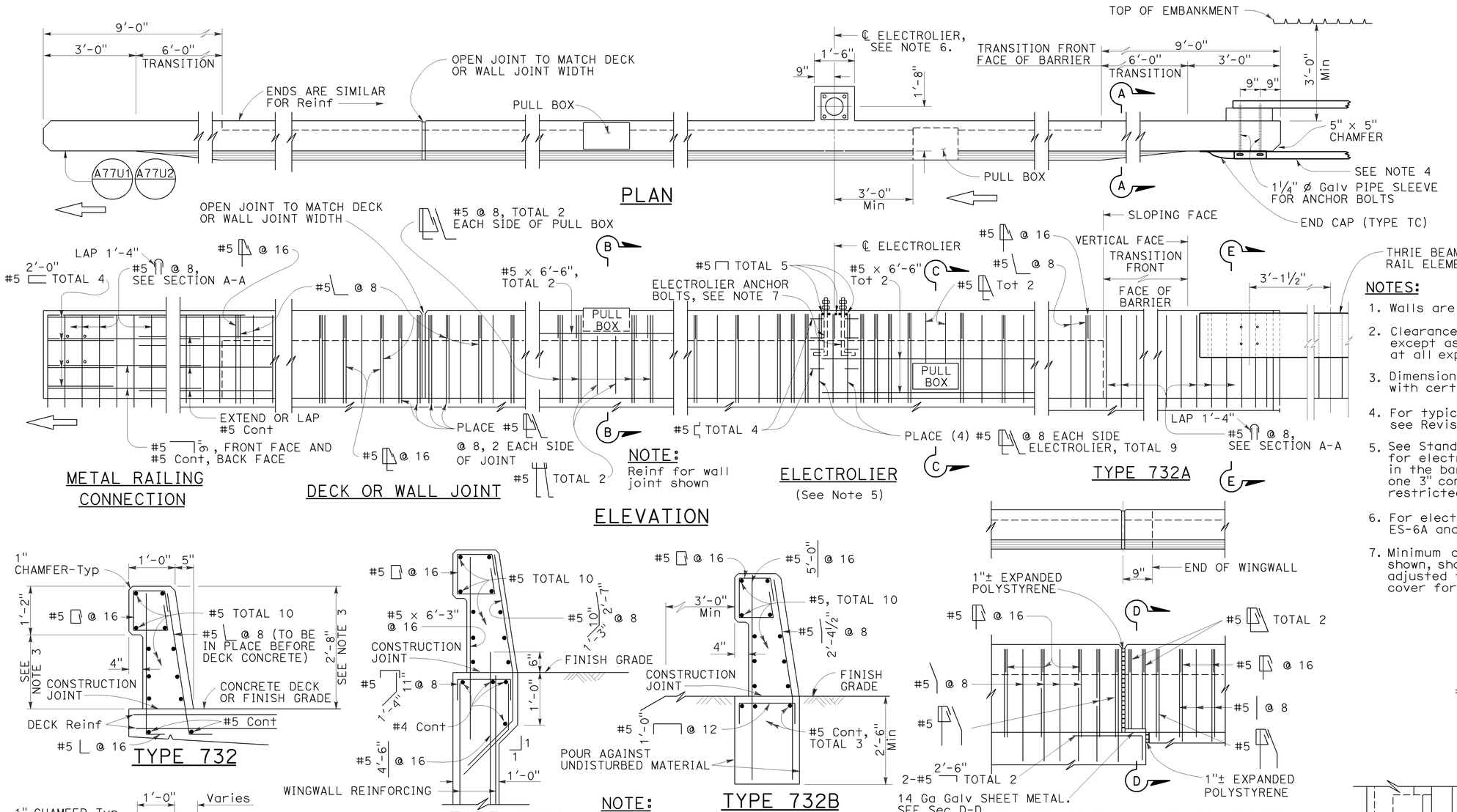

NOTES:

1. Walls are to be backfilled before barrier is placed.
2. Clearance to reinforcing steel in barrier to be 1", except as noted. Longitudinal reinforcement to stop at all expansion joints.
3. Dimensions may vary with roadway cross slope and with certain thickness of surfacing. See Project Plans.
4. For typical metal railing connection details not shown, see Revised Standard Plans RSP A77U1 and RSP A77U2.
5. See Standard Plans ES-9A, ES-9B, ES-9C, ES-9D and ES-9E for electrical details. The maximum number of conduits in the barrier is limited to two 2" conduits along with one 3" conduit. When a 3" conduit is used, it is restricted to the base of the barrier.
6. For electrolier mounting details, See Standard Plans ES-6A and ES-6B.
7. Minimum concrete edge distance, to the reinforcing shown, shall be maintained. Edge distance may be adjusted to accommodate increase in concrete cover for architectual treatment.

NOTE: Types 732A and 732B are similar to Type 732 except as noted.

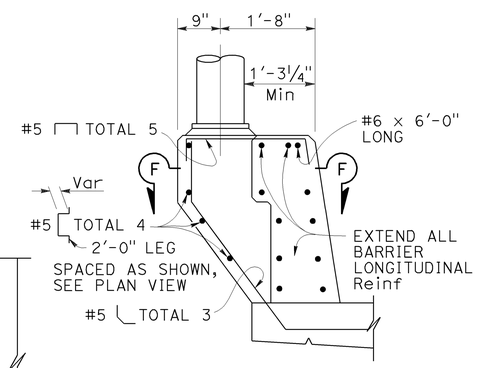

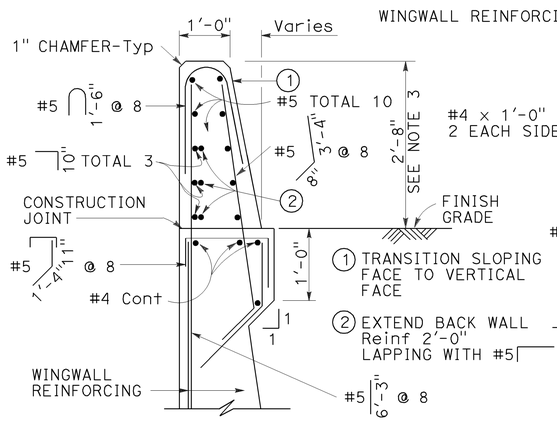

Details shown for barrier anchorage to Type 732A. Anchorage for barrier Types 732 and 732A are similar to their respective details.

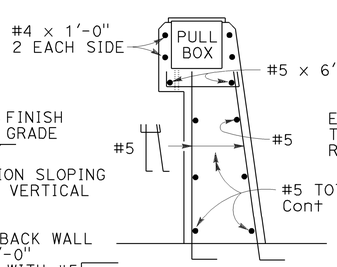

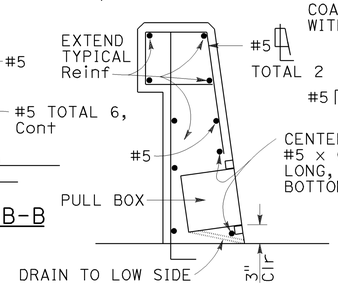

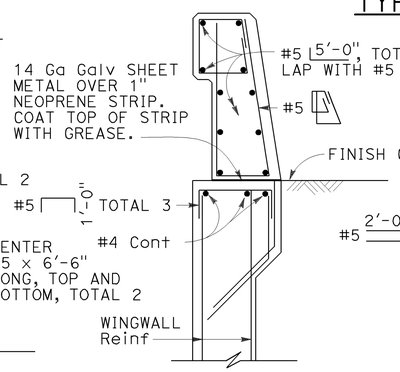

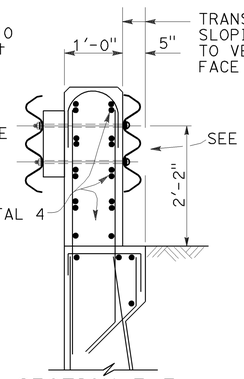

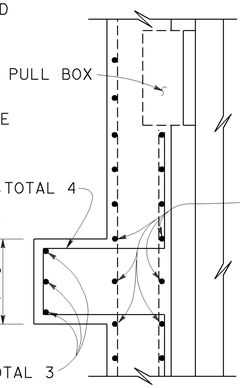

STATE OF CALIFORNIA
DEPARTMENT OF TRANSPORTATION

CONCRETE BARRIER TYPE 732

NO SCALE

RSP B11-55 DATED NOVEMBER 15, 2013 SUPERSEDES
RSP B11-55 DATED JULY 19, 2013 AND STANDARD PLAN B11-55
DATED MAY 20, 2011 - PAGE 297 OF THE STANDARD PLANS BOOK DATED 2010.

REVISED STANDARD PLAN RSP B11-55

2010 REVISED STANDARD PLAN RSP B11-55

10-4-13

Dist	COUNTY	ROUTE	POST MILES TOTAL PROJECT	SHEET No.	TOTAL SHEETS
04	SF	101,280	1.5/1.8 R4.1/R4.4	41	76

Theresa Gabriel
REGISTERED ELECTRICAL ENGINEER

July 19, 2013
PLANS APPROVAL DATE

REGISTERED PROFESSIONAL ENGINEER Theresa Aziz Gabriel No. E15129 Exp. 6-30-14 ELECTRICAL STATE OF CALIFORNIA

THE STATE OF CALIFORNIA OR ITS OFFICERS OR AGENTS SHALL NOT BE RESPONSIBLE FOR THE ACCURACY OR COMPLETENESS OF SCANNED COPIES OF THIS PLAN SHEET.

TO ACCOMPANY PLANS DATED 9-30-13

LEGEND:

AB	ABANDON. IF APPLIED TO CONDUIT, REMOVE CONDUCTORS
BC	INSTALL PULL BOX IN EXISTING CONDUIT RUN
BP	PEDESTRIAN BARRICADE, TYPE AS INDICATED ON PLAN
CB	INSTALL CONDUIT INTO EXISTING PULL BOX
CC	CONNECT NEW AND EXISTING CONDUIT. REMOVE EXISTING CONDUCTORS AND INSTALL CONDUCTORS AS INDICATED
CF	CONDUIT TO REMAIN FOR FUTURE USE. REMOVE CONDUCTORS. INSTALL PULL TAPE
DH	DETECTOR HANDHOLE
FA	FOUNDATION TO BE ABANDONED
IS	INSTALL SIGN ON SIGNAL MAST ARM
NS	NO SLIP BASE ON STANDARD
PEC	PHOTOELECTRIC CONTROL
PEU	PHOTOELECTRIC UNIT
RC	EQUIPMENT OR MATERIAL TO BE REMOVED AND BECOME THE PROPERTY OF THE CONTRACTOR
RE	REMOVE ELECTROLIER, FUSES AND BALLAST. TAPE ENDS OF CONDUCTORS
RL	RELOCATE EQUIPMENT
RR	REMOVE AND REUSE EQUIPMENT
RS	REMOVE AND SALVAGE EQUIPMENT
SC	SPLICE NEW TO EXISTING CONDUCTORS
SD	SERVICE DISCONNECT
TSP	TELEPHONE SERVICE POINT

ABBREVIATIONS

APS	ACCESSIBLE PEDESTRIAN SIGNAL
BBS	BATTERY BACKUP SYSTEM
BC	BOLT CIRCLE
BPB	BICYCLE PUSH BUTTON
C	CONDUIT
CB	CIRCUIT BREAKER
CCTV	CLOSED CIRCUIT TELEVISION
Ckt	CIRCUIT
CMS	CHANGEABLE MESSAGE SIGN
Ctid	CALTRANS IDENTIFICATION
Comm	COMMUNICATION
DLC	LOOP DETECTOR LEAD-IN CABLE
EMS	EXTINGUISHABLE MESSAGE SIGN
EVUC	EMERGENCY VEHICLE UNIT CABLE
EVUD	EMERGENCY VEHICLE UNIT DETECTOR
FB	FLASHING BEACON
FBCA	FLASHING BEACON CONTROL ASSEMBLY
FBS	FLASHING BEACON WITH SLIP BASE
FO	FIBER OPTIC
G	EQUIPMENT GROUNDING CONDUCTOR
GB	GROUND BUS
GFCI	GROUND FAULT CIRCUIT INTERRUPTER
HAR	HIGHWAY ADVISORY RADIO
Hex	HEXAGONAL
HPS	HIGH PRESSURE SODIUM
IISNS	INTERNALLY ILLUMINATED STREET NAME SIGN
ISL	INDUCTION SIGN LIGHTING
LED	LIGHT EMITTING DIODE
LMA	LUMINAIRE MAST ARM
LPS	LOW PRESSURE SODIUM
Ltg	LIGHTING
Lum	LUMINAIRE
M	METERED
MAT	MAST ARM MOUNTING TOP ATTACHMENT
MAS	MAST ARM MOUNTING SIDE ATTACHMENT
M/M	MULTIPLE TO MULTIPLE TRANSFORMER
Mtg	MOUNTING
MV	MERCURY VAPOR LIGHTING FIXTURE
MVDS	MICROWAVE VEHICLE DETECTION SYSTEM
N	NEUTRAL (GROUNDED CONDUCTOR)
NB	NEUTRAL BUS
NC	NORMALLY CLOSE
NO	NORMALLY OPEN
P	CIRCUIT BREAKER'S POLE
PB	PULL BOX
PBA	PUSH BUTTON ASSEMBLY
PEC	PHOTOELECTRIC CONTROL
Ped	PEDESTRIAN
PEU	PHOTOELECTRIC UNIT
PT	CONDUIT WITH PULL TAPE
RE	RELOCATED EQUIPMENT
RM	RAMP METERING
RWIS	ROADSIDE WEATHER INFORMATION SYSTEM
SB	SLIP BASE
SIC	SIGNAL INTERCONNECT CABLE
Sig	SIGNAL
SMA	SIGNAL MAST ARM
SNS	STREET NAME SIGN
SP	SERVICE POINT
TDC	TELEPHONE DEMARCATION CABINET
TMS	TRAFFIC MONITORING STATION
TOS	TRAFFIC OPERATIONS SYSTEM
Veh	VEHICLE
VIVDS	VIDEO IMAGE VEHICLE DETECTION SYSTEM
WIM	WEIGH-IN-MOTION
Xfmr	TRANSFORMER

SOFFIT AND WALL MOUNTED LUMINAIRES

PENDANT, 70 W HPS UNLESS OTHERWISE SPECIFIED

FLUSH, 70 W HPS UNLESS OTHERWISE SPECIFIED

WALL SURFACE, 70 W HPS UNLESS OTHERWISE SPECIFIED

EXISTING SOFFIT OR WALL LUMINAIRE TO REMAIN UNMODIFIED

EXISTING SOFFIT OR WALL LUMINAIRE TO BE MODIFIED AS SPECIFIED

NOTE:

Arrow indicates "street side" of luminaire.

MISCELLANEOUS ELECTROLIERS

NEW	EXISTING	
		LUMINAIRE ON WOOD POLE
		NON-STANDARD ELECTROLIER (SEE PROJECT NOTES OR PROJECT PLANS)
		CITY ELECTROLIER
		ELECTROLIER FOUNDATION (FUTURE INSTALLATION)

NOTES:

1. HPS luminaires shall be 310 W HPS when installed on Type 21, 21D, 30, 31 and 32 Standards, unless otherwise specified. HPS luminaires shall be 200 W when installed on other type standards or poles, unless otherwise specified.
2. LED luminaires shall be 235 W when installed on Type 21, 21D, 30, 31 and 32 Standards, unless otherwise specified. LED luminaires shall be 165 W when installed on other type standards or poles, unless otherwise specified.
3. Luminaires shall be the cutoff type, ANSI Type III medium cutoff lighting distribution, unless otherwise specified.

STANDARD ELECTROLIER

NEW	EXISTING	STANDARD TYPE
		15
		15D
		15 STRUCTURE
		15D STRUCTURE
		21
		21D
		21 STRUCTURE
		21D STRUCTURE
		30
		31
		32

COMMONLY USED SYMBOLS FOR UNITED STATES CUSTOMARY UNITS OF MEASUREMENT:

SYMBOL USED	DEFINITIONS
Ω	OHMS
min	MINUTE
s	SECOND
bps	BITS PER SECOND
Bps	BYTES PER SECOND
A	AMPERE
V	VOLT
V(dc)	VOLT (DIRECT CURRENT)
V(ac)	VOLT (ALTERNATING CURRENT)
FC	FOOT - CANDLE
W	WATTS
VA	VOLT-AMPERE
M	MEGA
k	KILO
m	MILLI
μ	MICRO
P	PICO
Hz	HERTZ

STATE OF CALIFORNIA
DEPARTMENT OF TRANSPORTATION

ELECTRICAL SYSTEMS (LEGEND AND ABBREVIATIONS)

NO SCALE

RSP ES-1A DATED JULY 19, 2013 SUPERSEDES STANDARD PLAN ES-1A DATED MAY 20, 2011 - PAGE 425 OF THE STANDARD PLANS BOOK DATED 2010.

REVISED STANDARD PLAN RSP ES-1A

2010 REVISED STANDARD PLAN RSP ES-1A

Dist	COUNTY	ROUTE	POST MILES TOTAL PROJECT	SHEET No.	TOTAL SHEETS
04	SF	101,280	1.5/1.8 R4.1/R4.4	42	76

Theresa Gabriel
REGISTERED ELECTRICAL ENGINEER

July 19, 2013
PLANS APPROVAL DATE

REGISTERED PROFESSIONAL ENGINEER Theresa Aziz Gabriel No. E15129 Exp. 6-30-14 ELECTRICAL STATE OF CALIFORNIA

THE STATE OF CALIFORNIA OR ITS OFFICERS OR AGENTS SHALL NOT BE RESPONSIBLE FOR THE ACCURACY OR COMPLETENESS OF SCANNED COPIES OF THIS PLAN SHEET.

TO ACCOMPANY PLANS DATED 9-30-13

CONDUIT

NEW	EXISTING	
		LIGHTING CONDUIT, UNLESS OTHERWISE INDICATED OR NOTED
		TRAFFIC SIGNAL CONDUIT
C	c	COMMUNICATION CONDUIT
T	t	TELEPHONE CONDUIT
F	f	FIRE ALARM CONDUIT
FO	fo	FIBER OPTIC CONDUIT
		CONDUIT TERMINATION
R	r	CONDUIT RISER ATTACHED TO THE STRUCTURE OR SERVICE POLE

SERVICE EQUIPMENT

NEW	EXISTING	
OH	oh	OVERHEAD LINES
U	U	WOOD POLE, "U" INDICATES UTILITY OWNED
		POLE GUY WITH ANCHOR
		UTILITY TRANSFORMER - GROUND MOUNTED
III	III	SERVICE EQUIPMENT ENCLOSURE TYPE. DOOR INDICATES FRONT OF ENCLOSURE
T	t	TELEPHONE DEMARCATION CABINET

POLE-MOUNTED SERVICE DESIGNATION

TYPE H SERVICE, 28'-10" — TYPE OF INSTALLATION AND POLE HEIGHT ABOVE GRADE

FLASHING BEACON

NEW	EXISTING	
R	R	FLASHING BEACON (ONE VEHICLE SIGNAL HEAD WITH BACKPLATE AND VISOR) "R" INDICATES RED INDICATION, "Y" INDICATES YELLOW INDICATION
Y Y	Y Y	FLASHING BEACON WITH TYPE 15-FBS STANDARD AND A SIGN.
R R	R R	FLASHING BEACON WITH TYPES 9, 9A OR 9B SIGN UNLESS OTHERWISE SPECIFIED OR INDICATED

SIGNAL EQUIPMENT

NEW	EXISTING	
C	C	PEDESTRIAN SIGNAL HEAD "C" INDICATES COUNTDOWN PEDESTRIAN HEAD
		PUSH BUTTON ASSEMBLY POST
		PEDESTRIAN BARRICADE
		VEHICLE SIGNAL HEAD (WITH BACKPLATE AND 3-SECTIONS: RED, YELLOW AND GREEN)
		VEHICLE SIGNAL HEAD WITH ANGLE VISOR
PV	PV	MODIFICATIONS OF BASIC SYMBOL: "L" INDICATES ALL NON-ARROW SECTIONS LOUVERED "LG" INDICATES LOUVERED GREEN SECTION ONLY "PV" INDICATES ALL 12" SECTIONS PROGRAMMED VISIBILITY "8" INDICATES ALL 8" SECTIONS (ONLY WHEN SPECIFIED)
		VEHICLE SIGNAL HEAD CONSISTING OF RED, YELLOW AND GREEN LEFT ARROW SECTIONS
		VEHICLE SIGNAL HEAD CONSISTING OF RED AND YELLOW SECTIONS WITH AN UP GREEN ARROW SECTION
		VEHICLE SIGNAL HEAD (5 SECTION) CONSISTING OF RED, YELLOW AND GREEN SECTIONS WITH YELLOW AND GREEN RIGHT ARROW SECTIONS
		TYPE 15TS STANDARD WITH VEHICLE SIGNAL HEAD AND LUMINAIRE
		TYPE 21TS STANDARD WITH VEHICLE SIGNAL HEAD AND LUMINAIRE
		STANDARD WITH LUMINAIRE AND SIGNAL MAST ARMS AND ATTACHED VEHICLE SIGNAL HEADS
		TYPE 1 STANDARD WITH ATTACHED VEHICLE SIGNAL HEADS
		STANDARD WITH A SIGNAL MAST ARM, ATTACHED VEHICLE SIGNAL HEADS AND INTERNALLY ILLUMINATED STREET NAME SIGN
		CONTROLLER ASSEMBLY. DOOR INDICATES FRONT OF CABINET

SIGNAL EQUIPMENT Cont

NEW	EXISTING	
		GUARD POST
		TYPE 1 STANDARD WITH RAMP METERING SIGN
		OPTICAL DETECTOR FOR THE EMERGENCY VEHICLE DETECTION SYSTEM

NOTES:

1. All signal sections shall be 12" unless shown otherwise.
2. Signal heads shall be provided with backplates unless shown otherwise.

ILLUMINATED OVERHEAD SIGN

NEW	EXISTING	
		SINGLE POST, SINGLE ILLUMINATED SIGN, BALANCED BUTTERFLY
		SINGLE POST, DOUBLE ILLUMINATED SIGN, BALANCED BUTTERFLY
		SINGLE POST, SINGLE ILLUMINATED SIGN, FULL CANTILEVER
		DOUBLE POST, SINGLE ILLUMINATED SIGN
		SINGLE ILLUMINATED SIGN MOUNTED ON STRUCTURE
		DOUBLE POST, SINGLE ILLUMINATED SIGN WITH ELECTROLIER

STATE OF CALIFORNIA
DEPARTMENT OF TRANSPORTATION

ELECTRICAL SYSTEMS (LEGEND AND ABBREVIATIONS)

NO SCALE

RSP ES-1B DATED JULY 19, 2013 SUPERSEDES STANDARD PLAN ES-1B DATED MAY 20, 2011 - PAGE 426 OF THE STANDARD PLANS BOOK DATED 2010.

REVISED STANDARD PLAN RSP ES-1B

2010 REVISED STANDARD PLAN RSP ES-1B

7-15-13

Dist	COUNTY	ROUTE	POST MILES TOTAL PROJECT	SHEET No.	TOTAL SHEETS
04	SF	101,280	1.5/1.8 R4.1/R4.4	43	76

Theresa Gabriel
REGISTERED ELECTRICAL ENGINEER

July 19, 2013
PLANS APPROVAL DATE

REGISTERED PROFESSIONAL ENGINEER Theresa Aziz Gabriel No. E15129 Exp. 6-30-14 ELECTRICAL STATE OF CALIFORNIA

THE STATE OF CALIFORNIA OR ITS OFFICERS OR AGENTS SHALL NOT BE RESPONSIBLE FOR THE ACCURACY OR COMPLETENESS OF SCANNED COPIES OF THIS PLAN SHEET.

TO ACCOMPANY PLANS DATED 9-30-13

EQUIPMENT IDENTIFICATION

ILLUMINATED SIGN IDENTIFICATION NUMBER:

SIGN No. 12345

10 ISL SCI 1.0

- SIGN NUMBER - PLACE ON POST OR STRUCTURE
- TRANSFORMER RATING (kVA)
- LIGHTING CONTROL TYPE
- NUMBER AND TYPE OF FIXTURES

DO NOT PLACE ON STANDARD OR STRUCTURE

ELECTROLIER OR EQUIPMENT IDENTIFICATION NUMBER:

12345 - 15'-0"

- MAST ARM LENGTH, IF SHOWN. DO NOT PLACE ON STANDARD OR STRUCTURE
- EQUIPMENT NUMBER - PLACE ON STANDARD OR STRUCTURE. EXISTING EQUIPMENT NUMBERS ARE SHOWN IN PARENTHESIS

CONDUIT AND CONDUCTOR IDENTIFICATION:

1½"C, 2#10, 15#14, 2 DLC, 12P#18

- PAIR
- NUMBER AND SIZE OF CONDUCTORS AND CABLES
- SIZE OF CONDUIT IN INCHES

ø1, ø2, ø2P, etc.	TRAFFIC PHASE IDENTIFICATION FOR SIGNAL FACES, DETECTORS AND PHASE DIAGRAMS
1 2 3	LEGEND NUMBERS
A B C	EQUIPMENT, SIGNAL POLES, INSTALLATION OR ITEMS
1 2 3	CONDUIT RUN NUMBERS

SIGNAL AND LIGHTING STANDARD (TYPICAL DESIGNATION):

19A - 3 - 100

- WIND VELOCITY = 100 mph
- CASE 3 ARM LOADING
- STANDARD TYPE
- STANDARD PLAN SHEET NUMBER
- DETAIL, NUMBER, SECTION, TYPE OR ELEVATION

MISCELLANEOUS EQUIPMENT

NEW	EXISTING	
CMS	cms	CHANGEABLE MESSAGE SIGN
		CLOSED CIRCUIT TELEVISION CAMERA
		HIGHWAY ADVISORY RADIO POLE AND ANTENNA
EMS	ems	EXTINGUISHABLE MESSAGE SIGN
M V	m v	DETECTION DEVICE M = MICROWAVE SENSOR V = VIDEO IMAGE SENSOR

WIRING DIAGRAM LEGEND

----	EXTERNAL CONDUCTOR
	CONDUCTOR OR BUS
	TIE POINT
	CONTACTOR COIL
	CONTACTOR, NO CONTACT
	TERMINAL BLOCKS
	CONTACTOR, NC CONTACT
	ENCLOSURE BOND
	GROUNDING ELECTRODE
	CIRCUIT BREAKER
	RECEPTACLE

PULL BOXES

NEW	EXISTING	
		PULL BOX, No. 5 UNLESS OTHERWISE INDICATED OR NOTED
3	9A(21)	PULL BOX, ADDITIONAL DESIGNATIONS OR DESCRIPTIONS

3 No. 3½ PULL BOX
5 No. 5 PULL BOX
6 No. 6 PULL BOX
7 No. 7 (CEILING PULL BOX)
8 No. 8 (PENDANT SOFFIT PULL BOX)
9 No. 9 PULL BOX
9A No. 9A PULL BOX

(C) COMMUNICATIONS PULL BOX
(E) PULL BOX WITH EXTENSION
(S) SPRINKLER CONTROL PULL BOX
(21) ANCHOR BOLTS AND CONDUIT FOR FUTURE INSTALLATION OF TYPE 21 STANDARD
(T) TRAFFIC PULL BOX

VEHICLE DETECTORS

5 J 9 U

- VEHICLE DETECTOR DESIGNATION
- U = UPPER
  L = LOWER
- SLOT NUMBER IN INPUT FILE
- INPUT FILE (I OR J)
- PHASE

NEW	EXISTING	
		TYPE A DETECTOR LOOP. OUTLINE OF SAWCUT SHOWN
		TYPE B DETECTOR LOOP. OUTLINE OF SAWCUT SHOWN
		TYPE C DETECTOR LOOP. OUTLINE OF SAWCUT SHOWN
		TYPE D DETECTOR LOOP. OUTLINE OF SAWCUT SHOWN
		TYPE E DETECTOR LOOP. OUTLINE OF SAWCUT SHOWN
		TYPE Q DETECTOR LOOP. OUTLINE OF SAWCUT SHOWN
		MAGNETIC DETECTOR
DH	dh	DETECTOR HANDHOLE
		MICROWAVE OR VIDEO DETECTION ZONE

STATE OF CALIFORNIA
DEPARTMENT OF TRANSPORTATION

ELECTRICAL SYSTEMS (LEGEND AND ABBREVIATIONS)

NO SCALE

RSP ES-1C DATED JULY 19, 2013 SUPERSEDES STANDARD PLAN ES-1C DATED MAY 20, 2011 - PAGE 427 OF THE STANDARD PLANS BOOK DATED 2010.

REVISED STANDARD PLAN RSP ES-1C

2010 REVISED STANDARD PLAN RSP ES-1C

DIST	COUNTY	ROUTE	POST MILES TOTAL PROJECT	SHEET NO.	TOTAL SHEETS
04	SF	101,280	1.5/1.8 R4.1/R4.4	44	76

Theresa Gabriel
REGISTERED ELECTRICAL ENGINEER

July 19, 2013
PLANS APPROVAL DATE

REGISTERED PROFESSIONAL ENGINEER Theresa Aziz Gabriel No. E15129 Exp. 6-30-14 ELECTRICAL STATE OF CALIFORNIA

THE STATE OF CALIFORNIA OR ITS OFFICERS OR AGENTS SHALL NOT BE RESPONSIBLE FOR THE ACCURACY OR COMPLETENESS OF SCANNED COPIES OF THIS PLAN SHEET.

TO ACCOMPANY PLANS DATED 9-30-13

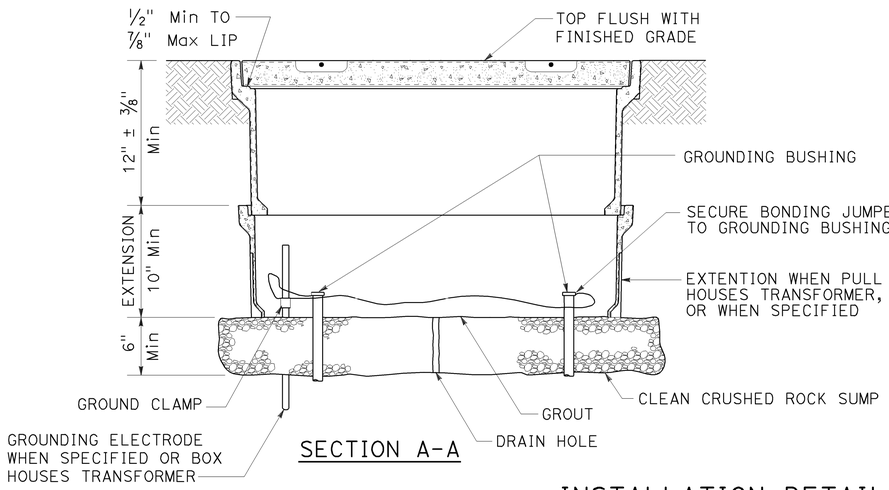

SECTION A-A

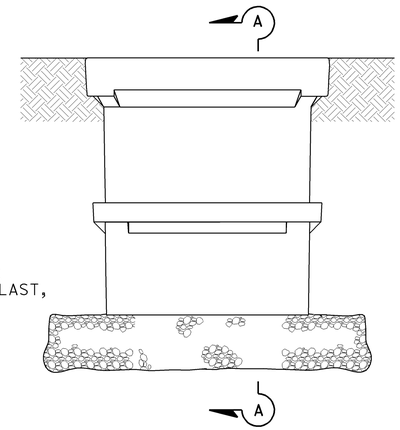

SIDE VIEW

INSTALLATION DETAILS

DETAIL A

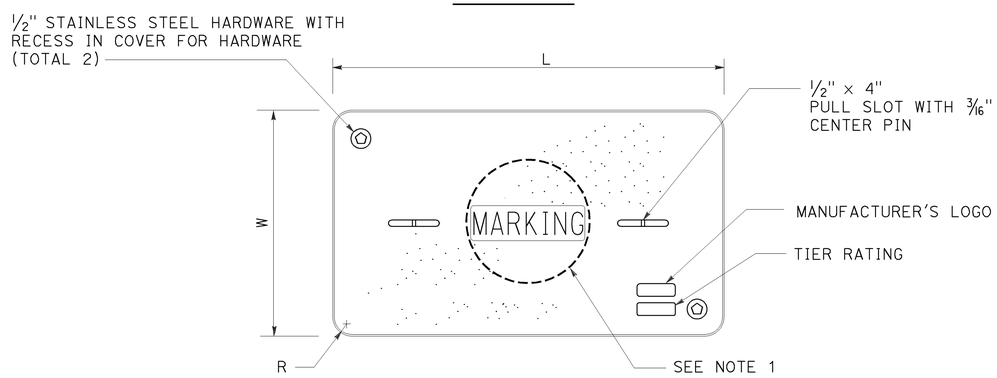

COVER TOP VIEW

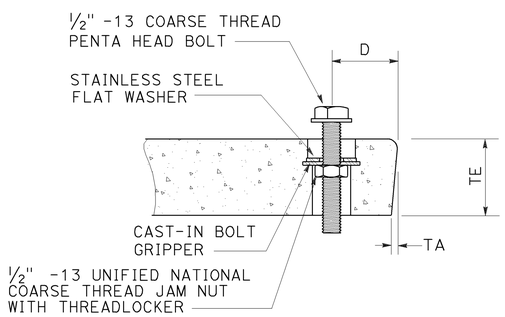

TYPICAL COVER CAPTIVE BOLT

OR SIMILAR

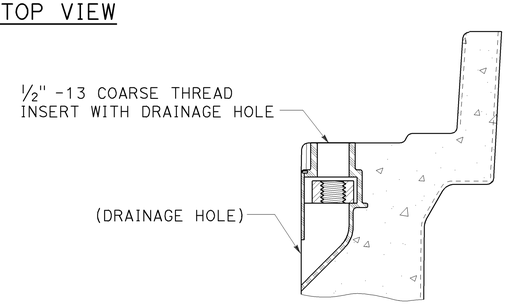

TYPICAL THREADED INSERT

OR SIMILAR

DIMENSION TABLE

PULL BOX	PULL BOX			COVER						
	MINIMUM DEPTH BOX	MINIMUM DEPTH EXTENSION	MAXIMUM WEIGHT	L	W	R	TE	TA	D	MAXIMUM WEIGHT
No. 3½	12"	N/A	40 lb	1′ - 3⅜"	10⅛"	1⅜"	2"	⅛"	1¾"	30 lb
No. 5	12"	10"	55 lb	1′ - 11¼"	1′ - 1¾"	1⅜"	2"	⅛"	1¾"	60 lb
No. 6	12"	10"	70 lb	2′ - 6½"	1′ - 5½"	1⅜"	2"	⅛"	2"	85 lb

NOTES:

1. Pull box covers shall be marked as follows: "SERVICE" Service circuits between service point and service disconnect; "SPRINKLER-CONTROL" sprinkler control circuits, 50 V or less; "CALTRANS" on all pull boxes, except pull boxes marked "SPRINKLER-CONTROL"; and "TELEPHONE" Telephone service;

   A) No. 3½ pull box.
      1) "SIGNAL" - Traffic signal circuits with or without lighting or sign lighting circuits.
      2) "LIGHTING" - Lighting or sign lighting circuits where voltage is under 600 V.

   B) No. 5, 6, 9 or 9A pull box.
      1) "TRAFFIC SIGNAL" - Traffic signal circuits with or without lighting or sign lighting circuits.
      2) "LIGHTING" - Lighting or sign lighting circuits where voltage is under 600 V.
      3) "LIGHTING-HIGH VOLTAGE" - Lighting or sign lighting circuits where voltage is above 600 V.
      4) "IRRIGATION" - Circuits to irrigation controller 120 V or more.
      5) "RAMP METER" - Ramp meter circuits.
      6) "COUNT STATION" - Count or speed monitor circuits.
      7) "COMMUNICATIONS" - Communication circuits.
      8) "TOS COMMUNICATIONS" - TOS communication line.
      9) "TOS POWER" - TOS power.
      10) "TDC POWER" - Telephone demarcation cabinet power.
      11) "CCTV" - Closed circuit television circuits.
      12) "TMS" - Traffic monitoring station circuits.
      13) "CMS" - Changeable message sign circuits.
      14) "HAR" - Highway advisory radio circuits.
      15) "BOOSTER PUMP" - Booster pump circuit.

2. The nominal dimensions of the opening in which the cover sets shall be the same as the cover dimensions except the length and width dimensions shall be ⅛" greater.

3. Covers and boxes shall be interchangeable with California standard male and female gages. When interchanged with a standard male or female gage, the top surfaces shall be flush within ⅛". Top outside radius of covers and pull boxes shall have a ⅛" radius.

4. Pull box extension may be another pull box as long as the bottom edge of the pull box can fit into the cover opening.

5. All dimensions for the cover for non-traffic pull box are nominal values.

STATE OF CALIFORNIA
DEPARTMENT OF TRANSPORTATION

ELECTRICAL SYSTEMS (NON-TRAFFIC PULL BOX)

NO SCALE

RSP ES-8A DATED JULY 19, 2013 SUPERSEDES RSP ES-8A DATED JANUARY 20, 2012 THAT SUPPLEMENTS THE STANDARD PLANS BOOK DATED 2010.

REVISED STANDARD PLAN RSP ES-8A

2010 REVISED STANDARD PLAN RSP ES-8A

7-15-13

Dist	COUNTY	ROUTE	POST MILES TOTAL PROJECT	SHEET No.	TOTAL SHEETS
04	SF	101,280	1.5/1.8 R4.1/R4.4	45	76

Theresa Gabriel
REGISTERED ELECTRICAL ENGINEER

July 19, 2013
PLANS APPROVAL DATE

REGISTERED PROFESSIONAL ENGINEER Theresa Aziz Gabriel No. E15129 Exp. 6-30-14 ELECTRICAL STATE OF CALIFORNIA

THE STATE OF CALIFORNIA OR ITS OFFICERS OR AGENTS SHALL NOT BE RESPONSIBLE FOR THE ACCURACY OR COMPLETENESS OF SCANNED COPIES OF THIS PLAN SHEET.

TO ACCOMPANY PLANS DATED 9-30-13

ISOFOOTCANDLE CURVE - MINIMUM

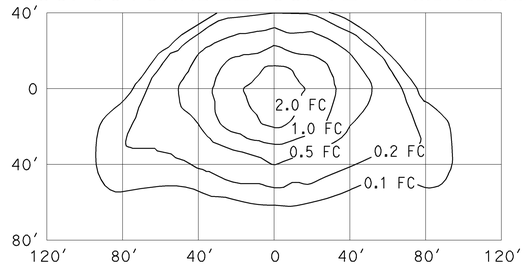

TYPE III MEDIUM CUTOFF

Cutoff Luminaire
34′ Mounting Height
Lamp operated at 22,000 lm
200-W high pressure sodium lamp
ANSI Designation S66

ISOFOOTCANDLE CURVE - MINIMUM

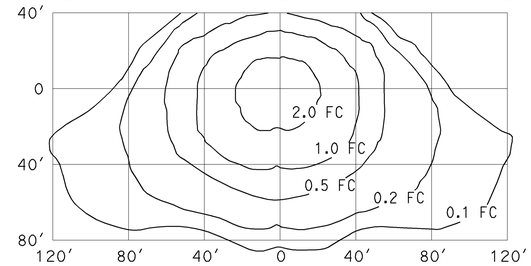

TYPE III MEDIUM CUTOFF

Cutoff Luminaire
40′ Mounting Height
Lamp operated at 37,000 lm
310-W high pressure sodium lamp
ANSI Designation S67

ISOFOOTCANDLE CURVE - MINIMUM

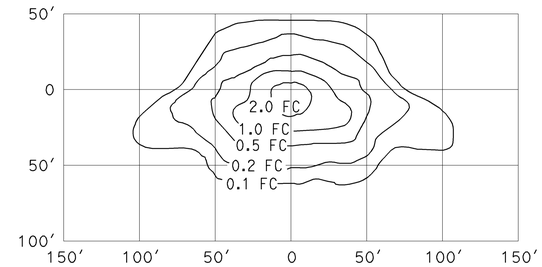

TYPE III MEDIUM CUTOFF

Cutoff Luminaire
30′ Mounting Height
Lamp operated at 16,000 lm
150-W high pressure sodium lamp
ANSI Designation S55

ISOFOOTCANDLE CURVE - MINIMUM

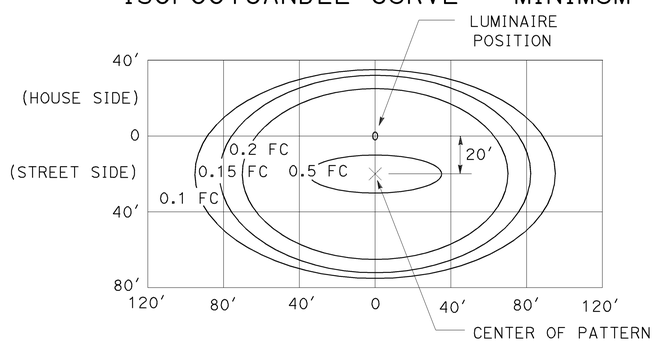

LED LUMINAIRE ROADWAY 1

165-W at 34′ Mounting Height

ISOFOOTCANDLE CURVE - MINIMUM

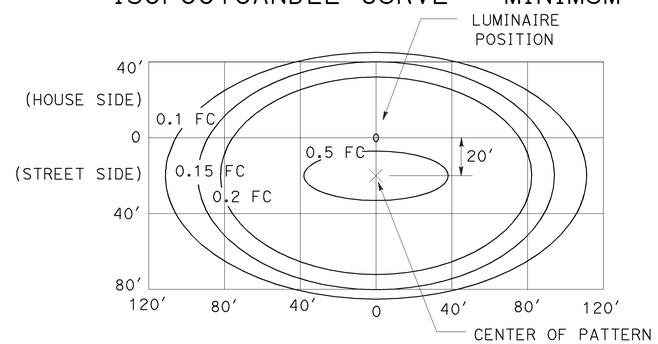

LED LUMINAIRE ROADWAY 2

235-W at 40′ Mounting Height

ISOFOOTCANDLE CURVE - MINIMUM

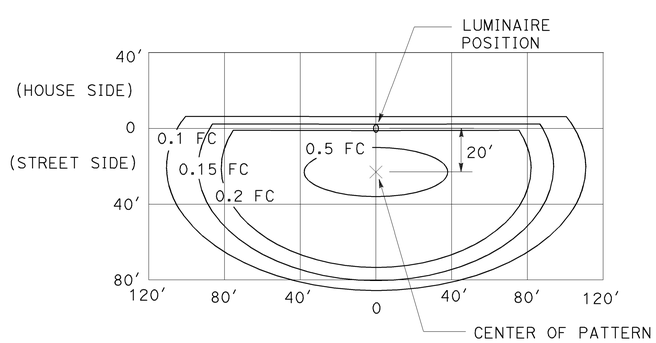

LED LUMINAIRE ROADWAY 3

235-W at 40′ Mounting Height
with back side control

ISOFOOTCANDLE CURVE - MINIMUM

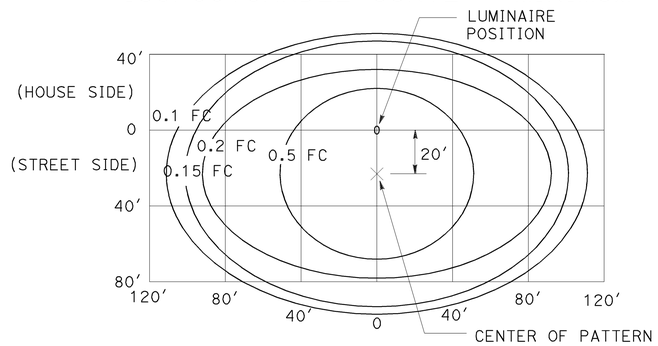

LED LUMINAIRE ROADWAY 4

300-W at 40′ Mounting Height

ISOFOOTCANDLE CURVE - MINIMUM

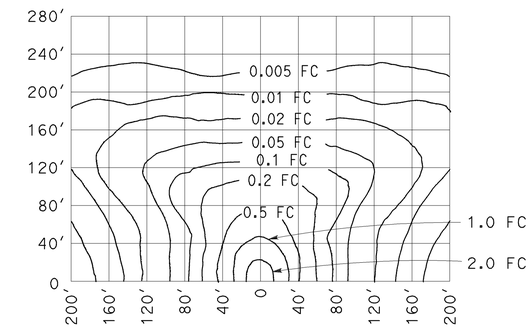

LOW PRESSURE SODIUM LUMINAIRE

40′ Mounting Height
Lamp operated at 33,000 lm
180-W low pressure sodium lamp

STATE OF CALIFORNIA
DEPARTMENT OF TRANSPORTATION

ELECTRICAL SYSTEMS (ISOFOOTCANDLE DIAGRAMS)

NO SCALE

RSP ES-10A DATED JULY 19, 2013 SUPERSEDES RSP ES-10A DATED JULY 20, 2012 THAT SUPPLEMENTS THE STANDARD PLANS BOOK DATED 2010.

REVISED STANDARD PLAN RSP ES-10A

2010 REVISED STANDARD PLAN RSP ES-10A

7-9-13

Dist	COUNTY	ROUTE	POST MILES TOTAL PROJECT	SHEET No.	TOTAL SHEETS
04	SF	101,280	1.5/1.8 R4.1/R4.4	46	76

REGISTERED CIVIL ENGINEER

July 19, 2013
PLANS APPROVAL DATE

REGISTERED PROFESSIONAL ENGINEER Gurinderpal Bhullar No. C48815 Exp. 9-30-14 CIVIL STATE OF CALIFORNIA

THE STATE OF CALIFORNIA OR ITS OFFICERS OR AGENTS SHALL NOT BE RESPONSIBLE FOR THE ACCURACY OR COMPLETENESS OF SCANNED COPIES OF THIS PLAN SHEET.

TO ACCOMPANY PLANS DATED 9-30-13

TABLE 1

TAPER LENGTH CRITERIA AND CHANNELIZING DEVICE SPACING

SPEED (S)	MINIMUM TAPER LENGTH * FOR WIDTH OF OFFSET 12 FEET (W)				MAXIMUM CHANNELIZING DEVICE SPACING		
					X	Y	Z **
	TANGENT 2L	MERGING L	SHIFTING L/2	SHOULDER L/3	TAPER	TANGENT	CONFLICT
mph	ft	ft	ft	ft	ft	ft	ft
20	160	80	40	27	20	40	10
25	250	125	63	42	25	50	12
30	360	180	90	60	30	60	15
35	490	245	123	82	35	70	17
40	640	320	160	107	40	80	20
45	1080	540	270	180	45	90	22
50	1200	600	300	200	50	100	25
55	1320	660	330	220	55	110	27
60	1440	720	360	240	60	120	30
65	1560	780	390	260	65	130	32
70	1680	840	420	280	70	140	35

* - For other offsets, use the following merging taper length formula for L:
For speed of 40 mph or less, $L = WS^2/60$
For speed of 45 mph or more, $L = WS$

Where: L = Taper length in feet
W = Width of offset in feet
S = Posted speed limit, off-peak 85th-percentile speed prior to work starting, or the anticipated operating speed in mph

** - Use for taper and tangent sections where there are no pavement markings or where there is a conflict between existing pavement markings and channelizers (CA).

TABLE 2

LONGITUDINAL BUFFER SPACE AND FLAGGER STATION SPACING

SPEED *	Min D **	DOWNGRADE Min D ***		
		-3%	-6%	-9%
mph	ft	ft	ft	ft
20	115	116	120	126
25	155	158	165	173
30	200	205	215	227
35	250	257	271	287
40	305	315	333	354
45	360	378	400	427
50	425	446	474	507
55	495	520	553	593
60	570	598	638	686
65	645	682	728	785
70	730	771	825	891

* - Speed is posted speed limit, off-peak 85th-percentile speed prior to work starting, or the anticipated operating speed in mph

** - Longitudinal buffer space or flagger station spacing

*** - Use on sustained downgrade steeper than -3 percent and longer than 1 mile.

TABLE 3

ADVANCE WARNING SIGN SPACING

ROAD TYPE	DISTANCE BETWEEN SIGNS *		
	A	B	C
	ft	ft	ft
URBAN - 25 mph OR LESS	100	100	100
URBAN - MORE THAN 25 mph TO 40 mph	250	250	250
URBAN - MORE THAN 40 mph	350	350	350
RURAL	500	500	500
EXPRESSWAY / FREEWAY	1000	1500	2640

* - The distances are approximate, are intended for guidance purposes only, and should be applied with engineering judgment. These distances should be adjusted by the Engineer for field conditions, if necessary, by increasing or decreasing the recommmended distances.

STATE OF CALIFORNIA
DEPARTMENT OF TRANSPORTATION

TRAFFIC CONTROL SYSTEM TABLES FOR LANE AND RAMP CLOSURES

NO SCALE

RSP T9 DATED JULY 19, 2013 SUPERSEDES RSP T9 DATED APRIL 19, 2013 THAT SUPPLEMENTS THE STANDARD PLANS BOOK DATED 2010.

REVISED STANDARD PLAN RSP T9

2010 REVISED STANDARD PLAN RSP T9

4-30-13

Dist	COUNTY	ROUTE	POST MILES TOTAL PROJECT	SHEET No.	TOTAL SHEETS
04	SF	101,280	1.5/1.8 R4.1/R4.4	47	76

REGISTERED CIVIL ENGINEER

April 19, 2013
PLANS APPROVAL DATE

REGISTERED PROFESSIONAL ENGINEER Gurinderpal Bhullar No. C48815 Exp. 9-30-14 CIVIL STATE OF CALIFORNIA

THE STATE OF CALIFORNIA OR ITS OFFICERS OR AGENTS SHALL NOT BE RESPONSIBLE FOR THE ACCURACY OR COMPLETENESS OF SCANNED COPIES OF THIS PLAN SHEET.

TO ACCOMPANY PLANS DATED 9-30-13

NOTES:

See Revised Standard Plan RSP T9 for tables.

Use cone spacing X for taper segment, Y for tangent segment or Z for conflict situations, as approriate, per Table 1, unless X, Y, or Z cone spacing is shown on this sheet.

Unless otherwise specified in the special provisions, all temporary warning signs shall have black legend on fluorescent orange background.

California codes are designated by (CA). Otherwise, Federal (MUTCD) codes are shown.

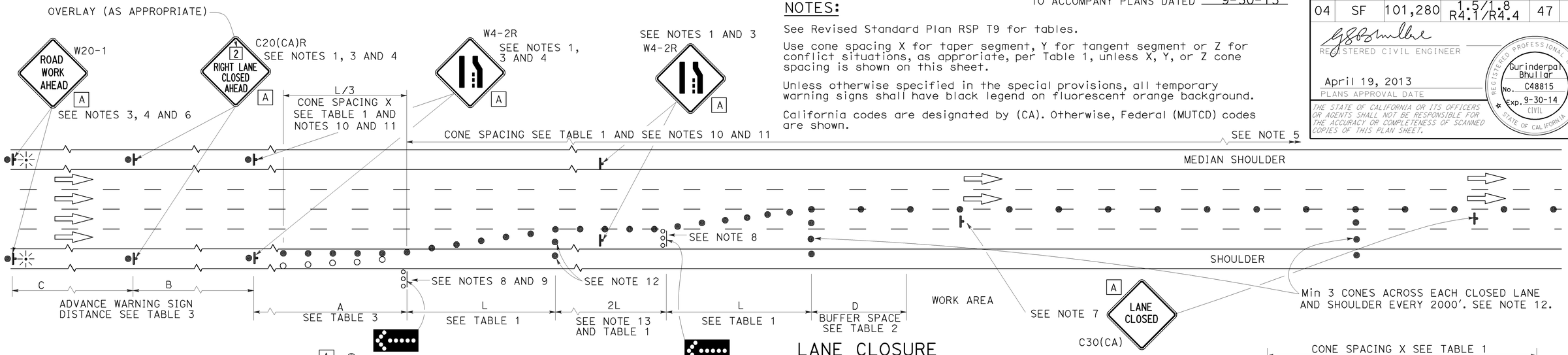

LANE CLOSURE

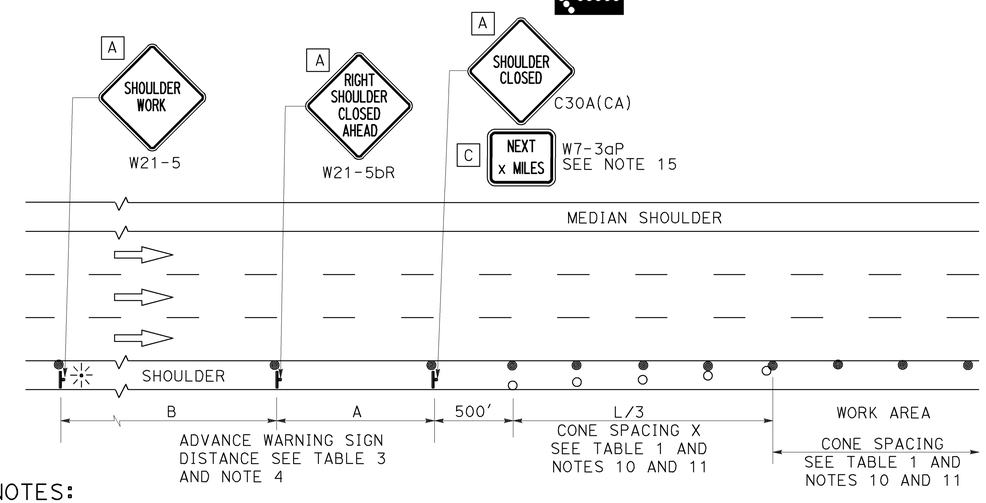

SHOULDER CLOSURE

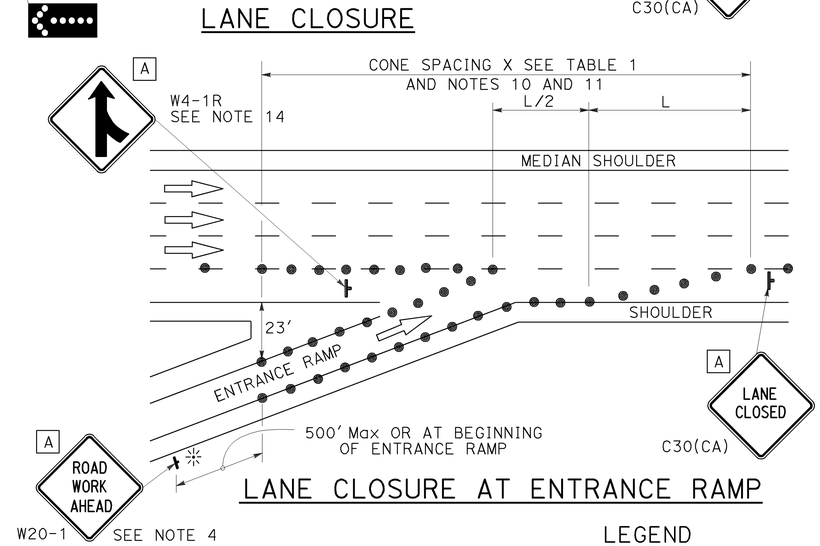

LANE CLOSURE AT ENTRANCE RAMP

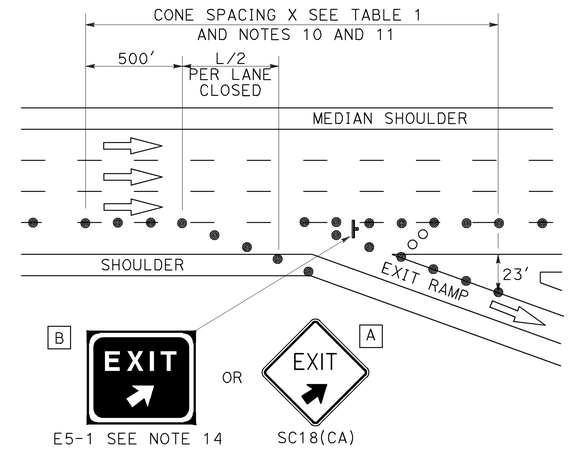

LANE CLOSURE AT EXIT RAMP

NOTES:

1. Median lane closures shall conform to the details as shown except that C20(CA)L and W4-2L signs shall be used.
2. At least one person shall be assigned to provide full time maintenance of traffic control devices for lane closures.
3. Duplicate sign installations are not required:
   a) On opposite shoulder if at least one-half of the available lanes remain open to traffic.
   b) In the median if the width of the median shoulder is less than 8' and the outside lanes are to be closed.
4. Each advance warning sign on each side of the roadway shall be equipped with at least two flags for daytime closure. Each flag shall be at least 16" x 16" in size and shall be orange or fluorescent red-orange in color. Flashing beacons shall be placed at the locations indicated for lane closure during hours of darkness.
5. A G20-2 "END ROAD WORK" sign, with minimum size of 48" x 24" as appropriate, shall be placed at the end of the lane closure unless the end of work area is obvious or ends within a larger project's limits.
6. If the W20-1 sign would follow within 2000' of a stationary W20-1 or G20-1 "ROAD WORK NEXT _____ MILES", use a C20(CA) sign for the first advance warning sign.
7. Place a C30(CA) sign every 2000' throughout length of lane closure.
8. One flashing arrow sign for each lane closed. The flashing arrow signs shall be Type I.
9. A minimum 1500' of sight distance shall be provided where possible for vehicles approaching the first flashing arrow sign. Lane closures shall not begin at top of crest vertical curve or on a horizontal curve.
10. All cones used for lane closures during the hours of darkness shall be fitted with retroreflective bands (or sleeves) as specified in the specifications.
11. Portable delineators, placed at one-half the spacing indicated for traffic cones may be used instead of cones for daytime closures only.
12. Unless otherwise specified in the special provisions, a minimum of 3 cones shall be placed transversely across each closed lane and shoulder at each location where a taper across a traffic lane ends and every 2000' as shown on the "Lane Closure" detail. Two Type II barricades may be used instead of the 3 cones. The transverse alignment of the cones or barricades on the closed shoulder may be shifted from the transverse alignment to provide access to the work.
13. Unless otherwise specified in the special provisions, the 2L tangent shown along lane lines shall be used between the L tapers required for each closed traffic lane.
14. Unless otherwise specified in the special provisions, the E5-1 or SC18(CA) and W4-1 signs shall be used as shown.
15. A W7-3aP "NEXT____ MILES" plaque must be used if theshoulder closure extends beyond the distance that can be perceived by road users.

LEGEND

- TRAFFIC CONE
- TRAFFIC CONE (OPTIONAL TAPER)
- TEMPORARY TRAFFIC CONTROL SIGN
- FLASHING ARROW SIGN (FAS)
- FAS SUPPORT OR TRAILER
- PORTABLE FLASHING BEACON

SIGN PANEL SIZE (Min)

A	48" x 48"
B	72" x 60"
C	36" x 30"

STATE OF CALIFORNIA
DEPARTMENT OF TRANSPORTATION

TRAFFIC CONTROL SYSTEM FOR LANE CLOSURE ON FREEWAYS AND EXPRESSWAYS

NO SCALE

RSP T10 DATED APRIL 19, 2013 SUPERSEDES STANDARD PLAN T10 DATED MAY 20, 2011 - PAGE 237 OF THE STANDARD PLANS BOOK DATED 2010.

REVISED STANDARD PLAN RSP T10

2010 REVISED STANDARD PLAN RSP T10

12-18-12

Dist	COUNTY	ROUTE	POST MILES TOTAL PROJECT	SHEET No.	TOTAL SHEETS
04	SF	101,280	1.5/1.8 R4.1/R4.4	48	76

REGISTERED CIVIL ENGINEER

April 19, 2013
PLANS APPROVAL DATE

REGISTERED PROFESSIONAL ENGINEER Gurinderpal Bhullar No. C48815 Exp. 9-30-14 CIVIL STATE OF CALIFORNIA

THE STATE OF CALIFORNIA OR ITS OFFICERS OR AGENTS SHALL NOT BE RESPONSIBLE FOR THE ACCURACY OR COMPLETENESS OF SCANNED COPIES OF THIS PLAN SHEET.

TO ACCOMPANY PLANS DATED 9-30-13

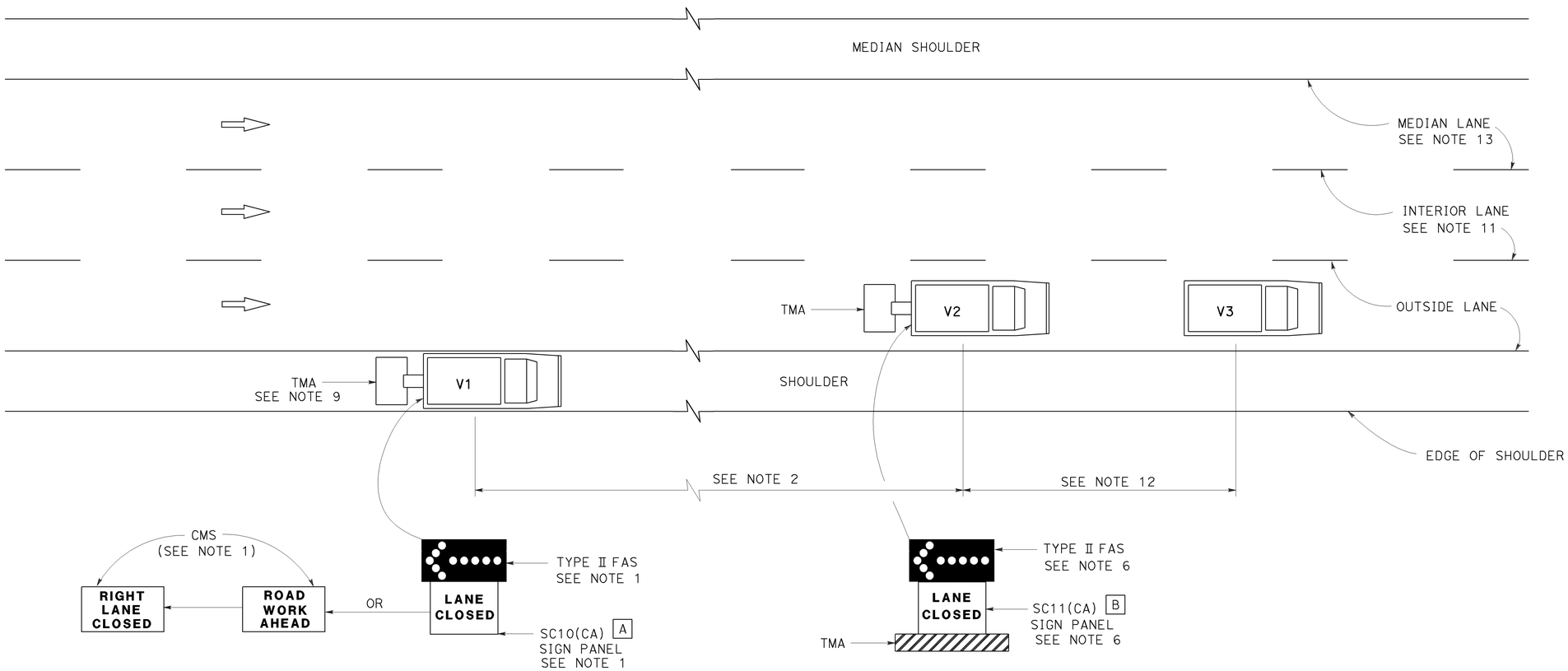

MOVING LANE CLOSURE ON MEDIAN LANE OR OUTSIDE LANE OF MULTILANE HIGHWAYS

SIGN PANEL SIZE (Min)

A 66" x 36"

B 54" x 42"

LEGEND

V1	SIGN VEHICLE
V2	SHADOW VEHICLE
V3	WORK/APPLICATION VEHICLE
	FLASHING ARROW SIGN (FAS)
CMS	CHANGEABLE MESSAGE SIGN
TMA	TRUCK-MOUNTED ATTENUATOR

NOTES:

1. Either a changeable message sign or a SC10(CA) sign panel and a Type II flashing arrow sign shall be mounted on the rear of sign vehicle V1. The changeable message sign shall be sequenced to show the "ROAD WORK AHEAD" message first, followed by the "RIGHT LANE CLOSED" message. For median lane closure, the flashing arrow symbol shall be reversed with the arrowhead on the right and the changeable message sign shall show "LEFT LANE CLOSED".
2. If traffic queues develop, sign vehicle V1 should be positioned upstream from the end of queue. Sign vehicle V1 shall be positioned where highly visible when shoulders are not available.
3. A minimum sight distance of 1500′ should be provided in advance of sign vehicle V1.
4. Sign vehicle V1 should remain at the beginning of horizontal or vertical curves until the other vehicles (V2 and V3) are far enough beyond the curve to resume the minimum sight distance of 1500′.
5. Vehicle-mounted sign panels shall have Type III or above retroreflective sheeting, black on white, or black on fluorescent orange, with 6" minimum series D letters per Caltrans sign specifications.
6. Shadow vehicle V2 shall be equipped with a truck-mounted attenuator. The sign panel shown and a Type II flashing arrow sign shall be mounted on the rear of shadow vehicle V2. For median lane closure the flashing arrow sign symbol shall be displayed with the arrowhead on the right.
7. All vehicles used for lane closures shall be equipped with two-way radios, and the vehicle operators shall maintain communication during the work or application operation.
8. All vehicles shall be equipped with flashing or rotating amber lights.
9. If sign vehicle V1 encroaches into the traffic lane due to insufficient shoulder width, sign vehicle V1 shall be equipped with a truck-mounted attenuator. Sign vehicle V1 shall stay as close to the edge of shoulder as practicable.
10. Where workers would be on foot in the work area, a stationary type lane closure (Revised Standard Plan T10, T11, etc., as applicable) shall be used instead of this plan.
11. For moving lane closure on interior lane of multilane highways, use Revised Standard Plan T16.
12. The spacing between work vehicle(s) and the shadow vehicles, and between each shadow vehicle should be minimized to deter road users from driving in between.
13. When the work/application vehicle V3 occupies the median lane, sign vehicle V1 should drive in the median shoulder and indicate left lane closed ahead.

STATE OF CALIFORNIA
DEPARTMENT OF TRANSPORTATION

TRAFFIC CONTROL SYSTEM FOR MOVING LANE CLOSURE ON MULTILANE HIGHWAYS

NO SCALE

RSP T15 DATED APRIL 19, 2013 SUPERSEDES STANDARD PLAN T15
DATED MAY 20, 2011 - PAGE 243 OF THE STANDARD PLANS BOOK DATED 2010.

REVISED STANDARD PLAN RSP T15

2010 REVISED STANDARD PLAN RSP T15

12-18-12

DIST	COUNTY	ROUTE	POST MILES TOTAL PROJECT	SHEET No.	TOTAL SHEETS
04	SF	101,280	1.5/1.8 R4.1/R4.4	49	76

REGISTERED CIVIL ENGINEER 09-20-13 DATE

9-30-13
PLANS APPROVAL DATE

REGISTERED PROFESSIONAL ENGINEER JOHN R. TJOELKER No. C77165 Exp. 12-31-14 CIVIL STATE OF CALIFORNIA

The State of California or its officers or agents shall not be responsible for the accuracy or completeness of electronic copies of this plan sheet.

LEGEND:

Indicates existing

Remove Existing Type 1 and Type 2 Barrier Railings

EXISTING TYPE 1 BARRIER RAILING

EXISTING TYPE 2 BARRIER RAILING

TYPICAL SECTION

3/4"=1'-0"

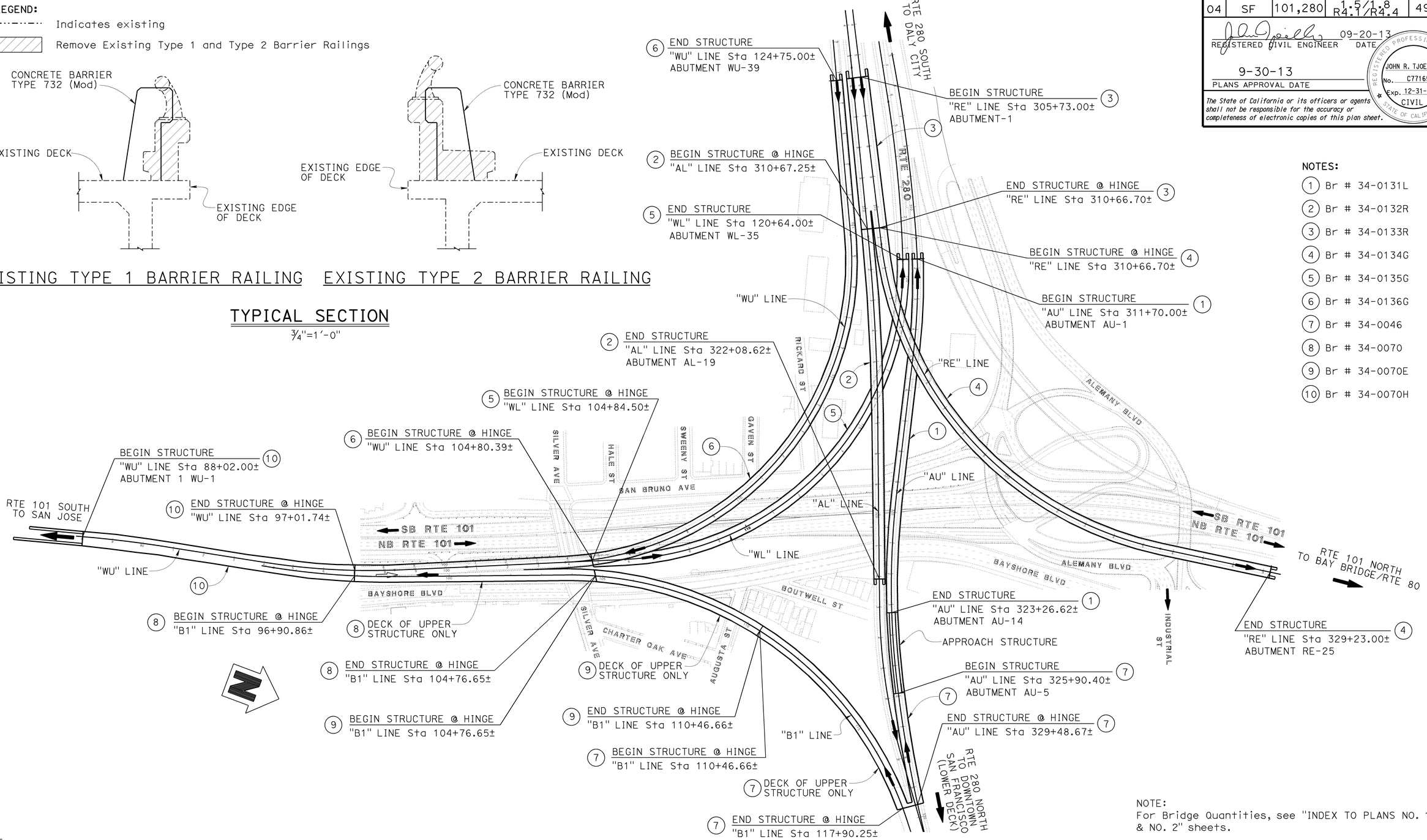

ROUTE 101/280 INTERCHANGE - PLAN

No Scale

NOTES:

1. Br # 34-0131L
2. Br # 34-0132R
3. Br # 34-0133R
4. Br # 34-0134G
5. Br # 34-0135G
6. Br # 34-0136G
7. Br # 34-0046
8. Br # 34-0070
9. Br # 34-0070E
10. Br # 34-0070H

NOTE:
For Bridge Quantities, see "INDEX TO PLANS NO. 1 & NO. 2" sheets.

NOTE:
THE CONTRACTOR SHALL VERIFY ALL CONTROLLING FIELD DIMENSIONS BEFORE ORDERING OR FABRICATING ANY MATERIAL.

ROUTE 101/280 INTERCHANGE
BARRIER REPLACEMENT
GENERAL PLAN

DESIGN	BY John Tjoelker	CHECKED Rangina Amir	LOAD & RESISTANCE FACTOR DESIGN	LIVE LOADING: HL93 W/"LOW-BOY"; PERMIT DESIGN VEHICLE
DETAILS	BY C. Cancino / A. Carreon	CHECKED J. Tjoelker / R. Amir	LAYOUT BY Carlo Cancino	CHECKED J. Tjoelker / R. Amir
QUANTITIES	BY John Tjoelker	CHECKED Rangina Amir	SPECIFICATIONS BY Mary Kopsa	PLANS AND SPECS COMPARED Mary Kopsa

BRIAN MORI
DESIGN ENGINEER

STATE OF CALIFORNIA
DEPARTMENT OF TRANSPORTATION

DIVISION OF ENGINEERING SERVICES
STRUCTURE DESIGN
DESIGN BRANCH 8

BRIDGE NO. VARIOUS
POST MILE VARIES

ORIGINAL SCALE IN INCHES FOR REDUCED PLANS 0 1 2 3

UNIT: 3593
PROJECT NUMBER & PHASE: 0400000496, 1
CONTRACT NO.: 04-1A5511

DISREGARD PRINTS BEARING EARLIER REVISION DATES

REVISION DATES 11-02-12 03-15-13

SHEET 1 OF 24

FILE => 34-0070-a-gp.dgn
USERNAME = s134003 DATE PLOTTED => 17-OCT-2013 TIME PLOTTED => 14:19

DIST	COUNTY	ROUTE	POST MILES TOTAL PROJECT	SHEET No.	TOTAL SHEETS
04	SF	101,280	1.5/1.8 R4.7/R4.4	50	76

REGISTERED CIVIL ENGINEER 09-20-13 DATE

9-30-13
PLANS APPROVAL DATE

REGISTERED PROFESSIONAL ENGINEER JOHN R. TJOELKER No. C77165 Exp. 12-31-14 CIVIL STATE OF CALIFORNIA

The State of California or its officers or agents shall not be responsible for the accuracy or completeness of electronic copies of this plan sheet.

INDEX TO PLANS

SHEET NO.	TITLE
1	GENERAL PLAN
2	INDEX TO PLANS NO. 1
3	INDEX TO PLANS NO. 2
4	STRUCTURE PLAN NO. 1
5	STRUCTURE PLAN NO. 2
6	STRUCTURE PLAN NO. 3
7	STRUCTURE PLAN NO. 4
8	STRUCTURE PLAN NO. 5
9	STRUCTURE PLAN NO. 6
10	STRUCTURE PLAN NO. 7
11	STRUCTURE PLAN NO. 8
12	STRUCTURE PLAN NO. 9
13	STRUCTURE PLAN NO. 10
14	BARRIER DETAILS NO. 1
15	BARRIER DETAILS NO. 2
16	BARRIER SLAB DETAILS NO. 1
17	BARRIER SLAB DETAILS NO. 2
18	BARRIER SLAB DETAILS NO. 3
19	BARRIER SLAB DETAILS NO. 4
20	CARBON FIBER REINFORCED OVERHANG
21	STEEL PLATE BARRIER TRANSITION
22	JOINT SEAL REPLACEMENT DETAILS
23	DECK DRAINS TABLE
24	JOINT SEAL ASSEMBLY MAXIMUM MOVEMENT RATING = 4"

STANDARD PLANS 2010 EDITION

PLAN NO.	PLAN TITLE
A10A	ABBREVIATIONS (SHEET 1 OF 2)
RSP A10B	ABBREVIATIONS (SHEET 2 OF 2)
B6-21	JOINT SEALS (MAXIMUM MOVEMENT RATING = 2")
RSP B11-55	CONCRETE BARRIER TYPE 732
B14-3	COMMUNICATION AND SPRINKLER CONTROL CONDUITS (CONDUITS LESS THAN 4")

STANDARD PLAN NO.

DETAIL NO.

GENERAL NOTES

LOAD AND RESISTANCE FACTOR DESIGN

DESIGN : AASHTO LFD BRIDGE DESIGN SPECIFICATIONS, and the Caltrans Amendments, dated April 2000.

CONCRETE : fy = 60,000 psi
f'c = 3,600 psi
n = 8

STRUCTURAL STEEL : Stainless Steel: fy = 75,000 psi ASTM A955 GRADE 75

MISCELLANEOUS METAL : Steel Grate Bars: fy = 40,000 psi

: Steel Plate Barrier Transition: fy = 36,000 psi

ANCHORS : ASTM A307 GRADE C

CARBON FIBER REINFORCED POLYMERS (CFRP) STRIPS : Minimum Tensile Strength = 285,000 psi
Tensile Modulus of Elasticity = 18,000,000 psi
Effective Cross-Sectional Area = 0.11 in^2

NOTE:
THE CONTRACTOR SHALL VERIFY ALL CONTROLLING FIELD DIMENSIONS BEFORE ORDERING OR FABRICATING ANY MATERIAL.

BRIDGE NO. 34-0131L

QUANTITIES

CLEAN BRIDGE DECK DRAINAGE SYSTEM	434	LF
SALVAGE METAL BRIDGE RAILING	2,352	LF
RECONSTRUCT DECK DRAIN GRATE	4	EA
REFINISH BRIDGE DECK	2,322	SQFT
BRIDGE REMOVAL (PORTION), LOCATION A	LUMPSUM	
STRUCTURAL CONCRETE, BRIDGE	3	CY
STRUCTURAL CONCRETE, BARRIER SLAB	23	CY
PAVING NOTCH EXTENSION	10	CF
CLEAN EXPANSION JOINT (MODIFIED)	68	LF
JOINT SEAL (MR 1")	68	LF
JOINT SEAL (MR 1½")	34	LF
JOINT SEAL ASSEMBLY (MR 2½")	34	LF
JOINT SEAL (MR 2")	34	LF
BAR REINFORCING STEEL (BRIDGE)	830	LB
CONCRETE BARRIER (TYPE 732 MODIFIED)	2,352	LF

BRIDGE NO. 34-0132R

QUANTITIES

CLEAN BRIDGE DECK DRAINAGE SYSTEM	643	LF
SALVAGE METAL BRIDGE RAILING	2,282	LF
RECONSTRUCT DECK DRAIN GRATE	4	EA
REFINISH BRIDGE DECK	2,292	SQFT
CORE CONCRETE (1⅛")	12	LF
BRIDGE REMOVAL (PORTION), LOCATION B	LUMPSUM	
STRUCTURAL CONCRETE, BRIDGE	2	CY
STRUCTURAL CONCRETE, BARRIER SLAB	23	CY
CLEAN EXPANSION JOINT (MODIFIED)	136	LF
JOINT SEAL (MR 1")	102	LF
JOINT SEAL (MR 1½")	34	LF
JOINT SEAL ASSEMBLY (MR 3")	34	LF
BAR REINFORCING STEEL (BRIDGE)	409	LB
MISCELLANEOUS METAL (BRIDGE)	796	LB
CONCRETE BARRIER (TRANSITION)	15	LF
CONCRETE BARRIER (TYPE 732 MODIFIED)	2,281	LF

BRIDGE NO. 34-0133R

QUANTITIES

CLEAN BRIDGE DECK DRAINAGE SYSTEM	380	LF
SALVAGE METAL BRIDGE RAILING	1,036	LF
RECONSTRUCT DECK DRAIN GRATE	8	EA
REFINISH BRIDGE DECK	881	SQFT
BRIDGE REMOVAL (PORTION), LOCATION C	LUMPSUM	
STRUCTURAL CONCRETE, BRIDGE	4	CY
STRUCTURAL CONCRETE, BARRIER SLAB	28	CY
PAVING NOTCH EXTENSION	10	CF
CLEAN EXPANSION JOINT (MODIFIED)	67	LF
JOINT SEAL (MR 1")	66	LF
JOINT SEAL (MR 1½")	71	LF
JOINT SEAL (MR 2")	79	LF
BAR REINFORCING STEEL (BRIDGE)	900	LB
CONCRETE BARRIER (TYPE 732 MODIFIED)	1,036	LF

BRIDGE NO. 34-0134G

QUANTITIES

RAPID SETTING CONCRETE (PATCH)	7	CF
CLEAN BRIDGE DECK DRAINAGE SYSTEM	717	LF
SALVAGE METAL BRIDGE RAILING	3,711	LF
RECONSTRUCT DECK DRAIN GRATE	1	EA
REMOVE UNSOUND CONCRETE	7	CF
REFINISH BRIDGE DECK	3,694	SQFT
CARBON FIBER REINFORCED POLYMER STRIP	464	LF
CORE CONCRETE (1⅛")	12	LF
BRIDGE REMOVAL (PORTION), LOCATION D	LUMPSUM	
STRUCTURAL CONCRETE, BRIDGE	2	CY
STRUCTURAL CONCRETE, BARRIER SLAB	23	CY
PAVING NOTCH EXTENSION	10	CF
CLEAN EXPANSION JOINT (MODIFIED)	204	LF
JOINT SEAL (MR 1")	136	LF
JOINT SEAL (MR 1½")	34	LF
JOINT SEAL (MR 2")	102	LF
BAR REINFORCING STEEL (BRIDGE)	408	LB
MISCELLANEOUS METAL (BRIDGE)	796	LB
CONCRETE BARRIER (TYPE 732 MODIFIED)	3,711	LF

BRIDGE NO. 34-0135G

QUANTITIES

RAPID SETTING CONCRETE (PATCH)	1	CF
CLEAN BRIDGE DECK DRAINAGE SYSTEM	391	LF
SALVAGE METAL BRIDGE RAILING	3,148	LF
REMOVE UNSOUND CONCRETE	1	CF
REFINISH BRIDGE DECK	3,094	SQFT
BRIDGE REMOVAL (PORTION), LOCATION E	LUMPSUM	
STRUCTURAL CONCRETE, BRIDGE	4	CY
STRUCTURAL CONCRETE, BARRIER SLAB	23	CY
PAVING NOTCH EXTENSION	10	CF
CLEAN EXPANSION JOINT (MODIFIED)	68	LF
JOINT SEAL ASSEMBLY (MR 2½")	34	LF
JOINT SEAL ASSEMBLY (MR 3")	34	LF
JOINT SEAL (MR 2")	102	LF
BAR REINFORCING STEEL (BRIDGE)	1,021	LB
CONCRETE BARRIER (TRANSITION)	27	LF
CONCRETE BARRIER (TYPE 732 MODIFIED)	3,147	LF

NOTE:
For Bridge Quantities not shown, see "INDEX TO PLANS NO. 2" sheet.

	BY	CHECKED
DESIGN	John Tjoelker	Rangina Amir
DETAILS	Carlo Cancino	J. Tjoelker / R. Amir
QUANTITIES	John Tjoelker	Rangina Amir

STATE OF CALIFORNIA
DEPARTMENT OF TRANSPORTATION

DIVISION OF ENGINEERING SERVICES
STRUCTURE DESIGN
DESIGN BRANCH 8

BRIDGE NO. VARIOUS
POST MILE VARIES

ROUTE 101/280 INTERCHANGE
BARRIER REPLACEMENT
INDEX TO PLANS NO. 1

STRUCTURES DESIGN DETAIL SHEET (ENGLISH) (REV. 09-01-10)

ORIGINAL SCALE IN INCHES FOR REDUCED PLANS 0 1 2 3

UNIT: 3593
PROJECT NUMBER & PHASE: 0400000496, 1 CONTRACT NO.: 04-1A5511

DISREGARD PRINTS BEARING EARLIER REVISION DATES

REVISION DATES: 11-15-12 03-18-13 03-15-13

SHEET 2 OF 24

FILE => 34-0070-b-itp1.dgn

USERNAME => s134063 DATE PLOTTED => 17-OCT-2013 TIME PLOTTED => 14:21

DIST	COUNTY	ROUTE	POST MILES TOTAL PROJECT	SHEET No.	TOTAL SHEETS
04	SF	101,280	1.5/1.8 R4.1/R4.4	51	76

REGISTERED CIVIL ENGINEER 09-20-13 DATE

9-30-13
PLANS APPROVAL DATE

REGISTERED PROFESSIONAL ENGINEER
JOHN R. TJOELKER
No. C77165
Exp. 12-31-14
CIVIL
STATE OF CALIFORNIA

The State of California or its officers or agents shall not be responsible for the accuracy or completeness of electronic copies of this plan sheet.

BRIDGE NO. 34-0136G

QUANTITIES

CLEAN BRIDGE DECK DRAINAGE SYSTEM	798	LF
SALVAGE METAL BRIDGE RAILING	4,027	LF
RECONSTRUCT DECK DRAIN GRATE	10	EA
REFINISH BRIDGE DECK	3,964	SQFT
BRIDGE REMOVAL (PORTION), LOCATION F	LUMPSUM	
STRUCTURAL CONCRETE, BARRIER SLAB	23	CY
PAVING NOTCH EXTENSION	10	CF
CONCRETE BARRIER (TYPE 732 MODIFIED)	4,027	LF

BRIDGE NO. 34-0046

QUANTITIES

CLEAN BRIDGE DECK DRAINAGE SYSTEM	383	LF
SALVAGE METAL BRIDGE RAILING	2,620	LF
RECONSTRUCT DECK DRAIN GRATE	2	EA
REFINISH BRIDGE DECK	2,416	SQFT
BRIDGE REMOVAL (PORTION), LOCATION G	LUMPSUM	
STRUCTURAL CONCRETE, BARRIER SLAB	118	CY
CLEAN EXPANSION JOINT (MODIFIED)	282	LF
JOINT SEAL (MR 1")	136	LF
JOINT SEAL (MR 1½")	112	LF
JOINT SEAL (MR 2")	34	LF
BAR REINFORCING STEEL (BRIDGE)	621	LB
CONCRETE BARRIER (TRANSITION CFRP)	45	LF
CONCRETE BARRIER (TYPE 732 MODIFIED)	2,315	LF
CONCRETE BARRIER (TYPE 732B)	261	LF

BRIDGE NO. 34-0070

QUANTITIES

CLEAN BRIDGE DECK DRAINAGE SYSTEM	818	LF
SALVAGE METAL BRIDGE RAILING	1,906	LF
RECONSTRUCT DECK DRAIN GRATE	7	EA
REFINISH BRIDGE DECK	1,867	SQFT
BRIDGE REMOVAL (PORTION), LOCATION H	LUMPSUM	
CONCRETE BARRIER (TRANSITION)	15	LF
CONCRETE BARRIER (TYPE 732 MODIFIED)	1,890	LF

BRIDGE NO. 34-0070E

QUANTITIES

CLEAN BRIDGE DECK DRAINAGE SYSTEM	235	LF
SALVAGE METAL BRIDGE RAILING	1,140	LF
REFINISH BRIDGE DECK	1,118	SQFT
BRIDGE REMOVAL (PORTION), LOCATION I	LUMPSUM	
CLEAN EXPANSION JOINT (MODIFIED)	136	LF
JOINT SEAL (MR 1")	68	LF
JOINT SEAL (MR 1½")	34	LF
JOINT SEAL (MR 2")	34	LF
CONCRETE BARRIER (TYPE 732 MODIFIED)	1,140	LF

BRIDGE NO. 34-0070H

QUANTITIES

CLEAN BRIDGE DECK DRAINAGE SYSTEM	330	LF
SALVAGE METAL BRIDGE RAILING	2,215	LF
RECONSTRUCT DECK DRAIN GRATE	3	EA
REFINISH BRIDGE DECK	2,328	SQFT
BRIDGE REMOVAL (PORTION), LOCATION J	LUMPSUM	
STRUCTURAL CONCRETE, BARRIER SLAB	189	CY
PAVING NOTCH EXTENSION	10	CF
CONCRETE BARRIER (TYPE 732 MODIFIED)	2,215	LF

NOTE:
For Bridge Quantities not shown, see "INDEX TO PLANS NO. 1" sheet.

NOTE:
THE CONTRACTOR SHALL VERIFY ALL CONTROLLING FIELD DIMENSIONS BEFORE ORDERING OR FABRICATING ANY MATERIAL.

ROUTE 101/280 INTERCHANGE
BARRIER REPLACEMENT
INDEX TO PLANS NO. 2

	BY	CHECKED
DESIGN	John Tjoelker	Rangina Amir
DETAILS	Carlo Cancino	J. Tjoelker / R. Amir
QUANTITIES	John Tjoelker	Rangina Amir

STATE OF CALIFORNIA
DEPARTMENT OF TRANSPORTATION

DIVISION OF ENGINEERING SERVICES
STRUCTURE DESIGN
DESIGN BRANCH 8

BRIDGE NO.: VARIOUS
POST MILE: VARIES

STRUCTURES DESIGN DETAIL SHEET (ENGLISH) (REV. 09-01-10)

ORIGINAL SCALE IN INCHES FOR REDUCED PLANS 0 1 2 3

UNIT: 3593
PROJECT NUMBER & PHASE: 0400000496, 1
CONTRACT NO.: 04-1A5511

DISREGARD PRINTS BEARING EARLIER REVISION DATES

REVISION DATES: 03-18-13

SHEET 3 OF 24

FILE => 34-0070-b-itp2.dgn

USERNAME => s134603 DATE PLOTTED => 17-OCT-2013 TIME PLOTTED => 14:21

DIST	COUNTY	ROUTE	POST MILES TOTAL PROJECT	SHEET No.	TOTAL SHEETS
04	SF	101,280	1.5/1.8 R4.1/R4.4	52	76

REGISTERED CIVIL ENGINEER 09-20-13 DATE

9-30-13
PLANS APPROVAL DATE

REGISTERED PROFESSIONAL ENGINEER JOHN R. TJOELKER No. C77165 Exp. 12-31-14 CIVIL STATE OF CALIFORNIA

The State of California or its officers or agents shall not be responsible for the accuracy or completeness of electronic copies of this plan sheet.

JOINT SEAL TABLE

JOINT SEAL LOCATION		MINIMUM "MR" (inches)	APPROXIMATE DEPTH TO CLEAN (inches)	APPROXIMATE JOINT LENGTH (feet) △	SEAL TYPE	WATER STOP EXIST (**)
ABUT AU-1	BW	1	30	34	B	YES
HINGE @ SPAN AU-4	H	2	30	34	B*	YES
HINGE @ SPAN AU-8	H	2½	30	34	JSA	YES
HINGE @ SPAN AU-11	H	1½	30	34	B*	YES
ABUT AU-14	BW	1	30	34	B	YES

JOINT SEAL TABLE LEGEND: (Applies to all Structure Plan sheets)

** - Indicates as shown in As-built
B* - Indicates reconstruction of joint before Type B Joint Seal placement
BW - Indicates Abutment Backwall joint
H - Indicates Hinge Joint
JSA - Indicates Joint Seal Assembly
B - Indicates Joint Seal Type B
△ - Clean expansion joint (Mod) ft.

LOCATION DESCRIPTION AND TYPE OF WORK LEGEND:

(JS) Indicates location of remove existing joint seal and placement of new joint seal.

(JSR) Indicates location of sawcut ½" and remove existing joint seal, concrete, reconstruct concrete expansion joint and place new joint seal.

(JSA) Indicates location of sawcut ½" and remove existing joint seal, concrete, and reconstruct with new joint seal assembly.

(B#) Indicates location of paint bridge No. on inside face of concrete barrier Type 732 (Mod) (i.e. "BR. NO. 34-0131L").

(AB) Indicates location of paint bridge abut No. or bent No. (all bent and abut. Nos. to be painted on inside face of concrete barrier Type 732 (Mod)) (i.e. "AU-14" for "ABUT AU-14").

(T1) Indicates location of sawcut full width and remove existing Type 1 barrier railing, refinish bridge deck, drill and bond dowels, place concrete barrier Type 732 (Mod).

(T2) Indicates location of sawcut full width and remove existing Type 2 barrier railing, refinish bridge deck, drill and bond dowels, place concrete barrier Type 732 (Mod).

(BS) Indicates location of new barrier slab and paving notch extension. Remove asphalt concrete, excavate roadway, sawcut wingwalls and pilecaps for removal of Type 1 and Type 2 barrier railings, cut existing reinforcement bars 1" below sawcut surface, refinish concrete surface, place elastomeric bearing pads, place barrier slab, place concrete barrier Type 732 (Mod). See "BARRIER SLAB DETAILS NO. 1 & NO. 2" sheets.

▬ Indicates approx location to clean existing drainage system in deck near the bent. For deck drain length, see "DECK DRAINS TABLE" sheet.

▭ Indicates approx location of existing drainage system in deck near the bent to reconstruct deck drain grate. Remove grate bars, grind smooth, weld riser bars, remove galvanizing and regalvanize. See "BARRIER DETAILS NO. 1 AND NO. 2" sheets.

LEGEND:

-·-·-·- Indicates existing
——— Indicates new construction
(H) Indicates approx. location of existing hinge

NOTES:

1. Bridge Structure Type - Reinforced Concrete Box Girder.
2. Bent location is as per as-built alignment, stationing and dimensions (±). Contractor shall verify actual location.
3. Gap in barrier is to match joint gaps in bridge deck.
4. For concrete barriers details not shown, see "BARRIER DETAILS NO. 1 and NO. 2" sheets.
5. For (JSA) and (JSR) see "JOINT SEAL REPLACEMENT DETAILS" sheet.
6. For Utilities, see "ROAD PLANS". For electrical pull box use top mounted in barrier.
7. For concrete removal above the bolster, see "BARRIER SLAB DETAILS NO. 3" sheet.

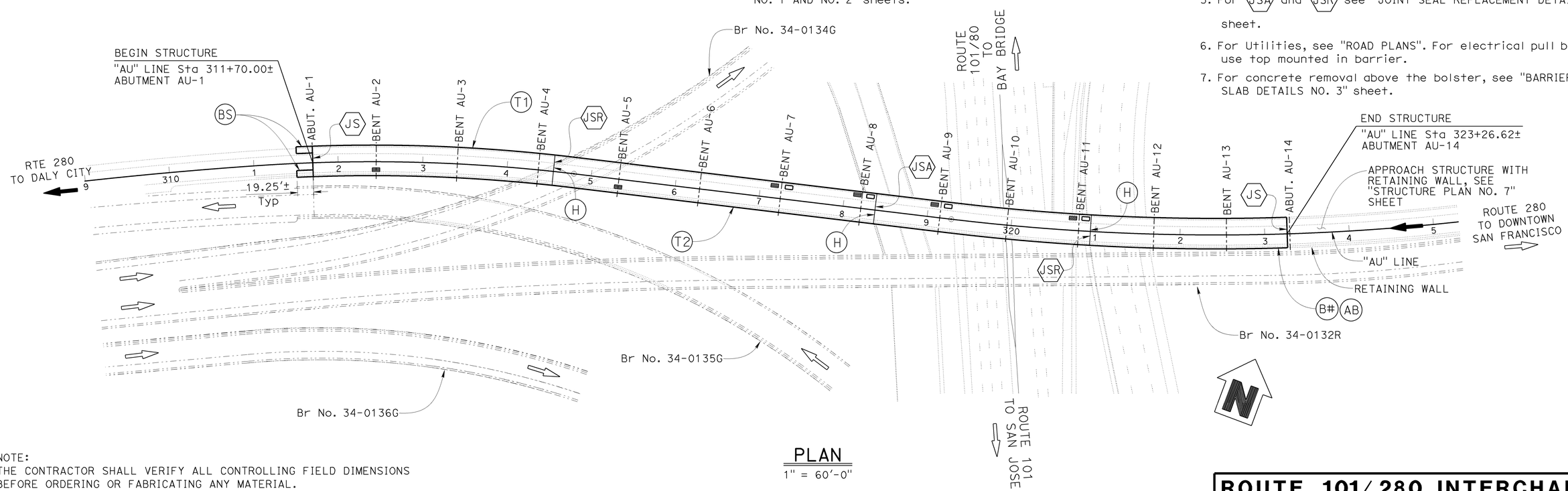

PLAN
1" = 60'-0"

NOTE:
THE CONTRACTOR SHALL VERIFY ALL CONTROLLING FIELD DIMENSIONS BEFORE ORDERING OR FABRICATING ANY MATERIAL.

	BY	CHECKED
DESIGN	John Tjoelker	Rangina Amir
DETAILS	Carlo Cancino	J. Tjoelker / R. Amir
QUANTITIES	John Tjoelker	Rangina Amir

STATE OF CALIFORNIA
DEPARTMENT OF TRANSPORTATION

DIVISION OF ENGINEERING SERVICES
STRUCTURE DESIGN
DESIGN BRANCH 8

BRIDGE NO. 34-0131L
POST MILE R4.18

ROUTE 101/280 INTERCHANGE
BARRIER REPLACEMENT
STRUCTURE PLAN NO. 1

STRUCTURES DESIGN DETAIL SHEET (ENGLISH) (REV. 09-01-10)

ORIGINAL SCALE IN INCHES FOR REDUCED PLANS 0 1 2 3

UNIT: 3593
PROJECT NUMBER & PHASE: 0400000496, 1
CONTRACT NO.: 04-1A5511

DISREGARD PRINTS BEARING EARLIER REVISION DATES

REVISION DATES 11-05-13 03-18-13 03-25-13

SHEET 4 OF 24

FILE => 34-0070-d-splan01.dgn

USERNAME => s133403 DATE PLOTTED => 17-OCT-2013 TIME PLOTTED => 14:22

DIST	COUNTY	ROUTE	POST MILES TOTAL PROJECT	SHEET No.	TOTAL SHEETS
04	SF	101,280	1.5/1.8 R4.1/R4.4	53	76

REGISTERED CIVIL ENGINEER 09-20-13 DATE

9-30-13
PLANS APPROVAL DATE

REGISTERED PROFESSIONAL ENGINEER JOHN R. TJOELKER No. C77165 Exp. 12-31-14 CIVIL STATE OF CALIFORNIA

The State of California or its officers or agents shall not be responsible for the accuracy or completeness of electronic copies of this plan sheet.

LOCATION DESCRIPTION AND TYPE OF WORK LEGEND:

JS — Indicates location of remove existing joint seal and placement of new joint seal.

JSA — Indicates location of sawcut ½" and remove existing joint seal, remove concrete, and reconstruct with new joint seal assembly.

B# — Indicates location of paint bridge No. on inside face of concrete barrier Type 732 (Mod) (i.e. "BR. NO. 34-0132R").

AB — Indicates location of paint bridge abut No. or bent No. (all bent and abut. Nos. to be painted on inside face of concrete barrier Type 732 (Mod)) (i.e. "AL-19" for "ABUT AL-19").

T1 — Indicates location of sawcut full width and remove existing Type 1 barrier railing, refinish bridge deck, drill and bond dowels, place concrete barrier Type 732 (Mod).

T2 — Indicates location of sawcut full width and remove existing Type 2 barrier railing, refinish bridge deck, drill and bond dowels, place concrete barrier Type 732 (Mod).

BS — Indicates location of new barrier slab. Remove asphalt concrete, excavate roadway, sawcut wingwalls and pilecaps for removal of Type 1 and Type 2 barrier railings , cut existing reinforcement bars 1" below sawcut surface, refinish concrete surface, place elastomeric bearing pads, place barrier slab, place concrete barrier Type 732 M(od). See "BARRIER SLAB DETAILS NO. 1 & NO. 2" sheets.

Indicates approx location to clean existing drainage system in deck near the bent. For deck drain length, see "DECK DRAINS TABLE" sheet.

Indicates approx location of existing drainage system in deck near the bent to reconstruct deck drain grate. Remove grate bars, grind smooth, weld riser bars, remove galvanizing and regalvanize. See "BARRIER DETAILS NO. 1 AND NO. 2" sheets.

ECW — Indicates location of existing concrete wall to have steel plate barrier transition. Sawcut ½" edge and chip for recess, core holes and bolt in place fabricated barrier transition. See "STEEL PLATE BARRIER TRANSITION" sheet.

✳ For Concrete Barrier (Transition), see "CONCRETE BARRIER (TRANSITION) CONCRETE BARRIER TYPE 732 (Mod) INTO EXISTING TYPE 2 BARRIER RAILING" on "DECK DRAINS TABLE" sheet. Place ½" polystyrene at end of barrier transition.

JOINT SEAL TABLE

JOINT SEAL LOCATION		MINIMUM "MR" (inches)	APPROXIMATE DEPTH TO CLEAN (inches)	APPROXIMATE JOINT LENGTH (feet) △	SEAL TYPE	WATER STOP EXIST (✳✳)
HINGE @ SPAN AL-9	H	3	30	34	JSA	YES
HINGE @ SPAN AL-12	H	1	30	34	B	YES
HINGE @ SPAN AL-14	H	1½	30	34	B	YES
HINGE @ SPAN AL-17	H	1	30	34	B	YES
ABUT AL-19	BW	1	60	34	B	YES

NOTES:

1. Bridge Structure Type - Reinforced Concrete Box Girder.
2. Bent location is as per as-built alignment, stationing and dimensions (±). Contractor shall verify actual location.
3. Gap in barrier is to match joint gaps in bridge deck.
4. For concrete barriers details not shown, see "BARRIER DETAILS NO. 1 and NO. 2" sheets.
5. For JSA see "JOINT SEAL REPLACEMENT DETAILS" sheet.
6. Between Bent 16 to Bent 19 - remove Type 25 barrier installed on Type 2 barrier face and replace with concrete barrier Type 732 (Mod). Removal to be similar to Type 2 with through sawcut.
7. For Utilities, see "ROAD PLANS". For electrical pull box use top mounted in barrier.
8. For concrete removal above the bolster, see "BARRIER SLAB DETAILS NO. 3" sheet.

LEGEND:

Indicates existing

Indicates new construction

(H) Indicates approx. location of existing hinge

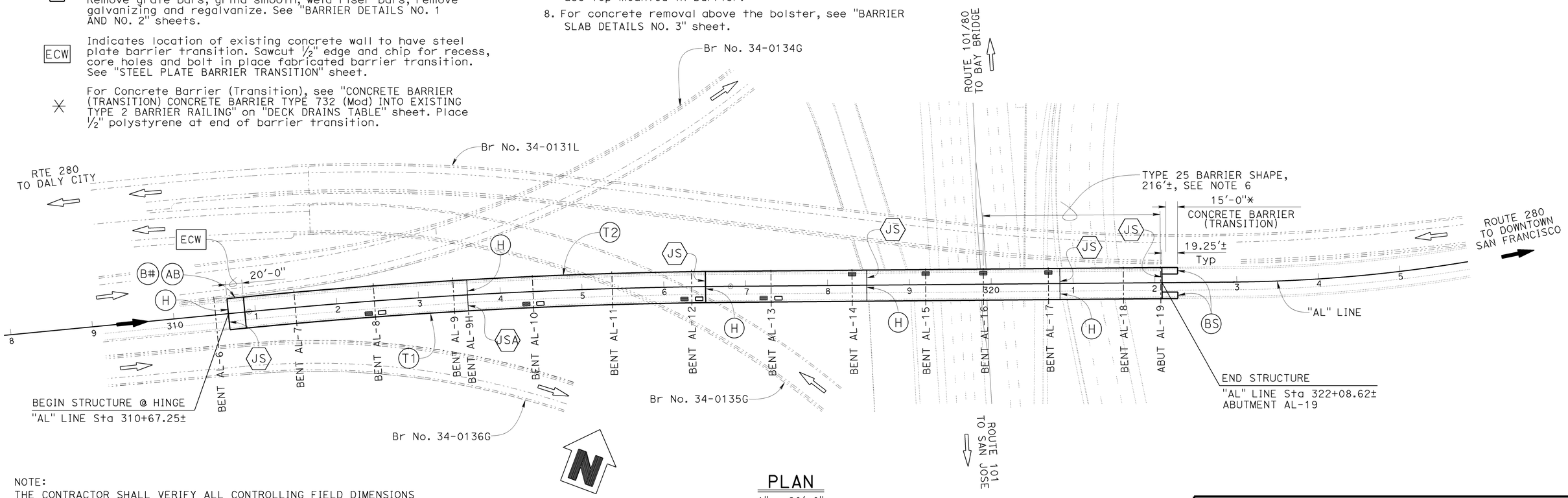

PLAN
1" = 60'-0"

NOTE:
THE CONTRACTOR SHALL VERIFY ALL CONTROLLING FIELD DIMENSIONS BEFORE ORDERING OR FABRICATING ANY MATERIAL.

	BY	CHECKED
DESIGN	John Tjoelker	Rangina Amir
DETAILS	Carlo Cancino	J. Tjoelker / R. Amir
QUANTITIES	John Tjoelker	Rangina Amir

STATE OF CALIFORNIA
DEPARTMENT OF TRANSPORTATION

DIVISION OF ENGINEERING SERVICES
STRUCTURE DESIGN
DESIGN BRANCH 8

BRIDGE NO. 34-0132R
POST MILE R4.16

ROUTE 101/280 INTERCHANGE
BARRIER REPLACEMENT
STRUCTURE PLAN NO. 2

STRUCTURES DESIGN DETAIL SHEET (ENGLISH) (REV. 09-01-10)

ORIGINAL SCALE IN INCHES FOR REDUCED PLANS 0 1 2 3

UNIT: 3593
PROJECT NUMBER & PHASE: 0400000496, 1
CONTRACT NO.: 04-1A5511

DISREGARD PRINTS BEARING EARLIER REVISION DATES

REVISION DATES: ~~11-05-12~~ 03-18-13 ~~03-15-13~~

SHEET 5 OF 24

FILE => 34-0070-d-splan02.dgn

USERNAME => s134003 DATE PLOTTED => 17-OCT-2013 TIME PLOTTED => 14:23

DIST	COUNTY	ROUTE	POST MILES TOTAL PROJECT	SHEET No.	TOTAL SHEETS
04	SF	101,280	1.5/1.8 R4.1/R4.4	54	76

REGISTERED CIVIL ENGINEER 09-20-13 DATE

9-30-13
PLANS APPROVAL DATE

REGISTERED PROFESSIONAL ENGINEER JOHN R. TJOELKER No. C77165 Exp. 12-31-14 CIVIL STATE OF CALIFORNIA

The State of California or its officers or agents shall not be responsible for the accuracy or completeness of electronic copies of this plan sheet.

LOCATION DESCRIPTION AND TYPE OF WORK LEGEND:

JS — Indicates location of remove existing joint seal and placement of new joint seal.

JSR — Indicates location of sawcut ½" and remove existing joint seal, remove concrete, reconstruct concrete expansion joint and place new joint seal.

B# — Indicates location of paint bridge No. on inside face of concrete barrier Type 732 (Mod) (i.e. "BR. NO. 34-0133R").

AB — Indicates location of paint bridge abut No. or bent No. (all bent and abut. Nos. to be painted on inside face of concrete barrier Type 732 (Mod)) (i.e. "BENT RE-1" for "ABUTMENT-1").

T1 — Indicates location of sawcut full width and remove existing Type 1 barrier railing, refinish bridge deck, drill and bond dowels, place concrete barrier Type 732 (Mod).

BS — Indicates location of new barrier slab and paving notch extension. Remove asphalt concrete, excavate roadway, sawcut wingwalls and pilecaps for removal of Type 1 and Type 2 barrier railings, cut existing reinforcement bars 1" below sawcut surface, refinish concrete surface, drill and bond dowels and place concrete paving notch, place elastomeric bearing pads, place barrier slab, place concrete barrier Type 732 (Mod). See "BARRIER SLAB DETAILS NO. 1 & NO. 2" sheets.

Indicates approx location to clean existing drainage system in deck near the bent. For deck drain length, see "DECK DRAINS TABLE" sheet.

Indicates approx location of existing drainage system in deck near the bent to reconstruct deck drain grate. Remove grate bars, grind smooth, weld riser bars, remove galvanizing and regalvanize. See "BARRIER DETAILS NO. 1 AND NO. 2" sheets.

JOINT SEAL TABLE

JOINT SEAL LOCATION		MINIMUM "MR" (inches)	APPROXIMATE DEPTH TO CLEAN (inches)	APPROXIMATE JOINT LENGTH (feet) △	SEAL TYPE	WATER STOP EXIST (✱✱)
ABUT RE-1	BW	1	30	66	B	YES
HINGE @ SPAN RE-3	H	1½	30	71	B✱	YES
HINGE @ SPAN RE-6	H	2	30	79	B✱	YES

NOTES:

1. Bridge Structure Type - Reinforced Concrete Box Girder.
2. Bent location is as per as-built alignment, stationing and dimensions (±). Contractor shall verify actual location.
3. Gap in barrier is to match joint gaps in bridge deck.
4. For lighting mounted on barriers, see "ROAD PLANS".
5. For concrete barriers details not shown, see "BARRIER DETAILS NO. 1 and NO. 2" sheets.
6. For JSR see "JOINT SEAL REPLACEMENT DETAILS" sheet.
7. For Utilities, see "ROAD PLANS". For electrical pull box use top mounted in barrier.

LEGEND:

Indicates existing

Indicates new construction

H — Indicates approx. location of existing hinge

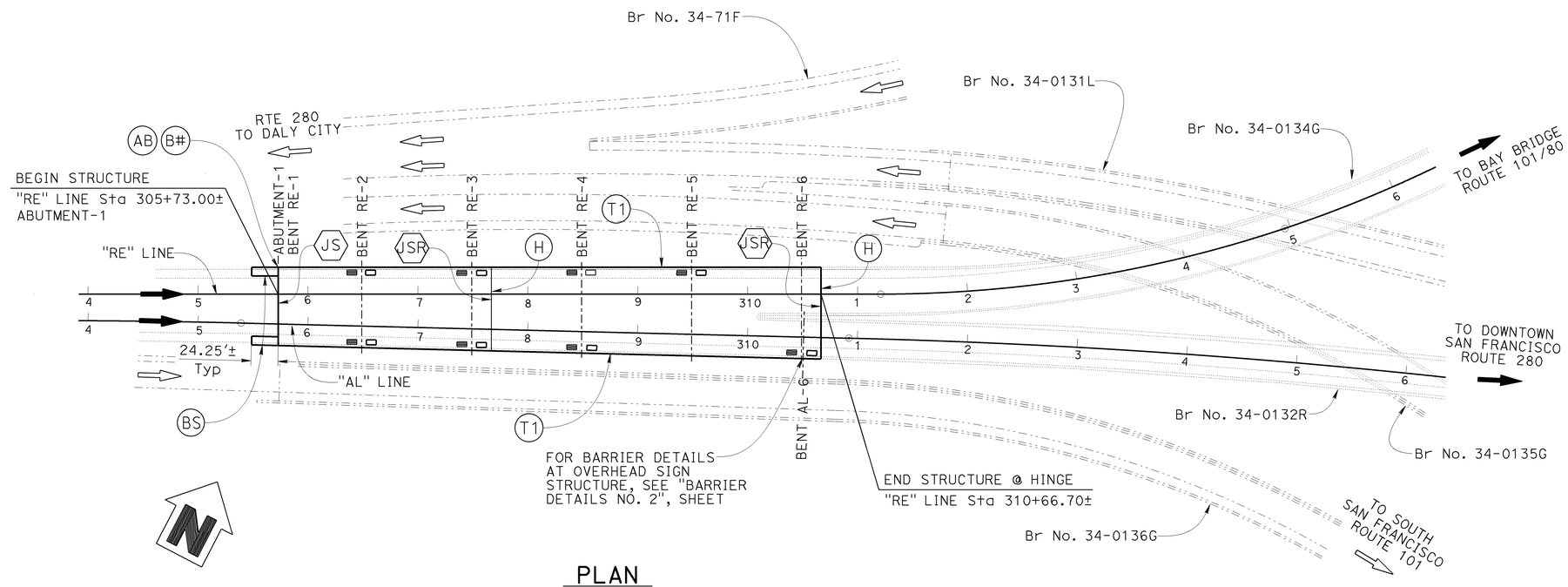

PLAN
1" = 60'-0"

NOTE:
THE CONTRACTOR SHALL VERIFY ALL CONTROLLING FIELD DIMENSIONS BEFORE ORDERING OR FABRICATING ANY MATERIAL.

	BY	CHECKED
DESIGN	John Tjoelker	Rangina Amir
DETAILS	Carlo Cancino	J. Tjoelker / R. Amir
QUANTITIES	John Tjoelker	Rangina Amir

STATE OF CALIFORNIA
DEPARTMENT OF TRANSPORTATION

DIVISION OF ENGINEERING SERVICES
STRUCTURE DESIGN
DESIGN BRANCH 8

BRIDGE NO. 34-0133R
POST MILE R4.07

ROUTE 101/280 INTERCHANGE
BARRIER REPLACEMENT
STRUCTURE PLAN NO. 3

STRUCTURES DESIGN DETAIL SHEET (ENGLISH) (REV. 09-01-10)

ORIGINAL SCALE IN INCHES FOR REDUCED PLANS 0 1 2 3

UNIT: 3593
PROJECT NUMBER & PHASE: 0400000496, 1
CONTRACT NO.: 04-1A5511

DISREGARD PRINTS BEARING EARLIER REVISION DATES

REVISION DATES: ~~11-06-12~~ 03-18-13 ~~03-15-13~~

SHEET 6 OF 24

FILE => 34-0070-d-splan03.dgn

USERNAME => s134003 DATE PLOTTED => 17-OCT-2013 TIME PLOTTED => 14:24

DIST	COUNTY	ROUTE	POST MILES TOTAL PROJECT	SHEET No.	TOTAL SHEETS
04	SF	101,280	1.5/1.8 R4.1/R4.4	55	76

REGISTERED CIVIL ENGINEER 09-20-13 DATE

9-30-13
PLANS APPROVAL DATE

REGISTERED PROFESSIONAL ENGINEER JOHN R. TJOELKER No. C77165 Exp. 12-31-14 CIVIL STATE OF CALIFORNIA

The State of California or its officers or agents shall not be responsible for the accuracy or completeness of electronic copies of this plan sheet.

JOINT SEAL TABLE

JOINT SEAL LOCATION		MINIMUM "MR" (inches)	APPROXIMATE DEPTH TO CLEAN (inches)	APPROXIMATE JOINT LENGTH (feet) △	SEAL TYPE	WATER STOP EXIST (✱✱)
HINGE @ SPAN RE-8	H	1	30	34	B	YES
HINGE @ SPAN RE-11	H	2	30	34	B✱	YES
HINGE @ SPAN RE-15	H	2	30	34	B✱	YES
HINGE @ SPAN RE-17	H	1	30	34	B	YES
2nd @ SPAN RE-17	H	1	30	34	B	YES
HINGE @ SPAN RE-19	H	2	30	34	B	YES
HINGE @ SPAN RE-22	H	1½	30	34	B	YES
ABUT RE-25	BW	1	60	34	B	YES

LOCATION DESCRIPTION AND TYPE OF WORK LEGEND:

- (JS) Indicates location of remove existing joint seal and placement of new joint seal.
- (JSR) Indicates location of sawcut ½" and remove existing joint seal, remove concrete, reconstruct concrete expansion joint and place new joint seal.
- (B#) Indicates location of paint bridge No. on inside face of concrete barrier Type 732 (Mod) (i.e. "BR. NO. 34-0134G").
- (AB) Indicates location of paint bridge abut No. or bent No. (all bent and abut. Nos. to be painted on inside face of concrete barrier Type 732 (Mod)) (i.e. "RE-25" for "ABUT RE-25").
- (T1) Indicates location of sawcut full width and remove existing Type 1 barrier railing, refinish bridge deck, drill and bond dowels, place concrete barrier Type 732 (Mod).
- (T2) Indicates location of sawcut full width and remove existing Type 2 barrier railing, refinish bridge deck, drill and bond dowels, place concrete barrier Type 732 (Mod).
- (BS) Indicates location of new barrier slab and paving notch extension. Remove asphalt concrete, excavate roadway, sawcut wingwalls and pilecaps for removal of Type 1 and Type 2 barrier railings, cut existing reinforcement bars 1" below sawcut surface, refinish concrete surface, drill and bond dowels and place concrete paving notch, place elastomeric bearing pads, place barrier slab, place concrete barrier Type 732 (Mod). See "BARRIER SLAB DETAILS NO. 1 & NO. 2" sheets.
- ▬ Indicates approx location to clean existing drainage system in deck near the bent. For deck drain length, see "DECK DRAINS TABLE" sheet.
- Indicates location of approx 20 sq ft X 4" deep to remove unsound concrete and place rapid setting cocnrete patch. For deck damage repair, see "BARRIER SLAB DETAILS NO. 2" sheet.
- (O) Remove Type 1 & Type 2 Barrier Railings, Resurface Bridge Deck, Place Carbon Fiber Reinforced Polymer Strips at Overhangs, Drill & Bond Dowels, Place Concrete Barrier Type 732 (Mod). See "CARBON FIBER REINFORCED OVERHANG" sheet.
- [ECW] Indicates location of existing concrete wall to have steel plate barrier transition. Sawcut ½" and chip for recess, core holes and bolt in place fabricated barrier transition. See "STEEL PLATE BARRIER TRANSITION" sheet.

LEGEND:

- Indicates existing
- Indicates new construction
- (H) Indicates approx. location of existing hinge

NOTES:

1. Bridge Structure Type - Reinforced Concrete Box Girder except Prestressed Girders at span 17.
2. Bent location is as per as-built alignment, stationing and dimensions (±). Contractor shall verify actual location.
3. Gap in barrier is to match joint gaps in bridge deck.
4. For lighting mounted on barriers, see "ROAD PLANS".
5. For concrete barriers details not shown, see "BARRIER DETAILS NO. 1 and NO. 2" sheets.
6. For (JSR) see "JOINT SEAL REPLACEMENT DETAILS" sheet.
7. For Utilities, see "ROAD PLANS". For electrical pull box use top mounted in barrier.

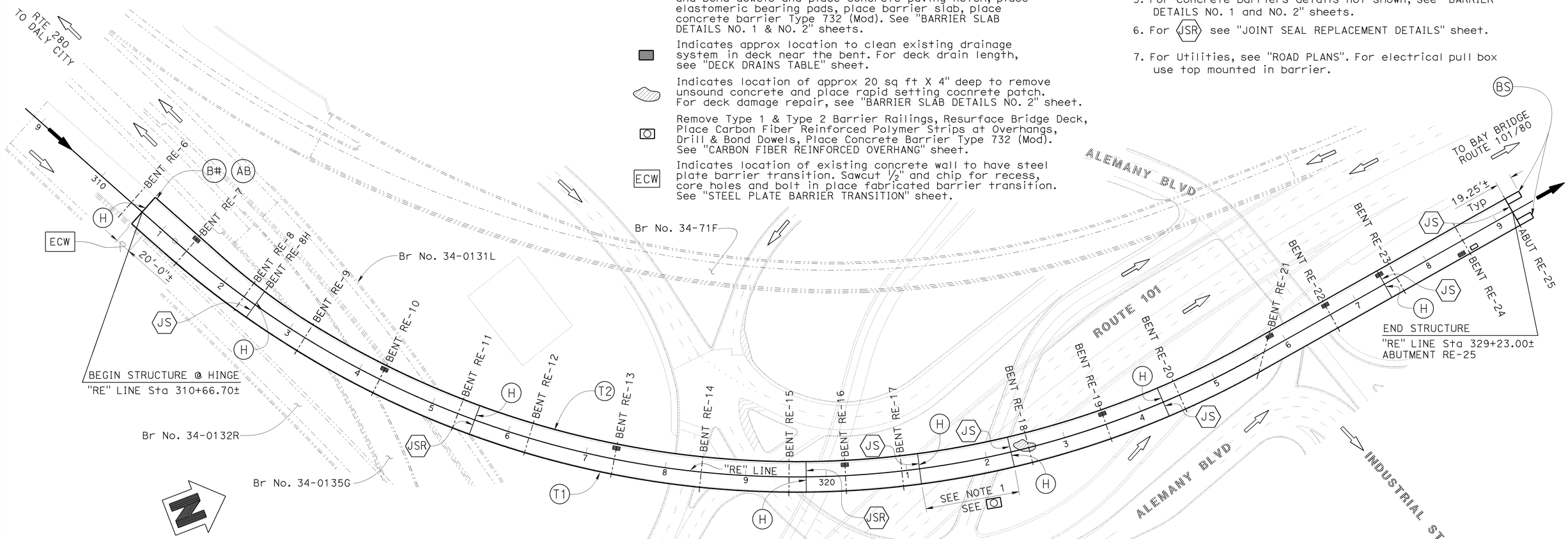

NOTE:
THE CONTRACTOR SHALL VERIFY ALL CONTROLLING FIELD DIMENSIONS BEFORE ORDERING OR FABRICATING ANY MATERIAL.

PLAN
1" = 60'-0"

ROUTE 101/280 INTERCHANGE
BARRIER REPLACEMENT
STRUCTURE PLAN NO. 4

	BY	CHECKED
DESIGN	John Tjoelker	Rangina Amir
DETAILS	Carlo Cancino	J. Tjoelker / R. Amir
QUANTITIES	John Tjoelker	Rangina Amir

STATE OF CALIFORNIA
DEPARTMENT OF TRANSPORTATION

DIVISION OF ENGINEERING SERVICES
STRUCTURE DESIGN
DESIGN BRANCH 8

BRIDGE NO. 34-0134G
POST MILE R4.16

STRUCTURES DESIGN DETAIL SHEET (ENGLISH) (REV. 09-01-10)

ORIGINAL SCALE IN INCHES FOR REDUCED PLANS 0 1 2 3

UNIT: 3593
PROJECT NUMBER & PHASE: 0400000496, 1
CONTRACT NO.: 04-1A5511

DISREGARD PRINTS BEARING EARLIER REVISION DATES

REVISION DATES: 11-06-12 03-13-13 03-18-13

SHEET 7 OF 24

FILE => 34-0070-d-splan04.dgn

USERNAME => s134003 DATE PLOTTED => 17-OCT-2013 TIME PLOTTED => 14:24

DIST	COUNTY	ROUTE	POST MILES TOTAL PROJECT	SHEET No.	TOTAL SHEETS
04	SF	101,280	1.5/1.8 R4.7/R4.4	56	76

REGISTERED CIVIL ENGINEER 09-20-13 DATE

9-30-13
PLANS APPROVAL DATE

REGISTERED PROFESSIONAL ENGINEER JOHN R. TJOELKER No. C77165 Exp. 12-31-14 CIVIL STATE OF CALIFORNIA

The State of California or its officers or agents shall not be responsible for the accuracy or completeness of electronic copies of this plan sheet.

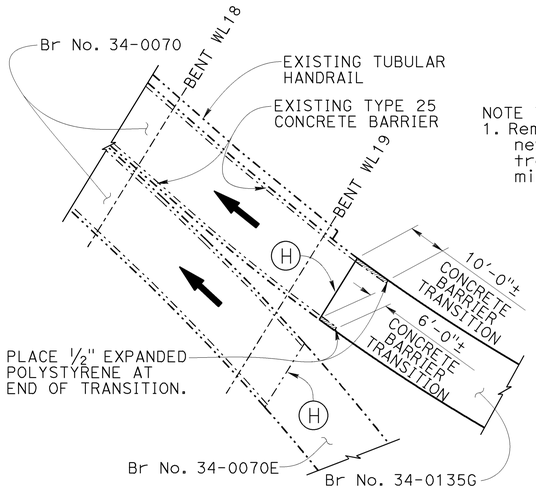

DETAIL A
No Scale

NOTE TO DETAIL A:
1. Remove existing concrete barrier Type 25 transition to fit new concrete barrier Type 732 (Mod). Concrete barrier transition in the horizontal plane of barrier is 20:1 minimum, in the vertical is 4:1 minimum slope.

LOCATION DESCRIPTION AND TYPE OF WORK LEGEND:

- JS — Indicates location of remove existing joint seal and placement of new joint seal.
- JSR — Indicates location of sawcut ½" and remove existing joint seal, remove concrete, reconstruct concrete expansion joint and place new joint seal.
- JSA — Indicates location of sawcut ½" and remove existing joint seal, remove concrete, and reconstruct with new joint seal assembly.
- B# — Indicates location of paint bridge No. on inside face of concrete barrier Type 732 (Mod) (i.e. "BR. NO. 34-0135G").
- AB — Indicates location of paint bridge abut No. or bent No. (all bent and abut. Nos. to be painted on inside face of concrete barrier Type 732 (Mod)) (i.e. "WL-35" for "ABUT WL-35").
- T1 — Indicates location of sawcut full width and remove existing Type 1 barrier railing, refinish bridge deck, drill and bond dowels, place concrete barrier Type 732 (Mod).
- T2 — Indicates location of sawcut full width and remove existing Type 2 barrier railing, refinish bridge deck, drill and bond dowels, place concrete barrier Type 732 (Mod).
- BS — Indicates location of new barrier slab and paving notch extension. Remove asphalt concrete, excavate roadway, sawcut wingwalls and pilecaps for removal of Type 1 and Type 2 barrier railings, cut existing reinforcement bars 1" below sawcut surface, refinish concrete surface, drill and bond dowels and place concrete paving notch, place elastomeric bearing pads, place barrier slab, place concrete barrier Type 732 (Mod). See "BARRIER SLAB DETAILS NO. 1 & NO. 2" sheets.
- Indicates approx location to clean existing drainage system in deck near the bent. For deck drain length, see "DECK DRAINS TABLE" sheet.
- Indicates location of 1 sq ft X 4" deep spalled concrete. For joint spall repair, see "BARRIER SLAB DETAILS NO. 2" sheet.

JOINT SEAL TABLE

JOINT SEAL LOCATION		MINIMUM "MR" (inches)	APPROXIMATE DEPTH TO CLEAN (inches)	APPROXIMATE JOINT LENGTH (feet) △	SEAL TYPE	WATER STOP EXIST (✱✱)
HINGE @ SPAN WL-19	H	2	30	34	B✱	YES
HINGE @ SPAN WL-23	H	2½	30	34	JSA	YES
HINGE @ SPAN WL-27	H	3	30	34	JSA	YES
HINGE @ SPAN WL-31	H	2	30	34	B	YES
ABUTMENT WL-35	BW	2	30	34	B	YES

LEGEND:
- Indicates existing
- Indicates new construction
- (H) Indicates approx. location of existing hinge

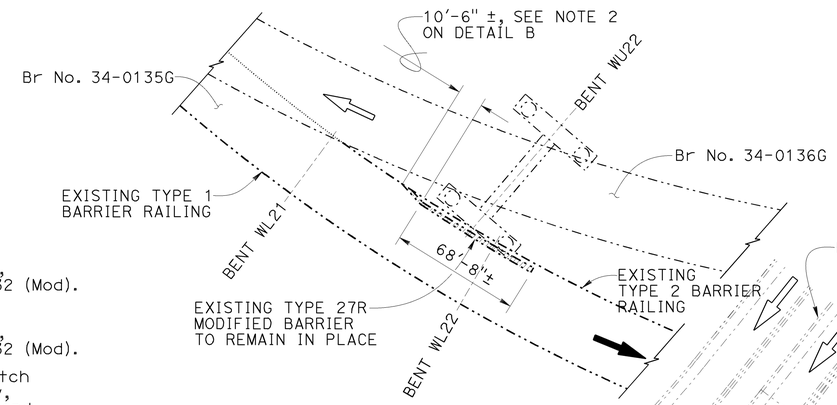

DETAIL B
No Scale

NOTE TO DETAIL B:
1. Existing Type 27R modified barrier installed due to vertical clearance conflict with Bent WU22 cross beam.
2. Transition from concrete barrier Type 732 (Mod) to concrete barrier Type 27R (Mod). In the horizontal plane of barrier is 20:1 minimum, in the vertical is 4:1 minimum slope. Place ½" expanded polystyrene at end of transition.

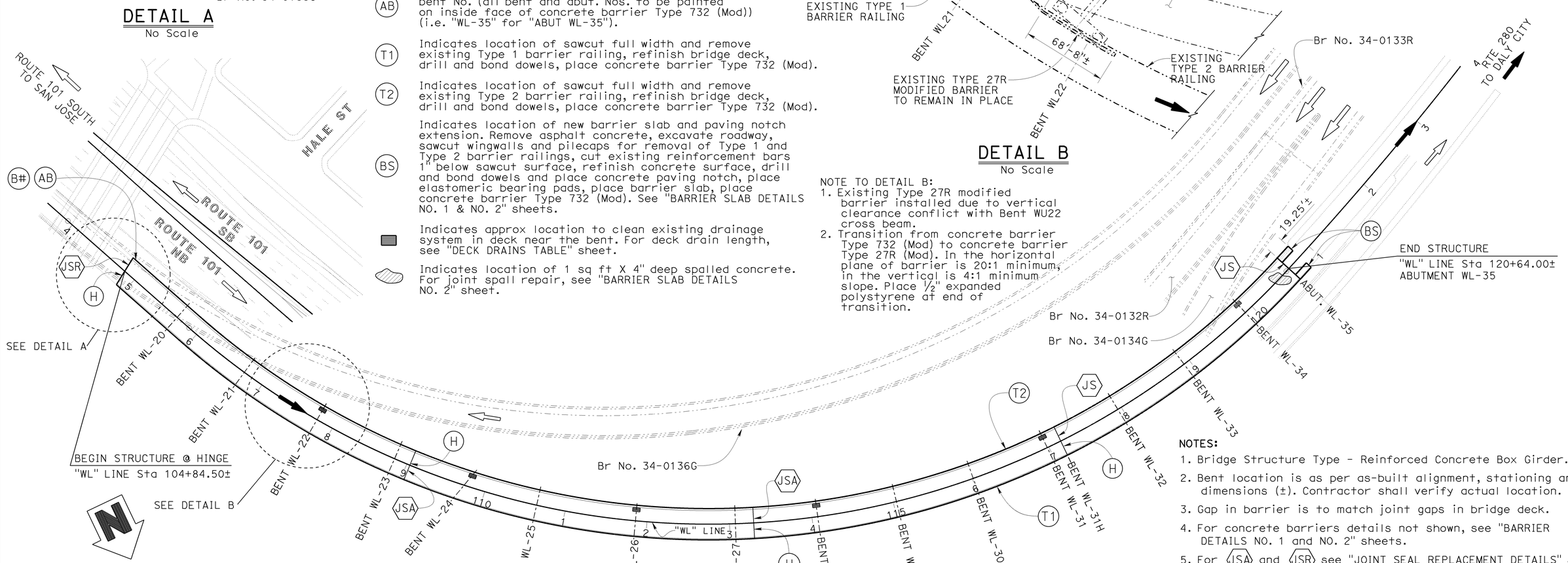

PLAN
1" = 60'-0"

NOTES:
1. Bridge Structure Type - Reinforced Concrete Box Girder.
2. Bent location is as per as-built alignment, stationing and dimensions (±). Contractor shall verify actual location.
3. Gap in barrier is to match joint gaps in bridge deck.
4. For concrete barriers details not shown, see "BARRIER DETAILS NO. 1 and NO. 2" sheets.
5. For JSA and JSR see "JOINT SEAL REPLACEMENT DETAILS" sheet.
6. For Utilities, see "ROAD PLANS". For electrical pull box use top mounted in barrier.

NOTE:
THE CONTRACTOR SHALL VERIFY ALL CONTROLLING FIELD DIMENSIONS BEFORE ORDERING OR FABRICATING ANY MATERIAL.

ROUTE 101/280 INTERCHANGE
BARRIER REPLACEMENT
STRUCTURE PLAN NO. 5

	BY	CHECKED
DESIGN	John Tjoelker	Rangina Amir
DETAILS	Carlo Cancino	J. Tjoelker / R. Amir
QUANTITIES	John Tjoelker	Rangina Amir

STATE OF CALIFORNIA DEPARTMENT OF TRANSPORTATION

DIVISION OF ENGINEERING SERVICES STRUCTURE DESIGN DESIGN BRANCH 8

BRIDGE NO. 34-0135G
POST MILE 1.79

STRUCTURES DESIGN DETAIL SHEET (ENGLISH) (REV. 09-01-10)

ORIGINAL SCALE IN INCHES FOR REDUCED PLANS 0 1 2 3

UNIT: 3593
PROJECT NUMBER & PHASE: 0400000496, 1
CONTRACT NO.: 04-1A5511

DISREGARD PRINTS BEARING EARLIER REVISION DATES

REVISION DATES 11-06-12 03-15-13 03-18-13

SHEET 8 OF 24

FILE => 34-0070-d-splan05.dgn

USERNAME => s134003 DATE PLOTTED => 17-OCT-2013 TIME PLOTTED => 14:25

DIST	COUNTY	ROUTE	POST MILES TOTAL PROJECT	SHEET No.	TOTAL SHEETS
04	SF	101,280	1.5/1.8 R4.7/R4.4	57	76

REGISTERED CIVIL ENGINEER 09-20-13 DATE

9-30-13
PLANS APPROVAL DATE

REGISTERED PROFESSIONAL ENGINEER JOHN R. TJOELKER No. C77165 Exp. 12-31-14 CIVIL STATE OF CALIFORNIA

The State of California or its officers or agents shall not be responsible for the accuracy or completeness of electronic copies of this plan sheet.

LOCATION DESCRIPTION AND TYPE OF WORK LEGEND:

(B#) Indicates location of paint bridge No. on inside face of concrete barrier Type 732 (Mod) (i.e. "BR. NO. 34-0136G").

(AB) Indicates location of paint bridge abut No. or bent No. (all bent and abut. Nos. to be painted on inside face of concrete barrier Type 732 (Mod)) (i.e. "WU-39" for "ABUT WU-39").

(T1) Indicates location of sawcut full width and remove existing Type 1 barrier railing, refinish bridge deck, drill and bond dowels, place concrete barrier Type 732 (Mod).

(T2) Indicates location of sawcut full width and remove existing Type 2 barrier railing, refinish bridge deck, drill and bond dowels, place concrete barrier Type 732 (Mod).

(BS) Indicates location of new barrier slab and paving notch extension. Remove asphalt concrete, excavate roadway, sawcut wingwalls and pilecaps for removal of Type 1 and Type 2 barrier railings, cut existing reinforcement bars 1" below sawcut surface, refinish concrete surface, drill and bond dowels and place concrete paving notch place elastomeric bearing pads, place barrier slab, place concrete barrier Type 732 (Mod). See "BARRIER SLAB DETAILS NO. 1 & NO. 2" sheets.

Indicates approx location to clean existing drainage system in deck near the bent. For deck drain length, see "DECK DRAINS TABLE" sheet.

Indicates approx location of existing drainage system in deck near the bent to reconstruct deck drain grate. Remove grate bars, grind smooth, weld riser bars, remove galvanizing and regalvanize. See "BARRIER DETAILS NO. 1 AND NO. 2" sheets.

LEGEND:

Indicates existing

Indicates new construction

(H) Indicates approx. location of existing hinge

NOTES:

1. Bridge Structure Type - Reinforced Concrete Box Girder.
2. Bent location is as per as-built alignment, stationing and dimensions (±). Contractor shall verify actual location.
3. Gap in barrier is to match joint gaps in bridge deck.
4. Joint seal to be kept intact while pulling away for reinstallation of new barrier.
5. For concrete barriers details not shown, see "BARRIER DETAILS NO. 1 and NO. 2" sheets.
6. For Utilities, see "ROAD PLANS". For electrical pull box use top mounted in barrier.

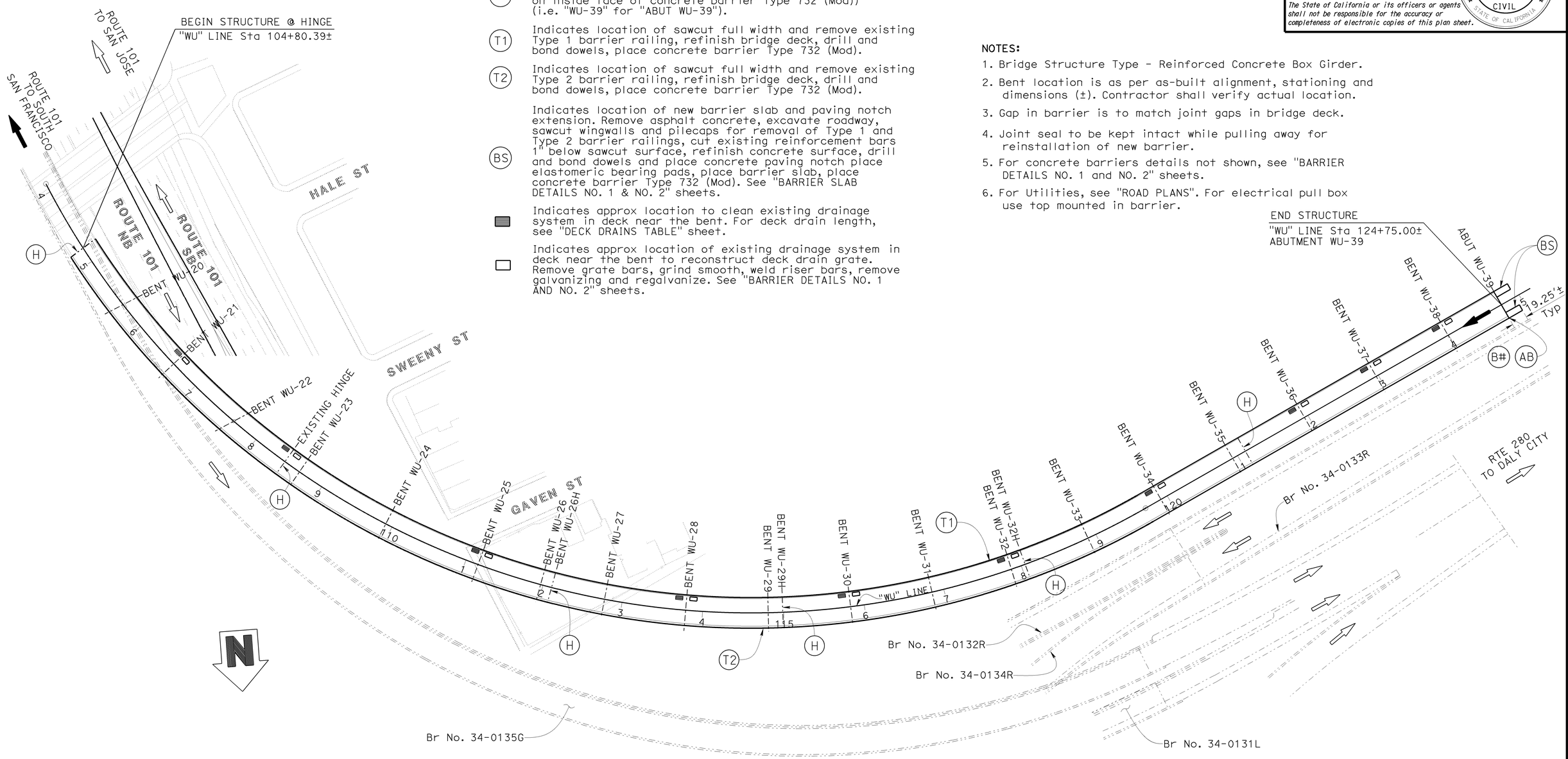

NOTE:
THE CONTRACTOR SHALL VERIFY ALL CONTROLLING FIELD DIMENSIONS BEFORE ORDERING OR FABRICATING ANY MATERIAL.

PLAN
1" = 60'-0"

ROUTE 101/280 INTERCHANGE
BARRIER REPLACEMENT
STRUCTURE PLAN NO. 6

	BY	CHECKED
DESIGN	John Tjoelker	Rangina Amir
DETAILS	Carlo Cancino	J. Tjoelker / R. Amir
QUANTITIES	John Tjoelker	Rangina Amir

STATE OF CALIFORNIA
DEPARTMENT OF TRANSPORTATION

DIVISION OF ENGINEERING SERVICES
STRUCTURE DESIGN
DESIGN BRANCH 8

BRIDGE NO. 34-0136G
POST MILE 1.79

STRUCTURES DESIGN DETAIL SHEET (ENGLISH) (REV. 09-01-10)

ORIGINAL SCALE IN INCHES FOR REDUCED PLANS 0 1 2 3

UNIT: 3593
PROJECT NUMBER & PHASE: 0400000496, 1
CONTRACT NO.: 04-1A5511

DISREGARD PRINTS BEARING EARLIER REVISION DATES

REVISION DATES 11-06-12 03-15-13 03-18-13

SHEET 9 OF 24

FILE => 34-0070-d-splan06.dgn

USERNAME => s134003 DATE PLOTTED => 17-OCT-2013 TIME PLOTTED => 14:26

DIST	COUNTY	ROUTE	POST MILES TOTAL PROJECT	SHEET No.	TOTAL SHEETS
04	SF	101,280	1.5/1.8 R4.1/R4.4	58	76

REGISTERED CIVIL ENGINEER 09-20-13 DATE

9-30-13
PLANS APPROVAL DATE

REGISTERED PROFESSIONAL ENGINEER JOHN R. TJOELKER No. C77165 Exp. 12-31-14 CIVIL STATE OF CALIFORNIA

The State of California or its officers or agents shall not be responsible for the accuracy or completeness of electronic copies of this plan sheet.

LEGEND:

Indicates existing

Indicates new construction

(H) Indicates approx. location of existing hinge

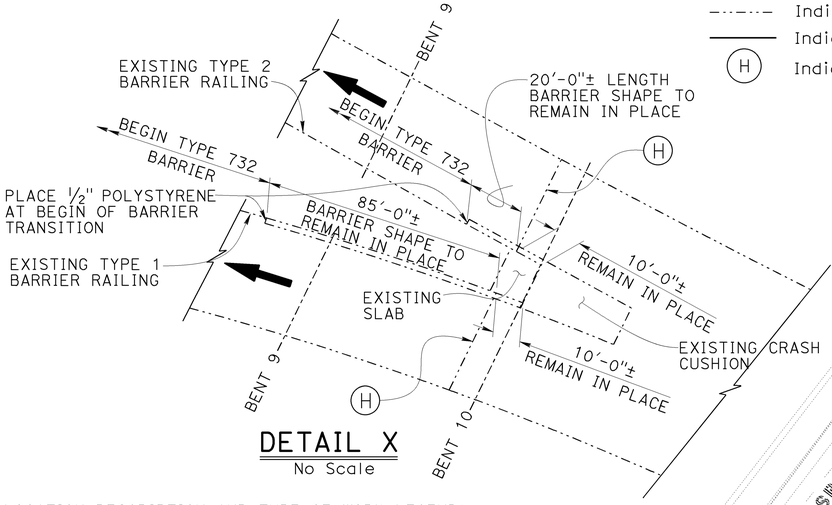

DETAIL X
No Scale

NOTES:

1. Bridge Structure Type - Reinforced Concrete Box Girder.
2. Bent location is as per as-built alignment, stationing and dimensions (±). Contractor shall verify actual location.
3. Gap in barrier is to match joint gaps in bridge deck.
4. For lighting mounted on barriers and utilities, see "ROAD PLANS". For electrical pull box use top mounted in barrier.
5. For concrete barriers details not shown, see "BARRIER DETAILS NO. 1 and NO. 2" sheets.
6. For concrete concrete removal and reconstruction of existing concrete bolster wall and shear block, see "BARRIER SLAB DETAILS NO. 4" sheet.
7. Transition in the horizontal plane of barriers is 20:1 minimum and transition in the vertical is 4:1 minimum slope.

JOINT SEAL TABLE						
JOINT SEAL LOCATION		MINIMUM "MR" (inches)	APPROXIMATE DEPTH TO CLEAN (inches)	APPROXIMATE JOINT LENGTH (feet) △	SEAL TYPE	WATER STOP EXIST (**)
ABUT AU-5	BW	1	60	34	B	YES
HINGE @ SPAN AU-7	H	1	30	34	B	YES
HINGE @ SPAN AU-9	H	1½	30	39	B	YES
HINGE @ SPAN BU-9	H	1½	30	39	B	YES
HINGE @ SPAN BU-11	H	1	30	34	B	YES
HINGE @ SPAN BU-13	H	1½	30	34	B	YES
HINGE @ SPAN BU-16	H	2	30	34	B	YES
HINGE @ SPAN BU-19	H	1	30	34	B	YES

LOCATION DESCRIPTION AND TYPE OF WORK LEGEND:

(JS) Indicates location of remove existing joint seal and placement of new joint seal.

(B#) Indicates location of paint bridge No. on inside face of concrete barrier Type 732 (Mod) (i.e. "BR. NO. 34-0046").

(AB) Indicates location of paint bridge abut No. or bent No. (all bent and abut. Nos. to be painted on inside face of concrete barrier Type 732 (Mod)) (i.e. "BU-12" for "ABUT BU-12").

(T1) Indicates location of sawcut full width and remove existing Type 1 barrier railing, refinish bridge deck, drill and bond dowels, place concrete barrier Type 732 (Mod).

(T2) Indicates location of sawcut full width and remove existing Type 2 barrier railing, refinish bridge deck, drill and bond dowels, place concrete barrier Type 732 (Mod).

(T3) Indicates location of sawcut PCC pavement full depth, excavate roadway and remove exsisting Type 1 barrier railing and place concrete barrier Type 732B. See "BARRIER SLAB DETAILS NO. 3 & NO. 4" sheets..

(BS) Indicates location of new barrier slab on retaining walls. Remove pcc concrete pavement, excavate roadway, sawcut retaining walls for removal of Type 1 and Type 2 barrier railings, cut existing reinf. bars 1" below sawcut surface, refinish concrete surface, place elastomeric bearing pads, place barrier slab, place concrete barrier Type 732 (Mod). See "BARRIER SLAB DETAILS NO. 1 & NO. 2" and "DECK DRAINS TABLE" sheets.

Indicates approx location to clean existing drainage system in deck near the bent. For deck drain length, see "DECK DRAINS TABLE" sheet.

Indicates approx location of existing drainage system in deck near the bent to reconstruct deck drain grate. Remove grate bars, grind smooth, weld riser bars, remove galvanizing and regalvanize. See "BARRIER DETAILS NO. 1 AND NO. 2" sheets.

(✳) Indicates location of concrete barrier (Transition CFRP). Remove Type 1 or Type 2 barrier railing, resurface bridge deck, place carbon fiber reinforced polymer strip. Drill and bond dowels, place concrete barrier Type 732 (Mod). See "TRANSITION TYPE 1 BARRIER RAILING INTO NEW CONCRETE BARRIER TYPE 732 (Mod)" on "DECK DRAINS TABLE" sheet.

NOTE:
THE CONTRACTOR SHALL VERIFY ALL CONTROLLING FIELD DIMENSIONS BEFORE ORDERING OR FABRICATING ANY MATERIAL.

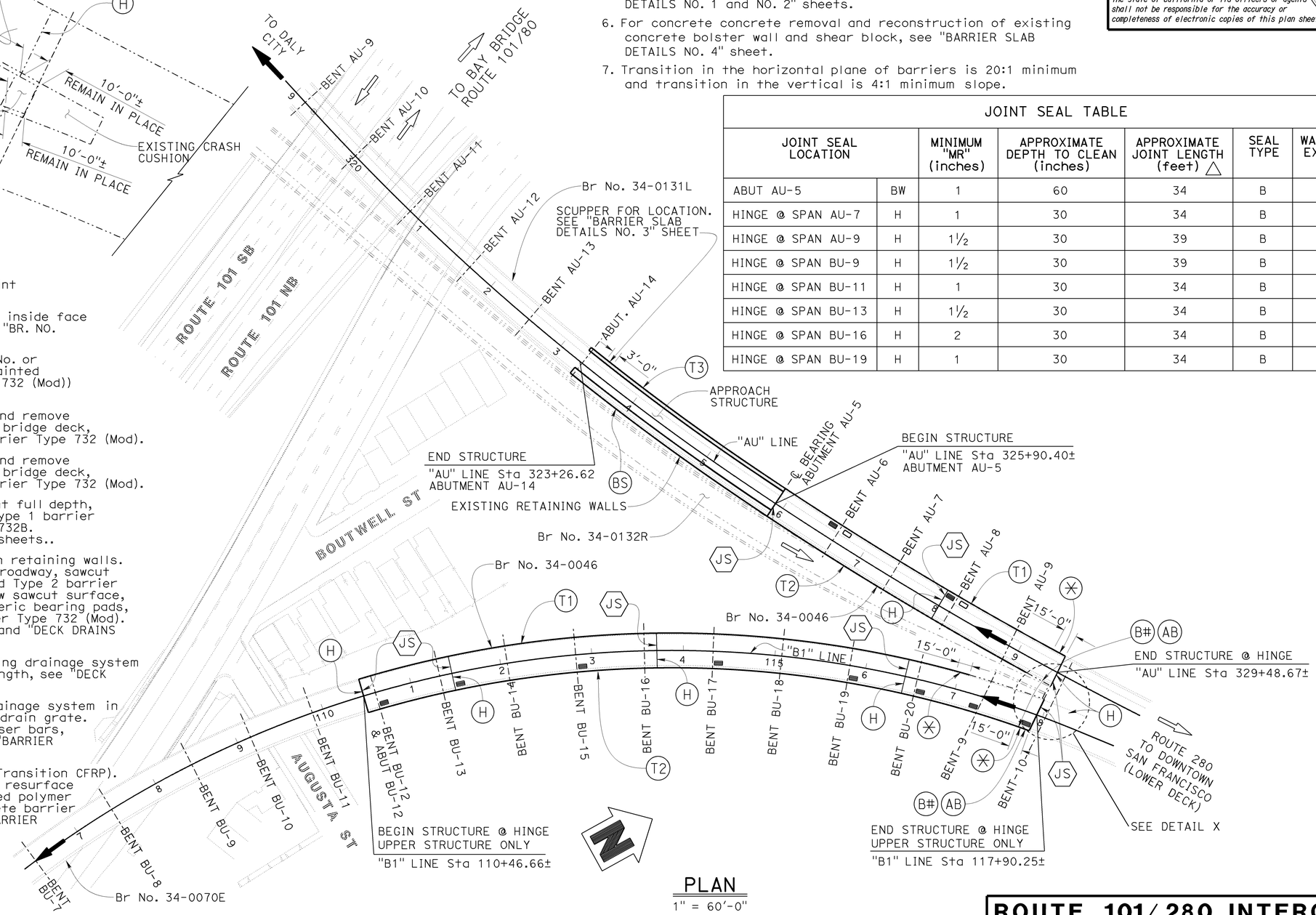

PLAN
1" = 60'-0"

ROUTE 101/280 INTERCHANGE
BARRIER REPLACEMENT
STRUCTURE PLAN NO. 7

	BY	CHECKED
DESIGN	John Tjoelker	Rangina Amir
DETAILS	Carlo Cancino	J. Tjoelker / R. Amir
QUANTITIES	John Tjoelker	Rangina Amir

STATE OF CALIFORNIA
DEPARTMENT OF TRANSPORTATION

DIVISION OF ENGINEERING SERVICES
STRUCTURE DESIGN
DESIGN BRANCH 8

BRIDGE NO. 34-0046
POST MILE R4.4

UNIT: 3593
PROJECT NUMBER & PHASE: 0400000496, 1
CONTRACT NO.: 04-1A5511

DISREGARD PRINTS BEARING EARLIER REVISION DATES
REVISION DATES 11-06-12 03-15-13 03-18-13
SHEET 10 OF 24

STRUCTURES DESIGN DETAIL SHEET (ENGLISH) (REV. 09-01-10)

ORIGINAL SCALE IN INCHES FOR REDUCED PLANS 0 1 2 3

FILE => 34-0070-d-splan07.dgn

USERNAME => s134003 DATE PLOTTED => 17-OCT-2013 TIME PLOTTED => 14:27

DIST	COUNTY	ROUTE	POST MILES TOTAL PROJECT	SHEET No.	TOTAL SHEETS
04	SF	101,280	1.5/1.8 R4.1/R4.4	59	76

REGISTERED CIVIL ENGINEER 09-20-13 DATE

9-30-13
PLANS APPROVAL DATE

REGISTERED PROFESSIONAL ENGINEER
JOHN R. TJOELKER
No. C77165
Exp. 12-31-14
CIVIL
STATE OF CALIFORNIA

The State of California or its officers or agents shall not be responsible for the accuracy or completeness of electronic copies of this plan sheet.

LOCATION DESCRIPTION AND TYPE OF WORK LEGEND:

(B#) Indicates location of paint bridge No. on inside face of concrete barrier Type 732 (Mod) (i.e. "BR. NO. 34-0070").

(AB) Indicates location of paint bridge abut No. or bent No. (all bent and abut. Nos. to be painted on inside face of concrete barrier Type 732 (Mod)) (i.e. "WU-11" for "BENT WU-11").

(T1) Indicates location of sawcut full width and remove existing Type 1 barrier railing, refinish bridge deck, drill and bond dowels, place concrete barrier Type 732 (Mod).

(T2) Indicates location of sawcut full width and remove existing Type 2 barrier railing, refinish bridge deck, drill and bond dowels, place concrete barrier Type 732 (Mod).

Indicates approx location to clean existing drainage system in deck near the bent. For deck drain length, see "DECK DRAINS TABLE" sheet.

Indicates approx location of existing drainage system in deck near the bent to reconstruct deck drain grate. Remove grate bars, grind smooth, weld riser bars, remove galvanizing and regalvanize. See "BARRIER DETAILS NO. 1 AND NO. 2" sheets.

✳ For Concrete Barrier (Transition), see "CONCRETE BARRIER (TRANSITION) CONCRETE BARRIER TYPE 732 (Mod) INTO EXISTING TYPE 2 BARRIER RAILING" on "DECK DRAINS TABLE" sheet.

NOTES:

1. Bridge Structure Type - Reinforced Concrete Box Girder.
2. Bent location is as per as-built alignment, stationing and dimensions (±). Contractor shall verify actual location.
3. Gap in barrier is to match joint gaps in bridge deck.
4. Joint seal to be kept intact while pulling away for reinstallation of new barrier.
5. For lighting mounted on barriers and utilities, see "ROAD PLANS". For electrical pull box use top mounted in barrier.
6. For concrete barriers details not shown, see "BARRIER DETAILS NO. 1 and NO. 2" sheets.
7. Place ½" expanded polystyrene at end of barrier transition.

LEGEND:

—·—·— Indicates existing

——— Indicates new construction

(H) Indicates approx. location of existing hinge

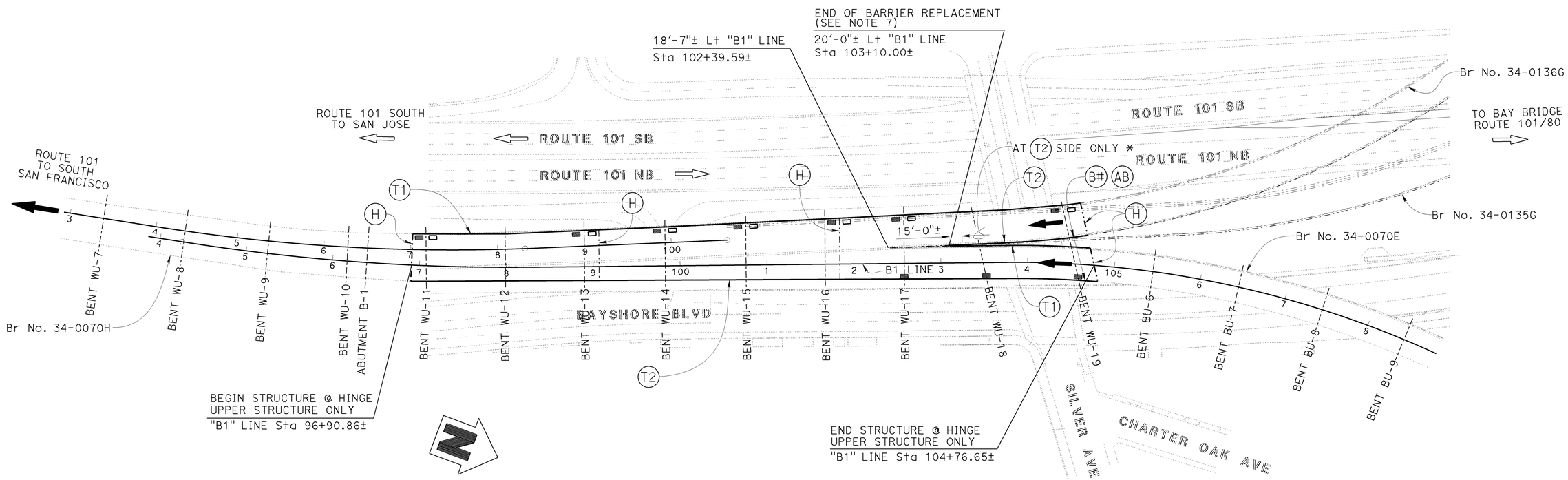

PLAN
1" = 60'-0"

NOTE:
THE CONTRACTOR SHALL VERIFY ALL CONTROLLING FIELD DIMENSIONS BEFORE ORDERING OR FABRICATING ANY MATERIAL.

	BY	CHECKED
DESIGN	John Tjoelker	Rangina Amir
DETAILS	Carlo Cancino	J. Tjoelker / R. Amir
QUANTITIES	John Tjoelker	Rangina Amir

STATE OF CALIFORNIA
DEPARTMENT OF TRANSPORTATION

DIVISION OF ENGINEERING SERVICES
STRUCTURE DESIGN
DESIGN BRANCH 8

BRIDGE NO. 34-0070
POST MILE 1.63

ROUTE 101/280 INTERCHANGE
BARRIER REPLACEMENT
STRUCTURE PLAN NO. 8

STRUCTURES DESIGN DETAIL SHEET (ENGLISH) (REV. 09-01-10)

ORIGINAL SCALE IN INCHES FOR REDUCED PLANS 0 1 2 3

UNIT: 3593
PROJECT NUMBER & PHASE: 0400000496, 1
CONTRACT NO.: 04-1A5511

DISREGARD PRINTS BEARING EARLIER REVISION DATES

REVISION DATES: 11-06-12 03-15-13 03-18-13

SHEET 11 OF 24

FILE => 34-0070-d-splan08.dgn

USERNAME => s134003 DATE PLOTTED => 17-OCT-2013 TIME PLOTTED => 14:34

DIST	COUNTY	ROUTE	POST MILES TOTAL PROJECT	SHEET No.	TOTAL SHEETS
04	SF	101,280	1.5/1.8 R4.7/R4.4	60	76

REGISTERED CIVIL ENGINEER 09-20-13 DATE

9-30-13
PLANS APPROVAL DATE

REGISTERED PROFESSIONAL ENGINEER JOHN R. TJOELKER No. C77165 Exp. 12-31-14 CIVIL STATE OF CALIFORNIA

The State of California or its officers or agents shall not be responsible for the accuracy or completeness of electronic copies of this plan sheet.

LOCATION DESCRIPTION AND TYPE OF WORK LEGEND:

- (JS) Indicates location of remove existing joint seal and placement of new joint seal.
- (B#) Indicates location of paint bridge No. on inside face of concrete barrier Type 732 (Mod) (i.e. "BR. NO. 34-0070E").
- (AB) Indicates location of paint bridge abut No. or bent No. (all bent and abut. Nos. to be painted on inside face of concrete barrier Type 732 (Mod)) (i.e. "BU-6" for "BENT BU-6").
- (T1) Indicates location of sawcut full width and remove existing Type 1 barrier railing, refinish bridge deck, drill and bond dowels, place concrete barrier Type 732 (Mod).
- (T2) Indicates location of sawcut full width and remove existing Type 2 barrier railing, refinish bridge deck, drill and bond dowels, place concrete barrier Type 732 (Mod).
- ▬ Indicates approx location to clean existing drainage system in deck near the bent. For deck drain length, see "DECK DRAINS TABLE" sheet.
- ▭ Indicates approx location of existing drainage system in deck near the bent to reconstruct deck drain grate. Remove grate bars, grind smooth, weld riser bars, remove galvanizing and regalvanize. See "BARRIER DETAILS NO. 1 AND NO. 2" sheets.

JOINT SEAL TABLE

JOINT SEAL LOCATION		MINIMUM "MR" (inches)	APPROXIMATE DEPTH TO CLEAN (inches)	APPROXIMATE JOINT LENGTH (feet) △	SEAL TYPE	WATER STOP EXIST (**)
HINGE @ SPAN WU-19	H	2	30	34	B	YES
HINGE @ SPAN BU-7	H	1.5	30	34	B	YES
HINGE @ SPAN BU-9	H	1	30	34	B	YES
HINGE @ SPAN BU-11	H	1	30	34	B	YES

LEGEND:

- Indicates existing
- Indicates new construction
- (H) Indicates approx. location of existing hinge

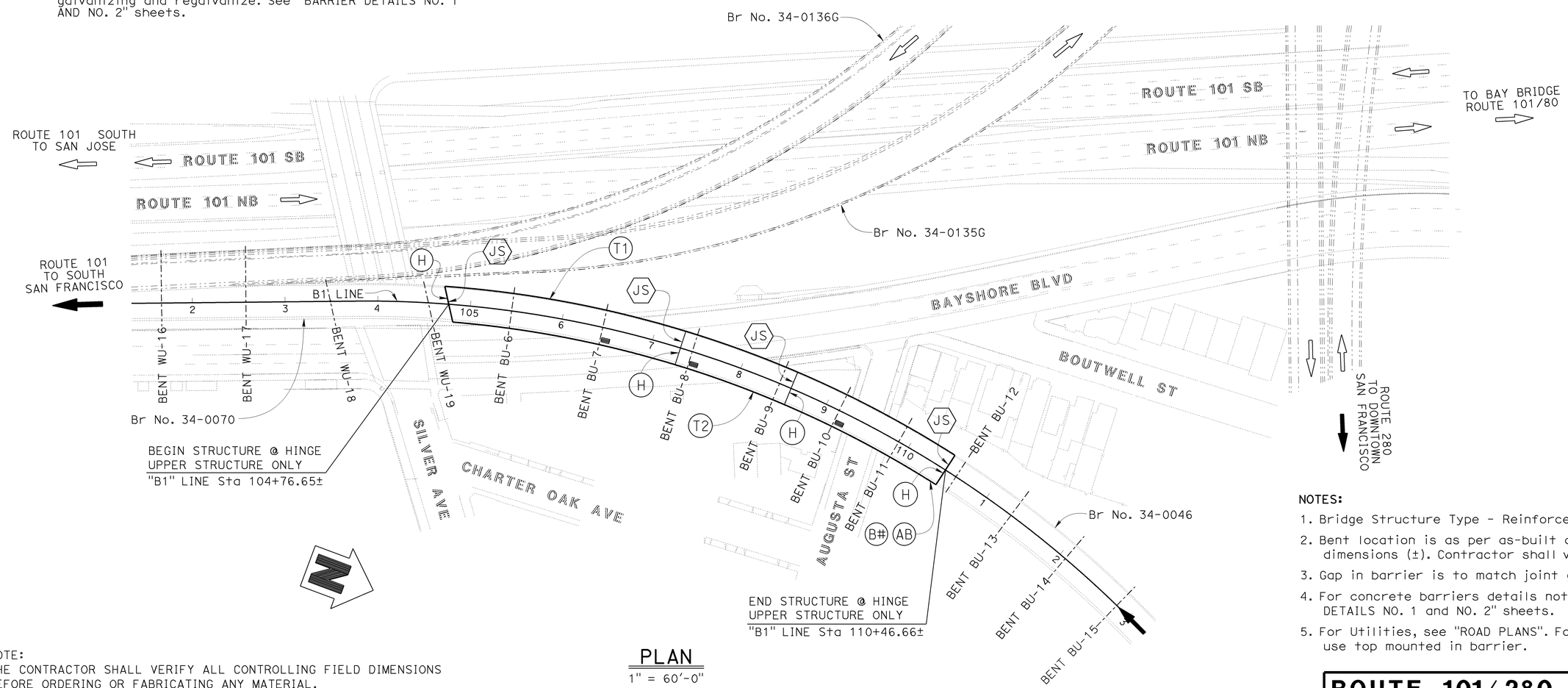

PLAN
1" = 60'-0"

NOTES:

1. Bridge Structure Type - Reinforced Concrete Box Girder.
2. Bent location is as per as-built alignment, stationing and dimensions (±). Contractor shall verify actual location.
3. Gap in barrier is to match joint gaps in bridge deck.
4. For concrete barriers details not shown, see "BARRIER DETAILS NO. 1 and NO. 2" sheets.
5. For Utilities, see "ROAD PLANS". For electrical pull box use top mounted in barrier.

NOTE:
THE CONTRACTOR SHALL VERIFY ALL CONTROLLING FIELD DIMENSIONS BEFORE ORDERING OR FABRICATING ANY MATERIAL.

ROUTE 101/280 INTERCHANGE
BARRIER REPLACEMENT
STRUCTURE PLAN NO. 9

	BY	CHECKED
DESIGN	John Tjoelker	Rangina Amir
DETAILS	Carlo Cancino	J. Tjoelker / R. Amir
QUANTITIES	John Tjoelker	Rangina Amir

STATE OF CALIFORNIA
DEPARTMENT OF TRANSPORTATION

DIVISION OF ENGINEERING SERVICES
STRUCTURE DESIGN
DESIGN BRANCH 8

BRIDGE NO. 34-0070E
POST MILE R4.07

STRUCTURES DESIGN DETAIL SHEET (ENGLISH) (REV. 09-01-10)

ORIGINAL SCALE IN INCHES FOR REDUCED PLANS 0 1 2 3

UNIT: 3593
PROJECT NUMBER & PHASE: 0400000496, 1
CONTRACT NO.: 04-1A5511

DISREGARD PRINTS BEARING EARLIER REVISION DATES

REVISION DATES 11-06-12 03-18-13 03-15-13

SHEET 12 OF 24

FILE => 34-0070-d-splan09.dgn

USERNAME => s134003 DATE PLOTTED => 17-OCT-2013 TIME PLOTTED => 14:35

DIST	COUNTY	ROUTE	POST MILES TOTAL PROJECT	SHEET No.	TOTAL SHEETS
04	SF	101,280	1.5/1.8 R4.1/R4.4	61	76

REGISTERED CIVIL ENGINEER 09-20-13 DATE

9-30-13
PLANS APPROVAL DATE

REGISTERED PROFESSIONAL ENGINEER JOHN R. TJOELKER No. C77165 Exp. 12-31-14 CIVIL STATE OF CALIFORNIA

The State of California or its officers or agents shall not be responsible for the accuracy or completeness of electronic copies of this plan sheet.

LOCATION DESCRIPTION AND TYPE OF WORK LEGEND:

(B#) Indicates location of paint bridge No. on inside face of concrete barrier Type 732 (Mod) (i.e. "BR. NO. 34-0070H").

(AB) Indicates location of paint bridge abut No. or bent No. (all bent and abut. Nos. to be painted on inside face of concrete barrier Type 732 (Mod)) (i.e. "WU-1" for "ABUTMENT 1 WU-1").

(T1) Indicates location of sawcut full width and remove existing Type 1 barrier railing, refinish bridge deck, drill and bond dowels, place concrete barrier Type 732 (Mod).

(T2) Indicates location of sawcut full width and remove existing Type 2 barrier railing, refinish bridge deck, drill and bond dowels, place concrete barrier Type 732 (Mod).

(BS) Indicates location of new barrier slab with paving notch extension on retaining walls. Remove asphalt concrete, excavate roadway, sawcut retaining walls for removal of Type 1 and Type 2 barrier railings, cut existing reinf. bars 1" below sawcut surface, refinish concrete surface, drill and bond dowels and place concrete for paving notch, place elastomeric bearing pads, place barrier slab, place concrete barrier Type 732 (Mod). See "BARRIER SLAB DETAILS NO. 2" and "DECK DRAIN TABLE" sheets.

Indicates approx location to clean existing drainage system in deck near the bent. For deck drain length, see "DECK DRAINS TABLE" sheet.

Indicates approx location of existing drainage system in deck near the bent to reconstruct deck drain grate. Remove grate bars, grind smooth, weld riser bars, remove galvanizing and regalvanize. See "BARRIER DETAILS NO. 1 AND NO. 2" sheets.

LEGEND:

Indicates existing

Indicates new construction

(H) Indicates approx. location of existing hinge

NOTES:

1. Bridge Structure Type - Reinforced Concrete Box Girder.
2. Bent location is as per as-built alignment, stationing and dimensions (±). Contractor shall verify actual location.
3. Joint seal to be kept intact while pulling away for reinstallation of new barrier.
4. Gap in barrier is to match joint gaps in bridge deck.
5. For lighting mounted on barriers and utilities, see "ROAD PLANS". For electrical pull box use top mounted in barrier.
6. For concrete barriers details not shown, see "BARRIER DETAILS NO. 1 and NO. 2" sheets.

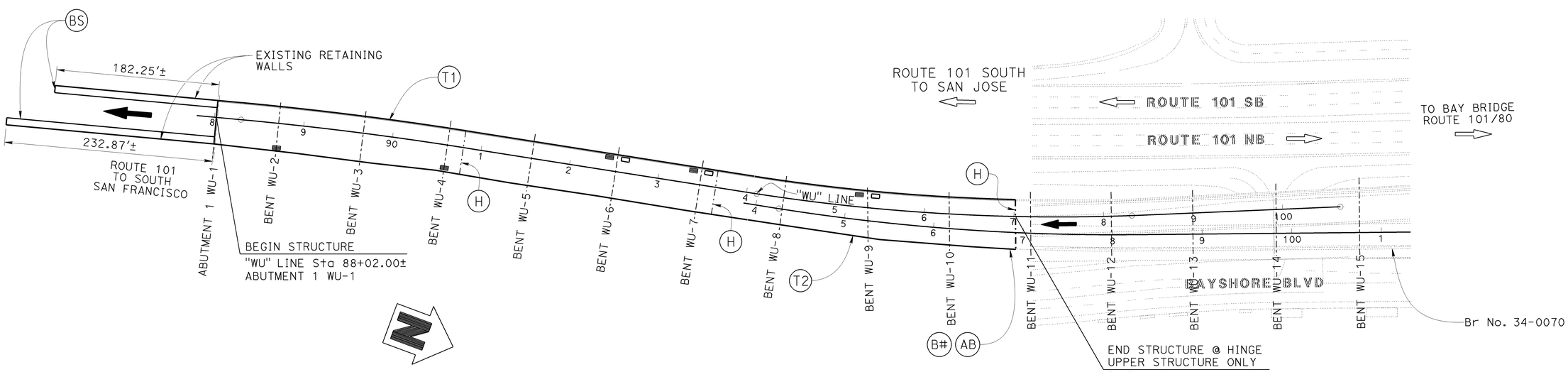

PLAN
1" = 60'-0"

NOTE:
THE CONTRACTOR SHALL VERIFY ALL CONTROLLING FIELD DIMENSIONS BEFORE ORDERING OR FABRICATING ANY MATERIAL.

	BY	CHECKED
DESIGN	John Tjoelker	Rangina Amir
DETAILS	Carlo Cancino	J. Tjoelker / R. Amir
QUANTITIES	John Tjoelker	Rangina Amir

STATE OF CALIFORNIA
DEPARTMENT OF TRANSPORTATION

DIVISION OF ENGINEERING SERVICES
STRUCTURE DESIGN
DESIGN BRANCH 8

BRIDGE NO. 34-0070H
POST MILE 1.48

ROUTE 101/280 INTERCHANGE
BARRIER REPLACEMENT
STRUCTURE PLAN NO. 10

STRUCTURES DESIGN DETAIL SHEET (ENGLISH) (REV. 09-01-10)

ORIGINAL SCALE IN INCHES FOR REDUCED PLANS 0 1 2 3

UNIT: 3593
PROJECT NUMBER & PHASE: 0400000496, 1 CONTRACT NO.: 04-1A5511

DISREGARD PRINTS BEARING EARLIER REVISION DATES

REVISION DATES: 11-06-12 03-15-13 03-18-13

SHEET 13 OF 24

FILE => 34-0070-d-splan10.dgn

USERNAME => s134003 DATE PLOTTED => 17-OCT-2013 TIME PLOTTED => 14:36

DIST	COUNTY	ROUTE	POST MILES TOTAL PROJECT	SHEET No.	TOTAL SHEETS
04	SF	101,280	1.5/1.8 R4.1/R4.4	62	76

REGISTERED CIVIL ENGINEER 09-20-13 DATE

9-30-13
PLANS APPROVAL DATE

REGISTERED PROFESSIONAL ENGINEER JOHN R. TJOELKER No. C77165 Exp. 12-31-14 CIVIL STATE OF CALIFORNIA

The State of California or its officers or agents shall not be responsible for the accuracy or completeness of electronic copies of this plan sheet.

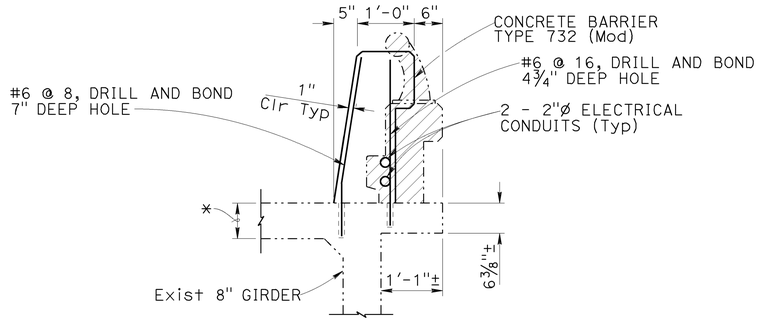

SECTION AT EXISTING TYPE 1 BARRIER RAILING

¾" = 1'-0"

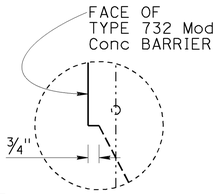

NOTE:

"DETAIL B" at drain opening.

DETAIL B

No Scale

LEGEND:

Indicates remove existing barrier railings and grate bars

Indicates existing

* Indicates top slab thickness

- 7½" for varying roadway width
- 6⅜" for 34' roadway, (see "STRUCTURE PLAN NO.1 THROUGH NO. 10" sheets)

NOTES:

1. For details not shown see, RSP B11-55 and B14-3.
2. For placement of Temporary K-rail, see "ROAD PLANS".
3. For Electrical Conduits, see "ROAD PLANS".

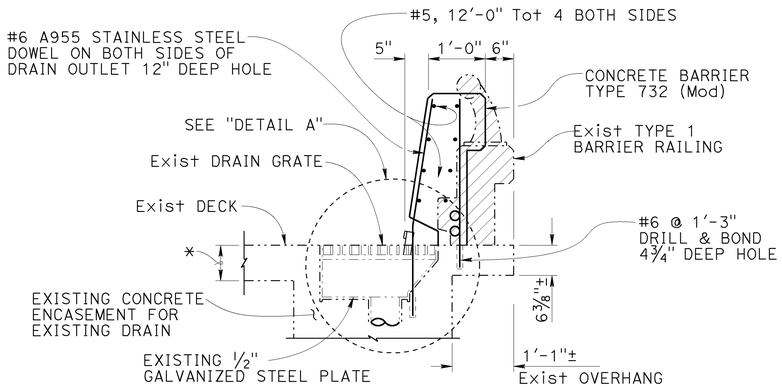

SECTION AT DRAIN EXISTING TYPE 1 BARRIER RAILING

¾" = 1'-0"

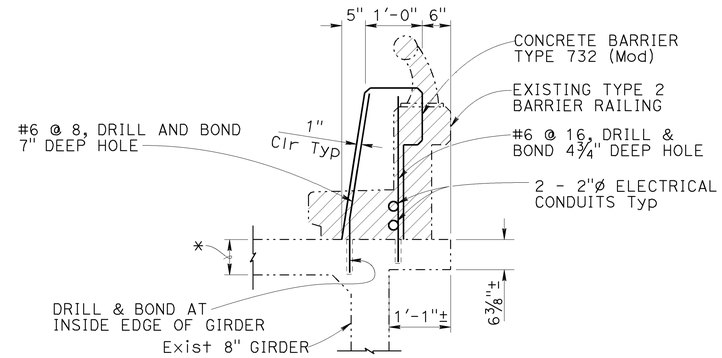

SECTION AT EXISTING TYPE 2 BARRIER RAILING

¾" = 1'-0"

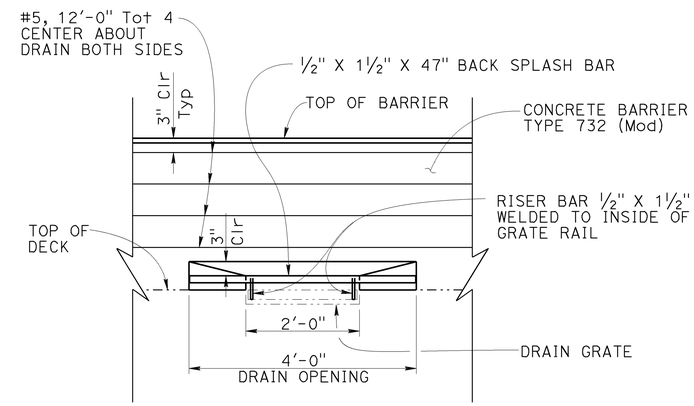

ELEVATION OF DECK DRAIN TYPE 1 BARRIER RAILING

¾" = 1'-0"

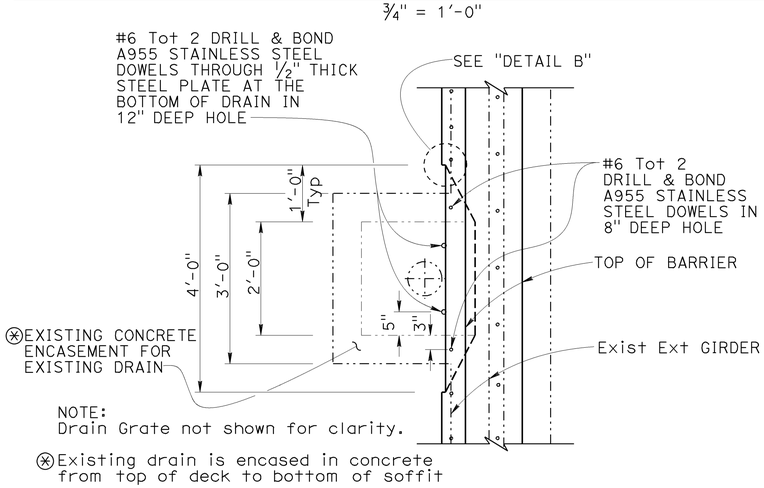

NOTE:
Drain Grate not shown for clarity.

⊛Existing drain is encased in concrete from top of deck to bottom of soffit

PLAN VIEW AT DECK DRAIN EXISTING TYPE 1 BARRIER RAILING

¾" = 1'-0"

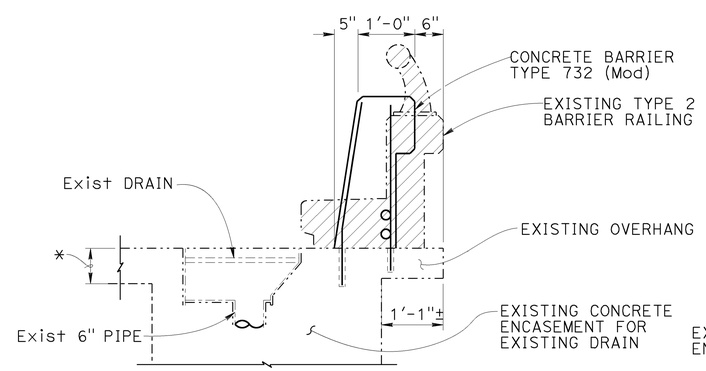

SECTION AT DRAIN EXISTING TYPE 2 BARRIER RAILING

¾" = 1'-0"

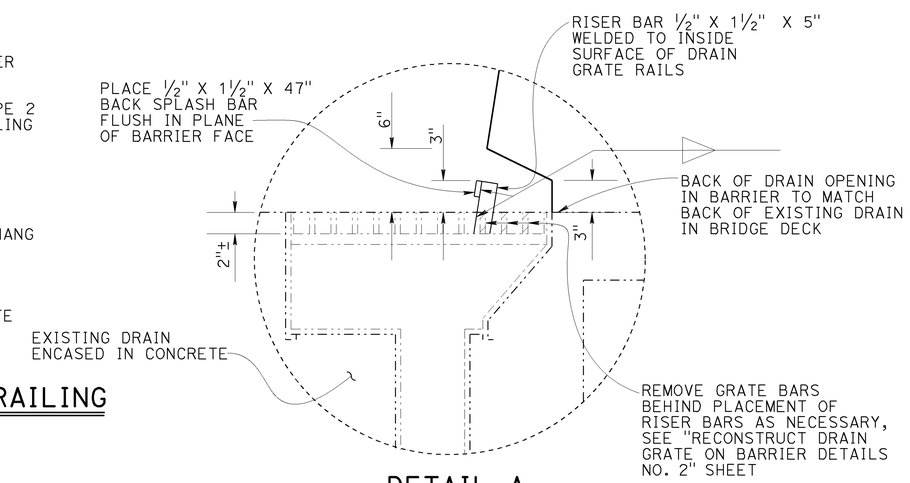

DETAIL A

No Scale

NOTE:
THE CONTRACTOR SHALL VERIFY ALL CONTROLLING FIELD DIMENSIONS BEFORE ORDERING OR FABRICATING ANY MATERIAL.

	BY	CHECKED
DESIGN	John Tjoelker	Rangina Amir
DETAILS	Antonio Carreon	J. Tjoelker / R. Amir
QUANTITIES	John Tjoelker	Rangina Amir

STATE OF CALIFORNIA
DEPARTMENT OF TRANSPORTATION

DIVISION OF ENGINEERING SERVICES
STRUCTURE DESIGN
DESIGN BRANCH 8

BRIDGE NO. VARIOUS
POST MILE VARIES

ROUTE 101/280 INTERCHANGE
BARRIER REPLACEMENT
BARRIER DETAILS NO. 1

STRUCTURES DESIGN DETAIL SHEET (ENGLISH) (REV. 09-01-10)

ORIGINAL SCALE IN INCHES FOR REDUCED PLANS 0 1 2 3

UNIT: 3593
PROJECT NUMBER & PHASE: 0400000496, 1 CONTRACT NO.: 04-1A5511

DISREGARD PRINTS BEARING EARLIER REVISION DATES

REVISION DATES: 11-20-12 03-01-13 03-13-13

SHEET 14 OF 24

FILE => 34-0070-e-det01.dgn

USERNAME => s134003 DATE PLOTTED => 17-OCT-2013 TIME PLOTTED => 14:37

DIST	COUNTY	ROUTE	POST MILES TOTAL PROJECT	SHEET No.	TOTAL SHEETS
04	SF	101,280	1.5/1.8 R4.1/R4.4	63	76

REGISTERED CIVIL ENGINEER 09-20-13 DATE

9-30-13
PLANS APPROVAL DATE

REGISTERED PROFESSIONAL ENGINEER JOHN R. TJOELKER No. C77165 Exp. 12-31-14 CIVIL STATE OF CALIFORNIA

The State of California or its officers or agents shall not be responsible for the accuracy or completeness of electronic copies of this plan sheet.

LEGEND:

- ① Indicates remove existing barrier railings (salvage metal railings and posts).
- ② Indicate remove existing parapet.
- ③ Indicates remove existing drain grate bars.
- Indicates existing
- XXX Indicates refinish bridge deck

NOTES:
1. For details not shown, see RSP B11-55 and B14-3.
2. For Electrical Conduits, see "Road Plans".

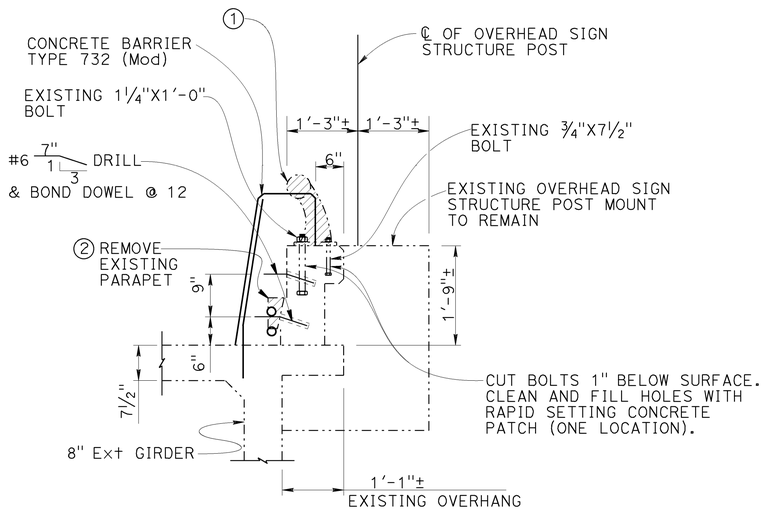

SECTION AT EXISTING OVERHEAD SIGN STRUCTURE

¾" = 1'-0"

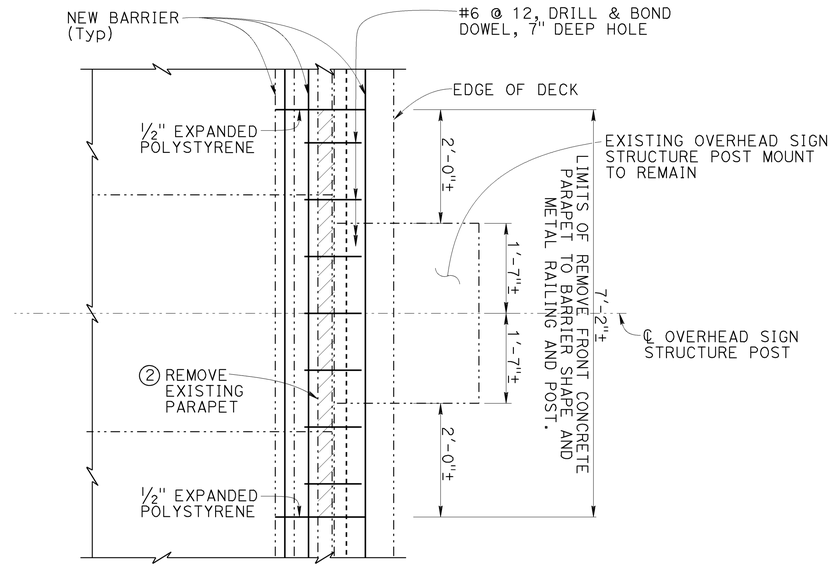

NOTE:
For location of overhead sign structure, see "STRUCTURE PLAN NO 3" sheet.

PLAN AT EXISTING OVERHEAD SIGN STRUCTURE

¾" = 1'-0"

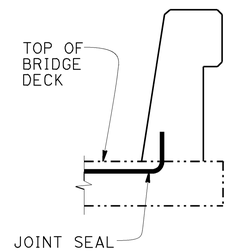

NOTE:
Details shown for illustration purposes only. For use only where deck joint matches the sidewalk, curb or barrier rail joint.

JOINT SEAL AT LOW SIDE OF DECK

No Scale

The following notes apply to JOINT SEAL TYPE B:

1) Seal must satisfy both minimum Movement Rating (MR) and minimum w1 requirements.
2) Minimum w1 is the calculated maximum width of the joint based on field measurements. After the joints have been cleaned, minimum w1 is to be calculated by the Engineer.
3) W1 shall be the smaller of the values determined as follows:
   A) 0.085 times the manufacturer's designed minimum uncompressed width of the seal.
   B) the width of the seal on third successive test cycle of the pressure deflection test, when compressed to an averge pressure of 3 psi.
4) Bend Type B joint seal 6" up into curb or rail on the low side of the deck where deck joint matches curb or rail joint.
5) For Ddetails not shown, see B6-21 2010 STANDARD PLANS

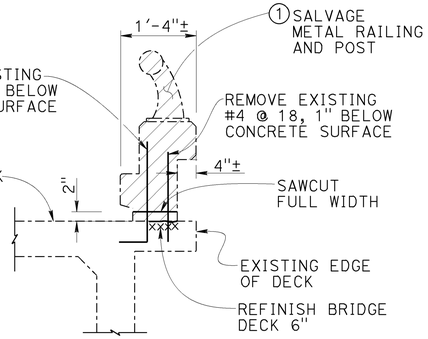

REMOVAL PLAN
EXISTING TYPE 1 BARRIER RAILING ON BRIDGE

¾" = 1'-0"

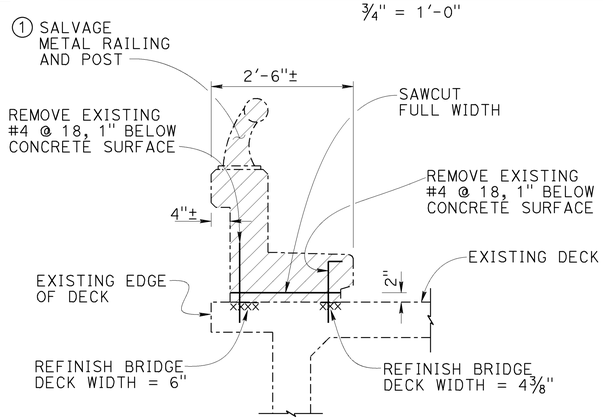

REMOVAL PLAN
EXISTING TYPE 2 BARRIER RAILING ON BRIDGE

¾" = 1'-0"

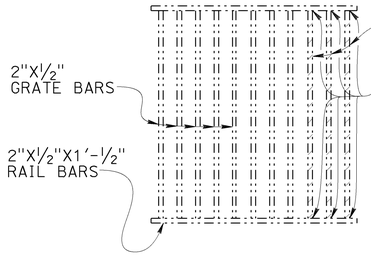

1. REMOVE STEEL GRATE BARS, Tot 3.
2. GRIND RAIL BARS FLUSH AND REMOVE GALVANIZE COATING ON THE INSIDE SURFACE OF RAIL BARS FOR WELDING NEW RISER BARS (SEE "DETAIL A" FOR RISER BARS AT "BARRIER DETAILS NO. 1" SHEET).
3. WELD RISER BARS TO INSIDE OF RAIL BARS.
4. REMOVE GALVANIZING AND REGALVANIZE DRAIN GRATES AFTER ASSEMBLY.

RECONSTRUCT DECK DRAIN GRATE

No Scale

NOTE:
THE CONTRACTOR SHALL VERIFY ALL CONTROLLING FIELD DIMENSIONS BEFORE ORDERING OR FABRICATING ANY MATERIAL.

	BY	CHECKED
DESIGN	John Tjoelker	Rangina Amir
DETAILS	Antonio Carreon	J. Tjoelker / R. Amir
QUANTITIES	John Tjoelker	Rangina Amir

STATE OF CALIFORNIA
DEPARTMENT OF TRANSPORTATION

DIVISION OF ENGINEERING SERVICES
STRUCTURE DESIGN
DESIGN BRANCH 8

BRIDGE NO. VARIOUS
POST MILE VARIES

ROUTE 101/280 INTERCHANGE
BARRIER REPLACEMENT
BARRIER DETAILS NO. 2

STRUCTURES DESIGN DETAIL SHEET (ENGLISH) (REV. 09-01-10)

ORIGINAL SCALE IN INCHES FOR REDUCED PLANS 0 1 2 3

UNIT: 3593
PROJECT NUMBER & PHASE: 0400000496, 1
CONTRACT NO.: 04-1A5511

DISREGARD PRINTS BEARING EARLIER REVISION DATES

REVISION DATES 11-14-12 03-18-13 03-13-13

SHEET 15 OF 24

FILE => 34-0070-e-det02.dgn

USERNAME => s134003 DATE PLOTTED => 17-OCT-2013 TIME PLOTTED => 14:37

DIST	COUNTY	ROUTE	POST MILES TOTAL PROJECT	SHEET No.	TOTAL SHEETS
04	SF	101,280	1.5/1.8 R4.1/R4.4	64	76

REGISTERED CIVIL ENGINEER 09-20-13 DATE

9-30-13
PLANS APPROVAL DATE

REGISTERED PROFESSIONAL ENGINEER JOHN R. TJOELKER No. C77165 Exp. 12-31-14 CIVIL STATE OF CALIFORNIA

The State of California or its officers or agents shall not be responsible for the accuracy or completeness of electronic copies of this plan sheet.

LEGEND:
- INDICATES CONCRETE REMOVAL
- INDICATES 3"X9" EXPANDED POLYSTYRENE
- INDICATES EXISTING

FOR DETAILS NOT SHOWN SEE, RSP B11-55 AND B14-3

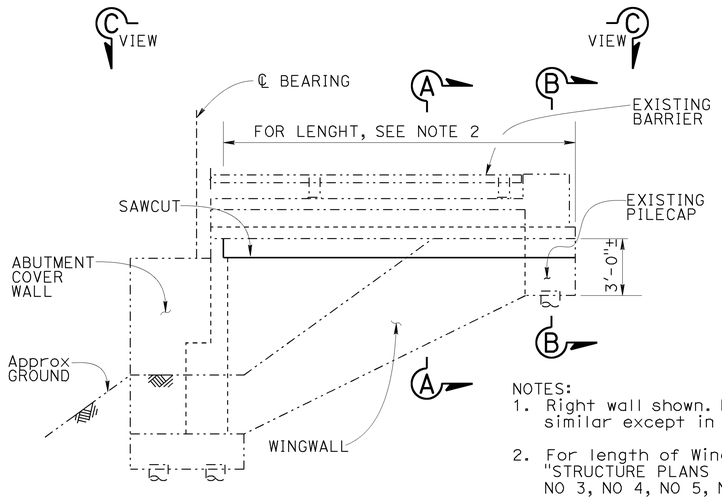

NOTES:
1. Right wall shown. Left wall similar except in opposite.
2. For length of Wingwalls, see "STRUCTURE PLANS NO 1, NO 2, NO 3, NO 4, NO 5, NO 6" sheets.
3. For "PLAN VIEW C-C", see "BARRIER SLAB DETAILS NO. 2" sheet.

EXISTING WINGWALL ELEVATION

1/4"=1'-0"

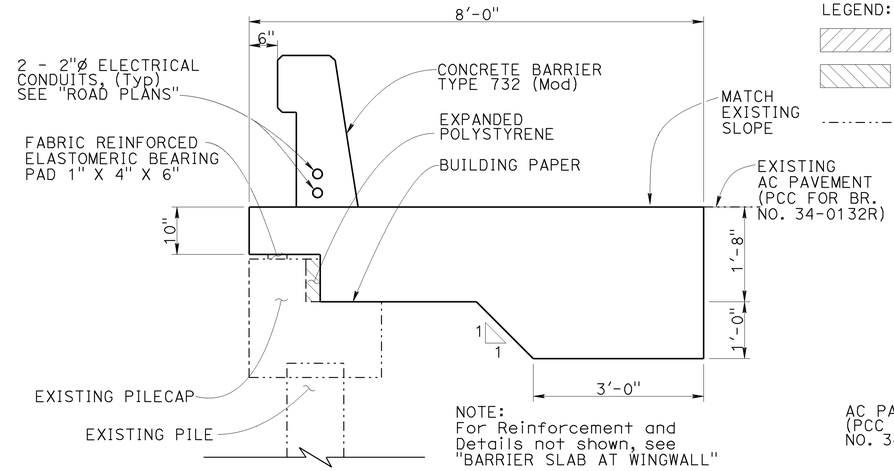

NOTE:
For Reinforcement and Details not shown, see "BARRIER SLAB AT WINGWALL"

BARRIER SLAB AT PILECAP

3/4" = 1'-0"

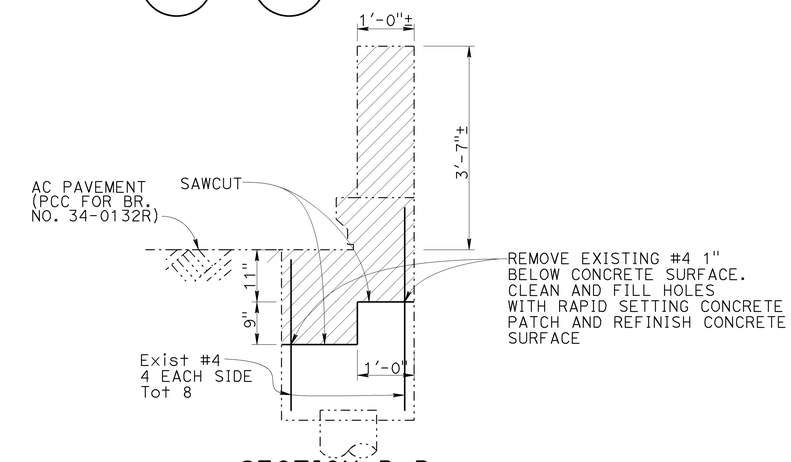

SECTION B-B
EXISTING TYPE 1 BARRIER AT PILECAP

3/4" = 1'-0"

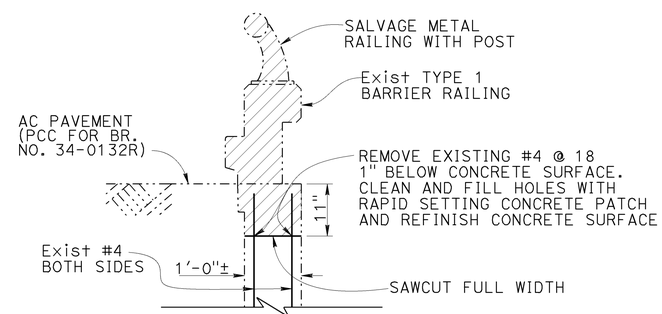

SECTION A-A
EXISTING TYPE 1 BARRIER AT WINGWALL

3/4" = 1'-0"

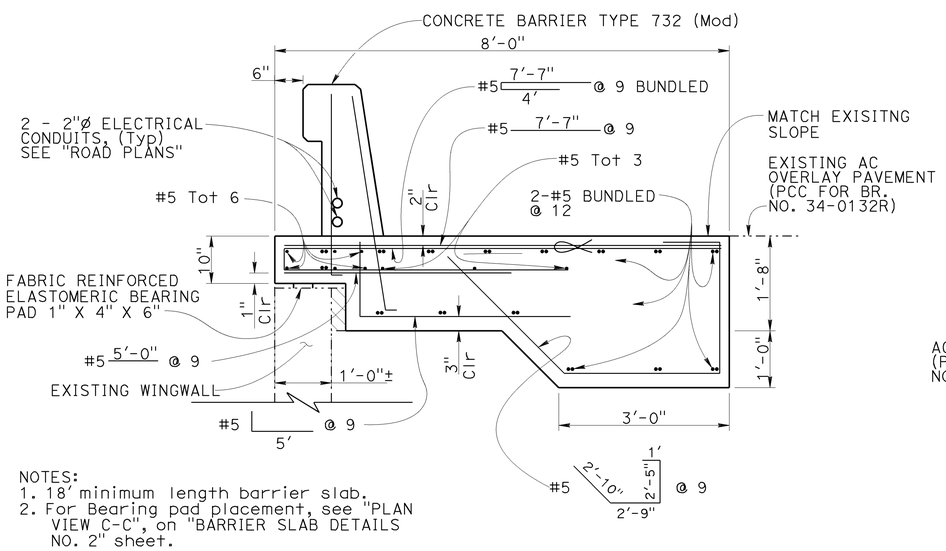

NOTES:
1. 18' minimum length barrier slab.
2. For Bearing pad placement, see "PLAN VIEW C-C", on "BARRIER SLAB DETAILS NO. 2" sheet.

BARRIER SLAB AT WINGWALL

3/4" = 1'-0"

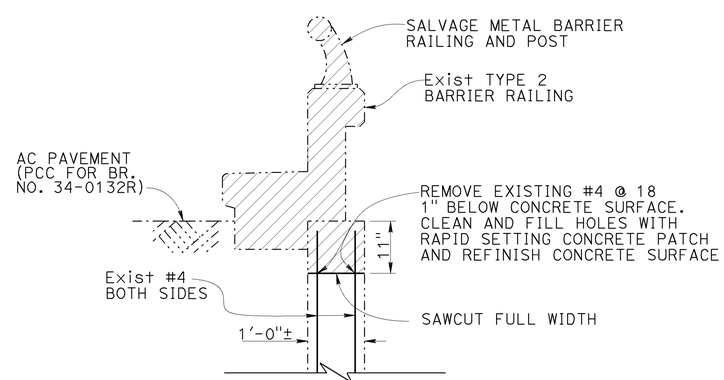

SECTION A-A
EXISTING TYPE 2 BARRIER AT WINGWALL

3/4" = 1'-0"

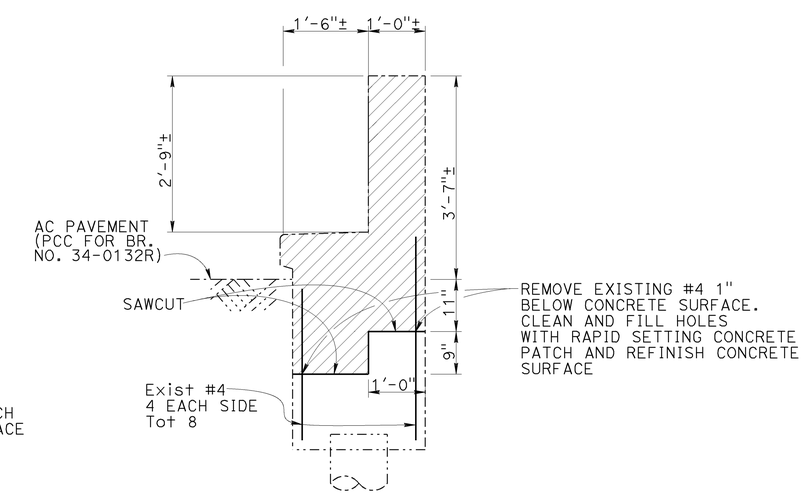

SECTION B-B
EXISTING TYPE 2 BARRIER AT PILECAP

3/4" = 1'-0"

NOTE:
THE CONTRACTOR SHALL VERIFY ALL CONTROLLING FIELD DIMENSIONS BEFORE ORDERING OR FABRICATING ANY MATERIAL.

	BY	CHECKED
DESIGN	John Tjoelker	Rangina Amir
DETAILS	Antonio Carreon	J. Tjoelker / R. Amir
QUANTITIES	John Tjoelker	Rangina Amir

STATE OF CALIFORNIA DEPARTMENT OF TRANSPORTATION

DIVISION OF ENGINEERING SERVICES STRUCTURE DESIGN DESIGN BRANCH 8

BRIDGE NO. VARIOUS
POST MILE VARIES

ROUTE 101/280 INTERCHANGE
BARRIER REPLACEMENT
BARRIER SLAB DETAILS NO. 1

STRUCTURES DESIGN DETAIL SHEET (ENGLISH) (REV. 09-01-10)

ORIGINAL SCALE IN INCHES FOR REDUCED PLANS 0 1 2 3

UNIT: 3593
PROJECT NUMBER & PHASE: 0400000496, 1 CONTRACT NO.: 04-1A5511

DISREGARD PRINTS BEARING EARLIER REVISION DATES

REVISION DATES 11-06-12 02-28-13 03-13-13 SHEET 16 OF 24

FILE => 34-0070-e-slbdet01.dgn

USERNAME => s134003 DATE PLOTTED => 17-OCT-2013 TIME PLOTTED => 14:38

DIST	COUNTY	ROUTE	POST MILES TOTAL PROJECT	SHEET No.	TOTAL SHEETS
04	SF	101,280	1.5/1.8 R4.1/R4.4	65	76

REGISTERED CIVIL ENGINEER 09-20-13 DATE

9-30-13
PLANS APPROVAL DATE

REGISTERED PROFESSIONAL ENGINEER JOHN R. TJOELKER No. C77165 Exp. 12-31-14 CIVIL STATE OF CALIFORNIA

The State of California or its officers or agents shall not be responsible for the accuracy or completeness of electronic copies of this plan sheet.

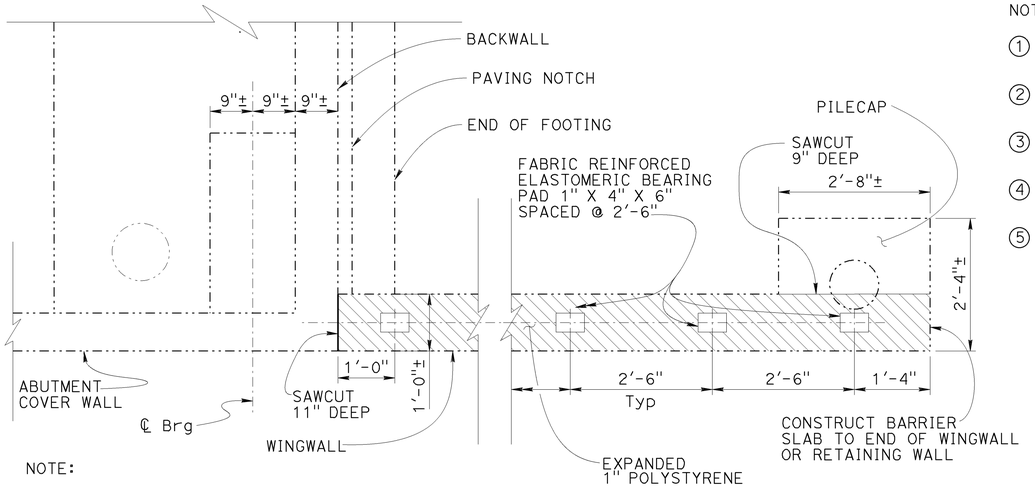

NOTE:

View taken after horizontal sawcut and concrete removed at wingwalls from elevation view of existing wingwalls.

PLAN VIEW C-C

¾" = 1'-0"

NOTES:

① PCC pavement for approach structure see, "STRUCTURE PLAN NO.7" sheet.

② AC pavement for retaining walls see, "STRUCTURE PLAN NO 10" sheet.

③ Detail applies to retaining walls in "STRUCTURE PLAN NO 7" sheet.

④ Detail applies to retaining walls in "STRUCTURE PLAN NO 10" sheet.

⑤ For exisitng reinforcing size and spacing see, "DECK DRAIN TABLE" sheet.

For details not shown, see "BARRIER SLAB DETAILS NO 1" sheet.

LEGEND:

- Indicates existing
- Indicates expanded polysytrene
- Indicates remove existing Type 1 and Type 2 Barriers and salvage metal barrier railings and posts
- Indicates rapid setting concrete patch
- Indicates bundled bars

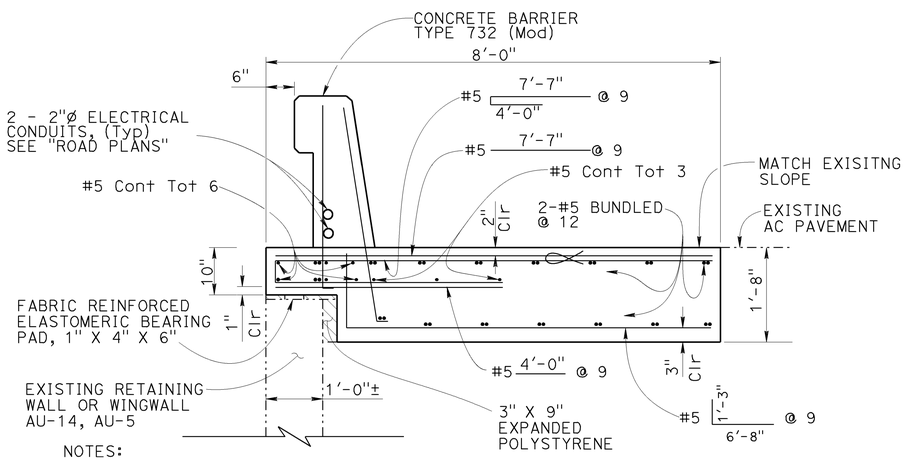

NOTES:

1. Bearing pad placement similar to wingwall "PLAN VIEW C-C".
2. No joints in Barrier Slab less than 40'.
3. For location and length of retaining walls at approach structure, see (BS) in "STRUCTURE PLAN NO 7" sheet.
4. For location and length of retaining walls, see (BS) in "STRUCTURE PLAN NO. 10" sheet.

BARRIER SLAB AT APPROACH STRUCTURE AND AT RETAINING WALLS

¾" = 1'-0"

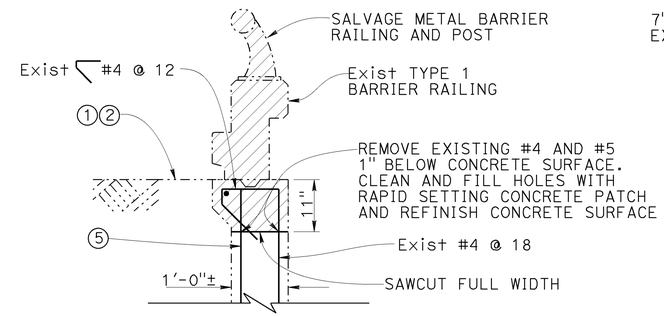

REMOVAL PLAN
TYPE 1 BARRIER AT RETAINING WALLS ④

¾" = 1'-0"

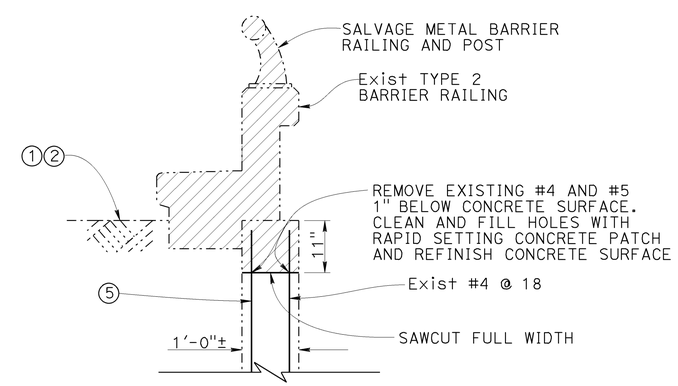

REMOVAL PLAN
TYPE 2 BARRIER AT RETAINING WALLS ③④

¾" = 1'-0"

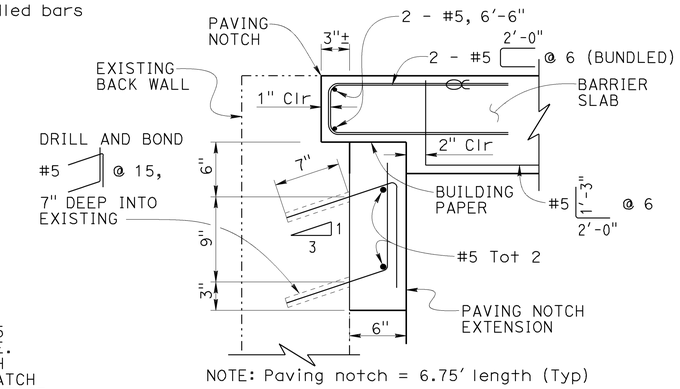

NOTE: Paving notch = 6.75' length (Typ)

PAVING NOTCH - REINFORCEMENT

No Scale

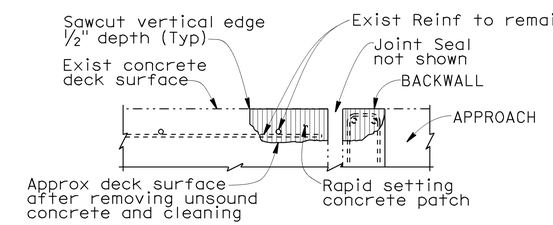

JOINT SPALL REPAIR DETAIL

No Scale

NOTE: Locations shown. If any other locations to be determined by the Engineer. Reinforcement may be encountered during deck concrete removal and is to remain undamaged.

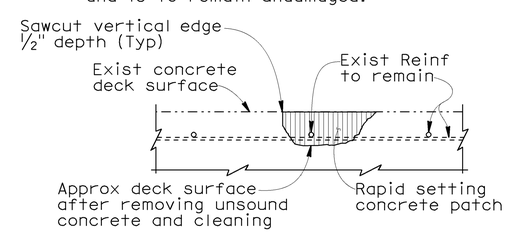

DECK DAMAGE REPAIR DETAIL

No Scale

NOTE: Locations shown. If any other locations to be determined by the Engineer. Reinforcement may be encountered during deck concrete removal and is to remain undamaged.

NOTE:
THE CONTRACTOR SHALL VERIFY ALL CONTROLLING FIELD DIMENSIONS BEFORE ORDERING OR FABRICATING ANY MATERIAL.

ROUTE 101/280 INTERCHANGE
BARRIER REPLACEMENT
BARRIER SLAB DETAILS NO. 2

	BY	CHECKED
DESIGN	John Tjoelker	Rangina Amir
DETAILS	Antonio Carreon	J. Tjoelker / R. Amir
QUANTITIES	John Tjoelker	Rangina Amir

STATE OF CALIFORNIA
DEPARTMENT OF TRANSPORTATION

DIVISION OF ENGINEERING SERVICES
STRUCTURE DESIGN
DESIGN BRANCH 8

BRIDGE NO.: VARIOUS
POST MILE: VARIES

STRUCTURES DESIGN DETAIL SHEET (ENGLISH) (REV. 09-01-10)

ORIGINAL SCALE IN INCHES FOR REDUCED PLANS 0 1 2 3

UNIT: 3593
PROJECT NUMBER & PHASE: 0400000496, 1
CONTRACT NO.: 04-1A5511

DISREGARD PRINTS BEARING EARLIER REVISION DATES

REVISION DATES: 11-06-12 02-28-13 03-13-13

SHEET 17 OF 24

FILE => 34-0070-e-stbdet02.dgn

USERNAME => s134003 DATE PLOTTED => 17-OCT-2013 TIME PLOTTED => 14:43

DIST	COUNTY	ROUTE	POST MILES TOTAL PROJECT	SHEET No.	TOTAL SHEETS
04	SF	101,280	15/1.8 R4.1/R4.4	66	76

REGISTERED CIVIL ENGINEER 09-20-13 DATE

9-30-13
PLANS APPROVAL DATE

REGISTERED PROFESSIONAL ENGINEER JOHN R. TJOELKER No. C77165 Exp. 12-31-14 CIVIL STATE OF CALIFORNIA

The State of California or its officers or agents shall not be responsible for the accuracy or completeness of electronic copies of this plan sheet.

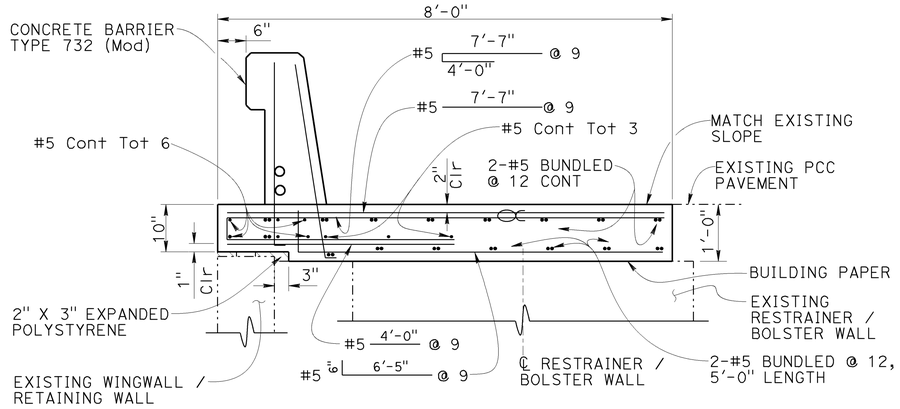

NOTE: Abut. AL-19 Rt shown, mirror for Lt.

SECTION S-S (BARRIER SLAB OVER BOLSTER WALL)

3/4" = 1'-0"

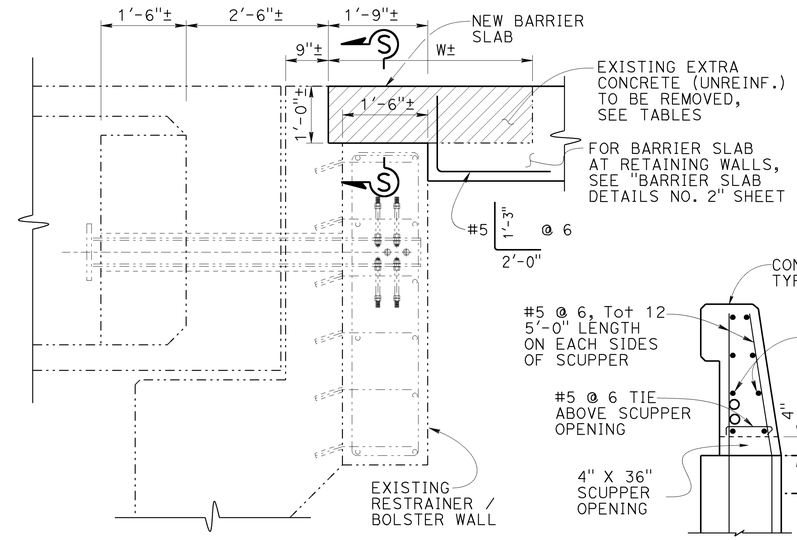

SECTION K-K

No Scale

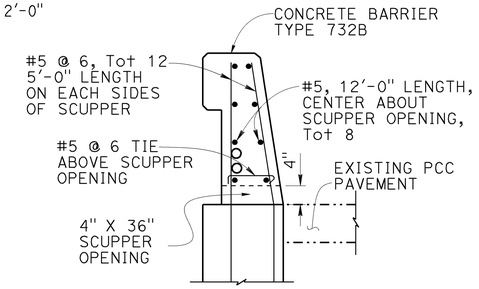

SCUPPER DETAILS @ CONCRETE BARRIER

3/4" = 1'-0"

LEGEND:

- Indicates existing
- Indicates limit of remove existing extra concrete (unreinforced) above bolster wall and replace with barrier slab (see note 1)
- Indicates bundled bars

NOTES:

1. For additional details, see "BARRIER SLAB DETAILS NO. 1" and "BARRIER SLAB DETAILS NO. 2" sheets.
2. Existing structure approach at Abut AU-19 and AU-14 is 10'-0"length and 8" depth and reinforced with #4 @ 18" transverse top and bottom matts. Remove existing #4 bars, 1" below concrete surface and fill holes with rapid setting concrete patch.
3. For details not shown, see RSP B11-55, B11-55/732B and B14-3.
4. For Electrical Conduits, see "Road Plans".

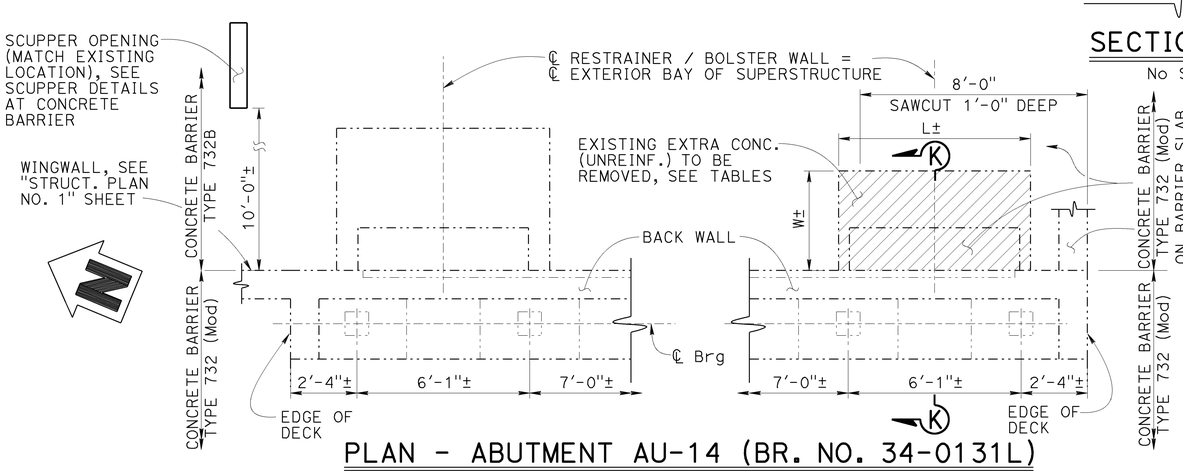

PLAN - ABUTMENT AU-14 (BR. NO. 34-0131L)

3/8" = 1'-0"

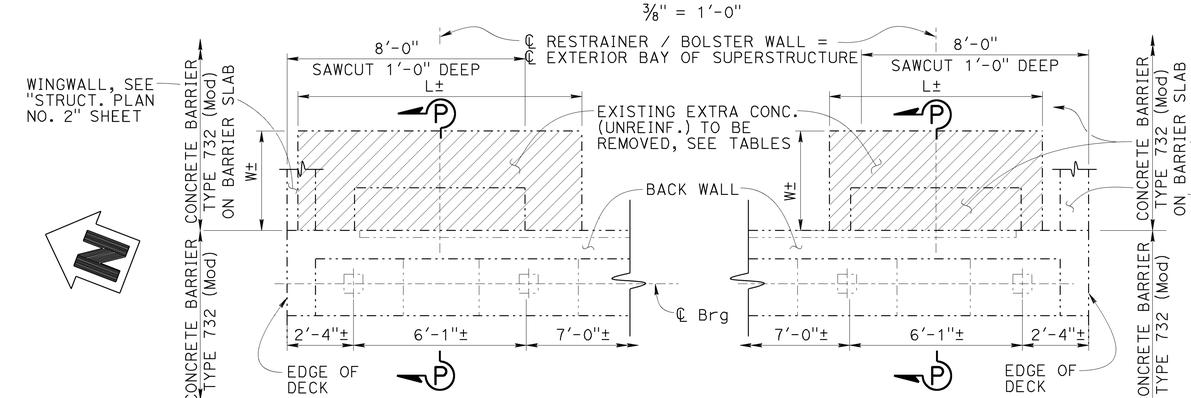

PLAN - ABUTMENT AL-19 (BR. NO. 34-0132R)

3/8" = 1'-0"

NOTE:
CONCRETE BARRIER / RAILING NOT SHOWN AT ABUTMENT PLAN

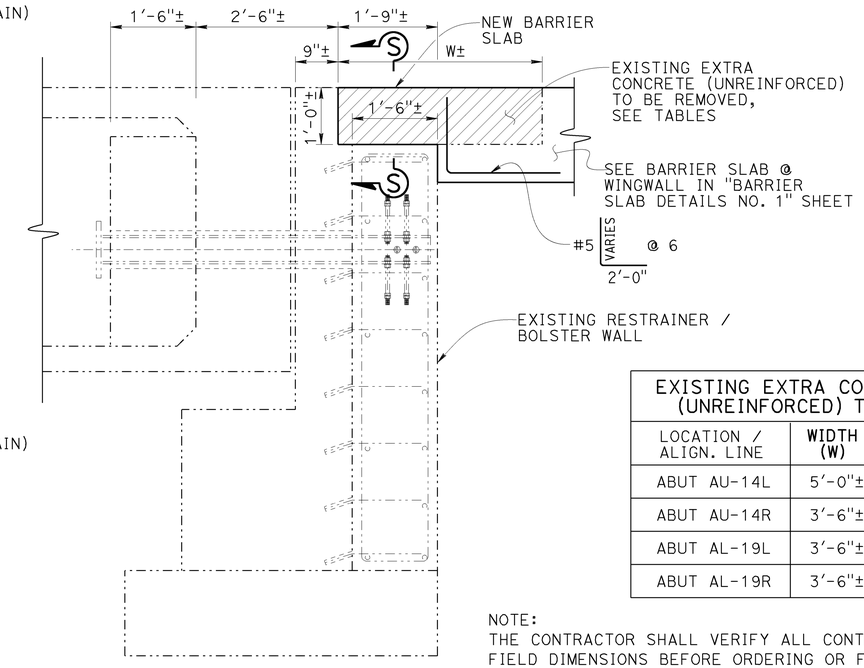

SECTION P-P

No Scale

EXISTING EXTRA CONCRETE (UNREINFORCED) TABLES		
LOCATION / ALIGN. LINE	WIDTH (W)	LENGTH (L)
ABUT AU-14L	5'-0"±	7'-6"±
ABUT AU-14R	3'-6"±	6'-9"±
ABUT AL-19L	3'-6"±	10'-0"±
ABUT AL-19R	3'-6"±	7'-6"±

NOTE:
THE CONTRACTOR SHALL VERIFY ALL CONTROLLING FIELD DIMENSIONS BEFORE ORDERING OR FABRICATING ANY MATERIAL.

ROUTE 101/280 INTERCHANGE
BARRIER REPLACEMENT
BARRIER SLAB DETAILS NO. 3

	BY	CHECKED
DESIGN	John Tjoelker	Rangina Amir
DETAILS	Carlo Cancino	J. Tjoelker / R. Amir
QUANTITIES	John Tjoelker	Rangina Amir

STATE OF CALIFORNIA
DEPARTMENT OF TRANSPORTATION

DIVISION OF ENGINEERING SERVICES
STRUCTURE DESIGN
DESIGN BRANCH 8

BRIDGE NO.: VARIOUS
POST MILE: VARIES

STRUCTURES DESIGN DETAIL SHEET (ENGLISH) (REV. 09-01-10)

ORIGINAL SCALE IN INCHES FOR REDUCED PLANS 0 1 2 3

UNIT: 3593
PROJECT NUMBER & PHASE: 0400000496, 1
CONTRACT NO.: 04-1A5511

DISREGARD PRINTS BEARING EARLIER REVISION DATES
REVISION DATES: 01-01-13 03-13-13 03-01-13
SHEET 18 OF 24

FILE => 34-0070-e-sibdet03.dgn

USERNAME => s134003 DATE PLOTTED => 17-OCT-2013 TIME PLOTTED => 14:43

DIST	COUNTY	ROUTE	POST MILES TOTAL PROJECT	SHEET No.	TOTAL SHEETS
04	SF	101,280	1.5/1.8 R4.1/R4.4	67	76

REGISTERED CIVIL ENGINEER 09-20-13 DATE

9-30-13
PLANS APPROVAL DATE

REGISTERED PROFESSIONAL ENGINEER JOHN R. TJOELKER No. C77165 Exp. 12-31-14 CIVIL STATE OF CALIFORNIA

The State of California or its officers or agents shall not be responsible for the accuracy or completeness of electronic copies of this plan sheet.

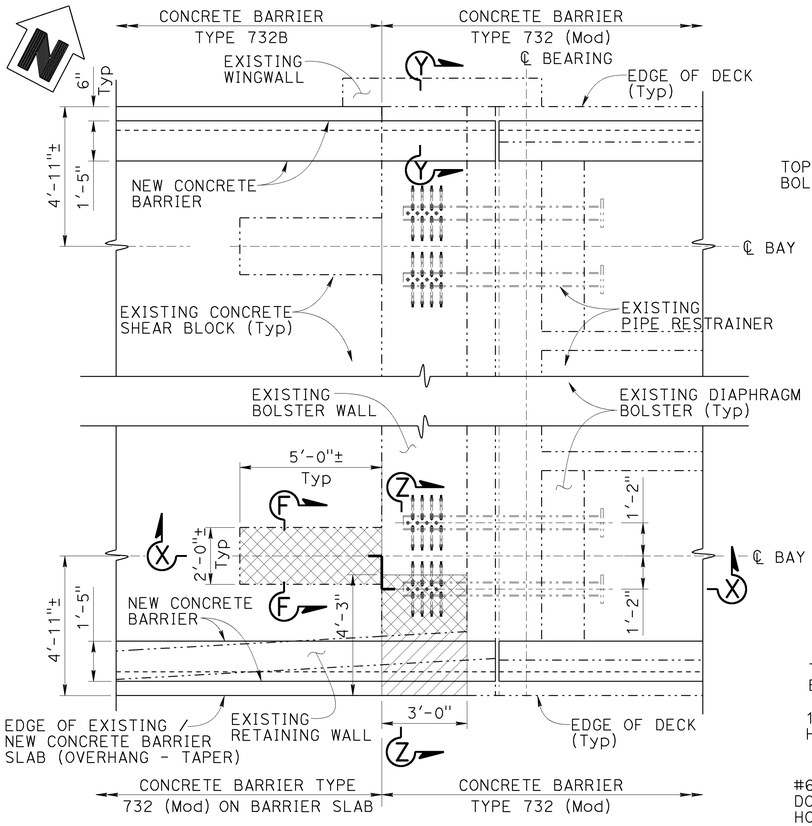

PLAN - ABUTMENT AU-5 (BR. NO. 34-0046)

3/8" = 1'-0"

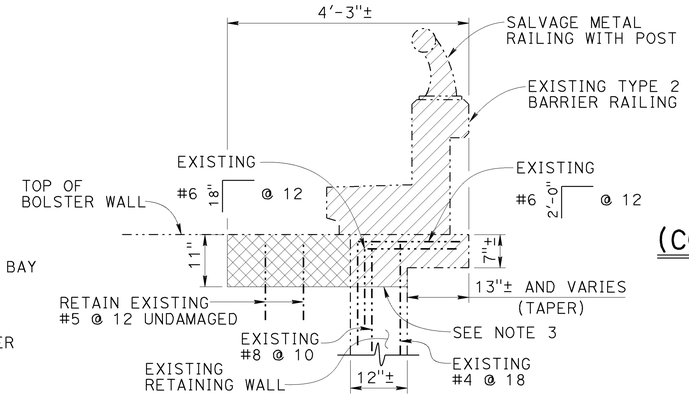

SECTION Z-Z
(CONCRETE REMOVAL AT BOLSTER WALL)

3/4" = 1'-0"

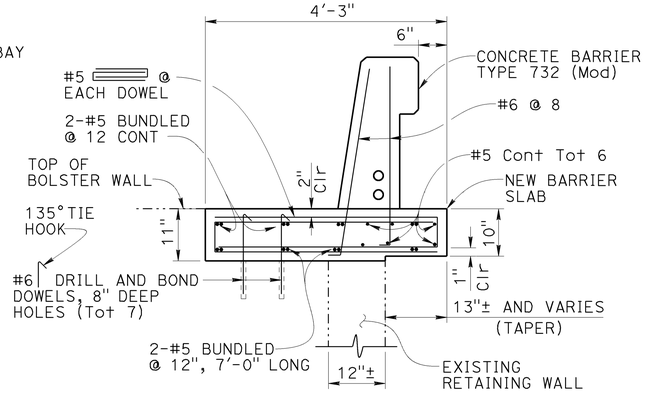

SECTION Z-Z
(RECONSTRUCTION AT BOLSTER WALL)

3/4" = 1'-0"

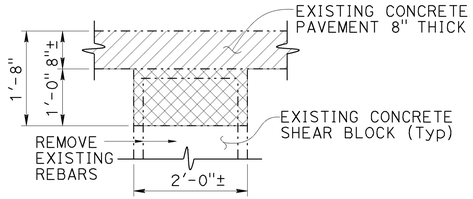

SECTION F-F
(CONCRETE REMOVAL AT SHEAR BLOCK)

3/4" = 1'-0"

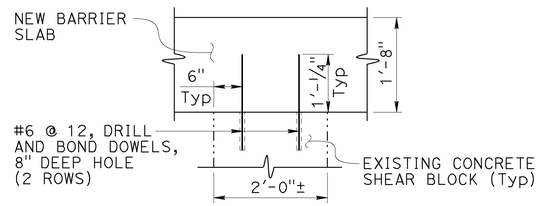

SECTION F-F
(RECONSTRUCTION AT SHEAR BLOCK)

3/4" = 1'-0"

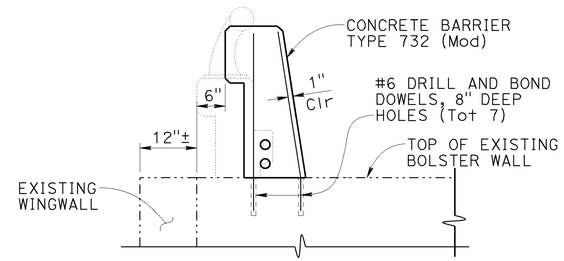

SECTION Y-Y
(CONCRETE BARRIER AT BOLSTER WALL)

3/4" = 1'-0"

LEGEND:

- Indicates existing
- Indicates limit of removal
- Indicates limit of remove existing concrete at bolster wall and shear block and replace with barrier slab (see note 1)

NOTES:

1. For additional details, see "BARRIER SLAB DETAILS NO. 1" and "BARRIER SLAB DETAILS NO. 2" sheets.
2. Limits of remove concrete for placement of barrier slab, see "BARRIER SLAB DETAILS NO. 2 sheet.
3. Sawcut 11" deep, remove existing bars 1" below surface. Clean and fill holes with rapid setting concrete patch and refinish surface.
4. For Details not shown, see RSP B11-55, B11-55 732B and B14-3.
5. Existing structure approach at Abut AU-5 is 10'-0" length and 8" depth and reinforced with #4 @ 18" transverse top and bottom matts. Remove existing #4 bars, 1" below concrete surface and fill holes with rapid setting concrete patch.
6. For Electrical Conduits, see "Road Plans".

NOTE:
THE CONTRACTOR SHALL VERIFY ALL CONTROLLING FIELD DIMENSIONS BEFORE ORDERING OR FABRICATING ANY MATERIAL.

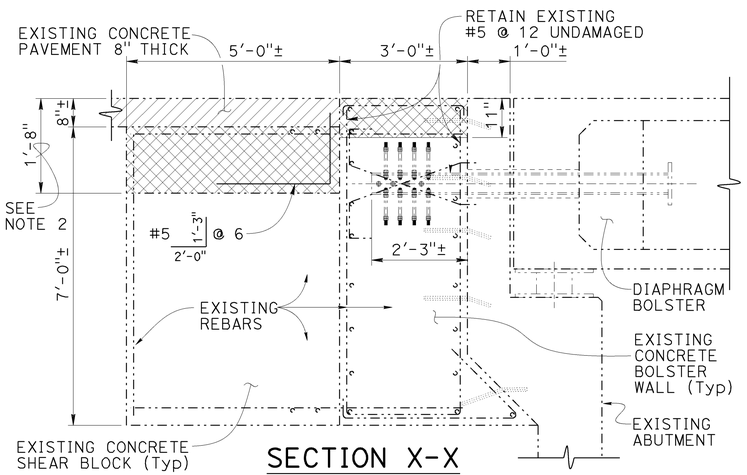

SECTION X-X

No Scale

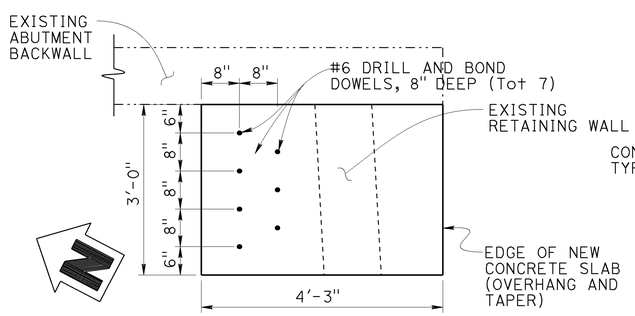

PLAN - DRILL AND BOND
(RECONSTRUCTION AT BOLSTER WALL)

3/4" = 1'-0"

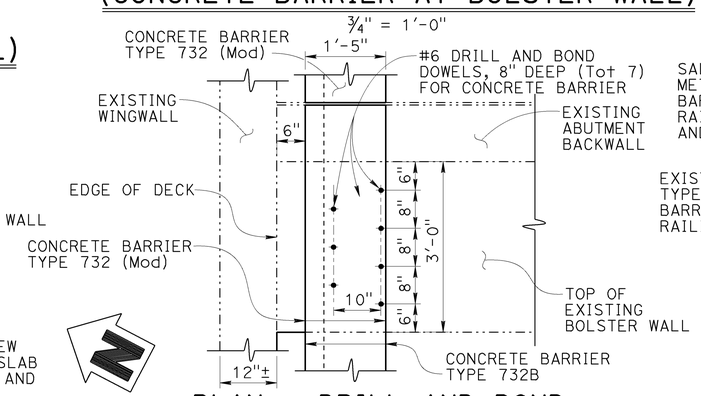

PLAN - DRILL AND BOND
(CONCRETE BARRIER AT BOLSTER WALL)

3/4" = 1'-0"

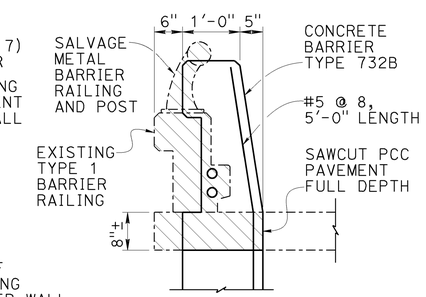

TYPE 732B CONCRETE BARRIER LAYOUT

3/4" = 1'-0"

NOTE:
NOT ALL TYPE 732B CONCRETE BARRIER SHOWN.

DESIGN	BY John Tjoelker	CHECKED Rangina Amir	
DETAILS	BY Carlo Cancino	CHECKED J. Tjoelker / R. Amir	
QUANTITIES	BY John Tjoelker	CHECKED Rangina Amir	

STATE OF CALIFORNIA
DEPARTMENT OF TRANSPORTATION

DIVISION OF ENGINEERING SERVICES
STRUCTURE DESIGN
DESIGN BRANCH 8

BRIDGE NO. VARIOUS
POST MILE VARIES

ROUTE 101/280 INTERCHANGE
BARRIER REPLACEMENT
BARRIER SLAB DETAILS NO. 4

STRUCTURES DESIGN DETAIL SHEET (ENGLISH) (REV. 09-01-10)

ORIGINAL SCALE IN INCHES FOR REDUCED PLANS 0 1 2 3

UNIT: 3593
PROJECT NUMBER & PHASE: 0400000496, 1 CONTRACT NO.: 04-1A5511

DISREGARD PRINTS BEARING EARLIER REVISION DATES

REVISION DATES 01-02-13 02-28-13 03-13-13

SHEET 19 OF 24

FILE => 34-0070-e-slbdet04.dgn

USERNAME => s134003 DATE PLOTTED => 17-OCT-2013 TIME PLOTTED => 14:44

DIST	COUNTY	ROUTE	POST MILES TOTAL PROJECT	SHEET No.	TOTAL SHEETS
04	SF	101,280	1.5/1.8 R4.1/R4.4	68	76

REGISTERED CIVIL ENGINEER 09-20-13 DATE

9-30-13
PLANS APPROVAL DATE

REGISTERED PROFESSIONAL ENGINEER JOHN R. TJOELKER No. C77165 Exp. 12-31-14 CIVIL STATE OF CALIFORNIA

The State of California or its officers or agents shall not be responsible for the accuracy or completeness of electronic copies of this plan sheet.

NOTE:
a_b = horizontal dimension for min. cross sectional area ≥ 0.11 in^2
b_b = 0.63" or equivalent

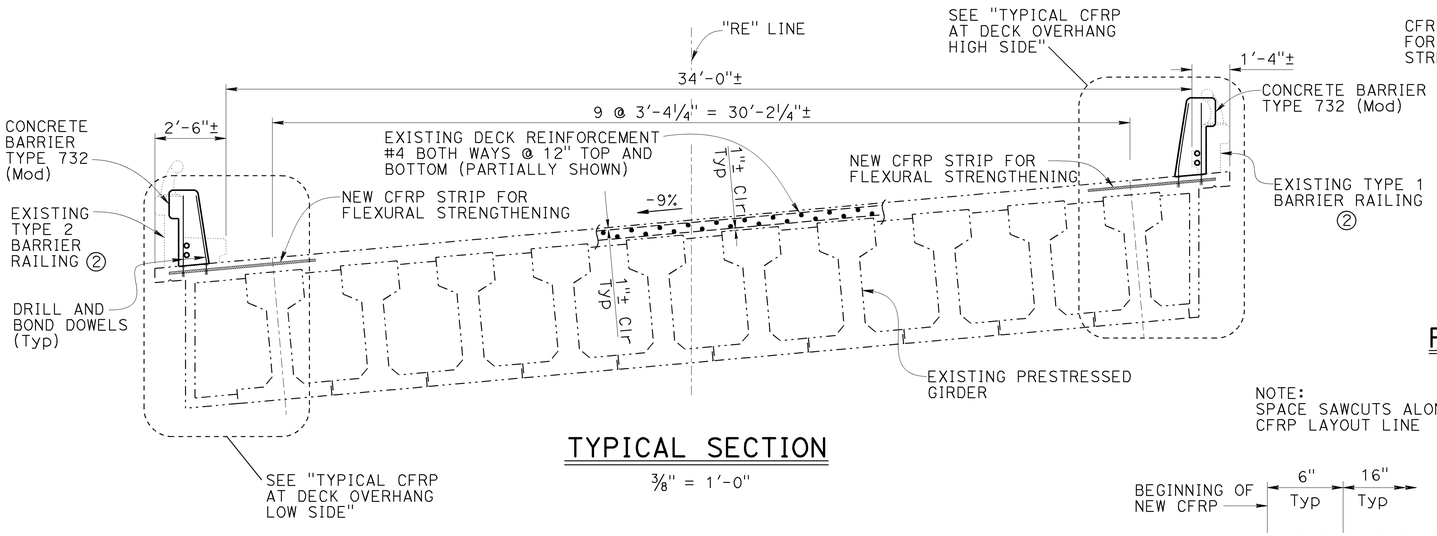

TYPICAL SECTION

⅜" = 1'-0"

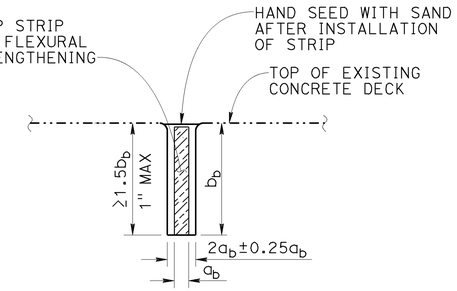

DETAIL A
RECTANGULAR (CFRP) STRIP

No Scale

NOTE:
SPACE SAWCUTS ALONG CFRP LAYOUT LINE

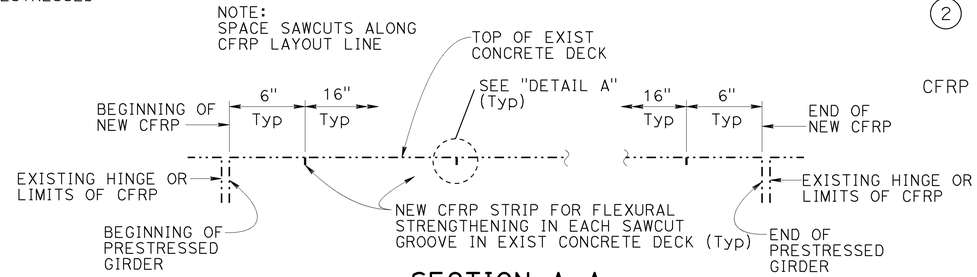

SECTION A-A

No Scale

LEGEND:

-·-·-·-	Indicates existing
———	Indicates new construction
(H)	Indicates location of existing hinge
(1) or ▥	Indicates limits of sawcut grooves in existing concrete deck, place new carbon fiber reinforced polymer (CFRP) strip flexural strengthening in each groove
(2)	Remove existing Type 1 or Type 2 Barrier Railing and replace with Concrete Barrier Type 732 (Mod), see "BARRIER REPLACEMENT DETAILS NO. 1 AND NO. 2" sheets.
CFRP	Carbon Fiber Reinforced Polymer Strip

NOTES:
1. For details not shown , see RSP B11-55 and B14-3 .

For additional details, see "BARRIER DETAILS NO 1" and "BARRIER DETAILS NO 2" sheets.

2. For Electrical Conduits, see "Road Plans".

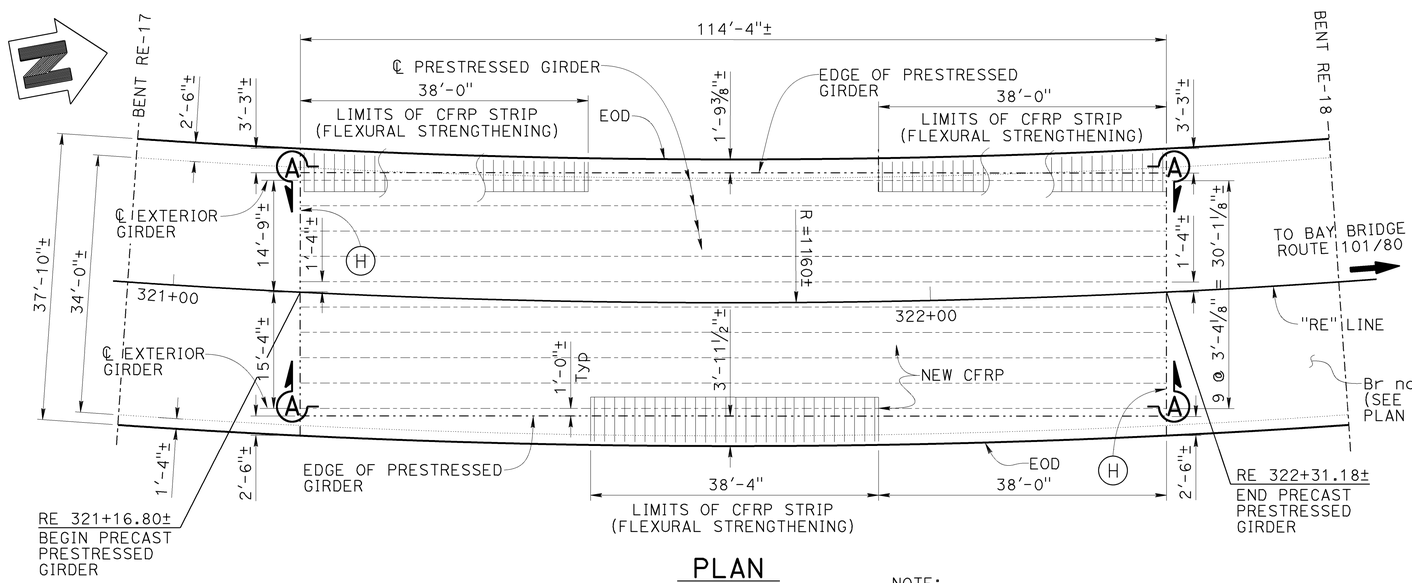

PLAN

1" = 10'-0"

NOTE:
CONCRETE BARRIER NOT SHOWN AT PLAN

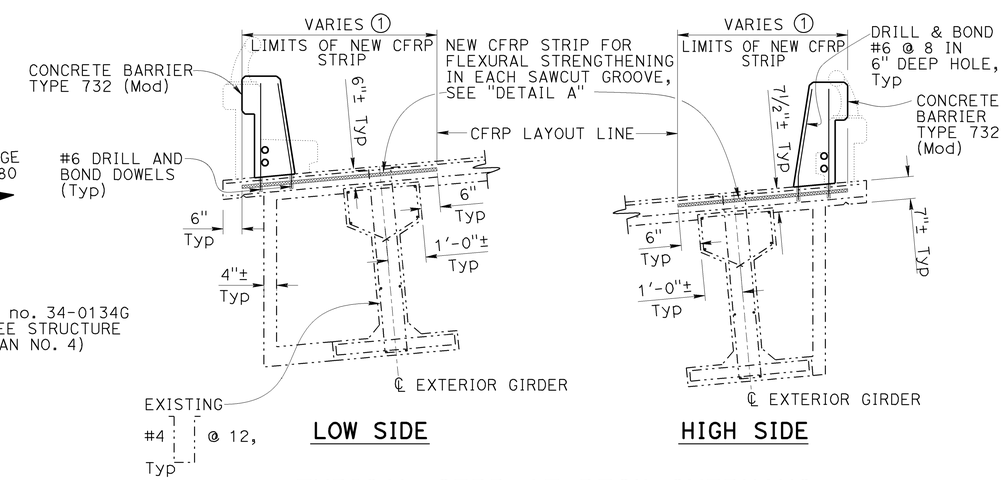

TYPICAL CFRP AT DECK OVERHANG

No Scale

NOTE:
THE CONTRACTOR SHALL VERIFY ALL CONTROLLING FIELD DIMENSIONS BEFORE ORDERING OR FABRICATING ANY MATERIAL.

	BY	CHECKED
DESIGN	John Tjoelker	Rangina Amir
DETAILS	Carlo Cancino	J. Tjoelker / R. Amir
QUANTITIES	John Tjoelker	Rangina Amir

STATE OF CALIFORNIA
DEPARTMENT OF TRANSPORTATION

DIVISION OF ENGINEERING SERVICES
STRUCTURE DESIGN
DESIGN BRANCH 8

BRIDGE NO. 34-0134G
POST MILE VARIES

ROUTE 101/280 INTERCHANGE
BARRIER REPLACEMENT
CARBON FIBER REINFORCED OVERHANG

STRUCTURES DESIGN DETAIL SHEET (ENGLISH) (REV. 09-01-10)

ORIGINAL SCALE IN INCHES FOR REDUCED PLANS 0 1 2 3

UNIT: 3593
PROJECT NUMBER & PHASE: 0400000496, 1
CONTRACT NO.: 04-1A5511

DISREGARD PRINTS BEARING EARLIER REVISION DATES

REVISION DATES: 01-02-13 03-01-13 03-13-13

SHEET 20 OF 24

FILE => 34-0070-f_cfrp-strips.dgn

USERNAME => s134003 DATE PLOTTED => 17-OCT-2013 TIME PLOTTED => 14:45

DIST	COUNTY	ROUTE	POST MILES TOTAL PROJECT	SHEET No.	TOTAL SHEETS
04	SF	101,280	1.5/1.8 R4.1/R4.4	69	76

REGISTERED CIVIL ENGINEER 09-20-13 DATE

9-30-13
PLANS APPROVAL DATE

REGISTERED PROFESSIONAL ENGINEER JOHN R. TJOELKER No. C77165 Exp. 12-31-14 CIVIL STATE OF CALIFORNIA

The State of California or its officers or agents shall not be responsible for the accuracy or completeness of electronic copies of this plan sheet.

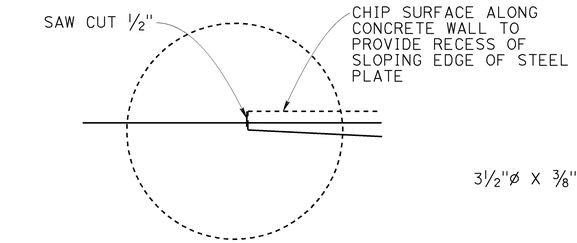

DETAIL A
No Scale

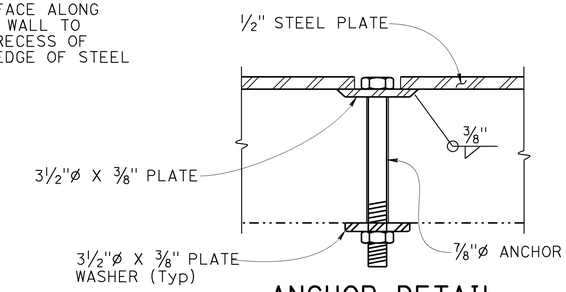

ANCHOR DETAIL
No Scale

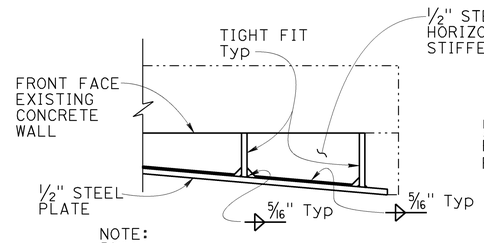

NOTE:
7/8"ø Through anchors not shown.

SECTION C-C
No Scale

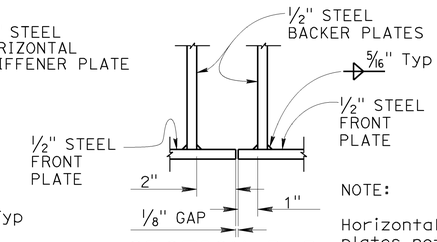

NOTE:
Horizontal stiffener plates not shown.

SECTION D-D
No Scale

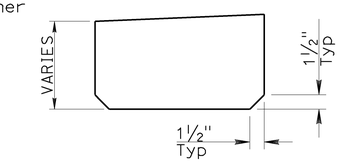

HORIZONTAL STIFFENER PLATE
No Scale

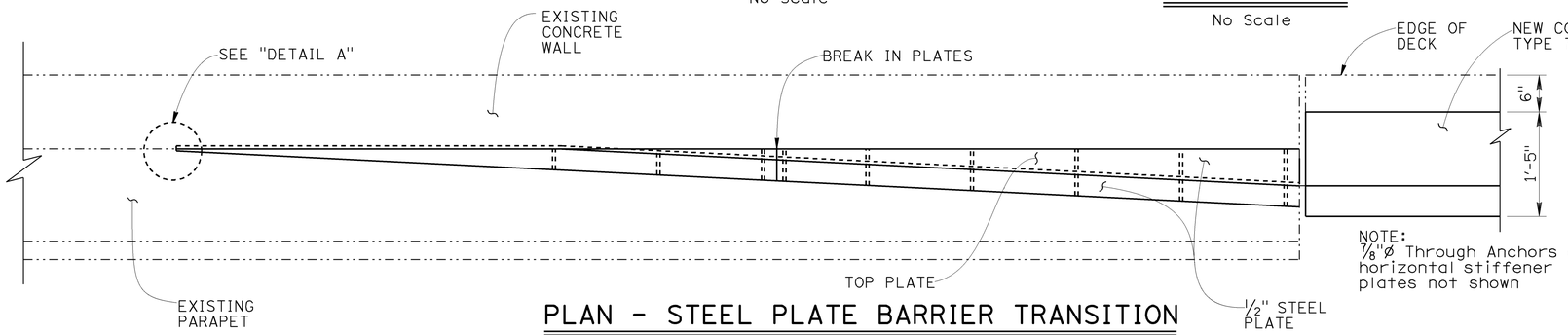

NOTE:
7/8"ø Through Anchors and horizontal stiffener plates not shown

PLAN - STEEL PLATE BARRIER TRANSITION
1" = 1'-0"

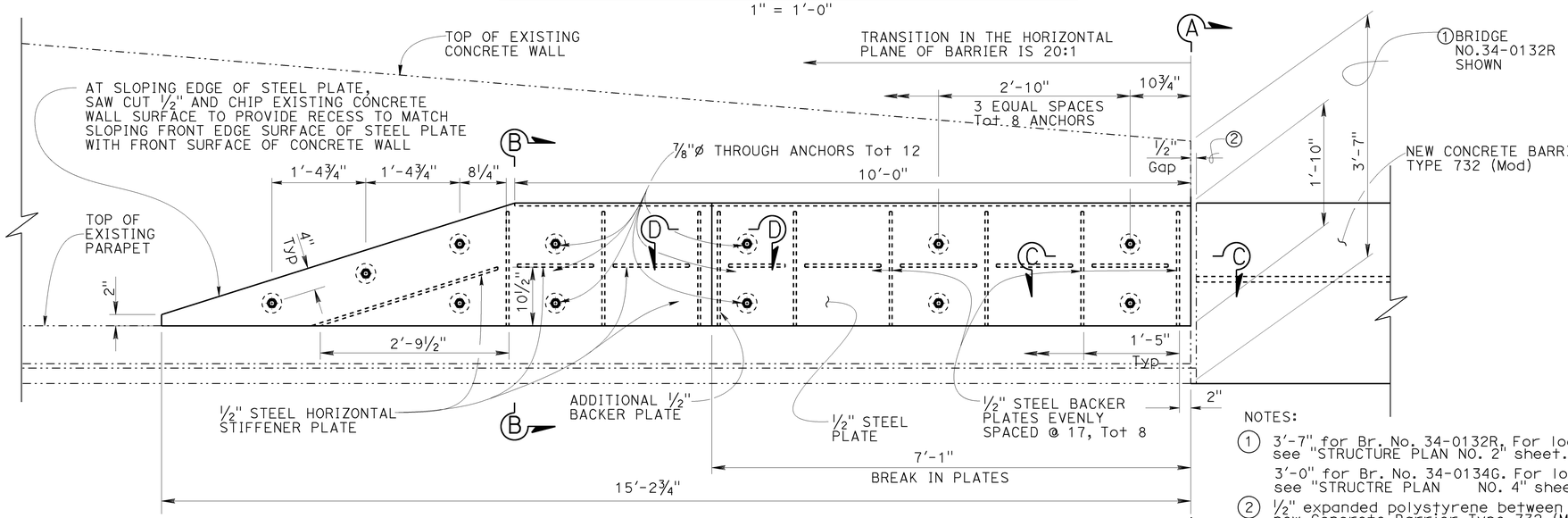

ELEVATION - STEEL PLATE BARRIER TRANSITION
1" = 1'-0"

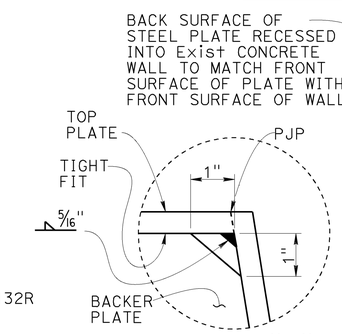

DETAIL "B"
No Scale

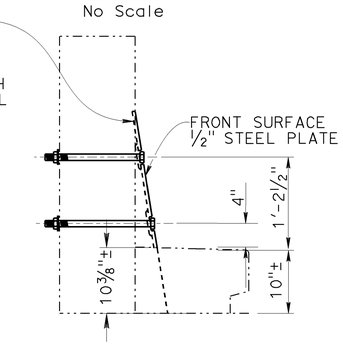

SECTION B-B
1" = 1'-0"

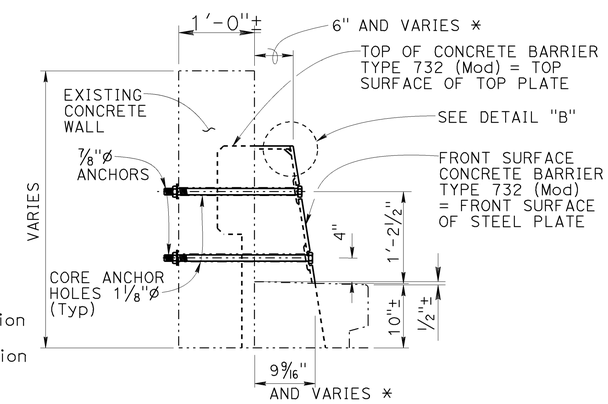

SECTION A-A
1" = 1'-0"

NOTE:
* To be measured exactly in the field.

NOTES:

1. 3'-7" for Br. No. 34-0132R. For location see "STRUCTURE PLAN NO. 2" sheet.
   3'-0" for Br. No. 34-0134G. For location see "STRUCTRE PLAN NO. 4" sheet.
2. 1/2" expanded polystyrene between new Concrete Barrier Type 732 (Mod) and existing concrete wall and parapet.
3. Steel plate barrier transition shown for Br. No.34-0132R mirror for Br. No. 34-0134G.
4. New Concrete Barrier Type 732 (Mod) installed prior to measuring existing dimensions for plate fabrication.
5. Galvanize plates after fabrication.

NOTE:
THE CONTRACTOR SHALL VERIFY ALL CONTROLLING FIELD DIMENSIONS BEFORE ORDERING OR FABRICATING ANY MATERIAL.

ROUTE 101/280 INTERCHANGE
BARRIER REPLACEMENT
STEEL PLATE BARRIER TRANSITION

	BY	CHECKED
DESIGN	John Tjoelker	Rangina Amir
DETAILS	Antonio Carreon	J. Tjoelker / R. Amir
QUANTITIES	John Tjoelker	Rangina Amir

STATE OF CALIFORNIA
DEPARTMENT OF TRANSPORTATION

DIVISION OF ENGINEERING SERVICES
STRUCTURE DESIGN
DESIGN BRANCH

BRIDGE NO. 34-0134G
POST MILE VARIES

STRUCTURES DESIGN DETAIL SHEET (ENGLISH) (REV. 09-01-10)

ORIGINAL SCALE IN INCHES FOR REDUCED PLANS 0 1 2 3

UNIT: 3593
PROJECT NUMBER & PHASE: 0400000496, 1
CONTRACT NO.: 04-1A5511

DISREGARD PRINTS BEARING EARLIER REVISION DATES

REVISION DATES: 02-26-13 03-01-13 03-13-13

SHEET 21 OF 24

FILE => 34-0070-f_ste.dgn

USERNAME => s134003 DATE PLOTTED => 17-OCT-2013 TIME PLOTTED => 14:46

DIST	COUNTY	ROUTE	POST MILES TOTAL PROJECT	SHEET No.	TOTAL SHEETS
04	SF	101,280	1.5/1.8 R4.7/R4.4	70	76

REGISTERED CIVIL ENGINEER 09-20-13 DATE

9-30-13
PLANS APPROVAL DATE

REGISTERED PROFESSIONAL ENGINEER JOHN R. TJOELKER No. C77165 Exp. 12-31-14 CIVIL STATE OF CALIFORNIA

The State of California or its officers or agents shall not be responsible for the accuracy or completeness of electronic copies of this plan sheet.

TEMPORARY DECK PLATE

MOMENT DEMAND/FOOT $\left(\frac{\text{kip-ft}}{\text{ft}}\right)$	BOLT SHEAR/FOOT $\left(\frac{\text{kip}}{\text{ft}}\right)$	BOLT TENSION (kips)
6	4.5	8

NOTES:
1. Plate deflection shall not exced s/300.0 (s= span (FT))
2. Minimum plate thickness shall be equal or greater than 7/8".
3. Maximum anchorage spacing shall not exceed 12".
4 Anchorage washer shall be neoprene or similar.

LEGEND:

"a" RECONSTRUCTION GAP WIDTH ARE DETERMINED BY THE ENGINEER

INDICATES EXISTING

INDICATES LIMITS OF REMOVE EXISTING CONCRETE. RETAIN EXISTING REINFORCING STEEL AS NOTED

INDICATES PLACE CONCRETE

JSA INDICATES JOINT SEAL ASSEMBLY

JSR INDICATES JOINT SEAL RECONSTRUCTION

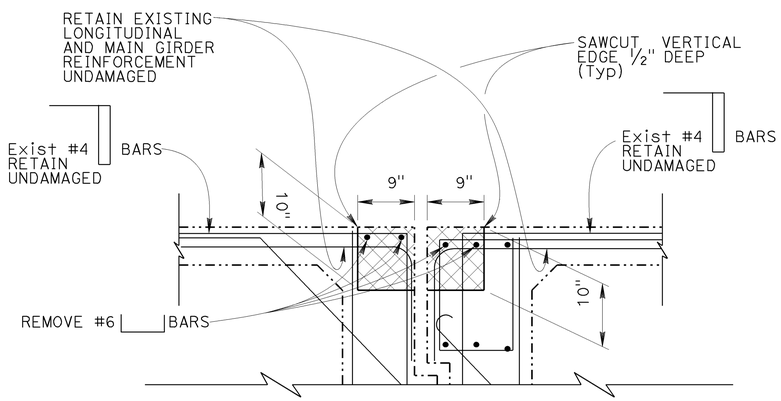

EXISTING HINGE REMOVAL STRIP SEAL JSA

No Scale

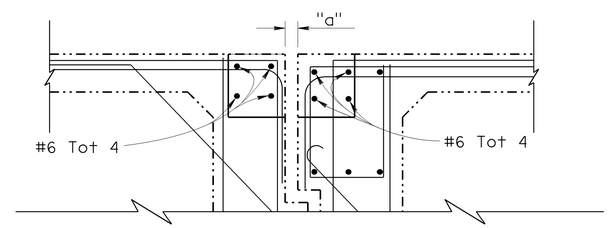

HINGE RECONSTRUCTION STRIP SEAL JSA

No Scale

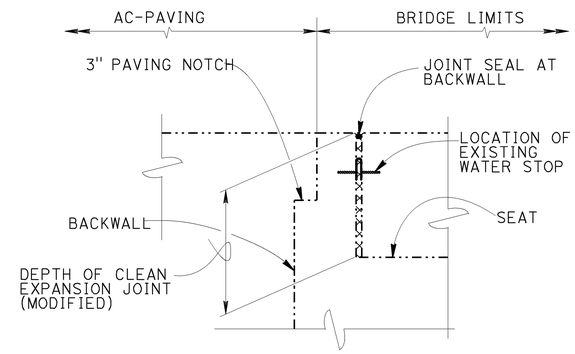

JOINT SEAL LOCATION AT ABUTMENT WITH BACKWALL

No Scale

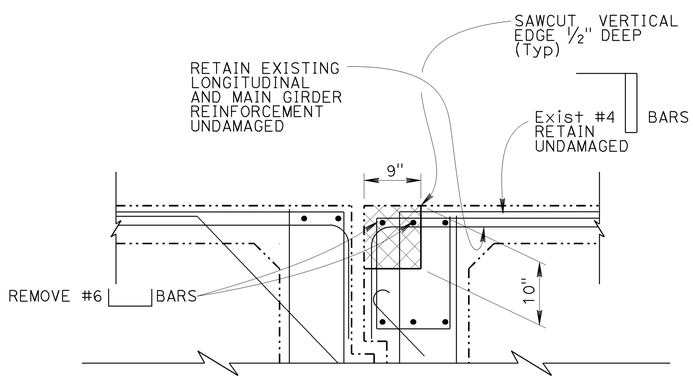

EXISTING HINGE FOR RECONSTUCTION TYPE B SEAL JSR

No Scale

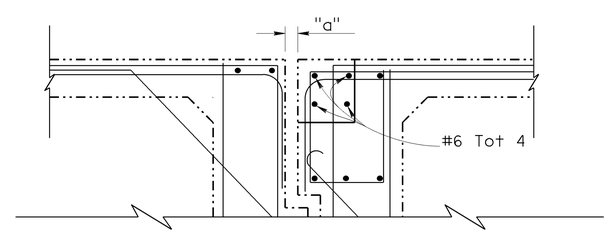

HINGE RECONSTRUCTION B SEAL JSR

No Scale

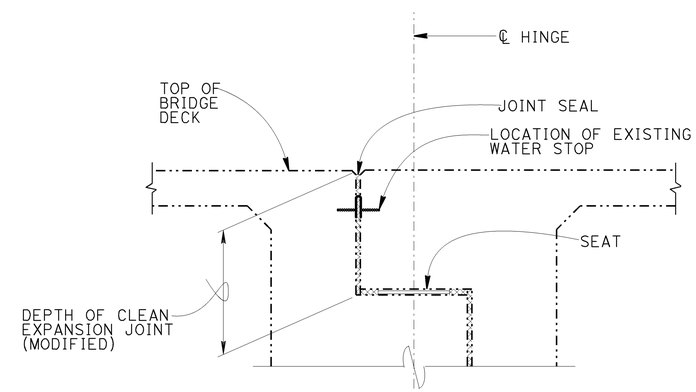

JOINT SEAL LOCATION AT HINGE

No Scale

NOTE:
For details not shown see, "BARRIER DETAILS NO. 1" sheet.

NOTE:
THE CONTRACTOR SHALL VERIFY ALL CONTROLLING FIELD DIMENSIONS BEFORE ORDERING OR FABRICATING ANY MATERIAL.

	BY	CHECKED
DESIGN	John Tjoelker	Rangina Amir
DETAILS	Antonio Carreon	J. Tjoelker / R. Amir
QUANTITIES	John Tjoelker	Rangina Amir

STATE OF CALIFORNIA
DEPARTMENT OF TRANSPORTATION

DIVISION OF ENGINEERING SERVICES
STRUCTURE DESIGN
DESIGN BRANCH 8

BRIDGE NO. VARIOUS
POST MILE VARIES

ROUTE 101/280 INTERCHANGE
BARRIER REPLACEMENT
JOINT SEAL REPLACEMENT DETAILS

STRUCTURES DESIGN DETAIL SHEET (ENGLISH) (REV. 09-01-10)

ORIGINAL SCALE IN INCHES FOR REDUCED PLANS 0 1 2 3

UNIT: 3593
PROJECT NUMBER & PHASE: 0400000496, 1
CONTRACT NO.: 04-1A5511

DISREGARD PRINTS BEARING EARLIER REVISION DATES

REVISION DATES: 11-06-12 03-01-13 03-13-13

SHEET 22 OF 24

FILE => 34-0070-g-jsealr.dgn

USERNAME => s134003 DATE PLOTTED => 17-OCT-2013 TIME PLOTTED => 14:46

DIST	COUNTY	ROUTE	POST MILES TOTAL PROJECT	SHEET No.	TOTAL SHEETS
04	SF	101,280	1.5/1.8 R4.1/R4.4	71	76

REGISTERED CIVIL ENGINEER 09-20-13 DATE

9-30-13
PLANS APPROVAL DATE

REGISTERED PROFESSIONAL ENGINEER JOHN R. TJOELKER No. C77165 Exp. 12-31-14 CIVIL STATE OF CALIFORNIA

The State of California or its officers or agents shall not be responsible for the accuracy or completeness of electronic copies of this plan sheet.

DECK DRAINS TABLE

BRIDGE NUMBER	INLET (GRATE) ID	TOTAL LENGTH OF CLEANOUT (ft)	COLUMN HEIGHT (ft)
34-0131L	BENT AU-2	54.03	19.03
	BENT AU-5	67.65	32.65
	BENT AU-7	76.19	41.19
	BENT AU-8	77.93	42.93
	BENT AU-9	76.57	41.57
	BENT AU-11	82.15	47.15
34-0132R	BENT AL-8	76.79	41.79
	BENT AL-10	81.58	46.58
	BENT AL-12	89.46	54.46
	BENT AL-13	84.62	49.62
	BENT AL-14	82.56	47.56
	BENT AL-15	76.70	41.70
	BENT AL-16	73.19	38.19
	BENT AL-17	68.17	33.17
34-0133R	BENT RE-2 Rt	51.54	22.54
	BENT RE-2 Lt	51.54	22.54
	BENT RE-3 Lt	52.29	23.29
	BENT RE-4 Rt	55.04	26.04
	BENT RE-4 Lt	55.04	26.04
	BENT RE-5	55.80	26.80
	BENT RE-6	57.60	28.60
34-0134G	BENT RE-7	71.40	36.40
	BENT RE-10	74.32	39.32
	BENT RE-13	94.65	59.65
	BENT RE-16	92.46	57.46
	BENT RE-19	89.98	54.98
	BENT RE-21	77.77	42.77
	BENT RE-22	76.41	41.41
	BENT RE-23	74.49	39.49
	BENT RE-24	66.01	31.01
34-0135G	BENT WL-22	74.18	39.18
	BENT WL-24	73.02	38.02
	BENT WL-26	65.22	30.22
	BENT WL-28	68.63	33.63
	BENT WL-31	59.48	24.48
	BENT WL-34	50.17	15.17

DECK DRAINS TABLE

BRIDGE NUMBER	INLET (GRATE) ID	TOTAL LENGTH OF CLEANOUT (ft)	COLUMN HEIGHT (ft)
34-0136G	BENT WU-21	108.98	73.98
	BENT WU-23	109.25	74.25
	BENT WU-25	90.79	55.79
	BENT WU-28	86.92	51.92
	BENT WU-30	82.80	47.80
	BENT WU-32	75.00	40.00
	BENT WU-34	68.00	33.00
	BENT WU-36	64.58	29.58
	BENT WU-37	56.57	21.57
	BENT WU-38	53.77	18.77
34-0046	BENT BU-12	61.00	32.00
	BENT BU-13	60.00	31.00
	BENT BU-15	53.00	24.00
	BENT BU-17	52.00	23.00
	BENT BU-19	53.00	24.00
	BENT BU-20	54.00	25.00
	BENT AU-6	22.50	22.50
	BENT AU-8	26.50	26.50
34-0070	BENT WU-11	76.02	47.02
	BENT WU-13	78.38	49.38
	BENT WU-14	78.84	49.84
	BENT WU-15	78.31	49.31
	BENT WU-16	80.69	51.69
	BENT WU-17 Rt	74.69	45.69
	BENT WU-17 Lt	94.69	65.69
	BENT WU-18	82.13	53.13
	BENT WU-19 Rt	75.44	46.44
	BENT WU-19 Lt	98.96	69.96
34-0070E	BENT BU-7	80.25	51.25
	BENT BU-8	80.25	51.25
	BENT BU-10	75.25	46.25
34-0070H	BENT WU-2	51.71	12.71
	BENT WU-4	62.70	23.70
	BENT WU-6	69.05	30.05
	BENT WU-7	72.80	33.80
	BENT WU-9	72.66	33.66

NOTE:
THE CONTRACTOR SHALL VERIFY ALL CONTROLLING FIELD DIMENSIONS BEFORE ORDERING OR FABRICATING ANY MATERIAL.

EXISTING REINFORCEMENT IN RETAINING WALLS

WALL LOCATION FROM ALIGN. LINE	DISTANCE (ft)	BAR SIZE AND SPACING
"WU" Lt (see note 1)	105'±	#5 @ 36"
	52'±	#5 @ 24"
	27'±	#5 @ 12"
"WU" Rt (see note 1)	34'±	#5 @ 24"
	23'±	#5 @ 12"
	36'±	#5 @ 8"
	67'±	#5 @ 30"
	40'±	#5 @ 15"
	30'±	#5 @ 11"
"AU" Rt (see note 2)	39'±	#7 @ 14"
	106'±	#8 @ 12"
	113'-6"'±	#8 @ 10"

NOTES ON TABLE:
1. Refers to Retaining Walls in "STRUCTURE PLAN NO. 10" sheet.
2. Refers to Retaining Walls in "STRUCTURE PLAN NO. 7" sheet.

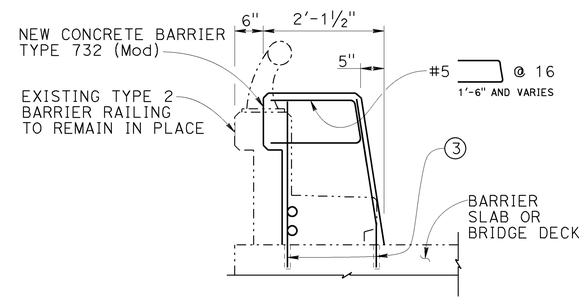

CONCRETE BARRIER (TRANSITION) CONCRETE BARRIER TYPE 732 (Mod) INTO EXISTING TYPE 2 BARRIER RAILING

¾" = 1'-0"

NOTES FOR CONCRETE BARRIER (TRANSITION) FROM CONCRETE BARRIER TYPE 732 (Mod) INTO EXISTING TYPE 2 BARRIER RAILING:

1. Not all barrier slab or bridge deck shown.
2. For barrier slab location and length of transition, see "STRUCTURE PLAN NO. 2" sheet.
3. For doweling into bridge deck, see"BARRIER DETAILS NO.1" sheet and for reinforcement placement in barrier slab see "BARRIER SLAB NO.1" sheet.
4. Section View at end of transition. For beginning, see "BARRIER DETAILS NO. 1 & NO. 2" sheets.

LEGEND:
-·-·-·- Indicates existing structure
——— Indicates new construction

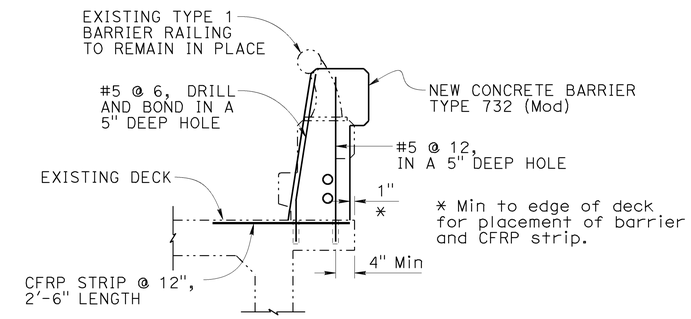

CONCRETE BARRIER (TRANSITION CFRP) TYPE 1 BARRIER RAILING INTO NEW CONCRETE BARRIER TYPE 732 (Mod)

¾" = 1'-0"

NOTES FOR CONCRETE BARRIER (TRANSITION CFRP) FROM TYPE 1 BARRIER RAILING TO NEW CONCRETE BARRIER TYPE 732 (Mod):

1. For location and length of transition, see "STRUCTURE PLAN NO. 7" sheet.
2. For CFRP placement, see "DETAIL A" in "CARBON FIBER REINFORCED OVERHANG" sheet.
3. Section View at beginning of transition. For end of barrier transition, see "BARRIER DETAILS NO. 1 & NO. 2" sheets.
4. Transition layout for new concrete barrier Type 732 (Mod) applies to location of existing Type 2 barrier railing, transition into concrete barrier Type 732 (Mod).

GENERAL NOTES:
1. For details not shown, see RSP B11-55 and B14-3.
2. For Electrical Conduits, see "Road Plans".
3. Begin and End of transition is in the direction of traffic.

DESIGN	BY John Tjoelker	CHECKED Rangina Amir	
DETAILS	BY Carlo Cancino	CHECKED J. Tjoelker / R. Amir	
QUANTITIES	BY John Tjoelker	CHECKED Rangina Amir	

STATE OF CALIFORNIA
DEPARTMENT OF TRANSPORTATION

DIVISION OF ENGINEERING SERVICES
STRUCTURE DESIGN
DESIGN BRANCH 8

BRIDGE NO. VARIOUS
POST MILE VARIES

ROUTE 101/280 INTERCHANGE
BARRIER REPLACEMENT
DECK DRAINS TABLE

STRUCTURES DESIGN DETAIL SHEET (ENGLISH) (REV. 09-01-10)

ORIGINAL SCALE IN INCHES FOR REDUCED PLANS 0 1 2 3

UNIT: 3593
PROJECT NUMBER & PHASE: 0400000496, 1
CONTRACT NO.: 04-1A5511

DISREGARD PRINTS BEARING EARLIER REVISION DATES

REVISION DATES: 02-21-13 03-04-13 03-13-13

SHEET 23 OF 24

FILE => 34-0070-g-tables.dgn

USERNAME => s134003 DATE PLOTTED => 17-OCT-2013 TIME PLOTTED => 14:52

DIST	COUNTY	ROUTE	POST MILES TOTAL PROJECT	SHEET No.	TOTAL SHEETS
04	SF	101,280	1.5/1.8 R4.1/R4.4	72	76

REGISTERED CIVIL ENGINEER 09-20-13 DATE

9-30-13
PLANS APPROVAL DATE

REGISTERED PROFESSIONAL ENGINEER JOHN R. TJOELKER No. C77165 Exp. 12-31-14 CIVIL STATE OF CALIFORNIA

The State of California or its officers or agents shall not be responsible for the accuracy or completeness of electronic copies of this plan sheet.

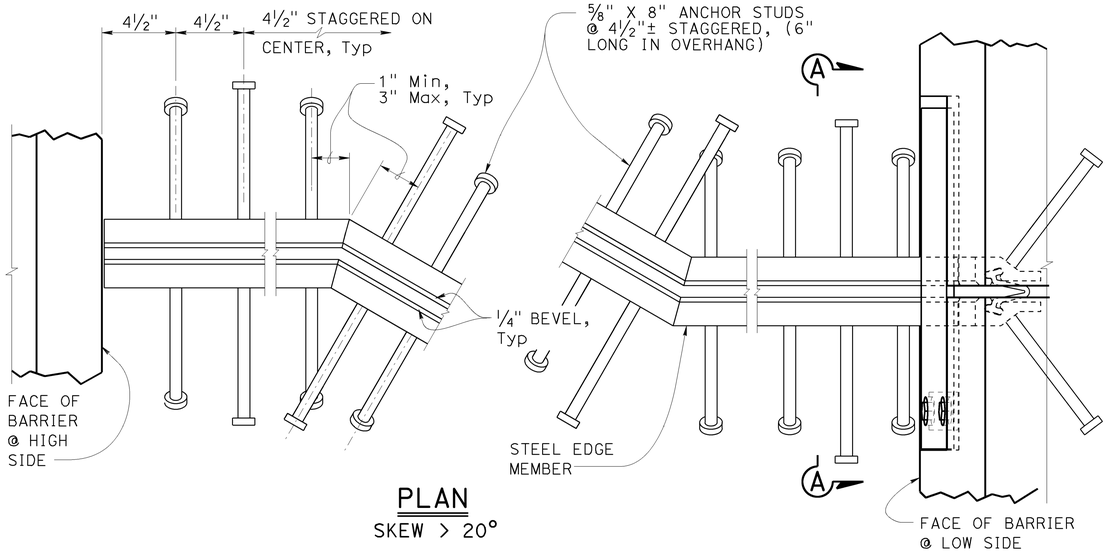

PLAN
SKEW > 20°

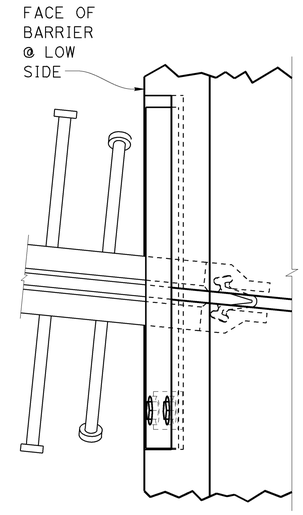

PLAN
SKEW ≤ 20°

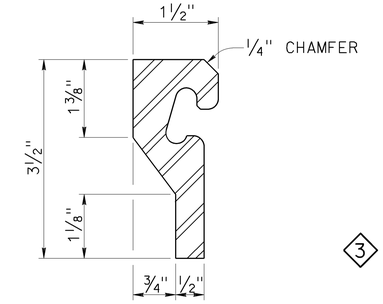

STEEL EDGE MEMBER

3 NOTE:
THE CONTRACTOR SHALL VERIFY ALL CONTROLLING FIELD DIMENSIONS BEFORE ORDERING OR FABRICATING ANY MATERIAL.

NOTES:

1. Alternatively, fillet or full penetration welds may be used at anchor studs.
2. Alternate types of anchor studs may be permitted subject to the approval by the Engineer
3. Joint seal assembly to be used in conjunction with closure pour. (See other sheets for limits). Closure pour shall not be placed until final deck surface is within the tolerances specified
4. Use joint at crown of roadway, at any change in traverse slope in deck and at changes in horizontal direction. Place other joints at or near lanes. All metal parts to be painted or galvanized after fabrication
5. Sheet Neoprene shall be fabricated in one continuous piece and shall be fabricated to bend around corners. Field splices of the neoprene are not allowed.
6. Insert assembly or expansion anchorage for ⅝" x 1¾" bolts. Use installation bolts extended ½" minimum past nut and coat with bond breaker, after concrete has cured, remove installation bolts, install A325 bolts and sheet neoprene
7. Sidewalk Detail similar to Barrier Detail on low side at both sides if the roadway is crowned or if the difference in elevation between the ends of the seal is 0.5′ or less
8. a_c, a_s, are the thermal expansion coefficients for concrete and steel respectively.

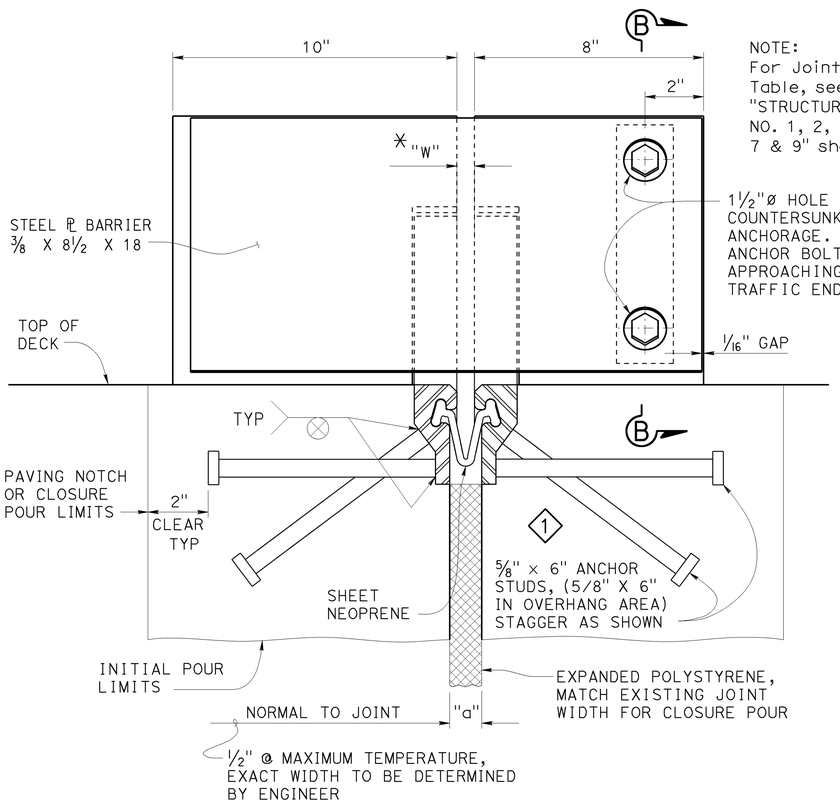

SECTION A-A

2 NOTE:
For Joint Seal Table, see "STRUCTURE PLANS NO. 1, 2, 3, 4, 5, 7 & 9" sheets.

JOINT INFORMATION			"a" DIMENSIONS		
LOCATION	MOVEMENT RATING (MR)	SKEW	WINTER	SPRING & FALL	SUMMER

* TO SET MINIMUM JOINT OPENING "W"

$$"W" = \begin{cases} \frac{1}{2}" + [(\text{Max Str temperature in F°}) - (\text{actual Str temperature in F°})] * (a_c \text{ or } a_s)(12)(\text{contributory L in feet}) \\ \\ \frac{1}{2}" \text{ Minimum} \\ a_c = 0.0000060 \\ a_s = 0.0000065 \end{cases}$$

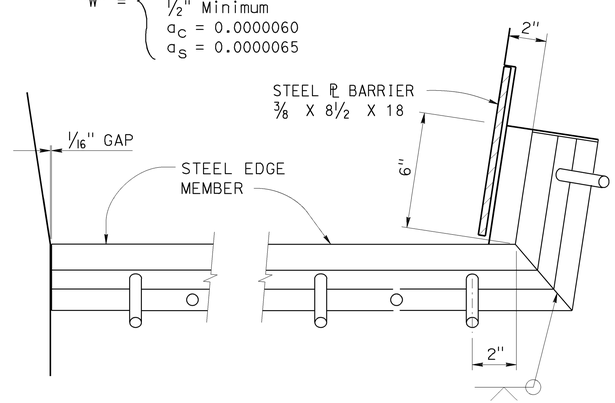

BARRIER DETAIL HIGH SIDE

BARRIER DETAIL LOW SIDE

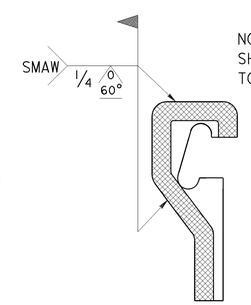

NOTE:
SHADED AREAS TO BE WELDED

FIELD WELD DETAIL

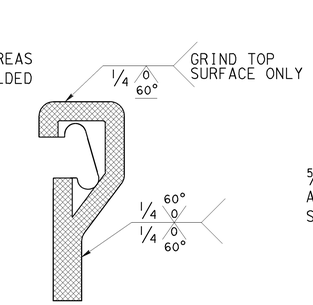

SHOP WELD DETAIL

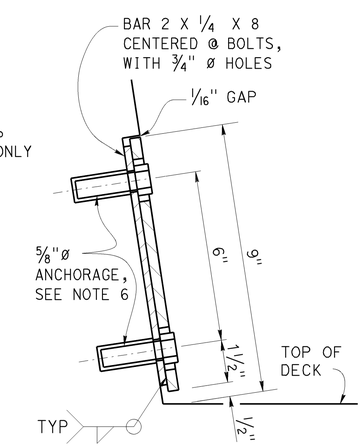

SECTION B-B

NO SCALE

SPECIAL DETAILS

ROUTE 101/280 INTERCHANGE BARRIER REPLACEMENT

JOINT SEAL ASSEMBLY

MAXIMUM MOVEMENT RATING = 4"

REVISED STANDARD DRAWING

FILE NO. xs8-010

APPROVAL DATE June 2012

1 Revised anchor stud length
2 Note added and table deleted
3 Note added

STATE OF CALIFORNIA DEPARTMENT OF TRANSPORTATION

DIVISION OF ENGINEERING SERVICES

BRIDGE NO. VARIOUS
POST MILE VARIES

UNIT: 3593
PROJECT NUMBER & PHASE: 0400000496, 1 CONTRACT NO.: 04-1A5511

DISREGARD PRINTS BEARING EARLIER REVISION DATES 02-21-12 03-01-13 06-21-12

SHEET 24 OF 24

DS OSD 2147A (ENGLISH STANDARD DRAWING "XS" BORDER REV. (02-02-11)

ORIGINAL SCALE IN INCHES FOR REDUCED PLANS 0 1 2 3

FILE => 34-0070-h-jseal.dgn

USERNAME => s134003 DATE PLOTTED => 17-OCT-2013 TIME PLOTTED => 14:53

DIST	COUNTY	ROUTE	POST MILES TOTAL PROJECT	SHEET No	TOTAL SHEETS
04	SF	101,280	1.5/1.8 R4.1/R4.4	73	76

REGISTERED CIVIL ENGINEER 4-5-12 DATE

9-30-13
PLANS APPROVAL DATE

REGISTERED PROFESSIONAL ENGINEER ANDREW BUI No. C63560 Exp. 9/30/14 CIVIL STATE OF CALIFORNIA

The State of California or its officers or agents shall not be responsible for the accuracy or completeness of scanned copies of this plan sheet.

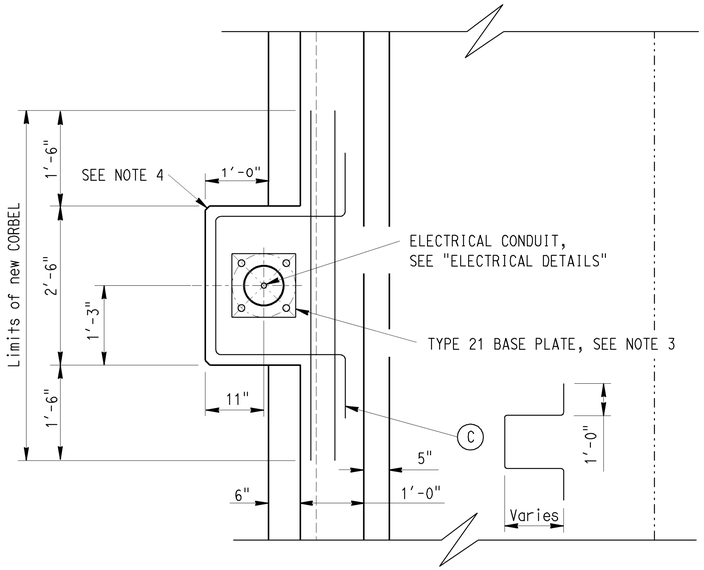

PLAN VIEW

NOTE: NOT ALL BARS SHOWN.

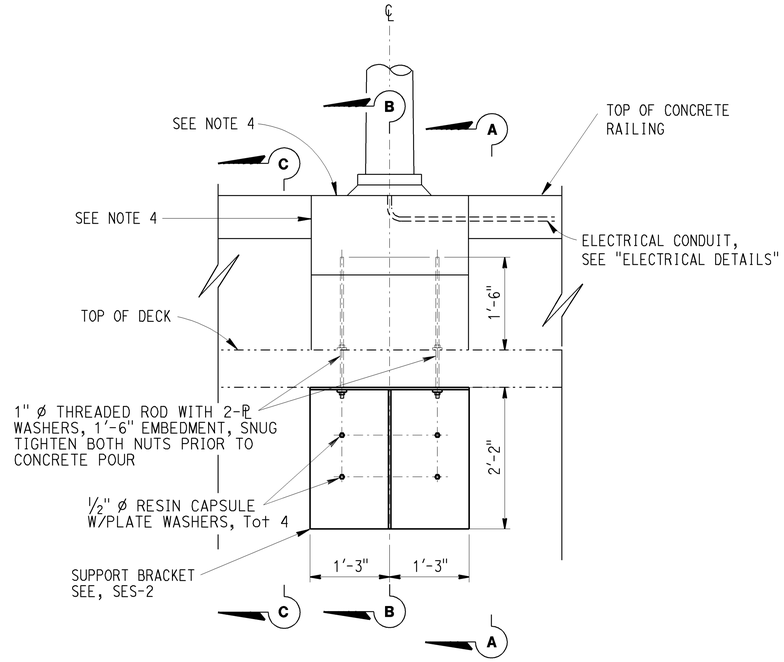

ELEVATION VIEW

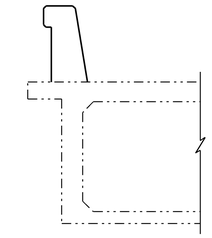

SECTION A-A

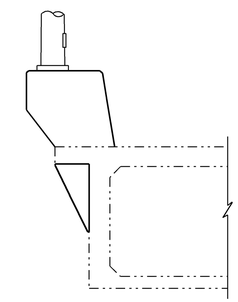

SECTION B-B

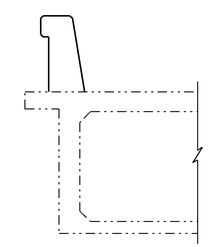

SECTION C-C

NOTES:

1. Provide minimum 1½" clr cover for bars.
2. Min f'c = 3,600 Psi @ 28 days.
3. See "2010 STANDARD PLAN" ES-6A.
4. Provide ½" chamfer at top and side edges.
5. Anchor bolts shall be 1¼" Ø x 1'-10" long, galvanize with 1'-4" concrete embedment.
6. Minimum concrete strength shall be achieved prior to installing lighting post.
7. Resin capsule bolts shall not interfere with existing reinforcements.
8. Resin capsule anchorage is subject to approval of engineer. Installation procedure shall comply with manufacturer's instructions.
9. Resin capsule bolt anchors shall be installed in sound concrete free of cracks or delamination.
10. Galvanized steel support bracket asssembly required prior to installation, See sheet SES-2.

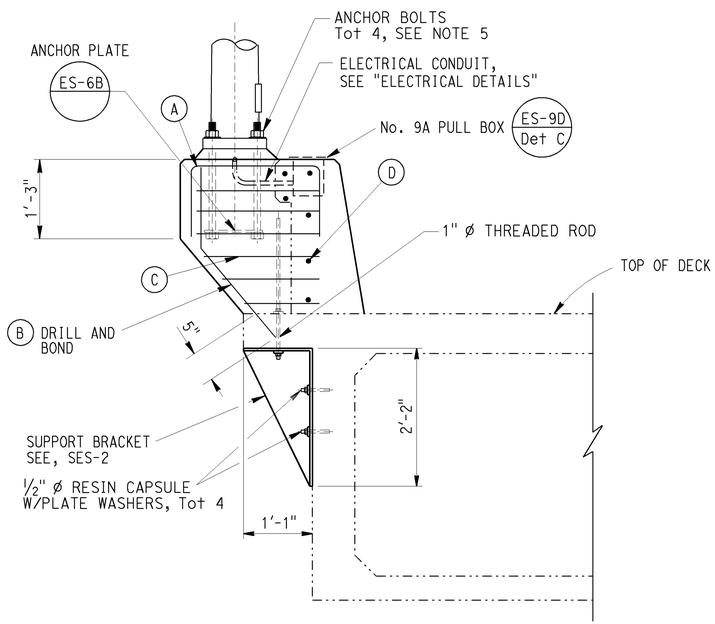

SIDE VIEW

NOTE: EXISTING AND BARRIER REPLACEMENT REBAR NOT SHOWN.

REBAR SCHEDULE

	TYPE	SIZE/SPACING*	TOTAL	VIEW
A		#5	5	SIDE
B		#5	5	SIDE
C		#5	6	PLAN
D		#5	6	PLAN

* Note: If spacing is not shown, then space evenly

NOTE:
THE CONTRACTOR SHALL VERIFY ALL CONTROLLING FIELD DIMENSIONS BEFORE ORDERING OR FABRICATING ANY MATERIAL.

NO SCALE

BRANCH CHIEF JEFF WOODY

	BY	CHECKED
DESIGN	A BUI	M LICHA
DETAILS	D W JUSTICE Jr	A BUI
QUANTITIES		

STATE OF CALIFORNIA DEPARTMENT OF TRANSPORTATION

DIVISION OF ENGINEERING SERVICES DESIGN AND TECHNICAL SERVICES SPECIAL DESIGNS BRANCH A

BRIDGE NO. VARIES
POST MILE N/A

280/101 INTERCHANGE BARRIER REPLACEMENT
TYPE 21 POLE ON TYPE 732 BARRIER (MOD)

SDS-1

(ENGLISH) SPECIAL DESIGNS BRANCH BORDER SHEET (REV. 7-1-09)

ORIGINAL SCALE IN INCHES FOR REDUCED PLANS 0 1 2 3

UNIT: 3619
PROJECT NUMBER & PHASE: 0400000496-1 CONTRACT NO.: 04-1A5511

DISREGARD PRINTS BEARING EARLIER REVISION DATES → REVISION DATES 3-28-13 8-8-13 3-6-13 3-6-13 SHEET OF

FILE => spec_des_br_prj/2013sd/04-1A5511/04-1a5511_sds1.dgn

USERNAME => s129055 DATE PLOTTED => 08-OCT-2013 TIME PLOTTED => 15:14

DIST	COUNTY	ROUTE	POST MILES TOTAL PROJECT	SHEET No	TOTAL SHEETS
04	SF	101,280	1.5/1.8 R4.1/R4.4	74	76

REGISTERED CIVIL ENGINEER 4-5-12 DATE

9-30-13
PLANS APPROVAL DATE

REGISTERED PROFESSIONAL ENGINEER ANDREW BUI No. C63560 Exp. 9/30/14 CIVIL STATE OF CALIFORNIA

The State of California or its officers or agents shall not be responsible for the accuracy or completeness of scanned copies of this plan sheet.

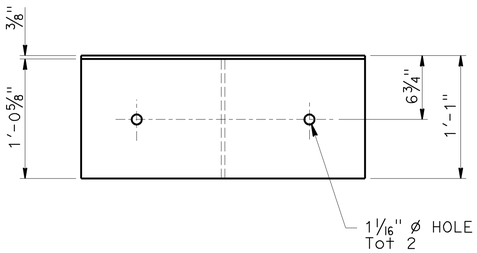

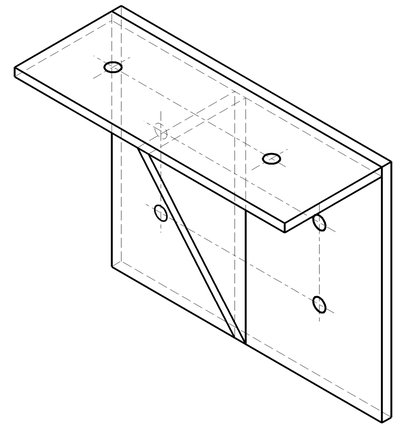

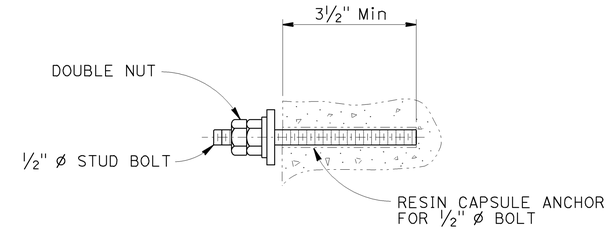

RESIN CAPSULE BOLT ANCHORAGE

SEE NOTES 7, 8, 9 ON SES-1

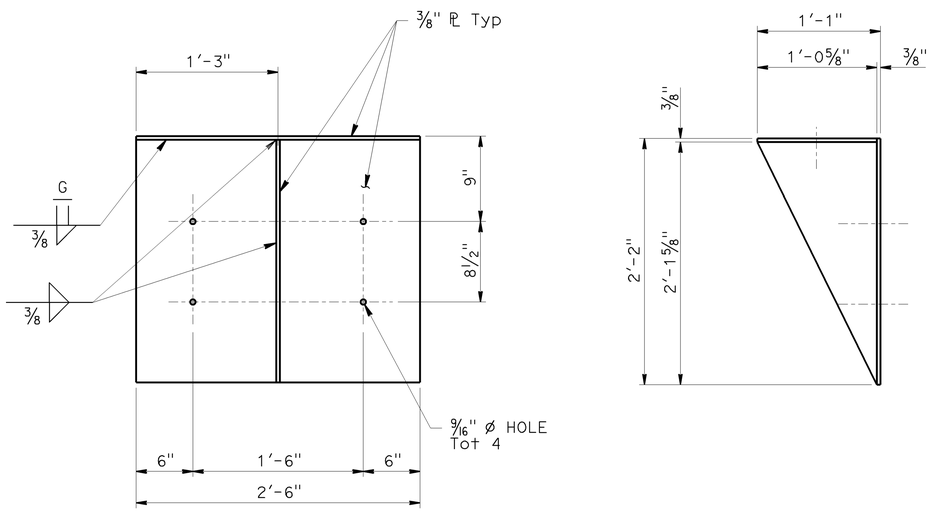

SUPPORT BRACKET ASSEMBLY

LOCATIONS OF CORBEL	
Line	Station
BI	96+50.00
BI	98+50.00
BI	100+50.00
WV	298+12.75
WV	300+10.00
WV	302+10.00
AL	305+60.00
AL	307+70.00
AL	309+60.00
AL	310+80.00
AL	311+60.00
RE	306+60.00
RE	308+75.00
RE	310+25.00

(SEE SHEET E2 & E3 FOR MORE INFORMATION)

NOTE:
THE CONTRACTOR SHALL VERIFY ALL CONTROLLING FIELD DIMENSIONS BEFORE ORDERING OR FABRICATING ANY MATERIAL.

NO SCALE

BRANCH CHIEF JEFF WOODY

	BY	CHECKED
DESIGN	A BUI	M LICHA
DETAILS	D W JUSTICE Jr	A BUI
QUANTITIES		

STATE OF CALIFORNIA DEPARTMENT OF TRANSPORTATION

DIVISION OF ENGINEERING SERVICES DESIGN AND TECHNICAL SERVICES SPECIAL DESIGNS BRANCH A

BRIDGE NO. VARIES
POST MILE N/A

280/101 INTERCHANGE BARRIER REPLACEMENT
MISC DETAILS

SDS-2

(ENGLISH) SPECIAL DESIGNS BRANCH BORDER SHEET (REV. 7-1-09)

ORIGINAL SCALE IN INCHES FOR REDUCED PLANS 0 1 2 3

UNIT: 3619
PROJECT NUMBER & PHASE: 0400000496-1 CONTRACT NO.: 04-1A5511

DISREGARD PRINTS BEARING EARLIER REVISION DATES

REVISION DATES 3-28-13 2-28-13 3-6-12 3-8-13 SHEET OF

FILE => spec_des_br_prj/2013sd/04-1A5511/04-1a5511_sds2.dgn

USERNAME => s129055 DATE PLOTTED => 08-OCT-2013 TIME PLOTTED => 15:15

DIST	COUNTY	ROUTE	POST MILES TOTAL PROJECT	SHEET No	TOTAL SHEETS
04	SF	101,280	1.5/1.8 R4.1/R4.4	75	76

REGISTERED CIVIL ENGINEER 4/15/13 DATE

9-30-13
PLANS APPROVAL DATE

REGISTERED PROFESSIONAL ENGINEER ANDREW BUI No. C63560 Exp. 9/30/14 CIVIL STATE OF CALIFORNIA

The State of California or its officers or agents shall not be responsible for the accuracy or completeness of electronic copies of this plan sheet.

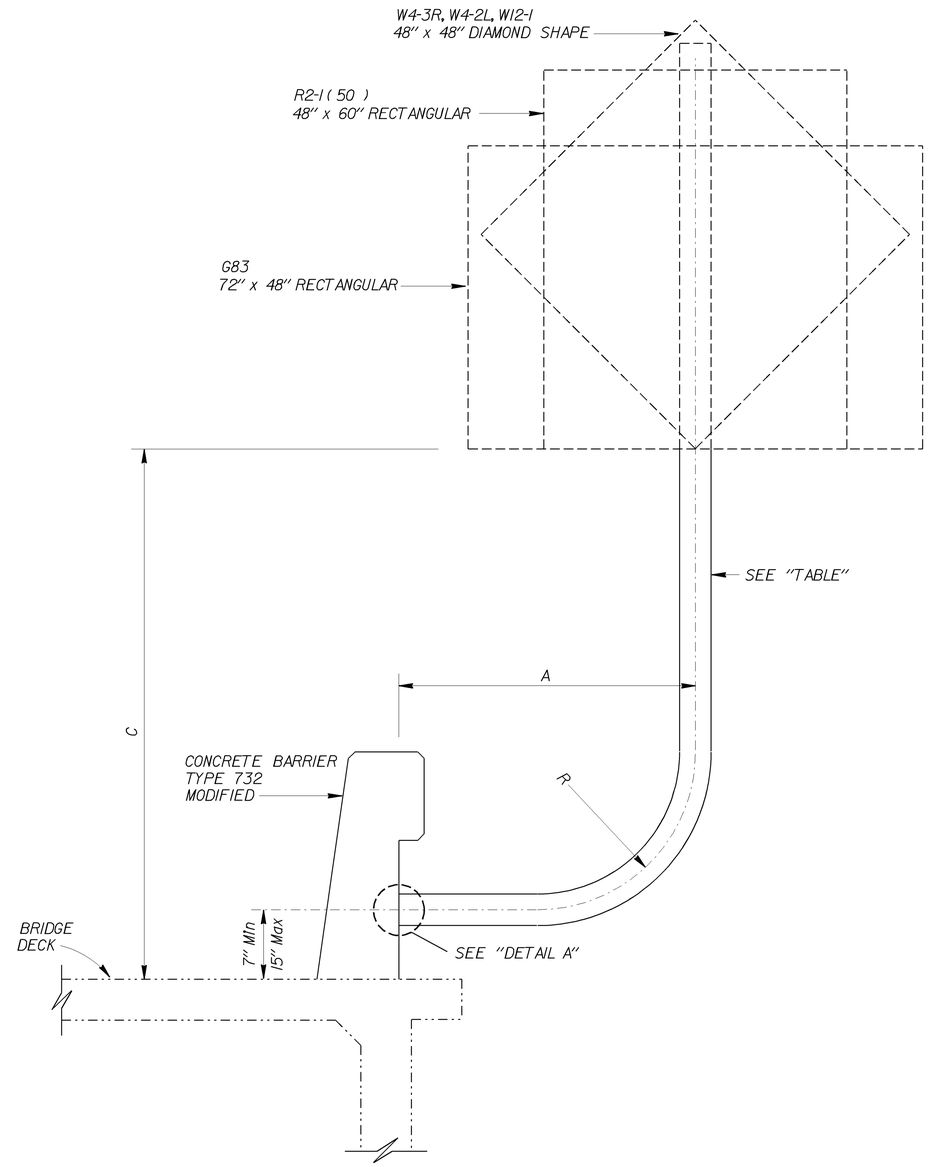

TYPE 732 MODIFIED

TABLE							
SIGN	A	C	R	D	BOLT CIRCLE	BOLT SIZE	PIPE SIZE
R2-1 (50)	3'-1"	7'-0"	2'-1"	13"	13"	7/8"	5" Ø Std
W4-3R, W4-2L, W12-1	3'-2"	7'-0"	1'-8"	13"	13"	3/4"	4" Ø XS
G83	3'-11"	7'-0"	2'-1"	13"	13"	7/8"	5" Ø XS

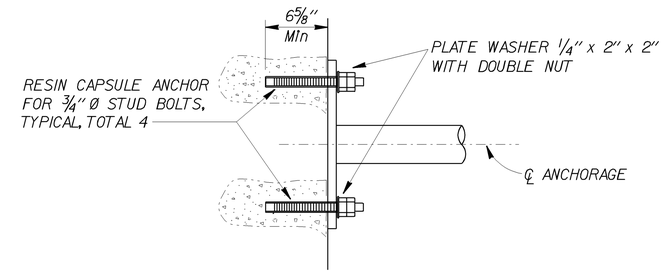

RESIN CAPSULE TYPE BOLT ANCHORAGE

DETAIL A

NOTES:

1. For details not shown, see "2010 STANDARD PLANS" and "2010 REVISED STANDARD PLANS".
2. All bolts shall have a washer under the nut. Bolts through post shall be 1/2" diameter. Bolts through sign panel and back brace shall be 1/2" diameter. Ream holes in sign as required.
3. All steel shall be galvanized.
4. Washer assembly consists of two oversize washers, two fiber washers, nut and jam nut.
5. Resin capsule is subject to approval of the Engineer. Installation procedures shall comply with manufacturer's instructions. Resin capsule bolt anchors shall be installed in sound concrete free of cracks or delamination.

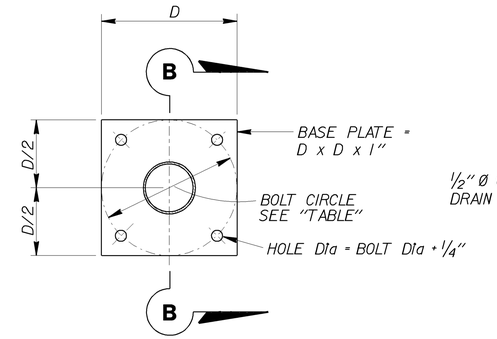

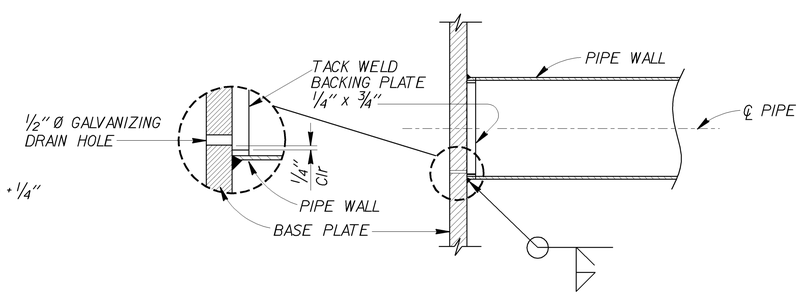

SECTION B-B

BASE PLATE DETAILS

NOTE: D = BOLT CIRCLE DIAMETER

NOTE:
THE CONTRACTOR SHALL VERIFY ALL CONTROLLING FIELD DIMENSIONS BEFORE ORDERING OR FABRICATING ANY MATERIAL.

STANDARD PLAN SHEET No.
DETAIL No.

NO SCALE

BRANCH CHIEF JEFF WOODY	DESIGN	BY ANDREW BUI	CHECKED JOHN DATILES
	DETAILS	BY R. YEE	CHECKED ANDREW BUI
	QUANTITIES	BY	CHECKED

STATE OF CALIFORNIA
DEPARTMENT OF TRANSPORTATION

DIVISION OF ENGINEERING SERVICES
DESIGN AND TECHNICAL SERVICES
SPECIAL DESIGNS BRANCH

A

BRIDGE NO. Various
POST MILE Varies

ROAD SIDE SIGN ON TYPE 732 MODIFIED BARRIER RAILING
ANCHORAGE, PIPE AND BASEPLATE DETAILS

SDS-3

(ENGLISH) SPECIAL DESIGNS BRANCH BORDER SHEET (REV. 7-1-09)

ORIGINAL SCALE IN INCHES FOR REDUCED PLANS 0 1 2 3

UNIT: 3619
PROJECT NUMBER & PHASE: 0400000496-1
CONTRACT NO.: 04-1A5511

DISREGARD PRINTS BEARING EARLIER REVISION DATES

REVISION DATES 4/11/13 4/15/13 SHEET OF

FILE => /2013sd/04-1A551/sds-3

USERNAME => s123055 DATE PLOTTED => 08-OCT-2013 TIME PLOTTED => 15:15

DIST	COUNTY	ROUTE	POST MILES TOTAL PROJECT	SHEET No	TOTAL SHEETS
04	SF	101,280	1.5/1.8 R4.1/R4.4	76	76

REGISTERED CIVIL ENGINEER 4/15/13 DATE

9-30-13
PLANS APPROVAL DATE

REGISTERED PROFESSIONAL ENGINEER ANDREW BUI No. C63560 Exp. 9/30/14 CIVIL STATE OF CALIFORNIA

The State of California or its officers or agents shall not be responsible for the accuracy or completeness of electronic copies of this plan sheet.

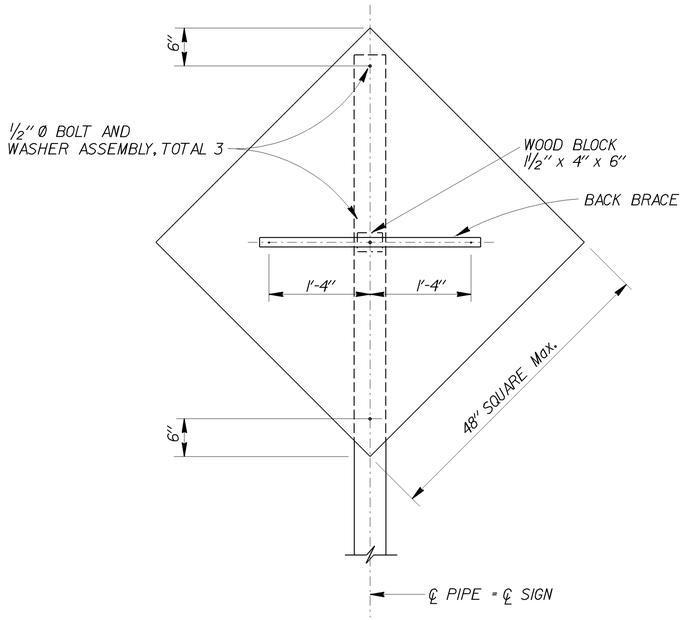

W4-3R, W4-2L, W12-1
48'' x 48'' DIAMOND SHAPED SIGN

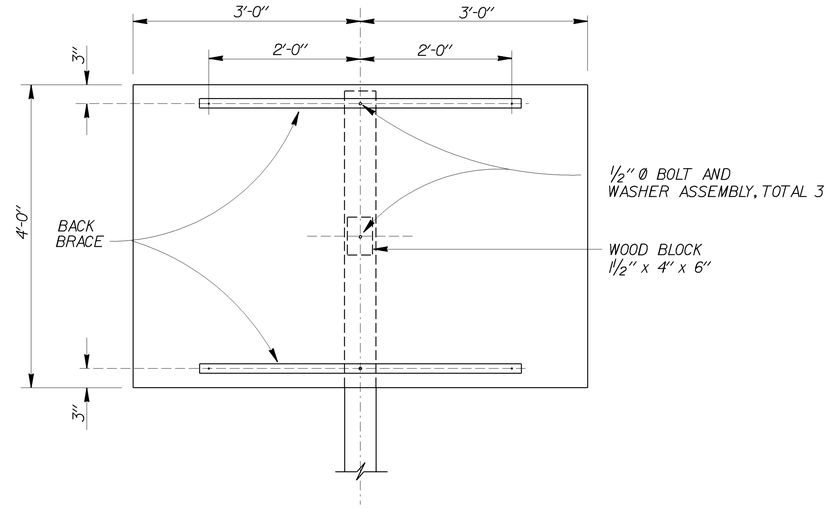

G83
72'' x 48'' RECTANGULAR SIGN

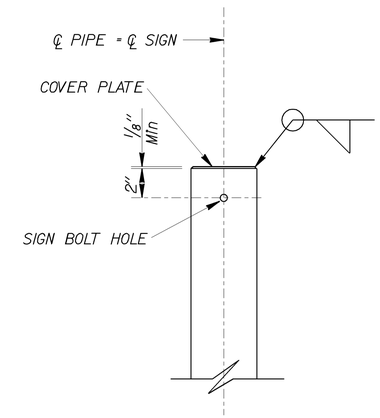

TOP OF POST DETAIL

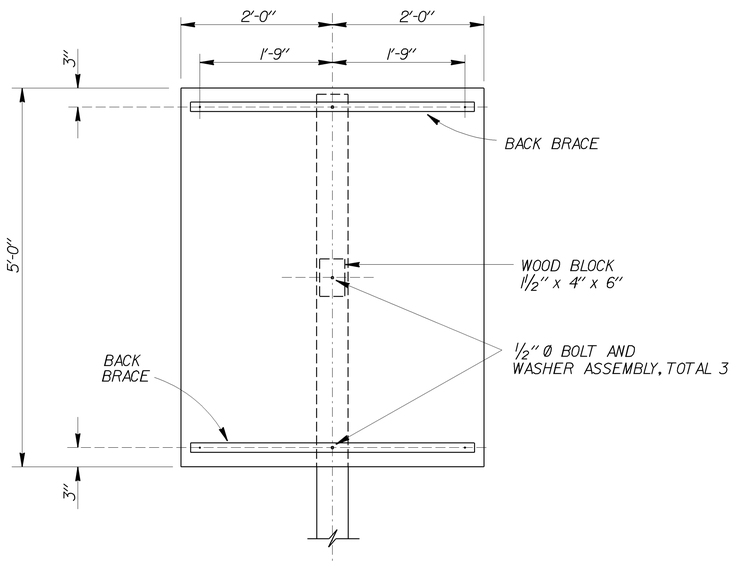

R2-1 (50)
48'' x 60'' RECTANGULAR SIGN

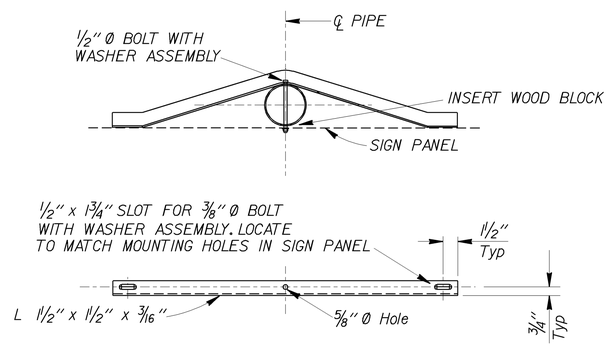

BACK BRACE DETAILS

STANDARD PLAN SHEET No.
DETAIL No.

NO SCALE

NOTE:
THE CONTRACTOR SHALL VERIFY ALL CONTROLLING FIELD DIMENSIONS BEFORE ORDERING OR FABRICATING ANY MATERIAL.

BRANCH CHIEF JEFF WOODY

	BY	CHECKED
DESIGN	ANDREW BUI	JOHN DATILES
DETAILS	R. YEE	ANDREW BUI
QUANTITIES		

STATE OF CALIFORNIA
DEPARTMENT OF TRANSPORTATION

DIVISION OF ENGINEERING SERVICES
DESIGN AND TECHNICAL SERVICES
SPECIAL DESIGNS BRANCH
A

BRIDGE NO. Various
POST MILE Varies

ROAD SIDE SIGN ON TYPE 732 MODIFIED BARRIER RAILING
SIGN CONNECTION DETAILS

SDS-4

(ENGLISH) SPECIAL DESIGNS BRANCH BORDER SHEET (REV. 7-1-09)

ORIGINAL SCALE IN INCHES FOR REDUCED PLANS 0 1 2 3

UNIT: 3619
PROJECT NUMBER & PHASE: 0400000496-1
CONTRACT NO.: 04-1A5511

DISREGARD PRINTS BEARING EARLIER REVISION DATES

REVISION DATES 4/11/13 4/15/13 SHEET OF

FILE => /2013sd/04-1A551/sds-4

USERNAME => s129055 DATE PLOTTED => 08-OCT-2013 TIME PLOTTED => 15:15