DIST	COUNTY	ROUTE	POST MILES TOTAL PROJECT	SHEET No	TOTAL SHEETS
04	CC	580	5.5/6.2	201	301

REGISTERED CIVIL ENGINEER 5-1-12 DATE

6-4-12
PLANS APPROVAL DATE

REGISTERED PROFESSIONAL ENGINEER Mike Van De Pol No. C35610 Exp. 9/30/2013 CIVIL STATE OF CALIFORNIA

The State of California or its officers or agents shall not be responsible for the accuracy or completeness of electronic copies of this plan sheet.

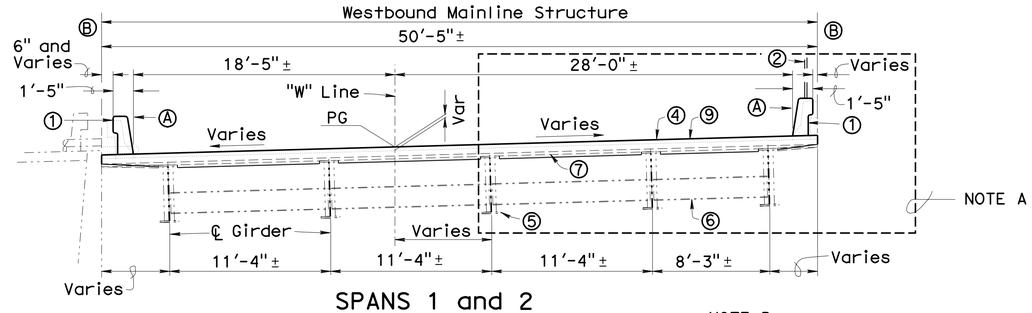

SPANS 1 and 2

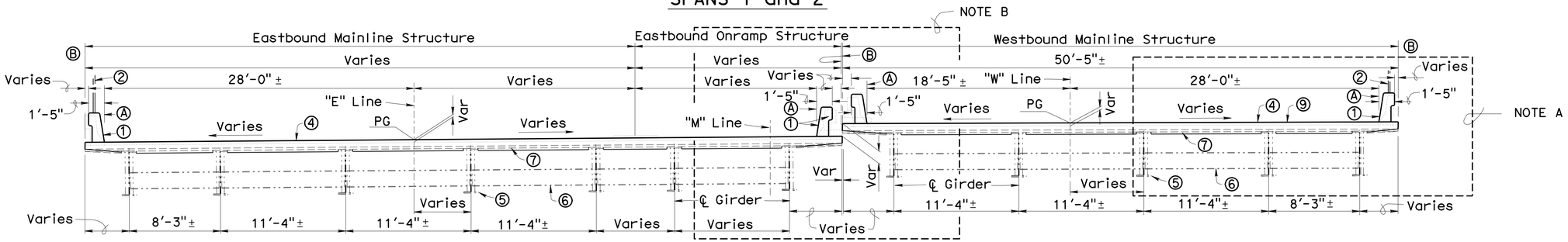

SPAN 3

Closure Pours ⑧ Not Shown

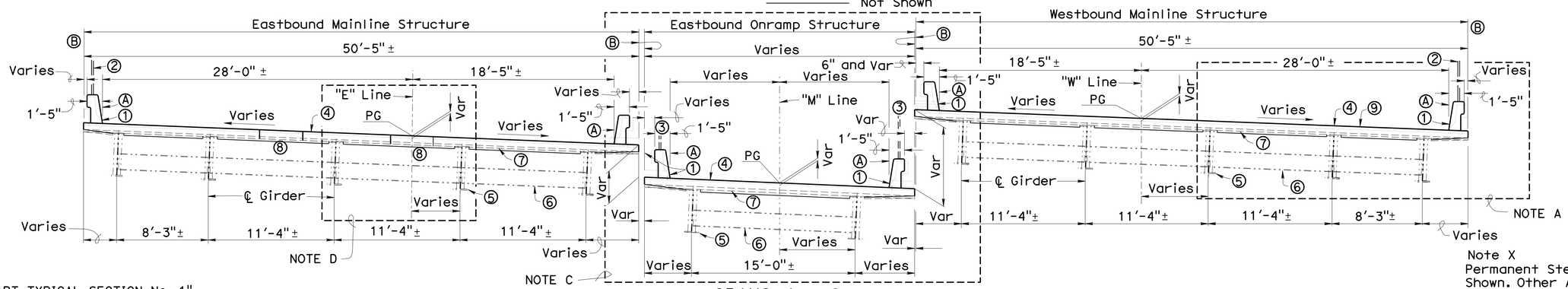

SPANS 4 - 9

Section Shown at Span 9 Only, For Other Locations Similar

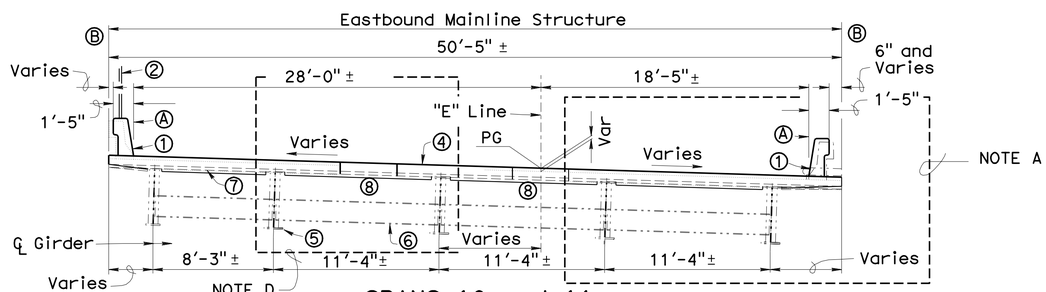

SPANS 10 and 11

TYPICAL SECTIONS

3/16" = 1'-0"

Denotes Existing Structure
Denotes New Construction

LEGEND

1. Concrete Barrier Type 732 (Mod)
2. Chain Link Railing Type 7 (Mod) Full Length of Bridge Barrier
3. Chain Link Railing Type 7 (Mod) Partial Length of Bridge Barrier See "ONRAMP CHAIN LINK RAILING DETAILS"
4. Concrete Deck
5. Steel Girder
6. Steel Diaphragm
7. Permanent Steel Deck Form Note X
8. Closure Pour
9. Deck Markers Type A

Ⓐ Existing Inside Barrier Face Line = New Inside Barrier Face Line

Ⓑ Existing Edge of Deck Line = New Edge of Deck Line

Note X
Permanent Steel Deck Form Alternatives Shown. Other Alternative Deck Form Configurations are Permitted, as Approved by the Engineer. See "TYPICAL SECTION DETAILS No. 2" Through "TYPICAL SECTION No. 12" Sheets

NOTE A
See "PART TYPICAL SECTION No. 1" on "TYPICAL SECTION No. 2" Sheet. See "PART TYPICAL SECTION NO. 4" on "TYPICAL SECTION No. 5" Sheet

NOTE B
See "PART TYPICAL SECTION No. 2" on "TYPICAL SECTION No. 3" Sheet. See "PART TYPICAL SECTION NO. 5" on "TYPICAL SECTION No. 6" Sheet

NOTE C
See "PART TYPICAL SECTION No. 3" on "TYPICAL SECTION No. 4" Sheet. See "PART TYPICAL SECTION NO. 6" on "TYPICAL SECTION No. 7" Sheet

NOTE D
See "PART TYPICAL SECTION No. 7" on "TYPICAL SECTION No. 8" Sheet

NOTE:
THE CONTRACTOR SHALL VERIFY ALL CONTROLLING FIELD DIMENSIONS BEFORE ORDERING OR FABRICATING ANY MATERIAL.

Notes

For Additional Details, see "STAGE CONSTRUCTION" Sheets, "REMOVAL DETAILS" Sheets and "PROTECTION SYSTEM DETAILS" Sheets

For Chain Link Railing Details, see "ONRAMP CHAIN LINK RAILING DETAILS" Sheet, "CHAIN LINK RAILING TYPE 7 (MOD) DETAILS No. 1" and "CHAIN LINK RAILING TYPE 7 (MOD) DETAILS No. 2" Sheets

Utilities and Conduits Not Shown. For Utility Details, see "SEWER FORCE MAIN DETAILS" Sheet and "FIBER OPTIC LINE DETAILS" Sheet

For Deck Marker Details, see "TYPICAL SECTION No. 11" Sheet

Typical Sections Drawn Parallel to Centerline of Adjacent Bents

All Existing Structural Steel Components Not Shown

Details at Hinges are Similar

Deck Removal Not Shown

Light Standards and Conduits Not Shown

	BY	CHECKED
DESIGN	Mike Van De Pol	P. Norboe
DETAILS	Mike Van De Pol	P. Norboe
QUANTITIES	Mike Van De Pol	E. Franciliso

STATE OF CALIFORNIA
DEPARTMENT OF TRANSPORTATION

DIVISION OF ENGINEERING SERVICES
STRUCTURE DESIGN
DESIGN BRANCH 9

BRIDGE NO. 28-0140
MILE POST 5.8

BRIDGE DECK REPLACEMENT
SCOFIELD AVENUE UNDERCROSSING
TYPICAL SECTION No. 1

STRUCTURES DESIGN DETAIL SHEET (ENGLISH) (REV. 10/25/05)

ORIGINAL SCALE IN INCHES FOR REDUCED PLANS 0 1 2 3

UNIT: 3594
PROJECT NUMBER & PHASE: 04000004831
CONTRACT NO.: 04-1A3201

DISREGARD PRINTS BEARING EARLIER REVISION DATES

REVISION DATES 3-02-11

SHEET 38 OF 92

FILE => 28-0140-h-typsec01.dgn

USERNAME => s114937 DATE PLOTTED => 06-JUN-2012 TIME PLOTTED => 15:10

DIST	COUNTY	ROUTE	POST MILES TOTAL PROJECT	SHEET No	TOTAL SHEETS
04	CC	580	5.5/6.2	202	301

REGISTERED CIVIL ENGINEER 5-1-12 DATE

6-4-12
PLANS APPROVAL DATE

REGISTERED PROFESSIONAL ENGINEER Mike Van De Pol No. C35610 Exp. 9/30/2013 CIVIL STATE OF CALIFORNIA

The State of California or its officers or agents shall not be responsible for the accuracy or completeness of electronic copies of this plan sheet.

Denotes Existing Structure
Denotes New Construction

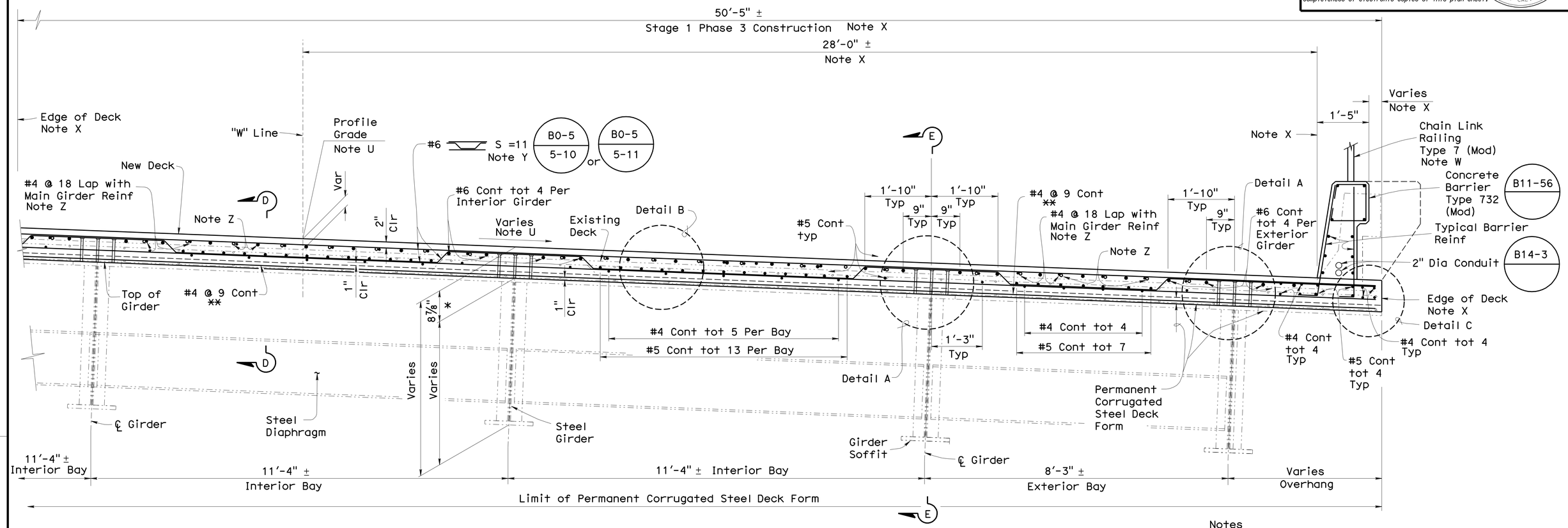

PART TYPICAL SECTION No. 1

¾" = 1'-0"

Westbound Mainline Structure Show
Part Typical Section Taken in Span 5.
Other Locations Similar
Permanent Deck Forms Continuous Across Girders

* Measured at ℄ Support

** Center Bar in Deck Form Corrugation

Barrier Face Architectural Texture Not Shown. See "BARRIER LAYOUT" and "BARRIER DETAILS No. 4" Sheets

NOTE:
THE CONTRACTOR SHALL VERIFY ALL CONTROLLING FIELD DIMENSIONS BEFORE ORDERING OR FABRICATING ANY MATERIAL.

Barrier Face Architectural Texture Not Shown. See "BARRIER LAYOUT" and "BARRIER DETAILS No. 4" Sheets

Permanent Steel Deck Form Alternative Shown Continuous Across Girders. Other Alternative Deck Form Configurations are Permitted, as Approved by the Engineer. See "PART TYPICAL SECTION No. 4" on "TYPICAL SECTION No. 5" Sheet

Note U
New Profile and Superelevation Based on Deck Thickness and Elevations at Top of Existing Girders. See "PROFILE GRADE AND AND ALIGNMENT DETAILS" Sheet

Note W
Chain Link Railing is Continuous Along Right Edge of Deck Only. See "CHAIN LINK RAILING TYPE 7 (MOD) DETAILS No. 1" Sheet

Note X
Location and Alignment of Existing Inside Barrier Face = Location and Alignment of New Inside Barrier Face
Location and Alignment of Existing Edge of Deck = Location and Alignment of New Edge of Deck

All reinforcement shall be epoxy coated.

Note Y
Place Parallel to ℄ Bents and Space Along "W" Line

Note Z
For Additional Top Main Longitudinal Reinforcement, see "DECK REINFORCEMENT" Sheets

Notes

For Location of "PART TYPICAL SECTION No. 1", See TYPICAL SECTION No. 1" Sheet

For DETAIL A, DETAIL B, DETAIL C, SECTION D-D and, SECTION E-E see "TYPICAL SECTION No. 9" Sheet

For Additional Details, see "STAGE CONSTRUCTION" Sheets, "REMOVAL DETAILS" Sheets and "PROTECTION SYSTEM DETAILS" Sheets

For Added Details, see "BENT DETAILS", "HINGE DETAILS" Sheets and "ABUTMENT DETAILS" Sheets

For Added Stud Connector Details, see "GIRDER STRENGTHENING DETAILS" Sheets

Eastbound Mainline and Eastbound Onramp Structures Not Shown

All Existing Structural Steel Components Not Shown

Existing Bolts and Rivets Not Shown

Existing Strengthening Components not Shown

Deck Removal Not Shown

	BY	CHECKED
DESIGN	Mike Van De Pol	P. Norboe
DETAILS	Mike Van De Pol	P. Norboe
QUANTITIES	Mike Van De Pol	E. Franciliso

STATE OF CALIFORNIA
DEPARTMENT OF TRANSPORTATION

DIVISION OF ENGINEERING SERVICES
STRUCTURE DESIGN
DESIGN BRANCH 9

BRIDGE NO. 28-0140
MILE POST 5.8

BRIDGE DECK REPLACEMENT
SCOFIELD AVENUE UNDERCROSSING
TYPICAL SECTION No. 2

STRUCTURES DESIGN DETAIL SHEET (ENGLISH) (REV. 10/25/05)

ORIGINAL SCALE IN INCHES FOR REDUCED PLANS 0 1 2 3

UNIT: 3594
PROJECT NUMBER & PHASE: 04000004831
CONTRACT NO.: 04-1A3201

DISREGARD PRINTS BEARING EARLIER REVISION DATES 3-02-11

SHEET 39 OF 92

FILE => 28-0140-h-typsec02.dgn

USERNAME => s114937 DATE PLOTTED => 06-JUN-2012 TIME PLOTTED => 15:10

DIST	COUNTY	ROUTE	POST MILES TOTAL PROJECT	SHEET No	TOTAL SHEETS
04	CC	580	5.5/6.2	203	301

REGISTERED CIVIL ENGINEER 5-1-12 DATE

6-4-12
PLANS APPROVAL DATE

REGISTERED PROFESSIONAL ENGINEER Mike Van De Pol No. C35610 Exp. 9/30/2013 CIVIL STATE OF CALIFORNIA

The State of California or its officers or agents shall not be responsible for the accuracy or completeness of electronic copies of this plan sheet.

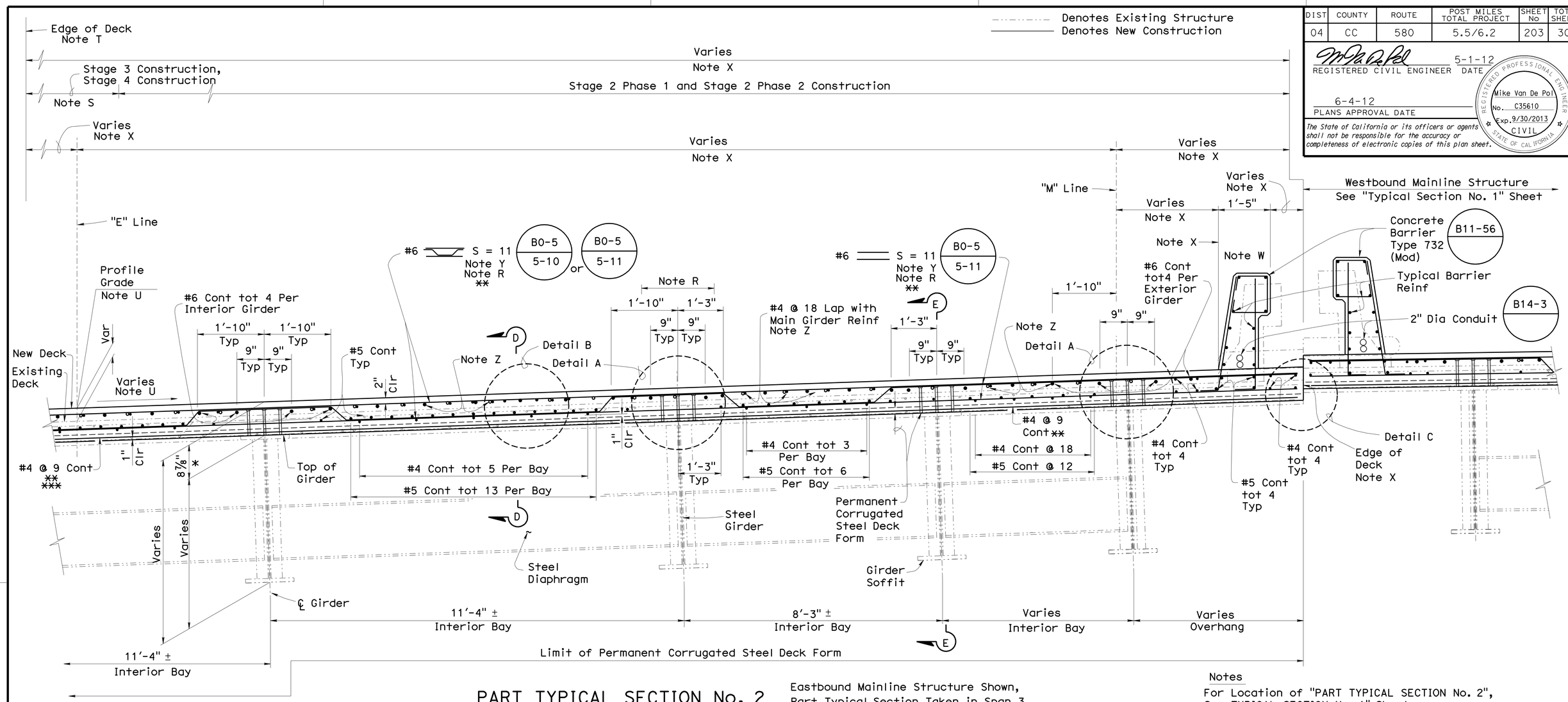

PART TYPICAL SECTION No. 2

3/4" = 1'-0"

Eastbound Mainline Structure Shown,
Part Typical Section Taken in Span 3.
Other Locations Similar
Closure Pour Not Shown. Note S
Permanent Deck Forms Continuous Across Girders

Note R
Transverse Deck Reinforcement Lapped Within Span 3. 2'-0" Min Lap Length. Lap Centered Over Girder

All reinforcement shall be epoxy coated.

* Measured at ℄ Support

** Lap Splice at Closure Pour 2'-6" Min Lap

*** Center Bar in Deck Form Corrugation

NOTE:
THE CONTRACTOR SHALL VERIFY ALL CONTROLLING FIELD DIMENSIONS BEFORE ORDERING OR FABRICATING ANY MATERIAL.

Barrier Face Architectural Texture Not Shown. See "BARRIER LAYOUT" and "BARRIER DETAILS No. 4" Sheets

Permanent Steel Deck Form Alternative Shown Continuous Across Girders. Other Alternative Deck Form Configurations are Permitted, as Approved by the Engineer. See "PART TYPICAL SECTION No. 5" on "TYPICAL SECTION No. 6" Sheet

Note S
For Locations and Widths of Closure Pours, See "Stage Construction Details" Sheets. For Details at Deck Closure Pour, see "TYPICAL SECTION No. 8" Sheet

Note T
Chain Link Railing is Continuous Along Left Edge of Deck. See "CHAIN LINK RAILING TYPE 7 (MOD) DETAILS No. 1" Sheet

Note U
New Profile and Superelevation Based on Deck Thickness and Elevations at Top of Existing Girders. See "PROFILE GRADE AND ALIGNMENT DETAILS" Sheet

Note W
Chain Link Railing is Located Along Portions of Eastbound Onramp. See "ONRAMP CHAIN LINK RAILING DETAILS" Sheet, "CHAIN LINK RAILING TYPE 7 (MOD) DETAILS No. 1" and "CHAIN LINK RAILING TYPE 7 (MOD) DETAILS No. 2" Sheets

Note X
Location and Alignment of Existing Inside Barrier Face = Location and Alignment of New Inside Barrier Face
Location and Alignment of Existing Edge of Deck = Location and Alignment of New Edge of Deck

Note Y
Place Parallel to ℄ Bent and Space Along "E" Line

Note Z
For Additional Top Main Longitudinal Reinforcement, see "DECK REINFORCEMENT" Sheets

Notes
For Location of "PART TYPICAL SECTION No. 2", See TYPICAL SECTION No. 1" Sheet
For DETAIL A, DETAIL B, DETAIL C, SECTION D-D and, SECTION E-E see "TYPICAL SECTION No. 9" Sheet
For Additional Details, see "STAGE CONSTRUCTION" Sheets, "REMOVAL DETAILS" Sheets and "PROTECTION SYSTEM DETAILS" Sheets
For Added Details, see "BENT DETAILS" Sheets, "HINGE DETAILS" Sheets and "ABUTMENT DETAILS" Sheets
For Added Stud Connector Details, see "GIRDER STRENGTHENING DETAILS" Sheets
Eastbound Onramp Structure Not Shown
All Existing Structural Steel Components Not Shown
Existing Bolts and Rivets Not Shown
Existing Strengthening Components not Shown
Deck Removal Not Shown

	BY	CHECKED
DESIGN	Mike Van De Pol	P. Norboe
DETAILS	Mike Van De Pol	P. Norboe
QUANTITIES	Mike Van De Pol	E. Franciliso

STATE OF CALIFORNIA
DEPARTMENT OF TRANSPORTATION

DIVISION OF ENGINEERING SERVICES
STRUCTURE DESIGN
DESIGN BRANCH 9

BRIDGE NO. 28-0140
MILE POST 5.8

BRIDGE DECK REPLACEMENT
SCOFIELD AVENUE UNDERCROSSING
TYPICAL SECTION No. 3

STRUCTURES DESIGN DETAIL SHEET (ENGLISH) (REV. 10/25/05)

ORIGINAL SCALE IN INCHES FOR REDUCED PLANS 0 1 2 3

UNIT: 3594
PROJECT NUMBER & PHASE: 04000004831
CONTRACT NO.: 04-1A3201

DISREGARD PRINTS BEARING EARLIER REVISION DATES 3-02-11

SHEET 40 OF 92

FILE => 28-0140-h-typsec03.dgn

USERNAME => s114937 DATE PLOTTED => 06-JUN-2012 TIME PLOTTED => 15:10

DIST	COUNTY	ROUTE	POST MILES TOTAL PROJECT	SHEET No	TOTAL SHEETS
04	CC	580	5.5/6.2	204	301

REGISTERED CIVIL ENGINEER 5-1-12 DATE

6-4-12
PLANS APPROVAL DATE

REGISTERED PROFESSIONAL ENGINEER Mike Van De Pol No. C35610 Exp. 9/30/2013 CIVIL STATE OF CALIFORNIA

The State of California or its officers or agents shall not be responsible for the accuracy or completeness of electronic copies of this plan sheet.

Denotes Existing Structure
Denotes New Construction

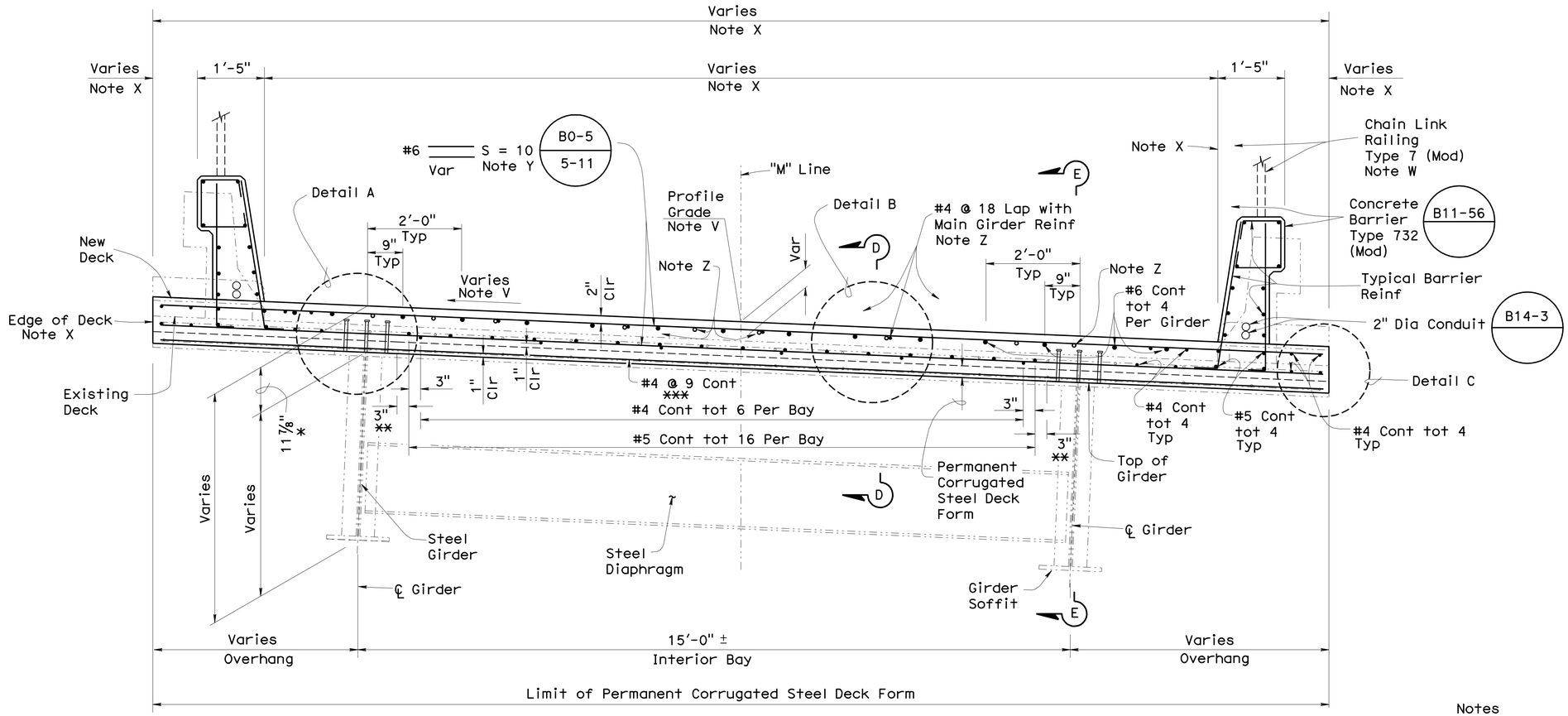

PART TYPICAL SECTION No. 3

3/4" = 1'-0"

Eastbound Onramp Structure
Part Typical Section Taken in Span 5. Other Locations Similar
Permanent Deck Forms Continuous Across Girders

** Edge of Girder Flange

* Measured at ℄ Support

*** Center Bar in Deck Form Corrugation

NOTE:
THE CONTRACTOR SHALL VERIFY ALL CONTROLLING FIELD DIMENSIONS BEFORE ORDERING OR FABRICATING ANY MATERIAL.

All reinforcement shall be epoxy coated.

Permanent Steel Deck Form Alternative Shown Continuous Across Girders. Other Alternative Deck Form Configurations are Permitted, as Approved by the Engineer. See "PART TYPICAL SECTION No. 6" on "TYPICAL SECTION No. 7" Sheet

Note V
New Profile and Superelevation Based on Deck Thickness and Elevations at Top of Existing Girders. See "PROFILE GRADE AND ALIGNMENT DETAILS" Sheet

Note W
Chain Link Railing Located Along a Portion of Eastbound Onramp. For Location and Limits, See "ONRAMP CHAIN LINK RAILING DETAILS" Sheet. For Other Details, See "CHAIN LINK RAILING TYPE 7 (MOD) DETAILS No. 1" and "CHAIN LINK RAILING TYPE 7 (MOD) No. 2 DETAILS" Sheet

Note X
Location and Alignment of Existing Inside Barrier Face = Location and Alignment of New Inside Barrier Face
Location and Alignment of Existing Edge of Deck = Location and Alignment of New Edge of Deck

Note Y
Place Parallel to ℄ Bents and Space Along "M" Line

Note Z
For Additional Top Main Longitudinal Reinforcement, see "DECK REINFORCEMENT" Sheets

Notes

For Location of "PART TYPICAL SECTION No. 3", See TYPICAL SECTION No. 1" Sheet

For DETAIL A, DETAIL B, DETAIL C, SECTION D-D and, SECTION E-E see "TYPICAL SECTION No. 9" Sheet

For Additional Details, see "STAGE CONSTRUCTION" Sheets, "REMOVAL DETAILS" Sheets and "PROTECTION SYSTEM DETAILS" Sheets

For Added Details, see "BENT DETAILS" Sheets, HINGE DETAILS" Sheets and "ABUTMENT DETAILS" Sheets

For Added Stud Connector Details, see "GIRDER STRENGTHENING DETAILS" Sheets

Eastbound and Westbound Mainline Structures Not Shown

All Existing Structural Steel Components Not Shown

Existing Bolts and Rivets Not Shown

Existing Strengthening Components not Shown

Deck Removal Not Shown

	BY	CHECKED
DESIGN	Mike Van De Pol	P. Norboe
DETAILS	Mike Van De Pol	P. Norboe
QUANTITIES	Mike Van De Pol	E. Franciliso

STATE OF CALIFORNIA
DEPARTMENT OF TRANSPORTATION

DIVISION OF ENGINEERING SERVICES
STRUCTURE DESIGN
DESIGN BRANCH 9

BRIDGE NO. 28-0140
MILE POST 5.8

BRIDGE DECK REPLACEMENT
SCOFIELD AVENUE UNDERCROSSING
TYPICAL SECTION No. 4

STRUCTURES DESIGN DETAIL SHEET (ENGLISH) (REV. 10/25/05)

ORIGINAL SCALE IN INCHES FOR REDUCED PLANS 0 1 2 3

UNIT: 3594
PROJECT NUMBER & PHASE: 04000004831
CONTRACT NO.: 04-1A3201

DISREGARD PRINTS BEARING EARLIER REVISION DATES 3-02-11

SHEET 41 OF 92

FILE => 28-0140-h-typsec04.dgn

USERNAME => s114937 DATE PLOTTED => 06-JUN-2012 TIME PLOTTED => 15:11

DIST	COUNTY	ROUTE	POST MILES TOTAL PROJECT	SHEET No	TOTAL SHEETS
04	CC	580	5.5/6.2	205	301

REGISTERED CIVIL ENGINEER 5-1-12 DATE

6-4-12
PLANS APPROVAL DATE

REGISTERED PROFESSIONAL ENGINEER Mike Van De Pol No. C35610 Exp. 9/30/2013 CIVIL STATE OF CALIFORNIA

The State of California or its officers or agents shall not be responsible for the accuracy or completeness of electronic copies of this plan sheet.

Denotes Existing Structure
Denotes New Construction

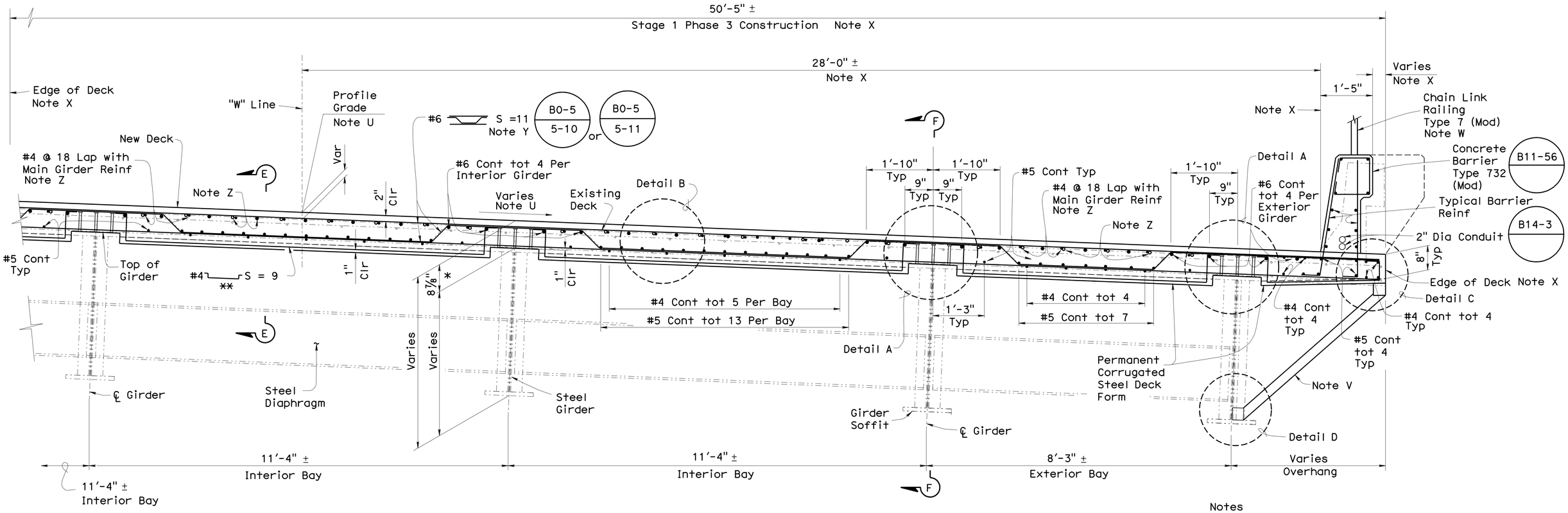

PART TYPICAL SECTION No. 4

¾" = 1'-0"

Westbound Mainline Structure Shown,
Part Typical Section Taken in Span 5.
Other Locations Similar
Permanent Deck Forms Not Continuous Across Girders

All reinforcement shall be epoxy coated.

Barrier Face Architectural Texture Not Shown. See "BARRIER LAYOUT" and "BARRIER DETAILS No. 4" Sheets

Permanent Steel Deck Form Alternative Shown Discontinuous, Spanning Between Girders. Other Alternative Deck Form Configurations are Permitted, as Approved by the Engineer.
See "PART TYPICAL SECTION No. 1" on "TYPICAL SECTION No. 2" Sheet

* Measured at ℄ Support
** Center Bar in Deck Form Corrugation

Note U
New Profile and Superelevation Based on Deck Thickness and Elevations at Top of Existing Girders. See "PROFILE GRADE AND AND ALIGNMENT DETAILS" Sheet

Note V
Permanent Steel Deck Form Overhang Support System. Details Shown are Approximate. The Support Details may Vary, at the Option of the Contractor as Approved by the Engineer

Note W
Chain Link Railing is Continuous Along Right Edge of Deck Only. See "CHAIN LINK RAILING TYPE 7 (MOD) DETAILS No. 1" Sheet

Note X
Location and Alignment of Existing Inside Barrier Face = Location and Alignment of New Inside Barrier Face
Location and Alignment of Existing Edge of Deck = Location and Alignment of New Edge of Deck

Note Y
Place Parallel to ℄ Bents and Space Along "W" Line

Note Z
For Additional Top Main Longitudinal Reinforcement, see "DECK REINFORCEMENT" Sheets

NOTE:
THE CONTRACTOR SHALL VERIFY ALL CONTROLLING FIELD DIMENSIONS BEFORE ORDERING OR FABRICATING ANY MATERIAL.

Notes

For Location of "PART TYPICAL SECTION No. 4", See TYPICAL SECTION No. 1" Sheet

For DETAIL A, DETAIL B, DETAIL C, DETAIL D, SECTION E-E and SECTION F-F see "TYPICAL SECTION No. 10" Sheet

For Additional Details, see "STAGE CONSTRUCTION" Sheets, "REMOVAL DETAILS" Sheets and "PROTECTION SYSTEM DETAILS" Sheets

For Added Details, see "BENT DETAILS", "HINGE DETAILS" Sheets and "ABUTMENT DETAILS" Sheets

For Added Stud Connector Details, see "GIRDER STRENGTHENING DETAILS" Sheets

Eastbound Mainline and Eastbound Onramp Structures Not Shown

All Existing Structural Steel Components Not Shown

Existing Bolts and Rivets Not Shown

Existing Strengthening Components not Shown

Deck Removal Not Shown

	BY	CHECKED
DESIGN	Mike Van De Pol	P. Norboe
DETAILS	Mike Van De Pol	P. Norboe
QUANTITIES	Mike Van De Pol	E. Franciliso

STATE OF CALIFORNIA
DEPARTMENT OF TRANSPORTATION

DIVISION OF ENGINEERING SERVICES
STRUCTURE DESIGN
DESIGN BRANCH 9

BRIDGE NO. 28-0140
MILE POST 5.8

BRIDGE DECK REPLACEMENT
SCOFIELD AVENUE UNDERCROSSING
TYPICAL SECTION No. 5

STRUCTURES DESIGN DETAIL SHEET (ENGLISH) (REV. 10/25/05)

ORIGINAL SCALE IN INCHES FOR REDUCED PLANS 0 1 2 3

UNIT: 3594
PROJECT NUMBER & PHASE: 04000004831
CONTRACT NO.: 04-1A3201

DISREGARD PRINTS BEARING EARLIER REVISION DATES 3-02-11

SHEET 42 OF 92

FILE => 28-0140-h-typsec05.dgn

USERNAME => s114937 DATE PLOTTED => 06-JUN-2012 TIME PLOTTED => 15:11

DIST	COUNTY	ROUTE	POST MILES TOTAL PROJECT	SHEET No	TOTAL SHEETS
04	CC	580	5.5/6.2	206	301

REGISTERED CIVIL ENGINEER 5-1-12 DATE

6-4-12
PLANS APPROVAL DATE

REGISTERED PROFESSIONAL ENGINEER Mike Van De Pol No. C35610 Exp. 9/30/2013 CIVIL STATE OF CALIFORNIA

The State of California or its officers or agents shall not be responsible for the accuracy or completeness of electronic copies of this plan sheet.

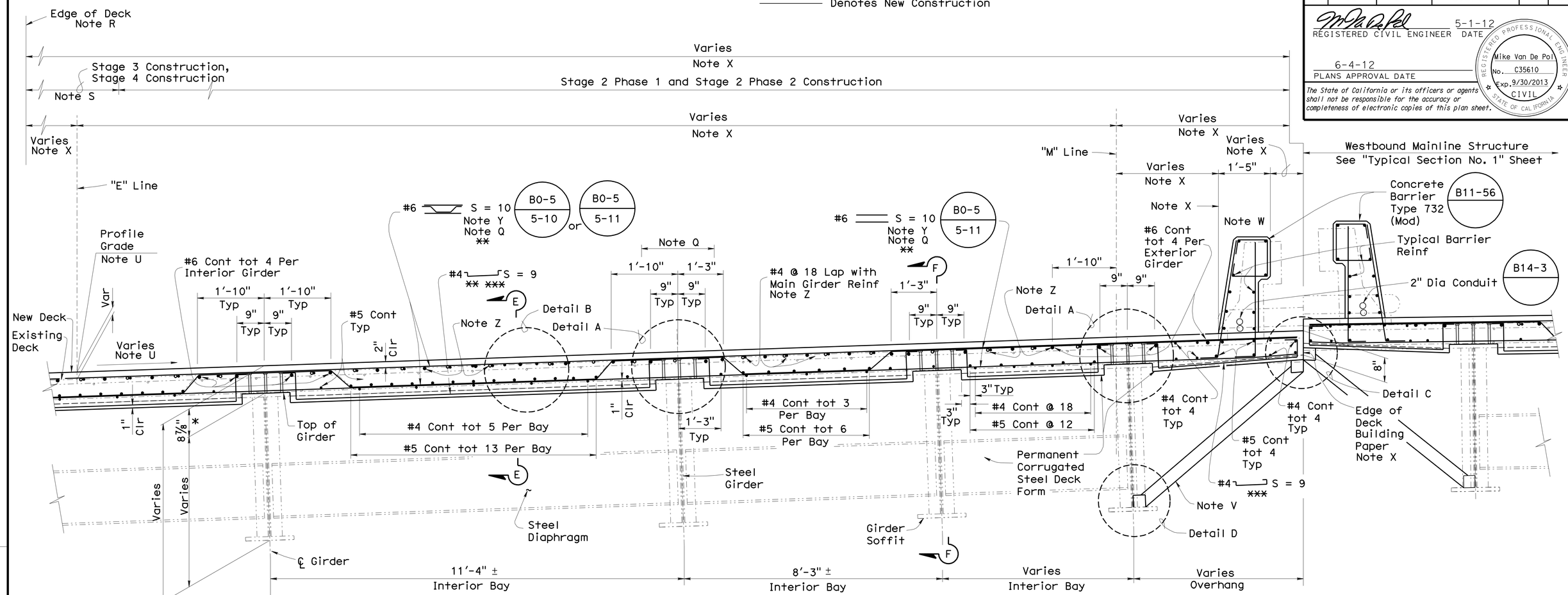

PART TYPICAL SECTION No. 5

3/4" = 1'-0"

Eastbound Mainline Structure Shown, Part Typical Section Taken in Span 3. Other Locations Similar
Stage 2A Details Shown. Stage 2B, 3 and 4 are Similar
Closure Pours Not Shown. Note S
Permanent Deck Forms Not Continuous Across Girders

All reinforcement shall be epoxy coated.

Permanent Steel Deck Form Alternative Shown Discontinuous, Spanning Between Girders. Other Alternative Deck Form Configurations are Permitted, as Approved by the Engineer.

See "PART TYPICAL SECTION No. 2" on "TYPICAL SECTION No. 3" Sheet

* Measured at ℄ Support

** Lap Splice at Closure Pour 2'-6" Min Lap

*** Center Bar in Deck Form Corrugation

NOTE:
THE CONTRACTOR SHALL VERIFY ALL CONTROLLING FIELD DIMENSIONS BEFORE ORDERING OR FABRICATING ANY MATERIAL.

Note Q
Transverse Deck Reinforcement Lapped Within Span 3. 2'-0" Min Lap Length. Lap Centered Over Girder

Note R
Chain Link Railing is Continuous Along Left Edge of Deck. See "CHAIN LINK RAILING TYPE 7 (MOD) DETAILS No. 1" Sheet

Note S
For Locations and Widths of Closure Pours, see "Stage Construction Details" Sheets. For Details at Deck Closure Pour, see "TYPICAL SECTION No. 8" Sheet

Note T
Mount Permanent Steel Deck Form to Existing Girder Flange Beneath Existing Deck to Facilitate Construction of Next Stage. See Detail X on "TYPICAL SECTION No. 9" Sheet

Note U
New Profile and Superelevation Based on Deck Thickness and Elevations at Top of Existing Girders. See "PROFILE GRADE AND AND ALIGNMENT DETAILS" Sheet

Note V
Permanent Steel Deck Form Overhang Support System. Details Shown are Approximate. The Support Details may Vary, at the Option of the Contractor as Approved by the Engineer

Note W
Chain Link Railing is Located Along Portions of Eastbound Onramp. See "ONRAMP CHAIN LINK RAILING DETAILS" Sheet, "CHAIN LINK RAILING TYPE 7 (MOD) DETAILS No. 1" and "CHAIN LINK RAILING TYPE 7 (MOD) DETAILS No. 2" Sheets

Note X
Location and Alignment of Existing Inside Barrier Face = Location and Alignment of New Inside Barrier Face
Location and Alignment of Existing Edge of Deck = Location and Alignment of New Edge of Deck

Note Y
Place Parallel to ℄ Bents and Space Along "E" Line

Note Z
For Additional Top Main Longitudinal Reinforcement, see "DECK REINFORCEMENT" Sheets

Barrier Face Architectural Texture Not Shown. See "BARRIER LAYOUT" and "BARRIER DETAILS No. 4" Sheets

Notes

For Location of "PART TYPICAL SECTION No. 5", See TYPICAL SECTION No. 1" Sheet

For DETAIL A, DETAIL B, DETAIL C, DETAIL D, SECTION E-E and SECTION F-F see "TYPICAL SECTION No. 10" Sheet

For Additional Details, see "STAGE CONSTRUCTION" Sheets, "REMOVAL DETAILS" Sheets and "PROTECTION SYSTEM DETAILS" Sheets

For Added Details, see "BENT DETAILS" Sheets, "HINGE DETAILS" Sheets and "ABUTMENT DETAILS" Sheets

For Added Stud Connector Details, see "GIRDER STRENGTHENING DETAILS" Sheets

Eastbound Onramp Structure Not Shown

All Existing Structural Steel Components Not Shown

Existing Bolts and Rivets Not Shown

Existing Strengthening Components not Shown

Deck Removal Not Shown

Denotes Existing Structure
Denotes New Construction

	BY	CHECKED
DESIGN	Mike Van De Pol	P. Norboe
DETAILS	Mike Van De Pol	P. Norboe
QUANTITIES	Mike Van De Pol	E. Franciliso

STATE OF CALIFORNIA
DEPARTMENT OF TRANSPORTATION

DIVISION OF ENGINEERING SERVICES
STRUCTURE DESIGN
DESIGN BRANCH 9

BRIDGE NO. 28-0140
MILE POST 5.8

BRIDGE DECK REPLACEMENT
SCOFIELD AVENUE UNDERCROSSING
TYPICAL SECTION No. 6

STRUCTURES DESIGN DETAIL SHEET (ENGLISH) (REV. 10/25/05)

ORIGINAL SCALE IN INCHES FOR REDUCED PLANS 0 1 2 3

UNIT: 3594
PROJECT NUMBER & PHASE: 04000004831
CONTRACT NO.: 04-1A3201

DISREGARD PRINTS BEARING EARLIER REVISION DATES 3-02-11

SHEET 43 OF 92

FILE => 28-0140-h-typsec06.dgn

USERNAME => s114937 DATE PLOTTED => 06-JUN-2012 TIME PLOTTED => 15:11

DIST	COUNTY	ROUTE	POST MILES TOTAL PROJECT	SHEET No	TOTAL SHEETS
04	CC	580	5.5/6.2	207	301

REGISTERED CIVIL ENGINEER 5-1-12 DATE

6-4-12
PLANS APPROVAL DATE

REGISTERED PROFESSIONAL ENGINEER Mike Van De Pol No. C35610 Exp. 9/30/2013 CIVIL STATE OF CALIFORNIA

The State of California or its officers or agents shall not be responsible for the accuracy or completeness of electronic copies of this plan sheet.

Denotes Existing Structure
Denotes New Construction

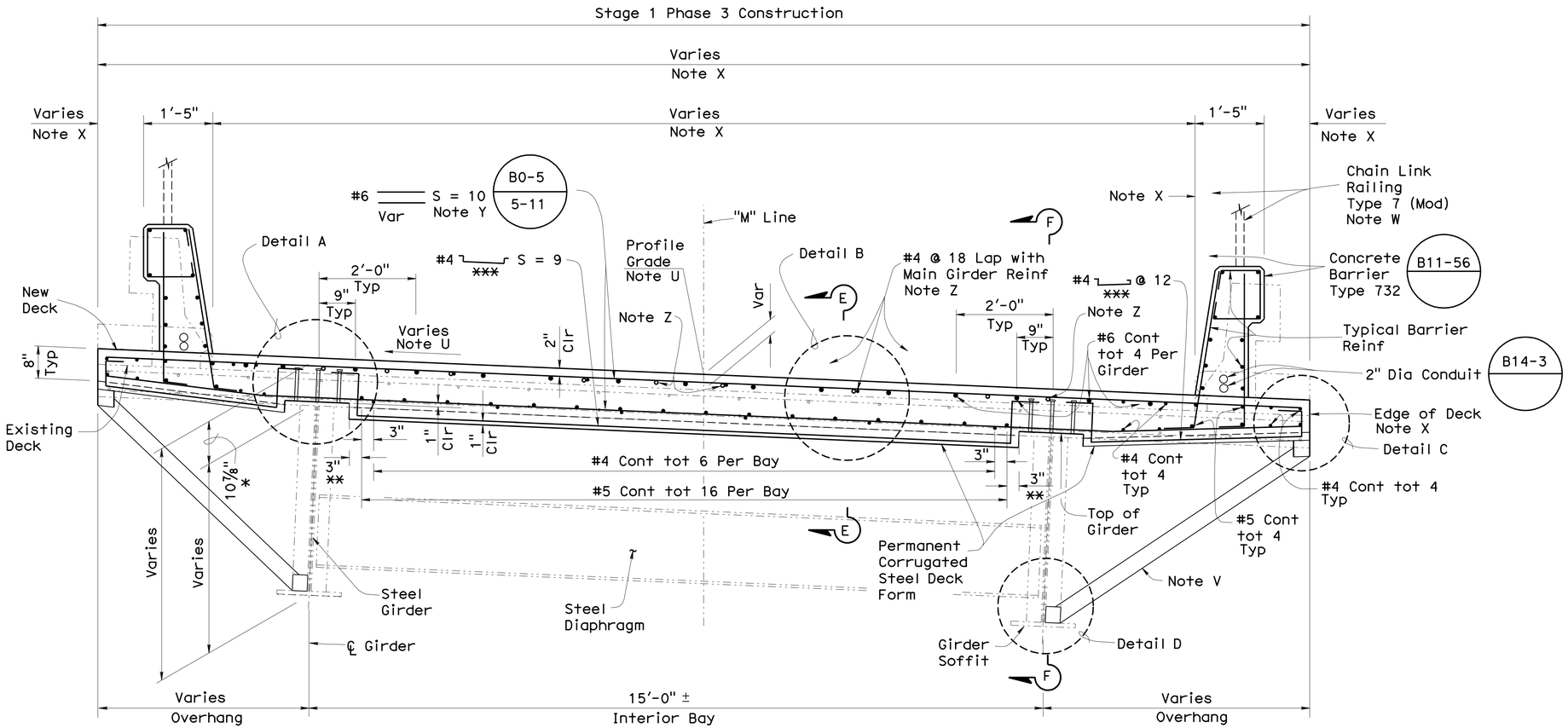

PART TYPICAL SECTION No. 6

3/4" = 1'-0"

Eastbound Onramp Structure
Part Typical Section Taken in Span 5. Other Locations Similar
Permanent Deck Forms Not Continuous Across Girders

* Measured at ℄ Support
** Edge of Girder Flange
*** Center Bar in Deck Form Corrugation

NOTE:
THE CONTRACTOR SHALL VERIFY ALL CONTROLLING FIELD DIMENSIONS BEFORE ORDERING OR FABRICATING ANY MATERIAL.

All reinforcement shall be epoxy coated.

Permanent Steel Deck Form Alternative Shown Discontinuous, Spanning Between Girders. Other Alternative Deck Form Configurations are Permitted, as Approved by the Engineer.
See "PART TYPICAL SECTION No. 3" on "TYPICAL SECTION No. 4" Sheet

Note U
New Profile and Superelevation Based on Deck Thickness and Elevations at Top of Existing Girders. See "PROFILE GRADE AND ALIGNMENT DETAILS" Sheet

Note V
Permanent Steel Deck Form Overhang Support System. Details Shown are Approximate. The Support Details may Vary, at the Option of the Contractor as Approved by the Engineer

Note W
Chain Link Railing Located Along a Portion of Eastbound Onramp. For Location and Limits, See "ONRAMP CHAIN LINK RAILING DETAILS" Sheet. For Other Details, See "CHAIN LINK RAILING TYPE 7 (MOD) DETAILS No. 1" and "CHAIN LINK RAILING TYPE 7 (MOD) No. 2 DETAILS" Sheet

Note X
Location and Alignment of Existing Inside Barrier Face = Location and Alignment of New Inside Barrier Face
Location and Alignment of Existing Edge of Deck = Location and Alignment of New Edge of Deck

Note Y
Place Parallel to ℄ Bents and Space Along "M" Line

Note Z
For Additional Top Main Longitudinal Reinforcement, see "DECK REINFORCEMENT" Sheets

Notes

For Location of "PART TYPICAL SECTION No. 6", See TYPICAL SECTION No. 1" Sheet

For DETAIL A, DETAIL B, DETAIL C, DETAIL D, SECTION E-E and, SECTION F-F see "TYPICAL SECTION No. 10" Sheet

For Added Details, see "BENT DETAILS" Sheets, HINGE DETAILS" Sheets and "ABUTMENT DETAILS" Sheets

For Additional Details, see "STAGE CONSTRUCTION" Sheets, "REMOVAL DETAILS" Sheets and "PROTECTION SYSTEM DETAILS" Sheets

For Added Stud Connector Details, see "GIRDER STRENGTHENING DETAILS" Sheets

Eastbound and Westbound Mainline Structures Not Shown

All Existing Structural Steel Components Not Shown

Existing Bolts and Rivets Not Shown

Existing Strengthening Components not Shown

Deck Removal Not Shown

	BY	CHECKED
DESIGN	Mike Van De Pol	P. Norboe
DETAILS	Mike Van De Pol	P. Norboe
QUANTITIES	Mike Van De Pol	E. Franciliso

STATE OF CALIFORNIA
DEPARTMENT OF TRANSPORTATION

DIVISION OF ENGINEERING SERVICES
STRUCTURE DESIGN
DESIGN BRANCH 9

BRIDGE NO. 28-0140
MILE POST 5.8

BRIDGE DECK REPLACEMENT
SCOFIELD AVENUE UNDERCROSSING
TYPICAL SECTION No. 7

STRUCTURES DESIGN DETAIL SHEET (ENGLISH) (REV. 10/25/05)

ORIGINAL SCALE IN INCHES FOR REDUCED PLANS 0 1 2 3

UNIT: 3594
PROJECT NUMBER & PHASE: 04000004831
CONTRACT NO.: 04-1A3201

DISREGARD PRINTS BEARING EARLIER REVISION DATES 3-02-11

SHEET 44 OF 92

FILE => 28-0140-h-typsec07.dgn

USERNAME => s114937 DATE PLOTTED => 06-JUN-2012 TIME PLOTTED => 15:11

DIST	COUNTY	ROUTE	POST MILES TOTAL PROJECT	SHEET No	TOTAL SHEETS
04	CC	580	5.5/6.2	208	301

REGISTERED CIVIL ENGINEER 5-1-12 DATE

6-4-12
PLANS APPROVAL DATE

REGISTERED PROFESSIONAL ENGINEER Mike Van De Pol No. C35610 Exp. 9/30/2013 CIVIL STATE OF CALIFORNIA

The State of California or its officers or agents shall not be responsible for the accuracy or completeness of electronic copies of this plan sheet.

Denotes Existing Structure
Denotes New Construction

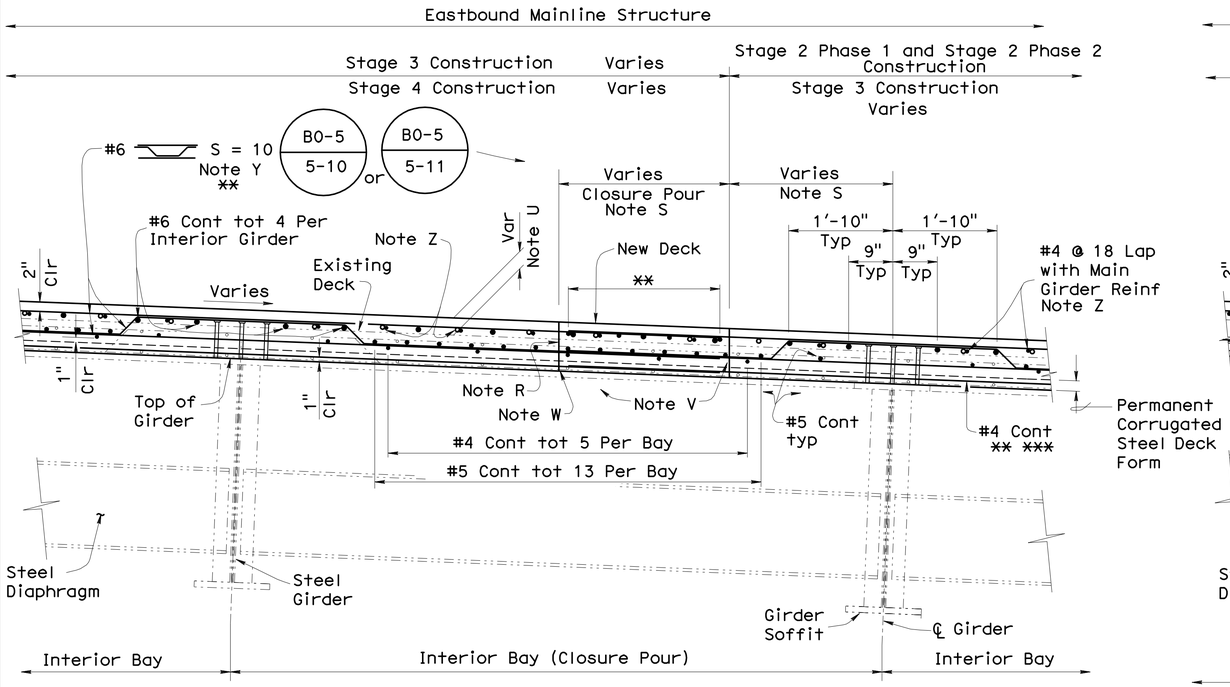

PART TYPICAL SECTIONS No. 7

¾" = 1'-0"

Eastbound Mainline Structure
Closure Pour Region Shown
Permanent Deck Forms Continuous Across Girders

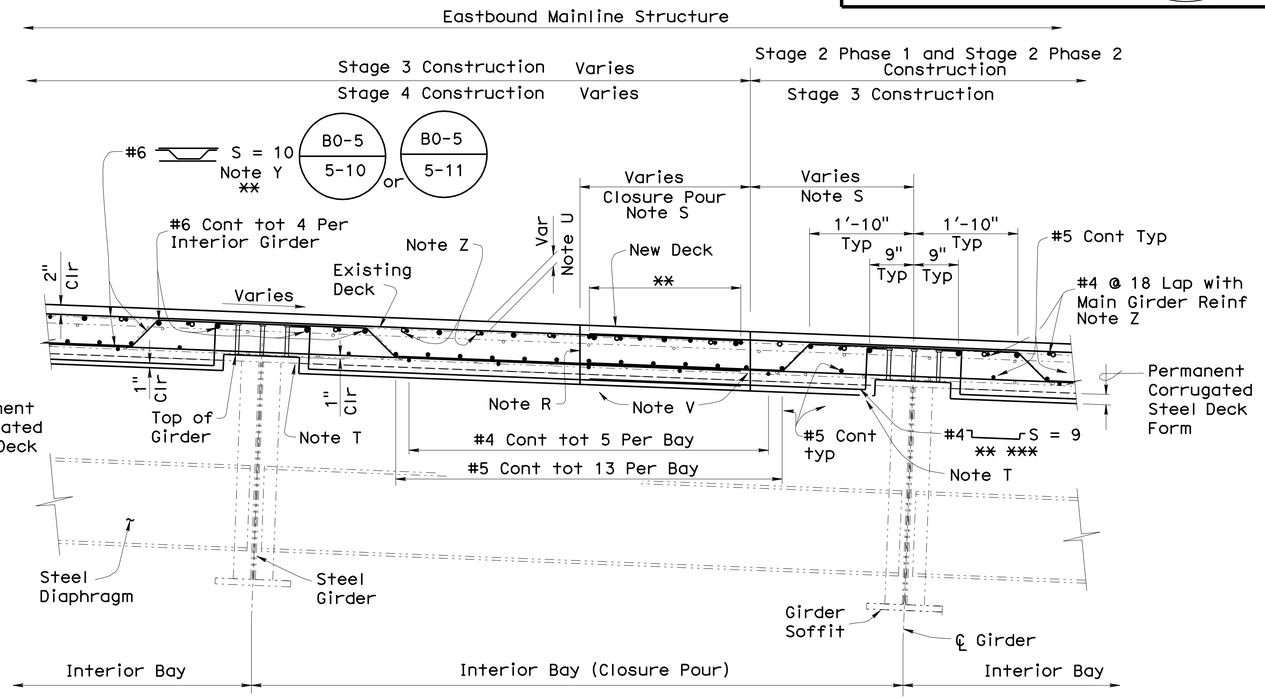

PART TYPICAL SECTIONS No. 7

¾" = 1'-0"

Eastbound Mainline Structure
Closure Pour Region Shown
Permanent Deck Forms Not Continuous Across Girders

All reinforcement shall be epoxy coated.

Deck Closure Pours Shall be Placed as Soon as Permitted by the Specifications

** Lap Splice at Closure Pour
2'-6" Min Lap Splice
*** Center Bar in Deck Form Corrugation

NOTE:
THE CONTRACTOR SHALL VERIFY ALL CONTROLLING FIELD DIMENSIONS BEFORE ORDERING OR FABRICATING ANY MATERIAL.

Note R
For Closure Pour Joint Details, see "TYPICAL SECTION No. 9" Sheet

Note S
For Locations and Widths of Closure Pours, see "Stage Construction Details" Sheets. See "TYPICAL SECTION No. 1" Sheet

Note T
Mount Permanent Steel Deck Form to Existing Girder Flange Beneath Existing Deck, to Facilitate Construction of Next Stage. See DETAIL X on "TYPICAL SECTION No. 11" Sheet

Note U
New Profile Based on Deck Thickness and Elevations at Top of Existing Girders Match Existing Cross-Slope. See "PROFILE GRADE AND ALIGNMENT DETAILS" Sheet

Note V
Adjust Position of Longitudinal Deck Reinforcement to Provide 3" Clear to Edges of Closure Pour

Note W
Weld or Mechanically Connect Permanent Deck Forms at Closure Pour. See "STAGE CONSTRUCTION DETAILS No. 8" Sheet

Note Y
Place Parallel to ℄ Bents and Space Along "E" Line

Note Z
For Additional Top Main Longitudinal Reinforcement, see "DECK REINFORCEMENT" Sheets

Notes

For Locations of "PART TYPICAL SECTION No. 7", See TYPICAL SECTION No. 1" Sheet

For Added Details, See "TYPICAL SECTION No. 3" and "TYPICAL SECTION No. 6" Sheets

For Additional Details, see "STAGE CONSTRUCTION" Sheets, "REMOVAL DETAILS" Sheets and "PROTECTION SYSTEM DETAILS" Sheets

For Added Details, see "BENT DETAILS", "HINGE DETAILS" Sheets and "ABUTMENT DETAILS" Sheets

For Added Stud Connector Details, see "GIRDER STRENGTHENING DETAILS" Sheets

All Existing Structural Steel Components Not Shown

Existing Bolts and Rivets Not Shown

Existing Strengthening Components not Shown

Deck Removal Not Shown

	BY	CHECKED
DESIGN	Mike Van De Pol	P. Norboe
DETAILS	Mike Van De Pol	P. Norboe
QUANTITIES	Mike Van De Pol	E. Franciliso

STATE OF CALIFORNIA
DEPARTMENT OF TRANSPORTATION

DIVISION OF ENGINEERING SERVICES
STRUCTURE DESIGN
DESIGN BRANCH 9

BRIDGE NO. 28-0140
MILE POST 5.8

BRIDGE DECK REPLACEMENT
SCOFIELD AVENUE UNDERCROSSING
TYPICAL SECTION No. 8

STRUCTURES DESIGN DETAIL SHEET (ENGLISH) (REV. 10/25/05)

ORIGINAL SCALE IN INCHES FOR REDUCED PLANS 0 1 2 3

UNIT: 3594
PROJECT NUMBER & PHASE: 04000004831
CONTRACT NO.: 04-1A3201

DISREGARD PRINTS BEARING EARLIER REVISION DATES 3-02-11

SHEET 45 OF 92

FILE => 28-0140-h-typsec08.dgn

USERNAME => s114937 DATE PLOTTED => 06-JUN-2012 TIME PLOTTED => 15:11

DIST	COUNTY	ROUTE	POST MILES TOTAL PROJECT	SHEET No	TOTAL SHEETS
04	CC	580	5.5/6.2	209	301

REGISTERED CIVIL ENGINEER 5-1-12 DATE

6-4-12
PLANS APPROVAL DATE

REGISTERED PROFESSIONAL ENGINEER Mike Van De Pol No. C35610 Exp. 9/30/2013 CIVIL STATE OF CALIFORNIA

The State of California or its officers or agents shall not be responsible for the accuracy or completeness of electronic copies of this plan sheet.

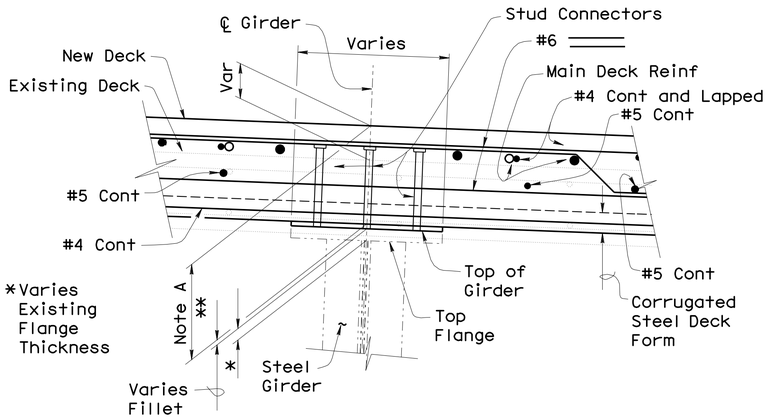

Note A
Varies. See "TYPICAL SECTION No. 2", Through "TYPICAL SECTION No.4" Sheets

EXTERIOR AND INTERIOR GIRDER

DETAIL A
1½" = 1'-0"

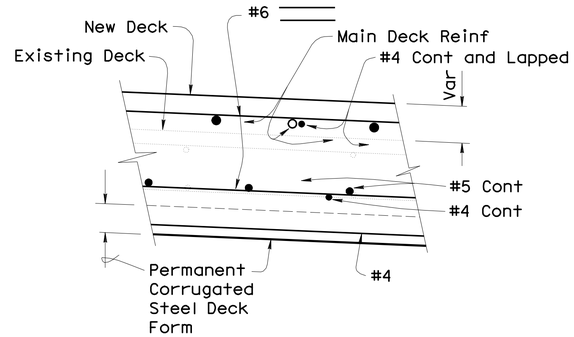

DETAIL B
1½" = 1'-0"

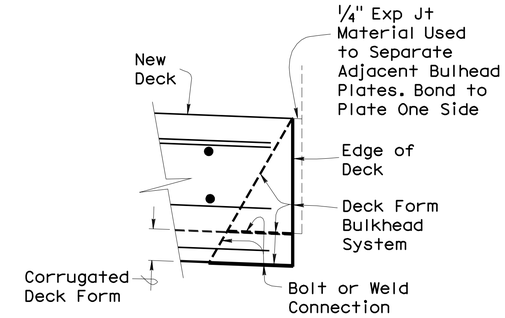

DETAIL G
1½" = 1'-0"

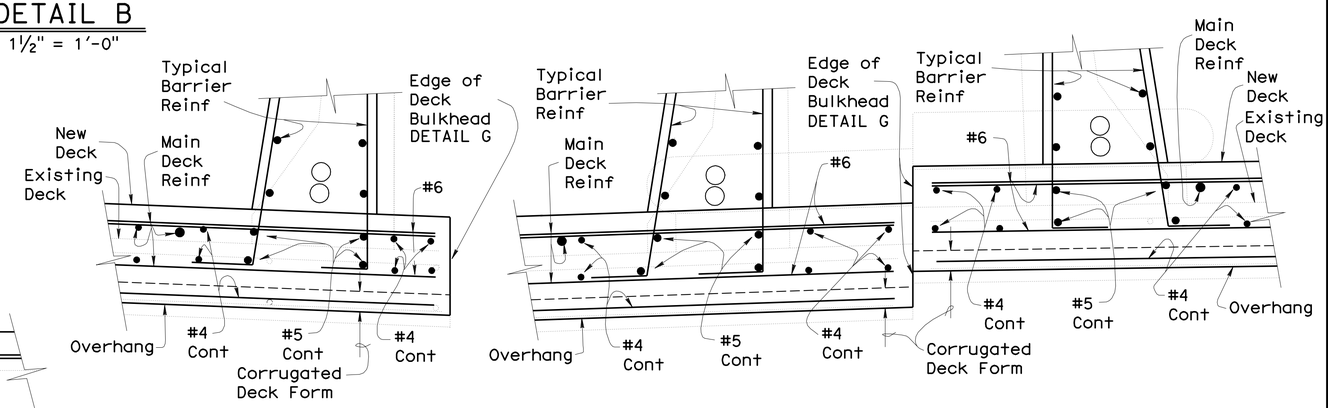

EXTERIOR EDGE OF DECK

INTERIOR EDGE OF DECK

DETAILS C
1" = 1'-0"

Barrier Face Architectural Texture Not Shown

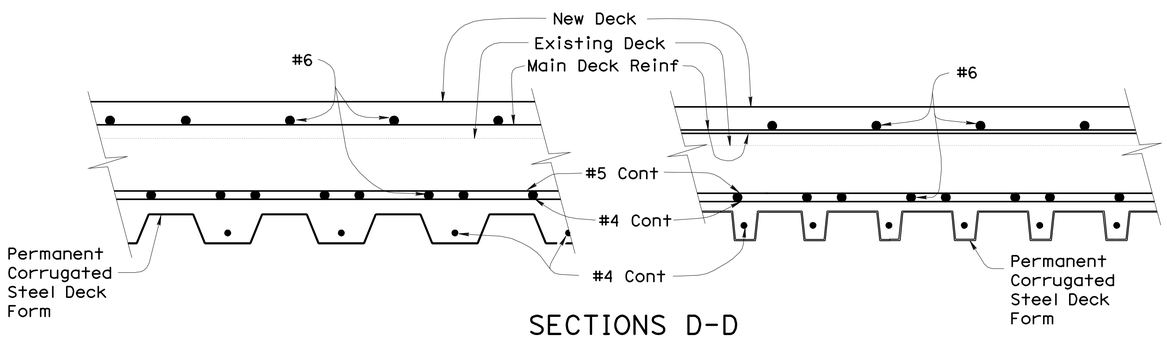

SECTIONS D-D
1½" = 1'-0"

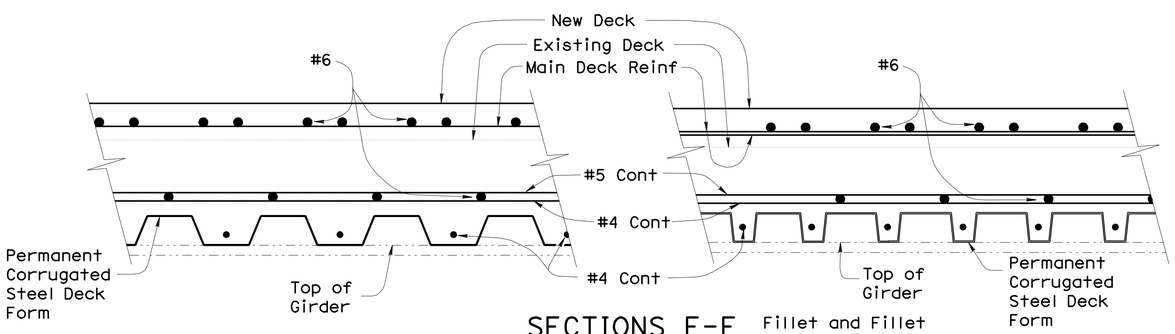

SECTIONS E-E
1½" = 1'-0"

Fillet and Fillet Bulkhead Not Shown

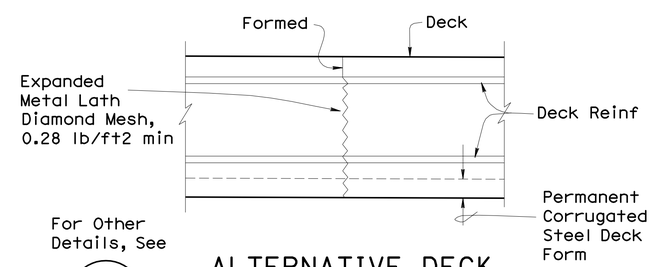

For Other Details, See
B0-5
5-2

ALTERNATIVE DECK CONSTRUCTION JOINT
No Scale

For Joint Locations, See "TYPICAL SECTION No. 1" and "TYPICAL SECTION No. 8" Sheets

Notes

For Locations of DETAIL A, DETAIL B, DETAIL C, SECTION D-D and, SECTION E-E see "TYPICAL SECTION No. 2", Through "TYPICAL SECTION No. 4" Sheets

For Added Details, see "BENT DETAILS" Sheets, "HINGE DETAILS" Sheets,and "ABUTMENT DETAILS" Sheets

For Added Stud Connector Details, see "GIRDER DETAILS" Sheet

All Existing Structural Steel Components Not Shown

Existing Bolts and Rivets Not Shown

For Added Details, see "TYPICAL SECTION No. 12" Sheet

Deck Removal Not Shown

Denotes Existing Structure

Denotes New Construction

NOTE:
THE CONTRACTOR SHALL VERIFY ALL CONTROLLING FIELD DIMENSIONS BEFORE ORDERING OR FABRICATING ANY MATERIAL.

All reinforcement shall be epoxy coated.

** Measured At ℄ Support

Continuous Permanent Deck Form Corrugation Alternative Details Shown. For Non-Continuous Alternative Details, See "TYPICAL SECTION No. 10" Sheet

Two Permanent Deck Form Corrugation Alternatives Shown. Other Alternatives are Permitted, as Approved by the Engineer. See "TYPICAL SECTION No. 12" Sheet

	BY	CHECKED
DESIGN	Mike Van De Pol	P. Norboe
DETAILS	Mike Van De Pol	P. Norboe
QUANTITIES	Mike Van De Pol	E. Franciliso

STATE OF CALIFORNIA
DEPARTMENT OF TRANSPORTATION

DIVISION OF ENGINEERING SERVICES
STRUCTURE DESIGN
DESIGN BRANCH 9

BRIDGE NO. 28-0140
MILE POST 5.8

BRIDGE DECK REPLACEMENT
SCOFIELD AVENUE UNDERCROSSING
TYPICAL SECTION No. 9

STRUCTURES DESIGN DETAIL SHEET (ENGLISH) (REV. 10/25/05)

ORIGINAL SCALE IN INCHES FOR REDUCED PLANS 0 1 2 3

UNIT: 3594
PROJECT NUMBER & PHASE: 04000004831
CONTRACT NO.: 04-1A3201

DISREGARD PRINTS BEARING EARLIER REVISION DATES 3-02-11

SHEET 46 OF 92

FILE => 28-0140-h-typsec09.dgn

USERNAME => s114937 DATE PLOTTED => 06-JUN-2012 TIME PLOTTED => 15:12

DIST	COUNTY	ROUTE	POST MILES TOTAL PROJECT	SHEET No	TOTAL SHEETS
04	CC	580	5.5/6.2	210	301

REGISTERED CIVIL ENGINEER 5-1-12 DATE

6-4-12
PLANS APPROVAL DATE

The State of California or its officers or agents shall not be responsible for the accuracy or completeness of electronic copies of this plan sheet.

REGISTERED PROFESSIONAL ENGINEER Mike Van De Pol No. C35610 Exp. 9/30/2013 CIVIL STATE OF CALIFORNIA

Denotes Existing Structure
Denotes New Construction

Min Clip Angle and Plate Thickness = 1/8"

Weld Deck Form to Clip Angles and Plates

Weld Clip Angle to Top Flange, or Use a Flange Strap

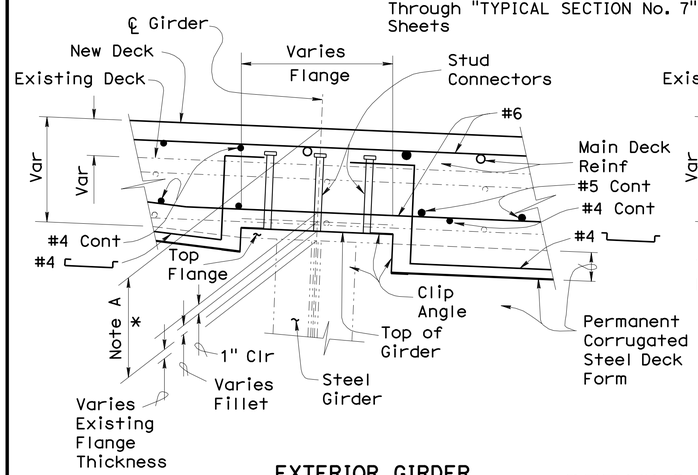

EXTERIOR GIRDER

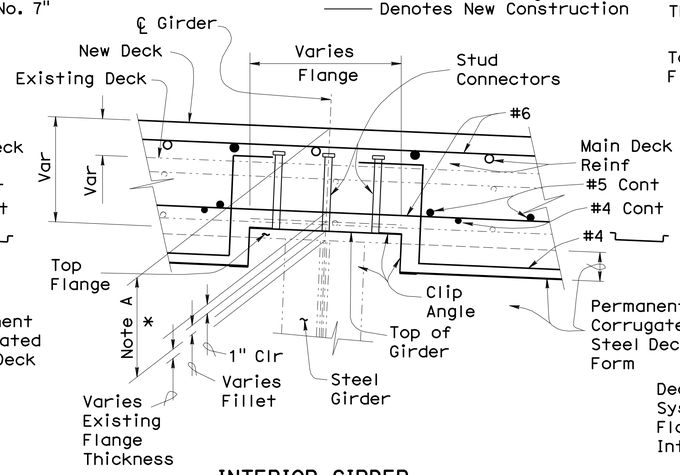

INTERIOR GIRDER

DETAILS A

1½" = 1'-0"

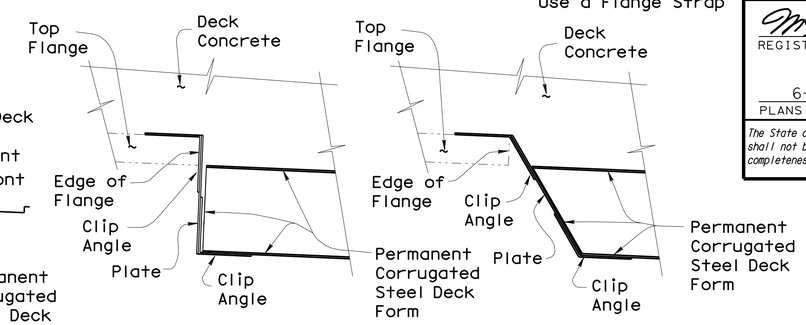

All reinforcement shall be epoxy coated.

Deck Form Support System at Girder Flange May be Made Integral to Deck Form

INTERFACE DETAILS

No Scale

Reinforcement and Stud Connectors Not Shown

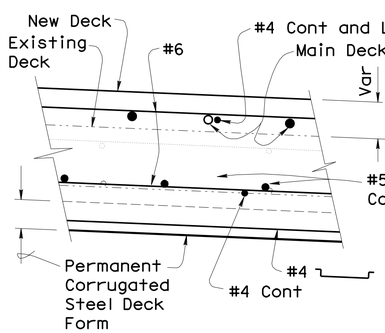

DETAIL B

1½" = 1'-0"

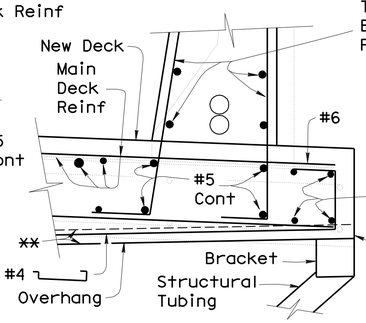

EXTERIOR EDGE OF DECK

See Detail X

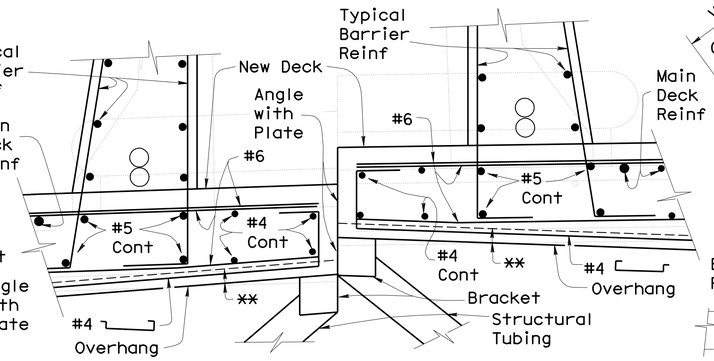

DETAILS C

1½" = 1'-0"

INTERIOR EDGE OF DECK

See Detail X

Barrier Face Architectural Texture Not Shown

** Permanent Corrugated Deck Form

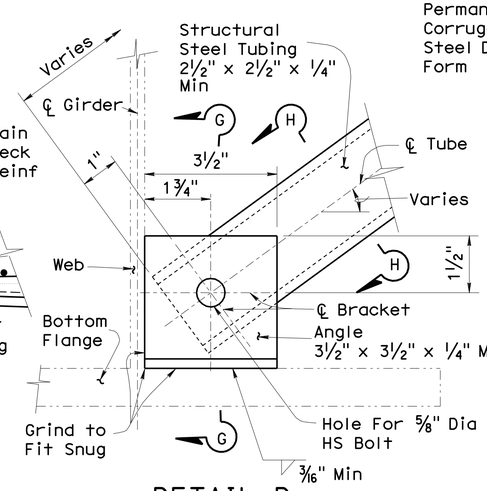

DETAIL D

1'-0" = 6"

Bolt Assembly Not Shown

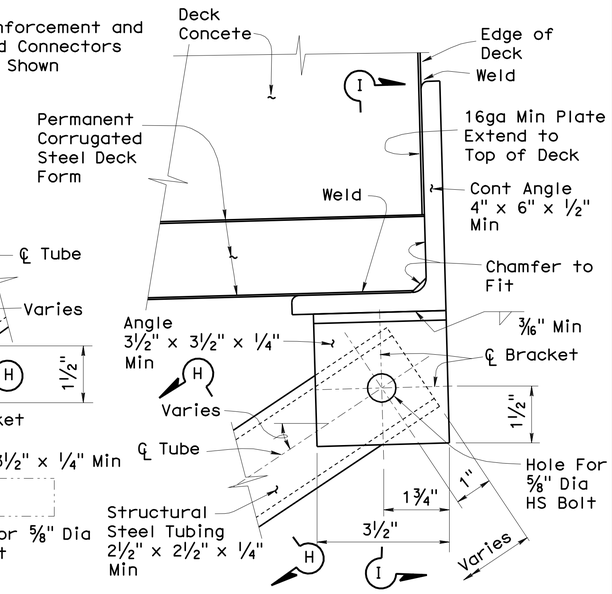

DETAIL X

1'-0" = 6"

Bolt Assembly Not Shown

Tube Spacing = 10'-0" Max
Tubes Located on Either Side of Deck Joint at Hinges

NOTE:
THE CONTRACTOR SHALL VERIFY ALL CONTROLLING FIELD DIMENSIONS BEFORE ORDERING OR FABRICATING ANY MATERIAL.

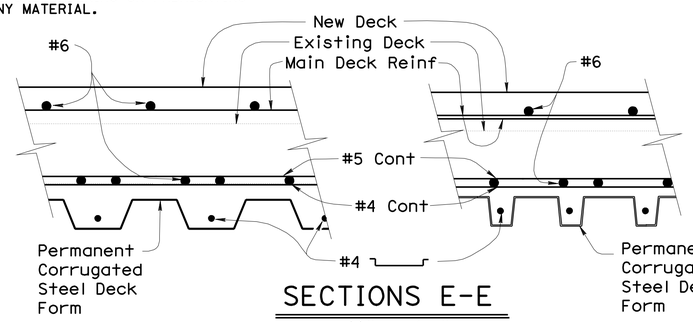

SECTIONS E-E

1½" = 1'-0"

Permanent Steel Deck Form Overhang Support System Details Shown are Approximate. The Support Details may Vary, at the Option of the Contractor as Approved by the Engineer. For Notes, See "TYPICAL SECTION DETAILS No. 12" Sheet

Two Permanent Deck Form Corrugation Alternatives Shown. Other Alternatives are Permitted, as Approved by the Engineer. See "TYPICAL SECTION No. 12" Sheet

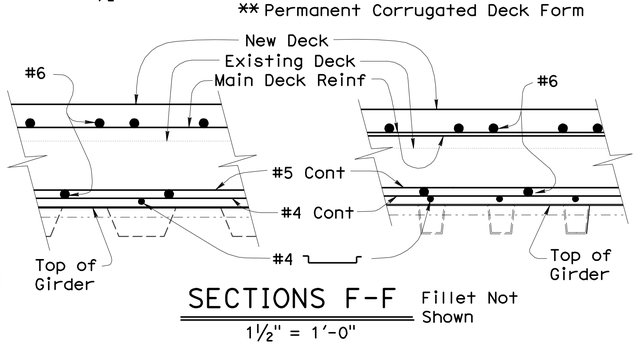

SECTIONS F-F

1½" = 1'-0"

Fillet Not Shown

* Measured At ℄ Support

Non-Continuous Permanent Deck Form Alternative Details Shown. For Non-Continuous Alternative Details, See "TYPICAL SECTION No. 9" Sheet

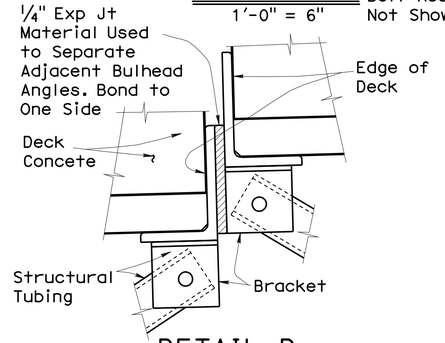

DETAIL D

3" = 1-0"

For Construction Joint Details, See B0-5 5-2
For Alternative Deck Construction Joint Detail, See "TYPICAL SECTION No. 9" Sheets

Notes

For Locations of DETAIL A, DETAIL B, DETAIL C, DETAIL D, SECTION E-E and, SECTION F-F see "TYPICAL SECTION No. 5" Through "TYPICAL SECTION No. 7" Sheets

For SECTION G-G SECTION H-H and, SECTION I-I see "TYPICAL SECTION No. 11" Sheet

For Added Details, see "BENT DETAILS" Sheets, "HINGE DETAILS" Sheets,and "ABUTMENT DETAILS" Sheets

For Added Stud Connector Details, see "GIRDER DETAILS" Sheet

All Existing Structural Steel Components Not Shown

Existing Bolts and Rivets Not Shown

Deck Removal Not Shown

For Added Details, see "TYPICAL SECTION No. 12" Sheet

	BY	CHECKED
DESIGN	Mike Van De Pol	P. Norboe
DETAILS	Mike Van De Pol	P. Norboe
QUANTITIES	Mike Van De Pol	E. Franciliso

STATE OF CALIFORNIA
DEPARTMENT OF TRANSPORTATION

DIVISION OF ENGINEERING SERVICES
STRUCTURE DESIGN
DESIGN BRANCH 9

BRIDGE NO. 28-0140
MILE POST 5.8

BRIDGE DECK REPLACEMENT
SCOFIELD AVENUE UNDERCROSSING
TYPICAL SECTION No. 10

STRUCTURES DESIGN DETAIL SHEET (ENGLISH) (REV. 10/25/05)

ORIGINAL SCALE IN INCHES FOR REDUCED PLANS 0 1 2 3

UNIT: 3594
PROJECT NUMBER & PHASE: 04000004831
CONTRACT NO.: 04-1A3201

DISREGARD PRINTS BEARING EARLIER REVISION DATES 3-02-11

SHEET 47 OF 92

FILE => 28-0140-h-typsec10.dgn

USERNAME => s114937 DATE PLOTTED => 06-JUN-2012 TIME PLOTTED => 15:12

DIST	COUNTY	ROUTE	POST MILES TOTAL PROJECT	SHEET No	TOTAL SHEETS
04	CC	580	5.5/6.2	211	301

REGISTERED CIVIL ENGINEER 5-1-12 DATE

6-4-12
PLANS APPROVAL DATE

REGISTERED PROFESSIONAL ENGINEER Mike Van De Pol No. C35610 Exp. 9/30/2013 CIVIL STATE OF CALIFORNIA

The State of California or its officers or agents shall not be responsible for the accuracy or completeness of electronic copies of this plan sheet.

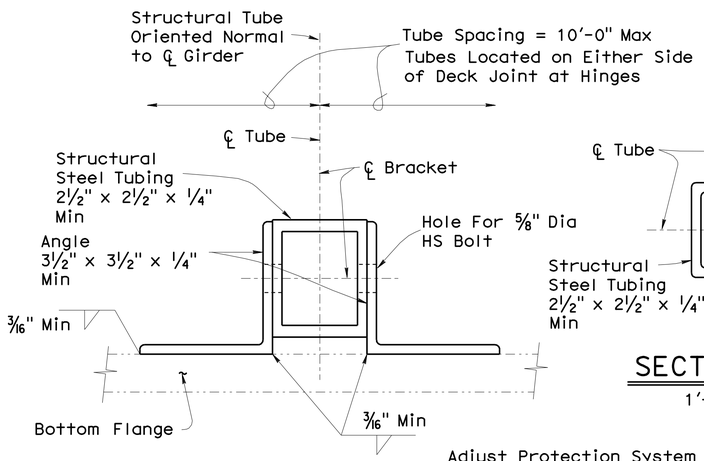

SECTION G-G

1'-0" = 6"
Bolt Assembly Not Shown

Adjust Protection System to Facilitate Placement of Support Bracket, as Approved by the Engineer and Chevron Oil Company

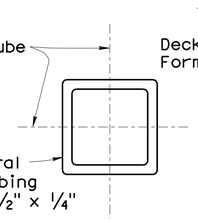

SECTION H-H

1'-0" = 6"

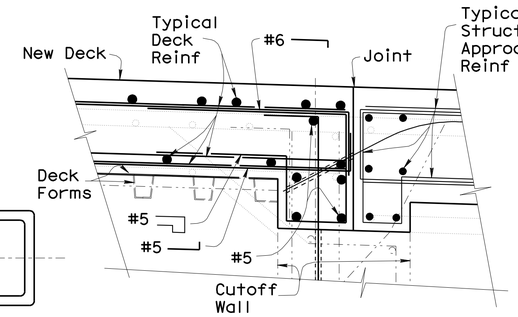

BENT 10 Cutoff Wall
Westbound Mainline Structure
BENT 10 Cutoff Wall
Eastbound Onramp Structure

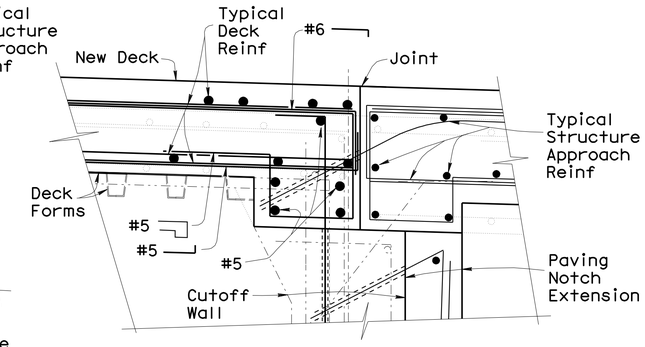

BENT 12 Cutoff Wall
Eastbound Mainline Structure

ABUTMENT LOCATIONS

Sections Taken Between Girders

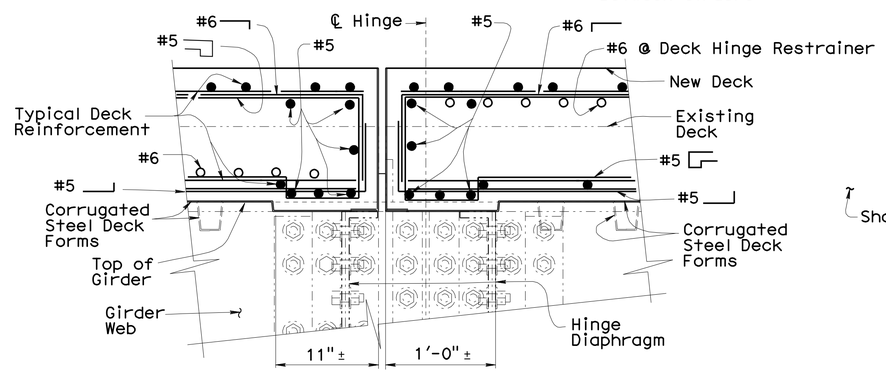

HINGE LOCATIONS

Sections Taken at Girders

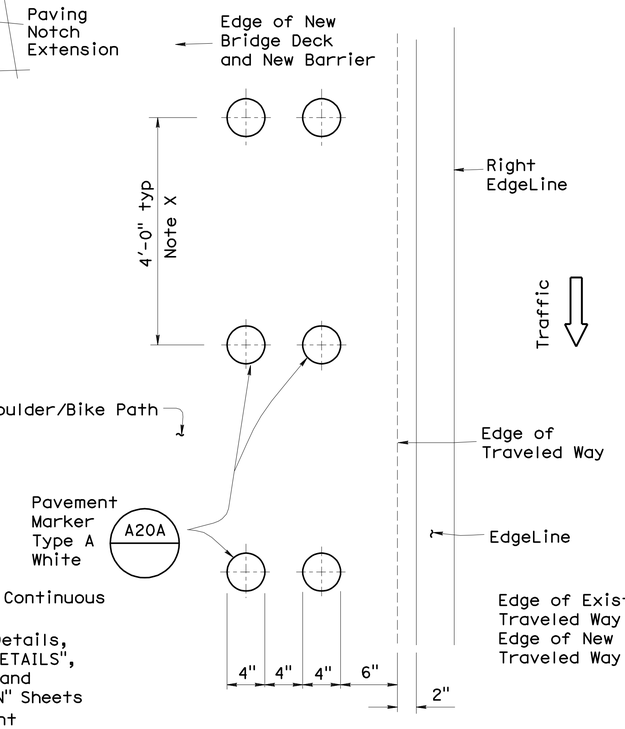

BRIDGE DECK MARKER DETAILS

Part Plan
No Scale

Note X
Markers Extend Along Entire Length of Structure and Structure Approach. See "ROAD PLANS"

Bridge Deck Markers Are Located at the Right Edge of Traveled Way For the Westbound Rte 580 Mainline Structure.

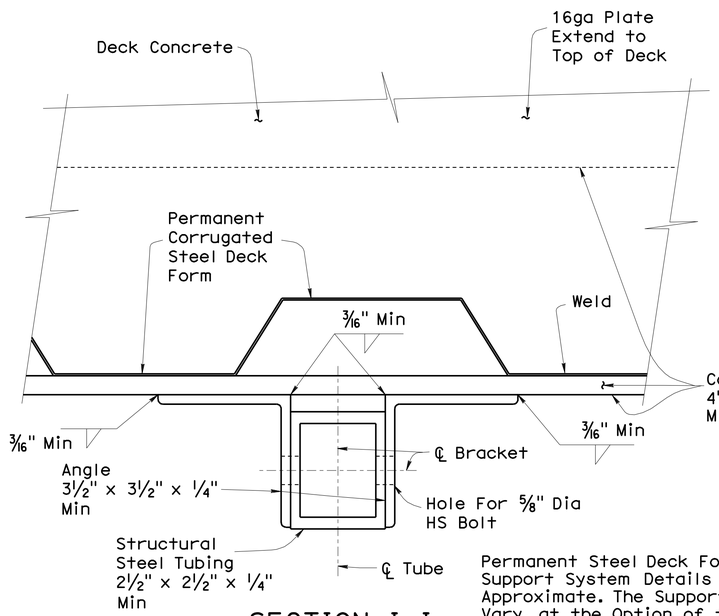

SECTION I-I

1'-0" = 6"
Bolt Assembly Not Shown

Permanent Steel Deck Form Overhang Support System Details Shown are Approximate. The Support Details may Vary, at the Option of the Contractor as Approved by the Engineer. For Notes, See "TYPICAL SECTION DETAILS No. 12" Sheet
One Permanent Deck Form Corrugation Alternative Shown. Other Alternatives are Permitted, as Approved by the Engineer. See "TYPICAL SECTION No. 12" Sheet

All reinforcement shall be epoxy coated.

ALTERNATIVE DECK FORM INTERFACE DETAILS

1½" = 1'-0"

Deck Forms Not Continuous Across Girders
For Additional Details, see "ABUTMENT DETAILS", "HINGE DETAILS" and "TYPICAL SECTION" Sheets
All Reinforcement Epoxy Coated

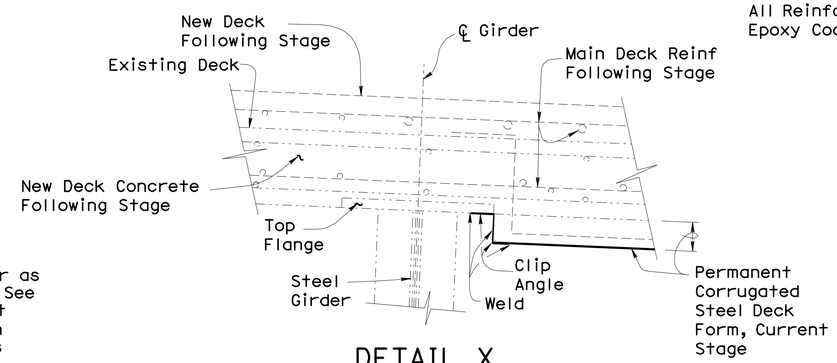

DETAIL X

1½" = 1'-0"

Weld Clip Angles to Flange Continuous

Mount Permanent Steel Deck Form to Existing Girder Flange Beneath Existing Deck to Facilitate Construction of Next Stage.

Notes

For Locations of Section G-G Through Section I-I, see "TYPICAL SECTION No. 10" Sheet

For Location of Bridge Deck Markers, See "TYPICAL SECTION No. 1" Sheet and "ROAD PLANS"

For Locations of DETAIL X, see "TYPICAL SECTION No. 6" and "TYPICAL SECTION No. 8" Sheets

For Added Stud Connector Details, see "GIRDER DETAILS" Sheets

All Existing Structural Steel Components Not Shown

Existing Bolts and Rivets Not Shown

NOTE:
THE CONTRACTOR SHALL VERIFY ALL CONTROLLING FIELD DIMENSIONS BEFORE ORDERING OR FABRICATING ANY MATERIAL.

Denotes Existing Structure
Denotes New Construction

	BY	CHECKED
DESIGN	Mike Van De Pol	P. Norboe
DETAILS	Mike Van De Pol	P. Norboe
QUANTITIES	Mike Van De Pol	E. Franciliso

STATE OF CALIFORNIA
DEPARTMENT OF TRANSPORTATION

DIVISION OF ENGINEERING SERVICES
STRUCTURE DESIGN
DESIGN BRANCH 9

BRIDGE NO. 28-0140
MILE POST 5.8

BRIDGE DECK REPLACEMENT
SCOFIELD AVENUE UNDERCROSSING
TYPICAL SECTION No. 11

STRUCTURES DESIGN DETAIL SHEET (ENGLISH) (REV. 10/25/05)

ORIGINAL SCALE IN INCHES FOR REDUCED PLANS 0 1 2 3

UNIT: 3594
PROJECT NUMBER & PHASE: 04000004831
CONTRACT NO.: 04-1A3201

DISREGARD PRINTS BEARING EARLIER REVISION DATES 3-02-11

SHEET 48 OF 92

FILE => 28-0140-h-typsec11.dgn

USERNAME => s14937 DATE PLOTTED => 06-JUN-2012 TIME PLOTTED => 15:12

DIST	COUNTY	ROUTE	POST MILES TOTAL PROJECT	SHEET No	TOTAL SHEETS
04	CC	580	5.5/6.2	212	301

REGISTERED CIVIL ENGINEER 5-1-12 DATE

6-4-12
PLANS APPROVAL DATE

REGISTERED PROFESSIONAL ENGINEER Mike Van De Pol No. C35610 Exp. 9/30/2013 CIVIL STATE OF CALIFORNIA

The State of California or its officers or agents shall not be responsible for the accuracy or completeness of electronic copies of this plan sheet.

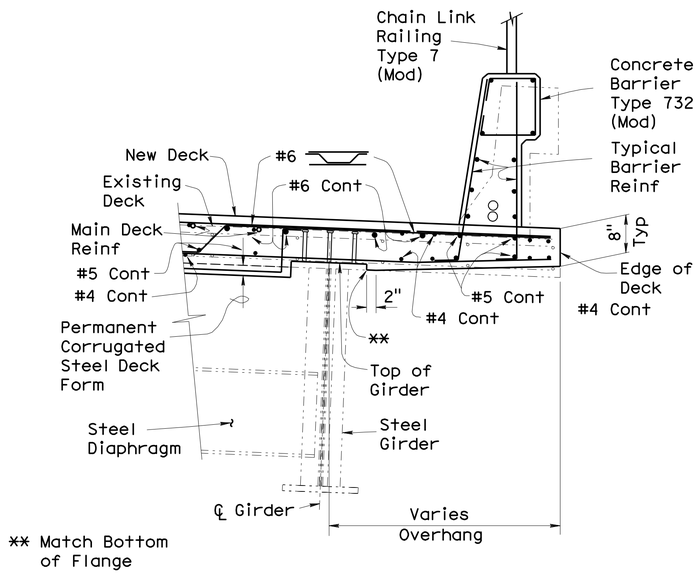

PART TYPICAL SECTION

¾" = 1'-0"

Variable Fillet Not Shown

For Details Not Shown, See "TYPICAL SECTION No. 5" Through "TYPICAL SECTION No. 7" Sheets

Overhang Formed Without Permanent Deck Forms- Overhang Form Support Off Protection System

PERMANENT DECK FORM GENERAL NOTES

1. For Limits of the Permanent Deck Form System, see "TYPICAL SECTION" Sheets, "STAGE CONSTRUCTION DETAILS" Sheets, "REMOVAL DETAILS" Sheets, "HINGE DETAILS" Sheets and "ABUTMENT DETAILS" Sheets.
2. Design and Details Shown Represent Two Deck Form Alternatives. Details and Design Shown Herein are Approximate. Deck Form Panel Dimensions, Corrugation Configuration and Corrugation Dimensions May Vary. Exact Design and Details Shall be Determined by the Contractor, as Approved by the Engineer.
3. The Permanent Deck Form Details Shown Herein Reflect Alternative Anchorage and Support Details to the Top Flanges of the Existing Bridge Girders. At the Option of the Contractor, the Deck Form System May be Anchored/Supported to the Top Flanges in a Different Fashion, as Approved by the Engineer.
4. The Longitudinal Sequence of Installation of the Permanent Deck Form System Shown Herein is Approximate. The Exact Sequence of Installation Shall be Determined by the Contractor, as Approved by the Engineer. See "STAGE CONSTRUCTION DETAILS" Sheets.
5. The Permanent Deck Form System Shall Extend Continuous From Begin Bridge to End Bridge per Given Stage of Bridge Deck Work, as Approved by the Engineer.
6. Where the Permanent Deck Form System Extends Beyond the Edge of Bridge Deck for a Given Stage, Toward the Next Stage of Removal Work, the Deck Form System Shall Extend a Minimum of 2 Feet Beyond the Edge of Deck at the Closure Pour, as Approved by the Engineer. See "STAGE CONSTRUCTION DETAILS" Sheets.
7. The Width of the Permanent Deck Form System Per Given Stage of Bridge Work, Shall Extend a Minimum of 2 Feet Beyond the Transverse Limits of the Closure Pour. The Deck Form System May Have to Extend Across the Full Width of the Girder Bay to Facilitate the Next Stage of Deck Construction as Shown, as Approved by the Engineer.
8. If a Continuous Deck Form System is Employed Across the Girder Flanges and Stud Connectors Exist on the Top Girder Flanges, Then Holes Shall be Cut in the Deck Forms to Facilitate Placement of the Deck Forms Over the Stud Connectors.
9. If a Continuous Deck Form System is Employed Across the Girder Flanges and Stud Connectors Do Not Exist on the Top Girder Flanges, Then Holes Shall be Cut in the Deck Forms to Facilitate Placement of the Stud Connectors Through the Deck Forms, as Approved by the Engineer.
10. All Components of the Permanent Deck Form System Shall be Galvanized Steel.
11. The Overhang Deck Form Support System Shown for the Non-Continuous Deck Form Alternative is Shown Approximate. The Exact Design and Details Shall be Determined by The Contractor, as Approved by the Engineer.
12. The Deck Form Bulkhead Design and Details for the Edge of Deck, Hinge, Abutment Cutoff Wall, and Bent Cap Beam Interfaces Shall be Designed by the Contractor, as Approved by the Engineer.
13. The New Profile Grade and Superelevation Shown are Based Upon an Assumed Permanent Deck Form Approach, Configuration and Dimensions. The Exact Final Profile Grade and Superelevation Will Depend Upon the Deck Form System Selected by the Contractor, as Approved by the Engineer. The Final Structure Profile Grade and Superelevation will Affect the Final Roadway Approach Grades and Superelevation Accordingly. Adjustments to the Approach Roadway Grades and Superelevation May be Required, as Approved by the Engineer.
14. The Overhang Deck Form Support System Shown for the Non-Continuous Deck Form Alternative, May be Eliminated if the Protection System is Employed For Temporary Overhang Form Support During Deck Casting Operations, Only as Approved by the Engineer and Chevron Oil Company. See "PROTECTION SYSTEM DETAILS" Sheets.
15. Elevation Differences May Exist Along the Top Flanges of Girders and Cap Beams, Due to Added Steel Plate Thickness. Elevation Differences May Exist at the Interfaces Between Girder Top Flanges and the Bent Cap Beam Top Flanges and Hinge Diaphragm Flanges. The Permanent Deck Form System Shall be Designed and Detailed to Address These Elevation Differences with Plates and/or Bulkheads, as Approved by the Engineer.
16. Design and Details For the Fillets and Fillet Forms on Top of the Girder Flanges are Not Shown. The Exact Design, Dimensions and Details For the Fillets Shall Developed by the Contractor, as Approved by the Engineer. Fillet Interfaces Shall be Sealed to Prevent Leakage During Casting Operations.
17. Deck Thickness Shown Will Vary Based Upon Selected Permanent Deck Form System Geometry and Support Approach. The Exact Thickness of the Deck Shall be Determined by the Contractor, as Approved by the Engineer.
18. The Protection System May be Used as Support For the Deck Forms, as Approved by the Engineer and Chevron Oil Company. See "PROTECTION SYSTEM DETAILS" Sheets, "REMOVAL DETAILS" Sheets and "STAGE CONSTRUCTION DETAILS" Sheets.
19. Deck Forms Shall be Oriented Normal or Radial to Mainline Layout Lines, or Centerlines of Girders, as Approved by the Engineer
20. Design and Details For the Bulkhead Forms on Top of the Girder Flanges are Not Shown. The Exact Design, Dimensions and Details For the Bulkheads Shall be Developed by the Contractor, as Approved by the Engineer. Bulkhead Interfaces Shall be Sealed to Prevent Leakage During Casting Operations.

GENERAL NOTES
LOAD AND RESISTANCE FACTOR DESIGN

DESIGN: AASHTO LRFD BRIDGE DESIGN SPECIFICATIONS, 3rd Edition with the 2005 Interims and Caltrans Amendments v3.06.01 with Bridge Design Specifications (1996 AASHTO with Interims and Revisions by CALTRANS)

DEAD LOADS:	Construction Dead Load	20 lb/ft2
	Concrete Deck Dead Load	150 lb/ft3
	Barrier Dead Load	150 lb/ft3
	Steel Dead Load	490 lb/ft3
LIVE LOADS:	Construction Live Load	20 psf
STRUCTURAL STEEL:	ASTM Designation A709, Grade 36	
	f_y = 36000 psi	
	f_u = 58000 psi	

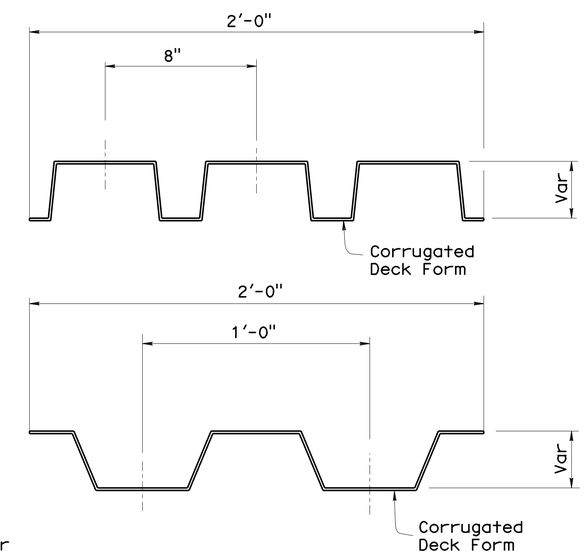

SECTIONS

Scale 3" = 1'-0"

	BY		CHECKED
DESIGN	Mike Van De Pol		P. Norboe
DETAILS	Mike Van De Pol		P. Norboe
QUANTITIES	Mike Van De Pol		E. Franciliso

STATE OF CALIFORNIA
DEPARTMENT OF TRANSPORTATION

DIVISION OF ENGINEERING SERVICES
STRUCTURE DESIGN
DESIGN BRANCH 9

BRIDGE NO. 28-0140
MILE POST 5.8

BRIDGE DECK REPLACEMENT
SCOFIELD AVENUE UNDERCROSSING
TYPICAL SECTION No. 12

STRUCTURES DESIGN DETAIL SHEET (ENGLISH) (REV. 10/25/05)

ORIGINAL SCALE IN INCHES FOR REDUCED PLANS 0 1 2 3

UNIT: 3594
PROJECT NUMBER & PHASE: 04000004831
CONTRACT NO.: 04-1A3201

DISREGARD PRINTS BEARING EARLIER REVISION DATES 3-02-11

SHEET 49 OF 92

FILE => 28-0140-h-typsec12.dgn

USERNAME => s128843 DATE PLOTTED => 06-JUN-2012 TIME PLOTTED => 16:03

DIST	COUNTY	ROUTE	POST MILES TOTAL PROJECT	SHEET No	TOTAL SHEETS
04	CC	580	5.5/6.2	213	301

REGISTERED CIVIL ENGINEER 5-1-12 DATE

6-4-12
PLANS APPROVAL DATE

REGISTERED PROFESSIONAL ENGINEER Mike Van De Pol No. C35610 Exp. 9/31/2013 CIVIL STATE OF CALIFORNIA

The State of California or its officers or agents shall not be responsible for the accuracy or completeness of electronic copies of this plan sheet.

APPROXIMATE REMOVAL SEQUENCE

Longitudinal Work Progression Per Stage

- Construct Protection System
- Mount/Anchor Protection System
- Provide Support for Fiber Optic Line and Sewer Force Main
- Cut/Core Lifting Holes in Deck
- Remove Barriers, Railing, Light Standards
- Longitudinal/Transverse Deck Saw Cuts
- Lift Out Deck Slab Sections
- Remove Deck Portion Over Girder Flanges

APPROXIMATE CONSTRUCTION SEQUENCE

Longitudinal Work Progression Per Stage

- Spot and Blast Clean Girders
- Partial Clean and Paint Structural Steel
- Install Permanent Steel Deck Forms
- Install Overhang Support System
- Partial Removal of Protection System
- Install Girder Stud Connectors
- Place Deck Reinforcement
- Cast New Deck Concrete
- Place Barrier Reinforcement
- Cast Barrier Concrete
- Place Railing, Light Standards and Seals
- Remove Remainder of Protection System
- Complete Clean and Paint Structural Steel

The Protection System Design and Details Shown Herein Represents One Alternative Approach. The Exact Design and Details for the Employed Protection System Shall be Developed by the Contractor, Per the Requirements Presented in the Project Specifications, as Approved by the Engineer and The Chevron Oil Company

The Design and Details Shown Herein Reflect a Bridge Mounted and Supported Protection System to Facilitate Bridge Deck Removal. A Ground-Based Protection System May be Employed, as Approved by the Engineer and Chevron Oil Company.

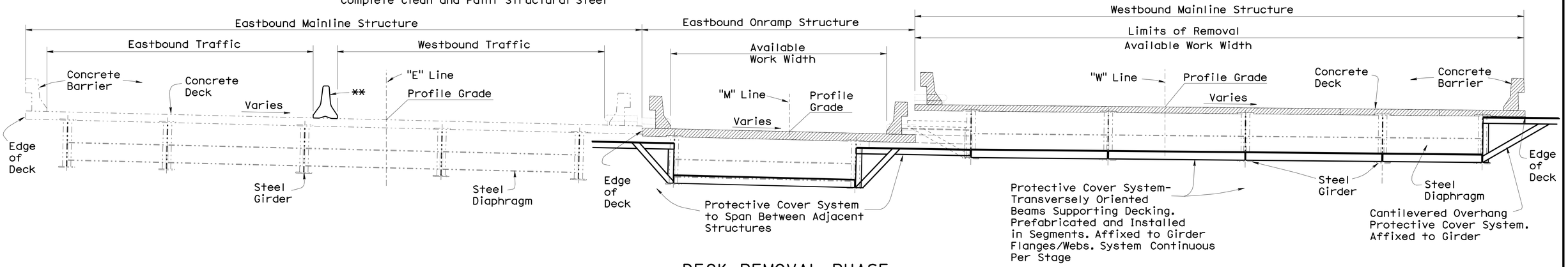

DECK REMOVAL PHASE

Protection System Railing not Shown

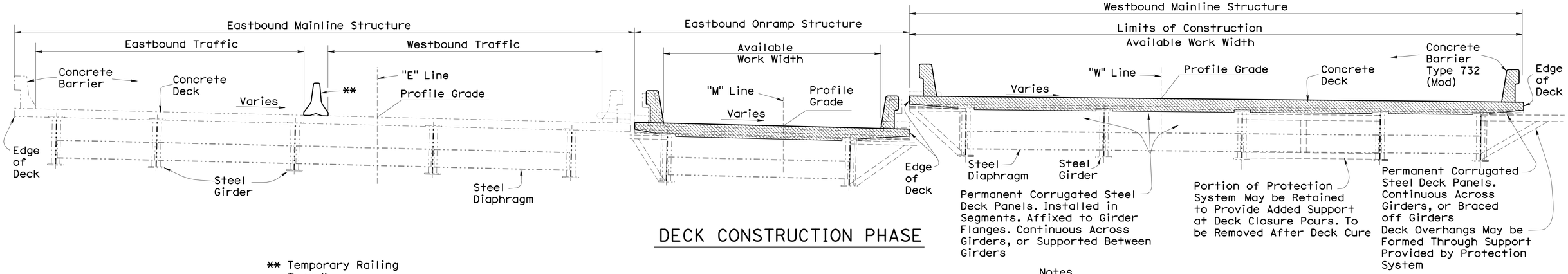

DECK CONSTRUCTION PHASE

** Temporary Railing Type K

Denotes Existing Structure

Denotes New Construction

Denotes Limits of Removal of Existing Decks, Barriers, Railings and Light Standards

Denotes Limits of Construction of New Decks, Barriers, Railings and Light Standards

NOTE:
THE CONTRACTOR SHALL VERIFY ALL CONTROLLING FIELD DIMENSIONS BEFORE ORDERING OR FABRICATING ANY MATERIAL.

SCHEMATIC REPRESENTATION
BRIDGE MOUNTED PROTECTION SYSTEM

1/4" = 1'-0"

Notes

Stage 1 Phase 3 Shown, Other Stages Similar

Sections Taken at Span 6, Other Span Locations Similar

For Additional Details, see "TYPICAL SECTION", "STAGE CONSTRUCTION" and "REMOVAL DETAILS" Sheets

For Other Details and Notes, see "PROTECTION SYSTEM DETAILS No. 2", "PROTECTION SYSTEM DETAILS No. 4" and "PROTECTION SYSTEM DETAILS No. 7" Sheets

All Existing Structural Steel Components Not Shown

Deck and Barrier Reinforcement not Shown

Chain Link Railings. Light Standards and Utilities Not Shown

Deck Form Alternatives Shown. For Other Alternative Details, See "TYPICAL SECTION" Sheets

	BY	CHECKED
DESIGN	Mike Van De Pol	P. Norboe
DETAILS	Mike Van De Pol	P. Norboe
QUANTITIES	Mike Van De Pol	E. Franciliso

STATE OF CALIFORNIA
DEPARTMENT OF TRANSPORTATION

DIVISION OF ENGINEERING SERVICES
STRUCTURE DESIGN
DESIGN BRANCH 9

BRIDGE NO. 28-0140
POST MILE 5.8

BRIDGE DECK REPLACEMENT
SCOFIELD AVENUE UNDERCROSSING
PROTECTION SYSTEM DETAILS No. 1

STRUCTURES DESIGN DETAIL SHEET (ENGLISH) (REV. 10/25/05)

ORIGINAL SCALE IN INCHES FOR REDUCED PLANS 0 1 2 3

UNIT: 3594
PROJECT NUMBER & PHASE: 04000004831
CONTRACT NO.: 04-1A3201

DISREGARD PRINTS BEARING EARLIER REVISION DATES 3-02-11

SHEET 50 OF 92

FILE => 28-0140-1-protsysdets01.dgn

USERNAME => s128843 DATE PLOTTED => 06-JUN-2012 TIME PLOTTED => 16:03

DIST	COUNTY	ROUTE	POST MILES TOTAL PROJECT	SHEET No	TOTAL SHEETS
04	CC	580	5.5/6.2	214	301

REGISTERED CIVIL ENGINEER 5-1-12 DATE

6-4-12
PLANS APPROVAL DATE

REGISTERED PROFESSIONAL ENGINEER Mike Van De Pol No. C35610 Exp. 9/30/2013 CIVIL STATE OF CALIFORNIA

The State of California or its officers or agents shall not be responsible for the accuracy or completeness of electronic copies of this plan sheet.

The Protection System Design and Details Shown Herein Represents One Alternative Approach. The Exact Design and Details for the Employed Protection System Shall be Developed by the Contractor, Per the Requirements Presented in the Project Specifications, as Approved by the Engineer and The Chevron Oil Company

NOTE:
THE CONTRACTOR SHALL VERIFY ALL CONTROLLING FIELD DIMENSIONS BEFORE ORDERING OR FABRICATING ANY MATERIAL.

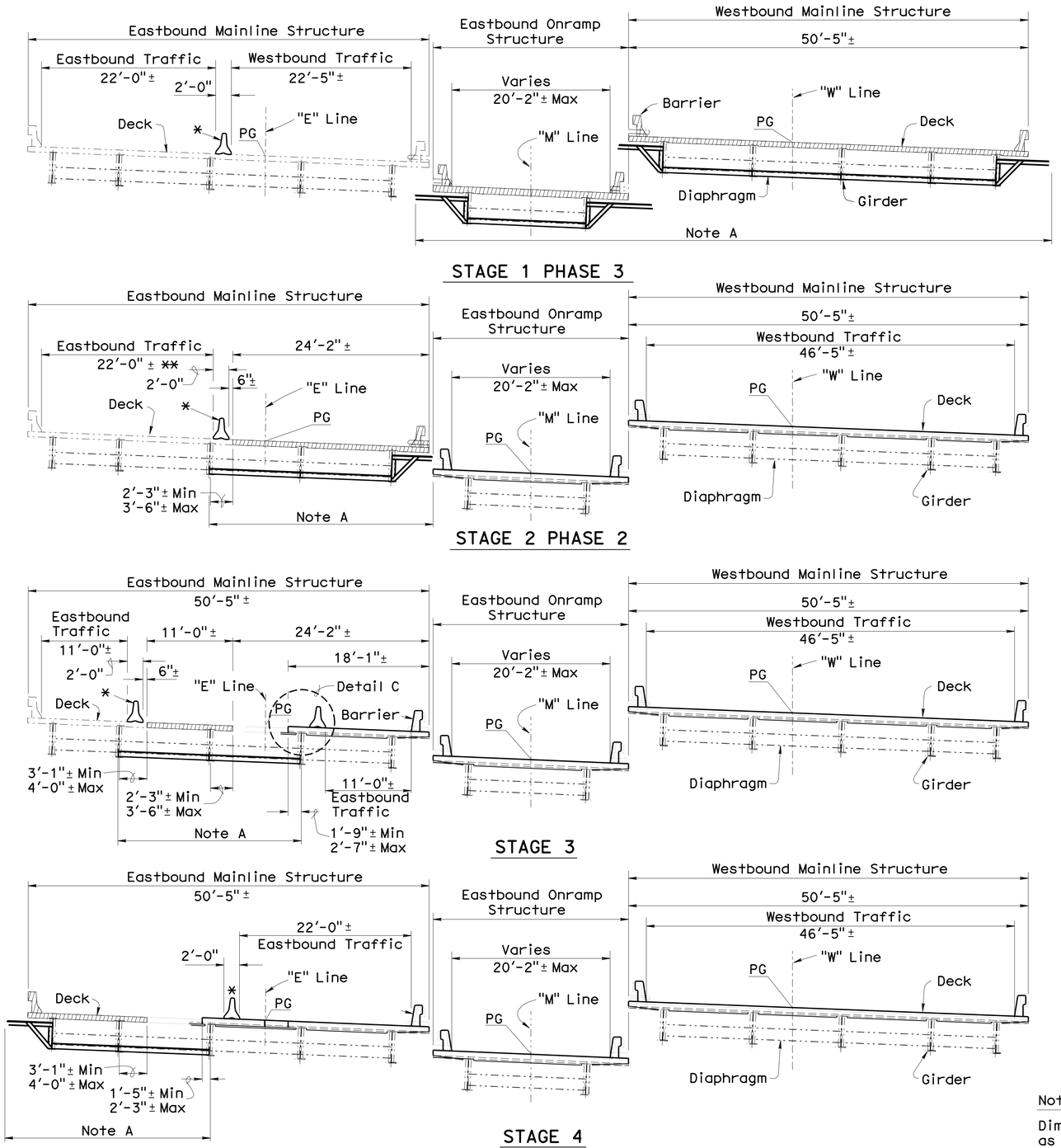

STAGE DETAILS

1/8" = 1'-0"

SPANS 3-9 Shown. Spans 1, 2, 10 and 11 Similar

Note A

Approximate Limits of Protection System. Limits May Vary. See Notes on "PROTECTION SYSTEM DETAILS No. 7" Sheet

Notes

For Plan Views, see "STAGE CONSTRUCTION DETAILS No. 1" Through "STAGE CONSTRUCTION DETAILS No. 5" Sheets, "PROTECTION SYSTEM DETAILS No. 5" and "PROTECTION SYSTEM DETAILS No. 6" Sheets

Sections Drawn Parallel to ℄ Bents

Light Standards and Utilities Not Shown

Chain Link Railing Not Shown

For Additional Details, see "TYPICAL SECTION", "STAGE CONSTRUCTION" and "REMOVAL DETAILS" Sheets

For Notes, see "PROTECTION SYSTEM DETAILS No. 7" Sheet

All Existing Structural Steel Components Not Shown

Deck and Barrier Reinforcement not Shown

Full Width Protection System or Partial Width Protection System May be Employed, as Approved by the Engineer and Chevron Oil Company.

For Bent Details, see "PROTECTION SYSTEM DETAILS No. 3" Sheet

Protection System Railing Not Shown

Note X

Dimensions Shown May Vary, as Approved by the Engineer

CP = Closure Pour

* Temporary Railing Type K

Denotes Limits of Removal of Existing Deck, Barrier, Railing and Light Standards

Denotes Existing Structure

Denotes New Construction

BRIDGE DECK REPLACEMENT
SCOFIELD AVENUE UNDERCROSSING
PROTECTION SYSTEM DETAILS No. 2

	BY	CHECKED
DESIGN	Mike Van De Pol	P. Norboe
DETAILS	Mike Van De Pol	P. Norboe
QUANTITIES	Mike Van De Pol	E. Franciliso

STATE OF CALIFORNIA
DEPARTMENT OF TRANSPORTATION

DIVISION OF ENGINEERING SERVICES
STRUCTURE DESIGN
DESIGN BRANCH 9

BRIDGE NO. 28-0140
POST MILE 5.8

STRUCTURES DESIGN DETAIL SHEET (ENGLISH) (REV. 10/25/05)

ORIGINAL SCALE IN INCHES FOR REDUCED PLANS 0 1 2 3

UNIT: 3594
PROJECT NUMBER & PHASE: 04000004831
CONTRACT NO.: 04-1A3201

DISREGARD PRINTS BEARING EARLIER REVISION DATES 3-02-11

SHEET 51 OF 92

FILE => 28-0140-i-protsysdets02.dgn

USERNAME => s128843 DATE PLOTTED => 06-JUN-2012 TIME PLOTTED => 16:03

DIST	COUNTY	ROUTE	POST MILES TOTAL PROJECT	SHEET No	TOTAL SHEETS
04	CC	580	5.5/6.2	215	301

REGISTERED CIVIL ENGINEER 5-1-12 DATE

6-4-12
PLANS APPROVAL DATE

REGISTERED PROFESSIONAL ENGINEER Mike Van De Pol No. C35610 Exp. 9/31/2013 CIVIL STATE OF CALIFORNIA

The State of California or its officers or agents shall not be responsible for the accuracy or completeness of electronic copies of this plan sheet.

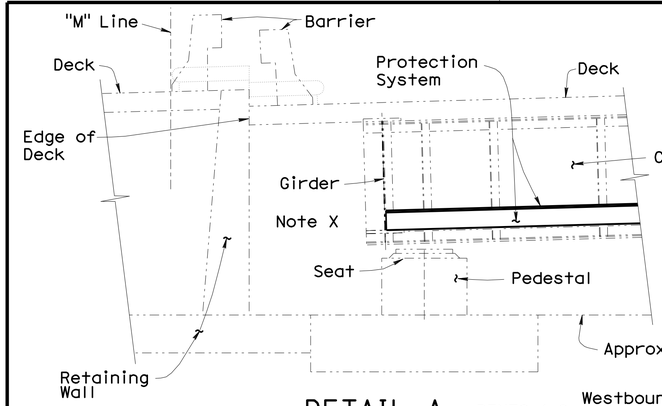

DETAIL A BENTS 1,2 Westbound Mainline Structure

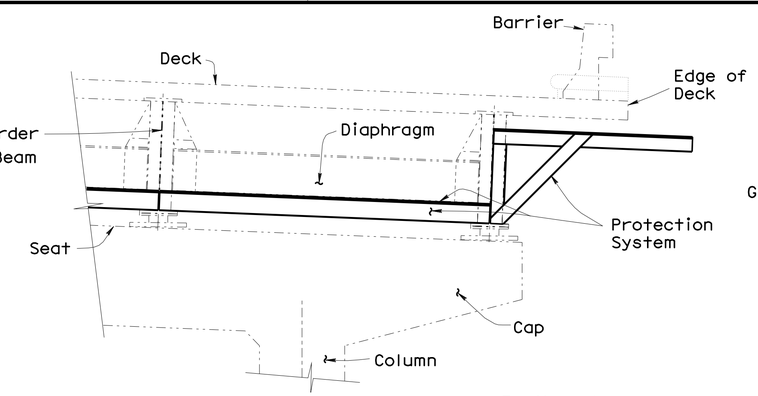

DETAIL B BENTS 9-12 Eastbound Mainline Structure

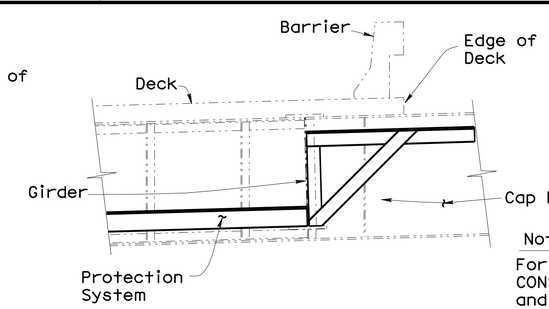

DETAIL C BENT 2 Westbound Mainline Structure

Notes

For Additional Details, see "TYPICAL SECTION", "STAGE CONSTRUCTION" , "ABUTMENT DETAILS", "BENT DETAILS" and "REMOVAL DETAILS" Sheets

Stage Construction and Protection System Staged Limits Not Shown

For Sections see "PROTECTION SYSTEM DETAILS No. 4" Sheet

All Existing Structural Steel Components Not Shown

Chain Link Railing Not Shown

Deck and Barrier Reinforcement Not Shown

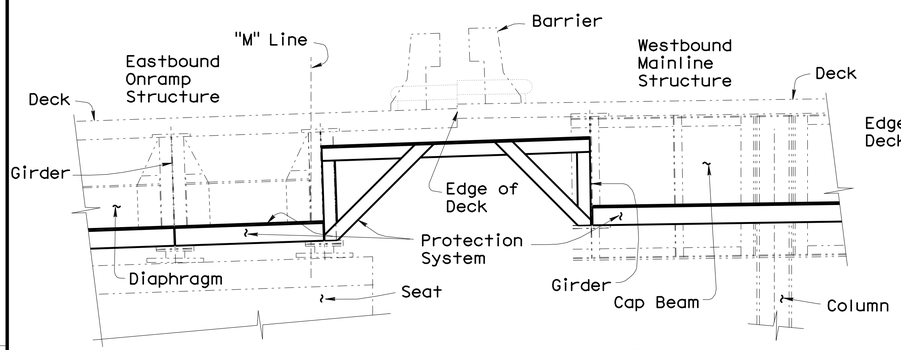

DETAIL D BENT 3 Eastbound Onramp Structure Westbound Mainline Structure

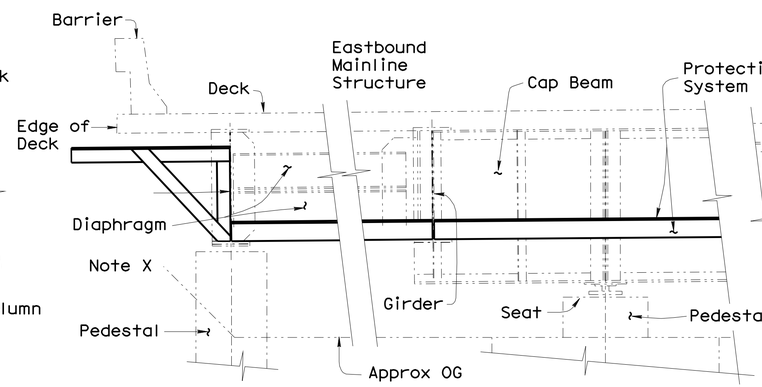

DETAIL E BENTS 4-6 ** BENTS 4-6

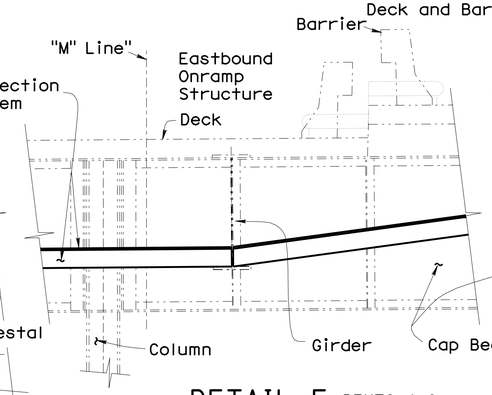

DETAIL F BENTS 4-6 **

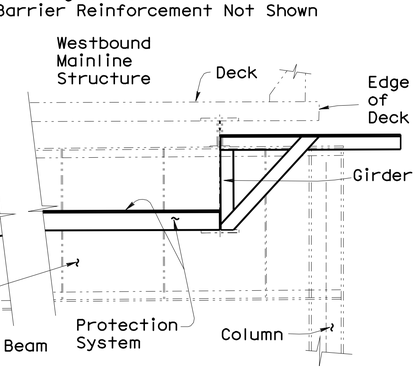

DETAIL G BENTS 4-6 **

** BENT 4 Shown, BENTS 5 and 6 Similar

NOTE:
THE CONTRACTOR SHALL VERIFY ALL CONTROLLING FIELD DIMENSIONS BEFORE ORDERING OR FABRICATING ANY MATERIAL.

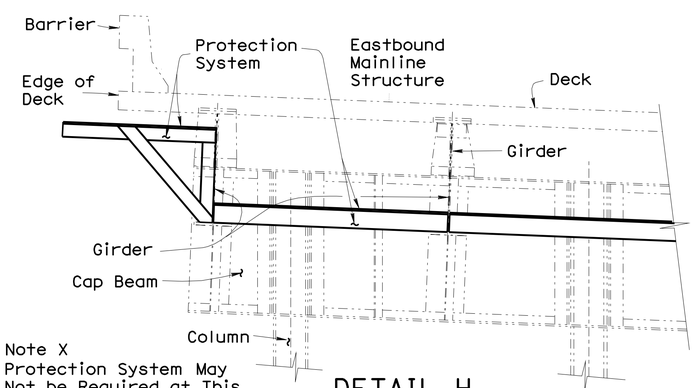

DETAIL H BENTS 7, 8 BENT 8 Shown

Note X
Protection System May Not be Required at This Location, as Approved by the Engineer and Chevron Oil Company

The Protection System Design and Details Shown Herein Represents One Alternative Approach. The Exact Design and Details for the Employed Protection System Shall be Developed by the Contractor, Per the Requirements Presented in the Project Specifications, as Approved by the Engineer and The Chevron Oil Company

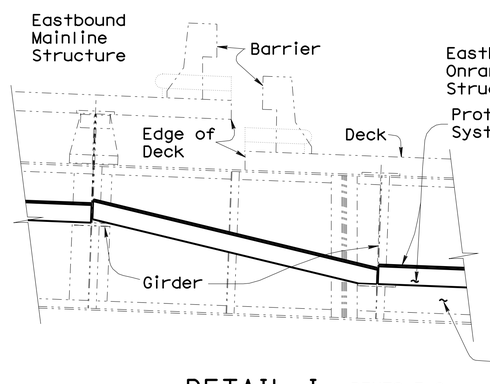

DETAIL I BENTS 7-9 BENT 8 Shown

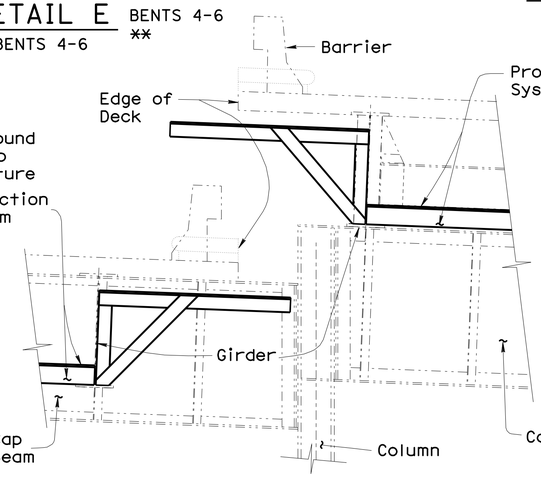

DETAIL J BENTS 5-9 ***

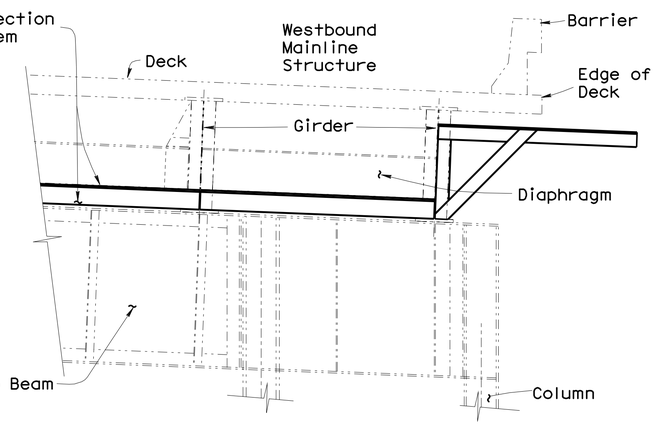

DETAIL K BENTS 5-9 ***

Full Width Protection System or Partial Width Protection System May be Employed, as Approved by the Engineer and Chevron Oil Company. See "PROTECTION SYSTEM DETAILS No. 5" Through "PROTECTION SYSTEM DETAILS No. 7" Sheets

Protection System Railing Not Shown

*** BENT 8 Shown, BENTS 5,6,7,9 Similar

PROTECTION SYSTEM PLACEMENT DETAILS

3/8" = 1'-0"

Denotes Existing Structure

	BY	CHECKED
DESIGN	Mike Van De Pol	P. Norboe
DETAILS	Mike Van De Pol	P. Norboe
QUANTITIES	Mike Van De Pol	E. Franciliso

STATE OF CALIFORNIA DEPARTMENT OF TRANSPORTATION

DIVISION OF ENGINEERING SERVICES STRUCTURE DESIGN DESIGN BRANCH 9

BRIDGE NO. 28-0140
MILE POST 5.8

BRIDGE DECK REPLACEMENT
SCOFIELD AVENUE UNDERCROSSING
PROTECTION SYSTEM DETAILS No. 3

STRUCTURES DESIGN DETAIL SHEET (ENGLISH) (REV. 10/25/05)

ORIGINAL SCALE IN INCHES FOR REDUCED PLANS 0 1 2 3

UNIT: 3594
PROJECT NUMBER & PHASE: 04000004831 CONTRACT NO.: 04-1A3201

DISREGARD PRINTS BEARING EARLIER REVISION DATES 3-02-11

SHEET 52 OF 92

FILE => 28-0140-i-protsysdets03.dgn

USERNAME => s128843 DATE PLOTTED => 16:04

DIST	COUNTY	ROUTE	POST MILES TOTAL PROJECT	SHEET No	TOTAL SHEETS
04	CC	580	5.5/6.2	216	301

REGISTERED CIVIL ENGINEER 5-1-12 DATE

6-4-12
PLANS APPROVAL DATE

REGISTERED PROFESSIONAL ENGINEER Mike Van De Pol No. C35610 Exp. 9/31/2013 CIVIL STATE OF CALIFORNIA

The State of California or its officers or agents shall not be responsible for the accuracy or completeness of electronic copies of this plan sheet.

The Protection System Design and Details Shown Herein Represent Alternative Approaches. The Exact Design and Details for the Employed Protection System Shall be Developed by the Contractor, Per the Requirements Presented in the Project Specifications, as Approved by the Engineer and The Chevron Oil Company

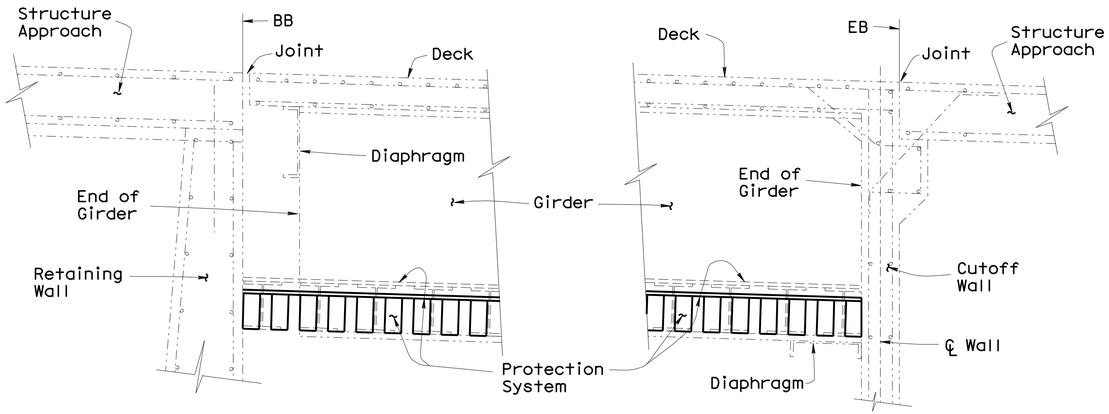

Bent 1 - Westbound Mainline Structure
Bent 3 - Eastbound Mainline Structure

Bent 10 - Westbound Mainline Structure
Bent 10 - Eastbound Onramp Structure
Bent 12 - Eastbound Mainline Structure

SECTIONS AT ABUTMENTS

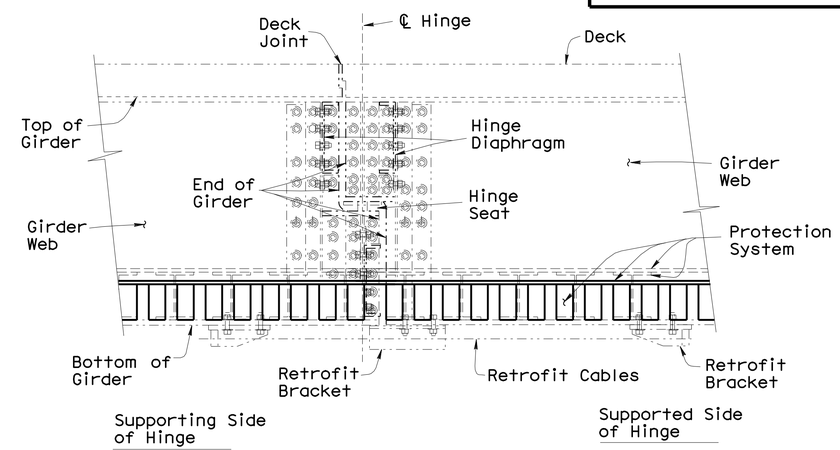

SECTION AT HINGES

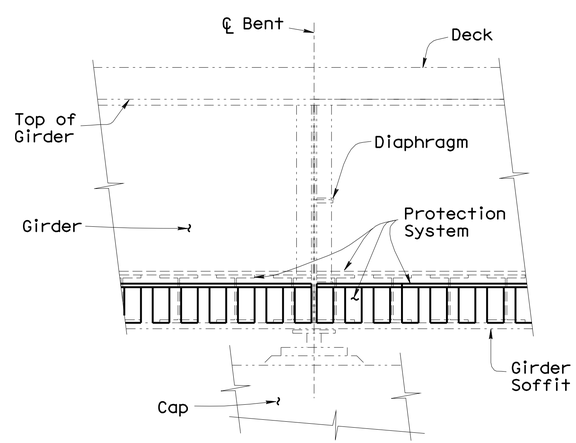

BENTS 1-3,9-11,12 Concrete Cap Support

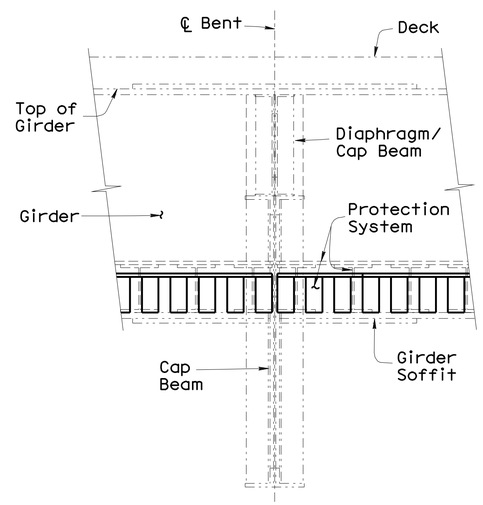

BENTS 2-9 Steel Cap Beam Support

SECTIONS AT BENTS

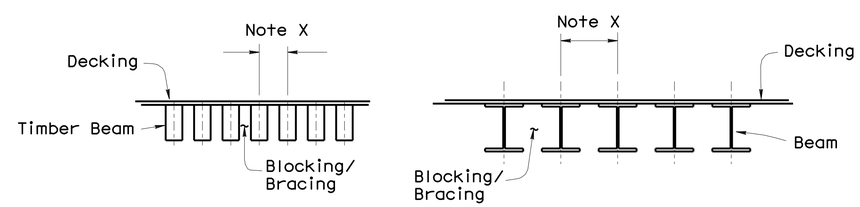

TIMBER

STEEL/ALUMINUM

TYPICAL SECTIONS Note X

Note X
Alternative Protection System Approaches are Permitted as Approved by the Engineer and The Chevron Oil Company

Notes

For Bent and Abutment Locations, see "GENERAL PLAN" Sheets

For Additional Details, see "TYPICAL SECTION", "STAGE CONSTRUCTION" and "REMOVAL DETAILS" Sheets

For General Notes, see "PROTECTION SYSTEM DETAILS No. 7" Sheet

For Hinge Locations, see "GENERAL PLAN" and "HINGE LAYOUT" Sheets

For Other Details, see "PROTECTION SYSTEM DETAILS No. 2" Sheet

All Existing Structural Steel Components Not Shown

Existing Deck and Barrier Reinforcement not Shown

Deck Removal Not Shown

NOTE:
THE CONTRACTOR SHALL VERIFY ALL CONTROLLING FIELD DIMENSIONS BEFORE ORDERING OR FABRICATING ANY MATERIAL.

Denotes Existing Structure
Denotes New Construction

PROTECTION SYSTEM SECTIONS

3/4" = 1'-0"

	BY	CHECKED
DESIGN	Mike Van De Pol	P. Norboe
DETAILS	Mike Van De Pol	P. Norboe
QUANTITIES	Mike Van De Pol	E. Franciliso

STATE OF CALIFORNIA
DEPARTMENT OF TRANSPORTATION

DIVISION OF ENGINEERING SERVICES
STRUCTURE DESIGN
DESIGN BRANCH 9

BRIDGE NO. 28-0140
MILE POST 5.8

BRIDGE DECK REPLACEMENT
SCOFIELD AVENUE UNDERCROSSING
PROTECTION SYSTEM DETAILS No. 4

STRUCTURES DESIGN DETAIL SHEET (ENGLISH) (REV. 10/25/05)

ORIGINAL SCALE IN INCHES FOR REDUCED PLANS 0 1 2 3

UNIT: 3594
PROJECT NUMBER & PHASE: 04000004831 CONTRACT NO.: 04-1A3201

DISREGARD PRINTS BEARING EARLIER REVISION DATES 3-02-11

SHEET 53 OF 92

FILE => 28-0140-i-protsysdets04.dgn

USERNAME => s128843 DATE PLOTTED => 06-JUN-2012 TIME PLOTTED => 16:04

The Protection System Design and Details Shown Herein Represents One Alternative Approach. The Exact Design and Details for the Employed Protection System Shall be Developed by the Contractor, Per the Requirements Presented in the Project Specifications, as Approved by the Engineer and The Chevron Oil Company

DIST	COUNTY	ROUTE	POST MILES TOTAL PROJECT	SHEET No	TOTAL SHEETS
04	CC	580	5.5/6.2	217	301

REGISTERED CIVIL ENGINEER 5-1-12 DATE

6-4-12
PLANS APPROVAL DATE

REGISTERED PROFESSIONAL ENGINEER Mike Van De Pol No. C35610 Exp. 9/30/2013 CIVIL STATE OF CALIFORNIA

The State of California or its officers or agents shall not be responsible for the accuracy or completeness of electronic copies of this plan sheet.

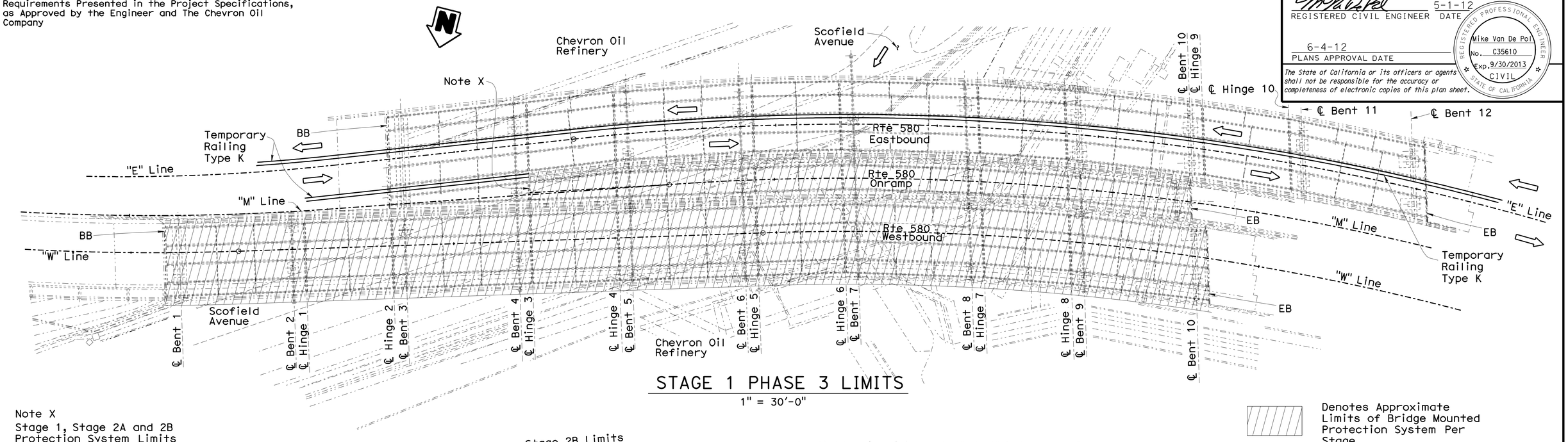

STAGE 1 PHASE 3 LIMITS

1" = 30'-0"

Note X
Stage 1, Stage 2A and 2B Protection System Limits Extend Past Hinge 3 Deck Joint, as Approved by the Engineer

Denotes Approximate Limits of Bridge Mounted Protection System Per Stage

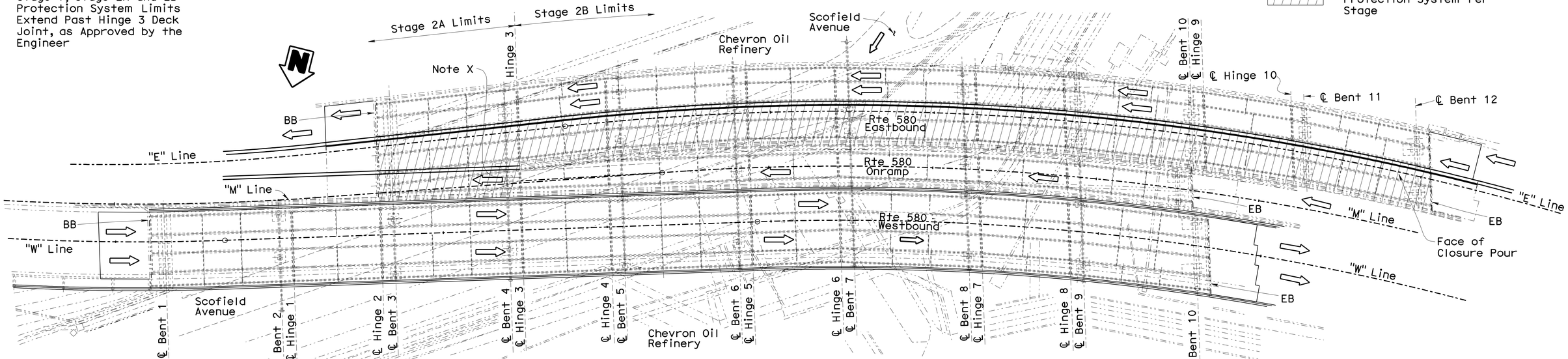

STAGE 2 PHASE 1 AND STAGE 2 PHASE 2 LIMITS

1" = 30'-0"

Denotes Direction of Traffic
Denotes Existing Structure
Denotes New Construction

NOTE:
THE CONTRACTOR SHALL VERIFY ALL CONTROLLING FIELD DIMENSIONS BEFORE ORDERING OR FABRICATING ANY MATERIAL.

For Notes, see "PROTECTION SYSTEM DETAILS No. 7" Sheet
For Additional Details, see "TYPICAL SECTION", "STAGE CONSTRUCTION" and "REMOVAL DETAILS" Sheets

For Additional Details, see "PROTECTION SYSTEM DETAILS No. 1" Through "PROTECTION SYSTEM DETAILS No. 4" Sheets
Full Width Protection System or Partial Width Protection System May be Employed, as Approved by the Engineer and Chevron Oil Company.

	BY	CHECKED
DESIGN	Mike Van De Pol	P. Norboe
DETAILS	Mike Van De Pol	P. Norboe
QUANTITIES	Mike Van De Pol	E. Franciliso

STATE OF CALIFORNIA
DEPARTMENT OF TRANSPORTATION

DIVISION OF ENGINEERING SERVICES
STRUCTURE DESIGN
DESIGN BRANCH 9

BRIDGE NO. 28-0140
MILE POST 5.8

BRIDGE DECK REPLACEMENT
SCOFIELD AVENUE UNDERCROSSING
PROTECTION SYSTEM DETAILS No. 5

STRUCTURES DESIGN DETAIL SHEET (ENGLISH) (REV. 10/25/05)

ORIGINAL SCALE IN INCHES FOR REDUCED PLANS 0 1 2 3

UNIT: 3594
PROJECT NUMBER & PHASE: 04000004831
CONTRACT NO.: 04-1A3201

DISREGARD PRINTS BEARING EARLIER REVISION DATES 3-02-11

SHEET 54 OF 92

FILE => 28-0140-i-protsysdets05.dgn

USERNAME => s128843 DATE PLOTTED => 06-JUN-2012 TIME PLOTTED => 16:04

The Protection System Design and Details Shown Herein Represents One Alternative Approach. The Exact Design and Details for the Employed Protection System Shall be Developed by the Contractor, Per the Requirements Presented in the Project Specifications, as Approved by the Engineer and The Chevron Oil Company

DIST	COUNTY	ROUTE	POST MILES TOTAL PROJECT	SHEET No	TOTAL SHEETS
04	CC	580	5.5/6.2	218	301

REGISTERED CIVIL ENGINEER 5-1-12 DATE

6-4-12
PLANS APPROVAL DATE

REGISTERED PROFESSIONAL ENGINEER
Mike Van De Pol
No. C35610
Exp. 9/30/2013
CIVIL
STATE OF CALIFORNIA

The State of California or its officers or agents shall not be responsible for the accuracy or completeness of electronic copies of this plan sheet.

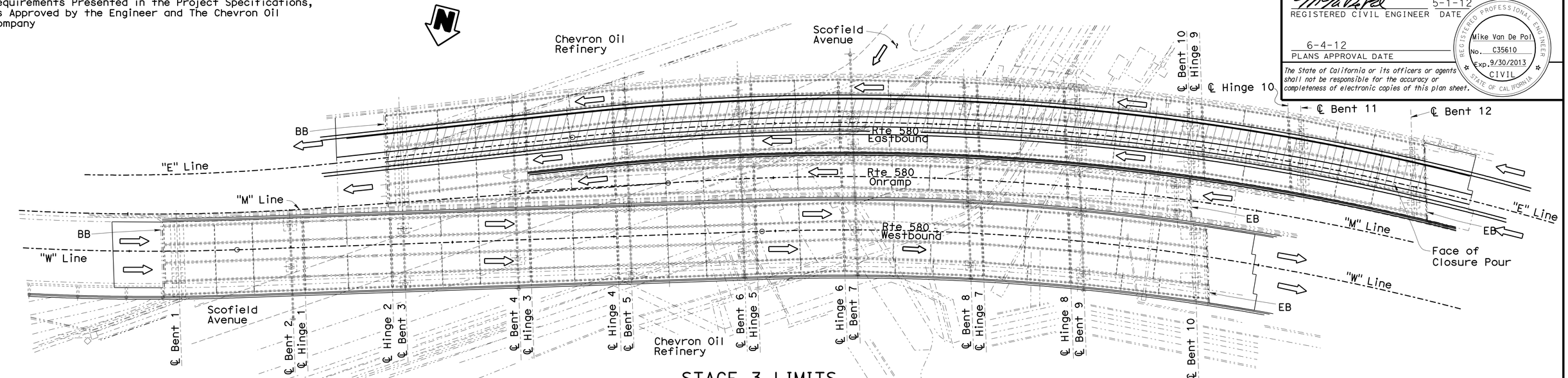

STAGE 3 LIMITS

1" = 30'-0"

Denotes Approximate Limits of Bridge Mounted Protection System Per Stage

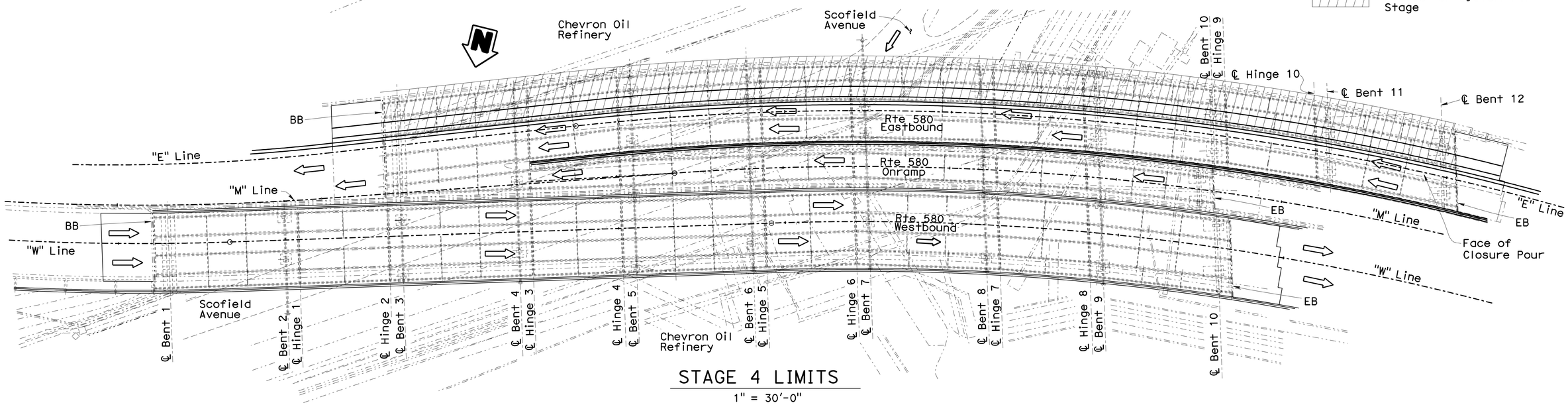

STAGE 4 LIMITS

1" = 30'-0"

NOTE:
THE CONTRACTOR SHALL VERIFY ALL CONTROLLING FIELD DIMENSIONS BEFORE ORDERING OR FABRICATING ANY MATERIAL.

For Notes, see "PROTECTION SYSTEM DETAILS No. 15" Sheet

For Additional Details, see "TYPICAL SECTION", "STAGE CONSTRUCTION" and "REMOVAL DETAILS" Sheets

For Additional Details, see "PROTECTION SYSTEM DETAILS No. 1" Through "PROTECTION SYSTEM DETAILS No. 4" Sheets

Full Width Protection System or Partial Width Protection System May be Employed, as Approved by the Engineer and Chevron Oil Company.

Denotes Direction of Traffic
Denotes Existing Structure
Denotes New Construction

	BY	CHECKED
DESIGN	Mike Van De Pol	P. Norboe
DETAILS	Mike Van De Pol	P. Norboe
QUANTITIES	Mike Van De Pol	E. Franciliso

STATE OF CALIFORNIA
DEPARTMENT OF TRANSPORTATION

DIVISION OF ENGINEERING SERVICES
STRUCTURE DESIGN
DESIGN BRANCH 9

BRIDGE NO. 28-0140
MILE POST 5.8

BRIDGE DECK REPLACEMENT
SCOFIELD AVENUE UNDERCROSSING
PROTECTION SYSTEM DETAILS No. 6

STRUCTURES DESIGN DETAIL SHEET (ENGLISH) (REV. 10/25/05)

ORIGINAL SCALE IN INCHES FOR REDUCED PLANS 0 1 2 3

UNIT: 3594
PROJECT NUMBER & PHASE: 04000004831
CONTRACT NO.: 04-1A3201

DISREGARD PRINTS BEARING EARLIER REVISION DATES 3-02-11

SHEET 55 OF 92

FILE => 28-0140-i-protsysdets06.dgn

USERNAME => s128843 DATE PLOTTED => 06-JUN-2012 TIME PLOTTED => 16:04

DIST	COUNTY	ROUTE	POST MILES TOTAL PROJECT	SHEET No	TOTAL SHEETS
04	CC	580	5.5/6.2	219	301

REGISTERED CIVIL ENGINEER 5-1-12 DATE

6-4-12
PLANS APPROVAL DATE

REGISTERED PROFESSIONAL ENGINEER
Mike Van De Pol
No. C35610
Exp. 9/30/2013
CIVIL
STATE OF CALIFORNIA

The State of California or its officers or agents shall not be responsible for the accuracy or completeness of electronic copies of this plan sheet.

PROTECTION SYSTEM GENERAL NOTES

1. The Protection System Design, Scope, Limits, Details and Staging Shown Herein are Approximate. The Exact Design and Details of the Protection System Shall be Established by the Contractor, as Approved by the Engineer and the Chevron Oil Company.
2. The Protection System Design and Details Shown Herein Reflects Anchorage to and Support by the Top Surface of the Bottom Flanges of the Existing Bridge Girders. At the Option of the Contractor, the Protection System May be Located/Anchored/Supported Closer to the Deck, or at the Bottom Surface of the Bottom Flanges of the Girders, as Approved by the Engineer and the Chevron Oil Company.
3. The Width of the Protection System Per Given Stage of Bridge Removal Work, Shall Extend a Minimum of 4 Feet Beyond the Transverse Limits of the Staged Deck Removal, or to the Limits of the Adjacent Girder Bay, as Approved by the Engineer and Chevron Oil Company.
4. The Protection System Transverse Limits Shown Herein, Were Established Based Upon Staged Bridge Deck Removal Limits. At the Option of the Contractor the Protection System may Extend the Full Width of the Structure, for the Duration of all Deck Removal Stages, as Approved by the Engineer and Chevron Oil Company.
5. Where the Protection System Extends Beyond the Existing Edge of Bridge Deck for a Given Stage, Toward the Next Stage of Removal Work, the Protection System Shall Extend a Minimum of 4 Feet Beyond the Edge of Deck, or Extend into the Next Adjacent Bay, as Approved by the Engineer and Chevron Oil Company.
6. The Sequence of Installation and Removal of the Protection System Shown Herein are Approximate. The Exact Sequence of Installation and Removal Shall be Determined by the Contractor, as Approved by the Engineer and Chevron Oil Company.
7. For Additional Details, see "TYPICAL SECTION" Sheets, "REMOVAL DETAILS" Sheets and "STAGE CONSTRUCTION" Sheets.
8. All Steel Components of the Protection System Shall be Galvanized.
9. The Overhang Deck Form Support System for the Non-Continuous Deck Form Alternative, May be Eliminated if the Protection System is Employed For Temporary Overhang Form Support During Deck Casting Operations, Only as Approved by the Engineer and Chevron Oil Company. See "TYPICAL SECTION No. 12" Sheet.
10. The Protection System is Intended to be Removed as the Permanent Deck Form System is Installed Longitudinally Along the Bridge Per Stage of Work. At the Option of the Contractor, the Protection System May be Removed After the Permanent Deck Form System is Installed Per Stage, as Approved by the Engineer and Chevron Oil Company. See "TYPICAL SECTION No. 12" Sheet, "REMOVAL DETAILS" Sheets and "STAGE CONSTRUCTION DETAILS" Sheets.
11. The Protection System May be Used as Support For the Deck Forms, as Approved by the Engineer and Chevron Oil Company. See "TYPICAL SECTION No. 12" Sheet, "REMOVAL DETAILS" Sheets and "STAGE CONSTRUCTION DETAILS" Sheets.
12. Protection System Beams Shall be Oriented Normal or Radial to Mainline Layout Lines, or Centerlines of Girders, as Approved by the Engineer

GENERAL NOTES
LOAD AND RESISTANCE FACTOR DESIGN

DESIGN: AASHTO LRFD BRIDGE DESIGN SPECIFICATIONS, 3rd Edition with the 2005 Interims and Caltrans Amendments v3.06.01: with Bridge Design Specifications (1996 AASHTO with Interims and Revisions by CALTRANS)

DEAD LOADS:	Construction Dead Load	100 lb/ft2
	Concrete Deck Dead Load	115 lb/ft3
	Barrier Dead Load	150 lb/ft3
	DF Dead Load	34 lb/ft3
	Plywood Dead Load	3 lb/ft2
	Steel Dead Load	490 lb/ft3
	Aluminum Dead Load	169 lb/ft3
LIVE LOADS:	Construction Live Load	20 psf
TIMBER:	Douglas Fir No. 1	
STRUCTURAL	ASTM Designation A709, Grade 36	
STEEL:	f_y = 36000 psi	
	f_u = 58000 psi	
ALUMINUM:	f_y = 35000 psi	

IMPACT DESIGN LOAD:

Point Load Equivalent of a 2'± x 2'± x 8"± Concrete Slab Falling a Distance of 6'± onto the Protection System Surface. Impact Located at the Centerline of Span Between Existing Girders. Distributed Equally Between Two Adjacent Protection System Transverse Beams.

IMPACT DESIGN LOAD COMBINATION:

Dead Load + Construction Dead Load + Construction Live Load + Impact Load

NOTE:
THE CONTRACTOR SHALL VERIFY ALL CONTROLLING FIELD DIMENSIONS BEFORE ORDERING OR FABRICATING ANY MATERIAL.

	BY	CHECKED
DESIGN	Mike Van De Pol	P. Norboe
DETAILS	Mike Van De Pol	P. Norboe
QUANTITIES	Mike Van De Pol	E. Franciliso

STATE OF CALIFORNIA
DEPARTMENT OF TRANSPORTATION

DIVISION OF ENGINEERING SERVICES
STRUCTURE DESIGN
DESIGN BRANCH 9

BRIDGE NO. 28-0140
MILE POST 5.8

BRIDGE DECK REPLACEMENT
SCOFIELD AVENUE UNDERCROSSING
PROTECTION SYSTEM DETAILS No. 7

STRUCTURES DESIGN DETAIL SHEET (ENGLISH) (REV. 10/25/05)

ORIGINAL SCALE IN INCHES FOR REDUCED PLANS 0 1 2 3

UNIT: 3594
PROJECT NUMBER & PHASE: 04000004831
CONTRACT NO.: 04-1A3201

DISREGARD PRINTS BEARING EARLIER REVISION DATES 3-02-11

SHEET 56 OF 92

FILE => 28-0140-i-protsysdets07.dgn

USERNAME => s128843 DATE PLOTTED => 06-JUN-2012 TIME PLOTTED => 16:04

DIST	COUNTY	ROUTE	POST MILES TOTAL PROJECT	SHEET No	TOTAL SHEETS
04	CC	580	5.5/6.2	220	301

REGISTERED CIVIL ENGINEER 5-1-12 DATE

6-4-12
PLANS APPROVAL DATE

REGISTERED PROFESSIONAL ENGINEER Mike Van De Pol No. C35610 Exp. 9/31/2013 CIVIL STATE OF CALIFORNIA

The State of California or its officers or agents shall not be responsible for the accuracy or completeness of electronic copies of this plan sheet.

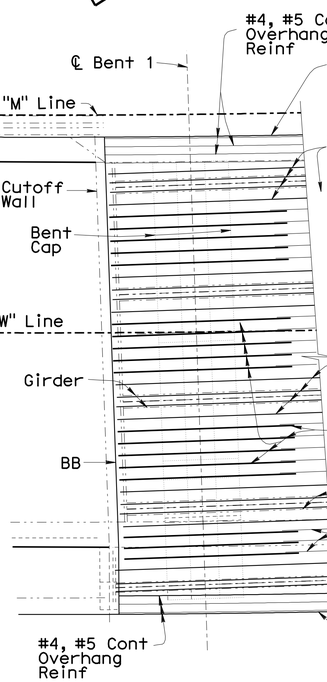

PLAN AT BENT 1

1/8"= 1'-0"

Westbound Mainline Structure

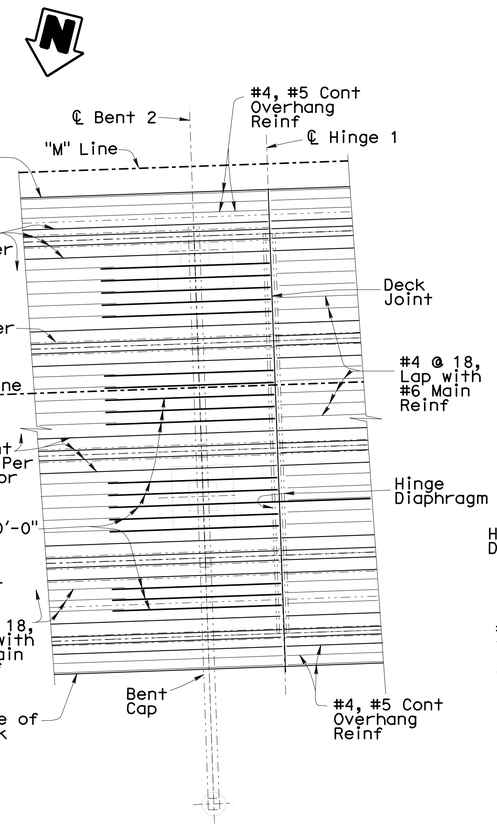

PLAN AT BENT 2

1/8"= 1'-0"

Westbound Mainline Structure

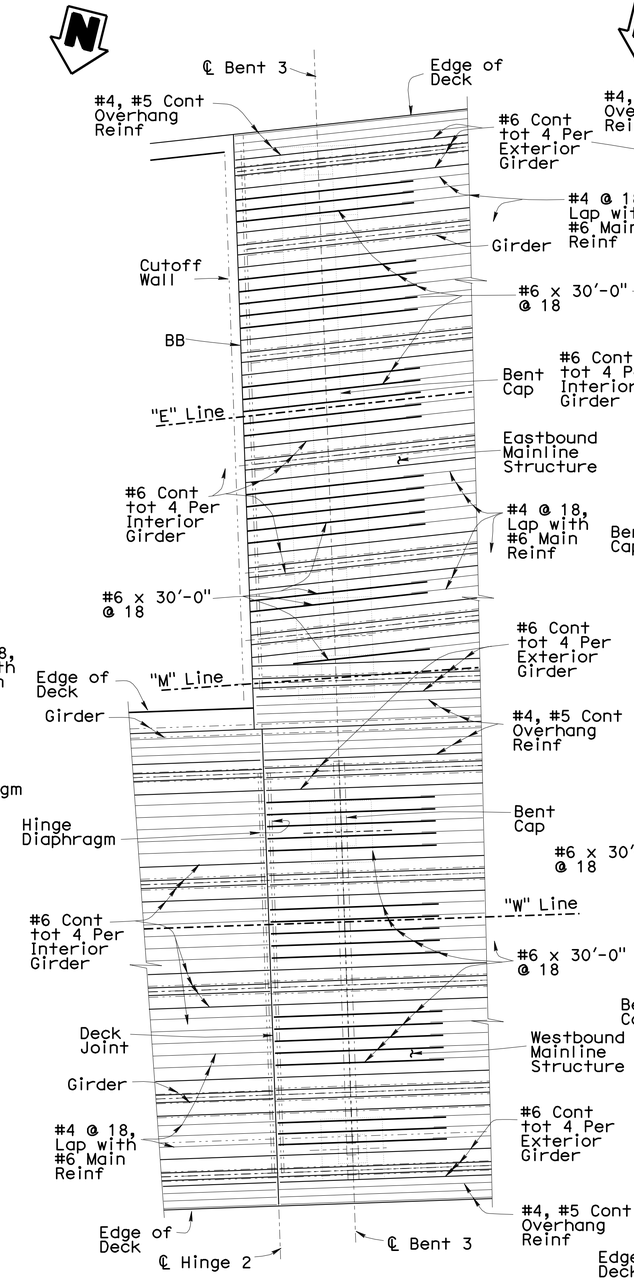

PLAN AT BENT 3

1/8"= 1'-0"

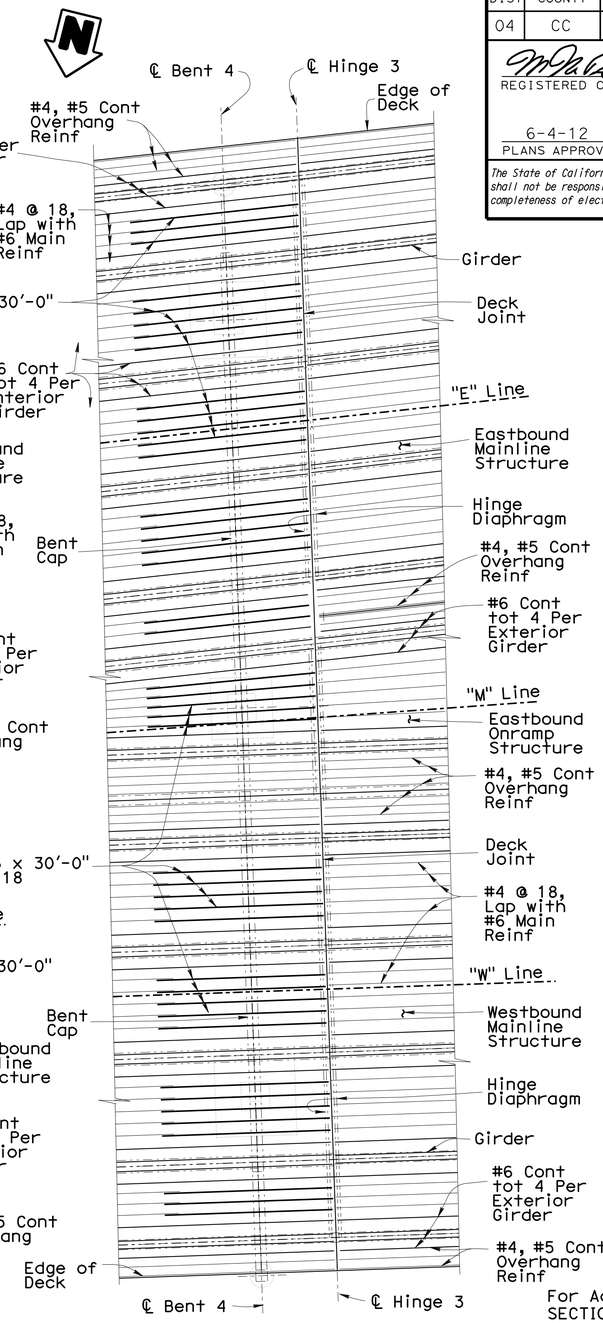

PLAN AT BENT 4

1/8"= 1'-0"

NOTE:
THE CONTRACTOR SHALL VERIFY ALL CONTROLLING FIELD DIMENSIONS BEFORE ORDERING OR FABRICATING ANY MATERIAL.

All Reinforcement Shall be Epoxy Coated

Closure Pours Not Shown. Adjust Position of Reinforcement to Provide Minimum 3" Clear to Face of Closure Pour

No Splices Allowed in #6 Reinforcement
Barrier Not Shown

For Additional Details, see "TYPICAL SECTION" Sheets, "ABUTMENT DETAILS" Sheets, "HINGE DETAILS" Sheets and "STAGE CONSTRUCTION DETAILS" Sheets

Denotes Existing Structure
Denotes New Construction

	BY	CHECKED
DESIGN	Mike Van De Pol	P. Norboe
DETAILS	Mike Van De Pol	P. Norboe
QUANTITIES	Mike Van De Pol	E. Franciliso

STATE OF CALIFORNIA
DEPARTMENT OF TRANSPORTATION

DIVISION OF ENGINEERING SERVICES
STRUCTURE DESIGN
DESIGN BRANCH 9

BRIDGE NO. 28-0140
MILE POST 5.8

BRIDGE DECK REPLACEMENT
SCOFIELD AVENUE UNDERCROSSING
DECK REINFORCEMENT No. 1

STRUCTURES DESIGN DETAIL SHEET (ENGLISH) (REV. 10/25/05)

ORIGINAL SCALE IN INCHES FOR REDUCED PLANS 0 1 2 3

UNIT: 3594
PROJECT NUMBER & PHASE: 04000004831
CONTRACT NO.: 04-1A3201

DISREGARD PRINTS BEARING EARLIER REVISION DATES 3-02-11

REVISION DATES

SHEET 57 OF 92

FILE => 28-0140-j-mildreinf01.dgn

USERNAME => s128843 DATE PLOTTED => 06-JUN-2012 TIME PLOTTED => 16:04

DIST	COUNTY	ROUTE	POST MILES TOTAL PROJECT	SHEET No	TOTAL SHEETS
04	CC	580	5.5/6.2	221	301

REGISTERED CIVIL ENGINEER 5-1-12 DATE

6-4-12
PLANS APPROVAL DATE

REGISTERED PROFESSIONAL ENGINEER Mike Van De Pol No. C35610 Exp. 9/31/2013 CIVIL STATE OF CALIFORNIA

The State of California or its officers or agents shall not be responsible for the accuracy or completeness of electronic copies of this plan sheet.

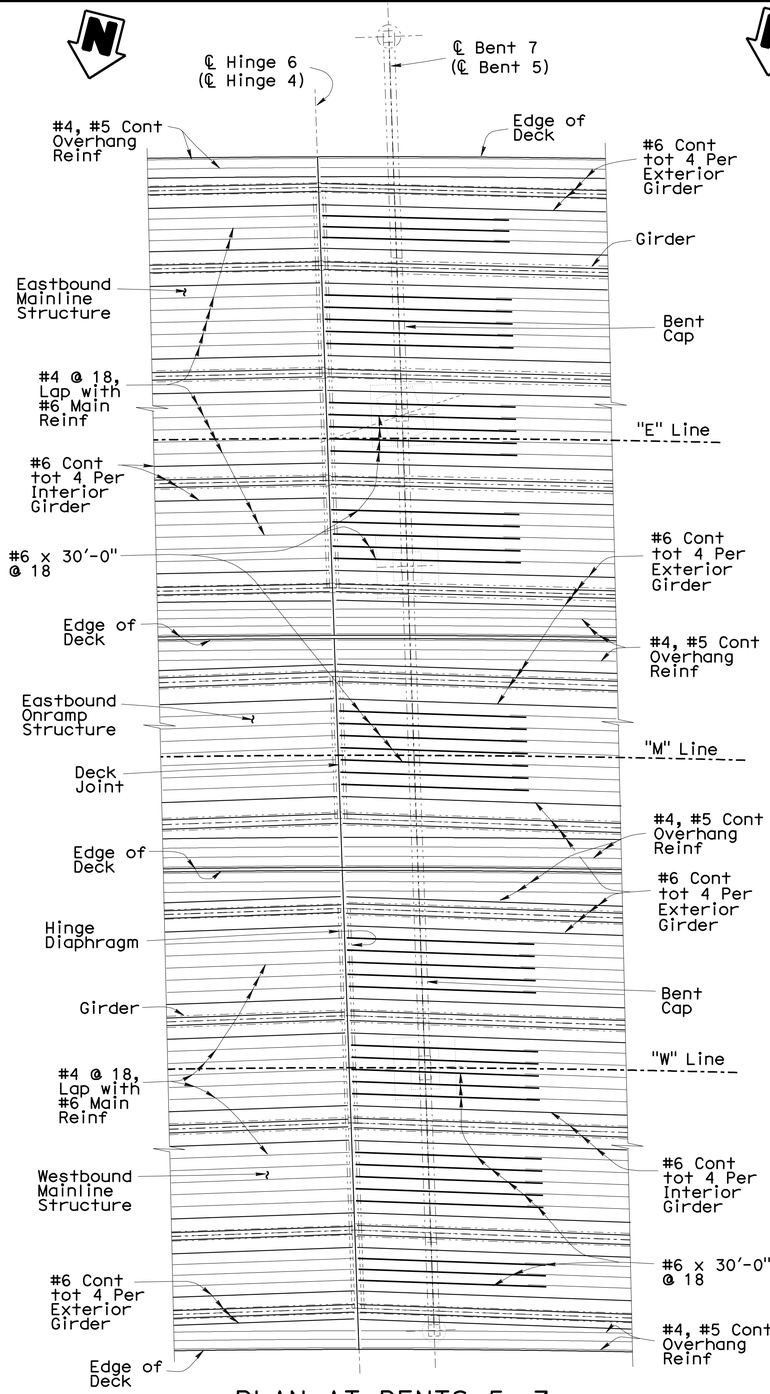

PLAN AT BENTS 5, 7

Bent 7 Shown, Bent 5 Similar

1/8"= 1'-0"

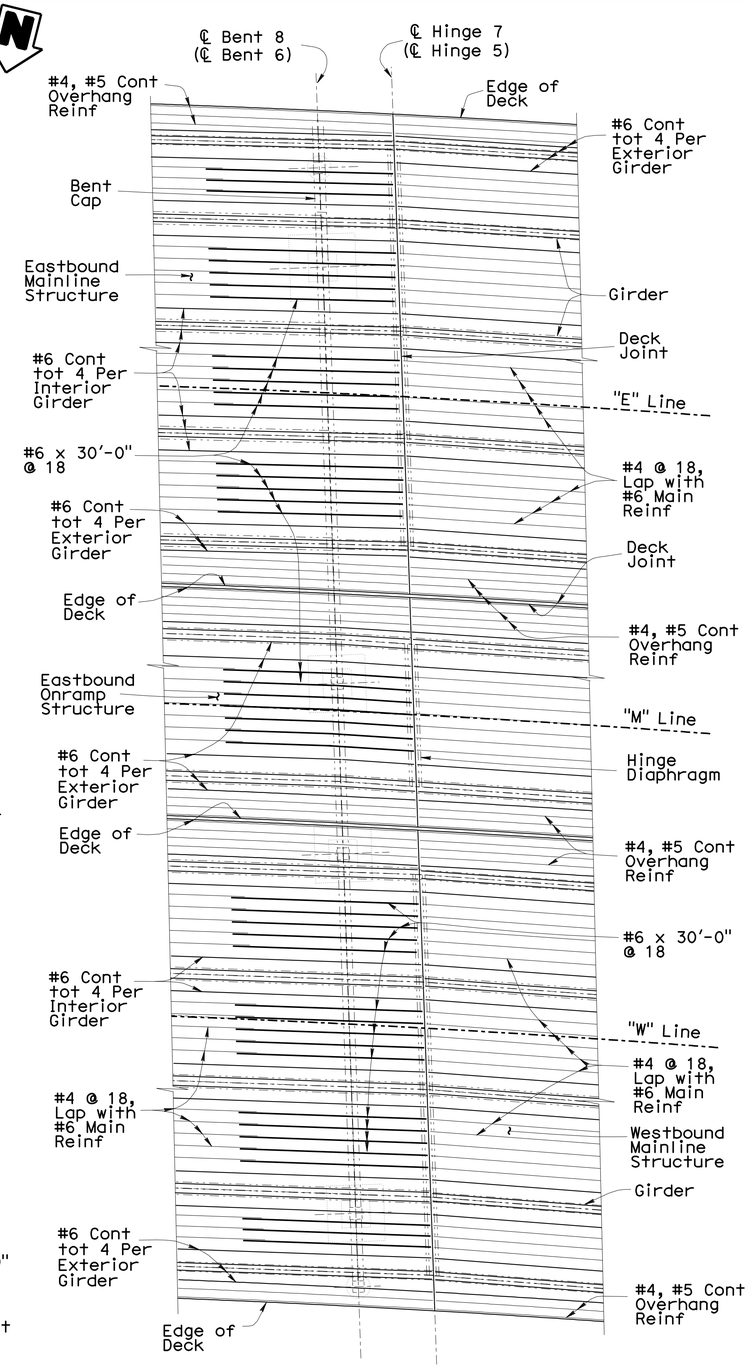

PLAN AT BENTS 6, 8

Bent 8 Shown, Bent 6 Similar

1/8"= 1'-0"

All Reinforcement Shall be Epoxy Coated

Closure Pours Not Shown. Adjust Position of Reinforcement to Provide Minimum 3" Clear to Face of Closure Pour

For Additional Details, see "TYPICAL SECTION" Sheets, "ABUTMENT DETAILS" Sheets, "HINGE DETAILS" Sheets and "STAGE CONSTRUCTION DETAILS" Sheets

Barrier Not Shown

No Splices Allowed in #6 Reinforcement

Denotes Existing Structure

Denotes New Construction

NOTE:
THE CONTRACTOR SHALL VERIFY ALL CONTROLLING FIELD DIMENSIONS BEFORE ORDERING OR FABRICATING ANY MATERIAL.

	BY	CHECKED
DESIGN	Mike Van De Pol	P. Norboe
DETAILS	Mike Van De Pol	P. Norboe
QUANTITIES	Mike Van De Pol	E. Franciliso

STATE OF CALIFORNIA
DEPARTMENT OF TRANSPORTATION

DIVISION OF ENGINEERING SERVICES
STRUCTURE DESIGN
DESIGN BRANCH 9

BRIDGE NO. 28-0140
MILE POST 5.8

BRIDGE DECK REPLACEMENT
SCOFIELD AVENUE UNDERCROSSING
DECK REINFORCEMENT No. 2

STRUCTURES DESIGN DETAIL SHEET (ENGLISH) (REV. 10/25/05)

ORIGINAL SCALE IN INCHES FOR REDUCED PLANS 0 1 2 3

UNIT: 3594
PROJECT NUMBER & PHASE: 04000004831
CONTRACT NO.: 04-1A3201

DISREGARD PRINTS BEARING EARLIER REVISION DATES

REVISION DATES 3-02-11

SHEET 58 OF 92

FILE => 28-0140-j-mildreinf02.dgn

USERNAME => s128843 DATE PLOTTED => 06-JUN-2012 TIME PLOTTED => 16:04

DIST	COUNTY	ROUTE	POST MILES TOTAL PROJECT	SHEET No	TOTAL SHEETS
04	CC	580	5.5/6.2	222	301

REGISTERED CIVIL ENGINEER 5-1-12 DATE

6-4-12
PLANS APPROVAL DATE

REGISTERED PROFESSIONAL ENGINEER
Mike Van De Pol
No. C35610
Exp. 9/31/2013
CIVIL
STATE OF CALIFORNIA

The State of California or its officers or agents shall not be responsible for the accuracy or completeness of electronic copies of this plan sheet.

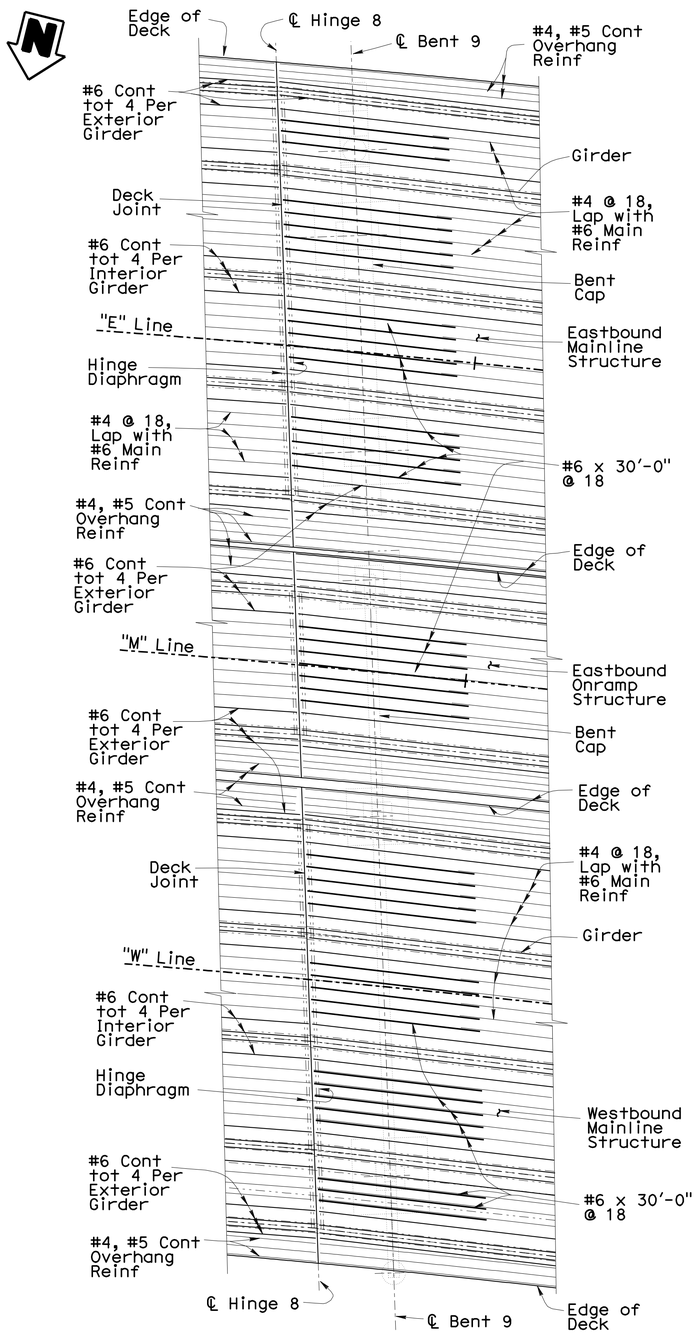

PLAN AT BENT 9

1/8"= 1'-0"

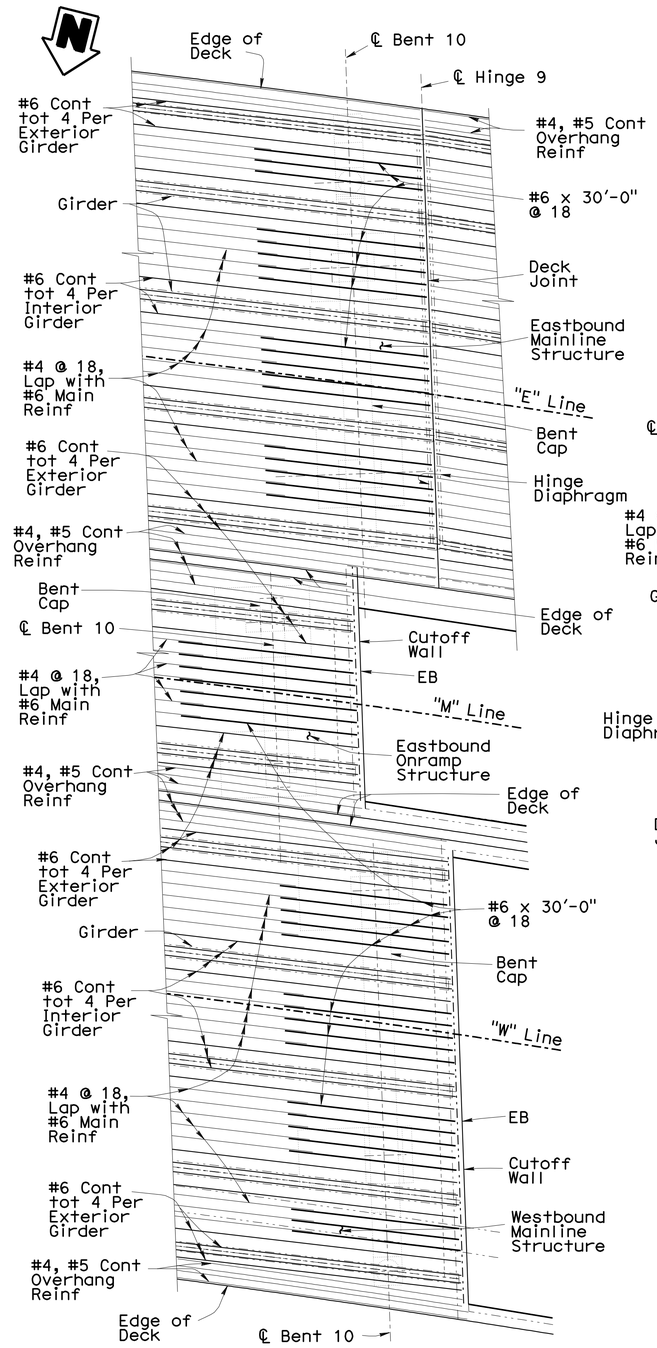

PLAN AT BENT 10

1/8"= 1'-0"

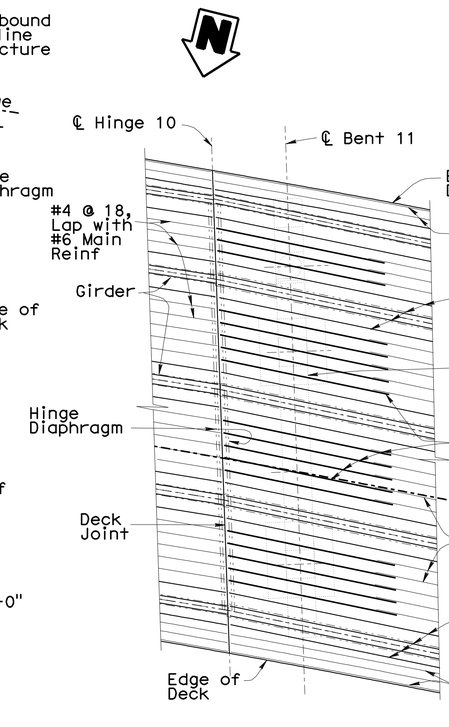

PLAN AT BENT 11

1/8"= 1'-0"

Eastbound Mainline Structure

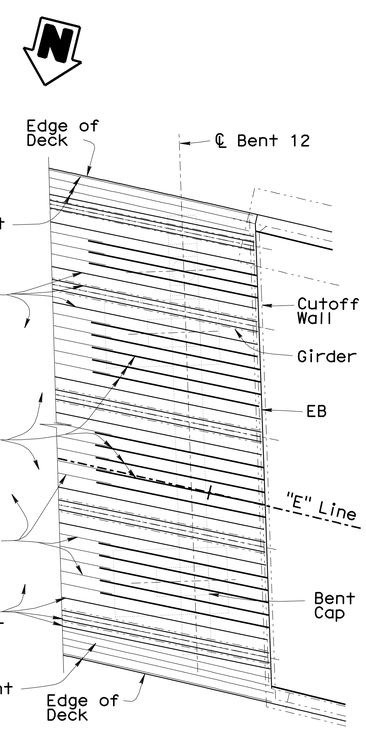

PLAN AT BENT 12

1/8"= 1'-0"

Eastbound Mainline Structure

NOTE:
THE CONTRACTOR SHALL VERIFY ALL CONTROLLING FIELD DIMENSIONS BEFORE ORDERING OR FABRICATING ANY MATERIAL.

All Reinforcement Shall be Epoxy Coated

No Splices Allowed in #6 Reinforcement

Barrier Not Shown

Closure Pours Not Shown.
Adjust Position of Reinforcement to Provide Minimum 3" Clear to Face of Closure Pour

For Additional Details, see "TYPICAL SECTION" Sheets, "ABUTMENT DETAILS" Sheets, "HINGE DETAILS" Sheets and "STAGE CONSTRUCTION DETAILS" Sheets

- - - - - - - - Denotes Existing Structure
———— Denotes New Construction

	BY	CHECKED
DESIGN	Mike Van De Pol	P. Norboe
DETAILS	Mike Van De Pol	P. Norboe
QUANTITIES	Mike Van De Pol	E. Franciliso

STATE OF CALIFORNIA
DEPARTMENT OF TRANSPORTATION

DIVISION OF ENGINEERING SERVICES
STRUCTURE DESIGN
DESIGN BRANCH 9

BRIDGE NO. 28-0140
MILE POST 5.8

BRIDGE DECK REPLACEMENT
SCOFIELD AVENUE UNDERCROSSING
DECK REINFORCEMENT No. 3

STRUCTURES DESIGN DETAIL SHEET (ENGLISH) (REV. 10/25/05)

ORIGINAL SCALE IN INCHES FOR REDUCED PLANS 0 1 2 3

UNIT: 3594
PROJECT NUMBER & PHASE: 04000004831
CONTRACT NO.: 04-1A3201

DISREGARD PRINTS BEARING EARLIER REVISION DATES

REVISION DATES: 3-02-11

SHEET 59 OF 92

FILE => 28-0140-j-mildreinf03.dgn

USERNAME => s128843 DATE PLOTTED => 06-JUN-2012 TIME PLOTTED => 16:05

DIST	COUNTY	ROUTE	POST MILES TOTAL PROJECT	SHEET No	TOTAL SHEETS
04	CC	580	5.5/6.2	223	301

REGISTERED CIVIL ENGINEER 5-1-12 DATE

6-4-12
PLANS APPROVAL DATE

The State of California or its officers or agents shall not be responsible for the accuracy or completeness of electronic copies of this plan sheet.

REGISTERED PROFESSIONAL ENGINEER Mike Van De Pol No. C35610 Exp. 9-30-2013 CIVIL STATE OF CALIFORNIA

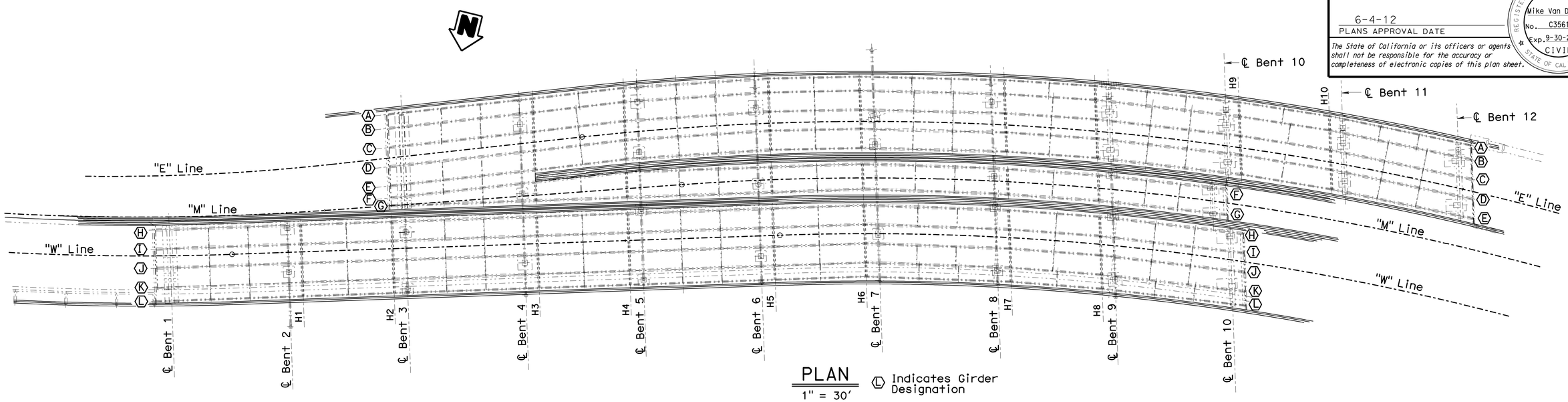

PLAN

1" = 30′

Ⓛ Indicates Girder Designation

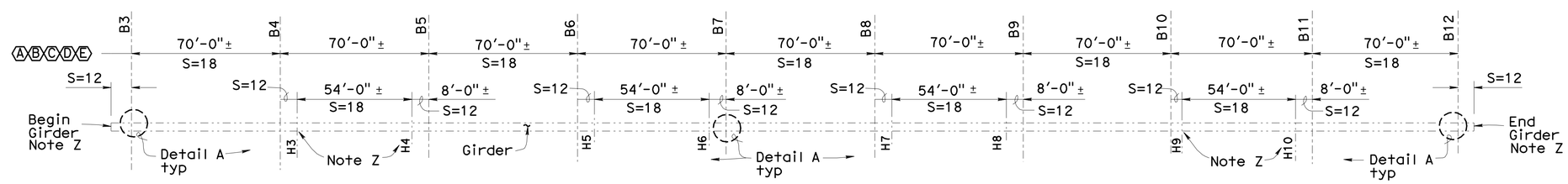

Adjustments in the Number and Location of the New Stud Connectors May be Made, as Approved by the Engineer

Note Z

Stud Connectors Extend to 4" Clear From End of Girder at Abutment Cutoff Walls, at Retaining Walls and at Hinge Joints

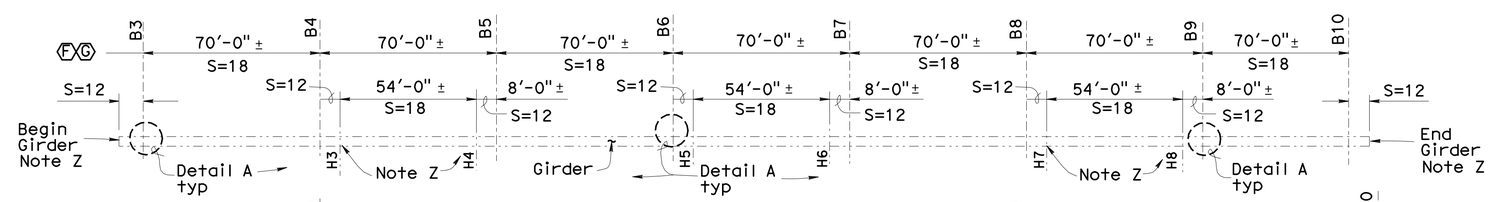

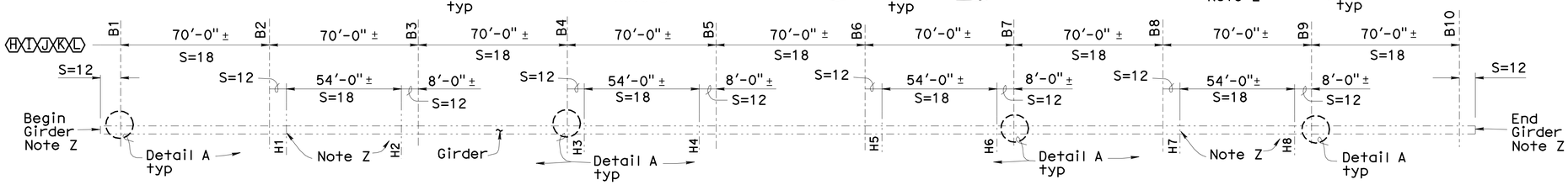

For Bent Locations, see "GENERAL PLAN" Sheets
For Additional Details, see "TYPICAL SECTION" Sheets
For DETAIL A, see "GIRDER STRENGTHENING DETAILS No. 2" Sheet
For Additional Details, see "BENT STRENGTHENING DETAILS" Sheets
All Existing Structural Steel Components Not Shown
Existing Bolts and Rivets Not Shown
All Deck Reinforcement not Shown
Deck Removal Not Shown

Denotes Existing Structure
Denotes New Construction

NOTE:
THE CONTRACTOR SHALL VERIFY ALL CONTROLLING FIELD DIMENSIONS BEFORE ORDERING OR FABRICATING ANY MATERIAL.

ELEVATIONS

1" = 30′

Deck, Stud Connectors, Deck Forms and Bents Not Shown

S= Denotes Stud Spacing

BRIDGE DECK REPLACEMENT
SCOFIELD AVENUE UNDERCROSSING
GIRDER STRENGTHENING DETAILS NO. 1

	BY	CHECKED
DESIGN	M. Van De Pol	P. Norboe
DETAILS	D. Elliott/M. Van De Pol	P. Norboe
QUANTITIES	M. Van De Pol	E. Franciliso

STATE OF CALIFORNIA
DEPARTMENT OF TRANSPORTATION

DIVISION OF ENGINEERING SERVICES
STRUCTURE DESIGN
DESIGN BRANCH 9

BRIDGE NO. 28-0140
POST MILE 5.8

STRUCTURES DESIGN DETAIL SHEET (ENGLISH) (REV. 10/25/05)

ORIGINAL SCALE IN INCHES FOR REDUCED PLANS 0 1 2 3

UNIT: 3594
PROJECT NUMBER & PHASE: 04000004831
CONTRACT NO.: 04-1A3201

DISREGARD PRINTS BEARING EARLIER REVISION DATES 3-02-11

SHEET 60 OF 92

FILE => 28-0140-k-girdrmv01.dgn

USERNAME => s128843 DATE PLOTTED => 06-JUN-2012 TIME PLOTTED => 16:05

DIST	COUNTY	ROUTE	POST MILES TOTAL PROJECT	SHEET No	TOTAL SHEETS
04	CC	580	5.5/6.2	224	301

REGISTERED CIVIL ENGINEER 5-1-12 DATE

6-4-12
PLANS APPROVAL DATE

REGISTERED PROFESSIONAL ENGINEER
Mike Van De Pol
No. C35610
Exp. 9-30-2013
CIVIL
STATE OF CALIFORNIA

The State of California or its officers or agents shall not be responsible for the accuracy or completeness of electronic copies of this plan sheet.

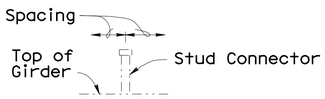

EXISTING CONNECTORS If Present

No Scale

Existing Connector Spacing Varies

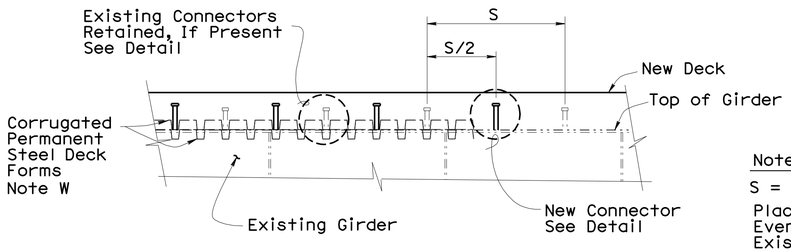

DETAIL

No Scale

Continuous Corrugated Deck Form Alternative Shown Note W

Note:

S = Spacing

Place New Connectors Evenly Spaced Between Existing Connectors, as Approved by the Engineer

Space to Fit in Deck Form Corrugations

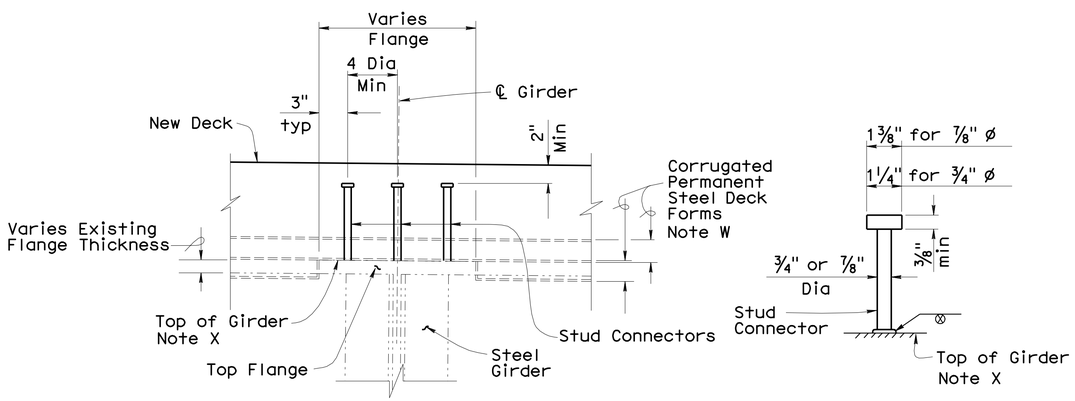

STUD CONNECTOR DETAILS

No Scale

All Existing Structural Steel Components Not Shown

Continuous Corrugated Deck Form Alternative Shown

Lengths to be determined by the Contractor, unless otherwise shown. Minimum length is 8". The top of deck is designed to be approximately parallel to the top of web for determining girder stud connector height. Alternative types of shear connectors will be permitted subject to approval by the Engineer.

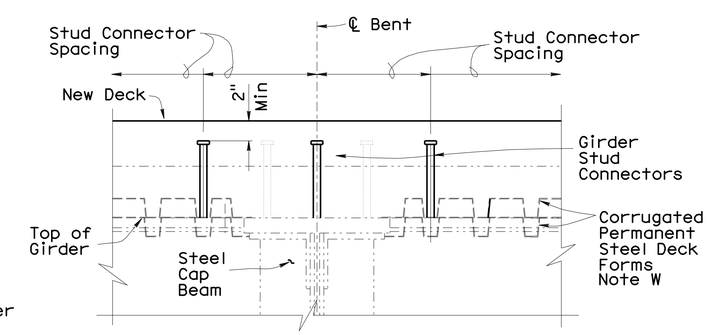

DETAIL A

No Scale

Girder Cover Plates Not Shown

Adjustments in the Number and Location of the New Stud Connectors May be Made, as Approved by the Engineer

Note W

Alternative Permanent Steel Deck Form Configurations are Shown. Other Configurations are Permitted, as Approved by the Engineer. See "TYPICAL SECTION" Sheets

Note X

Girder Top Flanges are Composed of Angles,Angles with Cover Plates and Welded Plates. Top Plates May Not be Continuous Along the Length of the Girder. Stud Connectors Shall be Welded to the Plate or the Angle Flanges. Stud Connectors May be Omitted at the Centerline of Girderin the Regions Where No Cover Plates Are Present, as Approved by the Engineer. Adjust Locations of Stud Connectors to Provide 1" Min Clear From Existing Flange Bolts or Rivets

Note Y

If the Continuous Corrugated Deck Form Alternative is Employed and Stud Connectors Exist on the Girder Flanges, Cut Holes in Deck Forms to Facilitate Placement of Forms Over Stud Connectors Onto the Girder Flanges. If the Continuous Deck Form Alternative is Employed and Stud Connectors Do Not Exist on the Girder Flanges, Cut Holes in Deck Forms to Facilitate Placement of New Stud Connectors Onto the Girder Flanges. Stud Connectors Shall be Located in the Valley of the Deck Form

For Additional Details, see "TYPICAL SECTION" Sheets
For Stud Connector Spacing, see Other "GIRDER STRENGTHENING DETAILS" Sheets
For Locations of DETAIL A, see "GIRDER STRENGTHENING DETAILS No.1" Sheet
All Existing Structural Steel Components Not Shown
Existing Bolts and Rivets Not Shown
Deck Reinforcement not Shown
Deck Removal Not Shown

——— Denotes Existing Structure
-·-·-·- Denotes New Construction

NOTE:
THE CONTRACTOR SHALL VERIFY ALL CONTROLLING FIELD DIMENSIONS BEFORE ORDERING OR FABRICATING ANY MATERIAL.

BRIDGE DECK REPLACEMENT
SCOFIELD AVENUE UNDERCROSSING
GIRDER STRENGTHENING DETAILS NO. 2

	BY	CHECKED
DESIGN	M. Van De Pol	P. Norboe
DETAILS	D. Elliott	P. Norboe
QUANTITIES	M. Van De Pol	E. Franciliso

STATE OF CALIFORNIA
DEPARTMENT OF TRANSPORTATION

DIVISION OF ENGINEERING SERVICES
STRUCTURE DESIGN
DESIGN BRANCH 9

BRIDGE NO. 28-0140
POST MILE 5.8

STRUCTURES DESIGN DETAIL SHEET (ENGLISH) (REV. 10/25/05)

ORIGINAL SCALE IN INCHES FOR REDUCED PLANS 0 1 2 3

UNIT: 3594
PROJECT NUMBER & PHASE: 04000004831
CONTRACT NO.: 04-1A3201

DISREGARD PRINTS BEARING EARLIER REVISION DATES 3-02-11

SHEET 61 OF 92

FILE => 28-0140-k-girdrmv02.dgn

USERNAME => s128843 DATE PLOTTED => 06-JUN-2012 TIME PLOTTED => 16:05

DIST	COUNTY	ROUTE	POST MILES TOTAL PROJECT	SHEET No	TOTAL SHEETS
04	CC	580	5.5/6.2	225	301

REGISTERED CIVIL ENGINEER 5-1-12 DATE

6-4-12
PLANS APPROVAL DATE

REGISTERED PROFESSIONAL ENGINEER Mike Van De Pol No. C35610 Exp. 9/30/2013 CIVIL STATE OF CALIFORNIA

The State of California or its officers or agents shall not be responsible for the accuracy or completeness of electronic copies of this plan sheet.

Notes

For Stud Connector Details, see "BENT STRENGTHENING DETAILS No. 3" Sheet
For Bent Location, see "GENERAL PLAN" Sheets
For Additional Details, see "Typical Section", "Stage Construction" and "BENT DETAILS" Sheets
All Existing Structural Steel Components Not Shown
Girder Stud Connectors not Shown
Deck and Barrier Reinforcement not Shown
Chain Link Railing Not Shown

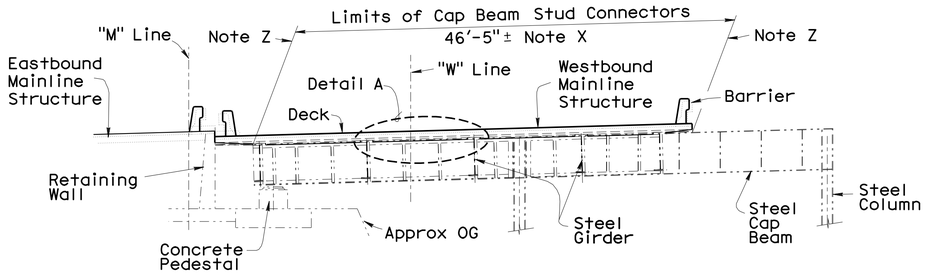

ELEVATION BENT 2
1/8" = 1'-0"

Note X
Stud Connectors Extend Along the Limits Shown, Except Within 9" Minimum of Centerline of Girders. See "Detail A"

Note Y
Stud Connectors Extend to 9" Clear From Centerline or Girder

Note Z
Stud Connectors Extend to 4" Clear From End of Cap Beam, or Edge of Deck

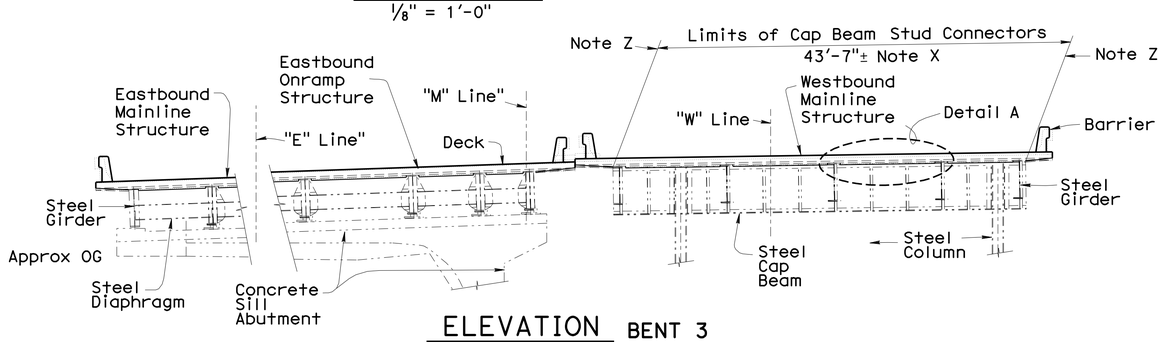

ELEVATION BENT 3
1/8" = 1'-0"

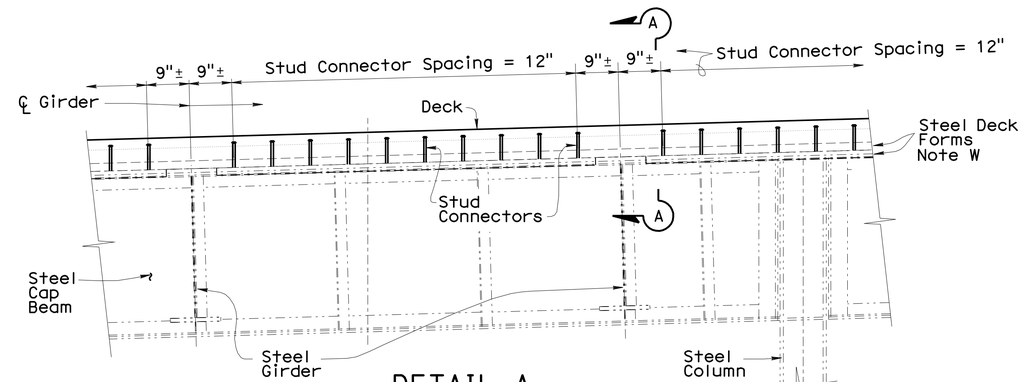

DETAIL A
1/2" = 1'-0"

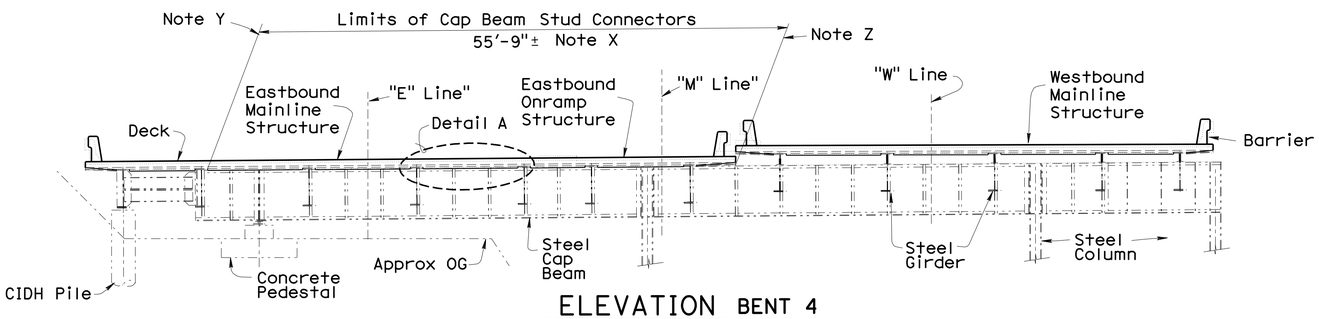

ELEVATION BENT 4
1/8" = 1'-0"

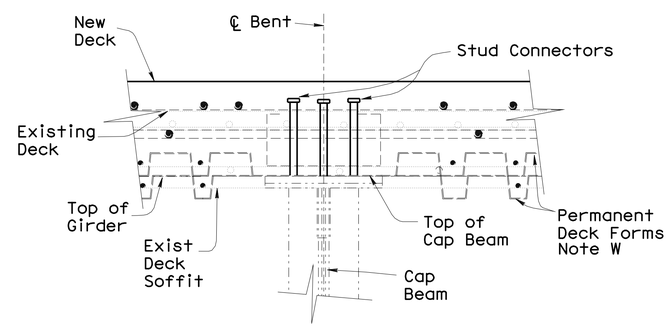

SECTION A-A
1 1/2" = 1'-0"

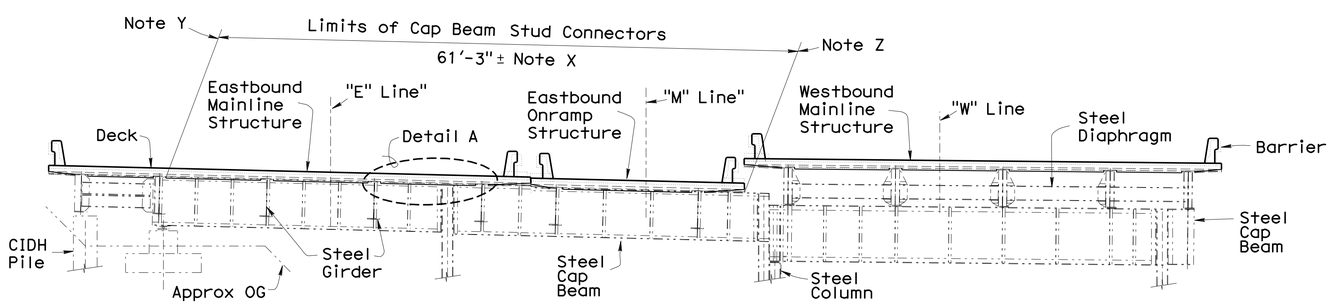

ELEVATION BENT 5
1/8" = 1'-0"

Note W
Alternative Permanent Steel Deck Form Configurations Shown. Other Configurations are Permitted, as Approved by the Engineer. See "TYPICAL SECTION" Sheets and "BENT DETAILS No. 7" Sheet

Adjustments in the Number and Location of the New Stud Connectors May be Made, as Approved by the Engineer

Denotes Existing Structure
Denotes New Construction

NOTE:
THE CONTRACTOR SHALL VERIFY ALL CONTROLLING FIELD DIMENSIONS BEFORE ORDERING OR FABRICATING ANY MATERIAL.

	BY	CHECKED
DESIGN	Mike Van De Pol	P. Norboe
DETAILS	Mike Van De Pol	P. Norboe
QUANTITIES	Mike Van De Pol	E. Franciliso

STATE OF CALIFORNIA
DEPARTMENT OF TRANSPORTATION

DIVISION OF ENGINEERING SERVICES
STRUCTURE DESIGN
DESIGN BRANCH 9

BRIDGE NO. 28-0140
MILE POST 5.8

BRIDGE DECK REPLACEMENT
SCOFIELD AVENUE UNDERCROSSING
BENT STRENGTHENING DETAILS No. 1

STRUCTURES DESIGN DETAIL SHEET (ENGLISH) (REV. 10/25/05)

ORIGINAL SCALE IN INCHES FOR REDUCED PLANS 0 1 2 3

UNIT: 3594
PROJECT NUMBER & PHASE: 04000004831
CONTRACT NO.: 04-1A3201

DISREGARD PRINTS BEARING EARLIER REVISION DATES 3-02-11

SHEET 62 OF 92

FILE => 28-0140-1-bntrmv01.dgn

USERNAME => s128843 DATE PLOTTED => 06-JUN-2012 TIME PLOTTED => 16:05

DIST	COUNTY	ROUTE	POST MILES TOTAL PROJECT	SHEET No	TOTAL SHEETS
04	CC	580	5.5/6.2	226	301

REGISTERED CIVIL ENGINEER 5-1-12 DATE

6-4-12
PLANS APPROVAL DATE

REGISTERED PROFESSIONAL ENGINEER Mike Van De Pol No. C35610 Exp. 9/30/2013 CIVIL STATE OF CALIFORNIA

The State of California or its officers or agents shall not be responsible for the accuracy or completeness of electronic copies of this plan sheet.

Notes

For Stud Connector Details, see "BENT STRENGTHENING DETAILS No. 3" Sheet
For Bent Location, see "GENERAL PLAN" Sheets
For Additional Details, see "Typical Section", and "Stage Construction" Sheets
All Existing Structural Steel Components Not Shown
Girder Stud Connectors not Shown
Deck and Barrier Reinforcement not Shown
Chain Link Railing Not Shown

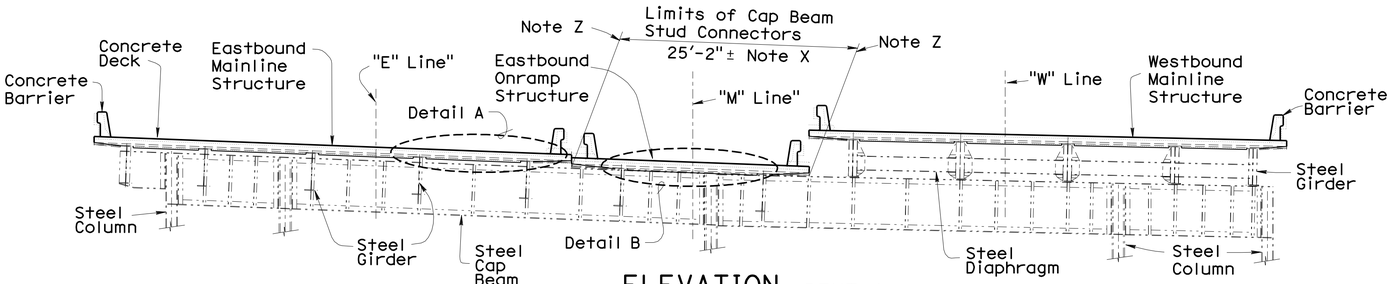

ELEVATION BENT 6
1/8" = 1'-0"

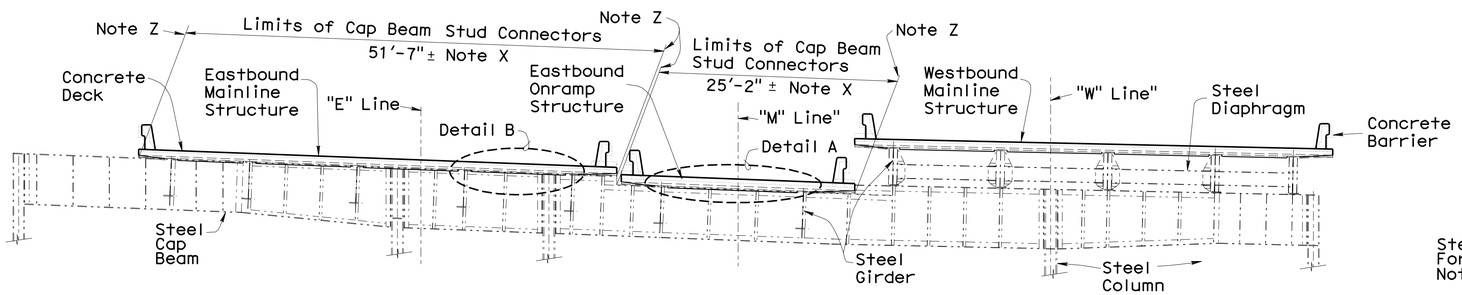

ELEVATION BENT 7
1/8" = 1'-0"

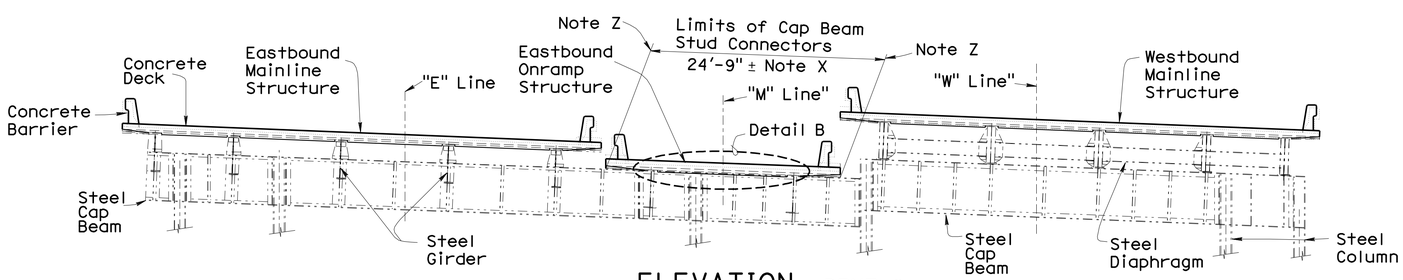

ELEVATION BENT 8
1/8" = 1'-0"

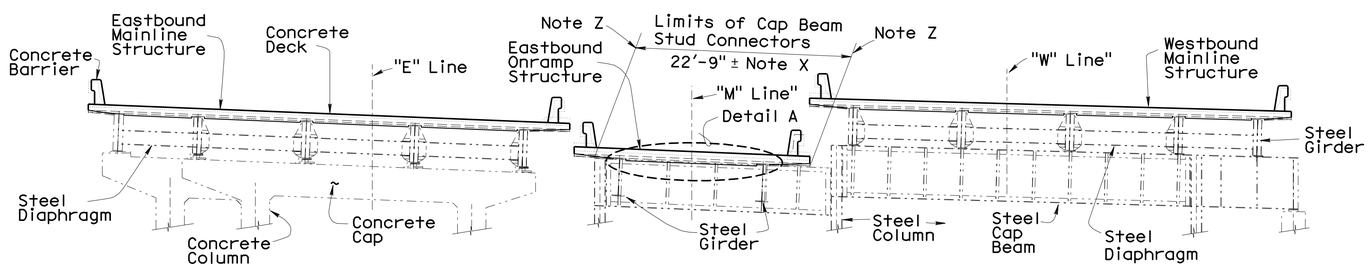

ELEVATION BENT 9
1/8" = 1'-0"

NOTE:
THE CONTRACTOR SHALL VERIFY ALL CONTROLLING FIELD DIMENSIONS BEFORE ORDERING OR FABRICATING ANY MATERIAL.

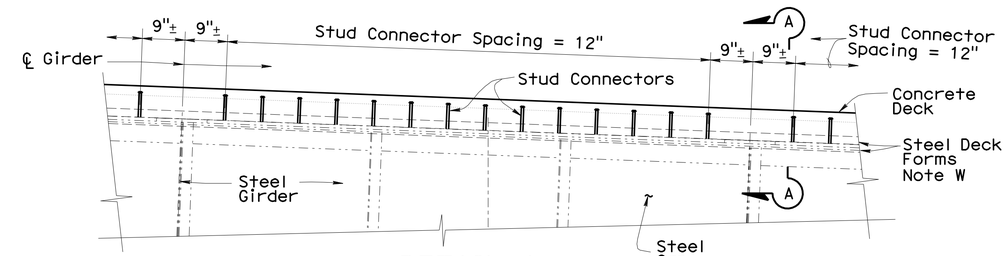

DETAIL A
1/2" = 1'-0"

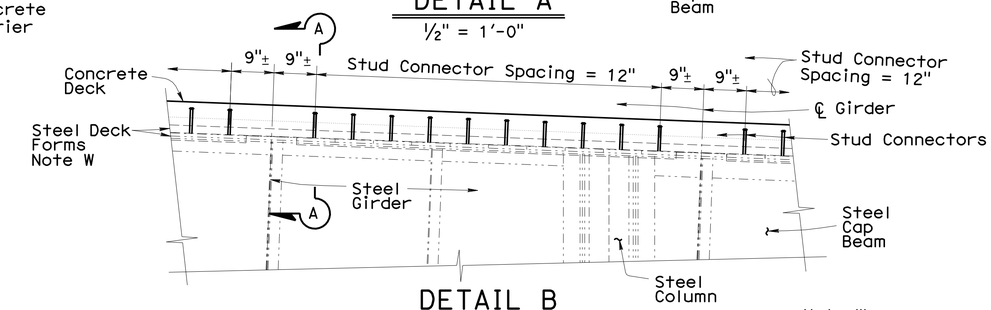

DETAIL B
1/2" = 1'-0"

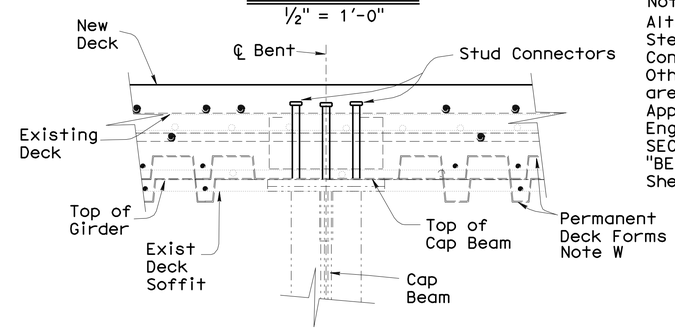

SECTION A-A
1 1/2" = 1'-0"

Note W
Alternative Permanent Steel Deck Form Configurations Shown. Other Configurations are Permitted, as Approved by the Engineer. See "TYPICAL SECTION" Sheets and "BENT DETAILS No. 7" Sheet

Adjustments in the Number and Location of the New Stud Connectors May be Made, as Approved by the Engineer

Note X
Stud Connectors Extend Along the Limits Shown, Except Within 9" Minimum of Centerline of Girders. See "Detail A" and "DETAIL B"

Note Z
Stud Connectors Extend to 4" Clear From End of Cap Beam, Face of Column, or Edge of Deck

Denotes Existing Structure
Denotes New Construction

	BY	CHECKED
DESIGN	Mike Van De Pol	P. Norboe
DETAILS	Mike Van De Pol	P. Norboe
QUANTITIES	Mike Van De Pol	E. Franciliso

STATE OF CALIFORNIA
DEPARTMENT OF TRANSPORTATION

DIVISION OF ENGINEERING SERVICES
STRUCTURE DESIGN
DESIGN BRANCH 9

BRIDGE NO. 28-0140
MILE POST 5.8

BRIDGE DECK REPLACEMENT
SCOFIELD AVENUE UNDERCROSSING
BENT STRENGTHENING DETAILS No. 2

STRUCTURES DESIGN DETAIL SHEET (ENGLISH) (REV. 10/25/05)

ORIGINAL SCALE IN INCHES FOR REDUCED PLANS 0 1 2 3

UNIT: 3594
PROJECT NUMBER & PHASE: 04000004831
CONTRACT NO.: 04-1A3201

DISREGARD PRINTS BEARING EARLIER REVISION DATES 3-02-11

SHEET 63 OF 92

FILE => 28-0140-1-bntrmv02.dgn

USERNAME => s128843 DATE PLOTTED => 06-JUN-2012 TIME PLOTTED => 16:05

DIST	COUNTY	ROUTE	POST MILES TOTAL PROJECT	SHEET No	TOTAL SHEETS
04	CC	580	5.5/6.2	227	301

REGISTERED CIVIL ENGINEER 5-1-12 DATE

6-4-12
PLANS APPROVAL DATE

REGISTERED PROFESSIONAL ENGINEER Mike Van De Pol No. C35610 Exp. 9/30/2013 CIVIL STATE OF CALIFORNIA

The State of California or its officers or agents shall not be responsible for the accuracy or completeness of electronic copies of this plan sheet.

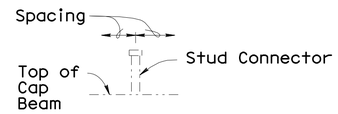

EXISTING CONNECTORS If Present

No Scale

Existing Connector Spacing Varies

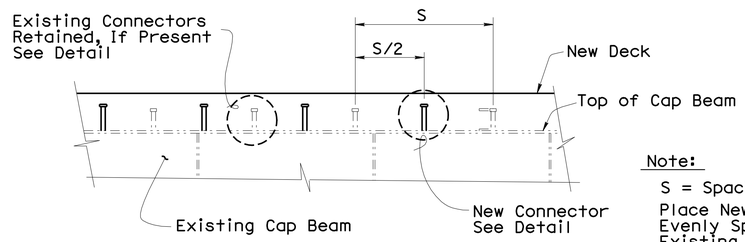

DETAIL

No Scale

Permanent Deck Forms Not Shown

Note:

S = Spacing

Place New Connectors Evenly Spaced Between Existing Connectors, if Present, as Approved by the Engineer

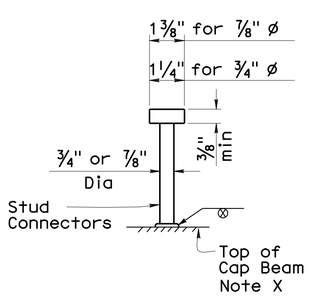

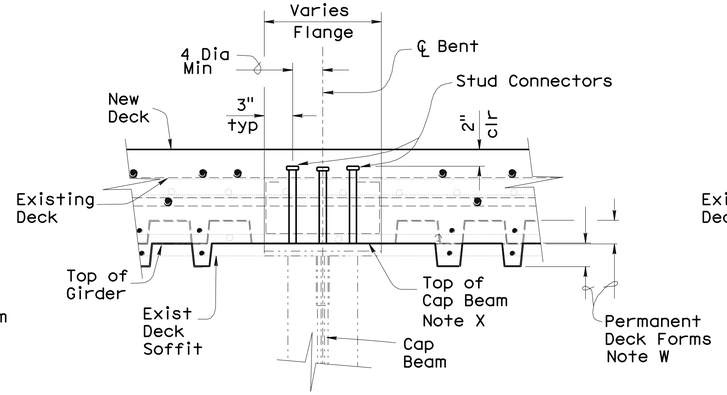

CAP BEAM DETAIL

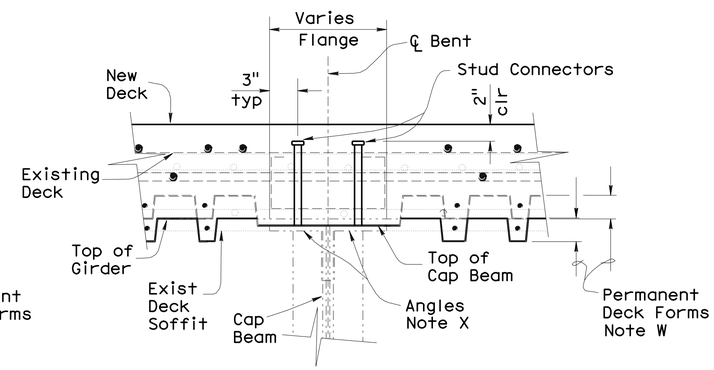

ALTERNATIVE DETAIL

STUD CONNECTOR DETAILS

No Scale

All Existing Structural Steel Components Not Shown

Lengths to be determined by the Contractor, unless otherwise shown. Minimum length is 8". The top of deck is designed to be approximately parallel to the top of web for determining girder stud connector height. Alternative types of shear connectors will be permitted subject to approval by the Engineer.

Adjustments in the Number and Location of the New Stud Connectors May be Made, as Approved by the Engineer

Note W

Alternative Permanent Steel Deck Form Configurations Shown. Other Configurations are Permitted, as Approved by the Engineer. See "TYPICAL SECTION" Sheets and "BENT DETAILS No. 7" Sheet

Note X

Cap Beam Top Flange is Composed of Angles with Cover Plates. Cover Plates May Not be Continuous Along the Length of the Cap Beam. Stud Connectors Shall be Welded to the Cover Plate or the Angle Flanges. Stud Connectors May be Omitted at the Centerline of Cap Beam in the Regions Where No Cover Plates Are Present, as Approved by the Engineer. Adjust Locations of Stud Connectors to Provide 1" Min Clear From Existing Flange Bolts or Rivets

For Bent Locations, see "GENERAL PLAN" Sheets.
For Additional Details, see "TYPICAL SECTION" Sheets
For Stud Connector Spacing, see Other "BENT STRENGTHENING DETAILS" Sheets
All Existing Structural Steel Components Not Shown
Existing Bolts and Rivets Not Shown
All Deck Reinforcement not Shown
Deck Removal Not Shown

Denotes Existing Structure
Denotes New Construction

NOTE:
THE CONTRACTOR SHALL VERIFY ALL CONTROLLING FIELD DIMENSIONS BEFORE ORDERING OR FABRICATING ANY MATERIAL.

	BY	CHECKED
DESIGN	Mike Van De Pol	P. Norboe
DETAILS	Mike Van De Pol	P. Norboe
QUANTITIES	Mike Van De Pol	E. Franciliso

STATE OF CALIFORNIA DEPARTMENT OF TRANSPORTATION

DIVISION OF ENGINEERING SERVICES STRUCTURE DESIGN DESIGN BRANCH 9

BRIDGE NO. 28-0140
MILE POST 5.8

BRIDGE DECK REPLACEMENT
SCOFIELD AVENUE UNDERCROSSING
BENT STRENGTHENING DETAILS No. 3

STRUCTURES DESIGN DETAIL SHEET (ENGLISH) (REV. 10/25/05)

ORIGINAL SCALE IN INCHES FOR REDUCED PLANS 0 1 2 3

UNIT: 3594
PROJECT NUMBER & PHASE: 04000004831
CONTRACT NO.: 04-1A3201

DISREGARD PRINTS BEARING EARLIER REVISION DATES 3-02-11

SHEET 64 OF 92

FILE => 28-0140-1-bntrmv03.dgn

USERNAME => s128843 DATE PLOTTED => 06-JUN-2012 TIME PLOTTED => 16:06

DIST	COUNTY	ROUTE	POST MILES TOTAL PROJECT	SHEET No	TOTAL SHEETS
04	CC	580	5.5/6.2	228	301

REGISTERED CIVIL ENGINEER 5-1-12 DATE

6-4-12
PLANS APPROVAL DATE

REGISTERED PROFESSIONAL ENGINEER Mike Van De Pol No. C35610 Exp. 9/30/2013 CIVIL STATE OF CALIFORNIA

The State of California or its officers or agents shall not be responsible for the accuracy or completeness of electronic copies of this plan sheet.

Denotes Existing Structure
Denotes New Construction

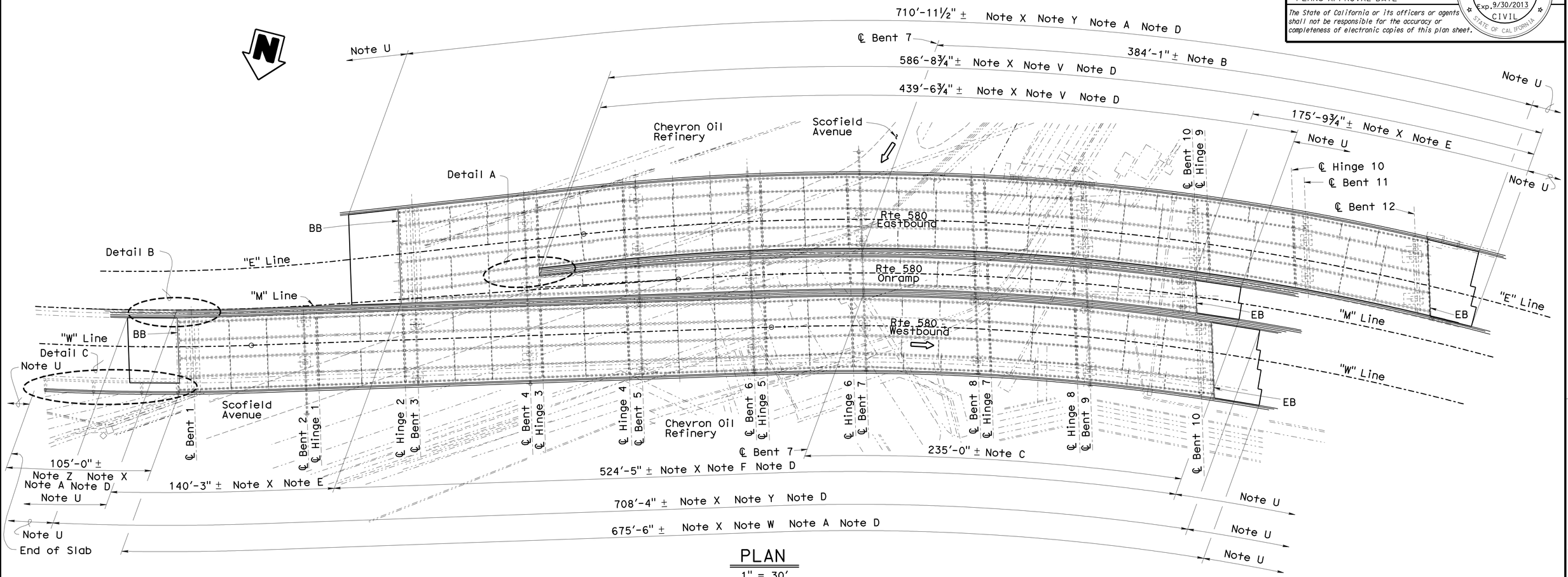

PLAN

1" = 30'

NOTES

For DETAIL A, DETAIL B, DETAIL C, see "BARRIER DETAILS No. 1" Sheet

Location and Alignment of Existing Edge of Deck = Location and Alignment of New Edge of Deck

Location and Alignment of Inside Face of Existing Barrier = Location and Alignment of Inside Face of New Barrier

For Other Details, see "TYPICAL SECTION", "ABUTMENT DETAILS, "STRUCTURE APPROACH DETAILS" Sheets

For Stage Construction Details, see "STAGE CONSTRUCTION DETAILS" Sheets

For Removal Details, see "REMOVAL DETAILS" Sheets

For Other Details, see "ROAD PLANS"

Light Standards Not Shown

Barrier Joint Locations and Widths Match Deck/Wall Joint Locations and Widths at Respective Locations

Note U
For Additional Barrier Details Beyond Limits of Structure, see "ROAD PLANS"

Note V
As Measured From Face of Curb Wall to End of Structure Approach

Note W
As Measured From End of Concrete Slab to End of Structure Approach

Note X
As Measured Along Front Face of Concrete Barrier at Bridge Deck

Note Y
As Measured From End of Structure Approach to End of Structure Approach

Note Z
As Measured From Beginning of Concrete Slab to End of Concrete Slab

Note A
Limits of Barrier Face Architectural Texture - Outside Edge of Deck Barrier

Note B
Limits of Barrier Face Architectural Texture - Inside Edge of Deck Barrier, Eastbound Mainline Structure

Note C
Limits of Barrier Face Architectural Texture - Inside Edge of Deck Barrier, Westbound Mainline Structure

Note D
Length of Payment of Structure Concrete Barrier

Note E
As Measured From Face of Cutoff Wall Paving Notch to Face of Cutoff Wall Paving Notch to

Note F
As Measured From Face of Cutoff Wall Paving Notch to End of Structure Approach

No Barrier Face Architectural Texture on Eastbound Onramp Barriers

For Barrier Face Architectural Texture Details, See "BARRIER DETAILS No. 4" Sheet

NOTE:
THE CONTRACTOR SHALL VERIFY ALL CONTROLLING FIELD DIMENSIONS BEFORE ORDERING OR FABRICATING ANY MATERIAL.

	BY	CHECKED
DESIGN	Mike Van De Pol	P. Norboe
DETAILS	Mike Van De Pol	P. Norboe
QUANTITIES	Mike Van De Pol	E. Franciliso

STATE OF CALIFORNIA
DEPARTMENT OF TRANSPORTATION

DIVISION OF ENGINEERING SERVICES
STRUCTURE DESIGN
DESIGN BRANCH 9

BRIDGE NO. 28-0140
MILE POST 5.8

BRIDGE DECK REPLACEMENT
SCOFIELD AVENUE UNDERCROSSING
BARRIER LAYOUT

STRUCTURES DESIGN DETAIL SHEET (ENGLISH) (REV. 10/25/05)

ORIGINAL SCALE IN INCHES FOR REDUCED PLANS 0 1 2 3

UNIT: 3594
PROJECT NUMBER & PHASE: 04000004831
CONTRACT NO.: 04-1A3201

DISREGARD PRINTS BEARING EARLIER REVISION DATES 3-02-11

SHEET 65 OF 92

FILE => 28-0140-m_barlyt01.dgn

USERNAME => s128843 DATE PLOTTED => 06-JUN-2012 TIME PLOTTED => 16:06

DIST	COUNTY	ROUTE	POST MILES TOTAL PROJECT	SHEET No	TOTAL SHEETS
04	CC	580	5.5/6.2	229	301

REGISTERED CIVIL ENGINEER 5-1-12 DATE

6-4-12
PLANS APPROVAL DATE

REGISTERED PROFESSIONAL ENGINEER Mike Van De Pol No. C35610 Exp. 9/30/2013 CIVIL STATE OF CALIFORNIA

The State of California or its officers or agents shall not be responsible for the accuracy or completeness of electronic copies of this plan sheet.

Uncertainties Exist Regarding the Details of Certain Barrier Interface Locations. Details Shown are Approximate. The Contractor Shall Perform Field Inspections to Identify Actual Barrier Interface Details. Details Shown Herein May be Adjusted, as Approved by the Engineer

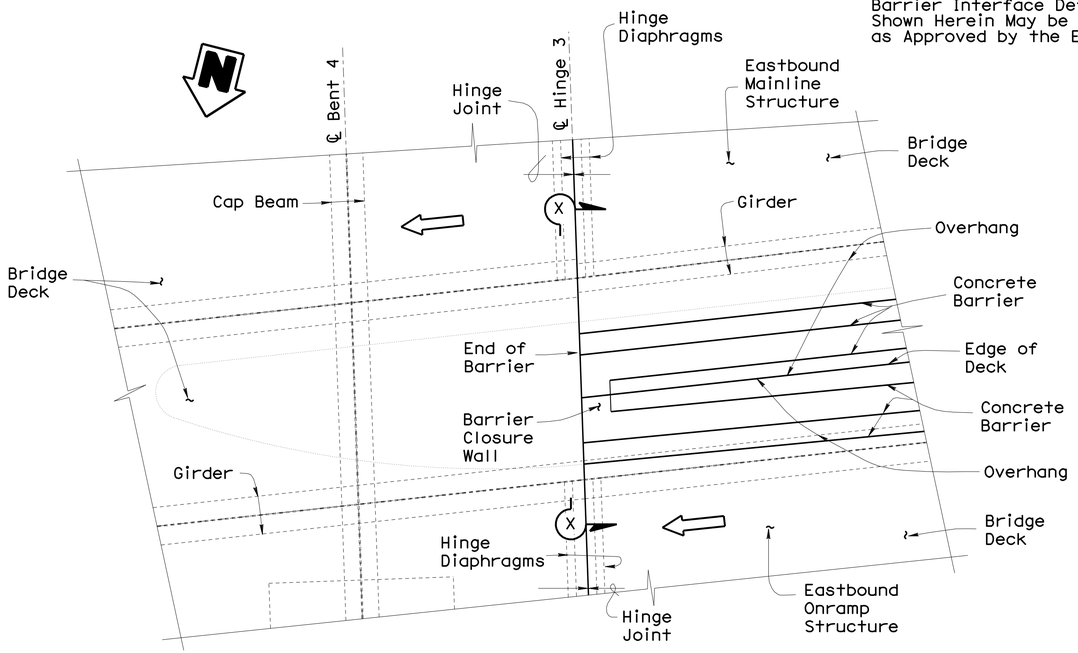

DETAIL A
3/8" = 1'-0"

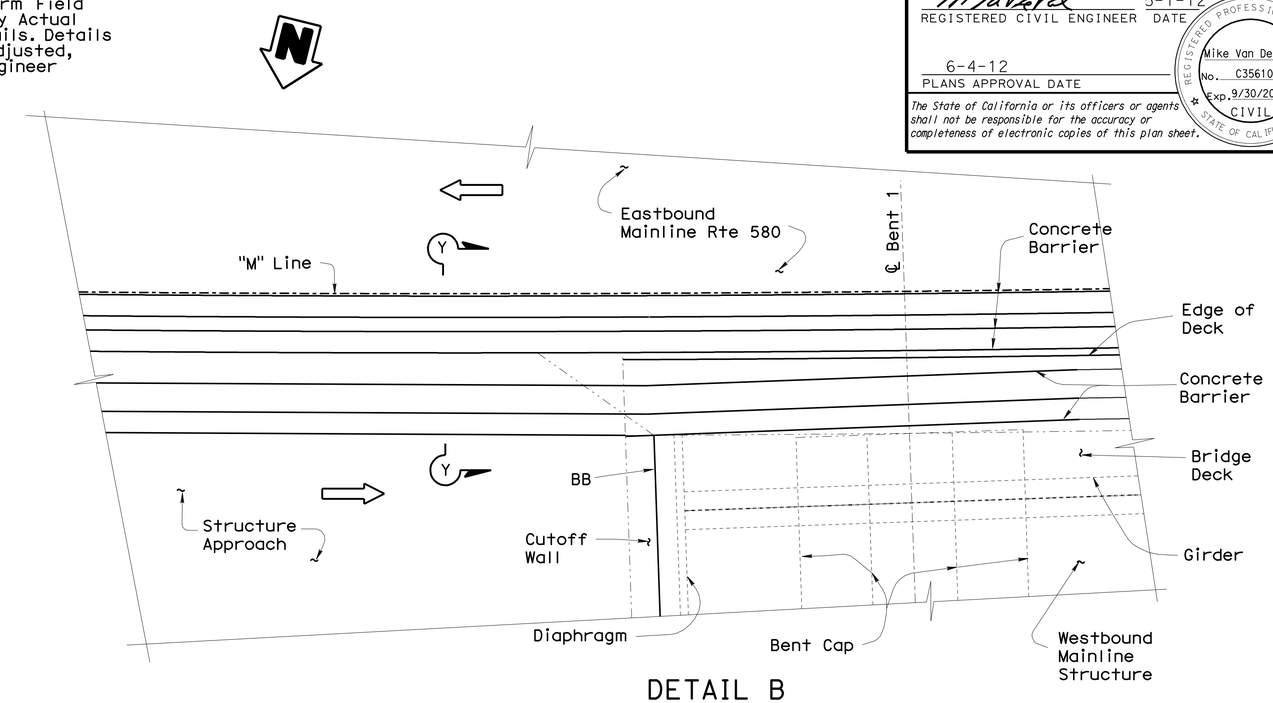

DETAIL B
3/8" = 1'-0"

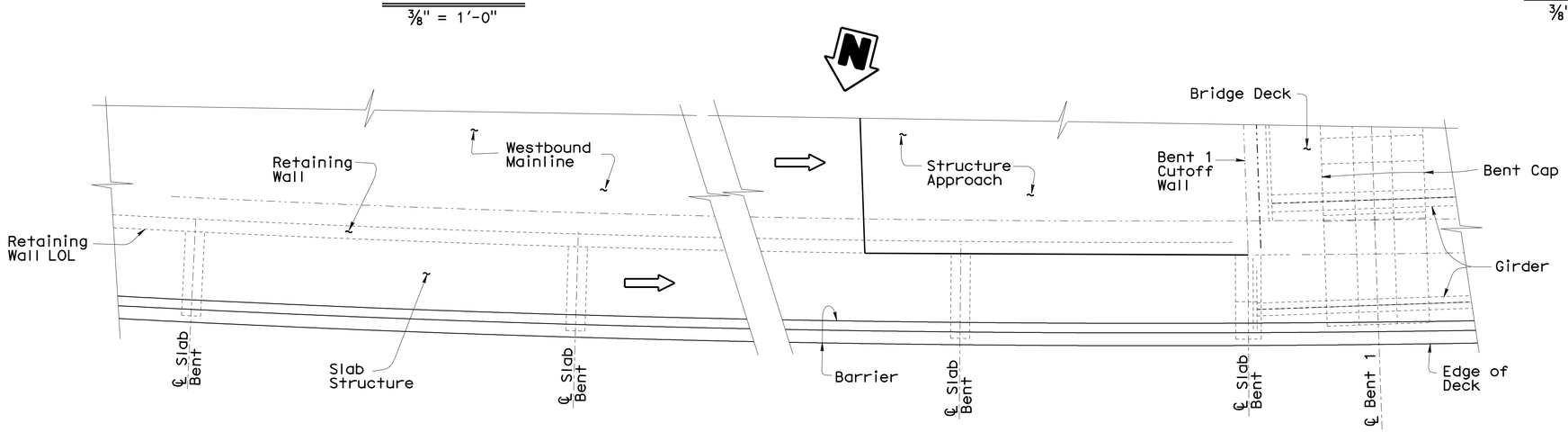

DETAIL C
3/16" = 1'-0"

NOTES

For Locations of DETAIL A, DETAIL B and DETAIL C, see "BARRIER LAYOUT" Sheet

For SECTION X-X and SECTION Y-Y, see "BARRIER DETAILS No. 3" Sheet

For Barrier Details on Slab Structure, see "BARRIER DETAILS No. 4" Sheet

For Other Details, see "TYPICAL SECTION", "ABUTMENT DETAILS, STRUCTURE APPROACH DETAILS Sheets

For Stage Construction Details, see "STAGE CONSTRUCTION DETAILS" Sheets

For Removal Details, see "REMOVAL DETAILS" Sheets

Light Standards and Conduits Not Shown

For Added Details, see "ROAD PLANS"

Note X
Location and Alignment of the Inside Face of Existing Barrier = Location and Alignment of the Inside Face of New Barrier

Note Y
Location and Alignment of Existing Edge of Deck = Location and Alignment of New Edge of Deck

Location and Width of Barrier Joints to Match Location and Width of Deck/Wall Joints at Respective Location

Denotes Direction of Traffic
Denotes Existing Structure
Denotes New Construction

NOTE:
THE CONTRACTOR SHALL VERIFY ALL CONTROLLING FIELD DIMENSIONS BEFORE ORDERING OR FABRICATING ANY MATERIAL.

	BY	CHECKED
DESIGN	Mike Van De Pol	P. Norboe
DETAILS	Mike Van De Pol	P. Norboe
QUANTITIES	Mike Van De Pol	P. Norboe

STATE OF CALIFORNIA
DEPARTMENT OF TRANSPORTATION

DIVISION OF ENGINEERING SERVICES
STRUCTURE DESIGN
DESIGN BRANCH 9

BRIDGE NO. 28-0140
MILE POST 5.8

BRIDGE DECK REPLACEMENT
SCOFIELD AVENUE UNDERCROSSING
BARRIER DETAILS No. 1

STRUCTURES DESIGN DETAIL SHEET (ENGLISH) (REV. 10/25/05)

ORIGINAL SCALE IN INCHES FOR REDUCED PLANS 0 1 2 3

UNIT: 3594
PROJECT NUMBER & PHASE: 04000004831
CONTRACT NO.: 04-1A3201

DISREGARD PRINTS BEARING EARLIER REVISION DATES 3-02-11

SHEET 66 OF 92

FILE => 28-0140-m-bardets01.dgn

USERNAME => s128843 DATE PLOTTED => 06-JUN-2012 TIME PLOTTED => 16:06

DIST	COUNTY	ROUTE	POST MILES TOTAL PROJECT	SHEET No	TOTAL SHEETS
04	CC	580	5.5/6.2	230	301

REGISTERED CIVIL ENGINEER 5-1-12 DATE

6-4-12
PLANS APPROVAL DATE

REGISTERED PROFESSIONAL ENGINEER Mike Van De Pol No. C35610 Exp. 9/30/2013 CIVIL STATE OF CALIFORNIA

The State of California or its officers or agents shall not be responsible for the accuracy or completeness of electronic copies of this plan sheet.

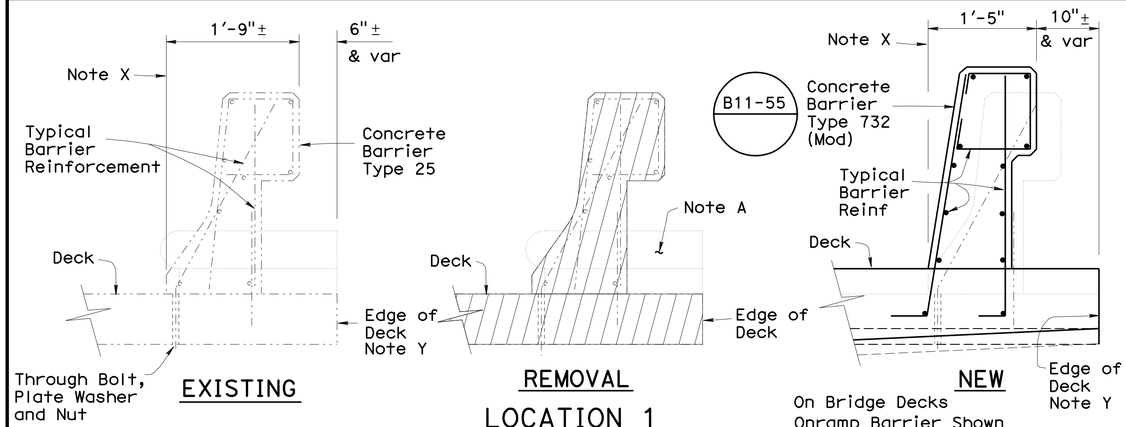

LOCATION 1
1" = 1'-0"

On Bridge Decks
Onramp Barrier Shown
Mainline Barrier Similar
Note B

Note A
If Curb is Present, Remove Along With Barrier

Note B
Uncertainties Exist Regarding the Details of Certain Barrier Interface Locations. Details Shown are Approximate. The Contractor Shall Perform Field Inspections to Identify Actual Barrier Interface Details. Details Shown Herein May be Adjusted, as Approved by the Engineer

Note C
At Option of Contractor Barrier Trench May be Removed Along With Barrier Section, as Approved by the Engineer. If Trench is Removed, New Barrier Vertical Reinf Shall Extend to Bottom of New Trench

The Barrier Locations Shown Attempt to Reperesent All the Barrier Interface Configurations on and Off the Structure to the Ends of the Structure Approaches. Details may be Adjusted as Approved by the Engineer

NOTES

For Other Details, see "TYPICAL SECTION", "ABUTMENT DETAILS, STRUCTURE APPROACH DETAILS Sheets

For Stage Construction Details, see "STAGE CONSTRUCTION DETAILS" Sheets

For Other Details, see "REMOVAL DETAILS" Sheets

Light Standards and Conduits Not Shown. For Removal and Replacement, see "ROAD PLANS"

For Added Details, see "ROAD PLANS"

For Scupper Details see "DRAINAGE DETAILS" Sheets

Barrier Joint Locations and Widths Match Deck Joint Locations and Widths

Note X
Location and Alignment of Inside Face of Existing Barrier = Location and Alignment of Inside Face of New Barrier

Note Y
Location and Alignment of Existing Edge of Deck = Location and Alignment of New Edge of Deck

Barrier Architectural Texture Not Shown

All Barrier Reinforcement shall be Epoxy Coated.

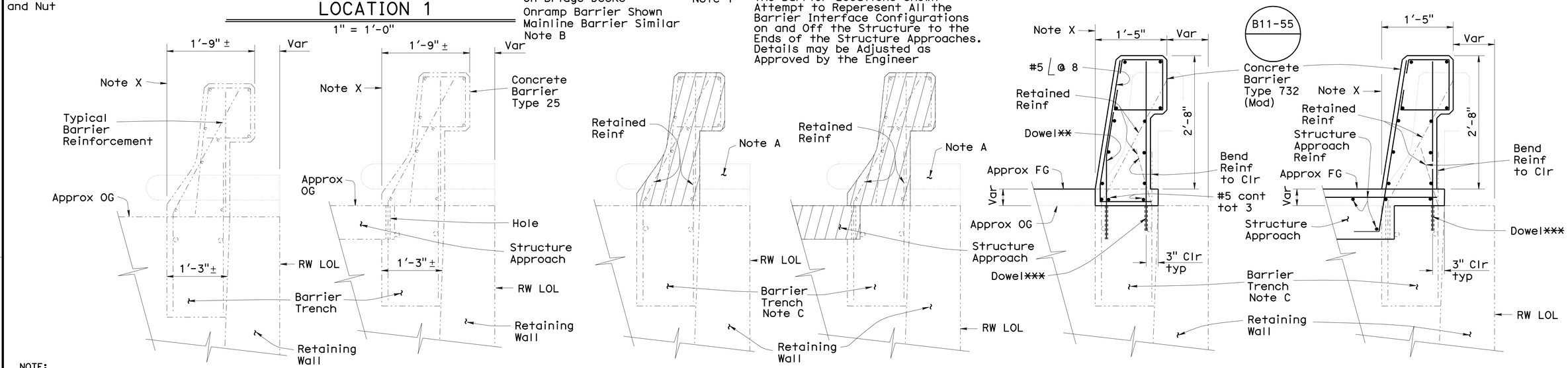

NOTE:
THE CONTRACTOR SHALL VERIFY ALL CONTROLLING FIELD DIMENSIONS BEFORE ORDERING OR FABRICATING ANY MATERIAL.

LOCATION 2
1" = 1'-0"

Off Bridge Decks
At Structure Approaches Note B

Denotes Limits of Removal of Existing Concrete Barrier, Conduit and Light Standards. Portion of Existing Reinforcement may be Retained

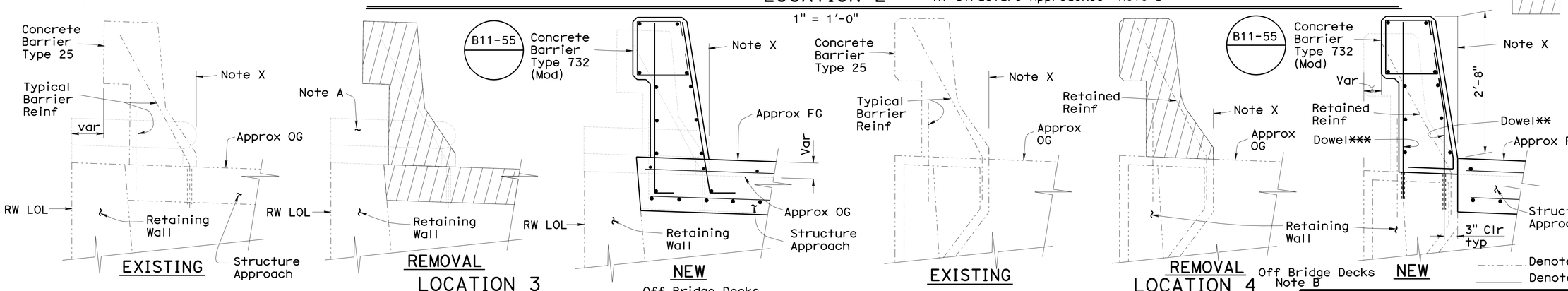

LOCATION 3
1" = 1'-0"

Off Bridge Decks
At Structure Approaches Note B

LOCATION 4
1" = 1'-0"

Off Bridge Decks
Note B

** Drill and Bond #5 x 2'-9" Dowel in 8" Deep Hole @ 6

*** Drill and Bond #5 x 3'-4" Dowel in 6" Deep Hole @ 12

Adjust Dowels to Clear Existing Reinf

Denotes Existing Structure

Denotes New Construction

	BY	CHECKED
DESIGN	Mike Van De Pol	P. Norboe
DETAILS	Mike Van De Pol	P. Norboe
QUANTITIES	Mike Van De Pol	E. Franciliso

STATE OF CALIFORNIA
DEPARTMENT OF TRANSPORTATION

DIVISION OF ENGINEERING SERVICES
STRUCTURE DESIGN
DESIGN BRANCH 9

BRIDGE NO. 28-0140
MILE POST 5.8

BRIDGE DECK REPLACEMENT
SCOFIELD AVENUE UNDERCROSSING
BARRIER DETAILS No. 2

STRUCTURES DESIGN DETAIL SHEET (ENGLISH) (REV. 10/25/05)

ORIGINAL SCALE IN INCHES FOR REDUCED PLANS 0 1 2 3

UNIT: 3594
PROJECT NUMBER & PHASE: 04000004831
CONTRACT NO.: 04-1A3201

DISREGARD PRINTS BEARING EARLIER REVISION DATES 3-02-11

SHEET 67 OF 92

FILE => 28-0140-m-bardets02.dgn

USERNAME => s128843 DATE PLOTTED => 06-JUN-2012 TIME PLOTTED => 16:06

DIST	COUNTY	ROUTE	POST MILES TOTAL PROJECT	SHEET No	TOTAL SHEETS
04	CC	580	5.5/6.2	231	301

REGISTERED CIVIL ENGINEER 5-1-12 DATE

6-4-12
PLANS APPROVAL DATE

REGISTERED PROFESSIONAL ENGINEER Mike Van De Pol No. C35610 Exp. 9/30/2013 CIVIL STATE OF CALIFORNIA

The State of California or its officers or agents shall not be responsible for the accuracy or completeness of electronic copies of this plan sheet.

Note A
If Curb is Present, Remove Along With Barrier

Note B
Uncertainties Exist Regarding the Details of Certain Barrier Interface Locations. Details Shown are Approximate. The Contractor Shall Perform Field Inspections to Identify Actual Barrier Interface Details. Details Shown Herein May be Adjusted, as Approved by the Engineer

Note C
At Option of Contractor Barrier Trench May be Removed Along With Barrier Section, as Approved by the Engineer. If Trench is Removed, New Barrier Vertical Reinf Shall Extend to Bottom of New Trench

Note X
Location and Alignment of Inside Face of Existing Barrier = Location and Alignment of Inside Face of New Barrier

Note Y
Location and Alignment of Existing Edge of Deck = Location and Alignment of New Edge of Deck

NOTES

For Other Details, see "TYPICAL SECTION", "ABUTMENT DETAILS, STRUCTURE APPROACH DETAILS Sheets

For Stage Construction Details, see "STAGE CONSTRUCTION DETAILS" Sheets

For Other Details, see "REMOVAL DETAILS" Sheets

Light Standards and Conduits Not Shown. For Removal and Replacement, see "ROAD PLANS"

For Added Details, see "ROAD PLANS"

All Reinforcement Not Shown

For Scupper Details see "DRAINAGE DETAILS" Sheets

Barrier Joint Locations and Widths Match Deck Joint Locations and Widths

For Location of SECTION X-X and SECTION Y-Y, see "BARRIER DETAILS No. 1" Sheet

Barrier Face Architectural Texture Not Shown

All Barrier Reinforcement shall be Epoxy Coated.

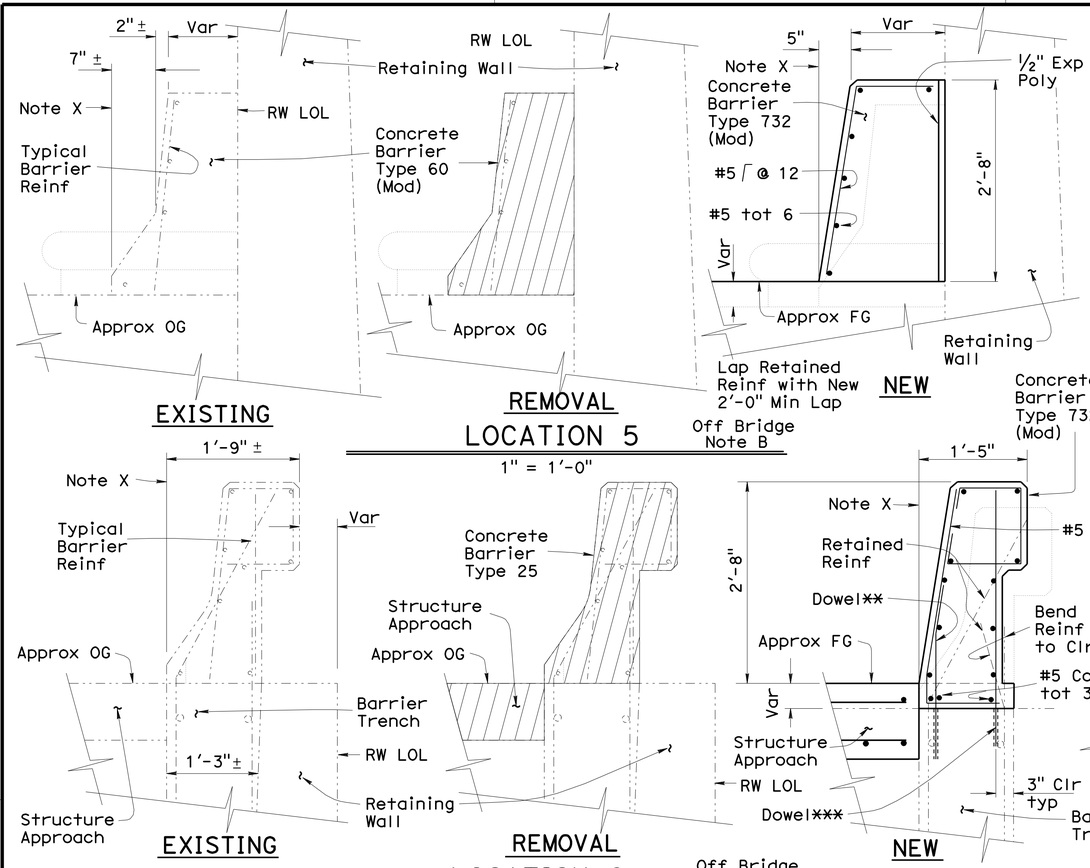

EXISTING — REMOVAL — NEW

LOCATION 5

1" = 1'-0"

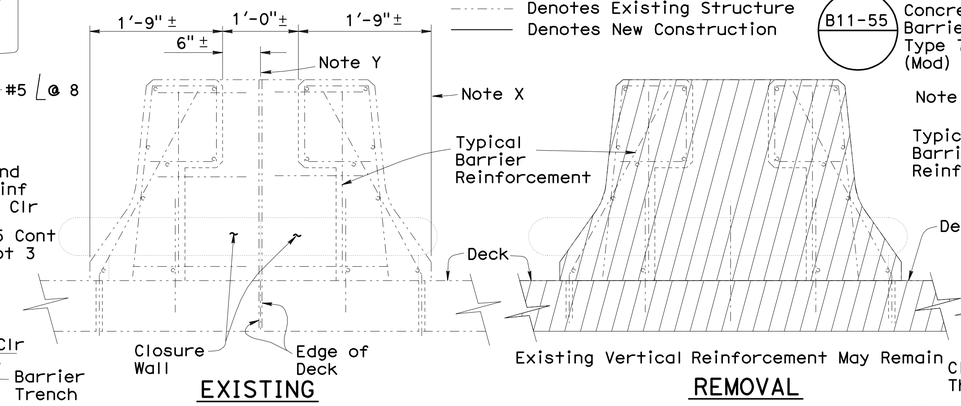

EXISTING — REMOVAL

SECTION X-X

1" = 1'-0"

Denotes Existing Structure
Denotes New Construction

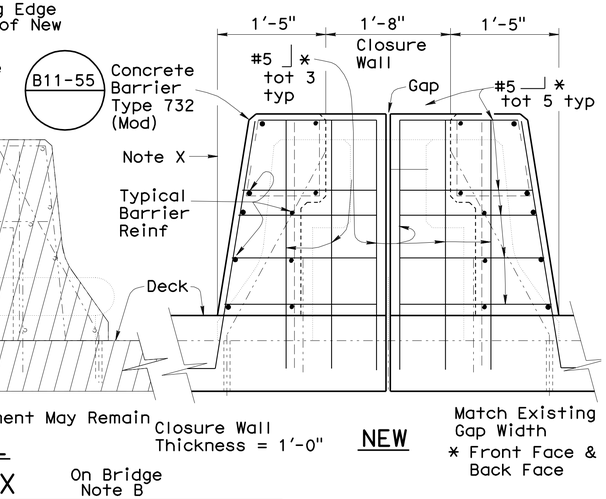

NEW

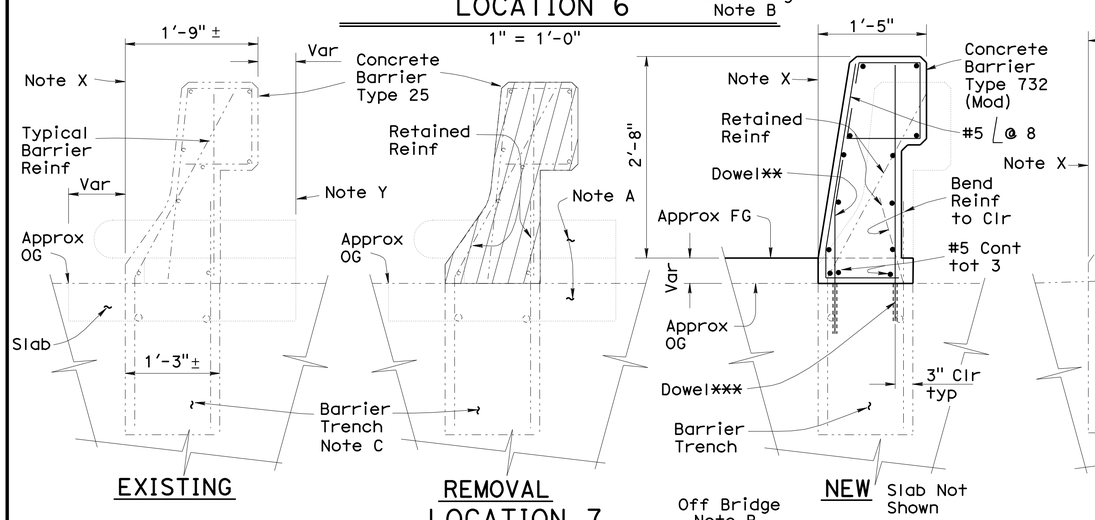

EXISTING — REMOVAL — NEW

LOCATION 6

1" = 1'-0"

Off Bridge Note B

Slab Not Shown

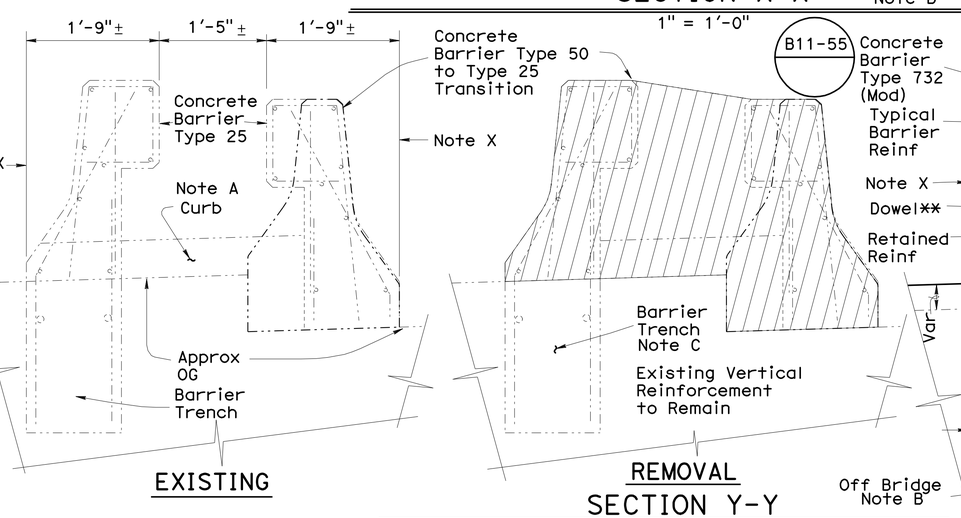

EXISTING — REMOVAL

SECTION Y-Y

1" = 1'-0"

On Bridge Note B

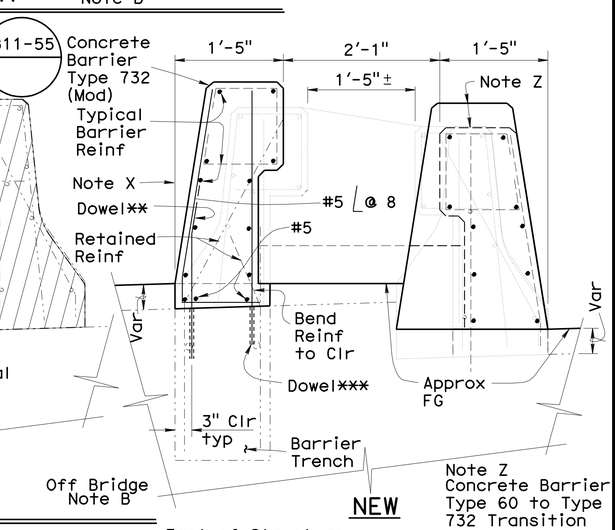

NEW

Off Bridge Note B

East of Structure Approach Limit

NOTE:
THE CONTRACTOR SHALL VERIFY ALL CONTROLLING FIELD DIMENSIONS BEFORE ORDERING OR FABRICATING ANY MATERIAL.

** Drill and Bond #5 x 2'-9" Dowel in 8" Deep Hole @ 6

*** Drill and Bond #5 x 3'-4" Dowel in 6" Deep Hole @ 12 Adjust to Clear Existing Reinf

Denotes Limits of Removal of Existing Concrete Barrier, Conduit. Portion of Existing Reinforcement to be Retained

The Barrier Locations Shown Attempt to Reperesent All the Barrier Interface Configurations on and Off Structure to the Ends of the Structure Approaches. Details may be Adjusted as Approved by the Engineer

	BY	CHECKED
DESIGN	Mike Van De Pol	P. Norboe
DETAILS	Mike Van De Pol	P. Norboe
QUANTITIES	Mike Van De Pol	E. Franciliso

STATE OF CALIFORNIA
DEPARTMENT OF TRANSPORTATION

DIVISION OF ENGINEERING SERVICES
STRUCTURE DESIGN
DESIGN BRANCH 9

BRIDGE NO. 28-0140
MILE POST 5.8

BRIDGE DECK REPLACEMENT
SCOFIELD AVENUE UNDERCROSSING
BARRIER DETAILS No. 3

STRUCTURES DESIGN DETAIL SHEET (ENGLISH) (REV. 10/25/05)

ORIGINAL SCALE IN INCHES FOR REDUCED PLANS 0 1 2 3

UNIT: 3594
PROJECT NUMBER & PHASE: 04000004831
CONTRACT NO.: 04-1A3201

DISREGARD PRINTS BEARING EARLIER REVISION DATES 3-02-11

SHEET 68 OF 92

FILE => 28-0140-m-bardets03.dgn

USERNAME => s109858 DATE PLOTTED => 07-JUN-2012 TIME PLOTTED => 07:02

DIST	COUNTY	ROUTE	POST MILES TOTAL PROJECT	SHEET No	TOTAL SHEETS
04	CC	580	5.5/6.2	232	301

REGISTERED CIVIL ENGINEER 5-1-12 DATE

6-4-12
PLANS APPROVAL DATE

The State of California or its officers or agents shall not be responsible for the accuracy or completeness of electronic copies of this plan sheet.

REGISTERED PROFESSIONAL ENGINEER Mike Van De Pol No. C35610 Exp. 9/30/2013 CIVIL STATE OF CALIFORNIA

NOTES:
THE CONTRACTOR SHALL VERIFY ALL CONTROLLING FIELD DIMENSIONS BEFORE ORDERING OR FABRICATING ANY MATERIAL.

ALL BARRIER REINFORCEMENT SHALL BE EPOXY COATED.

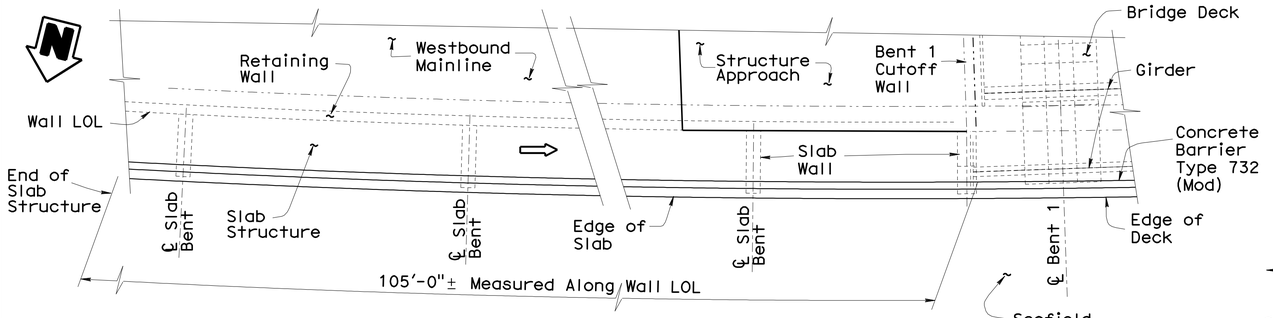

PART PLAN

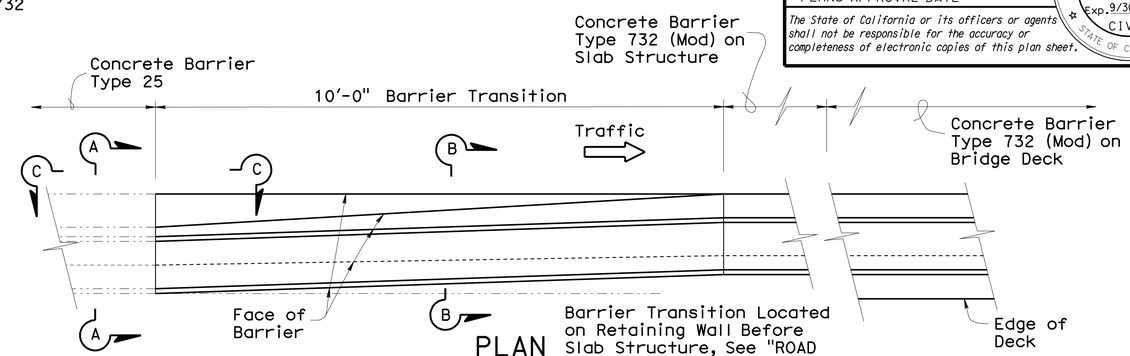

PLAN

Barrier Transition Located on Retaining Wall Before Slab Structure, See "ROAD PLANS"

Location and Employment of Barrier Transition, as Approved by the Engineer

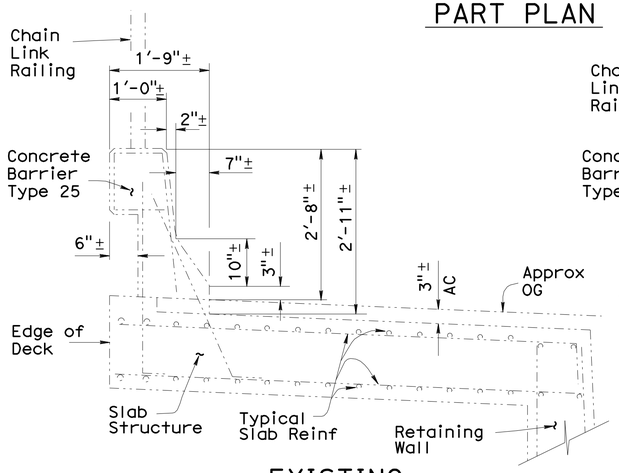

EXISTING

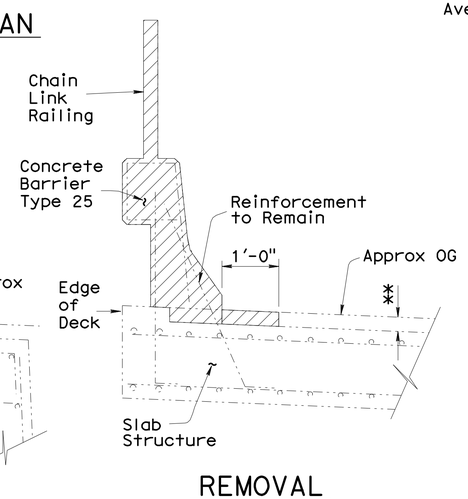

REMOVAL

Denotes Limits of Removal of Existing Barrier, Railing and AC Overlay

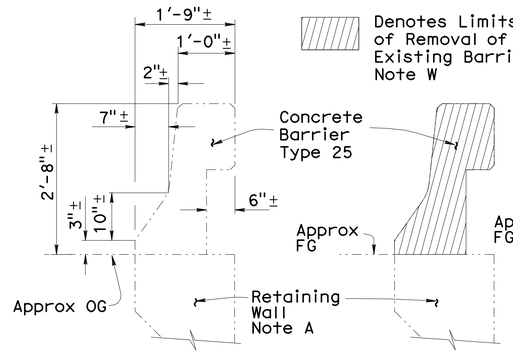

SECTION A-A

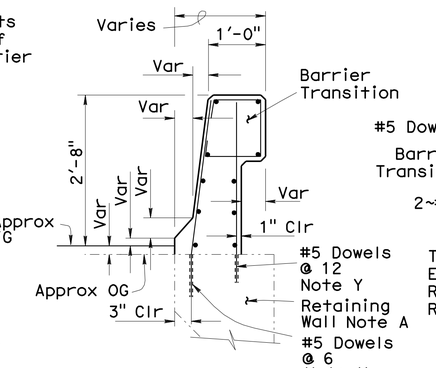

REMOVAL

SECTION B-B
Note W

Retained Existing Reinf Not Shown

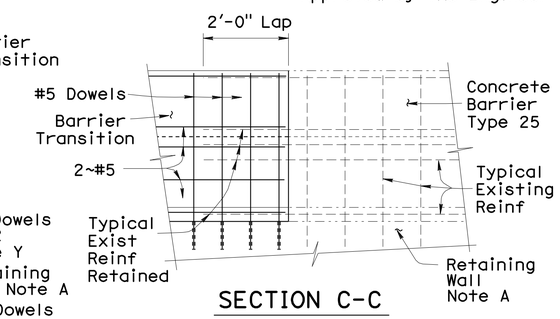

SECTION C-C

Note A
Retaining Wall Located at Beginning of Slab Structure. Barrier Transition May be Located on Retaining Wall or Slab Structure. See "ROAD PLANS"
Architectural Texture Not Shown

BARRIER TRANSITION DETAILS

¾" = 1'-0"

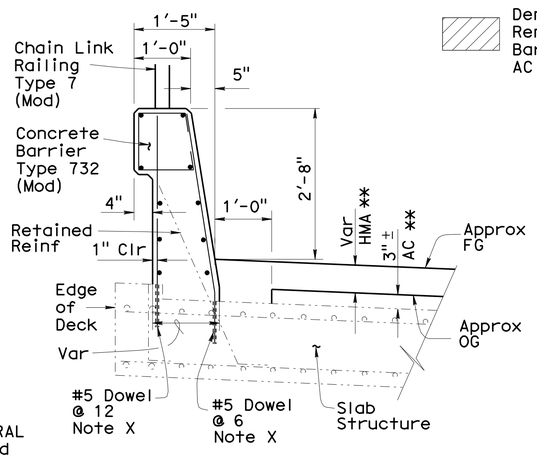

NEW

SECTIONS

Looking Easterly

¾" = 1'-0"

** Existing AC May be Removed and a Thicker Concrete Overlay May be Substituted, as Approved by the Engineer
Concrete Overlay Reinf: #4 @ 12 Each Way
Epoxy Coated

For Location of Slab Structure, See "GENERAL PLAN No. 1" Sheet and "ABUTMENT LAYOUT" Sheet
Architectural Texture Not Shown
Conduits Not Shown

Note W
Retain Existing Vertical Reinforcement Extending into Barrier From Retaining Wall

Note X
Drill and Bond Dowels in 9" Deep Hole. Adjust to Clear Existing Reinforcement

Note Y
Drill and Bond Dowels in 6" Deep Hole. Adjust to Clear Existing Reinforcement

BARRIER DETAILS ON SLAB STRUCTURE

Westbound Mainline Structure

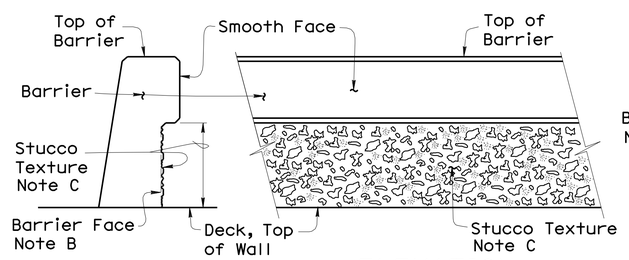

SECTION

ELEVATION

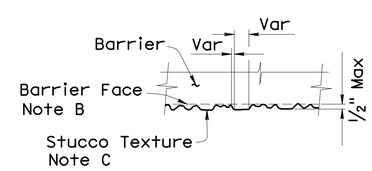

DETAIL

Note B
Face From Which Clearance to Reinforcement is Measured

Note C
Limits of Stucco Texture = Limits of Prepare and Paint

For Limits of Architectural Texture, See "BARRIER LAYOUT" Sheet

For Additional Details, see "TYPICAL SECTION" Sheet, "ABUTMENT DETAILS" and "BARRIER DETAILS No. 1" Sheets

BARRIER FACE ARCHITECTURALTEXTURE DETAILS

No Scale

For Other Details, see STANDARD PLAN B11-55

Denotes Existing Structure
Denotes New Construction

	BY	CHECKED
DESIGN	Mike Van De Pol	P. Norboe
DETAILS	Mike Van De Pol	P. Norboe
QUANTITIES	Mike Van De Pol	E. Franciliso

STATE OF CALIFORNIA
DEPARTMENT OF TRANSPORTATION

DIVISION OF ENGINEERING SERVICES
STRUCTURE DESIGN
DESIGN BRANCH 9

BRIDGE NO. 28-0140
MILE POST 5.8

BRIDGE DECK REPLACEMENT
SCOFIELD AVENUE UNDERCROSSING
BARRIER DETAILS No. 4

STRUCTURES DESIGN DETAIL SHEET (ENGLISH) (REV. 10/25/05)

ORIGINAL SCALE IN INCHES FOR REDUCED PLANS 0 1 2 3

UNIT: 3594
PROJECT NUMBER & PHASE: 04000004831
CONTRACT NO.: 04-1A3201

DISREGARD PRINTS BEARING EARLIER REVISION DATES 3-02-11

SHEET 69 OF 92

FILE => 28-0140-m-bardets04.dgn

USERNAME => s109858 DATE PLOTTED => 07-JUN-2012 TIME PLOTTED => 07:03

DIST	COUNTY	ROUTE	POST MILES TOTAL PROJECT	SHEET No	TOTAL SHEETS
04	CC	580	5.5/6.2	233	301

REGISTERED CIVIL ENGINEER 5-1-12 DATE

6-4-12
PLANS APPROVAL DATE

The State of California or its officers or agents shall not be responsible for the accuracy or completeness of electronic copies of this plan sheet.

REGISTERED PROFESSIONAL ENGINEER Mike Van De Pol No. C35610 Exp. 9/30/2013 CIVIL STATE OF CALIFORNIA

Scuppers Located Within Right Side Barrier Typical. Type B Deck Drains Located Within Left Side Barrier For Westbound Mainline Structure Only.

All Barrier Reinforcement shall be Epoxy Coated.

For Other Details, see "TYPICAL SECTION" Sheets and "BARRIER DETAILS" Sheets

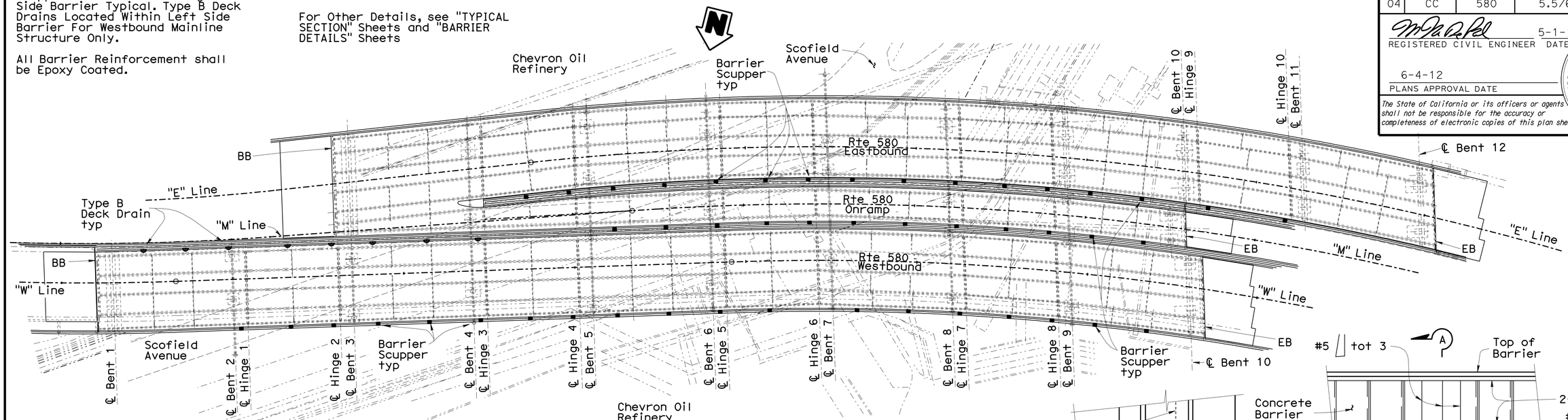

PLAN

1" = 30'

■ Denotes Location of Barrier Scupper

Denotes Location of Type B Deck Drain

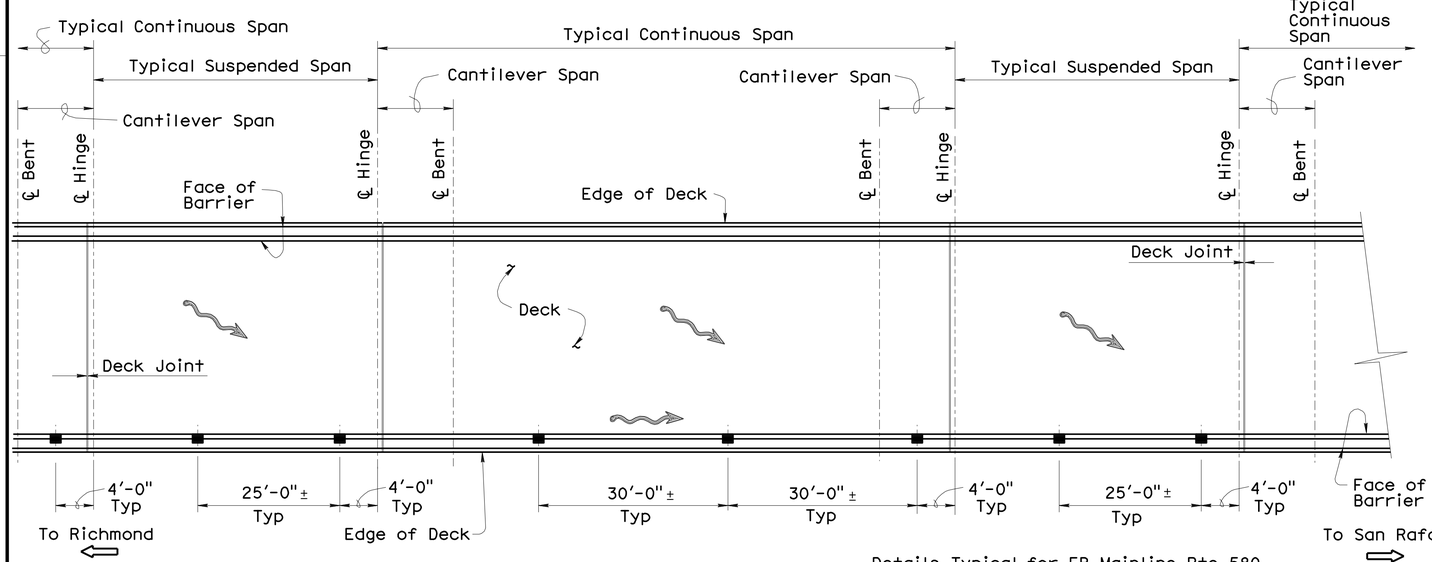

SCUPPER LAYOUT DETAIL

No Scale

Details Typical for EB Mainline Rte 580, EB Onramp and WB Mainline Rte 580. Scupper Spacing Shown. Type B Deck Drain Locations and Spacing Similar

Denotes Approximate Water Flow Direction

■ Denotes Location of Barrier Scupper

Skew Not Shown

For Deck Drain Type B Details, see B7-5

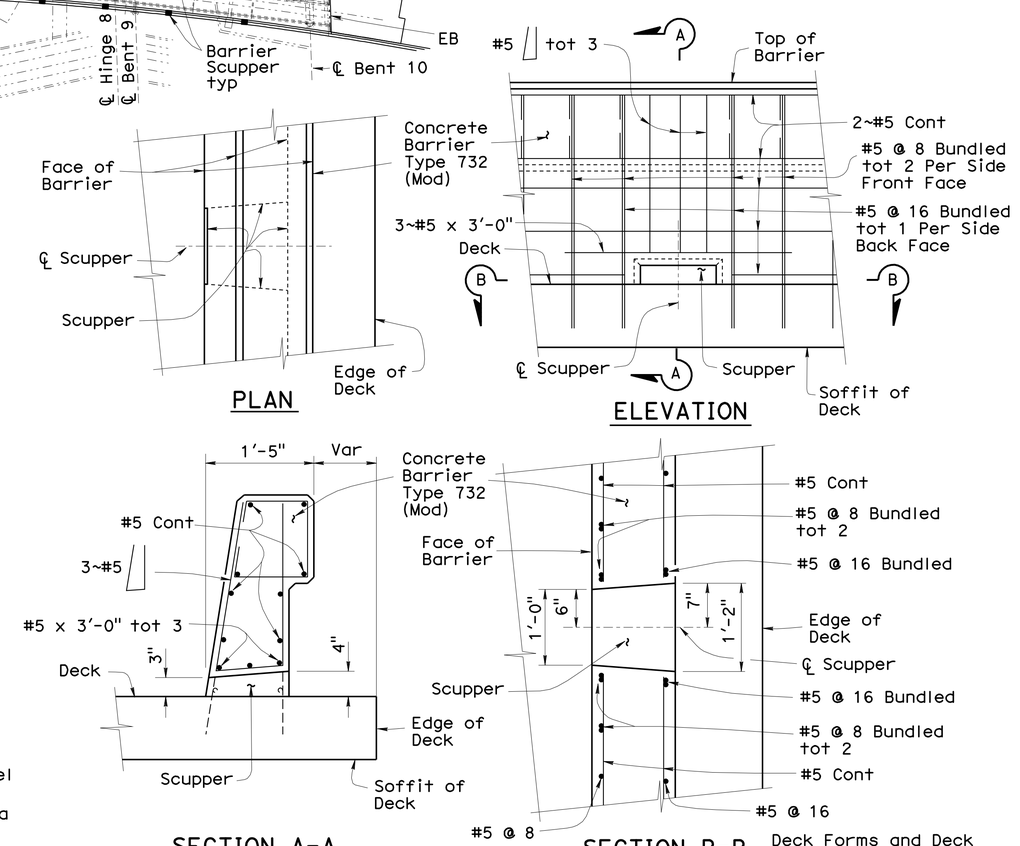

BARRIER SCUPPER DETAILS

1" = 1'-0"

Deck Forms and Deck Reinforcement Not Shown

For Scupper Spacing, see Bridge Plan View

Barrier Architectural Texture Not Shown

Denotes Existing Structure

Denotes New Construction

Conduits Not Shown

NOTE:
THE CONTRACTOR SHALL VERIFY ALL CONTROLLING FIELD DIMENSIONS BEFORE ORDERING OR FABRICATING ANY MATERIAL.

	BY	CHECKED
DESIGN	Mike Van De Pol	P. Norboe
DETAILS	Mike Van De Pol	P. Norboe
QUANTITIES	Mike Van De Pol	E. Franciliso

STATE OF CALIFORNIA
DEPARTMENT OF TRANSPORTATION

DIVISION OF ENGINEERING SERVICES
STRUCTURE DESIGN
DESIGN BRANCH 9

BRIDGE NO. 28-0140
MILE POST 5.8

BRIDGE DECK REPLACEMENT
SCOFIELD AVENUE UNDERCROSSING
DRAINAGE DETAILS

STRUCTURES DESIGN DETAIL SHEET (ENGLISH) (REV. 10/25/05)

ORIGINAL SCALE IN INCHES FOR REDUCED PLANS 0 1 2 3

UNIT: 3594
PROJECT NUMBER & PHASE: 04000004831
CONTRACT NO.: 04-1A3201

DISREGARD PRINTS BEARING EARLIER REVISION DATES

REVISION DATES 3-02-11

SHEET 70 OF 92

FILE => 28-0140-n-drain.dgn

USERNAME => s103858 DATE PLOTTED => 07-JUN-2012 TIME PLOTTED => 07:03

DIST	COUNTY	ROUTE	POST MILES TOTAL PROJECT	SHEET No	TOTAL SHEETS
04	CC	580	5.5/6.2	234	301

REGISTERED CIVIL ENGINEER 5-1-12 DATE

6-4-12
PLANS APPROVAL DATE

REGISTERED PROFESSIONAL ENGINEER Mike Van De Pol No. C35610 Exp. 9/31/2013 CIVIL STATE OF CALIFORNIA

The State of California or its officers or agents shall not be responsible for the accuracy or completeness of electronic copies of this plan sheet.

Notes

Maintain Existing Horizontal and Vertical Positioning of Pipe During Deck Removal and Replacement Operations

Existing Pipe Shall be Supported by the Bridge Mounted Protection System During Deck Removal

For Bent Location, see "GENERAL PLAN" Sheets

For Additional Details, see "TYPICAL SECTION" Sheets and "ROAD PLANS"

All Existing Structural Steel Components Not Shown

Girder and Cap Beam Stud Connectors not Shown

Existing and New Deck and Barrier Reinforcement not Shown

Deck Removal and Protection System Not Shown

Chain Link Railing, Barrier Architectural Texture and Conduits not Shown

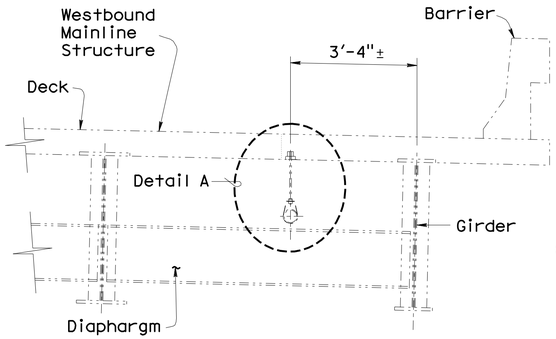

PART ELEVATION TYPICAL SPAN
½" = 1'-0"

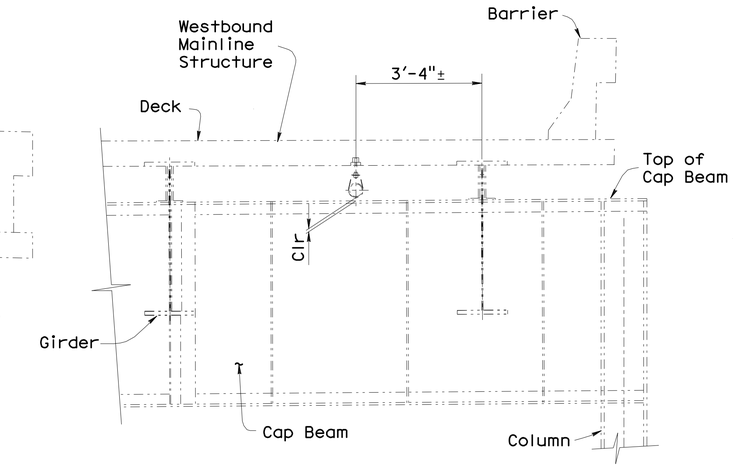

PART ELEVATION AT BENT 4
½" = 1'-0"

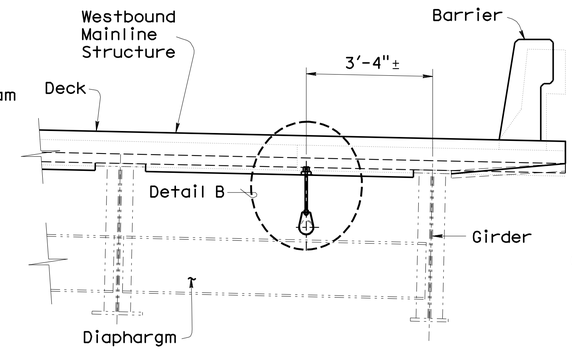

PART ELEVATION TYPICAL SPAN
½" = 1'-0"

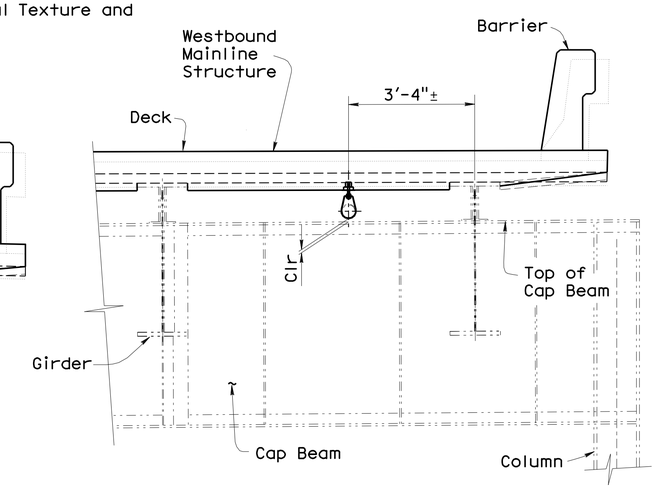

PART ELEVATION AT BENT 4
½" = 1'-0"

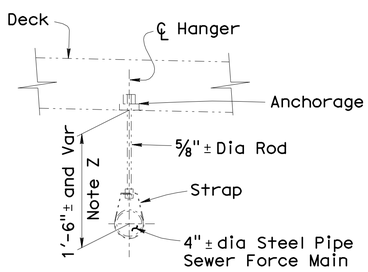

DETAIL A
1½" = 1'-0"

Note Z
At Bent 4, Pipe Position Adjusted to Clear Top of Cap Beam

EXISTING

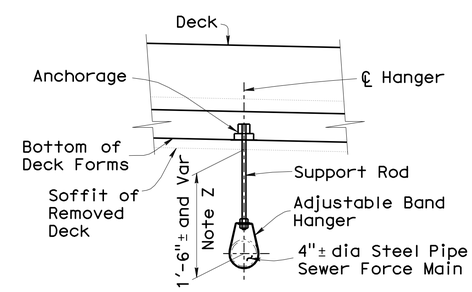

DETAIL B
1½" = 1'-0"

Max Hanger Spacing = 8'-0"

Min Support Rod Dia = ⅝"

Hangers Placed 1'-0" Max Clear From Faces of Cap Beams and Cutoff Walls Typ

Hangers Placed 1'-0" Max Clear From Angle Points in Force Main at Bent 4

Anchorage Located at Centerline of Deck Form Corrugation

NEW

NOTE:
THE CONTRACTOR SHALL VERIFY ALL CONTROLLING FIELD DIMENSIONS BEFORE ORDERING OR FABRICATING ANY MATERIAL.

Denotes Existing Structure
Denotes New Construction

	BY	CHECKED
DESIGN	Mike Van De Pol	P. Norboe
DETAILS	Mike Van De Pol	P. Norboe
QUANTITIES	Mike Van De Pol	E. Franciliso

STATE OF CALIFORNIA
DEPARTMENT OF TRANSPORTATION

DIVISION OF ENGINEERING SERVICES
STRUCTURE DESIGN
DESIGN BRANCH 9

BRIDGE NO. 28-0140
MILE POST 5.8

BRIDGE DECK REPLACEMENT
SCOFIELD AVENUE UNDERCROSSING
SEWER FORCE MAIN DETAILS

STRUCTURES DESIGN DETAIL SHEET (ENGLISH) (REV. 10/25/05)

ORIGINAL SCALE IN INCHES FOR REDUCED PLANS 0 1 2 3

UNIT: 3594
PROJECT NUMBER & PHASE: 04000004831
CONTRACT NO.: 04-1A3201

DISREGARD PRINTS BEARING EARLIER REVISION DATES 3-02-11

REVISION DATES | SHEET 71 | OF 92

FILE => 28-0140-o-pipedets.dgn

USERNAME => s109858 DATE PLOTTED => 07-JUN-2012 TIME PLOTTED => 07:03

DIST	COUNTY	ROUTE	POST MILES TOTAL PROJECT	SHEET No	TOTAL SHEETS
04	CC	580	5.5/6.2	235	301

REGISTERED CIVIL ENGINEER 5-1-12 DATE

6-4-12
PLANS APPROVAL DATE

REGISTERED PROFESSIONAL ENGINEER
Mike Van De Pol
No. C35610
Exp. 9/31/2013
CIVIL
STATE OF CALIFORNIA

The State of California or its officers or agents shall not be responsible for the accuracy or completeness of electronic copies of this plan sheet.

Notes

Existing Fiber Optic Line and Conduit Shall be Supported by the Bridge Mounted Protection System During Deck Removal. For Attachment Details and Location, see "ROAD PLANS"

For Exact Location and Method of Attachment of the Fiber Optic Line and Conduit, see "ROAD PLANS"

Section Taken Near Bent 8. Other Locations Similar

For Additional Details, see "TYPICAL SECTION" Sheets and "PROTECTION SYSTEM DETAILS" Sheets

All Existing Structural Steel Components Not Shown

Existing and New Deck and Barrier Reinforcement not Shown

For Additional Details, see "REMOVAL DETAILS" Sheets

Chain Link Railing, Barrier Conduit, Barrier Face Architectural Texture and Conduits Not Shown

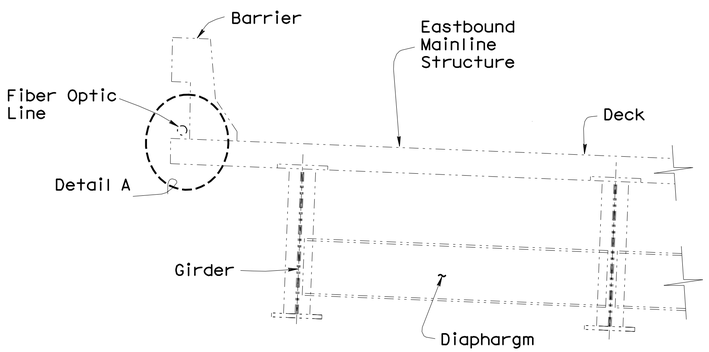

EXISTING

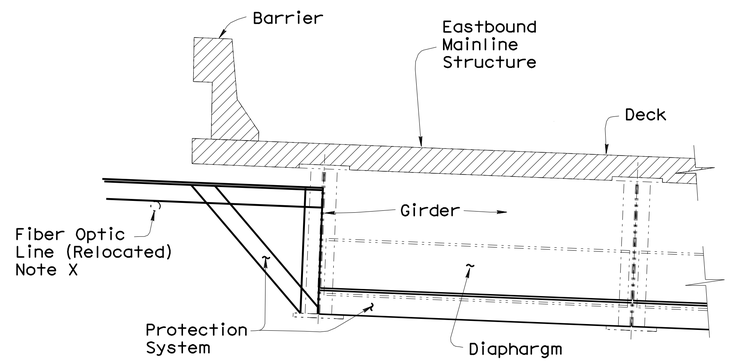

REMOVAL

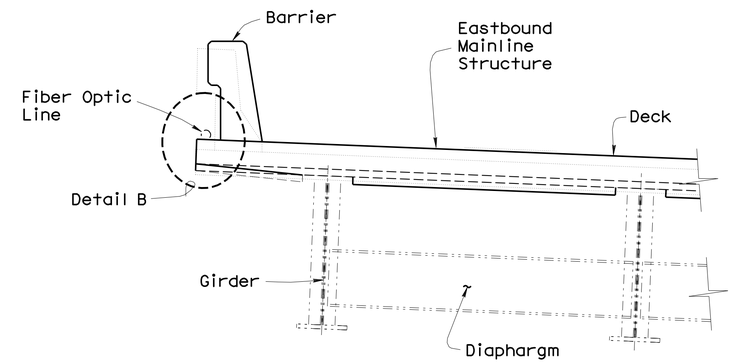

NEW

PART ELEVATIONS TYPICAL SPAN

1/2" = 1'-0"

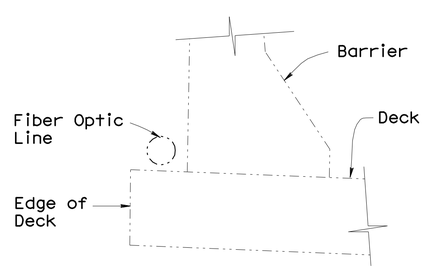

DETAIL A

1 1/2" = 1'-0"

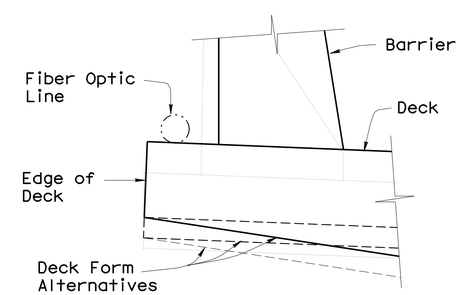

DETAIL B

1 1/2" = 1'-0"

Note X

For the Location, Alignment, Limits and Details of the Fiber Optics Line and Conduit, see "Road Plans". The Details Shown Herein are Intended to Reflect an Alternative Approach to Line Support. The Details Shown are Approximate. The Fiber Optics Line May be Temporarily Relocated Off the Structure on Poles During Construction, as Approved by the Engineer. See "Road Plans" for Details

Denotes Limits of Removal of Existing Deck and Barrier

Denotes Existing Structure

Denotes New Construction

NOTE:
THE CONTRACTOR SHALL VERIFY ALL CONTROLLING FIELD DIMENSIONS BEFORE ORDERING OR FABRICATING ANY MATERIAL.

	BY	CHECKED
DESIGN	Mike Van De Pol	P. Norboe
DETAILS	Mike Van De Pol	P. Norboe
QUANTITIES	Mike Van De Pol	E. Franciliso

STATE OF CALIFORNIA
DEPARTMENT OF TRANSPORTATION

DIVISION OF ENGINEERING SERVICES
STRUCTURE DESIGN
DESIGN BRANCH 9

BRIDGE NO. 28-0140
MILE POST 5.8

BRIDGE DECK REPLACEMENT
SCOFIELD AVENUE UNDERCROSSING
FIBER OPTIC LINE DETAILS

STRUCTURES DESIGN DETAIL SHEET (ENGLISH) (REV. 10/25/05)

ORIGINAL SCALE IN INCHES FOR REDUCED PLANS 0 1 2 3

UNIT: 3594
PROJECT NUMBER & PHASE: 04000004831
CONTRACT NO.: 04-1A3201

DISREGARD PRINTS BEARING EARLIER REVISION DATES

REVISION DATES 3-02-11

SHEET 72 OF 92

FILE => 28-0140-o-qdets.dgn

USERNAME => s103858 DATE PLOTTED => 07-JUN-2012 TIME PLOTTED => 07:03

DIST	COUNTY	ROUTE	POST MILES TOTAL PROJECT	SHEET No	TOTAL SHEETS
04	CC	580	5.5/6.2	236	301

REGISTERED CIVIL ENGINEER 5-1-12 DATE

6-4-12
PLANS APPROVAL DATE

The State of California or its officers or agents shall not be responsible for the accuracy or completeness of electronic copies of this plan sheet.

REGISTERED PROFESSIONAL ENGINEER Mike Van De Pol No. C35610 Exp. 9/30/2013 CIVIL STATE OF CALIFORNIA

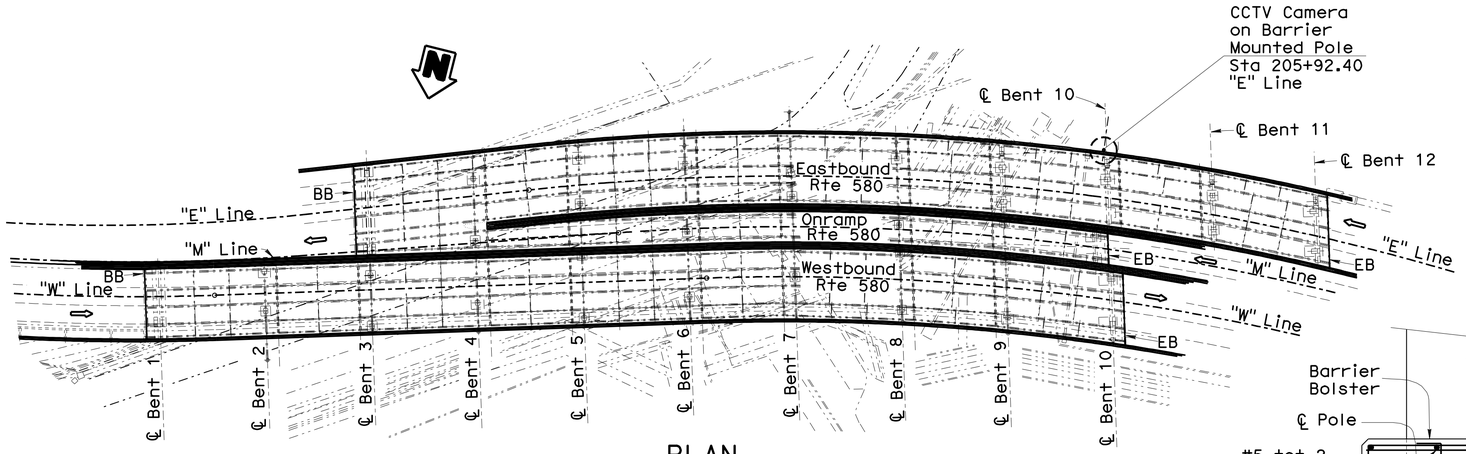

PLAN
1" = 50'

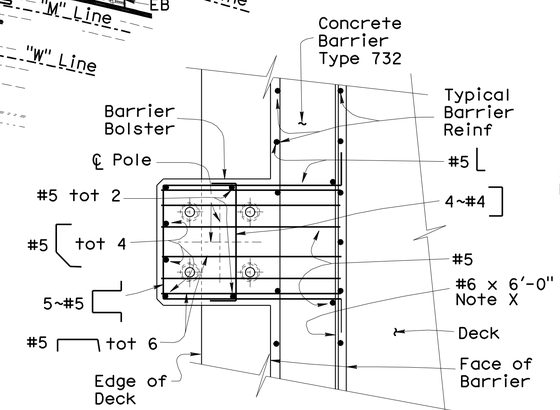

PLAN

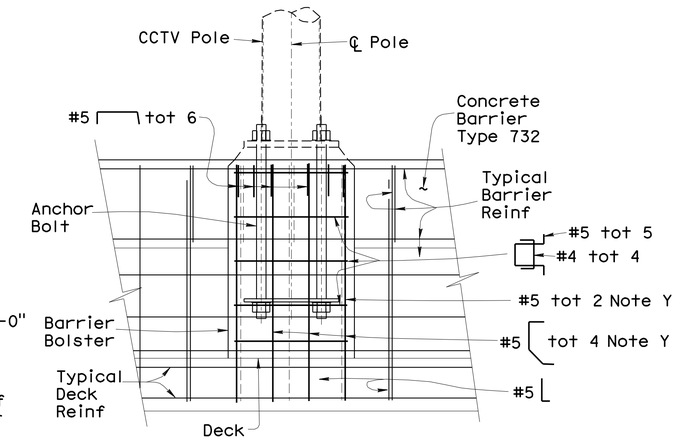

ELEVATION

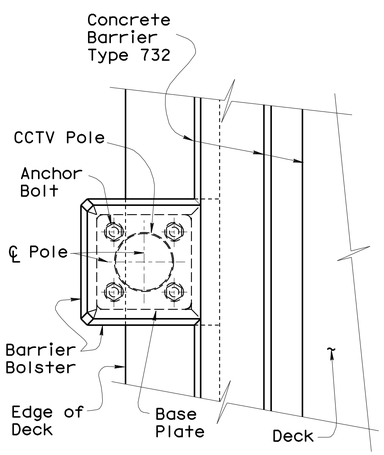

PLAN

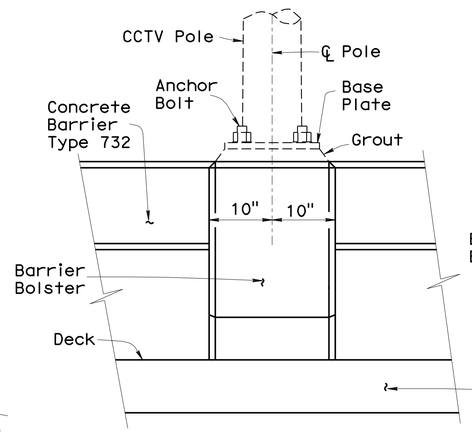

ELEVATION

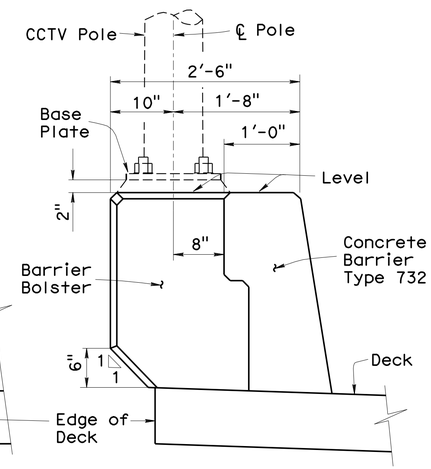

ELEVATION

LAYOUT
1" = 1'-0"

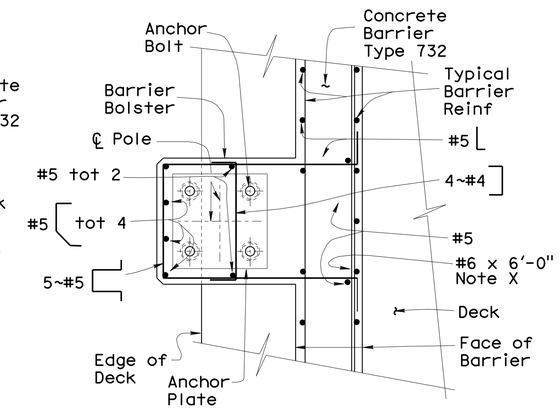

SECTION

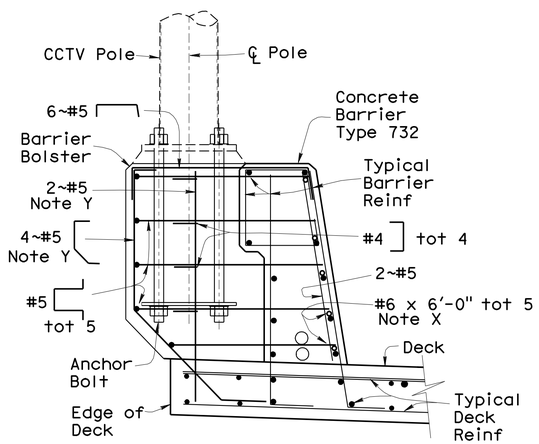

ELEVATION

Anchor Bolt
$1\frac{1}{4}$" Dia x 2'-6"
BC = 1'-$1\frac{1}{2}$"

REINFORCEMENT
1" = 1'-0"

Note X
Center Bar About
℄ Bolster

Note Y
Place Reinf
With Deck

NOTE:
THE CONTRACTOR SHALL VERIFY ALL CONTROLLING FIELD DIMENSIONS BEFORE ORDERING OR FABRICATING ANY MATERIAL.

For Additional Details, see "GENERAL PLAN No. 1", and "TYPICAL SECTION No. 2" Sheets

For CCTV Pole and Anchorage Details Not Shown, see STANDARD PLAN ES-16A and the "ROAD PLANS

For Concrete Barrier Details, see STANDARD PLAN B11-55

Conduits and Pull Box Not Shown

CCTV Pole Installed in Future Contract. Anchor Bolts, Conduits and Pull Boxes Installed in This Contract

Deck Forms Not Shown

CLOSED CIRCUIT TELEVISION SYSTEM DETAILS

Eastbound 580 Mainline Structure

	BY	CHECKED
DESIGN	Mike Van De Pol	P. Norboe
DETAILS	Mike Van De Pol	P. Norboe
QUANTITIES	Mike Van De Pol	E. Franciliso

STATE OF CALIFORNIA
DEPARTMENT OF TRANSPORTATION

DIVISION OF ENGINEERING SERVICES
STRUCTURE DESIGN
DESIGN BRANCH 9

BRIDGE NO. 28-0140
MILE POST 5.8

BRIDGE DECK REPLACEMENT
SCOFIELD AVENUE UNDERCROSSING
FUTURE CCTV POLE ANCHORAGE DETAILS

STRUCTURES DESIGN DETAIL SHEET (ENGLISH) (REV. 10/25/05)

ORIGINAL SCALE IN INCHES FOR REDUCED PLANS 0 1 2 3

UNIT: 259
PROJECT NUMBER & PHASE: 04000004831
CONTRACT NO.: 04-1A3201

DISREGARD PRINTS BEARING EARLIER REVISION DATES 4-26-12

SHEET 73 OF 92

FILE => 28-0140-p-bcctv.dgn

USERNAME => s103858 DATE PLOTTED => 07-JUN-2012 TIME PLOTTED => 07:03

DIST	COUNTY	ROUTE	POST MILES TOTAL PROJECT	SHEET No	TOTAL SHEETS
04	CC	580	5.5/6.2	237	301

REGISTERED CIVIL ENGINEER 5-1-12 DATE

6-4-12
PLANS APPROVAL DATE

The State of California or its officers or agents shall not be responsible for the accuracy or completeness of electronic copies of this plan sheet.

REGISTERED PROFESSIONAL ENGINEER Mike Van De Pol No. C35610 Exp. 9/30/2013 CIVIL STATE OF CALIFORNIA

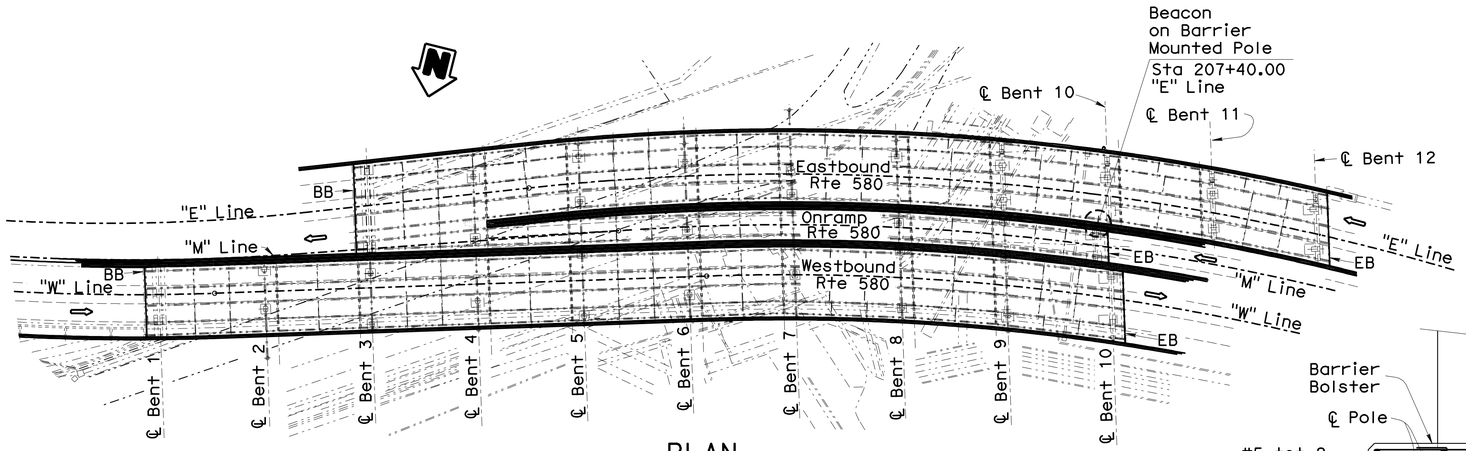

PLAN
1" = 50'

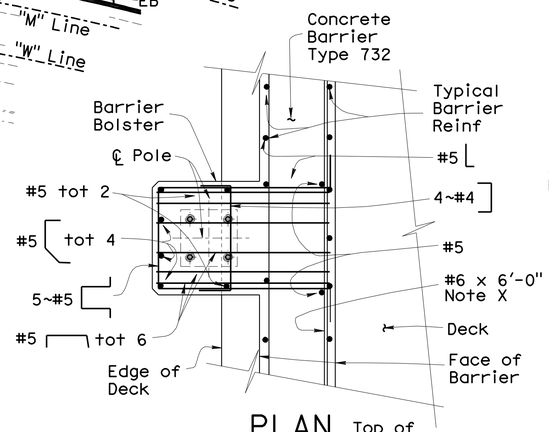

PLAN

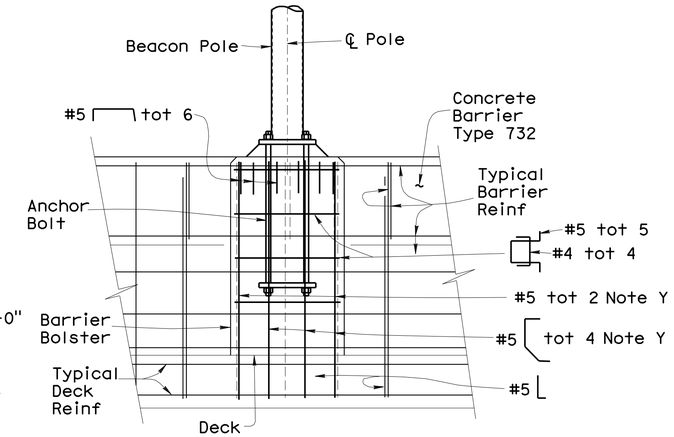

ELEVATION

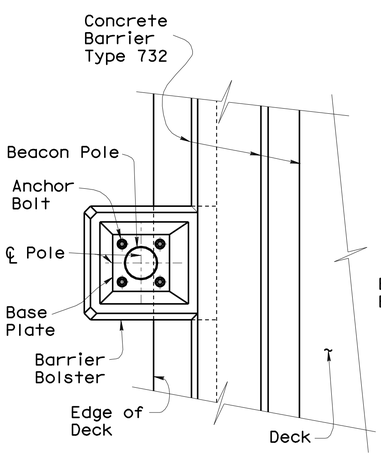

PLAN

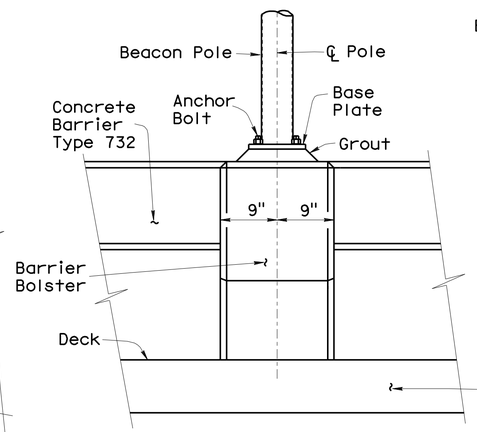

ELEVATION

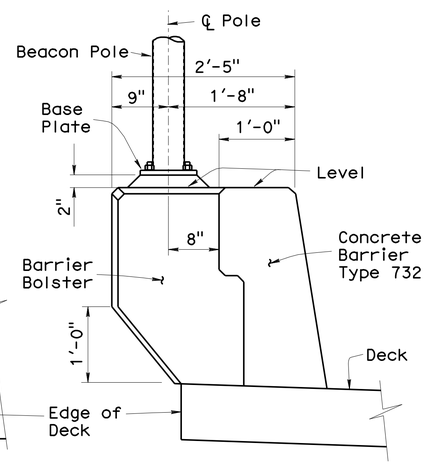

ELEVATION

LAYOUT

1" = 1'-0"

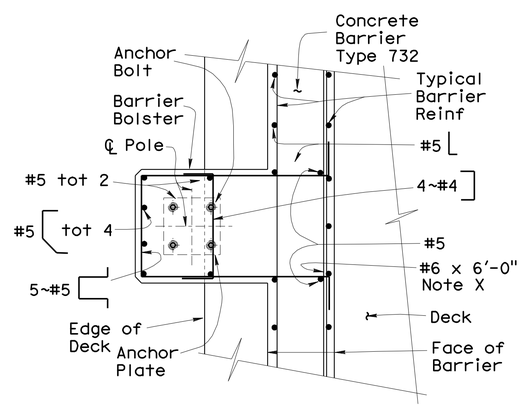

SECTION

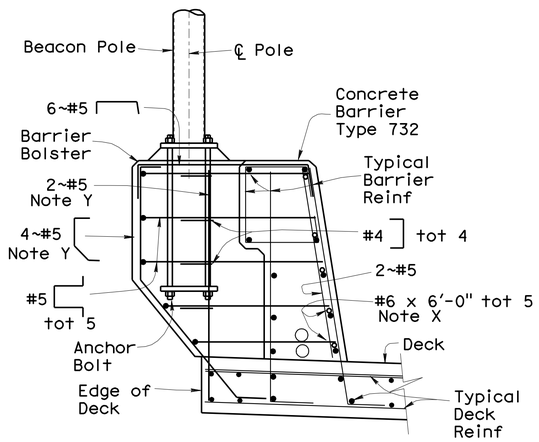

ELEVATION

REINFORCEMENT

1" = 1'-0"

Pole Type: 1-A
Bearing Plate: 9" x 9" x ¾"
Bolts: ¾" Dia x 2'-0"
BC = 8½"

For Additional Details, see "GENERAL PLAN No. 1", and "TYPICAL SECTION No. 2" Sheets

For Flashing Beacon Pole and Anchorage Details Not Shown, see STANDARD PLAN ES-7B, ES-7J, ES-7M and the "ROAD PLANS

For Concrete Barrier Details, see STANDARD PLAN B11-55

Conduits and Pull Box Not Shown

Note X
Center Bar About ℄ Bolster

Note Y
Place Reinf With Deck

NOTE:
THE CONTRACTOR SHALL VERIFY ALL CONTROLLING FIELD DIMENSIONS BEFORE ORDERING OR FABRICATING ANY MATERIAL.

FLASHING BEACON ANCHORAGE DETAILS

Eastbound 580 Mainline Structure

Deck Forms Not Shown

	BY	CHECKED
DESIGN	Mike Van De Pol	P. Norboe
DETAILS	Mike Van De Pol	P. Norboe
QUANTITIES	Mike Van De Pol	E. Franciliso

STATE OF CALIFORNIA
DEPARTMENT OF TRANSPORTATION

DIVISION OF ENGINEERING SERVICES
STRUCTURE DESIGN
DESIGN BRANCH 9

BRIDGE NO. 28-0140
MILE POST 5.8

BRIDGE DECK REPLACEMENT
SCOFIELD AVENUE UNDERCROSSING
FLASHING BEACON ANCHORAGE DETAILS

STRUCTURES DESIGN DETAIL SHEET (ENGLISH) (REV. 10/25/05)

ORIGINAL SCALE IN INCHES FOR REDUCED PLANS 0 1 2 3

UNIT: 259
PROJECT NUMBER & PHASE: 04000004831
CONTRACT NO.: 04-1A3201

DISREGARD PRINTS BEARING EARLIER REVISION DATES 4-26-12

SHEET 74 OF 92

FILE => 28-0140-p-beacon.dgn

USERNAME => s109858 DATE PLOTTED => 07-JUN-2012 TIME PLOTTED => 07:03

DIST	COUNTY	ROUTE	POST MILES TOTAL PROJECT	SHEET No	TOTAL SHEETS
04	CC	580	5.5/6.2	238	301

REGISTERED CIVIL ENGINEER 5-1-12 DATE

6-4-12
PLANS APPROVAL DATE

The State of California or its officers or agents shall not be responsible for the accuracy or completeness of electronic copies of this plan sheet.

REGISTERED PROFESSIONAL ENGINEER Mike Van De Pol No. C35610 Exp. 9/30/2013 CIVIL STATE OF CALIFORNIA

Note A
Denotes Approximate Location of New Gate in Existing Chain Link Fence, Type CL-6. Width 6'-0" with 12B130 State Lock

Note B
Denotes Approximate Location of Existing Chain Link Fence at OG. Fence to Remain

A85

NOTES

For Other Details, see "TYPICAL SECTION", and "BARRIER DETAILS" Sheets

For Stage Construction Details, see "STAGE CONSTRUCTION DETAILS" Sheets

Denotes Limits of Onramp Chain Link Railing
Denotes Existing Structure
Denotes New Construction

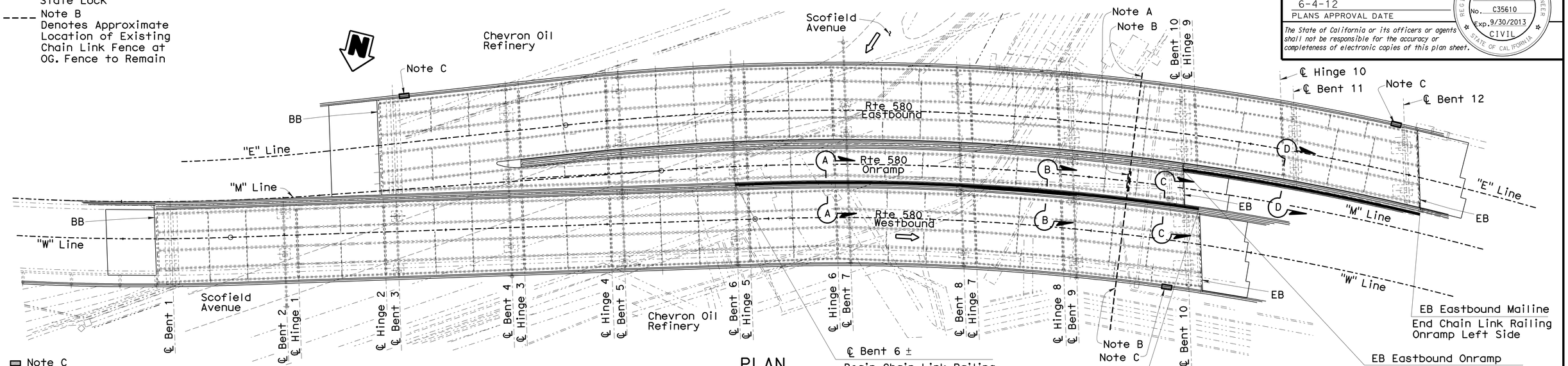

PLAN
1" = 30'

Note C
Denotes Approximate Location of New Gate in Chain Link Railing Type 7 (Mod)

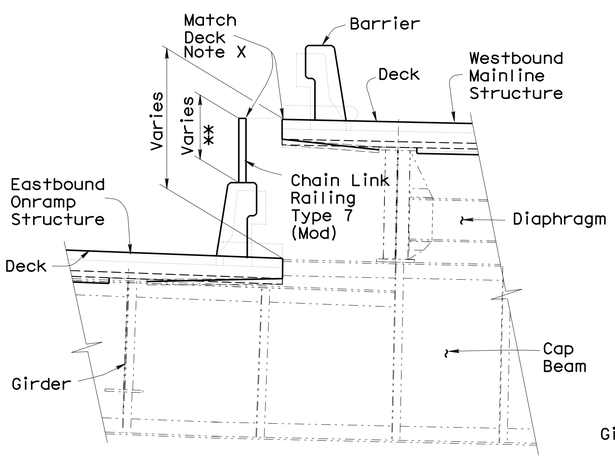

SECTION A-A
BENT 7
3/8" = 1'-0"

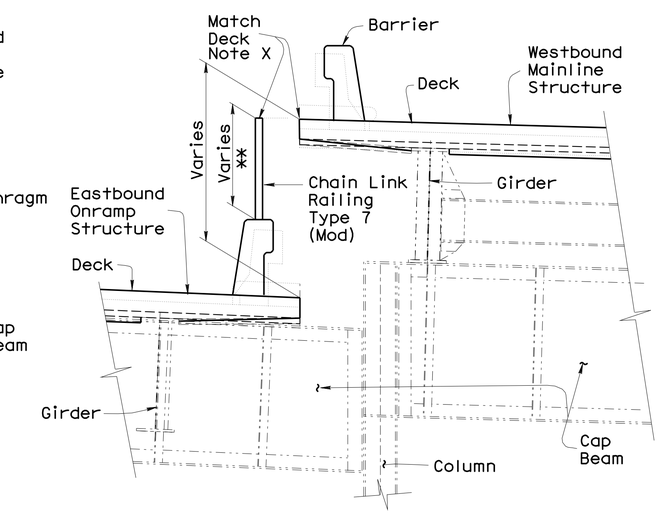

SECTION B-B
BENTS 8,9
3/8" = 1'-0"

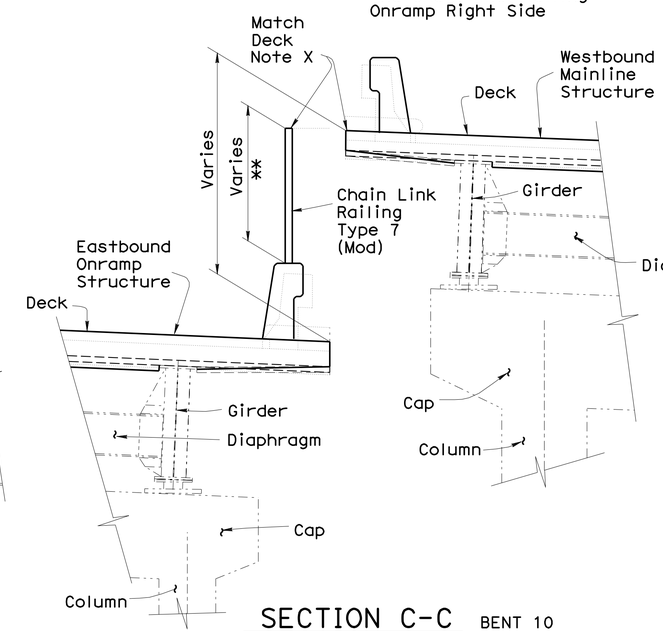

SECTION C-C
BENT 10
3/8" = 1'-0"

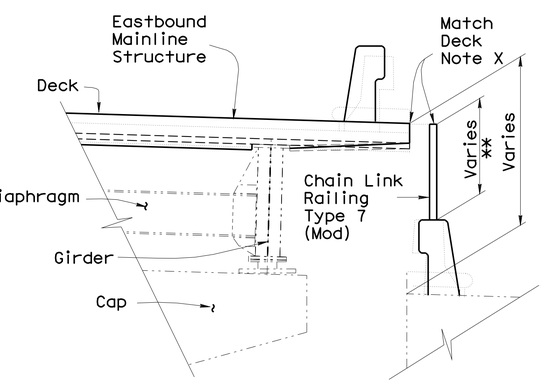

SECTION D-D
BENTS 11,12
3/8" = 1'-0"

NOTE:
THE CONTRACTOR SHALL VERIFY ALL CONTROLLING FIELD DIMENSIONS BEFORE ORDERING OR FABRICATING ANY MATERIAL.

Note X
Set Top of Chain Link Railing to Approximately Match Deck Elevation of Adjacent Structure

** Minimum 1'-3"± Maximum 4'-9"± EB Onramp Right Side
Minimum 1'-0"± Maximum 5'-4"± EB Onramp Left Side

For Chain Link Railing Details see, "CHAIN LINK RAILING TYPE 7 (Mod) No. 1" Sheet

For Chain Link Railing Gate Details see, "CHAIN LINK RAILING TYPE 7 (Mod) No. 2" Sheet

	BY	CHECKED
DESIGN	Mike Van De Pol	P. Norboe
DETAILS	Mike Van De Pol	P. Norboe
QUANTITIES	Mike Van De Pol	E. Franciliso

STATE OF CALIFORNIA
DEPARTMENT OF TRANSPORTATION

DIVISION OF ENGINEERING SERVICES
STRUCTURE DESIGN
DESIGN BRANCH 9

BRIDGE NO. 28-0140
MILE POST 5.8

BRIDGE DECK REPLACEMENT
SCOFIELD AVENUE UNDERCROSSING
ONRAMP CHAIN LINK RAILING DETAILS

STRUCTURES DESIGN DETAIL SHEET (ENGLISH) (REV. 10/25/05)

ORIGINAL SCALE IN INCHES FOR REDUCED PLANS 0 1 2 3

UNIT: 3594
PROJECT NUMBER & PHASE: 04000004831
CONTRACT NO.: 04-1A3201

DISREGARD PRINTS BEARING EARLIER REVISION DATES 3-02-11

REVISION DATES

SHEET 75 OF 92

FILE => 28-0140-p-chainlinklo.dgn

USERNAME => s12614 DATE PLOTTED => 08-AUG-2012 TIME PLOTTED => 07:13

DIST	COUNTY	ROUTE	POST MILES TOTAL PROJECT	SHEET No	TOTAL SHEETS
04	CC	580	5.5/6.2	239	301

REGISTERED CIVIL ENGINEER 5-1-12 DATE

6-4-12
PLANS APPROVAL DATE

The State of California or its officers or agents shall not be responsible for the accuracy or completeness of electronic copies of this plan sheet.

REGISTERED PROFESSIONAL ENGINEER Mike Van De Pol No. C35610 Exp. 9/30/2013 CIVIL STATE OF CALIFORNIA

NOTE:
THE CONTRACTOR SHALL VERIFY ALL CONTROLLING FIELD DIMENSIONS BEFORE ORDERING OR FABRICATING ANY MATERIAL.

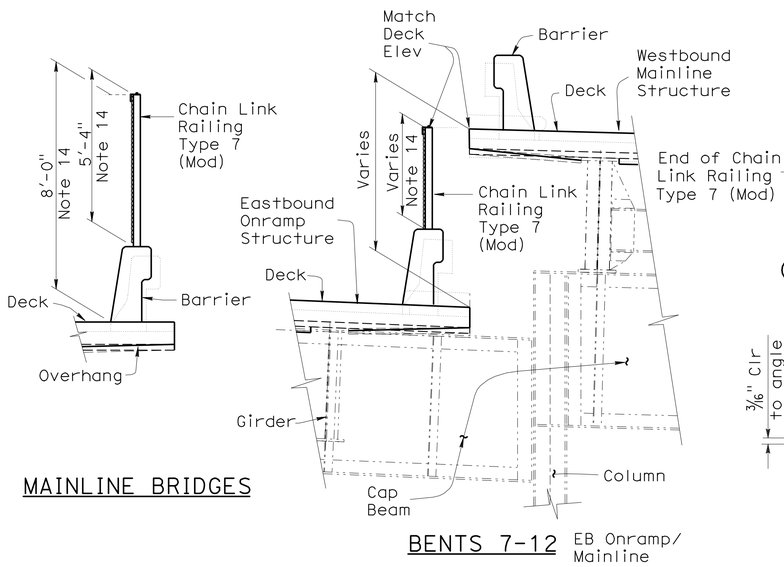

MAINLINE BRIDGES

BENTS 7-12 EB Onramp/ Mainline

TYPICAL SECTIONS
No Scale

All Locations Not Shown See Notes 8,12,13

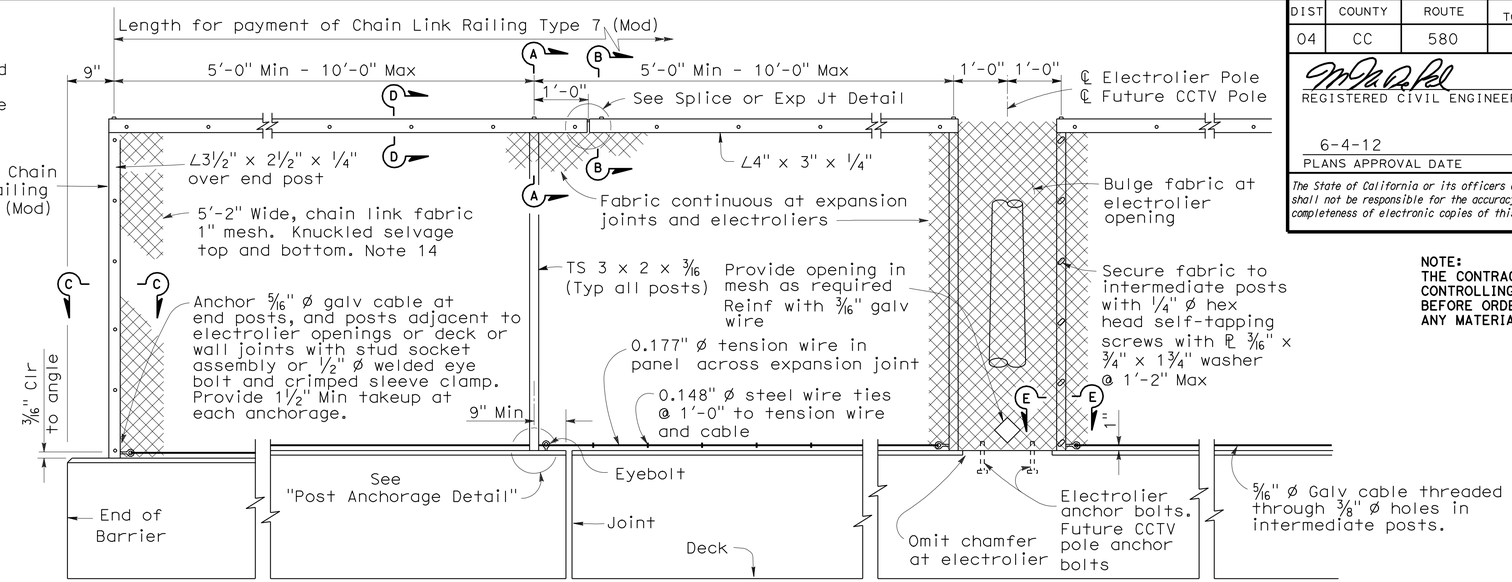

END POST DECK OR WALL JOINT ELECTROLIER

ELEVATION
No Scale

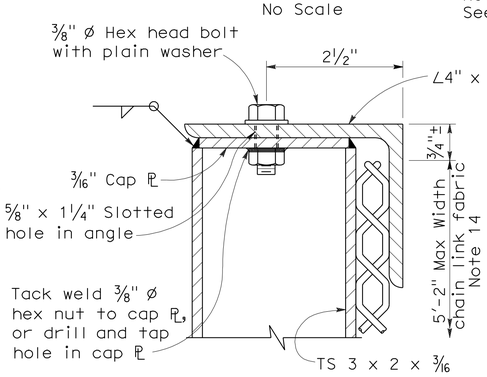

SECTION A-A
No Scale

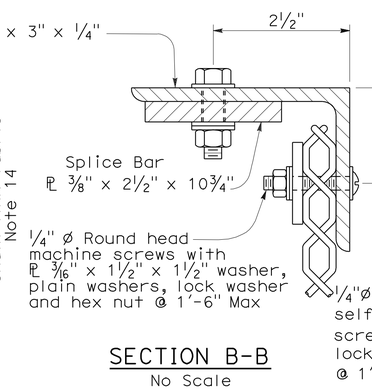

SECTION B-B
No Scale

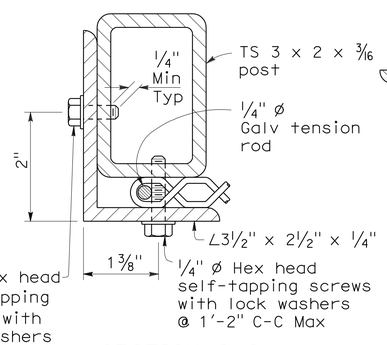

SECTION C-C
No Scale

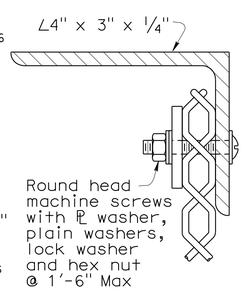

SECTION D-D
No Scale

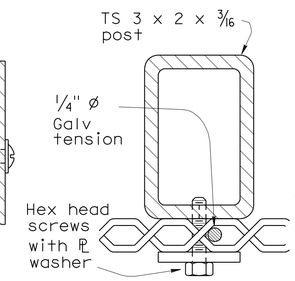

SECTION E-E
No Scale

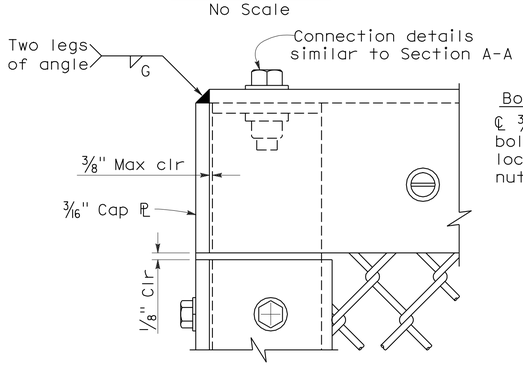

END POST ELEVATION
No Scale

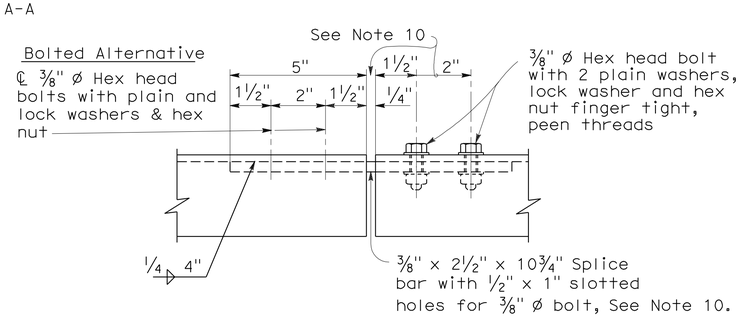

SPLICE OR EXPANSION JOINT DETAIL
No Scale

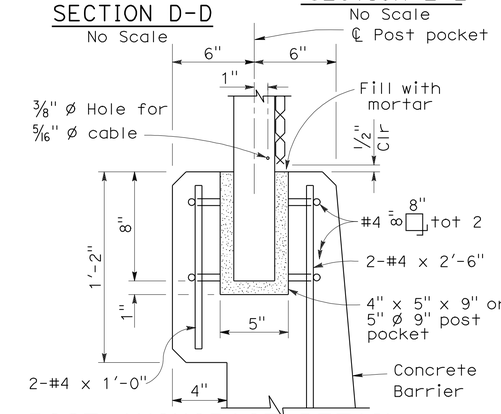

POST ANCHORAGE DETAIL
No Scale

NOTES:

1. Railing assembly except chain link fabric to be galvanized after fabrication.
2. Posts shall be vertical.
3. Railing shall conform to horizontal and vertical alignment. Horizontal Angle may be on 10'-0" chords if horizontal alignment radius is over 148'-0"
4. Horizontal angle shall be continuous over not less than two intermediate posts, except that a shorter length is permitted at expansion joints, electroliers and other rail discontinuities.
5. When rail is on slope, place fabric parallel to slope.
6. Alternative details may be submitted by Contractor for Engineer's approval.
7. For details and reinforcement not shown see Standrd Plan B11-55.
8. See Project Plans for limits of Chain Link Railing Type 7 (Mod).
9. Provide thimbles at all cable loops.
10. Expansion joint same dimension as expansion joint in deck/wall. Increase slotted hole length and splice bar length as needed.
11. Peen all exposed bolts.
12. For locations of chain link railing, see "TYPICAL SECTION" Sheets and "ONRAMP CHAIN LINK RAILING DETAILS" Sheet
13. For added details, see "BARRIER DETAILS" Sheets
14. Chain Link Railing height 5'-4" for Mainline Structures, variable height for EB Onramp structure. See "ONRAMP CHAIN LINK RAILING DETAILS" Sheet
15. For chain link railing gate details, see "CHAIN LINK RAILING TYPE 7 (MODIFIED) No. 2" sheet
16. For chain link railing gate locations, see "ONRAMP CHAIN LINK RAILING DETAILS" sheet
17. For electrolier pole locations, see "ROAD PLANS". For CCTV pole location and details, see "FUTURE CCTV POLE ANCHORAGE DETAILS" sheet

- - - - - - Denotes Existing Structure
———— Denotes New Construction

	BY	CHECKED
DESIGN	Mike Van De Pol	P. Norboe
DETAILS	Mike Van De Pol	P. Norboe
QUANTITIES	Mike Van De Pol	E. Franciliso

STATE OF CALIFORNIA
DEPARTMENT OF TRANSPORTATION

DIVISION OF ENGINEERING SERVICES
STRUCTURE DESIGN
DESIGN BRANCH 9

BRIDGE NO. 28-0140
MILE POST 5.8

BRIDGE DECK REPLACEMENT
SCOFIELD AVENUE UNDERCROSSING
CHAIN LINK RAILING TYPE 7 (MODIFIED) No. 1

STRUCTURES DESIGN DETAIL SHEET (ENGLISH) (REV. 10/25/05)

ORIGINAL SCALE IN INCHES FOR REDUCED PLANS 0 1 2 3

UNIT: 3594
PROJECT NUMBER & PHASE: 04000004831
CONTRACT NO.: 04-1A3201

DISREGARD PRINTS BEARING EARLIER REVISION DATES 3-02-11

SHEET 76 OF 92

FILE => 28-0140-p-chainlinkrail01.dgn

USERNAME => s109858 DATE PLOTTED => 07-JUN-2012 TIME PLOTTED => 07:04

DIST	COUNTY	ROUTE	POST MILES TOTAL PROJECT	SHEET No	TOTAL SHEETS
04	CC	580	5.5/6.2	240	301

REGISTERED CIVIL ENGINEER 5-1-12 DATE

6-4-12
PLANS APPROVAL DATE

The State of California or its officers or agents shall not be responsible for the accuracy or completeness of electronic copies of this plan sheet.

REGISTERED PROFESSIONAL ENGINEER Mike Van De Pol No. C35610 Exp. 9/30/2013 CIVIL STATE OF CALIFORNIA

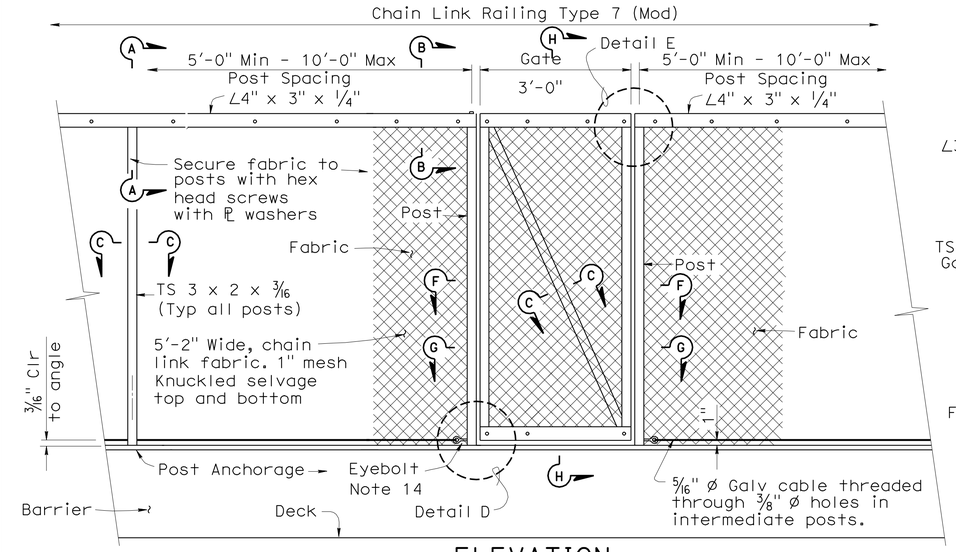

ELEVATION
No Scale

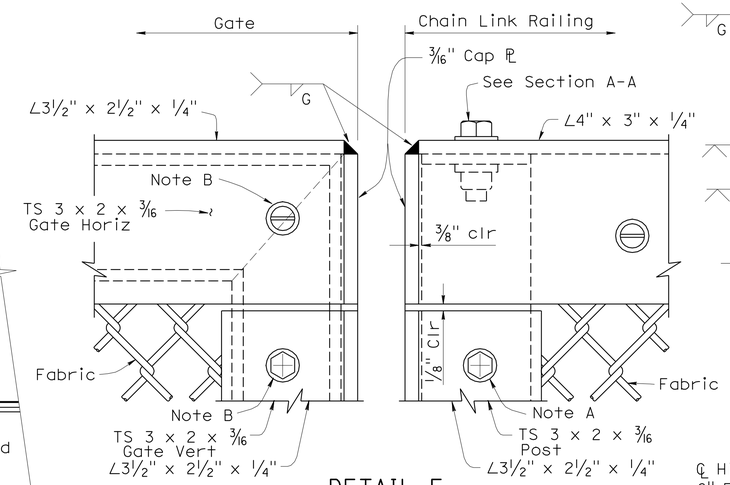

DETAIL E
No Scale

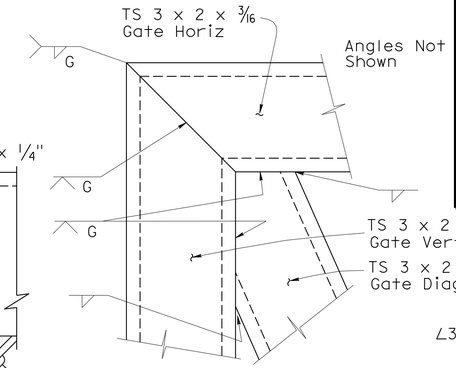

CORNER DETAIL
TS Sections
No Scale

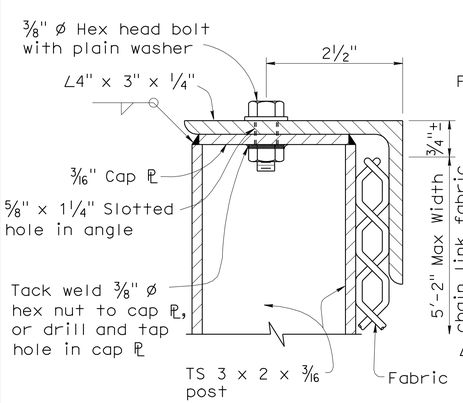

SECTION A-A
No Scale

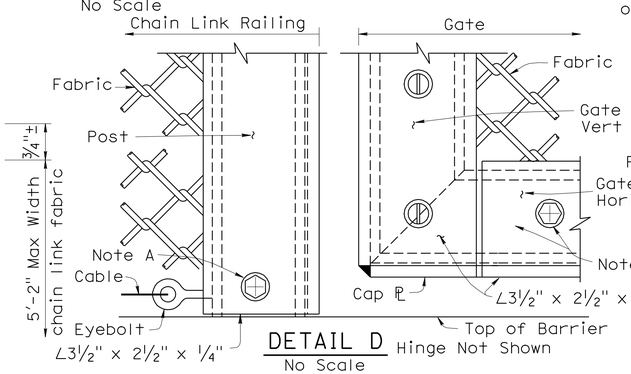

DETAIL D
No Scale

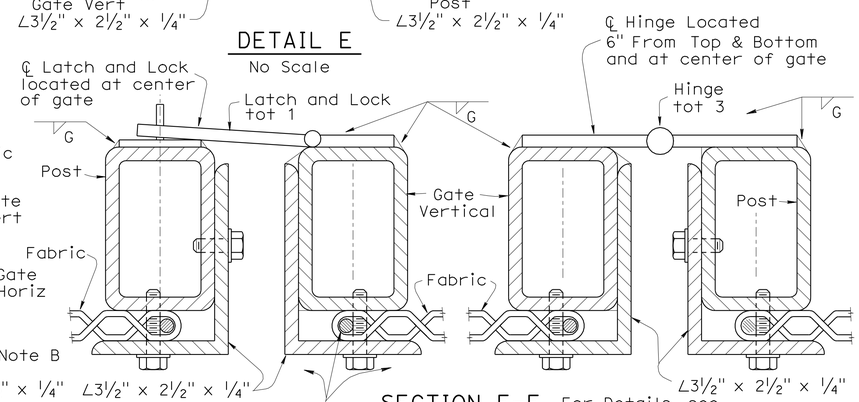

SECTION F-F
No Scale

For Details, see SECTION G-G 12B130 State Lock Not Shown

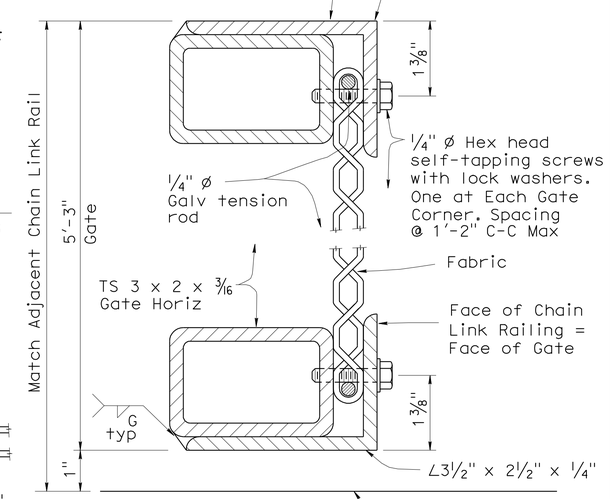

SECTION H-H
No Scale

NOTES:

1. Railing and gate assembly except chain link fabric to be galvanized after fabrication.
2. Posts shall be vertical.
3. Railing shall conform to horizontal and vertical alignment.
4. Horizontal angle shall be continuous over not less than two intermediate posts.
5. When rail is on slope, place fabric parallel to slope.
6. Alternative details may be submitted by Contractor for Engineer's approval.
7. Provide thimbles at all cable loops.
8. Peen all exposed bolts.
9. For locations of chain link railing, see "TYPICAL SECTION" and "ONRAMP CHAIN LINK RAILING DETAILS" Sheet
10. For added details, see "BARRIER DETAILS" Sheets
11. Chain Link Railing height 5'-4" for Mainline Structures,
12. For additional details and notes, see "CHAIN LINK RAILING TYPE 7 (MODIFIED) No. 1" sheet
13. For locatins and numbers of gates, see "ONRAMP CHAIN LINK RAILING DETAILS" sheet
14. Anchor 5/16" ø galv cable at posts with stud socket assembly or ½" ø welded eye bolt and crimped sleeve clamp.

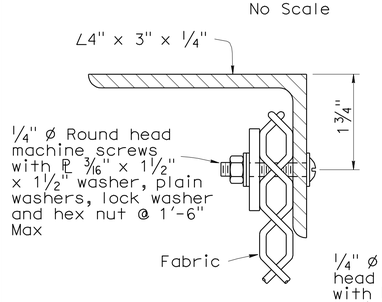

SECTION B-B
No Scale

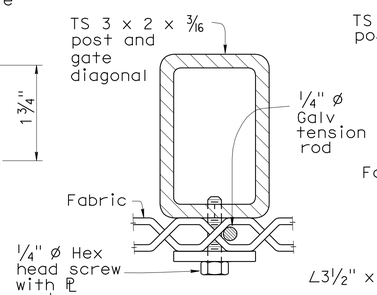

SECTION C-C
No Scale

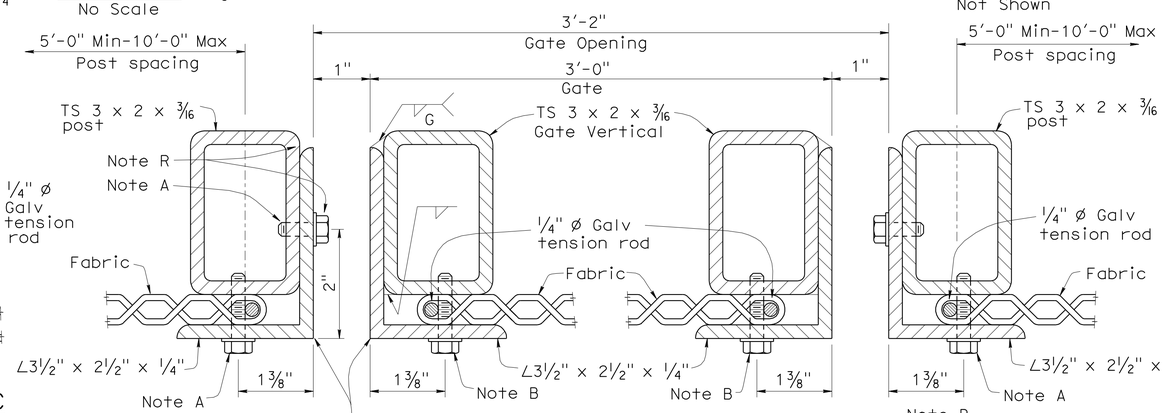

Note R
May be welded as approved by the Engineer

SECTION G-G
No Scale

Note A
¼" ø Hex head self-tapping screws with lock washers @ 1'-2" C-C Max

Note B
¼" ø Hex head self-tapping screws with lock washers. One Each Gate Corner. Spacing @ 1'-2" C-C Max

NOTE:
THE CONTRACTOR SHALL VERIFY ALL CONTROLLING FIELD DIMENSIONS BEFORE ORDERING OR FABRICATING ANY MATERIAL.

	BY	CHECKED
DESIGN	Mike Van De Pol	P. Norboe
DETAILS	Mike Van De Pol	P. Norboe
QUANTITIES	Mike Van De Pol	E. Franciliso

STATE OF CALIFORNIA
DEPARTMENT OF TRANSPORTATION

DIVISION OF ENGINEERING SERVICES
STRUCTURE DESIGN
DESIGN BRANCH 9

BRIDGE NO. 28-0140
MILE POST 5.8

BRIDGE DECK REPLACEMENT
SCOFIELD AVENUE UNDERCROSSING
CHAIN LINK RAILING TYPE 7 (MODIFIED) No. 2

STRUCTURES DESIGN DETAIL SHEET (ENGLISH) (REV. 10/25/05)

ORIGINAL SCALE IN INCHES FOR REDUCED PLANS 0 1 2 3

UNIT: 3594
PROJECT NUMBER & PHASE: 04000004831
CONTRACT NO.: 04-1A3201

DISREGARD PRINTS BEARING EARLIER REVISION DATES 3-02-11

SHEET 77 OF 92

FILE => 28-0140-p-chainlinkrail02.dgn

USERNAME => s109858 DATE PLOTTED => 07-JUN-2012 TIME PLOTTED => 07:04

DIST	COUNTY	ROUTE	POST MILES TOTAL PROJECT	SHEET No	TOTAL SHEETS
04	CC	580	5.5/6.2	241	301

REGISTERED CIVIL ENGINEER 5-1-12 DATE

6-4-12
PLANS APPROVAL DATE

REGISTERED PROFESSIONAL ENGINEER Mike Van De Pol No. C35610 Exp. 9-30-2013 CIVIL STATE OF CALIFORNIA

The State of California or its officers or agents shall not be responsible for the accuracy or completeness of electronic copies of this plan sheet.

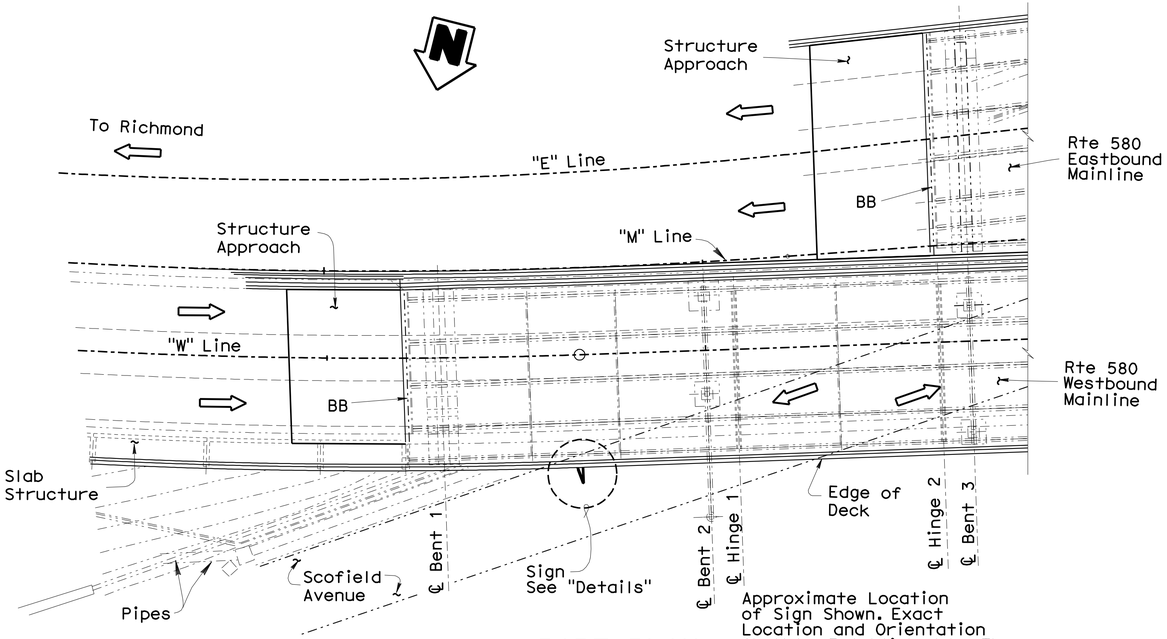

PART PLAN

1" = 20'

Approximate Location of Sign Shown. Exact Location and Orientation Shall be Established by The Contractor Prior to Removal. Final Sign Location and Orientation = Existing Sign Location and Orientation For Added Details, see "Road Plans"

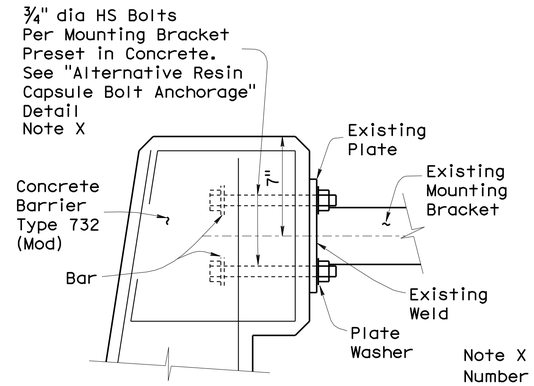

DETAIL X

No Scale

Note X
Number and Size of New Bolts, Shall Match Existing

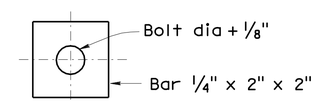

PLATE WASHER

No Scale

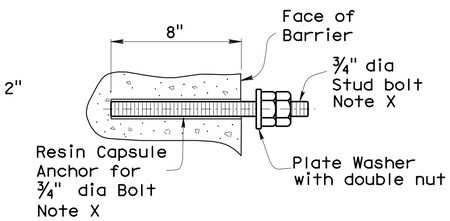

ALTERNATIVE RESIN CAPSULE BOLT ANCHORAGE

No Scale

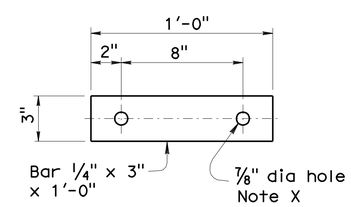

BAR DETAIL

No Scale

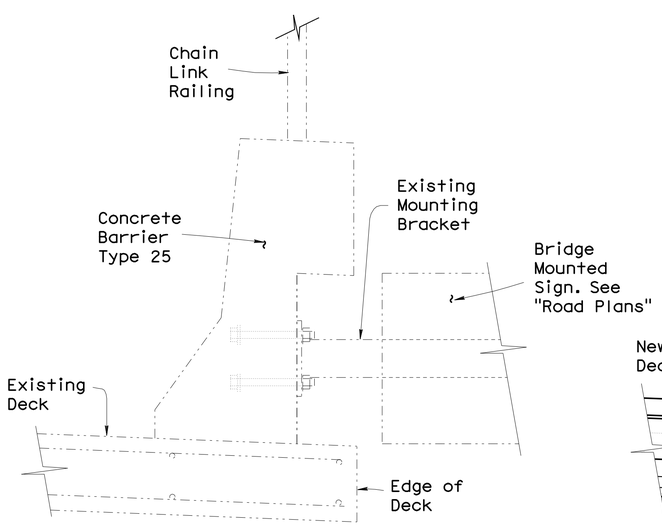

EXISTING

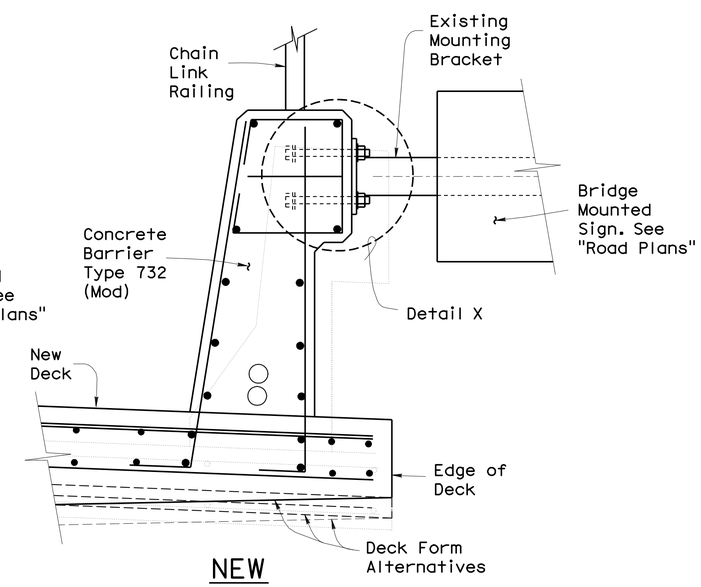

NEW

CROSS SECTIONS

NOTES

For Additional Details, see "STAGE CONSTRUCTION" Sheets, "REMOVAL DETAILS", "TYPICAL SECTION DETAILS" and "BARRIER DETAILS" Sheets

All Existing Chevron Oil Refinery Pipelines and Other Facilities are Not Shown

Barrier Face Architectural Texture Not Shown

Denotes Direction of Traffic
Denotes Existing Structure
Denotes New Construction

NOTE:
THE CONTRACTOR SHALL VERIFY ALL CONTROLLING FIELD DIMENSIONS BEFORE ORDERING OR FABRICATING ANY MATERIAL.

SIGN DETAILS

1½" = 1'-0"

Westbound Mainline Structure Existing Sign Shall be Removed and Replaced. Existing Mounting Bracket and Sign Shall be Reused. For Other Sign Details, see "Road Plans"

BRIDGE DECK REPLACEMENT
SCOFIELD AVENUE UNDERCROSSING
MISCELLANEOUS DETAILS

	BY	CHECKED
DESIGN	M. Van De Pol	P. Norboe
DETAILS	D. Elliott/M. Van De Pol	P. Norboe
QUANTITIES	M. Van De Pol	E. Franciliso

STATE OF CALIFORNIA
DEPARTMENT OF TRANSPORTATION

DIVISION OF ENGINEERING SERVICES
STRUCTURE DESIGN
DESIGN BRANCH 9

BRIDGE NO. 28-0140
POST MILE 5.8

STRUCTURES DESIGN DETAIL SHEET (ENGLISH) (REV. 10/25/05)

ORIGINAL SCALE IN INCHES FOR REDUCED PLANS 0 1 2 3

UNIT: 3594
PROJECT NUMBER & PHASE: 04000004831
CONTRACT NO.: 04-1A3201

DISREGARD PRINTS BEARING EARLIER REVISION DATES 3-02-11

SHEET 78 OF 92

FILE => 28-0140-p-sign.dgn

USERNAME => s109858 DATE PLOTTED => 07-JUN-2012 TIME PLOTTED => 07:04

DIST	COUNTY	ROUTE	POST MILES TOTAL PROJECT	SHEET No	TOTAL SHEETS
04	CC	580	5.5/6.2	242	301

REGISTERED CIVIL ENGINEER 5-1-12 DATE

6-4-12
PLANS APPROVAL DATE

REGISTERED PROFESSIONAL ENGINEER Mike Van De Pol No. C35610 Exp. 9/31/2013 CIVIL STATE OF CALIFORNIA

The State of California or its officers or agents shall not be responsible for the accuracy or completeness of electronic copies of this plan sheet.

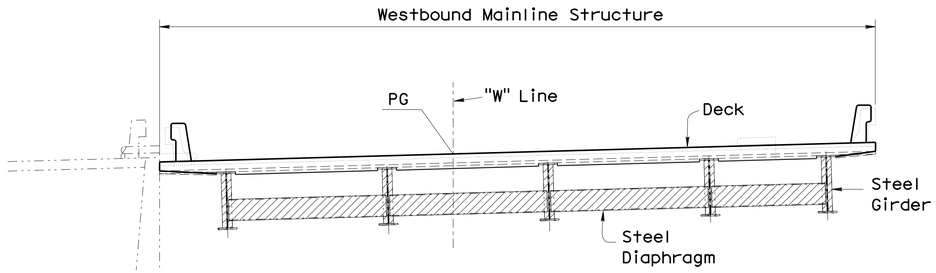

SPANS 1 and 2

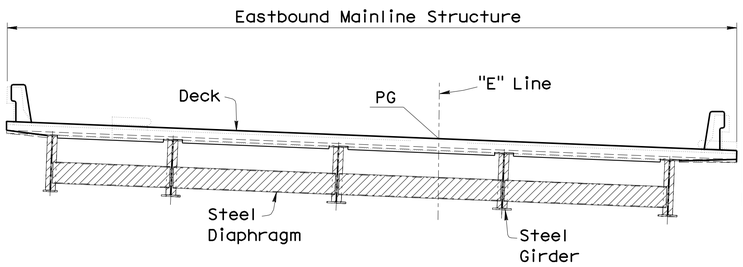

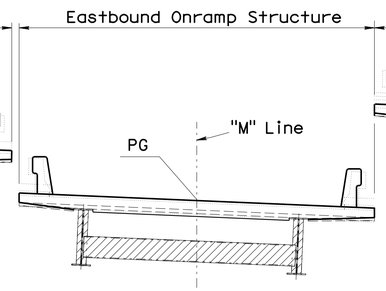

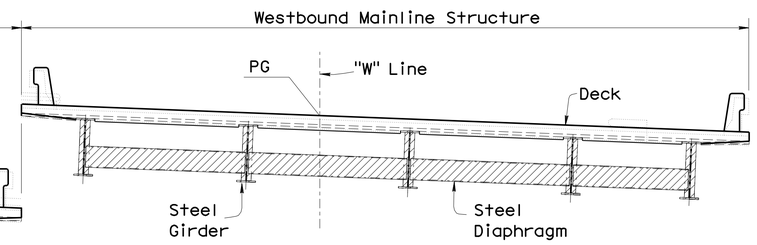

SPANS 3 - 9

Section Shown at Span 9 Only, For Other Locations, see "Typical Section" Sheets

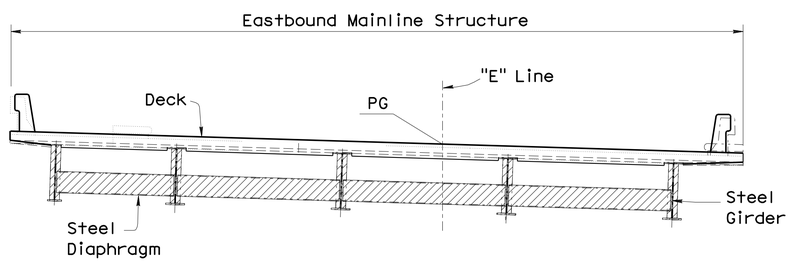

SPANS 10 and 11

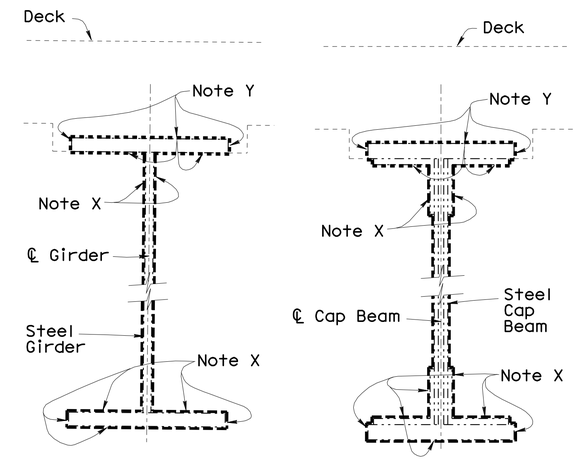

GIRDER

BENT CAP

SECTIONS

No Scale

Stud Connectors Not Shown

Note X
Limits of Clean and Paint

Note Y
Limits of Spot Blast and Paint Undercoat

TYPICAL SECTIONS

3/16" = 1'-0"

Denotes Approximate Limits of Clean and Paint Structural Steel. All Exposed Steel Surfaces. Clean and Paint May be Omitted for Non-Accessible Exposed Steel Surfaces, as Approved by the Engineer. Clean and Paint All Girder Surfaces

Notes

For Additional Details, see "Bent Details" and "Typical Section" Sheets

All Existing Structural Steel Components Not Shown

Chain Link Railing Not Shown

Details at Hinges are Similar to Details Shown

Utilities Not Shown

Denotes Existing Structure
Denotes New Construction

NOTE:
THE CONTRACTOR SHALL VERIFY ALL CONTROLLING FIELD DIMENSIONS BEFORE ORDERING OR FABRICATING ANY MATERIAL.

	BY	CHECKED
DESIGN	Mike Van De Pol	P. Norboe
DETAILS	Mike Van De Pol	P. Norboe
QUANTITIES	Mike Van De Pol	E. Franciliso

STATE OF CALIFORNIA
DEPARTMENT OF TRANSPORTATION

DIVISION OF ENGINEERING SERVICES
STRUCTURE DESIGN
DESIGN BRANCH 9

BRIDGE NO. 28-0140
MILE POST 5.8

BRIDGE DECK REPLACEMENT
SCOFIELD AVENUE UNDERCROSSING
CLEAN AND PAINT DETAILS No. 1

STRUCTURES DESIGN DETAIL SHEET (ENGLISH) (REV. 10/25/05)

ORIGINAL SCALE IN INCHES FOR REDUCED PLANS 0 1 2 3

UNIT: 3594
PROJECT NUMBER & PHASE: 04000004831
CONTRACT NO.: 04-1A3201

DISREGARD PRINTS BEARING EARLIER REVISION DATES → 3-02-11

REVISION DATES

SHEET 79 OF 92

FILE => 28-0140-p-tpntdets01.dgn

USERNAME => s109858 DATE PLOTTED => 07-JUN-2012 TIME PLOTTED => 07:04

DIST	COUNTY	ROUTE	POST MILES TOTAL PROJECT	SHEET No	TOTAL SHEETS
04	CC	580	5.5/6.2	243	301

REGISTERED CIVIL ENGINEER 5-1-12 DATE

6-4-12
PLANS APPROVAL DATE

The State of California or its officers or agents shall not be responsible for the accuracy or completeness of electronic copies of this plan sheet.

REGISTERED PROFESSIONAL ENGINEER
Mike Van De Pol
No. C35610
Exp. 9/31/2013
CIVIL
STATE OF CALIFORNIA

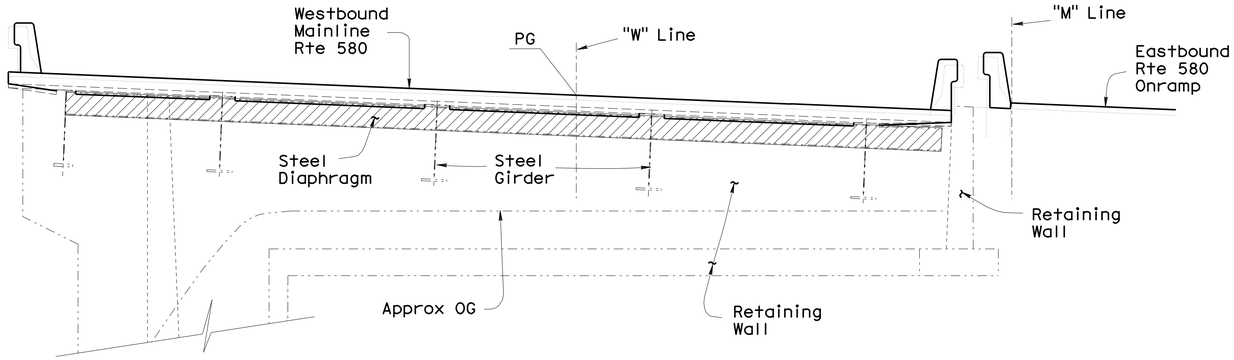

ELEVATION Bent 1 Westbound Mainline Rte 580
1/4" = 1'-0"

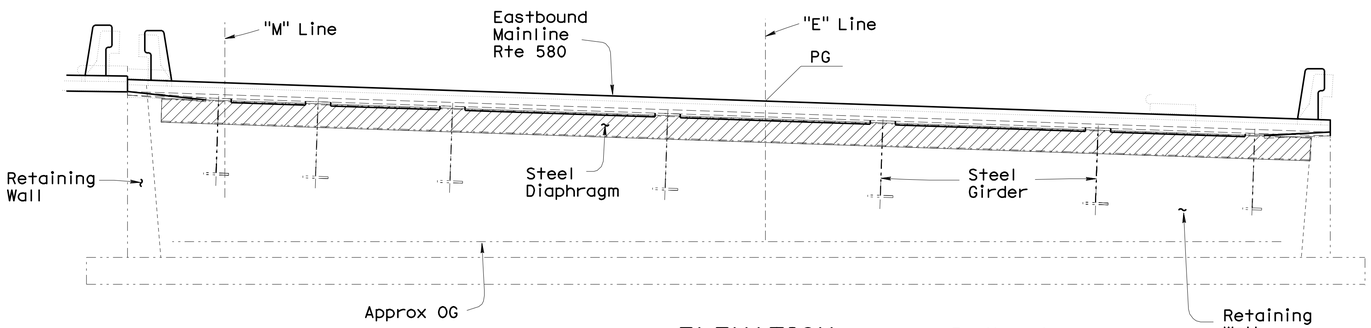

ELEVATION Bent 3 Eastbound Mainline Rte 580
1/4" = 1'-0"

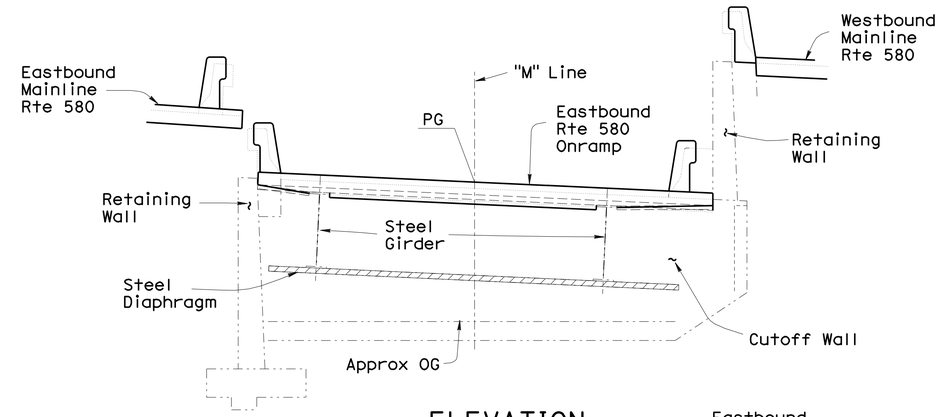

ELEVATION Bent 10 Eastbound Rte 580 Onramp
1/4" = 1'-0"

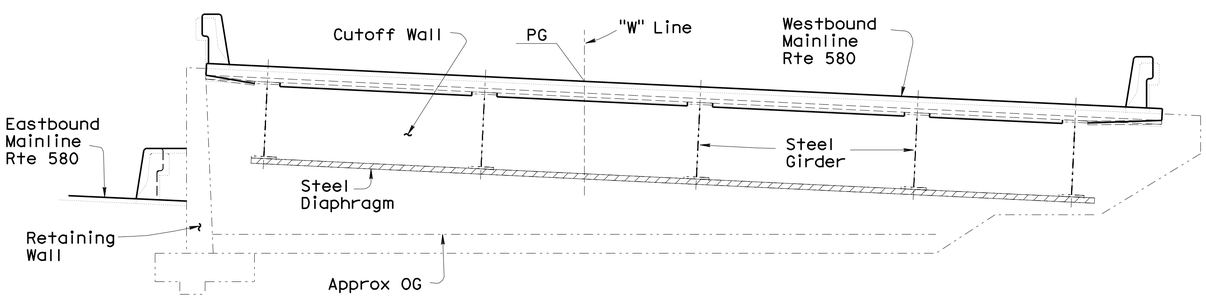

ELEVATION Bent 10 Westbound Mainline Rte 580
1/4" = 1'-0"

Notes

Elevations Taken at Faces of Cutoff Walls and Retaining Walls Respectively

For Bent Locations, see "GENERAL PLAN" Sheets

For Additional Details, see "Bent Details" and "Typical Section" Sheets

All Existing Structural Steel Components Not Shown

Chain Link Railing Not Shown

Chevron Refinery Pipes Not Shown

Denotes Approximate Limits of Clean and Paint Structural Steel. All Exposed Steel Surfaces. Clean and Paint May be Omitted for Non-Accessible Exposed Steel Surfaces, as Approved by the Engineer

NOTE:
THE CONTRACTOR SHALL VERIFY ALL CONTROLLING FIELD DIMENSIONS BEFORE ORDERING OR FABRICATING ANY MATERIAL.

Denotes Existing Structure
Denotes New Construction

	BY	CHECKED
DESIGN	Mike Van De Pol	P. Norboe
DETAILS	Mike Van De Pol	P. Norboe
QUANTITIES	Mike Van De Pol	E. Franciliso

STATE OF CALIFORNIA
DEPARTMENT OF TRANSPORTATION

DIVISION OF ENGINEERING SERVICES
STRUCTURE DESIGN
DESIGN BRANCH 9

BRIDGE NO. 28-0140
MILE POST 5.8

BRIDGE DECK REPLACEMENT
SCOFIELD AVENUE UNDERCROSSING
CLEAN AND PAINT DETAILS No. 2

STRUCTURES DESIGN DETAIL SHEET (ENGLISH) (REV. 10/25/05)

ORIGINAL SCALE IN INCHES FOR REDUCED PLANS 0 1 2 3

UNIT: 3594
PROJECT NUMBER & PHASE: 04000004831
CONTRACT NO.: 04-1A3201

DISREGARD PRINTS BEARING EARLIER REVISION DATES

REVISION DATES: 3-02-11

SHEET 80 OF 92

FILE => 28-0140-p-tpntdets02.dgn

USERNAME => s109858 DATE PLOTTED => 07-JUN-2012 TIME PLOTTED => 07:04

DIST	COUNTY	ROUTE	POST MILES TOTAL PROJECT	SHEET No	TOTAL SHEETS
04	CC	580	5.5/6.2	244	301

REGISTERED CIVIL ENGINEER 5-1-12 DATE

6-4-12
PLANS APPROVAL DATE

REGISTERED PROFESSIONAL ENGINEER Mike Van De Pol No. C35610 Exp. 9/31/2013 CIVIL STATE OF CALIFORNIA

The State of California or its officers or agents shall not be responsible for the accuracy or completeness of electronic copies of this plan sheet.

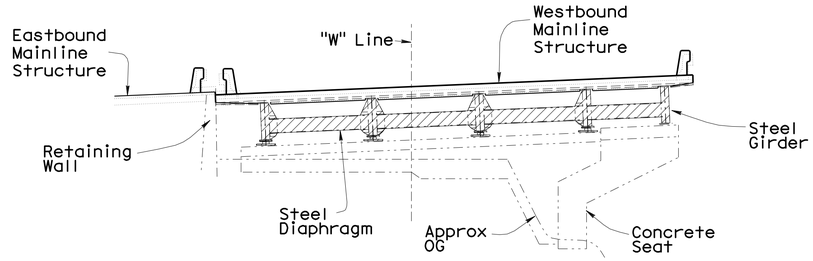

ELEVATION BENT 1
1/8" = 1'-0"

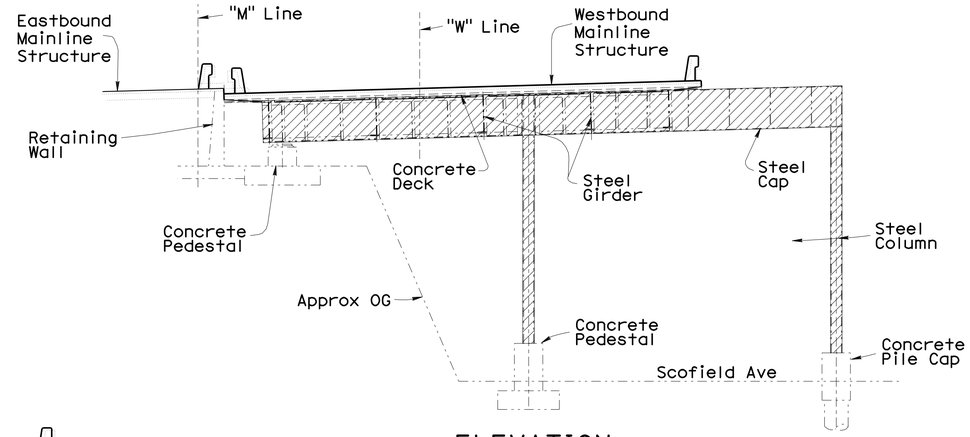

ELEVATION BENT 2
1/8" = 1'-0"

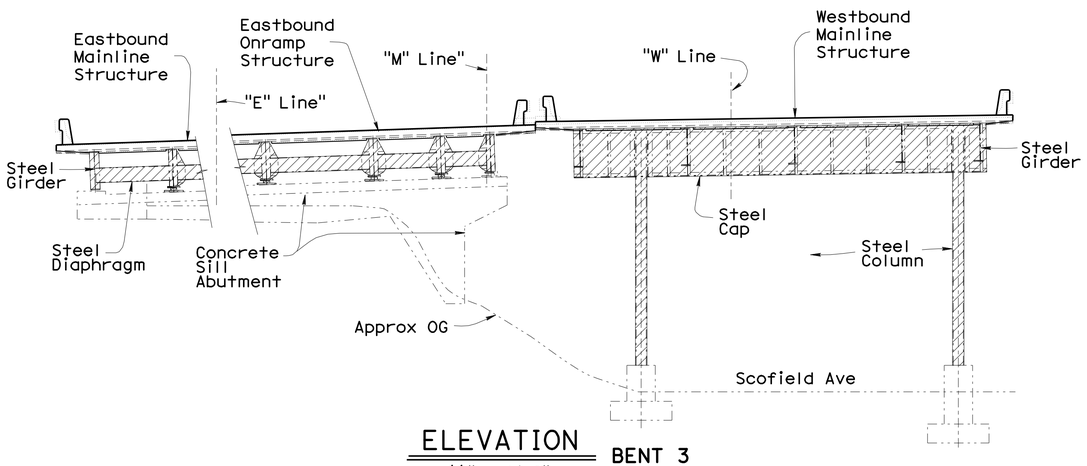

ELEVATION BENT 3
1/8" = 1'-0"

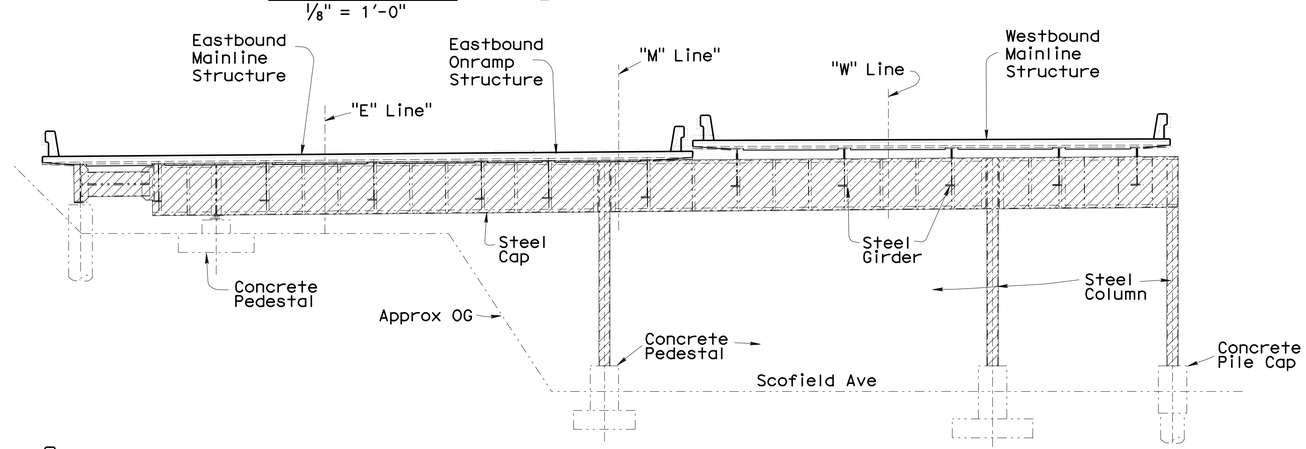

ELEVATION BENT 4
1/8" = 1'-0"

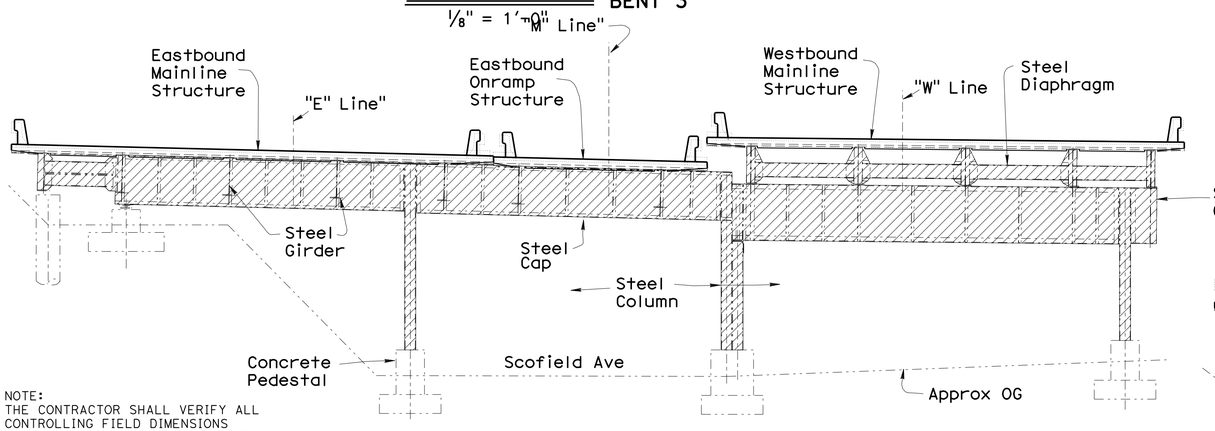

ELEVATION BENT 5
1/8" = 1'-0"

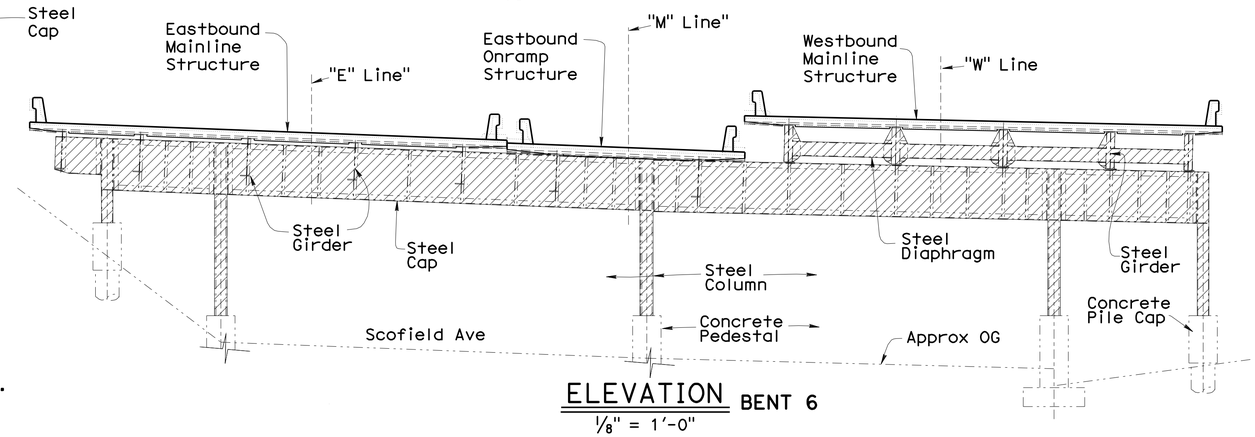

ELEVATION BENT 6
1/8" = 1'-0"

NOTE:
THE CONTRACTOR SHALL VERIFY ALL CONTROLLING FIELD DIMENSIONS BEFORE ORDERING OR FABRICATING ANY MATERIAL.

NOTES:

For Bent Locations, see "GENERAL PLAN" Sheets
For Additional Details, see "Bent Details" and "Typical Section" Sheets
All Existing Structural Steel Components Not Shown
Chain Link Railing Not Shown
Deck Form Alternatives Shown
Chevron Refinery Pipes Not Shown

LEGEND:

Denotes Approximate Limits of Clean and Paint Structural Steel. All Exposed Steel Surfaces.
Denotes Existing Structure
Denotes New Construction

	BY	CHECKED
DESIGN	Mike Van De Pol	P. Norboe
DETAILS	Mike Van De Pol	P. Norboe
QUANTITIES	Mike Van De Pol	E. Franciliso

STATE OF CALIFORNIA
DEPARTMENT OF TRANSPORTATION

DIVISION OF ENGINEERING SERVICES
STRUCTURE DESIGN
DESIGN BRANCH 9

BRIDGE NO. 28-0140
MILE POST 5.8

BRIDGE DECK REPLACEMENT
SCOFIELD AVENUE UNDERCROSSING
CLEAN AND PAINT DETAILS No. 3

STRUCTURES DESIGN DETAIL SHEET (ENGLISH) (REV. 10/25/05)

ORIGINAL SCALE IN INCHES FOR REDUCED PLANS 0 1 2 3

UNIT: 3594
PROJECT NUMBER & PHASE: 04000004831
CONTRACT NO.: 04-1A3201

DISREGARD PRINTS BEARING EARLIER REVISION DATES → 3-02-11

REVISION DATES

SHEET 81 OF 92

FILE => 28-0140-p-tpntdets03.dgn

USERNAME => s109858 DATE PLOTTED => 07-JUN-2012 TIME PLOTTED => 07:05

DIST	COUNTY	ROUTE	POST MILES TOTAL PROJECT	SHEET No	TOTAL SHEETS
04	CC	580	5.5/6.2	245	301

REGISTERED CIVIL ENGINEER 5-1-12 DATE

6-4-12
PLANS APPROVAL DATE

REGISTERED PROFESSIONAL ENGINEER Mike Van De Pol No. C35610 Exp. 9/31/2013 CIVIL STATE OF CALIFORNIA

The State of California or its officers or agents shall not be responsible for the accuracy or completeness of electronic copies of this plan sheet.

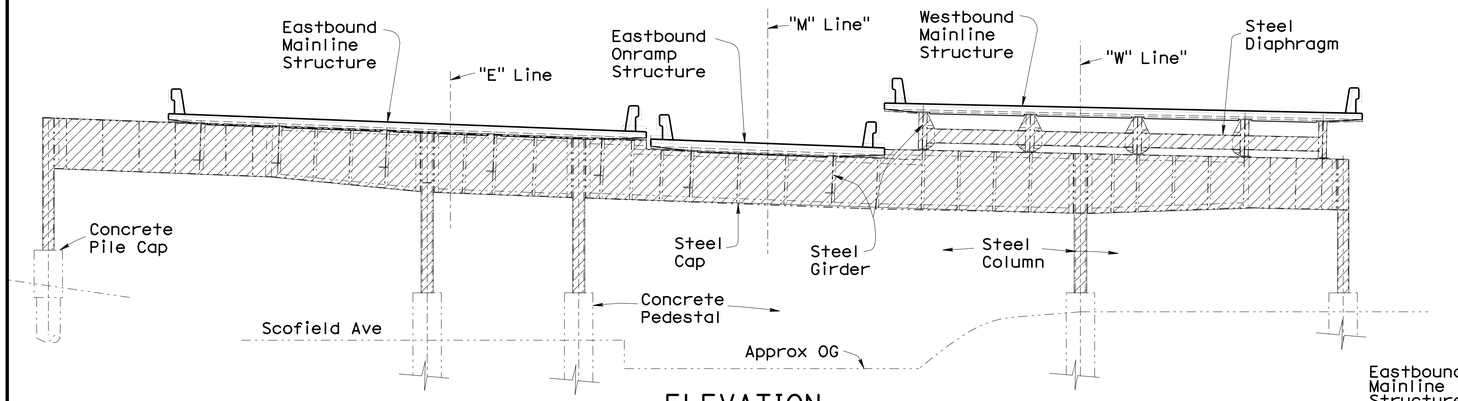

ELEVATION BENT 7
1/8" = 1'-0"

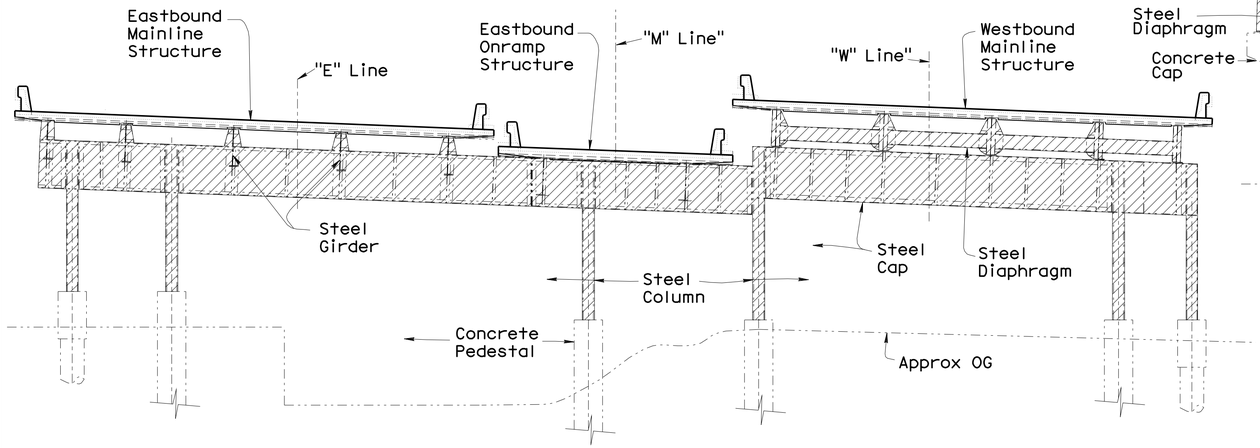

ELEVATION BENT 8
1/8" = 1'-0"

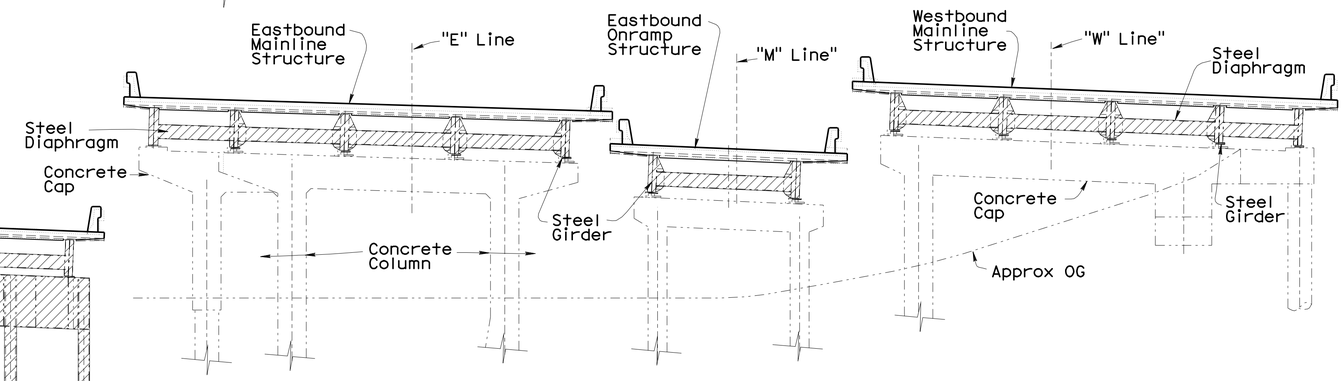

ELEVATION BENT 10
1/8" = 1'-0"
Retaining Wall not Shown

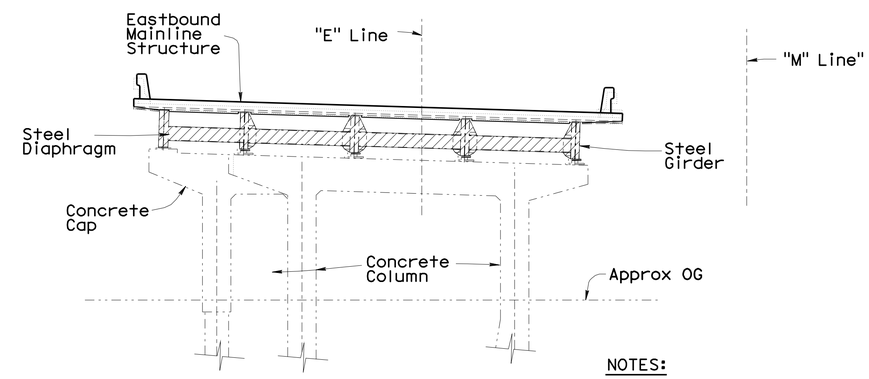

ELEVATION BENTS 11,12
1/8" = 1'-0"

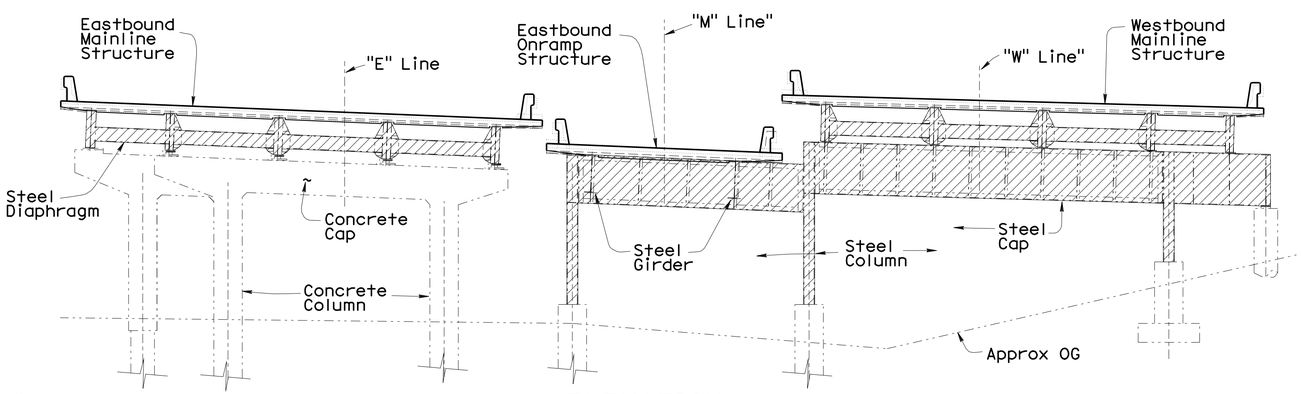

ELEVATION BENT 9
1/8" = 1'-0"

NOTE:
THE CONTRACTOR SHALL VERIFY ALL CONTROLLING FIELD DIMENSIONS BEFORE ORDERING OR FABRICATING ANY MATERIAL.

LEGEND:

Denotes Approximate Limits of Clean and Paint Structural Steel. All Exposed Steel Surfaces.

Denotes Existing Structure

Denotes New Construction

NOTES:

For Bent Locations, see "GENERAL PLAN" Sheets

For Additional Details, see "Bent Details" and "Typical Section" Sheets

All Existing Structural Steel Components Not Shown

Chain Link Railing Not Shown

Deck Form Alternatives Shown

	BY	CHECKED
DESIGN	Mike Van De Pol	P. Norboe
DETAILS	Mike Van De Pol	P. Norboe
QUANTITIES	Mike Van De Pol	E. Franciliso

STATE OF CALIFORNIA
DEPARTMENT OF TRANSPORTATION

DIVISION OF ENGINEERING SERVICES
STRUCTURE DESIGN
DESIGN BRANCH 9

BRIDGE NO. 28-0140
MILE POST 5.8

BRIDGE DECK REPLACEMENT
SCOFIELD AVENUE UNDERCROSSING
CLEAN AND PAINT DETAILS No. 4

STRUCTURES DESIGN DETAIL SHEET (ENGLISH) (REV. 10/25/05)

ORIGINAL SCALE IN INCHES FOR REDUCED PLANS 0 1 2 3

UNIT: 3594
PROJECT NUMBER & PHASE: 04000004831
CONTRACT NO.: 04-1A3201

DISREGARD PRINTS BEARING EARLIER REVISION DATES

REVISION DATES: 3-02-11

SHEET 82 OF 92

FILE => 28-0140-p-tpntdets04.dgn

USERNAME => s109858 DATE PLOTTED => 07-JUN-2012 TIME PLOTTED => 07:05

DIST	COUNTY	ROUTE	POST MILES TOTAL PROJECT	SHEET No	TOTAL SHEETS
04	CC	580	5.5/6.2	246	301

REGISTERED CIVIL ENGINEER 5-1-12 DATE

6-4-12
PLANS APPROVAL DATE

REGISTERED PROFESSIONAL ENGINEER Mike Van De Pol No. C35610 Exp. 9-30-2013 CIVIL STATE OF CALIFORNIA

The State of California or its officers or agents shall not be responsible for the accuracy or completeness of electronic copies of this plan sheet.

LEGEND:

Denotes Limits of Removal of Existing Decks, Barriers, Railing and Light Standards

Denotes Existing Structure

Denotes New Construction

* Temporary Railing Type K

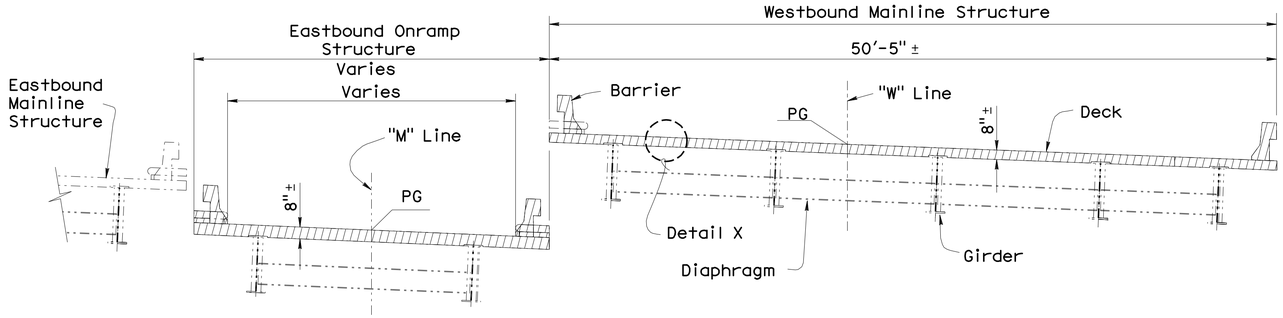

STAGE 1 PHASE 3 SPANS 1-11

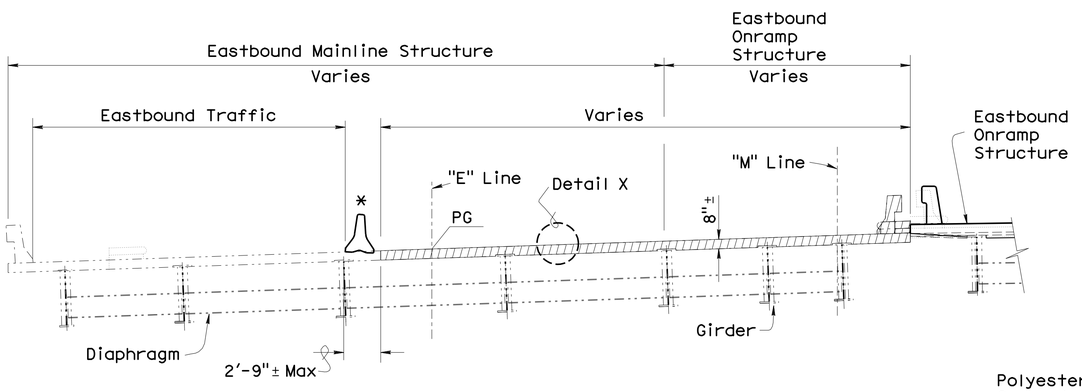

STAGE 2 PHASE 1 SPAN 3 Near Bent 3

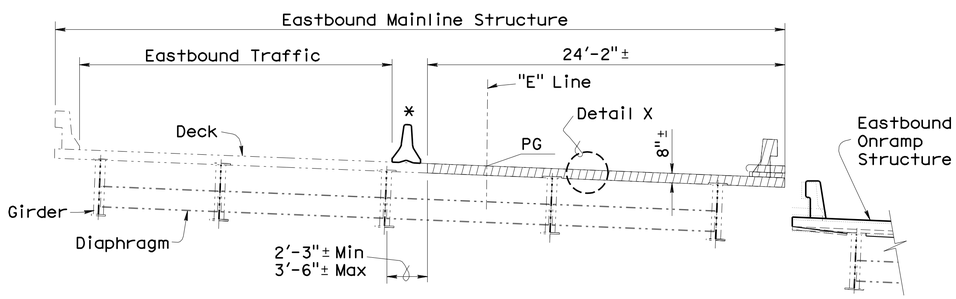

STAGE 2 PHASE 2 SPANS 3-11

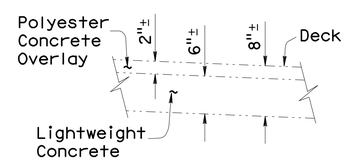

DETAIL X Typical Deck Section
1" = 1'-0"

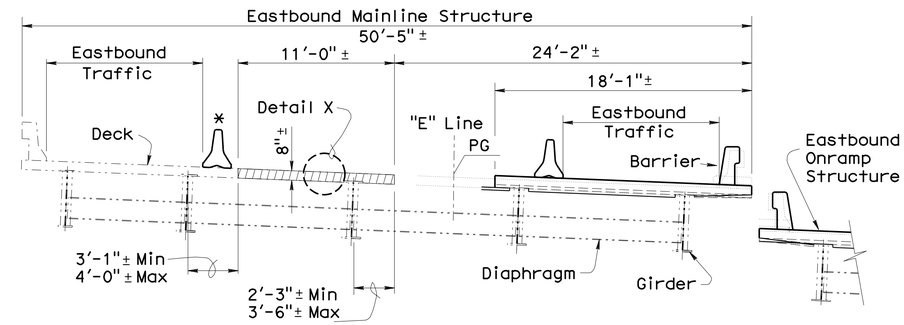

STAGE 3 SPANS 3-11

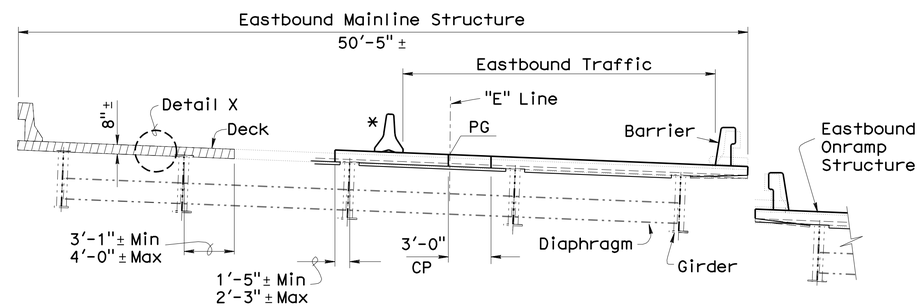

STAGE 4 SPANS 3-11

GENERAL REMOVAL SEQUENCE PER STAGE

Removal Operations Shall Proceed Along Bridge Alignment, per Respective Stage

1. Install Protection System
2. Remove Light Standards
3. Remove Barriers
4. Mark Deck Segment Core/Saw Cut Locations
5. Core Lifting Holes in Deck
6. Support Deck Segment to be Lifted
7. Saw Cut Deck
8. Lift Deck Segments and Transport
9. Remove Retained Portion of Deck at Girder Flange

NOTES:

For Other Details, see "TYPICAL SECTION" "ABUTMENT DETAILS" and "STAGE CONSTRUCTION DETAILS" Sheets

For Removal Plan Views and Other Stage Construction Details, see "STAGE CONSTRUCTION DETAILS" Sheets

Protection System Not Shown. For Details, see "PROTECTION SYSTEM DETAILS" Sheets

Protection System Shall be in Place Prior to the Commencement of any Removal Operations

Existing Deck and Barrier Reinforcement Not Shown

All Existing Structural Steel Components Not Shown. Existing Stud Connectors Not Shown

Light Standards, Chain Link Railing and Utilities Not Shown

TYPICAL SECTIONS
3/16" = 1'-0"

Existing Girder Flange Stud Connectors Shall Remain if Present

NOTE:
THE CONTRACTOR SHALL VERIFY ALL CONTROLLING FIELD DIMENSIONS BEFORE ORDERING OR FABRICATING ANY MATERIAL.

	BY	CHECKED
DESIGN	M. Van De Pol	P. Norboe
DETAILS	M. Van De Pol	P. Norboe
QUANTITIES	M. Van De Pol	E. Franciliso

STATE OF CALIFORNIA
DEPARTMENT OF TRANSPORTATION

DIVISION OF ENGINEERING SERVICES
STRUCTURE DESIGN
DESIGN BRANCH 9

BRIDGE NO. 28-0140
POST MILE 5.8

BRIDGE DECK REPLACEMENT
SCOFIELD AVENUE UNDERCROSSING
REMOVAL DETAILS No. 1

STRUCTURES DESIGN DETAIL SHEET (ENGLISH) (REV. 10/25/05)

ORIGINAL SCALE IN INCHES FOR REDUCED PLANS 0 1 2 3

UNIT: 3594
PROJECT NUMBER & PHASE: 04000004831
CONTRACT NO.: 04-1A3201

DISREGARD PRINTS BEARING EARLIER REVISION DATES

REVISION DATES 3-02-11

SHEET 83 OF 92

FILE => 28-0140-q-rmvldets01.dgn

USERNAME => s109858 DATE PLOTTED => 07-JUN-2012 TIME PLOTTED => 07:05

DIST	COUNTY	ROUTE	POST MILES TOTAL PROJECT	SHEET No	TOTAL SHEETS
04	CC	580	5.5/6.2	247	301

REGISTERED CIVIL ENGINEER 5-1-12 DATE

6-4-12
PLANS APPROVAL DATE

REGISTERED PROFESSIONAL ENGINEER Mike Van De Pol No. C35610 Exp. 9-30-2013 CIVIL STATE OF CALIFORNIA

The State of California or its officers or agents shall not be responsible for the accuracy or completeness of electronic copies of this plan sheet.

Existing Vertical Barrier Reinforcement Embedded in Barrier Tench and Retaining Wall to be Retained, Unless the Barrier Tench is Removed. See Note X. Retained Existing Vertical Reinforcement May be Bent to Fit New Deck, Barrier and Approach Configurations, as Approved by the Engineer. See "BARRIER DETAILS" Sheets

LEGEND:

Denotes Limits of Removal of Existing Deck, Barrier and Railing

Denotes Existing Structure

Denotes New Construction

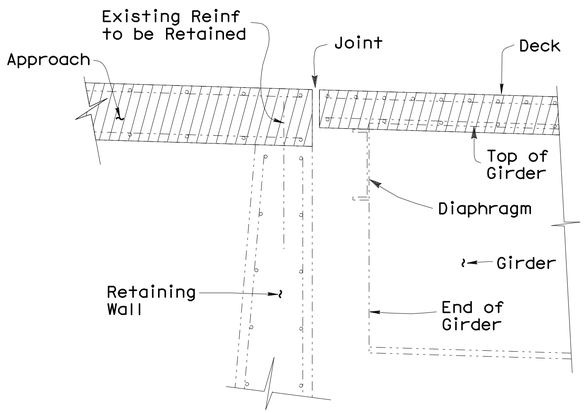

Westbound Mainline Structure Bent 1
Eastbound Mainline Structure Bent 3

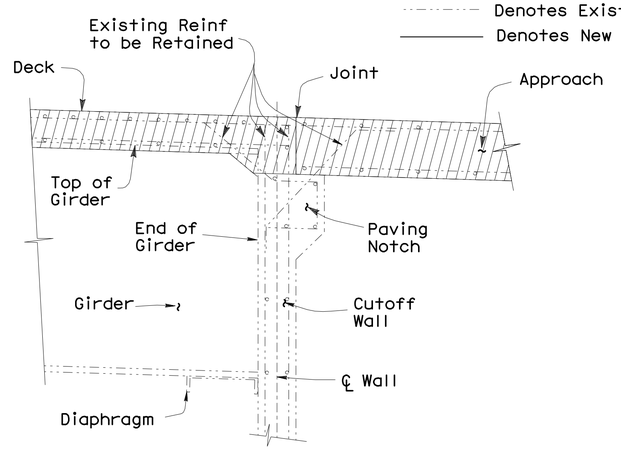

Westbound Mainline Structure Bent 10
Eastbound Onramp Structure Bent 10

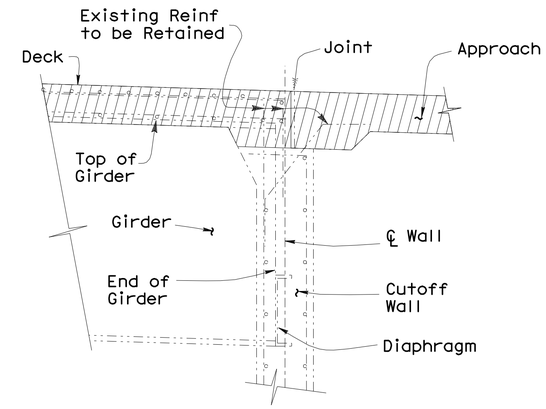

Eastbound Mainline Structure Bent 12

NOTES:

For Other Details, see "TYPICAL SECTION", "ABUTMENT DETAILS and "STRUCTURE APPROACH DETAILS" Sheets

For Stage Construction Details, see "STAGE CONSTRUCTION DETAILS" sheets

Protection System Not Shown. For Details, see "PROTECTION SYSTEM DETAILS" Sheets

Existing Deck and Barrier Reinforcement Not Shown

All Existing Structural Steel Components Not Shown. Existing Stud Connectors Not Shown

For Additional Details, see "BARRIER DETAILS" Sheet

For Additional Details, see "ROAD PLANS"

For Deck Composition, see "DETAIL X", on "REMOVAL DETAILS No. 1" Sheet

ABUTMENT SECTIONS

¾" = 1'-0"

BENT CUTOFF WALL SECTIONS

Note X
At Option of the Contractor, the Existing Barrier Trench May be Removed with the Exposed Portion of the Barrier, as Approved by the Engineer

NOTES

Existing Girder Flange Stud Connectors Shall Remain if Present

Portions of Existing Wall Reinforcement Shall be Retained as Shown

Damaged Reinforcement Intended for Retention Shall be Replaced as Approved by the Engineer

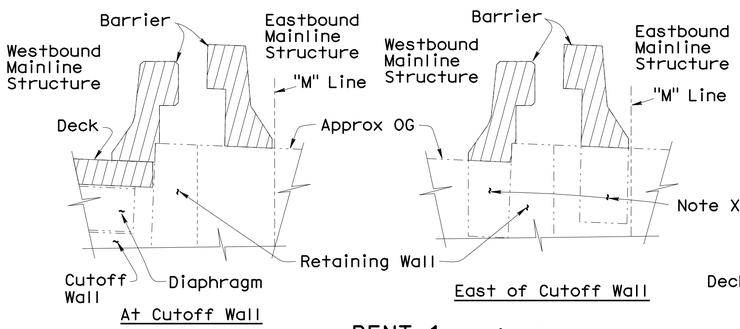

At Cutoff Wall

East of Cutoff Wall

BENT 1 Looking Easterly

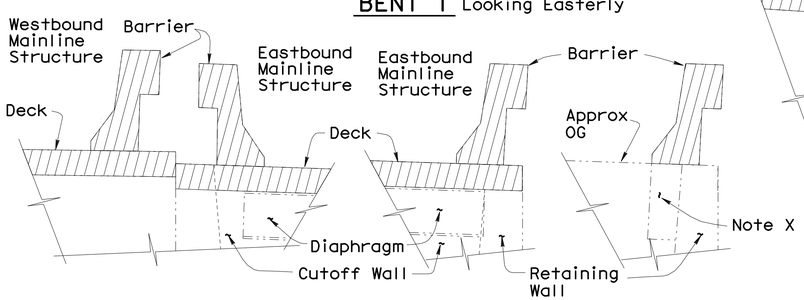

At Cutoff Wall

East of Cutoff Wall

BENT 3 Looking Easterly

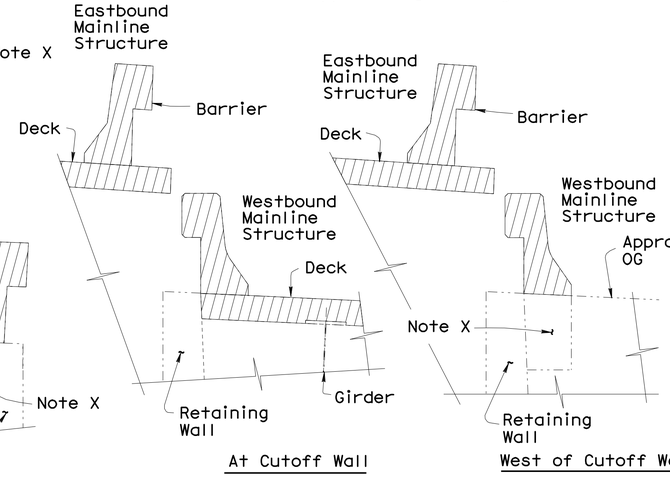

At Cutoff Wall

West of Cutoff Wall

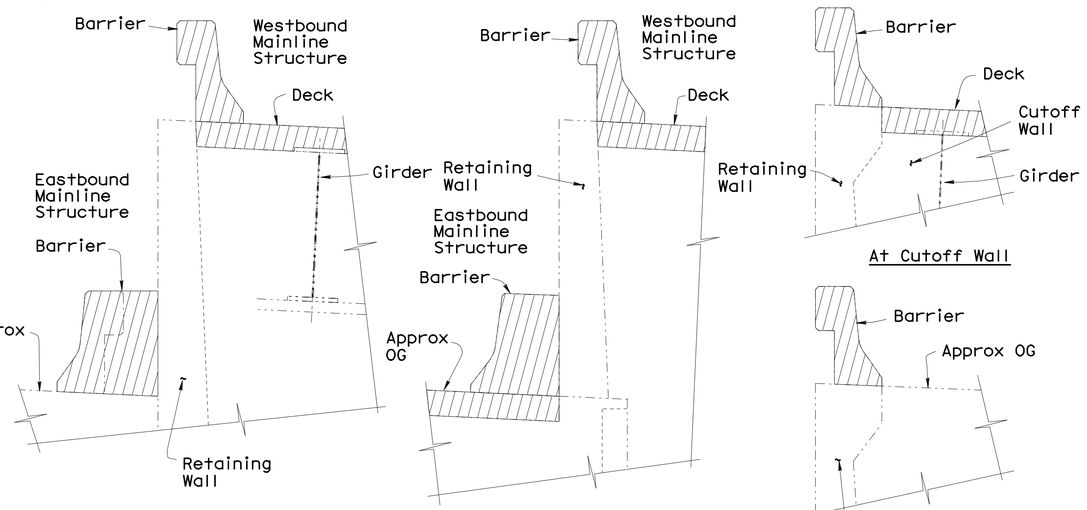

West of Cutoff Wall

At Cutoff Wall

At Cutoff Wall

West of Cutoff Wall

BENT 10 EB Onramp Looking Westerly

BENT 12 Looking Westerly

NOTE:
THE CONTRACTOR SHALL VERIFY ALL CONTROLLING FIELD DIMENSIONS BEFORE ORDERING OR FABRICATING ANY MATERIAL.

Details Shown are Approximate. Exact Barrier Configurations May Vary. Limits of Removal May Vary as Approved by the Engineer

WALL AND BARRIER DETAILS

½" = 1'-0"

For Locations of Removal Details, see ABUTMENT DETAILS" Sheets

Existing Chain Link Railing Not Shown

Existing Barrier and Wall Reinforcement Not Shown

	BY	CHECKED
DESIGN	M. Van De Pol	P. Norboe
DETAILS	M. Van De Pol	P. Norboe
QUANTITIES	M. Van De Pol	E. Franciliso

STATE OF CALIFORNIA
DEPARTMENT OF TRANSPORTATION

DIVISION OF ENGINEERING SERVICES
STRUCTURE DESIGN
DESIGN BRANCH 9

BRIDGE NO. 28-0140
POST MILE 5.8

BRIDGE DECK REPLACEMENT
SCOFIELD AVENUE UNDERCROSSING
REMOVAL DETAILS No. 2

STRUCTURES DESIGN DETAIL SHEET (ENGLISH) (REV. 10/25/05)

ORIGINAL SCALE IN INCHES FOR REDUCED PLANS 0 1 2 3

UNIT: 3594
PROJECT NUMBER & PHASE: 04000004831
CONTRACT NO.: 04-1A3201

DISREGARD PRINTS BEARING EARLIER REVISION DATES

REVISION DATES 3-02-11

SHEET 84 OF 92

FILE => 28-0140-q-rmvldets02.dgn

USERNAME => s109858 DATE PLOTTED => 07-JUN-2012 TIME PLOTTED => 07:05

DIST	COUNTY	ROUTE	POST MILES TOTAL PROJECT	SHEET No	TOTAL SHEETS
04	CC	580	5.5/6.2	248	301

REGISTERED CIVIL ENGINEER 5-1-12 DATE

6-4-12
PLANS APPROVAL DATE

REGISTERED PROFESSIONAL ENGINEER Mike Van De Pol No. C35610 Exp. 9-30-2013 CIVIL STATE OF CALIFORNIA

The State of California or its officers or agents shall not be responsible for the accuracy or completeness of electronic copies of this plan sheet.

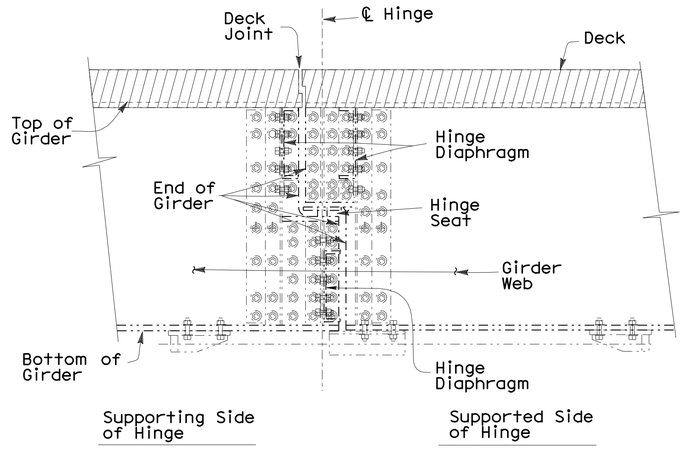

SECTION AT GIRDER

Section Normal to ℄ Hinge

Existing Deck Reinforcement Not Shown

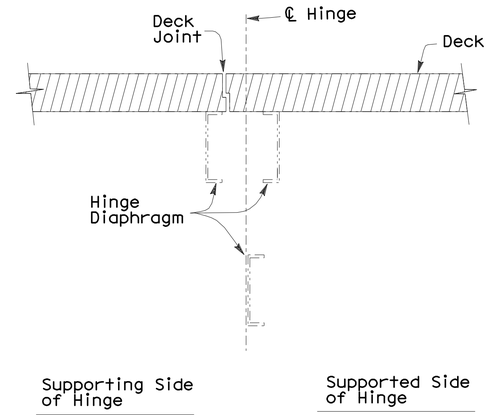

SECTION BETWEEN GIRDERS

Section Normal to ℄ Hinge

Existing Deck Reinforcement Not Shown

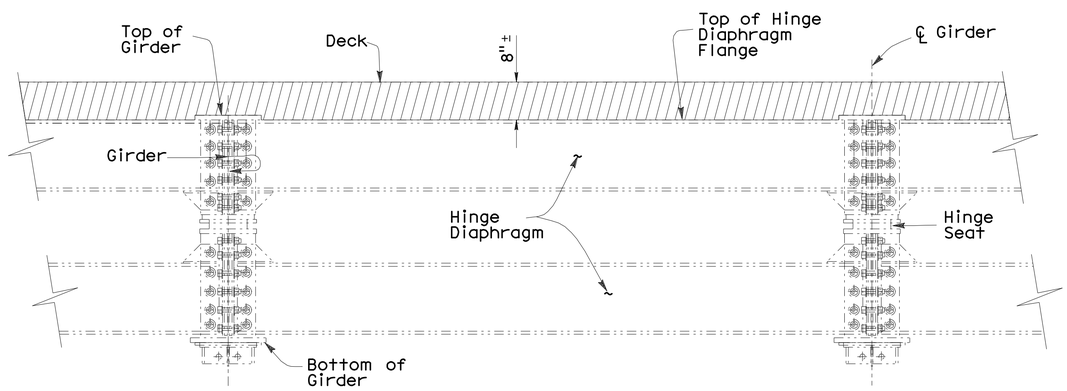

SECTION AT DIAPHRAGMS

Section Parallel to ℄ Hinge

Existing Deck Reinforcement Not Shown

HINGE DETAILS

3/4" = 1'-0"

Existing Girder Flange Stud Connectors Shall Remain If Present

LEGEND:

- Denotes Limits of Removal of Existing Deck, Barrier and Railing
- Denotes Existing Structure
- Denotes New Construction

NOTES:

For Other Details, see "TYPICAL SECTION" and "BENT DETAILS" Sheets

For Stage Construction Details, see "STAGE CONSTRUCTION DETAILS" sheets

Protection System Not Shown. For Details, see "PROTECTION SYSTEM DETAILS" Sheets

Existing Deck and Barrier Reinforcement Not Shown

All Existing Structural Steel Components Not Shown. Existing Stud Connectors Not Shown

For Deck Composition, see "DETAIL X" on "REMOVAL DETAILS No. 1" Sheet

NOTE:
THE CONTRACTOR SHALL VERIFY ALL CONTROLLING FIELD DIMENSIONS BEFORE ORDERING OR FABRICATING ANY MATERIAL.

	BY	CHECKED
DESIGN	M. Van De Pol	P. Norboe
DETAILS	M. Van De Pol	P. Norboe
QUANTITIES	M. Van De Pol	E. Franciliso

STATE OF CALIFORNIA
DEPARTMENT OF TRANSPORTATION

DIVISION OF ENGINEERING SERVICES
STRUCTURE DESIGN
DESIGN BRANCH 9

BRIDGE NO. 28-0140
POST MILE 5.8

BRIDGE DECK REPLACEMENT
SCOFIELD AVENUE UNDERCROSSING
REMOVAL DETAILS No. 3

STRUCTURES DESIGN DETAIL SHEET (ENGLISH) (REV. 10/25/05)

ORIGINAL SCALE IN INCHES FOR REDUCED PLANS 0 1 2 3

UNIT: 3594
PROJECT NUMBER & PHASE: 04000004831
CONTRACT NO.: 04-1A3201

DISREGARD PRINTS BEARING EARLIER REVISION DATES

REVISION DATES 3-02-11

SHEET 85 OF 92

FILE => 28-0140-q-rmvldets03.dgn

USERNAME => s109858 DATE PLOTTED => 07-JUN-2012 TIME PLOTTED => 07:05

DIST	COUNTY	ROUTE	POST MILES TOTAL PROJECT	SHEET No	TOTAL SHEETS
04	CC	580	5.5/6.2	249	301

REGISTERED CIVIL ENGINEER 5-1-12 DATE

6-4-12
PLANS APPROVAL DATE

REGISTERED PROFESSIONAL ENGINEER Mike Van De Pol No. C35610 Exp. 9-30-2013 CIVIL STATE OF CALIFORNIA

The State of California or its officers or agents shall not be responsible for the accuracy or completeness of electronic copies of this plan sheet.

LEGEND:

Denotes Limits of Removal of Existing Deck, Barrier and Railing

Denotes Existing Structure

Denotes New Construction

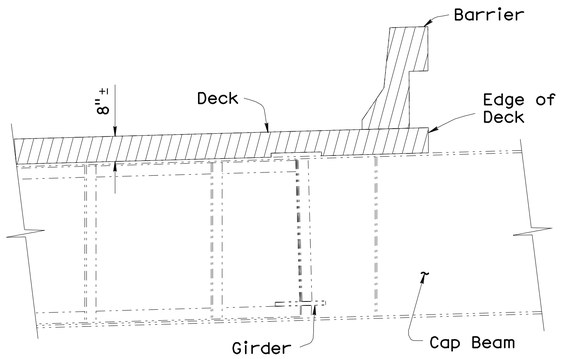

PART ELEVATION

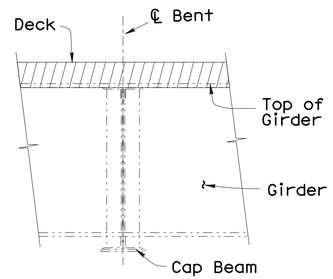

SECTION

BENTS 2 AND 3 DETAILS

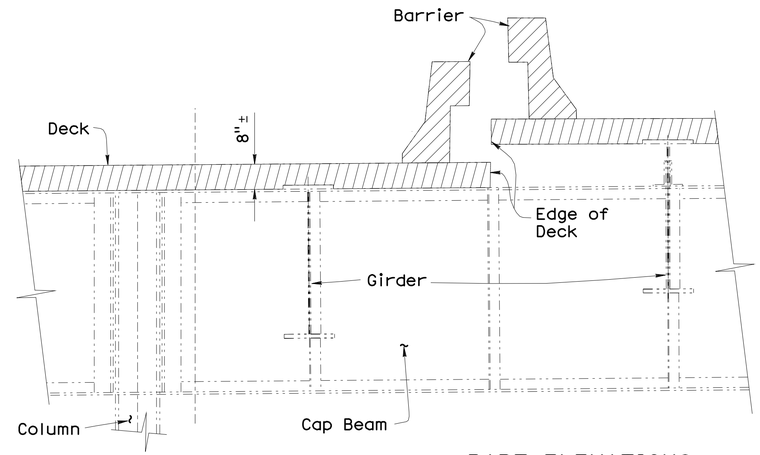

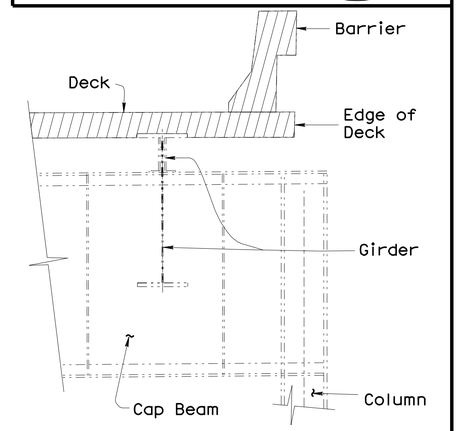

PART ELEVATIONS

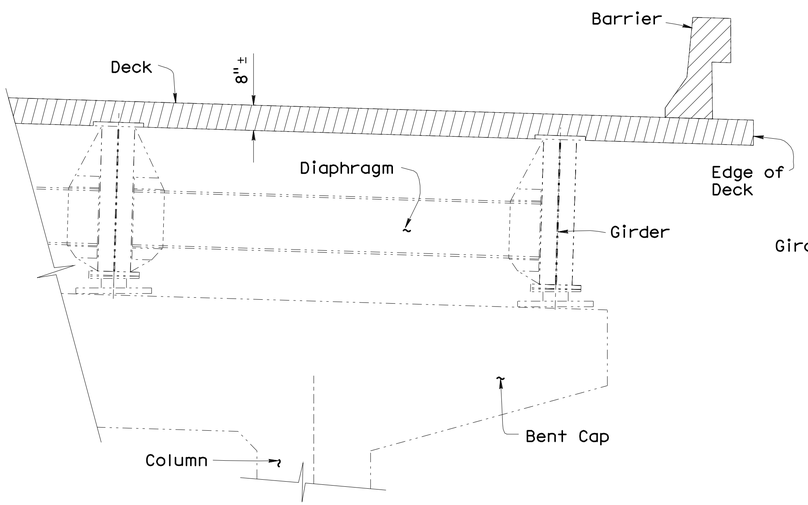

PART ELEVATION

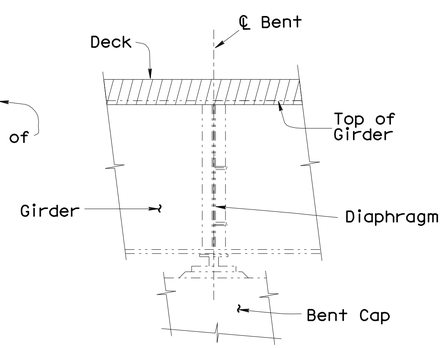

SECTION

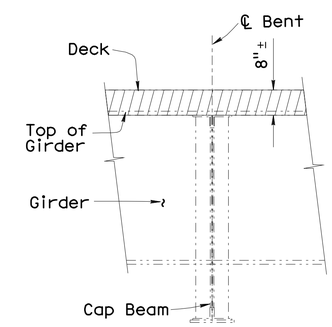

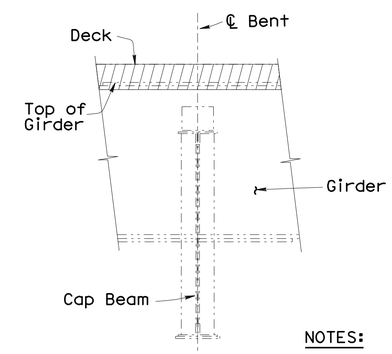

SECTIONS

BENT 4 DETAILS

BENTS 1, 3, 10, 11 AND 12 DETAILS

NOTES:

For Other Details, see "TYPICAL SECTION" and "BENT DETAILS" Sheets

For Stage Construction Details, see "STAGE CONSTRUCTION DETAILS" sheets

Protection System Not Shown. For Details, see "PROTECTION SYSTEM DETAILS" Sheets

Existing Deck and Barrier Reinforcement Not Shown

All Existing Structural Steel Components Not Shown. Existing Stud Connectors Not Shown

For Deck Composition, see "DETAIL X" on "REMOVAL DETAILS No. 1" Sheet

NOTE:
THE CONTRACTOR SHALL VERIFY ALL CONTROLLING FIELD DIMENSIONS BEFORE ORDERING OR FABRICATING ANY MATERIAL.

BENT DETAILS

½" = 1'-0"

Existing Girder Flange and Cap Beam Flange Stud Connectors Shall Remain if Present

Existing Chain Link Railing Not Shown

	BY	CHECKED
DESIGN	M. Van De Pol	P. Norboe
DETAILS	M. Van De Pol	P. Norboe
QUANTITIES	M. Van De Pol	E. Franciliso

STATE OF CALIFORNIA
DEPARTMENT OF TRANSPORTATION

DIVISION OF ENGINEERING SERVICES
STRUCTURE DESIGN
DESIGN BRANCH 9

BRIDGE NO. 28-0140
POST MILE 5.8

BRIDGE DECK REPLACEMENT
SCOFIELD AVENUE UNDERCROSSING
REMOVAL DETAILS No. 4

STRUCTURES DESIGN DETAIL SHEET (ENGLISH) (REV. 10/25/05)

ORIGINAL SCALE IN INCHES FOR REDUCED PLANS 0 1 2 3

UNIT: 3594
PROJECT NUMBER & PHASE: 04000004831
CONTRACT NO.: 04-1A3201

DISREGARD PRINTS BEARING EARLIER REVISION DATES

REVISION DATES 3-02-11

SHEET 86 OF 92

FILE => 28-0140-q-rmvldets04.dgn

USERNAME => s103858 DATE PLOTTED => 07-JUN-2012 TIME PLOTTED => 07:05

DIST	COUNTY	ROUTE	POST MILES TOTAL PROJECT	SHEET No	TOTAL SHEETS
04	CC	580	5.5/6.2	250	301

REGISTERED CIVIL ENGINEER 5-1-12 DATE

6-4-12
PLANS APPROVAL DATE

REGISTERED PROFESSIONAL ENGINEER Mike Van De Pol No. C35610 Exp. 9-30-2013 CIVIL STATE OF CALIFORNIA

The State of California or its officers or agents shall not be responsible for the accuracy or completeness of electronic copies of this plan sheet.

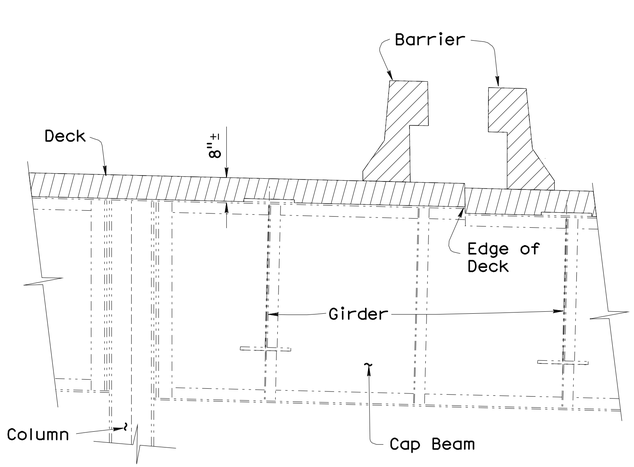

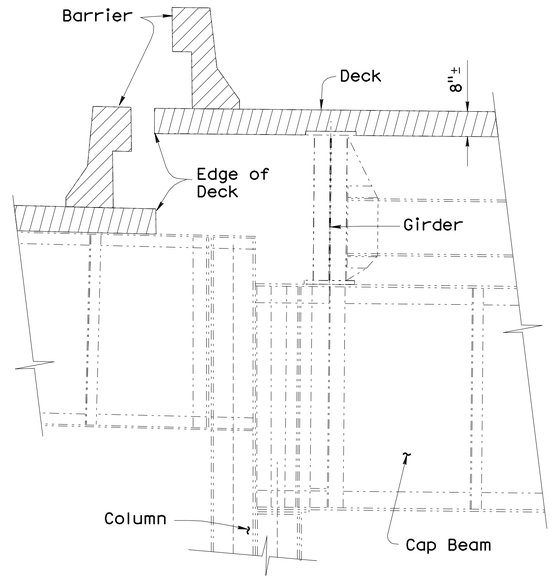

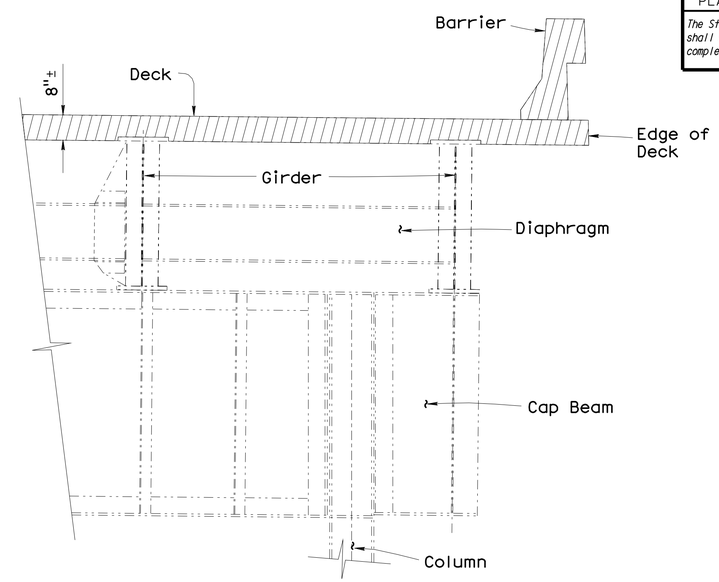

PART ELEVATIONS

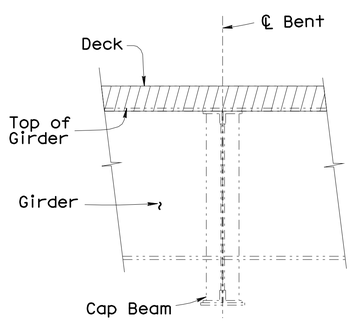

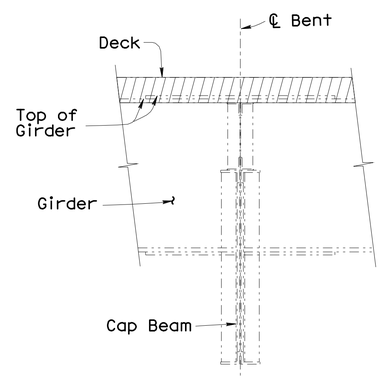

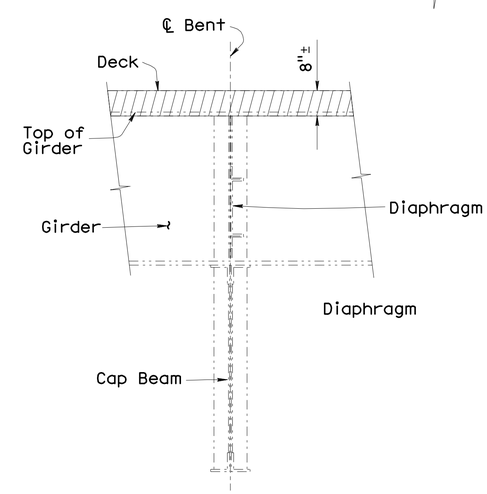

SECTIONS

BENTS 5, 6, 7, 8 AND 9

LEGEND:

- Denotes Limits of Removal of Existing Deck, Barrier and Railing
- Denotes Existing Structure
- Denotes New Construction

NOTES:

For Other Details, see "TYPICAL SECTION" and "BENT DETAILS" Sheets

For Stage Construction Details, see "STAGE CONSTRUCTION DETAILS" sheets

Protection System Not Shown. For Details, see "PROTECTION SYSTEM DETAILS" Sheets

Existing Deck and Barrier Reinforcement Not Shown

All Existing Structural Steel Components Not Shown. Existing Stud Connectors Not Shown

For Deck Composition, see "DETAIL X" on "REMOVAL DETAILS No. 1" Sheet

NOTE:
THE CONTRACTOR SHALL VERIFY ALL CONTROLLING FIELD DIMENSIONS BEFORE ORDERING OR FABRICATING ANY MATERIAL.

BENT DETAILS

½" = 1'-0"

Existing Girder Flange and Cap Beam Flange Stud Connectors Shall Remain if Present

Chain Link Railing Not Shown

BRIDGE DECK REPLACEMENT
SCOFIELD AVENUE UNDERCROSSING
REMOVAL DETAILS No. 5

	BY	CHECKED
DESIGN	M. Van De Pol	P. Norboe
DETAILS	M. Van De Pol	P. Norboe
QUANTITIES	M. Van De Pol	E. Franciliso

STATE OF CALIFORNIA
DEPARTMENT OF TRANSPORTATION

DIVISION OF ENGINEERING SERVICES
STRUCTURE DESIGN
DESIGN BRANCH 9

BRIDGE NO. 28-0140
POST MILE 5.8

STRUCTURES DESIGN DETAIL SHEET (ENGLISH) (REV. 10/25/05)

ORIGINAL SCALE IN INCHES FOR REDUCED PLANS 0 1 2 3

UNIT: 3594
PROJECT NUMBER & PHASE: 04000004831
CONTRACT NO.: 04-1A3201

DISREGARD PRINTS BEARING EARLIER REVISION DATES

REVISION DATES 3-02-11

SHEET 87 OF 92

FILE => 28-0140-q-rmvldets05.dgn

USERNAME => s103858 DATE PLOTTED => 07-JUN-2012 TIME PLOTTED => 07:05

DIST	COUNTY	ROUTE	POST MILES TOTAL PROJECT	SHEET No	TOTAL SHEETS
04	CC	580	5.5/6.2	251	301

REGISTERED CIVIL ENGINEER 5-1-12 DATE

6-4-12
PLANS APPROVAL DATE

REGISTERED PROFESSIONAL ENGINEER Mike Van De Pol No. C35610 Exp. 9/30/2013 CIVIL STATE OF CALIFORNIA

The State of California or its officers or agents shall not be responsible for the accuracy or completeness of electronic copies of this plan sheet.

NOTES:

For Additional Details, see "TYPICAL SECTION" Sheets, "ABUTMENT DETAILS" Sheets, "STAGE CONSTRUCTION DETAILS" and "BARRIER DETAILS" Sheets

For Section A-A and Section B-B, see "STRUCTURE APPROACH DETAILS No. 2" and "STRUCTURE APPROACH DETAILS No. 3" Sheets

For Section C-C, see "STRUCTURE APPROACH DETAILS No. 5" Sheet

Limits of Structure Approach May be Adjusted, as Approved by the Engineer

Deck Closure Pour Limits and Structure Approach Construction Joints Not Shown

LEGEND:

Denotes Limits of Structure Approach

Denotes Existing Structure

Denotes New Construction

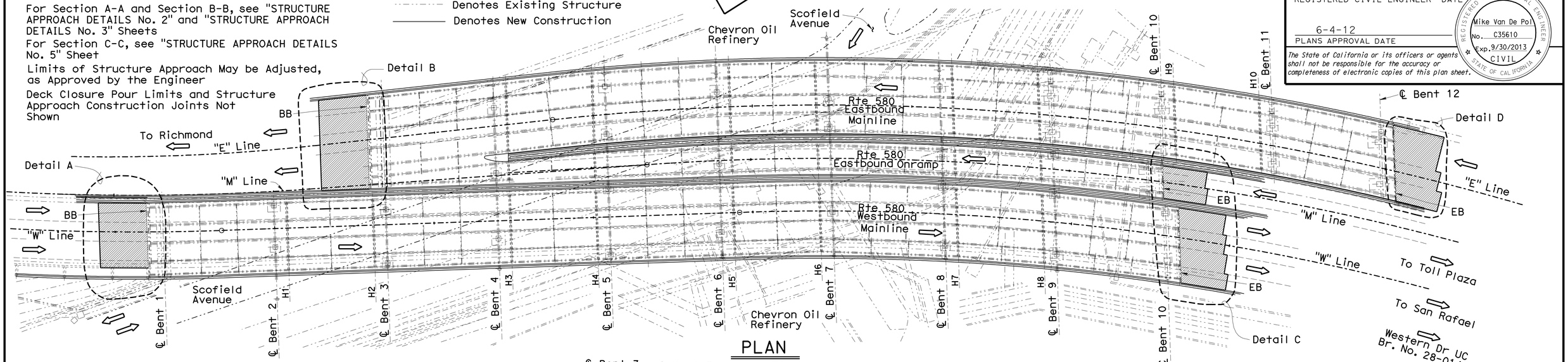

PLAN
1" = 30'

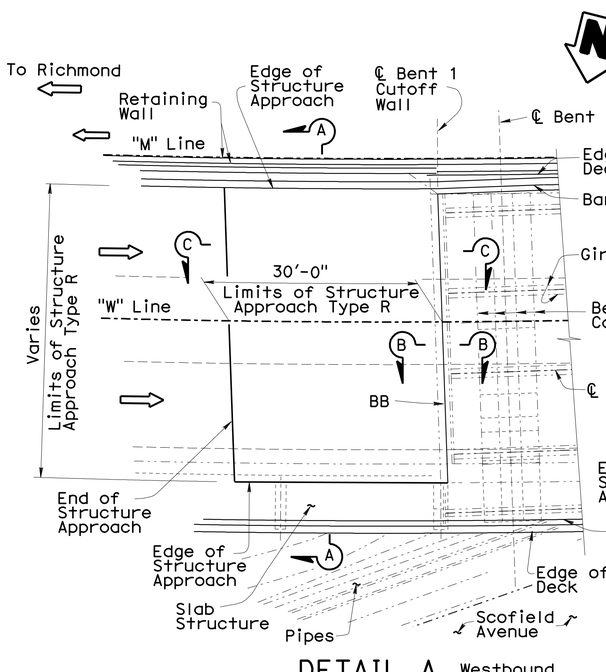

DETAIL A
3/32" = 1'-0"
Westbound Mainline Structure

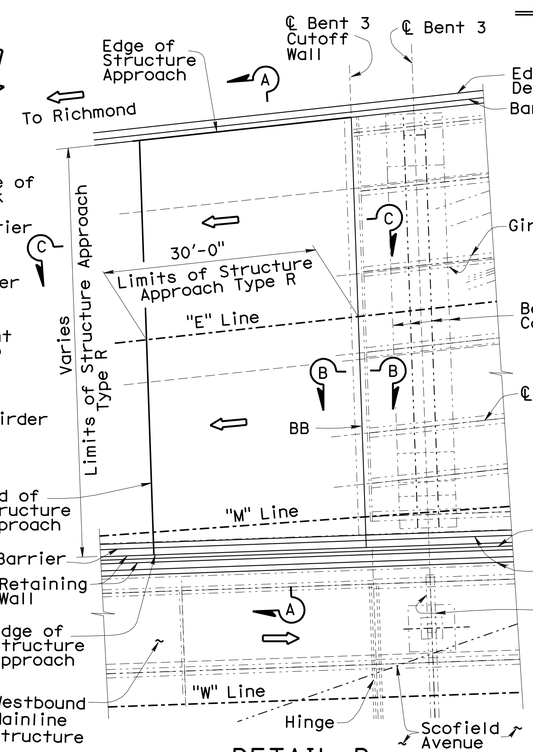

DETAIL B
3/32" = 1'-0"
Eastbound Mainline Structure

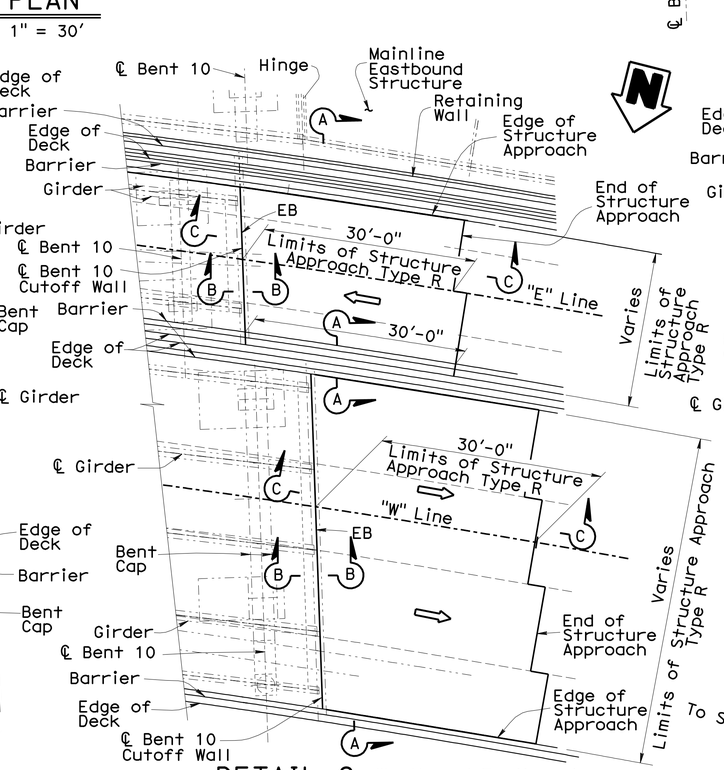

DETAIL C
3/32" = 1'-0"
Westbound Mainline Structure
Eastbound Onramp Structure

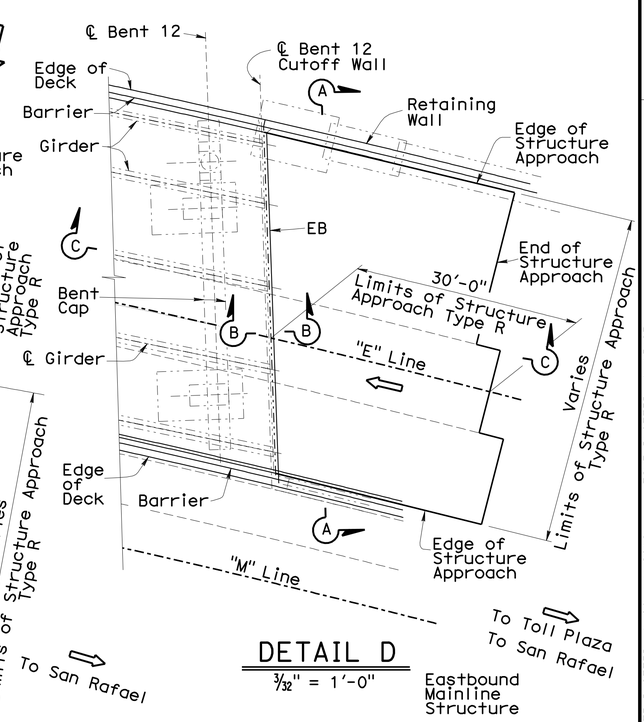

DETAIL D
3/32" = 1'-0"
Eastbound Mainline Structure

NOTE:
THE CONTRACTOR SHALL VERIFY ALL CONTROLLING FIELD DIMENSIONS BEFORE ORDERING OR FABRICATING ANY MATERIAL.

	BY	CHECKED
DESIGN	Mike Van De Pol	P. Norboe
DETAILS	Mike Van De Pol	P. Norboe
QUANTITIES	Mike Van De Pol	E. Franciliso

STATE OF CALIFORNIA
DEPARTMENT OF TRANSPORTATION

DIVISION OF ENGINEERING SERVICES
STRUCTURE DESIGN
DESIGN BRANCH 9

BRIDGE NO. 28-0140
MILE POST 5.8

BRIDGE DECK REPLACEMENT
SCOFIELD AVENUE UNDERCROSSING
STRUCTURE APPROACH TYPE R DETAILS No. 1

STRUCTURES DESIGN DETAIL SHEET (ENGLISH) (REV. 10/25/05)

ORIGINAL SCALE IN INCHES FOR REDUCED PLANS 0 1 2 3

UNIT: 3594
PROJECT NUMBER & PHASE: 04000004831
CONTRACT NO.: 04-1A3201

DISREGARD PRINTS BEARING EARLIER REVISION DATES 3-02-11

SHEET 88 OF 92

FILE => 28-0140-r-apprdets01.dgn

USERNAME => s114937 DATE PLOTTED => 06-JUN-2012 TIME PLOTTED => 15:27

DIST	COUNTY	ROUTE	POST MILES TOTAL PROJECT	SHEET No	TOTAL SHEETS
04	CC	580	5.5/6.2	252	301

REGISTERED CIVIL ENGINEER 5-1-12 DATE

6-4-12
PLANS APPROVAL DATE

REGISTERED PROFESSIONAL ENGINEER Mike Van De Pol No. C35610 Exp. 9/30/2013 CIVIL STATE OF CALIFORNIA

The State of California or its officers or agents shall not be responsible for the accuracy or completeness of electronic copies of this plan sheet.

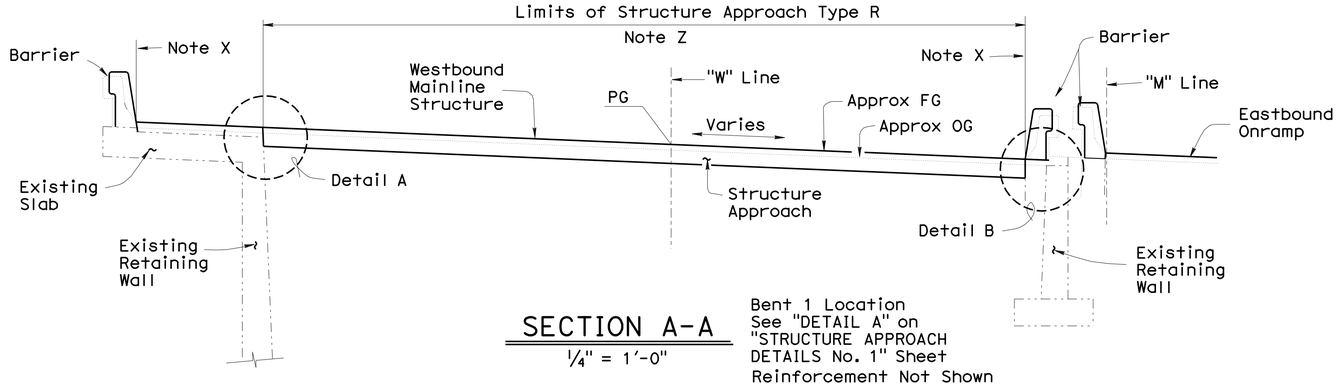

SECTION A-A

1/4" = 1'-0"

Bent 1 Location
See "DETAIL A" on "STRUCTURE APPROACH DETAILS No. 1" Sheet
Reinforcement Not Shown

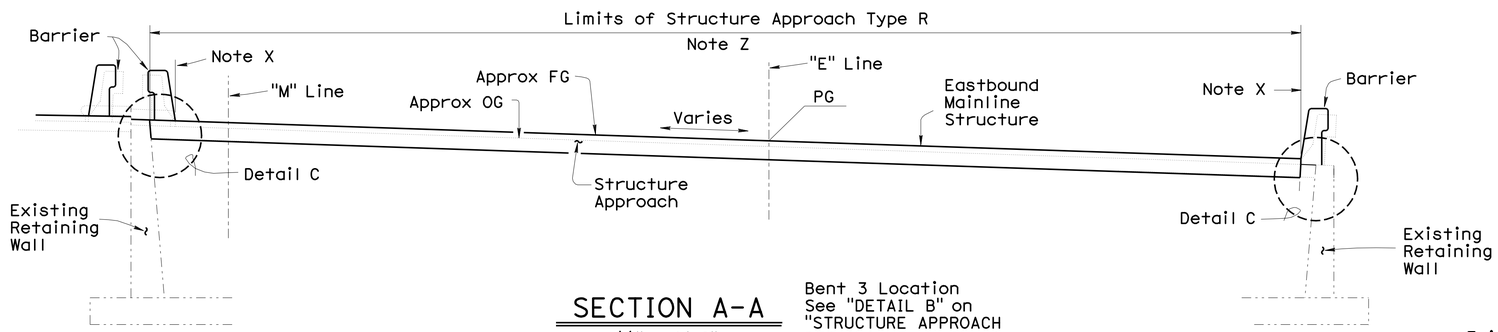

SECTION A-A

1/4" = 1'-0"

Bent 3 Location
See "DETAIL B" on "STRUCTURE APPROACH DETAILS No. 1" Sheet
Reinforcement Not Shown

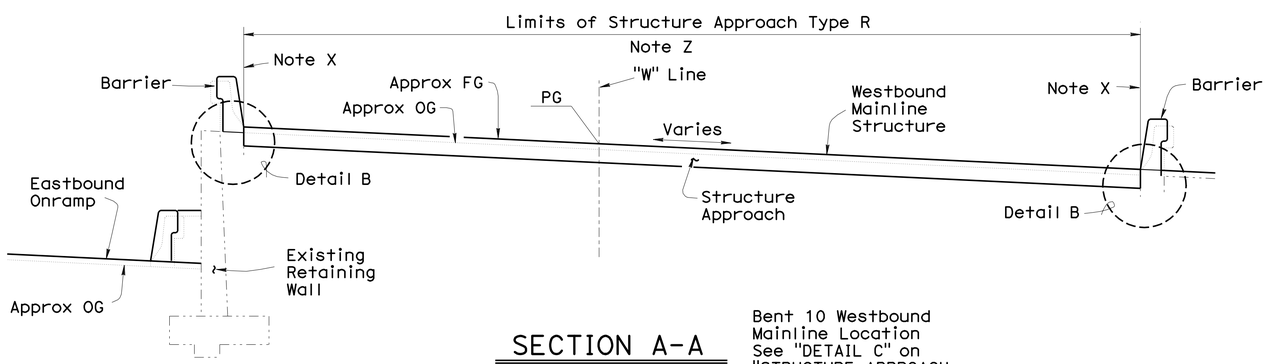

SECTION A-A

1/4" = 1'-0"

Bent 10 Westbound Mainline Location
See "DETAIL C" on "STRUCTURE APPROACH DETAILS No. 1" Sheet
Reinforcement Not Shown

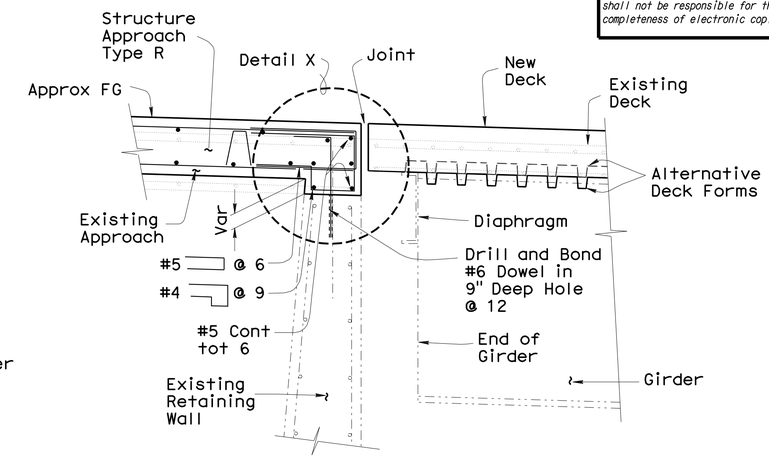

SECTION B-B

3/4" = 1'-0"

Bent 1 and Bent 3 Locations, see "DETAIL A" and "DETAIL B" on "STRUCTURE APPROACH DETAILS No. 1" Sheet

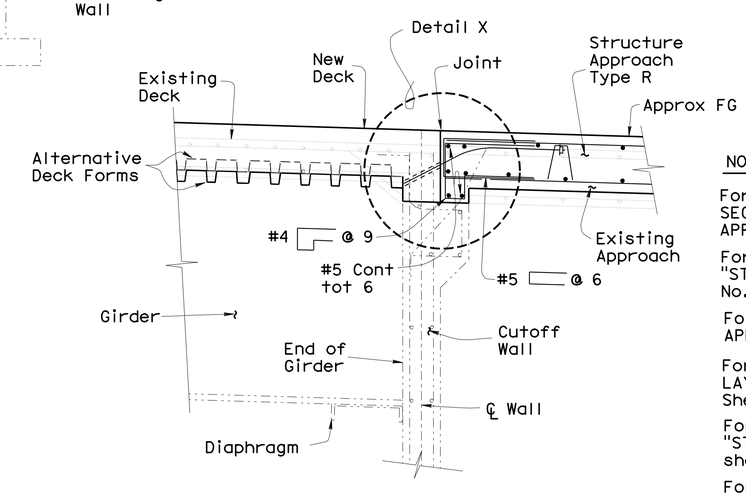

SECTION B-B

3/4" = 1'-0"

Bent 10 Eastbound Mainline Location
See "DETAIL C" on "STRUCTURE APPROACH DETAILS No. 1" Sheet

NOTES:

For Locations of SECTIONS A-A and SECTIONS B-B, see "STRUCTURE APPROACH DETAILS No. 1" Sheet

For DETAIL A Through DETAIL C, see "STRUCTURE APPROACH DETAILS No. 4" Sheet

For DETAIL X, see "STRUCTURE APPROACH DETAILS No. 5" Sheet

For Details Not Shown, see "ABUTMENT LAYOUT" and "ABUTMENT DETAILS" Sheets

For Stage Construction Details, see "STAGE CONSTRUCTION DETAILS" sheets

For Removal Details, see "REMOVAL DETAILS" sheets

Chain Link Railing Not Shown

LEGEND:

Denotes Existing Structure

Denotes New Construction

All Reinforcement Shall Be Epoxy Coated.

Note Z
LImits and Interface Details May be Adjusted Depending Upon Actual Field Conditions. See STRUCTURE APPROACH TYPE R DETAILS No. 4" Sheet.
All Reinforcement shall be Epoxy Coated.

NOTE:
THE CONTRACTOR SHALL VERIFY ALL CONTROLLING FIELD DIMENSIONS BEFORE ORDERING OR FABRICATING ANY MATERIAL.

Note X
Location and Alignment of Inside Face of Existing Barrier = Location and Alignment of Inside Face of New Barrier

	BY	CHECKED
DESIGN	Mike Van De Pol	P. Norboe
DETAILS	Mike Van De Pol	P. Norboe
QUANTITIES	Mike Van De Pol	E. Franciliso

STATE OF CALIFORNIA
DEPARTMENT OF TRANSPORTATION

DIVISION OF ENGINEERING SERVICES
STRUCTURE DESIGN
DESIGN BRANCH 9

BRIDGE NO. 28-0140
MILE POST 5.8

BRIDGE DECK REPLACEMENT
SCOFIELD AVENUE UNDERCROSSING
STRUCTURE APPROACH TYPE R DETAILS No. 2

STRUCTURES DESIGN DETAIL SHEET (ENGLISH) (REV. 10/25/05)

ORIGINAL SCALE IN INCHES FOR REDUCED PLANS 0 1 2 3

UNIT: 3594
PROJECT NUMBER & PHASE: 04000004831
CONTRACT NO.: 04-1A3201

DISREGARD PRINTS BEARING EARLIER REVISION DATES 3-02-11

SHEET 89 OF 92

FILE => 28-0140-r-apprdets02.dgn

USERNAME => s114937 DATE PLOTTED => 06-JUN-2012 TIME PLOTTED => 15:28

DIST	COUNTY	ROUTE	POST MILES TOTAL PROJECT	SHEET No	TOTAL SHEETS
04	CC	580	5.5/6.2	253	301

REGISTERED CIVIL ENGINEER 5-1-12 DATE

6-4-12
PLANS APPROVAL DATE

The State of California or its officers or agents shall not be responsible for the accuracy or completeness of electronic copies of this plan sheet.

REGISTERED PROFESSIONAL ENGINEER Mike Van De Pol No. C35610 Exp. 9/30/2013 CIVIL STATE OF CALIFORNIA

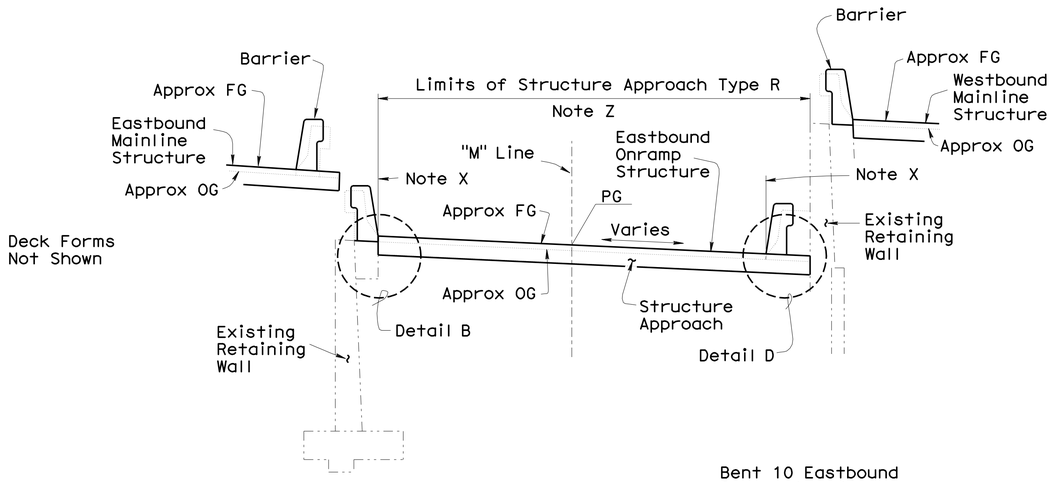

SECTION A-A

1/4" = 1'-0"

Bent 10 Eastbound Onramp Location
See "DETAIL C" on "STRUCTURE APPROACH DETAILS No. 1" Sheet

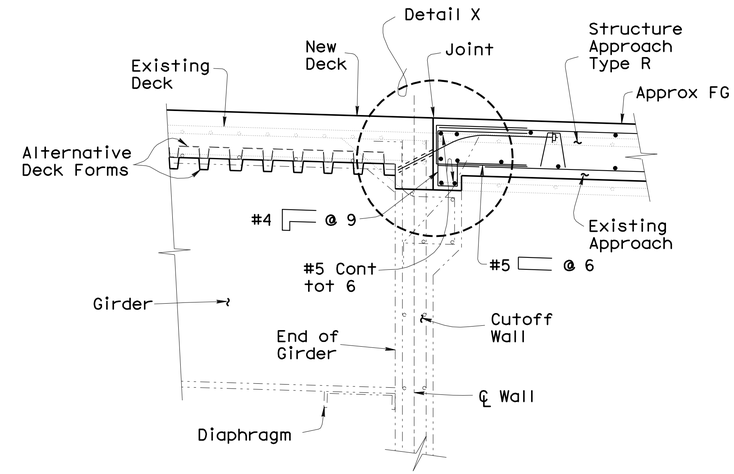

SECTION B-B

3/4" = 1'-0"

Bent 10 Eastbound Onramp Location
See "DETAIL C" on "STRUCTURE APPROACH DETAILS No. 1" Sheet

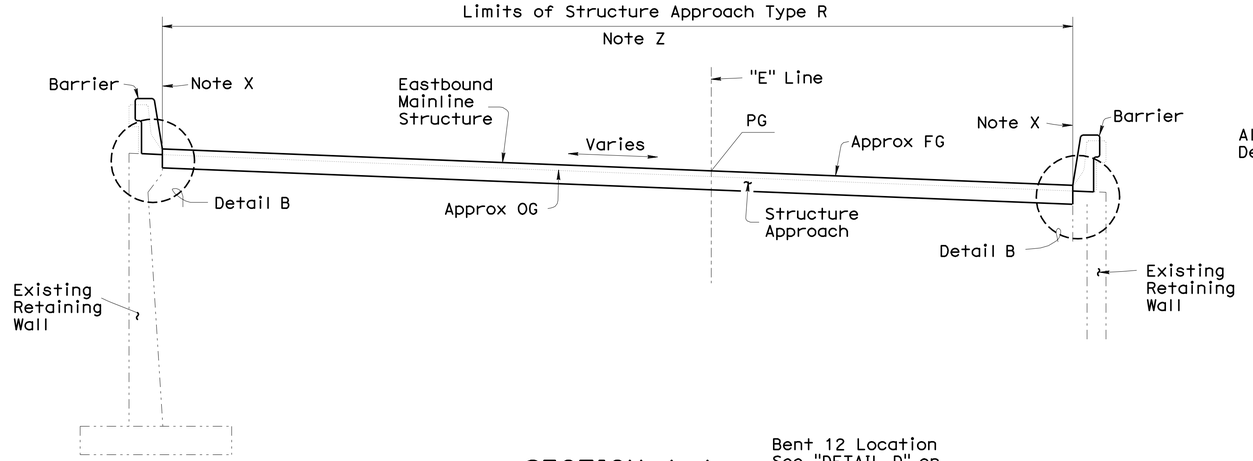

SECTION A-A

1/4" = 1'-0"

Bent 12 Location
See "DETAIL D" on "STRUCTURE APPROACH DETAILS No. 1" Sheet

Stage Construction Joints Not Shown

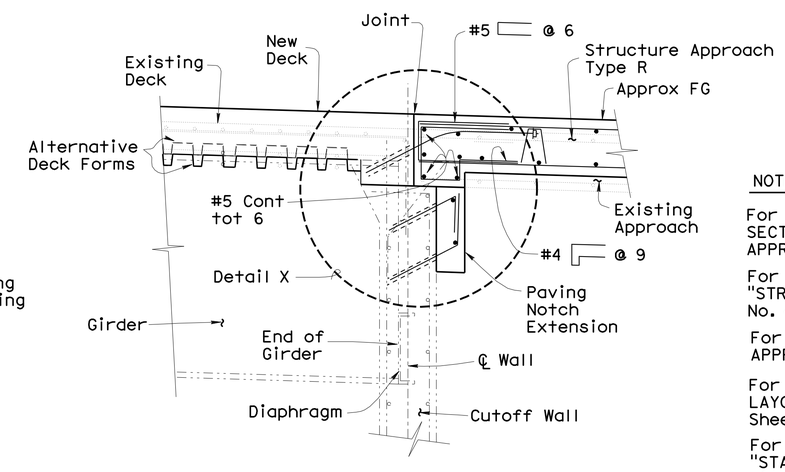

SECTION B-B

3/4" = 1'-0"

Bent 12 Location
See "DETAIL D" on "STRUCTURE APPROACH DETAILS No. 1" Sheet

NOTES:

For Locations of SECTIONS A-A and SECTIONS B-B, see "STRUCTURE APPROACH DETAILS No. 1" Sheet

For DETAIL A Through DETAIL C, see "STRUCTURE APPROACH DETAILS No. 4" Sheet

For DETAIL X, see "STRUCTURE APPROACH DETAILS No. 5" Sheet

For Details Not Shown, see "ABUTMENT LAYOUT" and "ABUTMENT DETAILS" Sheets

For Stage Construction Details, see "STAGE CONSTRUCTION DETAILS" sheets

For Removal Details, see "REMOVAL DETAILS" sheets

Chain Link Railing Not Shown

LEGEND:

Denotes Existing Structure

Denotes New Construction

All Reinforcement Shall Be Epoxy Coated.

Note Z
LImits and Interface Details May be Adjusted Depending Upon Actual Field Conditions. See STRUCTURE APPROACH TYPE R DETAILS No. 4" Sheet.
All Reinforcement shall be Epoxy Coated.

NOTE:
THE CONTRACTOR SHALL VERIFY ALL CONTROLLING FIELD DIMENSIONS BEFORE ORDERING OR FABRICATING ANY MATERIAL.

Note X
Location and Alignment of Inside Face of Existing Barrier = Location and Alignment of Inside Face of New Barrier

	BY	CHECKED
DESIGN	Mike Van De Pol	P. Norboe
DETAILS	Mike Van De Pol	P. Norboe
QUANTITIES	Mike Van De Pol	E. Franciliso

STATE OF CALIFORNIA
DEPARTMENT OF TRANSPORTATION

DIVISION OF ENGINEERING SERVICES
STRUCTURE DESIGN
DESIGN BRANCH 9

BRIDGE NO. 28-0140
MILE POST 5.8

BRIDGE DECK REPLACEMENT
SCOFIELD AVENUE UNDERCROSSING
STRUCTURE APPROACH TYPE R DETAILS No. 3

STRUCTURES DESIGN DETAIL SHEET (ENGLISH) (REV. 10/25/05)

ORIGINAL SCALE IN INCHES FOR REDUCED PLANS 0 1 2 3

UNIT: 3594
PROJECT NUMBER & PHASE: 04000004831
CONTRACT NO.: 04-1A3201

DISREGARD PRINTS BEARING EARLIER REVISION DATES 3-02-11

SHEET 90 OF 92

FILE => 28-0140-r-apprdets03.dgn

USERNAME => s114937 DATE PLOTTED => 06-JUN-2012 TIME PLOTTED => 15:35

DIST	COUNTY	ROUTE	POST MILES TOTAL PROJECT	SHEET No	TOTAL SHEETS
04	CC	580	5.5/6.2	254	301

REGISTERED CIVIL ENGINEER 5-1-12 DATE

6-4-12
PLANS APPROVAL DATE

REGISTERED PROFESSIONAL ENGINEER Mike Van De Pol No. C35610 Exp. 9/30/2013 CIVIL STATE OF CALIFORNIA

The State of California or its officers or agents shall not be responsible for the accuracy or completeness of electronic copies of this plan sheet.

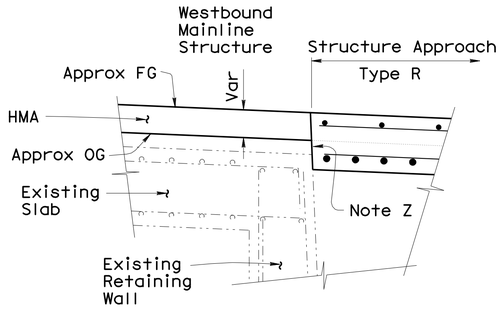

DETAIL A
3/4" = 1'-0"
Bent 1 Westbound Mainline Structure

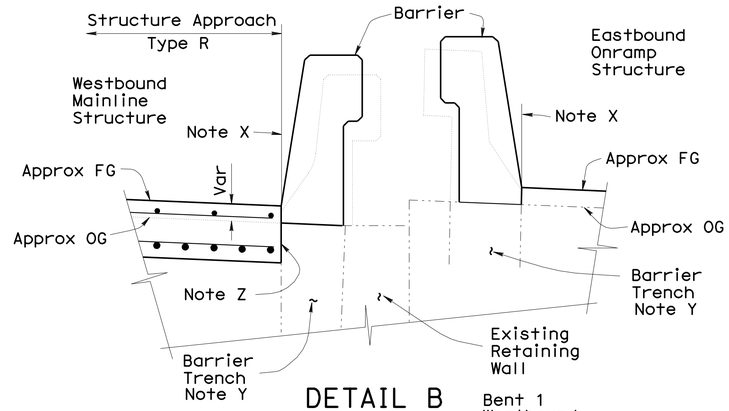

DETAIL B
3/4" = 1'-0"
Bent 1 Westbound Mainline Structure

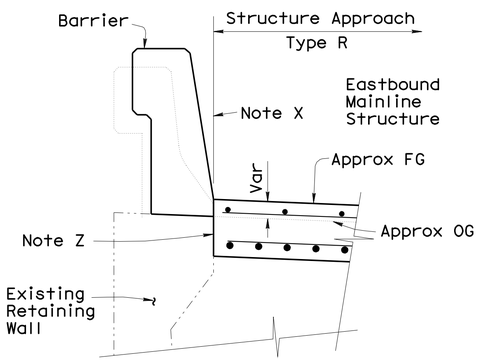

DETAIL B
3/4" = 1'-0"
Bent 12 Eastbound Mainline Structure

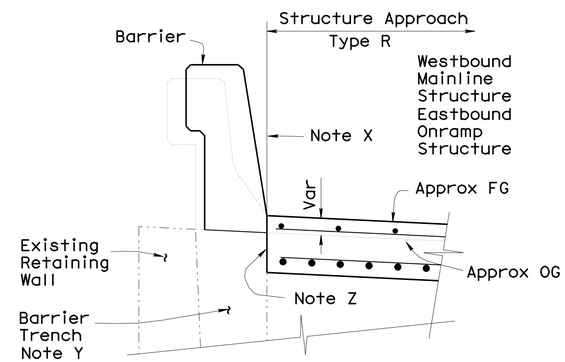

DETAIL B
3/4" = 1'-0"
Bent 10 Westbound Mainline Structure Eastbound Onramp Structure

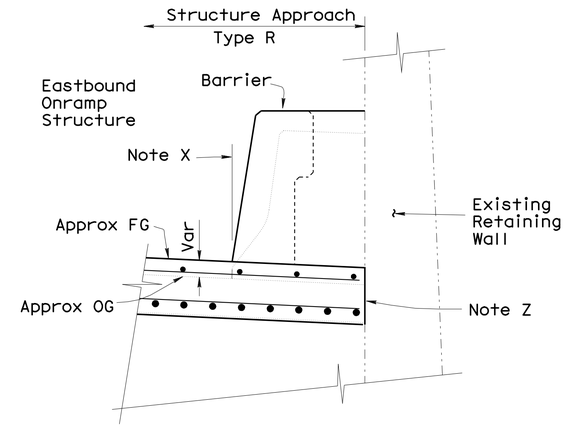

DETAIL D
3/4" = 1'-0"
Bent 10 Eastbound Onramp Structure

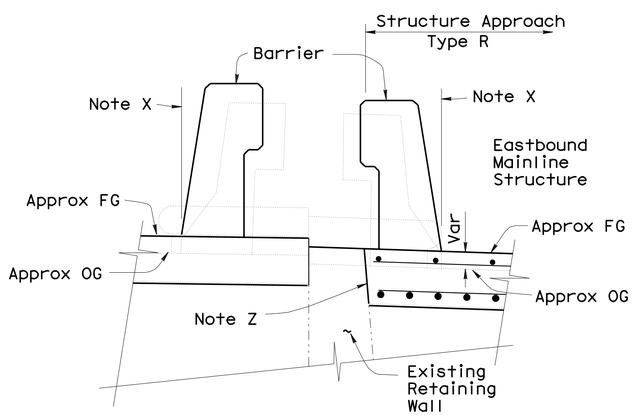

DETAIL C
3/4" = 1'-0"
Bent 3 Eastbound Mainline Structure

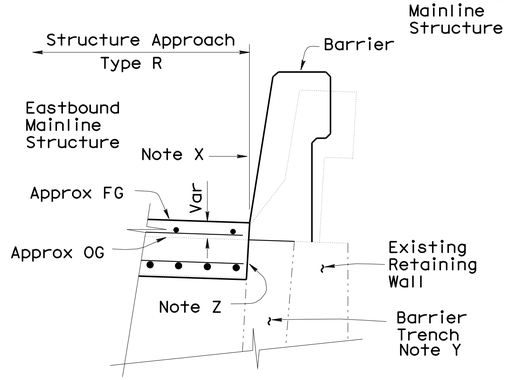

DETAIL C
3/4" = 1'-0"
Bent 3 Eastbound Mainline Structure

NOTE:
THE CONTRACTOR SHALL VERIFY ALL CONTROLLING FIELD DIMENSIONS BEFORE ORDERING OR FABRICATING ANY MATERIAL.

Barrier Face Architectural Texture Not Shown

Note X

Face of Existing Concrete Barrier = Face of New Concrete Barrier

Note Y

At Option of Contractor Barrier Trench May be Removed Along With Barrier Section, as Approved by the Engineer. If Trench is Removed, New Barrier Vertical Reinf Shall Extend to Bottom of New Trench

Note Z

Hardboard and Seal. For Details, see "STRUCTURE APPROACH DETAILS No. 5" Sheet

Uncertainties Exist Regarding the Details of Certain Barrier Interface Locations. Details Shown are Approximate. The Contractor Shall Perform Field Inspections to Identify Actual Barrier Interface Details. Details Shown Herein May be Adjusted, as Approved by the Engineer

All Structure Approach Reinforcement Shall be Epoxy Coated.

NOTES

For Locations of DETAIL A Through DETAIL C, see "STRUCTURE APPROACH DETAILS No. 2" and "STRUCTURE APPROACH No. 3" Sheets

For Location of DETAIL D, see "STRUCTURE APPROACH DETAILS No. 3" Sheet

For Details X, see "STRUCTURE APPROACH DETAILS No. 5" Sheet

For Details Not Shown, see "ABUTMENT DETAILS" and "BARRIER DETAILS" Sheets

For Stage Construction Details, see "STAGE CONSTRUCTION DETAILS" sheets

For Removal Details, see "REMOVAL DETAILS" sheets

Chain Link Railing Not Shown

Barrier Reinforcement Not Shown

Limits of Structure Approach May be Adjusted, as Approved by the Engineer

-·-·-·- Denotes Existing Structure
——— Denotes New Construction

	BY	CHECKED
DESIGN	Mike Van De Pol	P. Norboe
DETAILS	Mike Van De Pol	P. Norboe
QUANTITIES	Mike Van De Pol	E. Franciliso

STATE OF CALIFORNIA
DEPARTMENT OF TRANSPORTATION

DIVISION OF ENGINEERING SERVICES
STRUCTURE DESIGN
DESIGN BRANCH 9

BRIDGE NO. 28-0140
MILE POST 5.8

BRIDGE DECK REPLACEMENT
SCOFIELD AVENUE UNDERCROSSING
STRUCTURE APPROACH TYPE R DETAILS No. 4

STRUCTURES DESIGN DETAIL SHEET (ENGLISH) (REV. 10/25/05)

ORIGINAL SCALE IN INCHES FOR REDUCED PLANS 0 1 2 3

UNIT: 3594
PROJECT NUMBER & PHASE: 04000004831
CONTRACT NO.: 04-1A3201

DISREGARD PRINTS BEARING EARLIER REVISION DATES 3-02-11

SHEET 91 OF 92

FILE => 28-0140-r-apprdets04.dgn

USERNAME => s114337 DATE PLOTTED => 06-JUN-2012 TIME PLOTTED => 15:28

DIST	COUNTY	ROUTE	POST MILES TOTAL PROJECT	SHEET No	TOTAL SHEETS
04	CC	580	5.5/6.2	255	301

REGISTERED CIVIL ENGINEER 5-1-12 DATE

6-4-12
PLANS APPROVAL DATE

REGISTERED PROFESSIONAL ENGINEER Mike Van De Pol No. C35610 Exp. 9/31/2013 CIVIL STATE OF CALIFORNIA

The State of California or its officers or agents shall not be responsible for the accuracy or completeness of electronic copies of this plan sheet.

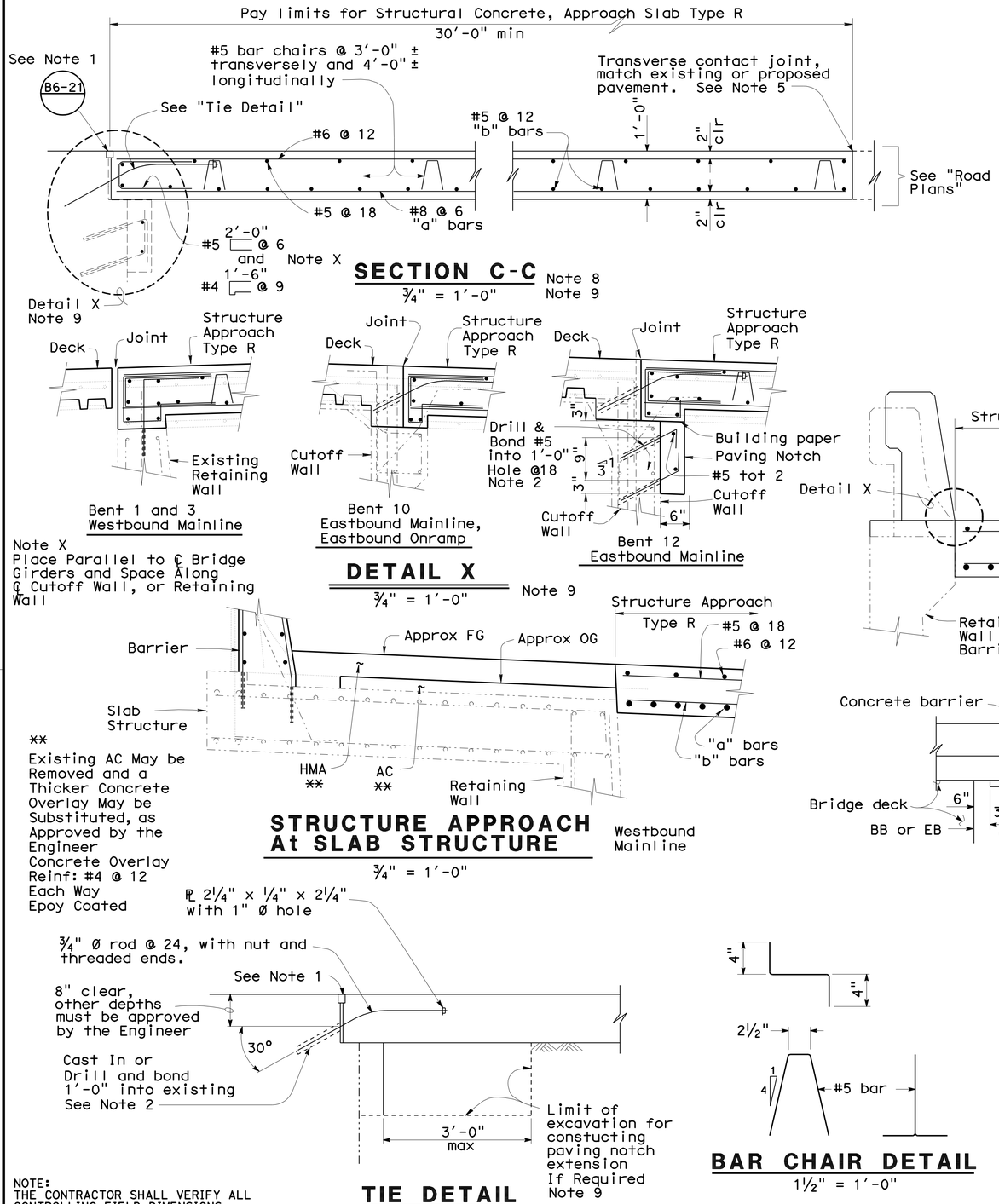

SECTION C-C
¾" = 1'-0"

DETAIL X
¾" = 1'-0"

STRUCTURE APPROACH At SLAB STRUCTURE
¾" = 1'-0"

TIE DETAIL
¾" = 1'-0"

NOTE:
THE CONTRACTOR SHALL VERIFY ALL CONTROLLING FIELD DIMENSIONS BEFORE ORDERING OR FABRICATING ANY MATERIAL.

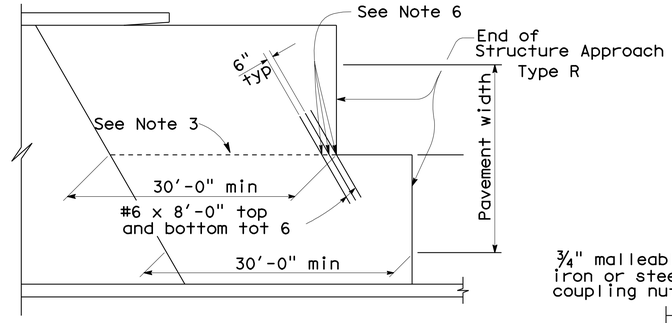

STRUCTURE APPROACH END STAGGER DETAIL
No Scale

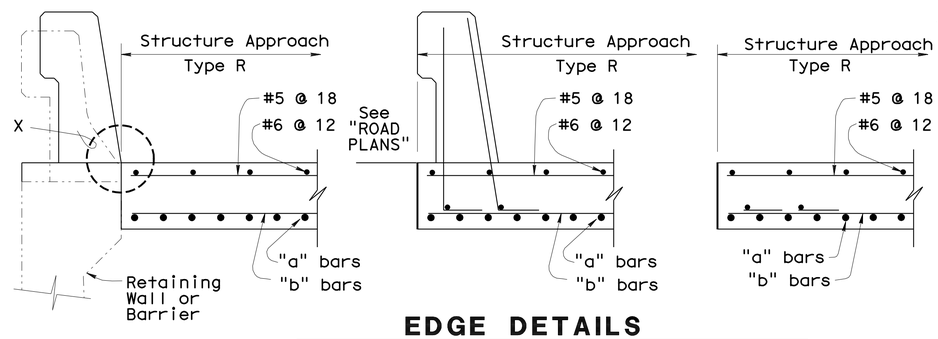

EDGE DETAILS
No Scale

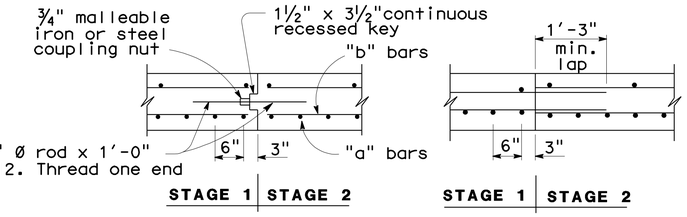

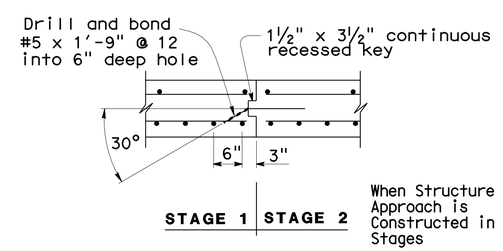

When Structure Approach is Constructed in Stages

LONGITUDINAL CONSTRUCTION JOINT ALTERNATIVES
¾" = 1'-0"

Stage Numbers Shown Here Do Not Correspond with Actual Construction Stage Numbers Shown in the "STAGE CONSTRUCTION" Sheets

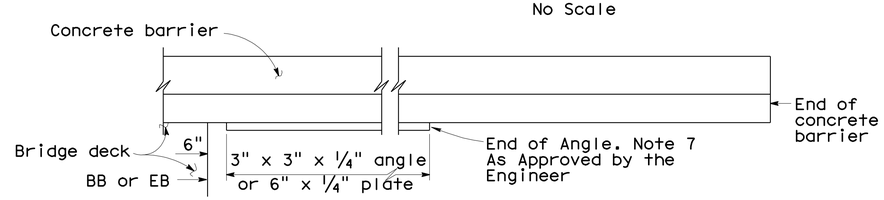

PART PLAN
No Scale

BAR CHAIR DETAIL
1½" = 1'-0"

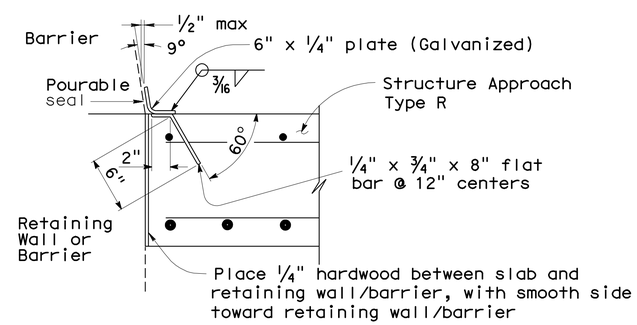

DETAIL X
No Scale

NOTES:

1. For details not shown or noted, see Structure Plans. Adjust bar reinforcement to clear a sawcut for sealed joint, when required.
2. Space to avoid existing main reinforcement.
3. Longitudinal construction joints,when permitted by the Engineer,shall be located on lane lines.
4. Transverse contact joint shall be a minimum of 5'-0" from an existing or constructed weakened plane joint.
5. For transverse contact joint with new PCC paving. refer to Standard Plan P10.
6. Couplers are required for stage construction.
7. End angle or plate at beginning of barrier transition, end of wingwall/retaining wall or end of structure approach as applicable.
8. For locations of Section C-C, see "STRUCTURE APPROACH DETAILS No. 1" sheet
9. See "ABUTMENT DETAILS" Sheets and "STRUCTURE "APPROACH DETAILS No. 2" Through "STRUCTURE APPROACH DETAILS No. 4" Sheets

All Structure Approach Reinforcement Shall be Epoxy Coated.

Denotes Existing Structure
Denotes New Construction

	BY	CHECKED
DESIGN	Mike Van De Pol	P. Norboe
DETAILS	Mike Van De Pol	P. Norboe
QUANTITIES	Mike Van De Pol	E. Franciliso

STATE OF CALIFORNIA
DEPARTMENT OF TRANSPORTATION

DIVISION OF ENGINEERING SERVICES
STRUCTURE DESIGN
DESIGN BRANCH 9

BRIDGE NO. 28-0140
MILE POST 5.8

BRIDGE DECK REPLACEMENT
SCOFIELD AVENUE UNDERCROSSING
STRUCTURE APPROACH TYPE R DETAILS No. 5

STRUCTURES DESIGN DETAIL SHEET (ENGLISH) (REV. 10/25/05)

ORIGINAL SCALE IN INCHES FOR REDUCED PLANS 0 1 2 3

UNIT: 3594
PROJECT NUMBER & PHASE: 04000004831
CONTRACT NO.: 04-1A3201

DISREGARD PRINTS BEARING EARLIER REVISION DATES 3-02-11

SHEET 92 OF 92

FILE => 28-0140-r-apprdets05.dgn

USERNAME => s114937 DATE PLOTTED => 06-JUN-2012 TIME PLOTTED => 15:28

DIST	COUNTY	ROUTE	POST MILES TOTAL PROJECT	SHEET No	TOTAL SHEETS
04	CC	580	5.5/6.2	256	301

REGISTERED CIVIL ENGINEER 5-1-12 DATE

6-4-12
PLANS APPROVAL DATE

REGISTERED PROFESSIONAL ENGINEER Mike Van De Pol No. C35610 Exp. 9/30/2013 CIVIL STATE OF CALIFORNIA

The State of California or its officers or agents shall not be responsible for the accuracy or completeness of electronic copies of this plan sheet.

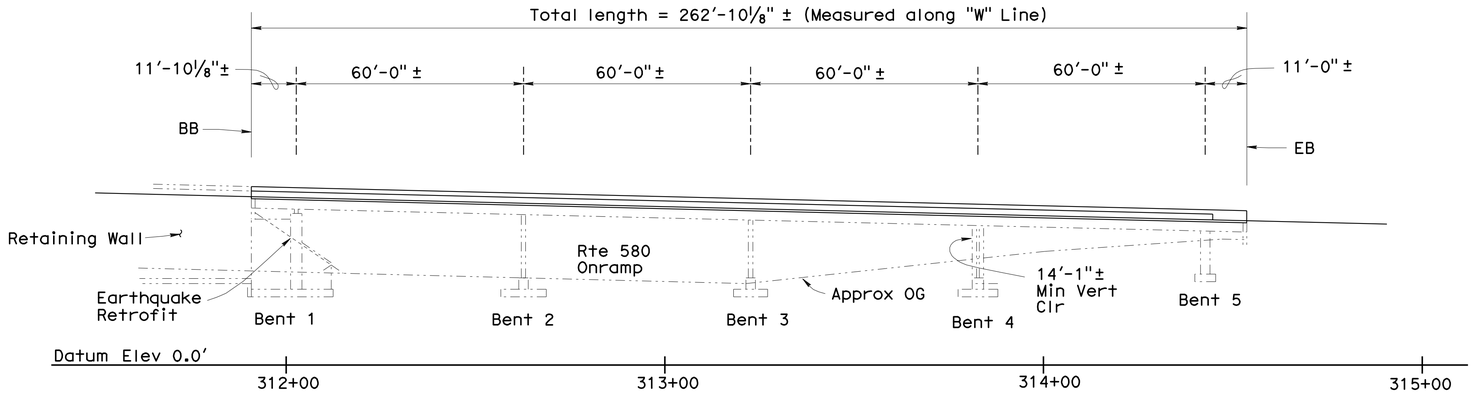

MIRROR ELEVATION

1" = 20'

Elevation Along Left Edge of Deck

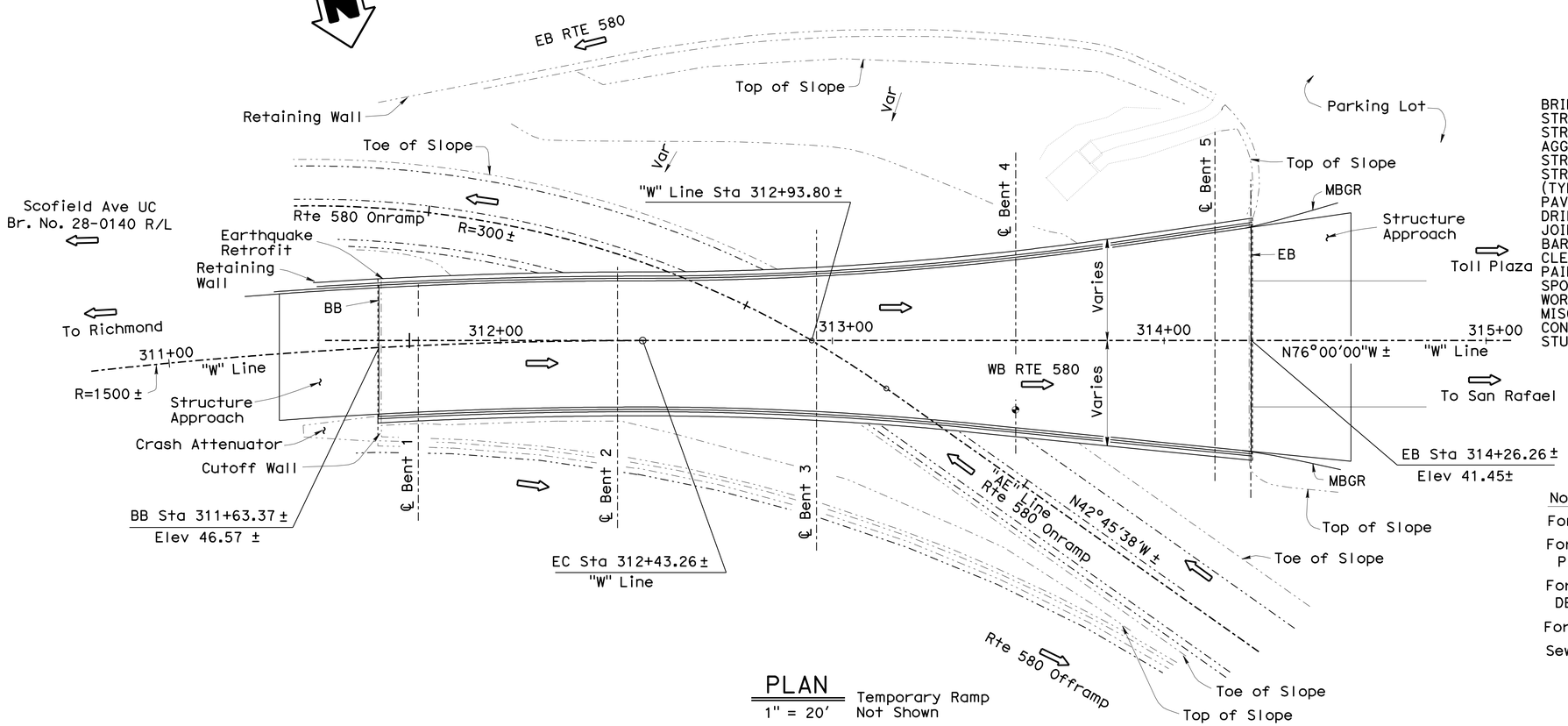

PLAN

1" = 20'

Temporary Ramp Not Shown

QUANTITIES

BRIDGE REMOVAL (PORTION), LOCATION B	LUMP	SUM
STRUCTURE EXCAVATION (BRIDGE)	4	CY
STRUCTURE BACKFILL (BRIDGE)	4	CY
AGGREGATE BASE (APPROACH SLAB)	12	CY
STRUCTURAL CONCRETE, BRIDGE	365	CY
STRUCTURAL CONCRETE, APPROACH SLAB (TYPE R MODIFIED)	121	CY
PAVING NOTCH EXTENSION	108	CF
DRILL AND BOND DOWEL	107	LF
JOINT SEAL (MR 1½")	106	LF
BAR REINFORCING STEEL (BRIDGE) EPOXY COATED	150,000	LB
CLEAN STRUCTURAL STEEL (EXISTING BRIDGE)	LUMP	SUM
PAINT STRUCTURAL STEEL (EXISTING BRIDGE)	LUMP	SUM
SPOT BLAST CLEAN AND PAINT UNDERCOAT	4,200	SQFT
WORK AREA MONITORING	LUMP	SUM
MISCELLANEOUS METAL (BRIDGE)	66	LB
CONCRETE BARRIER (TYPE 732 MODIFIED)	539	LF
STUD CONNECTOR	4020	LF

Notes

For Typical Sections, see "GENERAL PLAN No. 2" Sheet

For GENERAL NOTES, STANDARD PLANS and INDEX TO PLANS, see "INDEX TO PLANS" Sheet

For Other Details, see "PROFILE GRADE AND ALIGNMENT DETAILS" Sheet

For MBGR, See "ROAD PLANS"

Sewer Main Not Shown

⇨ Denotes Direction of Traffic

Denotes Existing Structure

Denotes New Construction

Point of Minimum Vertical Clearance

NOTE:
THE CONTRACTOR SHALL VERIFY ALL CONTROLLING FIELD DIMENSIONS BEFORE ORDERING OR FABRICATING ANY MATERIAL.

BRIDGE DECK REPLACEMENT
WESTERN DRIVE UNDERCROSSING
GENERAL PLAN No. 1

Gordon Danke
DESIGN ENGINEER

	BY	CHECKED
DESIGN	M. Van De Pol	P. Norboe
DETAILS	M. Van De Pol	P. Norboe
QUANTITIES	M. Van De Pol	I. Yalan

LOAD & RESISTANCE FACTOR DESIGN — LIVE LOADING: HL93 W/"LOW-BOY"; PERMIT DESIGN VEHICLE

LAYOUT — BY M. Van De Pol — CHECKED P. Norboe

SPECIFICATIONS — BY Sirisha Nelapatia — PLANS AND SPECS COMPARED Sirisha Nelapatia

STATE OF CALIFORNIA
DEPARTMENT OF TRANSPORTATION

DIVISION OF ENGINEERING SERVICES
STRUCTURE DESIGN
DESIGN BRANCH 9

BRIDGE NO. 28-0141
POST MILE 6.0

ORIGINAL SCALE IN INCHES FOR REDUCED PLANS 0 1 2 3

UNIT: 3594
PROJECT NUMBER & PHASE: 04000004831
CONTRACT NO.: 04-1A3201

DISREGARD PRINTS BEARING EARLIER REVISION DATES 3-02-11

SHEET 1 OF 27

USERNAME => s114937 DATE PLOTTED => 06-JUN-2012 TIME PLOTTED => 15:28

STRUCTURES DESIGN GENERAL PLAN SHEET (ENGLISH) (REV.07-24-06)

FILE => 28-0141-a-gp1.dgn

DIST	COUNTY	ROUTE	POST MILES TOTAL PROJECT	SHEET No	TOTAL SHEETS
04	CC	580	5.5/6.2	257	301

REGISTERED CIVIL ENGINEER 5-1-12 DATE

6-4-12
PLANS APPROVAL DATE

REGISTERED PROFESSIONAL ENGINEER Mike Van De Pol No. C35610 Exp. 9/30/2013 CIVIL STATE OF CALIFORNIA

The State of California or its officers or agents shall not be responsible for the accuracy or completeness of electronic copies of this plan sheet.

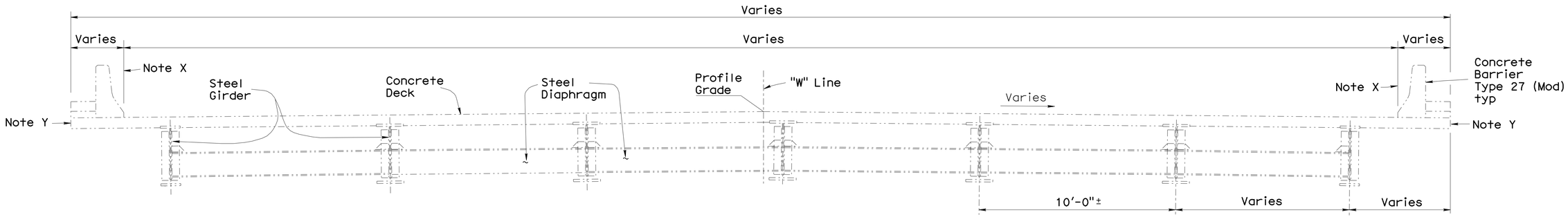

EXISTING TYPICAL SECTION

3/8" = 1'-0"

Existing Deck, Barriers and Light Standards to be Removed

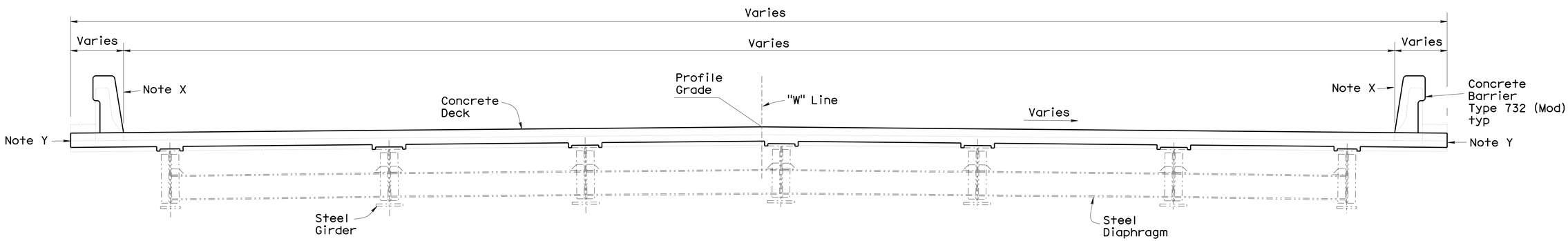

NEW TYPICAL SECTION

3/8" = 1'-0"

New Deck, Barriers and and Light Standards

Notes

For Plan and Elevation, see "GENERAL PLAN No. 1" Sheet

Spans 4 and 4C Shown, Other Spans Similar

Sections Drawn Normal to ℄ Bridge

For Additional Details, see "TYPICAL SECTION" Sheets and "REMOVAL DETAILS" Sheets

Bents Not Shown

Deck and Barrier Reinforcement Not Shown

All Structural Steel Components Not Shown

Sewer Main and Conduits Not Shown

Denotes Existing Structure

Denotes New Construction

Note X

Location and Alignment of the Inside Face of Existing Barrier = Location and Alignment of the Inside Face of New Barrier

Note Y

Location and Alignment of the Existing Edge of Deck = Location and Alignment of the New Edge of Deck

NOTE:
THE CONTRACTOR SHALL VERIFY ALL CONTROLLING FIELD DIMENSIONS BEFORE ORDERING OR FABRICATING ANY MATERIAL.

BRIDGE DECK REPLACEMENT
WESTERN DRIVE UNDERCROSSING
GENERAL PLAN No. 2

Gordon Danke
DESIGN ENGINEER

	BY	CHECKED		
DESIGN	M. Van De Pol	P. Norboe	LOAD & RESISTANCE FACTOR DESIGN	LIVE LOADING: HL93 W/"LOW-BOY"; PERMIT DESIGN VEHICLE
DETAILS	M. Van De Pol	P. Norboe	LAYOUT: M. Van De Pol	CHECKED: P. Norboe
QUANTITIES	M. Van De Pol	I. Yalan	SPECIFICATIONS: Sirisha Nelapatia	PLANS AND SPECS COMPARED: Sirisha Nelapatia

STATE OF CALIFORNIA
DEPARTMENT OF TRANSPORTATION

DIVISION OF ENGINEERING SERVICES
STRUCTURE DESIGN
DESIGN BRANCH 9

BRIDGE NO. 28-0141
POST MILE 6.0

ORIGINAL SCALE IN INCHES FOR REDUCED PLANS 0 1 2 3

UNIT: 3594
PROJECT NUMBER & PHASE: 04000004831
CONTRACT NO.: 04-1A3201

DISREGARD PRINTS BEARING EARLIER REVISION DATES 3-02-11

SHEET 2 OF 27

STRUCTURES DESIGN GENERAL PLAN SHEET (ENGLISH) (REV.07-24-06)

FILE => 28-0141-a-gp2.dgn

USERNAME => s114937 DATE PLOTTED => 06-JUN-2012 TIME PLOTTED => 16:01

DIST	COUNTY	ROUTE	POST MILES TOTAL PROJECT	SHEET No	TOTAL SHEETS
04	CC	580	5.5/6.2	258	301

REGISTERED CIVIL ENGINEER 5-1-12 DATE

6-4-12
PLANS APPROVAL DATE

REGISTERED PROFESSIONAL ENGINEER Mike Van De Pol No. C35610 Exp. 9/31/2013 CIVIL STATE OF CALIFORNIA

The State of California or its officers or agents shall not be responsible for the accuracy or completeness of electronic copies of this plan sheet.

INDEX TO PLANS

Sheet No.	Description
1.	GENERAL PLAN No. 1
2.	GENERAL PLAN No. 2
3.	INDEX TO PLANS
4.	PROFILE GRADE AND ALIGNMENT DETAILS
5.	DECK CONTOURS
6.	ABUTMENT DETAILS No. 1
7.	ABUTMENT DETAILS No. 2
8.	BENT DETAILS No. 1
9.	BENT DETAILS No. 2
10.	TYPICAL SECTION No. 1
11.	TYPICAL SECTION No. 2
12.	GIRDER DETAILS
13.	DECK REINFORCEMENT DETAILS
14.	BARRIER DETAILS No. 1
15.	BARRIER DETAILS No. 2
16.	DRAINAGE DETAILS
17.	REMOVAL DETAILS No. 1
18.	REMOVAL DETAILS No. 2
19.	BENT RETROFIT DETAILS No. 1
20.	BENT RETROFIT DETAILS No. 2
21.	CLEAN AND PAINT DETAILS No. 1
22.	CLEAN AND PAINT DETAILS No. 2
23.	SEWER MAIN DETAILS
24.	MISCELLANEOUS DETAILS
25.	STRUCTURE APPROACH DETAILS No. 1
26.	STRUCTURE APPROACH DETAILS No. 2
27.	STRUCTURE APPROACH DETAILS No. 3

STANDARD PLANS Dated May 2006

	A10A	Acronyms and Abbreviations (A-L)
	A10B	Acronyms and Abbreviations (M-Z)
	A10C	Symbols (Sheet 1 of 2)
	A10D	Symbols (Sheet 2 of 2)
	A62B	Limits of Payment for Excavaton and Backfill Bridge
	B0-1	Bridge Details
	B0-3	Bridge Details
	B0-5	Bridge Details
	B0-13	Bridge Details
RSP	B6-21	Joint Seals (Max Movement Rating = 4")
	B11-55	Concrete Barrier Type 732
	B14-3	Communication and Sprinkler Control Conduit (Conduit Less Than 4")

STANDARD PLAN SHEET NO.

DETAIL NO.

GENERAL NOTES
LOAD AND RESISTANCE FACTOR DESIGN

DESIGN: AASHTO LRFD BRIDGE DESIGN SPECIFICATIONS, 3rd Edition with the 2005 Interims and Caltrans Amendments v3.06.01: with Bridge Design Specifications (1996 AASHTO with Interims and Revisions by CALTRANS)

SEISMIC DESIGN: Caltrans Seismic Design Criteria (SDC), Version 1.4 June 2006

DEAD LOAD: Includes 35 psf For Future Wearing Surface

SEISMIC LOADING: See Site Specific Acceleration Response Spectra Curve

REINFORCED CONCRETE: f_y = 60000 psi n = 9
f'_c = 5000 psi at 28 Days (Deck, Abutment Diaphragms)
f'_c = 3600 psi at 7 Days (Deck, Abutment Diaphragms)

STRUCTURAL STEEL: ASTM Designation A709, Grade 36
f_y = 36000 psi
f_u = 58000 psi

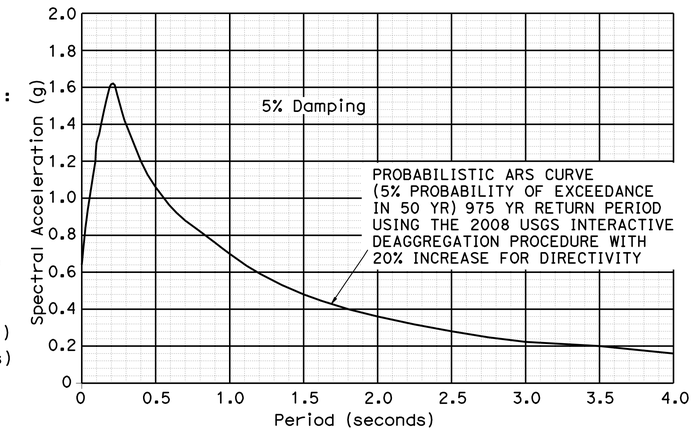

SITE SPECIFIC ACCELERATION RESPONSE SPECTRA CURVE

No Scale

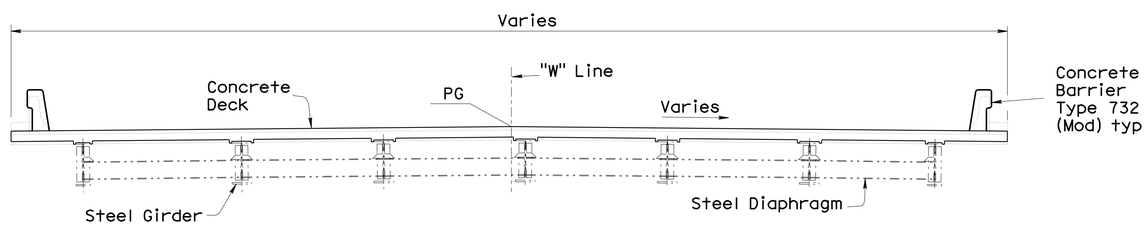

SECTION

Spans 4 and 5 Shown, Other Spans Similar
Section Drawn Normal to ℄ Bridge
Sewer Main Not Shown

CONCRETE STRENGTH AND TYPE LIMITS

3/16" = 1'-0"

Structural Concrete Bridge (5000 psi at 28 days)

For Additional Details, see "TYPICAL SECTION" Sheet

Denotes Existing Structure

Denotes New Construction

NOTE:
THE CONTRACTOR SHALL VERIFY ALL CONTROLLING FIELD DIMENSIONS BEFORE ORDERING OR FABRICATING ANY MATERIAL.

	BY	CHECKED
DESIGN	Mike Van De Pol	P. Norboe
DETAILS	Mike Van De Pol	P. Norboe
QUANTITIES	Mike Van De Pol	I. Yalan

STATE OF CALIFORNIA
DEPARTMENT OF TRANSPORTATION

DIVISION OF ENGINEERING SERVICES
STRUCTURE DESIGN
DESIGN BRANCH 9

BRIDGE NO. 28-0141
MILE POST 6.0

BRIDGE DECK REPLACEMENT
WESTERN DRIVE UNDERCROSSING
INDEX TO PLANS

STRUCTURES DESIGN DETAIL SHEET (ENGLISH) (REV. 10/25/05)

ORIGINAL SCALE IN INCHES FOR REDUCED PLANS 0 1 2 3

UNIT: 3594
PROJECT NUMBER & PHASE: 04000004831
CONTRACT NO.: 04-1A3201

DISREGARD PRINTS BEARING EARLIER REVISION DATES

REVISION DATES 3-02-11

SHEET 3 OF 27

FILE => 28-0141-b-itp.dgn

USERNAME => s114937 DATE PLOTTED => 06-JUN-2012 TIME PLOTTED => 16:01

DIST	COUNTY	ROUTE	POST MILES TOTAL PROJECT	SHEET No	TOTAL SHEETS
04	CC	580	5.5/6.2	259	301

REGISTERED CIVIL ENGINEER 5-1-12 DATE

6-4-12
PLANS APPROVAL DATE

The State of California or its officers or agents shall not be responsible for the accuracy or completeness of electronic copies of this plan sheet.

REGISTERED PROFESSIONAL ENGINEER
Mike Van De Pol
No. C35610
Exp. 9/30/2013
CIVIL
STATE OF CALIFORNIA

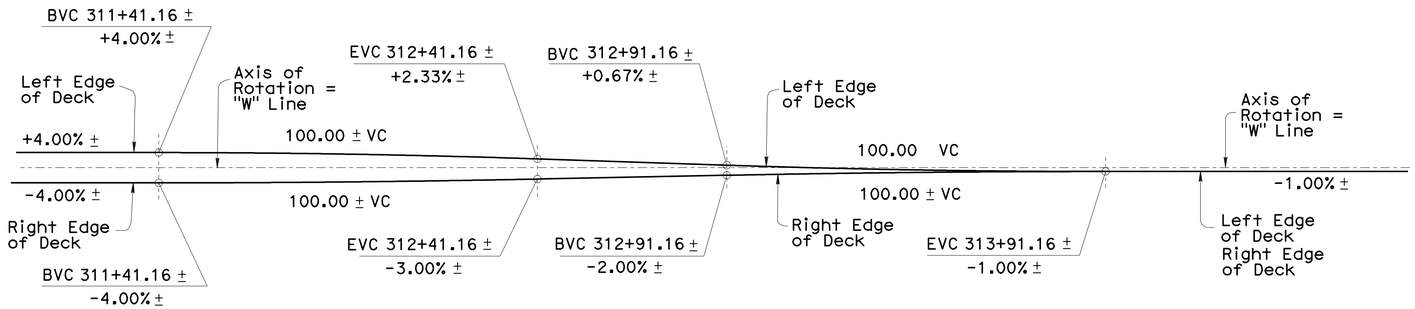

SUPERELEVATION
1" = 20'

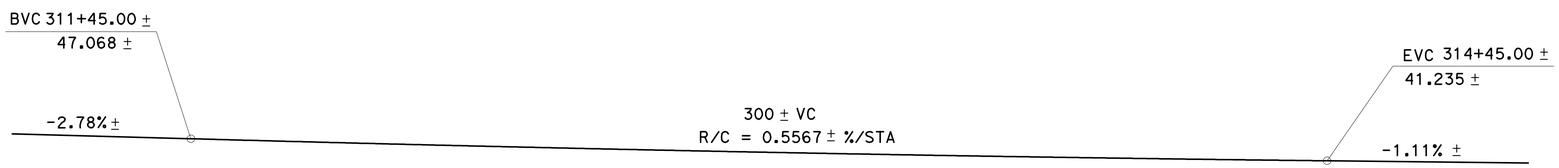

PROFILE GRADE
1" = 20'

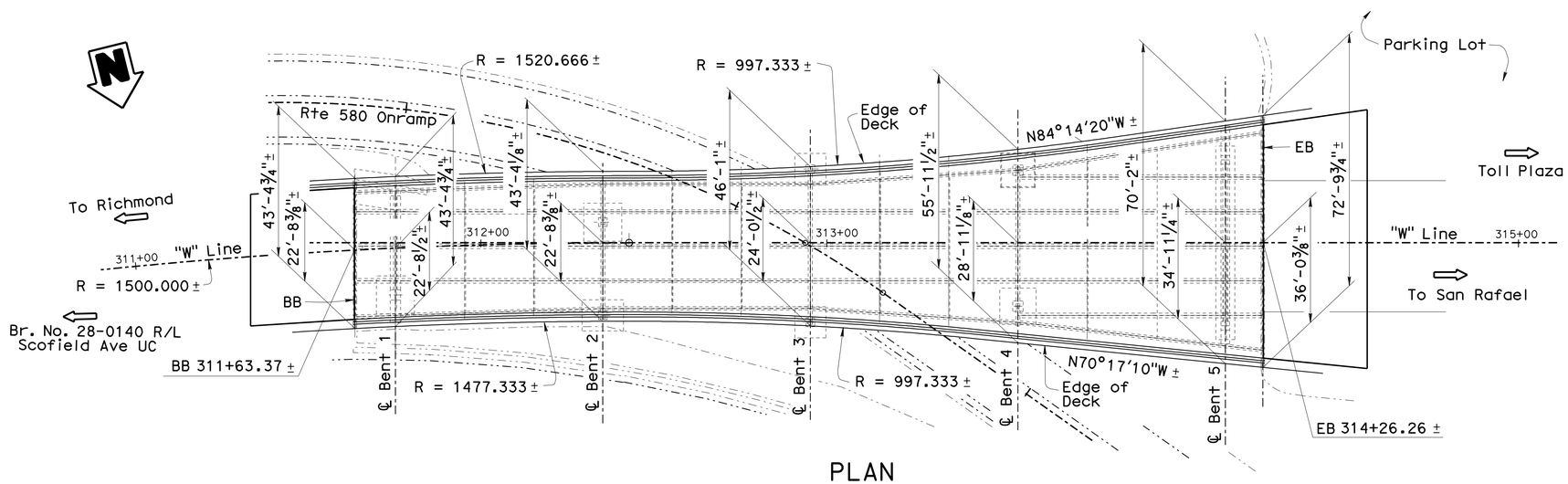

PLAN
1" = 20'

Notes

New Profile Grade and Superelevation Shown are Approximate. Exact Profile Grade and Superelevation Shall be Determined by the Contractor, as Approved by the Engineer

New Profile Grade and Superelevation is Based Upon Existing Girder Elevations, and the Minimum Fillet Thickness Employed. See "TYPICAL SECTION" Sheet

New Profile Grade and Superelevation May be Adjusted, as Approved by the Engineer

For Additional Details, see "TYPICAL SECTION" Sheets, "BENT DETAILS" Sheets, "ABUTMENT DETAILS" Sheets and "GENERAL PLAN No. 1" Sheet

Denotes Existing Structure
Denotes New Construction

NOTE:
THE CONTRACTOR SHALL VERIFY ALL CONTROLLING FIELD DIMENSIONS BEFORE ORDERING OR FABRICATING ANY MATERIAL.

	BY	CHECKED
DESIGN	Mike Van De Pol	P. Norboe
DETAILS	Mike Van De Pol	P. Norboe
QUANTITIES	Mike Van De Pol	P. Norboe

STATE OF CALIFORNIA
DEPARTMENT OF TRANSPORTATION

DIVISION OF ENGINEERING SERVICES
STRUCTURE DESIGN
DESIGN BRANCH 9

BRIDGE NO. 28-0141
MILE POST 6.0

BRIDGE DECK REPLACEMENT
WESTERN DRIVE UNDERCROSSING
PROFILE GRADE AND ALIGNMENT DETAILS

STRUCTURES DESIGN DETAIL SHEET (ENGLISH) (REV. 10/25/05)

ORIGINAL SCALE IN INCHES FOR REDUCED PLANS 0 1 2 3

UNIT: 3594
PROJECT NUMBER & PHASE: 04000004831
CONTRACT NO.: 04-1A3201

DISREGARD PRINTS BEARING EARLIER REVISION DATES 3-02-11

SHEET 4 OF 27

FILE => 28-0141-c-supr.dgn

USERNAME => s114937 DATE PLOTTED => 06-JUN-2012 TIME PLOTTED => 16:02

DIST	COUNTY	ROUTE	POST MILES TOTAL PROJECT	SHEET No	TOTAL SHEETS
04	CC	580	5.5/6.2	260	301

REGISTERED CIVIL ENGINEER 5-1-12 DATE

6-4-12
PLANS APPROVAL DATE

REGISTERED PROFESSIONAL ENGINEER
Mike Van De Pol
No. C35610
Exp. 9/30/2013
CIVIL
STATE OF CALIFORNIA

The State of California or its officers or agents shall not be responsible for the accuracy or completeness of electronic copies of this plan sheet.

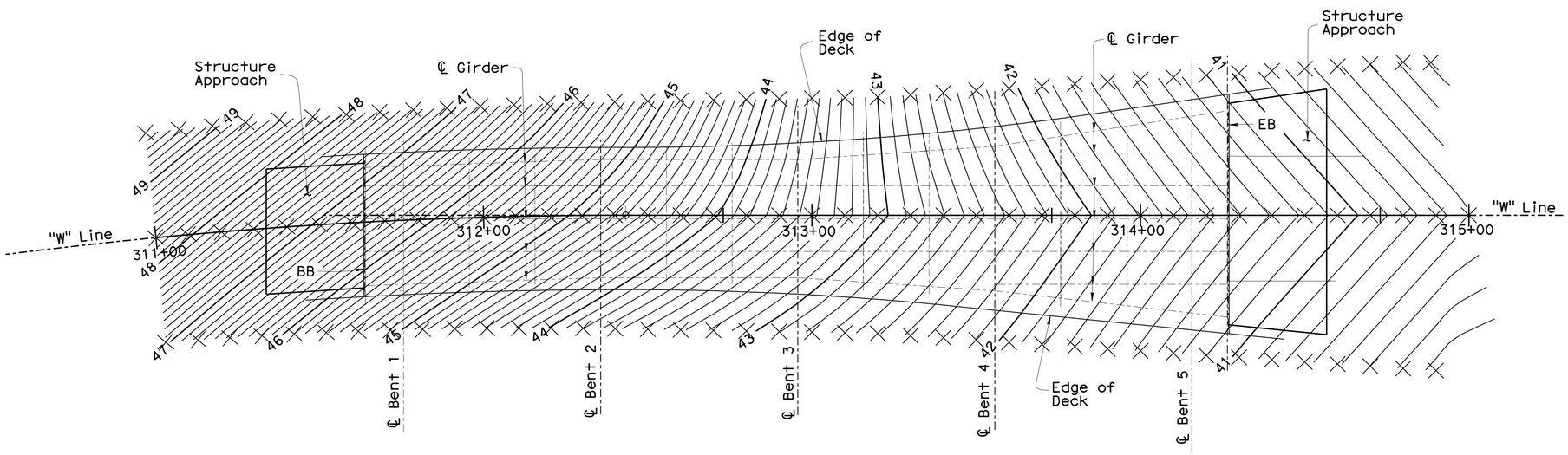

PLAN
1" = 20'

Notes:

× - 10 ft intervals station line

- Contours do not include camber

- Contour intervals = 0.1 ft

Notes

Deck Contours Shown are Approximate. Exact Profile Grade and Superelevation Shall be Determined by the Contractor, as Approved by the Engineer

Deck Contours are Based Upon Existing Girder Elevations, and the Fillet Thickness Employed. See "TYPICAL SECTION" Sheet

New Profile Grade and Superelevation May be Adjusted, as Approved by the Engineer

NOTE:
THE CONTRACTOR SHALL VERIFY ALL CONTROLLING FIELD DIMENSIONS BEFORE ORDERING OR FABRICATING ANY MATERIAL.

Denotes Existing Structure
Denotes New Construction

	BY	CHECKED
DESIGN	Mike Van De Pol	P. Norboe
DETAILS	Mike Van De Pol	P. Norboe
QUANTITIES	Mike Van De Pol	P. Norboe

STATE OF CALIFORNIA
DEPARTMENT OF TRANSPORTATION

DIVISION OF ENGINEERING SERVICES
STRUCTURE DESIGN
DESIGN BRANCH 9

BRIDGE NO. 28-0141
MILE POST 6.0

BRIDGE DECK REPLACEMENT
WESTERN DRIVE UNDERCROSSING
DECK CONTOURS

STRUCTURES DESIGN DETAIL SHEET (ENGLISH) (REV. 10/25/05)

ORIGINAL SCALE IN INCHES FOR REDUCED PLANS 0 1 2 3

UNIT: 259
PROJECT NUMBER & PHASE: 04000004831
CONTRACT NO.: 04-1A3201

DISREGARD PRINTS BEARING EARLIER REVISION DATES

SHEET 5 OF 27

FILE => 28-0141-d_dc01.dgn

USERNAME => s114337 DATE PLOTTED => 06-JUN-2012 TIME PLOTTED => 16:02

DIST	COUNTY	ROUTE	POST MILES TOTAL PROJECT	SHEET No.	TOTAL SHEETS
04	CC	580	5.5/6.2	261	301

REGISTERED CIVIL ENGINEER 5-1-12 DATE

6-4-12
PLANS APPROVAL DATE

REGISTERED PROFESSIONAL ENGINEER Mike Van De Pol No. C35610 Exp. 9/30/2013 CIVIL STATE OF CALIFORNIA

The State of California or its officers or agents shall not be responsible for the accuracy or completeness of electronic copies of this plan sheet.

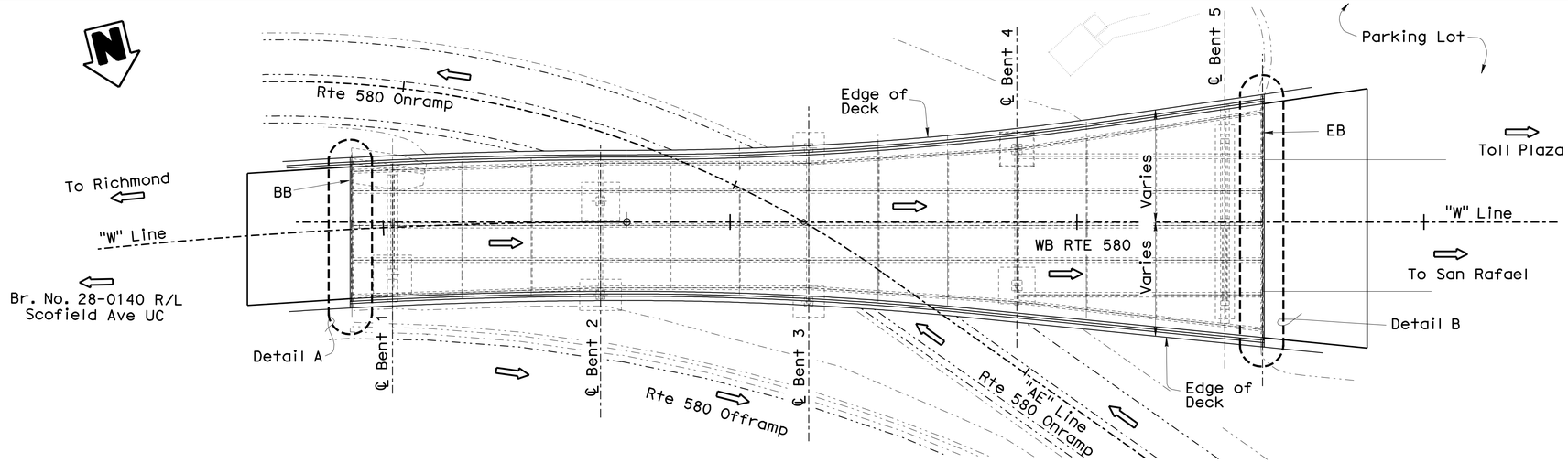

PLAN
1" = 20'

Sewer Main Not Shown
Crash Attenuator and Cutoff Wall Not Shown

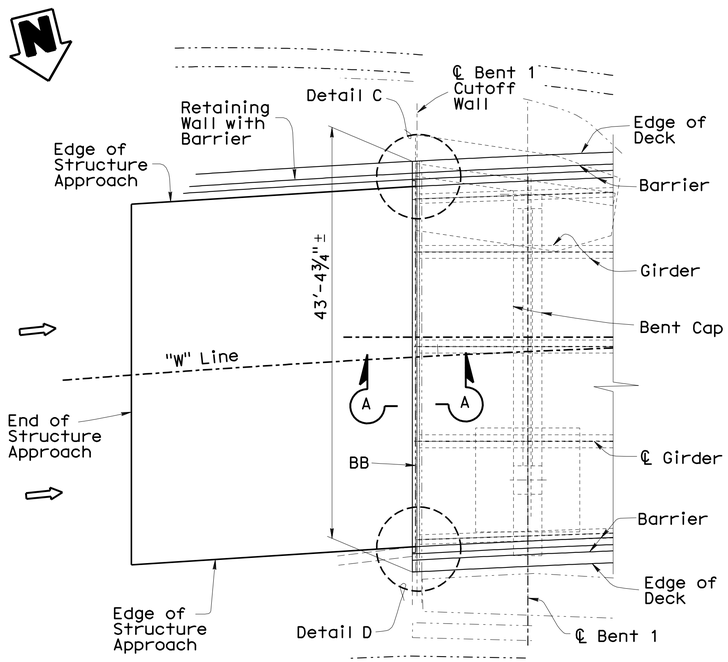

DETAIL A
1/8" = 1'-0"

Crash Attenuator and Cutoff Wall Not Shown

Sewer Main Not Shown

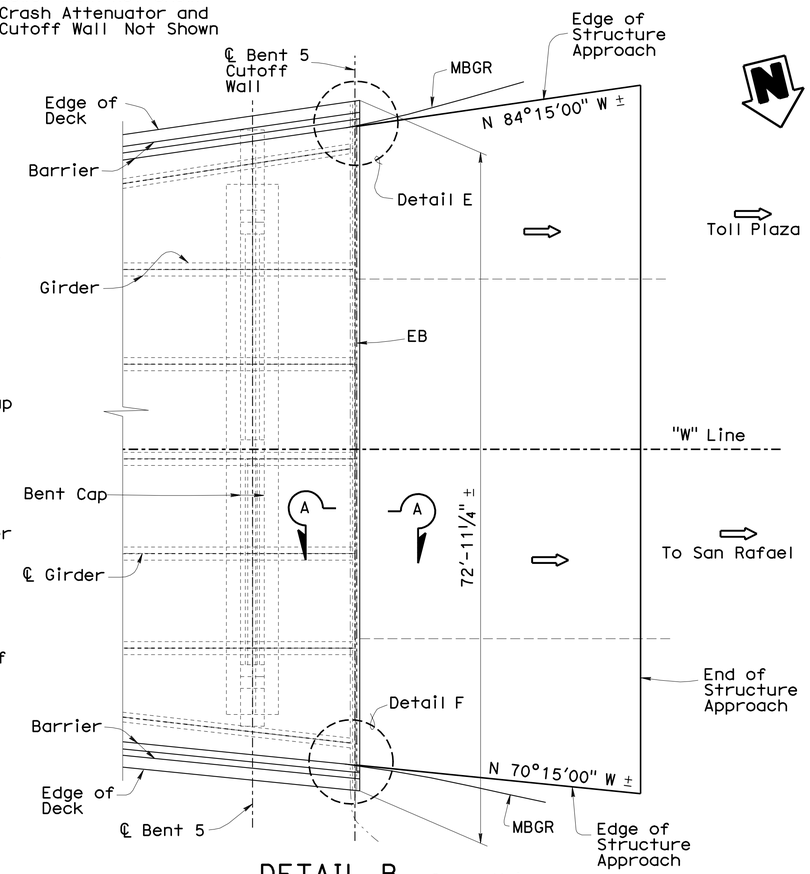

DETAIL B
1/8" = 1'-0"

Sewer Main Not Shown

Location and Alignment of Existing Edge of Deck = Location and Alignment of New Edge of Deck

Location and Alignment of Existing Deck Joints = Location and Alignment of New Deck Joints

Location and Alignment of Existing Inside Face of Barrier = Location and Alignment of New Inside Face of Barrier

For Details at Crash Attenuator, see "MISCELLANEOUS DETAILS" Sheet

Temporary Ramp Alignment Not Shown, see "ROAD PLANS"

For MBGR Details, see "BARRIER DETAILS" Sheets and "ROAD PLANS

For Additional Details, see "TYPICAL SECTION" Sheet, and "STRUCTURE APPROACH DETAILS" Sheets

For SECTION A-A and DETAIL C Through DETAIL F, see "ABUTMENT DETAILS No. 2" Sheet

For Added Details, see "REMOVAL DETAILS" Sheets

Denotes Existing Structure

Denotes New Construction

Denotes Direction of Traffic

NOTE:
THE CONTRACTOR SHALL VERIFY ALL CONTROLLING FIELD DIMENSIONS BEFORE ORDERING OR FABRICATING ANY MATERIAL.

	BY	CHECKED
DESIGN	Mike Van De Pol	P. Norboe
DETAILS	Mike Van De Pol	P. Norboe
QUANTITIES	Mike Van De Pol	I. Yalan

STATE OF CALIFORNIA
DEPARTMENT OF TRANSPORTATION

DIVISION OF ENGINEERING SERVICES
STRUCTURE DESIGN
DESIGN BRANCH 9

BRIDGE NO. 28-0141
POST MILE 6.0

BRIDGE DECK REPLACEMENT
WESTERN DRIVE UNDERCROSSING
ABUTMENT DETAILS No. 1

STRUCTURES DESIGN DETAIL SHEET (ENGLISH) (REV. 09-01-10)

ORIGINAL SCALE IN INCHES FOR REDUCED PLANS 0 1 2 3

UNIT: 3594
PROJECT NUMBER & PHASE: 04000004831
CONTRACT NO.: 04-1A3201

DISREGARD PRINTS BEARING EARLIER REVISION DATES 3-02-11

REVISION DATES

SHEET 6 OF 27

FILE => 28-0141-d-abtdets01.dgn

USERNAME => s114937 DATE PLOTTED => 06-JUN-2012 TIME PLOTTED => 16:02

DIST	COUNTY	ROUTE	POST MILES TOTAL PROJECT	SHEET No	TOTAL SHEETS
04	CC	580	5.5/6.2	262	301

REGISTERED CIVIL ENGINEER 5-1-12 DATE

6-4-12
PLANS APPROVAL DATE

REGISTERED PROFESSIONAL ENGINEER Mike Van De Pol No. C35610 Exp. 9/30/2013 CIVIL STATE OF CALIFORNIA

The State of California or its officers or agents shall not be responsible for the accuracy or completeness of electronic copies of this plan sheet.

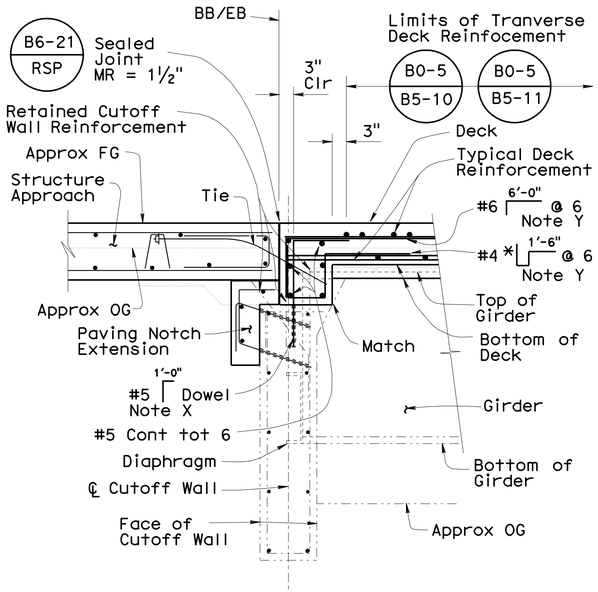

AT GIRDERS

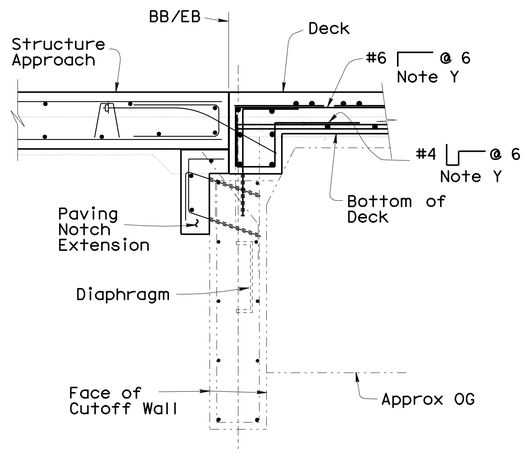

BETWEEN GIRDERS

For Details, see Section At Girders

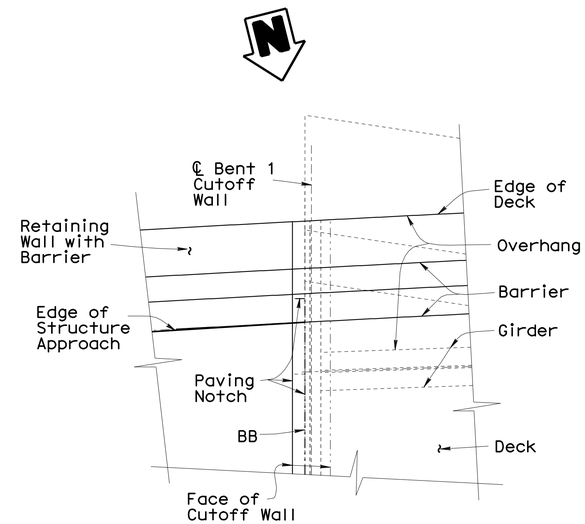

DETAIL C

½" = 1'-0"

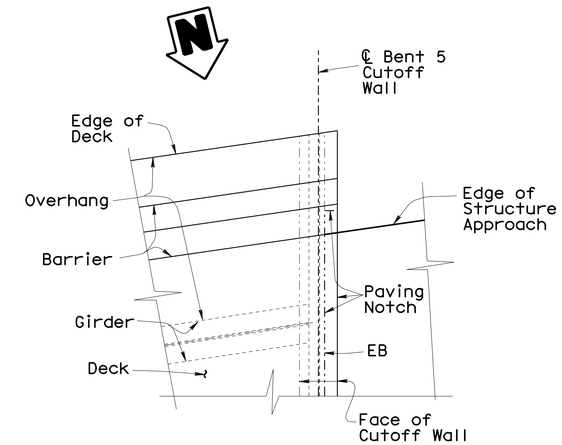

DETAIL E

½" = 1'-0"

MBGR Not Shown

Note X

Drill and Bond Dowel in 9" Deep Hole @ 9

Note Y

Place Parallel to ℄ Girder and Space Along ℄ Cutoff Wall

For Additional Details, see "STRUCTURE APPROACH DETAILS No. 2" Sheet

* Full Depth

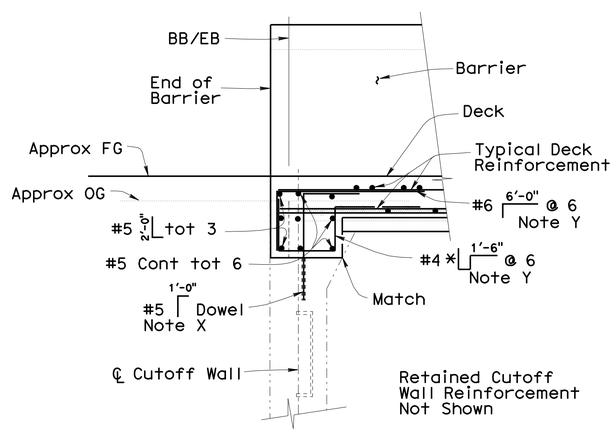

AT OVERHANG

SECTION A-A

¾" = 1'-0"

For Details at Barrier, See "BARRIER DETAILS No. 1" Sheet

For Paving Notch Details, See "STRUCTURE APPROACH DETAILS No. 3" Sheet

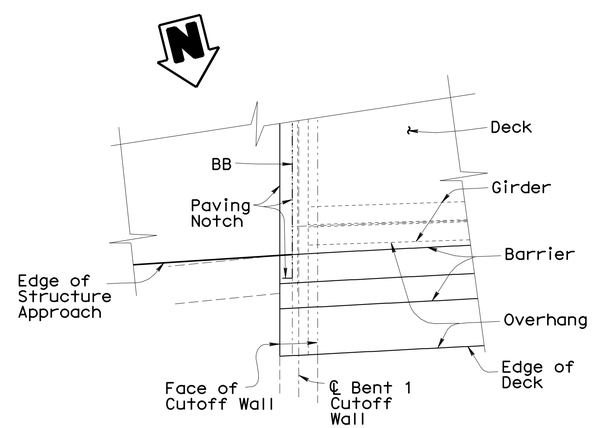

DETAIL D

½" = 1'-0"

Crash Attenuator and Cutoff Wall Not Shown

Sewer Main Not Shown

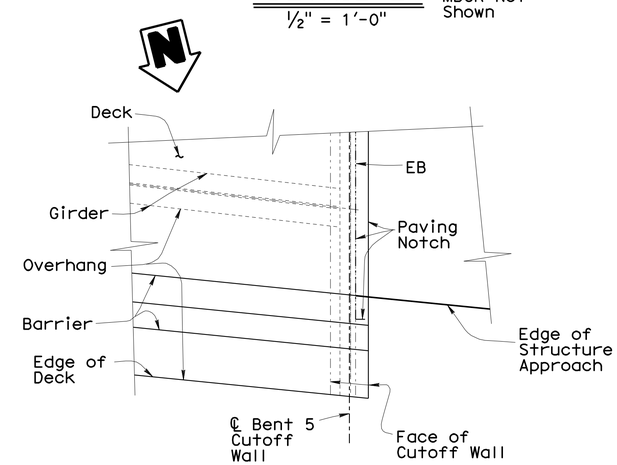

DETAIL F

½" = 1'-0"

MBGR Not Shown

Sewer Main Not Shown

NOTE:
THE CONTRACTOR SHALL VERIFY ALL CONTROLLING FIELD DIMENSIONS BEFORE ORDERING OR FABRICATING ANY MATERIAL.

For Locations of SECTION A-A and DETAIL C Through DETAIL F, see "ABUTMENT DETAILS No. 1" Sheet

For Additional Details, see "TYPICAL SECTION" Sheet, and "STRUCTURE APPROACH DETAILS" Sheets

For Added Details, see "REMOVAL DETAILS" Sheets

All Reinforcement shall be Epoxy Coated

Denotes Existing Structure

Denotes New Construction

	BY	CHECKED
DESIGN	Mike Van De Pol	P. Norboe
DETAILS	Mike Van De Pol	P. Norboe
QUANTITIES	Mike Van De Pol	I. Yalan

STATE OF CALIFORNIA
DEPARTMENT OF TRANSPORTATION

DIVISION OF ENGINEERING SERVICES
STRUCTURE DESIGN
DESIGN BRANCH 9

BRIDGE NO. 28-0141
MILE POST 6.0

BRIDGE DECK REPLACEMENT
WESTERN DRIVE UNDERCROSSING
ABUTMENT DETAILS No. 2

STRUCTURES DESIGN DETAIL SHEET (ENGLISH) (REV. 10/25/05)

ORIGINAL SCALE IN INCHES FOR REDUCED PLANS 0 1 2 3

UNIT: 3594
PROJECT NUMBER & PHASE: 04000004831
CONTRACT NO.: 04-1A3201

DISREGARD PRINTS BEARING EARLIER REVISION DATES 3-02-11

SHEET 7 OF 27

FILE => 28-0141-d-abtdets02.dgn

USERNAME => s121614 DATE PLOTTED => 07-JUN-2012 TIME PLOTTED => 06:06

DIST	COUNTY	ROUTE	POST MILES TOTAL PROJECT	SHEET No	TOTAL SHEETS
04	CC	580	5.5/6.2	263	301

REGISTERED CIVIL ENGINEER 5-1-12 DATE

6-4-12
PLANS APPROVAL DATE

The State of California or its officers or agents shall not be responsible for the accuracy or completeness of electronic copies of this plan sheet.

REGISTERED PROFESSIONAL ENGINEER Mike Van De Pol No. C35610 Exp. 9/30/2013 CIVIL STATE OF CALIFORNIA

Note A
Location and Alignment of the Front Face of Existing Barrier = Location and Alignment of the Front Face of New Barrier

Note B
Location and Alignment of Existing Edge of Deck = Location and Alignment of the New Edge of Deck

Note X
Stud Connectors Extend Along the Limits Shown, Except as Shown in DETAIL A

Note Z
Stud Connectors Extend to 4" Clear From End of Cap Beam, or Edge of Column

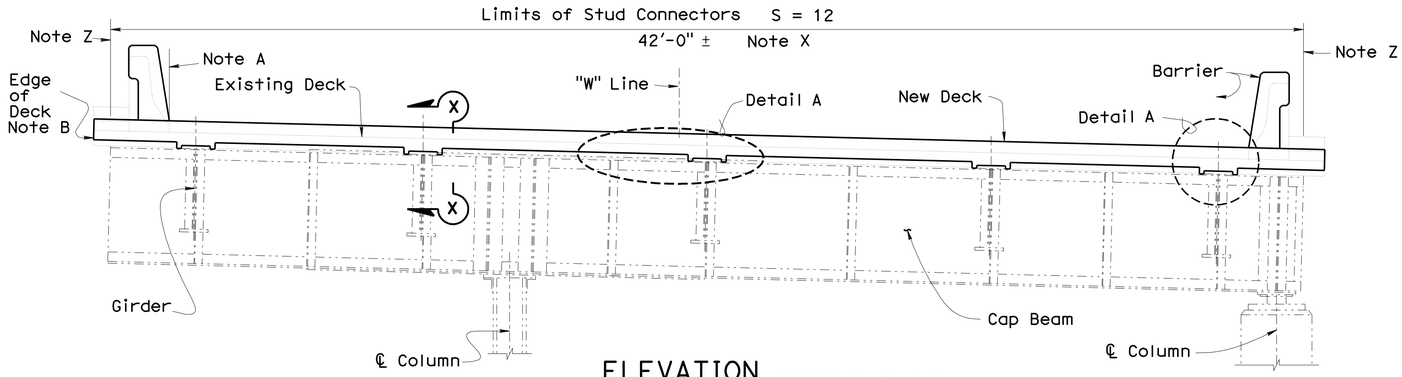

ELEVATION BENT 2 Stud Connectors Not Shown
3/8" = 1'-0"

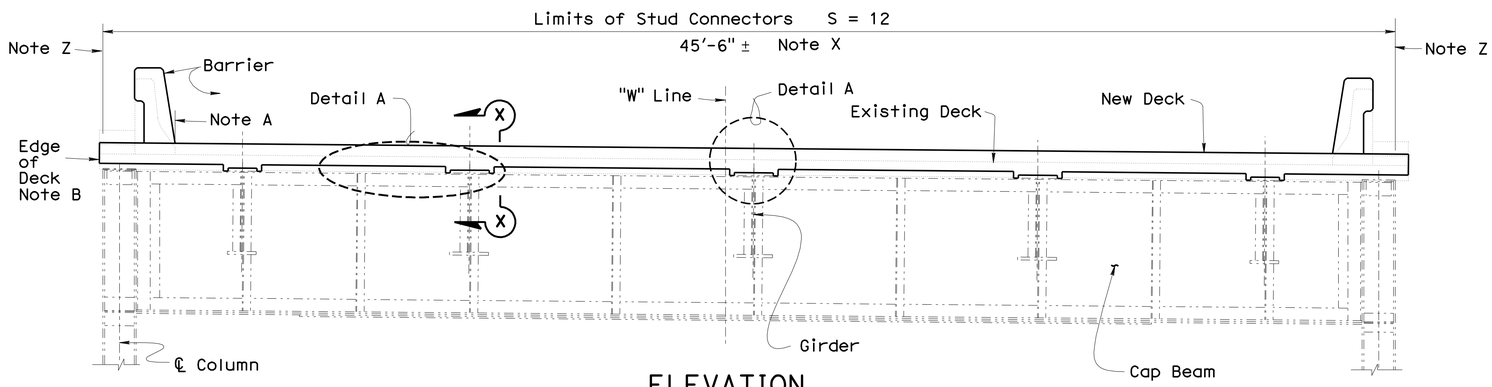

ELEVATION BENT 3 Stud Connectors Not Shown
3/8" = 1'-0"

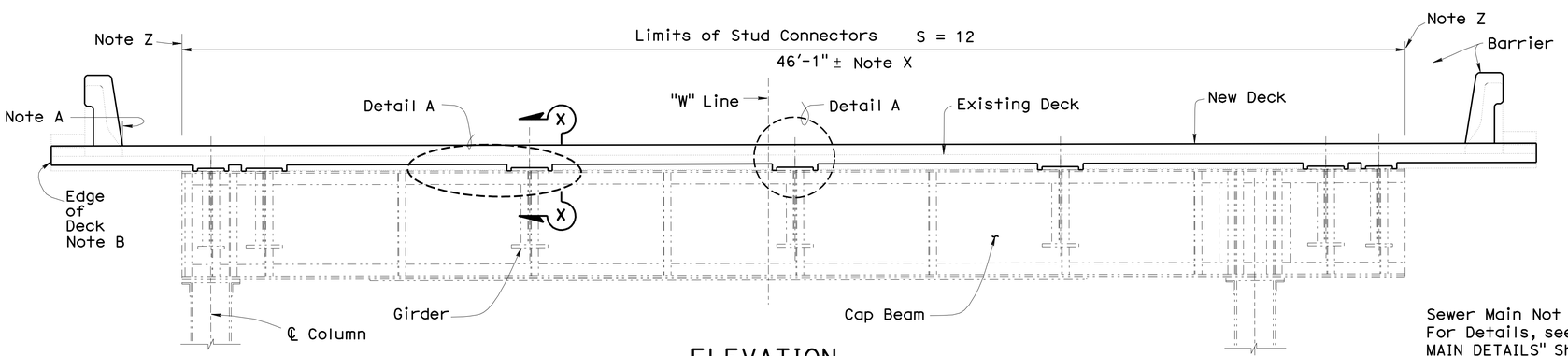

ELEVATION BENT 4 Stud Connectors Not Shown
3/8" = 1'-0"

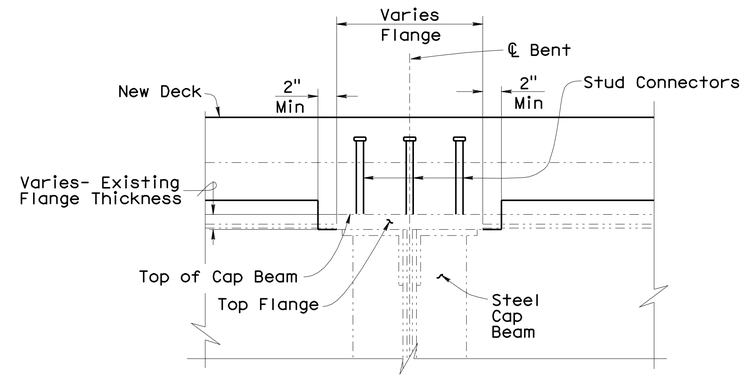

SECTION X-X
1½" = 1'-0"

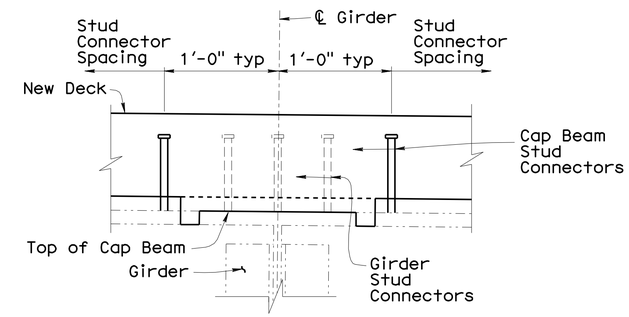

DETAIL A

Notes
For Bent Locations, see "GENERAL PLAN" Sheets.
For Additional Details, see "TYPICAL SECTION" Sheets
For Stud Connector Details, see "BENT DETAILS No. 2" Sheet
All Existing Structural Steel Components Not Shown
Existing Bolts and Rivets Not Shown
Girder Stud Connectors not Shown
Deck and Barrier Reinforcement not Shown
Deck Removal Not Shown
Earthquake Retrofit and Strengthening Components not Shown

NOTE:
THE CONTRACTOR SHALL VERIFY ALL CONTROLLING FIELD DIMENSIONS BEFORE ORDERING OR FABRICATING ANY MATERIAL.

Adjustments in the Number and Location of the New Stud Connectors May be Made, as Approved by the Engineer

Sewer Main Not Shown.
For Details, see "SEWER MAIN DETAILS" Sheet

S = Stud Connector Spacing

Denotes Existing Structure
Denotes New Construction

	BY	CHECKED
DESIGN	M. Van De Pol	P. Norboe
DETAILS	M. Van De Pol/DE	P. Norboe
QUANTITIES	M. Van De Pol	I. Yalan

STATE OF CALIFORNIA
DEPARTMENT OF TRANSPORTATION

DIVISION OF ENGINEERING SERVICES
STRUCTURE DESIGN
DESIGN BRANCH 9

BRIDGE NO. 28-0141
POST MILE 6.0

BRIDGE DECK REPLACEMENT
WESTERN DRIVE UNDERCROSSING
BENT DETAILS No. 1

STRUCTURES DESIGN DETAIL SHEET (ENGLISH) (REV. 10/25/05)

ORIGINAL SCALE IN INCHES FOR REDUCED PLANS 0 1 2 3

UNIT: 3594
PROJECT NUMBER & PHASE: 04000004831
CONTRACT NO.: 04-1A3201

DISREGARD PRINTS BEARING EARLIER REVISION DATES 3-02-11

SHEET 8 OF 27

FILE => 28-0141-e-bntdets01.dgn

USERNAME => s612614 DATE PLOTTED => 07-JUN-2012 TIME PLOTTED => 06:06

DIST	COUNTY	ROUTE	POST MILES TOTAL PROJECT	SHEET No	TOTAL SHEETS
04	CC	580	5.5/6.2	264	301

REGISTERED CIVIL ENGINEER 5-1-12 DATE

6-4-12
PLANS APPROVAL DATE

REGISTERED PROFESSIONAL ENGINEER
Mike Van De Pol
No. C35610
Exp. 9-30-2013
CIVIL
STATE OF CALIFORNIA

The State of California or its officers or agents shall not be responsible for the accuracy or completeness of electronic copies of this plan sheet.

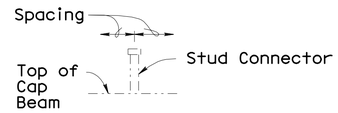

EXISTING CONNECTORS If Present

No Scale

Existing Connector Spacing Varies

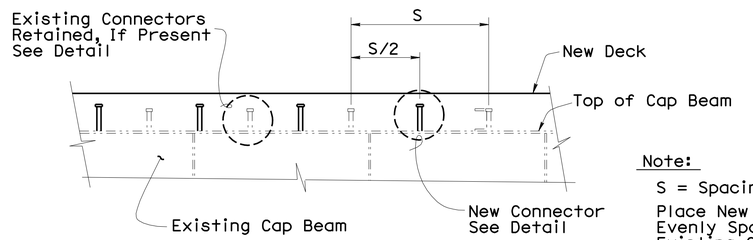

Note:

S = Spacing

Place New Connectors Evenly Spaced Between Existing Connectors, if Present, as Approved by the Engineer

DETAIL

No Scale

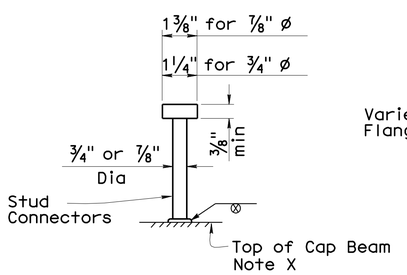

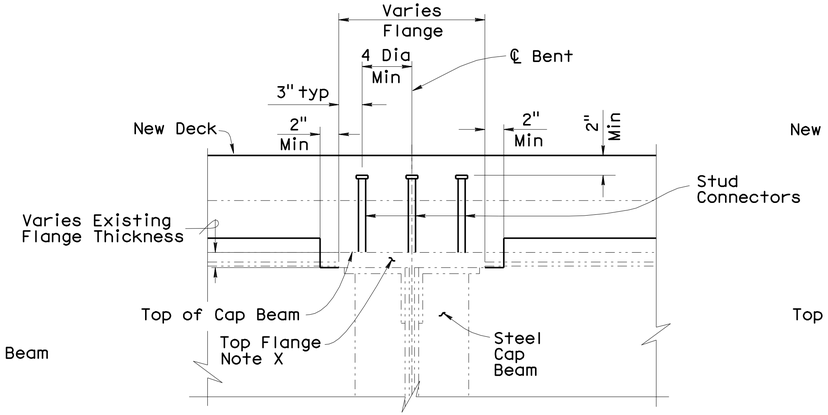

CAP DETAIL

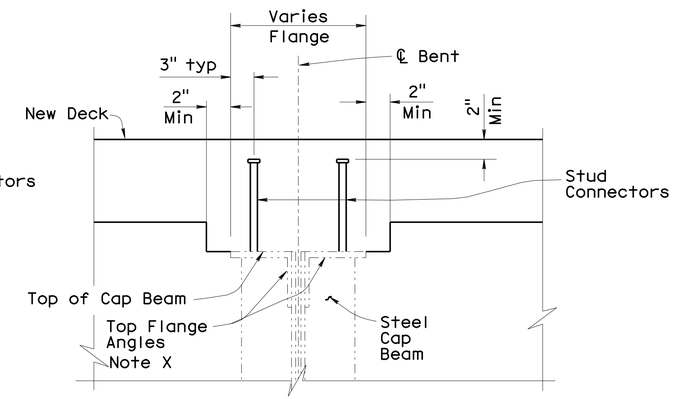

ALTERNATIVE DETAIL

Note X

Cap Beam Top Flange is Composed of Angles with Cover Plates. Cover Plates May Not be Continuous Along the Length of the Cap Beam. Stud Connectors Shall be Welded to the Cover Plate or the Angle Flanges. Stud Coneectors May be Omitted at the Centerline of Cap Beam in the Regions Where No Cover Plates Are Present, as Approved by the Engineer. Adjust Locations of Stud Connectors to Provide 1" Min Clear From Existing Flange Bolts or Rivets

STUD CONNECTOR DETAILS

No Scale

Lengths to be determined by the Contractor, unless otherwise shown. Minimum length is 8". The top of deck is designed to be approximately parallel to the top of web for determining girder stud connector height. Alternative types of shear connectors will be permitted subject to approval by the Engineer.

Adjustments in the Number and Location of the New Stud Connectors May be Made, as Approved by the Engineer

For Bent Locations, see "GENERAL PLAN" Sheets.
For Additional Details, see "TYPICAL SECTION" Sheets
For Stud Connector Spacing, see "BENT DETAILS No. 1" Sheet
All Existing Structural Steel Components Not Shown
Existing Bolts and Rivets Not Shown
Deck Reinforcement not Shown
Deck Removal Not Shown

Denotes Existing Structure
Denotes New Construction

NOTE:
THE CONTRACTOR SHALL VERIFY ALL CONTROLLING FIELD DIMENSIONS BEFORE ORDERING OR FABRICATING ANY MATERIAL.

	BY	CHECKED
DESIGN	M. Van De Pol	P. Norboe
DETAILS	D. Elliott	P. Norboe
QUANTITIES	M. Van De Pol	I. Yalan

STATE OF CALIFORNIA
DEPARTMENT OF TRANSPORTATION

DIVISION OF ENGINEERING SERVICES
STRUCTURE DESIGN
DESIGN BRANCH 9

BRIDGE NO. 28-0141
POST MILE 6.0

WESTERN DRIVE UNDERCROSSING
BENT DETAILS NO. 2

STRUCTURES DESIGN DETAIL SHEET (ENGLISH) (REV. 10/25/05)

ORIGINAL SCALE IN INCHES FOR REDUCED PLANS 0 1 2 3

UNIT: 3594
PROJECT NUMBER & PHASE: 04000004831
CONTRACT NO.: 04-1A3201

DISREGARD PRINTS BEARING EARLIER REVISION DATES 3-02-11

SHEET 9 OF 27

FILE => 28-0141-e-bntdets02.dgn

USERNAME => s12614 DATE PLOTTED => 07-JUN-2012 TIME PLOTTED => 06:06

DIST	COUNTY	ROUTE	POST MILES TOTAL PROJECT	SHEET No	TOTAL SHEETS
04	CC	580	5.5/6.2	265	301

REGISTERED CIVIL ENGINEER 5-1-12 DATE

6-4-12
PLANS APPROVAL DATE

The State of California or its officers or agents shall not be responsible for the accuracy or completeness of electronic copies of this plan sheet.

REGISTERED PROFESSIONAL ENGINEER
Mike Van De Pol
No. C35610
Exp. 9/30/2013
CIVIL
STATE OF CALIFORNIA

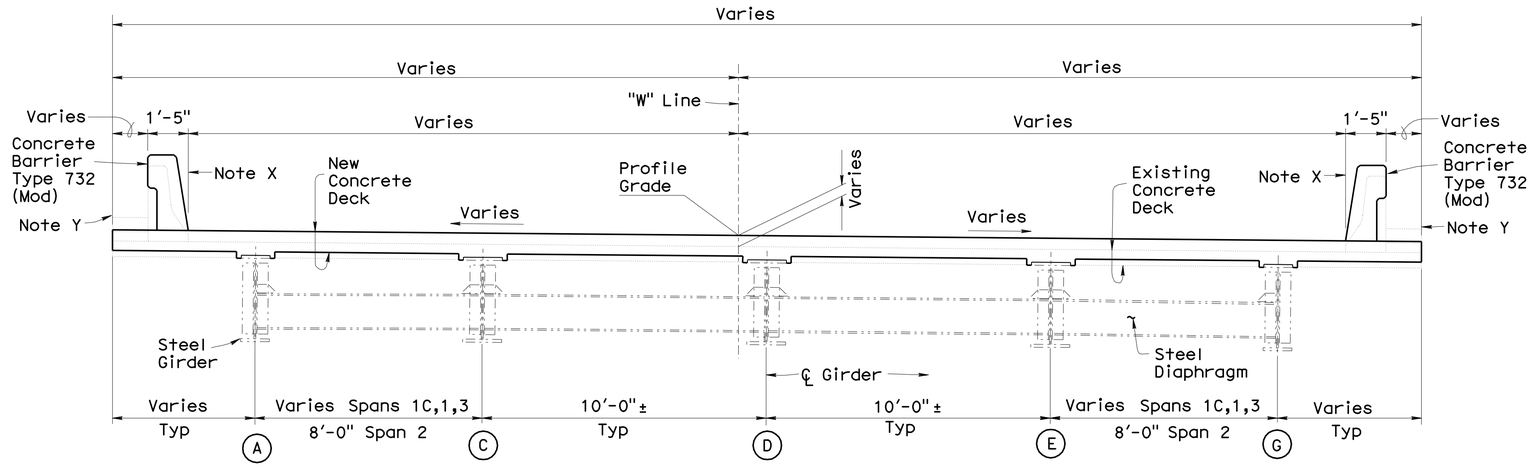

SPANS 1C, 1, 2, 3

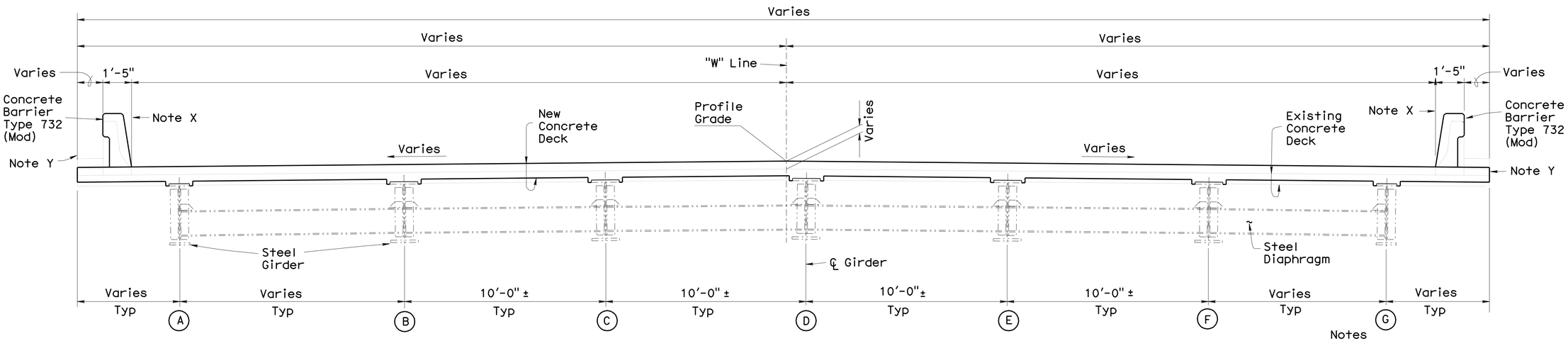

SPANS 4, 4C

TYPICAL SECTIONS

3/8" = 1'-0"

Notes

For Added Details, see "TYPICAL SECTION No. 2" Sheet

All Existing Structural Steel Components Not Shown

Existing Bolts and Rivets Not Shown

Existing Strengthening Components not Shown

Deck and Barrier Reinforcement Not Shown

Deck Removal Not Shown

For Light Standard Locations, see "ROAD PLANS"

Conduits Not Shown

Sewer Main Not Shown. For Details, see "SEWER MAIN DETAILS" Sheet

Note X

Location and Alignment of Existing Inside Barrier Face = Location and Alignment of New Inside Barrier Face

Note Y

Location and Alignment of Existing Edge of Deck = Location and Alignment of New Edge of Deck

NOTE:
THE CONTRACTOR SHALL VERIFY ALL CONTROLLING FIELD DIMENSIONS BEFORE ORDERING OR FABRICATING ANY MATERIAL.

(C) Denotes Girder Designation
For Girder Designations, see "GIRDER DETAILS" Sheet

SPAN 1C, 4C Denotes Cantilever Span From Bent to Abutment Cutoff Wall

Barrier Face Architectural Texture Not Shown

Denotes Existing Structure

Denotes New Construction

	BY	CHECKED
DESIGN	M. Van De Pol	P. Norboe
DETAILS	M. Van De Pol/DE	P. Norboe
QUANTITIES	M. Van De Pol	I. Yalan

STATE OF CALIFORNIA
DEPARTMENT OF TRANSPORTATION

DIVISION OF ENGINEERING SERVICES
STRUCTURE DESIGN
DESIGN BRANCH 9

BRIDGE NO. 28-0141
POST MILE 6.0

BRIDGE DECK REPLACEMENT
WESTERN DRIVE UNDERCROSSING
TYPICAL SECTION No. 1

STRUCTURES DESIGN DETAIL SHEET (ENGLISH) (REV. 10/25/05)

ORIGINAL SCALE IN INCHES FOR REDUCED PLANS 0 1 2 3

UNIT: 3594
PROJECT NUMBER & PHASE: 04000004831
CONTRACT NO.: 04-1A3201

DISREGARD PRINTS BEARING EARLIER REVISION DATES

REVISION DATES 3-02-11

SHEET 10 OF 27

FILE => 28-0141-f-typsec01.dgn

USERNAME => s12614 DATE PLOTTED => 07-JUN-2012 TIME PLOTTED => 06:06

DIST	COUNTY	ROUTE	POST MILES TOTAL PROJECT	SHEET No	TOTAL SHEETS
04	CC	580	5.5/6.2	266	301

REGISTERED CIVIL ENGINEER 5-1-12 DATE

6-4-12
PLANS APPROVAL DATE

REGISTERED PROFESSIONAL ENGINEER Mike Van De Pol No. C35610 Exp. 9/30/2013 CIVIL STATE OF CALIFORNIA

The State of California or its officers or agents shall not be responsible for the accuracy or completeness of electronic copies of this plan sheet.

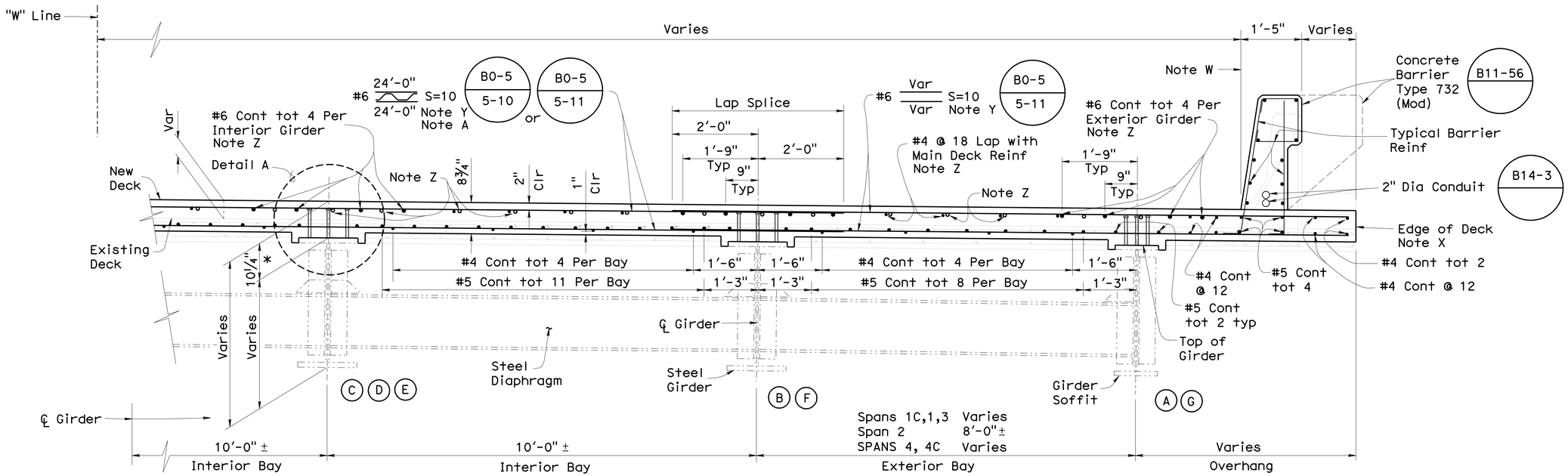

* Measured At ℄ Supports

PART TYPICAL SECTION

¾" = 1'-0"

Part Typical Section Taken in Span 5. Other Locations Similar

Details Symmetrical About ℄ Bridge

Barrier Face Architectural Texture Not Shown

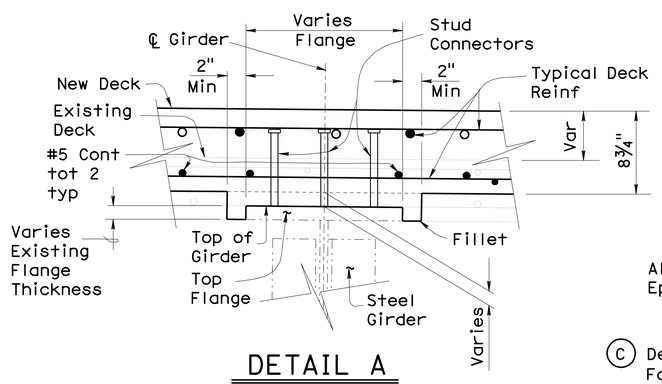

DETAIL A

1½" = 1'-0"

All Reinforcement shall be Epoxy Coated

(C) Denotes Girder Designation For Girder Designations, see "GIRDER DETAILS" Sheet

SPAN 1C, 4C Denotes Cantilever Span From Bent to Abutment Cutoff Wall

Note W
Location and Alignment of Existing Inside Barrier Face = Location and Alignment of New Inside Barrier Face

Note X
Location and Alignment of Existing Edge of Deck = Location and Alignment of New Edge of Deck

Note Y
Place Parallel to ℄ Bents and Abutments and Space Along the "W" Line. Lap Splice Reinforcement over Girders (B) and (F) Typical All Spans

Note Z
For Additional Top Main Longitudinal Reinforcement, see "DECK REINFORCEMENT DETAILS" Sheet

Note A
Center Reinforcement About the "W" Line

Notes

For Added Details, see "BENT DETAILS" Sheets and "ABUTMENT DETAILS" Sheets

For Added Stud Connector Details, see "GIRDER DETAILS" Sheets

All Existing Structural Steel Components Not Shown

Existing Bolts and Rivets Not Shown

Existing Strengthening Components not Shown

Deck Removal Not Shown

For Light Standard Locations, see "ROAD PLANS"

For Light Standard Anchorage and Electrical Details, see Notes F and G on Standard Plan B11-56

For Additional Conduit Details, see "ROAD PLANS"

Sewer Main Not Shown. For Details, see "SEWER MAIN DETAILS" Sheet

For Sign Anchorage Details, see "MISCELLANEOUS DETAILS" Sheet

Denotes Existing Structure
Denotes New Construction

NOTE:
THE CONTRACTOR SHALL VERIFY ALL CONTROLLING FIELD DIMENSIONS BEFORE ORDERING OR FABRICATING ANY MATERIAL.

	BY	CHECKED
DESIGN	Mike Van De Pol	P. Norboe
DETAILS	Mike Van De Pol	P. Norboe
QUANTITIES	Mike Van De Pol	I. Yalan

STATE OF CALIFORNIA
DEPARTMENT OF TRANSPORTATION

DIVISION OF ENGINEERING SERVICES
STRUCTURE DESIGN
DESIGN BRANCH 9

BRIDGE NO. 28-0141
MILE POST 6.0

BRIDGE DECK REPLACEMENT
WESTERN DRIVE UNDERCROSSING
TYPICAL SECTION No. 2

STRUCTURES DESIGN DETAIL SHEET (ENGLISH) (REV. 10/25/05)

ORIGINAL SCALE IN INCHES FOR REDUCED PLANS 0 1 2 3

UNIT: 3594
PROJECT NUMBER & PHASE: 04000004831
CONTRACT NO.: 04-1A3201

DISREGARD PRINTS BEARING EARLIER REVISION DATES 3-02-11

SHEET 11 OF 27

FILE => 28-0141-f-typsec02.dgn

USERNAME => s121614 DATE PLOTTED => 07-JUN-2012 TIME PLOTTED => 06:06

DIST	COUNTY	ROUTE	POST MILES TOTAL PROJECT	SHEET No	TOTAL SHEETS
04	CC	580	5.5/6.2	267	301

REGISTERED CIVIL ENGINEER 5-1-12 DATE

6-4-12
PLANS APPROVAL DATE

REGISTERED PROFESSIONAL ENGINEER Mike Van De Pol No. C35610 Exp. 9/30/2013 CIVIL STATE OF CALIFORNIA

The State of California or its officers or agents shall not be responsible for the accuracy or completeness of electronic copies of this plan sheet.

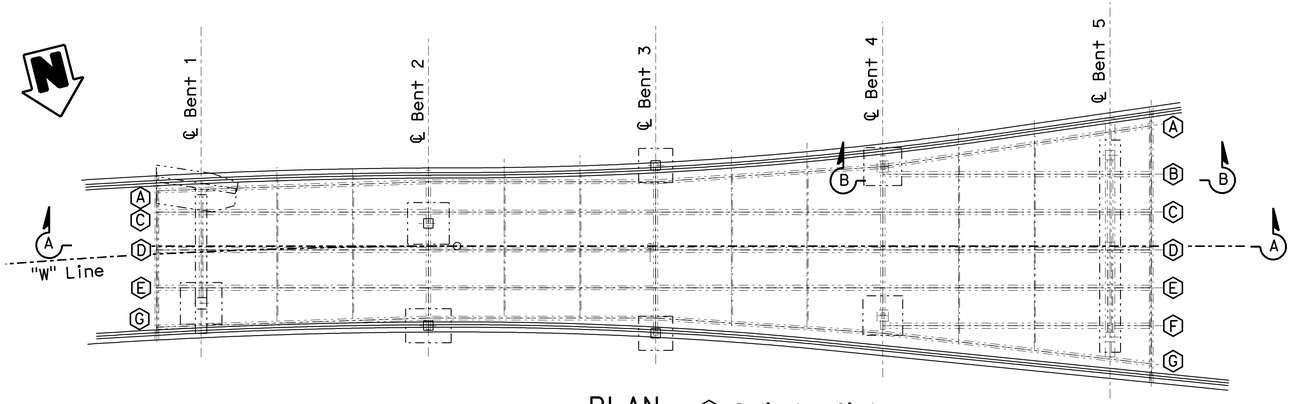

PLAN
1" = 20'

(A) Indicates Girder Designation
Sewer Main Not Shown

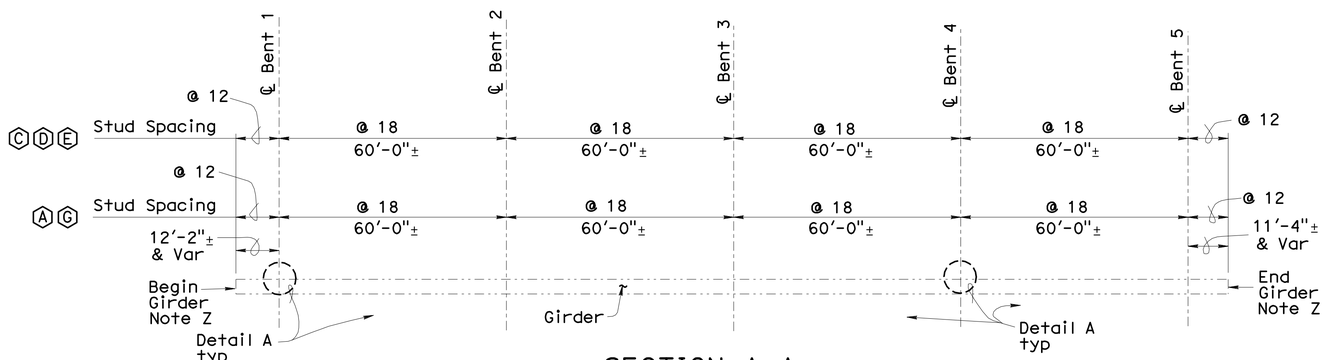

SECTION A-A
1" = 20'

Deck, Stud Connectors and Bents Not Shown

Note Z
Stud Connectors Extend to 4" Clear From End of Girder

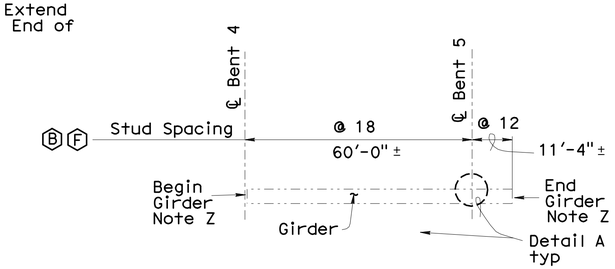

SECTION B-B
1" = 20'

Deck, Stud Connectors and Bents Not Shown

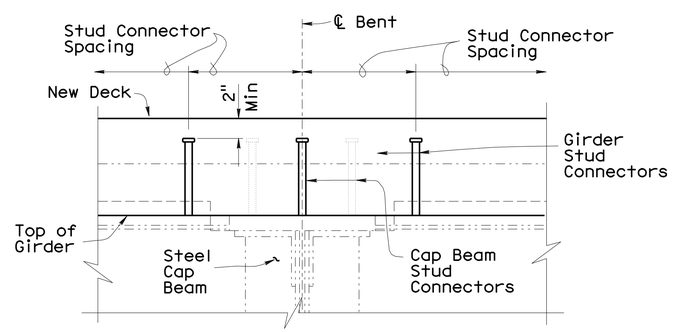

DETAIL A
No Scale

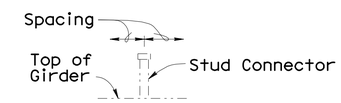

EXISTING CONNECTORS If Present
No Scale

Existing Connector Spacing Varies

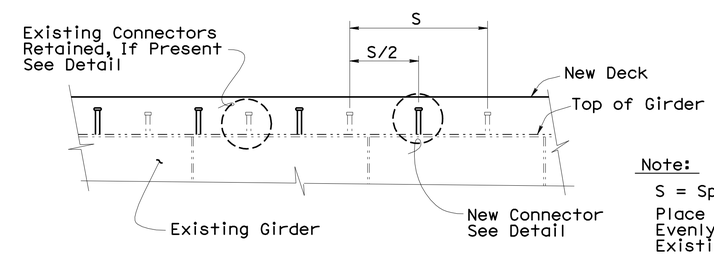

DETAIL
No Scale

Note:
S = Spacing
Place New Connectors Evenly Spaced Between Existing Connectors, if Present, as Approved by the Engineer

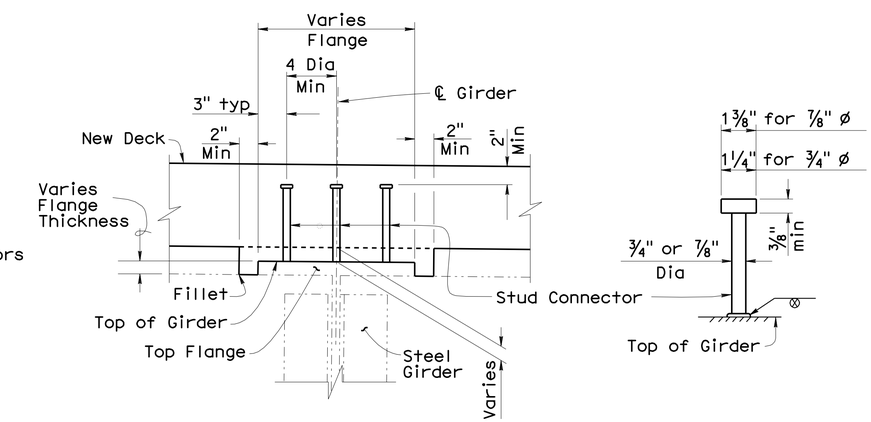

STUD CONNECTOR DETAILS
No Scale

Lengths to be determined by the Contractor, unless otherwise shown. Minimum length is 7". The top of deck is designed to be approximately parallel to the top of web for determining girder stud connector height. Alternative types of shear connectors will be permitted subject to approval by the Engineer.

NOTE:
THE CONTRACTOR SHALL VERIFY ALL CONTROLLING FIELD DIMENSIONS BEFORE ORDERING OR FABRICATING ANY MATERIAL.

Adjustments in the Number and Location of the New Stud Connectors May be Made, as Approved by the Engineer

For Other Details, see "TYPICAL SECTION" Sheet
Deck Reinforcement Not Shown
Denotes Existing Structure
Denotes New Construction

	BY	CHECKED
DESIGN	M. Van De Pol	P. Norboe
DETAILS	D. Elliott	P. Norboe
QUANTITIES	M. Van De Pol	I. Yalan

STATE OF CALIFORNIA
DEPARTMENT OF TRANSPORTATION

DIVISION OF ENGINEERING SERVICES
STRUCTURE DESIGN
DESIGN BRANCH 9

BRIDGE NO. 28-0141
POST MILE 6.0

BRIDGE DECK REPLACEMENT
WESTERN DRIVE UNDERCROSSING
GIRDER DETAILS

STRUCTURES DESIGN DETAIL SHEET (ENGLISH) (REV. 10/25/05)

ORIGINAL SCALE IN INCHES FOR REDUCED PLANS 0 1 2 3

UNIT: 3594
PROJECT NUMBER & PHASE: 04000004831
CONTRACT NO.: 04-1A3201

DISREGARD PRINTS BEARING EARLIER REVISION DATES 3-02-11

SHEET 12 OF 27

FILE => 28-0141-g-gird01.dgn

USERNAME => s12614 DATE PLOTTED => 07-JUN-2012 TIME PLOTTED => 06:06

DIST	COUNTY	ROUTE	POST MILES TOTAL PROJECT	SHEET No	TOTAL SHEETS
04	CC	580	5.5/6.2	268	301

REGISTERED CIVIL ENGINEER 5-1-12 DATE

6-4-12
PLANS APPROVAL DATE

REGISTERED PROFESSIONAL ENGINEER
Mike Van De Pol
No. C35610
Exp. 9/31/2013
CIVIL
STATE OF CALIFORNIA

The State of California or its officers or agents shall not be responsible for the accuracy or completeness of electronic copies of this plan sheet.

For Additional Details, see "TYPICAL SECTION" aand "ABUTMENT DETAILS" Sheets

Denotes Existing Structure
Denotes New Construction

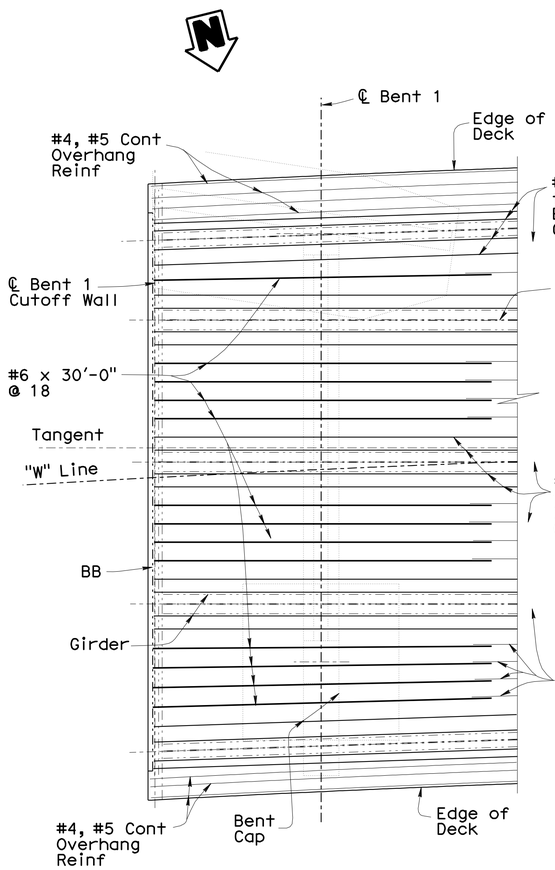

PLAN AT BENT 1
3/16" = 1'-0"

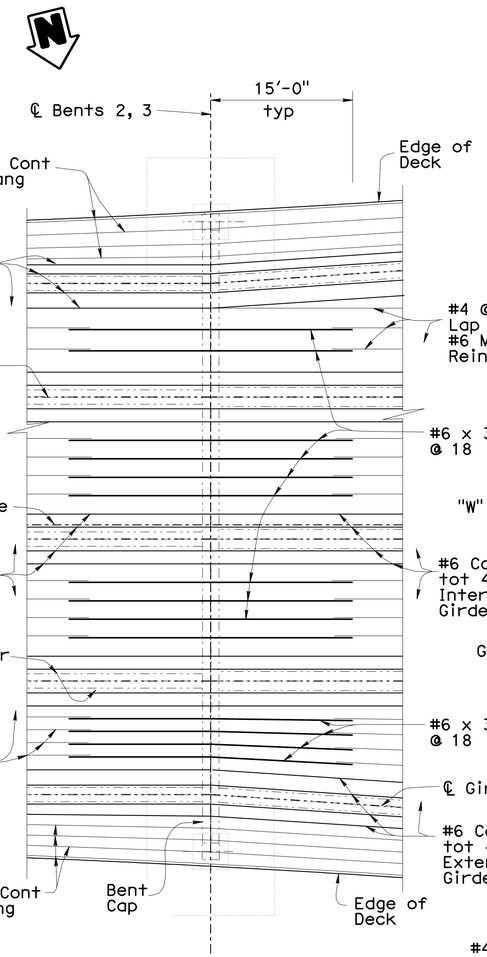

PLAN AT BENTS 2 AND 3
3/16" = 1'-0"
Bent 3 Shown, Bent 2 Similar

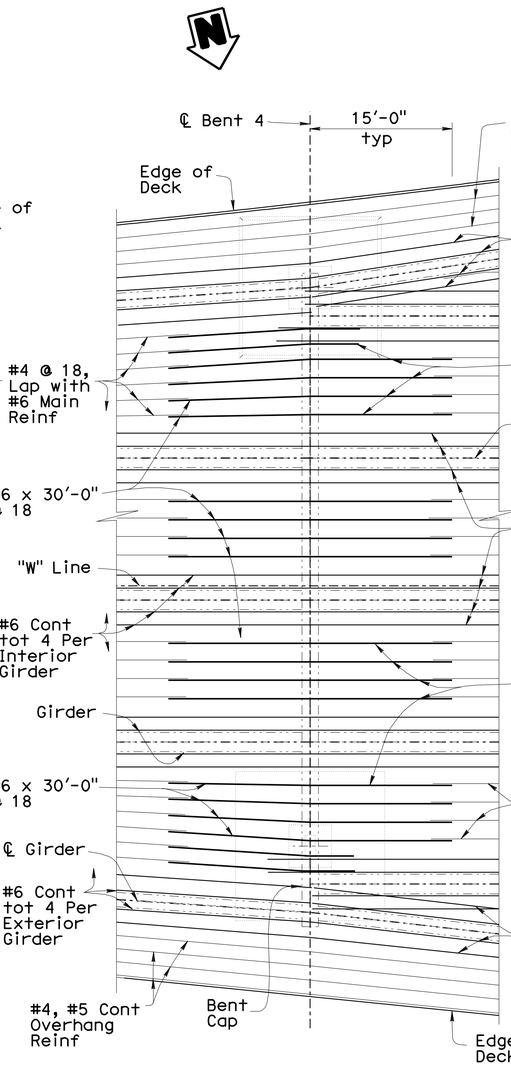

PLAN AT BENT 4
3/16" = 1'-0"

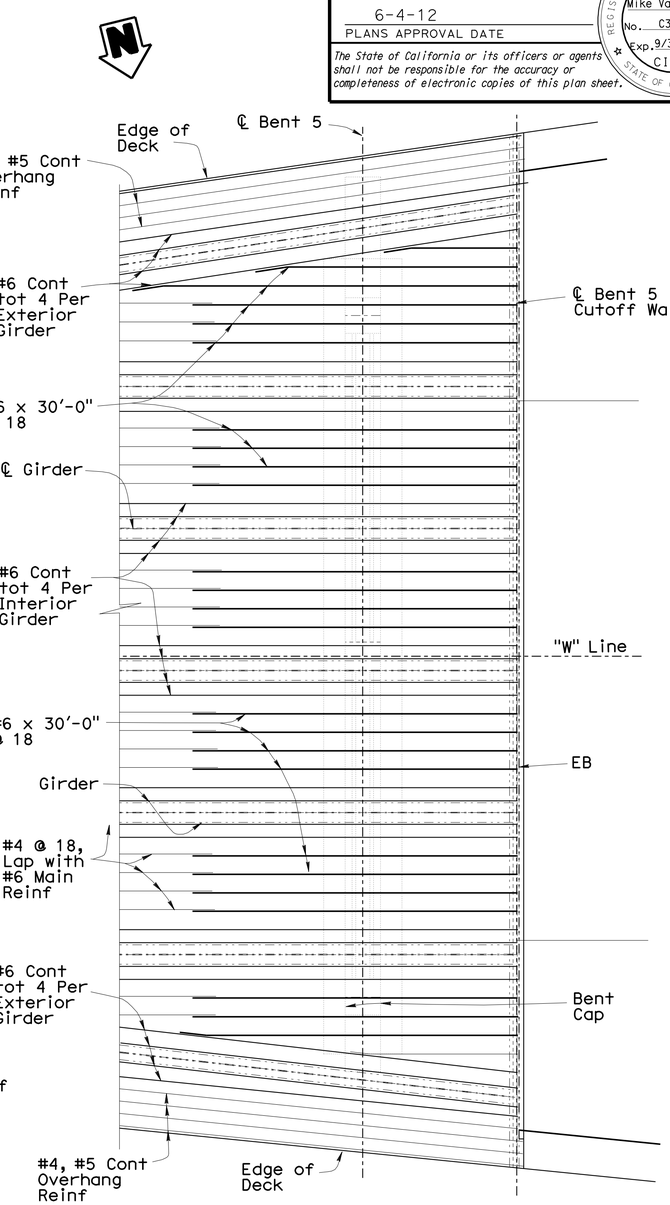

PLAN AT BENT 5
3/16" = 1'-0"

NOTE:
THE CONTRACTOR SHALL VERIFY ALL CONTROLLING FIELD DIMENSIONS BEFORE ORDERING OR FABRICATING ANY MATERIAL.

All Reinforcement shall be Epoxy Caoted

No Splices Allowed in #6 Reinforcement
Barrier Not Shown
Sewer Main Not Shown

	BY	CHECKED
DESIGN	Mike Van De Pol	P. Norboe
DETAILS	Mike Van De Pol	P. Norboe
QUANTITIES	Mike Van De Pol	E. Franciliso

STATE OF CALIFORNIA
DEPARTMENT OF TRANSPORTATION

DIVISION OF ENGINEERING SERVICES
STRUCTURE DESIGN
DESIGN BRANCH 9

BRIDGE NO. 28-0141
MILE POST 6.0

BRIDGE DECK REPLACEMENT
WESTERN DRIVE UNDERCROSSING
DECK REINFORCEMENT DETAILS

STRUCTURES DESIGN DETAIL SHEET (ENGLISH) (REV. 10/25/05)

ORIGINAL SCALE IN INCHES FOR REDUCED PLANS 0 1 2 3

UNIT: 3594
PROJECT NUMBER & PHASE: 04000004831
CONTRACT NO.: 04-1A3201

DISREGARD PRINTS BEARING EARLIER REVISION DATES

REVISION DATES: 3-02-11

SHEET 13 OF 27

FILE => 28-0141-h-dekreinf.dgn

USERNAME => s121614 DATE PLOTTED => 07-JUN-2012 TIME PLOTTED => 06:06

DIST	COUNTY	ROUTE	POST MILES TOTAL PROJECT	SHEET No.	TOTAL SHEETS
04	CC	580	5.5/6.2	269	301

REGISTERED CIVIL ENGINEER 5-1-12 DATE

6-4-12
PLANS APPROVAL DATE

REGISTERED PROFESSIONAL ENGINEER Mike Van De Pol No. C35610 Exp. 9/30/2013 CIVIL STATE OF CALIFORNIA

The State of California or its officers or agents shall not be responsible for the accuracy or completeness of electronic copies of this plan sheet.

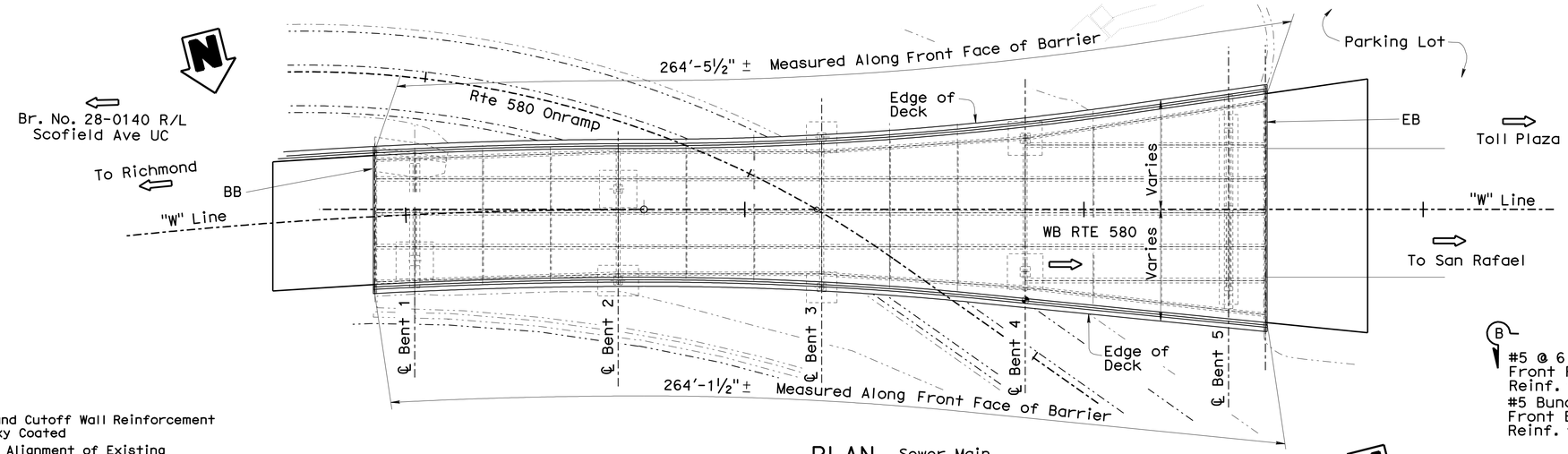

PLAN
1" = 20'

Sewer Main Not Shown
Crash Attenuator and Cutoff Wall Not Shown

All Barrier and Cutoff Wall Reinforcement shall be Epoxy Coated

Location and Alignment of Existing Inside Face of Barrier = Location and Alignment of New Inside Face of Barrier

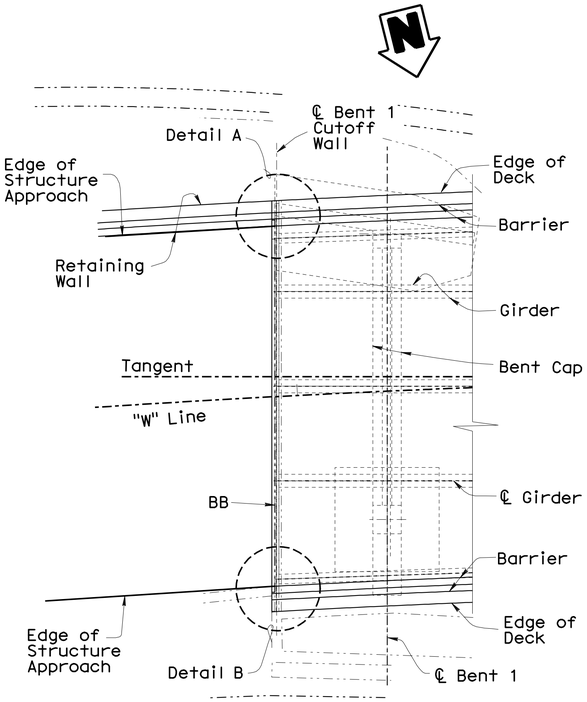

PART PLAN
⅛" = 1'-0"

Bent 1
Crash Attenuator and Cutoff Wall Not Shown
Sewer Main Not Shown

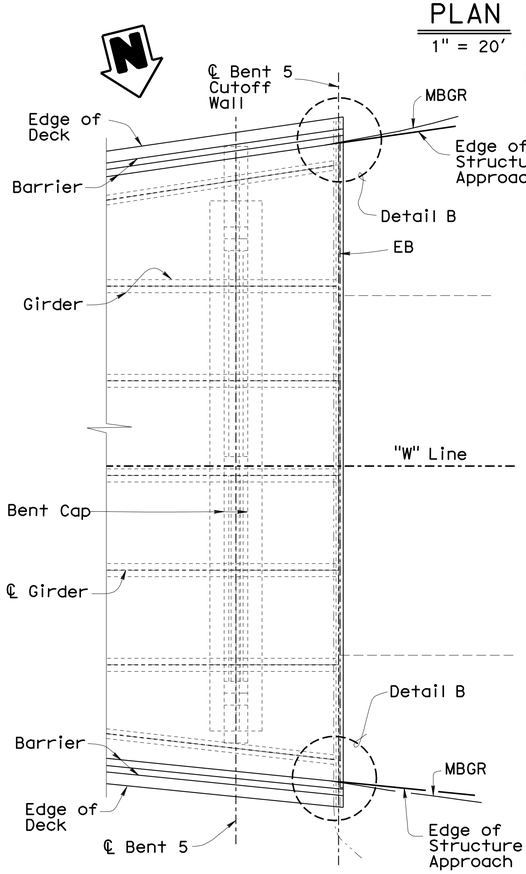

PART PLAN
⅛" = 1'-0"

Bent 5
Sewer Main Not Shown

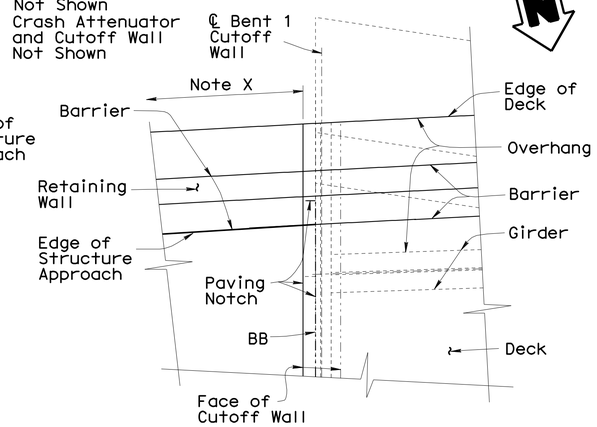

DETAIL A
½" = 1'-0"

Bent 1 Location Shown, Bent 5 Location Similar

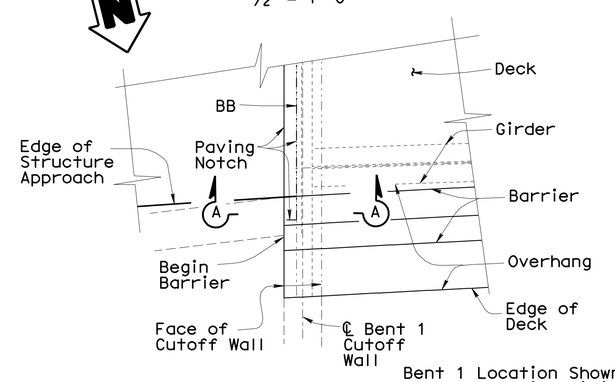

DETAIL B
½" = 1'-0"

Bent 1 Location Shown, Bent 5 Location Similar
Crash Attenuator and Cutoff Wall Not Shown
Sewer Main Not Shown

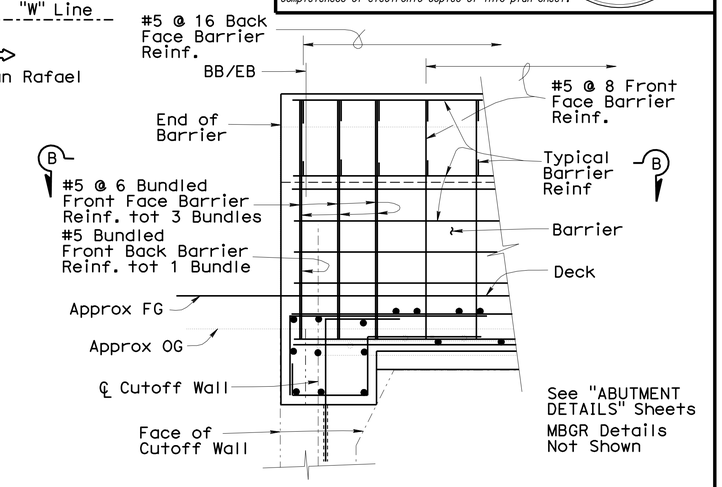

See "ABUTMENT DETAILS" Sheets
MBGR Details Not Shown

ELEVATION A-A
1" = 1'-0"

Note Y

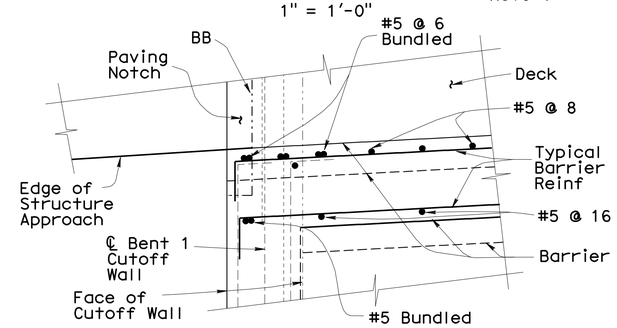

SECTION B-B
1" = 1'-0"

Note Y

Note X
For Barrier on Retaining Wall and Barrier Transition Details, See "BARRIER DETAILS No. 2" Sheet and "ROAD PLANS"

Note Y
For Barrier Wall Details, see "MISCELLANEOUS DETAILS" Sheet

For Barrier Details at Sewer Main, See "SEWER MAIN DETAILS" Sheet

For Paving Notch Details, See "STRUCTURE APPROACH DETAILS No. 3" Sheet

For Additional Details, see "TYPICAL SECTION" Sheets, and "ABUTMENT DETAILS" Sheets

For MBGR Details, see "ROAD PLANS

Denotes Existing Structure
Denotes New Construction

NOTE:
THE CONTRACTOR SHALL VERIFY ALL CONTROLLING FIELD DIMENSIONS BEFORE ORDERING OR FABRICATING ANY MATERIAL.

	BY	CHECKED
DESIGN	Mike Van De Pol	P. Norboe
DETAILS	Mike Van De Pol	P. Norboe
QUANTITIES	Mike Van De Pol	I. Yalan

STATE OF CALIFORNIA
DEPARTMENT OF TRANSPORTATION

DIVISION OF ENGINEERING SERVICES
STRUCTURE DESIGN
DESIGN BRANCH 9

BRIDGE NO. 28-0141
POST MILE 6.0

BRIDGE DECK REPLACEMENT
WESTERN DRIVE UNDERCROSSING
BARRIER DETAILS No. 1

STRUCTURES DESIGN DETAIL SHEET (ENGLISH) (REV. 09-01-10)

ORIGINAL SCALE IN INCHES FOR REDUCED PLANS 0 1 2 3

UNIT: 3594
PROJECT NUMBER & PHASE: 04000004831
CONTRACT NO.: 04-1A3201

DISREGARD PRINTS BEARING EARLIER REVISION DATES
REVISION DATES 3-02-11

SHEET 14 OF 27

FILE => 28-0141-1-bardets01.dgn

USERNAME => s12161d DATE PLOTTED => 07-JUN-2012 TIME PLOTTED => 06:07

DIST	COUNTY	ROUTE	POST MILES TOTAL PROJECT	SHEET No.	TOTAL SHEETS
04	CC	580	5.5/6.2	270	301

REGISTERED CIVIL ENGINEER 5-1-12 DATE

6-4-12
PLANS APPROVAL DATE

REGISTERED PROFESSIONAL ENGINEER Mike Van De Pol No. C35610 Exp. 9/30/2013 CIVIL STATE OF CALIFORNIA

The State of California or its officers or agents shall not be responsible for the accuracy or completeness of electronic copies of this plan sheet.

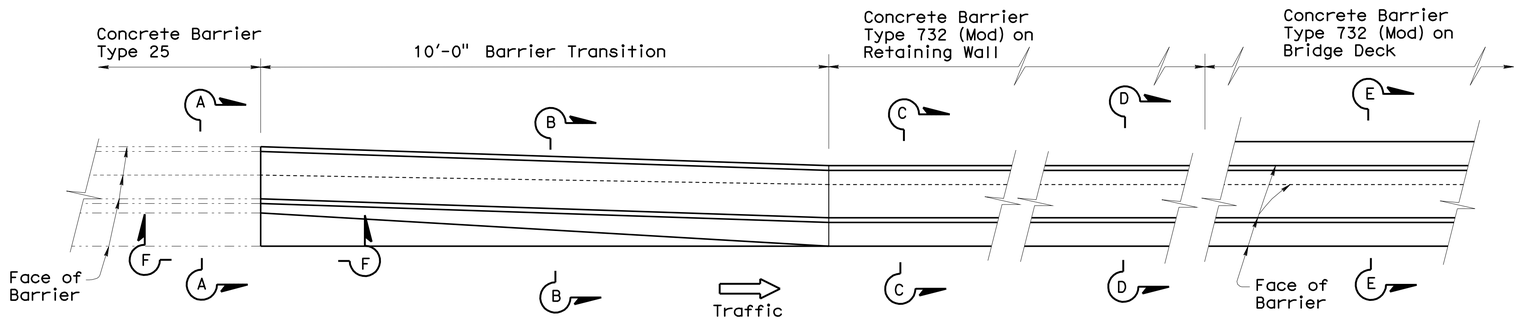

Location and Employment of Barrier Transition, as Approved by the Engineer

PLAN

Barrier Transition Located on Retaining Wall Before Bent 1 See "ROAD PLANS"

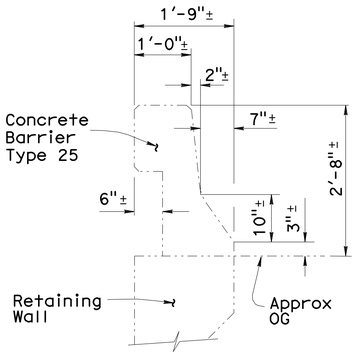

SECTION A-A

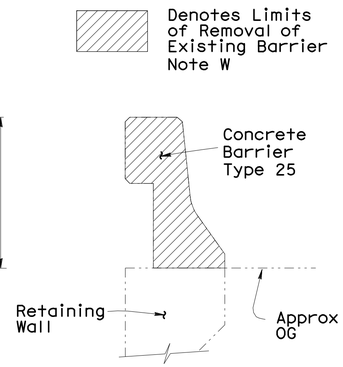

REMOVAL

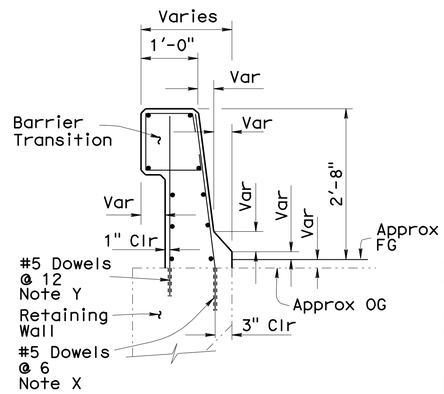

SECTION B-B
Note W

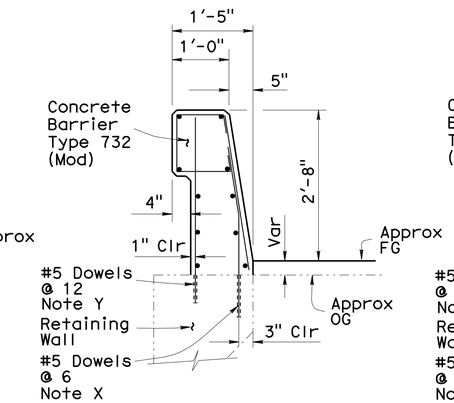

SECTION C-C
Note W

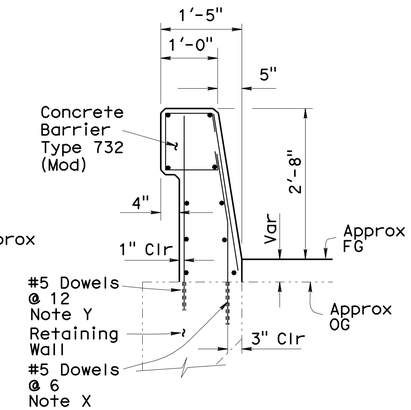

SECTION D-D
Note W

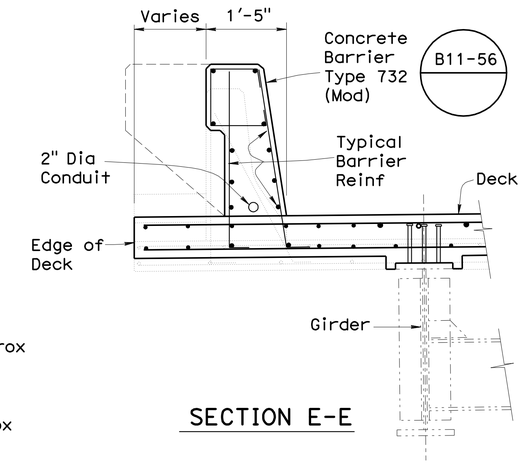

SECTION E-E

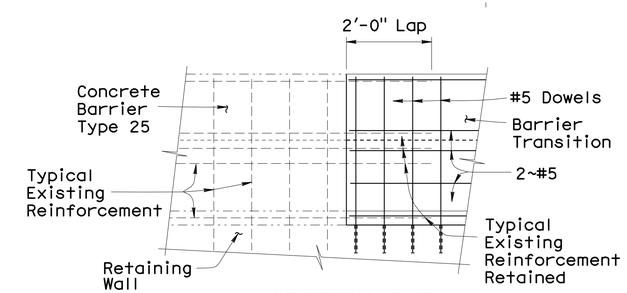

SECTION F-F

All Barrier Reinforcement shall be Epoxy Coated

BARRIER TRANSITION DETAILS

¾" = 1'-0"

Architectural Texture Not Shown
Conduits Not Shown

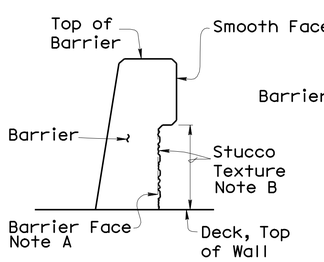

SECTION

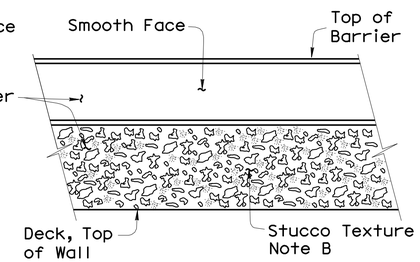

ELEVATION

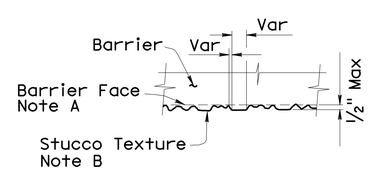

DETAIL

Note A
Face From Which Clearance to Reinforcement is Measured

Note B
Limits of Stucco Texture = Limits of Prepare and Paint

BARRIER FACE ARCHITECTURAL TEXTURE DETAILS

No Scale

Stucco Texture Located in Barrier Recess Along Entire Barrier Length, Typical Each Edge of Deck

Note W
Retain Existing Vertical Reinforcement Extending into Barrier From Retaining Wall

Note X
Drill and Bond Dowels in 9" Deep Hole. Adjust to Clear Existing Reinf

Note Y
Drill and Bond Dowels in 6" Deep Hole. Adjust to Clear Existing Reinf

For Additional Details, see "TYPICAL SECTION" Sheet, "ABUTMENT DETAILS" and "BARRIER DETAILS No. 1" Sheets

For Other Details, see STANDARD PLAN B11-55

Denotes Existing Structure
Denotes New Construction

NOTE:
THE CONTRACTOR SHALL VERIFY ALL CONTROLLING FIELD DIMENSIONS BEFORE ORDERING OR FABRICATING ANY MATERIAL.

	BY	CHECKED
DESIGN	Mike Van De Pol	P. Norboe
DETAILS	Mike Van De Pol	P. Norboe
QUANTITIES	Mike Van De Pol	I. Yalan

STATE OF CALIFORNIA
DEPARTMENT OF TRANSPORTATION

DIVISION OF ENGINEERING SERVICES
STRUCTURE DESIGN
DESIGN BRANCH 9

BRIDGE NO. 28-0141
POST MILE 6.0

BRIDGE DECK REPLACEMENT
WESTERN DRIVE UNDERCROSSING
BARRIER DETAILS No. 2

STRUCTURES DESIGN DETAIL SHEET (ENGLISH) (REV. 09-01-10)

ORIGINAL SCALE IN INCHES FOR REDUCED PLANS 0 1 2 3

UNIT: 3594
PROJECT NUMBER & PHASE: 04000004831
CONTRACT NO.: 04-1A3201

DISREGARD PRINTS BEARING EARLIER REVISION DATES

REVISION DATES 3-02-11

SHEET 15 OF 27

FILE => 28-0141-1-bardets02.dgn

USERNAME => s121614 DATE PLOTTED => 07-JUN-2012 TIME PLOTTED => 06:07

DIST	COUNTY	ROUTE	POST MILES TOTAL PROJECT	SHEET No.	TOTAL SHEETS
04	CC	580	5.5/6.2	271	301

REGISTERED CIVIL ENGINEER 5-1-12 DATE

6-4-12
PLANS APPROVAL DATE

REGISTERED PROFESSIONAL ENGINEER Mike Van De Pol No. C35610 Exp. 9/30/2013 CIVIL STATE OF CALIFORNIA

The State of California or its officers or agents shall not be responsible for the accuracy or completeness of electronic copies of this plan sheet.

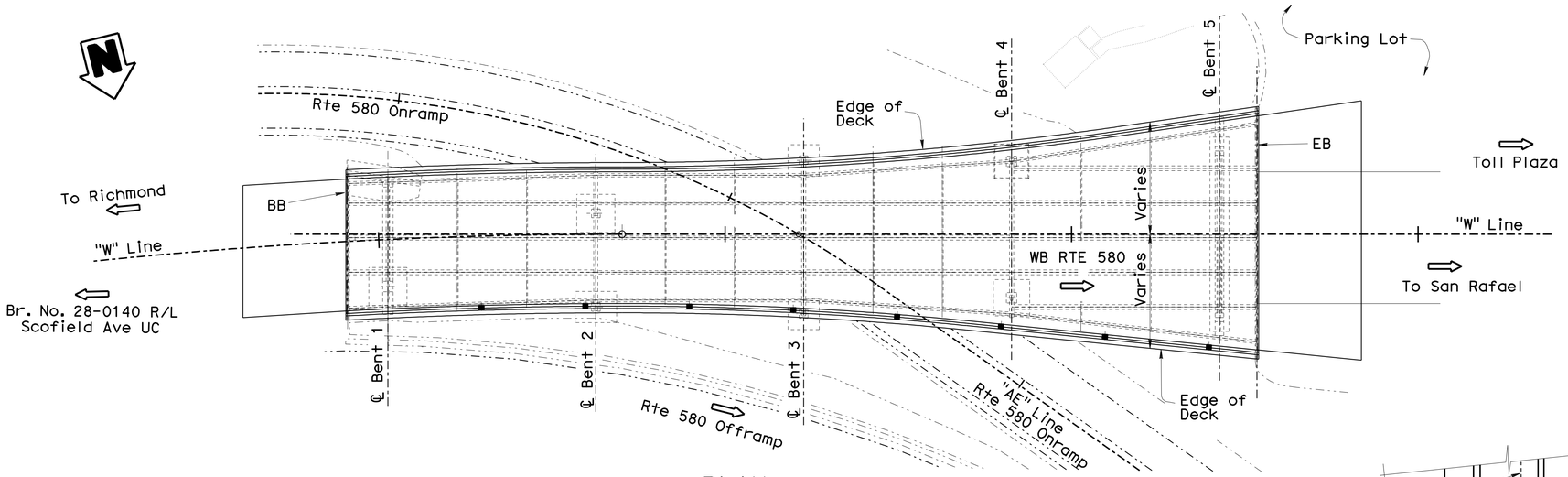

PLAN
1" = 20'

■ Denotes Location of Barrier Scupper
Sewer Main Not Shown

All Barrier Reinforcement shall be Epoxy Coated

Denotes Existing Structure
Denotes New Construction

For Additional Details, see "TYPICAL SECTION" and "BARRIER DETAILS" Sheets

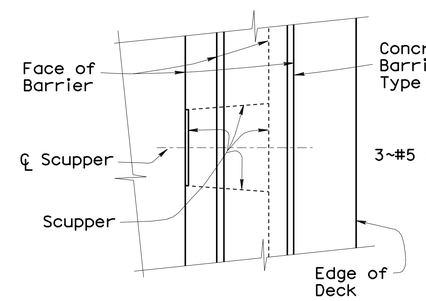

PLAN

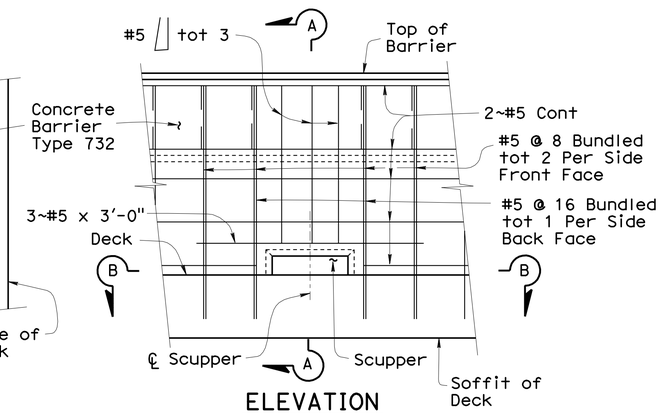

ELEVATION

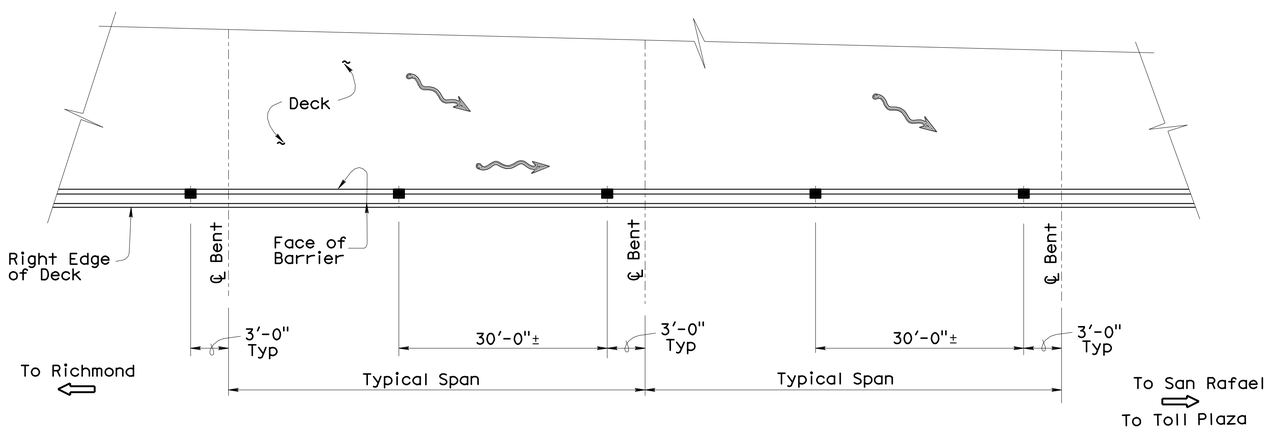

SCUPPER LAYOUT DETAIL
No Scale

Denotes Approximate Water Flow Direction
■ Denotes Location of Barrier Scupper
Edge of Deck Alignment Not Shown
Sewer Main Not Shown

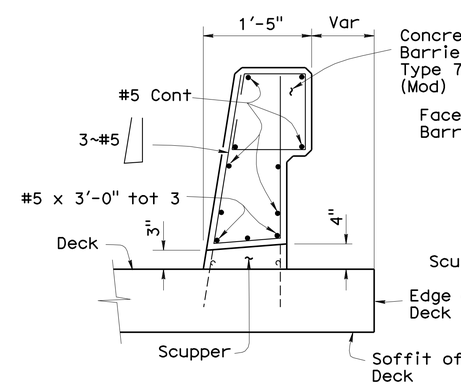

SECTION A-A

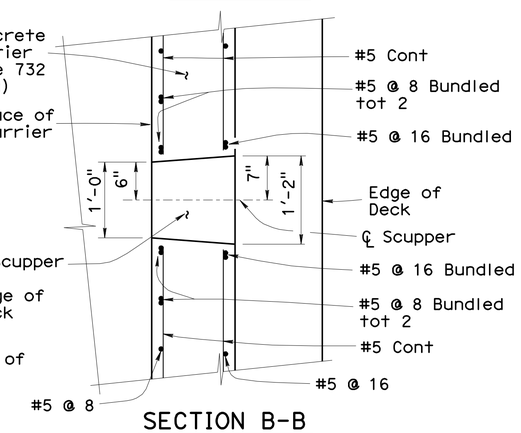

SECTION B-B

BARRIER SCUPPER DETAILS
1" = 1'-0"

Barrier Architectural Texture Not Shown
Conduits Not Shown
Conduits Not Shown

Deck Reinforcement Not Shown
For Scupper Spacing, see Bridge Plan View
Sewer Main Not Shown

NOTE:
THE CONTRACTOR SHALL VERIFY ALL CONTROLLING FIELD DIMENSIONS BEFORE ORDERING OR FABRICATING ANY MATERIAL.

	BY	CHECKED
DESIGN	Mike Van De Pol	P. Norboe
DETAILS	Mike Van De Pol	P. Norboe
QUANTITIES	Mike Van De Pol	I. Yalan

STATE OF CALIFORNIA
DEPARTMENT OF TRANSPORTATION

DIVISION OF ENGINEERING SERVICES
STRUCTURE DESIGN
DESIGN BRANCH 9

BRIDGE NO. 28-0141
POST MILE 6.0

BRIDGE DECK REPLACEMENT
WESTERN DRIVE UNDERCROSSING
DRAINAGE DETAILS

STRUCTURES DESIGN DETAIL SHEET (ENGLISH) (REV. 09-01-10)

ORIGINAL SCALE IN INCHES FOR REDUCED PLANS 0 1 2 3

UNIT: 3594
PROJECT NUMBER & PHASE: 04000004831
CONTRACT NO.: 04-1A3201

DISREGARD PRINTS BEARING EARLIER REVISION DATES

REVISION DATES: 3-02-11

SHEET 16 OF 27

FILE => 28-0141-j-ddets01.dgn

USERNAME => s121614 DATE PLOTTED => 07-JUN-2012 TIME PLOTTED => 06:07

DIST	COUNTY	ROUTE	POST MILES TOTAL PROJECT	SHEET No	TOTAL SHEETS
04	CC	580	5.5/6.2	272	301

REGISTERED CIVIL ENGINEER 5-1-12 DATE

6-4-12
PLANS APPROVAL DATE

The State of California or its officers or agents shall not be responsible for the accuracy or completeness of electronic copies of this plan sheet.

REGISTERED PROFESSIONAL ENGINEER
Mike Van De Pol
No. C35610
Exp. 9-30-2013
CIVIL
STATE OF CALIFORNIA

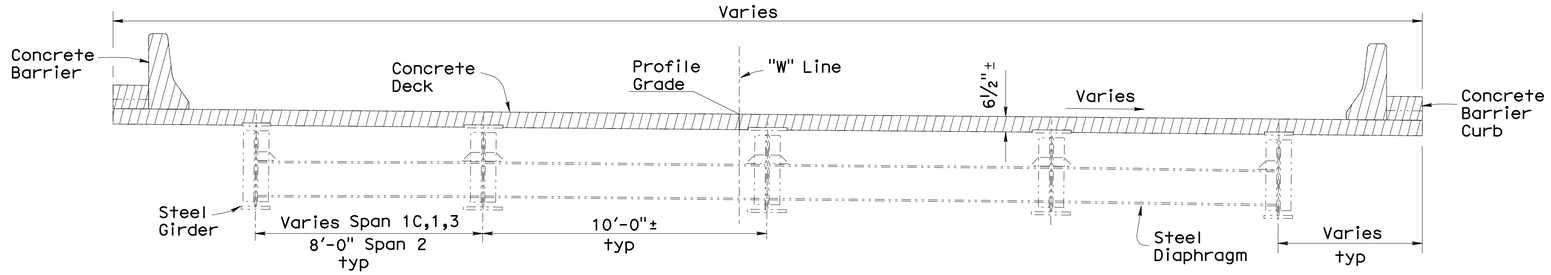

SPANS 1C, 1, 2, 3

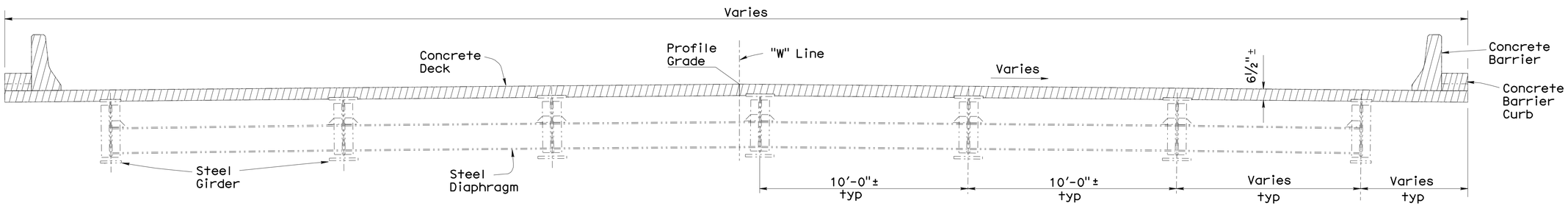

SPANS 4, 4C

TYPICAL SECTIONS

⅜" = 1'-0"

Existing Concrete Barrier Type 27 (Mod)

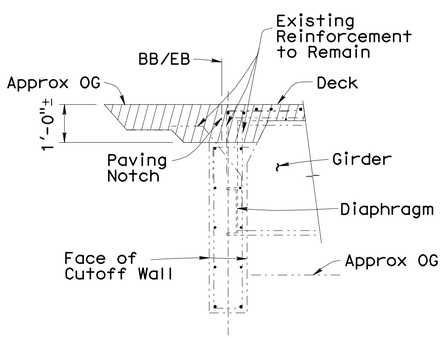

SECTION AT AND BETWEEN GIRDERS

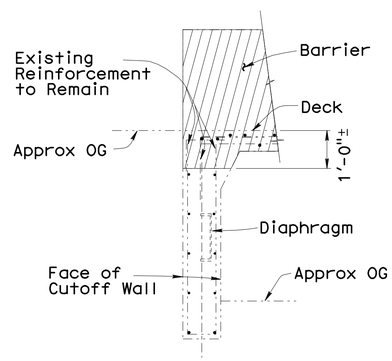

SECTION AT BARRIER

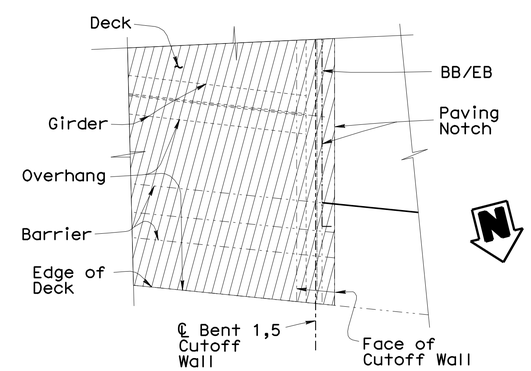

PART PLAN

Bent 5 Shown, Bent 1 Similar

ABUTMENT DETAILS

½" = 1'-0"

BENT CUTOFF WALL DETAILS

Span 1C, 4C Denotes Cantilever Span From Bent to Abutment Cutoff Wall

Denotes Limits of Removal of Existing Deck, Barrier, Railing and Light Standards

NOTES

For Other Details, see "TYPICAL SECTION" Sheet, "PROFILE GRADE AND ALIGNMENT DETAILS" Sheet and "ABUTMENT DETAILS" Sheets

Light Standards and Utilities Not Shown

For Light Standard Removal, See "ROAD PLANS"

All Structural Steel Components Not Shown

Existing Strengthening Components Not Shown

Exist Barrier Curb May Not Be Present At Both Edges of Deck

Sewer Main Not Shown. For Details, see "SEWER MAIN DETAILS" Sheet

Stud Connectors Shall Remain, if Existing

Denotes Existing Structure

Denotes New Construction

NOTE:
THE CONTRACTOR SHALL VERIFY ALL CONTROLLING FIELD DIMENSIONS BEFORE ORDERING OR FABRICATING ANY MATERIAL.

	BY	CHECKED
DESIGN	M. Van De Pol	P. Norboe
DETAILS	M. Van De Pol	P. Norboe
QUANTITIES	M. Van De Pol	I. Yalan

STATE OF CALIFORNIA
DEPARTMENT OF TRANSPORTATION

DIVISION OF ENGINEERING SERVICES
STRUCTURE DESIGN
DESIGN BRANCH 9

BRIDGE NO. 28-0141
POST MILE 6.0

BRIDGE DECK REPLACEMENT
WESTERN DRIVE UNDERCROSSING
REMOVAL DETAILS No. 1

STRUCTURES DESIGN DETAIL SHEET (ENGLISH) (REV. 10/25/05)

ORIGINAL SCALE IN INCHES FOR REDUCED PLANS 0 1 2 3

UNIT: 3594
PROJECT NUMBER & PHASE: 04000004831
CONTRACT NO.: 04-1A3201

DISREGARD PRINTS BEARING EARLIER REVISION DATES

REVISION DATES: 3-02-11

SHEET 17 OF 27

FILE => 28-0141-j-remdets01.dgn

USERNAME => s126614 DATE PLOTTED => 07-JUN-2012 TIME PLOTTED => 06:07

DIST	COUNTY	ROUTE	POST MILES TOTAL PROJECT	SHEET No	TOTAL SHEETS
04	CC	580	5.5/6.2	273	301

REGISTERED CIVIL ENGINEER 5-1-12 DATE

6-4-12
PLANS APPROVAL DATE

REGISTERED PROFESSIONAL ENGINEER Mike Van De Pol No. C35610 Exp. 9-30-2013 CIVIL STATE OF CALIFORNIA

The State of California or its officers or agents shall not be responsible for the accuracy or completeness of electronic copies of this plan sheet.

Denotes Existing Structure
Denotes New Construction

Denotes Limits of Removal of Existing Deck, Barrier, Curb, and Light Standards

Exist Barrier Curb May Not Be Present at Both Edges of Deck

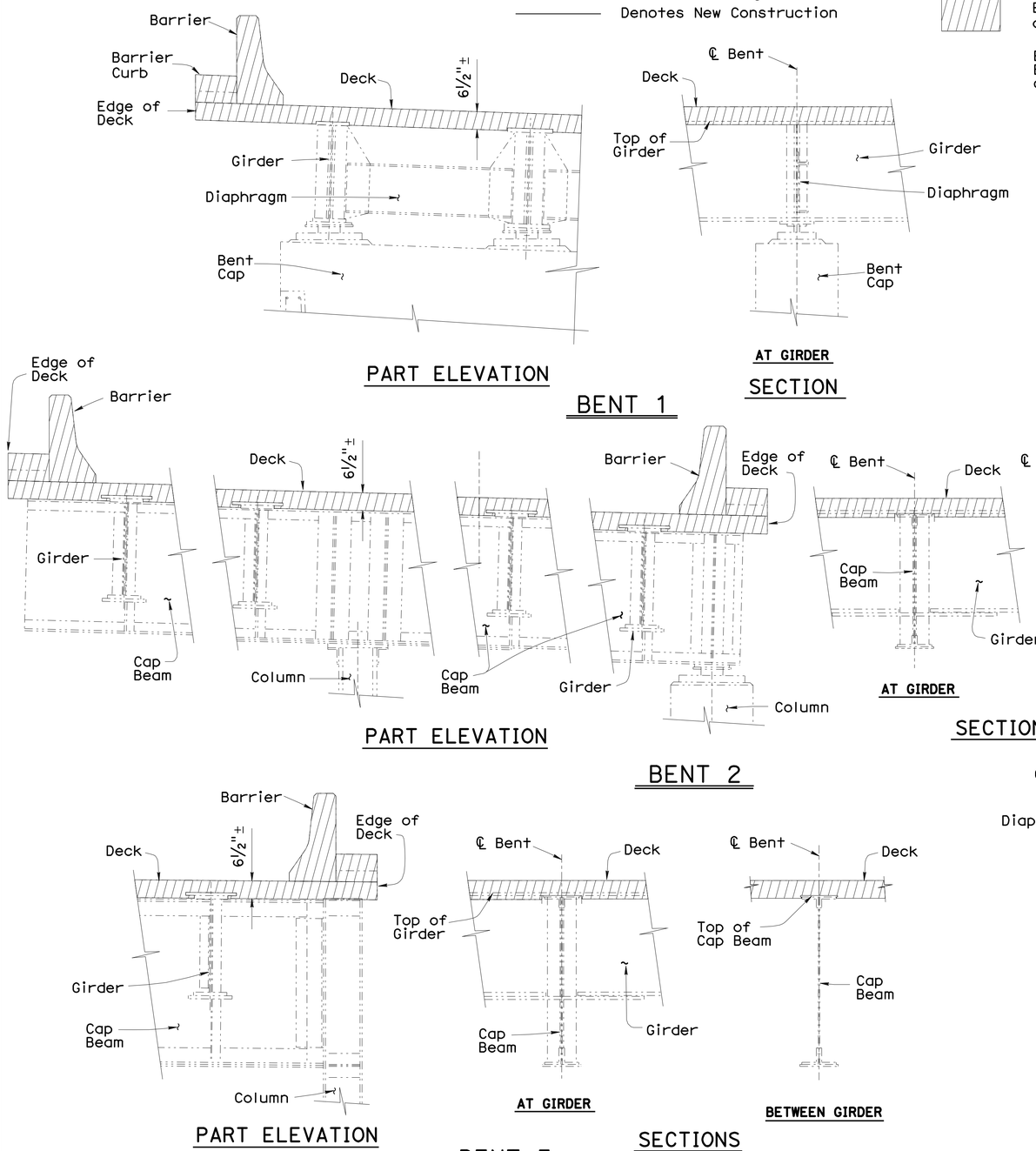

PART ELEVATION

BENT 1

SECTION

AT GIRDER

BETWEEN GIRDER

PART ELEVATION

BENT 2

SECTIONS

PART ELEVATION

BENT 3

SECTIONS

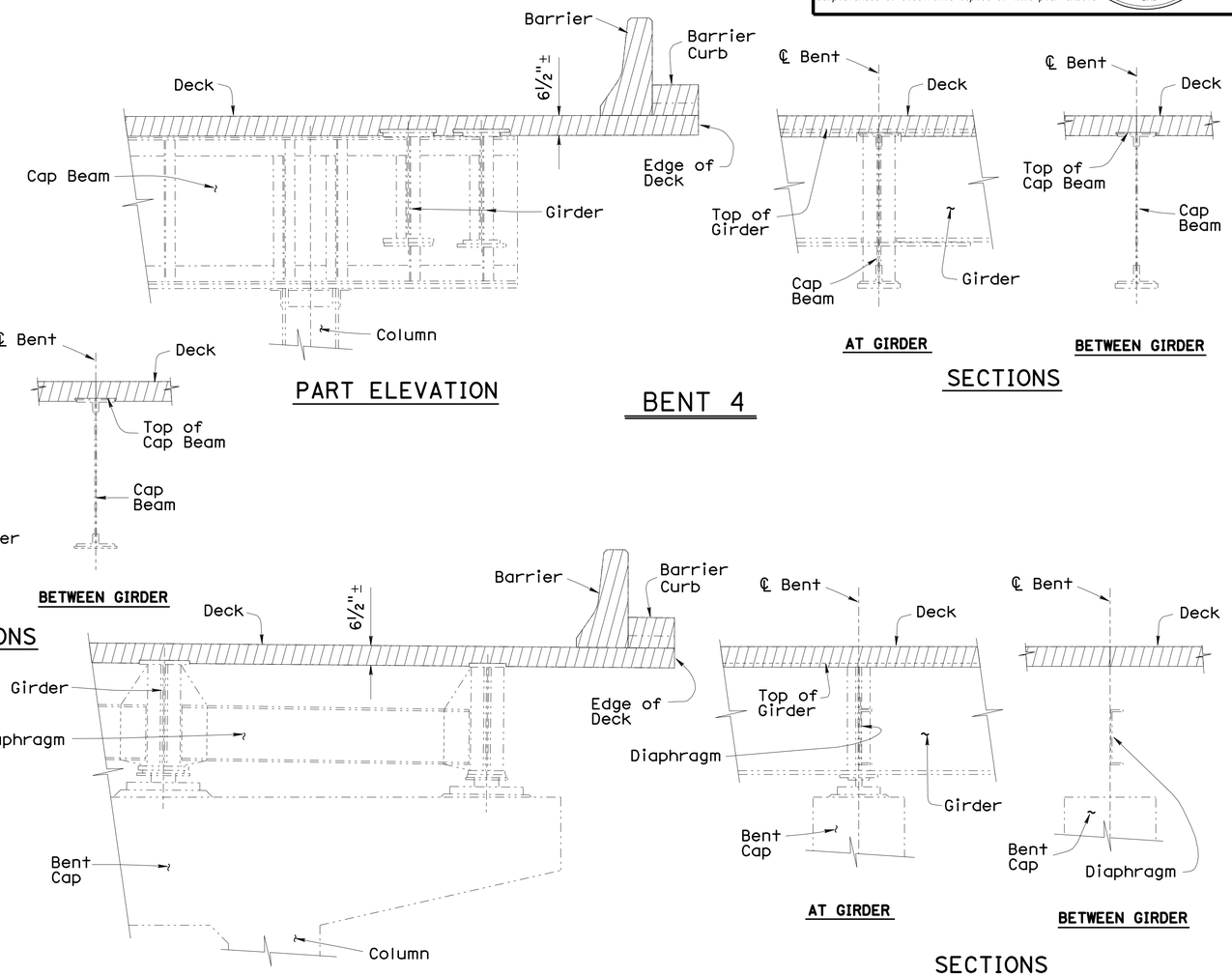

PART ELEVATION

BENT 4

AT GIRDER

BETWEEN GIRDER

SECTIONS

PART ELEVATION

BENT 5

SECTIONS

Existing Barrier Type 27 (Mod)

NOTES

For Other Details, see "TYPICAL SECTION Sheets and "ABUTMENT DETAILS" Sheets

Sewer Main Not Shown. For Details, see "SEWER MAIN DETAILS" Sheet

Light Standards and Utilities Not Shown

All Structural Steel Components Not Shown

Stud Connectors Shall Remain if Existing

NOTE:
THE CONTRACTOR SHALL VERIFY ALL CONTROLLING FIELD DIMENSIONS BEFORE ORDERING OR FABRICATING ANY MATERIAL.

BENT DETAILS

½" = 1'-0"

	BY	CHECKED
DESIGN	M. Van De Pol	P. Norboe
DETAILS	M. Van De Pol	P. Norboe
QUANTITIES	M. Van De Pol	I. Yalan

STATE OF CALIFORNIA
DEPARTMENT OF TRANSPORTATION

DIVISION OF ENGINEERING SERVICES
STRUCTURE DESIGN
DESIGN BRANCH 9

BRIDGE NO. 28-0141
POST MILE 6.0

BRIDGE DECK REPLACEMENT
WESTERN DRIVE UNDERCROSSING
REMOVAL DETAILS No. 2

STRUCTURES DESIGN DETAIL SHEET (ENGLISH) (REV. 10/25/05)

ORIGINAL SCALE IN INCHES FOR REDUCED PLANS 0 1 2 3

UNIT: 3594
PROJECT NUMBER & PHASE: 04000004831
CONTRACT NO.: 04-1A3201

DISREGARD PRINTS BEARING EARLIER REVISION DATES

REVISION DATES 3-02-11

SHEET 18 OF 27

FILE => 28-0141-j-remdets02.dgn

USERNAME => s12614 DATE PLOTTED => 07-JUN-2012 TIME PLOTTED => 06:07

DIST	COUNTY	ROUTE	POST MILES TOTAL PROJECT	SHEET No	TOTAL SHEETS
04	CC	580	5.5/6.2	274	301

REGISTERED CIVIL ENGINEER 5-1-12 DATE

6-4-12
PLANS APPROVAL DATE

The State of California or its officers or agents shall not be responsible for the accuracy or completeness of electronic copies of this plan sheet.

REGISTERED PROFESSIONAL ENGINEER Mike Van De Pol No. C35610 Exp. 9/30/2013 CIVIL STATE OF CALIFORNIA

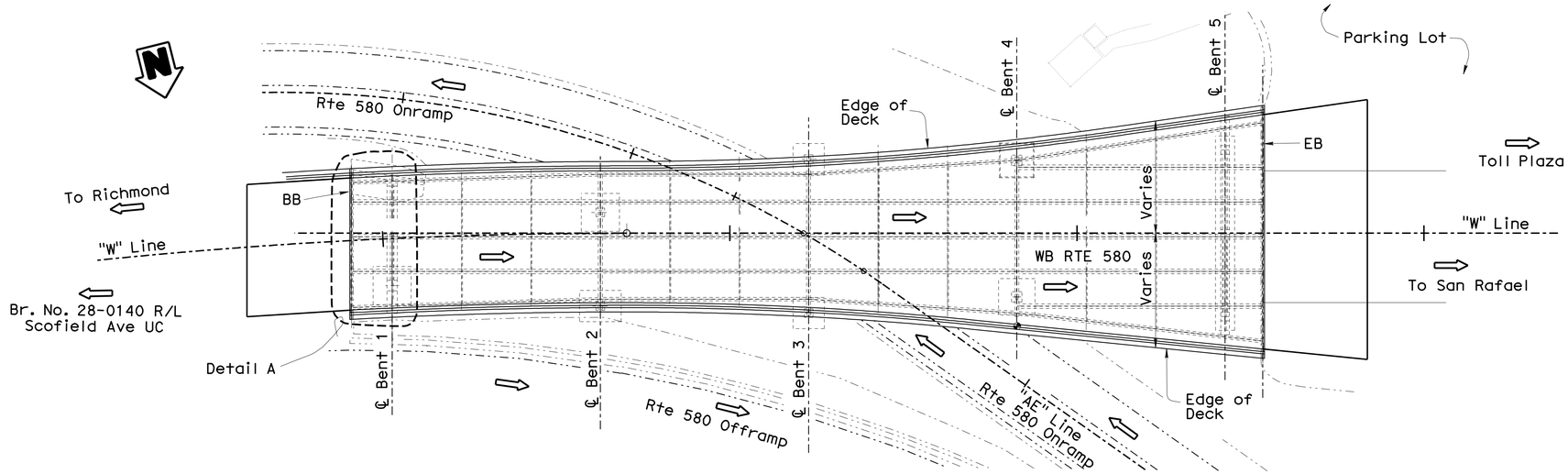

PLAN
1" = 20′

Sewer Main Not Shown
Crash Attenuator and Cutoff Wall Not Shown

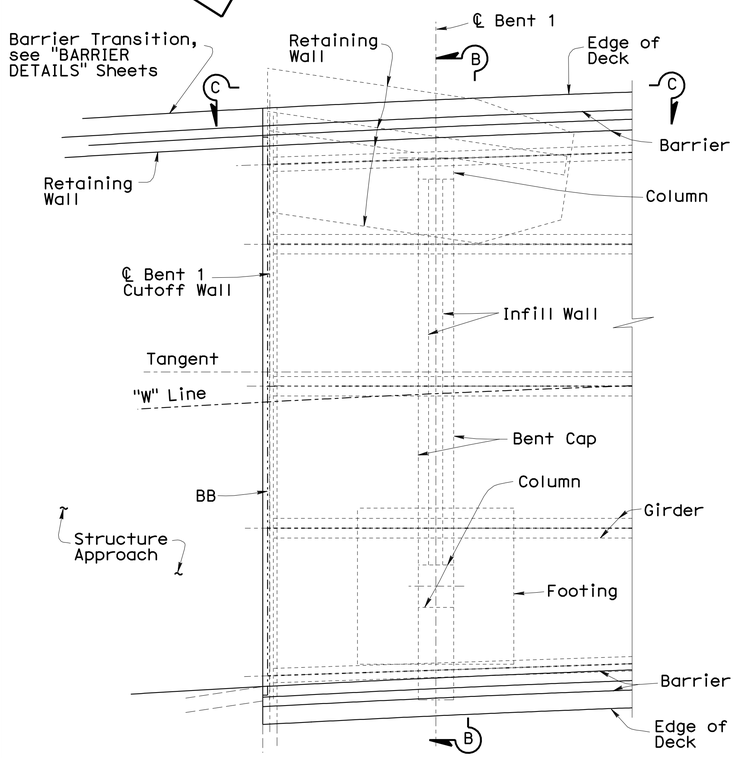

DETAIL A
3/16" = 1′-0"

Crash Attenuator and Cutoff Wall Not Shown

Sewer Main Not Shown

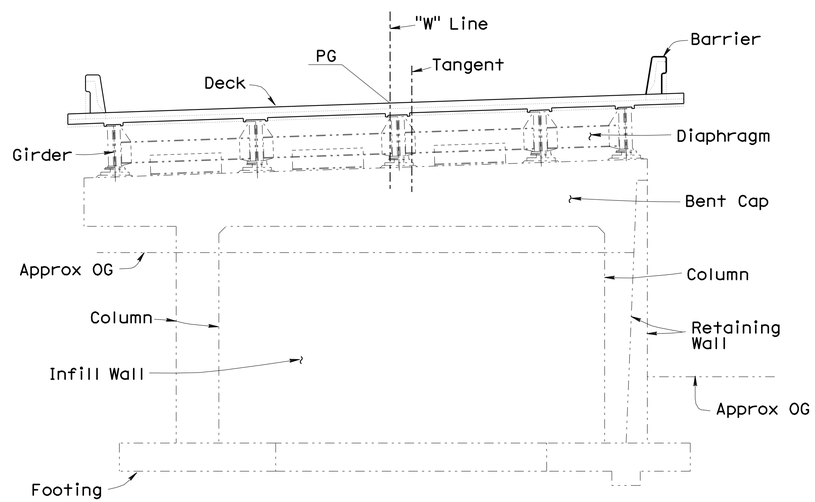

ELEVATION B-B
3/16" = 1′-0"

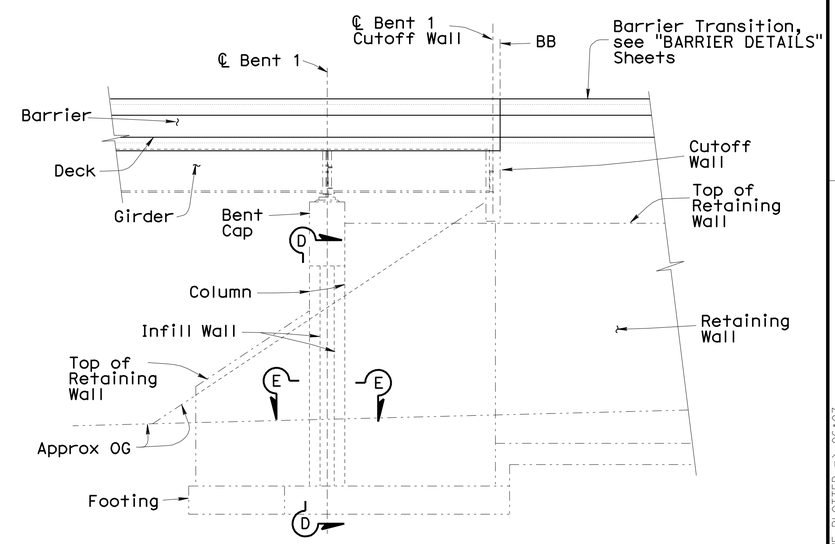

ELEVATION C-C
3/16" = 1′-0"

For Additional Details, see "BENT DETAILS" and "ABUTMENT DETAILS" Sheets

For Section D-D Through Section E-E, see "BENT RETROFIT DETAILS No. 2" Sheet

Denotes Existing Structure

Denotes New Construction

Denotes Direction of Traffic

NOTE:
THE CONTRACTOR SHALL VERIFY ALL CONTROLLING FIELD DIMENSIONS BEFORE ORDERING OR FABRICATING ANY MATERIAL.

	BY	CHECKED
DESIGN	Mike Van De Pol	P. Norboe
DETAILS	Mike Van De Pol	P. Norboe
QUANTITIES	Mike Van De Pol	I. Yalan

STATE OF CALIFORNIA
DEPARTMENT OF TRANSPORTATION

DIVISION OF ENGINEERING SERVICES
STRUCTURE DESIGN
DESIGN BRANCH 9

BRIDGE NO. 28-0141
MILE POST 6.0

BRIDGE DECK REPLACEMENT
WESTERN DRIVE UNDERCROSSING
BENT RETROFIT DETAILS No. 1

STRUCTURES DESIGN DETAIL SHEET (ENGLISH) (REV. 10/25/05)

ORIGINAL SCALE IN INCHES FOR REDUCED PLANS 0 1 2 3

UNIT: 3594
PROJECT NUMBER & PHASE: 04000004831
CONTRACT NO.: 04-1A3201

DISREGARD PRINTS BEARING EARLIER REVISION DATES 3-02-11

SHEET 19 OF 27

FILE => 28-0141-k-retro1.dgn

USERNAME => s121614 DATE PLOTTED => 07-JUN-2012 TIME PLOTTED => 06:07

DIST	COUNTY	ROUTE	POST MILES TOTAL PROJECT	SHEET No	TOTAL SHEETS
04	CC	580	5.5/6.2	275	301

REGISTERED CIVIL ENGINEER 5-1-12 DATE

6-4-12
PLANS APPROVAL DATE

REGISTERED PROFESSIONAL ENGINEER Mike Van De Pol No. C35610 Exp. 9/30/2013 CIVIL STATE OF CALIFORNIA

The State of California or its officers or agents shall not be responsible for the accuracy or completeness of electronic copies of this plan sheet.

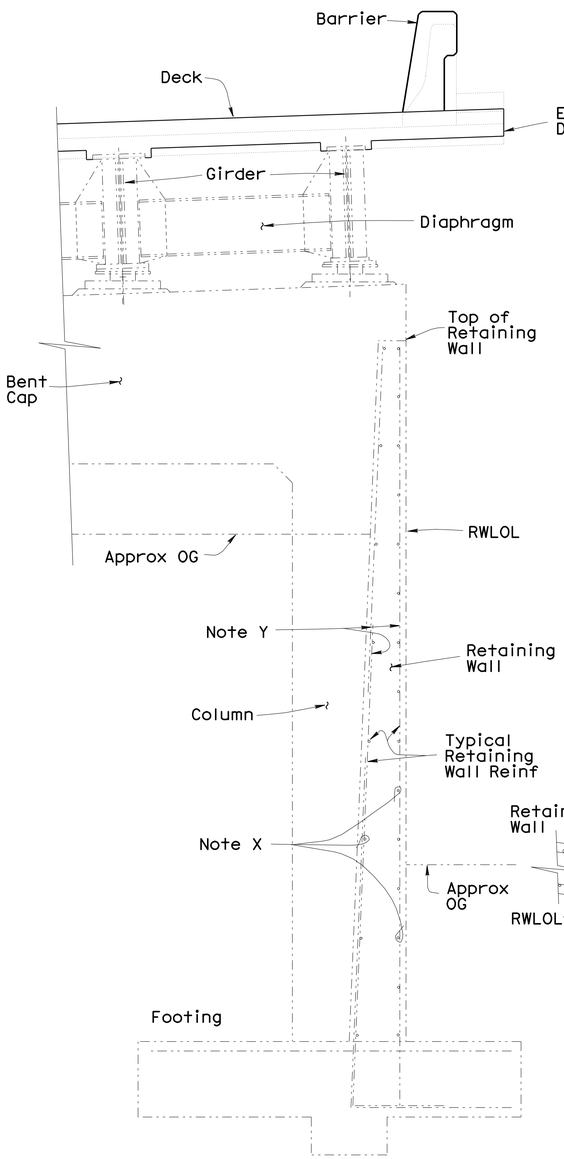

SECTION D-D

½" = 1'-0"

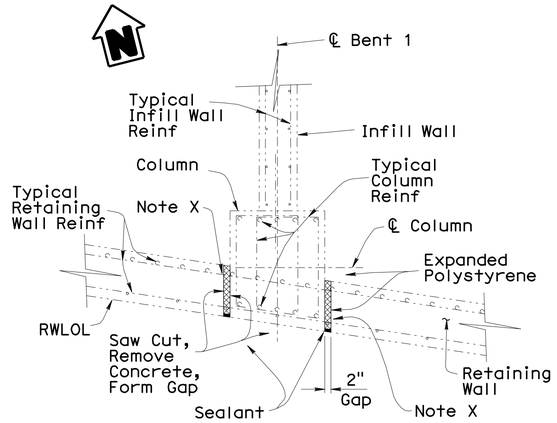

ALTERNATIVE 1

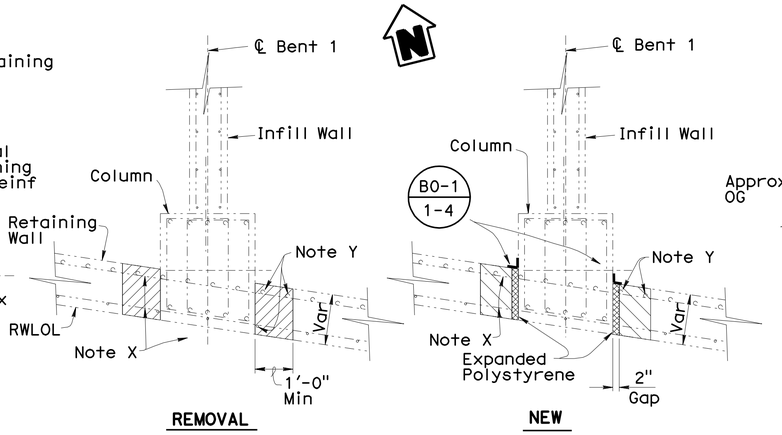

ALTERNATIVE 2

Limits of Removal of Existing Retaining Wall. Portion of Reinforcement to Remain

Limits of Replacement Concrete

Note X Retained Horizontal Reinforcement Shortened to Clear Gap

Note Y Retained Vertical Reinforcement

Gap May be Adjusted to Clear Retained Vertical Reinforcement

SECTION E-E

½" = 1'-0"

All reinforcement shall be Epoxy Coated

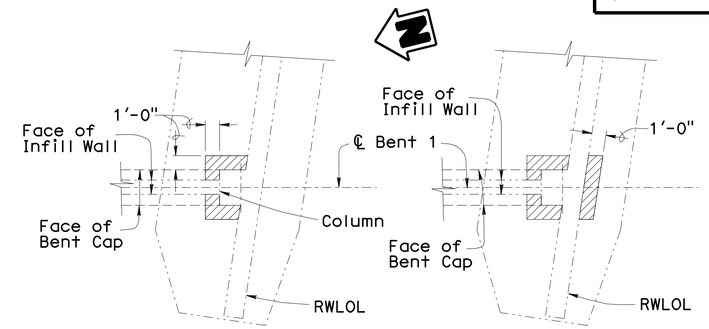

SECTION W-W

SECTION X-X

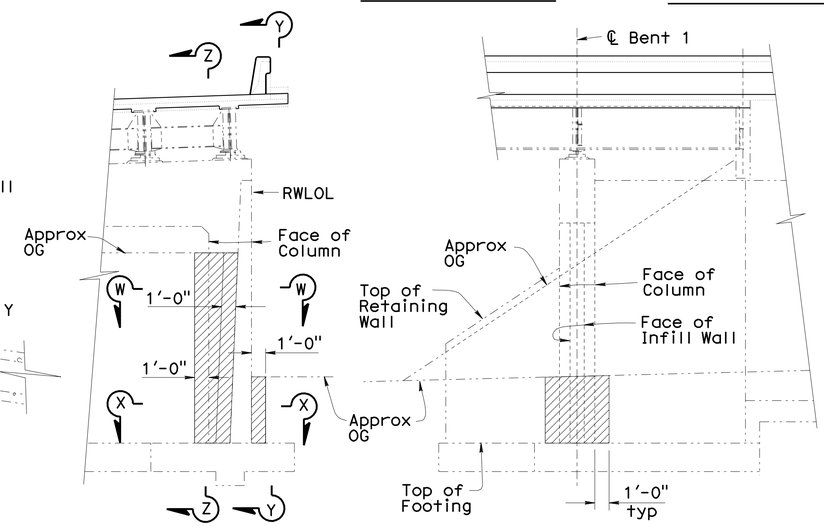

ELEVATION

SECTION Y-Y

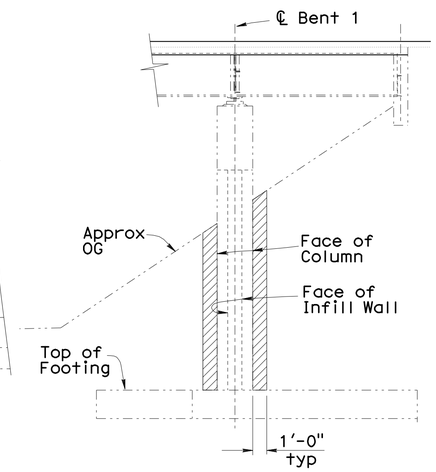

SECTION Z-Z

EXCAVATION AND BACKFILL DETAILS

3/16" = 1'-0"

For Additional Details, See Section D-D Through Section E-E

Denotes Limits of Structure Excavation = Limits of Structure Backfill
Limits Shown for Alternative 1
For Additional Details, See Sandard Plan A62B

Barrier Face Architectural Texture Not Shown

Conduits Not Shown

Denotes Existing Structure

Denotes New Construction

For Locations of Section D-D Through Section E-E, see "BENT RETROFIT DETAILS No. 1" Sheet

NOTE:
THE CONTRACTOR SHALL VERIFY ALL CONTROLLING FIELD DIMENSIONS BEFORE ORDERING OR FABRICATING ANY MATERIAL.

	BY	CHECKED
DESIGN	Mike Van De Pol	P. Norboe
DETAILS	Mike Van De Pol	P. Norboe
QUANTITIES	Mike Van De Pol	I. Yalan

STATE OF CALIFORNIA
DEPARTMENT OF TRANSPORTATION

DIVISION OF ENGINEERING SERVICES
STRUCTURE DESIGN
DESIGN BRANCH 9

BRIDGE NO. 28-0141
MILE POST 6.0

BRIDGE DECK REPLACEMENT
WESTERN DRIVE UNDERCROSSING
BENT RETROFIT DETAILS No. 2

STRUCTURES DESIGN DETAIL SHEET (ENGLISH) (REV. 10/25/05)

ORIGINAL SCALE IN INCHES FOR REDUCED PLANS 0 1 2 3

UNIT: 3594
PROJECT NUMBER & PHASE: 04000004831
CONTRACT NO.: 04-1A3201

DISREGARD PRINTS BEARING EARLIER REVISION DATES 3-02-11

SHEET 20 OF 27

FILE => 28-0141-k-retro2.dgn

USERNAME => s121614 DATE PLOTTED => 07-JUN-2012 TIME PLOTTED => 06:07

DIST	COUNTY	ROUTE	POST MILES TOTAL PROJECT	SHEET No	TOTAL SHEETS
04	CC	580	5.5/6.2	276	301

REGISTERED CIVIL ENGINEER 5-1-12 DATE

6-4-12
PLANS APPROVAL DATE

REGISTERED PROFESSIONAL ENGINEER
Mike Van De Pol
No. C35610
Exp. 9/30/2013
CIVIL
STATE OF CALIFORNIA

The State of California or its officers or agents shall not be responsible for the accuracy or completeness of electronic copies of this plan sheet.

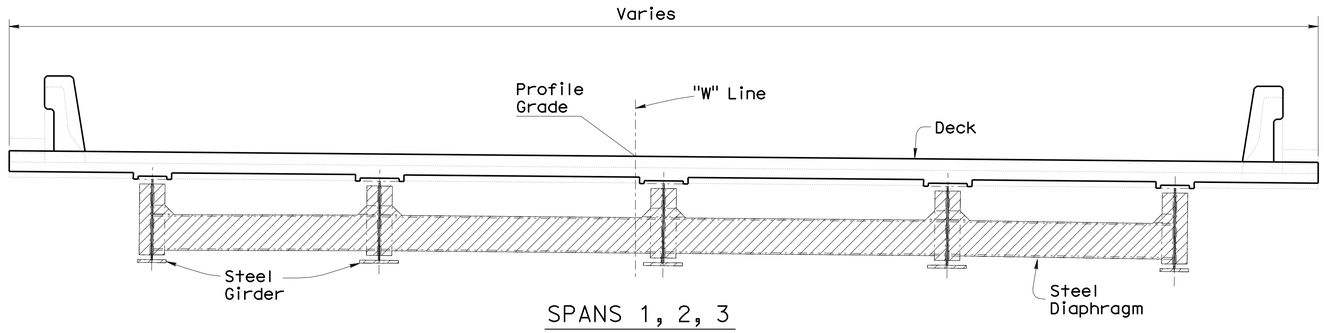

SPANS 1, 2, 3

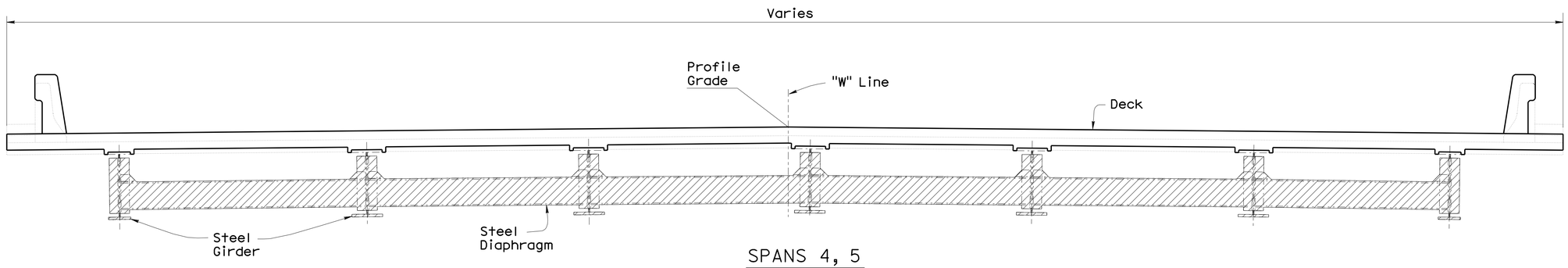

SPANS 4, 5

TYPICAL SECTIONS

3/8" = 1'-0"

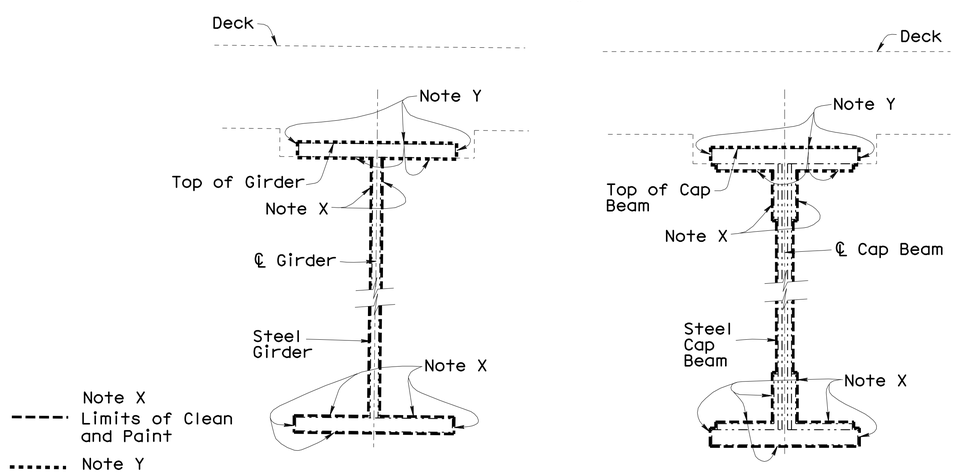

Note X
Limits of Clean and Paint

Note Y
Limits of Spot Blast and Paint Undercoat

GIRDER

BENT CAP

SECTIONS

No Scale

Stud Connectors Not Shown

NOTE:
THE CONTRACTOR SHALL VERIFY ALL CONTROLLING FIELD DIMENSIONS BEFORE ORDERING OR FABRICATING ANY MATERIAL.

Notes

For Additional Details, see "TYPICAL SECTION", "BENT DETAILS", and "GIRDER DETAILS" Sheets

All Existing Structural Steel Components Not Shown

Sewer Main and Conduits Not Shown

Sewer Main and Support Brackets Shall be Cleaned and Painted

Denotes Approximate Limits of Clean and Paint Structural Steel. All Exposed Steel Surfaces.

Denotes Existing Structure
Denotes New Construction

	BY	CHECKED
DESIGN	M. Van De Pol	P. Norboe
DETAILS	M. Van De Pol	P. Norboe
QUANTITIES	M. Van De Pol	I. Yalan

STATE OF CALIFORNIA
DEPARTMENT OF TRANSPORTATION

DIVISION OF ENGINEERING SERVICES
STRUCTURE DESIGN
DESIGN BRANCH 9

BRIDGE NO. 28-0141
POST MILE 6.0

BRIDGE DECK REPLACEMENT
WESTERN DRIVE UNDERCROSSING
CLEAN AND PAINT DETAILS No. 1

STRUCTURES DESIGN DETAIL SHEET (ENGLISH) (REV. 10/25/05)

ORIGINAL SCALE IN INCHES FOR REDUCED PLANS 0 1 2 3

UNIT: 3594
PROJECT NUMBER & PHASE: 04000004831
CONTRACT NO.: 04-1A3201

DISREGARD PRINTS BEARING EARLIER REVISION DATES

REVISION DATES: 3-02-11

SHEET 21 OF 27

FILE => 28-0141-k-retro3.dgn

USERNAME => s126614 DATE PLOTTED => 07-JUN-2012 TIME PLOTTED => 06:08

DIST	COUNTY	ROUTE	POST MILES TOTAL PROJECT	SHEET No	TOTAL SHEETS
04	CC	580	5.5/6.2	277	301

REGISTERED CIVIL ENGINEER 5-1-12 DATE

6-4-12
PLANS APPROVAL DATE

REGISTERED PROFESSIONAL ENGINEER
Mike Van De Pol
No. C35610
Exp. 9/30/2013
CIVIL
STATE OF CALIFORNIA

The State of California or its officers or agents shall not be responsible for the accuracy or completeness of electronic copies of this plan sheet.

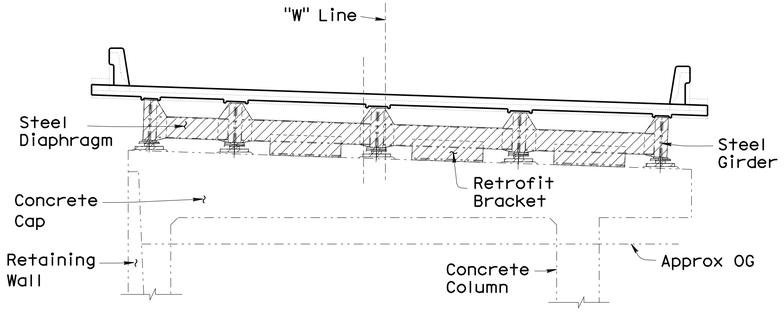

ELEVATION BENT 1
3/16" = 1'-0"

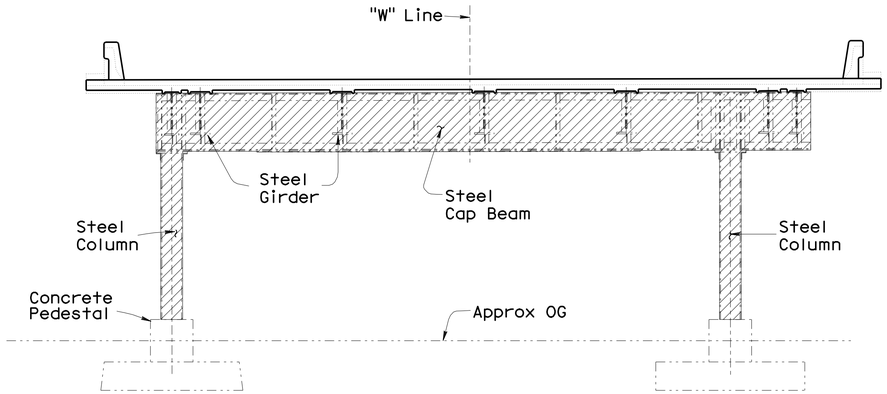

ELEVATION BENT 4
3/16" = 1'-0"

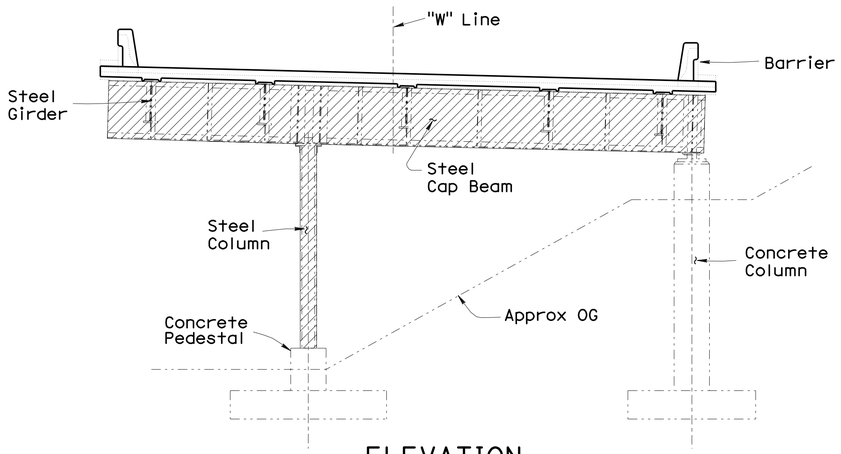

ELEVATION BENT 2
3/16" = 1'-0"

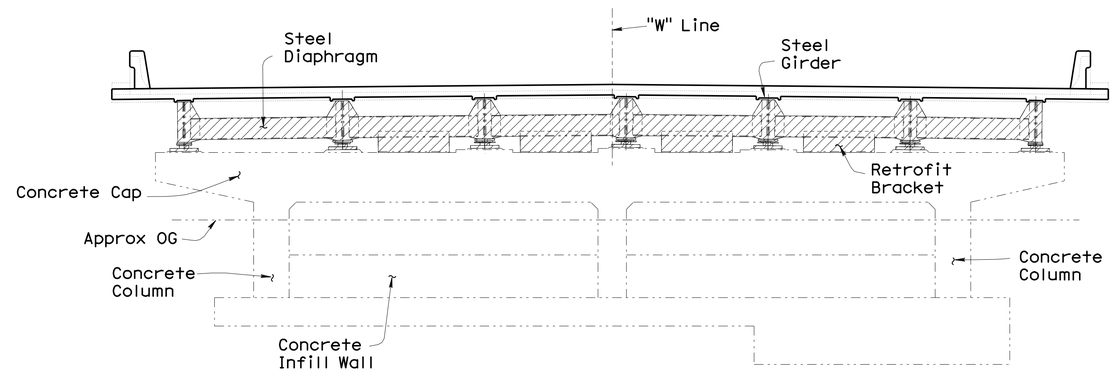

ELEVATION BENT 5
3/16" = 1'-0"

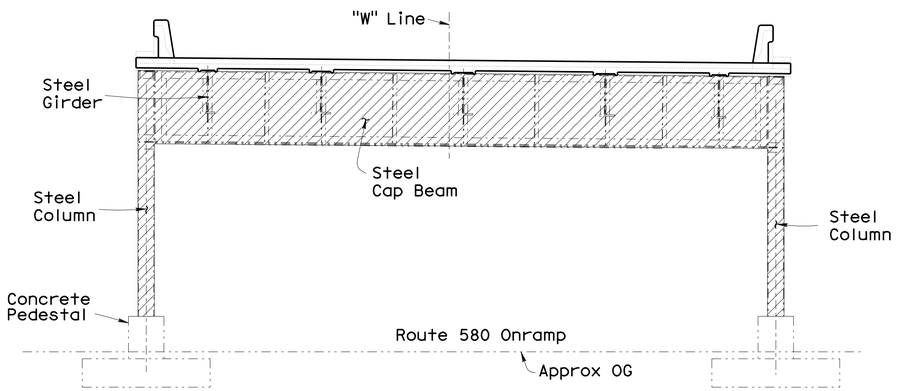

ELEVATION BENT 3
3/16" = 1'-0"

NOTE:
THE CONTRACTOR SHALL VERIFY ALL CONTROLLING FIELD DIMENSIONS BEFORE ORDERING OR FABRICATING ANY MATERIAL.

Notes

For Bent Locations, see "GENERAL PLAN" Sheets

For Additional Details, see "Bent Details" and "Typical Section" Sheets

All Existing Structural Steel Components Not Shown

Sewer Main Not Shown

Denotes Approximate Limits of Clean and Paint Structural Steel. All Exposed Steel Surfaces. For Additional Details, see "CLEAN AND PAINT DETAILS No. 1" Sheet

Denotes Existing Structure

Denotes New Construction

	BY	CHECKED
DESIGN	M. Van De Pol	P. Norboe
DETAILS	M. Van De Pol	P. Norboe
QUANTITIES	M. Van De Pol	I. Yalan

STATE OF CALIFORNIA
DEPARTMENT OF TRANSPORTATION

DIVISION OF ENGINEERING SERVICES
STRUCTURE DESIGN
DESIGN BRANCH 9

BRIDGE NO. 28-0141
POST MILE 6.0

BRIDGE DECK REPLACEMENT
WESTERN DRIVE UNDERCROSSING
CLEAN AND PAINT DETAILS No. 2

STRUCTURES DESIGN DETAIL SHEET (ENGLISH) (REV. 10/25/05)

ORIGINAL SCALE IN INCHES FOR REDUCED PLANS 0 1 2 3

UNIT: 3594
PROJECT NUMBER & PHASE: 04000004831
CONTRACT NO.: 04-1A3201

DISREGARD PRINTS BEARING EARLIER REVISION DATES

REVISION DATES 3-02-11

SHEET 22 OF 27

FILE => 28-0141-k-retro4.dgn

USERNAME => s12614 DATE PLOTTED => 07-JUN-2012 TIME PLOTTED => 06:08

DIST	COUNTY	ROUTE	POST MILES TOTAL PROJECT	SHEET No.	TOTAL SHEETS
04	CC	580	5.5/6.2	278	301

REGISTERED CIVIL ENGINEER 5-1-12 DATE

6-4-12
PLANS APPROVAL DATE

REGISTERED PROFESSIONAL ENGINEER Mike Van De Pol No. C35610 Exp. 9/30/2013 CIVIL STATE OF CALIFORNIA

The State of California or its officers or agents shall not be responsible for the accuracy or completeness of electronic copies of this plan sheet.

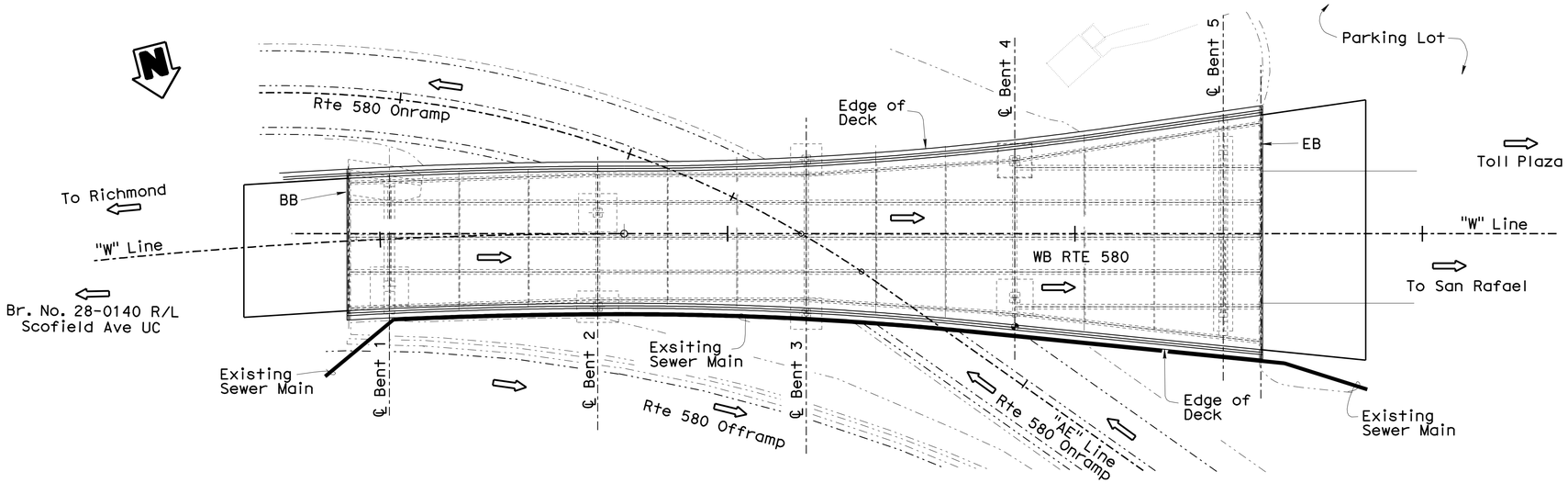

PLAN

1" = 20'

Notes

For Additional Details, see "TYPICAL SECTION" Sheets and "ROAD PLANS"

Existing Deck and Barrier Reinforcement Not Shown

Location, Profile and Alignment of Pipe Shall be Maintained During Removal and Construction Operations

Sewer Main and Support Brackets Shall be Cleaned and Painted

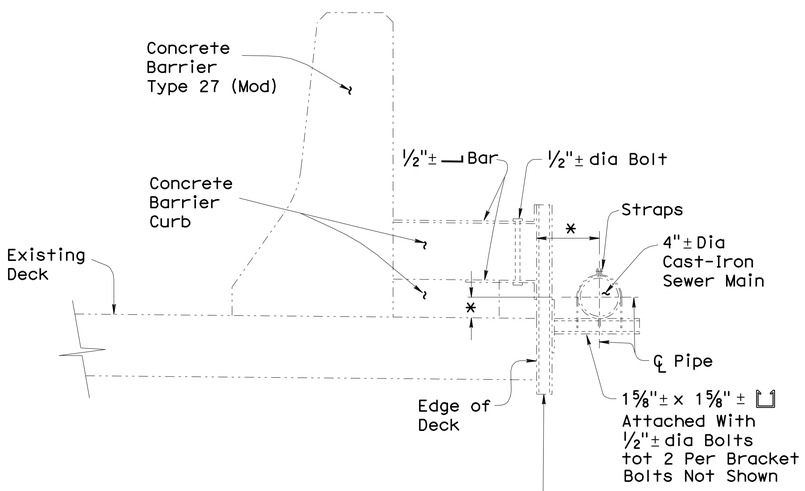

EXISTING

Bracket Spacing = 10'±

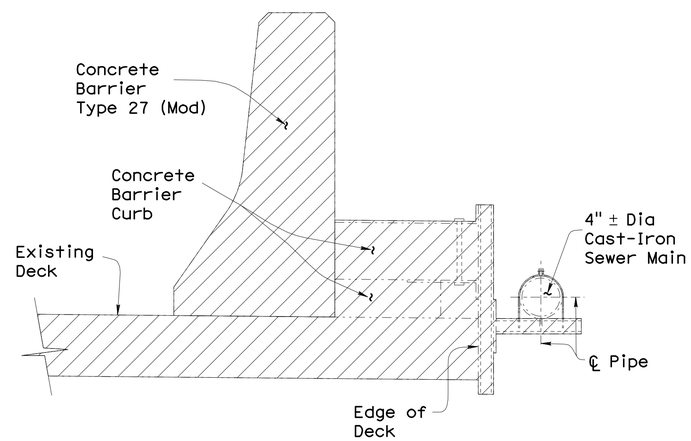

REMOVAL

Pipe Shall Be Supported and Protected During Removal Operations

Denotes Limits of Removal of Existing Deck, Barrier, Curb and Pipe Bracket.

Pipe Brackets Shall be Salvaged for Reuse

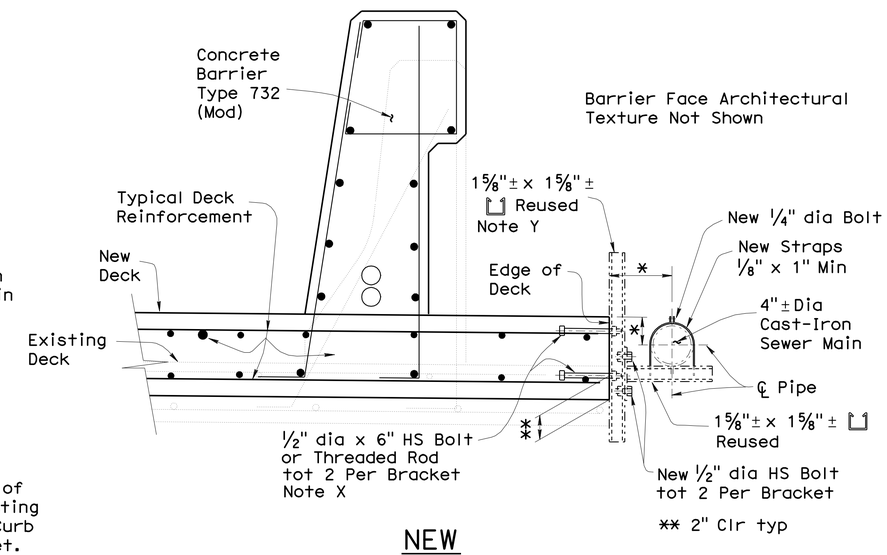

NEW

New Bracket Spacing = 10'±
New Hardware Galvanized

Note X
Bolts/Rods May be Cast Into Deck, or Attached With Expansion Anchorages, as Approved by the Engineer. Bolts/Rods are Galvanized

Pipe Shall Be Supported and Protected During Construction Operations

Note Y
Bracket May be Shortened as Approved by the Engineer

Place Building Paper Between Pipe and New Straps

PART TYPICAL SECTIONS

1½" = 1'-0"

* Varies
Denotes Existing Structure
Denotes New Construction

NOTE:
THE CONTRACTOR SHALL VERIFY ALL CONTROLLING FIELD DIMENSIONS BEFORE ORDERING OR FABRICATING ANY MATERIAL.

	BY	CHECKED
DESIGN	Mike Van De Pol	P. Norboe
DETAILS	Mike Van De Pol	P. Norboe
QUANTITIES	Mike Van De Pol	I. Yalan

STATE OF CALIFORNIA
DEPARTMENT OF TRANSPORTATION

DIVISION OF ENGINEERING SERVICES
STRUCTURE DESIGN
DESIGN BRANCH 9

BRIDGE NO. 28-0141
POST MILE 6.0

BRIDGE DECK REPLACEMENT
WESTERN DRIVE UNDERCROSSING
SEWER MAIN DETAILS

STRUCTURES DESIGN DETAIL SHEET (ENGLISH) (REV. 09-01-10)

ORIGINAL SCALE IN INCHES FOR REDUCED PLANS 0 1 2 3

UNIT: 3594
PROJECT NUMBER & PHASE: 04000004831
CONTRACT NO.: 04-1A3201

DISREGARD PRINTS BEARING EARLIER REVISION DATES

REVISION DATES 3-02-11

SHEET 23 OF 27

FILE => 28-0141-k-sewer.dgn

USERNAME => s121614 DATE PLOTTED => 07-JUN-2012 TIME PLOTTED => 06:08

NOTE:
THE CONTRACTOR SHALL VERIFY ALL CONTROLLING FIELD DIMENSIONS BEFORE ORDERING OR FABRICATING ANY MATERIAL.

DIST	COUNTY	ROUTE	POST MILES TOTAL PROJECT	SHEET No.	TOTAL SHEETS
04	CC	580	5.5/6.2	279	301

REGISTERED CIVIL ENGINEER 5-1-12 DATE

6-4-12
PLANS APPROVAL DATE

REGISTERED PROFESSIONAL ENGINEER Mike Van De Pol No. C35610 Exp. 9/30/2013 CIVIL STATE OF CALIFORNIA

The State of California or its officers or agents shall not be responsible for the accuracy or completeness of electronic copies of this plan sheet.

Denotes Existing Structure
Denotes New Construction

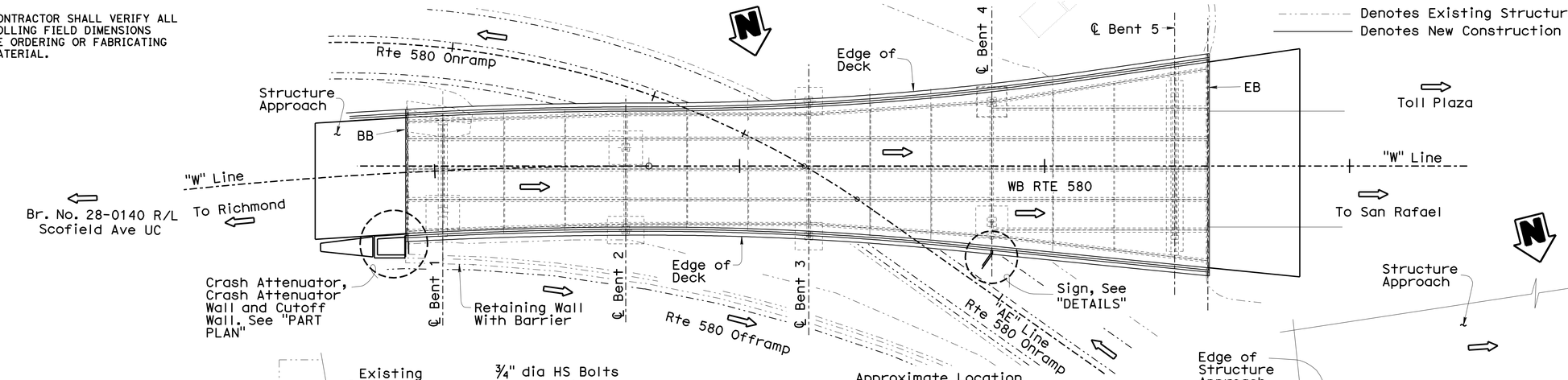

PLAN
1" = 20'

Approximate Location of Sign Shown. Exact Location Shall be Defined by The Contractor Prior to Removal. Final Sign Location = Existing Sign Location
For Added Details, see "Road Plans"
Sewer Main Not Shown

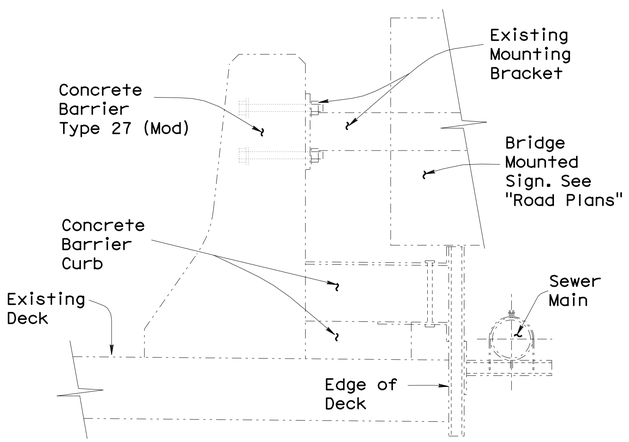

EXISTING

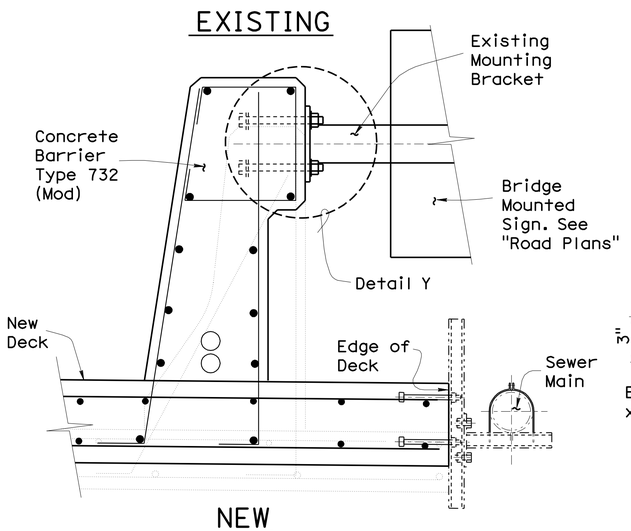

NEW

Barrier Face Architectural Texture Not Shown

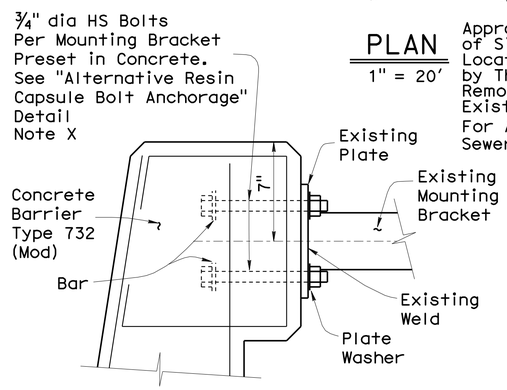

DETAIL Y
No Scale

Note X
Number and Size of New Bolts, Shall Match Existing

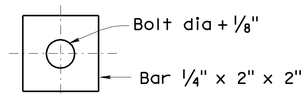

PLATE WASHER
No Scale

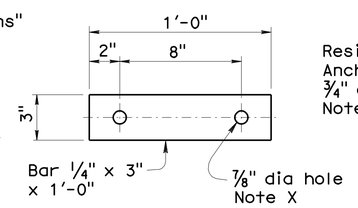

BAR DETAIL
No Scale

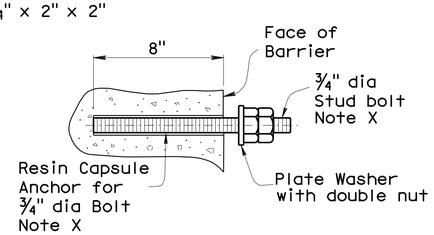

ALTERNATIVE RESIN CAPSULE BOLT ANCHORAGE
No Scale

Existing Sign Shall be Removed and Replaced. Existing Mounting Bracket and Sign to be Reused. For Other Sign Details, see "Road Plans"

SIGN DETAILS
1½" = 1'-0"

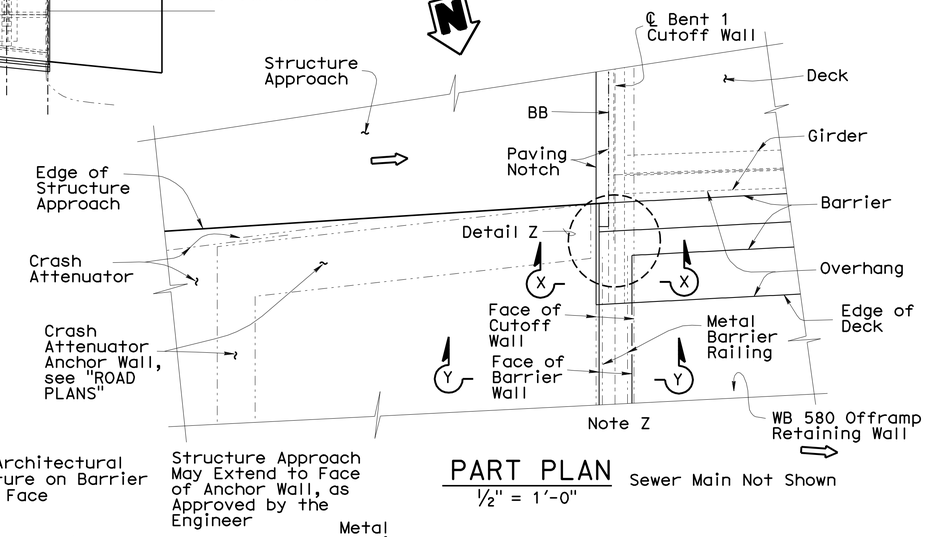

PART PLAN
½" = 1'-0"

Sewer Main Not Shown

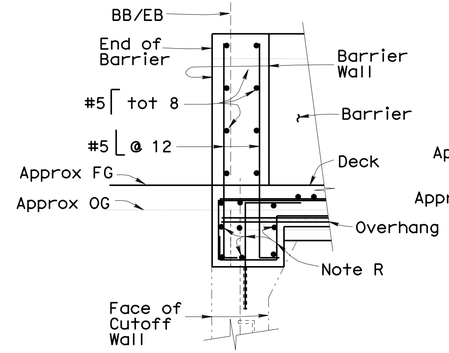

SECTION X-X
¾" = 1'-0"

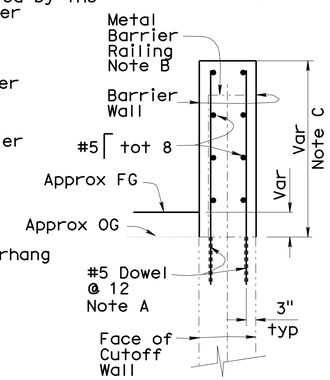

SECTION Y-Y
¾" = 1'-0"

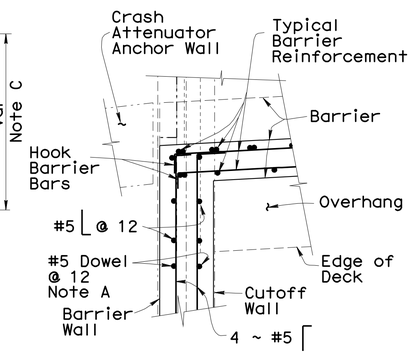

DETAIL Z
¾" = 1'-0"

BARRIER END DETAILS AT CRASH ATTENUATOR

Note R
For Reinforcement, see "BARRIER DETAILS", "ABUTMENT DETAILS" and "STRUCTURE APPROACH DETAILS" Sheets

Note Z
Extend Barrier Wall to Back Face of WB Offramp Retaining Wall Barrier

Note A
Drill and Bond Dowel in 6" Deep Hole

Note B
Remove Existing Metal Railing. Anchor Bolts May Remain

Note C
Height of Barrier Wall to Match Interfacing Barrier Heights at Ends

All Barrier Reinforcement shall be Epoxy Coated

	BY	CHECKED
DESIGN	Mike Van De Pol	P. Norboe
DETAILS	Mike Van De Pol	P. Norboe
QUANTITIES	Mike Van De Pol	I. Yalan

STATE OF CALIFORNIA
DEPARTMENT OF TRANSPORTATION

DIVISION OF ENGINEERING SERVICES
STRUCTURE DESIGN
DESIGN BRANCH 9

BRIDGE NO. 28-0141
POST MILE 6.0

BRIDGE DECK REPLACEMENT
WESTERN DRIVE UNDERCROSSING
MISCELLANEOUS DETAILS

STRUCTURES DESIGN DETAIL SHEET (ENGLISH) (REV. 09-01-10)

ORIGINAL SCALE IN INCHES FOR REDUCED PLANS 0 1 2 3

UNIT: 3594
PROJECT NUMBER & PHASE: 04000004831
CONTRACT NO.: 04-1A3201

DISREGARD PRINTS BEARING EARLIER REVISION DATES 3-02-11

REVISION DATES | SHEET 24 | OF 27

FILE => 28-0141-k-tmisc.dgn

USERNAME => s121614 DATE PLOTTED => 07-JUN-2012 TIME PLOTTED => 06:08

DIST	COUNTY	ROUTE	POST MILES TOTAL PROJECT	SHEET No.	TOTAL SHEETS
04	CC	580	5.5/6.2	280	301

REGISTERED CIVIL ENGINEER 5-1-12 DATE

6-4-12
PLANS APPROVAL DATE

REGISTERED PROFESSIONAL ENGINEER Mike Van De Pol No. C35610 Exp. 9/30/2013 CIVIL STATE OF CALIFORNIA

The State of California or its officers or agents shall not be responsible for the accuracy or completeness of electronic copies of this plan sheet.

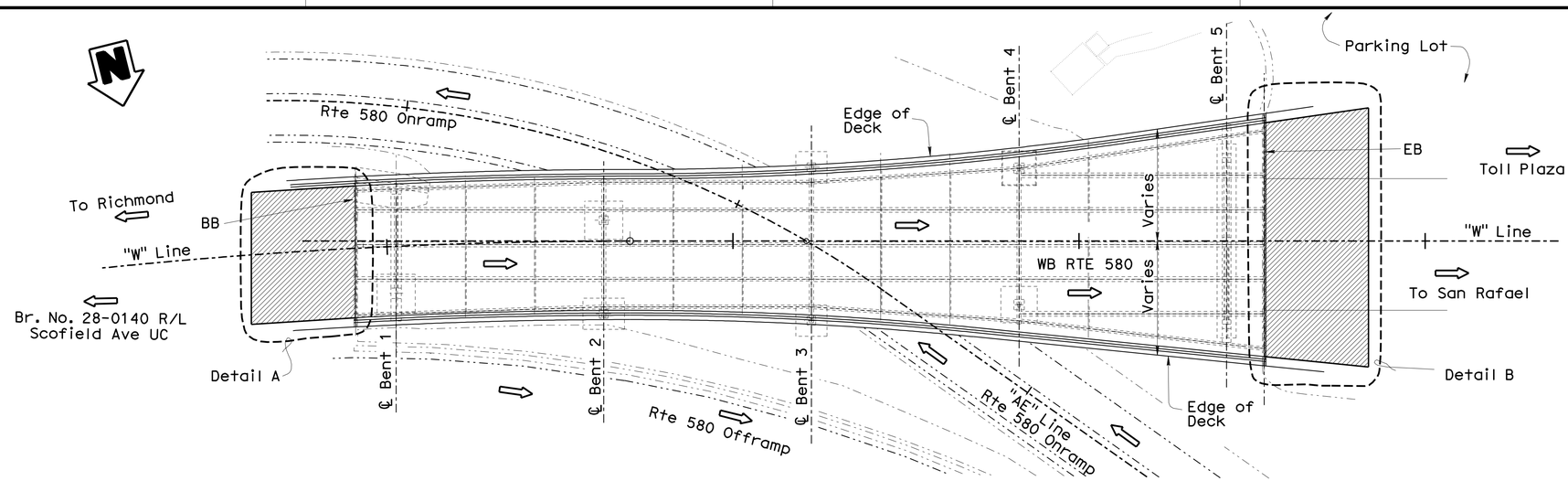

PLAN
1" = 20'

Denotes Limits of Structure Approach

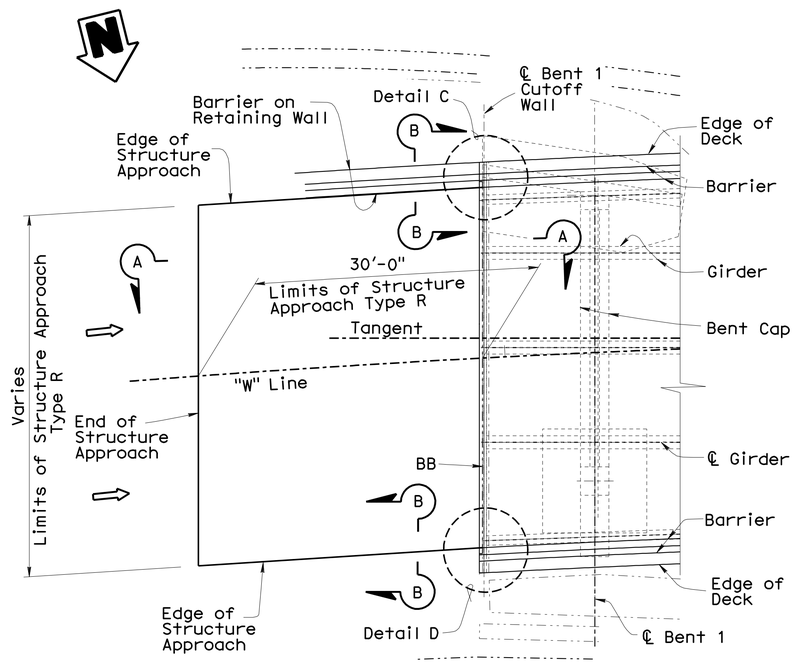

DETAIL A
1/8" = 1'-0"

Crash Attenuator, Attenuator Wall, and Barrier Wall Not Shown

Sewer Main Not Shown

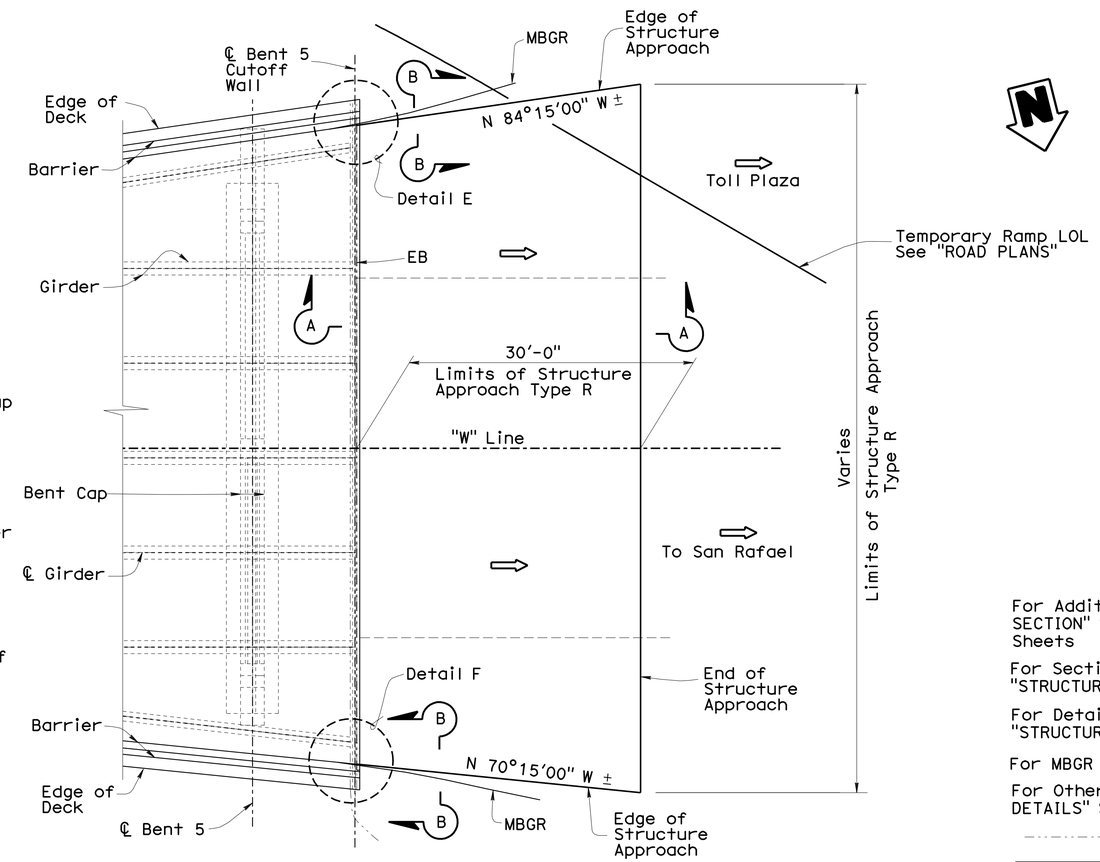

DETAIL B
1/8" = 1'-0"

Sewer Main Not Shown

Rapid Set Concrete May be Used Due to Temporary Ramp Location

For Additional Details, see "TYPICAL SECTION" Sheets, and "ABUTMENT DETAILS" Sheets

For Section A-A and Section B-B, see "STRUCTURE APPROACH DETAILS No. 3" Sheet

For Detail C Through Detail F, see "STRUCTURE APPROACH DETAILS No. 2" Sheet

For MBGR Details, See "ROAD PLANS"

For Other Details, See "MISCELLANEOUS DETAILS" Sheet

Denotes Existing Structure

Denotes New Construction

Denotes Direction of Traffic

NOTE:
THE CONTRACTOR SHALL VERIFY ALL CONTROLLING FIELD DIMENSIONS BEFORE ORDERING OR FABRICATING ANY MATERIAL.

	BY	CHECKED
DESIGN	Mike Van De Pol	P. Norboe
DETAILS	Mike Van De Pol	P. Norboe
QUANTITIES	Mike Van De Pol	I. Yalan

STATE OF CALIFORNIA
DEPARTMENT OF TRANSPORTATION

DIVISION OF ENGINEERING SERVICES
STRUCTURE DESIGN
DESIGN BRANCH 9

BRIDGE NO. 28-0141
POST MILE 6.0

BRIDGE DECK REPLACEMENT
WESTERN DRIVE UNDERCROSSING
STRUCTURE APPROACH TYPE R DETAILS No. 1

STRUCTURES DESIGN DETAIL SHEET (ENGLISH) (REV. 09-01-10)

ORIGINAL SCALE IN INCHES FOR REDUCED PLANS 0 1 2 3

UNIT: 3594
PROJECT NUMBER & PHASE: 04000004831
CONTRACT NO.: 04-1A3201

DISREGARD PRINTS BEARING EARLIER REVISION DATES

REVISION DATES 3-02-11

SHEET 25 OF 27

FILE => 28-0141-I--apprdets01.dgn

USERNAME => s12614 DATE PLOTTED => 07-JUN-2012 TIME PLOTTED => 08:08

DIST	COUNTY	ROUTE	POST MILES TOTAL PROJECT	SHEET No	TOTAL SHEETS
04	CC	580	5.5/6.2	281	301

REGISTERED CIVIL ENGINEER 5-1-12 DATE

6-4-12
PLANS APPROVAL DATE

REGISTERED PROFESSIONAL ENGINEER Mike Van De Pol No. C35610 Exp. 9/30/2013 CIVIL STATE OF CALIFORNIA

The State of California or its officers or agents shall not be responsible for the accuracy or completeness of electronic copies of this plan sheet.

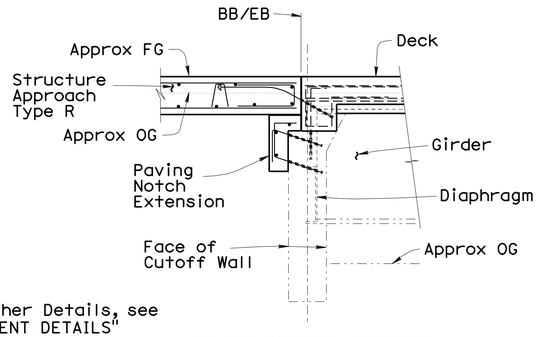

For Other Details, see "ABUTMENT DETAILS" Sheets

AT AND BETWEEN GIRDERS

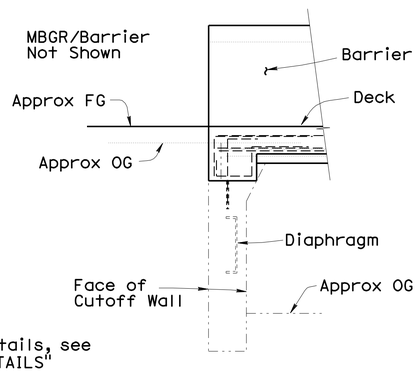

For Other Details, see "ABUTMENT DETAILS" Sheets

AT OVERHANG

SECTIONS A-A

½" = 1'-0"

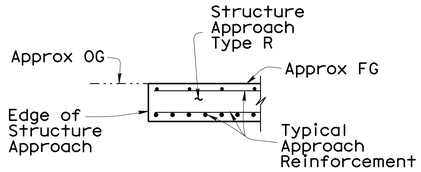

SECTION B-B

½" = 1'-0"

Retaining Wall Not Shown

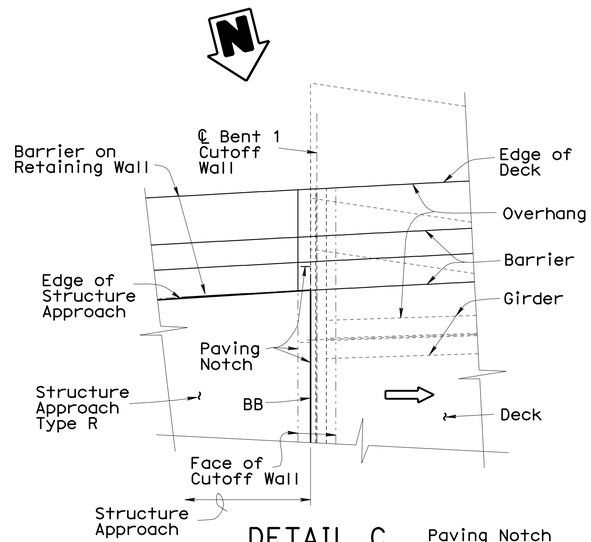

DETAIL C

½" = 1'-0"

Paving Notch Extension Not Shown

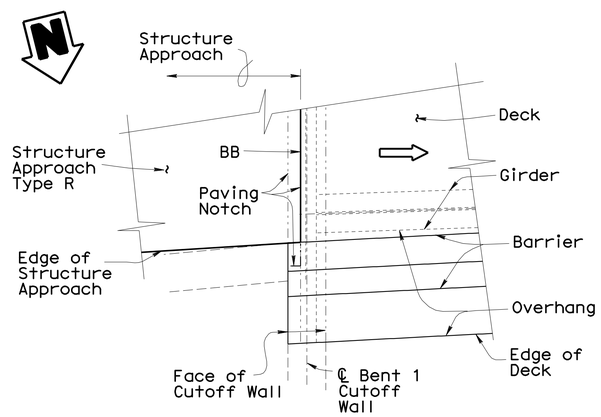

DETAIL D

½" = 1'-0"

Sewer Main Not Shown

Crash Attenuator, Cutoff Wall and Barrier Wall Not Shown. See "MISCELLANEOUS DETAILS" Sheet

Paving Notch Extension Not Shown

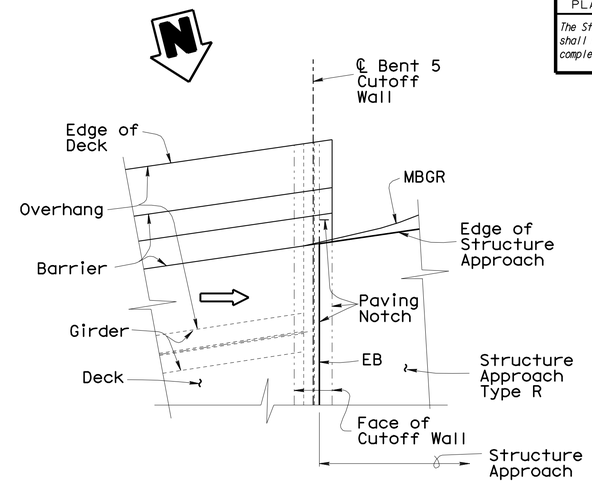

DETAIL E

½" = 1'-0"

Paving Notch Extension Not Shown

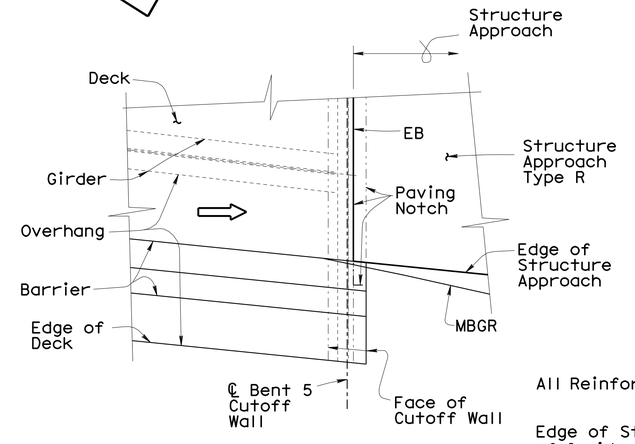

DETAIL F

½" = 1'-0"

Sewer Main Not Shown

Paving Notch Extension Not Shown

All Reinforcement shall be Epoxy Coated

Edge of Structure Approach = Extension of Inside Barrier Face Line at Location

For Locations of Section A-A and Section B-B, see "STRUCTURE APPROACH DETAILS No. 1" Sheet

For Locations of Detail C Through Detail F, see "STRUCTURE APPROACH DETAIL No. 1" Sheet

For Additional Details, see "STRUCTURE APPROACH DETAIL No. 3" Sheet and "BARRIER DETAILS" Sheets

For MBGR Details, see "ROAD PLANS"

Denotes Existing Structure

Denotes New Construction

Denotes Direction of Traffic

NOTE:
THE CONTRACTOR SHALL VERIFY ALL CONTROLLING FIELD DIMENSIONS BEFORE ORDERING OR FABRICATING ANY MATERIAL.

	BY	CHECKED
DESIGN	Mike Van De Pol	P. Norboe
DETAILS	Mike Van De Pol	P. Norboe
QUANTITIES	Mike Van De Pol	I. Yalan

STATE OF CALIFORNIA
DEPARTMENT OF TRANSPORTATION

DIVISION OF ENGINEERING SERVICES
STRUCTURE DESIGN
DESIGN BRANCH 9

BRIDGE NO. 28-0141
MILE POST 6.0

BRIDGE DECK REPLACEMENT
WESTERN DRIVE UNDERCROSSING
STRUCTURE APPROACH TYPE R DETAILS No. 2

STRUCTURES DESIGN DETAIL SHEET (ENGLISH) (REV. 10/25/05)

ORIGINAL SCALE IN INCHES FOR REDUCED PLANS 0 1 2 3

UNIT: 3594
PROJECT NUMBER & PHASE: 04000004831
CONTRACT NO.: 04-1A3201

DISREGARD PRINTS BEARING EARLIER REVISION DATES

REVISION DATES: 3-02-11

SHEET 26 OF 27

FILE => 28-0141-1--apprdets02.dgn

USERNAME => s121614 DATE PLOTTED => 07-JUN-2012 TIME PLOTTED => 06:08

DIST	COUNTY	ROUTE	POST MILES TOTAL PROJECT	SHEET No	TOTAL SHEETS
04	CC	580	5.5/6.2	282	301

REGISTERED CIVIL ENGINEER 5-1-12 DATE

6-4-12
PLANS APPROVAL DATE

REGISTERED PROFESSIONAL ENGINEER Mike Van De Pol No. C35610 Exp. 9/31/2013 CIVIL STATE OF CALIFORNIA

The State of California or its officers or agents shall not be responsible for the accuracy or completeness of electronic copies of this plan sheet.

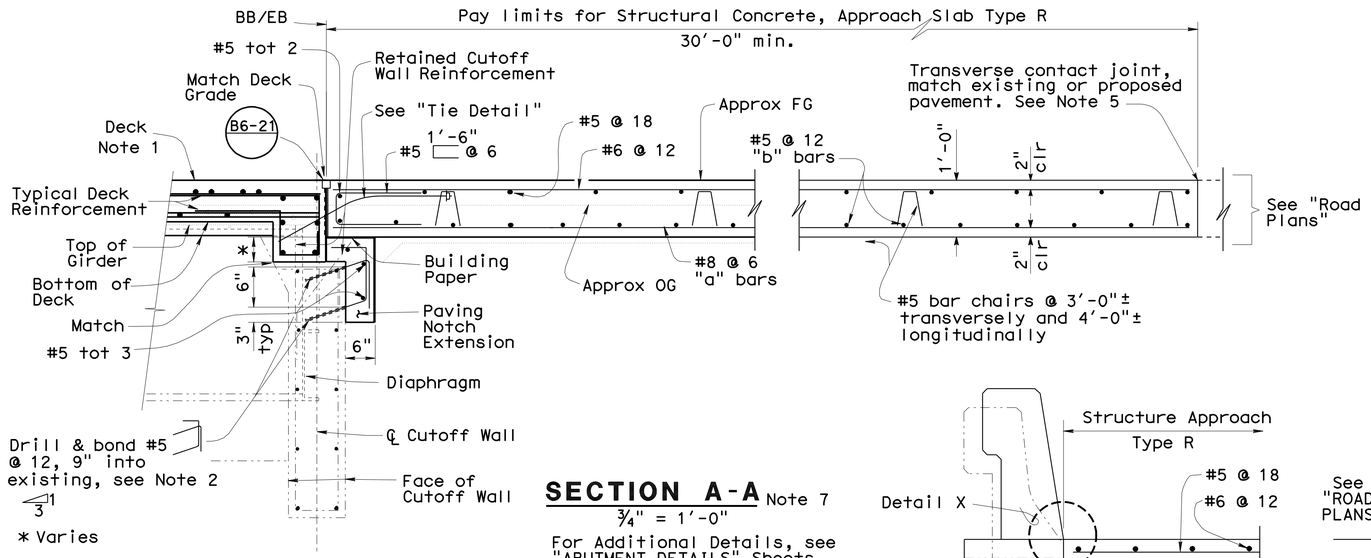

SECTION A-A Note 7

¾" = 1'-0"

For Additional Details, see "ABUTMENT DETAILS" Sheets

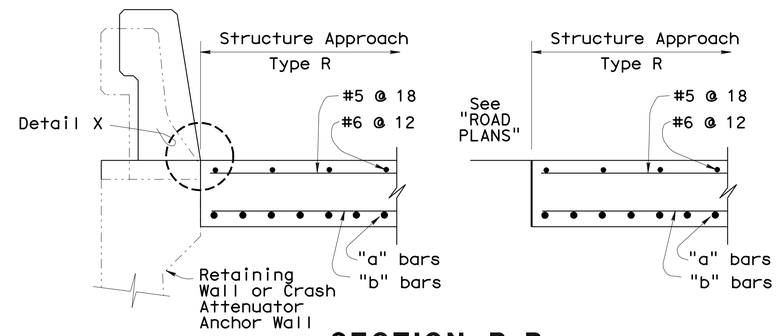

SECTION B-B Note 7

No Scale

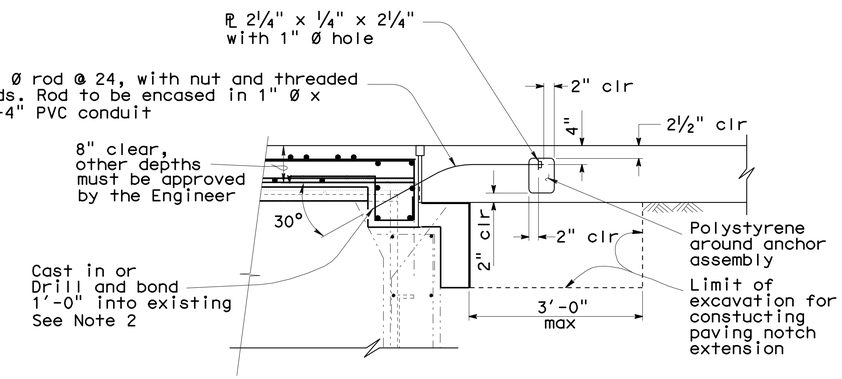

TIE DETAIL

¾" = 1'-0"

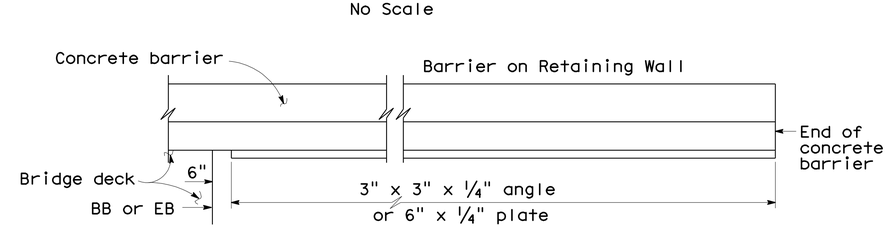

PART PLAN

No Scale

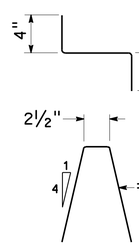

BAR CHAIR DETAIL

1½" = 1'-0"

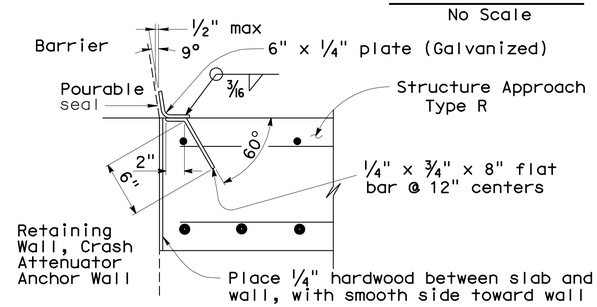

DETAIL X

No Scale

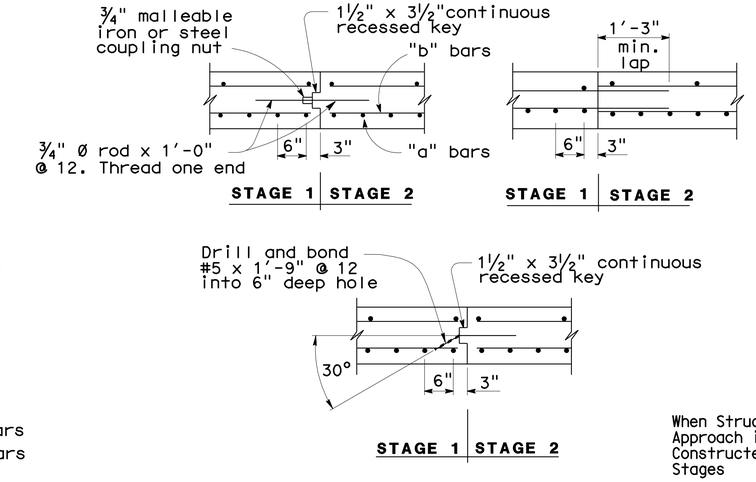

When Structure Approach is Constructed in Stages

LONGITUDINAL CONSTRUCTION JOINT ALTERNATIVES

¾" = 1'-0"

For Stage Construction Limits, see "STRUCTURE APPROACH TYPE R DETAILS No. 1" Sheet

NOTES:

1. For details not shown or noted, see Structure Plans. Adjust bar reinforcement to clear a sawcut for sealed joint, when required.
2. Space to avoid existing main reinforcement.
3. Longitudinal construction joints, when permitted by the Engineer, shall be located on lane lines.
4. Transverse contact joint shall be a minimum of 5'-0" from an existing or constructed weakened plane joint.
5. For transverse contact joint with new PCC paving. refer to Standard Plan P10.
6. End angle or plate at beginning of barrier transition, end of retaining wall or end of structure approach as applicable.
7. For locations of Section A-A and Section C-C, see "STRUCTURE APPROACH DETAILS No. 1" sheet

All Reinforcement shall be Epoxy Coated

NOTE:
THE CONTRACTOR SHALL VERIFY ALL CONTROLLING FIELD DIMENSIONS BEFORE ORDERING OR FABRICATING ANY MATERIAL.

Denotes Existing Structure
Denotes New Construction

	BY	CHECKED
DESIGN	Mike Van De Pol	P. Norboe
DETAILS	Mike Van De Pol	P. Norboe
QUANTITIES	Mike Van De Pol	I. Yalan

STATE OF CALIFORNIA
DEPARTMENT OF TRANSPORTATION

DIVISION OF ENGINEERING SERVICES
STRUCTURE DESIGN
DESIGN BRANCH 9

BRIDGE NO. 28-0141
MILE POST 6.0

BRIDGE DECK REPLACEMENT
WESTERN DRIVE UNDERCROSSING
STRUCTURE APPROACH TYPE R DETAILS No. 3

STRUCTURES DESIGN DETAIL SHEET (ENGLISH) (REV. 10/25/05)

ORIGINAL SCALE IN INCHES FOR REDUCED PLANS 0 1 2 3

UNIT: 3594
PROJECT NUMBER & PHASE: 04000004831
CONTRACT NO.: 04-1A3201

DISREGARD PRINTS BEARING EARLIER REVISION DATES 3-02-11

REVISION DATES | SHEET 27 | OF 27

FILE => 28-0141-1--apprdets03.dgn

USERNAME => s12161d DATE PLOTTED => 07-JUN-2012 TIME PLOTTED => 06:21

DIST	COUNTY	ROUTE	POST MILES TOTAL PROJECT	SHEET No	TOTAL SHEETS
04	CC	580	5.5/6.2	283	301

REGISTERED CIVIL ENGINEER 5-1-12 DATE

6-4-12
PLANS APPROVAL DATE

REGISTERED PROFESSIONAL ENGINEER Mike Van De Pol No. C35610 Exp. 9/30/2013 CIVIL STATE OF CALIFORNIA

The State of California or its officers or agents shall not be responsible for the accuracy or completeness of electronic copies of this plan sheet.

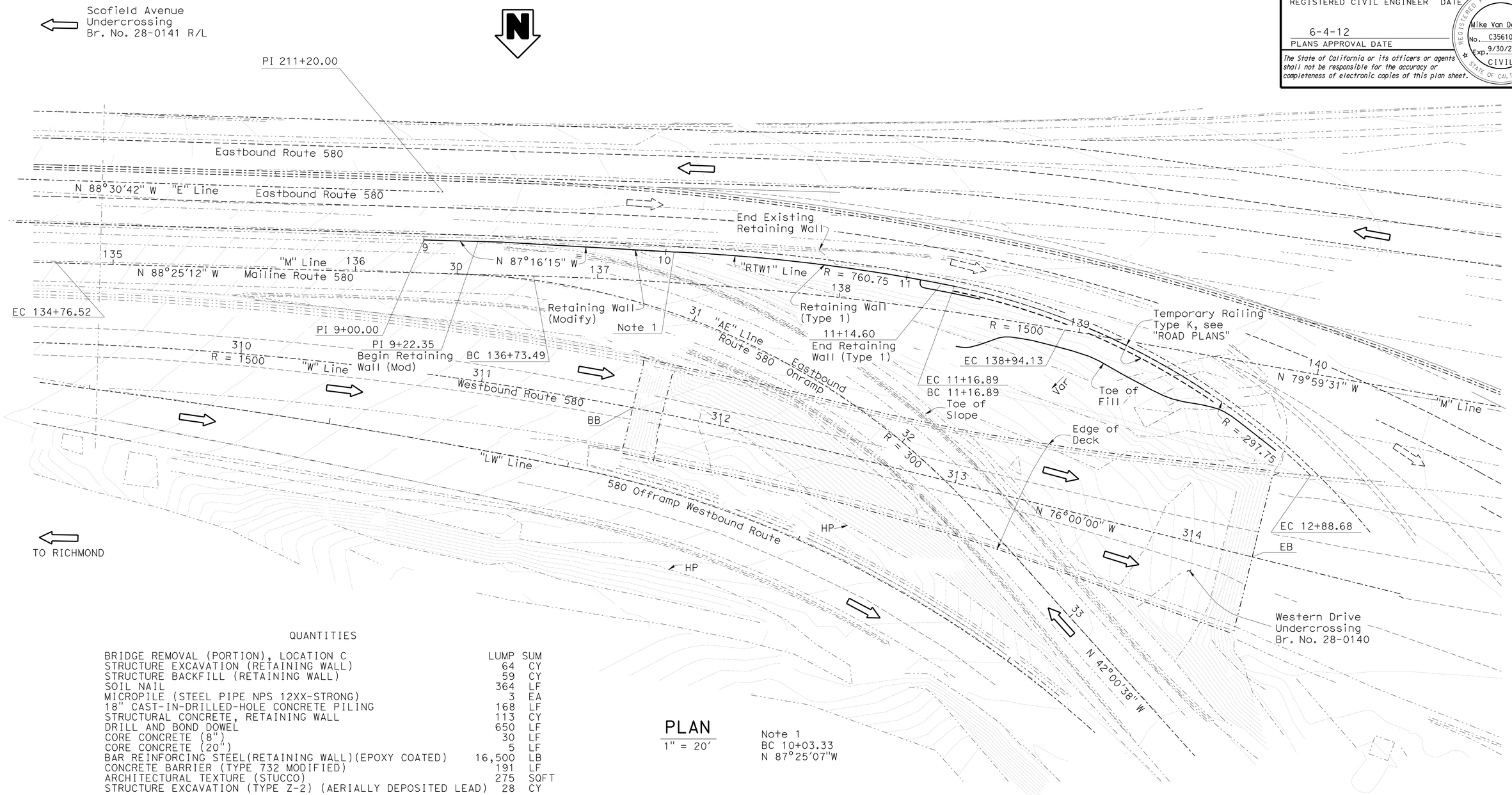

QUANTITIES

BRIDGE REMOVAL (PORTION), LOCATION C	LUMP	SUM
STRUCTURE EXCAVATION (RETAINING WALL)	64	CY
STRUCTURE BACKFILL (RETAINING WALL)	59	CY
SOIL NAIL	364	LF
MICROPILE (STEEL PIPE NPS 12XX-STRONG)	3	EA
18" CAST-IN-DRILLED-HOLE CONCRETE PILING	168	LF
STRUCTURAL CONCRETE, RETAINING WALL	113	CY
DRILL AND BOND DOWEL	650	LF
CORE CONCRETE (8")	30	LF
CORE CONCRETE (20")	5	LF
BAR REINFORCING STEEL(RETAINING WALL)(EPOXY COATED)	16,500	LB
CONCRETE BARRIER (TYPE 732 MODIFIED)	191	LF
ARCHITECTURAL TEXTURE (STUCCO)	275	SQFT
STRUCTURE EXCAVATION (TYPE Z-2) (AERIALLY DEPOSITED LEAD)	28	CY

PLAN
1" = 20'

Note 1
BC 10+03.33
N 87°25'07"W

For INDEX TO PLANS, GENERAL NOTES and PILE DATA TABLE, see "INDEX TO PLANS" Sheet

For Details, see "RETAINING WALL LAYOUT" and "WALL DETAILS" Sheets

Denotes Direction of Traffic
Denotes Existing Structure
Denotes New Construction
Denotes Existing Contour Lines

NOTE:
THE CONTRACTOR SHALL VERIFY ALL CONTROLLING FIELD DIMENSIONS BEFORE ORDERING OR FABRICATING ANY MATERIAL.

Gordon Danke
DESIGN ENGINEER

	BY	CHECKED
DESIGN	M. Van De Pol	P. Norboe
DETAILS	M. Van De Pol	P. Norboe
QUANTITIES	M. Van De Pol	E. Franciliso

LOAD & RESISTANCE FACTOR DESIGN — LIVE LOADING: HL93 W/"LOW-BOY"; PERMIT DESIGN VEHICLE
LAYOUT — BY M. Van De Pol — CHECKED P. Norboe
SPECIFICATIONS — BY Sirisha Nelapatia — PLANS AND SPECS COMPARED Sirisha Nelapatia

STATE OF CALIFORNIA
DEPARTMENT OF TRANSPORTATION

DIVISION OF ENGINEERING SERVICES
STRUCTURE DESIGN
DESIGN BRANCH 9

BRIDGE NO. 28E0055
POST MILE 6.0

RETAINING WALL
GENERAL PLAN

ORIGINAL SCALE IN INCHES FOR REDUCED PLANS 0 1 2 3

UNIT: 3594
PROJECT NUMBER & PHASE: 04000004831
CONTRACT NO.: 04-1A3201

DISREGARD PRINTS BEARING EARLIER REVISION DATES 3-02-11

SHEET 1 OF 19

USERNAME => s121614 DATE PLOTTED => 07-JUN-2012 TIME PLOTTED => 06:22

STRUCTURES DESIGN GENERAL PLAN SHEET (ENGLISH) (REV.07-24-06)

FILE => 28e0055-a-gp01.dgn

DIST	COUNTY	ROUTE	POST MILES TOTAL PROJECT	SHEET No	TOTAL SHEETS
04	CC	580	5.5/6.2	284	301

REGISTERED CIVIL ENGINEER 5-1-12 DATE

6-4-12
PLANS APPROVAL DATE

REGISTERED PROFESSIONAL ENGINEER Mike Van De Pol No. C35610 Exp. 9/30/2013 CIVIL STATE OF CALIFORNIA

The State of California or its officers or agents shall not be responsible for the accuracy or completeness of electronic copies of this plan sheet.

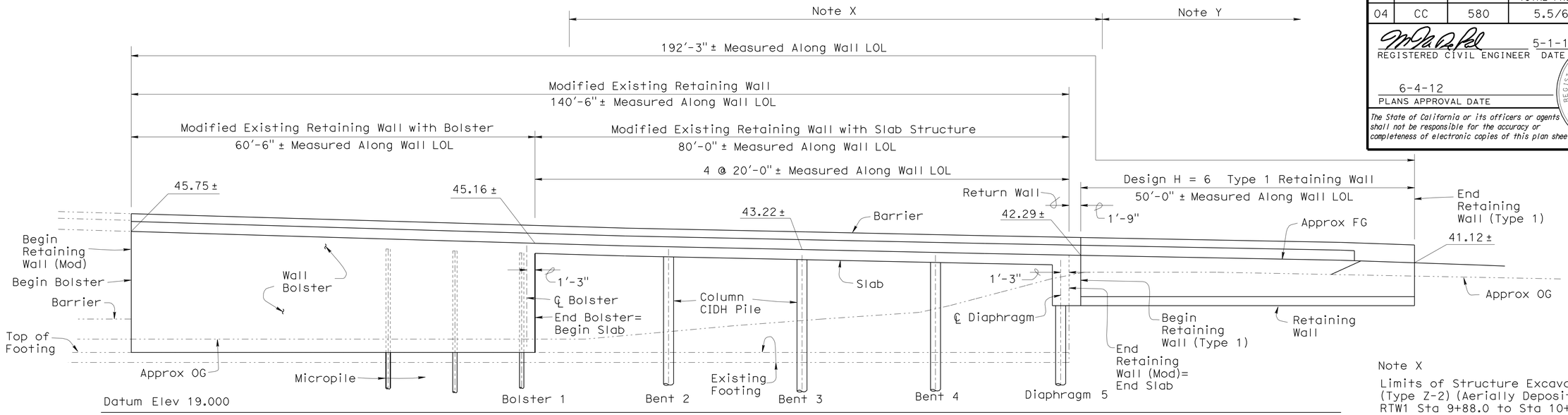

ELEVATION

1/8" = 1'-0"

Elevation Along Wall LOL

Architectural Treatment Not Shown

Note X

Limits of Structure Excavation (Type Z-2) (Aerially Deposited Lead), RTW1 Sta 9+88.0 to Sta 10+68.0 Depth Below OG Varies 0'-1' See "WALL DETAILS No. 8" Sheet

Note Y

Limits of Structure Excavation (Type Z-2) (Aerially Deposited Lead), RTW1 Sta 10+68.0 to Sta 11+88.0 Depth Below OG Varies 0'-2.5' See "WALL DETAILS No. 8" Sheet

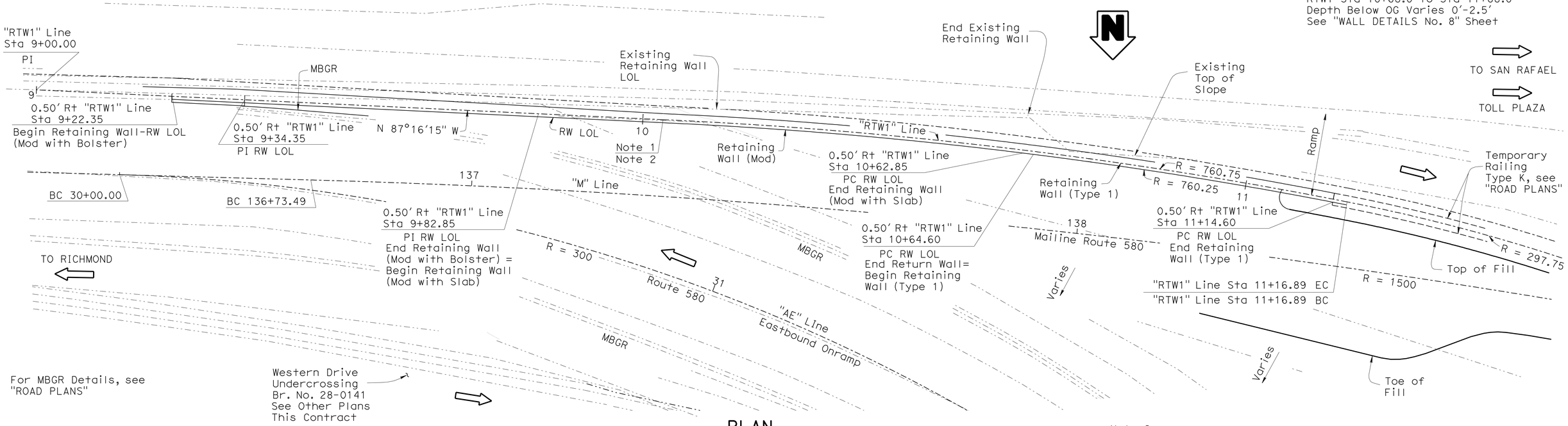

PLAN

1/8" = 1'-0"

All Wall Details Not Shown

Note 1
BC "RTW1" Line Sta 10+03.33
BC to PI Brg = N 87°25'07"W

Note 2
0.5' Rt "RTW1" Line Sta 10+03.33=
BC RW LOL
BC to PI Brg = N 87°25'07"W

Denotes Existing Structure
Denotes New Construction

NOTE:
THE CONTRACTOR SHALL VERIFY ALL CONTROLLING FIELD DIMENSIONS BEFORE ORDERING OR FABRICATING ANY MATERIAL.

For Support Bearings, see WALL DETAILS No. 5" Sheet

For Type 1 Retaining Wall Details, see "WALL DETAILS No. 2" Sheet

	BY	CHECKED
DESIGN	Mike Van De Pol	P. Norboe
DETAILS	Mike Van De Pol	P. Norboe
QUANTITIES	Mike Van De Pol	E. Franciliso

STATE OF CALIFORNIA
DEPARTMENT OF TRANSPORTATION

DIVISION OF ENGINEERING SERVICES
STRUCTURE DESIGN
DESIGN BRANCH 9

BRIDGE NO. 28E0055
POST MILE 6.0

RETAINING WALL
WALL LAYOUT

STRUCTURES DESIGN DETAIL SHEET (ENGLISH) (REV. 10/25/05)

ORIGINAL SCALE IN INCHES FOR REDUCED PLANS 0 1 2 3

UNIT: 3594
PROJECT NUMBER & PHASE: 04000004831
CONTRACT NO.: 04-1A3201

DISREGARD PRINTS BEARING EARLIER REVISION DATES 3-03-11

SHEET 2 OF 19

FILE => 28e0055-b-layout.dgn

USERNAME => s12614 DATE PLOTTED => 07-JUN-2012 TIME PLOTTED => 06:22

DIST	COUNTY	ROUTE	POST MILES TOTAL PROJECT	SHEET No	TOTAL SHEETS
04	CC	580	5.5/6.2	285	301

REGISTERED CIVIL ENGINEER 5-1-12 DATE

6-4-12
PLANS APPROVAL DATE

REGISTERED PROFESSIONAL ENGINEER Mike Van De Pol No. C35610 Exp. 9/30/2013 CIVIL STATE OF CALIFORNIA

The State of California or its officers or agents shall not be responsible for the accuracy or completeness of electronic copies of this plan sheet.

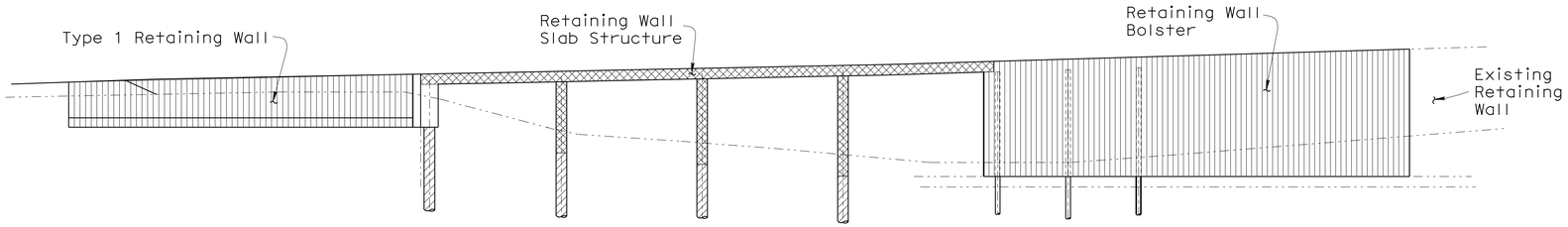

MIRROR ELEVATION
CONCRETE STRENGTH AND TYPE LIMITS

No Scale

Denote New Construction
Denotes Existing Structure

CIDH Concrete Piles
f'c = 4000 psi @ 28 days
f'c = 3600 psi @ 7 Days

Structural Concrete, Bridge Micropile Infill
f'c = 3600 psi @ 7 days

Structural Concrete, Bridge
f'c = 4000 psi @ 28 days
f'c = 3600 psi @ 7 days

Structural Concrete, Retaining Wall
f'c = 3600 psi @ 7 days

INDEX TO PLANS

SHEET No.	TITLE
1.	GENERAL PLAN
2.	WALL LAYOUT
3.	INDEX TO PLANS
4.	FOUNDATION PLAN
5.	WALL DETAILS No. 1
6.	WALL DETAILS No. 2
7.	WALL DETAILS No. 3
8.	WALL DETAILS No. 4
9.	WALL DETAILS No. 5
10.	WALL DETAILS No. 6
11.	WALL DETAILS No. 7
12.	WALL DETAILS No. 8
13.	WALL DETAILS No. 9
14.	WALL DETAILS No. 10
15.	LOG OF TEST BORINGS 1 OF 5
16.	LOG OF TEST BORINGS 2 OF 5
17.	LOG OF TEST BORINGS 3 OF 5
18.	LOG OF TEST BORINGS 4 OF 5
19.	LOG OF TEST BORINGS 5 OF 5

STANDARD PLANS DATED MAY 2006

A10A	ACRONYMS AND ABBREVIATIONS SHEET 1 OF 2)
A10B	ACRONYMS AND ABBREVIATIONS SHEET 2 OF 2)
A10C	SYMBOLS (SHEET 1 OF 2)
A10D	SYMBOLS (SHEET 2 OF 2)
A62C	LIMITS OF PAYMENT FOR EXCAVATION AND BACKFILL BRIDGE
B0-1	BRIDGE DETAILS
B0-3	BRIDGE DETAILS
B2-3	16" AND 24" CAST-IN-DRILLED HOLE CONCRETE PILE
B3-1	RETAINING WALL TYPE 1 - H = 4' THROUGH 30'
B3-8	RETAINING WALL DETAILS NO. 1
B11-55	CONCRETE BARRIER TYPE 732
B14-3	COMMUNICATION AND SPRINKLER CONTROL CONDUITS (CONDUIT LESS THAN 4")

STANDARD PLAN SHEET No.
DETAIL No.

GENERAL NOTES
LOAD AND RESISTANCE FACTOR DESIGN

DESIGN:
AASHTO LRFD Bridge Design Specifications, 4th edition, 2007; except that Abutments and Retaining Wall are designed using Bridge Design Specifications ('96 ASSHTO w/revisions by Caltrans).

SEISMIC DESIGN:
Caltrans Seismic Design Criteria (SDC), Version 1.4 dated June 2006

DEAD LOAD:
Includes 35 psf for future wearing surface.

LIVE LOADING:
HL93 and permit design load.

SEISMIC LOADING:
See "SITE SPECIFIC ACCELERATION RESPONSE SPECTRA CURVE"

CONCRETE:
fy = 60,000 psi
f'c = 3600 psi @ 7 Days (Wall Bolster, End Diaphragm, Return Wall, Micropile Infill and Type 1 Retaining Wall)
f'c = 4000 psi at 28 Days (Slab, Columns, Piles)
f'c = 3600 psi @ 7 Days (Slab, Columns, Piles)
n = 8

SOIL PARAMETERS:
Internal friction angle, ø (degrees) = 35°
Unit weight, γ (pcf) = 125

STEEL PIPE:
fy = 36,000 psi
ASTM A501 Grade 36

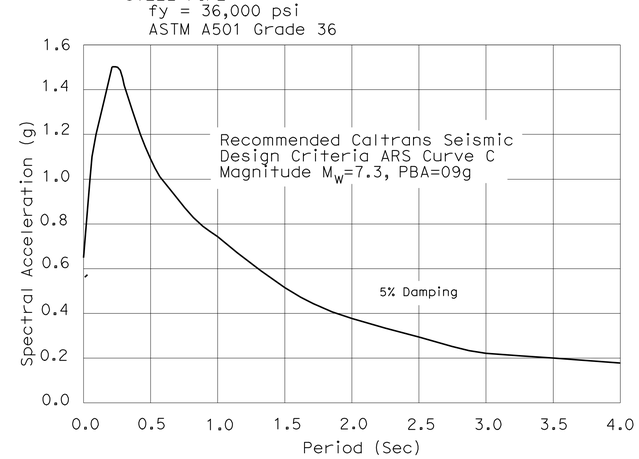

SITE SPECIFIC ACCELERATION RESPONSE SPECTRA CURVE

PILE DATA TABLE

Location	Pile Type	Design Loading (kips)	CIDH Cut-off Elev(Ft)	Nominal Resistance Compression (kips)	Nominal Resistance Tension (kips)	Design Tip Elevation (Ft)	Specified Tip Elevation (Ft)	Nominal Driving Resistance (kips)
Bent 2	18-inch CIDH	N/A	29.0	109.0	0	-10.0	-10.0	N/A
Bent 3	18-inch CIDH	N/A	31.0	109.0	0	-10.0	-10.0	N/A
Bent 4	18-inch CIDH	N/A	33.0	149.0	0	-10.0	-10.0	N/A
Abut 5	18-inch CIDH	N/A	35.0	190.0	0	-10.0	-10.0	N/A

1) Design tip elevations are controlled by: (a) Compression (Strength Limit)

NOTE:
THE CONTRACTOR SHALL VERIFY ALL CONTROLLING FIELD DIMENSIONS BEFORE ORDERING OR FABRICATING ANY MATERIAL.

MICROPILE DATA

Support Location	Pile Type	Cut-Off Elevation (ft)		Design Load (kips/pile)	Pipe Type	Nominal Resistance (kips/pile) Compression	Nominal Resistance (kips/pile) Tension	Design Tip Elevation (ft)	Specified Tip Elevation (ft)
Bolster	16" Dia Micropile	26.50		67	NPS 12-XX Strong	134	0	14.0	14.0
Abutment 1	16" Dia Micropile	26.50		68	NPS 12-XX Strong	136	0	14.0	14.0

Design Tip Elevations are controlled by demands: (1) Compression (Strength Limit)
1. The micropiles shall be designed to develop their load carrying capacity by using skin friction.

MICROPILE TEST DATA

TEST PILES:

Location	Pile Type	No. Piles	Design Load (kips/pile)	Min. Diameter (in)	Length of Piles (ft)	Nominal Resistance (kips/pile) Compression	Nominal Resistance (kips/pile) Tension
Bolster	NPS 12-XX Strong	1	68	12	40	134	0

	BY	CHECKED
DESIGN	Mike Van De Pol	P. Norboe
DETAILS	Mike Van De Pol	P. Norboe
QUANTITIES	Mike Van De Pol	E. Franciliso

STATE OF CALIFORNIA
DEPARTMENT OF TRANSPORTATION

DIVISION OF ENGINEERING SERVICES
STRUCTURE DESIGN
DESIGN BRANCH 9

BRIDGE NO. 28E0055
POST MILE 6.0

RETAINING WALL
INDEX TO PLANS

STRUCTURES DESIGN DETAIL SHEET (ENGLISH) (REV. 10/25/05)

ORIGINAL SCALE IN INCHES FOR REDUCED PLANS 0 1 2 3

UNIT: 3594
PROJECT NUMBER & PHASE: 04000004831
CONTRACT NO.: 04-1A3201

DISREGARD PRINTS BEARING EARLIER REVISION DATES 3-03-11

SHEET 3 OF 19

FILE => 28e0055-c-itp.dgn

USERNAME => s121614 DATE PLOTTED => 07-JUN-2012 TIME PLOTTED => 06:22

DIST	COUNTY	ROUTE	POST MILES TOTAL PROJECT	SHEET No	TOTAL SHEETS
04	CC	580	5.5/6.2	286	301

REGISTERED CIVIL ENGINEER 5-1-12 DATE

6-4-12
PLANS APPROVAL DATE

REGISTERED PROFESSIONAL ENGINEER Mike Van De Pol No. C35610 Exp. 9/30/2013 CIVIL STATE OF CALIFORNIA

The State of California or its officers or agents shall not be responsible for the accuracy or completeness of electronic copies of this plan sheet.

CURVE DATA

No.	R	Δ	T	L
(A)	760.75	8°33'09"	56.88	113.56
(C)	1500.00	8°25'41"	110.52	220.64
(D)	1500.00	30°00'00"	401.92	785.40
(E)	300.00	46°24'34"	128.61	243.00
(F)	297.75	33°03'25"	88.36	171.79

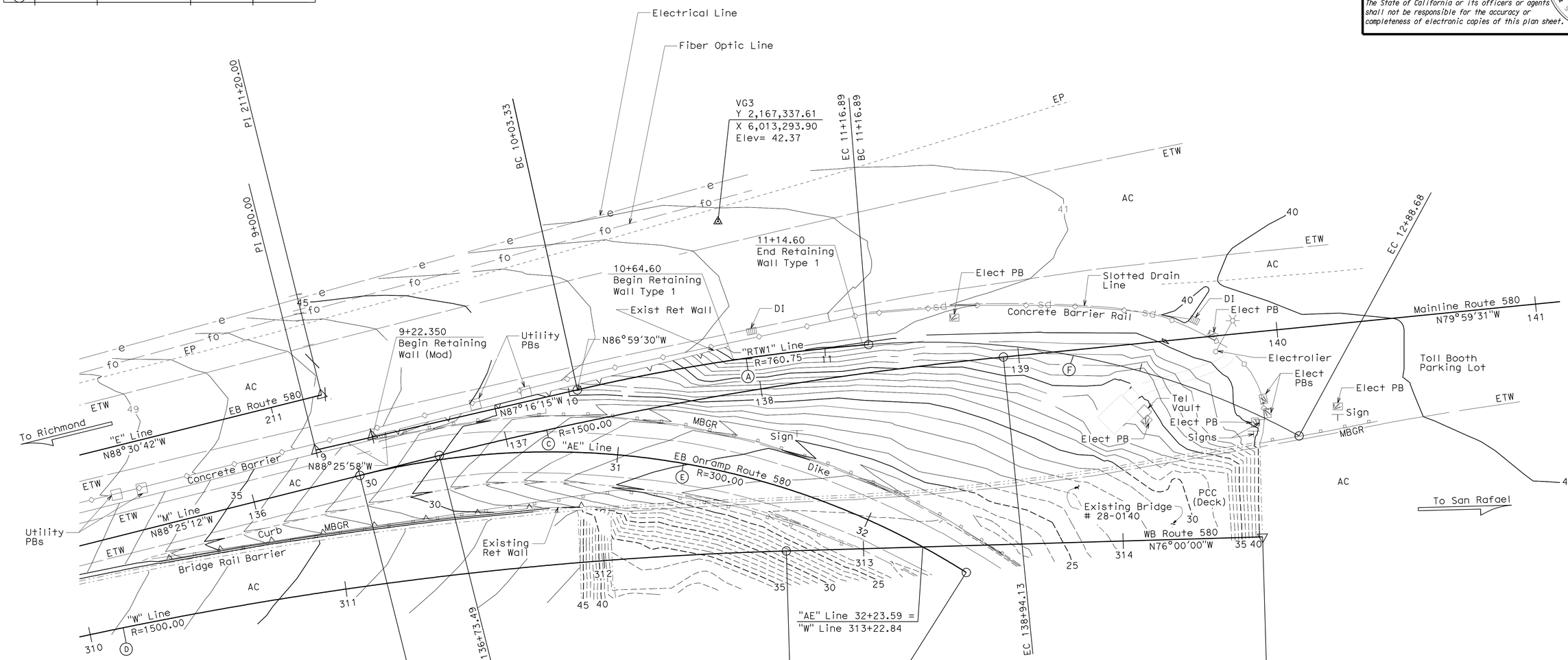

SURVEY CONTROL

VG2 (Not Shown On Foundation Plan)
Fnd 1" Iron Pipe w/ Caltrans PP
149.35 Ft Rt "M" Line, Rte 580
Sta 141+66.42
N 2,167,611.97
E 6,012,960.01
Elev= 39.76

VG3
Fnd PK Nail w/ Caltrans Brass Tag
66.28 Ft Lt "M" Line, Rte 580
Sta 137+94.27
N 2,167,337.61
E 6,013,293.90
Elev= 42.37

NOTE:
THE CONTRACTOR SHALL VERIFY ALL CONTROLLING FIELD DIMENSIONS BEFORE ORDERING OR FABRICATING ANY MATERIAL.

Note:
- Utility Lines Are Per District Utility Plan

For Type 1 Retaining Wall Footing Plan, see "WALL DETAILS No. 2" Sheet

Existing Retaining Wall Modification Bolster Limits and Type 1 Retaining Wall Limits Not Shown. See "Wall Details" Sheets

RW LOL Not Shown

For Support Bearings, see "WALL DETAILS No. 5" Sheet

PRELIMINARY INVESTIGATION SECTION

SCALE	VERT.DATUM NAVD88	PHOTOGRAMMETRY AS OF: X					
1"=20'	HORZ.DATUM NAD83 (1991.35)	SURVEYED	BY District	08/2009	CHECKED	BY J.Borden	02/2010
ALIGNMENT TIES Dist. Traverse Sheet		DRAFTED	BY J.Martinez	02/2010	CHECKED	BY S.Sou	02/2010

	BY	CHECKED
DESIGN	M. Van De Pol	P. Norboe
DETAILS	M. Van De Pol	P. Norboe
QUANTITIES	M. Van De Pol	E. Franciliso

STATE OF CALIFORNIA
DEPARTMENT OF TRANSPORTATION

DIVISION OF ENGINEERING SERVICES
STRUCTURE DESIGN
DESIGN BRANCH 9

BRIDGE NO. 28E0055
POST MILE 6.0

RETAINING WALL
FOUNDATION PLAN

STRUCTURES FOUNDATION PLAN SHEET (ENGLISH) (REV. 10/25/05)

ORIGINAL SCALE IN INCHES FOR REDUCED PLANS 0 1 2 3

UNIT: 3646
PROJECT NUMBER & PHASE: 04000004831
CONTRACT NO.: 04-1A3201

DISREGARD PRINTS BEARING EARLIER REVISION DATES 3-3-11

SHEET 4 OF 19

FILE => 28e0055-d-fp101.dgn

USERNAME => s121614 DATE PLOTTED => 07-JUN-2012 TIME PLOTTED => 06:22

DIST	COUNTY	ROUTE	POST MILES TOTAL PROJECT	SHEET No	TOTAL SHEETS
04	CC	580	5.5/6.2	287	301

REGISTERED CIVIL ENGINEER 5-1-12 DATE

6-4-12
PLANS APPROVAL DATE

REGISTERED PROFESSIONAL ENGINEER Mike Van De Pol No. C35610 Exp. 9/30/2013 CIVIL STATE OF CALIFORNIA

The State of California or its officers or agents shall not be responsible for the accuracy or completeness of electronic copies of this plan sheet.

Note W
Uncertainties Exist Regarding the Position and Alignment of the Existing Retaining Wall Stem Face. Width of Bolster and Slab May Vary From What is Shown Herein. Adjustments May be Made as Approved by the Engineer

Note X
Alternate Hooks. Hook Around Vert Reinf

Note Z
For Details, see "WALL DETAILS No. 2" Sheet

Note Y
Uncertainties Exist Regarding the Details of the Interface Between the Existing Retaining Wall and the Existing Barrier. Details shown are Approximate. Adjustments May be Made as Approved by the Engineer. See "WALL DETAILS No. 2" and "WALL DETAILS No. 3" Sheets

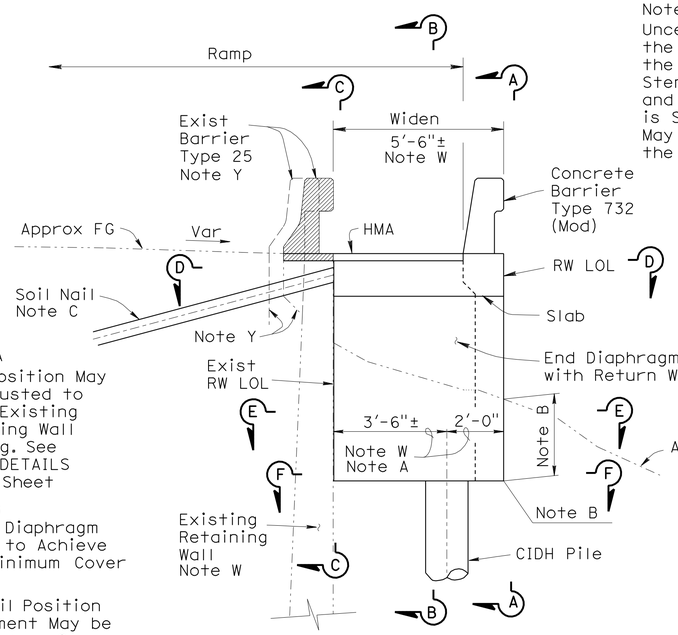

Note A
Pile Position May be Adjusted to Clear Existing Retaining Wall Footing. See "WALL DETAILS No. 8" Sheet

Note B
Adjust Diaphragm Height to Achieve 3'-6" Minimum Cover

Note C
Soil Nail Position Adjustment May be Required to Clear Existing Drain Pipe, see "WALL DETAILS No. 6" Sheet

ELEVATION
3/8" = 1'-0"

Diaphragm 5
End of Slab Structure Drains Not SHown

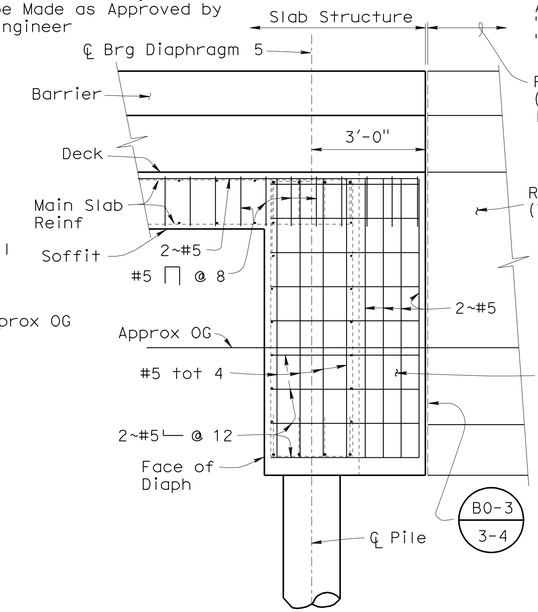

ELEVATION A-A
1/2" = 1'-0"

Drains Not SHown

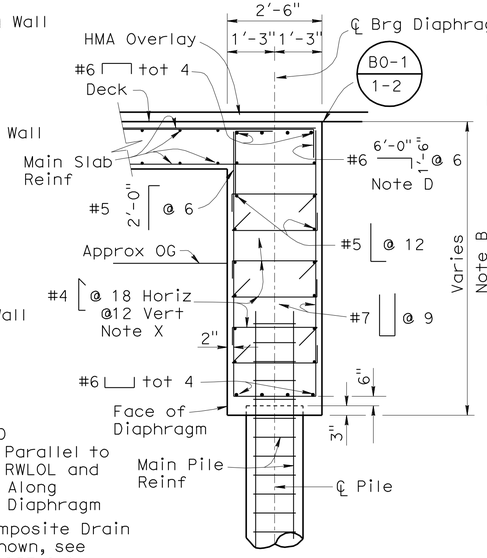

Note D
Place Parallel to Exist RWLOL and Space Along ℄ Brg Diaphragm

Geocomposite Drain Not Shown, see "WALL DETAILS No. 2" Sheet

SECTION B-B
1/2" = 1'-0"

Drains Not SHown

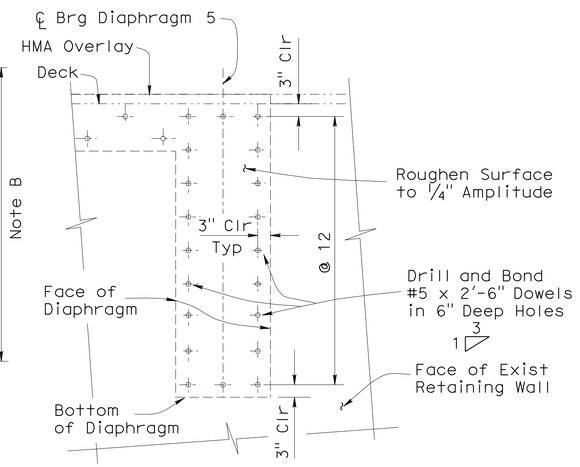

SECTION C-C
1/2" = 1'-0"

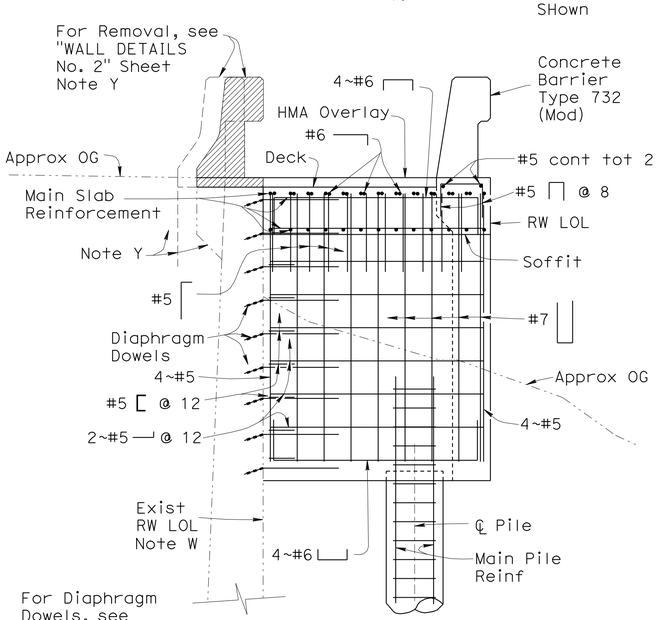

ELEVATION-REINF
1/2" = 1'-0"

Drains Not SHown

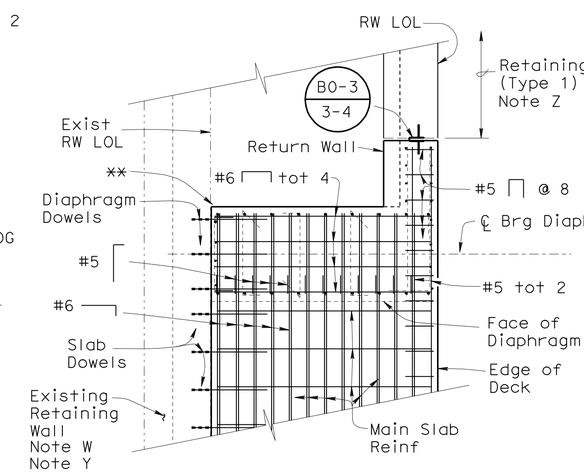

SECTION D-D
1/2" = 1'-0"

RTW1 Line not shown
All Diaphragm and Slab Reinforcement shall be Epoxy Coated

Existing Retaining Wall Reinforcement Not Shown

For Pile Reinforcement, see "WALL DETAILS No. 4" Sheet

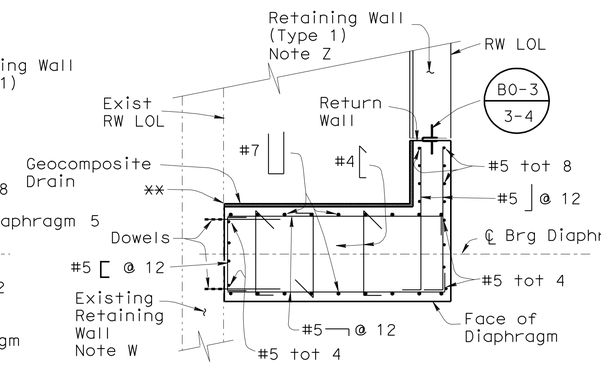

SECTION E-E
1/2" = 1'-0"

Drains Not SHown

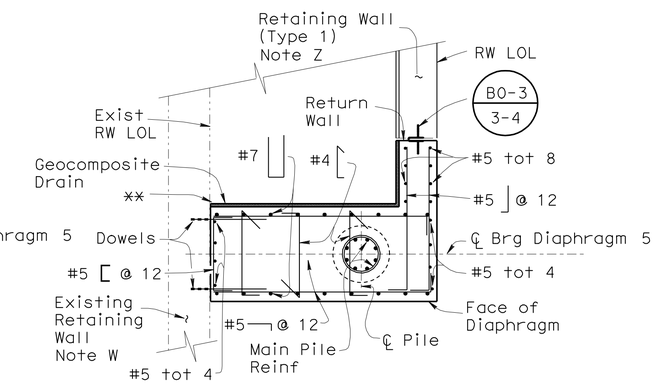

SECTION F-F
1/2" = 1'-0"

Drains Not SHown

** B0-1 / 1-4

Denotes Limits of Removal of Existing Barrier and Retaining Wall

Denotes Existing Structure
Denotes New Construction

Drain Pipe Not Shown, see "WALL DETAILS No. 2" Sheet

For Added Details, see "Wall Details No. 3" Sheet

NOTE:
THE CONTRACTOR SHALL VERIFY ALL CONTROLLING FIELD DIMENSIONS BEFORE ORDERING OR FABRICATING ANY MATERIAL.

	BY	CHECKED
DESIGN	Mike Van De Pol	P. Norboe
DETAILS	Mike Van De Pol	P. Norboe
QUANTITIES	Mike Van De Pol	E. Franciliso

STATE OF CALIFORNIA
DEPARTMENT OF TRANSPORTATION

DIVISION OF ENGINEERING SERVICES
STRUCTURE DESIGN
DESIGN BRANCH 9

BRIDGE NO. 28E0055
POST MILE 6.0

RETAINING WALL
WALL DETAILS No. 1

STRUCTURES DESIGN DETAIL SHEET (ENGLISH) (REV. 10/25/05)

ORIGINAL SCALE IN INCHES FOR REDUCED PLANS 0 1 2 3

UNIT: 3594
PROJECT NUMBER & PHASE: 04000004831
CONTRACT NO.: 04-1A3201

DISREGARD PRINTS BEARING EARLIER REVISION DATES 3-04-11

SHEET 5 OF 19

FILE => 28e0055-e-dets01.dgn

USERNAME => s121614 DATE PLOTTED => 07-JUN-2012 TIME PLOTTED => 06:22

DIST	COUNTY	ROUTE	POST MILES TOTAL PROJECT	SHEET No	TOTAL SHEETS
04	CC	580	5.5/6.2	288	301

REGISTERED CIVIL ENGINEER 5-1-12 DATE

6-4-12
PLANS APPROVAL DATE

REGISTERED PROFESSIONAL ENGINEER Mike Van De Pol No. C35610 Exp. 9/30/2013 CIVIL STATE OF CALIFORNIA

The State of California or its officers or agents shall not be responsible for the accuracy or completeness of electronic copies of this plan sheet.

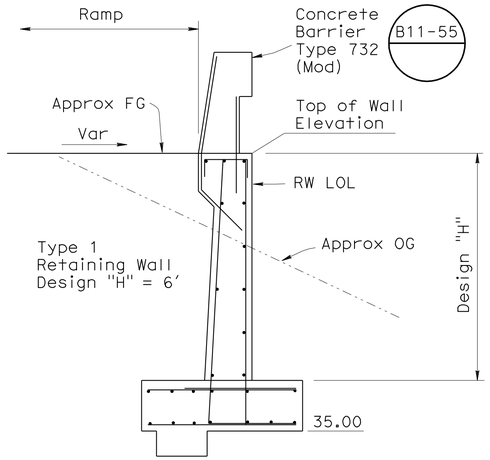

TYPICAL SECTION
½" = 1'-0"

For Top of Wall Elevations, see "WALL LAYOUT" Sheet

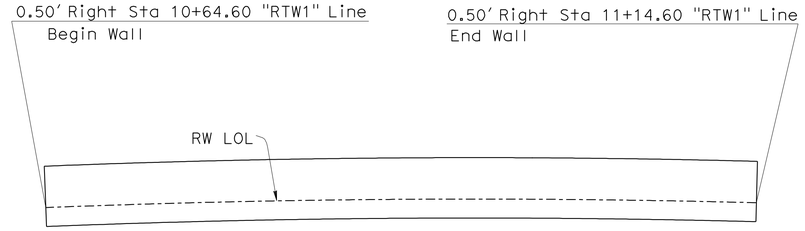

FOOTING PLAN
3/16" = 1'-0"

For Details Not Shown, see "GENERAL PLAN" and "WALL LAYOUT" Sheets

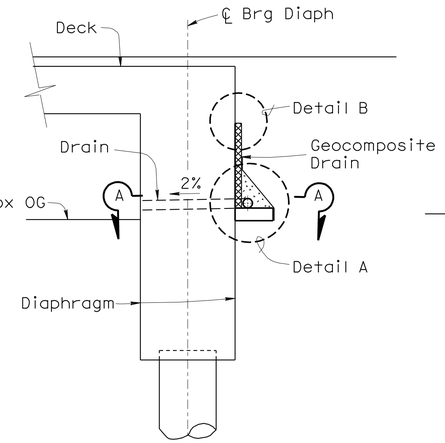

DIAPHRAGM
½" = 1'-0"

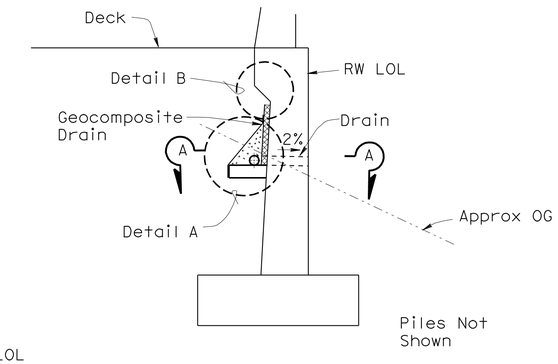

TYPE 1 WALL
½" = 1'-0"

TYPE 1 WALL
B3-1 B3-8

Barrier Face Architectural Texture Not Shown

All Type 1 retaining Wall reinforcement shall be Epoxy Coated

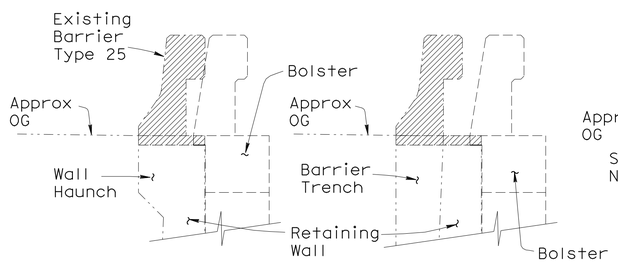

SECTIONS AT WALL BOLSTER

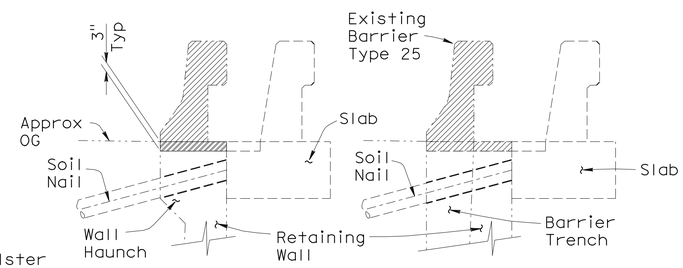

SECTIONS AT SLAB

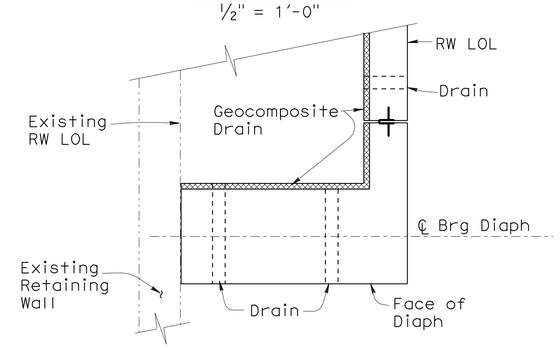

PLAN
½" = 1'-0"

Pipes Not Shown

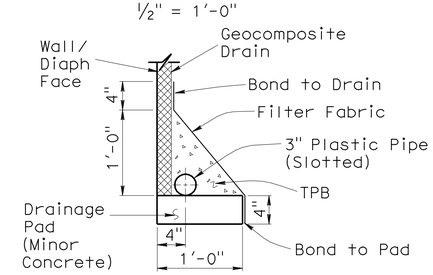

DETAIL A
No Scale

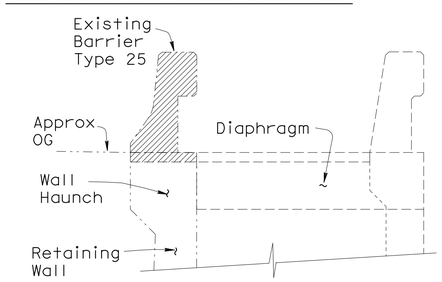

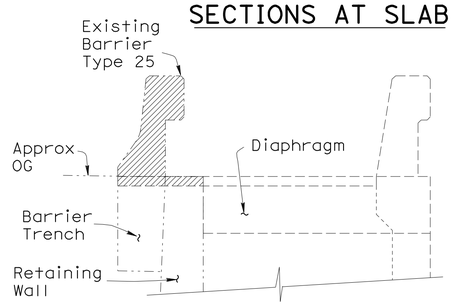

SECTIONS AT DIAPHRAGM

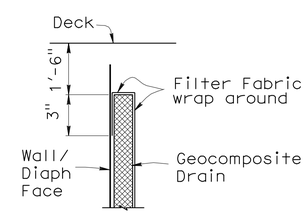

DETAIL B
No Scale

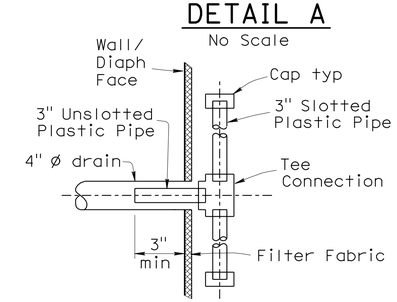

SECTION A-A
No Scale

Section Shown at Diaphragm. Section at Wall by Opposite Hand

REMOVAL DETAILS
Note A

3/8" = 1'-0"

Denotes Limits of Removal of Existing Barrier and Retaining Wall. Remove Reinf 1" Below Surface at Patch

At Option of the Contractor, the Barrier Trench May be Removed with the Barrier, as Approved by the Engineer

NOTE:
THE CONTRACTOR SHALL VERIFY ALL CONTROLLING FIELD DIMENSIONS BEFORE ORDERING OR FABRICATING ANY MATERIAL.

Notes

For Additional Details, see "WALL DETAILS No. 3" Sheet

Drain Pipe Not Shown. See "WALL DETAILS No. 6" Sheet

Reinforcement Not Shown

Note A
Uncertainties Exist Regarding the Details of the Interface Between the Existing Retaining Wall and the Existing Barrier. Details shown are Approximate. Adjustments May be Made as Approved by the Engineer.

"RTW1" Line Not Shown.

Denotes Existing Structure
Denotes New Construction

DRAINAGE DETAILS

A. 4" ø drains located as shown and at 15' max center to center along wall. Exposed drains shall be located 3"± above finished grade

B. Geocomposite drain, cement treated permeable base, and 3"ø slotted plastic pipe continuous behind retaining wall and diaphragm. Cap ends of pipe. Provide "Tee" connection at each 4" ø drain

	BY	CHECKED
DESIGN	Mike Van De Pol	P. Norboe
DETAILS	Mike Van De Pol	P. Norboe
QUANTITIES	Mike Van De Pol	E. Franciliso

STATE OF CALIFORNIA
DEPARTMENT OF TRANSPORTATION

DIVISION OF ENGINEERING SERVICES
STRUCTURE DESIGN
DESIGN BRANCH 9

BRIDGE NO. 28E0055
POST MILE 6.0

RETAINING WALL
WALL DETAILS No. 2

STRUCTURES DESIGN DETAIL SHEET (ENGLISH) (REV. 10/25/05)

ORIGINAL SCALE IN INCHES FOR REDUCED PLANS 0 1 2 3

UNIT: 3594
PROJECT NUMBER & PHASE: 04000004831
CONTRACT NO.: 04-1A3201

DISREGARD PRINTS BEARING EARLIER REVISION DATES 3-04-11

SHEET 6 OF 19

FILE => 28e0055-e-dets02.dgn

USERNAME => s121614 DATE PLOTTED => 07-JUN-2012 TIME PLOTTED => 06:23

DIST	COUNTY	ROUTE	POST MILES TOTAL PROJECT	SHEET No	TOTAL SHEETS
04	CC	580	5.5/6.2	289	301

REGISTERED CIVIL ENGINEER 5-1-12 DATE

6-4-12
PLANS APPROVAL DATE

The State of California or its officers or agents shall not be responsible for the accuracy or completeness of electronic copies of this plan sheet.

REGISTERED PROFESSIONAL ENGINEER Mike Van De Pol No. C35610 Exp. 9/30/2013 CIVIL STATE OF CALIFORNIA

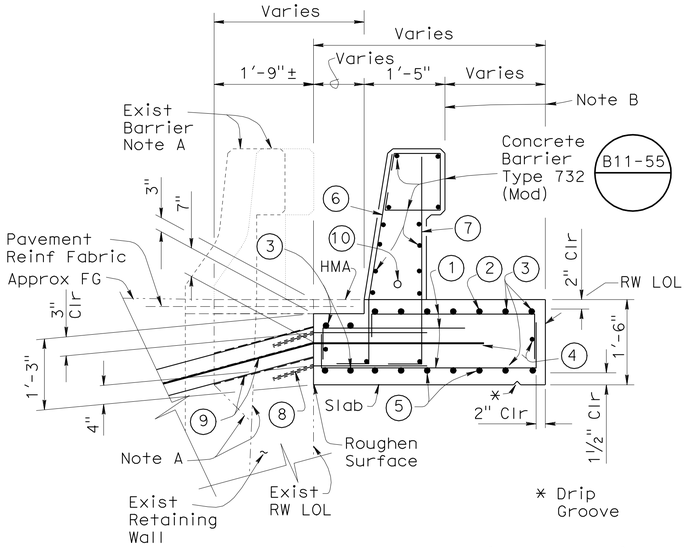

SLAB SECTION (In Span)

¾" = 1'-0"

For HMA and Reinforcing Fabric, see "Road Plans"

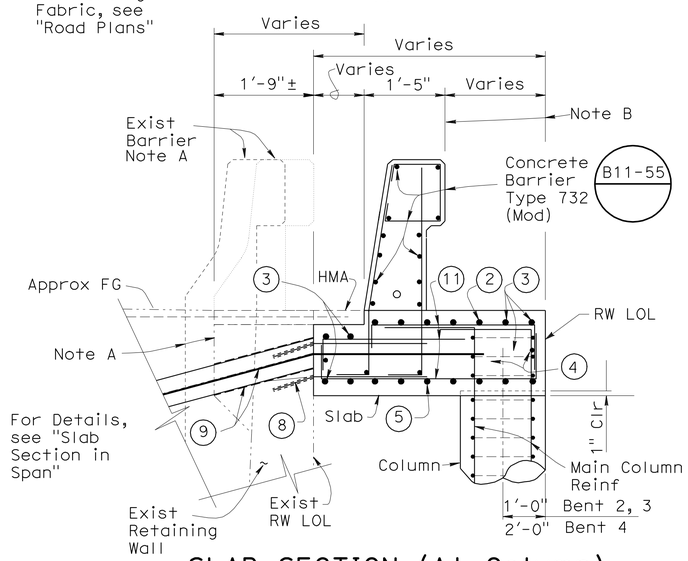

SLAB SECTION (At Column)

¾" = 1'-0"

Note A
Uncertainties Exist Regarding the Details of the Interface Between the Existing Retaining Wall and the Existing Barrier. Details shown are Approximate. Adjustments May be Made as Approved by the Engineer.

Note C
Drain Pipe Not Shown. Drain Pipe to be Removed, See "ROAD PLANS" and "WALL DETAILS No. 6" Sheet

Note B
Uncertainties Exist Regarding the Position and Alignment of the Existing Retaining Wall Stem Face Width of Slab May Vary From What is Shown. Adjustments May be Made as Approved by the Engineer.

RTW1 Line Not Shown

1. #5 @ 12 *** (2'-6" Var, Var)
2. #8 @ 6 Cont Top Main Reinf, see "WALL DETAILS No. 5" Sheet
3. #10 tot 4 Cont
4. #5 tot 2 Cont
5. #8 @ 6 Cont Bottom Main Reinf, see "WALL DETAILS No. 5" Sheet
6. #5 @ 8
7. #5 @ 12
8. Drill and Bond #5 x 2'-6" Dowels in 6" Deep Holes
9. Soil Nail Through Cored Hole
10. 2" Conduit for Future Utility
11. #7 tot 8 Var *** (2'-6" Var, Var)

*** Place Normal to Exist RW LOL and Space Along ℄ Exist RW LOL

Denotes Existing Structure
Denotes New Construction

All Slab, Barrier and Column Reinforcement shall be Epoxy Coated

Note A
Place Parallel to Wall LOL and Space Normal to ℄ Brg Diaphragm

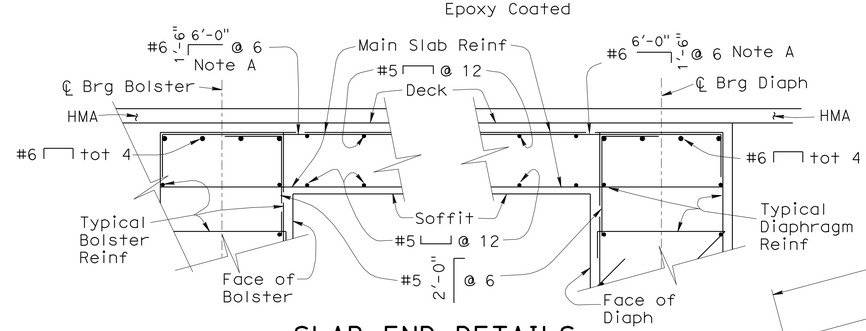

SLAB END DETAILS

¾" = 1'-0"

See WALL DETAILS No. 1" Sheet

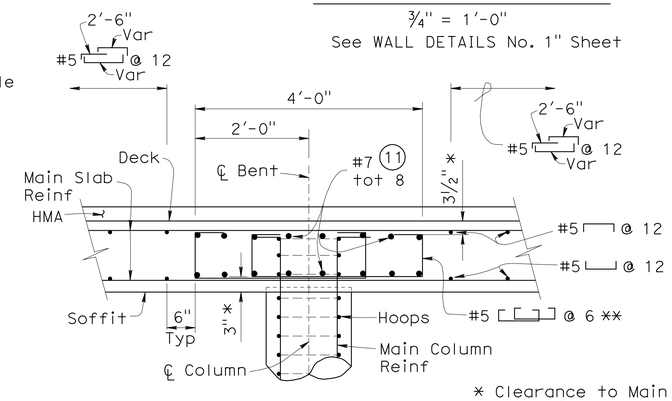

CAP SECTION

¾" = 1'-0"

* Clearance to Main Cap Reinforcement

** Place Parallel to Exist RW LOL and Space Along ℄ Bent

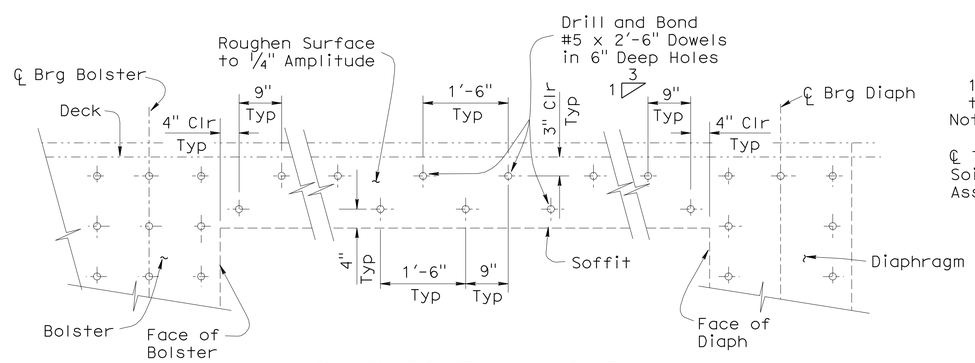

SLAB DOWEL LAYOUT

¾" = 1'-0"

Soil Nails Not Shown. Adjust Dowels to Clear Soil Nails

NOTE:
THE CONTRACTOR SHALL VERIFY ALL CONTROLLING FIELD DIMENSIONS BEFORE ORDERING OR FABRICATING ANY MATERIAL.

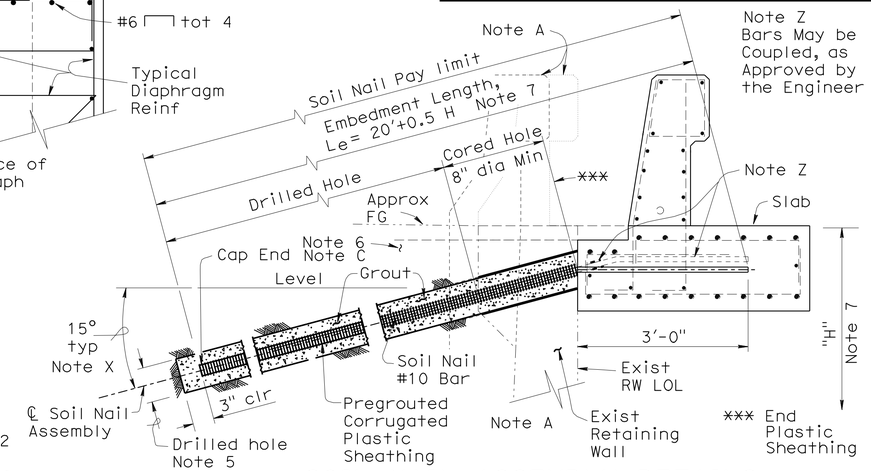

SOIL NAIL ASSEMBLY DETAILS

No Scale

For Other Soil Nail Details, see "WALL DETAILS No. 6" Sheet

Dowels Not Shown

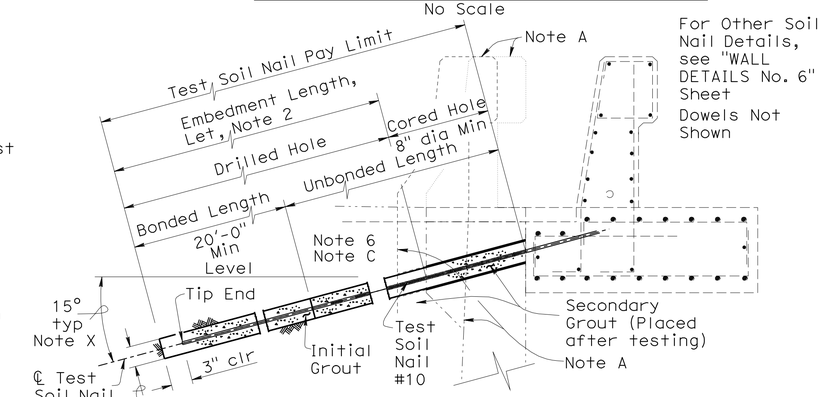

TEST SOIL NAIL ASSEMBLY DETAILS

No Scale

1. For other details see "WALL DETAILS No. 6" sheet.
2. The test nail embedment length, L_{et}, shall be equal to 2/3 of the embedment length, L_e, of adjacent production soil nail assemblies, but not less than 20'-0".
3. The total length of the test nail assembly equals the embedment length plus the length required for jacking equipment.
4. For location of proof test nails, see "Wall Details No. 6" Layout" sheet. Additional proof test nails will be installed and tested per special provisions.
5. Contractor to determine drilled hole diameter.
6. Disturbed material to be compacted to 95% compaction after soil nail installation, or place Slurry Cement Backfill.
7. H = Height of wall from top of slab to top of existing retaining wall footing.
8. Finished grout surface to be flush with face of wall.

Note X
Angle may be adjusted as approved by the engineer

	BY	CHECKED
DESIGN	Mike Van De Pol	P. Norboe
DETAILS	Mike Van De Pol	P. Norboe
QUANTITIES	Mike Van De Pol	E. Franciliso

STATE OF CALIFORNIA
DEPARTMENT OF TRANSPORTATION

DIVISION OF ENGINEERING SERVICES
STRUCTURE DESIGN
DESIGN BRANCH 9

BRIDGE NO. 28E0055
POST MILE 6.0

RETAINING WALL
WALL DETAILS No. 3

STRUCTURES DESIGN DETAIL SHEET (ENGLISH) (REV. 10/25/05)

ORIGINAL SCALE IN INCHES FOR REDUCED PLANS 0 1 2 3

UNIT: 3594
PROJECT NUMBER & PHASE: 04000004831
CONTRACT NO.: 04-1A3201

DISREGARD PRINTS BEARING EARLIER REVISION DATES 3-04-11

SHEET 7 OF 19

FILE => 28e0055-e-dets03.dgn

USERNAME => s12616 DATE PLOTTED => 07-JUN-2012 TIME PLOTTED => 06:23

DIST	COUNTY	ROUTE	POST MILES TOTAL PROJECT	SHEET No	TOTAL SHEETS
04	CC	580	5.5/6.2	290	301

REGISTERED CIVIL ENGINEER 5-1-12 DATE

6-4-12
PLANS APPROVAL DATE

REGISTERED PROFESSIONAL ENGINEER Mike Van De Pol No. C35610 Exp. 9/30/2013 CIVIL STATE OF CALIFORNIA

The State of California or its officers or agents shall not be responsible for the accuracy or completeness of electronic copies of this plan sheet.

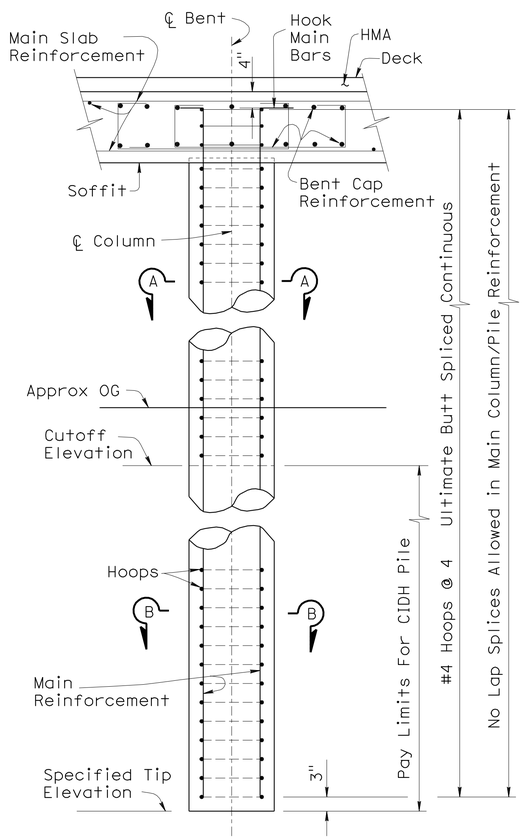

BENT

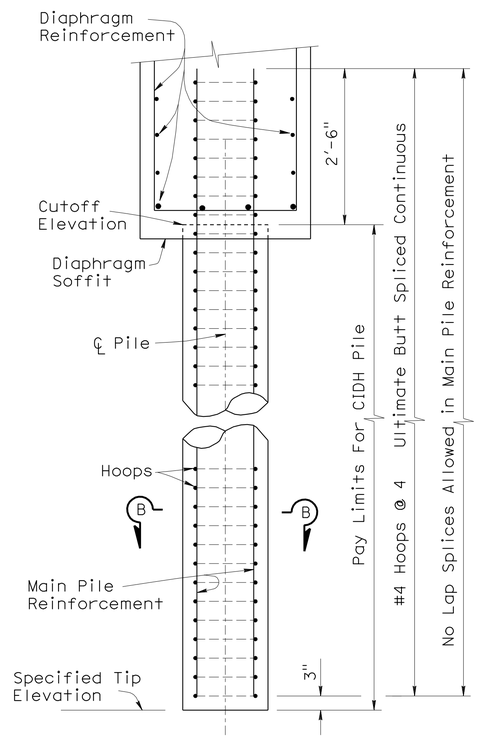

DIAPHRAGMS

ELEVATIONS

¾" = 1'-0"

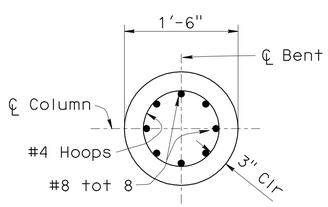

SECTION A-A

1" = 1'-0"

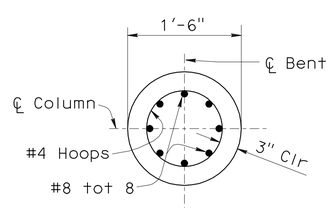

SECTION B-B

1" = 1'-0"

COLUMN/PILE DETAILS

¾" = 1'-0"

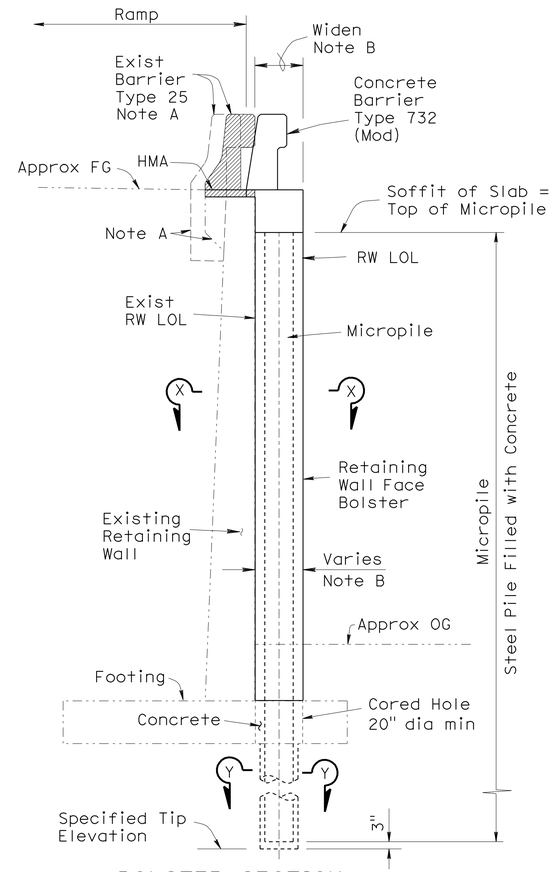

BOLSTER SECTION

⅜" = 1'-0"

SECTION U-U
Reinforcement Not Shown
For Location, See SECTION U-U on "WALL DETAILS No. 7" Sheet

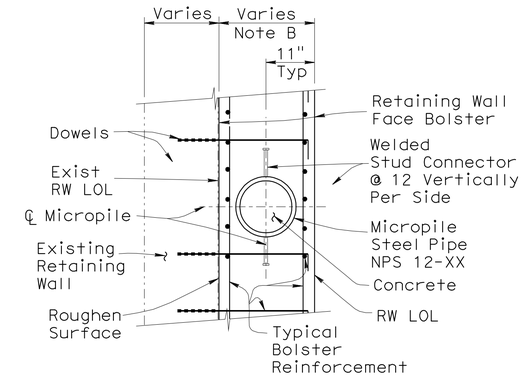

SECTION X-X

¾" = 1'-0"

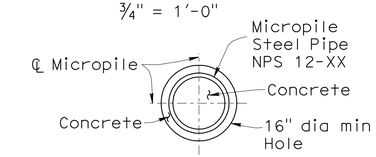

SECTION Y-Y

¾" = 1'-0"

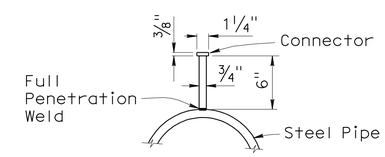

STUD CONNECTOR DETAIL

1½" = 1'-0"

MICROPILE DETAILS

Note A
Uncertainties Exist Regarding the Details of the Interface Between the Existing Retaining Wall and the Existing Barrier. Details shown are Approximate. Adjustments May be Made as Approved by the Engineer. See "WALL DETAILS No. 2" and "WALL DETAILS No. 3" Sheets

Note B
Uncertainties Exist Regarding the Position and Alignment of the Existing Retaining Wall Stem Face. Width of Bolster and Slab May Vary From What is Shown Herein. Adjustments May be Made as Approved by the Engineer

All Bolster and Column Reinforcement Shall be Epoxy Coated

Denotes limits of Removal of Existing Barrier and Wall. See "WALL DETAILS No. 2" and "WALL DETAILS No. 8" Sheets

For Micropile Locations and Details, see "WALL DETAILS No. 7" Sheet

For Bolster Details, see "WALL DETAILS No. 7" Sheet

Denotes Existing Structure

Denotes New Construction

NOTE:
THE CONTRACTOR SHALL VERIFY ALL CONTROLLING FIELD DIMENSIONS BEFORE ORDERING OR FABRICATING ANY MATERIAL.

	BY	CHECKED
DESIGN	Mike Van De Pol	P. Norboe
DETAILS	Mike Van De Pol	P. Norboe
QUANTITIES	Mike Van De Pol	E. Franciliso

STATE OF CALIFORNIA
DEPARTMENT OF TRANSPORTATION

DIVISION OF ENGINEERING SERVICES
STRUCTURE DESIGN
DESIGN BRANCH 9

BRIDGE NO. 28E0055
POST MILE 6.0

RETAINING WALL
WALL DETAILS No. 4

STRUCTURES DESIGN DETAIL SHEET (ENGLISH) (REV. 10/25/05)

ORIGINAL SCALE IN INCHES FOR REDUCED PLANS 0 1 2 3

UNIT: 3594
PROJECT NUMBER & PHASE: 04000004831
CONTRACT NO.: 04-1A3201

DISREGARD PRINTS BEARING EARLIER REVISION DATES 3-04-11

SHEET 8 OF 19

FILE => 28e0055-e-dets04.dgn

USERNAME => s121614 DATE PLOTTED => 07-JUN-2012 TIME PLOTTED => 06:23

DIST	COUNTY	ROUTE	POST MILES TOTAL PROJECT	SHEET No	TOTAL SHEETS
04	CC	580	5.5/6.2	291	301

REGISTERED CIVIL ENGINEER 5-1-12 DATE

6-4-12
PLANS APPROVAL DATE

REGISTERED PROFESSIONAL ENGINEER Mike Van De Pol No. C35610 Exp. 9/30/2013 CIVIL STATE OF CALIFORNIA

The State of California or its officers or agents shall not be responsible for the accuracy or completeness of electronic copies of this plan sheet.

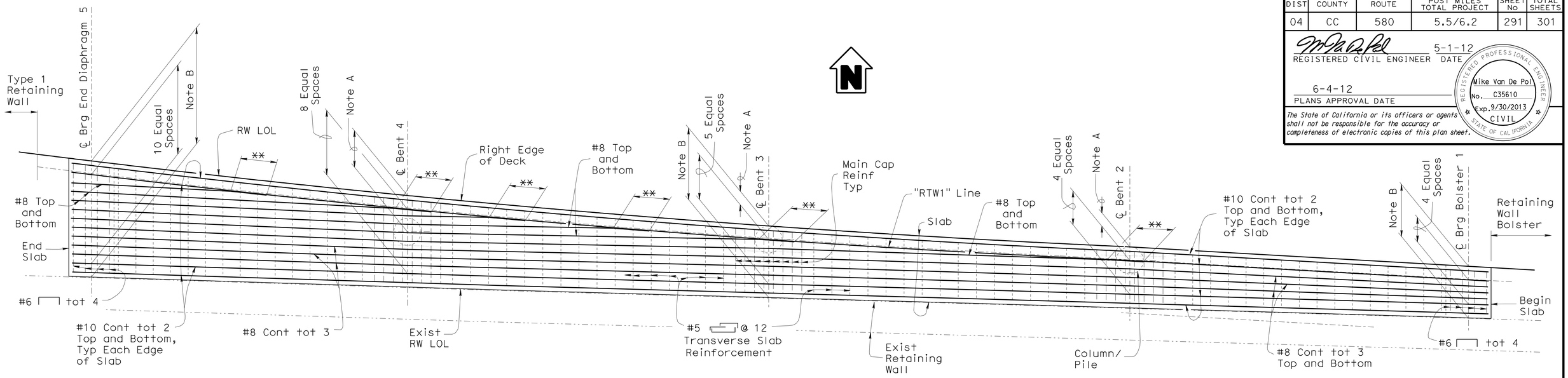

SLAB REINFORCEMENT PLAN (MIRROR VIEW)

3/8" = 1'-0"

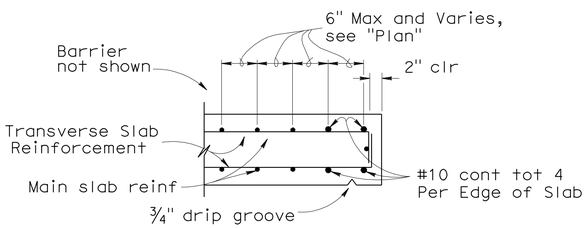

EDGE OF SLAB DETAILS

No Scale

Typical For Both Edges of Slab

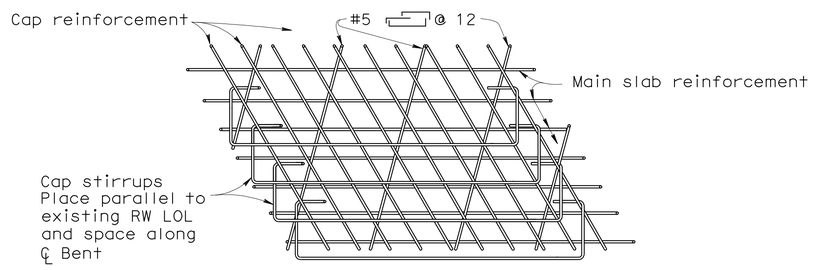

BOTTOM SLAB REINFORCEMENT AT BENT

No Scale

Actual Reinforcement Layout With No Skew

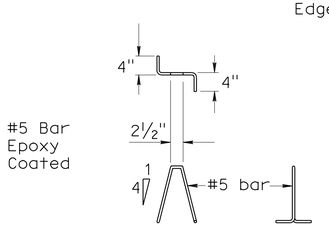

#5 bar chairs @ 2'± transversely and 3'± longitudinally

BAR CHAIR DETAIL

No Scale

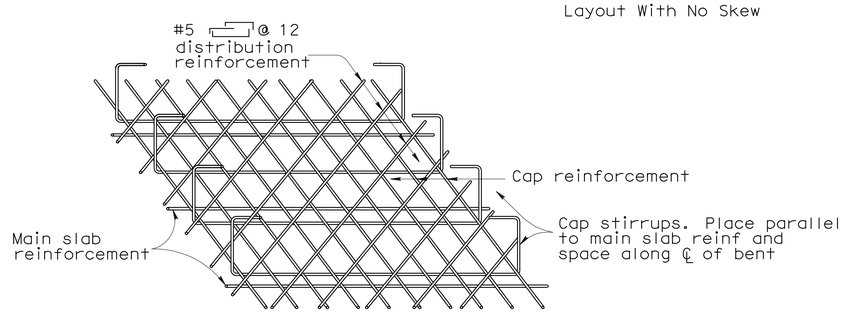

TOP SLAB REINFORCEMENT AT BENT

No Scale

Actual Reinforcement Layout With No Skew

Note A

Pile Position May be Adjusted to Clear Existing Retaining Wall Footing. See "WALL DETAILS No. 8" Sheet

Note B

Uncertainties Exist Regarding the Position and Alignment of the Existing Retaining Wall Stem Face. Width of Slab May Vary From What is Shown Herein. Adjustments May be Made as Approved by the Engineer

Support Bearings

Bolster 1	N 1°50'00" E
Bent 2	N 3°16'30" E
Bent 3	N 4°03'00" E
Bent 4	N 5°33'30" E
Diaphragm 5	N 7°52'30" E

Notes

** 2'-0" Min Lap Splice, #8 Bars with #10 Bars
Max Bar Spacing of Reinforcement = 6"
Cap Stirrups Not Shown in Plan
No Lap Splices Allowed in Main Top and Bottom Main Slab Reinforcement, Except as Shown
All Reinforcement Not Shown
Barriers Not Shown
Dowels Not Shown
Spacing of all transverse bars is measured along Ret Wall LOL
Place transverse slab bars perpendicular to Existing Retaining Wall LOL
Place Continuous Longitudinal #10 Bars Parallel to Edges of Slab
Place Continuous Longitudinal #8 Bars Spaced as Shown Between #10 Bars
For Additional Soil Nail Details, see "WALL DETAILS No. 3" Sheet
For Soil Nail Layout, see "WALL DETAILS No. 6" Sheet
All Slab Reinforcement shall be Epoxy Coated
-·-·-·-·- Denotes Existing Structure
——— Denotes New Construction

NOTE:
THE CONTRACTOR SHALL VERIFY ALL CONTROLLING FIELD DIMENSIONS BEFORE ORDERING OR FABRICATING ANY MATERIAL.

	BY	CHECKED
DESIGN	Mike Van De Pol	P. Norboe
DETAILS	Mike Van De Pol	P. Norboe
QUANTITIES	Mike Van De Pol	E. Franciliso

STATE OF CALIFORNIA
DEPARTMENT OF TRANSPORTATION

DIVISION OF ENGINEERING SERVICES
STRUCTURE DESIGN
DESIGN BRANCH 9

BRIDGE NO. 28E0055
POST MILE 6.0

RETAINING WALL
WALL DETAILS No. 5

STRUCTURES DESIGN DETAIL SHEET (ENGLISH) (REV. 10/25/05)

ORIGINAL SCALE IN INCHES FOR REDUCED PLANS 0 1 2 3

UNIT: 3594
PROJECT NUMBER & PHASE: 04000004831
CONTRACT NO.: 04-1A3201

DISREGARD PRINTS BEARING EARLIER REVISION DATES 3-04-11

SHEET 9 OF 19

FILE => 28e0055-e-dets05.dgn

USERNAME => s126614 DATE PLOTTED => 07-JUN-2012 TIME PLOTTED => 06:23

DIST	COUNTY	ROUTE	POST MILES TOTAL PROJECT	SHEET No	TOTAL SHEETS
04	CC	580	5.5/6.2	292	301

REGISTERED CIVIL ENGINEER 5-1-12 DATE

6-4-12
PLANS APPROVAL DATE

REGISTERED PROFESSIONAL ENGINEER Mike Van De Pol No. C35610 Exp. 9/30/2013 CIVIL STATE OF CALIFORNIA

The State of California or its officers or agents shall not be responsible for the accuracy or completeness of electronic copies of this plan sheet.

Uncertainties Exist Regarding the Position and Alignment of the Existing Retaining Wall Stem Face. Width of Bolster and Slab May Vary From What is Shown Herein. Adjustments May be Made as Approved by the Engineer

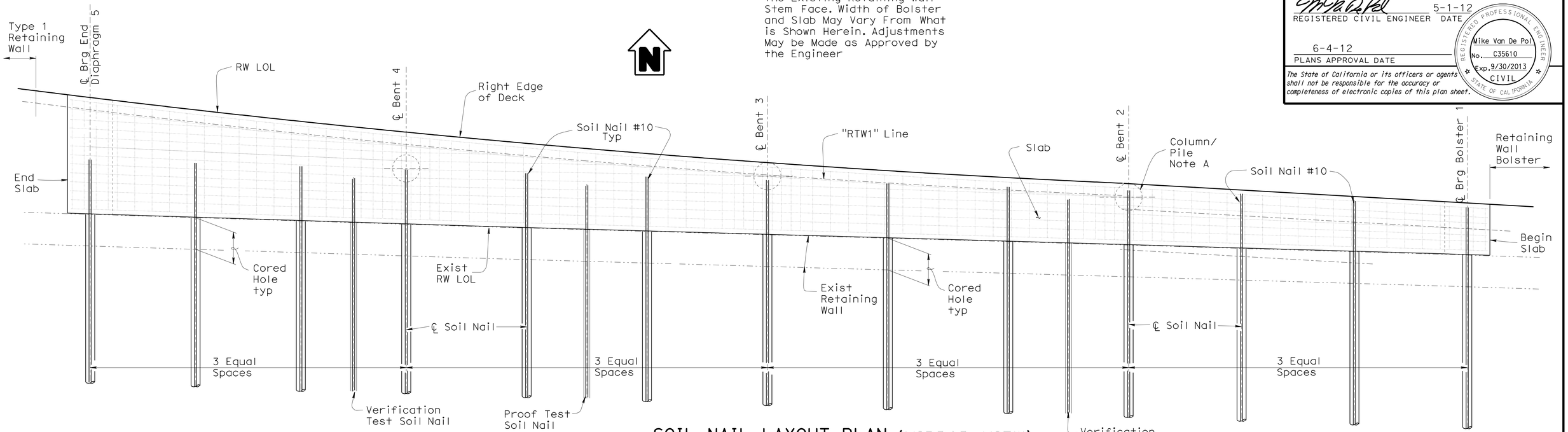

SOIL NAIL LAYOUT PLAN (MIRROR VIEW)

3/8" = 1'-0"

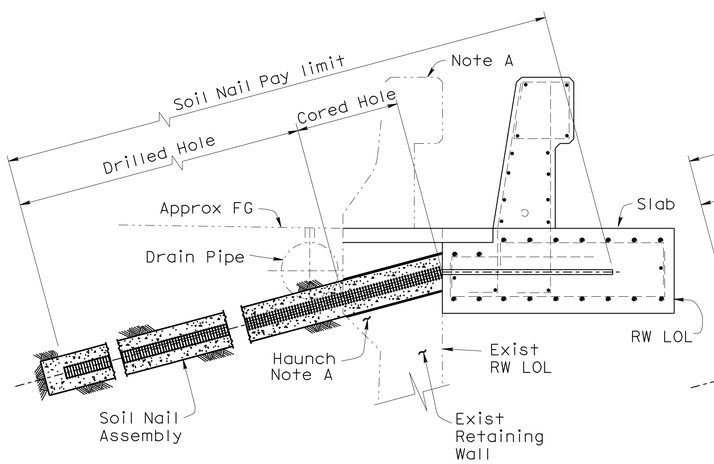

Note A
Uncertainties Exist Regarding the Details of the Interface Between the Existing Retaining Wall and the Existing Barrier. Details shown are Approximate. Adjustments May be Made as Approved by the Engineer. See "WALL DETAILS No. 2" and "WALL DETAILS No. 3" Sheets

CONDITION 1
Note A
Retaining Wall With Haunch

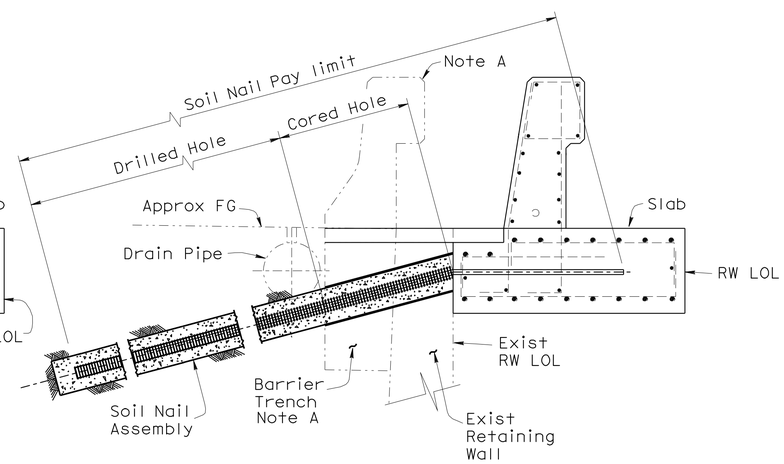

CONDITION 2
Note A
Retaining Wall Without Haunch Barrier With Trench

SOIL NAIL ASSEMBLY DETAILS

No Scale
Bar Coupler Not Shown
Barrier Face Architectural Texture Not Shown

SUPPLEMENTAL
For Other Details, see "WALL DETAILS No. 3" Sheet
Drain Pipe to be Removed, See "ROAD PLANS"

Notes

℄ Bent = ℄ Soil Nail
℄ Brg End Diapgragm = ℄ Soil Nail
℄ Brg Bolster = ℄ Soil Nail
Soil Nails Oriented Normal to Existing RW LOL
All Reinforcement Not Shown
Dowels Not Shown
Barriers Not Shown
Location, Number and Alignment of Soil Nails May be Adjusted as Approved by the Engineer
For Additional Soil Nail Details, see "WALL DETAILS No. 3" Sheet
Test Soil Nails Evenly Spaced Between Production Soil Nails
Total 3 Test Soil Nails Per Slab Section - Two Verification Tests and One Proof Test
Drain Pipe Not Shown in PLAN. See "WALL DETAILS No. 2" and "WALL DETAILS No. 3" Sheets
Test Soil Nail Locations Shown Are Approximate
Soil Nail Spaces Are Measured Along Existing Retaining Wall LOL

Note A
Pile Position May be Adjusted to Clear Existing Retaining Wall Footing. See "WALL DETAILS No. 8" Sheet

Soil Nail Position Adjustment May be Required to Clear Proposed Drainage System. See "ROAD PLANS"

NOTE:
THE CONTRACTOR SHALL VERIFY ALL CONTROLLING FIELD DIMENSIONS BEFORE ORDERING OR FABRICATING ANY MATERIAL.

-·-·-·-·- Denotes Existing Structure
——— Denotes New Construction

	BY	CHECKED
DESIGN	Mike Van De Pol	P. Norboe
DETAILS	Mike Van De Pol	P. Norboe
QUANTITIES	Mike Van De Pol	E. Franciliso

STATE OF CALIFORNIA
DEPARTMENT OF TRANSPORTATION

DIVISION OF ENGINEERING SERVICES
STRUCTURE DESIGN
DESIGN BRANCH 9

BRIDGE NO. 28E0055
POST MILE 6.0

RETAINING WALL
WALL DETAILS No. 6

STRUCTURES DESIGN DETAIL SHEET (ENGLISH) (REV. 10/25/05)

ORIGINAL SCALE IN INCHES FOR REDUCED PLANS 0 1 2 3

UNIT: 3594
PROJECT NUMBER & PHASE: 04000004831
CONTRACT NO.: 04-1A3201

DISREGARD PRINTS BEARING EARLIER REVISION DATES 3-04-11

SHEET 10 OF 19

FILE => 28e0055-e-dets06.dgn

USERNAME => s12614 DATE PLOTTED => 07-JUN-2012 TIME PLOTTED => 06:23

DIST	COUNTY	ROUTE	POST MILES TOTAL PROJECT	SHEET No	TOTAL SHEETS
04	CC	580	5.5/6.2	293	301

REGISTERED CIVIL ENGINEER 5-1-12 DATE

6-4-12
PLANS APPROVAL DATE

The State of California or its officers or agents shall not be responsible for the accuracy or completeness of electronic copies of this plan sheet.

REGISTERED PROFESSIONAL ENGINEER Mike Van De Pol No. C35610 Exp. 9/30/2013 CIVIL STATE OF CALIFORNIA

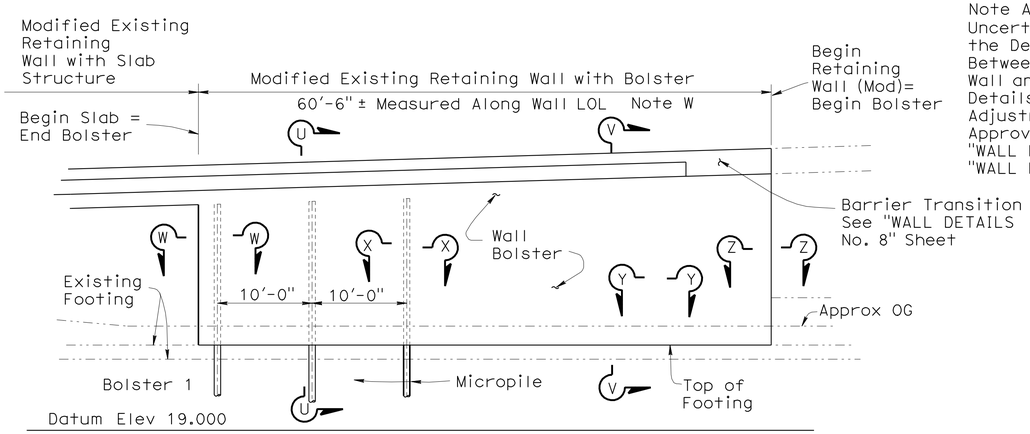

MIRROR ELEVATION
1/8" = 1'-0"

Retaining Wall Bolster Portion Elevation Along Wall LOL
For Location of ELEVATION, see "WALL LAYOUT" Sheet

Note A
Uncertainties Exist Regarding the Details of the Interface Between the Existing Retaining Wall and the Existing Barrier. Details shown are Approximate. Adjustments May be Made as Approved by the Engineer. See "WALL DETAILS No. 2" and "WALL DETAILS No. 3" Sheets

Note W
Uncertainties Exist Regarding the Position and Alignment of the Existing Retaining Wall Stem Face. Width of Bolster May Vary From What is Shown Herein. Adjustments May be Made as Approved by the Engineer

All Wall Bolster and Barrier Reinforcement Shall be Epoxy Coated

For Barrier Reinforcement, see B11-55

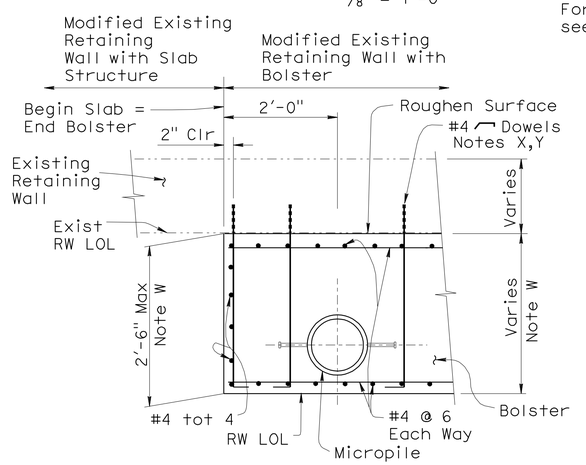

SECTION W-W
3/4" = 1'-0"

For Details, see Section X-X

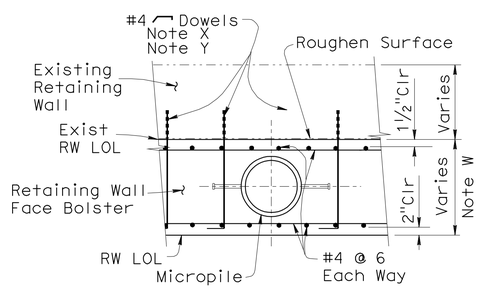

SECTION X-X
3/4" = 1'-0"

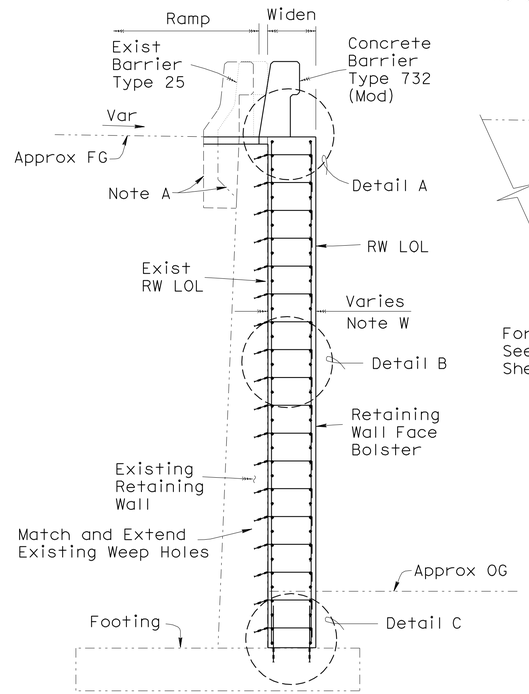

SECTION V-V
3/8" = 1'-0"

Match and Extend Existing Wall Joints

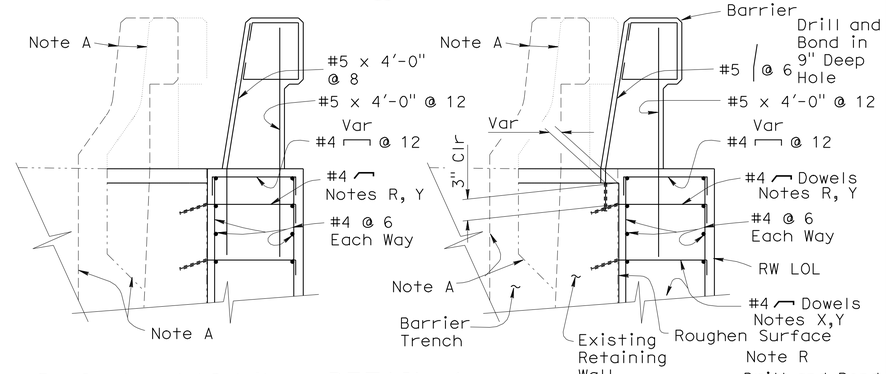

For Supplemental Details, See "WALL DETAILS No. 10" Sheet

DETAIL A
3/4" = 1'-0"

Note R
Drill and Bond Dowels in 9" Deep Hole at 6 Horiz. Hook Around Front Face Reinf. Adjust to Clr Micropiles and Soil Nails

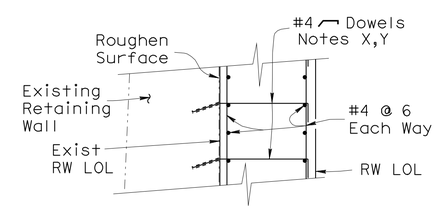

DETAIL B
3/4" = 1'-0"

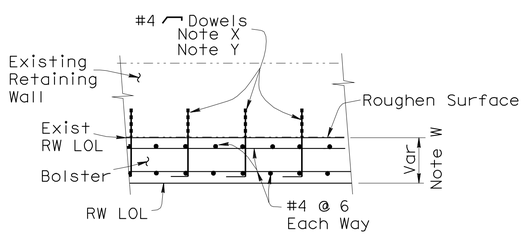

SECTION Y-Y
3/4" = 1'-0"

For Details, see Section X-X

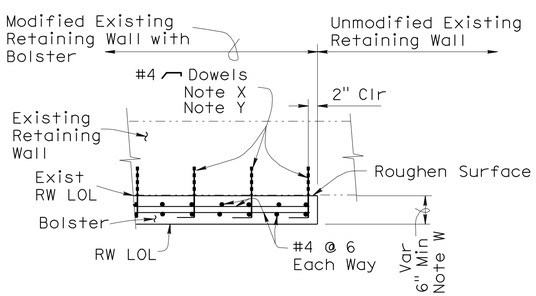

SECTION Z-Z
3/4" = 1'-0"

For Details, see Section X-X

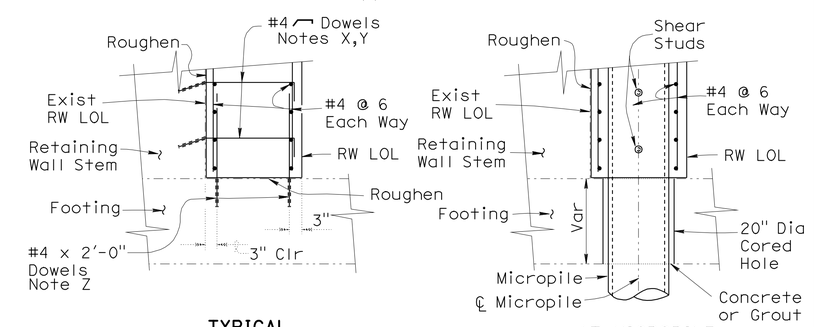

TYPICAL

AT MICROPILE

DETAIL C
3/4" = 1'-0"

Architectural Features Not Shown. For Details, See "WALL DETAILS No. 9" and "WALL DETAILS No. 10" Sheets

Roughen Surface to 1/4" Min Amplitude

Existing Wall Reinforcement Not Shown

For "Section U-U", see "MICROPILE DETAILS-BOLSTER SECTION" on "WALL DETAILS No. 4" Sheet

RTW1 Line Not Shown

Note X
Drill and Bond Dowels in 6" Deep Hole at 12 Vertically and Horizontally. Hook Around Front Face Reinforcing Mats. Adjust to Clear Micropiles and Soil Nails

Note Y
Alternative Dowel Configuration
Dowel — Mechanically Coupled

Note Z
Drill and Bond Dowels in 6" Deep Hole at 12. Adjust to Clear Micropiles and Cored Holes. 3" Min Clear

Drain Pipe Not Shown. See "ROAD PLANS"

NOTE:
THE CONTRACTOR SHALL VERIFY ALL CONTROLLING FIELD DIMENSIONS BEFORE ORDERING OR FABRICATING ANY MATERIAL.

Denotes Existing Structure
Denotes New Construction

	BY	CHECKED
DESIGN	Mike Van De Pol	P. Norboe
DETAILS	Mike Van De Pol	P. Norboe
QUANTITIES	Mike Van De Pol	E. Franciliso

STATE OF CALIFORNIA
DEPARTMENT OF TRANSPORTATION

DIVISION OF ENGINEERING SERVICES
STRUCTURE DESIGN
DESIGN BRANCH 9

BRIDGE NO. 28E0055
POST MILE 6.0

RETAINING WALL
WALL DETAILS No. 7

STRUCTURES DESIGN DETAIL SHEET (ENGLISH) (REV. 10/25/05)

ORIGINAL SCALE IN INCHES FOR REDUCED PLANS 0 1 2 3

UNIT: 3594
PROJECT NUMBER & PHASE: 04000004831
CONTRACT NO.: 04-1A3201

DISREGARD PRINTS BEARING EARLIER REVISION DATES 3-04-11

SHEET 11 OF 19

FILE => 28e0055-e-dets07.dgn

USERNAME => s121614 DATE PLOTTED => 07-JUN-2012 TIME PLOTTED => 06:23

DIST	COUNTY	ROUTE	POST MILES TOTAL PROJECT	SHEET No	TOTAL SHEETS
04	CC	580	5.5/6.2	294	301

REGISTERED CIVIL ENGINEER 5-1-12 DATE

6-4-12
PLANS APPROVAL DATE

The State of California or its officers or agents shall not be responsible for the accuracy or completeness of electronic copies of this plan sheet.

REGISTERED PROFESSIONAL ENGINEER Mike Van De Pol No. C35610 Exp. 9/30/2013 CIVIL STATE OF CALIFORNIA

Note A
Uncertainties Exist Regarding the Details of the Interface Between the Existing Retaining Wall and the Existing Barrier. Details shown are Approximate. Adjustments May be Made as Approved by the Engineer. See "WALL DETAILS No. 2" and "WALL DETAILS No. 3" Sheets

All Barrier Reinforcement Shall be Epoxy Coated

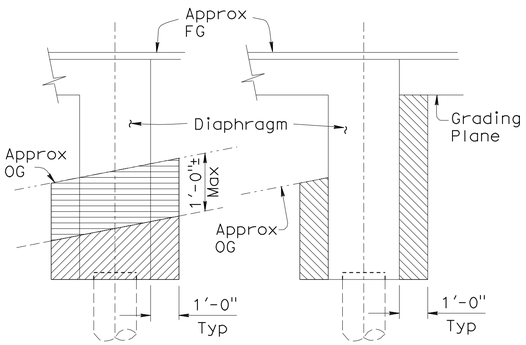

EXCAVATION BACKFILL

DIAPHRAGM

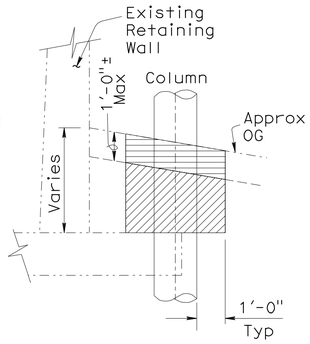

Sta 9+88 to 10+68

EXCAVATION

WALL SLAB PORTION

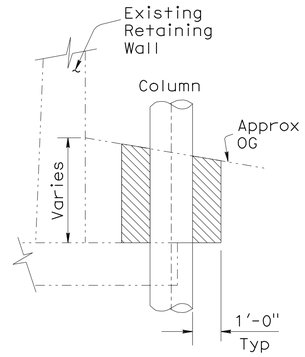

BACKFILL Typical

BENTS

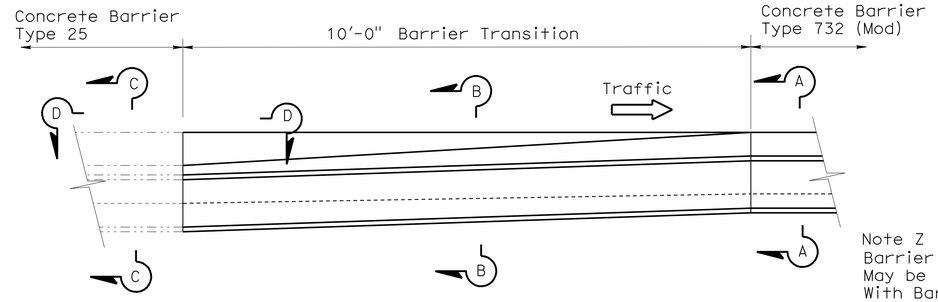

If Barrier Trench is Removed With Exposed Barrier Portion, Replace Barrier with Type 732B (Mod)

PLAN

Barrier Transition Located on Existing Retaining Wall Before Bolster Modification, as Approved by the Engineer

Note Z
Barrier Trench May be Removed With Barrier

Denotes Limits of Removal of Existing Barrier. Existing Vertical Reinforcement to Remain

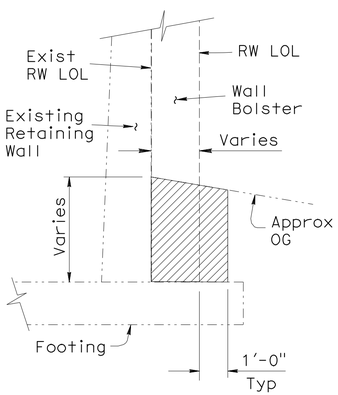

EXCAVATION No Aerially Deposited Lead Present

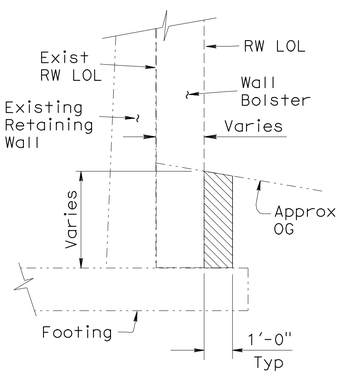

BACKFILL

WALL BOLSTER PORTION

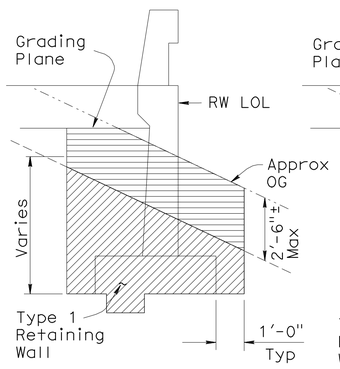

EXCAVATION

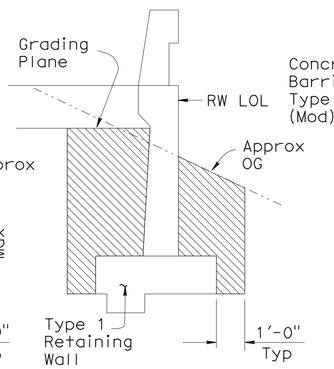

BACKFILL

TYPE 1 RETAINING WALL

EXCAVATION AND BACKFILL DETAILS

3/8" = 1'-0"

For Addition Details, see A62C

For Addition Details, see Other "WALL DETAILS" Sheets

Denotes Limits of Structure Excavation

Denotes Limits of Structure Backfill

Denotes Limits of Excavation- Soil Contaminated With Aerially Deposited Lead

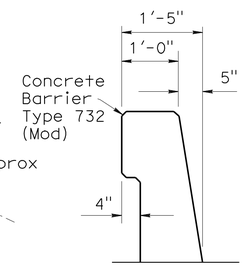

SECTION A-A

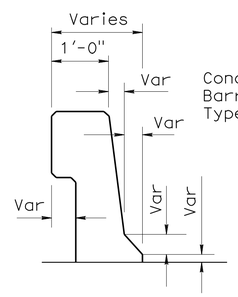

SECTION B-B

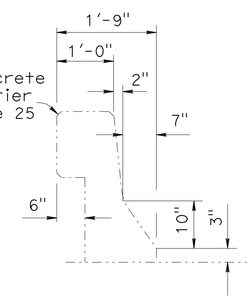

SECTION C-C

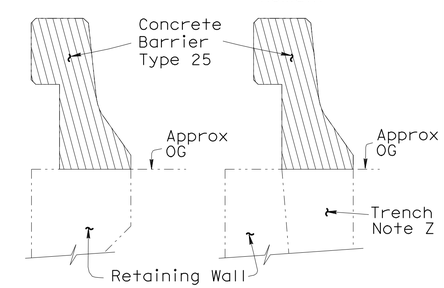

REMOVAL

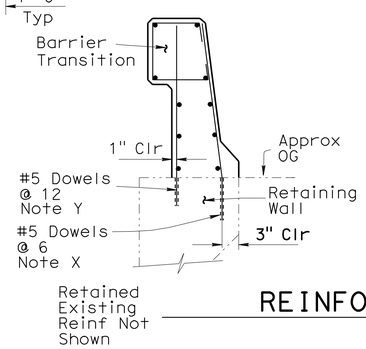

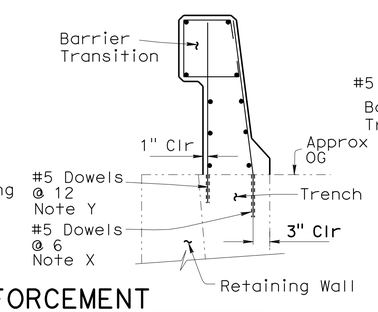

REINFORCEMENT

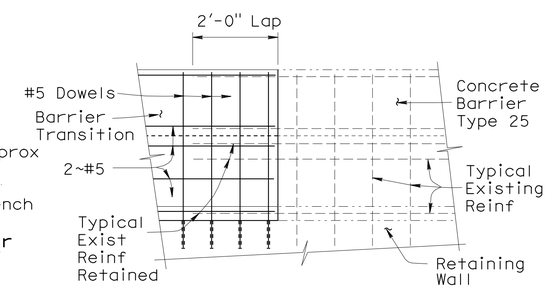

SECTION D-D

BARRIER TRANSITION DETAILS Note A

3/4" = 1'-0"

For Supplemental Details, See "WALL DETAILS No. 10" Sheet
Barrier Face Architectural Texture Not Shown

Note X Drill and Bond Dowels in 9" Deep Hole. Adjust to Clear Existing Reinforcement

Note Y Drill and Bond Dowels in 6" Deep Hole. Adjust to Clear Existing Reinforcement

NOTE:
THE CONTRACTOR SHALL VERIFY ALL CONTROLLING FIELD DIMENSIONS BEFORE ORDERING OR FABRICATING ANY MATERIAL.

Denotes Existing Structure
Denotes New Construction

	BY	CHECKED
DESIGN	Mike Van De Pol	P. Norboe
DETAILS	Mike Van De Pol	P. Norboe
QUANTITIES	Mike Van De Pol	E. Franciliso

STATE OF CALIFORNIA DEPARTMENT OF TRANSPORTATION

DIVISION OF ENGINEERING SERVICES STRUCTURE DESIGN DESIGN BRANCH 9

BRIDGE NO. 28E0055
POST MILE 6.0

RETAINING WALL
WALL DETAILS No. 8

STRUCTURES DESIGN DETAIL SHEET (ENGLISH) (REV. 10/25/05)

ORIGINAL SCALE IN INCHES FOR REDUCED PLANS 0 1 2 3

UNIT: 3594
PROJECT NUMBER & PHASE: 04000004831
CONTRACT NO.: 04-1A3201

DISREGARD PRINTS BEARING EARLIER REVISION DATES 3-04-11

SHEET 12 OF 19

FILE => 28e0055-e-dets08.dgn

USERNAME => s12f614 DATE PLOTTED => 07-JUN-2012 TIME PLOTTED => 06:24

DIST	COUNTY	ROUTE	POST MILES TOTAL PROJECT	SHEET No	TOTAL SHEETS
04	CC	580	5.5/6.2	295	301

REGISTERED CIVIL ENGINEER 5-1-12 DATE

6-4-12
PLANS APPROVAL DATE

The State of California or its officers or agents shall not be responsible for the accuracy or completeness of electronic copies of this plan sheet.

REGISTERED PROFESSIONAL ENGINEER Mike Van De Pol No. C35610 Exp. 9/30/2013 CIVIL STATE OF CALIFORNIA

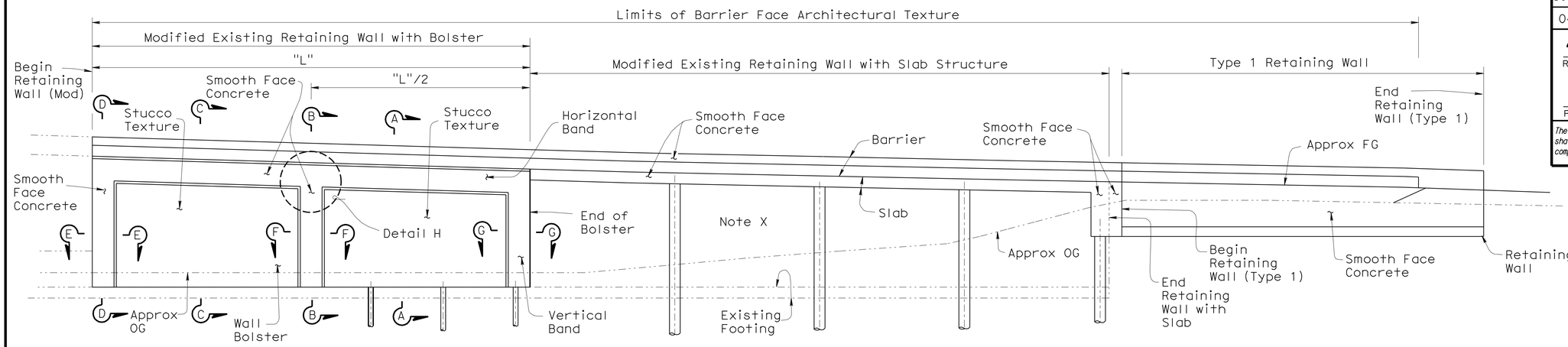

ELEVATION
1/8" = 1'-0"

Elevation Along Wall LOL
All Piles Not Shown

Note X
No New Texture Appled to Existing Wall Face

For Location of ELEVATION, see "WALL LAYOUT" Sheet

For Other Details, See "WALL DETAILS No. 7" Sheet

For Barrier Face Architectural Texture Details, See "WALL DETAILS No. 10" Sheet

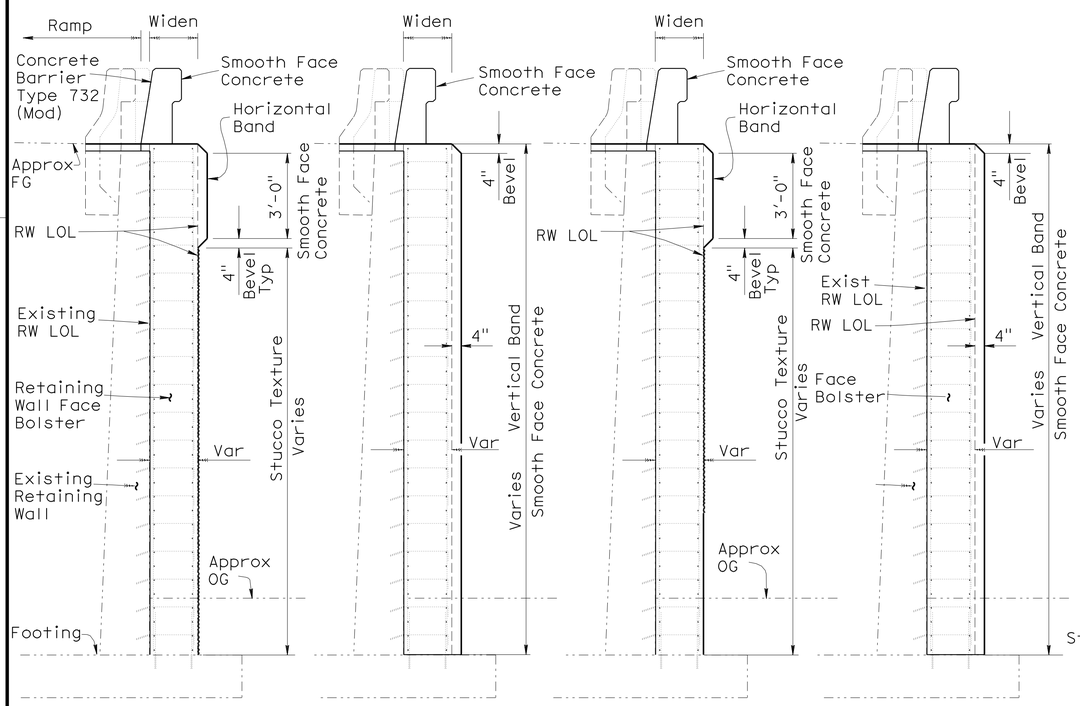

SECTION A-A
3/8" = 1'-0"

SECTION B-B
3/8" = 1'-0"

SECTION C-C
3/8" = 1'-0"

SECTION D-D
3/8" = 1'-0"

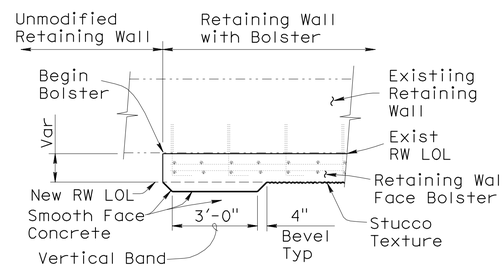

SECTION E-E
3/8" = 1'-0"

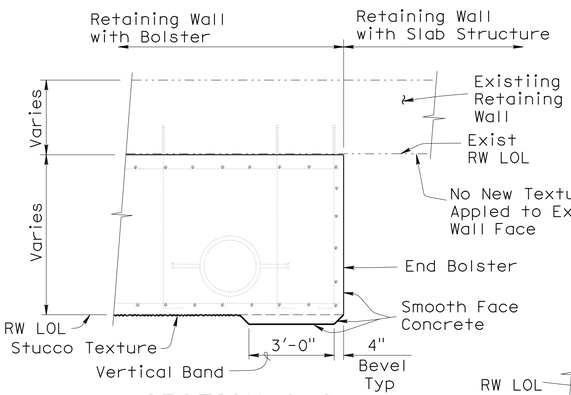

SECTION G-G
3/8" = 1'-0"

Note Y
Line From Which Clearance to Reinforcement is Measured

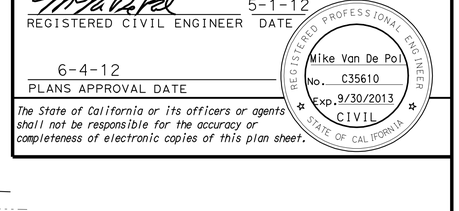

STUCCO TEXTURE
No Scale

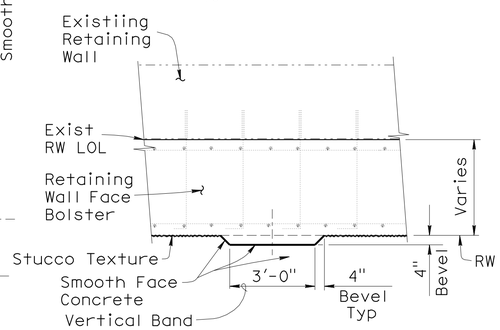

SECTION F-F
3/8" = 1'-0"

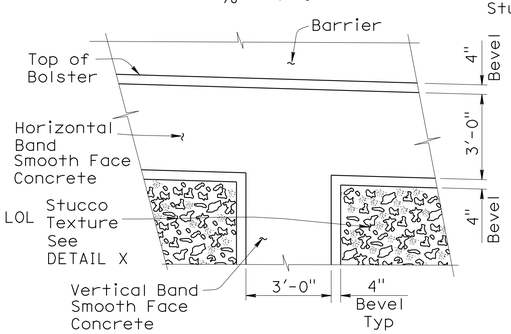

DETAIL H
3/8" = 1'-0"

Limits of Stucco Texture = Limits of Stain

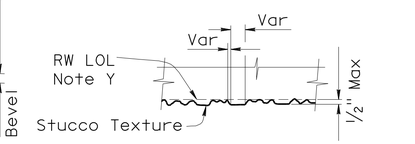

DETAIL X
No Scale

NOTE:
THE CONTRACTOR SHALL VERIFY ALL CONTROLLING FIELD DIMENSIONS BEFORE ORDERING OR FABRICATING ANY MATERIAL.

WALL FACE ARCHITECTURAL TEXTURE DETAILS

Denotes Existing Structure
Denotes New Construction

	BY	CHECKED
DESIGN	Mike Van De Pol	P. Norboe
DETAILS	Mike Van De Pol	P. Norboe
QUANTITIES	Mike Van De Pol	E. Franciliso

STATE OF CALIFORNIA
DEPARTMENT OF TRANSPORTATION

DIVISION OF ENGINEERING SERVICES
STRUCTURE DESIGN
DESIGN BRANCH 9

BRIDGE NO. 28E0055
POST MILE 6.0

RETAINING WALL
WALL DETAILS No. 9

STRUCTURES DESIGN DETAIL SHEET (ENGLISH) (REV. 10/25/05)

ORIGINAL SCALE IN INCHES FOR REDUCED PLANS 0 1 2 3

UNIT: 3594
PROJECT NUMBER & PHASE: 04000004831
CONTRACT NO.: 04-1A3201

DISREGARD PRINTS BEARING EARLIER REVISION DATES 3-04-11

SHEET 13 OF 19

FILE => 28e0055-e-dets09.dgn

USERNAME => s121614 DATE PLOTTED => 07-JUN-2012 TIME PLOTTED => 06:24

DIST	COUNTY	ROUTE	POST MILES TOTAL PROJECT	SHEET No	TOTAL SHEETS
04	CC	580	5.5/6.2	296	301

REGISTERED CIVIL ENGINEER 5-1-12 DATE

6-4-12
PLANS APPROVAL DATE

REGISTERED PROFESSIONAL ENGINEER Mike Van De Pol No. C35610 Exp. 9/30/2013 CIVIL STATE OF CALIFORNIA

The State of California or its officers or agents shall not be responsible for the accuracy or completeness of electronic copies of this plan sheet.

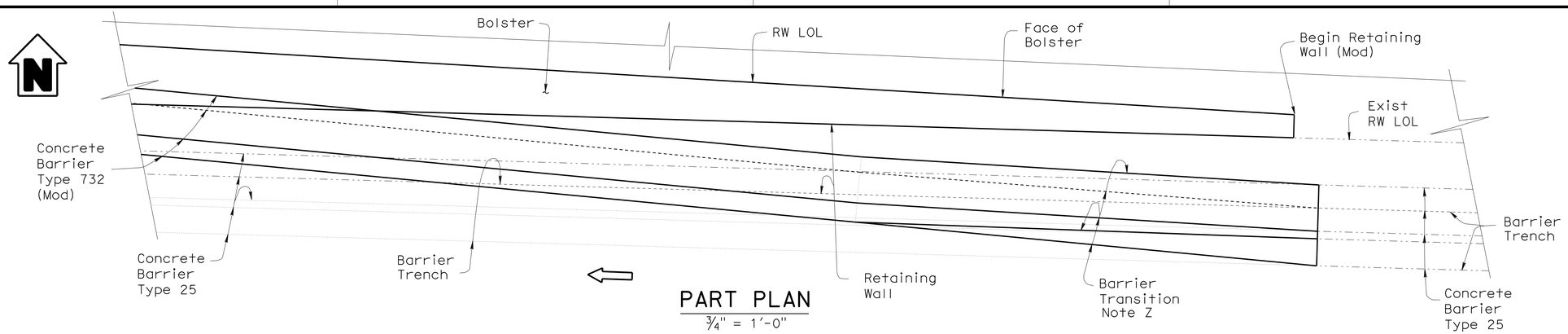

PART PLAN

¾" = 1'-0"

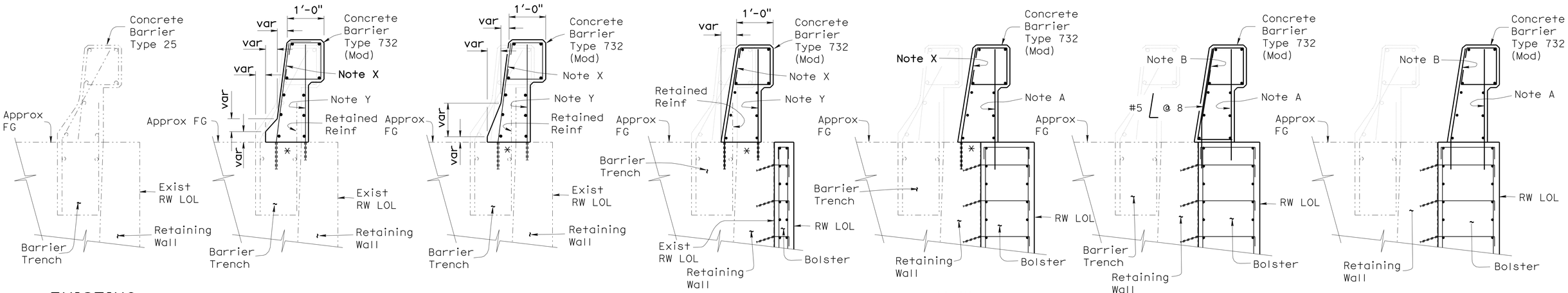

EXISTING

NEW

SECTIONS

Looking Ahead Station

SUPPLEMENTAL BARRIER TRANSITION DETAILS

¾" = 1'-0"

Uncertainties Exist Regarding the Details of the Interface Between the Existing Retaining Wall and the Existing Barrier. Details shown are Approximate. Adjustments May be Made as Approved by the Engineer. See "WALL DETAILS No. 2" and "WALL DETAILS No. 3" Sheets

Uncertainties Exist Regarding the Position and Alignment of the Existing Retaining Wall Stem Face. Width of Bolster May Vary From What is Shown Herein. Adjustments May be Made as Approved by the Engineer

All Barrier Reinforcement shall be Epoxy Coated

RTW1 Line Not Shown

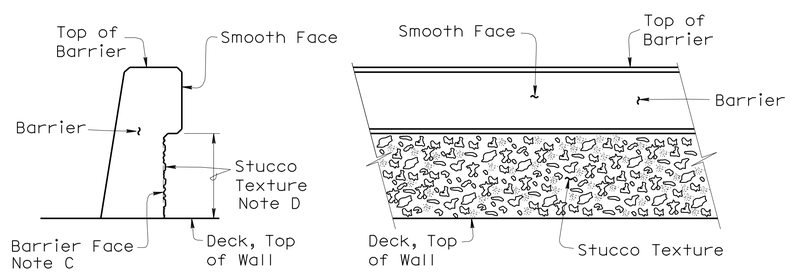

SECTION

ELEVATION

BARRIER FACE TEXTURE DETAILS

No Scale

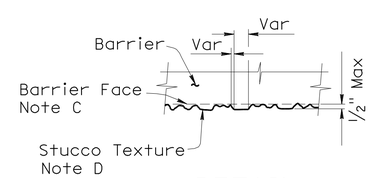

DETAIL

Located at Beginning of Existing Retaining Wall Bolster Modification

For Other Details, See "WALL DETAILS No. 7" Sheet

For Removal Details, See "WALL DETAILS No. 2" Sheet

Note X
Drill and Bond #5 x 3'-3" Dowel in 9" Deep Hole at 6

Note Y
Drill and Bond #5 x 3'-0" Dowel in 6" Deep Hole at 12

Note A
#5 x 4'-0" @ 12

Note B
#5 x 4'-0" @ 8

Adjust Dowels to Clear Existing Reinforcement

Note C
Face From Which Clearance to Reinforcement is Measured

Note D
Limits of Stucco Texture = Limits of Prepare and Paint

For Limits of Barrier Face Architectural Texture, See "WALL DETAILS No. 9" Sheet

* Roughen Surface to ¼" Min Amplitude

For Concrete Barrier Type 732 (Mod), see B11-55

Denotes Existing Structure

Denotes New Construction

NOTE:
THE CONTRACTOR SHALL VERIFY ALL CONTROLLING FIELD DIMENSIONS BEFORE ORDERING OR FABRICATING ANY MATERIAL.

	BY	CHECKED
DESIGN	Mike Van De Pol	P. Norboe
DETAILS	Mike Van De Pol	P. Norboe
QUANTITIES	Mike Van De Pol	E. Franciliso

STATE OF CALIFORNIA
DEPARTMENT OF TRANSPORTATION

DIVISION OF ENGINEERING SERVICES
STRUCTURE DESIGN
DESIGN BRANCH 9

BRIDGE NO. 28E0055
POST MILE 6.0

RETAINING WALL
WALL DETAILS No. 10

STRUCTURES DESIGN DETAIL SHEET (ENGLISH) (REV. 10/25/05)

ORIGINAL SCALE IN INCHES FOR REDUCED PLANS 0 1 2 3

UNIT: 3594
PROJECT NUMBER & PHASE: 04000004831
CONTRACT NO.: 04-1A3201

DISREGARD PRINTS BEARING EARLIER REVISION DATES 3-04-11

SHEET 14 OF 19

FILE => 28e0055-e-dets10.dgn

USERNAME => s121614 DATE PLOTTED => 07-JUN-2012 TIME PLOTTED => 06:24

DIST	COUNTY	ROUTE	POST MILES TOTAL PROJECT	SHEET No	TOTAL SHEETS
04	CC	580	5.5/6.2	297	301

REGISTERED CIVIL ENGINEER 6-20-11

6-4-12
PLANS APPROVAL DATE

The State of California or its officers or agents shall not be responsible for the accuracy or completeness of electronic copies of this plan sheet.

REGISTERED PROFESSIONAL ENGINEER
Sunny Yang
No. C71801
Exp. 12-31-13
CIVIL
STATE OF CALIFORNIA

This LOTB sheet was prepared in accordance with the Caltrans Soil & Rock Logging, Classification, & Presentation Manual (2010 Edition), with the exception of sections 2.5.7 and 2.5.8.

BENCH MARK

VG2
Fnd 1" Iron Pipe w/ Caltrans PP
149.35 Ft Rt "M" Line, Rte 580
Sta 141+66.42
N 2,167,611.97
E 6,012,960.01
Elev= 39.76

VG3
Fnd PK Nail w/ Caltrans Brass Tag
66.28 Ft Lt "M" Line, Rte 580
Sta 137+94.27
N 2,167,337.61
E 6,013,293.90
Elev= 42.37

NAVD 88

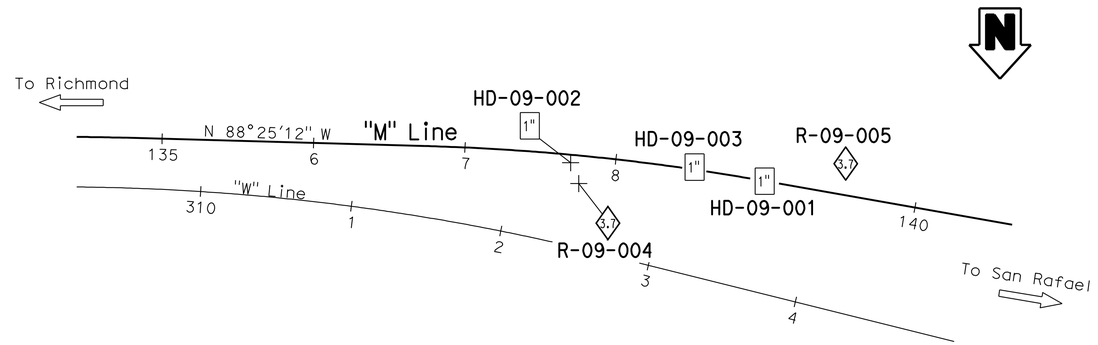

PLAN
1" = 50'

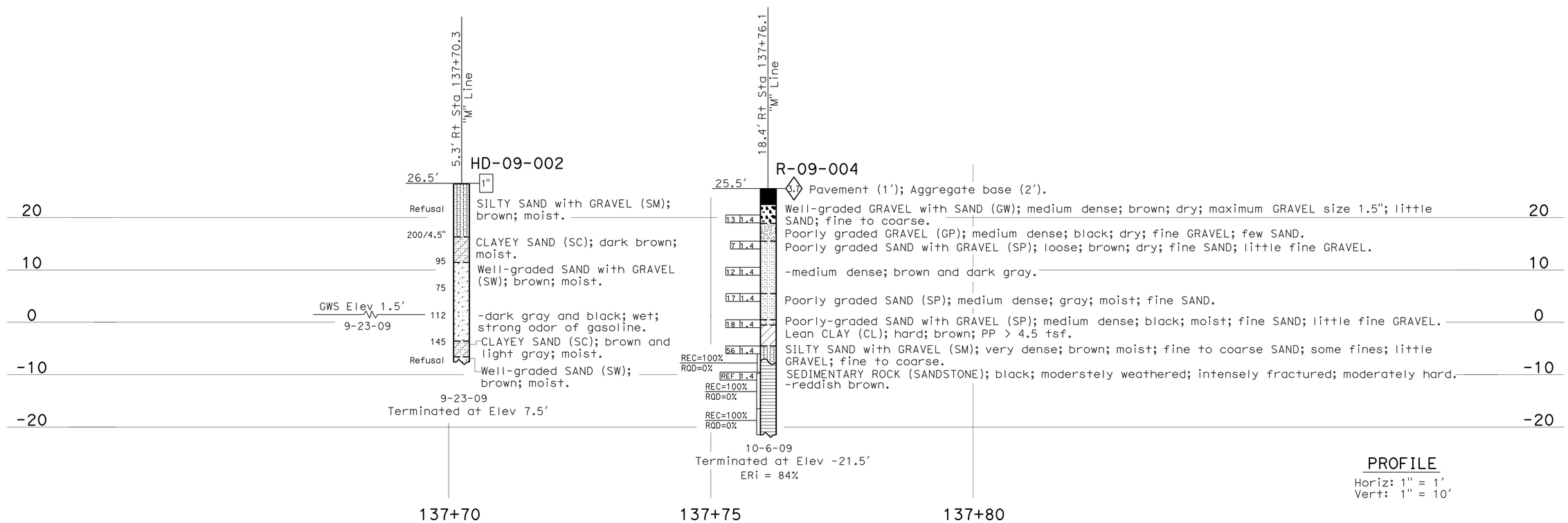

PROFILE
Horiz: 1" = 1'
Vert: 1" = 10'

ENGINEERING SERVICES	GEOTECHNICAL SERVICES	STATE OF CALIFORNIA DEPARTMENT OF TRANSPORTATION	DIVISION OF ENGINEERING SERVICES STRUCTURE DESIGN DESIGN BRANCH 9	BRIDGE NO. 28E0055 POST MILES 6.0	RETAINING WALL LOG OF TEST BORINGS 1 OF 5
FUNCTIONAL SUPERVISOR NAME: H. Nikoui	DRAWN BY: W. Tang 11/09 CHECKED BY: E. Kretschmer	FIELD INVESTIGATION BY: S. Yang			

OGS CIVIL LOG OF TEST BORINGS SHEET

ORIGINAL SCALE IN INCHES FOR REDUCED PLANS 0 1 2 3

CU 04
EA 1A3201

DISREGARD PRINTS BEARING EARLIER REVISION DATES 11-30-09 02-23-11 03-08-11 04-08-11 06/14/11

SHEET 15 OF 19

FILE => 28e0055-z-ltb01.dgn

USERNAME => s126614 DATE PLOTTED => 07-JUN-2012 TIME PLOTTED => 06:24

DIST	COUNTY	ROUTE	POST MILES TOTAL PROJECT	SHEET No	TOTAL SHEETS
04	CC	580	5.5/6.2	298	301

REGISTERED CIVIL ENGINEER 6-20-11

6-4-12
PLANS APPROVAL DATE

REGISTERED PROFESSIONAL ENGINEER
Sunny Yang
No. C71801
Exp. 12-31-13
CIVIL
STATE OF CALIFORNIA

The State of California or its officers or agents shall not be responsible for the accuracy or completeness of electronic copies of this plan sheet.

This LOTB sheet was prepared in accordance with the Caltrans Soil & Rock Logging, Classification, & Presentation Manual (2010 Edition), with the exception of sections 2.5.7 and 2.5.8.

FOR PLAN VIEW, SEE
"LOG OF TEST BORINGS 1 OF 5"

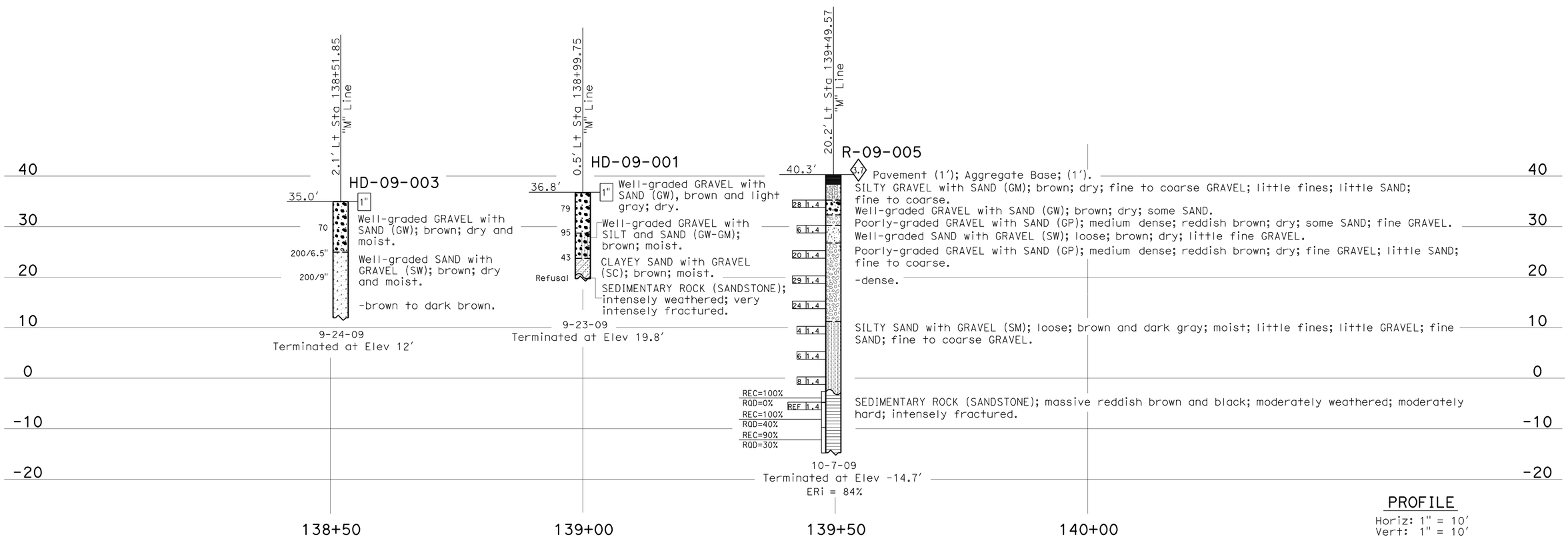

ENGINEERING SERVICES	GEOTECHNICAL SERVICES	STATE OF CALIFORNIA DEPARTMENT OF TRANSPORTATION	DIVISION OF ENGINEERING SERVICES STRUCTURE DESIGN	BRIDGE NO. 28E0055	RETAINING WALL
FUNCTIONAL SUPERVISOR	DRAWN BY: W. Tang 11/09		DESIGN BRANCH 9	POST MILES 6.0	LOG OF TEST BORINGS 2 OF 5
NAME: H. Nikoui	CHECKED BY: E. Kretschmer	FIELD INVESTIGATION BY: S. Yang			

OGS CIVIL LOG OF TEST BORINGS SHEET

ORIGINAL SCALE IN INCHES FOR REDUCED PLANS 0 1 2 3

CU 04
EA 1A3201

DISREGARD PRINTS BEARING EARLIER REVISION DATES

REVISION DATES: 11-30-09 02-23-11 04-08-11 06-14-11

SHEET 16 OF 19

FILE => 28e0055-z-lltb02.dgn

USERNAME => s121614 DATE PLOTTED => 07-JUN-2012 TIME PLOTTED => 06:24

DIST	COUNTY	ROUTE	POST MILES TOTAL PROJECT	SHEET No	TOTAL SHEETS
04	CC	580	5.5/6.2	299	301

REGISTERED CIVIL ENGINEER 6-20-11

6-4-12
PLANS APPROVAL DATE

REGISTERED PROFESSIONAL ENGINEER Sunny Yang No. C71801 Exp. 12-31-13 CIVIL STATE OF CALIFORNIA

The State of California or its officers or agents shall not be responsible for the accuracy or completeness of electronic copies of this plan sheet.

REFERENCE: CALTRANS SOIL & ROCK LOGGING, CLASSIFICATION, AND PRESENTATION MANUAL (JUNE 2007)

CEMENTATION

Description	Criteria
Weak	Crumbles or breaks with handling or little finger pressure.
Moderate	Crumbles or breaks with considerable finger pressure.
Strong	Will not crumble or break with finger pressure.

CONSISTENCY OF COHESIVE SOILS

Description	Unconfined Compressive Strength (tsf)	Pocket Penetrometer Measurement (tsf)	Torvane Measurement (tsf)	Field Approximation
Very Soft	< 0.25	< 0.25	< 0.12	Easily penetrated several inches by fist
Soft	0.25 to 0.50	0.25 to 0.50	0.12 to 0.25	Easily penetrated several inches by thumb
Medium Stiff	0.50 to 1.0	0.50 to 1.0	0.25 to 0.50	Penetrated several inches by thumb with moderate effort
Stiff	1 to 2	1 to 2	0.50 to 1.0	Readily indented by thumb but penetrated only with great effort
Very Stiff	2 to 4	2 to 4	1.0 to 2.0	Readily indented by thumbnail
Hard	> 4.0	> 4.0	> 2.0	Indented by thumbnail with difficulty

BOREHOLE IDENTIFICATION

Symbol	Hole Type	Description
Size	A	Auger Boring
Size	R P	Rotary drilled boring Rotary percussion boring (air)
Size	R	Rotary drilled diamond core
Size	HD HA	Hand driven (1-inch soil tube) Hand Auger
●	D	Dynamic Cone Penetration Boring
▲	CPT	Cone Penetration Test (ASTM D 5778-95)
⬚	O	Other

Note: Size in inches.

PLASTICITY OF FINE-GRAINED SOILS

Description	Criteria
Nonplastic	A 1/8-inch thread cannot be rolled at any water content.
Low	The thread can barely be rolled and the lump cannot be formed when drier than the plastic limit.
Medium	The thread is easy to roll and not much time is required to reach the plastic limit. The thread cannot be rerolled after reaching the plastic limit. The lump crumbles when drier than the plastic limit.
High	It takes considerable time rolling and kneading to reach the plastic limit. The thread can be rerolled several times after reaching the plastic limit. The lump can be formed without crumbling when drier than the plastic limit.

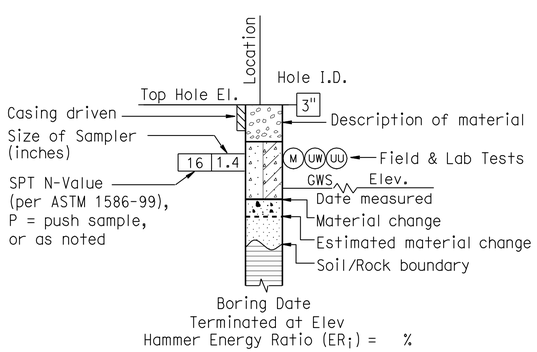

ROTARY BORING

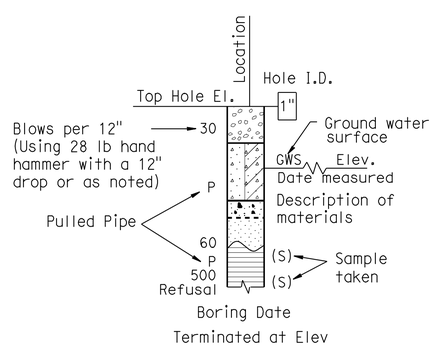

HAND BORING

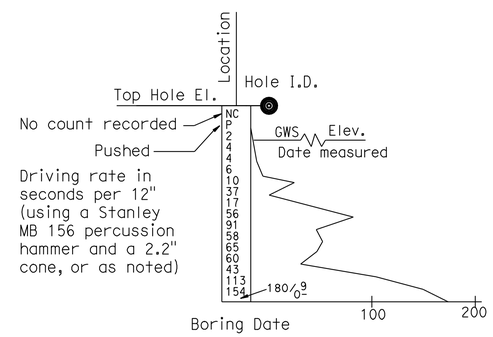

DYNAMIC CONE PENETRATION BORING

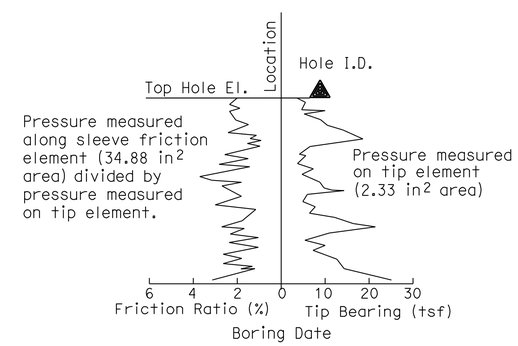

CONE PENETRATION TEST (CPT) SOUNDING

ENGINEERING SERVICES	GEOTECHNICAL SERVICES	STATE OF CALIFORNIA DEPARTMENT OF TRANSPORTATION	DIVISION OF ENGINEERING SERVICES STRUCTURE DESIGN DESIGN BRANCH 9	BRIDGE NO. 28E0055 POST MILE 6.0	RETAINING WALL LOG OF TEST BORINGS 3 OF 5
	PREPARED BY: W. Tang 11/09				

GS LOTB SOIL LEGEND

ORIGINAL SCALE IN INCHES FOR REDUCED PLANS 0 1 2 3

CU 04
EA 1A3201

DISREGARD PRINTS BEARING EARLIER REVISION DATES

REVISION DATES

SHEET 17 OF 19

FILE => 28e0055-z-1tb03.dgn

USERNAME => s121614 DATE PLOTTED => 07-JUN-2012 TIME PLOTTED => 06:25

REFERENCE: CALTRANS SOIL & ROCK LOGGING, CLASSIFICATION, AND PRESENTATION MANUAL (JUNE 2007)

DIST	COUNTY	ROUTE	POST MILES TOTAL PROJECT	SHEET No	TOTAL SHEETS
04	CC	580	5.5/6.2	300	301

REGISTERED CIVIL ENGINEER 6-20-11

6-4-12
PLANS APPROVAL DATE

REGISTERED PROFESSIONAL ENGINEER Sunny Yang No. C71801 Exp. 12-31-13 CIVIL STATE OF CALIFORNIA

The State of California or its officers or agents shall not be responsible for the accuracy or completeness of electronic copies of this plan sheet.

GROUP SYMBOLS AND NAMES

Graphic/Symbol	Group Names	Graphic/Symbol	Group Names
GW	Well-graded GRAVEL Well-graded GRAVEL with SAND	CL	Lean CLAY Lean CLAY with SAND Lean CLAY with GRAVEL SANDY lean CLAY SANDY lean CLAY with GRAVEL GRAVELLY lean CLAY GRAVELLY lean CLAY with SAND
GP	Poorly graded GRAVEL Poorly graded GRAVEL with SAND		
GW-GM	Well-graded GRAVEL with SILT Well-graded GRAVEL with SILT and SAND	CL-ML	SILTY CLAY SILTY CLAY with SAND SILTY CLAY with GRAVEL SANDY SILTY CLAY SANDY SILTY CLAY with GRAVEL GRAVELLY SILTY CLAY GRAVELLY SILTY CLAY with SAND
GW-GC	Well-graded GRAVEL with CLAY (or SILTY CLAY) Well-graded GRAVEL with CLAY and SAND (or SILTY CLAY and SAND)		
GP-GM	Poorly graded GRAVEL with SILT Poorly graded GRAVEL with SILT and SAND	ML	SILT SILT with SAND SILT with GRAVEL SANDY SILT SANDY SILT with GRAVEL GRAVELLY SILT GRAVELLY SILT with SAND
GP-GC	Poorly graded GRAVEL with CLAY (or SILTY CLAY) Poorly graded GRAVEL with CLAY and SAND (or SILTY CLAY and SAND)		
GM	SILTY GRAVEL SILTY GRAVEL with SAND	OL	ORGANIC lean CLAY ORGANIC lean CLAY with SAND ORGANIC lean CLAY with GRAVEL SANDY ORGANIC lean CLAY SANDY ORGANIC lean CLAY with GRAVEL GRAVELLY ORGANIC lean CLAY GRAVELLY ORGANIC lean CLAY with SAND
GC	CLAYEY GRAVEL CLAYEY GRAVEL with SAND		
GC-GM	SILTY, CLAYEY GRAVEL SILTY, CLAYEY GRAVEL with SAND	OL	ORGANIC SILT ORGANIC SILT with SAND ORGANIC SILT with GRAVEL SANDY ORGANIC SILT SANDY ORGANIC SILT with GRAVEL GRAVELLY ORGANIC SILT GRAVELLY ORGANIC SILT with SAND
SW	Well-graded SAND Well-graded SAND with GRAVEL		
SP	Poorly graded SAND Poorly graded SAND with GRAVEL	CH	Fat CLAY Fat CLAY with SAND Fat CLAY with GRAVEL SANDY fat CLAY SANDY fat CLAY with GRAVEL GRAVELLY fat CLAY GRAVELLY fat CLAY with SAND
SW-SM	Well-graded SAND with SILT Well-graded SAND with SILT and GRAVEL		
SW-SC	Well-graded SAND with CLAY (or SILTY CLAY) Well-graded SAND with CLAY and GRAVEL (or SILTY CLAY and GRAVEL)	MH	Elastic SILT Elastic SILT with SAND Elastic SILT with GRAVEL SANDY elastic SILT SANDY elastic SILT with GRAVEL GRAVELLY elastic SILT GRAVELLY elastic SILT with SAND
SP-SM	Poorly graded SAND with SILT Poorly graded SAND with SILT and GRAVEL		
SP-SC	Poorly graded SAND with CLAY (or SILTY CLAY) Poorly graded SAND with CLAY and GRAVEL (or SILTY CLAY and GRAVEL)	OH	ORGANIC fat CLAY ORGANIC fat CLAY with SAND ORGANIC fat CLAY with GRAVEL SANDY ORGANIC fat CLAY SANDY ORGANIC fat CLAY with GRAVEL GRAVELLY ORGANIC fat CLAY GRAVELLY ORGANIC fat CLAY with SAND
SM	SILTY SAND SILTY SAND with GRAVEL		
SC	CLAYEY SAND CLAYEY SAND with GRAVEL	OH	ORGANIC elastic SILT ORGANIC elastic SILT with SAND ORGANIC elastic SILT with GRAVEL SANDY ORGANIC elastic SILT SANDY ORGANIC elastic SILT with GRAVEL GRAVELLY ORGANIC elastic SILT GRAVELLY ORGANIC elastic SILT with SAND
SC-SM	SILTY, CLAYEY SAND SILTY, CLAYEY SAND with GRAVEL		
PT	PEAT	OL/OH	ORGANIC SOIL ORGANIC SOIL with SAND ORGANIC SOIL with GRAVEL SANDY ORGANIC SOIL SANDY ORGANIC SOIL with GRAVEL GRAVELLY ORGANIC SOIL GRAVELLY ORGANIC SOIL with SAND
	COBBLES COBBLES and BOULDERS BOULDERS		

FIELD AND LABORATORY TESTING

- (C) Consolidation (ASTM D 2435)
- (CL) Collapse Potential (ASTM D 5333)
- (CP) Compaction Curve (CTM 216)
- (CR) Corrosivity Testing (CTM 643, CTM 422, CTM 417)
- (CU) Consolidated Undrained Triaxial (ASTM D 4767)
- (DS) Direct Shear (ASTM D 3080)
- (EI) Expansion Index (ASTM D 4829)
- (M) Moisture Content (ASTM D 2216)
- (OC) Organic Content-% (ASTM D 2974)
- (P) Permeability (CTM 220)
- (PA) Particle Size Analysis (ASTM D 422)
- (PI) Plasticity Index (AASHTO T 90) Liquid Limit (AASHTO T 89)
- (PL) Point Load Index (ASTM D 5731)
- (PM) Pressure Meter
- (PP) Pocket Penetrometer
- (R) R-Value (CTM 301)
- (SE) Sand Equivalent (CTM 217)
- (SG) Specific Gravity (AASHTO T 100)
- (SL) Shrinkage Limit (ASTM D 427)
- (SW) Swell Potential (ASTM D 4546)
- (TV) Pocket Torvane
- (UC) Unconfined Compression-Soil (ASTM D 2166) Unconfined Compression-Rock (ASTM D 2938)
- (UU) Unconsolidated Undrained Triaxial (ASTM D 2850)
- (UW) Unit Weight (ASTM D 4767)
- (VS) Vane Shear (AASHTO T 223)

APPARENT DENSITY OF COHESIONLESS SOILS

Description	SPT N_{60} (Blows / 12 inches)
Very loose	0 - 4
Loose	5 - 10
Medium Dense	11 - 30
Dense	31 - 50
Very Dense	> 50

MOISTURE

Description	Criteria
Dry	Absence of moisture, dusty, dry to the touch
Moist	Damp but no visible water
Wet	Visible free water, usually soil is below water table

PERCENT OR PROPORTION OF SOILS

Description	Criteria
Trace	Particles are present but estimated to be less than 5%
Few	5 to 10%
Little	15 to 25%
Some	30 to 45%
Mostly	50 to 100%

PARTICLE SIZE

Description		Size
Boulder		> 12"
Cobble		3" to 12"
Gravel	Coarse	3/4" to 3"
	Fine	No. 4 to 3/4"
Sand	Coarse	No. 10 to No. 4
	Medium	No. 40 to No. 10
	Fine	No. 200 to No. 40

ENGINEERING SERVICES

GEOTECHNICAL SERVICES
PREPARED BY: W. Tang 11/09

STATE OF CALIFORNIA
DEPARTMENT OF TRANSPORTATION

DIVISION OF ENGINEERING SERVICES
STRUCTURE DESIGN
DESIGN BRANCH 9

BRIDGE NO. 28E0055
POST MILE 6.0

RETAINING WALL
LOG OF TEST BORINGS 4 OF 5

GS LOTB SOIL LEGEND

ORIGINAL SCALE IN INCHES FOR REDUCED PLANS 0 1 2 3

CU 04
EA 1A3201

DISREGARD PRINTS BEARING EARLIER REVISION DATES

REVISION DATES

SHEET 18 OF 19

FILE => 28e0055-z-ltb04.dgn

USERNAME => s121614 DATE PLOTTED => 07-JUN-2012 TIME PLOTTED => 06:25

DIST	COUNTY	ROUTE	POST MILES TOTAL PROJECT	SHEET No	TOTAL SHEETS
04	CC	580	5.5/6.2	301	301

REGISTERED CIVIL ENGINEER 6-20-11

6-4-12
PLANS APPROVAL DATE

REGISTERED PROFESSIONAL ENGINEER Sunny Yang No. C71801 Exp. 12-31-13 CIVIL STATE OF CALIFORNIA

The State of California or its officers or agents shall not be responsible for the accuracy or completeness of electronic copies of this plan sheet.

REFERENCE: CALTRANS SOIL & ROCK LOGGING, CLASSIFICATION, AND PRESENTATION MANUAL (JUNE 2007)

PERCENT CORE RECOVERY (REC) & ROCK QUALITY DESIGNATION (RQD)

$$REC = \frac{\sum \text{Length of the recovered core pieces (inches)}}{\text{Total length of core run (inches)}} \times 100\%$$

$$RQD = \frac{\sum \text{Length of intact core pieces} \geq 4''}{\text{Total length of core run (inches)}} \times 100\%$$

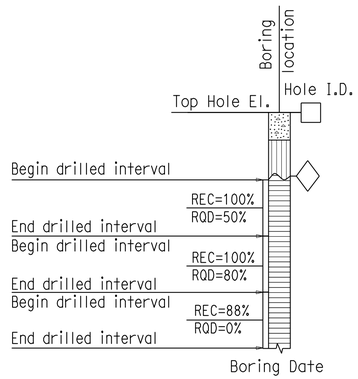

RELATIVE STRENGTH OF INTACT ROCK

Term	Uniaxial Compressive Strength (PSI)
Extremely Strong	> 30,000
Very Strong	14,500 - 30,000
Strong	7,000 - 14,500
Medium Strong	3,500 - 7,000
Weak	700 - 3,500
Very Weak	150 - 700
Extremely Weak	< 150

BEDDING SPACING

Description	Thickness / Spacing
Massive	Greater than 10 ft
Very thickly bedded	3 to 10 ft
Thickly bedded	1 to 3 ft
Moderately bedded	3-5/8" to 1 ft
Thinly bedded	1-1/4" to 3-5/8"
Very thinly bedded	3/8" to 1-1/4"
Laminated	Less than 3/8"

LEGEND OF ROCK MATERIALS

- IGNEOUS ROCK
- SEDIMENTARY ROCK
- METAMORPHIC ROCK

ROCK HARDNESS

Description	Criteria
Extremely Hard	Specimen cannot be scratched with a pocket knife or sharp pick; can only be chipped with repeated heavy hammer blows.
Very Hard	Specimen cannot be scratched with a pocket knife or sharp pick. Breaks with repeated heavy hammer blows.
Hard	Specimen can be scratched with a pocket knife or sharp pick with difficulty (heavy pressure). Heavy hammer blows required to break specimen.
Moderately Hard	Specimen can be scratched with pocket knife or sharp pick with light or moderate pressure. Core breaks with moderate hammer blows.
Moderately Soft	Specimen can be grooved 1/6" deep with a pocket knife or sharp pick with moderate or heavy pressure. Breaks with light hammer blow or heavy manual pressure.
Soft	Specimen can be grooved or gouged easily by a pocket knife or sharp pick with light pressure, can be scratched with fingernail. Breaks with light to moderate manual pressure.
Very Soft	Specimen can be readily indented, grooved or gouged with fingernail, or carved with a pocket knife. Breaks with light manual pressure.

FRACTURE DENSITY

Description	Observed Fracture Density
Unfractured	No fractures.
Very slightly fractured	Lengths greater than 3 feet.
Slightly fractured	Lengths from 1 to 3 feet with few lengths less than 1 foot or greater than 3 feet.
Moderately fractured	Lengths mostly in 4" to 1 foot range with most lengths about 8"
Intensely fractured	Lengths average from 1 to 4" with scattered fragmented intervals with lengths less than 4"
Very intensely fractured	Mostly chips and fragments with a few scattered short core lengths.

Combination descriptors (such as "Very intensely to intensely fractured") are used where equal distribution of both fracture density characteristics is present over a significant interval or exposure, or where characteristics are "in between" the descriptor definitions. Only two adjacent descriptors may be combined.

WEATHERING DESCRIPTORS FOR INTACT ROCK

Description	Diagnostic features					General Characteristics
	Chemical Weathering-Discoloration and/or oxidation		Mechanical Weathering-Grain boundary conditions (disaggregation) primarily for granitics and some coarse-grained sediments	Texture and Solutioning		
	Body of Rock	Fracture Surfaces		Texture	Solutioning	
Fresh	No discoloration, not oxidized.	No discoloration or oxidation.	No separation, intact (tight).	No change.	No solutioning.	Hammer rings when crystalline rocks are struck.
Slightly Weathered	Discoloration or oxidation is limited to surface of, or short distance from, fractures; some feldspar crystals are dull.	Minor to complete discoloration or oxidation of most surfaces.	No visible separation, intact (tight).	Preserved.	Minor leaching of some soluble minerals may be noted.	Hammer rings when crystalline rocks are struck. Body of rock not weakened.
Moderately Weathered	Discoloration or oxidation extends from fractures usually throughout; Fe-Mg minerals are "rusty," feldspar crystals are "cloudy."	All fracture surfaces are discolored or oxidized.	Partial separation of boundaries visible.	Generally preserved.	Soluble minerals may be mostly leached.	Hammer does not ring when rock is struck. Body of rock is slightly weakened.
Intensely Weathered	Discoloration or oxidation throughout; all feldspars and Fe-Mg minerals are altered to clay to some extent; or chemical alteration produces in-situ disaggregation, see grain boundary conditions.	All fracture surfaces are discolored or oxidized, surfaces friable.	Partial separation, rock is friable; in semiarid conditions granitics are disaggregated.	Texture altered by chemical disintegration (hydration, argillation).	Leaching of soluble minerals may be complete.	Dull sound when struck with hammer, usually can be broken with moderate to heavy manual pressure or by light hammer blow without reference to planes of weakness such as incipient or hairline fractures, or veinlets. Rock is significantly weakened.
Decomposed	Discolored or oxidized throughout, but resistant minerals such as quartz may be unaltered; all feldspars and Fe-Mg minerals are completely altered to clay.		Complete separation of grain boundaries (disaggregated).	Resembles a soil, partial or complete remnant rock structure may be preserved; leaching of soluble minerals usually complete.		Can be granulated by hand. Resistant minerals such as quartz may be present as "stringers" or "dikes."

Combination descriptors (such as "slightly weathered to fresh") are permissible where equal distribution of both weathering characteristics is present over significant intervals or where characteristics present are "in between" the diagnostic feature. However, combination descriptors should not be used where significant, identifiable zones can be delineated. Only two adjacent descriptors may be combined. "Very intensely weathered" is the combination descriptor for "intensely weathered to decomposed."

ENGINEERING SERVICES	GEOTECHNICAL SERVICES	STATE OF CALIFORNIA DEPARTMENT OF TRANSPORTATION	DIVISION OF ENGINEERING SERVICES STRUCTURE DESIGN DESIGN BRANCH 9	BRIDGE NO. 28E0055 POST MILE 6.0	RETAINING WALL LOG OF TEST BORINGS 5 OF 5
	PREPARED BY: W. Tang 11/09		CU 04 EA 1A3201	DISREGARD PRINTS BEARING EARLIER REVISION DATES →	REVISION DATES / SHEET 19 OF 19

GS LOTB ROCK LEGEND

ORIGINAL SCALE IN INCHES FOR REDUCED PLANS 0 1 2 3

FILE => 28e0055-z-ltb05.dgn

USERNAME => s121614 DATE PLOTTED => 07-JUN-2012 TIME PLOTTED => 08:25