Dist	COUNTY	ROUTE	POST MILES TOTAL PROJECT	SHEET No.	TOTAL SHEETS
04	Son	12	9.6	1	118

STATE OF CALIFORNIA

DEPARTMENT OF TRANSPORTATION

STP-P012(113)E

PROJECT PLANS FOR CONSTRUCTION ON

STATE HIGHWAY

IN SONOMA COUNTY
NEAR THE CITY OF SEBASTOPOL
AT LAGUNA DE SANTA ROSA BRIDGE

TO BE SUPPLEMENTED BY STANDARD PLANS DATED MAY 2010

INDEX OF PLANS

SHEET No.	DESCRIPTION
1	TITLE AND LOCATION MAP
2-5	TYPICAL CROSS SECTIONS
6-7	LAYOUTS
8	PROFILE AND SUPERELEVATION DIAGRAM
9-20	CONSTRUCTION DETAILS
21-22	TEMPORARY WATER POLLUTION CONTROL DETAILS AND QUANTITIES
23-25	EROSION CONTROL PLAN AND DETAILS
26-32	DRAINAGE PLANS, PROFILES, DETAILS AND QUANTITIES
33-34	UTILITY PLANS
35-37	CONSTRUCTION AREA SIGNS
38-46	STAGE CONSTRUCTION AND TRAFFIC HANDLING PLANS AND QUANTITIES
47-49	PAVEMENT DELINEATION PLANS AND QUANTITIES
50	SUMMARY OF QUANTITIES
51-55	PLANTING PLANS
56-61	IRRIGATION PLANS, CONSTRUCTION DETAILS AND QUANTITIES
62-68	SIGNAL, LIGHTING, DETAILS AND QUANTITIES
69	TRAFFIC CONTROL SYSTEM
70-79	REVISED STANDARD PLANS

STRUCTURE PLANS

80-118	LAGUNA DE SANTA ROSA Br No. 20-0296

THE STANDARD PLANS LIST APPLICABLE TO THIS CONTRACT IS INCLUDED IN THE NOTICE TO BIDDERS AND SPECIAL PROVISIONS BOOK.

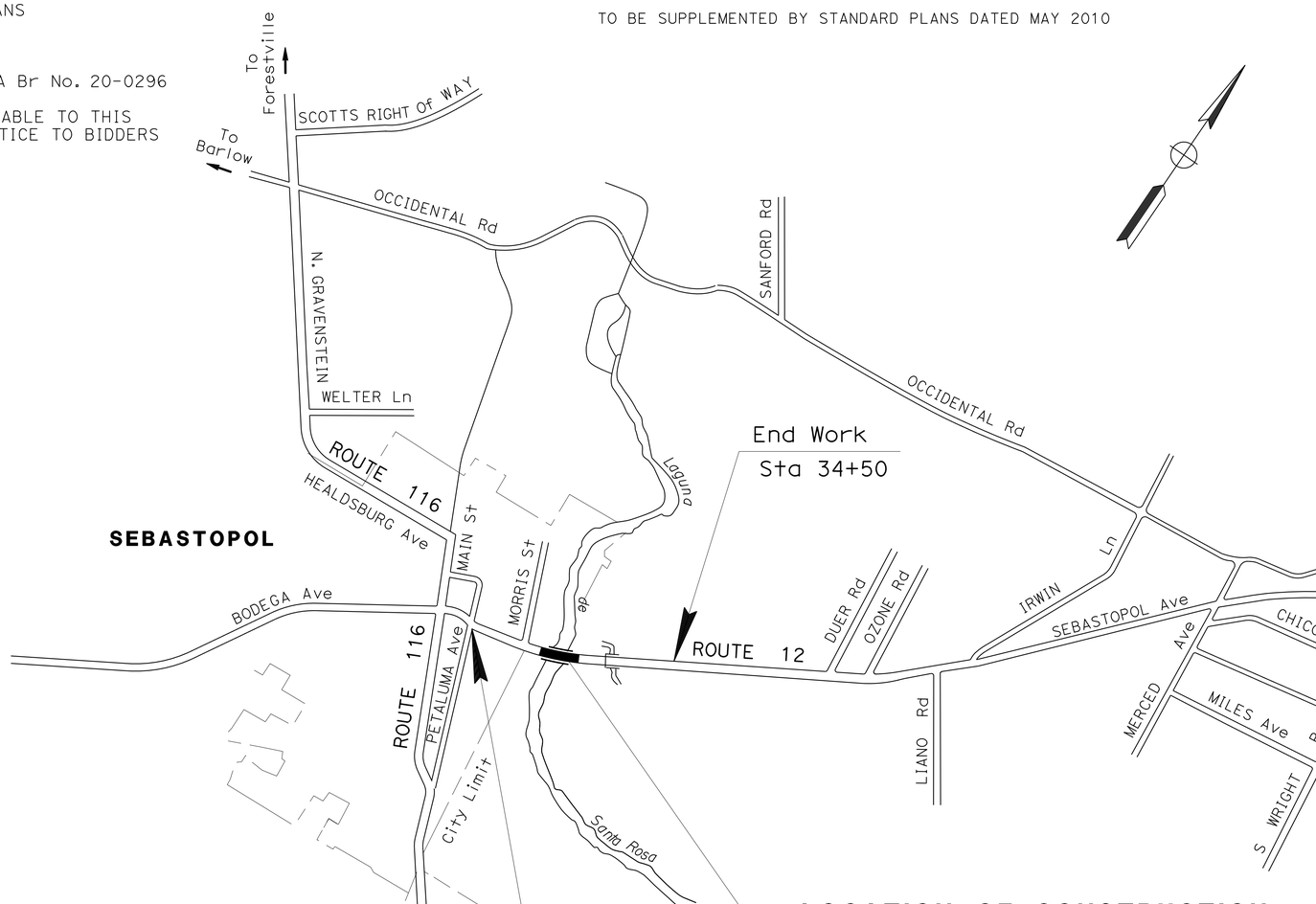

NO SCALE

LOCATION OF CONSTRUCTION

LAGUNA DE SANTA ROSA BRIDGE
Br No. 20-0296 PM 9.6

Bachyen Nguyen 10-1-12

PROJECT ENGINEER DATE
REGISTERED CIVIL ENGINEER

March 25, 2013
PLANS APPROVAL DATE

REGISTERED PROFESSIONAL ENGINEER
Bach-Yen Nguyen
No. 64435
Exp. 6-30-13
CIVIL
STATE OF CALIFORNIA

THE STATE OF CALIFORNIA OR ITS OFFICERS OR AGENTS SHALL NOT BE RESPONSIBLE FOR THE ACCURACY OR COMPLETENESS OF SCANNED COPIES OF THIS PLAN SHEET.

PROJECT MANAGER: LILIAN ACORDA
DESIGN ENGINEER: STEWART LEE

THE CONTRACTOR SHALL POSSESS THE CLASS (OR CLASSES) OF LICENSE AS SPECIFIED IN THE "NOTICE TO BIDDERS."

CONTRACT No.	04-1A2904
PROJECT ID	0400000482

LAST REVISION 02-07-12
DATE PLOTTED => 07-AUG-2013
TIME PLOTTED => 05:56

Dist	COUNTY	ROUTE	POST MILES TOTAL PROJECT	SHEET No.	TOTAL SHEETS
04	Son	12	9.6	2	118

Bachyen Nguyen 10-1-12
REGISTERED CIVIL ENGINEER DATE

3-25-13
PLANS APPROVAL DATE

REGISTERED PROFESSIONAL ENGINEER Bach-Yen Nguyen No. 64435 Exp. 6-30-13 CIVIL STATE OF CALIFORNIA

THE STATE OF CALIFORNIA OR ITS OFFICERS OR AGENTS SHALL NOT BE RESPONSIBLE FOR THE ACCURACY OR COMPLETENESS OF SCANNED COPIES OF THIS PLAN SHEET.

NOTES:

1. DIMENSIONS OF PAVEMENT STRUCTURES (STRUCTURAL SECTIONS) ARE SUBJECT TO TOLERANCES SPECIFIED IN THE STANDARD SPECIFICATIONS.
2. SUPERELEVATIONS ARE SHOWN ON THE SUPERELEVATION DIAGRAMS.
3. EXACT LOCATIONS AND TYPES OF HMA DIKE ARE SHOWN ON THE LAYOUTS AND SUMMARY OF QUANTITIES SHEETS.

DESIGN DESIGNATION (ROUTE 12)

2012 ADT (EB) = 13,900 (10 YEAR)
(WB) = 12,640
D = 56%
ESAL = 1,023.000
TI = 9
T = 4.19%
V = 45 MPH

2035 ADT (EB) = 15,500
(WB) = 14,095

DHV(AM) = 2,365
DHV(DM) = 2,346

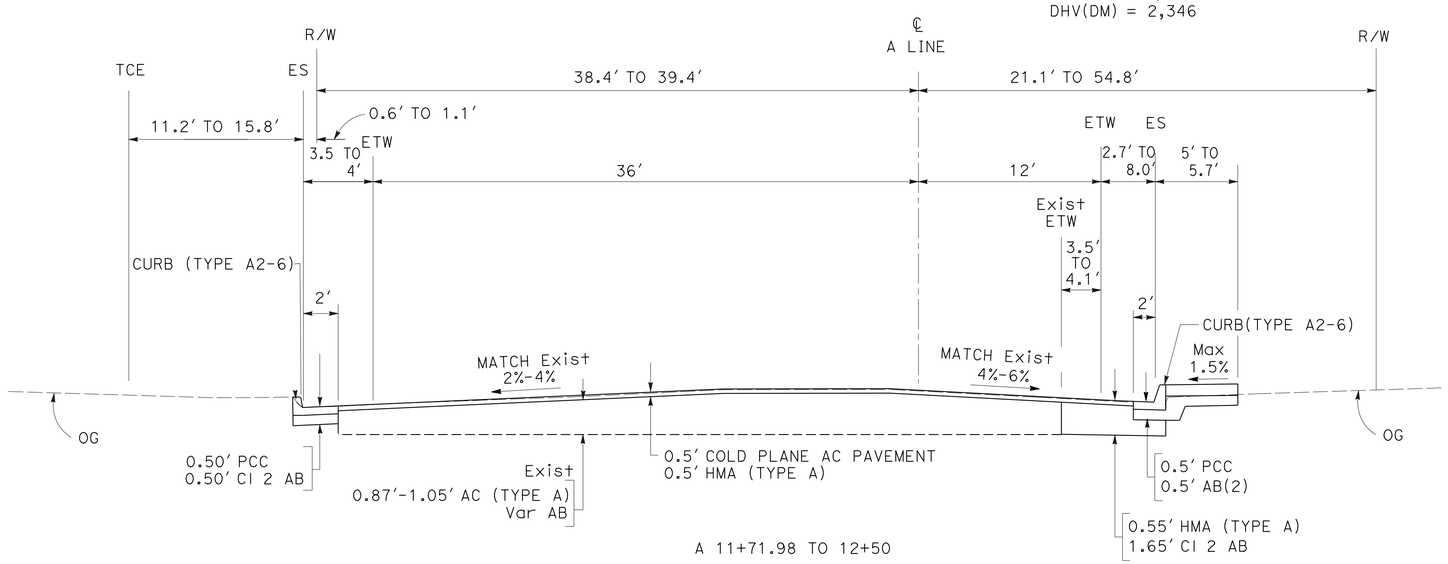

A 11+71.98 TO 12+50

ROUTE 12

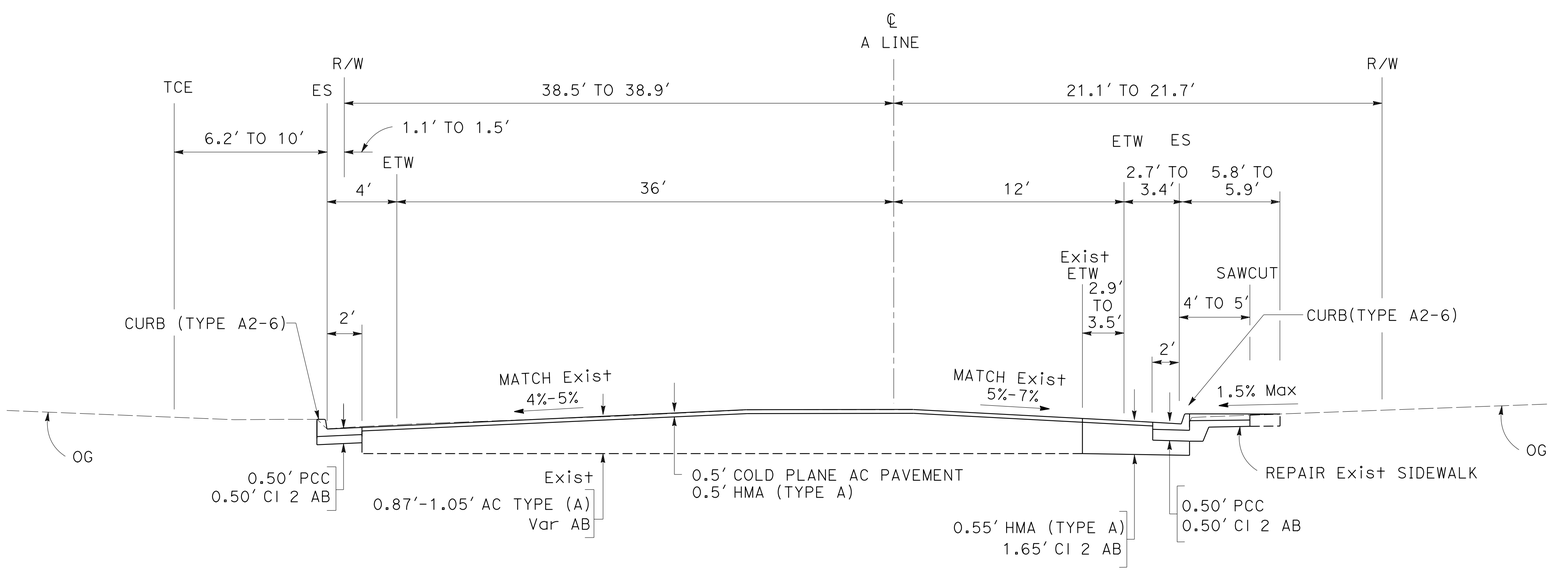

A 11+00 TO 11+71.98

ROUTE 12

TYPICAL CROSS SECTIONS

NO SCALE

X-1

REVISED BY	DATE REVISED
EP	9/12

CALCULATED-DESIGNED BY: EMARNAN PONGPAIROJ
CHECKED BY: BACH-YEN NGUYEN
FUNCTIONAL SUPERVISOR: STEWART LEE

STATE OF CALIFORNIA - DEPARTMENT OF TRANSPORTATION
Caltrans®
DESIGN

LAST REVISION 01-03-13
DATE PLOTTED => 28-MAR-2013
TIME PLOTTED => 13:52

Dist	COUNTY	ROUTE	POST MILES TOTAL PROJECT	SHEET No.	TOTAL SHEETS
04	Son	12	9.6	3	118

REGISTERED CIVIL ENGINEER 10-1-12 DATE

3-25-13
PLANS APPROVAL DATE

REGISTERED PROFESSIONAL ENGINEER Bach-Yen Nguyen No. 64435 Exp. 6-30-13 CIVIL STATE OF CALIFORNIA

THE STATE OF CALIFORNIA OR ITS OFFICERS OR AGENTS SHALL NOT BE RESPONSIBLE FOR THE ACCURACY OR COMPLETENESS OF SCANNED COPIES OF THIS PLAN SHEET.

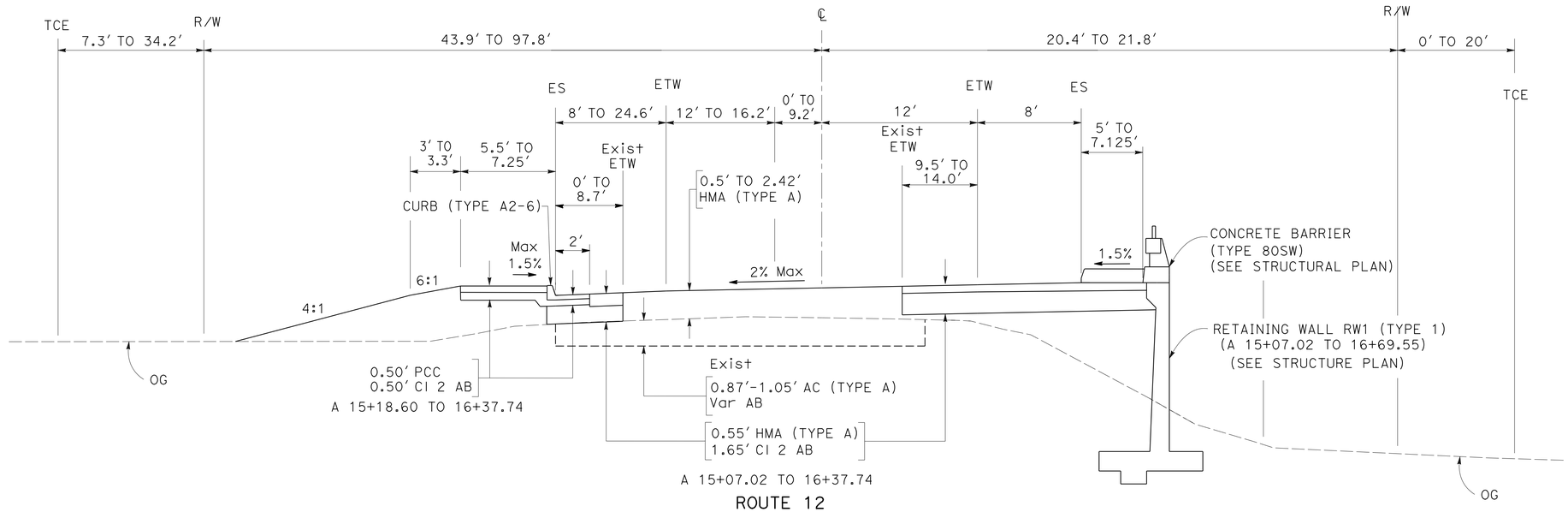

ROUTE 12

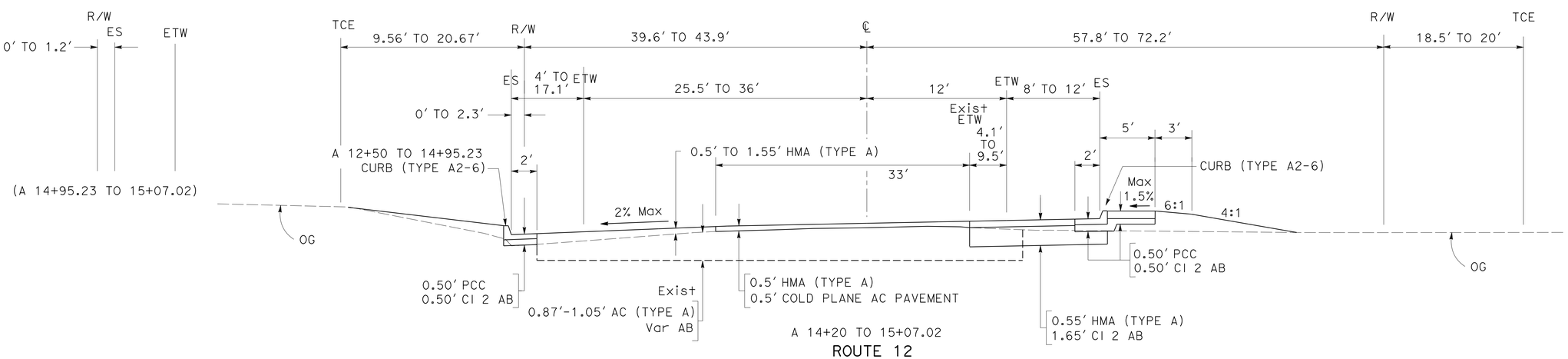

ROUTE 12

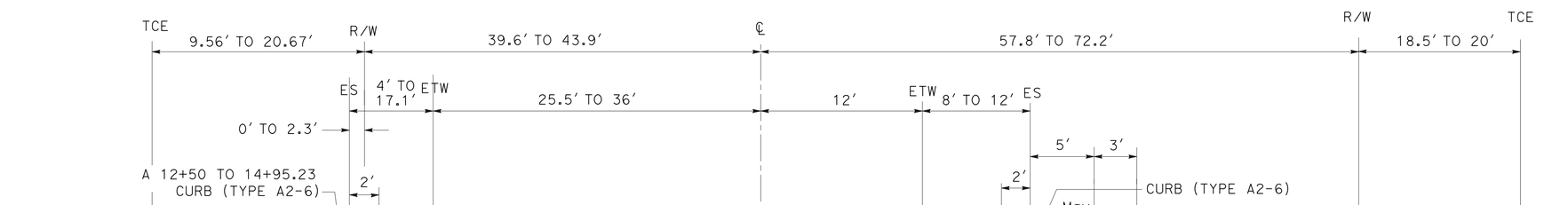

ROUTE 12

FOR NOTES, ABBREVIATIONS AND LEGEND, SEE SHEET X-1

TYPICAL CROSS SECTIONS

NO SCALE

X-2

	12/12	EP	9/12	EMARNAN PONGPAIROJ	BACH-YEN NGUYEN
		REVISED BY	DATE REVISED	CALCULATED-DESIGNED BY	CHECKED BY

FUNCTIONAL SUPERVISOR: STEWART LEE

STATE OF CALIFORNIA - DEPARTMENT OF TRANSPORTATION

Caltrans DESIGN

LAST REVISION 01-03-13 | DATE PLOTTED => 28-MAR-2013 | TIME PLOTTED => 13:52

Dist	COUNTY	ROUTE	POST MILES TOTAL PROJECT	SHEET No.	TOTAL SHEETS
04	Son	12	9.6	4	118

REGISTERED CIVIL ENGINEER 10-1-12 DATE

3-25-13
PLANS APPROVAL DATE

REGISTERED PROFESSIONAL ENGINEER Bach-Yen Nguyen No. 64435 Exp. 6-30-13 CIVIL STATE OF CALIFORNIA

THE STATE OF CALIFORNIA OR ITS OFFICERS OR AGENTS SHALL NOT BE RESPONSIBLE FOR THE ACCURACY OR COMPLETENESS OF SCANNED COPIES OF THIS PLAN SHEET.

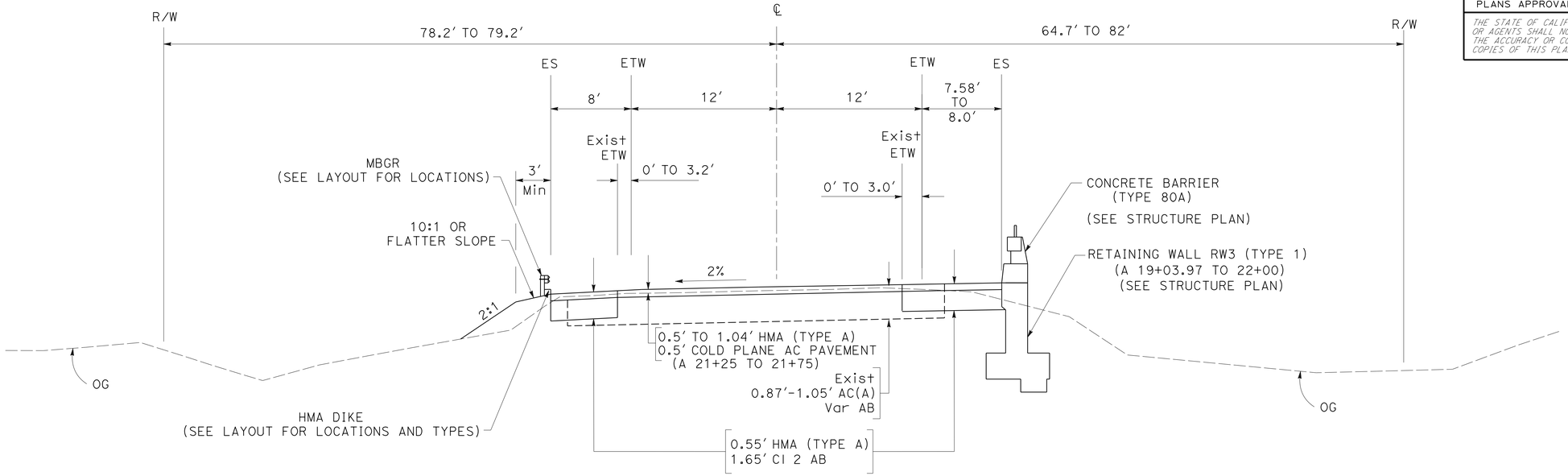

A 21+00 TO 21+75
ROUTE 12

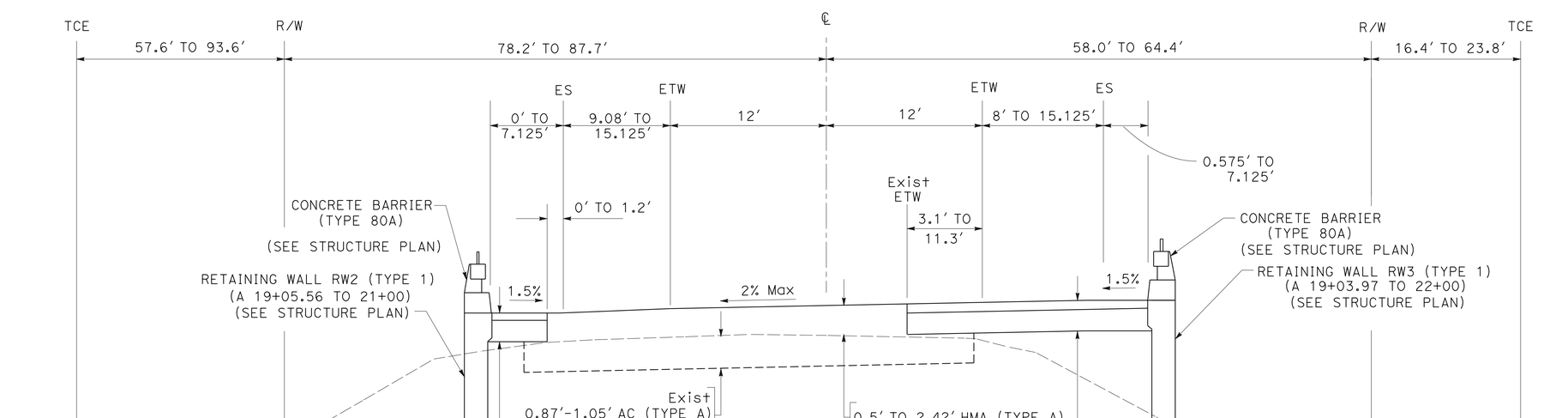

A 19+34.76 TO 21.00
ROUTE 12

FOR NOTES, ABBREVIATIONS AND LEGEND, SEE SHEET X-1

TYPICAL CROSS SECTIONS

NO SCALE

X-3

12/26	
EP	9/12
REVISED BY	DATE REVISED
EMARNAN PONGPAIROJ	BACH-YEN NGUYEN
CALCULATED-DESIGNED BY	CHECKED BY
FUNCTIONAL SUPERVISOR	STEWART LEE

STATE OF CALIFORNIA - DEPARTMENT OF TRANSPORTATION
Caltrans
DESIGN

LAST REVISION 01-02-13 | DATE PLOTTED => 28-MAR-2013 | TIME PLOTTED => 13:52

Dist	COUNTY	ROUTE	POST MILES TOTAL PROJECT	SHEET No.	TOTAL SHEETS
04	Son	12	9.6	5	118

Bachyen Nguyen 10-1-12
REGISTERED CIVIL ENGINEER DATE

3-25-13
PLANS APPROVAL DATE

REGISTERED PROFESSIONAL ENGINEER
Bach-Yen Nguyen
No. 64435
Exp. 6-30-13
CIVIL
STATE OF CALIFORNIA

THE STATE OF CALIFORNIA OR ITS OFFICERS OR AGENTS SHALL NOT BE RESPONSIBLE FOR THE ACCURACY OR COMPLETENESS OF SCANNED COPIES OF THIS PLAN SHEET.

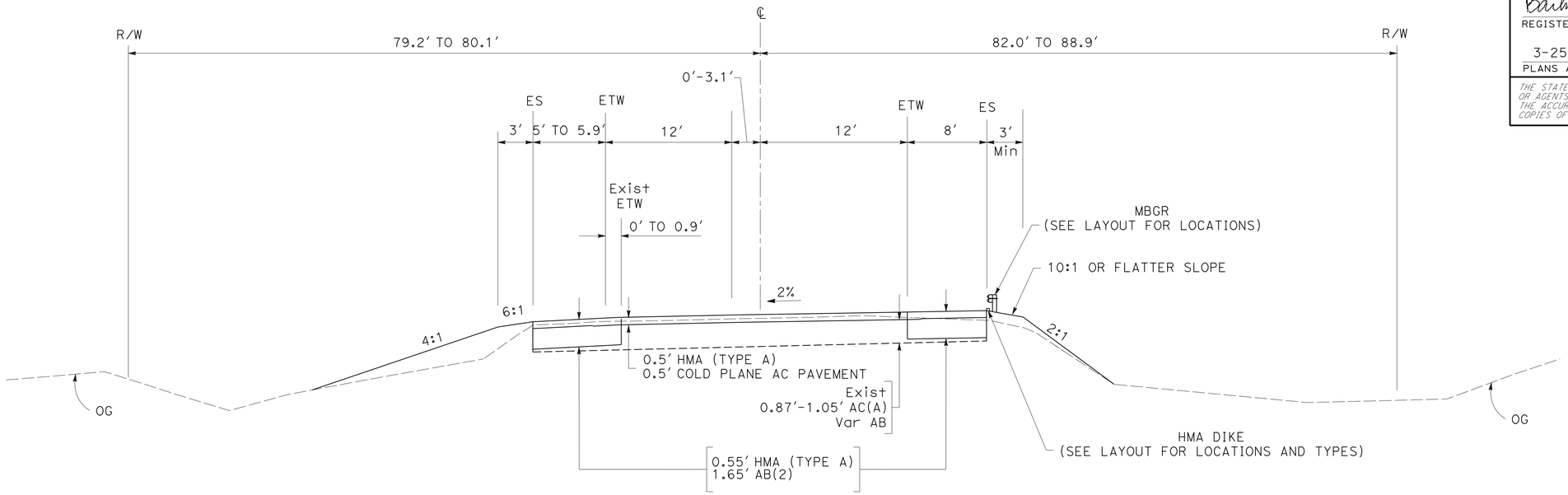

ROUTE 12
A 22+00 TO 24+55.37

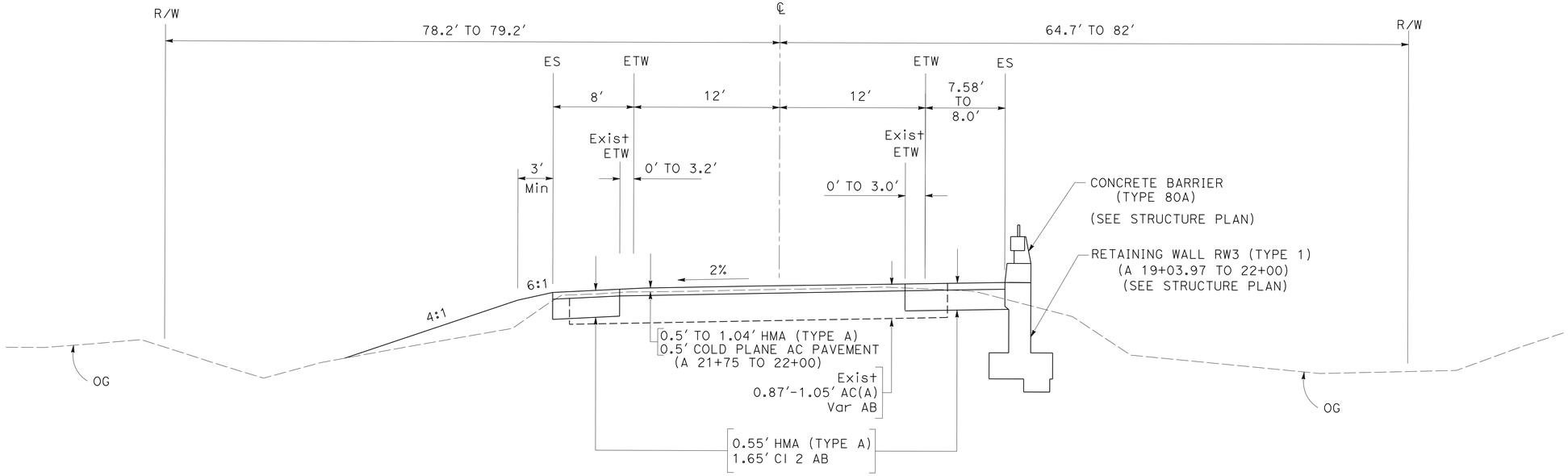

A 21+75 TO 22+00
ROUTE 12

FOR NOTES, ABBREVIATIONS AND LEGEND, SEE SHEET X-1

TYPICAL CROSS SECTIONS
NO SCALE

X-4

12/26	
EP	9/12
REVISED BY	DATE REVISED
EMARNAN PONGPAIROJ	BACH-YEN NGUYEN
CALCULATED-DESIGNED BY	CHECKED BY
FUNCTIONAL SUPERVISOR	STEWART LEE

STATE OF CALIFORNIA - DEPARTMENT OF TRANSPORTATION
Caltrans
DESIGN

LAST REVISION 01-10-13 | DATE PLOTTED => 28-MAR-2013 | TIME PLOTTED => 13:52

Dist	COUNTY	ROUTE	POST MILES TOTAL PROJECT	SHEET No.	TOTAL SHEETS
04	Son	12	9.6	6	118

Bachyen Nguyen 10-1-12
REGISTERED CIVIL ENGINEER DATE

3-25-13
PLANS APPROVAL DATE

REGISTERED PROFESSIONAL ENGINEER Bach-Yen Nguyen No. 64435 Exp. 6-30-13 CIVIL STATE OF CALIFORNIA

THE STATE OF CALIFORNIA OR ITS OFFICERS OR AGENTS SHALL NOT BE RESPONSIBLE FOR THE ACCURACY OR COMPLETENESS OF SCANNED COPIES OF THIS PLAN SHEET.

NOTE:

FOR ACCURATE RIGHT OF WAY DATA, CONTACT RIGHT OF WAY ENGINEERING AT THE DISTRICT OFFICE.

CURVE DATA

No.	R	Δ	T	L	N-COORDINATE	E-COORDINATE
1	4300′	11° 18′ 23″	425.65′	848.54′	1913863.37	6326337.71

ABBREVIATIONS

AITS = ALTERNATIVE IN-LINE TERMINAL SYSTEM

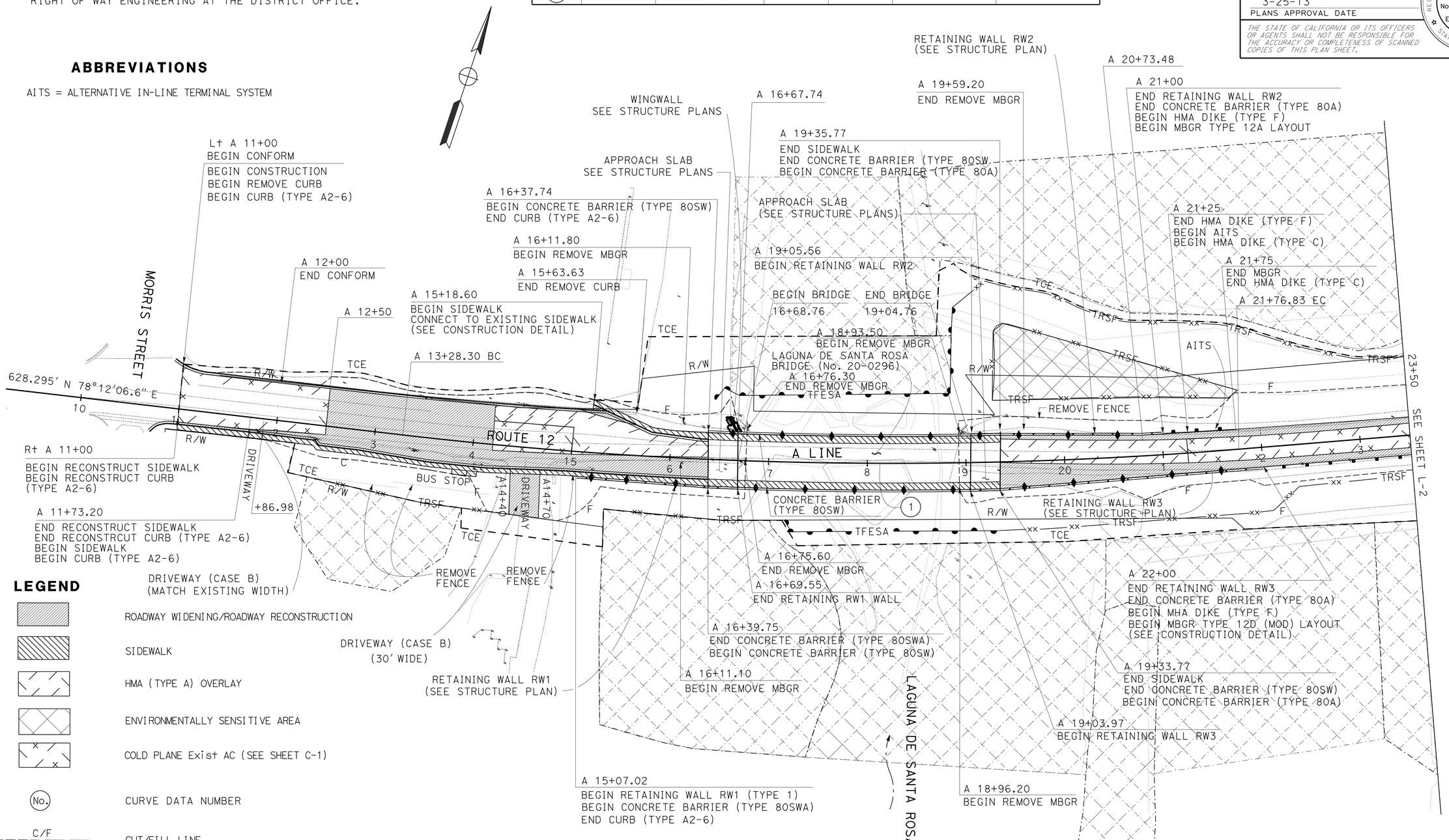

LEGEND

- ROADWAY WIDENING/ROADWAY RECONSTRUCTION
- SIDEWALK
- HMA (TYPE A) OVERLAY
- ENVIRONMENTALLY SENSITIVE AREA
- COLD PLANE Exist AC (SEE SHEET C-1)
- (No.) CURVE DATA NUMBER
- C/F — CUT/FILL LINE
- TCE — TEMPORARY CONSTRUCTION EASEMENT (TCE)
- —xx— TRSF —xx— TEMPORARY REINFORCED SILT FENCE
- TFESA — TEMPORARY FENCE (TYPE ESA)

LAYOUT

SCALE: 1″ = 50′

L-1

CALCULATED-DESIGNED BY	EMARNAN PONGPAIROJ	REVISED BY	EP
CHECKED BY	BACH-YEN NGUYEN	DATE REVISED	9/12
FUNCTIONAL SUPERVISOR	STEWART LEE		

STATE OF CALIFORNIA - DEPARTMENT OF TRANSPORTATION
Caltrans
DESIGN

LAST REVISION 01-10-13 | DATE PLOTTED => 28-MAR-2013 | TIME PLOTTED => 13:52

Dist	COUNTY	ROUTE	POST MILES TOTAL PROJECT	SHEET No.	TOTAL SHEETS
04	Son	12	9.6	7	118

REGISTERED CIVIL ENGINEER 10-1-12 DATE

3-25-13
PLANS APPROVAL DATE

REGISTERED PROFESSIONAL ENGINEER Bach-Yen Nguyen No. 64435 Exp. 6-30-13 CIVIL STATE OF CALIFORNIA

THE STATE OF CALIFORNIA OR ITS OFFICERS OR AGENTS SHALL NOT BE RESPONSIBLE FOR THE ACCURACY OR COMPLETENESS OF SCANNED COPIES OF THIS PLAN SHEET.

NOTE:

FOR ACCURATE RIGHT OF WAY DATA, CONTACT RIGHT OF WAY ENGINEERING AT THE DISTRICT OFFICE.

CURVE DATA

No.	R	Δ	T	L	N-COORDINATE	E-COORDINATE
2	1440.31′	1° 5′ 25.41"	13.71′	27.41′	1908832.57	6329174.11
3	5525.15′	1° 51′ 12.68"	89.38′	178.74′	1915358.63	6326732.47

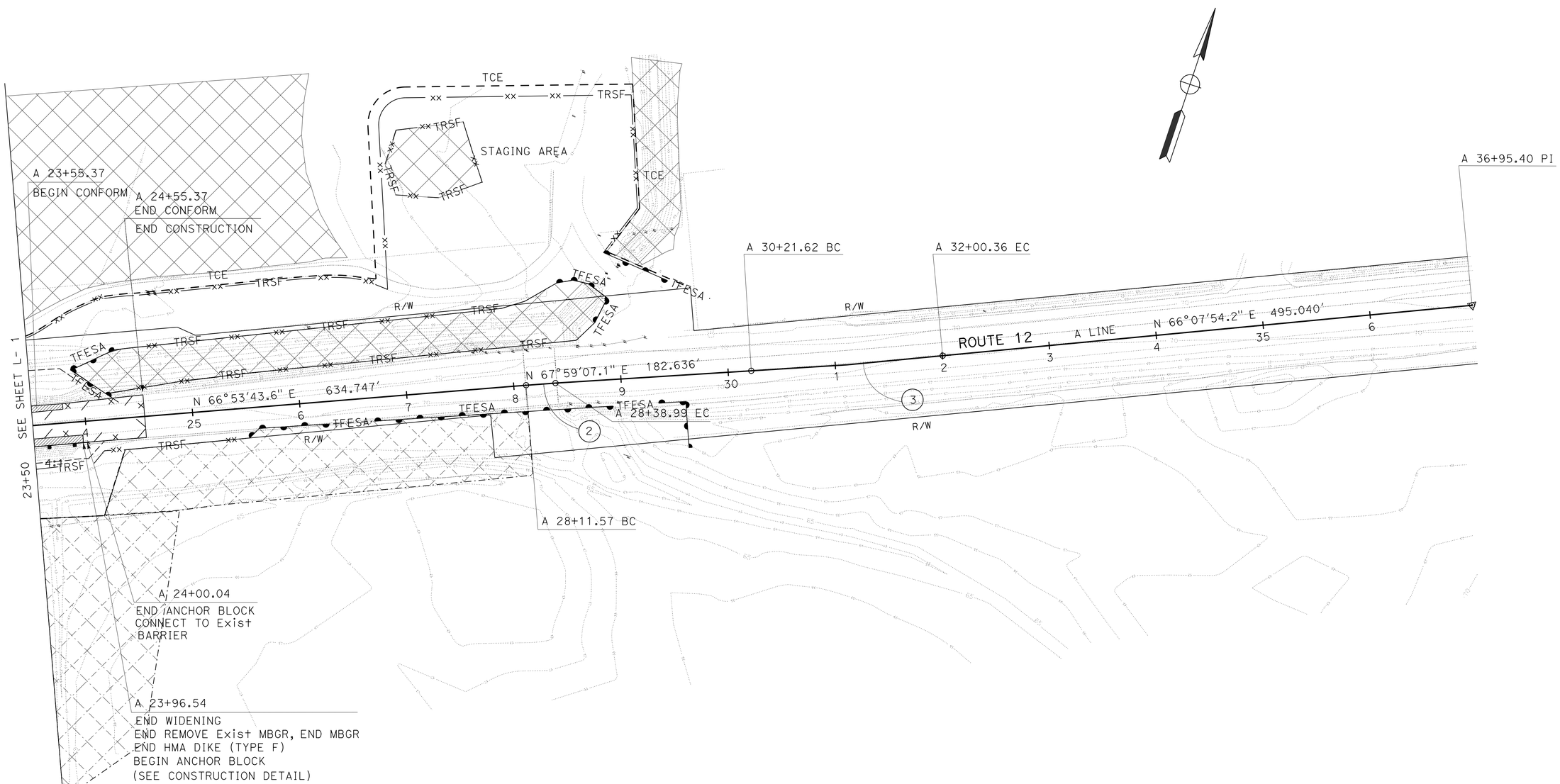

FOR NOTES, ABBREVIATIONS AND LEGEND, SEE SHEET L-1

LAYOUT

SCALE: 1" = 50′

L-2

STATE OF CALIFORNIA - DEPARTMENT OF TRANSPORTATION
Caltrans DESIGN

FUNCTIONAL SUPERVISOR: STEWART LEE

CALCULATED-DESIGNED BY: EMARNAN PONGPAIROJ
CHECKED BY: BACH-YEN NGUYEN

REVISED BY: EP
DATE REVISED: 9/12

LAST REVISION 01-04-13
DATE PLOTTED => 28-MAR-2013
TIME PLOTTED => 13:52

Dist	COUNTY	ROUTE	POST MILES TOTAL PROJECT	SHEET No.	TOTAL SHEETS
04	Son	12	9.6	8	118

REGISTERED CIVIL ENGINEER 10-1-12 DATE

3-25-13
PLANS APPROVAL DATE

REGISTERED PROFESSIONAL ENGINEER Bach-Yen Nguyen No. 64435 Exp. 6-30-13 CIVIL STATE OF CALIFORNIA

THE STATE OF CALIFORNIA OR ITS OFFICERS OR AGENTS SHALL NOT BE RESPONSIBLE FOR THE ACCURACY OR COMPLETENESS OF SCANNED COPIES OF THIS PLAN SHEET.

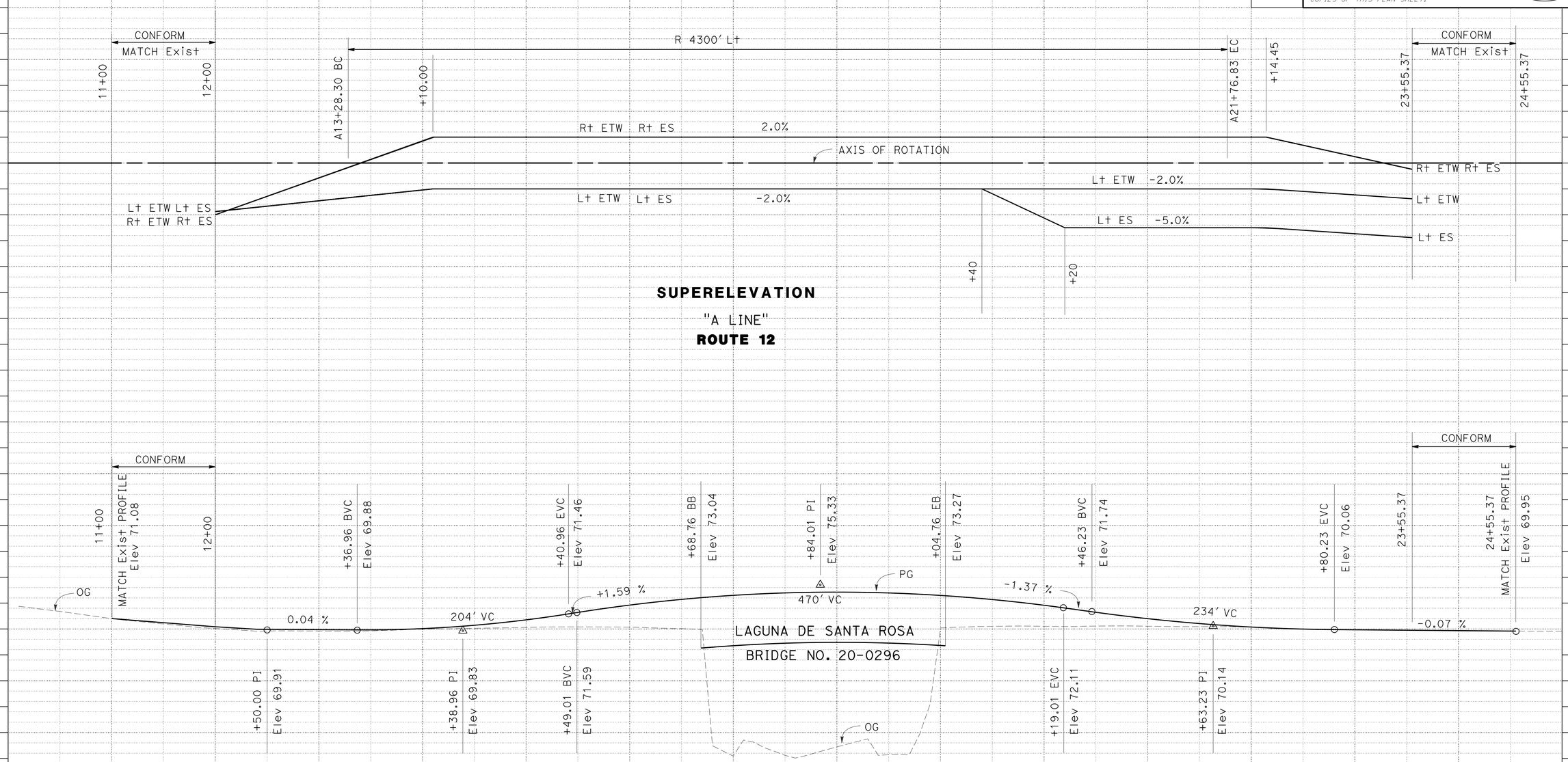

PROFILE
"A LINE"
ROUTE 12

PROFILE AND SUPERELEVATION DIAGRAM

SCALE: Horiz 1" = 50'
Vert 1" = 5'

PS-1

STATION		1	2	3	4	15	6	7	8	9	20	1	2	3	4	TOTAL
CY	Exc	0	109.76	277.59	455.08	168.17	20.26	0		0	1.7	32.66	91.88	138.38	134.27	
	Emb	-0	0.01	0.07	8.95	57.6	264.8	248.65	0	0	110.61	17.33	236.18	531.9	419.51	

REVISED BY | DATE REVISED
EMARNAN PONGPAIROJ | BACH-YEN NGUYEN
CALCULATED-DESIGNED BY | CHECKED BY
FUNCTIONAL SUPERVISOR | STEWART LEE
STATE OF CALIFORNIA - DEPARTMENT OF TRANSPORTATION
Caltrans
DESIGN

LAST REVISION 01-08-13
DATE PLOTTED => 28-MAR-2013
TIME PLOTTED => 13:52

Dist	COUNTY	ROUTE	POST MILES TOTAL PROJECT	SHEET No.	TOTAL SHEETS
04	Son	12	9.6	9	118

Bachyen Nguyen 10-1-12
REGISTERED CIVIL ENGINEER DATE

3-25-13
PLANS APPROVAL DATE

REGISTERED PROFESSIONAL ENGINEER
Bach-Yen Nguyen
No. 64435
Exp. 6-30-13
CIVIL
STATE OF CALIFORNIA

THE STATE OF CALIFORNIA OR ITS OFFICERS OR AGENTS SHALL NOT BE RESPONSIBLE FOR THE ACCURACY OR COMPLETENESS OF SCANNED COPIES OF THIS PLAN SHEET.

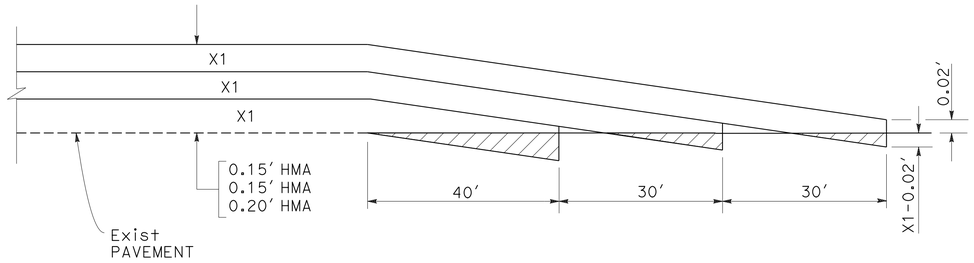

MAINLINE PAVING CONFORM

STATION FROM A 11+00 TO 12+00
STATION FROM A 23+55.37 TO 24+55.37

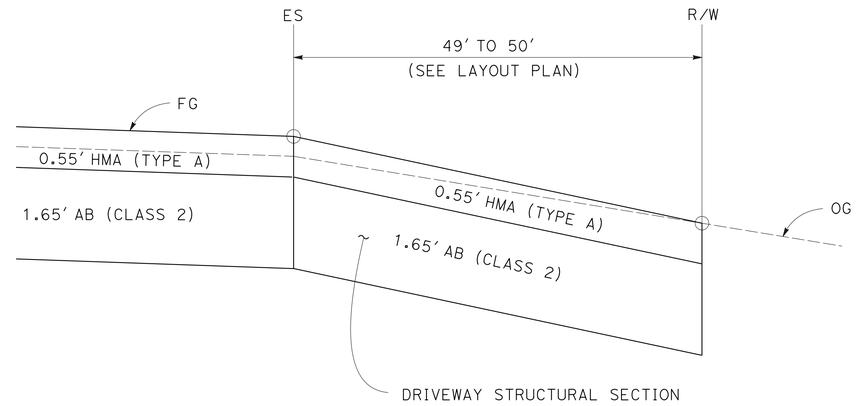

DRIVEWAY CONFORM

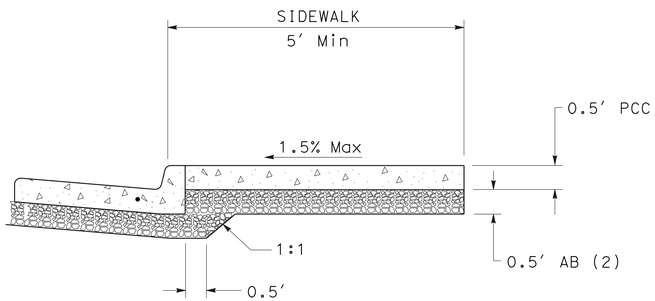

SIDEWALK & GUTTER

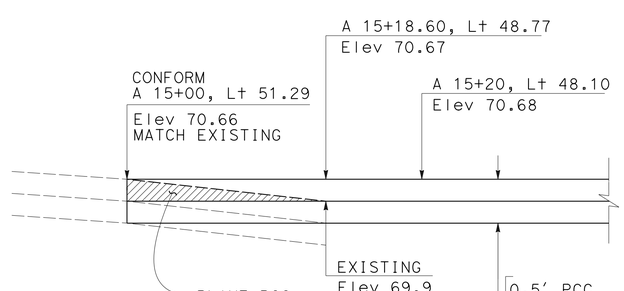

SIDEWALK CONFORM

STATION A 15+00, Lt 51.29 TO 15+18.60, Lt 48.77

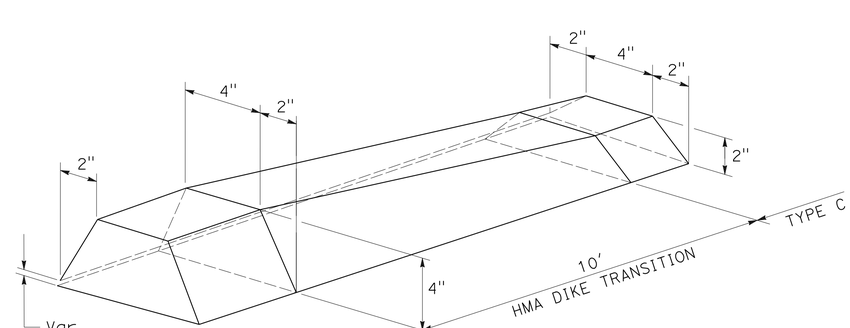

TRANSITION FROM HMA DIKE (TYPE F) TO HMA DIKE (TYPE C)

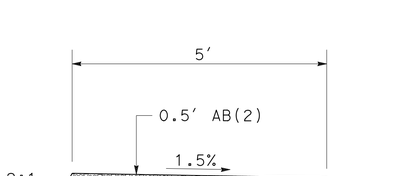

TEMPORARY PEDESTRIAN WALKWAY

CONSTRUCTION DETAILS

NO SCALE

C-1

STATE OF CALIFORNIA - DEPARTMENT OF TRANSPORTATION
Caltrans
DESIGN

FUNCTIONAL SUPERVISOR: STEWART LEE
CALCULATED-DESIGNED BY: EMARNAN PONGPAIROJ
CHECKED BY: BACH-YEN NGUYEN
REVISED BY: EP
DATE REVISED: 9/12

LAST REVISION | DATE PLOTTED => 28-MAR-2013
12-24-12 | TIME PLOTTED => 13:52

Dist	COUNTY	ROUTE	POST MILES TOTAL PROJECT	SHEET No.	TOTAL SHEETS
04	Son	12	9.6	10	118

REGISTERED CIVIL ENGINEER 10-1-12 DATE

3-25-13
PLANS APPROVAL DATE

REGISTERED PROFESSIONAL ENGINEER Bach-Yen Nguyen No. 64435 Exp. 6-30-13 CIVIL STATE OF CALIFORNIA

THE STATE OF CALIFORNIA OR ITS OFFICERS OR AGENTS SHALL NOT BE RESPONSIBLE FOR THE ACCURACY OR COMPLETENESS OF SCANNED COPIES OF THIS PLAN SHEET.

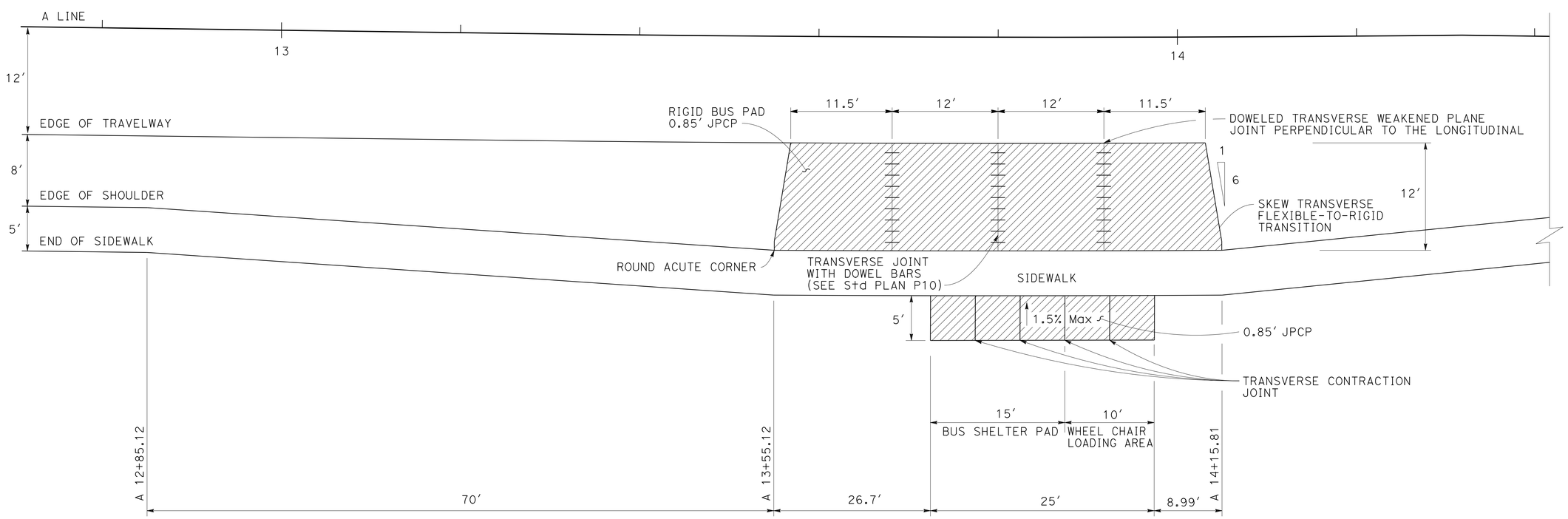

RIGID BUS PAD AND BUS SHELTER PAD DETAILS

CONSTRUCTION DETAILS

NO SCALE

C-2

STATE OF CALIFORNIA - DEPARTMENT OF TRANSPORTATION
Caltrans
DESIGN

FUNCTIONAL SUPERVISOR: STEWART LEE
CALCULATED-DESIGNED BY: EMARNAN PONGPAIROJ
CHECKED BY: BACH-YEN NGUYEN
REVISED BY: EP
DATE REVISED: 9/12

LAST REVISION 01-17-13 | DATE PLOTTED => 28-MAR-2013 | TIME PLOTTED => 13:52

Dist	COUNTY	ROUTE	POST MILES TOTAL PROJECT	SHEET No.	TOTAL SHEETS
04	Son	12	9.6	11	118

Bachyen Nguyen 10-1-12
REGISTERED CIVIL ENGINEER DATE

3-25-13
PLANS APPROVAL DATE

REGISTERED PROFESSIONAL ENGINEER
Bach-Yen Nguyen
No. 64435
Exp. 6-30-13
CIVIL
STATE OF CALIFORNIA

THE STATE OF CALIFORNIA OR ITS OFFICERS OR AGENTS SHALL NOT BE RESPONSIBLE FOR THE ACCURACY OR COMPLETENESS OF SCANNED COPIES OF THIS PLAN SHEET.

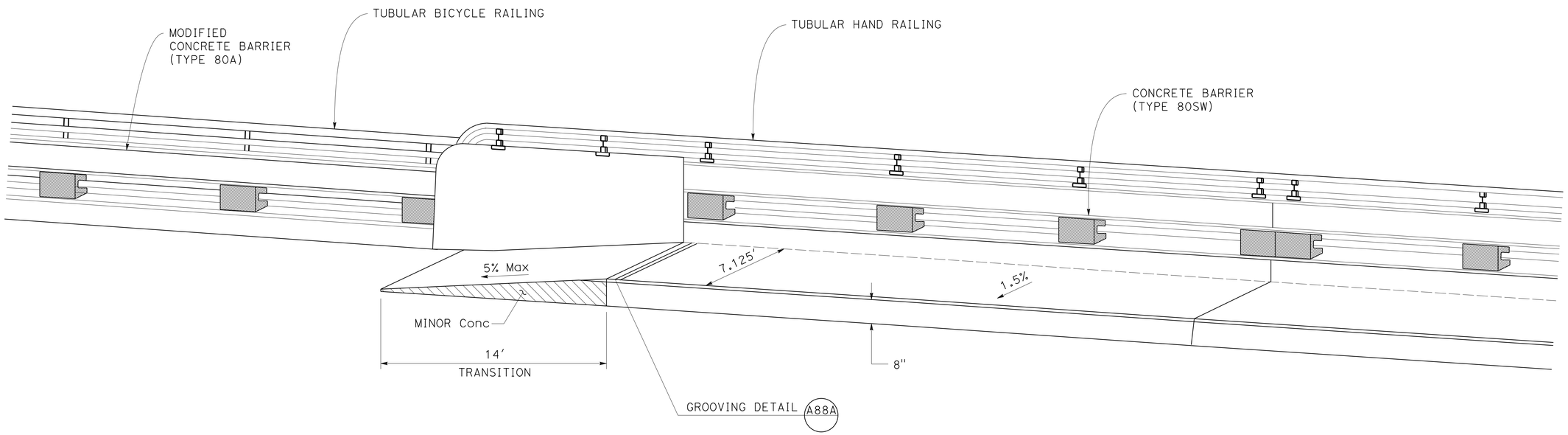

TYPICAL RAMP DETAIL
TRANSITION FROM CONCRETE BARRIER (TYPE 80SW)
TO MODIFIED CONCRETE BARRIER (TYPE 80A)

NOTE: SEE STRUCTURE PLANS FOR DETAILS

CONSTRUCTION DETAILS
NO SCALE

C-3

REVISED BY	EP
DATE REVISED	9/12
CALCULATED-DESIGNED BY	EMARNAN PONGPAIROJ
CHECKED BY	BACH-YEN NGUYEN
FUNCTIONAL SUPERVISOR	STEWART LEE

STATE OF CALIFORNIA - DEPARTMENT OF TRANSPORTATION
Caltrans
DESIGN

LAST REVISION 12-21-12 | DATE PLOTTED => 28-MAR-2013 | TIME PLOTTED => 13:52

Dist	COUNTY	ROUTE	POST MILES TOTAL PROJECT	SHEET No.	TOTAL SHEETS
04	Son	12	9.6	12	118

Bachyen Nguyen 10-1-12
REGISTERED CIVIL ENGINEER DATE

3-25-13
PLANS APPROVAL DATE

REGISTERED PROFESSIONAL ENGINEER
Bach-Yen Nguyen
No. 64435
Exp. 6-30-13
CIVIL
STATE OF CALIFORNIA

THE STATE OF CALIFORNIA OR ITS OFFICERS OR AGENTS SHALL NOT BE RESPONSIBLE FOR THE ACCURACY OR COMPLETENESS OF SCANNED COPIES OF THIS PLAN SHEET.

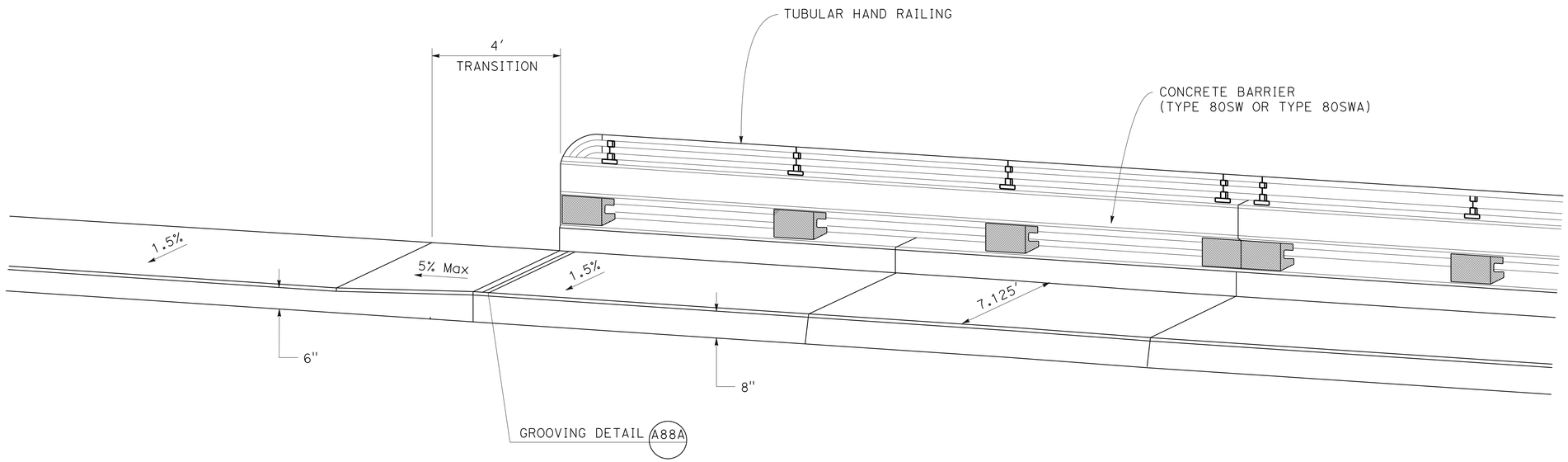

TYPICAL RAMP DETAIL
SIDEWALK TRANSITION FROM 8" TO 6"

CONSTRUCTION DETAILS
NO SCALE

C-4

STATE OF CALIFORNIA - DEPARTMENT OF TRANSPORTATION
Caltrans®
DESIGN

FUNCTIONAL SUPERVISOR: STEWART LEE
CALCULATED-DESIGNED BY: EMARNAN PONGPAIROJ
CHECKED BY: BACH-YEN NGUYEN
REVISED BY: EP
DATE REVISED: 9/12

LAST REVISION 09-17-12
DATE PLOTTED => 28-MAR-2013
TIME PLOTTED => 13:53

Dist	COUNTY	ROUTE	POST MILES TOTAL PROJECT	SHEET No.	TOTAL SHEETS
04	Son	12	9.6	13	118

Bachyen Nguyen 10-1-12
REGISTERED CIVIL ENGINEER DATE

3-25-13
PLANS APPROVAL DATE

REGISTERED PROFESSIONAL ENGINEER Bach-Yen Nguyen No. 64435 Exp. 6-30-13 CIVIL STATE OF CALIFORNIA

THE STATE OF CALIFORNIA OR ITS OFFICERS OR AGENTS SHALL NOT BE RESPONSIBLE FOR THE ACCURACY OR COMPLETENESS OF SCANNED COPIES OF THIS PLAN SHEET.

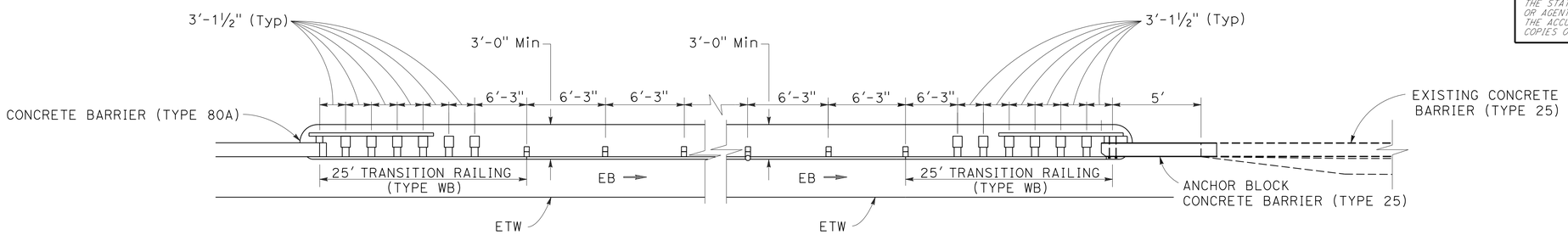

TYPE 12D (MOD) LAYOUT

NOTES:

1. THE CONTRACTOR SHALL VERIFY ALL CONTROLLING FIELD DIMENSIONS BEFORE ORDERING OR FABRICATING ANY MATERIAL.
2. THRIE BEAM NOT SHOWN.
3. FOR DETAILS NOT SHOWN, REFER TO STANDARD PLANS.

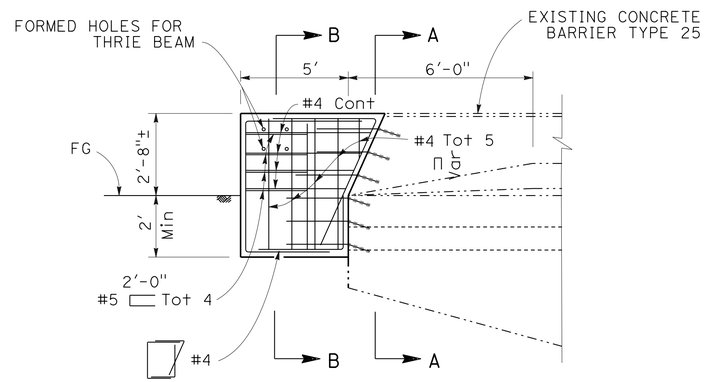

PLAN
ANCHOR BLOCK
CONCRETE BARRIER (TYPE 25)

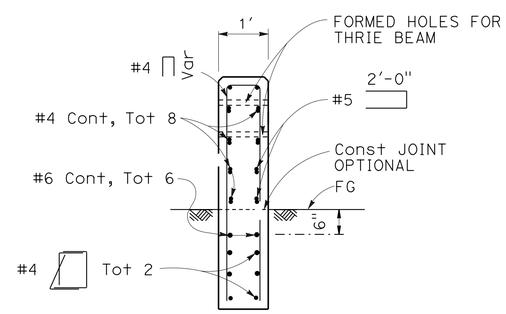

SECTION B-B

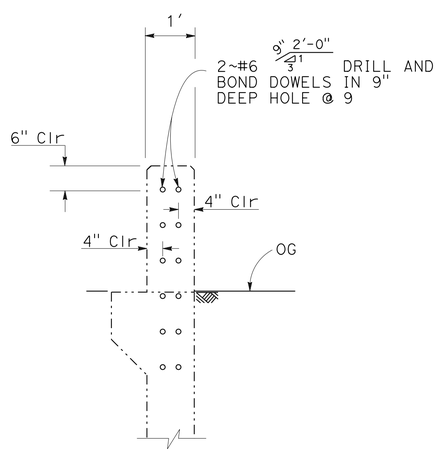

SECTION A-A

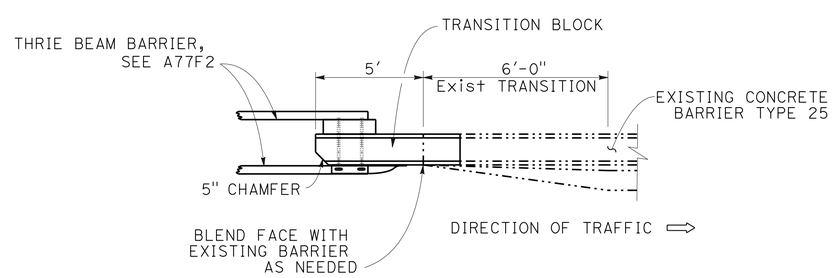

ELEVATION
ANCHOR BLOCK
CONCRETE BARRIER (TYPE 25)

CONSTRUCTION DETAILS
NO SCALE

C-5

STATE OF CALIFORNIA - DEPARTMENT OF TRANSPORTATION
Caltrans DESIGN
FUNCTIONAL SUPERVISOR STEWART LEE
CALCULATED-DESIGNED BY EMARNAN PONGPAIROJ
CHECKED BY BACH-YEN NGUYEN
REVISED BY EP
DATE REVISED 9/12

LAST REVISION 12-27-12
DATE PLOTTED => 28-MAR-2013
TIME PLOTTED => 13:53

Dist	COUNTY	ROUTE	POST MILES TOTAL PROJECT	SHEET No.	TOTAL SHEETS
04	Son	12	9.6	14	118

REGISTERED CIVIL ENGINEER 10-1-12 DATE

3-25-13
PLANS APPROVAL DATE

REGISTERED PROFESSIONAL ENGINEER Bach-Yen Nguyen No. 64435 Exp. 6-30-13 CIVIL STATE OF CALIFORNIA

THE STATE OF CALIFORNIA OR ITS OFFICERS OR AGENTS SHALL NOT BE RESPONSIBLE FOR THE ACCURACY OR COMPLETENESS OF SCANNED COPIES OF THIS PLAN SHEET.

NOTE:

FOR ACCURATE RIGHT OF WAY DATA, CONTACT RIGHT OF WAY ENGINEERING AT THE DISTRICT OFFICE.

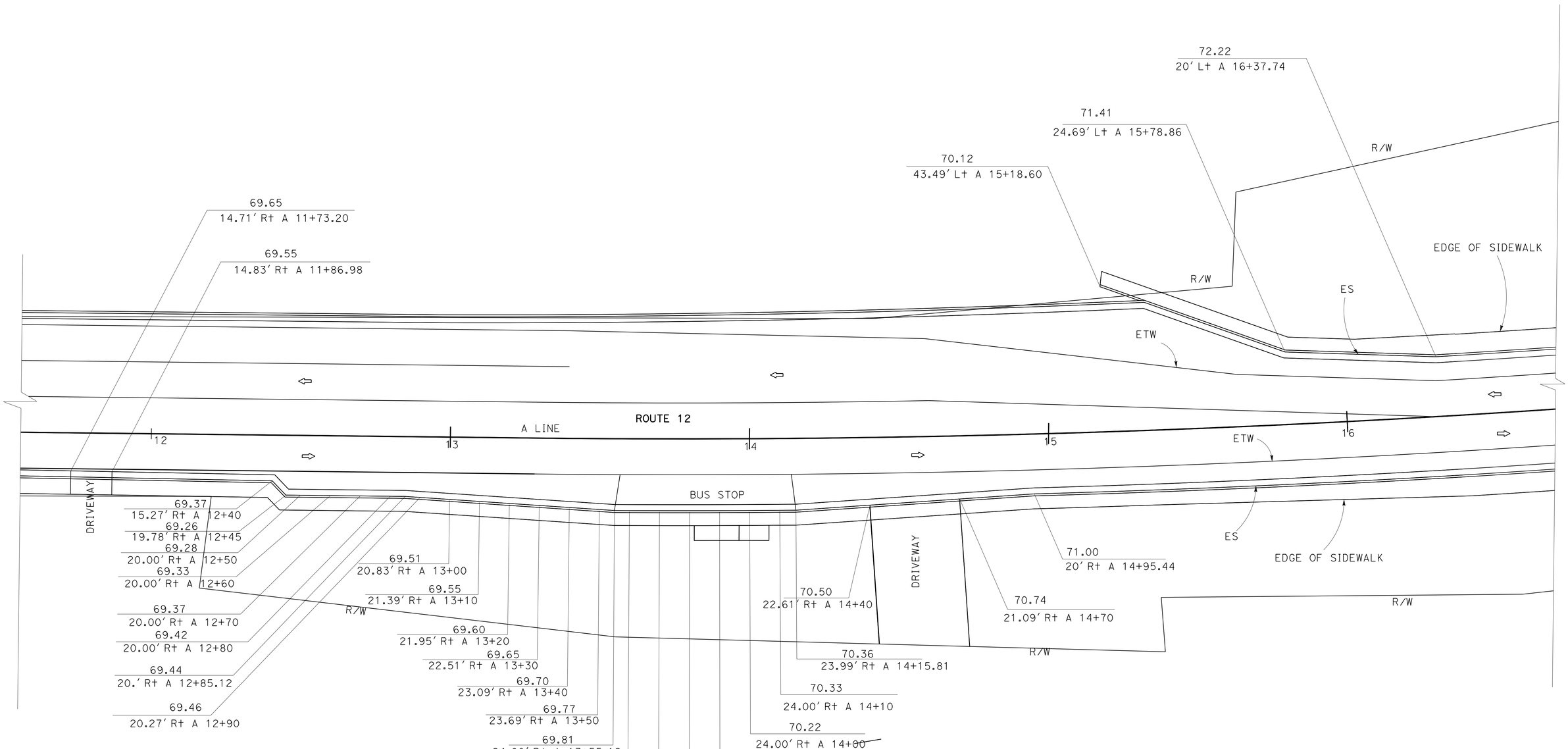

CONSTRUCTION DETAILS
PAVEMENT ELEVATION PLAN
NO SCALE

APPROVED FOR PAVEMENT ELEVATION WORK ONLY

C-6

STATE OF CALIFORNIA - DEPARTMENT OF TRANSPORTATION
Caltrans
DESIGN

FUNCTIONAL SUPERVISOR: STEWART LEE
CALCULATED-DESIGNED BY: EMARNAN PONGPAIROJ
CHECKED BY: BACH-YEN NGUYEN
REVISED BY: EP
DATE REVISED: 9/12

LAST REVISION 01-24-13
DATE PLOTTED => 28-MAR-2013
TIME PLOTTED => 13:53

Dist	COUNTY	ROUTE	POST MILES TOTAL PROJECT	SHEET No.	TOTAL SHEETS
04	Son	12	9.6	15	118

Bachyen Nguyen 10-1-12
REGISTERED CIVIL ENGINEER DATE

3-25-13
PLANS APPROVAL DATE

REGISTERED PROFESSIONAL ENGINEER
Bach-Yen Nguyen
No. 64435
Exp. 6-30-13
CIVIL
STATE OF CALIFORNIA

THE STATE OF CALIFORNIA OR ITS OFFICERS OR AGENTS SHALL NOT BE RESPONSIBLE FOR THE ACCURACY OR COMPLETENESS OF SCANNED COPIES OF THIS PLAN SHEET.

NOTE:

FOR ACCURATE RIGHT OF WAY DATA, CONTACT RIGHT OF WAY ENGINEERING AT THE DISTRICT OFFICE.

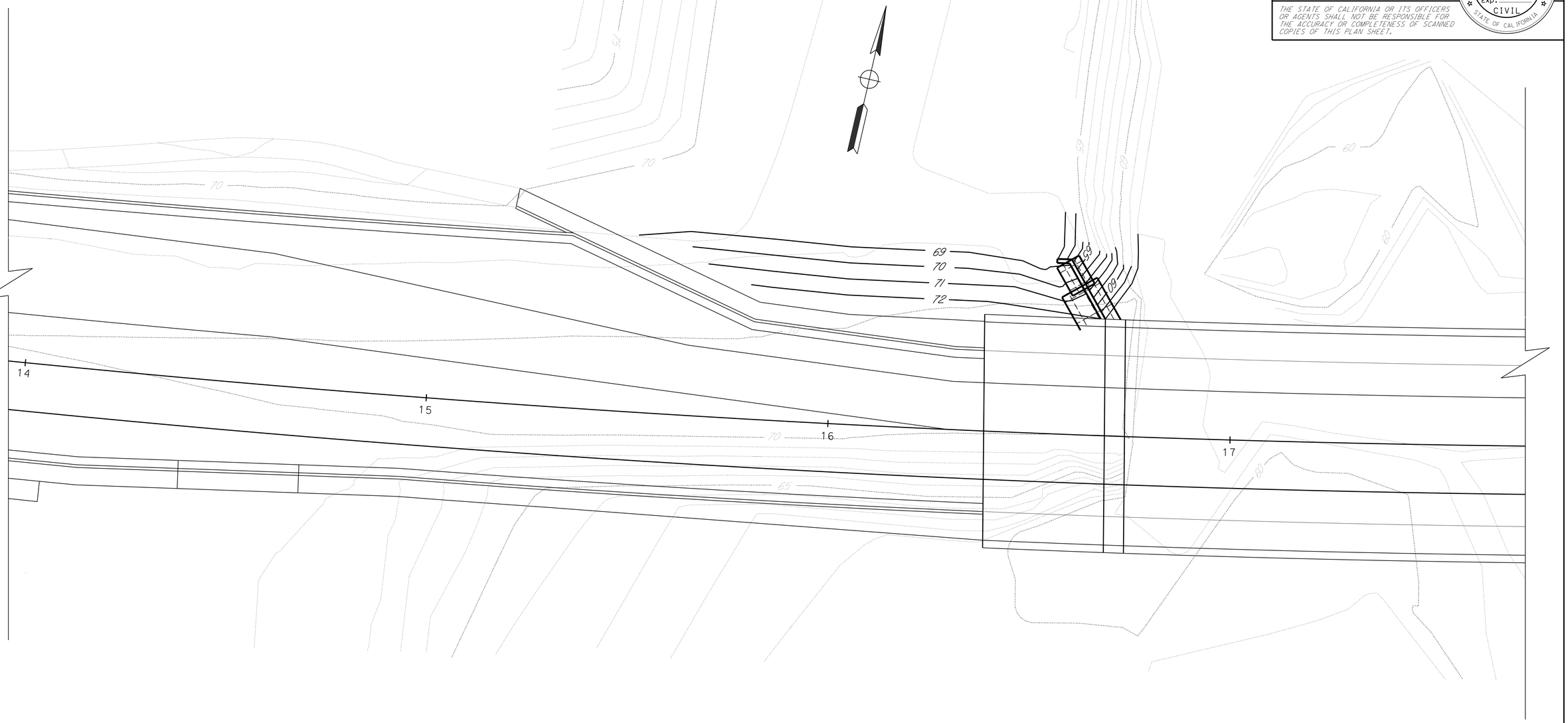

CONTOUR GRADING

APPROVED FOR PAVEMENT ELEVATION WORK ONLY

CONSTRUCTION DETAILS

NO SCALE

C-7

STATE OF CALIFORNIA - DEPARTMENT OF TRANSPORTATION
Caltrans®
DESIGN

FUNCTIONAL SUPERVISOR: STEWART LEE
CALCULATED-DESIGNED BY: EMARNAN PONGPAIROJ
CHECKED BY: BACH-YEN NGUYEN
REVISED BY: EP
DATE REVISED: 9/12

LAST REVISION 09-19-12
DATE PLOTTED => 28-MAR-2013
TIME PLOTTED => 13:53

Dist	COUNTY	ROUTE	POST MILES TOTAL PROJECT	SHEET No.	TOTAL SHEETS
04	Son	12	9.6	16	118

REGISTERED CIVIL ENGINEER 10-1-12 DATE

3-25-13
PLANS APPROVAL DATE

REGISTERED PROFESSIONAL ENGINEER Bach-Yen Nguyen No. 64435 Exp. 6-30-13 CIVIL STATE OF CALIFORNIA

THE STATE OF CALIFORNIA OR ITS OFFICERS OR AGENTS SHALL NOT BE RESPONSIBLE FOR THE ACCURACY OR COMPLETENESS OF SCANNED COPIES OF THIS PLAN SHEET.

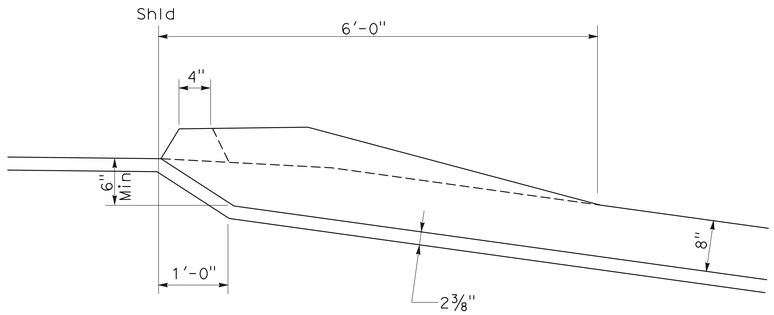

SECTION E-E

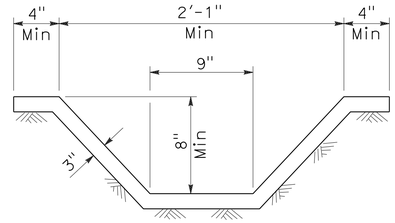

SECTION C-C
SEE NOTE

NOTE:
CROSS SECTION OF SLOPE DITCH MAY BE SEMICIRCULAR, VEE OR TRAPEZOIDAL.

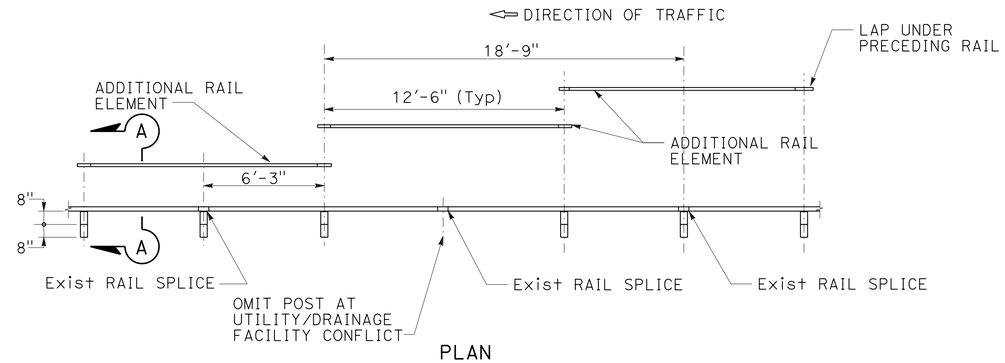

PLAN

CASE 1: ONE POST OMITTED AT EXISTING GUARDRAIL SPLICE

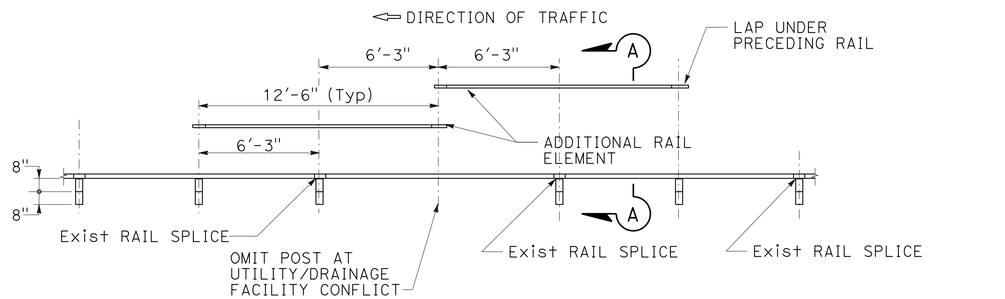

PLAN

CASE 2: ONE POST OMITTED AT EXISTING GUARDRAIL MID-RAIL SPAN

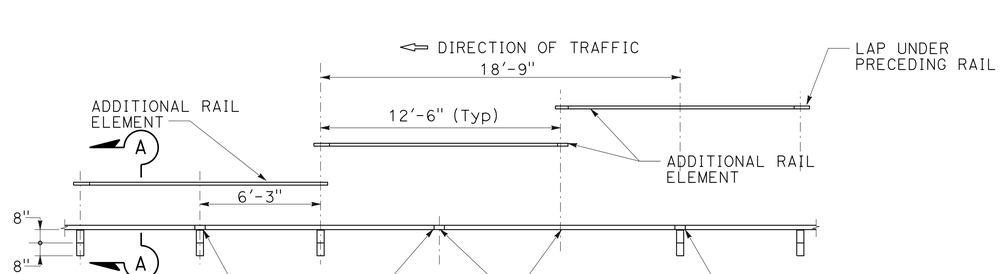

PLAN

CASE 3: TWO POSTS OMITTED AT EXISTING GUARDRAIL POST AND MID-RAIL SPAN

DETAIL A
OMIT WOOD POST(S) WITH NESTED RAILS

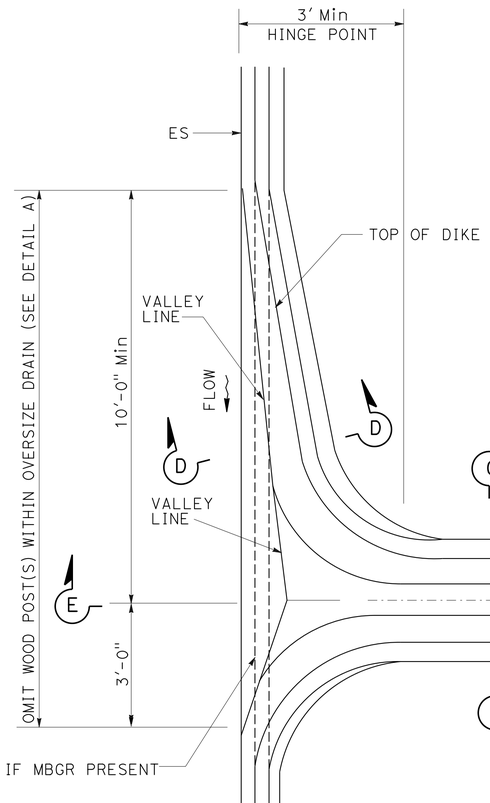

PLAN
AC DIKE (TYPE F)

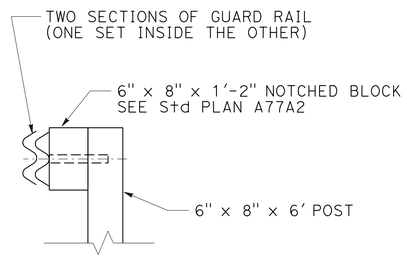

SECTION A-A

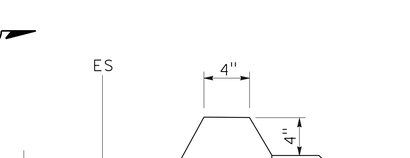

SECTION D-D

CONSTRUCTION DETAILS
NO SCALE

C-8

STATE OF CALIFORNIA - DEPARTMENT OF TRANSPORTATION
Caltrans®
DESIGN

FUNCTIONAL SUPERVISOR: STEWART LEE
CALCULATED-DESIGNED BY: EMARNAN PONGPAIROJ
CHECKED BY: BACH-YEN NGUYEN
REVISED BY: EP
DATE REVISED: 9/12

LAST REVISION 09-26-12
DATE PLOTTED => 28-MAR-2013
TIME PLOTTED => 13:53

Dist	COUNTY	ROUTE	POST MILES TOTAL PROJECT	SHEET No.	TOTAL SHEETS
04	Son	12	9.6	17	118

Bachyen Nguyen 10-1-12
REGISTERED CIVIL ENGINEER DATE

3-25-13
PLANS APPROVAL DATE

REGISTERED PROFESSIONAL ENGINEER Bach-Yen Nguyen No. 64435 Exp. 6-30-13 CIVIL STATE OF CALIFORNIA

THE STATE OF CALIFORNIA OR ITS OFFICERS OR AGENTS SHALL NOT BE RESPONSIBLE FOR THE ACCURACY OR COMPLETENESS OF SCANNED COPIES OF THIS PLAN SHEET.

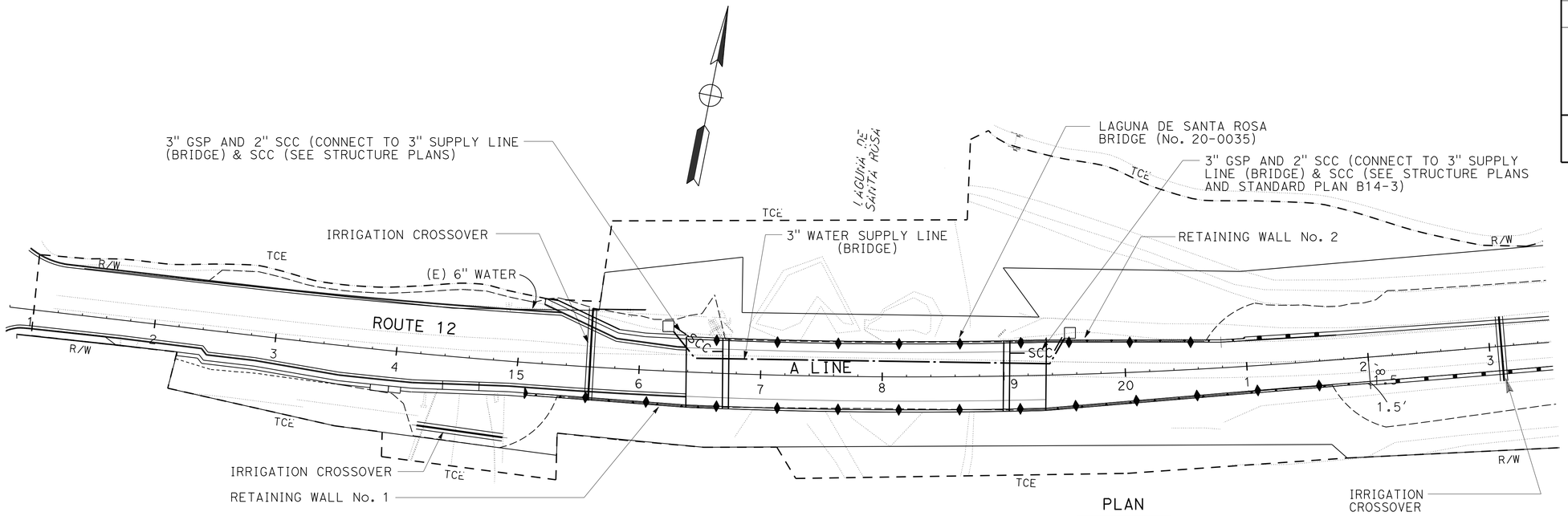

PLAN

IRRIGATION CROSSOVERS

NOTES:

1. SEE STRUCTURE PLANS FOR LOCATION OF 3" WATER SUPPLY LINE (BRIDGE) AND STD. PLAN B14-4.

GALVANIZED STEEL PIPE (GSP)

LOCATION		SIDE		SIZE (INCH)
LINE	STATION	L†	R†	3
				LENGTH (LF)
A	16+70	L		55
A	19+05	L		65
TOTAL				120

SPRINKLER CONTROL CONDUIT (SCC)

LOCATION		SIDE		SIZE (INCH)
LINE	STATION	L†	R†	2
				LENGTH (LF)
A	16+70	L		55
A	19+05	L		65
TOTAL				120

IRRIGATION CROSSOVERS

LOCATION		SIDE		CONDUIT		(N) WATER LINE CROSSOVER SIZE (INCH)	(N) SPRINKLER CONTROL CROSSOVER SIZE (INCH)
				(3)	(5)		
				SIZE (INCH)			
LINE	STATION	L†	R†	8	4		
				LENGTH (LF)			
A	14+10	–	X	–	50	2	–
A	15+60	X	X	75	–	3	2
A	23+10	X	X	50	–	3	2
TOTAL				125	50		

(N) - NOT A SEPARATE PAY ITEM FOR INFORMATION ONLY

X - DENOTES REQUIREMENT

CONDUIT TYPE:

(APPLICABLE WHEN CIRCLED BELOW AND SHOWN UNDER THE "CONDUIT TYPE" COLUMN HEADING)

1 BITUMINOUS COATED CORRUGATED STEEL PIPE (0.064 INCH THICK)
2 CORRUGATED STEEL PIPE (0.064 INCH THICK)
(3) CORRUGATED HIGH DENSITY POLYETHYLENE PIPE
4 ALTERNATIVE CONDUIT (GSP or PAINTED STEEL)
(5) WELDED STEEL PIPE

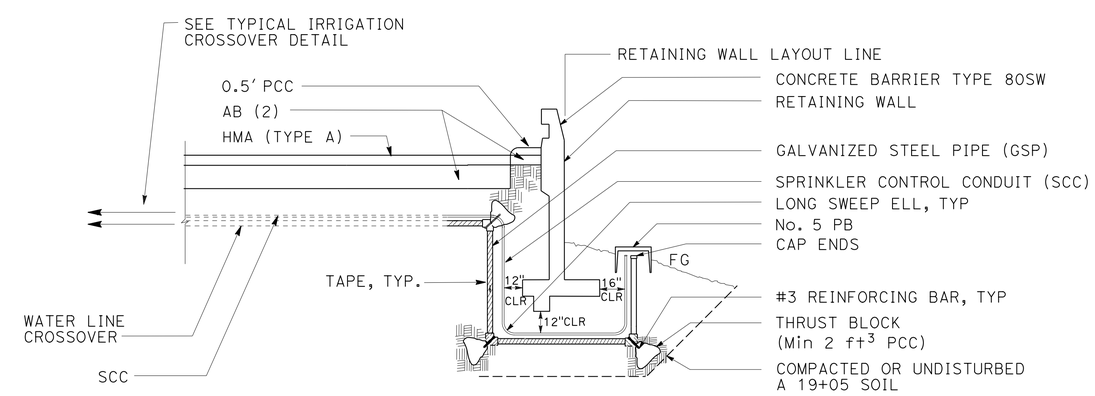

SECTION A 15+60

IRRIGATION CROSSOVER UNDER RETAINING WALL FOOTING

NO SCALE

CONSTRUCTION DETAILS

SCALE: 1" = 50'

C-9

REVISED BY	DATE REVISED	EMARNAN PONGPAIROJ	BACH-YEN NGUYEN	FUNCTIONAL SUPERVISOR	STEWART LEE	CALCULATED-DESIGNED BY	CHECKED BY
JN	9/12						

STATE OF CALIFORNIA - DEPARTMENT OF TRANSPORTATION

Caltrans DESIGN

LAST REVISION 07-19-12 | DATE PLOTTED => 28-MAR-2013 | TIME PLOTTED => 13:53

Dist	COUNTY	ROUTE	POST MILES TOTAL PROJECT	SHEET No.	TOTAL SHEETS
04	Son	12	9.6	18	118

Bachyen Nguyen 10-1-12
REGISTERED CIVIL ENGINEER DATE

3-25-13
PLANS APPROVAL DATE

REGISTERED PROFESSIONAL ENGINEER Bach-Yen Nguyen No. 64435 Exp. 6-30-13 CIVIL STATE OF CALIFORNIA

THE STATE OF CALIFORNIA OR ITS OFFICERS OR AGENTS SHALL NOT BE RESPONSIBLE FOR THE ACCURACY OR COMPLETENESS OF SCANNED COPIES OF THIS PLAN SHEET.

NOTE:

FOR ACCURATE RIGHT OF WAY DATA, CONTACT RIGHT OF WAY ENGINEERING AT THE DISTRICT OFFICE.

LEGEND:

ROADWAY EXCAVATION (TYPE Z-2) AERIALLY DEPOSITED LEAD (OG TO 2.2′ DEEP)

ABBREVIATION:

ADL AERIALLY DEPOSITED LEAD

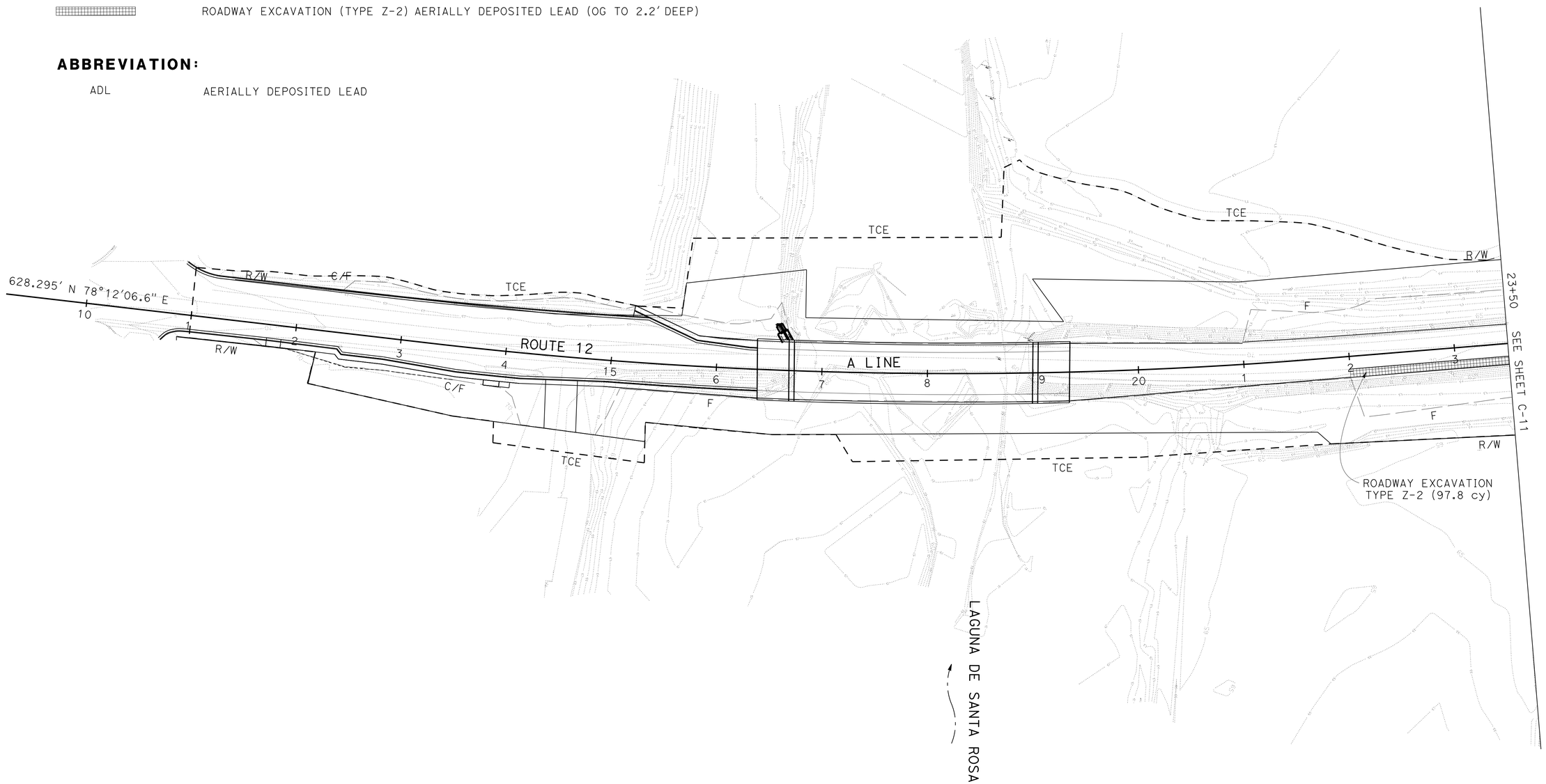

CONSTRUCTION DETAIL (AERIALLY DEPOSITED LEAD LOCATION)

SCALE: 1" = 50′

C-10

REVISED BY	DATE REVISED
EP	9/12

EMARNAN PONGPAIROJ — BACH-YEN NGUYEN — CALCULATED-DESIGNED BY — CHECKED BY

FUNCTIONAL SUPERVISOR: STEWART LEE

STATE OF CALIFORNIA - DEPARTMENT OF TRANSPORTATION — Caltrans — DESIGN

LAST REVISION 08-03-12 | DATE PLOTTED => 28-MAR-2013 | TIME PLOTTED => 13:53

Dist	COUNTY	ROUTE	POST MILES TOTAL PROJECT	SHEET No.	TOTAL SHEETS
04	Son	12	9.6	19	118

Bachyen Nguyen 10-1-12
REGISTERED CIVIL ENGINEER DATE

3-25-13
PLANS APPROVAL DATE

REGISTERED PROFESSIONAL ENGINEER
Bach-Yen Nguyen
No. 64435
Exp. 6-30-13
CIVIL
STATE OF CALIFORNIA

THE STATE OF CALIFORNIA OR ITS OFFICERS OR AGENTS SHALL NOT BE RESPONSIBLE FOR THE ACCURACY OR COMPLETENESS OF SCANNED COPIES OF THIS PLAN SHEET.

NOTE:

FOR ACCURATE RIGHT OF WAY DATA, CONTACT
RIGHT OF WAY ENGINEERING AT THE DISTRICT OFFICE.

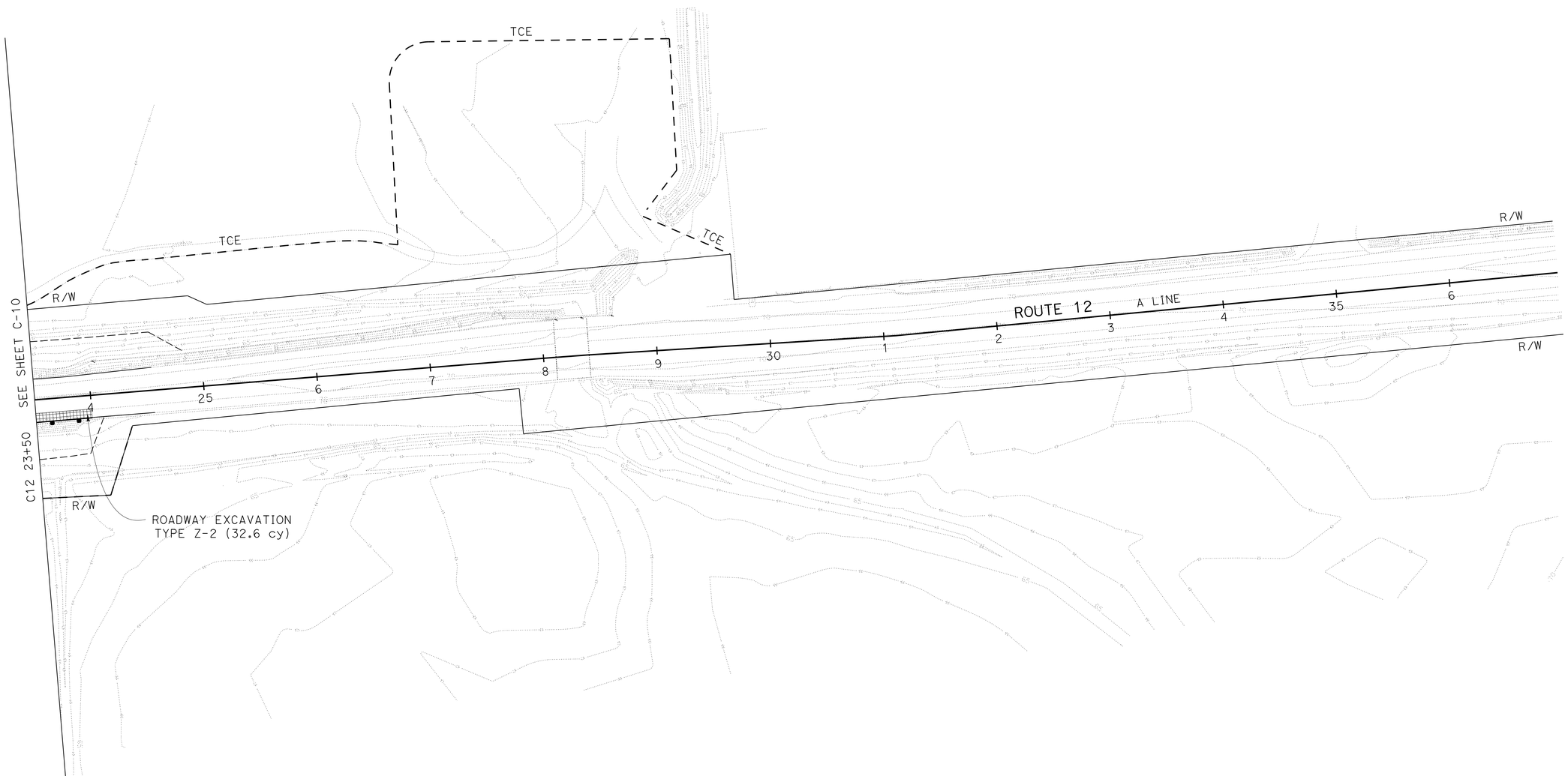

CONSTRUCTION DETAIL
(AERIALLY DEPOSITED LEAD LOCATION)

SCALE: 1" = 50'

FOR NOTES, ABBREVIATIONS
AND LEGEND, SEE SHEET C-1

C-11

STATE OF CALIFORNIA - DEPARTMENT OF TRANSPORTATION
Caltrans®
DESIGN

FUNCTIONAL SUPERVISOR: STEWART LEE

CALCULATED-DESIGNED BY: EMARNAN PONGPAIROJ
CHECKED BY: BACH-YEN NGUYEN

REVISED BY: EP
DATE REVISED: 9/12

LAST REVISION: 08-03-12
DATE PLOTTED => 28-MAR-2013
TIME PLOTTED => 13:53

Dist	COUNTY	ROUTE	POST MILES TOTAL PROJECT	SHEET No.	TOTAL SHEETS
04	Son	12	9.6	20	118

Bachyen Nguyen 10-1-12
REGISTERED CIVIL ENGINEER DATE

3-25-13
PLANS APPROVAL DATE

REGISTERED PROFESSIONAL ENGINEER Bach-Yen Nguyen No. 64435 Exp. 6-30-13 CIVIL STATE OF CALIFORNIA

THE STATE OF CALIFORNIA OR ITS OFFICERS OR AGENTS SHALL NOT BE RESPONSIBLE FOR THE ACCURACY OR COMPLETENESS OF SCANNED COPIES OF THIS PLAN SHEET.

NOTE:

FOR ACCURATE RIGHT OF WAY DATA, CONTACT RIGHT OF WAY ENGINEERING AT THE DISTRICT OFFICE.

NOTES:

1. ACCESS PAD LIMITS MUST BE WITHIN PLAC IMPACT MAPS.
2. CROSS SECTION OF ACCESS PAD MUST ADHERE TO PLAC REQUIREMENTS FOR IN-WATER WORK.

ABBREVIATIONS:

PLAC PERMIT, LICENSE, AGREEMENT, CERTIFICATION, OR ANY COMBINATION OF THESE

SEG SUBGRADE ENHANCEMENT GEOTEXTILE

LEGEND:

- Temp ACCESS PAD LIMITS
- Temp CREEK CROSSING LIMITS
- ROCK
- GRAVEL
- TCE — TEMPORARY CONSTRUCTION EASEMENT (TCE)
- —xx—TRSF—xx— TEMPORARY REINFORCED SILT FENCE
- TFESA — TEMPORARY FENCE (TYPE ESA)

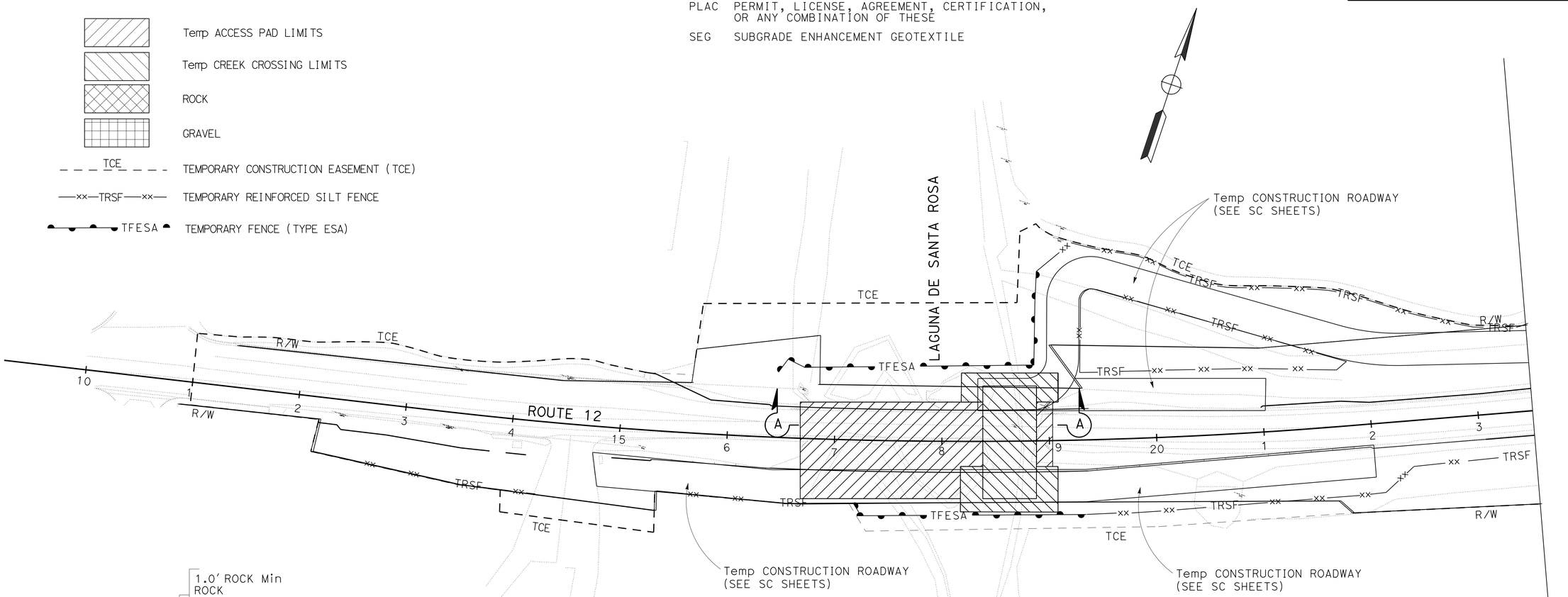

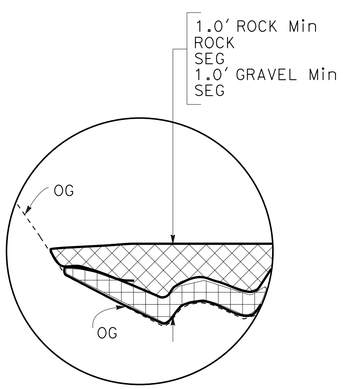

DETAIL A
NO SCALE

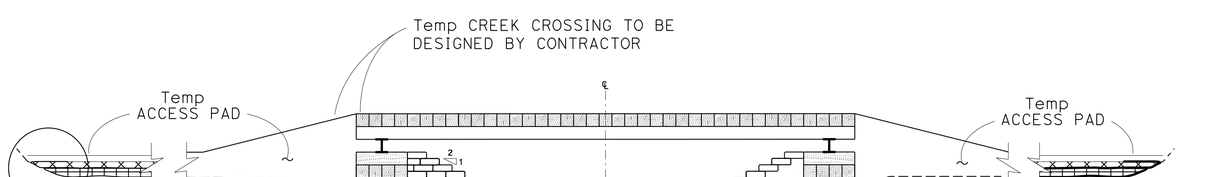

SECTION A-A
NO SCALE

CONSTRUCTION DETAILS ACCESS PAD

SCALE: 1" = 50'

C-12

STATE OF CALIFORNIA - DEPARTMENT OF TRANSPORTATION
Caltrans® DESIGN

FUNCTIONAL SUPERVISOR: STEWART LEE
CALCULATED-DESIGNED BY: EMARNAN PONGPAIROJ
CHECKED BY: BACH-YEN NGUYEN
REVISED BY: EP
DATE REVISED: 9/12

LAST REVISION 01-02-13
DATE PLOTTED => 28-MAR-2013
TIME PLOTTED => 13:53

Dist	COUNTY	ROUTE	POST MILES TOTAL PROJECT	SHEET No.	TOTAL SHEETS
04	Son	12	9.6	21	118

Trang Hoang 9-26-12
REGISTERED CIVIL ENGINEER DATE

3-25-13
PLANS APPROVAL DATE

REGISTERED PROFESSIONAL ENGINEER Trang T. Hoang No. 59917 Exp. 12-31-13 CIVIL STATE OF CALIFORNIA

THE STATE OF CALIFORNIA OR ITS OFFICERS OR AGENTS SHALL NOT BE RESPONSIBLE FOR THE ACCURACY OR COMPLETENESS OF SCANNED COPIES OF THIS PLAN SHEET.

LEGEND

- WETLAND
- TEMPORARY GROUND PROTECTION MAT
- COMPACTION TEST LOCATION
- TEMPORARY CONST ROADWAY OR ACCESS PAD

ABBREVIATIONS:

TGPM TEMPORARY GROUND PROTECTION MAT

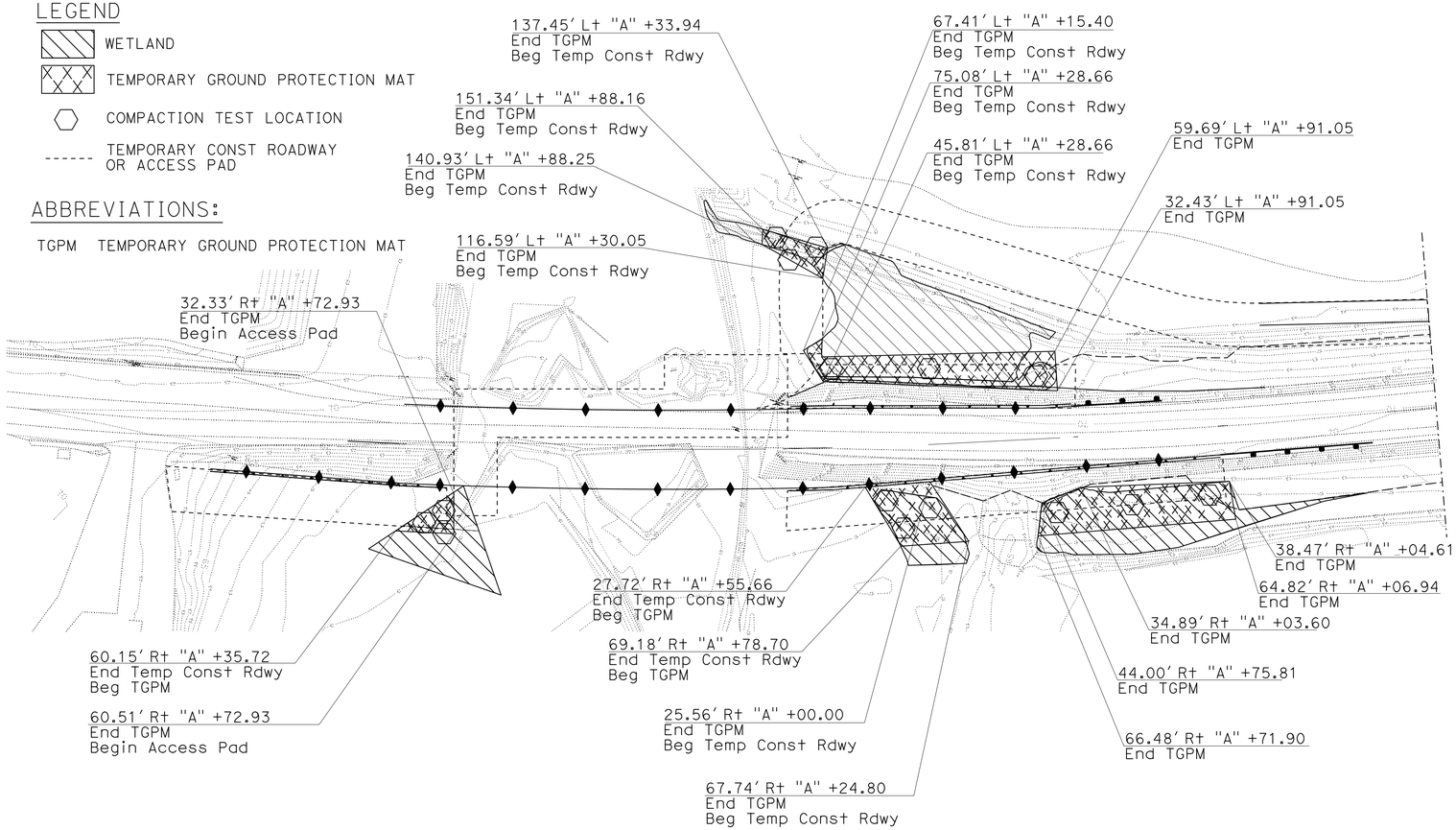

NOTES:

1. Temporary Ground Protection Mat functions as part of temporary construction roadway where wetland exists.
2. Install additional anchor bars and restraints rope if directed by Engineer.
3. Limits of Temporary Ground Protection Mat based on Temp Fence-ESA and Temporary Construction Roadway and may shift.
4. Location of compaction testing may shift as directed by Engineer.

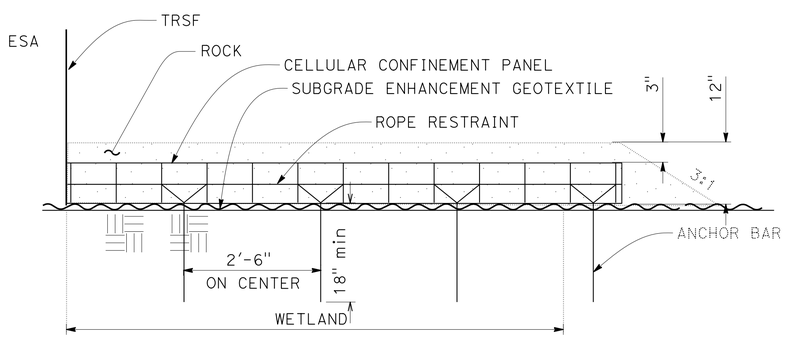

TYPICAL SECTION

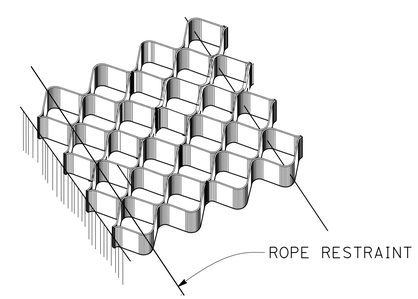

PARTIAL ISOMETRICS

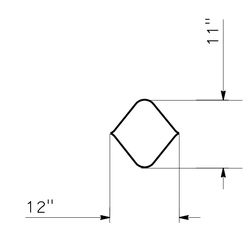

CELL DIMENSIONS
PLAN VIEW

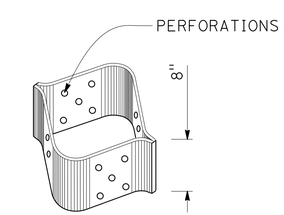

CELL ISOMETRICS VIEW

CELLULAR CONFINEMENT PANEL

WATER POLLUTION CONTROL DETAILS

WD-1

NO SCALE

STATE OF CALIFORNIA - DEPARTMENT OF TRANSPORTATION
Caltrans®
WATER QUALITY

SENIOR LANDSCAPE ARCHITECT: KAMRAN NAKHJIRI

CALCULATED-DESIGNED BY: TRANG HOANG
CHECKED BY: TRANG HOANG

REVISED BY: TH
DATE REVISED: 10/12

LAST REVISION 02-13-13
DATE PLOTTED => 28-MAR-2013
TIME PLOTTED => 13:23

Dist	COUNTY	ROUTE	POST MILES TOTAL PROJECT	SHEET No.	TOTAL SHEETS
04	Son	12	9.6	22	118

Trang Hoang 9-26-12
REGISTERED CIVIL ENGINEER DATE

3-25-13
PLANS APPROVAL DATE

REGISTERED PROFESSIONAL ENGINEER Trang T. Hoang No. 59917 Exp. 12-31-13 CIVIL STATE OF CALIFORNIA

THE STATE OF CALIFORNIA OR ITS OFFICERS OR AGENTS SHALL NOT BE RESPONSIBLE FOR THE ACCURACY OR COMPLETENESS OF SCANNED COPIES OF THIS PLAN SHEET.

TEMPORARY WATER POLLUTION CONTROL QUANTITY

PLAN SHEET No.	STAGE No.	TEMPORARY FIBER ROLL	TEMPORARY COVER	TEMPORARY HYDRAULIC MULCH (BONDED FIBER MATRIX)	TEMPORARY CHECK DAM	TEMPORARY CONSTRUCTION ENTRANCE	TEMPORARY DRAINAGE INLET PROTECTION	TEMPORARY GRAVEL BAG BERM
		LF	SQYD		LF	EA	EA	LF
SC-1,2,3	1	1401	750	2586	60	2	2	500
SC-4,5,6,7	2 & 3	735	750	6663	60	2	2	500
TOTAL		2136	1500	9249	120	4	4	1000

TEMPORARY CONSTRUCTION ROADWAY AND TEMPORARY GROUND PROTECTION MAT

PLAN SHEET No.	STATION	TEMPORARY CONSTRUCTION ROADWAY	TEMPORARY GROUND PROTECTION MAT
		SQYD	SQYD
SC-1	"A" 12+46 TO "A" 14+28	398	
	"A" 14+78 TO "A" 16+72	566	64
	"A" 19+03 TO "A" 22+00	325	633
SC-6	"A" 14+78 TO "A" 16+76	376	64
	"A" 18+93.5 TO "A" 23+50	1902	493
SC-7	"A" 23+50 TO "A" 29+29	1962	
TOTAL		5529	1254

TEMPORARY WATER POLLUTION CONTROL QUANTITIES

WPCQ-1

REVISED BY	DATE REVISED	CALCULATED-DESIGNED BY	CHECKED BY	SENIOR LANDSCAPE ARCHITECT
TH	10/12	TRANG HOANG	TRANG HOANG	KAMRAN NAKHJIRI

STATE OF CALIFORNIA - DEPARTMENT OF TRANSPORTATION
Caltrans® WATER QUALITY

LAST REVISION 02-25-13 DATE PLOTTED => 28-MAR-2013 TIME PLOTTED => 13:23

Dist	COUNTY	ROUTE	POST MILES TOTAL PROJECT	SHEET No.	TOTAL SHEETS
04	Son	12	9.6	23	118

LICENSED LANDSCAPE ARCHITECT

3-25-13
PLANS APPROVAL DATE

LICENSED LANDSCAPE ARCHITECT — CHRIS PADICK — No. 4255 — STATE OF CALIFORNIA — Expiration Date 11-30-14 — Renewal Date 10-23-12 — Date

THE STATE OF CALIFORNIA OR ITS OFFICERS OR AGENTS SHALL NOT BE RESPONSIBLE FOR THE ACCURACY OR COMPLETENESS OF SCANNED COPIES OF THIS PLAN SHEET.

NOTE:

FOR ACCURATE RIGHT OF WAY DATA, CONTACT RIGHT OF WAY ENGINEERING AT THE DISTRICT OFFICE.

LEGEND:

EROSION CONTROL (TYPE 1)
- COMPOST
- ROLLED EROSION CONTROL PRODUCT (NETTING)(TYPE A)
- HYDROSEED (SEED MIX 1)
- HYDROMULCH

EROSION CONTROL (TYPE 2)
- COMPOST
- HYDROSEED (SEED MIX 1)
- STRAW
- HYDROMULCH

EROSION CONTROL (TYPE 3)
- COMPOST
- HYDROSEED (SEED MIX 2)
- HYDROMULCH

EROSION CONTROL (TYPE 4)
- COMPOST
- INCORPORATE MATERIALS
- HYDROSEED (SEED MIX 1)
- STRAW
- HYDROMULCH

EROSION CONTROL (TYPE 5)
- HYDROSEED (SEED MIX 3)
- HYDROMULCH
- ROLLED EROSION CONTROL PRODUCT (NETTING)(TYPE B)

FR — FIBER ROLLS

TFESA — TEMPORARY FENCE (TYPE ESA)

—xx— TRSF —xx— TEMPORARY FENCE (TYPE RS)

BIOFILTRATION STRIP
- COMPOST
- ROLLED EROSION CONTROL PRODUCT (NETTING)(TYPE A)
- HYDROSEED (SEED MIX 3)
- HYDROMULCH

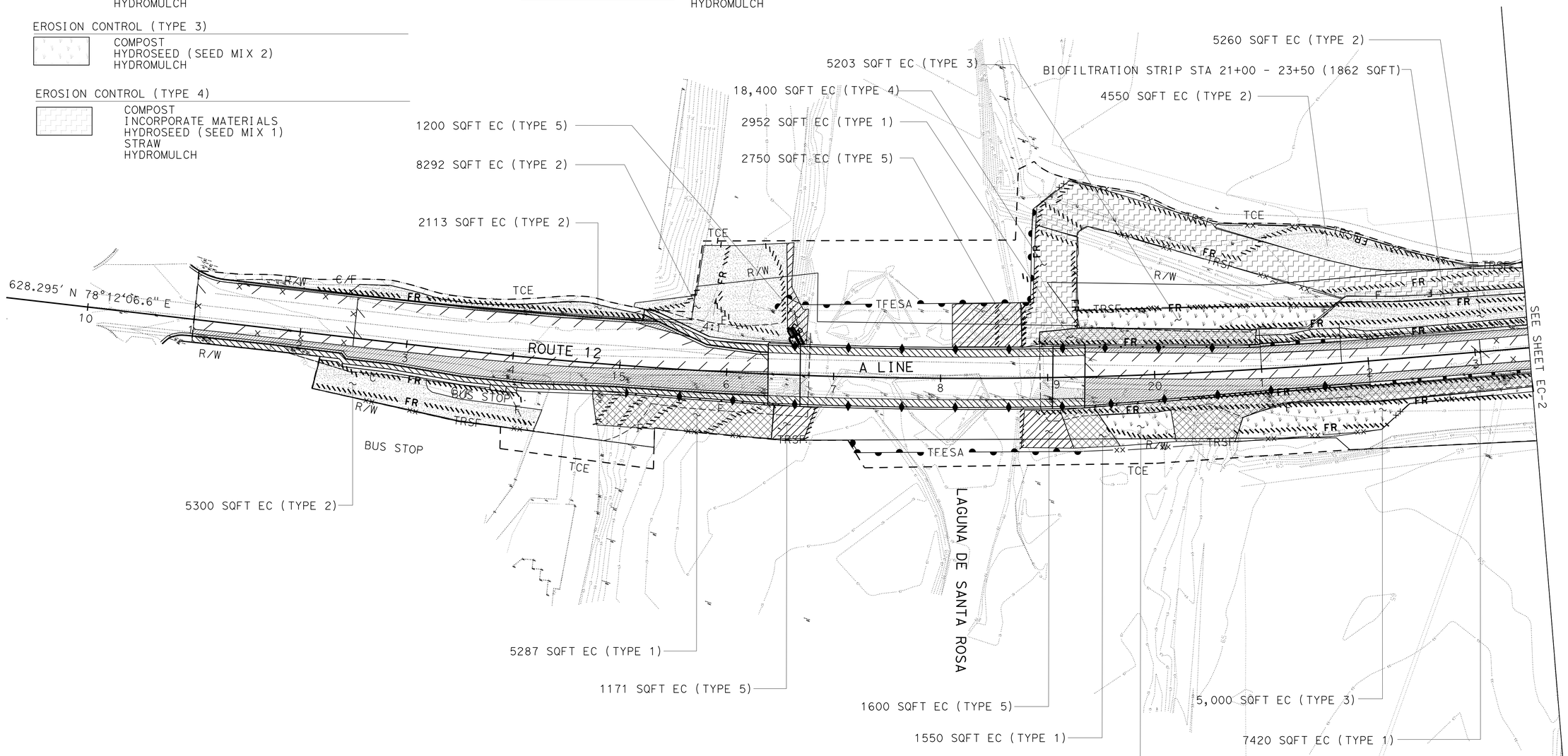

EROSION CONTROL PLAN

SCALE: 1'' = 50'

EC-1

APPROVED FOR EROSION CONTROL WORK ONLY

STATE OF CALIFORNIA - DEPARTMENT OF TRANSPORTATION
Caltrans® **WATER QUALITY**

SENIOR LANDSCAPE ARCHITECT: DAVID YAM

CALCULATED-DESIGNED BY: CHRIS PADICK
CHECKED BY: ALEX MCDONALD

REVISED BY: CP
DATE REVISED: 12-18-12

LAST REVISION 01-10-13

DATE PLOTTED => 28-MAR-2013
TIME PLOTTED => 13:23

Dist	COUNTY	ROUTE	POST MILES TOTAL PROJECT	SHEET No.	TOTAL SHEETS
04	Son	12	9.6	24	118

LICENSED LANDSCAPE ARCHITECT

3-25-13
PLANS APPROVAL DATE

LICENSED LANDSCAPE ARCHITECT
CHRIS PADICK No. 4255
Expiration Date 11-30-14
Renewal Date 12-18-12
Date
STATE OF CALIFORNIA

THE STATE OF CALIFORNIA OR ITS OFFICERS OR AGENTS SHALL NOT BE RESPONSIBLE FOR THE ACCURACY OR COMPLETENESS OF SCANNED COPIES OF THIS PLAN SHEET.

NOTE:

FOR ACCURATE RIGHT OF WAY DATA, CONTACT RIGHT OF WAY ENGINEERING AT THE DISTRICT OFFICE.

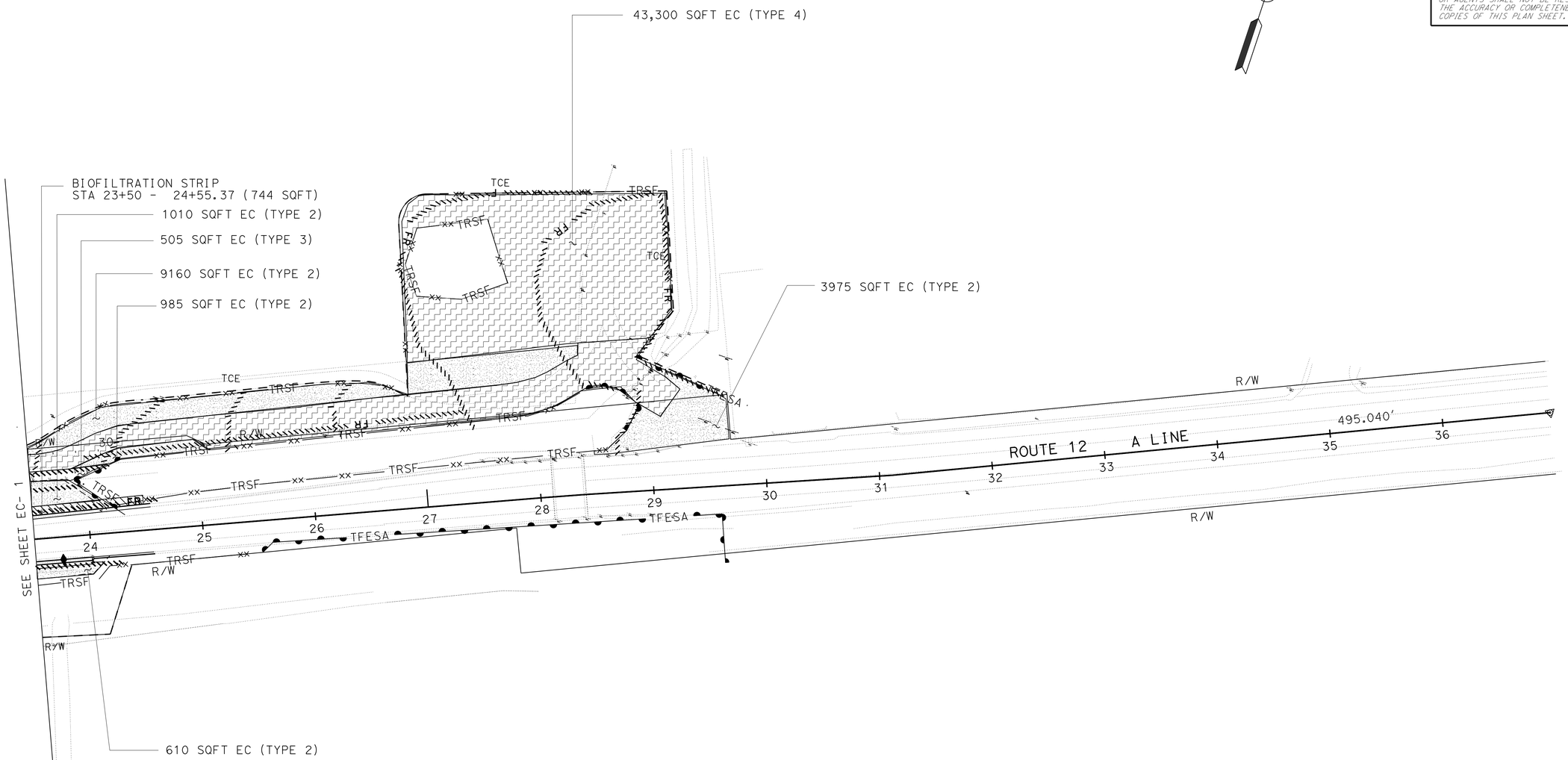

APPROVED FOR EROSION CONTROL WORK ONLY

EROSION CONTROL PLAN

SCALE: 1'' = 50'

EC-2

STATE OF CALIFORNIA - DEPARTMENT OF TRANSPORTATION
Caltrans® WATER QUALITY

SENIOR LANDSCAPE ARCHITECT: DAVID YAM
CALCULATED-DESIGNED BY: CHRISTOPHER PADICK
CHECKED BY: ALEX MCDONALD
REVISED BY: CP
DATE REVISED: 12-18-12

LAST REVISION 01-10-13
DATE PLOTTED => 28-MAR-2013
TIME PLOTTED => 13:23

Dist	COUNTY	ROUTE	POST MILES TOTAL PROJECT	SHEET No.	TOTAL SHEETS
04	Son	12	9.6	25	118

LICENSED LANDSCAPE ARCHITECT

3-25-13
PLANS APPROVAL DATE

LICENSED LANDSCAPE ARCHITECT
CHRIS PADICK No. 4259
Expiration Date
11-30-14
Renewal Date
10-23-12
Date
STATE OF CALIFORNIA

THE STATE OF CALIFORNIA OR ITS OFFICERS OR AGENTS SHALL NOT BE RESPONSIBLE FOR THE ACCURACY OR COMPLETENESS OF SCANNED COPIES OF THIS PLAN SHEET.

EROSION CONTROL QUANTITIES

SHEET	DESCRIPTION	COMPOST	STRAW	INCORPORATE MATERIALS	ROLLED EROSION CONTROL PRODUCT (NETTING)	HYDROSEED	HYDROMULCH	FIBER ROLLS
		SQFT	SQFT	SQFT	SQFT	SQFT	SQFT	LF
EC-1	EROSION CONTROL TYPE 1	17209			17209	17209	17209	
	EROSION CONTROL TYPE 2	24483	24483			24483	24483	
	EROSION CONTROL TYPE 3	12003				12003	12003	
	EROSION CONTROL TYPE 4	18400	18400	18400		18400	18400	
	EROSION CONTROL TYPE 5				6721	6721	6721	
	FIBER ROLLS							4640
EC-2	EROSION CONTROL TYPE 2	15740	15740			15740	15740	
	EROSION CONTROL TYPE 3	3166				3166	3166	
	EROSION CONTROL TYPE 4	43300	43300	43300		43300	43300	
	FIBER ROLLS							1795
EC-1	BIOFILTRATION STRIP AREAS	2894			2894	2894	2894	
EC-2	BIOFILTRATION STRIP AREAS	744			744	744	744	
	TOTAL	137939	101923	61700	27568	144660	144660	6435

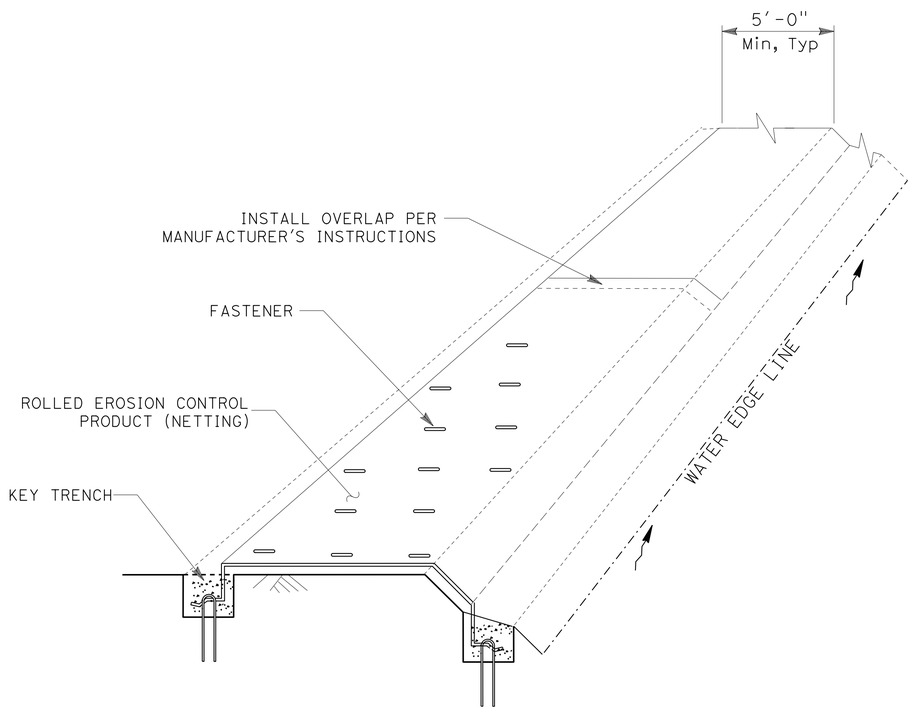

PERSPECTIVE

ROLLED EROSION CONTROL PRODUCT (NETTING) (TYPE 5) INSTALLATION

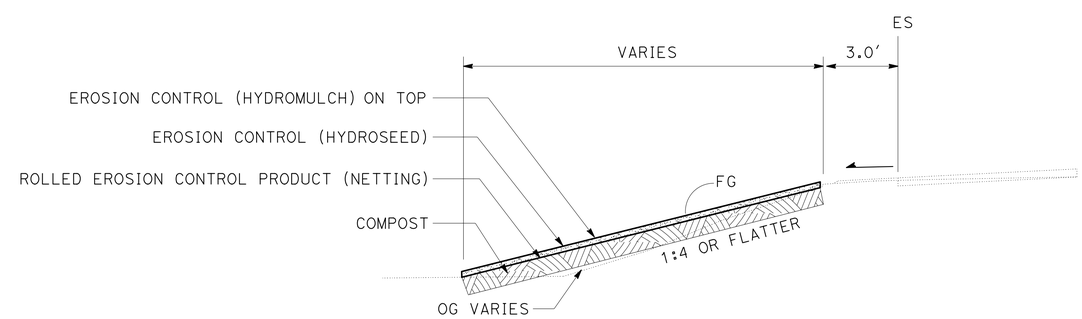

SECTION

BIOFILTRATION STRIP (Typ)

EROSION CONTROL DETAILS AND QUANTITIES

NO SCALE

ECD-1

STATE OF CALIFORNIA - DEPARTMENT OF TRANSPORTATION
Caltrans
SENIOR LANDSCAPE ARCHITECT
CALCULATED-DESIGNED BY
CHECKED BY
REVISED BY
DATE REVISED

LAST REVISION 09-25-12
DATE PLOTTED => 28-MAR-2013
TIME PLOTTED => 13:24

Dist	COUNTY	ROUTE	POST MILES TOTAL PROJECT	SHEET No.	TOTAL SHEETS
04	Son	12	9.6	26	118

Charlotte A. Cashin 9-27-12
REGISTERED CIVIL ENGINEER DATE

3-25-13
PLANS APPROVAL DATE

REGISTERED PROFESSIONAL ENGINEER Charlotte A. Cashin No. 34417 Exp. 9-30-13 CIVIL STATE OF CALIFORNIA

THE STATE OF CALIFORNIA OR ITS OFFICERS OR AGENTS SHALL NOT BE RESPONSIBLE FOR THE ACCURACY OR COMPLETENESS OF SCANNED COPIES OF THIS PLAN SHEET.

NOTE:

FOR ACCURATE RIGHT OF WAY DATA, CONTACT RIGHT OF WAY ENGINEERING AT THE DISTRICT OFFICE.

LEGEND:

- (No.) DRAINAGE SYSTEM NUMBER
- (a) DRAINAGE UNIT
- SO SIDE OPENING

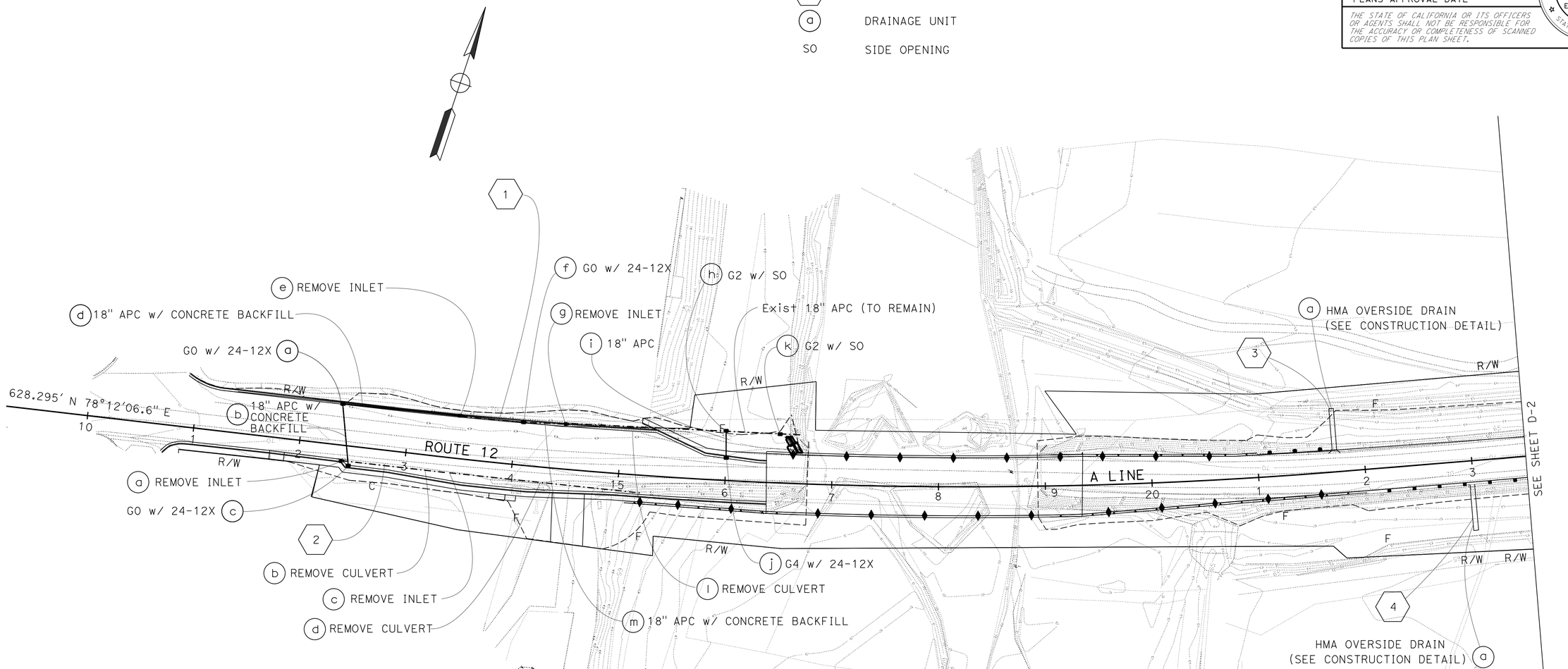

DRAINAGE PLAN

SCALE: 1" = 50'

APPROVED FOR DRAINAGE WORK ONLY

D-1

STATE OF CALIFORNIA - DEPARTMENT OF TRANSPORTATION
Caltrans
HYDRAULICS

FUNCTIONAL SUPERVISOR: JOSEPH PETERSON

CALCULATED-DESIGNED BY: CHARLOTTE CASHIN
CHECKED BY: CHARLOTTE CASHIN

REVISED BY: CC
DATE REVISED: 9/12

LAST REVISION 01-25-13
DATE PLOTTED => 28-MAR-2013
TIME PLOTTED => 13:24

Dist	COUNTY	ROUTE	POST MILES TOTAL PROJECT	SHEET No.	TOTAL SHEETS
04	Son	12	9.6	27	118

Charlotte A. Cashin 9-27-12
REGISTERED CIVIL ENGINEER DATE

3-25-13
PLANS APPROVAL DATE

REGISTERED PROFESSIONAL ENGINEER
Charlotte A. Cashin
No. 34417
Exp. 9-30-13
CIVIL
STATE OF CALIFORNIA

THE STATE OF CALIFORNIA OR ITS OFFICERS OR AGENTS SHALL NOT BE RESPONSIBLE FOR THE ACCURACY OR COMPLETENESS OF SCANNED COPIES OF THIS PLAN SHEET.

NOTE:

FOR ACCURATE RIGHT OF WAY DATA, CONTACT
RIGHT OF WAY ENGINEERING AT THE DISTRICT OFFICE.

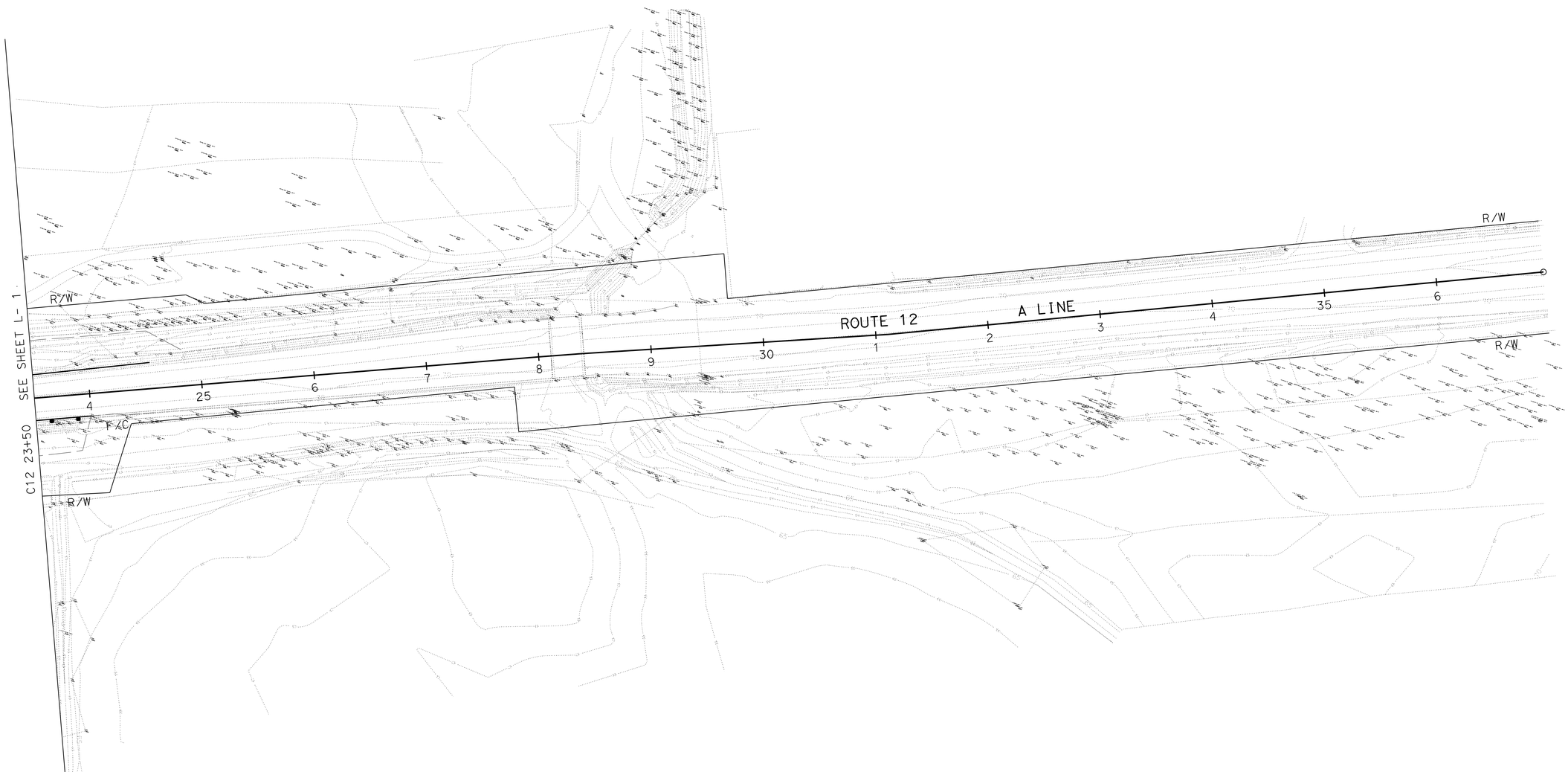

DRAINAGE PLAN

SCALE: 1" = 50'

D-2

APPROVED FOR DRAINAGE WORK ONLY

FOR NOTES, ABBREVIATIONS AND LEGEND, SEE SHEET D-1

STATE OF CALIFORNIA - DEPARTMENT OF TRANSPORTATION
Caltrans
HYDRAULICS

FUNCTIONAL SUPERVISOR: JOSEPH PETERSON

CALCULATED-DESIGNED BY: CHARLOTTE CASHIN
CHECKED BY: CHARLOTTE CASHIN

REVISED BY: CC
DATE REVISED: 9/12

LAST REVISION: DATE PLOTTED => 28-MAR-2013
09-26-12 TIME PLOTTED => 13:24

Dist	COUNTY	ROUTE	POST MILES TOTAL PROJECT	SHEET No.	TOTAL SHEETS
04	Son	12	9.6	28	118

REGISTERED CIVIL ENGINEER — DATE 10-1-12

3-25-13
PLANS APPROVAL DATE

REGISTERED PROFESSIONAL ENGINEER — Bach-Yen Nguyen — No. 64435 — Exp. 6-30-13 — CIVIL — STATE OF CALIFORNIA

THE STATE OF CALIFORNIA OR ITS OFFICERS OR AGENTS SHALL NOT BE RESPONSIBLE FOR THE ACCURACY OR COMPLETENESS OF SCANNED COPIES OF THIS PLAN SHEET.

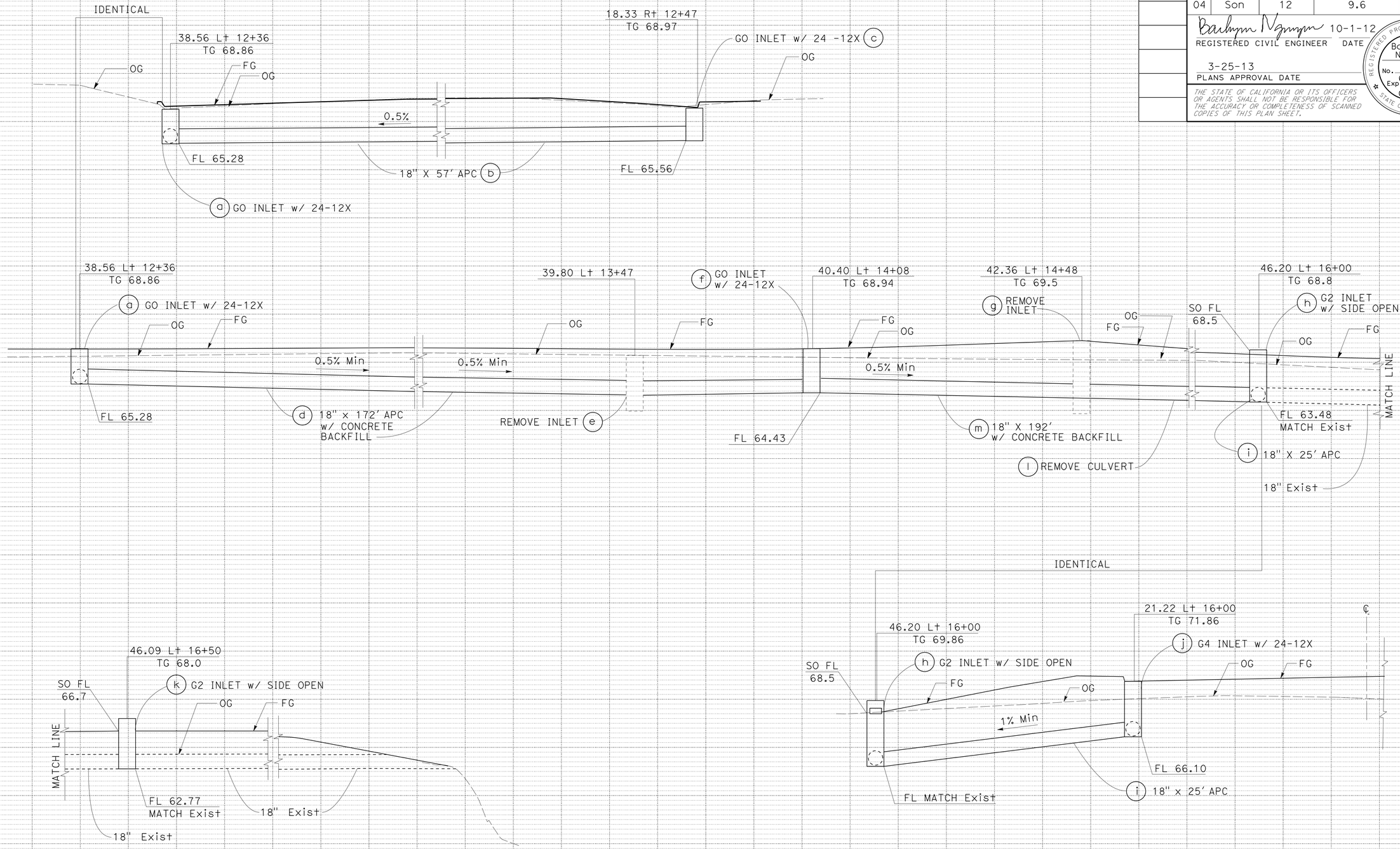

DRAINAGE SYSTEM No. 1

DRAINAGE PROFILES

SCALE: Horiz 1" = 5'
Vert 1" = 5'

DP-1

REVISED BY	DATE REVISED
JN	9/12

EMARNAN PONGPAIROJ — BACH-YEN NGUYEN — CALCULATED-DESIGNED BY — CHECKED BY

FUNCTIONAL SUPERVISOR: STEWART LEE

STATE OF CALIFORNIA - DEPARTMENT OF TRANSPORTATION — Caltrans — HYDRAULICS

LAST REVISION 01-02-13 — DATE PLOTTED => 28-MAR-2013 — TIME PLOTTED => 13:24

Dist	COUNTY	ROUTE	POST MILES TOTAL PROJECT	SHEET No.	TOTAL SHEETS
04	Son	12	9.6	29	118

Charlotte A. Cashin 9-27-12
REGISTERED CIVIL ENGINEER DATE

3-25-13
PLANS APPROVAL DATE

REGISTERED PROFESSIONAL ENGINEER
Charlotte A. Cashin
No. 34417
Exp. 9-30-13
CIVIL
STATE OF CALIFORNIA

THE STATE OF CALIFORNIA OR ITS OFFICERS OR AGENTS SHALL NOT BE RESPONSIBLE FOR THE ACCURACY OR COMPLETENESS OF SCANNED COPIES OF THIS PLAN SHEET.

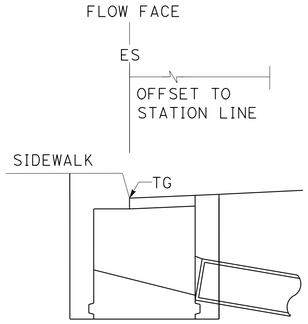

ELEVATION

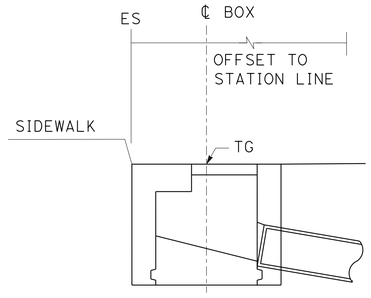

ELEVATION

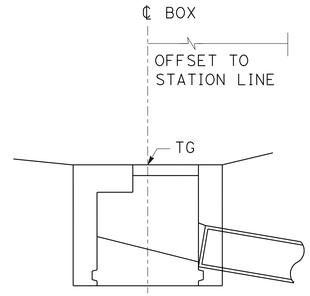

ELEVATION

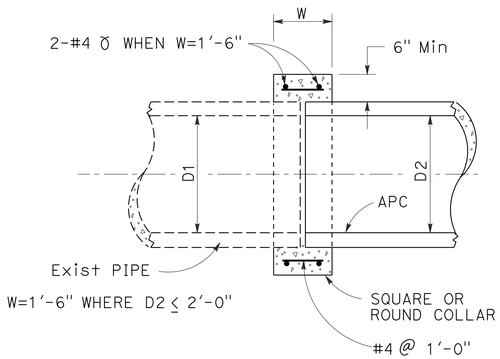

CONCRETE COLLAR DETAIL

1

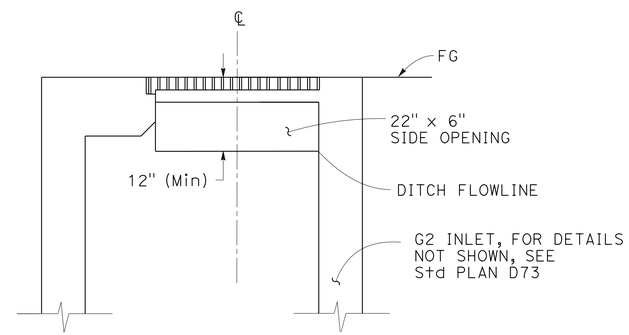

G2 WITH SIDE OPENING

1

NOTES:

1. TOP OF CAP TO BE 1'-0" Min BELOW THE GRADING PLANE.
2. REMOVE EXISTING DRAINAGE STRUCTURE WALLS WHERE REQUIRED.
3. DRAINAGE INLET SHOWN.SIMILAR FOR MANHOLE.

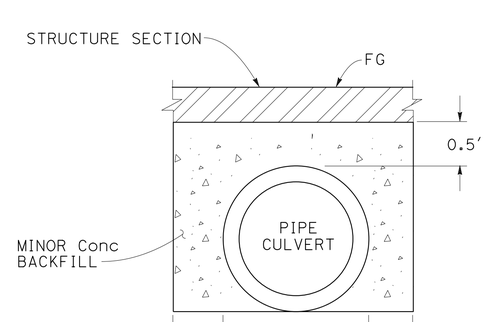

MINOR CONCRETE (BACKFILL)

1 b d m

DRAINAGE DETAILS

NO SCALE

DD-1

STATE OF CALIFORNIA - DEPARTMENT OF TRANSPORTATION
Caltrans
HYDRAULICS

FUNCTIONAL SUPERVISOR: JOSEPH PETERSON

CALCULATED-DESIGNED BY: CHARLOTTE CASHIN
CHECKED BY:

REVISED BY: CC
DATE REVISED: 9/12

LAST REVISION 01-03-13
DATE PLOTTED => 28-MAR-2013
TIME PLOTTED => 13:24

Dist	COUNTY	ROUTE	POST MILES TOTAL PROJECT	SHEET No.	TOTAL SHEETS
04	Son	12	9.6	30	118

Charlotte A. Cashin 9-27-12
REGISTERED CIVIL ENGINEER DATE

3-25-13
PLANS APPROVAL DATE

REGISTERED PROFESSIONAL ENGINEER
Charlotte A. Cashin
No. 34417
Exp. 9-30-13
CIVIL
STATE OF CALIFORNIA

THE STATE OF CALIFORNIA OR ITS OFFICERS OR AGENTS SHALL NOT BE RESPONSIBLE FOR THE ACCURACY OR COMPLETENESS OF SCANNED COPIES OF THIS PLAN SHEET.

NOTE:

SEE SHEETS C-12, TD-2.

DRAINAGE SYSTEM No.	DRAINAGE UNIT	DESCRIPTION	STATION	DRAINAGE SYSTEM No.	DRAINAGE UNIT
201	a	Temp CREEK DIVERSION SYSTEM	LOCATION 1	201	a
201	b	Temp CREEK DIVERSION SYSTEM	LOCATION 2	201	b

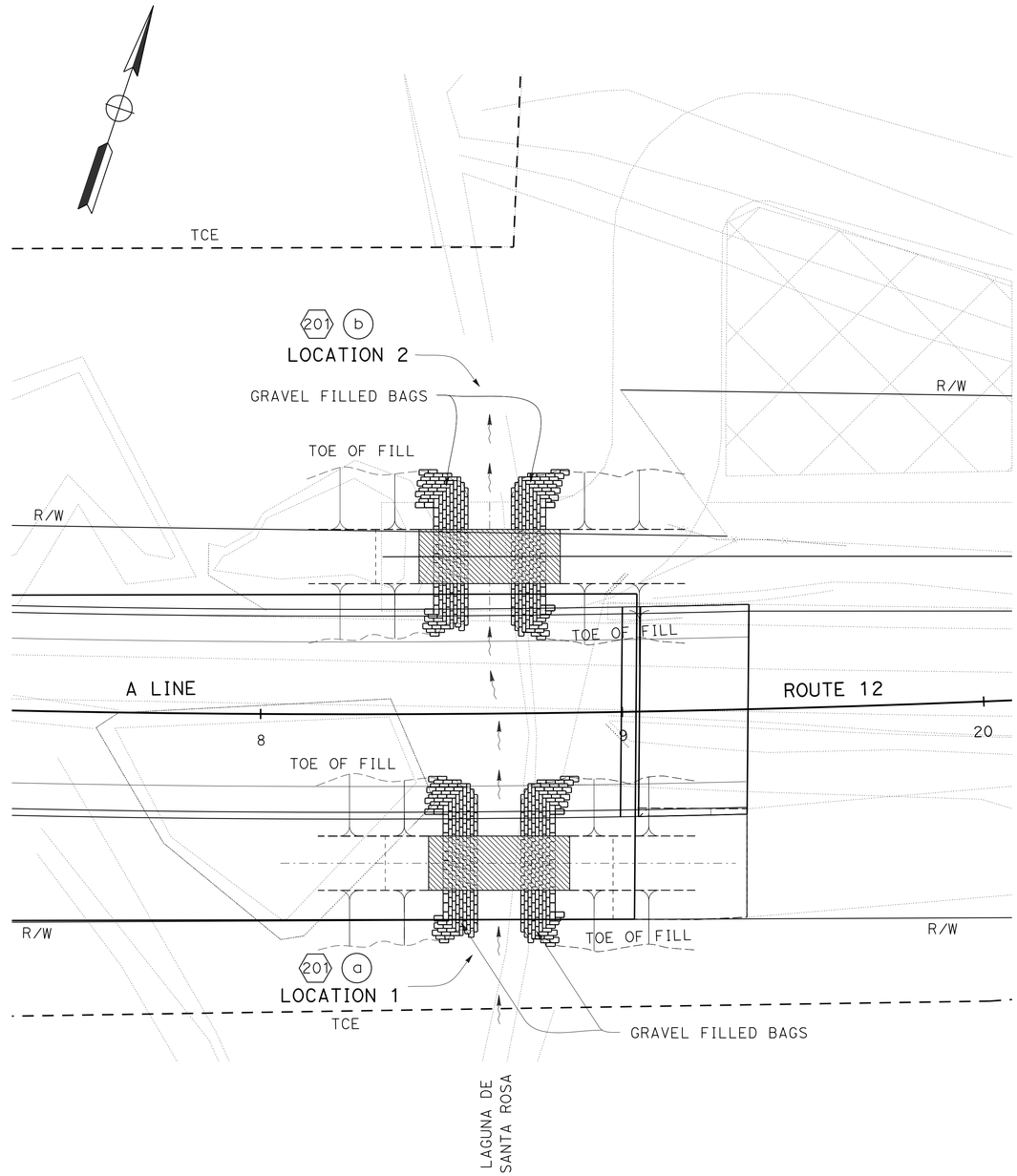

TEMPORARY CREEK DIVERSION SYSTEM
PLAN VIEW

TEMPORARY DRAINAGE DETAILS

NO SCALE

TD-1

STATE OF CALIFORNIA - DEPARTMENT OF TRANSPORTATION
Caltrans
HYDRAULICS

FUNCTIONAL SUPERVISOR: JOSEPH PETERSON

CALCULATED-DESIGNED BY: SHARON BATCH
CHECKED BY: CHARLOTTE CASHIN

REVISED BY: SB
DATE REVISED: 9/12

LAST REVISION 12-26-12
DATE PLOTTED => 28-MAR-2013
TIME PLOTTED => 13:24

Dist	COUNTY	ROUTE	POST MILES TOTAL PROJECT	SHEET No.	TOTAL SHEETS
04	Son	12	9.6	31	118

Charlotte A. Cashin 9-27-12
REGISTERED CIVIL ENGINEER DATE

3-25-13
PLANS APPROVAL DATE

REGISTERED PROFESSIONAL ENGINEER
Charlotte A. Cashin
No. 34417
Exp. 9-30-13
CIVIL
STATE OF CALIFORNIA

THE STATE OF CALIFORNIA OR ITS OFFICERS OR AGENTS SHALL NOT BE RESPONSIBLE FOR THE ACCURACY OR COMPLETENESS OF SCANNED COPIES OF THIS PLAN SHEET.

ABBREVIATION:

WSE DESIGN WATER SURFACE ELEVATION (TO BE DETERMINED BY CONTRACTOR)

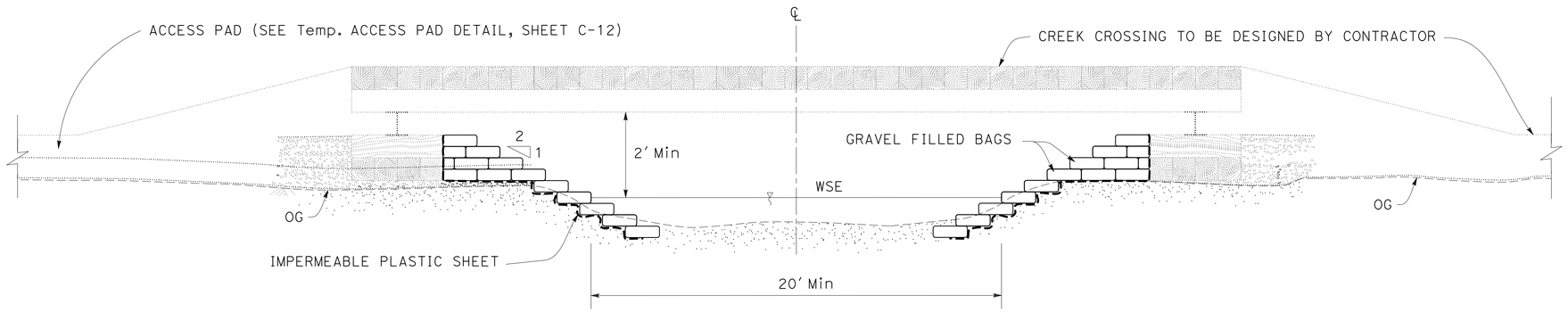

SECTION A-A

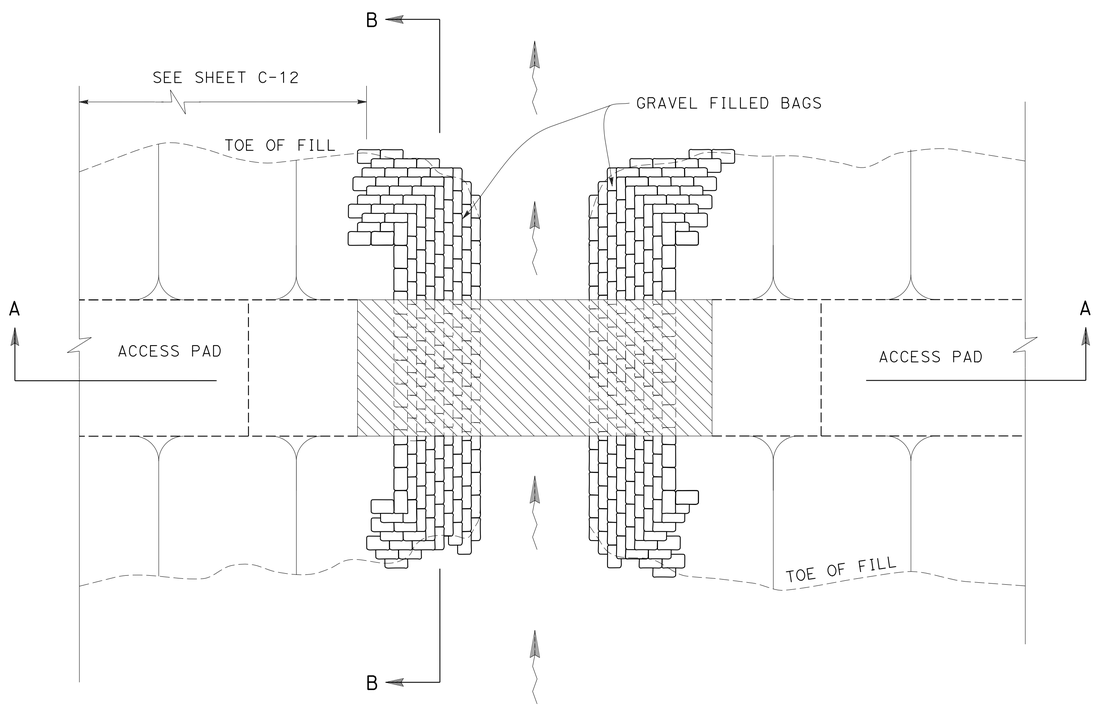

PLAN VIEW

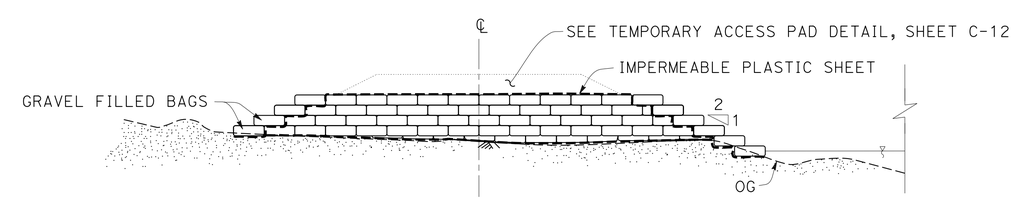

SECTION B-B

TEMPORARY CREEK DIVERSION SYSTEM DETAILS

TEMPORARY DRAINAGE DETAILS

NO SCALE

TD-2

STATE OF CALIFORNIA - DEPARTMENT OF TRANSPORTATION
Caltrans
HYDRAULICS

FUNCTIONAL SUPERVISOR: JOSEPH PETERSON
CALCULATED-DESIGNED BY: SHARON BATCH
CHECKED BY: CHARLOTTE CASHIN
REVISED BY: SB
DATE REVISED: 12/12

LAST REVISION 01-02-13
DATE PLOTTED => 28-MAR-2013
TIME PLOTTED => 13:24

Dist	COUNTY	ROUTE	POST MILES TOTAL PROJECT	SHEET No.	TOTAL SHEETS
04	Son	12	9.6	32	118

Bachyen Nguyen 10-1-12
REGISTERED CIVIL ENGINEER DATE

3-25-13
PLANS APPROVAL DATE

REGISTERED PROFESSIONAL ENGINEER Bach-Yen Nguyen No. 64435 Exp. 6-30-13 CIVIL STATE OF CALIFORNIA

THE STATE OF CALIFORNIA OR ITS OFFICERS OR AGENTS SHALL NOT BE RESPONSIBLE FOR THE ACCURACY OR COMPLETENESS OF SCANNED COPIES OF THIS PLAN SHEET.

APC ALLOWABLE PIPE MATERIAL

DESTINATION	RCP	PLASTIC PIPE	
	SIZE	SIZE	THICKNESS
18" APC (A)	18"	18"	SMOOTH INTERIOR

DRAINAGE QUANTITIES

DRAINAGE SHEET No.	DRAINAGE SYSTEM No. ⬡	DRAINAGE UNIT ○	GO INLET (N)	G2 INLET w/ SIDE OPENING (N)	G4 INLET (N)	REMOVE INLET	REMOVE CULVERT	MINOR CONCRETE (MINOR STRUCTURE)	FRAME & GRATE (N)	MISCELLANEOUS IRON & STEEL	APC (A) 18"	HMA OVERSIDE DRAIN (N)(*)	HEIGHT OF INLET(N)	MAXIMUN COVER (N)	PIPE JOINT CLASSIFICATION (N)	MINOR CONCRETE (BACKFILL)	DESCRIPTION	STATION	DRAINAGE SYSTEM No. ⬡	DRAINAGE UNIT ○
			EA				LF	CY	EA	LB	LF	SQYD	LF	LF		CY				
D-1	1	a	1					1.38	1	239			3.58				GO INLET WITH 24-12X	38.56 L+ 12+36	1	a
		b									57			2.08	S	7	18" APC WITH CONCRETE BACKFILL	38.56L+ 12+36 TO 18.33 R+ 12+47		b
		c	1					1.34	1	239			3.41				GO INLET WITH 24-12X	18.33 R+ 12+47		c
		d									172			3.01	S	21	18" APC WITH CONCRETE BACKFILL	38.56 L+ 12+36 TO 40.40 L+ 14+08		d
		e				1											REMOVE INLET	39.80 L+ 13+47		e
		f	1					1.61	1	239			4.51				GO INLET WITH 24-12X	40.40 L+ 14+08		f
		g				1											REMOVE INLET	42.36 L+ 14+48		g
		h		1				2.17	1	239			6.38				G2 INLET WITH SIDE OPEN, 24-12X	46.20 L+ 16+00		h
		i									25			4.88			18" APC	46.20 L+ 16+00 TO 21.22 16+00		i
		j			1			1.97	1	239			5.76		S		G4 INLET WITH 24-12X	21.22 L+ 16+00		j
		k		1				1.88	1	239			5.23				G2 INLET WITH SIDE OPEN, 24-12X	46.09 L+ 16+50		k
		l					152										REMOVE CULVERT	42.36 L+ 14+48 TO 46.20 L+ 16+00		l
		m									192					23	18" APC WITH CONCRETE BACKFILL	40.40 L+ 14+08 TO 46.20 L+ 16+00		m
D-1	2	a				1											REMOVE INLET	14.8 R+ 12+40	2	a
		b					100										REMOVE CULVERT	14.8 R+ 12+40 TO 14.2 R+ 13+40		b
		c				1											REMOVE INLET	14.2 RT 13+40		c
		d					180										REMOVE CULVERT	14.2 RT 13+40 TO 16.9 R+ 15+15		d
D-1	3	a										15					HMA OVERSIDE DRAIN	20 L+ 21+72 TO 60 L+ 21+72	3	a
D-1	4	a										14					HMA OVERSIDE DRAIN	57 R+ 23+00 TO 20 R+ 23+00	4	a
SHEET TOTAL			3	2	1	4	432	10.36	6	1434	446	29				51	SHEET TOTAL			

(N) - NOT A SEPARATE PAY ITEM, FOR INFORMATION ONLY.
(*) - SEE Q-1 SHEET FOR PAY ITEM.

EMARNAN PONGPAIROJ — REVISED BY — EP
BACH-YEN NGUYEN — DATE REVISED — 9/12
CALCULATED-DESIGNED BY
CHECKED BY
FUNCTIONAL SUPERVISOR — STEWART LEE

STATE OF CALIFORNIA - DEPARTMENT OF TRANSPORTATION
Caltrans® HYDRAULICS

DRAINAGE QUANTITIES DQ-1

LAST REVISION 01-25-12
DATE PLOTTED => 03-APR-2013
TIME PLOTTED => 09:46

Dist	COUNTY	ROUTE	POST MILES TOTAL PROJECT	SHEET No.	TOTAL SHEETS
04	Son	12	9.6	33	118

Bachyen Nguyen 10-1-12
REGISTERED CIVIL ENGINEER DATE

3-25-13
PLANS APPROVAL DATE

REGISTERED PROFESSIONAL ENGINEER Bach-Yen Nguyen No. 64435 Exp. 6-30-13 CIVIL STATE OF CALIFORNIA

THE STATE OF CALIFORNIA OR ITS OFFICERS OR AGENTS SHALL NOT BE RESPONSIBLE FOR THE ACCURACY OR COMPLETENESS OF SCANNED COPIES OF THIS PLAN SHEET.

LEGEND:

- gs — PG&E GASLINE - ABANDON IN PLACE
- GS — 4" PG&E GASLINE
- E — PG&E ELECTRICAL LINE
- T — AT&T TELEPHONE LINE
- tc — COMCAST CABLE LINE
- S — 14" LAGUNA FORCE MAIN (SEWER)
- s — 14" LAGUNA FORCE MAIN (SEWER) ABANDONED IN-PLACE

NOTE:

1. LOCATIONS OF ULTILITY FACILITIES SHOWN ON THESE PLANS ARE APROXIMATE AND SHALL BE VERIFIED BY CONTRACTOR PRIOR CONSTRUCTION.

PG&E: PACIFIC GAS AND ELECTRIC

AT&T: AMERICAN TELEPHONE AND TELEGRAPH

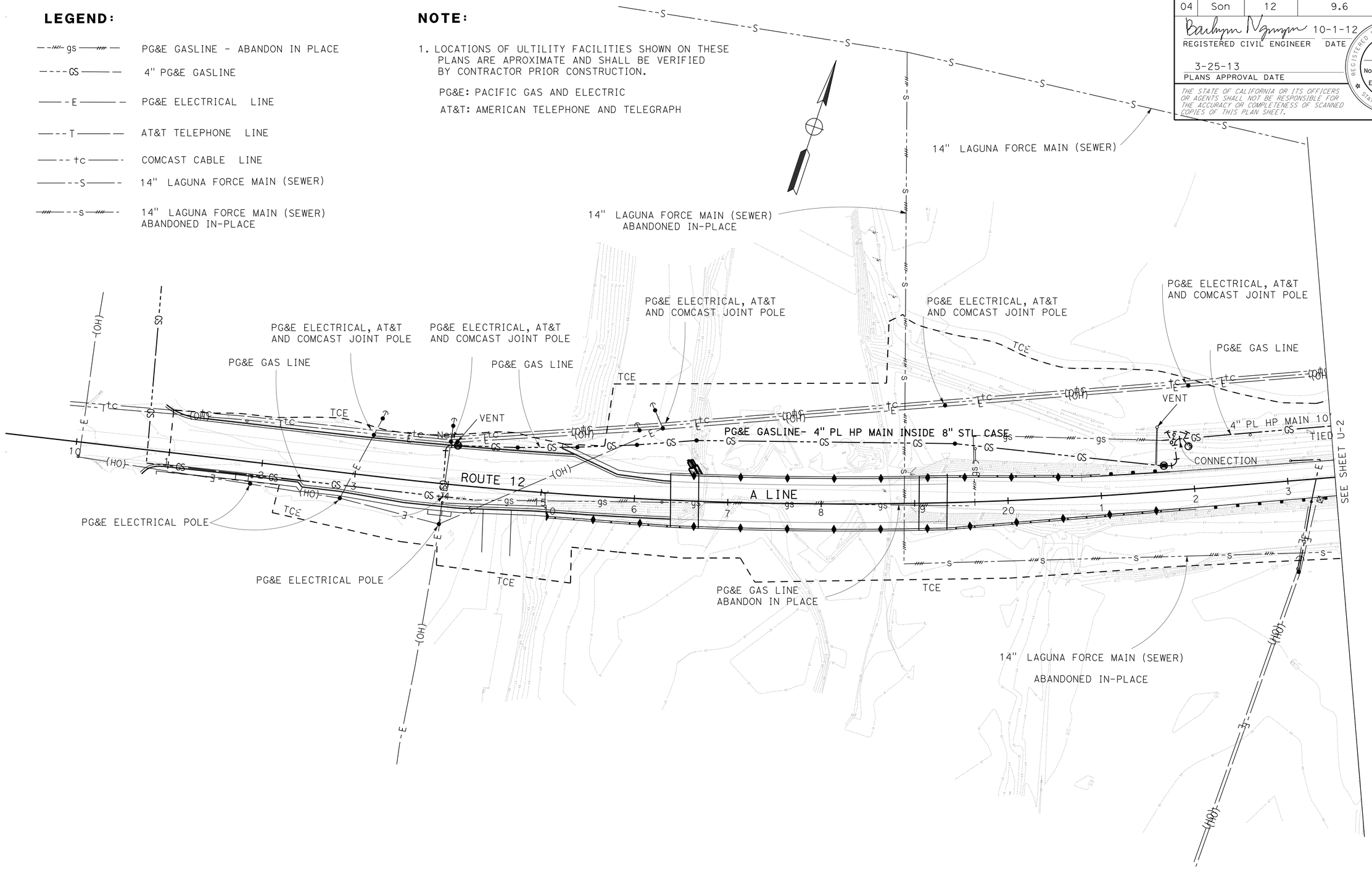

UTILITY PLAN

SCALE: 1" = 50'

APPROVED FOR UTILITY INFORMATION ONLY

U-1

STATE OF CALIFORNIA - DEPARTMENT OF TRANSPORTATION
Caltrans® DESIGN

FUNCTIONAL SUPERVISOR: STEWART LEE

CALCULATED-DESIGNED BY: EMARNAN PONGPAIROJ
CHECKED BY: BACH-YEN NGUYEN

REVISED BY: JN
DATE REVISED: 9/12

LAST REVISION: DATE PLOTTED => 28-MAR-2013
07-19-12 TIME PLOTTED => 14:29

Dist	COUNTY	ROUTE	POST MILES TOTAL PROJECT	SHEET No.	TOTAL SHEETS
04	Son	12	9.6	34	118

Bachyen Nguyen 10-1-12
REGISTERED CIVIL ENGINEER DATE

3-25-13
PLANS APPROVAL DATE

REGISTERED PROFESSIONAL ENGINEER
Bach-Yen Nguyen
No. 64435
Exp. 6-30-13
CIVIL
STATE OF CALIFORNIA

THE STATE OF CALIFORNIA OR ITS OFFICERS OR AGENTS SHALL NOT BE RESPONSIBLE FOR THE ACCURACY OR COMPLETENESS OF SCANNED COPIES OF THIS PLAN SHEET.

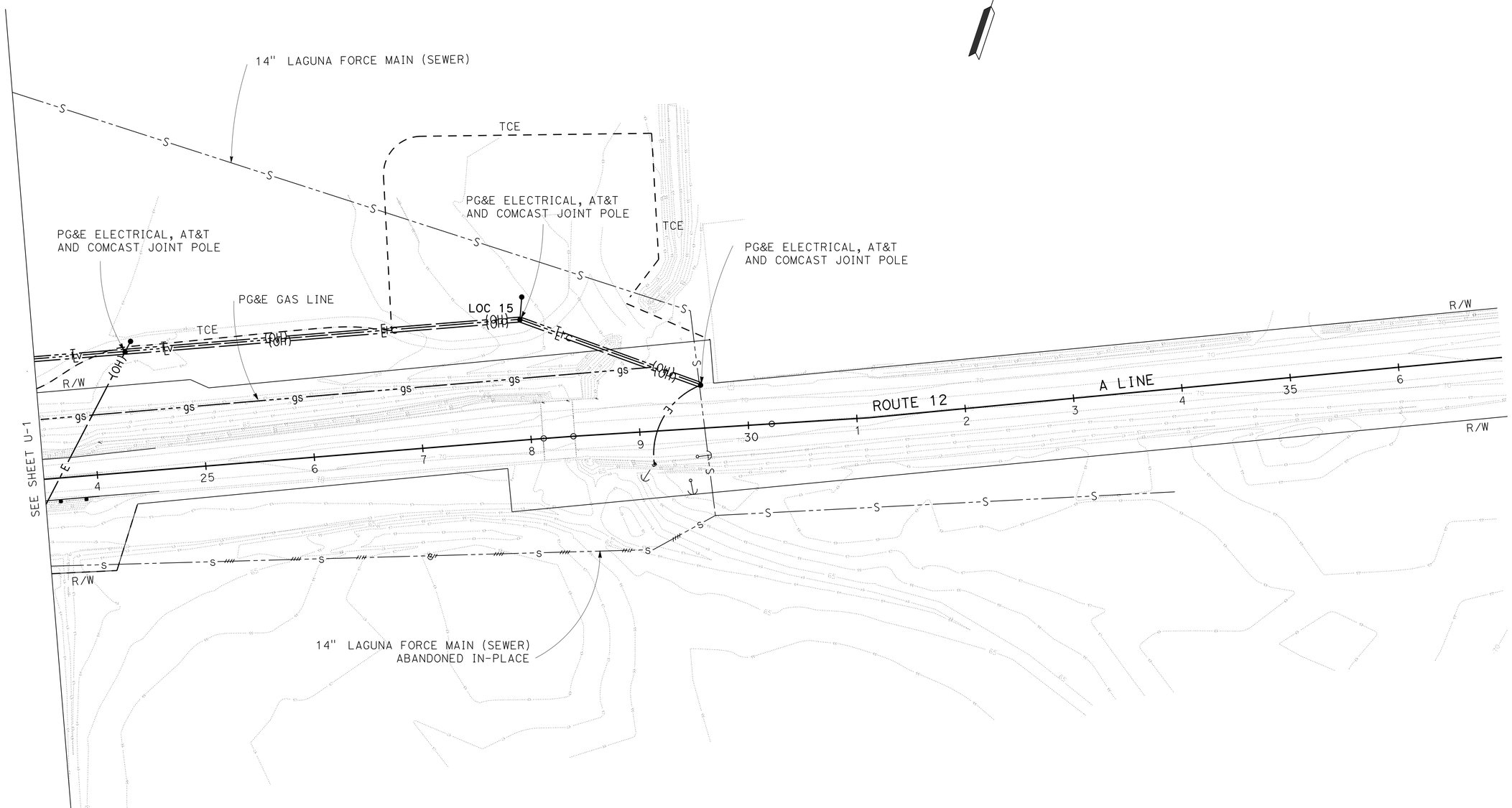

UTILITY PLAN

SCALE: 1" = 50'

APPROVED FOR UTILITY INFORMATION ONLY

U-2

STATE OF CALIFORNIA - DEPARTMENT OF TRANSPORTATION
Caltrans
DESIGN

FUNCTIONAL SUPERVISOR: STEWART LEE
CALCULATED-DESIGNED BY: EMARNAN PONGPAIROJ
CHECKED BY: BACH-YEN NGUYEN
REVISED BY: JN
DATE REVISED: 9/12

LAST REVISION 08-02-12
DATE PLOTTED => 28-MAR-2013
TIME PLOTTED => 14:29

Dist	COUNTY	ROUTE	POST MILES TOTAL PROJECT	SHEET No.	TOTAL SHEETS
04	Son	12	9.6	35	118

REGISTERED CIVIL ENGINEER 9-26-12 DATE

3-25-13
PLANS APPROVAL DATE

REGISTERED PROFESSIONAL ENGINEER Jerilyn L. Struven No. 49964 Exp. 12-31-15 CIVIL STATE OF CALIFORNIA

THE STATE OF CALIFORNIA OR ITS OFFICERS OR AGENTS SHALL NOT BE RESPONSIBLE FOR THE ACCURACY OR COMPLETENESS OF SCANNED COPIES OF THIS PLAN SHEET.

NOTES:

1. EXACT LOCATION AND POSITION OF CONSTRUCTION AREA SIGNS TO BE DETERMINED BY THE ENGINEER.
2. DIMENSIONS FOR SIGN PANEL AND POST ARE IN INCHES
3. LETTERING SIZES FOR SIGN PANELS ARE IN INCHES

LEGEND:

No. CONSTRUCTION AREA SIGN NUMBER

(S) DENOTES STATIONARY MOUNTED SIGN

→ DIRECTION OF TRAFFIC

✕ RAMP OR CONNECTOR TO BE CLOSED

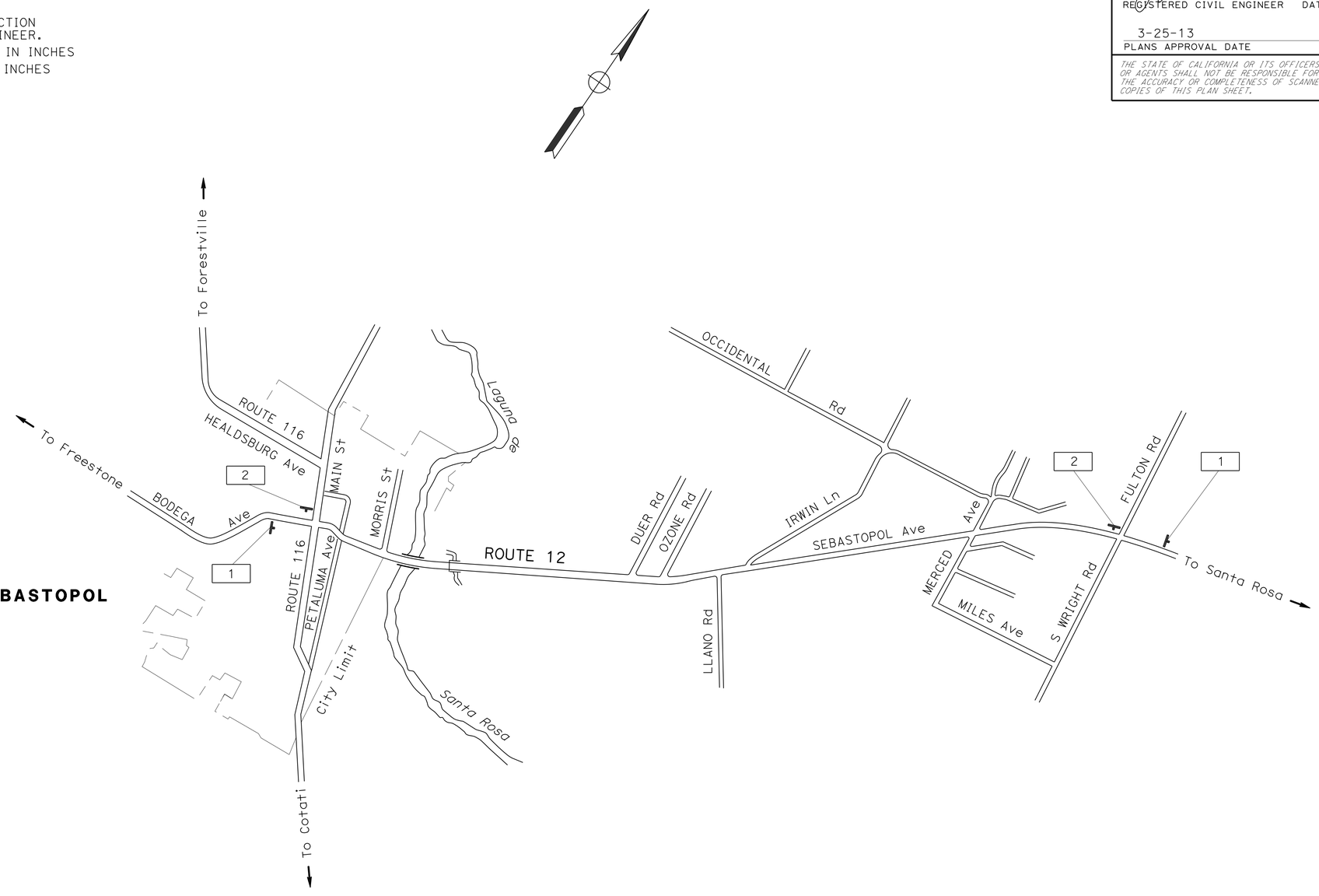

CONSTRUCTION AREA SIGNS

SIGN No.	MUTCD CODE	MESSAGE	PANEL SIZE	NUMBER OF POST AND SIZE	No. OF SIGNS
1	W20-1	ROAD WORK AHEAD	48" x 48"	(ONE) 4" x 6"	2
2	G20-2	END ROAD WORK	48" x 24"	(ONE) 4" x 6"	2

CONSTRUCTION AREA SIGNS

NO SCALE

CS-1

APPROVED FOR CONSTRUCTION AREA SIGN WORK ONLY

STATE OF CALIFORNIA - DEPARTMENT OF TRANSPORTATION

Caltrans® TRAFFIC

FUNCTIONAL SUPERVISOR: JERILYN STRUVEN

CALCULATED-DESIGNED BY: SHARI TALAI

CHECKED BY: SHARI TALAI

REVISED BY: ST

DATE REVISED: 9/12

LAST REVISION 09-24-12

DATE PLOTTED => 28-MAR-2013
TIME PLOTTED => 14:29

BORDER LAST REVISED 7/2/2010

USERNAME => s123631
DGN FILE => 04000004821a001.dgn

RELATIVE BORDER SCALE IS IN INCHES 0 1 2 3

UNIT 0738

PROJECT NUMBER & PHASE 04000004821

Dist	COUNTY	ROUTE	POST MILES TOTAL PROJECT	SHEET No.	TOTAL SHEETS
04	Son	12	9.6	36	118

REGISTERED CIVIL ENGINEER 9-26-12 DATE

3-25-13
PLANS APPROVAL DATE

REGISTERED PROFESSIONAL ENGINEER Jerilyn L. Struven No. 49964 Exp. 12-31-15 CIVIL STATE OF CALIFORNIA

THE STATE OF CALIFORNIA OR ITS OFFICERS OR AGENTS SHALL NOT BE RESPONSIBLE FOR THE ACCURACY OR COMPLETENESS OF SCANNED COPIES OF THIS PLAN SHEET.

NOTES:

1. EXACT LOCATION AND POSITION OF CONSTRUCTION AREA SIGNS TO BE DETERMINED BY THE ENGINEER.
2. DIMENSIONS FOR SIGN PANEL AND POST ARE IN INCHES
3. LETTERING SIZES FOR SIGN PANELS ARE IN INCHES

LEGEND:

No.	CONSTRUCTION AREA SIGN NUMBER
(S)	DENOTES STATIONARY MOUNTED SIGN
→	DIRECTION OF TRAFFIC
✕	RAMP OR CONNECTOR TO BE CLOSED

R11-2

ROAD CLOSED

R11-3a

ROAD CLOSED-LOCAL TRAFFIC ONLY

CONSTRUCTION AREA SIGNS

SIGN No.	MUTCD CODE	MESSAGE	PANEL SIZE (INCH X INCH)	NUMBER OF POST SIZE (EA-INCH x INCH)	QUANTITY EA
1	W20-1	ROAD WORK AHEAD	48 x 48	1-4 x 6	2
2	G20-2	END ROAD WORK	48 x 24	1-4 x 4	2
5	W20-2	DETOUR AHEAD	48 x 48	1-4 x 6	3
6	M4-8a	END DETOUR	36 x 18	1-4 x 4	2
7	SC3(CA)(↑)	DETOUR (STRAIGHT)	48 x 18	1-4 x 6	4
	G28-2(12) (CA)	ROUTE SHIELD	28 x 24		
	M3-4	WEST	21 x 9		
8	M4-10 (L↑)	DETOUR (LEFT)	48 x 18	1-4 x 6	4
	G28-2(12) (CA)	ROUTE SHIELD	28 x 24		
	M3-4	WEST	21 x 9		
9	R11-2	ROAD CLOSED	48 x 30	1-4 x 6	2
10	M4-10 (R↑)	DETOUR (RIGHT)	48 x 18	1-4 x 6	3
	G28-2(12) (CA)	ROUTE SHIELD	28 x 24		
	M3-4	WEST	21 x 9		
11	SC3(CA)(↑)	DETOUR (STRAIGHT)	48 x 48	1-4 x 6	3
	G28-2(12) (CA)	ROUTE SHIELD	28 x 18		
	M3-2	EAST	21 x 9		
12	M4-10 (L↑)	DETOUR (LEFT)	48 x 18	1-4 x 6	2
	G28-2(12) (CA)	ROUTE SHIELD	28 x 24		
	M3-2	EAST	21 x 9		
13	R11-3a	ROAD CLOSED 500 FEET AHEAD LOCAL TRAFFIC ONLY	60 x 30	1-4 x 6	2
14	M4-10 (R↑)	DETOUR (RIGHT)	48 x 18	1-4 x 6	5
	G28-2(12) (CA)	ROUTE SHIELD	28 x 24		
	M3-2	EAST	21 x 9		
	TOTAL				34

CONSTRUCTION AREA SIGNS

NO SCALE

CS-2

APPROVED FOR CONSTRUCTION AREA SIGN WORK ONLY

STATE OF CALIFORNIA - DEPARTMENT OF TRANSPORTATION
Caltrans
TRAFFIC

FUNCTIONAL SUPERVISOR: JERILYN STRUYEN
CALCULATED-DESIGNED BY: SHARI TALAI
CHECKED BY: SHARI TALAI
REVISED BY: ST
DATE REVISED: 9/12

LAST REVISION DATE PLOTTED => 28-MAR-2013
09-24-12 TIME PLOTTED => 14:29

Dist	COUNTY	ROUTE	POST MILES TOTAL PROJECT	SHEET No.	TOTAL SHEETS
04	Son	12	9.6	37	118

REGISTERED CIVIL ENGINEER — DATE: 9-26-12

3-25-13
PLANS APPROVAL DATE

REGISTERED PROFESSIONAL ENGINEER — Jerilyn L. Struven — No. 49964 — Exp. 12-31-15 — CIVIL — STATE OF CALIFORNIA

THE STATE OF CALIFORNIA OR ITS OFFICERS OR AGENTS SHALL NOT BE RESPONSIBLE FOR THE ACCURACY OR COMPLETENESS OF SCANNED COPIES OF THIS PLAN SHEET.

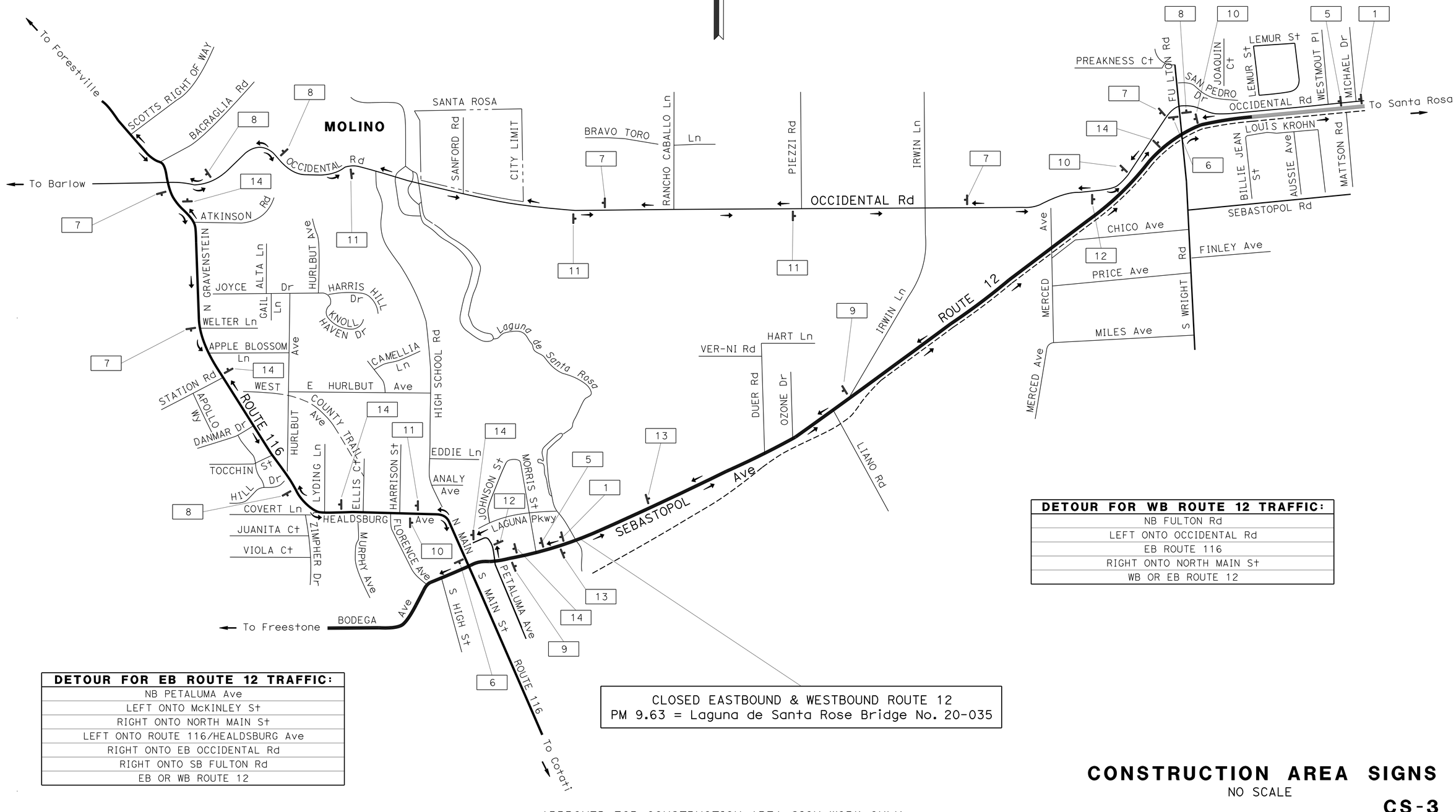

DETOUR FOR WB ROUTE 12 TRAFFIC:
NB FULTON Rd
LEFT ONTO OCCIDENTAL Rd
EB ROUTE 116
RIGHT ONTO NORTH MAIN St
WB OR EB ROUTE 12

DETOUR FOR EB ROUTE 12 TRAFFIC:
NB PETALUMA Ave
LEFT ONTO McKINLEY St
RIGHT ONTO NORTH MAIN St
LEFT ONTO ROUTE 116/HEALDSBURG Ave
RIGHT ONTO EB OCCIDENTAL Rd
RIGHT ONTO SB FULTON Rd
EB OR WB ROUTE 12

CLOSED EASTBOUND & WESTBOUND ROUTE 12
PM 9.63 = Laguna de Santa Rose Bridge No. 20-035

CONSTRUCTION AREA SIGNS

NO SCALE

CS-3

APPROVED FOR CONSTRUCTION AREA SIGN WORK ONLY

STATE OF CALIFORNIA - DEPARTMENT OF TRANSPORTATION
Caltrans®
TRAFFIC

FUNCTIONAL SUPERVISOR: JERILYN STRUVEN
CALCULATED-DESIGNED BY: SHARI TALAI
CHECKED BY: SHARI TALAI
REVISED BY: ST
DATE REVISED: 9/12

LAST REVISION 01-02-13
DATE PLOTTED => 28-MAR-2013
TIME PLOTTED => 14:29

Dist	COUNTY	ROUTE	POST MILES TOTAL PROJECT	SHEET No.	TOTAL SHEETS
04	Son	12	9.6	38	118

REGISTERED CIVIL ENGINEER — DATE 10-1-12

3-25-13
PLANS APPROVAL DATE

REGISTERED PROFESSIONAL ENGINEER Bach-Yen Nguyen No. 64435 Exp. 6-30-13 CIVIL STATE OF CALIFORNIA

THE STATE OF CALIFORNIA OR ITS OFFICERS OR AGENTS SHALL NOT BE RESPONSIBLE FOR THE ACCURACY OR COMPLETENESS OF SCANNED COPIES OF THIS PLAN SHEET.

NOTES:

1. FOR ACCURATE RIGHT OF WAY DATA, CONTACT RIGHT OF WAY ENGINEERING AT THE DISTRICT OFFICE.
2. FINAL 0.2' HMA (TYPE A) TO BE PLACED JUST PRIOR TO FINAL PAVE DELINEATION FOR THE ROADWAY SECTION
3. THE EXACT LOCATION OF CHANGEABLE MESSAGE SIGNS WILL BE DETERMINED BY THE ENGINEER

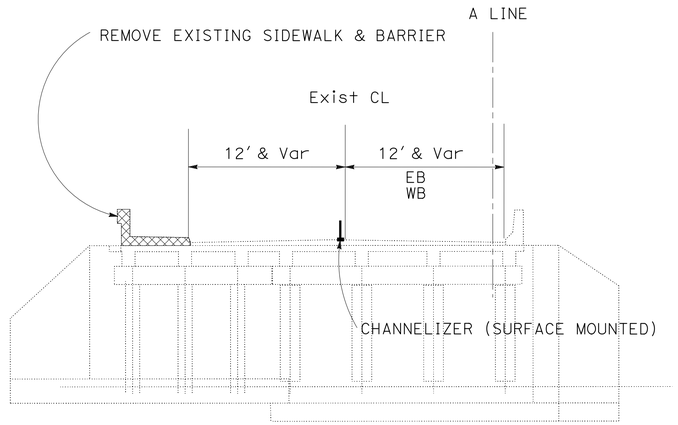

Sta A 16+77.14 TO A 18+94.71
NO SCALE

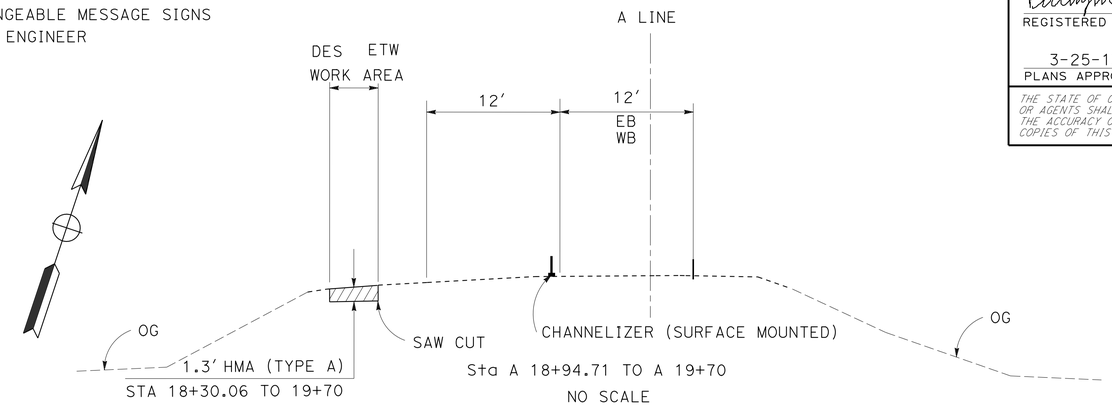

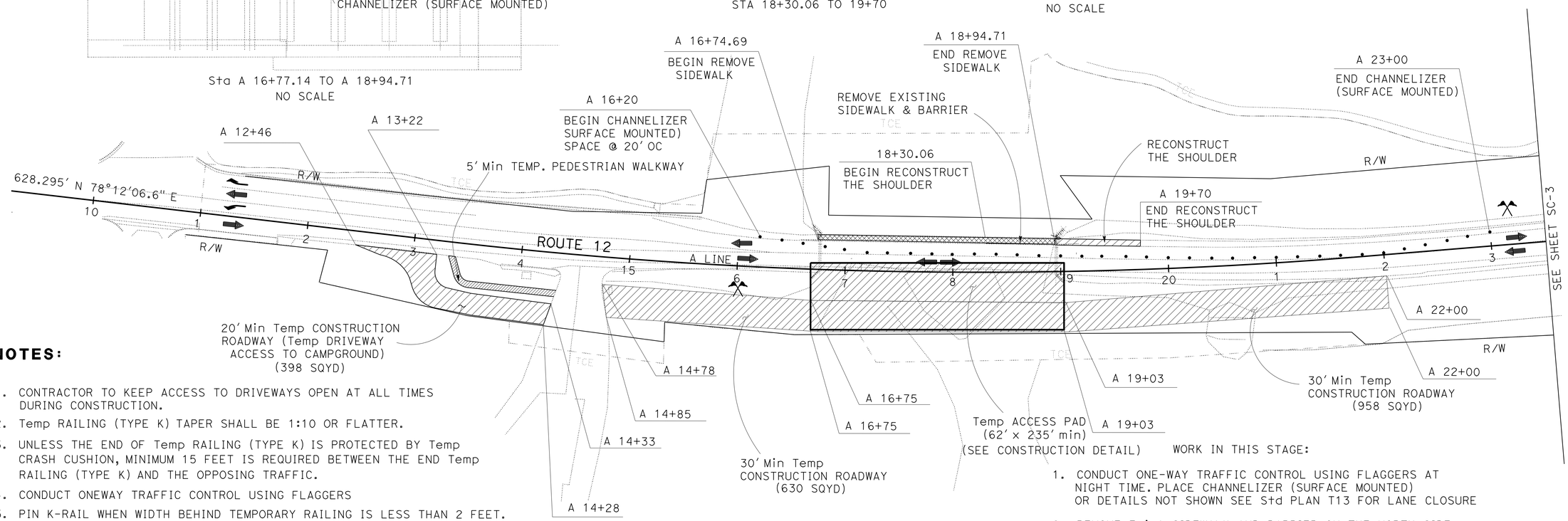

NOTES:

1. CONTRACTOR TO KEEP ACCESS TO DRIVEWAYS OPEN AT ALL TIMES DURING CONSTRUCTION.
2. Temp RAILING (TYPE K) TAPER SHALL BE 1:10 OR FLATTER.
3. UNLESS THE END OF Temp RAILING (TYPE K) IS PROTECTED BY Temp CRASH CUSHION, MINIMUM 15 FEET IS REQUIRED BETWEEN THE END Temp RAILING (TYPE K) AND THE OPPOSING TRAFFIC.
4. CONDUCT ONEWAY TRAFFIC CONTROL USING FLAGGERS
5. PIN K-RAIL WHEN WIDTH BEHIND TEMPORARY RAILING IS LESS THAN 2 FEET.

LEGEND:

- CONSTRUCTION IN THIS STAGE
- REMOVE EXISTING
- CLOSURE POUR
- TEMPORARY RAILING (TYPE K) WITH WHITE REFLECTIVE MARKER
- TEMPORARY CRASH CUSHION
- DIRECTION OF TRAFFIC
- CHANNELIZER (SURFACE MOUNTED)
- FLAGGER

BR XX BEGIN REMOVE Exist TRAFFIC STRIPE
ER XX END REMOVE Exist TRAFFIC STRIPE
BT XX BEGIN Temp PAINTED TRAFFIC STRIPE
ET XX END Temp PAINTED TRAFFIC STRIPE
T XX Temp PAINTED TRAFFIC STRIPE
R XX REMOVE Exist TRAFFIC STRIPE

WORK IN THIS STAGE:

1. CONDUCT ONE-WAY TRAFFIC CONTROL USING FLAGGERS AT NIGHT TIME. PLACE CHANNELIZER (SURFACE MOUNTED) OR DETAILS NOT SHOWN SEE Std PLAN T13 FOR LANE CLOSURE
2. REMOVE Exist SIDEWALK AND BARRIER ON THE NORTH SIDE
3. RECONSTRUCT THE SHOULDER ON THE NORTH SIDE BEFORE SHIFTING THE TRAFFIC TO THE SHOULDER.
4. CONSTRUCT TEMPORARY DRIVEWAY ACCESSING TO CAMPGROUND, TEMPORARY PEDESTRIAN WALKWAY, TEMPORARY CONSTRUCTION ROADWAY, TEMPORARY ACCESS PAD, TEMPORARY GROUND PROTECTION MAT AND TEMPORARY CREEK DIVERSION ON THE SOUTH SIDE (SEE TD-1,TD-2 & WPCD-1 FOR MORE INFORMATION)
5. CONSTRUCT COFFERDAM AT ABUTENT 1 AND 4

STAGE CONSTRUCTION AND TRAFFIC HANDLING PLAN

STAGE 1A

SCALE: 1" = 50'

APPROVED FOR STAGE CONSTRUCTION AND TRAFFIC HANDLING WORK ONLY

SC-1

CALCULATED-DESIGNED BY EMARNAN PONGPAIROJ
CHECKED BY BACH-YEN NGUYEN
REVISED BY EP
DATE REVISED 9/12
FUNCTIONAL SUPERVISOR STEWART LEE
STATE OF CALIFORNIA - DEPARTMENT OF TRANSPORTATION
Caltrans DESIGN

LAST REVISION 02-25-13
DATE PLOTTED => 28-MAR-2013
TIME PLOTTED => 14:29

Dist	COUNTY	ROUTE	POST MILES TOTAL PROJECT	SHEET No.	TOTAL SHEETS
04	Son	12	9.6	39	118

REGISTERED CIVIL ENGINEER 10-1-12 DATE

3-25-13
PLANS APPROVAL DATE

REGISTERED PROFESSIONAL ENGINEER Bach-Yen Nguyen No. 64435 Exp. 6-30-13 CIVIL STATE OF CALIFORNIA

THE STATE OF CALIFORNIA OR ITS OFFICERS OR AGENTS SHALL NOT BE RESPONSIBLE FOR THE ACCURACY OR COMPLETENESS OF SCANNED COPIES OF THIS PLAN SHEET.

NOTE:

FOR ACCURATE RIGHT OF WAY DATA, CONTACT RIGHT OF WAY ENGINEERING AT THE DISTRICT OFFICE.

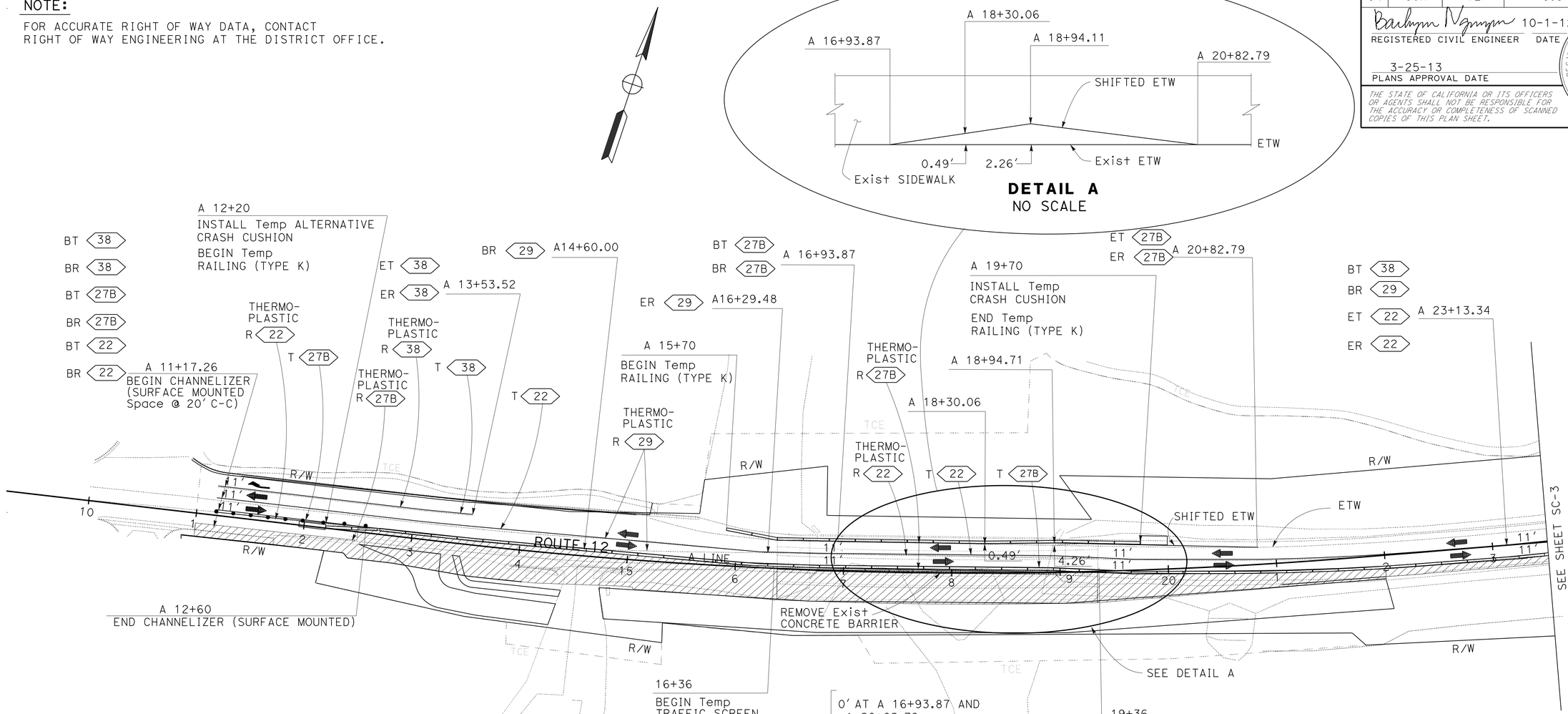

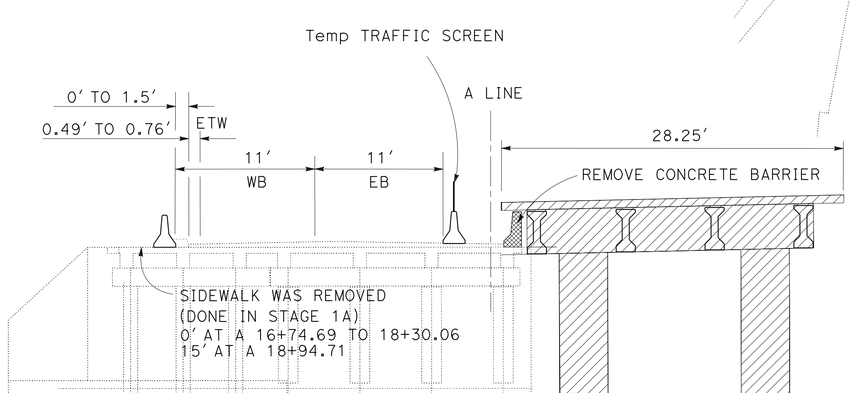

A 16+77.14 TO A 18+94.71

NO SCALE

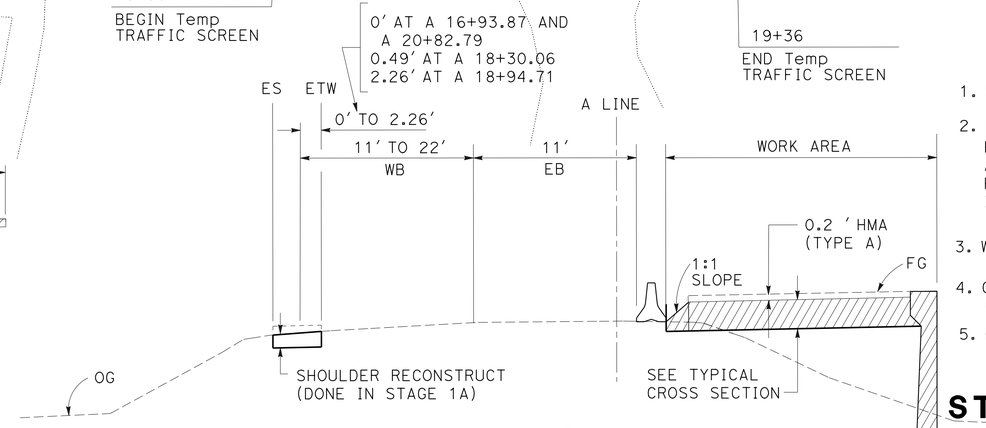

A 11+00 TO A 16+77.14
A 18+94.71 TO A 24+55.37

NO SCALE

WORK IN THIS STAGE:

1. SHIFTING THE TRAFFIC TO THE NORTH SIDE
2. REMOVE BARRIER ON THE SOUTH SIDE. PLACE Temp ALTERNATIVE CRASH CUSHION AND Temp RAILING (Type K) WITH WHITE REFLECTIVE MARKER AT ETW OF WB & EB. INSTALL Temp TRAFFIC SCREEN
3. WIDEN THE APPROACH ROADWAYS ON THE SOUTH SIDE.
4. CONSTRUCT RETAINING WALLS RW1, RW3 AND EMBANKMENTS ON THE SOUTH SIDE.
5. CONSTRUCT PORTION OF NEW BRIDGE ON THE SOUTH SIDE.

STAGE CONSTRUCTION AND TRAFFIC HANDLING PLAN

STAGE 1B

SCALE: 1" = 50'

APPROVED FOR STAGE CONSTRUCTION AND TRAFFIC HANDLING WORK ONLY

SC-2

REVISED BY: EP — DATE REVISED: 12/12
CALCULATED-DESIGNED BY: EMARNAN PONGPAIROJ — CHECKED BY: BACH-YEN NGUYEN
FUNCTIONAL SUPERVISOR: STEWART LEE

STATE OF CALIFORNIA - DEPARTMENT OF TRANSPORTATION — DESIGN — Caltrans

LAST REVISION 02-05-13 — DATE PLOTTED => 28-MAR-2013 — TIME PLOTTED => 14:29

Dist	COUNTY	ROUTE	POST MILES TOTAL PROJECT	SHEET No.	TOTAL SHEETS
04	Son	12	9.6	40	118

Bachyen Nguyen 10-1-12
REGISTERED CIVIL ENGINEER DATE

3-25-13
PLANS APPROVAL DATE

REGISTERED PROFESSIONAL ENGINEER
Bach-Yen Nguyen
No. 64435
Exp. 6-30-13
CIVIL
STATE OF CALIFORNIA

THE STATE OF CALIFORNIA OR ITS OFFICERS OR AGENTS SHALL NOT BE RESPONSIBLE FOR THE ACCURACY OR COMPLETENESS OF SCANNED COPIES OF THIS PLAN SHEET.

NOTE:

FOR ACCURATE RIGHT OF WAY DATA, CONTACT
RIGHT OF WAY ENGINEERING AT THE DISTRICT OFFICE.

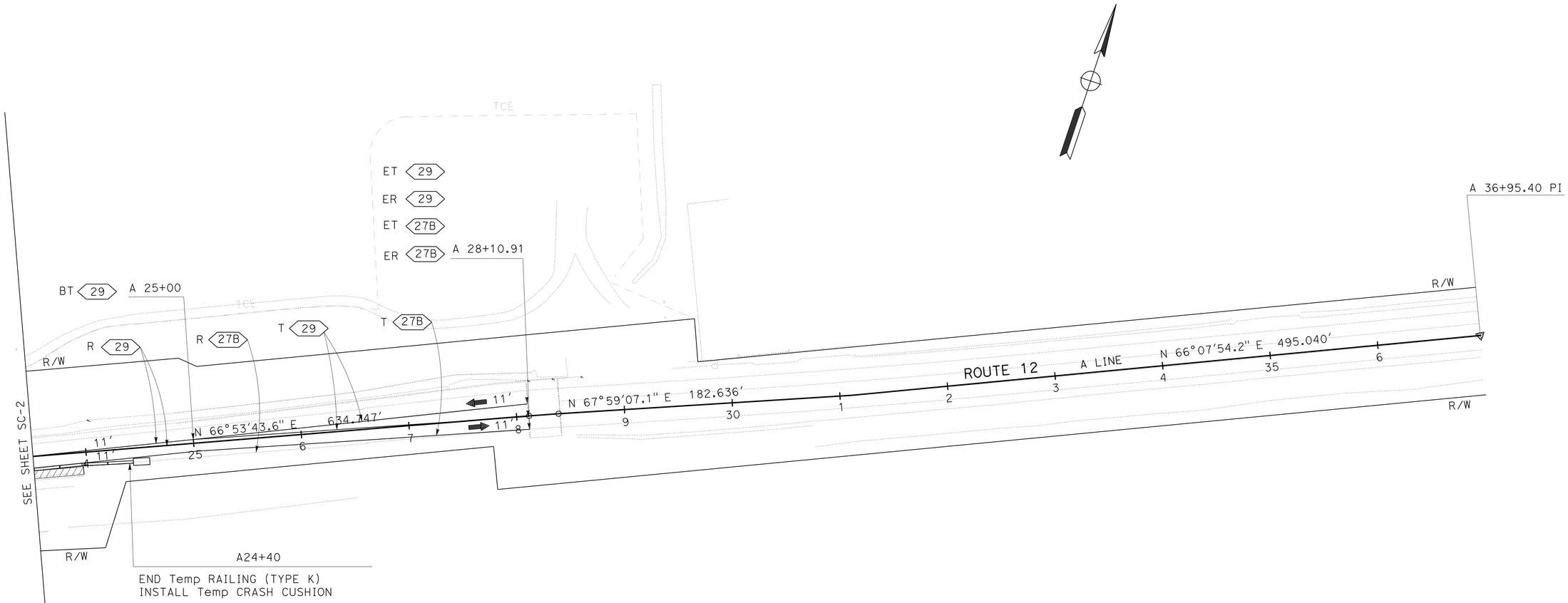

STAGE CONSTRUCTION AND TRAFFIC HANDLING PLAN

STAGE 1B

SCALE: 1" = 50'

APPROVED FOR STAGE CONSTRUCTION AND TRAFFIC HANDLING WORK ONLY

SC-3

STATE OF CALIFORNIA - DEPARTMENT OF TRANSPORTATION
Caltrans
DESIGN

FUNCTIONAL SUPERVISOR: STEWART LEE
CALCULATED-DESIGNED BY: EMARNAN PONGPAIROJ
CHECKED BY: BACH-YEN NGUYEN
REVISED BY: EP
DATE REVISED: 9/12

LAST REVISION 10-03-12
DATE PLOTTED => 28-MAR-2013
TIME PLOTTED => 14:29

Dist	COUNTY	ROUTE	POST MILES TOTAL PROJECT	SHEET No.	TOTAL SHEETS
04	Son	12	9.6	41	118

Bachyen Nguyen 10-1-12
REGISTERED CIVIL ENGINEER DATE

3-25-13
PLANS APPROVAL DATE

REGISTERED PROFESSIONAL ENGINEER Bach-Yen Nguyen No. 64435 Exp. 6-30-13 CIVIL STATE OF CALIFORNIA

THE STATE OF CALIFORNIA OR ITS OFFICERS OR AGENTS SHALL NOT BE RESPONSIBLE FOR THE ACCURACY OR COMPLETENESS OF SCANNED COPIES OF THIS PLAN SHEET.

NOTE:

FOR ACCURATE RIGHT OF WAY DATA, CONTACT RIGHT OF WAY ENGINEERING AT THE DISTRICT OFFICE.

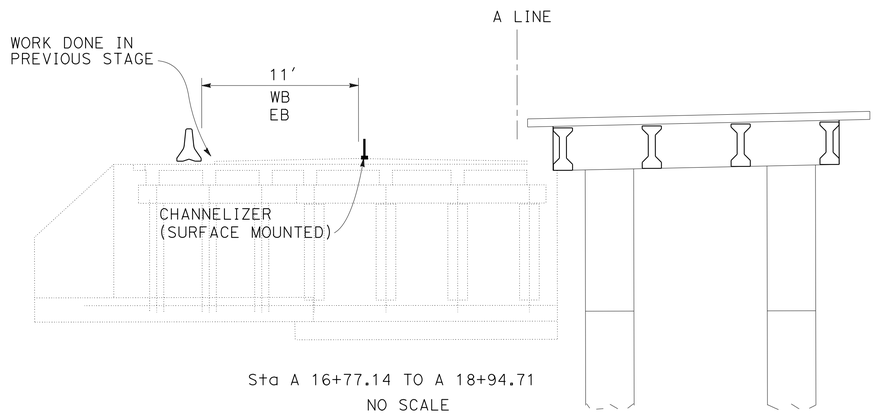

Sta A 16+77.14 TO A 18+94.71
NO SCALE

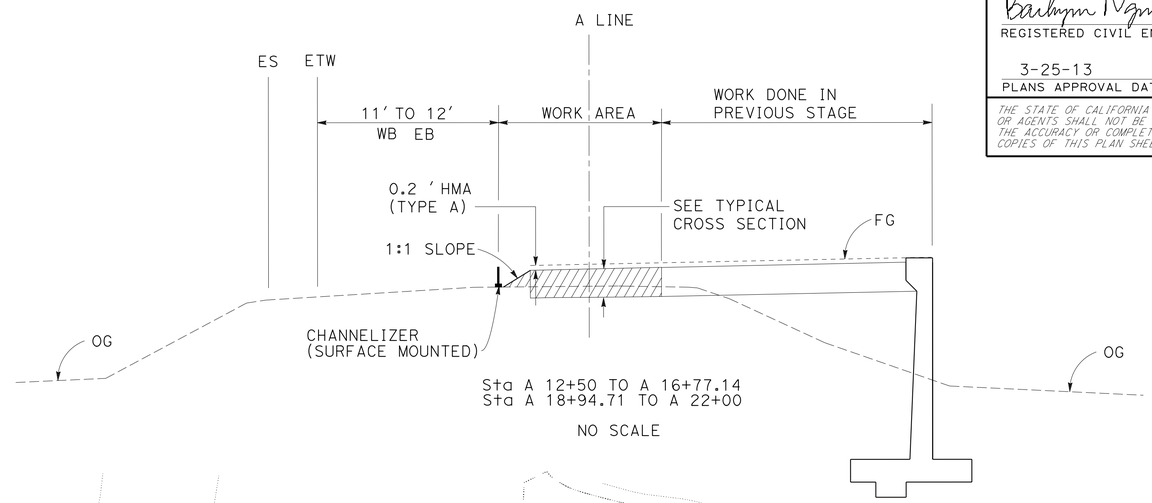

Sta A 12+50 TO A 16+77.14
Sta A 18+94.71 TO A 22+00
NO SCALE

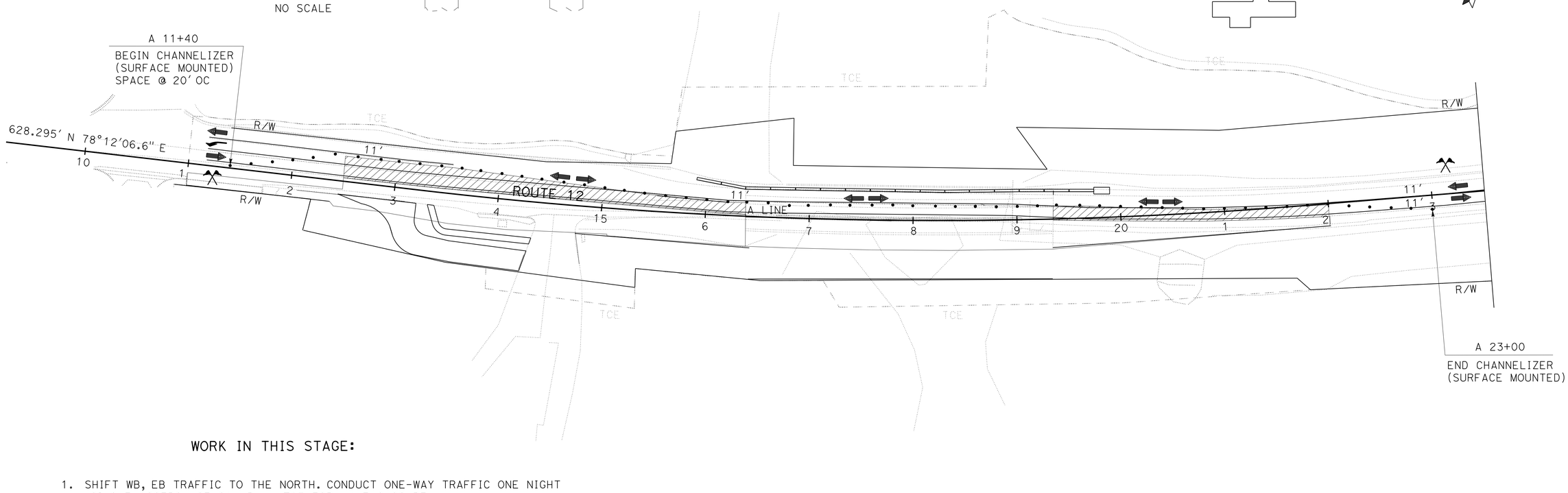

WORK IN THIS STAGE:

1. SHIFT WB, EB TRAFFIC TO THE NORTH. CONDUCT ONE-WAY TRAFFIC ONE NIGHT USING FLAGGERS USE Std PLAN T13 FOR LANE CLOSURE.
2. PLACE CHANNELIZER (SURFACE MOUNTED) AT ETW BEFORE OPENING THE TRAFFIC.
3. CONSTRUCT APPROACHING ROADWAYS.
4. OVERLAY WORK ON ROADWAYS WILL BE EXPECTED TO COMPLETE IN ONE NIGHT.

STAGE CONSTRUCTION AND TRAFFIC HANDLING PLAN

STAGE 2A

SCALE: 1" = 50′

APPROVED FOR STAGE CONSTRUCTION AND TRAFFIC HANDLING WORK ONLY

SC-4

REVISED BY	EP
DATE REVISED	12/12
CALCULATED-DESIGNED BY	EMARNAN PONGPAIROJ
CHECKED BY	BACH-YEN NGUYEN
FUNCTIONAL SUPERVISOR	STEWART LEE

STATE OF CALIFORNIA - DEPARTMENT OF TRANSPORTATION
Caltrans
DESIGN

LAST REVISION 01-02-13
DATE PLOTTED => 28-MAR-2013
TIME PLOTTED => 14:29

Dist	COUNTY	ROUTE	POST MILES TOTAL PROJECT	SHEET No.	TOTAL SHEETS
04	Son	12	9.6	42	118

REGISTERED CIVIL ENGINEER 10-1-12 DATE

3-25-13
PLANS APPROVAL DATE

REGISTERED PROFESSIONAL ENGINEER Bach-Yen Nguyen No. 64435 Exp. 6-30-13 CIVIL STATE OF CALIFORNIA

THE STATE OF CALIFORNIA OR ITS OFFICERS OR AGENTS SHALL NOT BE RESPONSIBLE FOR THE ACCURACY OR COMPLETENESS OF SCANNED COPIES OF THIS PLAN SHEET.

NOTE:

FOR ACCURATE RIGHT OF WAY DATA, CONTACT RIGHT OF WAY ENGINEERING AT THE DISTRICT OFFICE.

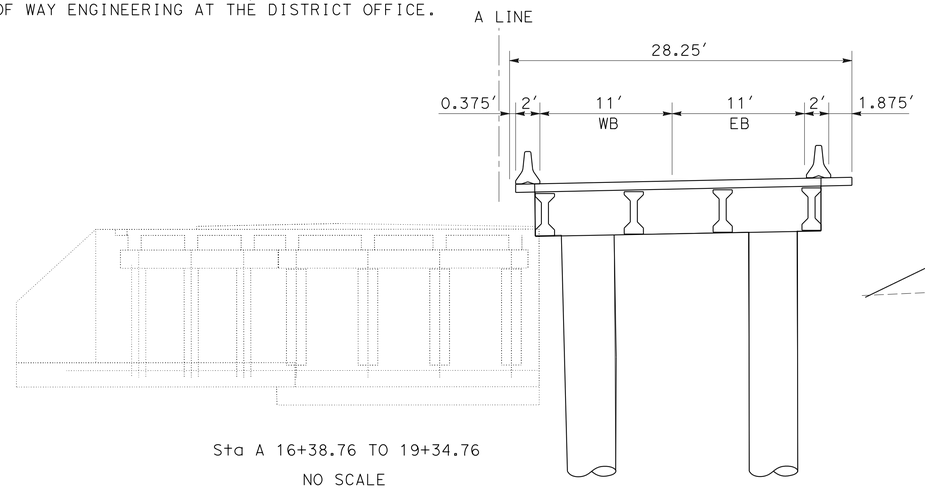

Sta A 16+38.76 TO 19+34.76

NO SCALE

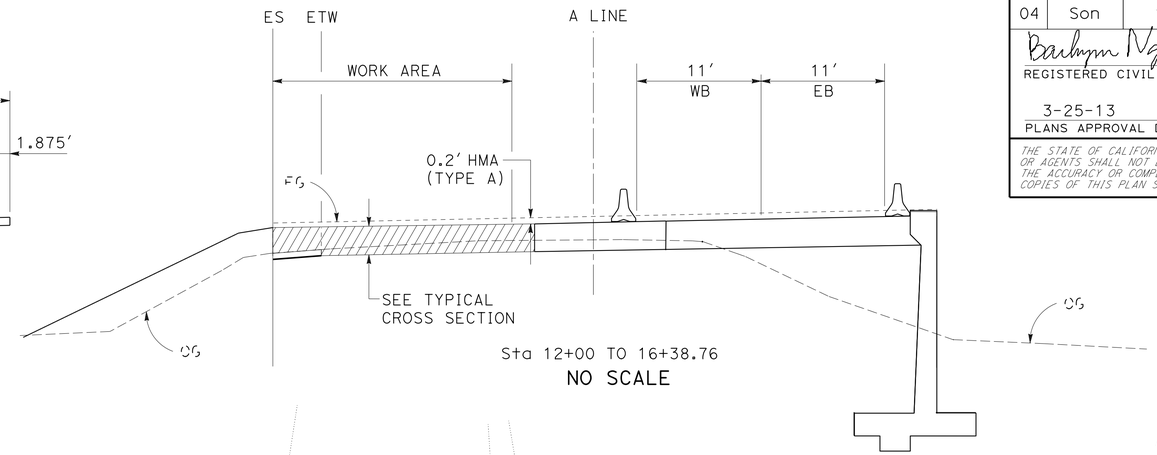

Sta 12+00 TO 16+38.76

NO SCALE

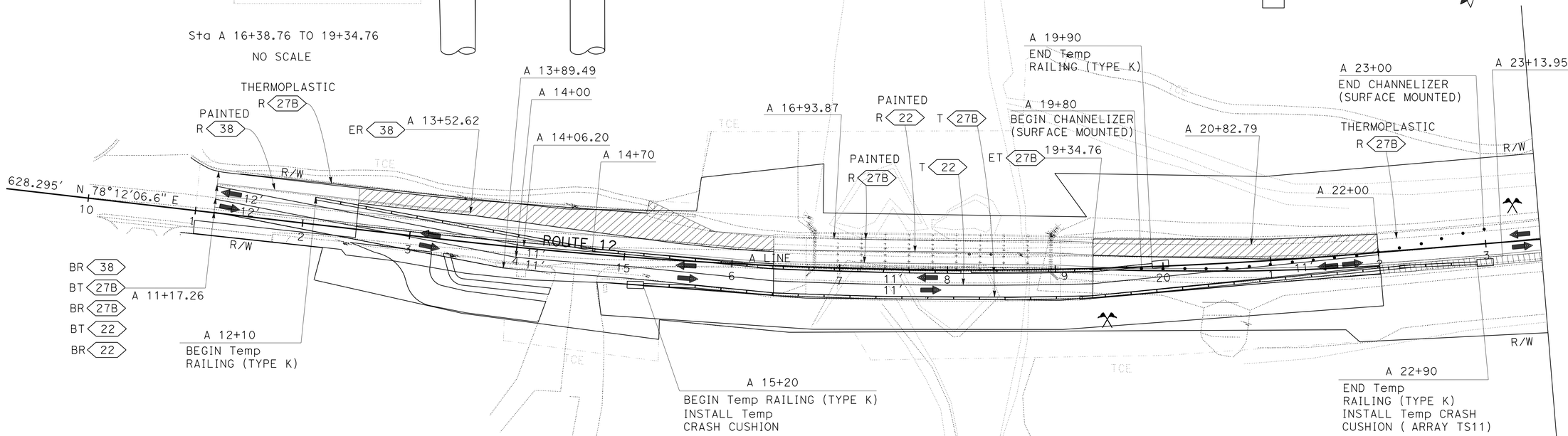

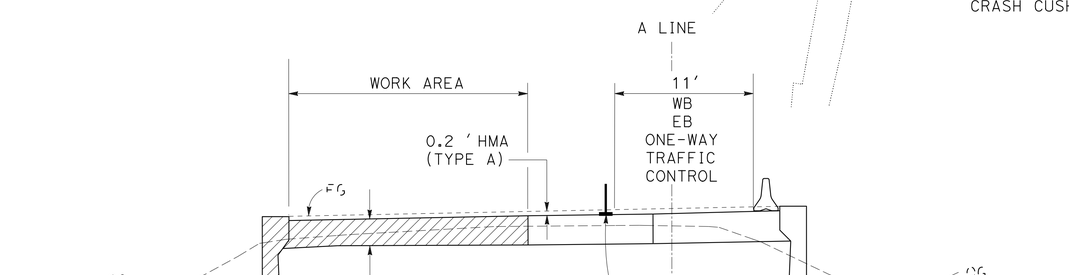

Sta 19+34.76 TO 23+00

NO SCALE

WORK IN THIS STAGE:

1. REMOVE Temp RAILING (TYPE K) ON THE NORTH SIDE SHIFT WB EB TRAFFIC TO THE SOUTH AND TO THE NEW BRIDGE; CONDUCT ONE WAY TRAFFIC CONTROL USING FLAGGERS AT NIGHT TIME ON THE EAST SIDE OF THE BRIDGE.
2. PLACE CHANNELIZER (SURFACE MOUNTED) AND PLACE Temp CRASH CUSHION MODULE (TYPE ARRAY TS11), Temp RAILING (TYPE K) WITH WHITE REFLECTIVE MARKER AT ETW OF WB BEFORE OPENING THE TRAFFIC.
3. CONSTRUCT THE APPROACHING ROADWAYS ON THE NORTH SIDE.
4. OVERLAY WORK ON ROADWAYS WILL BE EXPECTED TO COMPLETE IN ONE NIGHT.

STAGE CONSTRUCTION AND TRAFFIC HANDLING PLAN

STAGE 2B

SCALE: 1" = 50′

APPROVED FOR STAGE CONSTRUCTION AND TRAFFIC HANDLING WORK ONLY

SC-5

STATE OF CALIFORNIA - DEPARTMENT OF TRANSPORTATION
Caltrans®
DESIGN

FUNCTIONAL SUPERVISOR: STEWART LEE
CALCULATED-DESIGNED BY: EMARNAN PONGPAIROJ
CHECKED BY: BACH-YEN NGUYEN
REVISED BY: EP
DATE REVISED: 12/12

LAST REVISION 01-02-13
DATE PLOTTED => 28-MAR-2013
TIME PLOTTED => 14:29

Dist	COUNTY	ROUTE	POST MILES TOTAL PROJECT	SHEET No.	TOTAL SHEETS
04	Son	12	9.6	43	118

Bachyen Nguyen 10-1-12
REGISTERED CIVIL ENGINEER DATE

3-25-13
PLANS APPROVAL DATE

REGISTERED PROFESSIONAL ENGINEER Bach-Yen Nguyen No. 64435 Exp. 6-30-13 CIVIL STATE OF CALIFORNIA

THE STATE OF CALIFORNIA OR ITS OFFICERS OR AGENTS SHALL NOT BE RESPONSIBLE FOR THE ACCURACY OR COMPLETENESS OF SCANNED COPIES OF THIS PLAN SHEET.

NOTE:

FOR ACCURATE RIGHT OF WAY DATA, CONTACT RIGHT OF WAY ENGINEERING AT THE DISTRICT OFFICE.

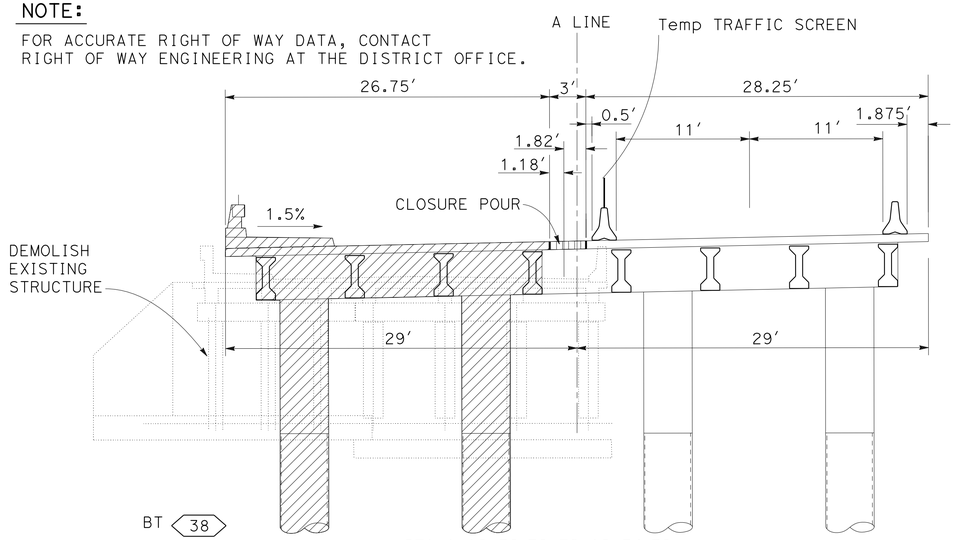

STA A 16+38.76 TO 19+34.76
NO SCALE

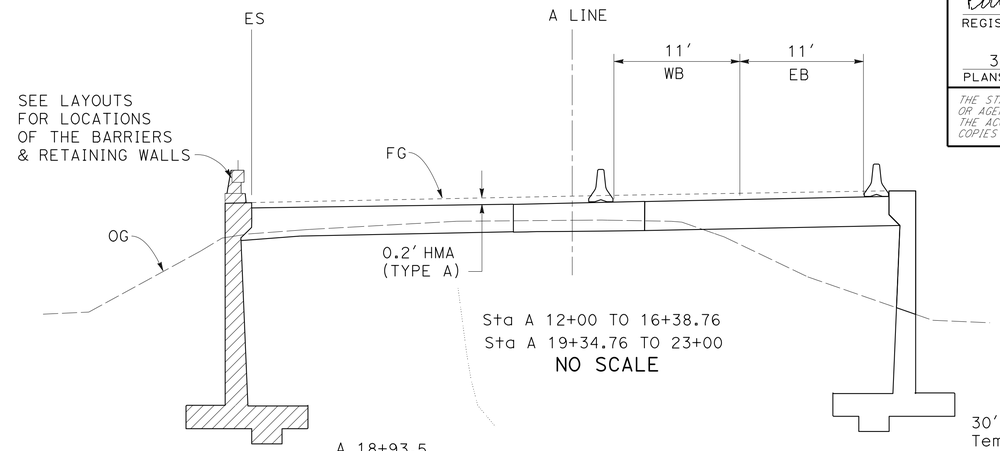

Sta A 12+00 TO 16+38.76
Sta A 19+34.76 TO 23+00
NO SCALE

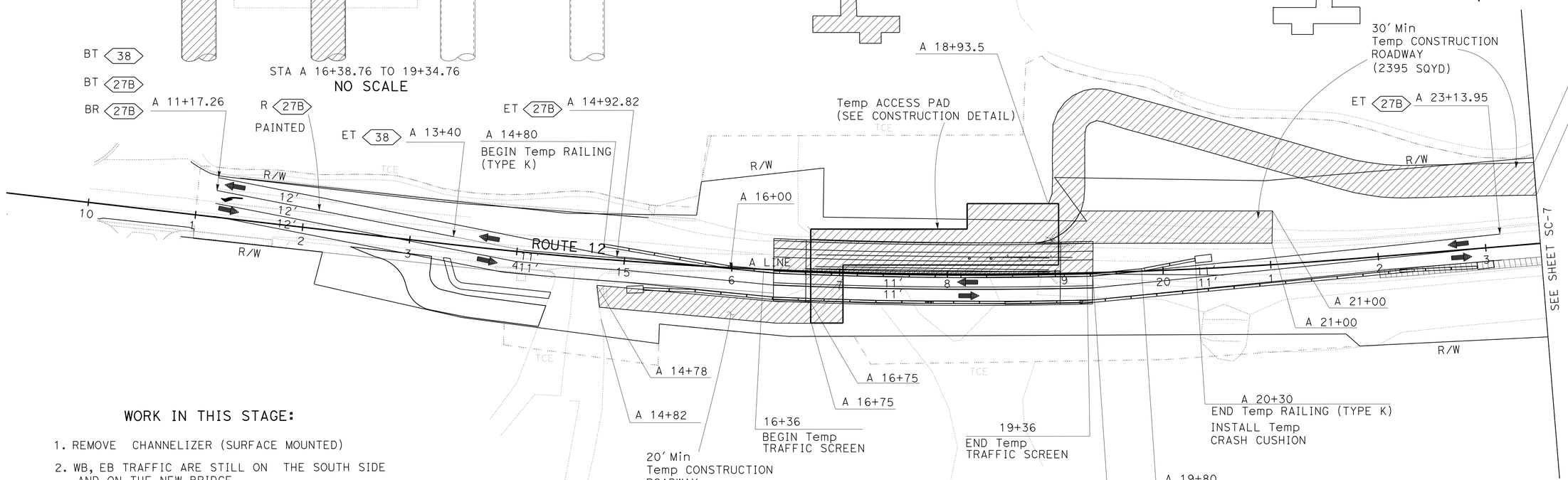

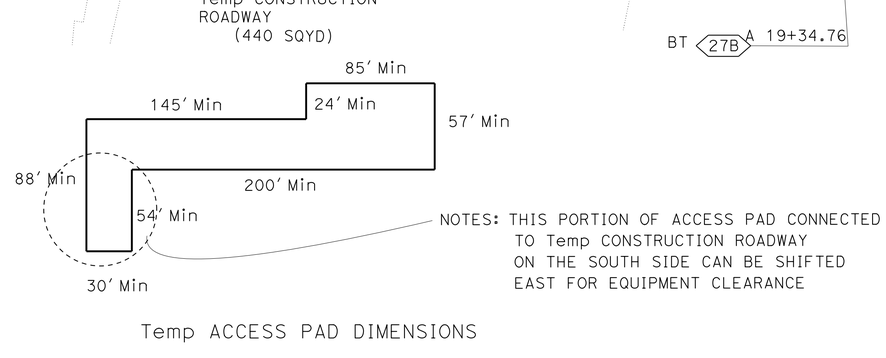

NOTES: THIS PORTION OF ACCESS PAD CONNECTED TO Temp CONSTRUCTION ROADWAY ON THE SOUTH SIDE CAN BE SHIFTED EAST FOR EQUIPMENT CLEARANCE

Temp ACCESS PAD DIMENSIONS

WORK IN THIS STAGE:

1. REMOVE CHANNELIZER (SURFACE MOUNTED)
2. WB, EB TRAFFIC ARE STILL ON THE SOUTH SIDE AND ON THE NEW BRIDGE.
3. ADJUST THE LENGTH OF Temp RAILING (TYPE K) REMOVE Temp RAILING (TYPE K) FROM STATION A 12+10 TO 14+80 WB EXTEND Temp RAILING TYPE K) FROM STATION A 19+90 TO TO 20+30 WB. INSTALL Temp TRAFFIC SCREEN.
4. CONSTRUCT Temp CONSTRUCTION ROADWAY,Temp ACCESS PAD, Temp GROUND PROTECTION MAT AND Temp CREEK DIVERSION ON THE NORTH SIDE AND SOUTH SIDE (SEE TD-1, TD-2 & WD-1 FOR MORE INFORMATION).
5. DEMOLISH THE EXISTING BRIDGE
6. CONSTRUCT COFFERDAM AT ABUTMENT 1 AND 4 CONSTRUCT RETAINING WALLS AND EMBANKMENT ON THE NORTH SIDE.
7. CONSTRUCT PORTION OF THE NEW BRIDGE ON THE NORTH SIDE.
8. BUILD BARRIER (TYPE 80SW AND 80A) ON THE NORTH SIDE OF THE BRIDGE AND APPROACHING ROADWAYS.

STAGE CONSTRUCTION AND TRAFFIC HANDLING PLAN
STAGE 2C
SCALE: 1" = 50′

APPROVED FOR STAGE CONSTRUCTION AND TRAFFIC HANDLING WORK ONLY

SC-6

STATE OF CALIFORNIA - DEPARTMENT OF TRANSPORTATION
Caltrans DESIGN
FUNCTIONAL SUPERVISOR: STEWART LEE
CALCULATED-DESIGNED BY: EMARNAN PONGPAIROJ
CHECKED BY: BACH-YEN NGUYEN
REVISED BY: EP
DATE REVISED: 12/12

LAST REVISION DATE PLOTTED => 28-MAR-2013
02-25-13 TIME PLOTTED => 14:29

Dist	COUNTY	ROUTE	POST MILES TOTAL PROJECT	SHEET No.	TOTAL SHEETS
04	Son	12	9.6	44	118

Bachyen Nguyen 10-1-12
REGISTERED CIVIL ENGINEER DATE

3-25-13
PLANS APPROVAL DATE

REGISTERED PROFESSIONAL ENGINEER
Bach-Yen Nguyen
No. 64435
Exp. 6-30-13
CIVIL
STATE OF CALIFORNIA

THE STATE OF CALIFORNIA OR ITS OFFICERS OR AGENTS SHALL NOT BE RESPONSIBLE FOR THE ACCURACY OR COMPLETENESS OF SCANNED COPIES OF THIS PLAN SHEET.

NOTE:

FOR ACCURATE RIGHT OF WAY DATA, CONTACT
RIGHT OF WAY ENGINEERING AT THE DISTRICT OFFICE.

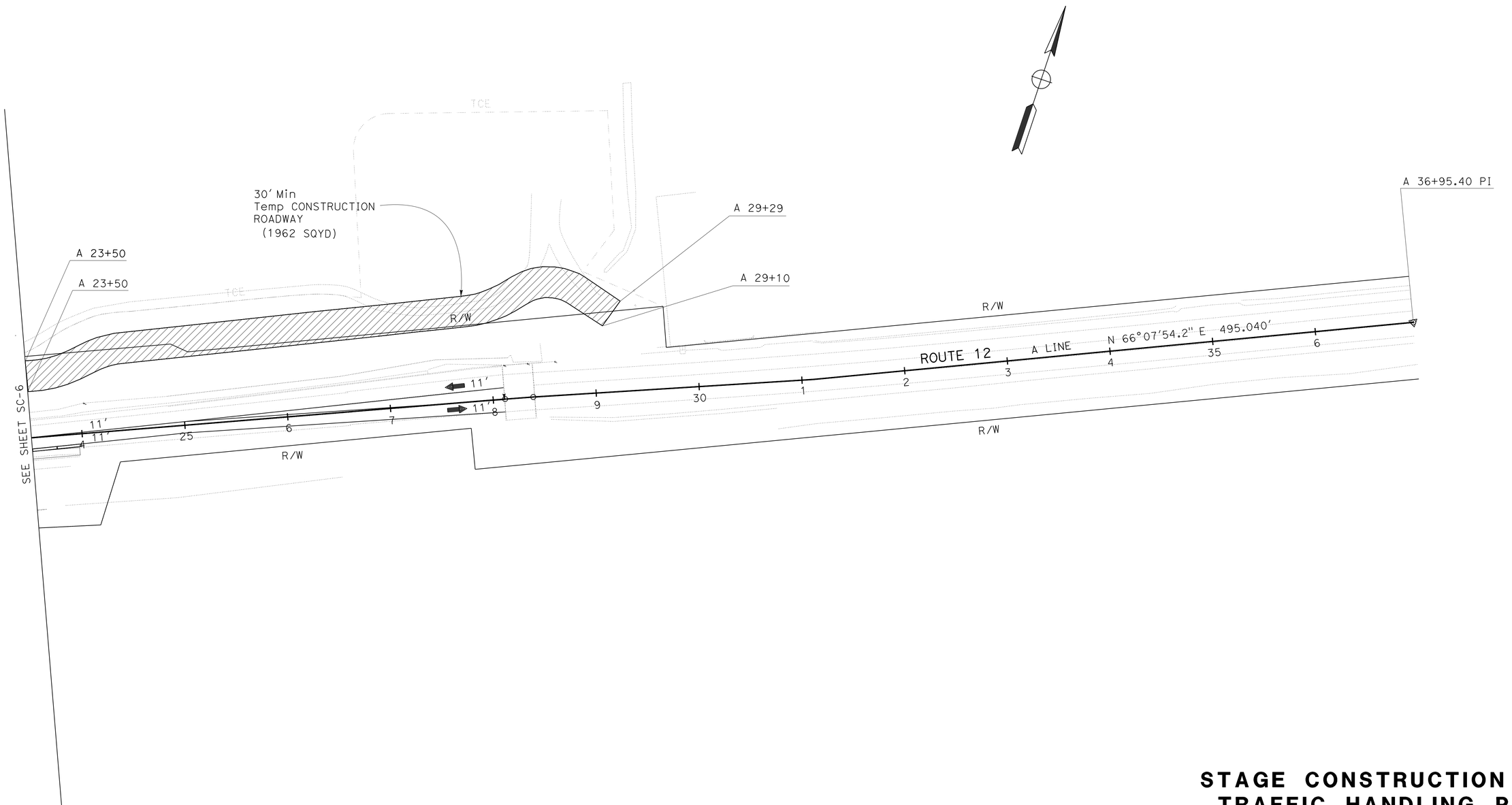

STAGE CONSTRUCTION AND TRAFFIC HANDLING PLAN

STAGE 2C

SCALE: 1" = 50'

APPROVED FOR STAGE CONSTRUCTION AND TRAFFIC HANDLING WORK ONLY

SC-7

STATE OF CALIFORNIA - DEPARTMENT OF TRANSPORTATION
Caltrans®
DESIGN

FUNCTIONAL SUPERVISOR: STEWART LEE
CALCULATED-DESIGNED BY: EMARNAN PONGPAIROJ
CHECKED BY: BACH-YEN NGUYEN
REVISED BY: EP
DATE REVISED: 9/12

LAST REVISION 02-05-13
DATE PLOTTED => 28-MAR-2013
TIME PLOTTED => 14:29

Dist	COUNTY	ROUTE	POST MILES TOTAL PROJECT	SHEET No.	TOTAL SHEETS
04	Son	12	9.6	45	118

Bachyen Nguyen 10-1-12
REGISTERED CIVIL ENGINEER DATE

3-25-13
PLANS APPROVAL DATE

REGISTERED PROFESSIONAL ENGINEER Bach-Yen Nguyen No. 64435 Exp. 6-30-13 CIVIL STATE OF CALIFORNIA

THE STATE OF CALIFORNIA OR ITS OFFICERS OR AGENTS SHALL NOT BE RESPONSIBLE FOR THE ACCURACY OR COMPLETENESS OF SCANNED COPIES OF THIS PLAN SHEET.

NOTE:

FOR ACCURATE RIGHT OF WAY DATA, CONTACT RIGHT OF WAY ENGINEERING AT THE DISTRICT OFFICE.

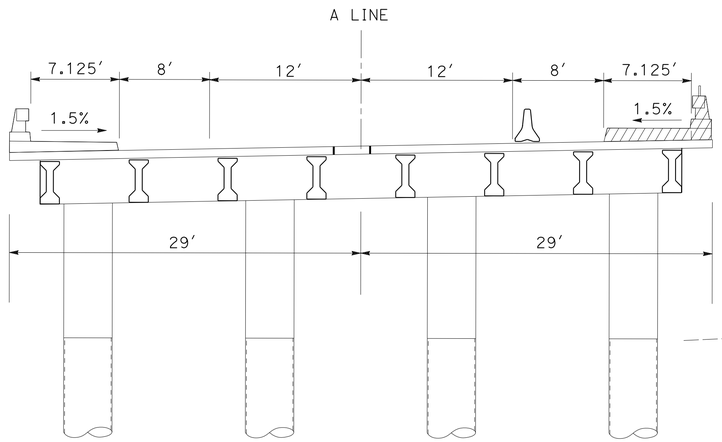

A 16+38.76 TO 19+34.76

NO SCALE

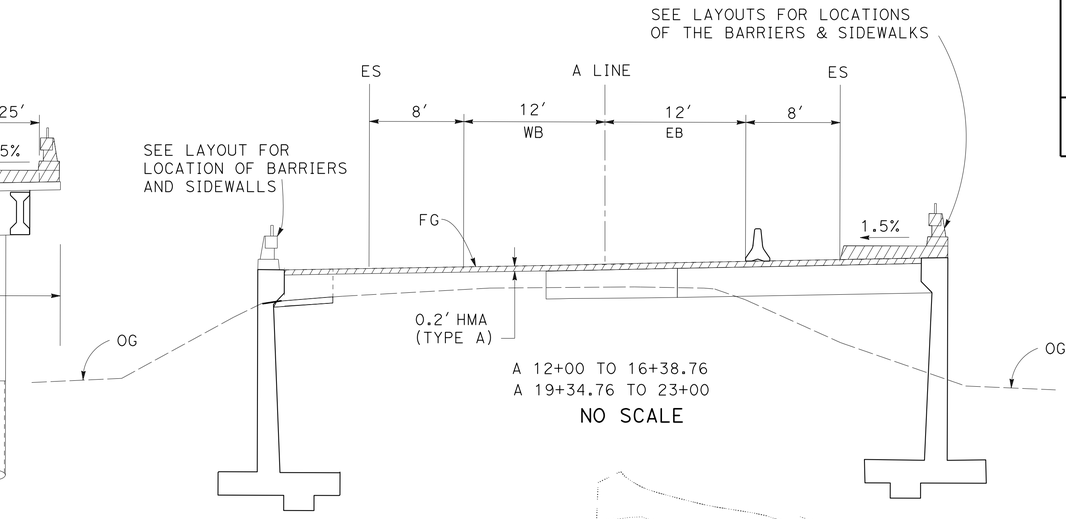

A 12+00 TO 16+38.76
A 19+34.76 TO 23+00

NO SCALE

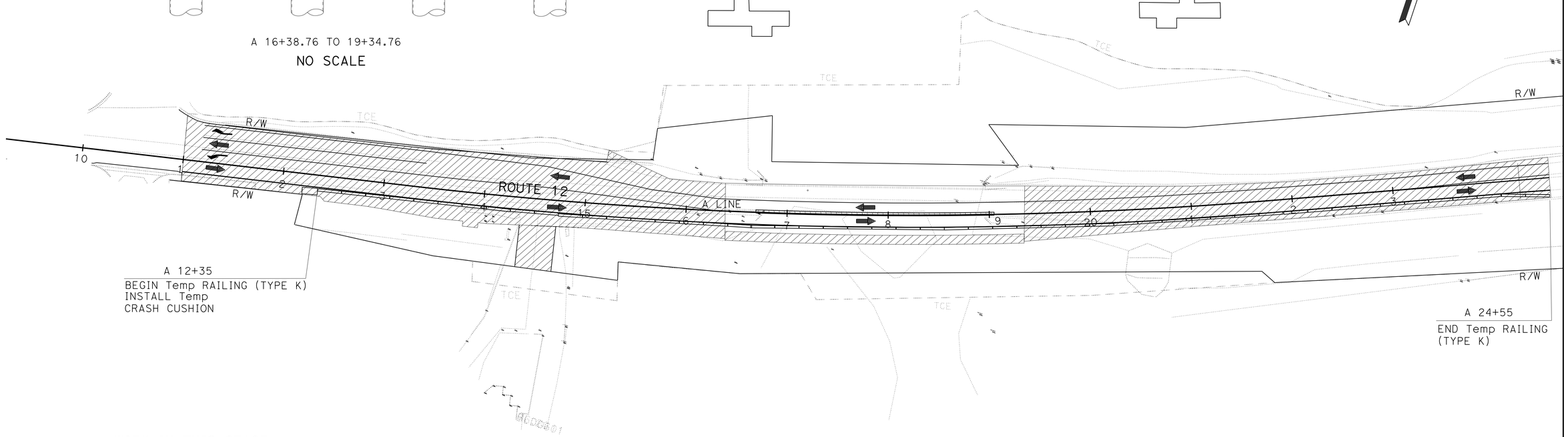

WORK IN THIS STAGE:

1. REMOVE Temp CRASH CUSHION MODULE (TYPE ARRAY TS11) AND Temp RAILING (TYPE K).
2. PLACE 0.2 FT HMA (TYPE A) OVERLAY AND CONFORM. USE Std PLAN T13 FOR LANE CLOSURE.
3. PLACE FINAL PAVEMENT DELINEATION.
4. PLACE Temp RAILING (TYPE K) WITH WHITE REFLECTIVE MARKER AT ETW ON THE SOUTH SIDE.
5. BUILD SIDEWALKS ON THE WEST SIDE OF THE BRIDGE CONNECT WITH EXISTING SIDEWALKS.
6. BUILD MBGR, BARRIER (TYPE 80SW, 80SWA AND TYPE 80A) ON THE SOUTH SIDE OF THE BRIDGE AND APPROACHING ROADWAYS.

STAGE CONSTRUCTION AND TRAFFIC HANDLING PLAN

STAGE 3

SCALE: 1" = 50′

APPROVED FOR STAGE CONSTRUCTION AND TRAFFIC HANDLING WORK ONLY

SC-8

STATE OF CALIFORNIA - DEPARTMENT OF TRANSPORTATION
Caltrans®
DESIGN

FUNCTIONAL SUPERVISOR: STEWART LEE
CALCULATED-DESIGNED BY: EMARNAN PONGPAIROJ
CHECKED BY: BACH-YEN NGUYEN
REVISED BY: EP
DATE REVISED: 9/12

LAST REVISION DATE PLOTTED => 28-MAR-2013
TIME PLOTTED => 14:29
10-03-12

Dist	COUNTY	ROUTE	POST MILES TOTAL PROJECT	SHEET No.	TOTAL SHEETS
04	Son	12	9.6	46	118

REGISTERED CIVIL ENGINEER 10-1-12 DATE

3-25-13
PLANS APPROVAL DATE

REGISTERED PROFESSIONAL ENGINEER Bach-Yen Nguyen No. 64435 Exp. 6-30-13 CIVIL STATE OF CALIFORNIA

THE STATE OF CALIFORNIA OR ITS OFFICERS OR AGENTS SHALL NOT BE RESPONSIBLE FOR THE ACCURACY OR COMPLETENESS OF SCANNED COPIES OF THIS PLAN SHEET.

REMOVE PAVEMENT DELINEATION

SHEET No.	STAGE No.	STATION	DIRECTION	DETAIL No.	REMOVE PAVEMENT MARKER		REMOVE THERMOPLASTIC TRAFFIC STRIPE			REMOVE PAINTED TRAFFIC STRIPE			REMOVE THERMOPLASTIC PAVEMENT MARKINGS
					TYPE D	TYPE G	4" YELLOW	4" WHITE	8" WHITE	4" YELLOW	4" WHITE	8" WHITE	ARROW
					EA		FT			FT			SQFT
SC-2,3	1B	A 14+60 TO 16+30	EB, WB	29	16		680						
		A 23+14 TO 28+11	EB, WB	29	44		1996						
		A 11+17 TO 13+54	WB	38		11			237				
		A 11+17 TO 28+11	EB	27B				1694					
		A 16+94 TO 20+83	WB	27B				389					
		A 11+17 TO 23+14	EB, WB	22	101		2394						
		A 11+50	WB	TYPE I,IV									29
SC-5	2B	A 11+17 TO 13+59	WB	38		11						237	
		A 11+17 TO 23+14	EB	27B							1197		
		A 11+17 TO 16+94	WB	27B				577					
		A 16+94 TO 20+83	WB	27B							389		
		A 20+83 TO 23+14	WB	27B				231					
		A 11+17 TO 23+14	WB	22	101					2394			
SC-6	2C	A 11+17 TO 14+93	WB	27B							376		
TOTAL					262	22	5070	2891	237	2394	1962	237	29
					284			8198			4593		29

CHANNELIZERS (SURFACE MOUNTED)

SHEET No.	STAGE No.	STATION LIMITS	QUANTITIES
			EA
SC-1	1A	16+20 TO 23+00	35
SC-2	1B	11+18 TO 12+60	8
SC-4	2A	11+40 TO 23+00	59
SC-5	2B	19+80 TO 23+00	17
TOTAL			119

TEMPORARY TRAFFIC STRIPE (PAINT)

SHEET No.	STAGE No.	STATION LIMITS	DIRECTION	DETAIL No.	TEMPORARY PAVEMENT MARKER		TEMPORARY TRAFFIC STRIPE (PAINT)			TEMPORARY PAVEMENT PAVEMENT MARKINGS (PAINT)		
					TYPE D	TYPE G	4" YELLOW	4" WHITE	8" WHITE	DESCRIPTION	(N) EA	SQFT
					EA	EA	FT	FT	FT			
SC-2,3	1B	11+17 TO 13+54	WB	38		11			237			
		11+17 TO 28+11	EB	27B				1694				
		16+94 TO 20+83	WB	27B				389				
		11+17 TO 23+14	EB, WB	22	101		2394					
		25+00 TO 28+11	EB, WB	29	26		1244					
		11+50	WB							TYPE III (R+)	1	42
										TYPE II (LT)	1	45
SC-5	2B	11+17 TO 19+35	WB	27B				820				
		11+17 TO 23+14	EB	27B				1202				
		11+17 TO 23+14	EB, WB	22	102		2404					
SC-6	2C	11+17 TO 13+40	WB	38		10			223			
		11+17 TO 14+93	WB	27B				376				
		19+34 TO 23+14	WB	27B				380				
TOTAL					229	21	6042	4861	460		2	87
					250			11363			2	87

(N) NOT A SEPARATE PAY ITEM, FOR INFORMATION ONLY.

TEMPORARY RAILING (TYPE K)

SHEET No.	STAGE No.	DIRECTION	STATION LIMITS	QUANTITY
				FT
SC-2,3	1B	EB	12+20 TO 24+40	1220
SC-2	1B	WB	15+70 TO 19+70	400
SC-5	2B	WB	12+10 TO 19+90	780
SC-5	2B	EB	15+10 TO 22+90	780
SC-6	2C	WB	19+90 TO 20+30	40
SC-7	3	EB	12+35 TO 24+55	1220
TOTAL				4420

TEMPORARY ALTERNATIVE CRASH CUSHION

SHEET No.	STAGE No.	DIRECTION	LOCATION	QUANTITY
				EA
SC-2	1B	EB	1220	1
SC-2	1B	WB	1970	1
SC-3	1B	EB	2440	1
SC-5	2B	EB	1470	1
SC-5	2B	WB	1990	1
SC-5	2B	EB	2290	1
SC-6	2C	WB	2030	1
SC-7	3	EB	1235	1
TOTAL				8

STAGE CONSTRUCTION QUANTITIES

SCQ-1

REVISED BY EP | DATE REVISED 9/12
EMARNAN PONGPAIROJ | BACH-YEN NGUYEN
CALCULATED-DESIGNED BY | CHECKED BY
FUNCTIONAL SUPERVISOR STEWART LEE
STATE OF CALIFORNIA - DEPARTMENT OF TRANSPORTATION
Caltrans® DESIGN

LAST REVISION 09-19-12 | DATE PLOTTED => 28-MAR-2013 TIME PLOTTED => 14:30

Dist	COUNTY	ROUTE	POST MILES TOTAL PROJECT	SHEET No.	TOTAL SHEETS
04	Son	12	9.6	47	118

REGISTERED CIVIL ENGINEER 10-1-12 DATE

3-25-13
PLANS APPROVAL DATE

REGISTERED PROFESSIONAL ENGINEER Bach-Yen Nguyen No. 64435 Exp. 6-30-13 CIVIL STATE OF CALIFORNIA

THE STATE OF CALIFORNIA OR ITS OFFICERS OR AGENTS SHALL NOT BE RESPONSIBLE FOR THE ACCURACY OR COMPLETENESS OF SCANNED COPIES OF THIS PLAN SHEET.

NOTES:

1. FOR ACCURATE RIGHT OF WAY DATA, CONTACT RIGHT OF WAY ENGINEERING AT THE DISTRICT OFFICE.
2. INSTALL HIGHLY REFLECTIVE THERMOPLASTIC STRIPES AND PAVEMENT MARKING PER NSSP.

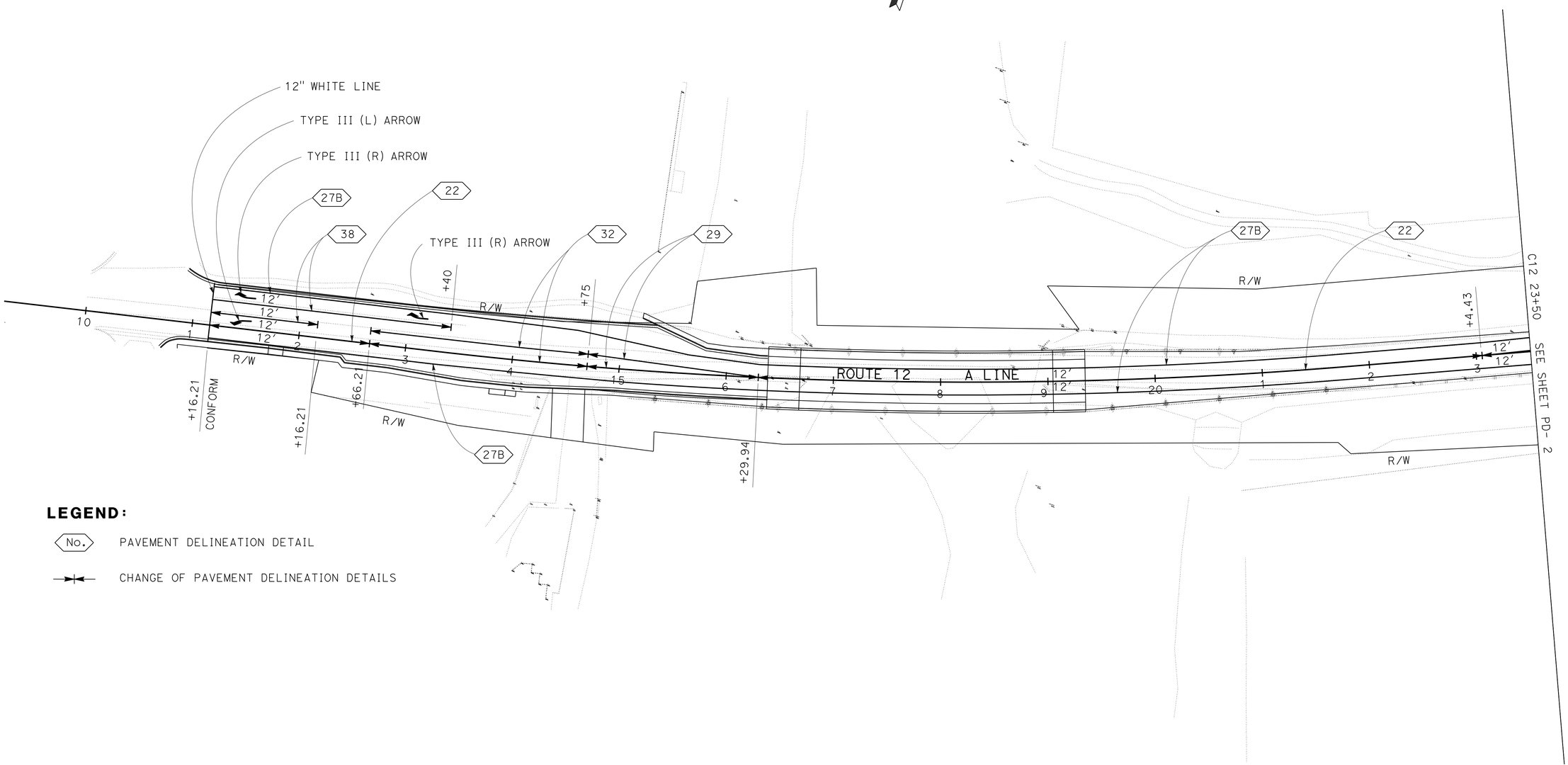

LEGEND:

No. PAVEMENT DELINEATION DETAIL

CHANGE OF PAVEMENT DELINEATION DETAILS

PAVEMENT DELINEATION PLAN

SCALE: 1'' = 50'

THIS PLAN ACCURATE FOR PAVEMENT DELINEATION WORK ONLY

PD-1

REVISED BY	EP
DATE REVISED	9/12
CALCULATED-DESIGNED BY	EMARNAN PONGPAIROJ
CHECKED BY	BACH-YEN NGUYEN
FUNCTIONAL SUPERVISOR	STEWART LEE

STATE OF CALIFORNIA - DEPARTMENT OF TRANSPORTATION

Caltrans

TRAFFIC

LAST REVISION 01-24-13 | DATE PLOTTED => 28-MAR-2013 | TIME PLOTTED => 14:30

Dist	COUNTY	ROUTE	POST MILES TOTAL PROJECT	SHEET No.	TOTAL SHEETS
04	Son	12	9.6	48	118

Bachyen Nguyen 10-1-12
REGISTERED CIVIL ENGINEER DATE

3-25-13
PLANS APPROVAL DATE

REGISTERED PROFESSIONAL ENGINEER
Bach-Yen Nguyen
No. 64435
Exp. 6-30-13
CIVIL
STATE OF CALIFORNIA

THE STATE OF CALIFORNIA OR ITS OFFICERS OR AGENTS SHALL NOT BE RESPONSIBLE FOR THE ACCURACY OR COMPLETENESS OF SCANNED COPIES OF THIS PLAN SHEET.

NOTE:

FOR ACCURATE RIGHT OF WAY DATA, CONTACT
RIGHT OF WAY ENGINEERING AT THE DISTRICT OFFICE.

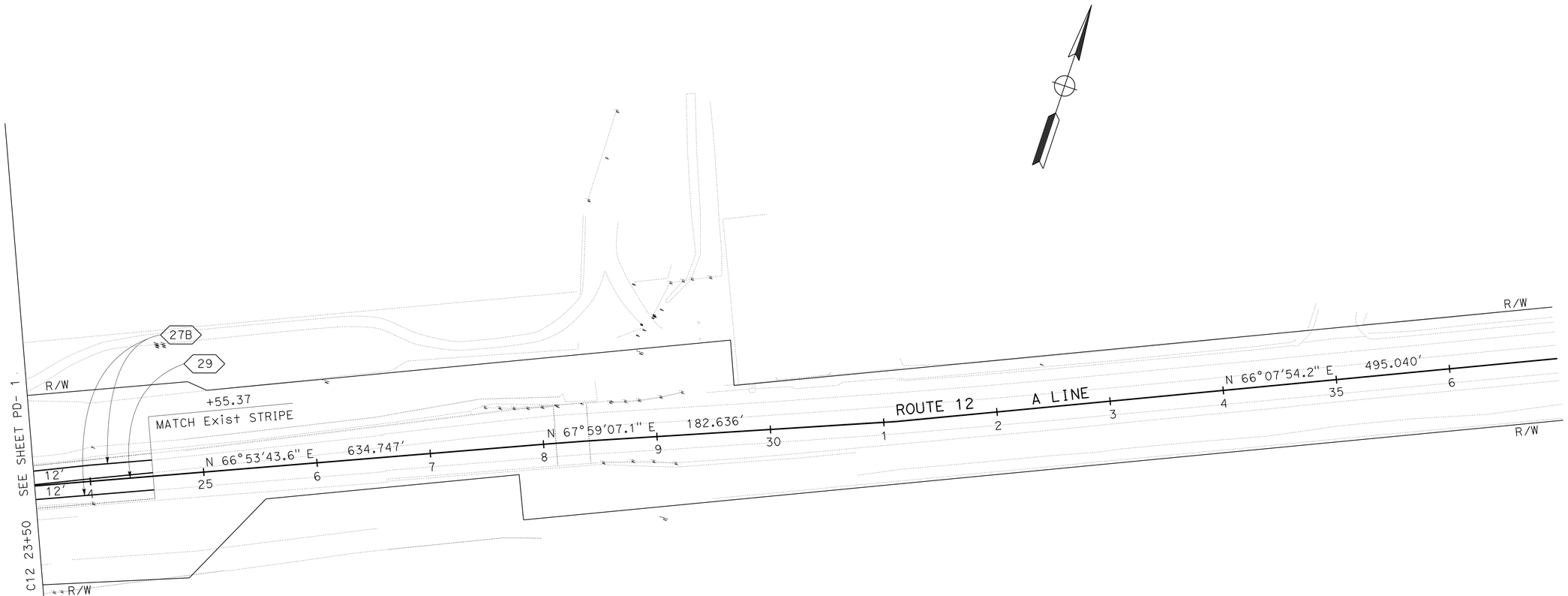

PAVEMENT DELINEATION PLAN

SCALE: 1" = 50'

PD-2

FOR NOTES, ABBREVIATIONS AND LEGEND, SEE SHEET PD-1

APPROVED FOR PAVEMENT DELINEATION WORK ONLY

STATE OF CALIFORNIA - DEPARTMENT OF TRANSPORTATION
Caltrans
TRAFFIC

FUNCTIONAL SUPERVISOR: STEWART LEE

CALCULATED-DESIGNED BY: EMARNAN PONGPAIROJ
CHECKED BY: BACH-YEN NGUYEN

REVISED BY: EP
DATE REVISED: 9/12

LAST REVISION: 08-02-12
DATE PLOTTED => 28-MAR-2013
TIME PLOTTED => 14:30

Dist	COUNTY	ROUTE	POST MILES TOTAL PROJECT	SHEET No.	TOTAL SHEETS
04	Son	12	9.6	49	118

REGISTERED CIVIL ENGINEER 10-1-12 DATE

3-25-13
PLANS APPROVAL DATE

REGISTERED PROFESSIONAL ENGINEER Bach-Yen Nguyen No. 64435 Exp. 6-30-13 CIVIL STATE OF CALIFORNIA

THE STATE OF CALIFORNIA OR ITS OFFICERS OR AGENTS SHALL NOT BE RESPONSIBLE FOR THE ACCURACY OR COMPLETENESS OF SCANNED COPIES OF THIS PLAN SHEET.

PAVEMENT DELINEATION STRIPINGS, MARKERS, AND MARKINGS

STATION LIMITS	SHEET No.	LOCATION	DETAIL No.	PAVEMENT MARKER (RETRO-REFLECTIVE)		THERMOPLASTIC TRAFFIC STRIPE			THERMOPLASTIC PAVEMENT MARKING		
				TYPE D	TYPE G	YELLOW SOLID 4"	WHITE SOLID 4"	WHITE SOLID 8"	LIMIT LINE	TYPE III ARROW (R)	TYPE III ARROW (L)
				EA		FT			SQFT		
11+16.21 - 13+40.00	PD-1	L+, R+	PAVEMENT MARKING						55	84	42
		L+, R+	27B				448				
		L+	38		17			324			
		CL	22	16		300					
13+40.00 - 14+75.00	PD-1	L+, R+	27B				270				
		L+, CL	32	32		648					
14+75.00 - 16+29.94	PD-1	L+, R+	27B				310				
		L+, CL	29	16		620					
16+29.94 - 23+04.43	PD-1	L+, R+	27B				1350				
		CL	22	60		1350					
23+04.43 - 24+55.37	PD-2	L+, R+	27B				302				
		CL	29	16		604					
				140	17	3522	2680	324	55	84	42
TOTAL				157		6202		324	181		

PAVEMENT DELINEATION QUANTITIES

PDQ-1

STATE OF CALIFORNIA - DEPARTMENT OF TRANSPORTATION
Caltrans® TRAFFIC

FUNCTIONAL SUPERVISOR: PHILLIPE VAN
CALCULATED-DESIGNED BY: EMARNAN PONGPAIROJ
CHECKED BY: BACH-YEN NGUYEN
REVISED BY: EP
DATE REVISED: 9/12

LAST REVISION 09-19-12 | DATE PLOTTED => 28-MAR-2013 | TIME PLOTTED => 14:30

Dist	COUNTY	ROUTE	POST MILES TOTAL PROJECT	SHEET No.	TOTAL SHEETS
04	Son	12	9.6	50	118

Bachyen Nguyen 10-1-12
REGISTERED CIVIL ENGINEER DATE

3-25-13
PLANS APPROVAL DATE

REGISTERED PROFESSIONAL ENGINEER Bach-Yen Nguyen No. 64435 Exp. 6-30-13 CIVIL STATE OF CALIFORNIA

THE STATE OF CALIFORNIA OR ITS OFFICERS OR AGENTS SHALL NOT BE RESPONSIBLE FOR THE ACCURACY OR COMPLETENESS OF SCANNED COPIES OF THIS PLAN SHEET.

EARTHWORK QUANTITES

STATION LIMITS	SHEET NO.	ROADWAY EXCAVATION	ROADWAY EXCAVATION (TYPE Z-2) (AERIALLY DEPOSITED LEAD)	EMBANKMENT (N)	IMPORTED BORROW
		CY			
11+00.00 TO 12+40.00	L-1	161.65		-	
12+40.00 TO 15+10.00	L-1	852.78		89.99	
15+10.00 TO 16+38.76	L-1	16.46		410.48	
16+38.76 TO 16+68.76	L-1	-		79.46	
19+04.79 TO 19+34.79	L-1	-		-	
19+34.79 TO 21+00.00	L-1	34.34		128.09	
21+00.00 TO 22+00.00	L-1	91.87		236.18	
22+00.00 TO 24+55.37	L-1	182.8	130.4	989.36	
TOTAL		1339.9	130.4	1933.56	593.66

ROADWAY QUANTITES

STATION LIMITS	SHEET NO.	HMA (TYPE A) CONSTRUCT ROADWAY	HMA (TYPE A) SURFACING	CLASS 2 AGGREGATE BASE	CLASS 3 PERMEABLE MATERIAL	COLD PLANE AC PAVEMENT
		TON		CY		SQYD
11+00.00 TO 12+40.00	L-1	44.49	246.26	75.47		785.6
12+40.00 TO 15+10.00	L-1	519.86	347.65	774.98		315.8
15+10.00 TO 16+38.76	L-1	147.17	255.70	214.14	12	
19+34.79 TO 21+00.00	L-1	158.86	500.44	236		
21+00.00 TO 22+00.00	L-1	67.86	87.38	97.72		201.1
22+00.00 TO 24+55.37	L-1	117.37	265.70	166.89		801.6
SUB TOTAL		1055.61	1703.13	1565.2	12	2104.1
TOTAL		2758.74		1565.2	12	2104.1

METAL BEAM GUARD RAILING (MBGR)

STATION LIMITS	SHEET NO.	LAYOUT TYPE	MBGR	AITS	TYPE WB TRANSITION	ANCHOR BLOCK CONCRETE BARRIER (TYPE 25)
			LF	EA	EA	LF
A 21+00.00 TO 22+00	L-1	12A	0	1	1	0
A 22+00 TO 24+05	L-1 & L-2	12D(MOD)	150	0	2	5
TOTAL			150	1	3	5

TACK COAT & LIQUID ASPHALT (PRIME COAT)

STATION LIMITS	TACK COAT	LIQUID ASPHALT (PRIME COAT)
	TON	
11+00 TO 24+55.37	4.96	6.2
TOTAL	4.96	6.2

(N) = NOT A SEPARATE PAY ITEM, FOR INFORMATION ONLY

(*) EXACT LOCATIONS AND LIMITS TO BE DETERMINED BY THE ENGINEER.

REMOVE CURB

STATION LIMITS	SHEET NO.	LOCATION	LENGTH
			LF
11+00.00 TO 15+63.63	L-1	Lt	473
TOTAL			473

TEMPORARY REINFORCED (*) SILT FENCE

STATION LIMITS	SHEET NO.	LOCATION	LENGTH
			LF
12+40 TO 14+20	L-1	Rt	191
15+40 TO 17+20	L-1	Rt	183
18+82 TO 23+40	L-1	Lt	1105
19+32 TO 23+50	L-1	Rt	435
23+50 TO 25+50	L-2	Rt	212
23+40 TO 29+50	L-2	Lt	1860
TOTAL			3986

PLACE HMA (MISC AREA)

STATION LIMITS	LOCATION	HMA OVERSIDE DRAIN
		SQYD
21+93	Lt	15
23+00	Rt	14
TOTAL		29

TEMPORARY FENCE (TYPE ESA) (*)

STATION LIMITS	SHEET NO.	LOCATION	LENGTH
			LF
16+43 TO 18+82	L-1	Lt	334
17+20 TO 19+32	L-1	Rt	233
23+50 TO 29+50	L-2	Lt	288
25+50 TO 29+50	L-2	Rt	455
TOTAL			1310

MINOR CONCRETE (MISCELLANEOUS CONSTRUCTION)

STATION LIMITS	SHEET NO.	LOCATION	0.5' SIDEWALK	CURB AND GUTTER
			PCC	
			CY	
11+00.00 TO 15+07.02	L-1	Rt	38	24.15
11+00 TO 16+37.74	L-1	Lt	12.3	31.94
TOTAL			50.3	56.09

REMOVE FENCE

STATION LIMITS	SHEET NO.	LOCATION	LENGTH
			LF
19+09 TO 14+23	L-1	Rt	200
14+93 TO 15+20	L-1	Rt	90
19+10 TO 19+60	L-1	Lt	50
TOTAL			340

PLACE HMA DIKE

STATION LIMITS	SHEET NO.	LOCATION	HMA DIKE TYPE C	HMA DIKE TYPE F
			LF	
22+00. TO 24+00	L-1	Rt		200
21+00 TO 21+25	L-1	Lt		25
21+25 TO 21+75	L-1	Lt	50	
		TOTAL	50	225

JOINTED PLAIN CONCRETE PAVEMENT

STATION LIMITS	SHEET NO.	LOCATION	BUS PAD & BUS SHELTER
			CY
13+55.12 TO 14+15.81	L-1	Rt	13.2
TOTAL			13.2

REMOVE MBGR & TREAT WOOD WASTE

STATION LIMITS	SHEET NO.	LOCATION	REMOVE MBGR	TREAT WOOD WASTE
			LF	LB
16+11.10 TO 16+75.60	L-1	Rt	65	1395
16+11.80 TO 16+76.30	L-1	Lt	65	1395
18+96.20 TO 24+00.10	L-1	Rt	504	6094
18+93.50 TO 19+59.20	L-1	Lt	66	1395
TOTAL			700	10279

SUMMARY OF QUANTITIES

Q-1

STATE OF CALIFORNIA - DEPARTMENT OF TRANSPORTATION
Caltrans DESIGN
FUNCTIONAL SUPERVISOR: STEWART LEE
CALCULATED-DESIGNED BY: EMARNAN PONGPAIROJ
CHECKED BY: BACH-YEN NGUYEN
REVISED BY: EP
DATE REVISED: 9/12

LAST REVISION 01-28-13 | DATE PLOTTED => 28-MAR-2013 | TIME PLOTTED => 14:30

Dist	COUNTY	ROUTE	POST MILES TOTAL PROJECT	SHEET No.	TOTAL SHEETS
04	Son	12	9.6	51	118

LICENSED LANDSCAPE ARCHITECT

3-25-13
PLANS APPROVAL DATE

LICENSED LANDSCAPE ARCHITECT
CHRIS PADICK No. 4232
Expiration Date 11-30-14
Renewal Date 12-19-12
Date
STATE OF CALIFORNIA

THE STATE OF CALIFORNIA OR ITS OFFICERS OR AGENTS SHALL NOT BE RESPONSIBLE FOR THE ACCURACY OR COMPLETENESS OF SCANNED COPIES OF THIS PLAN SHEET.

EROSION CONTROL TYPE 1

SEQUENCE	ITEM	MATERIAL		APPLICATION RATE
		DESCRIPTION	TYPE	
STEP 1	COMPOST	COMPOST	MEDIUM	34 CY/ACRE
STEP 2	ROLLED EROSION CONTROL PRODUCT (NETTING)	NETTING	TYPE A	
STEP 3	HYDROSEED	SEED	MIX 1	60 LB/ACRE
		FIBER	WOOD	1,000 LB/ACRE
STEP 4	HYDROMULCH	FIBER	WOOD	1,000 LB/ACRE
		TACKIFIER	GUAR	125 LB/ACRE

EROSION CONTROL TYPE 2

SEQUENCE	ITEM	MATERIAL		APPLICATION RATE
		DESCRIPTION	TYPE	
STEP 1	COMPOST	COMPOST	MEDIUM	34 CY/ACRE
STEP 2	HYDROSEED	SEED	MIX 1	60 LB/ACRE
		FIBER	WOOD	500 LB/ACRE
STEP 3	STRAW	STRAW	RICE	2 TON/ACRE
STEP 4	HYDROMULCH	FIBER	WOOD	1,500 LB/ACRE
		TACKIFIER	GUAR	125 LB/ACRE

EROSION CONTROL TYPE 3

SEQUENCE	ITEM	MATERIAL		APPLICATION RATE
		DESCRIPTION	TYPE	
STEP 1	COMPOST	COMPOST	MEDIUM	34 CY/ACRE
STEP 3	HYDROSEED	SEED	MIX 2	60 LB/ACRE
		FIBER	WOOD	500 LB/ACRE
STEP 4	HYDROMULCH	FIBER	WOOD	1,500 LB/ACRE
		TACKIFIER	GUAR	125 LB/ACRE

EROSION CONTROL TYPE 4

SEQUENCE	ITEM	MATERIAL		APPLICATION RATE	DEPTH
		DESCRIPTION	TYPE		
STEP 1	COMPOST	COMPOST	MEDIUM	135 CY/ACRE	
STEP 2	INCORPORATE MATERIALS	COMPOST			4"
STEP 3	HYDROSEED	SEED	MIX 1	60 LB/ACRE	
		FIBER	WOOD	500 LB/ACRE	
STEP 3	STRAW	STRAW	RICE	2 TON/ACRE	
STEP 4	HYDROMULCH	FIBER	WOOD	1,500 LB/ACRE	
		TACKIFIER	GUAR	125 LB/ACRE	

EROSION CONTROL TYPE 5

SEQUENCE	ITEM	MATERIAL		APPLICATION RATE
		DESCRIPTION	TYPE	
STEP 1	HYDROSEED	SEED	MIX 3	60 LB/ACRE
		FIBER	WOOD	500 LB/ACRE
STEP 2	HYDROMULCH	FIBER	WOOD	1,500 LB/ACRE
		TACKIFIER	GUAR	125 LB/ACRE
STEP 3	ROLLED EROSION CONTROL PRODUCT (NETTING)	NETTING	TYPE B	

FIBER ROLLS

SEQUENCE	ITEM	MATERIAL	
		DESCRIPTION	TYPE
IN EC TYPE 1 AREAS FIBER ROLLS MUST BE INSTALLED AFTER RECP (NETTING) AND BEFORE HYDROSEED.	FIBER ROLLS	FIBER ROLL	TYPE B 8" TO 10" Dia

SEED MIX

SEED	BOTANICAL NAME (COMMON NAME)	PERCENT GERMINATION (MINIMUM)	POUNDS PURE LIVE SEED PER ACRE (SLOPE MEASUREMENT)
MIX 1	BROMUS CARINATUS (CALIFORNIA BROME)	85	10
	ESCHSCHOLZIA CALIFORNICA (CALIFORNIA POPPY)	85	15
	NASSELLA CERNUA (NODDING NEEDLEGRASS)	80	15
	VULPIA MICROSTACHYS (SMALL FESCUE)	90	10
MIX 2	ARTEMESIA DOUGLASIANA (DOUGLAS MUGWORT)	85	10
	CYPERUS ERAGROSTIS (UMBRELLA SEDGE)	85	10
	ELEOCHARIS MACROSTACHYA (CREEPING SPIKE RUSH)	85	10
	HORDEUM BRACHYANTHERUM (MEADOW BARLEY)	85	10
	LEYMUS TRITICOIDES (CREEPING WILD RYE)	90	10
	VULPIA MICROSTACHYS (SMALL FESCUE)	85	10
MIX 3	HORDEUM BRACHYANTHERUM (MEADOW BARLEY)	85	10
	JUNCUS EFFUSUS (SOFT RUSH)	85	15
	NASSELLA PULCHRA (PURPLE NEEDLEGRASS)	90	15
	VULPIA MICROSTACHYS (SMALL FESCUE)	90	10

EROSION CONTROL LEGEND
ECL-1

REVISED BY	DATE REVISED
CP	12-18-12

CHRIS PADICK
CALCULATED-DESIGNED BY
CHECKED BY
SENIOR LANDSCAPE ARCHITECT
DAVID YAM

STATE OF CALIFORNIA - DEPARTMENT OF TRANSPORTATION
Caltrans
WATER QUALITY

LAST REVISION 12-18-12
DATE PLOTTED => 28-MAR-2013
TIME PLOTTED => 14:30

Dist	COUNTY	ROUTE	POST MILES TOTAL PROJECT	SHEET No.	TOTAL SHEETS
04	Son	12	9.6	52	118

Evalyn A Seidman
LICENSED LANDSCAPE ARCHITECT

3-25-13
PLANS APPROVAL DATE

LICENSED LANDSCAPE ARCHITECT
Evalyn A Seidman
Expiration Date
09-30-13
Renewal Date
01-04-13
Date
STATE OF CALIFORNIA

THE STATE OF CALIFORNIA OR ITS OFFICERS OR AGENTS SHALL NOT BE RESPONSIBLE FOR THE ACCURACY OR COMPLETENESS OF SCANNED COPIES OF THIS PLAN SHEET.

PLANT LIST AND PLANTING SPECIFICATIONS

PLANT GROUP	PLANT No.	SYMBOL	BOTANICAL NAME	COMMON NAME	SIZE	QUANTITY EACH	HOLE SIZE (INCH) Dia	HOLE SIZE (INCH) DEPTH	BASIN TYPE	IRON SULFATE ①	SOIL AMEND ①	COMMERCIAL FERTILIZER ① PLANTING	COMMERCIAL FERTILIZER ① PLT ESTB	BASIN MULCH (CY)	STAKING	PLANTING LIMITS MINIMUM DISTANCE (ft) FROM ETW	Pvmt	FENCE	WALL	PAVED DITCH	EARTH DITCH	ON CENTER (ft)	REMARKS
A	1		ROSA CALIFORNICA	CALIFORNIA ROSE	No.1	21	24	24	I	-	1.0 CF	1 Pkt	1.0 oz.	0.06	-	15	10	10	10	-	10	⑦	SHRUB ⑨
	2		SYMPHORICARPUS ALBUS	COMMON SNOWBERRY	No.1	100	24	24	I	-	1.0 CF	1 Pkt	1.0 oz.	0.06	-	12	10	10	10	-	10	⑦	SHRUB ⑨
I	3		ACER NEGUNDO	BOX ELDER	POT ⑬	10	12	18	II	-	0.5 CF	1 Pkt	1.0 oz.	0.06	④	25	22	20	20	-	17	⑦	TREE ⑨
	4		CORNUS SERICEA	AMERICAN DOGWOOD	POT ⑬	77	12	18	II	-	0.5 CF	1 Pkt	1.0 oz.	0.06	-	15	10	10	10	-	10	⑦	SHRUB ⑨
	5		CRATAEGUS DOUGLASII	DOUGLAS' HAWTHORN	POT ⑬	41	12	18	II	-	0.5 CF	1 Pkt	1.0 oz.	0.06	④	15	12	12	12	-	10	⑦	TREE ⑨
	6		FRAXINUS LATIFOLIA	OREGON ASH	POT ⑬	36	12	18	II	-	0.5 CF	1 Pkt	1.0 oz.	0.06	④	25	20	15	15	-	17	⑦	TREE ⑨
	7		QUERCUS LOBATA	VALLEY OAK	POT ⑬	35	12	18	II	-	0.5 CF	1 Pkt	1.0 oz.	0.06	④	25	22	15	15	-	17	⑦	TREE ⑨
W	8		SALIX LAEVIGATA	RED WILLOW	WILLOW CUTTING ⑤	18	-	-	-	-	-	1 Pkt	-	-	-	22	20	15	20	-	17	⑦	TREE
	9		SALIX LASIOLEPIS	ARROYO WILLOW	WILLOW CUTTING ⑤	31	-	-	-	-	-	1 Pkt	-	-	-	20	20	10	20	-	20	⑦	TREE

APPLICABLE WHEN CIRCLED:

① - QUANTITIES SHOWN ARE "PER PLANT" UNLESS SHOWN AS SQFT OR SQYD APPLICATION RATES
2 - BASIN MULCH IS INCLUDED WITH MULCH QUANTITIES SHOWN ON PLANTING PLAN
3 - SUFFICIENT TO RECEIVE ROOT BALL AND AMENDMENTS IF REQUIRED
④ - SEE DETAIL IN STANDARD PLAN.
⑤ - SEE SPECIAL PROVISIONS
6 - SEE STANDARD SPECIFICATIONS
⑦ - AS SHOWN ON PLANS
8 - UNLESS OTHERWISE SHOWN ON PLANS
⑨ - FOLIAGE PROTECTOR REQUIRED
10 - ROOT PROTECTOR REQUIRED
11 - ROOT BARRIER REQUIRED
12 - STATE-FURNISHED
⑬ - Min POT SIZE IS 4" X 4" X 14" (DEPTH)

LEGEND:

LIMIT OF PROPOSED EROSION CONTROL (TYPES 1 & 5). SEE EROSION CONTROL PLANS.

LIMIT OF BIOFILTRATION STRIP. SEE EROSION CONTROL PLANS

TFESA — LIMIT OF TFESA

TRFS — TSF — LIMIT OF TEMPORARY REINFORCED SILT FENCE (TRFS)

LIMIT OF CALIFORNIA DEPT. OF FISH AND WILDLIFE (CDFW) RESTORATION PLANTING LOCATION

EXISTING PLANTED AREA

NOTE:

1. UNDERLINED PORTIONS OF BOTANICAL NAME INDICATE ABBREVIATIONS USED ON PLANTING PLANS.
2. SEE ALSO EROSION CONTROL PLANS.
3. MULCH MUST BE WOOD CHIPS.
4. SOIL AMENDMENT MUST BE COMPOST. COMPOST MUST COMPLY WITH SECTION 21-1.02 M OF THE STANDARD SPECIFICATIONS.

PLANT LIST
PL-1

REVISED BY: ESEIDMAN — DATE REVISED: 12-21-12
EVALYN SEIDMAN — LYDIA MAC
CALCULATED-DESIGNED BY — CHECKED BY
SENIOR LANDSCAPE ARCHITECT: SUSAN LINDSAY
STATE OF CALIFORNIA - DEPARTMENT OF TRANSPORTATION
Caltrans® LANDSCAPE ARCHITECTURE

LAST REVISION 12-21-12 | DATE PLOTTED => 28-MAR-2013 | TIME PLOTTED => 14:30

Dist	COUNTY	ROUTE	POST MILES TOTAL PROJECT	SHEET No.	TOTAL SHEETS
04	Son	12	9.6	53	118

Evalyn A Seidman
LICENSED LANDSCAPE ARCHITECT

3-25-13
PLANS APPROVAL DATE

LICENSED LANDSCAPE ARCHITECT
EVALYN SEIDMAN No. 3944
Evalyn A Seidman
Signature
09-30-13
Renewal Date
01-04-13
Date
STATE OF CALIFORNIA

THE STATE OF CALIFORNIA OR ITS OFFICERS OR AGENTS SHALL NOT BE RESPONSIBLE FOR THE ACCURACY OR COMPLETENESS OF SCANNED COPIES OF THIS PLAN SHEET.

NOTE:

FOR ACCURATE RIGHT OF WAY DATA, CONTACT RIGHT OF WAY ENGINEERING AT THE DISTRICT OFFICE.

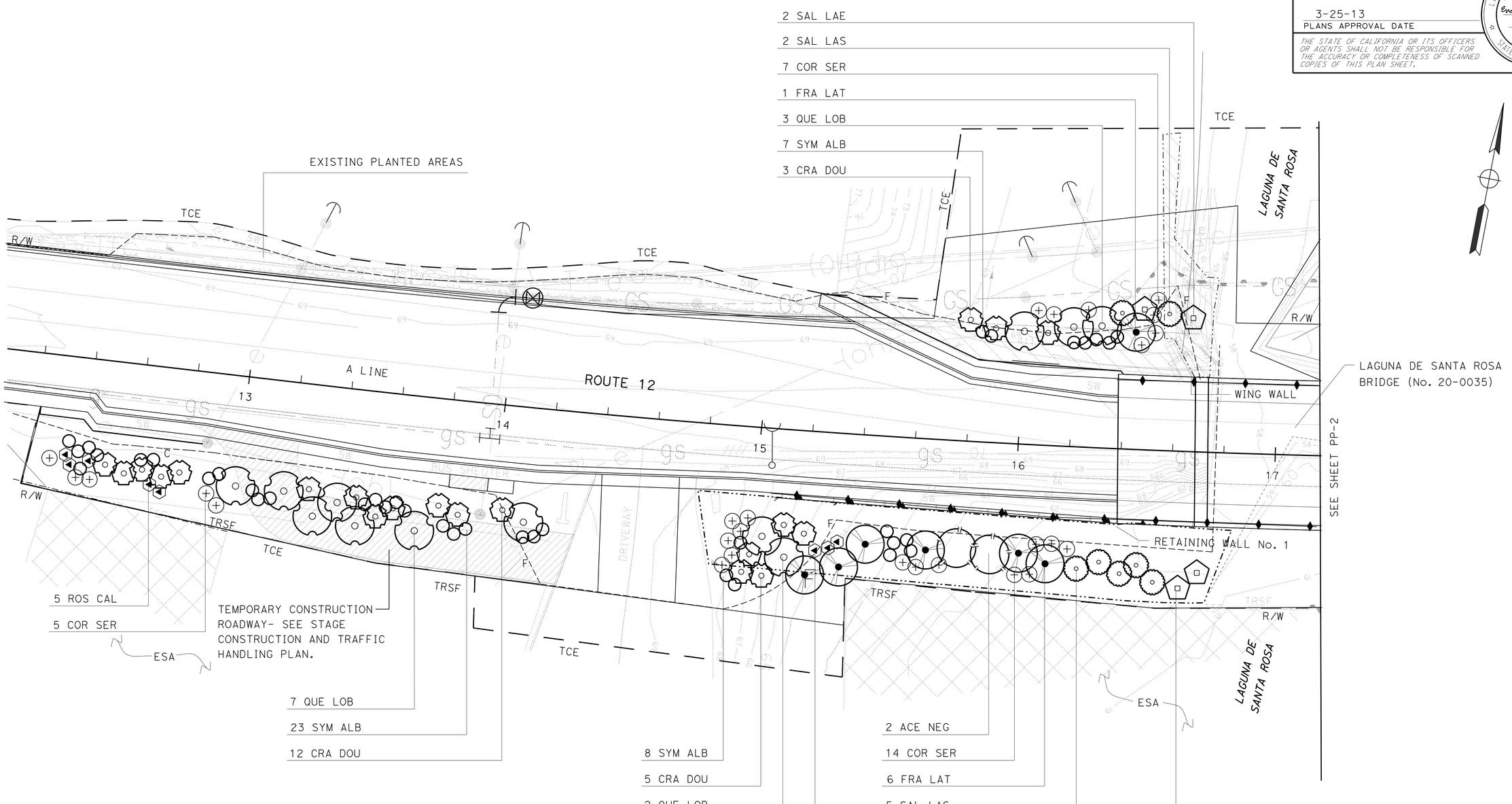

PLANTING PLAN

SCALE: 1" = 20'

PP-1

APPROVED FOR PLANTING WORK ONLY

STATE OF CALIFORNIA - DEPARTMENT OF TRANSPORTATION
Caltrans® LANDSCAPE ARCHITECTURE

SENIOR LANDSCAPE ARCHITECT: SUSAN LINDSAY

CALCULATED-DESIGNED BY: EVALYN SEIDMAN
CHECKED BY: LYDIA MAC

REVISED BY: E. SEIDMAN
DATE REVISED: 12-21-12

LAST REVISION 12-21-12
DATE PLOTTED => 28-MAR-2013
TIME PLOTTED => 14:30

Dist	COUNTY	ROUTE	POST MILES TOTAL PROJECT	SHEET No.	TOTAL SHEETS
04	Son	12	9.6	54	118

LICENSED LANDSCAPE ARCHITECT

3-25-13
PLANS APPROVAL DATE

LICENSED LANDSCAPE ARCHITECT
EVALYN SEIDMAN No. 3943
Update Date 09-30-13
Renewal Date 01-14-13
Date
STATE OF CALIFORNIA

THE STATE OF CALIFORNIA OR ITS OFFICERS OR AGENTS SHALL NOT BE RESPONSIBLE FOR THE ACCURACY OR COMPLETENESS OF SCANNED COPIES OF THIS PLAN SHEET.

NOTE:
FOR ACCURATE RIGHT OF WAY DATA, CONTACT RIGHT OF WAY ENGINEERING AT THE DISTRICT OFFICE.

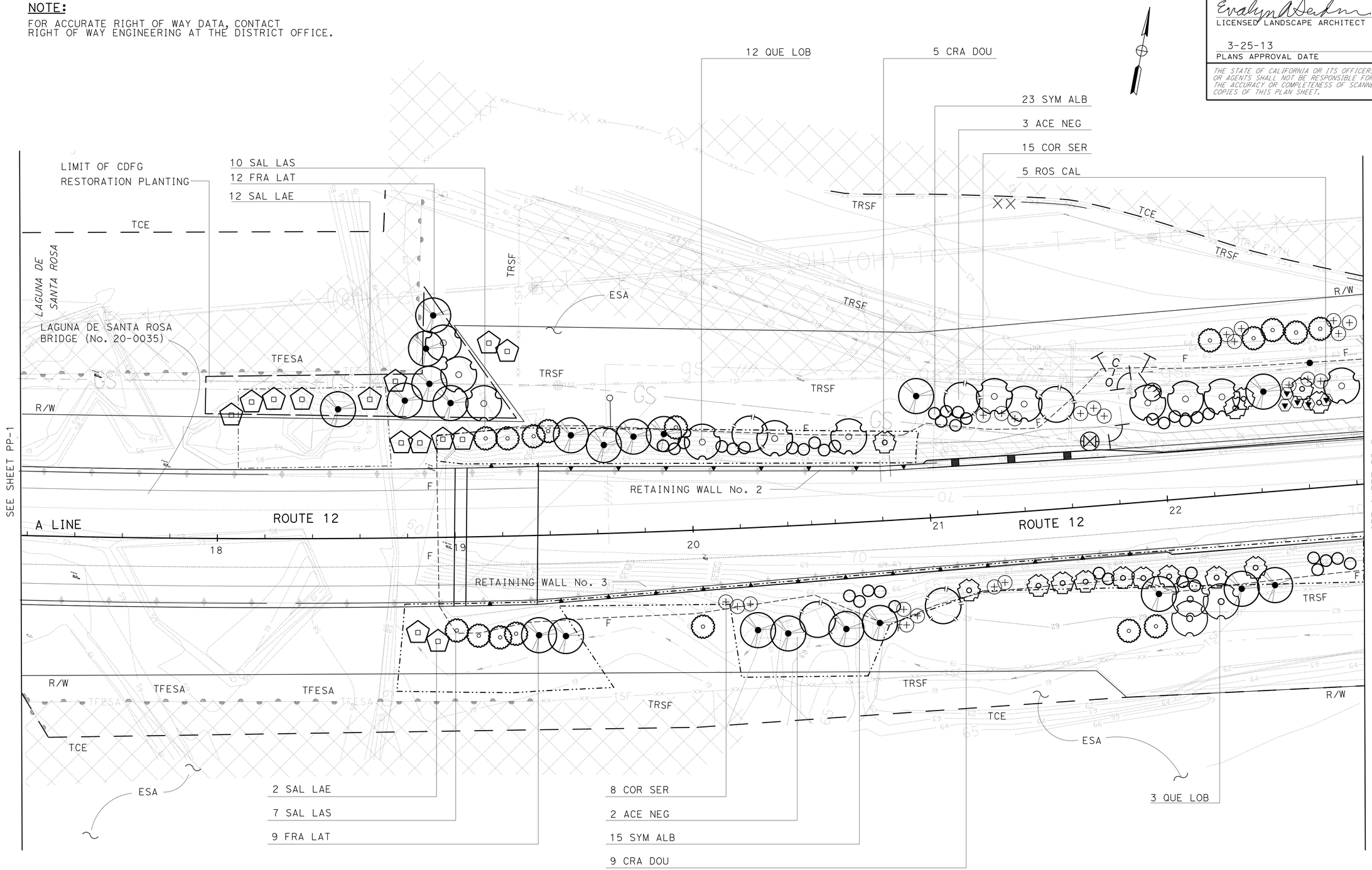

PLANTING PLAN

SCALE: 1" = 20'

PP-2

APPROVED FOR PLANTING WORK ONLY

STATE OF CALIFORNIA - DEPARTMENT OF TRANSPORTATION
Caltrans® LANDSCAPE ARCHITECTURE

SENIOR LANDSCAPE ARCHITECT: SUSAN LINDSAY
CALCULATED-DESIGNED BY: EVALYN SEIDMAN
CHECKED BY: LYDIA MAC
REVISED BY: E. SEIDMAN
DATE REVISED: 12-21-12

LAST REVISION 12-21-12
DATE PLOTTED => 28-MAR-2013
TIME PLOTTED => 14:30

Dist	COUNTY	ROUTE	POST MILES TOTAL PROJECT	SHEET No.	TOTAL SHEETS
04	Son	12	9.6	55	118

Evalyn A Seidman
LICENSED LANDSCAPE ARCHITECT

3-25-13
PLANS APPROVAL DATE

LICENSED LANDSCAPE ARCHITECT
EVALYN SEIDMAN No. 3943
Evalyn A Seidman
Signature
09-30-13
Renewal Date
01-04-13
Date
STATE OF CALIFORNIA

THE STATE OF CALIFORNIA OR ITS OFFICERS OR AGENTS SHALL NOT BE RESPONSIBLE FOR THE ACCURACY OR COMPLETENESS OF SCANNED COPIES OF THIS PLAN SHEET.

NOTE:

FOR ACCURATE RIGHT OF WAY DATA, CONTACT RIGHT OF WAY ENGINEERING AT THE DISTRICT OFFICE.

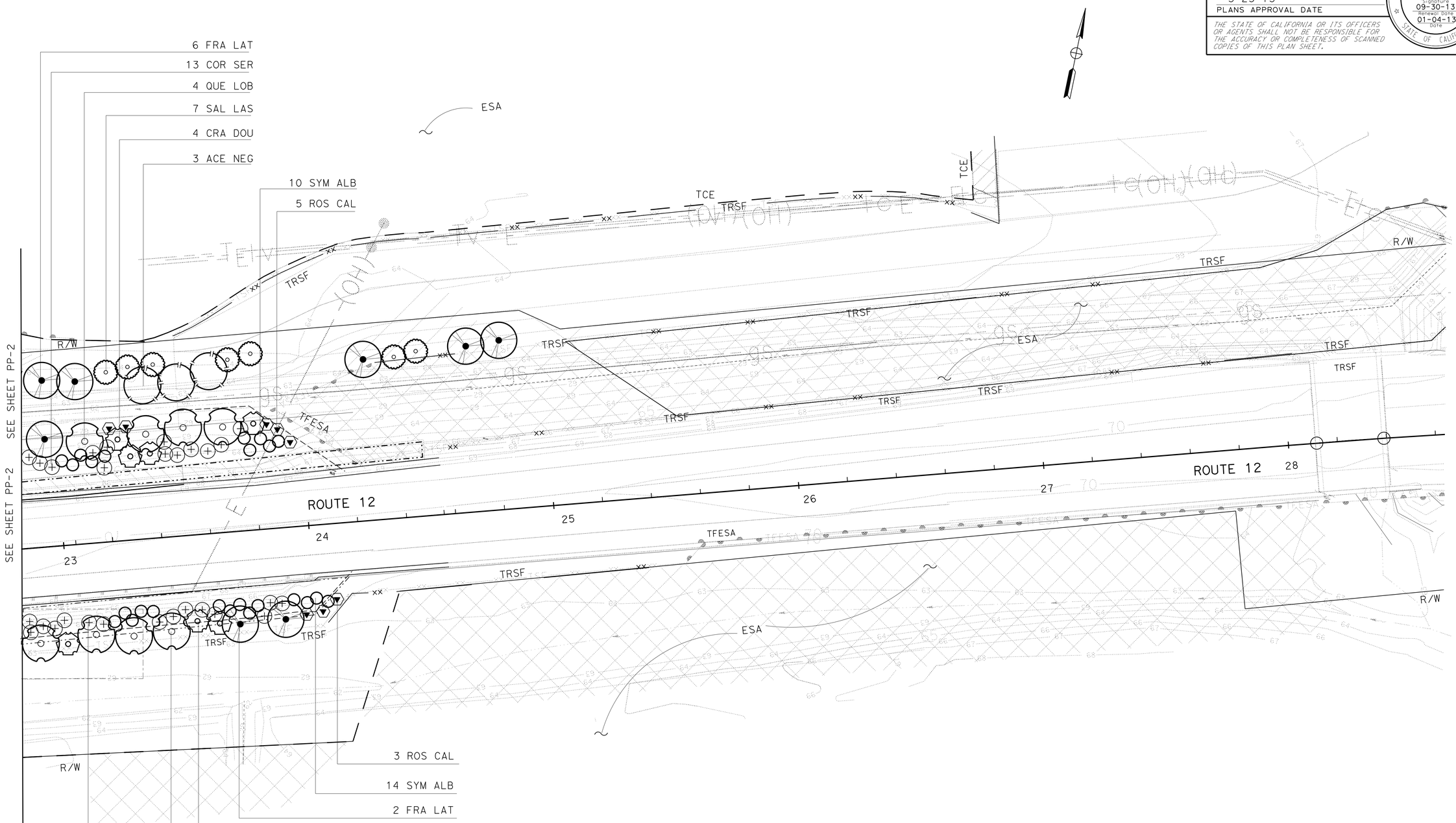

PLANTING PLAN

SCALE: 1" = 20'

PP-3

APPROVED FOR PLANTING WORK ONLY

STATE OF CALIFORNIA - DEPARTMENT OF TRANSPORTATION
Caltrans® LANDSCAPE ARCHITECTURE

SENIOR LANDSCAPE ARCHITECT: SUSAN LINDSAY
CALCULATED-DESIGNED BY: EVALYN SEIDMAN
CHECKED BY: LYDIA MAC
REVISED BY: E. SEIDMAN
DATE REVISED: 12-21-12

LAST REVISION 12-21-12
DATE PLOTTED => 28-MAR-2013
TIME PLOTTED => 14:30

Dist	COUNTY	ROUTE	POST MILES TOTAL PROJECT	SHEET No.	TOTAL SHEETS
04	Son	12	9.6	56	118

LICENSED LANDSCAPE ARCHITECT

3-25-13
PLANS APPROVAL DATE

LICENSED LANDSCAPE ARCHITECT — EVALYN SEIDMAN No. 3944 — Expiration Date 09-30-13 — Renewal Date 01-04-13 — Date — STATE OF CALIFORNIA

THE STATE OF CALIFORNIA OR ITS OFFICERS OR AGENTS SHALL NOT BE RESPONSIBLE FOR THE ACCURACY OR COMPLETENESS OF SCANNED COPIES OF THIS PLAN SHEET.

NOTE:

FOR ACCURATE RIGHT OF WAY DATA, CONTACT RIGHT OF WAY ENGINEERING AT THE DISTRICT OFFICE.

IRRIGATION NOTES:

1. UNLABELED PLASTIC PIPE SUPPLY LINE (MAIN) MUST BE 2" PVC, (SCH 40).
2. UNLABELED PLASTIC PIPE SUPPLY LINE (LATERAL) MUST BE ¾" PLASTIC PIPE SUPPLY LINE (SCHEDULE 40).
3. SPRINKLER TYPE D-1 (EMITTERS) INSTALLED IN PLANT BASINS IN SLOPE AREAS MUST BE INSTALLED ON THE UPHILL SIDE OF THE PLANT BASIN.
4. INSTALL IRRIGATION FACILITES PRIOR TO RECP (NETTING) IN EROSION CONTROL (TYPE 1), (TYPE 5) AND BIOFILTRATION STRIP AREAS.
5. SEE CONSTRUCTION DETAILS AND QUANTITY SHEETS FOR LOCATION OF IRRIGATION CROSSOVERS.
6. DO NOT INSTALL EMITTERS AT PLANT (GROUP W) PLANTS.

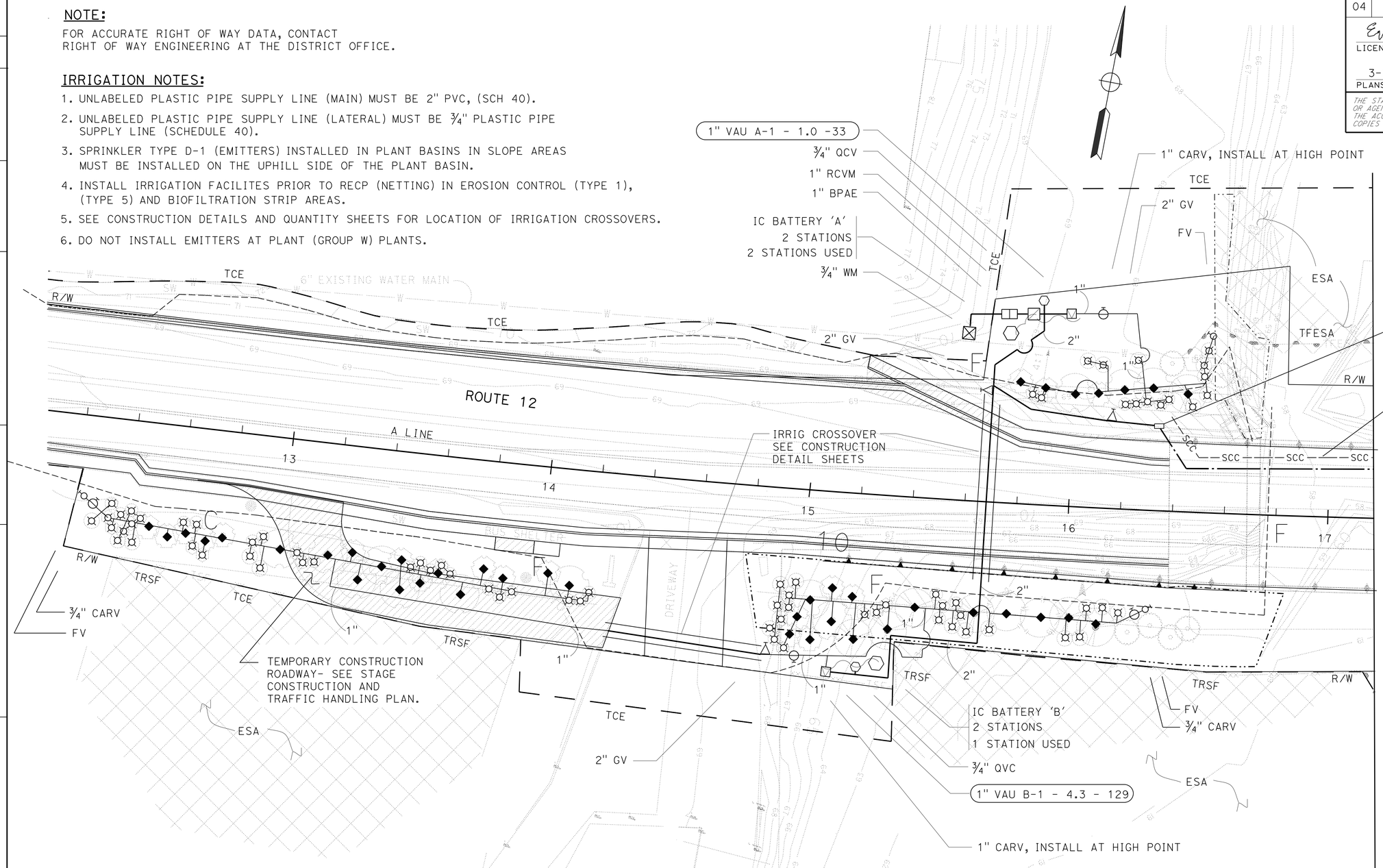

IRRIGATION PLAN

SCALE: 1" = 20'

IP-1

APPROVED FOR IRRIGATION WORK ONLY

CALCULATED- DESIGNED BY	EVALYN SEIDMAN
CHECKED BY	LYDIA MAC
SENIOR LANDSCAPE ARCHITECT	SUSAN LINDSAY
REVISED BY	E. SEIDMAN
DATE REVISED	12-21-12

STATE OF CALIFORNIA - DEPARTMENT OF TRANSPORTATION
Caltrans® LANDSCAPE ARCHITECTURE

LAST REVISION 12-21-12 | DATE PLOTTED => 28-MAR-2013 | TIME PLOTTED => 14:14

Dist	COUNTY	ROUTE	POST MILES TOTAL PROJECT	SHEET No.	TOTAL SHEETS
04	Son	12	9.6	57	118

LICENSED LANDSCAPE ARCHITECT

3-25-13
PLANS APPROVAL DATE

LICENSED LANDSCAPE ARCHITECT
EVALYN SEIDMAN No. 3098
Expiration Date 09-30-13
Renewal Date 01-04-13
Date
STATE OF CALIFORNIA

THE STATE OF CALIFORNIA OR ITS OFFICERS OR AGENTS SHALL NOT BE RESPONSIBLE FOR THE ACCURACY OR COMPLETENESS OF SCANNED COPIES OF THIS PLAN SHEET.

NOTE:

FOR ACCURATE RIGHT OF WAY DATA, CONTACT RIGHT OF WAY ENGINEERING AT THE DISTRICT OFFICE.

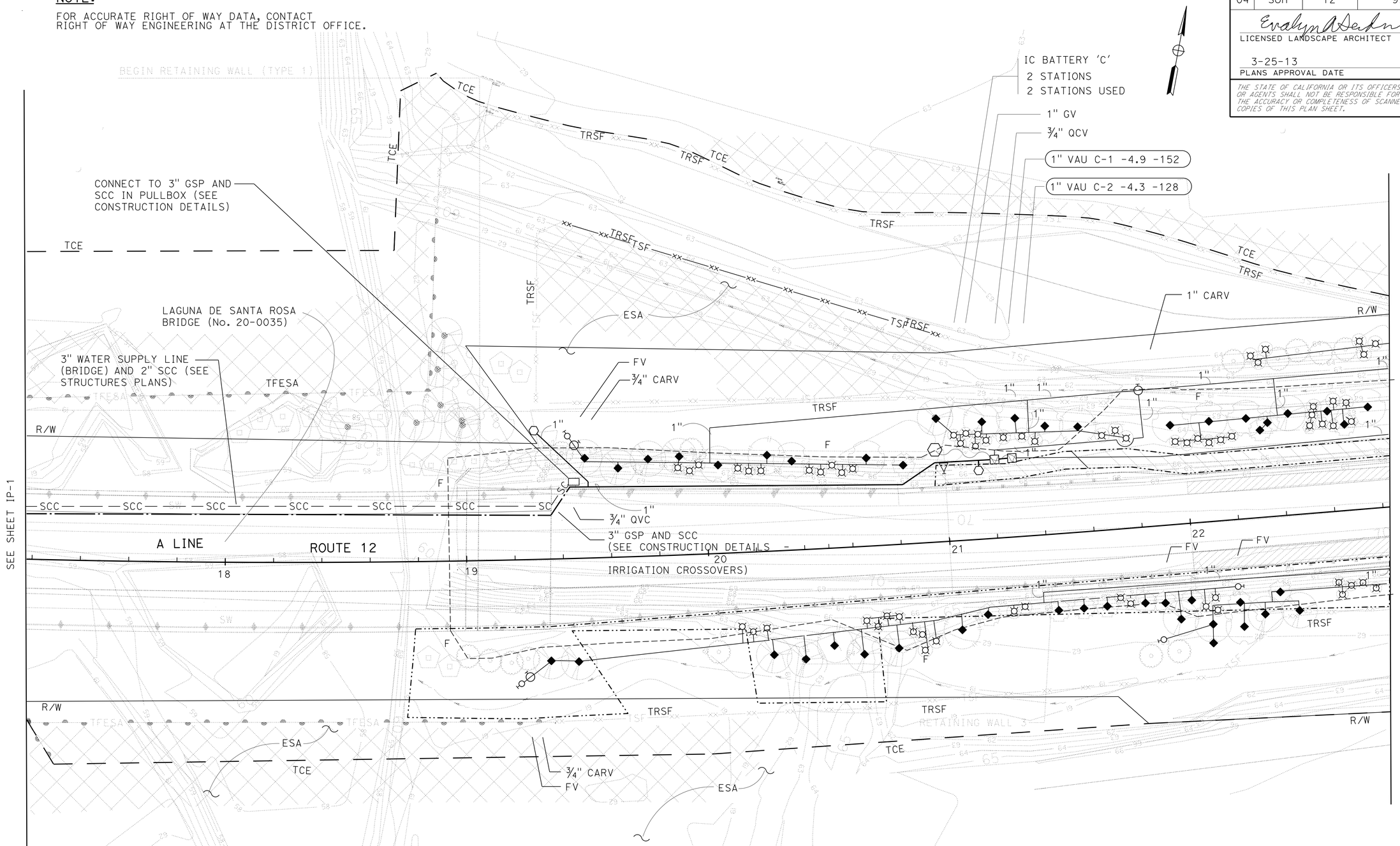

IRRIGATION PLAN

SCALE: 1" = 20'

IP-2

APPROVED FOR IRRIGATION WORK ONLY

STATE OF CALIFORNIA - DEPARTMENT OF TRANSPORTATION
Caltrans® LANDSCAPE ARCHITECTURE

SENIOR LANDSCAPE ARCHITECT: SUSAN LINDSAY
CALCULATED-DESIGNED BY: EVALYN SEIDMAN
CHECKED BY: LYDIA MAC
REVISED BY: E. SEIDMAN
DATE REVISED: 12-21-12

LAST REVISION 12-21-12
DATE PLOTTED => 28-MAR-2013
TIME PLOTTED => 14:14

Dist	COUNTY	ROUTE	POST MILES TOTAL PROJECT	SHEET No.	TOTAL SHEETS
04	Son	12	9.6	58	118

Evalyn Seidman
LICENSED LANDSCAPE ARCHITECT

3-25-13
PLANS APPROVAL DATE

LICENSED LANDSCAPE ARCHITECT
EVALYN SEIDMAN No. 3944
Evalyn Seidman
Expiration Date
09-30-13
Renewal Date
01-04-13
Date
STATE OF CALIFORNIA

THE STATE OF CALIFORNIA OR ITS OFFICERS OR AGENTS SHALL NOT BE RESPONSIBLE FOR THE ACCURACY OR COMPLETENESS OF SCANNED COPIES OF THIS PLAN SHEET.

NOTE:

FOR ACCURATE RIGHT OF WAY DATA, CONTACT RIGHT OF WAY ENGINEERING AT THE DISTRICT OFFICE.

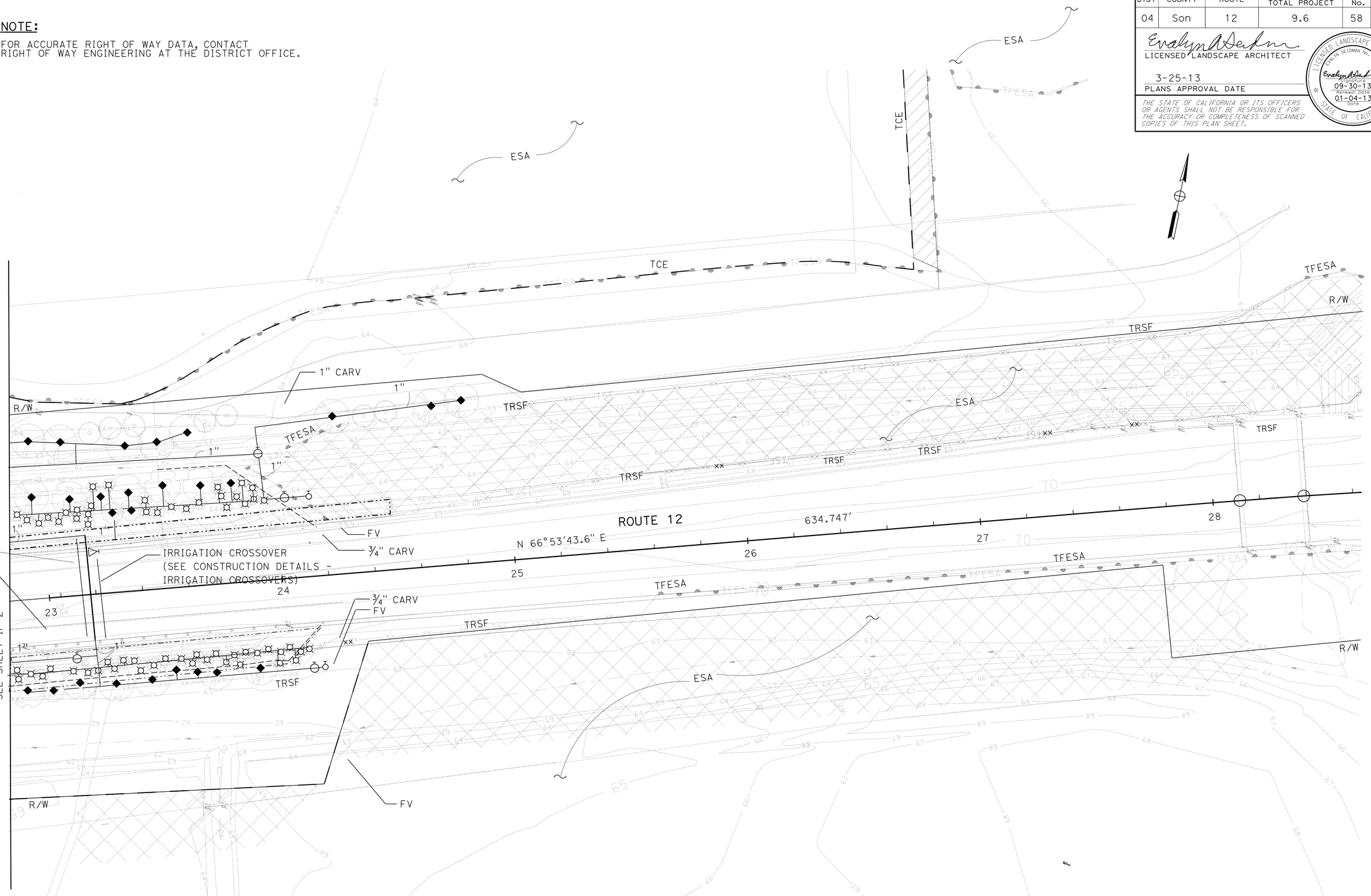

APPROVED FOR IRRIGATION WORK ONLY

IRRIGATION PLAN

SCALE: 1" = 20'

IP-3

STATE OF CALIFORNIA - DEPARTMENT OF TRANSPORTATION
Caltrans® LANDSCAPE ARCHITECTURE

SENIOR LANDSCAPE ARCHITECT: SUSAN LINDSAY

CALCULATED-DESIGNED BY: EVALYN SEIDMAN
CHECKED BY: LYDIA MAC

REVISED BY: E SEIDMAN
DATE REVISED: 01-04-13

LAST REVISION: 01-04-13
DATE PLOTTED => 28-MAR-2013
TIME PLOTTED => 14:14

Dist	COUNTY	ROUTE	POST MILES TOTAL PROJECT	SHEET No.	TOTAL SHEETS
04	Son	12	9.6	59	118

LICENSED LANDSCAPE ARCHITECT

3-25-13
PLANS APPROVAL DATE

LICENSED LANDSCAPE ARCHITECT — EVAYLN SEIDMAN No. 3094 — Signature — 09-30-13 Renewal Date — 01-04-13 Date — STATE OF CALIFORNIA

THE STATE OF CALIFORNIA OR ITS OFFICERS OR AGENTS SHALL NOT BE RESPONSIBLE FOR THE ACCURACY OR COMPLETENESS OF SCANNED COPIES OF THIS PLAN SHEET.

SPRINKLER SCHEDULE

SYMBOL	TYPE	DESCRIPTION	SPRAY PATTERN	OPERATING PRESSURE (psi)	PRESSURE COMPENSATING	PLUS/MINUS 5% ② DISCHARGE: GALLONS PER MINUTE (GPM)	GALLONS PER HOUR (GPH)	RADIUS (ft)	WIDTH x LENGTH (ft)	MATERIAL	INLET CONNECTION (NPT INCH)	POSITIVE-LOCKING Adj ARC STOP	BACKSPLASH PREVENTER	DIFFUSER PIN	DISTANCE CONTROL FLAP	Adj DISCHARGE	RISER: TYPE	MATERIAL: PLASTIC	GALVANIZED	SIZE (IPS INCH)	HEIGHT (INCH)	FLOW SHUTOFF DEVICE	⑤ SWING JOINT (TYPE)	RISER SUPPORT	SPRINKLER PROTECTOR (TYPE)	REMARKS
¤	D-1	SINGLE OUTLET EMITTER	—	30	X	—	2	—	—	PL	½"	—	—	—	—	—	V	X	—	½"	—	—	—	—	—	ONE EMITTER AT EACH PLANT LOCATION
◆ ⑦	D-1	SINGLE OUTLET EMITTER	—	30	X	—	2	—	—	PL	½"	—	—	—	—	—	V	X	—	½"	—	—	—	—	—	2x EMITTERS AT EACH PLANT LOCATION. INSTALL ON OPPOSITE SIDES OF PLANT BASIN

X IN BOX DENOTES REQUIREMENT

APPLICABLE WHEN CIRCLED BELOW:

1 - SEE SPECIAL PROVISIONS.
2 - IF A PRESSURE COMPENSATING DEVICE IS SPECIFIED, THE DISCHARGE AND RADII SHOWN REFLECT ITS USE.
3 - ARC STOP SHALL BE FITTED WITH A NUT AND BOLT.
4 - VINYL-COATED CAST IRON HOUSING.
5 - SWING JOINTS REQUIRED ADJACENT TO SHOULDERS, CURBS, SIDEWALKS, AND DIKES.
6 - UNLESS OTHERWISE SHOWN ON PLANS.

⑦ - SYMBOL = 2 EMITTERS PER PLANT LOCATION.

NOTES:

1. 2" TO 4" MINIMUM CLEARANCE ON ALL SIDES.
2. 4" TO 6" MINIMUM CLEARANCE.
3. 2" CLEARANCE.
4. VALVE ID TAG (MATCH NO. ON PLANS) OR RECYCLED WATER WARNING TAG (AS SPECIFIED).
5. BALL VALVE, WYE STRAINER, FILTER CANISTER, AND PRESSURE REGULATOR IN VAU MUST BE THE SAME SIZE AS THE REMOTE CONTROL VALVE, UNLESS OTHERWISE NOTED.

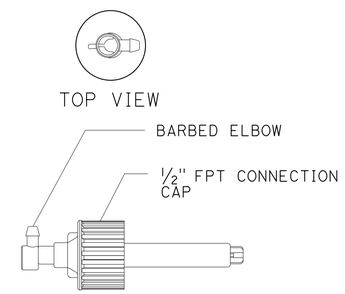

SPRINKLER (TYPE D)

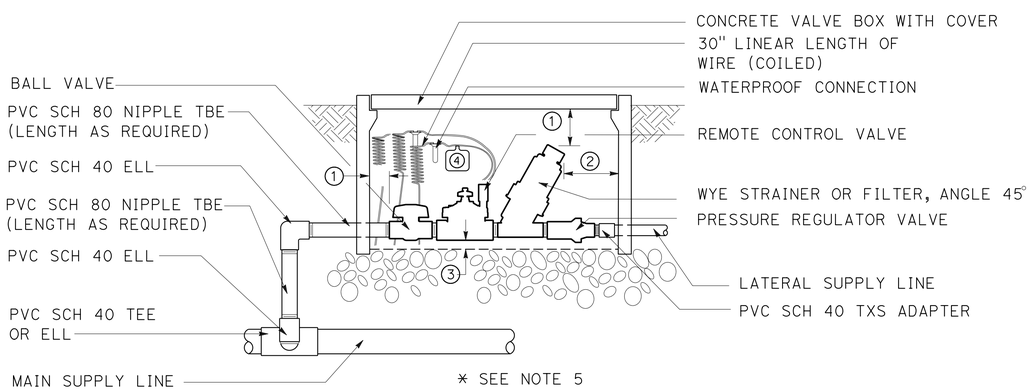

ELEVATION

VALVE ASSEMBLY UNIT

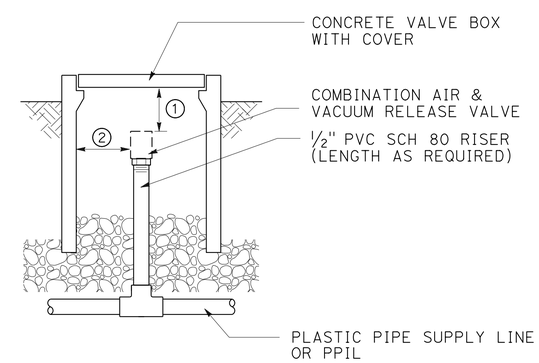

ELEVATION

COMBINATION AIR RELEASE VALVE

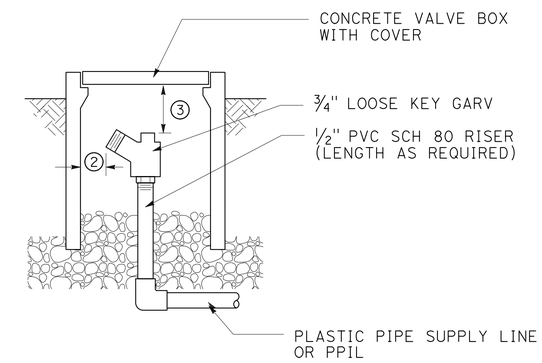

ELEVATION

FLUSH VALVE

IRRIGATION DETAILS

NO SCALE

ID-1

STATE OF CALIFORNIA - DEPARTMENT OF TRANSPORTATION
Caltrans® LANDSCAPE ARCHITECTURE

SENIOR LANDSCAPE ARCHITECT: SUSAN LINDSAY
CALCULATED-DESIGNED BY: EVAYLN SEIDMAN
CHECKED BY: LYDIA MAC
REVISED BY: E. SEIDMAN
DATE REVISED: 12-21-12

LAST REVISION 12-21-12 | DATE PLOTTED => 28-MAR-2013 | TIME PLOTTED => 14:14

Dist	COUNTY	ROUTE	POST MILES TOTAL PROJECT	SHEET No.	TOTAL SHEETS
04	Son	12	9.6	60	118

LICENSED LANDSCAPE ARCHITECT

3-25-13
PLANS APPROVAL DATE

LICENSED LANDSCAPE ARCHITECT
EVAYLYN SEIDMAN No. 3944
Signature
09-30-13
Renewal Date
01-04-13
Date
STATE OF CALIFORNIA

THE STATE OF CALIFORNIA OR ITS OFFICERS OR AGENTS SHALL NOT BE RESPONSIBLE FOR THE ACCURACY OR COMPLETENESS OF SCANNED COPIES OF THIS PLAN SHEET.

ABBREVIATIONS:

EA — EACH
DIP — DUCTILE IRON PIPE
GSP — GALVANIZED STEEL PIPE
Ft — FOOT/FEET
PR — PRESSURE RATED

SUBTOTALS PER VALVE ON LATERAL SUPPLY SIDE OF CONTROL VALVE

DESCRIPTION			UNIT	VALVE OR ASSEMBLY NUMBER A-1	B-1	C-1	C-2	SUBTOTALS	UNIT	DESCRIPTION		
PLASTIC PIPE SUPPLY LINE	SCH 40	¾"	LF	145	600	800	875	2420	LF	¾"	PR 200	PLASTIC PIPE SUPPLY LINE
		1"	LF	80	230	620	420	1350	LF	1"		
	PR 315										PR 315	
VALVES	CARV	¾"	EA	-	2	2	2	6	EA	¾"	CARV	VALVES
		1"	EA	1	1	2	1	5	EA	1"		
	FV	¾"	EA	1	2	2	3	8	EA	¾"	FV	
	GV	1"	EA	-	-	-	1	1	EA	1"	GV	
SPRINKLER TYPE		D-1	EA	33	129	152	128	442	EA	D-1	SPRINKLER TYPE	

IRRIGATION QUANTITIES
IQ-1

STATE OF CALIFORNIA - DEPARTMENT OF TRANSPORTATION
Caltrans® LANDSCAPE ARCHITECTURE

SENIOR LANDSCAPE ARCHITECT: SUSAN LINDSAY
CALCULATED-DESIGNED BY: EVAYLYN SEIDMAN
CHECKED BY: LYDIA MAC
REVISED BY: E. SEIDMAN
DATE REVISED: 01-04-13

LAST REVISION 01-04-13
DATE PLOTTED => 28-MAR-2013
TIME PLOTTED => 14:14

Dist	COUNTY	ROUTE	POST MILES TOTAL PROJECT	SHEET No.	TOTAL SHEETS
04	Son	12	9.6	61	118

LICENSED LANDSCAPE ARCHITECT

3-25-13
PLANS APPROVAL DATE

LICENSED LANDSCAPE ARCHITECT — EVALYN SEIDMAN No. 3993 — Signature — 09-30-13 Renewal Date — 01-04-13 Date — STATE OF CALIFORNIA

THE STATE OF CALIFORNIA OR ITS OFFICERS OR AGENTS SHALL NOT BE RESPONSIBLE FOR THE ACCURACY OR COMPLETENESS OF SCANNED COPIES OF THIS PLAN SHEET.

SUBTOTALS PER PLAN ON MAIN SUPPLY SIDE OF CONTROL VALVE

			UNIT	IP-1	IP-2	IP-3	SUBTOTALS
BPA		1"	EA	1	-	-	1
BPA		ENCLOSURE	EA	1	-	-	1
BOOSTER PUMP							
IC BATTERY		STATION 2-STATION STATION	EA	2	1		3
IC BATTERY	CEC	SINGLE	EA	-	-	-	
IC BATTERY	CEC	DOUBLE					
VALVES AND ASSEMBLIES	CARV	¾"	EA	-	-	-	-
VALVES AND ASSEMBLIES	CARV	1"	EA	-	-	-	-
VALVES AND ASSEMBLIES	RCVM	1"	EA	1	-	-	1
VALVES AND ASSEMBLIES	VAU	1"	EA	2	2	-	4
VALVES AND ASSEMBLIES	QCV	¾"	EA	2	2	-	4
VALVES AND ASSEMBLIES	FV	¾"	EA	-	-	-	-
VALVES AND ASSEMBLIES	GV	1"	EA	-	1	1	2
VALVES AND ASSEMBLIES	GV	2"	EA	3	-	-	3
CONDUIT CHDPE							
PLASTIC PIPE SUPPLY LINE	SCH 40	¾"	LF	-	-	-	
PLASTIC PIPE SUPPLY LINE	SCH 40	1"	LF	-	-	-	-
PLASTIC PIPE SUPPLY LINE	SCH 40	2"	LF	95	190	-	285

TOTAL QUANTITIES

TOTALS	UNIT	DESCRIPTION		
1	EA	1"		BPA
1	EA	ENCLOSURE		BPA
		BOOSTER PUMP		
3	EA	STATION 2-STATION STATION		IC BATTERY
		SINGLE	CEC	IC BATTERY
		DOUBLE	CEC	IC BATTERY
6	EA	¾"	CARV	VALVES AND ASSEMBLIES
5	EA	1"	CARV	VALVES AND ASSEMBLIES
1	EA	1"	RCVM	VALVES AND ASSEMBLIES
4	EA	1"	VAU	VALVES AND ASSEMBLIES
4	EA	¾"	QCV	VALVES AND ASSEMBLIES
8	EA	¾"	FV	VALVES AND ASSEMBLIES
3	EA	1"	GV	VALVES AND ASSEMBLIES
3	EA	2"	GV	VALVES AND ASSEMBLIES
				CONDUIT CHDPE
2420	LF	¾"	SCH 40	PLASTIC PIPE SUPPLY LINE
1350	LF	1"	SCH 40	PLASTIC PIPE SUPPLY LINE
285	LF	2"	SCH 40	PLASTIC PIPE SUPPLY LINE
442	EA	D-1		SPRINKLER TYPE

ABBREVIATIONS:

BPA — BACKFLOW PREVENTER ASSEMBLY
BV — BALL VALVE
CV — CHECK VALVE
CEC — CONTROLLER ENCLOSURE CABINET
CSP — CORRUGATED STEEL PIPE
DIP — DUCTILE IRON PIPE
EA — EACH
FAU — FILTER ASSEMBLY UNIT
FCV — FLOW CONTROL VALVE
FS — FLOW SENSOR
FV — FLUSH VALVE
GSP — GALVANIZED STEEL PIPE
GV — GATE VALVE
MCV — MANUAL CONTROL VALVE
Ft — FOOT/FEET
PR — PRESSURE RATED
PRV — PRESSURE REDUCING VALVE
PRLV — PRESSURE RELIEF VALVE
QCV — QUICK COUPLING VALVE
RCV — REMOTE CONTROL VALVE
RCVM — REMOTE CONTROL VALVE (MASTER)
VAU — VALVE ASSEMBLY UNIT
WSP — WELDED STEEL PIPE
WS — WYE STRAINER

IRRIGATION QUANTITIES
IQ-2

STATE OF CALIFORNIA - DEPARTMENT OF TRANSPORTATION
Caltrans® LANDSCAPE ARCHITECTURE
SENIOR LANDSCAPE ARCHITECT: SUSAN LINDSAY
EVALYN SEIDMAN — LYDIA MAC
REVISED BY: E. SEIDMAN — DATE REVISED: 01-04-13
CALCULATED-DESIGNED BY — CHECKED BY

LAST REVISION 01-04-13 — DATE PLOTTED => 03-APR-2013 — TIME PLOTTED => 08:46

Dist	COUNTY	ROUTE	POST MILES TOTAL PROJECT	SHEET No.	TOTAL SHEETS
04	Son	12	9.6	62	118

REGISTERED ELECTRICAL ENGINEER 9-18-12 DATE

3-25-13
PLANS APPROVAL DATE

REGISTERED PROFESSIONAL ENGINEER Nasrin Gharib No. 17498 Exp. 6-30-13 ELECT STATE OF CALIFORNIA

THE STATE OF CALIFORNIA OR ITS OFFICERS OR AGENTS SHALL NOT BE RESPONSIBLE FOR THE ACCURACY OR COMPLETENESS OF SCANNED COPIES OF THIS PLAN SHEET.

NOTE:

FOR ACCURATE RIGHT OF WAY DATA, CONTACT RIGHT OF WAY ENGINEERING AT THE DISTRICT OFFICE.

EXISTING PHASE DIAGRAM

4-SECTION HEAD

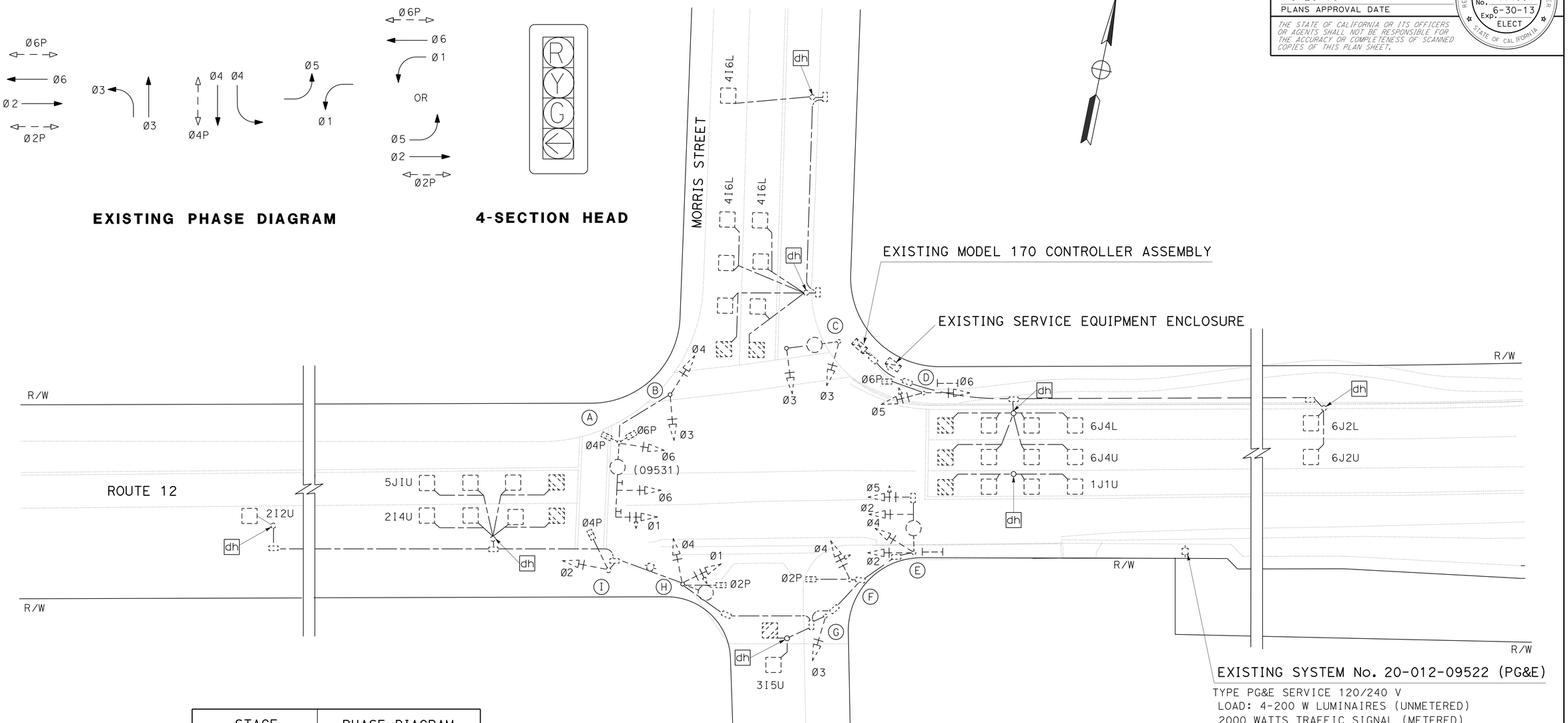

STAGE	PHASE DIAGRAM
1A	USE EXISTING PHASE DIAGRAM ON E-1
1B	SEE E-2
2A	USE FLAGGER
2B	SEE E-3
2C AND STAGE 3	REVERT BACK TO EXISTING PHASE DIAGRAM ON E-1

EXISTING ELECTRICAL FACILITIES

NO SCALE

E-1

REVISED BY	DATE REVISED
NG	9/12

NASRIN GHARIB — ELAINE WONG — CALCULATED-DESIGNED BY — CHECKED BY

FUNCTIONAL SUPERVISOR: LAI HONG CHIU

STATE OF CALIFORNIA - DEPARTMENT OF TRANSPORTATION — Caltrans — ELECTRICAL

LAST REVISION 09-13-12 | DATE PLOTTED => 28-MAR-2013 | TIME PLOTTED => 14:59

Dist	COUNTY	ROUTE	POST MILES TOTAL PROJECT	SHEET No.	TOTAL SHEETS
04	Son	12	9.6	63	118

REGISTERED ELECTRICAL ENGINEER 9-18-12 DATE

3-25-13 3-3-12
PLANS APPROVAL DATE

REGISTERED PROFESSIONAL ENGINEER Nasrin Gharib No. 17498 Exp. 6-30-13 ELECT STATE OF CALIFORNIA

THE STATE OF CALIFORNIA OR ITS OFFICERS OR AGENTS SHALL NOT BE RESPONSIBLE FOR THE ACCURACY OR COMPLETENESS OF SCANNED COPIES OF THIS PLAN SHEET.

NOTE:

FOR ACCURATE RIGHT OF WAY DATA, CONTACT RIGHT OF WAY ENGINEERING AT THE DISTRICT OFFICE.

EXISTING PHASE DIAGRAM FOR STAGE 1B

4-SECTION HEAD

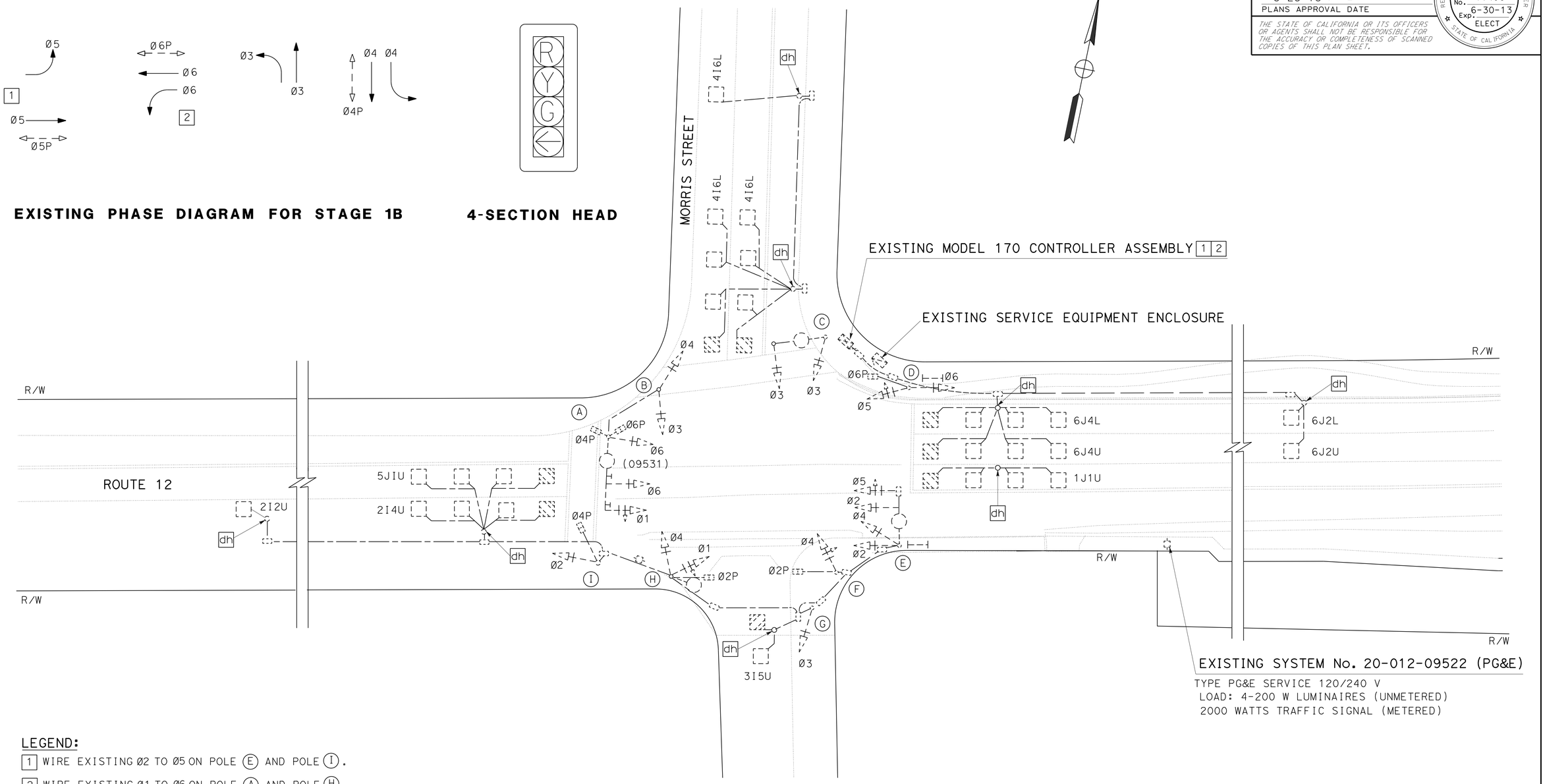

LEGEND:

1 WIRE EXISTING Ø2 TO Ø5 ON POLE (E) AND POLE (I).

2 WIRE EXISTING Ø1 TO Ø6 ON POLE (A) AND POLE (H).

STAGE CONSTRUCTION
STAGE 1B

MODIFY SIGNAL AND LIGHTING

NO SCALE

E-2

APPROVED FOR ELECTRICAL WORK ONLY

REVISED BY	DATE REVISED
NG	9/12

NASRIN GHARIB — CALCULATED-DESIGNED BY
ELAINE WONG — CHECKED BY
LAI HONG CHIU — FUNCTIONAL SUPERVISOR

STATE OF CALIFORNIA - DEPARTMENT OF TRANSPORTATION
Caltrans
ELECTRICAL

LAST REVISION 09-13-12
DATE PLOTTED => 28-MAR-2013
TIME PLOTTED => 14:59

Dist	COUNTY	ROUTE	POST MILES TOTAL PROJECT	SHEET No.	TOTAL SHEETS
04	Son	12	9.6	64	118

Nasrin Gharib 9-18-12
REGISTERED ELECTRICAL ENGINEER DATE

3-25-13
PLANS APPROVAL DATE

REGISTERED PROFESSIONAL ENGINEER Nasrin Gharib No. 17498 Exp. 6-30-13 ELECT STATE OF CALIFORNIA

THE STATE OF CALIFORNIA OR ITS OFFICERS OR AGENTS SHALL NOT BE RESPONSIBLE FOR THE ACCURACY OR COMPLETENESS OF SCANNED COPIES OF THIS PLAN SHEET.

NOTES:

1. FOR ACCURATE RIGHT OF WAY DATA, CONTACT RIGHT OF WAY ENGINEERING AT THE DISTRICT OFFICE.
2. AT THE BEGINNING OF STAGE 2C, REVERT BACK TO ORIGINAL PHASE DIAGRAM SHOWN ON E-1.

LEGEND:

[1] COVER ALL PHASE 1 AND PHASE 5 INDICATION ON POLE (A), (D), (E) AND (H).

PHASE DIAGRAM FOR STAGE 2B

4-SECTION HEAD

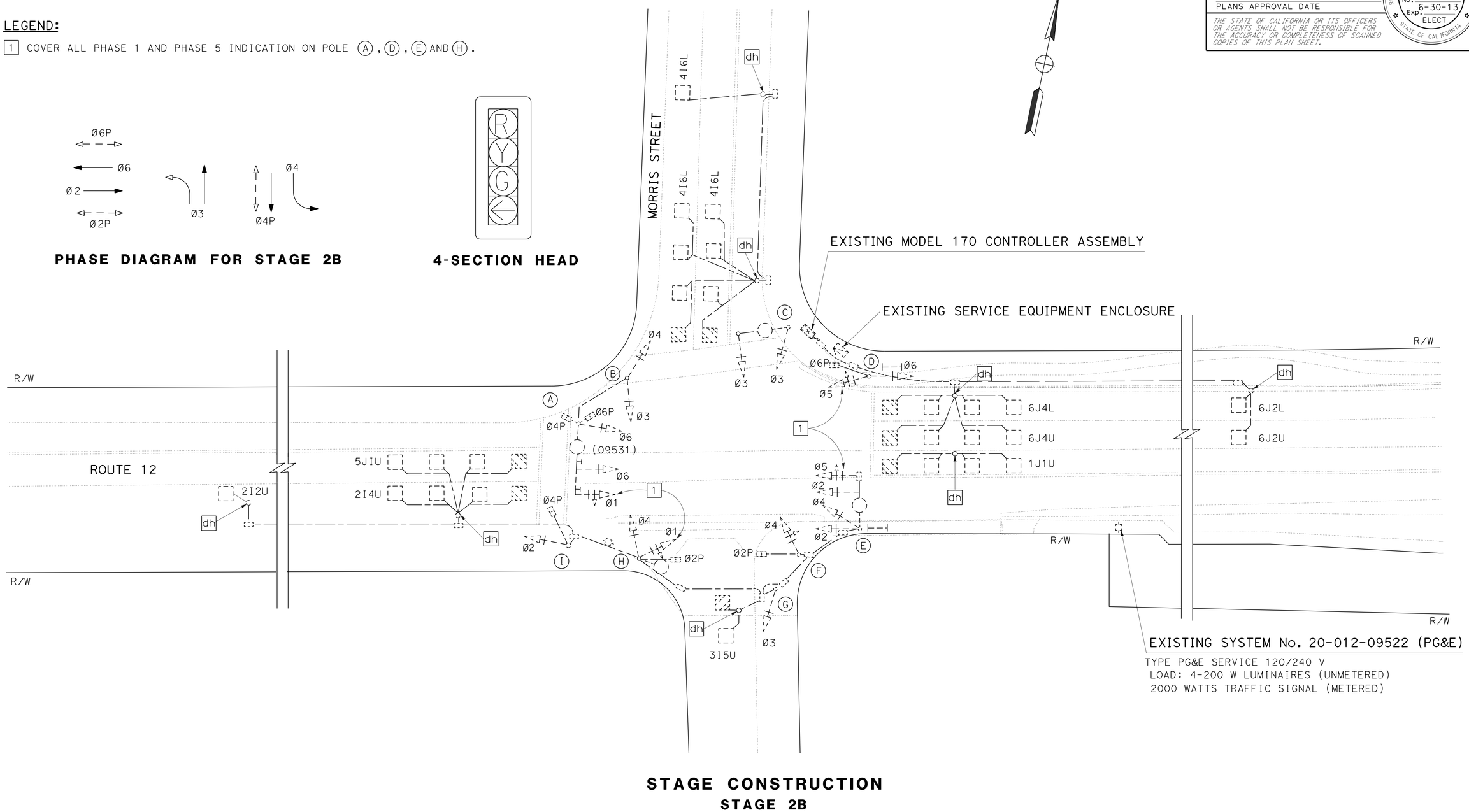

STAGE CONSTRUCTION
STAGE 2B

MODIFY SIGNAL AND LIGHTING

NO SCALE

E-3

APPROVED FOR ELECTRICAL WORK ONLY

STATE OF CALIFORNIA - DEPARTMENT OF TRANSPORTATION
Caltrans®
ELECTRICAL

FUNCTIONAL SUPERVISOR	CALCULATED-DESIGNED BY	NASRIN GHARIB	REVISED BY	NG
LAI HONG CHIU	CHECKED BY	ELAINE WONG	DATE REVISED	9/12

LAST REVISION 09-13-12 | DATE PLOTTED => 28-MAR-2013 | TIME PLOTTED => 14:59

Dist	COUNTY	ROUTE	POST MILES TOTAL PROJECT	SHEET No.	TOTAL SHEETS
04	Son	12	9.6	65	118

Nasrin Gharib 9-18-12
REGISTERED ELECTRICAL ENGINEER DATE

3-25-13
PLANS APPROVAL DATE

REGISTERED PROFESSIONAL ENGINEER
Nasrin Gharib
No. 17498
Exp. 6-30-13
ELECT
STATE OF CALIFORNIA

THE STATE OF CALIFORNIA OR ITS OFFICERS OR AGENTS SHALL NOT BE RESPONSIBLE FOR THE ACCURACY OR COMPLETENESS OF SCANNED COPIES OF THIS PLAN SHEET.

NOTE:

FOR ACCURATE RIGHT OF WAY DATA, CONTACT RIGHT OF WAY ENGINEERING AT THE DISTRICT OFFICE.

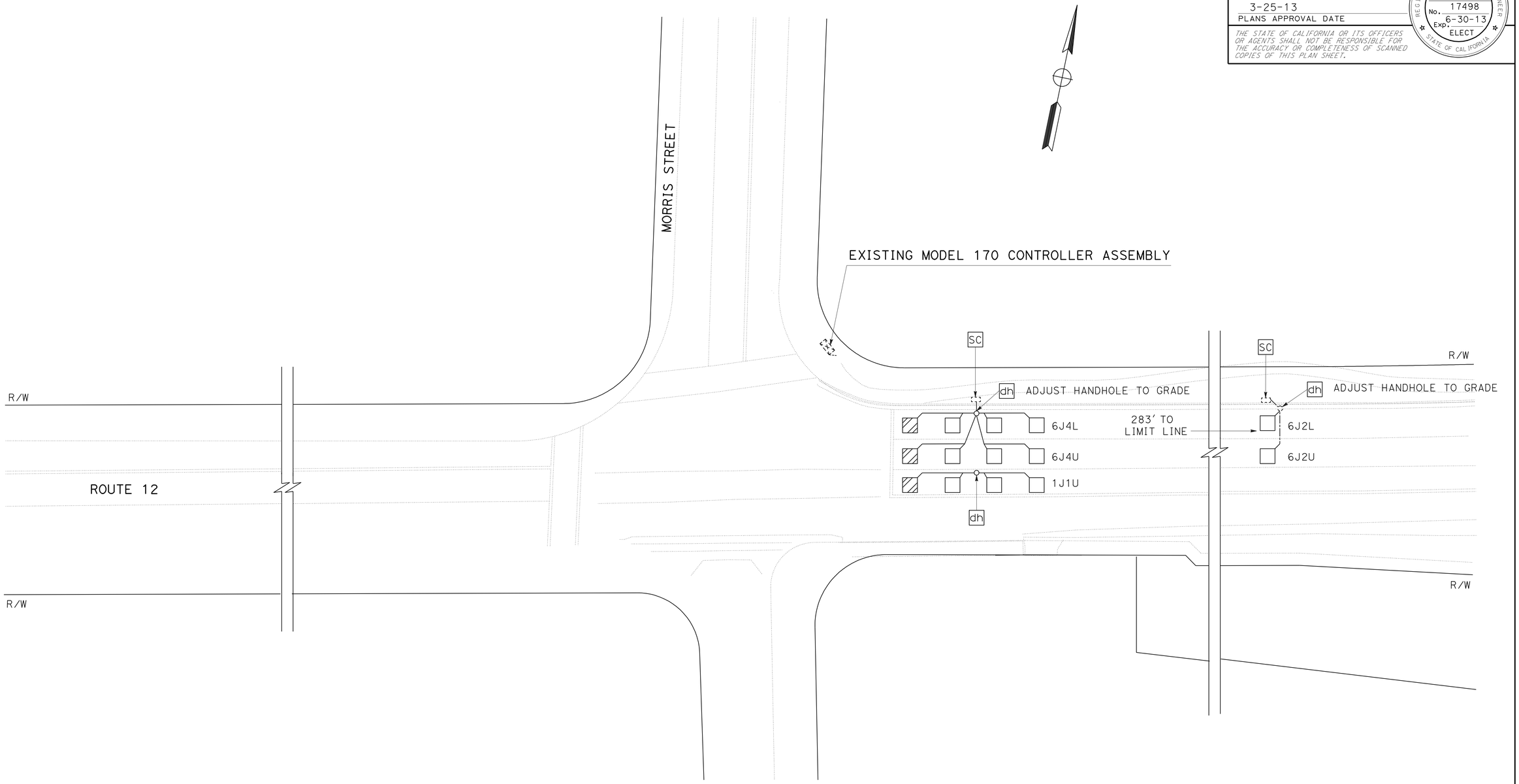

MODIFY SIGNAL AND LIGHTING
(STAGE 3)
NO SCALE

E-4

APPROVED FOR ELECTRICAL WORK ONLY

REVISED BY	NG
DATE REVISED	9/12
NASRIN GHARIB	
ELAINE WONG	
CALCULATED-DESIGNED BY	
CHECKED BY	
FUNCTIONAL SUPERVISOR	
LAI HONG CHIU	

STATE OF CALIFORNIA - DEPARTMENT OF TRANSPORTATION
Caltrans®
ELECTRICAL

LAST REVISION 09-13-12
DATE PLOTTED => 03-APR-2013
TIME PLOTTED => 07:55

Dist	COUNTY	ROUTE	POST MILES TOTAL PROJECT	SHEET No.	TOTAL SHEETS
04	Son	12	9.6	66	118

Nasrin Gharib 9-18-12
REGISTERED ELECTRICAL ENGINEER DATE

3-25-13
PLANS APPROVAL DATE

REGISTERED PROFESSIONAL ENGINEER
Nasrin Gharib
No. 17498
Exp. 6-30-13
ELECT
STATE OF CALIFORNIA

THE STATE OF CALIFORNIA OR ITS OFFICERS OR AGENTS SHALL NOT BE RESPONSIBLE FOR THE ACCURACY OR COMPLETENESS OF SCANNED COPIES OF THIS PLAN SHEET.

NOTE:

FOR ACCURATE RIGHT OF WAY DATA, CONTACT
RIGHT OF WAY ENGINEERING AT THE DISTRICT OFFICE.

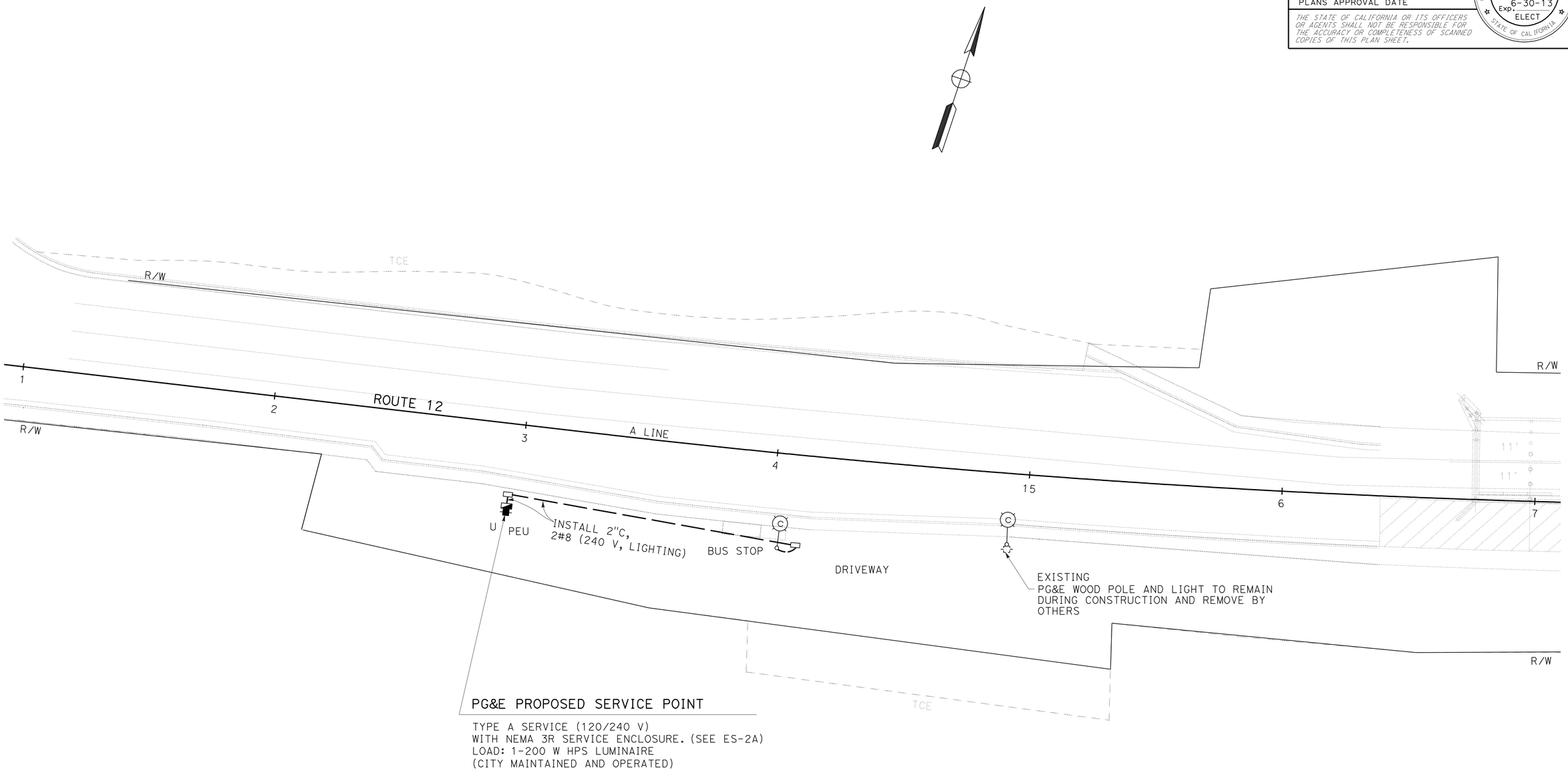

LIGHTING (CITY STREET)

SCALE: 1" = 20'

E-5

APPROVED FOR ELECTRICAL WORK ONLY

NASRIN GHARIB	REVISED BY
ELAINE WONG	DATE REVISED
	NG
	12/12
CALCULATED-DESIGNED BY	FUNCTIONAL SUPERVISOR
CHECKED BY	LAI HONG CHIU

STATE OF CALIFORNIA - DEPARTMENT OF TRANSPORTATION
Caltrans
ELECTRICAL

LAST REVISION 01-03-13 | DATE PLOTTED => 03-APR-2013 | TIME PLOTTED => 07:55

Dist	COUNTY	ROUTE	POST MILES TOTAL PROJECT	SHEET No.	TOTAL SHEETS
04	Son	12	9.6	67	118

Nasrin Gharib 9-18-12
REGISTERED ELECTRICAL ENGINEER DATE

3-25-13
PLANS APPROVAL DATE

REGISTERED PROFESSIONAL ENGINEER
Nasrin Gharib
No. 17498
Exp. 6-30-13
ELECT
STATE OF CALIFORNIA

THE STATE OF CALIFORNIA OR ITS OFFICERS OR AGENTS SHALL NOT BE RESPONSIBLE FOR THE ACCURACY OR COMPLETENESS OF SCANNED COPIES OF THIS PLAN SHEET.

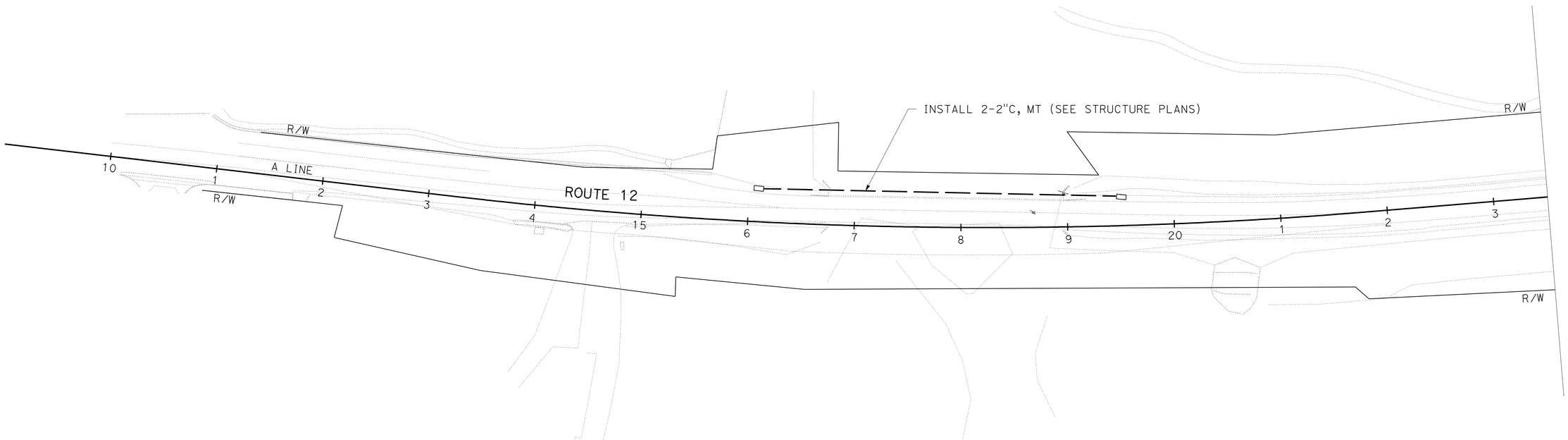

SPRINKLER CONTROL CONDUIT (BRIDGE)

SCALE: 1" = 50'

E-6

APPROVED FOR ELECTRICAL WORK ONLY

REVISED BY	NG
DATE REVISED	12/12
CALCULATED-DESIGNED BY	NASRIN GHARIB
CHECKED BY	ELAINE WONG
FUNCTIONAL SUPERVISOR	LAI HONG CHIU

STATE OF CALIFORNIA - DEPARTMENT OF TRANSPORTATION
Caltrans
ELECTRICAL

LAST REVISION 12-26-12
DATE PLOTTED => 03-APR-2013
TIME PLOTTED => 07:56

Dist	COUNTY	ROUTE	POST MILES TOTAL PROJECT	SHEET No.	TOTAL SHEETS
04	Son	12	9.6	68	118

REGISTERED ELECTRICAL ENGINEER 9-18-12 DATE

3-25-13
PLANS APPROVAL DATE

REGISTERED PROFESSIONAL ENGINEER Nasrin Gharib No. 17498 Exp. 6-30-13 ELECT STATE OF CALIFORNIA

THE STATE OF CALIFORNIA OR ITS OFFICERS OR AGENTS SHALL NOT BE RESPONSIBLE FOR THE ACCURACY OR COMPLETENESS OF SCANNED COPIES OF THIS PLAN SHEET.

NOTE:

THE QUANTITIES ON THIS SHEET ARE NOT A SEPARATE BID ITEM AND ARE FOR INFORMATION ONLY.

MODIFY SIGNAL AND LIGHTING

SHEET No.	TYPE A DETECTOR LOOP	TYPE D DETECTOR LOOP
	EA	
E-4	11	3

SPRINKLER CONTROL CONDUIT (BRIDGE)

SHEET No.	No. 5 PB	2"C TYPE 1	2"C TYPE 3
	EA	LF	
E-6	2	120	440

LIGHTING (CITY STREET)

SHEET No.	No. 8 CONDUCTOR	2"C TYPE 3	NEMA 3R SERVICE ENCLOSURE	No. 5 PB	TYPE 15 ELECTROLIER	TYPE 15 ELECTROLIER FOUNDATION
	LF		EA			
E-5	500	250	1	2	1	1

ELECTRICAL QUANTITIES

E-7

APPROVED FOR ELECTRICAL WORK ONLY

CALCULATED-DESIGNED BY	NASRIN GHARIB
CHECKED BY	ELAINE WONG
REVISED BY	NG
DATE REVISED	12/12
FUNCTIONAL SUPERVISOR	LAI HONG CHIU

STATE OF CALIFORNIA - DEPARTMENT OF TRANSPORTATION
Caltrans
ELECTRICAL

LAST REVISION 12-26-12 | DATE PLOTTED => 28-MAR-2013 | TIME PLOTTED => 15:25

Dist	COUNTY	ROUTE	POST MILES TOTAL PROJECT	SHEET No.	TOTAL SHEETS
04	Son	12	9.6	69	118

REGISTERED CIVIL ENGINEER 12-7-12 DATE

3-25-13
PLANS APPROVAL DATE

REGISTERED PROFESSIONAL ENGINEER Gurinderpal Bhullar No. C48815 Exp. 9-30-14 CIVIL STATE OF CALIFORNIA

THE STATE OF CALIFORNIA OR ITS OFFICERS OR AGENTS SHALL NOT BE RESPONSIBLE FOR THE ACCURACY OR COMPLETENESS OF SCANNED COPIES OF THIS PLAN SHEET.

NOTES:

Unless otherwise specified in the special provisions, all temporary warning signs shall have black legend on orange background.

California code are designated by (CA). Otherwise, Federal (MUTCD) codes are shown.

TYPICAL LANE CLOSURE WITH REVERSIBLE CONTROL

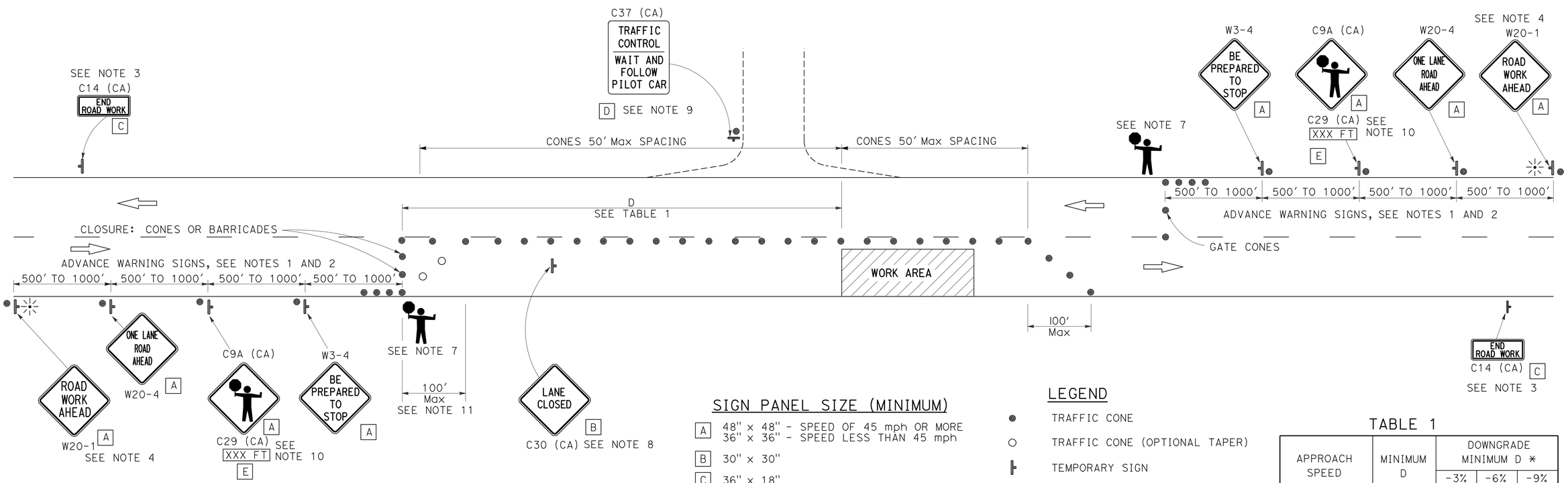

SIGN PANEL SIZE (MINIMUM)

- A: 48" x 48" - SPEED OF 45 mph OR MORE; 36" x 36" - SPEED LESS THAN 45 mph
- B: 30" x 30"
- C: 36" x 18"
- D: 36" x 42"
- E: 36" x 9"

LEGEND

- TRAFFIC CONE
- TRAFFIC CONE (OPTIONAL TAPER)
- TEMPORARY SIGN
- PORTABLE FLASHING BEACON
- FLAGGER

TABLE 1

APPROACH SPEED	MINIMUM D	DOWNGRADE MINIMUM D *		
		-3%	-6%	-9%
mph	ft	ft	ft	ft
25 AND BELOW	155	158	165	173
30	200	205	215	227
35	250	257	271	287
40	305	315	333	354
45	360	378	400	427
50	425	446	474	507
55	495	520	553	593
60	570	598	638	686
65	645	682	728	785

* USE ON SUSTAINED DOWNGRADE STEEPER THAN -3 PERCENT AND LONGER THAN 1 MILE.

NOTES:

1. Where approach speeds are low, advance warning signs may be placed at 300' spacing, and closer in urban areas.
2. Each advance warning sign in each direction of travel shall be equipped with at least two flags for daytime closure. Each flag shall be at least 16" x 16" in size and shall be orange or fluorescent red-orange in color. Flashing beacons shall be placed at the locations indicated for lane closure during hours of darkness.
3. A C14 (CA) "END ROAD WORK" sign, as appropriate, shall be placed at the end of the lane control unless the end of work area is obvious, or ends within a larger project's limits.
4. If the W20-1 sign would follow within 2000' of a stationary W20-1 or C11 (CA) "ROAD WORK NEXT _____MILES", use a W20-4 sign for the first advance warning sign.
5. All cones used for lane closures during the hours of darkness shall be fitted with retroreflective bands (or sleeves) as specified in the specifications.
6. Portable delineators, placed at one-half the spacing indicated for traffic cones, may be used instead of cones for daytime closures only.
7. Additional advance flaggers may be required. Flagger should stand in a conspicuous place, be visible to approaching traffic as well as approaching vehicles after the first vehicle has stopped. During the hours of darkness, the flagging-station and flagger shall be illuminated and clearly visible to approaching traffic. The illumination footprint of the lighting on the ground shall be at least 20' in diameter. Place a minimum of four cones at 50' intervals in advance of flagger station as shown.
8. Place C30 (CA) "LANE CLOSED" sign at 500' to 1000' intervals throughout extended work areas. They are optional if the work area is visible from the flagger station.
9. When a pilot car is used, place a C37 (CA) "TRAFFIC CONTROL-WAIT AND FOLLOW PILOT CAR" sign at all intersections within traffic control area. Signs shall be clean and visible at all times.
10. An optional C29 (CA) sign may be placed below the C9A (CA) sign.
11. Traffic cones or barricades may be placed on the optional taper as shown, barricades shall be Type I, II, or III.

STATE OF CALIFORNIA
DEPARTMENT OF TRANSPORTATION

TRAFFIC CONTROL SYSTEM FOR LANE CLOSURE ON TWO LANE CONVENTIONAL HIGHWAYS

NO SCALE

TCS-1

STATE OF CALIFORNIA - DEPARTMENT OF TRANSPORTATION
Caltrans

FUNCTIONAL SUPERVISOR | CALCULATED-DESIGNED BY | CHECKED BY | REVISED BY | DATE REVISED

LAST REVISION 00-00-00 | DATE PLOTTED => 28-MAR-2013 | TIME PLOTTED => 13:57

Dist	COUNTY	ROUTE	POST MILES TOTAL PROJECT	SHEET No.	TOTAL SHEETS
04	Son	12	9.6	70	118

Roberta L. McLaughlin
REGISTERED CIVIL ENGINEER

April 20, 2012
PLANS APPROVAL DATE

REGISTERED PROFESSIONAL ENGINEER
Roberta L. McLaughlin
No. C40375
Exp. 3-31-13
CIVIL
STATE OF CALIFORNIA

THE STATE OF CALIFORNIA OR ITS OFFICERS OR AGENTS SHALL NOT BE RESPONSIBLE FOR THE ACCURACY OR COMPLETENESS OF SCANNED COPIES OF THIS PLAN SHEET.

TO ACCOMPANY PLANS DATED 3-25-13

2010 REVISED STANDARD PLAN RSP A24A

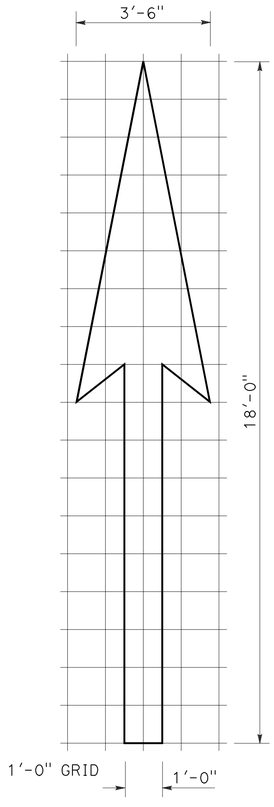

A=25 ft^2

TYPE I 18'-0" ARROW

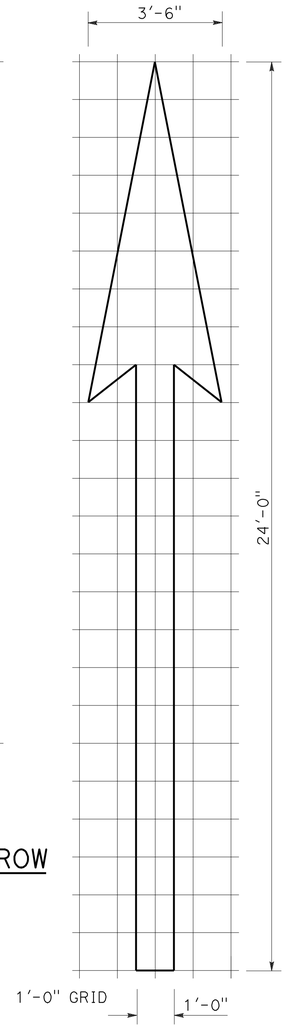

A=31 ft^2

TYPE I 24'-0" ARROW

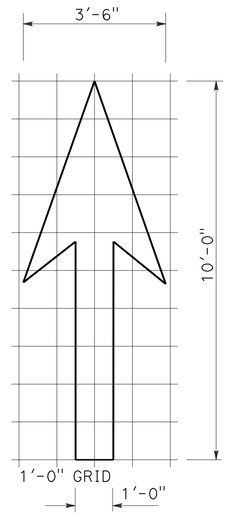

A=14 ft^2

TYPE I 10'-0" ARROW

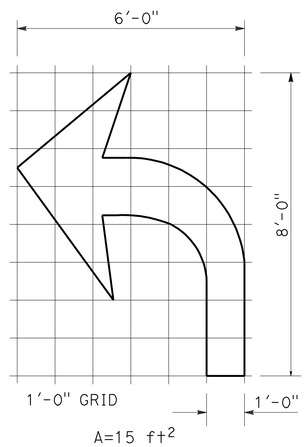

A=15 ft^2

TYPE IV (L) ARROW

(For Type IV (R) arrow, use mirror image)

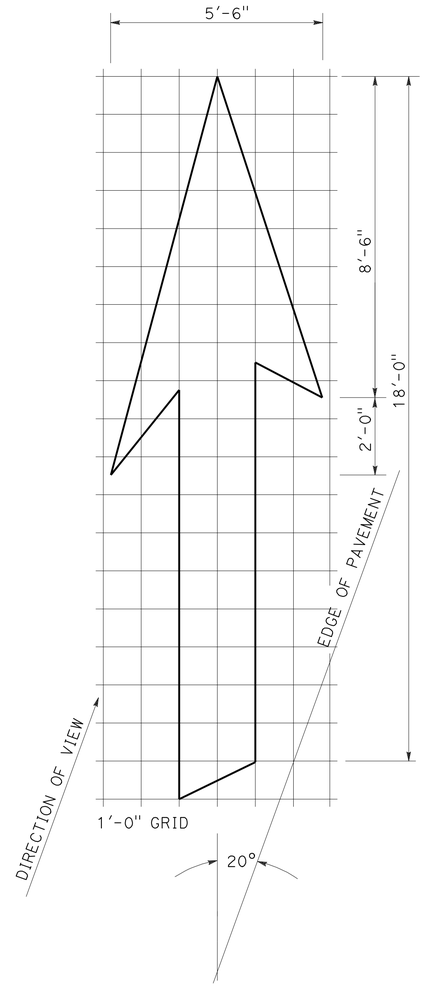

A=42 ft^2

TYPE VI ARROW

Right lane drop arrow
(For left lane, use mirror image)

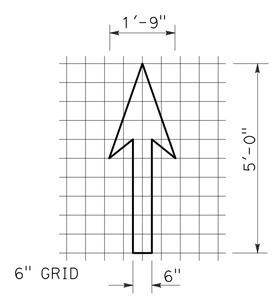

A=3.5 ft^2

BIKE LANE ARROW

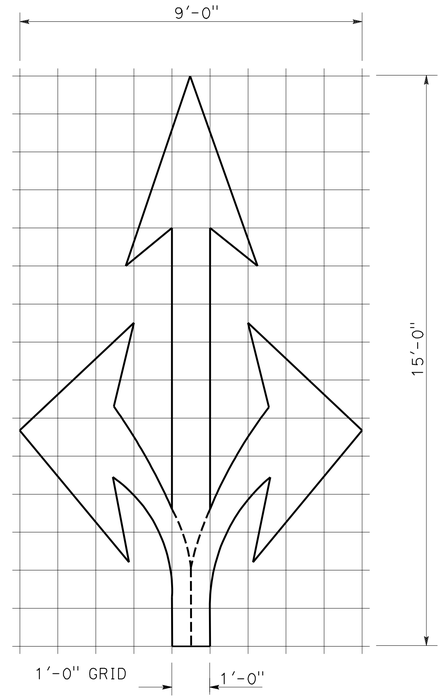

A=36 ft^2

TYPE VIII ARROW

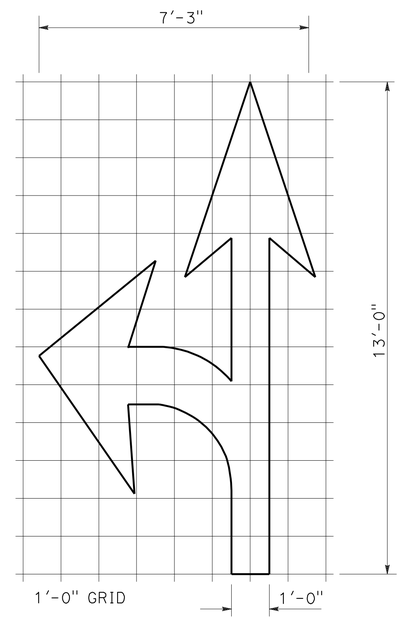

A=27 ft^2

TYPE VII (L) ARROW

(For Type VII (R) arrow, use mirror image)

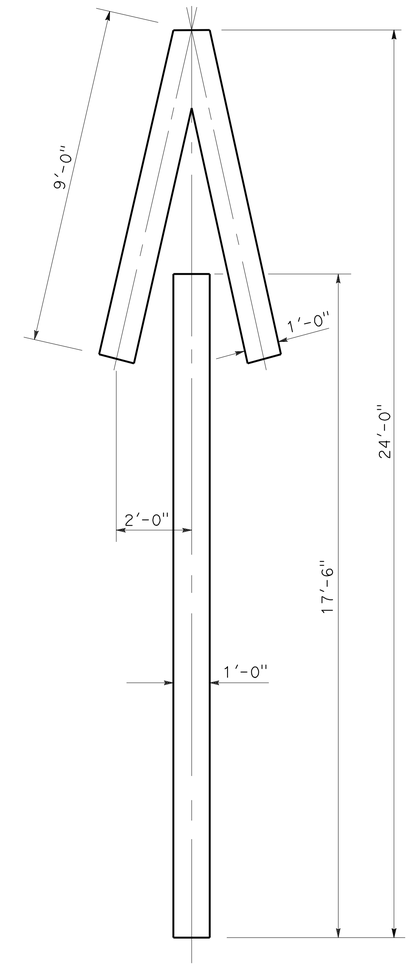

A=33 ft^2

TYPE V ARROW

NOTE:
Minor variations in dimensions may be accepted by the Engineer.

STATE OF CALIFORNIA
DEPARTMENT OF TRANSPORTATION

PAVEMENT MARKINGS ARROWS

NO SCALE

RSP A24A DATED APRIL 20, 2012 SUPERSEDES STANDARD PLAN A24A DATED MAY 20, 2011 - PAGE 13 OF THE STANDARD PLANS BOOK DATED 2010.

REVISED STANDARD PLAN RSP A24A

3-14-12

Dist	COUNTY	ROUTE	POST MILES TOTAL PROJECT	SHEET No.	TOTAL SHEETS
04	Son	12	9.6	71	118

REGISTERED CIVIL ENGINEER

April 20, 2012
PLANS APPROVAL DATE

REGISTERED PROFESSIONAL ENGINEER William K. Farnbach No. C49042 Exp. 9-30-12 CIVIL STATE OF CALIFORNIA

THE STATE OF CALIFORNIA OR ITS OFFICERS OR AGENTS SHALL NOT BE RESPONSIBLE FOR THE ACCURACY OR COMPLETENESS OF SCANNED COPIES OF THIS PLAN SHEET.

TO ACCOMPANY PLANS DATED 3-25-13

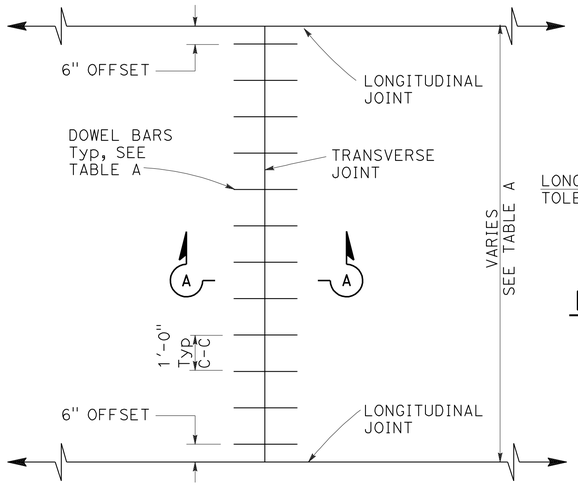

TRANSVERSE JOINT DOWEL BAR LAYOUT

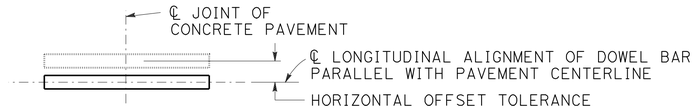

PLAN

HORIZONTAL OFFSET TOLERANCE

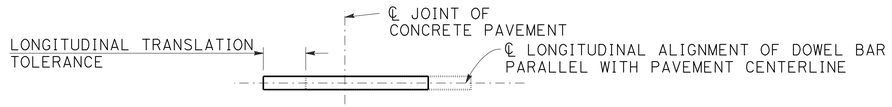

PLAN

LONGITUDINAL TRANSLATION TOLERANCE

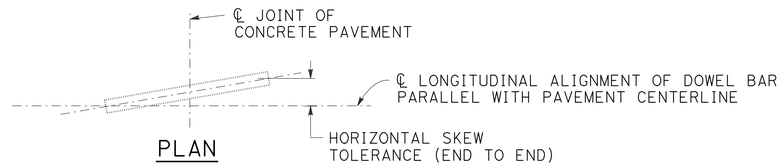

PLAN

HORIZONTAL SKEW TOLERANCE

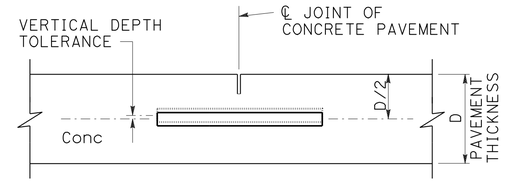

ELEVATION

VERTICAL DEPTH TOLERANCE

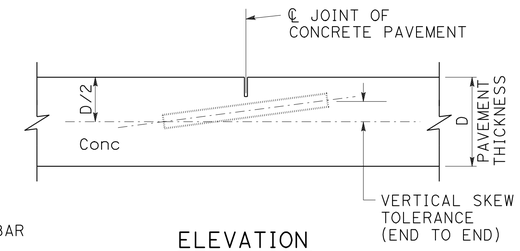

ELEVATION

VERTICAL SKEW TOLERANCE

NOTES:

1. See Standard Plan P1 for typical dowel bar placement and locations.
2. 1½" Dia dowel bars are to be used with a pavement thickness, D, equal to or greater than 0.70 feet. For pavement thickness, D, less than 0.70 feet, use 1¼" Dia dowel bars.
3. For widths not shown, see Project Plans.
4. If fresh concrete pavement is placed adjacent to existing concrete pavement, the top corner of the existing concrete pavement does not need to be rounded to the ¼" radius, as shown.
5. May also use ¾" Dia dowel bars 2'-4" ± ¼" in length. Center the length of dowel bars at the centerline of longitudinal joint.

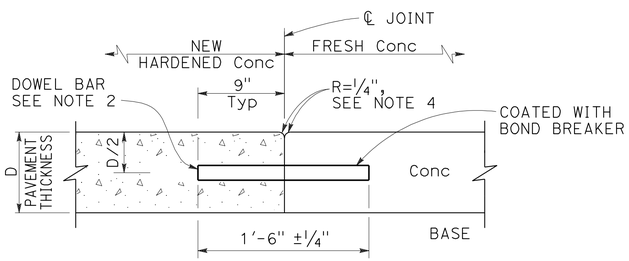

SECTION A-A

TRANSVERSE CONSTRUCTION JOINT DETAIL

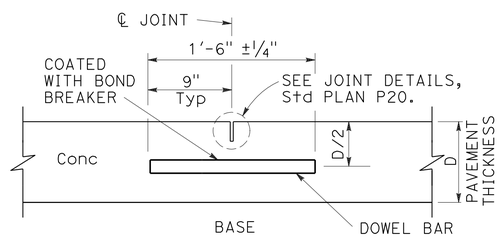

TRANSVERSE CONTRACTION JOINT

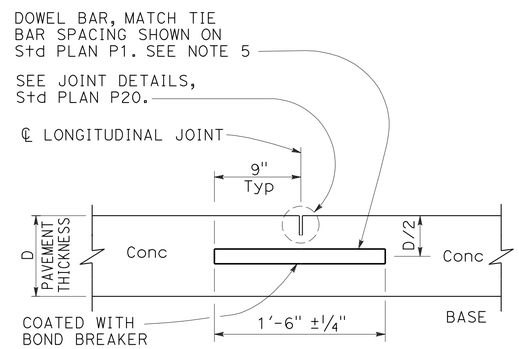

LONGITUDINAL CONTRACTION JOINT WITH DOWEL BARS

See Revised Std Plan RSP P18

TABLE A (See Note 3)

DOWEL BAR TRANSVERSE SPACING TABLE	
WIDTH BETWEEN LONGITUDINAL JOINTS	NUMBER OF DOWELS BETWEEN LONGITUDINAL JOINTS
14'-0"	14
13'-0"	13
12'-0"	12
11'-0"	11
10'-0"	10
8'-0"	8
5'-0"	5
4'-0"	4

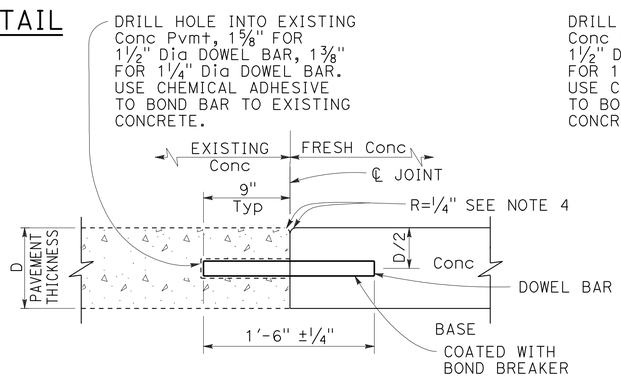

TRANSVERSE CONSTRUCTION JOINT FOR EXISTING CONCRETE PAVEMENT

Drill and bond locations

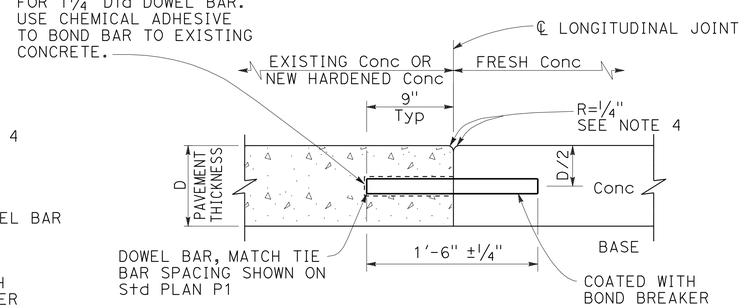

LONGITUDINAL CONSTRUCTION JOINT WITH DOWEL BARS

See Revised Std Plan RSP P18

STATE OF CALIFORNIA
DEPARTMENT OF TRANSPORTATION

CONCRETE PAVEMENT-DOWEL BAR DETAILS

NO SCALE

RSP P10 DATED APRIL 20, 2012 SUPERSEDES STANDARD PLAN P10 DATED MAY 20, 2011 - PAGE 131 OF THE STANDARD PLANS BOOK DATED 2010.

REVISED STANDARD PLAN RSP P10

2010 REVISED STANDARD PLAN RSP P10

2-22-12

Dist	COUNTY	ROUTE	POST MILES TOTAL PROJECT	SHEET No.	TOTAL SHEETS
04	Son	12	9.6	72	118

Raymond Don Tsztoo
REGISTERED CIVIL ENGINEER

July 20, 2012
PLANS APPROVAL DATE

REGISTERED PROFESSIONAL ENGINEER Raymond Don Tsztoo No. C37332 Exp. 6-30-14 CIVIL STATE OF CALIFORNIA

THE STATE OF CALIFORNIA OR ITS OFFICERS OR AGENTS SHALL NOT BE RESPONSIBLE FOR THE ACCURACY OR COMPLETENESS OF SCANNED COPIES OF THIS PLAN SHEET.

TO ACCOMPANY PLANS DATED 3-25-13

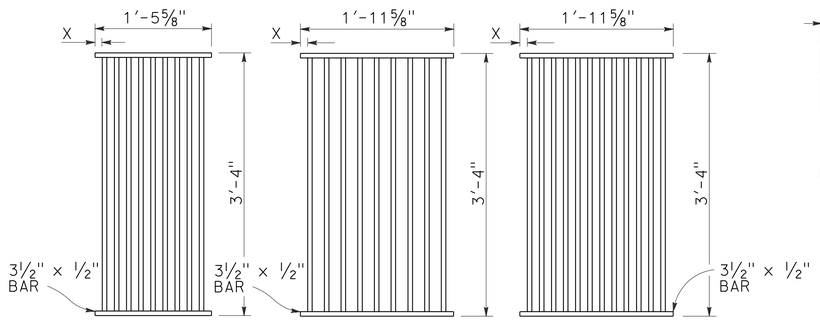

TYPE 18-9

1⅜" Clear spacing. Use within the roadbed on highways where bicycles and pedestrians are excluded.

TYPE 24-9

2" Clear spacing. Use in locations off the roadbed on all types of highways.

TYPE 24-12

1⅜" Clear spacing. Use within the roadbed on highways where bicycles and pedestrians are excluded.

RECTANGULAR GRATE DETAILS

(See table below)

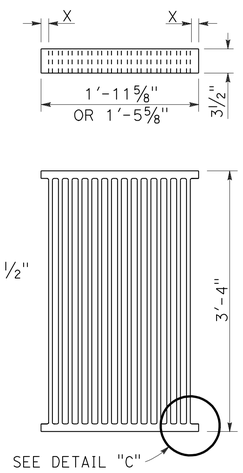

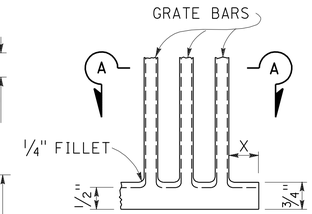

DETAIL "C"

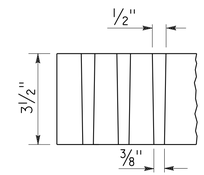

SECTION A-A

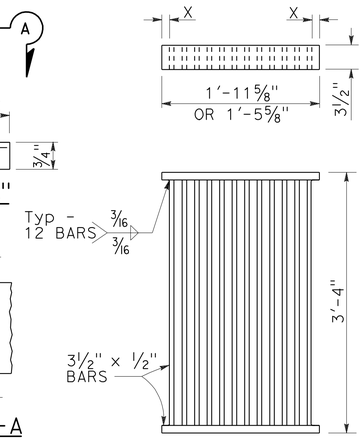

ALTERNATIVE CAST DUCTILE IRON GRATE OR CAST CARBON STEEL GRATE

ALTERNATIVE WELDED GRATE

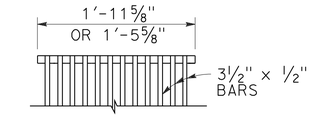

CAST END BLOCK

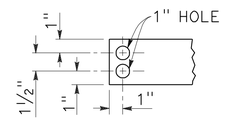

END OF BAR

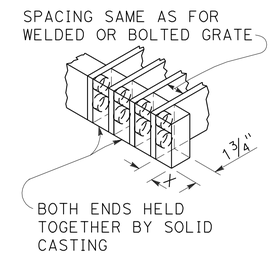

ALTERNATIVE CAST DUCTILE IRON OR CAST CARBON STEEL END BLOCK GRATE

NOTES:

1. Grate type numbers refer to approximate width of grate in inches and number of bars, respectively.
2. Contractor has the option of using cast ductile iron, cast carbon steel, welded, bolted, or cast end block grate.
3. Rounded top of bars optional on all grates.
4. Pipe inlets with a grate shall be placed so that bars parallel direction of principle surface flow.
5. Complete joint penetration butt welds may be substituted for the fillet welds on all anchors.
6. Standard square, hexagon, round or equivalent headed anchors may be substituted for the right angle hooks on the anchors shown on this plan.
7. Grate and frame weights are based on welded grates (weights of face angles, steps, protection bars, etc. are not included).
8. Connect chain to grate and frame only at locations shown on the plans. When chain is required, do not use cast ductile iron grates.

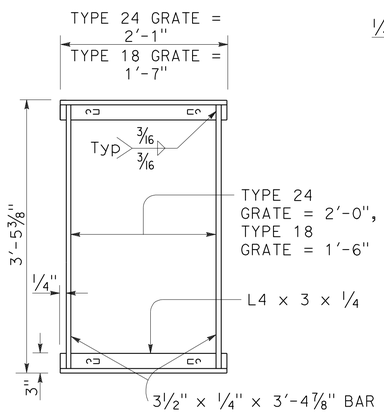

TYPICAL FRAME

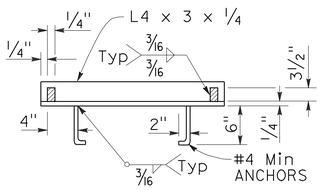

CROSS SECTION

(Thru frame)

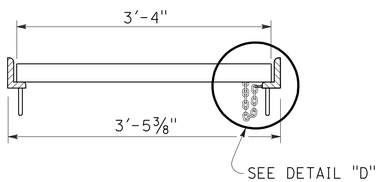

LONGITUDINAL SECTION

(Thru frame and grate)

RECTANGULAR FRAME DETAILS

(For all rectangular grates)

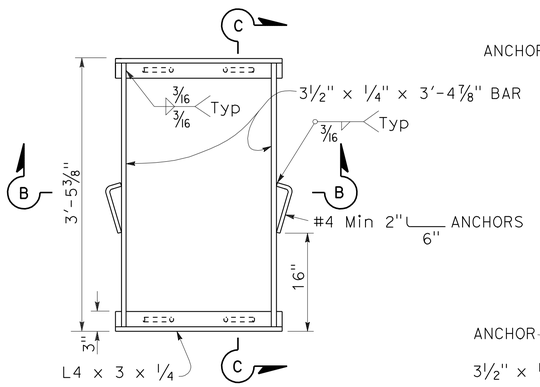

TYPICAL FRAME

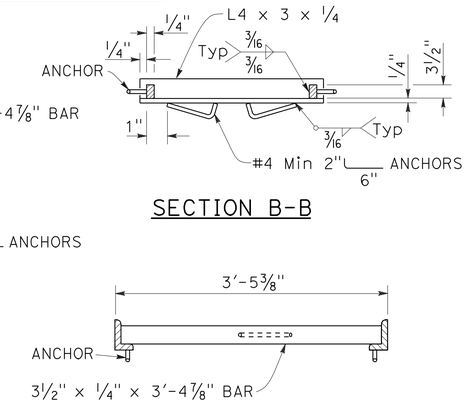

SECTION B-B

SECTION C-C

ALTERNATIVE ANCHOR FOR RECTANGULAR FRAME

(For details not shown, See Rectangular Frame Details)

INLET TYPE	GRATE TYPE	No. OF GRATES	WEIGHT LB
GDO	24-12	2	634
GOL-7	24-12	1	326
GOL-10	24-12	1	326
GO,G1,G2,G3,G4 (TYPE 24)	24-9	1	263
	24-12	1	326
G4 (TYPE 18),G5,G6	18-9	1	249
GT1	18-9	2	498
GT2	18-9	2	498
GT3	24-12	2	652
GT4	24-12	2	652
TRASH RACK			22
GRATE CHAIN			3

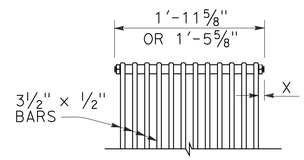

BOLTED END BLOCK

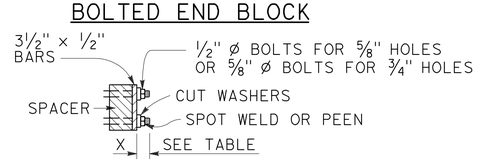

BOLTING DETAIL

ALTERNATIVE BOLTED GRATE

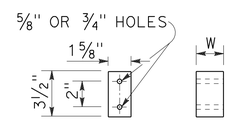

BAR SPACER

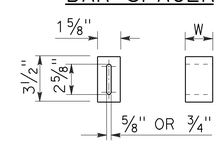

ALTERNATIVE SPACER

W = 1⅜" or 2"

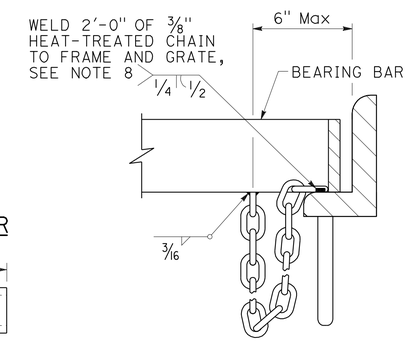

DETAIL "D"

(Steel grates only)

GRATE BAR SPACING TABLE

TYPE	No. OF BARS	CLEAR BAR SPACING	X
18-9	9	1⅜"	1 1/16"
24-9	9	2"	1 9/16"
24-12	12	1⅜"	1¼"

INLET TYPE	COVER TYPE	WEIGHT LB
OS	PLATE	174
OL-7	PLATE	170
OL-10	PLATE	170
OL-14	PLATE	170
OL-21	PLATE	170
OCP	PLATE	112
OCPI	PLATE	112
OCPI	REDWOOD	42
OMP	PLATE	177
OMPI	PLATE	177

BASIS FOR Misc IRON & STEEL FINAL PAY WEIGHTS FOR DRAINAGE INLETS

(See Note 7)

STATE OF CALIFORNIA
DEPARTMENT OF TRANSPORTATION

GRATE DETAILS

NO SCALE

RSP D77A DATED JULY 20, 2012 SUPERSEDES STANDARD PLAN D77A DATED MAY 20, 2011 - PAGE 164 OF THE STANDARD PLANS BOOK DATED 2010.

REVISED STANDARD PLAN RSP D77A

2010 REVISED STANDARD PLAN RSP D77A

6-13-12

Dist	COUNTY	ROUTE	POST MILES TOTAL PROJECT	SHEET No.	TOTAL SHEETS
04	Son	12	9.6	73	118

REGISTERED CIVIL ENGINEER

July 20, 2012
PLANS APPROVAL DATE

Raymond Don Tsztoo No. C37332 Exp. 6-30-14 CIVIL — REGISTERED PROFESSIONAL ENGINEER — STATE OF CALIFORNIA

THE STATE OF CALIFORNIA OR ITS OFFICERS OR AGENTS SHALL NOT BE RESPONSIBLE FOR THE ACCURACY OR COMPLETENESS OF SCANNED COPIES OF THIS PLAN SHEET.

TO ACCOMPANY PLANS DATED 3-25-13

2010 REVISED STANDARD PLAN RSP D77B

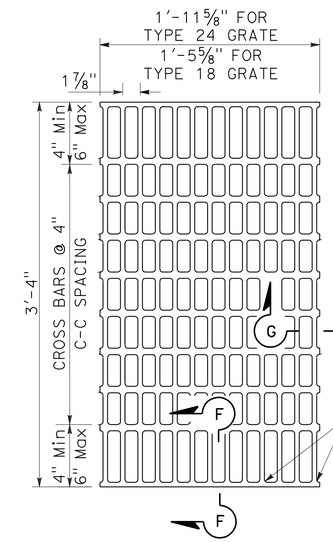

NOTES:

Bearing bars to be 3½" × ¼" bars on 1⅞" centers.

⅜"± ø Cross bars may be fillet welded, resistance welded or electroforged to bearing bars.

Weight of Type 24 grate = 141 LBS.

Weight of Type 18 grate = 107 LBS. (Type 24 grate shown).

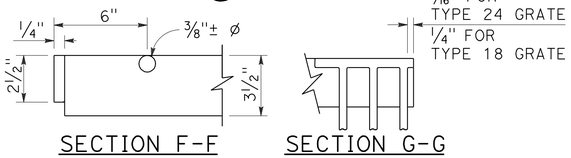

SECTION F-F SECTION G-G

TYPE 18-10 AND 24-13 GRATE

(Welded Steel)

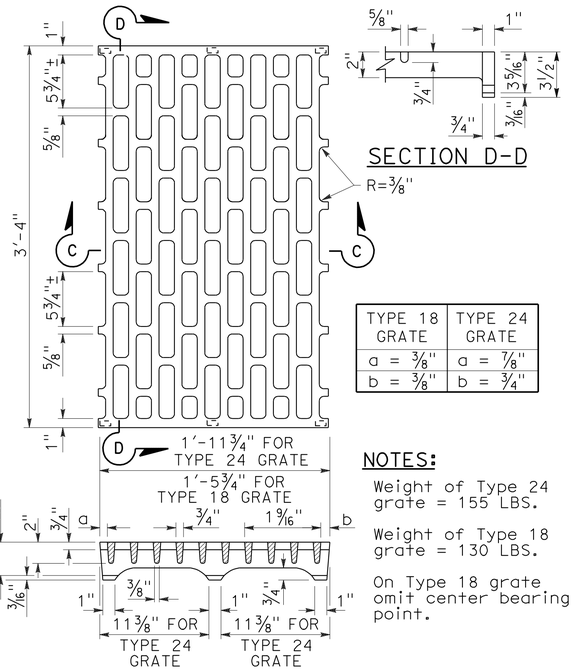

SECTION D-D

TYPE 18 GRATE	TYPE 24 GRATE
a = ⅜"	a = ⅞"
b = ⅜"	b = ¾"

NOTES:

Weight of Type 24 grate = 155 LBS.

Weight of Type 18 grate = 130 LBS.

On Type 18 grate omit center bearing point.

SECTION C-C

TYPE 18-8C AND 24-10C GRATE

(Cast ductile iron)

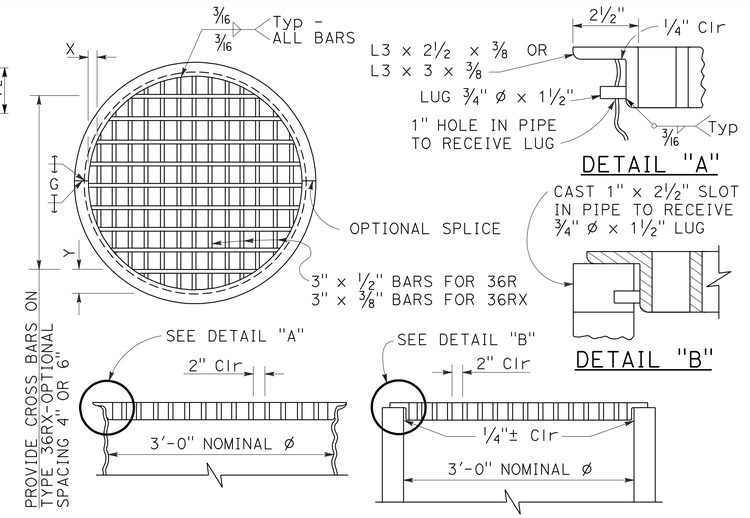

TYPE 36R AND 36RX GRATE DETAILS

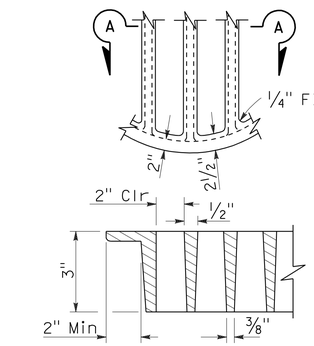

SECTION A-A

ALTERNATIVE CAST DUCTILE IRON GRATE OR CAST CARBON STEEL GRATE TYPE 36R AND 36RX

BASIS FOR Misc IRON AND STEEL FINAL PAY WEIGHTS FOR DRAINAGE INLETS

INLET TYPE	GRATE TYPE	No. OF GRATES	WEIGHT LB
GDO (SEE NOTE 4)	24-10C	2	391
	24-10S	2	456
	24-12X	2	473
	24-13	2	374
GO,GOL,G1,G2, G3,G4 (TYPE 24)	24-10C	1	202
	24-10S	1	229
	24-12X	1	239
	24-13	1	188
G4 (TYPE 18) G5,G6	18-8S	1	187
	18-9X	1	187
	18-10	1	149
GT1,GT2	18-8S	2	374
	18-9X	2	374
	18-10	2	298
GT3,GT4	24-10C	2	404
	24-10S	2	458
	24-12X	2	478
	24-13	2	376
ODI	36RX (Mod)	1	196
GMP,GCP,GCPI	36RX	1	215
ODI	36R (Mod)	1	220
GMP,GCP,GCPI	36R	1	236
TRASH RACK			22
GRATE CHAIN			3

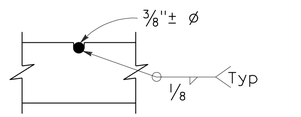

⅜"± ø Cross bars may be fillet welded, resistance welded or electroforged to bearing bars.

CROSS BAR DETAIL TYPE 36RX GRATE (WELDED STEEL)

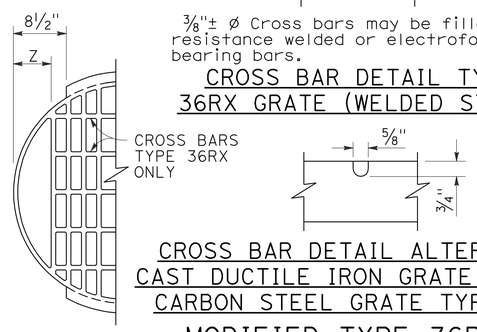

CROSS BAR DETAIL ALTERNATIVE CAST DUCTILE IRON GRATE OR CAST CARBON STEEL GRATE TYPE 36RX

MODIFIED TYPE 36R AND 36RX GRATE FOR ODI INLET

NOTES:

1. When alternative grates are allowed - Final pay based on alternative with the lesser weight.
2. Use frame shown on Standard Plan D74A, D74B or RSP D77A as appropriate.
3. When Type 24-10S, 24-12X or 24-13 grates are used with GDO Inlets, a ¼" × 3½" × 3'-4⅞" steel bar shall be welded across the center of inlet frame to separate the individual grates.
4. See Revised Standard Plan RSP D77A for connecting chain to welded grate and frame. When chain is required, do not use cast ductile iron grate.

GRATE BAR SPACING TABLE

TYPE	No. OF BARS	CLEAR BAR SPACING	X	Y 4" SPACING	Y 6" SPACING	Z
36R	13	2"	2⅛"	-	-	-
36RX (STEEL)	15	2"	9/16"	3¾"	5¾"	-
36RX (CAST)	13	2"	2⅛"	3¾"	5¾"	-
36R Mod	12	2"	2⅛"	-	-	5"
36RX Mod (STEEL)	13	2"	9/16"	3¾"	5¾"	5 11/16"
36RX Mod (CAST)	12	2"	2⅛"	3¾"	5¾"	5"

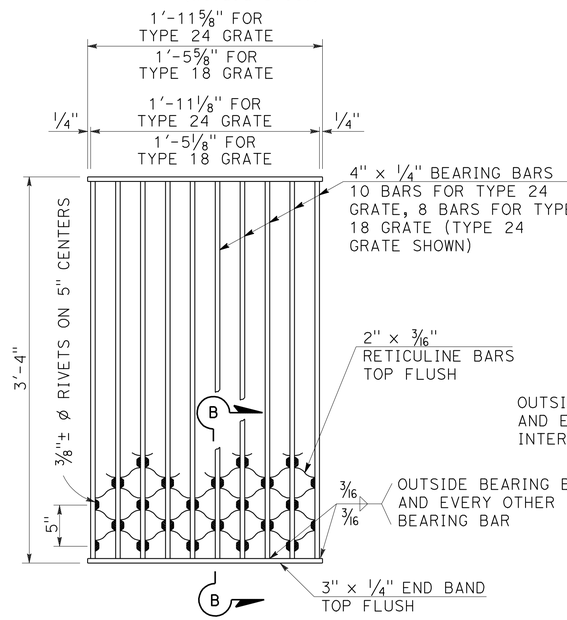

NOTES:

Weight of Type 24 grate = 182 LBS.
Weight of Type 18 grate = 145 LBS.

SECTION B-B

TYPE 18-8S AND 24-10S GRATE

(Welded Steel) Reticuline type

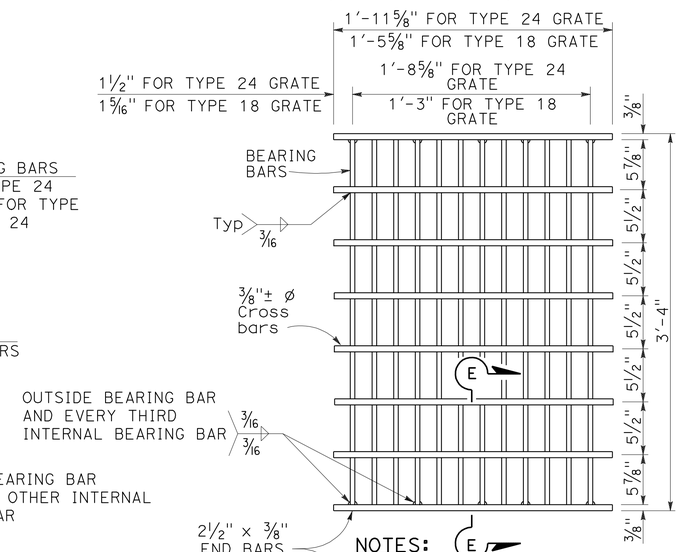

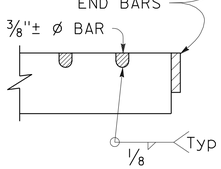

SECTION E-E

NOTES:

Bearing bars to be 3½" × ⅜" bars on 1⅞" centers.

12 Bars for Type 24 grate - 9 bars for Type 18 grates. (Type 24 grate shown).

Weight of Type 24 grate = 192 LBS.

Weight of Type 18 grate = 145 LBS.

⅜"± ø Cross bars may be fillet welded, resistance welded or electroforged to bearing bars.

TYPE 18-9X AND 24-12X GRATE

(Welded Steel)

STATE OF CALIFORNIA
DEPARTMENT OF TRANSPORTATION

BICYCLE TRAVERSABLE GRATE DETAILS

NO SCALE

RSP D77B DATED JULY 20, 2012 SUPERSEDES STANDARD PLAN D77B DATED MAY 20, 2011 - PAGE 165 OF THE STANDARD PLANS BOOK DATED 2010.

REVISED STANDARD PLAN RSP D77B

4-17-12

Dist	COUNTY	ROUTE	POST MILES TOTAL PROJECT	SHEET No.	TOTAL SHEETS
04	Son	12	9.6	74	118

REGISTERED CIVIL ENGINEER

April 20, 2012
PLANS APPROVAL DATE

REGISTERED PROFESSIONAL ENGINEER Gary Wang No. C58298 Exp. 6-30-12 CIVIL STATE OF CALIFORNIA

THE STATE OF CALIFORNIA OR ITS OFFICERS OR AGENTS SHALL NOT BE RESPONSIBLE FOR THE ACCURACY OR COMPLETENESS OF SCANNED COPIES OF THIS PLAN SHEET.

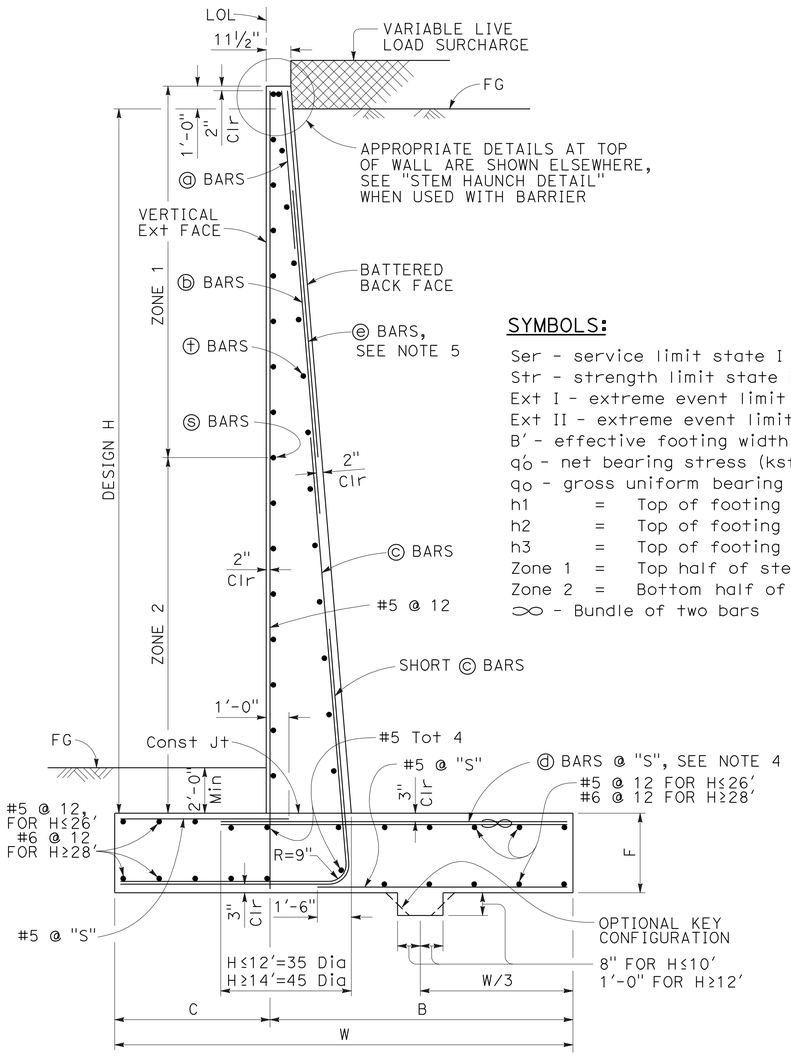

TYPICAL SECTION

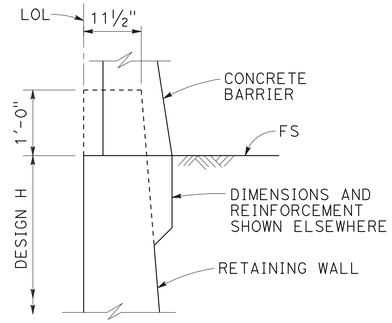

STEM HAUNCH DETAIL

SYMBOLS:

Ser - service limit state I
Str - strength limit state I
Ext I - extreme event limit state I
Ext II - extreme event limit state II
B' - effective footing width (ft)
q_o' - net bearing stress (ksf), OG assumed to be FG at toe
q_o - gross uniform bearing stress (ksf)
h1 = Top of footing to top of short ⓒ bar
h2 = Top of footing to top of ⓒ bar
h3 = Top of footing to top of ⓑ bar
Zone 1 = Top half of stem height
Zone 2 = Bottom half of stem height
∞ - Bundle of two bars

DESIGN CONDITIONS:

Design H may be exceeded by 6" before going to the next size. Special footing design is required where foundation material is incapable of supporting bearing stress listed in the table.

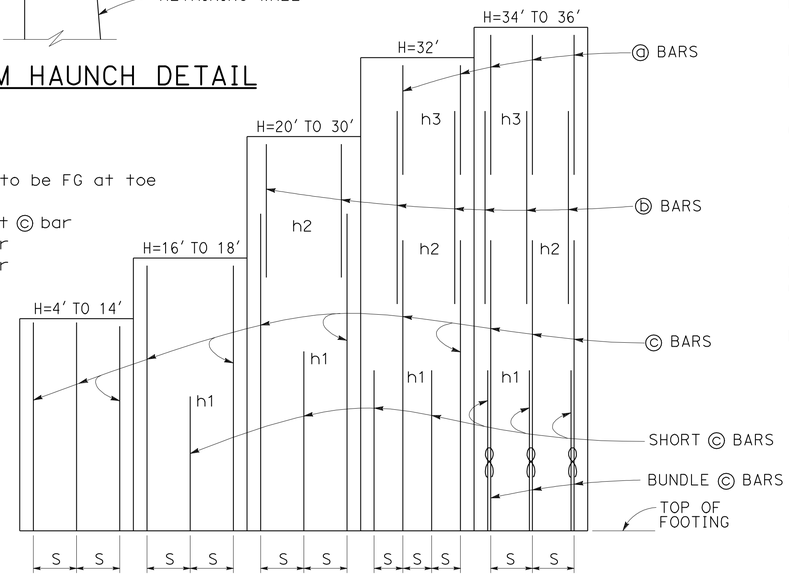

ELEVATION

DESIGN NOTES:

TO ACCOMPANY PLANS DATED 3-25-13

DESIGN: AASHTO LRFD Bridge Design Specifications, 4th Edition with California Amendments

LS: Varied surcharge on level ground surface

DC: Stem Architectural Treatment of thickness up to 6" of concrete (75 psf) considered

CT: 54 kip transverse force applied at He = 32", distributed over 10 feet at the top of wall and 1 : 1 distribution down and outward. Distribution below footing taken no less than 40'.

SEISMIC: $k_h = 0.2$, $k_v = 0.0$

SOIL: $\phi = 34°$, $\gamma = 120$ pcf

REINFORCED CONCRETE: f'c = 3,600 psi, fy = 60,000 psi

LOAD COMBINATIONS AND LIMIT STATES:

Service I	Q = 1.00DC+1.00EV+1.00EH+1.00LS
Strength I	Q = αDC+βEV+ηEH+1.75LS
Extreme I	Q = 1.00DC+1.00EV+1.00EH+1.00EQD+1.00EQE
Extreme II	Q = 1.00DC+1.00EV+1.00EH+1.00CT

Where:

Q:	Force Effects
α:	1.25 or 0.90, Whichever Controls Design
β:	1.35 or 1.00, Whichever Controls Design
η:	1.50 or 0.90, Whichever Controls Design
DC:	Dead Load of Structure Components
EH:	Horizontal Earth Fill Pressure
EV:	Vertical Earth Pressure from Earth Fill Weight
LS:	Live Load Surcharge
EQE:	Seismic Earth Pressure
EQD:	Soil and Structural and Nonstructural Components Inertia
CT:	Vehicular Collision Force

TABLE OF REINFORCING STEEL, DIMENSIONS AND DATA

DESIGN H	4'	6'	8'	10'	12'	14'	16'	18'	20'	22'	24'	26'	28'	30'	32'	34'	36'
W	6'-10"	7'-0"	7'-3"	7'-7"	8'-4"	9'-7"	10'-9"	12'-0"	13'-3"	14'-6"	15'-9"	17'-1"	18'-5"	19'-10"	21'-2"	22'-7"	24'-0"
C	2'-2"	2'-3"	2'-3"	2'-4"	2'-6"	3'-0"	3'-6"	4'-0"	4'-6"	5'-0"	5'-5"	6'-0"	6'-6"	7'-2"	7'-8"	8'-2"	9'-0"
B	4'-8"	4'-9"	5'-0"	5'-3"	5'-10"	6'-7"	7'-3"	8'-0"	8'-9"	9'-6"	10'-4"	11'-1"	11'-11"	12'-8"	13'-6"	14'-5"	15'-0"
F	1'-4"	1'-4"	1'-4"	1'-4"	1'-6"	1'-8"	1'-8"	1'-9"	1'-9"	1'-11"	2'-2"	2'-5"	2'-10"	3'-3"	3'-6"	4'-0"	4'-3"
BATTER	½: 12	½: 12	½: 12	½: 12	½: 12	½: 12	½: 12	½: 12	½: 12	½: 12	⅝: 12	⅝: 12	¾: 12	⅞: 12	1 : 12	1 : 12	1 : 12
SPACING "S"	9"	9"	9"	9"	9"	7"	6"	5"	6"	6"	6"	6"	6"	6"	6"	10"	8"
ⓐ BARS	-	-	-	-	-	-	-	-	-	-	-	-	-	-	#7	#7	#6
ⓑ BARS	-	-	-	-	-	-	-	-	#7	#7	#7	#7	#7	#7	#9	#9	#8
ⓒ BARS	#6	#6	#6	#6	#6	#6	#7	#7	#8	#9	#9	#10	#10	#10	#11	#11	#11
ⓓ BARS	#5	#5	#6	#6	#6	#6	#9	#8	#8	#9	#9	#10	#10	#10	#11	#11	#11
h1	-	-	-	-	-	-	5'-9"	5'-10"	8'-0"	9'-0"	10'-1"	11'-0"	12'-1"	13'-0"	13'-0"	12'-7"	11'-6"
h2	-	-	-	-	-	-	-	-	10'-5"	13'-0"	14'-7"	17'-6"	19'-0"	20'-5"	19'-0"	18'-0"	20'-2"
h3	-	-	-	-	-	-	-	-	-	-	-	-	-	-	21'-2"	21'-10"	24'-0"
ZONE 1 ⓢ BARS	#5 @ 18	#5 @ 18	#5 @ 18	#5 @ 18	#5 @ 18	#5 @ 18	#5 @ 18	#5 @ 18	#5 @ 18	#5 @ 18	#5 @ 12	#5 @ 12	#5 @ 12	#5 @ 12	#5 @ 12	#5 @ 12	#5 @ 12
ZONE 2 ⓢ BARS	#5 @ 18	#5 @ 18	#5 @ 18	#5 @ 18	#5 @ 18	#5 @ 18	#5 @ 12	#5 @ 12	#5 @ 12	#5 @ 12	#5 @ 12	#5 @ 12	#6 @ 12	#6 @ 12	#6 @ 12	#7 @ 12	#7 @ 12
ZONE 1 ⓣ BARS	#4 @ 18	#4 @ 18	#4 @ 18	#4 @ 18	#4 @ 18	#4 @ 18	#4 @ 18	#4 @ 18	#4 @ 18	#4 @ 18	#4 @ 12	#4 @ 12	#4 @ 18	#4 @ 12	#4 @ 12	#4 @ 12	#4 @ 12
ZONE 2 ⓣ BARS	#4 @ 18	#4 @ 18	#4 @ 18	#4 @ 18	#4 @ 18	#4 @ 18	#4 @ 18	#4 @ 18	#4 @ 18	#4 @ 18	#4 @ 12	#4 @ 12	#4 @ 12	#4 @ 12	#5 @ 12	#5 @ 12	#5 @ 12
Ser: B', q_o'	6.8, 0.7	6.5, 1.0	6.2, 1.3	6.0, 1.6	6.3, 2.0	7.5, 2.1	8.6, 2.2	9.8, 2.3	11.0, 2.4	12.1, 2.5	13.2, 2.8	14.4, 2.9	15.5, 3.1	16.8, 3.3	18.0, 3.5	19.2, 3.7	20.6, 3.7
Str: B', q_o	6.6, 1.6	5.0, 1.8	3.6, 2.3	3.0, 3.3	3.2, 4.0	4.3, 3.8	5.3, 3.7	6.4, 3.7	7.4, 3.8	8.2, 4.1	9.0, 4.4	9.9, 4.6	10.7, 4.9	11.7, 5.2	12.6, 5.4	13.6, 5.8	14.6, 5.9
Ext I: B', q_o	5.2, 1.1	4.7, 1.5	3.9, 2.2	3.1, 3.4	2.8, 4.8	3.2, 5.3	3.6, 5.7	4.1, 6.1	4.6, 6.4	5.0, 6.9	5.3, 7.6	5.8, 8.1	6.1, 8.9	6.7, 9.4	7.1, 10.0	7.5, 10.7	8.2, 10.9
Ext II: B', q_o	2.6, 2.2	2.7, 2.6	2.8, 3.1	2.9, 3.6	3.7, 3.6	5.2, 3.3	6.7, 3.1	8.3, 3.0	9.8, 3.0	11.2, 3.1	12.5, 3.2	13.9, 3.4	15.2, 3.6	16.7, 3.8	18.0, 4.0	19.3, 4.2	20.8, 4.3

NOTES:

1. For details not shown and drainage notes see RSP B3-5
2. For wall stem joint details see B0-3 / 3-3 and B0-3 / 3-4
3. At ⓒ bars:
   H ≤ 6', no splices are allowed within 1'-8" above the top of footing.
   H > 6', no splices are allowed within H/4 above the top of footing.
4. Bundle ⓓ bars for H = 34' & 36'.
5. Provide #6 @ 10" x 15'-0" ⓔ bars over a distance of 8'-0" measured from all expansion joints, begin wall and end wall locations. For H ≤ 14', hook ⓔ bar into footing and reduce bar length as needed to maintain Min Clr cover.

STATE OF CALIFORNIA
DEPARTMENT OF TRANSPORTATION

RETAINING WALL TYPE 1 (CASE 1)

NO SCALE

RSP B3-1A DATED APRIL 20, 2012 SUPPLEMENTS THE STANDARD PLANS BOOK DATED 2010.

REVISED STANDARD PLAN RSP B3-1A

2010 REVISED STANDARD PLAN RSP B3-1A

2-22-12

Dist	COUNTY	ROUTE	POST MILES TOTAL PROJECT	SHEET No.	TOTAL SHEETS
04	Son	12	9.6	75	118

REGISTERED CIVIL ENGINEER

April 20, 2012
PLANS APPROVAL DATE

REGISTERED PROFESSIONAL ENGINEER Gary Wang No. C58298 Exp. 6-30-12 CIVIL STATE OF CALIFORNIA

THE STATE OF CALIFORNIA OR ITS OFFICERS OR AGENTS SHALL NOT BE RESPONSIBLE FOR THE ACCURACY OR COMPLETENESS OF SCANNED COPIES OF THIS PLAN SHEET.

TO ACCOMPANY PLANS DATED 3-25-13

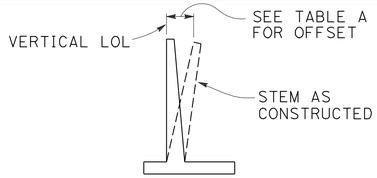

APPROXIMATE WALL OFFSET VALUES

Values for offseting forms to be determined by the Engineer.

TABLE A

H	OFFSET
4'-12'	H/200
14'-16'	H/160
18'-20'	H/140
22'-24'	H/130
26'-36'	2½"

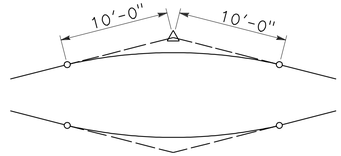

20'-0" VC AT TOP OF WALL SLOPE CHANGE

Where shown on the plans

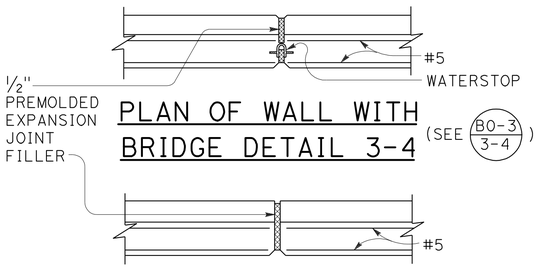

PLAN OF WALL WITH BRIDGE DETAIL 3-4

(SEE B0-3 / 3-4)

PLAN OF WALL WITH EXPANSION JOINT ONLY

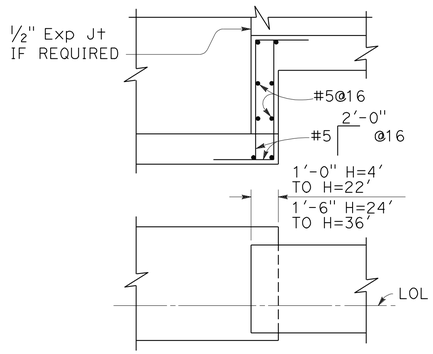

FOOTING STEP

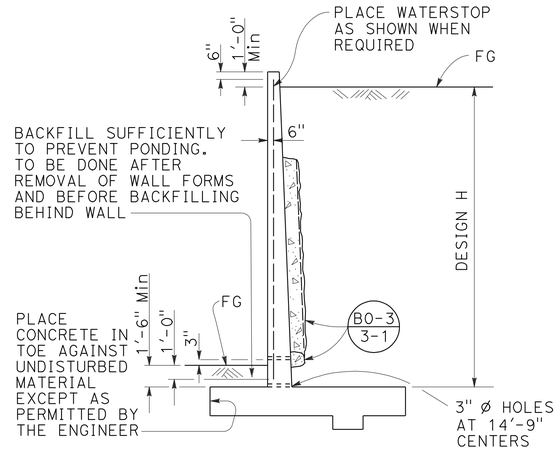

DESIGN AND DRAINAGE

DESIGN CONDITIONS:

Design "H" may be exceeded by 6" before going to the next size. Special footing design is required where foundation material is incapable of supporting bearing stress listed in table

Return wall not required unless shown elsewhere

DESIGN NOTES:

DESIGN: AASHTO LRFD Bridge Design Specifications, 4th edition with California Amendments

LIVE LOAD: Surcharge on level ground surface

SOIL: ø = 34°
γ = 120 pcf

REINFORCED CONCRETE: fy = 60,000 psi
fc' = 3,600 psi

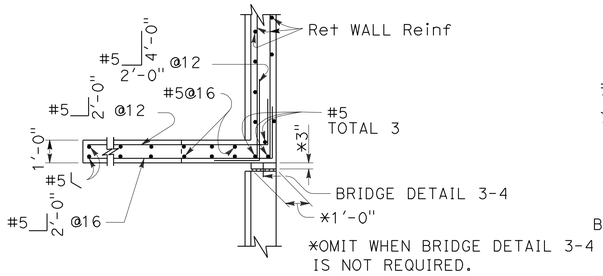

PLAN

(For return wall Type "A")

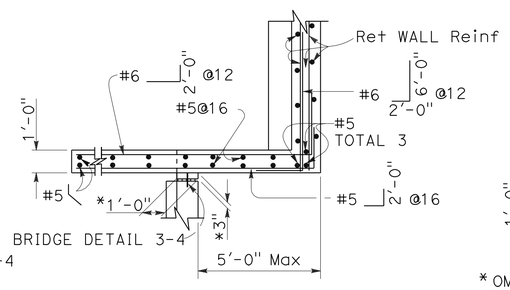

PLAN

(For return wall Type "B")

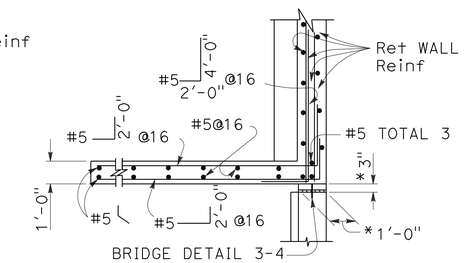

*OMIT WHEN BRIDGE DETAIL 3-4 IS NOT REQUIRED.

PLAN

(For return wall Type "C")

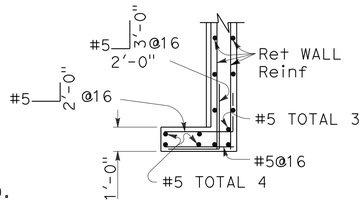

PLAN

(For return wall Type "D")

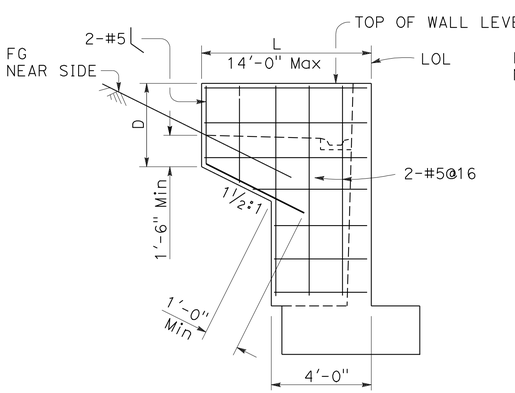

ELEVATION

RETURN WALL TYPE "A"

Use where H=8' or less

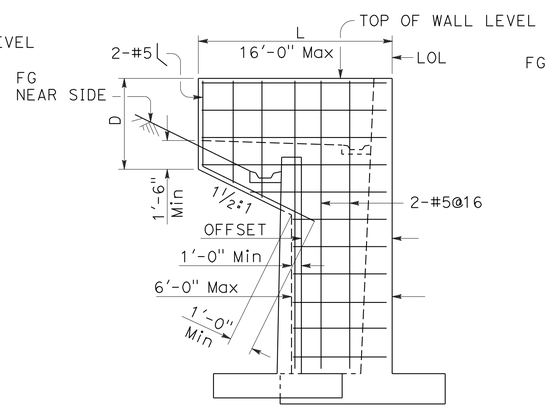

ELEVATION

RETURN WALL TYPE "B"

Use where H=10' or more on offset walls

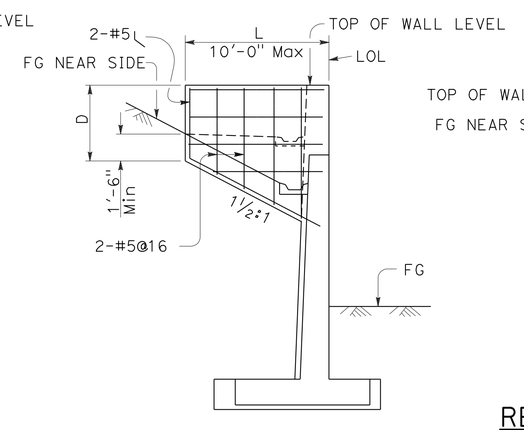

ELEVATION

RETURN WALL TYPE "C"

Use where H=10' or more on straight walls

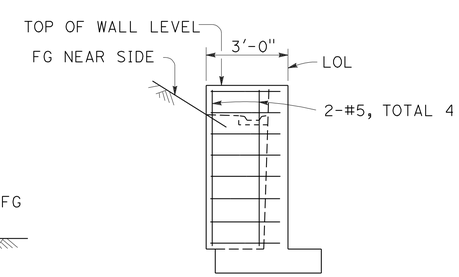

ELEVATION

RETURN WALL TYPE "D"

Use where H=6' or less

STATE OF CALIFORNIA
DEPARTMENT OF TRANSPORTATION

RETAINING WALL DETAILS No. 1

NO SCALE

RSP B3-5 DATED APRIL 20, 2012 SUPERSEDES STANDARD PLAN B3-5 DATED MAY 20, 2011 - PAGE 277 OF THE STANDARD PLANS BOOK DATED 2010.

REVISED STANDARD PLAN RSP B3-5

2010 REVISED STANDARD PLAN RSP B3-5

2-22-12

Dist	COUNTY	ROUTE	POST MILES TOTAL PROJECT	SHEET No.	TOTAL SHEETS
04	Son	12	9.6	76	118

REGISTERED CIVIL ENGINEER

October 21, 2011
PLANS APPROVAL DATE

REGISTERED PROFESSIONAL ENGINEER Tillat Satter No. C42892 Exp. 3-31-12 CIVIL STATE OF CALIFORNIA

THE STATE OF CALIFORNIA OR ITS OFFICERS OR AGENTS SHALL NOT BE RESPONSIBLE FOR THE ACCURACY OR COMPLETENESS OF SCANNED COPIES OF THIS PLAN SHEET.

TO ACCOMPANY PLANS DATED 3-25-13

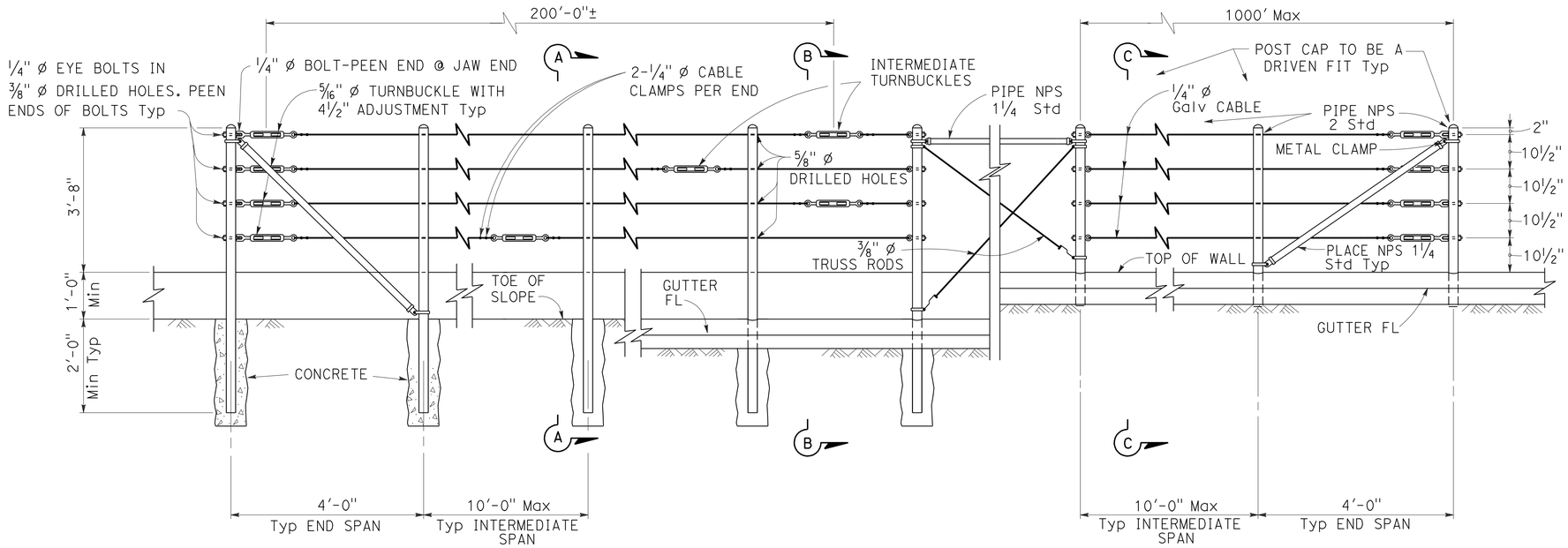

EXISTING WALL (WITHOUT GUTTER)
Existing

RETAINING WALL (WITH GUTTER)
Existing

RETAINING WALL (WITH GUTTER)
New construction

ELEVATION

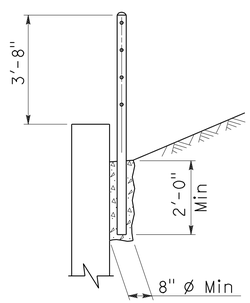

SECTION A-A
Existing

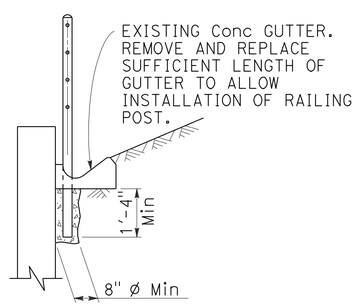

SECTION B-B
Existing

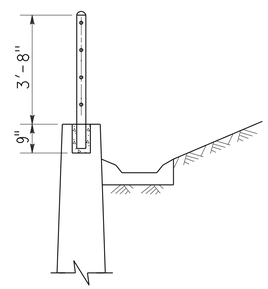

SECTION C-C
New construction

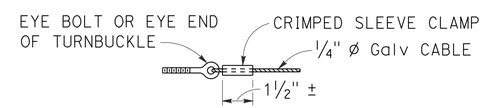

ALTERNATIVE CABLE CONNECTION

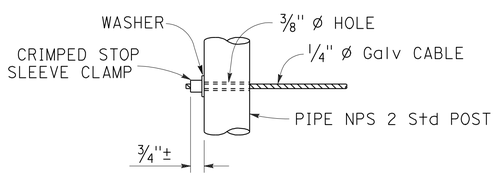

ALTERNATIVE DEAD END ANCHORAGE

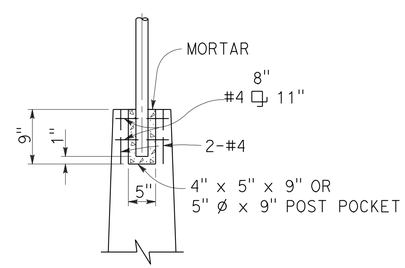

POST POCKET

NOTES:

1. Maximum distance between turnbuckles shall be 200'-0"±.
2. Intermediate turnbuckles to be placed in adjacent spans.
3. Cable shall not be spliced between intermediate turnbuckles and end posts.
4. Posts to be vertical.
5. Alignment of holes in posts may vary to conform to slope of top of retaining wall.
6. The Contractor shall verify all dependent dimensions in the field before ordering or fabricating any material.
7. Line posts shall be braced horizontally and trussed diagonally in both directions at intervals not to exceed 1000'.
8. Post pockets to be centered in top of wall.
9. Typical end spans, braced in both directions, shall be constructed at changes in line where the angle of deflection is 15° or more.
10. Provide thimbles at all cable loops.

STATE OF CALIFORNIA
DEPARTMENT OF TRANSPORTATION

CABLE RAILING

NO SCALE

RSP B11-47 DATED OCTOBER 21, 2011 SUPERSEDES STANDARD PLAN B11-47 DATED MAY 20, 2011 - PAGE 293 OF THE STANDARD PLANS BOOK DATED 2010.

REVISED STANDARD PLAN RSP B11-47

2010 REVISED STANDARD PLAN RSP B11-47

9-14-11

Dist	COUNTY	ROUTE	POST MILES TOTAL PROJECT	SHEET No.	TOTAL SHEETS
04	Son	12	9.6	77	118

REGISTERED CIVIL ENGINEER

April 20, 2012
PLANS APPROVAL DATE

REGISTERED PROFESSIONAL ENGINEER
Tillat Satter
No. C42892
Exp. 3-31-14
CIVIL
STATE OF CALIFORNIA

THE STATE OF CALIFORNIA OR ITS OFFICERS OR AGENTS SHALL NOT BE RESPONSIBLE FOR THE ACCURACY OR COMPLETENESS OF SCANNED COPIES OF THIS PLAN SHEET.

TO ACCOMPANY PLANS DATED 3-25-13

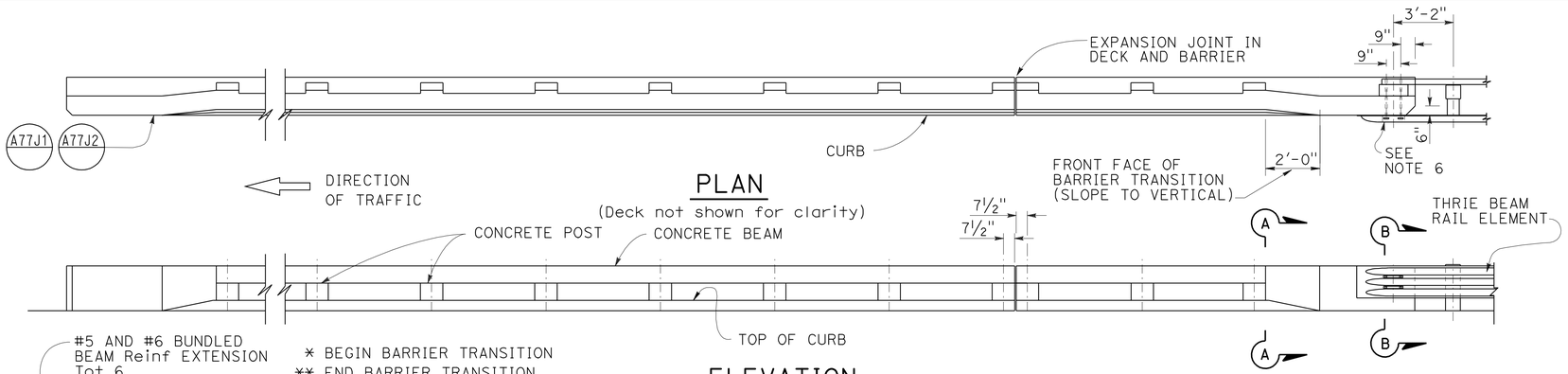

PLAN

(Deck not shown for clarity)

ELEVATION

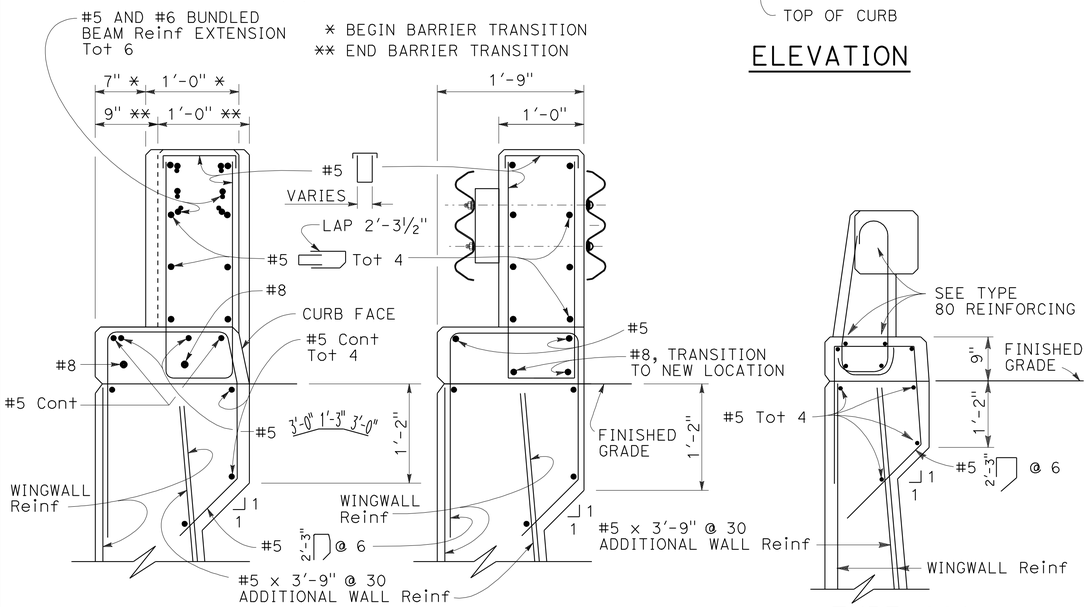

SECTION A-A

SECTION B-B

TYPE 80A

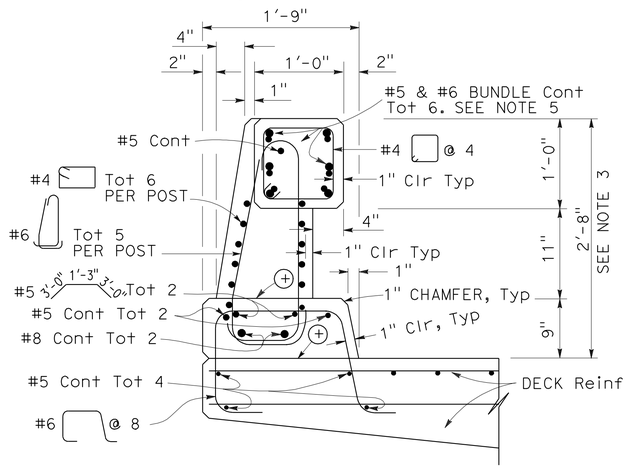

TYPE 80

⊕ Construction joint

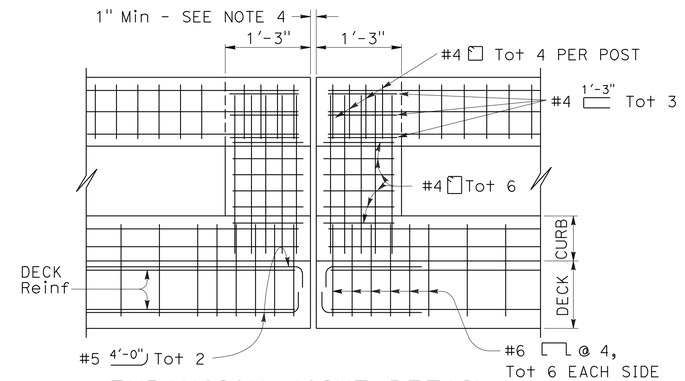

EXPANSION JOINT DETAIL

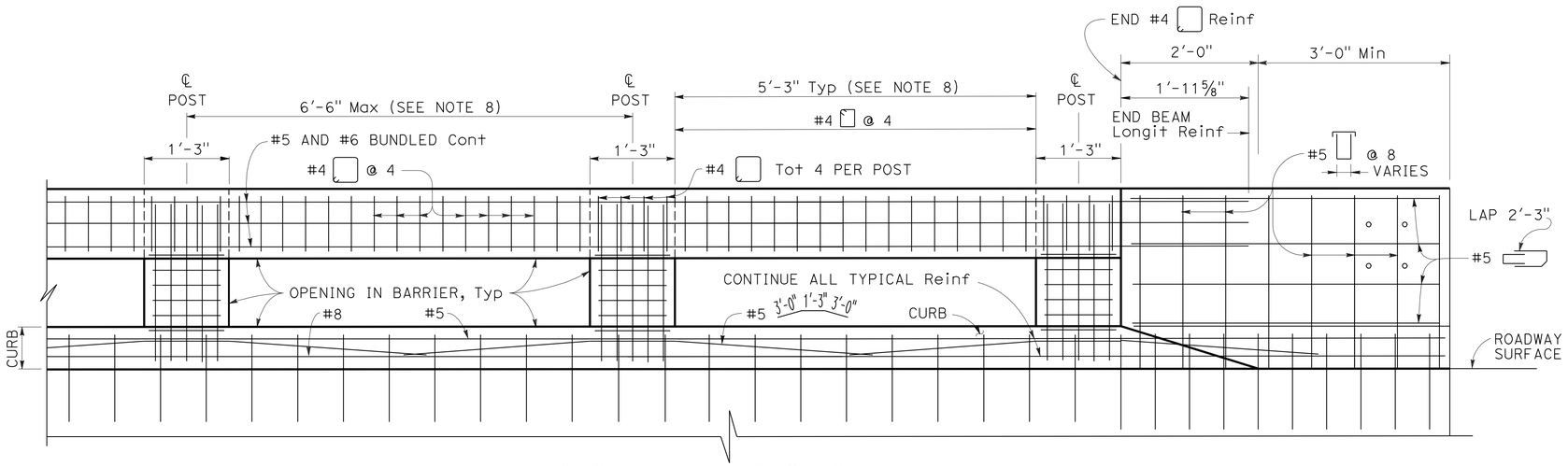

LONGITUDINAL SECTION

(Deck or wingwall reinforcing not shown)

NOTES:

1. Walls are to be backfilled before the barrier is placed.
2. Longitudinal reinforcing steel to stop at all expansion joints.
3. The front face dimensions are to be constant above the finish roadway profile, but the overall height will vary with certain thicknesses of surfacing and roadway slopes.
4. Expansion joint to match deck joint.
5. No lap splicing allowed on the longitudinal rail reinforcing. Splicing shall be staggered.
6. For typical metal railing connection details not shown, see Standard Plans A77J1 and A77J2.
7. Chain link railing is not allowed on Type 80 Barriers.
8. Post to be spaced equally, typically 6'-6" spacing. Post spacing may be reduced where location of hinges or expansion joints or the length of wingwalls will not accommodate the 6'-6" spacing. Maximum see-through availability is to be strived for, where 6'-6" post spacing can not be achieved.

STATE OF CALIFORNIA
DEPARTMENT OF TRANSPORTATION

CONCRETE BARRIER TYPE 80 (SHEET 1 OF 2)

NO SCALE

RSP B11-60 DATED APRIL 20, 2012 SUPERSEDES STANDARD PLAN B11-60 DATED MAY 20, 2011 - PAGE 300 OF THE STANDARD PLANS BOOK DATED 2010.

REVISED STANDARD PLAN RSP B11-60

2010 REVISED STANDARD PLAN RSP B11-60

4-5-12

DIST	COUNTY	ROUTE	POST MILES TOTAL PROJECT	SHEET NO.	TOTAL SHEETS
04	Son	12	9.6	78	118

REGISTERED ELECTRICAL ENGINEER

January 20, 2012
PLANS APPROVAL DATE

REGISTERED PROFESSIONAL ENGINEER Jeffery G. McRae No. E14512 Exp. 6-30-12 ELECTRICAL STATE OF CALIFORNIA

THE STATE OF CALIFORNIA OR ITS OFFICERS OR AGENTS SHALL NOT BE RESPONSIBLE FOR THE ACCURACY OR COMPLETENESS OF SCANNED COPIES OF THIS PLAN SHEET.

TO ACCOMPANY PLANS DATED 3-25-13

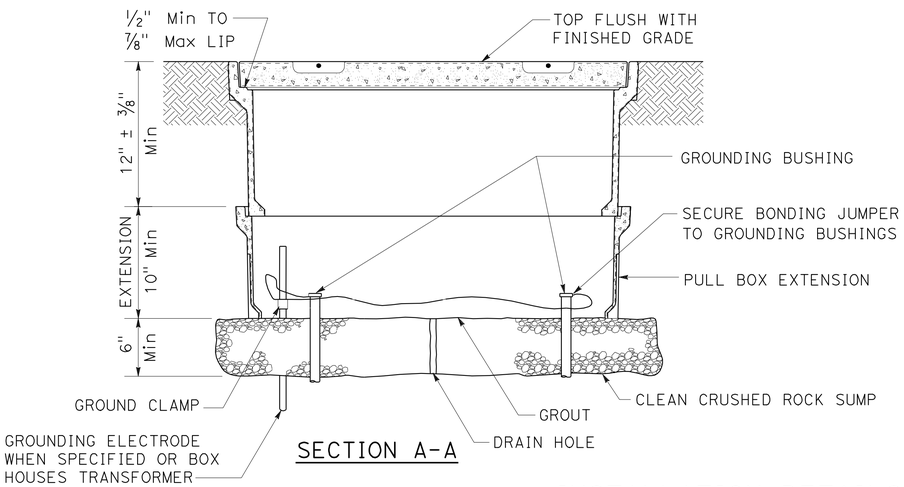

SECTION A-A

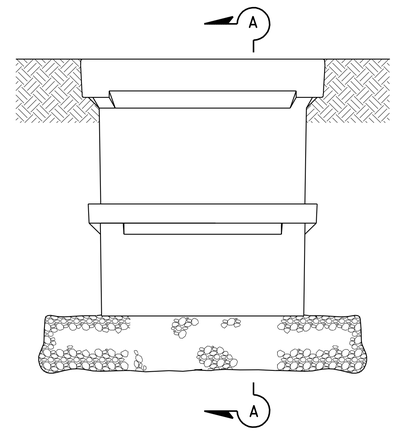

SIDE VIEW

INSTALLATION DETAILS

DETAIL A

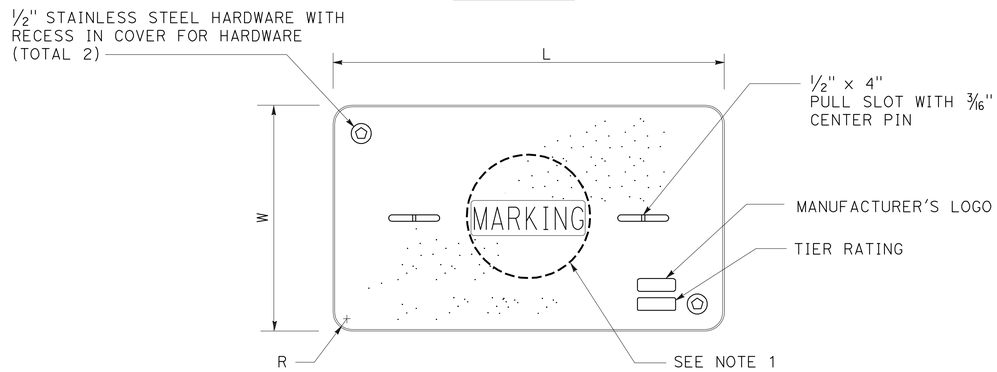

COVER TOP VIEW

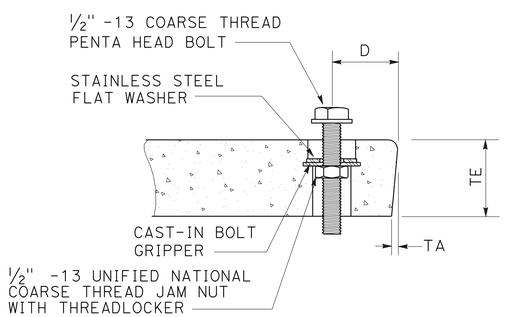

TYPICAL COVER CAPTIVE BOLT

OR SIMILAR

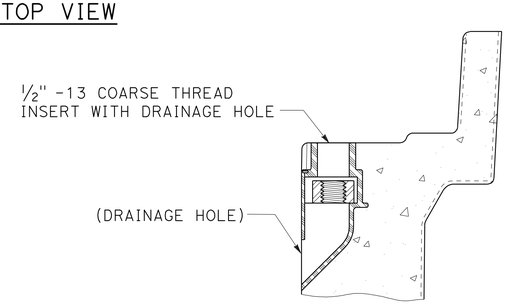

TYPICAL THREADED INSERT

OR SIMILAR

DIMENSION TABLE										
PULL BOX	PULL BOX			COVER						
	MINIMUM DEPTH BOX	MINIMUM DEPTH EXTENSION	MAXIMUM WEIGHT	L	W	R	TE	TA	D	MAXIMUM WEIGHT
No. 3 1/2	12"	N/A	40 lb	1' - 3 3/8"	10 1/8"	1 3/8"	2"	1/8"	1 3/4"	30 lb
No. 5	12"	10"	55 lb	1' - 11 1/4"	1' - 1 3/4"	1 3/8"	2"	1/8"	1 3/4"	60 lb
No. 6	12"	10"	70 lb	2' - 6 1/2"	1' - 5 1/2"	1 3/8"	2"	1/8"	2"	85 lb

NOTES ON PULL BOXES:

1. Pull box covers must be marked as follows: "SERVICE" Service circuits between service point and service disconnect; "SPRINKLER-CONTROL" sprinkler control circuits, 50 V or less; "CALTRANS" on all pull boxes, except pull boxes marked "SPRINKLER-CONTROL"; and "TELEPHONE" Telephone service;

   A) No. 3 1/2 pull box.
      1) "SIGNAL" - Traffic signal circuits with or without street or sign lighting circuits.
      2) "ST LIGHTING" - Street or sign lighting circuits where voltage is under 600 V.

   B) No. 5, 6, 9 or 9A pull box.
      1) "TRAFFIC SIGNAL" - Traffic signal circuits with or without street or sign lighting circuits.
      2) "STREET LIGHTING" - Street or sign lighting circuits where voltage is under 600 V.
      3) "STREET LIGHTING-HIGH VOLTAGE" - Street or sign lighting circuits where voltage is above 600 V.
      4) "IRRIGATION" - Circuits to irrigation controller 120 V or more.
      5) "RAMP METER" - Ramp meter circuits.
      6) "COUNT STATION" - Count or speed monitor circuits.
      7) "COMMUNICATIONS" - Communication circuits.
      8) "TOS COMMUNICATIONS" - TOS communication line.
      9) "TOS POWER" - TOS power.
      10) "TDC POWER" - Telephone demarcation cabinet power.
      11) "CCTV" - Closed circuit television circuits.
      12) "TMS" - Traffic monitoring station circuits.
      13) "CMS" - Changeable message sign circuits.
      14) "HAR" - Highway advisory radio circuits.

2. The nominal dimensions of the opening in which the cover sets must be the same as the cover dimensions (L and W) plus 1/8" or greater.

3. Covers and boxes must be interchangeable with California Standard. When interchanged with a standard, the top surfaces must be flush within 1/8". Top outside radius of covers and pull boxes must have a 1/8" radius.

4. Pull box extension may be another pull box as long as the bottom edge of the pull box can fit into the cover opening.

STATE OF CALIFORNIA
DEPARTMENT OF TRANSPORTATION

ELECTRICAL SYSTEMS (PULL BOX)

NO SCALE

RSP ES-8A DATED JANUARY 20, 2012 SUPPLEMENTS THE STANDARD PLANS BOOK DATED 2010.

REVISED STANDARD PLAN RSP ES-8A

2010 REVISED STANDARD PLAN RSP ES-8A

01-09-12

Dist	COUNTY	ROUTE	POST MILES TOTAL PROJECT	SHEET No.	TOTAL SHEETS
04	Son	12	9.6	79	118

REGISTERED ELECTRICAL ENGINEER

July 20, 2012
PLANS APPROVAL DATE

REGISTERED PROFESSIONAL ENGINEER
Jeffery G. McRae
No. E14512
Exp. 6-30-14
ELECTRICAL
STATE OF CALIFORNIA

THE STATE OF CALIFORNIA OR ITS OFFICERS OR AGENTS SHALL NOT BE RESPONSIBLE FOR THE ACCURACY OR COMPLETENESS OF SCANNED COPIES OF THIS PLAN SHEET.

TO ACCOMPANY PLANS DATED 3-25-13

ISOFOOTCANDLE CURVE - MINIMUM

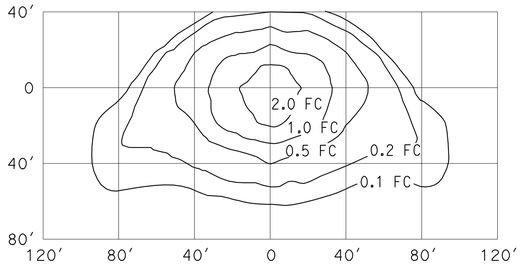

TYPE III MEDIUM CUTOFF

Cutoff Luminaire
34′ Mounting Height
Lamp operated at 22,000 lm
200-W high pressure sodium lamp
ANSI Designation S66

ISOFOOTCANDLE CURVE - MINIMUM

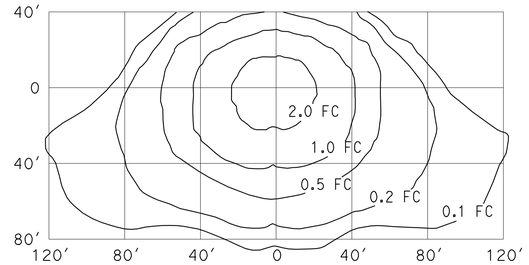

TYPE III MEDIUM CUTOFF

Cutoff Luminaire
40′ Mounting Height
Lamp operated at 37,000 lm
310-W high pressure sodium lamp
ANSI Designation S67

ISOFOOTCANDLE CURVE - MINIMUM

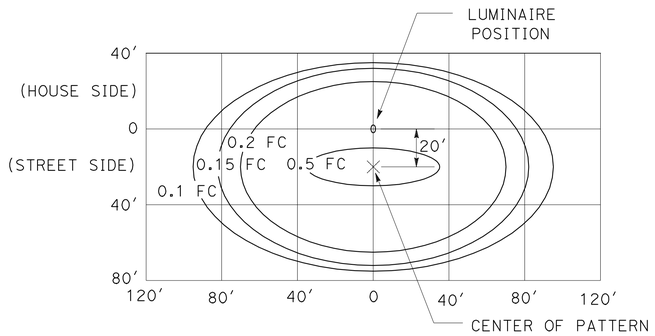

LED LUMINAIRE ROADWAY 1

200-W HPS Equivalent at 34′ Mounting Height

ISOFOOTCANDLE CURVE - MINIMUM

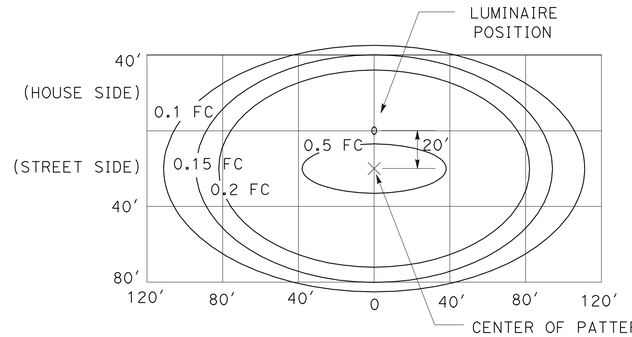

LED LUMINAIRE ROADWAY 2

310-W HPS Equivalent at 40′ Mounting Height

ISOFOOTCANDLE CURVE - MINIMUM

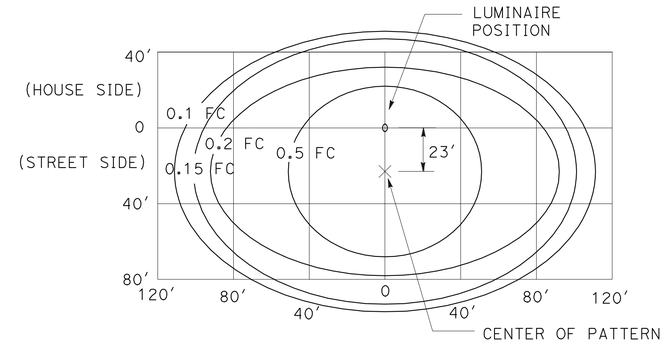

LED LUMINAIRE ROADWAY 4

400-W HPS Equivalent at 40′ Mounting Height

ISOFOOTCANDLE CURVE - MINIMUM

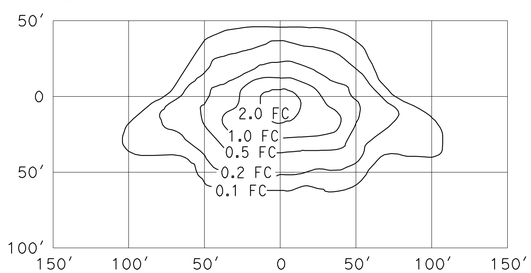

TYPE III MEDIUM CUTOFF

Cutoff Luminaire
30′ Mounting Height
Lamp operated at 16,000 lm
150-W high pressure sodium lamp
ANSI Designation S55

ISOFOOTCANDLE CURVE - MINIMUM

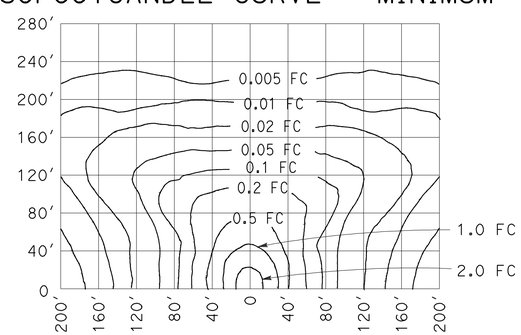

LOW PRESSURE SODIUM LUMINAIRE

40′ Mounting Height
Lamp operated at 33,000 lm
180-W low pressure sodium lamp

STATE OF CALIFORNIA
DEPARTMENT OF TRANSPORTATION

ELECTRICAL SYSTEMS (ISOFOOTCANDLE DIAGRAMS)

NO SCALE

RSP ES-10A DATED JULY 20, 2012 SUPPLEMENTS THE STANDARD PLANS BOOK DATED 2010.

REVISED STANDARD PLAN RSP ES-10A

2010 REVISED STANDARD PLAN RSP ES-10A

DIST	COUNTY	ROUTE	POST MILES TOTAL PROJECT	SHEET No.	TOTAL SHEETS
04	Son	12	9.6	80	118

REGISTERED CIVIL ENGINEER 9-12-12 DATE

3-25-13
PLANS APPROVAL DATE

REGISTERED PROFESSIONAL ENGINEER SON THANH LY No. 72584 Exp. 6-30-14 CIVIL STATE OF CALIFORNIA

The State of California or its officers or agents shall not be responsible for the accuracy or completeness of electronic copies of this plan sheet.

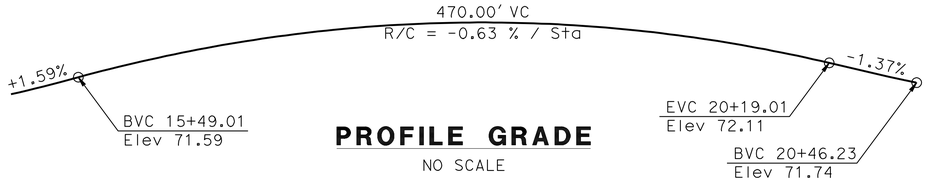

PROFILE GRADE

NO SCALE

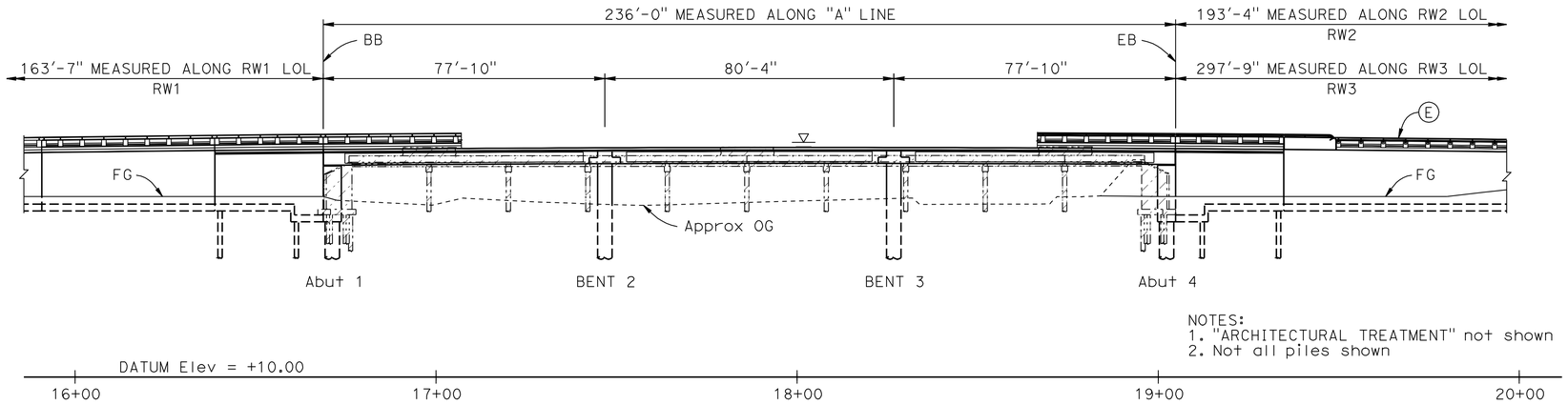

NOTES:
1. "ARCHITECTURAL TREATMENT" not shown
2. Not all piles shown

ELEVATION

1" = 20'

Indicates High Water Level, see "HYDROLOGIC SUMMARY", on "FOUNDATION PLAN" sheet

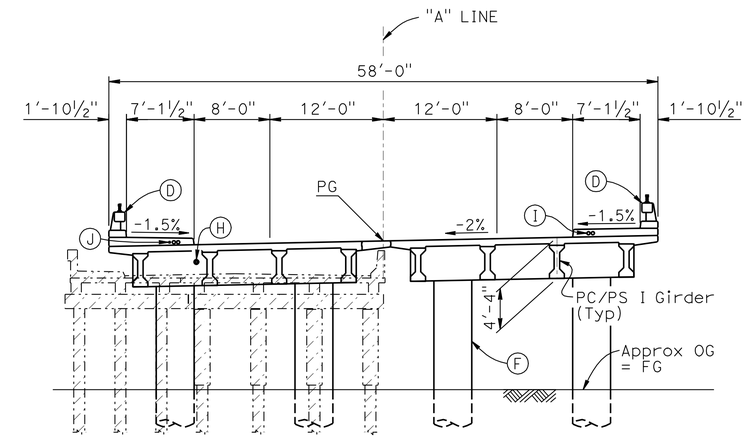

TYPICAL SECTION

⅛" = 1'-0"

NOTES:

1. For "STAGE CONSTRUCTION", see "STAGING PLANS" sheet
2. For "GENERAL NOTES" and "QUANTITIES", see "INDEX TO PLANS" sheet
3. For "PILE DATA", see "PILE DATA TABLES" sheet

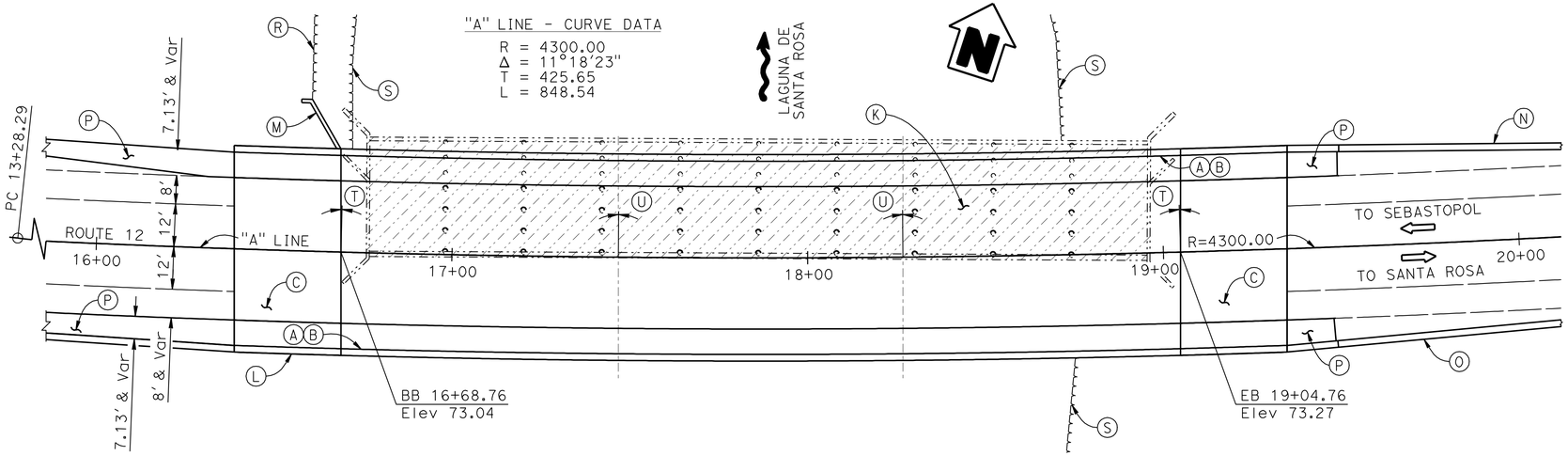

NOTE:
THE CONTRACTOR SHALL VERIFY ALL CONTROLLING FIELD DIMENSIONS BEFORE ORDERING OR FABRICATING ANY MATERIAL

PLAN

1" = 20'

LEGEND:

——— Indicates New Structure
-·-·-·- Indicates Existing Structure
▨ Indicates Limits of Bridge removal

NOTES:

- Ⓐ Paint "LAGUNA DE SANTA ROSA BRIDGE"
- Ⓑ Paint "Bridge No. 20-0296"
- Ⓒ Structure Approach, Type N(30S)
- Ⓓ Concrete Barrier, Type 80SW (Modified)
- Ⓔ Conc Barrier 80 (Mod) and Tubular Bicycle Railing
- Ⓕ 48"ø CIP Column Extension & 48"ø CISS Pile
- Ⓗ NPS 3"ø water supply line
- Ⓘ 4"ø round opening for future utilities (Typ)
- Ⓙ NPS 2"ø sprinkler control conduit
- Ⓚ Existing Bridge No. 20-0035 to be removed
- Ⓛ Retaining Wall RW1
- Ⓜ Retaining Wall RW1L
- Ⓝ Retaining Wall RW2
- Ⓞ Retaining Wall RW3
- Ⓟ Sidewalk transition, see "ROADWAY PLANS"
- Ⓡ Top of fill
- Ⓢ Toe of fill
- Ⓣ 1°34'20" Skew
- Ⓤ 0°31'59" Skew

9-10-12 SAMAD HAMOUD
DESIGN ENGINEER

	BY	CHECKED
DESIGN	Maxime Dabilly	Son Ly
DETAILS	Franklin Maagma/Min Yu	Son Ly
QUANTITIES	Maxime Dabilly	Son Ly

LOAD & RESISTANCE FACTOR DESIGN — LIVE LOADING: HL93 W/"LOW-BOY": PERMIT DESIGN VEHICLE

	BY	CHECKED
LAYOUT	Son Ly	Samad Hamoud
SPECIFICATIONS	Sirisha Nelapatla	PLANS AND SPECS COMPARED: Sirisha Nelapatla

ORIGINAL SCALE IN INCHES FOR REDUCED PLANS 0 1 2 3

STATE OF CALIFORNIA
DEPARTMENT OF TRANSPORTATION

DIVISION OF ENGINEERING SERVICES
STRUCTURE DESIGN
DESIGN BRANCH 16

BRIDGE NO. 20-0296
POST MILE 9.63

LAGUNA DE SANTA ROSA (REPLACE)
GENERAL PLAN

UNIT: 3617
PROJECT NUMBER & PHASE: 04000004821
CONTRACT NO.: 04-1A2901

DISREGARD PRINTS BEARING EARLIER REVISION DATES

REVISION DATES 05/17/12 07/17/12 08/07/12 09/12/12

SHEET 1 OF 39

USERNAME => s114640 DATE PLOTTED => 28-MAR-2013 TIME PLOTTED => 15:21

FILE => 20-0296-a-gp01.dgn

DIST	COUNTY	ROUTE	POST MILES TOTAL PROJECT	SHEET No.	TOTAL SHEETS
04	Son	12	9.6	81	118

REGISTERED CIVIL ENGINEER 9-12-12 DATE

3-25-13
PLANS APPROVAL DATE

REGISTERED PROFESSIONAL ENGINEER SON THANH LY No. 72584 Exp. 6-30-14 CIVIL STATE OF CALIFORNIA

The State of California or its officers or agents shall not be responsible for the accuracy or completeness of electronic copies of this plan sheet.

INDEX TO PLANS

SHEET NO	TITLE
1	GENERAL PLAN
2	INDEX TO PLANS
3	PILE DATA TABLES
4	STAGING PLAN
5	DECK CONTOURS
6	FOUNDATION PLAN NO. 1
7	FOUNDATION PLAN NO. 2
8	ABUTMENT 1 LAYOUT
9	ABUTMENT 4 LAYOUT
10	ABUTMENT DETAILS NO. 1
11	ABUTMENT DETAILS NO. 2
12	ABUTMENT DETAILS NO. 3
13	RETAINING WALL RW1 LAYOUT NO. 1
14	RETAINING WALL RW1 LAYOUT NO. 2
15	RETAINING WALL RW1L LAYOUT
16	RETAINING WALL RW2 LAYOUT NO. 1
17	RETAINING WALL RW2 LAYOUT NO. 2
18	RETAINING WALL RW3 LAYOUT NO. 1
19	RETAINING WALL RW3 LAYOUT NO. 2
20	RETAINING WALL RW3 LAYOUT NO. 3
21	RETAINING WALL DETAILS
22	BENT DETAILS NO. 1
23	BENT DETAILS NO. 2
24	BENT DETAILS NO. 3
25	BENT DETAILS NO. 4
26	TYPICAL SECTION
27	GIRDER LAYOUT
28	PRECAST PRESTRESSED I GIRDER DETAILS
29	GIRDER REINFORCEMENT
30	STRUCTURE APPROACH TYPE N(30S)
31	STRUCTURE APPROACH DRAINAGE DETAILS
32	ARCHITECTURAL TREATMENT NO. 1
33	ARCHITECTURAL TREATMENT NO. 2
34	ARCHITECTURAL TREATMENT NO. 3
35	CONCRETE BARRIER DETAILS
36	TUBULAR BICYCLE RAILING DETAILS
37	LOG OF TEST BORINGS 1 OF 3
38	LOG OF TEST BORINGS 2 OF 3
39	LOG OF TEST BORINGS 3 OF 3

STANDARD PLANS DATED 2010

A10A	ABBREVIATIONS (SHEET 1 OF 2)
A10B	ABBREVIATIONS (SHEET 2 OF 2)
A10C	LINES AND SYMBOLS (SHEET 1 OF 3)
A10D	LINES AND SYMBOLS (SHEET 2 OF 3)
A10E	LINES AND SYMBOLS (SHEET 3 OF 3)
A10F	LEGEND - SOIL (SHEET 1 OF 2)
A10G	LEGEND - SOIL (SHEET 2 OF 2)
A10H	LEGEND - ROCK
A62B	LIMITS OF PAYMENT FOR EXCAVATION AND BACKFILL - BRIDGE SURCHARGE AND WALL
A62C	LIMITS OF PAYMENT FOR EXCAVATION AND BACKFILL - BRIDGE
BO-1	BRIDGE DETAILS
BO-3	BRIDGE DETAILS
BO-5	BRIDGE DETAILS
BO-13	BRIDGE DETAILS
B2-5	PILE DETAILS - CLASS 90 AND CLASS 140
RSP B3-1A	RETAINING WALL TYPE 1 (CASE 1)
RSP B3-5	RETAINING WALL DETAILS NO. 1
B3-6	RETAINING WALL DETAILS NO. 2
B6-21	JOINT SEALS (MAXIMUM MOVEMENT RATING = 2")
B7-10	UTILITY OPENING - BOX GIRDER
RSP B11-47	CABLE RAILING
RSP B11-60	CONCRETE BARRIER TYPE 80 (SHEET 1 OF 2)
B11-62	CONCRETE BARRIER TYPE 80SW (SHEET 1 OF 3)
B11-63	CONCRETE BARRIER TYPE 80SW (SHEET 2 OF 3)
B11-64	CONCRETE BARRIER TYPE 80SW (SHEET 3 OF 3)
B14-4	WATER SUPPLY LINE (BRIDGE) (PIPE SIZES LESS THAN 4")
B14-5	WATER SUPPLY LINE (DETAILS) (PIPE SIZES LESS THAN 4")
T3A	TEMPORARY RAILING (TYPE K)

STANDARD PLAN SHEET NO.

DETAIL NO.

CONCRETE STRENGTH AND TYPE LIMITS

NO SCALE

LEGEND:

- Structural Concrete Bridge (f'c = 4 ksi @ 28 days)
- Prestressed I-girder (see other sheets)
- Structural Concrete Retaining Wall
- CISS Pile (f'c = 4 ksi @ 28 days)

GENERAL NOTE
LOAD AND RESISTANCE FACTOR DESIGN SUPERSTRUCTURE WITH LOAD FACTOR DESIGN SUBSTRUCTURE

DESIGN:
AASHTO LRFD Bridge Design Specifications, 4th edition and the Caltrans Amendments, preface dated December 2008

SEISMIC DESIGN:
Caltrans Seismic Design Criteria (SDC), Version 1.5 dated September 2009

DEAD LOAD:
Includes 35 psf for future wearing surface. The deck load between the girders has been increased by a factor of 10% to allow for the use of steel deck forms

LIVE LOADING:
HL93 and permit design load

SEISMIC LOADING:
Site specific ARS as shown

CONCRETE:
fy = 60 ksi
f'c = 3.6 ksi
n = 8
See "GENERAL NOTES" on "PRECAST PRESTRESSED I GIRDER DETAILS" sheet

STRUCTURAL STEEL (new construction):
fy = ASTM A709 Grade 50
Steel Pipe Piles: ASTM A252 Grade 3

STRUCTURAL STEEL
(assumed for evaluation of existing structure):
ASTM A7
fy = 39 ksi

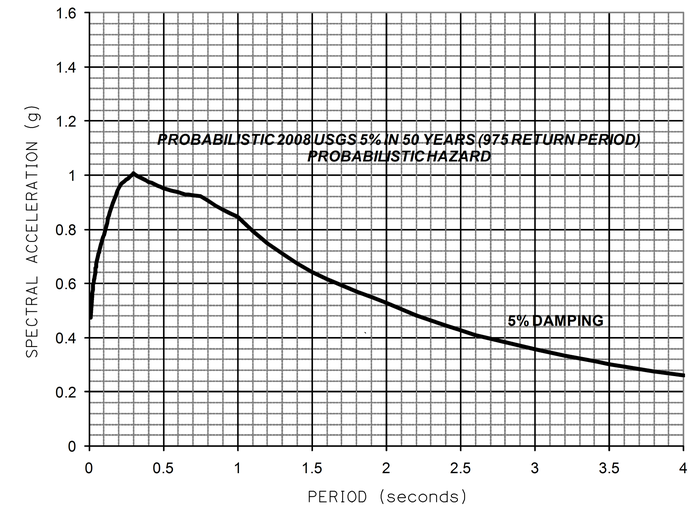

ACCELERATION RESPONSE SPECTRUM

NO SCALE

QUANTITIES

BRIDGE REMOVAL	LUMP	SUM
STRUCTURE EXCAVATION (BRIDGE)	401	CY
STRUCTURE EXCAVATION (TYPE A)	249	CY
STRUCTURE EXCAVATION (TYPE D)	25	CY
STRUCTURE EXCAVATION (RETAINING WALL)	1,205	CY
STRUCTURE EXCAVATION (RETAINING WALL TYPE A)	440	CY
STRUCTURE BACKFILL (BRIDGE)	130	CY
STRUCTURE BACKFILL (RETAINING WALL)	1,829	CY
3" SUPPLY LINE (BRIDGE)	306	LF
FURNISH PILING (CLASS 90) (ALTERNATIVE V)	3,729	LF
DRIVE PILE (CLASS 90) (ALTERNATIVE V)	94	EA
FURNISH 48" CAST-IN-STEEL SHELL CONCRETE PILING	822	LF
DRIVE 48" CAST-IN-STEEL SHELL CONCRETE PILE	16	EA
PRESTRESSING PRECAST GIRDER	LUMP	SUM
SEAL COURSE CONCRETE	412	CY
STRUCTURAL CONCRETE, BRIDGE	1,021	CY
STRUCTURAL CONCRETE, RETAINING WALL	733	CY
STRUCTURAL CONCRETE, APPROACH SLAB (TYPE N)	129	CY
RANDOM ROCK TEXTURE	4,854	SQFT
DRILL AND BOND DOWEL	77	LF
FURNISH PRECAST PRESTRESSED CONCRETE GIRDER (70'-80')	24	EA
ERECT PRECAST PRESTRESSED CONCRETE GIRDER	24	EA
JOINT SEAL (MR 1½")	113	LF
BAR REINFORCING STEEL (BRIDGE)	466,432	LB
BAR REINFORCING STEEL (RETAINING WALL)	103,033	LB
BAR REINFORCING STEEL (EPOXY COATED)	277	LB
PREPARE AND STAIN CONCRETE	9,850	SQFT
MINOR CONCRETE (GUTTER) (LF)	16	LF
TUBULAR BICYCLE RAILING	402	LF
CABLE RAILING (MODIFIED)	16	LF
CONCRETE BARRIER (TYPE 80SWA MODIFIED)	134	LF
CONCRETE BARRIER (TYPE 80SW MODIFIED)	621	LF
CONCRETE BARRIER (TYPE 80A MODIFIED)	402	LF
2" SPRINLER CONTROL CONDUIT	306	LF

	BY	CHECKED
DESIGN	Maxime Dabilly	Son Ly
DETAILS	Franklin Maagma/Min Yu	Son Ly
QUANTITIES	Maxime Dabilly	Son Ly

STATE OF CALIFORNIA
DEPARTMENT OF TRANSPORTATION

DIVISION OF ENGINEERING SERVICES
STRUCTURE DESIGN
DESIGN BRANCH 16

BRIDGE NO. 20-0296
POST MILE 9.63

LAGUNA DE SANTA ROSA (REPLACE)
INDEX TO PLANS

STRUCTURES DESIGN DETAIL SHEET (ENGLISH) (REV. 09-01-10)

ORIGINAL SCALE IN INCHES FOR REDUCED PLANS 0 1 2 3

UNIT: 3617
PROJECT NUMBER & PHASE: 04000004821
CONTRACT NO.: 04-1A2901

DISREGARD PRINTS BEARING EARLIER REVISION DATES

REVISION DATES 05/17/12 07/17/12 08/07/12 09/12/12

SHEET 2 OF 39

FILE => 20-0296-a-itp.dgn

USERNAME => s114640 DATE PLOTTED => 28-MAR-2013 TIME PLOTTED => 15:21

DIST	COUNTY	ROUTE	POST MILES TOTAL PROJECT	SHEET No.	TOTAL SHEETS
04	Son	12	9.6	82	118

REGISTERED CIVIL ENGINEER 9-12-12 DATE

3-25-13
PLANS APPROVAL DATE

REGISTERED PROFESSIONAL ENGINEER SON THANH LY No. 72584 Exp. 6-30-14 CIVIL STATE OF CALIFORNIA

The State of California or its officers or agents shall not be responsible for the accuracy or completeness of electronic copies of this plan sheet.

PILE DATA TABLE - BRIDGE

SUPPORT LOCATION	PILE TYPE	NOMINAL RESISTANCE (kips)		DESIGN TIP ELEVATION (Ft)	SPECIFIED TIP ELEVATION (Ft)	NOMINAL DRIVING RESISTANCE REQUIRED (kips)
		COMPRESSION	TENSION			
Abut 1	48" CISS	950	N/A	11 (a) 25 (c)	11	1080
BENT 2	48" CISS	1300	N/A	-7 (a) 3 (b) 11 (c) -2 (d)	-7	1800
BENT 3	48" CISS	1300	N/A	0 (a) 12 (b) 15 (c) 13 (d)	0	1500
Abut 4	48" CISS	950	N/A	5 (a) 18 (c)	5	1000

NOTES:

1. Design tip elevations for Abutments are controlled by: (a) Compression (Strength Limit) and (c) Settlement, respectively
2. Design tip elevations for Bents are controlled by: (a) Compression (Strength Limit), (c) Settlement, and (d) Lateral Load, respectively
3. The specific tip elevation shall not be raised above the design tip elevation for Settlement or Lateral Load
4. The nominal driving resistance required is equal to the nominal resistance needed to support the factored load plus driving resistance from the unsuitable penetrated soil layers (very soft, liquefiable, scourable, etc.), if any, which do not contribute to the design resistance. Unsuitable soil layers extend to Elevation 37 feet at Abutment 1, Elevation 13 feet at Bent 2, and Elevation 36 at Bent 3, and Elevation 39 feet at Abutment 4

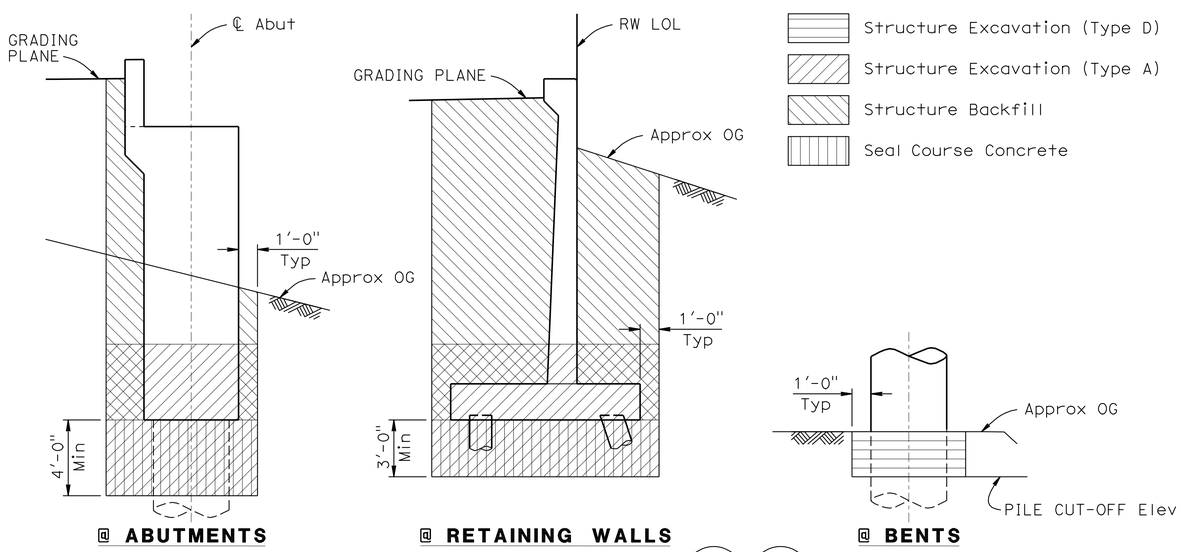

NOTE: For Details not shown, see A62B A62C

EXCAVATION AND BACKFILL

NO SCALE

PILE DATA TABLE - RETAINING WALL

WALL No.	SUPPORT LOCATION	PILE TYPE	NOMINAL RESISTANCE (kips)		BOTTOM OF FOOTING ELEVATION (Ft)	DESIGN TIP ELEVATION (Ft)	SPECIFIED TIP ELEVATION (Ft)	NOMINAL DRIVING RESISTANCE (kips)
			COMPRESSION	TENSION				
RW1	"RW1 LOL" 10+82.61 - 11+52.61	90 kips STEEL PIPE PILE (ALTER-NATIVE V) B2-5	129	N/A	56.00	18 (a) 26 (c) 19 (d)	18	170
	"RW1 LOL" 11+52.61 - 11+60.61				53.00	18 (a) 26 (c) 16 (d)	16	170
RW1L	"RW1L LOL" 1+00 - 1+08				57.00	18 (a) 26 (c) 20 (d)	18	170
	"RW1L LOL" 1+08 - 1+16				53.00	18 (a) 26 (c) 16 (d)	16	170
RW2	"RW2 LOL" 20+00 - 20+08				53.00	20 (a) 26 (c) 16 (d)	16	150
	"RW2 LOL" 20+08 - 20+16				57.00	20 (a) 26 (c) 20 (d)	20	150
	"RW2 LOL" 20+16 - 20+30				61.00	20 (a) 26 (c) 24 (d)	20	150
RW3	"RW3 LOL" 30+00 - 30+08				53.00	20 (a) 26 (c) 16 (d)	16	150
	"RW3 LOL" 30+08 - 30+30				56.00	20 (a) 26 (c) 19 (d)	19	150
	"RW3 LOL" 30+30 - 31+02				56.00	17 (a) 20 (c) 19 (d)	17	130
	"RW3 LOL" 31+02 - 31+34				59.00	20 (a) 24 (c) 19 (d)	19	150

NOTES:

1. Design tip elevations are controlled by: (a) Compression, (c) Settlement, and (d) Lateral Load, respectively
2. The specified tip elevation shall not be raised above the design tip elevation for Settlement and Lateral Load
3. Design tip elevation for Lateral Load was provided by Structure Design
4. The nominal driving resistance required is equal to the nominal resistance needed to support the factored load plus driving resistance from the unsuitable penetrated soil layers (very soft, liquefiable, scourable, etc.), if any, which do not contribute to the design resistance. Unsuitable soil layers for RW1L and RW1 extend to Elevation 37 feet. Unsuitable soil layers for RW2 and RW3 extend to Elevation 45 feet

	BY	CHECKED
DESIGN	Maxime Dabilly	Son Ly
DETAILS	Franklin Maagma	Son Ly
QUANTITIES	Maxime Dabilly	Son Ly

STATE OF CALIFORNIA
DEPARTMENT OF TRANSPORTATION

DIVISION OF ENGINEERING SERVICES
STRUCTURE DESIGN
DESIGN BRANCH 16

BRIDGE NO. 20-0296
POST MILE 9.63

LAGUNA DE SANTA ROSA (REPLACE)
PILE DATA TABLES

STRUCTURES DESIGN DETAIL SHEET (ENGLISH) (REV. 09-01-10)

ORIGINAL SCALE IN INCHES FOR REDUCED PLANS 0 1 2 3

UNIT: 3617
PROJECT NUMBER & PHASE: 04000004821
CONTRACT NO.: 04-1A2901

DISREGARD PRINTS BEARING EARLIER REVISION DATES

REVISION DATES 05/17/12 07/27/12 08/07/12 09/12/12

SHEET 3 OF 39

FILE => 20-0296-b-pdt.dgn

USERNAME => s114640 DATE PLOTTED => 28-MAR-2013 TIME PLOTTED => 15:21

DIST	COUNTY	ROUTE	POST MILES TOTAL PROJECT	SHEET No.	TOTAL SHEETS
04	Son	12	9.6	83	118

REGISTERED CIVIL ENGINEER 9-12-12 DATE

3-25-13
PLANS APPROVAL DATE

REGISTERED PROFESSIONAL ENGINEER SON THANH LY No. 72584 Exp. 6-30-14 CIVIL STATE OF CALIFORNIA

The State of California or its officers or agents shall not be responsible for the accuracy or completeness of electronic copies of this plan sheet.

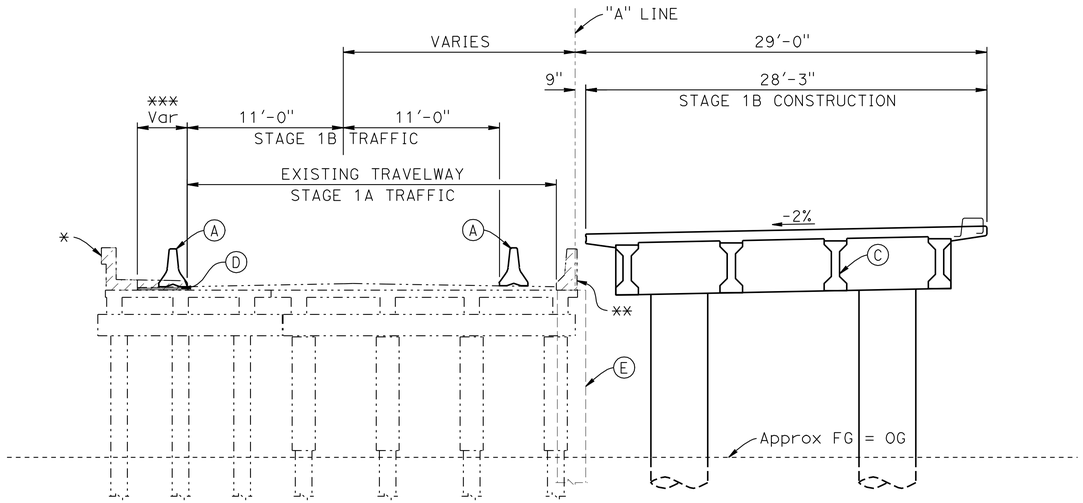

TYPICAL SECTION STAGE 1 CONSTRUCTION

3/16" = 1'-0"

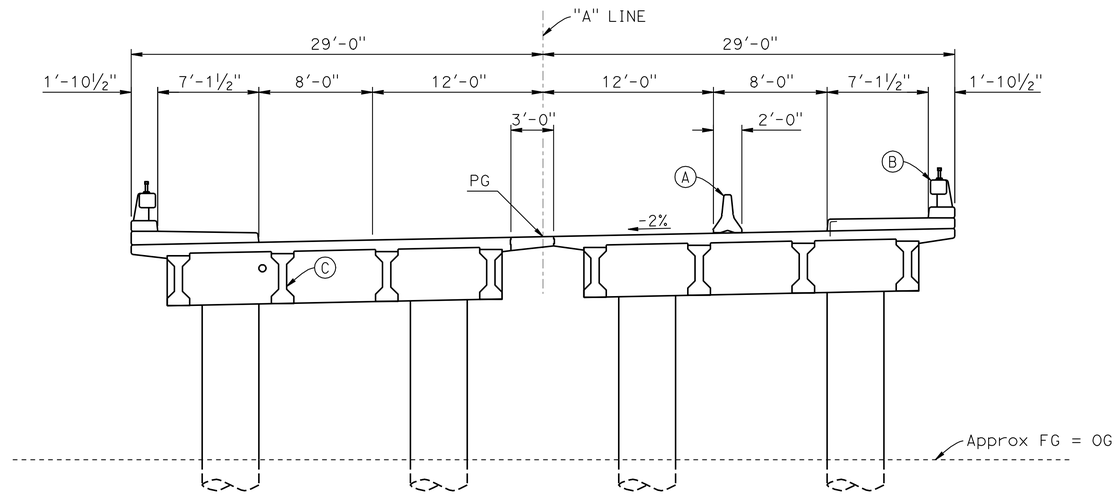

TYPICAL SECTION STAGE 3 CONSTRUCTION

3/16" = 1'-0"

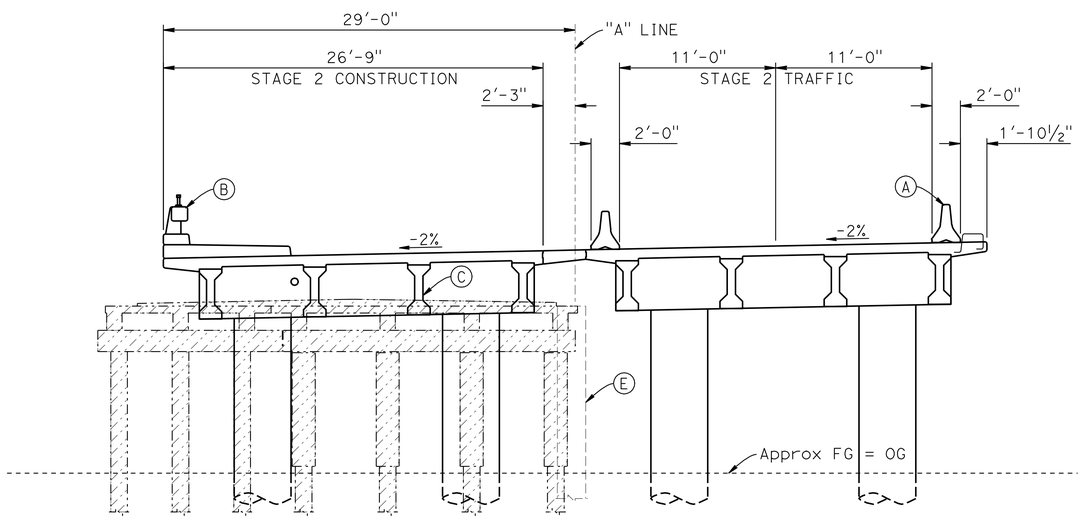

TYPICAL SECTION STAGE 2 CONSTRUCTION

3/16" = 1'-0"

NOTE:
THE CONTRACTOR SHALL VERIFY ALL CONTROLLING FIELD DIMENSIONS BEFORE ORDERING OR FABRICATING ANY MATERIAL

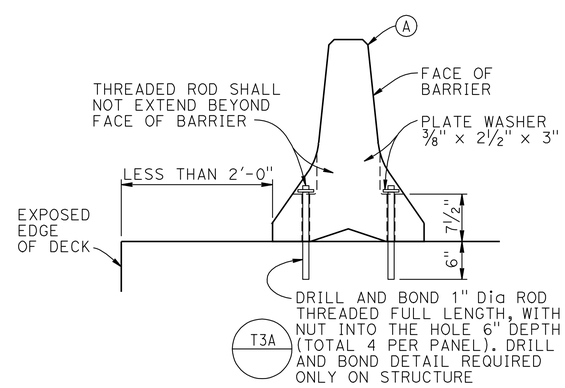

TEMPORARY RAILING ANCHOR DETAILS

1" = 1'-0"

LEGEND:

- ——— Indicates New Structure
- -·-·-·- Indicates Existing Structure
- ▨ Indicates Existing Bridge removal

NOTES:

- (A) Temp Railing (Type K), see "ROADWAY PLANS"
- (B) Concrete Barrier, Type 80SW (Modified)
- (C) PC/PS I Girder (Typ)
- (D) AC Overlay (match existing slope), see "ROADWAY PLANS"
- (E) Temporary shoring at abutment locations, to be provided by Contractor
- * Stage 1A bridge removal
- ** Stage 1B bridge removal
- *** K-Rail taper, 0' @ Sta 18+30.06± to 3'-6" @ Sta 18+94.71± (see "ROADWAY PLANS")

DESIGN	BY Maxime Dabilly	CHECKED Son Ly	
DETAILS	BY Franklin Maagma/Min Yu	CHECKED Son Ly	
QUANTITIES	BY Maxime Dabilly	CHECKED Son Ly	

STATE OF CALIFORNIA
DEPARTMENT OF TRANSPORTATION

DIVISION OF ENGINEERING SERVICES
STRUCTURE DESIGN
DESIGN BRANCH 16

BRIDGE NO. 20-0296
POST MILE 9.63

LAGUNA DE SANTA ROSA (REPLACE)
STAGING PLAN

STRUCTURES DESIGN DETAIL SHEET (ENGLISH) (REV. 09-01-10)

ORIGINAL SCALE IN INCHES FOR REDUCED PLANS 0 1 2 3

UNIT: 3617
PROJECT NUMBER & PHASE: 04000004821
CONTRACT NO.: 04-1A2901

DISREGARD PRINTS BEARING EARLIER REVISION DATES

REVISION DATES 05/31/12 07/23/12 08/07/12 09/12/12

SHEET 4 OF 39

FILE => 20-0296-c-stgp01.dgn

USERNAME => s114640 DATE PLOTTED => 28-MAR-2013 TIME PLOTTED => 15:21

DIST	COUNTY	ROUTE	POST MILES TOTAL PROJECT	SHEET No.	TOTAL SHEETS
04	Son	12	9.6	84	118

REGISTERED CIVIL ENGINEER 9-12-12 DATE

3-25-13
PLANS APPROVAL DATE

REGISTERED PROFESSIONAL ENGINEER SON THANH LY No. 72584 Exp. 6-30-14 CIVIL STATE OF CALIFORNIA

The State of California or its officers or agents shall not be responsible for the accuracy or completeness of electronic copies of this plan sheet.

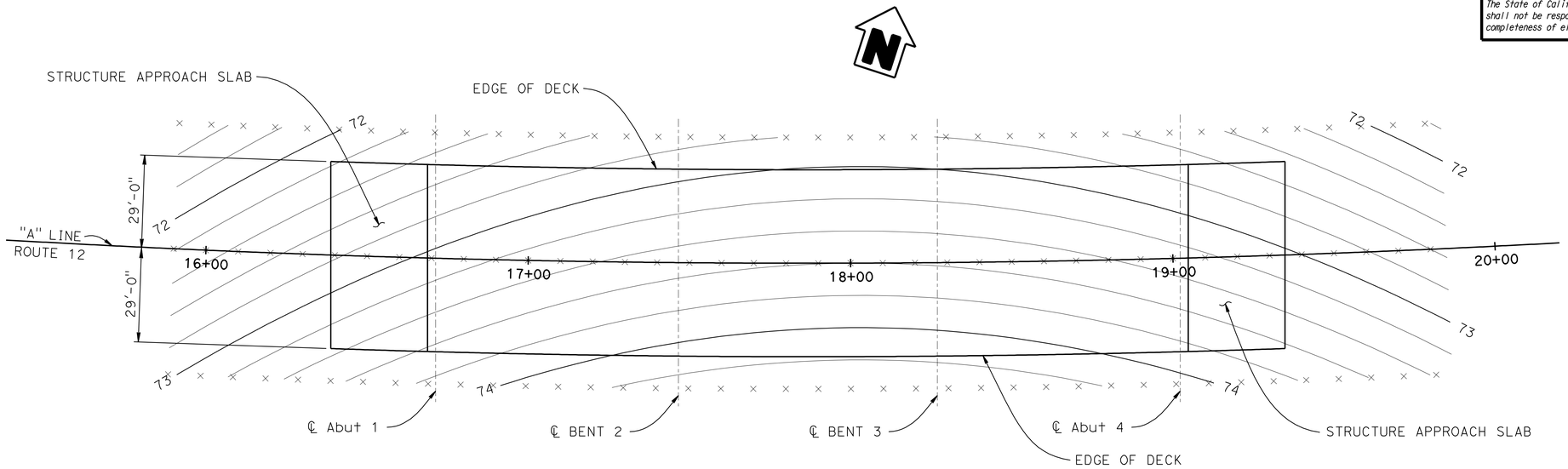

PLAN
1" = 20'

NOTES:

0.20 Contour Interval
× - 10.0 Station Increment
Contour do not include camber

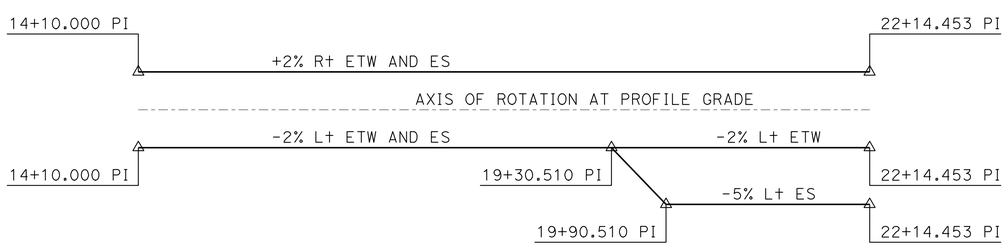

SUPERELEVATION DIAGRAM
NO SCALE

NOTE:
THE CONTRACTOR SHALL VERIFY ALL CONTROLLING FIELD DIMENSIONS BEFORE ORDERING OR FABRICATING ANY MATERIAL

	BY	CHECKED
DESIGN	Maxime Dabilly	Son Ly
DETAILS	Franklin Maagma	Son Ly
QUANTITIES	Maxime Dabilly	Son Ly

STATE OF CALIFORNIA
DEPARTMENT OF TRANSPORTATION

DIVISION OF ENGINEERING SERVICES
STRUCTURE DESIGN
DESIGN BRANCH 16

BRIDGE NO. 20-0296
POST MILE 9.63

LAGUNA DE SANTA ROSA (REPLACE)
DECK CONTOURS

STRUCTURES DESIGN DETAIL SHEET (ENGLISH) (REV. 09-01-10)

ORIGINAL SCALE IN INCHES FOR REDUCED PLANS 0 1 2 3

UNIT: 3617
PROJECT NUMBER & PHASE: 04000004821
CONTRACT NO.: 04-1A2901

DISREGARD PRINTS BEARING EARLIER REVISION DATES

REVISION DATES: 05/17/12 07/25/12 08/07/12 09/12/12

SHEET 5 OF 39

FILE => 20-0296-d-dc01.dgn

USERNAME => s114640 DATE PLOTTED => 28-MAR-2013 TIME PLOTTED => 15:21

DIST	COUNTY	ROUTE	POST MILES TOTAL PROJECT	SHEET No.	TOTAL SHEETS
04	Son	12	9.6	85	118

REGISTERED CIVIL ENGINEER 9-12-12 DATE

3-25-13
PLANS APPROVAL DATE

REGISTERED PROFESSIONAL ENGINEER SON THANH LY No. 72584 Exp. 6-30-14 CIVIL STATE OF CALIFORNIA

The State of California or its officers or agents shall not be responsible for the accuracy or completeness of electronic copies of this plan sheet.

CURVE DATA

No.	R	Δ	T	L
Ⓐ	4300.00	11°18′23″	425.65	848.54
Ⓑ	4329.00	0°23′49″	15.00	30.00

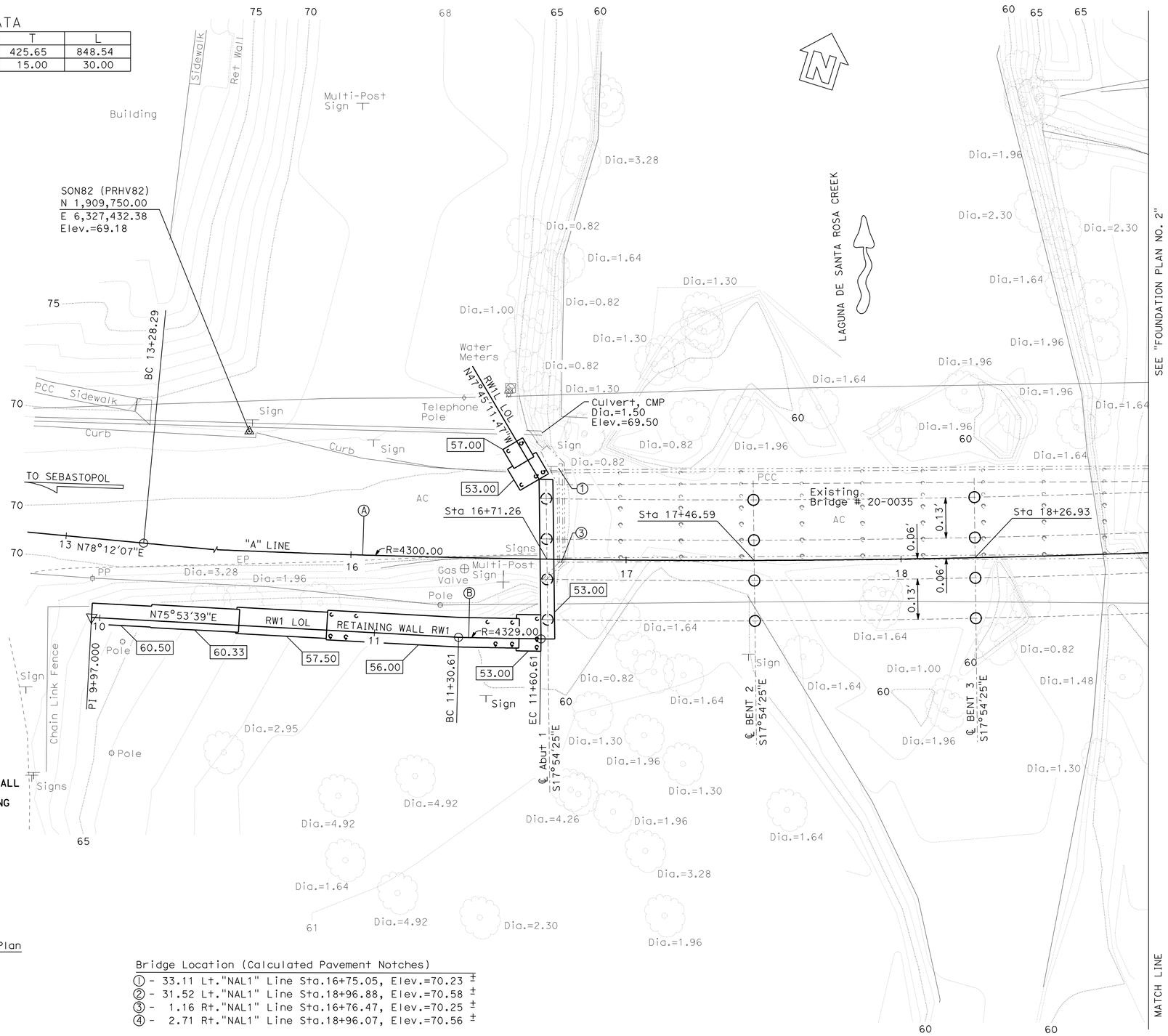

NOTE:
THE CONTRACTOR SHALL VERIFY ALL CONTROLLING FIELD DIMENSIONS BEFORE ORDERING OR FABRICATING ANY MATERIAL

SURVEY CONTROL

SON82 (PRHV82)
Fnd 0.3M Brass Disk
43.47 FT Lt. Rte 12
Sta. 15+61.26
N 1,909,750.00
E 6,327,432.38
Elev. = 69.16

SON83 (PRHV83) Not Shown On Plan
Fnd 0.55M Brass Disk
28.99 FT Rt. Rte 12
Sta. 35+53.00
N 1,910,422.17
E 6,329,302.34
Elev. = 69.21

Bridge Location (Calculated Pavement Notches)
① - 33.11 Lt."NAL1" Line Sta.16+75.05, Elev.=70.23 ±
② - 31.52 Lt."NAL1" Line Sta.18+96.88, Elev.=70.58 ±
③ - 1.16 Rt."NAL1" Line Sta.16+76.47, Elev.=70.25 ±
④ - 2.71 Rt."NAL1" Line Sta.18+96.07, Elev.=70.56 ±

LEGEND:
Indicates bottom of footing elevation

NOTE:
1. Not all piles shown

PRELIMINARY INVESTIGATION SECTION

SCALE	VERT.DATUM NAVD88	PHOTOGRAMMETRY AS OF: X			
1"=20′	HORZ.DATUM NAD83 (1991.35)	SURVEYED	BY District/J.Borden	CHECKED	BY J.Borden 2/2012
ALIGNMENT TIES Dist. Traverse Sheet		DRAFTED	BY T. Z./ S. Z. 02/2012	CHECKED	BY J.Pallares 2/2012

	BY	CHECKED
DESIGN	Maxime Dabilly	Son Ly
DETAILS	Franklin Maagma	Son Ly
QUANTITIES	Maxime Dabilly	Son Ly

STATE OF CALIFORNIA
DEPARTMENT OF TRANSPORTATION

DIVISION OF ENGINEERING SERVICES
STRUCTURE DESIGN
DESIGN BRANCH 16

BRIDGE NO. 20-0296
POST MILE 9.63

LAGUNA DE SANTA ROSA (REPLACE)
FOUNDATION PLAN NO. 1

STRUCTURES FOUNDATION PLAN SHEET (ENGLISH) (REV. 09-01-10)

ORIGINAL SCALE IN INCHES FOR REDUCED PLANS 0 1 2 3

UNIT: 3646
PROJECT NUMBER & PHASE: 04000004821
CONTRACT NO.: 04-1A2901

DISREGARD PRINTS BEARING EARLIER REVISION DATES
REVISION DATES 11/30/09 01/13/12 08/07/12 09/12/12

SHEET 6 OF 39

FILE => 20-0296-e-fpl01.dgn

DIST	COUNTY	ROUTE	POST MILES TOTAL PROJECT	SHEET No.	TOTAL SHEETS
04	Son	12	9.6	86	118

REGISTERED CIVIL ENGINEER 9-12-12 DATE

3-25-13
PLANS APPROVAL DATE

REGISTERED PROFESSIONAL ENGINEER SON THANH LY No. 72584 Exp. 6-30-14 CIVIL STATE OF CALIFORNIA

The State of California or its officers or agents shall not be responsible for the accuracy or completeness of electronic copies of this plan sheet.

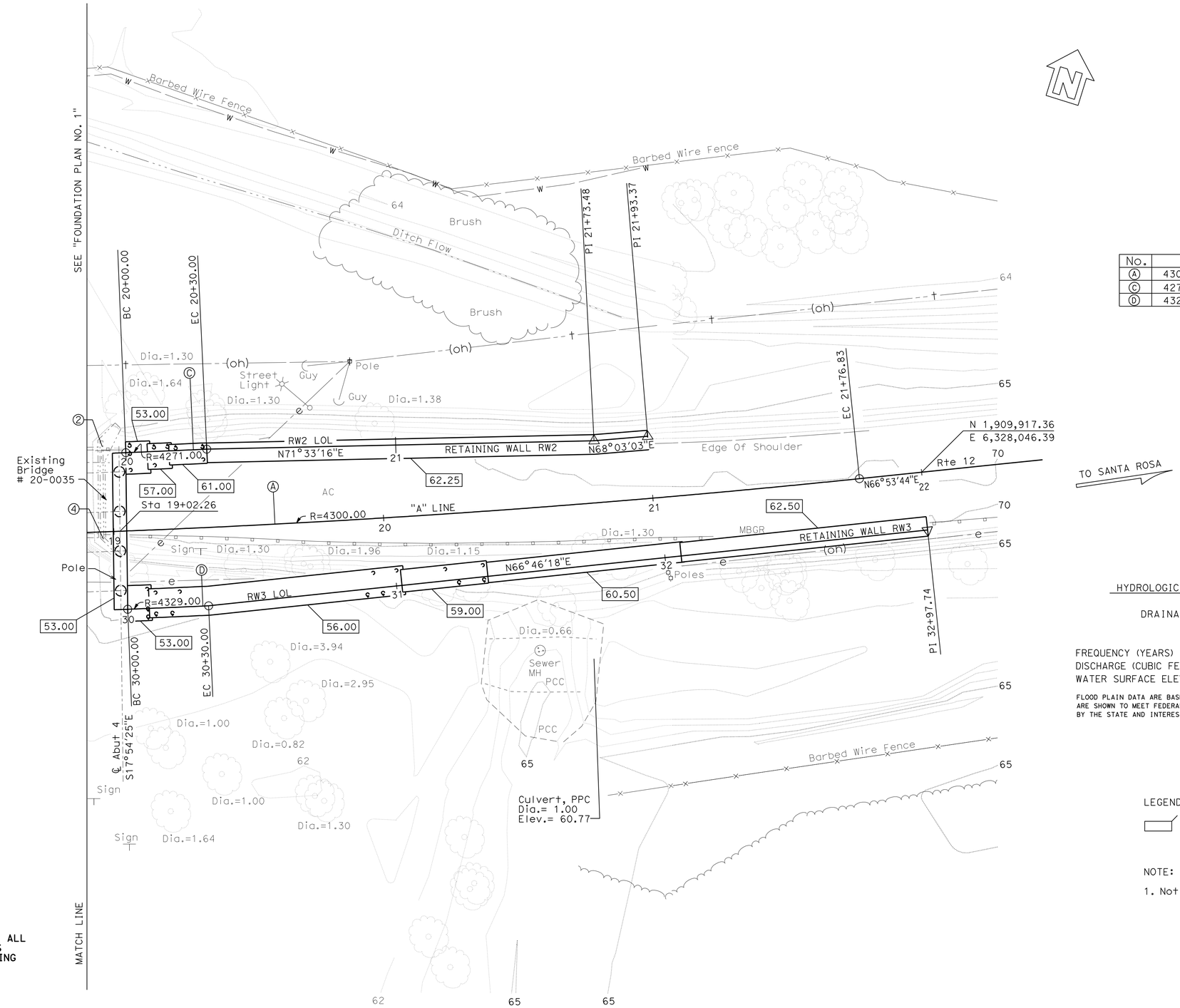

CURVE DATA

No.	R	Δ	T	L
Ⓐ	4300.00	11°18'23"	425.65	848.54
Ⓒ	4271.00	0°24'09"	15.00	30.00
Ⓓ	4329.00	0°23'49"	15.00	30.00

HYDROLOGIC SUMMARY FOR LAGUNA DE SANTA ROSA CHANNEL BRIDGE NO. 20-0296

DRAINAGE AREA: 170 SQUARE MILES

	DESIGN FLOOD	BASE FLOOD	OVERTOPPING FLOOD
FREQUENCY (YEARS)	50	100	N/A
DISCHARGE (CUBIC FEET PER SECOND)	18,000	20,500	N/A
WATER SURFACE ELEVEVATION AT BRIDGE (FEET)	72.5	75.0	N/A

FLOOD PLAIN DATA ARE BASED UPON INFORMATION AVAILABLE WHEN THE PLANS WERE PREPARED AND ARE SHOWN TO MEET FEDERAL REQUIREMENTS. THE ACCURACY OF SAID INFORMATION IS NOT WARRANTED BY THE STATE AND INTERESTED OR AFFECTED PARTIES SHOULD MAKE THEIR OWN INVESTIGATIONS.

LEGEND:

Indicates bottom of footing elevation

NOTE:

1. Not all piles shown

NOTE:
THE CONTRACTOR SHALL VERIFY ALL CONTROLLING FIELD DIMENSIONS BEFORE ORDERING OR FABRICATING ANY MATERIAL

PRELIMINARY INVESTIGATION SECTION

SCALE 1"=20'	VERT.DATUM NAVD88	PHOTOGRAMMETRY AS OF: X			
	HORZ.DATUM NAD83 (1991.35)	SURVEYED	BY District/J.Borden	CHECKED	BY J.Borden 2/2012
ALIGNMENT TIES Dist. Traverse Sheet		DRAFTED	BY T. Z./ S. Z. 2/2012	CHECKED	BY J.Pallares 2/2012

DESIGN	BY Maxime Dabilly	CHECKED Son Ly
DETAILS	BY Franklin Maagma	CHECKED Son Ly
QUANTITIES	BY Maxime Dabilly	CHECKED Son Ly

STATE OF CALIFORNIA
DEPARTMENT OF TRANSPORTATION

DIVISION OF ENGINEERING SERVICES
STRUCTURE DESIGN
DESIGN BRANCH 16

BRIDGE NO. 20-0296
POST MILE 9.63

LAGUNA DE SANTA ROSA (REPLACE)
FOUNDATION PLAN NO. 2

STRUCTURES FOUNDATION PLAN SHEET (ENGLISH) (REV. 09-01-10)

ORIGINAL SCALE IN INCHES FOR REDUCED PLANS 0 1 2 3

UNIT: 3646
PROJECT NUMBER & PHASE: 04000004821
CONTRACT NO.: 04-1A2901

DISREGARD PRINTS BEARING EARLIER REVISION DATES → REVISION DATES 11/28/09 01/23/12 08/07/12 09/12/12

SHEET 7 OF 39

FILE => 20-0296-e-fp102.dgn

DIST	COUNTY	ROUTE	POST MILES TOTAL PROJECT	SHEET No.	TOTAL SHEETS
04	Son	12	9.6	87	118

REGISTERED CIVIL ENGINEER 9-12-12 DATE

3-25-13
PLANS APPROVAL DATE

REGISTERED PROFESSIONAL ENGINEER SON THANH LY No. 72584 Exp. 6-30-14 CIVIL STATE OF CALIFORNIA

The State of California or its officers or agents shall not be responsible for the accuracy or completeness of electronic copies of this plan sheet.

NOTES:

1. Temporary shoring (to be provided by Contractor) may remain in place between Stage 1 & Stage 2, system shall not project beyond face of existing abutment during non-work window season or as specified in permit
2. Existing pile interfering with new foundation work

LEGEND:

- Indicates New Structure
- Indicates Existing Structure
- Indicates Limits of Bridge removal (Stage 1)
- Indicates Limits of Bridge removal

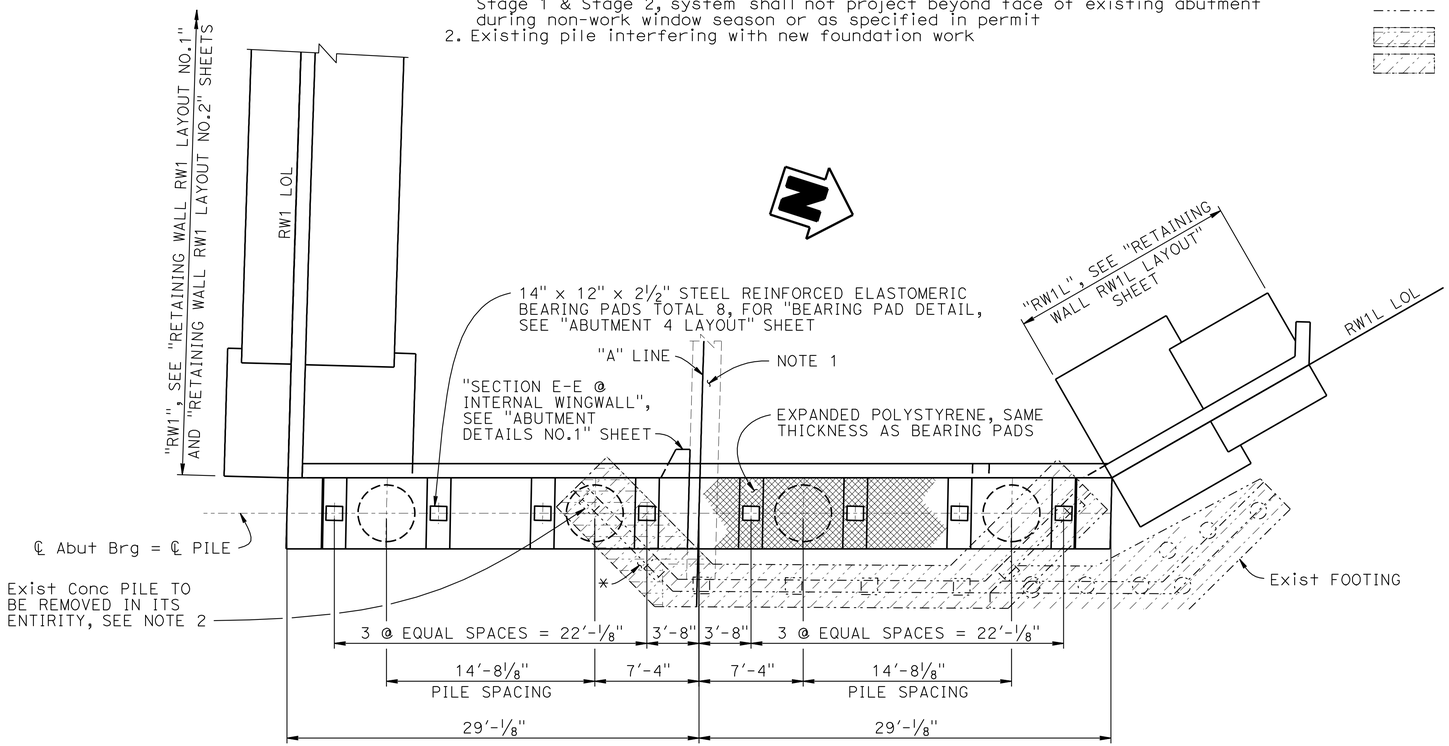

* FOR LIMIT OF STAGE 1 REMOVAL, SEE "ABUTMENT DETAILS NO. 2" SHEET

PLAN

3/16" = 1'-0"

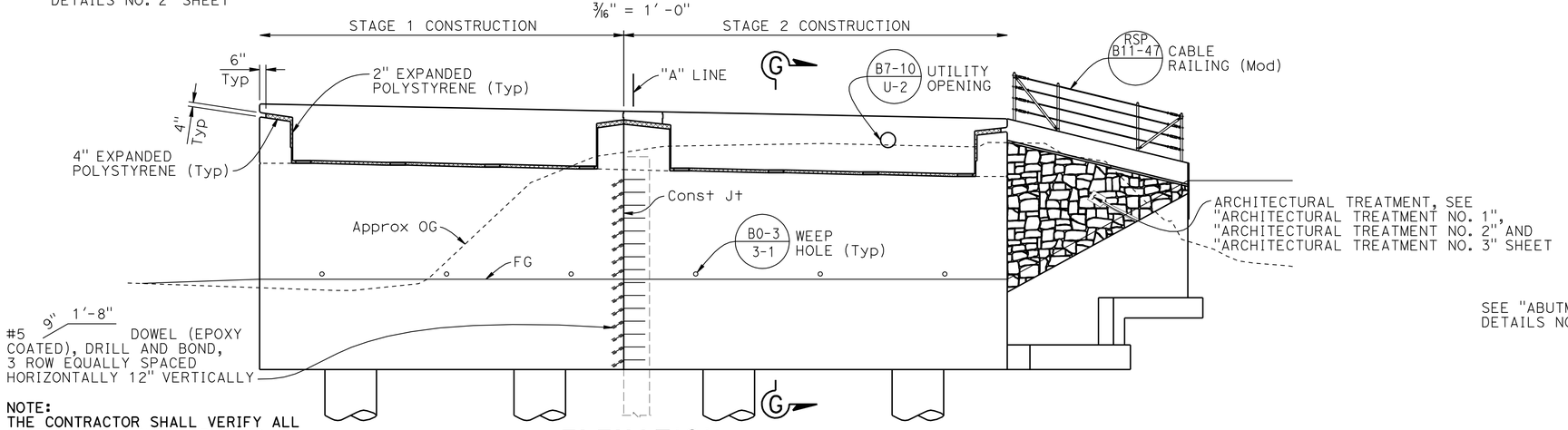

NOTE:
THE CONTRACTOR SHALL VERIFY ALL CONTROLLING FIELD DIMENSIONS BEFORE ORDERING OR FABRICATING ANY MATERIAL

ELEVATION

3/16" = 1'-0"

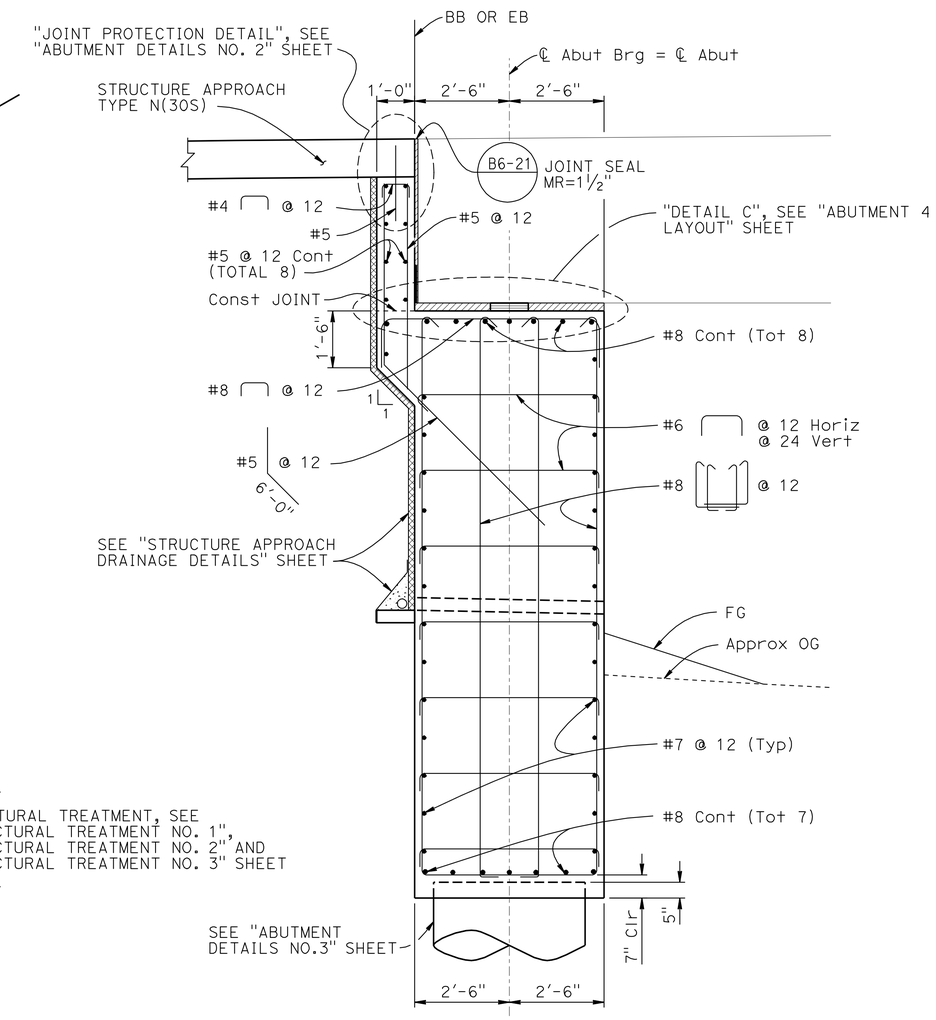

SECTION G-G

½" = 1'-0"

DESIGN	BY Maxime Dabilly	CHECKED Son Ly	
DETAILS	BY Franklin Maagma	CHECKED Son Ly	
QUANTITIES	BY Maxime Dabilly	CHECKED Son Ly	

STATE OF CALIFORNIA
DEPARTMENT OF TRANSPORTATION

DIVISION OF ENGINEERING SERVICES
STRUCTURE DESIGN
DESIGN BRANCH 16

BRIDGE NO. 20-0296
POST MILE 9.63

LAGUNA DE SANTA ROSA (REPLACE)
ABUTMENT 1 LAYOUT

STRUCTURES DESIGN DETAIL SHEET (ENGLISH) (REV. 09-01-10)

ORIGINAL SCALE IN INCHES FOR REDUCED PLANS 0 1 2 3

UNIT: 3617
PROJECT NUMBER & PHASE: 04000004821
CONTRACT NO.: 04-1A2901

DISREGARD PRINTS BEARING EARLIER REVISION DATES

REVISION DATES 05/11/12 07/13/12 08/07/12 09/12/12

SHEET 8 OF 39

FILE => 20-0296-f-a01_1o1.dgn

USERNAME => s114640 DATE PLOTTED => 28-MAR-2013 TIME PLOTTED => 15:21

DIST	COUNTY	ROUTE	POST MILES TOTAL PROJECT	SHEET No.	TOTAL SHEETS
04	Son	12	9.6	88	118

REGISTERED CIVIL ENGINEER 9-12-12 DATE

3-25-13
PLANS APPROVAL DATE

REGISTERED PROFESSIONAL ENGINEER SON THANH LY No. 72584 Exp. 6-30-14 CIVIL STATE OF CALIFORNIA

The State of California or its officers or agents shall not be responsible for the accuracy or completeness of electronic copies of this plan sheet.

NOTES:

1. For "SECTION G-G", see "ABUTMENT 1 LAYOUT" sheet
2. Temporary shoring (to be provided by Contractor) may remain in place between Stage 1 & Stage 2. System shall not project beyond face of existing abutment during non-work window season or as specified in permit
3. Existing pile interfering with new foundation work

LEGEND:

- Indicates New Structure
- Indicates Existing Structure
- Indicates Limits of Bridge removal (Stage 1)
- Indicates Limits of Bridge removal

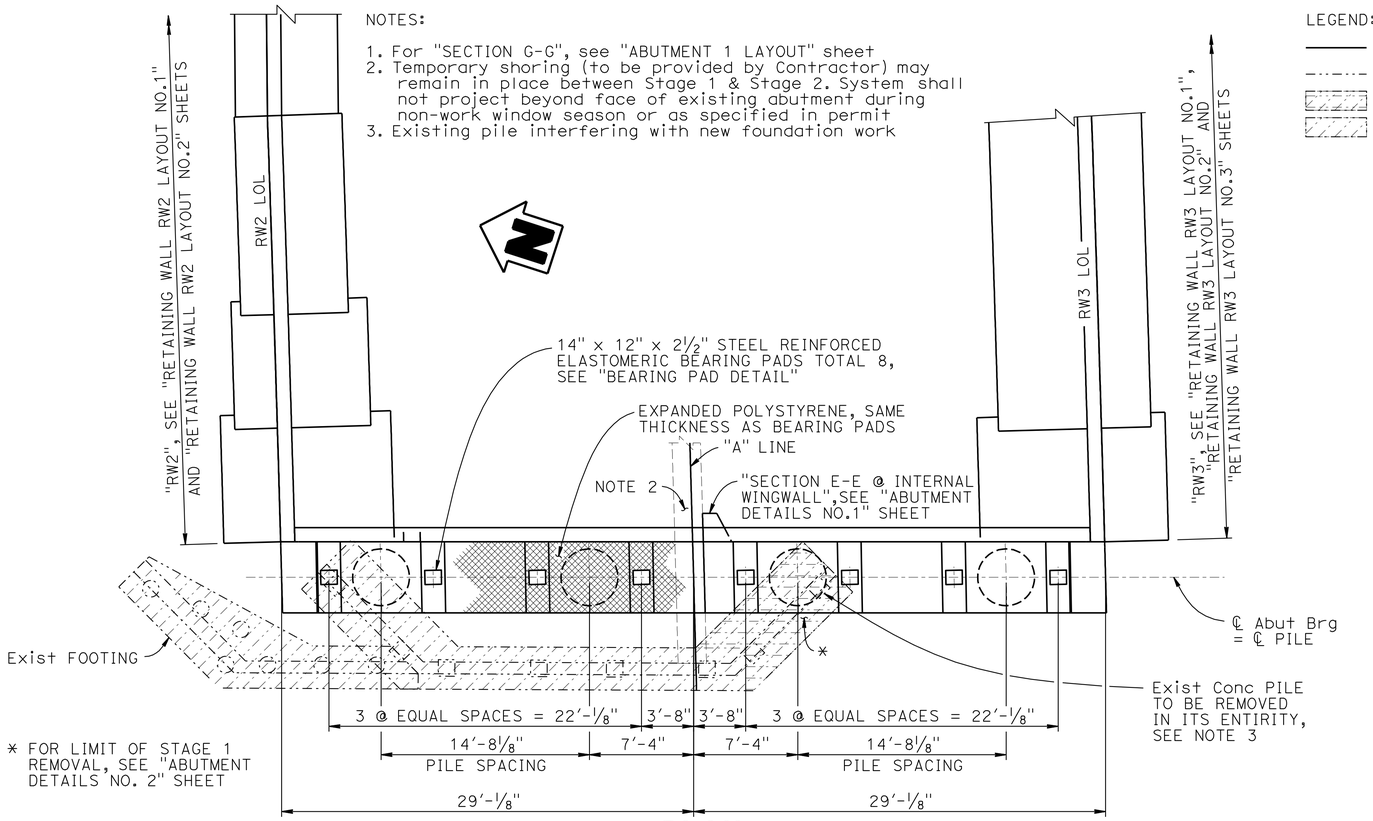

* FOR LIMIT OF STAGE 1 REMOVAL, SEE "ABUTMENT DETAILS NO. 2" SHEET

PLAN

3/16" = 1'-0"

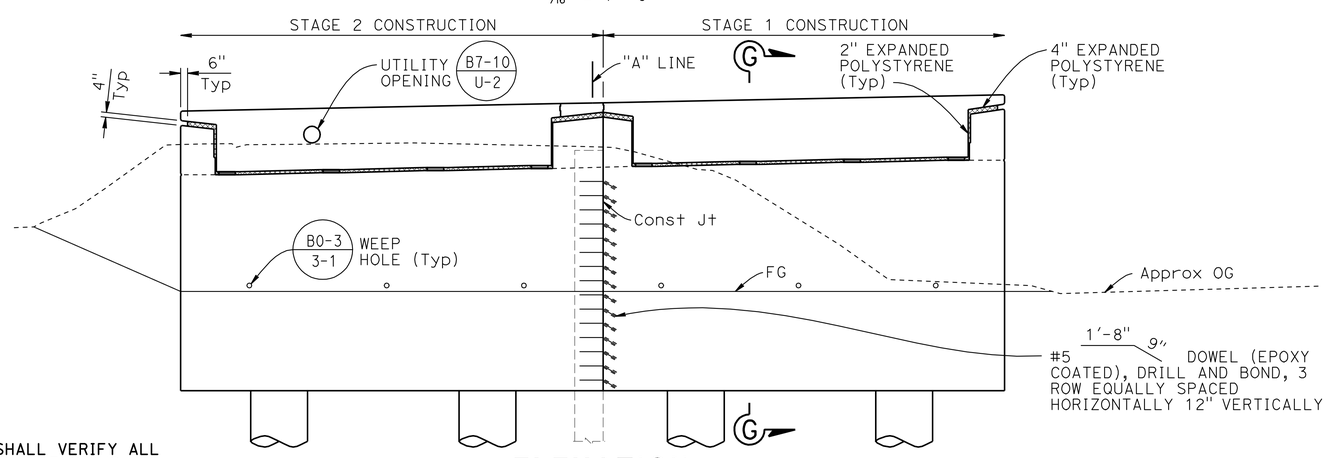

ELEVATION

3/16" = 1'-0"

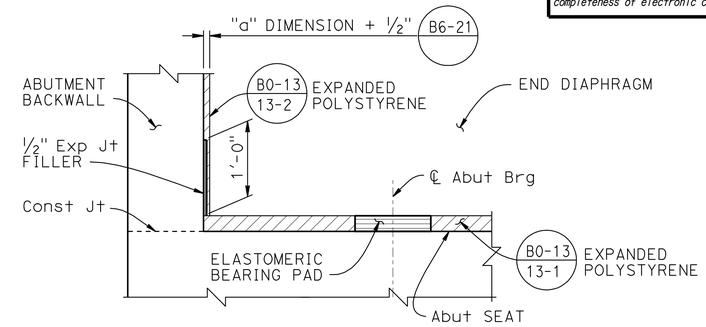

DETAIL C

1" = 1'-0"

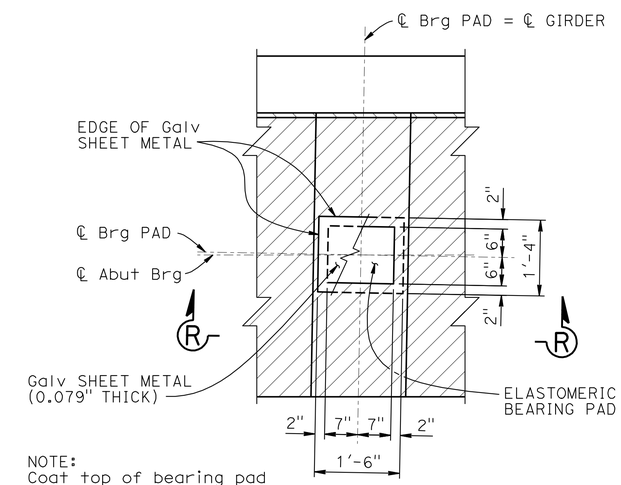

NOTE:
Coat top of bearing pad with silicon grease prior to placing sheet metal

PLAN

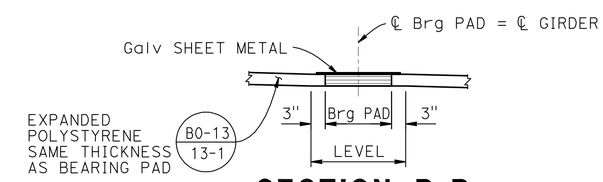

SECTION R-R

BEARING PAD DETAIL

¾" = 1'-0"

NOTE:
THE CONTRACTOR SHALL VERIFY ALL CONTROLLING FIELD DIMENSIONS BEFORE ORDERING OR FABRICATING ANY MATERIAL

	BY	CHECKED
DESIGN	Maxime Dabilly	Son Ly
DETAILS	Franklin Maagma	Son Ly
QUANTITIES	Maxime Dabilly	Son Ly

STATE OF CALIFORNIA
DEPARTMENT OF TRANSPORTATION

DIVISION OF ENGINEERING SERVICES
STRUCTURE DESIGN
DESIGN BRANCH 16

BRIDGE NO. 20-0296
POST MILE 9.63

LAGUNA DE SANTA ROSA (REPLACE)
ABUTMENT 4 LAYOUT

STRUCTURES DESIGN DETAIL SHEET (ENGLISH) (REV. 09-01-10)

ORIGINAL SCALE IN INCHES FOR REDUCED PLANS 0 1 2 3

UNIT: 3617
PROJECT NUMBER & PHASE: 04000004821
CONTRACT NO.: 04-1A2901

DISREGARD PRINTS BEARING EARLIER REVISION DATES

REVISION DATES: 05/01/12 07/13/12 08/01/12 09/12/12

SHEET 9 OF 39

FILE => 20-0296-f-a04_lo1.dgn

USERNAME => s114640 DATE PLOTTED => 28-MAR-2013 TIME PLOTTED => 13:21

DIST	COUNTY	ROUTE	POST MILES TOTAL PROJECT	SHEET No.	TOTAL SHEETS
04	Son	12	9.6	89	118

REGISTERED CIVIL ENGINEER 9-12-12 DATE

3-25-13
PLANS APPROVAL DATE

REGISTERED PROFESSIONAL ENGINEER SON THANH LY No. 72584 Exp. 6-30-14 CIVIL STATE OF CALIFORNIA

The State of California or its officers or agents shall not be responsible for the accuracy or completeness of electronic copies of this plan sheet.

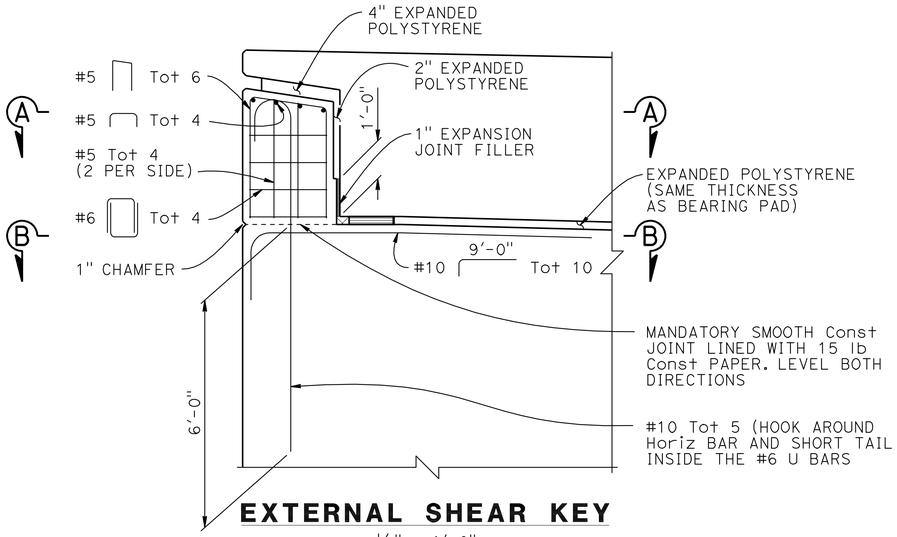

EXTERNAL SHEAR KEY

½" = 1'-0"

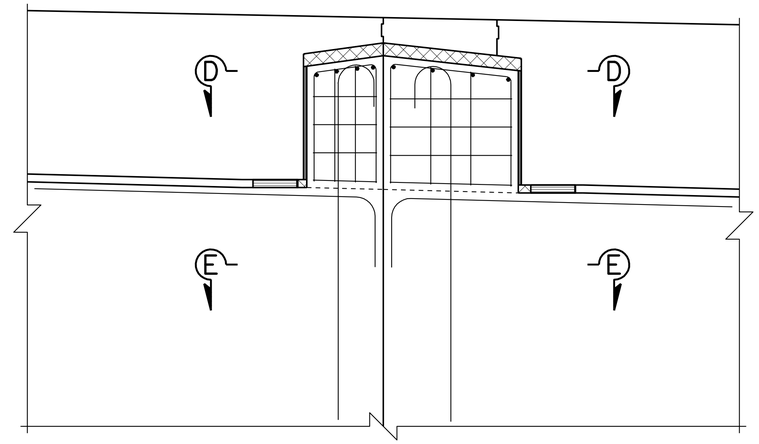

INTERNAL SHEAR KEY

½" = 1'-0"

NOTE:
Rebars and details are similar to "EXTERNAL SHEAR KEY"

NOTES:
1. Not all rebars are shown
2. Abutment 1 shown, Abutment 4 similar

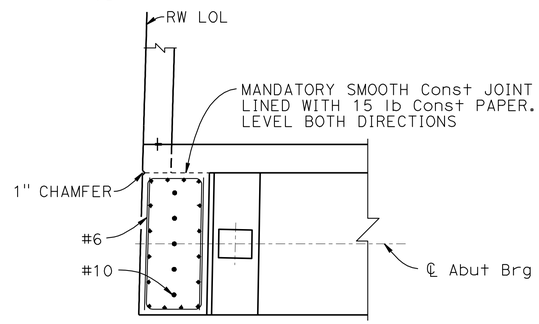

SECTION A-A

⅜" = 1'-0"

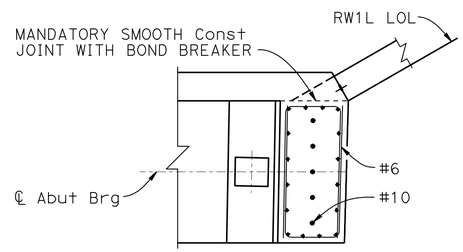

SECTION A-A @ RW1L ONLY

⅜" = 1'-0"

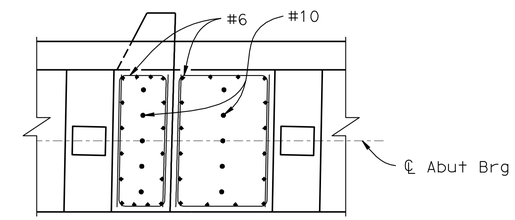

SECTION D-D

⅜" = 1'-0"

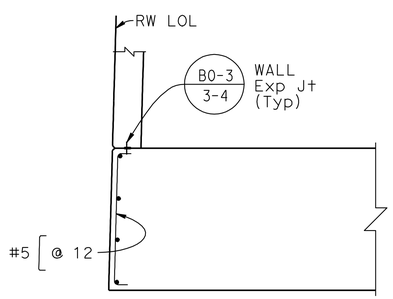

SECTION B-B

⅜" = 1'-0"

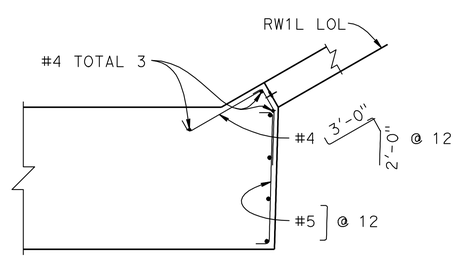

SECTION B-B @ RW1L ONLY

⅜" = 1'-0"

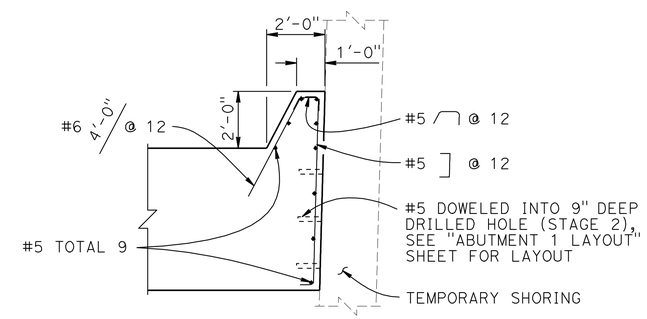

STAGE 1 CONSTRUCTION

SECTION E-E @ INTERNAL WINGWALL

⅜" = 1'-0"

NOTE:
THE CONTRACTOR SHALL VERIFY ALL CONTROLLING FIELD DIMENSIONS BEFORE ORDERING OR FABRICATING ANY MATERIAL

	BY	CHECKED
DESIGN	Maxime Dabilly	Son Ly
DETAILS	Franklin Maagma	Son Ly
QUANTITIES	Maxime Dabilly	Son Ly

STATE OF CALIFORNIA
DEPARTMENT OF TRANSPORTATION

DIVISION OF ENGINEERING SERVICES
STRUCTURE DESIGN
DESIGN BRANCH 16

BRIDGE NO. 20-0296
POST MILE 9.63

LAGUNA DE SANTA ROSA (REPLACE)
ABUTMENT DETAILS NO. 1

STRUCTURES DESIGN DETAIL SHEET (ENGLISH) (REV. 09-01-10)

ORIGINAL SCALE IN INCHES FOR REDUCED PLANS 0 1 2 3

UNIT: 3617
PROJECT NUMBER & PHASE: 04000004821
CONTRACT NO.: 04-1A2901

DISREGARD PRINTS BEARING EARLIER REVISION DATES

REVISION DATES: 05/01/12 07/23/12 08/01/12 09/12/12

SHEET 10 OF 39

FILE => 20-0296-f-a04dt01.dgn

USERNAME => s114640 DATE PLOTTED => 28-MAR-2013 TIME PLOTTED => 19:21

DIST	COUNTY	ROUTE	POST MILES TOTAL PROJECT	SHEET No.	TOTAL SHEETS
04	Son	12	9.6	90	118

REGISTERED CIVIL ENGINEER 9-12-12 DATE

3-25-13
PLANS APPROVAL DATE

REGISTERED PROFESSIONAL ENGINEER SON THANH LY No. 72584 Exp. 6-30-14 CIVIL STATE OF CALIFORNIA

The State of California or its officers or agents shall not be responsible for the accuracy or completeness of electronic copies of this plan sheet.

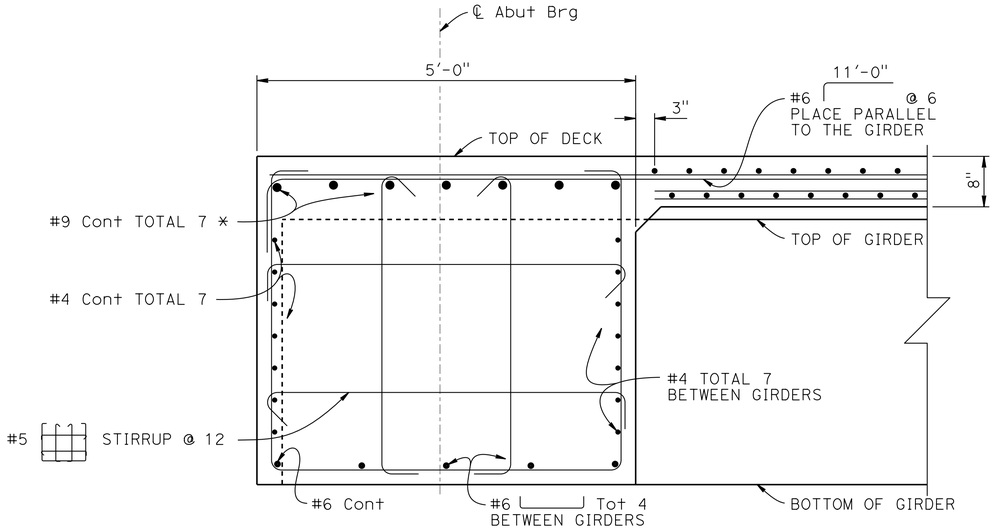

* Denotes reinforcement to be "ultimate" butt splice at construction joint

END DIAPHRAGM BETWEEN GIRDERS

1" = 1'-0"

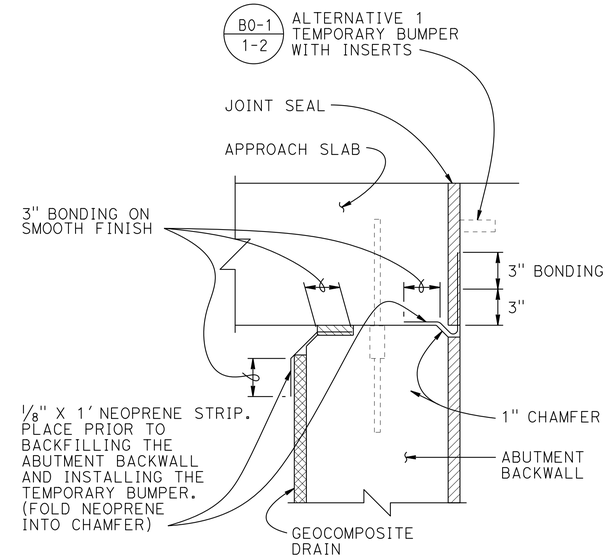

JOINT PROTECTION DETAIL

NO SCALE

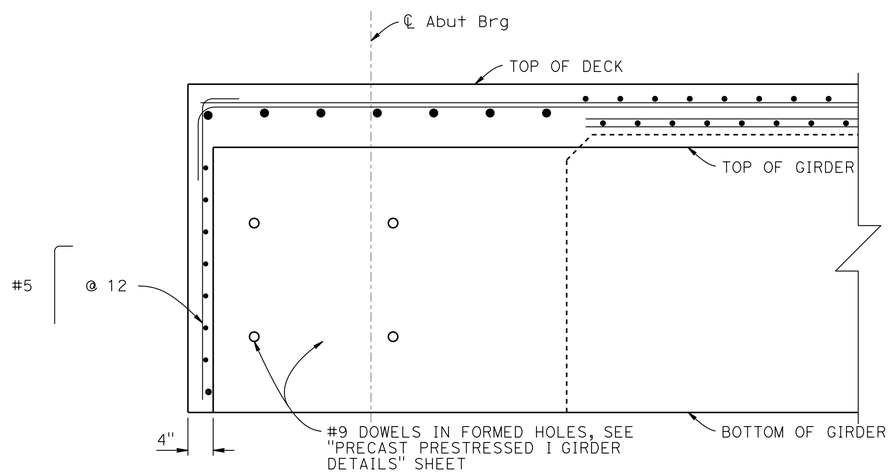

END DIAPHRAGM @ GIRDER END

1" = 1'-0"

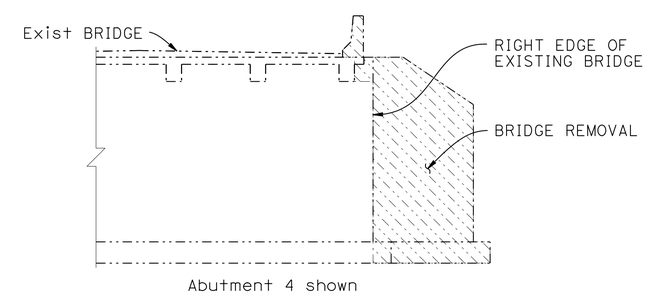

Abutment 4 shown

MAXIMUM LIMITS OF STAGE 1 REMOVAL

3/16" = 1'-0"

LEGEND:

-·-·-·- Indicates Existing Structure

▨ Indicates Limits of Bridge removal

NOTE:
THE CONTRACTOR SHALL VERIFY ALL CONTROLLING FIELD DIMENSIONS BEFORE ORDERING OR FABRICATING ANY MATERIAL

	BY	CHECKED
DESIGN	Maxime Dabilly	Son Ly
DETAILS	Franklin Maagma	Son Ly
QUANTITIES	Maxime Dabilly	Son Ly

STATE OF CALIFORNIA
DEPARTMENT OF TRANSPORTATION

DIVISION OF ENGINEERING SERVICES
STRUCTURE DESIGN
DESIGN BRANCH 16

BRIDGE NO. 20-0296
POST MILE 9.63

LAGUNA DE SANTA ROSA (REPLACE)
ABUTMENT DETAILS NO. 2

STRUCTURES DESIGN DETAIL SHEET (ENGLISH) (REV. 09-01-10)

ORIGINAL SCALE IN INCHES FOR REDUCED PLANS 0 1 2 3

UNIT: 3617
PROJECT NUMBER & PHASE: 04000004821
CONTRACT NO.: 04-1A2901

DISREGARD PRINTS BEARING EARLIER REVISION DATES

REVISION DATES 05/17/12 07/27/12 08/07/12 09/12/12

SHEET 11 OF 39

FILE => 20-0296-f-a04d102.dgn

USERNAME => s114926 DATE PLOTTED => 28-MAR-2013 TIME PLOTTED => 14:32

DIST	COUNTY	ROUTE	POST MILES TOTAL PROJECT	SHEET No.	TOTAL SHEETS
04	Son	12	9.6	91	118

REGISTERED CIVIL ENGINEER 9-12-12 DATE

3-25-13
PLANS APPROVAL DATE

REGISTERED PROFESSIONAL ENGINEER SON THANH LY No. 72584 Exp. 6-30-14 CIVIL STATE OF CALIFORNIA

The State of California or its officers or agents shall not be responsible for the accuracy or completeness of electronic copies of this plan sheet.

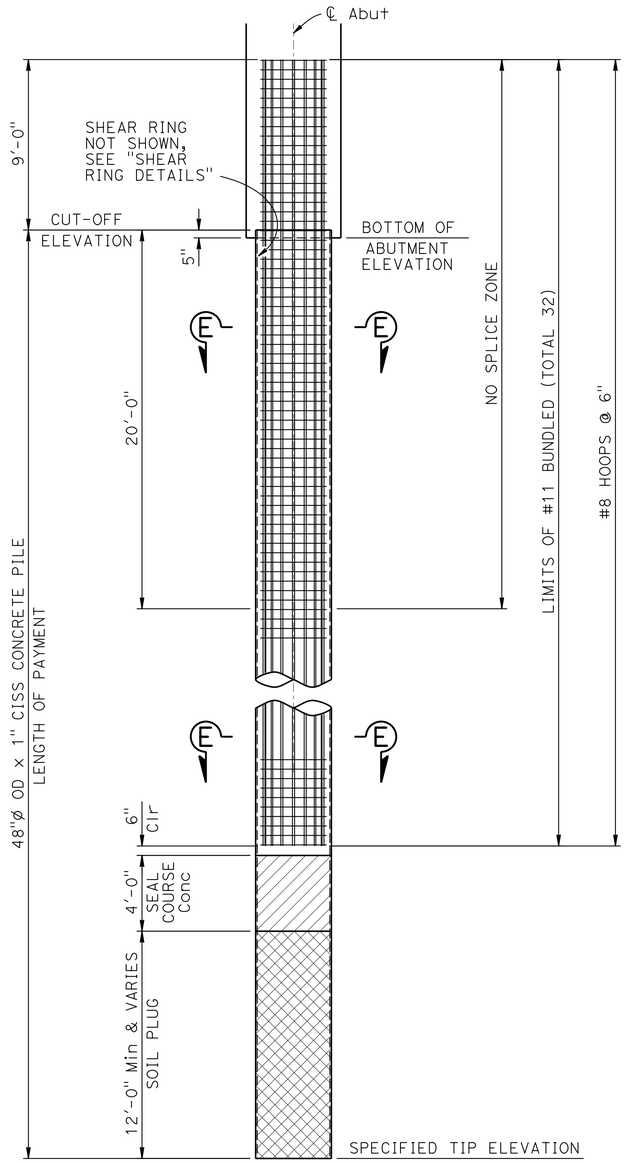

ELEVATION

1/4" = 1'-0"

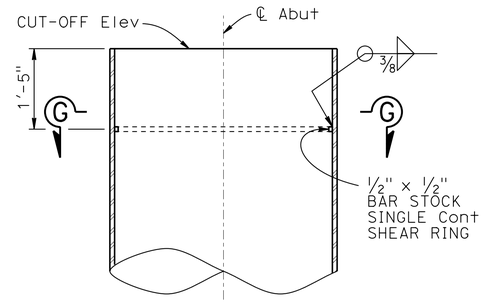

ELEVATION

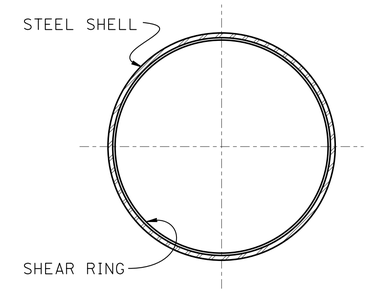

SECTION G-G

SHEAR RING DETAILS

3/4" = 1'-0"

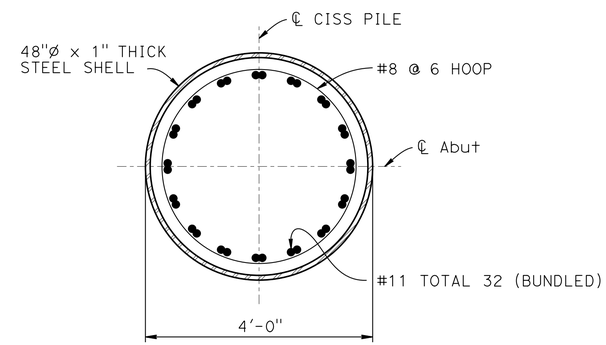

SECTION E-E

3/4" = 1'-0"

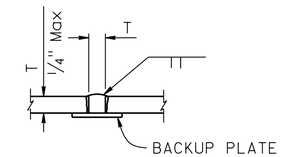

SQUARE GROOVE

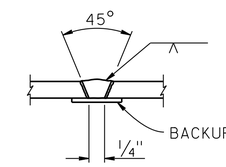

SINGLE VEE-GROOVE

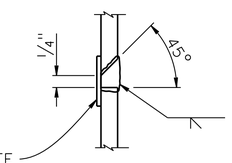

SINGLE BEVEL-GROOVE

PILE WELDING NOTES:
1. Single Vee-Groove and Square Groove permitted for all positions
2. Single Bevel-Groove permitted for horizontal joints only

PILE WELDING DETAIL-BUTT JOINTS

NO SCALE

NOTES:

1. For "PILE DATA TABLE", see "PILE DATA TABLES" sheet
2. Steel pipe pile (PP) shall be driven open ended. Pile tips shall be reinforced as required and approved by the Engineer
3. Structural steel for Pipe Piles (PP) shall conform to the Specifications
4. Minimum concrete strength for concrete plug: f'c = 4 ksi
5. The Contractor shall remove soil plug to the bottom elevation of the concrete plug, if required. If the top of the soil plug is below the lower elevation of the concrete plug as shown on the plans, the Contractor may fill the additional void in the steel pipe pile (PP) with concrete
6. All hoops shall be "ultimate" butt splice continuous

NOTE:
THE CONTRACTOR SHALL VERIFY ALL CONTROLLING FIELD DIMENSIONS BEFORE ORDERING OR FABRICATING ANY MATERIAL

	BY	CHECKED
DESIGN	Maxime Dabilly	Son Ly
DETAILS	Franklin Maagma	Son Ly
QUANTITIES	Maxime Dabilly	Son Ly

STATE OF CALIFORNIA
DEPARTMENT OF TRANSPORTATION

DIVISION OF ENGINEERING SERVICES
STRUCTURE DESIGN
DESIGN BRANCH 16

BRIDGE NO. 20-0296
POST MILE 9.63

LAGUNA DE SANTA ROSA (REPLACE)
ABUTMENT DETAILS NO. 3

STRUCTURES DESIGN DETAIL SHEET (ENGLISH) (REV. 09-01-10)

ORIGINAL SCALE IN INCHES FOR REDUCED PLANS 0 1 2 3

UNIT: 3617
PROJECT NUMBER & PHASE: 04000004821
CONTRACT NO.: 04-1A2901

DISREGARD PRINTS BEARING EARLIER REVISION DATES

REVISION DATES 05/14/12 07/13/12 08/07/12 09/12/12

SHEET 12 OF 39

FILE => 20-0296-f-a04dt03.dgn

USERNAME => s114926 DATE PLOTTED => 28-MAR-2013 TIME PLOTTED => 14:32

DIST	COUNTY	ROUTE	POST MILES TOTAL PROJECT	SHEET No.	TOTAL SHEETS
04	Son	12	9.6	92	118

REGISTERED CIVIL ENGINEER 9-12-12 DATE

3-25-13
PLANS APPROVAL DATE

REGISTERED PROFESSIONAL ENGINEER SON THANH LY No. 72584 Exp. 6-30-14 CIVIL STATE OF CALIFORNIA

The State of California or its officers or agents shall not be responsible for the accuracy or completeness of electronic copies of this plan sheet.

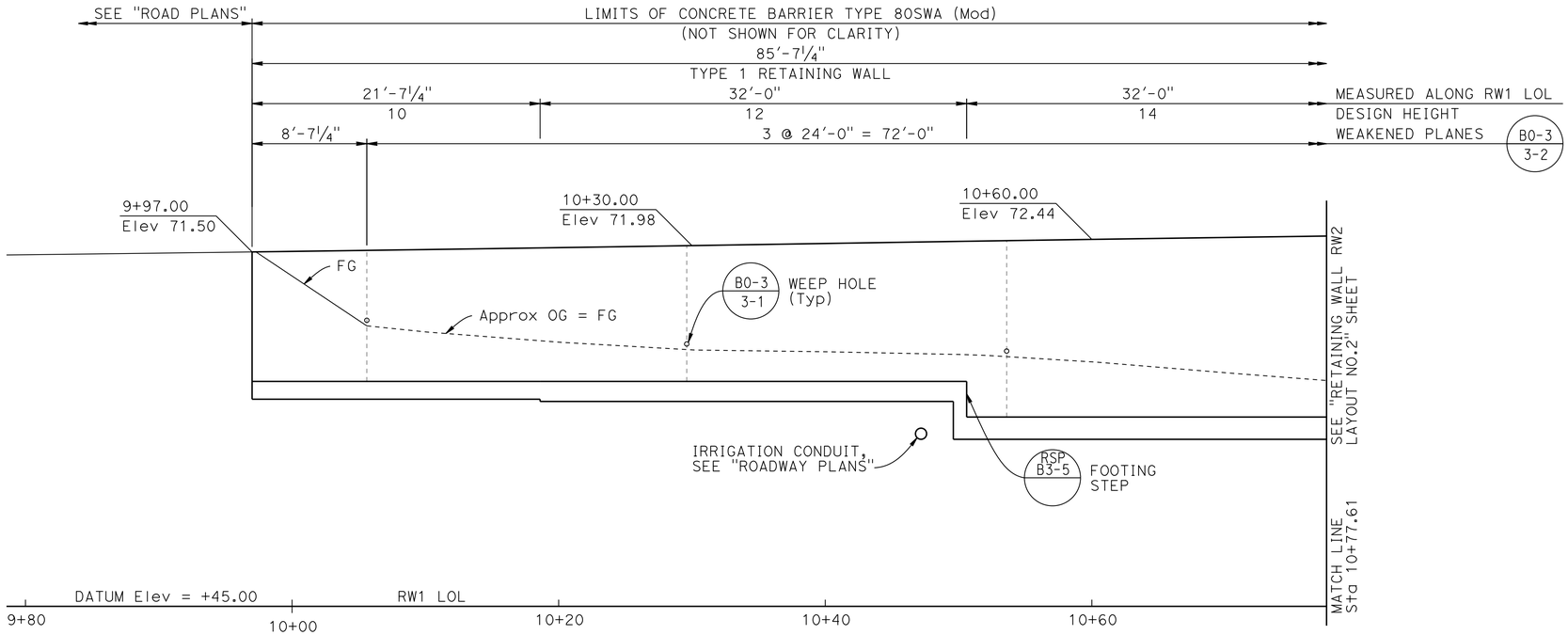

ELAVATION

3/16" = 1'-0"

NOTE:

1. Architectural Treatment not shown. For Architectural Treatment, see "ARCHITECTURAL TREATMENT NO.1", "ARCHITECTURAL TREATMENT NO.2" and "ARCHITECTURAL TREATMENT NO.3" sheets

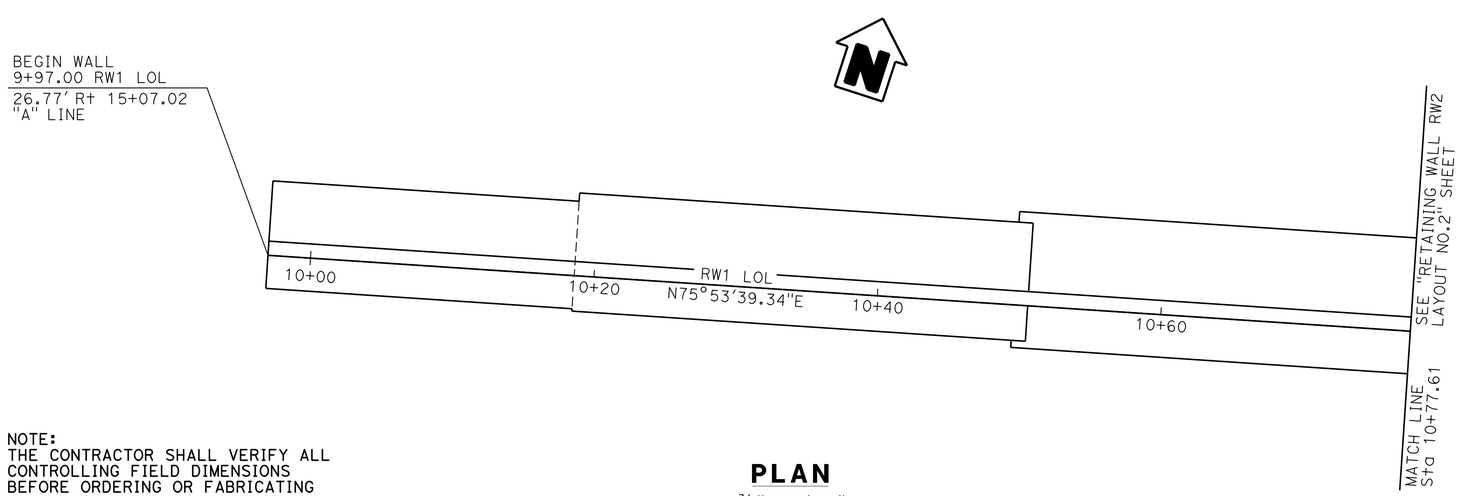

NOTE:
THE CONTRACTOR SHALL VERIFY ALL CONTROLLING FIELD DIMENSIONS BEFORE ORDERING OR FABRICATING ANY MATERIAL

PLAN

3/16" = 1'-0"

	BY	CHECKED
DESIGN	Maxime Dabilly	Son Ly
DETAILS	Franklin Maagma	Son Ly
QUANTITIES	Mastewal Bogale	Son Ly

STATE OF CALIFORNIA
DEPARTMENT OF TRANSPORTATION

DIVISION OF ENGINEERING SERVICES
STRUCTURE DESIGN
DESIGN BRANCH 16

BRIDGE NO. 20-0296
POST MILE 9.63

LAGUNA DE SANTA ROSA (REPLACE)
RETAINING WALL RW1 LAYOUT NO.1

STRUCTURES DESIGN DETAIL SHEET (ENGLISH) (REV. 09-01-10)

ORIGINAL SCALE IN INCHES FOR REDUCED PLANS 0 1 2 3

UNIT: 3617
PROJECT NUMBER & PHASE: 04000004821
CONTRACT NO.: 04-1A2901

DISREGARD PRINTS BEARING EARLIER REVISION DATES

REVISION DATES 05/24/12 07/24/12 08/24/12 09/12/12

SHEET 13 OF 39

FILE => 20-0296-g-rw1_lo01.dgn

USERNAME => s114926 DATE PLOTTED => 28-MAR-2013 TIME PLOTTED => 14:32

DIST	COUNTY	ROUTE	POST MILES TOTAL PROJECT	SHEET No.	TOTAL SHEETS
04	Son	12	9.6	93	118

REGISTERED CIVIL ENGINEER 9-12-12 DATE

3-25-13
PLANS APPROVAL DATE

REGISTERED PROFESSIONAL ENGINEER SON THANH LY No. 72584 Exp. 6-30-14 CIVIL STATE OF CALIFORNIA

The State of California or its officers or agents shall not be responsible for the accuracy or completeness of electronic copies of this plan sheet.

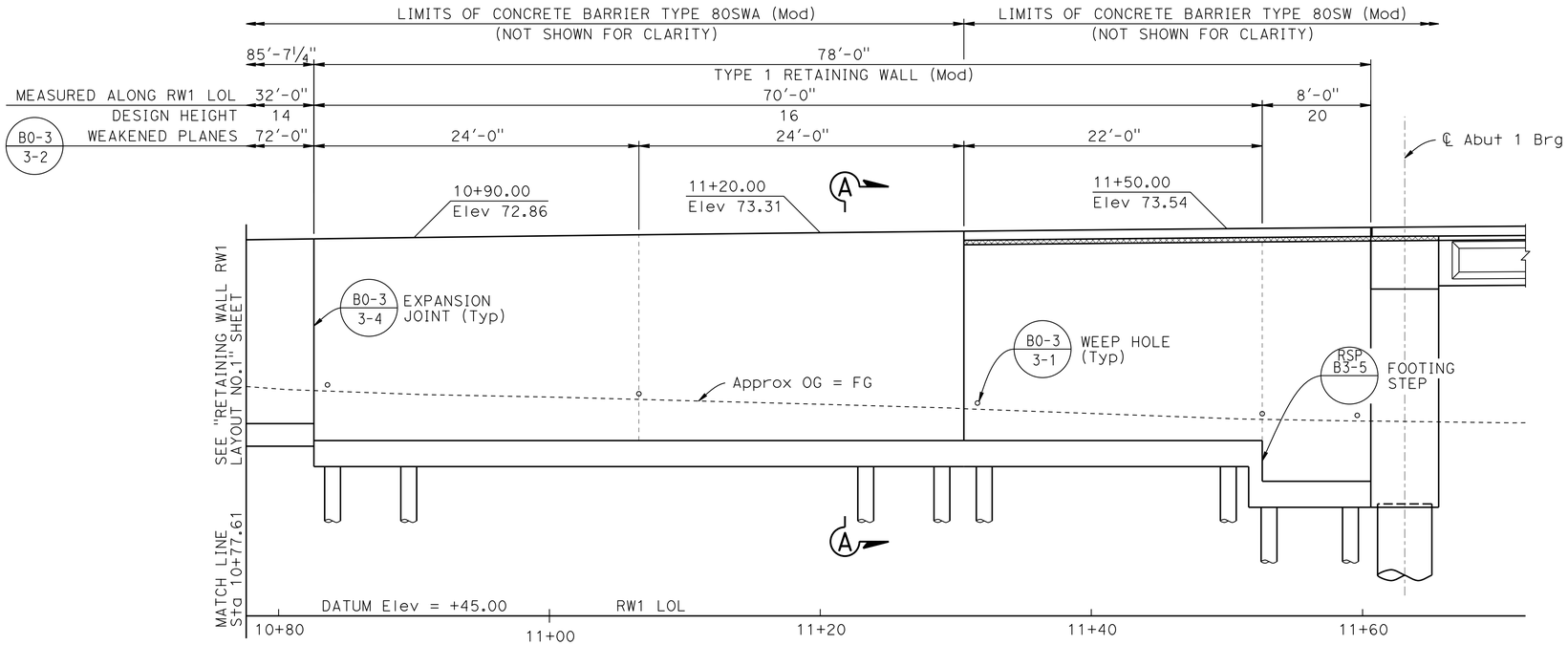

ELAVATION
3/16" = 1'-0"

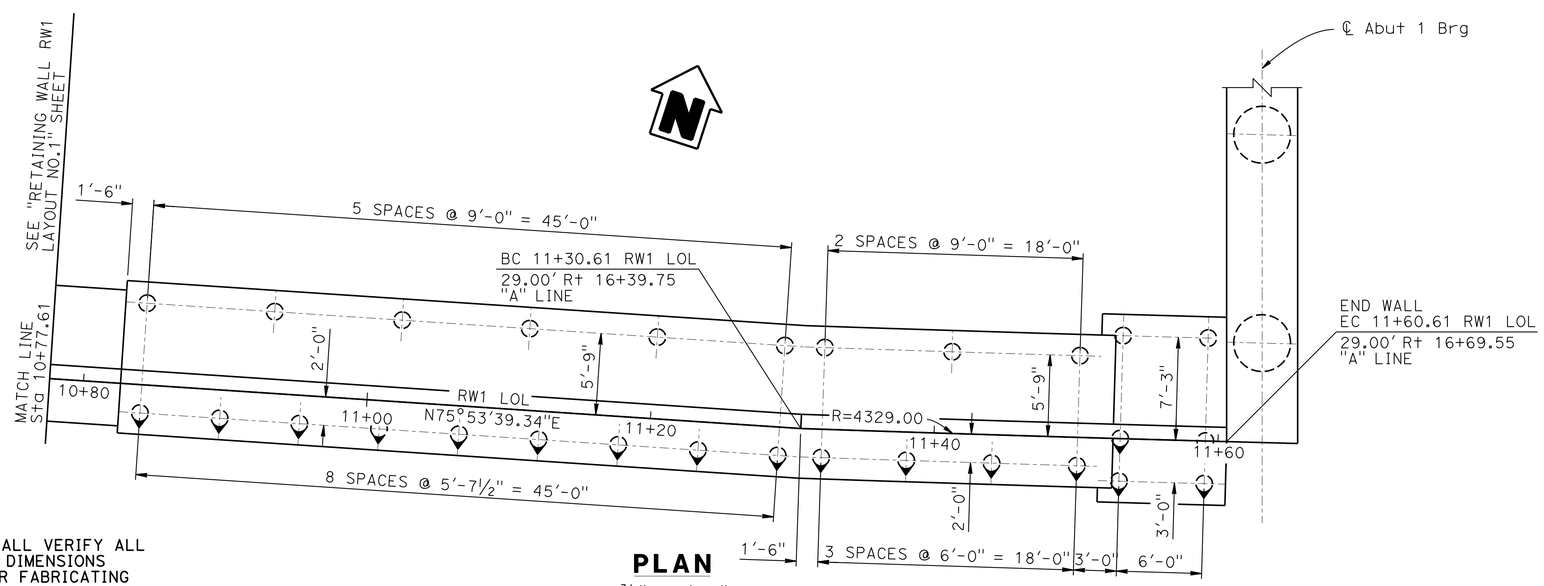

PLAN
3/16" = 1'-0"

NOTE:
THE CONTRACTOR SHALL VERIFY ALL CONTROLLING FIELD DIMENSIONS BEFORE ORDERING OR FABRICATING ANY MATERIAL

LEGEND:

Indicates vertical pile

Indicates 3:1 battered pile

NOTE:

1. Architectural Treatment not shown. For Architectural Treatment, see "ARCHITECTURAL TREATMENT NO.1", "ARCHITECTURAL TREATMENT NO.2" and "ARCHITECTURAL TREATMENT NO.3" sheets

	BY	CHECKED
DESIGN	Maxime Dabilly	Son Ly
DETAILS	Franklin Maagma	Son Ly
QUANTITIES	Mastewal Bogale	Son Ly

STATE OF CALIFORNIA
DEPARTMENT OF TRANSPORTATION

DIVISION OF ENGINEERING SERVICES
STRUCTURE DESIGN
DESIGN BRANCH 16

BRIDGE NO. 20-0296
POST MILE 9.63

LAGUNA DE SANTA ROSA (REPLACE)
RETAINING WALL RW1 LAYOUT NO.2

STRUCTURES DESIGN DETAIL SHEET (ENGLISH) (REV. 09-01-10)

ORIGINAL SCALE IN INCHES FOR REDUCED PLANS 0 1 2 3

UNIT: 3617
PROJECT NUMBER & PHASE: 04000004821
CONTRACT NO.: 04-1A2901

DISREGARD PRINTS BEARING EARLIER REVISION DATES

REVISION DATES 05/24/12 07/23/12 08/07/12 09/12/12

SHEET 14 OF 39

FILE => 20-0296-g-rw1_lo02.dgn

USERNAME => s174926 DATE PLOTTED => 28-MAR-2013 TIME PLOTTED => 14:32

DIST	COUNTY	ROUTE	POST MILES TOTAL PROJECT	SHEET No.	TOTAL SHEETS
04	Son	12	9.6	94	118

REGISTERED CIVIL ENGINEER 9-12-12 DATE

3-25-13
PLANS APPROVAL DATE

REGISTERED PROFESSIONAL ENGINEER SON THANH LY No. 72584 Exp. 6-30-14 CIVIL STATE OF CALIFORNIA

The State of California or its officers or agents shall not be responsible for the accuracy or completeness of electronic copies of this plan sheet.

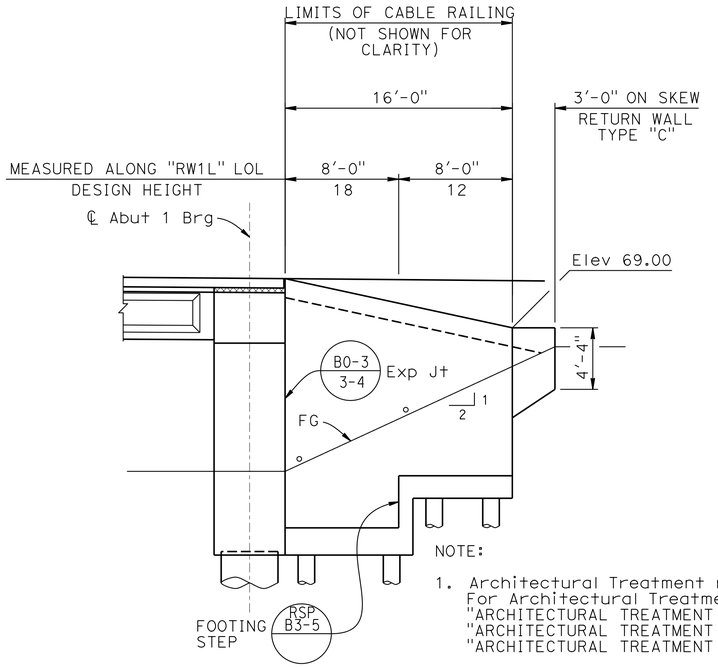

NOTE:

1. Architectural Treatment not shown. For Architectural Treatment, see "ARCHITECTURAL TREATMENT NO.1", "ARCHITECTURAL TREATMENT NO.2" and "ARCHITECTURAL TREATMENT NO.3" sheets

DEVELOPED ELEVATION

3/16" = 1'-0"

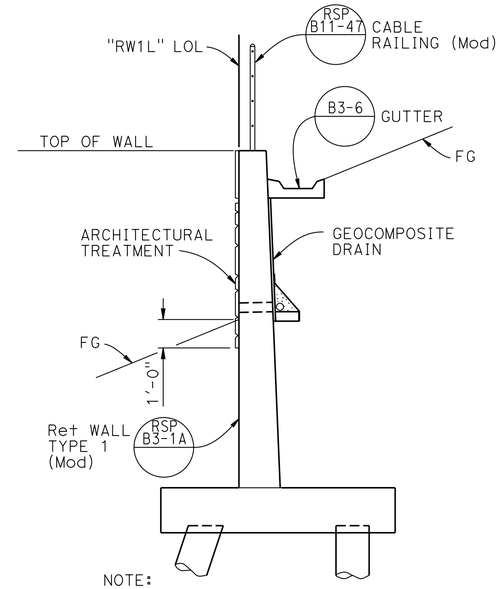

NOTE:

For "PILE FOOTING SECTION", see "RETAINING WALL DETAILS" sheets

RW1L TYPICAL SECTION

3/8" = 1'-0"

LEGEND:

Indicates vertical pile

Indicates 3:1 battered pile

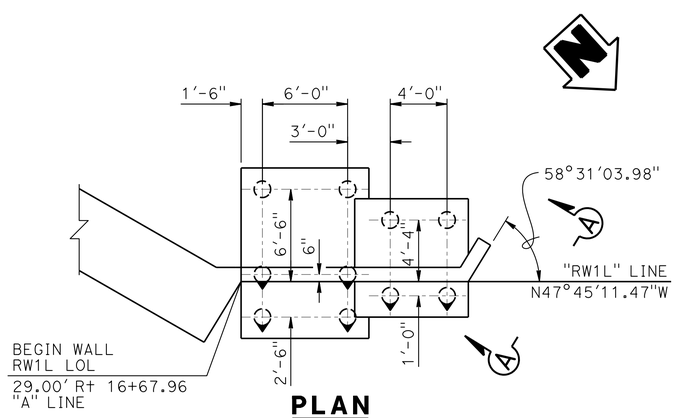

PLAN

3/16" = 1'-0"

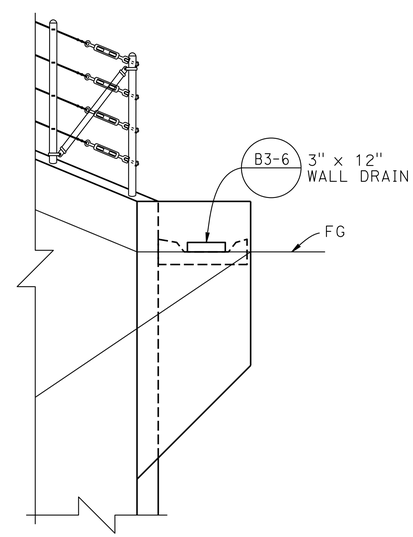

ELEVATION A-A

1/2" = 1'-0"

NOTE:
THE CONTRACTOR SHALL VERIFY ALL CONTROLLING FIELD DIMENSIONS BEFORE ORDERING OR FABRICATING ANY MATERIAL

	BY	CHECKED
DESIGN	Maxime Dabilly	Son Ly
DETAILS	Franklin Maagma	Son Ly
QUANTITIES	Mastewal Bogale	Son Ly

STATE OF CALIFORNIA
DEPARTMENT OF TRANSPORTATION

DIVISION OF ENGINEERING SERVICES
STRUCTURE DESIGN
DESIGN BRANCH 16

BRIDGE NO. 20-0296
POST MILE 9.63

LAGUNA DE SANTA ROSA (REPLACE)
RETAINING WALL RW1L LAYOUT

STRUCTURES DESIGN DETAIL SHEET (ENGLISH) (REV. 09-01-10)

ORIGINAL SCALE IN INCHES FOR REDUCED PLANS 0 1 2 3

UNIT: 3617
PROJECT NUMBER & PHASE: 04000004821
CONTRACT NO.: 04-1A2901

DISREGARD PRINTS BEARING EARLIER REVISION DATES

REVISION DATES 05/17/12 07/17/12 08/07/12 09/12/12

SHEET 15 OF 39

FILE => 20-0296-g-rw1l_to01.dgn

USERNAME => s114926 DATE PLOTTED => 28-MAR-2013 TIME PLOTTED => 14:32

DIST	COUNTY	ROUTE	POST MILES TOTAL PROJECT	SHEET No.	TOTAL SHEETS
04	Son	12	9.6	95	118

REGISTERED CIVIL ENGINEER 9-12-12 DATE

3-25-13
PLANS APPROVAL DATE

REGISTERED PROFESSIONAL ENGINEER SON THANH LY No. 72584 Exp. 6-30-14 CIVIL STATE OF CALIFORNIA

The State of California or its officers or agents shall not be responsible for the accuracy or completeness of electronic copies of this plan sheet.

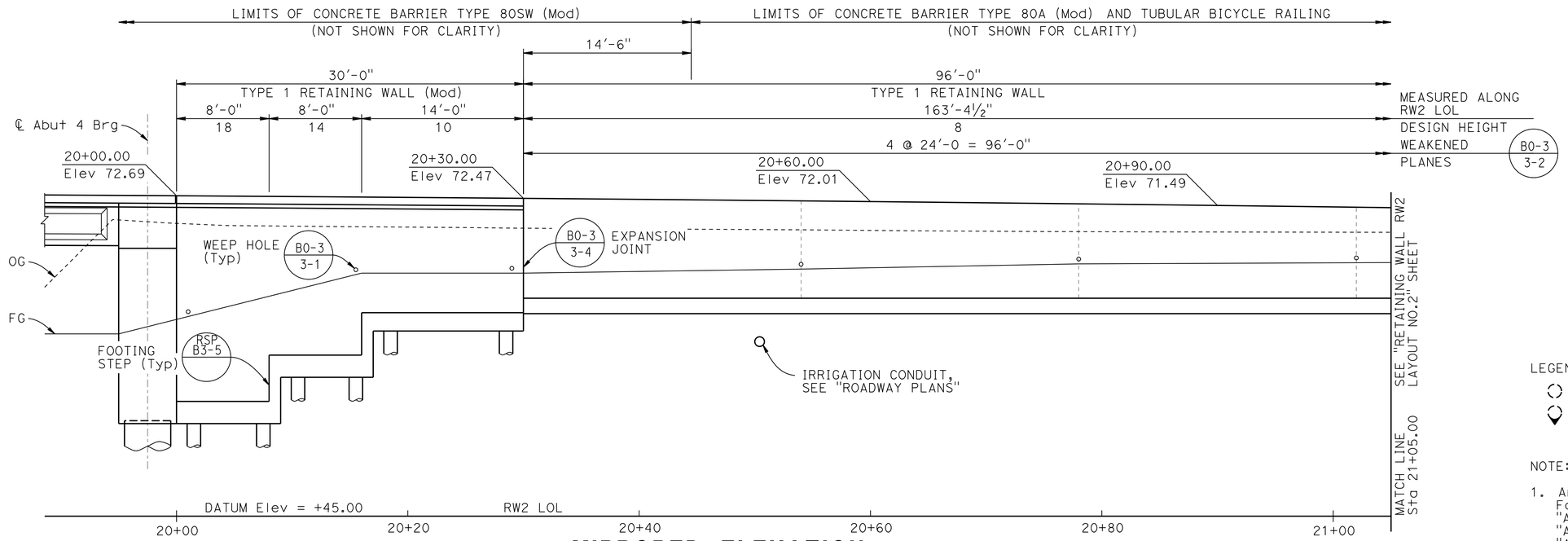

MIRRORED ELEVATION

3/16" = 1'-0"

LEGEND:

Indicates vertical pile

Indicates 3:1 battered pile

NOTE:

1. Architectural Treatment not shown. For Architectural Treatment, see "ARCHITECTURAL TREATMENT NO.1", "ARCHITECTURAL TREATMENT NO.2" and "ARCHITECTURAL TREATMENT NO.3" sheets

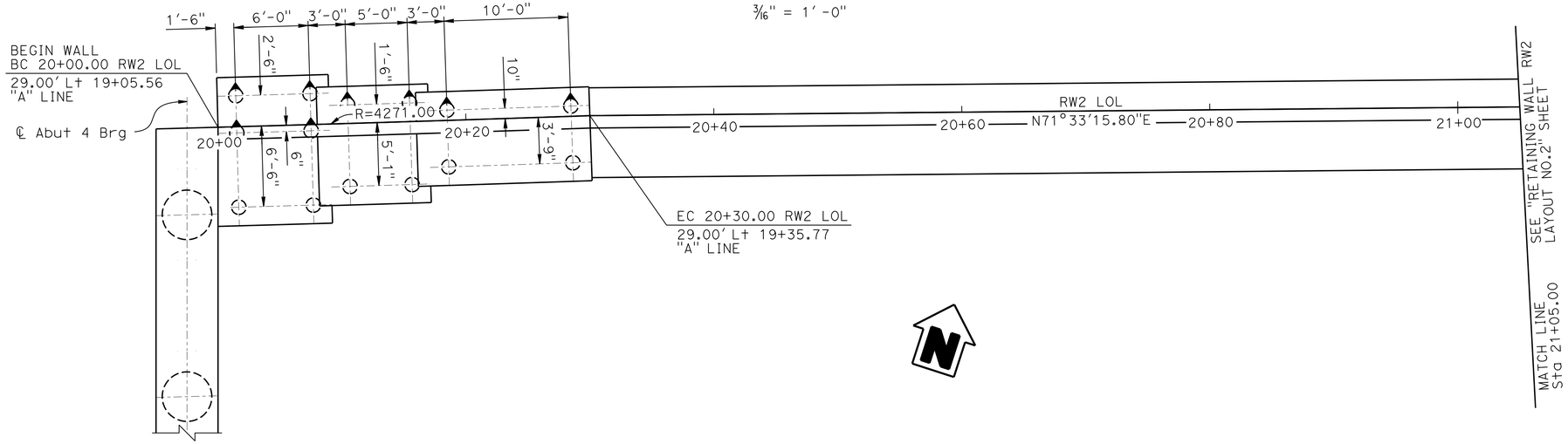

NOTE:
THE CONTRACTOR SHALL VERIFY ALL CONTROLLING FIELD DIMENSIONS BEFORE ORDERING OR FABRICATING ANY MATERIAL

PLAN

3/16" = 1'-0"

	BY	CHECKED
DESIGN	Maxime Dabilly	Son Ly
DETAILS	Franklin Maagma	Son Ly
QUANTITIES	Mastewal Bogale	Son Ly

STATE OF CALIFORNIA
DEPARTMENT OF TRANSPORTATION

DIVISION OF ENGINEERING SERVICES
STRUCTURE DESIGN
DESIGN BRANCH 16

BRIDGE NO. 20-0296
POST MILE 9.63

LAGUNA DE SANTA ROSA (REPLACE)
RETAINING WALL RW2 LAYOUT NO.1

STRUCTURES DESIGN DETAIL SHEET (ENGLISH) (REV. 09-01-10)

ORIGINAL SCALE IN INCHES FOR REDUCED PLANS 0 1 2 3

UNIT: 3617
PROJECT NUMBER & PHASE: 04000004821
CONTRACT NO.: 04-1A2901

DISREGARD PRINTS BEARING EARLIER REVISION DATES

REVISION DATES 05/24/12 07/23/12 08/07/12 09/12/12

SHEET 16 OF 39

FILE => 20-0296-g-rw2_lo01.dgn

USERNAME => s135318 DATE PLOTTED => 28-MAR-2013 TIME PLOTTED => 14:38

DIST	COUNTY	ROUTE	POST MILES TOTAL PROJECT	SHEET No.	TOTAL SHEETS
04	Son	12	9.6	96	118

REGISTERED CIVIL ENGINEER 9-12-12 DATE

3-25-13
PLANS APPROVAL DATE

REGISTERED PROFESSIONAL ENGINEER SON THANH LY No. 72584 Exp. 6-30-14 CIVIL STATE OF CALIFORNIA

The State of California or its officers or agents shall not be responsible for the accuracy or completeness of electronic copies of this plan sheet.

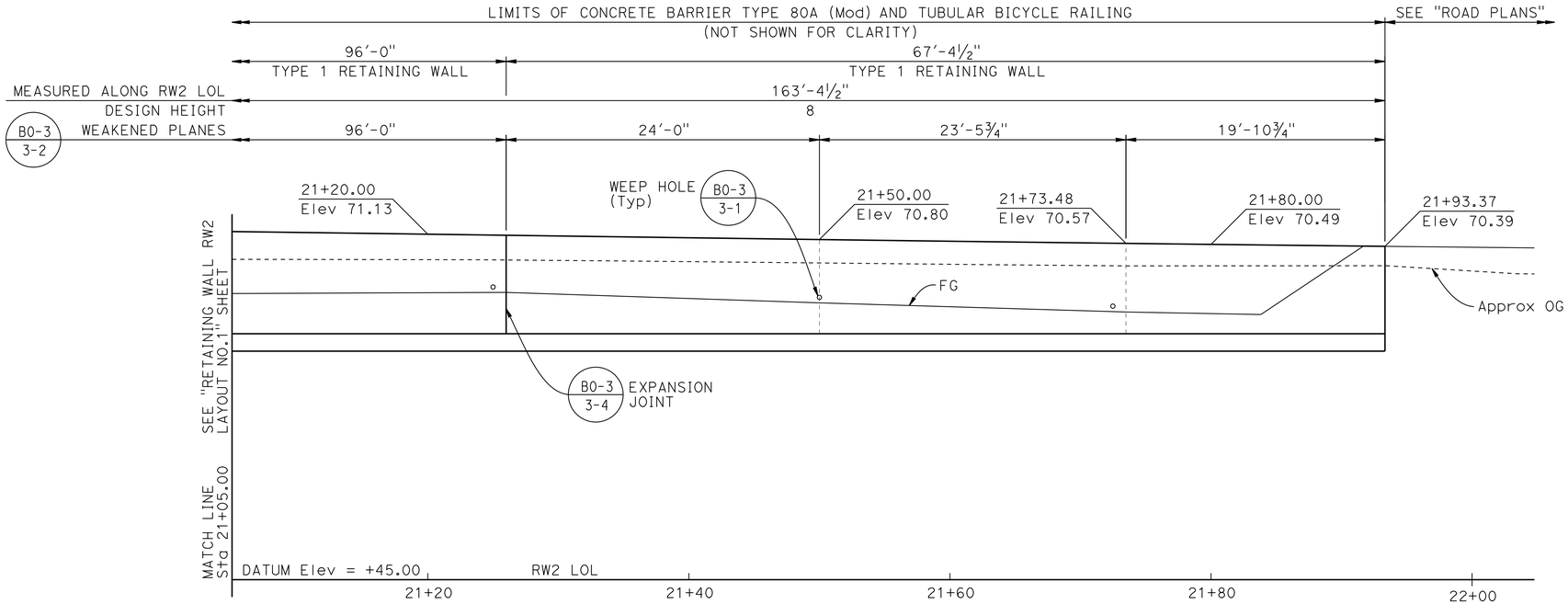

MIRRORED ELEVATION

3/16" = 1'-0"

NOTE:

1. Architectural Treatment not shown. For Architectural Treatment, see "ARCHITECTURAL TREATMENT NO.1", "ARCHITECTURAL TREATMENT NO.2" and "ARCHITECTURAL TREATMENT NO.3" sheets

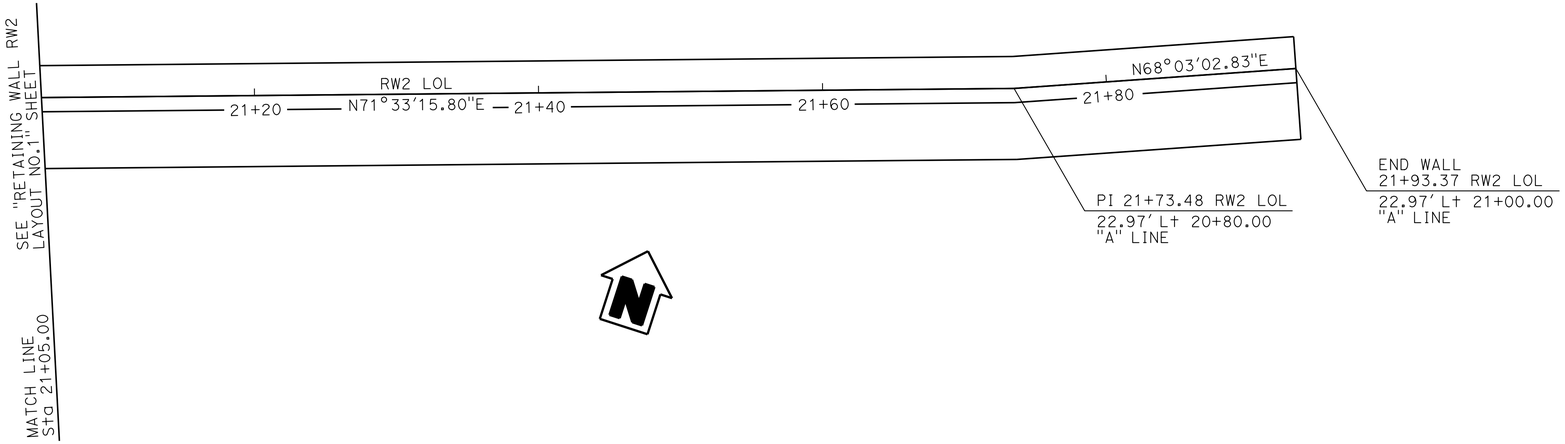

NOTE:
THE CONTRACTOR SHALL VERIFY ALL CONTROLLING FIELD DIMENSIONS BEFORE ORDERING OR FABRICATING ANY MATERIAL

PLAN

3/16" = 1'-0"

	BY	CHECKED
DESIGN	Maxime Dabilly	Son Ly
DETAILS	Franklin Maagma	Son Ly
QUANTITIES	Mastewal Bogale	Son Ly

STATE OF CALIFORNIA
DEPARTMENT OF TRANSPORTATION

DIVISION OF ENGINEERING SERVICES
STRUCTURE DESIGN
DESIGN BRANCH 16

BRIDGE NO. 20-0296
POST MILE 9.63

LAGUNA DE SANTA ROSA (REPLACE)
RETAINING WALL RW2 LAYOUT NO.2

STRUCTURES DESIGN DETAIL SHEET (ENGLISH) (REV. 09-01-10)

ORIGINAL SCALE IN INCHES FOR REDUCED PLANS 0 1 2 3

UNIT: 3617
PROJECT NUMBER & PHASE: 04000004821
CONTRACT NO.: 04-1A2901

DISREGARD PRINTS BEARING EARLIER REVISION DATES

REVISION DATES: 05/14/12 07/23/12 08/07/12 09/12/12

SHEET 17 OF 39

FILE => 20-0296-g-rw2_lo02.dgn

USERNAME => s135318 DATE PLOTTED => 28-MAR-2013 TIME PLOTTED => 14:38

DIST	COUNTY	ROUTE	POST MILES TOTAL PROJECT	SHEET No.	TOTAL SHEETS
04	Son	12	9.6	97	118

REGISTERED CIVIL ENGINEER 9-12-12 DATE

3-25-13
PLANS APPROVAL DATE

REGISTERED PROFESSIONAL ENGINEER SON THANH LY No. 72584 Exp. 6-30-14 CIVIL STATE OF CALIFORNIA

The State of California or its officers or agents shall not be responsible for the accuracy or completeness of electronic copies of this plan sheet.

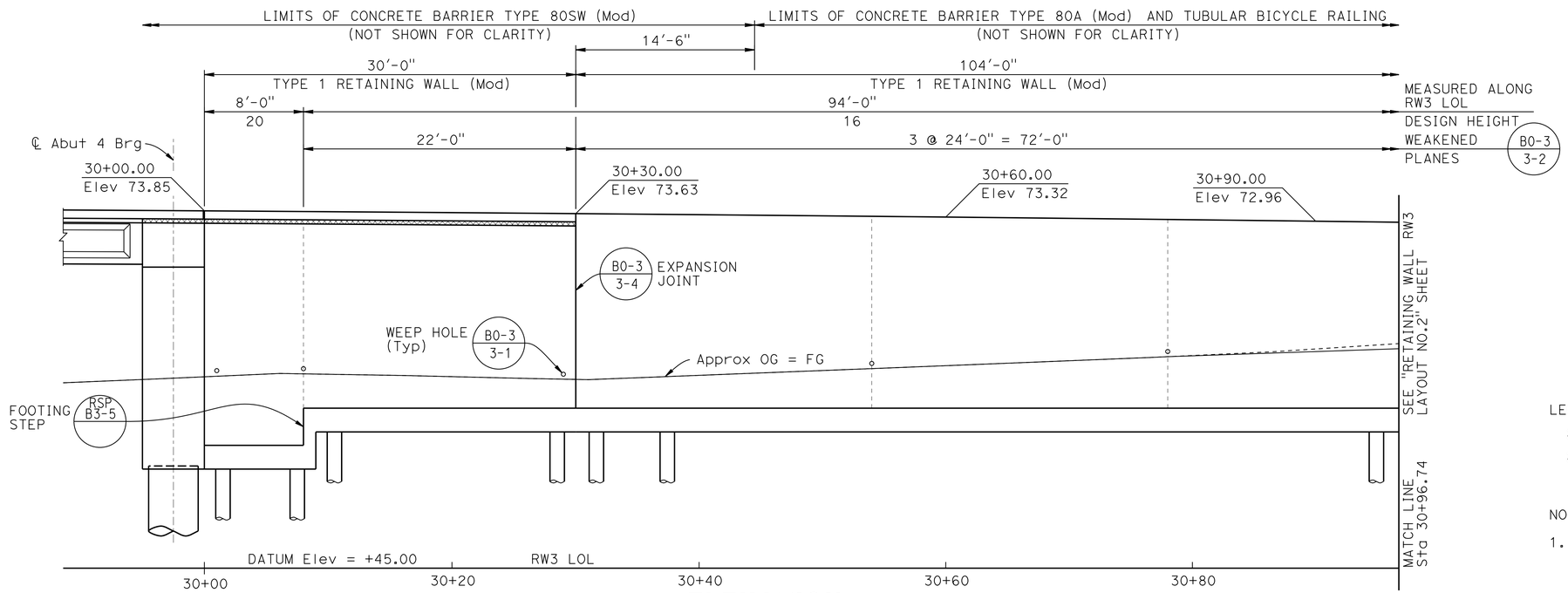

ELEVATION

3/16" = 1'-0"

LEGEND:

- Indicates vertical pile
- Indicates 3:1 battered pile

NOTE:

1. Architectural Treatment not shown. For Architectural Treatment, see "ARCHITECTURAL TREATMENT NO.1", "ARCHITECTURAL TREATMENT NO.2" and "ARCHITECTURAL TREATMENT NO.3" sheets

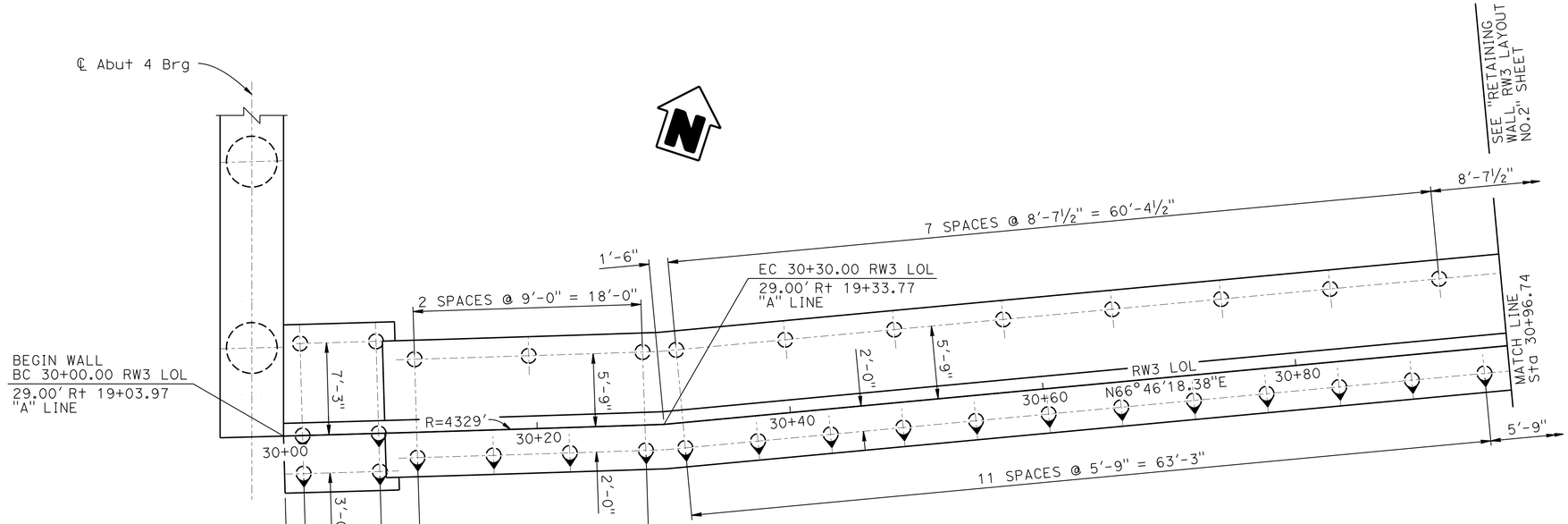

NOTE:
THE CONTRACTOR SHALL VERIFY ALL CONTROLLING FIELD DIMENSIONS BEFORE ORDERING OR FABRICATING ANY MATERIAL

PLAN

3/16" = 1'-0"

	BY	CHECKED
DESIGN	Maxime Dabilly	Son Ly
DETAILS	Franklin Maagma	Son Ly
QUANTITIES	Mastewal Bogale	Son Ly

STATE OF CALIFORNIA
DEPARTMENT OF TRANSPORTATION

DIVISION OF ENGINEERING SERVICES
STRUCTURE DESIGN
DESIGN BRANCH 16

BRIDGE NO. 20-0296
POST MILE 9.63

LAGUNA DE SANTA ROSA (REPLACE)
RETAINING WALL RW3 LAYOUT NO.1

STRUCTURES DESIGN DETAIL SHEET (ENGLISH) (REV. 09-01-10)

ORIGINAL SCALE IN INCHES FOR REDUCED PLANS 0 1 2 3

UNIT: 3617
PROJECT NUMBER & PHASE: 04000004821
CONTRACT NO.: 04-1A2901

DISREGARD PRINTS BEARING EARLIER REVISION DATES

REVISION DATES 05/24/12 07/23/12 08/07/12 09/12/12

SHEET 18 OF 39

FILE => 20-0296-g-rw3_lo01.dgn

USERNAME => s135318 DATE PLOTTED => 28-MAR-2013 TIME PLOTTED => 14:38

DIST	COUNTY	ROUTE	POST MILES TOTAL PROJECT	SHEET No.	TOTAL SHEETS
04	Son	12	9.6	98	118

REGISTERED CIVIL ENGINEER 9-12-12 DATE

3-25-13
PLANS APPROVAL DATE

REGISTERED PROFESSIONAL ENGINEER SON THANH LY No. 72584 Exp. 6-30-14 CIVIL STATE OF CALIFORNIA

The State of California or its officers or agents shall not be responsible for the accuracy or completeness of electronic copies of this plan sheet.

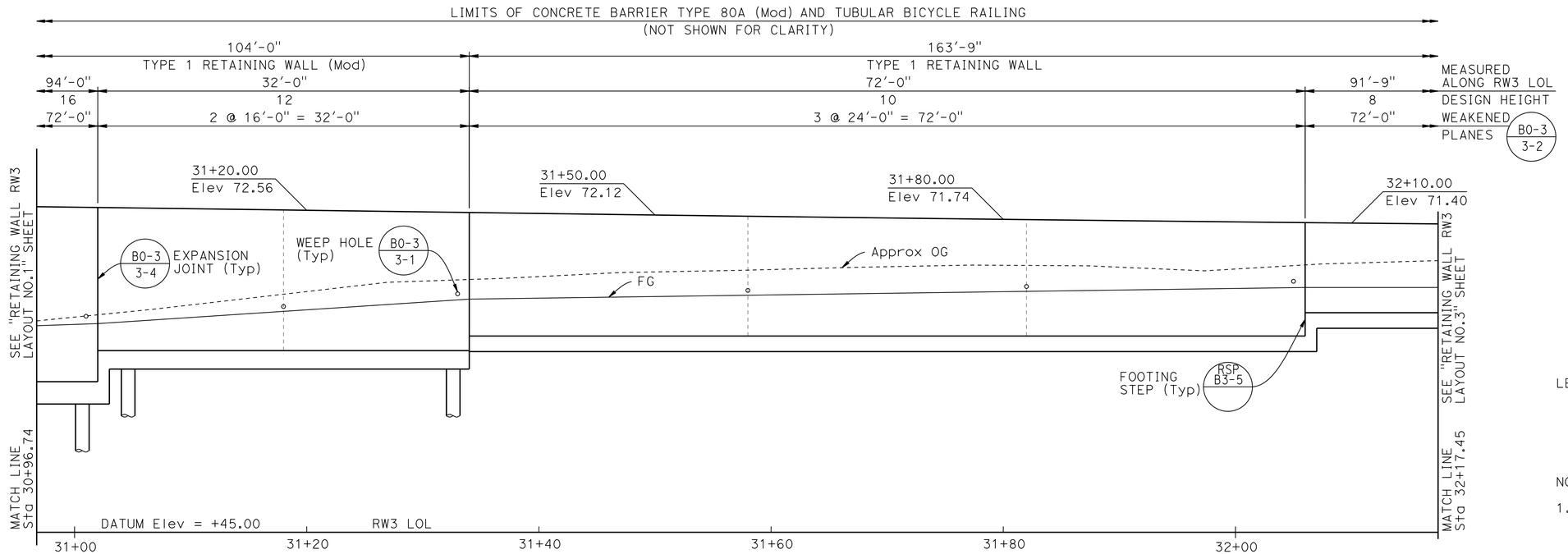

ELEVATION

3/16" = 1'-0"

LEGEND:

Indicates vertical pile

Indicates 3:1 battered pile

NOTE:

1. Architectural Treatment not shown. For Architectural Treatment, see "ARCHITECTURAL TREATMENT NO.1", "ARCHITECTURAL TREATMENT NO.2" and "ARCHITECTURAL TREATMENT NO.3" sheets

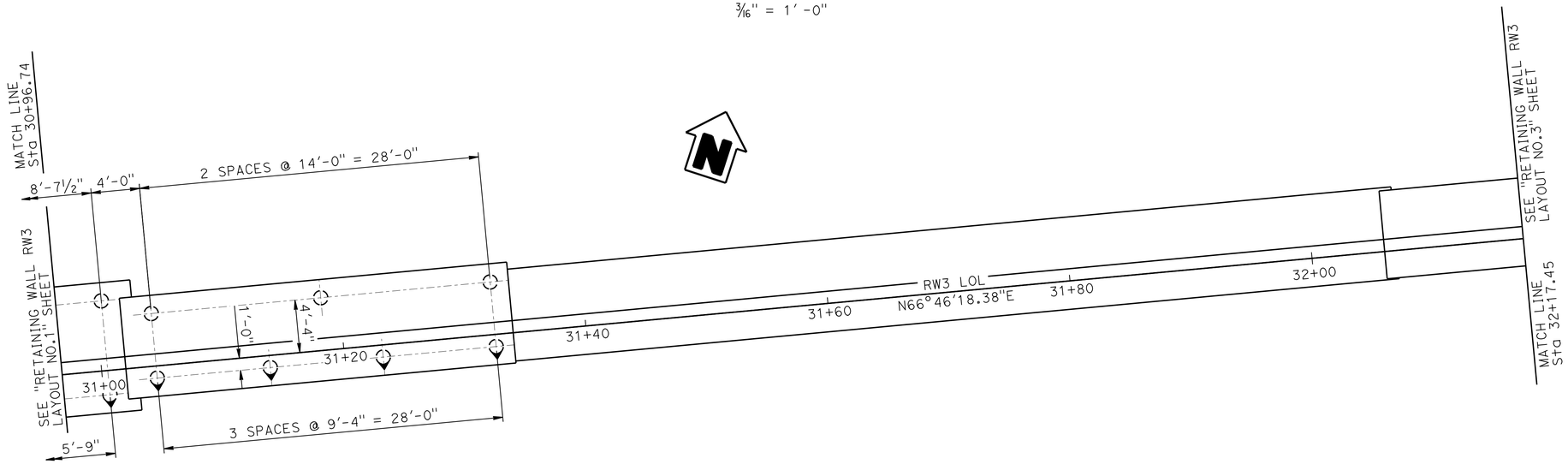

NOTE:
THE CONTRACTOR SHALL VERIFY ALL CONTROLLING FIELD DIMENSIONS BEFORE ORDERING OR FABRICATING ANY MATERIAL

PLAN

3/16" = 1'-0"

	BY	CHECKED
DESIGN	Maxime Dabilly	Son Ly
DETAILS	Franklin Maagma	Son Ly
QUANTITIES	Mastewal Bogale	Son Ly

STATE OF CALIFORNIA
DEPARTMENT OF TRANSPORTATION

DIVISION OF ENGINEERING SERVICES
STRUCTURE DESIGN
DESIGN BRANCH 16

BRIDGE NO. 20-0296
POST MILE 9.63

LAGUNA DE SANTA ROSA (REPLACE)
RETAINING WALL RW3 LAYOUT NO.2

STRUCTURES DESIGN DETAIL SHEET (ENGLISH) (REV. 09-01-10)

ORIGINAL SCALE IN INCHES FOR REDUCED PLANS 0 1 2 3

UNIT: 3617
PROJECT NUMBER & PHASE: 04000004821
CONTRACT NO.: 04-1A2901

DISREGARD PRINTS BEARING EARLIER REVISION DATES

REVISION DATES 05/17/12 07/17/12 08/07/12 09/12/12

SHEET 19 OF 39

FILE => 20-0296-g-rw3_lo02.dgn

USERNAME => s135318 DATE PLOTTED => 28-MAR-2013 TIME PLOTTED => 14:38

DIST	COUNTY	ROUTE	POST MILES TOTAL PROJECT	SHEET No.	TOTAL SHEETS
04	Son	12	9.6	99	118

REGISTERED CIVIL ENGINEER 9-12-12 DATE

3-25-13
PLANS APPROVAL DATE

REGISTERED PROFESSIONAL ENGINEER
SON THANH LY
No. 72584
Exp. 6-30-14
CIVIL
STATE OF CALIFORNIA

The State of California or its officers or agents shall not be responsible for the accuracy or completeness of electronic copies of this plan sheet.

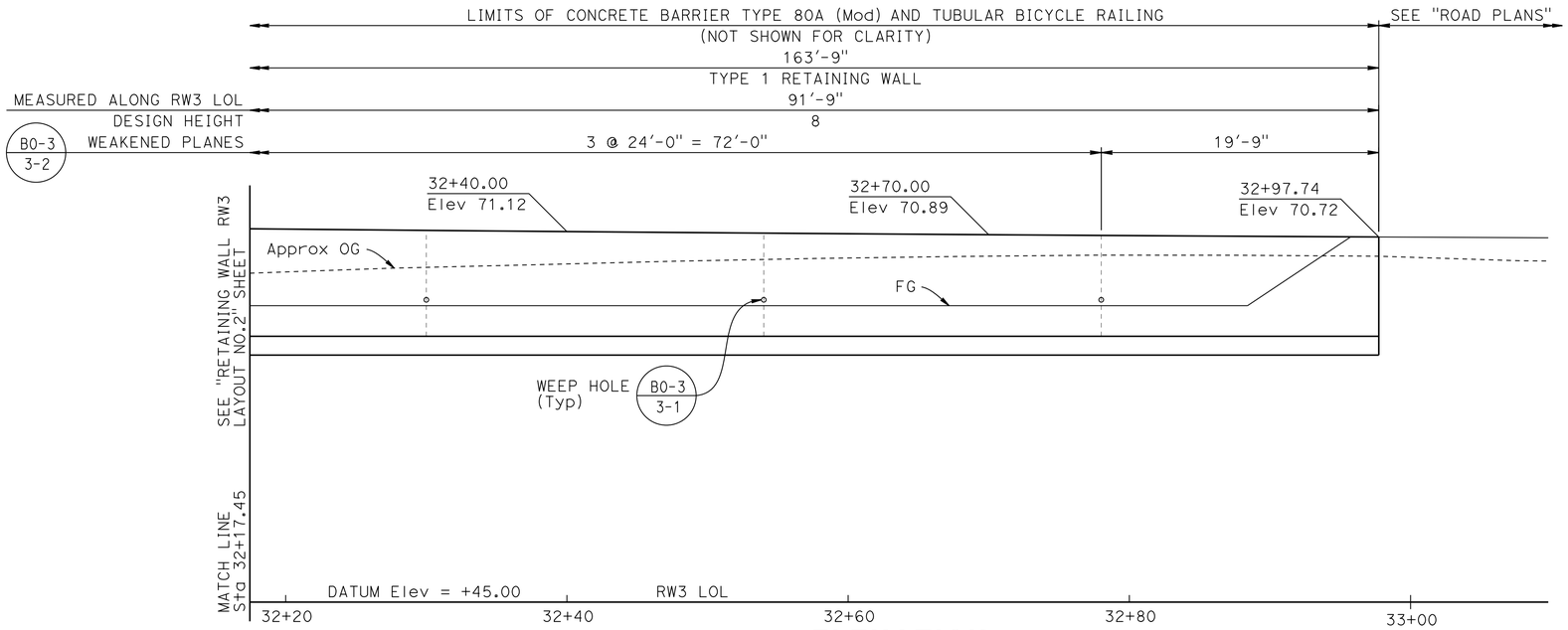

ELEVATION

3/16" = 1'-0"

NOTE:

1. Architectural Treatment not shown. For Architectural Treatment, see "ARCHITECTURAL TREATMENT NO.1", "ARCHITECTURAL TREATMENT NO.2" and "ARCHITECTURAL TREATMENT NO.3" sheets

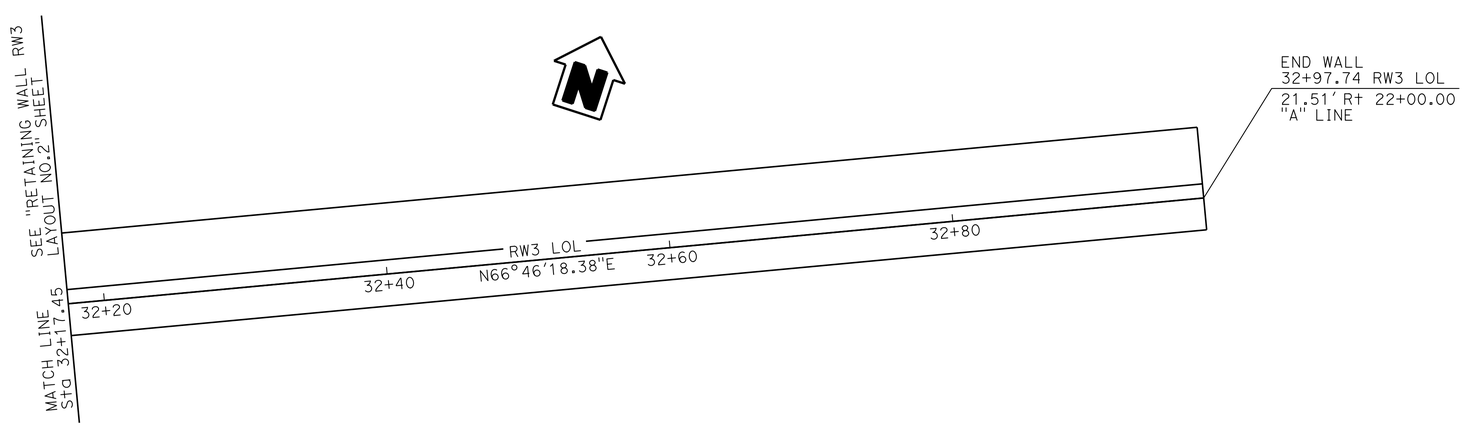

NOTE:
THE CONTRACTOR SHALL VERIFY ALL CONTROLLING FIELD DIMENSIONS BEFORE ORDERING OR FABRICATING ANY MATERIAL

PLAN

3/16" = 1'-0"

	BY	CHECKED
DESIGN	Maxime Dabilly	Son Ly
DETAILS	Franklin Maagma	Son Ly
QUANTITIES	Mastewal Bogale	Son Ly

STATE OF CALIFORNIA
DEPARTMENT OF TRANSPORTATION

DIVISION OF ENGINEERING SERVICES
STRUCTURE DESIGN
DESIGN BRANCH 16

BRIDGE NO. 20-0296
POST MILE 9.63

LAGUNA DE SANTA ROSA (REPLACE)
RETAINING WALL RW3 LAYOUT NO.3

STRUCTURES DESIGN DETAIL SHEET (ENGLISH) (REV. 09-01-10)

ORIGINAL SCALE IN INCHES FOR REDUCED PLANS 0 1 2 3

UNIT: 3617
PROJECT NUMBER & PHASE: 04000004821
CONTRACT NO.: 04-1A2901

DISREGARD PRINTS BEARING EARLIER REVISION DATES

REVISION DATES 05/17/12 07/17/12 08/17/12 09/12/12

SHEET 20 OF 39

FILE => 20-0296-g-rw3_lo03.dgn

USERNAME => s135318 DATE PLOTTED => 28-MAR-2013 TIME PLOTTED => 14:38

DIST	COUNTY	ROUTE	POST MILES TOTAL PROJECT	SHEET No.	TOTAL SHEETS
04	Son	12	9.6	100	118

REGISTERED CIVIL ENGINEER 9-12-12 DATE

3-25-13
PLANS APPROVAL DATE

REGISTERED PROFESSIONAL ENGINEER SON THANH LY No. 72584 Exp. 6-30-14 CIVIL STATE OF CALIFORNIA

The State of California or its officers or agents shall not be responsible for the accuracy or completeness of electronic copies of this plan sheet.

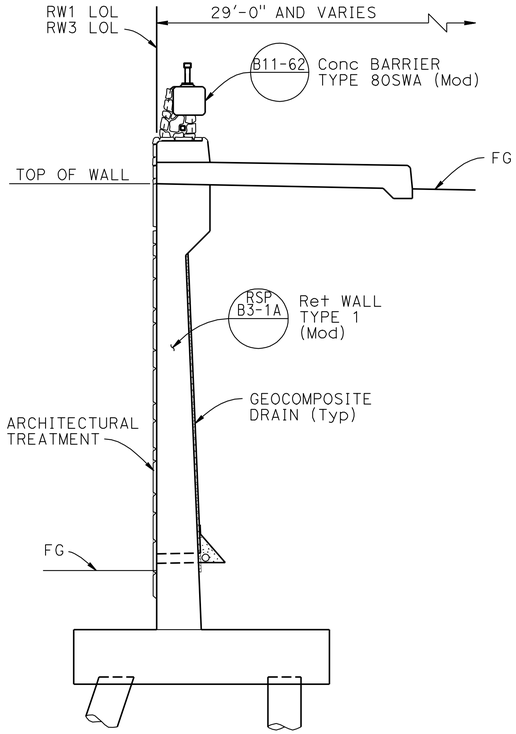

* Type 80A similar

TYPE 80SWA TYPICAL SECTION

3/8" = 1'-0"

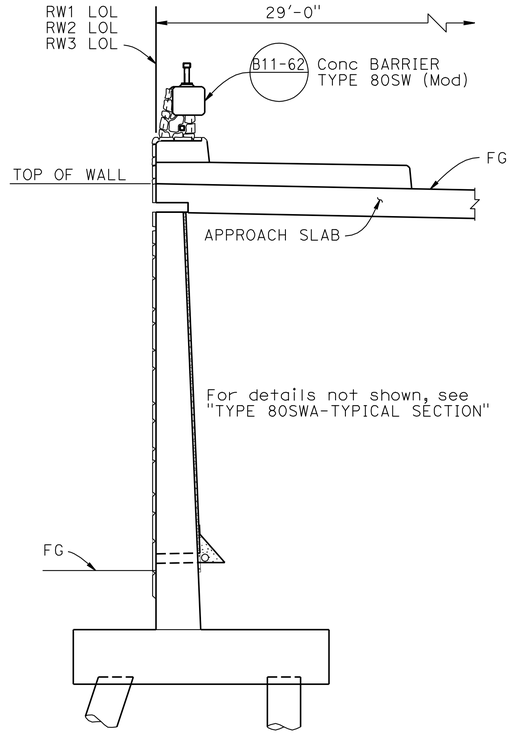

TYPE 80SW TYPICAL SECTION

3/8" = 1'-0"

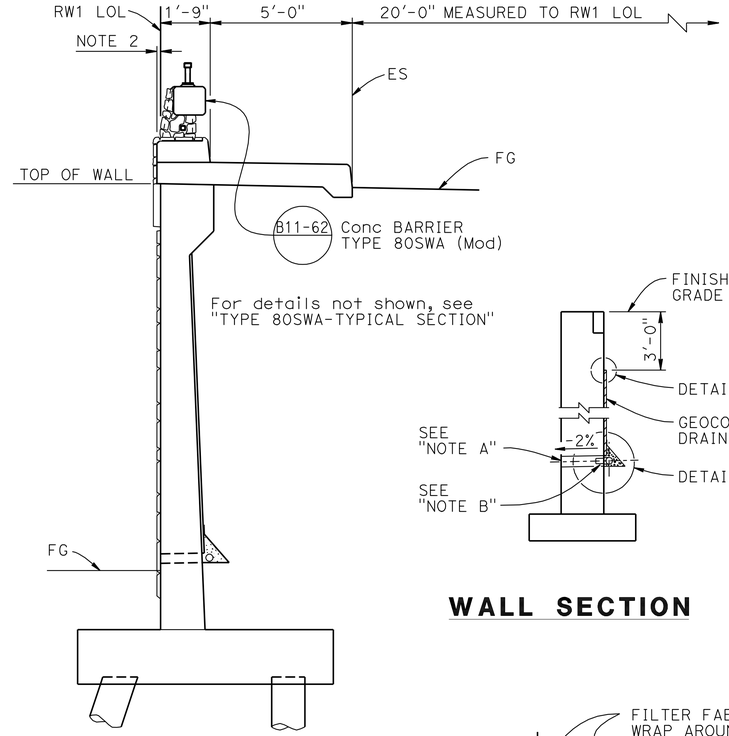

TYPE 80SWA

3/8" = 1'-0"

Sta 9+97.00 to 10+23.00 "RW1 LOL"

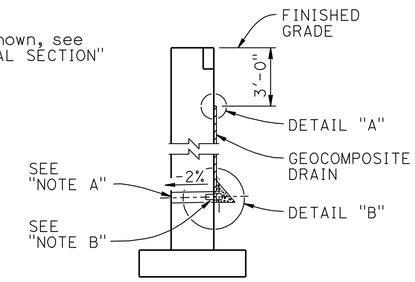

WALL SECTION

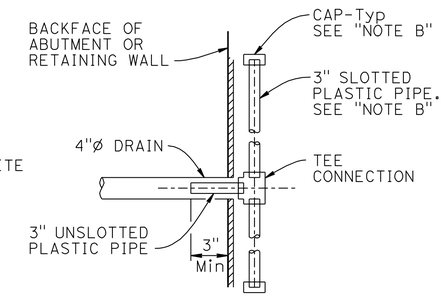

SECTION A-A

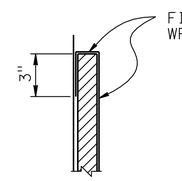

DETAIL "A"

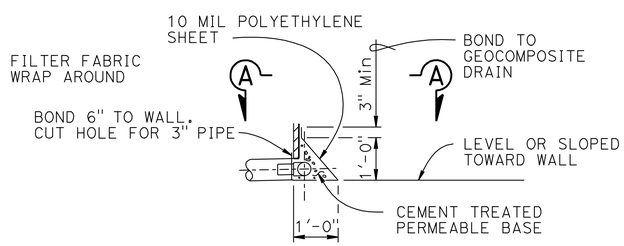

DETAIL "B"

WEEP HOLE AND GEOCOMPOSITE DRAIN

ALTERNATIVE TO BRIDGE DETAIL B0-3 / 3-1

NOTES:

1. 4" Ø drains at intermediate sag points and at 25' Max center to center (9' c-c for Type 3 and 9'-3" c-c for Type 4 retaining walls).
   For walls adjacent to sidewalks or curbs, provide 4" cast iron or asbestos cement pipe under the sidewalk to discharge through curb face.
   Exposed wall drains shall be located 3"± above finished grade
2. Geocomposite drain, cement treated permeable base, and 3"Ø slotted plastic pipe continuous behind retaining wall or abutment. Cap ends of pipe. Provide "Tee" connection at each 4"Ø drain
3. Connect the low end of plastic pipe to the main outlet pipe as apprlicable

NOTES:

1. Architectural Treatment not shown. For Architectural Treatment, see "ARCHITECTURAL TREATMENT NO.1", "ARCHITECTURAL TREATMENT NO.2" and "ARCHITECTURAL TREATMENT NO.3" sheets
2. Back of sidewalk to overhang RW LOL, 1½" Max @ 9+97 "RW1 LOL" taper down to match Typical Section @ 10+23 "RW1 LOL"

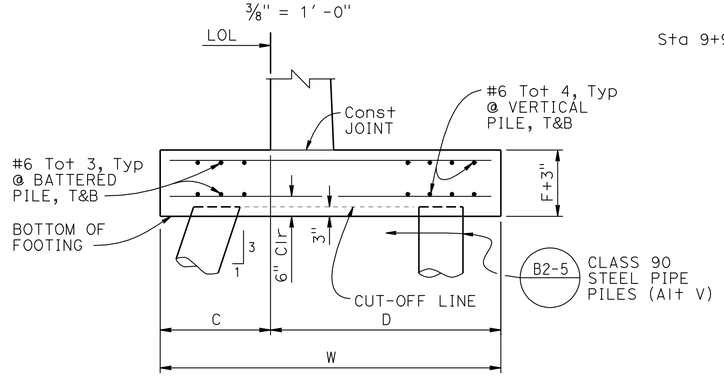

90 KIP PILE FOOTING SECTION

Reinforcement detailed is to be placed in addition to that shown for spread footing. All piles not shown, see pile layout on:
"RETAINING WALL RW1 LAYOUT NO. 2",
"RETAINING WALL RW1L LAYOUT",
"RETAINING WALL RW2 LAYOUT NO. 1",
"RETAINING WALL RW3 LAYOUT NO. 1", and
"RETAINING WALL RW3 LAYOUT NO. 2" sheets

NOTE:
THE CONTRACTOR SHALL VERIFY ALL CONTROLLING FIELD DIMENSIONS BEFORE ORDERING OR FABRICATING ANY MATERIAL

	BY	CHECKED
DESIGN	Maxime Dabilly	Son Ly
DETAILS	Franklin Maagma	Son Ly
QUANTITIES	Mastewal Bogale	Son Ly

STATE OF CALIFORNIA
DEPARTMENT OF TRANSPORTATION

DIVISION OF ENGINEERING SERVICES
STRUCTURE DESIGN
DESIGN BRANCH 16

BRIDGE NO. 20-0296
POST MILE 9.63

LAGUNA DE SANTA ROSA (REPLACE)
RETAINING WALL DETAILS

STRUCTURES DESIGN DETAIL SHEET (ENGLISH) (REV. 09-01-10)

ORIGINAL SCALE IN INCHES FOR REDUCED PLANS 0 1 2 3

UNIT: 3617
PROJECT NUMBER & PHASE: 04000004821
CONTRACT NO.: 04-1A2901

DISREGARD PRINTS BEARING EARLIER REVISION DATES

REVISION DATES 05/01/12 07/23/12 08/01/12 09/12/12

SHEET 21 OF 39

FILE => 20-0296-g-rwdt01.dgn

USERNAME => s124496 DATE PLOTTED => 28-MAR-2013 TIME PLOTTED => 13:14

DIST	COUNTY	ROUTE	POST MILES TOTAL PROJECT	SHEET No.	TOTAL SHEETS
04	Son	12	9.6	101	118

REGISTERED CIVIL ENGINEER 9-12-12 DATE

3-25-13
PLANS APPROVAL DATE

REGISTERED PROFESSIONAL ENGINEER SON THANH LY No. 72584 Exp. 6-30-14 CIVIL STATE OF CALIFORNIA

The State of California or its officers or agents shall not be responsible for the accuracy or completeness of electronic copies of this plan sheet.

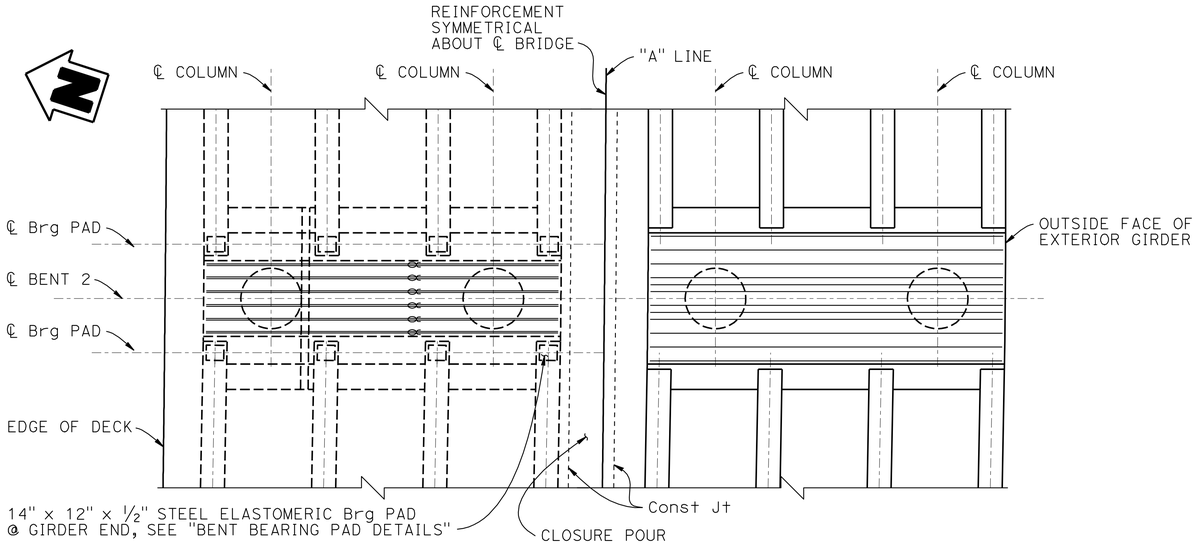

TOP REINFORCEMENT **BOTTOM REINFORCEMENT**

NOTES:
1. All reinforcement #10 unless otherwise noted
2. Bundled bars shown thus:
3. BENT 2 shown, BENT 3 similar

PLAN

1" = 5'

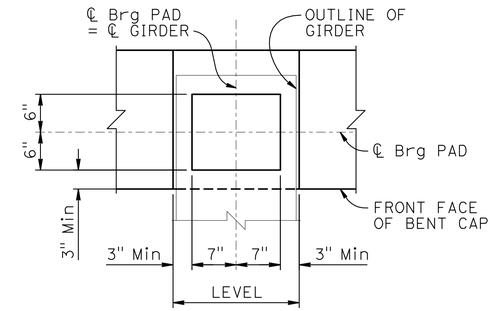

BENT BEARING PAD DETAILS

1" = 1'-0"

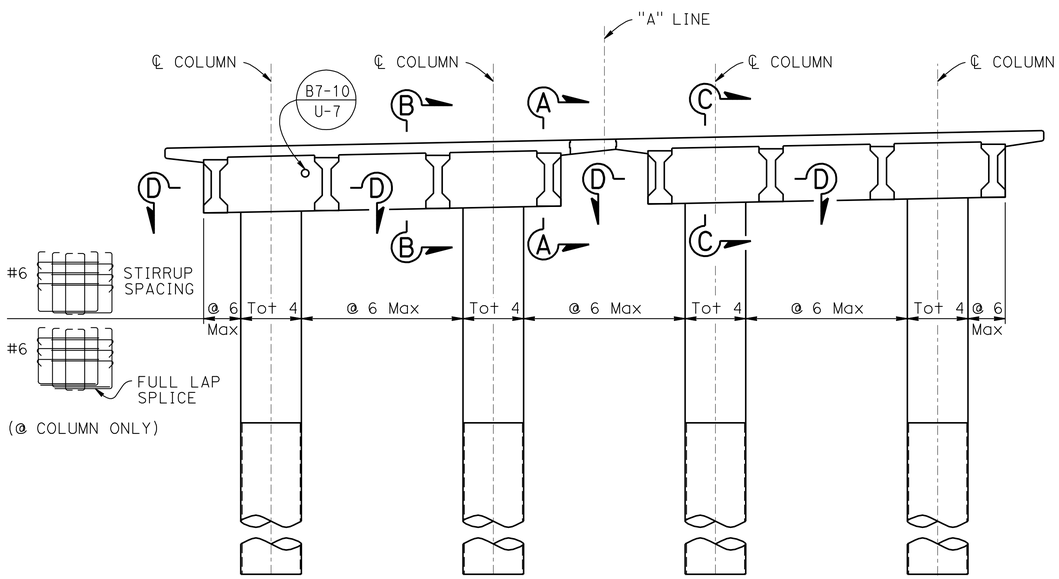

NOTE:
THE CONTRACTOR SHALL VERIFY ALL CONTROLLING FIELD DIMENSIONS BEFORE ORDERING OR FABRICATING ANY MATERIAL

ELEVATION

1" = 5'

NOTE:
1. For "SECTION A-A" and "SECTION B-B", see "BENT DETAILS NO.2" and for "SECTION C-C" and "SECTION D-D", see "BENT DETAILS NO.3" sheet

	BY	CHECKED
DESIGN	Maxime Dabilly	Son Ly
DETAILS	Franklin Maagma	Son Ly
QUANTITIES	Maxime Dabilly	Son Ly

STATE OF CALIFORNIA
DEPARTMENT OF TRANSPORTATION

DIVISION OF ENGINEERING SERVICES
STRUCTURE DESIGN
DESIGN BRANCH 16

BRIDGE NO. 20-0296
POST MILE 9.63

LAGUNA DE SANTA ROSA (REPLACE)
BENT DETAILS NO. 1

STRUCTURES DESIGN DETAIL SHEET (ENGLISH) (REV. 09-01-10)

ORIGINAL SCALE IN INCHES FOR REDUCED PLANS 0 1 2 3

UNIT: 3617
PROJECT NUMBER & PHASE: 04000004821
CONTRACT NO.: 04-1A2901

DISREGARD PRINTS BEARING EARLIER REVISION DATES

REVISION DATES 05/04/12 07/25/12 08/04/12 09/12/12

SHEET 22 OF 39

FILE => 20-0296-h-b01dt01.dgn

USERNAME => s124496 DATE PLOTTED => 28-MAR-2013 TIME PLOTTED => 13:14

DIST	COUNTY	ROUTE	POST MILES TOTAL PROJECT	SHEET No.	TOTAL SHEETS
04	Son	12	9.6	102	118

REGISTERED CIVIL ENGINEER 9-12-12 DATE

3-25-13
PLANS APPROVAL DATE

REGISTERED PROFESSIONAL ENGINEER SON THANH LY No. 72584 Exp. 6-30-14 CIVIL STATE OF CALIFORNIA

The State of California or its officers or agents shall not be responsible for the accuracy or completeness of electronic copies of this plan sheet.

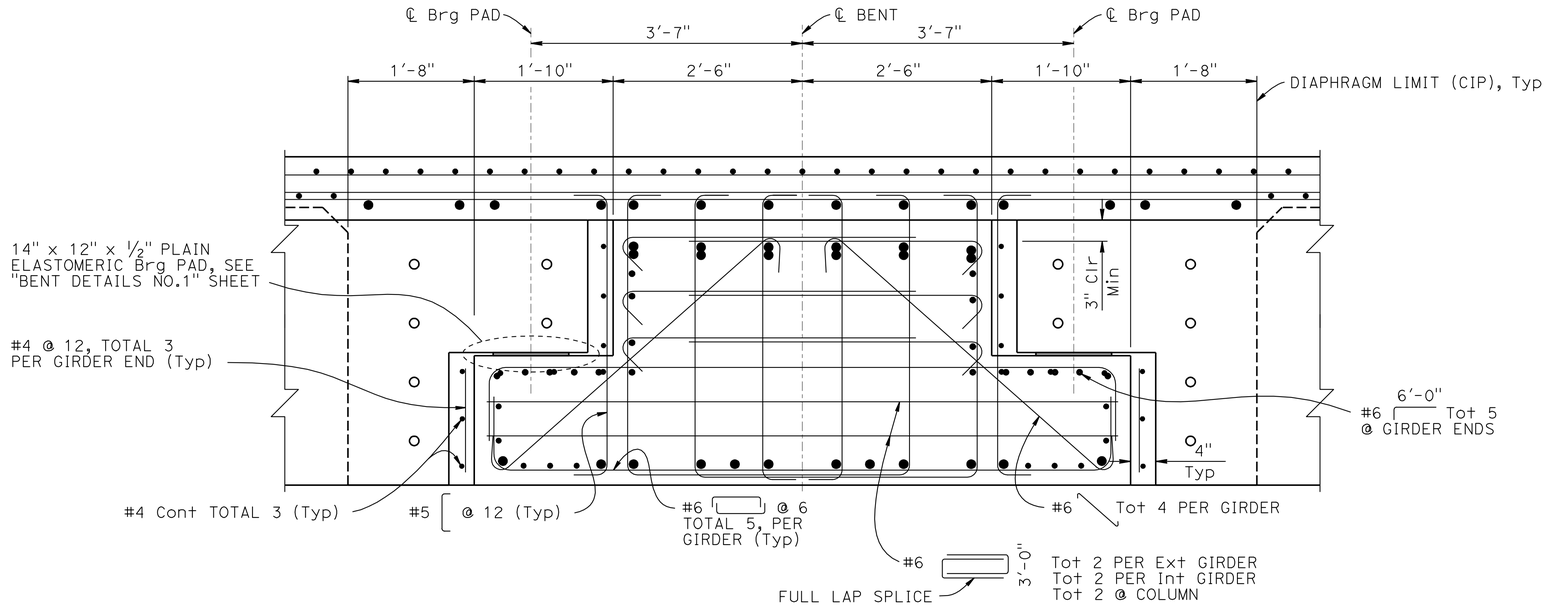

SECTION A-A @ GIRDER

1" = 1'-0"

NOTES:
1. Not all reinforcement shown
2. Reinforcement shall be "ultimate" butt splice continuous

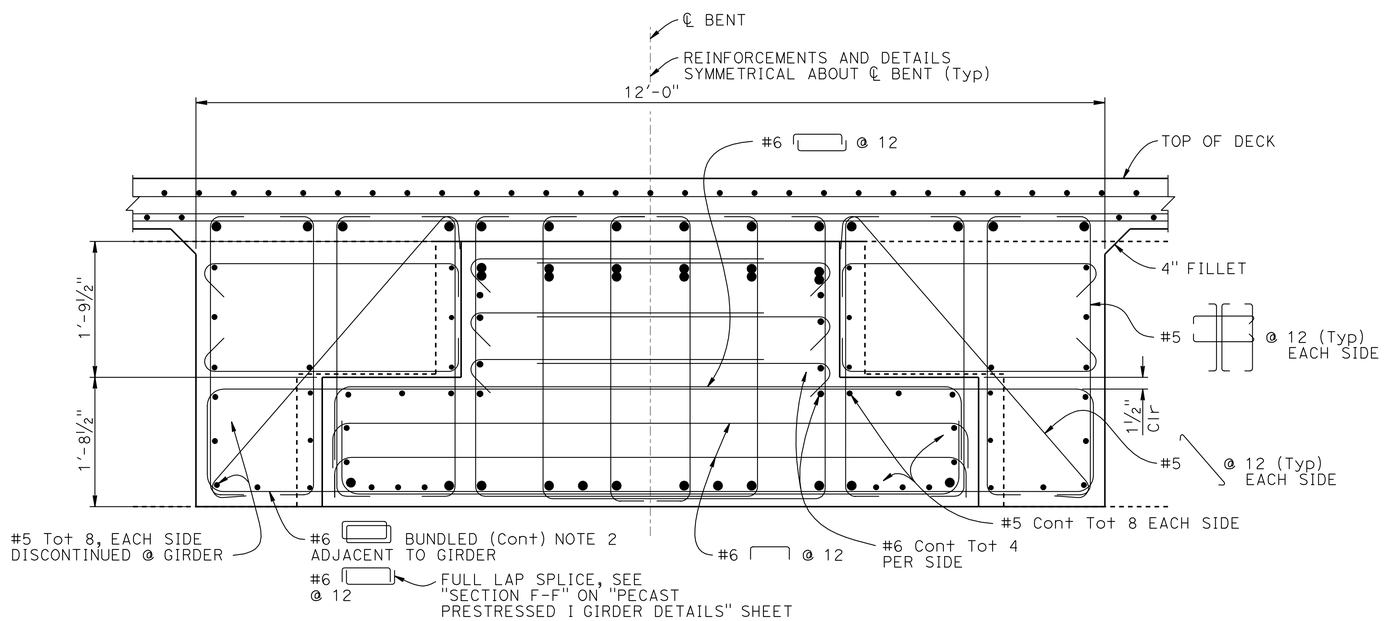

SECTION B-B BETWEEN GIRDER

1" = 1'-0"

NOTE:
THE CONTRACTOR SHALL VERIFY ALL CONTROLLING FIELD DIMENSIONS BEFORE ORDERING OR FABRICATING ANY MATERIAL

	BY	CHECKED
DESIGN	Maxime Dabilly	Son Ly
DETAILS	Franklin Maagma	Son Ly
QUANTITIES	Maxime Dabilly	Son Ly

STATE OF CALIFORNIA
DEPARTMENT OF TRANSPORTATION

DIVISION OF ENGINEERING SERVICES
STRUCTURE DESIGN
DESIGN BRANCH 16

BRIDGE NO. 20-0296
POST MILE 9.63

LAGUNA DE SANTA ROSA (REPLACE)
BENT DETAILS NO. 2

STRUCTURES DESIGN DETAIL SHEET (ENGLISH) (REV. 09-01-10)

ORIGINAL SCALE IN INCHES FOR REDUCED PLANS 0 1 2 3

UNIT: 3617
PROJECT NUMBER & PHASE: 04000004821
CONTRACT NO.: 04-1A2901

DISREGARD PRINTS BEARING EARLIER REVISION DATES

REVISION DATES: 05/11/12 07/23/12 08/07/12 09/12/12

SHEET 23 OF 39

FILE => 20-0296-h-b01dt02.dgn

USERNAME => s124496 DATE PLOTTED => 28-MAR-2013 TIME PLOTTED => 13:14

DIST	COUNTY	ROUTE	POST MILES TOTAL PROJECT	SHEET No.	TOTAL SHEETS
04	Son	12	9.6	103	118

REGISTERED CIVIL ENGINEER 9-12-12 DATE

3-25-13
PLANS APPROVAL DATE

REGISTERED PROFESSIONAL ENGINEER SON THANH LY No. 72584 Exp. 6-30-14 CIVIL STATE OF CALIFORNIA

The State of California or its officers or agents shall not be responsible for the accuracy or completeness of electronic copies of this plan sheet.

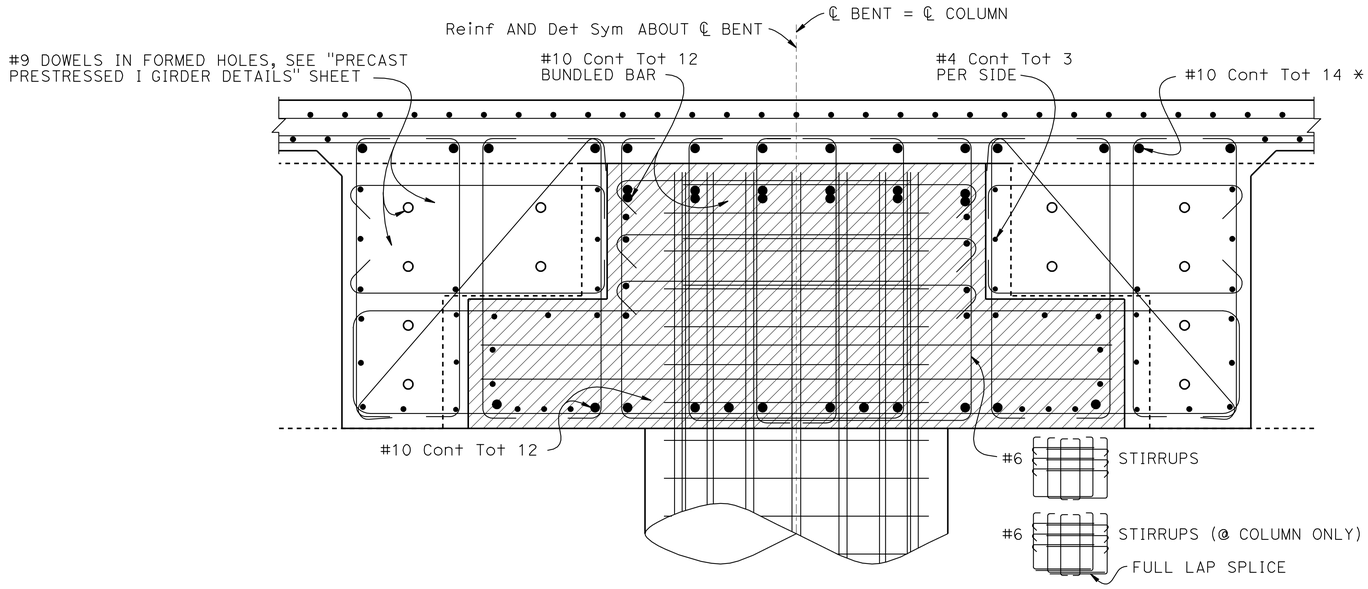

SECTION C-C @ COLUMN

1" = 1'-0"

LEGEND:

Concrete to reach strength of 4 ksi before placement of girders

* Denotes main cap reinforcement be "ultimate" butt splice at construction joint

NOTES:
1. Not all reinforcement shown
2. For "SECTION F-F", see "PRECAST PRESTRESSED I GIRDER DETAILS" sheet

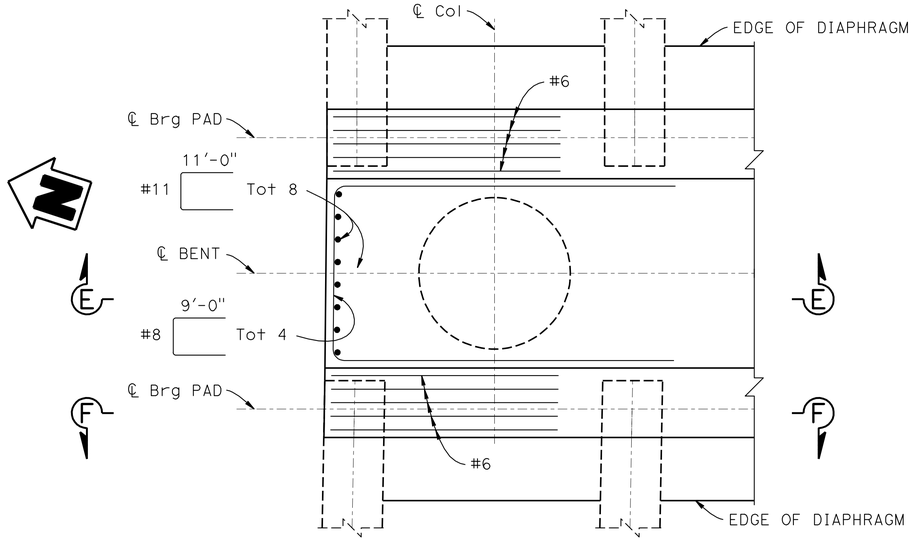

SECTION D-D

½" = 1'-0"

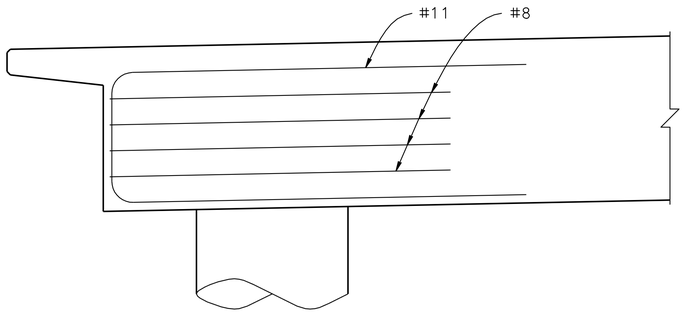

SECTION E-E

½" = 1'-0"

NOTE:
THE CONTRACTOR SHALL VERIFY ALL CONTROLLING FIELD DIMENSIONS BEFORE ORDERING OR FABRICATING ANY MATERIAL

	BY	CHECKED
DESIGN	Maxime Dabilly	Son Ly
DETAILS	Franklin Maagma	Son Ly
QUANTITIES	Maxime Dabilly	Son Ly

STATE OF CALIFORNIA
DEPARTMENT OF TRANSPORTATION

DIVISION OF ENGINEERING SERVICES
STRUCTURE DESIGN
DESIGN BRANCH 16

BRIDGE NO. 20-0296
POST MILE 9.63

LAGUNA DE SANTA ROSA (REPLACE)
BENT DETAILS NO. 3

STRUCTURES DESIGN DETAIL SHEET (ENGLISH) (REV. 09-01-10)

ORIGINAL SCALE IN INCHES FOR REDUCED PLANS 0 1 2 3

UNIT: 3617
PROJECT NUMBER & PHASE: 04000004821
CONTRACT NO.: 04-1A2901

DISREGARD PRINTS BEARING EARLIER REVISION DATES

REVISION DATES 05/17/12 07/27/12 08/07/12 09/12/12

SHEET 24 OF 39

FILE => 20-0296-h-b01d+03.dgn

USERNAME => s124496 DATE PLOTTED => 28-MAR-2013 TIME PLOTTED => 13:14

DIST	COUNTY	ROUTE	POST MILES TOTAL PROJECT	SHEET No.	TOTAL SHEETS
04	Son	12	9.6	104	118

REGISTERED CIVIL ENGINEER 9-12-12 DATE

3-25-13
PLANS APPROVAL DATE

REGISTERED PROFESSIONAL ENGINEER SON THANH LY No. 72584 Exp. 6-30-14 CIVIL STATE OF CALIFORNIA

The State of California or its officers or agents shall not be responsible for the accuracy or completeness of electronic copies of this plan sheet.

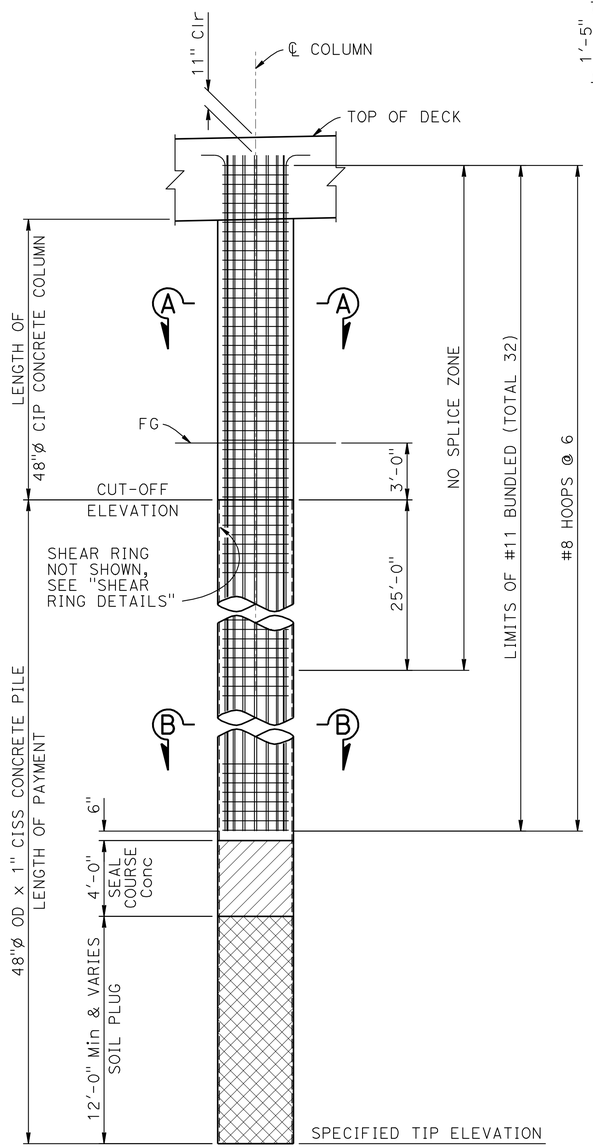

ELEVATION

1/4" = 1'-0"

NOTE:
THE CONTRACTOR SHALL VERIFY ALL CONTROLLING FIELD DIMENSIONS BEFORE ORDERING OR FABRICATING ANY MATERIAL

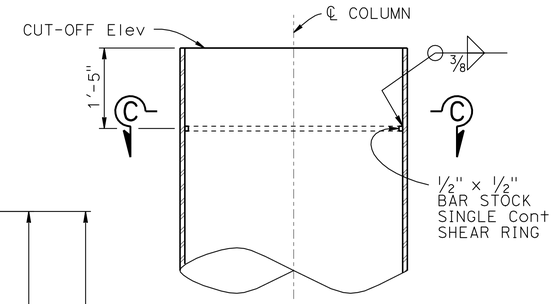

ELEVATION

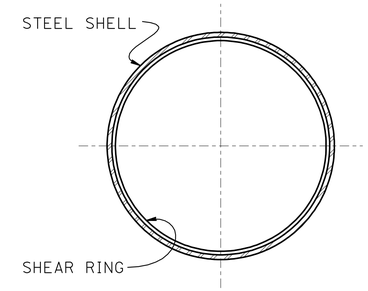

SECTION C-C

SHEAR RING DETAILS

3/4" = 1'-0"

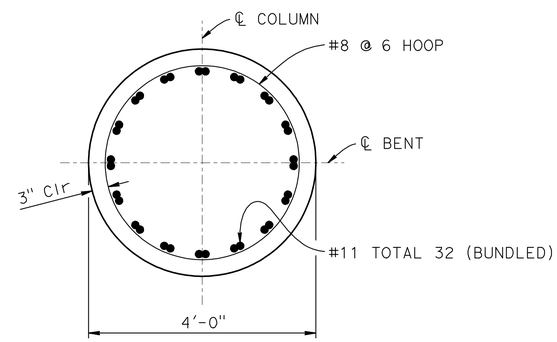

SECTION A-A

3/4" = 1'-0"

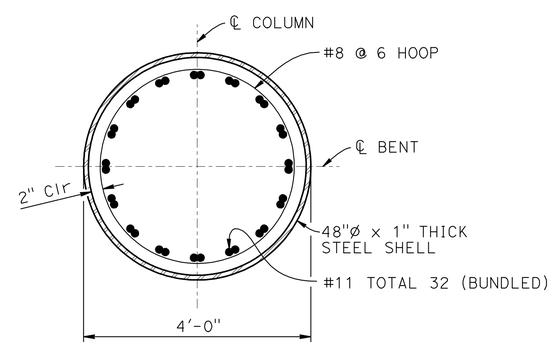

SECTION B-B

3/4" = 1'-0"

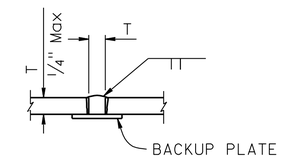

SQUARE GROOVE

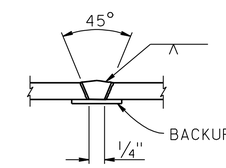

SINGLE VEE-GROOVE

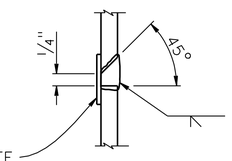

SINGLE BEVEL-GROOVE

PILE WELDING NOTES:
1. Single Vee-Groove and Square Groove permitted for all positions
2. Single Bevel-Groove permitted for horizontal joints only

PILE WELDING DETAIL-BUTT JOINTS

NO SCALE

NOTES:

1. For "PILE DATA TABLE", see "PILE DATA TABLES" sheet
2. Steel pipe pile (PP) shall be driven open ended. Pile tips shall be reinforced as required and approved by the Engineer
3. Structural steel for Pipe Piles (PP) shall conform to the Specifications
4. Minimum concrete strength for concrete plug: f'c = 4 ksi
5. The Contractor shall remove soil plug to the bottom elevation of the concrete plug, if required. If the top of the soil plug is below the lower elevation of the concrete plug as shown on the plans, the Contractor may fill the additional void in the steel pipe pile (PP) with concrete
6. All hoops shall be "ultimate" butt splice continuous
7. No splice is allowed in column main reinforcement

	BY	CHECKED
DESIGN	Maxime Dabilly	Son Ly
DETAILS	Franklin Maagma/Min Yu	Son Ly
QUANTITIES	Maxime Dabilly	Son Ly

STATE OF CALIFORNIA
DEPARTMENT OF TRANSPORTATION

DIVISION OF ENGINEERING SERVICES
STRUCTURE DESIGN
DESIGN BRANCH 16

BRIDGE NO. 20-0296
POST MILE 9.63

LAGUNA DE SANTA ROSA (REPLACE)
BENT DETAILS NO. 4

STRUCTURES DESIGN DETAIL SHEET (ENGLISH) (REV. 09-01-10)

ORIGINAL SCALE IN INCHES FOR REDUCED PLANS 0 1 2 3

UNIT: 3617
PROJECT NUMBER & PHASE: 04000004821
CONTRACT NO.: 04-1A2901

DISREGARD PRINTS BEARING EARLIER REVISION DATES

REVISION DATES 05/01/12 07/13/12 08/01/12 09/12/12

SHEET 25 OF 39

FILE => 20-0296-h-b01dt04.dgn

USERNAME => s124496 DATE PLOTTED => 28-MAR-2013 TIME PLOTTED => 13:14

DIST	COUNTY	ROUTE	POST MILES TOTAL PROJECT	SHEET No.	TOTAL SHEETS
04	Son	12	9.6	105	118

REGISTERED CIVIL ENGINEER 9-12-12 DATE

3-25-13
PLANS APPROVAL DATE

REGISTERED PROFESSIONAL ENGINEER SON THANH LY No. 72584 Exp. 6-30-14 CIVIL STATE OF CALIFORNIA

The State of California or its officers or agents shall not be responsible for the accuracy or completeness of electronic copies of this plan sheet.

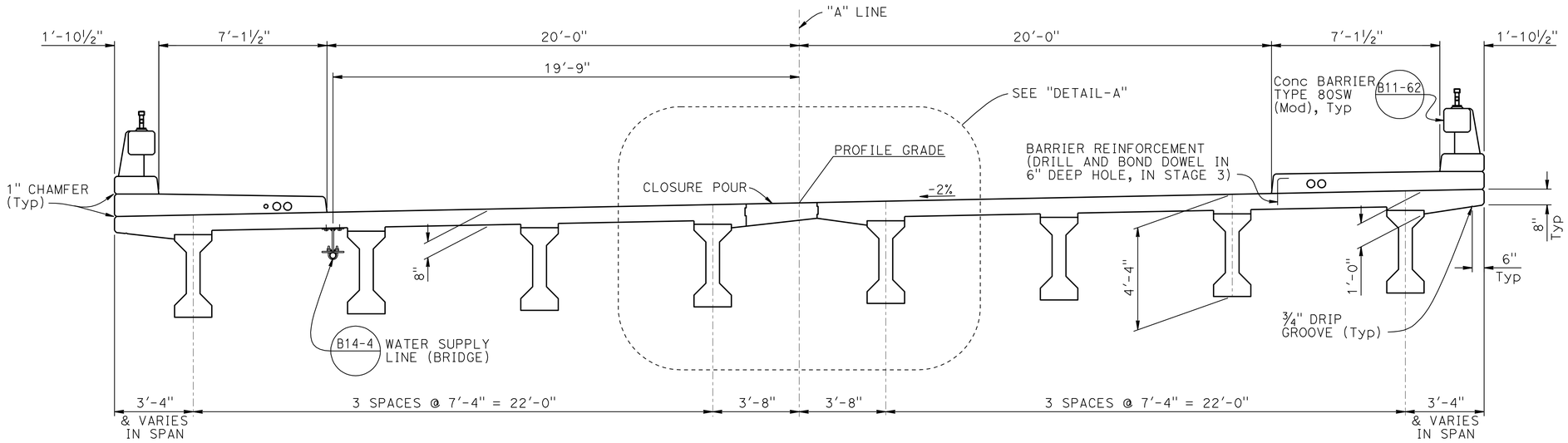

TYPICAL SECTION

⅜" = 1'-0"

NOTE:
1. Architectural treatment not shown for clarity

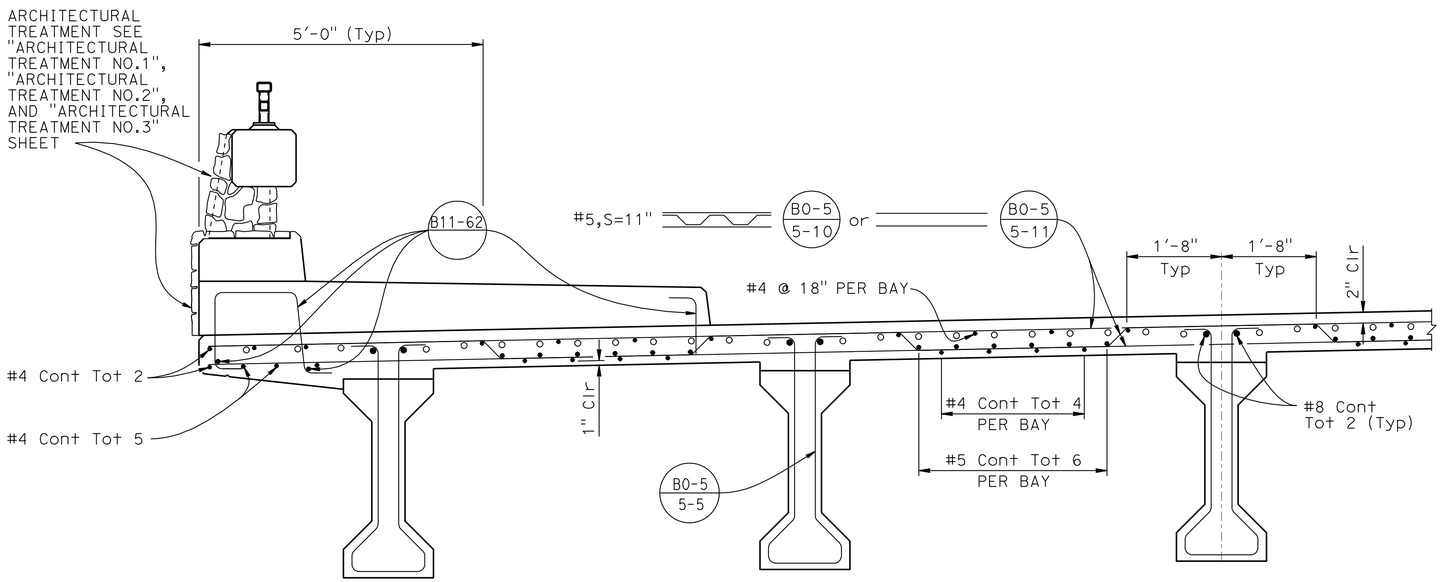

NOTE:
THE CONTRACTOR SHALL VERIFY ALL CONTROLLING FIELD DIMENSIONS BEFORE ORDERING OR FABRICATING ANY MATERIAL

PART TYPICAL SECTION B0-5

¾" = 1'-0"

LEGEND:

○ Indicates additional reinforcement, see "GIRDER REINFORCEMENT" sheet

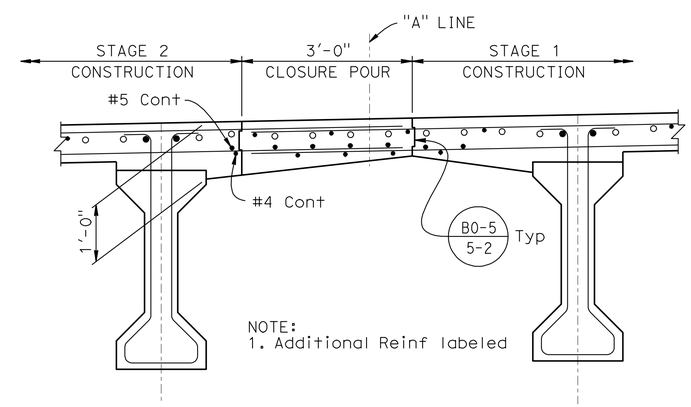

NOTE:
1. Additional Reinf labeled

DETAIL-A

¾" = 1'-0"

DESIGN	BY Maxime Dabilly	CHECKED Son Ly	
DETAILS	BY Franklin Maagma/Min Yu	CHECKED Son Ly	
QUANTITIES	BY Maxime Dabilly	CHECKED Son Ly	

STATE OF CALIFORNIA
DEPARTMENT OF TRANSPORTATION

DIVISION OF ENGINEERING SERVICES
STRUCTURE DESIGN
DESIGN BRANCH 16

BRIDGE NO. 20-0296
POST MILE 9.63

LAGUNA DE SANTA ROSA (REPLACE)
TYPICAL SECTION

STRUCTURES DESIGN DETAIL SHEET (ENGLISH) (REV. 09-01-10)

ORIGINAL SCALE IN INCHES FOR REDUCED PLANS 0 1 2 3

UNIT: 3617
PROJECT NUMBER & PHASE: 04000004821
CONTRACT NO.: 04-1A2901

DISREGARD PRINTS BEARING EARLIER REVISION DATES

REVISION DATES 05/24/12 07/23/12 08/20/12 09/12/12

SHEET 26 OF 39

FILE => 20-0296-k-ts01.dgn

USERNAME => s124496 DATE PLOTTED => 28-MAR-2013 TIME PLOTTED => 13:14

DIST	COUNTY	ROUTE	POST MILES TOTAL PROJECT	SHEET No.	TOTAL SHEETS
04	Son	12	9.6	106	118

REGISTERED CIVIL ENGINEER 9-12-12 DATE

3-25-13
PLANS APPROVAL DATE

REGISTERED PROFESSIONAL ENGINEER SON THANH LY No. 72584 Exp. 6-30-14 CIVIL STATE OF CALIFORNIA

The State of California or its officers or agents shall not be responsible for the accuracy or completeness of electronic copies of this plan sheet.

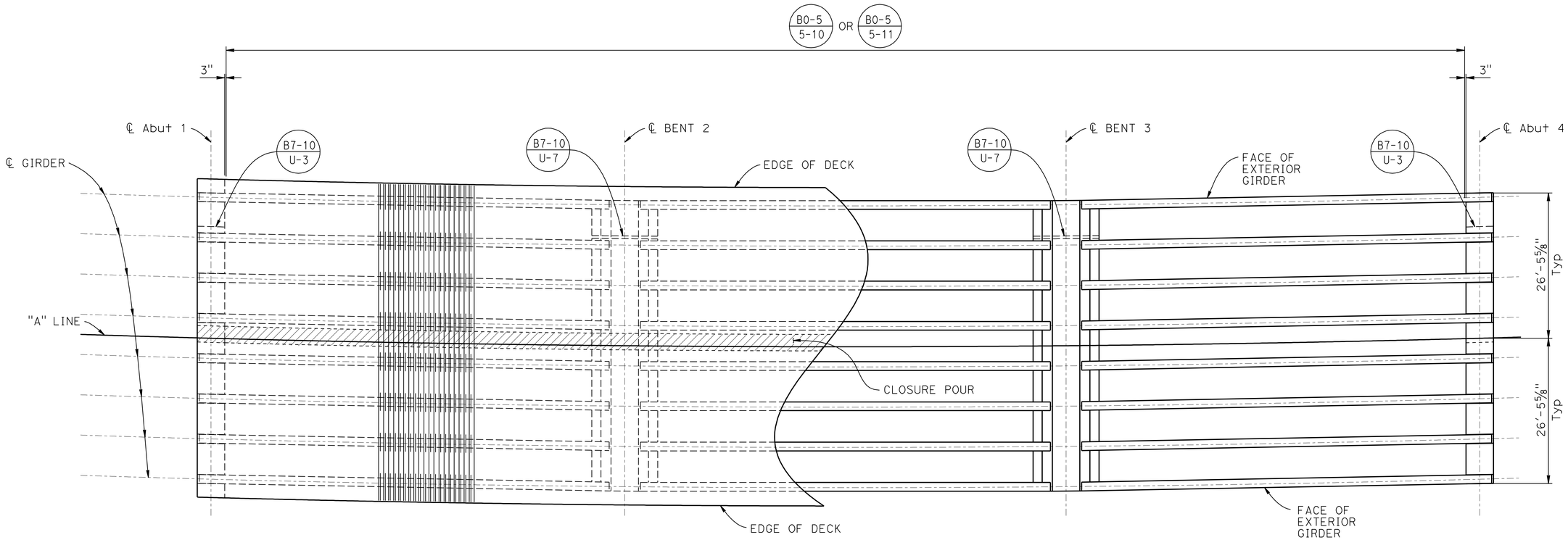

GIRDER LAYOUT

1" = 10'

N

NOTE:
THE CONTRACTOR SHALL VERIFY ALL CONTROLLING FIELD DIMENSIONS BEFORE ORDERING OR FABRICATING ANY MATERIAL

	BY	CHECKED
DESIGN	Maxime Dabilly	Son Ly
DETAILS	Franklin Maagma	Son Ly
QUANTITIES	Maxime Dabilly	Son Ly

STATE OF CALIFORNIA
DEPARTMENT OF TRANSPORTATION

DIVISION OF ENGINEERING SERVICES
STRUCTURE DESIGN
DESIGN BRANCH 16

BRIDGE NO. 20-0296
POST MILE 9.63

LAGUNA DE SANTA ROSA (REPLACE)
GIRDER LAYOUT

STRUCTURES DESIGN DETAIL SHEET (ENGLISH) (REV. 09-01-10)

ORIGINAL SCALE IN INCHES FOR REDUCED PLANS 0 1 2 3

UNIT: 3617
PROJECT NUMBER & PHASE: 04000004821
CONTRACT NO.: 04-1A2901

DISREGARD PRINTS BEARING EARLIER REVISION DATES

REVISION DATES 05/01/12 07/05/12 08/01/12 09/12/12

SHEET 27 OF 39

FILE => 20-0296-I-g_lo01.dgn

USERNAME => s124496 DATE PLOTTED => 28-MAR-2013 TIME PLOTTED => 13:14

DIST	COUNTY	ROUTE	POST MILES TOTAL PROJECT	SHEET No.	TOTAL SHEETS
04	Son	12	9.6	107	118

REGISTERED CIVIL ENGINEER 9-12-12 DATE

3-25-13
PLANS APPROVAL DATE

REGISTERED PROFESSIONAL ENGINEER SON THANH LY No. 72584 Exp. 6-30-14 CIVIL STATE OF CALIFORNIA

The State of California or its officers or agents shall not be responsible for the accuracy or completeness of electronic copies of this plan sheet.

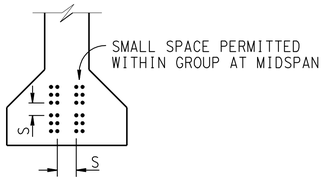

CLEARANCES FOR PRETENSIONED STRANDS

1. Strands may be bundled in groups consisting of 3 vertically, 2 horizontally and separated at the ends
2. The Min distance "S" between groups or individual strands is 1½" for ⅜" Ø strands, 1¾" for ½" Ø strands, 2" for 0.6" Ø strands
3. "S" is measured between centers of adjacent strands
4. Approval for Engineer is required for deviation

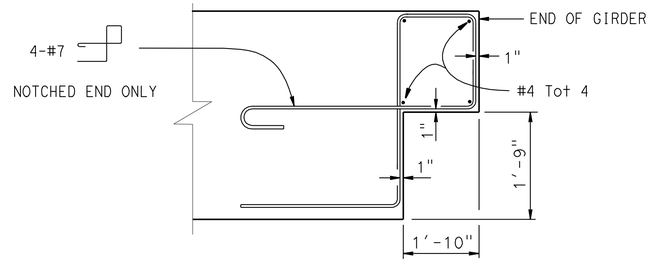

DETAIL B

FOR OPTIONAL NOTCHED END DETAIL ONLY

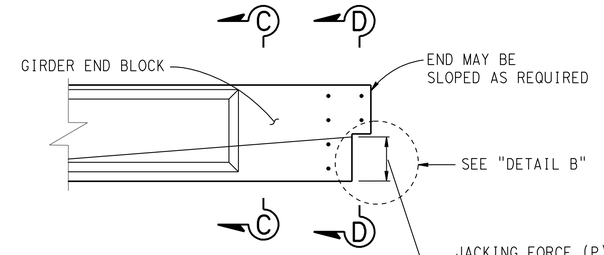

NOTCHED END DETAIL @ BENT

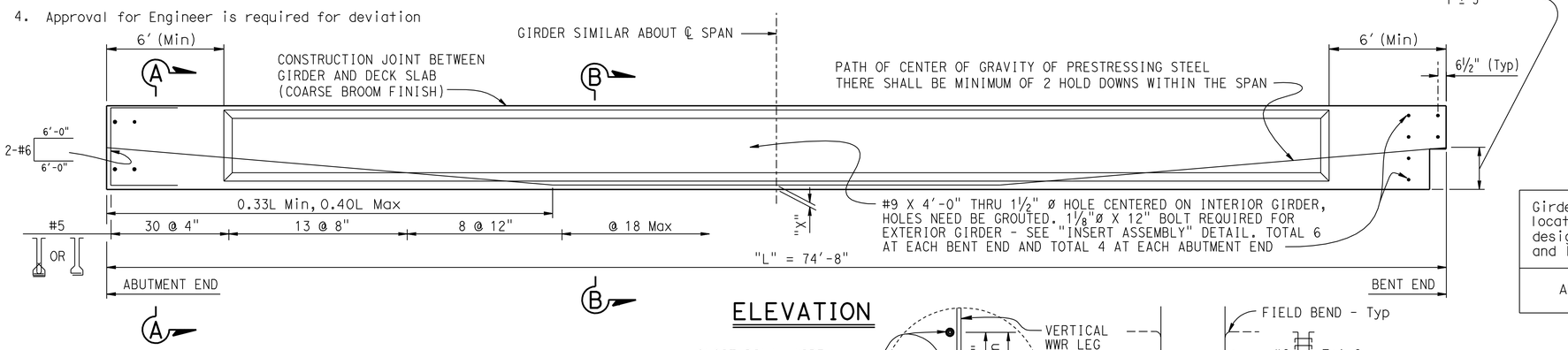

ELEVATION

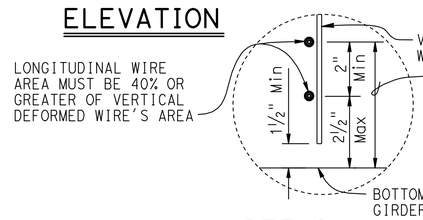

DETAIL A

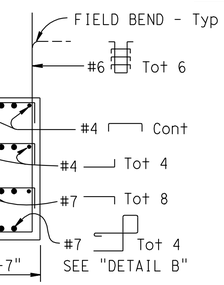

SECTION D-D

GENERAL NOTES

JACKING FORCE (P): The jacking force required at the point of control along the span. The jacking force does not include any fabrication specific losses.

The maximum tensile stress in the prestressing steel upon release shall not exceed 75% of the specified minimum ultimate tensile strength of the prestressing steel.

The maximum temporary tensile stress (jacking stress) in the prestressing steel shall not exceed 80% of the specified minimum ultimate tensile strength of the prestressing steel.

CONCRETE STRENGTH: f'ci is at time of initial stressing
f'c is at 28 days

DEFLECTION COMPONENTS: Informational - to be used in setting screed line elevations

Screed line elevations for deck concrete will be determined by the Engineer.

Contractor may interpolate "P" and "X" values between limits shown, as approved by the Engineer.

Use epoxy coated reinforcement in Environmental Area III

Girder location or designation and length	Jacking Force (P) (Kips) "X"		"Y" (in)	Concrete Strength (ksi) f'ci	Concrete Strength (ksi) f'c	Midspan Dead Load Deflection (inches) Deck	Midspan Dead Load Deflection (inches) Rail
ALL	4"	760	17	5.0	6.0	1	0.1
	6"	830					

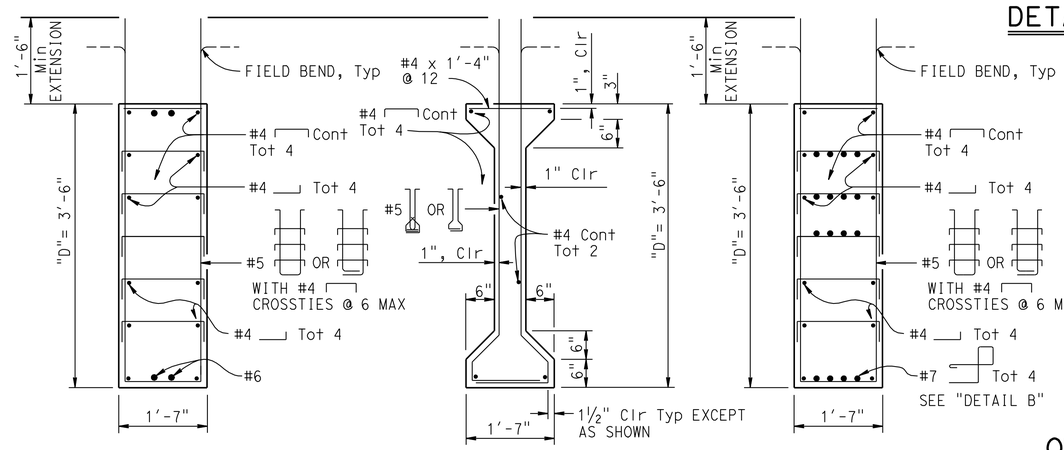

SECTION A-A

SECTION B-B

SECTION C-C

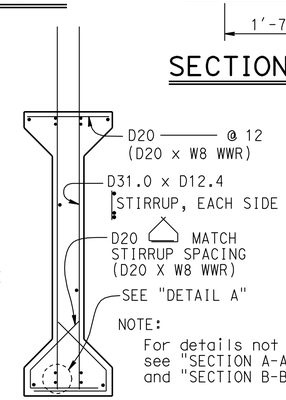

NOTE:
For details not shown, see "SECTION A-A" and "SECTION B-B"

OPTIONAL WELDED WIRE REINFORCEMENT (WWR) DETAIL

WWR NOTE: MANUFACTURER'S SHOP DRAWING SHALL CONFORM TO THE REINFORCEMENT SHOWN ON THIS SHEET AS NOTED AND THE SPECIAL PROVISIONS

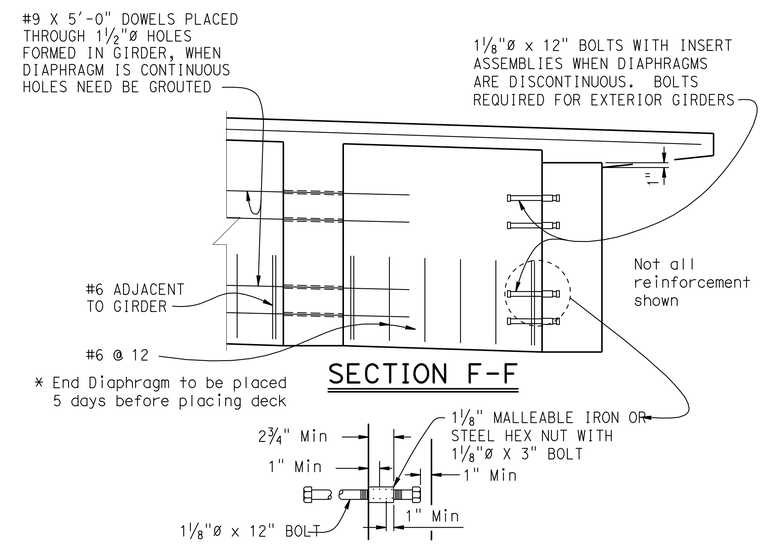

SECTION F-F

INSERT ASSEMBLY

NO SCALE

DESIGN	BY Maxime Dabilly	CHECKED Son Ly/Sam Kotalawala	
DETAILS	BY Franklin Maagma	CHECKED Son Ly	
QUANTITIES	BY Maxime Dabilly	CHECKED Son Ly	

STATE OF CALIFORNIA DEPARTMENT OF TRANSPORTATION

DIVISION OF ENGINEERING SERVICES STRUCTURE DESIGN DESIGN BRANCH 16

BRIDGE NO. 20-0296
POST MILE 9.63

LAGUNA DE SANTA ROSA (REPLACE)
PRECAST PRESTRESSED I GIRDER DETAILS

STRUCTURES DESIGN DETAIL SHEET (ENGLISH) (REV. 09-01-10)

ORIGINAL SCALE IN INCHES FOR REDUCED PLANS 0 1 2 3

UNIT: 3617
PROJECT NUMBER & PHASE: 04000004821
CONTRACT NO.: 04-1A2901

DISREGARD PRINTS BEARING EARLIER REVISION DATES

REVISION DATES 05/24/12 07/23/12 08/07/12 09/12/12

SHEET 28 OF 39

FILE => 20-0296-I-gdt01.dgn

USERNAME => s124496 DATE PLOTTED => 28-MAR-2013 TIME PLOTTED => 13:14

DIST	COUNTY	ROUTE	POST MILES TOTAL PROJECT	SHEET No.	TOTAL SHEETS
04	Son	12	9.6	108	118

REGISTERED CIVIL ENGINEER 9-12-12 DATE

3-25-13
PLANS APPROVAL DATE

REGISTERED PROFESSIONAL ENGINEER
SON THANH LY
No. 72584
Exp. 6-30-14
CIVIL
STATE OF CALIFORNIA

The State of California or its officers or agents shall not be responsible for the accuracy or completeness of electronic copies of this plan sheet.

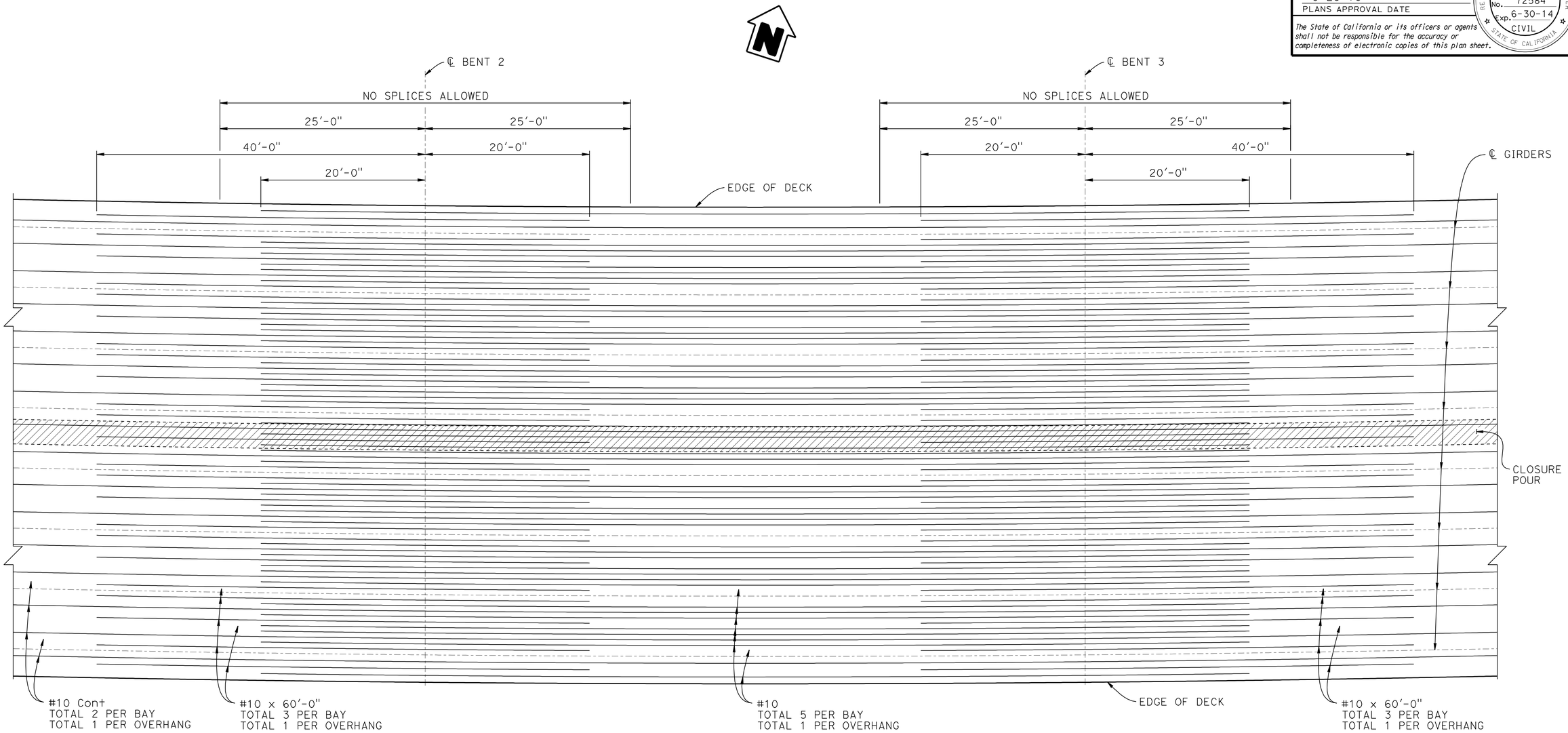

TOP REINFORCEMENT

NO SCALE

NOTE:
1. Not all reinforcement shown

NOTE:
THE CONTRACTOR SHALL VERIFY ALL CONTROLLING FIELD DIMENSIONS BEFORE ORDERING OR FABRICATING ANY MATERIAL

	BY	CHECKED
DESIGN	Maxime Dabilly	Son Ly
DETAILS	Franklin Maagma	Son Ly
QUANTITIES	Maxime Dabilly	Son Ly

STATE OF CALIFORNIA
DEPARTMENT OF TRANSPORTATION

DIVISION OF ENGINEERING SERVICES
STRUCTURE DESIGN
DESIGN BRANCH 16

BRIDGE NO. 20-0296
POST MILE 9.63

LAGUNA DE SANTA ROSA (REPLACE)
GIRDER REINFORCEMENT

STRUCTURES DESIGN DETAIL SHEET (ENGLISH) (REV. 09-01-10)

ORIGINAL SCALE IN INCHES FOR REDUCED PLANS 0 1 2 3

UNIT: 3617
PROJECT NUMBER & PHASE: 04000004821
CONTRACT NO.: 04-1A2901

DISREGARD PRINTS BEARING EARLIER REVISION DATES

REVISION DATES: 05/01/12 07/13/12 08/01/12 09/12/12

SHEET 29 OF 39

FILE => 20-0296-o-gir_rf01.dgn

USERNAME => s124496 DATE PLOTTED => 28-MAR-2013 TIME PLOTTED => 13:14

DIST	COUNTY	ROUTE	POST MILES TOTAL PROJECT	SHEET No.	TOTAL SHEETS
04	Son	12	9.6	109	118

REGISTERED CIVIL ENGINEER 9-12-12 DATE

3-25-13
PLANS APPROVAL DATE

REGISTERED PROFESSIONAL ENGINEER SON THANH LY No. 72584 Exp. 6-30-14 CIVIL STATE OF CALIFORNIA

The State of California or its officers or agents shall not be responsible for the accuracy or completeness of electronic copies of this plan sheet.

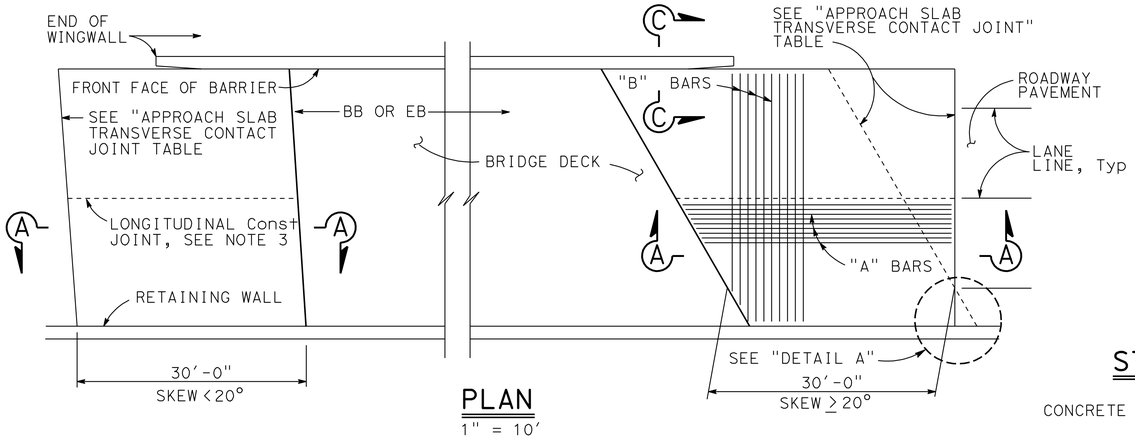

PLAN
1" = 10'

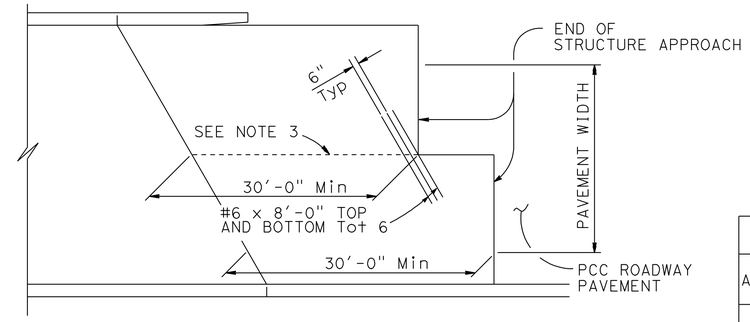

STRUCTURE APPROACH - END STAGGER DETAIL
NO SCALE

APPROACH SLAB TRANSVERSE CONTACT JOINT		
APPROACH SKEW	WITH AC ROADWAY PAVEMENT	WITH PCC ROADWAY PAVEMENT
< 20°	PARALLEL TO FACE OF PN	PARALLEL TO FACE OF PN
20° - 45°	PARALLEL TO FACE OF PN USE "DETAIL A"	STAGGER LINES 24' TO 36' APART
> 45°	PARALLEL TO FACE OF PN USE "DETAIL A"	STAGGER AT EACH LANE LINE

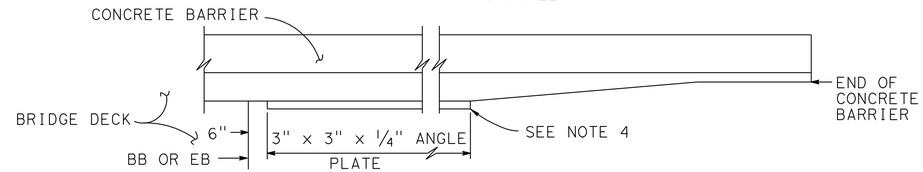

EDGE ANGLE DETAIL
1/2"=1'-0"

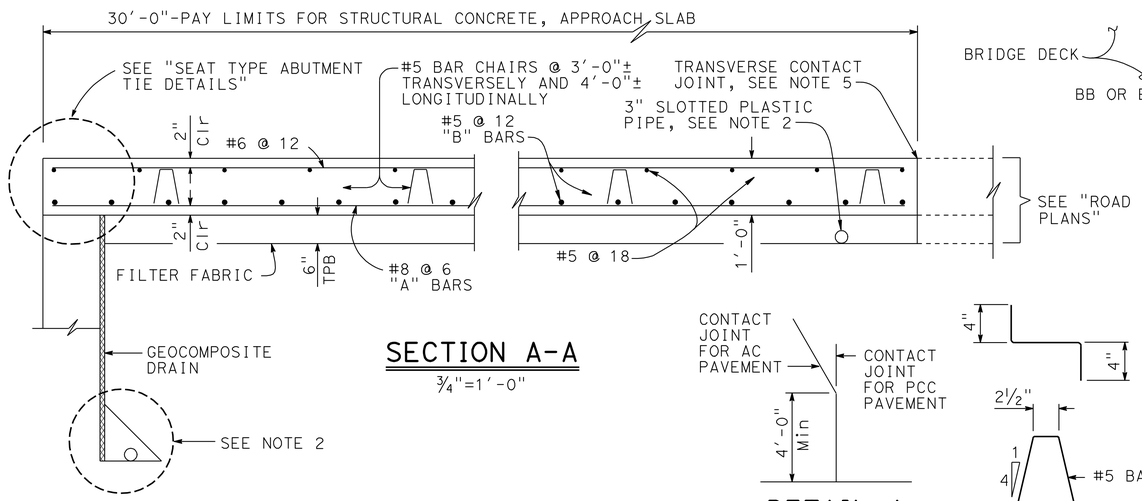

SECTION A-A
3/4"=1'-0"

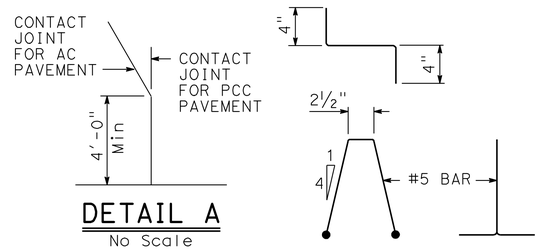

DETAIL A
No Scale

BAR CHAIR DETAIL
1 1/2"=1'-0"

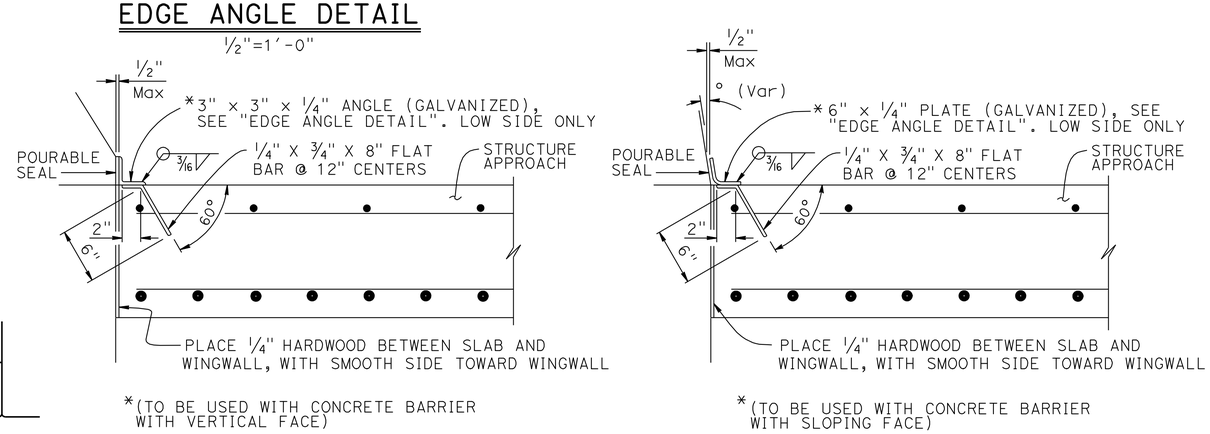

DETAIL B
1 1/2" = 1'-0"

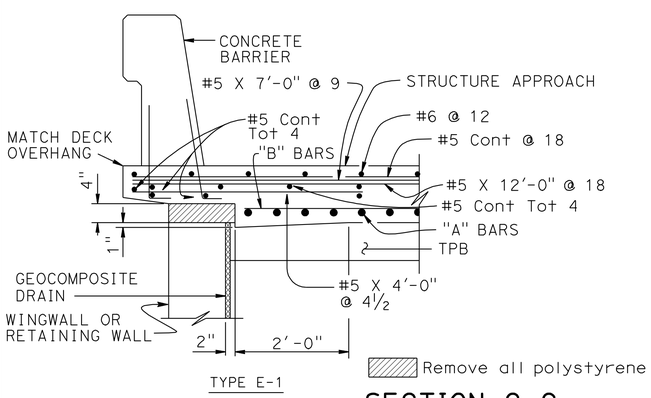

SECTION C-C
3/4"=1'-0"
(Type E-1 to be used, unless otherwise shown on plans)

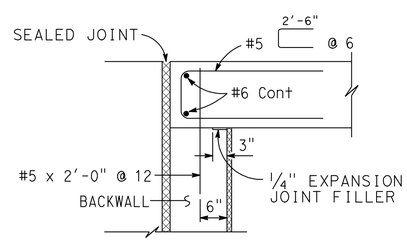

MR ≤ 2"

SEAT TYPE ABUTMENT TIE DETAILS (SEE NOTE 1)
3/4"=1'-0"

NOTES:
1. For details not shown, see Structure Plans. For MG ≤ 2", adjust bar reinforcement to clear a sawcut for sealed joint, when required
2. For drainage details, see "STRUCTURE APPROACH DRAINAGE DETAILS" sheet
3. Longitudinal construction joints, when permitted by the Engineer, shall be located on lane lines
4. End angle or plate at beginning of barrier transition, end of wingwall or end of structure approach as applicable
5. For transverse contact joint with new PCC paving, refer to Standard Plan P10
6. At the Contractor's option, approach slab transverse reinforcement may be placed parallel to paving notch. Spacing of transverse reinforcement is measured along ℄ roadway

	BY	CHECKED
DESIGN	Maxime Dabilly	Son Ly
DETAILS	Franklin Maagma	Son Ly
QUANTITIES	Maxime Dabilly	Son Ly

STATE OF CALIFORNIA
DEPARTMENT OF TRANSPORTATION

DIVISION OF ENGINEERING SERVICES
STRUCTURE DESIGN
DESIGN BRANCH 16

BRIDGE NO. 20-0296
POST MILE 9.63

LAGUNA DE SANTA ROSA (REPLACE)
STRUCTURE APPROACH TYPE N(30S)

STRUCTURES DESIGN DETAIL SHEET (ENGLISH) (REV. 09-01-10)

ORIGINAL SCALE IN INCHES FOR REDUCED PLANS 0 1 2 3

UNIT: 3617
PROJECT NUMBER & PHASE: 04000004821
CONTRACT NO.: 04-1A2901

DISREGARD PRINTS BEARING EARLIER REVISION DATES

REVISION DATES 05/17/12 07/23/12 08/07/12 09/12/12

SHEET 30 OF 39

FILE => 20-0296-s-sa.dgn

USERNAME => s124496 DATE PLOTTED => 28-MAR-2013 TIME PLOTTED => 13:14

DIST	COUNTY	ROUTE	POST MILES TOTAL PROJECT	SHEET No.	TOTAL SHEETS
04	Son	12	9.6	110	118

REGISTERED CIVIL ENGINEER 9-12-12 DATE

3-25-13
PLANS APPROVAL DATE

REGISTERED PROFESSIONAL ENGINEER SON THANH LY No. 72584 Exp. 6-30-14 CIVIL STATE OF CALIFORNIA

The State of California or its officers or agents shall not be responsible for the accuracy or completeness of electronic copies of this plan sheet.

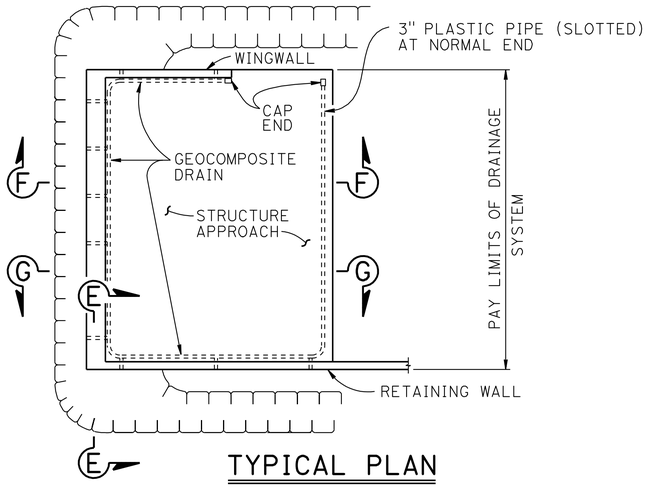

TYPICAL PLAN

1" = 10'

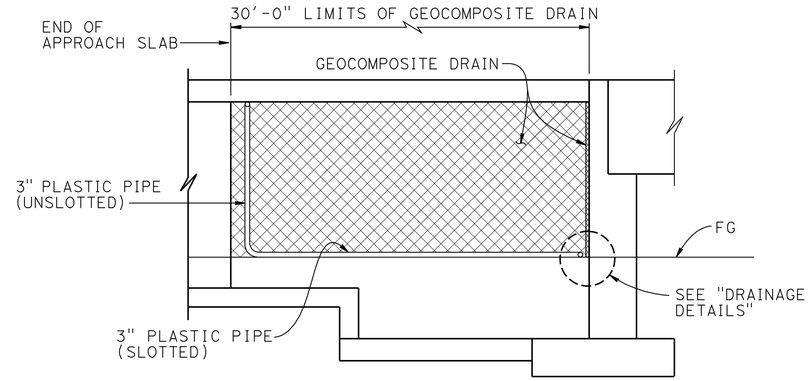

RETAINING WALL WINGWALL DRAINAGE DETAILS

¼" = 1'-0"

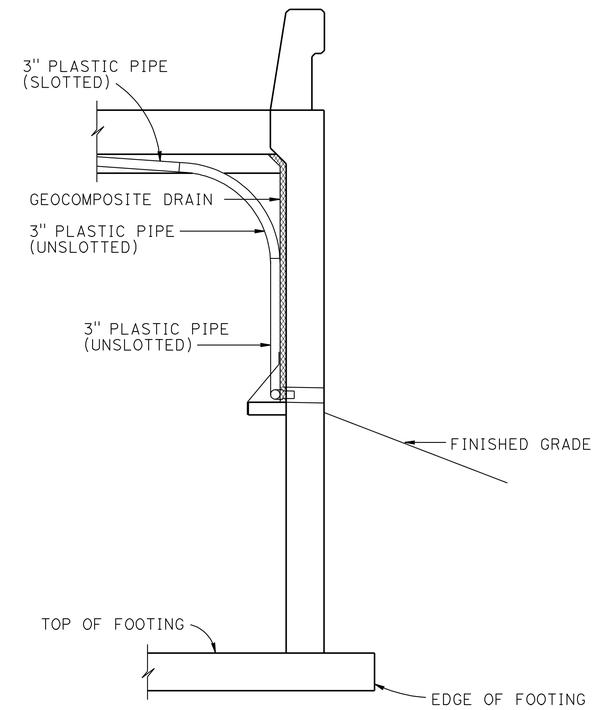

SECTION E-E

½" = 1'-0"

NOTE: Bends and junctions in 3" plastic pipe are 30" radius Min

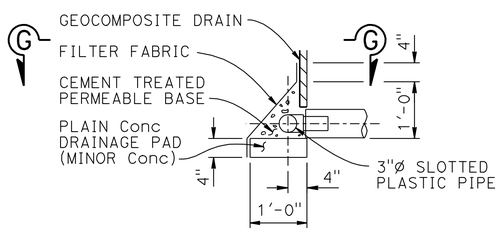

DRAINAGE DETAIL

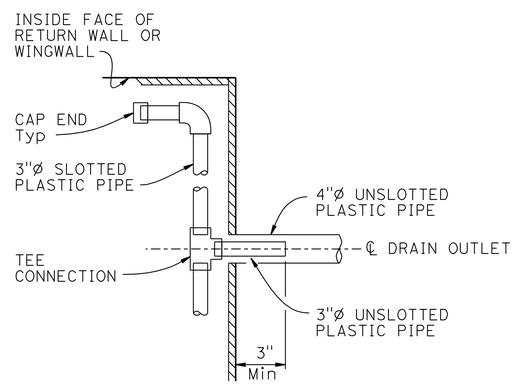

SECTION G-G

WEEP HOLE AND GEOCOMPOSITE DRAIN

NO SCALE

DESIGN	BY Maxime Dabilly	CHECKED Son Ly	
DETAILS	BY Franklin Maagma	CHECKED Son Ly	
QUANTITIES	BY Maxime Dabilly	CHECKED Son Ly	

STATE OF CALIFORNIA DEPARTMENT OF TRANSPORTATION

DIVISION OF ENGINEERING SERVICES STRUCTURE DESIGN DESIGN BRANCH 16

BRIDGE NO. 20-0296
POST MILE 9.63

LAGUNA DE SANTA ROSA (REPLACE)
STRUCTURE APPROACH DRAINAGE DETAILS

STRUCTURES DESIGN DETAIL SHEET (ENGLISH) (REV. 09-01-10)

ORIGINAL SCALE IN INCHES FOR REDUCED PLANS 0 1 2 3

UNIT: 3617
PROJECT NUMBER & PHASE: 04000004821
CONTRACT NO.: 04-1A2901

DISREGARD PRINTS BEARING EARLIER REVISION DATES

REVISION DATES 05/01/12 07/13/12 08/01/12 09/12/12

SHEET 31 OF 39

FILE => 20-0296-s-sadd.dgn

USERNAME => s124496 DATE PLOTTED => 28-MAR-2013 TIME PLOTTED => 13:14

DIST	COUNTY	ROUTE	POST MILES TOTAL PROJECT	SHEET No.	TOTAL SHEETS
04	Son	12	9.6	111	118

REGISTERED CIVIL ENGINEER 9-12-12 DATE

3-25-13
PLANS APPROVAL DATE

REGISTERED PROFESSIONAL ENGINEER SON THANH LY No. 72584 Exp. 6-30-14 CIVIL STATE OF CALIFORNIA

The State of California or its officers or agents shall not be responsible for the accuracy or completeness of electronic copies of this plan sheet.

NOTE:
1. For sidewalk ramp transition, see "ROADWAY PLANS"

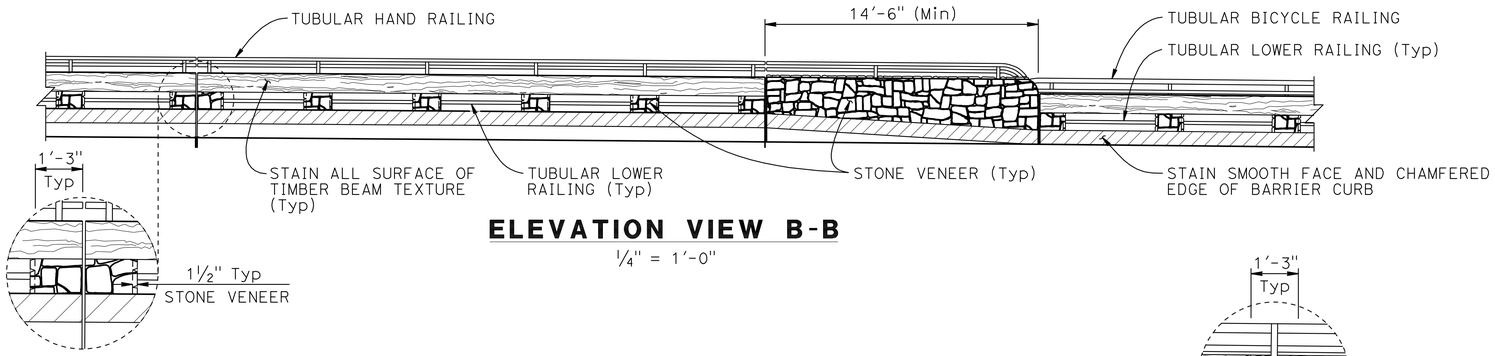

ELEVATION VIEW B-B

¼" = 1'-0"

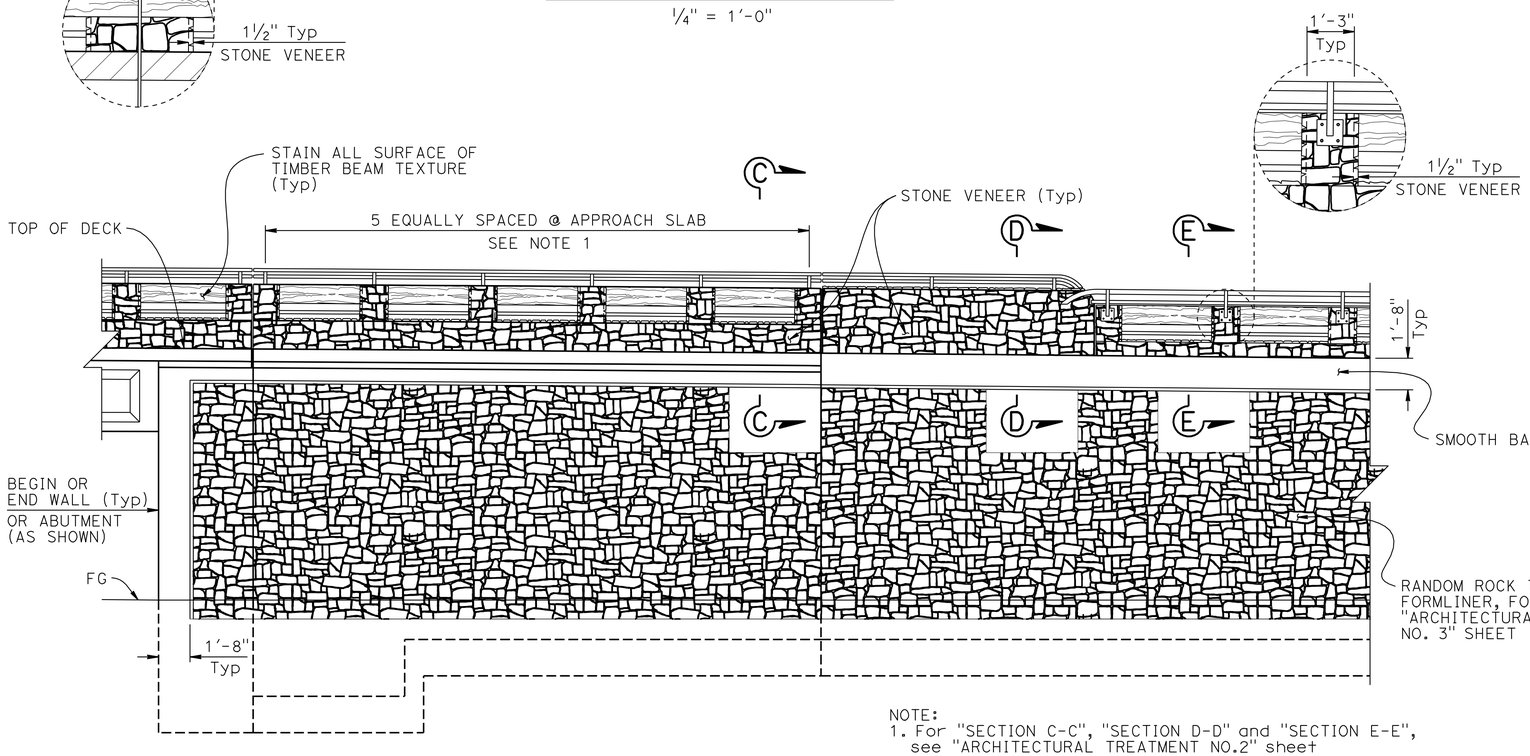

NOTE:
1. For "SECTION C-C", "SECTION D-D" and "SECTION E-E", see "ARCHITECTURAL TREATMENT NO.2" sheet

ELEVATION VIEW A-A

¼" = 1'-0"

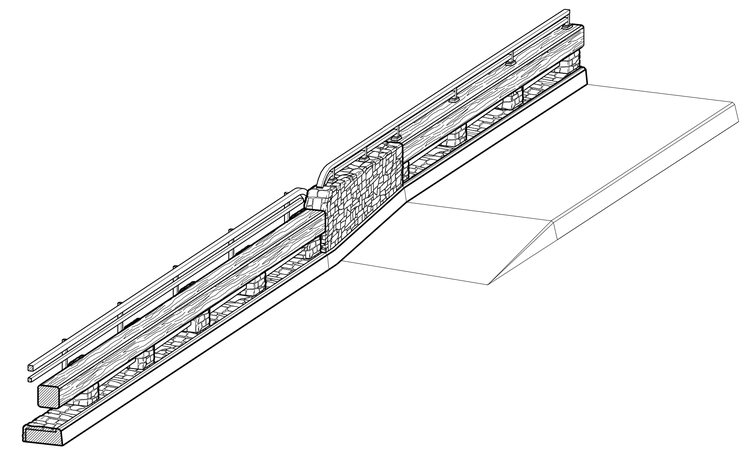

ISOMETRIC PARTIAL VIEW ARCHITECTURAL TREATMENT

NO SCALE

NOTE:
1. Post to be spaced equally, typically 6'-6" spacing. Post spacing may be reduced where location of hinges or expansion joints or the length of wingwalls will not accomodate the 6'-6" spacing. Maximum see-through availability is to be strived for, where 6'-6" post spacing cannot be achieved
2. Contractor shall coordinate the joint locations with the aesthetic treatments so as to have the least visible impacts on the aesthetic treatment
3. This sheet is accurate for aesthetic architectural treatment only
4. For barrier end blocks not shown, see Standard Plans, architectural treatment similar

NOTE:
THE CONTRACTOR SHALL VERIFY ALL CONTROLLING FIELD DIMENSIONS BEFORE ORDERING OR FABRICATING ANY MATERIAL

	BY	CHECKED
DESIGN	Son Ly	Valerie Moore
DETAILS	Franklin Maagma	Son Ly
QUANTITIES	Mastewal Bogale	Son Ly

STATE OF CALIFORNIA
DEPARTMENT OF TRANSPORTATION

DIVISION OF ENGINEERING SERVICES
STRUCTURE DESIGN
DESIGN BRANCH 16

BRIDGE NO. 20-0296
POST MILE 9.63

LAGUNA DE SANTA ROSA (REPLACE)
ARCHITECTURAL TREATMENT NO. 1

STRUCTURES DESIGN DETAIL SHEET (ENGLISH) (REV. 09-01-10)

ORIGINAL SCALE IN INCHES FOR REDUCED PLANS 0 1 2 3

UNIT: 3617
PROJECT NUMBER & PHASE: 04000004821
CONTRACT NO.: 04-1A2901

DISREGARD PRINTS BEARING EARLIER REVISION DATES

REVISION DATES 05/07/12 07/13/12 08/07/12 09/12/12

SHEET 32 OF 39

FILE => 20-0296-u-miscdt01.dgn

USERNAME => s124496 DATE PLOTTED => 28-MAR-2013 TIME PLOTTED => 13:14

DIST	COUNTY	ROUTE	POST MILES TOTAL PROJECT	SHEET No.	TOTAL SHEETS
04	Son	12	9.6	112	118

REGISTERED CIVIL ENGINEER 9-12-12 DATE

3-25-13
PLANS APPROVAL DATE

REGISTERED PROFESSIONAL ENGINEER SON THANH LY No. 72584 Exp. 6-30-14 CIVIL STATE OF CALIFORNIA

The State of California or its officers or agents shall not be responsible for the accuracy or completeness of electronic copies of this plan sheet.

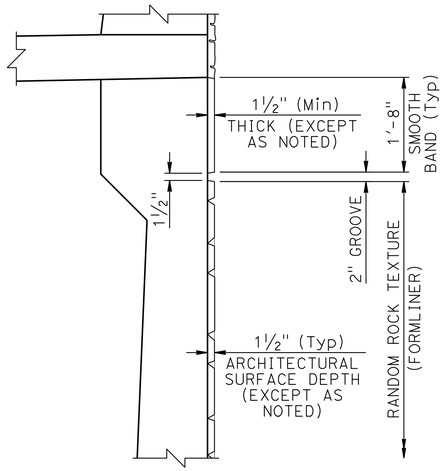

DETAIL Y
¾" = 1'-0"

NOTES:

* Color to match color of referee sample

(*) Texture to match texture of referee sample

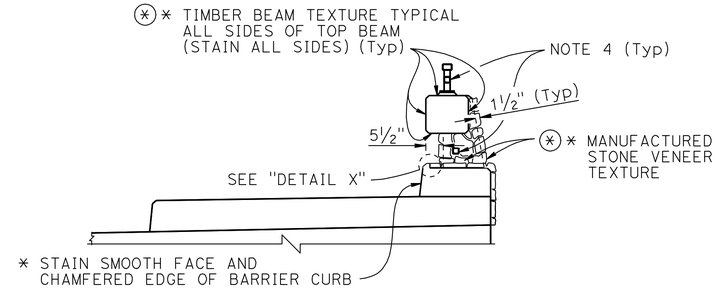

SECTION C-C
½" = 1'-0"

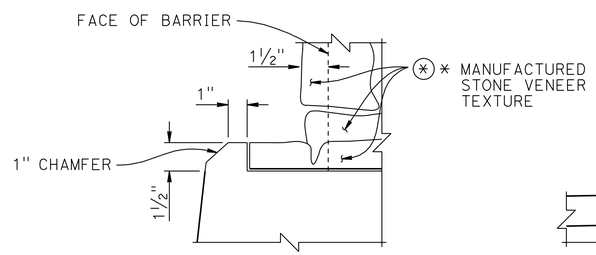

DETAIL X
3" = 1'-0"

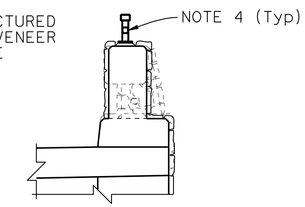

SECTION D-D
½" = 1'-0"

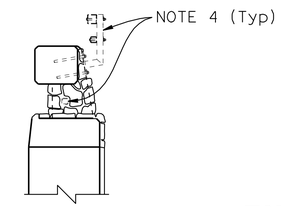

SECTION E-E
½" = 1'-0"

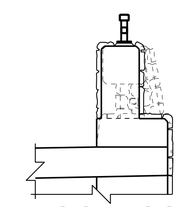

END BLOCK CONNECTION TO MBGR
½" = 1'-0"

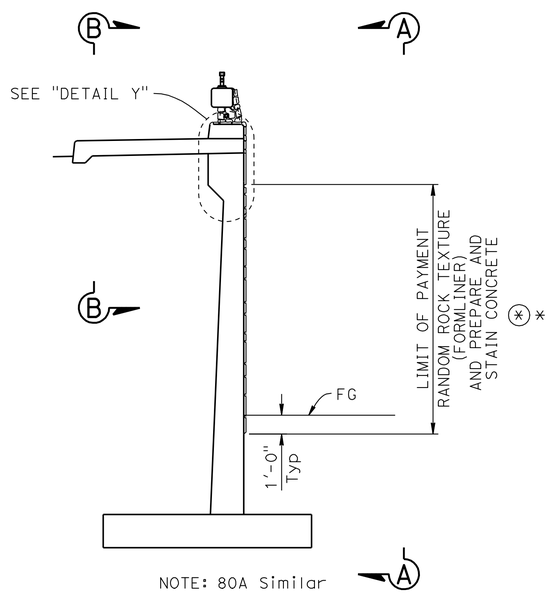

NOTE: 80A Similar

@ 80SWA TYPICAL SECTION
¼" = 1'-0"

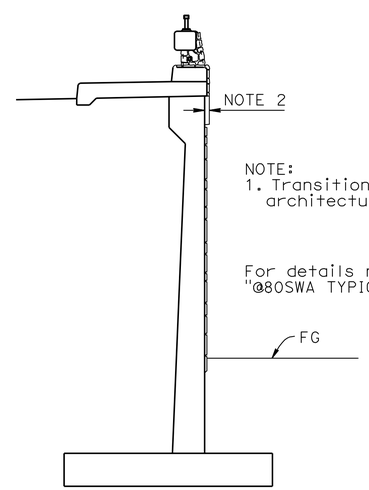

NOTE:
1. Transition and end block to have similar architectural treatment, not shown

For details not shown, see "@80SWA TYPICAL SECTION"

Sta 9+97.00 to 10+23.00 "RW1 LOL"

@ 80SWA
¼" = 1'-0"

NOTES:
1. For "SECTION A-A" and "SECTION B-B", see "ARCHITECTURAL TREATMENT NO. 1" sheet
2. Taper Thickness of smooth band, 3" Max @ 9+97 "RW1 LOL" down to match Typical Section @ 10+23 "RW1 LOL"
3. Cutting of veneer around metal base plates of tubular railings shall be avoided. If cut, surface shall be chiseled and stained
4. All tubular railings to be shop painted

NOTE:
THE CONTRACTOR SHALL VERIFY ALL CONTROLLING FIELD DIMENSIONS BEFORE ORDERING OR FABRICATING ANY MATERIAL

	BY	CHECKED
DESIGN	Son Ly	Valerie Moore
DETAILS	Franklin Maagma	Son Ly
QUANTITIES	Mastewal Bogale	Son Ly

STATE OF CALIFORNIA
DEPARTMENT OF TRANSPORTATION

DIVISION OF ENGINEERING SERVICES
STRUCTURE DESIGN
DESIGN BRANCH 16

BRIDGE NO. 20-0296
POST MILE 9.63

LAGUNA DE SANTA ROSA (REPLACE)
ARCHITECTURAL TREATMENT NO. 2

STRUCTURES DESIGN DETAIL SHEET (ENGLISH) (REV. 09-01-10)

ORIGINAL SCALE IN INCHES FOR REDUCED PLANS 0 1 2 3

UNIT: 3617
PROJECT NUMBER & PHASE: 04000004821
CONTRACT NO.: 04-1A2901

DISREGARD PRINTS BEARING EARLIER REVISION DATES

REVISION DATES 05/17/12 07/27/12 08/07/12 09/12/12

SHEET 33 OF 39

FILE => 20-0296-u-miscdt02.dgn

USERNAME => s124496 DATE PLOTTED => 28-MAR-2013 TIME PLOTTED => 13:15

DIST	COUNTY	ROUTE	POST MILES TOTAL PROJECT	SHEET No.	TOTAL SHEETS
04	Son	12	9.6	113	118

REGISTERED CIVIL ENGINEER 9-12-12 DATE

3-25-13
PLANS APPROVAL DATE

REGISTERED PROFESSIONAL ENGINEER SON THANH LY No. 72584 Exp. 6-30-14 CIVIL STATE OF CALIFORNIA

The State of California or its officers or agents shall not be responsible for the accuracy or completeness of electronic copies of this plan sheet.

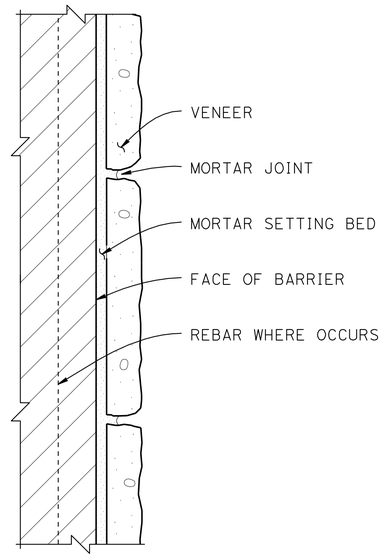

MANUFACTURED STONE VENEER TEXTURE

NO SCALE

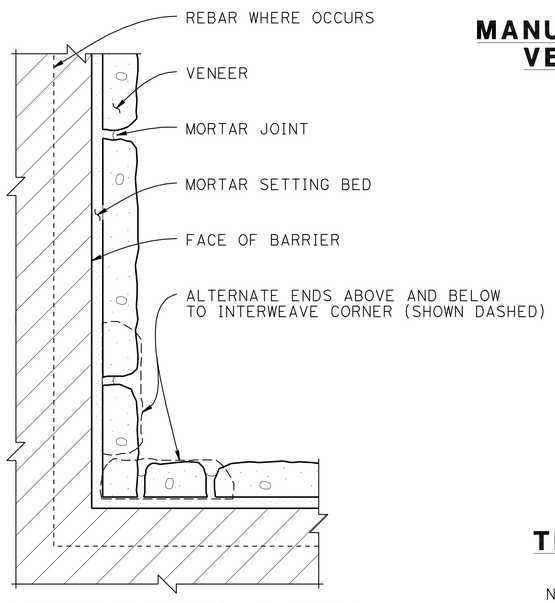

MANUFACTURED STONE VENEER TEXTURE INSIDE CORNER DETAIL

NO SCALE

NOTE:
THE CONTRACTOR SHALL VERIFY ALL CONTROLLING FIELD DIMENSIONS BEFORE ORDERING OR FABRICATING ANY MATERIAL

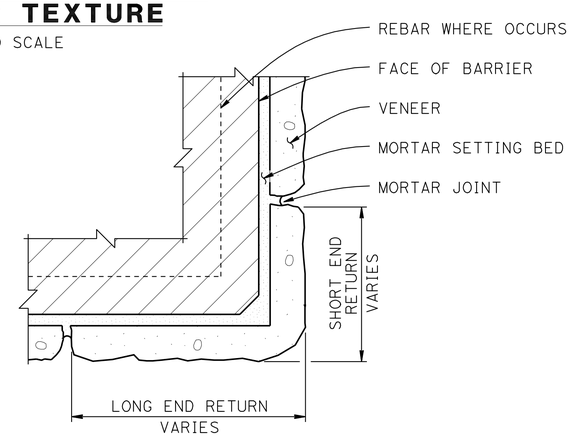

MANUFACTURED STONE VENEER TEXTURE OUTSIDE CORNER DETAIL

NO SCALE

NOTES:

1. Construct veneer according to manufacturers recommendations for adhesion to concrete surfaces
2. Construct veneer according to manufacturers recomendations for outside and insides corners where applicable unless otherwise shown on plans
3. Mortar color to match stone veneer

MANUFACTURED STONE VENEER TEXTURE "FIELDSTONE" (ON CONCRETE BARRIERS)

NO SCALE

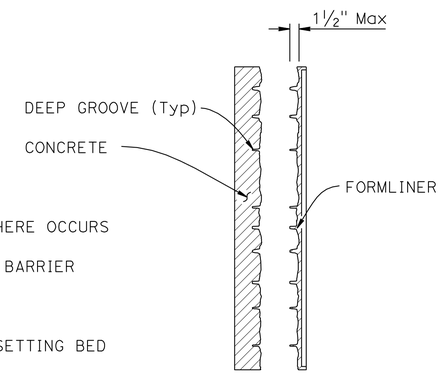

SECTION A-A

NO SCALE

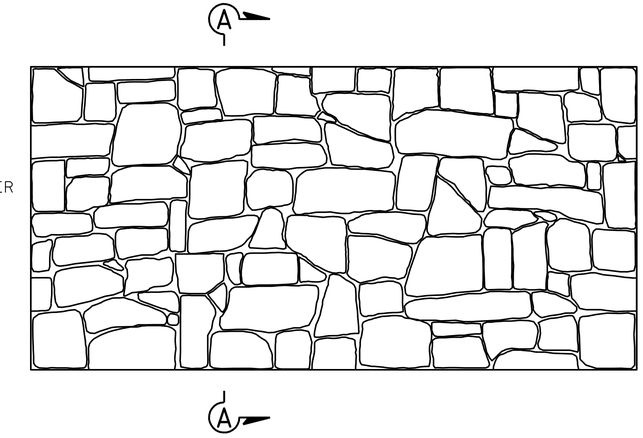

ARCHITECTURAL TREATMENT FOR RANDOM ROCK TEXTURE FORMLINER DETAIL (ON ABUTMENT AND RETAINING WALL)

NO SCALE

Architectural surface (Random Rough Stacked Rock-Fieldstone)

Maximum relief:	1½"
Stone sizes:	2½" to 18" W 2" to 12" H
Note:	Match points top to bottom/side to side

NOTES:

1. All formliner modules to be placed level with plumb edges
2. Contractor shall coordinate the joint locations with the aesthetic treatments so as to have the least visible impacts on the aesthetic treatment

	BY	CHECKED
DESIGN	Son Ly	Valerie Moore
DETAILS	Franklin Maagma	Son Ly
QUANTITIES	Mastewal Bogale	Son Ly

STATE OF CALIFORNIA
DEPARTMENT OF TRANSPORTATION

DIVISION OF ENGINEERING SERVICES
STRUCTURE DESIGN
DESIGN BRANCH 16

BRIDGE NO. 20-0296
POST MILE 9.63

LAGUNA DE SANTA ROSA (REPLACE)
ARCHITECTURAL TREATMENT NO. 3

STRUCTURES DESIGN DETAIL SHEET (ENGLISH) (REV. 09-01-10)

ORIGINAL SCALE IN INCHES FOR REDUCED PLANS 0 1 2 3

UNIT: 3617
PROJECT NUMBER & PHASE: 04000004821
CONTRACT NO.: 04-1A2901

DISREGARD PRINTS BEARING EARLIER REVISION DATES

REVISION DATES 07/25/12 08/07/12 09/12/12

SHEET 34 OF 39

FILE => 20-0296-u-miscdt03.dgn

USERNAME => s124496 DATE PLOTTED => 28-MAR-2013 TIME PLOTTED => 13:15

DIST	COUNTY	ROUTE	POST MILES TOTAL PROJECT	SHEET No.	TOTAL SHEETS
04	Son	12	9.6	114	118

REGISTERED CIVIL ENGINEER 9-12-12 DATE

3-25-13
PLANS APPROVAL DATE

REGISTERED PROFESSIONAL ENGINEER SON THANH LY No. 72584 Exp. 6-30-14 CIVIL STATE OF CALIFORNIA

The State of California or its officers or agents shall not be responsible for the accuracy or completeness of electronic copies of this plan sheet.

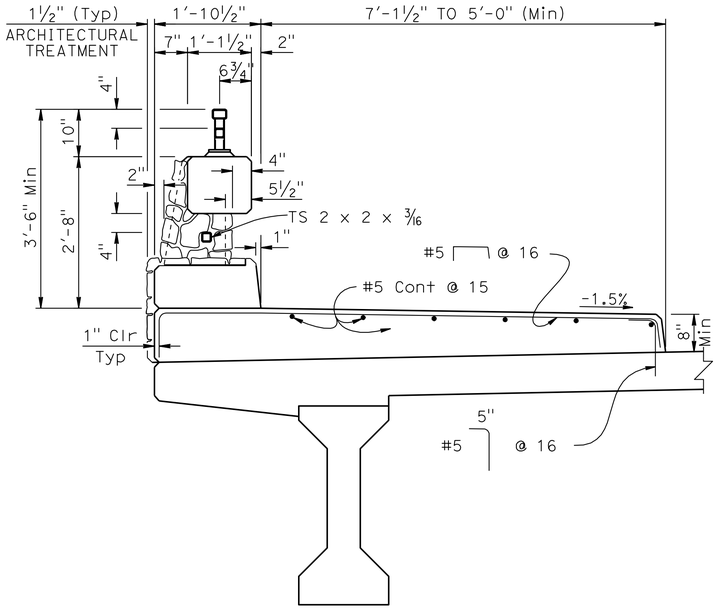

TYPE 80SW (MODIFIED)

¾" = 1'-0"

NOTES:
1. For details and reinforcement not shown, refer to Standard Plans No. B11-62, B11-63 and B11-64
2. For architectural treatment details, see "ARCHITECTURAL TREATMENT NO.1" and "ARCHITECTURAL TREATMENT NO.2" sheets
3. Utility conduits not shown

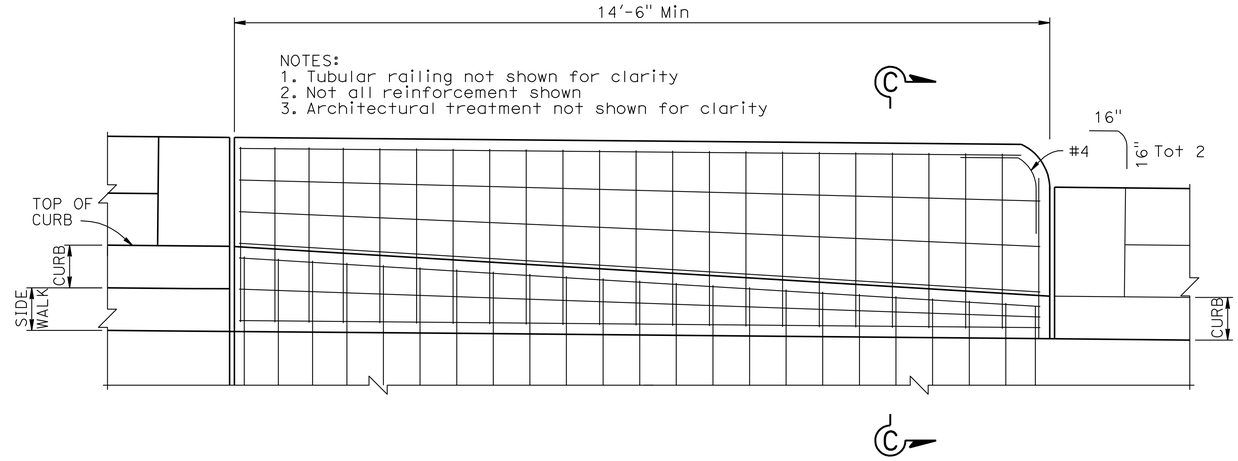

LONGITUDINAL - TRANSITION SECTION MODIFIED

(@ TRANSITION BETWEEN 80SW TO 80 ONLY)

¾" = 1'-0"

NOTE:
1. Type 80SW shown, Type 80 similar except for tubular bicycle railing

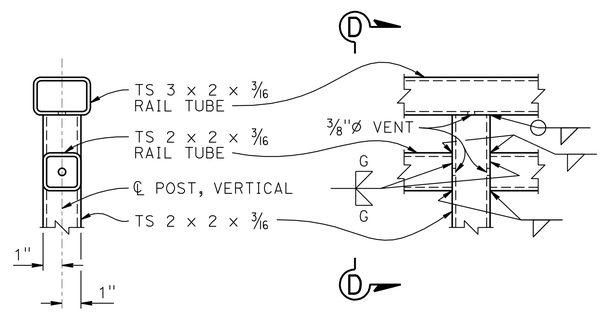

SECTION D-D

ELEVATION

* TS 2 x 2 x 3/16 SLEEVE TUBE SPLICE, SIMILAR

TUBULAR RAIL CONNECTION DETAILS (MODIFIED)

3" = 1'-0"

NOTE:
THE CONTRACTOR SHALL VERIFY ALL CONTROLLING FIELD DIMENSIONS BEFORE ORDERING OR FABRICATING ANY MATERIAL

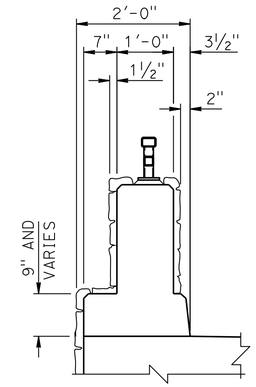

SECTION A-A

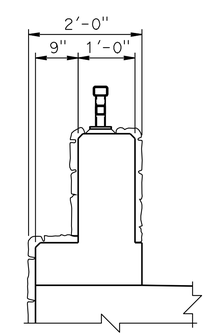

SECTION B-B

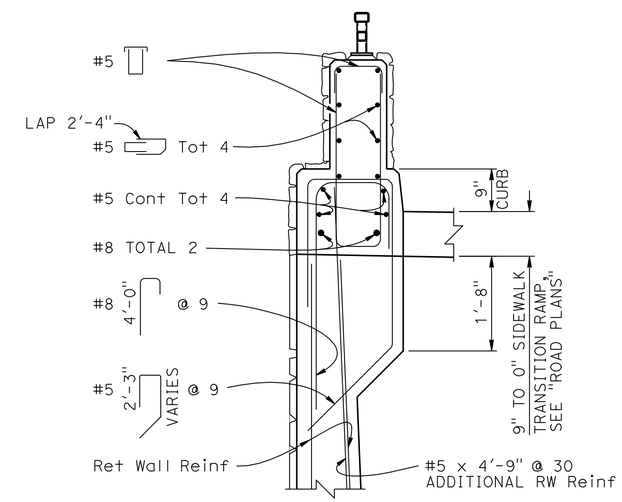

Not all reinforcement shown

SECTION C-C

(@ TRANSITION BLOCK ONLY)

For "ELEVATION" and "DETAILS" not shown, see RSP B11-60 and B11-62

MODIFIED END BLOCK SECTION

¾" = 1'-0"

DESIGN	BY Son Ly	CHECKED Valerie Moore	
DETAILS	BY Franklin Maagma	CHECKED Son Ly	
QUANTITIES	BY Mastewal Bogale	CHECKED Son Ly	

STATE OF CALIFORNIA DEPARTMENT OF TRANSPORTATION

DIVISION OF ENGINEERING SERVICES STRUCTURE DESIGN DESIGN BRANCH 16

BRIDGE NO. 20-0296
POST MILE 9.63

LAGUNA DE SANTA ROSA (REPLACE) CONCRETE BARRIER DETAILS

STRUCTURES DESIGN DETAIL SHEET (ENGLISH) (REV. 09-01-10)

ORIGINAL SCALE IN INCHES FOR REDUCED PLANS 0 1 2 3

UNIT: 3617
PROJECT NUMBER & PHASE: 04000004821
CONTRACT NO.: 04-1A2901

DISREGARD PRINTS BEARING EARLIER REVISION DATES

REVISION DATES 05/01/12 07/13/12 08/01/12 09/12/12

SHEET 35 OF 39

FILE => 20-0296-u-miscdt04.dgn

USERNAME => s124496 DATE PLOTTED => 28-MAR-2013 TIME PLOTTED => 13:15

DIST	COUNTY	ROUTE	POST MILES TOTAL PROJECT	SHEET No.	TOTAL SHEETS
04	Son	12	9.6	115	118

REGISTERED CIVIL ENGINEER 9-12-12 DATE

3-25-13
PLANS APPROVAL DATE

REGISTERED PROFESSIONAL ENGINEER SON THANH LY No. 72584 Exp. 6-30-14 CIVIL STATE OF CALIFORNIA

The State of California or its officers or agents shall not be responsible for the accuracy or completeness of electronic copies of this plan sheet.

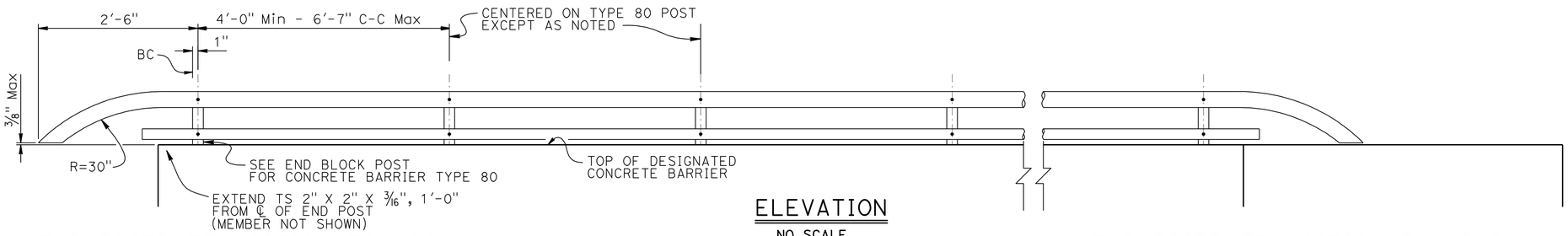

ELEVATION
NO SCALE

AT BARRIER TRANSITION TO 80SW

AT BARRIER TRANSITION TO MBGR

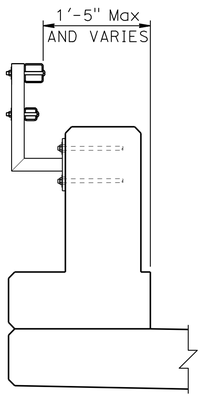

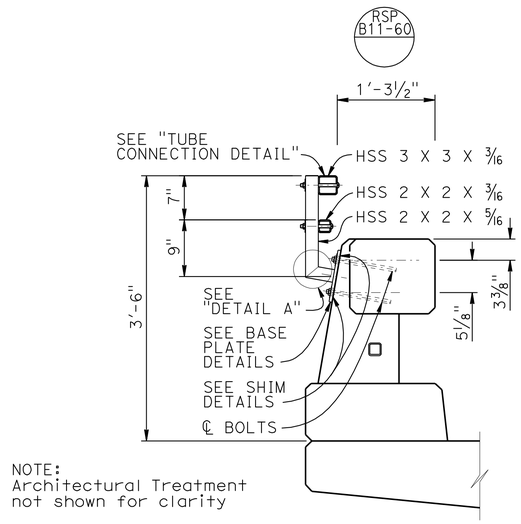

TYPE 80 END BLOCK POST
1" = 1'-0"

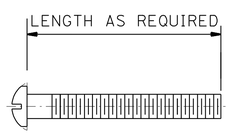

ROUND HEAD SCREW DETAIL
NO SCALE

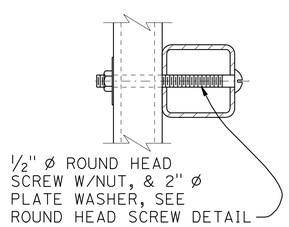

TUBE CONNECTION DETAIL
NO SCALE

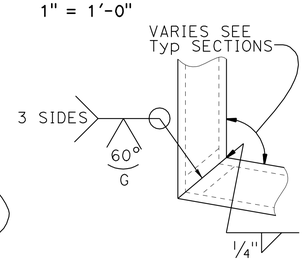

TYPE 80
1" = 1'-0"

DETAIL A
NO SCALE

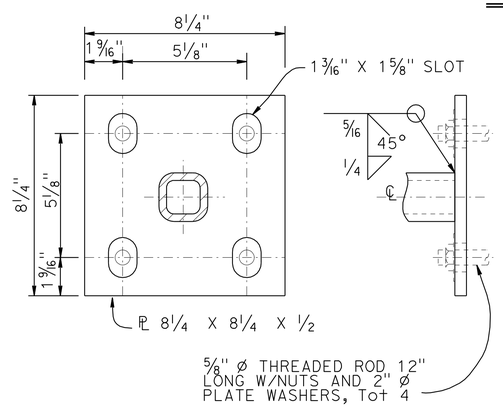

BASE PLATE DETAIL
NO SCALE

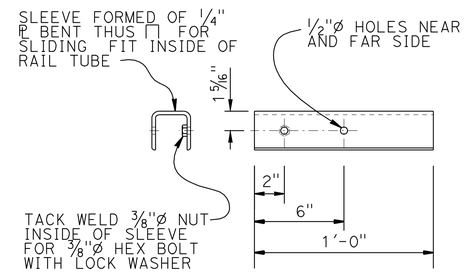

SLEEVE DETAIL
NO SCALE

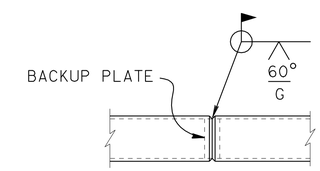

WELDED SPLICE DETAIL
NO SCALE

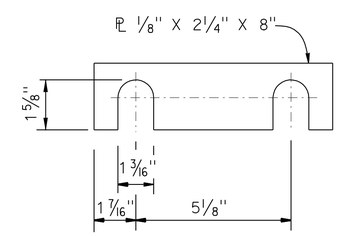

SHIM DETAILS
NO SCALE

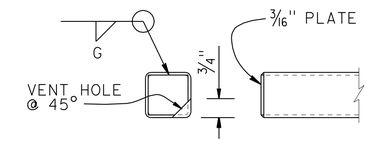

RAIL CAP DETAIL
NO SCALE

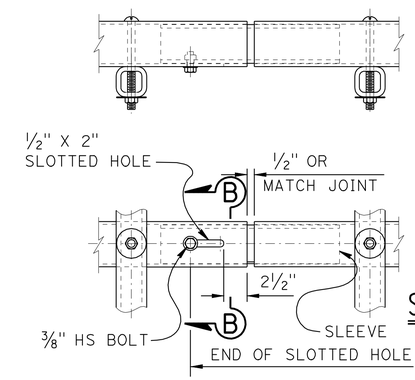

SECTION B-B
NO SCALE

TUBE EXPANSION JOINT DETAILS
NO SCALE

NOTES:

1. Post shall be normal to railing
2. Rail tubes shall be shop bent or fabricated to fit horizontal curve when radius is less than 12"
3. Tube splices shall be located in the tubes spanning deck or wall joints. Increase joint width in tubes to match expansion joint width and increase sleeve length correspondingly
4. Top rail tube shall be continuous over not less than two posts except a short post spacing is permitted near deck or wall joints, electroliers, or other rail discontinuities as noted
5. See Project Plans for limits of tubular hand railing
6. All tubular railings to be shop painted

DESIGN	BY Son Ly	CHECKED Valerie Moore	
DETAILS	BY Franklin Maagma	CHECKED Son Ly	
QUANTITIES	BY Mastewal Bogale	CHECKED Son Ly	

STATE OF CALIFORNIA
DEPARTMENT OF TRANSPORTATION

DIVISION OF ENGINEERING SERVICES
STRUCTURE DESIGN
DESIGN BRANCH 16

BRIDGE NO. 20-0296
POST MILE 9.63

LAGUNA DE SANTA ROSA (REPLACE)
TUBULAR BICYCLE RAILING DETAILS

STRUCTURES DESIGN DETAIL SHEET (ENGLISH) (REV. 09-01-10)

ORIGINAL SCALE IN INCHES FOR REDUCED PLANS 0 1 2 3

UNIT: 3617
PROJECT NUMBER & PHASE: 04000004821
CONTRACT NO.: 04-1A2901

DISREGARD PRINTS BEARING EARLIER REVISION DATES

REVISION DATES 05/24/12 07/25/12 08/07/12 09/12/12

SHEET 36 OF 39

FILE => 20-0296-u-miscdt05.dgn

USERNAME => s124496 DATE PLOTTED => 28-MAR-2013 TIME PLOTTED => 13:15

DIST	COUNTY	ROUTE	POST MILES TOTAL PROJECT	SHEET No	TOTAL SHEETS
04	Son	12	9.6	116	118

09-10-12

3-25-13
PLANS APPROVAL DATE

REGISTERED PROFESSIONAL ENGINEER — Zhaohui Yang — No. 71801 — Exp. 12-31-13 — CIVIL — STATE OF CALIFORNIA

The State of California or its officers or agents shall not be responsible for the accuracy or completeness of electronic copies of this plan sheet.

This LOTB sheet was prepared in accordance with the Caltrans Soil & Rock Logging, Classification, & Presentation Manual (2010 Edition).

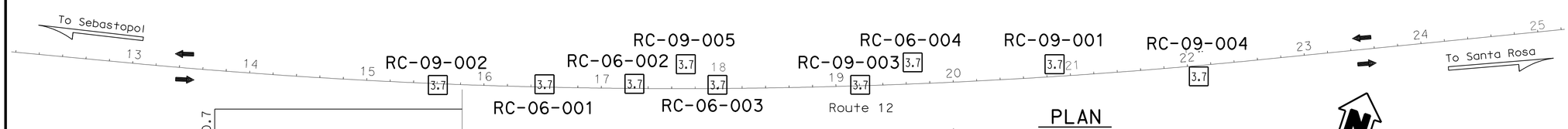

PLAN
1"=50'

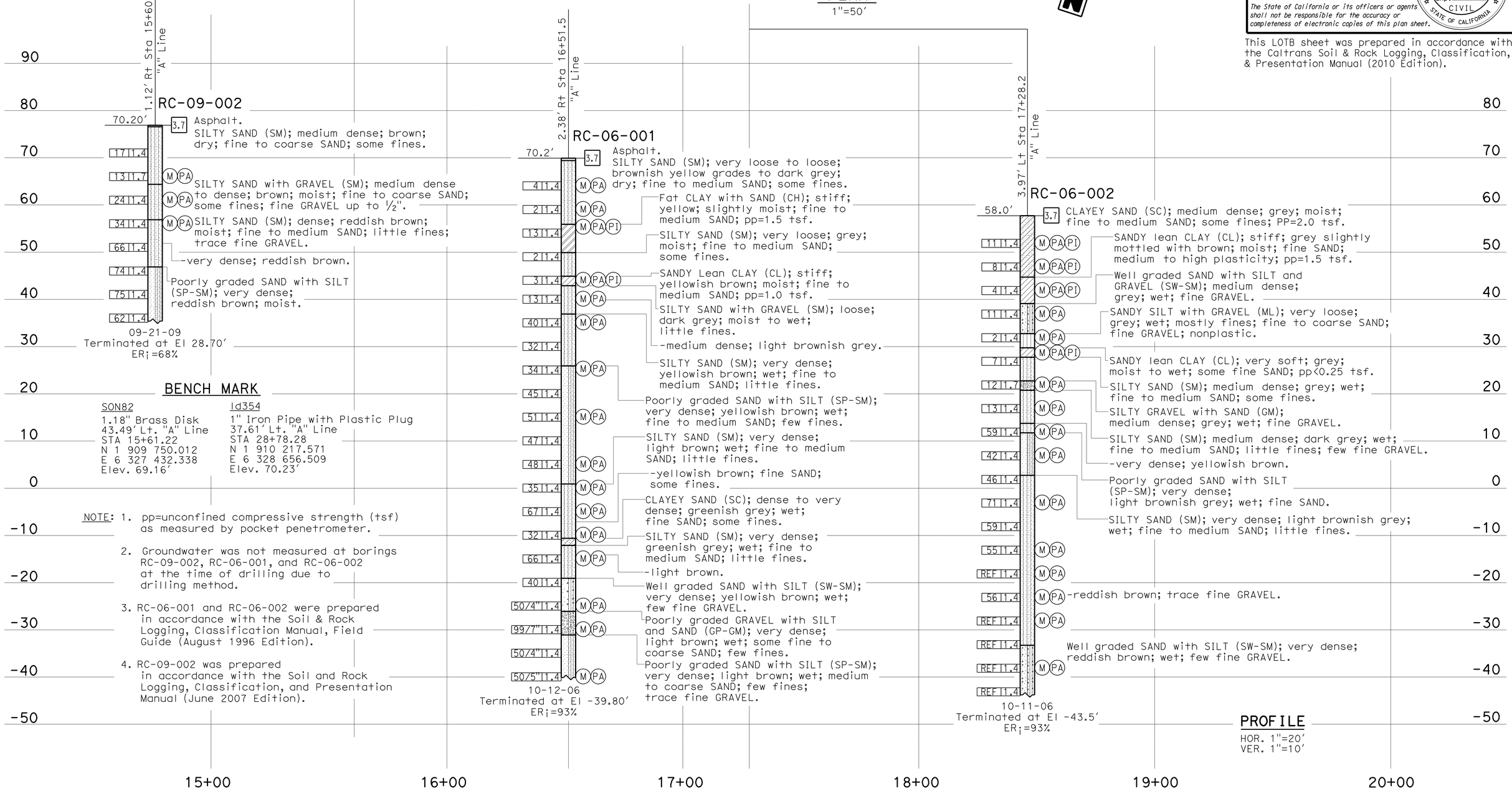

BENCH MARK

SON82	Id354
1.18" Brass Disk	1" Iron Pipe with Plastic Plug
43.49' Lt. "A" Line	37.61' Lt. "A" Line
STA 15+61.22	STA 28+78.28
N 1 909 750.012	N 1 910 217.571
E 6 327 432.338	E 6 328 656.509
Elev. 69.16'	Elev. 70.23'

NOTE:
1. pp=unconfined compressive strength (tsf) as measured by pocket penetrometer.
2. Groundwater was not measured at borings RC-09-002, RC-06-001, and RC-06-002 at the time of drilling due to drilling method.
3. RC-06-001 and RC-06-002 were prepared in accordance with the Soil & Rock Logging, Classification Manual, Field Guide (August 1996 Edition).
4. RC-09-002 was prepared in accordance with the Soil and Rock Logging, Classification, and Presentation Manual (June 2007 Edition).

PROFILE
HOR. 1"=20'
VER. 1"=10'

ENGINEERING SERVICES		GEOTECHNICAL SERVICES	STATE OF CALIFORNIA DEPARTMENT OF TRANSPORTATION	DIVISION OF ENGINEERING SERVICES OFFICE OF GEOTECHNICAL DESIGN BRANCH	BRIDGE NO. 20-0296	LAGUNA DE SANTA ROSA (REPLACE)
FUNCTIONAL SUPERVISOR	DRAWN BY: M. Reynolds 12/09	FIELD INVESTIGATION BY: R. Nashed, M. Hung, V. Khata-O-Khotan			POST MILES 9.63	LOG OF TEST BORINGS 1 of 3
NAME: H. Nikoui	CHECKED BY: M. Gaffney					

ORIGINAL SCALE IN INCHES FOR REDUCED PLANS 0 1 2 3

UNIT: 3660
PROJECT NUMBER & PHASE: 04000004821 CONTRACT NO.: 041A2901

DISREGARD PRINTS BEARING EARLIER REVISION DATES → 08/01/12 09/10/12

SHEET 37 OF 39

FILE => 20-0296-z-ltb01.dgn

USERNAME => s124496 DATE PLOTTED => 28-MAR-2013 TIME PLOTTED => 13:15

DIST	COUNTY	ROUTE	POST MILES TOTAL PROJECT	SHEET No	TOTAL SHEETS
04	Son	12	9.6	117	118

09-10-12

3-25-13
PLANS APPROVAL DATE

REGISTERED PROFESSIONAL ENGINEER Zhaohui Yang No. 71801 Exp. 12-31-13 CIVIL STATE OF CALIFORNIA

The State of California or its officers or agents shall not be responsible for the accuracy or completeness of electronic copies of this plan sheet.

This LOTB sheet was prepared in accordance with the Caltrans Soil & Rock Logging, Classification, & Presentation Manual (2010 Edition).

(For Boring Location See Plan, LOTB Sheet 1 of 3)

PROFILE
HOR. 1"=10'
VER. 1"=10'

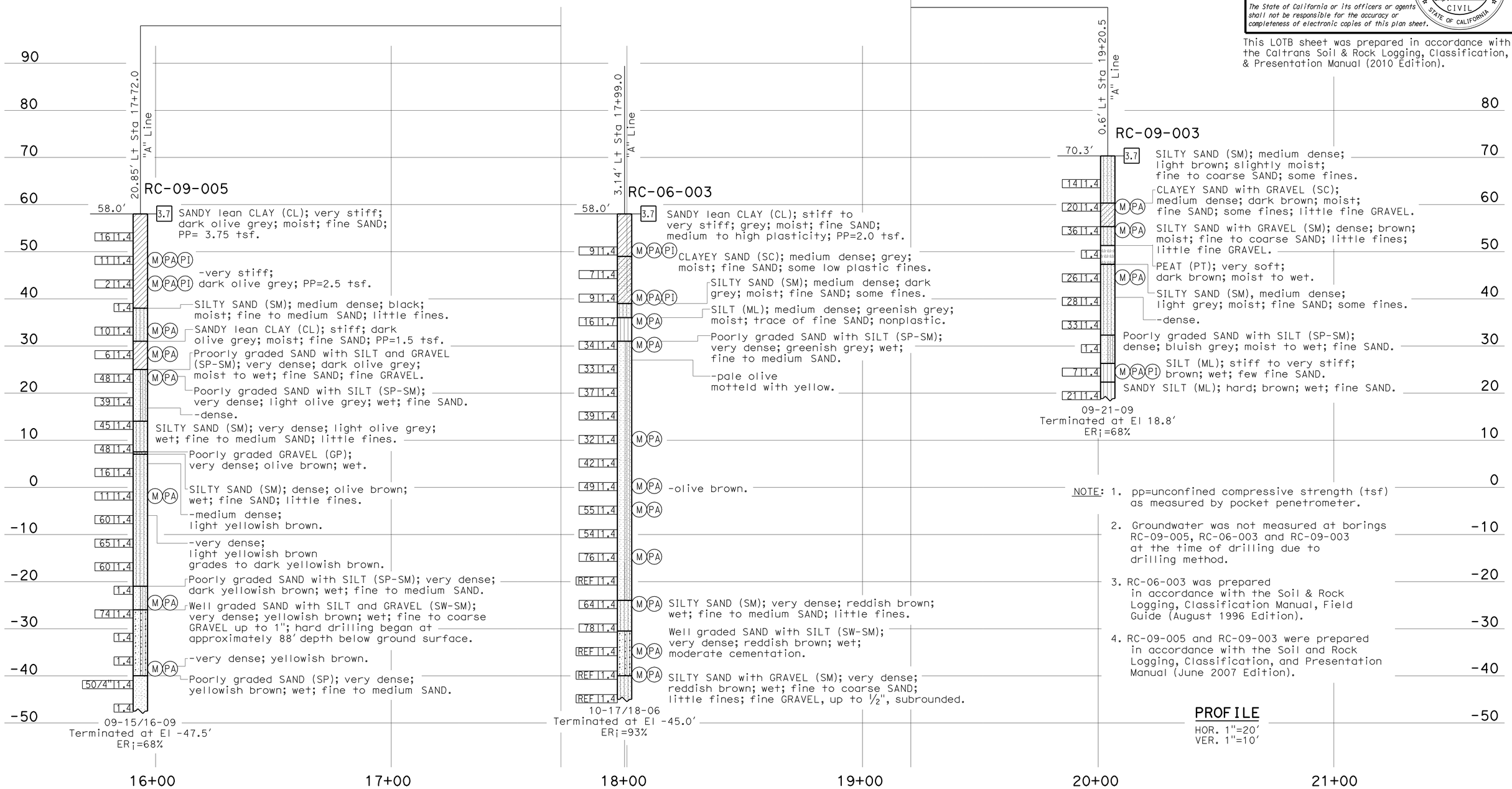

NOTE:
1. pp=unconfined compressive strength (tsf) as measured by pocket penetrometer.
2. Groundwater was not measured at borings RC-09-005, RC-06-003 and RC-09-003 at the time of drilling due to drilling method.
3. RC-06-003 was prepared in accordance with the Soil & Rock Logging, Classification Manual, Field Guide (August 1996 Edition).
4. RC-09-005 and RC-09-003 were prepared in accordance with the Soil and Rock Logging, Classification, and Presentation Manual (June 2007 Edition).

PROFILE
HOR. 1"=20'
VER. 1"=10'

ENGINEERING SERVICES		GEOTECHNICAL SERVICES	STATE OF CALIFORNIA DEPARTMENT OF TRANSPORTATION	DIVISION OF ENGINEERING SERVICES OFFICE OF GEOTECHNICAL DESIGN BRANCH	BRIDGE NO. 20-0296	LAGUNA DE SANTA ROSA (REPLACE)
FUNCTIONAL SUPERVISOR	DRAWN BY: M. Reynolds 12/09	FIELD INVESTIGATION BY: R. Nashed, M. Hung, V. Khata-O-Khotan			POST MILES 9.63	LOG OF TEST BORINGS 2 of 3
NAME: H. Nikoui	CHECKED BY: M. Gaffney					

ORIGINAL SCALE IN INCHES FOR REDUCED PLANS 0 1 2 3

UNIT: 3660
PROJECT NUMBER & PHASE: 04000004821 CONTRACT NO.: 041A2901

DISREGARD PRINTS BEARING EARLIER REVISION DATES → 08/01/12 09/10/12

SHEET 38 OF 39

FILE => 20-0296-z-ltb02.dgn

USERNAME => s124496 DATE PLOTTED => 28-MAR-2013 TIME PLOTTED => 13:15

DIST	COUNTY	ROUTE	POST MILES TOTAL PROJECT	SHEET No	TOTAL SHEETS
04	Son	12	9.6	118	118

09-10-12

3-25-13
PLANS APPROVAL DATE

REGISTERED PROFESSIONAL ENGINEER
Zhaohui Yang
No. 71801
Exp. 12-31-13
CIVIL
STATE OF CALIFORNIA

The State of California or its officers or agents shall not be responsible for the accuracy or completeness of electronic copies of this plan sheet.

This LOTB sheet was prepared in accordance with the Caltrans Soil & Rock Logging, Classification, & Presentation Manual (2010 Edition).

(For Boring Location See Plan, LOTB Sheet 1 of 3)

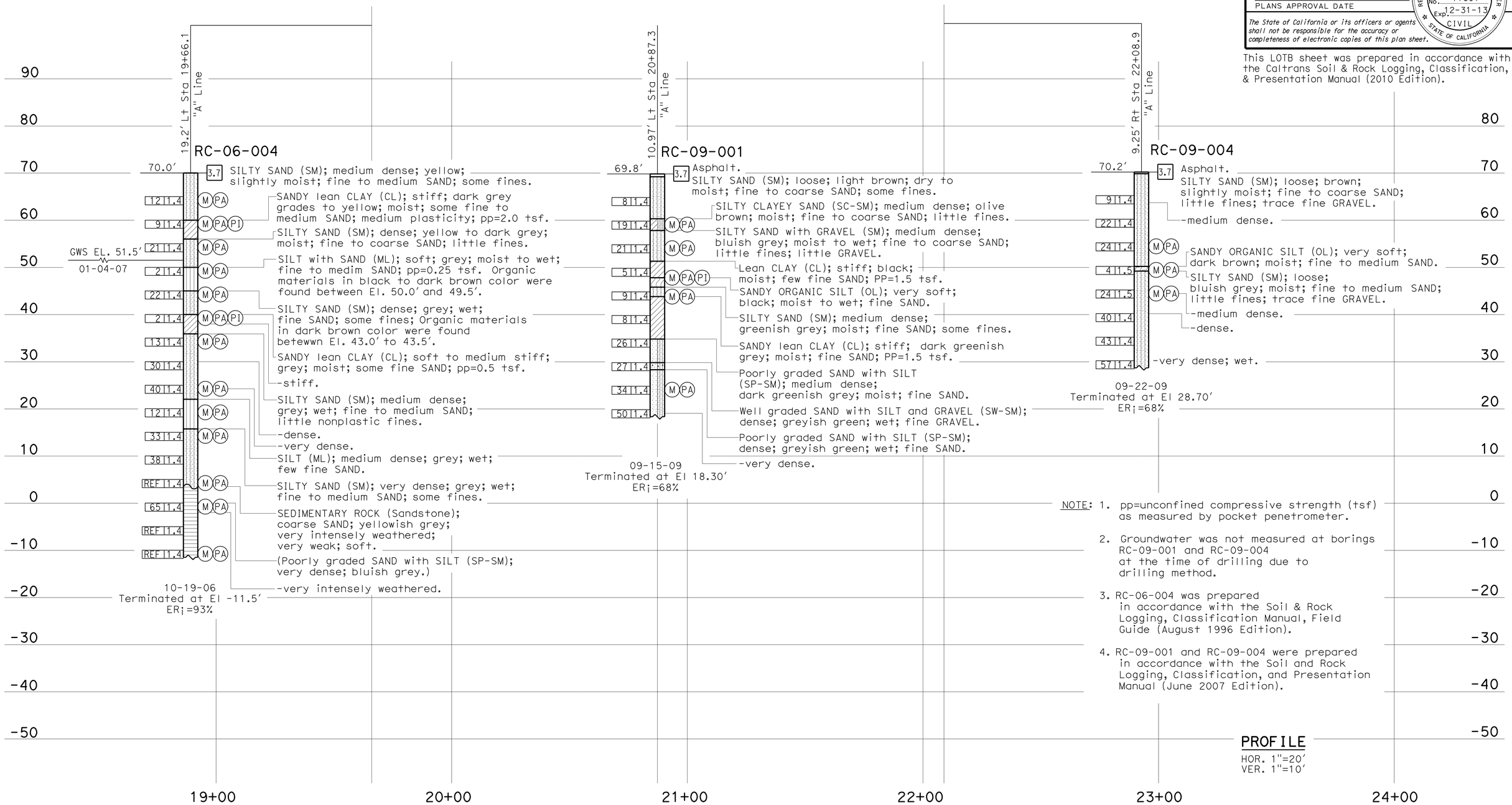

NOTE:
1. pp=unconfined compressive strength (tsf) as measured by pocket penetrometer.
2. Groundwater was not measured at borings RC-09-001 and RC-09-004 at the time of drilling due to drilling method.
3. RC-06-004 was prepared in accordance with the Soil & Rock Logging, Classification Manual, Field Guide (August 1996 Edition).
4. RC-09-001 and RC-09-004 were prepared in accordance with the Soil and Rock Logging, Classification, and Presentation Manual (June 2007 Edition).

PROFILE
HOR. 1"=20′
VER. 1"=10′

ENGINEERING SERVICES		GEOTECHNICAL SERVICES	STATE OF CALIFORNIA DEPARTMENT OF TRANSPORTATION	DIVISION OF ENGINEERING SERVICES OFFICE OF GEOTECHNICAL DESIGN BRANCH	BRIDGE NO. 20-0296 POST MILES 9.63	LAGUNA DE SANTA ROSA (REPLACE)
FUNCTIONAL SUPERVISOR	DRAWN BY: M. Reynolds 12/09	FIELD INVESTIGATION BY: R. Nashed, M. Hung, V. Khata-O-Khotan				LOG OF TEST BORINGS 3 of 3
NAME: H. Nikoui	CHECKED BY: M. Gaffney					

ORIGINAL SCALE IN INCHES FOR REDUCED PLANS 0 1 2 3

UNIT: 3660
PROJECT NUMBER & PHASE: 04000004821 CONTRACT NO.: 041A2901

DISREGARD PRINTS BEARING EARLIER REVISION DATES → 08/01/12 09/10/12

SHEET 39 OF 39

FILE => 20-0296-z-ltb03.dgn

USERNAME => s124496 DATE PLOTTED => 28-MAR-2013 TIME PLOTTED => 13:15