INDEX OF PLANS

SHEET No.	DESCRIPTION
1	TITLE SHEET AND LOCATION MAP
2-6	DRAINAGE PLAN, PROFILES, DETAILS AND QUANTITIES
7	UTILITY PLAN
8	CONSTRUCTION AREA SIGNS
9-11	TRAFFIC HANDLING PLAN AND QUANTITIES
12-13	EROSION CONTROL LEGEND AND PLAN
14-19	REVISED STANDARD PLANS

THE STANDARD PLANS LIST APPLICABLE TO THIS CONTRACT IS INCLUDED IN THE NOTICE TO BIDDERS AND SPECIAL PROVISIONS BOOK.

STATE OF CALIFORNIA

DEPARTMENT OF TRANSPORTATION

ACNHPI-080-2(365)E

Dist	COUNTY	ROUTE	POST MILES TOTAL PROJECT	SHEET No.	TOTAL SHEETS
04	Sol	80	4.0/4.3	1	19

PROJECT PLANS FOR CONSTRUCTION ON

STATE HIGHWAY

IN SOLANO COUNTY
IN VALLEJO
FROM 0.70 MILE EAST OF TENNESSEE STREET OVERCROSSING TO 0.20 MILE WEST OF REDWOOD STREET OVERCROSSING

TO BE SUPPLEMENTED BY STANDARD PLANS DATED 2010

LOCATION MAP

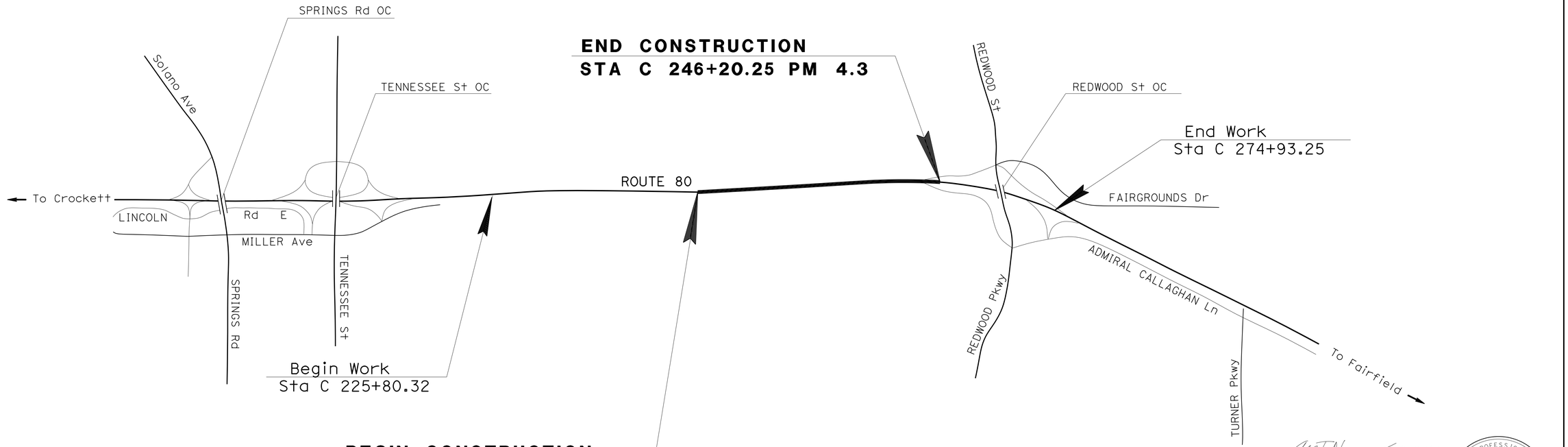

NO SCALE

PROJECT MANAGER: LAWRENCE A. JONES

DESIGN MANAGER: ARLISSA PANG

An T. Nguyen 2/6/14
PROJECT ENGINEER DATE
REGISTERED CIVIL ENGINEER

REGISTERED PROFESSIONAL ENGINEER — An T. Nguyen — No. 62776 — Exp. 6-30-14 — CIVIL — STATE OF CALIFORNIA

March 3, 2014
PLANS APPROVAL DATE

THE STATE OF CALIFORNIA OR ITS OFFICERS OR AGENTS SHALL NOT BE RESPONSIBLE FOR THE ACCURACY OR COMPLETENESS OF SCANNED COPIES OF THIS PLAN SHEET.

THE CONTRACTOR SHALL POSSESS THE CLASS (OR CLASSES) OF LICENSE AS SPECIFIED IN THE "NOTICE TO BIDDERS."

CONTRACT No.	04-1A2604
PROJECT ID	0400000480

LAST REVISION 03-03-14 — DATE PLOTTED => 17-MAR-2014 — TIME PLOTTED => 15:39

Dist	COUNTY	ROUTE	POST MILES TOTAL PROJECT	SHEET No.	TOTAL SHEETS
04	Sol	80	4.0/4.3	2	19

Eric Kawakita 2/10/14
REGISTERED CIVIL ENGINEER DATE

3-3-14
PLANS APPROVAL DATE

REGISTERED PROFESSIONAL ENGINEER
Eric S. Kawakita
No. 78480
Exp 9-30-15
CIVIL
STATE OF CALIFORNIA

THE STATE OF CALIFORNIA OR ITS OFFICERS OR AGENTS SHALL NOT BE RESPONSIBLE FOR THE ACCURACY OR COMPLETENESS OF SCANNED COPIES OF THIS PLAN SHEET.

LEGEND:

(No.) DRAINAGE SYSTEM NUMBER

( ) DRAINAGE UNIT

NOTE:

1. PROJECT VERTICAL DATUM IS NAVD 88.

ABBREVIATION:

w/ WITH

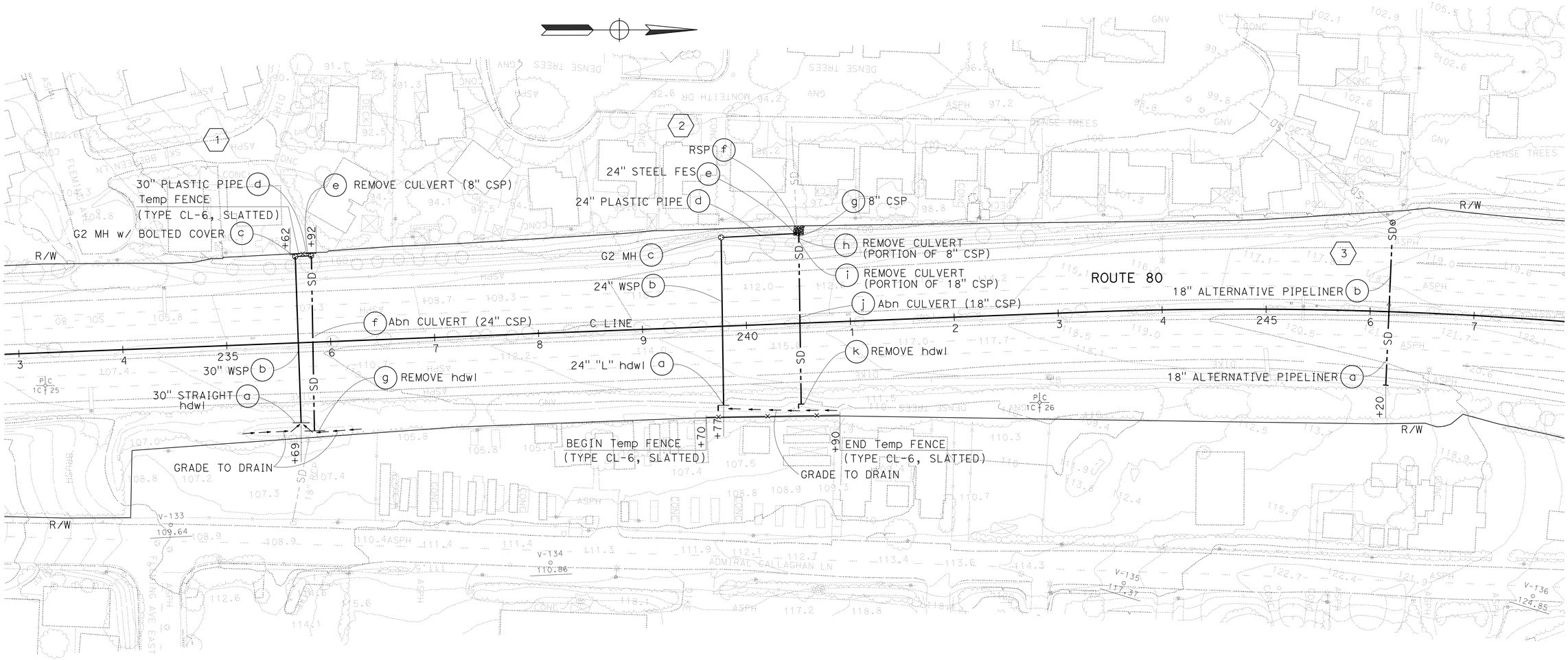

DRAINAGE PLAN
SCALE: 1" = 50'

D-1

APPROVED FOR DRAINAGE WORK ONLY

STATE OF CALIFORNIA - DEPARTMENT OF TRANSPORTATION
Caltrans®
HYDRAULICS

FUNCTIONAL SUPERVISOR: JOSEPH PETERSON

CALCULATED-DESIGNED BY: ERIC KAWAKITA
CHECKED BY: AN NGUYEN

REVISED BY: EK
DATE REVISED: 2/25/14

LAST REVISION DATE PLOTTED => 17-MAR-2014
03-03-14 TIME PLOTTED => 15:39

BORDER LAST REVISED 2/1/2013

USERNAME => s123043
DGN FILE => 04000004801a001.dgn

RELATIVE BORDER SCALE IS IN INCHES 0 1 2 3

UNIT 0702

PROJECT NUMBER & PHASE 04000004801

Dist	COUNTY	ROUTE	POST MILES TOTAL PROJECT	SHEET No.	TOTAL SHEETS
04	Sol	80	4.0/4.3	3	19

Eric Kawakita 2/10/14
REGISTERED CIVIL ENGINEER DATE

3-3-14
PLANS APPROVAL DATE

REGISTERED PROFESSIONAL ENGINEER
Eric S. Kawakita
No. 78480
Exp. 9-30-15
CIVIL
STATE OF CALIFORNIA

THE STATE OF CALIFORNIA OR ITS OFFICERS OR AGENTS SHALL NOT BE RESPONSIBLE FOR THE ACCURACY OR COMPLETENESS OF SCANNED COPIES OF THIS PLAN SHEET.

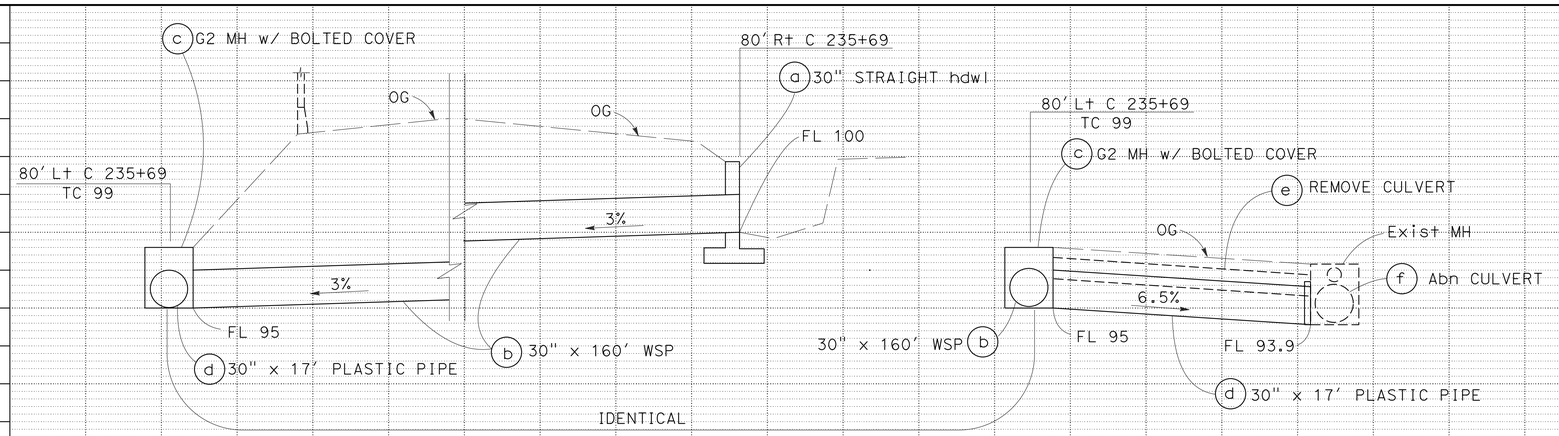

DRAINAGE SYSTEM No. 1

ABBREVIATIONS:

TC TOP OF COVER
w/ WITH

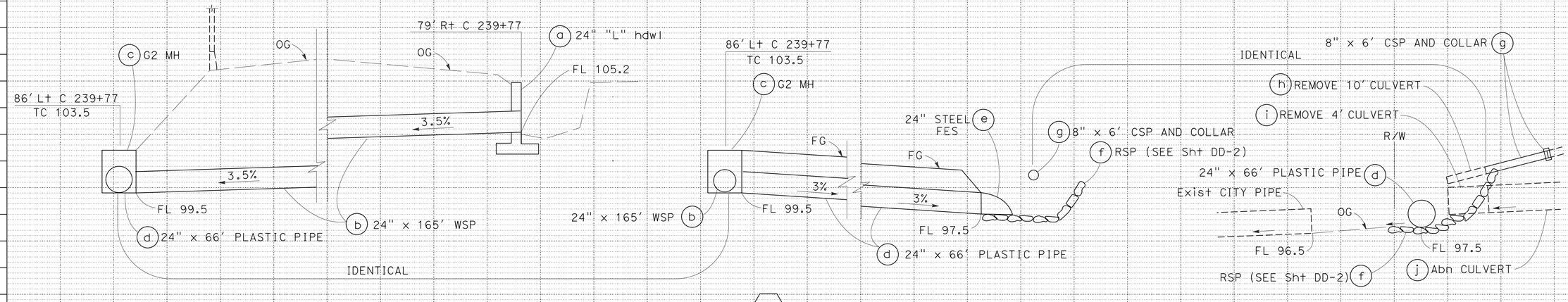

DRAINAGE SYSTEM No. 2

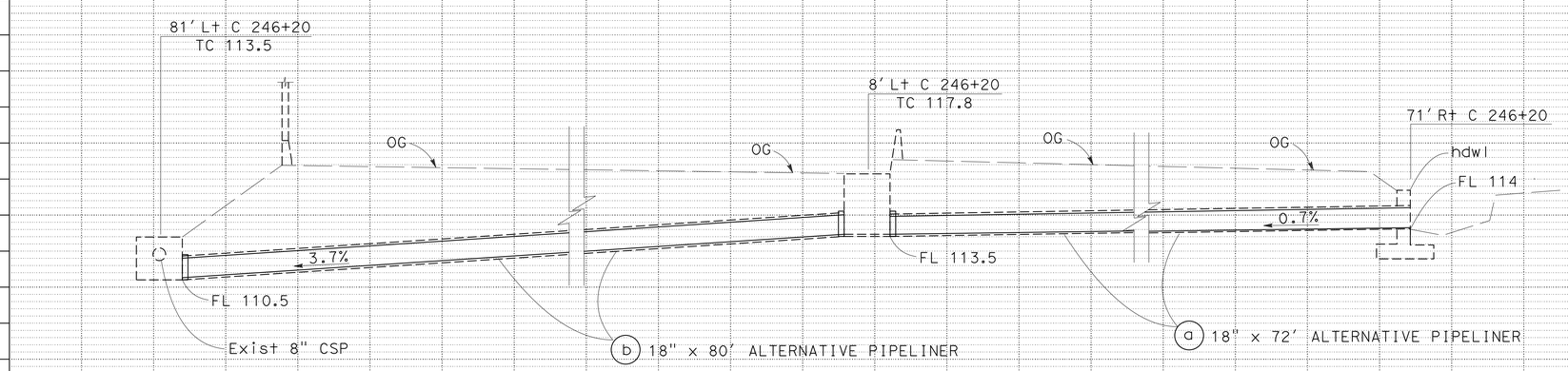

DRAINAGE SYSTEM No. 3

DRAINAGE PROFILES

SCALE: HORIZ 1" = 5'
VERT 1" = 5'

DP-1

STATE OF CALIFORNIA - DEPARTMENT OF TRANSPORTATION
Caltrans
HYDRAULICS

FUNCTIONAL SUPERVISOR: JOSEPH PETERSON
CALCULATED-DESIGNED BY: ERIC KAWAKITA
CHECKED BY: AN NGUYEN
REVISED BY: EK
DATE REVISED: 2/25/14

LAST REVISION 03-03-14
DATE PLOTTED => 17-MAR-2014
TIME PLOTTED => 15:39

Dist	COUNTY	ROUTE	POST MILES TOTAL PROJECT	SHEET No.	TOTAL SHEETS
04	Sol	80	4.0/4.3	4	19

Eric Kawakita 2/10/14
REGISTERED CIVIL ENGINEER DATE

3-3-14
PLANS APPROVAL DATE

REGISTERED PROFESSIONAL ENGINEER
Eric S. Kawakita
No. 78480
Exp. 9-30-15
CIVIL
STATE OF CALIFORNIA

THE STATE OF CALIFORNIA OR ITS OFFICERS OR AGENTS SHALL NOT BE RESPONSIBLE FOR THE ACCURACY OR COMPLETENESS OF SCANNED COPIES OF THIS PLAN SHEET.

NOTE:

1. FOR TYPE G2 INLET DETAILS NOT SHOWN, SEE Std PLAN D73.

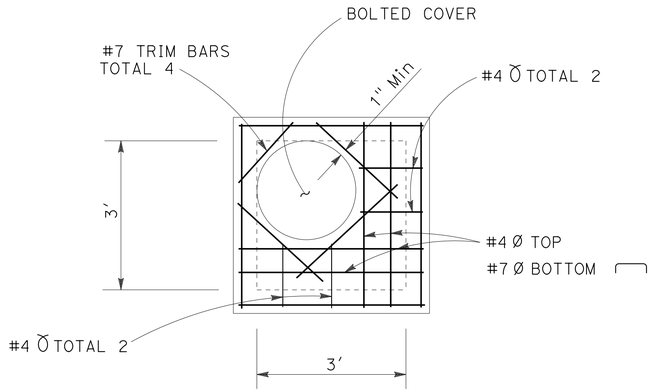

PLAN

G2 MH WITH BOLTED COVER

1 c

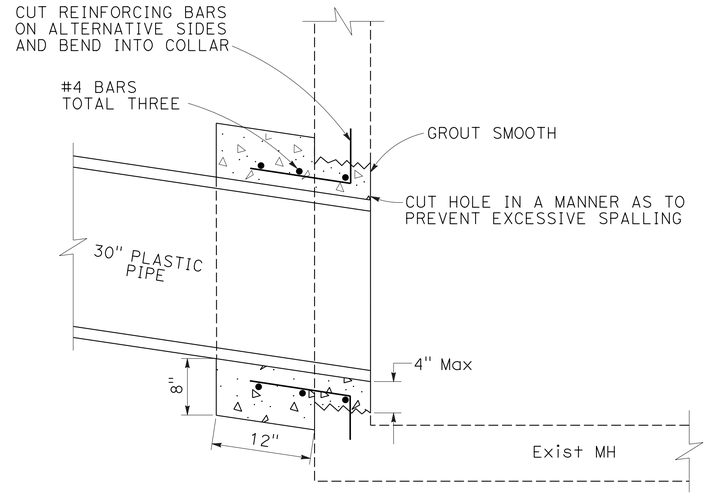

PIPE CONNECTION TO EXISTING INLET

1 d

DRAINAGE DETAILS

NO SCALE

DD-1

STATE OF CALIFORNIA - DEPARTMENT OF TRANSPORTATION
Caltrans
HYDRAULICS

FUNCTIONAL SUPERVISOR: JOSEPH PETERSON
CALCULATED-DESIGNED BY: ERIC KAWAKITA
CHECKED BY: AN NGUYEN
REVISED BY: EK
DATE REVISED: 2/25/14

LAST REVISION 03-03-14
DATE PLOTTED => 17-MAR-2014
TIME PLOTTED => 15:39

Dist	COUNTY	ROUTE	POST MILES TOTAL PROJECT	SHEET No.	TOTAL SHEETS
04	Sol	80	4.0/4.3	5	19

Eric Kawakita 2/10/14
REGISTERED CIVIL ENGINEER DATE

3-3-14
PLANS APPROVAL DATE

REGISTERED PROFESSIONAL ENGINEER
Eric S. Kawakita
No. 78480
Exp 9-30-15
CIVIL
STATE OF CALIFORNIA

THE STATE OF CALIFORNIA OR ITS OFFICERS OR AGENTS SHALL NOT BE RESPONSIBLE FOR THE ACCURACY OR COMPLETENESS OF SCANNED COPIES OF THIS PLAN SHEET.

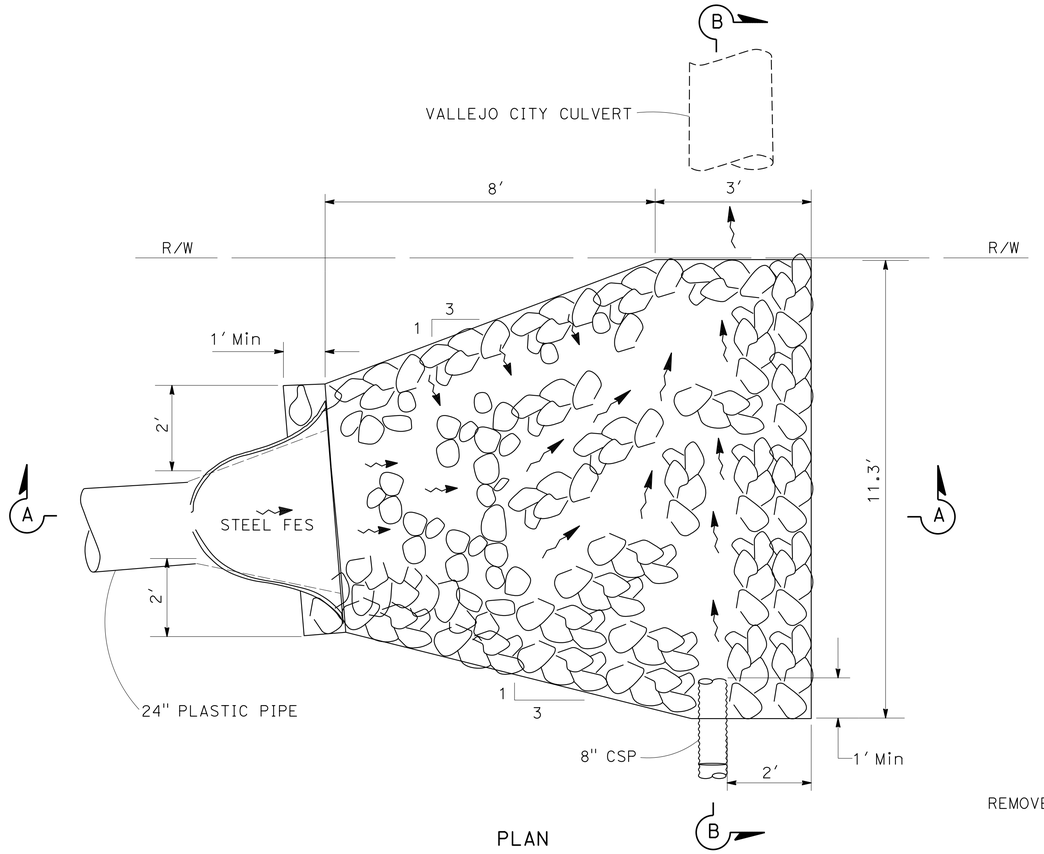

PLAN

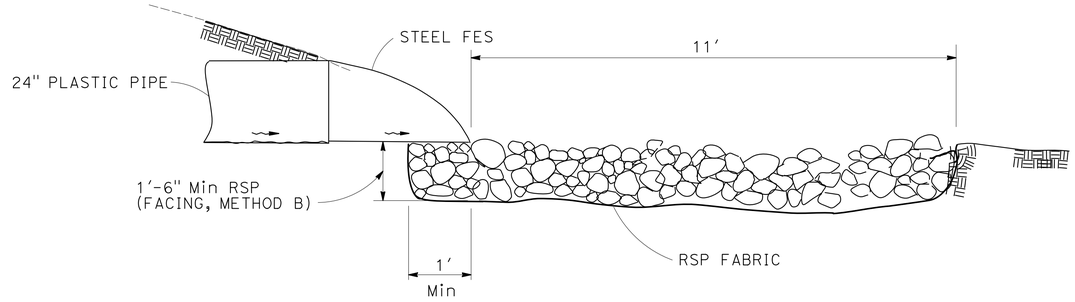

SECTION A-A

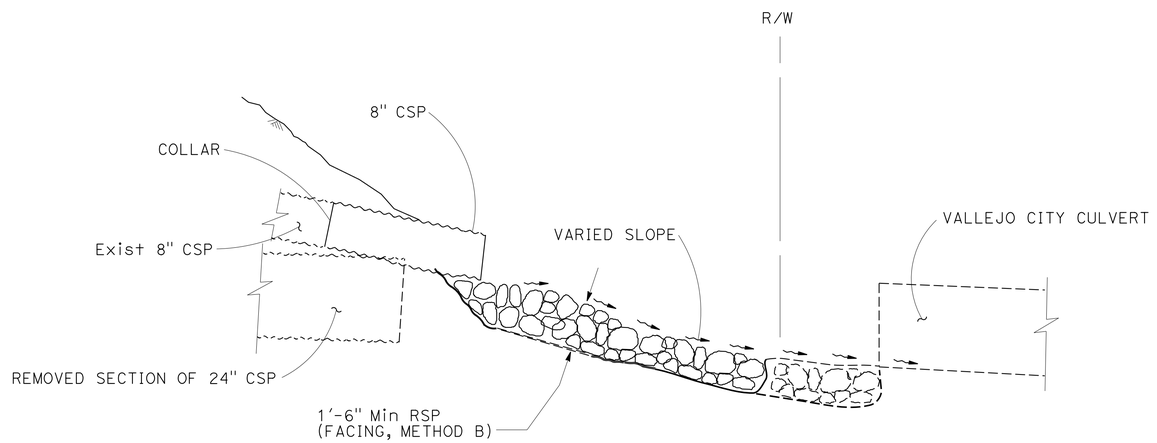

SECTION B-B

RSP

2 f

DRAINAGE DETAILS

NO SCALE

DD-2

CALCULATED-DESIGNED BY	ERIC KAWAKITA	REVISED BY	EK
CHECKED BY	AN NGUYEN	DATE REVISED	2/25/14

FUNCTIONAL SUPERVISOR: JOSEPH PETERSON

STATE OF CALIFORNIA - DEPARTMENT OF TRANSPORTATION
Caltrans®
HYDRAULICS

LAST REVISION 03-03-14 | DATE PLOTTED => 17-MAR-2014 | TIME PLOTTED => 15:39

BORDER LAST REVISED 2/1/2013

USERNAME => s123043
DGN FILE => 04000004801ic002.dgn

RELATIVE BORDER SCALE IS IN INCHES 0 1 2 3

UNIT 0702

PROJECT NUMBER & PHASE 04000004801

NOTE:

1. (N)= NOT A SEPARATE PAY ITEM, FOR INFORMATION ONLY.
2. ALTERNATIVE PIPELINER SHALL BE PLASTIC PIPELINER OR MACHINE SPIRAL WOUND PVC PIPELINER.

Dist	COUNTY	ROUTE	POST MILES TOTAL PROJECT	SHEET No.	TOTAL SHEETS
04	Sol	80	4.0/4.3	6	19

Eric Kawakita 2/10/14
REGISTERED CIVIL ENGINEER DATE

3-3-14
PLANS APPROVAL DATE

REGISTERED PROFESSIONAL ENGINEER — Eric S. Kawakita — No. 78480 — Exp 9-30-15 — CIVIL — STATE OF CALIFORNIA

THE STATE OF CALIFORNIA OR ITS OFFICERS OR AGENTS SHALL NOT BE RESPONSIBLE FOR THE ACCURACY OR COMPLETENESS OF SCANNED COPIES OF THIS PLAN SHEET.

DRAINAGE QUANTITIES

DRAINAGE SHEET No.	DRAINAGE SYSTEM No.	DRAINAGE UNIT	ABANDON CULVERT	REMOVE HEADWALL	REMOVE CULVERT	24" STEEL FES	30" WELDED STEEL PIPE	24" WELDED STEEL PIPE	30" PLASTIC PIPE	24" PLASTIC PIPE	8" CSP	18" ALTERNATIVE PIPELINER	MAXIMUM COVER (N)	MINOR CONCRETE (MINOR STRUCTURE)	Misc IRON AND STEEL	HEIGHT OF MANHOLE "H" (N)	RSP (FACING, METHOD B)	RSP FABRIC	SAND BACKFILL	DESCRIPTION	STATION	DRAINAGE SHEET No.	DRAINAGE SYSTEM No.	DRAINAGE UNIT
			LF	EA	LF	EA	LF							CY	LB	LF	CY	SQYD	CY					
D-1	1	a												1.52						30" STRAIGHT HEADWALL	80' Rt C 235+69	D-1	1	a
		b					160													30" WELDED STEEL PIPE				b
		c												1.60	375	4				G2 MANHOLE WITH BOLTED COVER	80' Lt C 235+69			c
		d							17				1.5							30" PLASTIC PIPE				d
		e			17															REMOVE CULVERT (8" CSP)				e
		f	163																19	ABANDON CULVERT (24" CSP)				f
		g		1																REMOVE HEADWALL				g
	2	a												1.29						24" "L" HEADWALL	79' Rt C 239+77		2	a
		b						165												24" WELDED STEEL PIPE				b
		c												1.60	375	4				G2 MANHOLE	86' Lt C 239+77			c
		d								66			2							24" PLASTIC PIPE				d
		e				1														24" STEEL FLARED END SECTION				e
		f															6.50	12		ROCK SLOPE PROTECTION				f
		g									6		1							8" CSP AND COLLAR				g
		h			10															REMOVE CULVERT (PORTION OF 8" CSP)				h
		i			4															REMOVE CULVERT (PORTION OF 18" CSP)				i
		j	165																10.8	ABANDON CULVERT (18" CSP)				j
		k		1																REMOVE HEADWALL				k
	3	a										72								18" ALTERNATIVE PIPELINER	C 246+20		3	a
		b										80								18" ALTERNATIVE PIPELINER	C 246+20			b
SHEET TOTAL			328	2	31	1	160	165	17	66	6	152		6.01	750	8	6.50	12	29.8	SHEET TOTAL				

ERIC KAWAKITA — CALCULATED-DESIGNED BY
AN NGUYEN — CHECKED BY
EK — REVISED BY
2/25/14 — DATE REVISED
JOSEPH PETERSON — FUNCTIONAL SUPERVISOR

STATE OF CALIFORNIA - DEPARTMENT OF TRANSPORTATION
Caltrans® HYDRAULICS

DRAINAGE QUANTITIES

DQ-1

LAST REVISION 03-03-14 | DATE PLOTTED => 17-MAR-2014 | TIME PLOTTED => 15:39

BORDER LAST REVISED 2/1/2013 | USERNAME => s123043 | DGN FILE => 04000004801id001.dgn | RELATIVE BORDER SCALE IS IN INCHES 0 1 2 3 | UNIT 0702 | PROJECT NUMBER & PHASE 04000004801

Dist	COUNTY	ROUTE	POST MILES TOTAL PROJECT	SHEET No.	TOTAL SHEETS
04	Sol	80	4.0/4.3	7	19

An T. Nguyen 2/6/14
REGISTERED CIVIL ENGINEER DATE

3-3-14
PLANS APPROVAL DATE

REGISTERED PROFESSIONAL ENGINEER — An T. Nguyen — No. 62776 — Exp. 6-30-14 — CIVIL — STATE OF CALIFORNIA

THE STATE OF CALIFORNIA OR ITS OFFICERS OR AGENTS SHALL NOT BE RESPONSIBLE FOR THE ACCURACY OR COMPLETENESS OF SCANNED COPIES OF THIS PLAN SHEET.

NOTES:

1. FOR ACCURATE RIGHT OF WAY DATA, CONTACT RIGHT OF WAY ENGINEERING AT THE DISTRICT OFFICE.
2. LOCATION OF UTILITIES ARE APPROXIMATE AND SHALL BE VERIFIED BY THE CONTRACTOR PRIOR TO CONSTRUCTION.
3. UTILITY OWNERSHIP:

ELECTRICAL - PACIFIC GAS & ELECTRIC (PG&E)
GAS - PACIFIC GAS & ELECTRIC (PG&E)
SEWER - VALLEJO SANITATION FLOOD CONTROL DISTRICT

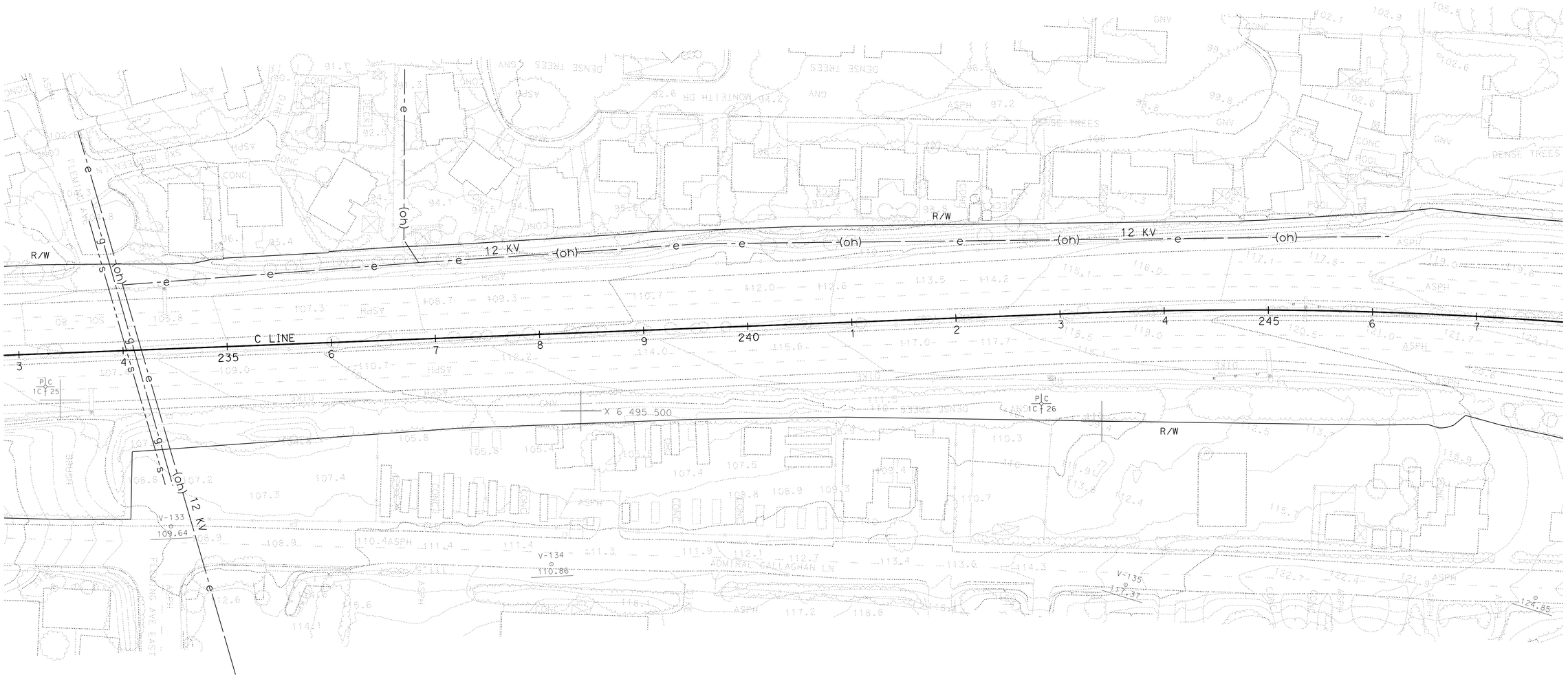

UTILITY PLAN (EXISTING UTILITIES)

SCALE: 1" = 50'

U-1

APPROVED FOR UTILITY INFORMATION ONLY

STATE OF CALIFORNIA - DEPARTMENT OF TRANSPORTATION
DESIGN
FUNCTIONAL SUPERVISOR: ARLISSA PANG
CALCULATED-DESIGNED BY: NICOLETA PASCUA
CHECKED BY: AN NGUYEN
REVISED BY: NP
DATE REVISED: 2/10/14
LAST REVISION
DATE PLOTTED => 17-MAR-2014
TIME PLOTTED => 15:39
03-03-14

BORDER LAST REVISED 2/1/2013
USERNAME => s123043
DGN FILE => 0400000480ka001.dgn
RELATIVE BORDER SCALE IS IN INCHES 0 1 2 3
UNIT 0702
PROJECT NUMBER & PHASE 04000004801

Dist	COUNTY	ROUTE	POST MILES TOTAL PROJECT	SHEET No.	TOTAL SHEETS
04	Sol	80	4.0/4.3	8	19

Jeri-Paul Fabian 2/6/14
REGISTERED CIVIL ENGINEER DATE

3-3-14
PLANS APPROVAL DATE

REGISTERED PROFESSIONAL ENGINEER
Jeri-Paul F. Fabian
No. 81174
Exp. 9-30-15
CIVIL
STATE OF CALIFORNIA

THE STATE OF CALIFORNIA OR ITS OFFICERS OR AGENTS SHALL NOT BE RESPONSIBLE FOR THE ACCURACY OR COMPLETENESS OF SCANNED COPIES OF THIS PLAN SHEET.

NOTE:

1. EXACT LOCATION AND POSITION OF CONSTRUCTION AREA SIGNS TO BE DETERMINED BY THE ENGINEER.

LEGEND:

[ ] CONSTRUCTION AREA SIGN LETTER

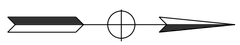

VALLEJO

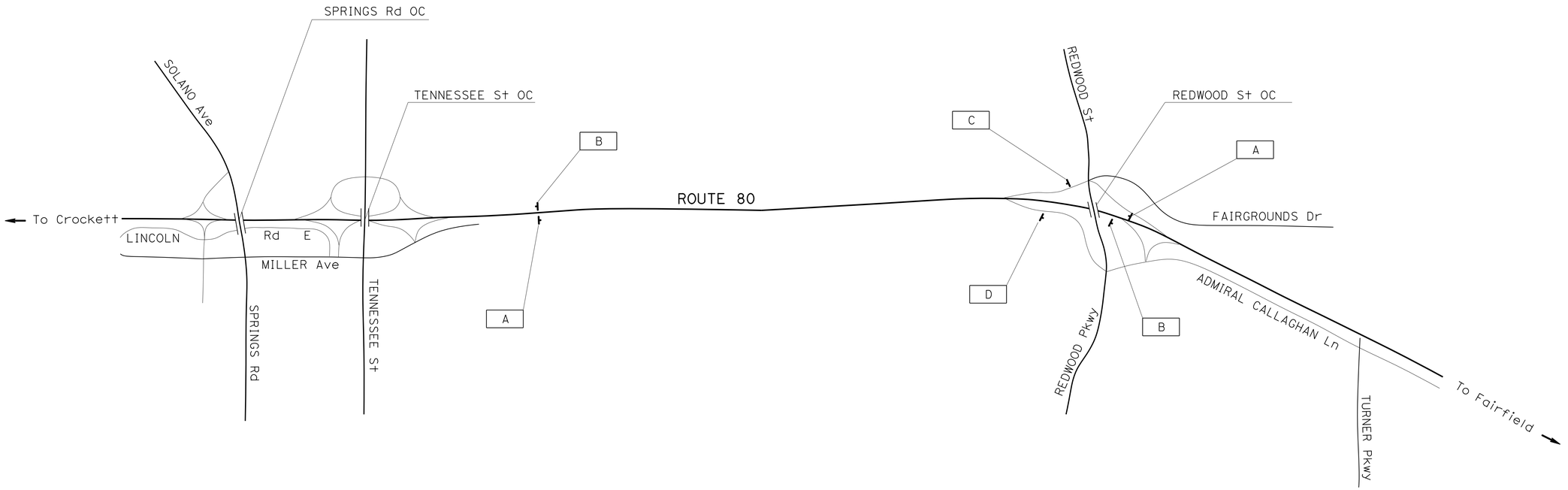

STATIONARY MOUNTED CONSTRUCTION AREA SIGNS

SIGN LETTER	SIGN CODE	MESSAGE	PANEL SIZE	NUMBER OF POST AND SIZE	No. OF SIGNS
A	W20-1	ROAD WORK AHEAD	48" x 48"	(1) 4" x 6"	2
B	G20-2	END ROAD WORK	48" x 24"	(1) 4" x 4"	2
C	W20-1	ROAD WORK AHEAD	36" x 36"	(1) 4" x 6"	1
D	G20-2	END ROAD WORK	36" x 18"	(1) 4" x 4"	1

APPROVED FOR CONSTRUCTION AREA SIGN WORK ONLY

CONSTRUCTION AREA SIGNS

NO SCALE

CS-1

REVISED BY	DATE REVISED
JF	2/10/14

CALCULATED-DESIGNED BY: JERI-PAUL FABIAN
CHECKED BY: CLAUDIA FANG
FUNCTIONAL SUPERVISOR: LOURDES DAVID

STATE OF CALIFORNIA - DEPARTMENT OF TRANSPORTATION
Caltrans®
TRAFFIC

LAST REVISION 03-03-14 | DATE PLOTTED => 17-MAR-2014 | TIME PLOTTED => 15:39

BORDER LAST REVISED 2/1/2013 | USERNAME => s123043 | DGN FILE => 04000004801a001.dgn | RELATIVE BORDER SCALE IS IN INCHES 0 1 2 3 | UNIT 0702 | PROJECT NUMBER & PHASE 04000004801

Dist	COUNTY	ROUTE	POST MILES TOTAL PROJECT	SHEET No.	TOTAL SHEETS
04	Sol	80	4.0/4.3	9	19

REGISTERED CIVIL ENGINEER — DATE 2/6/14

PLANS APPROVAL DATE 3-3-14

REGISTERED PROFESSIONAL ENGINEER — An T. Nguyen — No. 62776 — Exp. 6-30-14 — CIVIL — STATE OF CALIFORNIA

THE STATE OF CALIFORNIA OR ITS OFFICERS OR AGENTS SHALL NOT BE RESPONSIBLE FOR THE ACCURACY OR COMPLETENESS OF SCANNED COPIES OF THIS PLAN SHEET.

NOTE:

FOR ACCURATE RIGHT OF WAY DATA, CONTACT RIGHT OF WAY ENGINEERING AT THE DISTRICT OFFICE.

NOTES:

1. EXACT LOCATION AND POSITION OF CONSTRUCTION AREA SIGN TO BE DETERMINED BY THE ENGINEER.
2. FOR ADDITIONAL CONSTRUCTION AREA SIGNS, SEE CONTRUCTION AREA SIGNS PLAN.

LEGEND:

CONSTRUCTION AREA

CHANNELIZER (SURFACE MOUNTED) @ 25' C-C

No. — CONSTRUCTION AREA SIGN (STATIONARY-MOUNTED)

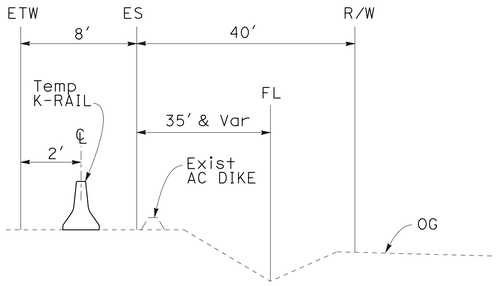

SECTION A-A
NO SCALE

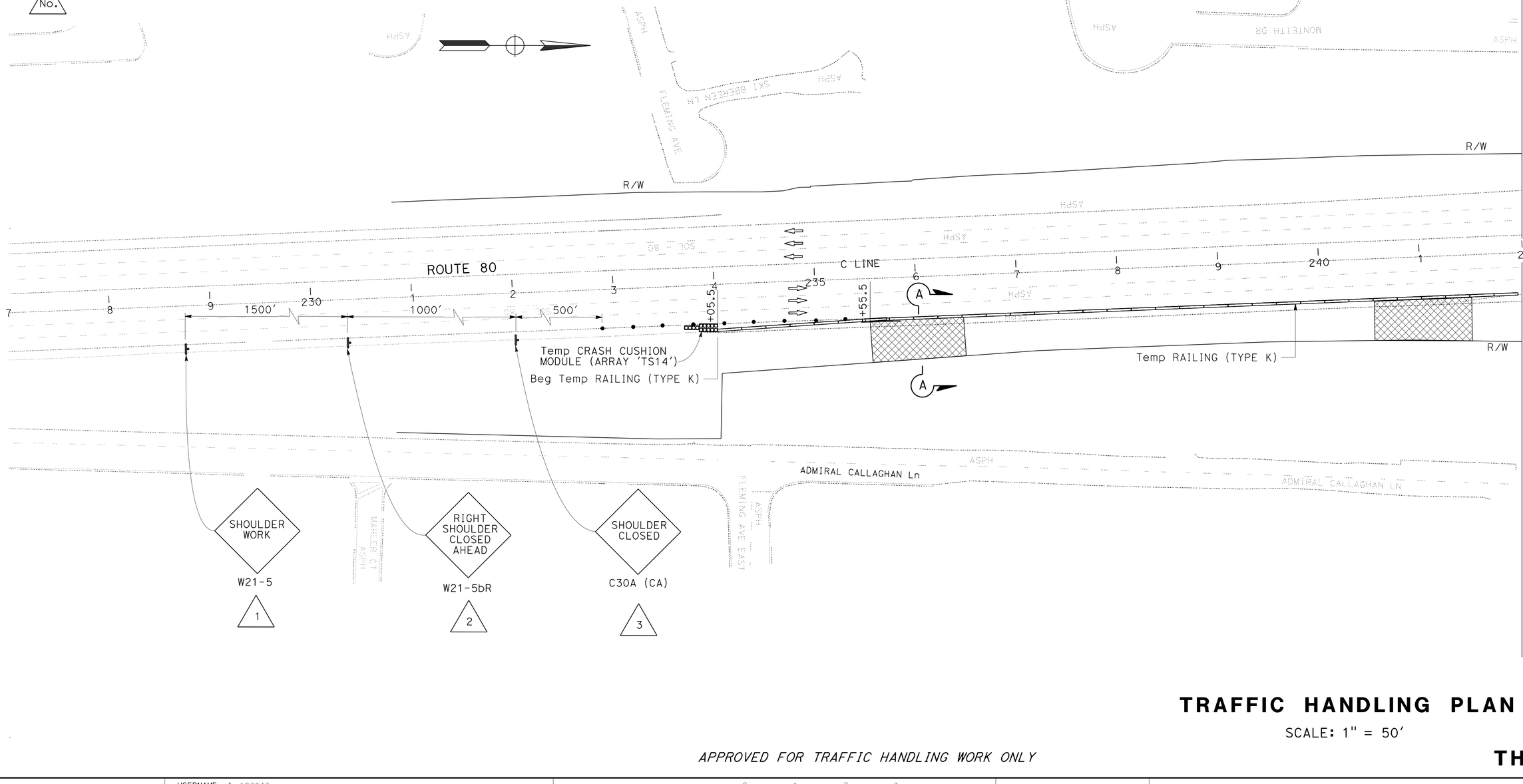

TRAFFIC HANDLING PLAN

SCALE: 1" = 50'

APPROVED FOR TRAFFIC HANDLING WORK ONLY

TH-1

REVISED BY	DATE REVISED
NP	2/10/14

CALCULATED-DESIGNED BY: NICOLETA PASCUA
CHECKED BY: AN NGUYEN
FUNCTIONAL SUPERVISOR: ARLISSA PANG
STATE OF CALIFORNIA - DEPARTMENT OF TRANSPORTATION
DESIGN
Caltrans

LAST REVISION | DATE PLOTTED => 17-MAR-2014
03-03-14 | TIME PLOTTED => 15:39

BORDER LAST REVISED 2/1/2013 | USERNAME => s123043 | DGN FILE => 0400000480md001.dgn | RELATIVE BORDER SCALE IS IN INCHES 0 1 2 3 | UNIT 0702 | PROJECT NUMBER & PHASE 04000004801

Dist	COUNTY	ROUTE	POST MILES TOTAL PROJECT	SHEET No.	TOTAL SHEETS
04	Sol	80	4.0/4.3	10	19

An T Nguyen 2/6/14
REGISTERED CIVIL ENGINEER DATE

3-3-14
PLANS APPROVAL DATE

REGISTERED PROFESSIONAL ENGINEER
An T. Nguyen
No. 62776
Exp 6-30-14
CIVIL
STATE OF CALIFORNIA

THE STATE OF CALIFORNIA OR ITS OFFICERS OR AGENTS SHALL NOT BE RESPONSIBLE FOR THE ACCURACY OR COMPLETENESS OF SCANNED COPIES OF THIS PLAN SHEET.

NOTE:

FOR ACCURATE RIGHT OF WAY DATA, CONTACT
RIGHT OF WAY ENGINEERING AT THE DISTRICT OFFICE.

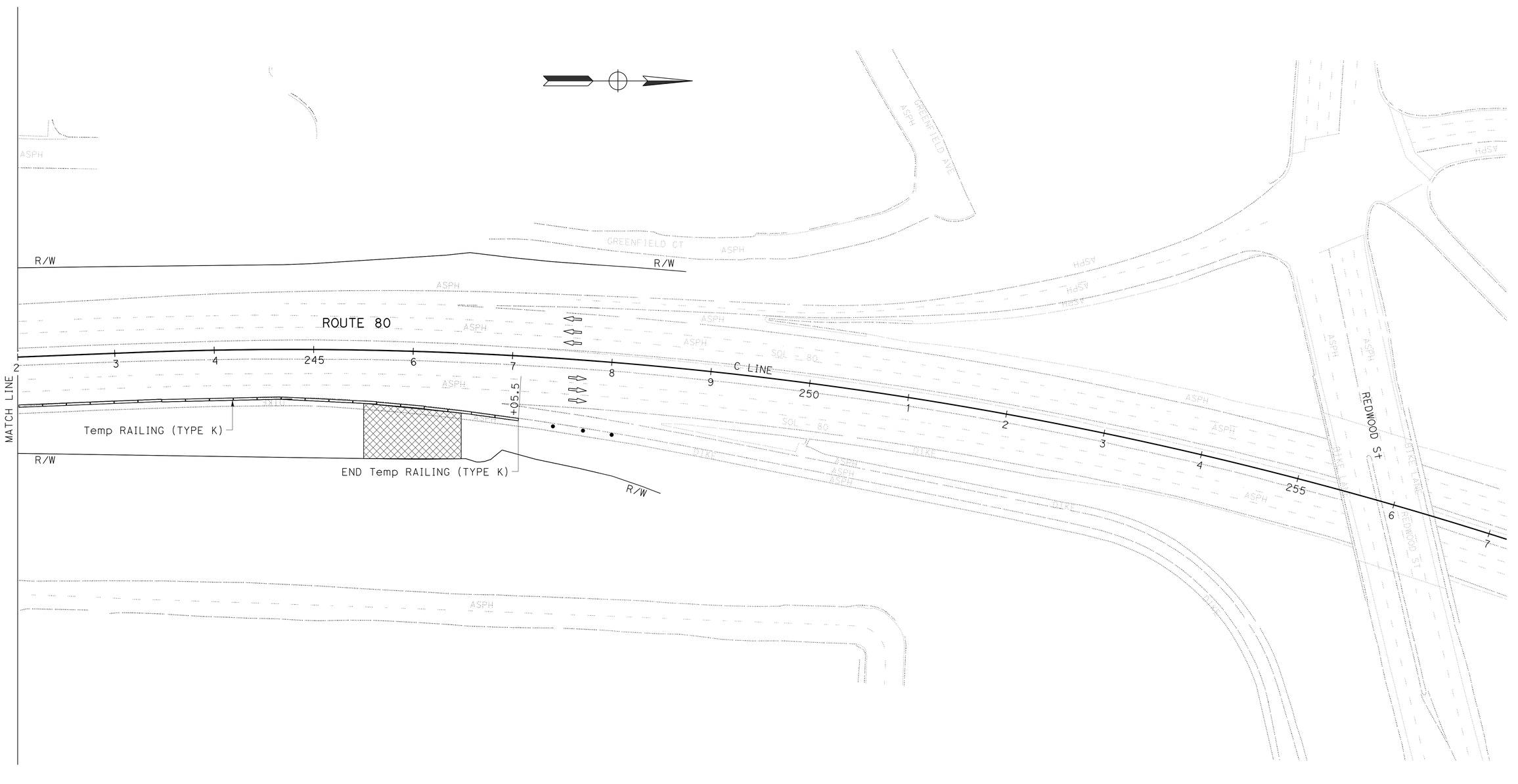

TRAFFIC HANDLING PLAN

SCALE: 1" = 50'

APPROVED FOR TRAFFIC HANDLING WORK ONLY

FOR NOTES, ABBREVIATIONS AND LEGEND, SEE SHEET TH-1

TH-2

REVISED BY	NP
DATE REVISED	2/10/14

CALCULATED-DESIGNED BY: NICOLETA PASCUA
CHECKED BY: AN NGUYEN
FUNCTIONAL SUPERVISOR: ARLISSA PANG

STATE OF CALIFORNIA - DEPARTMENT OF TRANSPORTATION
Caltrans®
DESIGN

LAST REVISION DATE PLOTTED => 17-MAR-2014
03-03-14 TIME PLOTTED => 15:39

BORDER LAST REVISED 2/1/2013
USERNAME => s123043
DGN FILE => 0400000480md002.dgn
RELATIVE BORDER SCALE IS IN INCHES 0 1 2 3
UNIT 0702
PROJECT NUMBER & PHASE 04000004801

Dist	COUNTY	ROUTE	POST MILES TOTAL PROJECT	SHEET No.	TOTAL SHEETS
04	Sol	80	4.0/4.3	11	19

An T Nguyen 2/6/14
REGISTERED CIVIL ENGINEER DATE

3-3-14
PLANS APPROVAL DATE

REGISTERED PROFESSIONAL ENGINEER
An T. Nguyen
No. 62776
Exp. 6-30-14
CIVIL
STATE OF CALIFORNIA

THE STATE OF CALIFORNIA OR ITS OFFICERS OR AGENTS SHALL NOT BE RESPONSIBLE FOR THE ACCURACY OR COMPLETENESS OF SCANNED COPIES OF THIS PLAN SHEET.

CONSTRUCTION AREA SIGNS (STATIONARY-MOUNTED)

LOCATION	SHEET No.	SIGN No.	SIGN CODE	PANEL SIZE	No. OF POST AND SIZE	SIGN MESSAGE
EB ROUTE 80	TH-1	1	W21-5	48" x 48"	1 - 4" x 6"	SHOULDER WORK
		2	W21-5bR	48" x 48"	1 - 4" x 6"	RIGHT SHOULDER CLOSED AHEAD
		3	C30A (CA)	48" x 48"	1 - 4" x 6"	SHOULDER CLOSED

FOR ADDITIONAL CONSTRUCTION AREA SIGNS, SEE CONTRUCTION AREA SIGNS PLAN.

TRAFFIC HANDLING QUANTITIES

SHEET No.	STATION	TEMPORARY CRASH CUSHION MODULE (ARRAY 'TS14')	TEMPORARY RAILING (TYPE K)	CHANNELIZER (SURFACE MOUNTED)
		EA	LF	EA
TH-1	C 233+71.30	14		
	C 234+05.5 TO 247+05.5		1300	
	C 232+80.5 TO 247+80.5			14

ROADWAY QUANTITIES

SHEET No.	STATION	TEMPORARY FENCE (TYPE CL-6, SLATTED)
		EA
D-1	C 235+62 TO 235+92	30
	C 239+70 TO 240+90	120
TOTAL		150

TRAFFIC HANDLING AND ROADWAY QUANTITIES

THQ-1

REVISED BY	DATE REVISED
NP	8/9/13

CALCULATED-DESIGNED BY: NICOLETA PASCUA
CHECKED BY: AN NGUYEN
FUNCTIONAL SUPERVISOR: ARLISSA PANG
STATE OF CALIFORNIA - DEPARTMENT OF TRANSPORTATION
DESIGN
Caltrans

LAST REVISION DATE PLOTTED => 17-MAR-2014
03-03-14 TIME PLOTTED => 15:39

BORDER LAST REVISED 2/1/2013
USERNAME => s123043
DGN FILE => 0400000480me001.dgn
RELATIVE BORDER SCALE IS IN INCHES 0 1 2 3
UNIT 0702
PROJECT NUMBER & PHASE 04000004801

Dist	COUNTY	ROUTE	POST MILES TOTAL PROJECT	SHEET No.	TOTAL SHEETS
04	Sol	80	4.0/4.3	12	19

LICENSED LANDSCAPE ARCHITECT

3-3-14

PLANS APPROVAL DATE

LICENSED LANDSCAPE ARCHITECT DAVID WARREN YAM No. 1949 Signature 11-30-15 Renewal Date 2-25-14 Date STATE OF CALIFORNIA

THE STATE OF CALIFORNIA OR ITS OFFICERS OR AGENTS SHALL NOT BE RESPONSIBLE FOR THE ACCURACY OR COMPLETENESS OF SCANNED COPIES OF THIS PLAN SHEET.

FIBER ROLLS

SEQUENCE	ITEM	MATERIAL		REMARKS
		DESCRIPTION	TYPE	
In EC Type 1 areas Fiber Rolls must be installed after RECP (Netting) and before Hydroseed.	FIBER ROLLS	FIBER ROLL	TYPE B 8" TO 10" Dia	Type 1 Fiber Roll installation

EROSION CONTROL TYPE 1

SEQUENCE	ITEM	MATERIAL		APPLICATION RATE
		DESCRIPTION	TYPE	
STEP 1	COMPOST	COMPOST	MEDIUM	130 CY/ACRE
STEP 2	ROLLED EROSION CONTROL PRODUCT (NETTING)	NETTING	TYPE A	
STEP 3	HYDROSEED	SEED	MIX 1	52 LB/ACRE
		FIBER	COMBINATION	285 LB/ACRE
STEP 4	STRAW	STRAW	RICE	2 TONS/ACRE
STEP 5	HYDROMULCH	FIBER	COMBINATION	285 LB/ACRE
		TACKIFIER	GUAR	125 LB/ACRE

SEED MIX

SEED	BOTANICAL NAME (COMMON NAME)	PERCENT GERMINATION (MINIMUM)	POUNDS PURE LIVE SEED PER ACRE (SLOPE MEASUREMENT)
MIX 1	BROMUS CARINATUS[1] (CALIFORNIA BROME)	40	10
	ESCHSCHOLZIA CALIFORNICA (CALIFORNIA POPPY)	35	1
	LUPINUS BICOLOR (BICOLOR LUPINE)	40	6
	HORDEUM BRACHYANTHERUM (MEADOW BARLEY)	40	8
	LEYMUS TRITICOIDES[1] (BEARDLESS WILDRYE)	40	9
	ERIOPHYLLUM CONFERTIFLORUM (GOLDEN YARROW)	30	2
	NASSELLA PULCHRA (PURPLE NEEDLEGRASS)	35	10
	VULPIA MICROSTACHYS[1] (SMALL FESCUE)	35	6
			52

[1] SEED PRODUCED IN CALIFORNIA ONLY.

[2] SEED SOURCE FROM (*Enter County Name*) COUNTY ONLY.

[3] SEED SOURCE FROM (*Enter* "ABOVE" *or* "BELOW") THE (*Enter Elevation*) FOOT ELEVATION LEVEL.

EROSION CONTROL LEGEND

APPROVED FOR EROSION CONTROL WORK ONLY

ECL-1

STATE OF CALIFORNIA - DEPARTMENT OF TRANSPORTATION

Caltrans® WATER QUALITY

SENIOR LANDSCAPE ARCHITECT: DAVID W. YAM

CALCULATED-DESIGNED BY: CALIE TSUI

CHECKED BY: DAVID W. YAM

REVISED BY: CT

DATE REVISED: 2/23/14

LAST REVISION 02-23-14

DATE PLOTTED => 17-MAR-2014

TIME PLOTTED => 15:39

Dist	COUNTY	ROUTE	POST MILES TOTAL PROJECT	SHEET No.	TOTAL SHEETS
04	Sol	80	4.0/4.3	13	19

LICENSED LANDSCAPE ARCHITECT

3-3-14

PLANS APPROVAL DATE

LICENSED LANDSCAPE ARCHITECT
DAVID WARREN YAM No. 1949
Signature
11-30-15
Renewal Date
2-25-14
Date
STATE OF CALIFORNIA

THE STATE OF CALIFORNIA OR ITS OFFICERS OR AGENTS SHALL NOT BE RESPONSIBLE FOR THE ACCURACY OR COMPLETENESS OF SCANNED COPIES OF THIS PLAN SHEET.

LEGEND

EROSION CONTROL TYPE 1

FIBER ROLLS

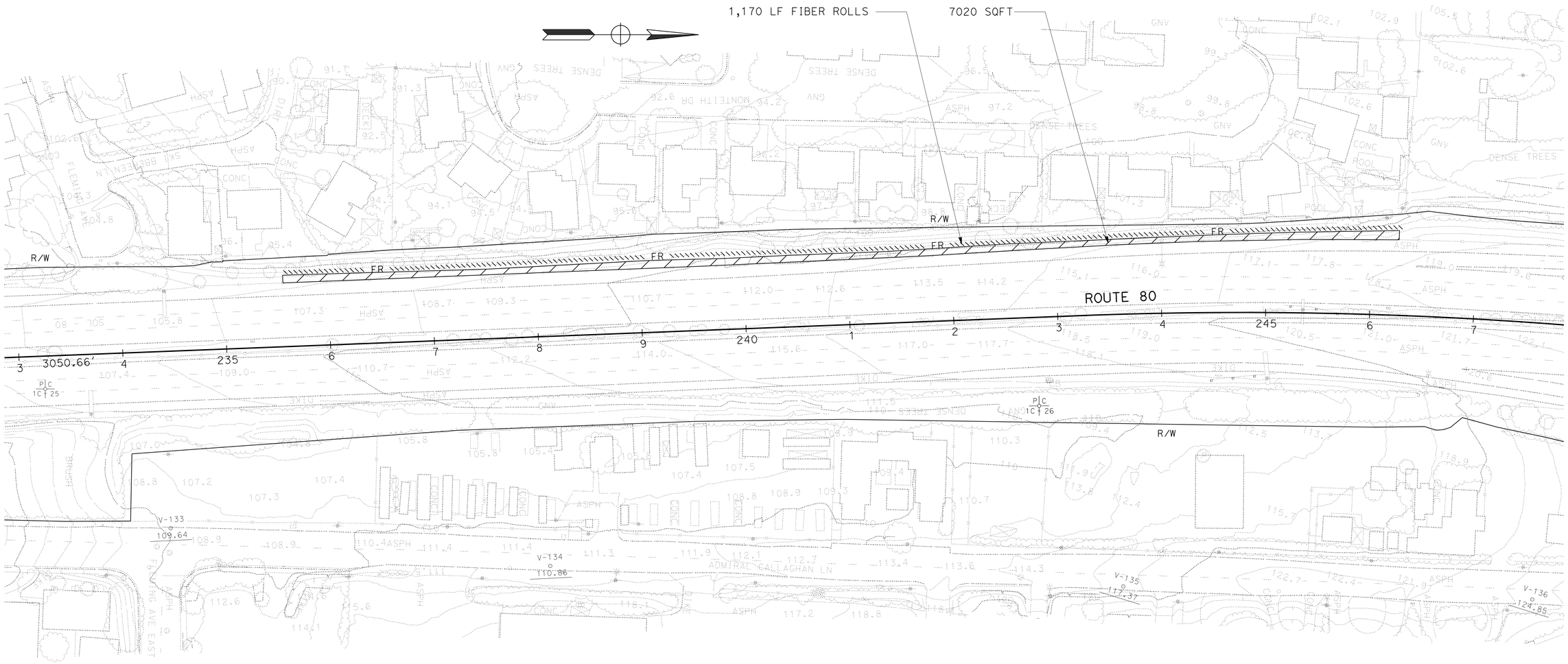

VALLEJO

EROSION CONTROL PLAN

SCALE: 1"= 50'

APPROVED FOR EROSION CONTROL WORK ONLY

EC-1

STATE OF CALIFORNIA - DEPARTMENT OF TRANSPORTATION

Caltrans®

WATER QUALITY

SENIOR LANDSCAPE ARCHITECT: DAVID W. YAM

CALCULATED-DESIGNED BY: CALIE TSUI

CHECKED BY: DAVID W. YAM

REVISED BY: CT

DATE REVISED: 2/26/14

LAST REVISION 02-26-14

DATE PLOTTED => 17-MAR-2014
TIME PLOTTED => 15:39

M

Maint	MAINTENANCE
Max	MAXIMUM
MB	METAL BEAM
MBB	METAL BEAM BARRIER
MBGR	METAL BEAM GUARD RAILING
Med	MEDIAN
MGS	MIDWEST GUARDRAIL SYSTEM
MH	MANHOLE
Min	MINIMUM
Misc	MISCELLANEOUS
Misc I & S	MISCELLANEOUS IRON AND STEEL
Mkr	MARKER
Mod	MODIFIED, MODIFY
Mon	MONUMENT
MP	METAL PLATE
MPGR	METAL PLATE GUARD RAILING
MR	MOVEMENT RATING
MSE	MECHANICALLY STABILIZED EMBANKMENT
Mt	MOUNTAIN, MOUNT
Mtl	MATERIAL
MVP	MAINTENANCE VEHICLE PULLOUT

N

N	NORTH
NB	NORTHBOUND
No.	NUMBER (MUST HAVE PERIOD)
Nos.	NUMBERS (MUST HAVE PERIOD)
NPS	NOMINAL PIPE SIZE
NS	NEAR SIDE
NSP	NEW STANDARD PLAN
NTS	NOT TO SCALE

O

Oblr	OBLITERATE
OC	OVERCROSSING
OD	OUTSIDE DIAMETER
OF	OUTSIDE FACE
OG	ORIGINAL GROUND
OGAC	OPEN GRADED ASPHALT CONCRETE
OGFC	OPEN GRADED FRICTION COURSE
OH	OVERHEAD
OHWM	ORDINARY HIGH WATER MARK
O-O	OUT TO OUT
Opp	OPPOSITE
OSD	OVERSIDE DRAIN

P

P	PAGE
PAP	PERFORATED ALUMINUM PIPE
PB	PULL BOX
PC	POINT OF CURVATURE, PRECAST
PCC	POINT OF COMPOUND CURVE, PORTLAND CEMENT CONCRETE
PCMS	PORTABLE CHANGEABLE MESSAGE SIGN
PCP	PERFORATED CONCRETE PIPE, PRESTRESSED CONCRETE PIPE
PCVC	POINT OF COMPOUND VERTICAL CURVE
PEC	PERMIT TO ENTER AND CONSTRUCT
Ped	PEDESTRIAN
Ped OC	PEDESTRIAN OVERCROSSING
Ped UC	PEDESTRIAN UNDERCROSSING
Perm Mtl	PERMEABLE MATERIAL

P continued

PG	PROFILE GRADE
PI	POINT OF INTERSECTION
PJP	PARTIAL JOINT PENETRATION
Pkwy	PARKWAY
℄,PL	PLATE
P/L	PROPERTY LINE
PM	POST MILE, TIME FROM NOON TO MIDNIGHT
PN	PAVING NOTCH
POC	POINT OF HORIZONTAL CURVE
POT	POINT OF TANGENT
POVC	POINT OF VERTICAL CURVE
PP	PIPE PILE, PLASTIC PIPE, POWER POLE
PPL	PREFORMED PERMEABLE LINER
PPP	PERFORATED PLASTIC PIPE
PRC	POINT OF REVERSE CURVE
PRF	PAVEMENT REINFORCING FABRIC
PRVC	POINT OF REVERSE VERTICAL CURVE
PS&E	PLANS, SPECIFICATIONS AND ESTIMATES
PS, P/S	PRESTRESSED
PSP	PERFORATED STEEL PIPE
PT	POINT OF TANGENCY
PVC	POLYVINYL CHLORIDE
Pvmt	PAVEMENT

Q

Qty	QUANTITY

R

R	RADIUS
R & D	REMOVE AND DISPOSE
R & S	REMOVE AND SALVAGE
R/C	RATE OF CHANGE
RCA	REINFORCED CONCRETE ARCH
RCB	REINFORCED CONCRETE BOX
RCP	REINFORCED CONCRETE PIPE
RCPA	REINFORCED CONCRETE PIPE ARCH
Rd	ROAD
Reinf	REINFORCED, REINFORCEMENT, REINFORCING
Rel	RELOCATE
Repl	REPLACEMENT
Ret	RETAINING
Rev	REVISED, REVISION
Rdwy	ROADWAY
RHMA	RUBBERIZED HOT MIX ASPHALT
Riv	RIVER
RM	ROAD-MIXED
RP	RADIUS POINT, REFERENCE POINT
RR	RAILROAD
RSP	ROCK SLOPE PROTECTION, REVISED STANDARD PLAN
Rt	RIGHT
Rte	ROUTE
RW	REDWOOD, RETAINING WALL
R/W	RIGHT OF WAY
Rwy	RAILWAY

S

S	SOUTH, SUPPLEMENT
SAE	STRUCTURE APPROACH EMBANKMENT
Salv	SALVAGE
SAPP	STRUCTURAL ALUMINUM PLATE PIPE
SB	SOUTHBOUND
SC	SAND CUSHION
SCSP	SLOTTED CORRUGATED STEEL PIPE
SD	STORM DRAIN
Sec	SECOND, SECTION
Sep	SEPARATION
SG	SUBGRADE
Shld	SHOULDER
Sht	SHEET
Sim	SIMILAR
℄	STATION LINE
SM	SELECTED MATERIAL
Spec	SPECIAL, SPECIFICATIONS
SPP	SLOTTED PLASTIC PIPE
SS	SLOPE STAKE
SSBM	STRAP AND SADDLE BRACKET METHOD
SSD	STRUCTURAL SECTION DRAIN
SSPA	STRUCTURAL STEEL PLATE ARCH
SSPP	STRUCTURAL STEEL PLATE PIPE
SSPPA	STRUCTURAL STEEL PLATE PIPE ARCH
SSRP	STEEL SPIRAL RIB PIPE
St	STREET
Sta	STATION
STBB	SINGLE THRIE BEAM BARRIER
Std	STANDARD
Str	STRUCTURE
Surf	SURFACING
SW	SIDEWALK, SOUND WALL
Swr	SEWER
Sym	SYMMETRICAL
S4S	SURFACE 4 SIDES

T

T	SEMI-TANGENT
Tan	TANGENT
TBB	THRIE BEAM BARRIER
Tbr	TIMBER
TC	TOP OF CURB
TCB	TRAFFIC CONTROL BOX
TCE	TEMPORARY CONSTRUCTION EASEMENT
Tel	TELEPHONE
Temp	TEMPORARY
TG	TOP OF GRADE
Tot	TOTAL
TP	TELEPHONE POLE
TPB	TREATED PERMEABLE BASE
TPM	TREATED PERMEABLE MATERIAL
Trans	TRANSITION

T continued

TS	TRANSVERSE, TRAFFIC SIGNAL, TUBULAR STEEL
Typ	TYPICAL

U

UC	UNDERCROSSING
UD	UNDERDRAIN
UG	UNDERGROUND
UON	UNLESS OTHERWISE NOTED
UP	UNDERPASS

V

V	VALVE, DESIGN SPEED
Var	VARIABLE, VARIES
VC	VERTICAL CURVE
VCP	VITRIFIED CLAY PIPE
Vert	VERTICAL
Via	VIADUCT
Vol	VOLUME

W

W	WEST, WIDTH
WB	WESTBOUND
WH	WEEP HOLE
WM	WIRE MESH
WS	WATER SURFACE
WSP	WELDED STEEL PIPE
Wt	WEIGHT
WV	WATER VALVE
WW	WINGWALL
WWLOL	WINGWALL LAYOUT LINE

X

X Sec	CROSS SECTION
Xing	CROSSING

Y

Yr	YEAR
Yrs	YEARS

Dist	COUNTY	ROUTE	POST MILES TOTAL PROJECT	SHEET No.	TOTAL SHEETS
04	Sol	80	4.0/4.3	14	19

Grace M. Tsushima
REGISTERED CIVIL ENGINEER

July 19, 2013
PLANS APPROVAL DATE

REGISTERED PROFESSIONAL ENGINEER — Grace M. Tsushima — No. C49814 — Exp. 9-30-14 — CIVIL — STATE OF CALIFORNIA

THE STATE OF CALIFORNIA OR ITS OFFICERS OR AGENTS SHALL NOT BE RESPONSIBLE FOR THE ACCURACY OR COMPLETENESS OF SCANNED COPIES OF THIS PLAN SHEET.

TO ACCOMPANY PLANS DATED 3-3-14

UNIT OF MEASUREMENT SYMBOLS:

Some of the symbols used in the project plan quantity tables and in the Bid Item List are:

TABLE A

SYMBOL USED	DEFINITIONS
ACRE	ACRE
CF	CUBIC FOOT
CY	CUBIC YARD
EA	EACH
GAL	GALLON
LB	POUND
LF	LINEAR FOOT
SQFT	SQUARE FOOT
SQYD	SQUARE YARD
STA	100 FEET
TAB	TABLET
TON	2,000 POUNDS

Some of the symbols used in the plans other than in the project plan quantity tables are:

TABLE B

SYMBOL USED	DEFINITIONS
ksi	KIPS PER SQUARE INCH
ksf	KIPS PER SQUARE FOOT
psi	POUNDS PER SQUARE INCH
psf	POUNDS PER SQUARE FOOT
lb/ft^3, pcf	POUNDS PER CUBIC FOOT
tsf	TONS PER SQUARE FOOT
mph, MPH *	MILES PER HOUR
ø	NOMINAL DIAMETER
oz	OUNCE
lb	POUND
kip	1,000 POUNDS
cal	CALORIE
ft	FOOT OR FEET
gal	GALLON

* For use on a sign panel only

STATE OF CALIFORNIA
DEPARTMENT OF TRANSPORTATION

ABBREVIATIONS (SHEET 2 OF 2)

NO SCALE

RSP A10B DATED JULY 19, 2013 SUPERSEDES STANDARD PLAN A10B DATED MAY 20, 2011 - PAGE 2 OF THE STANDARD PLANS BOOK DATED 2010.

REVISED STANDARD PLAN RSP A10B

2010 REVISED STANDARD PLAN RSP A10B

6-7-13

TO ACCOMPANY PLANS DATED 3-3-14

Dist	COUNTY	ROUTE	POST MILES TOTAL PROJECT	SHEET No.	TOTAL SHEETS
04	Sol	80	4.0/4.3	15	19

Glenn DeCou
REGISTERED CIVIL ENGINEER

October 19, 2012
PLANS APPROVAL DATE

REGISTERED PROFESSIONAL ENGINEER — Glenn DeCou — No. C34547 — Exp. 9-30-13 — CIVIL — STATE OF CALIFORNIA

THE STATE OF CALIFORNIA OR ITS OFFICERS OR AGENTS SHALL NOT BE RESPONSIBLE FOR THE ACCURACY OR COMPLETENESS OF SCANNED COPIES OF THIS PLAN SHEET.

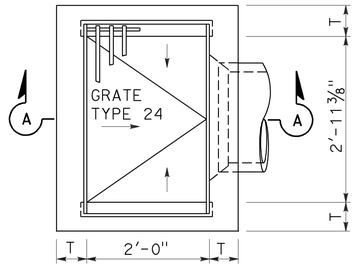

TYPE G1

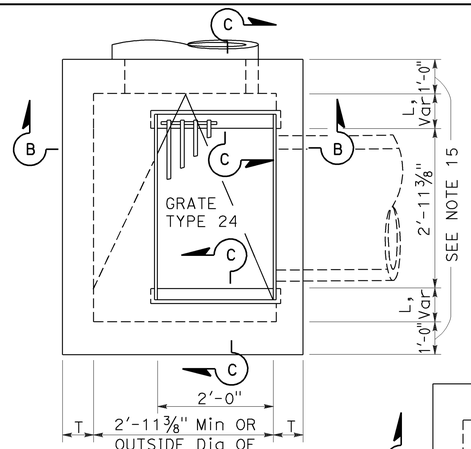

TYPE G2

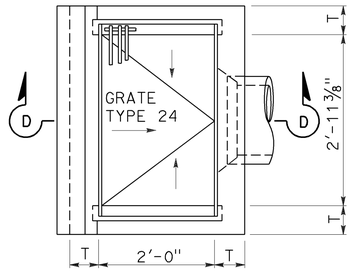

TYPE G3

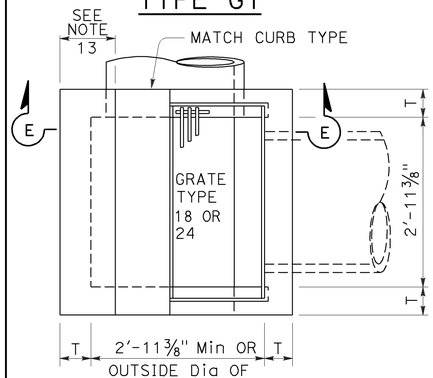

TYPE G4

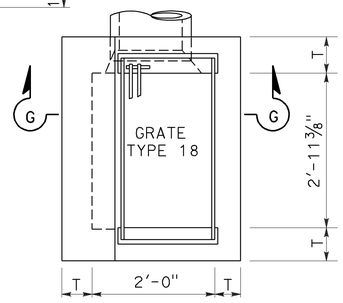

TYPE G6

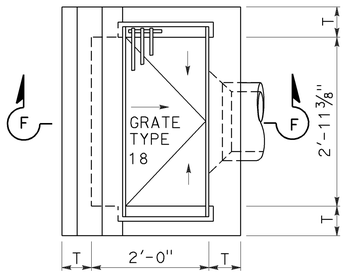

TYPE G5

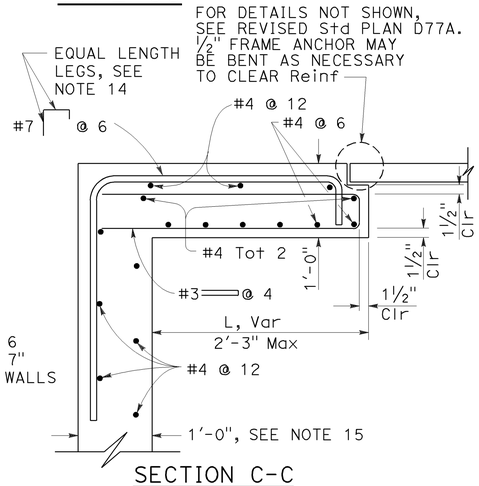

SECTION C-C

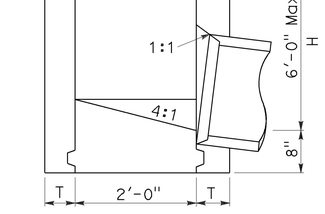

SECTION A-A

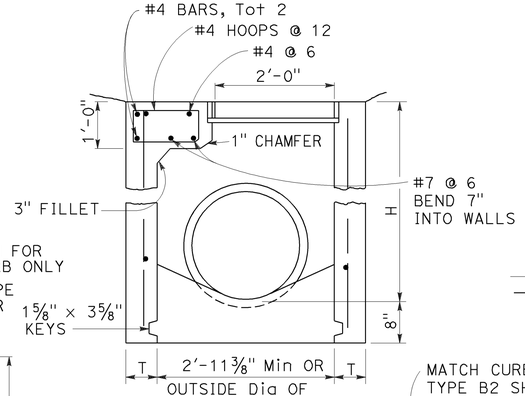

SECTION B-B

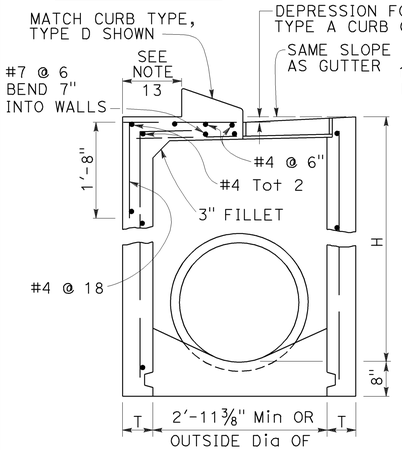

SECTION E-E

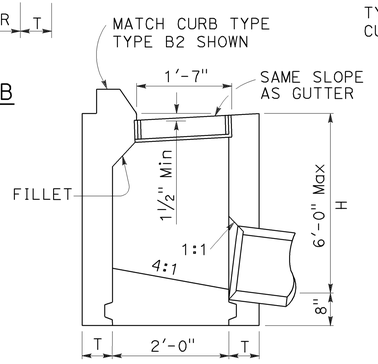

SECTION F-F

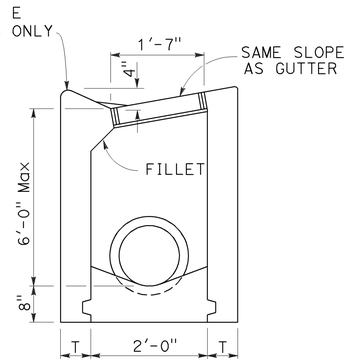

SECTION G-G

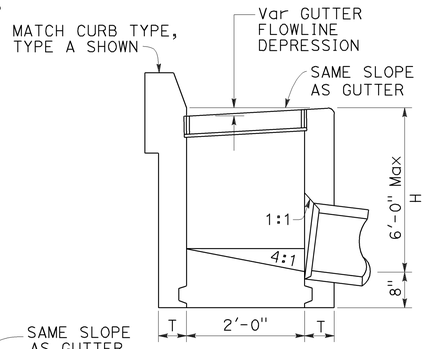

SECTION D-D

NOTES:

1. "H" is the difference in elevation between the outlet pipe flow line and the normal gutter grade line undepressed.
2. For "T" wall thickness, see Table A below.
3. Wall reinforcing not required when "H" is 8'-0" or less and the unsupported width or length is 7'-0" or less. Walls exceeding these limits shall be reinforced with #4 bars @ 1'-6" ± centers placed 1½" clear to inside of box unless otherwise shown.
4. Inlet bottom reinforcing not required. See Standard Plan D74C for alternative reinforced bottom and alternative half round bottom.
5. Steps-None required where "H" is less than 2'-6". Where "H" is 2'-6" or more, install steps with lowest rung 1'-0" above the floor and highest rung not more than 6" below top of inlet. The distance between steps shall not exceed 1'-0" and shall be uniform throughout the length of the wall. Place steps in the wall without an opening. Steps inserts may be substituted for the bar steps. Step inserts shall comply with State Industrial Safety requirements. See Standard Plan D74C for step details.
6. Details shown apply to both metal and concrete pipe.
7. Pipe(s) can be placed in any wall.
8. Curb section shall match adjacent curb.
9. Basin floors shall have wood trowel finish and a minimum slope of 12:3 from all directions toward outlet pipe.
10. Set inlet so that grate bars are parallel to direction of principal surface flow.
11. See Revised Standard Plans D77A and D77B for grate and frame details and weights of miscellaneous iron and steel.
12. See Standard Plan D78A for gutter depression details.
13. This dimenison will vary with different grates, curbs types, box width and wall thickness.
14. Bar may be rotated as necessary to clear opening. Where "L" is 6" or less, bar may be omitted.
15. Where "L" is 6" or less, wall thickness shall be as shown in Table A.
16. Cast-in-place inlets to be formed around all pipes/stubs intersecting the inlet, and concrete poured in one continuous operation. Precast inlets shall have mortared connections conforming to details for Type GCP Inlet shown on Standard Plan D75B. See Standard Specifications for mortar composition.

TABLE A

TYPE	CONCRETE QUANTITIES			
	H=3'-0" TO 8'-0" (T=6")		H=8'-1" TO 20'-0" (T=8")	
	H=3'-0" (CY)	ADDITIONAL PCC PER FOOT (CY)	H=8'-1" (CY)	ADDITIONAL PCC PER FOOT (CY)
G-1	0.95	0.220	See Note A	SEE NOTE A
G-2*	1.31	0.255	3.50	0.357
G-3	1.03	0.220	See Note A	SEE NOTE A
G-4* (TYPE 24)	1.27	0.255	3.48	0.357
G-4* (TYPE 18)	1.30	0.255	3.50	0.357
G-5	1.02	0.220	SEE NOTE A	SEE NOTE A
G-6	1.04	0.220	SEE NOTE A	SEE NOTE A

TABLE BASED ON 8" FLOOR SLAB. NO DEDUCTIONS ARE TO BE MADE TO THESE QUANTITIES BECAUSE OF PIPE OPENINGS, DIFFERENT FLOOR ALTERNATIVES OR DIFFERENT CURB TYPES. * QUANTITIES FOR TYPE G-2 AND G-4 INLETS BASED ON THE MINIMUM INTERIOR DIMENSIONS.

NOTE A:

Maximum allowable height 6'-0".

STATE OF CALIFORNIA
DEPARTMENT OF TRANSPORTATION

DRAINAGE INLETS

NO SCALE

RSP D73 DATED OCTOBER 19, 2012 SUPERSEDES STANDARD PLAN D73 DATED MAY 20, 2011 - PAGE 156 OF THE STANDARD PLANS BOOK DATED 2010.

REVISED STANDARD PLAN RSP D73

7-19-12

Dist	COUNTY	ROUTE	POST MILES TOTAL PROJECT	SHEET No.	TOTAL SHEETS
04	Sol	80	4.0/4.3	16	19

LICENSED LANDSCAPE ARCHITECT

July 19, 2013
PLANS APPROVAL DATE

Gregory A. Balzer 2015
10-31-15
2-28-15
Renewal Date
7-19-13
Date
LICENSED LANDSCAPE ARCHITECT
STATE OF CALIFORNIA

THE STATE OF CALIFORNIA OR ITS OFFICERS OR AGENTS SHALL NOT BE RESPONSIBLE FOR THE ACCURACY OR COMPLETENESS OF SCANNED COPIES OF THIS PLAN SHEET.

TO ACCOMPANY PLANS DATED 3-3-14

A

AB	AGGREGATE BASE
ABS	ACRYLONITRILE-BUTADIENE-STYRENE
AC	ASPHALT CONCRETE
ACC	ARMOR-CLAD CONDUCTORS
Adj	ADJACENT/ADJUSTABLE
AIC	AUXILIARY IRRIGATION CONTROLLER
Alt	ALTERNATIVE
AMEND	AMENDMENT
ARV	AIR RELEASE VALVE
AUTO	AUTOMATIC
AUX	AUXILIARY
AVB	ATMOSPHERIC VACUUM BREAKER

B

B&B	BALLED AND BURLAPPED
B/B	BRASS/BRONZE
B/B/PL	BRASS/BRONZE/PLASTIC
B/PL	BRASS/PLASTIC
BFM	BONDED FIBER MATRIX
Bit Ctd	BITUMINOUS COATED
BP	BOOSTER PUMP
BPA	BACKFLOW PREVENTER ASSEMBLY
BPE	BACKFLOW PREVENTER ENCLOSURE
BV	BALL VALVE

C

C	CONDUIT
CAP	CORRUGATED ALUMINUM PIPE
CARV	COMBINATION AIR RELEASE VALVE
CB	COUPLING BAND
CCA	CAM COUPLER ASSEMBLY
CEC	CONTROLLER ENCLOSURE CABINET
CHDPE	CORRUGATED HIGH DENSITY POLYETHYLENE
CL	CHAIN LINK
CNC	CONTROL AND NEUTRAL CONDUCTORS
Conc	CONCRETE
CP	COPPER PIPE
CS	COMPOST SOCK
CSP	CORRUGATED STEEL PIPE
CST	CENTER STRIP
CV	CHECK VALVE

D

Dia	DIAMETER
DIP	DUCTILE IRON PIPE
DIT	DRIP IRRIGATION TUBING
DG	DECOMPOSED GRANITE
DN	DIAMETER NOMINAL
DVA	DRIP VALVE ASSEMBLY

E

EC	EROSION CONTROL
ECTC	EROSION CONTROL TECHNOLOGY COUNCIL
Elect	ELECTRIC/ELECTRICAL
Elev	ELEVATION
ELL	ELBOW
ENCL	ENCLOSURE
EP	EDGE OF PAVEMENT
ES	EDGE OF SHOULDER
EST	END STRIP
ESTB	ESTABLISHMENT
ETW	EDGE OF TRAVELED WAY

F

F	FULL CIRCLE
F/P	FULL/PART CIRCLE
FCV	FLOW CONTROL VALVE
FERT	FERTILIZER
FG	FINISHED GRADE
FH	FLEXIBLE HOSE
FIPT	FEMALE IRON PIPE THREAD
FIS	FERTILIZER INJECTOR SYSTEM
FL	FLOW LINE
FR	FIBER ROLL
FS	FLOW SENSOR
FSC	FLOW SENSOR CABLE
FV	FLUSH VALVE

G

Galv	GALVANIZED
GARV	GARDEN VALVE
GARVA	GARDEN VALVE ASSEMBLY
GM	GRAVEL MULCH
GPH	GALLONS PER HOUR
GPM	GALLONS PER MINUTE
GSP	GALVANIZED STEEL PIPE
GV	GATE VALVE

H

H	HALF CIRCLE
HDPE	HIGH DENSITY POLYETHYLENE
HP	HORSEPOWER/HINGE POINT
HPL	HIGH PRESSURE LINE
Hwy	HIGHWAY

I

IC	IRRIGATION CONTROLLER
ICC	IRRIGATION CONTROLLER(S) IN CONTROLLER ENCLOSURE CABINET
ID	INSIDE DIAMETER
IFS	IRRIGATION FILTRATION SYSTEM
IPS	IRON PIPE SIZE
IPT	IRON PIPE THREAD
Irr	IRRIGATION

L

L	LENGTH

M

Max	MAXIMUM
MBGR	METAL BEAM GUARD RAILING
MCV	MANUAL CONTROL VALVE
MIC	MASTER IRRIGATION CONTROLLER
Min	MINIMUM
MIPT	MALE IRON PIPE THREAD
Misc	MISCELLANEOUS
Mtl	MATERIAL
MVP	MAINTENANCE VEHICLE PULLOUT

N

NCN	NO COMMON NAME
NL	NOZZLE LINE
No.	NUMBER
NPT	NATIONAL PIPE THREAD

O

O/C	ON CENTER
OD	OUTSIDE DIAMETER
OL	OVERLAP

P

P	PART CIRCLE
PB	PULL BOX
PCC	PORTLAND CEMENT CONCRETE
PE	POLYETHYLENE
Pkt	PACKET
PL	PLASTIC
PLS	PURE LIVE SEED
PLT	PLANT/PLANTING
PLT ESTB	PLANT ESTABLISHMENT
PM	POST MILE
PR	PRESSURE RATED
PRLV	PRESSURE RELIEF VALVE
PRV	PRESSURE REGULATING VALVE
PVC	POLYVINYL CHLORIDE
Pvmt	PAVEMENT

Q

Q	QUARTER CIRCLE
QCV	QUICK COUPLING VALVE

NOTE:
For additional abbreviations, see Standard Plans A10A and A10B.

R

R	RADIUS
RCP	REINFORCED CONCRETE PIPE
RCV	REMOTE CONTROL VALVE
RCVM	REMOTE CONTROL VALVE (MASTER)
RCVMF	REMOTE CONTROL VALVE (MASTER) W/FLOW SENSOR
RCVP	REMOTE CONTROL VALVE W/PRESSURE REGULATOR
RCW	RECYCLED WATER
RECP	ROLLED EROSION CONTROL PRODUCT
REQ	REQUIRED
RICS	REMOTE IRRIGATION CONTROL SYSTEM
R/W	RIGHT OF WAY

S

S	SLIP
SCH	SCHEDULE
SF	STATE-FURNISHED
Shld	SHOULDER
Sq	SQUARE
SST	SIDE STRIP
Sta	STATION
Std	STANDARD
SW	SIDEWALK/SOUND WALL

T

T	THIRD CIRCLE/THREAD
TLS	TRUCK LOADING STANDPIPE
TQ	THREE QUARTER CIRCLE
TRM	TURF REINFORCEMENT MAT
TT	TWO-THIRDS CIRCLE
TWSA	TREE WELL SPRINKLER ASSEMBLY
Typ	TYPICAL

U

UG	UNDERGROUND

W

W	WIDTH
W/	WITH
WM	WATER METER
WS	WYE STRAINER
WSA	WYE STRAINER ASSEMBLY
WSP	WELDED STEEL PIPE
WWM	WELDED WIRE MESH

STATE OF CALIFORNIA
DEPARTMENT OF TRANSPORTATION

LANDSCAPE AND EROSION CONTROL ABBREVIATIONS

NO SCALE

RSP H1 DATED JULY 19, 2013 SUPERSEDES STANDARD PLAN H1
DATED MAY 20, 2011 - PAGE 218 OF THE STANDARD PLANS BOOK DATED 2010.

REVISED STANDARD PLAN RSP H1

2010 REVISED STANDARD PLAN RSP H1

6-28-13

Dist	COUNTY	ROUTE	POST MILES TOTAL PROJECT	SHEET No.	TOTAL SHEETS
04	Sol	80	4.0/4.3	17	19

Gregory A. Balzer
LICENSED LANDSCAPE ARCHITECT

November 15, 2013
PLANS APPROVAL DATE

LICENSED LANDSCAPE ARCHITECT
Gregory A. Balzer 2576
Signature
2-28-15
Renewal Date
11-15-13
Date
STATE OF CALIFORNIA

THE STATE OF CALIFORNIA OR ITS OFFICERS OR AGENTS SHALL NOT BE RESPONSIBLE FOR THE ACCURACY OR COMPLETENESS OF SCANNED COPIES OF THIS PLAN SHEET.

TO ACCOMPANY PLANS DATED 3-3-14

EXISTING	NEW	ITEM DESCRIPTION
		WATER METER (WM)
		BACKFLOW PREVENTER ASSEMBLY (BPA)
		BACKFLOW PREVENTER ENCLOSURE (BPE)
		BOOSTER PUMP (BP)
		TRUCK LOADING STANDPIPE (TLS)
FS	FS	FLOW SENSOR (FS)
X		MASTER IRRIGATION CONTROLLER (MIC)
		AUXILIARY IRRIGATION CONTROLLER (AIC)
		IRRIGATION CONTROLLER (IC) IRRIGATION CONTROLLER (IC) (BATTERY) IRRIGATION CONTROLLER (IC) (SOLAR) IRRIGATION CONTROLLER (IC) (TWO WIRE) IRRIGATION CONTROLLER(S) IN CONTROLLER ENCLOSURE CABINET (ICC)
acc	ACC	ARMOR-CLAD CONDUCTORS (ACC)
cnc	CNC	CONTROL AND NEUTRAL CONDUCTORS (CNC)
		IRRIGATION CONDUIT
		EXTEND IRRIGATION CONDUIT
dip	DIP	DUCTILE IRON PIPE (SUPPLY LINE) (MAIN) (DIP)
		GALVANIZED STEEL PIPE (SUPPLY LINE) (MAIN) (GSP)
		GALVANIZED STEEL PIPE (SUPPLY LINE) (LATERAL) (GSP)
		PLASTIC PIPE (SUPPLY LINE) (MAIN)
		PLASTIC PIPE (SUPPLY LINE) (LATERAL)
cp	CP	COPPER PIPE (SUPPLY LINE)
dit	DIT	DRIP IRRIGATION TUBING
		REMOTE CONTROL VALVE (RCV) REMOTE CONTROL VALVE (MASTER) (RCVM) REMOTE CONTROL VALVE (MASTER) W/FLOW METER (RCVMF)
P	P	REMOTE CONTROL VALVE W/PRESSURE REGULATOR (RCVP)
		EXISTING MANUAL CONTROL VALVE (MCV)
		DRIP VALVE ASSEMBLY (DVA)
		WYE STRAINER ASSEMBLY (WSA)

EXISTING	NEW	ITEM DESCRIPTION
		GATE VALVE (GV)
		BALL VALVE (BV)
		QUICK COUPLING VALVE (QCV)
		CAM COUPLER ASSEMBLY (CCA)
		GARDEN VALVE ASSEMBLY (GARVA)
		PRESSURE REGULATING VALVE (PRV)
		PRESSURE RELIEF VALVE (PRLV)
		FLOW CONTROL VALVE (FCV)
		COMBINATION AIR RELEASE VALVE (CARV)
		CHECK VALVE (CV)
		FLUSH VALVE (FV)
		EXISTING NOZZLE LINE W/TURNING UNION
		EXISTING IRRIGATION SYSTEM
		EXISTING IRRIGATION SYSTEM TO BE REMOVED
		CHAIN LINK GATE
		QUICK COUPLING VALVE W/SPRINKLER PROTECTOR
3	3	SPRINKLER W/SPRINKLER PROTECTOR
	C	CONNECT TO EXISTING SYSTEM
		CAP
		CAP EXISTING
	\\\FR\\\	FIBER ROLL
	\\\CS\\\	COMPOST SOCK

RCV SIZE
IRRIGATION CONTROLLER
CONTROLLER STATION
VALVE IN PARALLEL (IF APPLICABLE)
GPM
QUANTITY OF SPRINKLERS (WHEN SHOWN)

* 2½"-A-2b-40-60

VALVE CODE

* VALVE CODES FOR EXISTING VALVES ARE SHOWN IN A DASHED ENCLOSURE.

STATE OF CALIFORNIA
DEPARTMENT OF TRANSPORTATION

LANDSCAPE AND EROSION CONTROL SYMBOLS

NO SCALE

RSP H2 DATED NOVEMBER 15, 2013 SUPERSEDES RSP H2 DATED JULY 19, 2013 AND STANDARD PLAN H2 DATED MAY 20, 2011 - PAGE 219 OF THE STANDARD PLANS BOOK DATED 2010.

REVISED STANDARD PLAN RSP H2

2010 REVISED STANDARD PLAN RSP H2

10-9-13

Dist	COUNTY	ROUTE	POST MILES TOTAL PROJECT	SHEET No.	TOTAL SHEETS
04	Sol	80	4.0/4.3	18	19

TO ACCOMPANY PLANS DATED 3-3-14

REGISTERED CIVIL ENGINEER

April 19, 2013
PLANS APPROVAL DATE

REGISTERED PROFESSIONAL ENGINEER
Gurinderpal Bhullar
No. C48815
Exp. 9-30-14
CIVIL
STATE OF CALIFORNIA

THE STATE OF CALIFORNIA OR ITS OFFICERS OR AGENTS SHALL NOT BE RESPONSIBLE FOR THE ACCURACY OR COMPLETENESS OF SCANNED COPIES OF THIS PLAN SHEET.

NOTES:

See Revised Standard Plan RSP T9 for tables.

Use cone spacing X for taper segment, Y for tangent segment or Z for conflict situations, as approriate, per Table 1, unless X, Y, or Z cone spacing is shown on this sheet.

Unless otherwise specified in the special provisions, all temporary warning signs shall have black legend on fluorescent orange background.

California codes are designated by (CA). Otherwise, Federal (MUTCD) codes are shown.

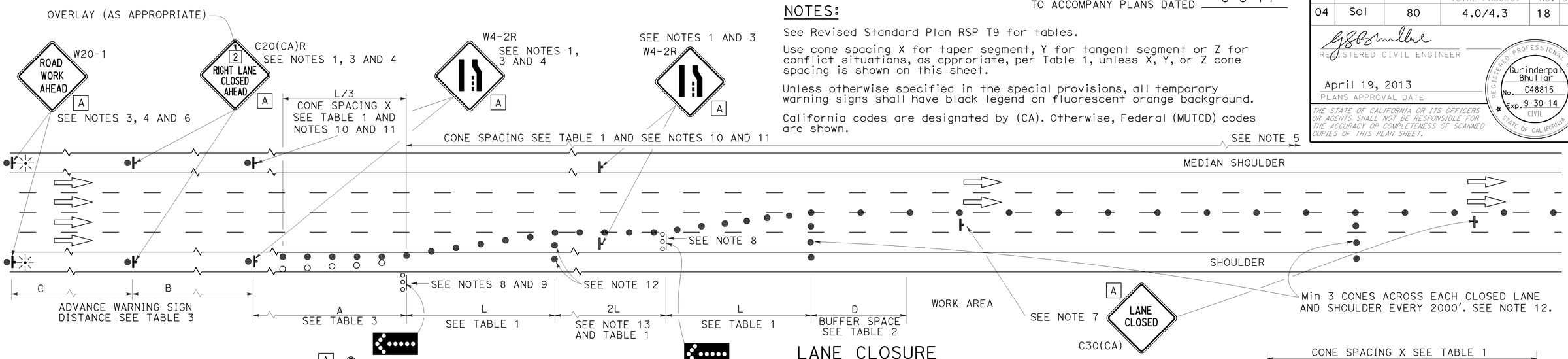

LANE CLOSURE

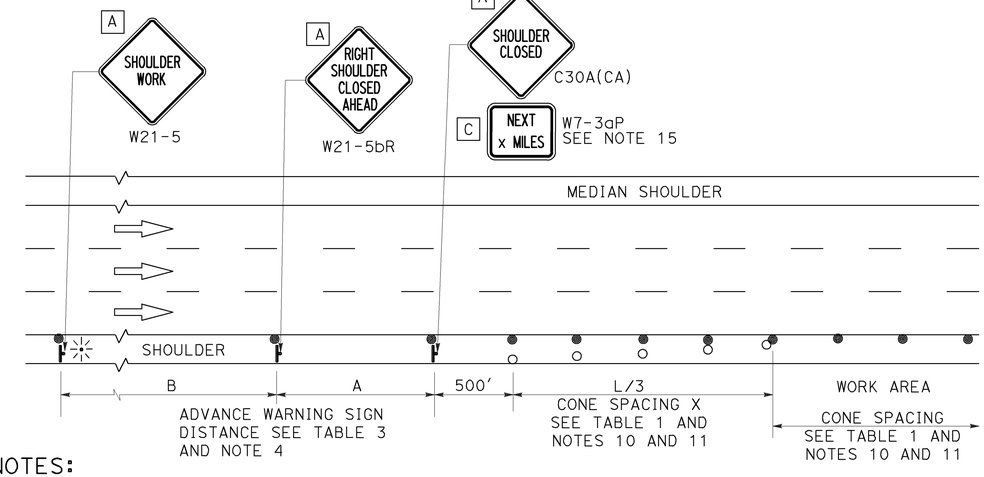

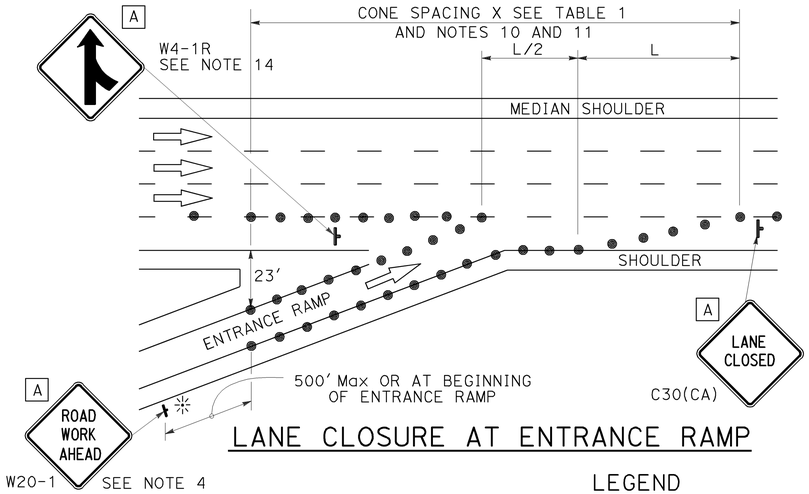

LANE CLOSURE AT ENTRANCE RAMP

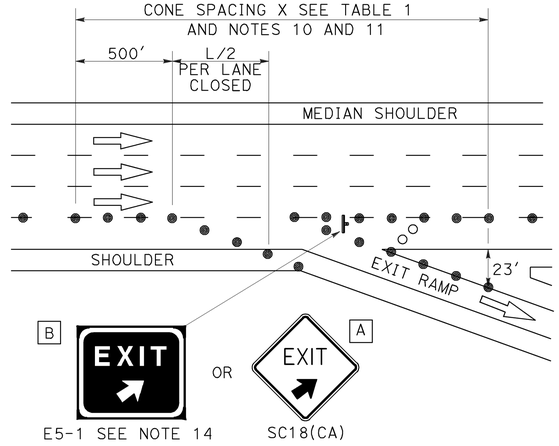

LANE CLOSURE AT EXIT RAMP

NOTES:

1. Median lane closures shall conform to the details as shown except that C20(CA)L and W4-2L signs shall be used.
2. At least one person shall be assigned to provide full time maintenance of traffic control devices for lane closures.
3. Duplicate sign installations are not required:
   a) On opposite shoulder if at least one-half of the available lanes remain open to traffic.
   b) In the median if the width of the median shoulder is less than 8' and the outside lanes are to be closed.
4. Each advance warning sign on each side of the roadway shall be equipped with at least two flags for daytime closure. Each flag shall be at least 16" x 16" in size and shall be orange or fluorescent red-orange in color. Flashing beacons shall be placed at the locations indicated for lane closure during hours of darkness.
5. A G20-2 "END ROAD WORK" sign, with minimum size of 48" x 24" as appropriate, shall be placed at the end of the lane closure unless the end of work area is obvious or ends within a larger project's limits.

SHOULDER CLOSURE

6. If the W20-1 sign would follow within 2000' of a stationary W20-1 or G20-1 "ROAD WORK NEXT _____ MILES", use a C20(CA) sign for the first advance warning sign.
7. Place a C30(CA) sign every 2000' throughout length of lane closure.
8. One flashing arrow sign for each lane closed. The flashing arrow signs shall be Type I.
9. A minimum 1500' of sight distance shall be provided where possible for vehicles approaching the first flashing arrow sign. Lane closures shall not begin at top of crest vertical curve or on a horizontal curve.
10. All cones used for lane closures during the hours of darkness shall be fitted with retroreflective bands (or sleeves) as specified in the specifications.
11. Portable delineators, placed at one-half the spacing indicated for traffic cones may be used instead of cones for daytime closures only.
12. Unless otherwise specified in the special provisions, a minimum of 3 cones shall be placed transversely across each closed lane and shoulder at each location where a taper across a traffic lane ends and every 2000' as shown on the "Lane Closure" detail. Two Type II barricades may be used instead of the 3 cones. The transverse alignment of the cones or barricades on the closed shoulder may be shifted from the transverse alignment to provide access to the work.
13. Unless otherwise specified in the special provisions, the 2L tangent shown along lane lines shall be used between the L tapers required for each closed traffic lane.
14. Unless otherwise specified in the special provisions, the E5-1 or SC18(CA) and W4-1 signs shall be used as shown.
15. A W7-3aP "NEXT___MILES" plaque must be used if theshoulder closure extends beyond the distance that can be perceived by road users.

LEGEND

- TRAFFIC CONE
- TRAFFIC CONE (OPTIONAL TAPER)
- TEMPORARY TRAFFIC CONTROL SIGN
- FLASHING ARROW SIGN (FAS)
- FAS SUPPORT OR TRAILER
- PORTABLE FLASHING BEACON

SIGN PANEL SIZE (Min)

A	48" x 48"
B	72" x 60"
C	36" x 30"

STATE OF CALIFORNIA
DEPARTMENT OF TRANSPORTATION

TRAFFIC CONTROL SYSTEM FOR LANE CLOSURE ON FREEWAYS AND EXPRESSWAYS

NO SCALE

RSP T10 DATED APRIL 19, 2013 SUPERSEDES STANDARD PLAN T10 DATED MAY 20, 2011 - PAGE 237 OF THE STANDARD PLANS BOOK DATED 2010.

REVISED STANDARD PLAN RSP T10

2010 REVISED STANDARD PLAN RSP T10

12-18-13

TO ACCOMPANY PLANS DATED 3-3-14

Dist	COUNTY	ROUTE	POST MILES TOTAL PROJECT	SHEET No.	TOTAL SHEETS
04	Sol	80	4.0/4.3	19	19

REGISTERED CIVIL ENGINEER

April 19, 2013
PLANS APPROVAL DATE

REGISTERED PROFESSIONAL ENGINEER — Gurinderpal Bhullar — No. C48815 — Exp. 9-30-14 CIVIL — STATE OF CALIFORNIA

THE STATE OF CALIFORNIA OR ITS OFFICERS OR AGENTS SHALL NOT BE RESPONSIBLE FOR THE ACCURACY OR COMPLETENESS OF SCANNED COPIES OF THIS PLAN SHEET.

NOTES:

See Revised Standard Plan RSP T9 for tables.

Use cone spacing X for taper segment, Y for tangent segment or Z for conflict situations, as approriate, per Table 1, unless X, Y, or Z cone spacing is shown on this sheet.

Unless otherwise specified in the special provisions, all temporary warning signs shall have black legend on fluorescent orange background.

California codes are designated by (CA). Otherwise, Federal (MUTCD) codes are shown.

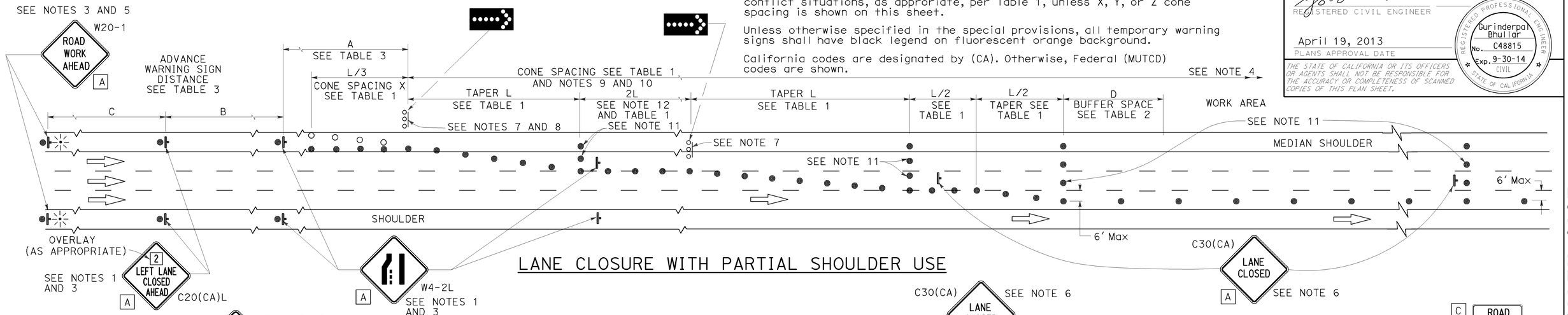

LANE CLOSURE WITH PARTIAL SHOULDER USE

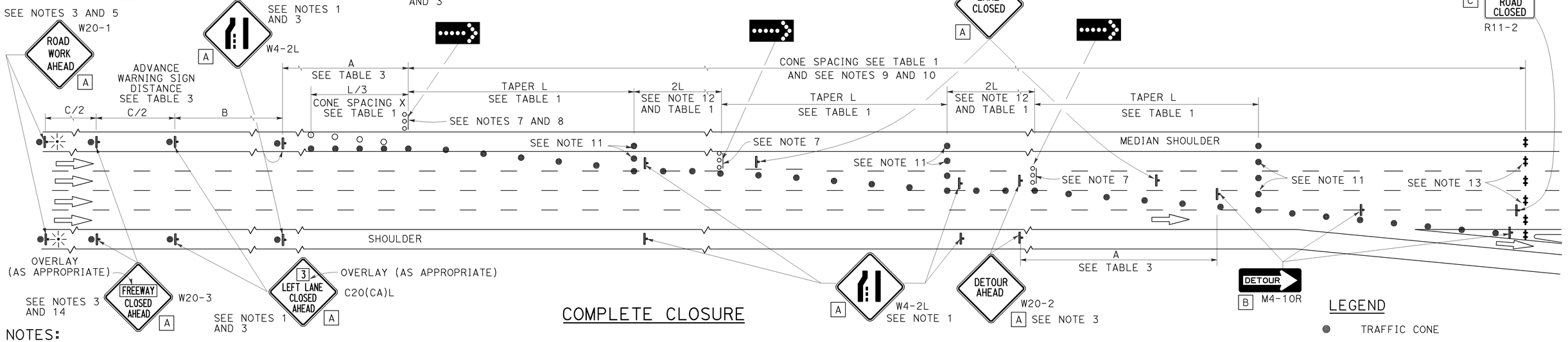

COMPLETE CLOSURE

NOTES:

1. Lane closures on the right side using partial median shoulder as a traffic lane shall conform to the details as shown except that C20(CA)R and W4-2R signs shall be used.
2. At least one person shall be assigned to provide full time maintenance of traffic control devices for lane closures.
3. Each advance warning sign on each side of the roadway shall be equipped with at least two flags for daytime closure. Each flag shall be at least 16" X 16" in size and shall be orange or fluorescent red-orange in color. Flashing beacons shall be placed at the locations indicated for lane closure during hours of darkness.
4. A G20-2 "END ROAD WORK" sign, with minimum size of 48" x 24" as appropriate, shall be placed at the end of the lane closure unless the end of work area is obvious or ends within a larger project's limits.
5. If the W20-1 sign would follow within 2000' of a stationary W20-1 or G20-1 "ROAD WORK NEXT ___ MILES", use a C20(CA) sign for the first advance warning sign.
6. Place a C30(CA) sign every 2000' throughout length of lane closure.
7. One flashing arrow sign for each lane closed. The flashing arrow signs shall be Type I.
8. A minimum 1500' of sight distance shall be provided where possible for vehicles approaching the first flashing arrow sign. Lane closures shall not begin at the top of crest vertical curve or on a horizontal curve.
9. All cones used for lane closures during the hours of darkness shall be fitted with retroreflective bands (or sleeves) as specified in the specifications.
10. Portable delineators, placed at one-half the spacing indicated for traffic cones, may be used instead of cones for daytime closures only.
11. Unless otherwise specified in the special provisions, a minimum of 3 cones shall be placed transversely across each closed lane and shoulder at each location where a taper across a traffic lane ends and every 2000' as shown on the "Lane Closure With Partial Shoulder Use" detail. Two Type II barricades may be used instead of the 3 cones. The transverse alignment of the cones or barricades on the closed shoulder may be shifted from the transverse alignment to provide access to the work.
12. Unless otherwise specified in the special provisions, the 2L tangent shown along lane lines shall be used between the L tapers required for each closed traffic lane.
13. A minimum of Two Type II or III barricades shall be placed across each closed lane and shoulder at the location shown and every 2000' within the complete closure area. Within the complete closure area, the transverse alignment of the barricades on the closed shoulder may be shifted from the transverse alignment to provide access to the work.
14. When specified in the special provisions, a W20-2 "DETOUR AHEAD" sign is to be used in place of the W20-3 "FREEWAY CLOSED AHEAD" sign.

SIGN PANEL SIZE (Min)

- A 48" x 48"
- B 48" x 18"
- C 48" x 30"

LEGEND

- TRAFFIC CONE
- TRAFFIC CONE (OPTIONAL TAPER)
- TEMPORARY TRAFFIC CONTROL SIGN
- FLASHING ARROW SIGN (FAS)
- FAS SUPPORT OR TRAILER
- PORTABLE FLASHING BEACON

STATE OF CALIFORNIA
DEPARTMENT OF TRANSPORTATION

TRAFFIC CONTROL SYSTEM FOR LANE CLOSURES ON FREEWAYS AND EXPRESSWAYS

NO SCALE

RSP T10A DATED APRIL 19, 2013 SUPERSEDES STANDARD PLAN T10A DATED MAY 20, 2011 - PAGE 238 OF THE STANDARD PLANS BOOK DATED 2010.

REVISED STANDARD PLAN RSP T10A

2010 REVISED STANDARD PLAN RSP T10A

12-18-12