INDEX OF PLANS

SHEET No.	DESCRIPTION
1	TITLE AND LOCATION MAP
2-6	TYPICAL CROSS SECTIONS
7	KEY MAP AND LINE INDEX
8-12	LAYOUTS
13-34	PROFILE AND SUPERELEVATION DIAGRAMS
35-42	CONSTRUCTION DETAILS
43-49	EROSION CONTROL PLANS, DETAILS AND QUANTITIES
50-52	CONTOUR GRADING
53-85	DRAINAGE PLANS, PROFILES, DETAILS AND QUANTITIES
86-89	UTILITY PLANS, DETAILS AND QUANTITIES
90-99	CONSTRUCTION AREA SIGNS
100-147	STAGE CONSTRUCTION PLANS, DETAILS AND QUANTITIES
148	TRAFFIC HANDLING PLAN, DETAILS AND QUANTITIES
149-152	PAVEMENT DELINEATION PLANS AND QUANTITIES
153-160	SIGN PLANS, DETAILS AND QUANTITIES
161-163	SUMMARY OF QUANTITIES
164	RETAINING WALL No. 4A PLAN AND ELEVATION
165-215	ELECTRICAL PLANS
216-268	REVISED AND NEW STANDARD PLANS

STRUCTURE PLANS

269-310	N101/S1 CONNECTOR SEPARATION Br No. 34-0155RL
311-350	RUCKMAN AVENUE UC (REPLACE) Br No. 34-0156
351-464	PRESIDIO VIADUCT - LEFT Br No. 34-0157L
465-484	RUCKMAN AVENUE UC TEMPORARY BRIDGE Br No. 34-0158
485-528	N1/S101 CONNECTOR Br No. 34-0160G
529-543	RETAINING WALL No. 3 Br No. 34E0011
544-554	RETAINING WALL No. 3A Br No. 34E0012
555-567	RETAINING WALL No. 4 Br No. 34E0013

THE STANDARD PLANS LIST APPLICABLE TO THIS CONTRACT IS INCLUDED IN THE NOTICE TO BIDDERS AND SPECIAL PROVISIONS BOOK.

STATE OF CALIFORNIA
DEPARTMENT OF TRANSPORTATION

ACBRNH-X075(027)N

Dist	COUNTY	ROUTE	POST MILES TOTAL PROJECT	SHEET No.	TOTAL SHEETS
04	SF	101,1	9.2/9.8, 6.8/7.1	1	567

PROJECT PLANS FOR CONSTRUCTION ON STATE HIGHWAY
IN THE CITY AND COUNTY OF SAN FRANCISCO
ON ROUTE 101
FROM 0.3 MILE SOUTH
TO 0.4 MILE NORTH OF ROUTE 101/1 SEPARATION
AND ON ROUTE 1
FROM RUCKMAN AVENUE UNDERCROSSING
TO ROUTE 101/1 SEPARATION

TO BE SUPPLEMENTED BY STANDARD PLANS DATED MAY 2006

LOCATION MAP

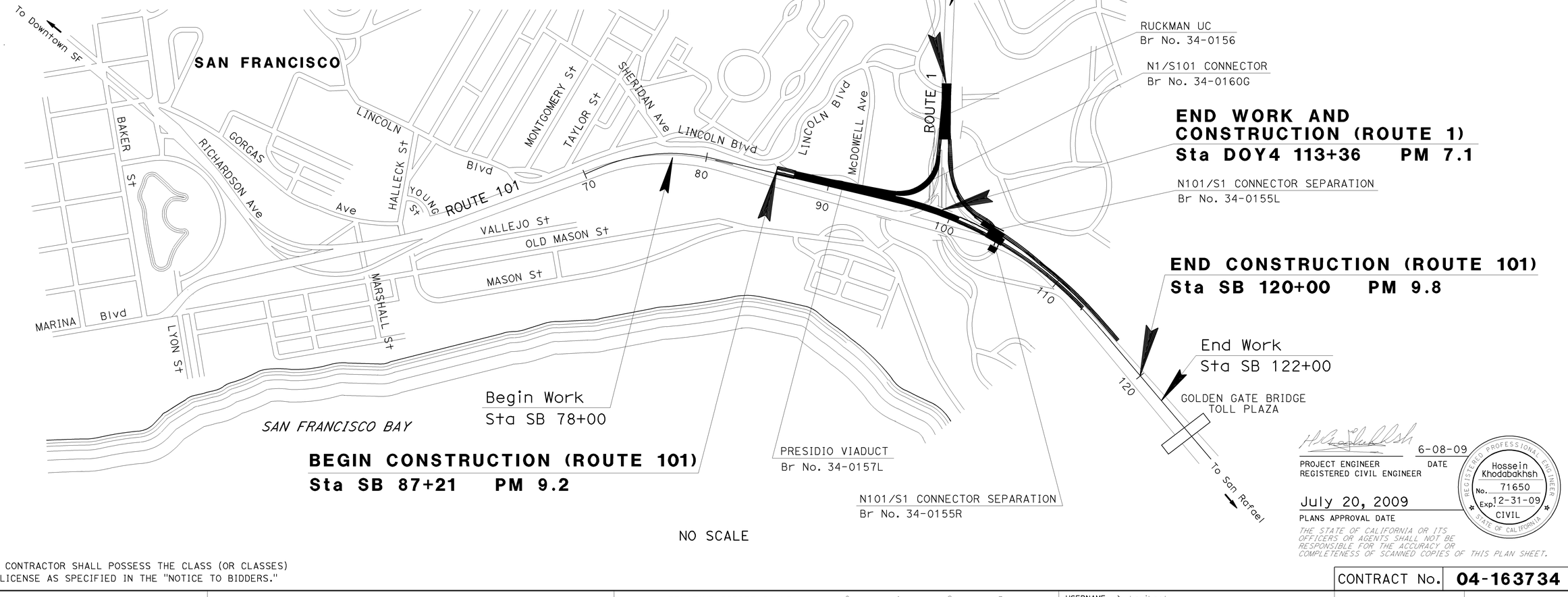

NO SCALE

THE CONTRACTOR SHALL POSSESS THE CLASS (OR CLASSES) OF LICENSE AS SPECIFIED IN THE "NOTICE TO BIDDERS."

PROJECT MANAGER: NIDAL TUOAN
DESIGN ENGINEER: ABOLFAZL EMADZADEH

6-08-09
PROJECT ENGINEER REGISTERED CIVIL ENGINEER — DATE

REGISTERED PROFESSIONAL ENGINEER — Hossein Khodabakhsh — No. 71650 — Exp. 12-31-09 — CIVIL — STATE OF CALIFORNIA

July 20, 2009
PLANS APPROVAL DATE

THE STATE OF CALIFORNIA OR ITS OFFICERS OR AGENTS SHALL NOT BE RESPONSIBLE FOR THE ACCURACY OR COMPLETENESS OF SCANNED COPIES OF THIS PLAN SHEET.

LAST REVISION 06-10-09
DATE PLOTTED => 28-JUL-2009
TIME PLOTTED => 07:43

CONTRACT No. 04-163734

Dist	COUNTY	ROUTE	POST MILES TOTAL PROJECT	SHEET No.	TOTAL SHEETS
04	SF	101,1	9.2/9.8, 6.8/7.1	2	567

REGISTERED CIVIL ENGINEER — 6-08-09 DATE

Hossein Khodabakhsh, No. 71650, Exp. 12-31-09, CIVIL — REGISTERED PROFESSIONAL ENGINEER — STATE OF CALIFORNIA

7-20-09
PLANS APPROVAL DATE

THE STATE OF CALIFORNIA OR ITS OFFICERS OR AGENTS SHALL NOT BE RESPONSIBLE FOR THE ACCURACY OR COMPLETENESS OF SCANNED COPIES OF THIS PLAN SHEET.

NOTES:

1. DIMENSIONS OF THE STRUCTURAL SECTIONS ARE SUBJECT TO TOLERANCES SPECIFIED IN THE STANDARD SPECIFICATIONS.
2. SUPERELEVATION AS SHOWN OR AS DIRECTED BY THE ENGINEER.
3. FOR Calif ST-10 BRIDGE RAIL (Mod) (TYPE B) DETAIL, SEE SHEET C-1.
4. FOR CRCP TERMINAL JOINT DETAILS, SEE Std PLAN P31A.
5. FOR CRCP DETAILS, SEE SHEET C-6 AND Std PLANS P4, P31A, AND P32B.

LEGEND:

No. — STRUCTURAL SECTION NUMBER

Exist — 0.25′ - 0.33′ AC
0.67′ PCC BASE
UNTREATED ROCK BASE

STRUCTURAL SECTION

1 — 0.65′ HMA
0.35′ LCB
1.00′ AS (CLASS 4)

2 — 0.20′ COLD PLANE ASPHALT CONCRETE AND PLACE
0.2′ HMA

3 — 0.50′ HMA
1.35′ AB (CLASS 3)

4 — 0.80′ CRCP
0.40′ HMA
0.60′ AS (CLASS 4)

5 — 0.60′ HMA
0.35′ LCB
0.95′ AS (CLASS 4)

6 — REMOVE Exist STRUCTURAL SECTION AND PLACE 0.5′ HMA & 0′ TO 0.5′ AB (CLASS 3)

7 — REMOVE Exist STRUCTURAL SECTION AND PLACE 0.5′ HMA

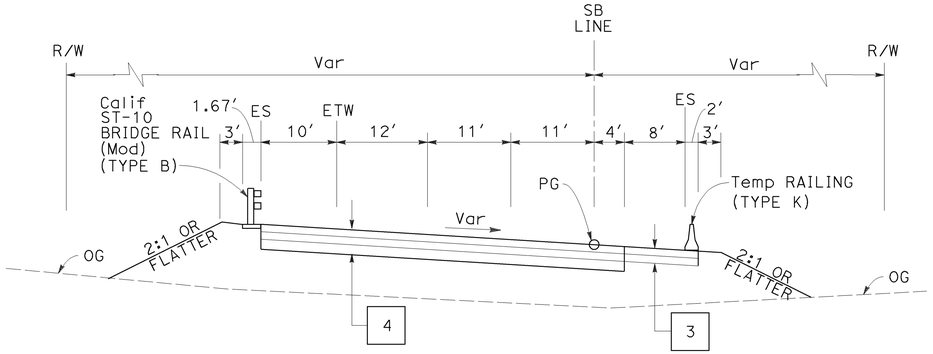

SB 100+96.27 TO 103+30
(SEE BRIDGE PLANS 034-0155L)

ROUTE 101 - DOYLE DRIVE

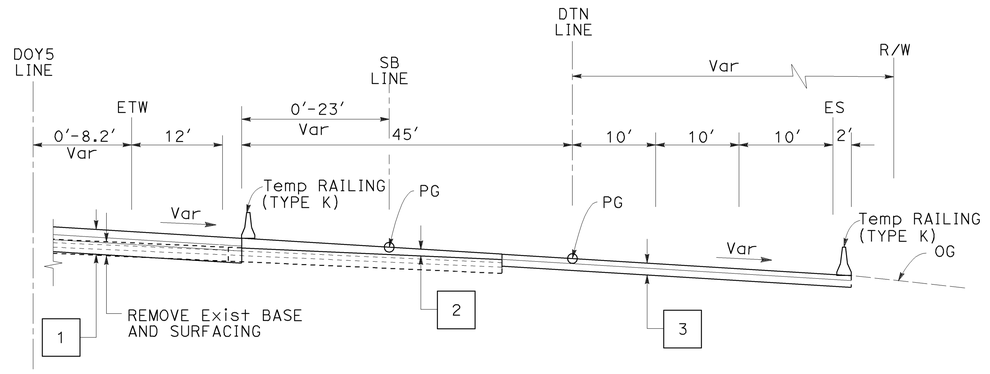

SB 105+68 TO 107+50

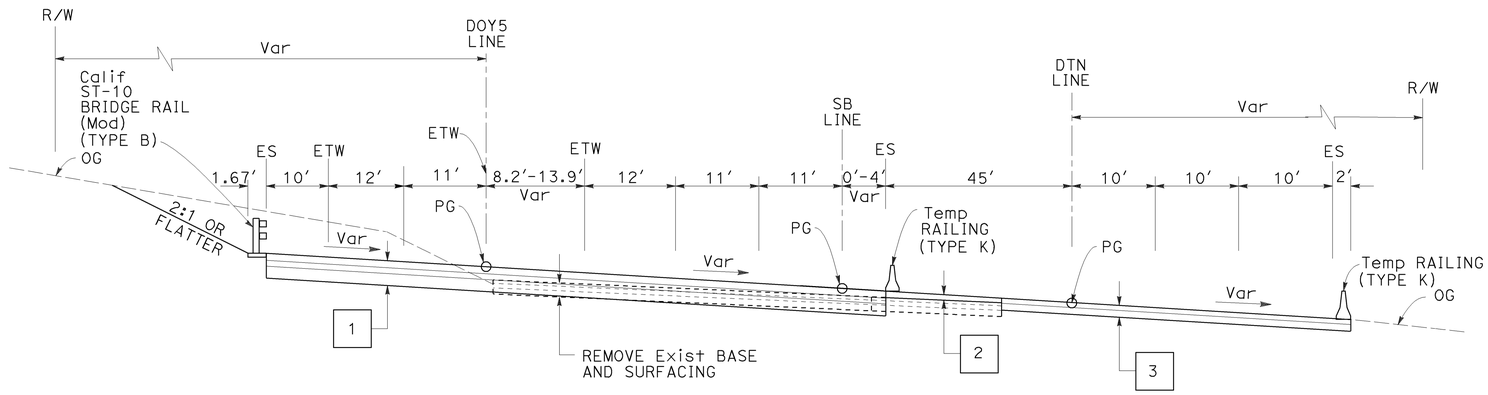

OFF RAMP
DOY5 107+88 TO 110+19.45

SB 104+83 TO 105+68
(SEE BRIDGE PLANS 034-0155R)

ROUTE 101 - DOYLE DRIVE

TYPICAL CROSS SECTIONS

NO SCALE

X-1

STATE OF CALIFORNIA - DEPARTMENT OF TRANSPORTATION — DESIGN
Caltrans
FUNCTIONAL SUPERVISOR: ABOLFAZL EMADZADEH
CALCULATED-DESIGNED BY: DOMINIC CHIN
CHECKED BY: ROMY ACOB
REVISED BY: DC
DATE REVISED: 6/10/09
LAST REVISION: 06-11-09
DATE PLOTTED => 21-JUL-2009
TIME PLOTTED => 07:52

BORDER LAST REVISED 4/11/2008
RELATIVE BORDER SCALE IS IN INCHES 0 1 2 3
USERNAME => trrene
DGN FILE => 416373ca001.dgn
CU 04242
EA 163731

Dist	COUNTY	ROUTE	POST MILES TOTAL PROJECT	SHEET No.	TOTAL SHEETS
04	SF	101,1	9.2/9.8, 6.8/7.1	3	567

REGISTERED CIVIL ENGINEER 6-08-09 DATE

7-20-09
PLANS APPROVAL DATE

REGISTERED PROFESSIONAL ENGINEER Hossein Khodabakhsh No. 71650 Exp. 12-31-09 CIVIL STATE OF CALIFORNIA

THE STATE OF CALIFORNIA OR ITS OFFICERS OR AGENTS SHALL NOT BE RESPONSIBLE FOR THE ACCURACY OR COMPLETENESS OF SCANNED COPIES OF THIS PLAN SHEET.

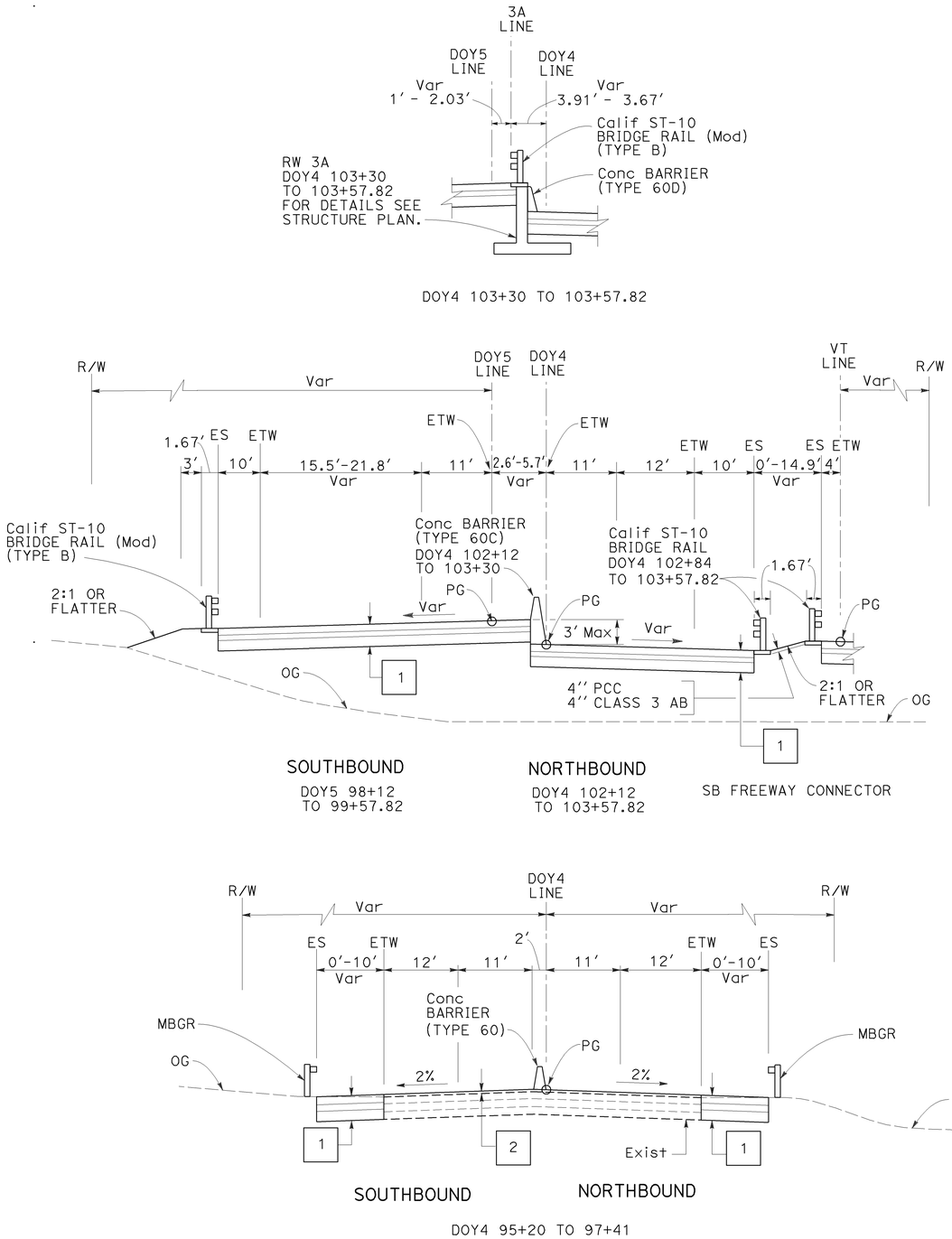

ROUTE 1 - PARK PRESIDIO

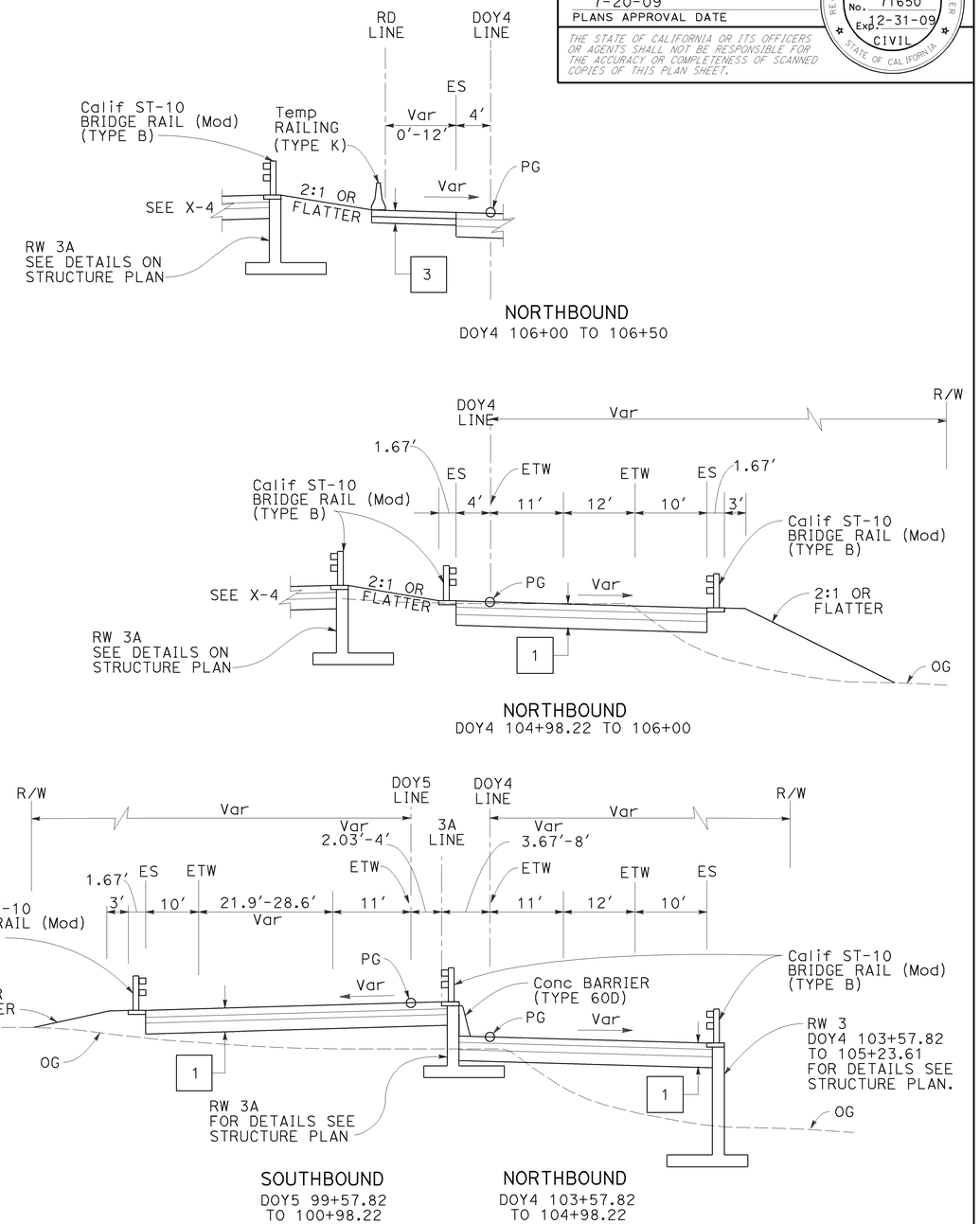

ROUTE 1 - PARK PRESIDIO

TYPICAL CROSS SECTIONS

NO SCALE

FOR NOTES, ABBREVIATIONS &/OR LEGEND, SEE SHEET X-1

X-2

STATE OF CALIFORNIA - DEPARTMENT OF TRANSPORTATION
Caltrans
DESIGN

FUNCTIONAL SUPERVISOR: ABOLFAZL EMADZADEH
CALCULATED-DESIGNED BY: DOMINIC CHIN
CHECKED BY: ROMY ACOB
REVISED BY: DC
DATE REVISED: 6/10/09

LAST REVISION 06-10-09
DATE PLOTTED => 21-JUL-2009
TIME PLOTTED => 07:35

Dist	COUNTY	ROUTE	POST MILES TOTAL PROJECT	SHEET No.	TOTAL SHEETS
04	SF	101,1	9.2/9.8, 6.8/7.1	4	567

REGISTERED CIVIL ENGINEER — DATE: 6-08-09

PLANS APPROVAL DATE: 7-20-09

REGISTERED PROFESSIONAL ENGINEER — Hossein Khodabakhsh — No. 71650 — Exp. 12-31-09 — CIVIL — STATE OF CALIFORNIA

THE STATE OF CALIFORNIA OR ITS OFFICERS OR AGENTS SHALL NOT BE RESPONSIBLE FOR THE ACCURACY OR COMPLETENESS OF SCANNED COPIES OF THIS PLAN SHEET.

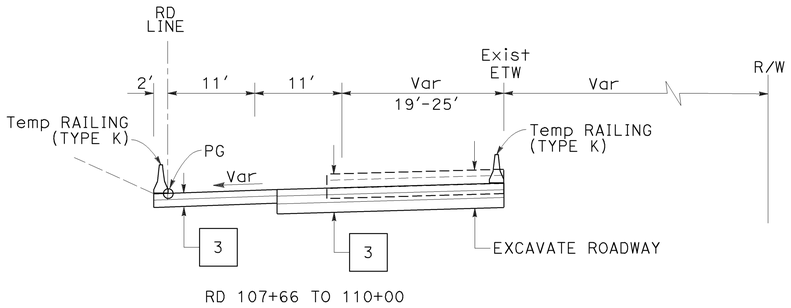

RD 107+66 TO 110+00

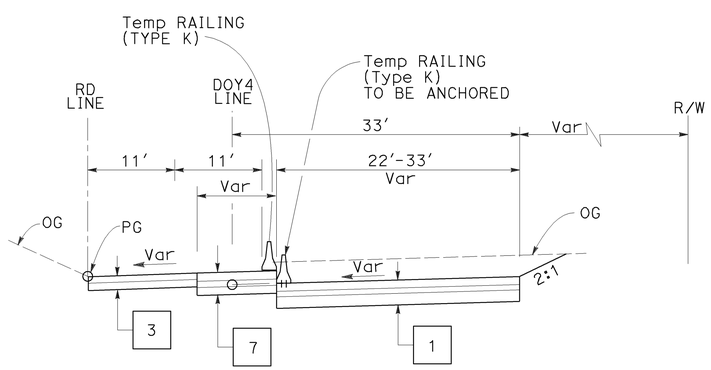

RD 106+50 TO 107+66

DOY4 106+50 TO 107+66

ROUTE 1 - PARK PRESIDIO

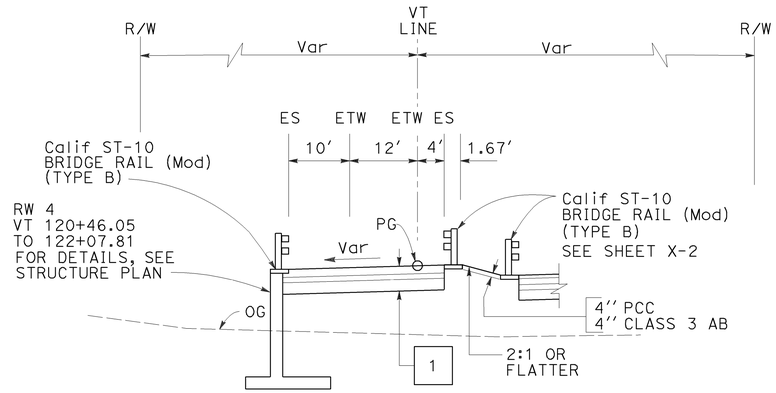

VT 120+41.55 TO 121+87.36

FREEWAY CONNECTOR NB ROUTE 1 TO SB ROUTE 101

TYPICAL CROSS SECTIONS

NO SCALE

FOR NOTES, ABBREVIATIONS &/OR LEGEND, SEE SHEET X-1

X-3

	REVISED BY	DC
	DATE REVISED	6/10/09
	DOMINIC CHIN	
	ROMY ACOB	
CALCULATED-DESIGNED BY		
CHECKED BY		

FUNCTIONAL SUPERVISOR: ABOLFAZL EMADZADEH

STATE OF CALIFORNIA - DEPARTMENT OF TRANSPORTATION — DESIGN

Caltrans

LAST REVISION | DATE PLOTTED => 21-JUL-2009 | TIME PLOTTED => 07:35 | 06-10-09

Dist	COUNTY	ROUTE	POST MILES TOTAL PROJECT	SHEET No.	TOTAL SHEETS
04	SF	101,1	9.2/9.8, 6.8/7.1	5	567

6-08-09
REGISTERED CIVIL ENGINEER DATE

7-20-09
PLANS APPROVAL DATE

REGISTERED PROFESSIONAL ENGINEER
Hossein Khodabakhsh
No. 71650
Exp. 12-31-09
CIVIL
STATE OF CALIFORNIA

THE STATE OF CALIFORNIA OR ITS OFFICERS OR AGENTS SHALL NOT BE RESPONSIBLE FOR THE ACCURACY OR COMPLETENESS OF SCANNED COPIES OF THIS PLAN SHEET.

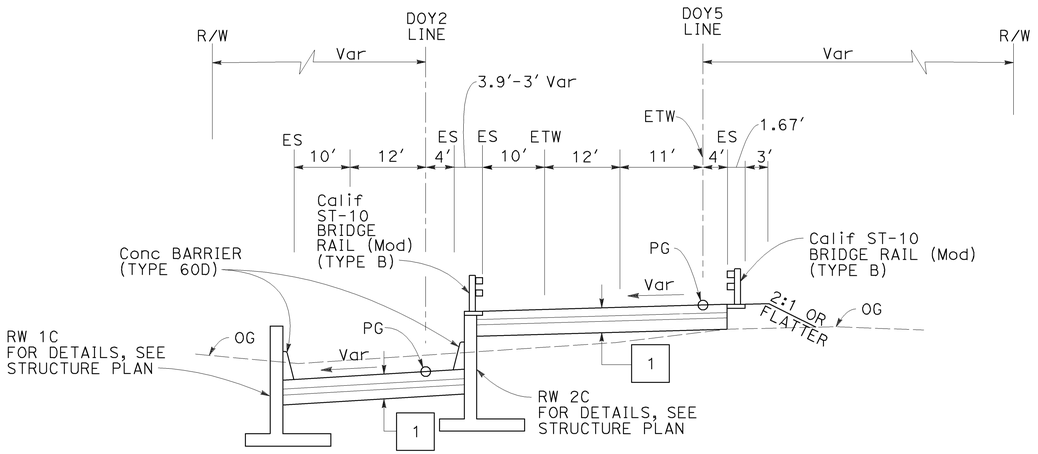

DOY5 104+24.43 TO 105+87

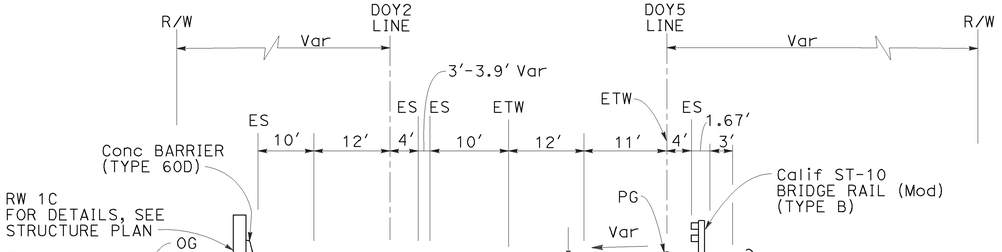

DOY5 103+58 TO 104+24.43

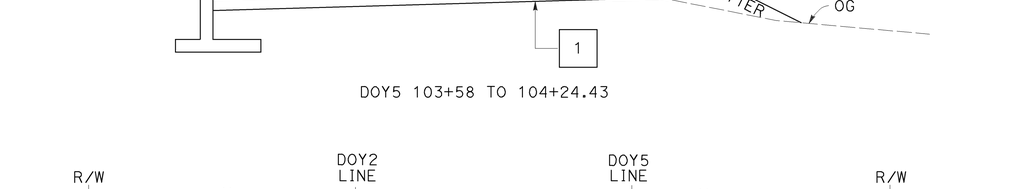

DOY5 100+25.14 TO 103+58

FREEWAY CONNECTOR ROUTE 101 TO SB ROUTE 1

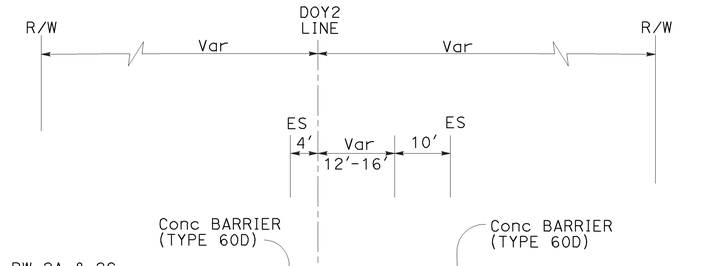

DOY2 104+22.6 TO 107+73.5

FREEWAY CONNECTOR ROUTE 101 TO SB ROUTE 1

FOR NOTES, ABBREVIATIONS &/OR LEGEND, SEE SHEET X-1

TYPICAL CROSS SECTIONS

NO SCALE

X-4

STATE OF CALIFORNIA - DEPARTMENT OF TRANSPORTATION
Caltrans®
DESIGN
FUNCTIONAL SUPERVISOR: ABOLFAZL EMADZADEH
CALCULATED-DESIGNED BY: DOMINIC CHIN
CHECKED BY: ROMY ACOB
REVISED BY: DC
DATE REVISED: 6/10/09

LAST REVISION | DATE PLOTTED => 21-JUL-2009 | TIME PLOTTED => 07:35
06-10-09

BORDER LAST REVISED 4/11/2008
RELATIVE BORDER SCALE IS IN INCHES 0 1 2 3
USERNAME => trrene
DGN FILE => 416373ca004.dgn
CU 04242
EA 163731

Dist	COUNTY	ROUTE	POST MILES TOTAL PROJECT	SHEET No.	TOTAL SHEETS
04	SF	101,1	9.2/9.8, 6.8/7.1	6	567

REGISTERED CIVIL ENGINEER — DATE 6-08-09

PLANS APPROVAL DATE 7-20-09

REGISTERED PROFESSIONAL ENGINEER — Hossein Khodabakhsh — No. 71650 — Exp. 12-31-09 — CIVIL — STATE OF CALIFORNIA

THE STATE OF CALIFORNIA OR ITS OFFICERS OR AGENTS SHALL NOT BE RESPONSIBLE FOR THE ACCURACY OR COMPLETENESS OF SCANNED COPIES OF THIS PLAN SHEET.

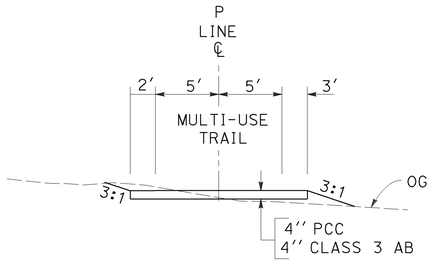

P 10+00 TO 12+72

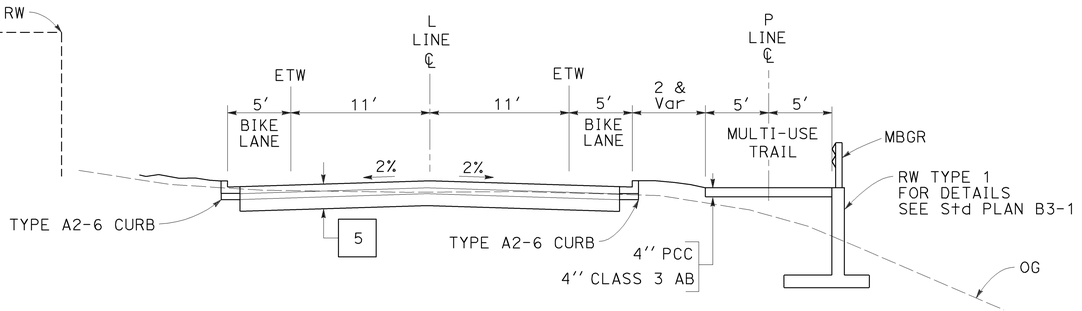

L 16+20 TO 18+80

P 13+05 TO 15+64

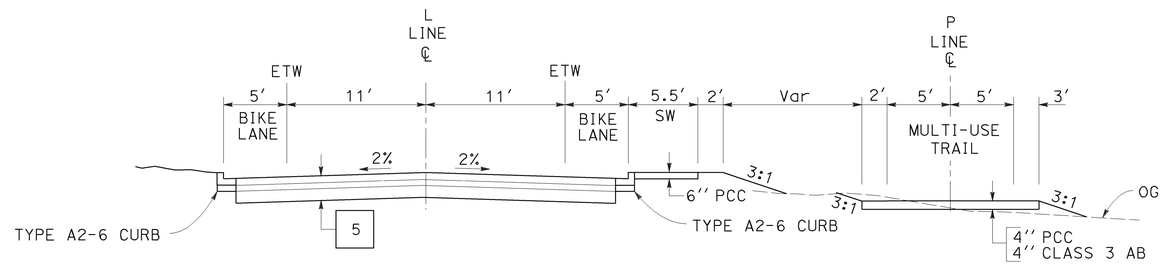

L 15+50 TO 16+20

P 12+72 TO 13+05

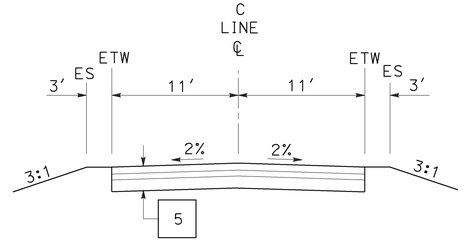

C 10+60 TO 13+60

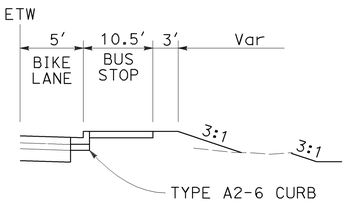

L 14+0.8703 TO 14+48.734

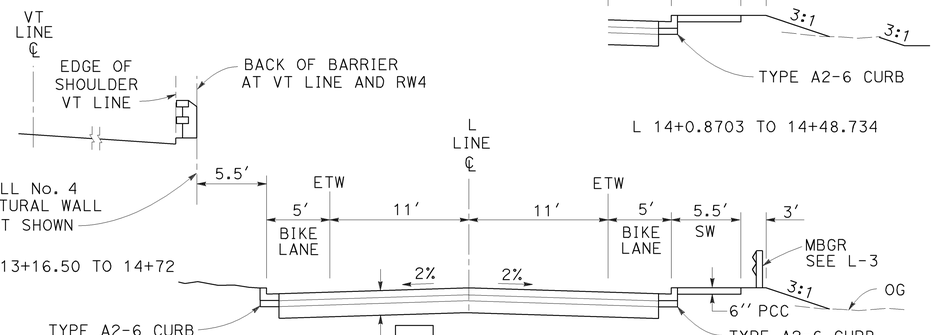

L 11+80 TO 15+50

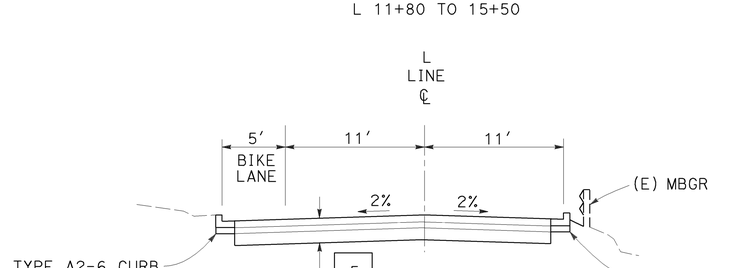

L 10+00 TO 11+80

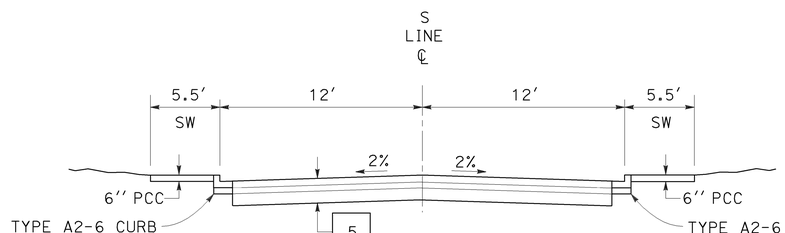

S 11+20 TO 12+10

FOR NOTES, ABBREVIATIONS &/OR LEGEND, SEE SHEET X-1

TYPICAL CROSS SECTIONS

NO SCALE

X-5

CALCULATED-DESIGNED BY	CHECKED BY	REVISED BY	DATE REVISED
DOMINIC CHIN	ROMY ACOB	DC	6/10/09

FUNCTIONAL SUPERVISOR: ABOLFAZL EMADZADEH

STATE OF CALIFORNIA - DEPARTMENT OF TRANSPORTATION — DESIGN

Caltrans

LAST REVISION — DATE PLOTTED => 21-JUL-2009 — TIME PLOTTED => 07:35

Dist	COUNTY	ROUTE	POST MILES TOTAL PROJECT	SHEET No.	TOTAL SHEETS
04	SF	101,1	9.2/9.8, 6.8/7.1	7	567

REGISTERED CIVIL ENGINEER 7-11-09 DATE

7-20-09
PLANS APPROVAL DATE

REGISTERED PROFESSIONAL ENGINEER
Hossein Khodabakhsh
No. 71650
Exp. 12-31-09
CIVIL
STATE OF CALIFORNIA

THE STATE OF CALIFORNIA OR ITS OFFICERS OR AGENTS SHALL NOT BE RESPONSIBLE FOR THE ACCURACY OR COMPLETENESS OF SCANNED COPIES OF THIS PLAN SHEET.

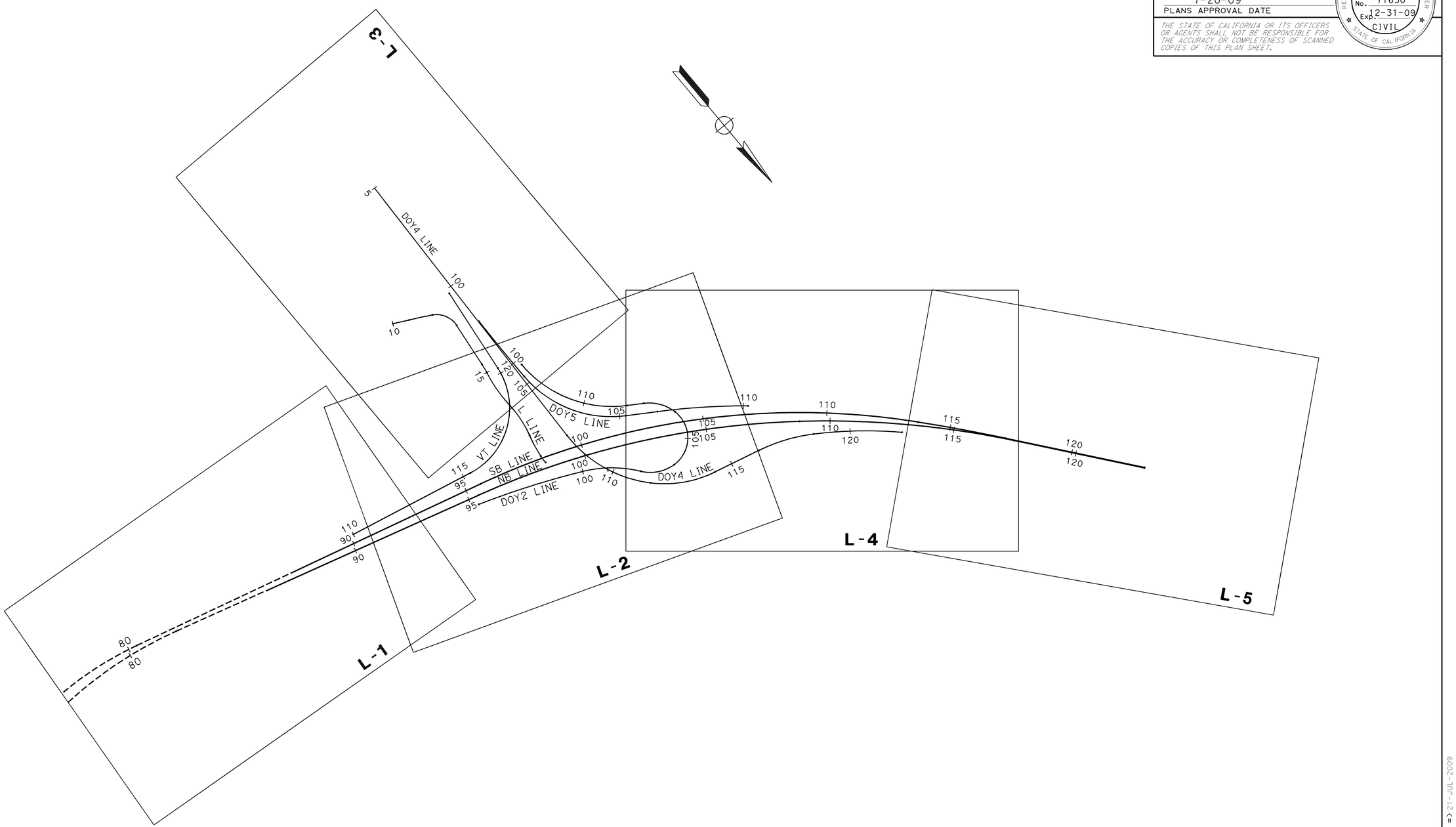

KEY MAP AND LINE INDEX

NO SCALE

K-1

STATE OF CALIFORNIA - DEPARTMENT OF TRANSPORTATION
Caltrans
DESIGN

FUNCTIONAL SUPERVISOR: ABOLFAZL EMADZADEH
CALCULATED-DESIGNED BY: ROGER DAYOAN
CHECKED BY: HOSSEIN KHODABAKHSH
REVISED BY: RD
DATE REVISED: 7/11/09

LAST REVISION 07-11-09
DATE PLOTTED => 21-JUL-2009
TIME PLOTTED => 08:46

BORDER LAST REVISED 4/11/2008
RELATIVE BORDER SCALE IS IN INCHES 0 1 2 3
USERNAME => trphils
DGN FILE => 416373da001.dgn
CU 04242
EA 163731

Dist	COUNTY	ROUTE	POST MILES TOTAL PROJECT	SHEET No.	TOTAL SHEETS
04	SF	101,1	9.2/9.8, 6.8/7.1	8	567

REGISTERED CIVIL ENGINEER 6-08-09 DATE

7-20-09
PLANS APPROVAL DATE

Hossein Khodabakhsh No. 71650 Exp. 12-31-09 CIVIL — REGISTERED PROFESSIONAL ENGINEER — STATE OF CALIFORNIA

THE STATE OF CALIFORNIA OR ITS OFFICERS OR AGENTS SHALL NOT BE RESPONSIBLE FOR THE ACCURACY OR COMPLETENESS OF SCANNED COPIES OF THIS PLAN SHEET.

FOR ACCURATE RIGHT OF WAY AND ACCESS DATA, CONTACT RIGHT OF WAY ENGINEERING AT THE DISTRICT OFFICE.

``COORDINATE VALUES SHOWN ARE CCS NAD-83, ZONE 29R. ELEVATIONS ARE BASED ON NAVD-88''.

NOTE:

1. FOR RETAINING WALL DETAILS, SEE STRUCTURE PLANS.

LEGEND:

- ROCKWALL
- CONFORM
- No. — STRUCTURAL SECTION NUMBER
- ×—ESA—× — VERTICAL ENVIRONMENTALLY SENSITIVE AREA
- —VESA—×— — Temp CONSTRUCTION EASEMENT
- ——--TCE—— — Temp FENCE (TYPE CL-6, SLATTED)
- ××—TRSF—×× — Temp REINFORCED SILT FENCE
- ⊠ — IRRIGATION WATER METER
- ××—TFESA—×× — Temp FENCE ENVIRONMENTALLY SENSITIVE AREA
- ---------- — FUTURE CONTRACT

ABBREVIATION:

CCS	CALIFORNIA COORDINATE SYSTEM
AFTS	ALTERNATIVE FLARED TERMINAL SYSTEM

CURVE DATA

No.	R	Δ	T	L	N-COORDINATE	E-COORDINATE
1	1380′	36° 24′ 25′′	453.81′	876.88′	2121646.10	5994945.58

S A N F R A N C I S C O

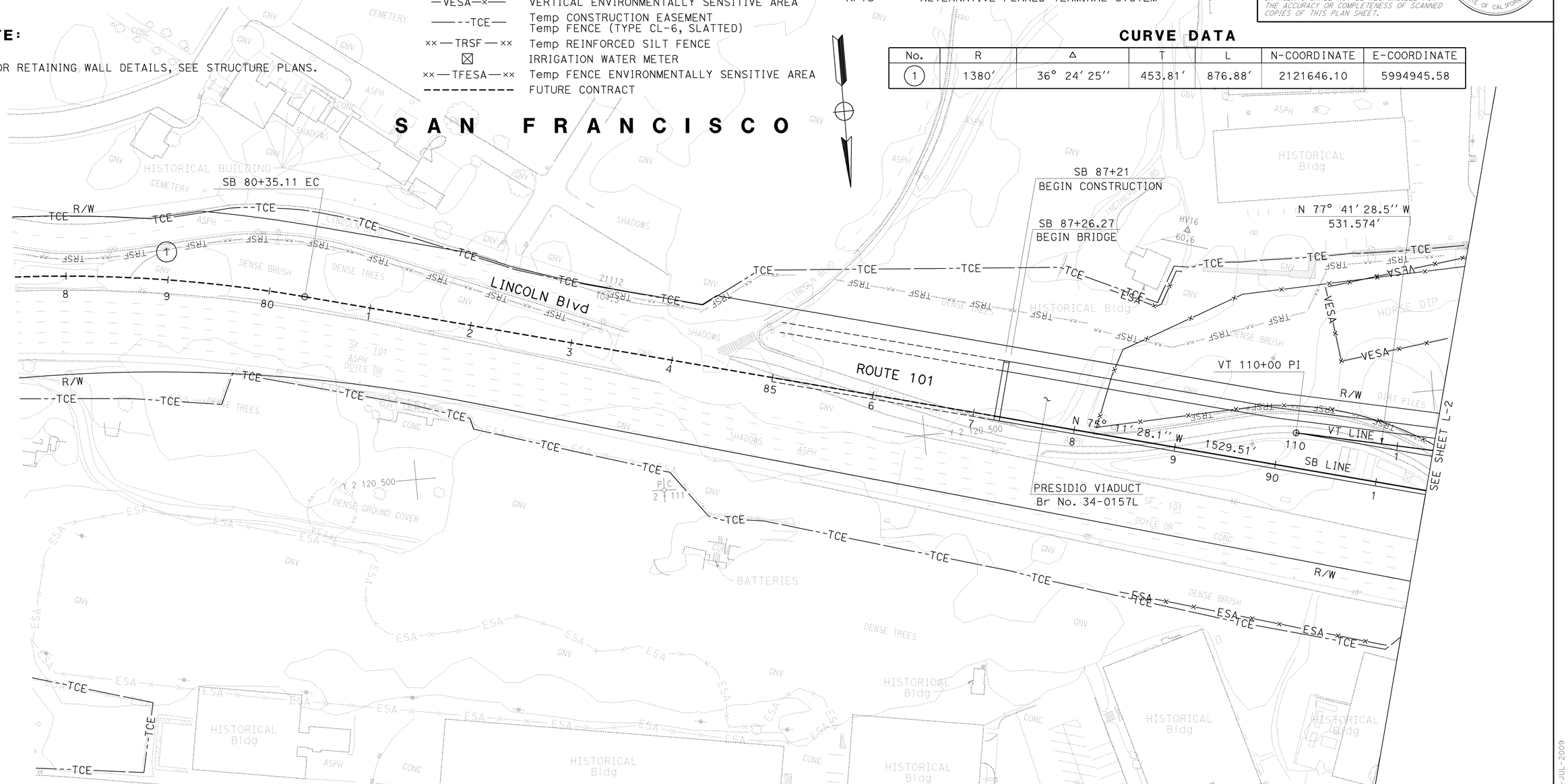

LAYOUT

SCALE: 1′′ = 50′

L-1

REVISED BY	DATE REVISED
GC	7/03/09
CS	6/10/09
CARLOS SANDOVAL	
ROGER DAYOAN	

CALCULATED-DESIGNED BY

CHECKED BY

FUNCTIONAL SUPERVISOR: ABOLFAZL EMADZADEH

STATE OF CALIFORNIA - DEPARTMENT OF TRANSPORTATION

Caltrans® DESIGN

LAST REVISION | DATE PLOTTED => 23-JUL-2009
07-03-09 | TIME PLOTTED => 08:15

BORDER LAST REVISED 4/11/2008

RELATIVE BORDER SCALE IS IN INCHES 0 1 2 3

USERNAME => trphils
DGN FILE => 416373ea001.dgn

CU 04242

EA 163731

Dist	COUNTY	ROUTE	POST MILES TOTAL PROJECT	SHEET No.	TOTAL SHEETS
04	SF	101,1	9.2/9.8, 6.8/7.1	9	567

REGISTERED CIVIL ENGINEER — 6-08-09 DATE

7-20-09
PLANS APPROVAL DATE

Hossein Khodabakhsh, No. 71650, Exp. 12-31-09, CIVIL, REGISTERED PROFESSIONAL ENGINEER, STATE OF CALIFORNIA

THE STATE OF CALIFORNIA OR ITS OFFICERS OR AGENTS SHALL NOT BE RESPONSIBLE FOR THE ACCURACY OR COMPLETENESS OF SCANNED COPIES OF THIS PLAN SHEET.

FOR ACCURATE RIGHT OF WAY AND ACCESS DATA, CONTACT RIGHT OF WAY ENGINEERING AT THE DISTRICT OFFICE.

NOTE: (FOR THIS SHEET ONLY)

1. FOR INFORMATION ON C, L & P LINES, SEE SHEET C-3.

S 06° 58′ 40.3″ W
358.576′
VT 120+22.41 EC
VT 120+41.55
END BRIDGE

44.23′ Rt DOY4 103+57.82
BEGIN RW 3

SEE SHEET L-3

REMOVABLE BOLLARDS

S A N F R A N C I S C O

COWLES St
C LINE

SB 95+64.62 BC

PRESIDIO VIADUCT
Br No. 34-0157L

McDOWELL Ave

16′ CL-6 GATE

VT 115+31.57 BC
VT 114+99.55
BEGIN BRIDGE

CONFORM

N1/S101 CONNECTOR
Br No. 34-0160G

VT LINE

P LINE

L LINE

RW 3

Calif ST-10 BRIDGE RAIL (Mod) (TYPE B)

SB 99+77.74=
DOY4 108+19.56

RW 1C
SEE STRUCTURE PLANS

DOY4 107+61.42 BC

Temp RAILING (TYPE K)
SB 100+96.27

BRIDGE APPROACH SLAB

DTN 100+43.32 BC

SB LINE

ROUTE 101

N 77° 41′ 28.5″ W
531.574′

N 75° 11′ 28.1″ W
1529.51

9′ Temp WIDENING

NB LINE (TYPE K)

SB 100+66.27
END BRIDGE
END Temp WIDENING

RD 108+11.63 BC

39.23′ Rt NB 101+87.52

4′ Lt NB 104+19.96
R 2582′

N 74° 13′ 41.1″ W
1334.51′

SB 93+34.27
BEGIN Temp WIDENING

DOY2 95+60 PI

DOY2 LINE

DTN LINE

NB 100+09.51=
DOY4 108+75.20

DTN 94+00 PI

16′ CL-6 GATE

DOY2 95+60.02 BC

DOY2 99+99.33 EC

DOY2 99+99.35 BC

DOY4 109+50
END Temp RAILING (TYPE K)

SEE LONGITUDINAL CONFORM DETAIL (SEE SHEET C-2)

DOY4 109+64.36=
DOY2 100+88.49

DOY4 110+00
CONFORM
DTN 101+10
BEGIN HMA SURFACING
CONFORM Temp RAILING TO BRIDGE RAILING

Calif ST-10 BRIDGE RAIL (Mod) (TYPE B)
SB 100+69.27 TO 101+75

LINCOLN Blvd

CRISSY FIELD Ave

DOY2 112+99.62 PI=
23.1′ Lt DOY5 100+25.10

DOY2 112+99.58 EC

RW 3A

DOY5 100+68.56 EC

DOY5 100+68.57 BC

34.67′ Rt DOY4 105+23.61
END RW 3

RD 106+00
BEGIN Temp RAILING (TYPE K)

4′ Rt DOY5 102+54
END RW 3A

S 57° 23′ 49.2″ E
68.422′

DOY2 108+25.55 BC
DOY5 105+25.19 EC

RW 2C
SEE STRUCTURE PLANS

N 57° 23′ 45.8″ W
128.34′

DOY5 105+87=
40.05′ Lt DOY2 107+73.50
DOY2 107+57.13 EC

DOY5 106+53.53 BC

CRASH CUSHION (''SMART'' SCI100GM)
Br No. 034-0155L

STOREY Ave

DOY5 107+13.50=
DOY2 106+34.86
DOY2 106+24.89 POC
SB 104+09.16
BEGIN BRIDGE

SEE SHEET L-4

SB 104+53.05
END BRIDGE

Calif ST-10 BRIDGE RAIL (Mod) (TYPE B) (SEE Sht C-1)
Br No. 034-0155R

SB 104+09.59=
DOY2 105+69.32
NB 104+53.18
END BRIDGE
4′ Lt NB 104+20.56

NB 104+25.10=
DOY2 105+21.06
NB 104+11.85
BEGIN BRIDGE
DOY2 104+22.60
BEGIN ROADWAY WORK

RW 1A
SEE STRUCTURE PLANS

Temp RAILING (TYPE K)
DTN 102+79.99 EC

RW 2A
SEE STRUCTURE PLANS

RD LINE

DOY4 LINE

RD 113+99.10 EC

DOY4 111+58.45 POC

DOY2 102+35.08 BC

DOY2 103+76.70 POC

MBGR, AFTS

DOY4 114+23.52 EC

N 76° 10′ 47.9″ W
198.63′

SEE SHEET L-1

CURVE DATA

No.	R	Δ	T	L	N-COORDINATE	E-COORDINATE
(2)	3015′	34° 18′ 00″	930.42′	1804.93′	2123617.73	5993884.77
(4)	295′	95° 19′ 51″	323.81′	490.83′	2120354.61	5993054.67
(5)	8200′	02° 29′ 44″	178.60′	357.15′	2120428.10	5984502.19
(6)	459′	56° 59′ 57″	249.21′	456.62′	2120481.72	5992243.01
(7)	2767′	07° 34′ 37″	183.22′	365.91′	2123268.51	5993873.15
(8)	3409′	07° 23′ 01″	219.96′	439.31′	2123989.71	5994267.90
(9)	492′	27° 27′ 04″	120.17′	235.72′	2121370.49	5992983.92
(10)	164′	49° 28′ 32″	75.56′	141.62′	2120980.89	5992456.15
(11)	133′	106° 55′ 09″	179.47′	248.19′	2121011.81	5992458.36
(12)	170′	44° 34′ 04″	69.67′	132.24′	2121020.02	5992494.44
(13)	474′	57° 17′ 59″	258.97′	474.03′	2120440.64	5992205.08
(14)	505′	45° 02′ 45″	209.41′	397.03′	2120795.82	5992217.83

CURVE DATA

No.	R	Δ	T	L	N-COORDINATE	E-COORDINATE
(15)	457′	33° 13′ 58″	136.38′	265.07′	2120828.52	5992252.97
(16)	1180′	11° 29′ 30″	118.73′	236.67′	2122062.51	5993026.67
(18)	430′	78° 16′ 41″	349.94′	587.47′	2120843.83	5992278.63
(19)	3391′	22° 32′ 37″	675.86′	1334.23′	2123995.67	5994072.09

FOR NOTES, ABBREVIATIONS &/OR LEGEND, SEE SHEET L-1

LAYOUT

SCALE: 1″ = 50′

L-2

REVISED BY	DATE REVISED
GC	7/03/09
CS	6/10/09

CALCULATED-DESIGNED BY: CARLOS SANDOVAL
CHECKED BY: ROGER DAYOAN
FUNCTIONAL SUPERVISOR: ABOLFAZL EMADZADEH

STATE OF CALIFORNIA - DEPARTMENT OF TRANSPORTATION
DESIGN

LAST REVISION DATE PLOTTED => 21-JUL-2009
TIME PLOTTED => 08:46
07-03-09

Dist	COUNTY	ROUTE	POST MILES TOTAL PROJECT	SHEET No.	TOTAL SHEETS
04	SF	101,1	9.2/9.8, 6.8/7.1	10	567

REGISTERED CIVIL ENGINEER — DATE: 6-08-09

Hossein Khodabakhsh, No. 71650, Exp. 12-31-09, CIVIL — REGISTERED PROFESSIONAL ENGINEER — STATE OF CALIFORNIA

PLANS APPROVAL DATE: 7-20-09

THE STATE OF CALIFORNIA OR ITS OFFICERS OR AGENTS SHALL NOT BE RESPONSIBLE FOR THE ACCURACY OR COMPLETENESS OF SCANNED COPIES OF THIS PLAN SHEET.

FOR ACCURATE RIGHT OF WAY AND ACCESS DATA, CONTACT RIGHT OF WAY ENGINEERING AT THE DISTRICT OFFICE.

NOTE: (FOR THIS SHEET ONLY)

1. FOR INFORMATION ON L, P, & S LINES, SEE SHEET C-3.

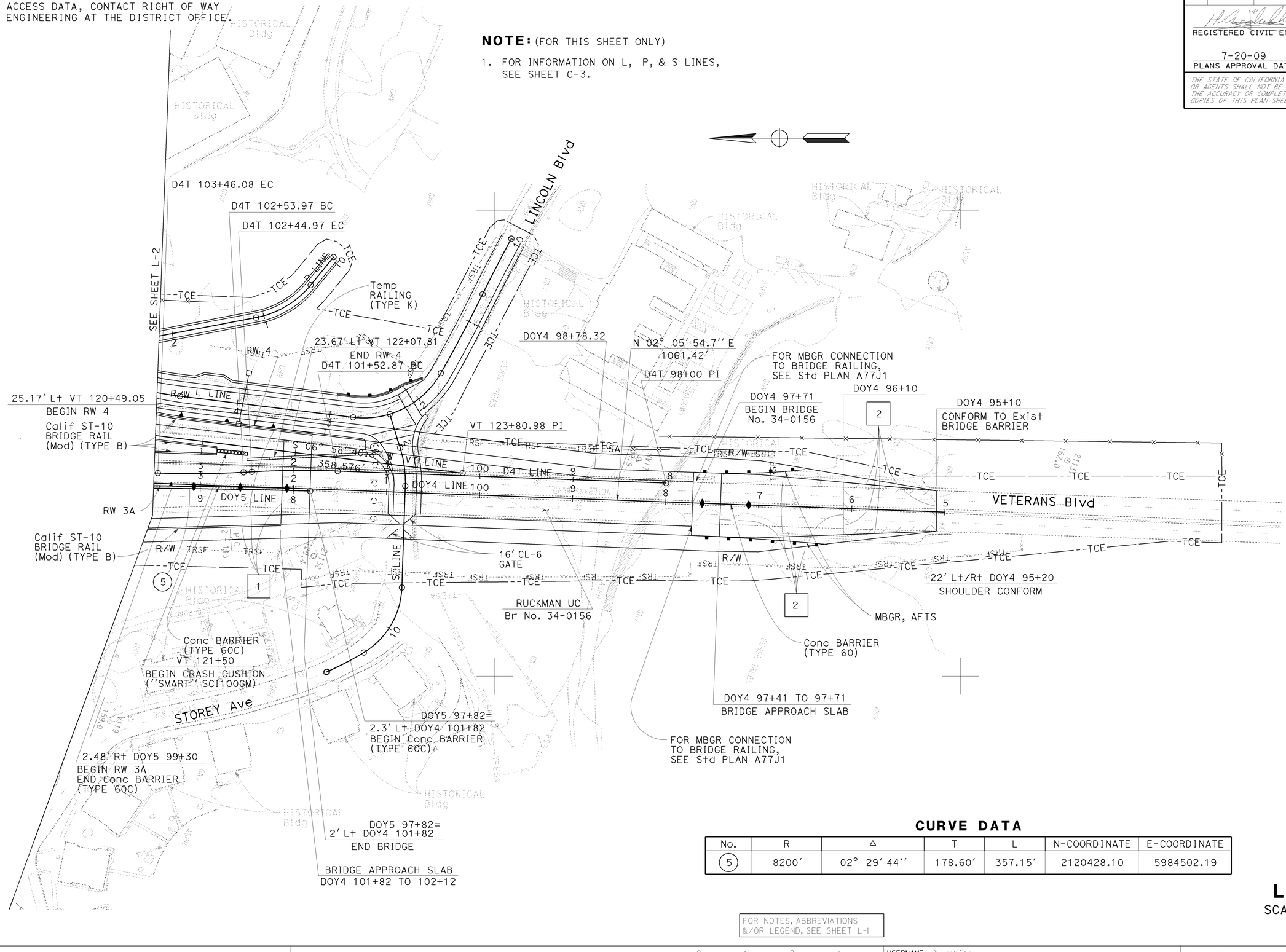

CURVE DATA

No.	R	Δ	T	L	N-COORDINATE	E-COORDINATE
(5)	8200'	02° 29' 44''	178.60'	357.15'	2120428.10	5984502.19

FOR NOTES, ABBREVIATIONS &/OR LEGEND, SEE SHEET L-1

LAYOUT

SCALE: 1'' = 50'

L-3

GC	7/03/09	CALCULATED-DESIGNED BY
CS	6/10/09	CHECKED BY
CARLOS SANDOVAL	REVISED BY	
ROGER DAYOAN	DATE REVISED	
FUNCTIONAL SUPERVISOR		
ABOLFAZL EMADZADEH		

STATE OF CALIFORNIA - DEPARTMENT OF TRANSPORTATION — DESIGN

LAST REVISION 07-03-09 | DATE PLOTTED => 21-JUL-2009 | TIME PLOTTED => 08:46

BORDER LAST REVISED 4/11/2008 | RELATIVE BORDER SCALE IS IN INCHES (0 1 2 3) | USERNAME => trphils | DGN FILE => 416373ea003.dgn | CU 04242 | EA 163731

FOR ACCURATE RIGHT OF WAY AND
ACCESS DATA, CONTACT RIGHT OF WAY
ENGINEERING AT THE DISTRICT OFFICE.

Dist	COUNTY	ROUTE	POST MILES TOTAL PROJECT	SHEET No.	TOTAL SHEETS
04	SF	101,1	9.2/9.8, 6.8/7.1	11	567

REGISTERED CIVIL ENGINEER — 6-08-09 DATE

Hossein Khodabakhsh No. 71650 Exp. 12-31-09 CIVIL — REGISTERED PROFESSIONAL ENGINEER — STATE OF CALIFORNIA

7-20-09
PLANS APPROVAL DATE

THE STATE OF CALIFORNIA OR ITS OFFICERS OR AGENTS SHALL NOT BE RESPONSIBLE FOR THE ACCURACY OR COMPLETENESS OF SCANNED COPIES OF THIS PLAN SHEET.

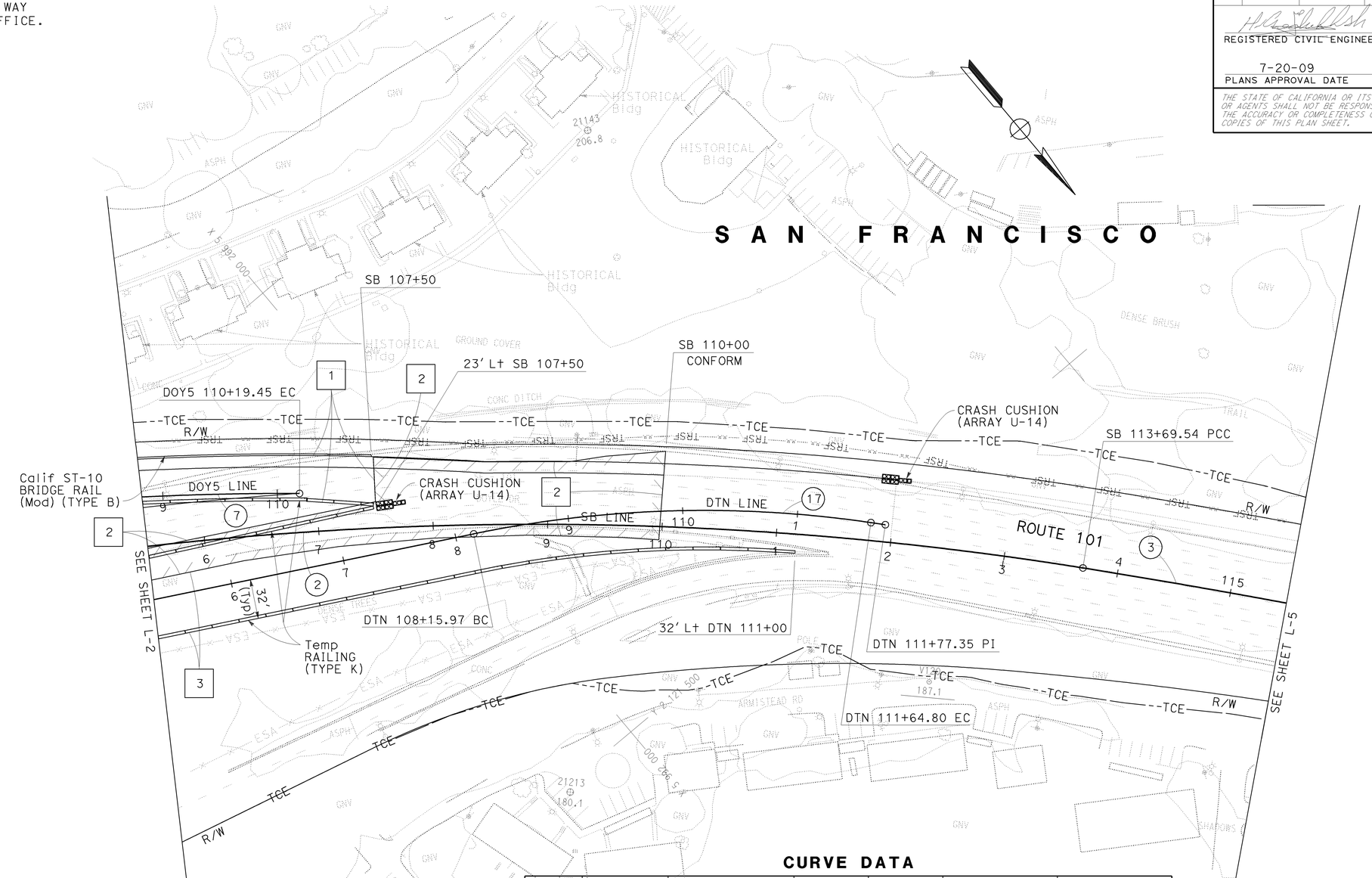

CURVE DATA

No.	R	Δ	T	L	N-COORDINATE	E-COORDINATE
(2)	3015′	34° 18′ 00″	930.42′	1804.93′	2123617.73	5993884.77
(3)	7381′	02° 46′ 26″	178.71′	357.34′	2126475.82	5997185.27
(7)	2767′	07° 34′ 37″	183.22′	365.91′	2123268.51	5993873.15
(17)	1000′	19° 59′ 12″	176.21′	348.83′	2122159.01	5992469.57

FOR NOTES, ABBREVIATIONS &/OR LEGEND, SEE SHEET L-1

LAYOUT
SCALE: 1″ = 50′

L-4

STATE OF CALIFORNIA - DEPARTMENT OF TRANSPORTATION
DESIGN
FUNCTIONAL SUPERVISOR: ABOLFAZL EMADZADEH
CALCULATED-DESIGNED BY
CHECKED BY
CARLOS SANDOVAL
ROGER DAYOAN
REVISED BY: GC
DATE REVISED: 7/03/09
CS 6/10/09

LAST REVISION | DATE PLOTTED => 21-JUL-2009 | TIME PLOTTED => 08:46
07-03-09

BORDER LAST REVISED 4/11/2008
RELATIVE BORDER SCALE IS IN INCHES 0 1 2 3
USERNAME => trphils
DGN FILE => 416373ea004.dgn
CU 04242
EA 163731

FOR ACCURATE RIGHT OF WAY AND ACCESS DATA, CONTACT RIGHT OF WAY ENGINEERING AT THE DISTRICT OFFICE.

CURVE DATA

No.	R	Δ	T	L	N-COORDINATE	E-COORDINATE
(3)	7381′	02° 46′ 26″	178.71′	357.34′	2126475.82	5997185.27

Dist	COUNTY	ROUTE	POST MILES TOTAL PROJECT	SHEET No.	TOTAL SHEETS
04	SF	101,1	9.2/9.8, 6.8/7.1	12	567

REGISTERED CIVIL ENGINEER — DATE 6-08-09

Hossein Khodabakhsh, No. 71650, Exp. 12-31-09, CIVIL, REGISTERED PROFESSIONAL ENGINEER, STATE OF CALIFORNIA

PLANS APPROVAL DATE 7-20-09

THE STATE OF CALIFORNIA OR ITS OFFICERS OR AGENTS SHALL NOT BE RESPONSIBLE FOR THE ACCURACY OR COMPLETENESS OF SCANNED COPIES OF THIS PLAN SHEET.

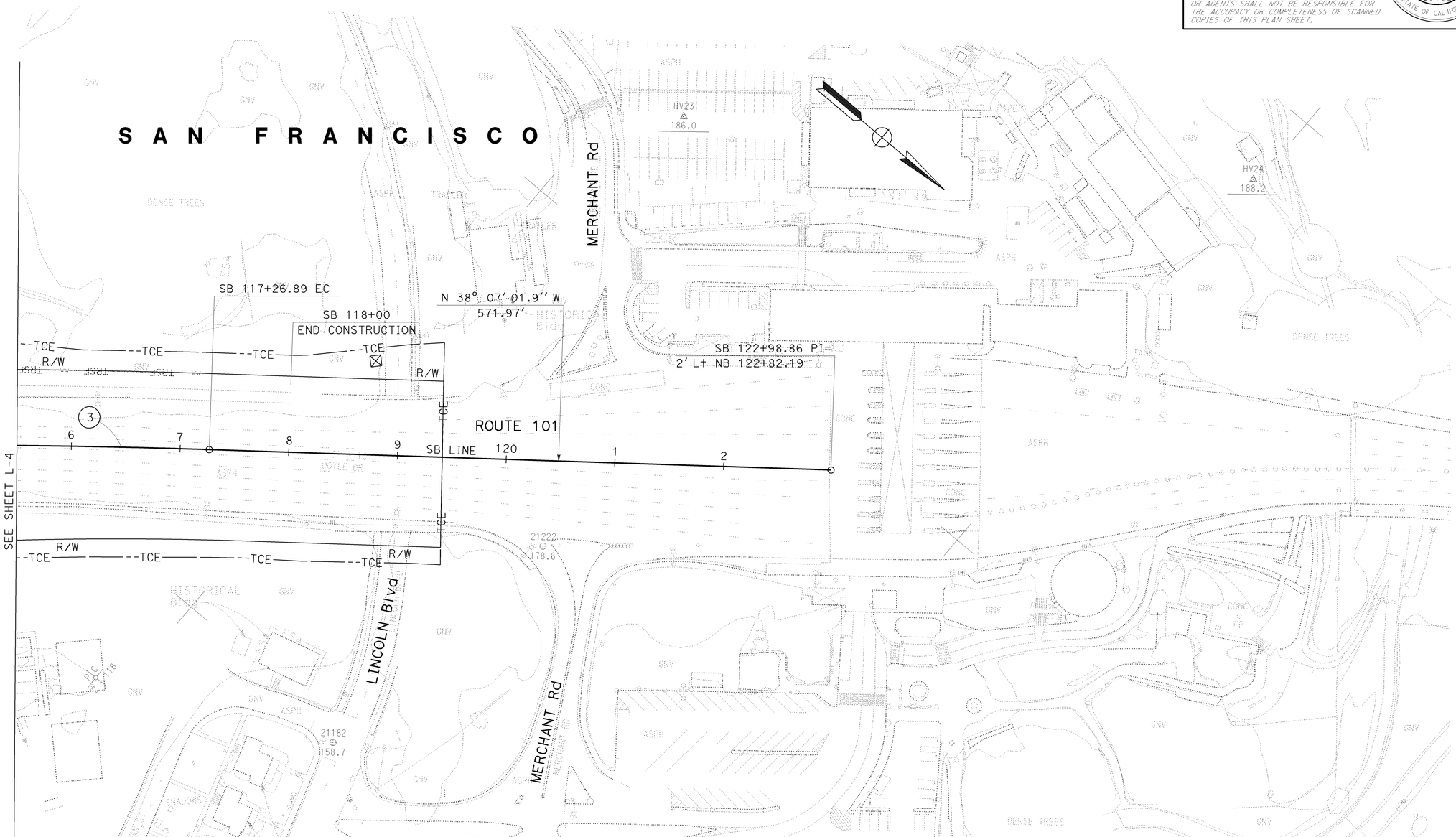

FOR NOTES, ABBREVIATIONS &/OR LEGEND, SEE SHEET L-1

LAYOUT

SCALE: 1″ = 50′

L-5

GC	7/03/09	CALCULATED-DESIGNED BY	CARLOS SANDOVAL
CS	6/10/09	CHECKED BY	ROGER DAYOAN
REVISED BY	DATE REVISED	FUNCTIONAL SUPERVISOR	ABOLFAZL EMADZADEH

STATE OF CALIFORNIA - DEPARTMENT OF TRANSPORTATION — DESIGN

Caltrans

LAST REVISION DATE PLOTTED => 21-JUL-2009 TIME PLOTTED => 08:46 06-03-09

BORDER LAST REVISED 4/11/2008 | RELATIVE BORDER SCALE IS IN INCHES 0 1 2 3 | USERNAME => trphils DGN FILE => 416373ea005.dgn | CU 04242 | EA 163731

Dist	COUNTY	ROUTE	POST MILES TOTAL PROJECT	SHEET No.	TOTAL SHEETS
04	SF	101,1	9.2/9.8, 6.8/7.1	13	567

REGISTERED CIVIL ENGINEER — 6-08-09 DATE

7-20-09 PLANS APPROVAL DATE

Hossein Khodabakhsh No. 71650 Exp. 12-31-09 CIVIL — REGISTERED PROFESSIONAL ENGINEER — STATE OF CALIFORNIA

THE STATE OF CALIFORNIA OR ITS OFFICERS OR AGENTS SHALL NOT BE RESPONSIBLE FOR THE ACCURACY OR COMPLETENESS OF SCANNED COPIES OF THIS PLAN SHEET.

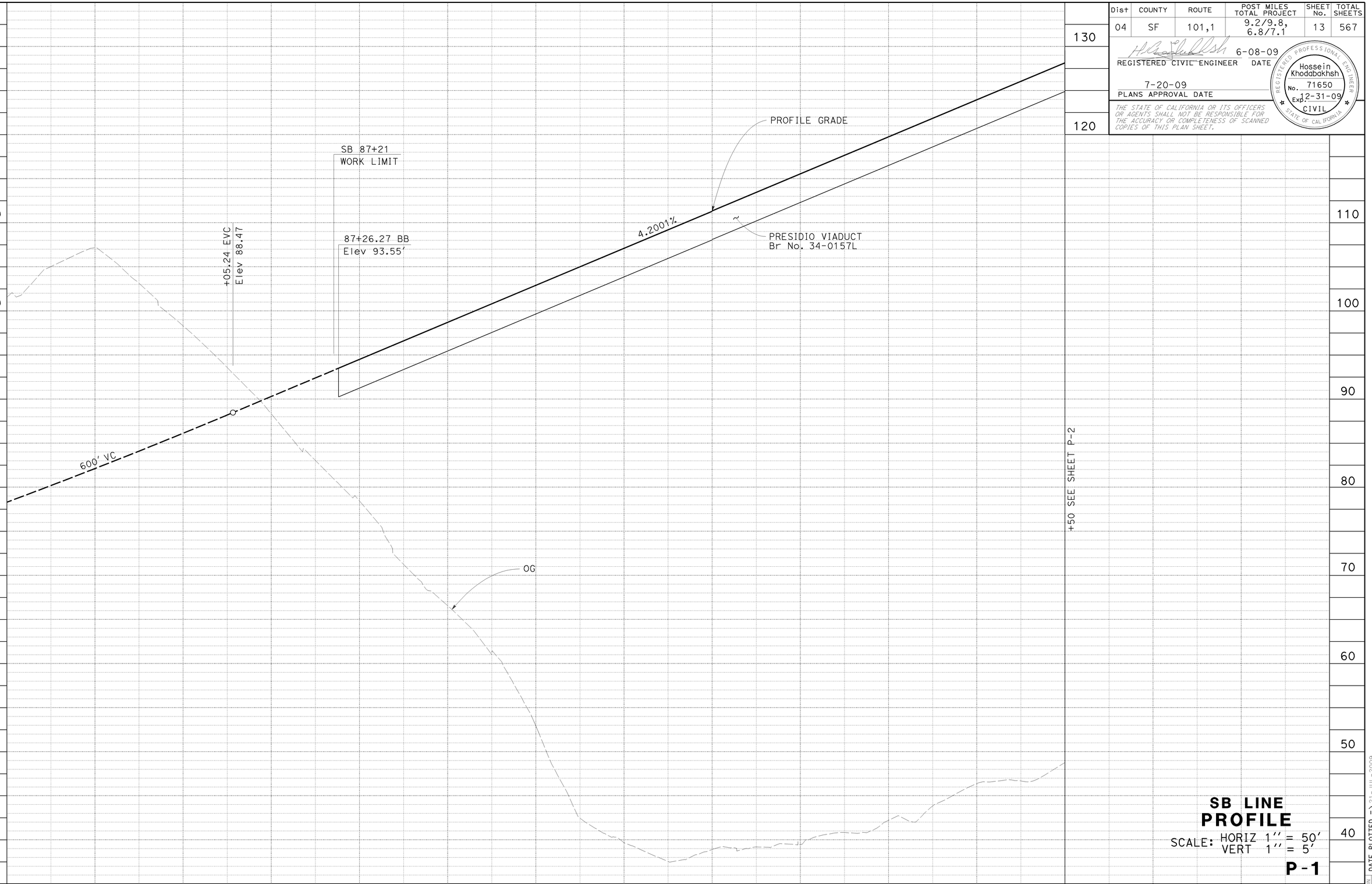

SB LINE PROFILE

SCALE: HORIZ 1'' = 50'
VERT 1'' = 5'

P-1

REVISED BY: CS — DATE REVISED: 6/10/09

CALCULATED-DESIGNED BY: CARLOS SANDOVAL

CHECKED BY: ROGER DAYOAN

FUNCTIONAL SUPERVISOR: ABOLFAZL EMADZADEH

STATE OF CALIFORNIA - DEPARTMENT OF TRANSPORTATION

DESIGN

LAST REVISION: 05-27-09

DATE PLOTTED => 21-JUL-2009
TIME PLOTTED => 08:46

BORDER LAST REVISED 4/11/2008

RELATIVE BORDER SCALE IS IN INCHES 0 1 2 3

USERNAME => trphils
DGN FILE => 416373fa001.dgn

CU 04242

EA 163731

Dist	COUNTY	ROUTE	POST MILES TOTAL PROJECT	SHEET No.	TOTAL SHEETS
04	SF	101,1	9.2/9.8, 6.8/7.1	14	567

REGISTERED CIVIL ENGINEER 6-08-09 DATE

7-20-09
PLANS APPROVAL DATE

Hossein Khodabakhsh No. 71650 Exp. 12-31-09 CIVIL
REGISTERED PROFESSIONAL ENGINEER STATE OF CALIFORNIA

THE STATE OF CALIFORNIA OR ITS OFFICERS OR AGENTS SHALL NOT BE RESPONSIBLE FOR THE ACCURACY OR COMPLETENESS OF SCANNED COPIES OF THIS PLAN SHEET.

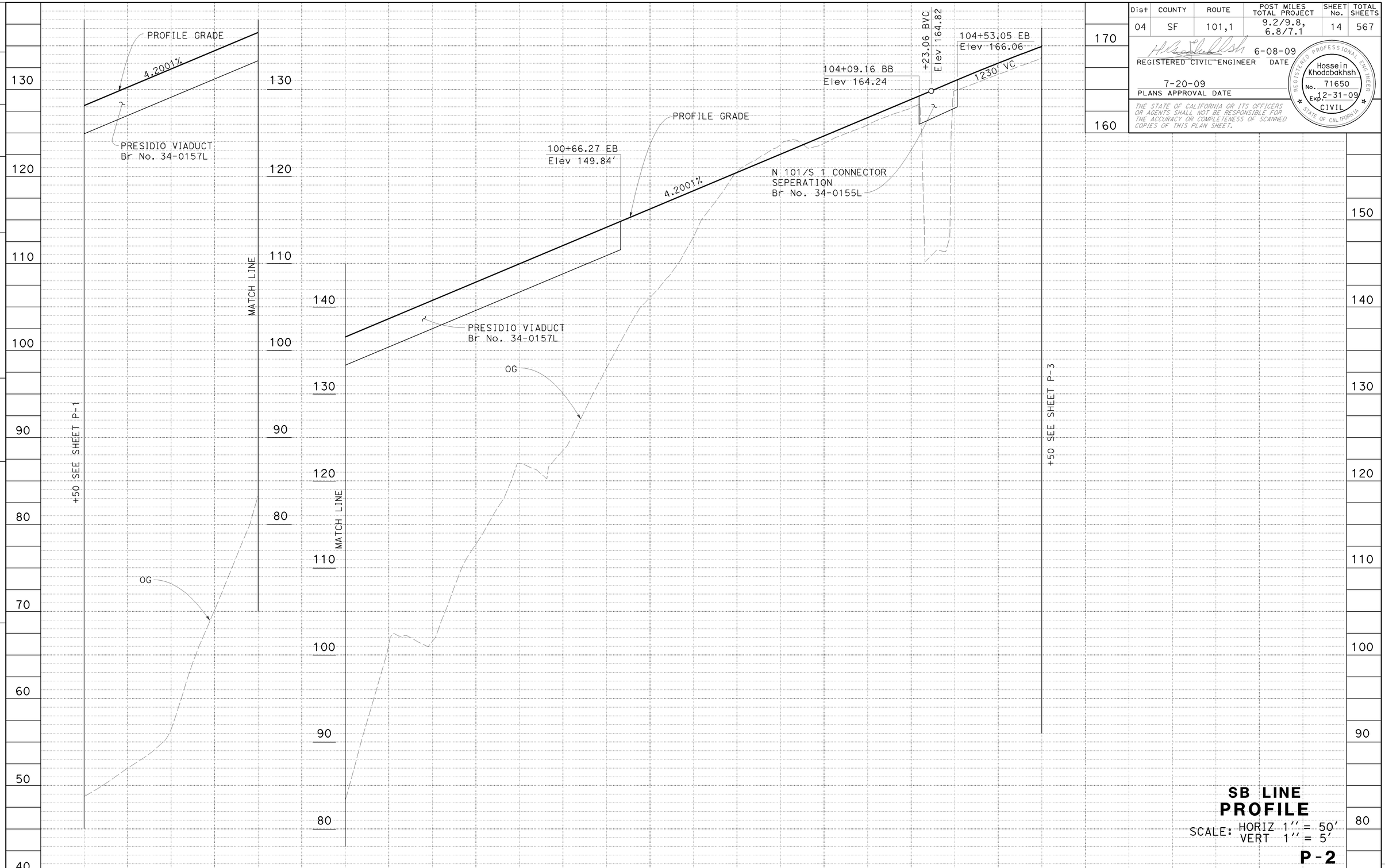

SB LINE PROFILE

SCALE: HORIZ 1'' = 50'
VERT 1'' = 5'

P-2

STATE OF CALIFORNIA - DEPARTMENT OF TRANSPORTATION	Caltrans
DESIGN	
FUNCTIONAL SUPERVISOR	ABOLFAZL EMADZADEH
CALCULATED-DESIGNED BY	CHECKED BY
CARLOS SANDOVAL	ROGER DAYOAN
REVISED BY	DATE REVISED
CS	6/10/09

DATE PLOTTED => 21-JUL-2009
TIME PLOTTED => 08:46
LAST REVISION 06-09-09

Dist	COUNTY	ROUTE	POST MILES TOTAL PROJECT	SHEET No.	TOTAL SHEETS
04	SF	101,1	9.2/9.8, 6.8/7.1	15	567

REGISTERED CIVIL ENGINEER — 6-08-09 DATE

7-20-09
PLANS APPROVAL DATE

Hossein Khodabakhsh
No. 71650
Exp. 12-31-09
CIVIL
REGISTERED PROFESSIONAL ENGINEER
STATE OF CALIFORNIA

THE STATE OF CALIFORNIA OR ITS OFFICERS OR AGENTS SHALL NOT BE RESPONSIBLE FOR THE ACCURACY OR COMPLETENESS OF SCANNED COPIES OF THIS PLAN SHEET.

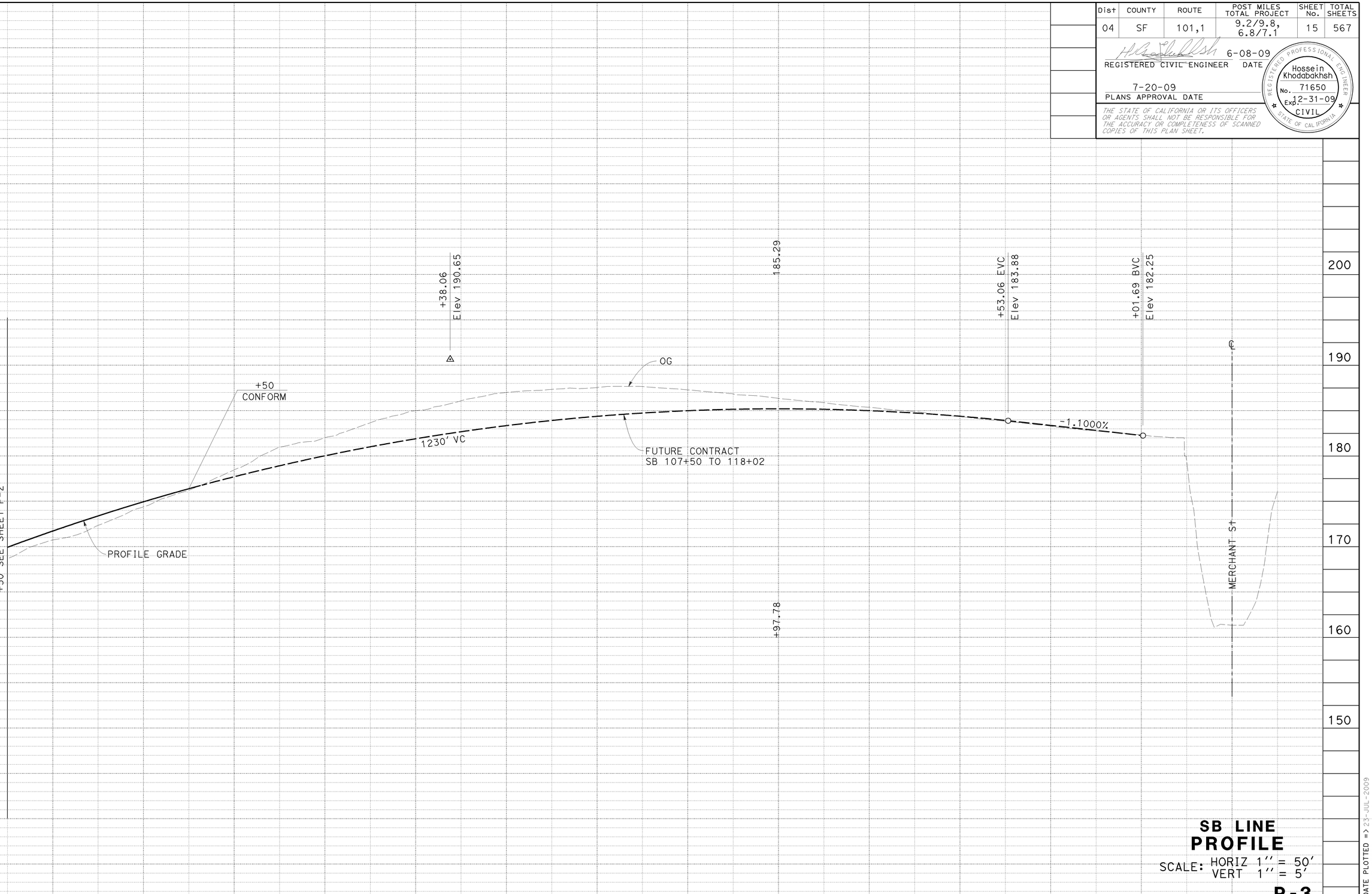

STATION	6	7	8	9	110	1	2	3	4	115	6	7	8	9	TOTAL
CY Exc	1736														
CY Emb	73														

SB LINE PROFILE

SCALE: HORIZ 1'' = 50'
VERT 1'' = 5'

P-3

CALCULATED-DESIGNED BY: CARLOS SANDOVAL
CHECKED BY: ROGER DAYOAN
REVISED BY: CS
DATE REVISED: 6/10/09
FUNCTIONAL SUPERVISOR: ABOLFAZL EMADZADEH

STATE OF CALIFORNIA - DEPARTMENT OF TRANSPORTATION
DESIGN

LAST REVISION DATE PLOTTED => 23-JUL-2009
TIME PLOTTED => 08:15
05-31-09

BORDER LAST REVISED 4/11/2008

RELATIVE BORDER SCALE IS IN INCHES 0 1 2 3

USERNAME => trphils
DGN FILE => 416373fa003.dgn

CU 04242

EA 163731

Dist	COUNTY	ROUTE	POST MILES TOTAL PROJECT	SHEET No.	TOTAL SHEETS
04	SF	101,1	9.2/9.8, 6.8/7.1	16	567

REGISTERED CIVIL ENGINEER — 6-08-09 DATE

Hossein Khodabakhsh No. 71650 Exp. 12-31-09 CIVIL — REGISTERED PROFESSIONAL ENGINEER — STATE OF CALIFORNIA

7-20-09
PLANS APPROVAL DATE

THE STATE OF CALIFORNIA OR ITS OFFICERS OR AGENTS SHALL NOT BE RESPONSIBLE FOR THE ACCURACY OR COMPLETENESS OF SCANNED COPIES OF THIS PLAN SHEET.

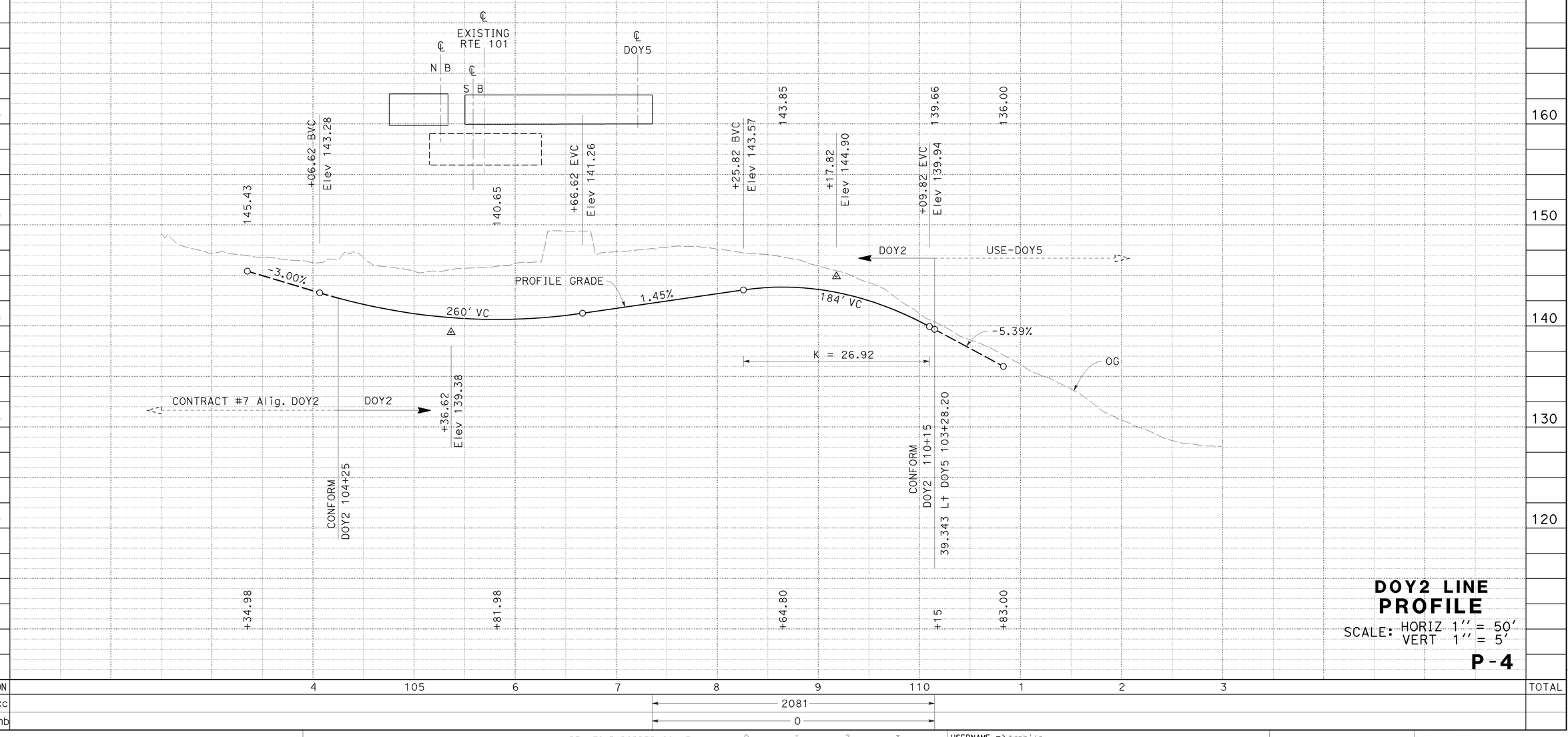

DOY2 LINE PROFILE

SCALE: HORIZ 1'' = 50'
VERT 1'' = 5'

P-4

STATION	4	105	6	7	8	9	110	1	2	3	TOTAL
CY Exc					2081						
CY Emb					0						

CALCULATED-DESIGNED BY: CARLOS SANDOVAL
CHECKED BY: ROGER DAYOAN
REVISED BY: CS
DATE REVISED: 6/10/09
FUNCTIONAL SUPERVISOR: ABOLFAZL EMADZADEH

STATE OF CALIFORNIA - DEPARTMENT OF TRANSPORTATION
DESIGN

LAST REVISION: DATE PLOTTED => 21-JUL-2009, TIME PLOTTED => 08:46, 05-31-09

BORDER LAST REVISED 4/11/2008

RELATIVE BORDER SCALE IS IN INCHES 0 1 2 3

USERNAME => trphils
DGN FILE => 416373fa004.dgn

CU 04242

EA 163731

Dist	COUNTY	ROUTE	POST MILES TOTAL PROJECT	SHEET No.	TOTAL SHEETS
04	SF	101,1	9.2/9.8, 6.8/7.1	17	567

REGISTERED CIVIL ENGINEER — 6-08-09 DATE

7-20-09
PLANS APPROVAL DATE

Hossein Khodabakhsh No. 71650 Exp. 12-31-09 CIVIL — REGISTERED PROFESSIONAL ENGINEER — STATE OF CALIFORNIA

THE STATE OF CALIFORNIA OR ITS OFFICERS OR AGENTS SHALL NOT BE RESPONSIBLE FOR THE ACCURACY OR COMPLETENESS OF SCANNED COPIES OF THIS PLAN SHEET.

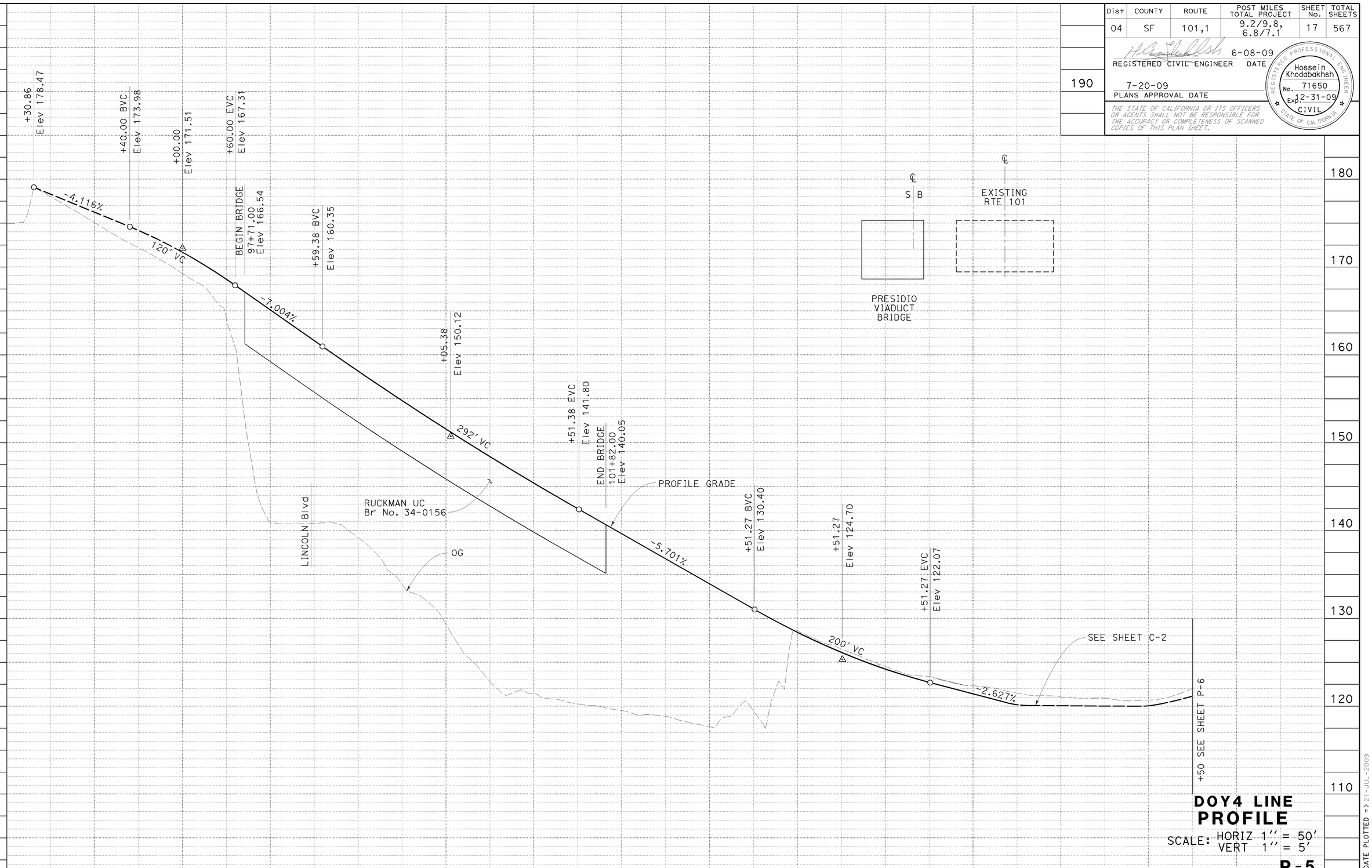

DOY4 LINE PROFILE

SCALE: HORIZ 1'' = 50'
VERT 1'' = 5'

P-5

STATION	6	7	8	9	100	1	2	3	4	105	6	7	8	TOTAL
CY Exc	533						1447							
CY Emb	780						5784							

STATE OF CALIFORNIA - DEPARTMENT OF TRANSPORTATION
DESIGN
FUNCTIONAL SUPERVISOR: ABOLFAZL EMADZADEH
CALCULATED-DESIGNED BY: CARLOS SANDOVAL
CHECKED BY: ROGER DAYOAN
REVISED BY: CS
DATE REVISED: 6/10/09
LAST REVISION DATE PLOTTED => 21-JUL-2009
TIME PLOTTED => 08:00
06-09-09

BORDER LAST REVISED 4/11/2008
RELATIVE BORDER SCALE IS IN INCHES 0 1 2 3
USERNAME => trpierce
DGN FILE => 416373fa005.dgn
CU 04242
EA 163731

Dist	COUNTY	ROUTE	POST MILES TOTAL PROJECT	SHEET No.	TOTAL SHEETS
04	SF	101,1	9.2/9.8, 6.8/7.1	18	567

REGISTERED CIVIL ENGINEER — 6-08-09 DATE

7-20-09
PLANS APPROVAL DATE

Hossein Khodabakhsh
No. 71650
Exp. 12-31-09
CIVIL
REGISTERED PROFESSIONAL ENGINEER
STATE OF CALIFORNIA

THE STATE OF CALIFORNIA OR ITS OFFICERS OR AGENTS SHALL NOT BE RESPONSIBLE FOR THE ACCURACY OR COMPLETENESS OF SCANNED COPIES OF THIS PLAN SHEET.

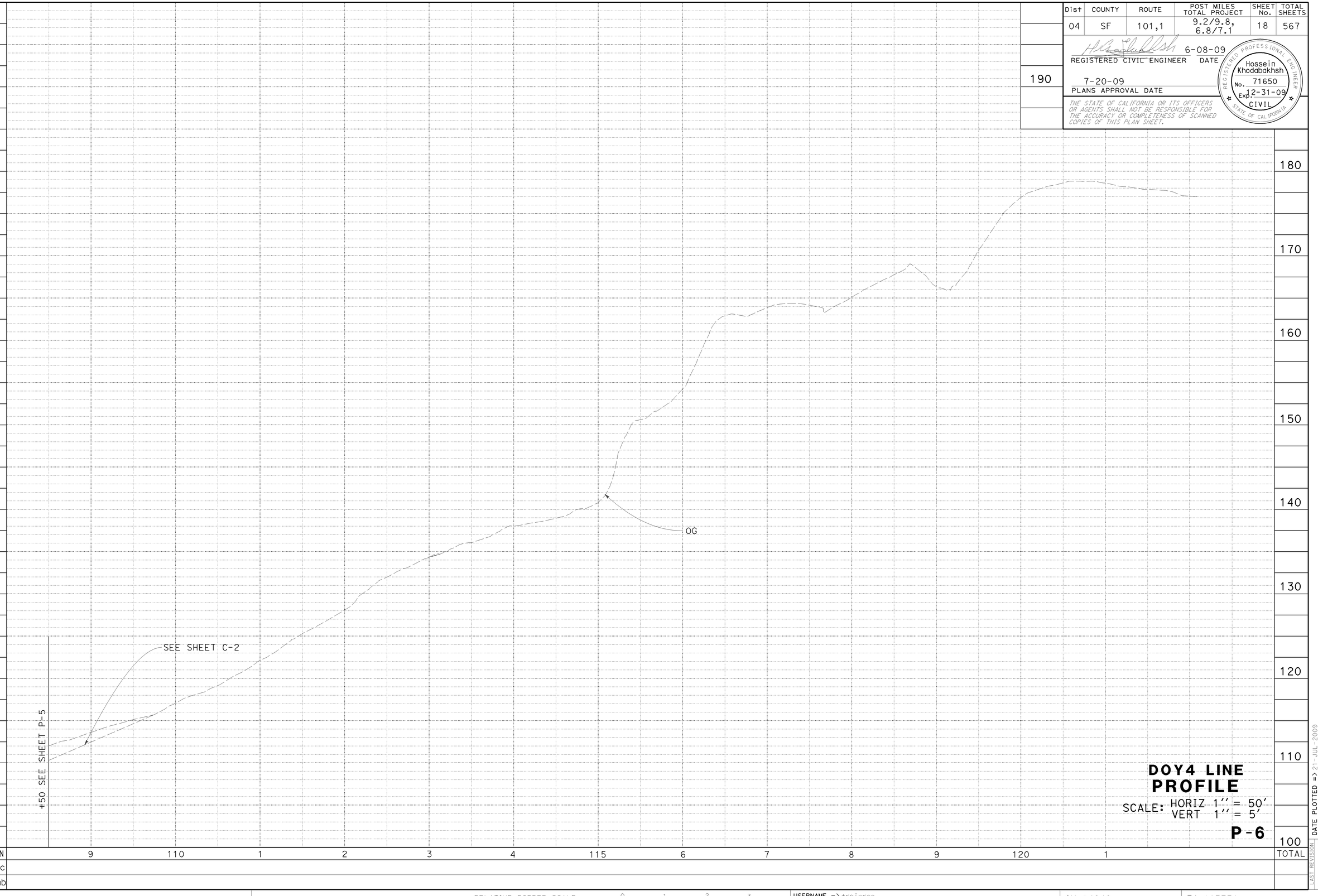

DOY4 LINE PROFILE

SCALE: HORIZ 1″ = 50′
VERT 1″ = 5′

P-6

CALCULATED-DESIGNED BY: CARLOS SANDOVAL
CHECKED BY: ROGER DAYOAN
FUNCTIONAL SUPERVISOR: ABOLFAZL EMADZADEH
REVISED BY: CS
DATE REVISED: 6/10/09

STATE OF CALIFORNIA - DEPARTMENT OF TRANSPORTATION
DESIGN

LAST REVISION DATE PLOTTED => 21-JUL-2009
TIME PLOTTED => 08:00
06-01-09

BORDER LAST REVISED 4/11/2008

RELATIVE BORDER SCALE IS IN INCHES 0 1 2 3

USERNAME => trpierce
DGN FILE => 416373fa006.dgn

CU 04242

EA 163731

Dist	COUNTY	ROUTE	POST MILES TOTAL PROJECT	SHEET No.	TOTAL SHEETS
04	SF	101,1	9.2/9.8, 6.8/7.1	19	567

REGISTERED CIVIL ENGINEER — 6-08-09 DATE

7-20-09
PLANS APPROVAL DATE

Hossein Khodabakhsh
No. 71650
Exp. 12-31-09
CIVIL
REGISTERED PROFESSIONAL ENGINEER
STATE OF CALIFORNIA

THE STATE OF CALIFORNIA OR ITS OFFICERS OR AGENTS SHALL NOT BE RESPONSIBLE FOR THE ACCURACY OR COMPLETENESS OF SCANNED COPIES OF THIS PLAN SHEET.

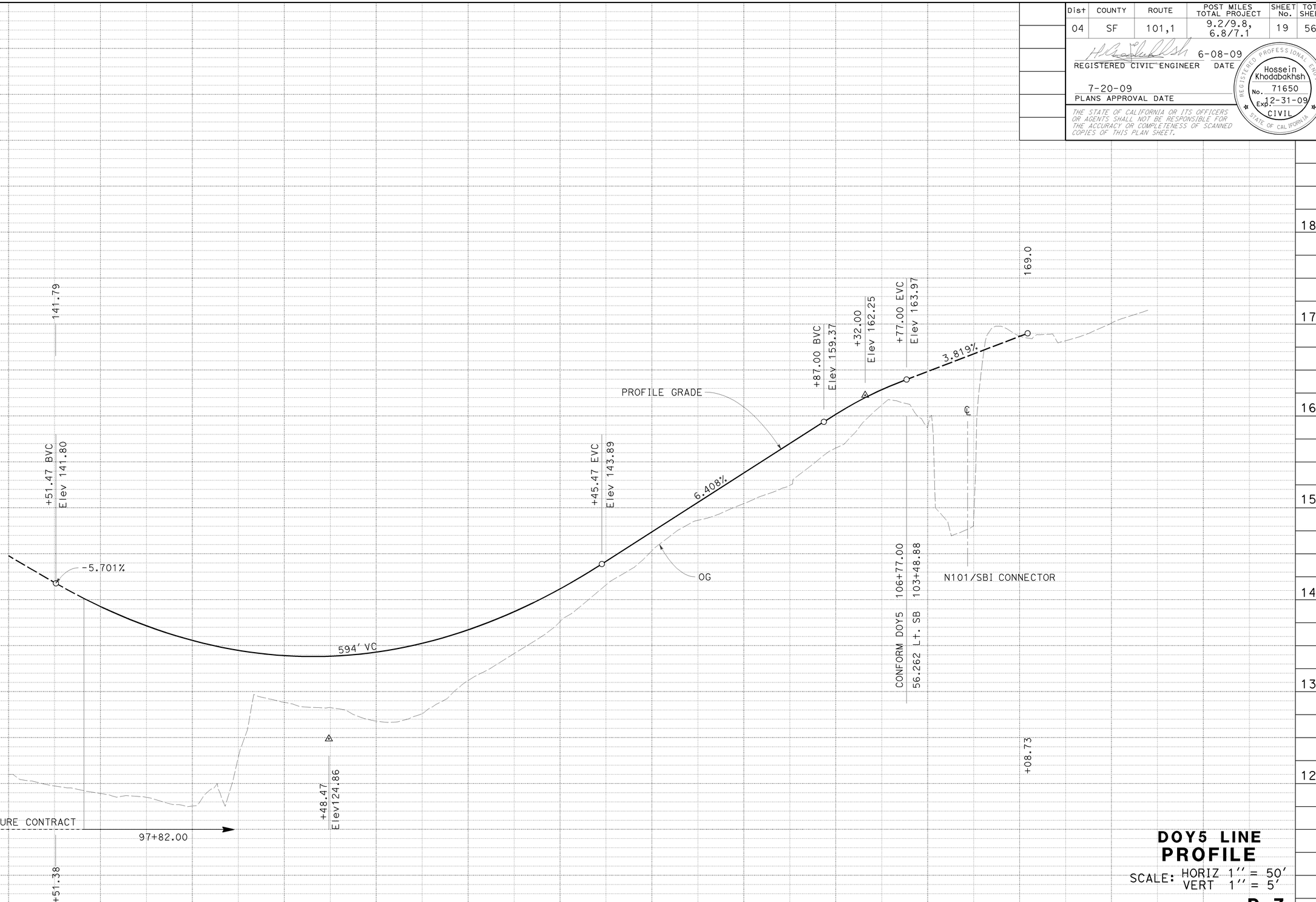

DOY5 LINE PROFILE

SCALE: HORIZ 1'' = 50'
VERT 1'' = 5'

P-7

LAST REVISION DATE PLOTTED => 21-JUL-2009
TIME PLOTTED => 08:00
06-09-09

STATE OF CALIFORNIA - DEPARTMENT OF TRANSPORTATION
DESIGN

REVISED BY	DATE REVISED
CS	6/10/09

CALCULATED-DESIGNED BY
CHECKED BY
FUNCTIONAL SUPERVISOR: ABOLFAZL EMADZADEH
CARLOS SANDOVAL
ROGER DAYOAN

BORDER LAST REVISED 4/11/2008

RELATIVE BORDER SCALE IS IN INCHES 0 1 2 3

USERNAME => trpierce
DGN FILE => 416373fq007.dgn

CU 04242

EA 163731

Dist	COUNTY	ROUTE	POST MILES TOTAL PROJECT	SHEET No.	TOTAL SHEETS
04	SF	101,1	9.2/9.8, 6.8/7.1	20	567

REGISTERED CIVIL ENGINEER — 6-08-09 DATE

Hossein Khodabakhsh No. 71650 Exp. 12-31-09 CIVIL — REGISTERED PROFESSIONAL ENGINEER — STATE OF CALIFORNIA

7-20-09
PLANS APPROVAL DATE

THE STATE OF CALIFORNIA OR ITS OFFICERS OR AGENTS SHALL NOT BE RESPONSIBLE FOR THE ACCURACY OR COMPLETENESS OF SCANNED COPIES OF THIS PLAN SHEET.

PRESIDIO VIADUCT BRIDGE

N1-S101 CONNECTOR BRIDGE

Elev 127.54
114+99.55
BEGIN BRIDGE

400' VC

PROFILE GRADE

4.2996%

+00 EVC
Elev 106.35

+24.24 BVC
Elev 124.59

+24.24
Elev 133.19

+50 SEE SHEET P-9

OG

℄
McDOWELL Ave

VT LINE PROFILE

SCALE: HORIZ 1'' = 50'
VERT 1'' = 5'

P-8

STATION		110	1	2	3	4	115	6	TOTAL
CY	Exc								
	Emb								

CALCULATED-DESIGNED BY
CHECKED BY

FUNCTIONAL SUPERVISOR: ABOLFAZL EMADZADEH

REVISED BY: CS — 6/10/09
DATE REVISED

CARLOS SANDOVAL
ROGER DAYOAN

STATE OF CALIFORNIA - DEPARTMENT OF TRANSPORTATION
DESIGN

LAST REVISION DATE PLOTTED => 21-JUL-2009
TIME PLOTTED => 08:00
06-01-09

BORDER LAST REVISED 4/11/2008

RELATIVE BORDER SCALE IS IN INCHES 0 1 2 3

USERNAME => trpierce
DGN FILE => 416373fa008.dgn

CU 04242

EA 163731

Dist	COUNTY	ROUTE	POST MILES TOTAL PROJECT	SHEET No.	TOTAL SHEETS
04	SF	101,1	9.2/9.8, 6.8/7.1	21	567

REGISTERED CIVIL ENGINEER — 6-08-09 DATE

7-20-09
PLANS APPROVAL DATE

Hossein Khodabakhsh No. 71650 Exp. 12-31-09 CIVIL — REGISTERED PROFESSIONAL ENGINEER — STATE OF CALIFORNIA

THE STATE OF CALIFORNIA OR ITS OFFICERS OR AGENTS SHALL NOT BE RESPONSIBLE FOR THE ACCURACY OR COMPLETENESS OF SCANNED COPIES OF THIS PLAN SHEET.

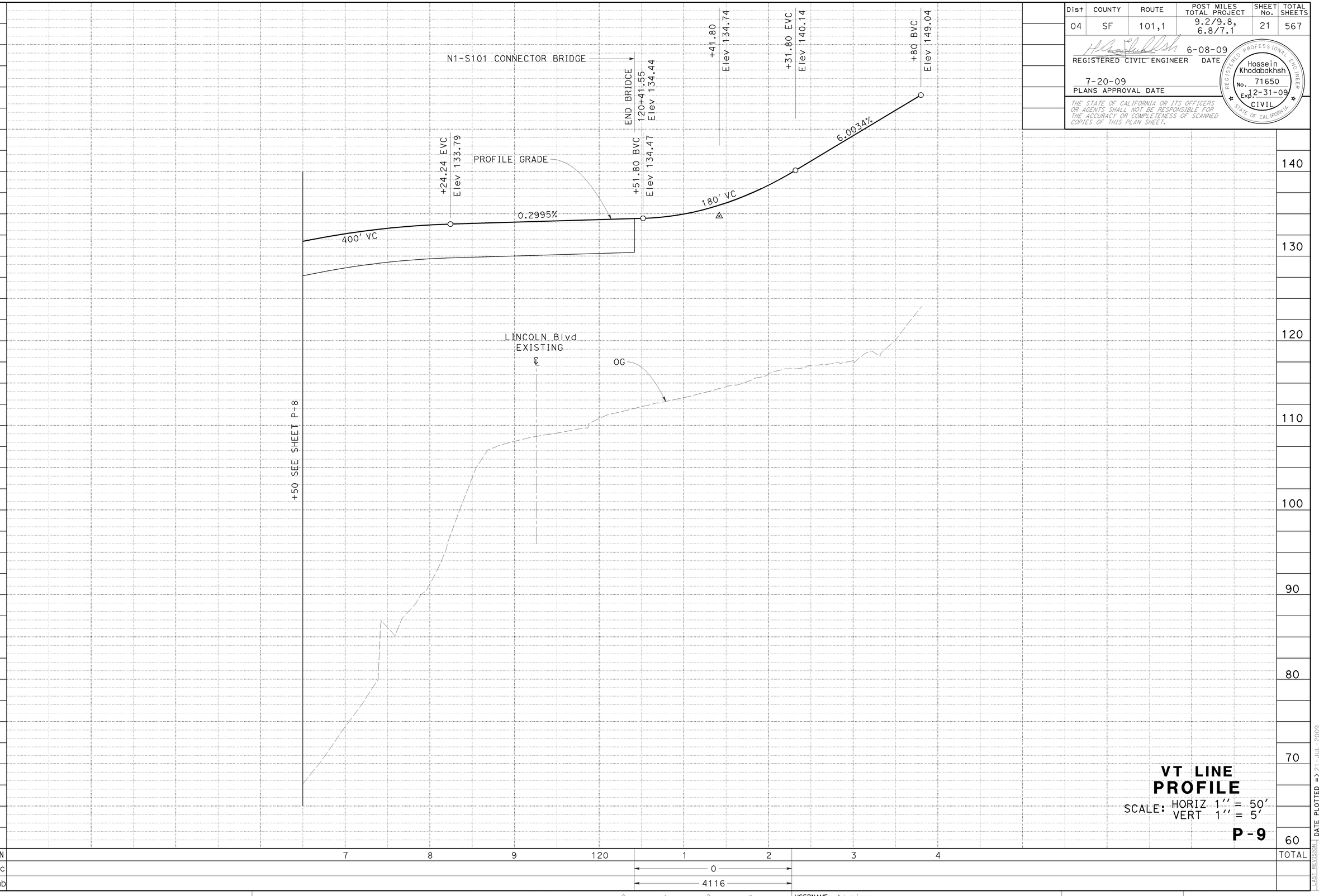

VT LINE PROFILE

SCALE: HORIZ 1'' = 50'
VERT 1'' = 5'

P-9

STATION	7	8	9	120	1	2	3	4	TOTAL
CY Exc					0				
CY Emb					4116				

STATE OF CALIFORNIA - DEPARTMENT OF TRANSPORTATION
DESIGN

FUNCTIONAL SUPERVISOR: ABOLFAZL EMADZADEH

CALCULATED-DESIGNED BY: CS
CHECKED BY: ROGER DAYOAN
DRAWN BY: CARLOS SANDOVAL
REVISED BY
DATE REVISED: 6/10/09

LAST REVISION DATE PLOTTED => 21-JUL-2009
TIME PLOTTED => 08:00
06-09-09

BORDER LAST REVISED 4/11/2008

RELATIVE BORDER SCALE IS IN INCHES 0 1 2 3

USERNAME => trpierce
DGN FILE => 416373fa009.dgn

CU 04242

EA 163731

Dist	COUNTY	ROUTE	POST MILES TOTAL PROJECT	SHEET No.	TOTAL SHEETS
04	SF	101,1	9.2/9.8, 6.8/7.1	22	567

REGISTERED CIVIL ENGINEER — 6-08-09 DATE

7-20-09
PLANS APPROVAL DATE

Hossein Khodabakhsh No. 71650 Exp. 12-31-09 CIVIL — REGISTERED PROFESSIONAL ENGINEER — STATE OF CALIFORNIA

THE STATE OF CALIFORNIA OR ITS OFFICERS OR AGENTS SHALL NOT BE RESPONSIBLE FOR THE ACCURACY OR COMPLETENESS OF SCANNED COPIES OF THIS PLAN SHEET.

C LINE PROFILE

SCALE: HORIZ 1'' = 50'
VERT 1'' = 5'

P-10

STATION	10	1	2	3	4	15	6	7	TOTAL
CY Exc		5							
CY Emb		1920							

CALCULATED-DESIGNED BY
CHECKED BY

CARLOS SANDOVAL
ROGER DAYOAN

REVISED BY: CS
DATE REVISED: 6/10/09

FUNCTIONAL SUPERVISOR: ABOLFAZL EMADZADEH

STATE OF CALIFORNIA - DEPARTMENT OF TRANSPORTATION
DESIGN

Gates

LAST REVISION
DATE PLOTTED => 21-JUL-2009
TIME PLOTTED => 08:00
06-01-09

BORDER LAST REVISED 4/11/2008

RELATIVE BORDER SCALE IS IN INCHES 0 1 2 3

USERNAME => trpierce
DGN FILE => 416373fa010.dgn

CU 04242

EA 163731

Dist	COUNTY	ROUTE	POST MILES TOTAL PROJECT	SHEET No.	TOTAL SHEETS
04	SF	101,1	9.2/9.8, 6.8/7.1	23	567

REGISTERED CIVIL ENGINEER — 6-08-09 DATE

Hossein Khodabakhsh No. 71650 Exp. 12-31-09 CIVIL — REGISTERED PROFESSIONAL ENGINEER — STATE OF CALIFORNIA

7-20-09
PLANS APPROVAL DATE

THE STATE OF CALIFORNIA OR ITS OFFICERS OR AGENTS SHALL NOT BE RESPONSIBLE FOR THE ACCURACY OR COMPLETENESS OF SCANNED COPIES OF THIS PLAN SHEET.

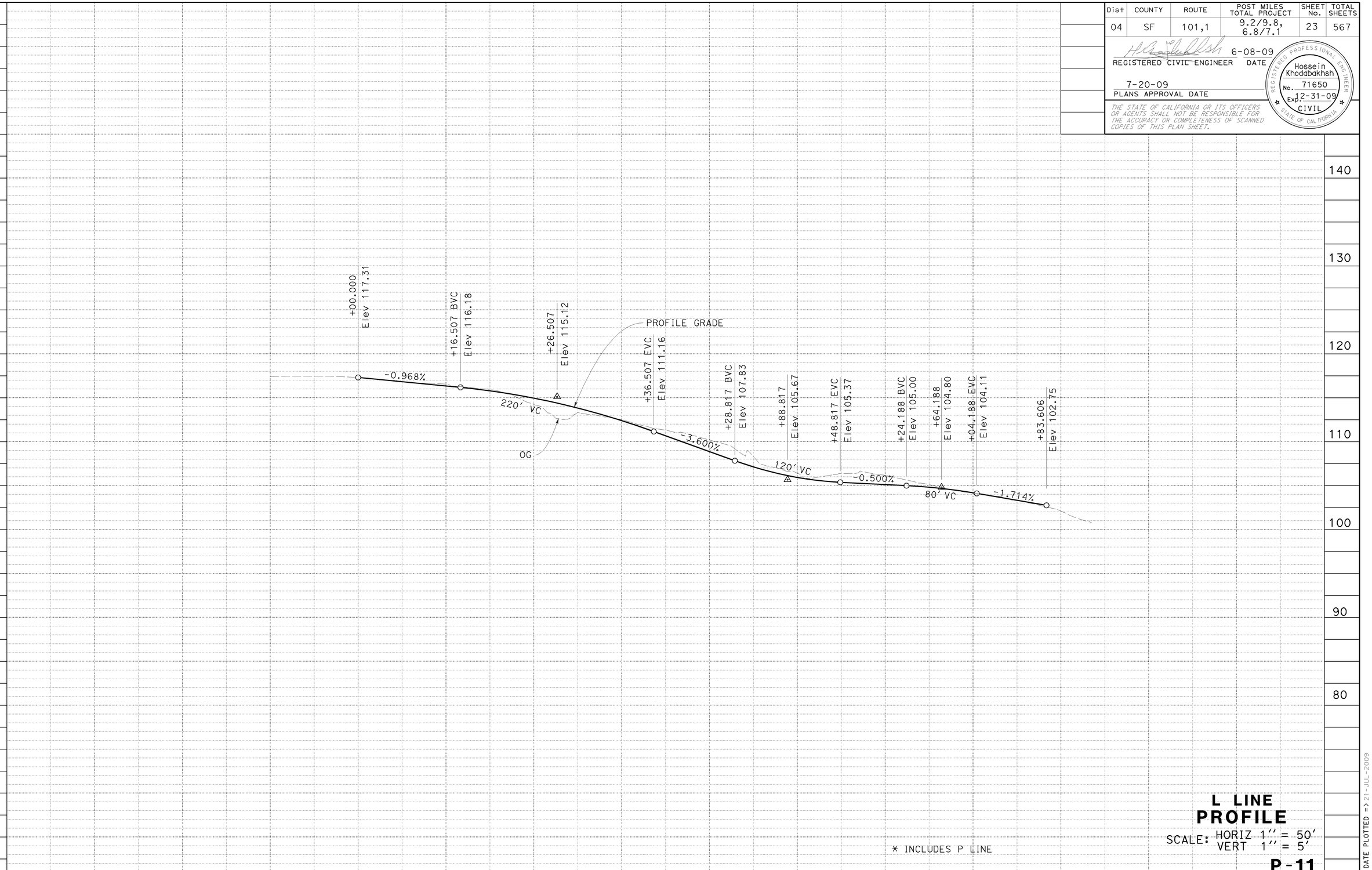

* INCLUDES P LINE

L LINE PROFILE

SCALE: HORIZ 1'' = 50'
VERT 1'' = 5'

P-11

STATION		10	1	2	3	4	15	6	7	8	9	20	TOTAL
CY	Exc		158				347*						
	Emb		2297				2312*						

CALCULATED-DESIGNED BY
CHECKED BY
REVISED BY — CS
DATE REVISED — 6/10/09
CARLOS SANDOVAL
ROGER DAYOAN
FUNCTIONAL SUPERVISOR — ABOLFAZL EMADZADEH
STATE OF CALIFORNIA - DEPARTMENT OF TRANSPORTATION
Caltrans®
DESIGN

LAST REVISION DATE PLOTTED => 21-JUL-2009
TIME PLOTTED => 08:00
06-01-09

BORDER LAST REVISED 4/11/2008

RELATIVE BORDER SCALE IS IN INCHES 0 1 2 3

USERNAME => trpierce
DGN FILE => 416373fa011.dgn

CU 04242

EA 163731

Dist	COUNTY	ROUTE	POST MILES TOTAL PROJECT	SHEET No.	TOTAL SHEETS
04	SF	101,1	9.2/9.8, 6.8/7.1	24	567

REGISTERED CIVIL ENGINEER — 6-08-09 DATE

7-20-09
PLANS APPROVAL DATE

Hossein Khodabakhsh
No. 71650
Exp. 12-31-09
CIVIL
REGISTERED PROFESSIONAL ENGINEER
STATE OF CALIFORNIA

THE STATE OF CALIFORNIA OR ITS OFFICERS OR AGENTS SHALL NOT BE RESPONSIBLE FOR THE ACCURACY OR COMPLETENESS OF SCANNED COPIES OF THIS PLAN SHEET.

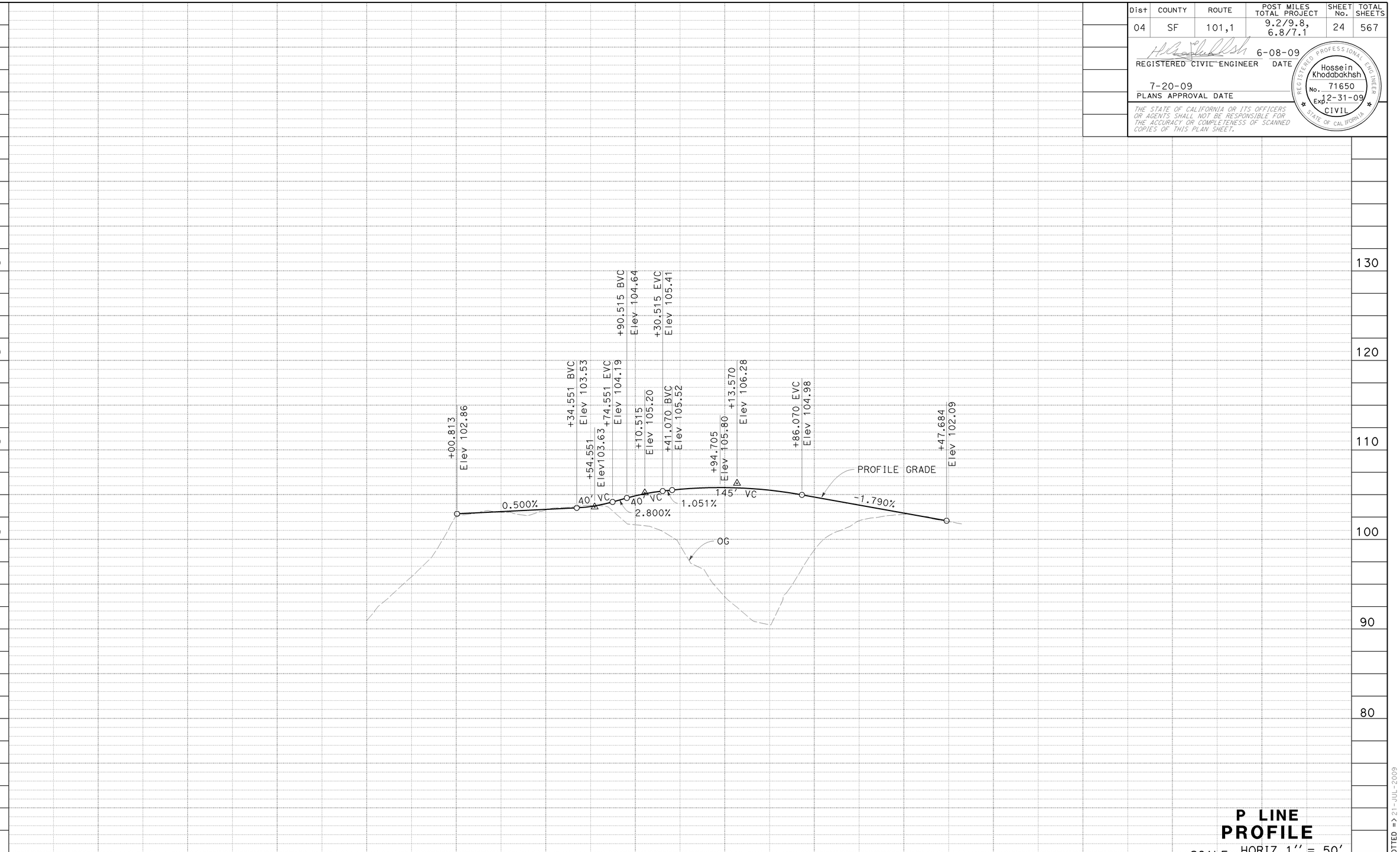

P LINE
PROFILE
SCALE: HORIZ 1'' = 50'
VERT 1'' = 5'

P-12

STATION	10	1	2	3	4	15	6	7	TOTAL
CY Exc		6							
CY Emb		10							

CALCULATED-DESIGNED BY
CHECKED BY
CARLOS SANDOVAL
ROGER DAYOAN
REVISED BY CS
DATE REVISED 6/10/09
FUNCTIONAL SUPERVISOR
ABOLFAZL EMADZADEH
STATE OF CALIFORNIA - DEPARTMENT OF TRANSPORTATION
DESIGN
Caltrans

LAST REVISION DATE PLOTTED => 21-JUL-2009
TIME PLOTTED => 08:01
06-01-09

BORDER LAST REVISED 4/11/2008
RELATIVE BORDER SCALE IS IN INCHES 0 1 2 3
USERNAME => trpierce
DGN FILE => 416373fa012.dgn
CU 04242
EA 163731

Dist	COUNTY	ROUTE	POST MILES TOTAL PROJECT	SHEET No.	TOTAL SHEETS
04	SF	101,1	9.2/9.8, 6.8/7.1	25	567

REGISTERED CIVIL ENGINEER — 6-08-09 DATE

Hossein Khodabakhsh No. 71650 Exp. 12-31-09 CIVIL — REGISTERED PROFESSIONAL ENGINEER — STATE OF CALIFORNIA

7-20-09
PLANS APPROVAL DATE

THE STATE OF CALIFORNIA OR ITS OFFICERS OR AGENTS SHALL NOT BE RESPONSIBLE FOR THE ACCURACY OR COMPLETENESS OF SCANNED COPIES OF THIS PLAN SHEET.

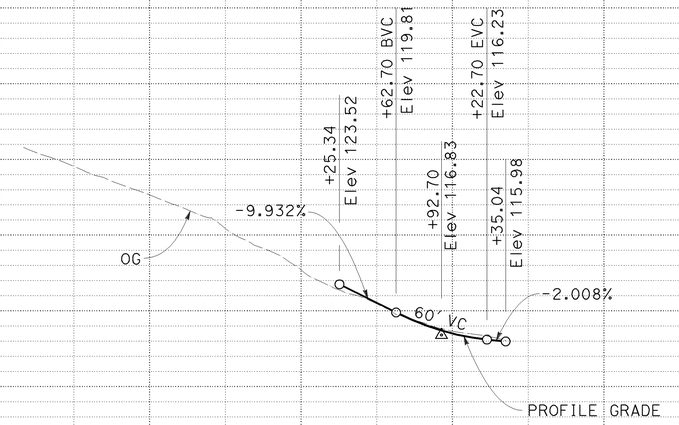

S LINE
PROFILE

SCALE: HORIZ 1'' = 50'
VERT 1'' = 5'

P-13

STATION	10	1	2	3	TOTAL
CY Exc					
CY Emb					

REVISED BY	DATE REVISED
CS	6/10/09

CALCULATED-DESIGNED BY: CARLOS SANDOVAL
CHECKED BY: ROGER DAYOAN

FUNCTIONAL SUPERVISOR: ABOLFAZL EMADZADEH

STATE OF CALIFORNIA - DEPARTMENT OF TRANSPORTATION
DESIGN

LAST REVISION DATE PLOTTED => 21-JUL-2009
TIME PLOTTED => 08:01
06-04-09

BORDER LAST REVISED 4/11/2008

RELATIVE BORDER SCALE IS IN INCHES 0 1 2 3

USERNAME => trpierce
DGN FILE => 416373fa014.dgn

CU 04242

EA 163731

Dist	COUNTY	ROUTE	POST MILES TOTAL PROJECT	SHEET No.	TOTAL SHEETS
04	SF	101,1	9.2/9.8, 6.8/7.1	26	567

REGISTERED CIVIL ENGINEER — 6-08-09 DATE

7-20-09
PLANS APPROVAL DATE

Hossein Khodabakhsh
No. 71650
Exp. 12-31-09
CIVIL
REGISTERED PROFESSIONAL ENGINEER
STATE OF CALIFORNIA

THE STATE OF CALIFORNIA OR ITS OFFICERS OR AGENTS SHALL NOT BE RESPONSIBLE FOR THE ACCURACY OR COMPLETENESS OF SCANNED COPIES OF THIS PLAN SHEET.

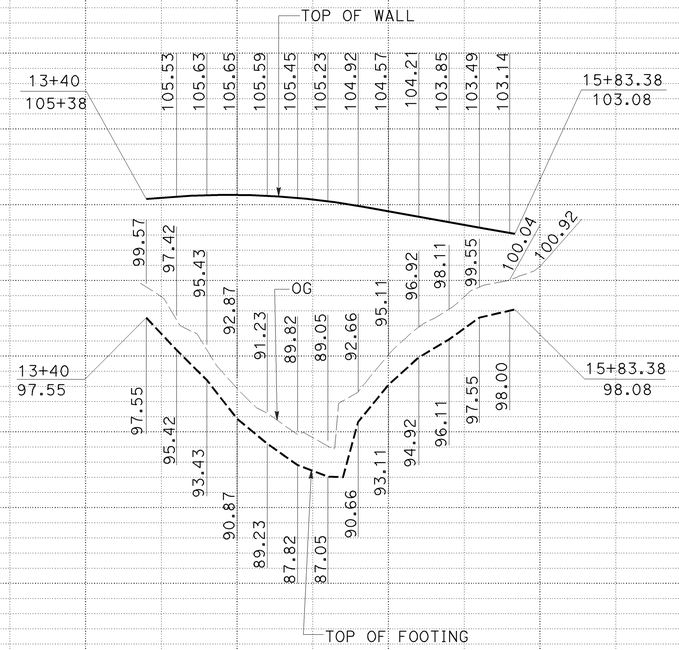

RETAINING WALL 4A
PROFILE

SCALE: HORIZ 1'' = 50'
VERT 1'' = 5'

P-14

STATION	3	4	15	6	TOTAL
CY Exc					
CY Emb					

REVISED BY	DATE REVISED
CS	6/10/09

CALCULATED-DESIGNED BY: CARLOS SANDOVAL
CHECKED BY: ROGER DAYOAN
FUNCTIONAL SUPERVISOR: ABOLFAZL EMADZADEH

STATE OF CALIFORNIA - DEPARTMENT OF TRANSPORTATION
DESIGN

Caltrans

LAST REVISION 06-09-09
DATE PLOTTED => 21-JUL-2009
TIME PLOTTED => 08:01

BORDER LAST REVISED 4/11/2008

RELATIVE BORDER SCALE IS IN INCHES 0 1 2 3

USERNAME => trpierce
DGN FILE => 416373fa015.dgn

CU 04242

EA 163731

Dist	COUNTY	ROUTE	POST MILES TOTAL PROJECT	SHEET No.	TOTAL SHEETS
04	SF	101,1	9.2/9.8, 6.8/7.1	27	567

REGISTERED CIVIL ENGINEER — 6-08-09 DATE

7-20-09
PLANS APPROVAL DATE

Hossein Khodabakhsh No. 71650 Exp. 12-31-09 CIVIL — REGISTERED PROFESSIONAL ENGINEER — STATE OF CALIFORNIA

THE STATE OF CALIFORNIA OR ITS OFFICERS OR AGENTS SHALL NOT BE RESPONSIBLE FOR THE ACCURACY OR COMPLETENESS OF SCANNED COPIES OF THIS PLAN SHEET.

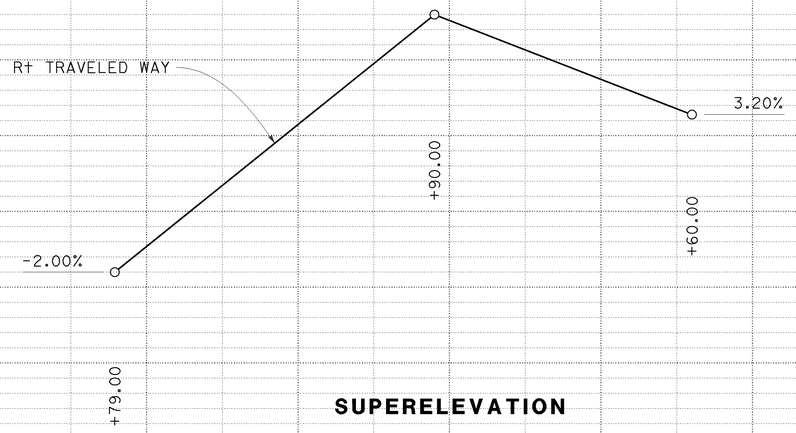

SUPERELEVATION

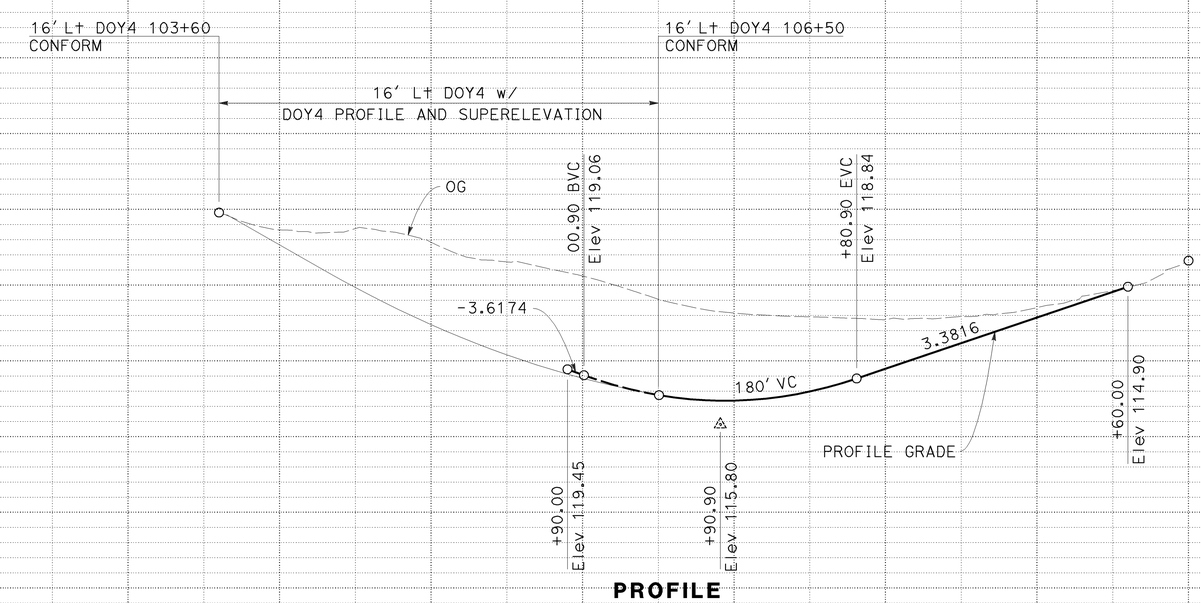

PROFILE

RD LINE
PROFILE AND SUPERELEVATION DIAGRAM

SCALE: HORIZ 1'' = 50'
VERT 1'' = 5'

PS-1

STATION	4	105	6	7	8	9	110	TOTAL
CY Exc								
CY Emb								

STATE OF CALIFORNIA - DEPARTMENT OF TRANSPORTATION
DESIGN
FUNCTIONAL SUPERVISOR: ABOLFAZL EMADZADEH
CALCULATED-DESIGNED BY: CS
CHECKED BY: ROGER DAYOAN
REVISED BY:
DATE REVISED: 6/10/09

LAST REVISION DATE PLOTTED => 21-JUL-2009
TIME PLOTTED => 08:01
05-30-09

BORDER LAST REVISED 4/11/2008

RELATIVE BORDER SCALE IS IN INCHES 0 1 2 3

USERNAME => trpierce
DGN FILE => 416373fb001.dgn

CU 04242

EA 163731

Dist	COUNTY	ROUTE	POST MILES TOTAL PROJECT	SHEET No.	TOTAL SHEETS
04	SF	101,1	9.2/9.8, 6.8/7.1	28	567

REGISTERED CIVIL ENGINEER — 6-08-09 DATE

7-20-09
PLANS APPROVAL DATE

Hossein Khodabakhsh
No. 71650
Exp. 12-31-09
CIVIL
REGISTERED PROFESSIONAL ENGINEER
STATE OF CALIFORNIA

THE STATE OF CALIFORNIA OR ITS OFFICERS OR AGENTS SHALL NOT BE RESPONSIBLE FOR THE ACCURACY OR COMPLETENESS OF SCANNED COPIES OF THIS PLAN SHEET.

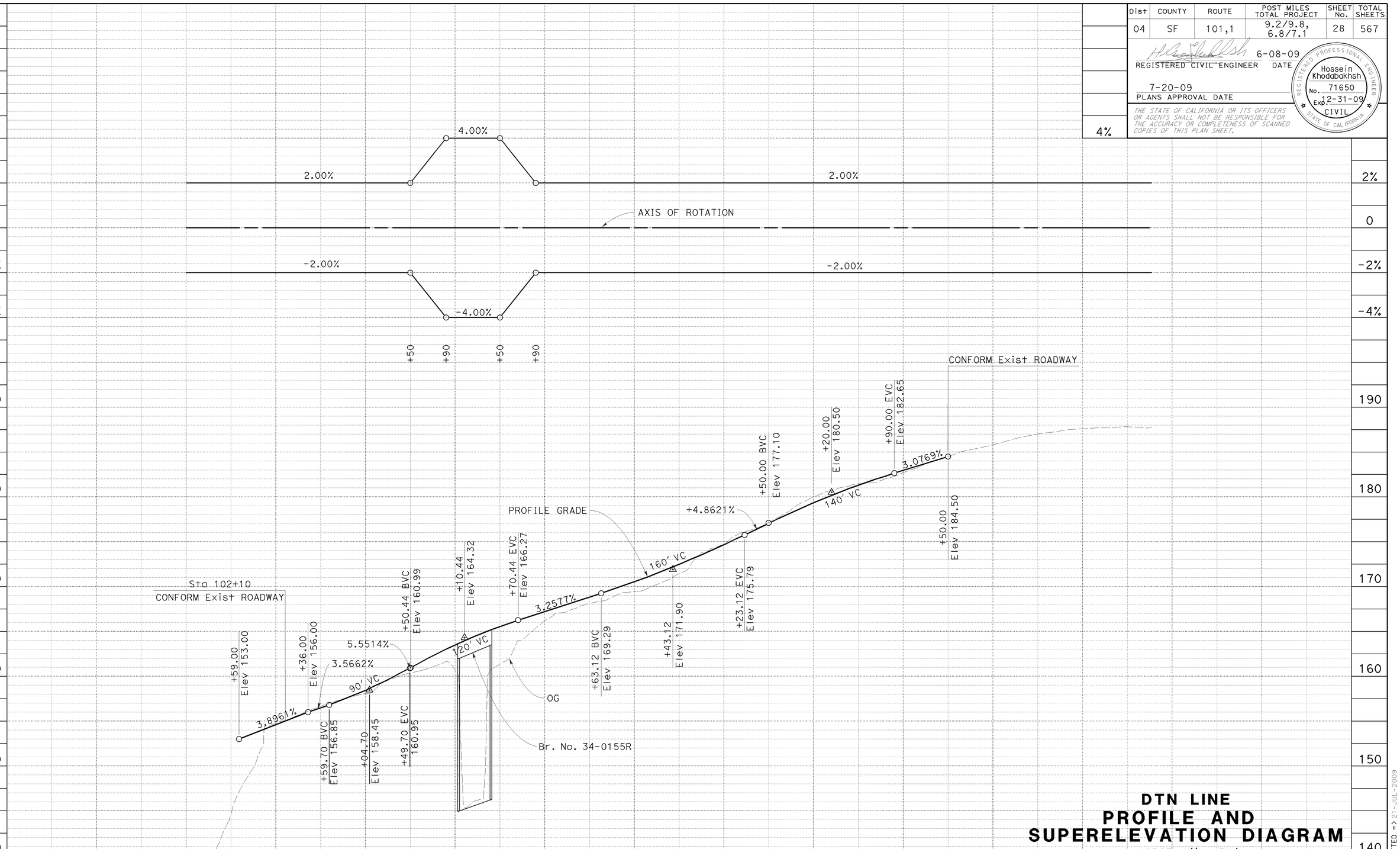

DTN LINE
PROFILE AND SUPERELEVATION DIAGRAM

SCALE: HORIZ 1'' = 50'
VERT 1'' = 5'

PS-2

CALCULATED-DESIGNED BY: CARLOS SANDOVAL
CHECKED BY: ROGER DAYOAN
FUNCTIONAL SUPERVISOR: ABOLFAZL EMADZADEH
REVISED BY: CS
DATE REVISED: 6/10/09

STATE OF CALIFORNIA - DEPARTMENT OF TRANSPORTATION
DESIGN

LAST REVISION DATE PLOTTED => 21-JUL-2009
TIME PLOTTED => 08:01
06-11-09

BORDER LAST REVISED 4/11/2008

RELATIVE BORDER SCALE IS IN INCHES 0 1 2 3

USERNAME => trpierce
DGN FILE => 416373fb002.dgn

CU 04242

EA 163731

Dist	COUNTY	ROUTE	POST MILES TOTAL PROJECT	SHEET No.	TOTAL SHEETS
04	SF	101,1	9.2/9.8, 6.8/7.1	29	567

6-08-09
REGISTERED CIVIL ENGINEER DATE

7-20-09
PLANS APPROVAL DATE

REGISTERED PROFESSIONAL ENGINEER
Hossein Khodabakhsh
No. 71650
Exp. 12-31-09
CIVIL
STATE OF CALIFORNIA

THE STATE OF CALIFORNIA OR ITS OFFICERS OR AGENTS SHALL NOT BE RESPONSIBLE FOR THE ACCURACY OR COMPLETENESS OF SCANNED COPIES OF THIS PLAN SHEET.

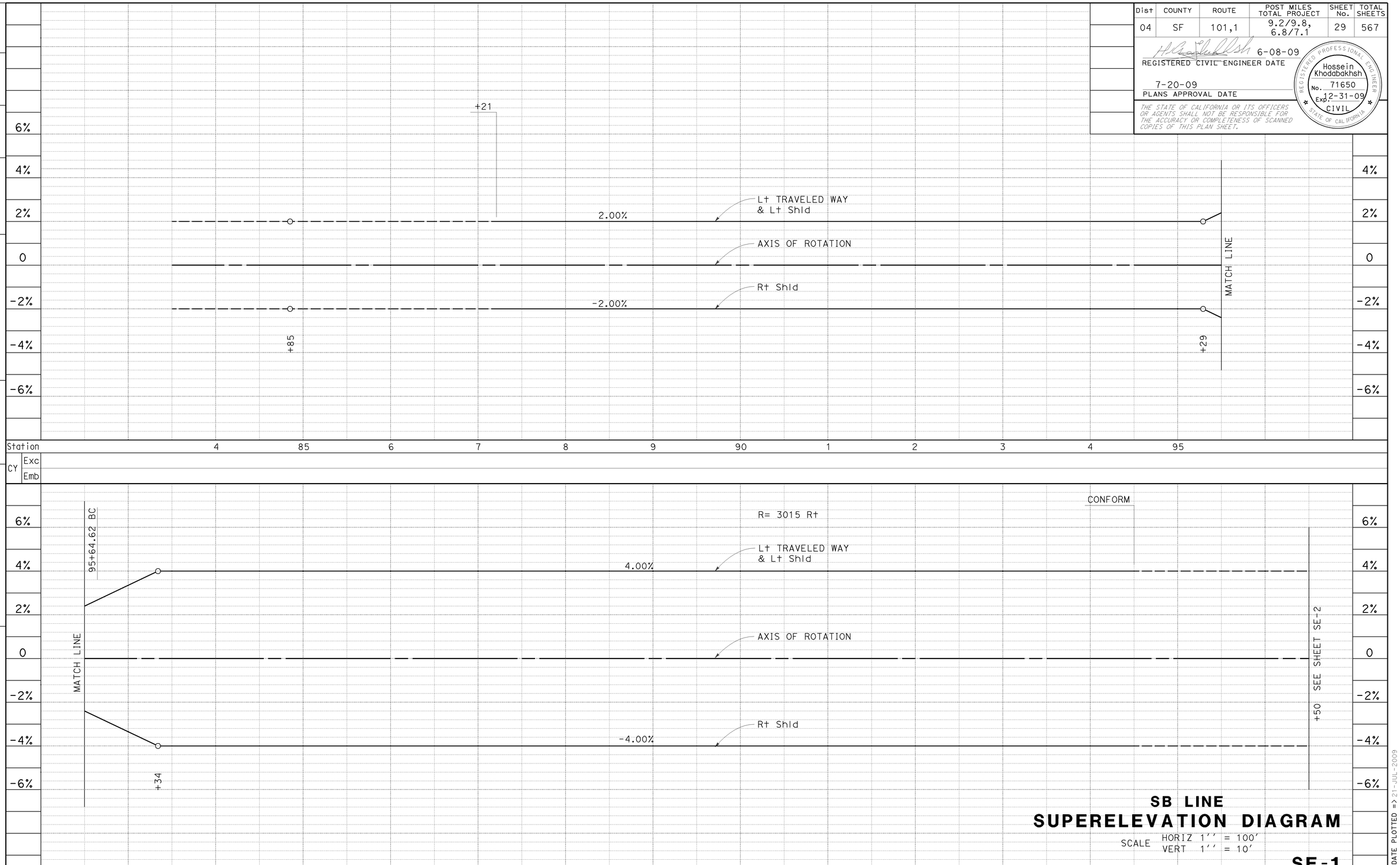

SB LINE

SUPERELEVATION DIAGRAM

SCALE HORIZ 1'' = 100'
VERT 1'' = 10'

SE-1

CALCULATED-DESIGNED BY: CS 6/10/09
CHECKED BY: CARLOS SANDOVAL
REVISED BY: ROGER DAYOAN
DATE REVISED:

FUNCTIONAL SUPERVISOR: ABOLFAZL EMADZADEH

STATE OF CALIFORNIA - DEPARTMENT OF TRANSPORTATION
DESIGN

LAST REVISION
DATE PLOTTED => 21-JUL-2009
TIME PLOTTED => 08:01
06-03-09

BORDER LAST REVISED 4/11/2008

RELATIVE BORDER SCALE IS IN INCHES 0 1 2 3

USERNAME => trpierce
DGN FILE => 416373fc001.dgn

CU 04242

EA 163731

Dist	COUNTY	ROUTE	POST MILES TOTAL PROJECT	SHEET No.	TOTAL SHEETS
04	SF	101,1	9.2/9.8, 6.8/7.1	30	567

REGISTERED CIVIL ENGINEER — 6-08-09 DATE

Hossein Khodabakhsh No. 71650 Exp. 12-31-09 CIVIL — REGISTERED PROFESSIONAL ENGINEER — STATE OF CALIFORNIA

7-20-09
PLANS APPROVAL DATE

THE STATE OF CALIFORNIA OR ITS OFFICERS OR AGENTS SHALL NOT BE RESPONSIBLE FOR THE ACCURACY OR COMPLETENESS OF SCANNED COPIES OF THIS PLAN SHEET.

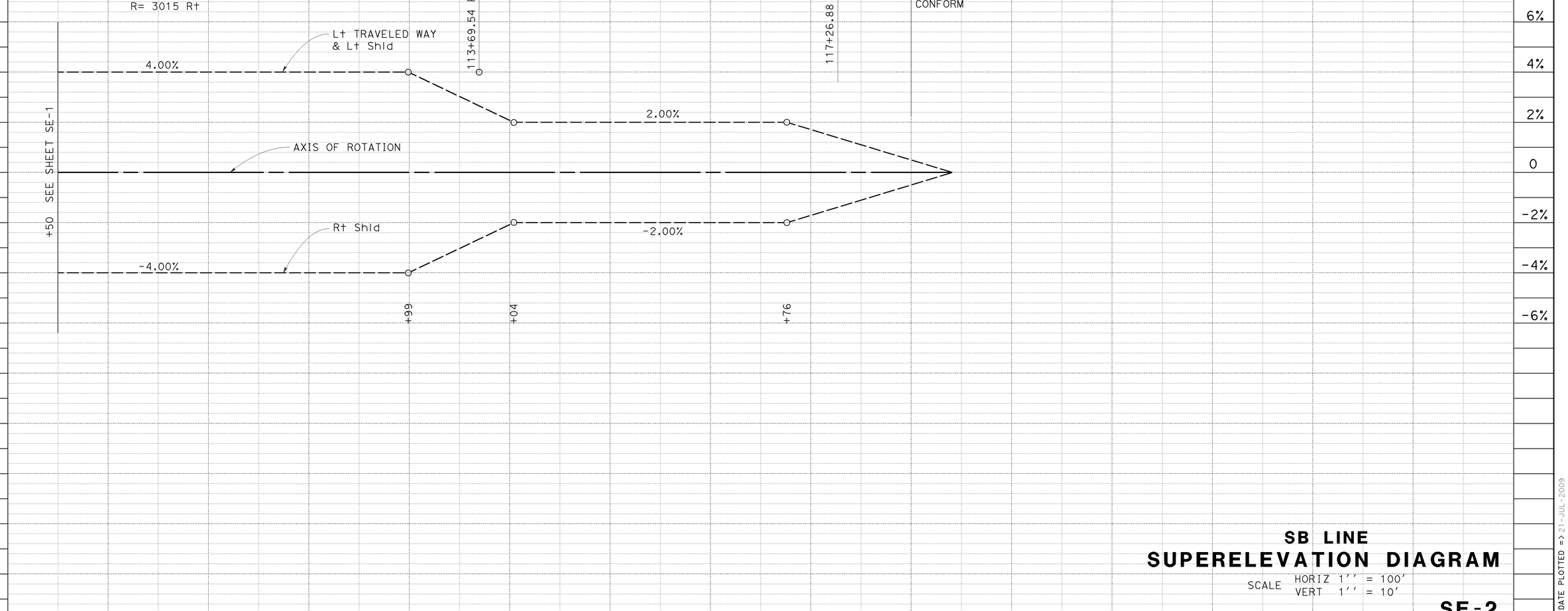

STATION	110	1	2	3	4	115	6	7	8	9	120	1	2	3	TOTAL
CY Exc															
CY Emb															

SB LINE

SUPERELEVATION DIAGRAM

SCALE HORIZ 1'' = 100'
VERT 1'' = 10'

SE-2

STATE OF CALIFORNIA - DEPARTMENT OF TRANSPORTATION
DESIGN
Caltrans

FUNCTIONAL SUPERVISOR: ABOLFAZL EMADZADEH

CALCULATED-DESIGNED BY: ROGER DAYOAN
CHECKED BY: CARLOS SANDOVAL

REVISED BY: CS
DATE REVISED: 6/10/09

LAST REVISION DATE PLOTTED => 21-JUL-2009
TIME PLOTTED => 08:01
06-04-09

BORDER LAST REVISED 4/11/2008

RELATIVE BORDER SCALE IS IN INCHES 0 1 2 3

USERNAME => trpierce
DGN FILE => 416373fc002.dgn

CU 04242

EA 163731

Dist	COUNTY	ROUTE	POST MILES TOTAL PROJECT	SHEET No.	TOTAL SHEETS
04	SF	101,1	9.2/9.8, 6.8/7.1	31	567

REGISTERED CIVIL ENGINEER — 6-08-09 DATE

7-20-09
PLANS APPROVAL DATE

Hossein Khodabakhsh No. 71650 Exp. 12-31-09 CIVIL — REGISTERED PROFESSIONAL ENGINEER — STATE OF CALIFORNIA

THE STATE OF CALIFORNIA OR ITS OFFICERS OR AGENTS SHALL NOT BE RESPONSIBLE FOR THE ACCURACY OR COMPLETENESS OF SCANNED COPIES OF THIS PLAN SHEET.

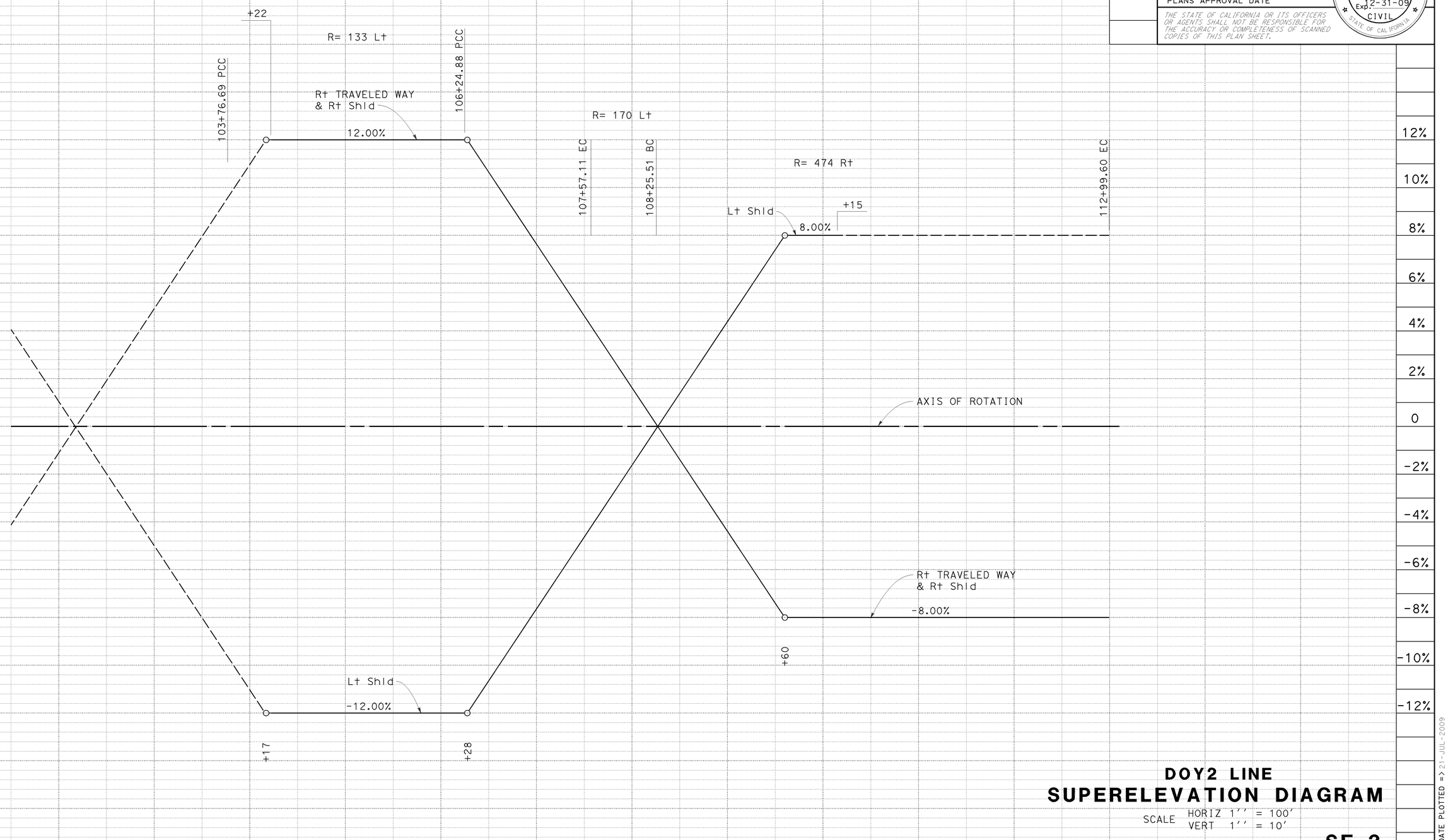

STATION: 2 | 3 | 4 | 105 | 6 | 7 | 8 | 9 | 110 | 1 | 2 | 3 | 6 | TOTAL

CY Exc

CY Emb

DOY2 LINE
SUPERELEVATION DIAGRAM

SCALE HORIZ 1'' = 100'
VERT 1'' = 10'

SE-3

STATE OF CALIFORNIA - DEPARTMENT OF TRANSPORTATION
DESIGN
Caltrans

FUNCTIONAL SUPERVISOR: ABOLFAZL EMADZADEH

CALCULATED-DESIGNED BY:

CHECKED BY:

CARLOS SANDOVAL
ROGER DAYOAN

REVISED BY: CS
DATE REVISED: 6/10/09

LAST REVISION DATE PLOTTED => 21-JUL-2009
TIME PLOTTED => 08:01
06-03-09

BORDER LAST REVISED 4/11/2008

RELATIVE BORDER SCALE IS IN INCHES 0 1 2 3

USERNAME => trpierce
DGN FILE => 416373fc003.dgn

CU 04242

EA 163731

Dist	COUNTY	ROUTE	POST MILES TOTAL PROJECT	SHEET No.	TOTAL SHEETS
04	SF	101,1	9.2/9.8, 6.8/7.1	32	567

REGISTERED CIVIL ENGINEER — 6-08-09 DATE

7-20-09 PLANS APPROVAL DATE

REGISTERED PROFESSIONAL ENGINEER — Hossein Khodabakhsh No. 71650 Exp. 12-31-09 CIVIL — STATE OF CALIFORNIA

THE STATE OF CALIFORNIA OR ITS OFFICERS OR AGENTS SHALL NOT BE RESPONSIBLE FOR THE ACCURACY OR COMPLETENESS OF SCANNED COPIES OF THIS PLAN SHEET.

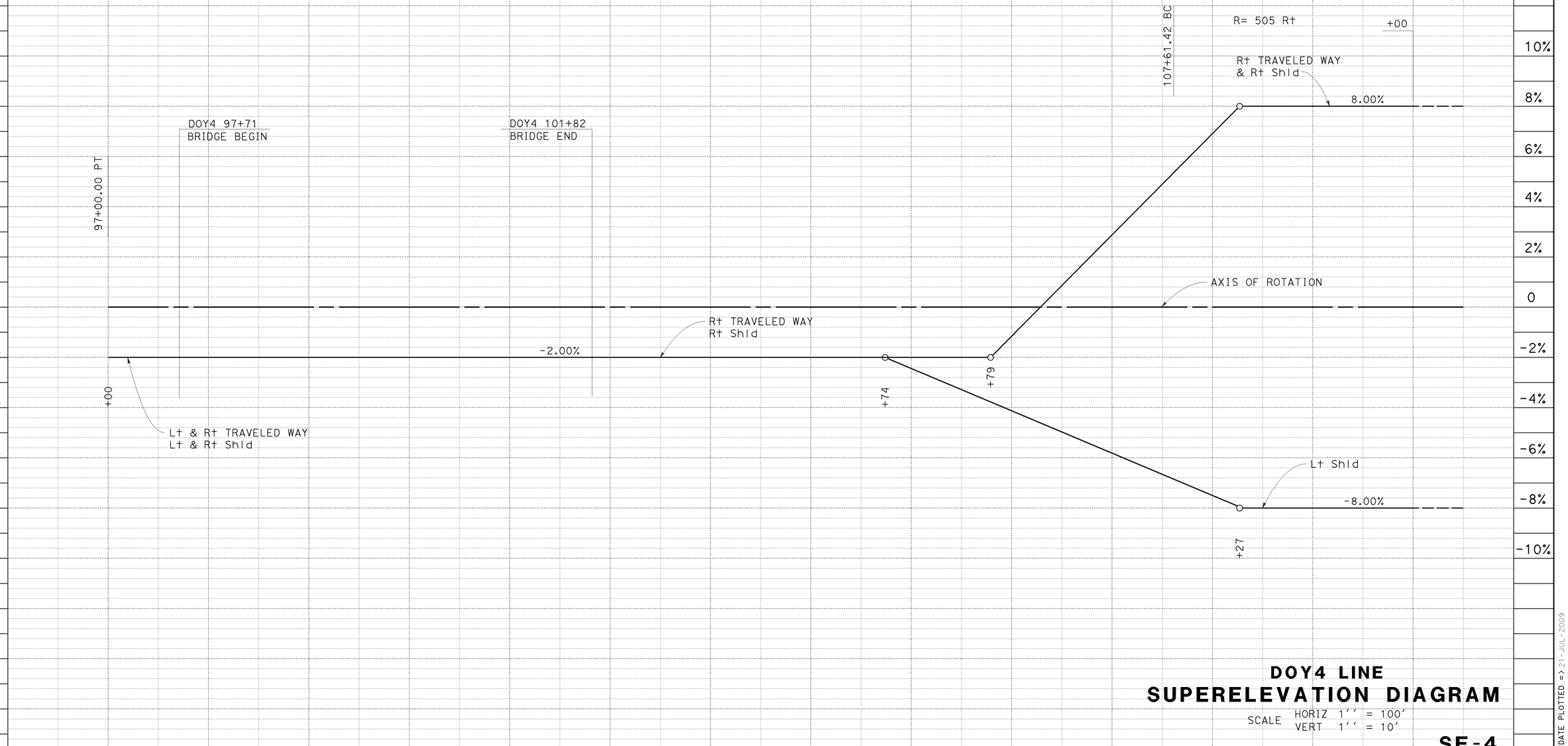

DOY4 LINE
SUPERELEVATION DIAGRAM

SCALE HORIZ 1'' = 100'
VERT 1'' = 10'

SE-4

STATION	7	8	9	100	1	2	3	4	105	6	7	8	9	110	TOTAL
CY Exc															
CY Emb															

CALCULATED-DESIGNED BY
CHECKED BY

REVISED BY: CS
DATE REVISED: 6/10/09

CARLOS SANDOVAL
ROGER DAYOAN

FUNCTIONAL SUPERVISOR
ABOLFAZL EMADZADEH

STATE OF CALIFORNIA - DEPARTMENT OF TRANSPORTATION
DESIGN

LAST REVISION
DATE PLOTTED => 21-JUL-2009
TIME PLOTTED => 08:01
05-28-09

BORDER LAST REVISED 4/11/2008

RELATIVE BORDER SCALE IS IN INCHES 0 1 2 3

USERNAME => trpierce
DGN FILE => 416373fc004.dgn

CU 04242

EA 163731

Dist	COUNTY	ROUTE	POST MILES TOTAL PROJECT	SHEET No.	TOTAL SHEETS
04	SF	101,1	9.2/9.8, 6.8/7.1	33	567

REGISTERED CIVIL ENGINEER 6-08-09 DATE

7-20-09
PLANS APPROVAL DATE

REGISTERED PROFESSIONAL ENGINEER Hossein Khodabakhsh No. 71650 Exp. 12-31-09 CIVIL STATE OF CALIFORNIA

THE STATE OF CALIFORNIA OR ITS OFFICERS OR AGENTS SHALL NOT BE RESPONSIBLE FOR THE ACCURACY OR COMPLETENESS OF SCANNED COPIES OF THIS PLAN SHEET.

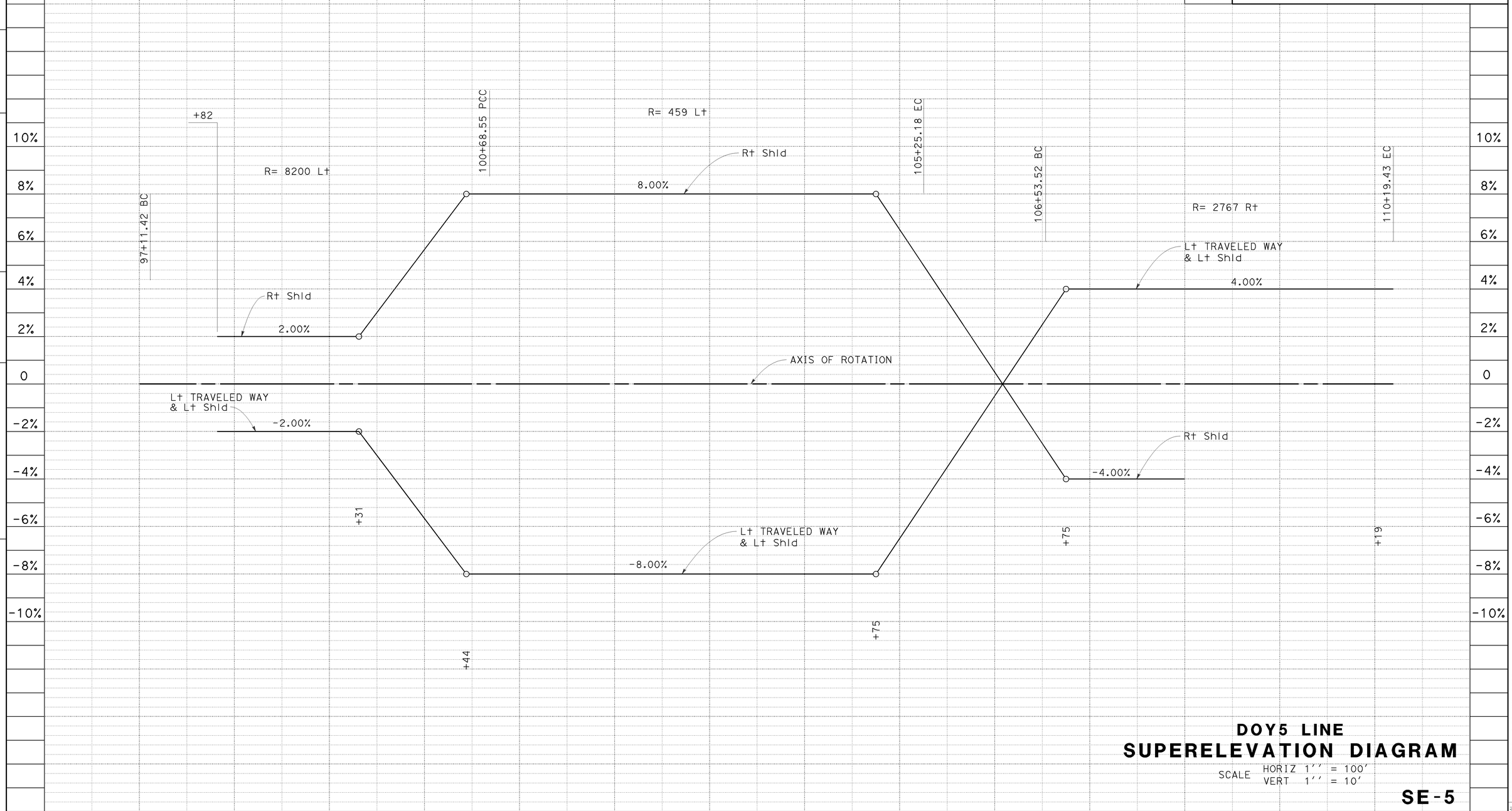

DOY5 LINE
SUPERELEVATION DIAGRAM

SCALE HORIZ 1'' = 100'
VERT 1'' = 10'

SE-5

STATE OF CALIFORNIA - DEPARTMENT OF TRANSPORTATION
Caltrans
DESIGN

FUNCTIONAL SUPERVISOR: ABOLFAZL EMADZADEH
CALCULATED-DESIGNED BY: CARLOS SANDOVAL
CHECKED BY: ROGER DAYOAN
REVISED BY: CS
DATE REVISED: 6/10/09

LAST REVISION 05-28-09
DATE PLOTTED => 21-JUL-2009
TIME PLOTTED => 08:01

Dist	COUNTY	ROUTE	POST MILES TOTAL PROJECT	SHEET No.	TOTAL SHEETS
04	SF	101,1	9.2/9.8, 6.8/7.1	34	567

REGISTERED CIVIL ENGINEER 6-08-09 DATE

7-20-09
PLANS APPROVAL DATE

Hossein Khodabakhsh
No. 71650
Exp. 12-31-09
CIVIL
REGISTERED PROFESSIONAL ENGINEER
STATE OF CALIFORNIA

THE STATE OF CALIFORNIA OR ITS OFFICERS OR AGENTS SHALL NOT BE RESPONSIBLE FOR THE ACCURACY OR COMPLETENESS OF SCANNED COPIES OF THIS PLAN SHEET.

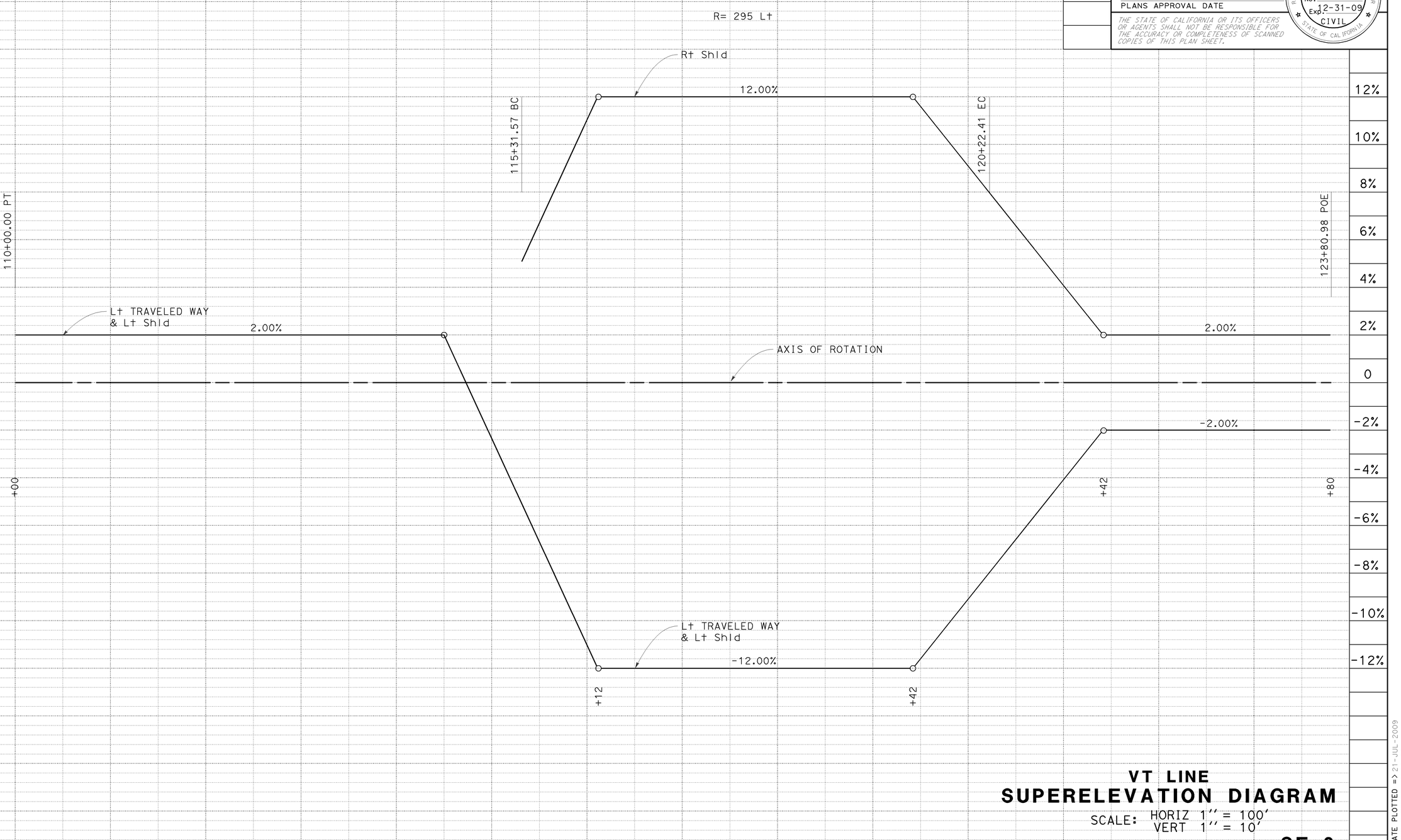

VT LINE
SUPERELEVATION DIAGRAM

SCALE: HORIZ 1'' = 100'
VERT 1'' = 10'

SE-6

CALCULATED-DESIGNED BY: CS
CHECKED BY: 6/10/09

REVISED BY
DATE REVISED

CARLOS SANDOVAL
ROGER DAYOAN

FUNCTIONAL SUPERVISOR
ABOLFAZL EMADZADEH

STATE OF CALIFORNIA - DEPARTMENT OF TRANSPORTATION
DESIGN

Caltrans

LAST REVISION DATE PLOTTED => 21-JUL-2009
05-28-09 TIME PLOTTED => 08:01

BORDER LAST REVISED 4/11/2008

RELATIVE BORDER SCALE IS IN INCHES 0 1 2 3

USERNAME => trpierce
DGN FILE => 416373fc006.dgn

CU 04242

EA 163731

Dist	COUNTY	ROUTE	POST MILES TOTAL PROJECT	SHEET No.	TOTAL SHEETS
04	SF	101,1	9.2/9.8, 6.8/7.1	35	567

REGISTERED CIVIL ENGINEER — 6-18-09 DATE

PHILIP E. LUTZ No. C 55839 Exp.12-31-10 CIVIL — REGISTERED PROFESSIONAL ENGINEER — STATE OF CALIFORNIA

7-20-09
PLANS APPROVAL DATE

THE STATE OF CALIFORNIA OR ITS OFFICERS OR AGENTS SHALL NOT BE RESPONSIBLE FOR THE ACCURACY OR COMPLETENESS OF ELECTRONIC COPIES OF THIS PLAN SHEET.

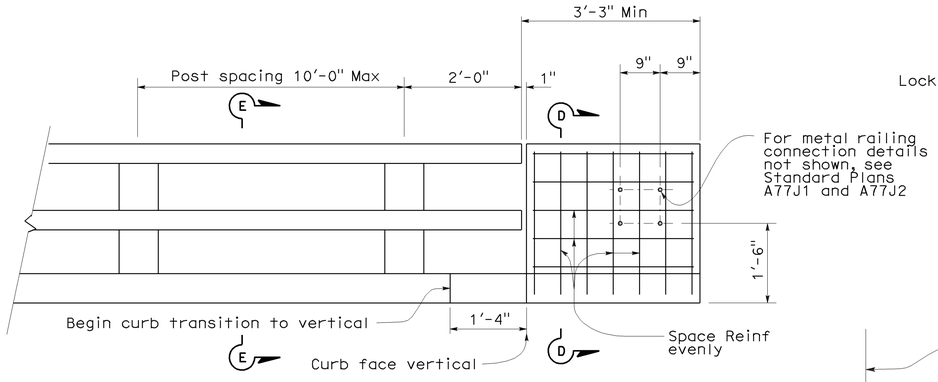

END OF RAILING ELEVATION

B11-68 B11-69

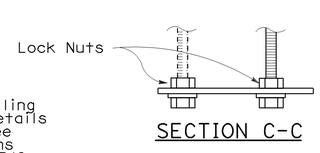

SECTION C-C

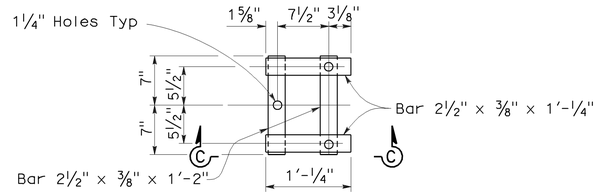

WALL ANCHOR PLATE DETAIL

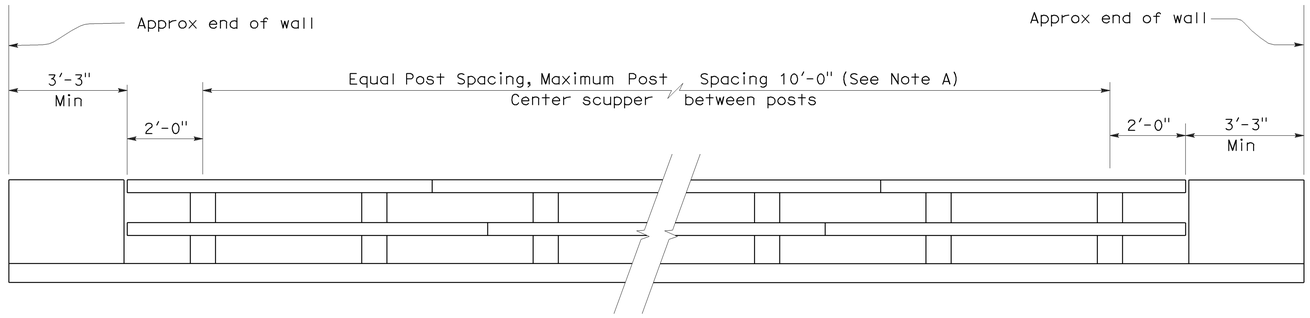

BRIDGE RAILING ELEVATION

NOTE A:
Post spacing and/or block length to be adjusted to fit bridge length or wingwall length.

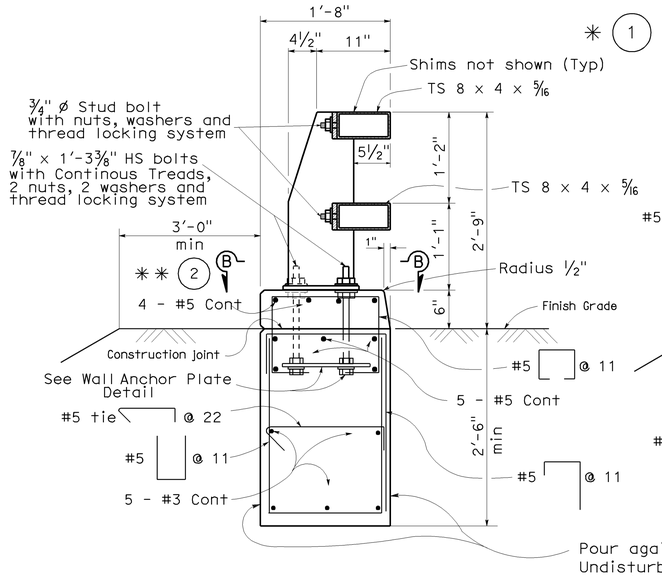

SECTION E-E

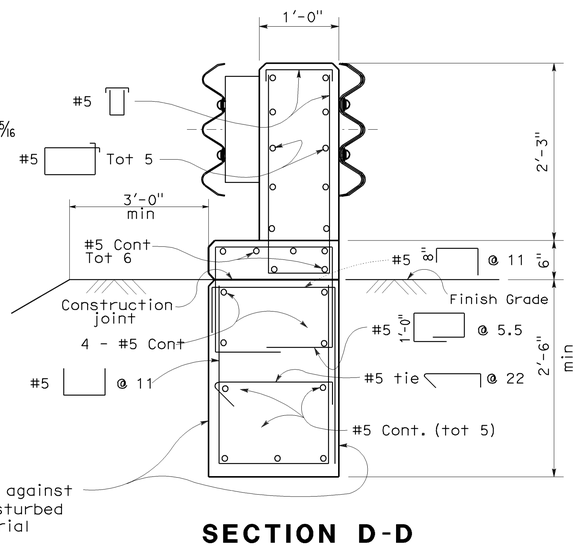

SECTION D-D

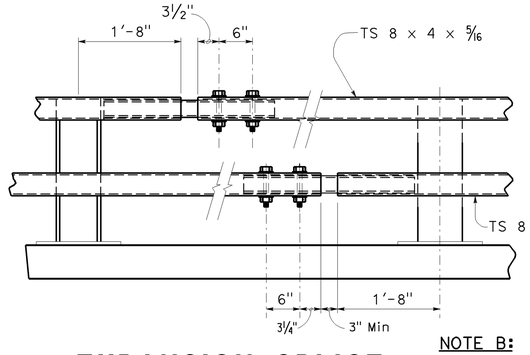

EXPANSION SPLICE

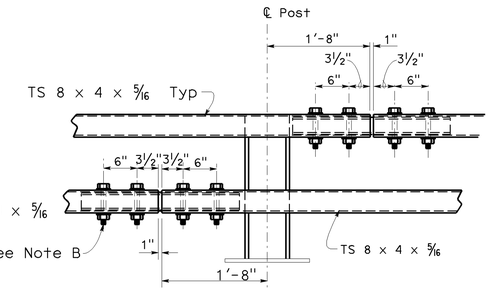

STANDARD SPLICE

NOTE B:
Use ¾" ø x 5⅝" HS bolts with washers, fully tensioned.
1" holes in rail Typ

Notes:

* (1) See Std. Plans B11-68 (STUD BOLT DETAIL)

** (2) See Std. Plans B11-68 for SECTION B-B

NOTE:
THE CONTRACTOR SHALL VERIFY ALL CONTROLLING FIELD DIMENSIONS BEFORE ORDERING OR FABRICATING ANY MATERIAL.

CALIFORNIA ST-10 BRIDGE RAIL (MOD) TYPE B

CONSTRUCTION DETAILS

NO SCALE

C-1

STATE OF CALIFORNIA - DEPARTMENT OF TRANSPORTATION — DESIGN
FUNCTIONAL SUPERVISOR: ABOLFAZL EMADZADEH
CALCULATED-DESIGNED BY: PHILIP E. LUTZ
CHECKED BY: MAJID MADANI
REVISED BY: A
DATE REVISED: A

LAST REVISION DATE PLOTTED => 21-JUL-2009
04-07-09 TIME PLOTTED => 08:17

BORDER LAST REVISED 3/1/2007 | RELATIVE BORDER SCALE IS IN INCHES 0 1 2 3 | USERNAME => trpierce | DGN FILE => 04-163731_c1.dgn | CU 04242 | EA 163731

Dist	COUNTY	ROUTE	POST MILES TOTAL PROJECT	SHEET No.	TOTAL SHEETS
04	SF	101,1	9.2/9.8, 6.8/7.1	36	567

REGISTERED CIVIL ENGINEER 6-08-09 DATE

7-20-09
PLANS APPROVAL DATE

REGISTERED PROFESSIONAL ENGINEER Hossein Khodabakhsh No. 71650 Exp. 12-31-09 CIVIL STATE OF CALIFORNIA

THE STATE OF CALIFORNIA OR ITS OFFICERS OR AGENTS SHALL NOT BE RESPONSIBLE FOR THE ACCURACY OR COMPLETENESS OF SCANNED COPIES OF THIS PLAN SHEET.

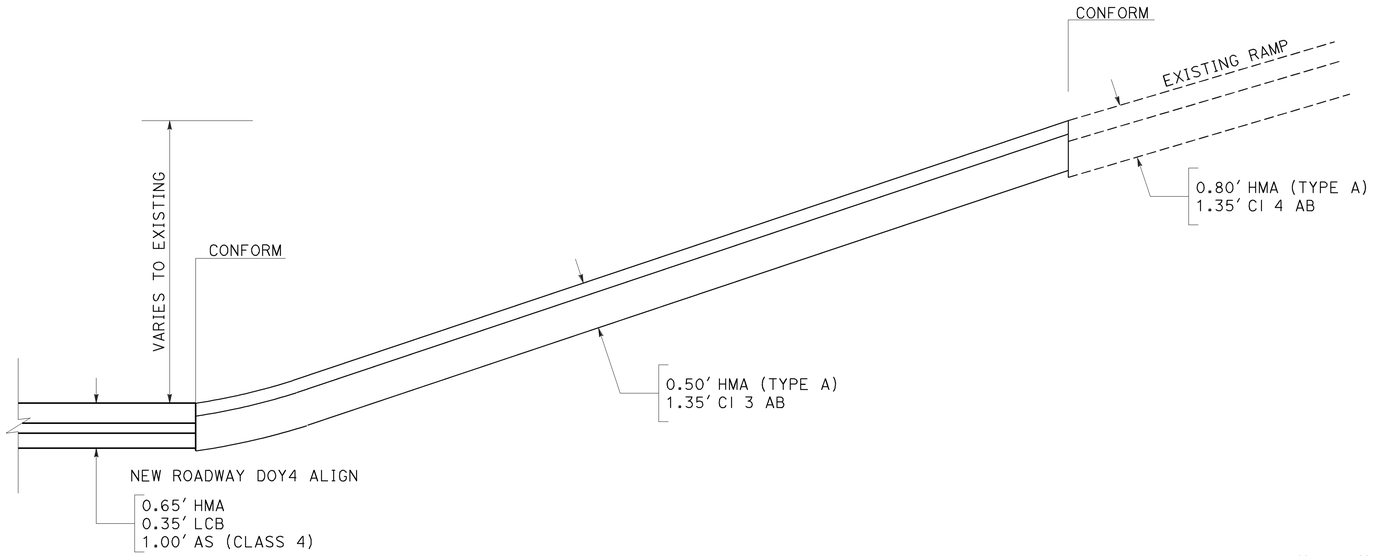

ELEVATION
RD 106+00 TO 110+00

NOTES:

1. THE SOIL REINFORCEMENT MATS SHALL BE SHOP FABRICATED OF COLD DRAWN STEEL WIRE W 7.0 SIZE CONFORMING TO REQUIREMENTS OF ASTM A-82, WELDED IN ACCORDANCE WITH ASTM A-185
2. WWF = WELDED WIRE FABRIC

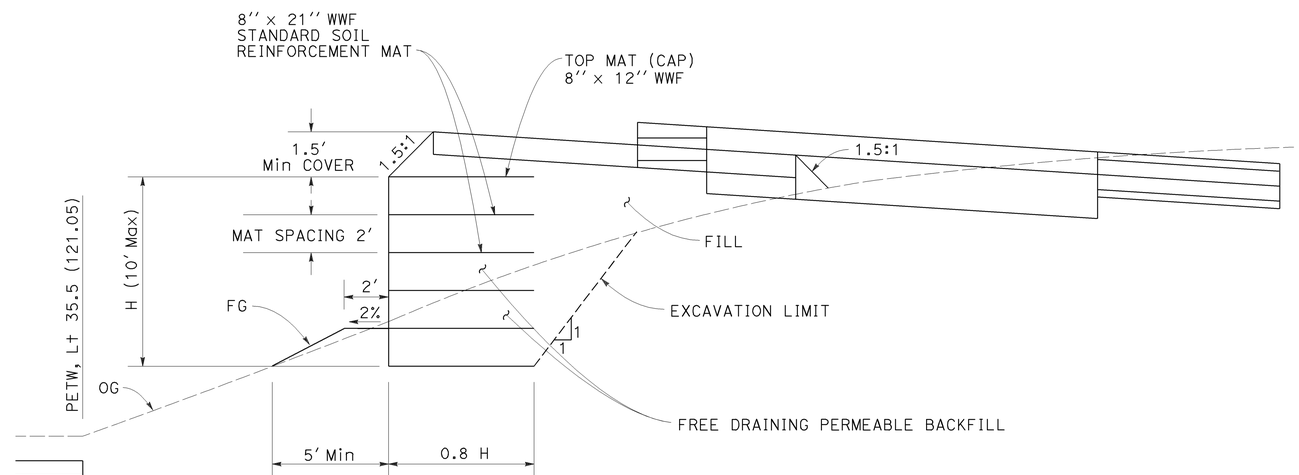

TYPICAL CROSS SECTION
HILFIKER RETAINING WALL

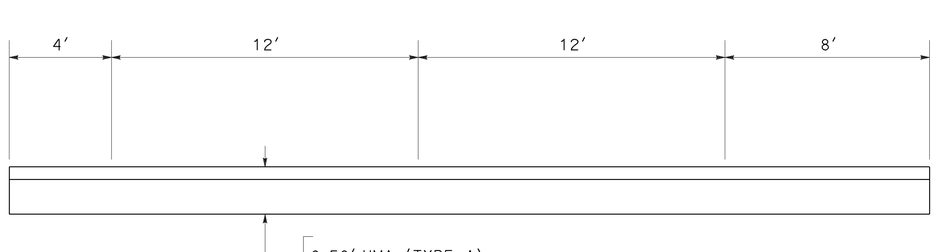

TYPICAL CROSS SECTION
RD 107+60 TO 110+00

LONGITUDINAL CONFORM

CONSTRUCTION DETAILS
NO SCALE

C-2

STATE OF CALIFORNIA - DEPARTMENT OF TRANSPORTATION
Caltrans
DESIGN

FUNCTIONAL SUPERVISOR: ABOLFAZL EMADZADEH
CALCULATED-DESIGNED BY: ROGER DAYOAN
CHECKED BY: ROMY ACOB
REVISED BY: RD
DATE REVISED: 6/10/09

LAST REVISION 06-12-09
DATE PLOTTED => 21-JUL-2009
TIME PLOTTED => 10:24

Dist	COUNTY	ROUTE	POST MILES TOTAL PROJECT	SHEET No.	TOTAL SHEETS
04	SF	101,1	9.2/9.8, 6.8/7.1	37	567

REGISTERED CIVIL ENGINEER — 6-08-09 DATE

7-20-09
PLANS APPROVAL DATE

REGISTERED PROFESSIONAL ENGINEER — Hossein Khodabakhsh — No. 71650 — Exp. 12-31-09 — CIVIL — STATE OF CALIFORNIA

THE STATE OF CALIFORNIA OR ITS OFFICERS OR AGENTS SHALL NOT BE RESPONSIBLE FOR THE ACCURACY OR COMPLETENESS OF SCANNED COPIES OF THIS PLAN SHEET.

FOR ACCURATE RIGHT OF WAY AND ACCESS DATA, CONTACT RIGHT OF WAY ENGINEERING AT THE DISTRICT OFFICE.

S A N F R A N C I S C O

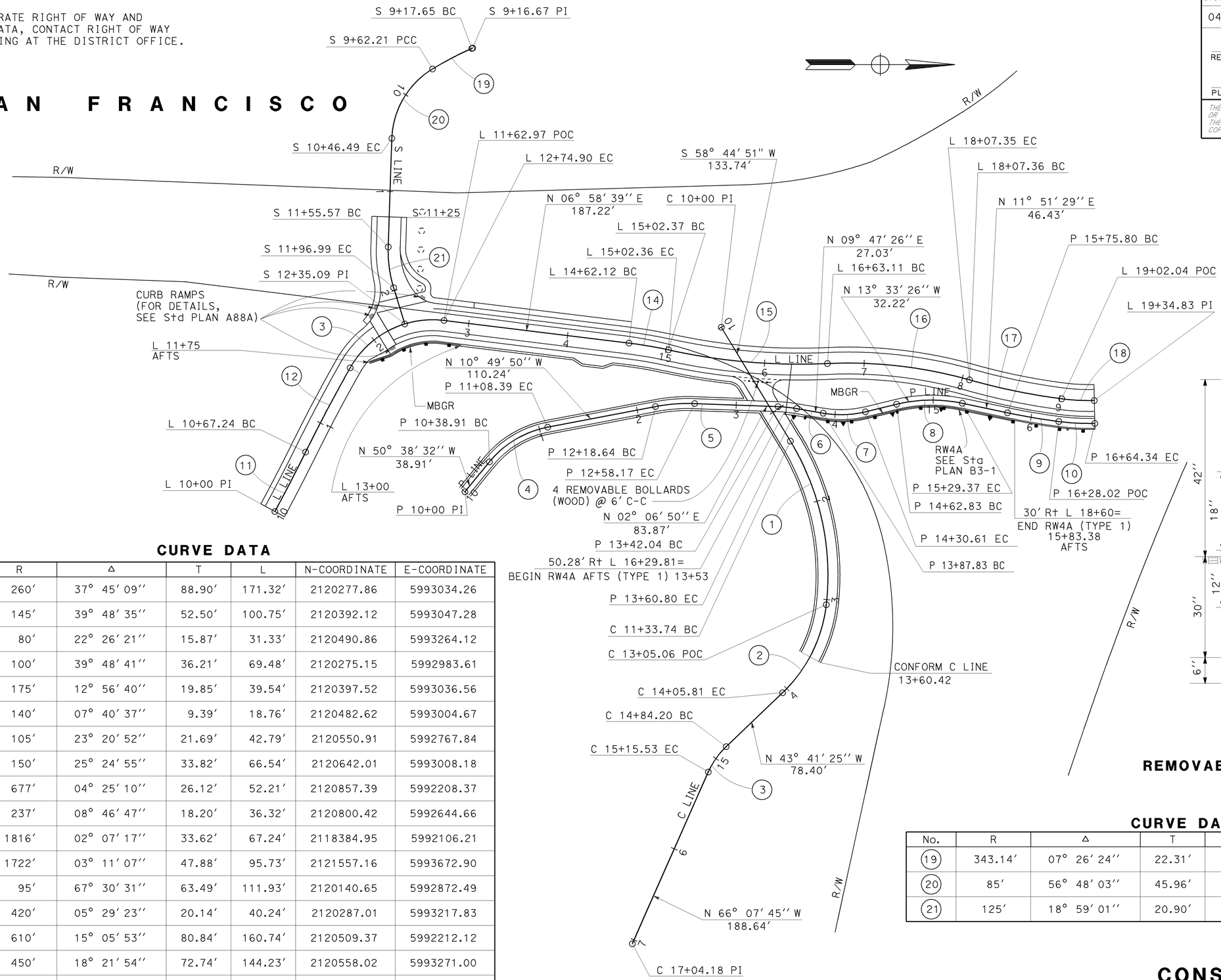

CURVE DATA

No.	R	Δ	T	L	N-COORDINATE	E-COORDINATE
1	260′	37° 45′ 09″	88.90′	171.32′	2120277.86	5993034.26
2	145′	39° 48′ 35″	52.50′	100.75′	2120392.12	5993047.28
3	80′	22° 26′ 21″	15.87′	31.33′	2120490.86	5993264.12
4	100′	39° 48′ 41″	36.21′	69.48′	2120275.15	5992983.61
5	175′	12° 56′ 40″	19.85′	39.54′	2120397.52	5993036.56
6	140′	07° 40′ 37″	9.39′	18.76′	2120482.62	5993004.67
7	105′	23° 20′ 52″	21.69′	42.79′	2120550.91	5992767.84
8	150′	25° 24′ 55″	33.82′	66.54′	2120642.01	5993008.18
9	677′	04° 25′ 10″	26.12′	52.21′	2120857.39	5992208.37
10	237′	08° 46′ 47″	18.20′	36.32′	2120800.42	5992644.66
11	1816′	02° 07′ 17″	33.62′	67.24′	2118384.95	5992106.21
12	1722′	03° 11′ 07″	47.88′	95.73′	2121557.16	5993672.90
13	95′	67° 30′ 31″	63.49′	111.93′	2120140.65	5992872.49
14	420′	05° 29′ 23″	20.14′	40.24′	2120287.01	5993217.83
15	610′	15° 05′ 53″	80.84′	160.74′	2120509.37	5992212.12
16	450′	18° 21′ 54″	72.74′	144.23′	2120558.02	5993271.00
17	654′	08° 17′ 43″	47.42′	94.67′	2120857.39	5992208.37
18	214′	08° 46′ 52″	16.43′	32.80′	2120800.42	5992644.66

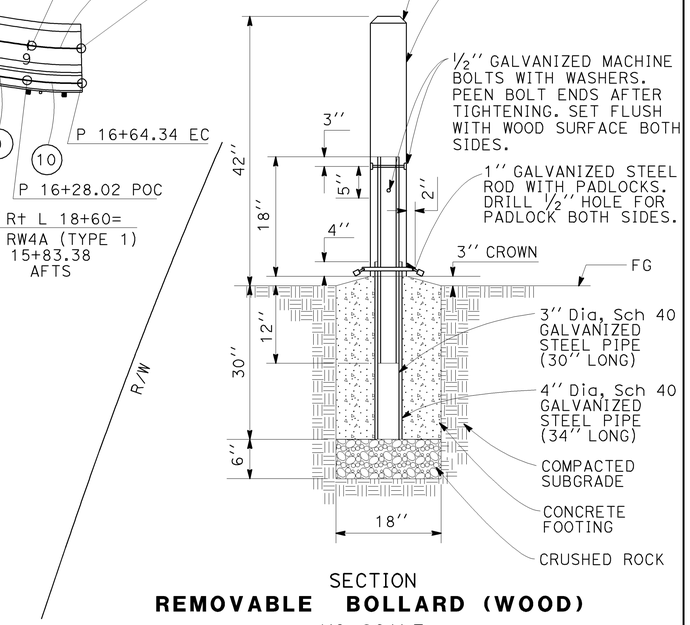

SECTION
REMOVABLE BOLLARD (WOOD)
NO SCALE

CURVE DATA

No.	R	Δ	T	L	N-COORDINATE	E-COORDINATE
19	343.14′	07° 26′ 24″	22.31′	44.56′	2120318.79	5992818.84
20	85′	56° 48′ 03″	45.96′	84.27′	2120184.78	5992598.21
21	125′	18° 59′ 01″	20.90′	41.42′	2120221.10	5992708.58

CONSTRUCTION DETAILS

SCALE: 1″ = 50′

C-3

CALCULATED-DESIGNED BY	CHECKED BY	REVISED BY	DATE REVISED
CARLOS SANDOVAL	ROGER DAYOAN	CS	6/10/09

FUNCTIONAL SUPERVISOR: ABOLFAZL EMADZADEH

STATE OF CALIFORNIA - DEPARTMENT OF TRANSPORTATION
DESIGN

Caltrans

LAST REVISION — DATE PLOTTED => 21-JUL-2009 — TIME PLOTTED => 10:24 — 06-11-09

BORDER LAST REVISED 4/11/2008

RELATIVE BORDER SCALE IS IN INCHES 0 1 2 3

USERNAME => trmartin
DGN FILE => 416373ga003.dgn

CU 04242

EA 163731

DIST	COUNTY	ROUTE	POST MILES TOTAL PROJECT	SHEET No	TOTAL SHEETS
04	SF	101,1	9.2/9.8, 6.8/7.1	38	567

Genaro M. Doria
REGISTERED CIVIL ENGINEER DATE

7-20-09
PLANS APPROVAL DATE

REGISTERED PROFESSIONAL ENGINEER
GENARO M. DORIA
No. C63583
Exp. 9/30/10
CIVIL
STATE OF CALIFORNIA

The State of California or its officers or agents shall not be responsible for the accuracy or completeness of electronic copies of this plan sheet.

Notes:

1. See STANDARD PLANS MAY 2006 B11-68,B11-69, B11-70 for missing details.
2. See "ROADWAY PLANS" for layout and location.

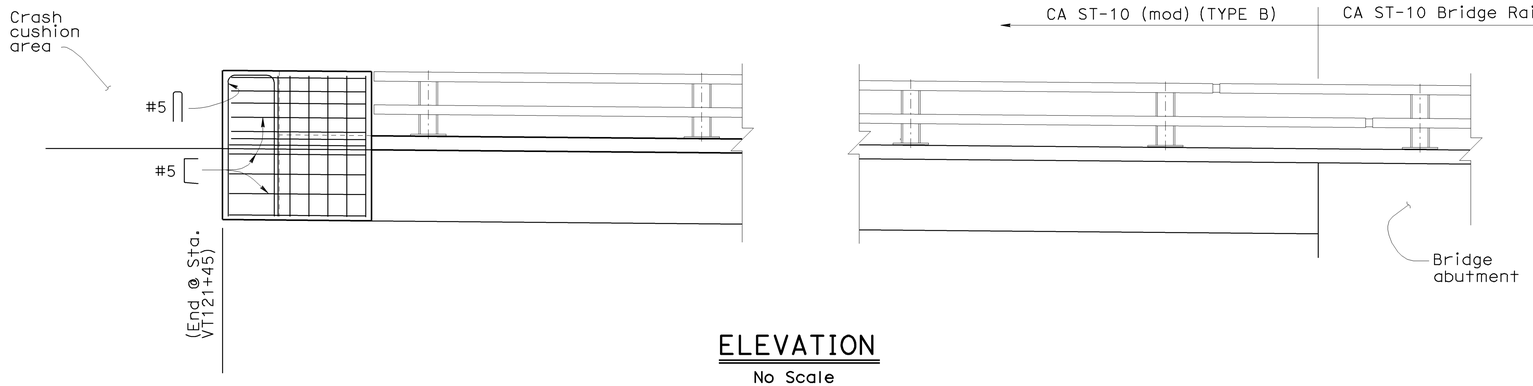

ELEVATION
No Scale

Note:
Left and right side similar

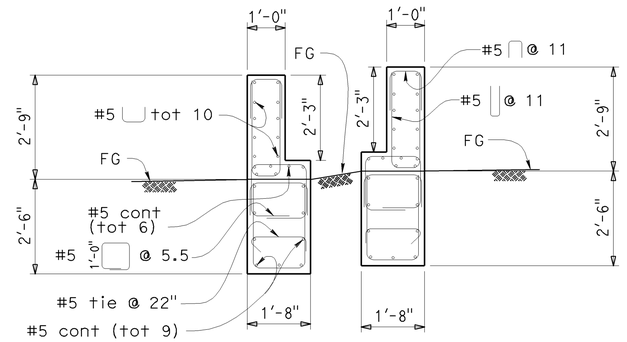

SECTION A-A
No Scale

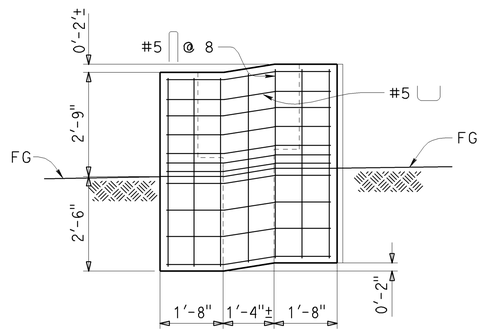

SECTION B-B
No Scale
(End @ Sta. 121+45)

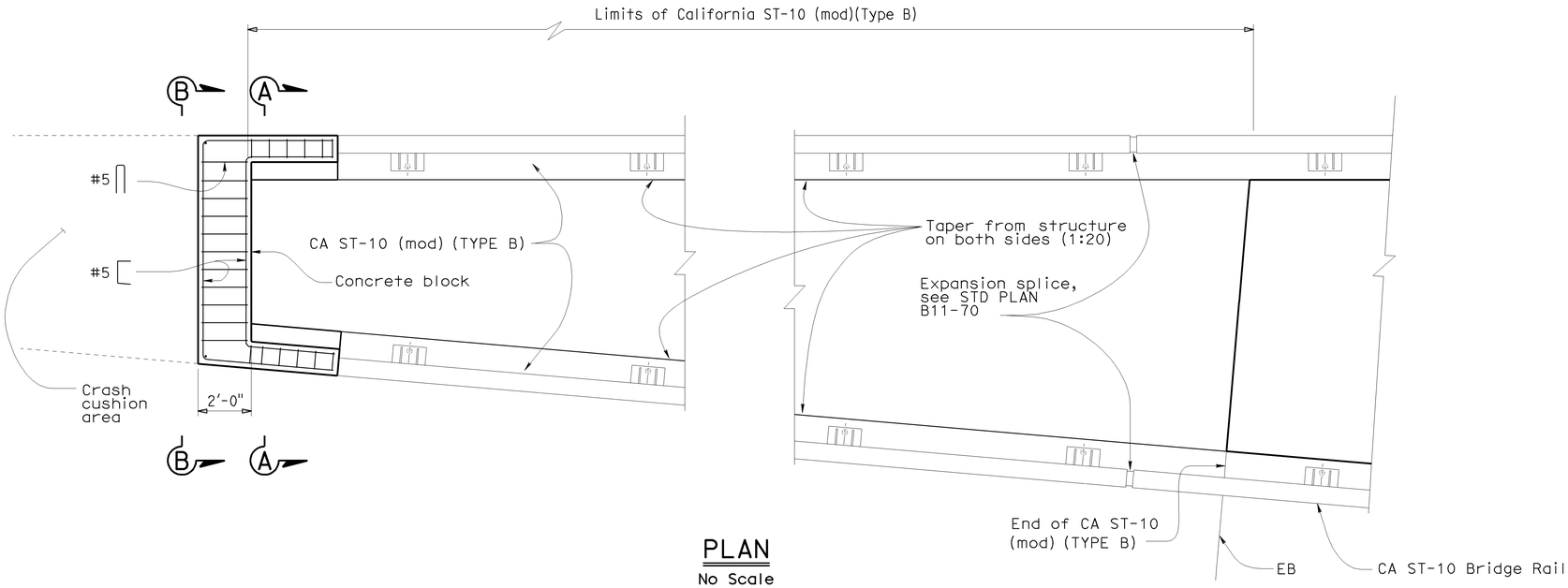

PLAN
No Scale

CONSTRUCTION DETAILS
CALIFORNIA ST-10 BARRIER TRANSITION
NO SCALE

C-4

DESIGN	BY G DORIA	CHECKED J MAGANA	STATE OF CALIFORNIA DEPARTMENT OF TRANSPORTATION	DIVISION OF ENGINEERING SERVICES STRUCTURE DESIGN SPECIAL DESIGNS BRANCH	BRIDGE NO. N/A	N1-S101 CONNECTOR (VT GORE AREA)
DETAILS	BY P C WELLS	CHECKED G DORIA			POST MILE X	CALIFORNIA ST-10 BARRIER TRANSITION
QUANTITIES	BY G DORIA	CHECKED P C WELLS				

STRUCTURES DESIGN SPECIAL DESIGN SHEET (ENGLISH) (REV. 10-25-05)

ORIGINAL SCALE IN INCHES FOR REDUCED PLANS 0 1 2 3

CU 04
EA 163731

DISREGARD PRINTS BEARING EARLIER REVISION DATES →

REVISION DATES										SHEET	OF
6/5/09										X	X

FILE => 04-163731_c4.dgn
2009sd/04_163731/st10_gore_area.dgn

USERNAME => tmartin DATE PLOTTED => 21-JUL-2009 TIME PLOTTED => 10:27

Dist	COUNTY	ROUTE	POST MILES TOTAL PROJECT	SHEET No.	TOTAL SHEETS
04	SF	101,1	9.2/9.8, 6.8/7.1	39	567

REGISTERED CIVIL ENGINEER 6-08-09 DATE

7-20-09
PLANS APPROVAL DATE

REGISTERED PROFESSIONAL ENGINEER
Hossein Khodabakhsh
No. 71650
Exp. 12-31-09
CIVIL
STATE OF CALIFORNIA

THE STATE OF CALIFORNIA OR ITS OFFICERS OR AGENTS SHALL NOT BE RESPONSIBLE FOR THE ACCURACY OR COMPLETENESS OF SCANNED COPIES OF THIS PLAN SHEET.

LEGEND:

AREAS FOR CONTRACTOR'S USE

AREAS FOR CONTRACTOR'S USE (UNDER EXISTING STRUCTURE)

APPROXIMATE LOCATION FOR CHAIN LINK GATE

NOTE:

1. FOR AVAILABILITY AND RESTRICTIONS SEE "AREAS FOR CONTRACTOR'S USE" IN THE CONTRACT SPECIAL PROVISIONS.

CONSTRUCTION DETAILS
AREA FOR CONTRACTOR'S USE
NO SCALE

C-5

STATE OF CALIFORNIA - DEPARTMENT OF TRANSPORTATION
Caltrans
DESIGN

FUNCTIONAL SUPERVISOR: ABOLFAZL EMADZADEH
CALCULATED-DESIGNED BY: GINA CHOI
CHECKED BY: ROGER DAYOAN
REVISED BY: GC
DATE REVISED: 6/10/09

LAST REVISION 06-11-09
DATE PLOTTED => 21-JUL-2009
TIME PLOTTED => 10:25

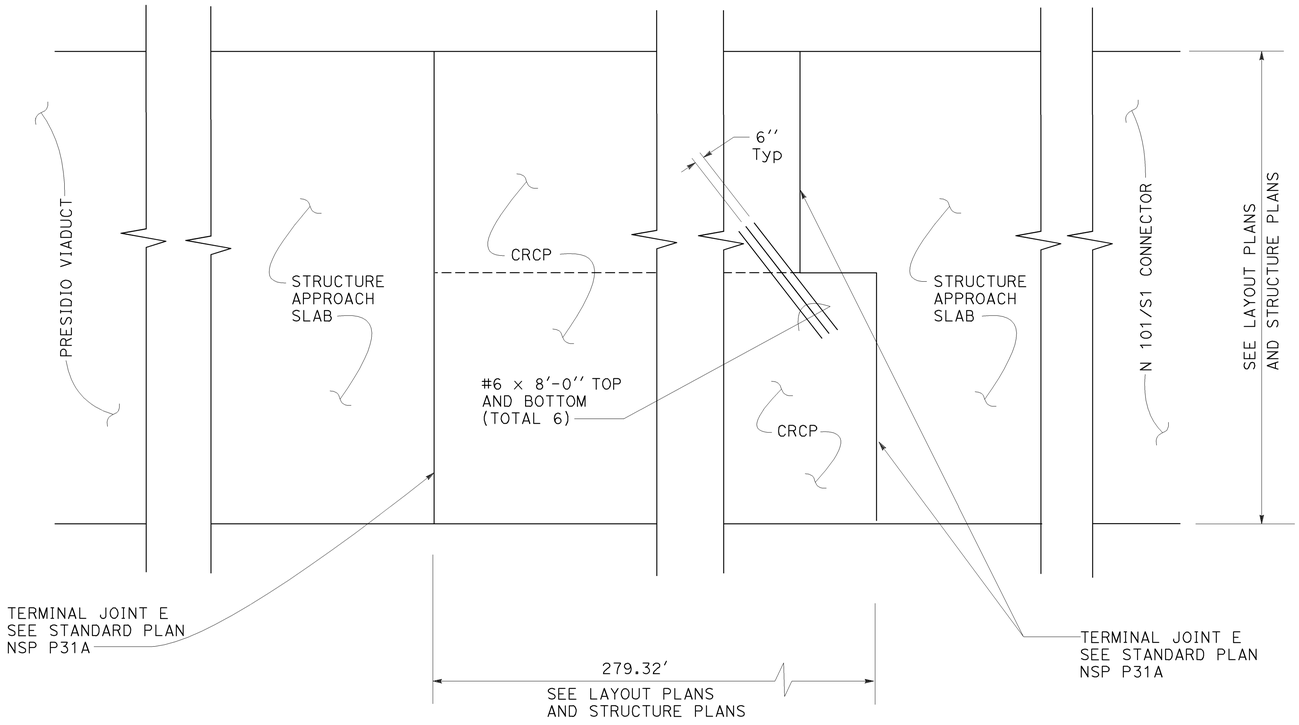

PLAN - CRCP

NOTES:

TRANSVERSE BAR ASSEMBLY MUST MEET THE FOLLOWING:

1. SEE NEW STANDARD PLAN NSP P-4 FOR SPACING OF LONGITUDINAL BARS.

Dist	COUNTY	ROUTE	POST MILES TOTAL PROJECT	SHEET No.	TOTAL SHEETS
04	SF	101,1	9.2/9.8, 6.8/7.1	40	567

6-11-09
REGISTERED CIVIL ENGINEER DATE

Richard Man Shing Chan
No. 45557
Exp. 12-31-10
CIVIL
REGISTERED PROFESSIONAL ENGINEER
STATE OF CALIFORNIA

7-20-09
PLANS APPROVAL DATE

THE STATE OF CALIFORNIA OR ITS OFFICERS OR AGENTS SHALL NOT BE RESPONSIBLE FOR THE ACCURACY OR COMPLETENESS OF SCANNED COPIES OF THIS PLAN SHEET.

CONSTRUCTION DETAILS

NO SCALE

C-6

CALCULATED-DESIGNED BY	CHECKED BY	REVISED BY	DATE REVISED
SAMIA ARA	RICHARD CHAN	SA	6/10/09

STATE OF CALIFORNIA - DEPARTMENT OF TRANSPORTATION
Caltrans® ENGINEERING SERVICES 1
FUNCTIONAL SUPERVISOR: BRIAN KEARNEY

LAST REVISION DATE PLOTTED => 21-JUL-2009
06-11-09 TIME PLOTTED => 10:25

BORDER LAST REVISED 4/11/2008

RELATIVE BORDER SCALE IS IN INCHES 0 1 2 3

USERNAME => trmartin
DGN FILE => 416373ga006.dgn

CU 04242

EA 163731

DIST	COUNTY	ROUTE	POST MILES TOTAL PROJECT	SHEET No	TOTAL SHEETS
04	SF	101,1	9.279.8, 6.8/7.1	41	567

Genaro M. Doria
REGISTERED CIVIL ENGINEER DATE

7-20-09
PLANS APPROVAL DATE

REGISTERED PROFESSIONAL ENGINEER
GENARO M. DORIA
No. C63583
Exp. 9/30/10
CIVIL
STATE OF CALIFORNIA

The State of California or its officers or agents shall not be responsible for the accuracy or completeness of electronic copies of this plan sheet.

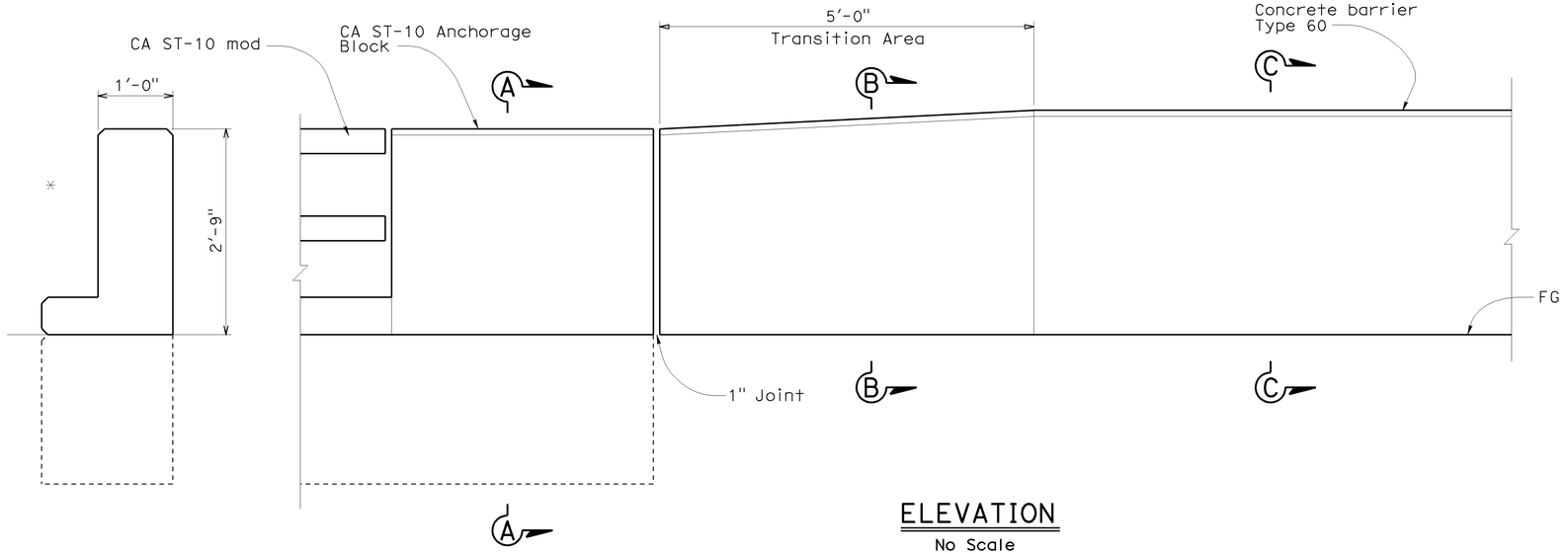

SECTION A-A
No Scale

ELEVATION
No Scale

SECTION C-C
No Scale

* Note: See sheet C-1 for dimensions and reinforcing.

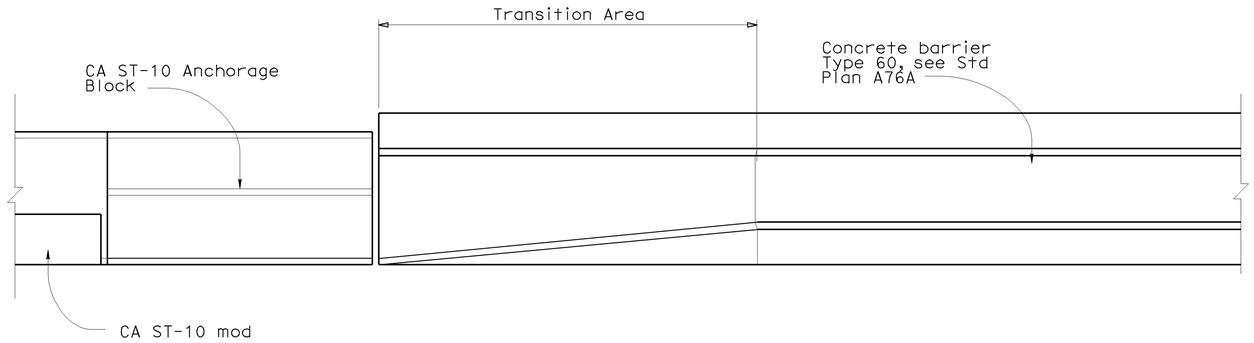

PLAN
No Scale

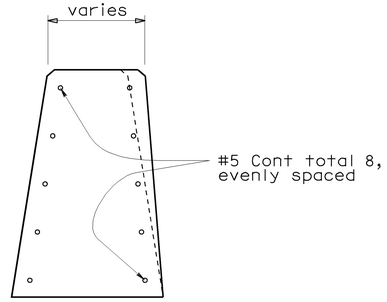

SECTION B-B
No Scale

NOTE:
See Roadway Plans for Transition Locations.

THE CONTRACTOR SHALL VERIFY ALL CONTROLLING FIELD DIMENSIONS BEFORE ORDERING OR FABRICATING ANY MATERIAL.

CONSTRUCTION DETAILS
C-7

	BY	CHECKED
DESIGN	G DORIA	J MAGANA
DETAILS	P C WELLS	G DORIA
QUANTITIES	G DORIA	P C WELLS

STATE OF CALIFORNIA
DEPARTMENT OF TRANSPORTATION

DIVISION OF ENGINEERING SERVICES
STRUCTURE DESIGN
SPECIAL DESIGNS BRANCH

CU 04
EA 163731

BRIDGE NO. VARIES
POST MILE

N101/S1 CONNECTOR SEPARATION
TRANSITION ST-10 TO TYPE 60 BARRIER

STRUCTURES DESIGN SPECIAL DESIGN SHEET (ENGLISH) (REV. 10-25-05)

ORIGINAL SCALE IN INCHES FOR REDUCED PLANS 0 1 2 3

DISREGARD PRINTS BEARING EARLIER REVISION DATES →

REVISION DATES										SHEET	OF
X										X	X

spec_des_br_proj/2009sd/04-163731

FILE => 04-163731_p-trans.dgn

USERNAME => tmartin DATE PLOTTED => 23-JUL-2009 TIME PLOTTED => 07:59

Dist	COUNTY	ROUTE	POST MILES TOTAL PROJECT	SHEET No.	TOTAL SHEETS
04	SF	101,1	9.0/9.8, 6.8/7.1	42	567

REGISTERED CIVIL ENGINEER — 7-15-09 DATE

7-20-09
PLANS APPROVAL DATE

REGISTERED PROFESSIONAL ENGINEER — Hossein Khodabakhsh — No. 71650 — Exp. 12-31-09 — CIVIL — STATE OF CALIFORNIA

THE STATE OF CALIFORNIA OR ITS OFFICERS OR AGENTS SHALL NOT BE RESPONSIBLE FOR THE ACCURACY OR COMPLETENESS OF SCANNED COPIES OF THIS PLAN SHEET.

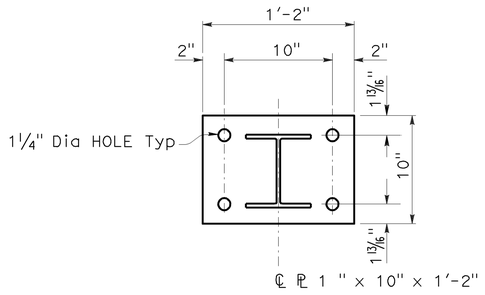

POST BASE PLATE PLAN

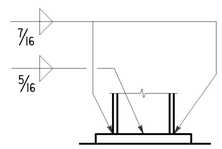

POST BASE WELD DETAIL

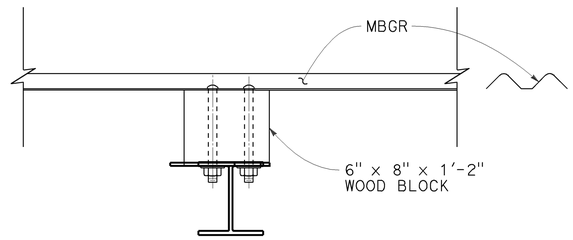

MBGR CONNECTION

NOTES:

1. ALL EXPOSED CUTS OR SHEARED EDGES SHALL BE ROUNDED AND FREE OF BURRS.
2. MBGR RAIL POSTS SHALL BE SET NORMAL TO GRADE.
3. LENGTHS OF RAIL BAR SHALL BE ATTACHED TO A MINIMUN OF TWO (2) RAIL POSTS.
4. ALL STRUCTURAL STEEL SHALL BE GALVANIZED AFTER FABRICATION.
5. MBGR RAIL POST ANCHORING NUTS SHALL BE TIGHTENED TO A SNUG FIT AND GIVEN ADDITIONAL ⅛ TURN.
6. HOLES IN POSTS FOR RAIL BAR ATTACHMENT MAY BE FIELD DRILLED. HOLES SHALL BE COATED WITH AN APPROVED ZINC-RICH PAINT PRIOR TO ERECTION.
7. THE MBGR POST SHALL BE SPACED 6'-6" Max.

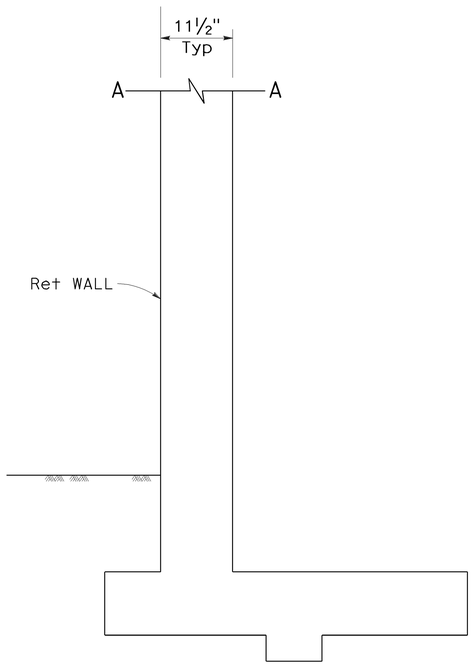

RETAINING WALL TYPE 1 DETAIL

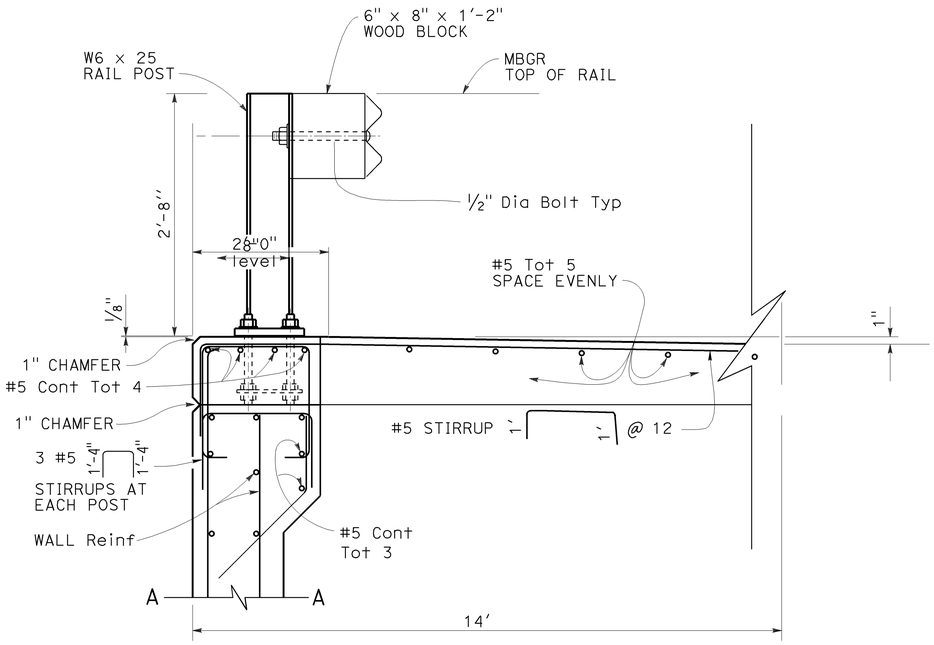

SECTION

RETAINING WALL DETAIL RW-4A

CONSTRUCTION DETAILS

NO SCALE

C-8

STATE OF CALIFORNIA - DEPARTMENT OF TRANSPORTATION
DESIGN
FUNCTIONAL SUPERVISOR: ABOLFAZL EMADZADEH
CALCULATED-DESIGNED BY: ROGER DAYOAN
CHECKED BY: HOSSEIN KHODABAKHSH
REVISED BY: RD
DATE REVISED: 7/15/09

LAST REVISION DATE PLOTTED => 21-JUL-2009
07-15-09 TIME PLOTTED => 10:25

BORDER LAST REVISED 4/11/2008
RELATIVE BORDER SCALE IS IN INCHES 0 1 2 3
USERNAME => trmartin
DGN FILE => 416373ga008.dgn
CU 04242
EA 163731

FOR ACCURATE RIGHT OF WAY AND ACCESS DATA, CONTACT RIGHT OF WAY ENGINEERING AT THE DISTRICT OFFICE.

LEGEND:

- FIBER ROLLS
- EROSION CONTROL (NETTING) OVER EROSION CONTROL (COMPOST BLANKET)
- TFESA — TEMPORARY FENCE (TYPE ESA)
- EXISTING FENCE

ABBREVIATIONS:

- TCE — TEMPORARY CONSTRUCTION EASEMENT

NOTE:

1. EROSION CONTROL LOCATIONS ARE DIAGRAMMATIC ONLY.

Dist	COUNTY	ROUTE	POST MILES TOTAL PROJECT	SHEET No.	TOTAL SHEETS
04	SF	101,1	9.2/9.8, 6.8/7.1	43	567

Alex McDonald
LICENSED LANDSCAPE ARCHITECT

7-20-09
PLANS APPROVAL DATE

LICENSED LANDSCAPE ARCHITECT
ALEXANDER K. MCDONALD No. 5392
Alex McDonald
Signature
08-31-10
Renewal Date
Date
STATE OF CALIFORNIA

THE STATE OF CALIFORNIA OR ITS OFFICERS OR AGENTS SHALL NOT BE RESPONSIBLE FOR THE ACCURACY OR COMPLETENESS OF SCANNED COPIES OF THIS PLAN SHEET.

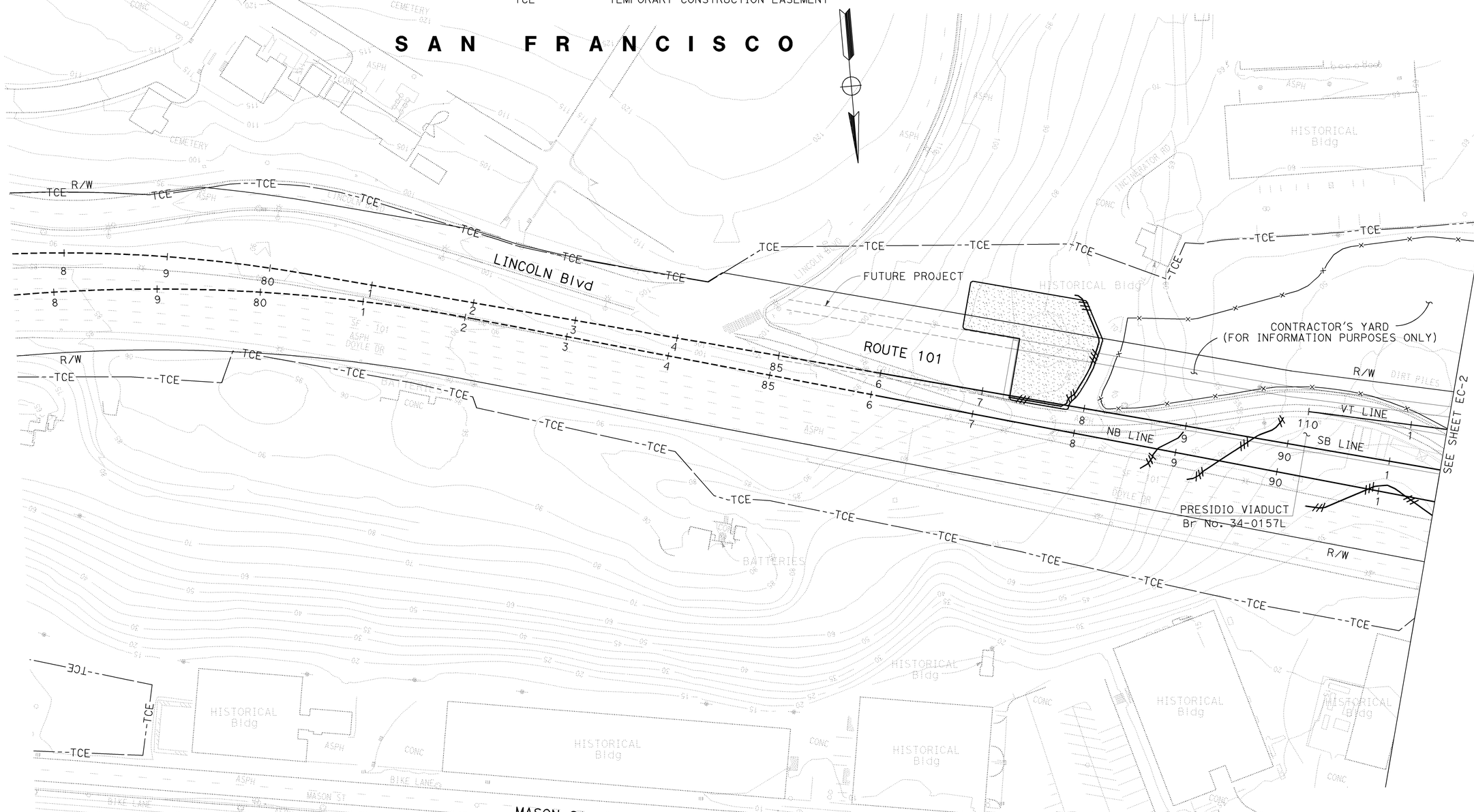

EROSION CONTROL PLAN

SCALE: 1'' = 50'

THIS PLAN ACCURATE FOR EROSION CONTROL WORK ONLY.

EC-1

STATE OF CALIFORNIA - DEPARTMENT OF TRANSPORTATION
Caltrans LANDSCAPE ARCHITECTURE

SENIOR LANDSCAPE ARCHITECT: DAVID W. YAM
CALCULATED-DESIGNED BY: Alex McDonald
CHECKED BY: Jennifer Egawa
REVISED BY
DATE REVISED

LAST REVISION 05-22-09
DATE PLOTTED => 21-JUL-2009
TIME PLOTTED => 08:39

Dist	COUNTY	ROUTE	POST MILES TOTAL PROJECT	SHEET No.	TOTAL SHEETS
04	SF	101,1	9.2/9.8, 6.8/7.1	44	567

Alex McDonald
LICENSED LANDSCAPE ARCHITECT

7-20-09
PLANS APPROVAL DATE

LICENSED LANDSCAPE ARCHITECT
ALEXANDER K. MCDONALD No. 5362
Alex McDonald
Signature
08-31-10
Renewal Date
Date
STATE OF CALIFORNIA

THE STATE OF CALIFORNIA OR ITS OFFICERS OR AGENTS SHALL NOT BE RESPONSIBLE FOR THE ACCURACY OR COMPLETENESS OF SCANNED COPIES OF THIS PLAN SHEET.

FOR ACCURATE RIGHT OF WAY AND ACCESS DATA, CONTACT RIGHT OF WAY ENGINEERING AT THE DISTRICT OFFICE.

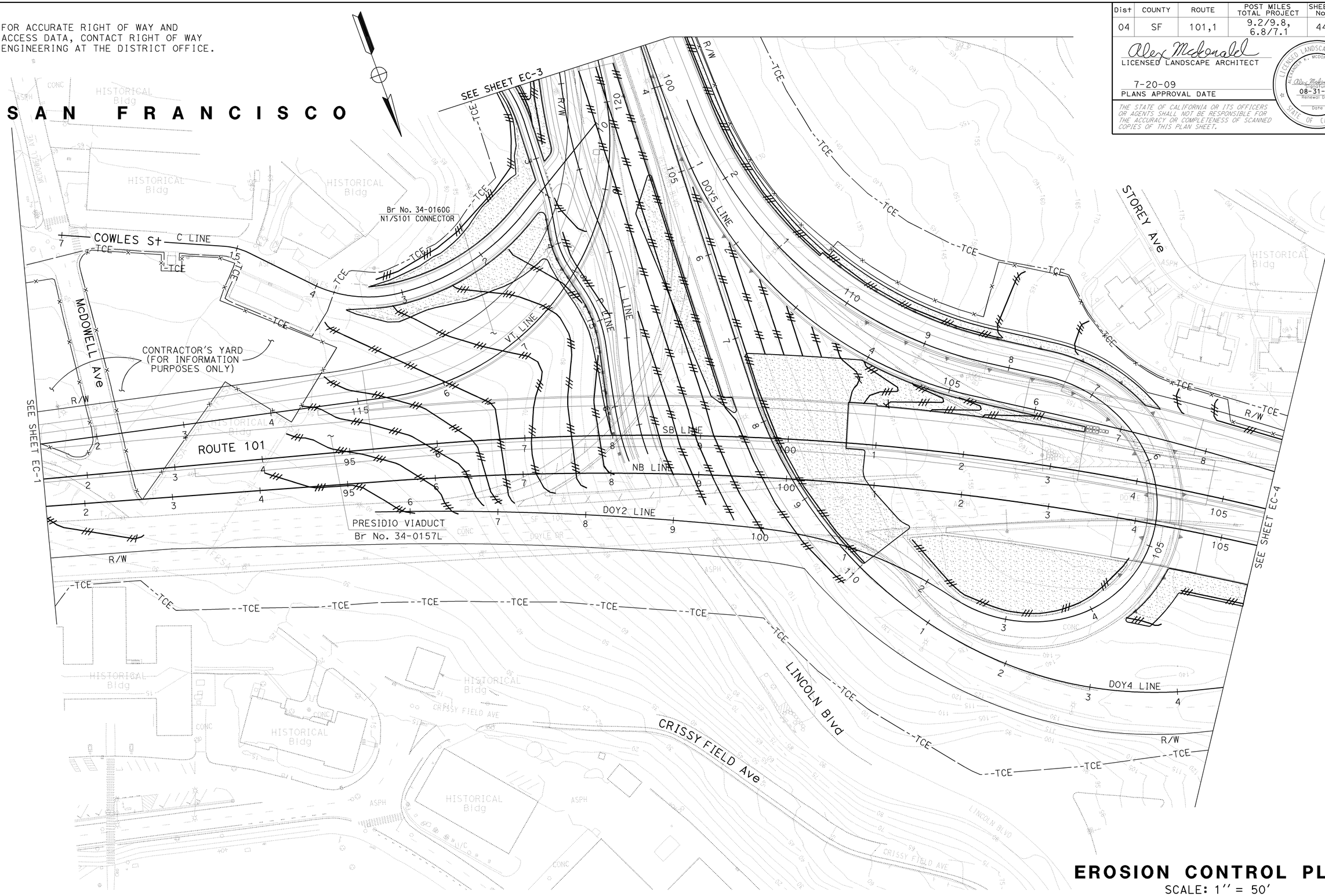

EROSION CONTROL PLAN

SCALE: 1'' = 50'

THIS PLAN ACCURATE FOR EROSION CONTROL WORK ONLY.

EC-2

STATE OF CALIFORNIA - DEPARTMENT OF TRANSPORTATION
Caltrans LANDSCAPE ARCHITECTURE

SENIOR LANDSCAPE ARCHITECT: DAVID W. YAM
CALCULATED-DESIGNED BY: Alex McDonald
CHECKED BY: Jennifer Egawa
REVISED BY
DATE REVISED

LAST REVISION 05-22-09
DATE PLOTTED => 21-JUL-2009
TIME PLOTTED => 08:36

BORDER LAST REVISED 4/11/2008
RELATIVE BORDER SCALE IS IN INCHES 0 1 2 3
USERNAME => trmariak
DGN FILE => 416373ge002.dgn
CU 04343
EA 163731

FOR ACCURATE RIGHT OF WAY AND
ACCESS DATA, CONTACT RIGHT OF WAY
ENGINEERING AT THE DISTRICT OFFICE.

Dist	COUNTY	ROUTE	POST MILES TOTAL PROJECT	SHEET No.	TOTAL SHEETS
04	SF	101,1	9.2/9.8, 6.8/7.1	45	567

Alex Mcdonald
LICENSED LANDSCAPE ARCHITECT

7-20-09
PLANS APPROVAL DATE

THE STATE OF CALIFORNIA OR ITS OFFICERS OR AGENTS SHALL NOT BE RESPONSIBLE FOR THE ACCURACY OR COMPLETENESS OF SCANNED COPIES OF THIS PLAN SHEET.

LICENSED LANDSCAPE ARCHITECT
ALEXANDER K. MCDONALD No. 5382
Alex Mcdonald
Signature
08-31-10
Renewal Date
Date
STATE OF CALIFORNIA

THIS PLAN ACCURATE FOR EROSION CONTROL WORK ONLY.

EROSION CONTROL PLAN

SCALE: 1'' = 50'

EC-3

STATE OF CALIFORNIA - DEPARTMENT OF TRANSPORTATION
Caltrans® LANDSCAPE ARCHITECTURE

SENIOR LANDSCAPE ARCHITECT: DAVID W. YAM

CALCULATED-DESIGNED BY: Alex McDonald
CHECKED BY: Jennifer Egawa

REVISED BY
DATE REVISED

FOR ACCURATE RIGHT OF WAY AND ACCESS DATA, CONTACT RIGHT OF WAY ENGINEERING AT THE DISTRICT OFFICE.

Dist	COUNTY	ROUTE	POST MILES TOTAL PROJECT	SHEET No.	TOTAL SHEETS
04	SF	101,1	9.2/9.8, 6.8/7.1	46	567

Alex McDonald
LICENSED LANDSCAPE ARCHITECT

7-20-09
PLANS APPROVAL DATE

LICENSED LANDSCAPE ARCHITECT
ALEXANDER K. McDONALD No. 5382
Alex McDonald
Signature
08-31-10
Renewal Date
Date
STATE OF CALIFORNIA

THE STATE OF CALIFORNIA OR ITS OFFICERS OR AGENTS SHALL NOT BE RESPONSIBLE FOR THE ACCURACY OR COMPLETENESS OF SCANNED COPIES OF THIS PLAN SHEET.

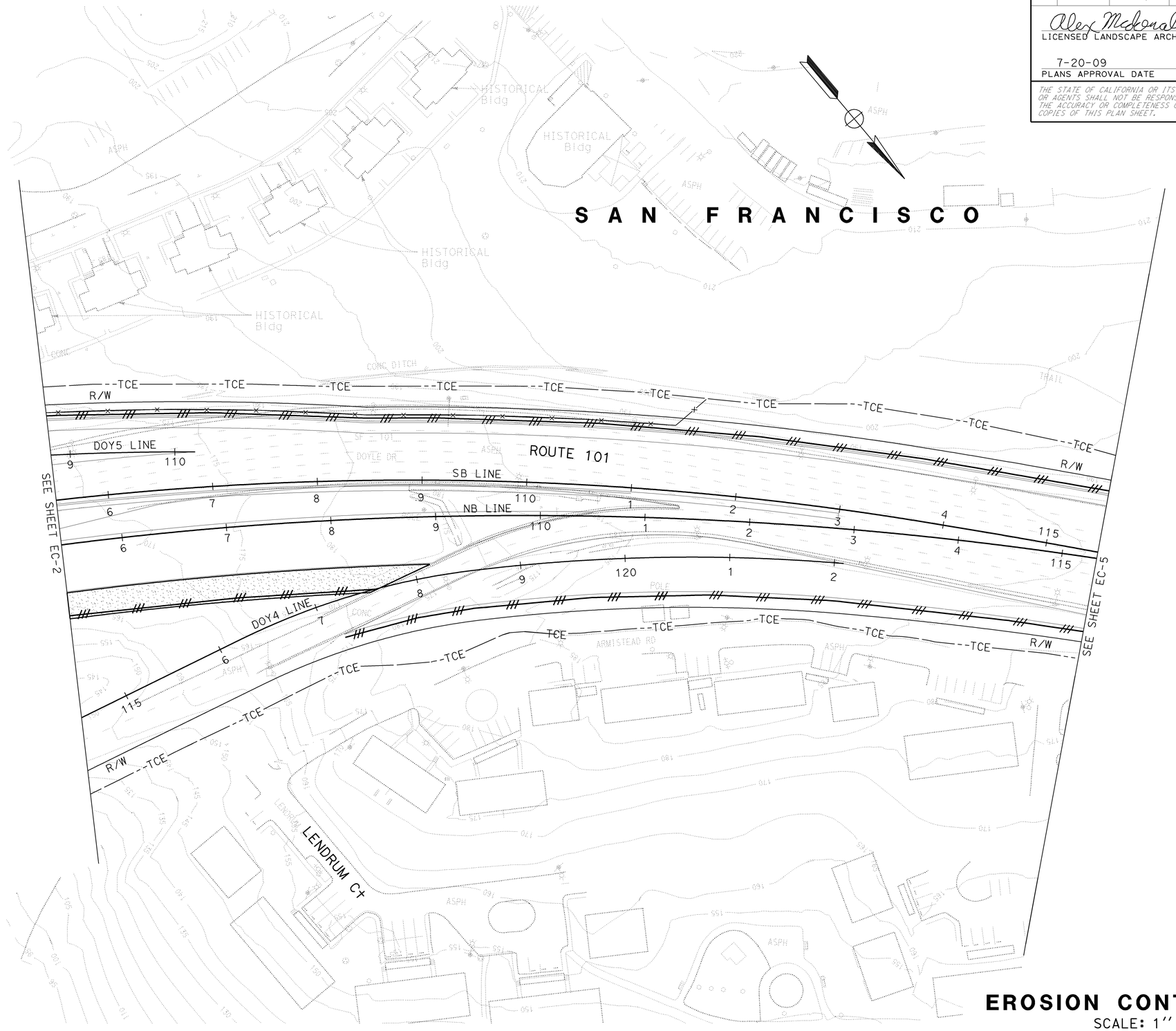

EROSION CONTROL PLAN

SCALE: 1'' = 50'

THIS PLAN ACCURATE FOR EROSION CONTROL WORK ONLY.

EC-4

STATE OF CALIFORNIA - DEPARTMENT OF TRANSPORTATION
Caltrans LANDSCAPE ARCHITECTURE

SENIOR LANDSCAPE ARCHITECT: DAVID W. YAM
CALCULATED-DESIGNED BY: Alex McDonald
CHECKED BY: Jennifer Egawa
REVISED BY
DATE REVISED

LAST REVISION 05-22-09
DATE PLOTTED => 21-JUL-2009
TIME PLOTTED => 08:36

FOR ACCURATE RIGHT OF WAY AND ACCESS DATA, CONTACT RIGHT OF WAY ENGINEERING AT THE DISTRICT OFFICE.

Dist	COUNTY	ROUTE	POST MILES TOTAL PROJECT	SHEET No.	TOTAL SHEETS
04	SF	101,1	9.2/9.8, 6.8/7.1	47	567

Alex McDonald
LICENSED LANDSCAPE ARCHITECT

7-20-09
PLANS APPROVAL DATE

LICENSED LANDSCAPE ARCHITECT
ALEXANDER K. McDONALD No. 3382
Alex McDonald
Signature
08-31-10
Renewal Date
Date
STATE OF CALIFORNIA

THE STATE OF CALIFORNIA OR ITS OFFICERS OR AGENTS SHALL NOT BE RESPONSIBLE FOR THE ACCURACY OR COMPLETENESS OF SCANNED COPIES OF THIS PLAN SHEET.

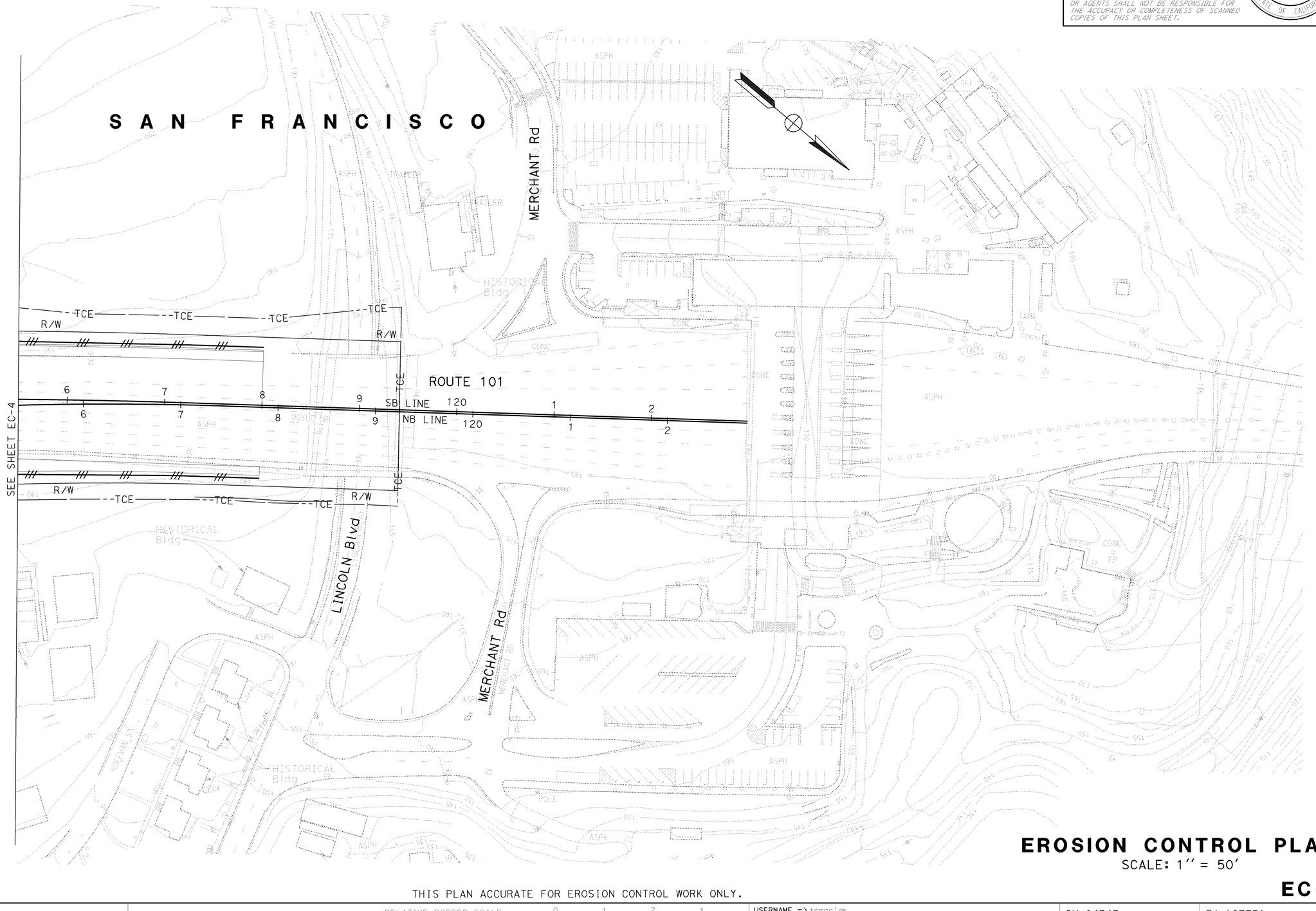

EROSION CONTROL PLAN

SCALE: 1'' = 50'

THIS PLAN ACCURATE FOR EROSION CONTROL WORK ONLY.

EC-5

STATE OF CALIFORNIA - DEPARTMENT OF TRANSPORTATION
Caltrans LANDSCAPE ARCHITECTURE

SENIOR LANDSCAPE ARCHITECT: DAVID W. YAM
CALCULATED-DESIGNED BY: Alex McDonald
CHECKED BY: Jennifer Egawa
REVISED BY
DATE REVISED

LAST REVISION 05-22-09
DATE PLOTTED => 21-JUL-2009
TIME PLOTTED => 08:36

Dist	COUNTY	ROUTE	POST MILES TOTAL PROJECT	SHEET No.	TOTAL SHEETS
04	SF	101,1	9.2/9.8, 6.8/7.1	48	567

Alex McDonald
LICENSED LANDSCAPE ARCHITECT

7-20-09
PLANS APPROVAL DATE

LICENSED LANDSCAPE ARCHITECT
ALEXANDER K. McDONALD No. 5362
Alex McDonald
Signature
08-31-10
Renewal Date
Date
STATE OF CALIFORNIA

THE STATE OF CALIFORNIA OR ITS OFFICERS OR AGENTS SHALL NOT BE RESPONSIBLE FOR THE ACCURACY OR COMPLETENESS OF SCANNED COPIES OF THIS PLAN SHEET.

NOTES

1. Exact limits of Erosion Control work shall be determined by the Engineer.

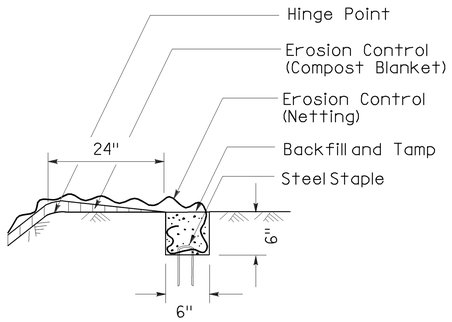

SECTION

DETAIL C

KEY TRENCH AT TOP OF SLOPE

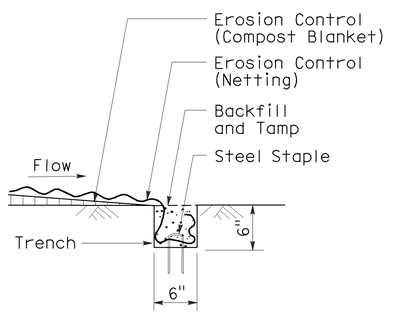

SECTION

DETAIL D

KEY TRENCH

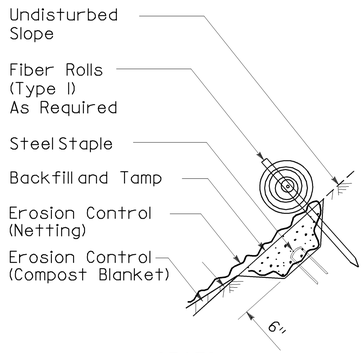

SECTION

DETAIL E

KEY TRENCH AT UPPER CONFORM

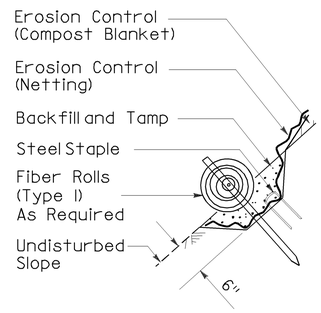

SECTION

DETAIL F

KEY TRENCH AT LOWER CONFORM

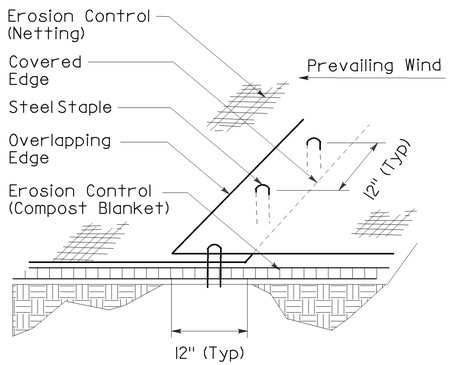

DETAIL B

LONGITUDINAL (NETTING) JOINT

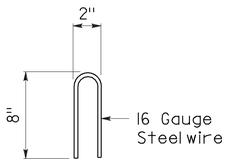

STAPLE DETAIL

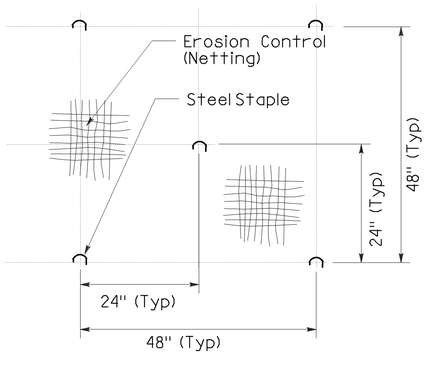

DETAIL A

STAPLE PATTERN

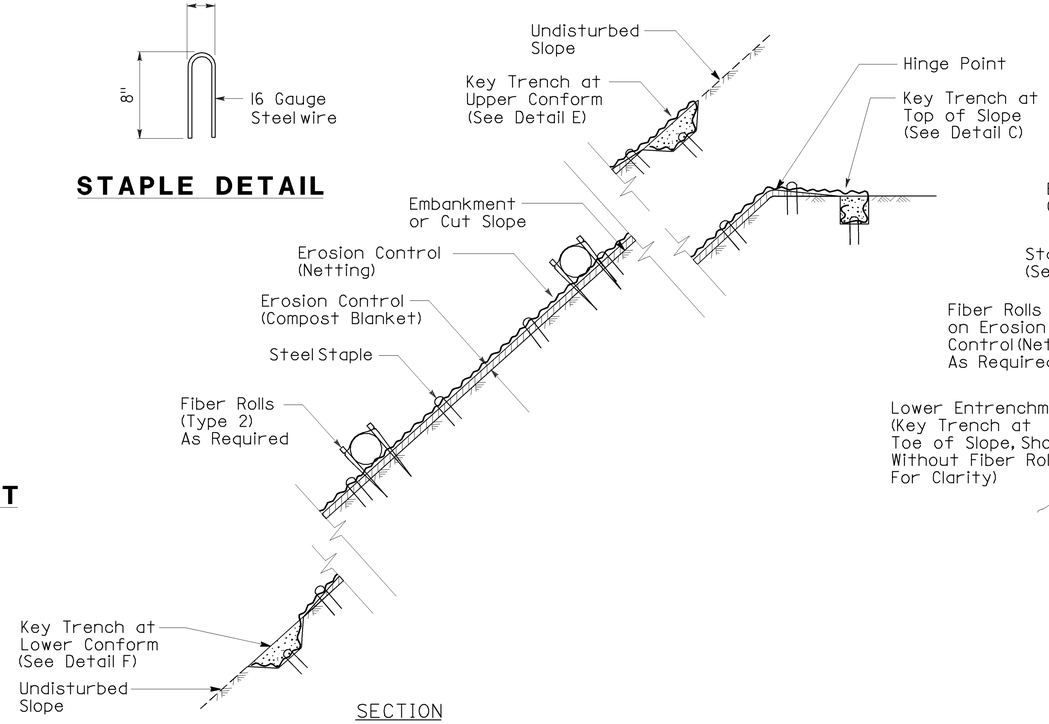

SECTION

EROSION CONTROL (NETTING) ON SLOPE WITH VARIOUS KEY ENTRENCHMENTS

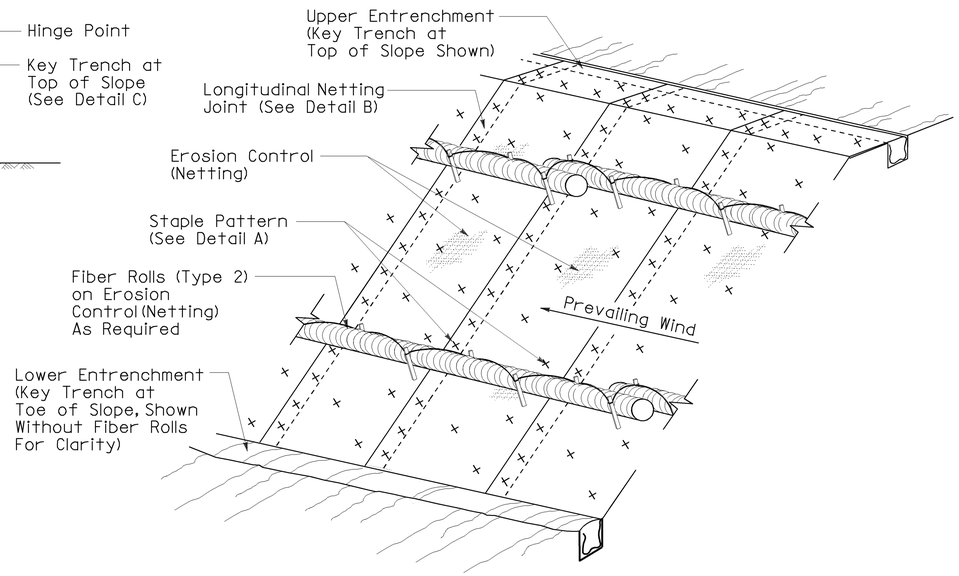

ISOMETRIC

EROSION CONTROL (NETTING) ON SLOPE WITH FIBER ROLLS (TYPE 2)

EROSION CONTROL DETAIL

NO SCALE

ECD-1

STATE OF CALIFORNIA - DEPARTMENT OF TRANSPORTATION
Caltrans LANDSCAPE ARCHITECTURE

SENIOR LANDSCAPE ARCHITECT: DAVID W. YAM
CALCULATED-DESIGNED BY: Alex McDonald
CHECKED BY: Jennifer Egawa
REVISED BY
DATE REVISED

LAST REVISION 05-22-09
DATE PLOTTED => 21-JUL-2009
TIME PLOTTED => 08:36

Dist	COUNTY	ROUTE	POST MILES TOTAL PROJECT	SHEET No.	TOTAL SHEETS
04	SF	101,1	9.2/9.8, 6.8/7.1	49	567

Alex McDonald
LICENSED LANDSCAPE ARCHITECT

7-20-09
PLANS APPROVAL DATE

LICENSED LANDSCAPE ARCHITECT
ALEXANDER K. MCDONALD No. 5382
Alex McDonald
Signature
08-31-10
Renewal Date
Date
STATE OF CALIFORNIA

THE STATE OF CALIFORNIA OR ITS OFFICERS OR AGENTS SHALL NOT BE RESPONSIBLE FOR THE ACCURACY OR COMPLETENESS OF SCANNED COPIES OF THIS PLAN SHEET.

EROSION CONTROL QUANTITIES

SHEET No.	EROSION CONTROL (COMPOST BLANKET)	EROSION CONTROL (NETTING)	ERROSION CONTROL (TYPE D)	FIBER ROLLS
	CY	SQYD	ACRE	LF
EC-1	35	1,248	0.58	488
EC-2	235	8,446	3.76	7,608
EC-3	85	3,044	1.08	2,298
EC-4	28	980	0.14	2,026
EC-5	-	-	0.32	500
TOTAL	383	13,718	5.88	12,920

EROSION CONTROL QUANTITIES

NO SCALE

ECQ-1

STATE OF CALIFORNIA - DEPARTMENT OF TRANSPORTATION
Caltrans LANDSCAPE ARCHITECTURE

SENIOR LANDSCAPE ARCHITECT: DAVID W. YAM
CALCULATED-DESIGNED BY: Alex McDonald
CHECKED BY: Jennifer Egawa
REVISED BY
DATE REVISED

LAST REVISION 05-27-09
DATE PLOTTED => 22-JUL-2009
TIME PLOTTED => 10:33

Dist	COUNTY	ROUTE	POST MILES TOTAL PROJECT	SHEET No.	TOTAL SHEETS
04	SF	101,1	9.2/9.8, 6.8/7.1	50	567

REGISTERED CIVIL ENGINEER — DATE: 6-08-09

Hossein Khodabakhsh, No. 71650, Exp. 12-31-09, CIVIL — REGISTERED PROFESSIONAL ENGINEER — STATE OF CALIFORNIA

PLANS APPROVAL DATE: 7-20-09

THE STATE OF CALIFORNIA OR ITS OFFICERS OR AGENTS SHALL NOT BE RESPONSIBLE FOR THE ACCURACY OR COMPLETENESS OF SCANNED COPIES OF THIS PLAN SHEET.

FOR ACCURATE RIGHT OF WAY AND ACCESS DATA, CONTACT RIGHT OF WAY ENGINEERING AT THE DISTRICT OFFICE.

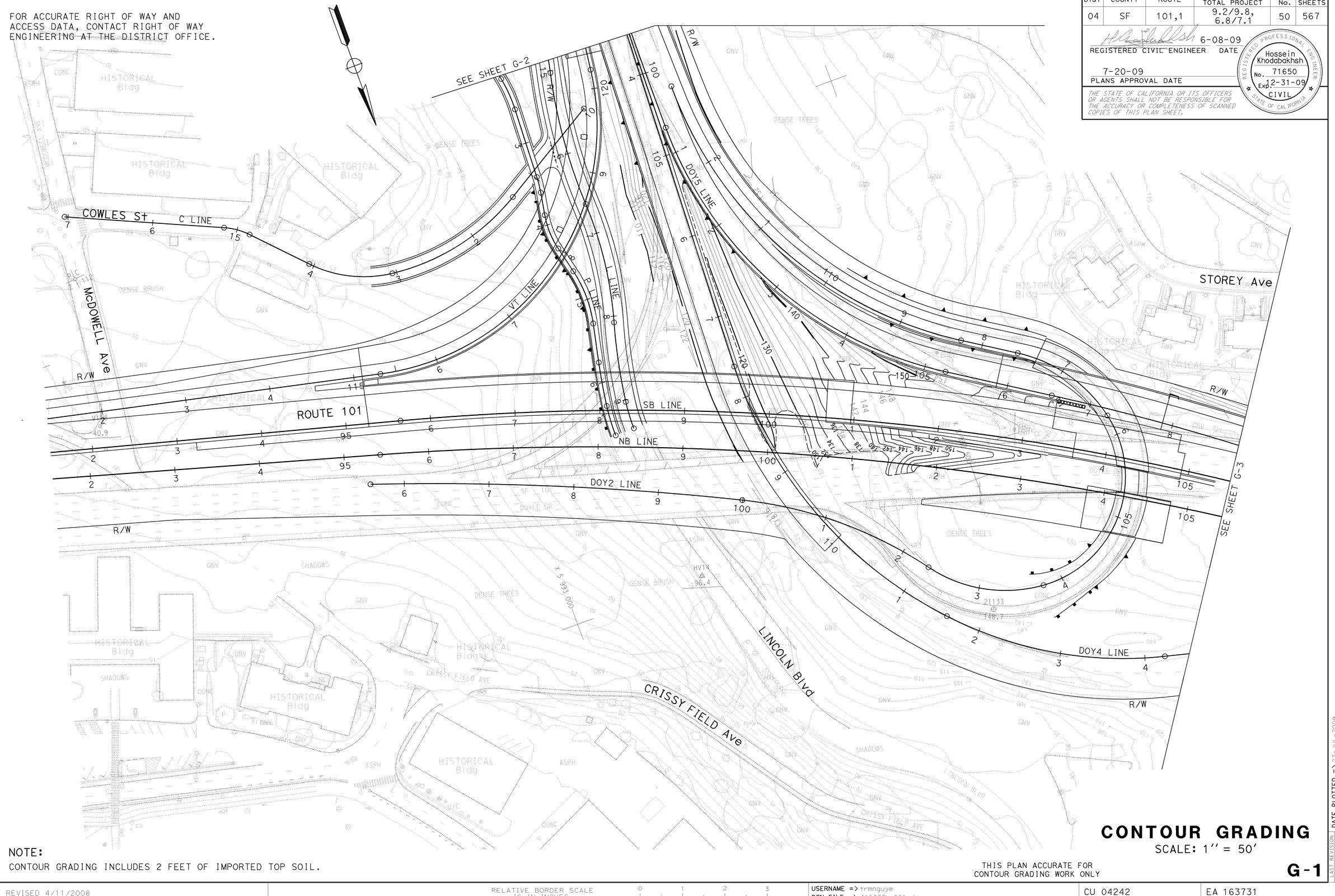

NOTE:
CONTOUR GRADING INCLUDES 2 FEET OF IMPORTED TOP SOIL.

THIS PLAN ACCURATE FOR CONTOUR GRADING WORK ONLY

CONTOUR GRADING

SCALE: 1'' = 50'

G-1

STATE OF CALIFORNIA - DEPARTMENT OF TRANSPORTATION
DESIGN
FUNCTIONAL SUPERVISOR: ABOLFAZL EMADZADEH
CALCULATED-DESIGNED BY: MOHAMMAD G. SAHIBZADAH
CHECKED BY: ROMY ACOB
REVISED BY: MS
DATE REVISED: 5/08/09

LAST REVISION DATE PLOTTED => 23-JUL-2009
TIME PLOTTED => 08:03
05-08-09

BORDER LAST REVISED 4/11/2008
RELATIVE BORDER SCALE IS IN INCHES 0 1 2 3
USERNAME => trmnguye
DGN FILE => 416373ha001.dgn
CU 04242
EA 163731

FOR ACCURATE RIGHT OF WAY AND
ACCESS DATA, CONTACT RIGHT OF WAY
ENGINEERING AT THE DISTRICT OFFICE.

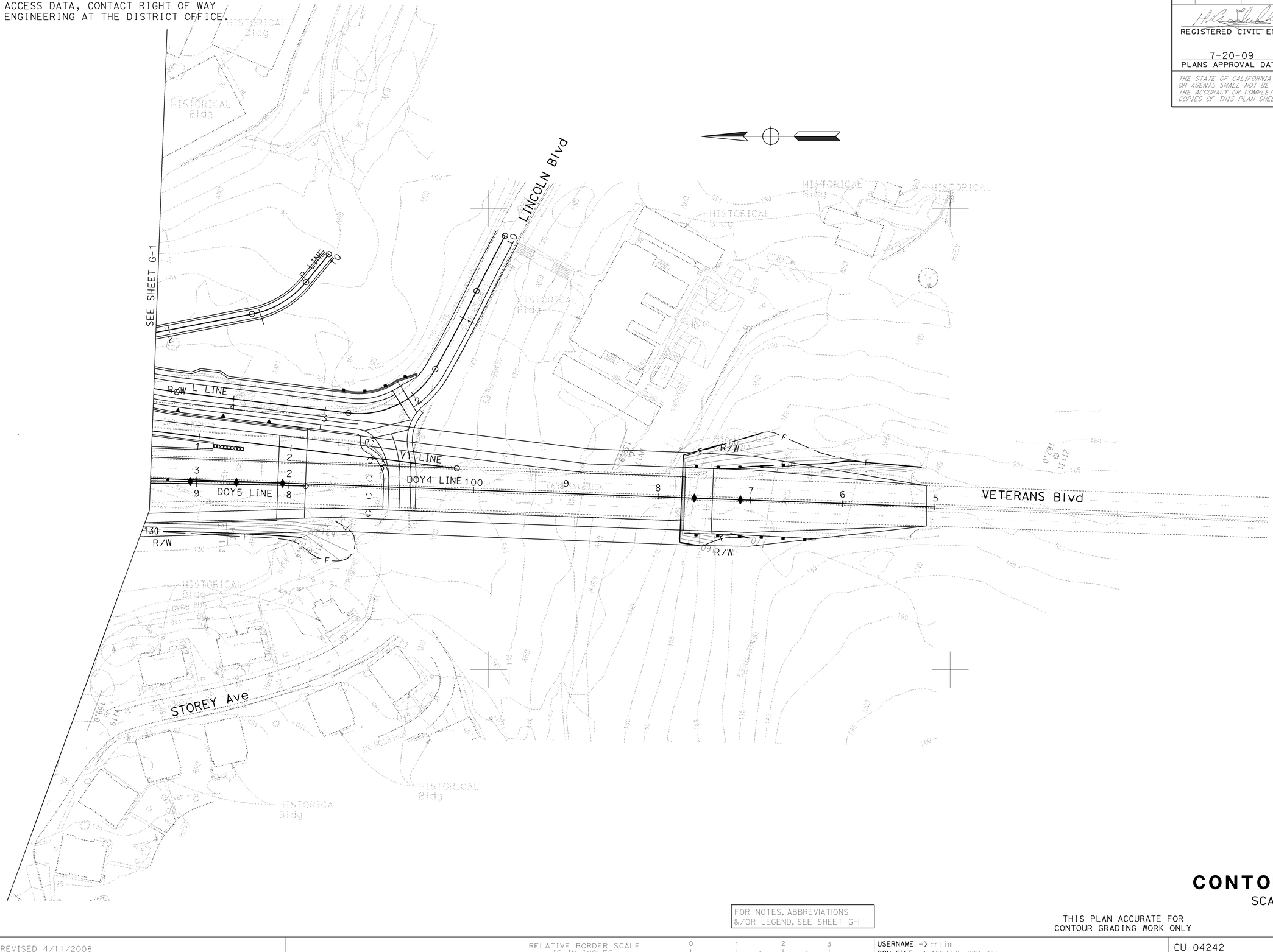

Dist	COUNTY	ROUTE	POST MILES TOTAL PROJECT	SHEET No.	TOTAL SHEETS
04	SF	101,1	9.2/9.8, 6.8/7.1	51	567

6-08-09
REGISTERED CIVIL ENGINEER DATE

7-20-09
PLANS APPROVAL DATE

Hossein Khodabakhsh
No. 71650
Exp. 12-31-09
CIVIL
REGISTERED PROFESSIONAL ENGINEER
STATE OF CALIFORNIA

THE STATE OF CALIFORNIA OR ITS OFFICERS OR AGENTS SHALL NOT BE RESPONSIBLE FOR THE ACCURACY OR COMPLETENESS OF SCANNED COPIES OF THIS PLAN SHEET.

FOR NOTES, ABBREVIATIONS &/OR LEGEND, SEE SHEET G-1

CONTOUR GRADING

SCALE: 1'' = 50'

THIS PLAN ACCURATE FOR CONTOUR GRADING WORK ONLY

G-2

STATE OF CALIFORNIA - DEPARTMENT OF TRANSPORTATION
DESIGN

FUNCTIONAL SUPERVISOR: ABOLFAZL EMADZADEH

CALCULATED-DESIGNED BY: MOHAMMAD G. SAHIBZADAH
CHECKED BY: ROMY ACOB

REVISED BY: MS
DATE REVISED: 5/08/09

LAST REVISION
DATE PLOTTED => 23-JUL-2009
TIME PLOTTED => 08:09
05-08-09

BORDER LAST REVISED 4/11/2008

RELATIVE BORDER SCALE IS IN INCHES 0 1 2 3

USERNAME => trliim
DGN FILE => 416373ha002.dgn

CU 04242

EA 163731

FOR ACCURATE RIGHT OF WAY AND
ACCESS DATA, CONTACT RIGHT OF WAY
ENGINEERING AT THE DISTRICT OFFICE.

Dist	COUNTY	ROUTE	POST MILES TOTAL PROJECT	SHEET No.	TOTAL SHEETS
04	SF	101,1	9.2/9.8, 6.8/7.1	52	567

REGISTERED CIVIL ENGINEER — 6-08-09 DATE

7-20-09
PLANS APPROVAL DATE

REGISTERED PROFESSIONAL ENGINEER
Hossein Khodabakhsh
No. 71650
Exp. 12-31-09
CIVIL
STATE OF CALIFORNIA

THE STATE OF CALIFORNIA OR ITS OFFICERS OR AGENTS SHALL NOT BE RESPONSIBLE FOR THE ACCURACY OR COMPLETENESS OF SCANNED COPIES OF THIS PLAN SHEET.

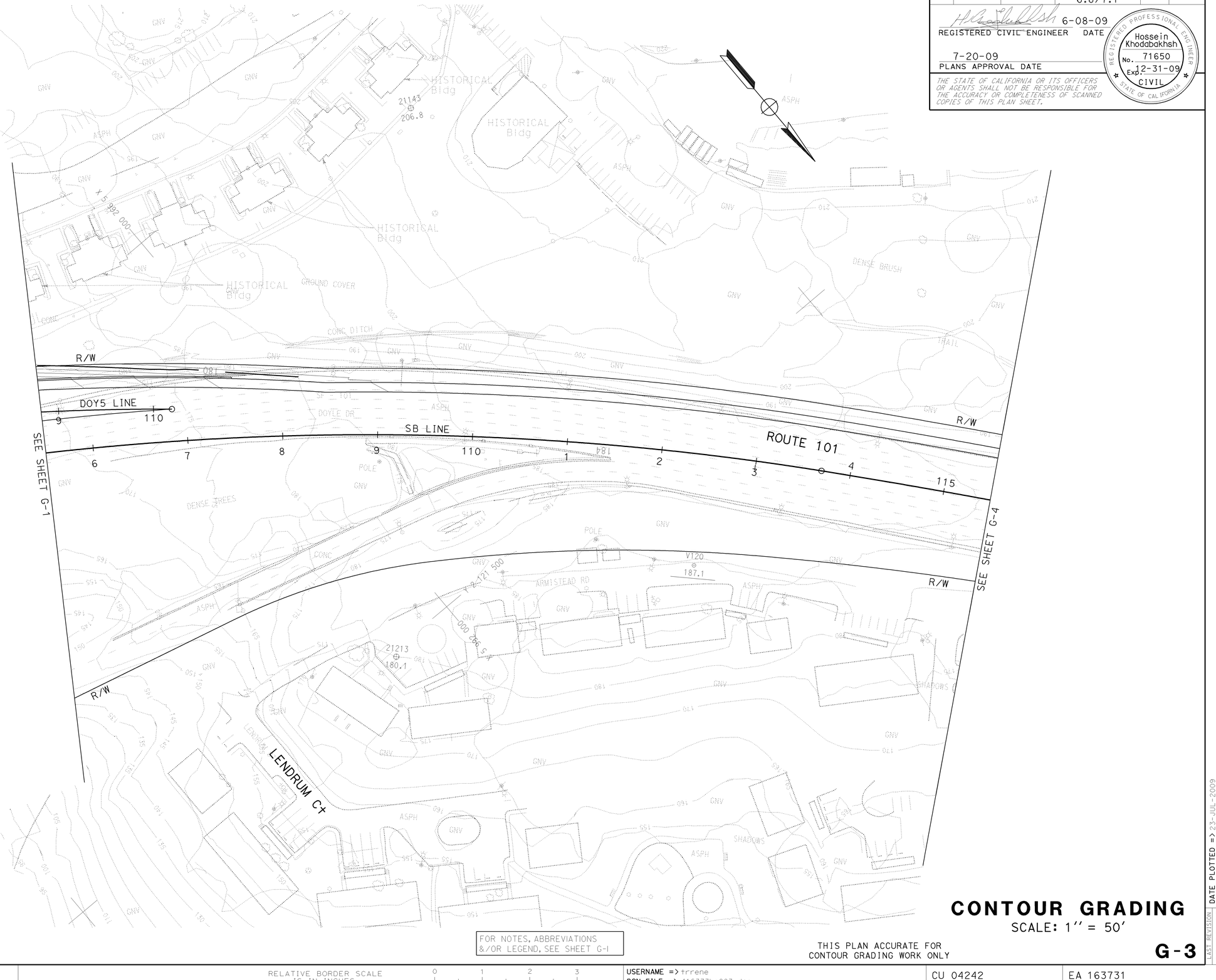

FOR NOTES, ABBREVIATIONS &/OR LEGEND, SEE SHEET G-1

THIS PLAN ACCURATE FOR CONTOUR GRADING WORK ONLY

CONTOUR GRADING

SCALE: 1'' = 50'

G-3

	REVISED BY	DATE REVISED
	MS	5/08/09

CALCULATED-DESIGNED BY: MOHAMMAD G. SAHIBZADAH
CHECKED BY: ROMY ACOB
FUNCTIONAL SUPERVISOR: ABOLFAZL EMADZADEH

STATE OF CALIFORNIA - DEPARTMENT OF TRANSPORTATION
Caltrans®
DESIGN

LAST REVISION | DATE PLOTTED => 23-JUL-2009 | TIME PLOTTED => 09:11
05-08-09

BORDER LAST REVISED 4/11/2008

RELATIVE BORDER SCALE IS IN INCHES 0 1 2 3

USERNAME => trrene
DGN FILE => 416373ha003.dgn

CU 04242

EA 163731

Dist	COUNTY	ROUTE	POST MILES TOTAL PROJECT	SHEET No.	TOTAL SHEETS
04	SF	101,1	9.2/9.8, 6.8/7.1	53	567

REGISTERED CIVIL ENGINEER — 6-09-09 DATE

7-20-09
PLANS APPROVAL DATE

JOHN EDWARD KARN JR
No. C66743
Exp. 9-30-10
CIVIL
REGISTERED PROFESSIONAL ENGINEER
STATE OF CALIFORNIA

THE STATE OF CALIFORNIA OR ITS OFFICERS OR AGENTS SHALL NOT BE RESPONSIBLE FOR THE ACCURACY OR COMPLETENESS OF SCANNED COPIES OF THIS PLAN SHEET.

Arup PB JV
560 Mission Street, Suite 700
San Francisco, CA 94105

NOTES:

1. FOR ACCURATE RIGHT OF WAY AND ACCESS DATA, CONTACT RIGHT OF WAY ENGINEERING AT THE DISTRICT OFFICE.
2. ALL TIES TO STORM DRAINAGE MANHOLES ARE TO BE AT THE CENTER OF THE BASE, UNLESS OTHERWISE NOTED.
3. LOCATION OF EXISTING DRAINAGE FACILITIES ARE APPROXIMATE. VERIFY LOCATION AND ELEVATION OF EXISTING DRAINAGE FACILITIES PRIOR TO MODIFYING.

LEGEND:

- Exist ABANDONED STORM DRAIN
- No. — DRAINAGE SYSTEM No.
- × — DRAINAGE UNIT
- BRIDGE SUPPORT COLUMN
- GUTTER/DITCH/SWALE FLOW LINE

ABBREVIATIONS:

DDJ	DOWNDRAIN JOINTS
PT	PRESIDIO TRUST
Rem	REMOVE
SGD	STANDARD GUTTER DEPRESSION
TC	TOP OF MH COVER
TG	TOP OF DI GRATE
w/	WITH

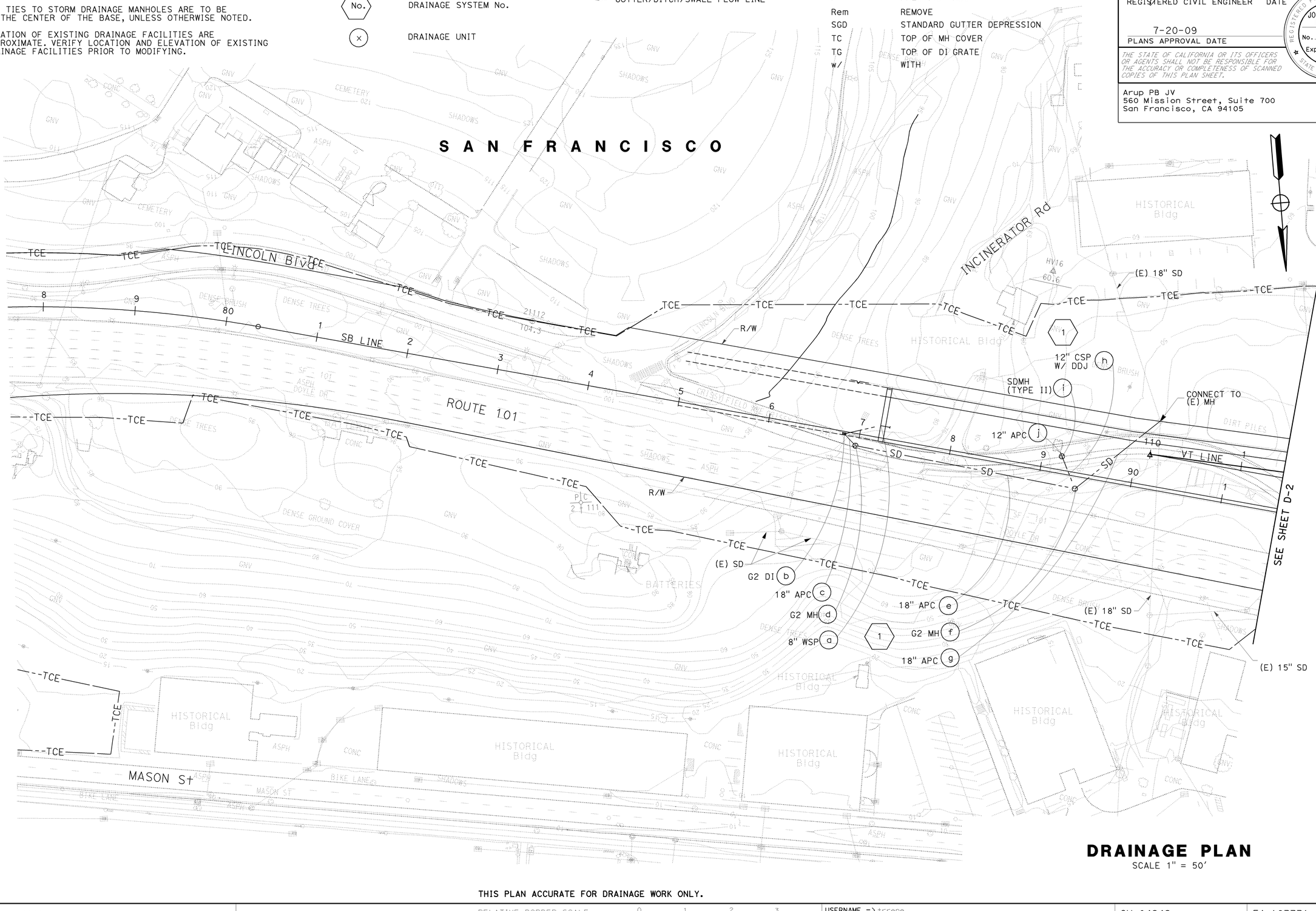

DRAINAGE PLAN

SCALE 1" = 50'

THIS PLAN ACCURATE FOR DRAINAGE WORK ONLY.

D-1

CALCULATED-DESIGNED BY: MANISH DALIA/JACK MONG
CHECKED BY: DUANNE GILMORE
REVISED BY: ML/KM
DATE REVISED: 6/09/09
CONSULTANT FUNCTIONAL SUPERVISOR: ABOLFAZL EMADZADEH
STATE OF CALIFORNIA - DEPARTMENT OF TRANSPORTATION
Caltrans

LAST REVISION | DATE PLOTTED => 23-JUL-2009 | TIME PLOTTED => 09:11
06-08-09

BORDER LAST REVISED 4/11/2008 | RELATIVE BORDER SCALE IS IN INCHES 0 1 2 3 | USERNAME => trrene | DGN FILE => 416373ia001.dgn | CU 04242 | EA 163731

Dist	COUNTY	ROUTE	POST MILES TOTAL PROJECT	SHEET No.	TOTAL SHEETS
04	SF	101,1	9.2/9.8, 6.8/7.1	54	567

REGISTERED CIVIL ENGINEER 6-09-09 DATE

7-20-09
PLANS APPROVAL DATE

REGISTERED PROFESSIONAL ENGINEER JOHN EDWARD KARN JR No. C66743 Exp. 9-30-10 CIVIL STATE OF CALIFORNIA

THE STATE OF CALIFORNIA OR ITS OFFICERS OR AGENTS SHALL NOT BE RESPONSIBLE FOR THE ACCURACY OR COMPLETENESS OF SCANNED COPIES OF THIS PLAN SHEET.

Arup PB JV
560 Mission Street, Suite 700
San Francisco, CA 94105

NOTES:

1. FOR ACCURATE RIGHT OF WAY AND ACCESS DATA, CONTACT RIGHT OF WAY ENGINEERING AT THE DISTRICT OFFICE.
2. FOR NOTES, LEGENDS, AND ABBREVIATIONS SEE SHEET D-1.

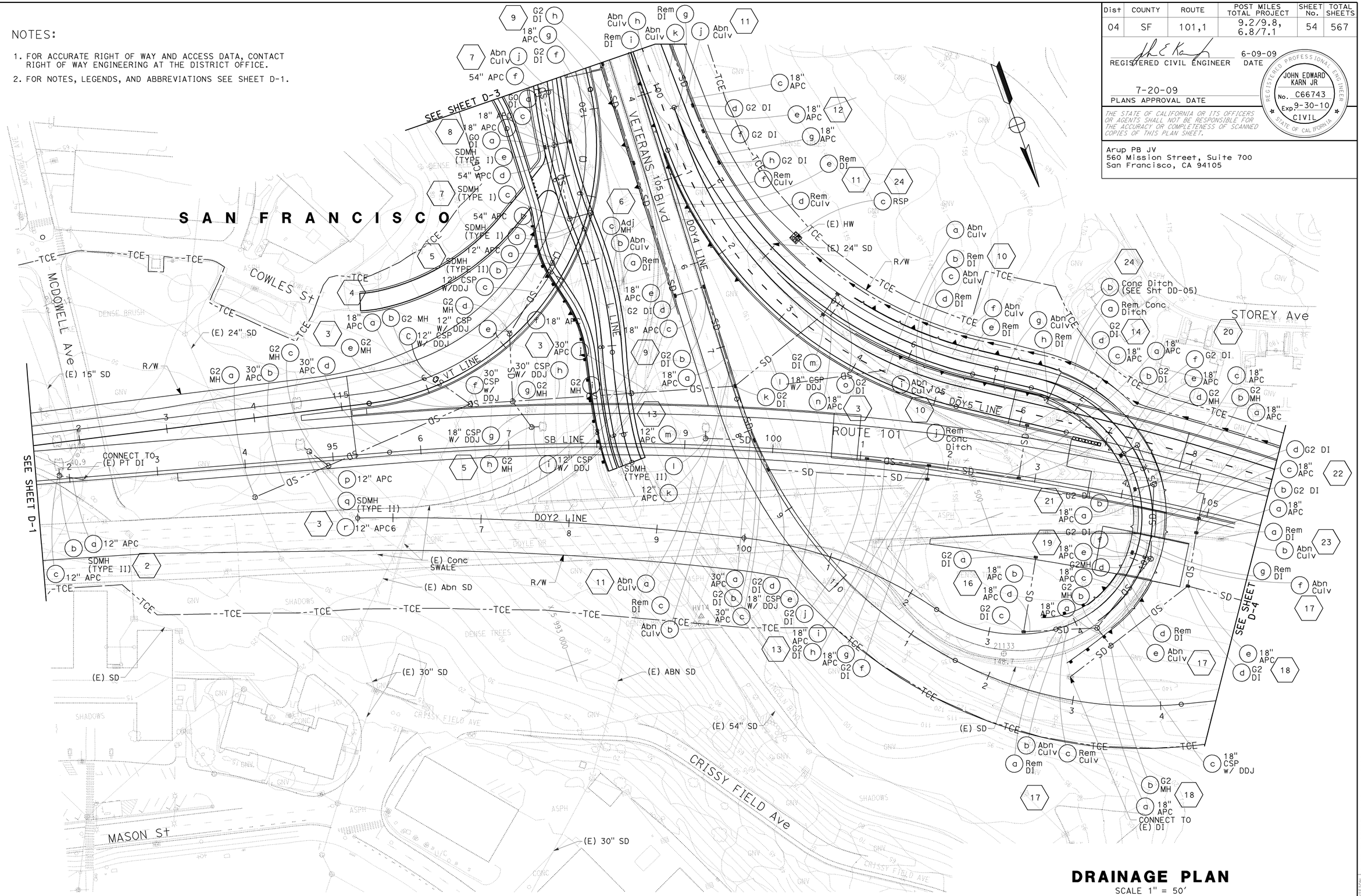

THIS PLAN ACCURATE FOR DRAINAGE WORK ONLY.

DRAINAGE PLAN

SCALE 1" = 50'

D-2

STATE OF CALIFORNIA - DEPARTMENT OF TRANSPORTATION
Caltrans

CONSULTANT FUNCTIONAL SUPERVISOR: ABOLFAZL EMADZADEH
CALCULATED-DESIGNED BY: MANISH DALIA/JACK MONG
CHECKED BY: DUANNE GILMORE
REVISED BY: ML/KM
DATE REVISED: 6/09/09

LAST REVISION 06-08-09
DATE PLOTTED => 23-JUL-2009
TIME PLOTTED => 09:11

BORDER LAST REVISED 4/11/2008
RELATIVE BORDER SCALE IS IN INCHES 0 1 2 3
USERNAME => trrene
DGN FILE => 416373ia002.dgn
CU 04242
EA 163731

NOTES:

1. FOR ACCURATE RIGHT OF WAY AND ACCESS DATA, CONTACT RIGHT OF WAY ENGINEERING AT THE DISTRICT OFFICE.
2. FOR NOTES, LEGENDS, AND ABBREVIATIONS SEE SHEET D-1.

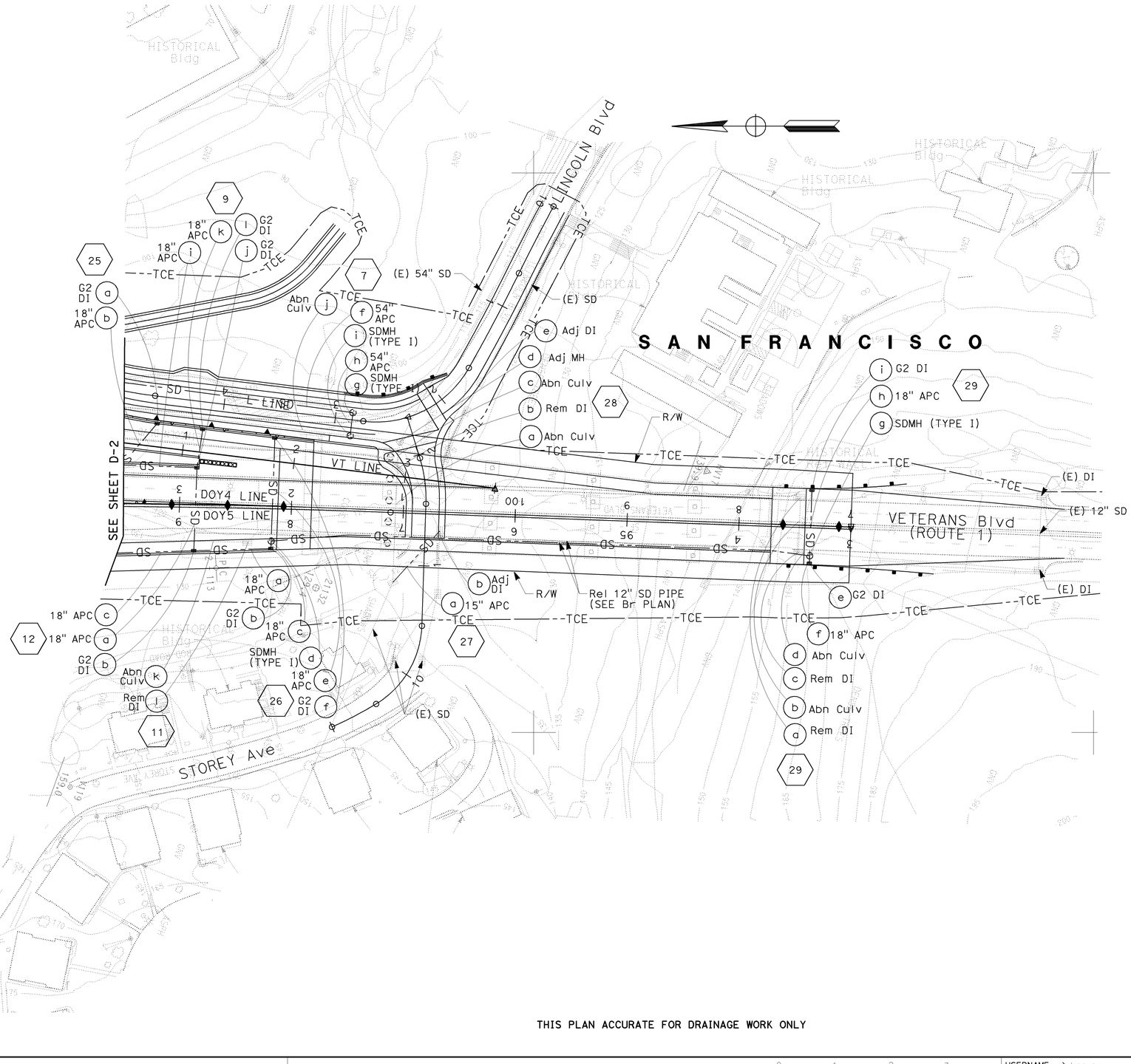

THIS PLAN ACCURATE FOR DRAINAGE WORK ONLY

DRAINAGE PLAN

SCALE 1" = 50'

D-3

Dist	COUNTY	ROUTE	POST MILES TOTAL PROJECT	SHEET No.	TOTAL SHEETS
04	SF	101,1	9.2/9.8, 6.8/7.1	55	567

REGISTERED CIVIL ENGINEER — 6-09-09 DATE

JOHN EDWARD KARN JR No. C66743 Exp. 9-30-10 CIVIL — REGISTERED PROFESSIONAL ENGINEER — STATE OF CALIFORNIA

7-20-09
PLANS APPROVAL DATE

THE STATE OF CALIFORNIA OR ITS OFFICERS OR AGENTS SHALL NOT BE RESPONSIBLE FOR THE ACCURACY OR COMPLETENESS OF SCANNED COPIES OF THIS PLAN SHEET.

Arup PB JV
560 Mission Street, Suite 700
San Francisco, CA 94105

CALCULATED-DESIGNED BY: MANISH DALIA/JACK MONG
CHECKED BY: DUANNE GILMORE
REVISED BY: ML/KM
DATE REVISED: 6/09/09
CONSULTANT FUNCTIONAL SUPERVISOR: ABOLFAZL EMADZADEH
STATE OF CALIFORNIA - DEPARTMENT OF TRANSPORTATION
Caltrans

LAST REVISION DATE PLOTTED => 23-JUL-2009
TIME PLOTTED => 09:11
06-08-09

Dist	COUNTY	ROUTE	POST MILES TOTAL PROJECT	SHEET No.	TOTAL SHEETS
04	SF	101,1	9.2/9.8, 6.8/7.1	56	567

REGISTERED CIVIL ENGINEER 6-09-09 DATE

7-20-09
PLANS APPROVAL DATE

REGISTERED PROFESSIONAL ENGINEER JOHN EDWARD KARN JR No. C66743 Exp. 9-30-10 CIVIL STATE OF CALIFORNIA

THE STATE OF CALIFORNIA OR ITS OFFICERS OR AGENTS SHALL NOT BE RESPONSIBLE FOR THE ACCURACY OR COMPLETENESS OF SCANNED COPIES OF THIS PLAN SHEET.

Arup PB JV
560 Mission Street, Suite 700
San Francisco, CA 94105

NOTES:

1. FOR ACCURATE RIGHT OF WAY AND ACCESS DATA, CONTACT RIGHT OF WAY ENGINEERING AT THE DISTRICT OFFICE.
2. FOR NOTES, LEGEND, AND ABBREVIATIONS SEE SHEET D-1.

THIS PLAN ACCURATE FOR DRAINAGE WORK ONLY

DRAINAGE PLAN

SCALE 1" = 50'

D-4

STATE OF CALIFORNIA - DEPARTMENT OF TRANSPORTATION

Caltrans

CONSULTANT FUNCTIONAL SUPERVISOR: ABOLFAZL EMADZADEH

CALCULATED-DESIGNED BY: MANISH DALIA/JACK MONG

CHECKED BY: DUANNE GILMORE

REVISED BY: ML/KM

DATE REVISED: 6/09/09

BORDER LAST REVISED 4/11/2008

RELATIVE BORDER SCALE IS IN INCHES 0 1 2 3

USERNAME => trpierce
DGN FILE => 416373ia004.dgn

CU 04242

EA 163731

LAST REVISION 06-08-09

DATE PLOTTED => 23-JUL-2009
TIME PLOTTED => 08:54

Dist	COUNTY	ROUTE	POST MILES TOTAL PROJECT	SHEET No.	TOTAL SHEETS
04	SF	101,1	9.2/9.8, 6.8/7.1	57	567

REGISTERED CIVIL ENGINEER — 6-09-09 DATE

REGISTERED PROFESSIONAL ENGINEER
JOHN EDWARD KARN JR
No. C66743
Exp. 9-30-10
CIVIL
STATE OF CALIFORNIA

7-20-09
PLANS APPROVAL DATE

THE STATE OF CALIFORNIA OR ITS OFFICERS OR AGENTS SHALL NOT BE RESPONSIBLE FOR THE ACCURACY OR COMPLETENESS OF SCANNED COPIES OF THIS PLAN SHEET.

Arup PB JV
560 Mission Street, Suite 700
San Francisco, CA 94105

NOTES:

1. FOR ACCURATE RIGHT OF WAY AND ACCESS DATA, CONTACT RIGHT OF WAY ENGINEERING AT THE DISTRICT OFFICE.
2. ALL TIES TO STORM DRAINAGE MANHOLES ARE TO BE AT THE CENTER OF THE BASE, UNLESS OTHERWISE NOTED.
3. LOCATION OF EXISTING DRAINAGE FACILITIES ARE APPROXIMATE. VERIFY LOCATION AND ELEVATION OF EXISTING DRAINAGE FACILITIES PRIOR TO MODIFYING.
4. FOR STAGE CONSTRUCTION DETAILS, SEE STAGE CONSTRUCTION AND TRAFFIC HANDLING PLAN.
5. FOR DRAINAGE DETAILS, SEE DD SHEETS.

LEGEND:

(No.) Temp DRAINAGE SYSTEM No.

(x) Temp DRAINAGE UNIT

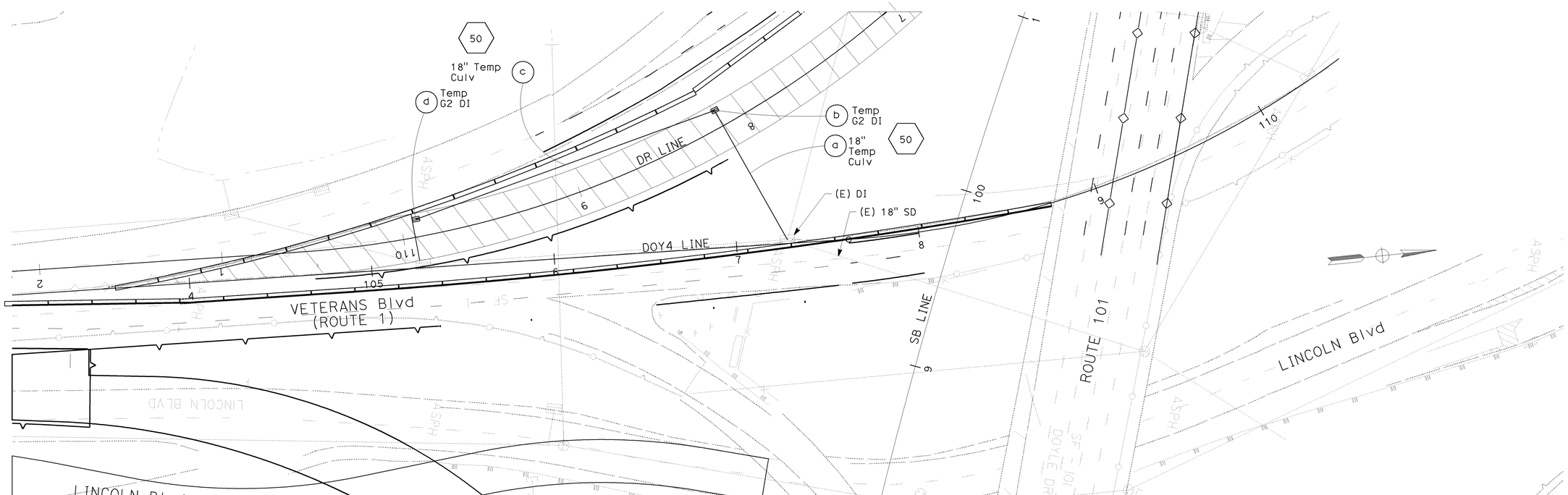

THIS PLAN ACCURATE FOR DRAINAGE WORK ONLY

TEMPORARY DRAINAGE PLAN
STAGE 1 - PHASE 2

SCALE: 1"= 30'

D-5

STATE OF CALIFORNIA - DEPARTMENT OF TRANSPORTATION
Caltrans

CONSULTANT FUNCTIONAL SUPERVISOR: ABOLFAZL EMADZADEH

CALCULATED-DESIGNED BY: MANISH DALIA/JACK MONG
CHECKED BY: DUANNE GILMORE

REVISED BY	DATE REVISED
ML/KM	6/09/09

LAST REVISION — DATE PLOTTED => 23-JUL-2009
06-08-09 — TIME PLOTTED => 08:54

BORDER LAST REVISED 4/11/2008

RELATIVE BORDER SCALE IS IN INCHES 0 1 2 3

USERNAME => trpierce
DGN FILE => 416373ia005.dgn

CU 04242

EA 163731

Dist	COUNTY	ROUTE	POST MILES TOTAL PROJECT	SHEET No.	TOTAL SHEETS
04	SF	101,1	9.2/9.8, 6.8/7.1	58	567

REGISTERED CIVIL ENGINEER 6-09-09 DATE

7-20-09
PLANS APPROVAL DATE

REGISTERED PROFESSIONAL ENGINEER
JOHN EDWARD KARN JR
No. C66743
Exp. 9-30-10
CIVIL
STATE OF CALIFORNIA

THE STATE OF CALIFORNIA OR ITS OFFICERS OR AGENTS SHALL NOT BE RESPONSIBLE FOR THE ACCURACY OR COMPLETENESS OF SCANNED COPIES OF THIS PLAN SHEET.

Arup PB JV
560 Mission Street, Suite 700
San Francisco, CA 94105

NOTE:

1. FOR ACCURATE RIGHT OF WAY AND ACCESS DATA, CONTACT RIGHT OF WAY ENGINEERING AT THE DISTRICT OFFICE.

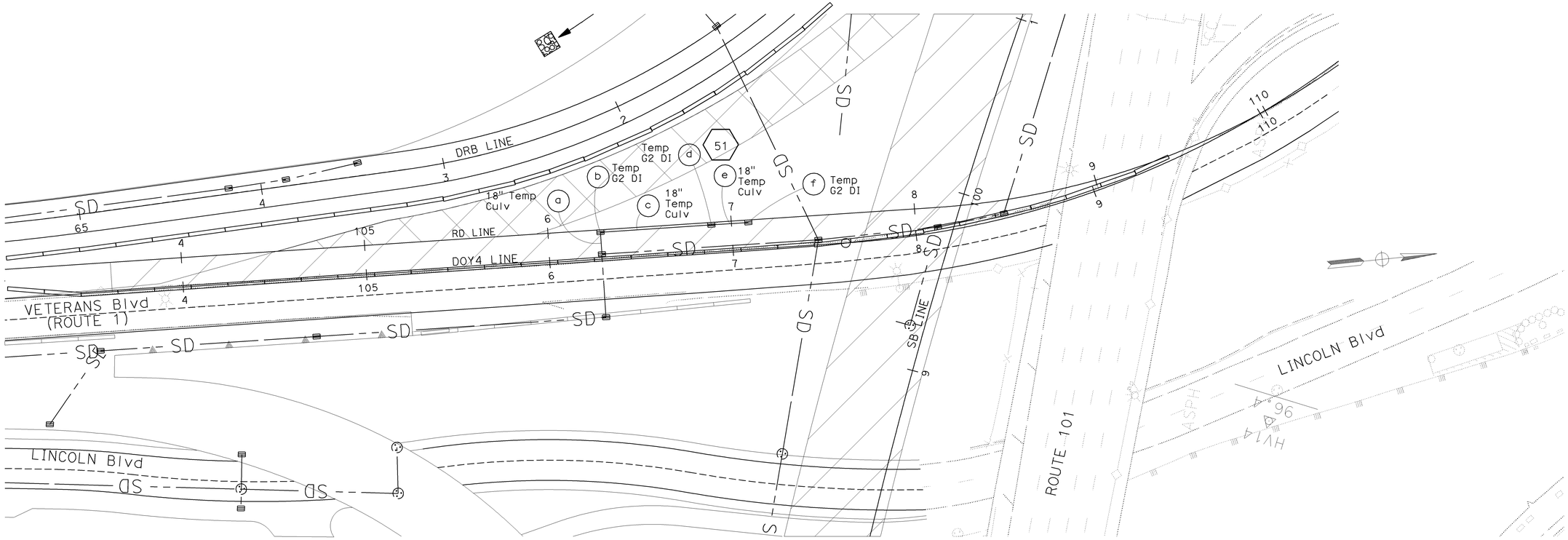

TEMPORARY DRAINAGE PLAN
STAGE 3

SCALE: 1"=30'

THIS PLAN ACCURATE FOR DRAINAGE WORK ONLY

D-6

STATE OF CALIFORNIA - DEPARTMENT OF TRANSPORTATION
Caltrans

CONSULTANT FUNCTIONAL SUPERVISOR: ABOLFAZL EMADZADEH
CALCULATED-DESIGNED BY: MANISH DALIA/JACK MONG
CHECKED BY: DUANNE GILMORE
REVISED BY: ML/KM
DATE REVISED: 6/09/09

LAST REVISION 06-08-09
DATE PLOTTED => 23-JUL-2009
TIME PLOTTED => 08:54

NOTE:
ELEVATIONS SHOWN ARE BASED ON NORTH AMERICAN VERTICAL DATUM OF 1988 (NAVD 88).

ABBREVIATIONS:

DDJ	DOWNDRAIN JOINTS
PT	PRESIDIO TRUST
SDMH	STORM DRAIN MANHOLE

Dist	COUNTY	ROUTE	POST MILES TOTAL PROJECT	SHEET No.	TOTAL SHEETS
04	SF	101,1	9.2/9.8, 6.8/7.1	59	567

REGISTERED CIVIL ENGINEER — 6-09-09 DATE

7-20-09
PLANS APPROVAL DATE

REGISTERED PROFESSIONAL ENGINEER — JOHN EDWARD KARN JR — No. C66743 — Exp.9-30-10 — CIVIL — STATE OF CALIFORNIA

THE STATE OF CALIFORNIA OR ITS OFFICERS OR AGENTS SHALL NOT BE RESPONSIBLE FOR THE ACCURACY OR COMPLETENESS OF SCANNED COPIES OF THIS PLAN SHEET.

Arup PB JV
560 Mission Street, Suite 700
San Francisco, CA 94105

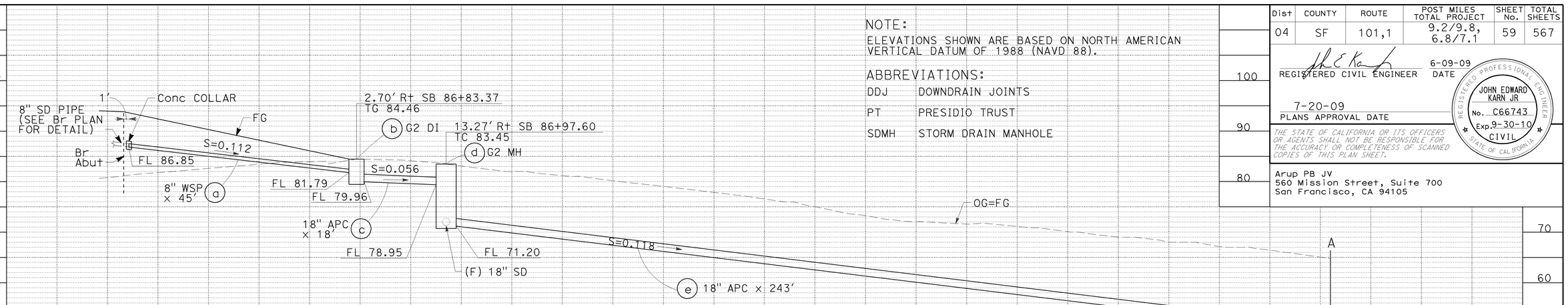

DRAINAGE SYSTEM No. 1 Cont

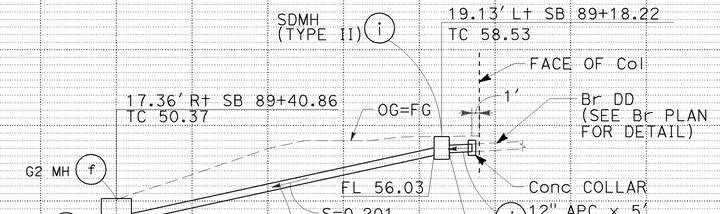

DRAINAGE SYSTEM No. 1 Cont

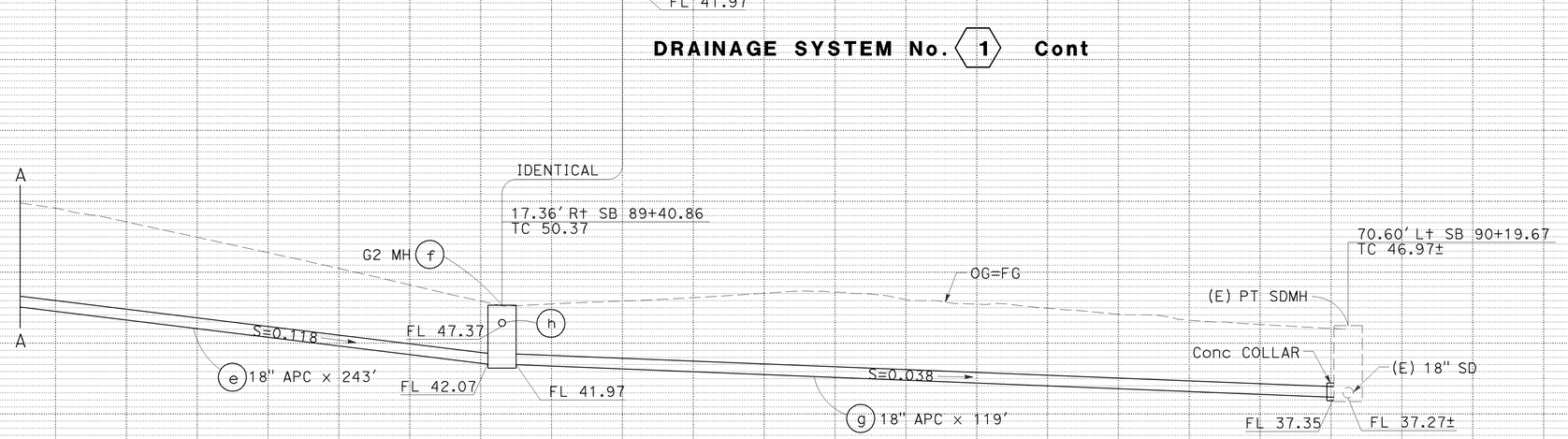

DRAINAGE SYSTEM No. 1

DRAINAGE PROFILE

SCALE: 1"=10' Horiz
1"=10' Vert

DP-1

STATE OF CALIFORNIA - DEPARTMENT OF TRANSPORTATION
CONSULTANT FUNCTIONAL SUPERVISOR: ABOLFAZL EMADZADEH
CALCULATED-DESIGNED BY: MANISH DALIA/JACK MONG
CHECKED BY: DUANNE GILMORE
REVISED BY: ML/KM
DATE REVISED: 6/09/09
LAST REVISION: DATE PLOTTED => 21-JUL-2009 TIME PLOTTED => 09:36
06-08-09

BORDER LAST REVISED 4/11/2008
RELATIVE BORDER SCALE IS IN INCHES 0 1 2 3
USERNAME => trpierce
DGN FILE => 416373ib001.dgn
CU 04242
EA 163731

Dist	COUNTY	ROUTE	POST MILES TOTAL PROJECT	SHEET No.	TOTAL SHEETS
04	SF	101,1	9.2/9.8, 6.8/7.1	60	567

REGISTERED CIVIL ENGINEER — 6-09-09 DATE

7-20-09
PLANS APPROVAL DATE

REGISTERED PROFESSIONAL ENGINEER
JOHN EDWARD KARN JR
No. C66743
Exp.9-30-10
CIVIL
STATE OF CALIFORNIA

THE STATE OF CALIFORNIA OR ITS OFFICERS OR AGENTS SHALL NOT BE RESPONSIBLE FOR THE ACCURACY OR COMPLETENESS OF SCANNED COPIES OF THIS PLAN SHEET.

Arup PB JV
560 Mission Street, Suite 700
San Francisco, CA 94105

DRAINAGE SYSTEM No. 2

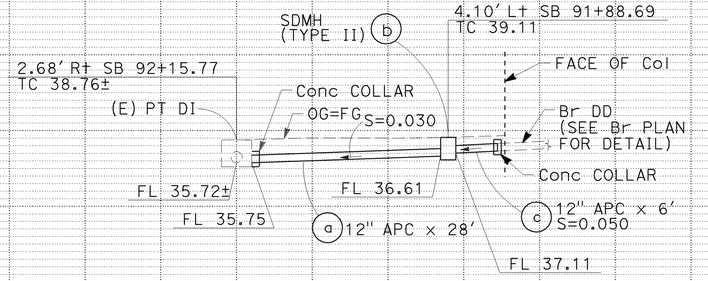

DRAINAGE SYSTEM No. 3 Cont

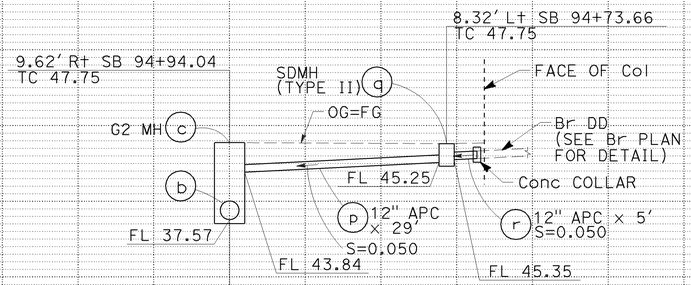

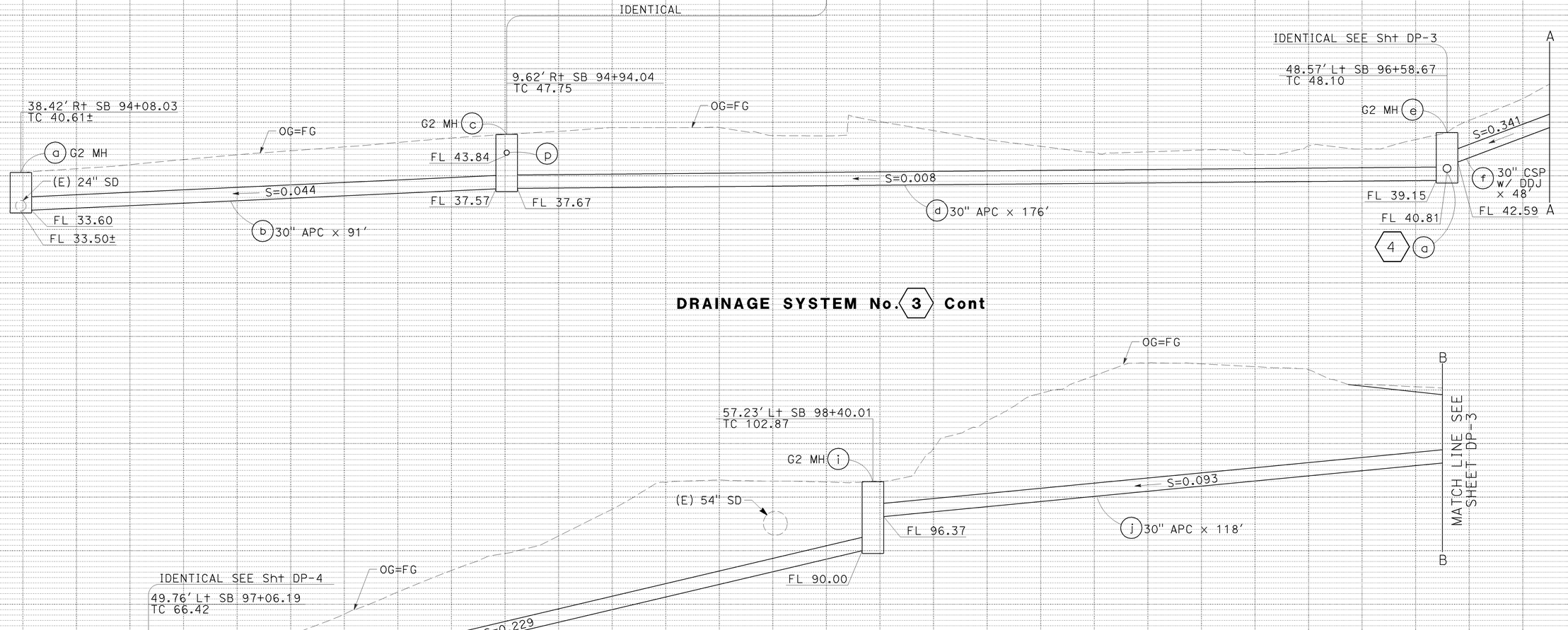

DRAINAGE SYSTEM No. 3 Cont

DRAINAGE SYSTEM No. 3 Cont

DRAINAGE PROFILE

SCALE: 1"=10' Horiz
1"=10' Vert

DP-2

STATE OF CALIFORNIA - DEPARTMENT OF TRANSPORTATION
Caltrans

CONSULTANT FUNCTIONAL SUPERVISOR: ABOLFAZL EMADZADEH
CALCULATED-DESIGNED BY: MANISH DALIA/JACK MONG
CHECKED BY: DUANNE GILMORE
REVISED BY: ML/KM
DATE REVISED: 6/09/09

LAST REVISION DATE PLOTTED => 21-JUL-2009
TIME PLOTTED => 09:36
06-08-09

BORDER LAST REVISED 4/11/2008
RELATIVE BORDER SCALE IS IN INCHES 0 1 2 3
USERNAME => trpierce
DGN FILE => 416373ib002.dgn
CU 04242
EA 163731

Dist	COUNTY	ROUTE	POST MILES TOTAL PROJECT	SHEET No.	TOTAL SHEETS
04	SF	101,1	9.2/9.8, 6.8/7.1	61	567

REGISTERED CIVIL ENGINEER 6-09-09 DATE

7-20-09
PLANS APPROVAL DATE

REGISTERED PROFESSIONAL ENGINEER JOHN EDWARD KARN JR No. C66743 Exp. 9-30-10 CIVIL STATE OF CALIFORNIA

THE STATE OF CALIFORNIA OR ITS OFFICERS OR AGENTS SHALL NOT BE RESPONSIBLE FOR THE ACCURACY OR COMPLETENESS OF SCANNED COPIES OF THIS PLAN SHEET.

Arup PB JV
560 Mission Street, Suite 700
San Francisco, CA 94105

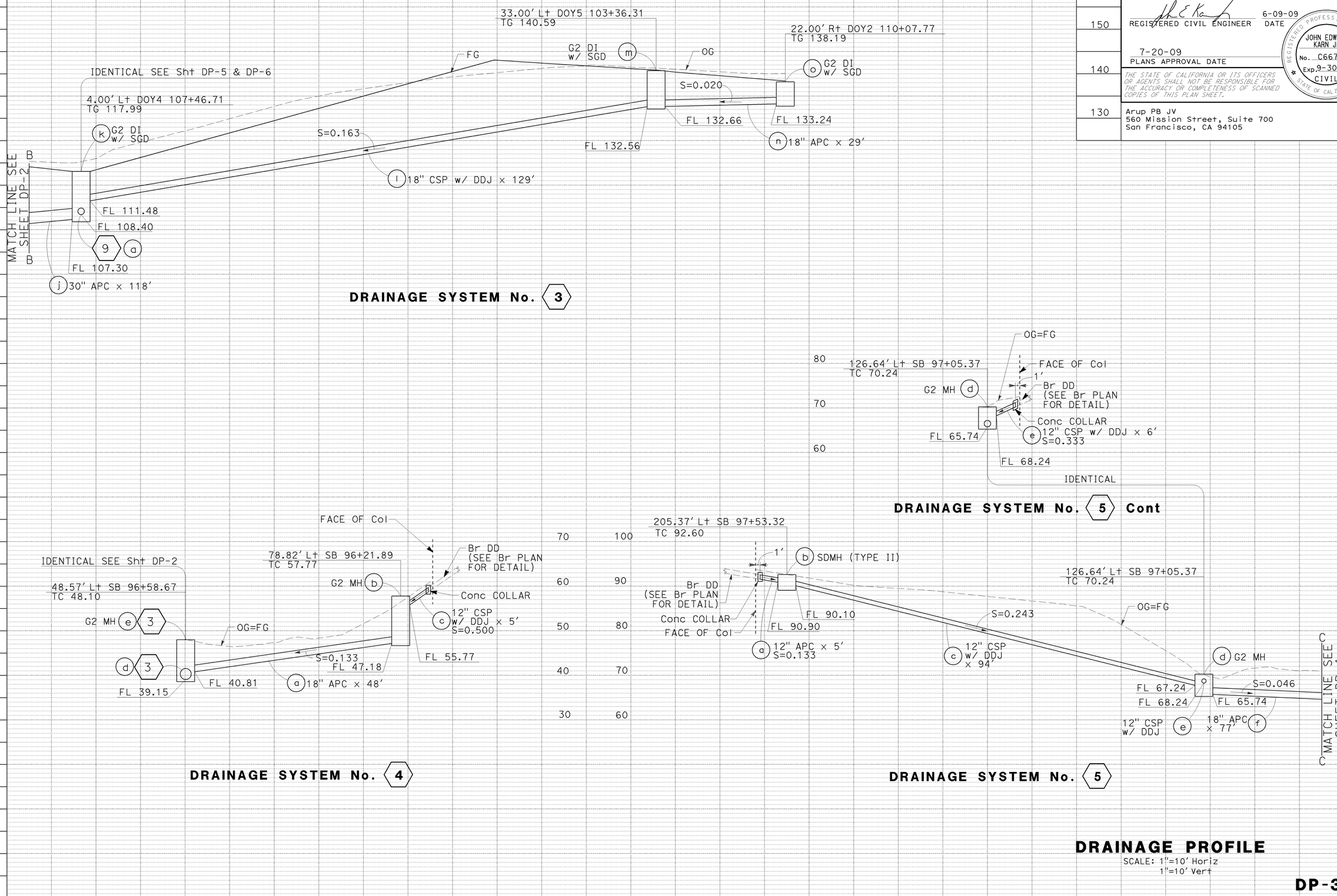

DRAINAGE PROFILE

SCALE: 1"=10' Horiz
1"=10' Vert

DP-3

STATE OF CALIFORNIA - DEPARTMENT OF TRANSPORTATION
Caltrans

CONSULTANT FUNCTIONAL SUPERVISOR: ABOLFAZL EMADZADEH
CALCULATED-DESIGNED BY: MANISH DALIA/JACK MONG
CHECKED BY: DUANNE GILMORE
REVISED BY: ML/KM
DATE REVISED: 6/09/09

LAST REVISION 06-08-09
DATE PLOTTED => 21-JUL-2009
TIME PLOTTED => 09:36

Dist	COUNTY	ROUTE	POST MILES TOTAL PROJECT	SHEET No.	TOTAL SHEETS
04	SF	101,1	9.2/9.8, 6.8/7.1	62	567

REGISTERED CIVIL ENGINEER — 6-09-09 DATE

7-20-09
PLANS APPROVAL DATE

REGISTERED PROFESSIONAL ENGINEER — JOHN EDWARD KARN JR — No. C66743 — Exp.9-30-10 — CIVIL — STATE OF CALIFORNIA

THE STATE OF CALIFORNIA OR ITS OFFICERS OR AGENTS SHALL NOT BE RESPONSIBLE FOR THE ACCURACY OR COMPLETENESS OF SCANNED COPIES OF THIS PLAN SHEET.

Arup PB JV
560 Mission Street, Suite 700
San Francisco, CA 94105

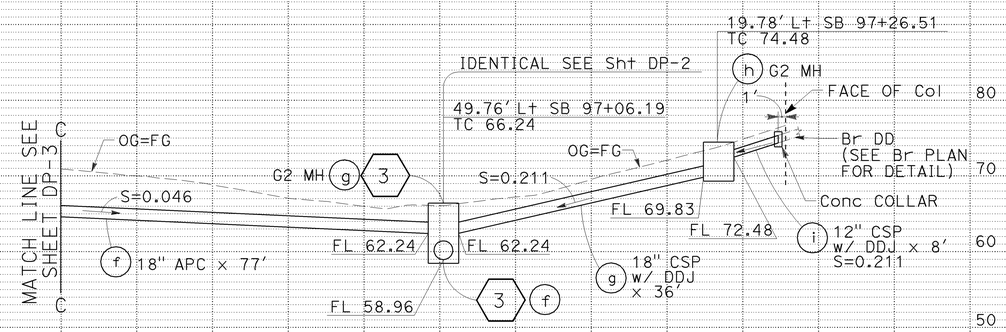

DRAINAGE SYSTEM No. 5

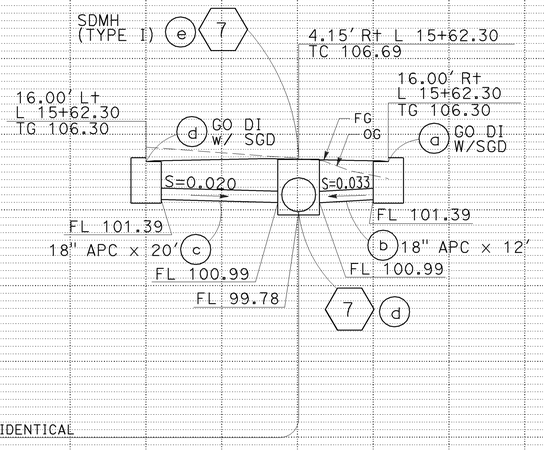

DRAINAGE SYSTEM No. 8

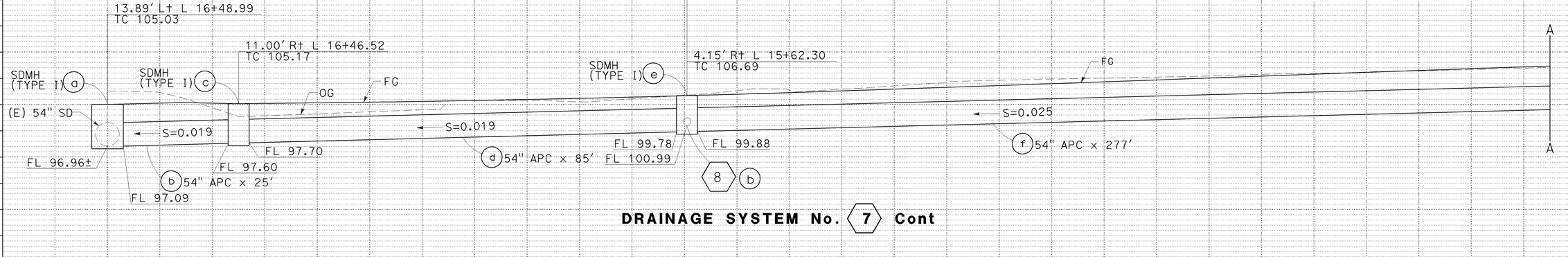

DRAINAGE SYSTEM No. 7 Cont

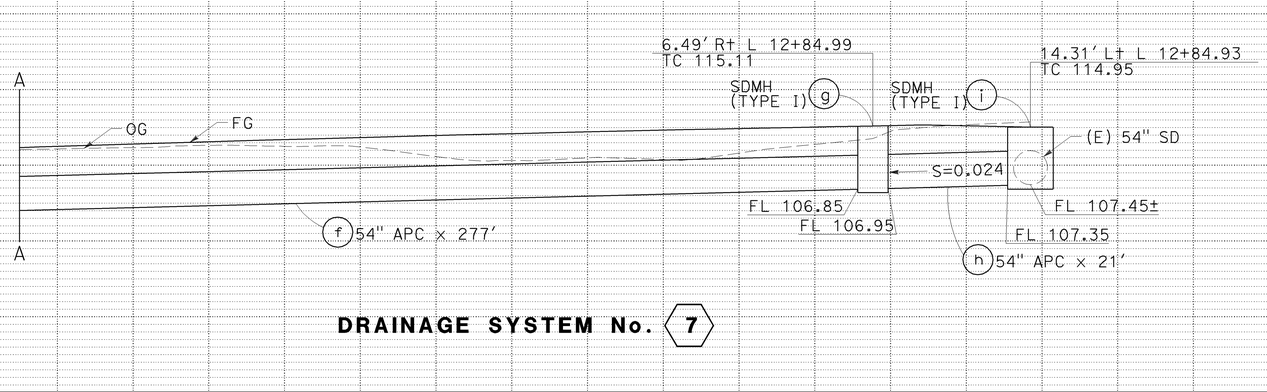

DRAINAGE SYSTEM No. 7

DRAINAGE PROFILE

SCALE: 1"=10' Horiz
1"=10' Vert

DP-4

CALCULATED-DESIGNED BY: ML/KM
CHECKED BY: MANISH DALIA/JACK MONG
REVISED BY: DUANNE GILMORE
DATE REVISED: 6/09/09
CONSULTANT FUNCTIONAL SUPERVISOR: ABOLFAZL EMADZADEH
STATE OF CALIFORNIA - DEPARTMENT OF TRANSPORTATION

LAST REVISION | DATE PLOTTED => 21-JUL-2009 | TIME PLOTTED => 09:36
06-08-09

BORDER LAST REVISED 4/11/2008 | RELATIVE BORDER SCALE IS IN INCHES 0 1 2 3 | USERNAME => trpierce | DGN FILE => 416373ib004.dgn | CU 04242 | EA 163731

Dist	COUNTY	ROUTE	POST MILES TOTAL PROJECT	SHEET No.	TOTAL SHEETS
04	SF	101,1	9.2/9.8, 6.8/7.1	63	567

REGISTERED CIVIL ENGINEER — 6-09-09 DATE

7-20-09
PLANS APPROVAL DATE

JOHN EDWARD KARN JR
No. C66743
Exp.9-30-10
CIVIL
REGISTERED PROFESSIONAL ENGINEER
STATE OF CALIFORNIA

THE STATE OF CALIFORNIA OR ITS OFFICERS OR AGENTS SHALL NOT BE RESPONSIBLE FOR THE ACCURACY OR COMPLETENESS OF SCANNED COPIES OF THIS PLAN SHEET.

Arup PB JV
560 Mission Street, Suite 700
San Francisco, CA 94105

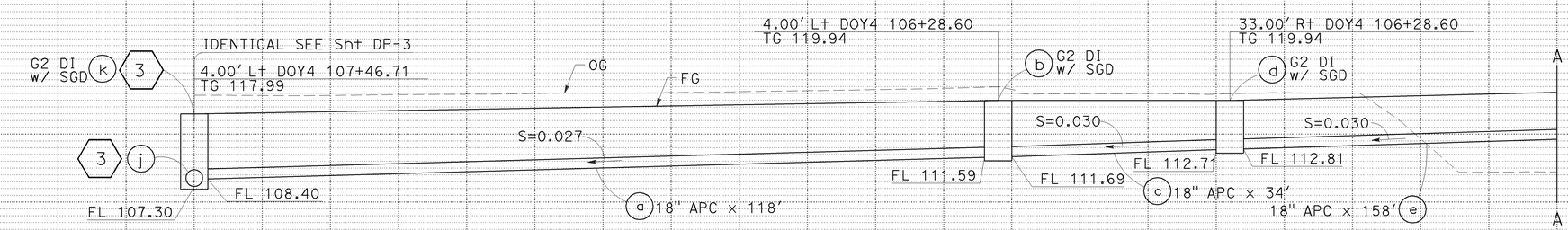

DRAINAGE SYSTEM No. 9 Cont

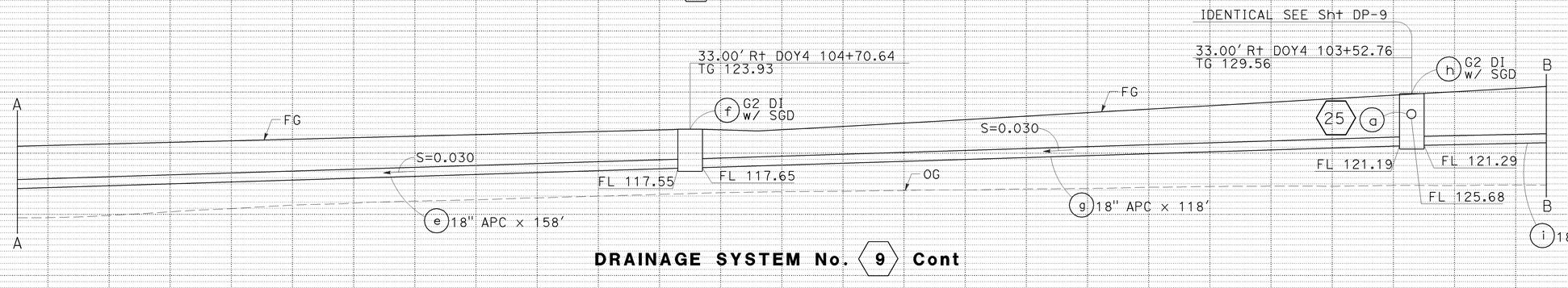

DRAINAGE SYSTEM No. 9 Cont

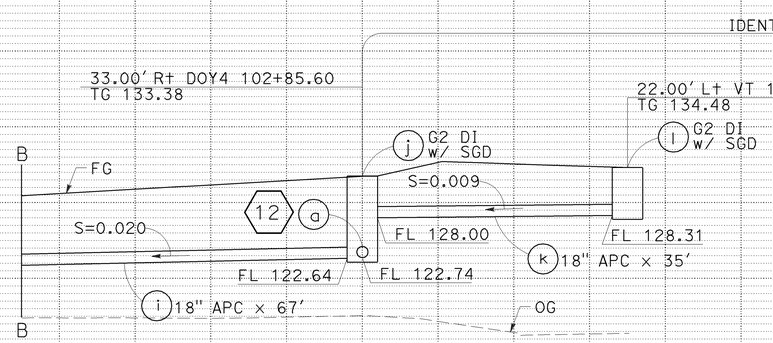

DRAINAGE SYSTEM No. 9

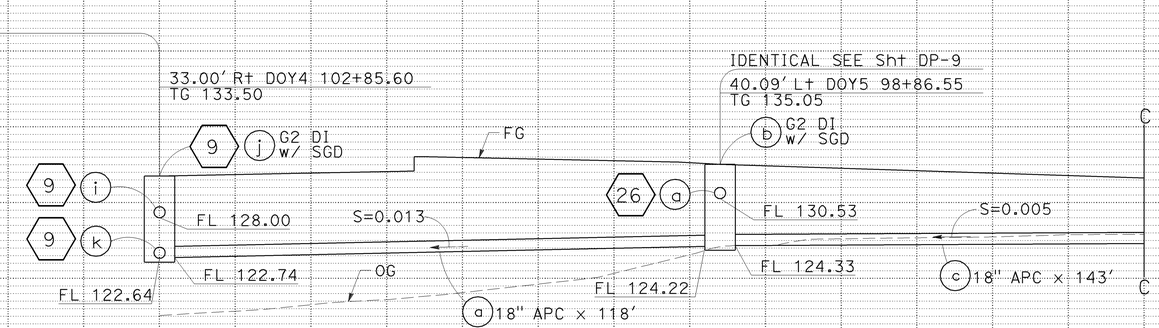

DRAINAGE SYSTEM No. 12 Cont

DRAINAGE SYSTEM No. 12

DRAINAGE PROFILE

SCALE: 1"=10' Horiz
1"=10' Vert

DP-5

STATE OF CALIFORNIA - DEPARTMENT OF TRANSPORTATION
CONSULTANT FUNCTIONAL SUPERVISOR: ABOLFAZL EMADZADEH
CALCULATED-DESIGNED BY: MANISH DALIA/JACK MONG
CHECKED BY: DUANNE GILMORE
REVISED BY: ML/KM
DATE REVISED: 6/09/09
LAST REVISION DATE PLOTTED => 21-JUL-2009
LAST REVISION TIME PLOTTED => 09:36
06-08-09

BORDER LAST REVISED 4/11/2008
RELATIVE BORDER SCALE IS IN INCHES 0 1 2 3
USERNAME => trpierce
DGN FILE => 416373ib005.dgn
CU 04242
EA 163731

Dist	COUNTY	ROUTE	POST MILES TOTAL PROJECT	SHEET No.	TOTAL SHEETS
04	SF	101,1	9.2/9.8, 6.8/7.1	64	567

REGISTERED CIVIL ENGINEER — 6-09-09 DATE

7-20-09 PLANS APPROVAL DATE

JOHN EDWARD KARN JR — No. C66743 — Exp. 9-30-10 — CIVIL — REGISTERED PROFESSIONAL ENGINEER — STATE OF CALIFORNIA

THE STATE OF CALIFORNIA OR ITS OFFICERS OR AGENTS SHALL NOT BE RESPONSIBLE FOR THE ACCURACY OR COMPLETENESS OF SCANNED COPIES OF THIS PLAN SHEET.

Arup PB JV
560 Mission Street, Suite 700
San Francisco, CA 94105

IDENTICAL SEE Sht DP-3

4.00' Lt DOY4 107+46.71
TG 117.99

4.00' Lt DOY4 108+12.40
TG 120.28

4.00' Lt DOY4 108+49.36
TG 121.39

3 (k) G2 DI w/ SGD — OG — FG — G2 DI (b) w/ SGD — G2 DI (d) w/ SGD — OG=FG

3 (j) — S=0.020 — K — FL 114.33 — S=0.018 — S=0.171 — (e) 18" CSP w/ DDJ x 181'

(i) — FL 107.40 — FL 108.68 — FL 108.78 — FL 109.44 — FL 113.10

FL 107.30 — (a) 30" APC x 65' — (c) 30" APC x 37'

A — A

IDENTICAL

DRAINAGE SYSTEM No. 13 Cont

4.00' Rt SB 101+78.48
TG 154.29

18.24' Rt SB 101+78.52
TG 152.96

4.00' Rt SB 101+07.50
TG 151.30

G2 DI (f) — (a) 14 — (h) G2 DI w/ SGD — OG — FG — G2 DI w/ SGD (j)

S=0.022 — S=0.005 — FL 147.17 — FL 148.65 — FL 147.52

A — S=0.171 — FL 144.12 — FL 146.72 — (i) 18" APC x 70'

(e) 18" CSP w/ DDJ x 181' — 30" APC x 16' (g) — FL 147.07

IDENTICAL

A

DRAINAGE SYSTEM No. 13

48.00' Rt DOY4 107+90.69
TC 117.38

4.00' Lt DOY4 108+12.40
TG 120.28

(b) G2 DI w/ SGD — OG — SDMH (TYPE II) (l) — FACE OF Col — 1' — Br DD (SEE Br PLAN FOR DETAIL)

FG — S=0.010 — FL 114.33 — FL 114.88 — Conc CALLAR

(j) — FL 108.68 — (k) 12" APC x 56' — (m) 12" APC x 6' S=0.050

(a) — FL 115.43

DRAINAGE SYSTEM No. 13 Cont

4.00 Lt SB 101+78.48
TG 154.29

4.00 Rt SB 102+81.50
TG 158.61

4.00 Rt DOY5 106+08.33
TG 160.28

G2 DI w/ SGD (h) 13 — FG — OG — G2 DI (b) — FG — G2 DI w/ SGD (d)

(g) 13 — S=0.046 — FL 153.41 — FL 153.51 — S=0.030 — FL 155.28

FL 148.65 — FL 147.07 — (a) 18" APC x 103' — (c) 18" APC x 60'

DRAINAGE SYSTEM No. 14

DRAINAGE PROFILE

SCALE: 1"=10' Horiz
1"=10' Vert

DP-6

STATE OF CALIFORNIA - DEPARTMENT OF TRANSPORTATION — Caltrans®

CONSULTANT FUNCTIONAL SUPERVISOR: ABOLFAZL EMADZADEH

CALCULATED-DESIGNED BY: MANISH DALIA/JACK MONG

CHECKED BY: DUANNE GILMORE

REVISED BY: ML/KM

DATE REVISED: 6/09/09

LAST REVISION DATE PLOTTED => 21-JUL-2009
TIME PLOTTED => 09:37

BORDER LAST REVISED 4/11/2008

RELATIVE BORDER SCALE IS IN INCHES 0 1 2 3

USERNAME => trpierce
DGN FILE => 416373ib006.dgn

CU 04242

EA 163731

Dist	COUNTY	ROUTE	POST MILES TOTAL PROJECT	SHEET No.	TOTAL SHEETS
04	SF	101,1	9.2/9.8, 6.8/7.1	65	567

REGISTERED CIVIL ENGINEER — 6-09-09 DATE

JOHN EDWARD KARN JR
No. C66743
Exp.9-30-10
CIVIL
REGISTERED PROFESSIONAL ENGINEER
STATE OF CALIFORNIA

7-20-09
PLANS APPROVAL DATE

THE STATE OF CALIFORNIA OR ITS OFFICERS OR AGENTS SHALL NOT BE RESPONSIBLE FOR THE ACCURACY OR COMPLETENESS OF SCANNED COPIES OF THIS PLAN SHEET.

Arup PB JV
560 Mission Street, Suite 700
San Francisco, CA 94105

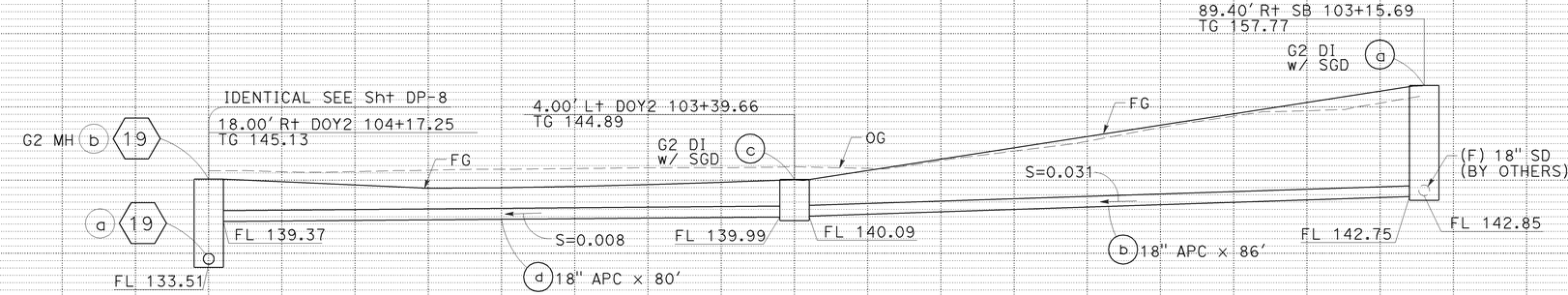

DRAINAGE SYSTEM No. 16

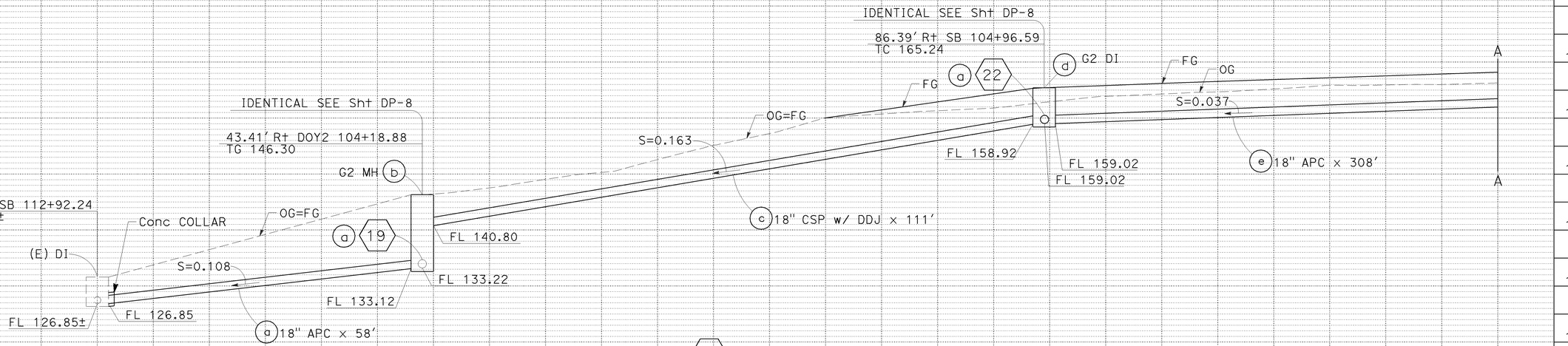

DRAINAGE SYSTEM No. 18 Cont

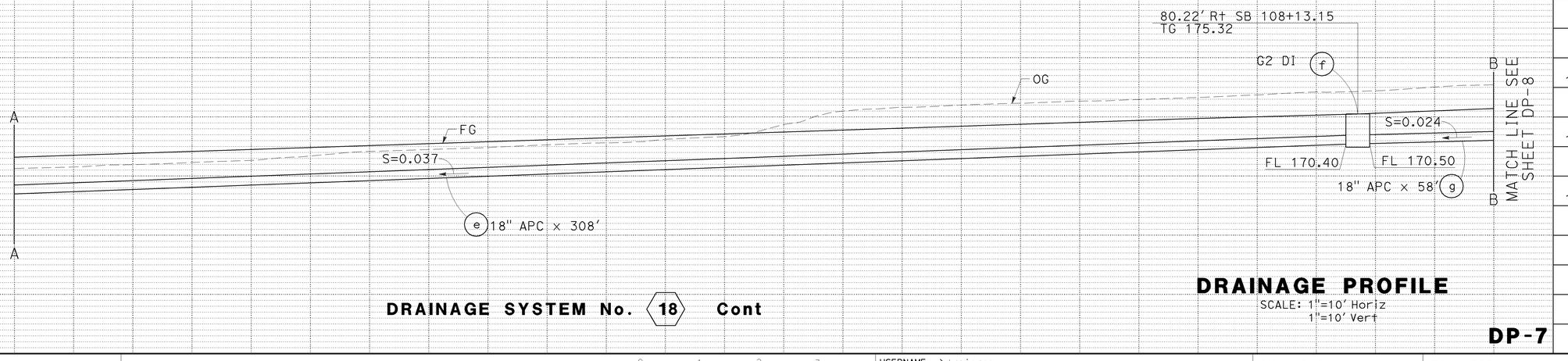

DRAINAGE SYSTEM No. 18 Cont

DRAINAGE PROFILE

SCALE: 1"=10' Horiz
1"=10' Vert

DP-7

STATE OF CALIFORNIA - DEPARTMENT OF TRANSPORTATION
Caltrans

CONSULTANT FUNCTIONAL SUPERVISOR: ABOLFAZL EMADZADEH
CALCULATED-DESIGNED BY: MANISH DALIA/JACK MONG
CHECKED BY: DUANNE GILMORE
REVISED BY: ML/KM
DATE REVISED: 6/09/09

LAST REVISION
DATE PLOTTED => 21-JUL-2009
TIME PLOTTED => 09:37
06-08-09

BORDER LAST REVISED 4/11/2008
RELATIVE BORDER SCALE IS IN INCHES 0 1 2 3
USERNAME => trpierce
DGN FILE => 416373ib007.dgn
CU 04242
EA 163731

NOTE:
1. SYSTEM 24 PROFILE SHOWN ON DD-5.

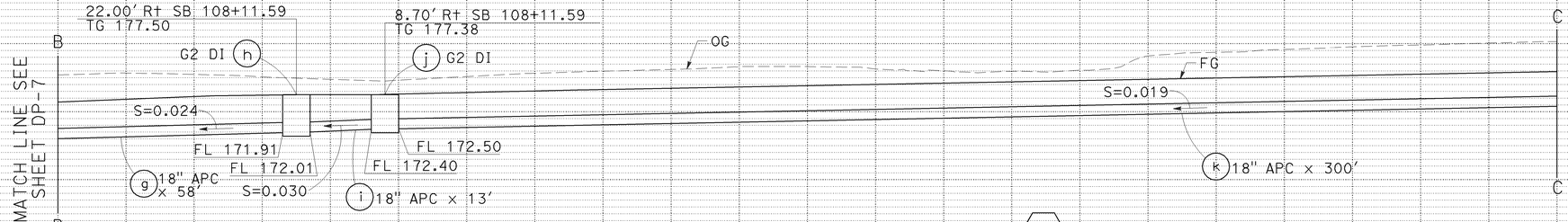

DRAINAGE SYSTEM No. 18 Cont

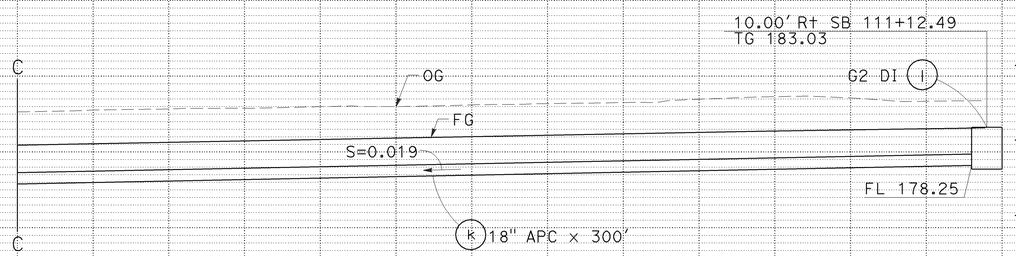

DRAINAGE SYSTEM No. 18

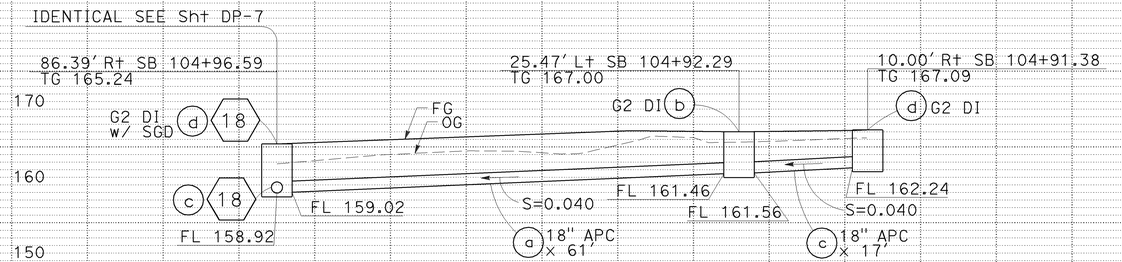

DRAINAGE SYSTEM No. 22

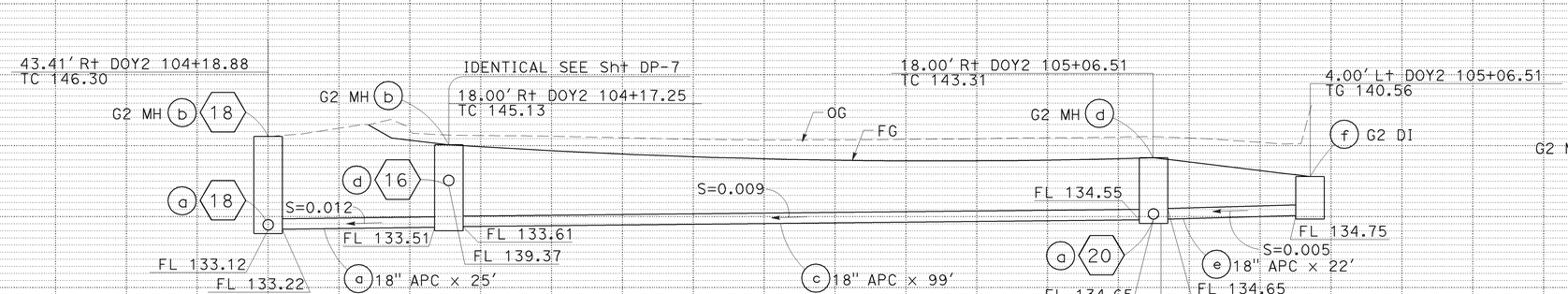

DRAINAGE SYSTEM No. 19

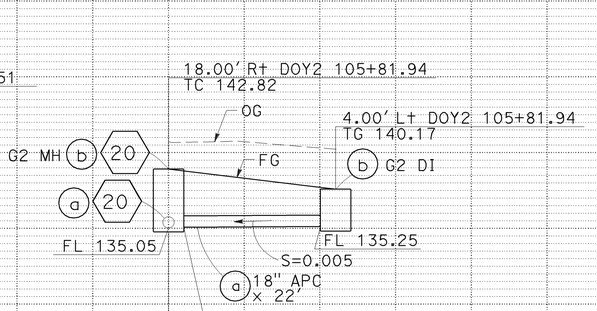

DRAINAGE SYSTEM No. 21

IDENTICAL

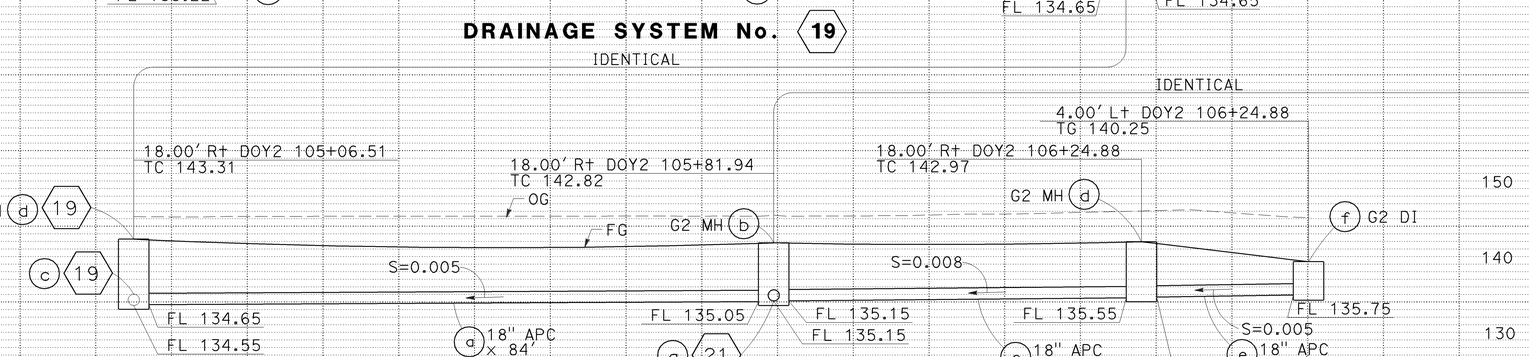

DRAINAGE SYSTEM No. 20

DRAINAGE PROFILE
SCALE: 1"=10' Horiz
1"=10' Vert

DP-8

Dist	COUNTY	ROUTE	POST MILES TOTAL PROJECT	SHEET No.	TOTAL SHEETS
04	SF	101,1	9.2/9.8, 6.8/7.1	66	567

REGISTERED CIVIL ENGINEER — 6-09-09 DATE

7-20-09
PLANS APPROVAL DATE

JOHN EDWARD KARN JR
No. C66743
Exp. 9-30-10
CIVIL
REGISTERED PROFESSIONAL ENGINEER
STATE OF CALIFORNIA

THE STATE OF CALIFORNIA OR ITS OFFICERS OR AGENTS SHALL NOT BE RESPONSIBLE FOR THE ACCURACY OR COMPLETENESS OF SCANNED COPIES OF THIS PLAN SHEET.

Arup PB JV
560 Mission Street, Suite 700
San Francisco, CA 94105

REVISED BY: ML/KM
DATE REVISED: 6/09/09
CALCULATED-DESIGNED BY: MANISH DALIA/JACK MONG
CHECKED BY: DUANNE GILMORE
CONSULTANT FUNCTIONAL SUPERVISOR: ABOLFAZL EMADZADEH
STATE OF CALIFORNIA - DEPARTMENT OF TRANSPORTATION
Caltrans

LAST REVISION — DATE PLOTTED => 23-JUL-2009
TIME PLOTTED => 08:10
06-08-09

BORDER LAST REVISED 4/11/2008
RELATIVE BORDER SCALE IS IN INCHES 0 1 2 3
USERNAME => trlim
DGN FILE => 416373ib008.dgn
CU 04242
EA 163731

Dist	COUNTY	ROUTE	POST MILES TOTAL PROJECT	SHEET No.	TOTAL SHEETS
04	SF	101,1	9.2/9.8, 6.8/7.1	67	567

REGISTERED CIVIL ENGINEER — 6-09-09 DATE

7-20-09
PLANS APPROVAL DATE

JOHN EDWARD KARN JR
No. C66743
Exp. 9-30-10
CIVIL
REGISTERED PROFESSIONAL ENGINEER
STATE OF CALIFORNIA

THE STATE OF CALIFORNIA OR ITS OFFICERS OR AGENTS SHALL NOT BE RESPONSIBLE FOR THE ACCURACY OR COMPLETENESS OF SCANNED COPIES OF THIS PLAN SHEET.

Arup PB JV
560 Mission Street, Suite 700
San Francisco, CA 94105

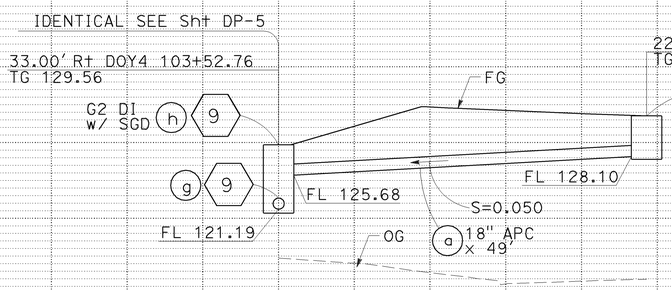

DRAINAGE SYSTEM No. 25

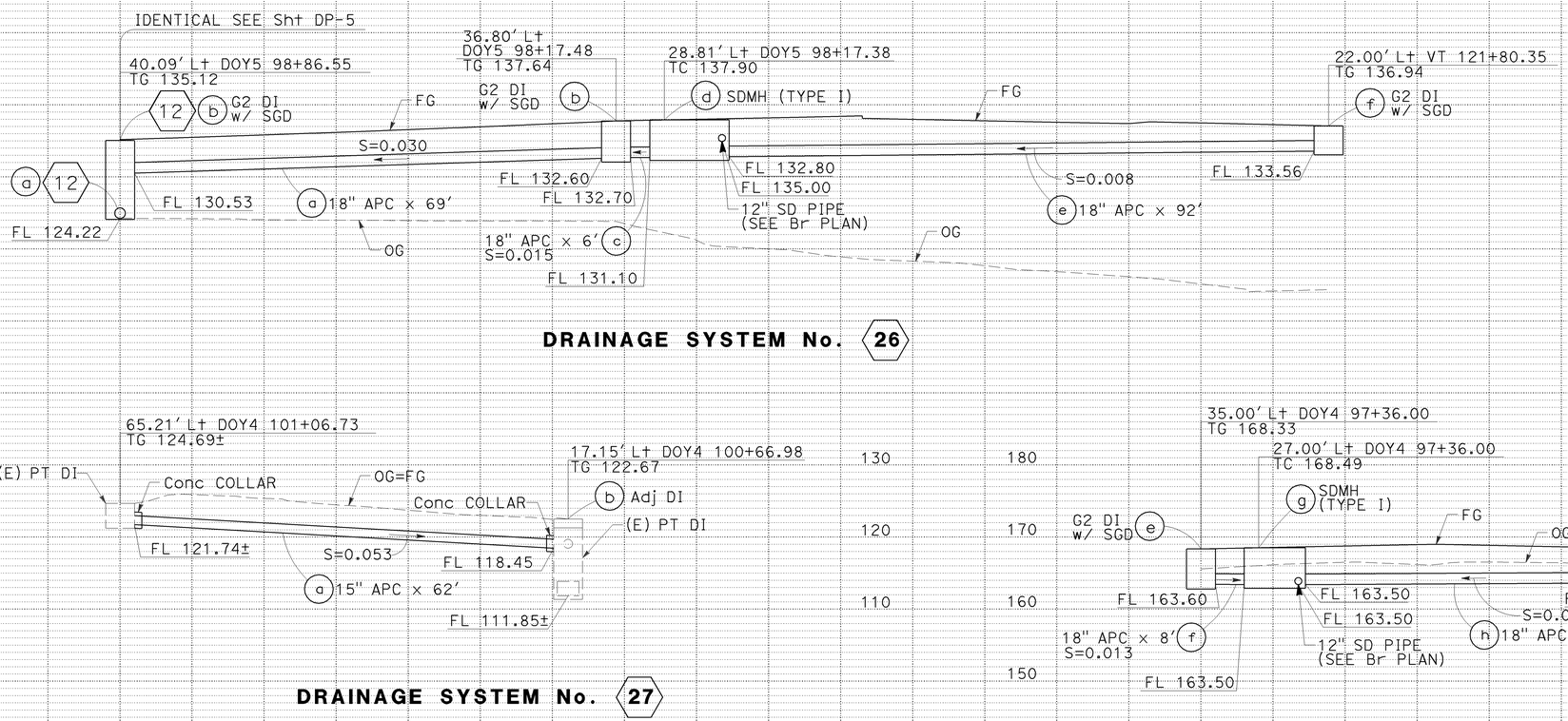

DRAINAGE SYSTEM No. 26

DRAINAGE SYSTEM No. 27

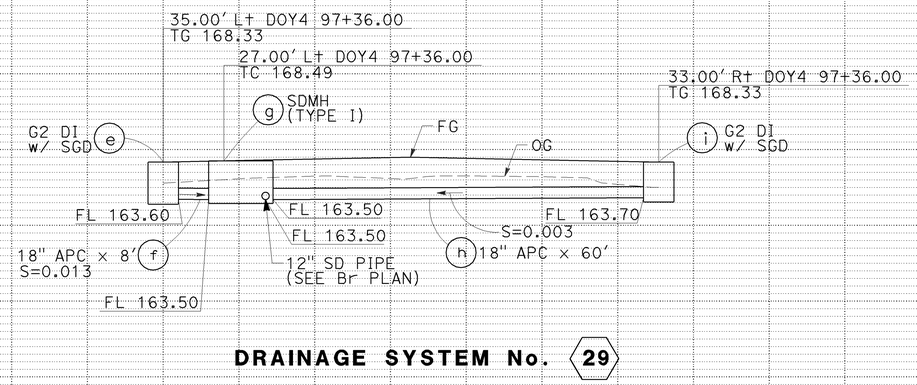

DRAINAGE SYSTEM No. 29

DRAINAGE PROFILE

SCALE: 1"=10' Horiz
1"=10' Vert

DP-9

STATE OF CALIFORNIA - DEPARTMENT OF TRANSPORTATION
Caltrans

CONSULTANT FUNCTIONAL SUPERVISOR: ABOLFAZL EMADZADEH
CALCULATED-DESIGNED BY: MANISH DALIA/JACK MONG
CHECKED BY: DUANNE GILMORE
REVISED BY: ML/KM
DATE REVISED: 6/09/09

LAST REVISION DATE PLOTTED => 21-JUL-2009
TIME PLOTTED => 11:07
06-08-09

BORDER LAST REVISED 4/11/2008
RELATIVE BORDER SCALE IS IN INCHES 0 1 2 3
USERNAME => trlim
DGN FILE => 416373ib009.dgn
CU 04242
EA 163731

NOTES:

1. ELEVATIONS SHOWN ARE BASED ON NORTH AMERICAN VERTICAL DATUM OF 1988 (NAVD 88).
2. FG SHOWN REFLECTS THE STAGE CONSTRUCTION.

Dist	COUNTY	ROUTE	POST MILES TOTAL PROJECT	SHEET No.	TOTAL SHEETS
04	SF	101,1	9.2/9.8, 6.8/7.1	68	567

REGISTERED CIVIL ENGINEER — 6-09-09 DATE

7-20-09
PLANS APPROVAL DATE

REGISTERED PROFESSIONAL ENGINEER
JOHN EDWARD KARN JR
No. C66743
Exp. 9-30-10
CIVIL
STATE OF CALIFORNIA

THE STATE OF CALIFORNIA OR ITS OFFICERS OR AGENTS SHALL NOT BE RESPONSIBLE FOR THE ACCURACY OR COMPLETENESS OF SCANNED COPIES OF THIS PLAN SHEET.

Arup PB JV
560 Mission Street, Suite 700
San Francisco, CA 94105

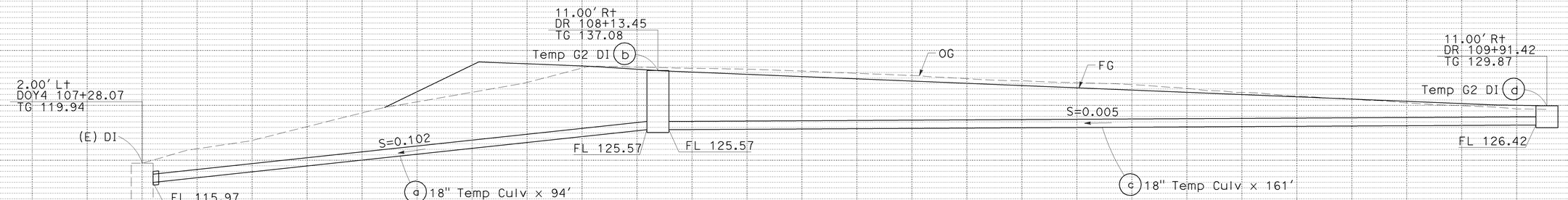

TEMPORARY DRAINAGE SYSTEM No. 50

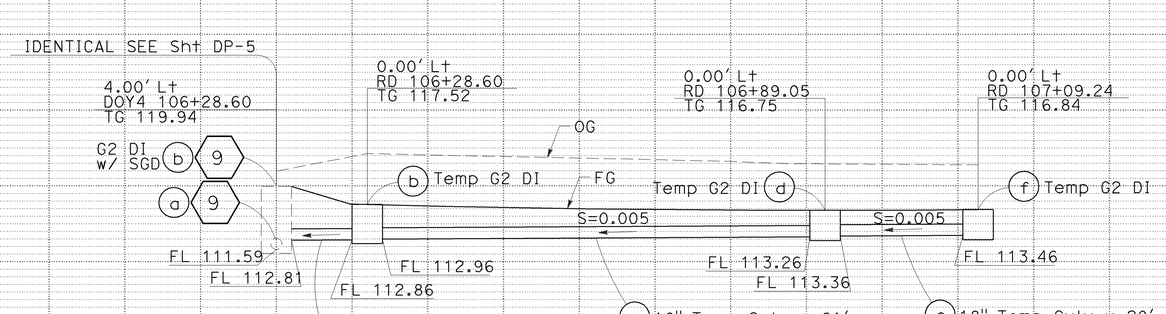

TEMPORARY DRAINAGE SYSTEM No. 51

TEMPORARY DRAINAGE PROFILE

SCALE: 1"=10' Horiz
1"=10' Vert

DP-10

STATE OF CALIFORNIA - DEPARTMENT OF TRANSPORTATION
Caltrans
CONSULTANT FUNCTIONAL SUPERVISOR: ABOLFAZL EMADZADEH
CALCULATED-DESIGNED BY: MANISH DALIA/JACK MONG
CHECKED BY: DUANNE GILMORE
REVISED BY: ML/KM
DATE REVISED: 6/09/09
LAST REVISION DATE PLOTTED => 27-JUL-2009
TIME PLOTTED => 06:07
06-08-09

BORDER LAST REVISED 4/11/2008
RELATIVE BORDER SCALE IS IN INCHES 0 1 2 3
USERNAME => trmikesl
DGN FILE => 416373ib010.dgn
CU 04242
EA 163731

Dist	COUNTY	ROUTE	POST MILES TOTAL PROJECT	SHEET No.	TOTAL SHEETS
04	SF	101,1	9.2/9.8, 6.8/7.1	69	567

REGISTERED CIVIL ENGINEER 6-09-09 DATE

7-20-09
PLANS APPROVAL DATE

REGISTERED PROFESSIONAL ENGINEER
JOHN EDWARD KARN JR
No. C66743
Exp. 9-30-10
CIVIL
STATE OF CALIFORNIA

THE STATE OF CALIFORNIA OR ITS OFFICERS OR AGENTS SHALL NOT BE RESPONSIBLE FOR THE ACCURACY OR COMPLETENESS OF SCANNED COPIES OF THIS PLAN SHEET.

Arup PB JV
560 Mission Street, Suite 700
San Francisco, CA 94105

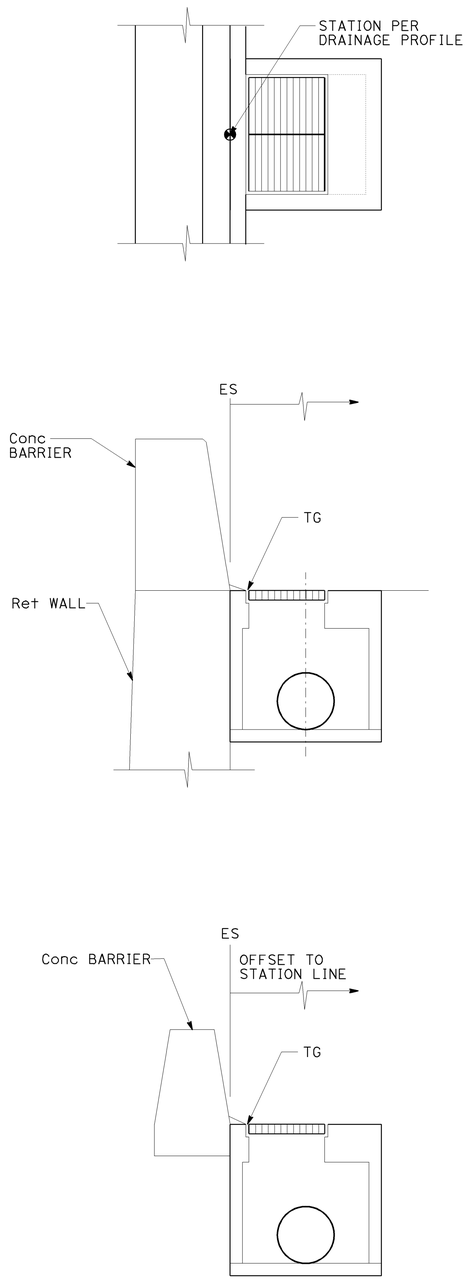

INLET ADJACENT TO TOP RETAINING WALL OR CONCRETE BARRIER

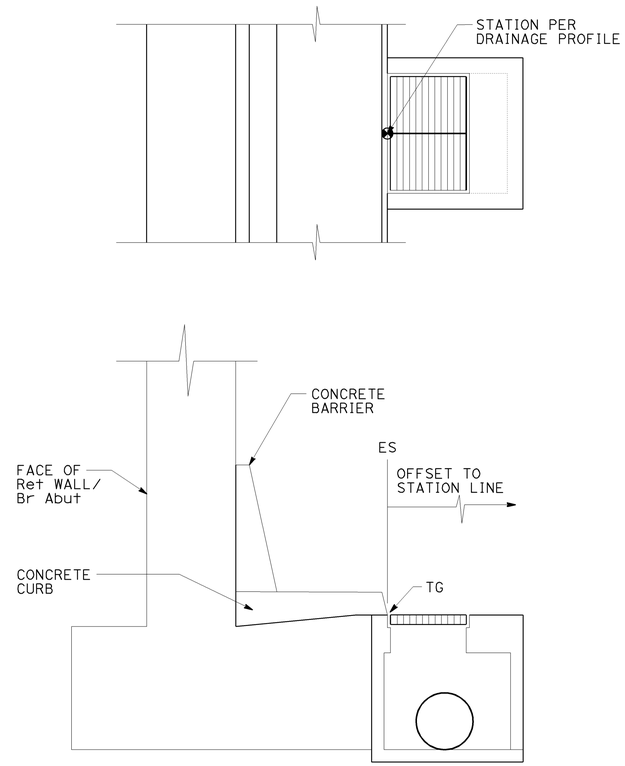

INLET ADJACENT TO BOTTOM RETAINING WALL OR BRIDGE ABUTMENT

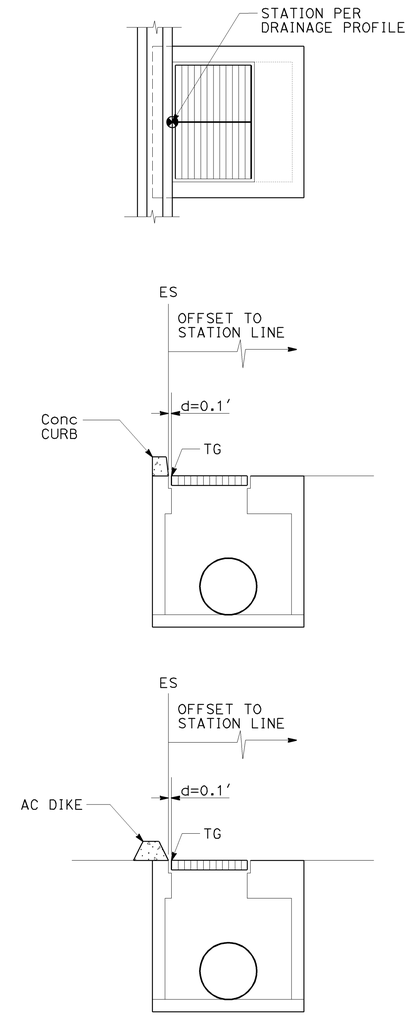

INLET ADJACENT TO HMA DIKE OR CONCRETE CURB

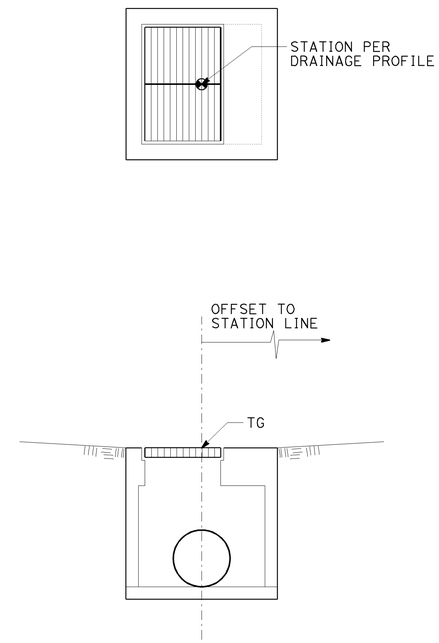

FIELD INLET

DRAINAGE DETAILS
NO SCALE

DD-1

STATE OF CALIFORNIA - DEPARTMENT OF TRANSPORTATION
Caltrans

CONSULTANT FUNCTIONAL SUPERVISOR: ABOLFAZL EMADZADEH
CALCULATED-DESIGNED BY: MANISH DALIA/JACK MONG
CHECKED BY: DUANNE GILMORE
REVISED BY: ML/KM
DATE REVISED: 6/09/09

LAST REVISION 06-08-09
DATE PLOTTED => 23-JUL-2009
TIME PLOTTED => 08:15

Dist	COUNTY	ROUTE	POST MILES TOTAL PROJECT	SHEET No.	TOTAL SHEETS
04	SF	101,1	9.2/9.8, 6.8/7.1	70	567

REGISTERED CIVIL ENGINEER — 6-09-09 DATE

JOHN EDWARD KARN JR No. C66743 Exp. 9-30-10 CIVIL — REGISTERED PROFESSIONAL ENGINEER — STATE OF CALIFORNIA

7-20-09
PLANS APPROVAL DATE

THE STATE OF CALIFORNIA OR ITS OFFICERS OR AGENTS SHALL NOT BE RESPONSIBLE FOR THE ACCURACY OR COMPLETENESS OF SCANNED COPIES OF THIS PLAN SHEET.

Arup PB JV
560 Mission Street, Suite 700
San Francisco, CA 94105

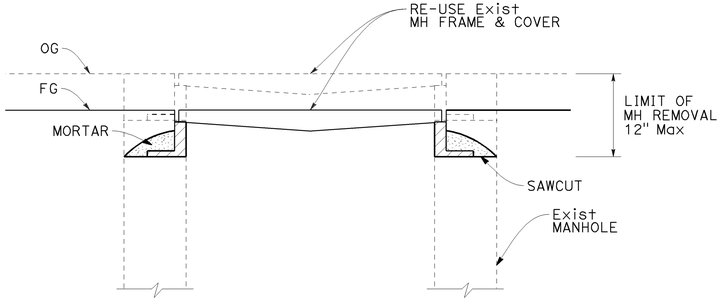

ADJUST MANHOLE TO GRADE

6 c 28 d

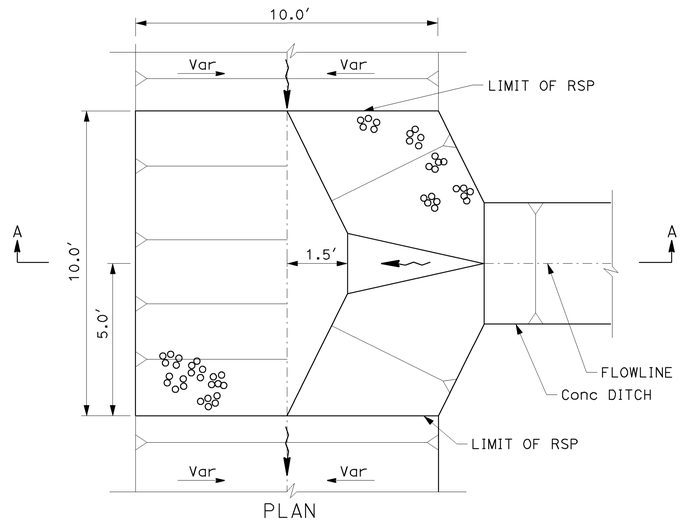

PLAN

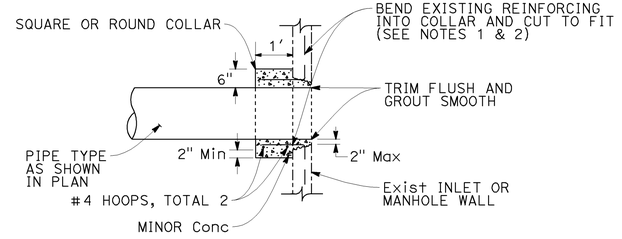

NOTES:

1) CUT REINFORCEMENT ON ALTERNATE SIDES AND BEND INTO COLLAR.

2) IF THERE ARE NO EXISTING REINFORCING BARS, THEN USE 6 #4 DOWELS, SPACED EVENLY AROUND NEW PIPE, AND DRILL AND GROUT INTO EXISTING INLET WALLS 6".

CONCRETE COLLAR PIPE CONNECTION TO EXISTING INLET OR MANHOLE

1 g 2 a 18 a 27 a 50 a

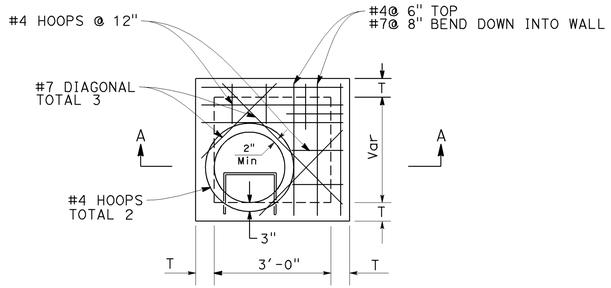

PLAN

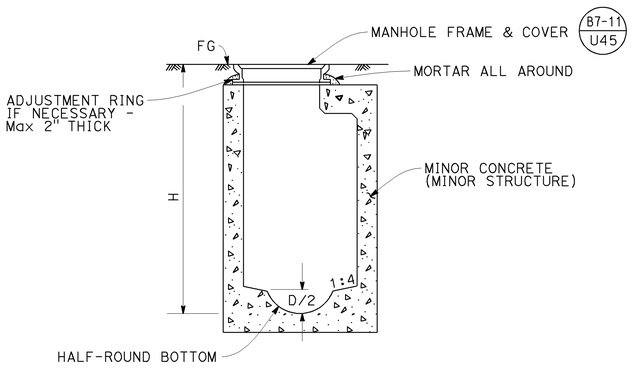

SECTION A-A

NOTE:
FOR DETAILS NOT SHOWN, SEE Std PLAN D73 - G2 INLET.

G2 MANHOLE

(FOR PIPE Dia < 36")

1 d f 3 a c e g i 4 b

5 d h 18 b 19 b d 20 b d

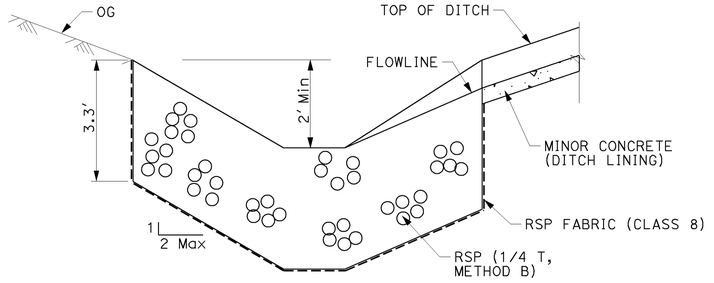

SECTION A-A

ROCK SLOPE PROTECTION

24 c

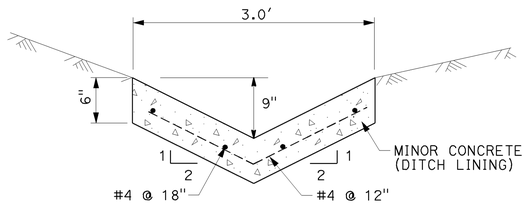

CONCRETE DITCH

24 b

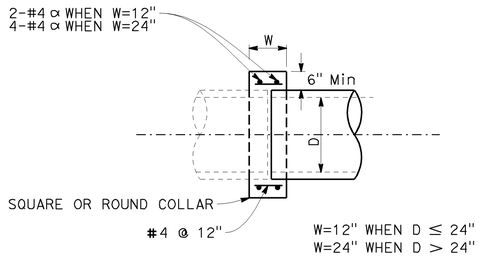

NOTE:

COLLAR CAN BE USED FOR JOINING NEW PIPE TO EXISTING PIPE, PIPES OF DIFFERENT SIZES, AND FLARED END SECTIONS TO PIPE AS DIRECTED BY THE ENGINEER.

CONCRETE COLLAR

1 a j 2 a c 3 r 4 c

5 a e i 13 m

DRAINAGE DETAILS

NO SCALE

DD-2

STATE OF CALIFORNIA - DEPARTMENT OF TRANSPORTATION
CONSULTANT FUNCTIONAL SUPERVISOR: ABOLFAZL EMADZADEH
CALCULATED-DESIGNED BY: MANISH DALIA/JACK MONG
CHECKED BY: DUANNE GILMORE
REVISED BY: ML/KM
DATE REVISED: 6/09/09
LAST REVISION DATE PLOTTED => 21-JUL-2009
TIME PLOTTED => 10:29
06-08-09

BORDER LAST REVISED 4/11/2008
RELATIVE BORDER SCALE IS IN INCHES 0 1 2 3
USERNAME => trstrk
DGN FILE => 416373ic002.dgn
CU 04242
EA 163731

Dist	COUNTY	ROUTE	POST MILES TOTAL PROJECT	SHEET No.	TOTAL SHEETS
04	SF	101,1	9.2/9.8, 6.8/7.1	71	567

REGISTERED CIVIL ENGINEER — 6-09-09 DATE

7-20-09
PLANS APPROVAL DATE

JOHN EDWARD KARN JR
No. C66743
Exp. 9-30-10
CIVIL
REGISTERED PROFESSIONAL ENGINEER
STATE OF CALIFORNIA

THE STATE OF CALIFORNIA OR ITS OFFICERS OR AGENTS SHALL NOT BE RESPONSIBLE FOR THE ACCURACY OR COMPLETENESS OF SCANNED COPIES OF THIS PLAN SHEET.

Arup PB JV
560 Mission Street, Suite 700
San Francisco, CA 94105

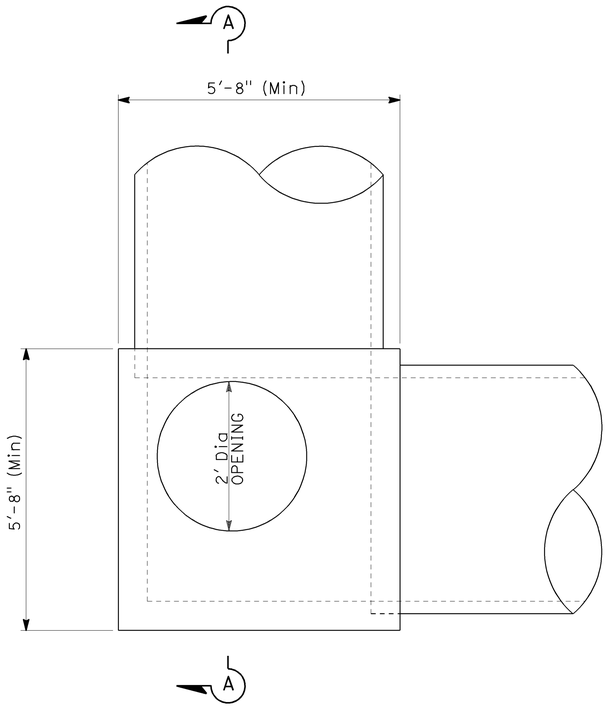

PLAN

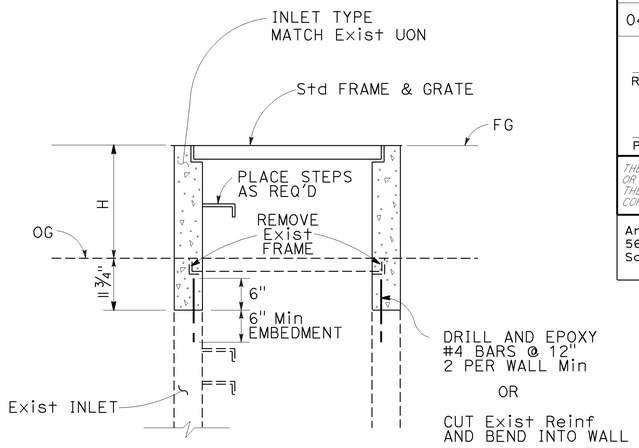

ADJUST INLET TO GRADE

SECTIONAL VIEW

27 b 28 e

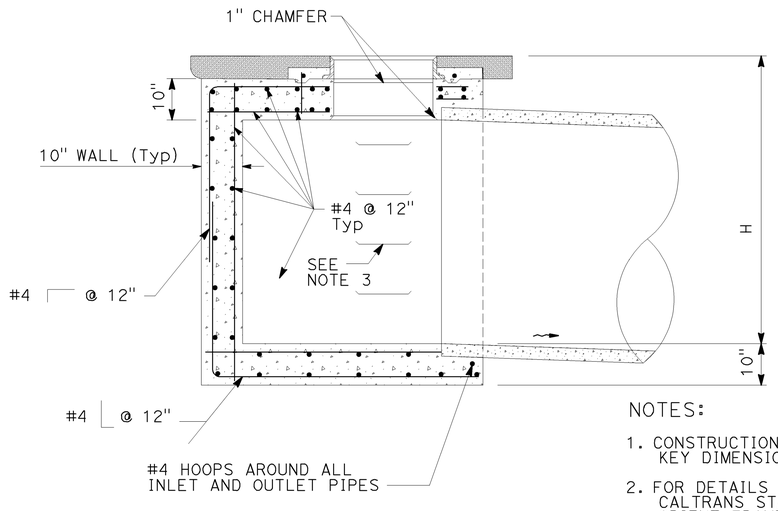

SECTION A-A

NOTES:

1. CONSTRUCTION JOINTS ARE OPTIONAL WHERE SHOWN. KEY DIMENSIONS ARE 1 ½" X 3 ½".
2. FOR DETAILS OF MANHOLE FRAME AND COVER, SEE CALTRANS STANDARD PLAN B7-11 DETAIL U45. ORIENT FRAME DIRECTLY ABOVE STEPS.
3. FOR STEP DETAILS AND LOCATION, SEE CALTRANS STANDARD PLAN D74C.
4. HEIGHT OF THE STRUCTURE (H) VARIES PER INFORMATION ON QUANTITY SHEETS.

STORM DRAIN MANHOLE (TYPE I)

7 a c e g i 26 d 29 g

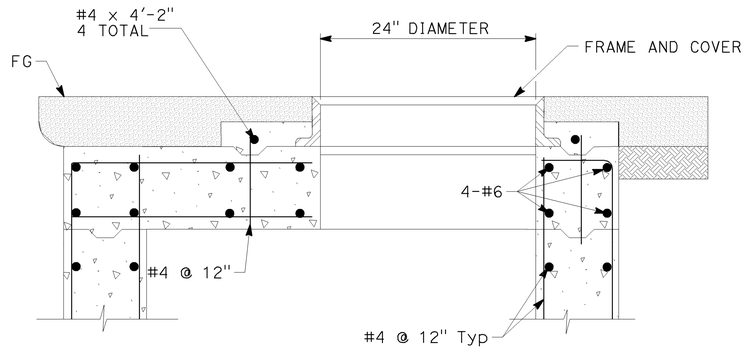

TOP SLAB ELEVATION

DRAINAGE DETAILS

NO SCALE

DD-3

STATE OF CALIFORNIA - DEPARTMENT OF TRANSPORTATION
Caltrans
CONSULTANT FUNCTIONAL SUPERVISOR: ABOLFAZL EMADZADEH
CALCULATED-DESIGNED BY: MANISH DALIA/JACK MONG
CHECKED BY: DUANNE GILMORE
REVISED BY: ML/KM
DATE REVISED: 6/09/09
LAST REVISION DATE PLOTTED => 21-JUL-2009
TIME PLOTTED => 10:29
06-08-09

BORDER LAST REVISED 4/11/2008
RELATIVE BORDER SCALE IS IN INCHES 0 1 2 3
USERNAME => trstrk
DGN FILE => 416373ic003.dgn
CU 04242
EA 163731

Dist	COUNTY	ROUTE	POST MILES TOTAL PROJECT	SHEET No.	TOTAL SHEETS
04	SF	101,1	9.2/9.8, 6.8/7.1	72	567

REGISTERED CIVIL ENGINEER 6-09-09 DATE

7-20-09
PLANS APPROVAL DATE

REGISTERED PROFESSIONAL ENGINEER JOHN EDWARD KARN JR No. C66743 Exp. 9-30-10 CIVIL STATE OF CALIFORNIA

THE STATE OF CALIFORNIA OR ITS OFFICERS OR AGENTS SHALL NOT BE RESPONSIBLE FOR THE ACCURACY OR COMPLETENESS OF SCANNED COPIES OF THIS PLAN SHEET.

Arup PB JV
560 Mission Street, Suite 700
San Francisco, CA 94105

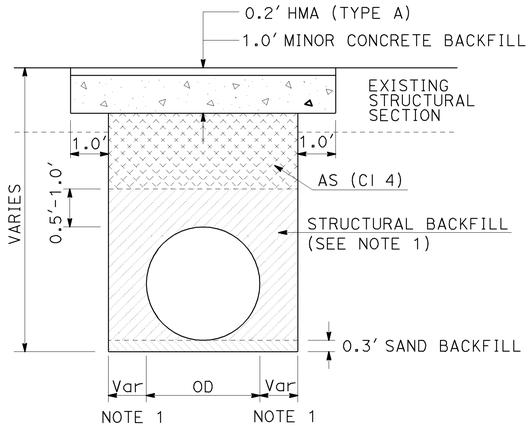

NOTE:
1. 0.5' FOR PIPES UP TO 42", OR 1' FOR PIPES OVER 42" DIAMETER.

TRENCH PAVING DETAIL
(FOR LOCAL STREETS ONLY)

27 a

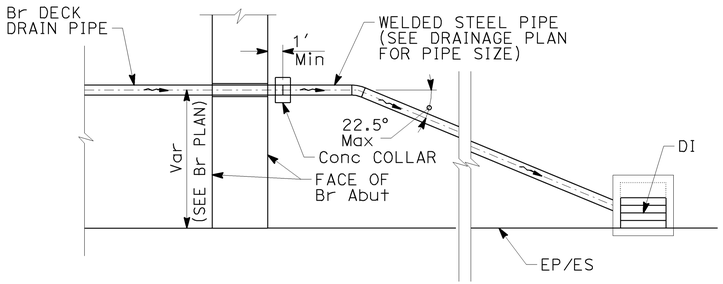

NOTES:
1. FITTING AND BENDS SHALL HAVE A MINIMUM WALL THICKNESS OF 1/8".
2. BRIDGE APPROACH SLAB IS NOT SHOWN.

PIPE CONNECTION TO DECK DRAIN PIPE AT BRIDGE ABUTMENT

1 a

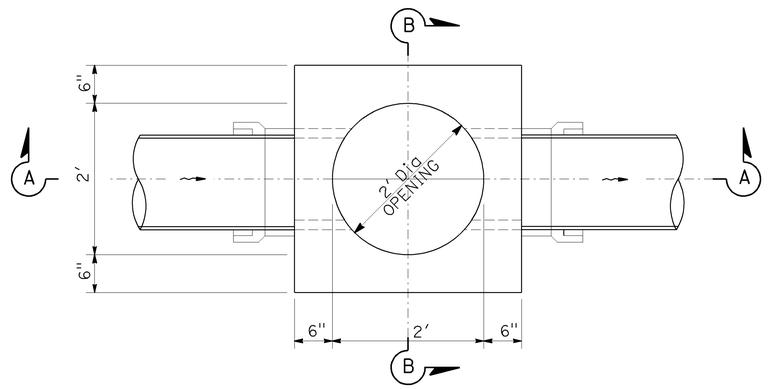

PLAN
(MANHOLE FRAME COVER NOT SHOWN)

NOTES:
1. MAXIMUM DIAMETER OF PIPE CONNECTING TO THIS MANHOLE IS 12".
2. "H" IS THE DIFFERENCE IN ELEVATION BETWEEN THE OUTLET PIPE FLOW LINE AND THE BOTTOM OF MANHOLE FRAME.
3. "B" IS 1/2 DIAMETER OF THE OUTLET PIPE.
4. MANHOLE WALL/BOTTOM REINFORCING IS NOT REQUIRED.
5. PIPE(S) CAN BE PLACED IN ANY WALL.
6. CAST-IN-PLACE OR PRECAST ALTERNATIVE IS OPTIONAL WITH CONTRACTOR.

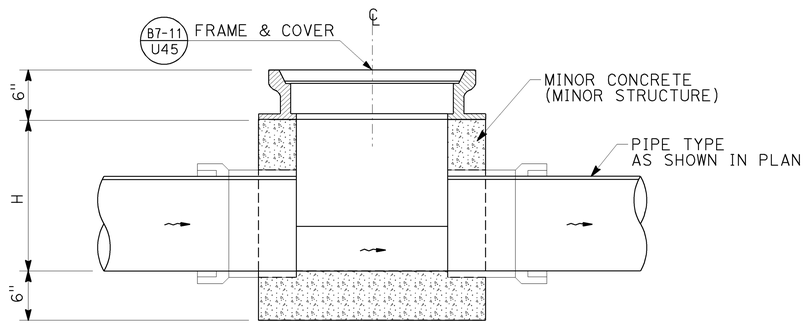

SECTION A-A

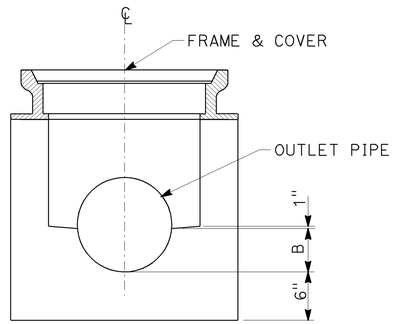

SECTION B-B

STORM DRAIN MANHOLE (TYPE II)

1 i 2 b 3 q 5 b 13 l

DRAINAGE DETAILS
NO SCALE

DD-4

STATE OF CALIFORNIA - DEPARTMENT OF TRANSPORTATION
Caltrans

CONSULTANT FUNCTIONAL SUPERVISOR: ABOLFAZL EMADZADEH
CALCULATED-DESIGNED BY: MANISH DALIA/JACK MONG
CHECKED BY: DUANNE GILMORE
REVISED BY: ML/KM
DATE REVISED: 6/09/09

LAST REVISION 06-08-09
DATE PLOTTED => 23-JUL-2009
TIME PLOTTED => 08:22

Dist	COUNTY	ROUTE	POST MILES TOTAL PROJECT	SHEET No.	TOTAL SHEETS
04	SF	101,1	9.2/9.8, 6.8/7.1	73	567

REGISTERED CIVIL ENGINEER — 6-09-09 DATE

REGISTERED PROFESSIONAL ENGINEER
JOHN EDWARD KARN JR
No. C66743
Exp. 9-30-10
CIVIL
STATE OF CALIFORNIA

7-20-09
PLANS APPROVAL DATE

THE STATE OF CALIFORNIA OR ITS OFFICERS OR AGENTS SHALL NOT BE RESPONSIBLE FOR THE ACCURACY OR COMPLETENESS OF SCANNED COPIES OF THIS PLAN SHEET.

Arup PB JV
560 Mission Street, Suite 700
San Francisco, CA 94105

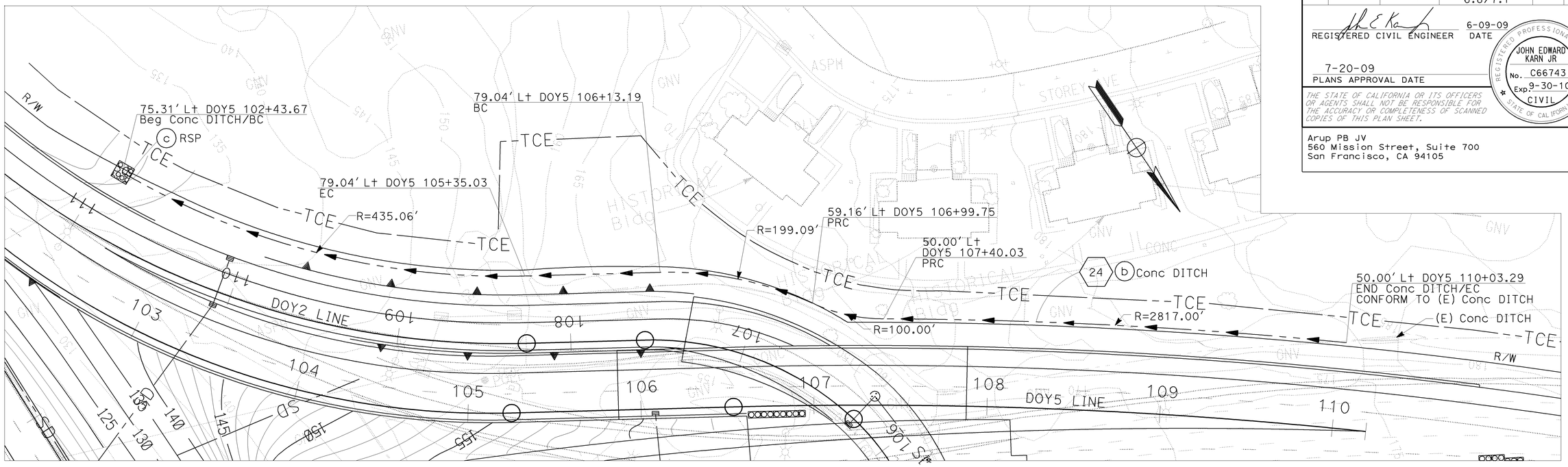

PLAN
SCALE: 1" = 30'

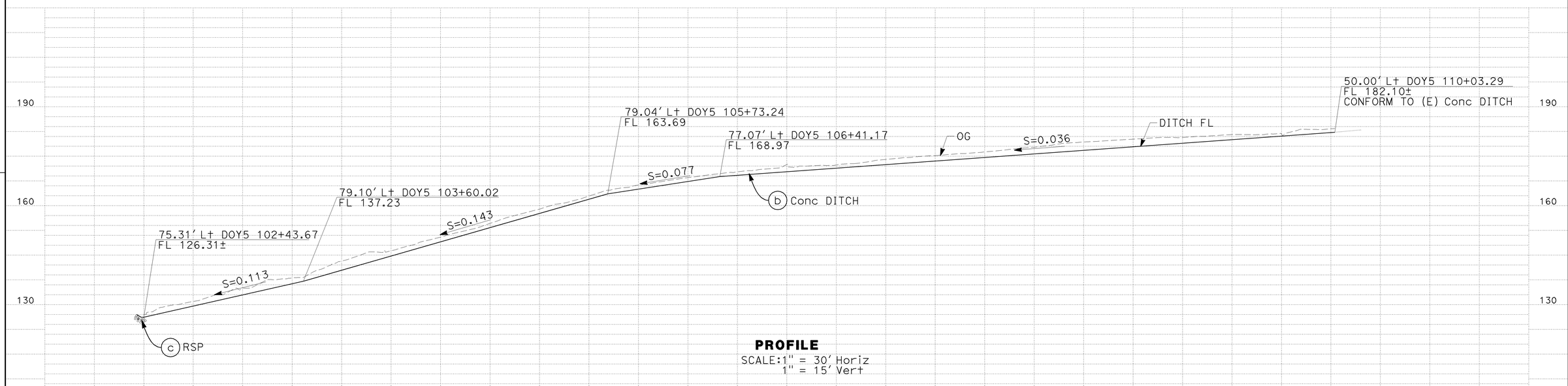

PROFILE
SCALE:1" = 30' Horiz
1" = 15' Vert

DRAINAGE SYSTEM No. 24

THIS PLAN ACCURATE FOR DRAINAGE WORK ONLY

DRAINAGE DETAILS

AS SHOWN

DD-5

STATE OF CALIFORNIA - DEPARTMENT OF TRANSPORTATION
Caltrans
CONSULTANT FUNCTIONAL SUPERVISOR: ABOLFAZL EMADZADEH
CALCULATED-DESIGNED BY: MANISH DALIA/JACK MONG
CHECKED BY: DUANNE GILMORE
REVISED BY: ML/KM
DATE REVISED: 6/09/09
STATION
CY EXC
EMB

LAST REVISION DATE PLOTTED => 23-JUL-2009
TIME PLOTTED => 08:22
06-08-09

BORDER LAST REVISED 4/11/2008
RELATIVE BORDER SCALE IS IN INCHES 0 1 2 3
USERNAME => trstrk
DGN FILE => 416373ic005.dgn
CU 04242
EA 163731

ALTERNATIVE PIPE CULVERTS (ALLOWABLE PIPE MATERIAL AND PROTECTION)

DESIGNATION	RCP	CSP			SSRP			PLASTIC
	SIZE	SIZE	THICKNESS WITH BC	THICKNESS WITH PSC	SIZE	THICKNESS WITH BC	THICKNESS WITH PSC	SMOOTH INTERIOR SIZE
12" APC	12"	12"	0.064"	0.052"	12"	0.064"	0.052"	12"
15" APC	15"	15"	0.064"	0.052"	15"	0.064"	0.052"	15"
18" APC	18"	18"	0.064"	0.052"	18"	0.064"	0.052"	18"
30" APC	30"	30"	0.064"	0.052"	30"	0.064"	0.052"	30"
54" APC	54"	54"	0.064"	0.052"	54"	0.064"	0.052"	54"

NOTES:

1. FOR MINIMUM ALLOWABLE CLASS OF RCP SEE STANDARD PLAN D79.
2. BITUMINOUS COATING IS ON THE SOIL SIDE ONLY.
3. ALL G2 INLETS, USE F&G TYPE 24-12.
4. ALL MANHOLES, USE F&C TYPE U45.
5. SURVEY INFORMATION IS INCONCLUSIVE OF SIZES OF SEVERAL EXISTING CULVERTS AND DITCHES. UNLESS OTHERWISE NOTED, AS ABANDONED CULVERTS HAVE BEEN ASSUMED TO BE 18" Dia AND DITCHES QUANTITIES ARE 3' WIDE WITH 6" THICKNESS.

LEGEND

BC - BITUMINOUS COATING
DA - DEPRESSION APRON
DD - DOWNDRAIN JOINT SYSTEM
DDJ - DOWNDRAIN JOINT
DIM - DRAINAGE INLET MARKER (FOR DETAIL, SEE WPCD SHEETS)
(N) - NOT A SEPARATE PAY ITEM, FOR INFORMATION ONLY
P - POSITIVE JOINT SYSTEM
PSC - POLYMETRIC SHEET COATING
S - STANDARD JOINT SYSTEM
SGD - STANDARD GUTTER DEPRESSION

Dist	COUNTY	ROUTE	POST MILES TOTAL PROJECT	SHEET No.	TOTAL SHEETS
04	SF	101,1	9.2/9.8, 6.8/7.1	74	567

REGISTERED CIVIL ENGINEER — 6-09-09 DATE

7-20-09
PLANS APPROVAL DATE

JOHN EDWARD KARN JR
No. C66743
Exp. 9-30-10
CIVIL
REGISTERED PROFESSIONAL ENGINEER
STATE OF CALIFORNIA

THE STATE OF CALIFORNIA OR ITS OFFICERS OR AGENTS SHALL NOT BE RESPONSIBLE FOR THE ACCURACY OR COMPLETENESS OF SCANNED COPIES OF THIS PLAN SHEET.

Arup PB JV
560 Mission Street, Suite 700
San Francisco, CA 94105

DRAINAGE SYSTEM No.	DRAINAGE UNIT	ABANDON CULVERT (LF)	REMOVE CULVERT (LF)	REMOVE INLET (EA)	REMOVE CONCRETE (CY)	ADJUST MANHOLE TO GRADE (EA)	ADJUST INLET TO GRADE (LF)	SAND BACKFILL (CY)	DITCH EXCAVATION (CY)	MINOR CONCRETE: MINOR STRUCTURE (CY)	MINOR CONCRETE: BACKFILL (CY)	MINOR CONCRETE: DITCH LINING (CY)	MINOR CONCRETE: MISCELLANEOUS CONSTRUCTION (CY)	ALTERNATIVE PIPE CULVERT: 12" (LF)	15" (LF)	18" (LF)	30" (LF)	54" (LF)	12" CSP (0.079" THICK) (LF)	18" CSP (0.079" THICK) (LF)	30" CSP (0.079" THICK) (LF)	8" WSP (LF)	ROCK SLOPE PROTECTION (1/4 T, METHOD B) (CY)	RSP FABRIC (CLASS 8) (SF)	FRAME & GRATE (TYPE 24-12) (N) (EA)	FRAME & GRATE (TYPE 24-12X) (N) (EA)	FRAME & COVER (DETAIL U45) (N) (EA)	MISCELLANEOUS IRON AND STEEL (LBS)	CONCRETE COLLAR (N) (EA)	MAXIMUM PIPE COVER (N) (LF)	HEIGHT OF DRAINAGE STRUCTURE (N) (LF)	PIPE JOINT CLASSIFICATION	DESCRIPTION	STATION	DRAINAGE UNIT	DRAINAGE SYSTEM No.	DRAINAGE PROFILE SHEET No.	DRAINAGE PLAN SHEET No.
1	a																					45							1	5.6		P	8" WSP w/ COLLAR	Br Abut TO 2.70' Rt SB 86+83.37	a	1	DP-1	D-1
	b									1.7															1			326			4.5		G2 DI	2.70' Rt SB 86+83.37	b			
	c															18														3.0		P	18" APC	2.70' Rt SB 86+83.37 TO 13.27' Rt SB 86+97.60	c			
	d									5.0																	1	435			12.3		G2 MANHOLE	13.27' Rt SB 86+97.60	d			
	e															243														13.5		P	18" APC	13.27' Rt SB 86+97.60 TO 17.36' Rt SB 89+40.86	e			
	f									3.6																	1	435			8.4		G2 MANHOLE	17.36' Rt SB 89+40.86	f			
	g															119													1	11.0		S	18" APC w/ COLLAR	17.36' Rt SB 89+40.86 TO 70.60' Lt SB 90+19.67	g			
	h																			43										6.0		DD	12" CSP w/ DDJ	17.36' Rt SB 89+40.86 TO 19.13' Lt SB 89+18.22	h			
	i									0.8																	1	435			2.5		SDMH (TYPE II)	19.13' Lt SB 89+18.22	i			
	j									0.1				5															1	1.1		P	12" APC w/ COLLAR	19.13' Lt SB 89+18.22 TO Br DD	j			
2	a													28															1	2.0		S	12" APC w/ COLLAR	2.68' Rt SB 92+15.77 TO 4.10' Lt SB 91+88.69	a	2	DP-2	D-2
	b									0.8																	1	435			2.5		SDMH (TYPE II)	4.10' Lt SB 91+88.69	b			
	c													6															1	1.0		P	12" APC w/ COLLAR	4.10' Lt SB 91+88.69 TO Br DD	c			
SHEET TOTAL										11.9				39		380			43			45			1		4	2066	5								

DRAINAGE QUANTITIES

NO SCALE

DQ-1

REVISED BY	ML/KM	MANISH DALIA/JACK MONG	CALCULATED-DESIGNED BY
DATE REVISED	6/09/09	DUANNE GILMORE	CHECKED BY

CONSULTANT FUNCTIONAL SUPERVISOR: ABOLFAZL EMADZADEH

STATE OF CALIFORNIA - DEPARTMENT OF TRANSPORTATION
Caltrans

LAST REVISION | DATE PLOTTED => 21-JUL-2009
06-08-09 | TIME PLOTTED => 10:57

BORDER LAST REVISED 4/11/2008 | RELATIVE BORDER SCALE IS IN INCHES 0 1 2 3 | USERNAME => trrichf | DGN FILE => 416373id001.dgn | CU 04242 | EA 163731

NOTE:

1. FOR NOTES AND LEGEND SEE DQ-1.

Dist	COUNTY	ROUTE	POST MILES TOTAL PROJECT	SHEET No.	TOTAL SHEETS
04	SF	101,1	9.2/9.8, 6.8/7.1	75	567

REGISTERED CIVIL ENGINEER — 6-09-09 DATE

REGISTERED PROFESSIONAL ENGINEER — JOHN EDWARD KARN JR — No. C66743 — Exp. 9-30-10 — CIVIL — STATE OF CALIFORNIA

7-20-09
PLANS APPROVAL DATE

THE STATE OF CALIFORNIA OR ITS OFFICERS OR AGENTS SHALL NOT BE RESPONSIBLE FOR THE ACCURACY OR COMPLETENESS OF SCANNED COPIES OF THIS PLAN SHEET.

Arup PB JV
560 Mission Street, Suite 700
San Francisco, CA 94105

DRAINAGE SYSTEM No. ⬡	DRAINAGE UNIT ◯	ABANDON CULVERT (LF)	REMOVE CULVERT (LF)	REMOVE INLET (EA)	REMOVE CONCRETE (CY)	ADJUST MANHOLE TO GRADE (EA)	ADJUST INLET TO GRADE (LF)	SAND BACKFILL (CY)	DITCH EXCAVATION (CY)	MINOR CONCRETE (CY): MINOR STRUCTURE	MINOR CONCRETE (CY): BACKFILL	MINOR CONCRETE (CY): DITCH LINING	MINOR CONCRETE (CY): MISCELLANEOUS CONSTRUCTION	ALTERNATIVE PIPE CULVERT (LF): 12"	15"	18"	30"	54"	12" CSP (0.079" THICK) (LF)	18" CSP (0.079" THICK) (LF)	30" CSP (0.079" THICK) (LF)	8" WSP (LF)	ROCK SLOPE PROTECTION (1/4 T, METHOD B) (CY)	RSP FABRIC (CLASS 8) (SF)	FRAME & GRATE (TYPE 24-12) (N) (EA)	FRAME & GRATE (TYPE 24-12X) (N) (EA)	FRAME & COVER (DETAIL U45) (N) (EA)	MISCELLANEOUS IRON AND STEEL (LBS)	CONCRETE COLLAR (N) (EA)	MAXIMUM PIPE COVER (N)	HEIGHT OF DRAINAGE STRUCTURE (N) (LF)	PIPE JOINT CLASSIFICATION	DESCRIPTION	STATION	DRAINAGE UNIT ◯	DRAINAGE SYSTEM No. ⬡	DRAINAGE PROFILE SHEET No.	DRAINAGE PLAN SHEET No.
3	a									2.4																	1	435			7.1		G2 MANHOLE	38.42′ Rt SB 94+08.03	a	3	DP-2	D-2
	b																91												7.7		S	30" APC	38.42′ Rt SB 94+08.03 TO 9.62′ Rt SB 94+94.04	b			
	c									4.2																	1	435			10.2		G2 MANHOLE	9.62′ Rt SB 94+94.04	c			
	d																176												8.5		S	30" APC	9.62′ Rt SB 94+94.04 TO 48.57′ Lt SB 96+58.67	d			
	e									3.8																	1	435			9.0		G2 MANHOLE	48.57′ Lt SB 96+58.67	e			
	f																				48								5.0		DD	30" CSP w/ DDJ	48.57′ Lt SB 96+58.67 TO 49.76′ Lt SB 97+06.19	f			
	g									2.4																	1	435			7.5		G2 MANHOLE	49.76′ Lt SB 97+06.19	g			
	h																				135								18.9		DD	30" CSP w/ DDJ	49.76′ Lt SB 97+06.19 TO 57.23′ Lt SB 98+40.01	h			
	i									5.2																	1	435			12.9		G2 MANHOLE	57.23′ Lt SB 98+40.01	i			
	j																118												21.7		P	30" APC	57.23′ Lt SB 98+40.01 TO 4.00′ Lt DOY4 107+46.71	j			
	k									4.4		1.2												1				326			10.7		G2 DI w/ SGD	4.00′ Lt DOY4 107+46.71	k		DP-3	
	l																				129								13.5		DD	18" CSP w/ DDJ	4.00′ Lt DOY4 107+46.71 TO 33.00′ Lt DOY5 103+36.31	l			
	m									3.5		1.2												1				326			8.0		G2 DI w/ SGD	33.00′ Lt DOY5 103+36.31	m			
	n																29												6.5		S	18" APC	33.00′ Lt DOY5 103+36.31 TO 22.00′ Rt DOY2 110+07.77	n			
	o									1.8		1.2												1				326			4.9		G2 DI w/ SGD	22.00′ Rt DOY2 110+07.77	o			
	p													29															3.0		P	12" APC	9.62′ Rt SB 94+94.04 TO 8.32′ Lt SB 94+73.66	p		DP-2	
	q									0.8																	1	435			2.5		SDMH (TYPE II)	8.32′ Lt SB 94+73.66	q			
	r													5															1.0		P	12" APC w/ COLLAR	8.32′ Lt SB 94+73.66 TO Br DD	r			
4	a																48												6.5		P	18" APC	48.57′ Lt SB 96+58.67 TO 78.82′ Lt SB 96+21.89	a	4	DP-3	D-2
	b									4.3																	1	435			10.6		G2 MANHOLE	78.82′ Lt SB 96+21.89	b			
	c									0.1																			2.0		DD	12" CSP w/ DDJ w/ COLLAR	78.82′ Lt SB 96+21.89 TO Br DD	c			
SHEET TOTAL										32.9		3.6		34		77	385				129	183		3		7	4023	2										

DRAINAGE QUANTITIES

NO SCALE

DQ-2

STATE OF CALIFORNIA - DEPARTMENT OF TRANSPORTATION
Caltrans

CONSULTANT FUNCTIONAL SUPERVISOR: ABOLFAZL EMADZADEH
CALCULATED-DESIGNED BY: MANISH DALIA/JACK MONG
CHECKED BY: DUANNE GILMORE
REVISED BY: ML/KM
DATE REVISED: 6/09/09

LAST REVISION | DATE PLOTTED => 21-JUL-2009
06-08-09 | TIME PLOTTED => 10:57

BORDER LAST REVISED 4/11/2008

RELATIVE BORDER SCALE IS IN INCHES 0 1 2 3

USERNAME => trrichf
DGN FILE => 416373id002.dgn

CU 04242

EA 163731

NOTE:

1. FOR NOTES AND LEGEND SEE DQ-1.

Dist	COUNTY	ROUTE	POST MILES TOTAL PROJECT	SHEET No.	TOTAL SHEETS
04	SF	101,1	9.2/9.8, 6.8/7.1	76	567

REGISTERED CIVIL ENGINEER — 6-09-09 DATE

7-20-09
PLANS APPROVAL DATE

REGISTERED PROFESSIONAL ENGINEER — JOHN EDWARD KARN JR — No. C66743 — Exp. 9-30-10 — CIVIL — STATE OF CALIFORNIA

THE STATE OF CALIFORNIA OR ITS OFFICERS OR AGENTS SHALL NOT BE RESPONSIBLE FOR THE ACCURACY OR COMPLETENESS OF SCANNED COPIES OF THIS PLAN SHEET.

Arup PB JV
560 Mission Street, Suite 700
San Francisco, CA 94105

DRAINAGE SYSTEM No.	DRAINAGE UNIT	ABANDON CULVERT (LF)	REMOVE CULVERT (LF)	REMOVE INLET (EA)	REMOVE CONCRETE (CY)	ADJUST MANHOLE TO GRADE (EA)	ADJUST INLET TO GRADE (LF)	SAND BACKFILL (CY)	DITCH EXCAVATION (CY)	MINOR CONCRETE (CY): MINOR STRUCTURE	MINOR CONCRETE (CY): BACKFILL	MINOR CONCRETE (CY): DITCH LINING	MINOR CONCRETE (CY): MISCELLANEOUS CONSTRUCTION	ALTERNATIVE PIPE CULVERT (LF): 12"	15"	18"	30"	54"	12" CSP (0.079" THICK) (LF)	18" CSP (0.079" THICK) (LF)	30" CSP (0.079" THICK) (LF)	8" WSP (LF)	ROCK SLOPE PROTECTION (1/4 T, METHOD B) (CY)	RSP FABRIC (CLASS 8) (SF)	FRAME & GRATE (TYPE 24-12) (EA)	FRAME & GRATE (TYPE 24-12X) (N) (EA)	FRAME & COVER (DETAIL U45) (EA)	MISCELLANEOUS IRON AND STEEL (LBS)	CONCRETE COLLAR (N) (EA)	MAXIMUM PIPE COVER (N) (LF)	HEIGHT OF DRAINAGE STRUCTURE (N) (LF)	PIPE JOINT CLASSIFICATION	DESCRIPTION	STATION	DRAINAGE UNIT	DRAINAGE SYSTEM No.	DRAINAGE PROFILE SHEET No.	DRAINAGE PLAN SHEET No.
5	a									0.1				5														1	2.0		P	12" APC w/ COLLAR	Br DD TO 205.37' Lt SB 97+53.32	a	5	DP-3	D-2
	b									0.8																1	435			2.5		SDMH (TYPE II)	205.37' Lt SB 97+53.32	b			
	c																		94										10.0		DD	12" CSP w/ DDJ	205.37' Lt SB 97+53.32 TO 126.64' Lt SB 97+05.37	c			
	d									1.6																1	435			4.5		G2 MANHOLE	126.64' Lt SB 97+05.37	d			
	e									0.1									6									1	2.0		DD	12" CSP w/ DDJ w/ COLLAR	126.64' Lt SB 97+05.37 TO Br DD	e			
	f															77													5.0		S	18" APC	126.64' Lt SB 97+05.37 TO 49.76' Lt SB 97+06.19	f		DP-4	
	g																			36									3.1		DD	18" CSP w/DDJ	49.76' Lt SB 97+06.19 TO 19.78' Lt SB 97+26.51	g			
	h									1.6																1	435			4.6		G2 MANHOLE	19.78' Lt SB 97+26.51	h			
	i									0.1									8									1	2.0		DD	12" CSP w/ DDJ w/ COLLAR	19.78' Lt SB 97+26.51 TO Br DD	i			
6	a			1																												REMOVE INLET	65.29' Rt VT 118+28.56	a	6		D-2
	b	20						1.3																								ABANDON CULVERT	65.29' Rt VT 118+28.56 TO 47.89' Rt VT 118+20.25	b			
	c					1																										ADJUST MANHOLE TO GRADE	53.38' Rt VT 118+14.65	c			
7	a									5.8																1	435			8.1		SDMH (TYPE I)	13.89' Lt L 16+48.99	a	7	DP-4	D-2
	b																		25										3.6		S	54" APC	13.89' Lt L 16+48.99 TO 11.00' Rt L 16+46.52	b			
	c									5.5																1	435			7.6		SDMH (TYPE I)	11.00' Rt L 16+46.52	c			
	d																		85										3.1		S	54" APC	11.00' Rt L 16+46.52 TO 4.15' Rt L 15+62.30	d			
	e									5.1																1	435			6.9		SDMH (TYPE I)	4.15' Rt L 15+62.30	e			
	f																		277										2.4		S	54" APC	4.15' Rt L 15+62.30 TO 6.49' Rt L 12+84.99	f			D-3
	g									6.0																1	435			8.4		SDMH (TYPE I)	6.49' Rt L 12+84.99	g			
	h																		21										3.9		S	54" APC	6.49' Rt L 12+84.99 TO 14.31' Lt L 12+84.93	h			
	i									5.6																1	435			7.7		SDMH (TYPE I)	14.31' Lt L 12+84.93	i			
	j	361						212.7																								ABANDON CULVERT	13.89' Lt L 16+48.99 TO 14.31' Lt L 12+84.93	j			
SHEET TOTAL		381		1		1		214.0		32.3				5		77		408	108	36						8	3480	3									

DRAINAGE QUANTITIES

NO SCALE

DQ-3

STATE OF CALIFORNIA - DEPARTMENT OF TRANSPORTATION — Caltrans

CONSULTANT FUNCTIONAL SUPERVISOR: ABOLFAZL EMADZADEH

CALCULATED-DESIGNED BY: MANISH DALIA/JACK MONG
CHECKED BY: DUANNE GILMORE

REVISED BY	DATE REVISED
ML/KM	6/09/09

LAST REVISION | DATE PLOTTED => 21-JUL-2009
06-08-09 | TIME PLOTTED => 10:57

NOTE:

1. FOR NOTES AND LEGEND SEE DQ-1.

Dist	COUNTY	ROUTE	POST MILES TOTAL PROJECT	SHEET No.	TOTAL SHEETS
04	SF	101,1	9.2/9.8, 6.8/7.1	77	567

REGISTERED CIVIL ENGINEER — 6-09-09 DATE

REGISTERED PROFESSIONAL ENGINEER — JOHN EDWARD KARN JR — No. C66743 — Exp. 9-30-10 — CIVIL — STATE OF CALIFORNIA

7-20-09
PLANS APPROVAL DATE

THE STATE OF CALIFORNIA OR ITS OFFICERS OR AGENTS SHALL NOT BE RESPONSIBLE FOR THE ACCURACY OR COMPLETENESS OF SCANNED COPIES OF THIS PLAN SHEET.

Arup PB JV
560 Mission Street, Suite 700
San Francisco, CA 94105

DRAINAGE SYSTEM No. ⬡	DRAINAGE UNIT ◯	ABANDON CULVERT (LF)	REMOVE CULVERT (LF)	REMOVE INLET (EA)	REMOVE CONCRETE (CY)	ADJUST MANHOLE TO GRADE (EA)	ADJUST INLET TO GRADE (LF)	SAND BACKFILL (CY)	DITCH EXCAVATION (CY)	MINOR CONCRETE (CY)				ALTERNATIVE PIPE CULVERT (LF)					12" CSP (0.079" THICK) (LF)	18" CSP (0.079" THICK) (LF)	30" CSP (0.079" THICK) (LF)	8" WSP (LF)	ROCK SLOPE PROTECTION (1/4 T, METHOD B) (CY)	RSP FABRIC (CLASS 8) (SF)	FRAME & GRATE (TYPE 24-12) (N) (EA)	FRAME & GRATE (TYPE 24-12X) (N) (EA)	FRAME & COVER (DETAIL U45) (N) (EA)	MISCELLANEOUS IRON AND STEEL (LBS)	CONCRETE COLLAR (N) (EA)	MAXIMUM PIPE COVER (N) (LF)	HEIGHT OF DRAINAGE STRUCTURE (N) (LF)	PIPE JOINT CLASSIFICATION	DESCRIPTION	STATION	DRAINAGE UNIT ◯	DRAINAGE SYSTEM No. ⬡	DRAINAGE PROFILE SHEET No.	DRAINAGE PLAN SHEET No.
										MINOR STRUCTURE	BACKFILL	DITCH LINING	MISCELLANEOUS CONSTRUCTION	12"	15"	18"	30"	54"																						
8	a									1.7			1.2												1			239			4.9		GO DI W/ SGD	16.00′ R† L 15+62.30	a	8	DP-4	D-2
	b															12														4.2			18" APC	16.00′ L† L 15+62.30 TO 4.15′ R† L 15+62.30	b			
	c															20														4.2			18"APC	4.15′ R† L 15+62.30 TO 16.00′ L† L 15+62.30	c			
	d									1.7			1.2												1			239			4.9		GO DI W/ SGD	16.00′ R† L 15+62.30	d			
9	a															118														8.0		S	18" APC	4.00′ L† DOY4 107+46.71 TO 4.00′ L† DOY4 106+28.60	a	9	DP-5	D-2
	b									3.7			1.2												1			326			8.4		G2 DI w/ SGD	4.00′ L† DOY4 106+28.60	b			
	c															34														6.8		S	18" APC	4.00′ L† DOY4 106+28.60 TO 33.00′ R† DOY4 106+28.60	c			
	d									2.4			1.2												1			326			7.2		G2 DI w/ SGD	33.00′ R† DOY4 106+28.60	d			
	e															158														5.7		S	18" APC	33.00′ R† DOY4 106+28.60 TO 33.00′ R† DOY4 104+70.64	e			
	f									2.2			1.2												1			326			6.4		G2 DI w/ SGD	33.00′ R† DOY4 104+70.64	f			
	g															118														6.9		S	18" APC	33.00′ R† DOY4 104+70.64 TO 33.00′ R† DOY4 103.52.76	g			
	h									3.7			1.2												1			326			8.4		G2 DI w/ SGD	33.00′ R† DOY4 103.52.76	h			
	i															67														9.2		S	18" APC	33.00′ R† DOY4 103.52.76 TO 33.00′ R† DOY4 102+85.60	i			D-3
	j									4.5			1.2												1			326			10.7		G2 DI w/ SGD	33.00′ R† DOY4 102+85.60	j			
	k															35														5.0		S	18" APC	33.00′ R† DOY4 102+85.60 TO 22.00′ L† VT 121+15.45	k			
	l									2.1			1.2												1			326			6.2		G2 DI w/ SGD	22.00′ L† VT 121+15.45	l			
10	a	214						14.0																										ABANDON CULVERT	86.00′ L† SB 99+47.01 TO 18.43′ L† DOY2 108+83.65	a	10		D-2
	b			1																														REMOVE INLET	18.43′ L† DOY2 108+83.65	b			
	c	33						2.2																										ABANDON CULVERT	18.43′ L† DOY2 108+83.65 TO 13.91′ R† DOY2 108+76.07	c			
	d			1																														REMOVE INLET	13.91′ R† DOY2 108+76.07	d			
	e			1																														REMOVE INLET	16.37′ R† DOY2 108+32.33	e			
	f	42						2.8																										ABANDON CULVERT	13.91′ R† DOY2 108+76.07 TO 16.37′ R† DOY2 108+32.33	f			
	g	152						9.9																										ABANDON CULVERT	18.43′ L† DOY2 108+83.65 TO 11.26′ L† DOY2 107+32.31	g			
	h			1																														REMOVE INLET	11.26′ L† DOY2 107+32.31	h			
SHEET TOTAL		441		4				28.9		22.0			9.6			562									6	2		2434											

DRAINAGE QUANTITIES

NO SCALE

DQ-4

CALCULATED-DESIGNED BY: ML/KM
CHECKED BY: DUANNE GILMORE
REVISED BY: MANISH DALIA/JACK MONG
DATE REVISED: 6/09/09

CONSULTANT FUNCTIONAL SUPERVISOR: ABOLFAZL EMADZADEH

STATE OF CALIFORNIA - DEPARTMENT OF TRANSPORTATION
Caltrans

LAST REVISION | DATE PLOTTED => 21-JUL-2009
06-08-09 | TIME PLOTTED => 10:57

BORDER LAST REVISED 4/11/2008

RELATIVE BORDER SCALE IS IN INCHES 0 1 2 3

USERNAME => trrichf
DGN FILE => 416373id004.dgn

CU 04242

EA 163731

NOTE:

1. FOR NOTES AND LEGEND SEE DQ-1.

Dist	COUNTY	ROUTE	POST MILES TOTAL PROJECT	SHEET No.	TOTAL SHEETS
04	SF	101,1	9.2/9.8, 6.8/7.1	78	567

REGISTERED CIVIL ENGINEER — 6-09-09 DATE

7-20-09
PLANS APPROVAL DATE

REGISTERED PROFESSIONAL ENGINEER — JOHN EDWARD KARN JR — No. C66743 — Exp. 9-30-10 — CIVIL — STATE OF CALIFORNIA

THE STATE OF CALIFORNIA OR ITS OFFICERS OR AGENTS SHALL NOT BE RESPONSIBLE FOR THE ACCURACY OR COMPLETENESS OF SCANNED COPIES OF THIS PLAN SHEET.

Arup PB JV
560 Mission Street, Suite 700
San Francisco, CA 94105

DRAINAGE SYSTEM No.	DRAINAGE UNIT	ABANDON CULVERT (LF)	REMOVE CULVERT (LF)	REMOVE INLET (EA)	REMOVE CONCRETE (CY)	ADJUST MANHOLE TO GRADE (EA)	ADJUST INLET TO GRADE (LF)	SAND BACKFILL (CY)	DITCH EXCAVATION (CY)	MINOR CONCRETE: MINOR STRUCTURE (CY)	MINOR CONCRETE: BACKFILL (CY)	MINOR CONCRETE: DITCH LINING (CY)	MINOR CONCRETE: MISCELLANEOUS CONSTRUCTION (CY)	ALTERNATIVE PIPE CULVERT: 12" (LF)	15" (LF)	18" (LF)	30" (LF)	54" (LF)	12" CSP (0.079" THICK) (LF)	18" CSP (0.079" THICK) (LF)	30" CSP (0.079" THICK) (LF)	8" WSP (LF)	ROCK SLOPE PROTECTION (1/4 T, METHOD B) (CY)	RSP FABRIC (CLASS 8) (SF)	FRAME & GRATE (TYPE 24-12) (N) (EA)	FRAME & GRATE (TYPE 24-12X) (N) (EA)	FRAME & COVER (DETAIL U45) (N) (EA)	MISCELLANEOUS IRON AND STEEL (LBS)	CONCRETE COLLAR (N) (EA)	MAXIMUM PIPE COVER (N) (LF)	HEIGHT OF DRAINAGE STRUCTURE (N) (LF)	PIPE JOINT CLASSIFICATION	DESCRIPTION	STATION	DRAINAGE UNIT	DRAINAGE SYSTEM No.	DRAINAGE PROFILE SHEET No.	DRAINAGE PLAN SHEET No.
10	i	11						0.1																								ABANDON CULVERT (8")	94.57′ Lt SB 101+12.58 TO 83.70′ Lt SB 101+13.37	i	10		D-2
	j				9.1																											REMOVE DITCH	83.70′ Lt SB 101+13.37 TO 2.70′ Lt SB 102+46.13	j			
11	a	249						7.2																								ABANDON CULVERT (12")	114.10′ Lt SB 98+55.21 TO 118.76′ Rt SB 99+42.70	a	11		D-2
	b	205						13.4																								ABANDON CULVERT (18")	86.00′ Lt SB 99+47.01 TO 118.76′ Rt SB 99+42.70	b			
	c			1																												REMOVE INLET	86.00′ Lt SB 99+47.01	c			
	d		200																										6.0			REMOVE CULVERT (15")	86.00′ Lt SB 99+47.01 TO 1.81′ Lt DOY4 105+28.44	d			
	e			1																												REMOVE INLET	1.81′ Lt DOY4 105+28.44	e			
	f		108																										6.0			REMOVE CULVERT (15")	1.81′ Lt DOY4 105+28.44 TO 35.99′ Lt DOY4 104+25.26	f			
	g			1																												REMOVE INLET	35.99′ Lt DOY4 104+25.26	g			
	h	51						3.3																								ABANDON CULVERT (18")	35.99′ Lt DOY4 104+25.26 TO 46.35′ Lt DOY4 104+75.35	h			
	i			1																												REMOVE INLET	46.35′ Lt DOY4 104+75.35	i			
	j	19						0.9																								ABANDON CULVERT (15")	35.99′ Lt DOY4 104+25.26 TO 54.91′ Lt DOY4 104+22.03	j			
	k	187						8.5																								ABANDON CULVERT (15")	35.99′ Lt DOY4 104+25.26 TO 33.37′ Lt DOY4 102+38.14	k			
	l			1																												REMOVE INLET	33.37′ Lt DOY4 102+38.14	l			D-3
12	a															118													11.0		S	18" APC	33.00′ Rt DOY4 102+85.60 TO 40.09′ Lt DOY5 98+86.55	a	12	DP-5	D-3
	b									4.5			1.2											1			326			10.8		G2 DI w/ SGD	40.09′ Lt DOY5 98+86.55	b			
	c															143													9.3		S	18" APC	40.09′ Lt DOY5 98+86.55 TO 22.00′ Rt DOY2 112+94.53	c			D-2
	d									1.9			1.2											1			326			5.4		G2 DI w/ SGD	45.07′ Lt DOY5 100+29.96	d			
	e															32													3.9		S	18" APC	45.07′ Lt DOY5 100+29.96 TO 46.49′ Lt DOY5 100+61.62	e			
	f									1.8			1.6											1			326			4.9		G2 DI w/ SGD	46.49′ Lt DOY5 100+61.62	f			
	g															20													3.4		S	18" APC	46.49′ Lt DOY5 100+61.62 TO 49.93′ Lt DOY5 101+05.26	g			
	h									1.7			1.2											1			326			4.7		G2 DI w/ SGD	49.93′ Lt DOY5 101+05.26	h			
SHEET TOTAL		722	308	5	9.1			33.4		9.9			5.2			313								4			1304										

DRAINAGE QUANTITIES

NO SCALE

DQ-5

STATE OF CALIFORNIA - DEPARTMENT OF TRANSPORTATION — Caltrans

CONSULTANT FUNCTIONAL SUPERVISOR: ABOLFAZL EMADZADEH

CALCULATED-DESIGNED BY: MANISH DALIA/JACK MONG

CHECKED BY: DUANNE GILMORE

REVISED BY	DATE REVISED
ML/KM	6/09/09

LAST REVISION DATE PLOTTED => 21-JUL-2009
TIME PLOTTED => 10:57
06-08-09

BORDER LAST REVISED 4/11/2008

RELATIVE BORDER SCALE IS IN INCHES 0 1 2 3

USERNAME => trrichf
DGN FILE => 416373id005.dgn

CU 04242

EA 163731

NOTE:

1. FOR NOTES AND LEGEND SEE DQ-1.

Dist	COUNTY	ROUTE	POST MILES TOTAL PROJECT	SHEET No.	TOTAL SHEETS
04	SF	101,1	9.2/9.8, 6.8/7.1	79	567

REGISTERED CIVIL ENGINEER — 6-09-09 DATE

7-20-09
PLANS APPROVAL DATE

REGISTERED PROFESSIONAL ENGINEER — JOHN EDWARD KARN JR — No. C66743 — Exp. 9-30-10 — CIVIL — STATE OF CALIFORNIA

THE STATE OF CALIFORNIA OR ITS OFFICERS OR AGENTS SHALL NOT BE RESPONSIBLE FOR THE ACCURACY OR COMPLETENESS OF SCANNED COPIES OF THIS PLAN SHEET.

Arup PB JV
560 Mission Street, Suite 700
San Francisco, CA 94105

DRAINAGE SYSTEM No.	DRAINAGE UNIT	ABANDON CULVERT (LF)	REMOVE CULVERT (LF)	REMOVE INLET (EA)	REMOVE CONCRETE (CY)	ADJUST MANHOLE TO GRADE (EA)	ADJUST INLET TO GRADE (LF)	SAND BACKFILL (CY)	DITCH EXCAVATION (CY)	MINOR CONCRETE (CY): MINOR STRUCTURE	MINOR CONCRETE (CY): BACKFILL	MINOR CONCRETE (CY): DITCH LINING	MINOR CONCRETE (CY): MISCELLANEOUS CONSTRUCTION	ALTERNATIVE PIPE CULVERT (LF): 12"	15"	18"	30"	54"	12" CSP (0.079" THICK) (LF)	18" CSP (0.079" THICK) (LF)	30" CSP (0.079" THICK) (LF)	8" WSP (LF)	ROCK SLOPE PROTECTION (1/4 T, METHOD B) (CY)	RSP FABRIC (CLASS 8) (SF)	FRAME & GRATE (TYPE 24-12) (N) (EA)	FRAME & GRATE (TYPE 24-12X) (N) (EA)	FRAME & COVER (DETAIL U45) (N) (EA)	MISCELLANEOUS IRON STEEL (F) (LBS)	CONCRETE COLLAR (N) (EA)	MAXIMUM PIPE COVER (N) (LF)	HEIGHT OF DRAINAGE STRUCTURE (N) (LF)	PIPE JOINT CLASSIFICATION	DESCRIPTION	STATION	DRAINAGE UNIT	DRAINAGE SYSTEM No.	DRAINAGE PROFILE SHEET No.	DRAINAGE PLAN SHEET No.
13	a																65												9.1		S	30" APC	4.00′ Lt DOY4 107+46.71 TO 4.00′ Lt DOY4 108+12.40	a	13	DP-6	D-2
	b									4.8			1.6											1			326			11.6		G2 DI w/ SGD	4.00′ Lt DOY4 108+12.40	b			
	c																37												9.5		S	30" APC	4.00′ Lt DOY4 108+12.40 TO 4.00′ Lt DOY4 108+49.36	c			
	d									4.9			1.2											1			326			12.0		G2 DI w/ SGD	4.00′ Lt DOY4 108+49.36	d			
	e																			181									8.4		DD	18" CSP w/ DDJ	4.00′ Lt DOY4 108+49.36 TO 18.24′ Rt SB 101+78.52	e			
	f									3.8														1			326			8.8		G2 DI	18.24′ Rt SB 101+78.52	f			
	g															16													7.3		S	18" APC	18.24′ Rt SB 101+78.52 TO 4.00′ Rt SB 101+78.48	g			
	h									2.4			1.2											1			326			7.4		G2 DI w/ SGD	4.00′ Rt SB 101+78.48	h			
	i															70													4.9		S	18" APC	4.00′ Rt SB 101+78.48 TO 4.00′ Rt SB 101+07.50	i			
	j									1.6			1.2											1			326			4.0		G2 DI w/ SGD	4.00′ Rt SB 101+07.50	j			
	k													56															6.3		S	12" APC	4.00′ Lt DOY4 108+12.40 TO 48.00′ Rt DOY4 107+90.69	k			
	l									0.8																		1	435		2.5		SDMH (TYPE II)	48.00′ Rt DOY4 107+90.69	l			
	m													6															1.5		S	12" APC w/ COLLAR	48.00′ Rt DOY4 107+90.69 TO Br DD	m			
14	a															103													4.8		S	18" APC	4.00′ Lt SB 101+78.48 TO 4.00′ Rt SB 102+81.50	a	14	DP-6	D-2
	b									1.9														1			326			5.2		G2 DI	4.00′ Rt SB 102+81.50	b			
	c															60													4.2		S	18" APC	4.00′ Rt SB 102+81.50 TO 4.00′ Rt DOY5 106+08.33	c			
	d									1.9			1.2											1			326			5.4		G2 DI w/ SGD	4.00′ Rt DOY5 106+08.33	d			
15	-																															NOT USED		-	15		
16	a									6.0			1.2											1			326			15.0		G2 DI w/ SGD	89.40′ Rt SB 103+15.69	a	16	DP-7	D-2
	b															86													13.5		S	18" APC	89.40′ Rt SB 103+15.69 TO 4.00′ Lt DOY2 103+39.66	b			
	c									1.8			1.2											1			326			4.9		G2 DI w/ SGD	4.00′ Lt DOY2 103+39.66	c			
	d															80													4.2		S	18" APC	4.00′ Lt DOY2 103+39.66 TO 18.00′ Rt DOY2 104+17.25	d			
SHEET TOTAL										29.9			8.8	62		415	102			181				9		1	3369	1										

DRAINAGE QUANTITIES

NO SCALE

DQ-6

CALCULATED-DESIGNED BY: MANISH DALIA/JACK MONG
CHECKED BY: DUANNE GILMORE
REVISED BY: ML/KM
DATE REVISED: 6/09/09
CONSULTANT FUNCTIONAL SUPERVISOR: ABOLFAZL EMADZADEH
STATE OF CALIFORNIA - DEPARTMENT OF TRANSPORTATION
Caltrans

LAST REVISION | DATE PLOTTED => 21-JUL-2009
06-08-09 | TIME PLOTTED => 10:33

BORDER LAST REVISED 4/11/2008 | RELATIVE BORDER SCALE IS IN INCHES 0 1 2 3 | USERNAME => trmariak | DGN FILE => 416373id006.dgn | CU 04242 | EA 163731

NOTE:

1. FOR NOTES AND LEGEND SEE DQ-1.

Dist	COUNTY	ROUTE	POST MILES TOTAL PROJECT	SHEET No.	TOTAL SHEETS
04	SF	101,1	9.2/9.8, 6.8/7.1	80	567

REGISTERED CIVIL ENGINEER — 6-09-09 DATE

7-20-09
PLANS APPROVAL DATE

REGISTERED PROFESSIONAL ENGINEER — JOHN EDWARD KARN JR — No. C66743 — Exp. 9-30-10 — CIVIL — STATE OF CALIFORNIA

THE STATE OF CALIFORNIA OR ITS OFFICERS OR AGENTS SHALL NOT BE RESPONSIBLE FOR THE ACCURACY OR COMPLETENESS OF SCANNED COPIES OF THIS PLAN SHEET.

Arup PB JV
560 Mission Street, Suite 700
San Francisco, CA 94105

DRAINAGE SYSTEM No.	DRAINAGE UNIT	ABANDON CULVERT (LF)	REMOVE CULVERT (LF)	REMOVE INLET (EA)	REMOVE CONCRETE (CY)	ADJUST MANHOLE TO GRADE (EA)	ADJUST INLET TO GRADE (LF)	SAND BACKFILL (CY)	DITCH EXCAVATION (CY)	MINOR CONCRETE: MINOR STRUCTURE (CY)	MINOR CONCRETE: BACKFILL (CY)	MINOR CONCRETE: DITCH LINING (CY)	MINOR CONCRETE: MISCELLANEOUS CONSTRUCTION (CY)	ALTERNATIVE PIPE CULVERT: 12" (LF)	15" (LF)	18" (LF)	30" (LF)	54" (LF)	12" CSP (0.079" THICK) (LF)	18" CSP (0.079" THICK) (LF)	30" CSP (0.079" THICK) (LF)	8" WSP (LF)	ROCK SLOPE PROTECTION (1/4 T, METHOD B) (CY)	RSP FABRIC (CLASS 8) (SF)	FRAME & GRATE (TYPE 24-12) (N) (EA)	FRAME & GRATE (TYPE 24-12X) (N) (EA)	FRAME & COVER (DETAI; U45) (N) (EA)	MISCELLANEOUS IRON AND STEEL (LBS)	CONCRETE COLLAR (N) (EA)	MAXIMUM PIPE COVER (N) (LF)	HEIGHT OF DRAINAGE STRUCTURE (N) (LF)	PIPE JOINT CLASSIFICATION	DESCRIPTION	STATION	DRAINAGE UNIT	DRAINAGE SYSTEM No.	DRAINAGE PROFILE SHEET No.	DRAINAGE PLAN SHEET No.
17	a			1																												REMOVE INLET	1.99′ Lt DOY2 103+82.20	a	17		D-2
	b	59						3.9																								ABANDON CULVERT	1.99′ Lt DOY2 103+82.20 TO 56.63′ Rt DOY2 103+77.68	b			
	c		95																													REMOVE CULVERT	1.99′ Lt DOY2 103+82.20 TO 2.44′ Lt DOY2 104+79.63	c			
	d			1																												REMOVE INLET	2.44′ Lt DOY2 104+79.63	d			
	e	47						3.0																								ABANDON CULVERT	2.44′ Lt DOY2 104+79.63 TO 26.67′ Rt DOY2 104+46.33	e			
	f	48						3.1																								ABANDON CULVERT	2.44′ Lt DOY2 104+79.63 TO 11.53′ Lt DOY2 105+29.35	f			
	g			1																												REMOVE INLET	11.53′ Lt DOY2 105+29.35	g			
18	a															58												1	11.7		P	18" APC w/ COLLAR	25.62′ Lt SB 112+92.24 TO 43.41′ Rt DOY2 104+18.88	a	18	DP-7	D-2
	b									5.4																	1	435			13.2		G2 MANHOLE	43.41′ Rt DOY2 104+18.88	b			
	c																		111										6.0		DD	18" CSP w/ DDJ	43.41′ Rt DOY2 104+18.88 TO 86.39′ Rt SB 104+96.59	c			
	d									2.2															1			326		6.3		G2 DI	86.39′ Rt SB 104+96.59	d			
	e															308													4.7		S	18" APC	86.39′ Rt SB 104+96.59 TO 80.22′ Rt SB 108+13.15	e			
	f									1.8															1			326		4.9		G2 DI	80.22′ Rt SB 108+13.15	f			D-4
	g															58													4.1		S	18" APC	80.22′ Rt SB 108+13.15 TO 22.00′ Rt SB 108+11.59	g			
	h									2.0															1			326		5.6		G2 DI	22.00′ Rt SB 108+11.59	h		DP-8	
	i															13													4.1		S	18" APC	22.00′ Rt SB 108+11.59 TO 8.70′ Rt SB 108+11.59	i			
	j									1.8															1			326		5.0		G2 DI	8.70′ Rt SB 108+11.59	j			
	k															300													3.4		S	18" APC	8.70′ Rt SB 108+11.59 TO 10.00′ Rt SB 111+12.49	k			
	l									1.8															1			326		4.8		G2 DI	10.00′ Rt SB 111+12.49	l			
SHEET TOTAL		154	95	3				10.0		15.0						737			111						5		1	2065	1									

DRAINAGE QUANTITIES

NO SCALE

DQ-7

STATE OF CALIFORNIA - DEPARTMENT OF TRANSPORTATION — Caltrans

CONSULTANT FUNCTIONAL SUPERVISOR: ABOLFAZL EMADZADEH

CALCULATED-DESIGNED BY: MANISH DALIA/JACK MONG
CHECKED BY: DUANNE GILMORE

REVISED BY: ML/KM
DATE REVISED: 6/09/09

LAST REVISION DATE PLOTTED => 23-JUL-2009
TIME PLOTTED => 08:13
06-08-09

BORDER LAST REVISED 4/11/2008

RELATIVE BORDER SCALE IS IN INCHES 0 1 2 3

USERNAME => trmartin
DGN FILE => 416373id007.dgn

CU 04242

EA 163731

NOTE:

1. FOR NOTES AND LEGEND SEE DQ-1.

Dist	COUNTY	ROUTE	POST MILES TOTAL PROJECT	SHEET No.	TOTAL SHEETS
04	SF	101,1	9.2/9.8, 6.8/7.1	81	567

REGISTERED CIVIL ENGINEER — 6-09-09 DATE

REGISTERED PROFESSIONAL ENGINEER — JOHN EDWARD KARN JR — No. C66743 — Exp. 9-30-10 — CIVIL — STATE OF CALIFORNIA

7-20-09
PLANS APPROVAL DATE

THE STATE OF CALIFORNIA OR ITS OFFICERS OR AGENTS SHALL NOT BE RESPONSIBLE FOR THE ACCURACY OR COMPLETENESS OF SCANNED COPIES OF THIS PLAN SHEET.

Arup PB JV
560 Mission Street, Suite 700
San Francisco, CA 94105

DRAINAGE SYSTEM No. ⬡	DRAINAGE UNIT ◯	ABANDON CULVERT (LF)	REMOVE CULVERT (LF)	REMOVE INLET (EA)	REMOVE CONCRETE (CY)	ADJUST MANHOLE TO GRADE (EA)	ADJUST INLET TO GRADE (LF)	SAND BACKFILL (CY)	DITCH EXCAVATION (CY)	MINOR CONCRETE (CY): MINOR STRUCTURE	MINOR CONCRETE (CY): BACKFILL	MINOR CONCRETE (CY): DITCH LINING	MINOR CONCRETE (CY): MISCELLANEOUS CONSTRUCTION	ALTERNATIVE PIPE CULVERT (LF): 12"	15"	18"	30"	54"	12" CSP (0.079" THICK) (LF)	18" CSP (0.079" THICK) (LF)	30" CSP (0.079" THICK) (LF)	8" WSP (LF)	ROCK SLOPE PROTECTION (1/4 T, METHOD B) (CY)	RSP FABRIC (CLASS 8) (SF)	FRAME & GRATE (TYPE 24-12) (EA)	FRAME & GRATE (TYPE 24-12X) (EA)	FRAME & COVER (DETAIL U45) (N) (EA)	MISCELLANEOUS IRON AND STEEL (LBS)	CONCRETE COLLAR (N) (EA)	MAXIMUM PIPE COVER (N) (LF)	HEIGHT OF DRAINAGE STRUCTURE (N) (LF)	PIPE JOINT CLASSIFICATION	DESCRIPTION	STATION	DRAINAGE UNIT ◯	DRAINAGE SYSTEM No. ⬡	DRAINAGE PROFILE SHEET No.	DRAINAGE PLAN SHEET No.
19	a															25													11.7		S	18" APC	43.41′ R† DOY2 104+18.88 TO 18.00′ R† DOY2 104+17.25	a	19	DP-8	D-2
	b									4.8																1	435			11.6		G2 MANHOLE	18.00′ R† DOY2 104+17.25	b			
	c															99													10.1		S	18" APC	18.00′ R† DOY2 104+17.25 TO 18.00′ R† DOY2 105+06.51	c			
	d									3.8																1	435			8.8		G2 MANHOLE	18.00′ R† DOY2 105+06.51	d			
	e															22													7.3		S	18" APC	18.00′ R† DOY2 105+06.51 TO 4.00′ L† DOY2 105+06.51	e			
	f									2.0															1			326			5.8		G2 DI	4.00′ L† DOY2 105+06.51	f			
20	a															84													7.2		S	18" APC	18.00′ R† DOY2 105+06.51 TO 18.00′ R† DOY2 105+81.94	a	20	DP-8	D-2
	b									2.5																1	435			7.8		G2 MANHOLE	18.00′ R† DOY2 105+81.94	b			
	c															49													3.3		S	18" APC	18.00′ R† DOY2 105+81.94 TO 18.00′ R† DOY2 106+24.88	c			
	d									2.4																1	435			7.4		G2 MANHOLE	18.00′ R† DOY2 106+24.88	d			
	e															22													5.9		S	18" APC	18.00′ R† DOY2 106+24.88 TO 4.00′ L† DOY2 106+24.88	e			
	f									1.7															1			326			4.5		G2 DI	4.00′ L† DOY2 106+24.88	f			
21	a															22													6.3		S	18" APC	18.00′ R† DOY2 105+81.94 TO 4.00′ L† DOY2 105+81.94	a	21	DP-8	D-2
	b									1.8															1			326			4.9		G2 DI	4.00′ L† DOY2 105+81.94	b			
22	a															61													4.7		S	18" APC	86.39′ R† SB 104+96.59 TO 25.47′ L† SB 104+92.29	a	22	DP-8	D-2
	b									2.0															1			326			5.5		G2 DI	25.47′ L† SB 104+92.29	b			
	c															17													4.0		S	18" APC	25.47′ L† SB 104+92.29 TO 10.00′ R† SB 104+91.38	c			
	d									1.8															1			326			4.8		G2 DI	10.00′ R† SB 104+91.38	d			
SHEET TOTAL										22.8						401									5		4	3370												

DRAINAGE QUANTITIES

NO SCALE

DQ-8

STATE OF CALIFORNIA - DEPARTMENT OF TRANSPORTATION — Caltrans

CONSULTANT FUNCTIONAL SUPERVISOR: ABOLFAZL EMADZADEH

CALCULATED-DESIGNED BY: MANISH DALIA/JACK MONG

CHECKED BY: DUANNE GILMORE

REVISED BY	DATE REVISED
ML/KM	6/09/09

LAST REVISION — DATE PLOTTED => 21-JUL-2009
06-08-09 — TIME PLOTTED => 10:25

BORDER LAST REVISED 4/11/2008

RELATIVE BORDER SCALE IS IN INCHES 0 1 2 3

USERNAME => trmartin
DGN FILE => 416373id008.dgn

CU 04242

EA 163731

NOTE:

1. FOR NOTES AND LEGEND SEE DQ-1.

Dist	COUNTY	ROUTE	POST MILES TOTAL PROJECT	SHEET No.	TOTAL SHEETS
04	SF	101,1	9.2/9.8, 6.8/7.1	82	567

REGISTERED CIVIL ENGINEER — 6-09-09 DATE

7-20-09
PLANS APPROVAL DATE

REGISTERED PROFESSIONAL ENGINEER — JOHN EDWARD KARN JR — No. C66743 — Exp. 9-30-10 — CIVIL — STATE OF CALIFORNIA

THE STATE OF CALIFORNIA OR ITS OFFICERS OR AGENTS SHALL NOT BE RESPONSIBLE FOR THE ACCURACY OR COMPLETENESS OF SCANNED COPIES OF THIS PLAN SHEET.

Arup PB JV
560 Mission Street, Suite 700
San Francisco, CA 94105

DRAINAGE SYSTEM No. ⬡	DRAINAGE UNIT ◯	ABANDON CULVERT (LF)	REMOVE CULVERT (LF)	REMOVE INLET (EA)	REMOVE CONCRETE (CY)	ADJUST MANHOLE TO GRADE (EA)	ADJUST INLET TO GRADE (LF)	SAND BACKFILL (CY)	DITCH EXCAVATION (CY)	MINOR CONCRETE: MINOR STRUCTURE (CY)	MINOR CONCRETE: BACKFILL (CY)	MINOR CONCRETE: DITCH LINING (CY)	MINOR CONCRETE: MISCELLANEOUS CONSTRUCTION (CY)	ALTERNATIVE PIPE CULVERT: 12" (LF)	15" (LF)	18" (LF)	30" (LF)	54" (LF)	12" CSP (0.079" THICK) (LF)	18" CSP (0.079" THICK) (LF)	30" CSP (0.079" THICK) (LF)	8" WSP (LF)	ROCK SLOPE PROTECTION (1/4 T, METHOD B) (CY)	RSP FABRIC (CLASS 8) (SF)	FRAME & GRATE (TYPE 24-12) (EA)	FRAME & GRATE (TYPE 24-12X) (EA)	FRAME & COVER (DETAIL U45) (N) (EA)	MISCELLANEOUS IRON AND STEEL (LBS)	CONCRETE COLLAR (N) (EA)	MAXIMUM PIPE COVER (N) (LF)	HEIGHT OF DRAINAGE STRUCTURE (N) (LF)	PIPE JOINT CLASSIFICATION	DESCRIPTION	STATION	DRAINAGE UNIT ◯	DRAINAGE SYSTEM No. ⬡	DRAINAGE PROFILE SHEET No.	DRAINAGE PLAN SHEET No.
23	a			1																												REMOVE INLET	25.74′ Rt SB 105+20.62	a	23		D-2
	b	194						5.6																								ABANDON CULVERT (12")	25.74′ Rt SB 105+20.62 TO 5.54′ Rt SB 107+15.53	b			
	c			1																												REMOVE INLET	5.54′ Rt SB 107+15.53	c			D-4
	d	100						2.9																								ABANDON CULVERT (12")	5.54′ Rt SB 107+15.53 TO 1.66′ Rt SB 108+14.32	d			
	e			1																												REMOVE INLET	1.66′ Rt SB 108+14.32	e			
	f	100						2.9																								ABANDON CULVERT (12")	1.66′ Rt SB 108+14.32 TO 2.16′ Rt SB 109+14.41	f			
	g			1																												REMOVE INLET	2.16′ Rt SB 109+14.41	g			
	h	14						0.4																								ABANDON CULVERT (12")	2.16′ Rt SB 109+14.41 TO 13.06′ Rt SB 109+23.14	h			
	i			1																												REMOVE INLET	13.06′ Rt SB 109+23.14	i			
	j	88						2.6																								ABANDON CULVERT (12")	13.06′ Rt SB 109+23.14 TO 15.39′ Rt SB 110+11.51	j			
	k	98						2.8																								ABANDON CULVERT (12")	2.16′ Rt SB 109+14.41 TO 4.25′ Rt SB 110+12.04	k			
	l			1																												REMOVE INLET	4.25′ Rt SB 110+12.04	l			
	m	11						0.3																								ABANDON CULVERT (12")	4.25′ Rt SB 110+12.04 TO 15.39′ Rt SB 110+11.51	m			
	n			1																												REMOVE INLET	15.39′ Rt SB 110+11.51	n			
	o	50						1.5																								ABANDON CULVERT (12")	15.39′ Rt SB 110+11.51 TO 6.71′ Rt SB 110+62.45	o			
	p			1																												REMOVE INLET	6.71′ Rt SB 110+62.45	p			
24	a				39.4																											REMOVE CONCRETE DITCH	37.47′ Rt DOY2 110+91.48 TO 82.11′ Lt SB 106+25.31	a	24	DD-5	D-4
	b								40.3			40.3																					CONCRETE DITCH	50.00′ Lt DOY5 110+03.29 TO 75.31′ Lt DOY5 102+43.67	b			D-2
	c																						13.6	274.2								RSP	75.31′ Lt DOY5 102+43.67	c			
25	a															49														6.8		P	18" APC	33.00′ Rt DOY4 103+52.76 TO 22.07′ Lt VT 120+74.52	a	25	DP-9	D-3
	b									1.8			1.2												1		326			5.0		G2 DI w/ SGD	22.07′ Lt VT 120+74.52	b			
SHEET TOTAL		655		8	39.4			19.0	40.3	1.8		40.3	1.2			49							13.6	274.2	1		326										

DRAINAGE QUANTITIES

NO SCALE

DQ-9

CALCULATED-DESIGNED BY: MANISH DALIA/JACK MONG
CHECKED BY: DUANNE GILMORE
CONSULTANT FUNCTIONAL SUPERVISOR: ABOLFAZL EMADZADEH
STATE OF CALIFORNIA - DEPARTMENT OF TRANSPORTATION
Caltrans

REVISED BY: ML/KM
DATE REVISED: 6/09/09

LAST REVISION DATE PLOTTED => 23-JUL-2009
TIME PLOTTED => 08:14
06-08-09

NOTE:

1. FOR NOTES AND LEGEND SEE DQ-1.

DRAINAGE SYSTEM/UNIT	Misc HMA PAVING	AS4 BASE
	TON	CY
27 a	0.3	2.5 CY

Dist	COUNTY	ROUTE	POST MILES TOTAL PROJECT	SHEET No.	TOTAL SHEETS
04	SF	101,1	9.2/9.8, 6.8/7.1	83	567

REGISTERED CIVIL ENGINEER — 6-09-09 DATE

7-20-09
PLANS APPROVAL DATE

REGISTERED PROFESSIONAL ENGINEER — JOHN EDWARD KARN JR — No. C66743 — Exp. 9-30-10 — CIVIL — STATE OF CALIFORNIA

THE STATE OF CALIFORNIA OR ITS OFFICERS OR AGENTS SHALL NOT BE RESPONSIBLE FOR THE ACCURACY OR COMPLETENESS OF SCANNED COPIES OF THIS PLAN SHEET.

Arup PB JV
560 Mission Street, Suite 700
San Francisco, CA 94105

DRAINAGE SYSTEM No. ⬡	DRAINAGE UNIT ◯	ABANDON CULVERT (LF)	REMOVE CULVERT (LF)	REMOVE INLET (EA)	REMOVE CONCRETE (CY)	ADJUST MANHOLE TO GRADE (EA)	ADJUST INLET TO GRADE (LF)	SAND BACKFILL (CY)	DITCH EXCAVATION (CY)	MINOR CONCRETE (CY): MINOR STRUCTURE	MINOR CONCRETE (CY): BACKFILL	MINOR CONCRETE (CY): DITCH LINING	MINOR CONCRETE (CY): MISCELLANEOUS CONSTRUCTION	ALTERNATIVE PIPE CULVERT (LF): 12"	15"	18"	30"	54"	12" CSP (0.079" THICK) (LF)	18" CSP (0.079" THICK) (LF)	30" CSP (0.079" THICK) (LF)	8" WSP (LF)	ROCK SLOPE PROTECTION (1/4 T, METHOD B) (CY)	RSP FABRIC (CLASS 8) (SF)	FRAME & GRATE (TYPE 24-12) (N) (EA)	FRAME & GRATE (TYPE 24-12X) (N) (EA)	FRAME & COVER (DETAIL U45) (N) (EA)	MISCELLANEOUS IRON AND STEEL (LBS)	CONCRETE COLLAR (N) (EA)	MAXIMUM PIPE COVER (N) (LF)	HEIGHT OF DRAINAGE STRUCTURE (N) (LF)	PIPE JOINT CLASSIFICATION	DESCRIPTION	STATION	DRAINAGE UNIT ◯	DRAINAGE SYSTEM No. ⬡	DRAINAGE PROFILE SHEET No.	DRAINAGE PLAN SHEET No.
26	a															69													3.3		S	18" APC	40.09′ Lt DOY5 98+86.55 TO 36.80′ Lt DOY5 98+17.48	a	26	DP-9	D-3
	b									1.8			1.2												1			326			5.0		G2 DI w/ SGD	36.80′ Lt DOY5 98+17.48	b			
	c															6													3.9		S	18" APC	36.80′ Lt DOY5 98+17.48 TO 28.81′ Lt DOY5 98+17.38	c			
	d									3.8																	1	435			5.4		SDMH (TYPE I)	28.81′ Lt DOY5 98+17.38	d			
	e															92													4.2		S	18" APC	28.81′ Lt DOY5 98+17.38 TO 22.00′ Lt VT 121+80.35	e			
	f									1.4			1.2												1			326			3.4		G2 DI w/ SGD	22.00′ Lt VT 121+80.35	f			
27	a										10.1				62													2	3.0		P	15" APC w/ COLLAR	65.21′ Lt DOY4 101+06.73 TO 17.15′ Lt DOY4 100+66.98	a	27	DP-9	D-3
	b						1.0																										ADJUST INLET TO GRADE	17.15′ Lt DOY4 100+66.98	b			
28	a	102						6.7																									ABANDON CULVERT	64.67′ Lt DOY4 101+07.06 TO 37.51′ Rt DOY4 101+06.67	a	28		D-3
	b			1																													REMOVE INLET	37.51′ Rt DOY4 101+06.67	b			
	c	24						1.6																									ABANDON CULVERT	37.51′ Rt DOY4 101+06.67 TO 61.48′ Rt DOY4 101+05.28	c			
	d					1																											ADJUST MANHOLE TO GRADE	19.58′ Lt L 12+45.59	d			
	e						1.0																										ADJUST INLET TO GRADE	16.00′ Lt L 11+67.94	e			
29	a			1																													REMOVE INLET	24.86′ Rt DOY4 97+46.05	a	29	DP-9	D-3
	b	49						3.2																					5.0				ABANDON CULVERT	24.86′ Rt DOY4 97+46.05 TO 24.31′ Lt DOY4 97+46.20	b			
	c			1																							1						REMOVE INLET	24.31′ Lt DOY4 97+46.20	c			
	d	11						0.7																									ABANDON CULVERT	24.31′ Lt DOY4 97+46.20 TO 35.00′ Lt DOY4 97+36.00	d			
	e									1.8			1.2												1			326			4.7		G2 DI w/ SGD	35.00′ Lt DOY4 97+36.00	e			
	f															8													3.0		S	18" APC	35.00′ Lt DOY4 97+36.00 TO 27.00′ Lt DOY4 97+36.00	f			
	g									3.8																	1	435			5.4		SDMH (TYPE I)	27.00′ Lt DOY4 97+36.00	g			
	h															60													3.0		S	18" APC	27.00′ Lt DOY4 97+36.00 TO 33.00′ Rt DOY4 97+36.00	h			
	i									1.7			1.2												1			326			4.6		G2 DI w/ SGD	33.00′ Rt DOY4 97+36.00	i			
SHEET TOTAL		186		3		1	2.0	12.2		14.3	10.1		4.8		62	235								4		3	2174	2										

DRAINAGE QUANTITIES

NO SCALE

DQ-10

CALCULATED-DESIGNED BY: ML/KM
CHECKED BY: DUANNE GILMORE
REVISED BY: MANISH DALIA/JACK MONG
DATE REVISED: 6/09/09

CONSULTANT FUNCTIONAL SUPERVISOR: ABOLFAZL EMADZADEH

STATE OF CALIFORNIA - DEPARTMENT OF TRANSPORTATION
Caltrans

LAST REVISION | DATE PLOTTED => 23-JUL-2009
06-08-09 | TIME PLOTTED => 08:14

BORDER LAST REVISED 4/11/2008

RELATIVE BORDER SCALE IS IN INCHES 0 1 2 3

USERNAME => trmartin
DGN FILE => 416373id010.dgn

CU 04242

EA 163731

NOTE:

1. FOR NOTES AND LEGEND SEE DQ-1.

Dist	COUNTY	ROUTE	POST MILES TOTAL PROJECT	SHEET No.	TOTAL SHEETS
04	SF	101,1	9.2/9.8, 6.8/7.1	84	567

REGISTERED CIVIL ENGINEER — 6-09-09 DATE

7-20-09
PLANS APPROVAL DATE

REGISTERED PROFESSIONAL ENGINEER — JOHN EDWARD KARN JR — No. C66743 — Exp. 9-30-10 — CIVIL — STATE OF CALIFORNIA

THE STATE OF CALIFORNIA OR ITS OFFICERS OR AGENTS SHALL NOT BE RESPONSIBLE FOR THE ACCURACY OR COMPLETENESS OF SCANNED COPIES OF THIS PLAN SHEET.

Arup PB JV
560 Mission Street, Suite 700
San Francisco, CA 94105

DRAINAGE SYSTEM No.	DRAINAGE UNIT	ABANDON CULVERT (LF)	REMOVE CULVERT (LF)	REMOVE INLET (EA)	REMOVE CONCRETE (CY)	ADJUST MANHOLE TO GRADE (EA)	ADJUST INLET TO GRADE (LF)	SAND BACKFILL (CY)	DITCH EXCAVATION (CY)	MINOR CONCRETE: MINOR STRUCTURE (CY)	MINOR CONCRETE: BACKFILL (CY)	MINOR CONCRETE: DITCH LINING (CY)	MINOR CONCRETE: MISCELLANEOUS CONSTRUCTION (CY)	ALTERNATIVE PIPE CULVERT: 12" (LF)	15" (LF)	18" (LF)	30" (LF)	54" (LF)	12" CSP (0.079" THICK) (LF)	18" CSP (0.079" THICK) (LF)	30" CSP (0.079" THICK) (LF)	8" WSP (LF)	ROCK SLOPE PROTECTION (1/4 T, METHOD B) (CY)	RSP FABRIC (CLASS 8) (SF)	FRAME & GRATE (TYPE 24-12) (EA)	FRAME & GRATE (TYPE 24-12X) (EA)	FRAME & COVER (DETAIL U45) (N) (EA)	MISCELLANEOUS IRON AND STEEL (LBS)	CONCRETE COLLAR (N) (EA)	MAXIMUM PIPE COVER (N) (LF)	HEIGHT OF DRAINAGE STRUCTURE (N) (LF)	PIPE JOINT CLASSIFICATION	DESCRIPTION	STATION	DRAINAGE UNIT	DRAINAGE SYSTEM No.	DRAINAGE PROFILE SHEET No.	DRAINAGE PLAN SHEET No.
30	a	31						2.1																								ABANDON CULVERT	33.46′ R† DOY4 118+62.31 TO 4.72′ R† DOY4 118+75.04	a	30		D-4
	b			1																												REMOVE INLET	4.72′ R† DOY4 118+75.04	b			
	c	38						2.5																								ABANDON CULVERT	4.72′ R† DOY4 118+75.04 TO 31.05′ L† DOY4 118+63.58	c			
	d			1																												REMOVE INLET	31.05′ L† DOY4 118+63.58	d			
	e	52						3.4																								ABANDON CULVERT	31.05′ L† DOY4 118+63.58 TO 13.06′ R† SB 109+23.14	e			
SHEET TOTAL		121		2				8.0																														
GRAND TOTAL		2660	403	26	49	2	2.0	325.5	40	192.8	10	40	33	140	62	3246	487	408	151	457	183	45	14	274	38	2	28	24611	14									

DRAINAGE QUANTITIES

NO SCALE

DQ-11

STATE OF CALIFORNIA - DEPARTMENT OF TRANSPORTATION — Caltrans

CONSULTANT FUNCTIONAL SUPERVISOR: ABOLFAZL EMADZADEH

CALCULATED-DESIGNED BY: ML/KM

CHECKED BY: DUANNE GILMORE

REVISED BY: MANISH DALIA/JACK MONG

DATE REVISED: 6/09/09

LAST REVISION | DATE PLOTTED => 21-JUL-2009 | TIME PLOTTED => 10:25 | 06-08-09

BORDER LAST REVISED 4/11/2008

RELATIVE BORDER SCALE IS IN INCHES 0 1 2 3

USERNAME => trmartin
DGN FILE => 416373id011.dgn

CU 04242

EA 163731

NOTE:

1. FOR NOTES AND LEGEND SEE DQ-1.

Dist	COUNTY	ROUTE	POST MILES TOTAL PROJECT	SHEET No.	TOTAL SHEETS
04	SF	101,1	9.2/9.8, 6.8/7.1	85	567

REGISTERED CIVIL ENGINEER — 6-09-09 DATE

7-20-09
PLANS APPROVAL DATE

REGISTERED PROFESSIONAL ENGINEER — JOHN EDWARD KARN JR — No. C66743 — Exp. 9-30-10 — CIVIL — STATE OF CALIFORNIA

THE STATE OF CALIFORNIA OR ITS OFFICERS OR AGENTS SHALL NOT BE RESPONSIBLE FOR THE ACCURACY OR COMPLETENESS OF SCANNED COPIES OF THIS PLAN SHEET.

Arup PB JV
560 Mission Street, Suite 700
San Francisco, CA 94105

DRAINAGE SYSTEM No. ⬡	DRAINAGE UNIT ◯	CAP INLET	PARTIAL DI w/ Temp COVER	Adj PARTIAL DI TO GRADE (N)	TEMPORARY GO INLET (N)	TEMPORARY G1 INLET (N)	TEMPORARY G2 INLET (N)	TEMPORARY G2 MANHOLE (N)	TEMPORARY SDMH (TYPE 1) (N)	MINOR CONCRETE: MINOR STRUCTURE	MINOR CONCRETE: BACKFILL	Temp Culv: 12"	Temp Culv: 15"	Temp Culv: 18"	Temp Culv: 30"	Temp Culv: 54"	TYPE 24-12 FRAME & GRATE (N)	FRAME & COVER (DETAIL U45) (N)	MISCELLANEOUS IRON AND STEEL	CONCRETE COLLAR (N)	MAXIMUM PIPE COVER (N)	HEIGHT OF DRAINAGE STRUCTURE (N)	PIPE JOINT CLASSIFICATION	DESCRIPTION	STATION	DRAINAGE UNIT ◯	DRAINAGE SYSTEM No. ⬡	DRAINAGE PROFILE SHEET No.	DRAINAGE PLAN SHEET No.
		EA								CY		LF					EA		LBS	EA	LF								
50	a									0.2				94							14.0		P	18" Temp Culv w/ COLLAR	2.00' Lt DOY4 107+28.07 to 11.00' Rt DR 108+13.45	a	50	DP-10	D-5
	b						1			4.8							1		326			11.5		Temp G2 DI	11.00' Rt DR 108+13.45	b			
	c													161							10.0		S	18" Temp Culv	11.00' Rt DR 108+13.45 to 11.00' Rt DR 109+91.42	c			
	d						1			1.4							1		326			3.3		Temp G2 DI	11.00' Rt DR 109+91.42	d			
51	a													12							5.6		S	18" Temp Culv	4.00' Lt DOY4 106+28.60 to 0.00' Lt RD 106+28.60	a	51	DP-10	D-6
	b						1			1.7							1		326			4.7		Temp G2 DI	0.00' Lt RD 106+28.60	b			
	c													61							3.0		S	18" Temp Culv	0.00' Lt RD 106+28.60 to 0.00' Lt RD 106+89.05	c			
	d						1			1.4							1		326			3.3		Temp G2 DI	0.00' Lt RD 106+89.05	d			
	e													20							2.0		S	18" Temp Culv	0.00' Lt RD 106+89.05 to 0.00' Lt RD 107+09.24	e			
	f						1			1.4							1		326			3.5		Temp G2 DI	0.00' Lt RD 107+09.24	f			
SHEET TOTAL							5			10.9				348			5		1630										

TEMPORARY DRAINAGE QUANTITIES

NO SCALE

DQ-12

REVISED BY: ML/KM
DATE REVISED: 6/09/09
CALCULATED-DESIGNED BY: MANISH DALIA/JACK MONG
CHECKED BY: DUANNE GILMORE
CONSULTANT FUNCTIONAL SUPERVISOR: ABOLFAZL EMADZADEH
STATE OF CALIFORNIA - DEPARTMENT OF TRANSPORTATION — Caltrans

LAST REVISION | DATE PLOTTED => 23-JUL-2009 | TIME PLOTTED => 08:14
06-08-09

BORDER LAST REVISED 4/11/2008

RELATIVE BORDER SCALE IS IN INCHES 0 1 2 3

USERNAME => trmartin
DGN FILE => 416373id012.dgn

CU 04242

EA 163731

NOTES:

1. EXISTING UTILITIES IN CONFLICT WITH FUTURE ALIGNMENT TO BE RELOCATED BY OTHERS

2. ALL UTILITIES SHOWN IN THESE PLANS ARE BASED UPON RECORD INFORMATION OBTAINED FROM UTILITY OWNERS, AND/OR FIELD SURVEYS OF EXISTING UTILITY SURFACE FEATURES.

3. LOCATION OF UTILITY FACILITIES SHOWN ON THESE PLANS ARE APPROXIMATE AND SHALL BE VERIFIED BY THE CONTRACTOR PRIOR TO CONSTRUCTION.

Dist	COUNTY	ROUTE	POST MILES TOTAL PROJECT	SHEET No.	TOTAL SHEETS
04	SF	101,1	9.2/9.8, 6.8/7.1	86	567

REGISTERED CIVIL ENGINEER — 6-09-09 DATE

JOHN EDWARD KARN JR No. C66743 Exp. 9-30-10 CIVIL — REGISTERED PROFESSIONAL ENGINEER — STATE OF CALIFORNIA

7-20-09
PLANS APPROVAL DATE

THE STATE OF CALIFORNIA OR ITS OFFICERS OR AGENTS SHALL NOT BE RESPONSIBLE FOR THE ACCURACY OR COMPLETENESS OF SCANNED COPIES OF THIS PLAN SHEET.

Arup PB JV
560 Mission Street, Suite 700
San Francisco, CA 94105

SAN FRANCISCO

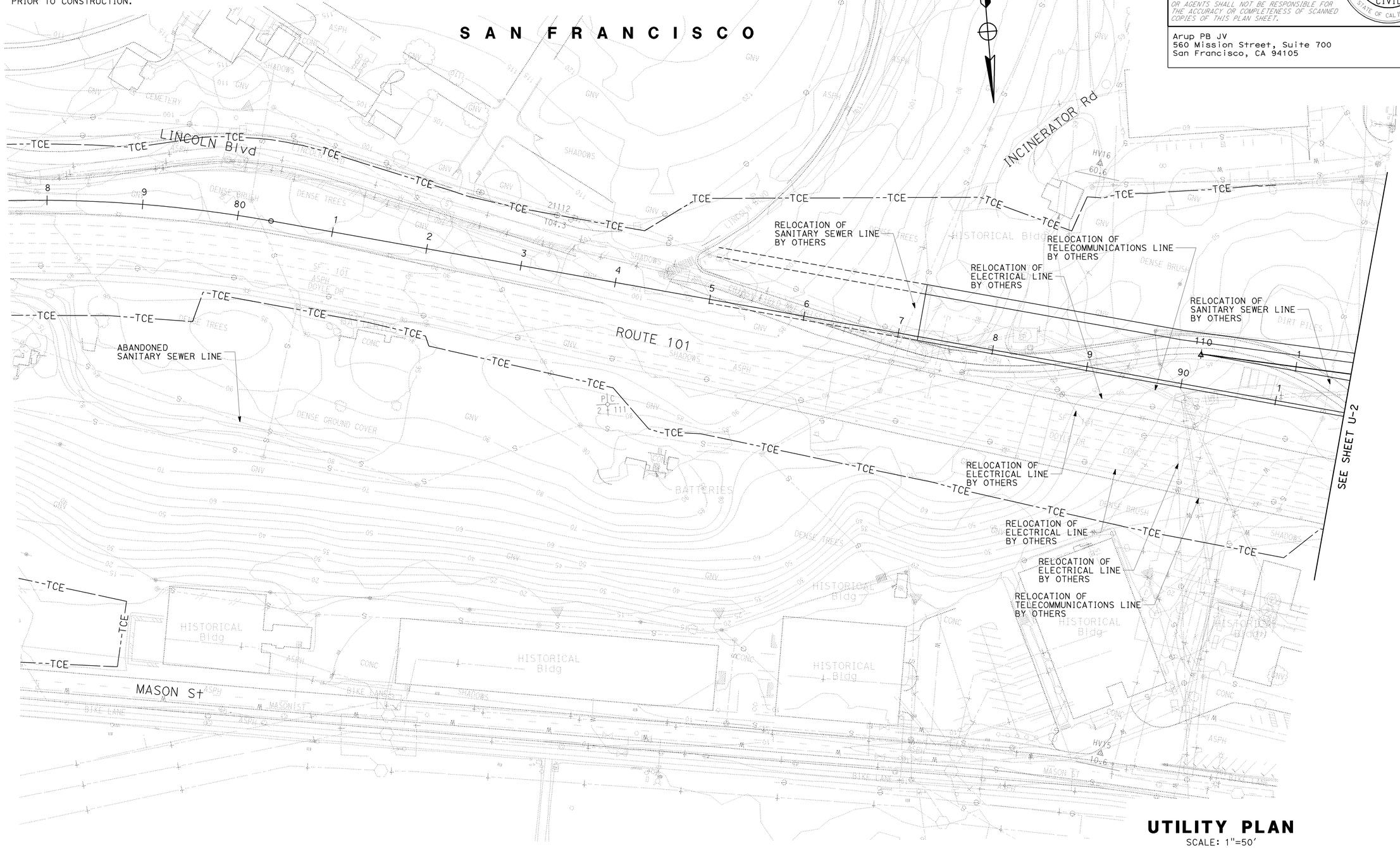

UTILITY PLAN
SCALE: 1"=50'

THIS PLAN ACCURATE FOR UTILITY INFORMATION ONLY

U-1

STATE OF CALIFORNIA - DEPARTMENT OF TRANSPORTATION — Caltrans

CONSULTANT FUNCTIONAL SUPERVISOR: ABOLFAZL EMADZADEH

CALCULATED-DESIGNED BY: DUANNE GILMORE
CHECKED BY: JOHN E KARN
REVISED BY: DG
DATE REVISED: 6/09/09

LAST REVISION — DATE PLOTTED => 21-JUL-2009, TIME PLOTTED => 10:30
06-08-09

BORDER LAST REVISED 4/11/2008

RELATIVE BORDER SCALE IS IN INCHES 0 1 2 3

USERNAME => trmartin
DGN FILE => 416373ka001.dgn

CU 04242

EA 163731

NOTE:

1. FOR GENERAL NOTES, LEGENDS, AND ABBREVIATIONS, SEE SHEET U-1.

Dist	COUNTY	ROUTE	POST MILES TOTAL PROJECT	SHEET No.	TOTAL SHEETS
04	SF	101,1	9.2/9.8, 6.8/7.1	87	567

REGISTERED CIVIL ENGINEER — 6-09-09 DATE

7-20-09
PLANS APPROVAL DATE

REGISTERED PROFESSIONAL ENGINEER
JOHN EDWARD KARN JR
No. C66743
Exp. 9-30-10
CIVIL
STATE OF CALIFORNIA

THE STATE OF CALIFORNIA OR ITS OFFICERS OR AGENTS SHALL NOT BE RESPONSIBLE FOR THE ACCURACY OR COMPLETENESS OF SCANNED COPIES OF THIS PLAN SHEET.

Arup PB JV
560 Mission Street, Suite 700
San Francisco, CA 94105

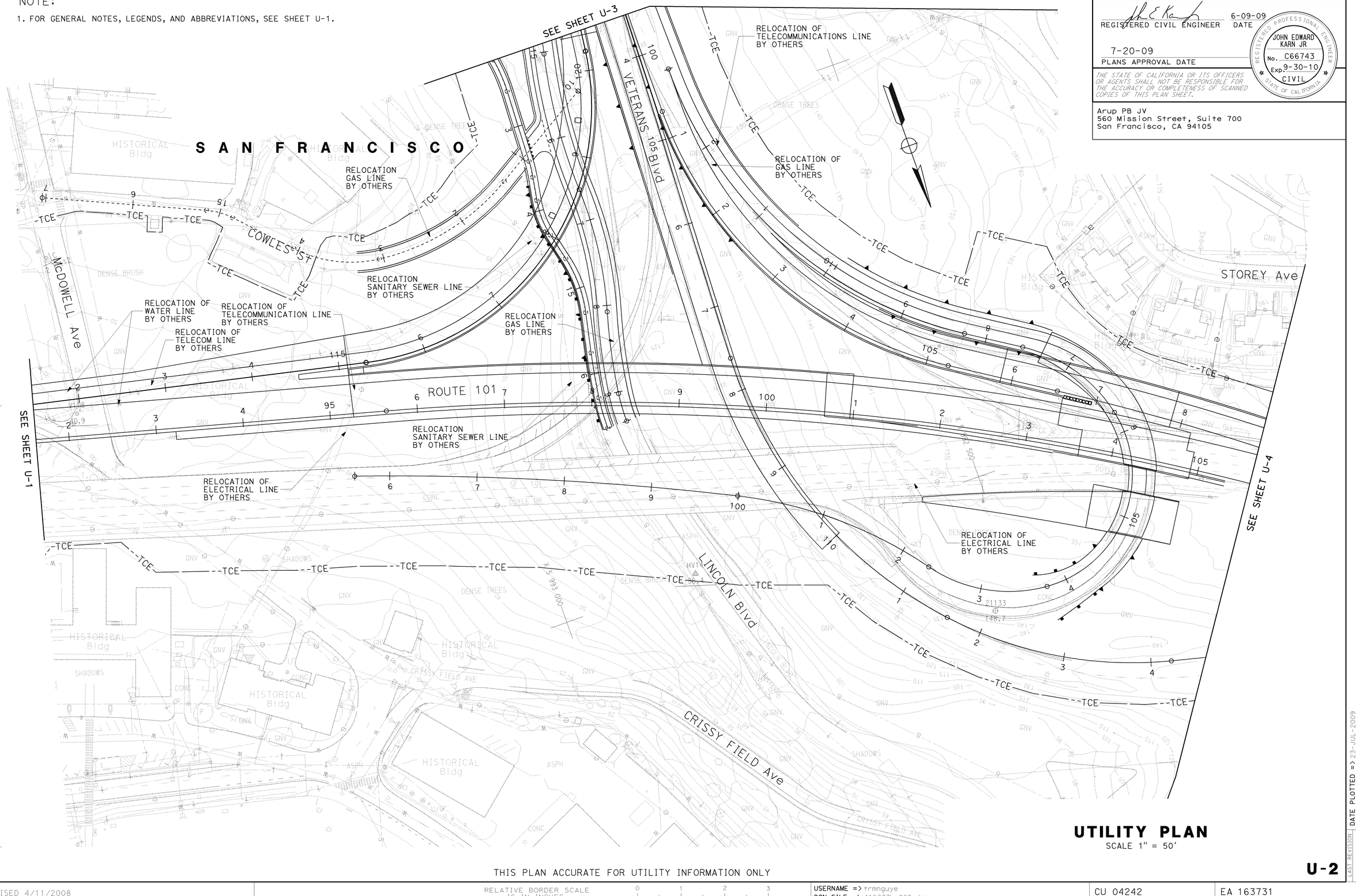

UTILITY PLAN

SCALE 1" = 50'

THIS PLAN ACCURATE FOR UTILITY INFORMATION ONLY

U-2

STATE OF CALIFORNIA - DEPARTMENT OF TRANSPORTATION
Caltrans

CONSULTANT FUNCTIONAL SUPERVISOR: ABOLFAZL EMADZADEH
CALCULATED-DESIGNED BY:
CHECKED BY:
DUANNE GILMORE
JOHN E KARN
REVISED BY: DG
DATE REVISED: 6/09/09

LAST REVISION | DATE PLOTTED => 23-JUL-2009
06-08-09 | TIME PLOTTED => 08:20

BORDER LAST REVISED 4/11/2008 | RELATIVE BORDER SCALE IS IN INCHES 0 1 2 3 | USERNAME => trmnguye | DGN FILE => 416373ka002.dgn | CU 04242 | EA 163731

NOTE:

1. FOR GENERAL NOTES, LEGENDS, AND ABBREVIATIONS, SEE SHEET U-1.

Dist	COUNTY	ROUTE	POST MILES TOTAL PROJECT	SHEET No.	TOTAL SHEETS
04	SF	101,1	9.2/9.8, 6.8/7.1	88	567

REGISTERED CIVIL ENGINEER 6-09-09 DATE

7-20-09
PLANS APPROVAL DATE

REGISTERED PROFESSIONAL ENGINEER JOHN EDWARD KARN JR No. C66743 Exp. 9-30-10 CIVIL STATE OF CALIFORNIA

THE STATE OF CALIFORNIA OR ITS OFFICERS OR AGENTS SHALL NOT BE RESPONSIBLE FOR THE ACCURACY OR COMPLETENESS OF SCANNED COPIES OF THIS PLAN SHEET.

Arup PB JV
560 Mission Street, Suite 700
San Francisco, CA 94105

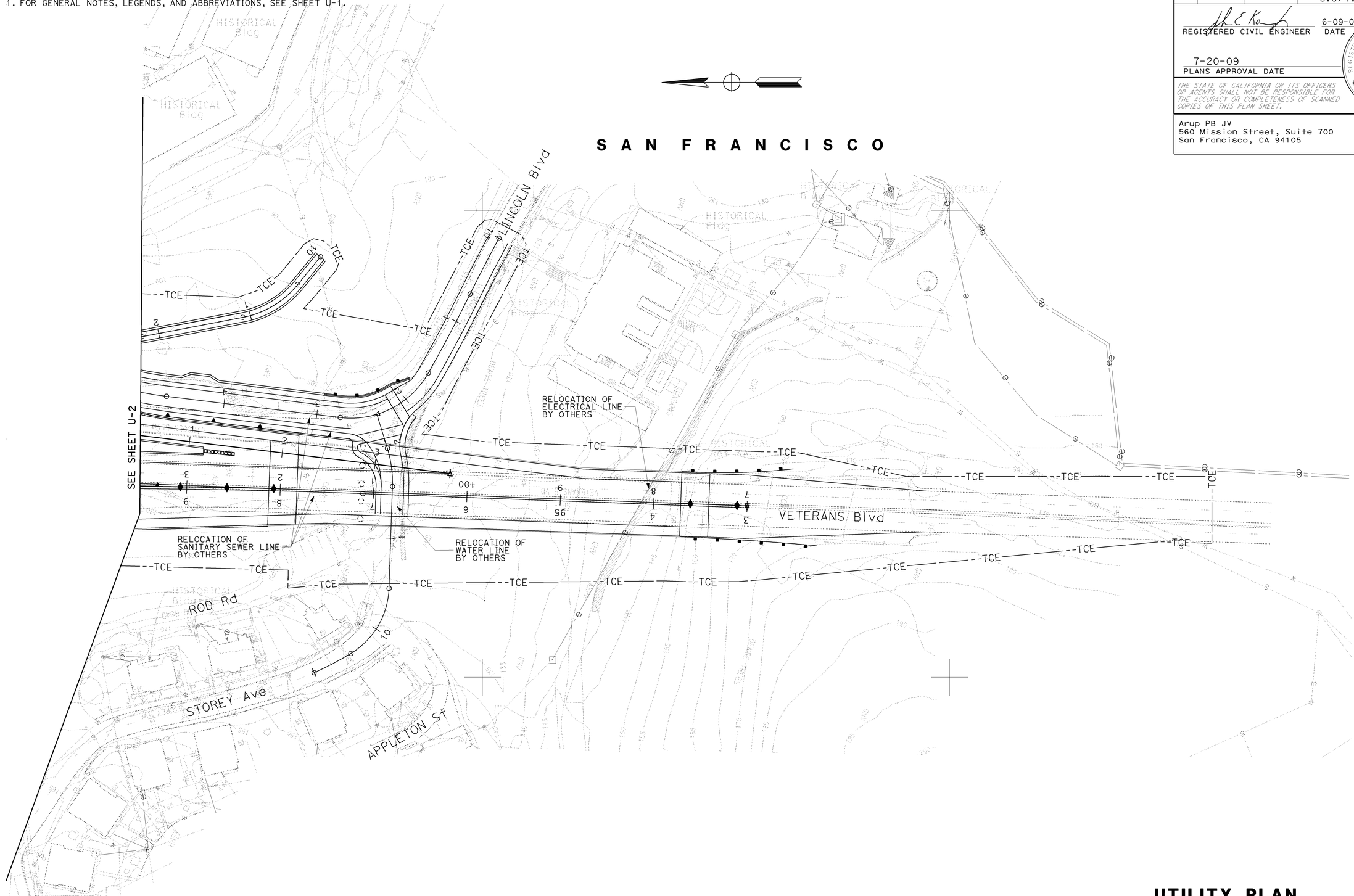

UTILITY PLAN

SCALE 1" = 50'

THIS PLAN ACCURATE FOR UTILITY INFORMATION ONLY

U-3

STATE OF CALIFORNIA - DEPARTMENT OF TRANSPORTATION

Caltrans

CONSULTANT FUNCTIONAL SUPERVISOR: ABOLFAZL EMADZADEH

CALCULATED-DESIGNED BY: DUANNE GILMORE

CHECKED BY: JOHN E KARN

REVISED BY: DG

DATE REVISED: 6/09/09

LAST REVISION 06-08-09

DATE PLOTTED => 21-JUL-2009

TIME PLOTTED => 10:30

NOTE:

1. FOR GENERAL NOTES, LEGENDS, AND ABBREVIATIONS, SEE SHEET U-1.

Dist	COUNTY	ROUTE	POST MILES TOTAL PROJECT	SHEET No.	TOTAL SHEETS
04	SF	101,1	9.2/9.8, 6.8/7.1	89	567

REGISTERED CIVIL ENGINEER — 6-09-09 DATE

JOHN EDWARD KARN JR No. C66743 Exp. 9-30-10 CIVIL — REGISTERED PROFESSIONAL ENGINEER — STATE OF CALIFORNIA

7-20-09
PLANS APPROVAL DATE

THE STATE OF CALIFORNIA OR ITS OFFICERS OR AGENTS SHALL NOT BE RESPONSIBLE FOR THE ACCURACY OR COMPLETENESS OF SCANNED COPIES OF THIS PLAN SHEET.

Arup PB JV
560 Mission Street, Suite 700
San Francisco, CA 94105

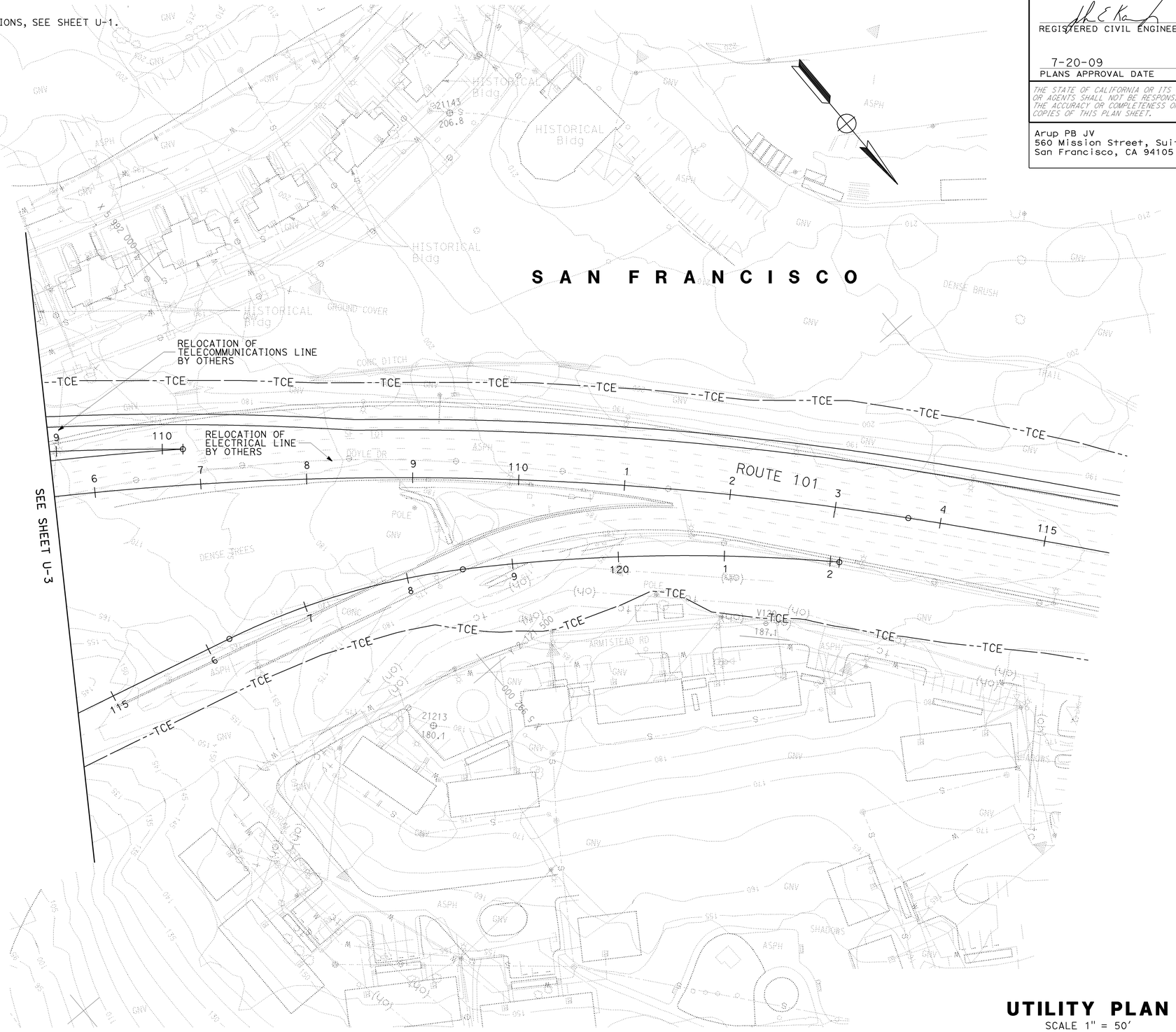

UTILITY PLAN

SCALE 1" = 50'

THIS PLAN ACCURATE FOR UTILITY INFORMATION ONLY

U-4

STATE OF CALIFORNIA - DEPARTMENT OF TRANSPORTATION

Caltrans

CONSULTANT FUNCTIONAL SUPERVISOR: ABOLFAZL EMADZADEH

CALCULATED-DESIGNED BY: DUANNE GILMORE

CHECKED BY: JOHN E KARN

REVISED BY: DG

DATE REVISED: 6/09/09

LAST REVISION — DATE PLOTTED => 21-JUL-2009 TIME PLOTTED => 10:30

06-08-09

BORDER LAST REVISED 4/11/2008

RELATIVE BORDER SCALE IS IN INCHES 0 1 2 3

USERNAME => trmartin
DGN FILE => 416373ka004.dgn

CU 04242

EA 163731

Dist	COUNTY	ROUTE	POST MILES TOTAL PROJECT	SHEET No.	TOTAL SHEETS
04	SF	101,1	9.2/9.8, 6.8/7.1	90	567

REGISTERED CIVIL ENGINEER — 6-08-09 DATE

7-20-09
PLANS APPROVAL DATE

Jerilyn L. Struven, No. 49964, Exp. 12-31-10, CIVIL, REGISTERED PROFESSIONAL ENGINEER, STATE OF CALIFORNIA

THE STATE OF CALIFORNIA OR ITS OFFICERS OR AGENTS SHALL NOT BE RESPONSIBLE FOR THE ACCURACY OR COMPLETENESS OF SCANNED COPIES OF THIS PLAN SHEET.

LEGEND:

No. CONSTRUCTION AREA SIGN NUMBER

NOTES:

1. LOCATION OF CONSTRUCTION AREA SIGNS ARE APPROXIMATE. EXACT LOCATION WILL BE DETERMINED BY THE ENGINEER
2. CONSTRUCTION AREA SIGNS ARE STATIONARY MOUNTED

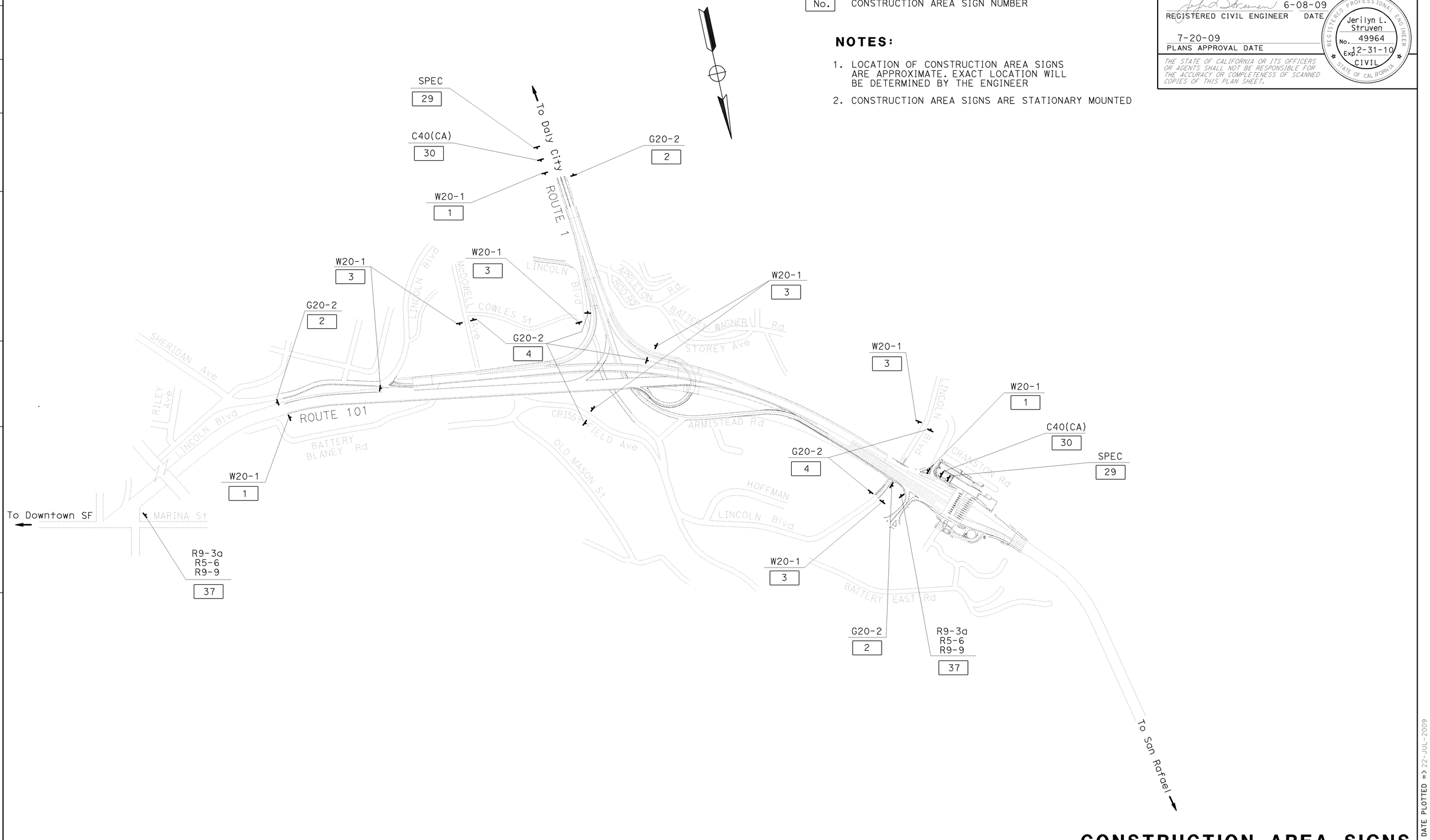

CONSTRUCTION AREA SIGNS

NO SCALE

THIS PLAN ACCURATE FOR CONSTRUCTION AREA SIGN WORK ONLY

CS-1

STATE OF CALIFORNIA - DEPARTMENT OF TRANSPORTATION
TRAFFIC
Caltrans

FUNCTIONAL SUPERVISOR: ROLAND AU-YEUNG
CALCULATED-DESIGNED BY: ULICES F. VEGA
CHECKED BY: LILY Y. TING
REVISED BY: UV
DATE REVISED: 6/10/09

LAST REVISION — DATE PLOTTED => 22-JUL-2009, TIME PLOTTED => 06:22
06-11-09

BORDER LAST REVISED 4/11/2008

RELATIVE BORDER SCALE IS IN INCHES 0 1 2 3

USERNAME => trstrk
DGN FILE => 4163731a001.dgn

CU 04242

EA 163731

Dist	COUNTY	ROUTE	POST MILES TOTAL PROJECT	SHEET No.	TOTAL SHEETS
04	SF	101,1	9.2/9.8, 6.8/7.1	91	567

REGISTERED CIVIL ENGINEER — DATE 6-08-09

Jerilyn L. Struven, No. 49964, Exp. 12-31-10, CIVIL, REGISTERED PROFESSIONAL ENGINEER, STATE OF CALIFORNIA

7-20-09
PLANS APPROVAL DATE

THE STATE OF CALIFORNIA OR ITS OFFICERS OR AGENTS SHALL NOT BE RESPONSIBLE FOR THE ACCURACY OR COMPLETENESS OF SCANNED COPIES OF THIS PLAN SHEET.

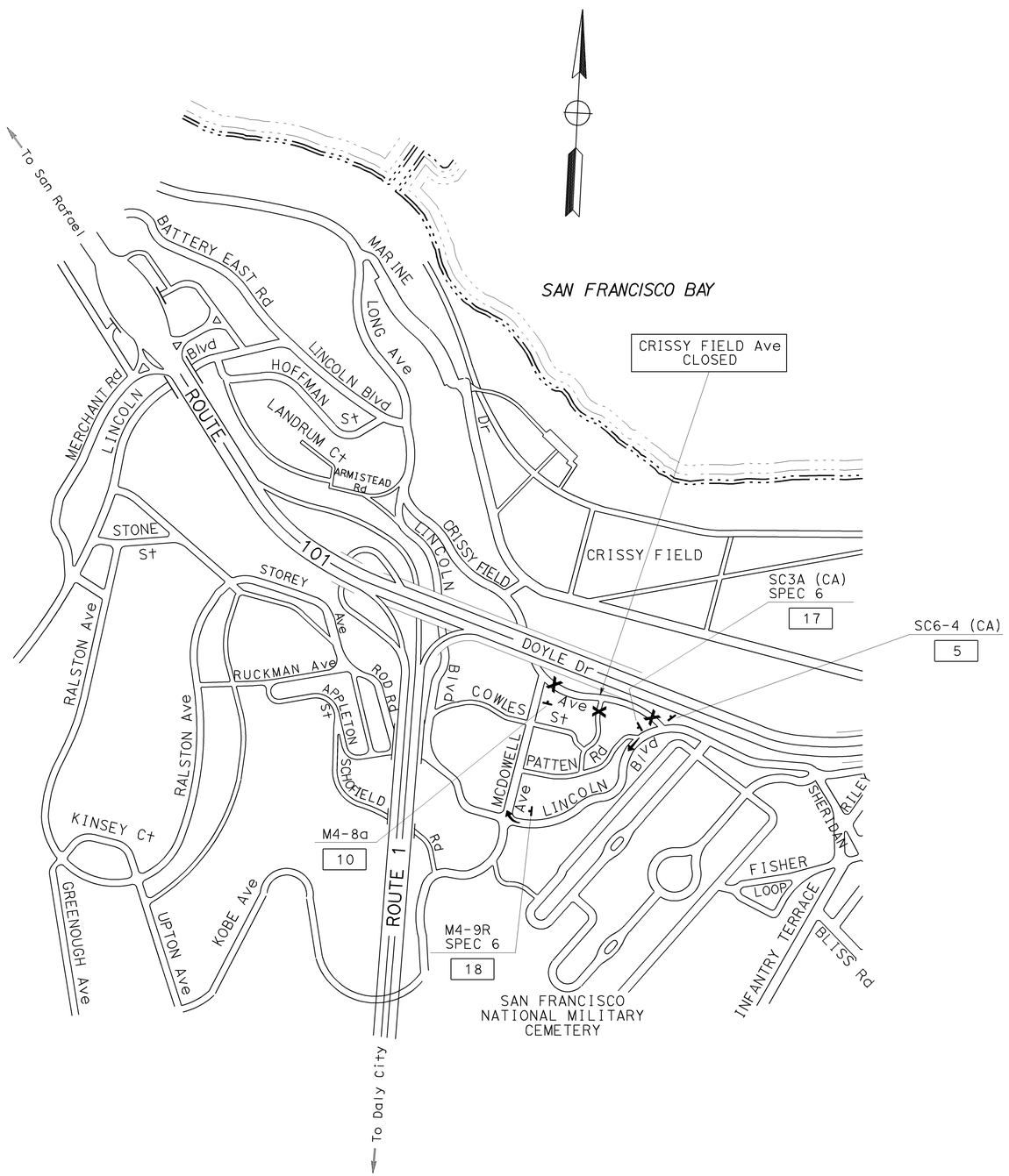

DETOUR

CRISSY FIELD Ave CLOSED

CONSTRUCTION AREA SIGNS

NO SCALE

THIS PLAN ACCURATE FOR CONSTRUCTION AREA SIGN WORK ONLY

CS-2

CALCULATED-DESIGNED BY	REVISED BY	ULICES F. VEGA	FUNCTIONAL SUPERVISOR	STATE OF CALIFORNIA - DEPARTMENT OF TRANSPORTATION
CHECKED BY	DATE REVISED	LILY Y. TING	ROLAND AU-YEUNG	TRAFFIC
	UV			Caltrans
	6/10/09			

LAST REVISION DATE PLOTTED => 22-JUL-2009
TIME PLOTTED => 06:22
06-10-09

BORDER LAST REVISED 4/11/2008

RELATIVE BORDER SCALE IS IN INCHES 0 1 2 3

USERNAME => trstrk
DGN FILE => 4163731a002.dgn

CU 04242

EA 163731

Dist	COUNTY	ROUTE	POST MILES TOTAL PROJECT	SHEET No.	TOTAL SHEETS
04	SF	101,1	9.2/9.8, 6.8/7.1	92	567

REGISTERED CIVIL ENGINEER — DATE: 6-08-09

Jerilyn L. Struven, No. 49964, Exp. 12-31-10, CIVIL, REGISTERED PROFESSIONAL ENGINEER, STATE OF CALIFORNIA

PLANS APPROVAL DATE: 7-20-09

THE STATE OF CALIFORNIA OR ITS OFFICERS OR AGENTS SHALL NOT BE RESPONSIBLE FOR THE ACCURACY OR COMPLETENESS OF SCANNED COPIES OF THIS PLAN SHEET.

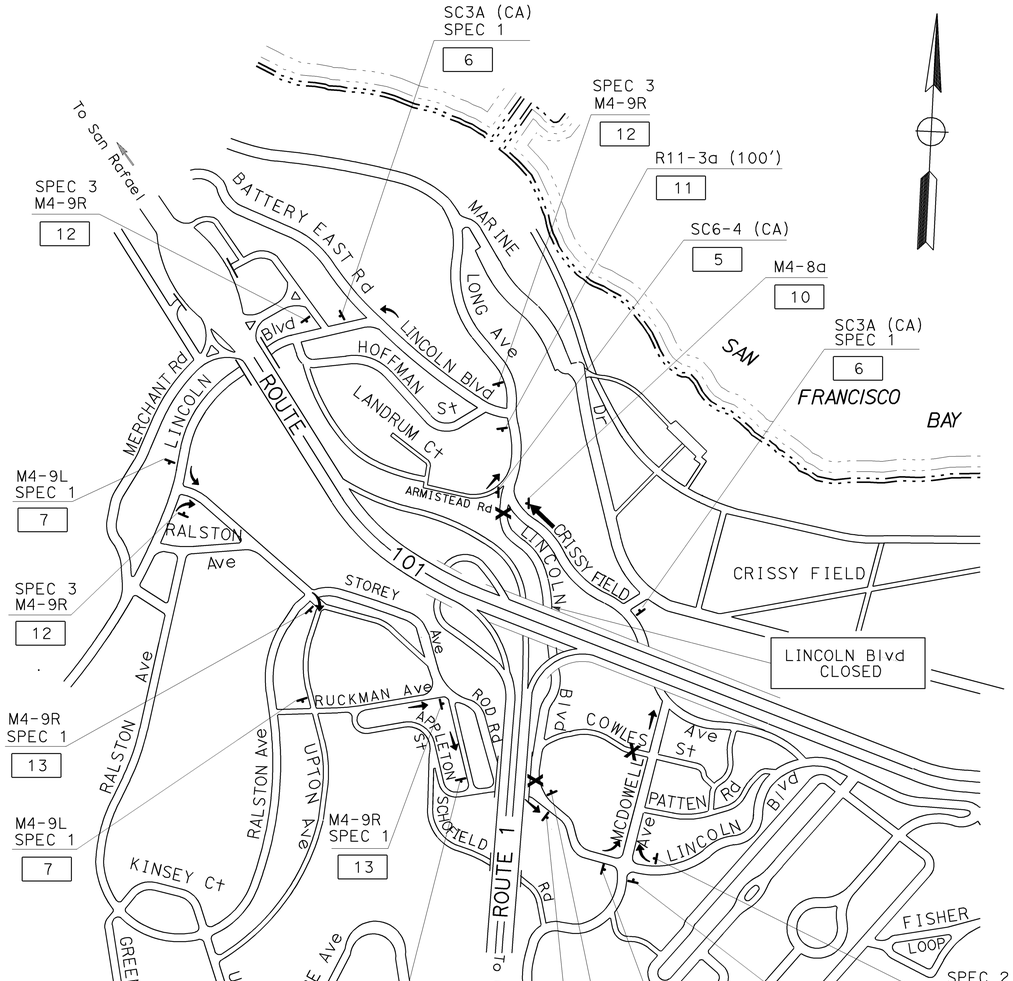

DETOUR

LINCOLN Blvd & COWLES St CLOSED

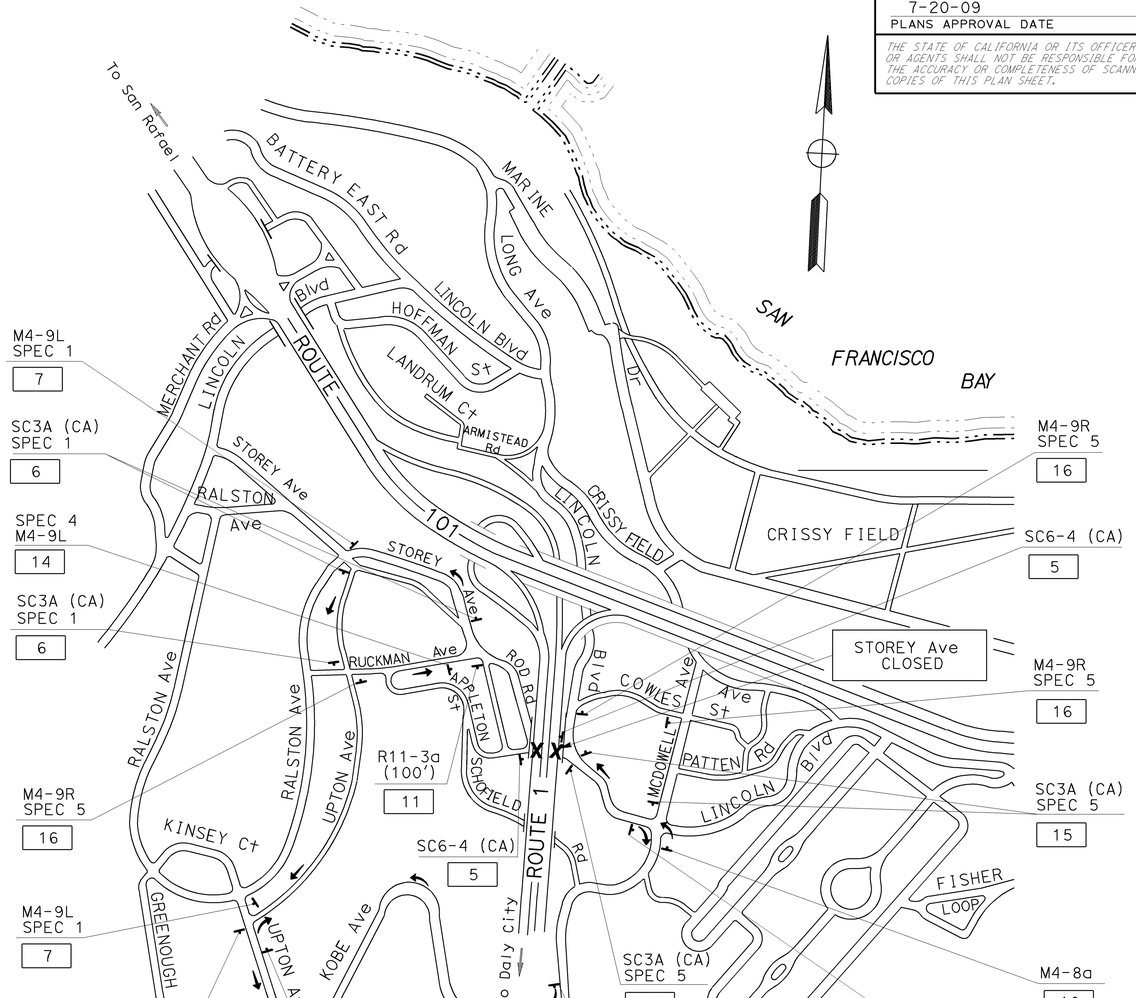

DETOUR

STOREY Ave CLOSED

CONSTRUCTION AREA SIGNS

NO SCALE

THIS PLAN ACCURATE FOR CONSTRUCTION AREA SIGN WORK ONLY

CS-3

STATE OF CALIFORNIA - DEPARTMENT OF TRANSPORTATION

TRAFFIC

Caltrans

FUNCTIONAL SUPERVISOR: ROLAND AU-YEUNG

CALCULATED-DESIGNED BY: ULICES F. VEGA

CHECKED BY: LILY Y. TING

REVISED BY: UV

DATE REVISED: 6/10/09

LAST REVISION | DATE PLOTTED => 23-JUL-2009 | TIME PLOTTED => 11:01

06-10-09

BORDER LAST REVISED 4/11/2008

RELATIVE BORDER SCALE IS IN INCHES 0 1 2 3

USERNAME => trmnguye

DGN FILE => 416373la003.dgn

CU 04242

EA 163731

Dist	COUNTY	ROUTE	POST MILES TOTAL PROJECT	SHEET No.	TOTAL SHEETS
04	SF	101,1	9.2/9.8, 6.8/7.1	93	567

REGISTERED CIVIL ENGINEER — 6-08-09 DATE

7-20-09
PLANS APPROVAL DATE

REGISTERED PROFESSIONAL ENGINEER — Jerilyn L. Struven — No. 49964 — Exp. 12-31-10 — CIVIL — STATE OF CALIFORNIA

THE STATE OF CALIFORNIA OR ITS OFFICERS OR AGENTS SHALL NOT BE RESPONSIBLE FOR THE ACCURACY OR COMPLETENESS OF SCANNED COPIES OF THIS PLAN SHEET.

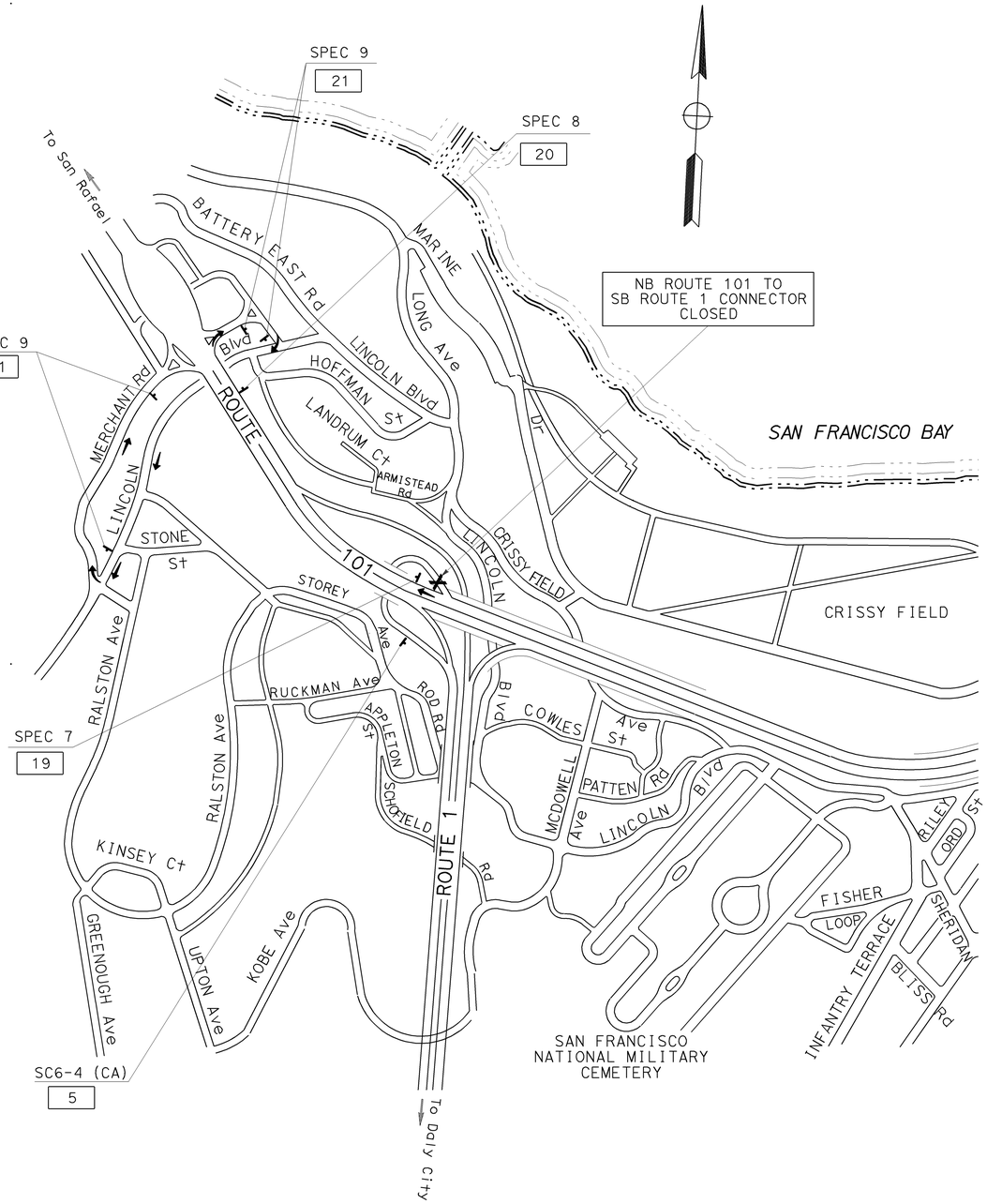

DETOUR

NB ROUTE 101 TO SB ROUTE 1 CONNECTOR CLOSED

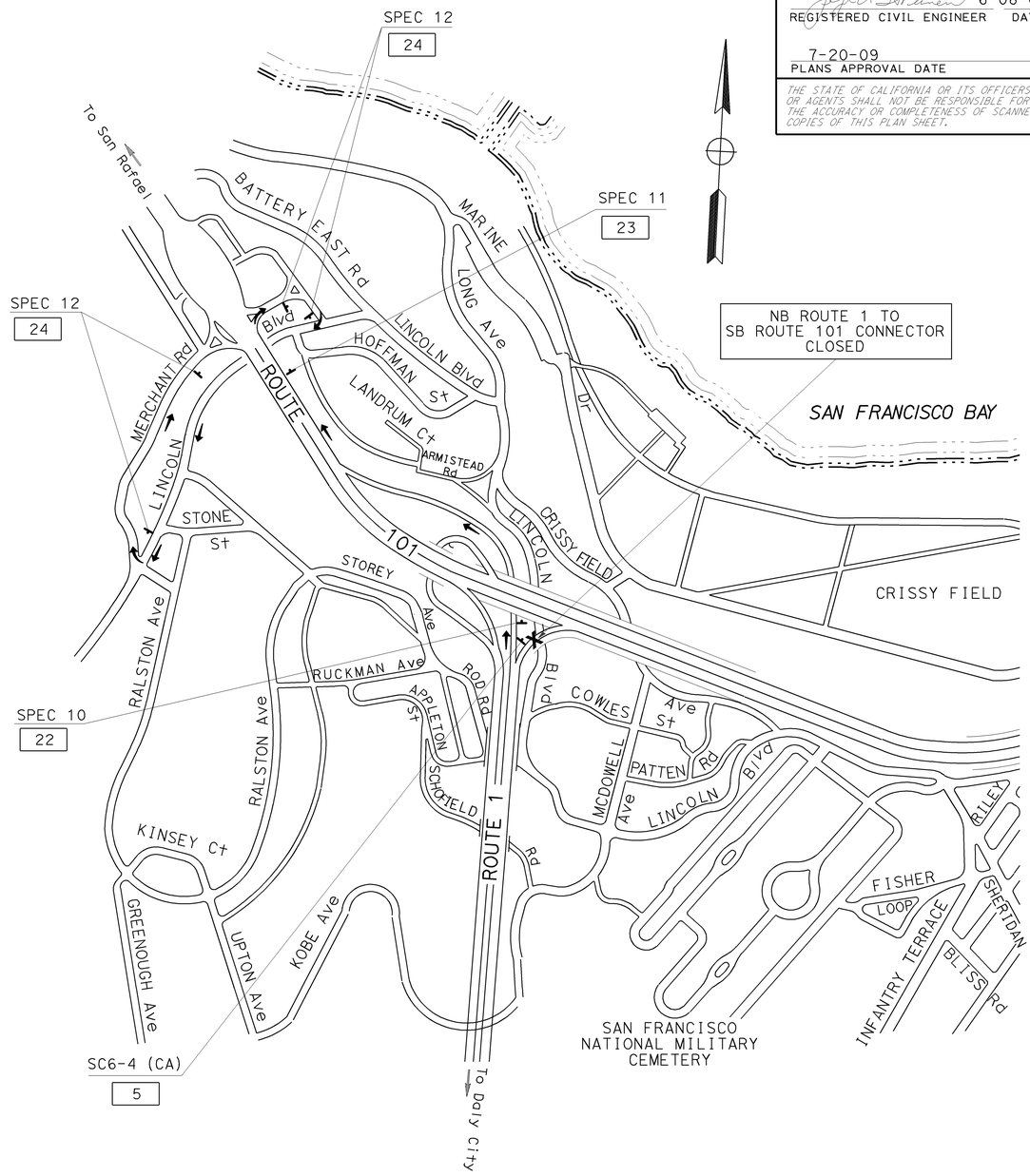

DETOUR

NB ROUTE 1 TO SB ROUTE 101 CONNECTOR CLOSED

CONSTRUCTION AREA SIGNS

NO SCALE

THIS PLAN ACCURATE FOR
CONSTRUCTION AREA SIGN WORK ONLY

CS-4

CALCULATED-DESIGNED BY	REVISED BY	FUNCTIONAL SUPERVISOR
CHECKED BY	DATE REVISED	
ULICES F. VEGA	UV	ROLAND AU-YEUNG
LILY Y. TING	6/10/09	

STATE OF CALIFORNIA - DEPARTMENT OF TRANSPORTATION
Caltrans
TRAFFIC

LAST REVISION | DATE PLOTTED => 21-JUL-2009
06-10-09 | TIME PLOTTED => 15:36

BORDER LAST REVISED 4/11/2008

RELATIVE BORDER SCALE IS IN INCHES 0 1 2 3

USERNAME => trmnguye
DGN FILE => 4163731a004.dgn

CU 04242

EA 163731

Dist	COUNTY	ROUTE	POST MILES TOTAL PROJECT	SHEET No.	TOTAL SHEETS
04	SF	101,1	9.2/9.8, 6.8/7.1	94	567

REGISTERED CIVIL ENGINEER — DATE: 6-08-09

PLANS APPROVAL DATE: 7-20-09

REGISTERED PROFESSIONAL ENGINEER — Jerilyn L. Struven — No. 49964 — Exp. 12-31-10 — CIVIL — STATE OF CALIFORNIA

THE STATE OF CALIFORNIA OR ITS OFFICERS OR AGENTS SHALL NOT BE RESPONSIBLE FOR THE ACCURACY OR COMPLETENESS OF SCANNED COPIES OF THIS PLAN SHEET.

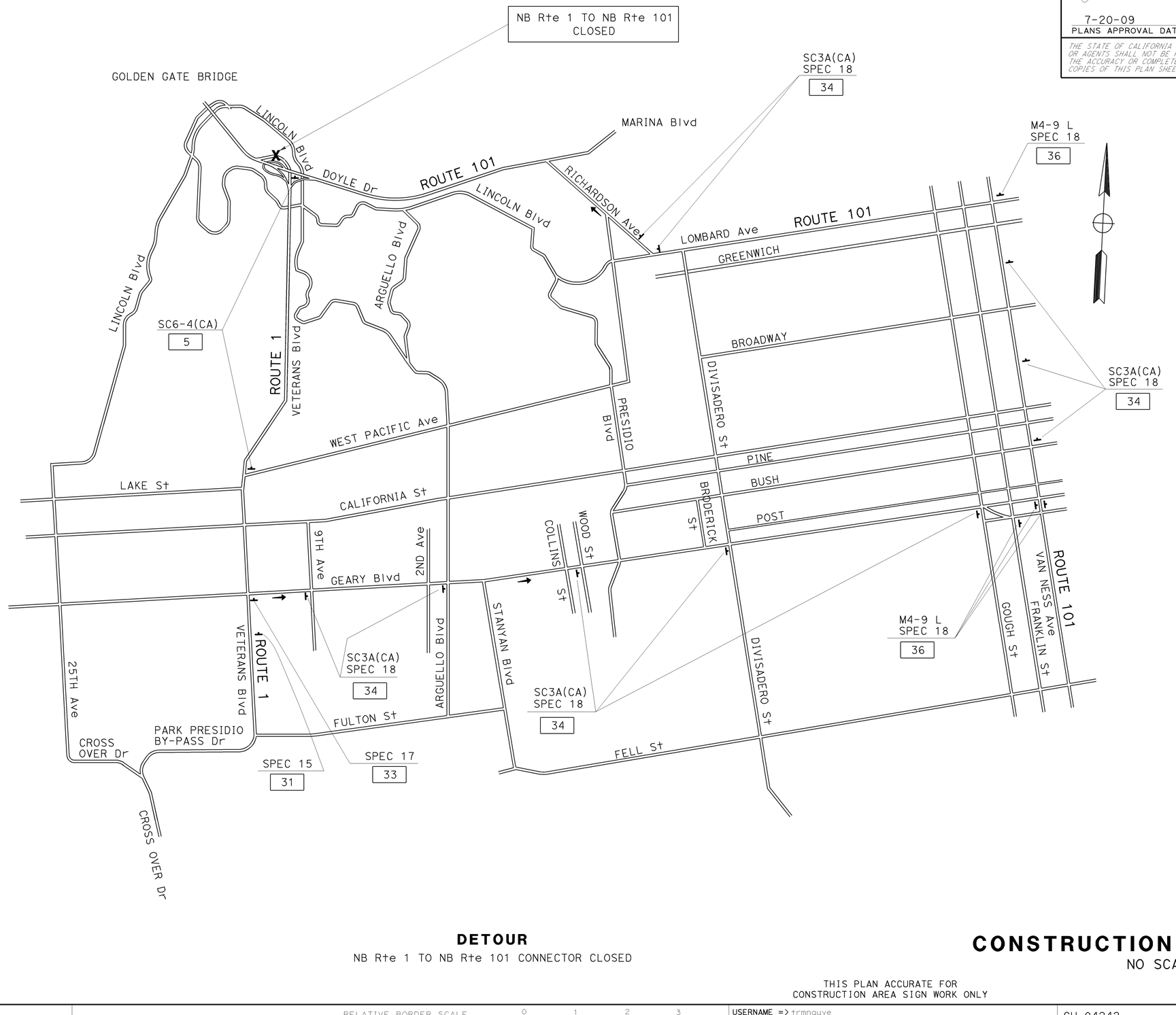

DETOUR

NB Rte 1 TO NB Rte 101 CONNECTOR CLOSED

CONSTRUCTION AREA SIGNS

NO SCALE

THIS PLAN ACCURATE FOR CONSTRUCTION AREA SIGN WORK ONLY

CS-5

CALCULATED-DESIGNED BY	REVISED BY	
CHECKED BY	DATE REVISED	
ULICES F. VEGA	UV	6/10/09
LILY Y. TING		

FUNCTIONAL SUPERVISOR: ROLAND AU-YEUNG

STATE OF CALIFORNIA - DEPARTMENT OF TRANSPORTATION

Caltrans **TRAFFIC**

LAST REVISION | DATE PLOTTED => 23-JUL-2009 | TIME PLOTTED => 11:01 | 06-11-09

BORDER LAST REVISED 4/11/2008

RELATIVE BORDER SCALE IS IN INCHES 0 1 2 3

USERNAME => trmnguye
DGN FILE => 4163731a005.dgn

CU 04242

EA 163731

Dist	COUNTY	ROUTE	POST MILES TOTAL PROJECT	SHEET No.	TOTAL SHEETS
04	SF	101,1	9.2/9.8, 6.8/7.1	95	567

REGISTERED CIVIL ENGINEER — DATE: 6-08-09

Jerilyn L. Struven, No. 49964, Exp. 12-31-10, CIVIL, REGISTERED PROFESSIONAL ENGINEER, STATE OF CALIFORNIA

PLANS APPROVAL DATE: 7-20-09

THE STATE OF CALIFORNIA OR ITS OFFICERS OR AGENTS SHALL NOT BE RESPONSIBLE FOR THE ACCURACY OR COMPLETENESS OF SCANNED COPIES OF THIS PLAN SHEET.

REVISED BY	DATE REVISED
UV	6/10/09

CALCULATED-DESIGNED BY: ULICES F. VEGA
CHECKED BY: LILY Y. TING
FUNCTIONAL SUPERVISOR: ROLAND AU-YEUNG

STATE OF CALIFORNIA - DEPARTMENT OF TRANSPORTATION
Caltrans
TRAFFIC

To San Rafael
BATTERY EAST Rd
MARINE Dr
LONG Ave
LINCOLN Blvd
HOFFMAN St
LANDRUM Ct
ARMISTEAD Rd
MERCHANT Rd
LINCOLN Blvd
ROUTE 101
CRISSY FIELD
LINCOLN
STONE St
STOREY Ave
RUCKMAN Ave
APPLETON St
ROD RD
SCHOFIELD Rd
McDOWELL Ave
COWLES St
PATTEN Rd
LINCOLN Blvd
RALSTON Ave
UPTON Ave
KINSEY Ct
GREENOUGH Ave
KOBE Ave
ROUTE 1
To Daly City
SAN FRANCISCO NATIONAL MILITARY CEMETERY
INFANTRY TERRACE
FISHER LOOP
BLISS Rd
RILEY St
ORD St
TAYLOR St
MONTGOMERY St
SHERIDAN Ave
ANZA St
GRAHAM St
CANBY St
KEVES Ave
MESA St
FUNSTON Ave
HALLECK St
FRENCH Ct
YOUNG St
LINCOLN
GIRARD Dr
Blvd
BIRMINGHAM Rd
GORGAS Ave
PALACE OF FINE ARTS
RICHARDSON Ave
SAN FRANCISCO BAY
CRISSY FIELD
MASON St
VALLEJO St
DOYLE Dr
ROUTE 101
MARSHALL St
CROOK St
LYON St
MARINA Ave OC
MARINA Blvd
LUNDEN St
JEFFERSON
BEACH
N POINT
BAY
FRANCISCO St
CHESTNUT
LOMBARD St
ROUTE 101
To San Jose
BAKER St
DIVISADERO St
LYON St

SC3A(CA) SPEC 14 — 26
McDOWELL Ave CLOSED
SC6-4(CA) — 5
SC6-4(CA) — 5
M4-8a — 10
M4-9 R SPEC 14 — 28
M4-9 L SPEC 14 — 27
M4-9 R SPEC 14 — 28
M4-9 L SPEC 14 — 27
SC3A(CA) SPEC 14 — 26
M4-9 L SPEC 14 — 27
M4-9 L SPEC 14 — 27
SC3A(CA) SPEC 14 — 26
M4-8a — 10
M4-9 R SPEC 13 — 25
SC3A(CA) SPEC 14 — 26
SC3A(CA) SPEC 14 — 26
M4-9 L SPEC 14 — 27
M4-9 R SPEC 14 — 28
M4-9 L SPEC 14 — 27
SC3A(CA) SPEC 14 — 26
M4-9 L SPEC 14 — 27
SC3A(CA) SPEC 14 — 26

DETOUR
McDOWELL Ave CLOSED

CONSTRUCTION AREA SIGNS

NO SCALE

THIS PLAN ACCURATE FOR CONSTRUCTION AREA SIGN WORK ONLY

CS-6

LAST REVISION | DATE PLOTTED => 21-JUL-2009 | TIME PLOTTED => 15:36
06-10-09

BORDER LAST REVISED 4/11/2008

RELATIVE BORDER SCALE IS IN INCHES 0 1 2 3

USERNAME => trmnguye
DGN FILE => 416373 1a006.dgn

CU 04242

EA 163731

Dist	COUNTY	ROUTE	POST MILES TOTAL PROJECT	SHEET No.	TOTAL SHEETS
04	SF	101,1	9.2/9.8, 6.8/7.1	96	567

Jerilyn L. Struven 6-08-09
REGISTERED CIVIL ENGINEER DATE

7-20-09
PLANS APPROVAL DATE

REGISTERED PROFESSIONAL ENGINEER — Jerilyn L. Struven — No. 49964 — Exp. 12-31-10 — CIVIL — STATE OF CALIFORNIA

THE STATE OF CALIFORNIA OR ITS OFFICERS OR AGENTS SHALL NOT BE RESPONSIBLE FOR THE ACCURACY OR COMPLETENESS OF SCANNED COPIES OF THIS PLAN SHEET.

4"D CAPS

LINCOLN BLVD

30" × 18"

SPEC 1

4"D CAPS

LINCOLN BLVD
CLOSED AT
STOREY RD

48" × 24"

SPEC 2

4"D CAPS

LINCOLN BLVD
CLOSED AT
ARMISTEAD RD

48" × 24"

SPEC 3

4"D CAPS

STOREY RD TO
LINCOLN AVE
CLOSED

48" × 24"

SPEC 4

4"D CAPS

STOREY RD

42" × 12"

SPEC 5

4"D CAPS

CRISSY
FIELD AVE

36" × 18"

SPEC 6

8"E CAPS

DETOUR

1 SOUTH

19th Ave
NEXT RIGHT

8"E U.C. &
6"E L.C.

90" × 78"

SPEC 7

8"E CAPS

DETOUR →

1 SOUTH

19th Ave

8"E U.C. &
6"E L.C.

78" × 60"

SPEC 8

4"D CAPS

DETOUR →

1 SOUTH

19TH AVE

42" × 36"

SPEC 9

8"E CAPS

↑ DETOUR

Downtown
Marina Blvd

8"E U.C. &
6"E L.C.

90" × 60"

SPEC 10

8"E CAPS

DETOUR →

Downtown
Marina Blvd

8"E U.C. &
6"E L.C.

90" × 60"

SPEC 11

4"D CAPS

DETOUR →

DOWNTOWN
MARINA BLVD

42" × 36"

SPEC 12

4"C CAPS

McDOWELL AVE
CLOSED AT
COWLES ST

42" × 24"

SPEC 13

4"C CAPS

McDOWELL AVE

42" × 12"

SPEC 14

6" D CAPS

DETOUR

1 NORTH

GOLDEN GATE BR
USE GEARY BLVD

84" × 60"

SPEC 15

6" C CAPS

DETOUR →

1 NORTH

GOLDEN GATE BR

72" × 48"

SPEC 17

4"C CAPS

1 NORTH

GOLDEN GATE BR

48" × 24"

SPEC 18

CONSTRUCTION AREA SIGNS

NO SCALE

THIS PLAN ACCURATE FOR
CONSTRUCTION AREA SIGN WORK ONLY

CS-7

STATE OF CALIFORNIA - DEPARTMENT OF TRANSPORTATION
Caltrans
TRAFFIC

FUNCTIONAL SUPERVISOR: ROLAND AU-YEUNG

CALCULATED-DESIGNED BY: ULICES F. VEGA
CHECKED BY: LILY Y. TING

REVISED BY: UV
DATE REVISED: 6/10/09

LAST REVISION | DATE PLOTTED => 23-JUL-2009
06-10-09 | TIME PLOTTED => 11:01

BORDER LAST REVISED 4/11/2008

RELATIVE BORDER SCALE IS IN INCHES 0 1 2 3

USERNAME => trmnguye
DGN FILE => 4163731a007.dgn

CU 04242

EA 163731

Dist	COUNTY	ROUTE	POST MILES TOTAL PROJECT	SHEET No.	TOTAL SHEETS
04	SF	101,1	9.2/9.8, 6.8/7.1	97	567

REGISTERED CIVIL ENGINEER — DATE 6-08-09

PLANS APPROVAL DATE 7-20-09

REGISTERED PROFESSIONAL ENGINEER — Jerilyn L. Struven — No. 49964 — Exp. 12-31-10 — CIVIL — STATE OF CALIFORNIA

THE STATE OF CALIFORNIA OR ITS OFFICERS OR AGENTS SHALL NOT BE RESPONSIBLE FOR THE ACCURACY OR COMPLETENESS OF SCANNED COPIES OF THIS PLAN SHEET.

CONSTRUCTION AREA SIGNS

SIGN No.	CODE	PANEL SIZE (INCH x INCH)	SIGN MESSAGE	No. OF SIGNS EA	POST SIZE (EA - INCH x INCH)	REMARKS
1	W20-1	48 x 48	ROAD WORK AHEAD	3	1 - 4 x 6	
2	G20-2	48 x 24	END ROAD WORK	3	1 - 4 x 6	
3	W20-1	36 x 36	ROAD WORK AHEAD	6	1 - 4 x 6	
4	G20-2	36 x 18	END ROAD WORK	6	1 - 4 x 6	
5	SC6-4 (CA)	48 x 60	ROAD (RAMP)-CLOSED-(DATES)	11	1 - 4 x 6	
6	SC3A (CA)	36 x 12	DETOUR	8	1 - 4 x 6	
	SPEC 1	30 x 18	LINCOLN Blvd			
7	M4-9 L	30 x 24	DETOUR	7	1 - 4 x 6	
	SPEC 1	30 x 18	LINCOLN Blvd			
8	SPEC 2	48 x 24	LINCOLN Blvd-CLOSED AT	1	1 - 4 x 6	
	SC3A (CA)	36 x 12	DETOUR			
9	SPEC 2	48 x 24	LINCOLN Blvd-CLOSED AT	1	1 - 4 x 6	
	M4-9 R	30 x 24	DETOUR			
10	M4-8a	24 x 18	END DETOUR	6	1 - 4 x 4	
11	R11-3a	60 x 30	ROAD CLOSED-100 FEET AHEAD	2	2 - 4 x 6	
12	SPEC 3	48 x 24	LINCOLN Blvd- CLOSED AT	3	1 - 4 x 6	
	M4-9 R	30 x 24	DETOUR			
13	M4-9 R	30 x 24	DETOUR	2	1 - 4 x 6	
	SPEC 1	30 x 18	LINCOLN Blvd			
14	SPEC 4	48 x 24	STOREY Rd-TO LINCOLN Ave	1	1 - 4 x 6	
	M4-9 L	30 x 24	DETOUR			
15	SC3A (CA)	36 x 12	DETOUR	3	1 - 4 x 6	
	SPEC 5	42 x 12	STOREY Rd			
16	M4-9 R	30 x 24	DETOUR	7	1 - 4 x 6	
	SPEC 5	42 x 12	STOREY Rd			
17	SC3A (CA)	36 x 12	DETOUR	1	1 - 4 x 6	
	SPEC 6	36 x 18	CRISSY-FIELD Ave			
18	M4-9 R	30 x 24	DETOUR	1	1 - 4 x 6	
	SPEC 6	36 x 18	CRISSY-FIELD Ave			
19	SPEC 7	90 x 78	DETOUR-1 SOUTH-19th Ave	1		MOUNT ON Exist POSTS
20	SPEC 8	78 x 60	DETOUR-1 SOUTH-19th Ave	1	2 - 4 x 6	
21	SPEC 9	42 x 36	DETOUR-1 SOUTH-19th Ave	4	1 - 4 x 6	
22	SPEC 10	90 x 60	DETOUR-DOWNTOWN-MARINA Blvd	1	2 - 6 x 6	
23	SPEC 11	90 x 60	DETOUR-DOWNTOWN-MARINA Blvd	1	2 - 6 x 6	
24	SPEC 12	42 x 36	DETOUR-DOWNTOWN-MARINA	4	1 - 4 x 6	
25	SPEC 13	42 x 24	McDOWELL Ave-CLOSED AT	1	1 - 4 x 6	
	M4-9 R	30 x 24	DETOUR			
26	SC3A (CA)	36 x 12	DETOUR	11	1 - 4 x 6	
	SPEC 14	42 x 12	McDOWELL Ave			
27	M4-9 L	30 x 24	DETOUR	7	1 - 4 x 6	
	SPEC 14	42 x 12	McDOWELL Ave			
28	M4-9 R	30 x 24	DETOUR	3	1 - 4 x 6	
	SPEC 14	42 x 12	McDOWELL Ave			
29	SPEC	90 x 60	Const PROJECT FUNDING ID SIGN	2	2 - 4 x 6	TYPE 1
30	C40 (CA)	72 x 36	TRAFFIC FINES DOUBLE IN	2	2 - 4 x 6	
31	SPEC 15	84 x 60	DETOUR-1 NORTH-GOLDEN	1	2 - 4 x 6	
32						
33	SPEC 17	72 x 48	DETOUR-1 NORTH-GOLDEN	1	2 - 4 x 6	
34	SC3A (CA)	36 x 12	DETOUR	10	1 - 4 x 6	
	SPEC 18	48 x 24	1 NORTH-GOLDEN GATE Br			
35						
36	M4-9 L	30 x 24	DETOUR	4	1 - 4 x 6	
	SPEC 18	48 x 24	1 NORTH-GOLDEN GATE Br			
37	R9-3a	24 x 24	(NO PEDESTRIAN CROSSING)	2	1 - 4 x 6	
	R5-6	24 x 24	(NO BICYCLES)			
	R9-9	24 x 24	(SIDEWALK CLOSED)			

THIS PLAN ACCURATE FOR CONSTRUCTION AREA SIGN WORK ONLY

CONSTRUCTION AREA SIGNS

NO SCALE

CS-8

CALCULATED-DESIGNED BY	CHECKED BY	REVISED BY	DATE REVISED
ULICES F. VEGA	LILY Y. TING	UV	6/10/09

FUNCTIONAL SUPERVISOR: ROLAND AU-YEUNG

STATE OF CALIFORNIA - DEPARTMENT OF TRANSPORTATION — TRAFFIC

Caltrans

LAST REVISION | DATE PLOTTED => 21-JUL-2009 | TIME PLOTTED => 15:36

06-13-09

BORDER LAST REVISED 4/11/2008

RELATIVE BORDER SCALE IS IN INCHES 0 1 2 3

USERNAME => trmnguye
DGN FILE => 416373la008.dgn

CU 04242

EA 163731

DIST	COUNTY	ROUTE	POST MILES TOTAL PROJECT	SHEET No	TOTAL SHEETS
04	SF	101,1	9.2/9.8, 6.8/7.1	98	567

REGISTERED CIVIL ENGINEER DATE

7-20-09
PLANS APPROVAL DATE

REGISTERED PROFESSIONAL ENGINEER — LISA McCUTCHEON — No. C70121 — Exp. 9/30/10 — CIVIL — STATE OF CALIFORNIA

The State of California or its officers or agents shall not be responsible for the accuracy or completeness of electronic copies of this plan sheet.

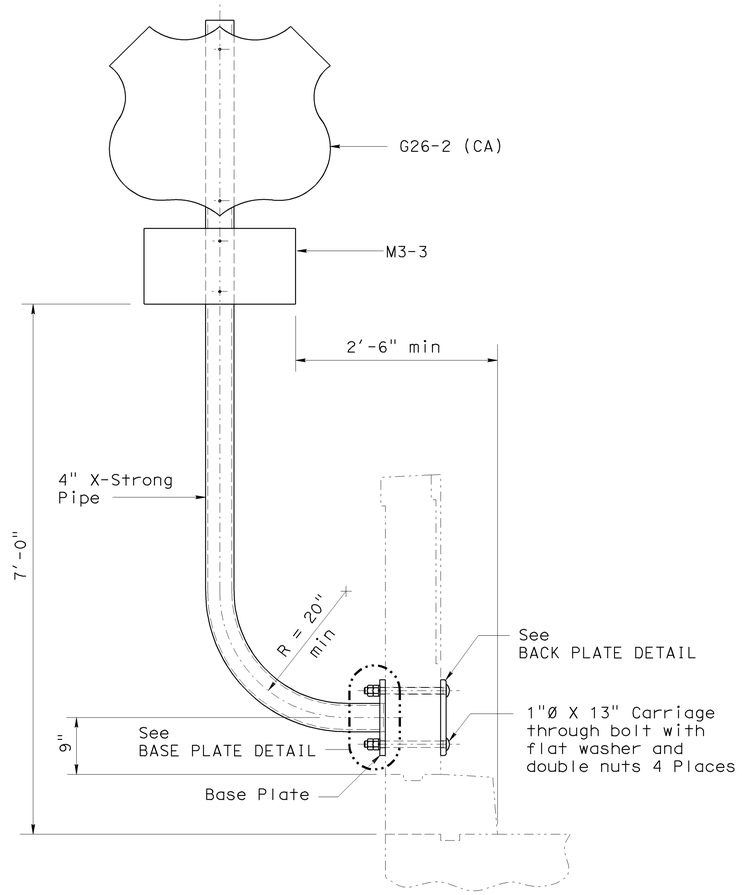

ELEVATION
STAGE CONSTRUCTION SIGN SC-2

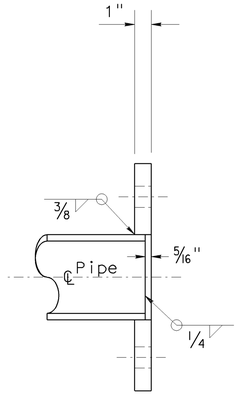

SECTION A-A

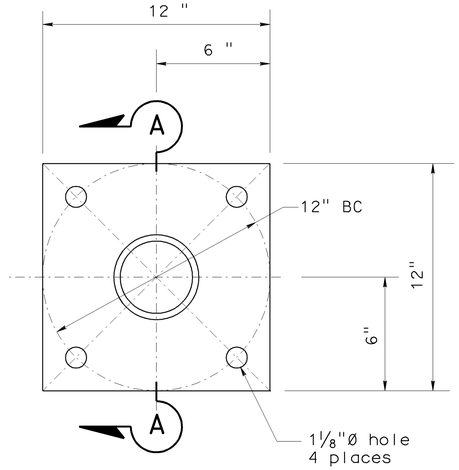

BASE PLATE

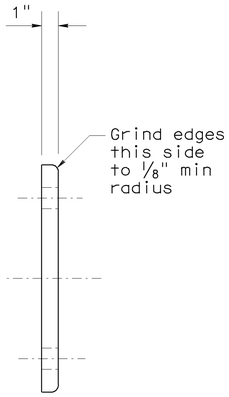

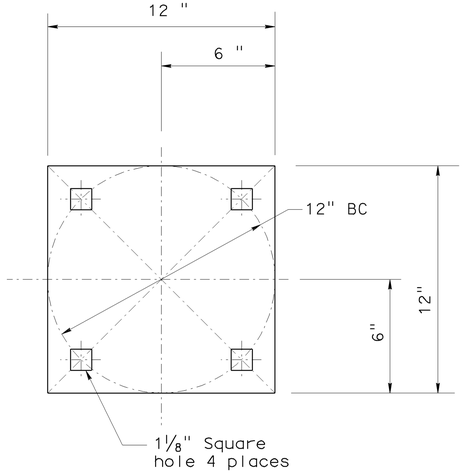

BACK PLATE

NOTES:

1. Unless otherwise shown all steel shall be galvanized after fabrication.
2. Contractor to provide anchor bolt layout before anchor bolts are placed.
3. Minimum fillet weld is 3/8" or thickness of thinner part unless noted.
4. See "ROAD PLANS" for sign location.
5. Refer to STD PLANS RS-2 for SIGN BACKING DETAILS.

NOTE:
THE CONTRACTOR SHALL VERIFY ALL CONTROLLING FIELD DIMENSIONS BEFORE ORDERING OR FABRICATING ANY MATERIAL.

NO SCALE

CS-9

Jeffrey B Woody
BRANCH CHIEF

DESIGN	BY M O'LEARY	CHECKED JOHN DATILES
DETAILS	BY A R DUDSAK	CHECKED BOB GIORGIS
QUANTITIES	BY M O'LEARY	CHECKED JOHN DATILES

STATE OF **CALIFORNIA** DEPARTMENT OF TRANSPORTATION

DIVISION OF ENGINEERING SERVICES STRUCTURE DESIGN
SPECIAL DESIGNS BRANCH

BRIDGE NO. 34-0157L
POST MILE X

PRESIDIO ROADWAY SIGN
EXISTING VIADUCT

STRUCTURES DESIGN SPECIAL DESIGN SHEET (ENGLISH) (REV. 10-25-05)

ORIGINAL SCALE IN INCHES FOR REDUCED PLANS 0 1 2 3

CU 04
EA 163731

DISREGARD PRINTS BEARING EARLIER REVISION DATES →

REVISION DATES: 6-3-09 6-16-09

SHEET 1 OF 4

DGN FILE =>spec_des_br_prj/2009sd/04-163731/04_163731_cs9.dgn

USERNAME => tmmguye DATE PLOTTED => 23-JUL-2009 TIME PLOTTED => 11:03

DIST	COUNTY	ROUTE	POST MILES TOTAL PROJECT	SHEET No	TOTAL SHEETS
04	SF	101,1	9.2/9.8, 6.8/7.1	99	567

REGISTERED CIVIL ENGINEER DATE

7-20-09
PLANS APPROVAL DATE

LISA McCUTCHEON — REGISTERED PROFESSIONAL ENGINEER — No. C70121 — Exp. 9/30/10 — CIVIL — STATE OF CALIFORNIA

The State of California or its officers or agents shall not be responsible for the accuracy or completeness of electronic copies of this plan sheet.

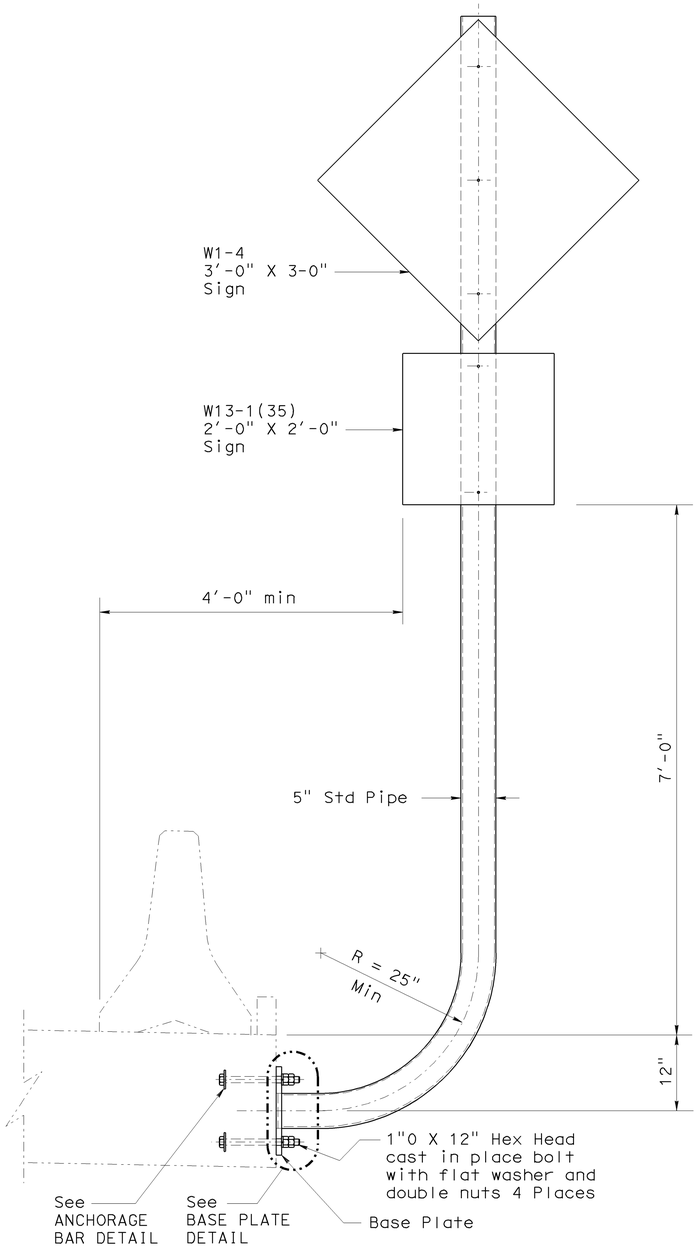

ELEVATION
STAGE CONSTRUCTION SIGN SC-13

NOTE:
THE CONTRACTOR SHALL VERIFY ALL CONTROLLING FIELD DIMENSIONS BEFORE ORDERING OR FABRICATING ANY MATERIAL.

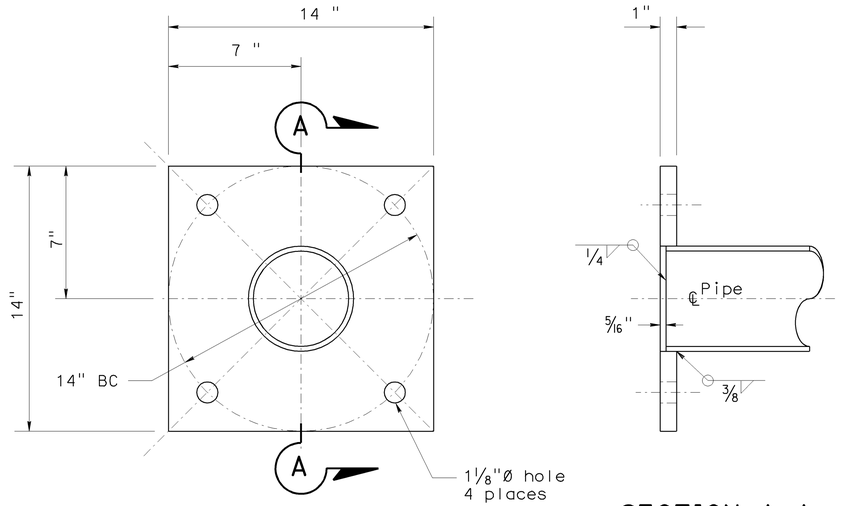

BASE PLATE

SECTION A-A

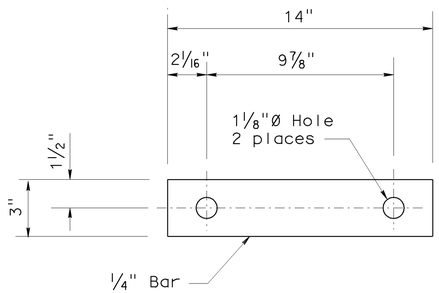

ANCHORAGE BAR

NOTES:

1. Unless otherwise shown all steel shall be galvanized after fabrication.
2. Contractor to provide anchor bolt layout and template before anchor bolts are placed.
3. Minimum fillet weld is ⅜" or thickness of thinner part unless noted.
4. See "ROAD PLANS" for sign location.
5. Refer to STD PLANS RS-2 for SIGN BACKING DETAILS.

NO SCALE

CS-10

BRANCH CHIEF

DESIGN	BY M O'LEARY	CHECKED JOHN DATILES
DETAILS	BY A R DUDSAK	CHECKED BOB GIORGIS
QUANTITIES	BY M O'LEARY	CHECKED JOHN DATILES

STATE OF CALIFORNIA
DEPARTMENT OF TRANSPORTATION

DIVISION OF ENGINEERING SERVICES
STRUCTURE DESIGN
SPECIAL DESIGNS BRANCH

BRIDGE NO. 34-0157L
POST MILE X

PRESISIO ROADWAY SIGN
RUCKMAN AVE UC ROADWAY SIGN

STRUCTURES DESIGN SPECIAL DESIGN SHEET (ENGLISH) (REV. 10-25-05)

ORIGINAL SCALE IN INCHES FOR REDUCED PLANS 0 1 2 3

CU 04
EA 163731

DISREGARD PRINTS BEARING EARLIER REVISION DATES →

REVISION DATES: 6/4/09 6-16-09

SHEET 2 OF 4

DGN FILE =>spec_des_br_prj/2009sd/04-163731/04_163731_cs10.dgn

USERNAME = tmphesl DATE PLOTTED => 22-JUL-2009 TIME PLOTTED => 06:28

FOR ACCURATE RIGHT OF WAY AND ACCESS DATA, CONTACT RIGHT OF WAY ENGINEERING AT THE DISTRICT OFFICE.

GENERAL NOTE:

1. FOR TRAFFIC DETOUR AND SIGNING, SEE DETOUR PLANS AND SIGNING PLANS.
2. TRAFFIC STRIPE REMOVAL LIMITS ARE IN THE AREA CONFLICTING BETWEEN THE EXISTING ROADWAY AND THE STAGE CONSTRUCTION ROAD.

TRAFFIC HANDLING - STAGE 1 PER LANE CLOSURE CHART

AA — TRAFFIC REMAINS ON Exist LANES WITH LANE CLOSURES DURING ALLOWABLE HOURS.

BB — CONSTRUCT LINCOLN Blvd, PROMENADE AND COWLES REALIGNMENT. CLOSE LINCOLN Blvd FOR REALIGNMENT.

CC — CLOSE SB VETERANS Blvd EXIT RAMP FOR N101/S1 CONNECTOR SEPARATION (Br No. 34-0155R) CONSTRUCTION.

DD — CLOSE CRISSY FIELD Ave FOR VIADUCT CONSTRUCTION.

EE — CLOSE NB 1 TO SB 101 CONNECTOR RAMP.

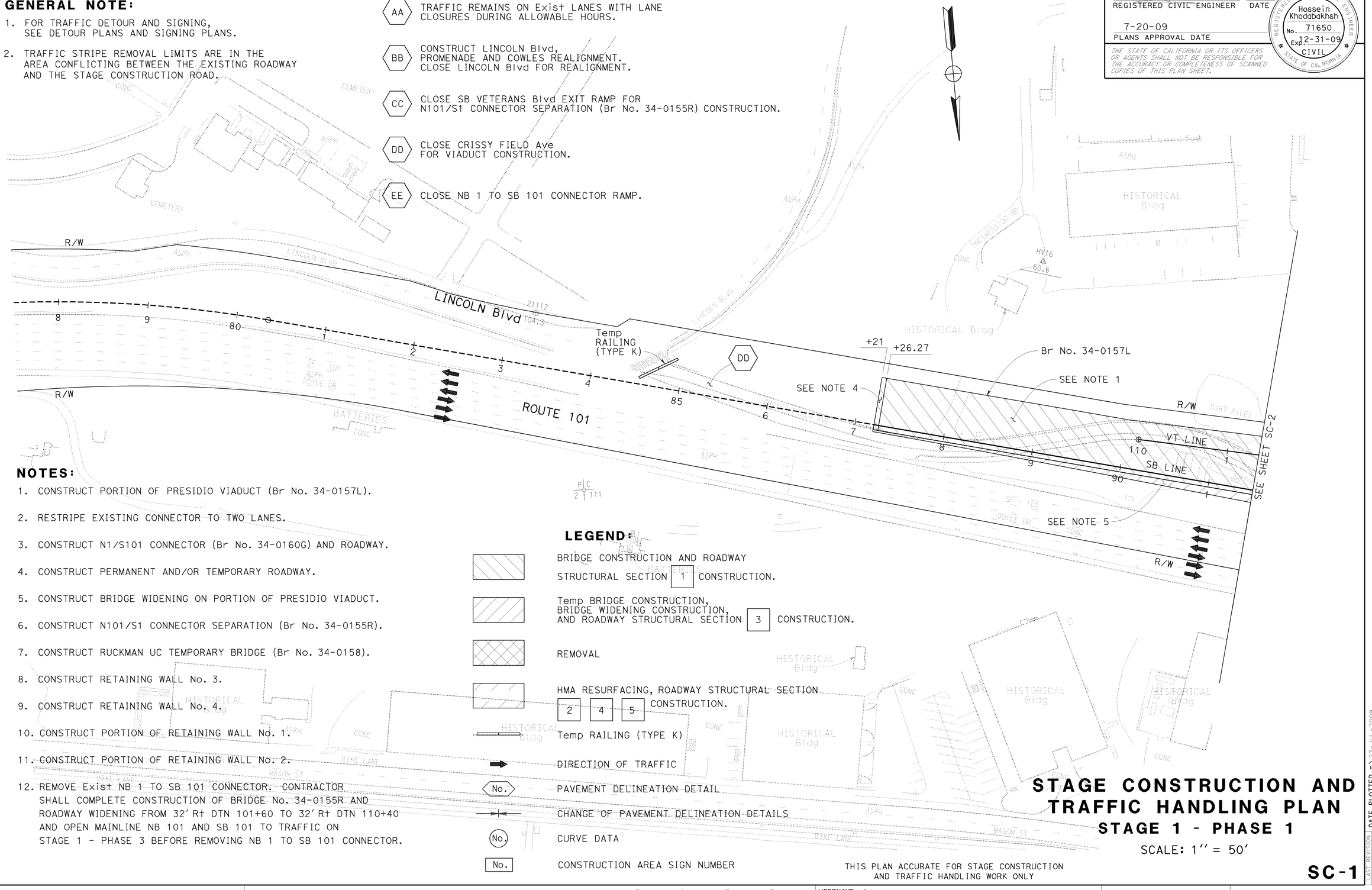

NOTES:

1. CONSTRUCT PORTION OF PRESIDIO VIADUCT (Br No. 34-0157L).
2. RESTRIPE EXISTING CONNECTOR TO TWO LANES.
3. CONSTRUCT N1/S101 CONNECTOR (Br No. 34-0160G) AND ROADWAY.
4. CONSTRUCT PERMANENT AND/OR TEMPORARY ROADWAY.
5. CONSTRUCT BRIDGE WIDENING ON PORTION OF PRESIDIO VIADUCT.
6. CONSTRUCT N101/S1 CONNECTOR SEPARATION (Br No. 34-0155R).
7. CONSTRUCT RUCKMAN UC TEMPORARY BRIDGE (Br No. 34-0158).
8. CONSTRUCT RETAINING WALL No. 3.
9. CONSTRUCT RETAINING WALL No. 4.
10. CONSTRUCT PORTION OF RETAINING WALL No. 1.
11. CONSTRUCT PORTION OF RETAINING WALL No. 2.
12. REMOVE Exist NB 1 TO SB 101 CONNECTOR. CONTRACTOR SHALL COMPLETE CONSTRUCTION OF BRIDGE No. 34-0155R AND ROADWAY WIDENING FROM 32' Rt DTN 101+60 TO 32' Rt DTN 110+40 AND OPEN MAINLINE NB 101 AND SB 101 TO TRAFFIC ON STAGE 1 - PHASE 3 BEFORE REMOVING NB 1 TO SB 101 CONNECTOR.

LEGEND:

- BRIDGE CONSTRUCTION AND ROADWAY STRUCTURAL SECTION [1] CONSTRUCTION.
- Temp BRIDGE CONSTRUCTION, BRIDGE WIDENING CONSTRUCTION, AND ROADWAY STRUCTURAL SECTION [3] CONSTRUCTION.
- REMOVAL
- HMA RESURFACING, ROADWAY STRUCTURAL SECTION [2] [4] [5] CONSTRUCTION.
- Temp RAILING (TYPE K)
- DIRECTION OF TRAFFIC
- [No.] PAVEMENT DELINEATION DETAIL
- CHANGE OF PAVEMENT DELINEATION DETAILS
- (No.) CURVE DATA
- [No.] CONSTRUCTION AREA SIGN NUMBER

THIS PLAN ACCURATE FOR STAGE CONSTRUCTION AND TRAFFIC HANDLING WORK ONLY

STAGE CONSTRUCTION AND TRAFFIC HANDLING PLAN

STAGE 1 - PHASE 1

SCALE: 1'' = 50'

SC-1

Dist	COUNTY	ROUTE	POST MILES TOTAL PROJECT	SHEET No.	TOTAL SHEETS
04	SF	101,1	9.2/9.8, 6.8/7.1	100	567

REGISTERED CIVIL ENGINEER — DATE: 6-08-09

PLANS APPROVAL DATE: 7-20-09

Hossein Khodabakhsh, No. 71650, Exp. 12-31-09, CIVIL, REGISTERED PROFESSIONAL ENGINEER, STATE OF CALIFORNIA

THE STATE OF CALIFORNIA OR ITS OFFICERS OR AGENTS SHALL NOT BE RESPONSIBLE FOR THE ACCURACY OR COMPLETENESS OF SCANNED COPIES OF THIS PLAN SHEET.

REVISED BY	DATE REVISED
GG	6/10/09

CALCULATED-DESIGNED BY: GEORGE GIN
CHECKED BY: ROGER DAYOAN
FUNCTIONAL SUPERVISOR: ABOLFAZL EMADZADEH

STATE OF CALIFORNIA - DEPARTMENT OF TRANSPORTATION
Caltrans® DESIGN

LAST REVISION DATE PLOTTED => 23-JUL-2009
06-08-09 TIME PLOTTED => 11:01

BORDER LAST REVISED 4/11/2008 | RELATIVE BORDER SCALE IS IN INCHES 0 1 2 3 | USERNAME => trmnguye | DGN FILE => 416373ma001.dgn | CU 04242 | EA 163731

Dist	COUNTY	ROUTE	POST MILES TOTAL PROJECT	SHEET No.	TOTAL SHEETS
04	SF	101,1	9.2/9.8, 6.8/7.1	101	567

REGISTERED CIVIL ENGINEER — 6-08-09 DATE

7-20-09
PLANS APPROVAL DATE

Hossein Khodabakhsh No. 71650 Exp. 12-31-09 CIVIL — REGISTERED PROFESSIONAL ENGINEER — STATE OF CALIFORNIA

THE STATE OF CALIFORNIA OR ITS OFFICERS OR AGENTS SHALL NOT BE RESPONSIBLE FOR THE ACCURACY OR COMPLETENESS OF SCANNED COPIES OF THIS PLAN SHEET.

FOR ACCURATE RIGHT OF WAY AND ACCESS DATA, CONTACT RIGHT OF WAY ENGINEERING AT THE DISTRICT OFFICE.

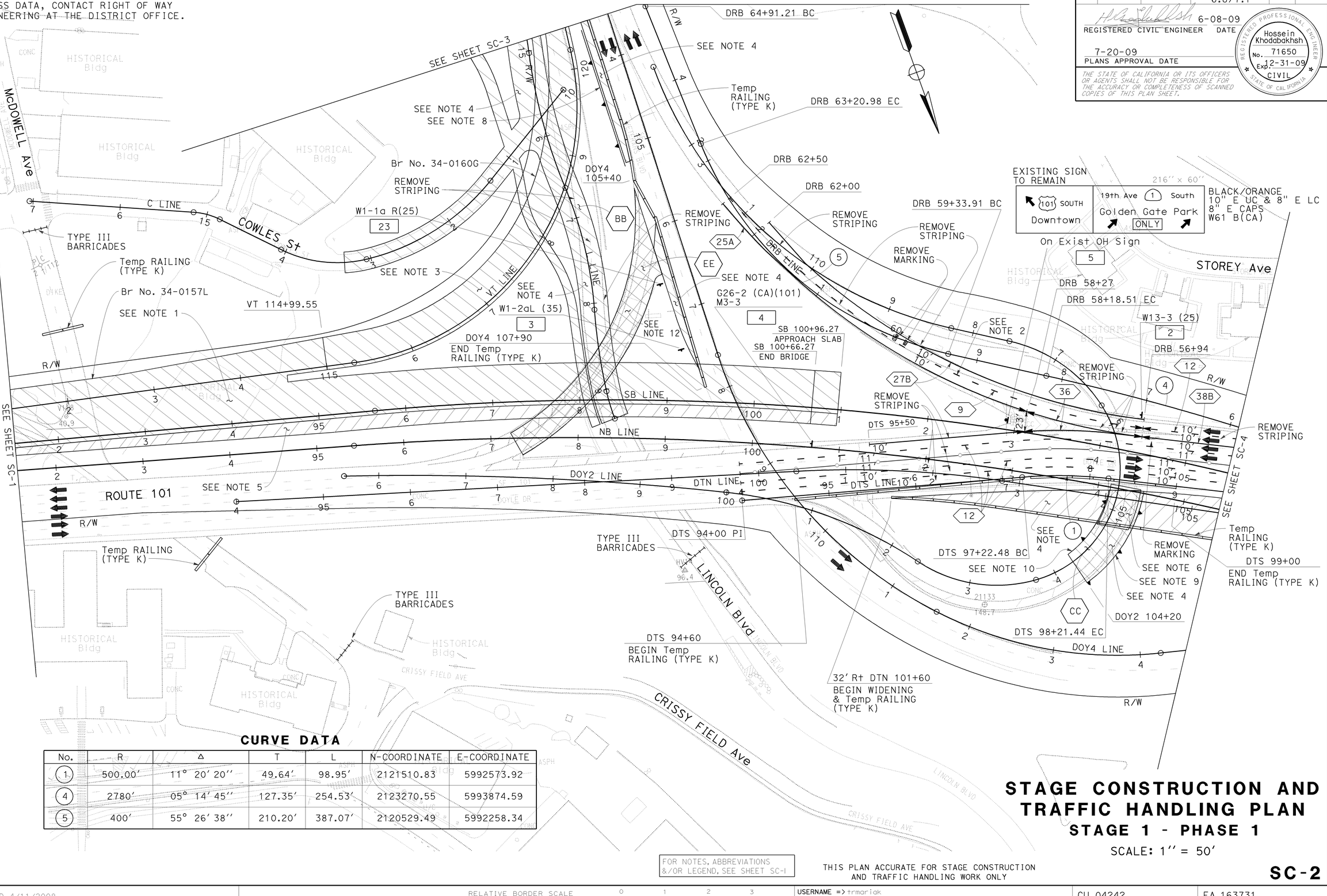

CURVE DATA

No.	R	Δ	T	L	N-COORDINATE	E-COORDINATE
1	500.00′	11° 20′ 20″	49.64′	98.95′	2121510.83	5992573.92
4	2780′	05° 14′ 45″	127.35′	254.53′	2123270.55	5993874.59
5	400′	55° 26′ 38″	210.20′	387.07′	2120529.49	5992258.34

FOR NOTES, ABBREVIATIONS &/OR LEGEND, SEE SHEET SC-1

THIS PLAN ACCURATE FOR STAGE CONSTRUCTION AND TRAFFIC HANDLING WORK ONLY

STAGE CONSTRUCTION AND TRAFFIC HANDLING PLAN

STAGE 1 - PHASE 1

SCALE: 1'' = 50'

SC-2

STATE OF CALIFORNIA - DEPARTMENT OF TRANSPORTATION
DESIGN
Caltrans

FUNCTIONAL SUPERVISOR: ABOLFAZL EMADZADEH
CALCULATED-DESIGNED BY: GEORGE GIN
CHECKED BY: ROGER DAYOAN
REVISED BY: GG
DATE REVISED: 6/10/09

LAST REVISION DATE PLOTTED => 22-JUL-2009
TIME PLOTTED => 08:24
06-09-09

BORDER LAST REVISED 4/11/2008
RELATIVE BORDER SCALE IS IN INCHES 0 1 2 3
USERNAME => trmariak
DGN FILE => 416373ma002.dgn
CU 04242
EA 163731

Dist	COUNTY	ROUTE	POST MILES TOTAL PROJECT	SHEET No.	TOTAL SHEETS
04	SF	101,1	9.2/9.8, 6.8/7.1	102	567

REGISTERED CIVIL ENGINEER 6-08-09 DATE

7-20-09
PLANS APPROVAL DATE

REGISTERED PROFESSIONAL ENGINEER Hossein Khodabakhsh No. 71650 Exp. 12-31-09 CIVIL STATE OF CALIFORNIA

THE STATE OF CALIFORNIA OR ITS OFFICERS OR AGENTS SHALL NOT BE RESPONSIBLE FOR THE ACCURACY OR COMPLETENESS OF SCANNED COPIES OF THIS PLAN SHEET.

FOR ACCURATE RIGHT OF WAY AND ACCESS DATA, CONTACT RIGHT OF WAY ENGINEERING AT THE DISTRICT OFFICE.

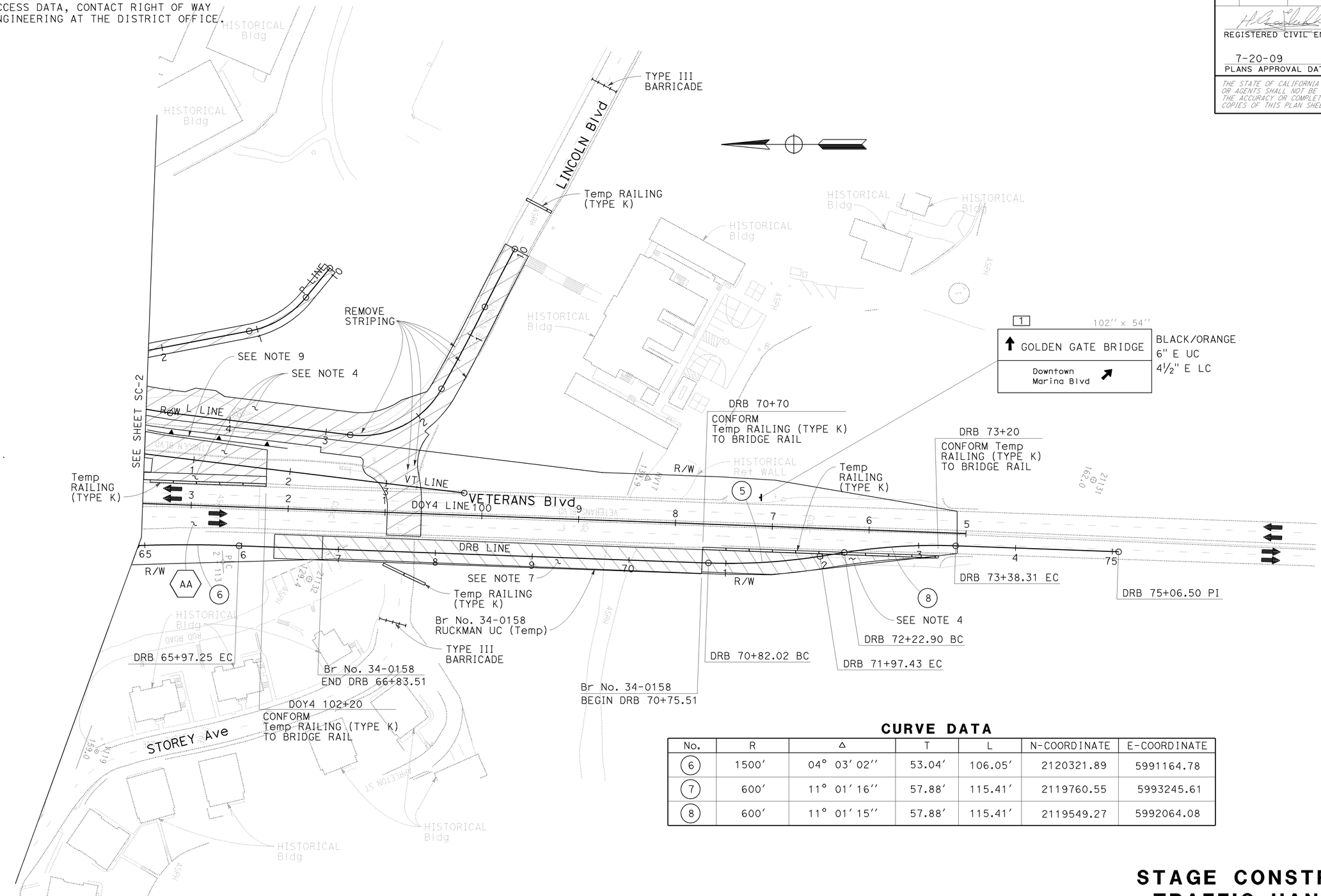

CURVE DATA

No.	R	Δ	T	L	N-COORDINATE	E-COORDINATE
6	1500'	04° 03' 02''	53.04'	106.05'	2120321.89	5991164.78
7	600'	11° 01' 16''	57.88'	115.41'	2119760.55	5993245.61
8	600'	11° 01' 15''	57.88'	115.41'	2119549.27	5992064.08

STAGE CONSTRUCTION AND TRAFFIC HANDLING PLAN

STAGE 1 - PHASE 1

SCALE: 1'' = 50'

FOR NOTES, ABBREVIATIONS &/OR LEGEND, SEE SHEET SC-1

THIS PLAN ACCURATE FOR STAGE CONSTRUCTION AND TRAFFIC HANDLING WORK ONLY

SC-3

STATE OF CALIFORNIA - DEPARTMENT OF TRANSPORTATION
Caltrans
DESIGN

FUNCTIONAL SUPERVISOR: ABOLFAZL EMADZADEH
CALCULATED-DESIGNED BY: GEORGE GIN
CHECKED BY: ROGER DAYOAN
REVISED BY: GG
DATE REVISED: 6/10/09

LAST REVISION 06-09-09
DATE PLOTTED => 22-JUL-2009
TIME PLOTTED => 08:20

FOR ACCURATE RIGHT OF WAY AND
ACCESS DATA, CONTACT RIGHT OF WAY
ENGINEERING AT THE DISTRICT OFFICE.

Dist	COUNTY	ROUTE	POST MILES TOTAL PROJECT	SHEET No.	TOTAL SHEETS
04	SF	101,1	9.2/9.8, 6.8/7.1	103	567

REGISTERED CIVIL ENGINEER — 6-08-09 DATE

Hossein Khodabakhsh No. 71650 Exp. 12-31-09 CIVIL — REGISTERED PROFESSIONAL ENGINEER — STATE OF CALIFORNIA

7-20-09
PLANS APPROVAL DATE

THE STATE OF CALIFORNIA OR ITS OFFICERS OR AGENTS SHALL NOT BE RESPONSIBLE FOR THE ACCURACY OR COMPLETENESS OF SCANNED COPIES OF THIS PLAN SHEET.

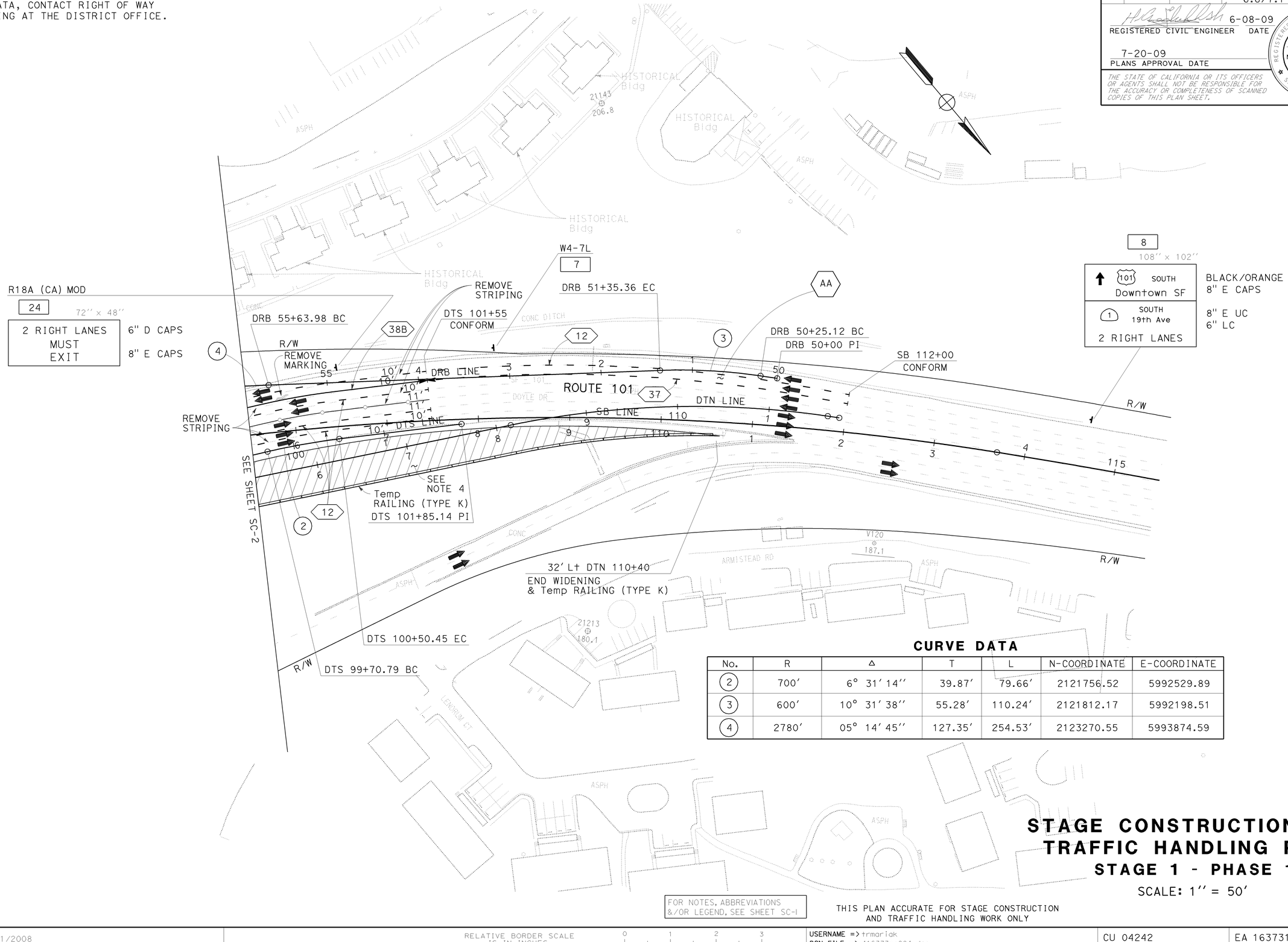

CURVE DATA

No.	R	Δ	T	L	N-COORDINATE	E-COORDINATE
2	700′	6° 31′ 14′′	39.87′	79.66′	2121756.52	5992529.89
3	600′	10° 31′ 38′′	55.28′	110.24′	2121812.17	5992198.51
4	2780′	05° 14′ 45′′	127.35′	254.53′	2123270.55	5993874.59

FOR NOTES, ABBREVIATIONS &/OR LEGEND, SEE SHEET SC-1

THIS PLAN ACCURATE FOR STAGE CONSTRUCTION AND TRAFFIC HANDLING WORK ONLY

STAGE CONSTRUCTION AND TRAFFIC HANDLING PLAN

STAGE 1 - PHASE 1

SCALE: 1′′ = 50′

SC-4

REVISED BY	DATE REVISED
GG	6/10/09

CALCULATED-DESIGNED BY: GEORGE GIN
CHECKED BY: ROGER DAYOAN
FUNCTIONAL SUPERVISOR: ABOLFAZL EMADZADEH

STATE OF CALIFORNIA - DEPARTMENT OF TRANSPORTATION
DESIGN

LAST REVISION | DATE PLOTTED => 22-JUL-2009 | TIME PLOTTED => 08:20
06-04-09

BORDER LAST REVISED 4/11/2008

RELATIVE BORDER SCALE IS IN INCHES 0 1 2 3

USERNAME => trmariak
DGN FILE => 416373ma004.dgn

CU 04242

EA 163731

FOR ACCURATE RIGHT OF WAY AND
ACCESS DATA, CONTACT RIGHT OF WAY
ENGINEERING AT THE DISTRICT OFFICE.

Dist	COUNTY	ROUTE	POST MILES TOTAL PROJECT	SHEET No.	TOTAL SHEETS
04	SF	101,1	9.2/9.8, 6.8/7.1	104	567

REGISTERED CIVIL ENGINEER — 6-08-09 DATE

Hossein Khodabakhsh No. 71650 Exp. 12-31-09 CIVIL — REGISTERED PROFESSIONAL ENGINEER — STATE OF CALIFORNIA

7-20-09
PLANS APPROVAL DATE

THE STATE OF CALIFORNIA OR ITS OFFICERS OR AGENTS SHALL NOT BE RESPONSIBLE FOR THE ACCURACY OR COMPLETENESS OF SCANNED COPIES OF THIS PLAN SHEET.

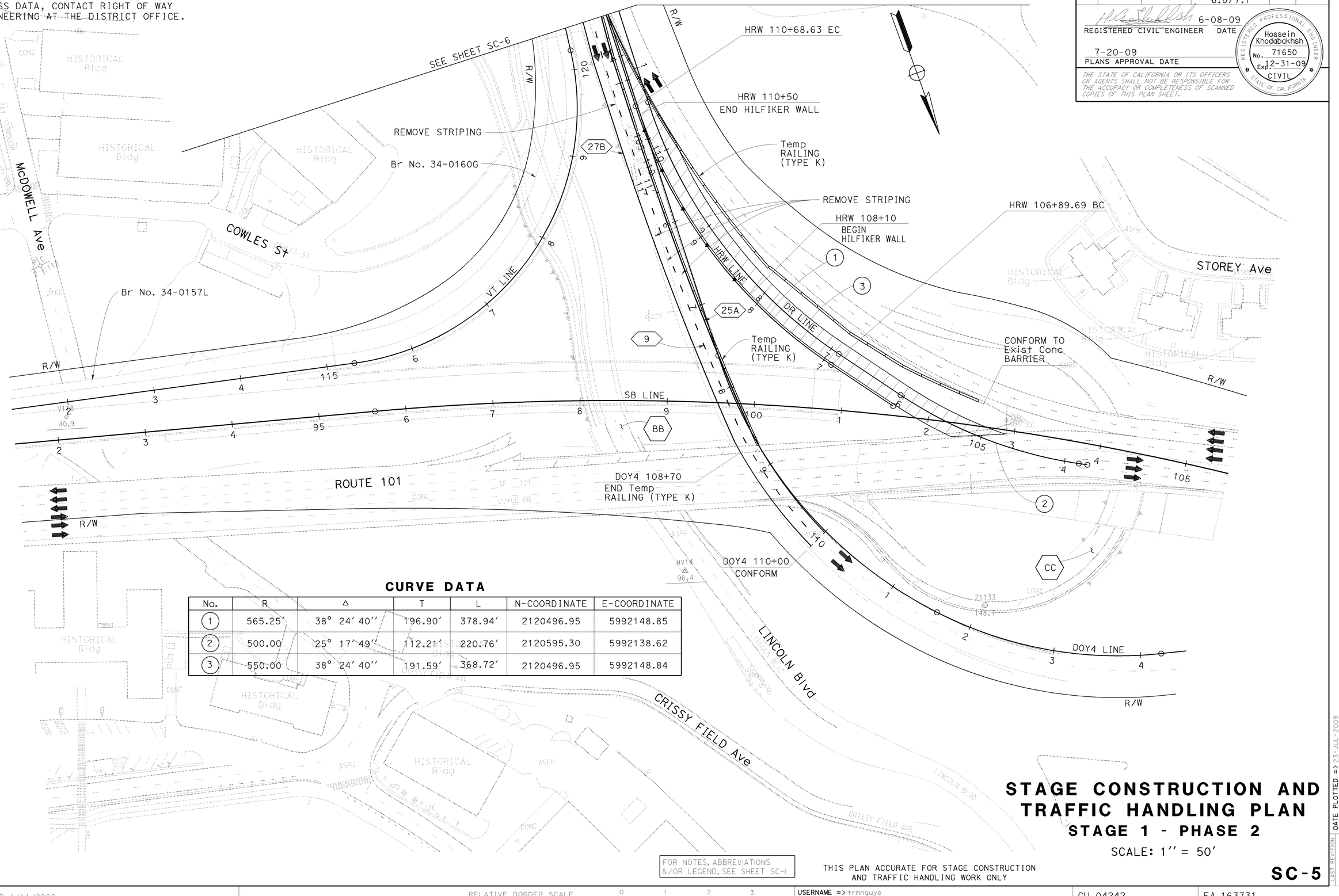

CURVE DATA

No.	R	Δ	T	L	N-COORDINATE	E-COORDINATE
1	565.25′	38° 24′ 40″	196.90′	378.94′	2120496.95	5992148.85
2	500.00	25° 17′ 49″	112.21′	220.76′	2120595.30	5992138.62
3	550.00	38° 24′ 40″	191.59′	368.72′	2120496.95	5992148.84

FOR NOTES, ABBREVIATIONS &/OR LEGEND, SEE SHEET SC-1

THIS PLAN ACCURATE FOR STAGE CONSTRUCTION AND TRAFFIC HANDLING WORK ONLY

STAGE CONSTRUCTION AND TRAFFIC HANDLING PLAN

STAGE 1 - PHASE 2

SCALE: 1″ = 50′

SC-5

STATE OF CALIFORNIA - DEPARTMENT OF TRANSPORTATION
DESIGN
FUNCTIONAL SUPERVISOR: ABOLFAZL EMADZADEH
CALCULATED-DESIGNED BY: GEORGE GIN
CHECKED BY: ROGER DAYOAN
REVISED BY: GG
DATE REVISED: 6/10/09

LAST REVISION — DATE PLOTTED => 23-JUL-2009 TIME PLOTTED => 11:01
06-09-09

BORDER LAST REVISED 4/11/2008
RELATIVE BORDER SCALE IS IN INCHES 0 1 2 3
USERNAME => trmnguye
DGN FILE => 416373ma005.dgn
CU 04242
EA 163731

Dist	COUNTY	ROUTE	POST MILES TOTAL PROJECT	SHEET No.	TOTAL SHEETS
04	SF	101,1	9.2/9.8, 6.8/7.1	105	567

REGISTERED CIVIL ENGINEER — DATE: 6-08-09

Hossein Khodabakhsh, No. 71650, Exp. 12-31-09, CIVIL — REGISTERED PROFESSIONAL ENGINEER — STATE OF CALIFORNIA

PLANS APPROVAL DATE: 7-20-09

THE STATE OF CALIFORNIA OR ITS OFFICERS OR AGENTS SHALL NOT BE RESPONSIBLE FOR THE ACCURACY OR COMPLETENESS OF SCANNED COPIES OF THIS PLAN SHEET.

FOR ACCURATE RIGHT OF WAY AND ACCESS DATA, CONTACT RIGHT OF WAY ENGINEERING AT THE DISTRICT OFFICE.

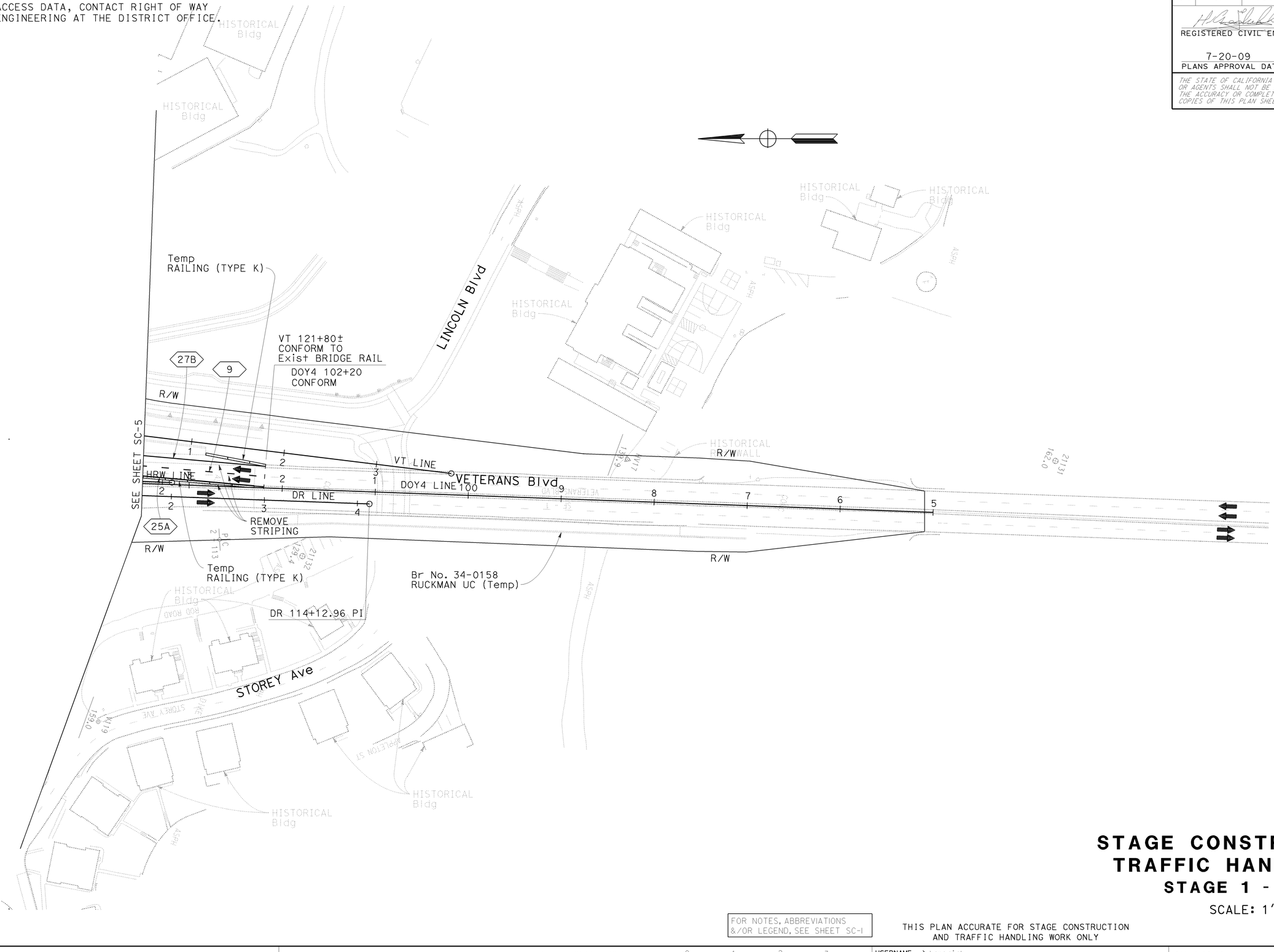

STAGE CONSTRUCTION AND TRAFFIC HANDLING PLAN

STAGE 1 - PHASE 2

SCALE: 1'' = 50'

FOR NOTES, ABBREVIATIONS &/OR LEGEND, SEE SHEET SC-1

THIS PLAN ACCURATE FOR STAGE CONSTRUCTION AND TRAFFIC HANDLING WORK ONLY

SC-6

STATE OF CALIFORNIA - DEPARTMENT OF TRANSPORTATION — DESIGN

FUNCTIONAL SUPERVISOR: ABOLFAZL EMADZADEH

CALCULATED-DESIGNED BY: GEORGE GIN

CHECKED BY: ROGER DAYOAN

REVISED BY: GG

DATE REVISED: 6/10/09

LAST REVISION — DATE PLOTTED => 22-JUL-2009, TIME PLOTTED => 08:20, 05-30-09

BORDER LAST REVISED 4/11/2008

RELATIVE BORDER SCALE IS IN INCHES (0 1 2 3)

USERNAME => trmariak

DGN FILE => 416373ma006.dgn

CU 04242

EA 163731

Dist	COUNTY	ROUTE	POST MILES TOTAL PROJECT	SHEET No.	TOTAL SHEETS
04	SF	101,1	9.2/9.8, 6.8/7.1	106	567

REGISTERED CIVIL ENGINEER — DATE: 6-08-09

Hossein Khodabakhsh, No. 71650, Exp. 12-31-09, CIVIL — REGISTERED PROFESSIONAL ENGINEER — STATE OF CALIFORNIA

PLANS APPROVAL DATE: 7-20-09

THE STATE OF CALIFORNIA OR ITS OFFICERS OR AGENTS SHALL NOT BE RESPONSIBLE FOR THE ACCURACY OR COMPLETENESS OF SCANNED COPIES OF THIS PLAN SHEET.

FOR ACCURATE RIGHT OF WAY AND ACCESS DATA, CONTACT RIGHT OF WAY ENGINEERING AT THE DISTRICT OFFICE.

TRAFFIC HANDLING - STAGE 1 - PHASE 3 PER LANE CLOSURE CHART

AA — TRAFFIC REMAINS ON Exist LANES WITH LANE CLOSURES DURING ALLOWABLE HOURS.

BB — CLOSE SB VETERANS Blvd OFF-RAMP. FOR TRAFFIC DETOUR AND SIGNING, SEE CS SHEETS.

CC — SHIFT DOYLE Dr TRAFFIC.

DD — SHIFT SB VETERANS Blvd OFF-RAMP TRAFFIC.

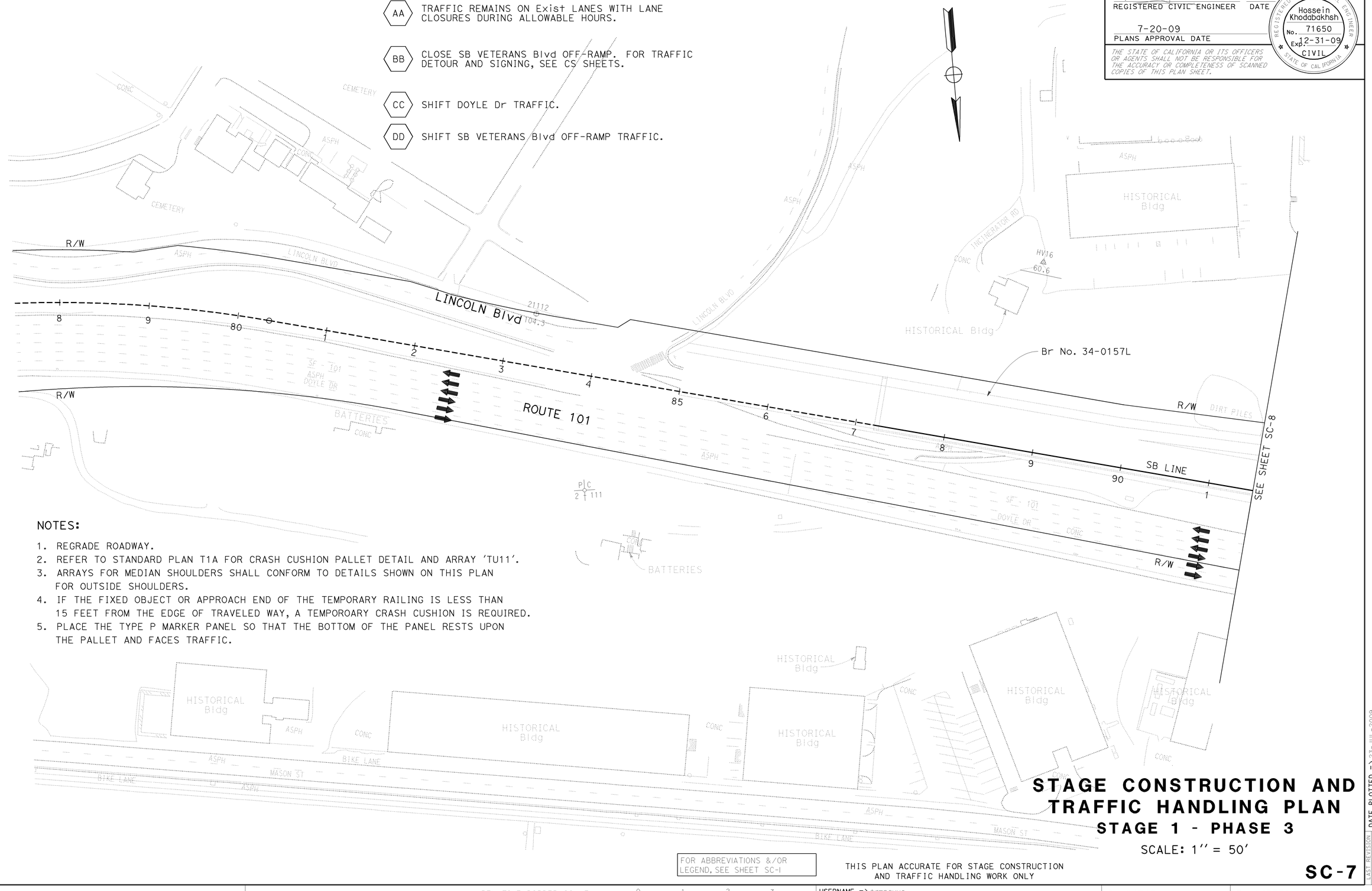

NOTES:

1. REGRADE ROADWAY.
2. REFER TO STANDARD PLAN T1A FOR CRASH CUSHION PALLET DETAIL AND ARRAY 'TU11'.
3. ARRAYS FOR MEDIAN SHOULDERS SHALL CONFORM TO DETAILS SHOWN ON THIS PLAN FOR OUTSIDE SHOULDERS.
4. IF THE FIXED OBJECT OR APPROACH END OF THE TEMPORARY RAILING IS LESS THAN 15 FEET FROM THE EDGE OF TRAVELED WAY, A TEMPOROARY CRASH CUSHION IS REQUIRED.
5. PLACE THE TYPE P MARKER PANEL SO THAT THE BOTTOM OF THE PANEL RESTS UPON THE PALLET AND FACES TRAFFIC.

FOR ABBREVIATIONS &/OR LEGEND, SEE SHEET SC-1

THIS PLAN ACCURATE FOR STAGE CONSTRUCTION AND TRAFFIC HANDLING WORK ONLY

STAGE CONSTRUCTION AND TRAFFIC HANDLING PLAN

STAGE 1 - PHASE 3

SCALE: 1'' = 50'

SC-7

REVISED BY	DATE REVISED
GG	6/10/09

CALCULATED-DESIGNED BY: GEORGE GIN
CHECKED BY: ROGER DAYOAN
FUNCTIONAL SUPERVISOR: ABOLFAZL EMADZADEH

STATE OF CALIFORNIA - DEPARTMENT OF TRANSPORTATION
DESIGN

LAST REVISION — DATE PLOTTED => 23-JUL-2009, TIME PLOTTED => 11:01
06-09-09

BORDER LAST REVISED 4/11/2008

RELATIVE BORDER SCALE IS IN INCHES 0 1 2 3

USERNAME => trmnguye
DGN FILE => 416373ma007.dgn

CU 04242

EA 163731

Dist	COUNTY	ROUTE	POST MILES TOTAL PROJECT	SHEET No.	TOTAL SHEETS
04	SF	101,1	9.2/9.8, 6.8/7.1	107	567

REGISTERED CIVIL ENGINEER 6-08-09 DATE

7-20-09
PLANS APPROVAL DATE

REGISTERED PROFESSIONAL ENGINEER Hossein Khodabakhsh No. 71650 Exp. 12-31-09 CIVIL STATE OF CALIFORNIA

THE STATE OF CALIFORNIA OR ITS OFFICERS OR AGENTS SHALL NOT BE RESPONSIBLE FOR THE ACCURACY OR COMPLETENESS OF SCANNED COPIES OF THIS PLAN SHEET.

FOR ACCURATE RIGHT OF WAY AND ACCESS DATA, CONTACT RIGHT OF WAY ENGINEERING AT THE DISTRICT OFFICE.

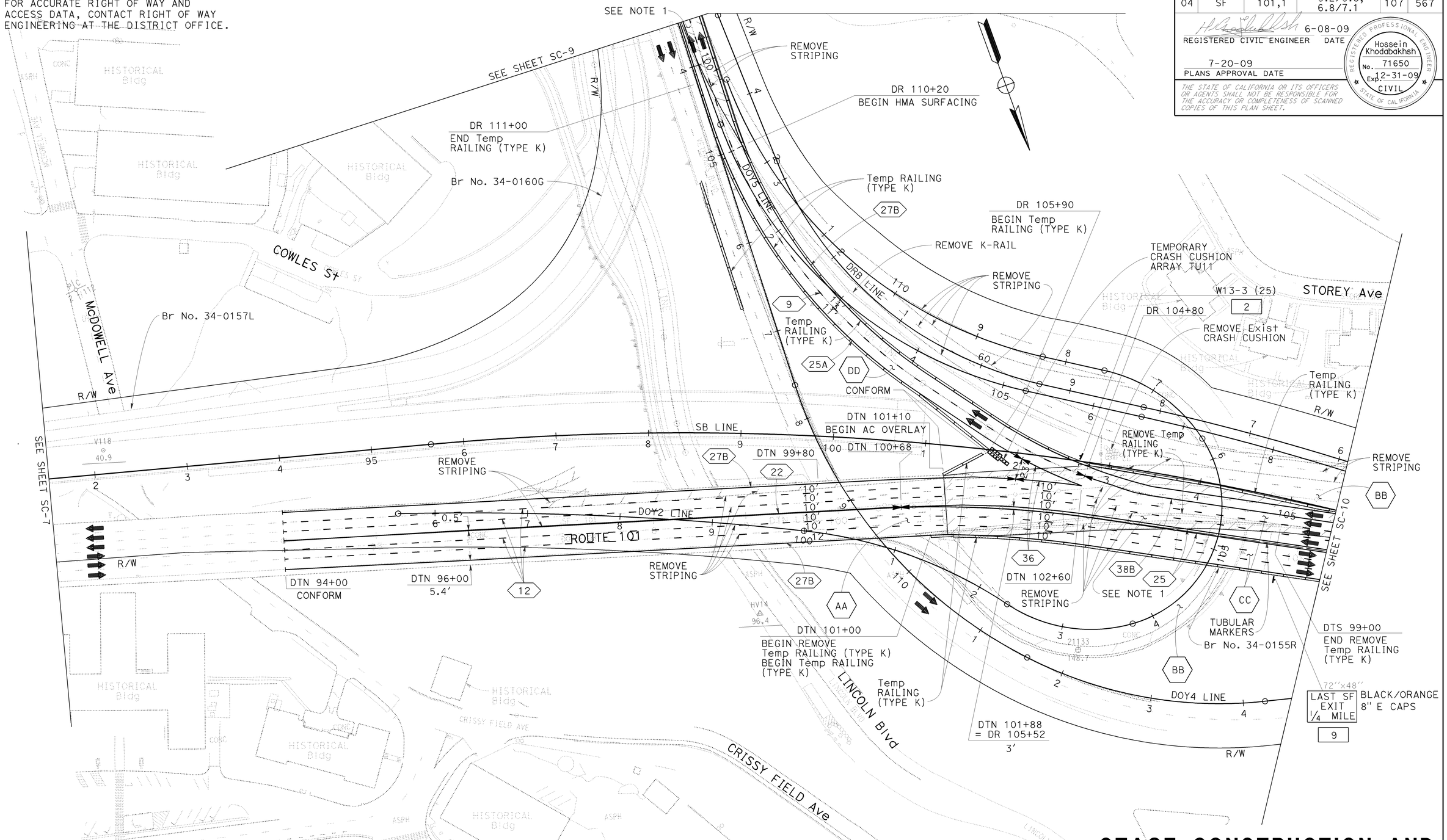

STAGE CONSTRUCTION AND TRAFFIC HANDLING PLAN

STAGE 1 - PHASE 3

SCALE: 1" = 50'

FOR NOTES, SEE SHEET SC-7

FOR ABBREVIATIONS &/OR LEGEND, SEE SHEET SC-1

THIS PLAN ACCURATE FOR STAGE CONSTRUCTION AND TRAFFIC HANDLING WORK ONLY

SC-8

STATE OF CALIFORNIA - DEPARTMENT OF TRANSPORTATION

Caltrans DESIGN

FUNCTIONAL SUPERVISOR: ABOLFAZL EMADZADEH

CALCULATED-DESIGNED BY: GEORGE GIN

CHECKED BY: ROGER DAYOAN

REVISED BY: GG

DATE REVISED: 6/10/09

LAST REVISION 06-10-09

DATE PLOTTED => 22-JUL-2009

TIME PLOTTED => 08:20

BORDER LAST REVISED 4/11/2008

RELATIVE BORDER SCALE IS IN INCHES 0 1 2 3

USERNAME => trmariak

DGN FILE => 416373ma008.dgn

CU 04242

EA 163731

Dist	COUNTY	ROUTE	POST MILES TOTAL PROJECT	SHEET No.	TOTAL SHEETS
04	SF	101,1	9.2/9.8, 6.8/7.1	108	567

REGISTERED CIVIL ENGINEER — 6-08-09 DATE

7-20-09
PLANS APPROVAL DATE

Hossein Khodabakhsh
No. 71650
Exp. 12-31-09
CIVIL
REGISTERED PROFESSIONAL ENGINEER
STATE OF CALIFORNIA

THE STATE OF CALIFORNIA OR ITS OFFICERS OR AGENTS SHALL NOT BE RESPONSIBLE FOR THE ACCURACY OR COMPLETENESS OF SCANNED COPIES OF THIS PLAN SHEET.

FOR ACCURATE RIGHT OF WAY AND ACCESS DATA, CONTACT RIGHT OF WAY ENGINEERING AT THE DISTRICT OFFICE.

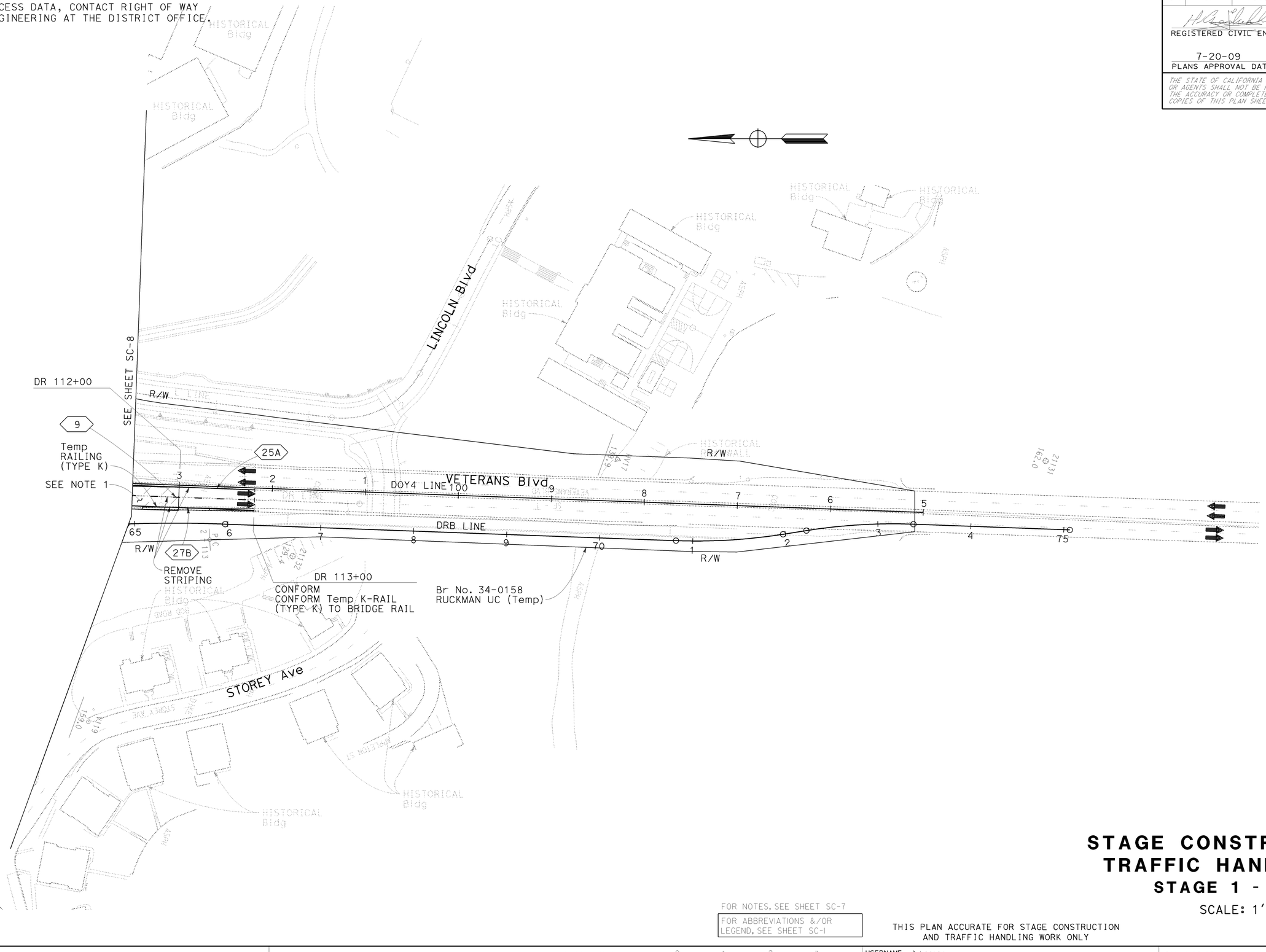

FOR NOTES, SEE SHEET SC-7

FOR ABBREVIATIONS &/OR LEGEND, SEE SHEET SC-1

THIS PLAN ACCURATE FOR STAGE CONSTRUCTION AND TRAFFIC HANDLING WORK ONLY

STAGE CONSTRUCTION AND TRAFFIC HANDLING PLAN

STAGE 1 - PHASE 3

SCALE: 1'' = 50'

SC-9

STATE OF CALIFORNIA - DEPARTMENT OF TRANSPORTATION
DESIGN
Caltrans

FUNCTIONAL SUPERVISOR: ABOLFAZL EMADZADEH

CALCULATED-DESIGNED BY: GEORGE GIN
CHECKED BY: ROGER DAYOAN

REVISED BY	DATE REVISED
GG	6/10/09

LAST REVISION — DATE PLOTTED => 21-JUL-2009, TIME PLOTTED => 15:01
06-09-09

BORDER LAST REVISED 4/11/2008

RELATIVE BORDER SCALE IS IN INCHES 0 1 2 3

USERNAME => trrene
DGN FILE => 416373ma009.dgn

CU 04242

EA 163731

FOR ACCURATE RIGHT OF WAY AND
ACCESS DATA, CONTACT RIGHT OF WAY
ENGINEERING AT THE DISTRICT OFFICE.

Dist	COUNTY	ROUTE	POST MILES TOTAL PROJECT	SHEET No.	TOTAL SHEETS
04	SF	101,1	9.2/9.8, 6.8/7.1	109	567

REGISTERED CIVIL ENGINEER — 6-08-09 DATE

Hossein Khodabakhsh No. 71650 Exp. 12-31-09 CIVIL — REGISTERED PROFESSIONAL ENGINEER — STATE OF CALIFORNIA

7-20-09
PLANS APPROVAL DATE

THE STATE OF CALIFORNIA OR ITS OFFICERS OR AGENTS SHALL NOT BE RESPONSIBLE FOR THE ACCURACY OR COMPLETENESS OF SCANNED COPIES OF THIS PLAN SHEET.

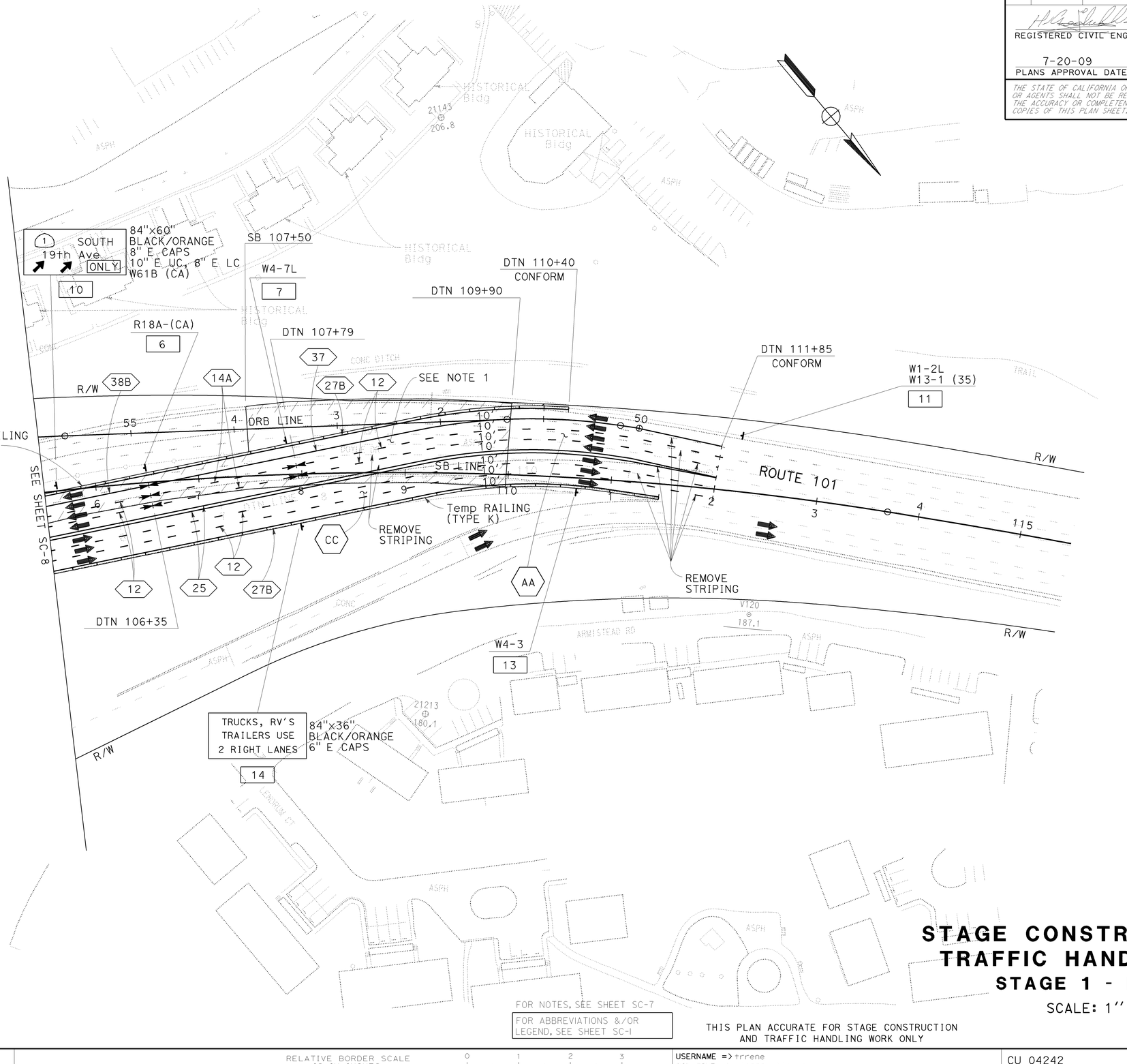

FOR NOTES, SEE SHEET SC-7

FOR ABBREVIATIONS &/OR LEGEND, SEE SHEET SC-1

THIS PLAN ACCURATE FOR STAGE CONSTRUCTION AND TRAFFIC HANDLING WORK ONLY

STAGE CONSTRUCTION AND TRAFFIC HANDLING PLAN

STAGE 1 - PHASE 3

SCALE: 1'' = 50'

SC-10

STATE OF CALIFORNIA - DEPARTMENT OF TRANSPORTATION
DESIGN
FUNCTIONAL SUPERVISOR: ABOLFAZL EMADZADEH
CALCULATED-DESIGNED BY
CHECKED BY
REVISED BY: GG — DATE REVISED: 6/10/09
GEORGE GIN
ROGER DAYOAN

LAST REVISION DATE PLOTTED => 23-JUL-2009
TIME PLOTTED => 09:47

BORDER LAST REVISED 4/11/2008

RELATIVE BORDER SCALE IS IN INCHES 0 1 2 3

USERNAME => trrene
DGN FILE => 416373ma010.dgn

CU 04242

EA 163731

FOR ACCURATE RIGHT OF WAY AND
ACCESS DATA, CONTACT RIGHT OF WAY
ENGINEERING AT THE DISTRICT OFFICE.

TRAFFIC HANDLING -STAGE 2
PER LANE CLOSURE CHART

AA — CLOSE SB VETERANS Blvd OFF-RAMP FOR N101/S1 CONNECTOR SEPARATION (Br No. 34-0155L) CONSTRUCTION. FOR TRAFFIC DETOUR AND SIGNING, SEE CS SHEETS.

Dist	COUNTY	ROUTE	POST MILES TOTAL PROJECT	SHEET No.	TOTAL SHEETS
04	SF	101,1	9.2/9.8, 6.8/7.1	110	567

REGISTERED CIVIL ENGINEER — DATE 6-08-09

Hossein Khodabakhsh, No. 71650, Exp. 12-31-09, CIVIL — REGISTERED PROFESSIONAL ENGINEER — STATE OF CALIFORNIA

PLANS APPROVAL DATE 7-20-09

THE STATE OF CALIFORNIA OR ITS OFFICERS OR AGENTS SHALL NOT BE RESPONSIBLE FOR THE ACCURACY OR COMPLETENESS OF SCANNED COPIES OF THIS PLAN SHEET.

NOTES:

1. CONSTRUCT PERMANENT AND/OR Temp ROADWAY.
2. CONSTRUCT N101/S1 CONNECTOR SEPARATION (Br No. 34-0155L).
3. CONSTRUCT RETAINING WALL No. 1.
4. CONSTRUCT RETAINING WALL No. 2.

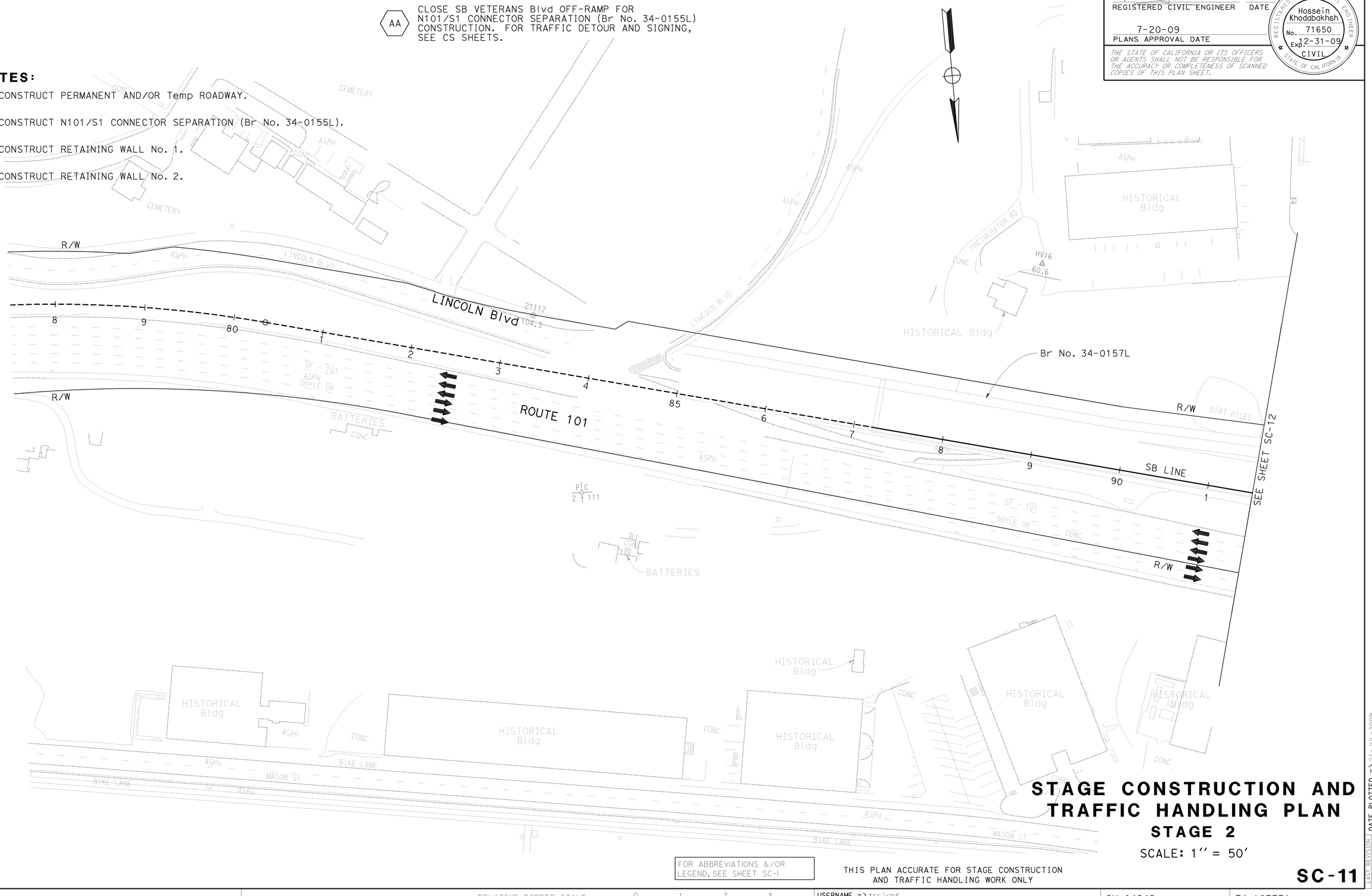

STAGE CONSTRUCTION AND TRAFFIC HANDLING PLAN
STAGE 2

SCALE: 1'' = 50'

FOR ABBREVIATIONS &/OR LEGEND, SEE SHEET SC-1

THIS PLAN ACCURATE FOR STAGE CONSTRUCTION AND TRAFFIC HANDLING WORK ONLY

SC-11

REVISED BY	DATE REVISED
GG	6/10/09

CALCULATED-DESIGNED BY: GEORGE GIN
CHECKED BY: ROGER DAYOAN
FUNCTIONAL SUPERVISOR: ABOLFAZL EMADZADEH

STATE OF CALIFORNIA - DEPARTMENT OF TRANSPORTATION
Caltrans®
DESIGN

LAST REVISION: DATE PLOTTED => 21-JUL-2009, TIME PLOTTED => 15:25
06-09-09

BORDER LAST REVISED 4/11/2008

RELATIVE BORDER SCALE IS IN INCHES 0 1 2 3

USERNAME => trrichf
DGN FILE => 416373mq011.dgn

CU 04242

EA 163731

Dist	COUNTY	ROUTE	POST MILES TOTAL PROJECT	SHEET No.	TOTAL SHEETS
04	SF	101,1	9.2/9.8, 6.8/7.1	111	567

REGISTERED CIVIL ENGINEER — 6-08-09 DATE

Hossein Khodabakhsh, No. 71650, Exp. 12-31-09, CIVIL, REGISTERED PROFESSIONAL ENGINEER, STATE OF CALIFORNIA

7-20-09
PLANS APPROVAL DATE

THE STATE OF CALIFORNIA OR ITS OFFICERS OR AGENTS SHALL NOT BE RESPONSIBLE FOR THE ACCURACY OR COMPLETENESS OF SCANNED COPIES OF THIS PLAN SHEET.

FOR ACCURATE RIGHT OF WAY AND ACCESS DATA, CONTACT RIGHT OF WAY ENGINEERING AT THE DISTRICT OFFICE.

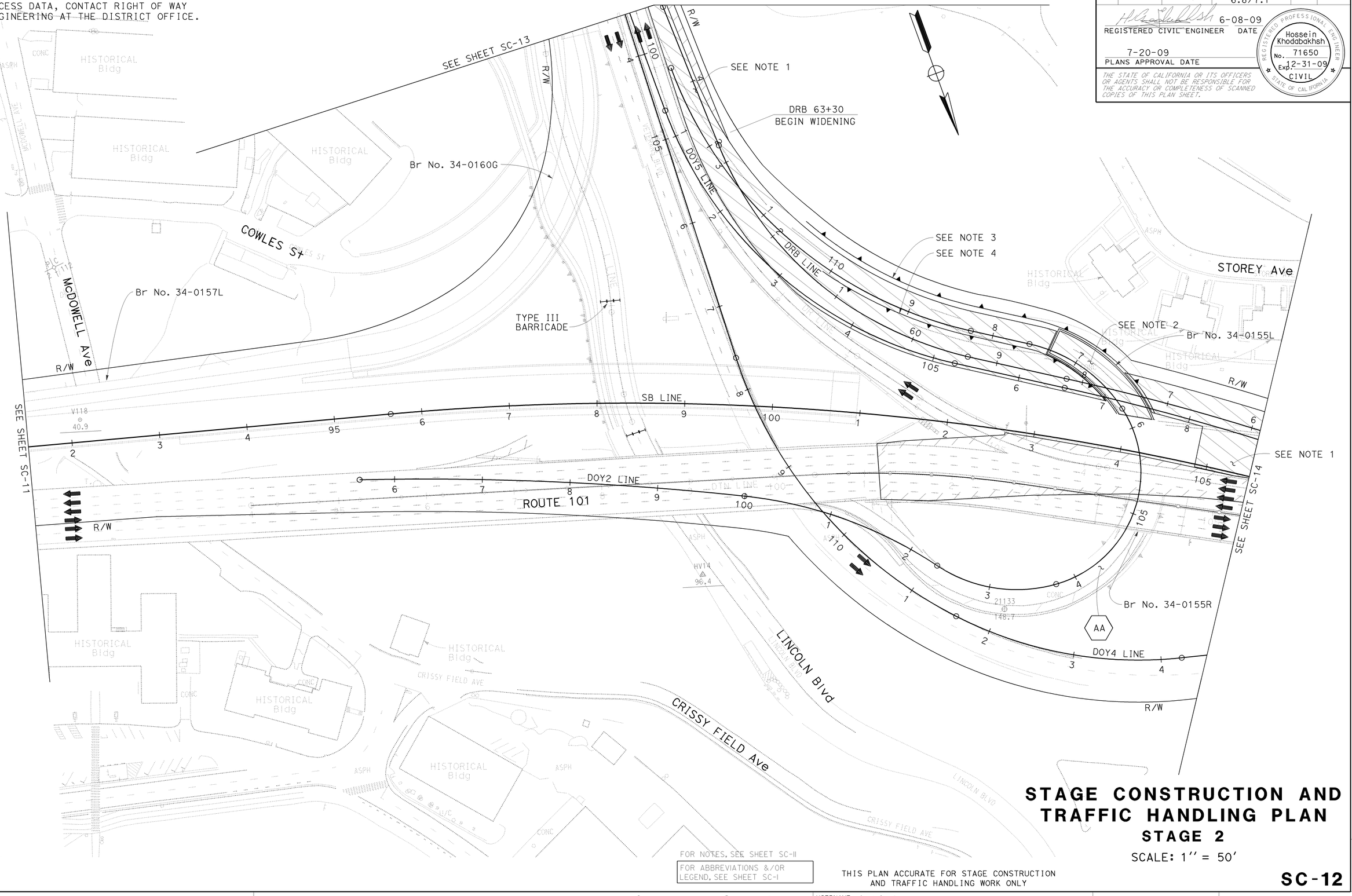

FOR NOTES, SEE SHEET SC-11

FOR ABBREVIATIONS &/OR LEGEND, SEE SHEET SC-1

THIS PLAN ACCURATE FOR STAGE CONSTRUCTION AND TRAFFIC HANDLING WORK ONLY

STAGE CONSTRUCTION AND TRAFFIC HANDLING PLAN

STAGE 2

SCALE: 1'' = 50'

SC-12

CALCULATED-DESIGNED BY	CHECKED BY	REVISED BY	DATE REVISED
GEORGE GIN	ROGER DAYOAN	GG	6/10/09

FUNCTIONAL SUPERVISOR: ABOLFAZL EMADZADEH

STATE OF CALIFORNIA - DEPARTMENT OF TRANSPORTATION
DESIGN

LAST REVISION DATE PLOTTED => 21-JUL-2009
TIME PLOTTED => 15:25

BORDER LAST REVISED 4/11/2008

RELATIVE BORDER SCALE IS IN INCHES 0 1 2 3

USERNAME => trrichf
DGN FILE => 416373ma012.dgn

CU 04242

EA 163731

Dist	COUNTY	ROUTE	POST MILES TOTAL PROJECT	SHEET No.	TOTAL SHEETS
04	SF	101,1	9.2/9.8, 6.8/7.1	112	567

REGISTERED CIVIL ENGINEER 6-08-09 DATE

7-20-09
PLANS APPROVAL DATE

REGISTERED PROFESSIONAL ENGINEER Hossein Khodabakhsh No. 71650 Exp. 12-31-09 CIVIL STATE OF CALIFORNIA

THE STATE OF CALIFORNIA OR ITS OFFICERS OR AGENTS SHALL NOT BE RESPONSIBLE FOR THE ACCURACY OR COMPLETENESS OF SCANNED COPIES OF THIS PLAN SHEET.

FOR ACCURATE RIGHT OF WAY AND ACCESS DATA, CONTACT RIGHT OF WAY ENGINEERING AT THE DISTRICT OFFICE.

STAGE CONSTRUCTION AND TRAFFIC HANDLING PLAN
STAGE 2

SCALE: 1'' = 50'

FOR NOTES, SEE SHEET SC-II

FOR ABBREVIATIONS &/OR LEGEND, SEE SHEET SC-I

THIS PLAN ACCURATE FOR STAGE CONSTRUCTION AND TRAFFIC HANDLING WORK ONLY

SC-13

STATE OF CALIFORNIA - DEPARTMENT OF TRANSPORTATION
Caltrans
DESIGN

FUNCTIONAL SUPERVISOR: ABOLFAZL EMADZADEH
CALCULATED-DESIGNED BY: GEORGE GIN
CHECKED BY: ROGER DAYOAN
REVISED BY: GG
DATE REVISED: 6/10/09

LAST REVISION 06-10-09
DATE PLOTTED => 21-JUL-2009
TIME PLOTTED => 15:25

Dist	COUNTY	ROUTE	POST MILES TOTAL PROJECT	SHEET No.	TOTAL SHEETS
04	SF	101,1	9.2/9.8, 6.8/7.1	113	567

REGISTERED CIVIL ENGINEER 6-08-09 DATE

7-20-09
PLANS APPROVAL DATE

REGISTERED PROFESSIONAL ENGINEER
Hossein Khodabakhsh
No. 71650
Exp. 12-31-09
CIVIL
STATE OF CALIFORNIA

THE STATE OF CALIFORNIA OR ITS OFFICERS OR AGENTS SHALL NOT BE RESPONSIBLE FOR THE ACCURACY OR COMPLETENESS OF SCANNED COPIES OF THIS PLAN SHEET.

FOR ACCURATE RIGHT OF WAY AND ACCESS DATA, CONTACT RIGHT OF WAY ENGINEERING AT THE DISTRICT OFFICE.

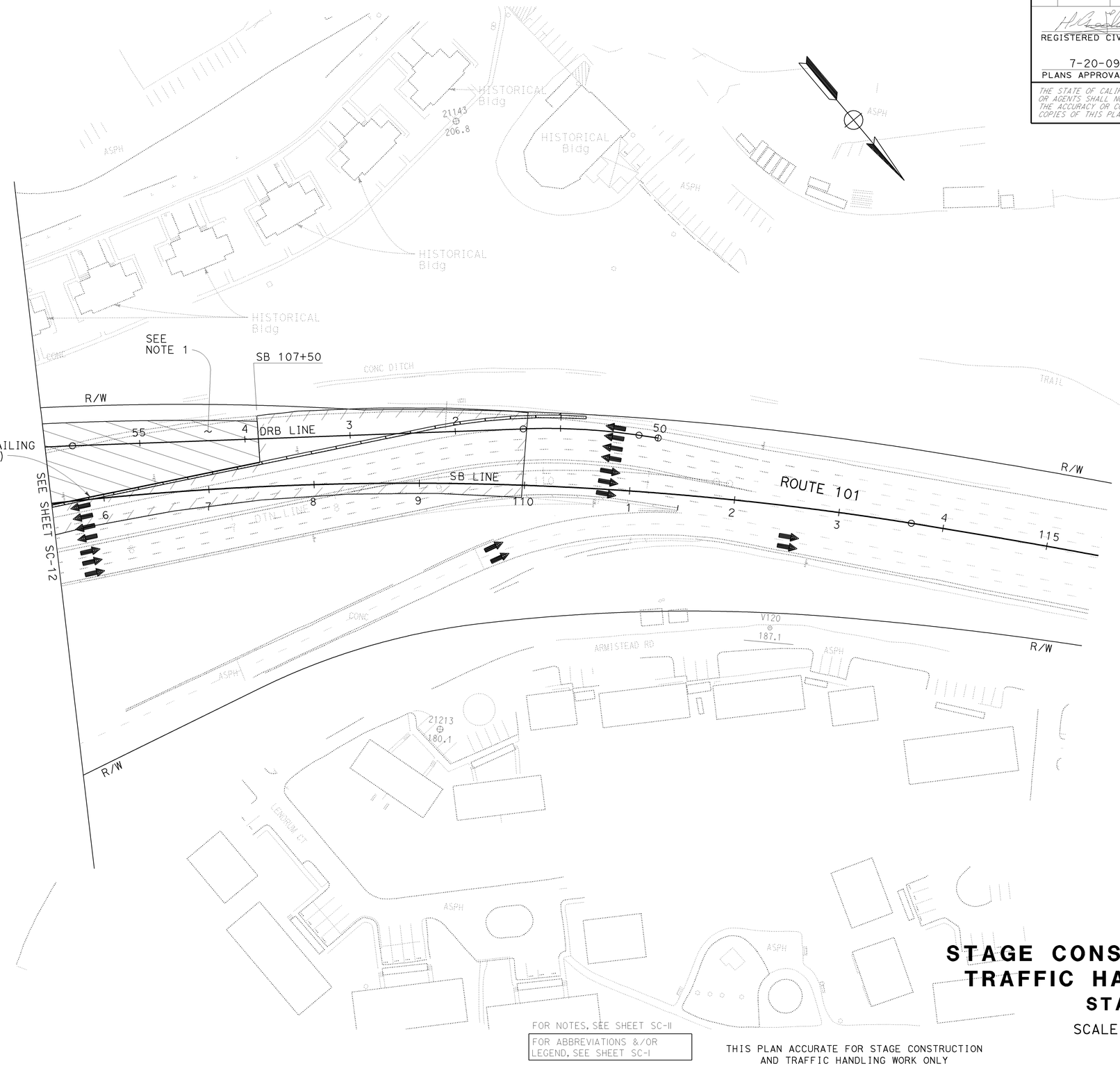

STAGE CONSTRUCTION AND TRAFFIC HANDLING PLAN
STAGE 2

SCALE: 1'' = 50'

FOR NOTES, SEE SHEET SC-II

FOR ABBREVIATIONS &/OR LEGEND, SEE SHEET SC-I

THIS PLAN ACCURATE FOR STAGE CONSTRUCTION AND TRAFFIC HANDLING WORK ONLY

SC-14

STATE OF CALIFORNIA - DEPARTMENT OF TRANSPORTATION
Caltrans
DESIGN

FUNCTIONAL SUPERVISOR: ABOLFAZL EMADZADEH
CALCULATED-DESIGNED BY: GEORGE GIN
CHECKED BY: ROGER DAYOAN
REVISED BY: GG
DATE REVISED: 6/10/09

LAST REVISION 06-10-09
DATE PLOTTED => 21-JUL-2009
TIME PLOTTED => 15:25

FOR ACCURATE RIGHT OF WAY AND
ACCESS DATA, CONTACT RIGHT OF WAY
ENGINEERING AT THE DISTRICT OFFICE.

TRAFFIC HANDLING - STAGE 3
PER LANE CLOSURE CHART

AA — SHIFT SB ROUTE 101/1 TRAFFIC.

BB — SHIFT NB ROUTE 1 TRAFFIC.

CC — CLOSE SB VETERANS Blvd OFF-RAMP FOR ROADWAY CONSTRUCTION. FOR TRAFFIC DETOUR AND SIGNING, SEE SHEET CS-4.

NOTES:

1. REMOVE ROADWAY.
2. CONSTRUCT PORTION OF PRESIDIO VIADUCT (Br No. 34-0157L) AND ROADWAY.
3. CONSTRUCT PORTION OF PRESIDIO VIADUCT WIDENING.
4. CONSTRUCT PERMANENT AND/OR Temp ROADWAY.

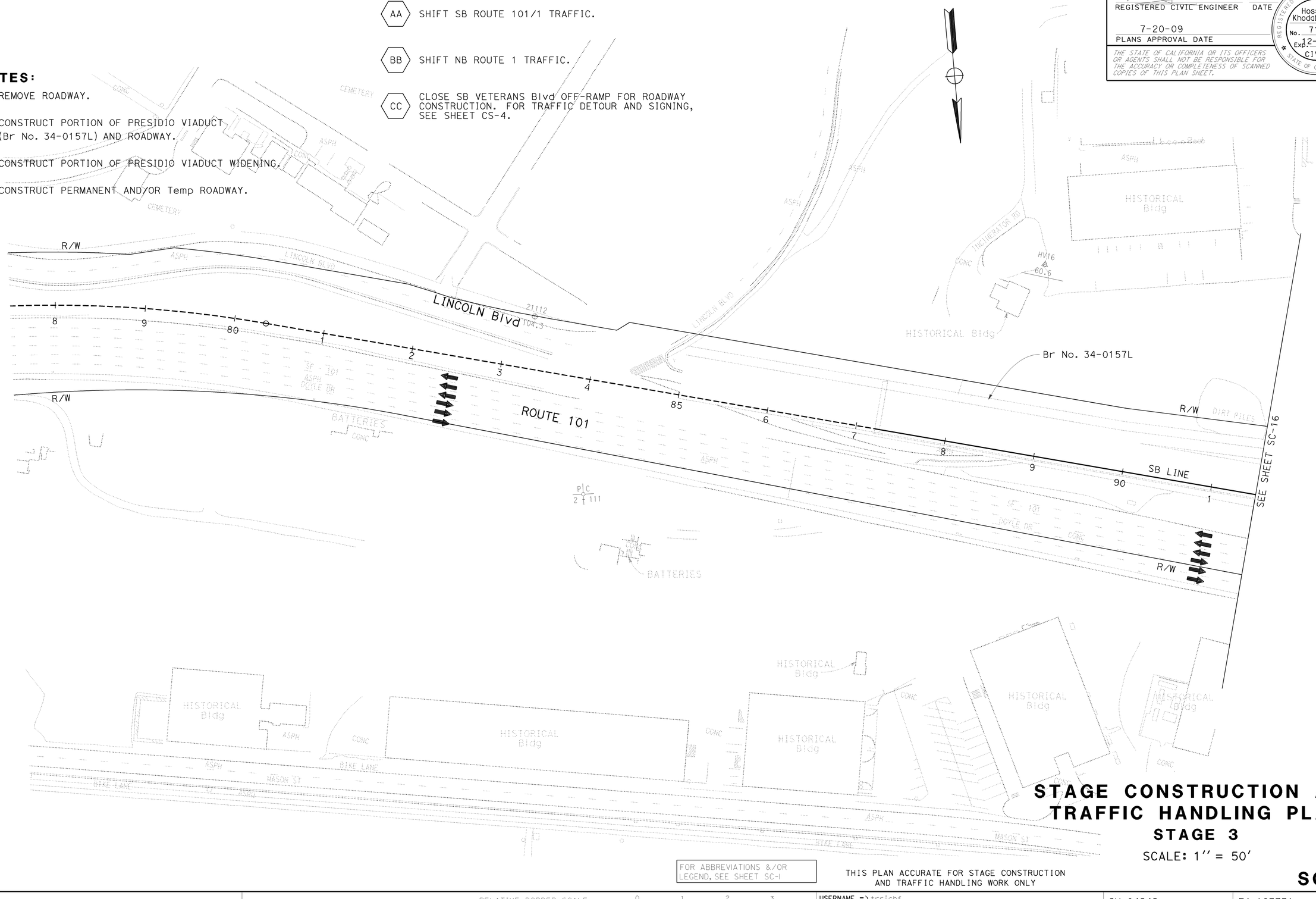

FOR ABBREVIATIONS &/OR LEGEND, SEE SHEET SC-1

THIS PLAN ACCURATE FOR STAGE CONSTRUCTION AND TRAFFIC HANDLING WORK ONLY

STAGE CONSTRUCTION AND TRAFFIC HANDLING PLAN
STAGE 3

SCALE: 1'' = 50'

SC-15

Dist	COUNTY	ROUTE	POST MILES TOTAL PROJECT	SHEET No.	TOTAL SHEETS
04	SF	101,1	9.2/9.8, 6.8/7.1	114	567

REGISTERED CIVIL ENGINEER — DATE: 6-08-09

Hossein Khodabakhsh, No. 71650, Exp. 12-31-09, CIVIL, REGISTERED PROFESSIONAL ENGINEER, STATE OF CALIFORNIA

PLANS APPROVAL DATE: 7-20-09

THE STATE OF CALIFORNIA OR ITS OFFICERS OR AGENTS SHALL NOT BE RESPONSIBLE FOR THE ACCURACY OR COMPLETENESS OF SCANNED COPIES OF THIS PLAN SHEET.

REVISED BY	DATE REVISED
GG	6/10/09

CALCULATED-DESIGNED BY: GEORGE GIN
CHECKED BY: ROGER DAYOAN
FUNCTIONAL SUPERVISOR: ABOLFAZL EMADZADEH

STATE OF CALIFORNIA - DEPARTMENT OF TRANSPORTATION
Caltrans®
DESIGN

LAST REVISION: DATE PLOTTED => 21-JUL-2009, TIME PLOTTED => 15:25
06-11-09

BORDER LAST REVISED 4/11/2008

RELATIVE BORDER SCALE IS IN INCHES: 0 1 2 3

USERNAME => trrichf
DGN FILE => 416373mq015.dgn

CU 04242

EA 163731

Dist	COUNTY	ROUTE	POST MILES TOTAL PROJECT	SHEET No.	TOTAL SHEETS
04	SF	101,1	9.2/9.8, 6.8/7.1	115	567

REGISTERED CIVIL ENGINEER — 6-08-09 DATE

Hossein Khodabakhsh No. 71650 Exp. 12-31-09 CIVIL — REGISTERED PROFESSIONAL ENGINEER — STATE OF CALIFORNIA

7-20-09
PLANS APPROVAL DATE

THE STATE OF CALIFORNIA OR ITS OFFICERS OR AGENTS SHALL NOT BE RESPONSIBLE FOR THE ACCURACY OR COMPLETENESS OF SCANNED COPIES OF THIS PLAN SHEET.

FOR ACCURATE RIGHT OF WAY AND ACCESS DATA, CONTACT RIGHT OF WAY ENGINEERING AT THE DISTRICT OFFICE.

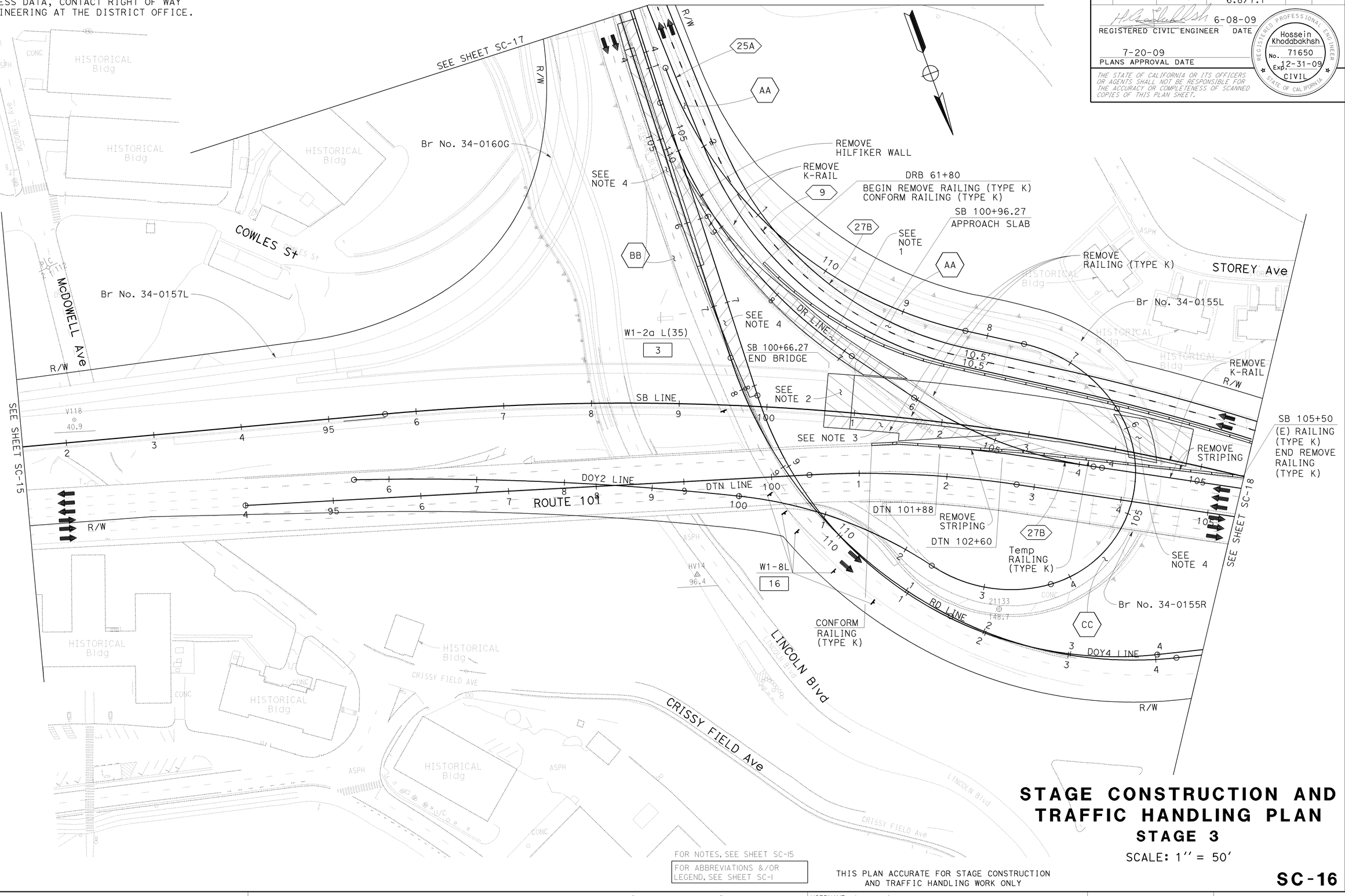

FOR NOTES, SEE SHEET SC-15

FOR ABBREVIATIONS &/OR LEGEND, SEE SHEET SC-1

THIS PLAN ACCURATE FOR STAGE CONSTRUCTION AND TRAFFIC HANDLING WORK ONLY

STAGE CONSTRUCTION AND TRAFFIC HANDLING PLAN

STAGE 3

SCALE: 1'' = 50'

SC-16

STATE OF CALIFORNIA - DEPARTMENT OF TRANSPORTATION
DESIGN

FUNCTIONAL SUPERVISOR: ABOLFAZL EMADZADEH

CALCULATED-DESIGNED BY: GEORGE GIN
CHECKED BY: ROGER DAYOAN

REVISED BY	DATE REVISED
GG	6/10/09

LAST REVISION DATE PLOTTED => 23-JUL-2009
TIME PLOTTED => 10:50

BORDER LAST REVISED 4/11/2008

RELATIVE BORDER SCALE IS IN INCHES 0 1 2 3

USERNAME => trmartin
DGN FILE => 416373ma016.dgn

CU 04242

EA 163731

Dist	COUNTY	ROUTE	POST MILES TOTAL PROJECT	SHEET No.	TOTAL SHEETS
04	SF	101,1	9.2/9.8, 6.8/7.1	116	567

REGISTERED CIVIL ENGINEER — 6-08-09 DATE

7-20-09
PLANS APPROVAL DATE

Hossein Khodabakhsh
No. 71650
Exp. 12-31-09
CIVIL
REGISTERED PROFESSIONAL ENGINEER
STATE OF CALIFORNIA

THE STATE OF CALIFORNIA OR ITS OFFICERS OR AGENTS SHALL NOT BE RESPONSIBLE FOR THE ACCURACY OR COMPLETENESS OF SCANNED COPIES OF THIS PLAN SHEET.

FOR ACCURATE RIGHT OF WAY AND ACCESS DATA, CONTACT RIGHT OF WAY ENGINEERING AT THE DISTRICT OFFICE.

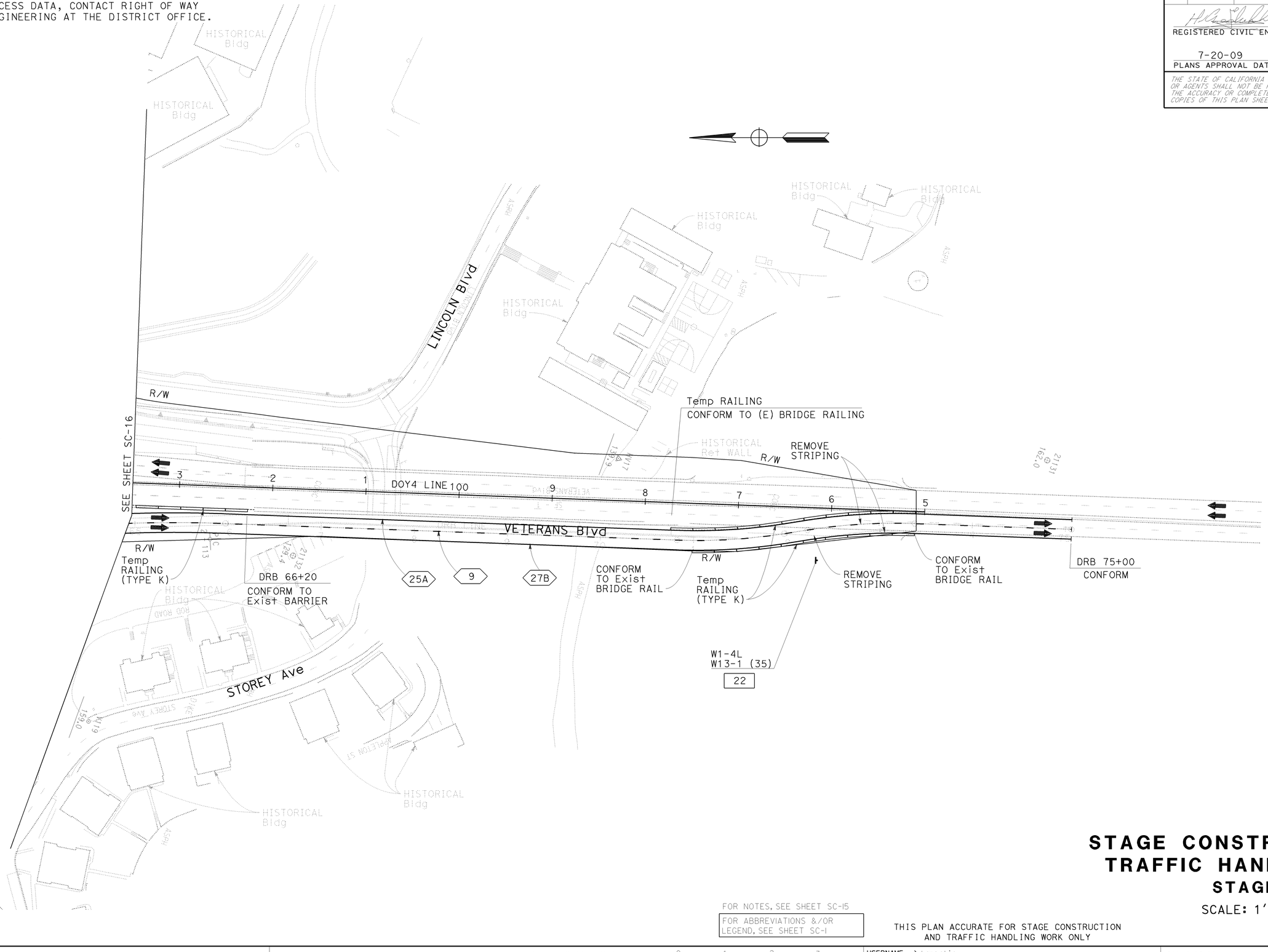

FOR NOTES, SEE SHEET SC-15

FOR ABBREVIATIONS &/OR LEGEND, SEE SHEET SC-1

THIS PLAN ACCURATE FOR STAGE CONSTRUCTION AND TRAFFIC HANDLING WORK ONLY

STAGE CONSTRUCTION AND TRAFFIC HANDLING PLAN

STAGE 3

SCALE: 1'' = 50'

SC-17

CALCULATED-DESIGNED BY	GEORGE GIN	REVISED BY	GG
CHECKED BY	ROGER DAYOAN	DATE REVISED	6/10/09

FUNCTIONAL SUPERVISOR: ABOLFAZL EMADZADEH

STATE OF CALIFORNIA - DEPARTMENT OF TRANSPORTATION

Caltrans® DESIGN

LAST REVISION — DATE PLOTTED => 21-JUL-2009, TIME PLOTTED => 15:45, 06-09-09

BORDER LAST REVISED 4/11/2008

RELATIVE BORDER SCALE IS IN INCHES 0 1 2 3

USERNAME => trmartin
DGN FILE => 416373ma017.dgn

CU 04242

EA 163731

FOR ACCURATE RIGHT OF WAY AND
ACCESS DATA, CONTACT RIGHT OF WAY
ENGINEERING AT THE DISTRICT OFFICE.

Dist	COUNTY	ROUTE	POST MILES TOTAL PROJECT	SHEET No.	TOTAL SHEETS
04	SF	101,1	9.2/9.8, 6.8/7.1	117	567

6-08-09
REGISTERED CIVIL ENGINEER DATE

7-20-09
PLANS APPROVAL DATE

Hossein Khodabakhsh
No. 71650
Exp. 12-31-09
CIVIL
REGISTERED PROFESSIONAL ENGINEER
STATE OF CALIFORNIA

THE STATE OF CALIFORNIA OR ITS OFFICERS OR AGENTS SHALL NOT BE RESPONSIBLE FOR THE ACCURACY OR COMPLETENESS OF SCANNED COPIES OF THIS PLAN SHEET.

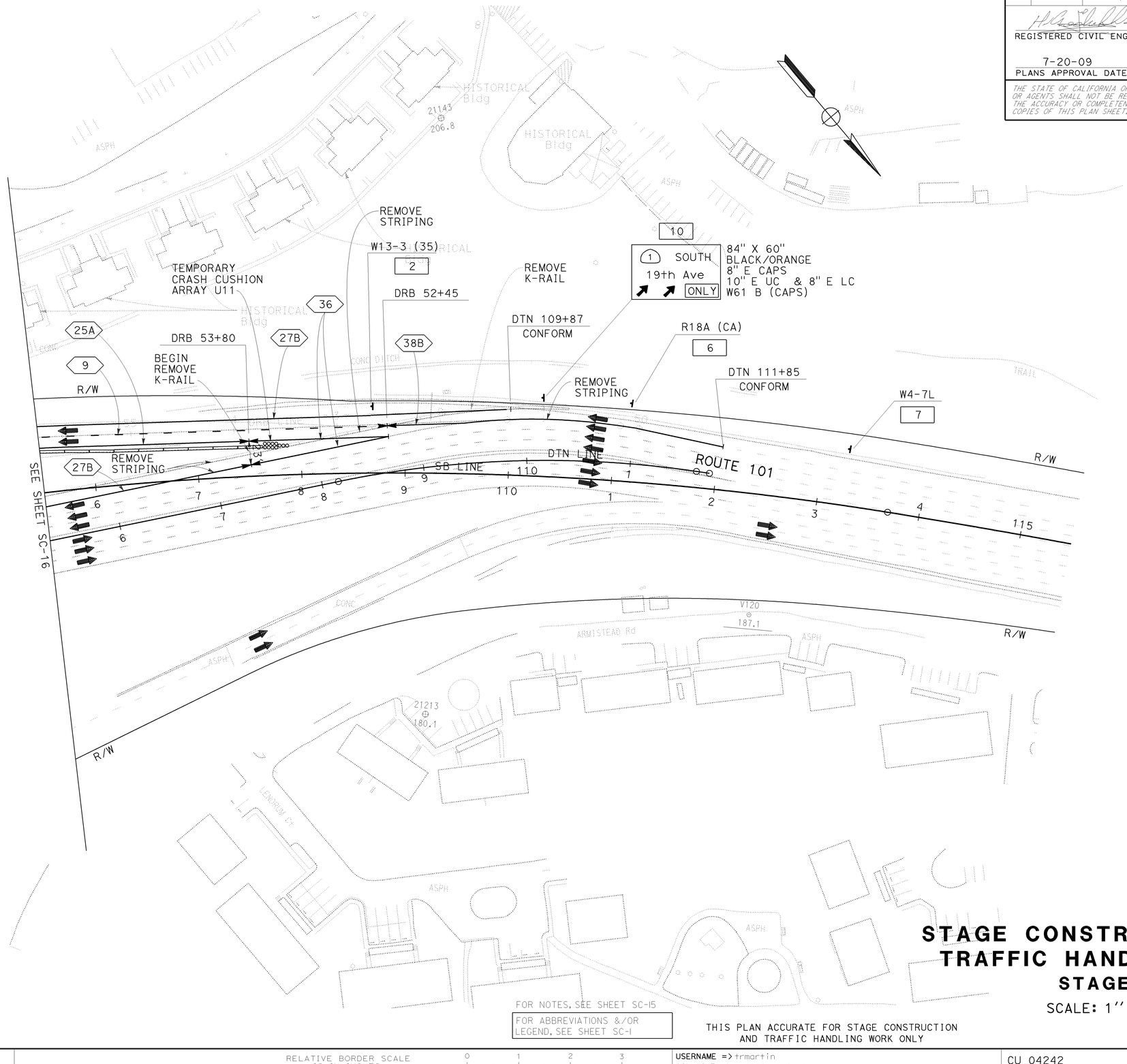

FOR NOTES, SEE SHEET SC-15

FOR ABBREVIATIONS &/OR LEGEND, SEE SHEET SC-1

THIS PLAN ACCURATE FOR STAGE CONSTRUCTION AND TRAFFIC HANDLING WORK ONLY

STAGE CONSTRUCTION AND TRAFFIC HANDLING PLAN

STAGE 3

SCALE: 1'' = 50'

SC-18

REVISED BY	DATE REVISED
GG	6/10/09

CALCULATED-DESIGNED BY: GEORGE GIN
CHECKED BY: ROGER DAYOAN
FUNCTIONAL SUPERVISOR: ABOLFAZL EMADZADEH

STATE OF CALIFORNIA - DEPARTMENT OF TRANSPORTATION
DESIGN

LAST REVISION DATE PLOTTED => 21-JUL-2009
TIME PLOTTED => 15:53
06-09-09

BORDER LAST REVISED 4/11/2008

RELATIVE BORDER SCALE IS IN INCHES 0 1 2 3

USERNAME => trmartin
DGN FILE => 416373ma018.dgn

CU 04242

EA 163731

FOR ACCURATE RIGHT OF WAY AND
ACCESS DATA, CONTACT RIGHT OF WAY
ENGINEERING AT THE DISTRICT OFFICE.

TRAFFIC HANDLING - STAGE 4
PER LANE CLOSURE CHART

AA — SHIFT NB PARK PRESIDIO Blvd TRAFFIC.

BB — TRAFFIC REMAINS ON Exist LANES WITH LANE CLOSURES DURING ALLOWABLE HOURS.

CC — CLOSE VETERANS Blvd OFF-RAMP. FOR TRAFFIC DETOUR AND SIGNING, SEE SHEET CS-4.

NOTES:

1. REGRADE ROADWAY.
2. CONSTRUCT PORTION OF RUCKMAN UC (Br No. 34-0156) AND NB ROUTE 1 ROADWAY.
3. CONSTRUCT Temp RUCKMAN UC BRIDGE WIDENING.

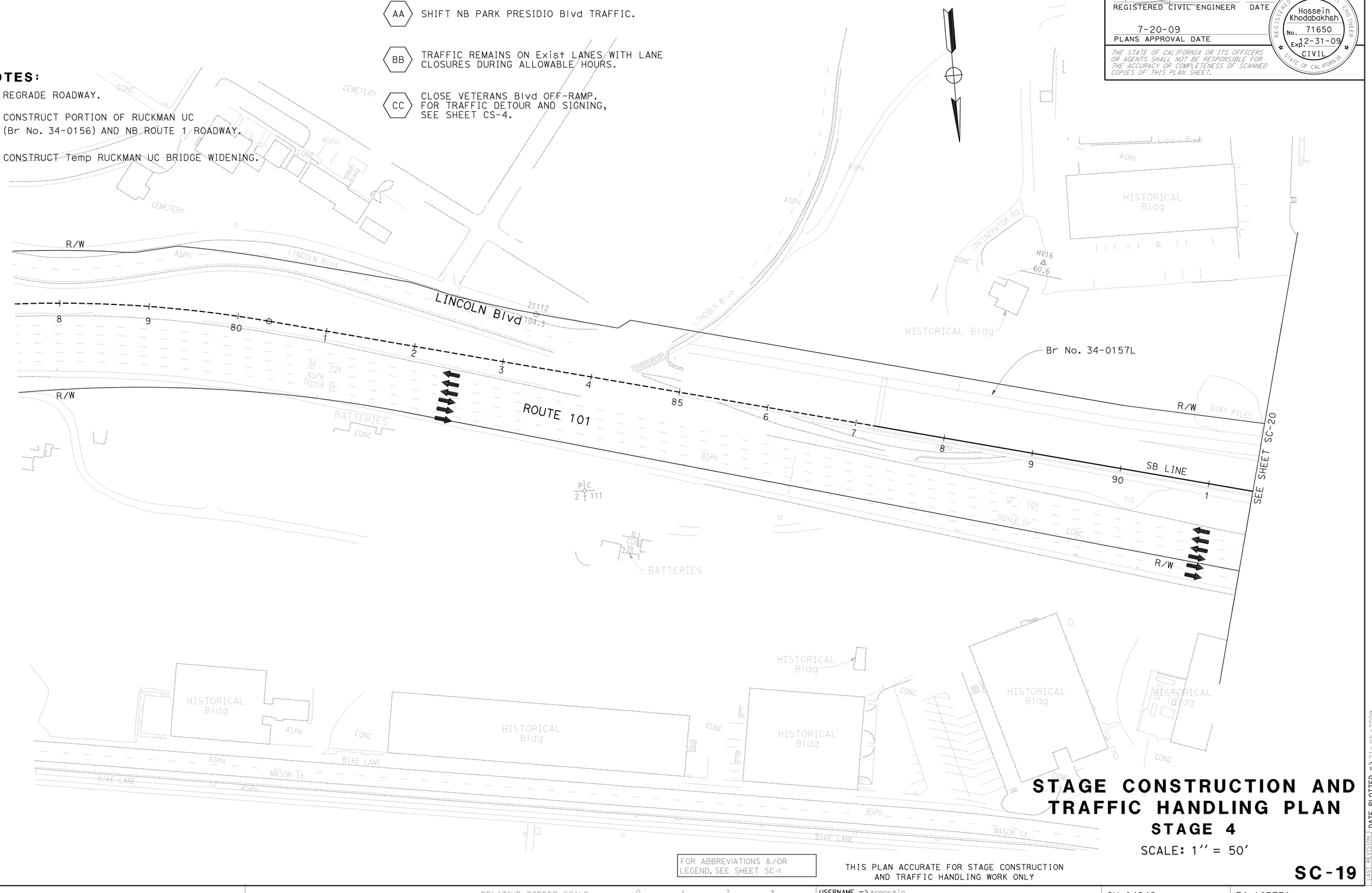

FOR ABBREVIATIONS &/OR LEGEND, SEE SHEET SC-1

THIS PLAN ACCURATE FOR STAGE CONSTRUCTION AND TRAFFIC HANDLING WORK ONLY

STAGE CONSTRUCTION AND TRAFFIC HANDLING PLAN
STAGE 4

SCALE: 1'' = 50'

SC-19

Dist	COUNTY	ROUTE	POST MILES TOTAL PROJECT	SHEET No.	TOTAL SHEETS
04	SF	101,1	9.2/9.8, 6.8/7.1	118	567

REGISTERED CIVIL ENGINEER — DATE: 6-08-09

Hossein Khodabakhsh No. 71650 Exp. 12-31-09 CIVIL — REGISTERED PROFESSIONAL ENGINEER — STATE OF CALIFORNIA

PLANS APPROVAL DATE: 7-20-09

THE STATE OF CALIFORNIA OR ITS OFFICERS OR AGENTS SHALL NOT BE RESPONSIBLE FOR THE ACCURACY OR COMPLETENESS OF SCANNED COPIES OF THIS PLAN SHEET.

REVISED BY	DATE REVISED
GG	6/10/09

CALCULATED-DESIGNED BY: GEORGE GIN
CHECKED BY: ROGER DAYOAN
FUNCTIONAL SUPERVISOR: ABOLFAZL EMADZADEH

STATE OF CALIFORNIA - DEPARTMENT OF TRANSPORTATION
DESIGN

LAST REVISION: DATE PLOTTED => 21-JUL-2009, TIME PLOTTED => 15:45
06-11-09

BORDER LAST REVISED 4/11/2008

RELATIVE BORDER SCALE IS IN INCHES 0 1 2 3

USERNAME => trmartin
DGN FILE => 416373ma019.dgn

CU 04242

EA 163731

Dist	COUNTY	ROUTE	POST MILES TOTAL PROJECT	SHEET No.	TOTAL SHEETS
04	SF	101,1	9.2/9.8, 6.8/7.1	119	567

REGISTERED CIVIL ENGINEER — 6-08-09 DATE

Hossein Khodabakhsh No. 71650 Exp. 12-31-09 CIVIL — REGISTERED PROFESSIONAL ENGINEER — STATE OF CALIFORNIA

7-20-09
PLANS APPROVAL DATE

THE STATE OF CALIFORNIA OR ITS OFFICERS OR AGENTS SHALL NOT BE RESPONSIBLE FOR THE ACCURACY OR COMPLETENESS OF SCANNED COPIES OF THIS PLAN SHEET.

FOR ACCURATE RIGHT OF WAY AND ACCESS DATA, CONTACT RIGHT OF WAY ENGINEERING AT THE DISTRICT OFFICE.

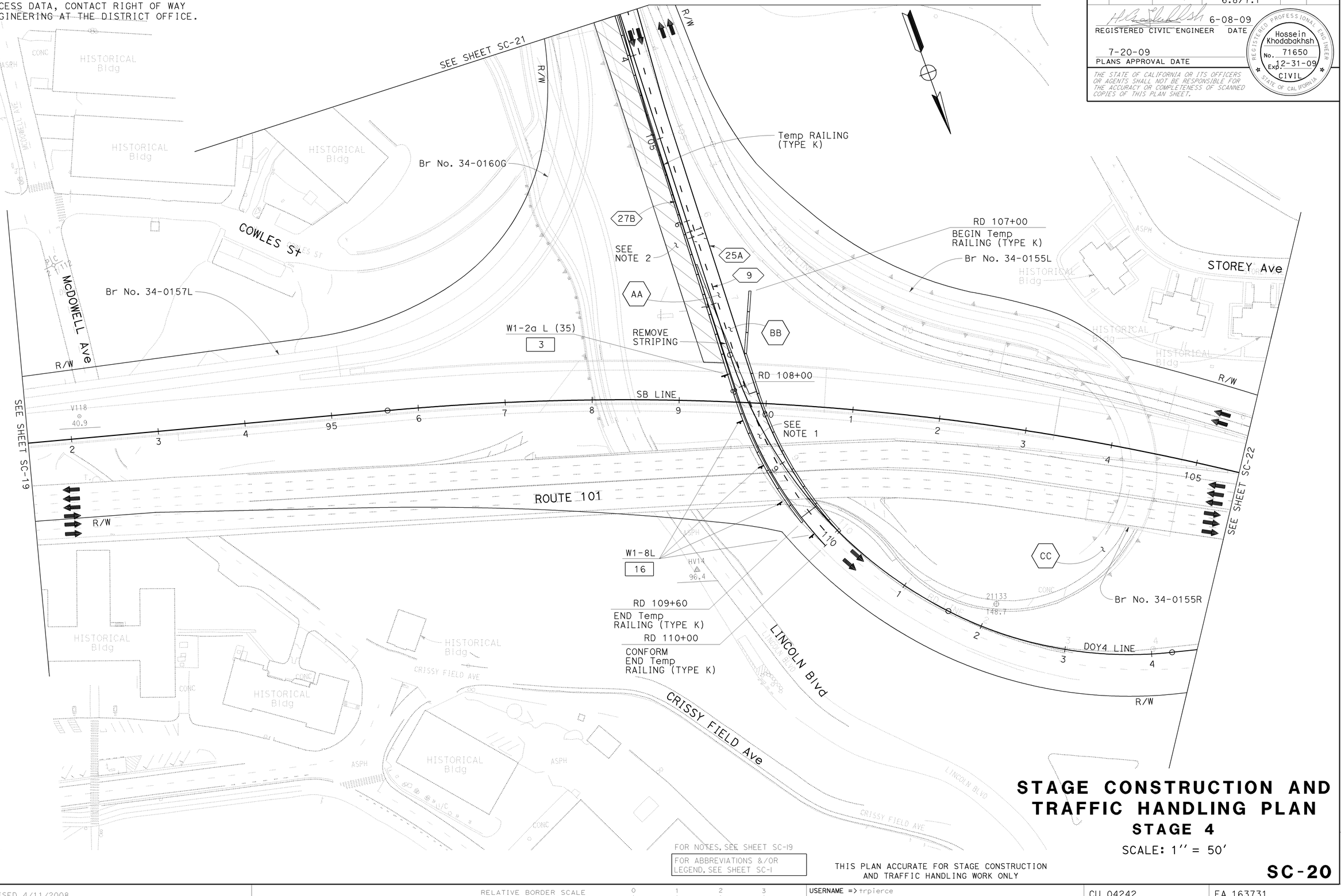

FOR NOTES, SEE SHEET SC-19

FOR ABBREVIATIONS &/OR LEGEND, SEE SHEET SC-1

THIS PLAN ACCURATE FOR STAGE CONSTRUCTION AND TRAFFIC HANDLING WORK ONLY

STAGE CONSTRUCTION AND TRAFFIC HANDLING PLAN

STAGE 4

SCALE: 1'' = 50'

SC-20

REVISED BY	DATE REVISED
GG	6/10/09

CALCULATED-DESIGNED BY: GEORGE GIN
CHECKED BY: ROGER DAYOAN
FUNCTIONAL SUPERVISOR: ABOLFAZL EMADZADEH

STATE OF CALIFORNIA - DEPARTMENT OF TRANSPORTATION
DESIGN

LAST REVISION DATE PLOTTED => 22-JUL-2009
TIME PLOTTED => 06:52
06-02-09

BORDER LAST REVISED 4/11/2008

RELATIVE BORDER SCALE IS IN INCHES 0 1 2 3

USERNAME => trpierce
DGN FILE => 416373ma020.dgn

CU 04242

EA 163731

Dist	COUNTY	ROUTE	POST MILES TOTAL PROJECT	SHEET No.	TOTAL SHEETS
04	SF	101,1	9.2/9.8, 6.8/7.1	120	567

REGISTERED CIVIL ENGINEER — 6-08-09 DATE

7-20-09
PLANS APPROVAL DATE

Hossein Khodabakhsh No. 71650 Exp. 12-31-09 CIVIL — REGISTERED PROFESSIONAL ENGINEER — STATE OF CALIFORNIA

THE STATE OF CALIFORNIA OR ITS OFFICERS OR AGENTS SHALL NOT BE RESPONSIBLE FOR THE ACCURACY OR COMPLETENESS OF SCANNED COPIES OF THIS PLAN SHEET.

FOR ACCURATE RIGHT OF WAY AND ACCESS DATA, CONTACT RIGHT OF WAY ENGINEERING AT THE DISTRICT OFFICE.

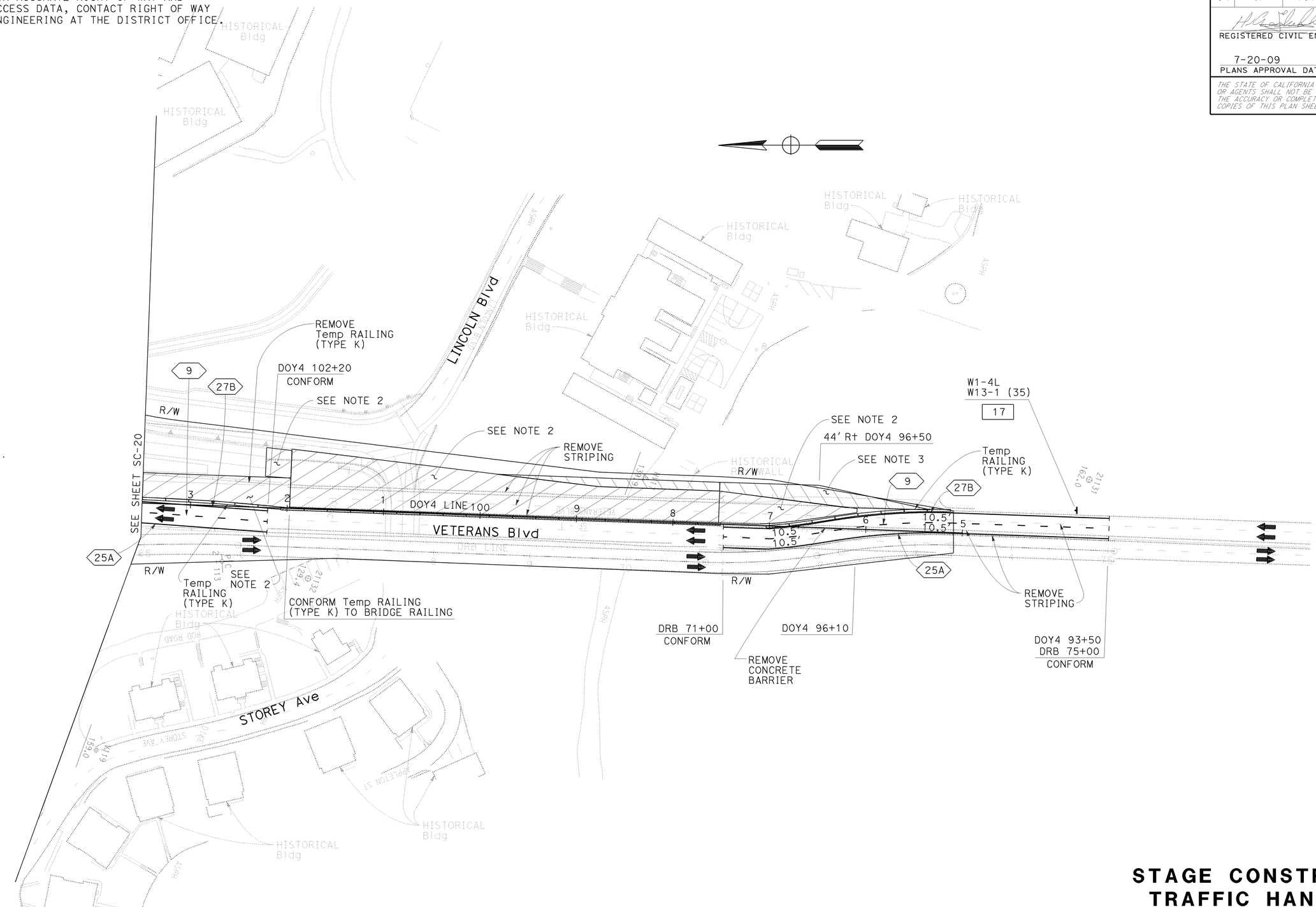

FOR NOTES, SEE SHEET SC-19

FOR ABBREVIATIONS &/OR LEGEND, SEE SHEET SC-1

THIS PLAN ACCURATE FOR STAGE CONSTRUCTION AND TRAFFIC HANDLING WORK ONLY

STAGE CONSTRUCTION AND TRAFFIC HANDLING PLAN

STAGE 4

SCALE: 1'' = 50'

SC-21

CALCULATED-DESIGNED BY	CHECKED BY	REVISED BY	DATE REVISED
GEORGE GIN	ROGER DAYOAN	GG	6/10/09

FUNCTIONAL SUPERVISOR: ABOLFAZL EMADZADEH

STATE OF CALIFORNIA - DEPARTMENT OF TRANSPORTATION

DESIGN

Caltrans

LAST REVISION: DATE PLOTTED => 23-JUL-2009; TIME PLOTTED => 11:01; 06-09-09

BORDER LAST REVISED 4/11/2008

RELATIVE BORDER SCALE IS IN INCHES 0 1 2 3

USERNAME => trmnguye
DGN FILE => 416373ma021.dgn

CU 04242

EA 163731

FOR ACCURATE RIGHT OF WAY AND
ACCESS DATA, CONTACT RIGHT OF WAY
ENGINEERING AT THE DISTRICT OFFICE.

Dist	COUNTY	ROUTE	POST MILES TOTAL PROJECT	SHEET No.	TOTAL SHEETS
04	SF	101,1	9.2/9.8, 6.8/7.1	121	567

REGISTERED CIVIL ENGINEER 6-08-09 DATE

7-20-09
PLANS APPROVAL DATE

REGISTERED PROFESSIONAL ENGINEER
Hossein Khodabakhsh
No. 71650
Exp. 12-31-09
CIVIL
STATE OF CALIFORNIA

THE STATE OF CALIFORNIA OR ITS OFFICERS OR AGENTS SHALL NOT BE RESPONSIBLE FOR THE ACCURACY OR COMPLETENESS OF SCANNED COPIES OF THIS PLAN SHEET.

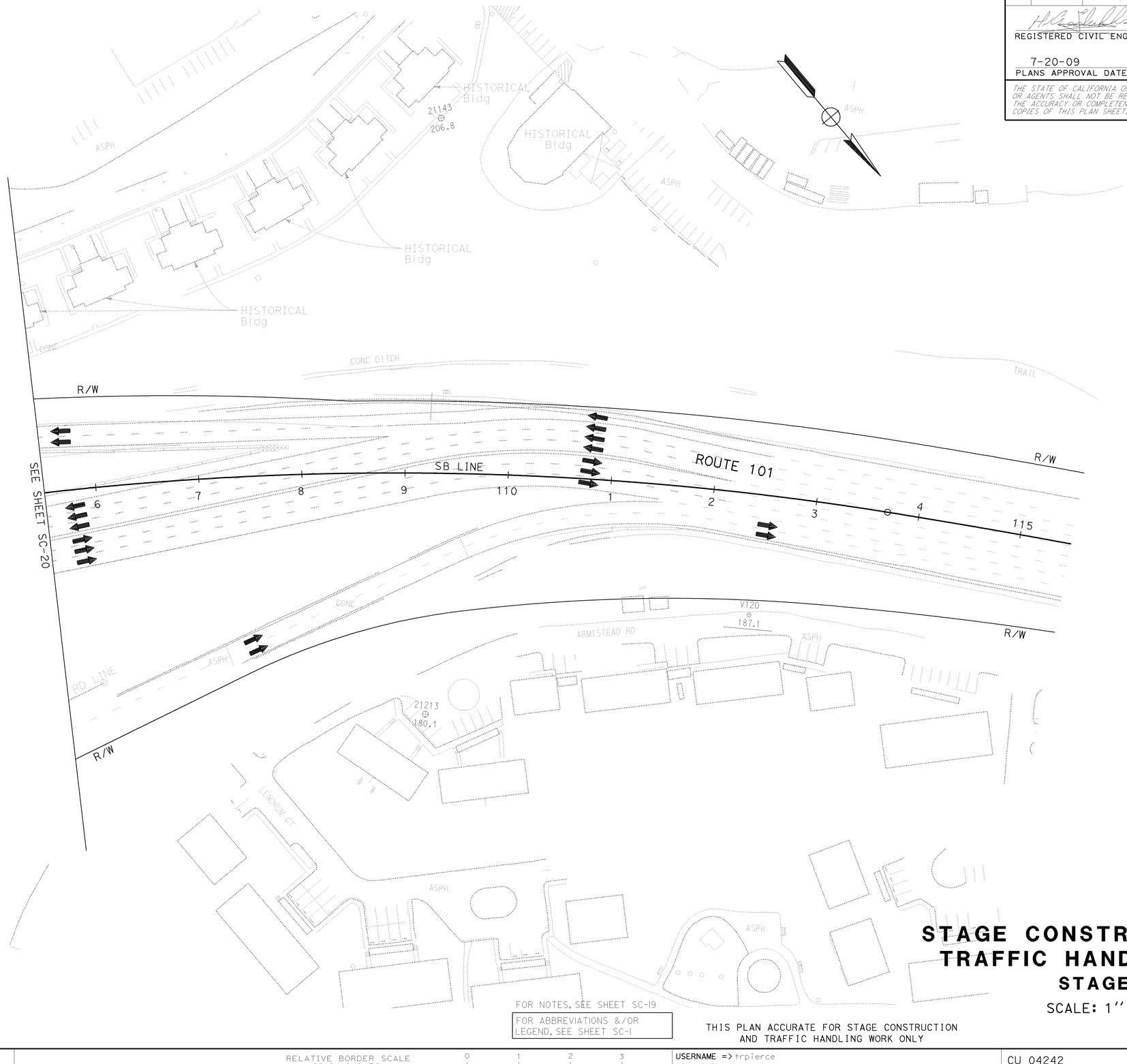

FOR NOTES, SEE SHEET SC-19

FOR ABBREVIATIONS &/OR LEGEND, SEE SHEET SC-1

THIS PLAN ACCURATE FOR STAGE CONSTRUCTION AND TRAFFIC HANDLING WORK ONLY

STAGE CONSTRUCTION AND TRAFFIC HANDLING PLAN

STAGE 4

SCALE: 1'' = 50'

SC-22

CALCULATED-DESIGNED BY			
CHECKED BY			
FUNCTIONAL SUPERVISOR	ABOLFAZL EMADZADEH		
REVISED BY	GG		
DATE REVISED	6/10/09		
GEORGE GIN			
ROGER DAYOAN			

STATE OF CALIFORNIA - DEPARTMENT OF TRANSPORTATION
DESIGN

LAST REVISION DATE PLOTTED => 22-JUL-2009
TIME PLOTTED => 06:52
06-09-09

BORDER LAST REVISED 4/11/2008

RELATIVE BORDER SCALE IS IN INCHES 0 1 2 3

USERNAME => trpierce
DGN FILE => 416373ma022.dgn

CU 04242

EA 163731

Dist	COUNTY	ROUTE	POST MILES TOTAL PROJECT	SHEET No.	TOTAL SHEETS
04	SF	101,1	9.2/9.8, 6.8/7.1	122	567

REGISTERED CIVIL ENGINEER — DATE: 6-08-09

PLANS APPROVAL DATE: 7-20-09

Hossein Khodabakhsh No. 71650 Exp. 12-31-09 CIVIL — REGISTERED PROFESSIONAL ENGINEER — STATE OF CALIFORNIA

THE STATE OF CALIFORNIA OR ITS OFFICERS OR AGENTS SHALL NOT BE RESPONSIBLE FOR THE ACCURACY OR COMPLETENESS OF SCANNED COPIES OF THIS PLAN SHEET.

FOR ACCURATE RIGHT OF WAY AND ACCESS DATA, CONTACT RIGHT OF WAY ENGINEERING AT THE DISTRICT OFFICE.

TRAFFIC HANDLING - STAGE 5 PER LANE CLOSURE CHART

AA — SHIFT NB ROUTE 1 TRAFFIC.

BB — CLOSE SB VETERANS Blvd OFF-RAMP. FOR TRAFFIC DETOUR AND SIGNING, SEE SHEET CS-4.

NOTE:

1. CONSTRUCT PERMANENT AND/OR Temp ROADWAY.
2. REGRADE Temp ROADWAY.

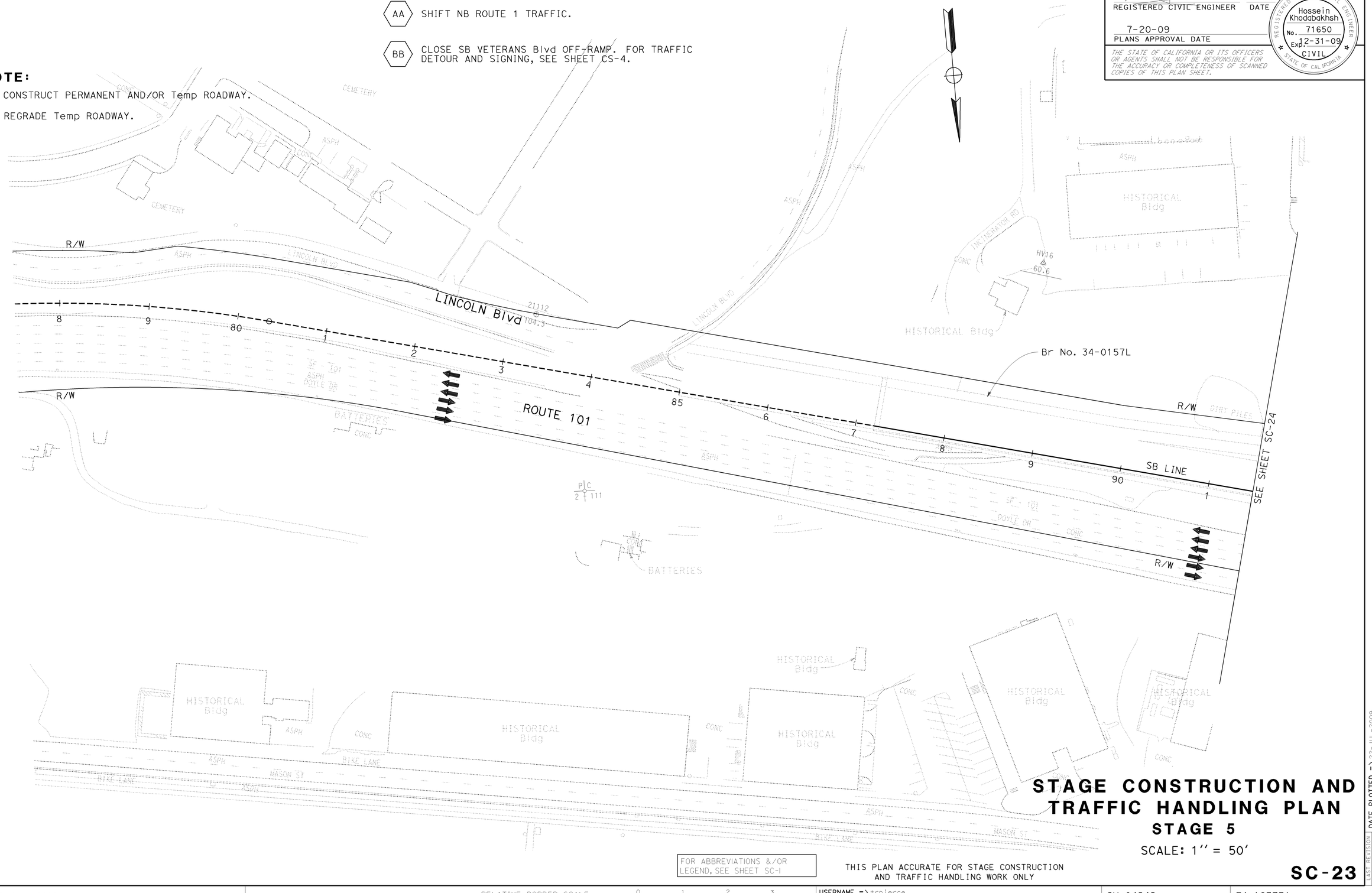

STAGE CONSTRUCTION AND TRAFFIC HANDLING PLAN

STAGE 5

SCALE: 1'' = 50'

FOR ABBREVIATIONS &/OR LEGEND, SEE SHEET SC-1

THIS PLAN ACCURATE FOR STAGE CONSTRUCTION AND TRAFFIC HANDLING WORK ONLY

SC-23

REVISED BY	DATE REVISED
GG	6/10/09

CALCULATED-DESIGNED BY: GEORGE GIN
CHECKED BY: ROGER DAYOAN
FUNCTIONAL SUPERVISOR: ABOLFAZL EMADZADEH

STATE OF CALIFORNIA - DEPARTMENT OF TRANSPORTATION
Caltrans
DESIGN

LAST REVISION: DATE PLOTTED => 22-JUL-2009, TIME PLOTTED => 06-53, 06-11-09

BORDER LAST REVISED 4/11/2008

RELATIVE BORDER SCALE IS IN INCHES 0 1 2 3

USERNAME => trpierce
DGN FILE => 416373mq023.dgn

CU 04242

EA 163731

Dist	COUNTY	ROUTE	POST MILES TOTAL PROJECT	SHEET No.	TOTAL SHEETS
04	SF	101,1	9.2/9.8, 6.8/7.1	123	567

REGISTERED CIVIL ENGINEER 6-08-09 DATE

7-20-09
PLANS APPROVAL DATE

REGISTERED PROFESSIONAL ENGINEER Hossein Khodabakhsh No. 71650 Exp. 12-31-09 CIVIL STATE OF CALIFORNIA

THE STATE OF CALIFORNIA OR ITS OFFICERS OR AGENTS SHALL NOT BE RESPONSIBLE FOR THE ACCURACY OR COMPLETENESS OF SCANNED COPIES OF THIS PLAN SHEET.

FOR ACCURATE RIGHT OF WAY AND ACCESS DATA, CONTACT RIGHT OF WAY ENGINEERING AT THE DISTRICT OFFICE.

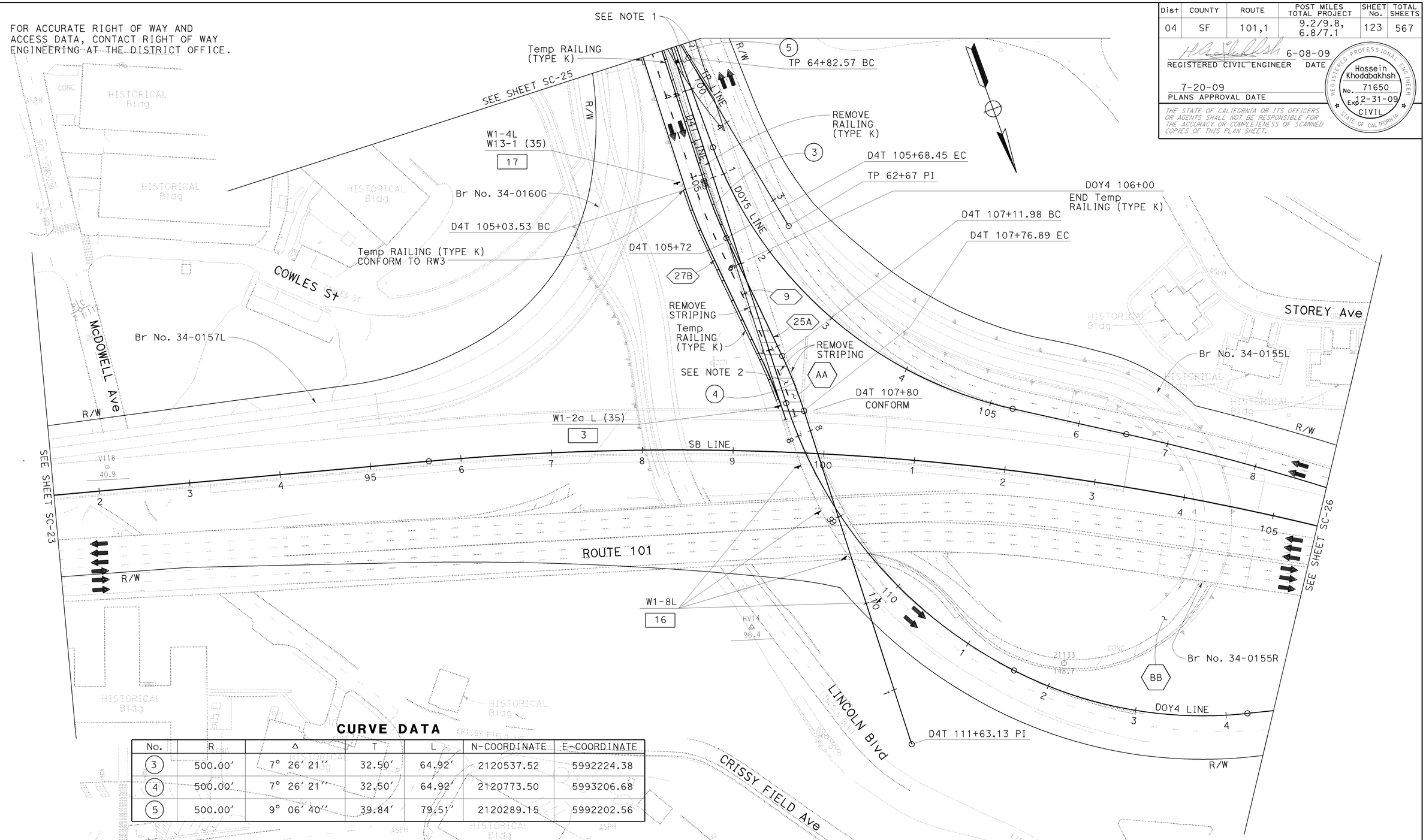

CURVE DATA

No.	R	Δ	T	L	N-COORDINATE	E-COORDINATE
3	500.00′	7° 26′ 21″	32.50′	64.92′	2120537.52	5992224.38
4	500.00′	7° 26′ 21″	32.50′	64.92′	2120773.50	5993206.68
5	500.00′	9° 06′ 40″	39.84′	79.51′	2120289.15	5992202.56

FOR NOTES, SEE SHEET SC-23

FOR NOTES, ABBREVIATIONS LEGEND, SEE SHEET SC-1

THIS PLAN ACCURATE FOR STAGE CONSTRUCTION AND TRAFFIC HANDLING WORK ONLY

STAGE CONSTRUCTION AND TRAFFIC HANDLING PLAN
STAGE 5

SCALE: 1″ = 50′

SC-24

STATE OF CALIFORNIA - DEPARTMENT OF TRANSPORTATION
Caltrans
DESIGN

FUNCTIONAL SUPERVISOR: ABOLFAZL EMADZADEH
CALCULATED-DESIGNED BY: GEORGE GIN
CHECKED BY: ROGER DAYOAN
REVISED BY: GG
DATE REVISED: 6/10/09

LAST REVISION 06-09-09
DATE PLOTTED => 22-JUL-2009
TIME PLOTTED => 06:53

BORDER LAST REVISED 4/11/2008
RELATIVE BORDER SCALE IS IN INCHES 0 1 2 3
USERNAME => trpierce
DGN FILE => 416373ma024.dgn
CU 04242
EA 163731

Dist	COUNTY	ROUTE	POST MILES TOTAL PROJECT	SHEET No.	TOTAL SHEETS
04	SF	101,1	9.2/9.8, 6.8/7.1	124	567

REGISTERED CIVIL ENGINEER — 6-08-09 DATE

7-20-09
PLANS APPROVAL DATE

REGISTERED PROFESSIONAL ENGINEER — Hossein Khodabakhsh — No. 71650 — Exp. 12-31-09 — CIVIL — STATE OF CALIFORNIA

THE STATE OF CALIFORNIA OR ITS OFFICERS OR AGENTS SHALL NOT BE RESPONSIBLE FOR THE ACCURACY OR COMPLETENESS OF SCANNED COPIES OF THIS PLAN SHEET.

FOR ACCURATE RIGHT OF WAY AND ACCESS DATA, CONTACT RIGHT OF WAY ENGINEERING AT THE DISTRICT OFFICE.

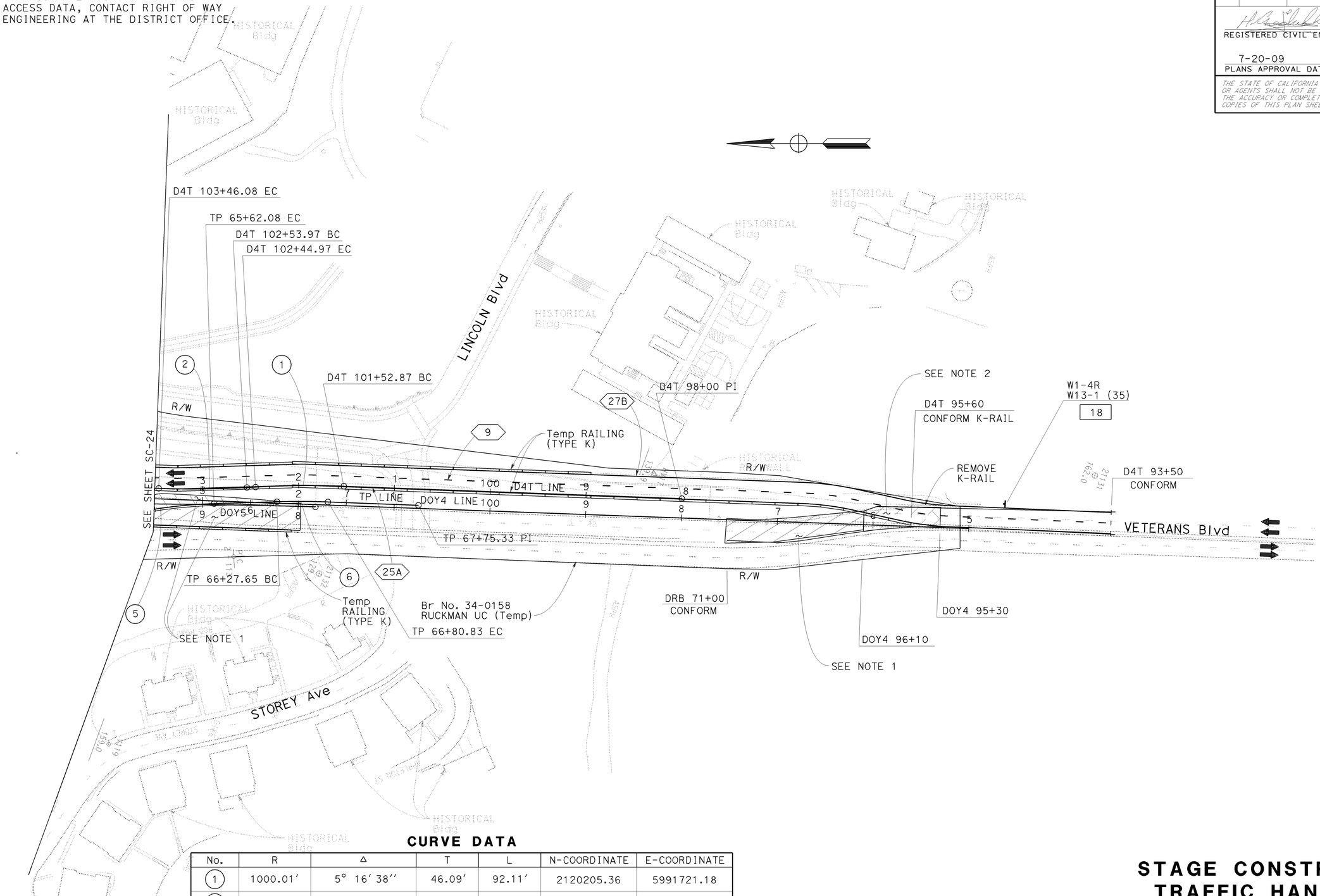

CURVE DATA

No.	R	Δ	T	L	N-COORDINATE	E-COORDINATE
(1)	1000.01′	5° 16′ 38″	46.09′	92.11′	2120205.36	5991721.18
(2)	1000.01′	5° 16′ 38″	46.09′	92.11′	2120325.25	5993717.62
(5)	500.00′	9° 06′ 40″	39.84′	79.51′	2120289.15	5992202.56
(6)	800.00′	3° 48′ 30″	26.60′	53.18′	2120214.65	5991904.64

FOR NOTES, SEE SHEET SC-23

FOR ABBREVIATIONS &/OR LEGEND, SEE SHEET SC-1

THIS PLAN ACCURATE FOR STAGE CONSTRUCTION AND TRAFFIC HANDLING WORK ONLY

STAGE CONSTRUCTION AND TRAFFIC HANDLING PLAN

STAGE 5

SCALE: 1″ = 50′

SC-25

CALCULATED-DESIGNED BY	CHECKED BY	REVISED BY	DATE REVISED
GEORGE GIN	ROGER DAYOAN	GG	6/10/09

FUNCTIONAL SUPERVISOR: ABOLFAZL EMADZADEH

STATE OF CALIFORNIA - DEPARTMENT OF TRANSPORTATION — DESIGN

Caltrans

LAST REVISION — DATE PLOTTED => 22-JUL-2009 — TIME PLOTTED => 06:53

BORDER LAST REVISED 4/11/2008

RELATIVE BORDER SCALE IS IN INCHES 0 1 2 3

USERNAME => trpierce
DGN FILE => 416373ma025.dgn

CU 04242

EA 163731

Dist	COUNTY	ROUTE	POST MILES TOTAL PROJECT	SHEET No.	TOTAL SHEETS
04	SF	101,1	9.2/9.8, 6.8/7.1	125	567

REGISTERED CIVIL ENGINEER 6-08-09 DATE

7-20-09
PLANS APPROVAL DATE

REGISTERED PROFESSIONAL ENGINEER
Hossein Khodabakhsh
No. 71650
Exp. 12-31-09
CIVIL
STATE OF CALIFORNIA

THE STATE OF CALIFORNIA OR ITS OFFICERS OR AGENTS SHALL NOT BE RESPONSIBLE FOR THE ACCURACY OR COMPLETENESS OF SCANNED COPIES OF THIS PLAN SHEET.

FOR ACCURATE RIGHT OF WAY AND ACCESS DATA, CONTACT RIGHT OF WAY ENGINEERING AT THE DISTRICT OFFICE.

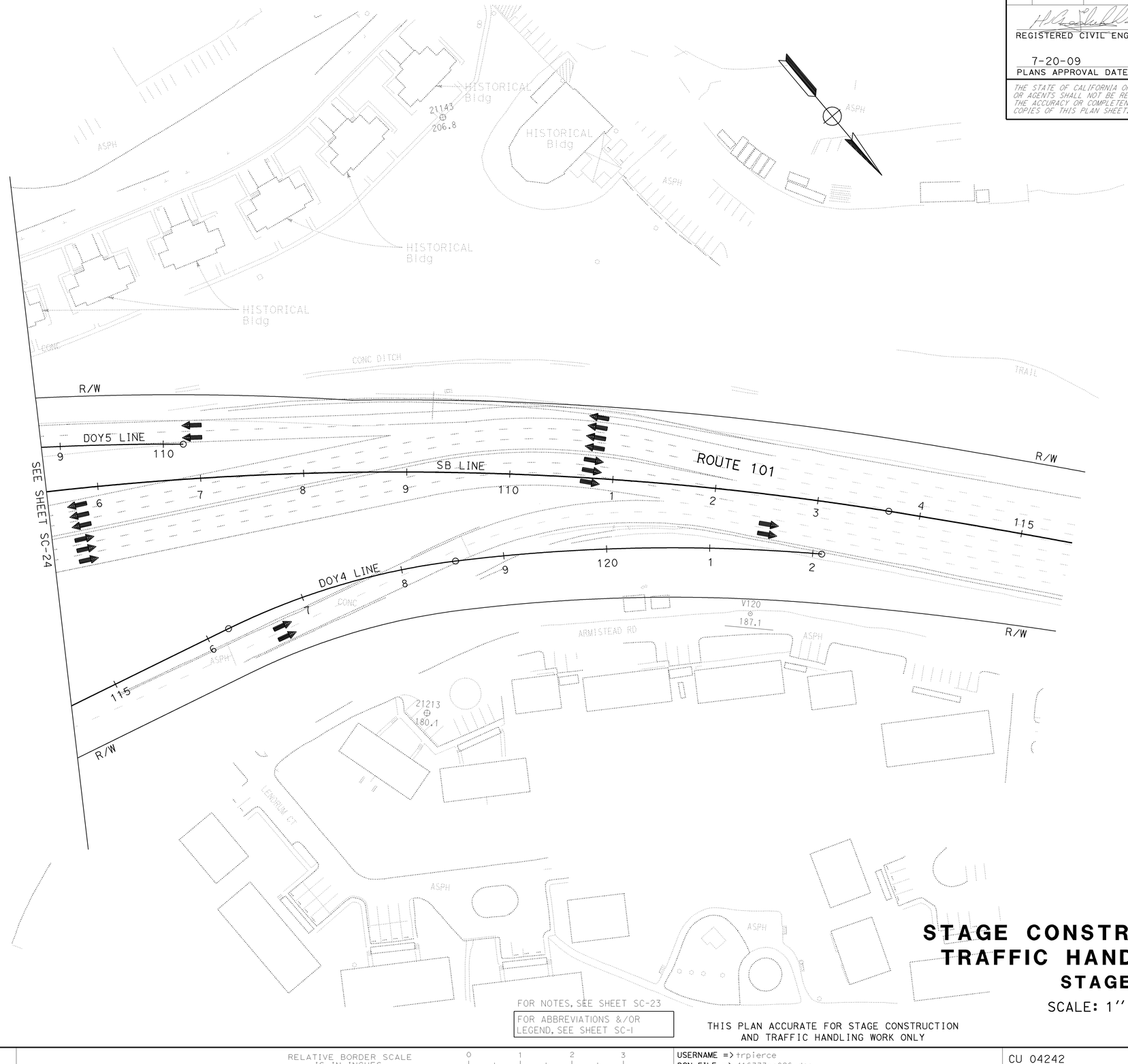

STAGE CONSTRUCTION AND TRAFFIC HANDLING PLAN

STAGE 5

SCALE: 1'' = 50'

FOR NOTES, SEE SHEET SC-23

FOR ABBREVIATIONS &/OR LEGEND, SEE SHEET SC-1

THIS PLAN ACCURATE FOR STAGE CONSTRUCTION AND TRAFFIC HANDLING WORK ONLY

SC-26

STATE OF CALIFORNIA - DEPARTMENT OF TRANSPORTATION
Caltrans
DESIGN

FUNCTIONAL SUPERVISOR: ABOLFAZL EMADZADEH
CALCULATED-DESIGNED BY: GEORGE GIN
CHECKED BY: ROGER DAYOAN
REVISED BY: GG
DATE REVISED: 6/10/09

LAST REVISION 06-09-09
DATE PLOTTED => 22-JUL-2009
TIME PLOTTED => 06:53

FOR ACCURATE RIGHT OF WAY AND
ACCESS DATA, CONTACT RIGHT OF WAY
ENGINEERING AT THE DISTRICT OFFICE.

TRAFFIC HANDLING - STAGE 6
PER LANE CLOSURE CHART

AA — REDUCE TRAFFIC LANE FROM 2 LANES TO ONE LANE.

BB — CLOSE SB VETERANS Blvd OFF-RAMP.

NOTES:

1. REMOVE Temp RUCKMAN UC (Br No. 34-0158) AND Temp ROADWAY.
2. CONSTRUCT PORTION OF RUCKMAN UC (Br No. 34-0156) AND PORTION OF SB ROUTE 1 ROADWAY.
3. REGRADE ROADWAY.

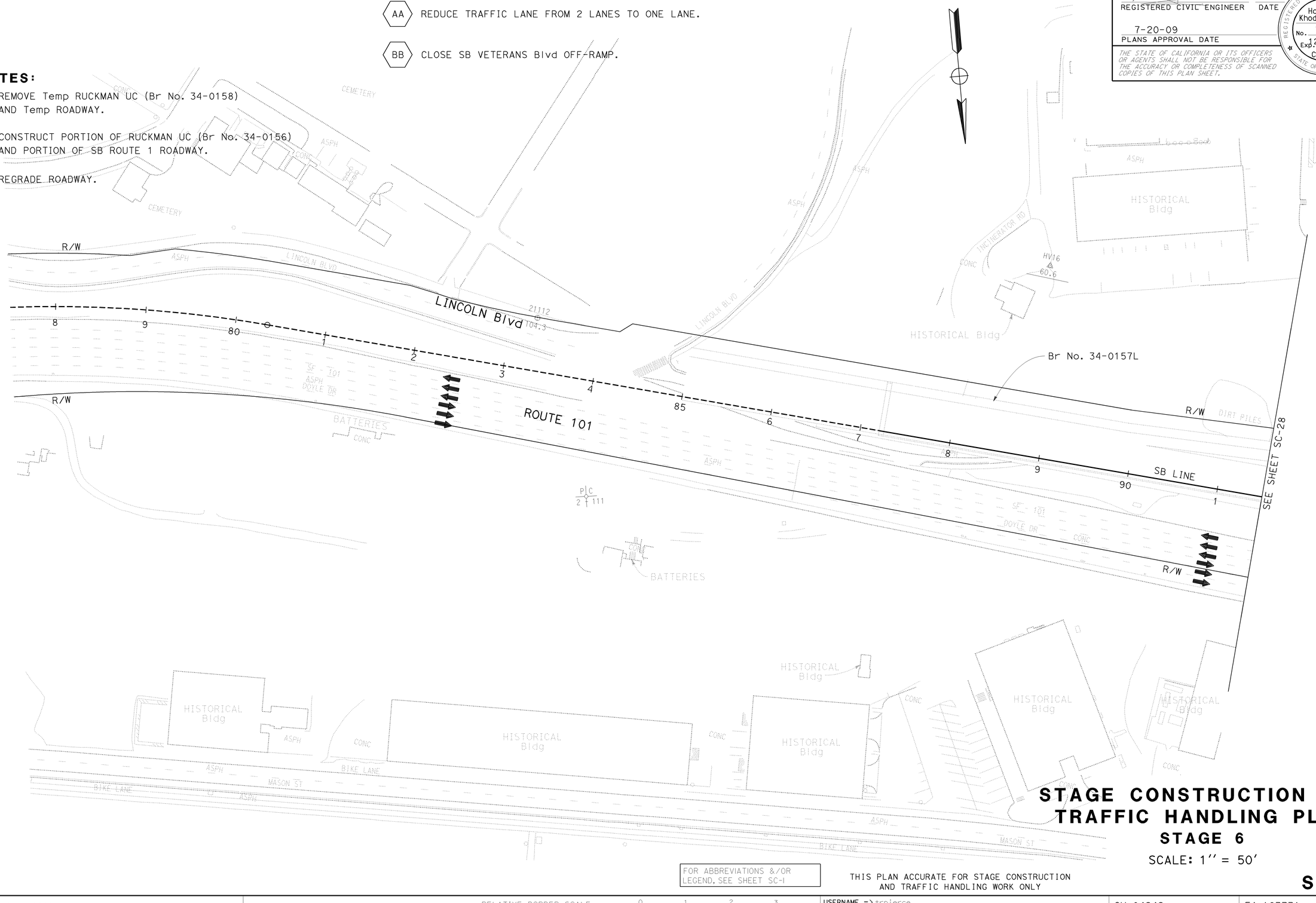

FOR ABBREVIATIONS &/OR LEGEND, SEE SHEET SC-1

THIS PLAN ACCURATE FOR STAGE CONSTRUCTION AND TRAFFIC HANDLING WORK ONLY

STAGE CONSTRUCTION AND TRAFFIC HANDLING PLAN
STAGE 6

SCALE: 1'' = 50'

SC-27

Dist	COUNTY	ROUTE	POST MILES TOTAL PROJECT	SHEET No.	TOTAL SHEETS
04	SF	101,1	9.2/9.8, 6.8/7.1	126	567

REGISTERED CIVIL ENGINEER — DATE: 6-08-09

Hossein Khodabakhsh, No. 71650, Exp. 12-31-09, CIVIL, REGISTERED PROFESSIONAL ENGINEER, STATE OF CALIFORNIA

PLANS APPROVAL DATE: 7-20-09

THE STATE OF CALIFORNIA OR ITS OFFICERS OR AGENTS SHALL NOT BE RESPONSIBLE FOR THE ACCURACY OR COMPLETENESS OF SCANNED COPIES OF THIS PLAN SHEET.

REVISED BY	DATE REVISED
GG	6/10/09

CALCULATED-DESIGNED BY: GEORGE GIN
CHECKED BY: ROGER DAYOAN
FUNCTIONAL SUPERVISOR: ABOLFAZL EMADZADEH

STATE OF CALIFORNIA - DEPARTMENT OF TRANSPORTATION
Caltrans®
DESIGN

LAST REVISION: DATE PLOTTED => 22-JUL-2009, TIME PLOTTED => 06-53, 06-09-09

BORDER LAST REVISED 4/11/2008

RELATIVE BORDER SCALE IS IN INCHES 0 1 2 3

USERNAME => trpierce
DGN FILE => 416373mq027.dgn

CU 04242

EA 163731

Dist	COUNTY	ROUTE	POST MILES TOTAL PROJECT	SHEET No.	TOTAL SHEETS
04	SF	101,1	9.2/9.8, 6.8/7.1	127	567

REGISTERED CIVIL ENGINEER — 6-08-09 DATE

Hossein Khodabakhsh No. 71650 Exp. 12-31-09 CIVIL — REGISTERED PROFESSIONAL ENGINEER — STATE OF CALIFORNIA

7-20-09
PLANS APPROVAL DATE

THE STATE OF CALIFORNIA OR ITS OFFICERS OR AGENTS SHALL NOT BE RESPONSIBLE FOR THE ACCURACY OR COMPLETENESS OF SCANNED COPIES OF THIS PLAN SHEET.

FOR ACCURATE RIGHT OF WAY AND ACCESS DATA, CONTACT RIGHT OF WAY ENGINEERING AT THE DISTRICT OFFICE.

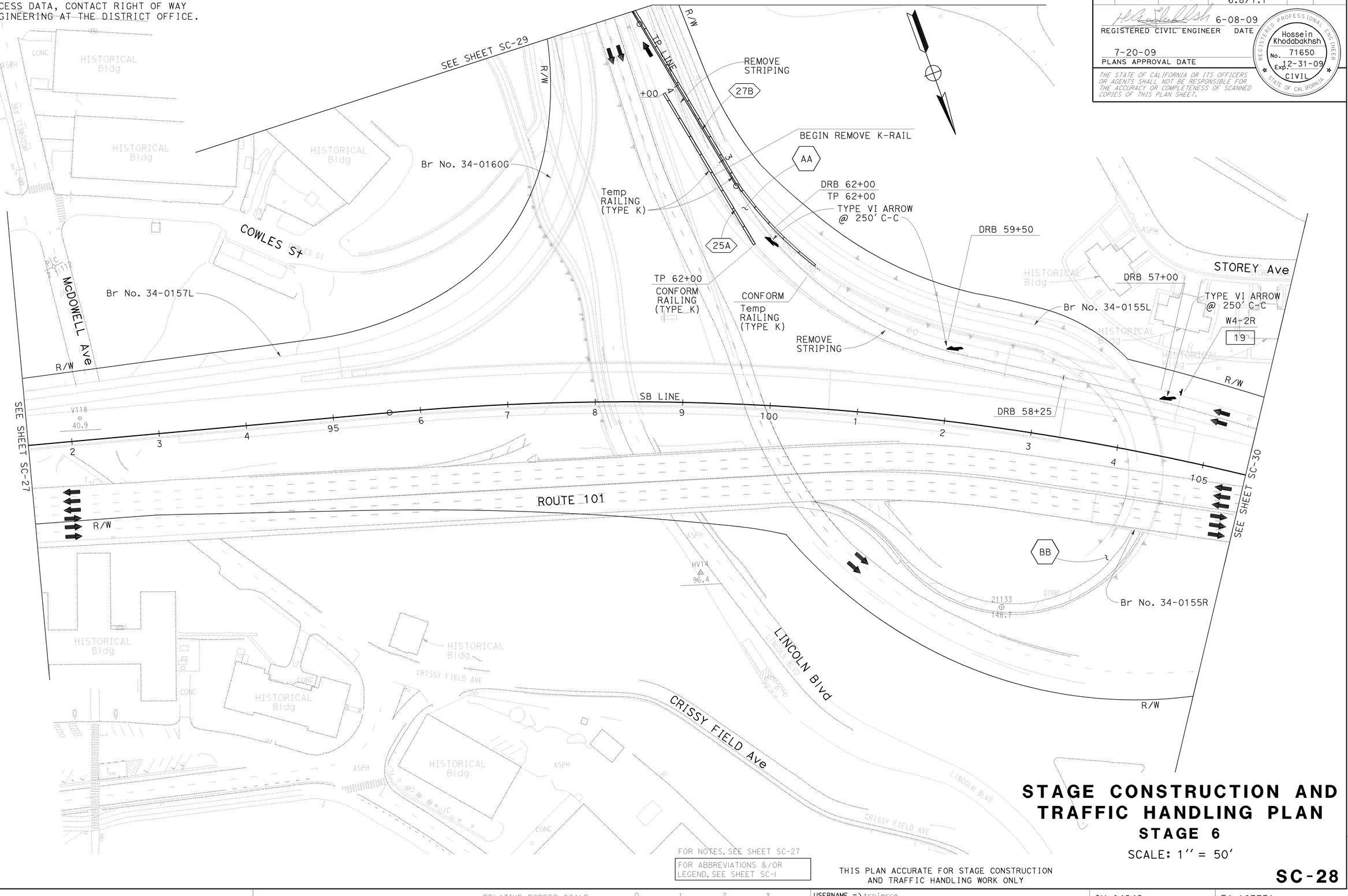

FOR NOTES, SEE SHEET SC-27

FOR ABBREVIATIONS &/OR LEGEND, SEE SHEET SC-1

THIS PLAN ACCURATE FOR STAGE CONSTRUCTION AND TRAFFIC HANDLING WORK ONLY

STAGE CONSTRUCTION AND TRAFFIC HANDLING PLAN

STAGE 6

SCALE: 1'' = 50'

SC-28

REVISED BY	DATE REVISED
GG	6/10/09

CALCULATED-DESIGNED BY: GEORGE GIN
CHECKED BY: ROGER DAYOAN
FUNCTIONAL SUPERVISOR: ABOLFAZL EMADZADEH

STATE OF CALIFORNIA - DEPARTMENT OF TRANSPORTATION
DESIGN

LAST REVISION DATE PLOTTED => 23-JUL-2009
TIME PLOTTED => 10:17

BORDER LAST REVISED 4/11/2008

RELATIVE BORDER SCALE IS IN INCHES 0 1 2 3

USERNAME => trpierce
DGN FILE => 416373ma028.dgn

CU 04242

EA 163731

Dist	COUNTY	ROUTE	POST MILES TOTAL PROJECT	SHEET No.	TOTAL SHEETS
04	SF	101,1	9.2/9.8, 6.8/7.1	128	567

REGISTERED CIVIL ENGINEER — DATE: 6-08-09

PLANS APPROVAL DATE: 7-20-09

Hossein Khodabakhsh, No. 71650, Exp. 12-31-09, CIVIL — REGISTERED PROFESSIONAL ENGINEER — STATE OF CALIFORNIA

THE STATE OF CALIFORNIA OR ITS OFFICERS OR AGENTS SHALL NOT BE RESPONSIBLE FOR THE ACCURACY OR COMPLETENESS OF SCANNED COPIES OF THIS PLAN SHEET.

FOR ACCURATE RIGHT OF WAY AND ACCESS DATA, CONTACT RIGHT OF WAY ENGINEERING AT THE DISTRICT OFFICE.

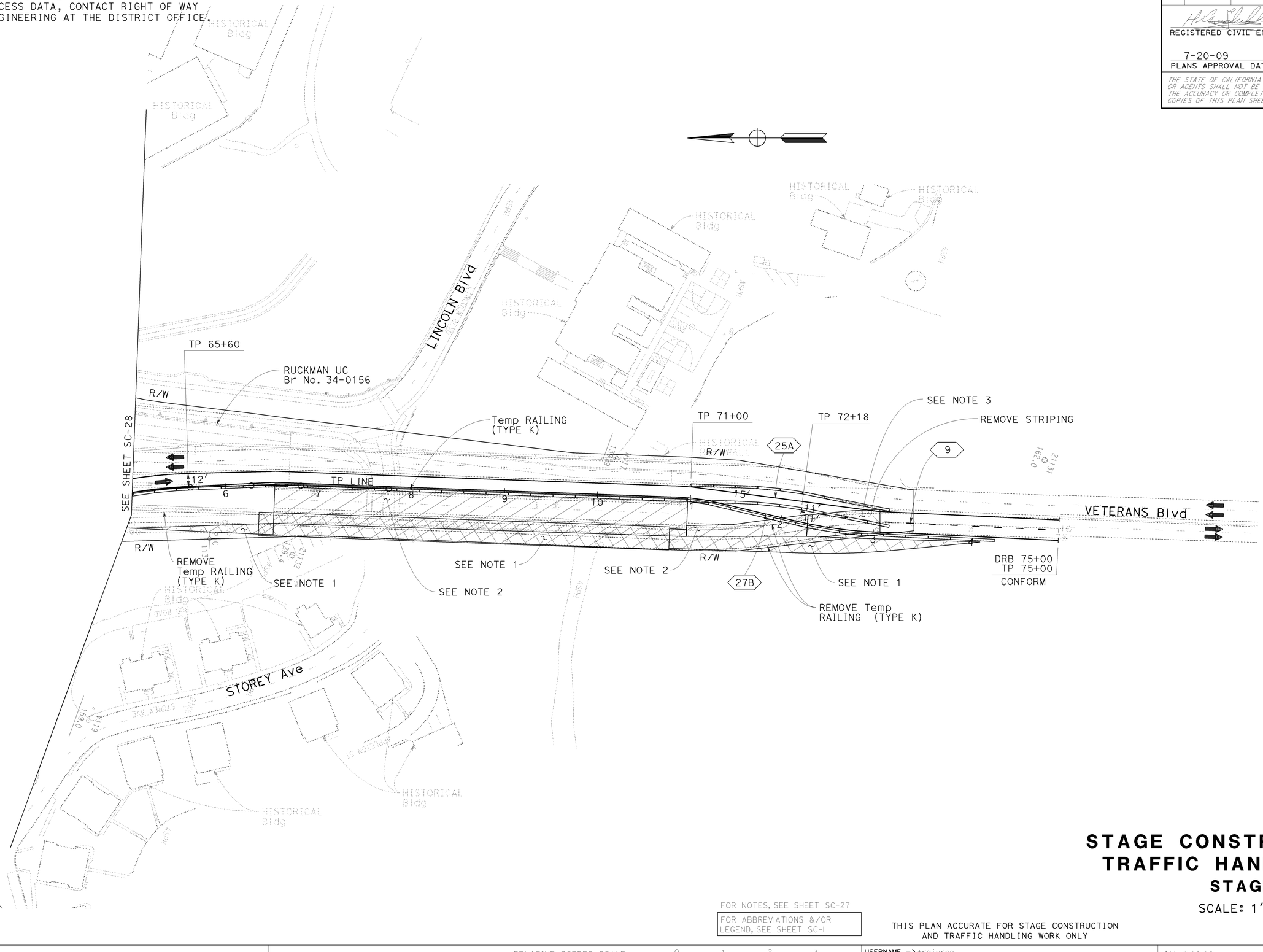

FOR NOTES, SEE SHEET SC-27

FOR ABBREVIATIONS &/OR LEGEND, SEE SHEET SC-1

THIS PLAN ACCURATE FOR STAGE CONSTRUCTION AND TRAFFIC HANDLING WORK ONLY

STAGE CONSTRUCTION AND TRAFFIC HANDLING PLAN

STAGE 6

SCALE: 1'' = 50'

SC-29

LAST REVISION DATE PLOTTED => 22-JUL-2009
06-09-09 TIME PLOTTED => 06:53

CALCULATED-DESIGNED BY	CHECKED BY
GEORGE GIN	ROGER DAYOAN

REVISED BY	DATE REVISED
GG	6/10/09

FUNCTIONAL SUPERVISOR: ABOLFAZL EMADZADEH

STATE OF CALIFORNIA - DEPARTMENT OF TRANSPORTATION

DESIGN

Caltrans

BORDER LAST REVISED 4/11/2008

RELATIVE BORDER SCALE IS IN INCHES 0 1 2 3

USERNAME => trpierce
DGN FILE => 416373ma029.dgn

CU 04242

EA 163731

FOR ACCURATE RIGHT OF WAY AND
ACCESS DATA, CONTACT RIGHT OF WAY
ENGINEERING AT THE DISTRICT OFFICE.

Dist	COUNTY	ROUTE	POST MILES TOTAL PROJECT	SHEET No.	TOTAL SHEETS
04	SF	101,1	9.2/9.8, 6.8/7.1	129	567

REGISTERED CIVIL ENGINEER 6-08-09 DATE

7-20-09
PLANS APPROVAL DATE

REGISTERED PROFESSIONAL ENGINEER
Hossein Khodabakhsh
No. 71650
Exp. 12-31-09
CIVIL
STATE OF CALIFORNIA

THE STATE OF CALIFORNIA OR ITS OFFICERS OR AGENTS SHALL NOT BE RESPONSIBLE FOR THE ACCURACY OR COMPLETENESS OF SCANNED COPIES OF THIS PLAN SHEET.

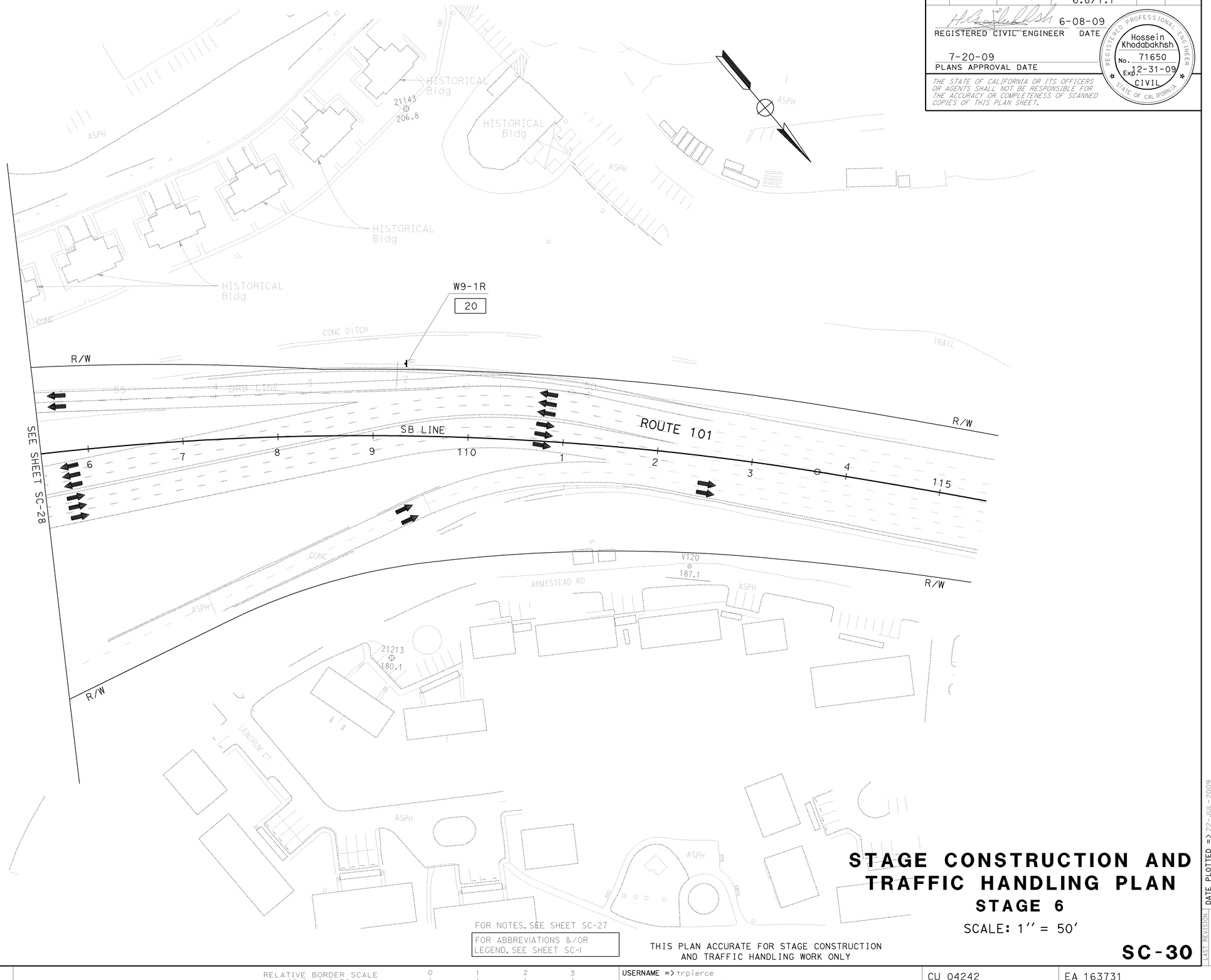

FOR NOTES, SEE SHEET SC-27

FOR ABBREVIATIONS &/OR LEGEND, SEE SHEET SC-1

THIS PLAN ACCURATE FOR STAGE CONSTRUCTION AND TRAFFIC HANDLING WORK ONLY

STAGE CONSTRUCTION AND TRAFFIC HANDLING PLAN

STAGE 6

SCALE: 1'' = 50'

SC-30

STATE OF CALIFORNIA - DEPARTMENT OF TRANSPORTATION
DESIGN

FUNCTIONAL SUPERVISOR: ABOLFAZL EMADZADEH
CALCULATED-DESIGNED BY:
CHECKED BY:
REVISED BY: GG
DATE REVISED: 6/10/09
GEORGE GIN
ROGER DAYOAN

LAST REVISION DATE PLOTTED => 22-JUL-2009
TIME PLOTTED => 06:53
06-09-09

BORDER LAST REVISED 4/11/2008

RELATIVE BORDER SCALE IS IN INCHES 0 1 2 3

USERNAME => trpierce
DGN FILE => 416373ma030.dgn

CU 04242

EA 163731

FOR ACCURATE RIGHT OF WAY AND
ACCESS DATA, CONTACT RIGHT OF WAY
ENGINEERING AT THE DISTRICT OFFICE.

TRAFFIC HANDLING - STAGE 7
PER LANE CLOSURE CHART

AA SHIFT TRAFFIC.

Dist	COUNTY	ROUTE	POST MILES TOTAL PROJECT	SHEET No.	TOTAL SHEETS
04	SF	101,1	9.2/9.8, 6.8/7.1	130	567

REGISTERED CIVIL ENGINEER 6-08-09 DATE

7-20-09
PLANS APPROVAL DATE

REGISTERED PROFESSIONAL ENGINEER
Hossein Khodabakhsh
No. 71650
Exp. 12-31-09
CIVIL
STATE OF CALIFORNIA

THE STATE OF CALIFORNIA OR ITS OFFICERS OR AGENTS SHALL NOT BE RESPONSIBLE FOR THE ACCURACY OR COMPLETENESS OF SCANNED COPIES OF THIS PLAN SHEET.

NOTES:

1. CONSTRUCT Ret WALL No. 3A AND PORTION OF ROUTE 1 ROADWAY.
2. REMOVE Temp RUCKMAN UC BRIDGE WIDENING.

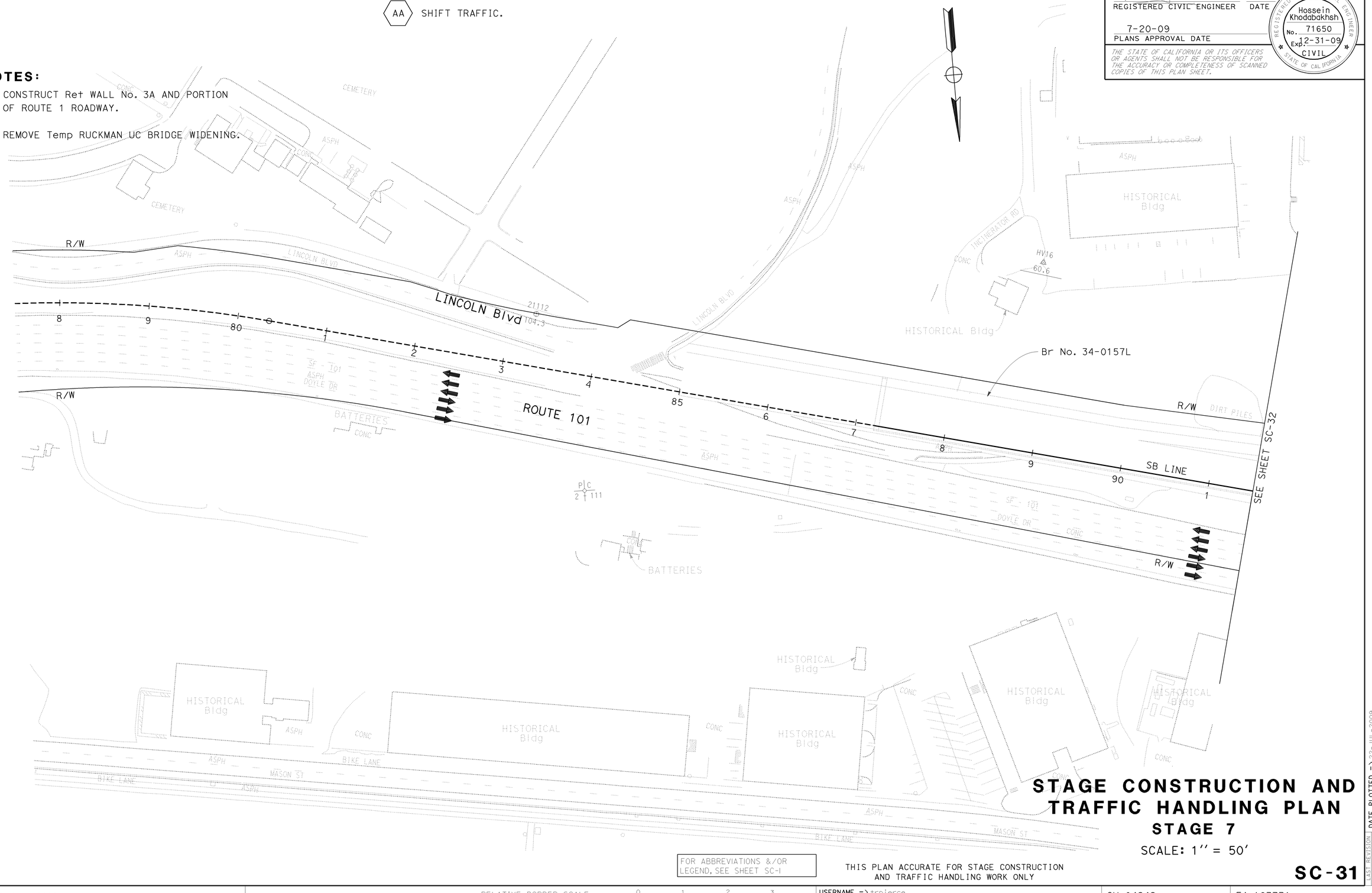

FOR ABBREVIATIONS &/OR LEGEND, SEE SHEET SC-1

THIS PLAN ACCURATE FOR STAGE CONSTRUCTION AND TRAFFIC HANDLING WORK ONLY

STAGE CONSTRUCTION AND TRAFFIC HANDLING PLAN
STAGE 7

SCALE: 1'' = 50'

SC-31

REVISED BY	DATE REVISED
GG	6/10/09

CALCULATED-DESIGNED BY: GEORGE GIN
CHECKED BY: ROGER DAYOAN
FUNCTIONAL SUPERVISOR: ABOLFAZL EMADZADEH

STATE OF CALIFORNIA - DEPARTMENT OF TRANSPORTATION
Caltrans
DESIGN

LAST REVISION: DATE PLOTTED => 22-JUL-2009
06-09-09 TIME PLOTTED => 06:53

BORDER LAST REVISED 4/11/2008

RELATIVE BORDER SCALE IS IN INCHES 0 1 2 3

USERNAME => trpierce
DGN FILE => 416373mq031.dgn

CU 04242

EA 163731

Dist	COUNTY	ROUTE	POST MILES TOTAL PROJECT	SHEET No.	TOTAL SHEETS
04	SF	101,1	9.2/9.8, 6.8/7.1	131	567

REGISTERED CIVIL ENGINEER — DATE: 6-08-09

PLANS APPROVAL DATE: 7-20-09

Hossein Khodabakhsh, No. 71650, Exp. 12-31-09, CIVIL — REGISTERED PROFESSIONAL ENGINEER — STATE OF CALIFORNIA

THE STATE OF CALIFORNIA OR ITS OFFICERS OR AGENTS SHALL NOT BE RESPONSIBLE FOR THE ACCURACY OR COMPLETENESS OF SCANNED COPIES OF THIS PLAN SHEET.

FOR ACCURATE RIGHT OF WAY AND ACCESS DATA, CONTACT RIGHT OF WAY ENGINEERING AT THE DISTRICT OFFICE.

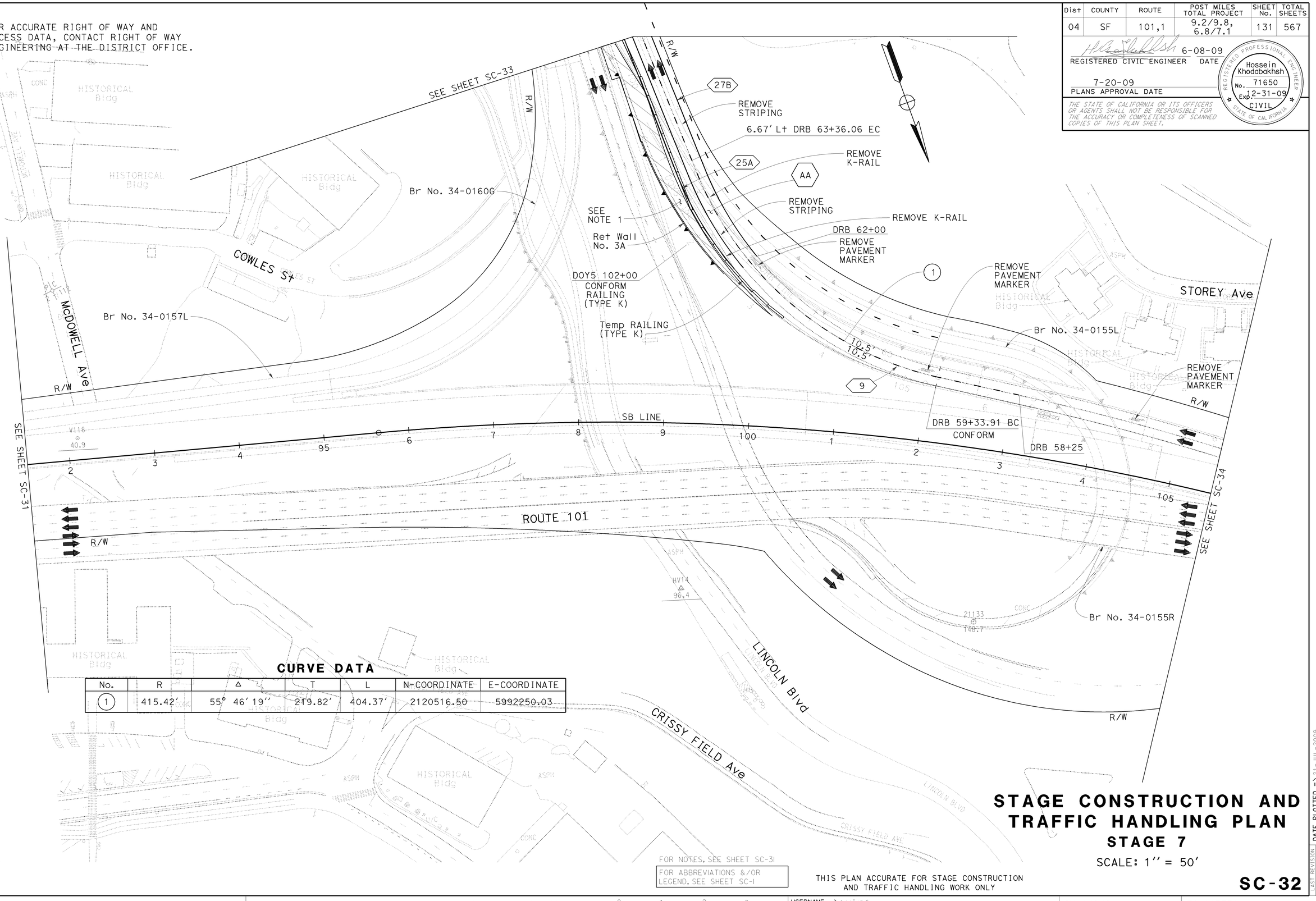

CURVE DATA

No.	R	Δ	T	L	N-COORDINATE	E-COORDINATE
(1)	415.42′	55° 46′ 19″	219.82′	404.37′	2120516.50	5992250.03

FOR NOTES, SEE SHEET SC-31

FOR ABBREVIATIONS &/OR LEGEND, SEE SHEET SC-1

THIS PLAN ACCURATE FOR STAGE CONSTRUCTION AND TRAFFIC HANDLING WORK ONLY

STAGE CONSTRUCTION AND TRAFFIC HANDLING PLAN

STAGE 7

SCALE: 1″ = 50′

SC-32

STATE OF CALIFORNIA - DEPARTMENT OF TRANSPORTATION — DESIGN

FUNCTIONAL SUPERVISOR: ABOLFAZL EMADZADEH

CALCULATED-DESIGNED BY: GEORGE GIN

CHECKED BY: ROGER DAYOAN

REVISED BY: GG — DATE REVISED: 6/10/09

LAST REVISION — DATE PLOTTED => 21-JUL-2009 — TIME PLOTTED => 16:01

BORDER LAST REVISED 4/11/2008

RELATIVE BORDER SCALE IS IN INCHES (0 1 2 3)

USERNAME => trrichf

DGN FILE => 416373ma032.dgn

CU 04242

EA 163731

Dist	COUNTY	ROUTE	POST MILES TOTAL PROJECT	SHEET No.	TOTAL SHEETS
04	SF	101,1	9.2/9.8, 6.8/7.1	132	567

REGISTERED CIVIL ENGINEER — 6-08-09 DATE

7-20-09
PLANS APPROVAL DATE

Hossein Khodabakhsh No. 71650 Exp. 12-31-09 CIVIL — REGISTERED PROFESSIONAL ENGINEER — STATE OF CALIFORNIA

THE STATE OF CALIFORNIA OR ITS OFFICERS OR AGENTS SHALL NOT BE RESPONSIBLE FOR THE ACCURACY OR COMPLETENESS OF SCANNED COPIES OF THIS PLAN SHEET.

FOR ACCURATE RIGHT OF WAY AND ACCESS DATA, CONTACT RIGHT OF WAY ENGINEERING AT THE DISTRICT OFFICE.

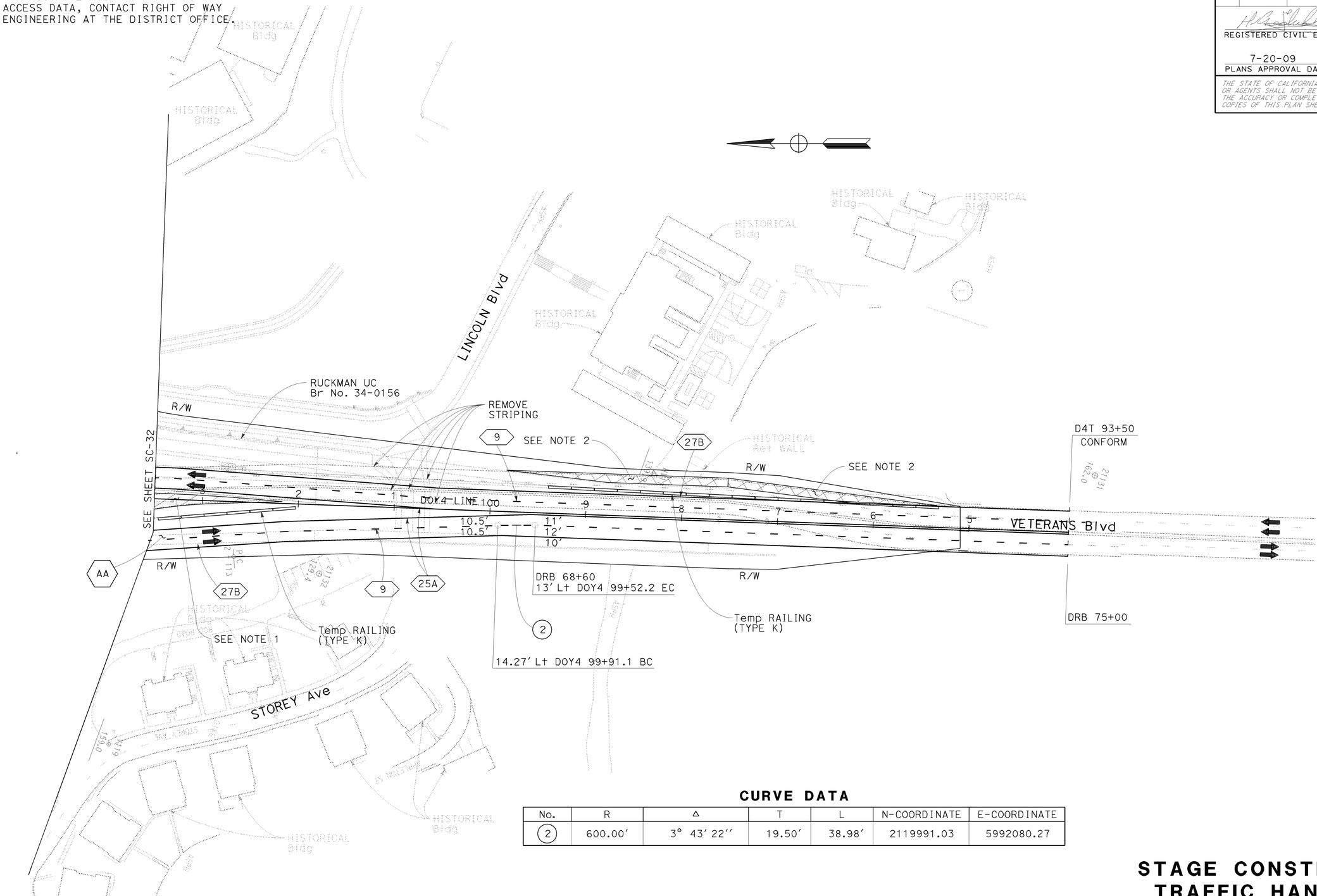

CURVE DATA

No.	R	Δ	T	L	N-COORDINATE	E-COORDINATE
(2)	600.00′	3° 43′ 22″	19.50′	38.98′	2119991.03	5992080.27

FOR NOTES, SEE SHEET SC-31

FOR ABBREVIATIONS &/OR LEGEND, SEE SHEET SC-1

THIS PLAN ACCURATE FOR STAGE CONSTRUCTION AND TRAFFIC HANDLING WORK ONLY

STAGE CONSTRUCTION AND TRAFFIC HANDLING PLAN

STAGE 7

SCALE: 1″ = 50′

SC-33

LAST REVISION DATE PLOTTED => 23-JUL-2009
06-09-09 TIME PLOTTED => 09:50

STATE OF CALIFORNIA - DEPARTMENT OF TRANSPORTATION
DESIGN
FUNCTIONAL SUPERVISOR: ABOLFAZL EMADZADEH
CALCULATED-DESIGNED BY: GEORGE GIN
CHECKED BY: ROGER DAYOAN
REVISED BY: GG
DATE REVISED: 6/10/09

BORDER LAST REVISED 4/11/2008

RELATIVE BORDER SCALE IS IN INCHES 0 1 2 3

USERNAME => trrichf
DGN FILE => 416373ma033.dgn

CU 04242

EA 163731

FOR ACCURATE RIGHT OF WAY AND
ACCESS DATA, CONTACT RIGHT OF WAY
ENGINEERING AT THE DISTRICT OFFICE.

Dist	COUNTY	ROUTE	POST MILES TOTAL PROJECT	SHEET No.	TOTAL SHEETS
04	SF	101,1	9.2/9.8, 6.8/7.1	133	567

REGISTERED CIVIL ENGINEER 6-08-09 DATE

7-20-09
PLANS APPROVAL DATE

REGISTERED PROFESSIONAL ENGINEER
Hossein Khodabakhsh
No. 71650
Exp. 12-31-09
CIVIL
STATE OF CALIFORNIA

THE STATE OF CALIFORNIA OR ITS OFFICERS OR AGENTS SHALL NOT BE RESPONSIBLE FOR THE ACCURACY OR COMPLETENESS OF SCANNED COPIES OF THIS PLAN SHEET.

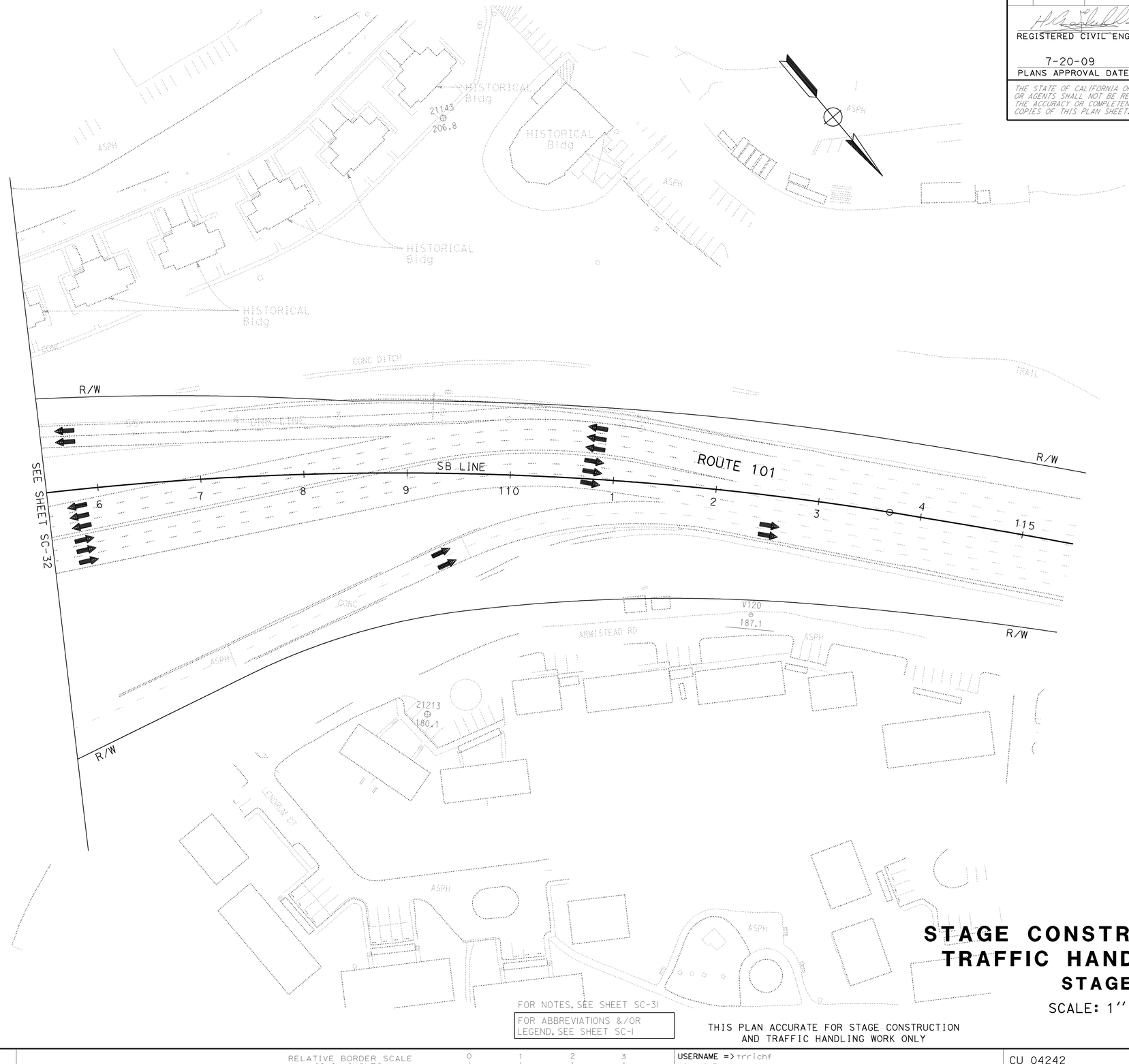

FOR NOTES, SEE SHEET SC-31

FOR ABBREVIATIONS &/OR LEGEND, SEE SHEET SC-1

THIS PLAN ACCURATE FOR STAGE CONSTRUCTION AND TRAFFIC HANDLING WORK ONLY

STAGE CONSTRUCTION AND TRAFFIC HANDLING PLAN

STAGE 7

SCALE: 1'' = 50'

SC-34

CALCULATED-DESIGNED BY			
CHECKED BY			
FUNCTIONAL SUPERVISOR	ABOLFAZL EMADZADEH		
REVISED BY	GG		
DATE REVISED	6/10/09		
GEORGE GIN			
ROGER DAYOAN			

STATE OF CALIFORNIA - DEPARTMENT OF TRANSPORTATION
DESIGN

LAST REVISION DATE PLOTTED => 21-JUL-2009
TIME PLOTTED => 16:01
06-09-09

BORDER LAST REVISED 4/11/2008

RELATIVE BORDER SCALE IS IN INCHES 0 1 2 3

USERNAME => trrichf
DGN FILE => 416373ma034.dgn

CU 04242

EA 163731

Dist	COUNTY	ROUTE	POST MILES TOTAL PROJECT	SHEET No.	TOTAL SHEETS
04	SF	101,1	9.2/9.8, 6.8/7.1	134	567

REGISTERED CIVIL ENGINEER — DATE: 6-08-09

Hossein Khodabakhsh, No. 71650, Exp. 12-31-09, CIVIL — REGISTERED PROFESSIONAL ENGINEER — STATE OF CALIFORNIA

PLANS APPROVAL DATE: 7-20-09

THE STATE OF CALIFORNIA OR ITS OFFICERS OR AGENTS SHALL NOT BE RESPONSIBLE FOR THE ACCURACY OR COMPLETENESS OF SCANNED COPIES OF THIS PLAN SHEET.

NOTES:

1. DIMENSIONS OF THE STRUCTURAL SECTIONS ARE SUBJECT TO TOLERANCES SPECIFIED IN THE STANDARD SPECIFICATIONS.
2. SUPERELEVATION AS SHOWN OR AS DIRECTED BY THE ENGINEER.
3. FOR Calif ST-10 BRIDGE RAIL (Mod) (TYPE B) DETAIL, SEE SHEET C-1.

LEGEND:

- No. — STRUCTURAL SECTION NUMBER
- Exist — 0.25′ - 0.33′ AC; 0.67′ PCC BASE; UNTREATED ROCK BASE

STRUCTURAL SECTION

- 1 — 0.65′ HMA; 0.35′ LCB; 1.00′ AS (CLASS 4)
- 2 — 0.20′ COLD PLANE ASPHALT CONCRETE AND PLACE; 0.20′ HMA
- 3 — 0.50′ HMA; 1.35′ AB (CLASS 3)
- 4 — REMOVE Exist STRUCTURAL SECTION AND PLACE 0.5′ HMA & 0′ TO 0.5′ AB (CLASS 3)
- 5 — REMOVE Exist STRUCTURAL SECTION AND PLACE 0.5′ HMA

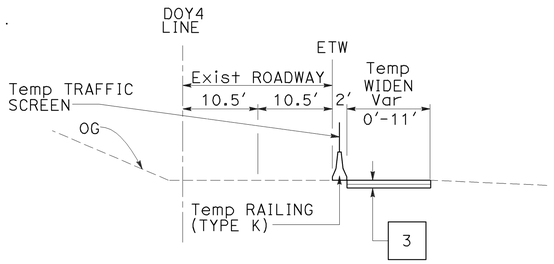

STAGE 1, PHASE 1
DOY4 106+00 TO 107+90

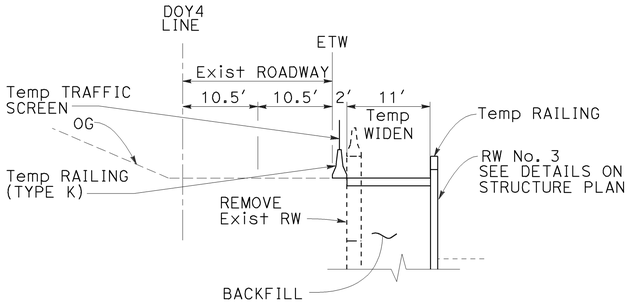

STAGE 1, PHASE 1
DOY4 103+44 TO 105+20

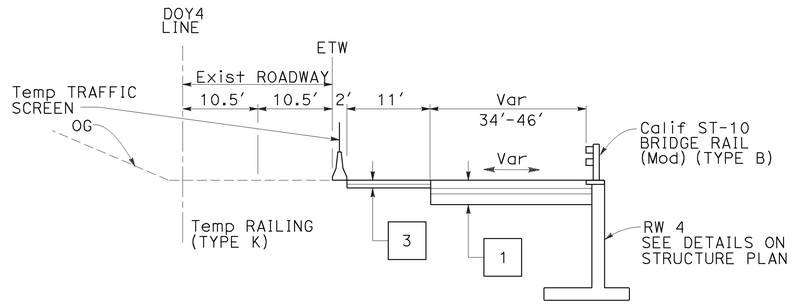

STAGE 1, PHASE 1
DOY4 102+23 TO 103+44

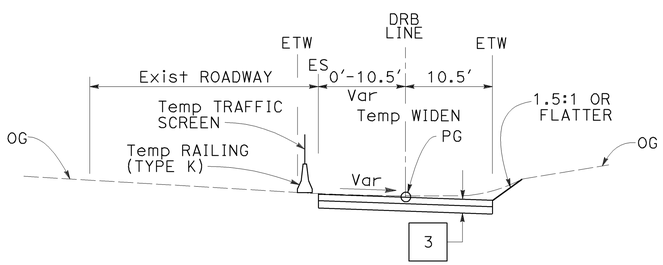

STAGE 1, PHASE 1
DRB 71+05 TO 73+20

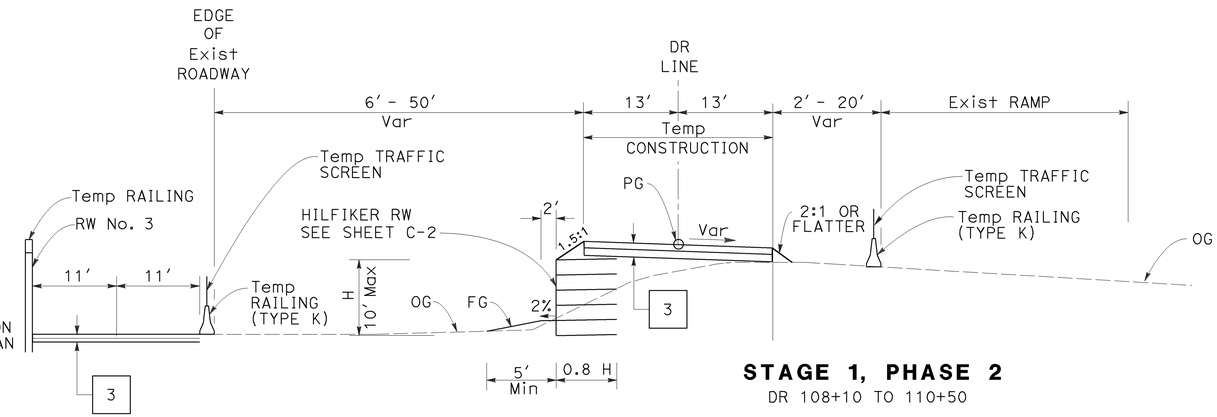

STAGE 1, PHASE 2
DR 108+10 TO 110+50

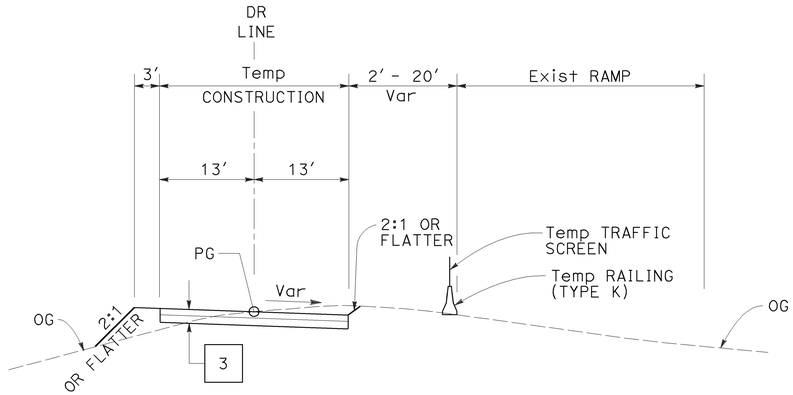

STAGE 1, PHASE 2
DR 105+00 TO 108+10
DR 110+50 TO 110+67

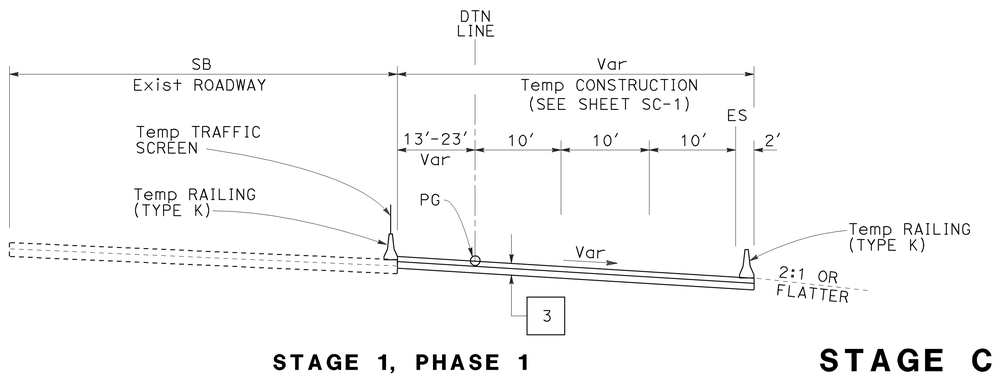

STAGE 1, PHASE 1
DTN 101+60 TO 110+40

STAGE CONSTRUCTION
TYPICAL CROSS SECTIONS
NO SCALE

SC-35

DESIGN	STATE OF CALIFORNIA - DEPARTMENT OF TRANSPORTATION
ABOLFAZL EMADZADEH	FUNCTIONAL SUPERVISOR
ROMY ACOB	DOMINIC CHIN
CHECKED BY	CALCULATED-DESIGNED BY
	DC
DATE REVISED	6/10/09
REVISED BY	

LAST REVISION — DATE PLOTTED => 23-JUL-2009; TIME PLOTTED => 10:15; 06-11-09

BORDER LAST REVISED 4/11/2008 — RELATIVE BORDER SCALE IS IN INCHES (0 1 2 3) — USERNAME => trpierce — DGN FILE => 416373ma035.dgn — CU 04242 — EA 163731

Dist	COUNTY	ROUTE	POST MILES TOTAL PROJECT	SHEET No.	TOTAL SHEETS
04	SF	101,1	9.2/9.8, 6.8/7.1	135	567

6-08-09
REGISTERED CIVIL ENGINEER DATE

Hossein Khodabakhsh
No. 71650
Exp. 12-31-09
CIVIL
REGISTERED PROFESSIONAL ENGINEER
STATE OF CALIFORNIA

7-20-09
PLANS APPROVAL DATE

THE STATE OF CALIFORNIA OR ITS OFFICERS OR AGENTS SHALL NOT BE RESPONSIBLE FOR THE ACCURACY OR COMPLETENESS OF SCANNED COPIES OF THIS PLAN SHEET.

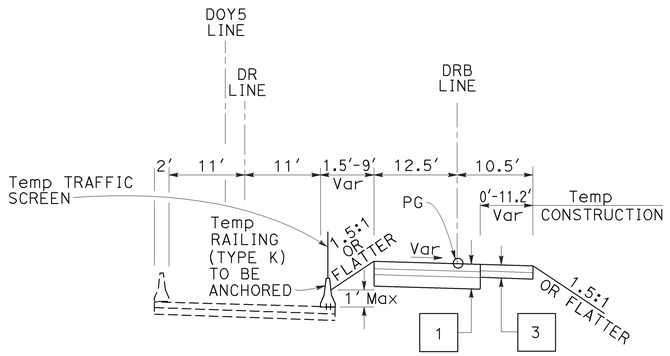

STAGE 1, PHASE 3
DR 111+00 TO 113+05

STAGE 2
DRB 64+28 TO 66+33

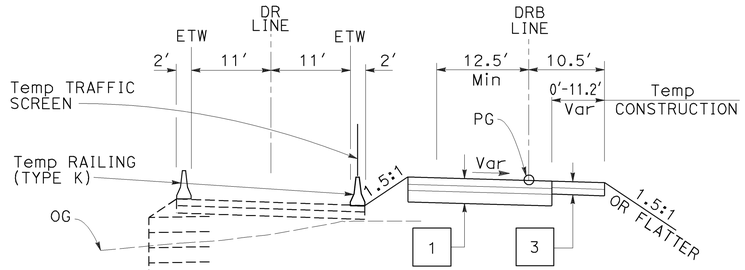

STAGE 1, PHASE 3
DR 110+00 TO 111+00

STAGE 2
DRB 63+32 TO 64+28

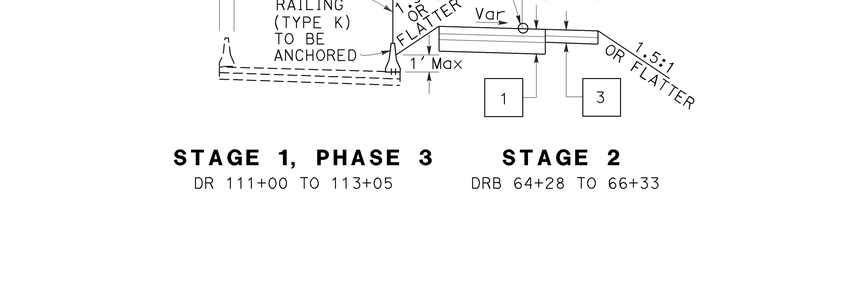

STAGE 1, PHASE 3
DR 107+80 TO 110+00

STAGE 2
DRB 61+26 TO 63+32

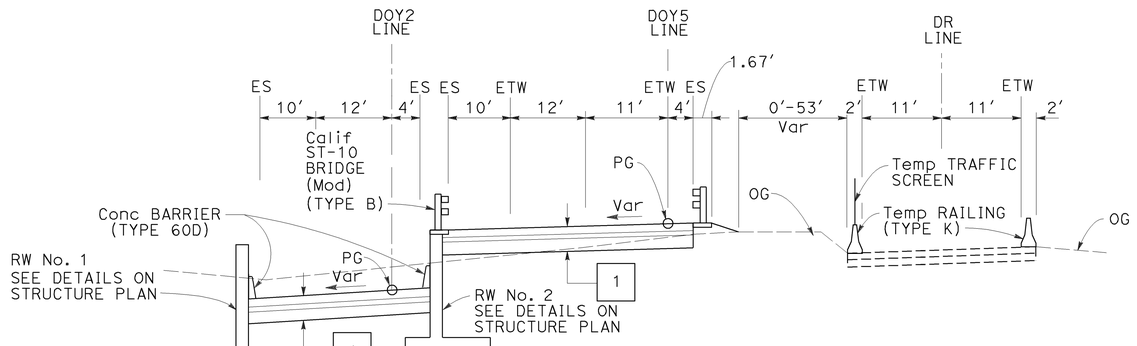

STAGE 2
DOY5 103+37 TO 106+07

STAGE 1, PHASE 3
DR 107+80 TO 105+00

FOR NOTES, ABBREVIATIONS &/OR LEGEND, SEE SHEET SC-35

STAGE CONSTRUCTION
TYPICAL CROSS SECTIONS
NO SCALE

SC-36

STATE OF CALIFORNIA - DEPARTMENT OF TRANSPORTATION
DESIGN
FUNCTIONAL SUPERVISOR: ABOLFAZL EMADZADEH
CALCULATED-DESIGNED BY: DOMINIC CHIN
CHECKED BY: ROMY ACOB
REVISED BY: DC
DATE REVISED: 6/10/09

LAST REVISION DATE PLOTTED => 23-JUL-2009
TIME PLOTTED => 10:15
06-11-09

BORDER LAST REVISED 4/11/2008
RELATIVE BORDER SCALE IS IN INCHES 0 1 2 3
USERNAME => trpierce
DGN FILE => 416373ma036.dgn
CU 04242
EA 163731

Dist	COUNTY	ROUTE	POST MILES TOTAL PROJECT	SHEET No.	TOTAL SHEETS
04	SF	101,1	9.2/9.8, 6.8/7.1	136	567

REGISTERED CIVIL ENGINEER — 6-08-09 DATE

7-20-09
PLANS APPROVAL DATE

Hossein Khodabakhsh No. 71650 Exp. 12-31-09 CIVIL — REGISTERED PROFESSIONAL ENGINEER — STATE OF CALIFORNIA

THE STATE OF CALIFORNIA OR ITS OFFICERS OR AGENTS SHALL NOT BE RESPONSIBLE FOR THE ACCURACY OR COMPLETENESS OF SCANNED COPIES OF THIS PLAN SHEET.

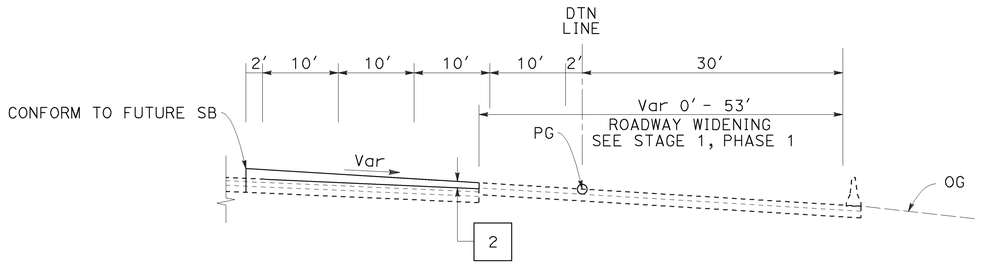

STAGE 1, PHASE 3

DTN 101+10 TO 109+90

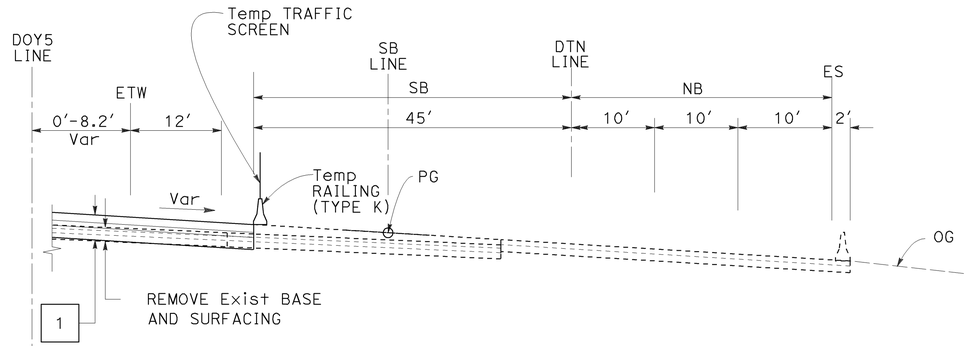

SB 105+68 TO 107+50

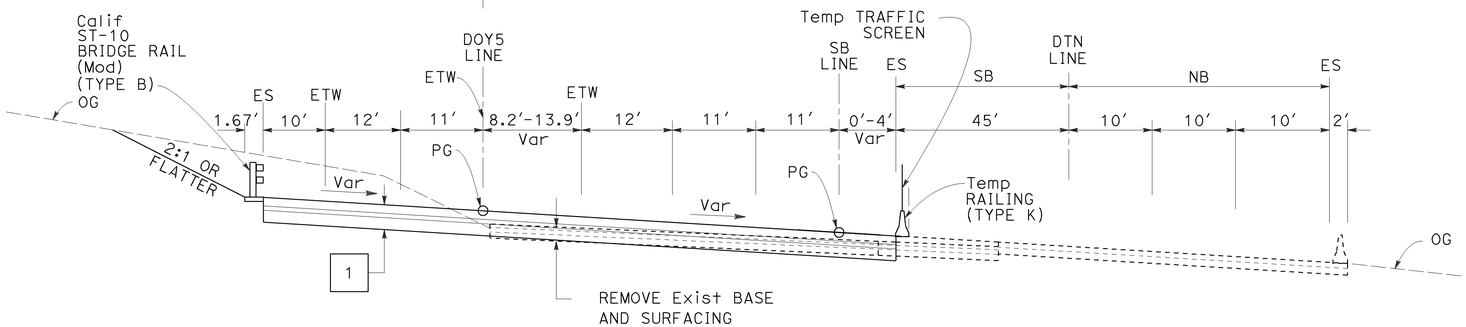

STAGE 2

SB 104+53.05 TO 105+68

STAGE CONSTRUCTION
TYPICAL CROSS SECTIONS
NO SCALE

FOR NOTES, ABBREVIATIONS &/OR LEGEND, SEE SHEET SC-35

SC-37

STATE OF CALIFORNIA - DEPARTMENT OF TRANSPORTATION
DESIGN
FUNCTIONAL SUPERVISOR: ABOLFAZL EMADZADEH
CALCULATED-DESIGNED BY: DOMINIC CHIN
CHECKED BY: ROMY ACOB
REVISED BY: DC
DATE REVISED: 6/10/09

LAST REVISION DATE PLOTTED => 22-JUL-2009
TIME PLOTTED => 06:22
06-09-09

BORDER LAST REVISED 4/11/2008
RELATIVE BORDER SCALE IS IN INCHES 0 1 2 3
USERNAME => trmikesl
DGN FILE => 416373ma037.dgn
CU 04242
EA 163731

Dist	COUNTY	ROUTE	POST MILES TOTAL PROJECT	SHEET No.	TOTAL SHEETS
04	SF	101,1	9.2/9.8, 6.8/7.1	137	567

REGISTERED CIVIL ENGINEER — DATE 6-08-09

Hossein Khodabakhsh, No. 71650, Exp. 12-31-09, CIVIL, REGISTERED PROFESSIONAL ENGINEER, STATE OF CALIFORNIA

PLANS APPROVAL DATE 7-20-09

THE STATE OF CALIFORNIA OR ITS OFFICERS OR AGENTS SHALL NOT BE RESPONSIBLE FOR THE ACCURACY OR COMPLETENESS OF SCANNED COPIES OF THIS PLAN SHEET.

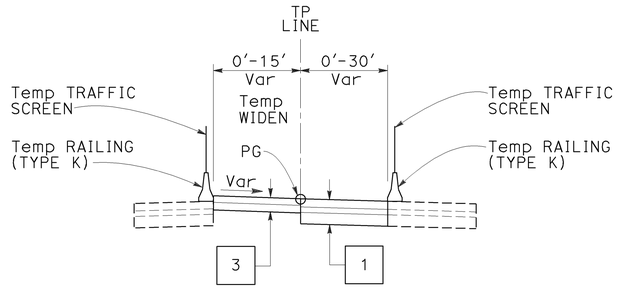

STAGE 5
TP 63+94 TO 66+33

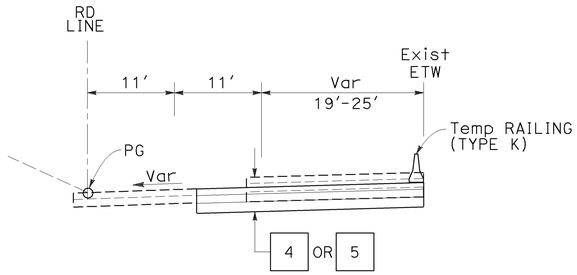

STAGE 4
RD 107+66 TO 110+00

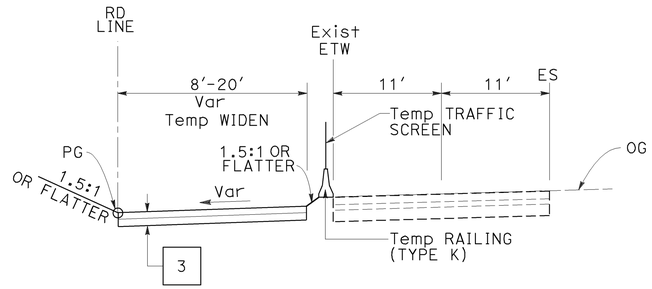

STAGE 3
RD 106+50 TO 108+10

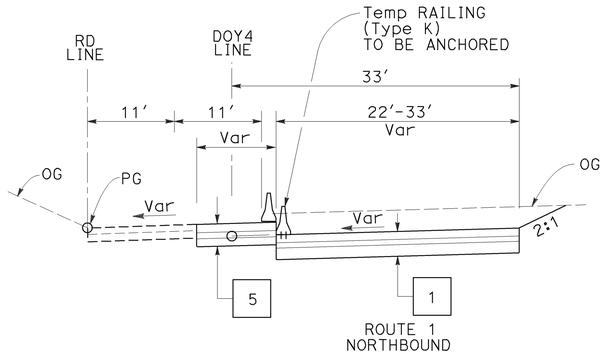

STAGE 4
RD 106+50 TO 107+66
DOY4 106+50 TO 107+66

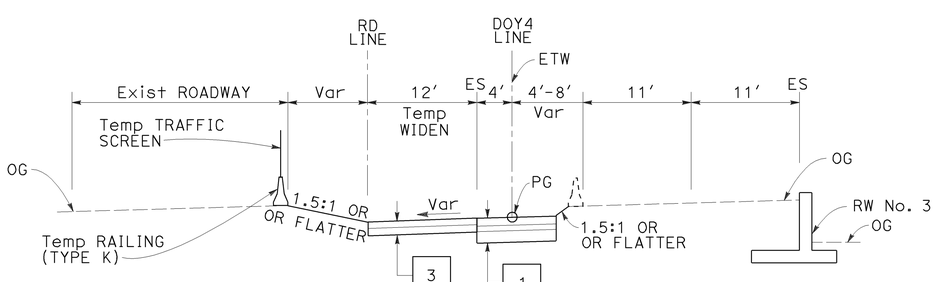

STAGE 3
RD 103+90 TO 106+50
DOY4 103+90 TO 106+50

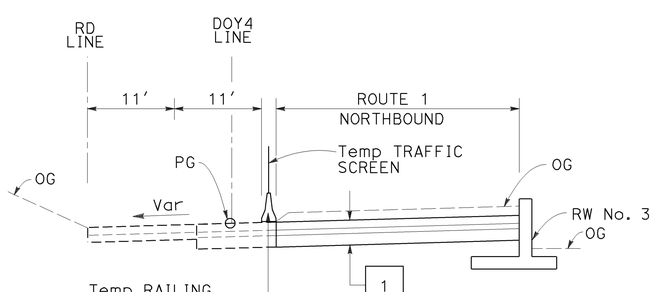

STAGE 4
DOY4 103+90 TO 106+50
(RD 103+90 TO 106+50)

FOR NOTES, ABBREVIATIONS &/OR LEGEND, SEE SHEET SC-35

STAGE CONSTRUCTION
TYPICAL CROSS SECTIONS
NO SCALE

SC-38

STATE OF CALIFORNIA - DEPARTMENT OF TRANSPORTATION
DESIGN
FUNCTIONAL SUPERVISOR: ABOLFAZL EMADZADEH
CALCULATED-DESIGNED BY: DOMINIC CHIN
CHECKED BY: ROMY ACOB
REVISED BY: DC
DATE REVISED: 6/10/09

LAST REVISION DATE PLOTTED => 22-JUL-2009
TIME PLOTTED => 06:22

BORDER LAST REVISED 4/11/2008
RELATIVE BORDER SCALE IS IN INCHES 0 1 2 3
USERNAME => trmikesl
DGN FILE => 416373ma038.dgn
CU 04242
EA 163731

Dist	COUNTY	ROUTE	POST MILES TOTAL PROJECT	SHEET No.	TOTAL SHEETS
04	SF	101,1	9.2/9.8, 6.8/7.1	138	567

REGISTERED CIVIL ENGINEER 6-08-09 DATE

Hossein Khodabakhsh No. 71650 Exp. 12-31-09 CIVIL — REGISTERED PROFESSIONAL ENGINEER — STATE OF CALIFORNIA

7-20-09
PLANS APPROVAL DATE

THE STATE OF CALIFORNIA OR ITS OFFICERS OR AGENTS SHALL NOT BE RESPONSIBLE FOR THE ACCURACY OR COMPLETENESS OF SCANNED COPIES OF THIS PLAN SHEET.

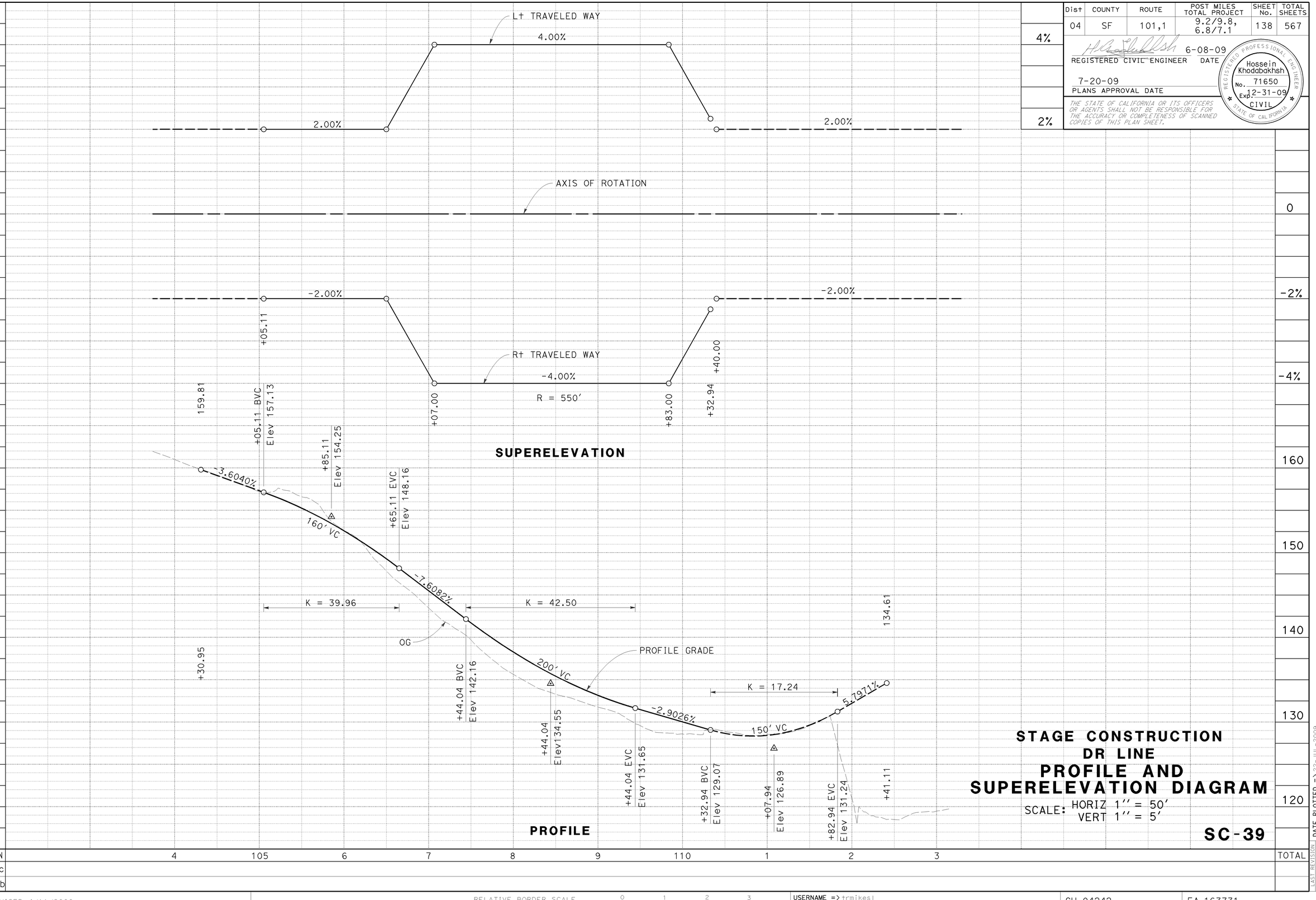

4% 2% 0 -2% -4%

160 150 140 130 120

CALCULATED-DESIGNED BY: GEORGE GIN
CHECKED BY: ROGER DAYOAN
REVISED BY: GG
DATE REVISED: 6/10/09
FUNCTIONAL SUPERVISOR: ABOLFAZL EMADZADEH

STATE OF CALIFORNIA - DEPARTMENT OF TRANSPORTATION
DESIGN

LAST REVISION: DATE PLOTTED => 22-JUL-2009
06-09-09 TIME PLOTTED => 06:22

BORDER LAST REVISED 4/11/2008

RELATIVE BORDER SCALE IS IN INCHES 0 1 2 3

USERNAME => trmikesl
DGN FILE => 416373ma039.dgn

CU 04242

EA 163731

Dist	COUNTY	ROUTE	POST MILES TOTAL PROJECT	SHEET No.	TOTAL SHEETS
04	SF	101,1	9.2/9.8, 6.8/7.1	139	567

REGISTERED CIVIL ENGINEER 6-08-09 DATE

7-20-09
PLANS APPROVAL DATE

REGISTERED PROFESSIONAL ENGINEER Hossein Khodabakhsh No. 71650 Exp. 12-31-09 CIVIL STATE OF CALIFORNIA

THE STATE OF CALIFORNIA OR ITS OFFICERS OR AGENTS SHALL NOT BE RESPONSIBLE FOR THE ACCURACY OR COMPLETENESS OF SCANNED COPIES OF THIS PLAN SHEET.

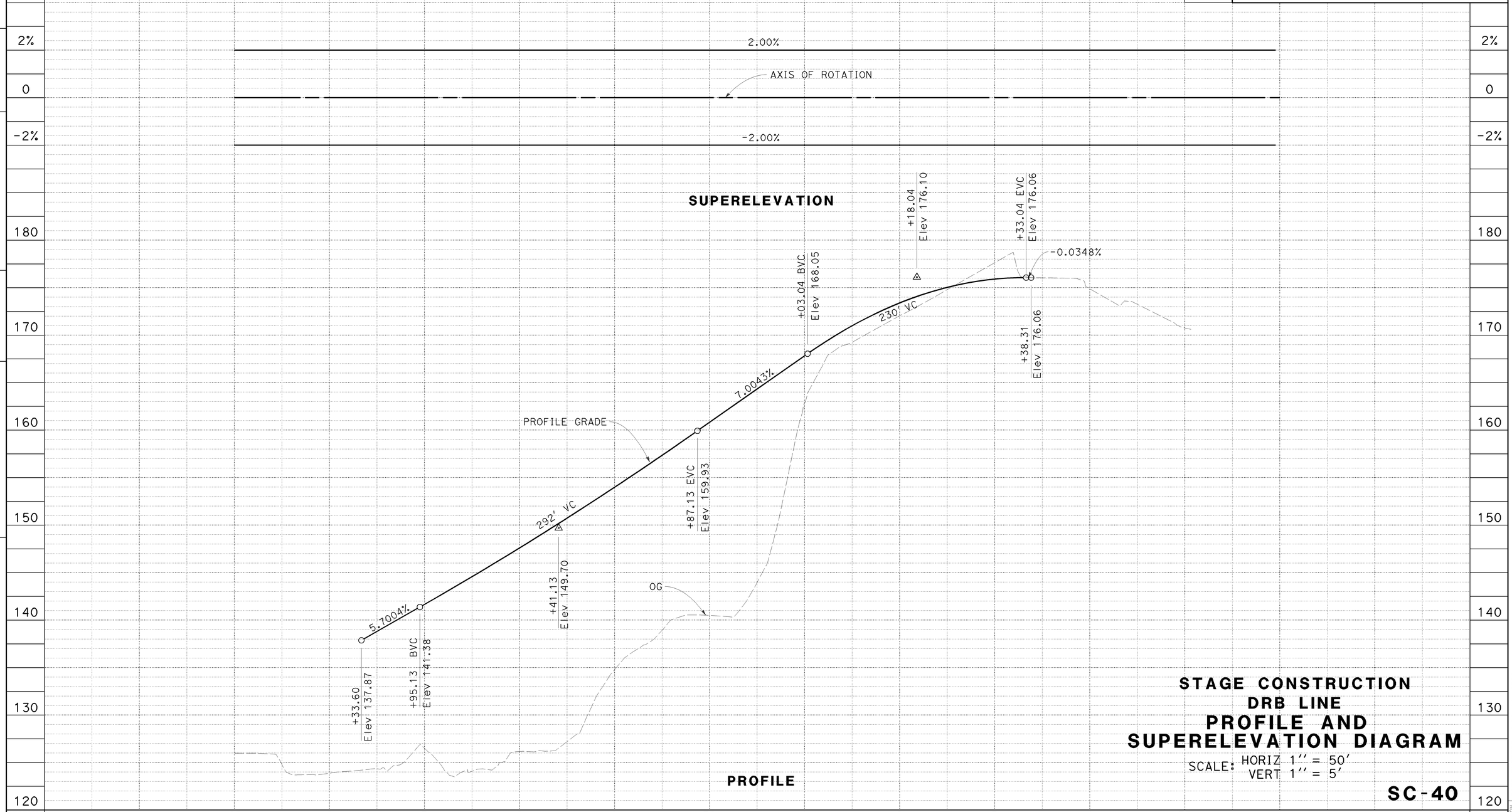

STAGE CONSTRUCTION
DRB LINE
PROFILE AND SUPERELEVATION DIAGRAM

SCALE: HORIZ 1'' = 50'
VERT 1'' = 5'

SC-40

STATE OF CALIFORNIA - DEPARTMENT OF TRANSPORTATION
Caltrans
DESIGN

FUNCTIONAL SUPERVISOR: ABOLFAZL EMADZADEH
CALCULATED-DESIGNED BY: GEORGE GIN
CHECKED BY: ROGER DAYOAN
REVISED BY: GG
DATE REVISED: 6/10/09

LAST REVISION 06-09-09
DATE PLOTTED => 22-JUL-2009
TIME PLOTTED => 06:41

BORDER LAST REVISED 4/11/2008
RELATIVE BORDER SCALE IS IN INCHES 0 1 2 3
USERNAME => trmnguye
DGN FILE => 416373ma040.dgn
CU 04242
EA 163731

Dist	COUNTY	ROUTE	POST MILES TOTAL PROJECT	SHEET No.	TOTAL SHEETS
04	SF	101,1	9.2/9.8, 6.8/7.1	140	567

REGISTERED CIVIL ENGINEER 6-08-09 DATE

7-20-09 PLANS APPROVAL DATE

Hossein Khodabakhsh No. 71650 Exp. 12-31-09 CIVIL — REGISTERED PROFESSIONAL ENGINEER — STATE OF CALIFORNIA

THE STATE OF CALIFORNIA OR ITS OFFICERS OR AGENTS SHALL NOT BE RESPONSIBLE FOR THE ACCURACY OR COMPLETENESS OF SCANNED COPIES OF THIS PLAN SHEET.

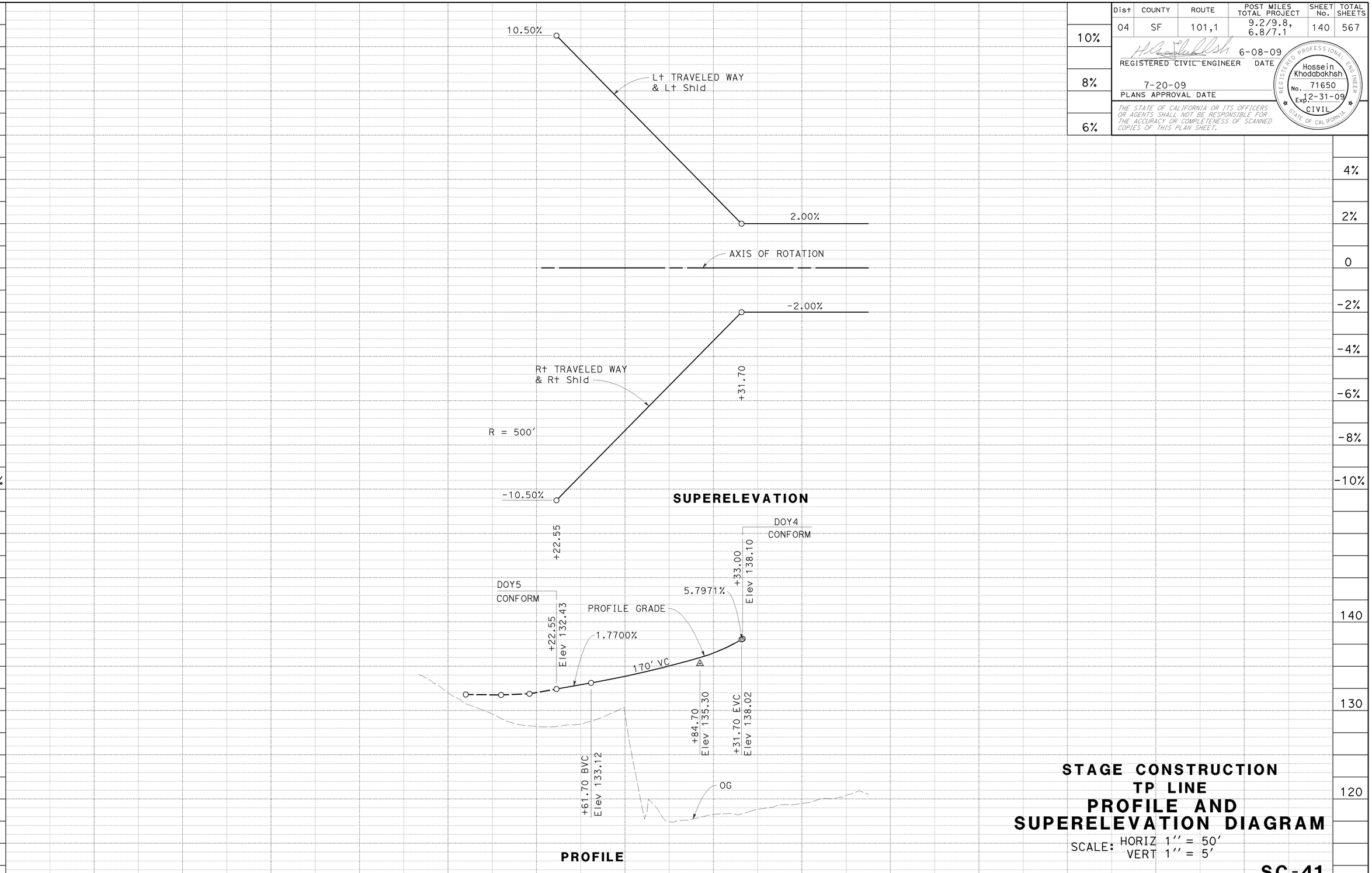

STAGE CONSTRUCTION
TP LINE
PROFILE AND SUPERELEVATION DIAGRAM

SCALE: HORIZ 1'' = 50'
VERT 1'' = 5'

SC-41

STATION	3	4	65	6	7	8	TOTAL
CY Exc							
CY Emb							

STATE OF CALIFORNIA - DEPARTMENT OF TRANSPORTATION
DESIGN
FUNCTIONAL SUPERVISOR: ABOLFAZL EMADZADEH
CALCULATED-DESIGNED BY
CHECKED BY
REVISED BY: GG
DATE REVISED: 6/10/09
GEORGE GIN
ROGER DAYOAN

LAST REVISION DATE PLOTTED => 22-JUL-2009
TIME PLOTTED => 06:48
06-09-09

BORDER LAST REVISED 4/11/2008

RELATIVE BORDER SCALE IS IN INCHES 0 1 2 3

USERNAME => trmnguye
DGN FILE => 416373ma041.dgn

CU 04242

EA 163731

Dist	COUNTY	ROUTE	POST MILES TOTAL PROJECT	SHEET No.	TOTAL SHEETS
04	SF	101,1	9.2/9.8, 6.8/7.1	141	567

REGISTERED CIVIL ENGINEER — 6-08-09 DATE

Hossein Khodabakhsh No. 71650 Exp. 12-31-09 CIVIL — REGISTERED PROFESSIONAL ENGINEER — STATE OF CALIFORNIA

7-20-09
PLANS APPROVAL DATE

THE STATE OF CALIFORNIA OR ITS OFFICERS OR AGENTS SHALL NOT BE RESPONSIBLE FOR THE ACCURACY OR COMPLETENESS OF SCANNED COPIES OF THIS PLAN SHEET.

REVISED BY: GG — DATE REVISED: 6/10/09

CALCULATED-DESIGNED BY: GEORGE GIN

CHECKED BY: ROGER DAYOAN

FUNCTIONAL SUPERVISOR: ABOLFAZL EMADZADEH

STATE OF CALIFORNIA - DEPARTMENT OF TRANSPORTATION

Caltrans®

DESIGN

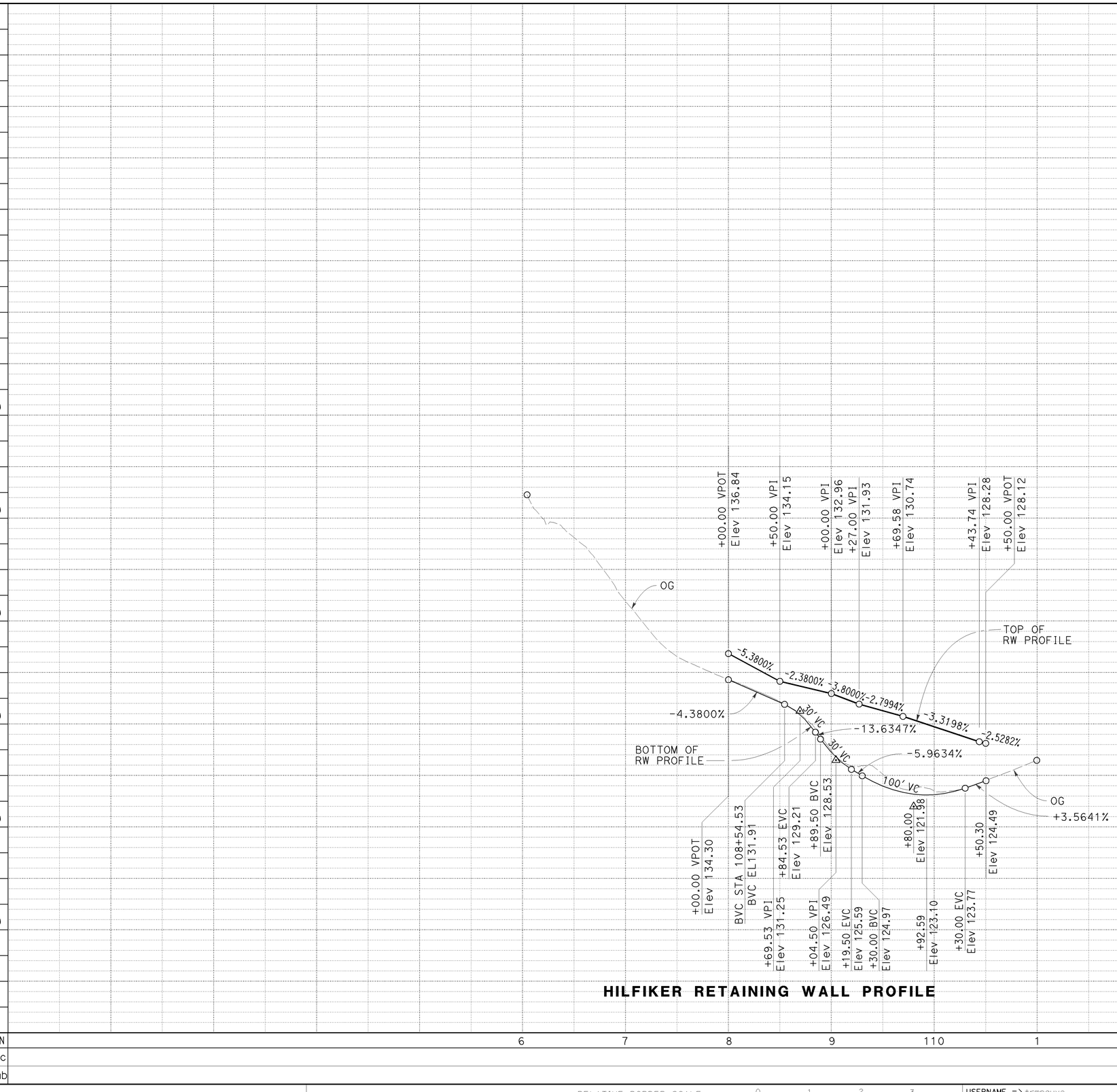

HILFIKER RETAINING WALL PROFILE

STAGE CONSTRUCTION
HRW LINE
PROFILE AND SUPERELEVATION DIAGRAM

SCALE: HORIZ 1'' = 50'
VERT 1'' = 5'

SC-42

STATION	6	7	8	9	110	1	TOTAL
CY Exc							
CY Emb							

LAST REVISION — DATE PLOTTED => 22-JUL-2009 — TIME PLOTTED => 06:41

06-09-09

BORDER LAST REVISED 4/11/2008

RELATIVE BORDER SCALE IS IN INCHES 0 1 2 3

USERNAME => trmnguye
DGN FILE => 416373ma042.dgn

CU 04242

EA 163731

Dist	COUNTY	ROUTE	POST MILES TOTAL PROJECT	SHEET No.	TOTAL SHEETS
04	SF	101,1	9.2/9.8, 6.8/7.1	142	567

REGISTERED CIVIL ENGINEER — DATE 6-08-09

7-20-09
PLANS APPROVAL DATE

REGISTERED PROFESSIONAL ENGINEER — Hossein Khodabakhsh — No. 71650 — Exp. 12-31-09 — CIVIL — STATE OF CALIFORNIA

THE STATE OF CALIFORNIA OR ITS OFFICERS OR AGENTS SHALL NOT BE RESPONSIBLE FOR THE ACCURACY OR COMPLETENESS OF SCANNED COPIES OF THIS PLAN SHEET.

TRAFFIC STRIPES, PAVEMENT MARKING AND PAVEMENT MARKERS (STAGE CONSTRUCTION)

SHEET No.	STATION LIMITS	LOCATION	DETAIL No. OR PAVEMENT MARKING	REMOVE PAVEMENT MARKER	REMOVE PAINTED TRAFFIC STRIPE		REMOVE PAINTED PAVEMENT MARKING	REMOVE THERMOPLASTIC TRAFFIC STRIPE		REMOVE THERMOPLASTIC PAVEMENT MARKING	PAVEMENT MARKER RETROREFLECTIVE				PAINT TRAFFIC STRIPE (2-COAT)			PAINT PAVEMENT MARKING (2-COAT)	THERMOPLASTIC TRAFFIC STRIPE	
					YELLOW	WHITE		YELLOW	WHITE		TYPE C	TYPE D	TYPE G	TYPE H	4'' WHITE	4'' YELLOW	8'' WHITE		4'' WHITE	4'' YELLOW
				EA	LF		SQFT	LF		SQFT	EA				LF			SQFT	LF	
STAGE 1 - PHASE 1																				
SC-2	L 14+87 TO L 19+35	R†, L†		38				900	900											
SC-2	DRB 55+85 TO 62+50	R†, L†		21				230	1060	51										
SC-2	DRB 56+94 TO 62+50	R†, L†	9										13		556					
SC-2	DRB 55+85 TO 56+94	L†	12										4		108					
SC-2	DRB 58+27 TO 62+50	L†	25A											19		423				
SC-2	DRB 56+94 TO 62+00	R†, L†	27B												506					
SC-2	DRB 56+94 TO 58+27	L†	36										7				133			
SC-2	DTS 94+00 TO 99+50	L†		196					1270	84										
SC-2	DTS 94+00 TO 99+50	L†	12										39		1650					
SC-2	DTS 95+50 TO 97+30	L†	27B												180					
SC-2	DTS 97+30 TO 98+60	L†	36										7				130			
SC-2	DTS 98+60 TO 99+50	L†	38B										10				90			
SC-3	L 10+00 TO 14+87	R†, L†		18				948	927	22										
SC-4	DTS 99+50 TO SB 112+00	L†		113					590	42										
SC-4	DTS 99+50 TO SB 112+00	L†	12										28		1250					
SC-4	DTS 99+50 TO 101+55	L†	12										18		615					
SC-4	DTS 99+50 TO 101+55	L†	38B										20				200			
SC-4	DTS 101+55 TO SB 112+00	L†	37								32						450			
STAGE 1 - PHASE 2																				
SC-5	DOY4 103+50 TO 110+00	R†		42				650	840											
SC-5	DOY4 103+50 TO 110+00	R†	9										15		650					
SC-5	DOY4 103+50 TO 110+00	R†	25A											29		650				
SC-5	DOY4 103+50 TO 110+00	R†	27B												650					
SC-6	DOY4 102+20 TO 103+50	R†		9				130	170											
SC-6	DOY4 102+20 TO 103+50	R†	9										4		130					
SC-6	DOY4 102+20 TO 103+50	R†	25A											7		130				
SC-6	DOY4 102+20 TO 103+50	R†	27B												130					
STAGE 1 - PHASE 3																				
SC-8	DRB 55+86 TO 65+00	R†, L†		72	430	1180		250	1125											
SC-8	DTN 94+00 TO 105+50	R†, L†		382		870			1892	83										
SC-8	DTN 94+00 TO 105+50	R†, L†	12										100		4600					
SC-8	DTN 94+00 TO 100+68	R†, L†	22									58				668				
SC-8	DTN 94+00 TO 105+50	R†, L†	27B												2228					
SC-8	DTN 100+68 TO 105+50	R†, L†	25											24		964				
SC-8	DTN 101+88 TO 102+60	L†	36										4				72			
SC-8	DTN 102+60 TO 105+50	L†	38B										28				290			
SC-8	DR 104+80 TO 111+70	R†, L†	9										16		690					
SC-8	DR 104+80 TO 111+70	L†	25A											27		618				
SHEET SUBTOTAL				891	430	2050		3108	8774	282	32	58	313	106	13943	3453	1365			
SHEET TOTAL				891	430	2050		3108	8774	282	509				17396		1365			

STAGE CONSTRUCTION QUANTITIES

SCQ-1

CT	7/04/09	CHRIS TSENG	ROGER DAYOAN
CT	6/10/09	CALCULATED-DESIGNED BY	CHECKED BY
REVISED BY	DATE REVISED	FUNCTIONAL SUPERVISOR	ABOLFAZL EMADZADEH

STATE OF CALIFORNIA - DEPARTMENT OF TRANSPORTATION — DESIGN

Caltrans

LAST REVISION — DATE PLOTTED => 22-JUL-2009 — TIME PLOTTED => 06:41 — 07-09-09

BORDER LAST REVISED 4/11/2008

RELATIVE BORDER SCALE IS IN INCHES 0 1 2 3

USERNAME => trmnguye
DGN FILE => 416373mc001.dgn

CU 04242

EA 163731

Dist	COUNTY	ROUTE	POST MILES TOTAL PROJECT	SHEET No.	TOTAL SHEETS
04	SF	101,1	9.2/9.8, 6.8/7.1	143	567

REGISTERED CIVIL ENGINEER — DATE 6-08-09

PLANS APPROVAL DATE 7-20-09

REGISTERED PROFESSIONAL ENGINEER — Hossein Khodabakhsh — No. 71650 — Exp. 12-31-09 — CIVIL — STATE OF CALIFORNIA

THE STATE OF CALIFORNIA OR ITS OFFICERS OR AGENTS SHALL NOT BE RESPONSIBLE FOR THE ACCURACY OR COMPLETENESS OF SCANNED COPIES OF THIS PLAN SHEET.

TRAFFIC STRIPES, PAVEMENT MARKING AND PAVEMENT MARKERS (STAGE CONSTRUCTION)

SHEET No.	STATION LIMITS	LOCATION	DETAIL No. OR PAVEMENT MARKING	REMOVE PAVEMENT MARKER	REMOVE PAINTED TRAFFIC STRIPE		REMOVE PAINTED PAVEMENT MARKING	REMOVE THERMOPLASTIC TRAFFIC STRIPE		REMOVE THERMOPLASTIC PAVEMENT MARKING	PAVEMENT MARKER RETROREFLECTIVE				PAINT TRAFFIC STRIPE (2-COAT)			PAINT PAVEMENT MARKING (2-COAT)	THERMOPLASTIC TRAFFIC STRIPE	
					YELLOW	WHITE		YELLOW	WHITE		TYPE C	TYPE D	TYPE G	TYPE H	4'' WHITE	4'' YELLOW	8'' WHITE		4'' WHITE	4'' YELLOW
				EA	LF		SQFT	LF		SQFT	EA				LF			SQFT	LF	
	STAGE 1 - PHASE 3																			
SC-8	DR 104+80 TO 105+52	L†	36										4				72			
SC-8	DR 104+80 TO 111+70	R†	27B												690					
SC-9	DR 111+70 TO 113+00	R†, L†		3				130	170											
SC-9	DR 111+70 TO 113+00	R†, L†	9										4		130					
SC-9	DR 111+70 TO 113+00	L†	25A											7		130				
SC-9	DR 111+70 TO 113+00	R†	27B												130					
SC-10	DTN 105+50 TO 111+85	R†, L†		154		960			830											
SC-10	DTN 105+50 TO 111+85	R†, L†	12										56		2252					
SC-10	DTN 105+50 TO 111+85	R†, L†	25											30		1270				
SC-10	DTN 105+50 TO 111+85	R†, L†	27B												1086					
SC-10	DTN 105+50 TO 111+85	L†	37								38						550			
SC-10	DTN 105+50 TO 111+85	L†	38B										10				85			
SC-10	DTN 106+35 TO 107+79	L†	14A											8	288					
	STAGE 3																			
SC-16	DTN 101+88 TO 105+50	L†		37		814														
SC-16	DTN 101+88 TO 105+50	L†	27B												362					
SC-16	DRB 55+85 TO 65+00	R†, L†	9										21		915					
SC-16	DRB 55+85 TO 65+00	L†	25A											40		915				
SC-16	DRB 55+85 TO 65+00	R†	27B												915					
SC-17	DRB 65+00 TO 75+00	R†, L†		3					465											
SC-17	DRB 65+00 TO 75+00	R†, L†	9										22		1000					
SC-17	DRB 65+00 TO 75+00	L†	25A											43		1000				
SC-17	DRB 65+00 TO 75+00	R†	27B												1000					
SC-18	DTN 105+50 TO 107+55	L†	27B												205					
SC-18	DTN 105+50 TO 111+85	L†		48		600														
SC-18	DTN 107+55 TO 108+90	L†	36										7				135			
SC-18	DTN 108+90 TO 111+85	L†	38B										28				295			
SC-18	DRB 52+45 TO 55+85	R†, L†	9										9		340					
SC-18	DRB 52+45 TO 55+85	L†	25A											10		205				
SC-18	DRB 52+45 TO 55+85	R†	27B												340					
SC-18	DRB 52+45 TO 55+85	L†	36										7				135			
	STAGE 4																			
SC-20	RD 103+50 TO 110+00	R†, L†		42	650															
SC-20	RD 103+50 TO 110+00	L†	9										15		650					
SC-20	RD 103+50 TO 110+00	L†	25A											29		650				
SC-20	RD 103+50 TO 110+00	R†	27B												650					
SHEET SUBTOTAL				287	650	2374		130	1465		38		183	167	10953	4170	1272			
SHEET TOTAL				287	650	2374		130	1465		388				15123		1272			

STAGE CONSTRUCTION QUANTITIES

SCQ-2

CALCULATED-DESIGNED BY	CHECKED BY	REVISED BY	DATE REVISED
CHRIS TSENG	ROGER DAYOAN	CT	7/04/09
		CT	6/10/09

FUNCTIONAL SUPERVISOR: ABOLFAZL EMADZADEH

STATE OF CALIFORNIA - DEPARTMENT OF TRANSPORTATION — DESIGN — Caltrans

LAST REVISION 07-09-09 | DATE PLOTTED => 22-JUL-2009 | TIME PLOTTED => 06:41

BORDER LAST REVISED 4/11/2008 | RELATIVE BORDER SCALE IS IN INCHES 0 1 2 3 | USERNAME => trmnguye | DGN FILE => 416373mc002.dgn | CU 04242 | EA 163731

Dist	COUNTY	ROUTE	POST MILES TOTAL PROJECT	SHEET No.	TOTAL SHEETS
04	SF	101,1	9.2/9.8, 6.8/7.1	144	567

REGISTERED CIVIL ENGINEER — 6-08-09 DATE

7-20-09
PLANS APPROVAL DATE

Hossein Khodabakhsh
No. 71650
Exp. 12-31-09
CIVIL
REGISTERED PROFESSIONAL ENGINEER
STATE OF CALIFORNIA

THE STATE OF CALIFORNIA OR ITS OFFICERS OR AGENTS SHALL NOT BE RESPONSIBLE FOR THE ACCURACY OR COMPLETENESS OF SCANNED COPIES OF THIS PLAN SHEET.

TRAFFIC STRIPES, PAVEMENT MARKING AND PAVEMENT MARKERS (STAGE CONSTRUCTION)

SHEET No.	STATION LIMITS	LOCATION	DETAIL No. OR PAVEMENT MARKING	REMOVE PAVEMENT MARKER	REMOVE PAINTED TRAFFIC STRIPE		REMOVE PAINTED PAVEMENT MARKING	REMOVE THERMOPLASTIC TRAFFIC STRIPE		REMOVE THERMOPLASTIC PAVEMENT MARKING	PAVEMENT MARKER RETROREFLECTIVE				PAINT TRAFFIC STRIPE (2-COAT)			PAINT PAVEMENT MARKING (2-COAT)	THERMOPLASTIC TRAFFIC STRIPE	
					YELLOW	WHITE		YELLOW	WHITE		TYPE C	TYPE D	TYPE G	TYPE H	4'' WHITE	4'' YELLOW	8'' WHITE		4'' WHITE	4'' YELLOW
				EA	LF		SQFT	LF		SQFT	EA				LF			SQFT	LF	
STAGE 4																				
SC-21	DOY4 93+50 TO 102+20	R†		63				870	1125											
SC-21	RD 102+20 TO 103+50	R†, L†		9				130	190											
SC-21	RD 102+20 TO 103+50	L†	9										4		130					
SC-21	RD 102+20 TO 103+50	L†	25A											6		130				
SC-21	RD 102+20 TO 103+50	R†	27B												130					
SC-21	DRB 71+00 TO 75+00	L†		26				400	520											
SC-21	DRB 71+00 TO 75+00	L†	9										10		400					
SC-21	DRB 71+00 TO 75+00	L†	25A											18		400				
SC-21	DRB 71+00 TO 75+00	L†	27B												400					
STAGE 5																				
SC-24	D4T 103+50 TO 107+80	R†, L†		27	430	560														
SC-24	D4T 103+50 TO 107+80	R†	9										10		430					
SC-24	D4T 103+50 TO 107+80	L†	25A											19		430				
SC-24	D4T 103+50 TO 107+80	R†	27B												430					
SC-25	D4T 93+50 TO 103+50	R†	9										22		1000					
SC-25	D4T 93+50 TO 103+50	L†	25A											43		1000				
SC-25	D4T 93+50 TO 103+50	R†	27B												1000					
STAGE 6																				
SC-28	DRB 55+85 TO 62+00	L†	TYPE VI ARROW															126		
SC-28	TP 62+00 TO 65+00	R†, L†		28	300	390														
SC-28	TP 62+00 TO 65+00	L†	25A											14		300				
SC-28	TP 62+00 TO 65+00	R†, L†	27B												300					
SC-29	TP 65+00 TO 75+00	L†	9										7		282					
SC-29	TP 65+00 TO 75+00	L†	25A											43		1000				
SC-29	TP 65+00 TO 75+00	R†, L†	27B												1000					
SC-29	TP 71+00 TO 73+00	R†		14	200	260														
STAGE 7																				
SC-32	DRB 58+25 TO 65+00	R†	TYPE VI ARROW				126													
SC-32	DRB 58+25 TO 65+00	L†	9										16		675					
SC-32	DRB 62+00 TO 65+00	R†		13	300	300														
SC-32	DRB 62+00 TO 65+00	L†	25A											14		300				
SC-32	DRB 62+00 TO 65+00	R†	27B												300					
SHEET SUBTOTAL				180	1230	1510	126	1400	1835				69	157	6477	3560		126		
SHEET TOTAL				180	1230	1510	126	1400	1835		226				10037			126		

STAGE CONSTRUCTION QUANTITIES

SCQ-3

REVISED BY	DATE REVISED
CT	6/10/09
CT	7/04/09

CHRIS TSENG — CALCULATED-DESIGNED BY
ROGER DAYOAN — CHECKED BY
ABOLFAZL EMADZADEH — FUNCTIONAL SUPERVISOR

STATE OF CALIFORNIA - DEPARTMENT OF TRANSPORTATION
DESIGN

LAST REVISION | DATE PLOTTED => 22-JUL-2009
07-09-09 | TIME PLOTTED => 06:41

BORDER LAST REVISED 4/11/2008

RELATIVE BORDER SCALE IS IN INCHES 0 1 2 3

USERNAME => trmnguye
DGN FILE => 416373mc003.dgn

CU 04242

EA 163731

Dist	COUNTY	ROUTE	POST MILES TOTAL PROJECT	SHEET No.	TOTAL SHEETS
04	SF	101,1	9.2/9.8, 6.8/7.1	145	567

REGISTERED CIVIL ENGINEER — DATE: 6-08-09

PLANS APPROVAL DATE: 7-20-09

Hossein Khodabakhsh, No. 71650, Exp. 12-31-09, CIVIL — REGISTERED PROFESSIONAL ENGINEER — STATE OF CALIFORNIA

THE STATE OF CALIFORNIA OR ITS OFFICERS OR AGENTS SHALL NOT BE RESPONSIBLE FOR THE ACCURACY OR COMPLETENESS OF SCANNED COPIES OF THIS PLAN SHEET.

TRAFFIC STRIPES, PAVEMENT MARKING AND PAVEMENT MARKERS (STAGE CONSTRUCTION)

SHEET No.	STATION LIMITS	LOCATION	DETAIL No. OR PAVEMENT MARKING	REMOVE PAVEMENT MARKER	REMOVE PAINTED TRAFFIC STRIPE		REMOVE PAINTED PAVEMENT MARKING	REMOVE THERMOPLASTIC TRAFFIC STRIPE		REMOVE THERMOPLASTIC PAVEMENT MARKING	PAVEMENT MARKER RETROREFLECTIVE				PAINT TRAFFIC STRIPE (2-COAT)			PAINT PAVEMENT MARKING (2-COAT)	THERMOPLASTIC TRAFFIC STRIPE	
					YELLOW	WHITE		YELLOW	WHITE		TYPE C	TYPE D	TYPE G	TYPE H	4'' WHITE	4'' YELLOW	8'' WHITE		4'' WHITE	4'' YELLOW
				EA	LF		SQFT	LF		SQFT	EA				LF			SQFT	LF	
STAGE 7																				
SC-33	DRB 65+00 TO 68+60	Lt	9										9		360					
SC-33	DRB 65+00 TO 68+60	Lt	25A											16		360				
SC-33	DRB 65+00 TO 68+60	Rt, Lt	27B												360					
SC-33	DRB 65+00 TO 75+00	Lt		6	1000	1085														
SC-33	DRB 68+60 TO 75+00	Lt	9										15						640	
SC-33	DRB 68+60 TO 75+00	Lt	25A											28						640
SC-33	DRB 68+60 TO 75+00	Lt	27B																640	
SC-33	D4T 93+50 TO 103+50	Rt, Lt		54	1000	1300														
SC-33	D4T 93+50 TO 103+50	Rt, Lt	9										22		1000					
SC-33	D4T 93+50 TO 103+50	Lt	25A											43		1000				
SC-33	D4T 93+50 TO 103+50	Rt, Lt	27B												1000					
SHEET SUBTOTAL				60	2000	2385							46	87	2720	1360			1280	640
SHEET TOTAL				60	2000	2385							133		4080				1920	
TOTAL FROM SHEET SCQ-1				891	430	2050		3108	8774	282			509		17396		1365			
TOTAL FROM SHEET SCQ-2				287	650	2374		130	1465				388		15123		1272			
TOTAL FROM SHEET SCQ-3				180	1230	1510	126	1400	1835				226		10037			126		
GRAND TOTAL				1418	4310	8319	126	4638	12074	282			1256		46636		2637	126	1920	

STAGE CONSTRUCTION QUANTITIES

SCQ-4

REVISED BY	DATE REVISED
CT	7/04/09
CT	6/10/09

CALCULATED-DESIGNED BY: CHRIS TSENG
CHECKED BY: ROGER DAYOAN

FUNCTIONAL SUPERVISOR: ABOLFAZL EMADZADEH

STATE OF CALIFORNIA - DEPARTMENT OF TRANSPORTATION
Caltrans® DESIGN

LAST REVISION: DATE PLOTTED => 22-JUL-2009, TIME PLOTTED => 06:41

Dist	COUNTY	ROUTE	POST MILES TOTAL PROJECT	SHEET No.	TOTAL SHEETS
04	SF	101,1	9.2/9.8, 6.8/7.1	146	567

6-08-09
REGISTERED CIVIL ENGINEER DATE

Hossein Khodabakhsh No. 71650 Exp. 12-31-09 CIVIL — REGISTERED PROFESSIONAL ENGINEER — STATE OF CALIFORNIA

7-20-09
PLANS APPROVAL DATE

THE STATE OF CALIFORNIA OR ITS OFFICERS OR AGENTS SHALL NOT BE RESPONSIBLE FOR THE ACCURACY OR COMPLETENESS OF SCANNED COPIES OF THIS PLAN SHEET.

TEMPORARY ROADWAY QUANTITIES

SHEET No.	LOCATION/STATION	ROADWAY EXCAVATION (TYPE Z-2) (AERIALLY DEPOSITED LEAD)	ROADWAY EXCAVATION (NATURALLY OCCURING ASBESTOS)	EMBANKMENT (N)	IMPORTED BORROW	CLASS 3 AGGREGATE BASE	TEMPORARY EARTH RETAINING STRUCTURE	COLD PLANE ASPHALT CONCRETE PAVEMENT (20' MAXIMUM)	TACK COAT	HOT MIX ASPHALT
		CY					SQFT	SQYD	TON	
STAGE1	DRB 71+05 TO 73+20	110		229	229	247			0.4	185
	DR 105+00 TO 108+10	850		734	734	746			1.1	559
	DR 108+10 TO 110+50						12119		0.4	280
	DOY4 102+23 TO 107+90	50		1056	1056	109			0.2	81
	DTN 101+10 TO 107+90							3792	2.0	512
STAGE 2	DRB 61+26 TO 66+33	20		596	596	41			1.5	462
STAGE 3	SB 100+60 TO 102+60	230		574	574	136			0.2	102
	DR 105+00 TO 108+10		734							
STAGE 4	DOY4 106+50 TO 110+00	200							0.9	440
	DOY4 95+40 TO 97+71	330		818	818	87			0.3	112
STAGE 5	TP 63+94 TO 66+33	200		1006	1006	166			0.5	247
STAGE 6	DRB 65+00 TO 66+35		596							
	DRB 70+80 TO 74+00		229							
STAGE 7	DOY4 95+40 TO 97+71		818							
TOTAL		1990	2377	5013	5013	1532	12119	3792	7.5	2980

(N) NOT A SEPARATE PAY ITEM. FOR INFORMATION ONLY.

CONSTRUCTION AREA SIGNS STAGE CONSTRUCTION

SIGN No. ☐	SIGN CODE	PANEL SIZE INCH x INCH	SIGN MESSAGE	No OF EA	POST SIZE INCH x INCH	REMARKS
1	SPEC	102 x 54	Golden Gate Br-Downtown....	1	2-6 x 6	REMOVE SIGN WHEN NB2 TO SB101 RAMP IS CLOSED
2	W13-3 (25)	36 x 48		3	1-4 x 6	
3	W1-2a L (35)	48 x 48		4	1-4 x 6	
4	M3-3	24 x 12		1		INSTALLATION DETAILS SEE CS-9
	G26-2 (CA)	28 x 24	101			
5	SPEC	216 x 60	19th Ave - 1 SOUTH - Golden....	1		INSTALL ON EXISTING SIGN STRUCTURE
6	R18A (CA)	66 x 48	RIGHT LANE MUST EXIT	2	2-4 x 6	
7	W4-7 L	48 x 48	THRU TRAFFIC MERGE LEFT	3	1-4 x 6	
8	SPEC	108 x 102	101 SOUTH - Downtown - SOUTH	1	2-6 x 8	
9	SPEC	72 x 48	LAST SF - EXIT - ¼ MILE	1	2-4 x 6	
10	SPEC	84 x 60	1 SOUTH - 19th Ave....	2	2-4 x 6	
11	W1-2 L	48 x 48		1	1-4 x 6	
	W13-1 (35)	30 x 30				
12						DELETED
13	W4-3	48 x 48		1	1-4 x 6	
14	SPEC	84 x 36	TRUCKS, RV'S - TRAILERS USE....	1	2-4 x 6	
15				1		DELETED
16	W1-8 L	24 x 30		13	1-4 x 4	
17	W1-4 L	48 x 48		2		INSTALLATION DETAILS SEE CS-10
	W13-1 (35)	30 x 30				
18	W1-4 R	48 x 48		1	1-4 x 6	
	W13-1 (35)	30 x 30				
19	W4-2 R	48 x 48		1	1-4 x 6	
20	W9-1 R	48 x 48	RIGHT LANE ENDS	1	1-4 x 6	
21						DELETED
22	W1-4 L	48 x 48		1		INSTALLATION DETAILS SEE CS-10
	W13-1 (35)	30 x 30				
23	W1-1A R (25)	48 x 48		1	1-4 x 6	REMOVE SIGN WHEN NB1 TO SB101 RAMP IS CLOSED
24	R18A (CA) MOD	72 x 48	2 RIGHT LANE MUST EXIT	1	2-4 x 6	

STAGE CONSTRUCTION QUANTITIES

SCQ-5

CALCULATED-DESIGNED BY	CHECKED BY	REVISED BY	DATE REVISED
ROGER DUAN	ROGER DAYOAN	RD	6/10/09

FUNCTIONAL SUPERVISOR: ABOLFAZL EMADZADEH

STATE OF CALIFORNIA - DEPARTMENT OF TRANSPORTATION — DESIGN — Caltrans®

LAST REVISION: DATE PLOTTED => 23-JUL-2009; TIME PLOTTED => 10:50; 06-09-09

BORDER LAST REVISED 4/11/2008

RELATIVE BORDER SCALE IS IN INCHES 0 1 2 3

USERNAME => trmartin
DGN FILE => 416373mc005.dgn

CU 04242

EA 163731

Dist	COUNTY	ROUTE	POST MILES TOTAL PROJECT	SHEET No.	TOTAL SHEETS
04	SF	101,1	9.2/9.8, 6.8/7.1	147	567

REGISTERED CIVIL ENGINEER — 6-08-09 DATE

Hossein Khodabakhsh No. 71650 Exp. 12-31-09 CIVIL — REGISTERED PROFESSIONAL ENGINEER — STATE OF CALIFORNIA

7-20-09
PLANS APPROVAL DATE

THE STATE OF CALIFORNIA OR ITS OFFICERS OR AGENTS SHALL NOT BE RESPONSIBLE FOR THE ACCURACY OR COMPLETENESS OF SCANNED COPIES OF THIS PLAN SHEET.

BARRICADES

SHEET No.	LOCATION	TYPE III BARRICADE
		EA
SC-2	McDOWELL Ave 200' Lt SB 92+20	8
SC-2	McDOWELL Ave 205' Rt SB 95+00	8
SC-2	LINCOLN Blvd 150' Rt SB 99+00	8
SC-3	L 8+00	8
SC-3	STOREY Ave 75' Lt DOY4 100+80	8
SC-12	L LINE 100' Rt DOY4 106+50	8
SC-12	L LINE 140' Rt DOY4 108+00	8
TOTAL		54

TEMPORARY CRASH CUSHION MODULE

SHEET No.	LOCATION	ARRAY TU 11
		EA
L-4 (SAME AS SHOWN ON SC-18)	DRB 53+60	11
L-5	SB 118+00	11
SC-8	DR 105+90	11
TOTAL		33

TEMPORARY RAILING & TEMPORARY TRAFFIC SCREEN

STAGE No.	STATION	LOCATION	Temp RAILING (TYPE K)	Temp TRAFFIC SCREEN
			LF	
STAGE 1, PHASE 1	CRISSY FIELD Ave	20' Lt SB 84+90	50	
	McDOWELL Ave	110' Lt SB 92+20	50	
	McDOWELL Ave	140' Rt SB 93+50	50	
	LINCOLN Blvd	18' Rt SB 99+10	50	
	DOY4 102+20 TO 107+90	Lt	570	570
	DTS 94+60 TO 99+00	Rt	440	440
	DTN 101+60 TO 110+40	Rt	880	880
	DRB 70+70 TO 73+20	Lt	250	250
	L 9+50		50	
	STOREY Ave	50' Lt DOY4 100+80	50	
STAGE 1 PHASE 1 SUBTOTAL			2440	2140
STAGE 1, PHASE 2	DR 105+00 TO 111+80	Rt	680	680
	DOY4 102+20 TO 108+70	Lt	650	650
	DOY4 102+20 TO 102+80	Rt	60	60
STAGE 1 PHASE 2 SUBTOTAL			1390	1390
STAGE 1, PHASE 3	DTN 101+00 TO 111+60	40' Rt DTN	1060	1060
	DR 105+90 TO 113+00	11' Lt DR	710	0
	DR 105+00 TO 113+00	11' Rt DR	800	800
	DOY4 105+10 TO 106+80	30' Rt DOY4	170	170
	SB 101+20	20' Rt SB	60	60
	DTN 102+40 TO 110+40	40' Rt DTN	800	800
STAGE 1 PHASE 3 SUBTOTAL			3600	2890
STAGE 3	SB 101+20 TO 105+50	Rt	430	430
	DRB 53+80 TO 66+20	Lt	1240	1240
	DRB 70+80 TO 73+50	Lt	270	270
	DRB 71+00 TO 73+50	Rt	250	
STAGE 3 SUBTOTAL			2190	1940
STAGE 4	RD 102+20 TO 109+60	Rt	740	740
	RD 107+00 TO 110+00	Lt	300	
	DOY4 95+20 TO 97+50	Rt	230	230
STAGE 4 SUBTOTAL			1270	970
STAGE 5	DOY4 105+20 TO 107+80	Rt	260	
	D4T 95+60 TO 106+10	CL	1050	1050
	D4T 99+00 TO 103+50	Rt	450	450
	DOY5 98+00 TO 100+10	Lt	210	210
STAGE 5 SUBTOTAL			1970	1710
STAGE 6	TP 62+00 TO 64+00	Lt	200	
	TP 61+20 TO 74+20	Rt	1300	1300
	TP 71+00 TO 73+00	Lt	200	0
	TP 71+00 TO 73+00	Rt	200	0
STAGE 6 SUBTOTAL			1900	1300
STAGE 7	DOY5 98+00 TO 103+50	Rt	550	550
	DOY4 95+20 TO 99+50	Rt	430	430
STAGE 7 SUBTOTAL			980	980
TOTAL			15740	13320

STAGE CONSTRUCTION QUANTITIES

SCQ-6

CALCULATED-DESIGNED BY	CHECKED BY	FUNCTIONAL SUPERVISOR	REVISED BY	DATE REVISED
ROGER DUAN	ROGER DAYOAN	ABOLFAZL EMADZADEH	RD	6/10/09

STATE OF CALIFORNIA - DEPARTMENT OF TRANSPORTATION
DESIGN

LAST REVISION 06-09-09 | DATE PLOTTED => 23-JUL-2009 | TIME PLOTTED => 10:50

Dist	COUNTY	ROUTE	POST MILES TOTAL PROJECT	SHEET No.	TOTAL SHEETS
04	SF	101,1	9.2/9.8, 6.8/7.1	148	567

REGISTERED CIVIL ENGINEER — DATE: 6-08-09

Hossein Khodabakhsh
No. 71650
Exp. 12-31-09
CIVIL
REGISTERED PROFESSIONAL ENGINEER
STATE OF CALIFORNIA

7-20-09
PLANS APPROVAL DATE

THE STATE OF CALIFORNIA OR ITS OFFICERS OR AGENTS SHALL NOT BE RESPONSIBLE FOR THE ACCURACY OR COMPLETENESS OF SCANNED COPIES OF THIS PLAN SHEET.

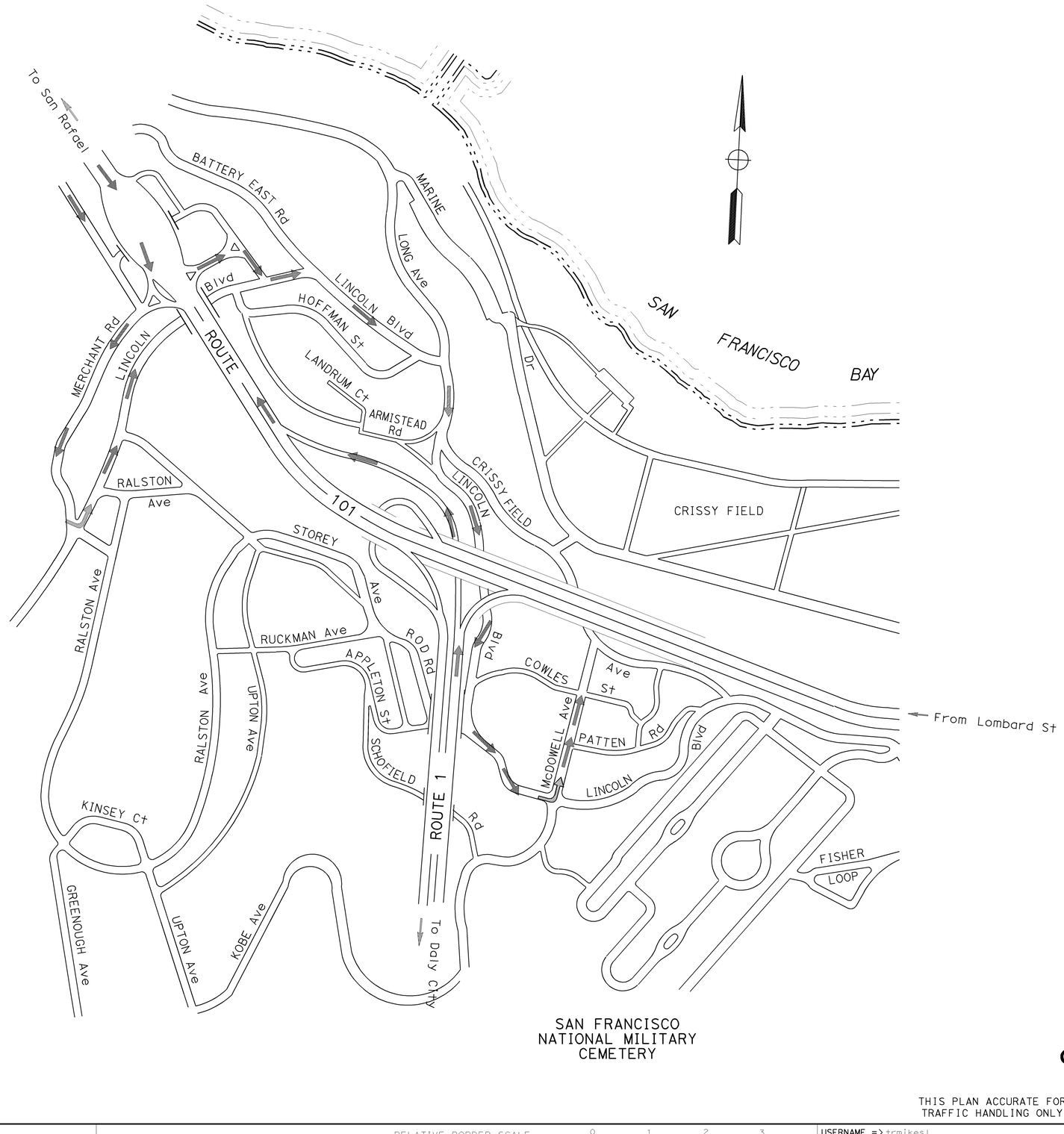

SAN FRANCISCO
NATIONAL MILITARY
CEMETERY

TRAFFIC HANDLING PLAN
CONSTRUCTION TRUCK TRAFFIC

SCALE: 1'' = 50'

THIS PLAN ACCURATE FOR
TRAFFIC HANDLING ONLY

TH-1

CALCULATED-DESIGNED BY	
CHECKED BY	
REVISED BY	HK
DATE REVISED	6/10/09
HOSSEIN KHODABAKHSH	
MANSUE MAMOODI	
FUNCTIONAL SUPERVISOR	
ABOLFAZL EMADZADEH	

STATE OF CALIFORNIA - DEPARTMENT OF TRANSPORTATION
Caltrans®
DESIGN

LAST REVISION | DATE PLOTTED => 22-JUL-2009 | TIME PLOTTED => 06:58
06-02-09

BORDER LAST REVISED 4/11/2008

RELATIVE BORDER SCALE IS IN INCHES 0 1 2 3

USERNAME => trmikesl
DGN FILE => 416373md001.dgn

CU 04242

EA 163731

Dist	COUNTY	ROUTE	POST MILES TOTAL PROJECT	SHEET No.	TOTAL SHEETS
04	SF	101,1	9.2/9.8, 6.8/7.1	149	567

REGISTERED CIVIL ENGINEER — 3-10-09 DATE

7-20-09
PLANS APPROVAL DATE

Paul M. Leung No. 40875 Exp. 3-31-11 CIVIL — REGISTERED PROFESSIONAL ENGINEER — STATE OF CALIFORNIA

THE STATE OF CALIFORNIA OR ITS OFFICERS OR AGENTS SHALL NOT BE RESPONSIBLE FOR THE ACCURACY OR COMPLETENESS OF SCANNED COPIES OF THIS PLAN SHEET.

FOR ACCURATE RIGHT OF WAY AND ACCESS DATA, CONTACT RIGHT OF WAY ENGINEERING AT THE DISTRICT OFFICE.

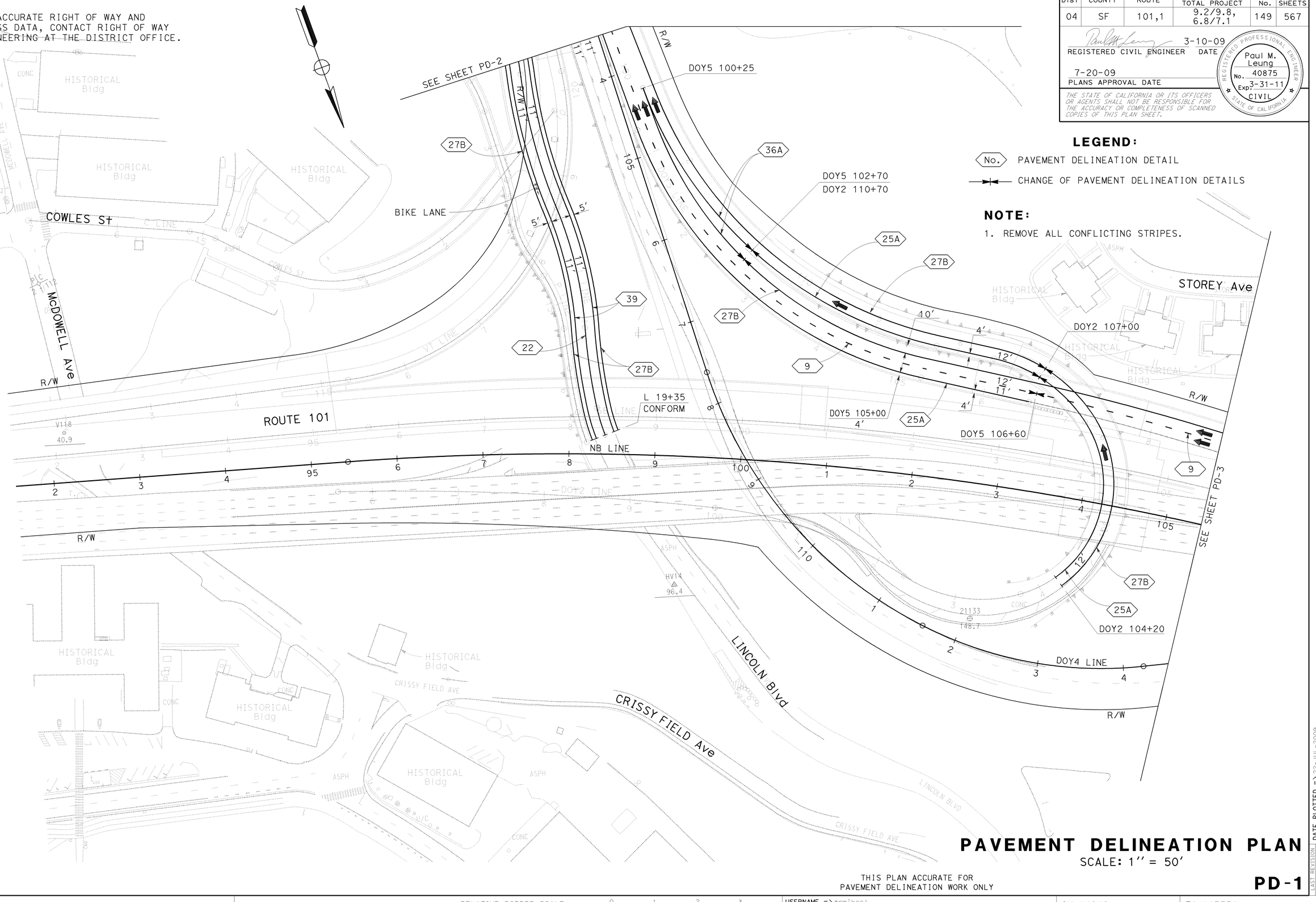

LEGEND:

No. PAVEMENT DELINEATION DETAIL

CHANGE OF PAVEMENT DELINEATION DETAILS

NOTE:

1. REMOVE ALL CONFLICTING STRIPES.

PAVEMENT DELINEATION PLAN

SCALE: 1'' = 50'

THIS PLAN ACCURATE FOR PAVEMENT DELINEATION WORK ONLY

PD-1

REVISED BY	DATE REVISED
CT	6/10/09

CHRIS TSENG — CALCULATED-DESIGNED BY
PAUL LEUNG — CHECKED BY
RAMIEL F. GUTIERREZ — FUNCTIONAL SUPERVISOR

STATE OF CALIFORNIA - DEPARTMENT OF TRANSPORTATION
TRAFFIC
Caltrans

LAST REVISION 06-11-09 | DATE PLOTTED => 22-JUL-2009 | TIME PLOTTED => 06:58

BORDER LAST REVISED 4/11/2008 | RELATIVE BORDER SCALE IS IN INCHES 0 1 2 3 | USERNAME => trmikesl | DGN FILE => 416373na001.dgn | CU 04242 | EA 163731

Dist	COUNTY	ROUTE	POST MILES TOTAL PROJECT	SHEET No.	TOTAL SHEETS
04	SF	101,1	9.2/9.8, 6.8/7.1	150	567

REGISTERED CIVIL ENGINEER 3-10-09 DATE

7-20-09
PLANS APPROVAL DATE

REGISTERED PROFESSIONAL ENGINEER
Paul M. Leung
No. 40875
Exp. 3-31-11
CIVIL
STATE OF CALIFORNIA

THE STATE OF CALIFORNIA OR ITS OFFICERS OR AGENTS SHALL NOT BE RESPONSIBLE FOR THE ACCURACY OR COMPLETENESS OF SCANNED COPIES OF THIS PLAN SHEET.

FOR ACCURATE RIGHT OF WAY AND ACCESS DATA, CONTACT RIGHT OF WAY ENGINEERING AT THE DISTRICT OFFICE.

FOR NOTES, ABBREVIATIONS &/OR LEGEND, SEE SHEET PD-1

PAVEMENT DELINEATION PLAN

SCALE: 1'' = 50'

THIS PLAN ACCURATE FOR PAVEMENT DELINEATION WORK ONLY

PD-2

STATE OF CALIFORNIA - DEPARTMENT OF TRANSPORTATION
Caltrans
TRAFFIC

FUNCTIONAL SUPERVISOR	RAMIEL F. GUTIERREZ
CALCULATED-DESIGNED BY	CHRIS TSENG
CHECKED BY	PAUL LEUNG
REVISED BY	CT
DATE REVISED	6/10/09

LAST REVISION 06-12-09
DATE PLOTTED => 22-JUL-2009
TIME PLOTTED => 06:58

FOR ACCURATE RIGHT OF WAY AND
ACCESS DATA, CONTACT RIGHT OF WAY
ENGINEERING AT THE DISTRICT OFFICE.

Dist	COUNTY	ROUTE	POST MILES TOTAL PROJECT	SHEET No.	TOTAL SHEETS
04	SF	101,1	9.2/9.8, 6.8/7.1	151	567

REGISTERED CIVIL ENGINEER — 3-10-09 DATE

Paul M. Leung No. 40875 Exp 3-31-11 CIVIL — REGISTERED PROFESSIONAL ENGINEER — STATE OF CALIFORNIA

7-20-09
PLANS APPROVAL DATE

THE STATE OF CALIFORNIA OR ITS OFFICERS OR AGENTS SHALL NOT BE RESPONSIBLE FOR THE ACCURACY OR COMPLETENESS OF SCANNED COPIES OF THIS PLAN SHEET.

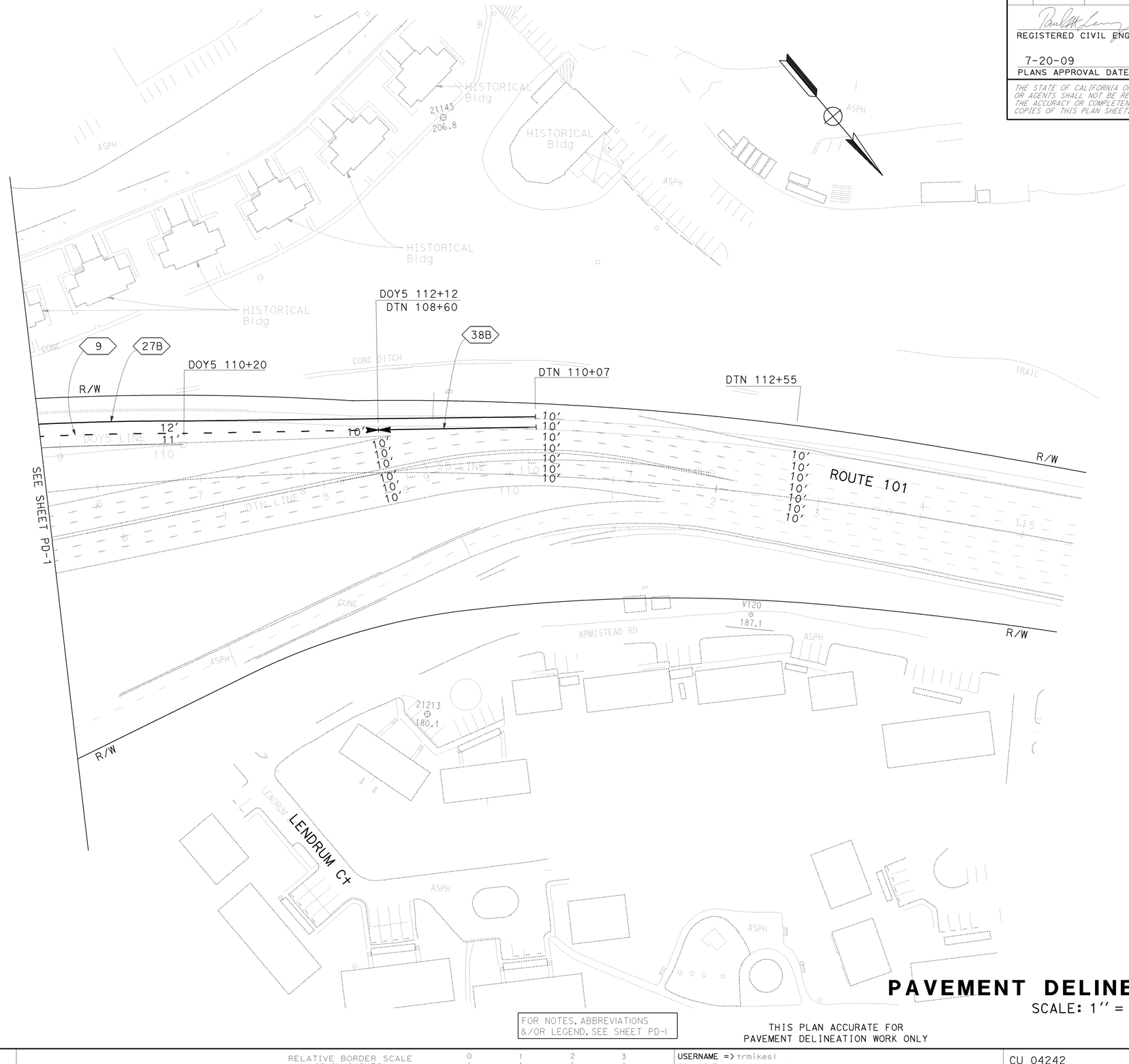

FOR NOTES, ABBREVIATIONS &/OR LEGEND, SEE SHEET PD-1

THIS PLAN ACCURATE FOR PAVEMENT DELINEATION WORK ONLY

PAVEMENT DELINEATION PLAN

SCALE: 1″ = 50′

PD-3

STATE OF CALIFORNIA - DEPARTMENT OF TRANSPORTATION
TRAFFIC
FUNCTIONAL SUPERVISOR: RAMIEL F. GUTIERREZ
CALCULATED-DESIGNED BY
CHECKED BY
CHRIS TSENG
PAUL LEUNG
REVISED BY: CT
DATE REVISED: 6/10/09

LAST REVISION
DATE PLOTTED => 22-JUL-2009
TIME PLOTTED => 06:58
06-11-09

BORDER LAST REVISED 4/11/2008
RELATIVE BORDER SCALE IS IN INCHES 0 1 2 3
USERNAME => trmikesl
DGN FILE => 416373na003.dgn
CU 04242
EA 163731

Dist	COUNTY	ROUTE	POST MILES TOTAL PROJECT	SHEET No.	TOTAL SHEETS
04	SF	101,1	9.2/9.8, 6.8/7.1	152	567

6-08-09
REGISTERED CIVIL ENGINEER DATE

7-20-09
PLANS APPROVAL DATE

REGISTERED PROFESSIONAL ENGINEER
Hossein Khodabakhsh
No. 71650
Exp. 12-31-09
CIVIL
STATE OF CALIFORNIA

THE STATE OF CALIFORNIA OR ITS OFFICERS OR AGENTS SHALL NOT BE RESPONSIBLE FOR THE ACCURACY OR COMPLETENESS OF SCANNED COPIES OF THIS PLAN SHEET.

TRAFFIC STRIPES, PAVEMENT MARKING AND PAVEMENT MARKERS

SHEET No.	STATION LIMITS	LOCATION	DETAIL No. OR PAVEMENT MARKING	REMOVE PAVEMENT MARKER	REMOVE TRAFFIC STRIPE		PAVEMENT MARKER				PAINT TRAFFIC STRIPE (2-COAT)		THERMOPLASTIC TRAFFIC STRIPE				THERMOPLASTIC PAVEMENT MARKING
							NON-REFLECTIVE	RETROREFLECTIVE			4 INCH	8 INCH	4 INCH		6 INCH	8 INCH	WHITE
					YELLOW	WHITE	A	D	G	H	WHITE	WHITE	WHITE	YELLOW	WHITE	WHITE	
				EA	LF		EA				LF						SQFT
PD-1	DOY5 99+50 TO 108+82	Rt, Lt		59	932	1204											
PD-1	DOY5 99+50 TO 108+82	Lt	9						21				932				
PD-1	DOY5 99+50 TO 108+82	Rt	25A							31				710			
PD-1	DOY5 99+50 TO 108+82	Lt	27B										932				
PD-1	DOY5 99+50 TO 108+82	Lt	36A						24							490	
PD-1	DOY2 104+20 TO 110+70	Lt	25A							29				650			
PD-1	DOY2 104+20 TO 110+70	Rt	27B										650				
PD-1	L 14+87 TO 19+35	Rt, Lt					7										
PD-1	L 14+87 TO 19+35	Rt, Lt	22					40						896			
PD-1	L 14+87 TO 19+35	Rt, Lt	27B										896				
PD-1	L 14+87 TO 19+35	Rt, Lt	39												896		
PD-2	L 10+00 TO 14+87	Rt, Lt	21											514			
PD-2	L 10+00 TO 14+87	Rt, Lt	22					22						470			
PD-2	L 10+00 TO 14+87	Rt, Lt	27B										520				
PD-2	L 10+00 TO 14+87	Rt, Lt	39												634		
PD-2	L 10+00 TO 14+87	Rt, Lt	12'' LIMIT LINE														44
PD-2	L 10+00 TO 14+87	Rt, Lt	"BIKE"														15
PD-2	L 10+00 TO 14+87	Rt, Lt	"LANE"														18
PD-2	L 10+00 TO 14+87	Rt, Lt	BIKE LANE ARROW														21
PD-2	L 10+00 TO 14+87	Rt, Lt	"STOP"														66
PD-2	L 10+00 TO 14+87	Rt, Lt	12'' CROSSWALK														162
PD-2	L 10+00 TO 14+87	Rt, Lt					1										
PD-2	DOY5 95+90 TO 99+50	Rt, Lt		23	360	465											
PD-2	DOY5 95+90 TO 99+50	Lt	9						9				360				
PD-2	DOY5 95+90 TO 99+50	Rt	25A							16				360			
PD-2	DOY5 95+90 TO 99+50	Lt	27B										360				
PD-3	DTN 108+60 TO 110+07	Lt		14		294											
PD-3	DTN 108+60 TO 110+07	Lt	27B										147				
PD-3	DTN 108+60 TO 110+07	Lt	38B						16			147					
PD-3	DOY5 108+82 TO 112+12	Lt		7		430											
PD-3	DOY5 108+82 TO 112+12	Lt	9						8		330						
PD-3	DOY5 108+82 TO 112+12	Lt	27B										330				
SUBTOTAL				103	1292	2393	8	62	78	76	330	147	5127	3600	1530	490	326
TOTAL				103	1292	2393	8	216			330	147	8727		1530	490	326

NOTE: FOR ADDITIONAL QUANTITIES, SEE STAGE CONSTRUCTION SHEETS.

PAVEMENT DELINEATION QUANTITIES

PDQ-1

REVISED BY: CT | DATE REVISED: 6/10/09
CALCULATED-DESIGNED BY: CHRIS TSENG | CHECKED BY: PAUL LEUNG
FUNCTIONAL SUPERVISOR: ABOLFAZL EMADZADEH
STATE OF CALIFORNIA - DEPARTMENT OF TRANSPORTATION
DESIGN

LAST REVISION | DATE PLOTTED => 22-JUL-2009
06-12-09 | TIME PLOTTED => 06:58

BORDER LAST REVISED 4/11/2008
RELATIVE BORDER SCALE IS IN INCHES 0 1 2 3
USERNAME => trmikesl
DGN FILE => 416373nc001.dgn
CU 04242
EA 163731

Dist	COUNTY	ROUTE	POST MILES TOTAL PROJECT	SHEET No.	TOTAL SHEETS
04	SF	101,1	9.2/9.8, 6.8/7.1	153	567

REGISTERED CIVIL ENGINEER — 6-08-09 DATE

Jerilyn L. Struven, No. 49964, Exp. 12-31-10, CIVIL, REGISTERED PROFESSIONAL ENGINEER, STATE OF CALIFORNIA

7-20-09
PLANS APPROVAL DATE

THE STATE OF CALIFORNIA OR ITS OFFICERS OR AGENTS SHALL NOT BE RESPONSIBLE FOR THE ACCURACY OR COMPLETENESS OF SCANNED COPIES OF THIS PLAN SHEET.

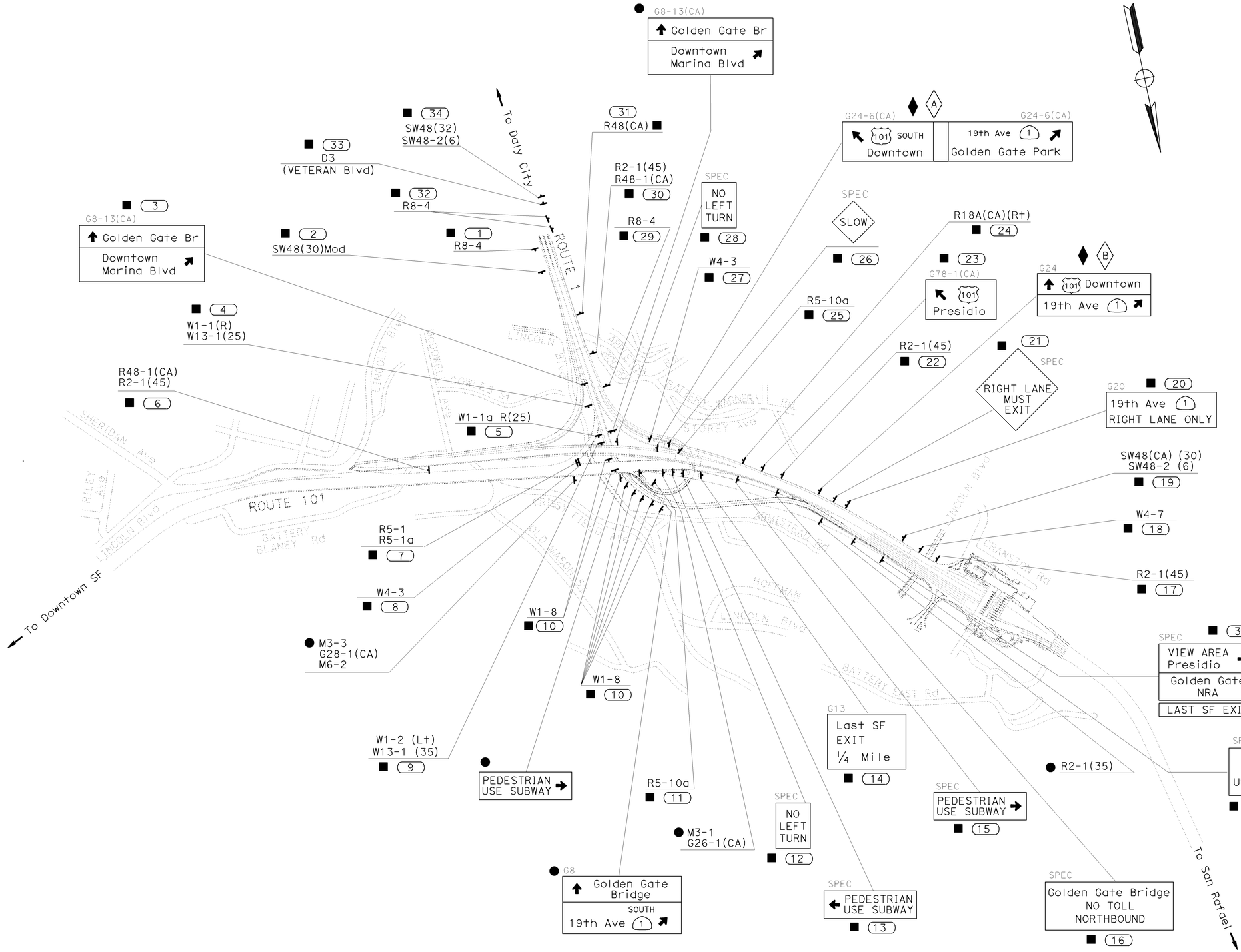

LEGEND:

- (No.) ROADSIDE SIGN NUMBER
- ■ REMOVE ROADSIDE SIGN
- ◇ OVERHEAD SIGN
- ◆ REMOVE OVERHEAD SIGN
- ● EXISTING SIGN TO REMAIN

NOTES:

1. LOCATION OF ROADSIDE SIGNS ARE APPROXIMATE. EXACT LOCATION WILL BE DETERMINED BY THE ENGINEER.
2. POST LENGTH GIVEN IS APPROXIMATE EXACT SIZE AND LENGTH OF WOOD POST TO BE DETERMINED BY THE FIELD ENGINEER.
3. THE CONTRACTOR SHALL DETERMINE THE LOCATION OF ANY UNDERGROUND UTILITIES PRIOR TO DRILLING HOLES OR PREPARING SIGN FOUNDATIONS.

SIGN PLAN
(EXISTING)
NO SCALE

THIS PLAN ACCURATE FOR SIGN WORK ONLY

S-1

STATE OF CALIFORNIA - DEPARTMENT OF TRANSPORTATION
TRAFFIC
FUNCTIONAL SUPERVISOR: ROLAND AU-YEUNG
CALCULATED-DESIGNED BY: ULICES F. VEGA
CHECKED BY: LILY Y. TING
REVISED BY: UV
DATE REVISED: 6/10/09

LAST REVISION DATE PLOTTED => 22-JUL-2009
06-10-09 TIME PLOTTED => 06:58

BORDER LAST REVISED 4/11/2008
RELATIVE BORDER SCALE IS IN INCHES 0 1 2 3
USERNAME => trmikesl
DGN FILE => 416373oa001.dgn
CU 04242
EA 163731

Dist	COUNTY	ROUTE	POST MILES TOTAL PROJECT	SHEET No.	TOTAL SHEETS
04	SF	101,1	9.2/9.8, 6.8/7.1	154	567

REGISTERED CIVIL ENGINEER 6-08-09 DATE

7-20-09 PLANS APPROVAL DATE

REGISTERED PROFESSIONAL ENGINEER Jerilyn L. Struven No. 49964 Exp. 12-31-10 CIVIL STATE OF CALIFORNIA

THE STATE OF CALIFORNIA OR ITS OFFICERS OR AGENTS SHALL NOT BE RESPONSIBLE FOR THE ACCURACY OR COMPLETENESS OF SCANNED COPIES OF THIS PLAN SHEET.

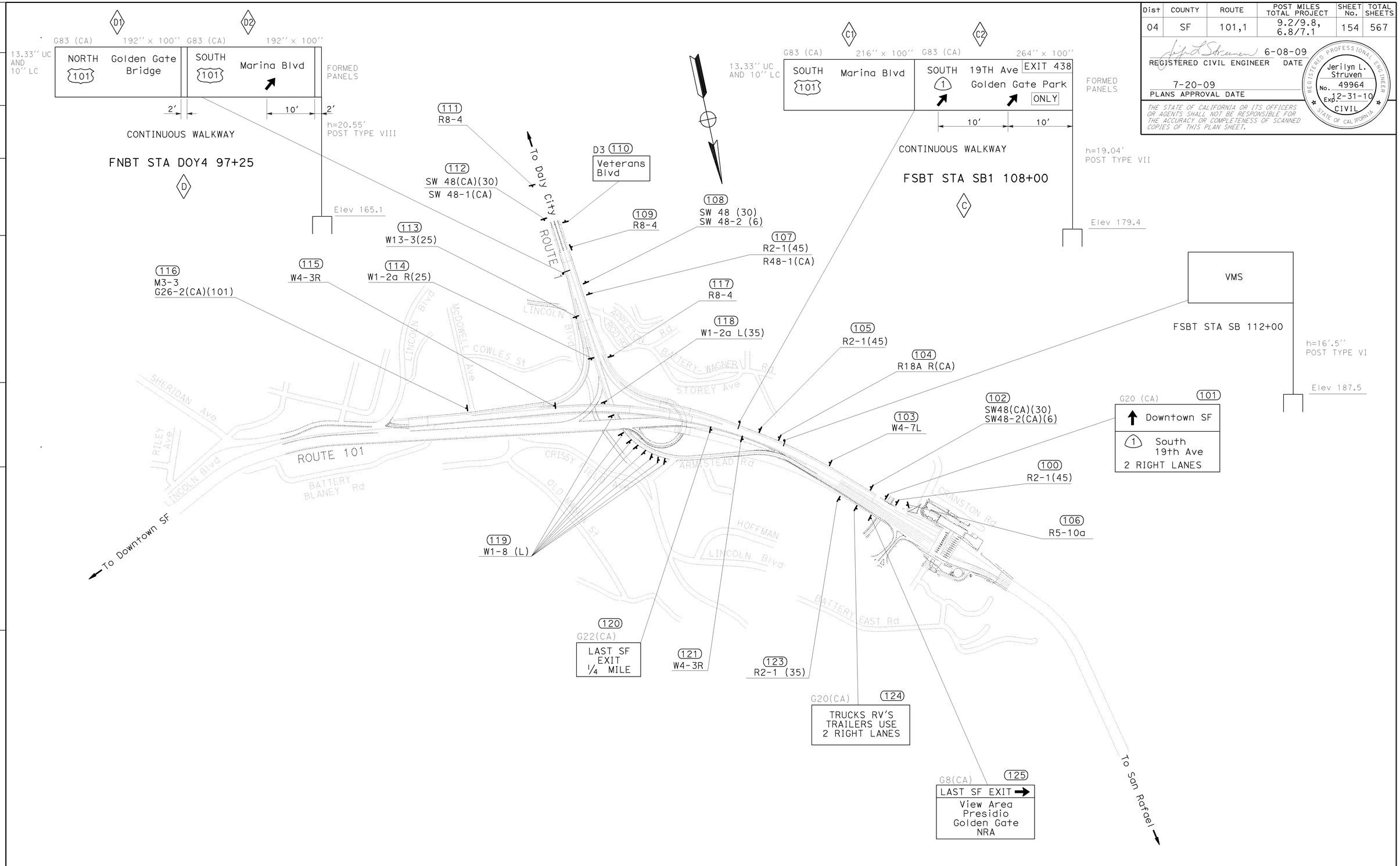

SIGN PLAN

NO SCALE

THIS PLAN ACCURATE FOR SIGN WORK ONLY

S-2

STATE OF CALIFORNIA - DEPARTMENT OF TRANSPORTATION

Caltrans

TRAFFIC

FUNCTIONAL SUPERVISOR: ROLAND AU-YEUNG

CALCULATED-DESIGNED BY: ULICES F. VEGA

CHECKED BY: LILY Y. TING

REVISED BY: UV

DATE REVISED: 6/10/09

LAST REVISION 06-09-09

DATE PLOTTED => 23-JUL-2009

TIME PLOTTED => 08:30

BORDER LAST REVISED 4/11/2008

RELATIVE BORDER SCALE IS IN INCHES 0 1 2 3

USERNAME => trmartin

DGN FILE => 416373oa002.dgn

CU 04242

EA 163731

Dist	COUNTY	ROUTE	POST MILES TOTAL PROJECT	SHEET No.	TOTAL SHEETS
04	SF	101,1	9.2/9.8, 6.8/7.1	155	567

REGISTERED CIVIL ENGINEER — DATE 6-08-09

Jerilyn L. Struven, No. 49964, Exp. 12-31-10, CIVIL, REGISTERED PROFESSIONAL ENGINEER, STATE OF CALIFORNIA

PLANS APPROVAL DATE 7-20-09

THE STATE OF CALIFORNIA OR ITS OFFICERS OR AGENTS SHALL NOT BE RESPONSIBLE FOR THE ACCURACY OR COMPLETENESS OF SCANNED COPIES OF THIS PLAN SHEET.

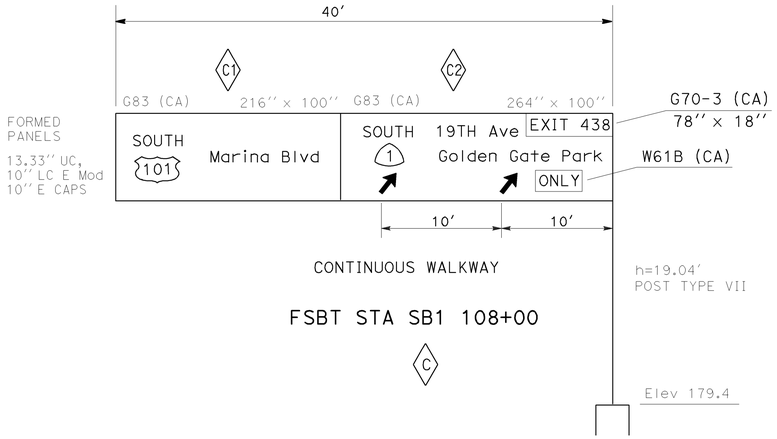

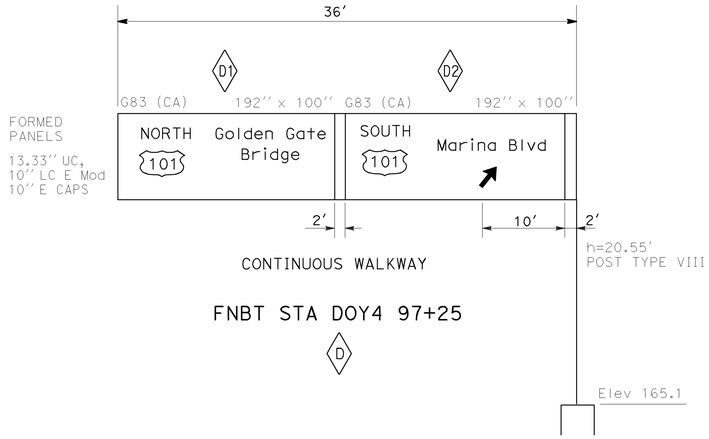

101

G20 (CA) 114″ × 84″

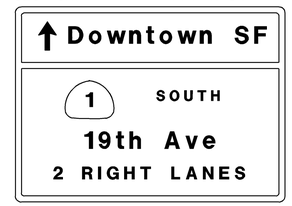

8″ UC, 6″ LC E Mod
6″ E CAPS

110

D3 54″ × 30″

6″ UC, 4½″ LC E Mod

120

G22 72″ × 48″

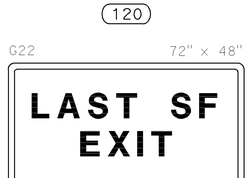

8″ E CAPS
6″ E CAPS

124

G20 84″ × 36″

6″ E CAPS

125

G8 96″ × 66″

6″ E CAPS
6″ UC, 4½″ LC E Mod

SIGN DETAILS

NO SCALE

SD-1

CALCULATED-DESIGNED BY	REVISED BY	DATE REVISED
ULICES F. VEGA	UV	7/04/09
CHECKED BY	UV	6/10/09
LILY Y. TING		

STATE OF CALIFORNIA - DEPARTMENT OF TRANSPORTATION
TRAFFIC
Caltrans
FUNCTIONAL SUPERVISOR
ROLAND AU-YEUNG

LAST REVISION DATE PLOTTED => 23-JUL-2009
TIME PLOTTED => 08:30
07-04-09

BORDER LAST REVISED 4/11/2008

RELATIVE BORDER SCALE IS IN INCHES 0 1 2 3

USERNAME => trmartin
DGN FILE => 416373ob001.dgn

CU 04242

EA 163731

DIST	COUNTY	ROUTE	POST MILES TOTAL PROJECT	SHEET No	TOTAL SHEETS
04	SF	101,1	9.2/9.8, 6.8/7.1	156	567

REGISTERED CIVIL ENGINEER — DATE

7-20-09
DATE

LISA McCUTCHEON — REGISTERED PROFESSIONAL ENGINEER — No. C70121 — Exp. 9/30/10 — CIVIL — STATE OF CALIFORNIA

The State of California or its officers or agents shall not be responsible for the accuracy or completeness of electronic copies of this plan sheet.

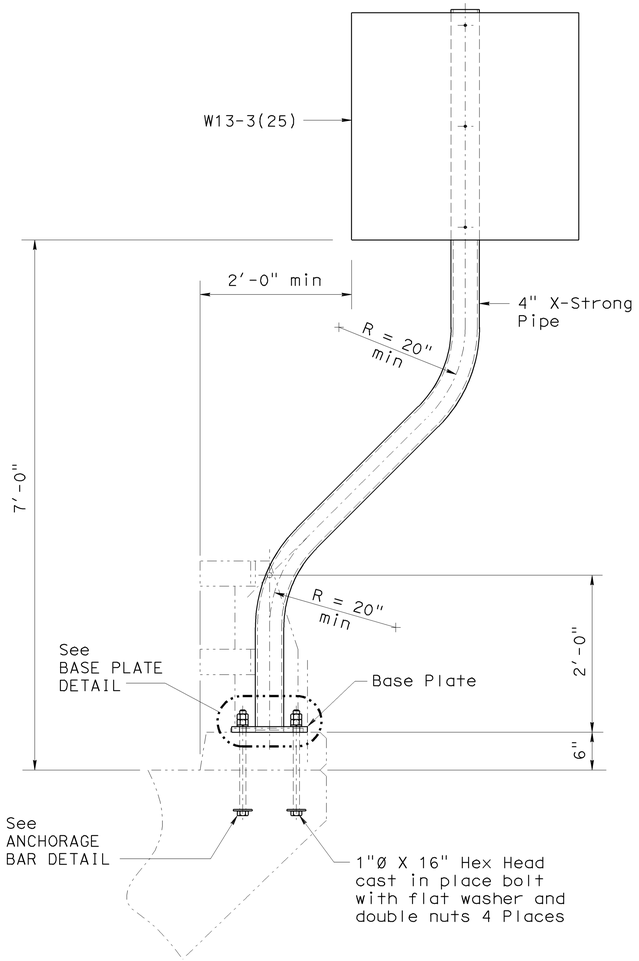

ELEVATION

PERMANENT SIGN 113

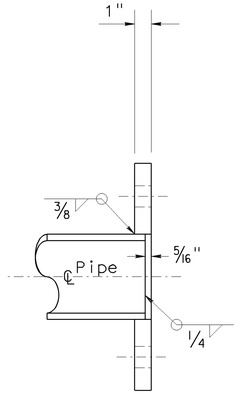

SECTION A-A

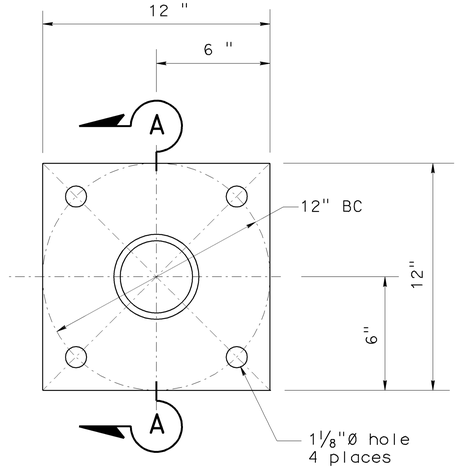

BASE PLATE

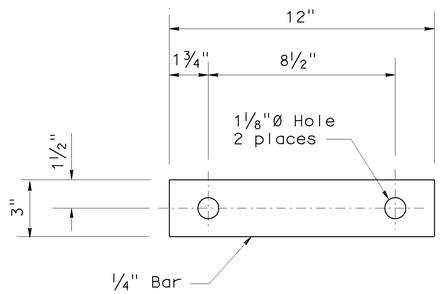

ANCHORAGE BAR

NOTES:

1. Unless otherwise shown all steel shall be galvanized after fabrication.
2. Contractor to provide anchor bolt layout and template before anchor bolts are placed.
3. Minimum fillet weld is 3/8" or thickness of thinner part unless noted.
4. See "ROAD PLANS" for sign location.
5. Refer to STD PLANS RS-2 for SIGN BACKING DETAILS.

NOTE:
THE CONTRACTOR SHALL VERIFY ALL CONTROLLING FIELD DIMENSIONS BEFORE ORDERING OR FABRICATING ANY MATERIAL.

SIGN DETAILS

SD-2

NO SCALE

Jeffrey B Woody
BRANCH CHIEF

DESIGN	BY M O'LEARY	CHECKED JOHN DATILES
DETAILS	BY A R DUDSAK	CHECKED BOB GIORGIS
QUANTITIES	BY M O'LEARY	CHECKED JOHN DATILES

STATE OF **CALIFORNIA** DEPARTMENT OF TRANSPORTATION

DIVISION OF ENGINEERING SERVICES
STRUCTURE DESIGN
SPECIAL DESIGNS BRANCH

BRIDGE NO. 34-0157L
POST MILE X

PRESIDIO ROADWAY SIGN

RUCKMAN AVE UC ROADWAY SIGN

STRUCTURES DESIGN SPECIAL DESIGN SHEET (ENGLISH) (REV. 10-25-05)

ORIGINAL SCALE IN INCHES FOR REDUCED PLANS 0 1 2 3

CU 04
EA 163731

DISREGARD PRINTS BEARING EARLIER REVISION DATES →

REVISION DATES: 6/4/09 | 6-16-09

SHEET 3 OF 4

DGN FILE =>spec_des_br_prj/2009sd/04-163731/04_163731_s3.dgn

USERNAME =>tripierce DATE PLOTTED => 23-JUL-2009 TIME PLOTTED => 09:05

DIST	COUNTY	ROUTE	POST MILES TOTAL PROJECT	SHEET No	TOTAL SHEETS
04	SF	101,1	9.2/9.8, 6.8/7.1	157	567

REGISTERED CIVIL ENGINEER — DATE

7-20-09
DATE

LISA McCUTCHEON — REGISTERED PROFESSIONAL ENGINEER — No. C70121 — Exp. 9/30/10 — CIVIL — STATE OF CALIFORNIA

The State of California or its officers or agents shall not be responsible for the accuracy or completeness of electronic copies of this plan sheet.

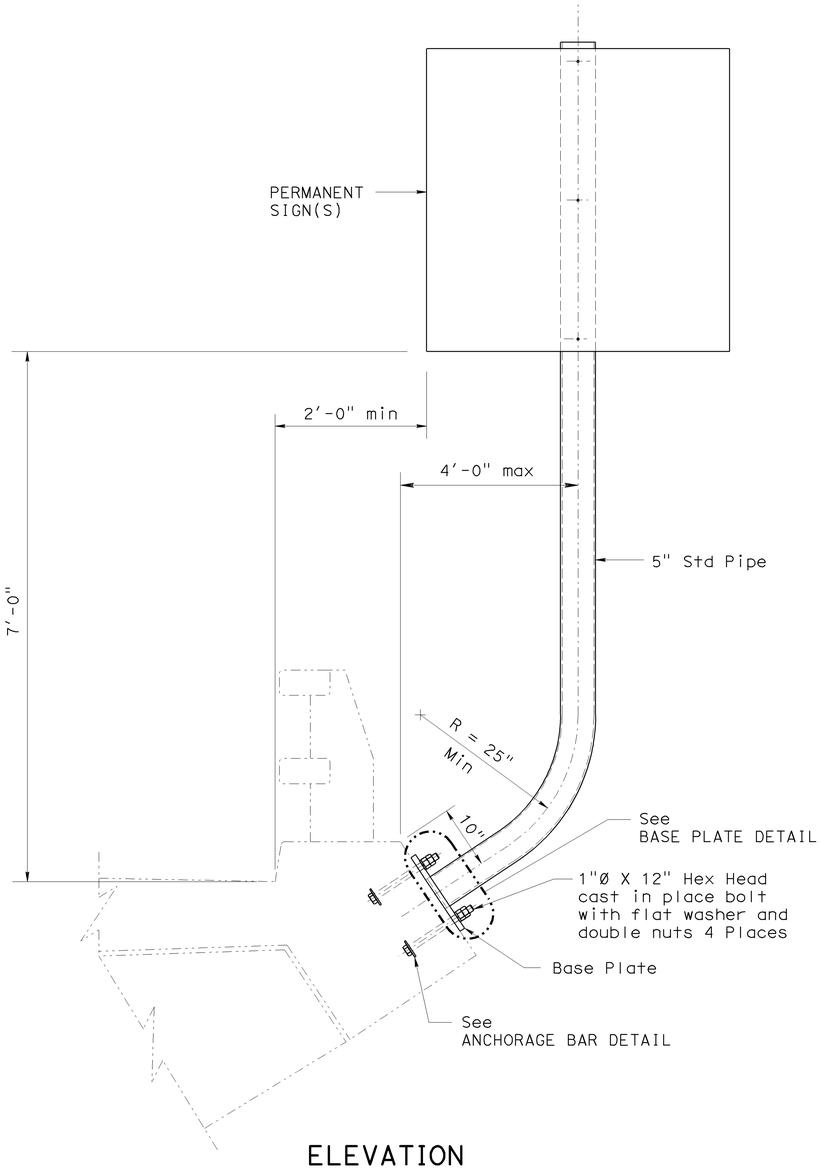

ELEVATION
PERMANENT SIGN 114, 115 & 116

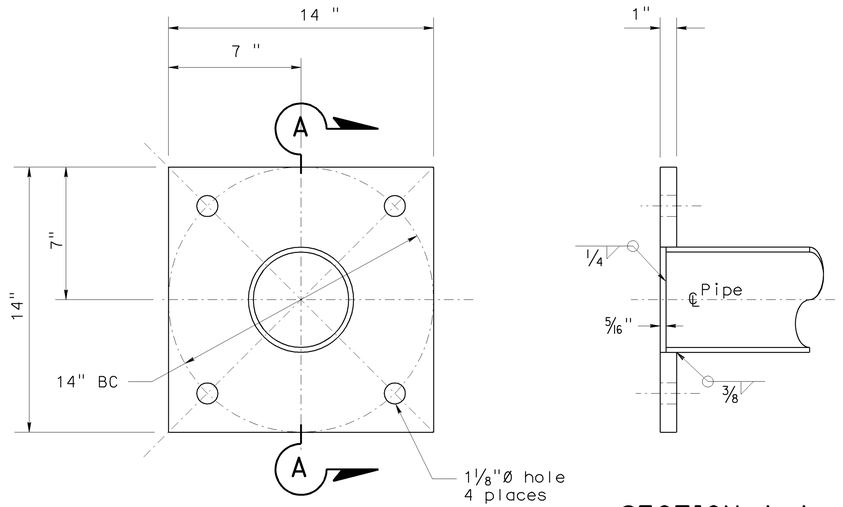

BASE PLATE

SECTION A-A

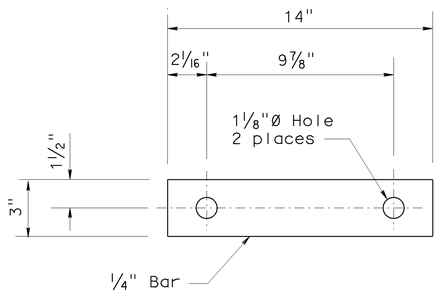

ANCHORAGE BAR

NOTES:

1. Unless otherwise shown all steel shall be galvanized after fabrication.
2. Contractor to provide anchor bolt layout and template before anchor bolts are placed.
3. Minimum fillet weld is ⅜" or thickness of thinner part unless noted.
4. See "ROAD PLANS" for sign location.
5. Refer to STD PLANS RS-2 for SIGN BACKING DETAILS.

NOTE:
THE CONTRACTOR SHALL VERIFY ALL CONTROLLING FIELD DIMENSIONS BEFORE ORDERING OR FABRICATING ANY MATERIAL.

SIGN DETAILS

NO SCALE — **SD-3**

BRANCH CHIEF

	BY	CHECKED
DESIGN	M O'LEARY	JOHN DATILES
DETAILS	A R DUDSAK	BOB GIORGIS
QUANTITIES	M O'LEARY	JOHN DATILES

STATE OF CALIFORNIA
DEPARTMENT OF TRANSPORTATION

DIVISION OF ENGINEERING SERVICES
STRUCTURE DESIGN
SPECIAL DESIGNS BRANCH

BRIDGE NO. 34-0157L
POST MILE X

PRESIDIO ROADWAY SIGN
VIADUCT / CONNECTOR

STRUCTURES DESIGN SPECIAL DESIGN SHEET (ENGLISH) (REV. 10-25-05)

ORIGINAL SCALE IN INCHES FOR REDUCED PLANS 0 1 2 3

CU 04
EA 163731

DISREGARD PRINTS BEARING EARLIER REVISION DATES →

REVISION DATES: 6/3/09 6-16-09

SHEET 4 OF 4

DGN FILE =>spec_des_br_prj/2009sd/04-163731/04_163731_s4.dgn

USERNAME = trpierce DATE PLOTTED => 23-JUL-2009 TIME PLOTTED => 09:07

Dist	COUNTY	ROUTE	POST MILES TOTAL PROJECT	SHEET No.	TOTAL SHEETS
04	SF	101,1	9.2/9.8, 6.8/7.1	158	567

REGISTERED CIVIL ENGINEER — DATE 6-08-09

PLANS APPROVAL DATE 7-20-09

REGISTERED PROFESSIONAL ENGINEER — Jerilyn L. Struven — No. 49964 — Exp. 12-31-10 — CIVIL — STATE OF CALIFORNIA

THE STATE OF CALIFORNIA OR ITS OFFICERS OR AGENTS SHALL NOT BE RESPONSIBLE FOR THE ACCURACY OR COMPLETENESS OF SCANNED COPIES OF THIS PLAN SHEET.

ROADSIDE SIGN QUANTITIES

SHEET No.	SIGN No.	CODE	PANEL SIZE	POST SIZE LENGTH				ROADSIDE SIGN		REMOVE ROADSIDE SIGN	METAL (RAIL MOUNTED SIGN)	REMARKS
								ONE POST	TWO POST			
			INCH x INCH	4'' x 4''	4'' x 6''	6'' x 6''	6'' x 8''	EA			LB	
S-1	1	R8-4	108 x 108	15'-6''						1		
	2	SW48 (30) Mod								1		
	3	G8-13 (CA)								1		
	4	W1-1 R								1		
		W13-1 (25)										
	5	W1-1a R (25)								1		
	6	R48-1 (CA)								1		
		R2-1 (45)										
	7	R5-1								1		
		R5-1a										
	8	W4-3								1		
	9	W1-2a L (25)								1		
	10	W1-8 L								7		
	11	R5-10a								1		
	12	SPEC								1		
	13	SPEC								1		
	14	G13								1		
	15	SPEC								1		
	16	SPEC								1		
	17	R2-1 (45)								1		
	18	W4-7								1		
	19	SW48 (CA)(30)								1		
		SW48-2 (6)										
	20	G20								1		
	21	SPEC								1		
	22	R2-1 (45)								1		
	23	G78-1 (CA)								1		
	24	R18A R (CA)								1		
	25	R5-10a								1		
	26	SPEC								1		
	27	R4-3								1		
	28	SPEC								1		
	29	R8-4								1		
	30	R2-1 (45)								1		
		R48-1 (CA)										
	31	R48 (CA)								1		
	32	R8-4								2		
	33	D3								1		
	34	SW48 (CA)								1		
		SW48-2 (CA)										
	35	SPEC								1		
	36	SPEC								1		
TOTAL										43		

SIGN QUANTITIES

SQ-1

LAST REVISION 06-09-09 | DATE PLOTTED => 22-JUL-2009 | TIME PLOTTED => 11:00

STATE OF CALIFORNIA - DEPARTMENT OF TRANSPORTATION — TRAFFIC — Caltrans

FUNCTIONAL SUPERVISOR: ROLAND AU-YEUNG

CALCULATED-DESIGNED BY: ULICES F. VEGA

CHECKED BY: LILY Y. TING

REVISED BY: UV | DATE REVISED: 6/10/09

BORDER LAST REVISED 4/11/2008

RELATIVE BORDER SCALE IS IN INCHES 0 1 2 3

USERNAME => trpierce
DGN FILE => 416373oc001.dgn

CU 04242

EA 163731

Dist	COUNTY	ROUTE	POST MILES TOTAL PROJECT	SHEET No.	TOTAL SHEETS
04	SF	101,1	9.2/9.8, 6.8/7.1	159	567

REGISTERED CIVIL ENGINEER — DATE 6-08-09

Jerilyn L. Struven, No. 49964, Exp. 12-31-10, CIVIL, REGISTERED PROFESSIONAL ENGINEER, STATE OF CALIFORNIA

7-20-09
PLANS APPROVAL DATE

THE STATE OF CALIFORNIA OR ITS OFFICERS OR AGENTS SHALL NOT BE RESPONSIBLE FOR THE ACCURACY OR COMPLETENESS OF SCANNED COPIES OF THIS PLAN SHEET.

ROADSIDE SIGN QUANTITIES

SHEET No.	SIGN No.	CODE	PANEL SIZE	POST SIZE LENGTH				ROADSIDE SIGN		REMOVE ROADSIDE SIGN	METAL (RAIL MOUNTED SIGN)	REMARKS
								ONE POST	TWO POST			
			INCH x INCH	4'' x 4''	4'' x 6''	6'' x 6''	6'' x 8''	EA			LB	
S-2	37-99	DELETED										
	100	R2-1(45)	36 x 48		15'-6''			1				
	101	G20(CA)	114 x 84				22'-0''		1			
	102	SW48(CA)(30)	48 x 36		15'-6''			1				
		SW48-2(CA)(6)	48 x 12									
	103	W4-7 L	48 x 48		17'-6''			1				
	104	R18A R(CA)	66 x 48		15'-6''				1			
	105	R2-1(45)	36 x 48		15'-6''			1				
	106	R5-10a	30 x 36		14'-6''			1				
	107	R2-1(45)	36 x 48		17'-6''			1				
		R48-1(CA)	36 x 18									
	108	SW48(CA)	48 x 36		15'-6''			1				
		SW48-2(CA)	48 x 12									
	109	R8-4	30 x 24		12'-6''			2				
	110	D3	54 x 30		14'-0''			1				
	111	R8-4	30 x 24		12'-6''			1				
	112	SW48(CA)(30)	48 x 36		15'-6''			1				
		SW48-1(CA)	48 x 12									
	113	W13-3(25)	36 x 48								275	RAIL MOUNTED SEE S-2
	114	W1-2a R(25)	48 x 48								260	RAIL MOUNTED SEE S-3
	115	W4-3 R	48 x 48								260	RAIL MOUNTED SEE S-3
	116	M3-3	24 x 12								235	RAIL MOUNTED SEE S-3
		G26-2(CA)(1a)	28 x 24									
	117	R8-4	30 x 24		12'-6''			1				
	118	W1-2a L(35)	48 x 48		17'-6''			1				
	119	W1-8 L	24 x 30	13'-0''				8				
	120	G22(CA)	72 x 48		15'-6''				1			
	121	W4-3 R	48 x 48		17'-6''			1				
	122	DELETED										
	123	R2-1(35)	36 x 48		15'-6''			1				
	124	G20(CA)	84 x 36		14'-6''			1				
	125	G8(CA)	96 x 66			17'-6''			1			
TOTAL								25	4			
TOTAL FROM SQ-1										43	1030	
GRAND TOTAL								25	4	43	1030	

OVERHEAD SIGN QUANTITIES

STATION	SIGN LETTER ◇	FURNISH SIGN STRUCTURE (TRUSS)	INSTALL SIGN STRUCTURE (TRUSS)	CIDH CONCRETE PILE (SIGN FOUNDATION)	REMOVE SIGN STRUCTURE	REMARKS
		LB		5'-0'' Dia	EA	
	A				1	
	B				1	
	C	23,720	23,720	30'		
	D	20,180	20,180	26'		
SB 112+00	VMS	12,535	12.535	22'		SEE E-46 AND E-47
VT 111+80		32,500	32,500			SEE PRESIDIO VIADUCT
DOY4 107				22'		SEE E-10
TOTAL		88,935	88,935	100'		

SIGN QUANTITIES

SQ-2

ULICES F. VEGA	UV
LILY Y. TING	6/10/09
CALCULATED-DESIGNED BY	REVISED BY
CHECKED BY	DATE REVISED
FUNCTIONAL SUPERVISOR	
ROLAND AU-YEUNG	

STATE OF CALIFORNIA - DEPARTMENT OF TRANSPORTATION
TRAFFIC
Caltrans

LAST REVISION DATE PLOTTED => 23-JUL-2009
06-10-09 TIME PLOTTED => 08:54

BORDER LAST REVISED 4/11/2008

RELATIVE BORDER SCALE IS IN INCHES 0 1 2 3

USERNAME => trpierce
DGN FILE => 416373oc002.dgn

CU 04242

EA 163731

Dist	COUNTY	ROUTE	POST MILES TOTAL PROJECT	SHEET No.	TOTAL SHEETS
04	SF	101,1	9.2/9.8, 6.8/7.1	160	567

REGISTERED CIVIL ENGINEER — DATE: 6-08-09

Jerilyn L. Struven, No. 49964, Exp. 12-31-10, CIVIL — REGISTERED PROFESSIONAL ENGINEER — STATE OF CALIFORNIA

PLANS APPROVAL DATE: 7-20-09

THE STATE OF CALIFORNIA OR ITS OFFICERS OR AGENTS SHALL NOT BE RESPONSIBLE FOR THE ACCURACY OR COMPLETENESS OF SCANNED COPIES OF THIS PLAN SHEET.

MATERIAL SUMMARY

NUMBER	SIGN CODE	SIGN SIZE	SIGN AREA	SINGLE FACED	DOUBLE FACED	BACKGROUND		LEGEND		PROTECTIVE OVERLAY		ROADSIDE SIGNS									OVERHEAD			DESCRIPTION
												SINGLE SHEET						LAMINATED						
												FRP	FRAMED ALUMINUM		UNFRAMED ALUMINUM									
						SHEETING COLOR	RETROREFLECTIVE ASTM TYPE	SHEETING COLOR	RETROREFLECTIVE ASTM TYPE	STANDARD	PREMIUM	0.134''	0.063''	0.080''	0.063''	0.080''	0.134''	1'' TYPE B	2.6'' TYPE B	2.6'' TYPE H	FORMED	LAMINATED TYPE A	FORMED w/o RSPF	FORMED WITH RSPF	
		INCH × INCH	SQFT									SQFT												
100, 105,107,117,123	R2-1	36 × 48	60	X		WHITE		BLACK	0		X					60								
101	G20(CA)	114 × 84	66.5	X		GREEN	III	WHITE	IX		X			66.5										
102,108,112	SW48(CA)	48 × 36	36	X		YELLOW	III	BLACK	0		X					36								
102,108	SW48-2(CA)	48 × 12	8	X		YELLOW	III	BLACK	0		X				8									
103	W4-7 L	48 × 48	16	X		YELLOW	III	BLACK	0		X					16								
104	R18A R(CA)	66 × 48	22	X		WHITE	III	BLACK	0		X			22										
106	R5-10a	30 × 36	10.5	X		WHITE	III	BLACK	0		X					10.5								
107	R48-1(CA)	36 × 18	4.5	X		WHITE	III	BLACK	0		X				4.5									
109,111,117	R8-4	30 × 24	20	X		WHITE	III	BLACK	0		X				20									4 SIGNS TOTAL
110	D3	54 × 30	11.25	X		GREEN	III	WHITE	IX		X					11.25								
112	SW48-1(CA)	48 × 12	4	X		YELLOW	III	BLACK	0		X					4								
113	W13-3	36 × 48	12	X		YELLOW	III	BLACK	0		X					12								
114	W1-2a R	48 × 48	16	X		YELLOW	III	BLACK	0		X					16								
115	W4-3 R	48 × 48	16	X		YELLOW	III	BLACK	0		X					16								
116	M3-3	24 × 12	2	X		WHITE	III	BLACK	0		X				2									
116	G26-2(CA)	28 × 24	4.7	X		WHITE	III	BLACK	0		X				4.7									
118	W1-2a L	48 × 48	16	X		YELLOW	III	BLACK	0		X					16								
119	W1-8 L	24 × 30	40	X		YELLOW	III	BLACK	0		X				40									8 SIGNS TOTAL
120	G22(CA)	72 × 48	24	X		GREEN	III	WHITE	IX		X			24										
121	W4-3 R	48 × 48	16	X		YELLOW	III	BLACK	0		X					16								
124	G20(CA)	84 × 36	21	X		GREEN	III	WHITE	IX		X			21										
125	G8(CA)	96 × 66	44	X		GREEN	III	WHITE	IX		X			44										
C1	G83(CA)	216 × 100	150	X		GREEN	III	WHITE	IX		X												150	
C2	G83(CA)	264 × 100	183	X		GREEN	III	WHITE	IX		X												183	
D1	G83(CA)	192 × 100	133	X		GREEN	III	WHITE	IX		X												133	
D2	G83(CA)	192 × 100	133	X		GREEN	III	WHITE	IX		X												133	
TOTAL														177.5	79.2	213.75							599	

CALCULATED-DESIGNED BY: ULICES F. VEGA
CHECKED BY: LILY Y. TING
REVISED BY: UV
DATE REVISED: 6/10/09
FUNCTIONAL SUPERVISOR: ROLAND AU-YEUNG

STATE OF CALIFORNIA - DEPARTMENT OF TRANSPORTATION
Caltrans
TRAFFIC

SIGN QUANTITIES
CONTRACTOR FURNISHED SIGNS
SQ-3

LAST REVISION: DATE PLOTTED => 22-JUL-2009, TIME PLOTTED => 10:00, 06-10-09

BORDER LAST REVISED 4/11/2008

RELATIVE BORDER SCALE IS IN INCHES: 0 1 2 3

USERNAME => trpierce
DGN FILE => 416373oc003.dgn

CU 04242

EA 163731

Dist	COUNTY	ROUTE	POST MILES TOTAL PROJECT	SHEET No.	TOTAL SHEETS
04	SF	101,1	9.2/9.8, 6.8/7.1	161	567

6-08-09
REGISTERED CIVIL ENGINEER DATE

7-20-09
PLANS APPROVAL DATE

REGISTERED PROFESSIONAL ENGINEER
Hossein Khodabakhsh
No. 71650
Exp. 12-31-09
CIVIL
STATE OF CALIFORNIA

THE STATE OF CALIFORNIA OR ITS OFFICERS OR AGENTS SHALL NOT BE RESPONSIBLE FOR THE ACCURACY OR COMPLETENESS OF SCANNED COPIES OF THIS PLAN SHEET.

CONCRETE BARRIER

STATION	LOCATION	REMOVE CONCRETE BARRIER	TYPE 60	TYPE 60C	TYPE 60D
		LF			
DOY4 95+20 TO 97+71	Med		251		
DOY4 102+12 TO 103+30	L†			118	
DOY4 103+30 TO 103+58	L†				28
DOY2 104+28 TO 110+08	L†				580
DOY2 104+28 TO 110+08	R†				614
Exist SF 1, DOY4 95+10 TO 97+70	Med	260			
Exist SF 1, DOY4 97+20 TO 97+40	L†	20			
Exist SF 1, DOY5 97+80 TO 97+90	L†	10			
Exist SF 1, DOY4 101+80 TO 106+00	R†	420			
Exist SF 1, DOY4 108+20 TO 110+00	R†	180			
Exist SF 1, DOY5 97+80 TO 100+40	Med	260			
Exist VT RAMP, 60' Rt DOY4 106+40	R†	100			
Exist SF 101, SB 101+20 TO 110+40	R†	920			
TOTAL		2170	251	118	1222

MINOR CONCRETE

STATION	LOCATION	CURB	SIDEWALK	CURB RAMP	MISCELLANEOUS CONSTRUCTION
		CY			
L 10+00 TO 18+40	L†	50			
L 10+00 TO 18+40	R†	50			
L 11+80 TO 16+20	R†		45		
P 10+00 TO 15+64					111
P 12+20	L†			3	
P 12+20	R†			3	
S 11+20 TO 12+10	L†	5	9		
S 11+20 TO 12+10	R†	5	9		
S 12+20	L†			3	
S 12+20	R†			3	
GORE VT AND DOY4					17
TOTAL		110	63	12	128

MISCELLANEOUS

SHEET No.	STATION	BAR REINFORCING STEEL (Ret WALL)	STRUCTURE EXCAVATION (Ret WALL)	STRUCTURAL CONCRETE (Ret WALL)	REMOVABLE BOLLARD (WOOD)	CRCP (TERMINAL JOINT, TYPE E)
		LB	CY		EA	LF
L-2	P 16+20 TO 18+60	16500	200	251		
L-2	C 10+80				4	
L-2	SB 100+96					60
L-2	SB 103+80					60
TOTAL		16500	200	251	4	120

ROADWAY QUANTITIES

SHEET No.	STATION	REMOVE BASE AND SURFACING	ROADWAY EXCAVATION (TYPE Z-2) (AERIALLY DEPOSITED LEAD)	ROADWAY EXCAVATION (NATURALLY OCCURING ASBESTOS)	EMBANKMENT (N)	IMPORTED BORROW	CONTINUOUSLY REINFORCED CONCRETE PAVEMENT	CLASS 3 AGGREGATE BASE	CLASS 4 AGGREGATE SUBBASE	LEAN CONCRETE BASE	TEMPORARY EARTH RETAINING STRUCTURE	COLD PLANE ASPHALT CONCRETE PAVEMENT (.20' Max)	TACK COAT	HMA
		CY									SQFT	SQYD	TON	
L-2	SB 100+96 TO 103+30		733		1704	1704	495	394	371				1.7	780
L-2, L-4	SB 104+83 TO 107+50		1432		73	73		915	872	305		986	4.0	2417
L-2	DOY2 104+20 TO 107+74		619	3295					369	129			1.0	485
L-3	DOY4 95+20 TO 97+41		586		780	780			201	70		1445	1.0	398
L-2, L-3	DOY4 102+12 TO 103+60				9228	9228			711	249			1.7	935
L-2, L-3	DOY4 103+60 TO 104+70		307		4889	4889			350	122			0.9	594
L-2	DOY4 104+70 TO 107+70		615	768	749				737	258			1.8	970
L-2	DOY5 100+71 TO 106+30		1025	2205	2172				1249	437			3.2	1839
L-2, L-3	RD 103+90 TO 108+10		1320	123	167	44		313					0.5	235
L-2, L-3	L 10+00 TO 18+80		556		4610	4610			1081	398			3.0	1365
L-2, L-3	P 10+00 TO 15+64		7		10	10		111						
L-3	S 11+20 TO 12+10		5						76	28			0.2	97
L-2	C 10+60 TO 13+60		5		1921	1921			191	70			0.5	247
L-2	Exist VT RAMP 40' Rt DOY4 106+20	99												
L-2, L-3	Exist SF 1, DOY4 101+80 TO 103+70	450												
L-2, L-4	Exist LINCOLN Blvd	709												
SUBTOTAL		1258	7210	6391	26303	23259	495	1733	6208	2066		2431	19.5	10362
SCQ-5	FROM TEMPORARY ROADWAY QUANTITIES TABLE		1990	2377	5013	5013		1531			12119	3792	7.5	2980
TOTAL		1258	9200	8768	31316	28272	495	3264	6208	2066	12119	6223	27.0	13342

(N) NOT A SEPARATE PAY ITEM. FOR INFORMATION ONLY.

SUMMARY OF QUANTITIES

Q-1

REVISED BY	DATE REVISED
RD	7/11/09
CT	6/10/09

CALCULATED-DESIGNED BY	CHECKED BY
ROGER DUAN	MOHAMMAD SAHIBZADAH

FUNCTIONAL SUPERVISOR: ABOLFAZL EMADZADEH

STATE OF CALIFORNIA - DEPARTMENT OF TRANSPORTATION
DESIGN

LAST REVISION | DATE PLOTTED => 22-JUL-2009
07-12-09 | TIME PLOTTED => 10:00

BORDER LAST REVISED 4/11/2008

RELATIVE BORDER SCALE IS IN INCHES 0 1 2 3

USERNAME => trpierce
DGN FILE => 416373pa001.dgn

CU 04242

EA 163731

Dist	COUNTY	ROUTE	POST MILES TOTAL PROJECT	SHEET No.	TOTAL SHEETS
04	SF	101,1	9.2/9.8, 6.8/7.1	162	567

REGISTERED CIVIL ENGINEER — 6-08-09 DATE

7-20-09
PLANS APPROVAL DATE

REGISTERED PROFESSIONAL ENGINEER — Hossein Khodabakhsh — No. 71650 — Exp. 12-31-09 — CIVIL — STATE OF CALIFORNIA

THE STATE OF CALIFORNIA OR ITS OFFICERS OR AGENTS SHALL NOT BE RESPONSIBLE FOR THE ACCURACY OR COMPLETENESS OF SCANNED COPIES OF THIS PLAN SHEET.

TEMPORARY FENCE (TYPE ESA)

SHEET	LOCATION	Lt, Rt	LF
L-1	SB 88+11 TO 88+84	Lt	102
L-1	SB 88+71 TO 91+50	Rt	286
L-2	SB 91+50 TO 94+95	Rt	370
L-2	NB 92+68 TO 93+41	Rt	95
L-2	P 12+14 TO 12+59	Rt	45
L-3	P 11+51 TO 12+14	Rt	56
L-3	DOY4 97+98 TO 98+83	Rt	86
TOTAL			1040

VERTICAL ESA (N)

SHEET	LOCATION	Lt, Rt	SQFT
L-1	VT 110+12 TO 111+35	Lt	9066
L-2	VT 111+35 TO 111+72	Lt	1367
TOTAL			10433

(N) - NOT A SEPARATE PAY ITEM, FOR INFORMATION ONLY

TEMPORARY FENCE AND CHAIN LINK GATE

SHEET	LOCATION	TEMPORARY FENCE (TYPE CL-6, SLATTED)	TEMPORARY GATE (TYPE CL-6)
		LF	EA
L-1 TO L-5	ALONG TCE LINE	13,000	
L-2	SB 94+00, 150' TO Rt		1
L-2	SB 92+00, 40' TO Lt		1
L-2	SB 92+25, 144' TO Lt		1
L-3	DOY4 100+90, 40' TO Lt		1
TOTAL		13,000	4

IRRIGATION CROSSOVERS

LOCATION		SIDE		CONDUIT TYPE (3)		(N) WATER LINE CROSSOVER	(N) SPRINKLER CONTROL CROSSOVER
LINE	STATION	Rt	Lt	SIZE (INCH) 8 / LENGTH (LF)		SIZE (INCH)	SIZE (INCH)
C	12+50	X	X	28	——	3	2
P	12+87	X	X	18	——	3	2
P	16+19	X	X	49	——	3	2
L	18+94	X	X				
L	13+94	X	X	52	——	3	2
DOY2	102+59	X	X	81	——	3	2
DOY5	110+78	X	X				
DOY4	106+14	X	X	43	——	3	2
DOY4	107+86	X	X	32	——	3	2
TOTAL				303			

(N) - NOT A SEPARATE PAY ITEM FOR INFORMATION ONLY
X - DENOTES REQUIREMENT

CONDUIT TYPE
(Applicable when circled below and shown under the 'CONDUIT TYPE' column heading)

1 BITUMINOUS COATED CORRUGATED STEEL PIPE (0.064 INCH THICK)
2 CORRUGATED STEEL PIPE (0.064 INCH THICK)
(3) CORRUGATED HIGH DENSITY POLYETHYLENE PIPE
4 WELDED STEEL PIPE

SUMMARY OF QUANTITIES

Q-2

CALCULATED-DESIGNED BY: GINA CHOI
CHECKED BY: ROGER DAYOAN
FUNCTIONAL SUPERVISOR: ABOLFAZL EMADZADEH
REVISED BY: GC
DATE REVISED: 6/10/09
STATE OF CALIFORNIA - DEPARTMENT OF TRANSPORTATION
DESIGN
Caltrans

LAST REVISION DATE PLOTTED => 23-JUL-2009
TIME PLOTTED => 08:59
06-05-09

BORDER LAST REVISED 4/11/2008
RELATIVE BORDER SCALE IS IN INCHES 0 1 2 3
USERNAME => trpierce
DGN FILE => 416373pa002.dgn
CU 04242
EA 163731

Dist	COUNTY	ROUTE	POST MILES TOTAL PROJECT	SHEET No.	TOTAL SHEETS
04	SF	101, 1	9.2/9.8, 6.8/7.1	163	567

REGISTERED CIVIL ENGINEER 7-11-09 DATE

7-20-09
PLANS APPROVAL DATE

REGISTERED PROFESSIONAL ENGINEER Hossein Khodabakhsh No. 71650 Exp. 12-31-09 CIVIL STATE OF CALIFORNIA

THE STATE OF CALIFORNIA OR ITS OFFICERS OR AGENTS SHALL NOT BE RESPONSIBLE FOR THE ACCURACY OR COMPLETENESS OF SCANNED COPIES OF THIS PLAN SHEET.

RAILING

STATION	LOCATION	ALTERNATIVE FLARED TERMINAL SYSTEM	TRANSITION RAILING (TYPE WB)	REMOVE MBGR	REMOVE METAL RAILING	MBGR	Calif ST-10 BRIDGE RAIL (Mod) (TYPE B)	ST-10 COLOR (N)
		EA		LF				
SB 100+66 TO 104+09	Lt						343	INTERNATIONAL ORANGE
SB 106+55 TO 112+00	Lt						545	INTERNATIONAL ORANGE
DOY2 103+48 TO 103+98	Lt	1						
DOY2 103+48 TO 103+98	Rt	1						
DOY2 103+98 TO 104+23	Lt		1					
DOY2 103+98 TO 104+23	Rt		1					
DOY4 96+96 TO 97+46	Lt	1						
DOY4 96+96 TO 97+46	Rt	1						
DOY4 97+46 TO 97+71	Lt		1					
DOY4 97+46 TO 97+71	Rt		1					
DOY4 101+82 TO 106+50	Rt						468	GREEN
DOY4 104+75 TO 106+50	Lt						175	GREEN
DOY5 97+82 TO 103+00	Lt						578	GREEN
DOY5 100+75 TO 103+00	Rt						225	GREEN
DOY5 103+00 TO 110+00	Lt						700	INTERNATIONAL ORANGE
DOY5 103+00 TO 110+00	Rt						375	INTERNATIONAL ORANGE
Exist SF 1, DOY4 96+80 TO 97+40	Rt			60				
Exist SF 1, DOY4 101+80 TO 106+00	Rt				420			
Exist SF 1, DOY4 106+80 TO 108+20	Rt			140				
Exist SF 1, DOY5 97+80 TO 98+20	Lt			40				
Exist SF 1, DOY5 100+40 TO 101+00	Rt				60			
Exist LINCOLN Blvd, L 10+00 TO 11+50	Rt			150				
Exist VT RAMP, 60' Rt DOY4 106+40	Rt				100			
Exist VT RAMP, 40' Rt DOY4 106+40	Lt			100				
P 13+53 TO 14+03	Rt	1						
P 14+03 TO 15+34	Rt					259		
P 15+34 TO 15+84	Rt	1						
L 11+75 TO 12+25	Rt	1						
L 12+25 TO 12+50	Rt					25		
L 12+50 TO 13+00	Rt	1						
VT 120+41 TO 121+00	Rt						59	INTERNATIONAL ORANGE
VT 120+41 TO 121+00	Lt						59	INTERNATIONAL ORANGE
TOTAL		8	4	490	580	284	3527	

(N) NOT A SEPARATE PAY ITEM. FOR INFORMATION ONLY.

LOCATION	ANTI-GRAFFITI COATING
	SQFT
WALL 2 AND 2A	15000
WALL 3	1700
WALL 3A	2380
WALL 4	3400
RUCKMAN Bridge	6600
PRESIDIO VIADUCT	6800
VETERANS RAMP	4000
WALL 4A	2260
CONCRETE BARRIERS	23000
TOTAL	65140

SUMMARY OF QUANTITIES

Q-3

STATE OF CALIFORNIA - DEPARTMENT OF TRANSPORTATION
Caltrans DESIGN

FUNCTIONAL SUPERVISOR: ABOLFAZL EMADZADEH
CALCULATED-DESIGNED BY: ROGER DUAN
CHECKED BY: MOHAMMAD SAHIBZADAH
REVISED BY: RD
DATE REVISED: 7/11/09

LAST REVISION 07-13-09
DATE PLOTTED => 23-JUL-2009
TIME PLOTTED => 08:55

Dist	COUNTY	ROUTE	POST MILES TOTAL PROJECT	SHEET No.	TOTAL SHEETS
04	SF	101, 1	9.0/9.8, 6.8/7.1	164	567

6-08-09
REGISTERED CIVIL ENGINEER DATE

Hossein Khodabakhsh
No. 71650
Exp. 12-31-09
CIVIL
REGISTERED PROFESSIONAL ENGINEER
STATE OF CALIFORNIA

7-20-09
PLANS APPROVAL DATE

THE STATE OF CALIFORNIA OR ITS OFFICERS OR AGENTS SHALL NOT BE RESPONSIBLE FOR THE ACCURACY OR COMPLETENESS OF SCANNED COPIES OF THIS PLAN SHEET.

REVISED BY	DATE REVISED
RD	7/16/09
GG	7/16/09

CALCULATED-DESIGNED BY: GEORGE GIN
CHECKED BY: ROGER DAYOAN
FUNCTIONAL SUPERVISOR: ABOLFAZL EMADZADEH

STATE OF CALIFORNIA - DEPARTMENT OF TRANSPORTATION
Caltrans®
DESIGN

NOTE:

1. RETAINING WALL RW-4A PROFILE
   SEE PROFILE SHEETS.

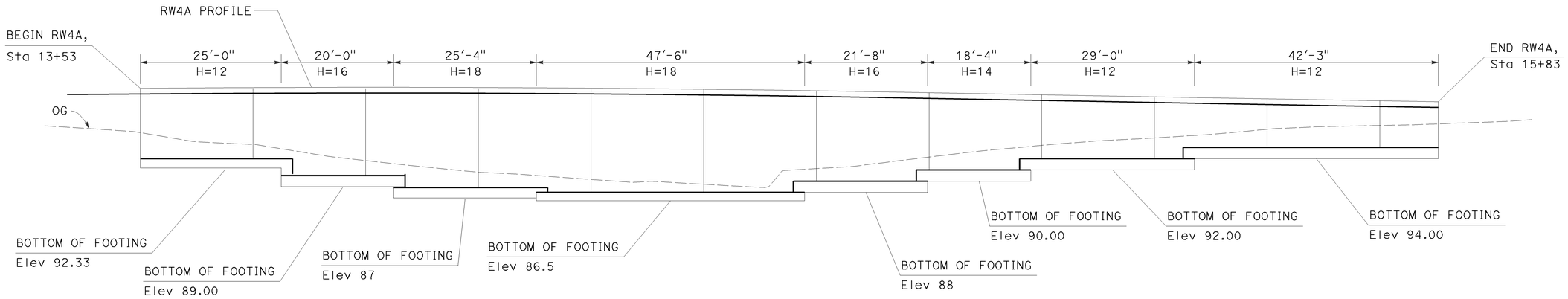

PART DEVELOPED ELEVATION

SCALE: 1"=10'-0"

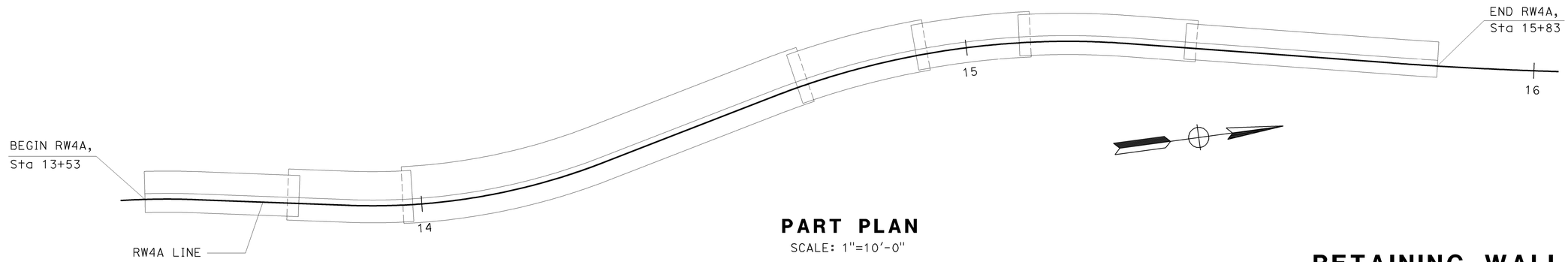

PART PLAN

SCALE: 1"=10'-0"

RETAINING WALL No. 4A

SCALE: AS SHOWN

THIS PLAN ACCURATE FOR RETAINING WALL WORK ONLY

R-1

LAST REVISION DATE PLOTTED => 22-JUL-2009
TIME PLOTTED => 10:00
07-16-09

BORDER LAST REVISED 4/11/2008

RELATIVE BORDER SCALE IS IN INCHES 0 1 2 3

USERNAME => trpierce
DGN FILE => 416373qb001.dgn

CU 04242

EA 163731

Dist	COUNTY	ROUTE	POST MILES TOTAL PROJECT	SHEET No.	TOTAL SHEETS
04	SF	101,1	9.2/9.8, 6.8/7.1	165	567

REGISTERED ELECTRICAL ENGINEER — 6-03-09 DATE

Mahmood Noii No. 13717 Exp 6-30-11 ELECT — REGISTERED PROFESSIONAL ENGINEER — STATE OF CALIFORNIA

7-20-09
PLANS APPROVAL DATE

THE STATE OF CALIFORNIA OR ITS OFFICERS OR AGENTS SHALL NOT BE RESPONSIBLE FOR THE ACCURACY OR COMPLETENESS OF SCANNED COPIES OF THIS PLAN SHEET.

GENERAL NOTES:

1. PRIOR TO ANY WORK ON PG&E SERVICE POINTS, THE CONTRACTOR SHALL NOTIFY THE PG&E INSPECTOR.
2. PRIOR TO ANY WORK ON AT&T SERVICE POINTS, THE CONTRACTOR SHALL NOTIFY THE AT&T INSPECTOR.
3. PRIOR TO ANY WORK ON THE GOLDEN GATE BRIDGE ELECTRICAL SYSTEMS, THE CONTRACTOR SHALL NOTIFY THE GOLDEN GATE BRIDGE MAINTENANCE SUPERINTENDENT.
4. THE MINIMUM DISTANCE BETWEEN MODEL 170 CONTROLLER ASSEMBLY AND SERVICE EQUIPMENT ENCLOSURE SHALL BE 10'.
5. ALL No. 9 PULL BOXES SHALL BE PROVIDED WITH KNOCKOUTS THAT MATCH THE SIZE AND NUMBER OF THE CONDUITS SHOWN ON THE PLANS.
6. NO ABOVE GROUND ELECTRICAL WORK SHALL BE PERFORMED ON ANY SYSTEM WITHIN THE PROJECT SITE UNTIL ALL CONTRACTOR-FURNISHED ELECTRICAL MATERIALS FOR THAT INDIVIDUAL SYSTEM HAVE BEEN TESTED AND DELIVERED TO THE CONTRACTOR.
7. THE NEUTRAL CONDUCTOR SHALL RUN FROM THE SERVICE EQUIPMENT ENCLOSURE TO THE CONTROLLER CABINET WITHOUT SPLICING TO ANY OTHER NUETRAL CONDUCTOR.
8. THE CLEARANCE BETWEEN THE BOTTOM OF THE LOWEST CIRCUIT BREAKER AND THE BOTTOM OF THE SERVICE EQUIPMENT ENCLOSURE FOR A TYPE III-A SERIES SHALL BE 24 INCHES MINIMUM.
9. NO OVERHEAD SIGN PANEL SHALL BE INSTALLED UNTIL THE OVERHEAD SIGN LIGHTING IS COMPLETELY OPERATIONAL.

PROJECT NOTES:

1. PART OF BID ITEM "TRAFFIC OPERATIONS SYSTEM." SEE E-11.
2. 1½''C, MT. INSTALL CONDUIT IN STRUCTURE
3. INSTALL STATE-FURNISHED MODEL 170 CONTROLLER ASSEMBLY WITH A MODEL 334 CABINET.
4. CAMERA STATION: INSTALL TYPE CCTV 45 POLE AND AN INTEGRATED CCTV CAMERA UNIT. SEE ES-16A FOR POLE DETAILS AND E-22 FOR CCTV MOUNTING DETAILS.
5. CAMERA STATION: INSTALL CONTRACTOR-FURNISHED MODEL 334 CABINET WITH STATE-FURNISHED MODEL 170 CONTROLLER UNIT. INSTALL 1 CCU AND 1 VEU. SEE E-21 AND E-23 FOR DETAILS.
6. INSTALL CONDUIT INSIDE THE BRIDGE DECK.
7. INSTALL PREFORMED LOOP DETECTORS. DETECTORS SHALL BE CENTERED IN EACH LANE.
8. DETECTORS SHALL BE CENTERED IN EACH LANE AND SHALL BE INSTALLED 14' APART (20' FROM CENTER TO CENTER). SEE DETAILS ON E-24.
9. INSTALL FDU, FODM AND FOTS. SEE E-29 FOR DETAILS.
10. INSTALL WALL MOUNTED LUMINAIRE WITH 100 W HPS LAMP. SEE ES-9E AND STRUCTURE PLANS FOR DETAILS.
11. RC EXISTING SIGN LIGHTING FIXTURES AND SIGN DISCONNECT.
12. INSTALL FOUNDATION FOR A FUTURE VMS SIGN POST. SEE THE STRUCTURE PLANS FOR DETAILS.
13. VMS SYSTEM: INSTALL VMS SIGN POST WITH A 27' ARM. INSTALL STATE-FURNISHED VMS PANEL AND CONTROLLER ASSEMBLY. INSTALL NEMA 3R ENCLOSURE ON SIGN POST AS SHOWN ON ES-15C. INSTALL VMS CONTROLLER ASSEMBLY 6'' MINIMUM ABOVE THE NEMA 3R ENCLOSURE. SEE E-14, E-20 AND STRUCTURE PLANS FOR DETAILS.
14. INSTALL FOUNDATION FOR A FUTURE VMS SIGN POST WITH A 24' CANTILEVER. SEE STRUCTURE PLANS FOR DETAILS.
15. INSTALL ELECTRICAL EQUIPMENT BEHIND THE BRIDGE RAIL.
16. RC SIGN POST. RS ems, EXISTING NEMA 3R ENCLOSURE AND CONTROL CABINET.
17. INSTALL A SINGLE PHASE, 7.0 kVA (480 V/120-240 V), STEPDOWN SUBMERSIBLE TYPE TRANSFORMER IN PULL BOX. INSTALL TWO 20 A, 480 V IN-LINE FUSES ON THE PRIMARY SIDE OF THE TRANSFORMER.
18. BASE CAMERA SYSTEM: INSTALL CONTRACTOR-FURNISHED MODEL 334 CABINET.
19. SEE SHEET E-11.
20. BASE CAMERA SYSTEM: INSTALL TYPE 18-1-100 POLE WITHOUT SIGNAL ARM AND GUSSET. SEE RSP ES-7C FOR POLE DETAILS.
21. HAR SYSTEM: INSTALL CONTRACTOR-FURNISHED MODEL 334 CABINET.
22. INSTALL FDU AND FODM. SEE E-29 FOR DETAILS.
23. 2''C, MT (FO CONDUIT). SEE E-28 FOR DETAILS.
24. VMS SYSTEM: INSTALL STATE-FURNISHED VMS PANEL AND CONTROLLER ASSEMBLY ON WOOD POSTS. SEE E-20 FOR DETAILS.
25. CAMERA STATION: INSTALL 1 CCU AND 1 VEU. SEE E-21 AND E-23 FOR DETAILS.
26. 3''C, 2#4 (120 V TMS/CCTV SERVICE), 2#6 (120 V HAR SERVICE), 2#6 (120 V RM/CCTV SERVICE), 2#6 (120 V BASE CAMERA-SB), 2#8 (120 V IRRIGATION, IC-A, B), 2#8 (120 V IRRIGATION, IC-C, D)
27. SEE E-14. PART OF BID ITEM "BASE CAMERA SYSTEM".
28. Exist 2''C, 5#4
29. Exist 2''C, 5#4, 2#12
30. 1½''C, 2#8 (120 V IRRIGATION)
31. INSTALL TYPE 30 LIGHT STANDARD WITH 12' LUMINAIRE ARM ADJACENT TO THE BACK OF THE BRIDGE RAIL.
32. INSTALL THE FOUNDATION ADJACENT TO THE BACK OF THE BRIDGE RAIL.
33. INSTALL 10' OF SLACK FOR EACH CONDUCTOR. COIL THE CONDUCTORS IN THE PULL BOX. TAPE ENDS OF CONDUCTORS.
34. COIL 6' OF SLACK OF EACH LOOP CONDUCTOR IN THE PULL BOX.
35. INSTALL GPRS WIRELESS MODEM ASSEMBLY, ANTENNA, POWER SUPPLY AND TERMINAL BLOCK IN THE CABINET. SEE E-25 FOR DETAILS.

ELECTRICAL INDEX

DRAWING No.	TITLE
E-1	ELECTRICAL INDEX, NOTES, ABBREVIATIONS AND SYMBOLS
E-2 TO E-8	LIGHTING AND SIGN ILLUMINATION
E-9	COMMUNICATION CONDUIT
E-10 TO E-12	TRAFFIC OPERATIONS SYSTEM
E-13 & E-14	TUNNEL TRAFFIC CONTROL SYSTEM
E-15 & E-16	LIGHTING AND SIGN ILLUMINATION (EXISTING)
E-17 TO E-29	ELECTRICAL DETAILS
E-30	LIGHTING AND SIGN ILLUMINATION (STAGE CONSTRUCTION) (ELECTRICAL NOTES, SYMBOLS AND DETAILS)
E-31 TO E-43	LIGHTING AND SIGN ILLUMINATION (STAGE CONSTRUCTION)
E-44 TO E-47	ELECTRICAL DETAILS (STRUCTURES)

SYMBOLS

PROPOSED	EXISTING	
—HV—		HIGH VOLTAGE CONDUIT (SUBSTATION)
	ems	EXTINGUISHABLE MESSAGE SIGN (LED)-WOOD POSTS
	ems	EXTINGUISHABLE MESSAGE SIGN (LED)-SIGN POST CANTILEVER
VMS		VARIABLE MESSAGE SIGN-WOOD POSTS
VMS		VARIABLE MESSAGE SIGN SIGN POST-TRUSS
VMS(F) VMS(F)		FOUNDATION-FUTURE VMS SIGN POST (TRUSS)
1-B(F)	1-B(f)	FOUNDATION-FUTURE TYPE 1-B STANDARD
		GOLDEN GATE BRIDGE TYPE LIGHT STANDARD
(F) 21		FOUNDATION-FUTURE LIGHT STANDARD WITH 12' LUMINAIRE ARM 21 - TYPE 21 LIGHT STANDARD 30 - TYPE 30 LIGHT STANDARD
FO		FIBER OPTIC PULL BOX (SEE E-26 FOR DETAILS)
F		BASE CAMERA - FUTURE

ABBREVIATIONS:

PROPOSED	EXISTING	
ACC	acc	ANTENNA COAXIAL CABLE
CTID		CALTRANS IDENTIFICATION
CCU		CAMERA CONTROL UNIT
FDU		FIBER OPTIC DISTRIBUTION UNIT
FOC		FIBER OPTIC CABLE
FORS		FIBER OPTIC RECEIVERS
FOTS		FIBER OPTIC TRANSMITTERS
GPRS		GENERAL PACKET RADIO SYSTEM
HCC		HYBRID CAMERA CABLE
IC-A		IRRIGATION CONTROLLER (A, B ...)
	mvc	MVDS CABLE
MVDS	mvds	MICROWAVE VEHICLE DETECTION SYSTEM
	tc	TELEPHONE CABLE
	tvc	TELEVISION CONTROL CABLE
	tvcp	TELEVISION CONTROL POWER CABLE
	tvl	TELEVISION VIDEO CABLE
	tvp	TELEVISION POWER CABLE
VCC		VMS CONTROL CABLE
VMS		VARIABLE MESSAGE SIGN
WAN		WIDE AREA NETWORK

THIS PLAN IS ACCURATE FOR ELECTRICAL WORK ONLY

ELECTRICAL INDEX, NOTES, ABBREVIATIONS AND SYMBOLS

E-1

REVISED BY	DATE REVISED
PL	6/10/09

CALCULATED-DESIGNED BY: PIERRE LASSALLE
CHECKED BY: MAHMOOD NOII
FUNCTIONAL SUPERVISOR: LAI HONG CHIU

STATE OF CALIFORNIA - DEPARTMENT OF TRANSPORTATION
ELECTRICAL

LAST REVISION: DATE PLOTTED => 23-JUL-2009, TIME PLOTTED => 08:17
06-15-09

BORDER LAST REVISED 4/11/2008

RELATIVE BORDER SCALE IS IN INCHES 0 1 2 3

USERNAME => trrene
DGN FILE => 416373ua001.dgn

CU 04242

EA 163731

Dist	COUNTY	ROUTE	POST MILES TOTAL PROJECT	SHEET No.	TOTAL SHEETS
04	SF	101,1	9.2/9.8, 6.8/7.1	166	567

REGISTERED ELECTRICAL ENGINEER — DATE: 6-03-09

PLANS APPROVAL DATE: 7-20-09

REGISTERED PROFESSIONAL ENGINEER — Mahmood Noii — No. 13717 — Exp 6-30-11 — ELECT — STATE OF CALIFORNIA

THE STATE OF CALIFORNIA OR ITS OFFICERS OR AGENTS SHALL NOT BE RESPONSIBLE FOR THE ACCURACY OR COMPLETENESS OF SCANNED COPIES OF THIS PLAN SHEET.

FOR ACCURATE RIGHT OF WAY AND ACCESS DATA, CONTACT RIGHT OF WAY ENGINEERING AT THE DISTRICT OFFICE.

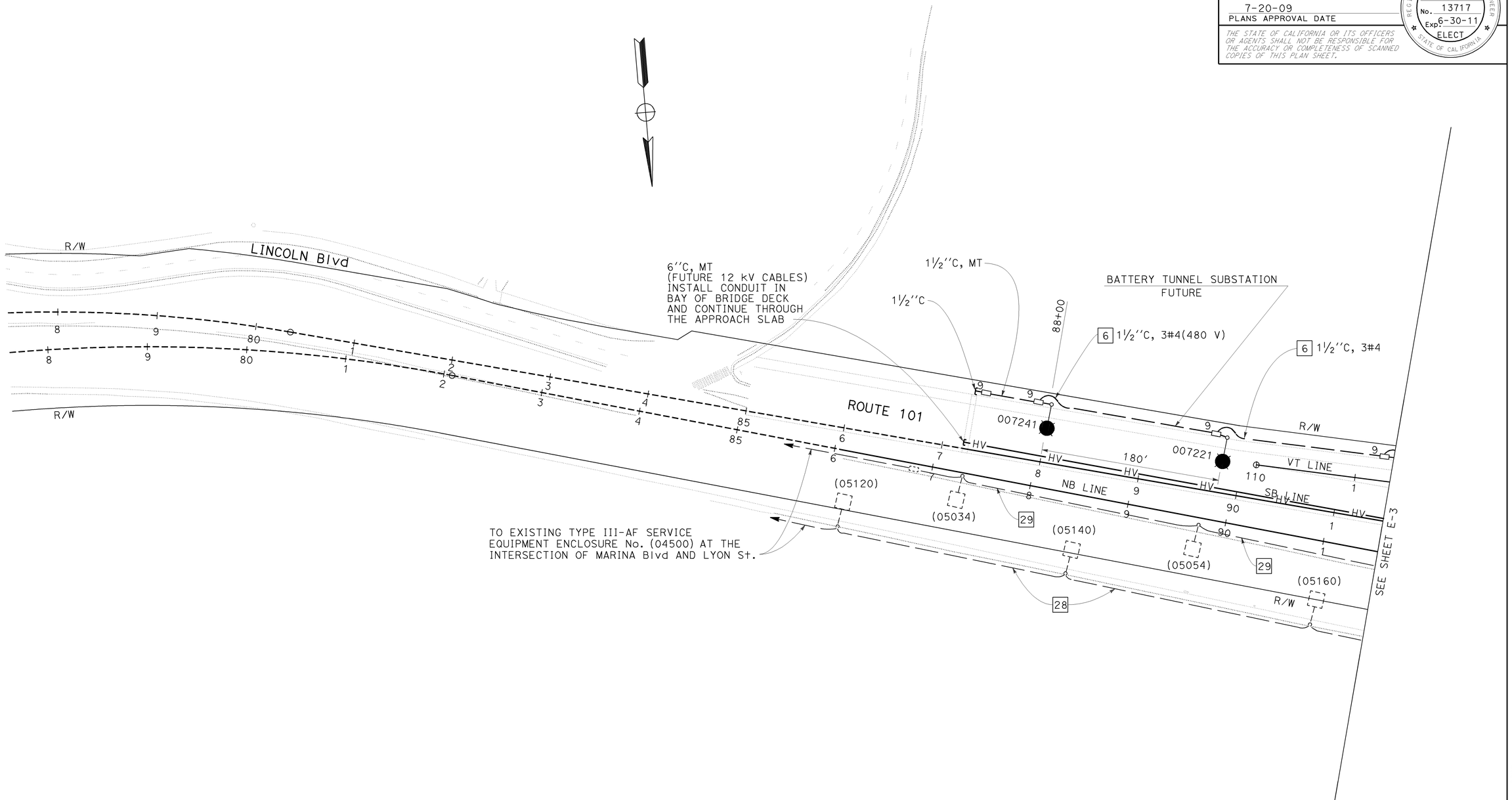

LIGHTING AND SIGN ILLUMINATION
HIGH VOLTAGE CONDUIT

SCALE: 1" = 50'

THIS PLAN IS ACCURATE FOR ELECTRICAL WORK ONLY

FOR NOTES, ABBREVIATIONS AND LEGEND, SEE SHEET E-1

E-2

STATE OF CALIFORNIA - DEPARTMENT OF TRANSPORTATION
ELECTRICAL

FUNCTIONAL SUPERVISOR: LAI HONG CHIU

CALCULATED-DESIGNED BY: PIERRE LASSALLE
CHECKED BY: MAHMOOD NOII

REVISED BY: PL
DATE REVISED: 6/10/09

LAST REVISION — DATE PLOTTED => 23-JUL-2009
TIME PLOTTED => 08:17

BORDER LAST REVISED 4/11/2008

RELATIVE BORDER SCALE IS IN INCHES 0 1 2 3

USERNAME => trrene
DGN FILE => 416373ua002.dgn

CU 04242

EA 163731

Dist	COUNTY	ROUTE	POST MILES TOTAL PROJECT	SHEET No.	TOTAL SHEETS
04	SF	101,1	9.2/9.8, 6.8/7.1	167	567

M Noii 6-03-09
REGISTERED ELECTRICAL ENGINEER DATE

7-20-09
PLANS APPROVAL DATE

REGISTERED PROFESSIONAL ENGINEER Mahmood Noii No. 13717 Exp. 6-30-11 ELECT STATE OF CALIFORNIA

THE STATE OF CALIFORNIA OR ITS OFFICERS OR AGENTS SHALL NOT BE RESPONSIBLE FOR THE ACCURACY OR COMPLETENESS OF SCANNED COPIES OF THIS PLAN SHEET.

FOR ACCURATE RIGHT OF WAY AND ACCESS DATA, CONTACT RIGHT OF WAY ENGINEERING AT THE DISTRICT OFFICE.

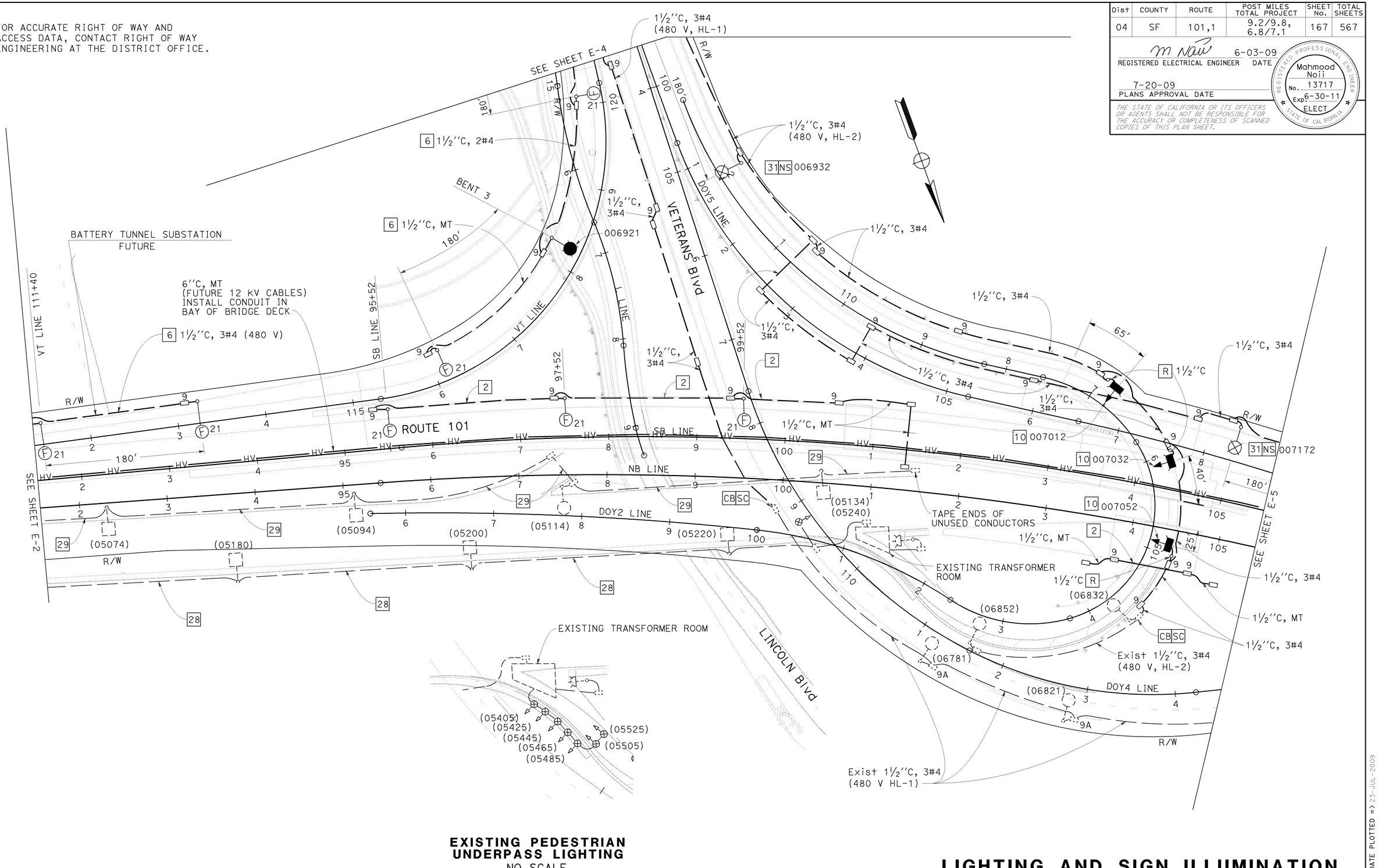

EXISTING PEDESTRIAN UNDERPASS LIGHTING
NO SCALE

THIS PLAN IS ACCURATE FOR ELECTRICAL WORK ONLY

FOR NOTES, ABBREVIATIONS AND LEGEND, SEE SHEET E-1

LIGHTING AND SIGN ILLUMINATION HIGH VOLTAGE CONDUIT

SCALE: 1" = 50'

E-3

STATE OF CALIFORNIA - DEPARTMENT OF TRANSPORTATION
Caltrans
ELECTRICAL

FUNCTIONAL SUPERVISOR: LAI HONG CHIU
CALCULATED-DESIGNED BY: PIERRE LASSALLE
CHECKED BY: MAHMOOD NOII
REVISED BY: PL
DATE REVISED: 6/10/09

LAST REVISION 06-08-09
DATE PLOTTED => 23-JUL-2009
TIME PLOTTED => 08:17

Dist	COUNTY	ROUTE	POST MILES TOTAL PROJECT	SHEET No.	TOTAL SHEETS
04	SF	101,1	9.2/9.8, 6.8/7.1	168	567

REGISTERED ELECTRICAL ENGINEER — DATE: 6-03-09

PLANS APPROVAL DATE: 7-20-09

REGISTERED PROFESSIONAL ENGINEER — Mahmood Noii — No. 13717 — Exp 6-30-11 — ELECT — STATE OF CALIFORNIA

THE STATE OF CALIFORNIA OR ITS OFFICERS OR AGENTS SHALL NOT BE RESPONSIBLE FOR THE ACCURACY OR COMPLETENESS OF SCANNED COPIES OF THIS PLAN SHEET.

FOR ACCURATE RIGHT OF WAY AND ACCESS DATA, CONTACT RIGHT OF WAY ENGINEERING AT THE DISTRICT OFFICE.

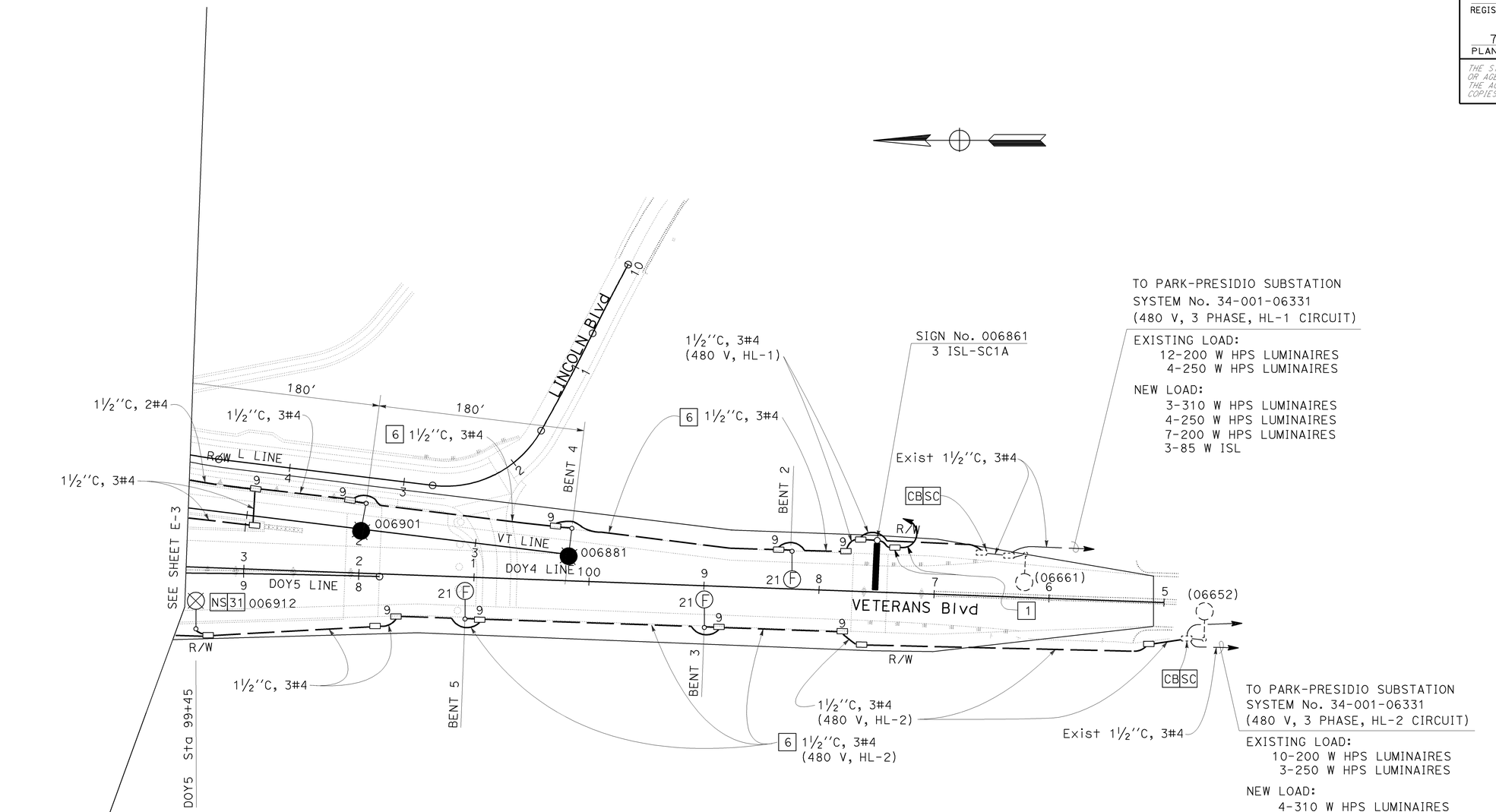

TO PARK-PRESIDIO SUBSTATION
SYSTEM No. 34-001-06331
(480 V, 3 PHASE, HL-1 CIRCUIT)

EXISTING LOAD:
- 12-200 W HPS LUMINAIRES
- 4-250 W HPS LUMINAIRES

NEW LOAD:
- 3-310 W HPS LUMINAIRES
- 4-250 W HPS LUMINAIRES
- 7-200 W HPS LUMINAIRES
- 3-85 W ISL

TO PARK-PRESIDIO SUBSTATION
SYSTEM No. 34-001-06331
(480 V, 3 PHASE, HL-2 CIRCUIT)

EXISTING LOAD:
- 10-200 W HPS LUMINAIRES
- 3-250 W HPS LUMINAIRES

NEW LOAD:
- 4-310 W HPS LUMINAIRES
- 3-250 W HPS LUMINAIRES
- 3-200 W HPS LUMINAIRES
- 3-100 W HPS WALL LUMINAIRES
- 3-85 W ISL

THIS PLAN IS ACCURATE FOR ELECTRICAL WORK ONLY

FOR NOTES, ABBREVIATIONS AND LEGEND, SEE SHEET E-1

LIGHTING AND SIGN ILLUMINATION

SCALE: 1'' = 50'

E-4

CALCULATED-DESIGNED BY		
CHECKED BY		
PL	7/08/09	
PL	6/10/09	
REVISED BY	DATE REVISED	
PIERRE LASSALLE	MAHMOOD NOII	
FUNCTIONAL SUPERVISOR	LAI HONG CHIU	

STATE OF CALIFORNIA - DEPARTMENT OF TRANSPORTATION

ELECTRICAL

LAST REVISION: DATE PLOTTED => 23-JUL-2009 TIME PLOTTED => 08:17 07-08-09

BORDER LAST REVISED 4/11/2008

RELATIVE BORDER SCALE IS IN INCHES 0 1 2 3

USERNAME => trrene
DGN FILE => 416373ua004.dgn

CU 04242

EA 163731

FOR ACCURATE RIGHT OF WAY AND
ACCESS DATA, CONTACT RIGHT OF WAY
ENGINEERING AT THE DISTRICT OFFICE.

Dist	COUNTY	ROUTE	POST MILES TOTAL PROJECT	SHEET No.	TOTAL SHEETS
04	SF	101,1	9.2/9.8, 6.8/7.1	169	567

REGISTERED ELECTRICAL ENGINEER — DATE: 6-03-09

PLANS APPROVAL DATE: 7-20-09

REGISTERED PROFESSIONAL ENGINEER — Mahmood Noii — No. 13717 — Exp 6-30-11 — ELECT — STATE OF CALIFORNIA

THE STATE OF CALIFORNIA OR ITS OFFICERS OR AGENTS SHALL NOT BE RESPONSIBLE FOR THE ACCURACY OR COMPLETENESS OF SCANNED COPIES OF THIS PLAN SHEET.

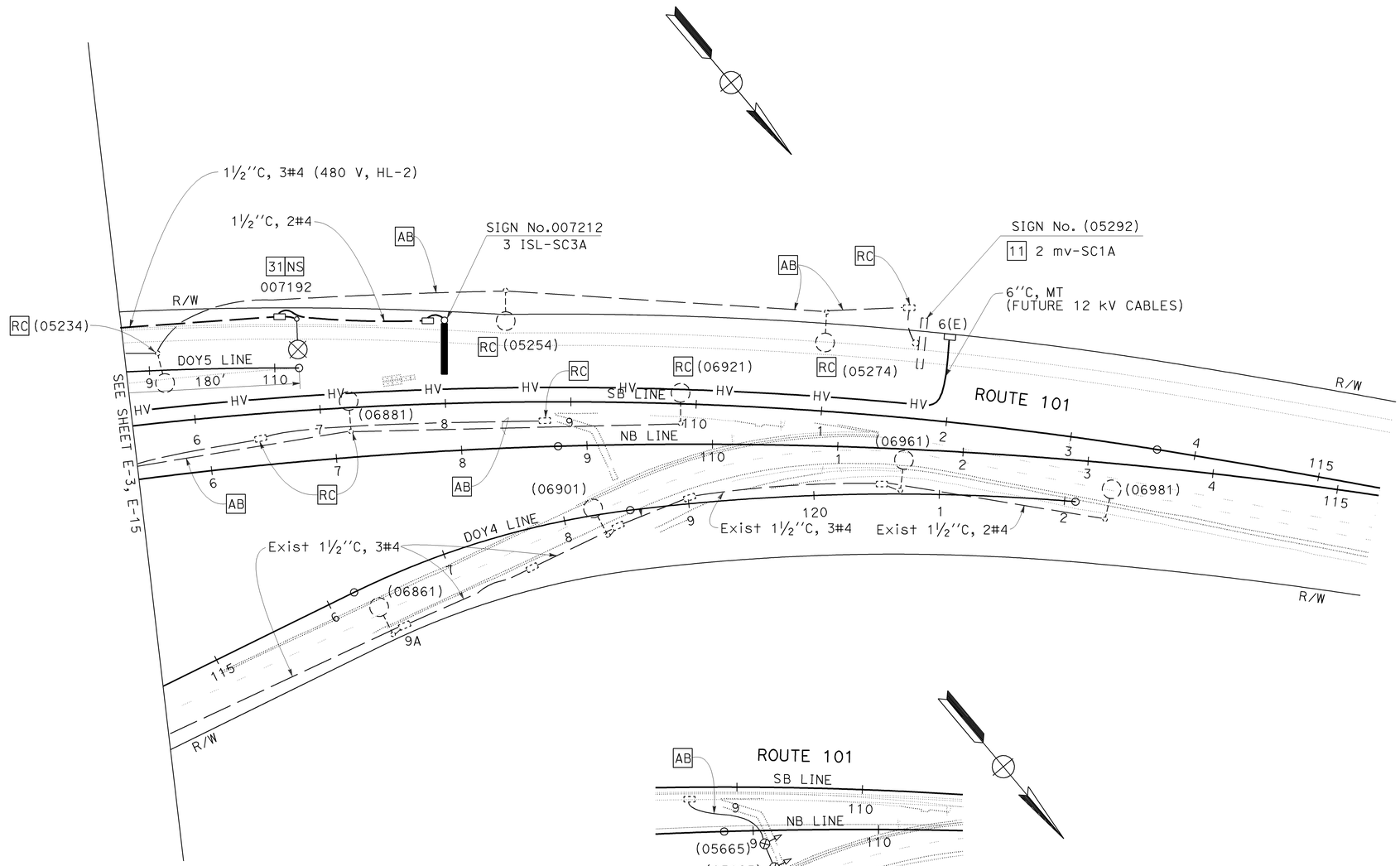

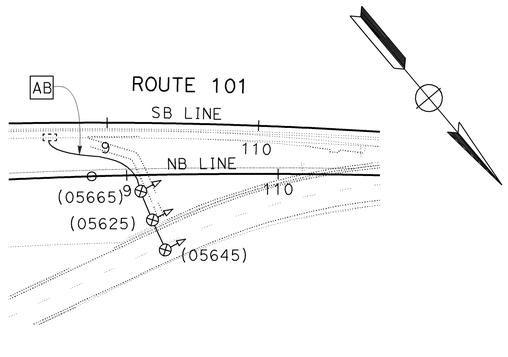

EXISTING PEDESTRIAN UNDERPASS LIGHTING
NO SCALE

THIS PLAN IS ACCURATE FOR ELECTRICAL WORK ONLY

FOR NOTES, ABBREVIATIONS AND LEGEND, SEE SHEET E-1

LIGHTING AND SIGN ILLUMINATION HIGH VOLTAGE CONDUIT

SCALE: 1'' = 50'

E-5

CALCULATED-DESIGNED BY	CHECKED BY	REVISED BY	DATE REVISED
PIERRE LASSALLE	MAHMOOD NOII	PL	6/10/09

FUNCTIONAL SUPERVISOR: LAI HONG CHIU

STATE OF CALIFORNIA - DEPARTMENT OF TRANSPORTATION
ELECTRICAL

LAST REVISION: DATE PLOTTED => 23-JUL-2009
06-06-09 TIME PLOTTED => 09:22

BORDER LAST REVISED 4/11/2008

RELATIVE BORDER SCALE IS IN INCHES 0 1 2 3

USERNAME => trrene
DGN FILE => 416373ua005.dgn

CU 04242

EA 163731

FOR ACCURATE RIGHT OF WAY AND
ACCESS DATA, CONTACT RIGHT OF WAY
ENGINEERING AT THE DISTRICT OFFICE.

Dist	COUNTY	ROUTE	POST MILES TOTAL PROJECT	SHEET No.	TOTAL SHEETS
04	SF	101,1	9.2/9.8, 6.8/7.1	170	567

m Noii 6-03-09
REGISTERED ELECTRICAL ENGINEER DATE

7-20-09
PLANS APPROVAL DATE

REGISTERED PROFESSIONAL ENGINEER
Mahmood Noii
No. 13717
Exp 6-30-11
ELECT
STATE OF CALIFORNIA

THE STATE OF CALIFORNIA OR ITS OFFICERS OR AGENTS SHALL NOT BE RESPONSIBLE FOR THE ACCURACY OR COMPLETENESS OF SCANNED COPIES OF THIS PLAN SHEET.

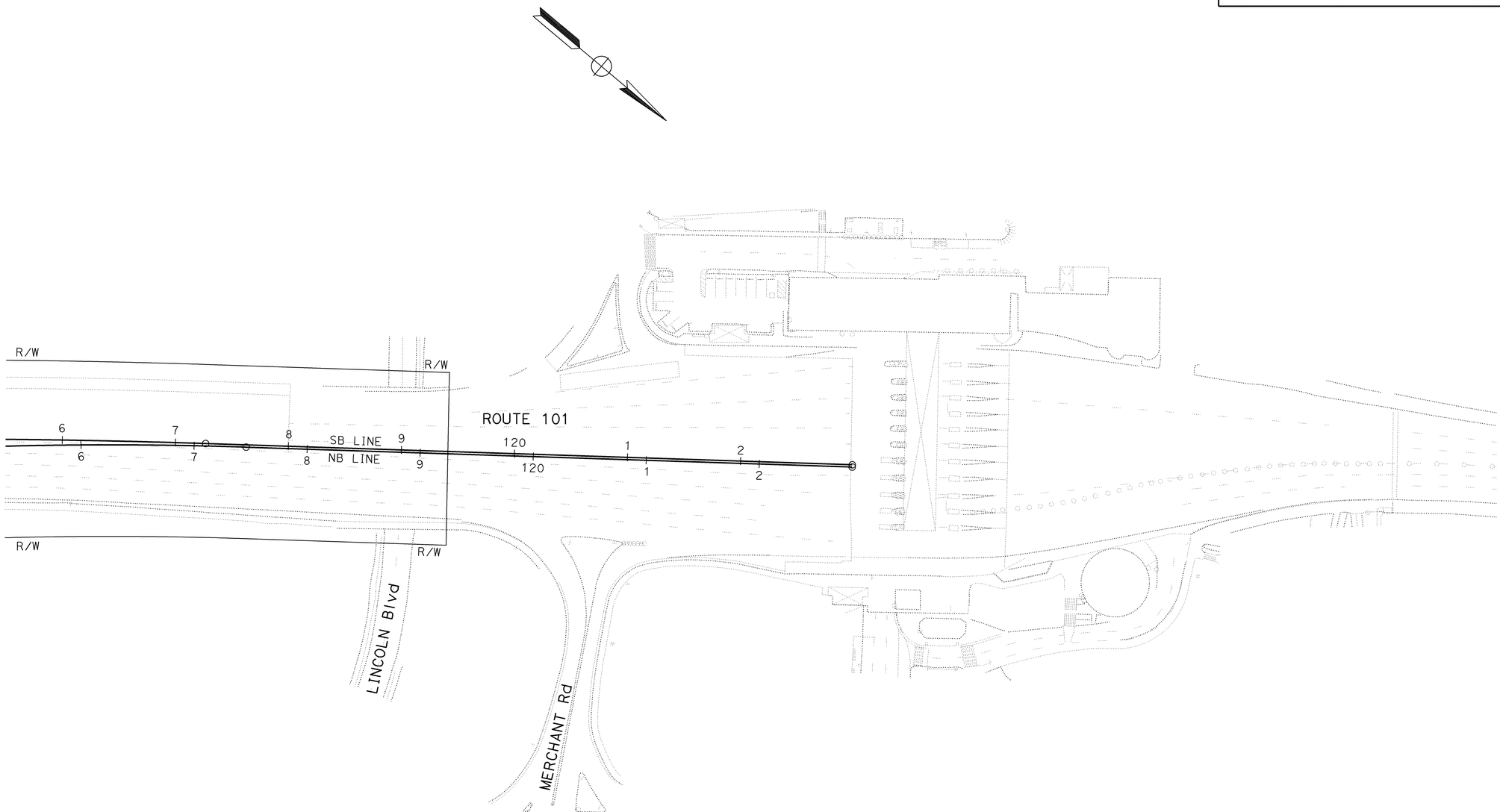

FOR INFORMATION ONLY, NO ELECTRICAL WORK.

LIGHTING AND SIGN ILLUMINATION

SCALE: 1'' = 50'

THIS PLAN IS ACCURATE FOR ELECTRICAL WORK ONLY

FOR NOTES, ABBREVIATIONS AND LEGEND, SEE SHEET E-1

E-6

CALCULATED-DESIGNED BY
CHECKED BY

PIERRE LASSALLE
MAHMOOD NOII

REVISED BY
DATE REVISED

PL
6/10/09

FUNCTIONAL SUPERVISOR
LAI HONG CHIU

STATE OF CALIFORNIA - DEPARTMENT OF TRANSPORTATION
ELECTRICAL
Caltrans

LAST REVISION DATE PLOTTED => 23-JUL-2009
TIME PLOTTED => 13:02
06-05-09

BORDER LAST REVISED 4/11/2008

RELATIVE BORDER SCALE IS IN INCHES 0 1 2 3

USERNAME => trstrk
DGN FILE => 416373ua006.dgn

CU 04242

EA 163731

FOR ACCURATE RIGHT OF WAY AND ACCESS DATA, CONTACT RIGHT OF WAY ENGINEERING AT THE DISTRICT OFFICE.

Dist	COUNTY	ROUTE	POST MILES TOTAL PROJECT	SHEET No.	TOTAL SHEETS
04	SF	101,1	9.2/9.8, 6.8/7.1	171	567

M Noii 6-03-09
REGISTERED ELECTRICAL ENGINEER DATE

7-20-09
PLANS APPROVAL DATE

REGISTERED PROFESSIONAL ENGINEER Mahmood Noii No. 13717 Exp. 6-30-11 ELECT STATE OF CALIFORNIA

THE STATE OF CALIFORNIA OR ITS OFFICERS OR AGENTS SHALL NOT BE RESPONSIBLE FOR THE ACCURACY OR COMPLETENESS OF SCANNED COPIES OF THIS PLAN SHEET.

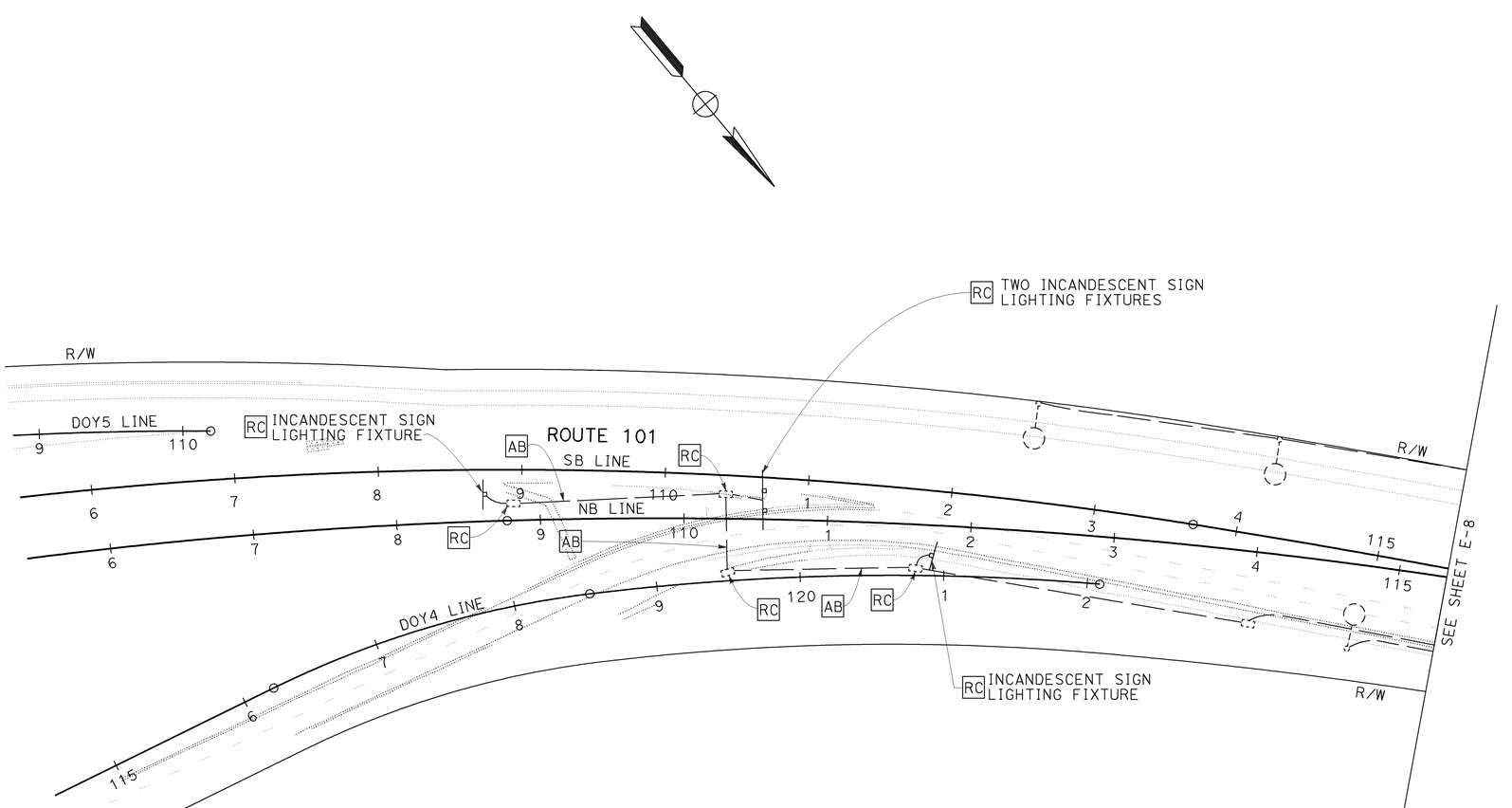

LIGHTING AND SIGN ILLUMINATION
(GOLDEN GATE BRIDGE)

SCALE: 1'' = 50'

E-7

THIS PLAN IS ACCURATE FOR ELECTRICAL WORK ONLY

FOR NOTES, ABBREVIATIONS AND LEGEND, SEE SHEET E-1

STATE OF CALIFORNIA - DEPARTMENT OF TRANSPORTATION
Caltrans ELECTRICAL

FUNCTIONAL SUPERVISOR: LAI HONG CHIU
CALCULATED-DESIGNED BY: PIERRE LASSALLE
CHECKED BY: MAHMOOD NOII
REVISED BY: PL
DATE REVISED: 6/10/09

LAST REVISION 05-29-09
DATE PLOTTED => 23-JUL-2009
TIME PLOTTED => 08:12

FOR ACCURATE RIGHT OF WAY AND
ACCESS DATA, CONTACT RIGHT OF WAY
ENGINEERING AT THE DISTRICT OFFICE.

Dist	COUNTY	ROUTE	POST MILES TOTAL PROJECT	SHEET No.	TOTAL SHEETS
04	SF	101,1	9.2/9.8, 6.8/7.1	172	567

REGISTERED ELECTRICAL ENGINEER — 6-03-09 DATE

Registered Professional Engineer — Mahmood Noii — No. 13717 — Exp 6-30-11 — ELECT — State of California

7-20-09
PLANS APPROVAL DATE

THE STATE OF CALIFORNIA OR ITS OFFICERS OR AGENTS SHALL NOT BE RESPONSIBLE FOR THE ACCURACY OR COMPLETENESS OF SCANNED COPIES OF THIS PLAN SHEET.

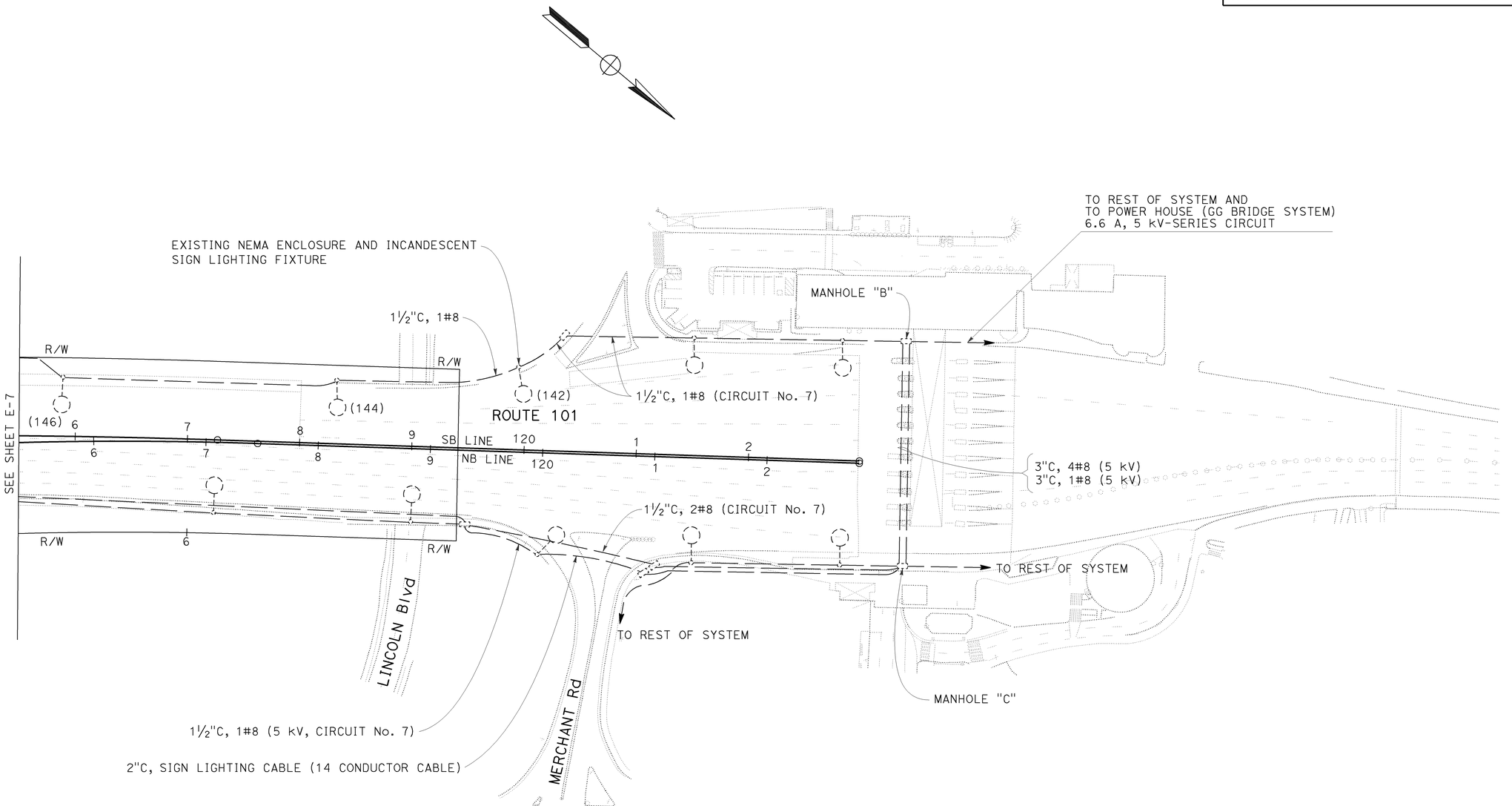

LIGHTING AND SIGN ILLUMINATION
(GOLDEN GATE BRIDGE)

SCALE: 1'' = 50'

THIS PLAN IS ACCURATE FOR ELECTRICAL WORK ONLY

FOR NOTES, ABBREVIATIONS AND LEGEND, SEE SHEET E-1

E-8

CALCULATED-DESIGNED BY	CHECKED BY	REVISED BY	DATE REVISED
PIERRE LASSALLE	MAHMOOD NOII	PL	6/10/09

FUNCTIONAL SUPERVISOR: LAI HONG CHIU

STATE OF CALIFORNIA - DEPARTMENT OF TRANSPORTATION
ELECTRICAL

LAST REVISION DATE PLOTTED => 23-JUL-2009
TIME PLOTTED => 13:02

FOR ACCURATE RIGHT OF WAY AND
ACCESS DATA, CONTACT RIGHT OF WAY
ENGINEERING AT THE DISTRICT OFFICE.

Dist	COUNTY	ROUTE	POST MILES TOTAL PROJECT	SHEET No.	TOTAL SHEETS
04	SF	101,1	9.2/9.8, 6.8/7.1	173	567

m Nau 6-03-09
REGISTERED ELECTRICAL ENGINEER DATE

7-20-09
PLANS APPROVAL DATE

REGISTERED PROFESSIONAL ENGINEER
Mahmood Noii
No. 13717
Exp 6-30-11
ELECT
STATE OF CALIFORNIA

THE STATE OF CALIFORNIA OR ITS OFFICERS OR AGENTS SHALL NOT BE RESPONSIBLE FOR THE ACCURACY OR COMPLETENESS OF SCANNED COPIES OF THIS PLAN SHEET.

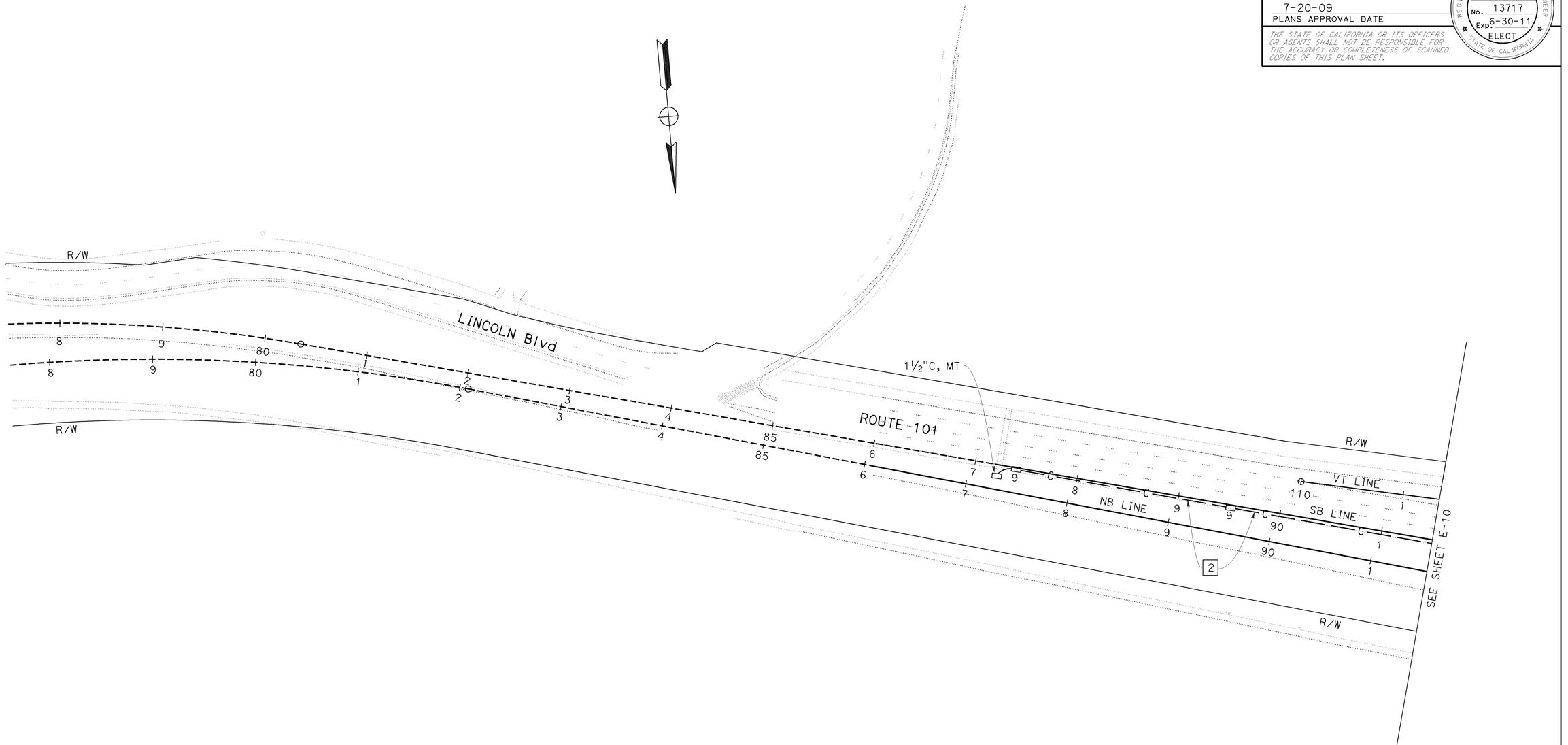

COMMUNICATION CONDUIT
SCALE: 1'' = 50'

THIS PLAN IS ACCURATE FOR ELECTRICAL WORK ONLY

FOR NOTES, ABBREVIATIONS AND LEGEND, SEE SHEET E-1

E-9

PIERRE LASSALLE
MAHMOOD NOII
CALCULATED-DESIGNED BY
CHECKED BY

REVISED BY: PL
DATE REVISED: 6/10/09

FUNCTIONAL SUPERVISOR: LAI HONG CHIU

STATE OF CALIFORNIA - DEPARTMENT OF TRANSPORTATION
Caltrans
ELECTRICAL

LAST REVISION
DATE PLOTTED => 23-JUL-2009
TIME PLOTTED => 08:12
06-08-09

BORDER LAST REVISED 4/11/2008

RELATIVE BORDER SCALE IS IN INCHES 0 1 2 3

USERNAME => trstrk
DGN FILE => 416373ua009.dgn

CU 04242

EA 163731

Dist	COUNTY	ROUTE	POST MILES TOTAL PROJECT	SHEET No.	TOTAL SHEETS
04	SF	101,1	9.2/9.8, 6.8/7.1	174	567

REGISTERED ELECTRICAL ENGINEER — DATE 6-03-09

Mahmood Noii, No. 13717, Exp 6-30-11, ELECT — REGISTERED PROFESSIONAL ENGINEER — STATE OF CALIFORNIA

7-20-09
PLANS APPROVAL DATE

THE STATE OF CALIFORNIA OR ITS OFFICERS OR AGENTS SHALL NOT BE RESPONSIBLE FOR THE ACCURACY OR COMPLETENESS OF SCANNED COPIES OF THIS PLAN SHEET.

FOR ACCURATE RIGHT OF WAY AND ACCESS DATA, CONTACT RIGHT OF WAY ENGINEERING AT THE DISTRICT OFFICE.

15 TYPE III-AF SERVICE EQUIPMENT ENCLOSURE No. 006333

PROVIDE EQUIPMENT ITEMS (1), (2), (5), (7), (8), (9) AND (20) THROUGH (27) PER THE SERVICE WIRING DIAGRAM ON E-18.

ITEM (20) SHALL BE 30 A AND LABELLED "RM NB 1/101".
ITEM (21) SHALL BE 30 A AND LABELLED "BASE CAMERA-SB".
ITEM (22) SHALL BE LABELLED "IC-A,B".
ITEM (23) SHALL BE LABELLED "RM/CCTV".
ITEM (24) SHALL BE 20 A AND LABELLED "IC-C,D".
ITEM (25) SHALL BE LABELLED "TMS/CCTV".
ITEM (26) SHALL BE LABELLED "BASE CAMERA-NB". DOOR SHALL FACE SOUTH.

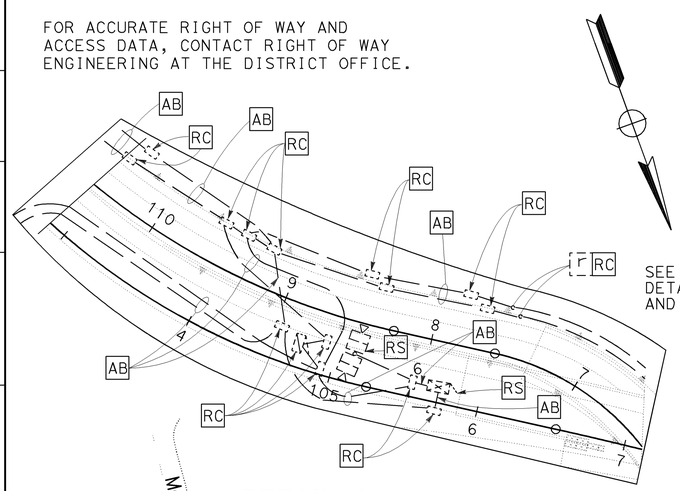

DETAIL A

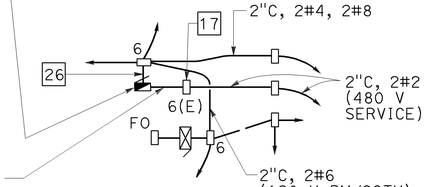

DETAIL C2

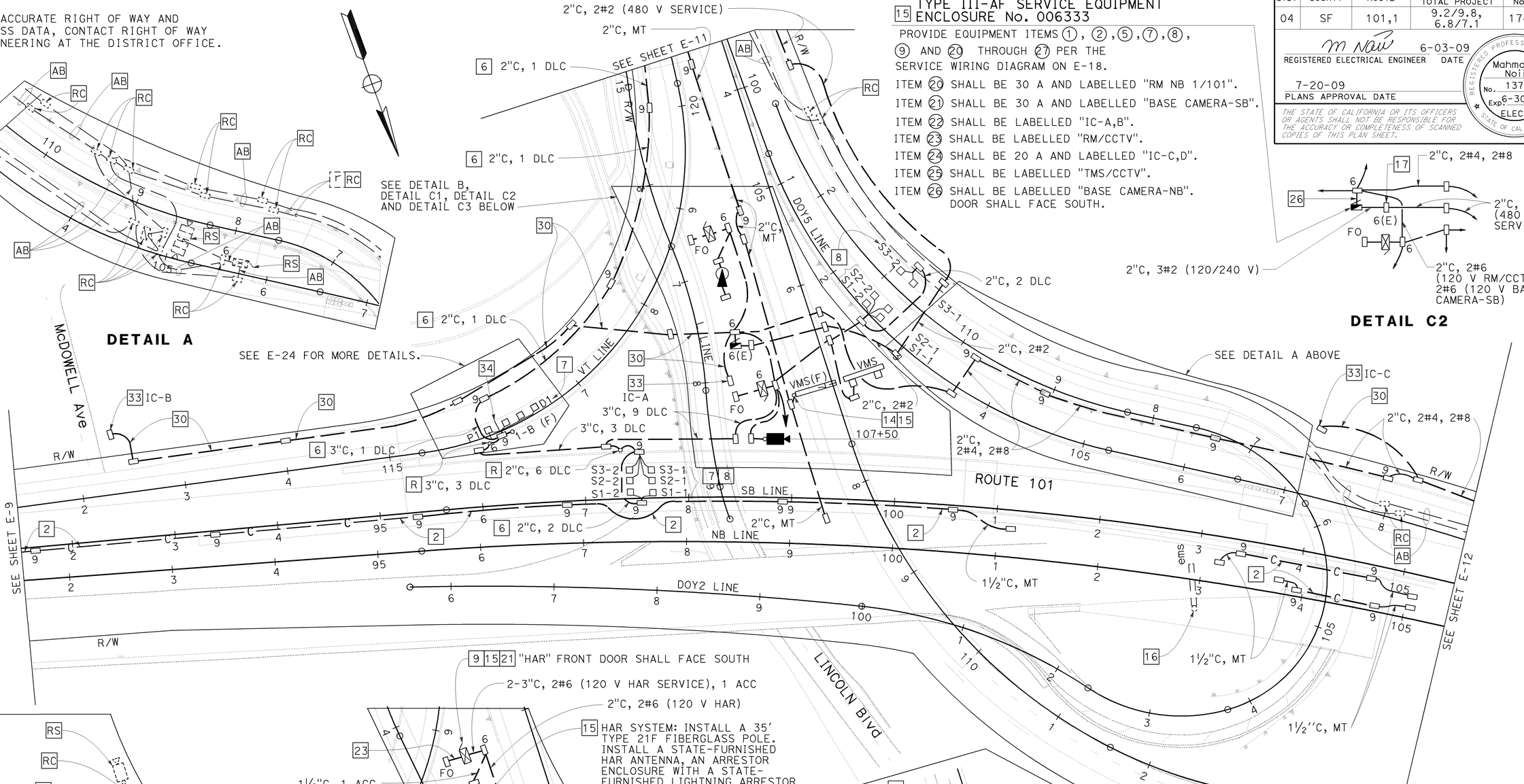

DETAIL B
EXISTING HAR/CCTV EQUIPMENT

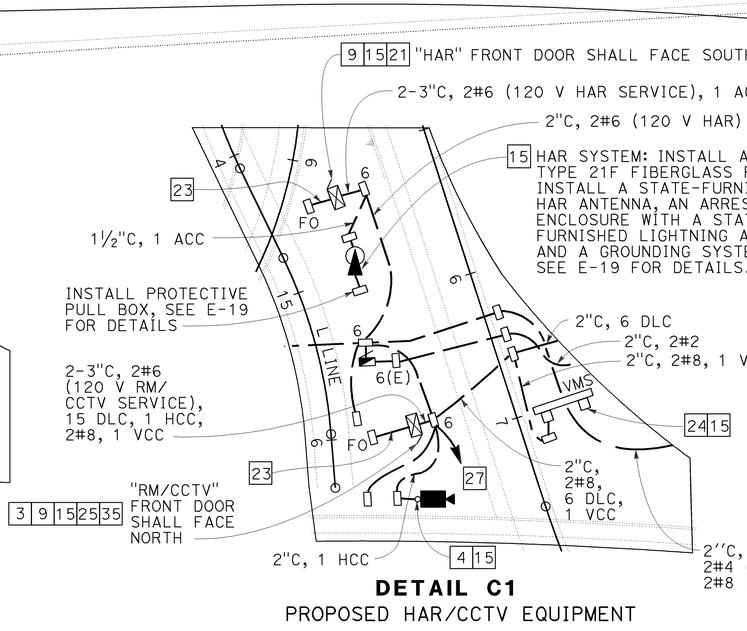

DETAIL C1
PROPOSED HAR/CCTV EQUIPMENT

DETAIL C3

TRAFFIC OPERATIONS SYSTEM ELECTRIC SERVICE (IRRIGATION) COMMUNICATION CONDUIT

SCALE: 1'' = 50'

FOR NOTES, ABBREVIATIONS AND LEGEND, SEE SHEET E-1

THIS PLAN IS ACCURATE FOR ELECTRICAL WORK ONLY

E-10

PL	7/08/09		
PL	6/10/09		
REVISED BY	DATE REVISED		
PIERRE LASSALLE	MAHMOOD NOII		
CALCULATED-DESIGNED BY	CHECKED BY		
FUNCTIONAL SUPERVISOR	LAI HONG CHIU		

STATE OF CALIFORNIA - DEPARTMENT OF TRANSPORTATION
ELECTRICAL

LAST REVISION DATE PLOTTED => 23-JUL-2009
TIME PLOTTED => 08:12
07-08-09

BORDER LAST REVISED 4/11/2008
RELATIVE BORDER SCALE IS IN INCHES 0 1 2 3
USERNAME => trstrk
DGN FILE => 416373ua010.dgn
CU 04242
EA 163731

Dist	COUNTY	ROUTE	POST MILES TOTAL PROJECT	SHEET No.	TOTAL SHEETS
04	SF	101,1	9.2/9.8, 6.8/7.1	175	567

M Noii 6-03-09
REGISTERED ELECTRICAL ENGINEER DATE

7-20-09
PLANS APPROVAL DATE

REGISTERED PROFESSIONAL ENGINEER Mahmood Noii No. 13717 Exp. 6-30-11 ELECT STATE OF CALIFORNIA

THE STATE OF CALIFORNIA OR ITS OFFICERS OR AGENTS SHALL NOT BE RESPONSIBLE FOR THE ACCURACY OR COMPLETENESS OF SCANNED COPIES OF THIS PLAN SHEET.

FOR ACCURATE RIGHT OF WAY AND ACCESS DATA, CONTACT RIGHT OF WAY ENGINEERING AT THE DISTRICT OFFICE.

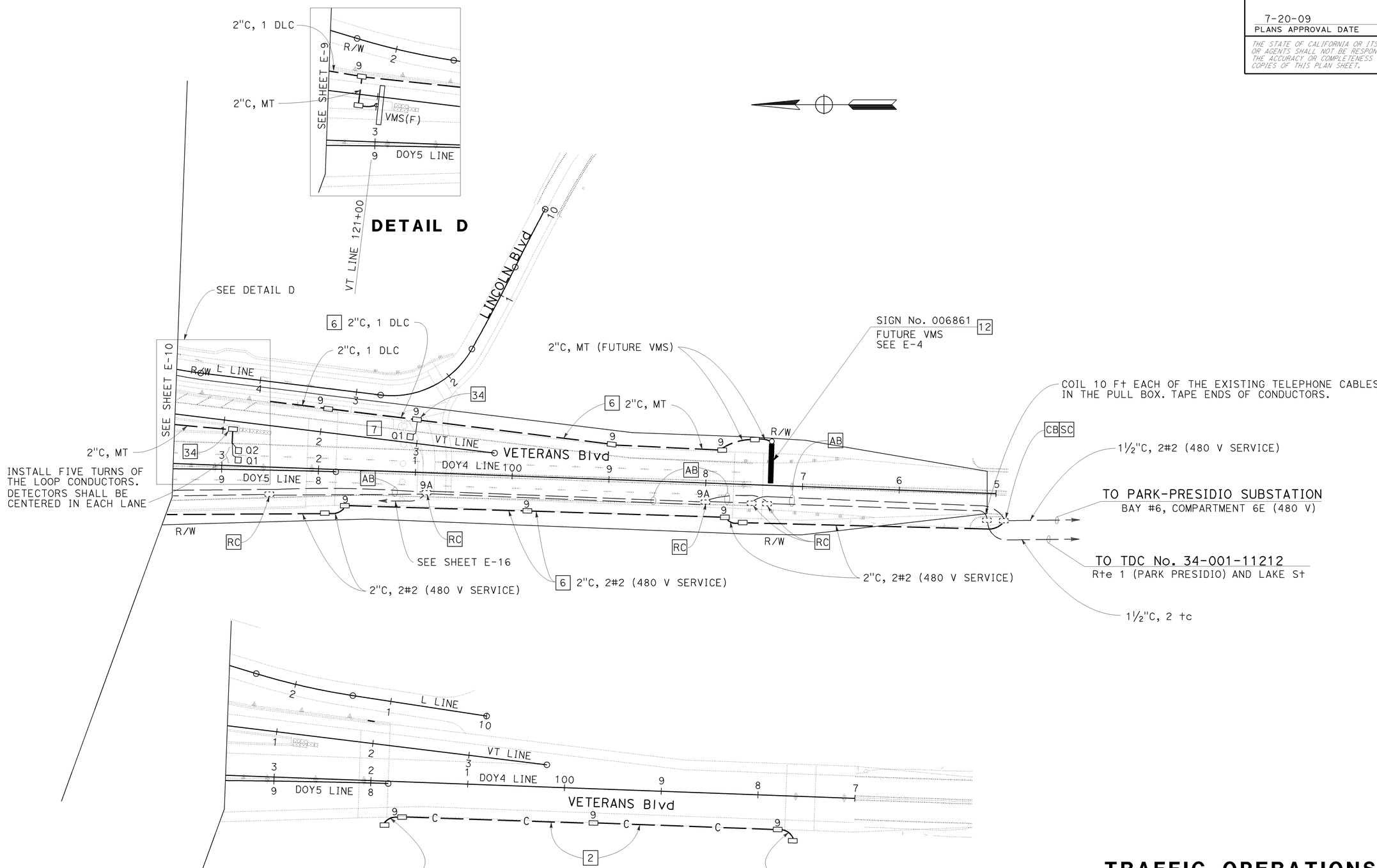

TRAFFIC OPERATIONS SYSTEM COMMUNICATION CONDUIT

SCALE: 1'' = 50'

THIS PLAN IS ACCURATE FOR ELECTRICAL WORK ONLY

FOR NOTES, ABBREVIATIONS AND LEGEND, SEE SHEET E-I

E-11

STATE OF CALIFORNIA - DEPARTMENT OF TRANSPORTATION
Caltrans
ELECTRICAL

FUNCTIONAL SUPERVISOR: LAI HONG CHIU
CALCULATED-DESIGNED BY: PIERRE LASSALLE
CHECKED BY: MAHMOOD NOII
REVISED BY: PL
DATE REVISED: 6/10/09

LAST REVISION 05-30-09
DATE PLOTTED => 23-JUL-2009
TIME PLOTTED => 08:12

BORDER LAST REVISED 4/11/2008
RELATIVE BORDER SCALE IS IN INCHES 0 1 2 3
USERNAME => trstrk
DGN FILE => 416373ua011.dgn
CU 04242
EA 163731

FOR ACCURATE RIGHT OF WAY AND
ACCESS DATA, CONTACT RIGHT OF WAY
ENGINEERING AT THE DISTRICT OFFICE.

Dist	COUNTY	ROUTE	POST MILES TOTAL PROJECT	SHEET No.	TOTAL SHEETS
04	SF	101,1	9.2/9.8, 6.8/7.1	176	567

REGISTERED ELECTRICAL ENGINEER — 6-03-09 DATE

Mahmood Noii
No. 13717
Exp 6-30-11
ELECT
REGISTERED PROFESSIONAL ENGINEER
STATE OF CALIFORNIA

7-20-09
PLANS APPROVAL DATE

THE STATE OF CALIFORNIA OR ITS OFFICERS OR AGENTS SHALL NOT BE RESPONSIBLE FOR THE ACCURACY OR COMPLETENESS OF SCANNED COPIES OF THIS PLAN SHEET.

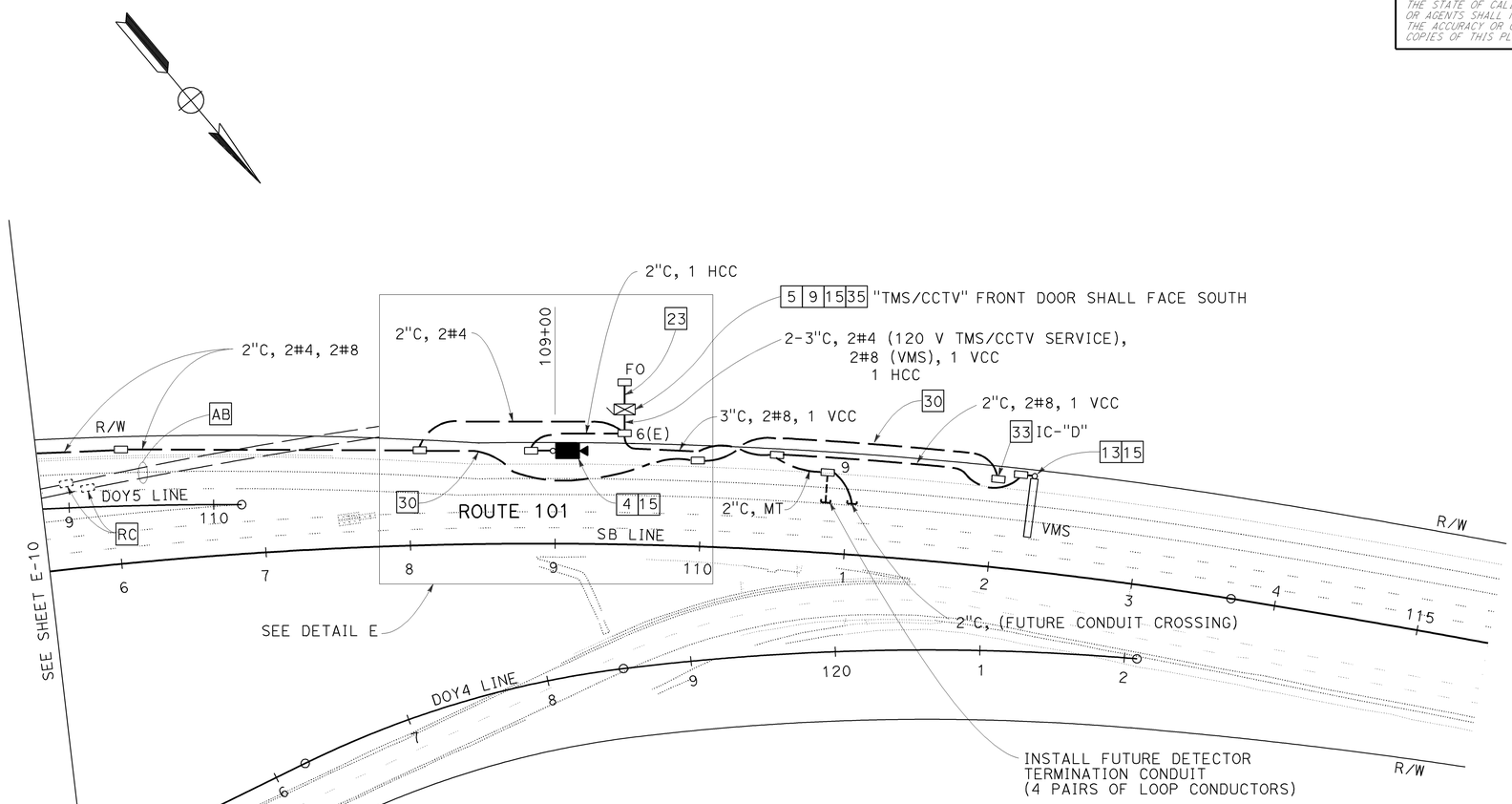

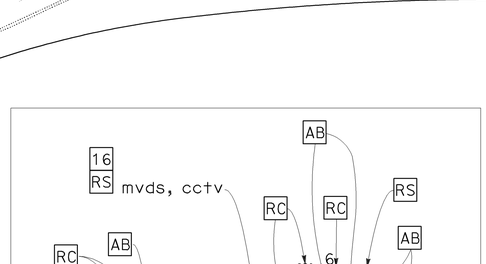

DETAIL E

THIS PLAN IS ACCURATE FOR ELECTRICAL WORK ONLY

FOR NOTES, ABBREVIATIONS AND LEGEND, SEE SHEET E-1

TRAFFIC OPERATIONS SYSTEM
ELECTRIC SERVICE (IRRIGATION)

SCALE: 1'' = 50'

E-12

PIERRE LASSALLE — CALCULATED-DESIGNED BY
MAHMOOD NOII — CHECKED BY
PL — REVISED BY
6/10/09 — DATE REVISED
LAI HONG CHIU — FUNCTIONAL SUPERVISOR
STATE OF CALIFORNIA - DEPARTMENT OF TRANSPORTATION
ELECTRICAL
Caltrans

LAST REVISION DATE PLOTTED => 23-JUL-2009
TIME PLOTTED => 08:12
06-03-09

BORDER LAST REVISED 4/11/2008
RELATIVE BORDER SCALE IS IN INCHES 0 1 2 3
USERNAME => trstrk
DGN FILE => 416373ua012.dgn
CU 04242
EA 163731

FOR ACCURATE RIGHT OF WAY AND
ACCESS DATA, CONTACT RIGHT OF WAY
ENGINEERING AT THE DISTRICT OFFICE.

Dist	COUNTY	ROUTE	POST MILES TOTAL PROJECT	SHEET No.	TOTAL SHEETS
04	SF	101,1	9.2/9.8, 6.8/7.1	177	567

REGISTERED ELECTRICAL ENGINEER — 6-03-09 DATE

Mahmood Noii
No. 13717
Exp 6-30-11
ELECT
REGISTERED PROFESSIONAL ENGINEER
STATE OF CALIFORNIA

7-20-09
PLANS APPROVAL DATE

THE STATE OF CALIFORNIA OR ITS OFFICERS OR AGENTS SHALL NOT BE RESPONSIBLE FOR THE ACCURACY OR COMPLETENESS OF SCANNED COPIES OF THIS PLAN SHEET.

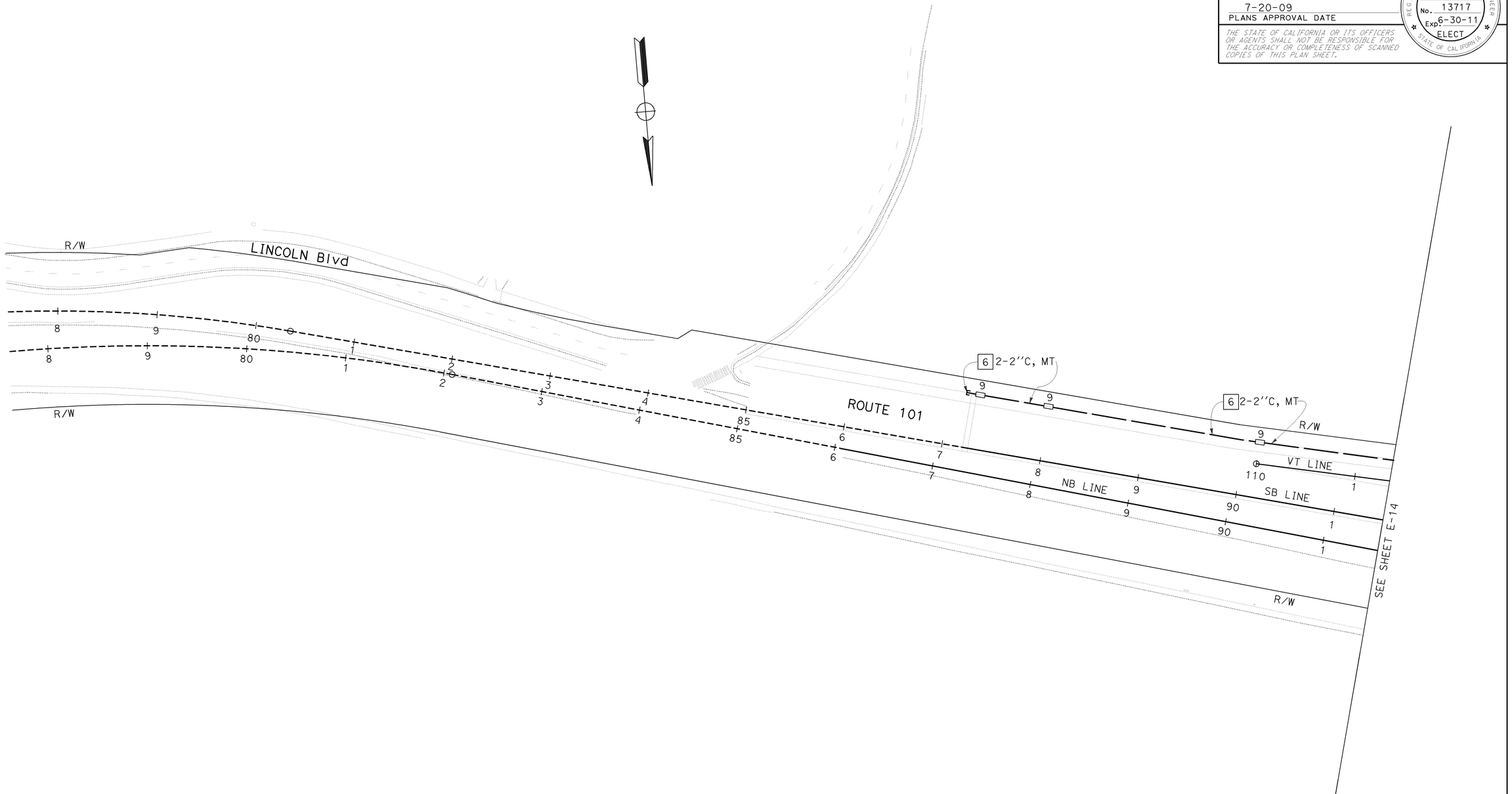

THIS PLAN IS ACCURATE FOR ELECTRICAL WORK ONLY

FOR NOTES, ABBREVIATIONS AND LEGEND, SEE SHEET E-1

TUNNEL TRAFFIC CONTROL SYSTEM

SCALE: 1'' = 50'

E-13

CALCULATED-DESIGNED BY: PIERRE LASSALLE
CHECKED BY: MAHMOOD NOII
REVISED BY: PL
DATE REVISED: 6/10/09
FUNCTIONAL SUPERVISOR: LAI HONG CHIU

STATE OF CALIFORNIA - DEPARTMENT OF TRANSPORTATION
Caltrans®
ELECTRICAL

LAST REVISION: DATE PLOTTED => 23-JUL-2009
TIME PLOTTED => 08:00
06-02-09

BORDER LAST REVISED 4/11/2008

RELATIVE BORDER SCALE IS IN INCHES 0 1 2 3

USERNAME => trpierce
DGN FILE => 416373ua013.dgn

CU 04242

EA 163731

Dist	COUNTY	ROUTE	POST MILES TOTAL PROJECT	SHEET No.	TOTAL SHEETS
04	SF	101,1	9.2/9.8, 6.8/7.1	178	567

REGISTERED ELECTRICAL ENGINEER — DATE: 6-03-09

Mahmood Noii, No. 13717, Exp 6-30-11, ELECT — REGISTERED PROFESSIONAL ENGINEER — STATE OF CALIFORNIA

PLANS APPROVAL DATE: 7-20-09

THE STATE OF CALIFORNIA OR ITS OFFICERS OR AGENTS SHALL NOT BE RESPONSIBLE FOR THE ACCURACY OR COMPLETENESS OF SCANNED COPIES OF THIS PLAN SHEET.

FOR ACCURATE RIGHT OF WAY AND ACCESS DATA, CONTACT RIGHT OF WAY ENGINEERING AT THE DISTRICT OFFICE.

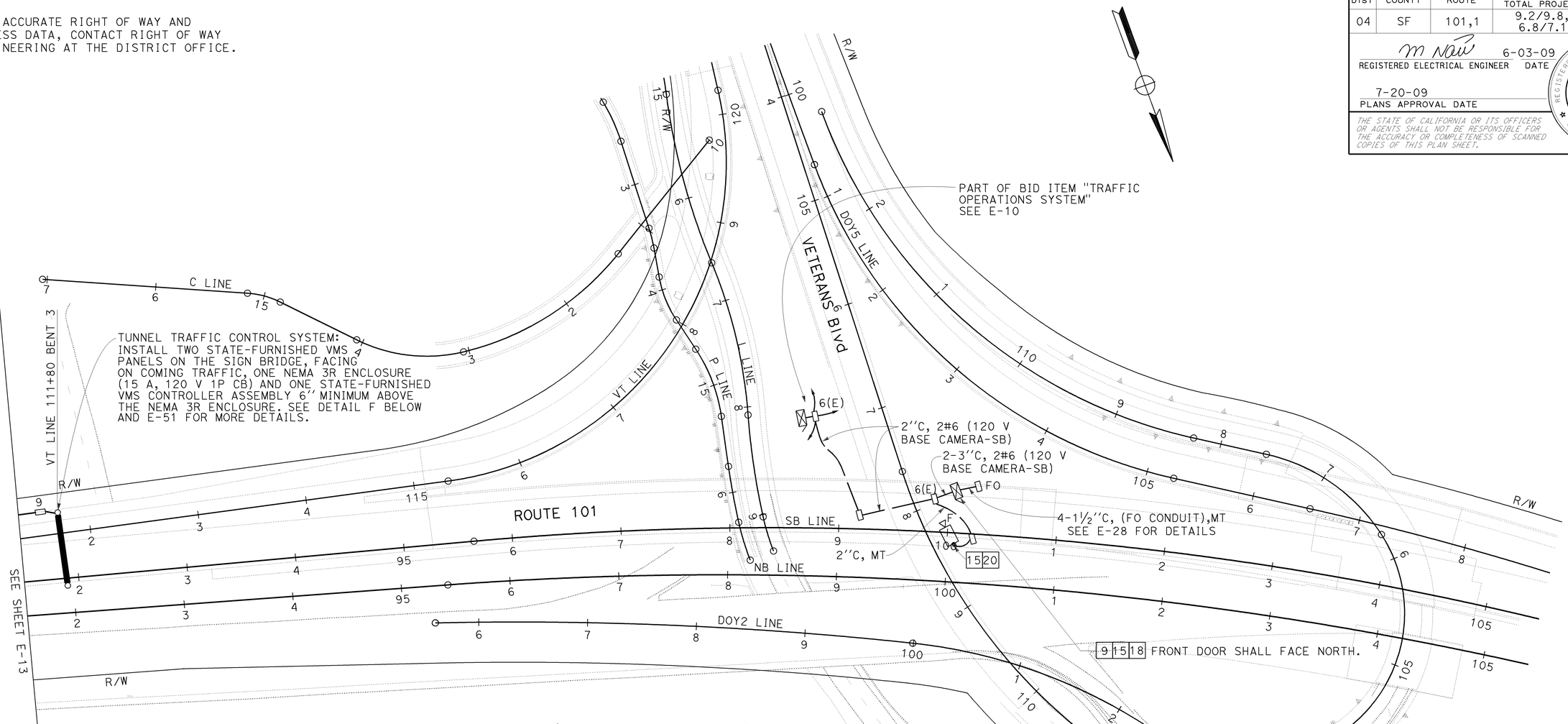

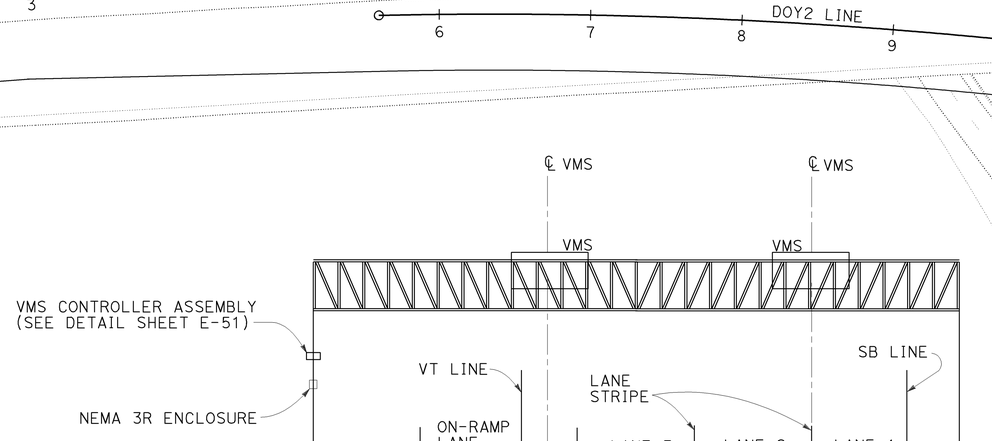

DETAIL F

THIS PLAN IS ACCURATE FOR ELECTRICAL WORK ONLY

FOR NOTES, ABBREVIATIONS AND LEGEND, SEE SHEET E-1

TUNNEL TRAFFIC CONTROL SYSTEM
BASE CAMERA SYSTEM

SCALE: 1'' = 50'

E-14

CALCULATED-DESIGNED BY	CHECKED BY	REVISED BY	DATE REVISED
PIERRE LASSALLE	MAHMOOD NOII	PL	6/10/09

FUNCTIONAL SUPERVISOR: LAI HONG CHIU

STATE OF CALIFORNIA - DEPARTMENT OF TRANSPORTATION — ELECTRICAL

Caltrans

LAST REVISION | DATE PLOTTED => 23-JUL-2009 | TIME PLOTTED => 13:07 | 06-05-09

BORDER LAST REVISED 4/11/2008

RELATIVE BORDER SCALE IS IN INCHES 0 1 2 3

USERNAME => trphils
DGN FILE => 416373ua014.dgn

CU 04242

EA 163731

FOR ACCURATE RIGHT OF WAY AND
ACCESS DATA, CONTACT RIGHT OF WAY
ENGINEERING AT THE DISTRICT OFFICE.

Dist	COUNTY	ROUTE	POST MILES TOTAL PROJECT	SHEET No.	TOTAL SHEETS
04	SF	101,1	9.2/9.8, 6.8/7.1	179	567

6-03-09
REGISTERED ELECTRICAL ENGINEER DATE

7-20-09
PLANS APPROVAL DATE

REGISTERED PROFESSIONAL ENGINEER
Mahmood Noii
No. 13717
Exp 6-30-11
ELECT
STATE OF CALIFORNIA

THE STATE OF CALIFORNIA OR ITS OFFICERS OR AGENTS SHALL NOT BE RESPONSIBLE FOR THE ACCURACY OR COMPLETENESS OF SCANNED COPIES OF THIS PLAN SHEET.

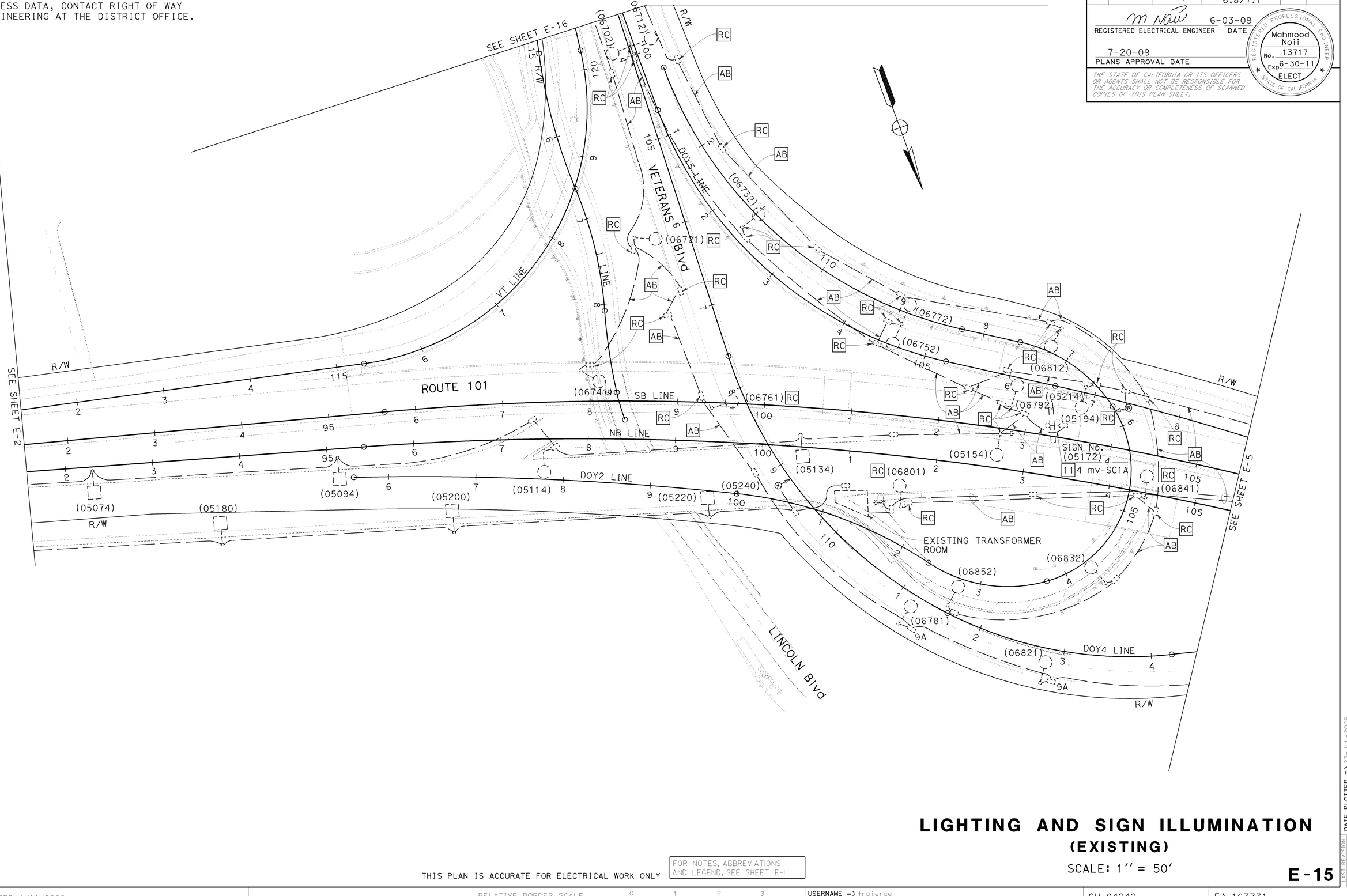

THIS PLAN IS ACCURATE FOR ELECTRICAL WORK ONLY

FOR NOTES, ABBREVIATIONS AND LEGEND, SEE SHEET E-1

LIGHTING AND SIGN ILLUMINATION
(EXISTING)

SCALE: 1'' = 50'

E-15

CALCULATED-DESIGNED BY	CHECKED BY	REVISED BY	DATE REVISED
PIERRE LASSALLE	MAHMOOD NOII	PL	6/10/09

FUNCTIONAL SUPERVISOR: LAI HONG CHIU

STATE OF CALIFORNIA - DEPARTMENT OF TRANSPORTATION
ELECTRICAL

LAST REVISION DATE PLOTTED => 23-JUL-2009
TIME PLOTTED => 08:00
06-02-09

BORDER LAST REVISED 4/11/2008

RELATIVE BORDER SCALE IS IN INCHES 0 1 2 3

USERNAME => trpierce
DGN FILE => 416373ua015.dgn

CU 04242

EA 163731

Dist	COUNTY	ROUTE	POST MILES TOTAL PROJECT	SHEET No.	TOTAL SHEETS
04	SF	101,1	9.2/9.8, 6.8/7.1	180	567

REGISTERED ELECTRICAL ENGINEER — DATE: 6-03-09

PLANS APPROVAL DATE: 7-20-09

REGISTERED PROFESSIONAL ENGINEER — Mahmood Noii — No. 13717 — Exp 6-30-11 — ELECT — STATE OF CALIFORNIA

THE STATE OF CALIFORNIA OR ITS OFFICERS OR AGENTS SHALL NOT BE RESPONSIBLE FOR THE ACCURACY OR COMPLETENESS OF SCANNED COPIES OF THIS PLAN SHEET.

FOR ACCURATE RIGHT OF WAY AND ACCESS DATA, CONTACT RIGHT OF WAY ENGINEERING AT THE DISTRICT OFFICE.

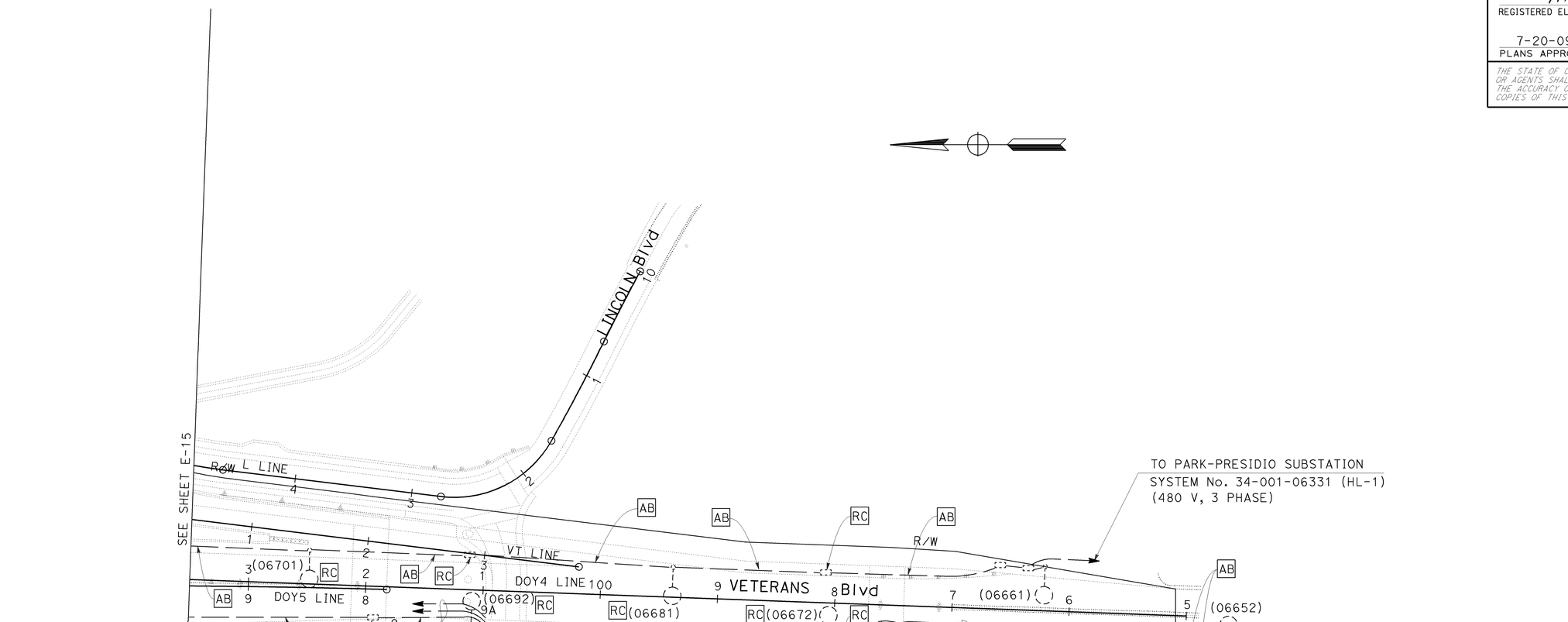

LIGHTING AND SIGN ILLUMINATION
(EXISTING)

SCALE: 1'' = 50'

THIS PLAN IS ACCURATE FOR ELECTRICAL WORK ONLY

FOR NOTES, ABBREVIATIONS AND LEGEND, SEE SHEET E-1

E-16

CALCULATED-DESIGNED BY	
CHECKED BY	
PL	PIERRE LASSALLE
6/10/09	MAHMOOD NOII
REVISED BY	
DATE REVISED	
FUNCTIONAL SUPERVISOR	LAI HONG CHIU

STATE OF CALIFORNIA - DEPARTMENT OF TRANSPORTATION

Caltrans

ELECTRICAL

LAST REVISION — DATE PLOTTED => 23-JUL-2009 — TIME PLOTTED => 08:00 — 06-02-09

BORDER LAST REVISED 4/11/2008

RELATIVE BORDER SCALE IS IN INCHES 0 1 2 3

USERNAME => trpierce
DGN FILE => 416373ua016.dgn

CU 04242

EA 163731

Dist	COUNTY	ROUTE	POST MILES TOTAL PROJECT	SHEET No.	TOTAL SHEETS
04	SF	101,1	9.2/9.8, 6.8/7.1	181	567

REGISTERED ELECTRICAL ENGINEER — 6-03-09 DATE

7-20-09
PLANS APPROVAL DATE

REGISTERED PROFESSIONAL ENGINEER — Mahmood Noii — No. 13717 — Exp 6-30-11 — ELECT — STATE OF CALIFORNIA

THE STATE OF CALIFORNIA OR ITS OFFICERS OR AGENTS SHALL NOT BE RESPONSIBLE FOR THE ACCURACY OR COMPLETENESS OF SCANNED COPIES OF THIS PLAN SHEET.

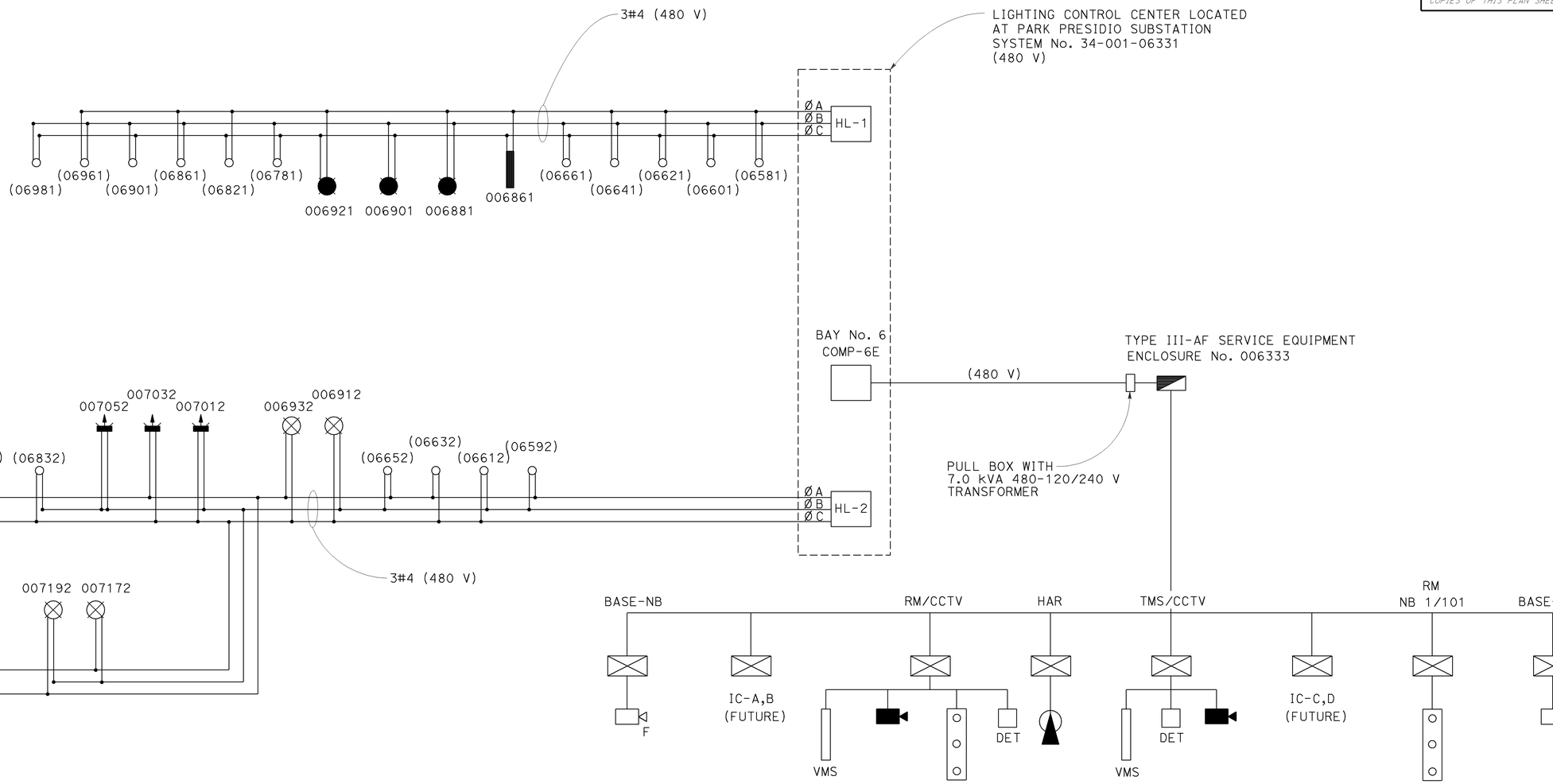

ELECTRICAL DETAILS
(WIRING DIAGRAM FOR SYSTEM No. 34-001-06331)

NO SCALE

THIS PLAN IS ACCURATE FOR ELECTRICAL WORK ONLY

FOR NOTES, ABBREVIATIONS AND LEGEND, SEE SHEET E-1

E-17

CALCULATED-
DESIGNED BY PL — REVISED BY
CHECKED BY 6/10/09 — DATE REVISED

PIERRE LASSALLE
MAHMOOD NOII

FUNCTIONAL SUPERVISOR
LAI HONG CHIU

STATE OF CALIFORNIA - DEPARTMENT OF TRANSPORTATION
ELECTRICAL

LAST REVISION | DATE PLOTTED => 23-JUL-2009
06-08-09 | TIME PLOTTED => 13:21

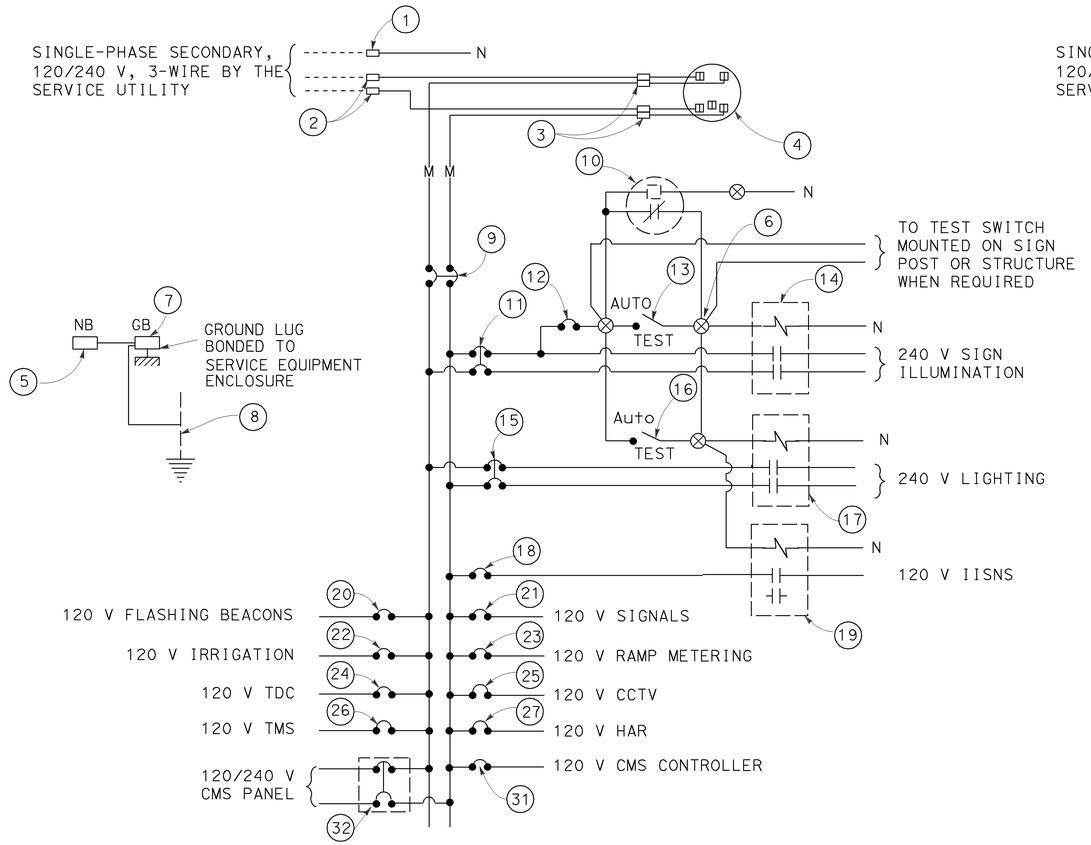

120/240 V SERVICE WIRING DIAGRAM (TYPICAL)

(FOR CIRCUITS WITH BOTH SIGN ILLUMINATION AND LIGHTING)

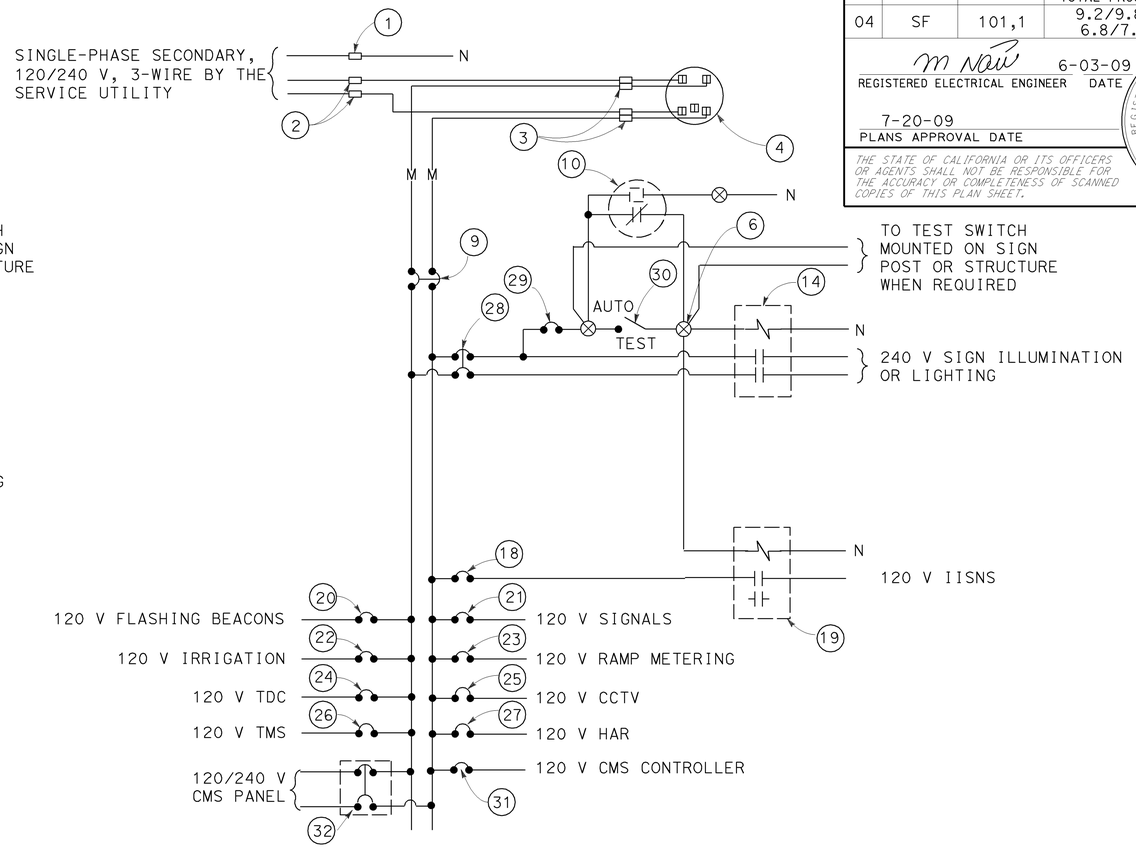

120/240 V SERVICE WIRING DIAGRAM (TYPICAL)

(FOR CIRCUIT ONLY WITH SIGN ILLUMINATION OR LIGHTING)

TYPE III-A SERVICE (120/240 V) EQUIPMENT LEGEND

ITEM No.	COMPONENT	NAMEPLATE DESCRIPTION
1	NEUTRAL LUG	
2	LANDING LUG	
3	TEST BYPASS FACILITY	
4	METER SOCKET AND SUPPORT	
5	NEUTRAL BUS	
6	TERMINAL BLOCK	
7	GROUND BUS	
8	GROUNDING ELECTRODE	
9	100 A, 240 V, 2P, CB	MAIN BREAKER
10	PHOTOELECTRIC UNIT (NOTE 7)	
11	30 A, 240 V, 2P, CB	SIGN ILLUMINATION
12	15 A, 120 V, 1P, CB	SIGN ILLUMINATION AND LIGHTING CONTROL
13	15 A, 1P, TEST SWITCH	SIGN ILLUMINATION TEST SWITCH
14	30 A, 2PNO, CONTACTOR	SIGN ILLUMINATION
15	30 A, 240 V, 2P, CB	LIGHTING
16	15 A, 1P, TEST SWITCH	LIGHTING TEST SWITCH

ITEM No.	COMPONENT	NAMEPLATE DESCRIPTION
17	30 A, 2PNO, CONTACTOR	LIGHTING
18	15 A, 120 V, 1P, CB	IISNS
19	30 A, 2PNO, CONTACTOR	IISNS
20	15 A, 120 V, 1P, CB	FLASHING BEACON
21	50 A, 120 V, 1P, CB	SIGNALS
22	20 A, 120 V, 1P, CB	IRRIGATION
23	30 A, 120 V, 1P, CB	RAMP METERING
24	15 A, 120 V, 1P, CB	TELEPHONE DEMARCATION CABINET
25	30 A, 120 V, 1P, CB	CCTV
26	30 A, 120 V, 1P, CB	TMS
27	30 A, 120 V, 1P, CB	HAR
28	30 A, 240 V, 2P, CB	SIGN ILLUMINATION *
29	15 A, 120 V, 1P, CB	SIGN ILLUMINATION CONTROL *
30	15 A, 1P, TEST SWITCH	SIGN ILLUMINATION TEST SWITCH *
31	30 A, 120 V, 1P, CB	CMS CONTROLLER
32	30 A, 240 V, 2P, CB	CMS PANEL

* FOR LIGHTING CIRCUIT, WORDS OF "SIGN ILLUMINATION" IN NAMEPLATE DESCRIPTION SHALL BE CHANGED TO "LIGHTING".

LEGEND:

(SEE RSP ES-1A AND ES-1C)

NOTES: (FOR SERVICE EQUIPMENT)

1. VOLTAGE RATINGS OF SERVICE EQUIPMENT SHALL CONFORM TO THE SERVICE VOLTAGES INDICATED ON THE PLANS.
2. UNLESS OTHERWISE INDICATED ON THE PLANS, ALL SERVICE EQUIPMENT ITEMS SHALL BE PROVIDED FOR EACH SERVICE EQUIPMENT ENCLOSURE AS SHOWN.
3. ITEM No. (1) AND (5) SHALL BE ISOLATED FROM THE CABINET.
4. METER SOCKETS SHALL BE 5 CLIP TYPE.
5. SERVICE UTILITY WILL INSTALL THE TIME-OF-USE METER IF APPLICABLE
6. UNLESS OTHERWISE NOTED, NO MORE THAN 14 CB CAN BE INSTALLED IN THE ENCLOSURE.
7. PHOTOELECTRIC CONTROL SHALL BE TYPE II.

ELECTRICAL DETAILS
(SERVICE EQUIPMENT AND TYPICAL WIRING DIAGRAM TYPE III-A SERIES)

NO SCALE

THIS PLAN IS ACCURATE FOR ELECTRICAL WORK ONLY

FOR NOTES, ABBREVIATIONS AND LEGEND, SEE SHEET E-1

E-18

Dist	COUNTY	ROUTE	POST MILES TOTAL PROJECT	SHEET No.	TOTAL SHEETS
04	SF	101,1	9.2/9.8, 6.8/7.1	182	567

REGISTERED ELECTRICAL ENGINEER — 6-03-09 DATE

Mahmood Noii, No. 13717, Exp 6-30-11, ELECT — REGISTERED PROFESSIONAL ENGINEER — STATE OF CALIFORNIA

7-20-09
PLANS APPROVAL DATE

THE STATE OF CALIFORNIA OR ITS OFFICERS OR AGENTS SHALL NOT BE RESPONSIBLE FOR THE ACCURACY OR COMPLETENESS OF SCANNED COPIES OF THIS PLAN SHEET.

REVISED BY	DATE REVISED
PL	6/10/09

CALCULATED-DESIGNED BY: PIERRE LASSALLE
CHECKED BY: MAHMOOD NOII
FUNCTIONAL SUPERVISOR: LAI HONG CHIU

STATE OF CALIFORNIA - DEPARTMENT OF TRANSPORTATION
ELECTRICAL
Caltrans

LAST REVISION — DATE PLOTTED => 23-JUL-2009, TIME PLOTTED => 08:00
05-28-09

Dist	COUNTY	ROUTE	POST MILES TOTAL PROJECT	SHEET No.	TOTAL SHEETS
04	SF	101,1	9.2/9.8, 6.8/7.1	183	567

REGISTERED ELECTRICAL ENGINEER — DATE 6-07-09

PLANS APPROVAL DATE 7-20-09

REGISTERED PROFESSIONAL ENGINEER — Michael P. Lee — No. 13435 — Exp 9-30-10 — ELECT — STATE OF CALIFORNIA

THE STATE OF CALIFORNIA OR ITS OFFICERS OR AGENTS SHALL NOT BE RESPONSIBLE FOR THE ACCURACY OR COMPLETENESS OF SCANNED COPIES OF THIS PLAN SHEET.

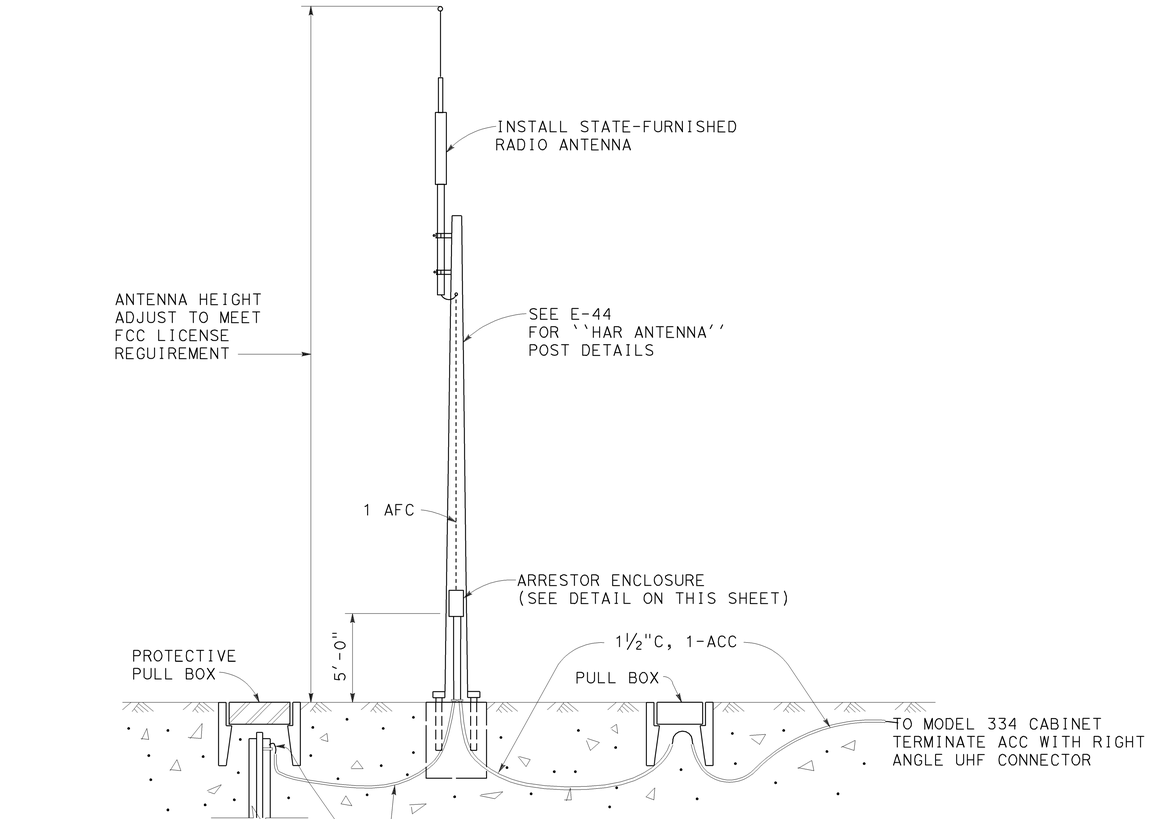

ANTENNA STATION DETAIL

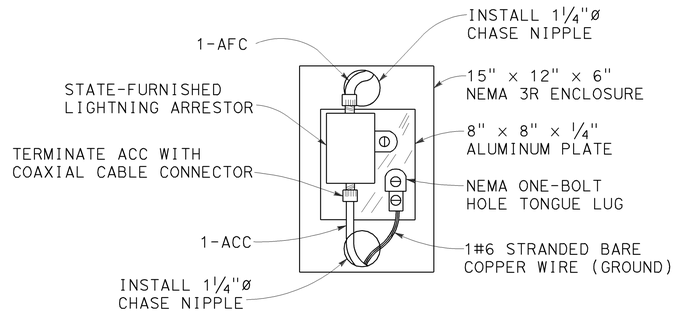

ARRESTOR ENCLOSURE DETAIL

ABBREVIATIONS

ACC - ANTENNA COAXIAL CABLE

AFC - ANTENNA FEEDING CABLE

UHF - ULTRA HIGH FREQUENCY

THIS PLAN IS ACCURATE FOR ELECTRICAL WORK ONLY

FOR NOTES, ABBREVIATIONS AND LEGEND, SEE SHEET E-1

ELECTRICAL DETAILS
(HAR ANTENNA, ARRESTOR ENCLOSURE)

NO SCALE

E-19

STATE OF CALIFORNIA - DEPARTMENT OF TRANSPORTATION — ELECTRICAL

FUNCTIONAL SUPERVISOR: CHARLES PRICE

CALCULATED-DESIGNED BY: MICHAEL P. LEE

CHECKED BY: CHARLES PRICE

REVISED BY: ML — DATE REVISED: 6/10/09

LAST REVISION — DATE PLOTTED => 23-JUL-2009 — TIME PLOTTED => 08:06

Dist	COUNTY	ROUTE	POST MILES TOTAL PROJECT	SHEET No.	TOTAL SHEETS
04	SF	101,1	9.2/9.8, 6.8/7.1	184	567

REGISTERED ELECTRICAL ENGINEER — DATE 6-07-09

PLANS APPROVAL DATE 7-20-09

REGISTERED PROFESSIONAL ENGINEER — Michael P. Lee — No. 13435 — Exp 9-30-10 — ELECT — STATE OF CALIFORNIA

THE STATE OF CALIFORNIA OR ITS OFFICERS OR AGENTS SHALL NOT BE RESPONSIBLE FOR THE ACCURACY OR COMPLETENESS OF SCANNED COPIES OF THIS PLAN SHEET.

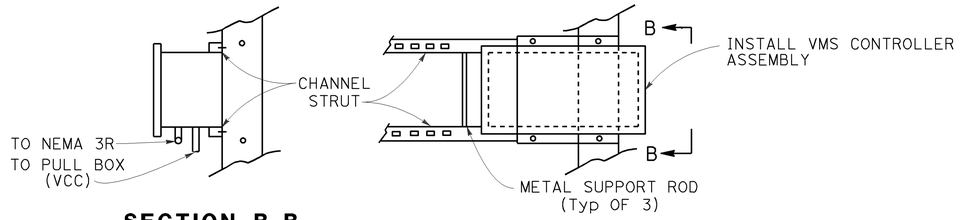

SECTION B-B

DETAIL A

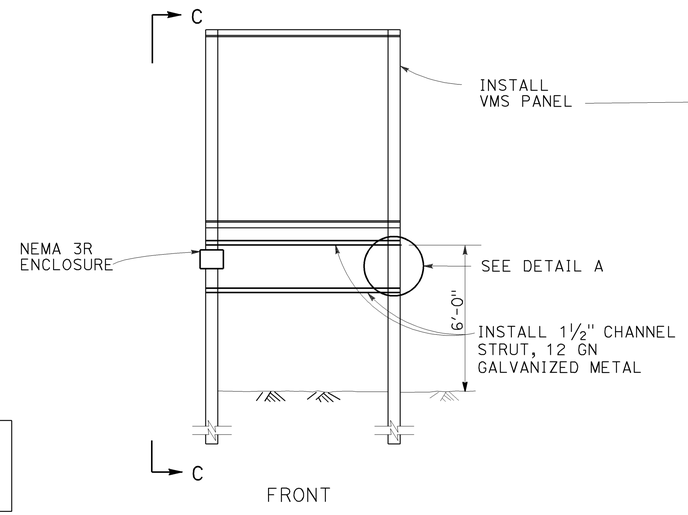

FRONT

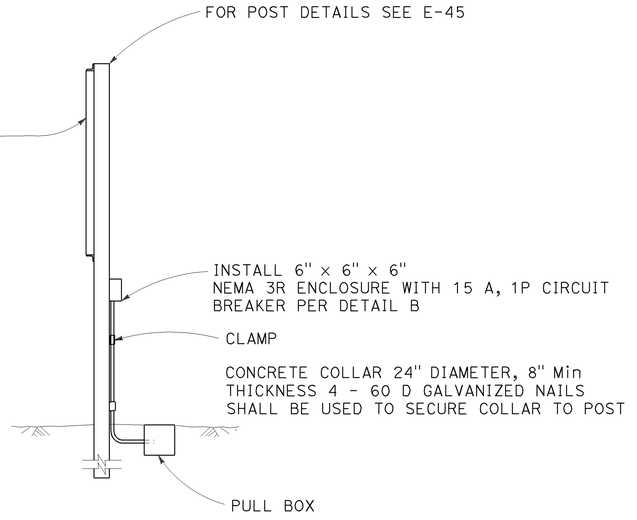

SECTION C-C

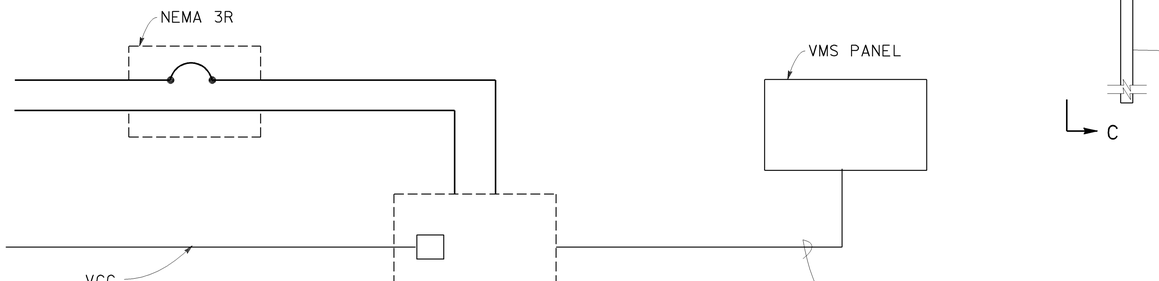

DETAIL "VMS"
VARIABLE MESSAGE SIGN

VMS WIRING DIAGRAM

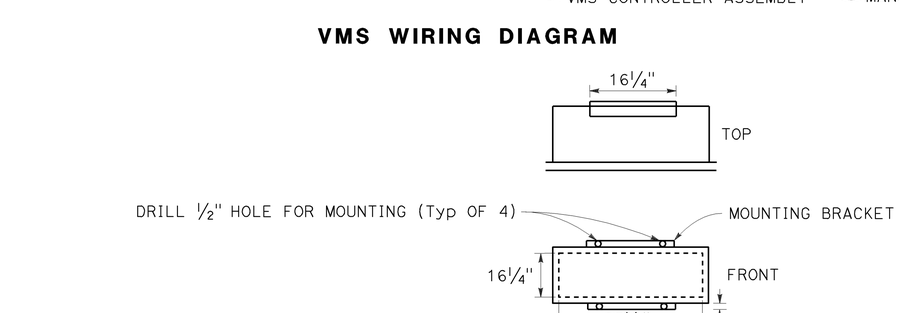

VMS CONTROLLER ASSEMBLY

DETAIL B

ELECTRICAL DETAILS
(VMS INSTALLATION)

NO SCALE

THIS PLAN IS ACCURATE FOR ELECTRICAL WORK ONLY

FOR NOTES, ABBREVIATIONS AND LEGEND, SEE SHEET E-1

E-20

REVISED BY	DATE REVISED
ML	6/10/09

CALCULATED-DESIGNED BY: MICHAEL P. LEE
CHECKED BY: CHARLES PRICE
FUNCTIONAL SUPERVISOR: CHARLES PRICE

STATE OF CALIFORNIA - DEPARTMENT OF TRANSPORTATION
ELECTRICAL
Caltrans

LAST REVISION — DATE PLOTTED => 23-JUL-2009 — TIME PLOTTED => 13:33
06-04-09

Dist	COUNTY	ROUTE	POST MILES TOTAL PROJECT	SHEET No.	TOTAL SHEETS
04	SF	101,1	9.2/9.8, 6.8/7.1	185	567

REGISTERED ELECTRICAL ENGINEER — DATE 6-07-09

Michael P. Lee, No. 13435, Exp 9-30-10, ELECT — REGISTERED PROFESSIONAL ENGINEER — STATE OF CALIFORNIA

7-20-09
PLANS APPROVAL DATE

THE STATE OF CALIFORNIA OR ITS OFFICERS OR AGENTS SHALL NOT BE RESPONSIBLE FOR THE ACCURACY OR COMPLETENESS OF SCANNED COPIES OF THIS PLAN SHEET.

8-POSITION CONNECTING BLOCK		No. 18 AWG SOLID CONDUCTOR COLOR	TBO POSITION ASSIGMENT
CIRCUIT 1	GREEN TERMINAL	WHITE	7
	RED TERMINAL	BROWN	8
CIRCUIT 2	GREEN TERMINAL	WHITE	9
	RED TERMINAL	GRAY	10
CIRCUIT 3	GREEN TERMINAL	RED	11
	RED TERMINAL	BLUE	12

NOTES:
1. USE ONE CONNECTING BLOCK FOR EACH REQUIRED CIRCUIT FOR EACH LOCATION.
2. N/C - NO CONNECTION.
3. CRT - CIRCUIT.

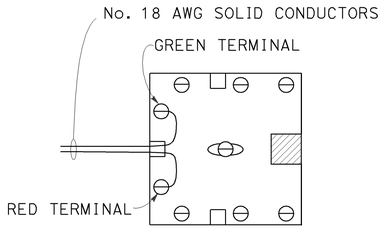

8-POSITION CONNECTING BLOCK

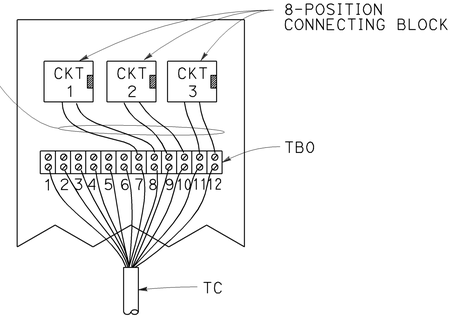

SERVICE PANEL FOR MODEL 334 CABINET

WIRING DETAIL FOR TELEPHONE CABLE INSIDE CONTROLLER CABINET

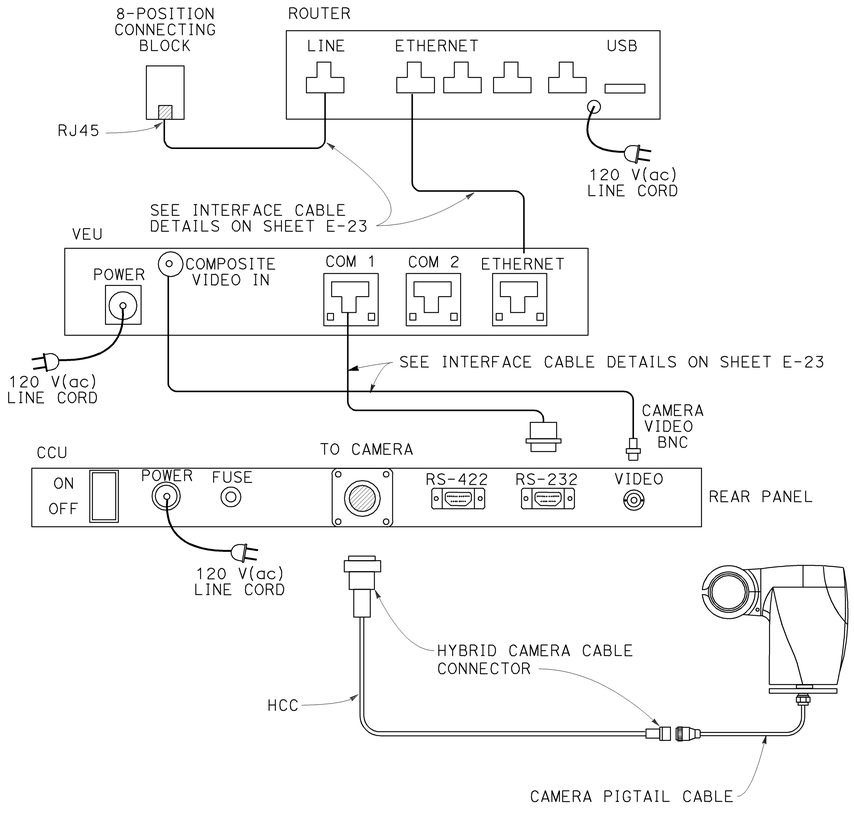

CCTV SYSTEM LAYOUT

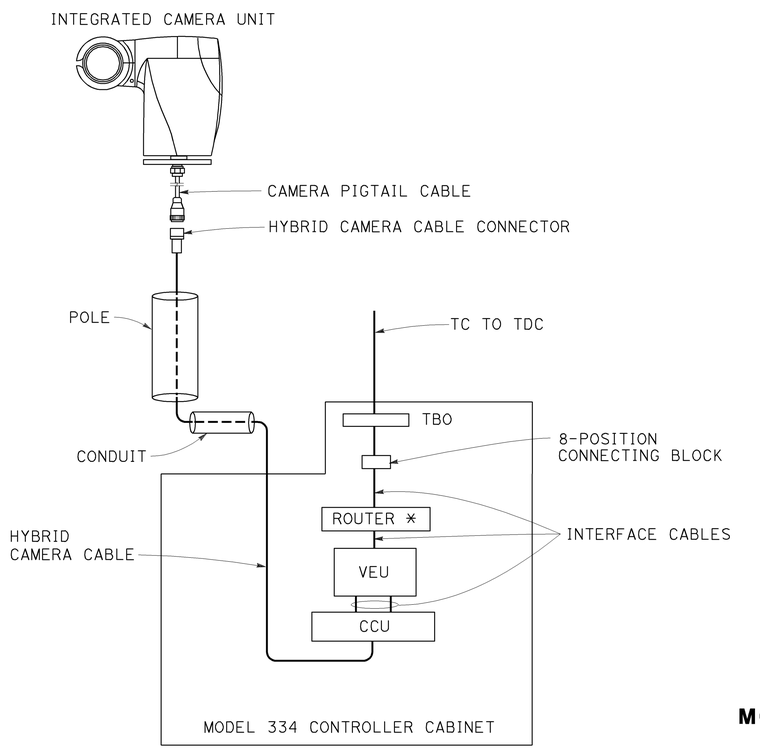

CCTV SYSTEM BLOCK DIAGRAM

TC - TELEPHONE CABLE
HCC - HYBRID CAMERA CABLE
TBO - TERMINAL BLOCK O
PDA - POWER DISTRIBUTION ASSEMBLY
CCU - CAMERA CONTROL UNIT
VEU - VIDEO ENCODER UNIT

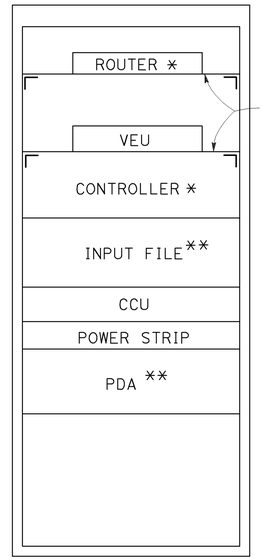

MODEL 334 CONTROLLER CABINET LAYOUT (FRONT VIEW)

* STATE-FURNISHED

** PDA AND INPUT FILE WILL BE INCLUDED ONLY WITH STATE-FURNISHED CONTROLLER CABINET.

ELECTRICAL DETAILS (CCTV WITH TELEPHONE SERVICE)

NO SCALE

THIS PLAN IS ACCURATE FOR ELECTRICAL WORK ONLY

FOR NOTES, ABBREVIATIONS AND LEGEND, SEE SHEET E-1

E-21

CALCULATED-DESIGNED BY	CHECKED BY	REVISED BY	DATE REVISED
MICHAEL P. LEE	CHARLES PRICE	ML	6/10/09

FUNCTIONAL SUPERVISOR: CHARLES PRICE

STATE OF CALIFORNIA - DEPARTMENT OF TRANSPORTATION
ELECTRICAL

DATE PLOTTED => 23-JUL-2009
TIME PLOTTED => 07:51
LAST REVISION 06-05-09

DIST	COUNTY	ROUTE	POST MILE TOTAL PROJECT	SHEET No	TOTAL SHEETS
04	SF	101,1	9.2/9.8, 6.8/7.1	186	567

Jeffrey B Woody 6-8-09
REGISTERED CIVIL ENGINEER DATE

7-20-09
PLANS APPROVAL DATE

REGISTERED PROFESSIONAL ENGINEER — JEFFREY B. WOODY — No. C41260 — Exp. 3/31/11 — CIVIL — STATE OF CALIFORNIA

The State of California or its officers or agents shall not be responsible for the accuracy or completeness of electronic copies of this plan sheet.

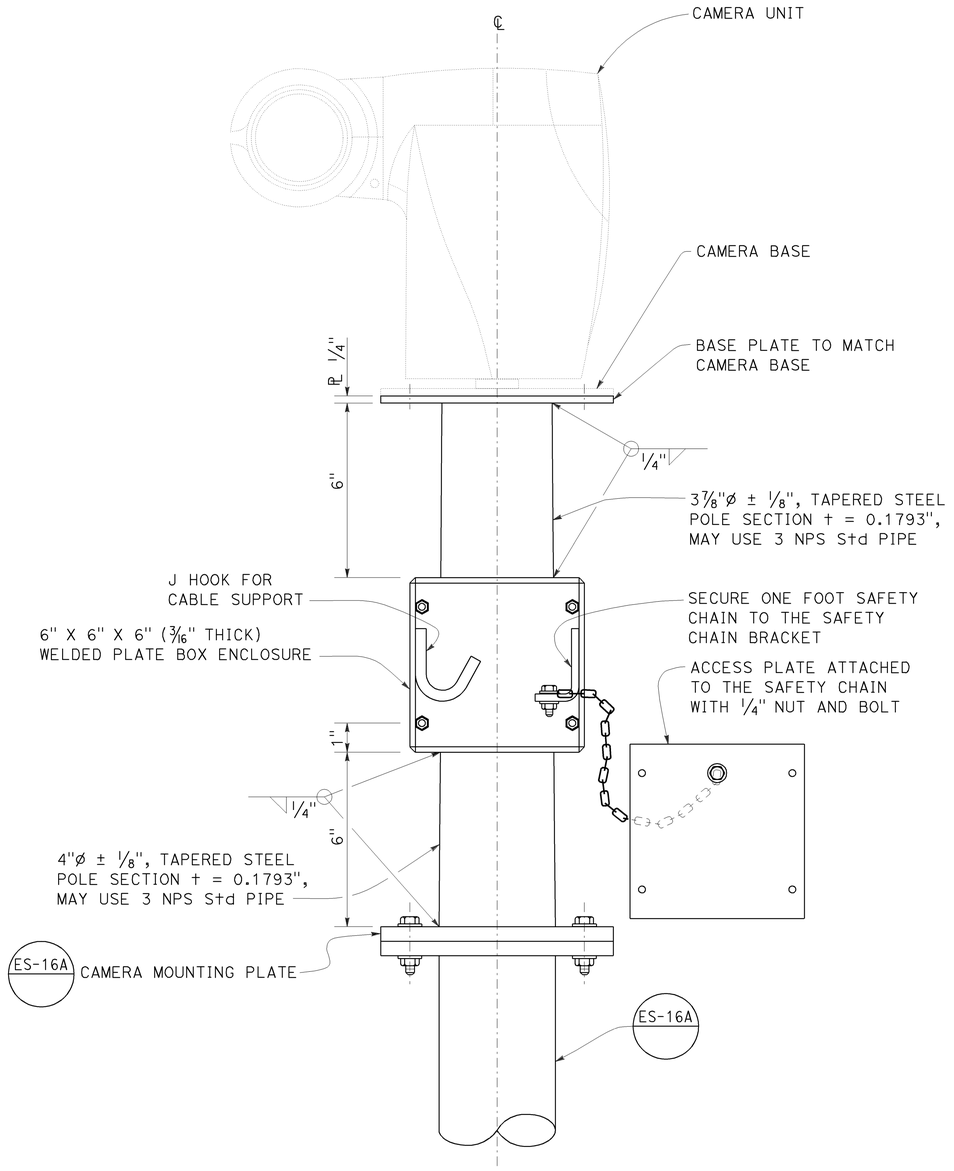

DETAIL A
CCTV POLE MOUNTING WITH ADAPTER

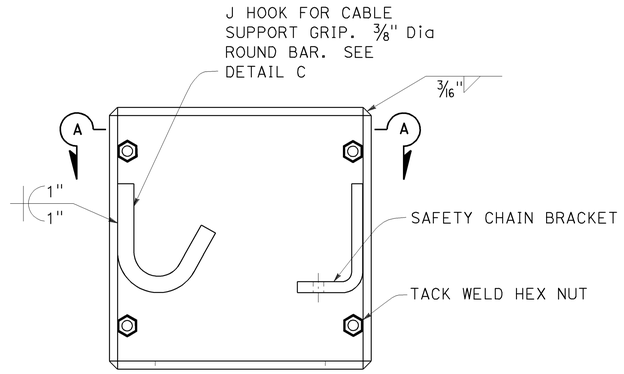

DETAIL B
BOX ENCLOSURE

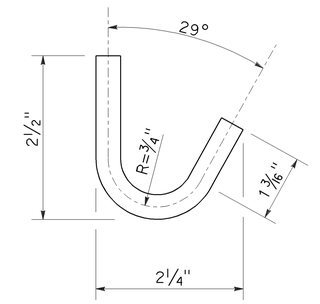

DETAIL C
J HOOK

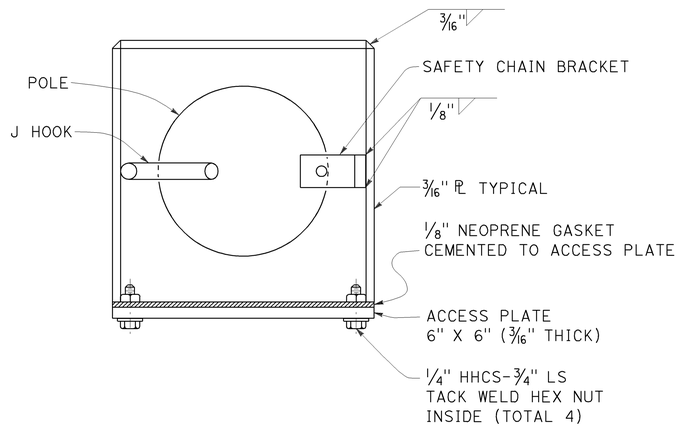

SECTION A-A

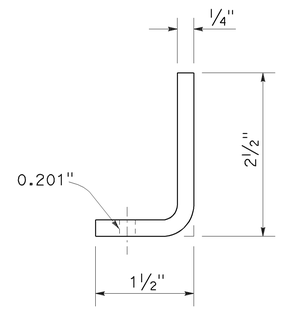

DETAIL D
SAFETY CHAIN BRACKET

NOTE:
THE CONTRACTOR SHALL VERIFY ALL CONTROLLING FIELD DIMENSIONS BEFORE ORDERING OR FABRICATING ANY MATERIAL.

REVISED STANDARD PLAN SHEET No.
DETAIL No.

THIS PLAN IS ACCURATE FOR ELECTRICAL WORK ONLY.

FOR NOTES, ABBREVIATIONS AND LEGEND, SEE SHEET E-1

ELECTRICAL DETAILS
CAMERA MOUNTING DETAILS

NO SCALE

E-22

LAST REVISION 6-8-09
DATE PLOTTED = 23-JUL-2009
TIME PLOTTED = 07:45

ORIGINAL SCALE IN INCHES FOR REDUCED PLANS 0 1 2 3

USERNAME => trcarol
DGN FILE =>spec_des_br_prj/2009sd/04-163731/ 04-163731_e22.dgn

CU 04 | EA 163731

STATE OF CALIFORNIA - DEPARTMENT OF TRANSPORTATION
Caltrans
SPECIAL DESIGNS BRANCH

PROJECT ENGINEER: JEFF WOODY

CALCULATED/ DESIGNED BY	J WOODY	DATE 6-8-09	DETAILS	D W JUSTICE Jr
CHECKED BY			QUANTITIES	

Dist	COUNTY	ROUTE	POST MILES TOTAL PROJECT	SHEET No.	TOTAL SHEETS
04	SF	101,1	9.2/9.8, 6.8/7.1	187	567

REGISTERED ELECTRICAL ENGINEER — DATE 6-07-09

PLANS APPROVAL DATE 7-20-09

REGISTERED PROFESSIONAL ENGINEER — Michael P. Lee — No. 13435 — Exp 9-30-10 — ELECT — STATE OF CALIFORNIA

THE STATE OF CALIFORNIA OR ITS OFFICERS OR AGENTS SHALL NOT BE RESPONSIBLE FOR THE ACCURACY OR COMPLETENESS OF SCANNED COPIES OF THIS PLAN SHEET.

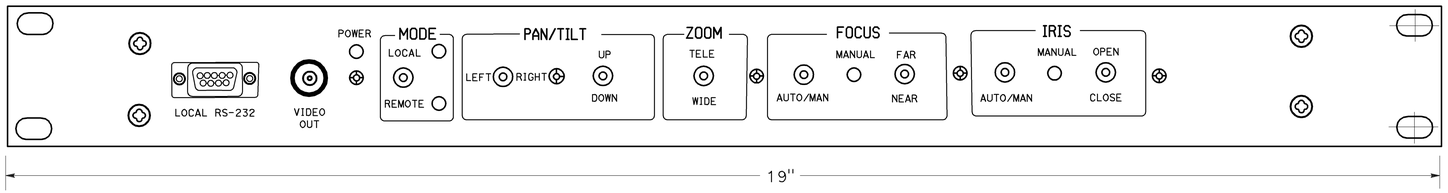

CCU FRONT PANEL LAYOUT

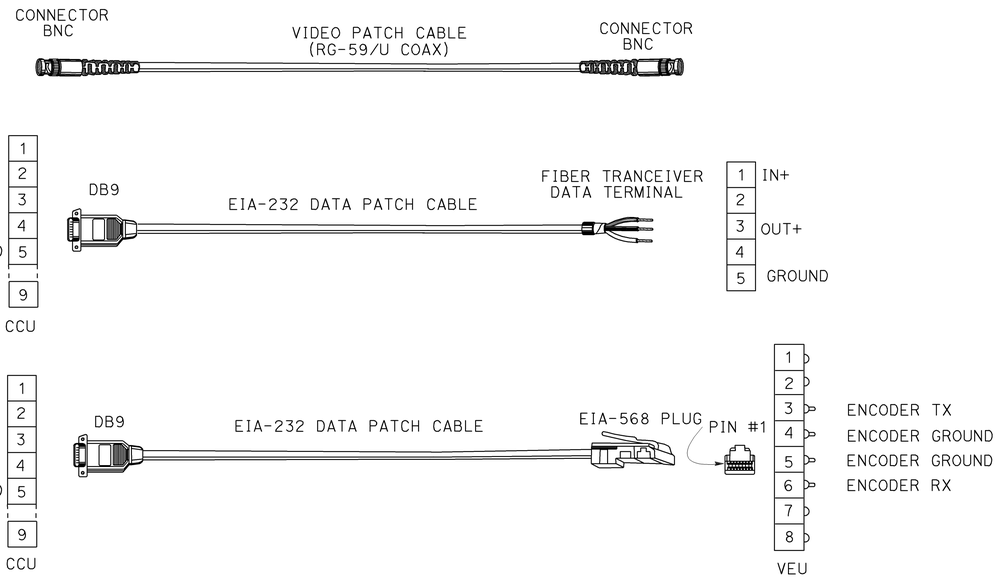

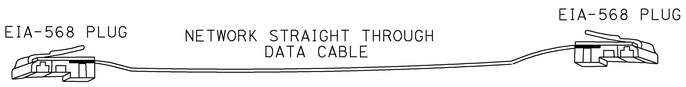

INTERFACE CABLE DETAILS

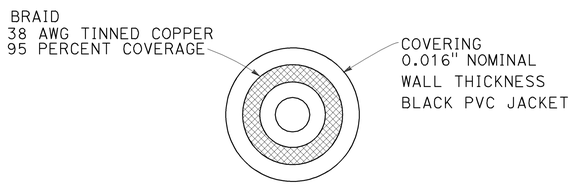

COMPONENT A

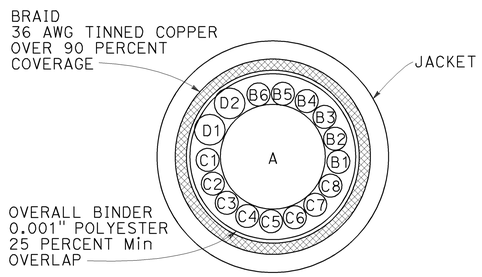

HYBRID CAMERA CABLE CROSS SECTION

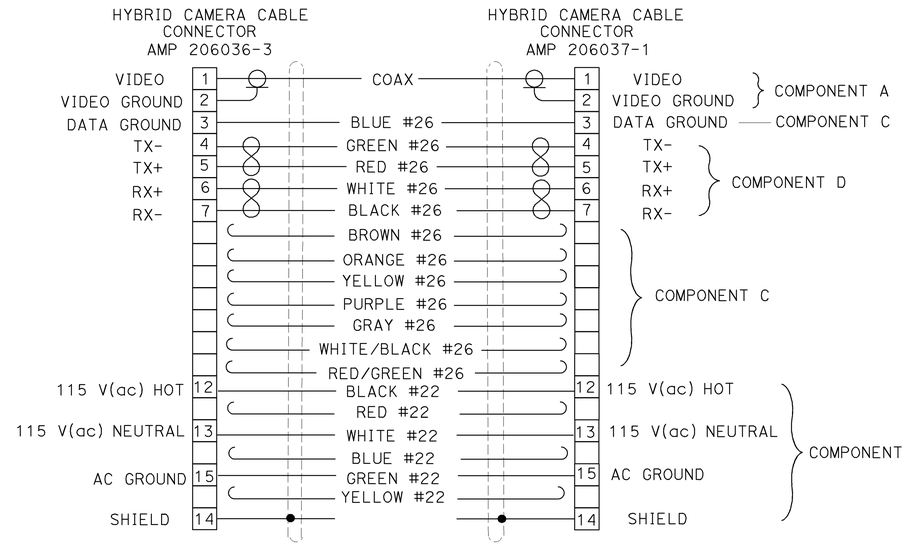

COMPONENT	CONDUCTOR	DESCRIPTION
A	COAX	75 OHM, RG-59/U TYPE, STANDARD ANALOG VIDEO CABLE, 0.242" NOMINAL DIAMETER
B	6 CONDUCTOR	22 AWG, COPPER INSULATED CONDUCTOR, 0.048" NOMINAL DIAMETER, COLOR CODED: B1-BLACK, B2-RED, B3-GREEN, B4-WHITE, B5-BLUE, B6-YELLOW
C	8 CONDUCTOR	26 AWG, COPPER INSULATED CONDUCTOR, 0.037" NOMINAL DIAMETER, COLOR CODED: C1-BROWN, C2-BLUE, C3-ORANGE, C4-YELLOW, C5-PURPLE, C6-GRAY, C7-WHITE/BLACK, C8-RED/GREEN
D	4 CONDUCTOR	26 AWG, COPPER INSULATED CONDUCTOR, 0.037" NOMINAL DIAMETER, COLOR CODED: D1-BLACK & WHITE, D2-RED & GREEN

HYBRID CAMERA CABLE AND CONNECTORS DETAIL

ELECTRICAL DETAILS
(CCTV MOUNTING DETAILS)

NO SCALE

THIS PLAN IS ACCURATE FOR ELECTRICAL WORK ONLY

FOR NOTES, ABBREVIATIONS AND LEGEND, SEE SHEET E-1

E-23

REVISED BY	DATE REVISED
ML	6/10/09

CALCULATED-DESIGNED BY: MICHAEL P. LEE
CHECKED BY: CHARLES PRICE
FUNCTIONAL SUPERVISOR: CHARLES PRICE

STATE OF CALIFORNIA - DEPARTMENT OF TRANSPORTATION
ELECTRICAL

LAST REVISION — DATE PLOTTED => 23-JUL-2009 — TIME PLOTTED => 07:51 — 06-04-09

BORDER LAST REVISED 4/11/2008

RELATIVE BORDER SCALE IS IN INCHES 0 1 2 3

USERNAME => trcarol
DGN FILE => 416373ua023.dgn

CU 04242

EA 163731

Dist	COUNTY	ROUTE	POST MILES TOTAL PROJECT	SHEET No.	TOTAL SHEETS
04	SF	101,1	9.2/9.8, 6.8/7.1	188	567

REGISTERED ELECTRICAL ENGINEER 6-03-09 DATE

7-20-09
PLANS APPROVAL DATE

REGISTERED PROFESSIONAL ENGINEER Ray C. Duschane No. 14758 Exp. 6-30-11 ELECT STATE OF CALIFORNIA

THE STATE OF CALIFORNIA OR ITS OFFICERS OR AGENTS SHALL NOT BE RESPONSIBLE FOR THE ACCURACY OR COMPLETENESS OF SCANNED COPIES OF THIS PLAN SHEET.

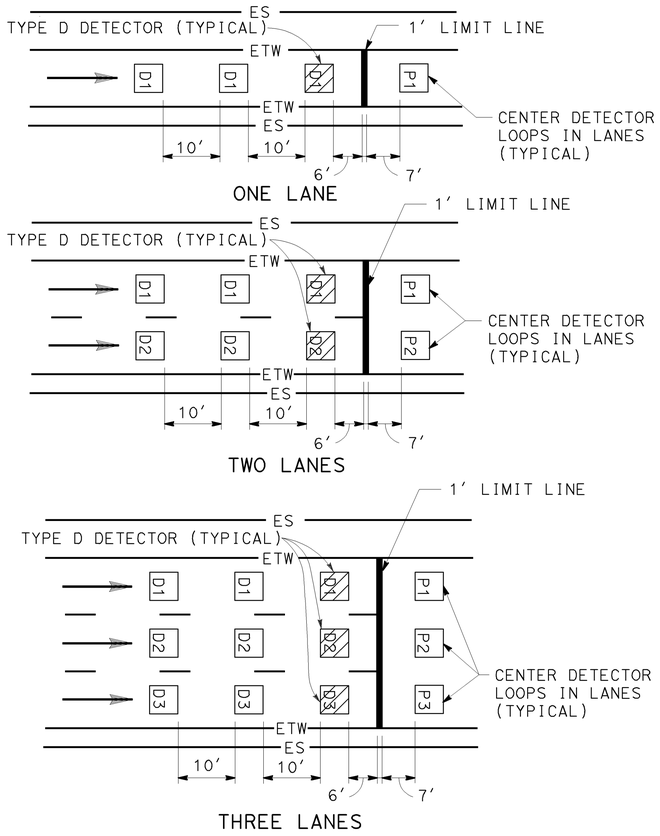

ONE LANE

TWO LANES

THREE LANES

DETAIL "RM"
RAMP METERING STATION

RAMP METERING STATION NOTES

1. SEE RSP ES-5A, ES-5B, AND ES-13A FOR ADDITIONAL DETAILS.
2. DLC CONDUCTORS SHALL BE SPLICED TO THE LOOP CONDUCTORS IN THE NEAREST PULL BOX.
3. ALL SPLICES SHALL BE TYPE "S" OR TYPE "ST" AS REQUIRED.

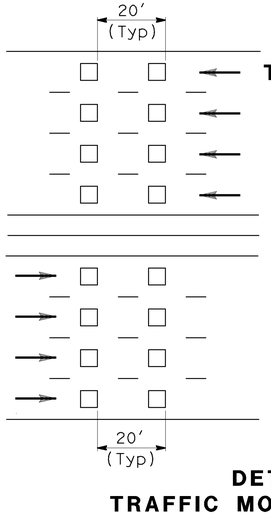

TRAFFIC MONITORING STATION NOTES

FREEWAY MAINLINE DETECTOR DESIGNATION:

N=NORTHBOUND LANES (NB)
S=SOUTHBOUND LANES (SB)
E=EASTBOUND LANES (EB)
W=WESTBOUND LANES (WB)
DET=DETOUR

N 3-2

NUMBER OF LANES FROM LEFT WITH RESPECT TO DIRECTION OF TRAFFIC:

1=FIRST LANE FROM LEFT
2=SECOND LANE FROM LEFT
3=THIRD LANE FROM LEFT
4=FOURTH LANE FROM LEFT

NUMBER OF DETECTOR IN THE SAME LANE:

1=ENTERING DETECTOR
2=LEAVING DETECTOR

DETAIL "TM"
TRAFFIC MONITORING STATION

RAMP DETECTOR DESIGNATION:

D=DEMAND DETECTOR
P=PASSAGE DETECTOR
Q=QUEUE DETECTOR
F=OFFRAMP DETECTOR

D-2

1=FIRST LANE FROM LEFT
2=SECOND LANE FROM LEFT

ELECTRICAL DETAILS
(RAMP METERING AND TRAFFIC MONITORING DETECTOR SPACING AND DESIGNATION)

NO SCALE

THIS PLAN IS ACCURATE FOR ELECTRICAL WORK ONLY

FOR NOTES, ABBREVIATIONS AND LEGEND, SEE SHEET E-1

E-24

STATE OF CALIFORNIA - DEPARTMENT OF TRANSPORTATION
Caltrans
ELECTRICAL

FUNCTIONAL SUPERVISOR: CHARLES PRICE
CALCULATED-DESIGNED BY: RAY DUSCHANE
CHECKED BY: CHARLES PRICE
REVISED BY: RD
DATE REVISED: 6/10/09 7/08/09

LAST REVISION 07-08-09
DATE PLOTTED => 23-JUL-2009
TIME PLOTTED => 07:51

Dist	COUNTY	ROUTE	POST MILES TOTAL PROJECT	SHEET No.	TOTAL SHEETS
04	SF	101,1	9.2/9.8, 6.8/7.1	189	567

R C Duschane 6-03-09
REGISTERED ELECTRICAL ENGINEER DATE

7-20-09
PLANS APPROVAL DATE

REGISTERED PROFESSIONAL ENGINEER
Ray C. Duschane
No. 14758
Exp. 6-30-11
ELECT
STATE OF CALIFORNIA

THE STATE OF CALIFORNIA OR ITS OFFICERS OR AGENTS SHALL NOT BE RESPONSIBLE FOR THE ACCURACY OR COMPLETENESS OF SCANNED COPIES OF THIS PLAN SHEET.

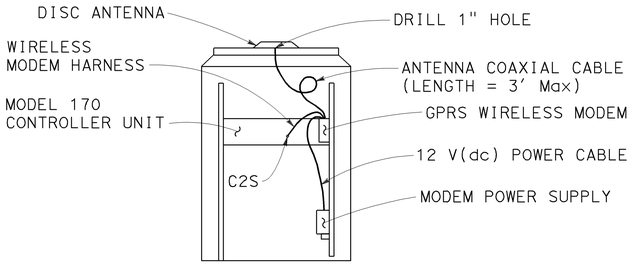

REAR VIEW OF THE MODEL 334 CABINET

GPRS WIRELESS MODEM AND ANTENNA INSTALLATION DETAIL

CONTRACTOR'S WORK IN THE CONTROLLER CABINET

1. PROVIDE THE GPRS MODEM AND WIRELESS MODEM HARNESS TO THE ENGINEER 30 WORKING DAYS BEFORE INSTALLATION. THE ENGINEER WILL RETURN THE PROGRAMMED MODEM, WITH PDP CONTEXT AND APN, AND HARNESS WITHIN 15 WORKING DAYS.
2. DRILL 1" HOLE THROUGH THE TOP OF THE CABINET. ATTACH THE ANTENNA ON THE CABINET AS DIRECTED BY THE MANUFACTURER.
3. MOUNT THE MODEM UNIT ON THE CABINET REAR MOUNTING RAIL WITH MOUNTING BRACKET PROVIDED BY THE MANUFACTURER.
4. MOUNT THE MODEM 12 V(dc) POWER SUPPLY DIRECTLY TO CABINET.
5. CONNECT POWER CABLE TO 12 V(dc) POWER ADAPTER.
6. CONNECT THE ANTENNA COAXIAL CABLE TO THE MODEM.
7. CONNECT MODEM HARNESS BETWEEN THE MODEM AND THE MODEL 170 CONTROLLER UNIT AS SHOWN.
8. RECORD THE SERIAL NUMBER OF THE MODEM ON THE CHECKLIST SHEET.

COMMUNICATION SERIAL CABLE TYPE D

1. PIN OUT DIAGRAM

AMP 201360-2-ND DB9-P
L — 2
K — 3
N — 5
D, H, J, M — 1,4,6,7,8,9 N/C

2. CONSTRUCT AND INSTALL COMMUNICATION CABLE. SEE SPECIAL PROVISIONS FOR CABLE TYPE AND OTHER INFORMATION.

ELECTRICAL DETAILS
(GENERAL PACKET RADIO SYSTEM WIRELESS MODEM INSTALLATION DETAILS)

NO SCALE

THIS PLAN IS ACCURATE FOR ELECTRICAL WORK ONLY

FOR NOTES, ABBREVIATIONS AND LEGEND, SEE SHEET E-1

E-25

STATE OF CALIFORNIA - DEPARTMENT OF TRANSPORTATION
Caltrans
ELECTRICAL

FUNCTIONAL SUPERVISOR: CHARLES PRICE
CALCULATED-DESIGNED BY: RAY DUSCHANE
CHECKED BY: CHARLES PRICE
REVISED BY: RD
DATE REVISED: 6/10/09

LAST REVISION 06-03-09
DATE PLOTTED => 23-JUL-2009
TIME PLOTTED => 13:50

Dist	COUNTY	ROUTE	POST MILES TOTAL PROJECT	SHEET No.	TOTAL SHEETS
04	SF	101,1	9.2/9.8, 6.8/7.1	190	567

REGISTERED ELECTRICAL ENGINEER — DATE 6-07-09

Michael P. Lee — No. 13435 — Exp 9-30-10 — ELECT — REGISTERED PROFESSIONAL ENGINEER — STATE OF CALIFORNIA

PLANS APPROVAL DATE 7-20-09

THE STATE OF CALIFORNIA OR ITS OFFICERS OR AGENTS SHALL NOT BE RESPONSIBLE FOR THE ACCURACY OR COMPLETENESS OF SCANNED COPIES OF THIS PLAN SHEET.

NOTES: (THIS SHEET ONLY)

1. CONCRETE SHOULD BE PLACED AROUND AND UNDER PULL BOXES (6'' MINIMUM) AND SHOULD CONTAIN A MINIMUM OF 550 lbs OF PORTLAND CEMENT PER CUBIC YARD.
2. PORTLAND CEMENT CONCRETE FLOOR OVER CLEAN CRUSHED ROCK SUMP. BOTTOM OF PULL BOX SHALL BE SLOPED TOWARD DRAIN PIPE FOR DRAINAGE AND SHALL HAVE SMOOTH FINISH.
3. PULL BOX SHALL BE PRECAST OF STEEL REINFORCED PORTLAND CEMENT CONCRETE. PULL BOX COVER SHALL BE POLYMER CONCRETE. PULL BOX AND COVER SHALL SUPPORT MINIMUM TEST LOAD OF 25,000 lbs. IF BOX IS LOCATED IN TRAVEL WAY, PULL BOX AND COVER SHALL CONFORM VERTICAL PROOF-LOAD STRENGTH REQUIREMENT AS PER CALTRANS STANDARD SPECIFICATIONS, SECTION 86-2.07.
4. IF APPLICABLE, PULL BOX HEIGHT ABOVE EXISTING DIRT GRADE SHALL PERMIT 1'' OF FUTURE SURFACE LANDSCAPING. WHEN PULL BOX IS INSTALLED IN EXISTING SIDEWALK, PULL BOX COVER SHALL SIT FLUSH WITH THE PAVEMENT.
5. LOCKING MECHANISM SHALL BE PROVIDED FOR COVER. TWO ⅜''Ø BRASS OR STAINLESS STEEL STUB BOLTS NUTS, AND WASHERS. 2 PER BOX, RECESS IN COVER FOR NUT.
6. "CALTRANS TOS COMMUNICATIONS" SHALL BE CASTED ON THE TOP FACE OF ALL COVERS.
7. MINIMUM PULL BOX DEPTH WITH EXTENSION SHALL BE 20''.
8. SEE PLAN SHEETS FOR NUMBER AND SIZE OF CONDUIT.
9. ALL CONDUITS SHALL ENTER THROUGH KNOCKOUTS. IF MORE THAN 3 CONDUITS ARE REQUIRED IN SAME KNOCKOUT, KNOCKOUT SHALL BE WIDENED TO ⅜" MORE THAN THE COMBINED CONDUIT WIDTH.
10. CONDUIT FROM THE TYPICAL BORE OR TRENCH SECTION SHOULD NOT DEFLECT BY MORE THAN 1' PER 10' FROM THE ALIGNMENT PRECEDING OR THE FOLLOWING THE PULL BOX.
11. BOTTOM OF CONDUIT CENTERLINE SHALL BE ALIGNED TO EXITING TOP OF PULL BOX TO FACILITATE CABLE PULLING. IF EXISTING CONDUIT IS USED, THE CONTRACTOR SHALL MODIFY CONDUIT SWEEP (IF NEEDED) AS SHOWN. IF NEW CONDUIT IS USED, THE CONTRACTOR SHALL INSTALL CONDUIT ELBOW AS SHOWN.
12. EXCESS CONDUIT FOR ALL CONDUIT ENDS SHALL BE CUT BACK TO PROVIDE STUB ENDS OF 1'' MINIMUM TO 2'' MAXIMUM.
13. ALL METALLIC CONDUIT SHALL HAVE THREADED METALLIC BUSHINGS. ALL PVC AND HDPE CONDUITS SHALL HAVE BELL ENDS.
14. INSTALL CAPS OR DUCT PLUGS FOR ALL CONDUITS.
15. ALL CONDUITS AND PULL BOXES CONTAINING FIBER OPTIC CABLE SHALL HAVE PERMANENT MARKERS AS SHOWN ON DRAWING SHEET E-27.

LEGEND: (THIS SHEET ONLY)

(1) 45 DEGREE ELBOW, 3' RADIUS Min. ELBOW AND COUPLING MAY NOT BE NECESSARY FOR NEW CONDUIT INSTALLED BY DIRECTIONAL BORING. NEW CONDUIT INSTALLED BY DIRECTIONAL BORING SHALL ENTER THE PULL BOX WITH BENDING RADIUS OF 3' Min.

(2) WARNING TAPE (FOR NEW CONDUIT IF INSTALLED BY TRENCHING).

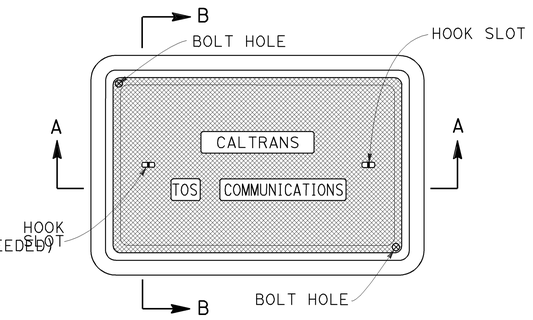

PLAN VIEW

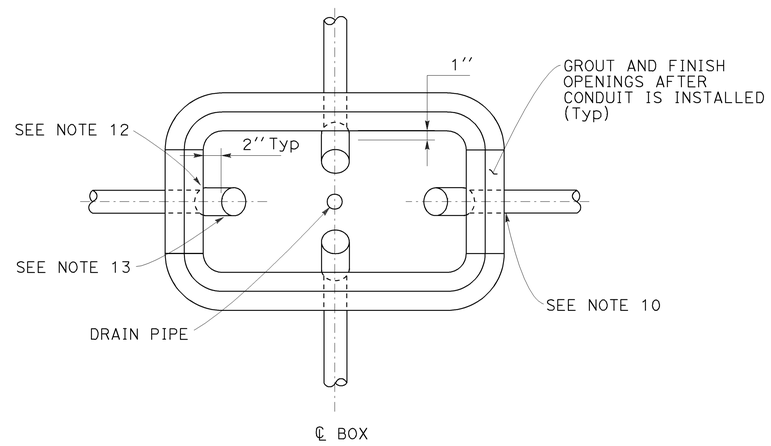

PLAN VIEW WITHOUT COVER

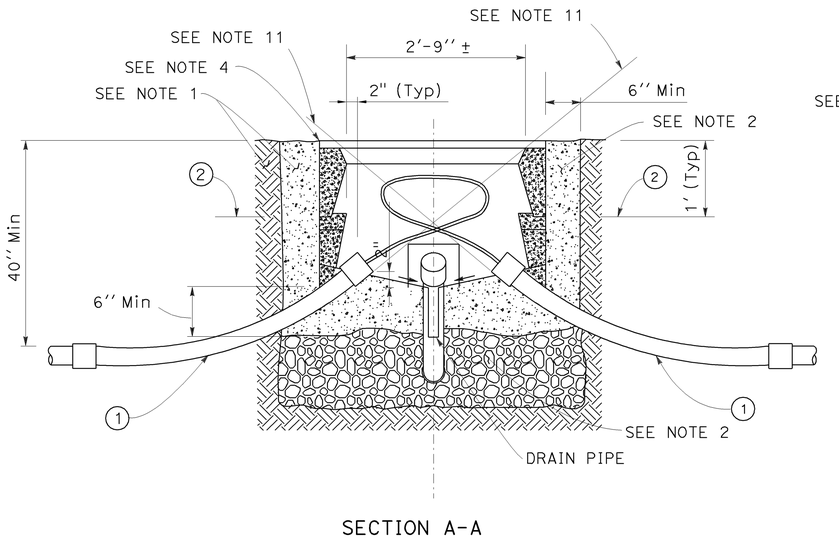

SECTION A-A

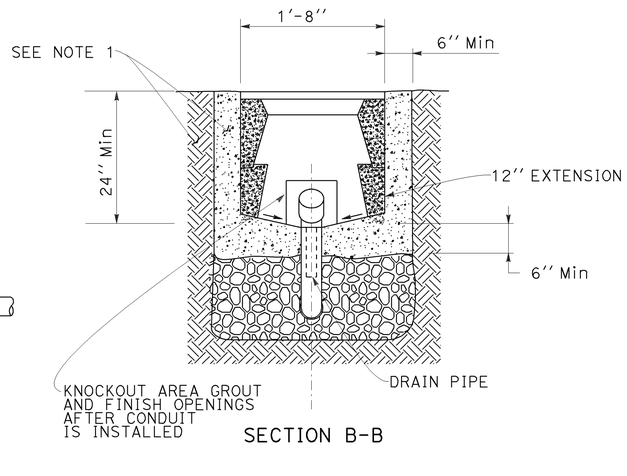

SECTION B-B

ELECTRICAL DETAILS (FIBER OPTIC PULL BOX)

NO SCALE

THIS PLAN IS ACCURATE FOR ELECTRICAL WORK ONLY

FOR NOTES, ABBREVIATIONS AND LEGEND, SEE SHEET E-1

E-26

REVISED BY	DATE REVISED
ML	6/10/09

CALCULATED-DESIGNED BY: MICHAEL P. LEE
CHECKED BY: CHARLES PRICE
FUNCTIONAL SUPERVISOR: CHARLES PRICE

STATE OF CALIFORNIA - DEPARTMENT OF TRANSPORTATION
ELECTRICAL

LAST REVISION DATE PLOTTED => 23-JUL-2009
TIME PLOTTED => 07:51
06-05-09

Dist	COUNTY	ROUTE	POST MILES TOTAL PROJECT	SHEET No.	TOTAL SHEETS
04	SF	101,1	9.2/9.8, 6.8/7.1	191	567

REGISTERED ELECTRICAL ENGINEER — DATE: 6-07-09

REGISTERED PROFESSIONAL ENGINEER — Michael P. Lee — No. 13435 — Exp 9-30-10 — ELECT — STATE OF CALIFORNIA

PLANS APPROVAL DATE: 7-20-09

THE STATE OF CALIFORNIA OR ITS OFFICERS OR AGENTS SHALL NOT BE RESPONSIBLE FOR THE ACCURACY OR COMPLETENESS OF SCANNED COPIES OF THIS PLAN SHEET.

CALTRANS STANDARD TYPE K-2 OBJECT MARKER WITH 6"x12" YELLOW REFLECTIVE BACKGROUND (DIAMOND GRADE SHEETING) AND BLACK LETTERS

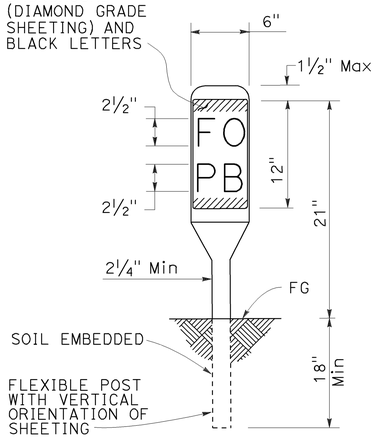

PERMANENT FIBER OPTIC
VAULT OR PULL BOX MARKER

NOTE: IN UNPAVED AREAS, INSTALL ONE MARKER 1 FOOT AWAY FROM EACH VAULT OR PULL BOX IN WHICH FIBER OPTIC CABLE IS INSTALLED.

PERMANENT FIBER OPTIC
CABLE MARKER
PAVED AREAS

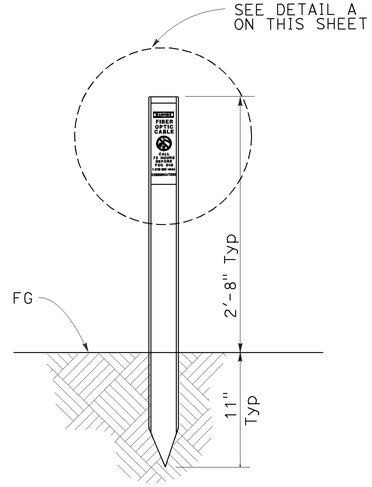

PERMANENT FIBER OPTIC
CABLE MARKER
UNPAVED AREAS

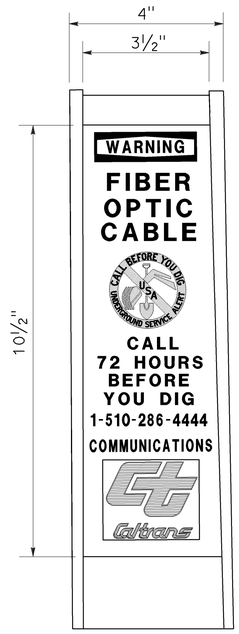

DETAIL A

ELECTRICAL DETAILS
(FIBER OPTIC MARKER)
NO SCALE

THIS PLAN IS ACCURATE FOR ELECTRICAL WORK ONLY

FOR NOTES, ABBREVIATIONS AND LEGEND, SEE SHEET E-1

E-27

STATE OF CALIFORNIA - DEPARTMENT OF TRANSPORTATION — Caltrans — ELECTRICAL

CALCULATED-DESIGNED BY: MICHAEL P. LEE
CHECKED BY: CHARLES PRICE
FUNCTIONAL SUPERVISOR: CHARLES PRICE
REVISED BY: ML
DATE REVISED: 6/10/09

LAST REVISION DATE PLOTTED => 23-JUL-2009
TIME PLOTTED => 07:24
06-04-09

BORDER LAST REVISED 4/11/2008

RELATIVE BORDER SCALE IS IN INCHES 0 1 2 3

USERNAME => trmartin
DGN FILE => 416373ua027.dgn

CU 04242

EA 163731

Dist	COUNTY	ROUTE	POST MILES TOTAL PROJECT	SHEET No.	TOTAL SHEETS
04	SF	101,1	9.2/9.8, 6.8/7.1	192	567

REGISTERED ELECTRICAL ENGINEER — DATE: 6-07-09

REGISTERED PROFESSIONAL ENGINEER — Michael P. Lee — No. 13435 — Exp 9-30-10 — ELECT — STATE OF CALIFORNIA

PLANS APPROVAL DATE: 7-20-09

THE STATE OF CALIFORNIA OR ITS OFFICERS OR AGENTS SHALL NOT BE RESPONSIBLE FOR THE ACCURACY OR COMPLETENESS OF SCANNED COPIES OF THIS PLAN SHEET.

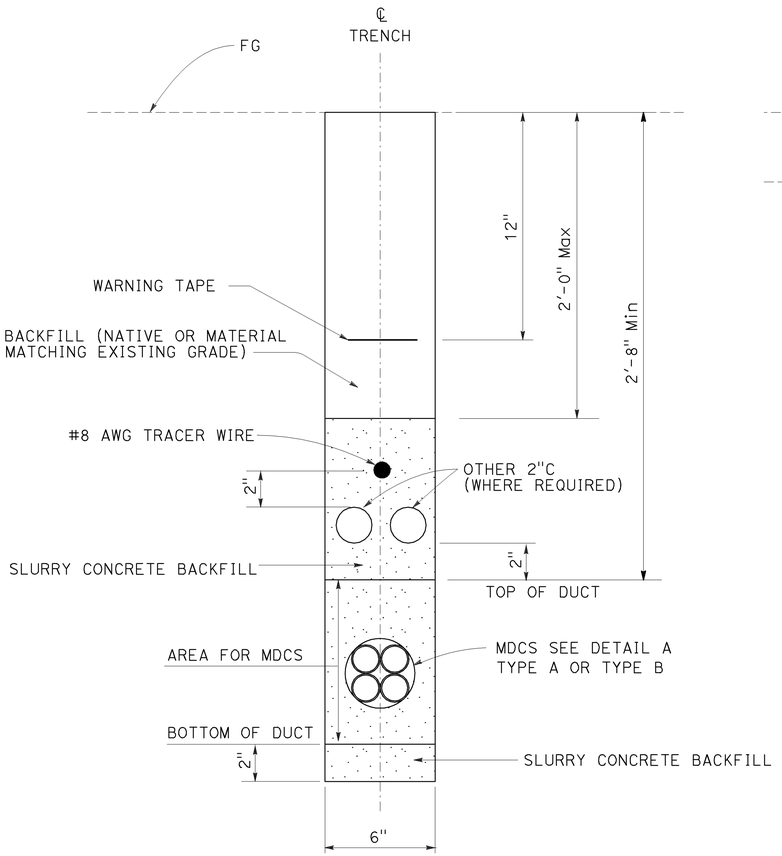

TRENCH IN DIRT

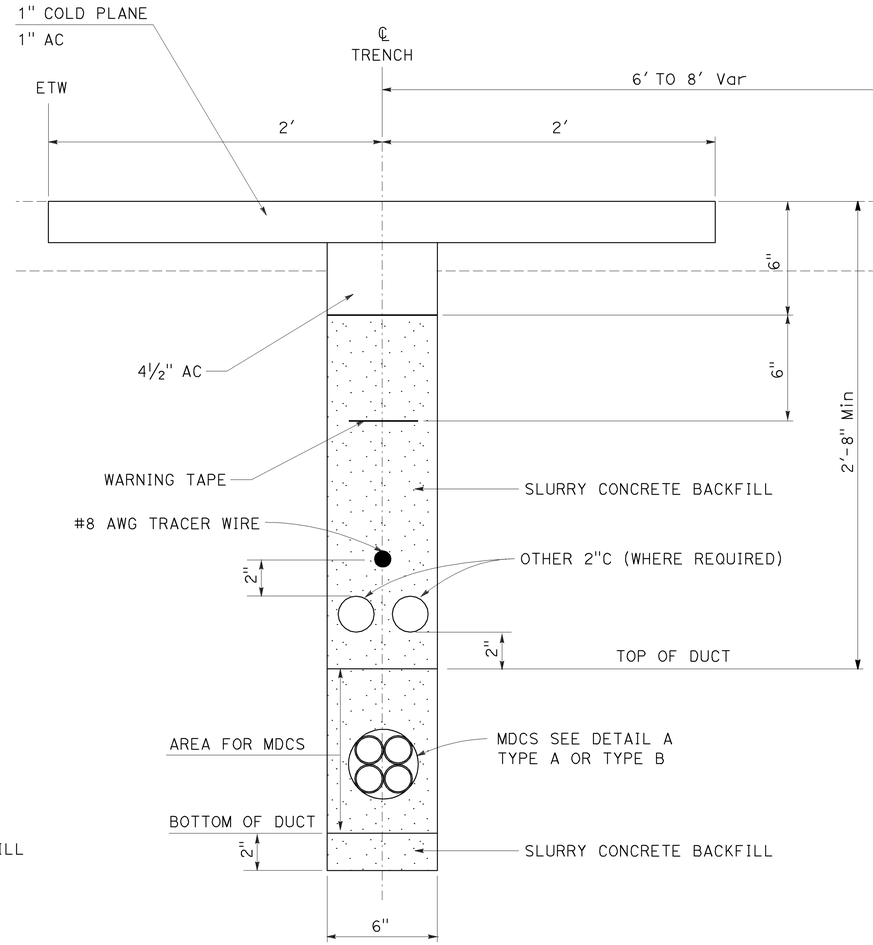

TRENCH IN PAVEMENT

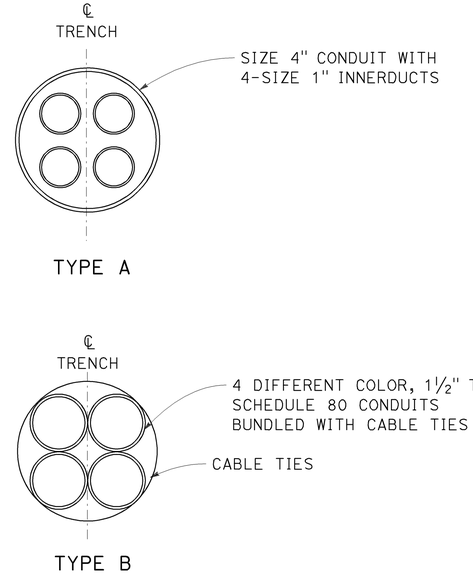

MDCS (Typ) DETAIL A

ABBREVIATIONS:

MDCS- MULTIPLE DUCT CONDUIT SYSTEM

ELECTRICAL DETAILS (FIBER OPTIC CONDUIT AND TRENCH DETAILS)

NO SCALE

THIS PLAN IS ACCURATE FOR ELECTRICAL WORK ONLY

FOR NOTES, ABBREVIATIONS AND LEGEND, SEE SHEET E-1

E-28

CALCULATED-DESIGNED BY	MICHAEL P. LEE	
CHECKED BY	CHARLES PRICE	
FUNCTIONAL SUPERVISOR	CHARLES PRICE	
REVISED BY	ML	
DATE REVISED	6/10/09	

STATE OF CALIFORNIA - DEPARTMENT OF TRANSPORTATION — ELECTRICAL

Caltrans

LAST REVISION — DATE PLOTTED => 23-JUL-2009 — TIME PLOTTED => 07:24 — 06-04-09

Dist	COUNTY	ROUTE	POST MILES TOTAL PROJECT	SHEET No.	TOTAL SHEETS
04	SF	101,1	9.2/9.8, 6.8/7.1	193	567

REGISTERED ELECTRICAL ENGINEER — DATE 6-07-09

PLANS APPROVAL DATE 7-20-09

REGISTERED PROFESSIONAL ENGINEER — Michael P. Lee — No. 13435 — Exp 9-30-10 — ELECT — STATE OF CALIFORNIA

THE STATE OF CALIFORNIA OR ITS OFFICERS OR AGENTS SHALL NOT BE RESPONSIBLE FOR THE ACCURACY OR COMPLETENESS OF SCANNED COPIES OF THIS PLAN SHEET.

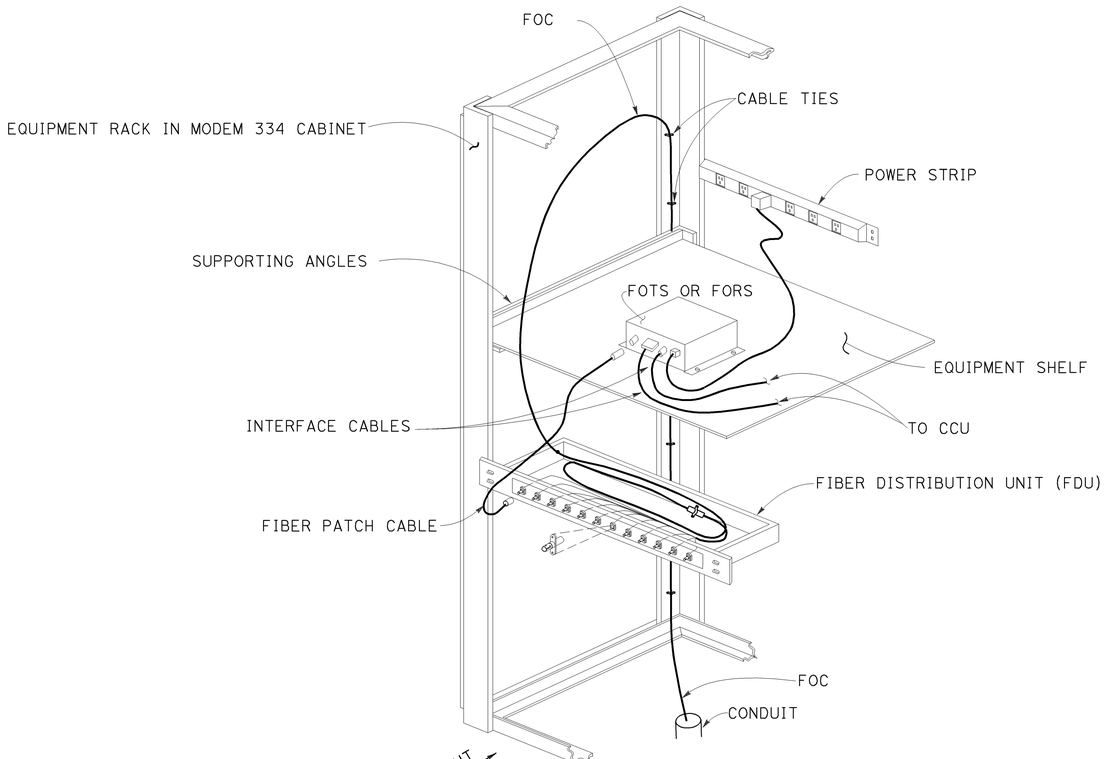

PARTIAL CABINET EQUIPMENT LAYOUT

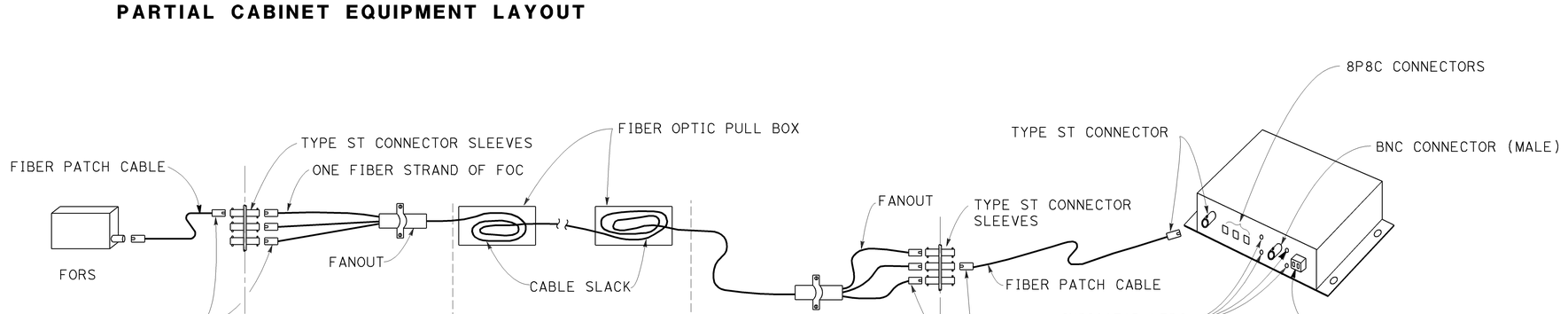

CABINET WITH WAN COMMUNICATION — CABINET WITH CAMERA INSTALLATION

TYPICAL FIBER OPTIC LINK

ELECTRICAL DETAILS
(FIBER OPTIC LINK INSTALLATION DETAILS)

NO SCALE

THIS PLAN IS ACCURATE FOR ELECTRICAL WORK ONLY

FOR NOTES, ABBREVIATIONS AND LEGEND, SEE SHEET E-1

E-29

CALCULATED-DESIGNED BY	MICHAEL P. LEE	ML
CHECKED BY	CHARLES PRICE	6/10/09
		DATE REVISED
		REVISED BY

FUNCTIONAL SUPERVISOR: CHARLES PRICE

STATE OF CALIFORNIA - DEPARTMENT OF TRANSPORTATION — ELECTRICAL — Caltrans

LAST REVISION DATE PLOTTED => 23-JUL-2009
06-05-09 TIME PLOTTED => 07:25

Dist	COUNTY	ROUTE	POST MILES TOTAL PROJECT	SHEET No.	TOTAL SHEETS
04	SF	101,1	9.2/9.8, 6.8/7.1	194	567

REGISTERED ELECTRICAL ENGINEER — 6-03-09 DATE

Mahmood Noii No. 13717 Exp 6-30-11 ELECT — REGISTERED PROFESSIONAL ENGINEER — STATE OF CALIFORNIA

7-20-09
PLANS APPROVAL DATE

THE STATE OF CALIFORNIA OR ITS OFFICERS OR AGENTS SHALL NOT BE RESPONSIBLE FOR THE ACCURACY OR COMPLETENESS OF SCANNED COPIES OF THIS PLAN SHEET.

SYMBOL
(STAGE CONSTRUCTION ONLY)

PROPOSED TEMPORARY 50 ft WOOD POLE WITH 12 ft LUMINAIRE ARM AND 310 W HPS LUMINAIRE. SEE DETAIL WP ON THIS SHEET FOR INSTALLATION DETAILS.

OH — 3/8", 7 STRAND GALVANIZED MESSENGER WIRE (WITH CONDUCTORS AND CABLES AS NOTED ON THE PLANS) - PROPOSED

oh — 3/8", 7 STRAND GALVANIZED MESSENGER WIRE (WITH CONDUCTORS AND CABLES AS NOTED ON THE PLANS) - EXISTING

AREA OF CONSTRUCTION

DB — DIRECT BURIAL CABLE (CONDUCTORS NOTED ON PLANS) - PROPOSED

db — DIRECT BURIAL CABLE (CONDUCTORS NOTED ON PLANS) - EXISTING

GENERAL NOTES
(STAGE CONSTUCTION ONLY)

1. EXISTING AND TEMPORARY ELECTRICAL EQUIPMENT NO LONGER REQUIRED AT THE END OF A CONSTRUCTION STAGE SHALL BE REMOVED AND SALVAGED OR REUSED IN STAGES TO FOLLOW, EXCEPT FOUNDATIONS AND CONDUITS SHALL BE ABANDONED AND PULL BOXES AND CONDUCTORS SHALL BE REMOVED AND BECOME THE PROPERTY OF THE CONTRACTOR.
2. TEMPORARY LIGHTING AND SIGN ILLUMINATION SHOWN ON THE PLANS SHALL BE INSTALLED PRIOR TO THE BEGINING OF EACH STAGE CONSTRUCTION AND MAINTAINED IN EFFECTIVE OPERATION THROUGHOUT THE STAGE CONSTRUCTION INDICATED ON THE PLANS OR AS DIRECTED BY THE ENGINEER.
3. OTHER PERMANENT ELECTRICAL EQUIPMENT NOT SHOWN ON THE PLANS CAN BE INSTALLED AT ANY STAGE IF NOT INTERFERING WITH CONSTRUCTION AND TRAFFIC AND AS DIRECTED BY THE ENGINEER.
4. PERMANENT ELECTRICAL EQUIPMENT SHOWN ON STAGE CONSTRUCTION PLANS SHALL BE CONSIDERED AS PART OF CONTRACT BID ITEM FOR LIGHTING AND SIGN ILLUMINATION.
5. ALL TEMPORARY WOOD POLES TO BE INSTALLED SHALL BE 50 ft IN LENGTH UNLESS OTHERWISE NOTED.
6. AT LOCATIONS WHERE PERMANENT CONDUIT INSTALLATION ARE SHOWN, CONDUCTORS AND CABLES REQUIRED ONLY DURING STAGE CONSTRUCTION ARE INDICATED ON THE PLANS. AT THE CONTRACTOR'S OPTION, OTHER PERMANENT CONDUCTORS AND CABLES CAN BE INSTALLED IF NOT INTERFERING WITH FUTURE STAGES OF CONSTRUCTION.
7. POLE GUY AND ANCHOR SHALL BE PROVIDED ON ALL WOOD POLE INSTALLATIONS.

PROJECT NOTES
(STAGE CONSTUCTION ONLY)

50 PERMANENT ELECTRICAL EQUIPMENT TO BE INSTALLED AND USED DURING STAGE CONSTRUCTION. SEE LIGHTING AND SIGN ILLUMINATION PLAN.

51 EXISTING EQUIPMENT TO BE REMOVED AND PART OF BID ITEM LIGHTING AND SIGN ILLUMINATION. SEE LIGHTING AND SIGN ILLUMINATION PLAN.

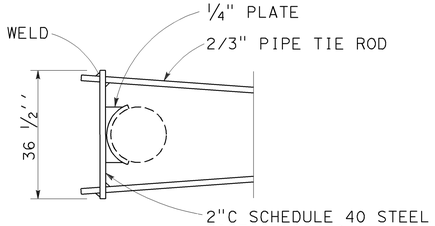

CROSSBAR DETAIL

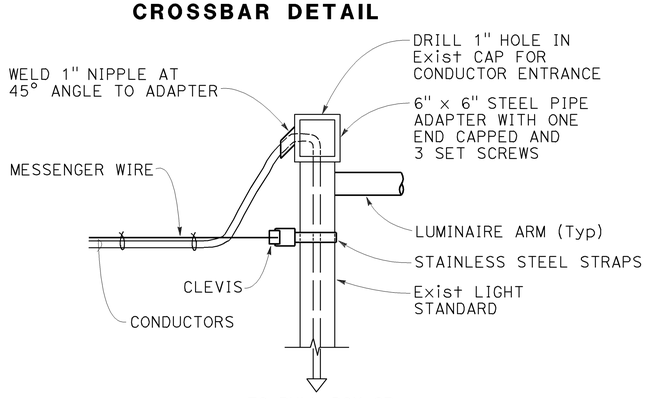

NOTE: SPLICE NEW AND EXISTING CONDUCTORS INSIDE PULL BOX OR BASE OF POLE (NO PULL BOX)

DETAIL - SC1
OH CONDUCTOR CONNECTION TO EXISTING LIGHT STANDARD

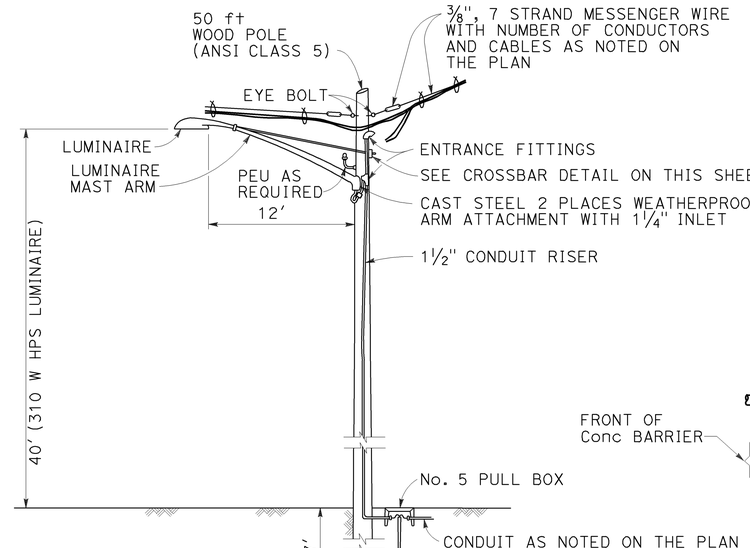

DETAIL WP
TYPICAL LUMINAIRE MOUNTING ON WOOD POLE

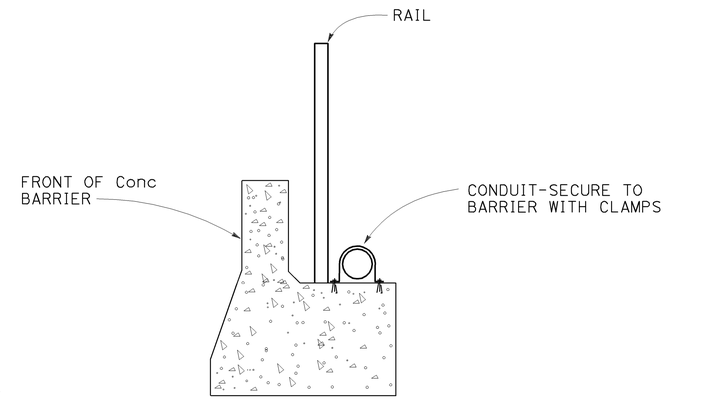

DETAIL - SC2

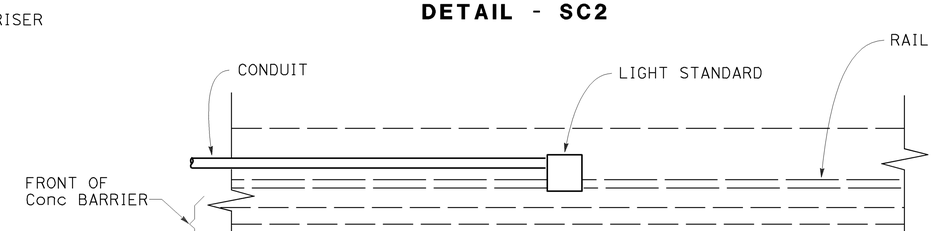

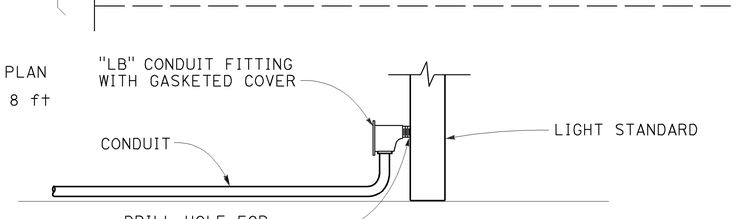

DETAIL - SC3

LIGHTING AND SIGN ILLUMINATION
(STAGE CONSTRUCTION)
(ELECTRICAL NOTES, SYMBOLS AND DETAILS)

NO SCALE

E-30

THIS PLAN IS ACCURATE FOR ELECTRICAL WORK ONLY

CALCULATED-DESIGNED BY	CHECKED BY	REVISED BY	DATE REVISED
PIERRE LASSALLE	MAHMOOD NOII	PL	6/10/09

FUNCTIONAL SUPERVISOR: LAI HONG CHIU

STATE OF CALIFORNIA - DEPARTMENT OF TRANSPORTATION — ELECTRICAL

LAST REVISION DATE PLOTTED => 23-JUL-2009
TIME PLOTTED => 08:45
05-26-09

Dist	COUNTY	ROUTE	POST MILES TOTAL PROJECT	SHEET No.	TOTAL SHEETS
04	SF	101,1	9.2/9.8, 6.8/7.1	195	567

REGISTERED ELECTRICAL ENGINEER — 6-03-09 DATE

Mahmood Noii No. 13717 Exp 6-30-11 ELECT — REGISTERED PROFESSIONAL ENGINEER — STATE OF CALIFORNIA

7-20-09
PLANS APPROVAL DATE

THE STATE OF CALIFORNIA OR ITS OFFICERS OR AGENTS SHALL NOT BE RESPONSIBLE FOR THE ACCURACY OR COMPLETENESS OF SCANNED COPIES OF THIS PLAN SHEET.

FOR ACCURATE RIGHT OF WAY AND ACCESS DATA, CONTACT RIGHT OF WAY ENGINEERING AT THE DISTRICT OFFICE.

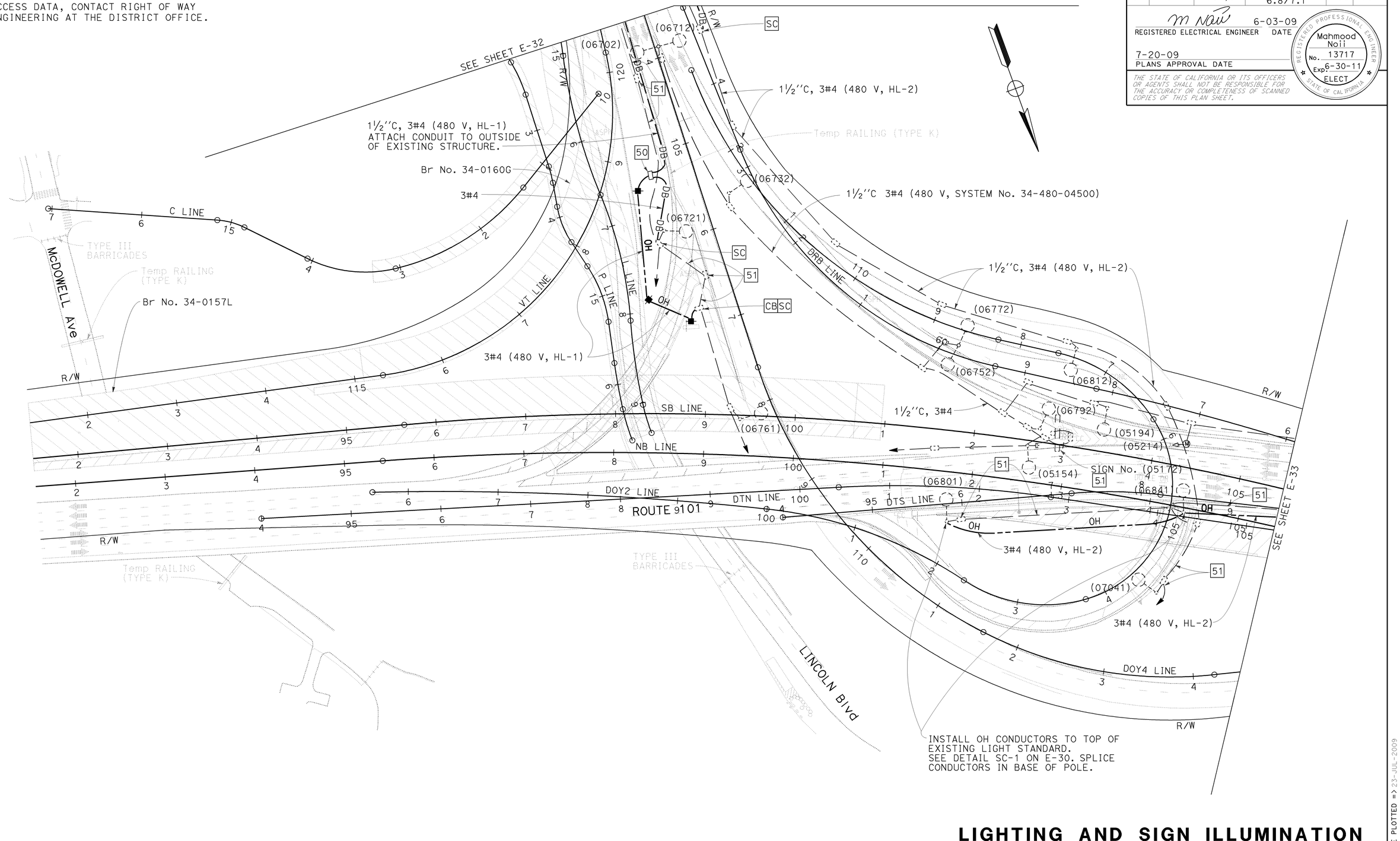

LIGHTING AND SIGN ILLUMINATION
(STAGE CONSTRUCTION)
STAGE 1 - PHASE 1
SCALE: 1'' = 50'

THIS PLAN IS ACCURATE FOR ELECTRICAL WORK ONLY

FOR NOTES, ABBREVIATIONS AND LEGEND, SEE SHEET E-30

E-31

STATE OF CALIFORNIA - DEPARTMENT OF TRANSPORTATION
ELECTRICAL
FUNCTIONAL SUPERVISOR: LAI HONG CHIU
CALCULATED-DESIGNED BY: PIERRE LASSALLE
CHECKED BY: MAHMOOD NOII
REVISED BY: PL
DATE REVISED: 6/10/09

LAST REVISION DATE PLOTTED => 23-JUL-2009
TIME PLOTTED => 08:45

Dist	COUNTY	ROUTE	POST MILES TOTAL PROJECT	SHEET No.	TOTAL SHEETS
04	SF	101,1	9.2/9.8, 6.8/7.1	196	567

M Noii 6-03-09
REGISTERED ELECTRICAL ENGINEER DATE

7-20-09
PLANS APPROVAL DATE

REGISTERED PROFESSIONAL ENGINEER
Mahmood Noii
No. 13717
Exp. 6-30-11
ELECT
STATE OF CALIFORNIA

THE STATE OF CALIFORNIA OR ITS OFFICERS OR AGENTS SHALL NOT BE RESPONSIBLE FOR THE ACCURACY OR COMPLETENESS OF SCANNED COPIES OF THIS PLAN SHEET.

FOR ACCURATE RIGHT OF WAY AND ACCESS DATA, CONTACT RIGHT OF WAY ENGINEERING AT THE DISTRICT OFFICE.

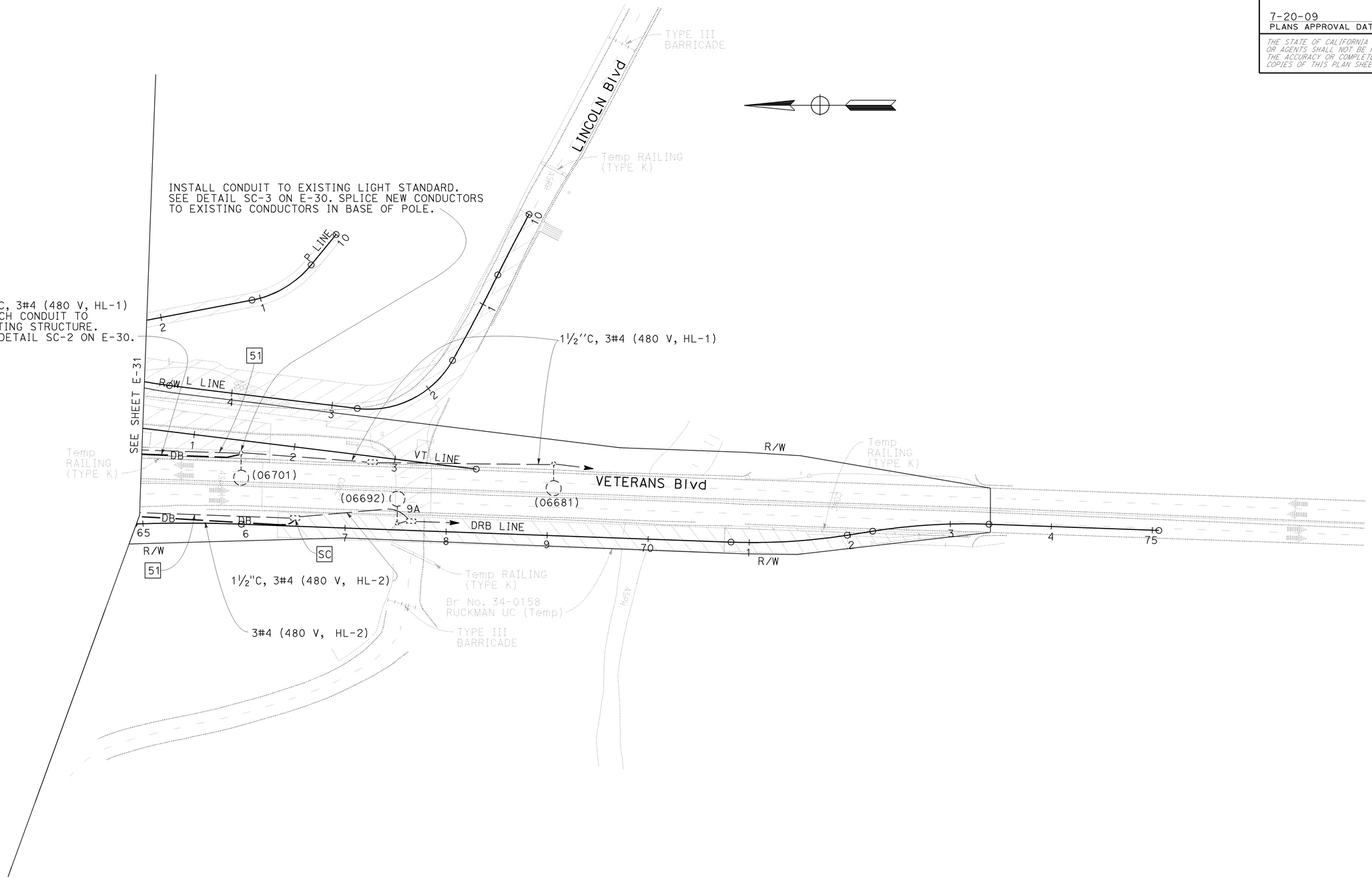

LIGHTING AND SIGN ILLUMINATION
(STAGE CONSTRUCTION)
STAGE 1 - PHASE 1
SCALE: 1'' = 50'

THIS PLAN IS ACCURATE FOR ELECTRICAL WORK ONLY

FOR NOTES, ABBREVIATIONS AND LEGEND, SEE SHEET E-30

E-32

STATE OF CALIFORNIA - DEPARTMENT OF TRANSPORTATION
Caltrans
ELECTRICAL

FUNCTIONAL SUPERVISOR: LAI HONG CHIU
CALCULATED-DESIGNED BY: PIERRE LASSALLE
CHECKED BY: MAHMOOD NOII
REVISED BY: PL
DATE REVISED: 6/10/09

LAST REVISION 06-04-09
DATE PLOTTED => 23-JUL-2009
TIME PLOTTED => 08:45

Dist	COUNTY	ROUTE	POST MILES TOTAL PROJECT	SHEET No.	TOTAL SHEETS
04	SF	101,1	9.2/9.8, 6.8/7.1	197	567

M Noii 6-03-09
REGISTERED ELECTRICAL ENGINEER DATE

7-20-09
PLANS APPROVAL DATE

REGISTERED PROFESSIONAL ENGINEER
Mahmood Noii
No. 13717
Exp. 6-30-11
ELECT
STATE OF CALIFORNIA

THE STATE OF CALIFORNIA OR ITS OFFICERS OR AGENTS SHALL NOT BE RESPONSIBLE FOR THE ACCURACY OR COMPLETENESS OF SCANNED COPIES OF THIS PLAN SHEET.

FOR ACCURATE RIGHT OF WAY AND ACCESS DATA, CONTACT RIGHT OF WAY ENGINEERING AT THE DISTRICT OFFICE.

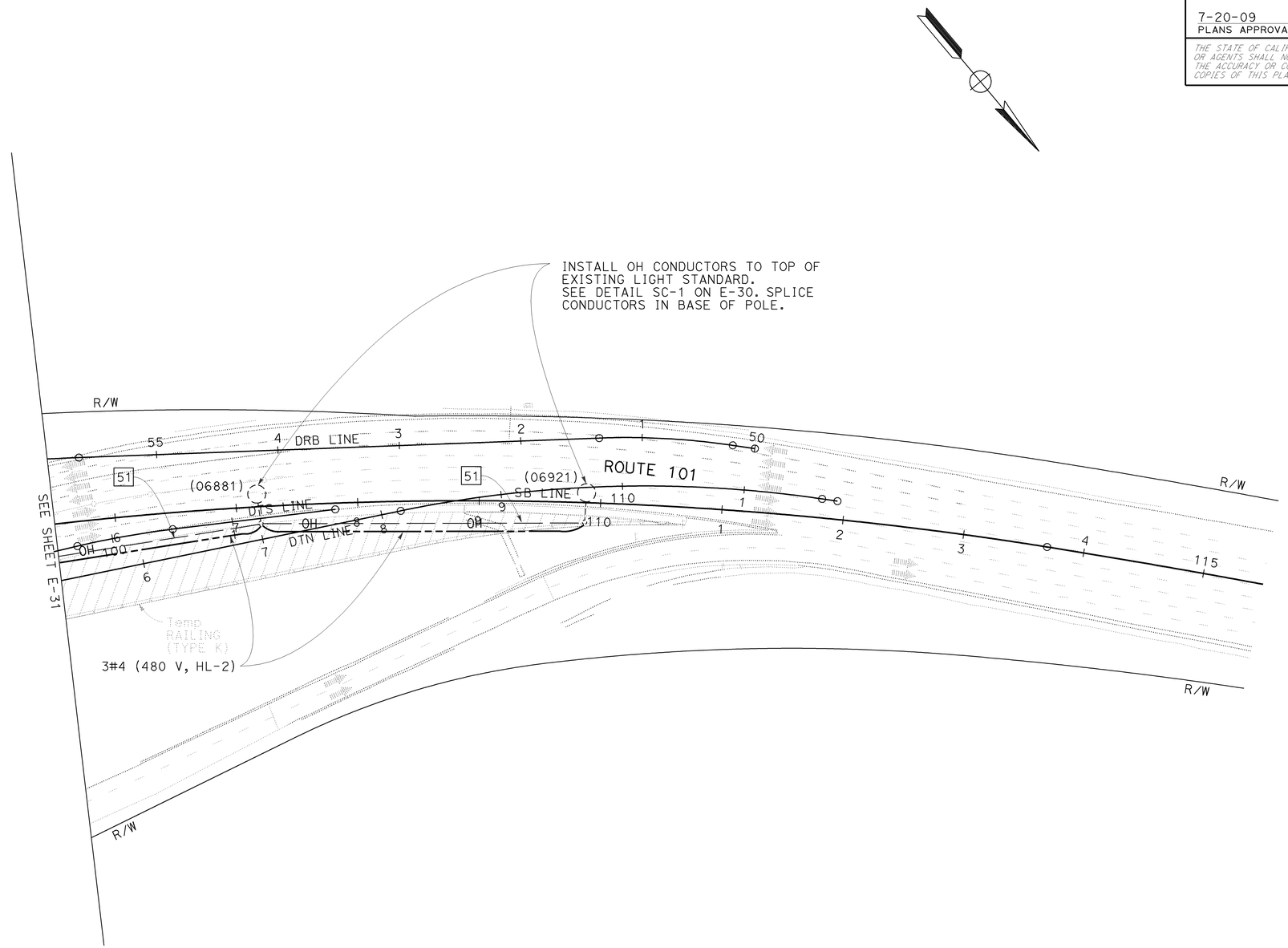

LIGHTING AND SIGN ILLUMINATION
(STAGE CONSTRUCTION)
STAGE 1 - PHASE 1
SCALE: 1'' = 50'

THIS PLAN IS ACCURATE FOR ELECTRICAL WORK ONLY

FOR NOTES, ABBREVIATIONS AND LEGEND, SEE SHEET E-30

E-33

STATE OF CALIFORNIA - DEPARTMENT OF TRANSPORTATION
Caltrans
ELECTRICAL

FUNCTIONAL SUPERVISOR: LAI HONG CHIU
CALCULATED-DESIGNED BY: PIERRE LASSALLE
CHECKED BY: MAHMOOD NOII
REVISED BY: PL
DATE REVISED: 6/10/09

LAST REVISION 05-29-09
DATE PLOTTED => 23-JUL-2009
TIME PLOTTED => 08:45

Dist	COUNTY	ROUTE	POST MILES TOTAL PROJECT	SHEET No.	TOTAL SHEETS
04	SF	101,1	9.2/9.8, 6.8/7.1	198	567

REGISTERED ELECTRICAL ENGINEER — 6-03-09 DATE

Mahmood Noii No. 13717 Exp 6-30-11 ELECT — REGISTERED PROFESSIONAL ENGINEER — STATE OF CALIFORNIA

7-20-09
PLANS APPROVAL DATE

THE STATE OF CALIFORNIA OR ITS OFFICERS OR AGENTS SHALL NOT BE RESPONSIBLE FOR THE ACCURACY OR COMPLETENESS OF SCANNED COPIES OF THIS PLAN SHEET.

FOR ACCURATE RIGHT OF WAY AND ACCESS DATA, CONTACT RIGHT OF WAY ENGINEERING AT THE DISTRICT OFFICE.

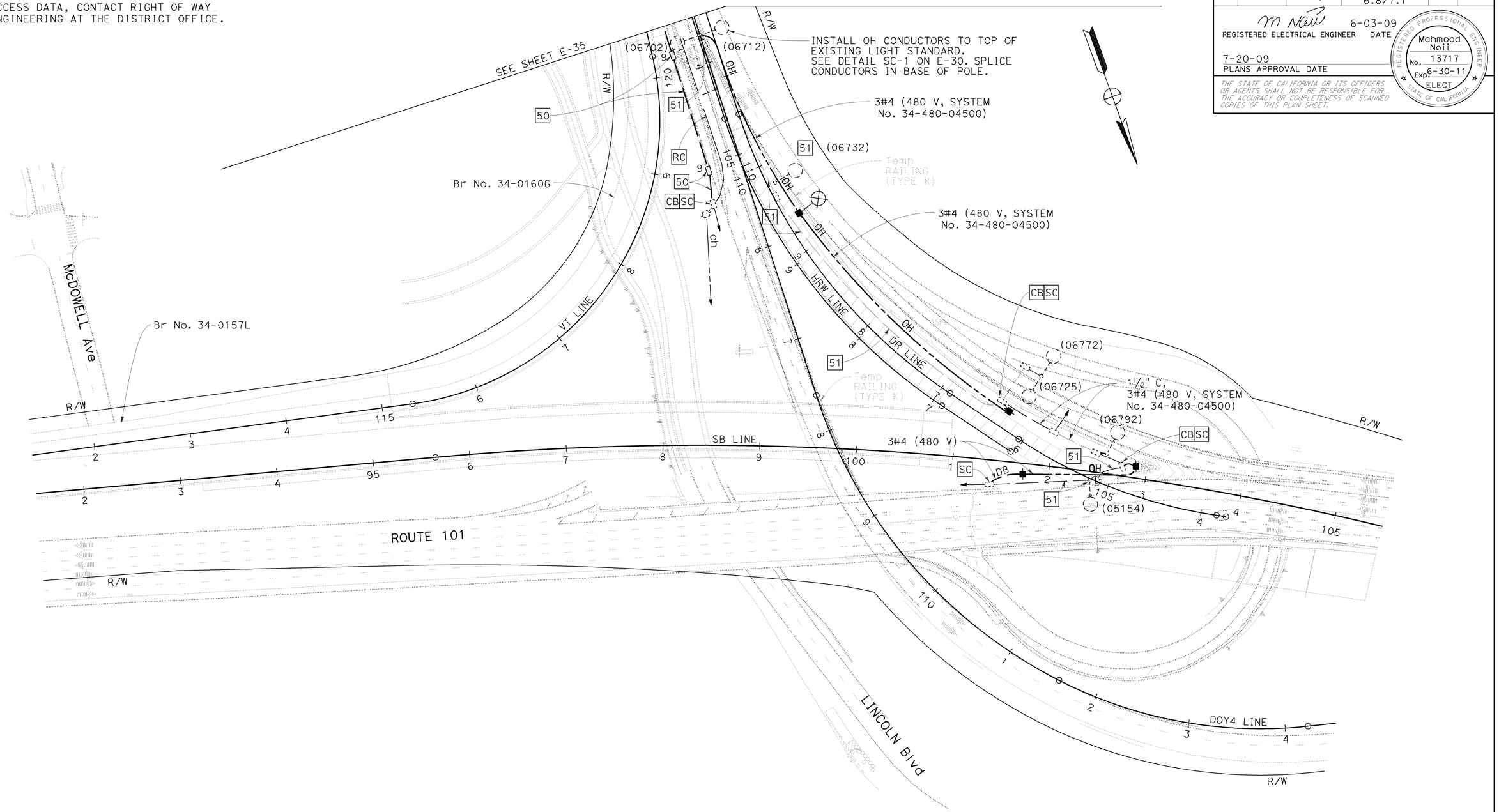

LIGHTING AND SIGN ILLUMINATION
(STAGE CONSTRUCTION)
STAGE 1 - PHASE 2
SCALE: 1'' = 50'

THIS PLAN IS ACCURATE FOR ELECTRICAL WORK ONLY

FOR NOTES, ABBREVIATIONS AND LEGEND, SEE SHEET E-30

E-34

STATE OF CALIFORNIA - DEPARTMENT OF TRANSPORTATION
ELECTRICAL

FUNCTIONAL SUPERVISOR: LAI HONG CHIU

CALCULATED-DESIGNED BY: PL
CHECKED BY: MAHMOOD NOII

REVISED BY | DATE REVISED: 6/10/09

LAST REVISION | DATE PLOTTED => 23-JUL-2009 | TIME PLOTTED => 08:55
06-09-09

BORDER LAST REVISED 4/11/2008

RELATIVE BORDER SCALE IS IN INCHES 0 1 2 3

USERNAME => trcarol
DGN FILE => 416373ua034.dgn

CU 04242

EA 163731

Dist	COUNTY	ROUTE	POST MILES TOTAL PROJECT	SHEET No.	TOTAL SHEETS
04	SF	101,1	9.2/9.8, 6.8/7.1	199	567

M Noii 6-03-09
REGISTERED ELECTRICAL ENGINEER DATE

7-20-09
PLANS APPROVAL DATE

REGISTERED PROFESSIONAL ENGINEER
Mahmood Noii
No. 13717
Exp. 6-30-11
ELECT
STATE OF CALIFORNIA

THE STATE OF CALIFORNIA OR ITS OFFICERS OR AGENTS SHALL NOT BE RESPONSIBLE FOR THE ACCURACY OR COMPLETENESS OF SCANNED COPIES OF THIS PLAN SHEET.

FOR ACCURATE RIGHT OF WAY AND ACCESS DATA, CONTACT RIGHT OF WAY ENGINEERING AT THE DISTRICT OFFICE.

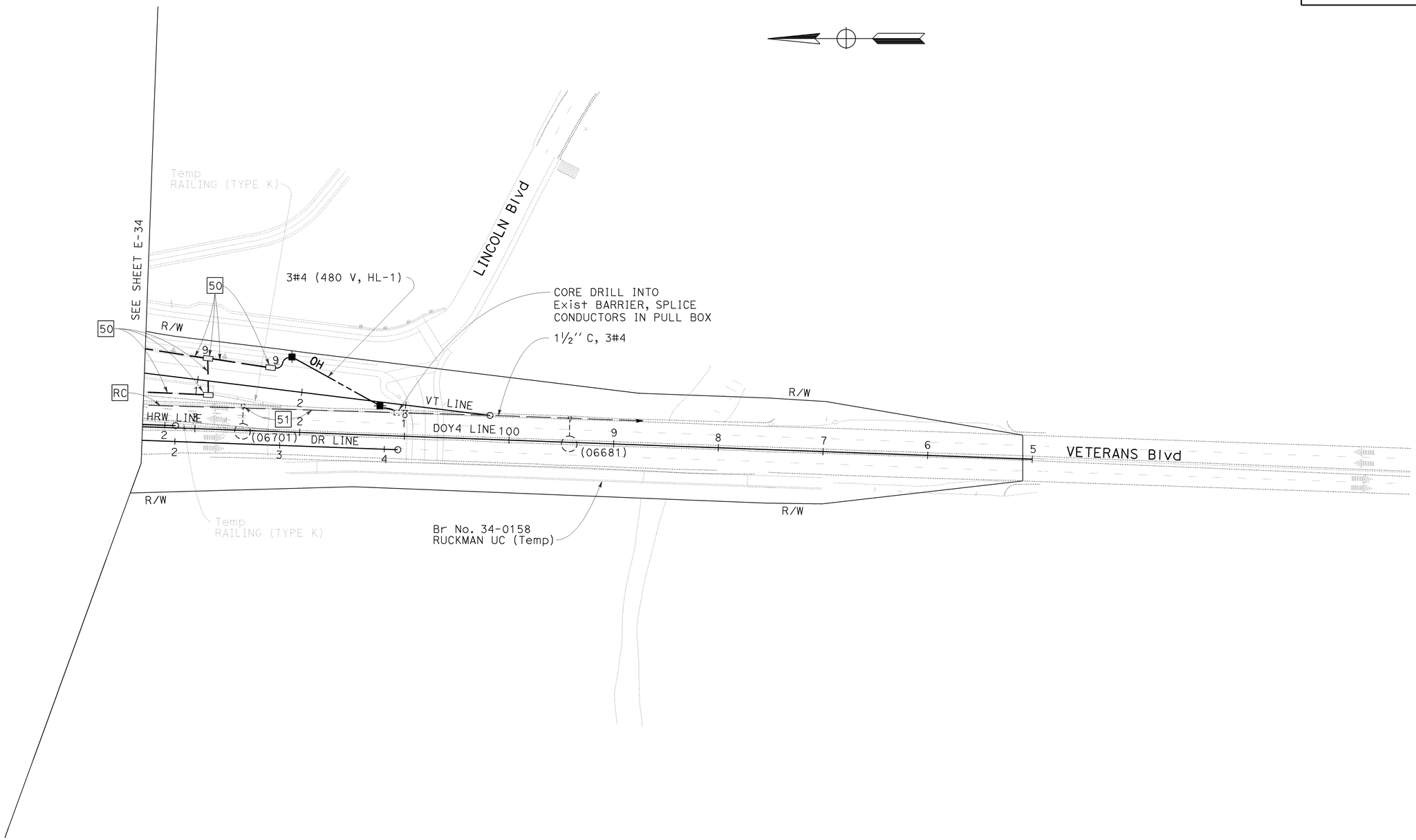

LIGHTING AND SIGN ILLUMINATION
(STAGE CONSTRUCTION)
STAGE 1 - PHASE 2
SCALE: 1'' = 50'

THIS PLAN IS ACCURATE FOR ELECTRICAL WORK ONLY

FOR NOTES, ABBREVIATIONS AND LEGEND, SEE SHEET E-30

E-35

STATE OF CALIFORNIA - DEPARTMENT OF TRANSPORTATION
Caltrans
ELECTRICAL

FUNCTIONAL SUPERVISOR: LAI HONG CHIU
CALCULATED-DESIGNED BY: PIERRE LASSALLE
CHECKED BY: MAHMOOD NOII
REVISED BY: PL
DATE REVISED: 6/10/09

LAST REVISION: 05-30-09
DATE PLOTTED => 23-JUL-2009
TIME PLOTTED => 08:45

Dist	COUNTY	ROUTE	POST MILES TOTAL PROJECT	SHEET No.	TOTAL SHEETS
04	SF	101,1	9.2/9.8, 6.8/7.1	200	567

REGISTERED ELECTRICAL ENGINEER — 6-03-09 DATE

Mahmood Noii No. 13717 Exp 6-30-11 ELECT — REGISTERED PROFESSIONAL ENGINEER — STATE OF CALIFORNIA

7-20-09
PLANS APPROVAL DATE

THE STATE OF CALIFORNIA OR ITS OFFICERS OR AGENTS SHALL NOT BE RESPONSIBLE FOR THE ACCURACY OR COMPLETENESS OF SCANNED COPIES OF THIS PLAN SHEET.

FOR ACCURATE RIGHT OF WAY AND ACCESS DATA, CONTACT RIGHT OF WAY ENGINEERING AT THE DISTRICT OFFICE.

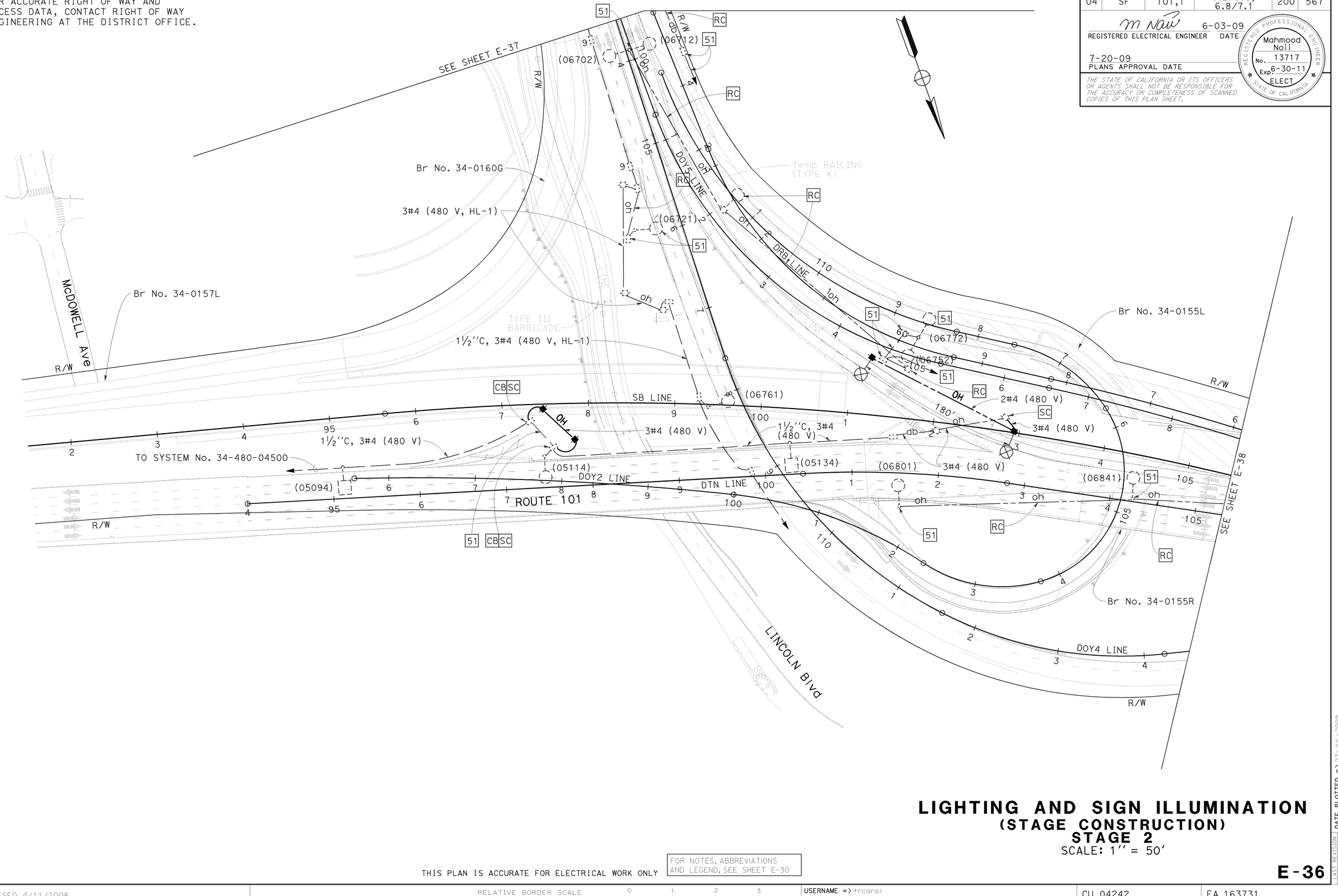

LIGHTING AND SIGN ILLUMINATION
(STAGE CONSTRUCTION)
STAGE 2
SCALE: 1" = 50'

THIS PLAN IS ACCURATE FOR ELECTRICAL WORK ONLY

FOR NOTES, ABBREVIATIONS AND LEGEND, SEE SHEET E-30

E-36

CALCULATED-DESIGNED BY	CHECKED BY	REVISED BY	DATE REVISED
PIERRE LASSALLE	MAHMOOD NOII	PL	6/10/09

FUNCTIONAL SUPERVISOR: LAI HONG CHIU

STATE OF CALIFORNIA - DEPARTMENT OF TRANSPORTATION
ELECTRICAL

LAST REVISION DATE PLOTTED => 23-JUL-2009
TIME PLOTTED => 08:45
06-10-09

BORDER LAST REVISED 4/11/2008

RELATIVE BORDER SCALE IS IN INCHES 0 1 2 3

USERNAME => trcarol
DGN FILE => 416373ua036.dgn

CU 04242

EA 163731

FOR ACCURATE RIGHT OF WAY AND
ACCESS DATA, CONTACT RIGHT OF WAY
ENGINEERING AT THE DISTRICT OFFICE.

Dist	COUNTY	ROUTE	POST MILES TOTAL PROJECT	SHEET No.	TOTAL SHEETS
04	SF	101,1	9.2/9.8, 6.8/7.1	201	567

m Noii 6-03-09
REGISTERED ELECTRICAL ENGINEER DATE

7-20-09
PLANS APPROVAL DATE

REGISTERED PROFESSIONAL ENGINEER
Mahmood Noii
No. 13717
Exp 6-30-11
ELECT
STATE OF CALIFORNIA

THE STATE OF CALIFORNIA OR ITS OFFICERS OR AGENTS SHALL NOT BE RESPONSIBLE FOR THE ACCURACY OR COMPLETENESS OF SCANNED COPIES OF THIS PLAN SHEET.

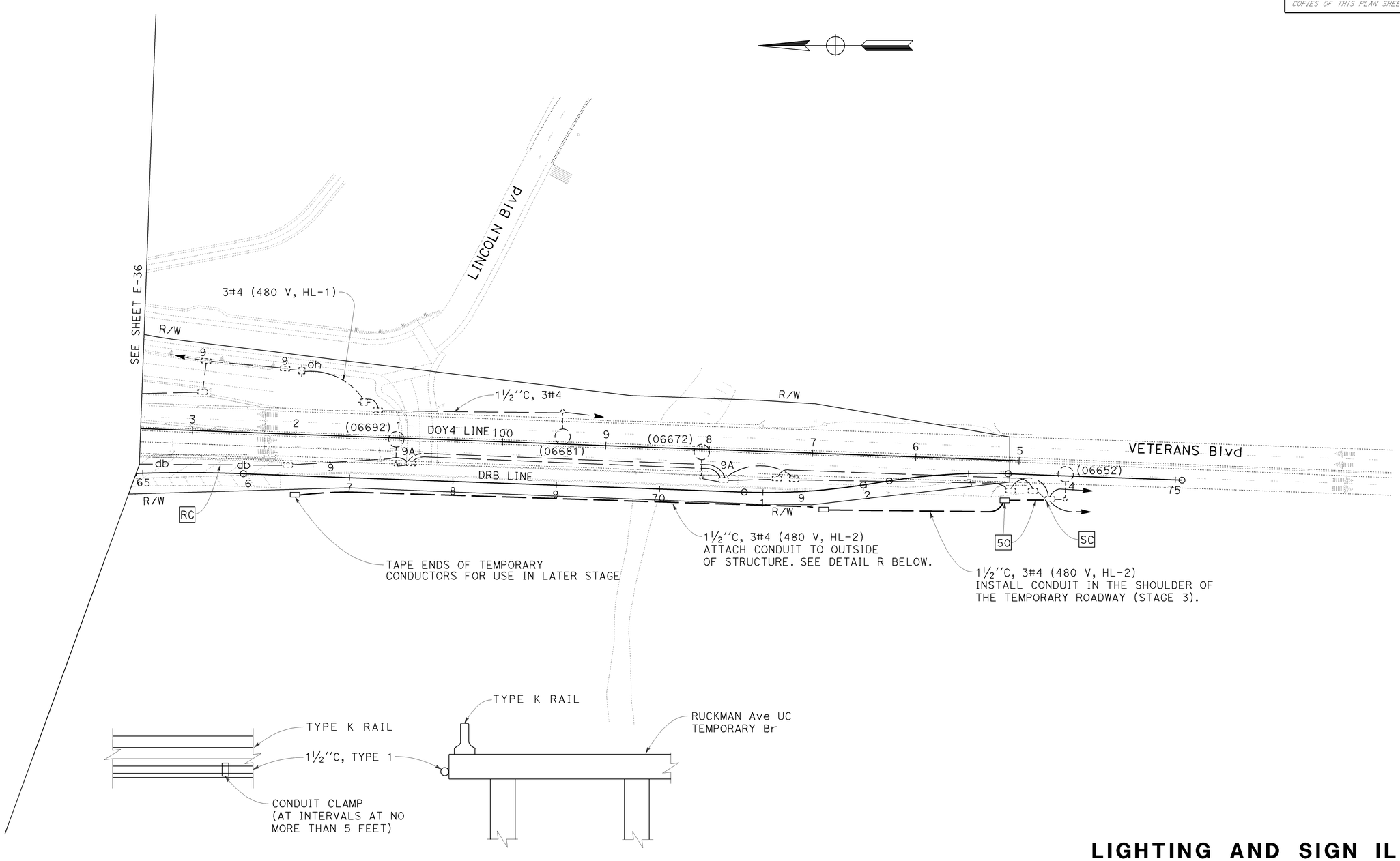

DETAIL R
NO SCALE

THIS PLAN IS ACCURATE FOR ELECTRICAL WORK ONLY

FOR NOTES, ABBREVIATIONS AND LEGEND, SEE SHEET E-30

LIGHTING AND SIGN ILLUMINATION
(STAGE CONSTRUCTION)
STAGE 2
SCALE: 1'' = 50'

E-37

CALCULATED-DESIGNED BY	REVISED BY	DATE PLOTTED => 23-JUL-2009
CHECKED BY	DATE REVISED	TIME PLOTTED => 08:45
PIERRE LASSALLE	PL	LAST REVISION 06-10-09
MAHMOOD NOII	6/10/09	

FUNCTIONAL SUPERVISOR: LAI HONG CHIU

STATE OF CALIFORNIA - DEPARTMENT OF TRANSPORTATION
ELECTRICAL

FOR ACCURATE RIGHT OF WAY AND
ACCESS DATA, CONTACT RIGHT OF WAY
ENGINEERING AT THE DISTRICT OFFICE.

Dist	COUNTY	ROUTE	POST MILES TOTAL PROJECT	SHEET No.	TOTAL SHEETS
04	SF	101,1	9.2/9.8, 6.8/7.1	202	567

REGISTERED ELECTRICAL ENGINEER — 6-03-09 DATE

REGISTERED PROFESSIONAL ENGINEER
Mahmood Noii
No. 13717
Exp 6-30-11
ELECT
STATE OF CALIFORNIA

7-20-09
PLANS APPROVAL DATE

THE STATE OF CALIFORNIA OR ITS OFFICERS OR AGENTS SHALL NOT BE RESPONSIBLE FOR THE ACCURACY OR COMPLETENESS OF SCANNED COPIES OF THIS PLAN SHEET.

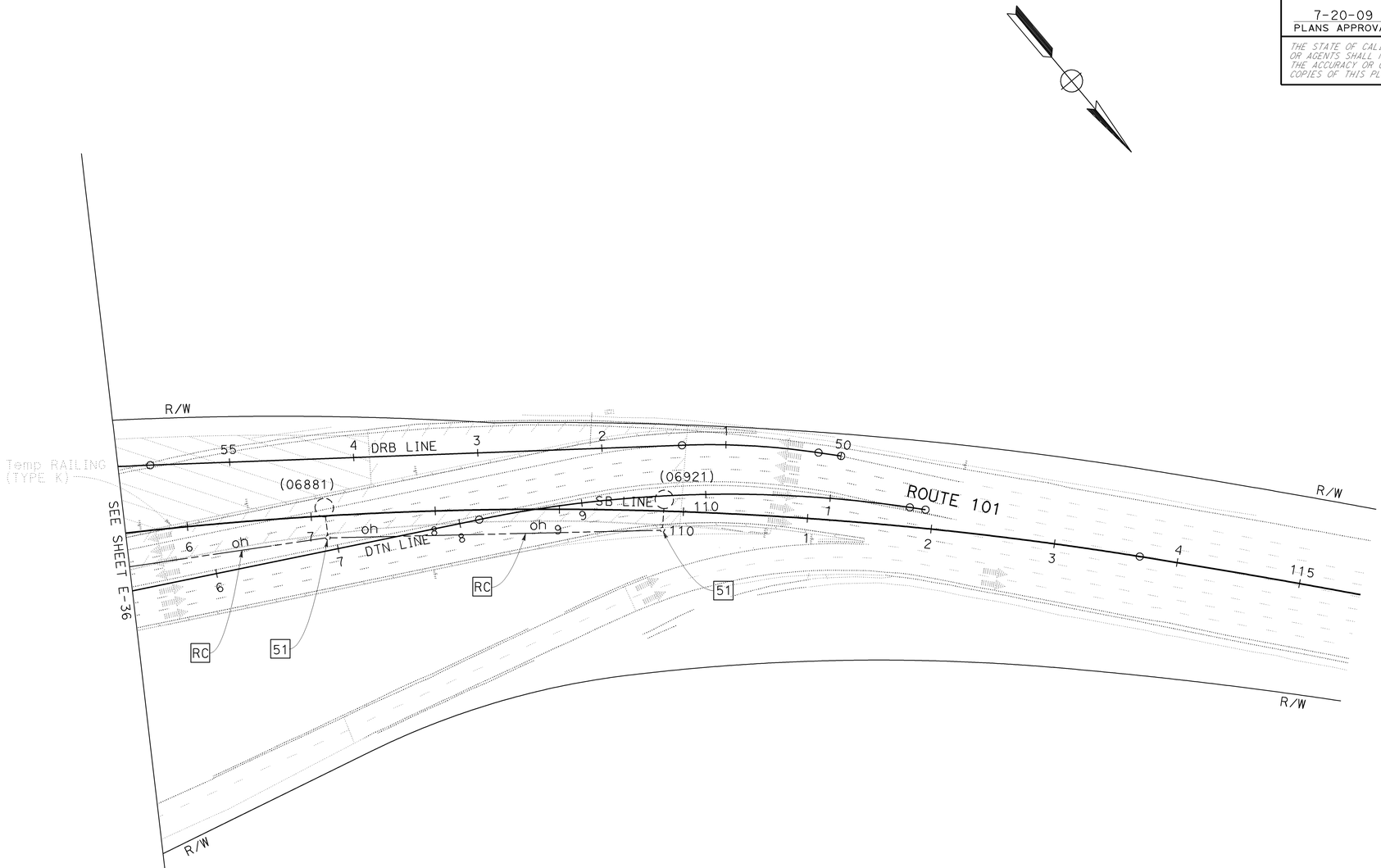

LIGHTING AND SIGN ILLUMINATION
(STAGE CONSTRUCTION)
STAGE 2
SCALE: 1'' = 50'

THIS PLAN IS ACCURATE FOR ELECTRICAL WORK ONLY

FOR NOTES, ABBREVIATIONS AND LEGEND, SEE SHEET E-30

E-38

REVISED BY	PL		
DATE REVISED	6/10/09		
CALCULATED-DESIGNED BY	PIERRE LASSALLE		
CHECKED BY	MAHMOOD NOII		
FUNCTIONAL SUPERVISOR	LAI HONG CHIU		
STATE OF CALIFORNIA - DEPARTMENT OF TRANSPORTATION	ELECTRICAL		

LAST REVISION DATE PLOTTED => 23-JUL-2009
TIME PLOTTED => 08:52

BORDER LAST REVISED 4/11/2008

RELATIVE BORDER SCALE IS IN INCHES 0 1 2 3

USERNAME => s135318
DGN FILE => 416373ua038.dgn

CU 04242

EA 163731

FOR ACCURATE RIGHT OF WAY AND
ACCESS DATA, CONTACT RIGHT OF WAY
ENGINEERING AT THE DISTRICT OFFICE.

Dist	COUNTY	ROUTE	POST MILES TOTAL PROJECT	SHEET No.	TOTAL SHEETS
04	SF	101,1	9.2/9.8, 6.8/7.1	203	567

REGISTERED ELECTRICAL ENGINEER — 6-03-09 DATE

7-20-09
PLANS APPROVAL DATE

REGISTERED PROFESSIONAL ENGINEER
Mahmood Noii
No. 13717
Exp 6-30-11
ELECT
STATE OF CALIFORNIA

THE STATE OF CALIFORNIA OR ITS OFFICERS OR AGENTS SHALL NOT BE RESPONSIBLE FOR THE ACCURACY OR COMPLETENESS OF SCANNED COPIES OF THIS PLAN SHEET.

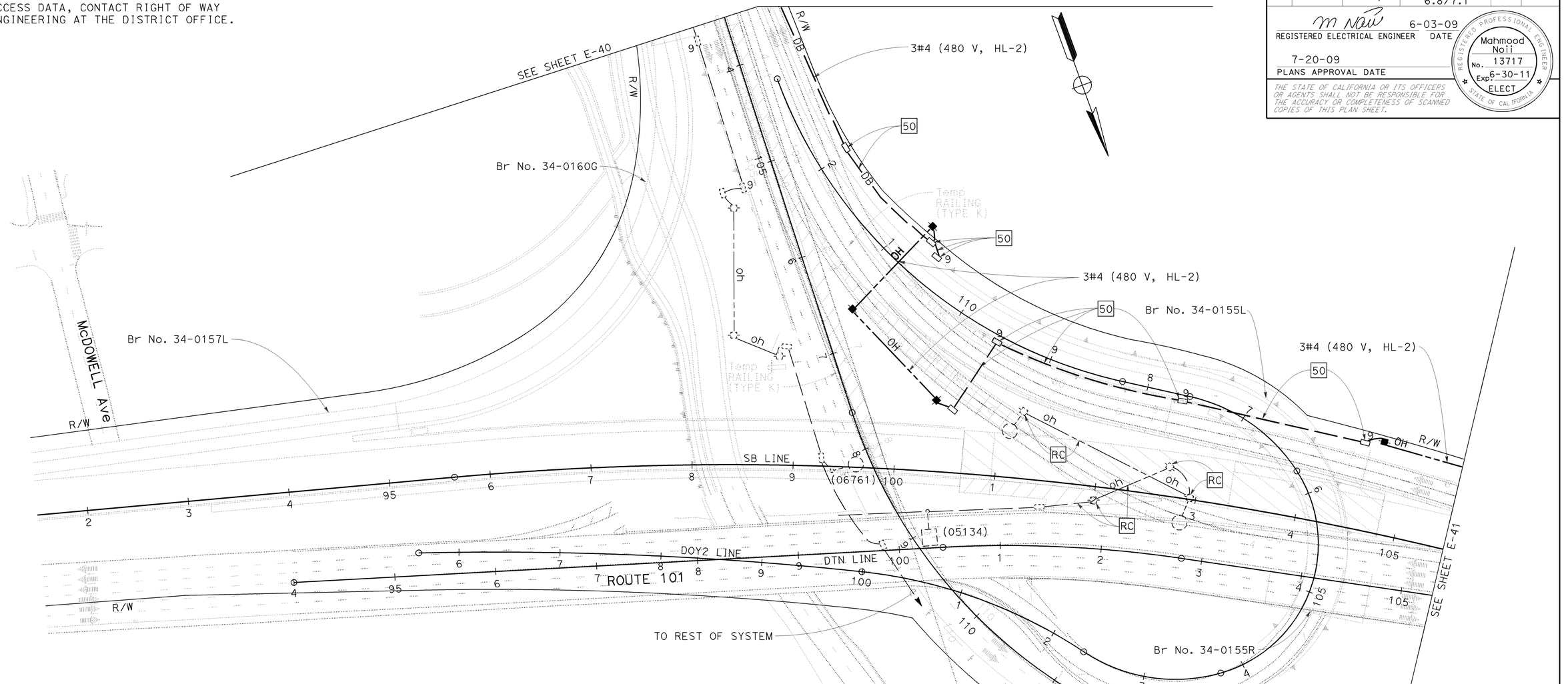

LIGHTING AND SIGN ILLUMINATION
(STAGE CONSTRUCTION)
STAGE 3
SCALE: 1'' = 50'

THIS PLAN IS ACCURATE FOR ELECTRICAL WORK ONLY

FOR NOTES, ABBREVIATIONS AND LEGEND, SEE SHEET E-30

E-39

CALCULATED-DESIGNED BY	CHECKED BY	REVISED BY	DATE REVISED
PIERRE LASSALLE	MAHMOOD NOII	PL	6/10/09

FUNCTIONAL SUPERVISOR: LAI HONG CHIU

STATE OF CALIFORNIA - DEPARTMENT OF TRANSPORTATION
ELECTRICAL

LAST REVISION: DATE PLOTTED => 23-JUL-2009, TIME PLOTTED => 08:55
06-09-09

BORDER LAST REVISED 4/11/2008 | RELATIVE BORDER SCALE IS IN INCHES 0 1 2 3 | USERNAME => s135318, DGN FILE => 416373ua039.dgn | CU 04242 | EA 163731

FOR ACCURATE RIGHT OF WAY AND
ACCESS DATA, CONTACT RIGHT OF WAY
ENGINEERING AT THE DISTRICT OFFICE.

Dist	COUNTY	ROUTE	POST MILES TOTAL PROJECT	SHEET No.	TOTAL SHEETS
04	SF	101,1	9.2/9.8, 6.8/7.1	204	567

m Nau 6-03-09
REGISTERED ELECTRICAL ENGINEER DATE

7-20-09
PLANS APPROVAL DATE

REGISTERED PROFESSIONAL ENGINEER
Mahmood Noii
No. 13717
Exp 6-30-11
ELECT
STATE OF CALIFORNIA

THE STATE OF CALIFORNIA OR ITS OFFICERS OR AGENTS SHALL NOT BE RESPONSIBLE FOR THE ACCURACY OR COMPLETENESS OF SCANNED COPIES OF THIS PLAN SHEET.

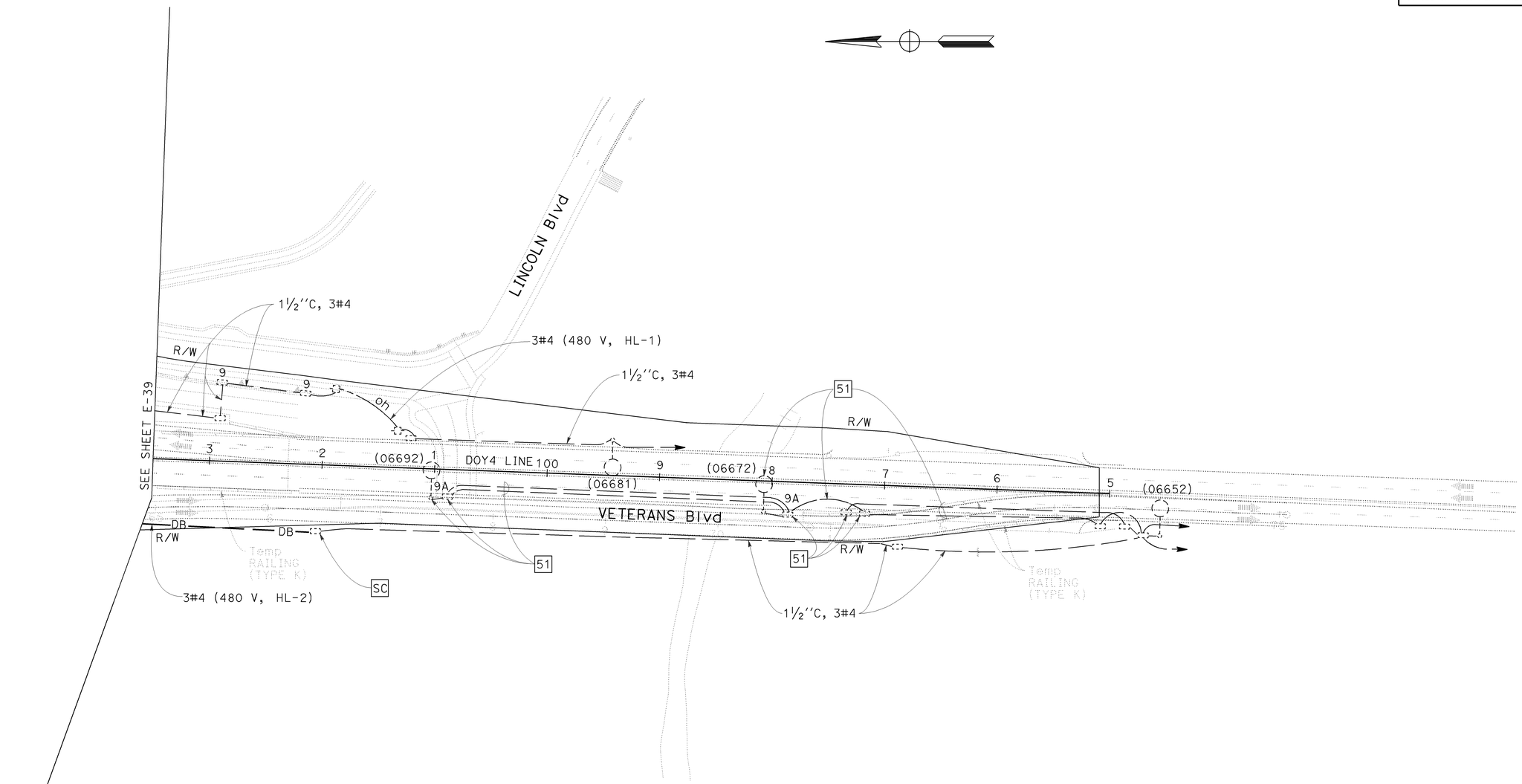

LIGHTING AND SIGN ILLUMINATION
(STAGE CONSTRUCTION)
STAGE 3
SCALE: 1" = 50'

THIS PLAN IS ACCURATE FOR ELECTRICAL WORK ONLY

FOR NOTES, ABBREVIATIONS AND LEGEND, SEE SHEET E-30

E-40

STATE OF CALIFORNIA - DEPARTMENT OF TRANSPORTATION
ELECTRICAL
FUNCTIONAL SUPERVISOR: LAI HONG CHIU
CALCULATED-DESIGNED BY: PIERRE LASSALLE
CHECKED BY: MAHMOOD NOII
REVISED BY: PL
DATE REVISED: 6/10/09

LAST REVISION
DATE PLOTTED => 23-JUL-2009
TIME PLOTTED => 08:53
05-31-09

BORDER LAST REVISED 4/11/2008
RELATIVE BORDER SCALE IS IN INCHES 0 1 2 3
USERNAME => s135318
DGN FILE => 416373ua040.dgn
CU 04242
EA 163731

FOR ACCURATE RIGHT OF WAY AND
ACCESS DATA, CONTACT RIGHT OF WAY
ENGINEERING AT THE DISTRICT OFFICE.

Dist	COUNTY	ROUTE	POST MILES TOTAL PROJECT	SHEET No.	TOTAL SHEETS
04	SF	101,1	9.2/9.8, 6.8/7.1	205	567

REGISTERED ELECTRICAL ENGINEER — 6-03-09 DATE

7-20-09
PLANS APPROVAL DATE

REGISTERED PROFESSIONAL ENGINEER
Mahmood Noii
No. 13717
Exp 6-30-11
ELECT
STATE OF CALIFORNIA

THE STATE OF CALIFORNIA OR ITS OFFICERS OR AGENTS SHALL NOT BE RESPONSIBLE FOR THE ACCURACY OR COMPLETENESS OF SCANNED COPIES OF THIS PLAN SHEET.

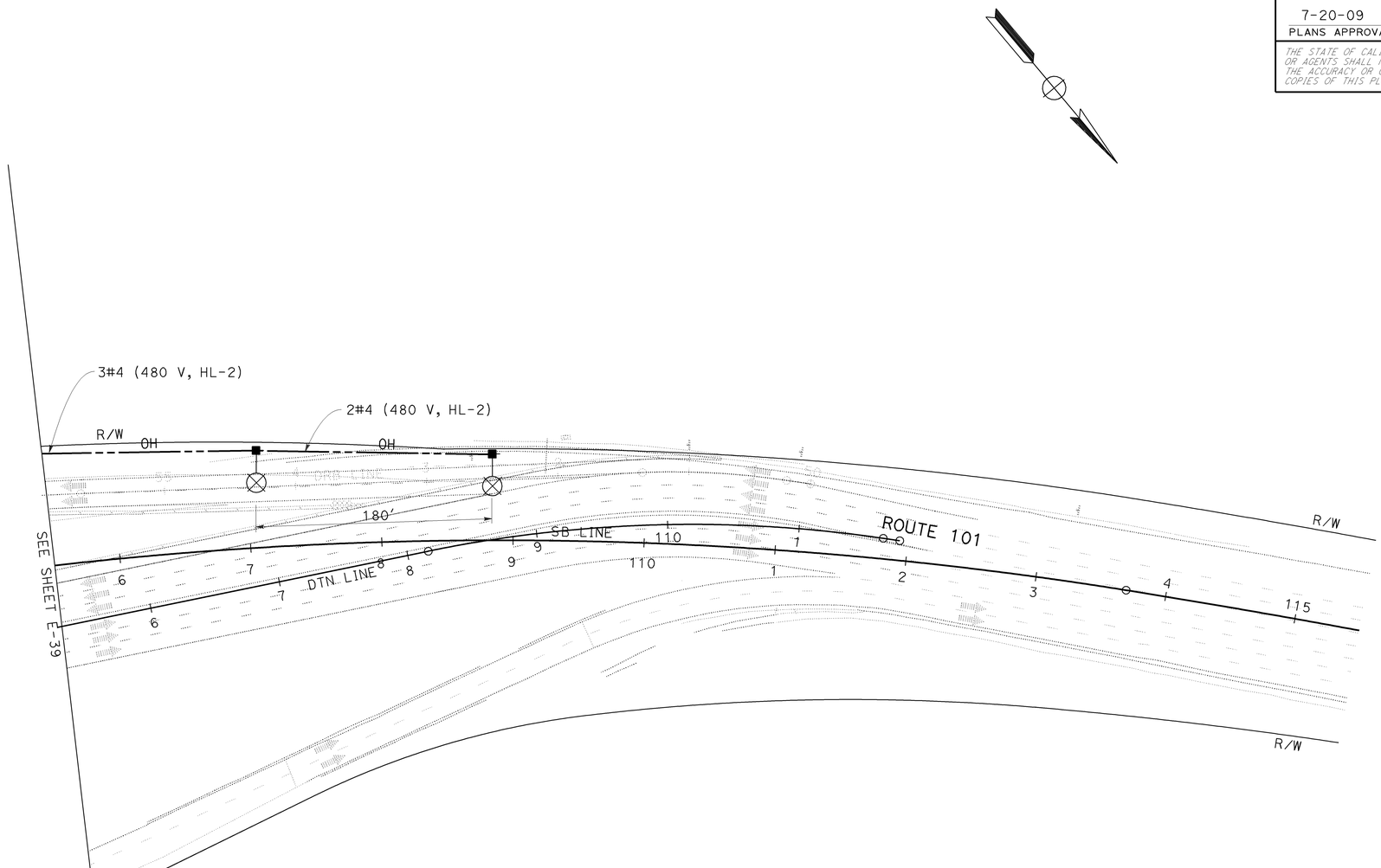

THIS PLAN IS ACCURATE FOR ELECTRICAL WORK ONLY

FOR NOTES, ABBREVIATIONS AND LEGEND, SEE SHEET E-30

LIGHTING AND SIGN ILLUMINATION
(STAGE CONSTRUCTION)
STAGE 3
SCALE: 1'' = 50'

E-41

STATE OF CALIFORNIA - DEPARTMENT OF TRANSPORTATION
Caltrans®
ELECTRICAL

FUNCTIONAL SUPERVISOR: LAI HONG CHIU

CALCULATED-DESIGNED BY: PIERRE LASSALLE
CHECKED BY: MAHMOOD NOII

REVISED BY	DATE REVISED
PL	6/10/09

LAST REVISION
DATE PLOTTED => 23-JUL-2009
TIME PLOTTED => 08:53
05-31-09

BORDER LAST REVISED 4/11/2008

RELATIVE BORDER SCALE IS IN INCHES 0 1 2 3

USERNAME => s135318
DGN FILE => 416373ua041.dgn

CU 04242

EA 163731

FOR ACCURATE RIGHT OF WAY AND
ACCESS DATA, CONTACT RIGHT OF WAY
ENGINEERING AT THE DISTRICT OFFICE.

Dist	COUNTY	ROUTE	POST MILES TOTAL PROJECT	SHEET No.	TOTAL SHEETS
04	SF	101,1	9.2/9.8, 6.8/7.1	206	567

REGISTERED ELECTRICAL ENGINEER — DATE: 6-03-09

PLANS APPROVAL DATE: 7-20-09

REGISTERED PROFESSIONAL ENGINEER
Mahmood Noii
No. 13717
Exp 6-30-11
ELECT
STATE OF CALIFORNIA

THE STATE OF CALIFORNIA OR ITS OFFICERS OR AGENTS SHALL NOT BE RESPONSIBLE FOR THE ACCURACY OR COMPLETENESS OF SCANNED COPIES OF THIS PLAN SHEET.

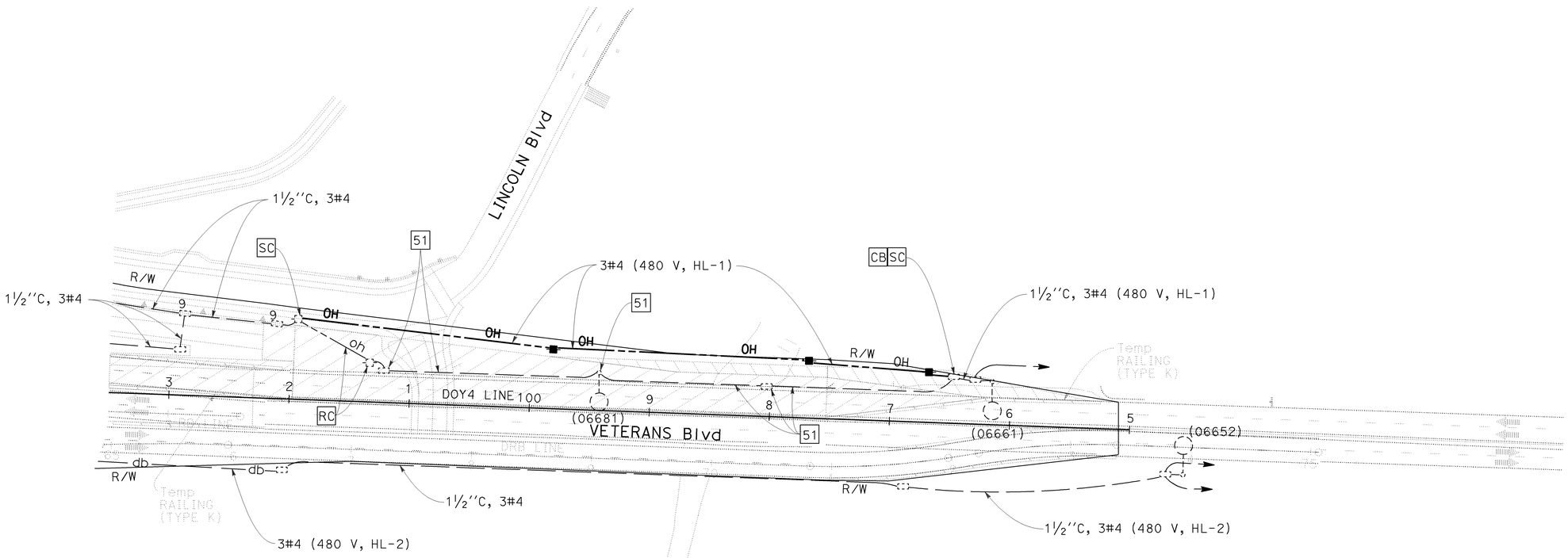

LIGHTING AND SIGN ILLUMINATION
(STAGE CONSTRUCTION)
STAGE 4
SCALE: 1'' = 50'

THIS PLAN IS ACCURATE FOR ELECTRICAL WORK ONLY

FOR NOTES, ABBREVIATIONS AND LEGEND, SEE SHEET E-30

E-42

STATE OF CALIFORNIA - DEPARTMENT OF TRANSPORTATION
ELECTRICAL
FUNCTIONAL SUPERVISOR: LAI HONG CHIU
CALCULATED-DESIGNED BY: PIERRE LASSALLE
CHECKED BY: MAHMOOD NOII
REVISED BY: PL
DATE REVISED: 6/10/09

LAST REVISION — DATE PLOTTED => 23-JUL-2009 TIME PLOTTED => 08:53
05-26-09

BORDER LAST REVISED 4/11/2008
RELATIVE BORDER SCALE IS IN INCHES 0 1 2 3
USERNAME => s135318
DGN FILE => 416373ua042.dgn
CU 04242
EA 163731

FOR ACCURATE RIGHT OF WAY AND ACCESS DATA, CONTACT RIGHT OF WAY ENGINEERING AT THE DISTRICT OFFICE.

Dist	COUNTY	ROUTE	POST MILES TOTAL PROJECT	SHEET No.	TOTAL SHEETS
04	SF	101,1	9.2/9.8, 6.8/7.1	207	567

M Noii 6-03-09
REGISTERED ELECTRICAL ENGINEER DATE

7-20-09
PLANS APPROVAL DATE

REGISTERED PROFESSIONAL ENGINEER Mahmood Noii No. 13717 Exp. 6-30-11 ELECT STATE OF CALIFORNIA

THE STATE OF CALIFORNIA OR ITS OFFICERS OR AGENTS SHALL NOT BE RESPONSIBLE FOR THE ACCURACY OR COMPLETENESS OF SCANNED COPIES OF THIS PLAN SHEET.

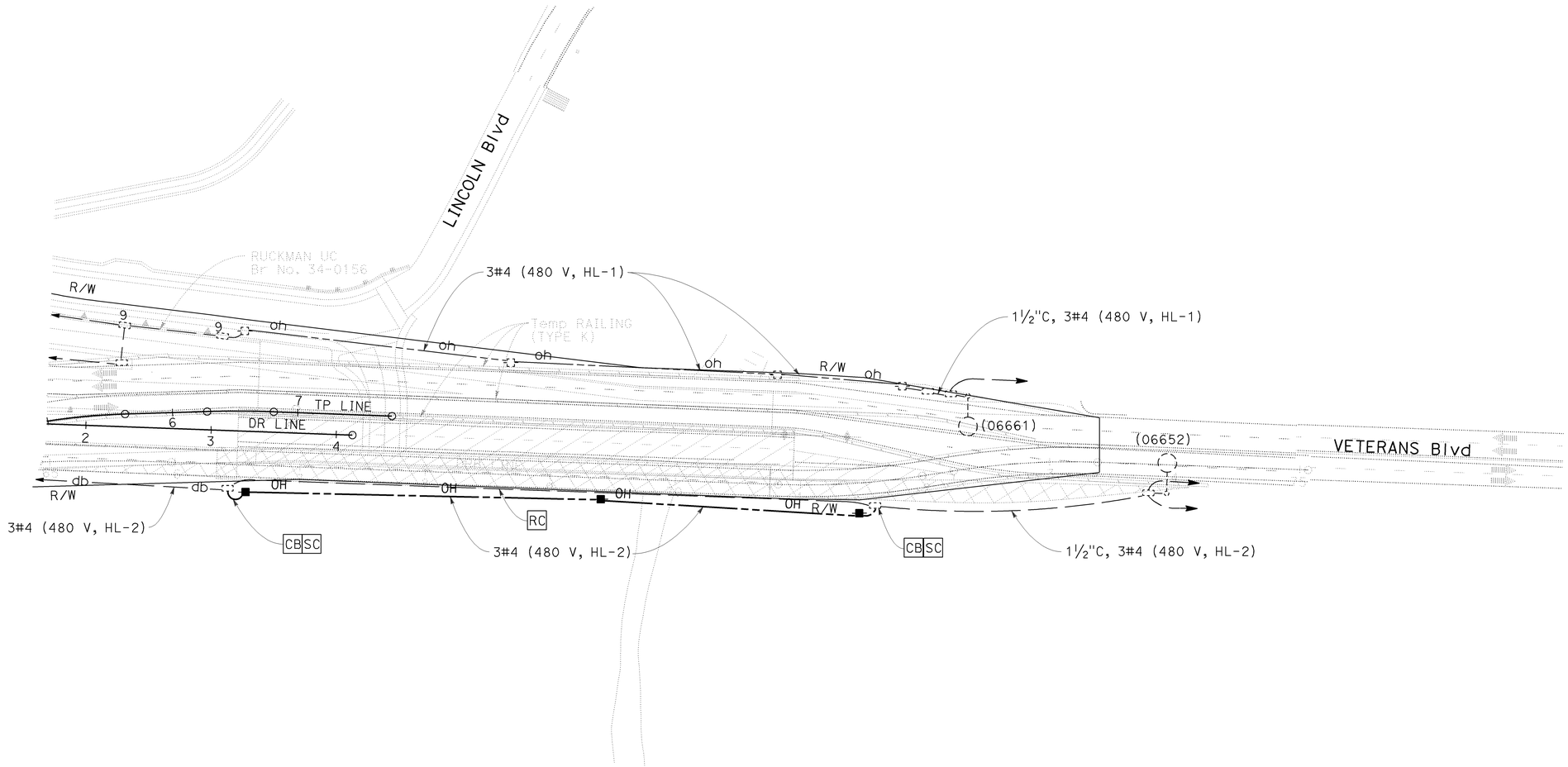

LIGHTING AND SIGN ILLUMINATION
(STAGE CONSTRUCTION)
STAGE 6
SCALE: 1'' = 50'

THIS PLAN IS ACCURATE FOR ELECTRICAL WORK ONLY

FOR NOTES, ABBREVIATIONS AND LEGEND, SEE SHEET E-30

E-43

STATE OF CALIFORNIA - DEPARTMENT OF TRANSPORTATION
Caltrans
ELECTRICAL

FUNCTIONAL SUPERVISOR: LAI HONG CHIU
CALCULATED-DESIGNED BY: PIERRE LASSALLE
CHECKED BY: MAHMOOD NOII
REVISED BY: PL
DATE REVISED: 6/10/09

LAST REVISION 05-23-09
DATE PLOTTED => 23-JUL-2009
TIME PLOTTED => 09:03

Fiberglass Pole Type	Pole Data				Anchor Base		
	"A" Height	Min OD		Weight Lb	Thickness "t"	Anchor Bolts	
		Base	Top			Size	Bolt Circle
21F	34′-9½"	8½"	4 13/16"	185	¾"	1"ø x 36" x 4"	11½"

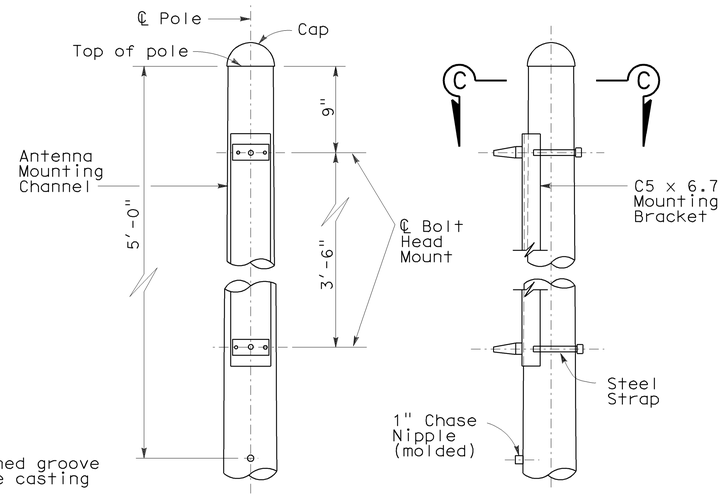

MOUNTING BRACKET DETAILS

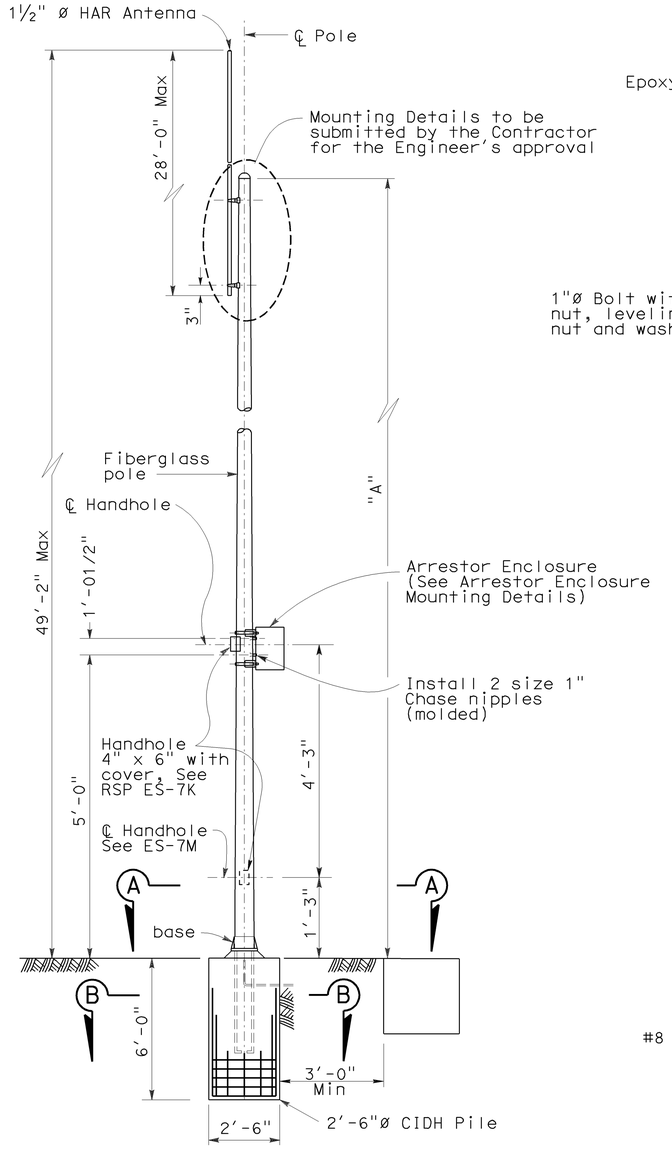

ELEVATION

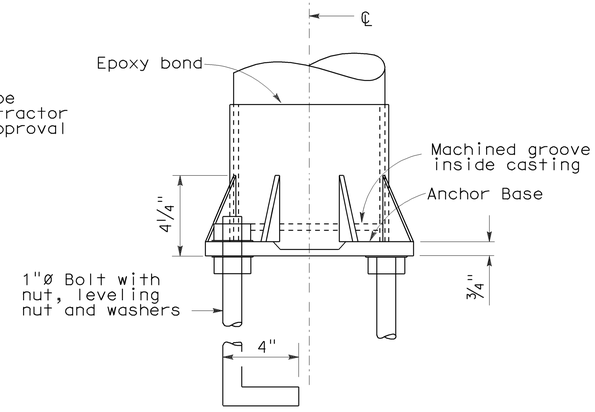

BASE ELEVATION

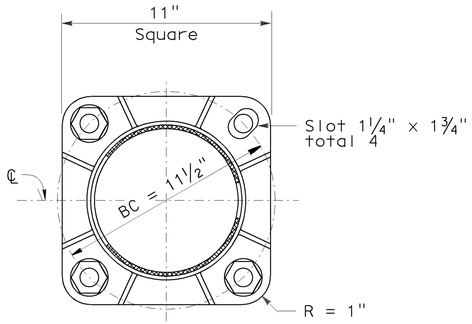

SECTION A-A

ALUMINUM ANCHOR

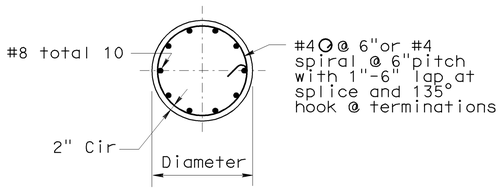

SECTION B-B

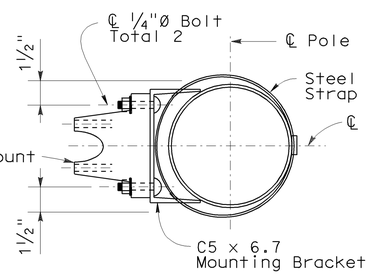

SECTION C-C

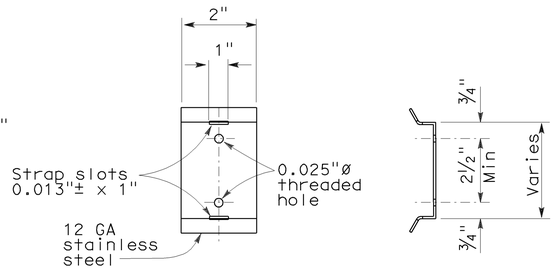

SADDLE BRACKET

GENERAL NOTES:

Specifications

Design: AASHTO specifications for the design and construction of structural supports for highway signs, dated 1994.

Construction: Standard specifications and the special provisions.

Wind Loading: 85 mph AASHTO

Notes:

1. The Contractor shall verify all controlling field dimensions before ordering or fabricating any material.
2. During pole erection, The post shall be racked as necessary with the use of leveling nuts to provide a plumb pole.
3. For locations, see "Electrical Plans".
4. HAR antenna shall be placed plumb.
5. All connections to fiberglass pole to be epoxy bond except when noted otherwise.
6. Bolt and connections to be specified for wind loading of 85 mph in conformance with AASHTO.
7. Foundation design is based on 2001 AASHTO article 13.6 Broms approximate procedure assuming a cohesionless material. The angle of internal friction used is 30 degrees and unit weight of soil used is 120 lb/ft.

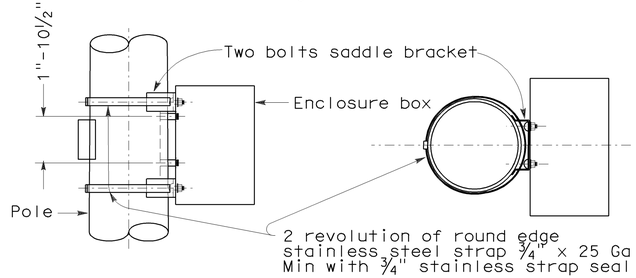

ELEVATION PLAN VIEW

ARRESTOR ENCLOSURE MOUNTING DETAILS

HIGHWAY ADVISORY RADIO SYSTEM ANTENNA DETAILS

NO SCALE

E-44

DIST	COUNTY	ROUTE	POST MILES TOTAL PROJECT	SHEET No	TOTAL SHEETS
04	SF	101,1	9.2/9.8, 6.8/7.1	208	567

Jeffrey B Woody 5-15-09
REGISTERED CIVIL ENGINEER DATE

7-20-09
PLANS APPROVAL DATE

The State of California or its officers or agents shall not be responsible for the accuracy or completeness of electronic copies of this plan sheet.

REGISTERED PROFESSIONAL ENGINEER JEFFREY B. WOODY No. C41260 Exp. 3/31/11 CIVIL STATE OF CALIFORNIA

STATE OF CALIFORNIA - DEPARTMENT OF TRANSPORTATION
Caltrans
SPECIAL DESIGNS BRANCH
PROJECT ENGINEER JEFF WOODY
CALCULATED/ DESIGNED BY T MARCHENKO
CHECKED BY X
DETAILS X
QUANTITIES X
DATE 5/12/09
A R DUDSAK

ORIGINAL SCALE IN INCHES FOR REDUCED PLANS 0 1 2 3

USERNAME => trstrk
DGN FILE => 04-163731_e44.dgn

CU 04

EA 163731

LAST REVISION 6-3-09
DATE PLOTTED => 23-JUL-2009
TIME PLOTTED => 09:57

VMS Sign DOY4 Line Sta 107+00	POST DATA, See Note 5								
	Laminated Wood Box Post Type	Section Dimensions	Length, Ft		Weight, Lb		Breakaway System	VMS Panel Manufacturer	Mounting Bolt Size
			Left	Right	Left	Right			
Roadside	"L"	14⅞" x 7⅞"	18.25	20.0	310	340	No	Ver Mac	½" ø
					Total Wgt = 650 lbs				

DIST	COUNTY	ROUTE	POST MILE TOTAL PROJECT	SHEET No	TOTAL SHEETS
04	SF	101,1	9.2/9.8, 6.8/7.1	209	567

REGISTERED CIVIL ENGINEER — 5/15/09 DATE

7-20-09
PLANS APPROVAL DATE

REGISTERED PROFESSIONAL ENGINEER — ANDREW BUI No. C63560 Exp. 9/30/10 CIVIL — STATE OF CALIFORNIA

The State of California or its officers or agents shall not be responsible for the accuracy or completeness of electronic copies of this plan sheet.

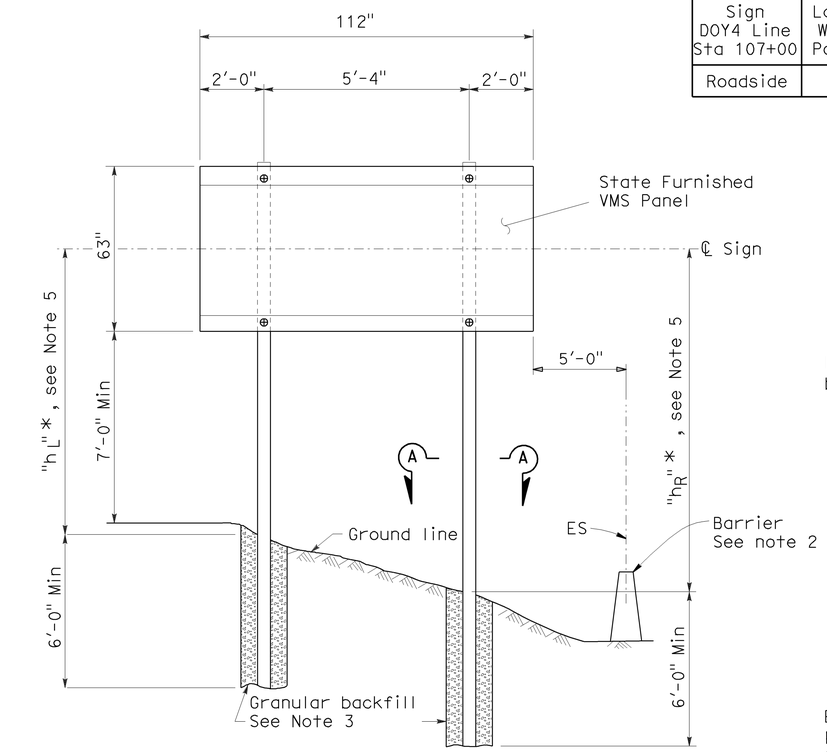

ELEVATION

* Dimensions shown on project plans are for fabrication. At time of installation adjust these dimensions to verify in field.

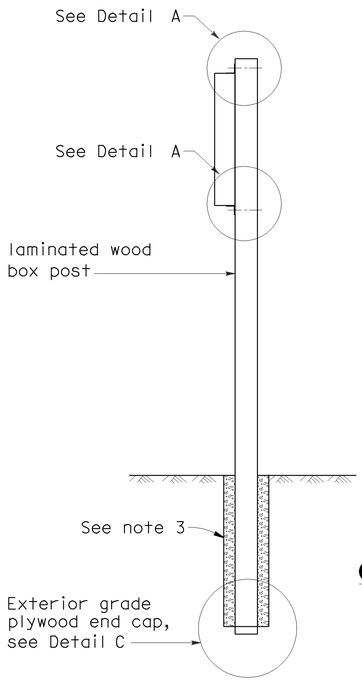

SIDE VIEW

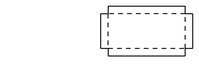

GALV METAL CAP

GENERAL NOTES

DESIGN:
AASHTO Specifications for Structural Supports for Highway Signs, Luminaries and Traffic Signals, dated 2001

CONSTRUCTION:
Standard Specifications and the Special Provisions State of California Department of Transportation Dated July 1999 and May 2006

Standard Plans
State of California Department of Transportation Dated May 2006 and current Revised Plans

LOADING:
WIND LOADING:
40 psf applied load combinations per 3.9 AASHTO Specifications for Structural Supports for Hightway Signs, Luminaries and Traffic Signals, dated 2001

NOTES:

1. For details not shown, see "2006 STANDARD PLANS" and "2006 REVISED STANDARD PLANS".
2. For sign location and barrier type see "PROJECT PLANS".
3. Diameter of post holes shall be at least 2'-6".
4. Refer to VMS Manufacturer to verify bolt hole layout and length.
5. Design based on 1:4 slope. The Contractor to verify before post fabrication.
6. The Contractor shall verify all controlling field dimensions before ordering or fabricating any material.

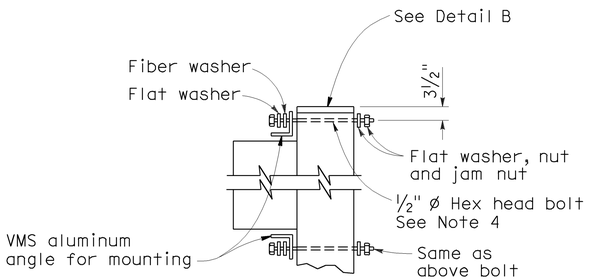

DETAIL A

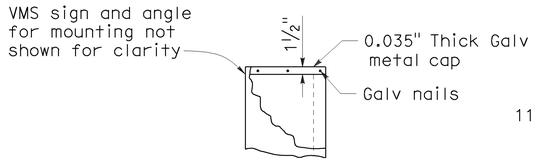

DETAIL B

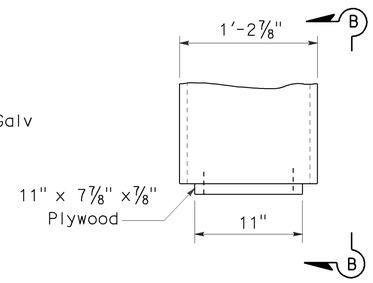

DETAIL C

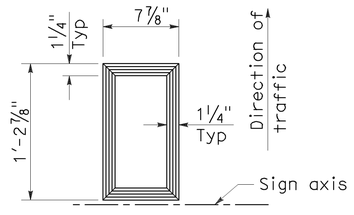

SECTION A-A
TYPE "L"

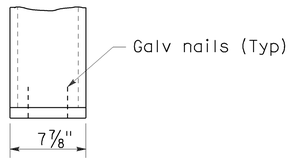

SECTION B-B

VMS ROADSIDE SIGN AT DOY4 LINE STA 107+00 INSTALLATION & DETAILS

NO SCALE

E-45

STATE OF CALIFORNIA - DEPARTMENT OF TRANSPORTATION
Caltrans
SPECIAL DESIGNS BRANCH

PROJECT ENGINEER: ANDREW BUI

CALCULATED/DESIGNED BY: T MARCHENKO
CHECKED BY: A BUI

DETAILS: D W JUSTICE Jr
QUANTITIES: 5-13-09
DATE: 5-13-09

LAST REVISION: 6-3-09
DATE PLOTTED => 23-JUL-2009
TIME PLOTTED => 13:11

ORIGINAL SCALE IN INCHES FOR REDUCED PLANS 0 1 2 3

USERNAME => trstrk
DGN FILE => 04-163731_e45.dgn

CU 04

EA 163731

DIST	COUNTY	ROUTE	POST MILE TOTAL PROJECT	SHEET No	TOTAL SHEETS
04	SF	101,1	9.2/9.8, 6.8/7.1	210	567

REGISTERED CIVIL ENGINEER — 5/15/09 DATE

REGISTERED PROFESSIONAL ENGINEER — ANDREW BUI No. C63560 Exp. 9/30/10 CIVIL — STATE OF CALIFORNIA

7-20-09
PLANS APPROVAL DATE

The State of California or its officers or agents shall not be responsible for the accuracy or completeness of electronic copies of this plan sheet.

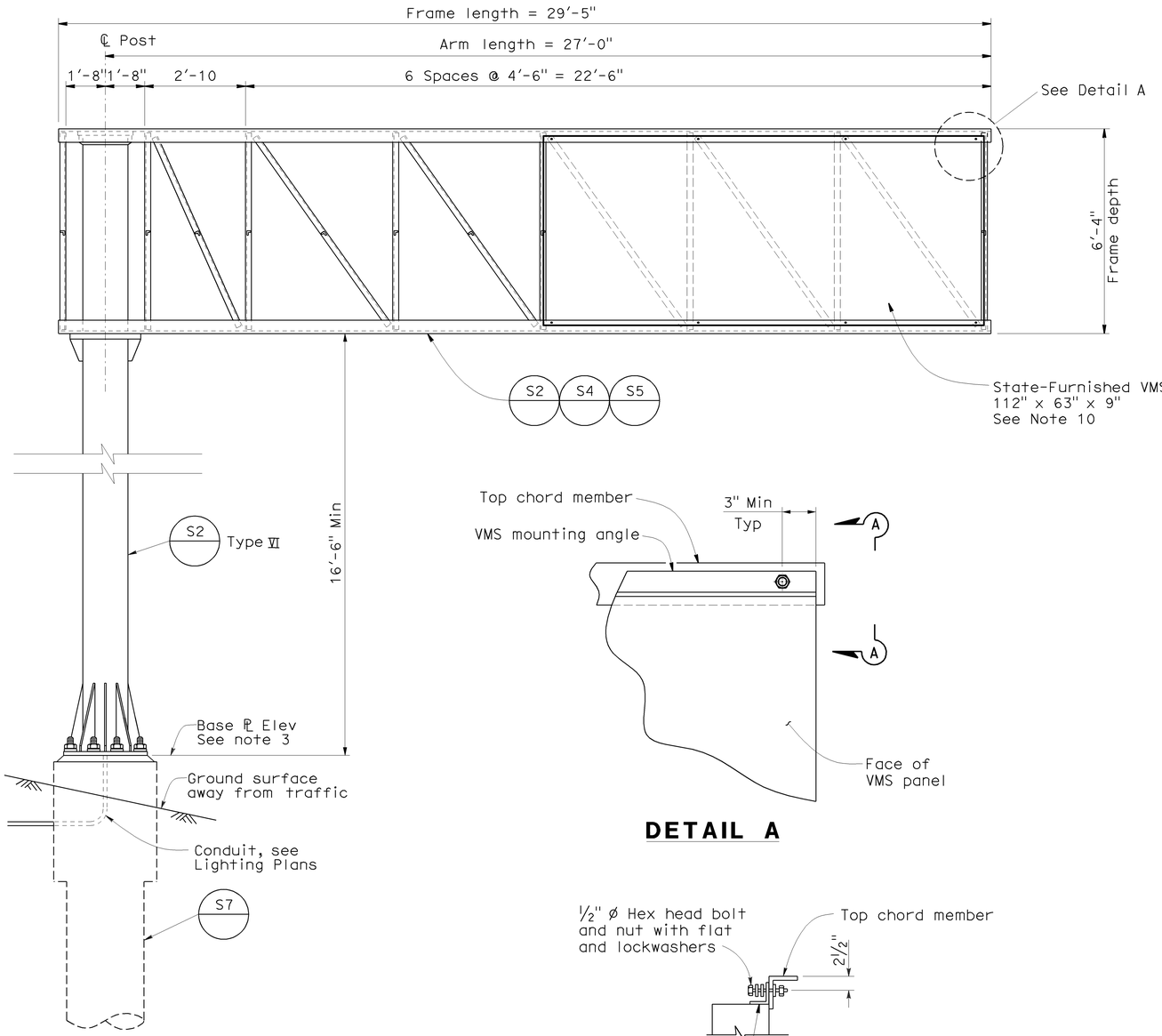

ELEVATION

DETAIL A

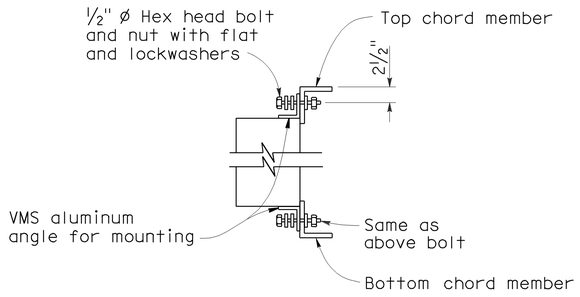

SECTION A-A
Typ

Post Type	Pipe		Cap Plate size for Chord L's 5 x 5	Cap Plate size for Chord L's 6 x 6	Square Pedestal					
					Pedestal Size	Vertical ⌋-Bars			Hoop	
	NPS	Thickness			Square	Equally spaced total	Bar Size	# of Bars ea face	Bar Size	Spacing
VI	24	½"	2'-10" x 2'-10" x 1"	3'-0" x 3'-0" x 1"	5'-9"	16	#11	5	#5	3½"

NOTES:

1. For "General Notes", see Standard Plan S1.
2. Backfill shall be in place prior to erection of post.
3. See Project Plans for details.
4. For pile foundation details, see Standard Plans S4, S7 and S8.
5. Anchor plates may be retained with hexagon nut or formed head as alternatives to details shown.
6. The post shall be raked out of plumb, with the use of the leveling nuts make the bottom of the sign frame level.
7. At final position of post all top and bottom nuts shall be tightened against base plate.
8. Foundation is located on a steep slope with exposed face of concrete adjacent to traffic, see sheet S4.
9. Slope protection required when indicated on the Project Plans.
10. Refer to VMS manufacturer for details.
11. The Contractor shall verify all controlling field dimensions before ordering or fabricating any material.

ABBREVIATION:

VMS - Variable Message Sign

VARIABLE MESSAGE SIGN AT SB LINE STA 112+00
27' ARM OVERHEAD SIGN-TRUSS
LAYOUT & DETAILS

NO SCALE

E-46

STATE OF CALIFORNIA - DEPARTMENT OF TRANSPORTATION
Caltrans
SPECIAL DESIGNS BRANCH

PROJECT ENGINEER: ANDREW BUI

CALCULATED/ DESIGNED BY	CHECKED BY	DATE	DETAILS	QUANTITIES
T MARCHENKO	A BUI	5-13-09	D W JUSTICE Jr	5-13-09

LAST REVISION 6-3-09
DATE PLOTTED => 23-JUL-2009
TIME PLOTTED => 09:40

ORIGINAL SCALE IN INCHES FOR REDUCED PLANS 0 1 2 3

USERNAME => trstrk
DGN FILE => 04-163731_e46.dgn

CU 04

EA 163731

DIST	COUNTY	ROUTE	POST MILE TOTAL PROJECT	SHEET No	TOTAL SHEETS
04	SF	101,1	9.2/9.8, 6.8/7.1	211	567

REGISTERED CIVIL ENGINEER — DATE 5/15/09

REGISTERED PROFESSIONAL ENGINEER — ANDREW BUI — No. C63560 — Exp. 9/30/10 — CIVIL — STATE OF CALIFORNIA

7-20-09
PLANS APPROVAL DATE

The State of California or its officers or agents shall not be responsible for the accuracy or completeness of electronic copies of this plan sheet.

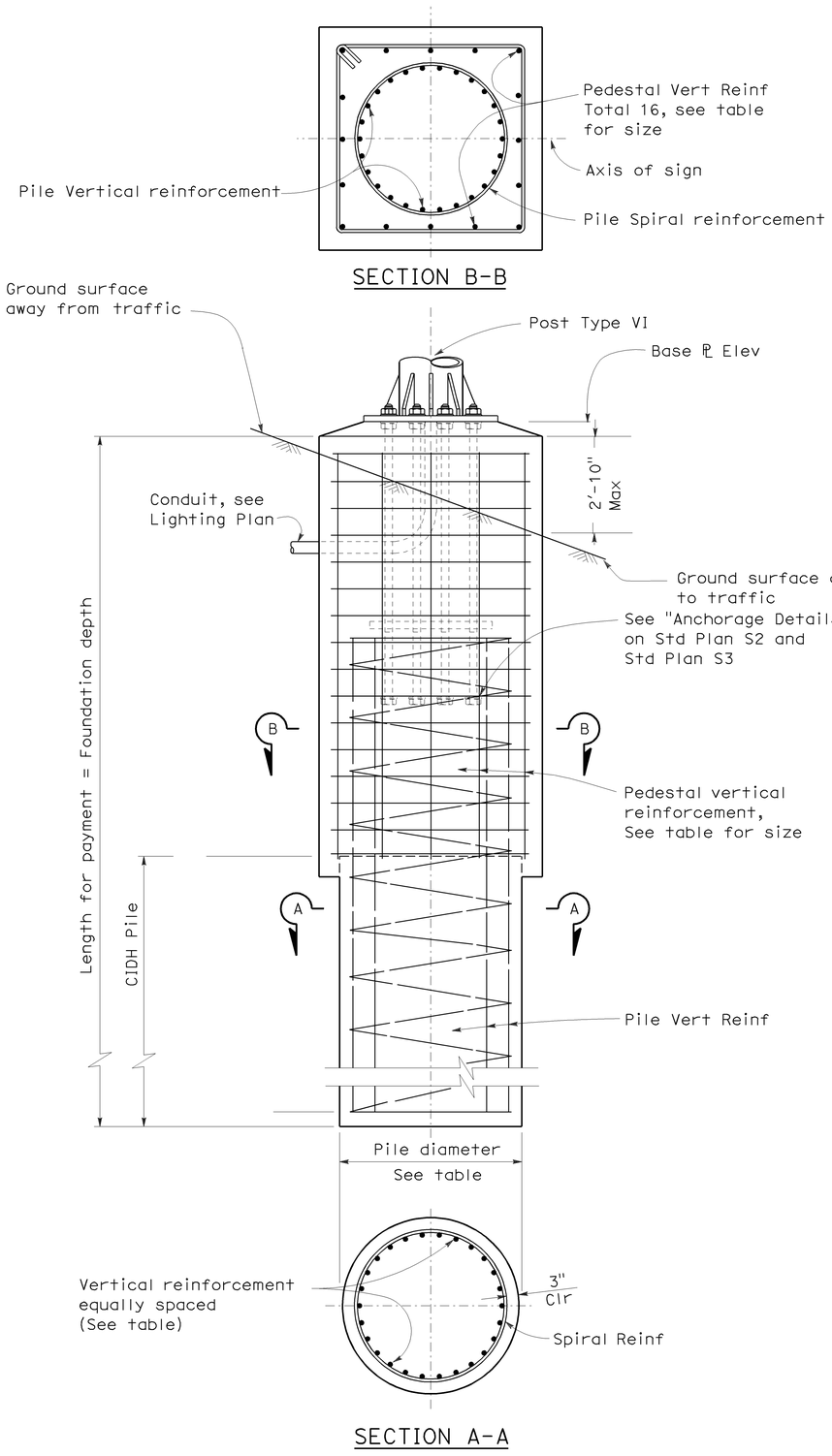

Post Type No.	Anchor Bolts			Square Pile Pedestal						CIDH Pile					Foundation Depth
	Bolt Circle	Bolt Total and Dia	Total Length	Pedestal Square one side	Vertical Reinforcing			Hoop		Pile Dia	Vertical Reinforcing		Spiral		See Note 4
					Total	Bar Size	# of bars each face	Bar Size	Spacing		Total	Bar Size	Bar Size	Pitch	
VI	2'-10"	16-2½"	5'-0"	5'-9"	16	#11	5	#5	3½"	5'-0"	28	#11	#5	3½"	22'-0"

NOTES:

1. For notes refer to Standard Plans S7.
2. For details not shown see Standard Plans.
3. Foundation design is based on 2001 AASHTO article 13.6 Broms' approximate procedure assuming a cohesionless material. The angle of internal friction used is 30 degree and unit weight of soil used is 120 lb/ft^3.
4. The Standard design soil properties shall be verified in field. Foundation shall be approved by the Engineer if the Standard design soil properties have not met.
5. The Contractor shall verify all controlling field dimensions before ordering or fabricating any material.

VARIABLE MESSAGE SIGN AT SB LINE STA 112+00
27' ARM OVERHEAD SIGN-TRUSS
SQUARE PEDESTAL PILE FOUNDATION

NO SCALE

E-47

CALCULATED/ DESIGNED BY	T MARCHENKO
CHECKED BY	A BUI
DATE	5-13-09
DETAILS	D W JUSTICE Jr
QUANTITIES	5-13-09
PROJECT ENGINEER	ANDREW BUI

STATE OF CALIFORNIA - DEPARTMENT OF TRANSPORTATION
Caltrans
SPECIAL DESIGNS BRANCH

LAST REVISION 6-3-09
DATE PLOTTED => 23-JUL-2009
TIME PLOTTED => 09:40

ORIGINAL SCALE IN INCHES FOR REDUCED PLANS 0 1 2 3

USERNAME => trstrk
DGN FILE => 04-163731_e47.dgn

CU 04

EA 163731

DIST	COUNTY	ROUTE	POST MILES TOTAL PROJECT	SHEET No	TOTAL SHEETS
04	SF	101,1	9.2/9.8, 6.8/7.1	212	567

Genaro M. Doria
REGISTERED CIVIL ENGINEER DATE

7-20-09
PLANS APPROVAL DATE

REGISTERED PROFESSIONAL ENGINEER
GENARO M. DORIA
No. C63583
Exp. 9/30/10
CIVIL
STATE OF CALIFORNIA

The State of California or its officers or agents shall not be responsible for the accuracy or completeness of electronic copies of this plan sheet.

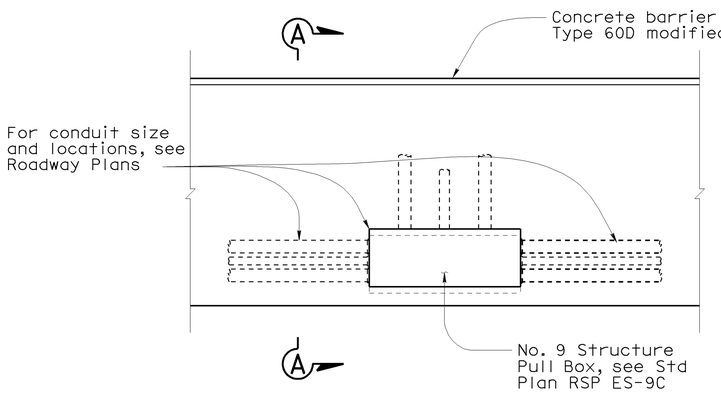

ELEVATION
No Scale

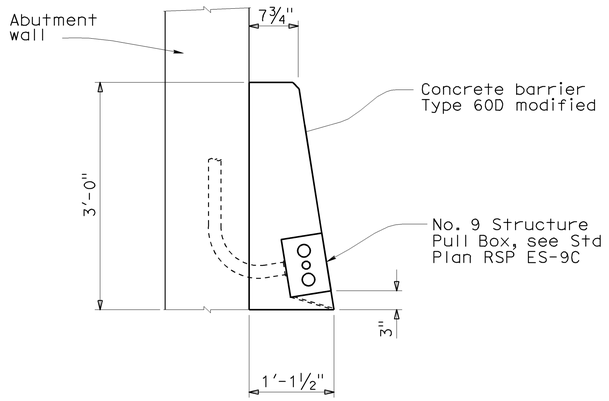

SECTION A-A
No Scale

THE CONTRACTOR SHALL VERIFY ALL CONTROLLING FIELD DIMENSIONS BEFORE ORDERING OR FABRICATING ANY MATERIAL.

E-48

DESIGN	BY G DORIA	CHECKED J MAGANA	STATE OF CALIFORNIA DEPARTMENT OF TRANSPORTATION	DIVISION OF ENGINEERING SERVICES STRUCTURE DESIGN SPECIAL DESIGNS BRANCH	BRIDGE NO. N/A
DETAILS	BY P C WELLS	CHECKED G DORIA			POST MILE
QUANTITIES	BY G DORIA	CHECKED P C WELLS			

N101/S1 CONNECTOR SEPARATION
PULL BOX DETAILS BARRIER TYPE 60D (MOD)

STRUCTURES DESIGN SPECIAL DESIGN SHEET (ENGLISH) (REV. 10-25-05)

ORIGINAL SCALE IN INCHES FOR REDUCED PLANS 0 1 2 3

CU 04
EA 163731

DISREGARD PRINTS BEARING EARLIER REVISION DATES →

REVISION DATES: X

SHEET X OF X

spec_des_br_proj±9sd*-163731 FILE => 04-163731_pbox1.dgn

USERNAME => trphtis DATE PLOTTED => 23-JUL-2009 TIME PLOTTED => 13:07

DIST	COUNTY	ROUTE	POST MILES TOTAL PROJECT	SHEET No	TOTAL SHEETS
04	SF	101,1	9.2/9.8, 6.8/7.1	213	567

Genaro M. Doria
REGISTERED CIVIL ENGINEER DATE

7-20-09
PLANS APPROVAL DATE

The State of California or its officers or agents shall not be responsible for the accuracy or completeness of electronic copies of this plan sheet.

REGISTERED PROFESSIONAL ENGINEER
GENARO M. DORIA
No. C63583
Exp. 9/30/10
CIVIL
STATE OF CALIFORNIA

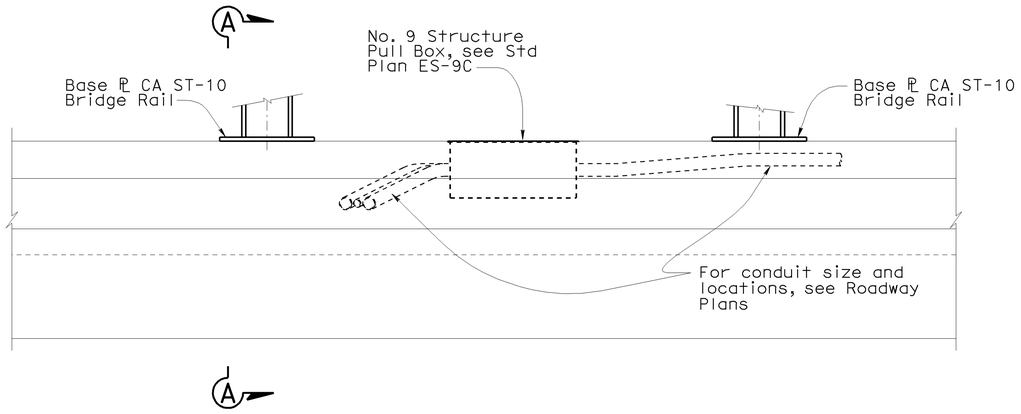

ELEVATION
No Scale

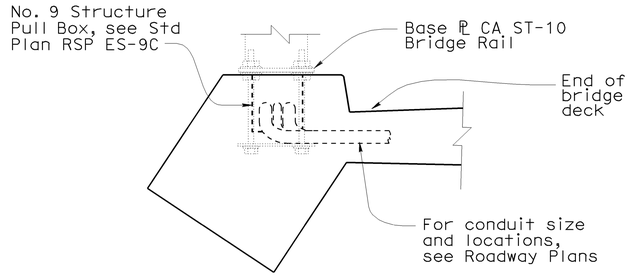

SECTION A-A
No Scale

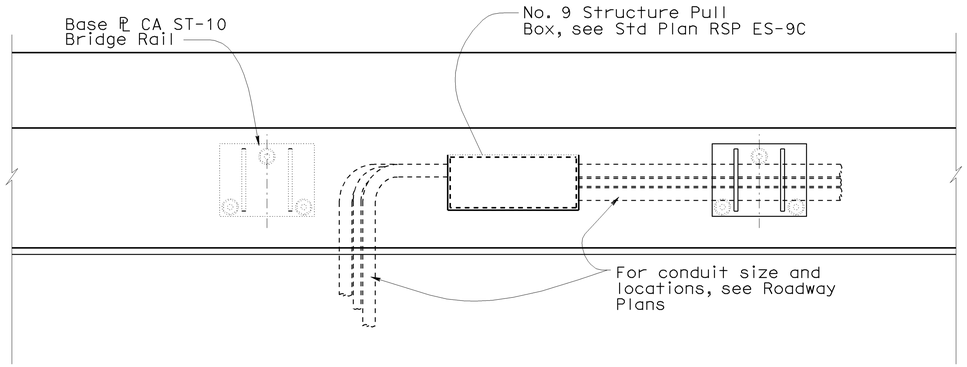

PLAN
No Scale

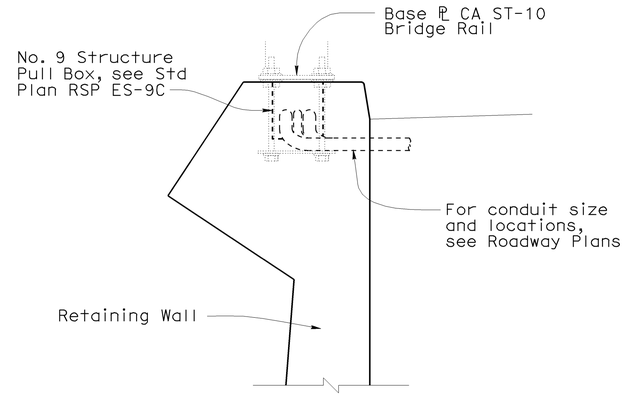

SECTION @ RETAINING WALLS 3 & 4
No Scale

THE CONTRACTOR SHALL VERIFY ALL CONTROLLING FIELD DIMENSIONS BEFORE ORDERING OR FABRICATING ANY MATERIAL.

E-49

	BY	CHECKED
DESIGN	G DORIA	J MAGANA
DETAILS	P C WELLS	G DORIA
QUANTITIES	G DORIA	P C WELLS

STATE OF **CALIFORNIA** DEPARTMENT OF TRANSPORTATION

DIVISION OF ENGINEERING SERVICES STRUCTURE DESIGN
SPECIAL DESIGNS BRANCH

BRIDGE NO. 34-0157L
POST MILE

PRESIDIO VIADUCT AND N1/S101 CONNECTOR
PULL BOX DETAILS

CU 04
EA 163731

DISREGARD PRINTS BEARING EARLIER REVISION DATES →

REVISION DATES: X

SHEET X OF X

STRUCTURES DESIGN SPECIAL DESIGN SHEET (ENGLISH) (REV. 10-25-05)

ORIGINAL SCALE IN INCHES FOR REDUCED PLANS 0 1 2 3

spec_des_br_proj±9sd*-163731

FILE => 04-163731_pbox2.dgn

USERNAME = rrphillis DATE PLOTTED => 23-JUL-2009 TIME PLOTTED => 13:07

DIST	COUNTY	ROUTE	POST MILES TOTAL PROJECT	SHEET No	TOTAL SHEETS
04	SF	101,1	9.2/9.8, 6.8/7.1	214	567

Genaro M. Doria
REGISTERED CIVIL ENGINEER DATE

7-20-09
PLANS APPROVAL DATE

REGISTERED PROFESSIONAL ENGINEER
GENARO M. DORIA
No. C63583
Exp. 9/30/10
CIVIL
STATE OF CALIFORNIA

The State of California or its officers or agents shall not be responsible for the accuracy or completeness of electronic copies of this plan sheet.

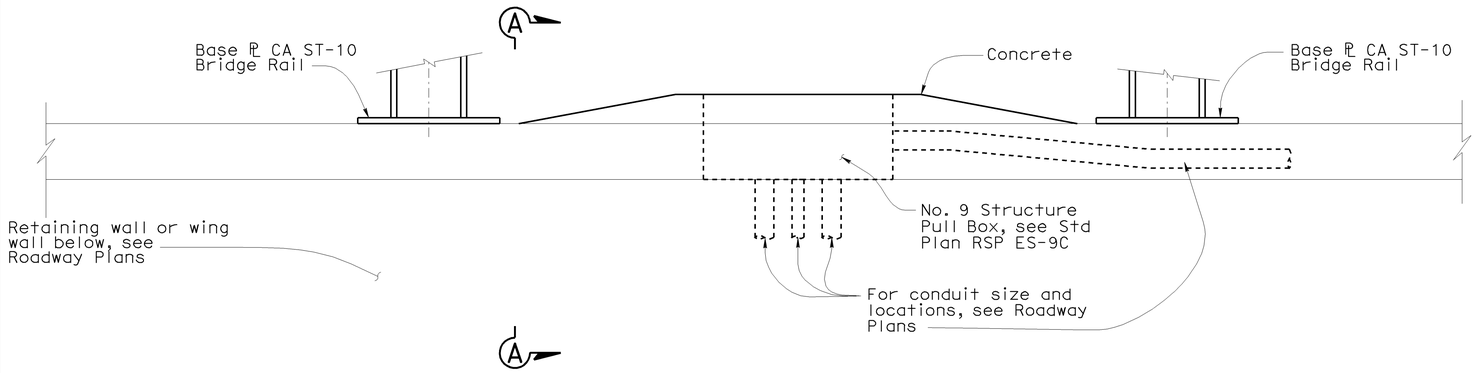

ELEVATION
No Scale

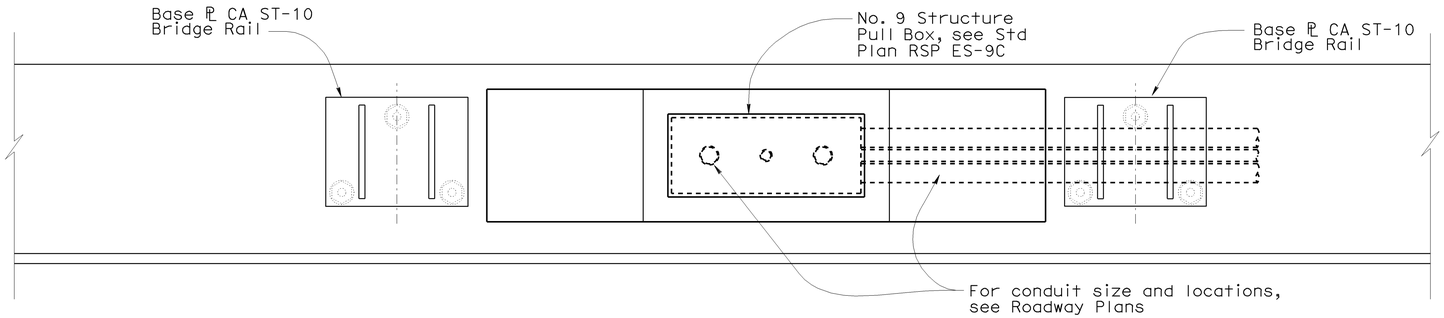

PLAN
No Scale

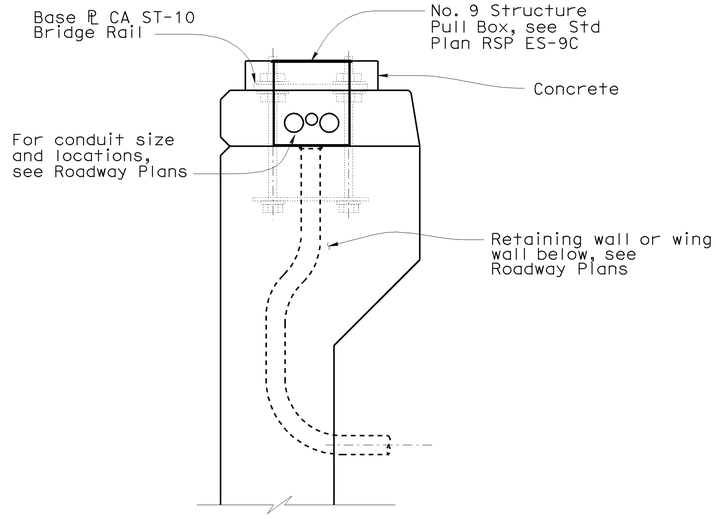

SECTION A-A
No Scale

THE CONTRACTOR SHALL VERIFY ALL CONTROLLING FIELD DIMENSIONS BEFORE ORDERING OR FABRICATING ANY MATERIAL.

E-50

DESIGN	BY G DORIA	CHECKED J MAGANA	STATE OF CALIFORNIA DEPARTMENT OF TRANSPORTATION	DIVISION OF ENGINEERING SERVICES STRUCTURE DESIGN SPECIAL DESIGNS BRANCH	BRIDGE NO. N/A
DETAILS	BY P C WELLS	CHECKED G DORIA			POST MILE
QUANTITIES	BY G DORIA	CHECKED P C WELLS		CU 04 EA 163731	

RETAINING WALLS 2 W/CA ST-10 BARRIER RAIL
PULL BOX DETAILS

STRUCTURES DESIGN SPECIAL DESIGN SHEET (ENGLISH) (REV. 10-25-05)

ORIGINAL SCALE IN INCHES FOR REDUCED PLANS 0 1 2 3

DISREGARD PRINTS BEARING EARLIER REVISION DATES →

REVISION DATES: X

SHEET X OF X

USERNAME => trphillis DATE PLOTTED => 23-JUL-2009 TIME PLOTTED => 13:08

spec_des_br_proj/2009sd/04-163731 FILE => 04-163731_pbox3.dgn

DIST	COUNTY	ROUTE	POST MILES TOTAL PROJECT	SHEET No	TOTAL SHEETS
04	SF	101,1	9.2/9.8, 6.8/7.1	215	567

M Noii 6-03-09
REGISTERED CIVIL ENGINEER DATE

7-20-09
PLANS APPROVAL DATE

REGISTERED PROFESSIONAL ENGINEER
Mahmood Noii
No. 13717
Exp. 6-30-11
ELECT
STATE OF CALIFORNIA

The State of California or its officers or agents shall not be responsible for the accuracy or completeness of electronic copies of this plan sheet.

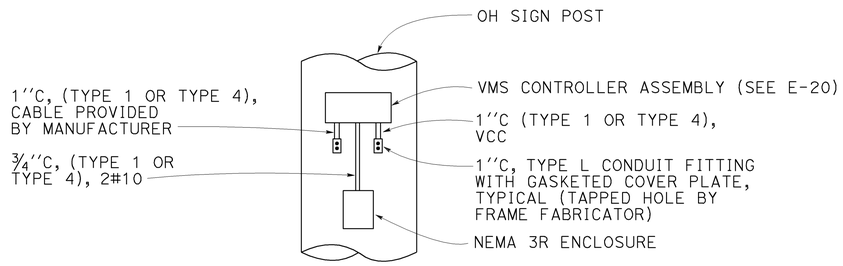

OH SIGN POST INSTALLATION DETAILS

(SEE ES-15A AND ES-15C FOR MORE DETAILS)

THE CONTRACTOR SHALL VERIFY ALL CONTROLLING FIELD DIMENSIONS BEFORE ORDERING OR FABRICATING ANY MATERIAL.

E-51

DESIGN	BY G DORIA	CHECKED J MAGANA	STATE OF CALIFORNIA DEPARTMENT OF TRANSPORTATION	DIVISION OF ENGINEERING SERVICES STRUCTURE DESIGN SPECIAL DESIGNS BRANCH	BRIDGE NO. N/A
DETAILS	BY P C WELLS	CHECKED G DORIA			POST MILE
QUANTITIES	BY G DORIA	CHECKED P C WELLS			

RETAINING WALLS 2 W/CA ST-10 BARRIER RAIL

PULL BOX DETAILS

STRUCTURES DESIGN SPECIAL DESIGN SHEET (ENGLISH) (REV. 10-25-05)

ORIGINAL SCALE IN INCHES FOR REDUCED PLANS 0 1 2 3

CU 04
EA 163731

DISREGARD PRINTS BEARING EARLIER REVISION DATES →

REVISION DATES: X

SHEET X OF X

USERNAME => trphillis DATE PLOTTED => 23-JUL-2009 TIME PLOTTED => 13:08
spec_des_br_proj/2009sd/04-163731 FILE => 04-163731_pbox4.dgn

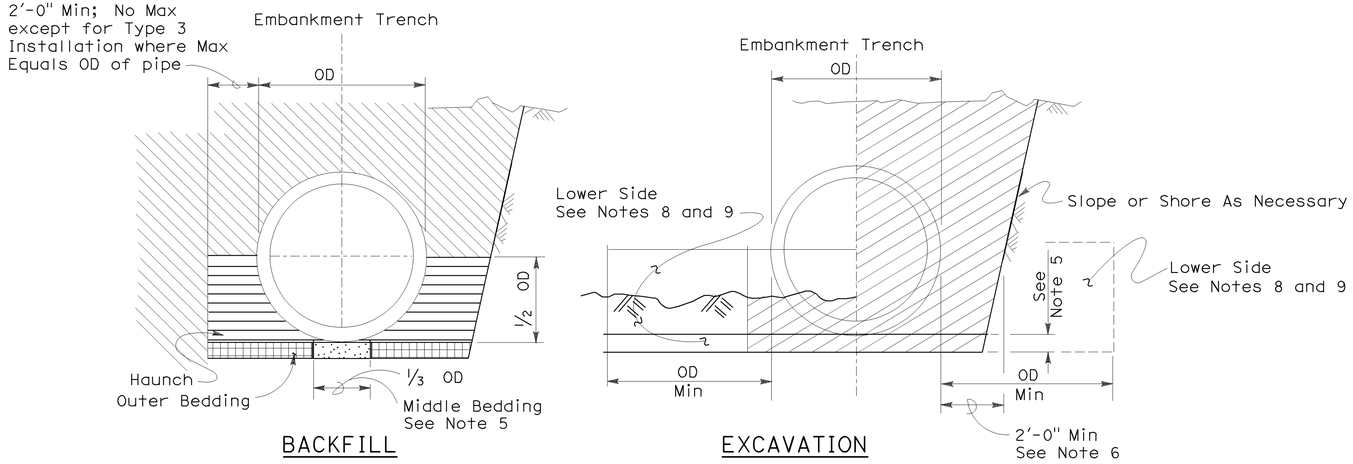

TYPE 1 INSTALLATION:

The haunch and outer bedding shall be compacted to a minimum 90 percent relative compaction. In addition, the minimum sand equivalent in these areas shall be 30 and the maximum percentage passing the 75 μm sieve size shall be 12.

TYPE 2 INSTALLATION:

The haunch and outer bedding shall be compacted to a minimum 90 percent relative compaction. In addition, the minimum sand equivalent in these areas shall be 25.

TYPE 3 INSTALLATION:

The haunch and outer bedding shall be compacted to a minimum 85 percent relative compaction. 90 percent relative compaction will be required where the fill over the pipe is less than 4′-0" or 1/2 OD.

INSTALLATION TYPE 1

MINIMUM CLASS AND D-LOAD	COVER	
	108" Dia AND SMALLER	OVER 108" Dia
Class II 1000D	14.9′	12.9′
Class III 1350D	15.0′ - 20.9′	13.0′ - 18.9′
Class III Special 1700D	21.0′ - 26.9′	19.0′ - 24.9′
Class IV 2000D	27.0′ - 31.9′	25.0′ - 29.9′
Class IV Special 2500D	32.0′ - 40.9′	30.0′ - 38.9′
Class V 3000D	41.0′ - 49.9′	39.0′ - 46.9′
Class V Special 3600D	50.0′ - 59.0′	47.0′ - 58.0′

INSTALLATION TYPE 2

MINIMUM CLASS AND D-LOAD	COVER
Class II 1000D	9.9′
Class III 1350D	10.0′- 14.9′
Class III Special 1700D	15.0′ - 19.9′
Class IV 2000D	20.0′ - 24.9′
Class IV Special 2500D	25.0′ - 31.9′
Class V 3000D	32.0′ - 38.9′
Class V Special 3600D	39.0′ - 47.0′

INSTALLATION TYPE 3

MINIMUM CLASS AND D-LOAD	COVER	
	48" Dia AND SMALLER	OVER 48" Dia
Class II 1000D	7.9′	5.9′
Class III 1350D	8.0′ - 10.9′	6.0′ - 8.9′
Class III Special 1700D	11.0′ - 14.9′	9.0′ - 12.9′
Class IV 2000D	15.0′ - 17.9′	13.0′ - 15.9′
Class IV Special 2500D	18.0′ - 21.9′	16.0′ - 19.9′
Class V 3000D	22.0′ - 26.9′	20.0′ - 24.9′
Class V Special 3600D	30.0′ - 33.0′	25.0′ - 31.0′

DIST	COUNTY	ROUTE	POST MILES TOTAL PROJECT	SHEET NO.	TOTAL SHEETS
04	SF	101,1	9.2/9.8, 6.8/7.1	216	567

Dallas Forester
REGISTERED CIVIL ENGINEER

November 17, 2006
PLANS APPROVAL DATE

REGISTERED PROFESSIONAL ENGINEER — Dallas Forester No. C37765 Exp.12-31-06 CIVIL — STATE OF CALIFORNIA

The State of California or its officers or agents shall not be responsible for the accuracy or completeness of electronic copies of this plan sheet.

To accompany plans dated 7-20-09

NOTES:

1. Unless otherwise shown on the plans or specified in the special provision, the Contractor shall have the option of selecting the class of RCP and the type of installation to be used, provided the height of cover does not exceed the value shown for the RCP selected.
   Example: 24" RCP culvert with maximum cover of 19′-0"′ the options are:
   a) Class III or stronger with Installation Type 1.
   b) Class III Special or stronger with Installation Type 2.
   c) Class IV Special or stronger with Installation Type 3.
   Cover is defined as the maximum vertical distance from top of the pipe to finished grade within the length of any given culvert.
2. The class of RCP and Installation Type selected shall be the same throughout the length of any given culvert.
3. The "length of any culvert" is defined as the culvert between:
   a) Successive drainage structure (inlets, junction boxes, headwalls, etc.).
   b) A drainage structure and the inlet or outlet end of the culvert.
   c) The inlet and outlet end of the culvert when there are no intervening drainage structures.
4. Oval and arch shaped RCP shall not be used.
5. 1/25 OD Min, not less than 3".
6. Slurry cement backfill may be substituted for backfill in the outer bedding and haunch areas. If slurry is used the outer and middle beddings shall be omitted. Prior to installation the soil under the middle 1/3 of the outside diameter of the pipe shall be softened by scarifying or other means to a minimum depth of 1/25 OD, but not less than 3". Where slurry cement backfill is used clear distance to trench wall may be reduced as set forth in Section 19-3.062 of the Standard Specifications.
7. Backfill shall be placed full width of excavation except where dimensions are shown for backfill width or thickness. Dimensions shown are minimums.
8. Lower side shall be suitable material as determined by the Engineer. Otherwise it shall be considered unsuitable as set forth in Section 19-2.02 of the Standard Specifications. See Note 9.
9. Where the pipe is placed in a trench, if the trench walls are sloped at 5 vertical to 1 horizontal or steeper for at least 90 percent of the trench height or up to not less than 12" from the grading plane, the firmness of the soil in the lower side need not be considered.
10. Non-reinforced precast concrete pipe sizes 3′-0" or smaller may be placed under installation Types 1, 2 or 3.

STATE OF CALIFORNIA
DEPARTMENT OF TRANSPORTATION

EXCAVATION AND BACKFILL CONCRETE PIPE CULVERTS

NO SCALE

RSP A62DA DATED NOVEMBER 17, 2006 SUPERSEDES STANDARD PLAN A62DA DATED MAY 1, 2006 - PAGE 20 OF THE STANDARD PLANS BOOK DATED MAY 2006.

REVISED STANDARD PLAN RSP A62DA

2006 REVISED STANDARD PLAN RSP A62DA

10-26-06

DIST	COUNTY	ROUTE	POST MILES TOTAL PROJECT	SHEET NO.	TOTAL SHEETS
04	SF	101,1	9.2/9.8, 6.8/7.1	217	567

Randell D. Hiatt
REGISTERED CIVIL ENGINEER

June 6, 2008
PLANS APPROVAL DATE

REGISTERED PROFESSIONAL ENGINEER — Randell D. Hiatt — No. C50200 — Exp. 6-30-09 — CIVIL — STATE OF CALIFORNIA

The State of California or its officers or agents shall not be responsible for the accuracy or completeness of electronic copies of this plan sheet.

To accompany plans dated 7-20-09

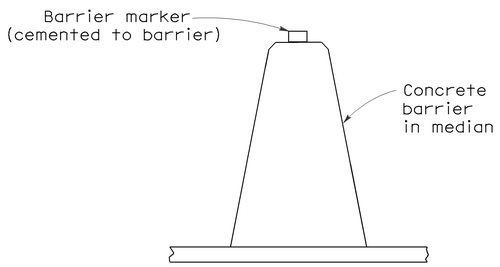

CONCRETE BARRIER TYPE 60 DELINEATION

See Notes 7 and 8

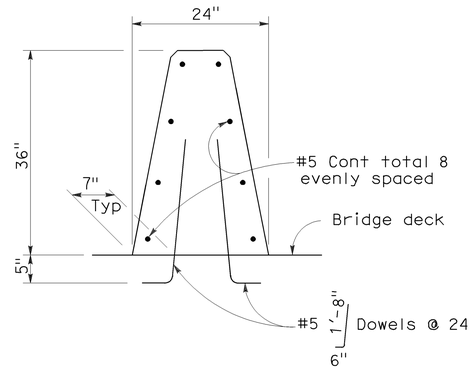

CONCRETE BARRIER TYPE 60A

Details similar to Type 60 except as noted.

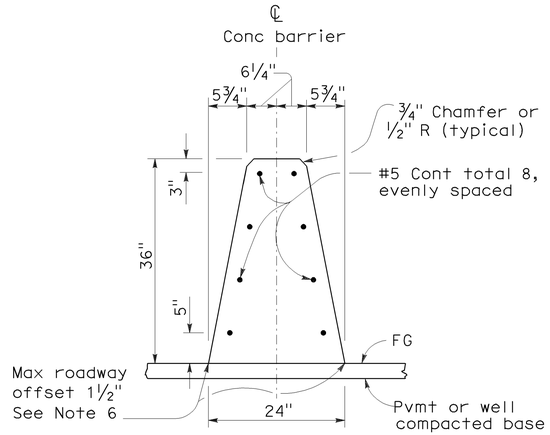

CONCRETE BARRIER TYPE 60

NOTES:

1. See Standard Plan A76B for details of Concrete Barrier Type 60 end anchors, connection to structures and transitions to Concrete Barrier Type 50 and Concrete Barrier Type 60S.
2. See Standard Plan A76C for Concrete Barrier Type 60 transitions at bridge column and sign pedestals.
3. Where glare screen is required on Concrete Barrier Type 60, use Concrete Barrier Type 60G.
4. Where the concrete barrier is added to the face of existing concrete structure, match existing weep holes.
5. Expansion joints in concrete barrier shall be located at all deck, pavement and principal wall joints. Expansion joint filler material shall be the same size as joint or ½" minimum.
6. Where roadway offset is greater than 1½", see Concrete Barrier Type 60C.
7. Barrier delineation to be used when required by the Special Provisions.
8. Spacing of barrier markers to match spacing of raised pavement markers on the adjacent median edgeline pavement delineation.
9. Reinforcing stirrup not required for roadway offsets less than 1'-0".
10. For roadway surfaces offset greater than 1½" to 3", no rebars required. For roadway surfaces offset greater than 3" to 8" use two #4 rebars at 3" above the lower roadway surface. For roadway surfaces offset greater than 8" to 12", use two #4 rebars at 3" above the lower roadway surface and two #4 rebars at 8" above the lower roadway surface. For roadway surfaces offset greater than 12" to 36", use two #4 rebars at 3" above the lower roadway surface and two #4 rebars at every 8" increment vertical spacing above the first two #4 rebars.

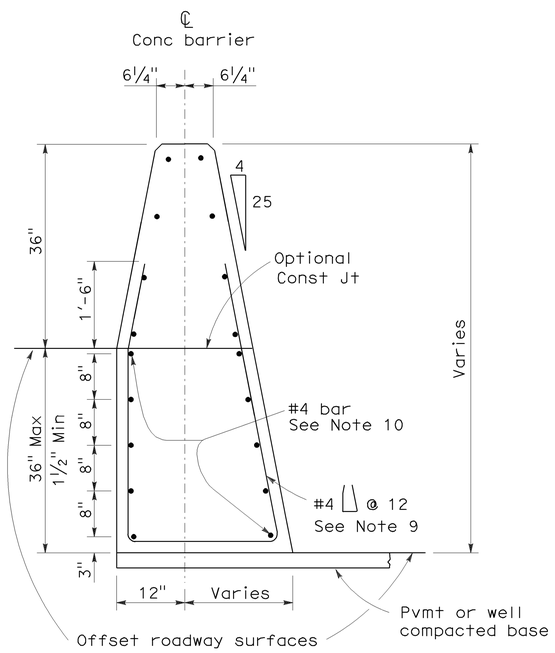

CONCRETE BARRIER TYPE 60C

Details similar to Type 60 except as noted.
Concrete barrier end anchor when necessary.
36" roadway surfaces offset shown.

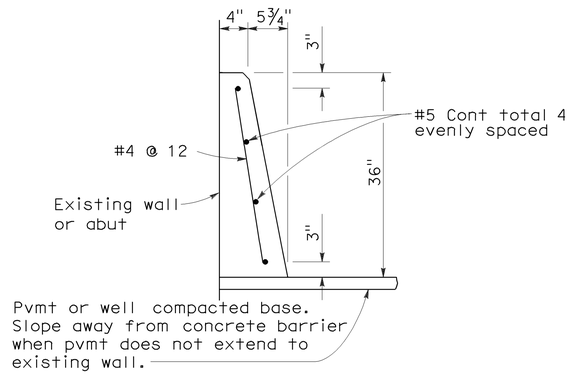

CONCRETE BARRIER TYPE 60D

STATE OF CALIFORNIA
DEPARTMENT OF TRANSPORTATION

CONCRETE BARRIER TYPE 60

NO SCALE

RSP A76A DATED JUNE 6, 2008 SUPERSEDES STANDARD PLAN A76A
DATED MAY 1, 2006 - PAGE 29 OF THE STANDARD PLANS BOOK DATED MAY 2006.

REVISED STANDARD PLAN RSP A76A

2006 REVISED STANDARD PLAN RSP A76A

5-21-08

DIST	COUNTY	ROUTE	POST MILES TOTAL PROJECT	SHEET NO.	TOTAL SHEETS
04	SF	101,1	9.2/9.8, 6.8/7.1	218	567

Randell D. Hiatt
REGISTERED CIVIL ENGINEER

June 6, 2008
PLANS APPROVAL DATE

REGISTERED PROFESSIONAL ENGINEER
Randell D. Hiatt
No. C50200
Exp. 6-30-09
CIVIL
STATE OF CALIFORNIA

The State of California or its officers or agents shall not be responsible for the accuracy or completeness of electronic copies of this plan sheet.

To accompany plans dated 7-20-09

NOTES:

1. When necessary to place dike in front of face of guard railing, only Type C dike may be used. For dike details, see Standard Plan A87B.
2. For standard railing post embedment, see Standard Plans A77C3.
3. Guard railing delineation to be used where shown on the Project Plans.
4. When dike or curb is placed under guard railing, the maximum height of the dike or curb shall be 4". Mountable dike should not be used. For dike and curb details, see Revised Standard Plans RSP A87A and Standard Plan A87B.
5. For details of typical distance between the face of rail and hinge point, see Standard Plan A77C3.

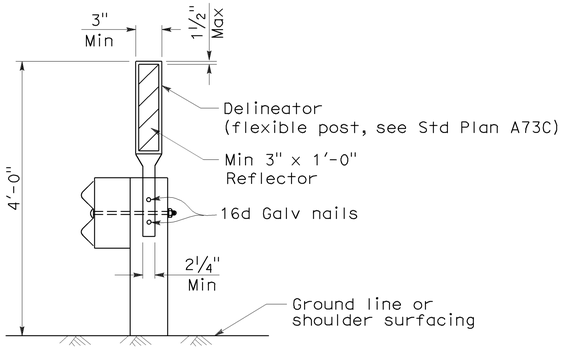

GUARD RAILING DELINEATION
See Note 3

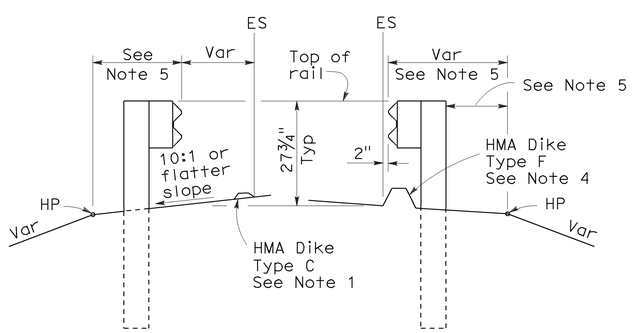

DIKE POSITIONING
See Note 1

STATE OF CALIFORNIA
DEPARTMENT OF TRANSPORTATION

METAL BEAM GUARD RAILING TYPICAL RAILING DELINEATION AND DIKE POSITIONING DETAILS

NO SCALE

RSP A77C4 DATED JUNE 6, 2008 SUPERSEDES STANDARD PLAN A77C4 DATED MAY 1, 2006 - PAGE 47 OF THE STANDARD PLANS BOOK DATED MAY 2006.

REVISED STANDARD PLAN RSP A77C4

2006 REVISED STANDARD PLAN RSP A77C4

12-10-07

DIST	COUNTY	ROUTE	POST MILES TOTAL PROJECT	SHEET NO.	TOTAL SHEETS
04	SF	101,1	9.2/9.8, 6.8/7.1	219	567

Randell D. Hiatt
REGISTERED CIVIL ENGINEER

June 6, 2008
PLANS APPROVAL DATE

REGISTERED PROFESSIONAL ENGINEER — Randell D. Hiatt — No. C50200 — Exp. 6-30-09 — CIVIL — STATE OF CALIFORNIA

The State of California or its officers or agents shall not be responsible for the accuracy or completeness of electronic copies of this plan sheet.

To accompany plans dated 7-20-09

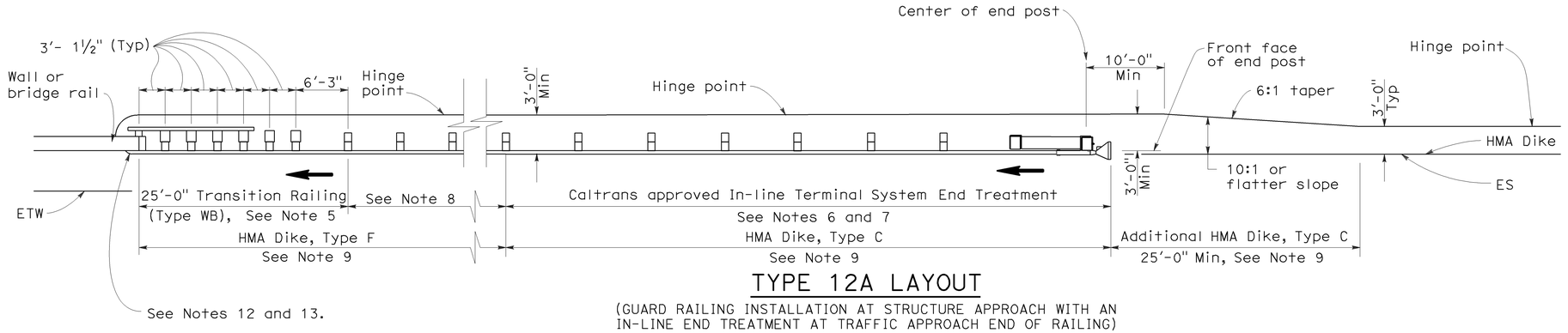

TYPE 12A LAYOUT

(GUARD RAILING INSTALLATION AT STRUCTURE APPROACH WITH AN IN-LINE END TREATMENT AT TRAFFIC APPROACH END OF RAILING)
See Notes 10

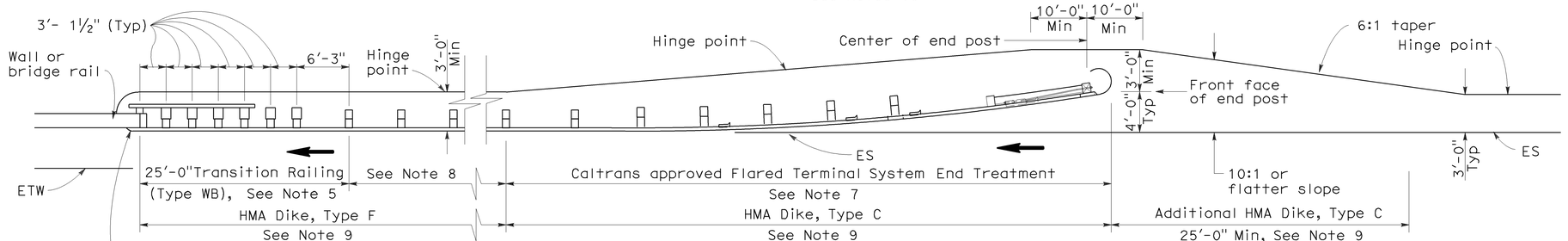

TYPE 12B LAYOUT

(GUARD RAILING INSTALLATION AT STRUCTURE APPROACH WITH A FLARED END TREATMENT AT TRAFFIC APPROACH END OF RAILING)
See Notes 10

NOTES:

1. Line post, blocks and hardware to be used are shown on Standard Plans A77A1, A77A2, A77B1, A77C1 and A77C2.
2. Guard rail post spacing to be 6'-3" center to center, except as otherwise noted.
3. Except as noted, line posts are 6" x 8" x 6'-0" wood with 6" x 8" x 1'-2" wood blocks. W6 x 9 steel posts, 6'-0" in length, with 6" x 8" x 1'-2" notched wood blocks or plastic blocks may be used for 6" x 8" x 6'-0" wood posts with 6" x 8" x 1'-2" wood blocks where applicable and when specified.
4. Direction of adjacent traffic indicated by ➔.
5. For Transition Railing (Type WB) details for Types 12A and 12B Layouts, see Standard Plan A77J4.
6. In-line Terminal System End Treatments are used where site conditions will not accommodate a flared end treatment.
7. The type of terminal system end treatment to be used will be shown on the Project Plans.
8. Dependent on site conditions (embankment height, side slopes, or other fixed objects), it may be advisable to construct additional guard railing (a length equal to multiples of 12'-6" with 6'-3" post spacing) between the transition railing and end treatment.
9. Where placement of dike is required with guard railing installations, see Revised Standard Plan RSP A77C4 for dike positioning details.
10. Type 12A or Type 12B Layouts are typically used:
    a. To the right of approaching traffic, at the end of a structure, on two-lane conventional highway where the roadbed width across the structure is less than 40 feet.
    b. To the left of approaching traffic, at the end of a structure, on two-lane conventional highway where the roadbed width across the structure is less than 40 feet.
    c. To the right of approaching traffic at the end of each structure on multilane freeways or expressways with separate adjacent or parallel bridges.
    d. To the right of approaching traffic at the end of the structure on multilane freeways or expressways with decked median on the bridge.
11. See Revised Standard Plan RSP A77F3 for typical layout used left of approaching traffic at the ends of each structure on multilane freeways or expressways with separate adjacent or parallel bridges.
12. For additional details of typical connections to bridge rail, see Connection Detail AA on Revised Standard Plans RSP A77J1 and RSP A77J2 and Connection Detail FF on Standard Plans A77K1 and A77K2.
13. For additional details of a typical connection to walls or abutments, see Standard Plan A77J3.

STATE OF CALIFORNIA
DEPARTMENT OF TRANSPORTATION

METAL BEAM GUARD RAILING TYPICAL LAYOUTS FOR STRUCTURE APPROACH

NO SCALE

RSP A77F1 DATED JUNE 6, 2008 SUPERSEDES STANDARD PLAN A77F1
DATED MAY 1, 2006 - PAGE 54 OF THE STANDARD PLANS BOOK DATED MAY 2006.

REVISED STANDARD PLAN RSP A77F1

2006 REVISED STANDARD PLAN RSP A77F1

12-10-07

DIST	COUNTY	ROUTE	POST MILES TOTAL PROJECT	SHEET NO.	TOTAL SHEETS
04	SF	101,1	9.2/9.8, 6.8/7.1	220	567

Randell D. Hiatt
REGISTERED CIVIL ENGINEER

June 6, 2008
PLANS APPROVAL DATE

REGISTERED PROFESSIONAL ENGINEER — Randell D. Hiatt — No. C50200 — Exp. 6-30-09 — CIVIL — STATE OF CALIFORNIA

The State of California or its officers or agents shall not be responsible for the accuracy or completeness of electronic copies of this plan sheet.

To accompany plans dated 7-20-09

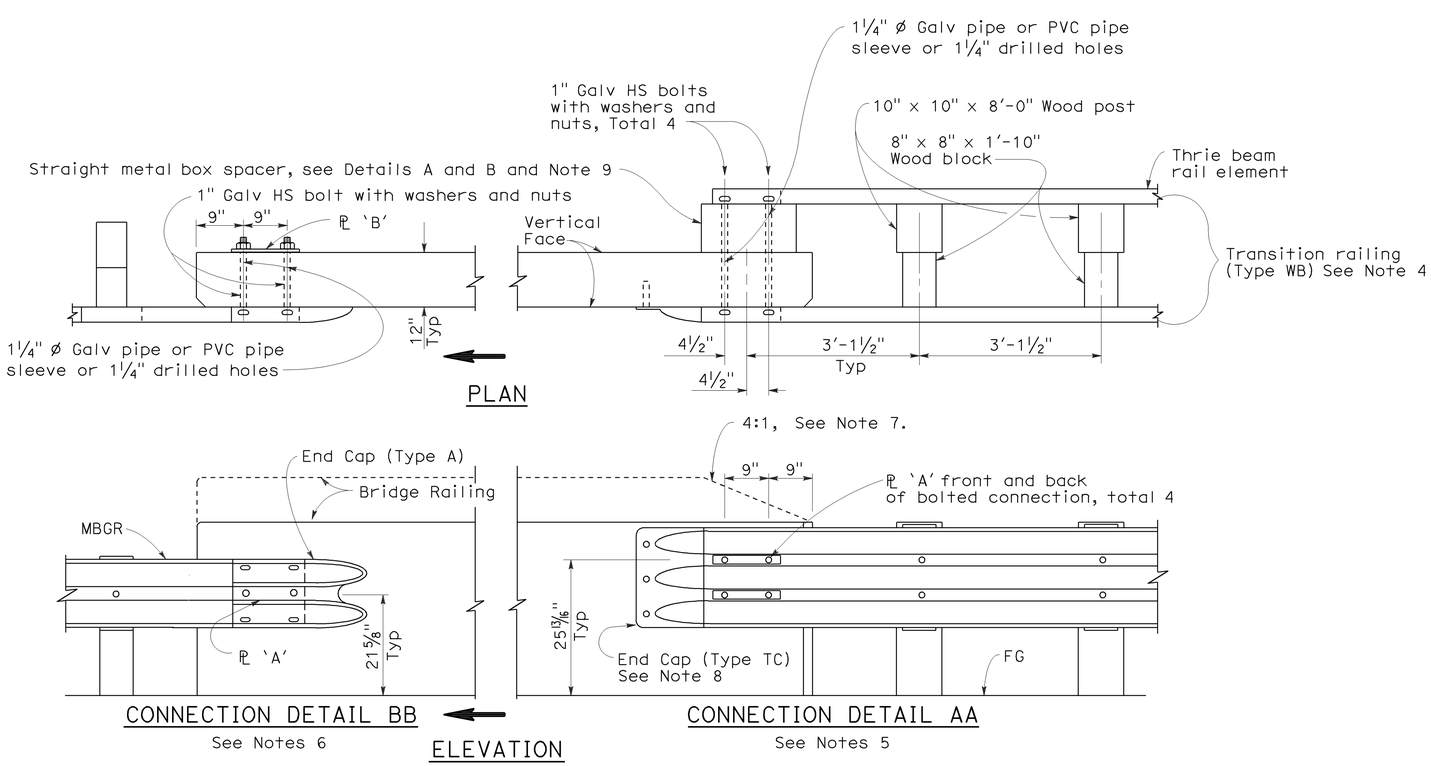

GUARD RAILING CONNECTION TO BRIDGE RAILING WITHOUT SIDEWALK

NOTES:

1. See Revised Standard Plan RSP A77J2 for additional connection details to bridges without sidewalks.
2. Additional details of posts, blocks and hardware are shown on Standard Plan A77B1, A77C1 and A77C2.
3. Direction of adjacent traffic indicated by ➞.
4. For additional details of Transition Railing (Type WB), see Standard Plan A77J4. Transition Railing (Type WB) transitions the 12 gage w-beam standard railing section of guard railing to a heavier gage nested thrie beam railing section which is connected to the concrete bridge railing.
5. For typical use of Connection Detail AA, see Layout Types 12A and 12B on Revised Standard Plan RSP A77F1, Layout Types 12C and 12D on Standard Plan A77F2, and Layout Type 12E on Revised Standard Plan RSP A77F3.
6. For typical use of Connection Detail BB, see Layout Type 12D (structure departure railing connection) on Standard Plan A77F2 and Layout Type 12DD on Standard Plan A77F5.
7. Where the height of the bridge railing exceeds the height of the thrie beam railing by more than 1" at Connection Detail AA, taper the top of the end of the bridge railing at 4:1 to match the top elevation of the thrie beam rail.
8. For details of End Cap (Type TC), see Standard Plan A77J4.
9. See Standard Plan A77J4 for additional details regarding depth dimension for straight metal box spacer.

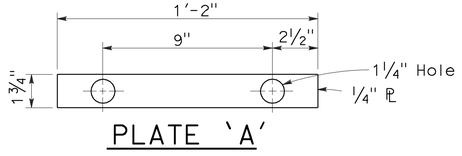

PLATE 'A'

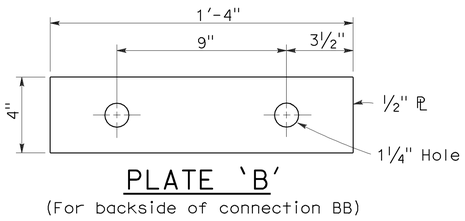

PLATE 'B'
(For backside of connection BB)

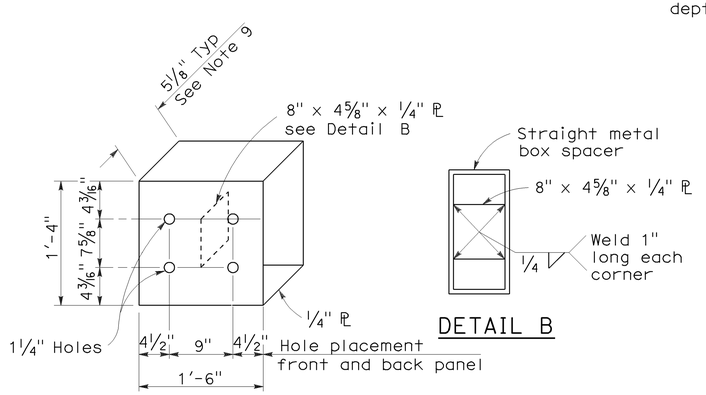

DETAIL A

STRAIGHT METAL BOX SPACER

STATE OF CALIFORNIA
DEPARTMENT OF TRANSPORTATION

METAL BEAM GUARD RAILING CONNECTIONS TO BRIDGE RAILINGS WITHOUT SIDEWALKS DETAILS No.1

NO SCALE

RSP A77J1 DATED JUNE 6, 2008 SUPERSEDES STANDARD PLAN A77J1
DATED MAY 1, 2006 - PAGE 72 OF THE STANDARD PLANS BOOK DATED MAY 2006.

REVISED STANDARD PLAN RSP A77J1

2006 REVISED STANDARD PLAN RSP A77J1

12-10-07

DIST	COUNTY	ROUTE	POST MILES TOTAL PROJECT	SHEET NO.	TOTAL SHEETS
04	SF	101,1	9.2/9.8, 6.8/7.1	221	567

Randell D. Hiatt
REGISTERED CIVIL ENGINEER

June 5, 2009
PLANS APPROVAL DATE

REGISTERED PROFESSIONAL ENGINEER — Randell D. Hiatt — No. C50200 — Exp. 6-30-09 CIVIL — STATE OF CALIFORNIA

The State of California or its officers or agents shall not be responsible for the accuracy or completeness of electronic copies of this plan sheet.

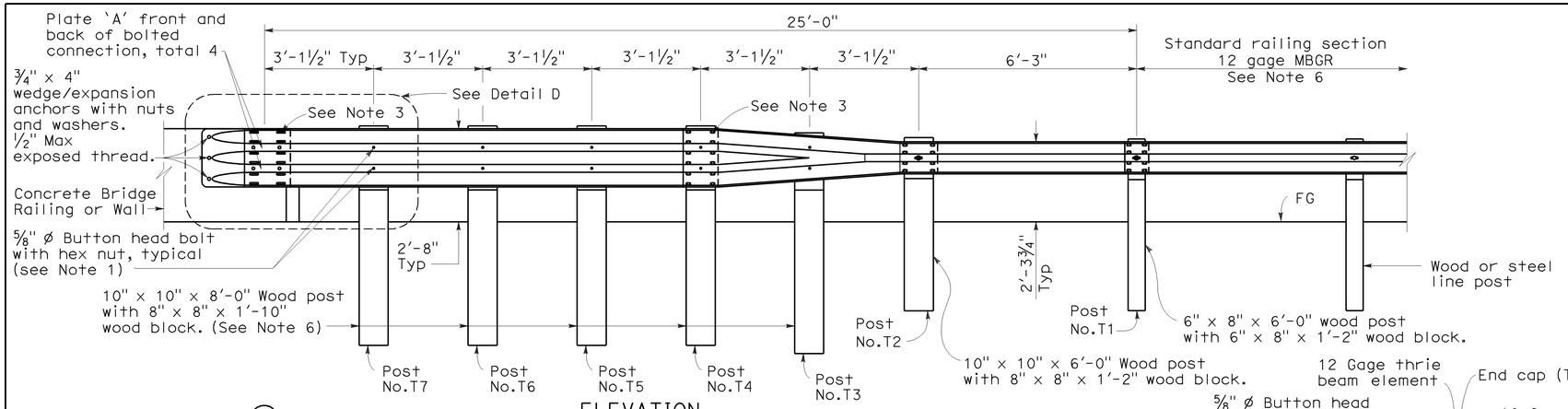

ELEVATION

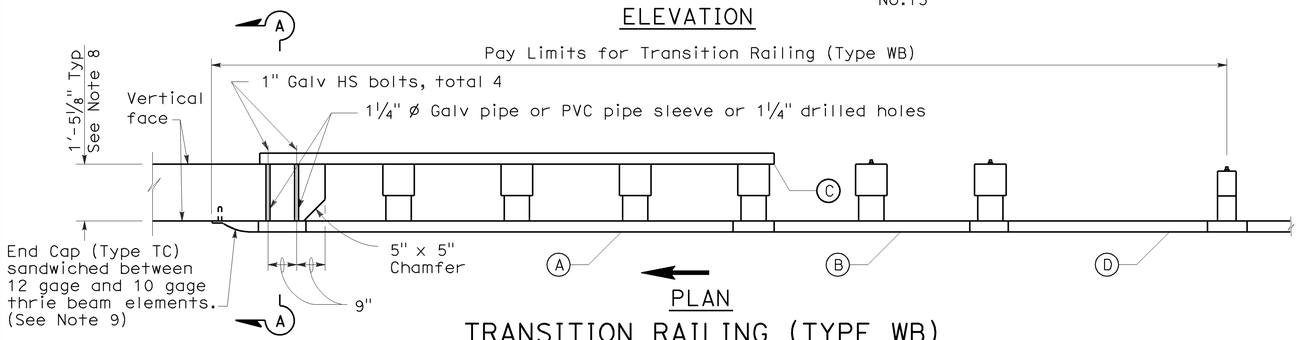

PLAN

TRANSITION RAILING (TYPE WB)

(No Blockout Attachment)

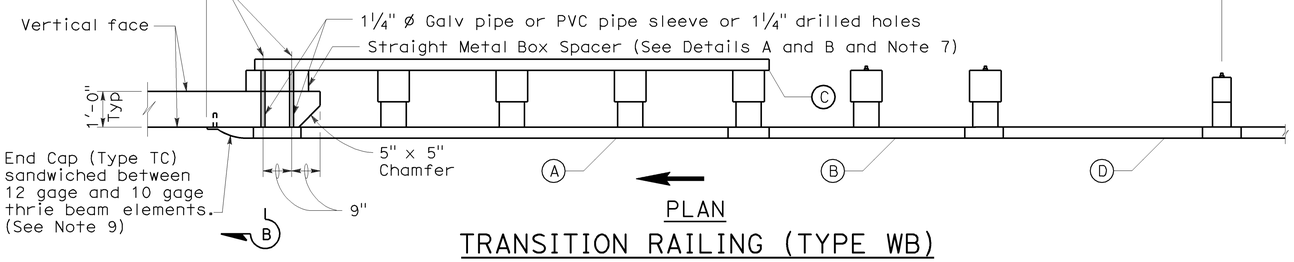

PLAN

TRANSITION RAILING (TYPE WB)

(Blockout Attachment)

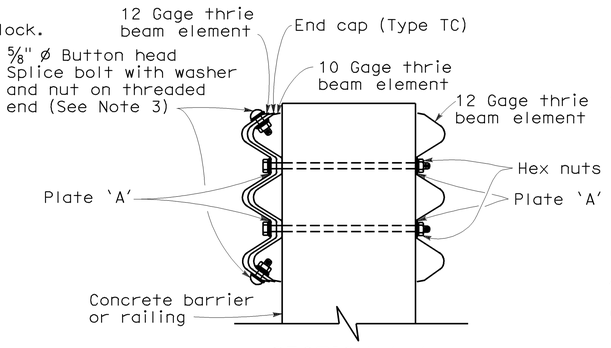

SECTION A-A

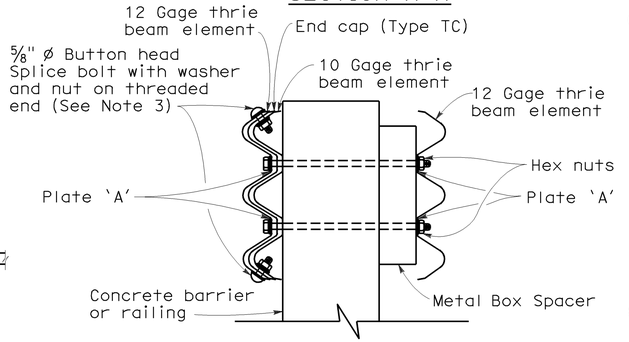

SECTION B-B

LEGEND

- (A) Nested thrie beam elements (one 12 gage element nested over one 10 gage element).
- (B) One 10 gage "W" beam to thrie beam element.
- (C) One 12 gage thrie beam element.
- (D) One 10 gage "W" beam rail element (7'-3½" length)

  10 gage = 0.135" thick

  12 gage = 0.108" thick

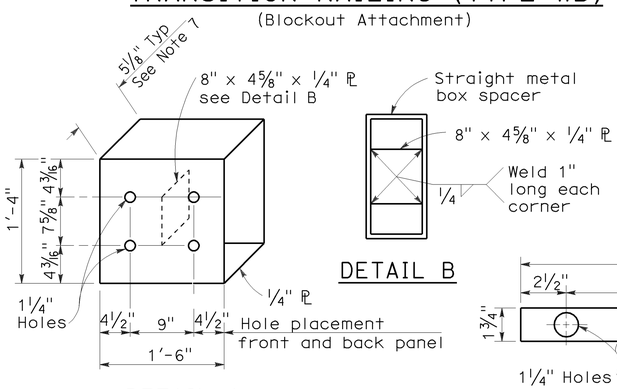

DETAIL A

DETAIL B

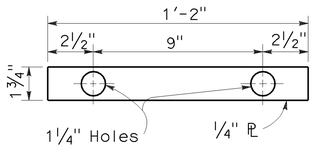

DETAIL C

STRAIGHT METAL BOX SPACER

PLATE 'A'

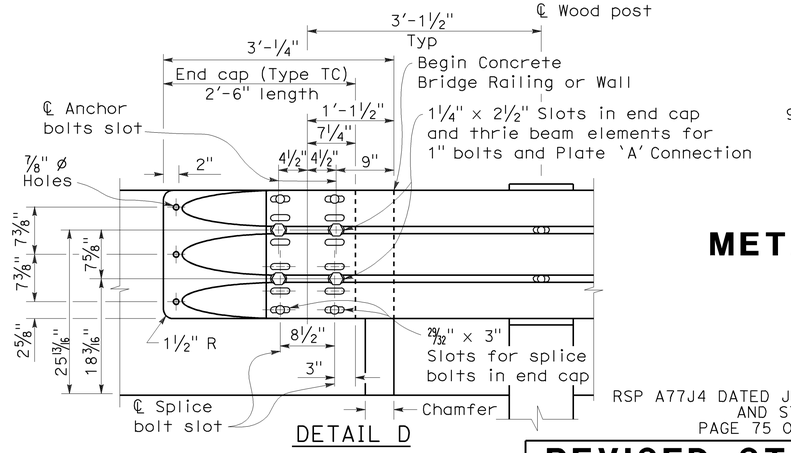

DETAIL D

NOTES:

To accompany plans dated 7-20-09

1. Use 5/8 " ø Button head bolts and hex nuts for connections to posts. No washer on rail face for bolted connections to post.
2. The nested rail elements, end cap, and 'W' beam to thrie beam element may be spliced together prior to bolting the elements to the wood post and concrete barrier or railing.
3. Exterior splice bolt holes for rail element splices at Post No.T4 and the connection to the concrete barrier or railing shall be the standard 29/32 " x 1 1/8 " slot size. Interior splice bolt holes at these locations may be increased up to 1 1/4 " ø. Only the top 2 and the bottom 2 splice bolts with washers and nuts are required for rail splices at Post No.T4 and the connection to the concrete barrier or railing.
4. Direction of adjacent traffic indicated by →.
5. The top elevation of Post Nos.T2 through T7 shall not project more than 1" above the top elevation of the rail element.
6. Typically, the railing connected to Transition Railing (Type WB) will be either standard railing section of metal beam guard railing or an approved Caltrans end treatment attached to Post No.T1.
7. The depth of the metal box spacer varies from the 5 1/8 " to 1 1/2 " and is dependent on the width of the concrete railing or wall. The combined dimension for the depth of the metal box spacer plus the width of railing or wall is typically 17 1/8 ". Where the space between the backside of the concrete railing or wall and the rear thrie beam element is less than 1 1/2 ", metal plates similar to Plate 'A' are to be used as spacers.
8. Where the width of the concrete railing or wall is greater than 17 1/8 ", wood blocks are to be used to fill the space created between the backside of Posts No.4 through No.7 and the rear thrie beam element. These wood blocks shall be 8" in width and 1'-2" in length. The dimension between the front thrie beam element and the rear thrie beam element is to match the width of the concrete railing or wall.
9. End cap may be installed over 12 gage and 10 gage thrie beam elements where transition railing is installed on the departure end of bridge railing.

STATE OF CALIFORNIA
DEPARTMENT OF TRANSPORTATION

METAL BEAM GUARD RAILING TRANSITION RAILING (TYPE WB)

NO SCALE

RSP A77J4 DATED JUNE 5, 2009 SUPERSEDES RSP A77J4 DATED JUNE 6, 2008 AND STANDARD PLAN A77J4 DATED MAY 1, 2006 - PAGE 75 OF THE STANDARD PLANS BOOK DATED MAY 2006.

REVISED STANDARD PLAN RSP A77J4

2006 REVISED STANDARD PLAN RSP A77J4

5-14-09

DIST	COUNTY	ROUTE	POST MILES TOTAL PROJECT	SHEET NO.	TOTAL SHEETS
04	SF	101,1	9.2/9.8, 6.8/7.1	222	567

Randell D. Hiatt
REGISTERED CIVIL ENGINEER

June 6, 2008
PLANS APPROVAL DATE

REGISTERED PROFESSIONAL ENGINEER
Randell D. Hiatt
No. C50200
Exp. 6-30-09
CIVIL
STATE OF CALIFORNIA

The State of California or its officers or agents shall not be responsible for the accuracy or completeness of electronic copies of this plan sheet.

To accompany plans dated 7-20-09

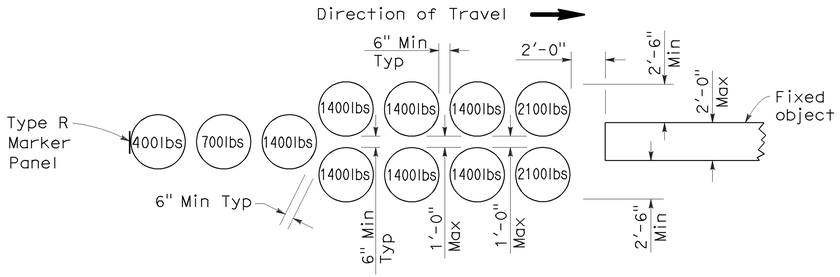

ARRAY 'U11'

Approach speed less than 45 mph

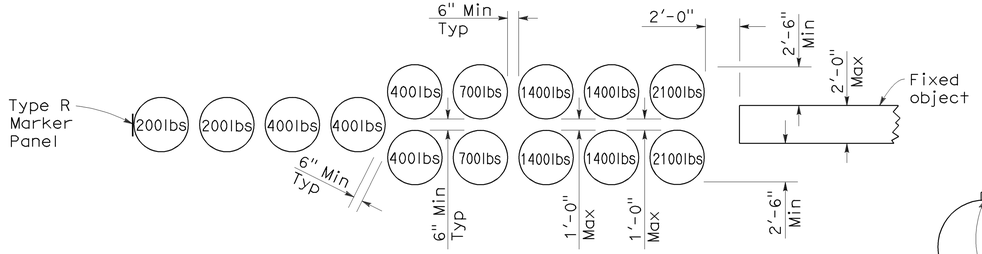

ARRAY 'U14'

Approach speed 45 mph or more

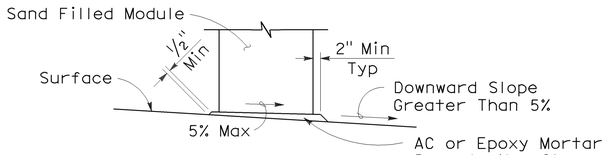

ELEVATION

SLOPED SEAT DETAIL

(See Note 4)

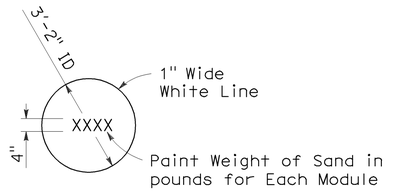

PAINTING DETAIL

(See Note 5)

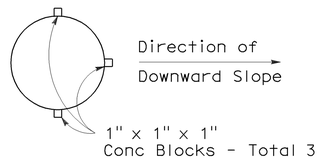

ALTERNATIVE 1

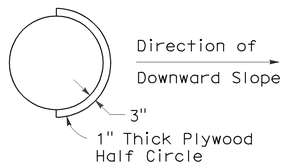

ALTERNATIVE 2

PLAN

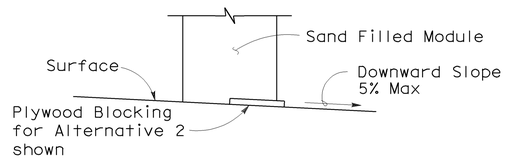

ELEVATION

BRIDGE DECK MODULE BLOCKING DETAILS

(See Note 6)

NOTES:

1. (XXX) Indicates module location and mass of sand in pounds for each module. Module spacing is based on the greater diameter of the modules.
2. All sand weights are nominal.
3. Each module is to contain amount of sand indicated, supported according to the manufacturer's instructions.
4. Modules shall be placed on asphalt concrete, epoxy mortar or concrete surface. Modules to be placed on surfacing with greater than 5% downward slope shall be seated as shown.
5. Mass of sand and outline of each module shall be painted on the surface at each module location.
6. Module blocking, epoxied to the deck surface, is required for all modules placed on bridge decks. Two acceptable alternatives are shown. Other alternatives recommended by the manufacturer and approved by the Engineer will be accepted.
7. Place the top of the Type R marker panel 1" below the module lid.
8. Approach speeds indicated conform to NCHRP Report criteria.

STATE OF CALIFORNIA
DEPARTMENT OF TRANSPORTATION

CRASH CUSHION, SAND FILLED (UNIDIRECTIONAL)

NO SCALE

RSP A81A DATED JUNE 6, 2008 SUPERSEDES STANDARD PLAN A81A
DATED MAY 1, 2006 - PAGE 99 OF THE STANDARD PLANS BOOK DATED MAY 2006.

REVISED STANDARD PLAN RSP A81A

2006 REVISED STANDARD PLAN RSP A81A

5-15-08

DIST	COUNTY	ROUTE	POST MILES TOTAL PROJECT	SHEET NO.	TOTAL SHEETS
04	SF	101,1	9.2/9.8, 6.8/7.1	223	567

Randell D. Hiatt
REGISTERED CIVIL ENGINEER

June 6, 2008
PLANS APPROVAL DATE

REGISTERED PROFESSIONAL ENGINEER
Randell D. Hiatt
No. C50200
Exp. 6-30-09
CIVIL
STATE OF CALIFORNIA

The State of California or its officers or agents shall not be responsible for the accuracy or completeness of electronic copies of this plan sheet.

To accompany plans dated 7-20-09

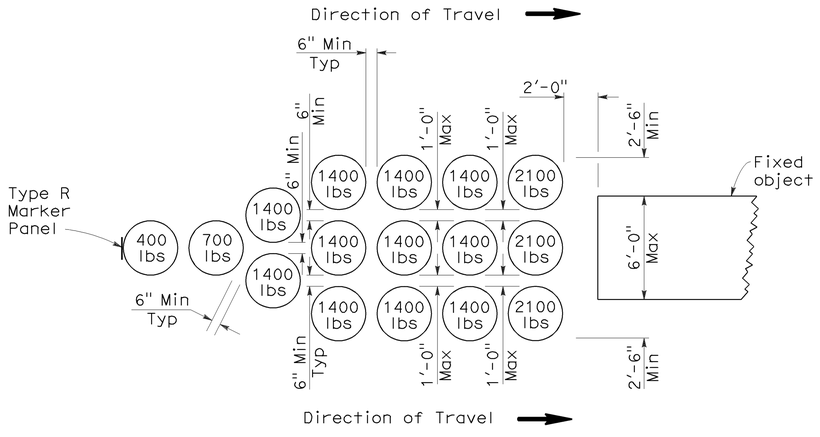

ARRAY 'U16'

Approach speed less than 45 mph

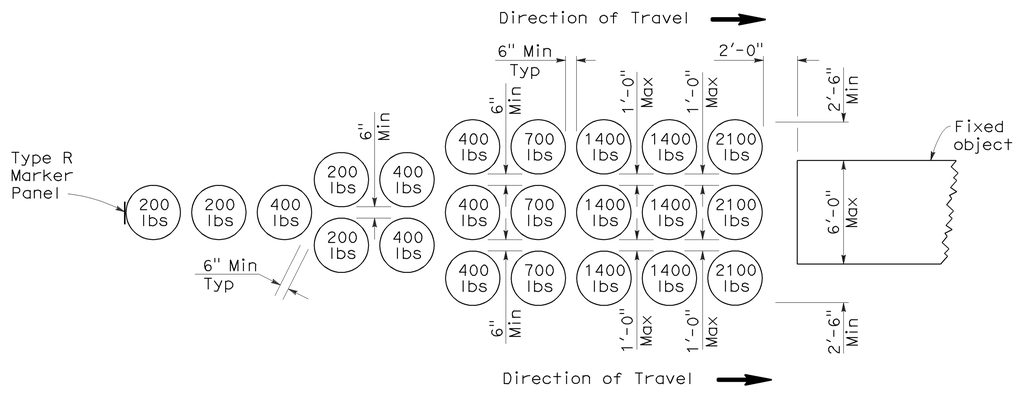

ARRAY 'U21'

Approach speed 45 mph or more

NOTES:

1. (XXX) Indicates module location and weight of sand in pounds for each module. Module spacing is based on the greater diameter of the modules.
2. All sand weights are nominal.
3. Each module is to contain amount of sand indicated, supported according to the manufacturer's instructions.
4. Modules shall be placed on asphalt concrete, epoxy mortar or concrete surface. Modules to be placed on surfacing with greater than 5% downward slope shall be seated as shown.
5. Mass of sand and outline of each module shall be painted on the surface at each module location.
6. Module blocking, epoxied to the deck surface, is required for all modules placed on bridge decks. Two acceptable alternatives are shown. Other alternatives recommended by the manufacturer and approved by the Engineer will be accepted.
7. Place the top of the Type R marker panel 1" below the module lid.
8. Approach speeds indicated conform to NCHRP Report criteria.

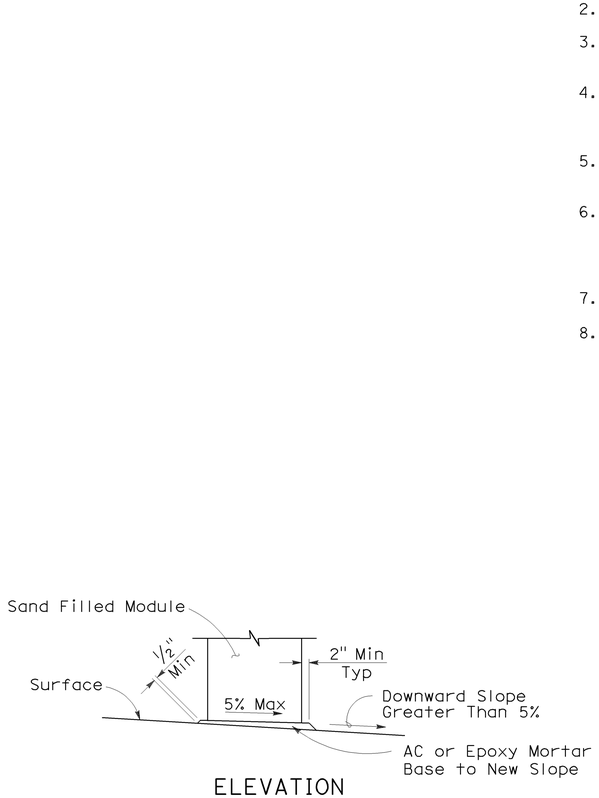

ELEVATION

SLOPED SEAT DETAIL

(See Note 4)

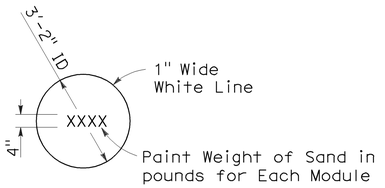

PAINTING DETAIL

(See Note 5)

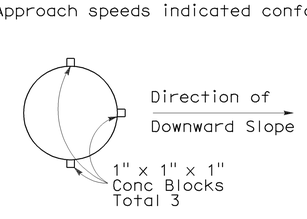

ALTERNATIVE 1

ALTERNATIVE 2

PLAN

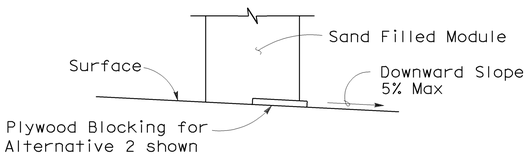

ELEVATION

BRIDGE DECK MODULE BLOCKING DETAILS

(See Note 6)

STATE OF CALIFORNIA
DEPARTMENT OF TRANSPORTATION

CRASH CUSHION, SAND FILLED (UNIDIRECTIONAL)

NO SCALE

RSP A81B DATED JUNE 6, 2008 SUPERSEDES STANDARD PLAN A81B DATED MAY 1, 2006 - PAGE 100 OF THE STANDARD PLANS BOOK DATED MAY 2006.

REVISED STANDARD PLAN RSP A81B

2006 REVISED STANDARD PLAN RSP A81B

5-15-08

DIST	COUNTY	ROUTE	POST MILES TOTAL PROJECT	SHEET NO.	TOTAL SHEETS
04	SF	101,1	9.2/9.8, 6.8/7.1	224	567

Randell D. Hiatt
REGISTERED CIVIL ENGINEER

June 6, 2008
PLANS APPROVAL DATE

REGISTERED PROFESSIONAL ENGINEER — Randell D. Hiatt — No. C50200 — Exp. 6-30-09 — CIVIL — STATE OF CALIFORNIA

The State of California or its officers or agents shall not be responsible for the accuracy or completeness of electronic copies of this plan sheet.

To accompany plans dated 7-20-09

2006 REVISED STANDARD PLAN RSP A81C

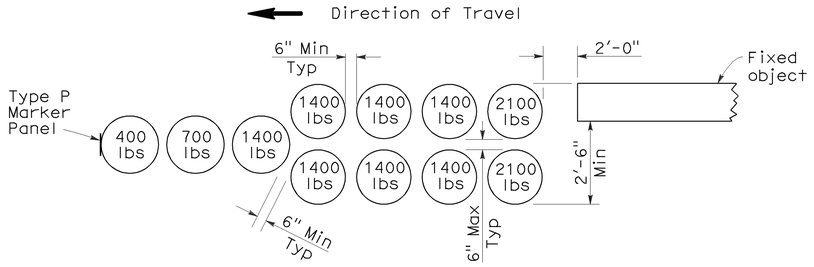

ARRAY 'B11'

Approach speed less than 45 mph

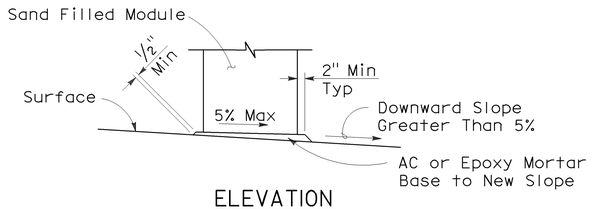

ELEVATION

SLOPED SEAT DETAIL

(See Note 5)

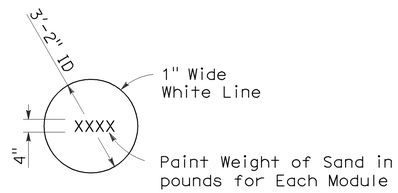

PAINTING DETAIL

(See Note 6)

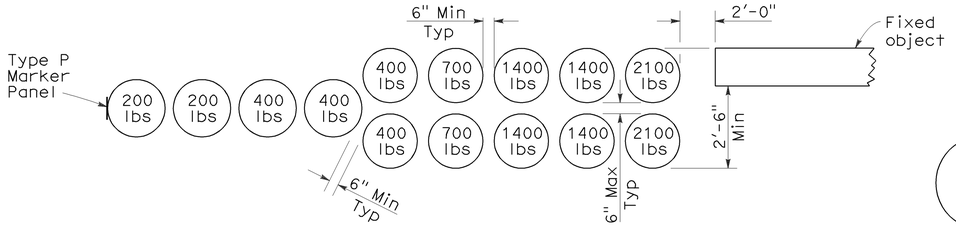

ARRAY 'B14'

Approach speed 45 mph or more

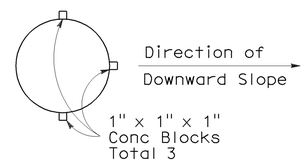

ALTERNATIVE 1

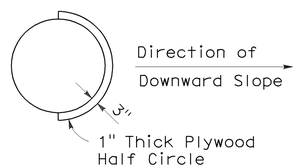

ALTERNATIVE 2

PLAN

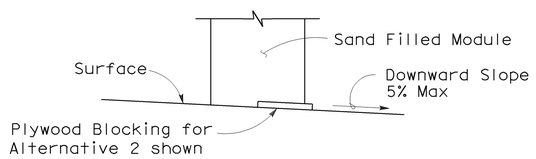

ELEVATION

BRIDGE DECK MODULE BLOCKING DETAILS

(See Note 7)

NOTES:

1. (XXX) Indicates module location and weight of sand in pounds for each module. Module spacing is based on the greater diameter of the module.
2. All sand weights are nominal.
3. Each module is to contain amount of sand indicated, supported according to the manufacturer's instructions.
4. Bidirectional crash cushion arrays may be angled toward approaching traffic. Amount of angle not to exceed 10 degrees.
5. Modules shall be placed on asphalt concrete, epoxy mortar or concrete surface. Modules to be placed on surfacing with greater than 5% downward slope shall be seated as shown.
6. Mass of sand and outline of each module shall be painted on the surface at each module location.
7. Module blocking, epoxied to the deck surface, is required for all modules placed on bridge decks. Two acceptable alternatives are shown. Other alternatives recommended by the manufacturer and approved by the Engineer will be accepted.
8. Place the Type P marker panel so that the bottom of the panel is at the bottom of the module.
9. Approach speeds indicated conform to NCHRP Report criteria.

STATE OF CALIFORNIA
DEPARTMENT OF TRANSPORTATION

CRASH CUSHION, SAND FILLED (BIDIRECTIONAL)

NO SCALE

RSP A81C DATED JUNE 6, 2008 SUPERSEDES STANDARD PLAN A81C
DATED MAY 1, 2006 - PAGE 101 OF THE STANDARD PLANS BOOK DATED MAY 2006.

REVISED STANDARD PLAN RSP A81C

5-15-08

DIST	COUNTY	ROUTE	POST MILES TOTAL PROJECT	SHEET NO.	TOTAL SHEETS
04	SF	101,1	9.2/9.8, 6.8/7.1	225	567

Glenn DeCou
REGISTERED CIVIL ENGINEER

June 5, 2009
PLANS APPROVAL DATE

REGISTERED PROFESSIONAL ENGINEER
Glenn DeCou
No. C34547
Exp. 9-30-09
CIVIL
STATE OF CALIFORNIA

The State of California or its officers or agents shall not be responsible for the accuracy or completeness of electronic copies of this plan sheet.

To accompany plans dated 7-20-09

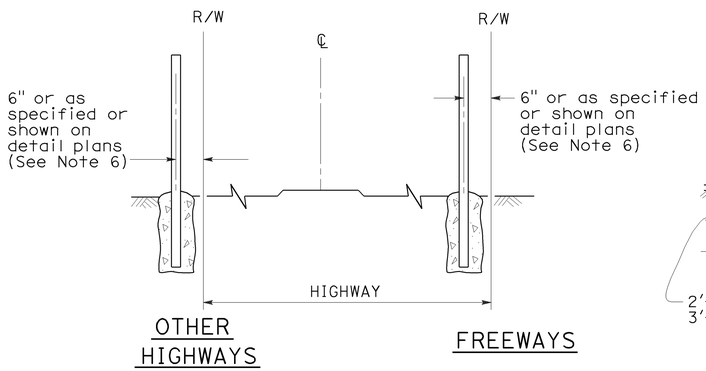

FENCE LOCATION

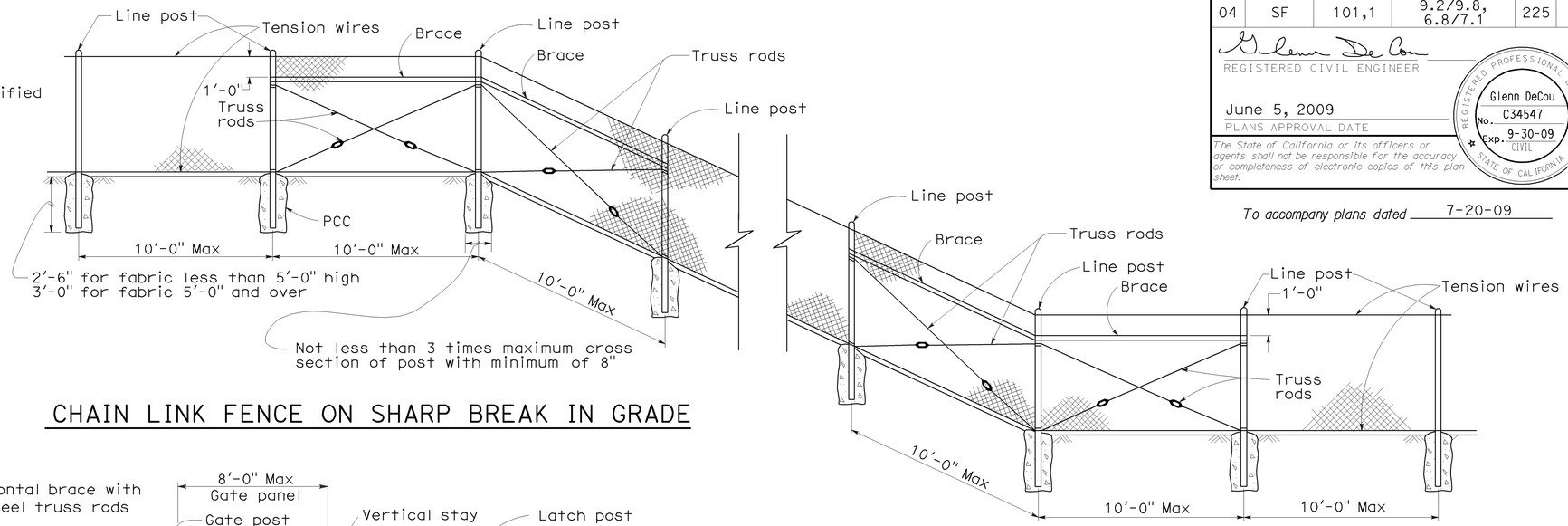

CHAIN LINK FENCE ON SHARP BREAK IN GRADE

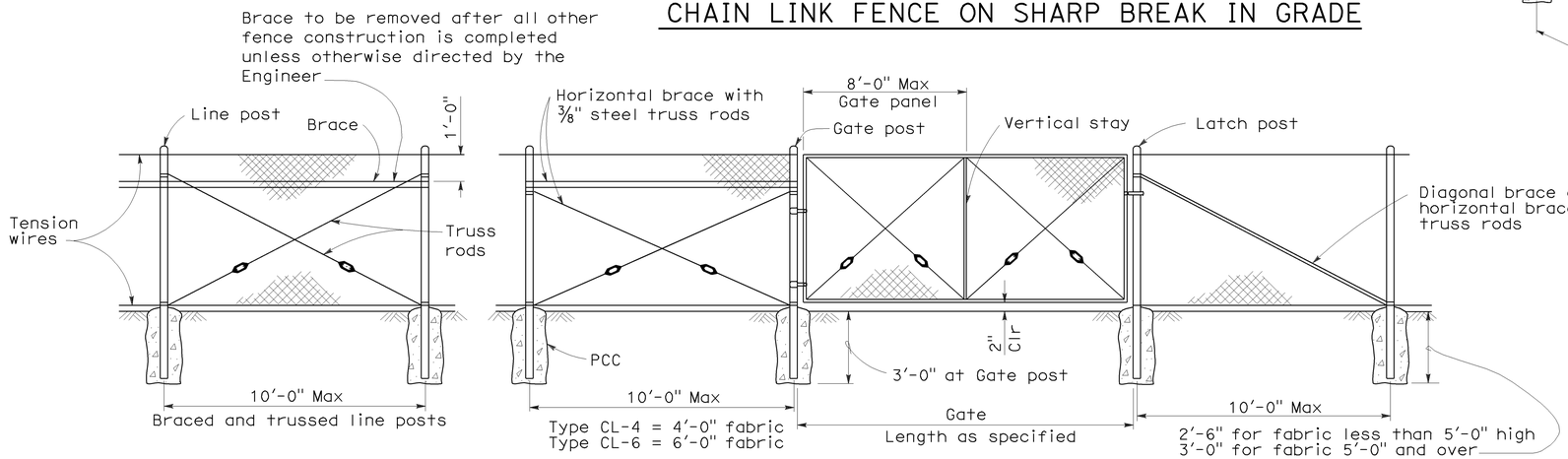

CHAIN LINK GATE INSTALLATION

GATE POST			
FENCE HEIGHT	GATE WIDTHS	NOMINAL ID	WEIGHT PER FOOT
6'-0" and Less	Up thru 6'-0"	2½"	4.95 LB
	Over 6'-0" thru 12'-0"	4"	10.79 LB
	Over 12'-0" thru 18'-0"	5"	14.62 LB
	Over 18'-0" to 24'-0" Max	6"	18.97 LB
Over 6'-0"	Up thru 6'-0"	3"	7.58 LB
	Over 6'-0" thru 12'-0"	5"	14.62 LB
	Over 12'-0" thru 18'-0"	6"	18.97 LB
	Over 18'-0" to 24'-0" Max	8"	28.55 LB

Above post dimensions and weights are minimums. Larger sizes may be used on approval of the Engineer.

NOTES:

1. The below table shows examples of post and brace sections which may comply with the Specifications.
2. Sections shown in the tables must also comply with the strength requirements and other provisions of the Specifications.
3. Other sections which comply with the strength requirements and other provisions of the Specifications may be used on approval of the Engineer.
4. Options exercised shall be uniform on any one project.
5. Dimensions shown are nominal.
6. Offset to be 2'-0" at monument locations, measured at right angles to R/W lines. Taper to achieve offset to be at least 20'-0" long.

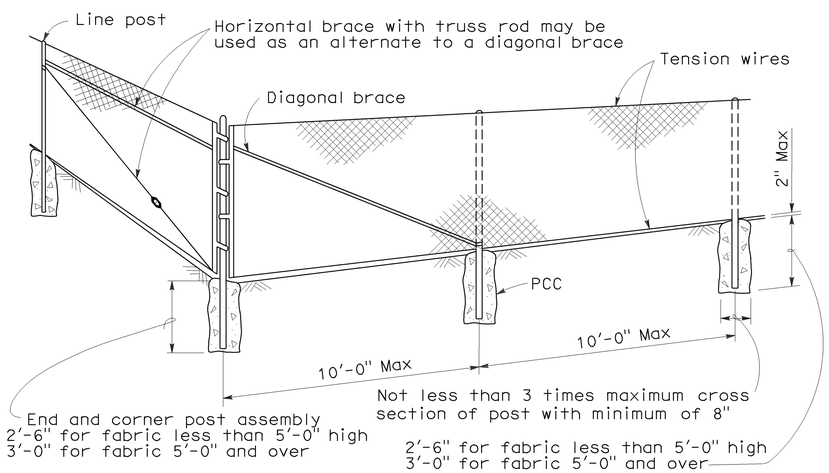

CORNER POST

TYPICAL MEMBER DIMENSIONS (See Notes)										
FENCE HEIGHT	LINE POSTS			END, LATCH & CORNER POSTS			BRACES			
	ROUND ID	H	ROLL FORMED	ROUND ID	ROLL FORMED		ROUND ID	H	ROLL FORMED	
6' & less	1½"	1⅞" x 1⅝"	1⅞" x 1⅝"	2"	3½" x 3½"	2" x 1¾"	1¼"	1½" x 1 5/16"	1⅝" x 1¼"	1¾" x 1¼"
Over 6'	2"	2¼" x 2"	2" x 1¾"	2½"	3½" x 3½"	2½" x 2½"	1¼"	1½" x 1 5/16"	1⅝" x 1¼"	1¾" x 1¼"

STATE OF CALIFORNIA
DEPARTMENT OF TRANSPORTATION

CHAIN LINK FENCE

NO SCALE

RSP A85 DATED JUNE 5, 2009 SUPERSEDES STANDARD PLAN A85
DATED MAY 1, 2006 - PAGE 111 OF THE STANDARD PLANS BOOK DATED MAY 2006.

REVISED STANDARD PLAN RSP A85

2006 REVISED STANDARD PLAN RSP A85

5-7-09

DIST	COUNTY	ROUTE	POST MILES TOTAL PROJECT	SHEET NO.	TOTAL SHEETS
04	SF	101,1	9.2/9.8, 6.8/7.1	226	567

Glenn DeCou
REGISTERED CIVIL ENGINEER

REGISTERED PROFESSIONAL ENGINEER
Glenn DeCou
No. C34547
Exp. 9-30-09
CIVIL
STATE OF CALIFORNIA

June 5, 2009
PLANS APPROVAL DATE

The State of California or its officers or agents shall not be responsible for the accuracy or completeness of electronic copies of this plan sheet.

To accompany plans dated 7-20-09

NOTES:

1. H is 2'-6" for fabric less than 5'-0" high. H is 3'-0" for fabric 5'-0" and over.
2. T is not less than 3 times maximum cross section of post with minimum of 8".
3. Arms with barbed wire to be used where shown on plans.
4. See Revised Standard Plan RSP A85 for Chain Link Fencing dimensions.
5. Reinforcing must comply with ASTM A 706.
6. See Detail A on New Standard Plan NSP A86B for connection at headwall.

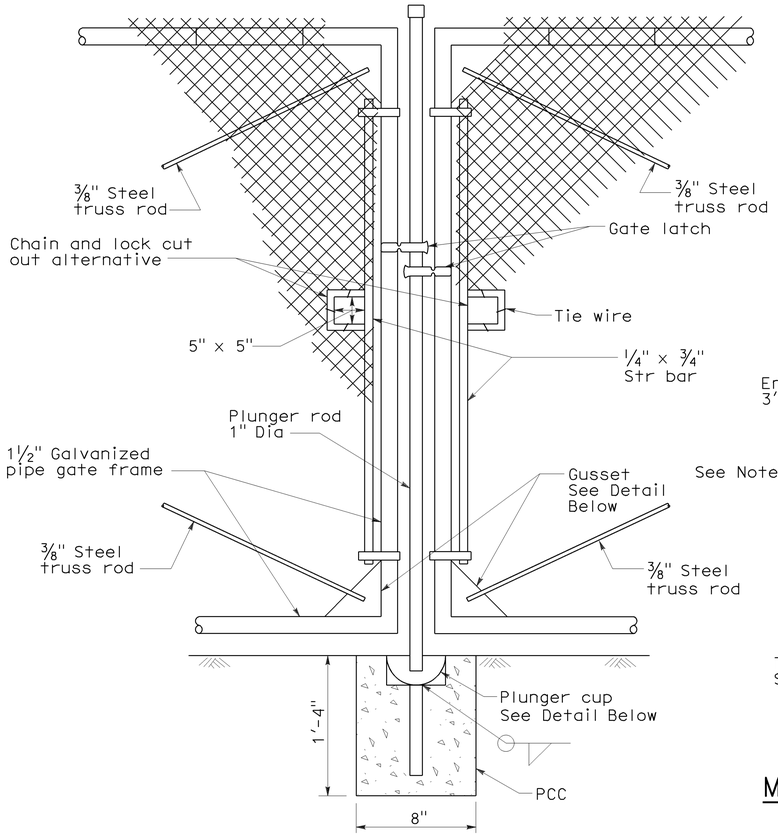

TYPICAL DOUBLE GATE
REMOVABLE CENTER POST

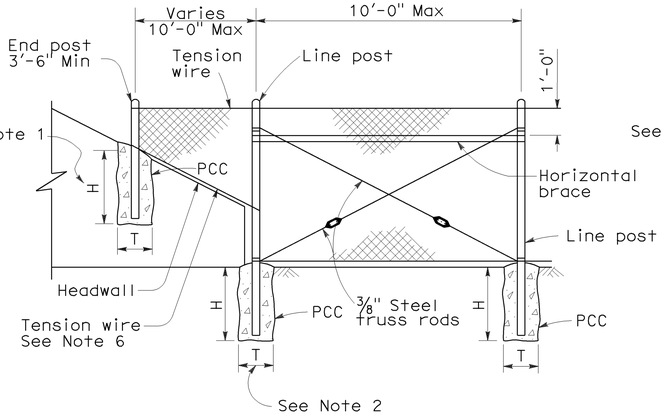

METHOD OF TYING FENCE TO HEADWALL

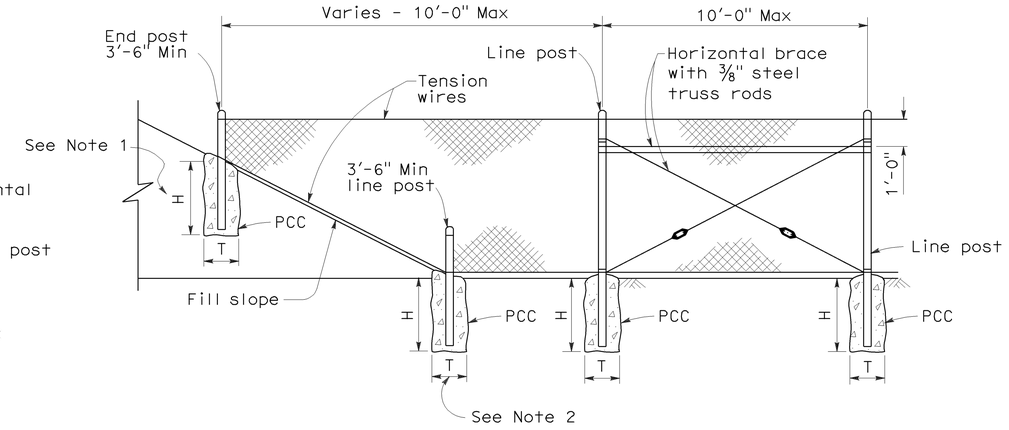

METHOD OF ERECTING FENCE FOR FILL SLOPE

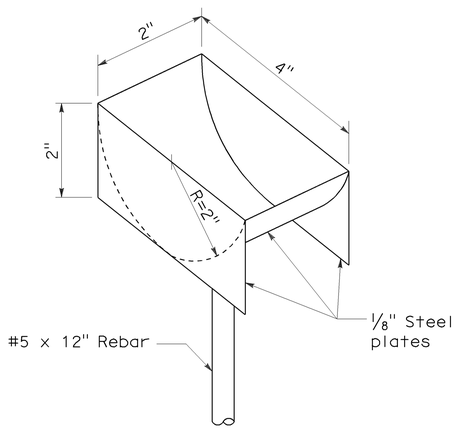

PLUNGER CUP DETAIL

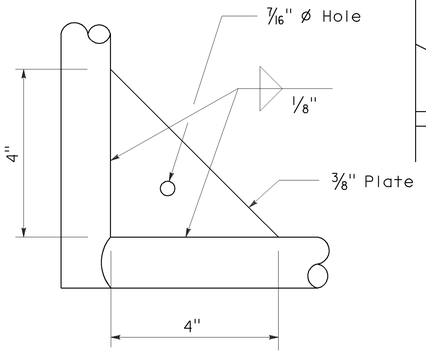

GUSSET DETAIL

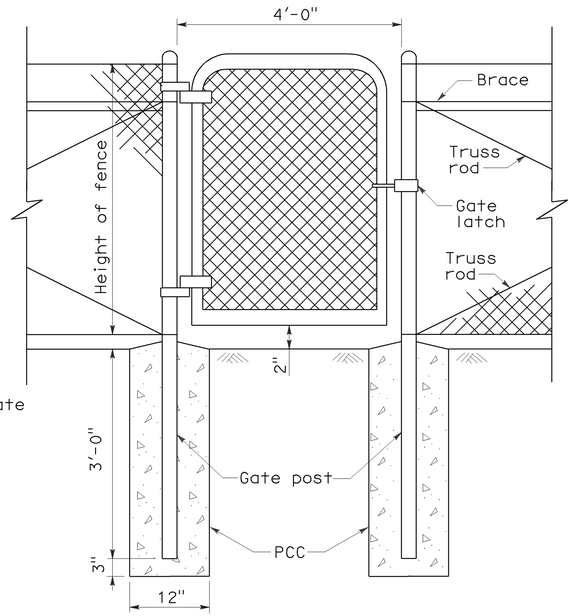

WALK GATE

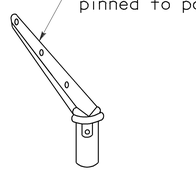

POST TOP END

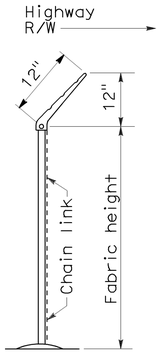

END ELEVATION

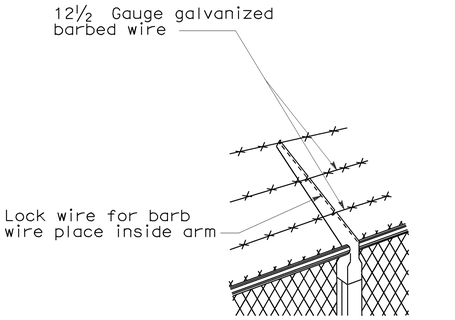

LINE POST TOP
Vertical arms when desired

BARBED WIRE POST TOP
See Note 3

STATE OF CALIFORNIA
DEPARTMENT OF TRANSPORTATION

CHAIN LINK FENCE DETAILS

NO SCALE

NSP A85A DATED JUNE 5, 2009 SUPPLEMENTS THE STANDARD PLANS BOOK DATED MAY 2006.

NEW STANDARD PLAN NSP A85A

2006 NEW STANDARD PLAN NSP A85A

5-7-09

DIST	COUNTY	ROUTE	POST MILES TOTAL PROJECT	SHEET NO.	TOTAL SHEETS
04	SF	101,1	9.2/9.8, 6.8/7.1	227	567

Glenn DeCou
REGISTERED CIVIL ENGINEER

June 5, 2009
PLANS APPROVAL DATE

Glenn DeCou
No. C34547
Exp. 9-30-09
CIVIL
REGISTERED PROFESSIONAL ENGINEER
STATE OF CALIFORNIA

The State of California or its officers or agents shall not be responsible for the accuracy or completeness of electronic copies of this plan sheet.

To accompany plans dated 7-20-09

2006 NEW STANDARD PLAN NSP A85B

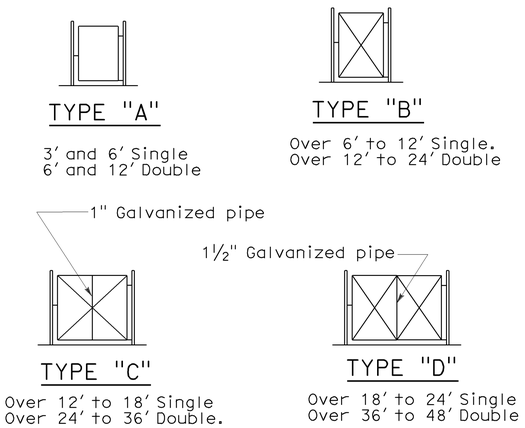

TYPICAL FRAMEWORK SHOWING NUMBER OF BAYS IN GATE

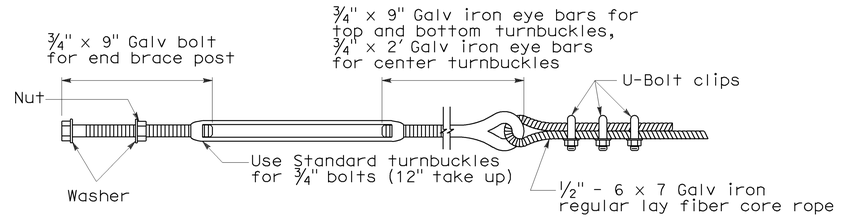

TURNBUCKLE A

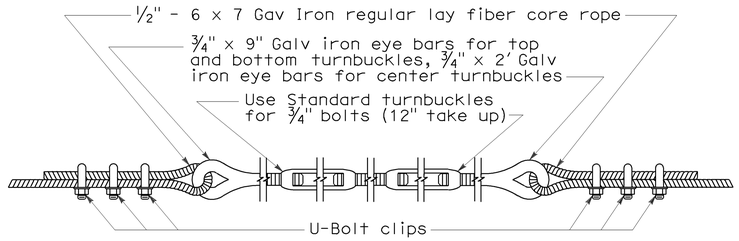

TURNBUCKLE B

NOTES:

1. All material for abutment connection to be galvanized.
2. The chain link fabric shall be replaced by barbed wire strands at 12" maximum centers between the double posts.
3. When the width of the culvert makes it necessary to anchor a post to the top of the culvert, a cast iron shoe or other device approved by the Engineer shall be used.
4. Fencing over stream and around headwall may also use Barbed Wire or Wire Mesh fencing with either wood post or steel post installation.
5. See Revised Standard Plan RSP A85 for Chain Link fence dimensions. See Standard Plan A86 for Barbed Wire and Wire Mesh fence dimensions and for wood post and steel post installation.

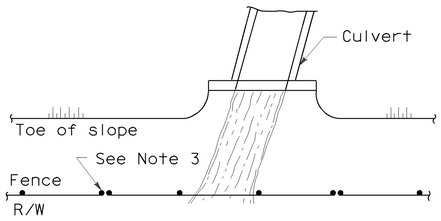

PLAN

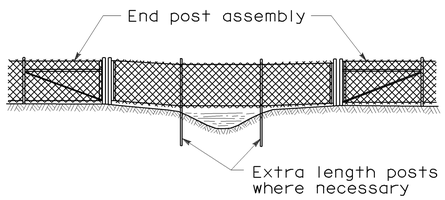

ELEVATION

INSTALLATION OVER STREAM

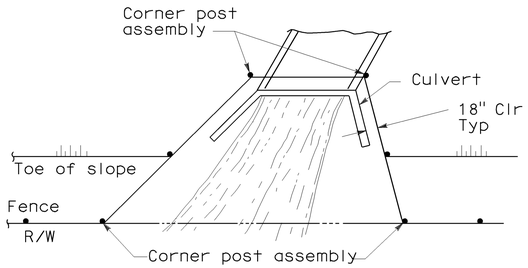

PLAN

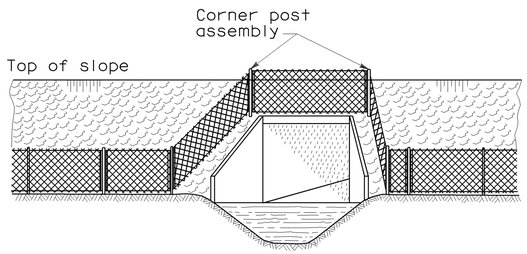

ELEVATION

INSTALLATION AROUND HEADWALL

See Note 4

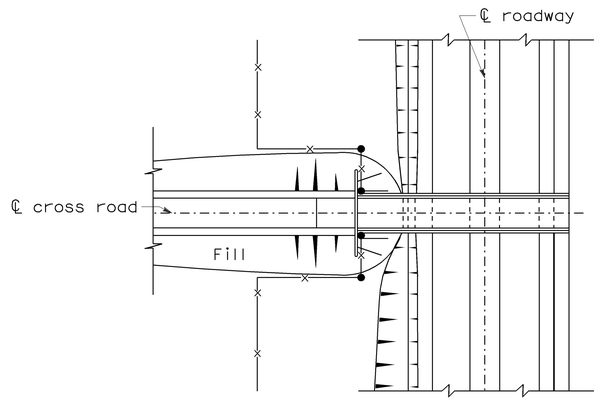

PLAN OF ROADWAY - UNDERPASS

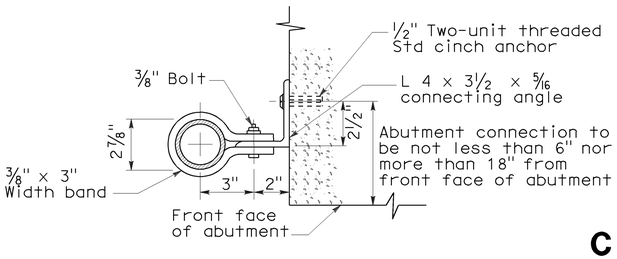

ABUTMENT CONNECTION

TYPICAL INSTALLATION AT BRIDGES

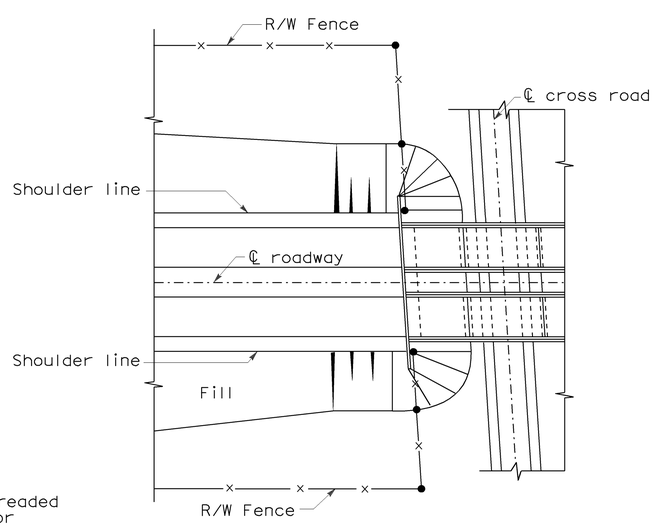

PLAN OF ROADWAY - OVERPASS

STATE OF CALIFORNIA
DEPARTMENT OF TRANSPORTATION

CHAIN LINK FENCE DETAILS

NO SCALE

NSP A85B DATED JUNE 5, 2009 SUPPLEMENTS THE STANDARD PLANS BOOK DATED MAY 2006.

NEW STANDARD PLAN NSP A85B

5-12-09

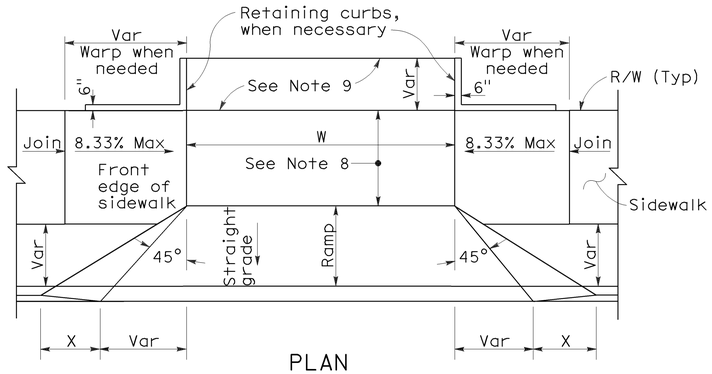

PLAN

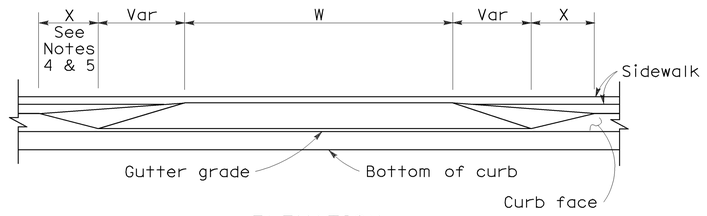

ELEVATION

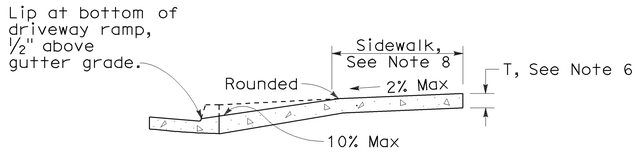

CASE A

Typical driveway, sidewalk not depressed

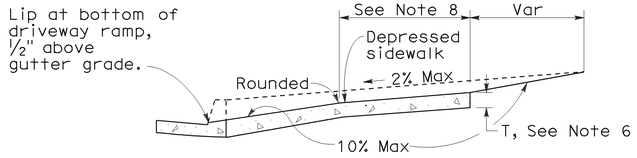

CASE B

Driveway with depressed sidewalk

SECTIONS

CURB QUANTITIES

TYPE	CUBIC YARDS PER LINEAR FOOT
A1-6	0.02585
A1-8	0.03084
A2-6	0.05903
A2-8	0.06379
A3-6	0.01036
A3-8	0.01435
B1-4	0.02185
B1-6	0.02930
B2-4	0.05515
B2-6	0.06171
B3-4	0.00641
B3-6	0.01074
B4	0.05709
D-4	0.04083
D-6	0.06804
E	0.06661

DIST	COUNTY	ROUTE	POST MILES TOTAL PROJECT	SHEET NO.	TOTAL SHEETS
04	SF	101,1	9.2/9.8, 6.8/7.1	228	567

REGISTERED CIVIL ENGINEER

November 17, 2006
PLANS APPROVAL DATE

REGISTERED PROFESSIONAL ENGINEER — Michael Janzen No. 44788 Exp. 03-31-08 CIVIL — STATE OF CALIFORNIA

The State of California or its officers or agents shall not be responsible for the accuracy or completeness of electronic copies of this plan sheet.

To accompany plans dated 7-20-09

TABLE A

CURB TYPE	DIMENSIONS "H1"	"H2"	"W1"	"W2"
A1-6	1′-2"	6"	7½"	1½"
A1-8	1′-4"	8"	8"	2"
A2-6	1′-0"	6"	2′-7½"	1½"
A2-8	1′-2"	8"	2′-8"	2"
A3-6	6"	5"	7¼"	1¼"
A3-8	8"	7"	7¾"	1¾"
B1-4	1′-0"	4"	7½"	2½"
B1-6	1′-2"	6"	9"	4"
B2-4	10"	4"	2′-7½"	2½"
B2-6	1′-0"	6"	2′-9"	4"
B3-4	4"	3"	7"	2"
B3-6	6"	5"	8½"	3½"
D-4	10"	4"	1′-6"	1′-1"
D-6	1′-0"	6"	2′-2"	1′-8"

DRIVEWAYS

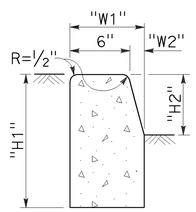

TYPE A1 CURBS

See Table A

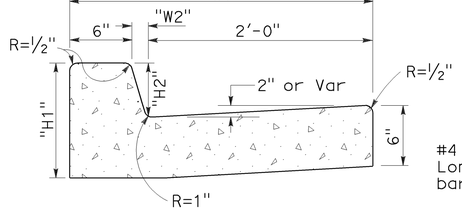

TYPE A2 CURBS

See Table A

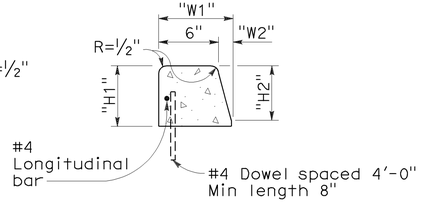

TYPE A3 CURBS

Superimposed on existing pavement
See Table A

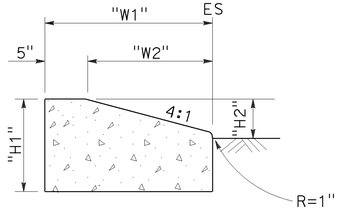

TYPE D CURBS

See Table A

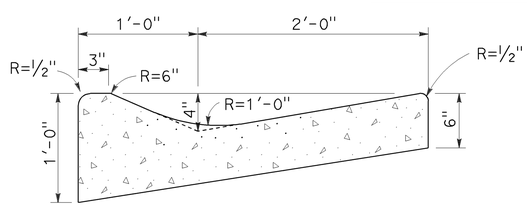

TYPE E CURB

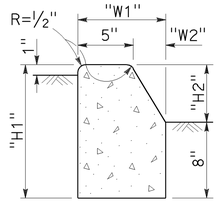

TYPE B1 CURBS

See Table A

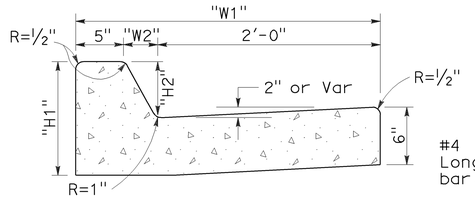

TYPE B2 CURBS

See Table A

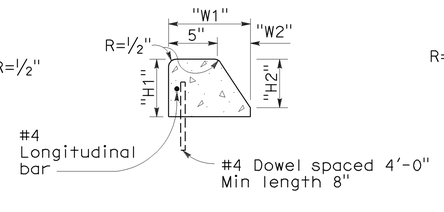

TYPE B3 CURBS

Superimposed on existing pavement
See Table A

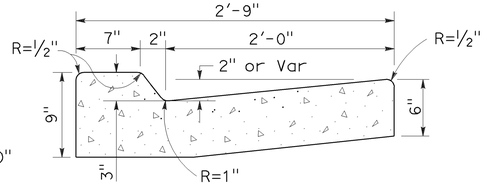

TYPE B4 CURBS

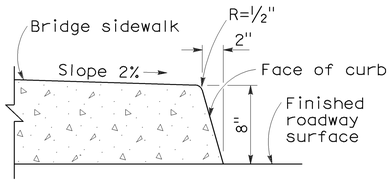

TYPE H CURB

On Bridges

NOTES:

1. Case A driveway section typically applies.
2. Use Case B driveway section when ramp slopes would exceed 10% in Case A.
3. Use Case B driveway section when sidewalk cross slope would exceed 2% in Case A.
4. X=3′-0" except for curb heights over 10" where 4:1 slopes shall be used on curb slope.

CURBS

5. X is a variable when sidewalk is located where wheelchairs may traverse the surface. Slopes shall not exceed 8.33%.
6. Sidewalk and ramp thickness "T" at driveway shall be 4" for residental and 6" for commercial.
7. Difference in slope of the driveway ramp and the slope of a line between the gutter and a point on the roadway 5′-0" from gutter line shall not exceed 15%. Reduce driveway ramp slope, not gutter slope, where required.
8. Minimum width of clear passageway for sidewalk shall be 4′-0".
9. Retaining curbs and acquisition of construction easement may be necessary for narrow sidewalks or curb heights in excess of 6".
10. Across the pedestrian route at curb ramp locations, the gutter pan slope shall not exceed 1" of depth for each 2′-0" of width.

STATE OF CALIFORNIA
DEPARTMENT OF TRANSPORTATION

CURBS AND DRIVEWAYS

NO SCALE

RSP A87A DATED NOVEMBER 17, 2006 SUPERSEDES STANDARD PLAN A87A
DATED MAY 1, 2006 - PAGE 113 OF THE STANDARD PLANS BOOK DATED MAY 2006.

REVISED STANDARD PLAN RSP A87A

2006 REVISED STANDARD PLAN RSP A87A

10-25-06

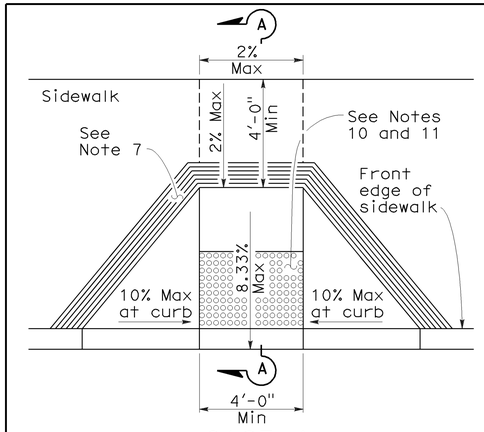

CASE A

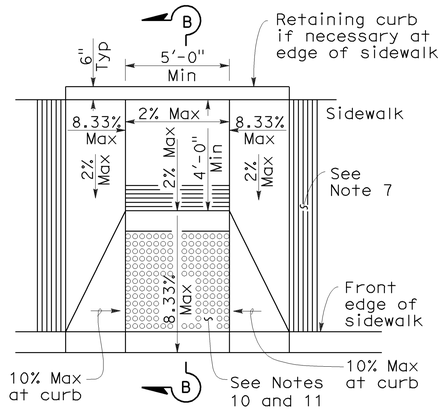

CASE B

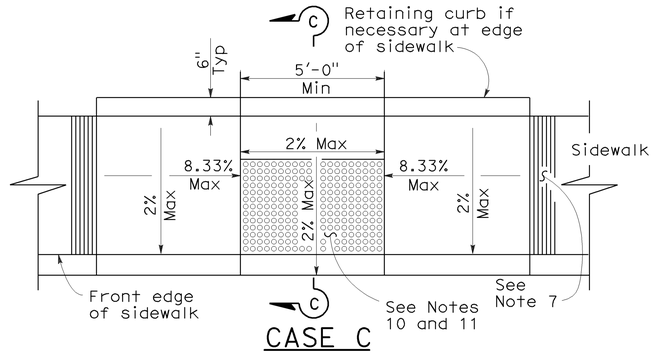

CASE C

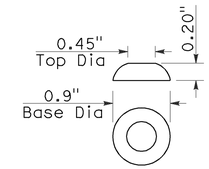

RAISED TRUNCATED DOME

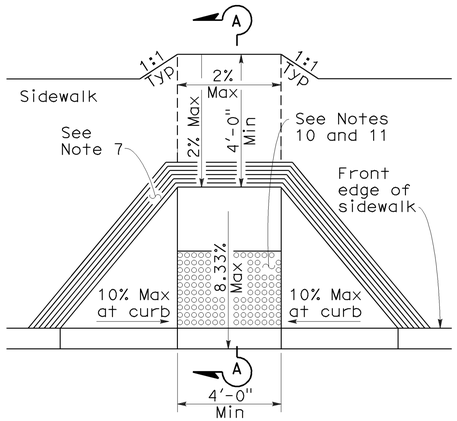

CASE D

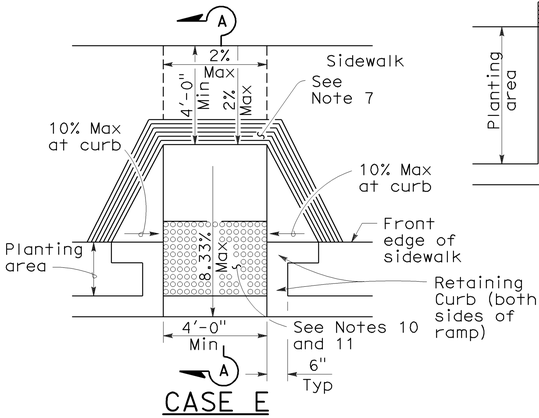

CASE E

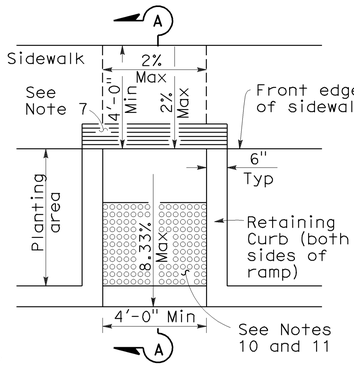

CASE F

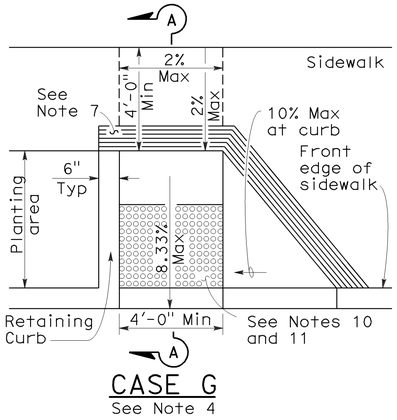

CASE G
See Note 4

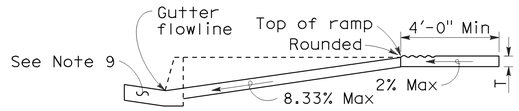

SECTION A-A

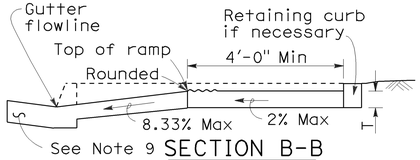

SECTION B-B

Depress entire sidewalk as required

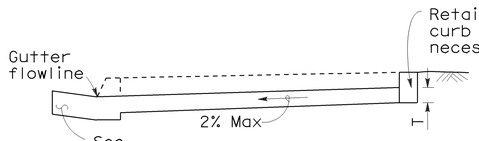

SECTION C-C

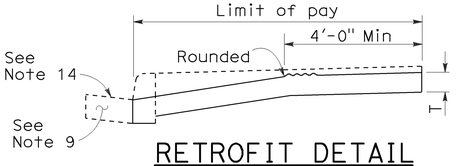

RETROFIT DETAIL

Existing curb and sidewalk

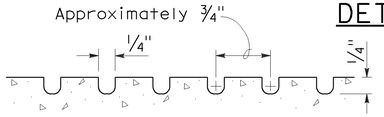

GROOVING DETAIL

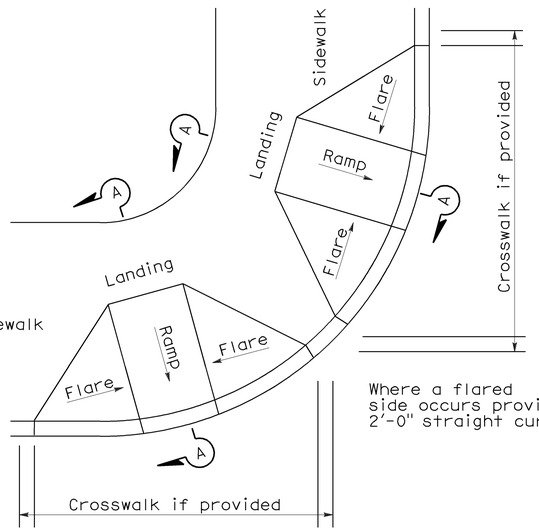

DETAIL A

TYPICAL TWO-RAMP CORNER INSTALLATION

See Note 1

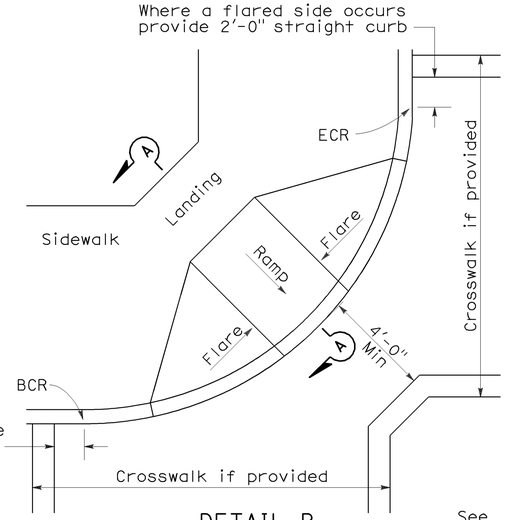

DETAIL B

TYPICAL ONE-RAMP CORNER INSTALLATION

See Notes 1 and 3

NOTES:

1. As site conditions dictate, Case A through Case G curb ramps may be used for corner installations similar to those shown in Detail A and Detail B. The case of curb ramps used in Detail A do not have to be the same. Case A through Case G curb ramps also may be used at mid block locations, as site conditions dictate.
2. If distance from curb to back of sidewalk is too short to accommodate ramp and 4'-0" platform (landing) as shown in Case A, the sidewalk may be depressed longitudinally as in Case B, or C or may be widened as in Case D.
3. When ramp is located in center of curb return, crosswalk configuration must be similar to that shown for Detail B.
4. As site conditions dictate, the retaining curb side and the flared side of the Case G ramp shall be constructed in reversed position.
5. If located on a curve, the sides of the ramp need not be parallel, but the minimum width of the ramp shall be 4'-0".
6. Side slope of ramp flares vary uniformly from a maximum of 10% at curb to conform with longitudinal sidewalk slope adjacent to top of the ramp, except in Case C and Case F.
7. The curb ramp shall be outlined, as shown, with a 1'-0" wide border with ¼" grooves approximately ¾" on center. See grooving detail.
8. Transitions from ramps and landing to walks, gutters or streets shall be flush and free of abrupt changes.
9. Maximum slopes of adjoining gutters, the road surface immediately adjacent to the curb ramp or accessible route shall not exceed 5 percent within 4'-0" of the top and bottom of the curb ramp.
10. Curb ramps shall have a detectable warning surface that extends the full width and 3'-0" depth of the ramp. Detectable Warning Surfaces shall conform to the details on this plan and the requirements in the Special Provisions.
11. The edge of the detectable warning surface nearest the street shall be between 6" and 8" from the gutter flowline.
12. Sidewalk and ramp thickness, "T", shall be 3½" minimum.
13. Utility pull boxes, manholes, vaults and all other utility facilities within the boundaries of the curb ramp will be relocated or adjusted to grade by the owner prior to, or in conjunction with, curb ramp construction.
14. For retrofit conditions, removal and replacement of curb apron will be at the Contractor's option, unless otherwise shown on project plans.

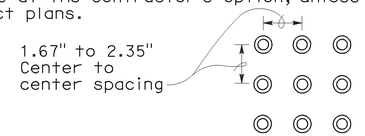

RAISED TRUNCATED DOME PATTERN (IN-LINE)

DETECTABLE WARNING SURFACE

See Note 10

STATE OF CALIFORNIA
DEPARTMENT OF TRANSPORTATION

CURB RAMP DETAILS

NO SCALE

RSP A88A DATED SEPTEMBER 1, 2006 SUPERSEDES STANDARD PLAN A88A DATED MAY 1, 2006 - PAGE 115 OF THE STANDARD PLANS BOOK DATED MAY 2006.

REVISED STANDARD PLAN RSP A88A

DIST	COUNTY	ROUTE	POST MILES TOTAL PROJECT	SHEET NO.	TOTAL SHEETS
04	SF	101,1	9.2/9.8, 6.8/7.1	229	567

H. David Cordova
REGISTERED CIVIL ENGINEER

September 1, 2006
PLANS APPROVAL DATE

REGISTERED PROFESSIONAL ENGINEER — Hector David Cordova — No. C41957 — Exp. 3-31-08 CIVIL — STATE OF CALIFORNIA

The State of California or its officers or agents shall not be responsible for the accuracy or completeness of electronic copies of this plan sheet.

To accompany plans dated 7-20-09

2006 REVISED STANDARD PLAN RSP A88A

8-3-06

DIST	COUNTY	ROUTE	POST MILES TOTAL PROJECT	SHEET NO.	TOTAL SHEETS
04	SF	101,1	9.2/9.8, 6.8/7.1	230	567

William K. Farnbach
REGISTERED CIVIL ENGINEER

May 15, 2009
PLANS APPROVAL DATE

REGISTERED PROFESSIONAL ENGINEER — William K. Farnbach — No. C49042 — Exp. 9-30-10 — CIVIL — STATE OF CALIFORNIA

The State of California or its officers or agents shall not be responsible for the accuracy or completeness of electronic copies of this plan sheet.

To accompany plans dated 7-20-09

2006 NEW STANDARD PLAN NSP P4

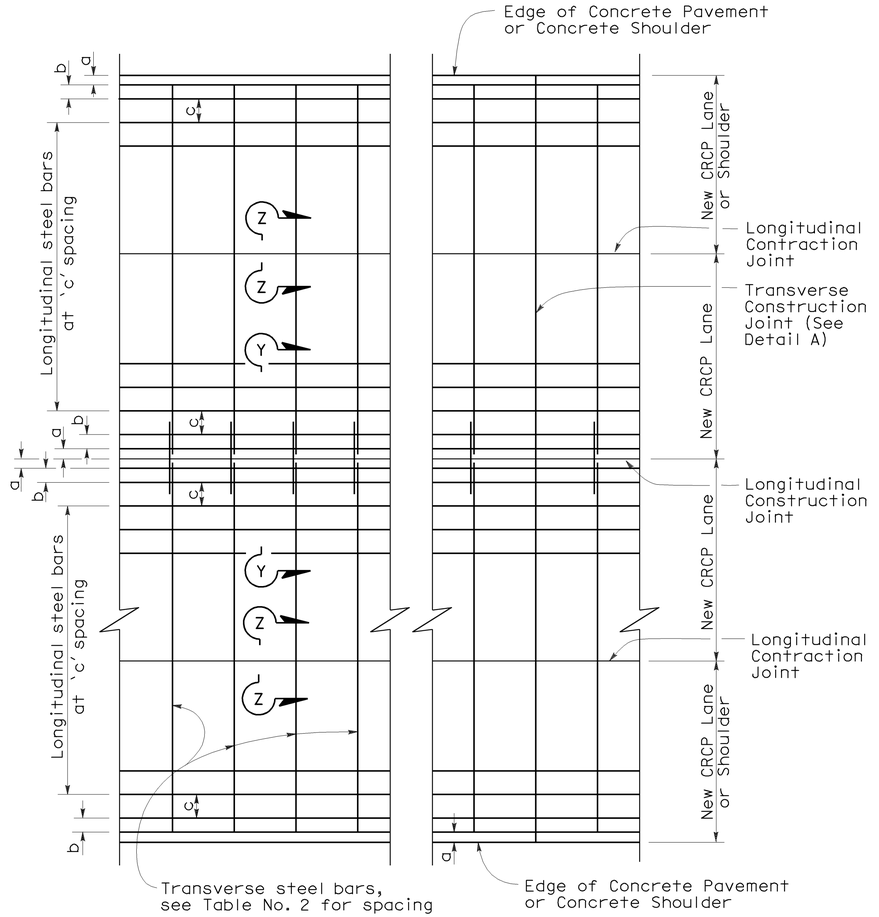

PLAN

TABLE No. 1 LONGITUDINAL STEEL

Slab Thickness and Bar Size		First Spacing at Edge or Joint	Second Spacing from Edge or Joint	Regular Steel Bars	Additional Reinforcement at Transverse Construction Joint		Clr
D	Bar Size	Spacing a	Spacing b	Spacing c	Spacing 2 x c	Length L	X
.80′	#6	3" TO 4"	3" TO 8"	8"	16"	42"	4"
.85′	#6	3" TO 4"	3" TO 7"	7"	14"	42"	4"
.90′	#6	3" TO 4"	3" TO 6.5"	6.5"	13"	42"	4"
.95′	#6	3" TO 4"	3" TO 6"	6.5"	13"	42"	4"
1.00′	#6	3" TO 4"	3" TO 6"	6"	12"	42"	4.25"
1.05′	#6	3" TO 4"	3" TO 5.5"	6"	12"	42"	4.5"
1.10′	#6	3" TO 4"	3" TO 5.5"	5.5"	11"	42"	4.75"

TABLE No. 2 TRANSVERSE STEEL

Slab Thickness and Bar Size		Pvmt Width (From Edge of Conc Pvmt or Conc Shld to Nearest Edge of Conc Pvmt or Conc Shld)						
		≤ 48′	≤ 60′	≤ 72′	≤ 84′	≤ 96′	≤ 108′	≤ 120′
D	Bar Size	Spacing	Spacing	Spacing	Spacing	Spacing	Spacing	Spacing
.80′	#6	3′	3′	3′	2.5′	2′	2′	1.5′
.85′	#6	3′	3′	2.5′	2.5′	2′	1.5′	1.5′
.90′	#6	3′	2.5′	2.5′	2′	2′	1.5′	1.5′
.95′	#6	3′	2.5′	2′	2′	1.5′	1.5′	1′
1.00′	#6	3′	2.5′	2′	2′	1.5′	1.5′	1′
1.05′	#6	2.5′	2.5′	2′	1.5′	1.5′	1.5′	1′
1.10′	#6	2.5′	2.5′	2′	1.5′	1.5′	1.5′	1′

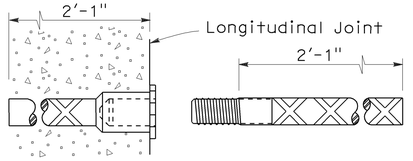

TIE BAR SPLICE DETAIL
(Splice Coupler)

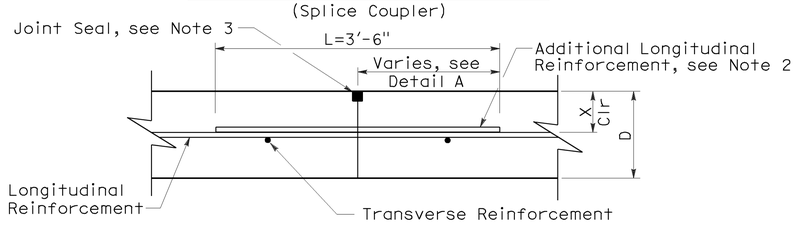

SECTION X-X
TRANSVERSE CONSTRUCTION JOINT

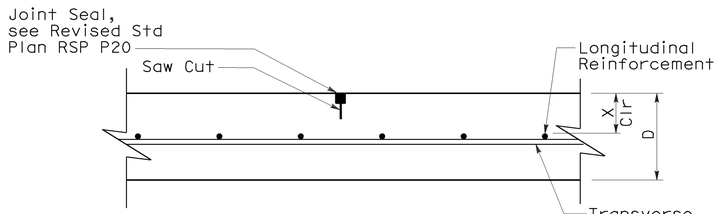

SECTION Z-Z
LONGITUDINAL CONTRACTION JOINT

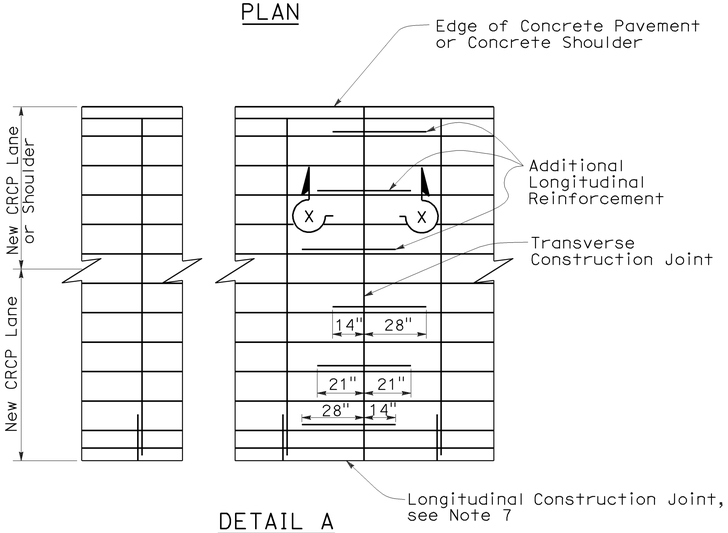

DETAIL A

ADDITIONAL LONGITUDINAL REINFORCEMENT AT TRANSVERSE CONSTRUCTION JOINT

NOTES:

1. Place tie bar in the same plane as transverse reinforcements.
2. Place additional longitudinal reinforcement in the same horizontal plane as the longitudinal reinforcement without horizontal space.
3. Joint Seals at transverse Construction joints shall conform to the details shown on Revised Standard Plan RSP P20 for Type C joint.
4. Joint seals at longitudinal construction joints shall conform to the details shown on Revised Standard Plan RSP P20 for Type C joint.
5. Tie bar spacing shall be equal to transverse bar spacing.
6. Reinforcing bar splices shall be a minimum of 25".
7. Additional longitudinal reinforcement symmetrical about longitudinal construction joint.

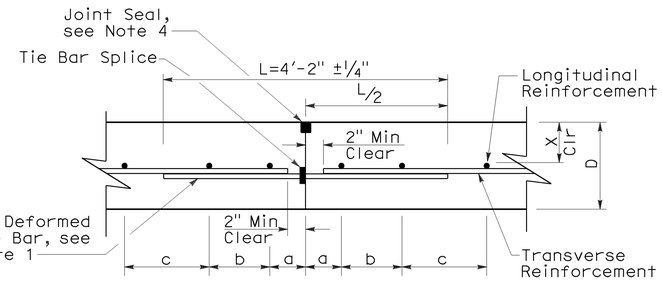

SECTION Y-Y
LONGITUDINAL CONSTRUCTION JOINT

STATE OF CALIFORNIA
DEPARTMENT OF TRANSPORTATION

CONTINUOUSLY REINFORCED CONCRETE PAVEMENT

NO SCALE

NSP P4 DATED MAY 15, 2009 SUPPLEMENTS THE STANDARD PLANS BOOK DATED MAY 2006.

NEW STANDARD PLAN NSP P4

5-8-09

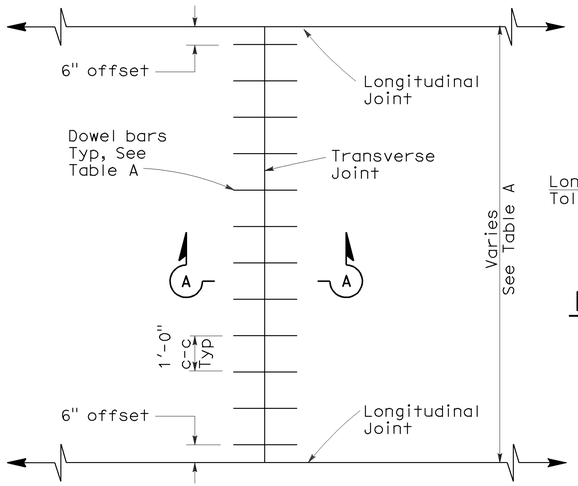

TRANSVERSE JOINT DOWEL BAR LAYOUT

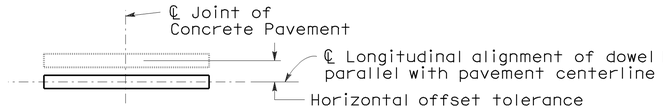

PLAN

HORIZONTAL OFFSET TOLERANCE

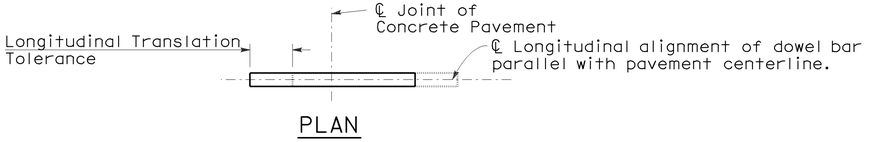

PLAN

LONGITUDINAL TRANSLATION TOLERANCE

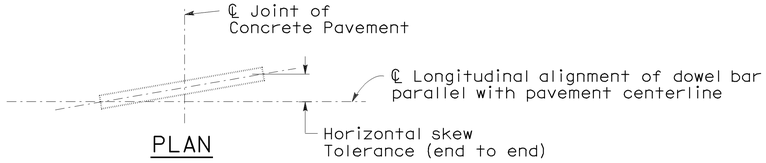

PLAN

HORIZONTAL SKEW TOLERANCE

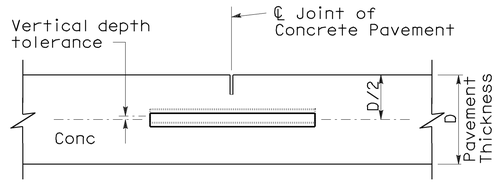

ELEVATION

VERTICAL DEPTH TOLERANCE

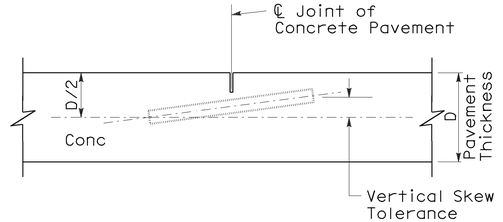

ELEVATION

VERTICAL SKEW TOLERANCE

DIST	COUNTY	ROUTE	POST MILES TOTAL PROJECT	SHEET NO.	TOTAL SHEETS
04	SF	101,1	9.2/9.8, 6.8/7.1	231	567

William K. Farnbach
REGISTERED CIVIL ENGINEER

May 15, 2009
PLANS APPROVAL DATE

REGISTERED PROFESSIONAL ENGINEER — William K. Farnbach — No. C49042 — Exp. 9-30-10 CIVIL — STATE OF CALIFORNIA

The State of California or its officers or agents shall not be responsible for the accuracy or completeness of electronic copies of this plan sheet.

To accompany plans dated 7-20-09

NOTES:

1. See Revised Standard Plan RSP P1 for typical dowel bar placement and locations.
2. 1½" Dia smooth dowel bars are to be used with a pavement thickness, D, equal to or greater than 0.70 feet. For pavement thickness, D, less than 0.70 feet, use 1¼" Dia smooth dowel bars.
3. For widths not shown, see Project Plans.
4. If fresh concrete pavement is placed adjacent to existing concrete pavement, the top corner of the existing concrete pavement does not need to be rounded to the ¼" radius, as shown.

TABLE A (See Note 3)

Dowel Bar Transverse Spacing Table	
Width between Longitudinal Joints	Number of Dowels between Longitudinal Joints
14'-0"	14
13'-0"	13
12'-0"	12
11'-0"	11
10'-0"	10
8'-0"	8
5'-0"	5
4'-0"	4

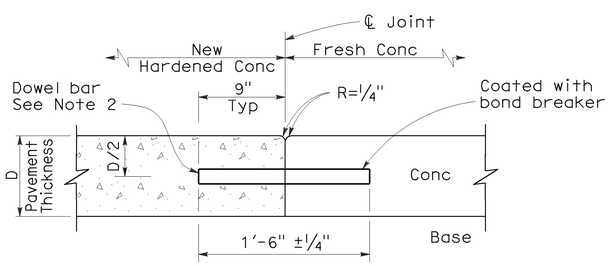

SECTION A-A

TRANSVERSE CONSTRUCTION JOINT DETAIL

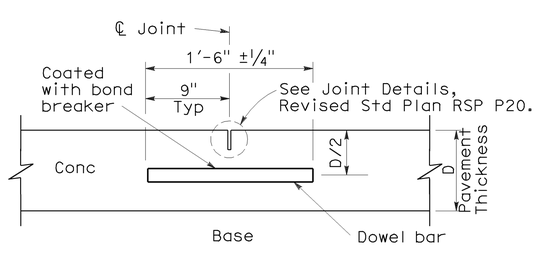

TRANSVERSE CONTRACTION JOINT

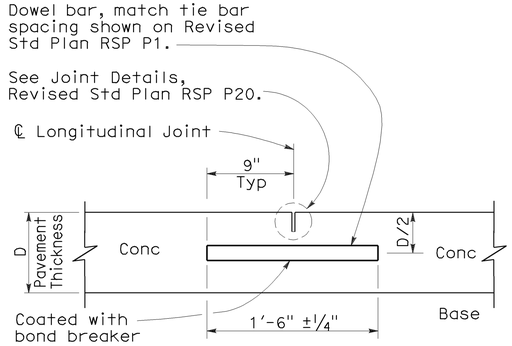

LONGITUDINAL CONTRACTION JOINT WITH DOWEL BARS

(See Revised Std Plan RSP P18)

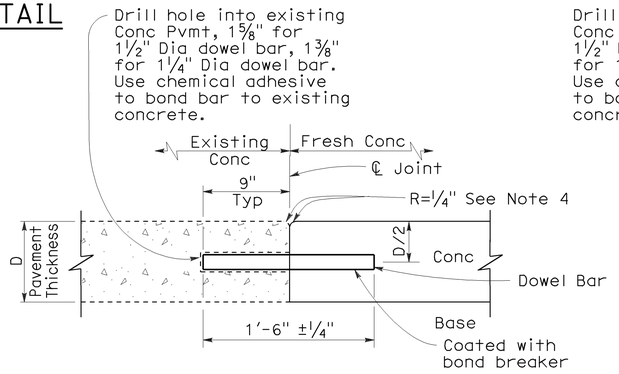

TRANSVERSE CONSTRUCTION JOINT FOR EXISTING CONCRETE PAVEMENT

(Drill and bond locations)

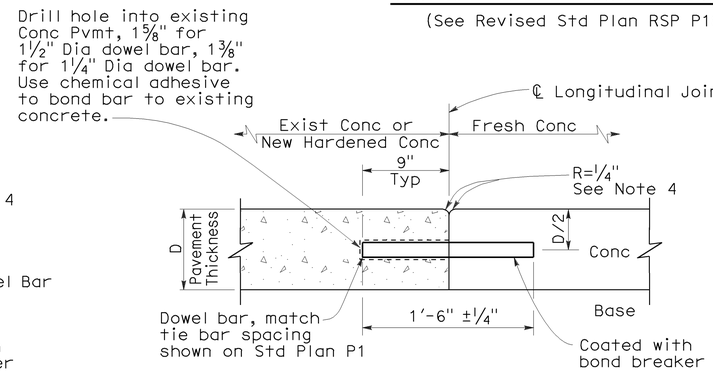

LONGITUDINAL CONSTRUCTION JOINT WITH DOWEL BARS

(See Revised Std Plan RSP P18)

STATE OF CALIFORNIA
DEPARTMENT OF TRANSPORTATION

CONCRETE PAVEMENT-DOWEL BAR DETAILS

NO SCALE

RSP P10 DATED MAY 15, 2009 SUPERSEDES STANDARD PLAN P10
DATED MAY 1, 2006 - PAGE 124 OF THE STANDARD PLANS BOOK DATED MAY 2006.

REVISED STANDARD PLAN RSP P10

2006 REVISED STANDARD PLAN RSP P10

5-8-09

DIST	COUNTY	ROUTE	POST MILES TOTAL PROJECT	SHEET NO.	TOTAL SHEETS
04	SF	101,1	9.2/9.8, 6.8/7.1	232	567

William K. Farnbach
REGISTERED CIVIL ENGINEER

June 5, 2009
PLANS APPROVAL DATE

REGISTERED PROFESSIONAL ENGINEER
William K. Farnbach
No. 49042
Exp. 09-30-10
CIVIL
STATE OF CALIFORNIA

The State of California or its officers or agents shall not be responsible for the accuracy or completeness of electronic copies of this plan sheet.

To accompany plans dated 7-20-09

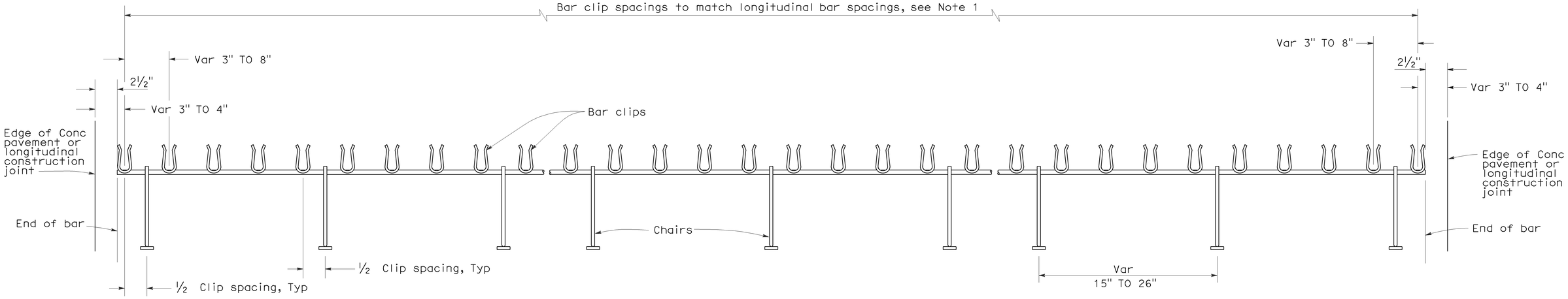

TRANSVERSE BAR ASSEMBLY

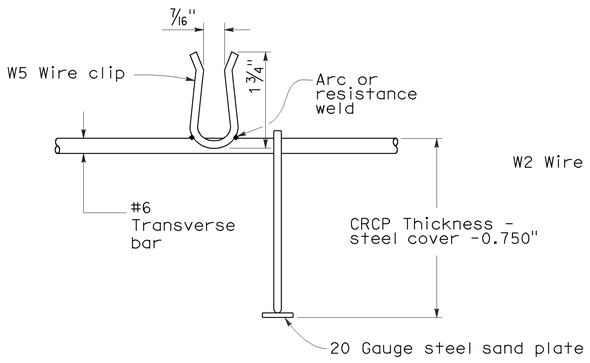

#6 BAR CLIP DETAIL

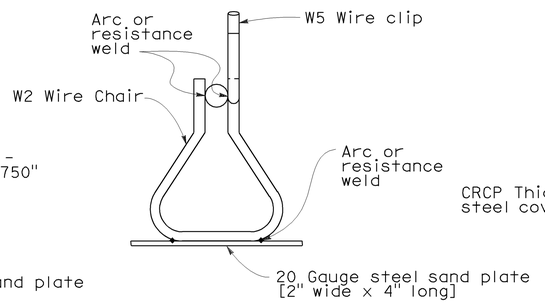

CHAIR DETAIL

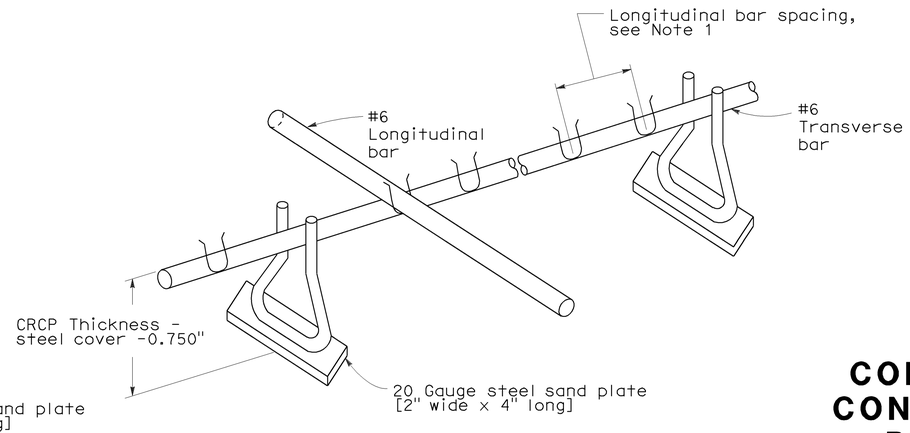

ISOMETRIC VIEW OF CHAIR ASSEMBLY

NOTES:

1. See New Standard Plan NSP P4 for spacing of longitudinal bars.
2. Tensile strength of chair shall be at least 50,000 psi.
3. Wire sizes shown are minimum required.

STATE OF CALIFORNIA
DEPARTMENT OF TRANSPORTATION

CONTINUOUSLY REINFORCED CONCRETE PAVEMENT-SINGLE PIECE TRANSVERSE BAR ASSEMBLY

NO SCALE

NSP P13 DATED JUNE 5, 2009 SUPPLEMENTS THE STANDARD PLANS BOOK DATED MAY 2006.

NEW STANDARD PLAN NSP P13

2006 NEW STANDARD PLAN NSP P13

5-19-09

DIST	COUNTY	ROUTE	POST MILES TOTAL PROJECT	SHEET NO.	TOTAL SHEETS
04	SF	101,1	9.2/9.8, 6.8/7.1	233	567

William K. Farnbach
REGISTERED CIVIL ENGINEER

June 5, 2009
PLANS APPROVAL DATE

REGISTERED PROFESSIONAL ENGINEER — William K. Farnbach — No. 49042 — Exp. 09-30-10 — STATE OF CALIFORNIA

The State of California or its officers or agents shall not be responsible for the accuracy or completeness of electronic copies of this plan sheet.

To accompany plans dated 7-20-09

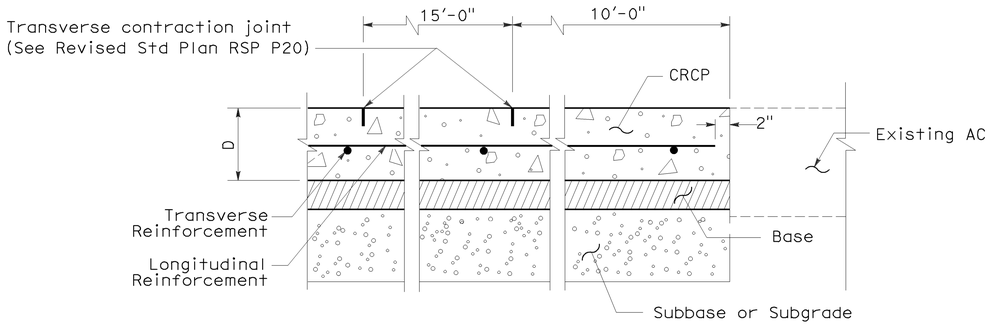

TERMINAL JOINT TYPE A

(For Existing AC)

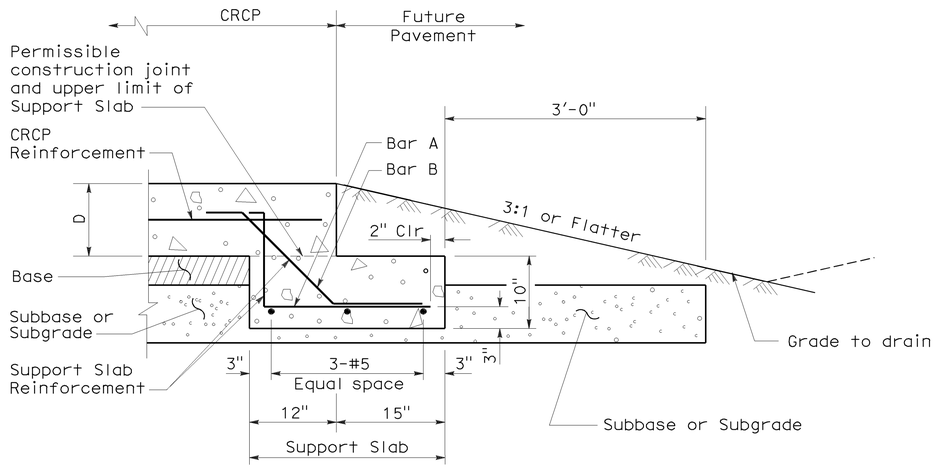

TERMINAL JOINT TYPE B

(For Future Pavement)

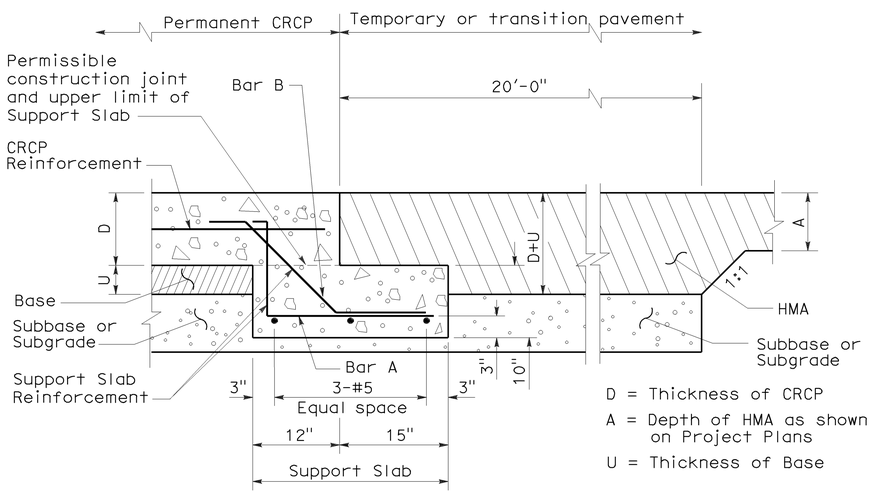

TERMINAL JOINT TYPE C

(For Temporary HMA Pavement)

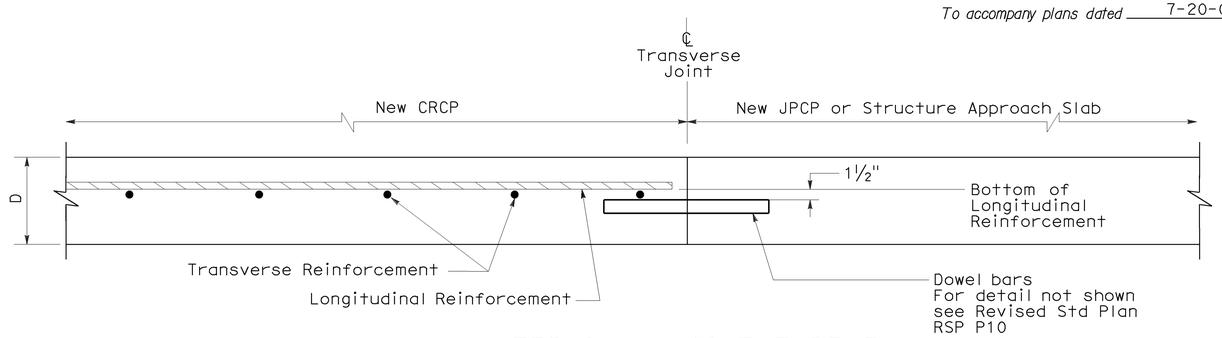

TERMINAL JOINT TYPE E

(For New JPCP or Structure Appproach Slabs)

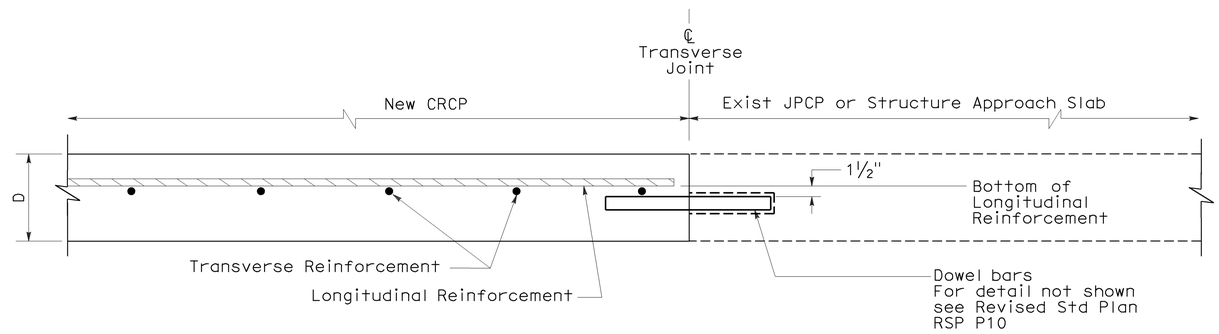

TERMINAL JOINT TYPE D

(For Existing JPCP or Structure Appproach Slabs)

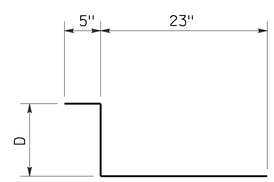

BAR "A" (#5)
AT 12" C-C

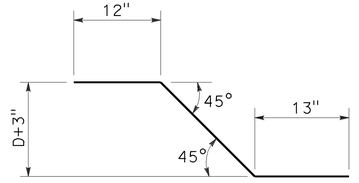

BAR "B" (#5)
AT 12" C-C

STATE OF CALIFORNIA
DEPARTMENT OF TRANSPORTATION

CONTINUOUSLY REINFORCED CONCRETE PAVEMENT- TERMINAL JOINT DETAILS

NO SCALE

NSP P31A DATED JUNE 5, 2009 SUPPLEMENTS THE STANDARD PLANS BOOK DATED MAY 2006.

NEW STANDARD PLAN NSP P31A

2006 NEW STANDARD PLAN NSP P31A

5-19-09

DIST	COUNTY	ROUTE	POST MILES TOTAL PROJECT	SHEET NO.	TOTAL SHEETS
04	SF	101,1	9.2/9.8, 6.8/7.1	234	567

Robert B Schott
LICENSED LANDSCAPE ARCHITECT

April 3, 2009
PLANS APPROVAL DATE

The State of California or its officers or agents shall not be responsible for the accuracy or completeness of electronic copies of this plan sheet.

LICENSED LANDSCAPE ARCHITECT — Robert B. Schott 3625 — Signature — 11-30-10 Renewal Date — 2-25-09 Date — STATE OF CALIFORNIA

To accompany plans dated 7-20-09

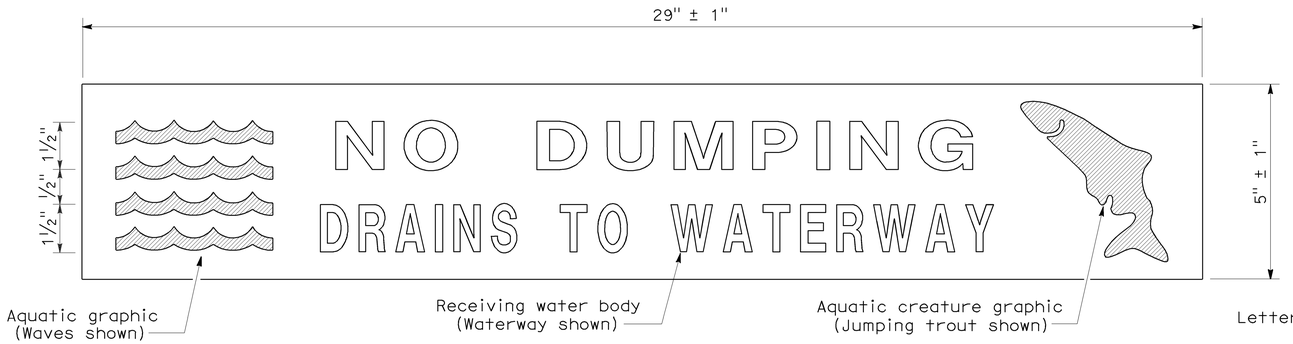

PLAN
DRAINAGE INLET MARKER
(PREFABRICATED THERMOPLASTIC)

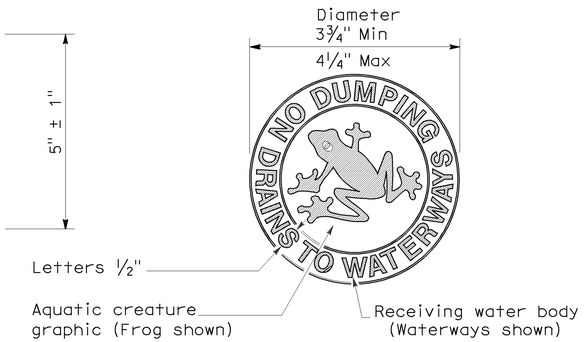

PLAN
DRAINAGE INLET MARKER
(MEDALLION)

PLAN
DRAINAGE INLET MARKER
(STAMPED CONCRETE IMPRINT)

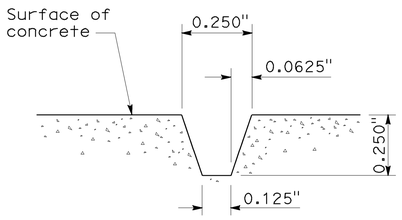

SECTION A-A
STAMPED CONCRETE
IMPRINT DETAIL

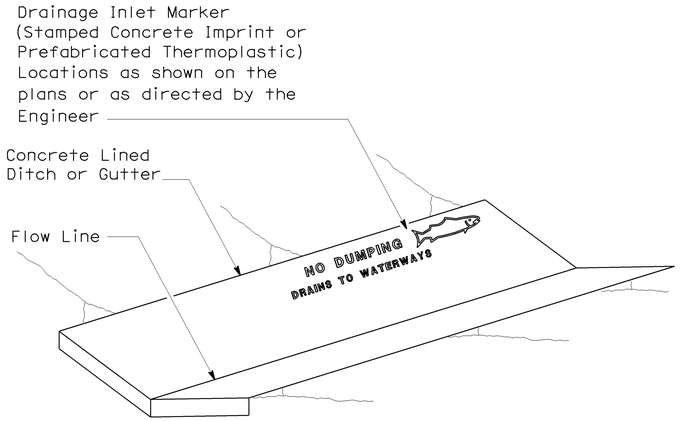

PERSPECTIVE
DRAINAGE INLET MARKER ON
CONCRETE LINED DITCH

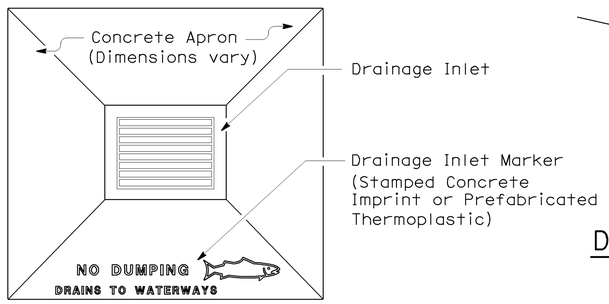

PLAN
DRAINAGE INLET MARKER ON
DRAINAGE INLET APRON

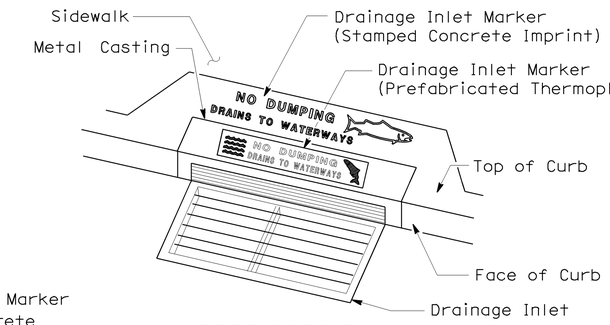

PERSPECTIVE
DRAINAGE INLET MARKER ON
DRAINAGE INLET

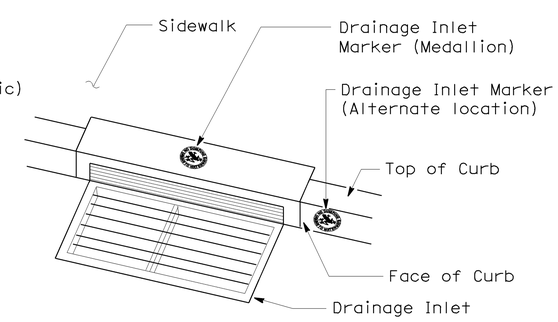

PERSPECTIVE
DRAINAGE INLET MARKER (MEDALLION)
ON DRAINAGE INLET

STATE OF CALIFORNIA
DEPARTMENT OF TRANSPORTATION

DRAINAGE INLET MARKERS

NO SCALE

NSP D71 DATED APRIL 3, 2009 SUPPLEMENTS
THE STANDARD PLANS BOOK DATED MAY 2006.

NEW STANDARD PLAN NSP D71

2006 NEW STANDARD PLAN NSP D71

7-24-09

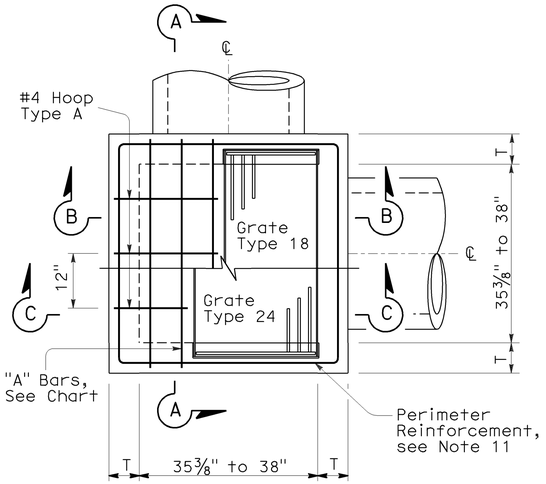

STANDARD TYPE G2 OR G4

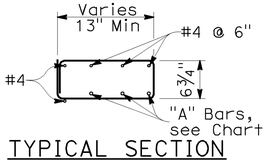

TYPICAL SECTION
(HOOP TYPE A)

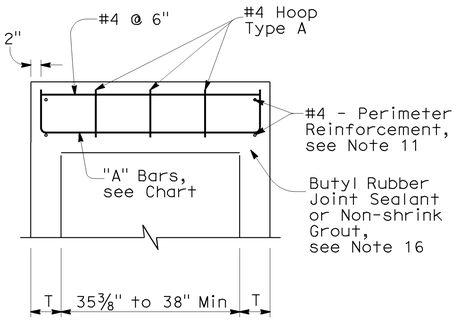

SECTION A-A

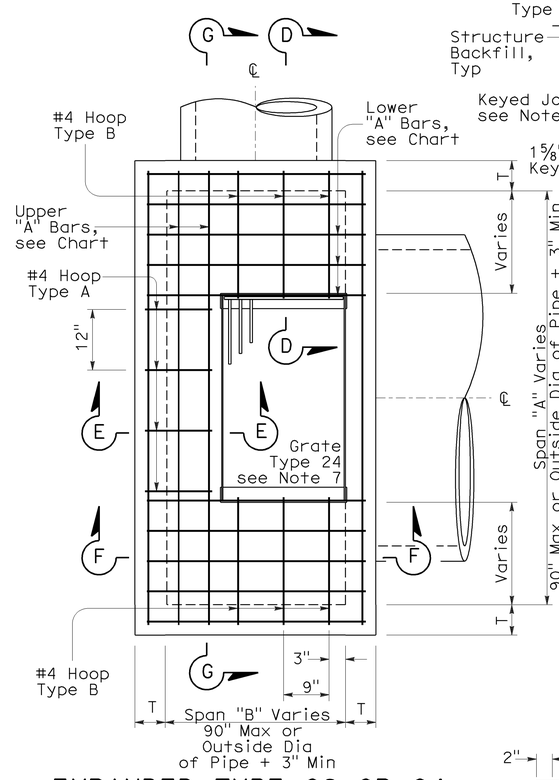

EXPANDED TYPE G2 OR G4
(Top Rebar Not Shown)

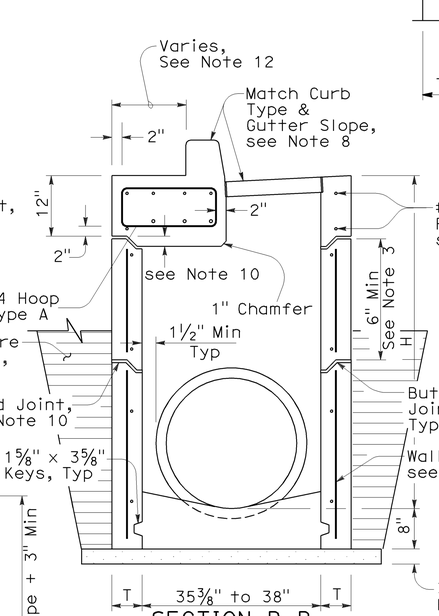

SECTION B-B
(with G4 Top)

SECTION E-E
(with G4 Top)

SECTION D-D

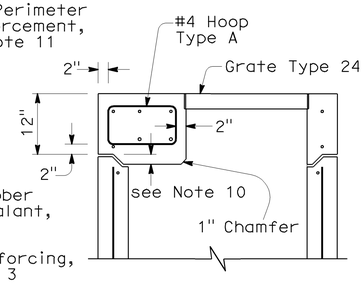

SECTION C-C
(with G2 Top)

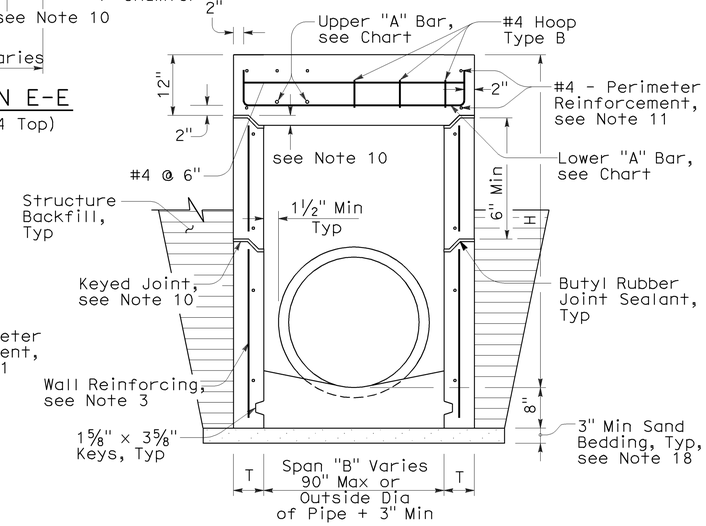

SECTION F-F
(with G2 Top)

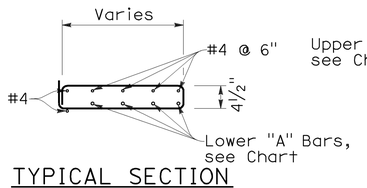

TYPICAL SECTION
(HOOP TYPE B)

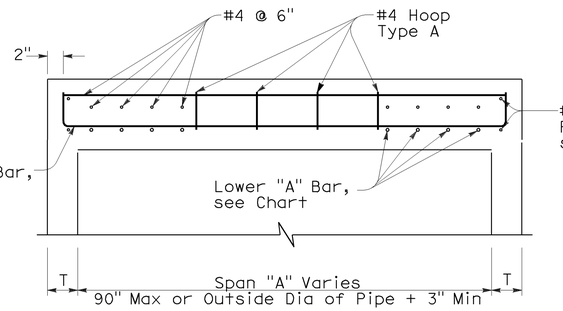

SECTION G-G

To accompany plans dated 7-20-09

NOTES:

1. "H" is the difference in elevation between the outlet pipe flow line and the normal gutter grade line undepressed.
2. For "T" wall thickness: T=6" when "H" is 8' or less. T=8" when "H" is over 8'.
3. Wall reinforcing not required when "H" is 8' or less and the unsupported width or length is 6'-0" or less. Reinforce wall exceeding these limits with #4 bars @ 1'-6" ± centers placed 2" clear to the inside of inlet unless otherwise shown. Short independent wall sections or height adjustment rings 6" to 24" high must have a minimum of two #4 horizontal bars.
4. Seal pre-cast inlets connection openings between wall and pipe with non-shrink grout or resilient connectors as specified in the Special Provisions.
5. Steps - None required where "H" is less than 2'-6". Where "H" is 2'-6" or more, install steps with lowest rung 1'-0" above the floor and highest rung not more than 6" below bottom of lid. The distance between steps must not exceed 1'-0" and be uniform throughout the length of the wall. Place steps in the wall without an opening. Steps inserts may be substituted for the bar steps. Step inserts must comply with State Industrial Safety Requirements. See Standard Plan D74C for step details.
6. Pipe(s) can be placed in any wall.
7. Set inlet so that grate bars are parallel to direction of principal surface flow.
8. Type G4 inlet can use Grate Type 18 or 24. Type G2 inlet uses Grate Type 24. See Revised Standard Plan RSP D77A and Standard Plan D77B for grate and frame details and weights of miscellaneous Iron and Steel.
9. G4 inlet details are the same as the G2 with the addition of a curb and sloped grate that matches the adjacent curb and gutter depression. See Standard Plans D78A & D78B for gutter and inlet depresssion details. See Revised Standard Plan RSP A87A & Standard Plan A87B for Curb and Dike Details.
10. Provide pre-cast inlets with separate top sections for final grade adjustment under Standard Specifcation Section 51-1.02. Provide keyed joints between the top and wall and multiple wall sections. Joint design may vary but must be 1" to 3" in depth.
11. Perimeter reinforcement serves as a rigid frame to position and attach the required structural reinforcement and may be tack welded at outer corners when using ASTM A706 weldable bars.
12. This dimension will vary with different grates, curbs types, box width and wall thickness.
13. 2" unless inlet is expanded in the Span "A" direction, then clearance is 2" plus the diameter of the lower "A" bar.
14. Place "A" Bars at an angle so hooked ends will maintain 2" clear coverage.
15. Refer to Standard Plan D73, Table A for concrete quantities.
16. Non-shrink grout can be used for upper most joint to facilitate final top grade adjustment.
17. Slope inlet floors 4:1 towards the outlet pipe. Pre-cast inlets may have monolithic sloped floors, flat floors, or no floors in which case a sloped floor must be cast in the field. Inlet floors do not require reinforcing.
18. Extend sand bedding under all structure backfill.

DIST	COUNTY	ROUTE	POST MILES TOTAL PROJECT	SHEET NO.	TOTAL SHEETS
04	SF	101,1	9.2/9.8, 6.8/7.1	235	567

Glenn DeCou
REGISTERED CIVIL ENGINEER

June 5, 2009
PLANS APPROVAL DATE

REGISTERED PROFESSIONAL ENGINEER
Glenn DeCou
No. C34547
Exp. 9-30-09
CIVIL
STATE OF CALIFORNIA

The State of California or its officers or agents shall not be responsible for the accuracy or completeness of electronic copies of this plan sheet.

TOP REINFORCEMENT CHART

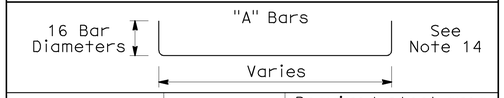

Span	"A" Bars	Required steel area per foot (in^2/ft)
Under 38" with Type 24 Grate	#5 @ 7" C-C 2-#5 Min	0.525
Under 38" with Type 18 Grate	#5 @ 7" C-C 3-#5 Min	0.525
38"-60"	#5 @ 6" C-C	0.621
61"-72"	#5 @ 5" C-C	0.744
73"-90"	#6 @ 6" C-C	0.811

STATE OF CALIFORNIA
DEPARTMENT OF TRANSPORTATION

DRAINAGE INLETS (PRECAST)

NO SCALE

NSP D73A DATED JUNE 5, 2009 SUPPLEMENTS
THE STANDARD PLANS BOOK DATED MAY 2006.

NEW STANDARD PLAN NSP D73A

2006 NEW STANDARD PLAN NSP D73A

3-16-09

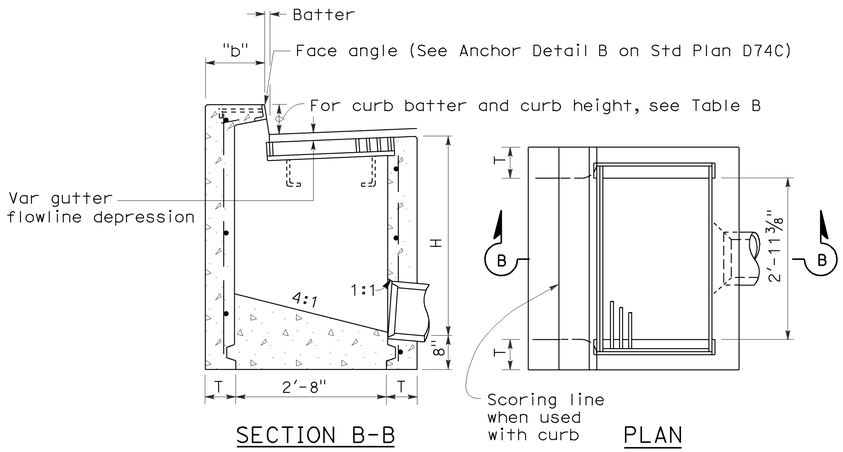

SECTION B-B PLAN

TYPE GO

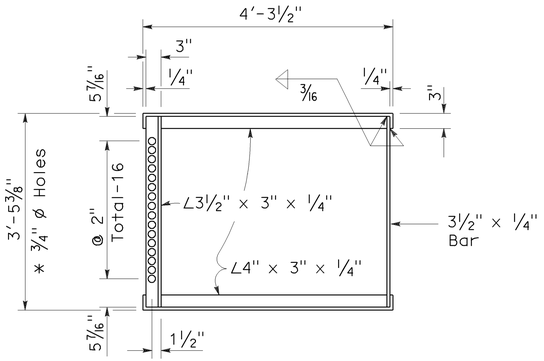

* 3/4" ø Holes required only with trash rack

GRATE FRAME FOR TYPE GDO INLET

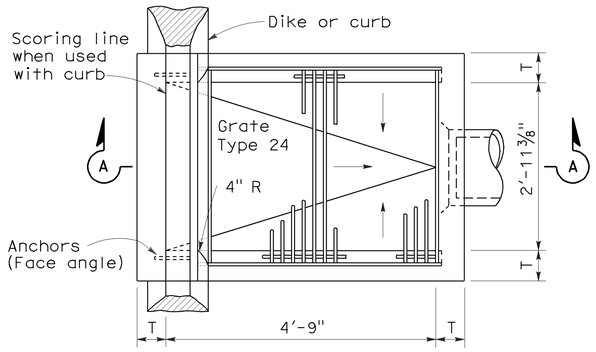

PLAN

TYPE GDO

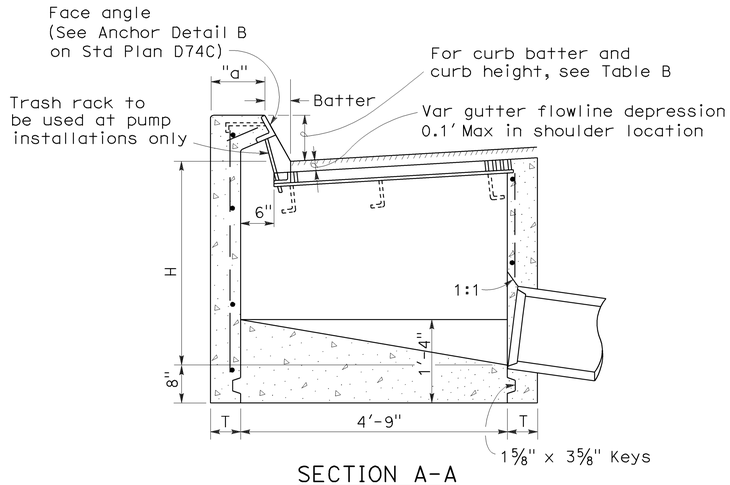

SECTION A-A

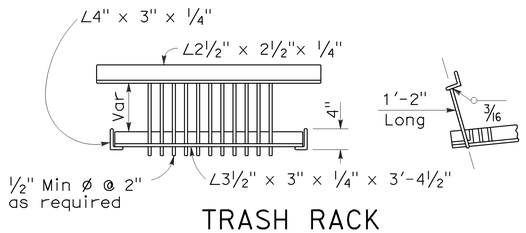

TRASH RACK

(For use with pump installation)

TABLE A

CONCRETE QUANTITIES				
	H=3'-0" TO 8'-0" (T=6")		H=8'-1" TO 20'-0" (T=8")	
TYPE	H=3'-0" (CY)	ADDITIONAL PCC PER FOOT (CY)	H=8'-1" (CY)	ADDITIONAL PCC PER FOOT (CY)
GO	1.24	0.245	3.39	0.346
GDO	1.62	0.322	4.36	0.446

Table based on 8" floor slab, no deduction for pipe openings, and curb type giving highest quantity of concrete. No deductions or adjustments are to be made to these quantities because of pipe openings, different floor alternatives or different curb type.

TABLE B

CURB TYPE	NORMAL CURB HEIGHT	CURB BATTER	"a" DIMENSION	"b" DIMENSION
A1-6	6"	1 1/2"	T+7 1/2"	T+6 1/2"
A1-8	8"	2"	T+7"	T+6"
B1-6	6"	4"	T+5"	T+4"
Type A Dike	6"	3"	T+6"	T+5"

DIST	COUNTY	ROUTE	POST MILES TOTAL PROJECT	SHEET NO.	TOTAL SHEETS
04	SF	101,1	9.2/9.8, 6.8/7.1	236	567

REGISTERED CIVIL ENGINEER

June 15, 2007
PLANS APPROVAL DATE

REGISTERED PROFESSIONAL ENGINEER — Glenn DeCou — No. C34547 — Exp. 9-30-07 CIVIL — STATE OF CALIFORNIA

The State of California or its officers or agents shall not be responsible for the accuracy or completeness of electronic copies of this plan sheet.

To accompany plans dated 7-20-09

NOTES:

1. "H" is the difference in elevation between the outlet pipe flow line and the normal gutter grade line undepressed.
2. For "T" wall thickness, see Table A below.
3. Wall reinforcing not required when "H" is 8'-0" or less and the unsupported width or length is 7'-0" or less. Walls exceeding these limits shall be reinforced with #4 @ 18"± centers placed 1½" clear to inside of box unless otherwise shown.
4. Inlet bottom reinforcing not required. See Standard Plan D74C for alternative reinforced bottom.
5. Steps - None required where "H" is less than 2'-6" Where "H" is 2'-6" or more, install steps with lowest rung 1'-0" above the floor and highest rung not more than 6" below top of inlet. The distance between steps shall not exceed 1'-0" and shall be uniform throughout the length of the wall. Place steps in the wall without an opening. Step inserts may be substituted for the bar steps. Step Inserts shall comply with State Industrial Safety requirements. See Standard Plan D74C for step details.
6. When shown on the project plans, place a ¾" plain round protection bar horizontally across the length of the opening and bend back 4" into the inlet wall on each side.
7. Pipe(s) can be placed in any wall.
8. Curb section shall match adjacent curb.
9. Basin floors shall have wood trowel finish and shall slope toward the outlet pipe as shown.
10. Galvanizing - See Standard Specifications or Special Provisions.
11. See Standard Plan D77A and D77B for grate and frame details and weights of miscellaneous iron and Steel.
12. See Standard Plan D78A for gutter depression details.
13. Full penetration butt welds may be substituted for the fillet welds on all anchors.
14. Standard square, hexagon, round or equivalent headed anchors may be substituted for the right angle hooks on the anchors shown on this plan.
15. Cast-in-place or precast alternative is optional with contractor. See Standard Specifications.
16. Cast-in-place inlets to be formed around all pipes/stubs intersecing the inlet and concrete poured in one continuous operation. Precast inlets shall have mortared pipe connections conforming to details for Type GCP inlets on Standard Plan D75B. See Standard Specifications for mortar composition.

STATE OF CALIFORNIA
DEPARTMENT OF TRANSPORTATION

DRAINAGE INLETS

NO SCALE

RSP D74B DATED JUNE 15, 2007 SUPERSEDES STANDARD PLAN D74B DATED MAY 1, 2006 - PAGE 150 OF THE STANDARD PLANS BOOK DATED MAY 2006.

REVISED STANDARD PLAN RSP D74B

2006 REVISED STANDARD PLAN RSP D74B

4-16-07

DIST	COUNTY	ROUTE	POST MILES TOTAL PROJECT	SHEET NO.	TOTAL SHEETS
04	SF	101,1	9.2/9.8, 6.8/7.1	237	567

Raymond Don Tsztoo
REGISTERED CIVIL ENGINEER

June 6, 2008
PLANS APPROVAL DATE

REGISTERED PROFESSIONAL ENGINEER — Raymond Don Tsztoo — No. C37332 — Exp. 6-30-08 — CIVIL — STATE OF CALIFORNIA

The State of California or its officers or agents shall not be responsible for the accuracy or completeness of electronic copies of this plan sheet.

To accompany plans dated 7-20-09

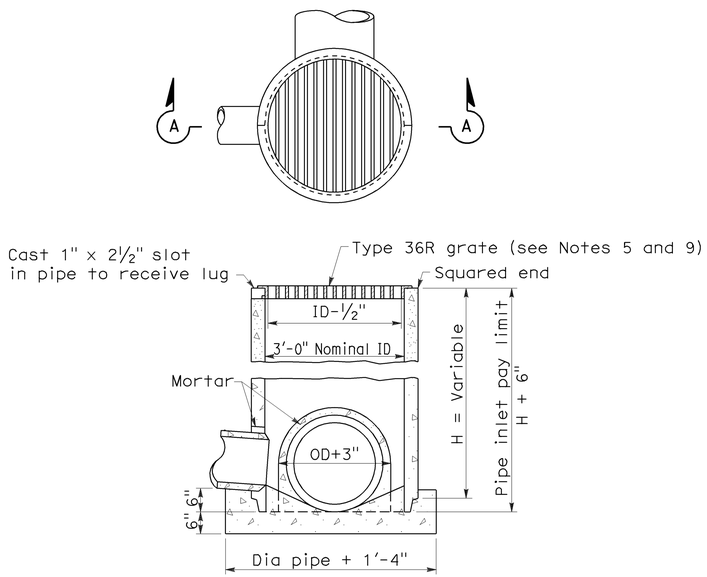

SECTION A-A

TYPE GCP

CONCRETE PIPE INLET WITH GRATE

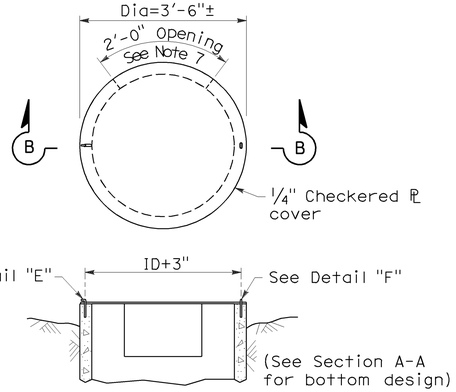

SECTION B-B

TYPE OCP or OCPI

CONCRETE PIPE INLET WITH STEEL COVER
(See Note 6)

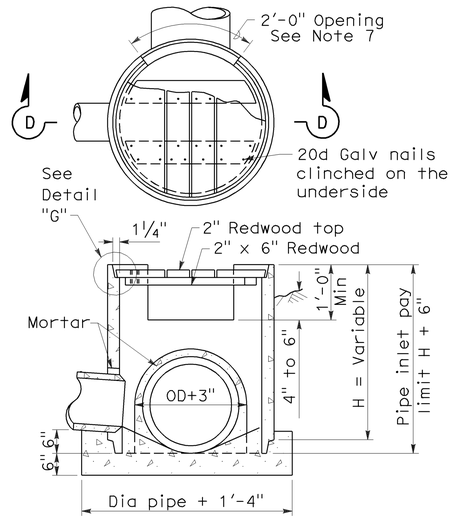

SECTION D-D

TYPE OCP or OCPI

CONCRETE PIPE INLET WITH REDWOOD COVER
(See Notes 6 and 10)

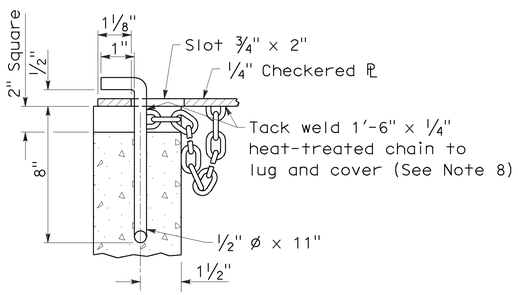

DETAIL "E"

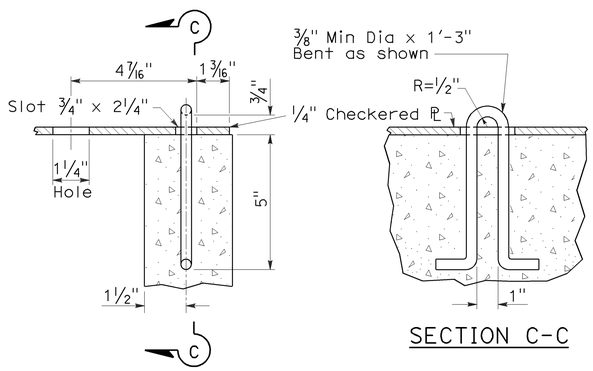

DETAIL "F"

SECTION C-C

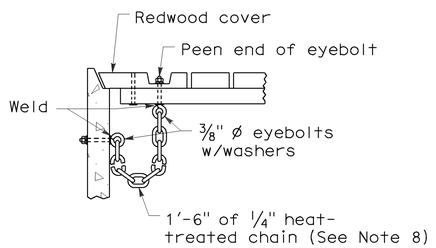

DETAIL "G"

NOTES:

1. For details of steel pipe inlets, see Standard Plan D75A.
2. For details of ladder and steps and when ladder or steps are required, see Standard Plan D75C.
3. Inlet pipes shall not protrude into basin.
4. Except for inlets used for junction boxes, basin floors shall have minimum slope of 4:1 from all directions toward outlet pipe, and a wood trowel finish.
5. See Revised Standard Plan RSP D77A and Standard Plan D77B for Grate and Frame Details and Weights of Miscellaneous Iron and Steel.
6. Designation of Type OCPI pipe inlets on plans indicates trash racks are to be furnished and installed on all side openings. See Standard Plan D75C for Trash Rack details.
7. More than one side opening may be required. Location and number as ordered by the Engineer. Opening may be cast in pipe.
8. Chain to be provided when specified.
9. Place pipe so bars of grate will be parallel with main surface flow.
10. Redwood covers shall only be placed at locations designated on the plans.

STATE OF CALIFORNIA
DEPARTMENT OF TRANSPORTATION

CONCRETE PIPE INLETS

NO SCALE

RSP D75B DATED JUNE 6, 2008 SUPERSEDES STANDARD PLAN D75B
DATED MAY 1, 2006 - PAGE 153 OF THE STANDARD PLANS BOOK DATED MAY 2006.

REVISED STANDARD PLAN RSP D75B

2006 REVISED STANDARD PLAN RSP D75B

5-20-08

DIST	COUNTY	ROUTE	POST MILES TOTAL PROJECT	SHEET NO.	TOTAL SHEETS
04	SF	101,1	9.2/9.8, 6.8/7.1	238	567

Raymond Don Tsztoo
REGISTERED CIVIL ENGINEER

January 18, 2008
PLANS APPROVAL DATE

REGISTERED PROFESSIONAL ENGINEER — Raymond Don Tsztoo — No. C37332 — Exp. 6-30-08 — CIVIL — STATE OF CALIFORNIA

The State of California or its officers or agents shall not be responsible for the accuracy or completeness of electronic copies of this plan sheet.

To accompany plans dated 7-20-09

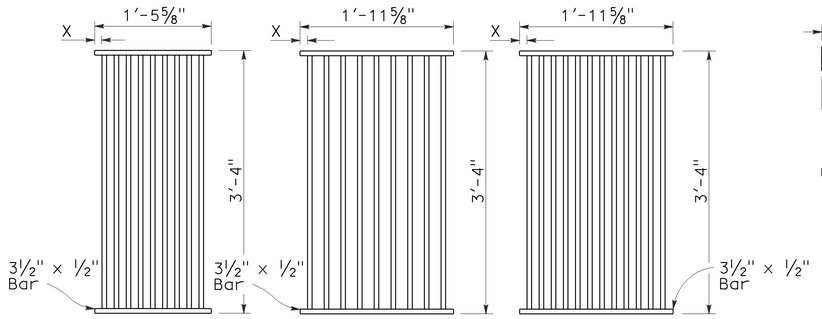

TYPE 18-9

1⅜" Clear spacing. Use within the roadbed on highways where bicycles and pedestrians are excluded.

TYPE 24-9

2" Clear spacing. Use in locations off the roadbed on all types of highways.

TYPE 24-12

1⅜" Clear spacing. Use within the roadbed on highways where bicycles and pedestrians are excluded.

RECTANGULAR GRATE DETAILS

(See table below)

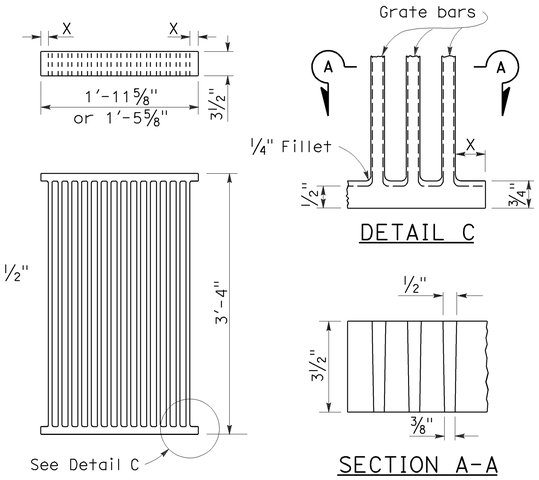

DETAIL C

SECTION A-A

ALTERNATIVE CAST NODULAR IRON GRATE OR CAST STEEL GRATE

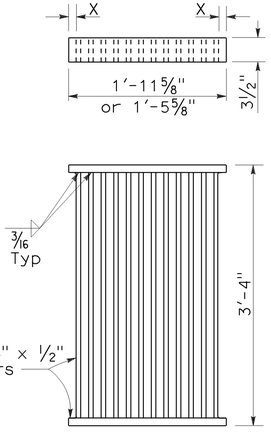

ALTERNATIVE WELDED GRATE

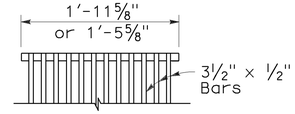

CAST END BLOCK

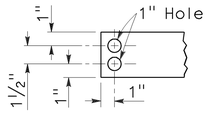

END OF BAR

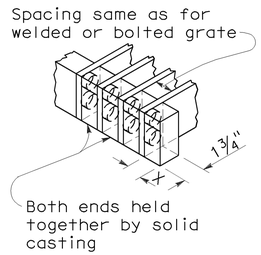

ALTERNATIVE CAST NODULAR IRON OR CAST STEEL END BLOCK GRATE

NOTES:

1. Grate type numbers refer to approximate width of grate in inches and number of bars, respectively.
2. Contractor has the option of using cast nodular iron, cast steel, welded, bolted, or cast end block grate.
3. See Special Provisions for requirements pertaining to galvanizing or asphalt dipping of grates and frames.
4. Rounded top of bars optional on all grates.
5. Pipe inlets with a grate shall be placed so that bars parallel direction of principle surface flow.
6. Full penetration butt welds may be substituted for the fillet welds on all anchors.
7. Standard square, hexagon, round or equivalent headed anchors may be substituted for the right angle hooks on the anchors shown on this plan.
8. Grate and frame weights are based on welded grates (weights of face angles, steps, protection bars, etc. are not included).

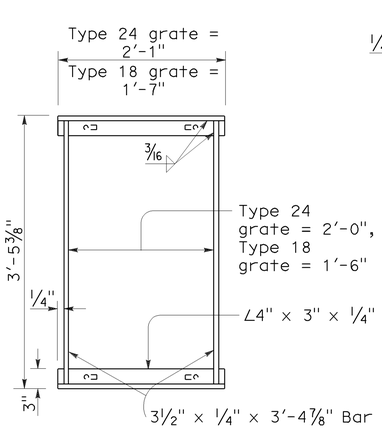

TYPICAL FRAME

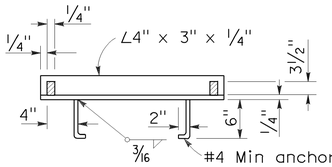

CROSS SECTION
(Thru frame)

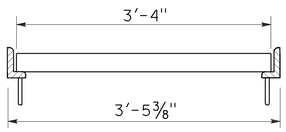

LONGITUDINAL SECTION
(Thru frame and grate)

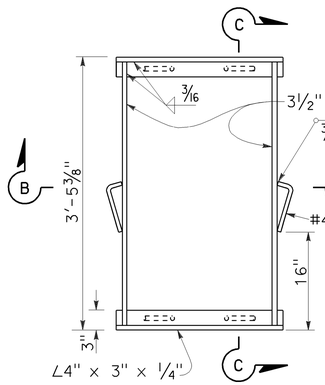

TYPICAL FRAME

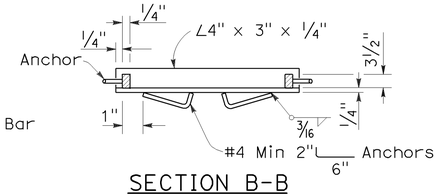

SECTION B-B

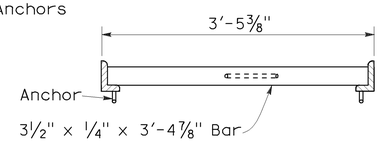

SECTION C-C

RECTANGULAR FRAME DETAILS

(For all rectangular grates)

ALTERNATIVE ANCHOR FOR RECTANGULAR FRAME

(For details not shown, See Rectangular Frame Details)

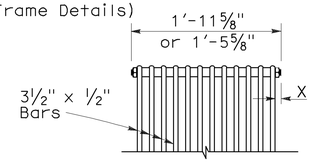

BOLTED END BLOCK

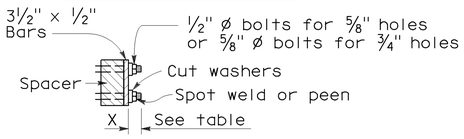

BOLTING DETAIL

ALTERNATIVE BOLTED GRATE

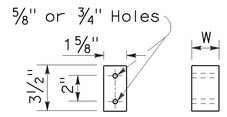

BAR SPACER

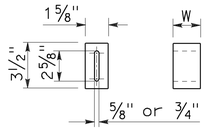

ALTERNATIVE SPACER
W = 1⅜" or 2"

GRATE BAR SPACING TABLE

TYPE	No. OF BARS	CLEAR BAR SPACING	X
18-9	9	1⅜"	1 1⁄16"
24-9	9	2"	1⅜16"
24-12	12	1⅜"	1¼"

INLET TYPE	COVER TYPE	WEIGHT LB
OS	PLATE	174
OL-7	PLATE	170
OL-10	PLATE	170
OL-14	PLATE	170
OL-21	PLATE	170
OCP	PLATE	112
OCPI	PLATE	112
OCPI	REDWOOD	42
OMP	PLATE	177
OMPI	PLATE	177

INLET TYPE	GRATE TYPE	No. OF GRATES	WEIGHT LB
GDO	24-12	2	634
GOL-7	24-12	1	326
GOL-10	24-12	1	326
GO,G1,G2,G3,G4 (TYPE 24)	24-9	1	263
	24-12	1	326
G4 (TYPE 18),G5,G6	18-9	1	249
GT1	18-9	2	498
GT2	18-9	2	498
GT3	24-12	2	652
GT4	24-12	2	652
TRASH RACK			22

BASIS FOR MISC IRON & STEEL FINAL PAY WEIGHTS FOR DRAINAGE INLETS

(See General Notes, No 8)

STATE OF CALIFORNIA
DEPARTMENT OF TRANSPORTATION

GRATE DETAILS

NO SCALE

RSP D77A DATED JANUARY 18, 2008 SUPERSEDES STANDARD PLAN D77A DATED MAY 1, 2006 - PAGE 155 OF THE STANDARD PLANS BOOK DATED MAY 2006.

REVISED STANDARD PLAN RSP D77A

2006 REVISED STANDARD PLAN RSP D77A

12-14-07

DIST	COUNTY	ROUTE	POST MILES TOTAL PROJECT	SHEET NO.	TOTAL SHEETS
04	SF	101,1	9.2/9.8, 6.8/7.1	239	567

Randell D. Hiatt
REGISTERED CIVIL ENGINEER

June 6, 2008
PLANS APPROVAL DATE

REGISTERED PROFESSIONAL ENGINEER
Randell D. Hiatt
No. C50200
Exp. 6-30-09
CIVIL
STATE OF CALIFORNIA

The State of California or its officers or agents shall not be responsible for the accuracy or completeness of electronic copies of this plan sheet.

To accompany plans dated 7-20-09

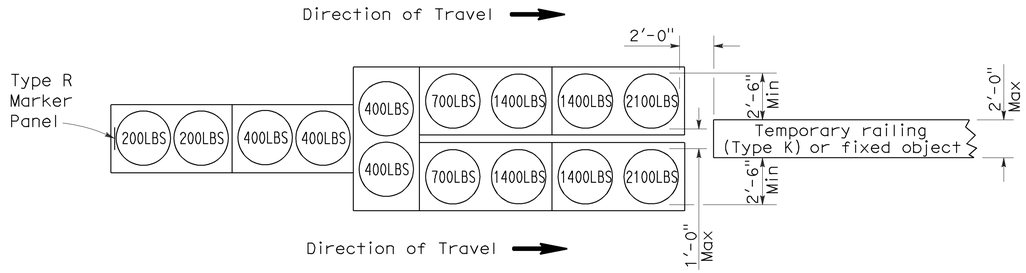

ARRAY 'TU14'

Approach speed 45 mph or more

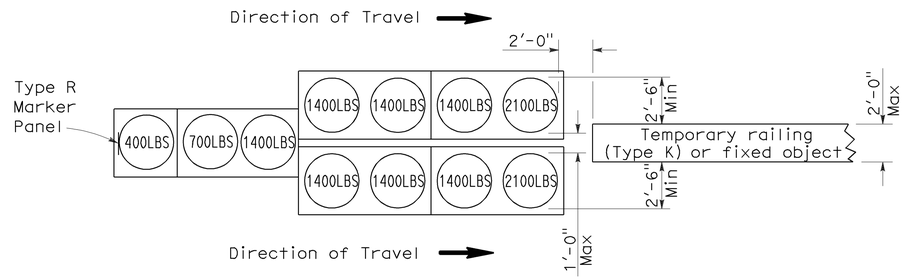

ARRAY 'TU11'

Approach speed less than 45 mph

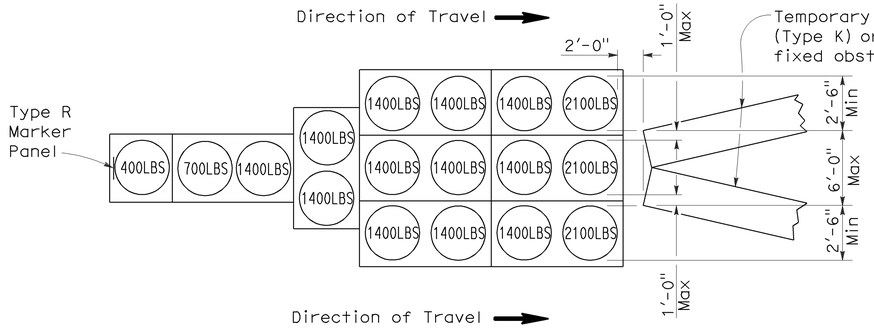

ARRAY 'TU17'

Approach speed less than 45 mph

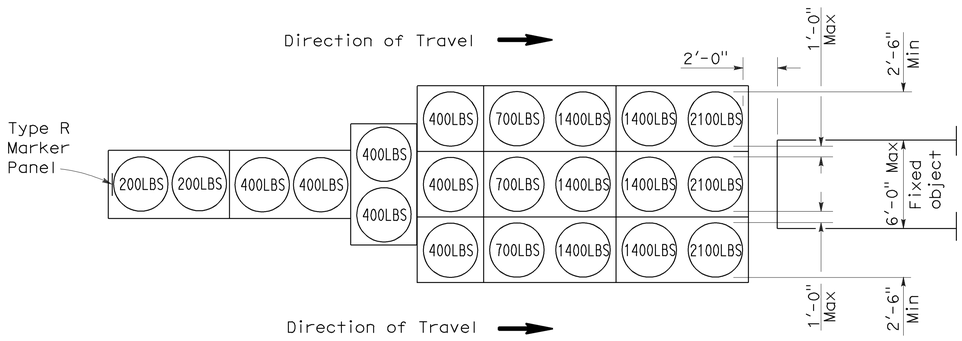

ARRAY 'TU21'

Approach speed 45 mph or more

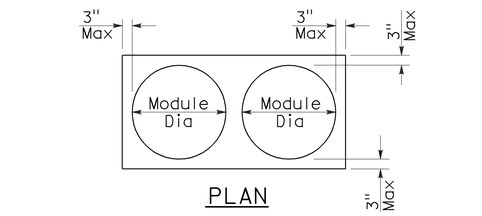

PLAN

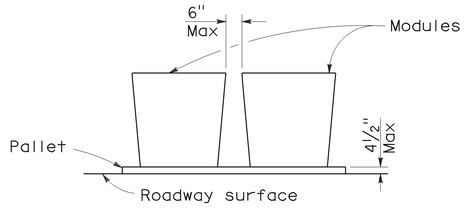

ELEVATION

CRASH CUSHION PALLET DETAIL

See Note 7

NOTES:

1. (XXX) Indicates sand filled module location and weight of sand in pounds for each module. Module spacing is based on the greater diameter of the module.
2. All sand weights are nominal.
3. Temporary crash cushion arrays shall not encroach on the traveled way.
4. Place the top of Type R marker panel 1" below the module lid.
5. Refer to Standard Plan A73B for marker details.
6. Approach speeds indicated conform to NCHRP 350 Report criteria.
7. Use of pallets is optional.

STATE OF CALIFORNIA
DEPARTMENT OF TRANSPORTATION

TEMPORARY CRASH CUSHION, SAND FILLED (UNIDIRECTIONAL)

NO SCALE

RSP T1A DATED JUNE 6, 2008 SUPERSEDES STANDARD PLAN T1A
DATED MAY 1, 2006 - PAGE 211 OF THE STANDARD PLANS BOOK DATED MAY 2006.

REVISED STANDARD PLAN RSP T1A

2006 REVISED STANDARD PLAN RSP T1A

5-15-08

DIST	COUNTY	ROUTE	POST MILES TOTAL PROJECT	SHEET NO.	TOTAL SHEETS
04	SF	101,1	9.2/9.8, 6.8/7.1	240	567

Randell D. Hiatt
REGISTERED CIVIL ENGINEER

June 6, 2008
PLANS APPROVAL DATE

REGISTERED PROFESSIONAL ENGINEER
Randell D. Hiatt
No. C50200
Exp. 6-30-09
CIVIL
STATE OF CALIFORNIA

The State of California or its officers or agents shall not be responsible for the accuracy or completeness of electronic copies of this plan sheet.

To accompany plans dated 7-20-09

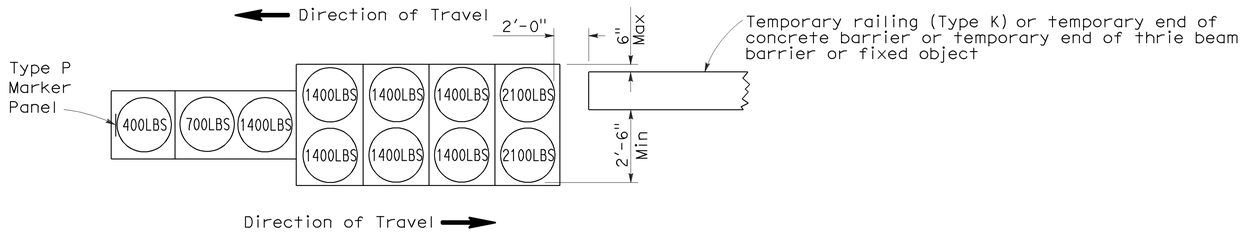

ARRAY 'TB11'

Approach speed less than 45 mph

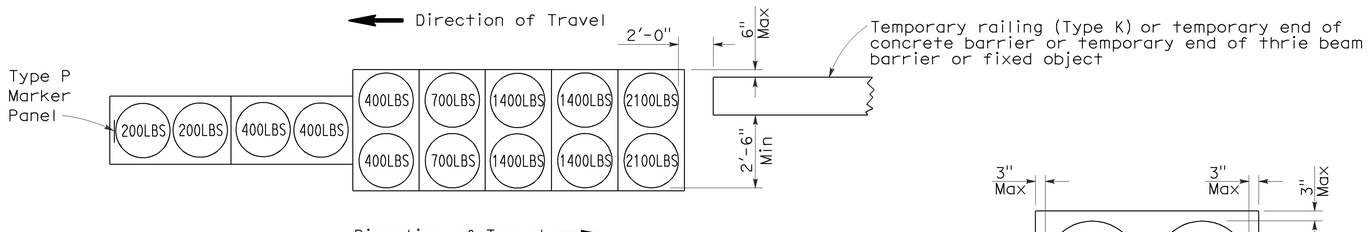

ARRAY 'TB14'

Approach speed 45 mph or more

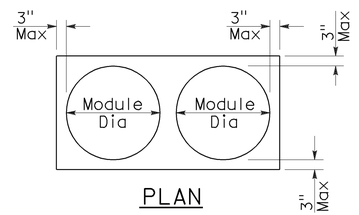

PLAN

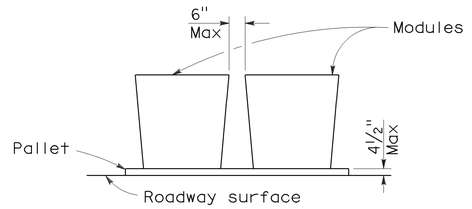

ELEVATION

CRASH CUSHION PALLET DETAIL

See Note 7

NOTES:

1. (XXX) Indicates sand filled module location and weight of sand in pounds for each module. Module spacing is based on the greater diameter of the module.
2. All sand weights are nominal.
3. Temporary crash cushion arrays shall not encroach on the traveled way.
4. Place the Type P marker panel so that the bottom of the panel rests upon the pallet.
5. Refer to Standard Plan A73B for marker details.
6. Approach speeds indicated conform to NCHRP 350 Report criteria.
7. Use of pallets is optional.

STATE OF CALIFORNIA
DEPARTMENT OF TRANSPORTATION

TEMPORARY CRASH CUSHION, SAND FILLED (BIDIRECTIONAL)

NO SCALE

RSP T1B DATED JUNE 6, 2008 SUPERSEDES STANDARD PLAN T1B
DATED MAY 1, 2006 - PAGE 212 OF THE STANDARD PLANS BOOK DATED MAY 2006.

REVISED STANDARD PLAN RSP T1B

2006 REVISED STANDARD PLAN RSP T1B

5-15-08

DIST	COUNTY	ROUTE	POST MILES TOTAL PROJECT	SHEET NO.	TOTAL SHEETS
04	SF	101,1	9.2/9.8, 6.8/7.1	241	567

Randell D. Hiatt
REGISTERED CIVIL ENGINEER

June 6, 2008
PLANS APPROVAL DATE

REGISTERED PROFESSIONAL ENGINEER
Randell D. Hiatt
No. C50200
Exp. 6-30-09
CIVIL
STATE OF CALIFORNIA

The State of California or its officers or agents shall not be responsible for the accuracy or completeness of electronic copies of this plan sheet.

To accompany plans dated 7-20-09

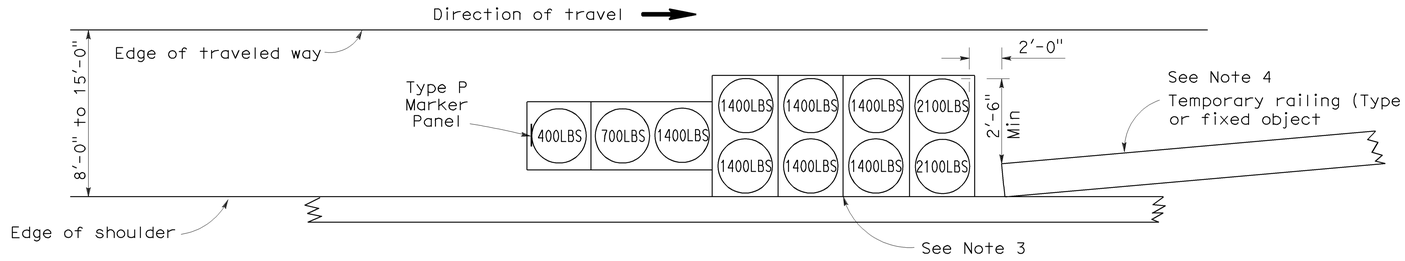

ARRAY 'TS11'

Approach speed less than 45 mph
See Note 9

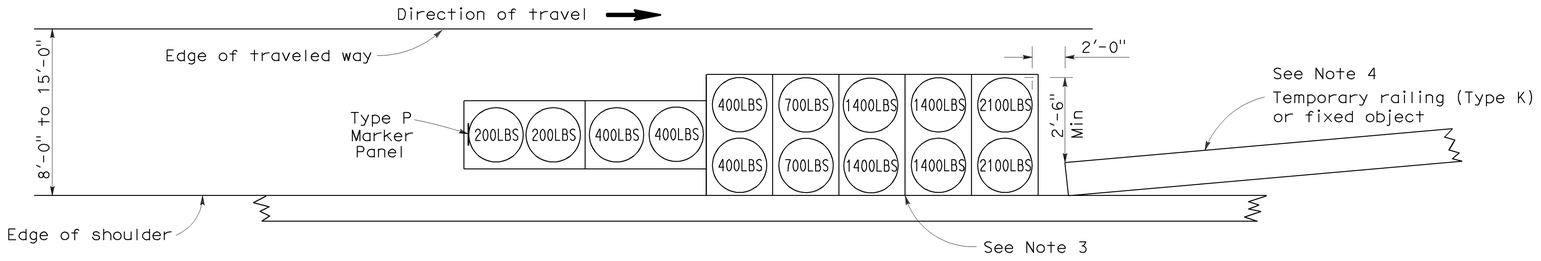

ARRAY 'TS14'

Approach speed 45 mph or more
See Note 9

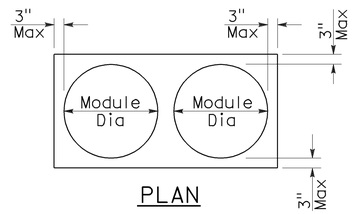

PLAN

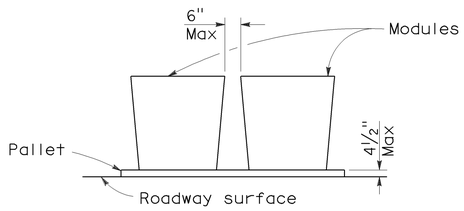

ELEVATION

CRASH CUSHION PALLET DETAIL

See Note 11

NOTES:

1. (XXX) Indicates sand filled module location and weight of sand in pounds for each module. Module spacing is based on the greater diameter of the module.
2. All sand weights are nominal.
3. The temporary crash cushion arrays shown on this plan shall be used only in locations where there will be traffic on one side of the temporary crash cushion array.
4. If the fixed object or approach end of the temporary railing is less than 15'-0" from the edge of traveled way, a temporary crash cushion is required in a construction or work zone.
5. Temporary crash cushion arrays shall not encroach on the traveled way.
6. Arrays for median shoulders shall conform to details shown on this plan for outside shoulders.
7. Place the Type P marker panel so that the bottom of the panel rests upon the pallet and faces traffic.
8. Refer to Standard Plan A73B for marker details.
9. For shoulder widths less than 8'-0", appropriate approved crash cushion protection, other than sand filled modules, shall be provided at fixed objects and at approach ends of temporary railing. The specific type of crash cushion shall be as shown on the project plans or as specified in the Special Provisions, or if not shown on the project plans or specified in the Special Provisions, shall be as approved by the Engineer.
10. Approach speeds indicated conform to NCHRP 350 Report criteria.
11. Use of pallets is optional.

STATE OF CALIFORNIA
DEPARTMENT OF TRANSPORTATION

TEMPORARY CRASH CUSHION, SAND FILLED (SHOULDER INSTALLATIONS)

NO SCALE

RSP T2 DATED JUNE 6, 2008 SUPERSEDES STANDARD PLAN T2
DATED MAY 1, 2006 - PAGE 213 OF THE STANDARD PLANS BOOK DATED MAY 2006.

REVISED STANDARD PLAN RSP T2

2006 REVISED STANDARD PLAN RSP T2

5-15-08

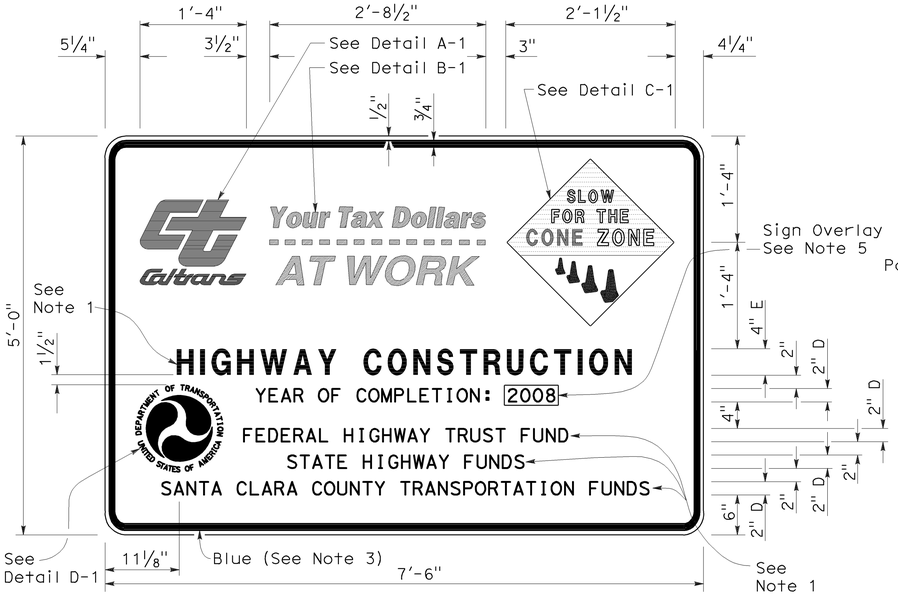

TYPE 1

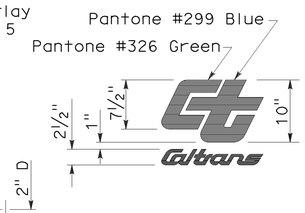

DETAIL A-1

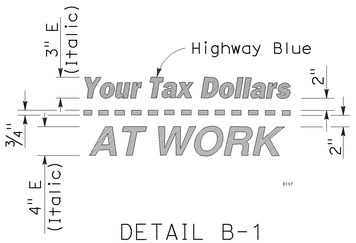

DETAIL B-1
(See Note 3)

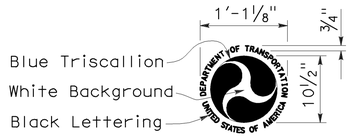

DETAIL D-1
(See Note 6)

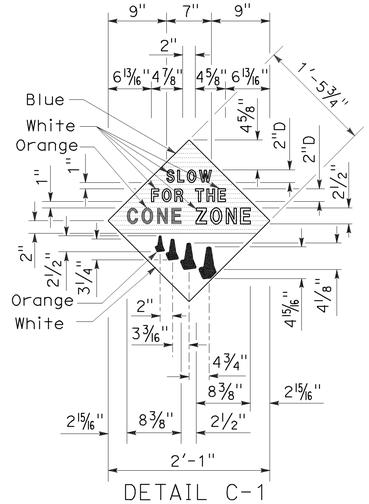

DETAIL C-1
(See Note 4)

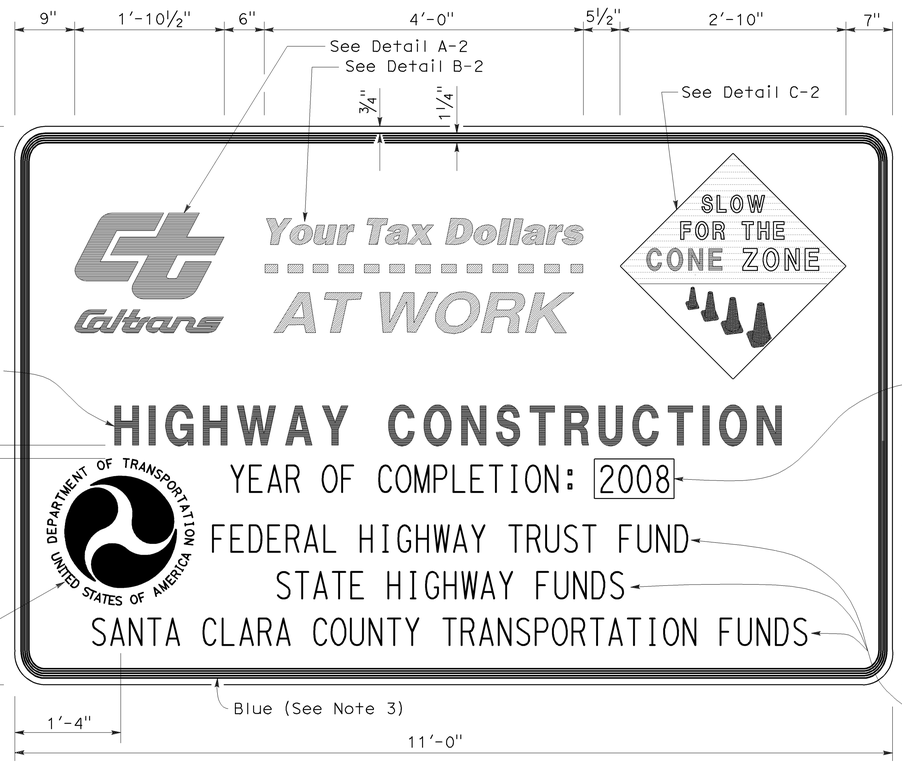

TYPE 2

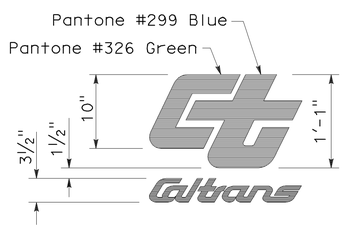

DETAIL A-2

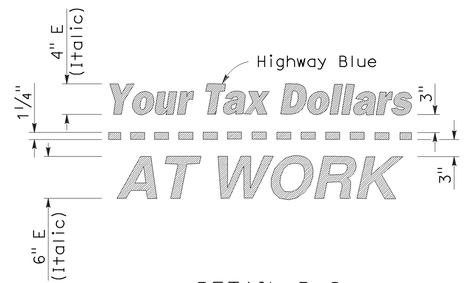

DETAIL B-2
(See Note 3)

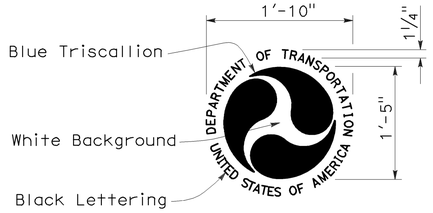

DETAIL D-2
(See Note 6)

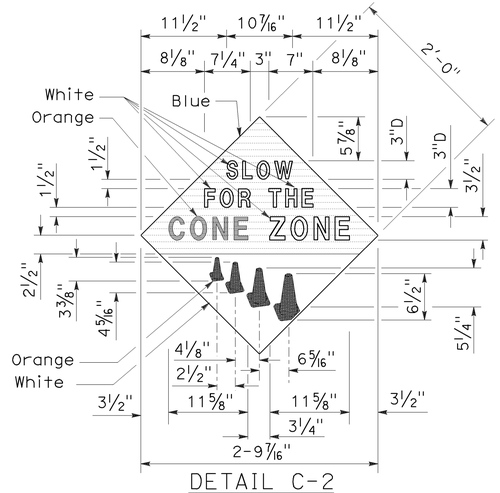

DETAIL C-2
(See Note 4)

NOTES:

1. The sign messages shown for type of project and fund types are examples only. See the Special Provisions for the applicable type of project and fund type messages to be used.
2. Except as otherwise shown, the legend of sign shall be black on a white background (non-reflective).
3. The border of the signs and details "B-1" and "B-2" shall be blue (non-reflective).
4. The diamond in details "C-1" and "C-2" shall be blue for the background of message, " SLOW FOR THE CONE ZONE", and white background for the orange cones. The color and type of font for the "SLOW FOR THE CONE ZONE" message shall be: "SLOW" white D; "FOR THE" white D; "CONE" orange Arial font; "ZONE" white Arial font.
5. Year of completion of project construction shown on the overlay is an example only. See the Special Provisions.
6. Use when the Project involves Federal Highway Trust Fund.

STATE OF CALIFORNIA
DEPARTMENT OF TRANSPORTATION

CONSTRUCTION PROJECT FUNDING IDENTIFICATION SIGNS

NO SCALE

RSP T7 DATED NOVEMBER 17, 2006 SUPERSEDES STANDARD PLAN T7
DATED MAY 1, 2006 - PAGE 217 OF THE STANDARD PLANS BOOK DATED MAY 2006.

REVISED STANDARD PLAN RSP T7

DIST	COUNTY	ROUTE	POST MILES TOTAL PROJECT	SHEET NO.	TOTAL SHEETS
04	SF	101,1	9.2/9.8, 6.8/7.1	242	567

Greg W. Edwards
REGISTERED CIVIL ENGINEER

November 17, 2006
PLANS APPROVAL DATE

REGISTERED PROFESSIONAL ENGINEER
Greg W. Edwards
No. C36386
Exp. 6-30-08
CIVIL
STATE OF CALIFORNIA

The State of California or its officers or agents shall not be responsible for the accuracy or completeness of electronic copies of this plan sheet.

To accompany plans dated 7-20-09

2006 REVISED STANDARD PLAN RSP T7

9-7-06

DIST	COUNTY	ROUTE	POST MILES TOTAL PROJECT	SHEET NO.	TOTAL SHEETS
04	SF	101,1	9.2/9.8, 6.8/7.1	243	567

Robert B Schott
LICENSED LANDSCAPE ARCHITECT

April 3, 2009
PLANS APPROVAL DATE

LICENSED LANDSCAPE ARCHITECT — Robert B. Schott 3695 — 11-30-10 Renewal Date — 2-25-09 Date — STATE OF CALIFORNIA

The State of California or its officers or agents shall not be responsible for the accuracy or completeness of electronic copies of this plan sheet.

To accompany plans dated 7-20-09

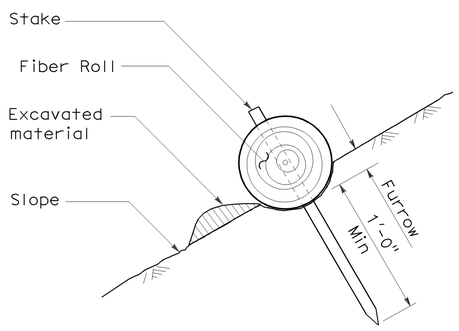

SECTION

TEMPORARY FIBER ROLL (TYPE 1)

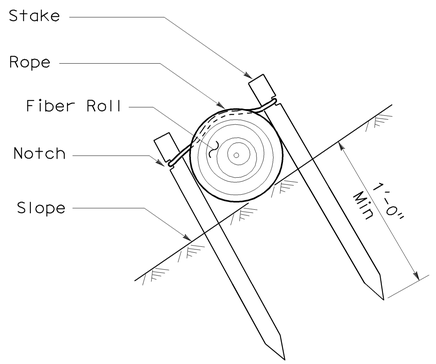

SECTION

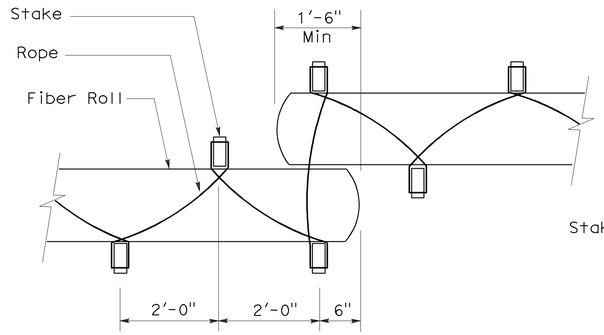

PLAN

TEMPORARY FIBER ROLL (TYPE 2)

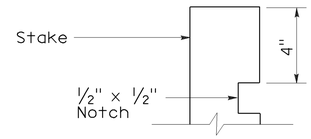

ELEVATION

STAKE NOTCH DETAIL

NOTES:

1. Temporary fiber roll spacing varies depending upon slope inclination.
2. Installations shown in the perspectives are for slope inclination of 10:1 and steeper.

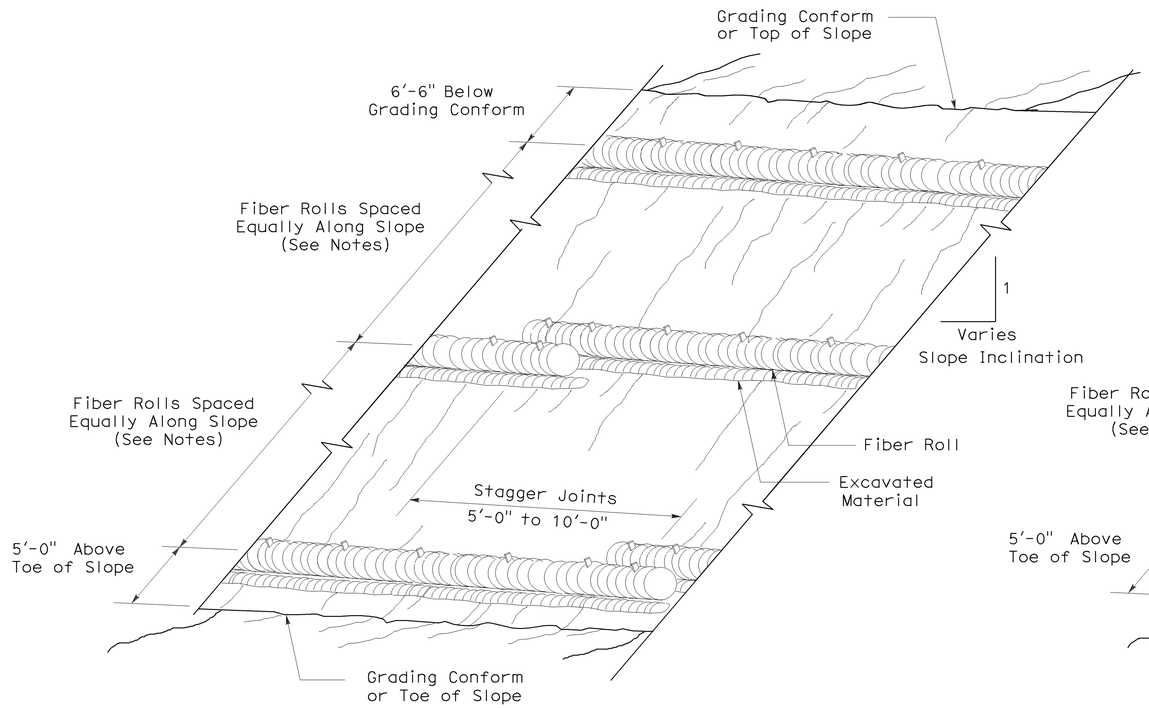

PERSPECTIVE

TEMPORARY FIBER ROLL (TYPE 1)

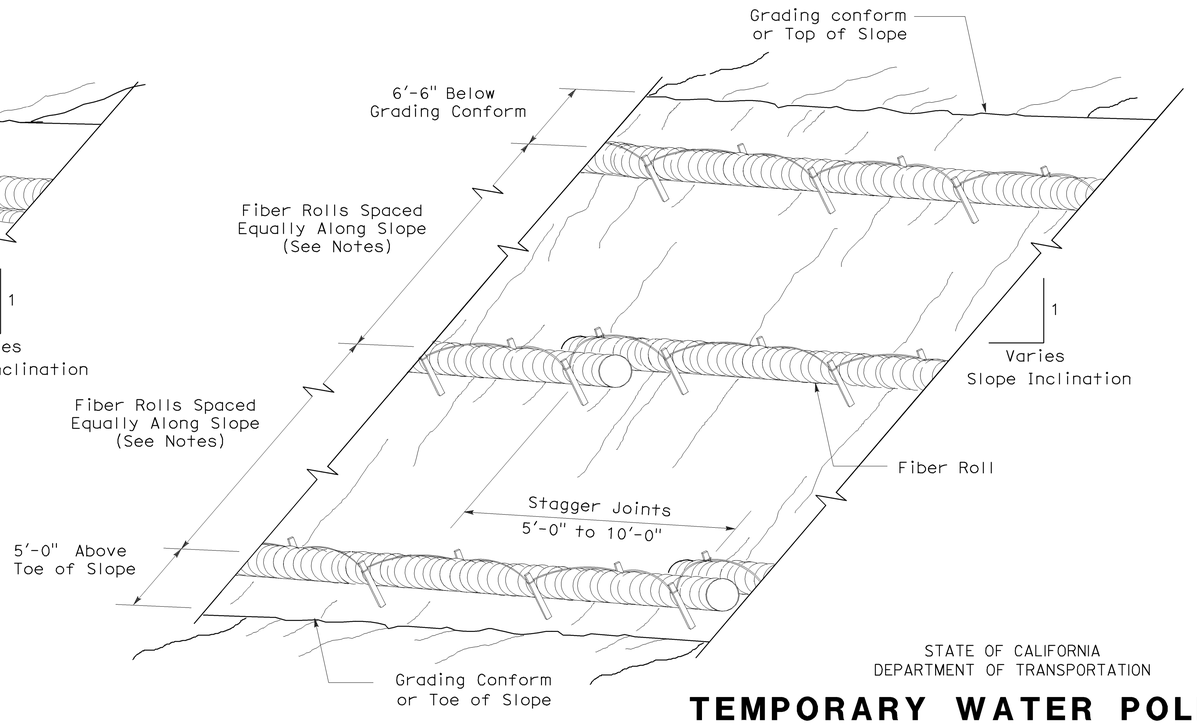

PERSPECTIVE

TEMPORARY FIBER ROLL (TYPE 2)

STATE OF CALIFORNIA
DEPARTMENT OF TRANSPORTATION

TEMPORARY WATER POLLUTION CONTROL DETAILS (TEMPORARY FIBER ROLL)

NO SCALE

RSP T56 DATED APRIL 3, 2009 SUPERSEDES STANDARD PLAN T56
DATED MAY 1, 2006 - PAGE 232 OF THE STANDARD PLANS BOOK DATED MAY 2006.

REVISED STANDARD PLAN RSP T56

2006 REVISED STANDARD PLAN RSP T56

2-23-09

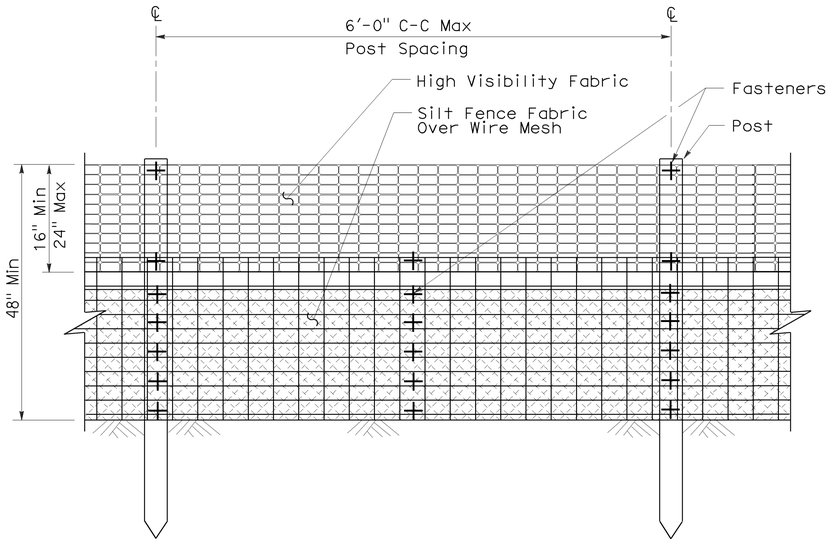

ELEVATION

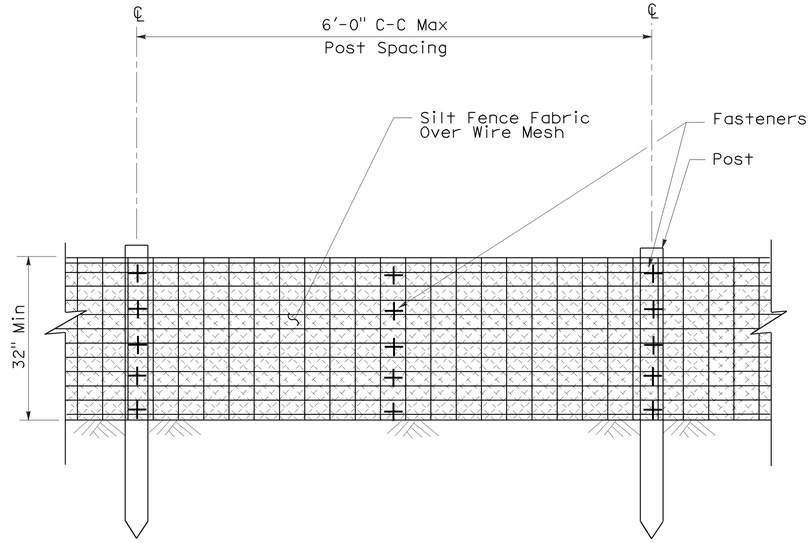

ELEVATION

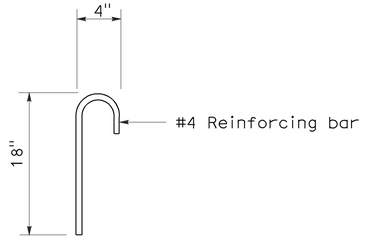

ANCHOR

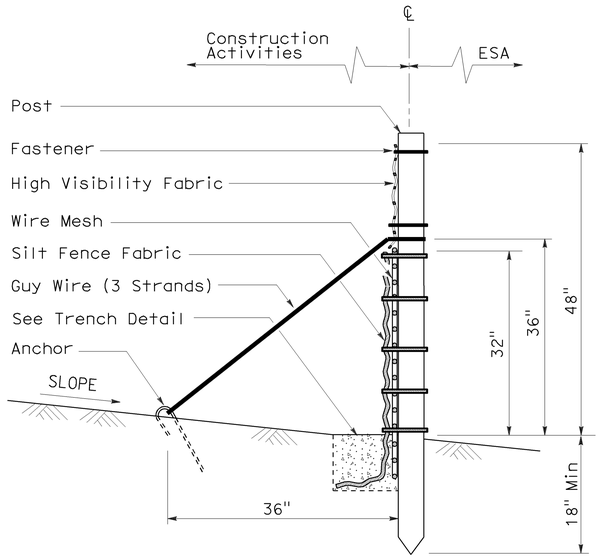

SECTION

TEMPORARY REINFORCED SILT FENCE (TYPE 1)

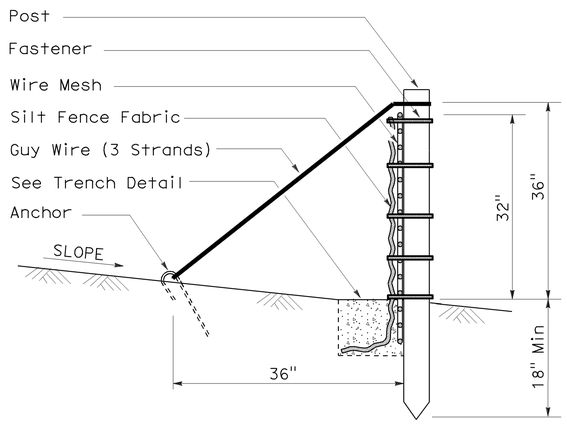

SECTION

TEMPORARY REINFORCED SILT FENCE (TYPE 2)

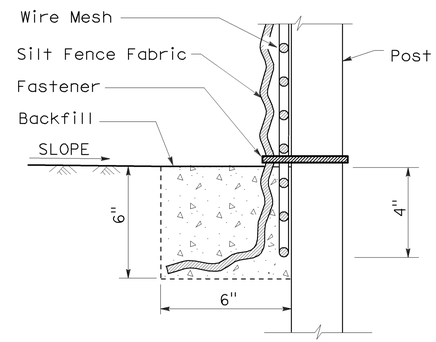

SECTION

TRENCH DETAIL

DIST	COUNTY	ROUTE	POST MILES TOTAL PROJECT	SHEET NO.	TOTAL SHEETS
04	SF	101,1	9.2/9.8, 6.8/7.1	244	567

Robert B Schott
LICENSED LANDSCAPE ARCHITECT

April 3, 2009
PLANS APPROVAL DATE

LICENSED LANDSCAPE ARCHITECT
Robert B. Schott 3625
Signature
11-30-10
Renewal Date
2-25-09
Date
STATE OF CALIFORNIA

The State of California or its officers or agents shall not be responsible for the accuracy or completeness of electronic copies of this plan sheet.

To accompany plans dated 7-20-09

STATE OF CALIFORNIA
DEPARTMENT OF TRANSPORTATION

TEMPORARY WATER POLLUTION CONTROL DETAILS (TEMPORARY REINFORCED SILT FENCE)

NO SCALE

NSP T60 DATED APRIL 3, 2009 SUPPLEMENTS
THE STANDARD PLANS BOOK DATED MAY 2006.

NEW STANDARD PLAN NSP T60

2006 NEW STANDARD PLAN NSP T60

1-7-09

DIST	COUNTY	ROUTE	POST MILES TOTAL PROJECT	SHEET NO.	TOTAL SHEETS
04	SF	101,1	9.2/9.8, 6.8/7.1	245	567

Robert B Schott
LICENSED LANDSCAPE ARCHITECT

August 15, 2008
PLANS Approval DATE

The State of California or its officers or agents shall not be responsible for the accuracy or completeness of electronic copies of this plan sheet.

LICENSED LANDSCAPE ARCHITECT — Robert B. Schott 3825 — Signature Date 11-04-08 — Renewal Date 08-11-08 — Date — STATE OF CALIFORNIA

To accompany plans dated 7-20-09

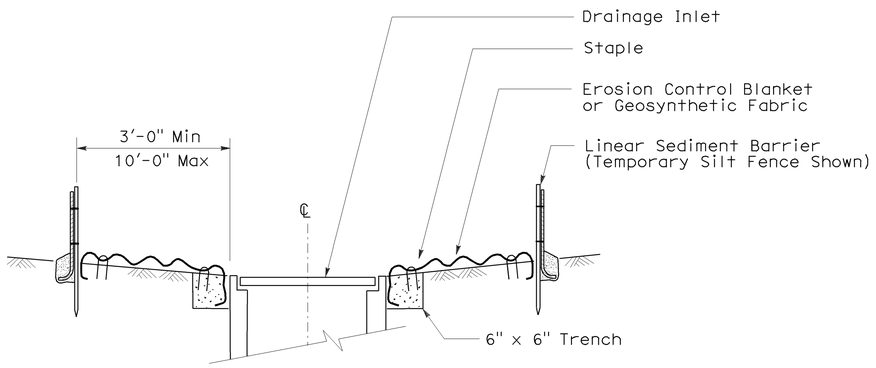

SECTION A-A

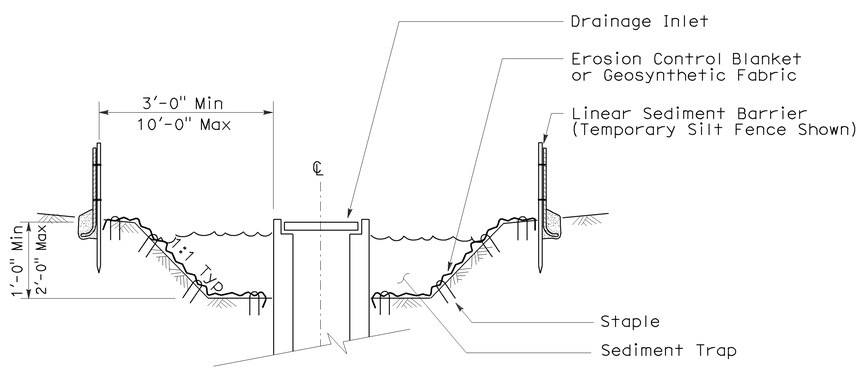

SECTION B-B

NOTES:

1. See Standard Plan T51 for Temporary Silt Fence.
2. Dimensions may vary to fit field conditions.

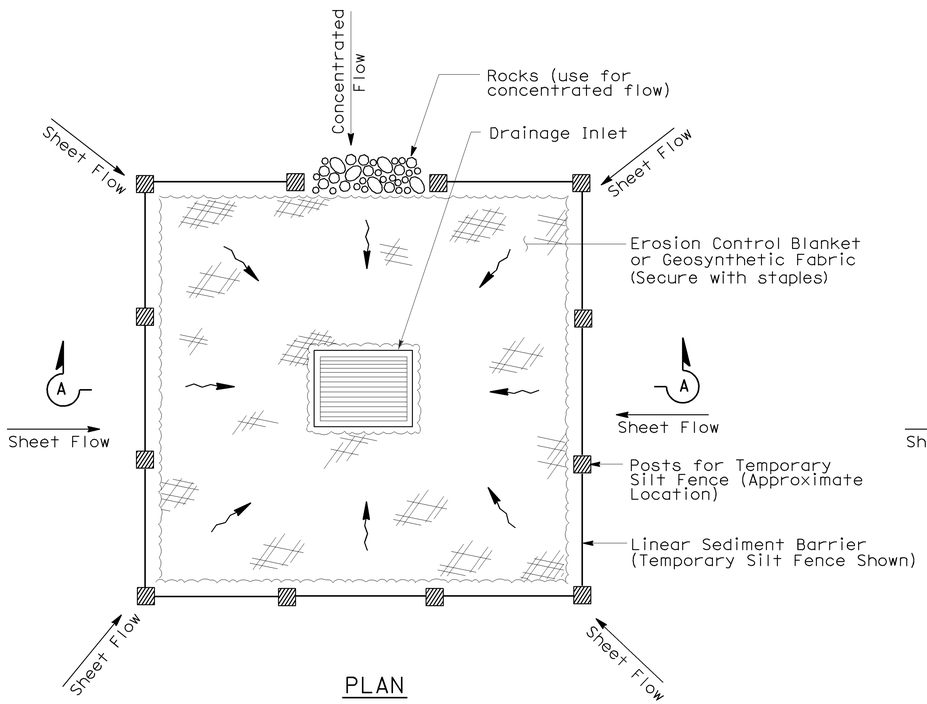

PLAN

TEMPORARY DRAINAGE INLET PROTECTION (TYPE 1)

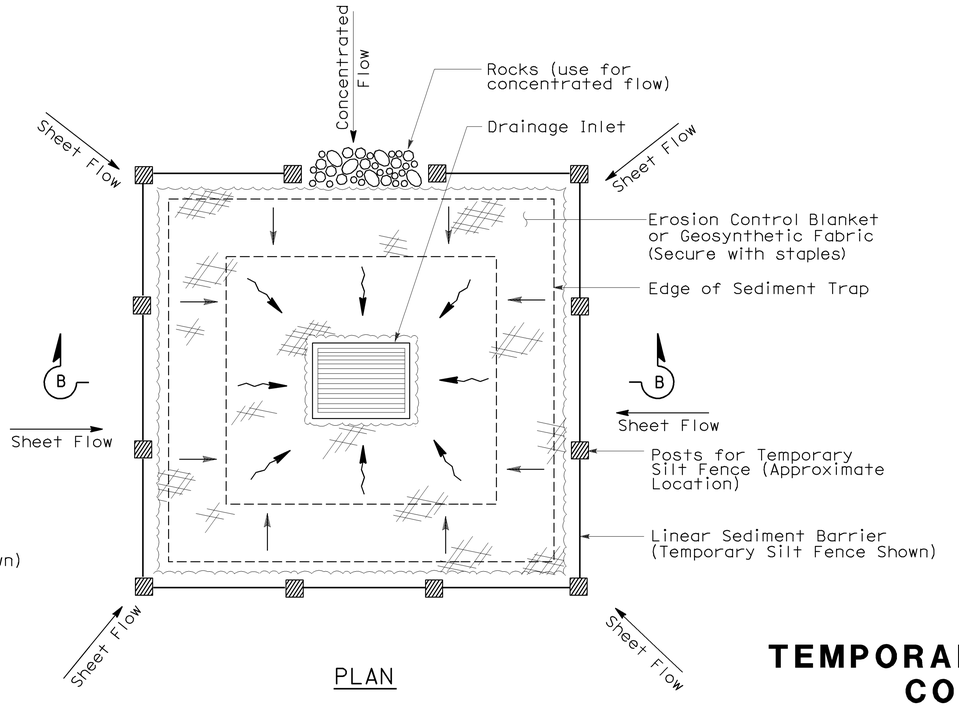

PLAN

TEMPORARY DRAINAGE INLET PROTECTION (TYPE 2) (EXCAVATED SEDIMENT TRAP)

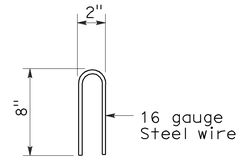

STAPLE DETAIL

STATE OF CALIFORNIA
DEPARTMENT OF TRANSPORTATION

TEMPORARY WATER POLLUTION CONTROL DETAILS (TEMPORARY DRAINAGE INLET PROTECTION)

NO SCALE

NSP T61 DATED AUGUST 15, 2008 SUPPLEMENTS THE STANDARD PLANS BOOK DATED MAY 2006.

NEW STANDARD PLAN NSP T61

2006 NEW STANDARD PLAN NSP T61

7-11-08

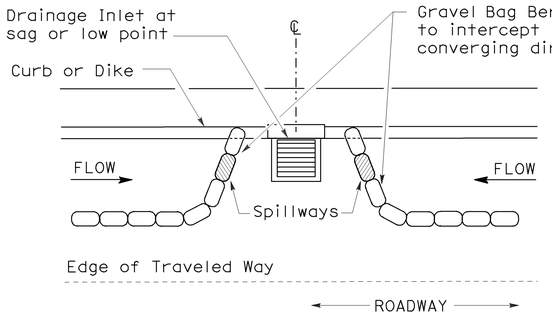

PLAN

CONFIGURATION FOR SAG POINT INLET (GRAVEL BAG BERM)

GRAVEL BAG BERM (TYPE 3A) SPACING TABLE

SLOPE OF ROADWAY (PERCENT)	1 to 3.9	4 to 5.9	6 to 7.9	8 to 10	10+
INTERVAL BETWEEN BERM	100′	75′	50′	25′	12′

For slope of less than 1%, install barriers only if erosion/sediment is prevalent

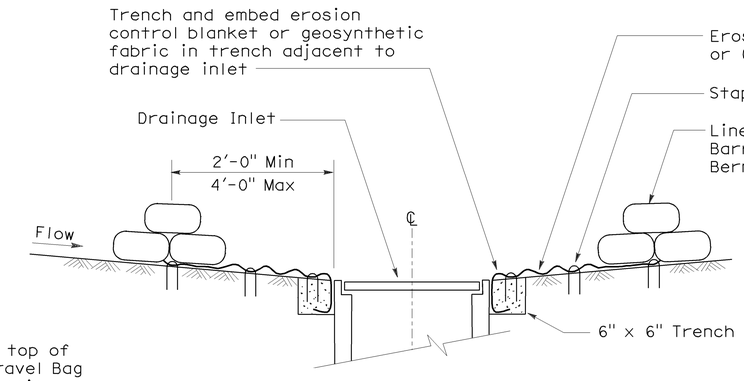

SECTION A-A

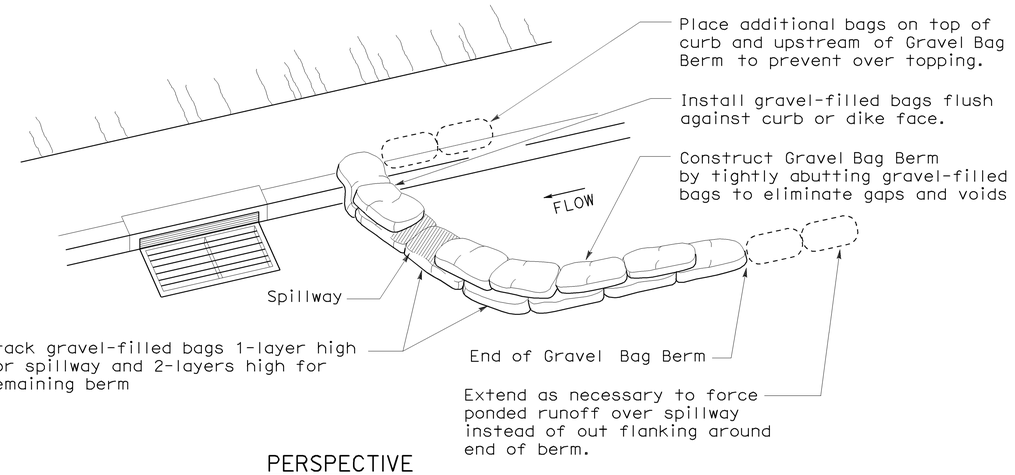

PERSPECTIVE

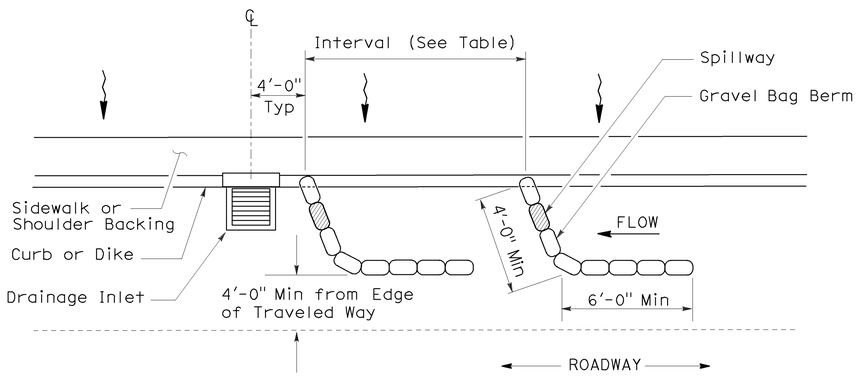

PLAN

TEMPORARY DRAINAGE INLET PROTECTION (TYPE 3A) (GRAVEL BAG BERM)

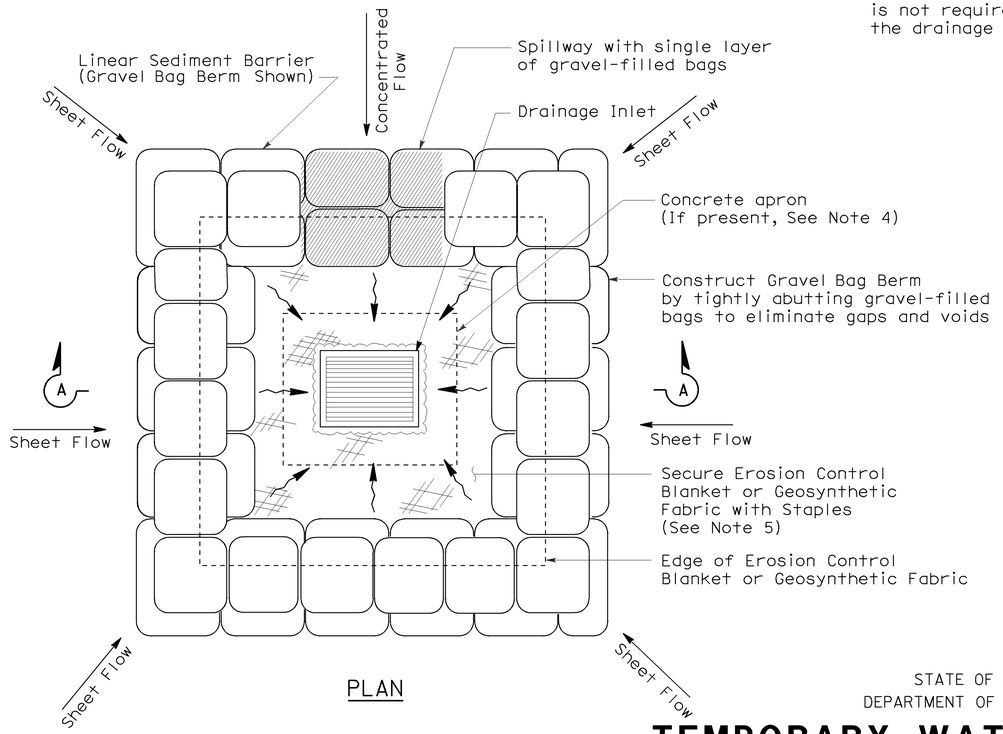

PLAN

TEMPORARY DRAINAGE INLET PROTECTION (TYPE 3B)

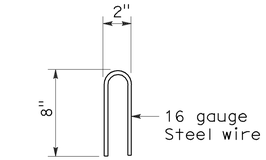

STAPLE DETAIL

NOTES:

1. Place safety cones adjacent to drainage inlet protection.
2. Dimensions may vary to fit field conditions.
3. Install a minimum of 3 gravel bag berms upstream of each drainage inlet to be protected.
4. Position erosion control blanket or geosynthetic fabric at edge of concrete apron and secure in trench.
5. Erosion control blanket or geosynthetic fabric is not required if the area adjacent to the drainage inlet is vegetated or paved.

DIST	COUNTY	ROUTE	POST MILES TOTAL PROJECT	SHEET NO.	TOTAL SHEETS
04	SF	101,1	9.2/9.8, 6.8/7.1	246	567

Robert B Schott
LICENSED LANDSCAPE ARCHITECT

August 15, 2008
PLANS APPROVAL DATE

LICENSED LANDSCAPE ARCHITECT Robert B. Schott 3825 Signature 11-04-08 Renewal Date 08-11-08 Date STATE OF CALIFORNIA

The State of California or its officers or agents shall not be responsible for the accuracy or completeness of electronic copies of this plan sheet.

To accompany plans dated 7-20-09

STATE OF CALIFORNIA
DEPARTMENT OF TRANSPORTATION

TEMPORARY WATER POLLUTION CONTROL DETAILS (TEMPORARY DRAINAGE INLET PROTECTION)

NO SCALE

NSP T62 DATED AUGUST 15, 2008 SUPPLEMENTS THE STANDARD PLANS BOOK DATED MAY 2006.

NEW STANDARD PLAN NSP T62

2006 NEW STANDARD PLAN NSP T62

7-11-08

DIST	COUNTY	ROUTE	POST MILES TOTAL PROJECT	SHEET NO.	TOTAL SHEETS
04	SF	101,1	9.2/9.8, 6.8/7.1	247	567

Robert B Schott
LICENSED LANDSCAPE ARCHITECT

August 15, 2008
PLANS APPROVAL DATE

LICENSED LANDSCAPE ARCHITECT — Robert B. Schott 3825 — Signature — 11-04-08 Renewal Date — 08-11-08 Date — STATE OF CALIFORNIA

The State of California or its officers or agents shall not be responsible for the accuracy or completeness of electronic copies of this plan sheet.

To accompany plans dated 7-20-09

FLEXIBLE SEDIMENT BARRIER SPACING TABLE

SLOPE OF ROADWAY (PERCENT)	0 to 0.9	1 to 1.9	2 to 2.9	3 to 4	5+
INTERVAL BETWEEN BARRIERS	50′	35′	30′	25′	20′
ANGLE FROM FACE OF CURB	70°	70°	70°	45°	45°
SUGGESTED BARRIER LENGTH	6′	6′	6′	6′	6′

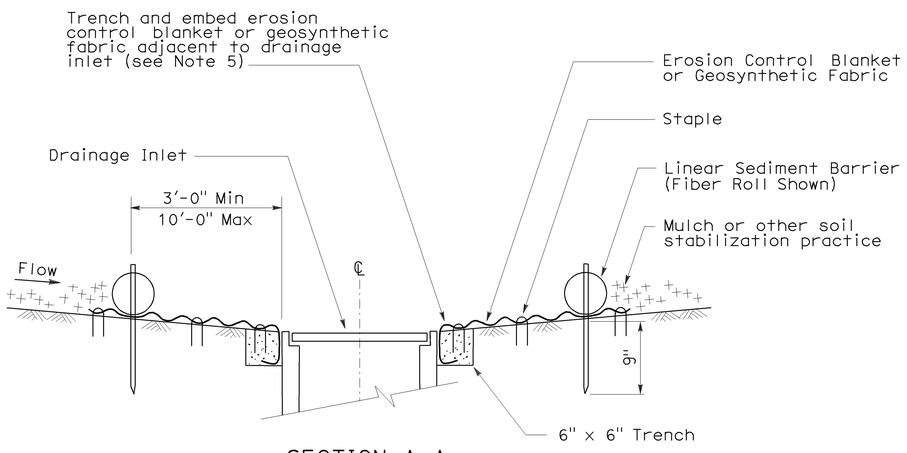

SECTION A-A

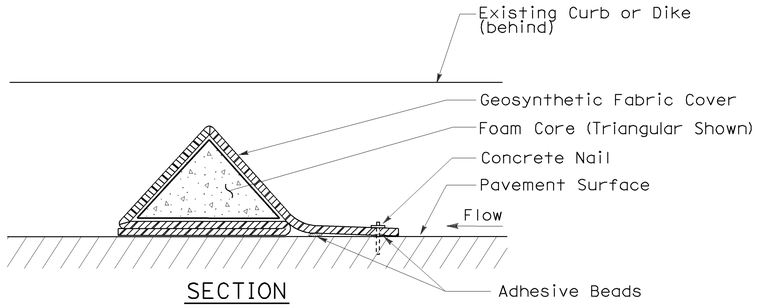

SECTION

FLEXIBLE SEDIMENT BARRIER DETAIL (FOAM BARRIER SHOWN)

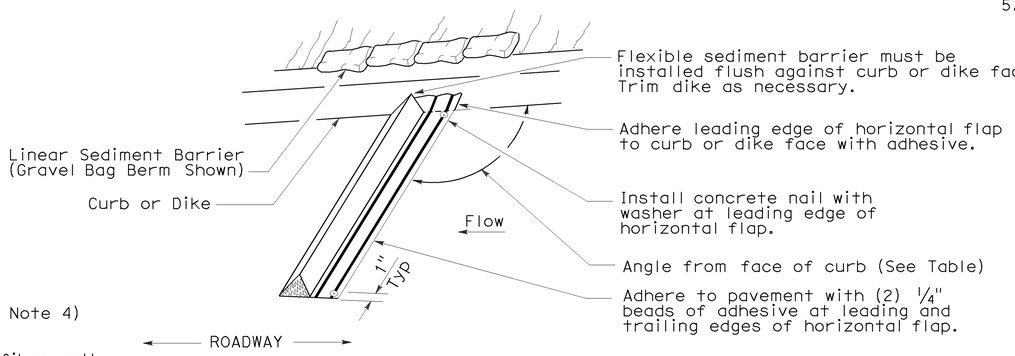

PERSPECTIVE

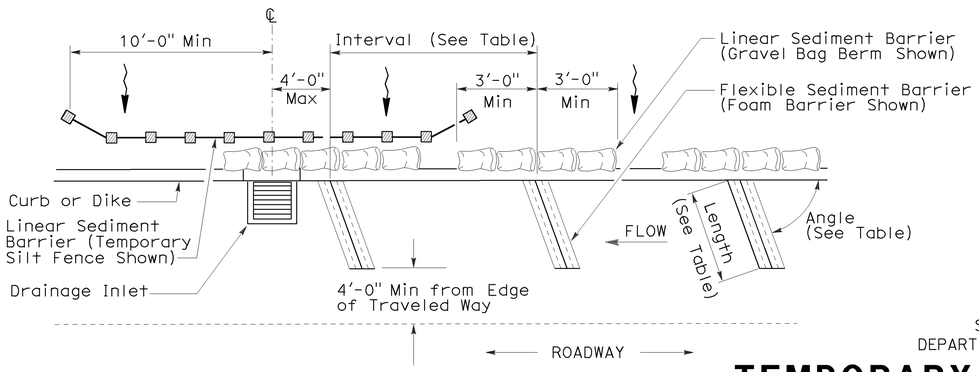

PLAN

TEMPORARY DRAINAGE INLET PROTECTION (TYPE 4B) FLEXIBLE SEDIMENT BARRIER

NOTES:

1. See Standard Plan T51 for Temporary Silt Fence.
2. Dimensions may vary to fit field conditions.
3. Install a minimum of 3 flexible sediment barriers upstream of each drainage inlet to be protected.
4. Position erosion control blanket or geosynthetic fabric at edge of concrete apron and secure in trench.
5. Erosion control blanket or geosynthetic fabric is not required if the area adjacent to the drainage inlet is vegetated.

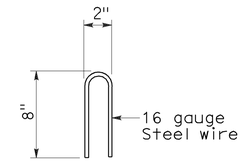

STAPLE DETAIL

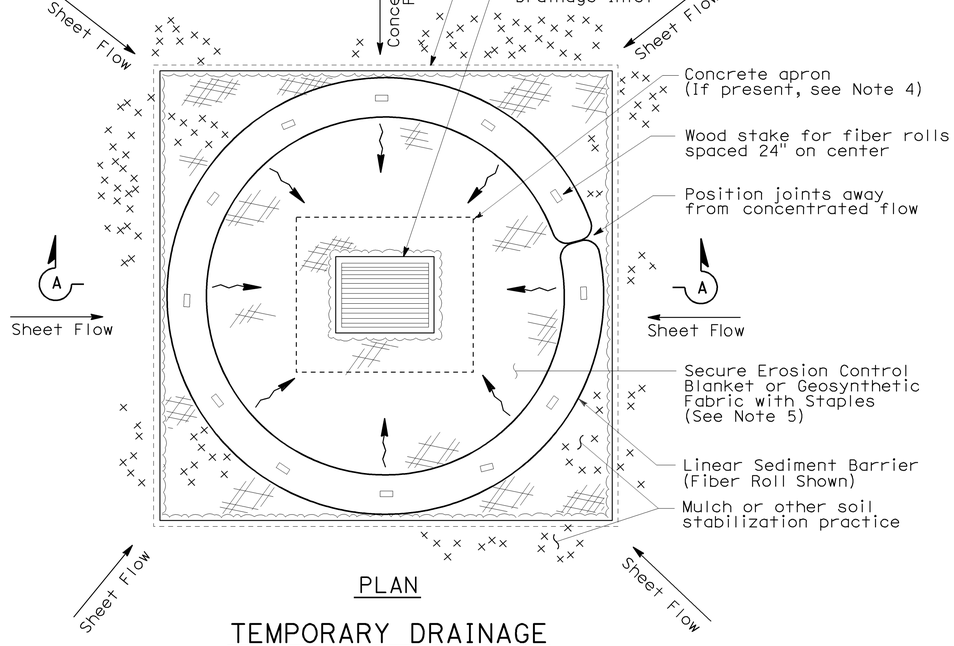

PLAN

TEMPORARY DRAINAGE INLET PROTECTION (TYPE 4A)

STATE OF CALIFORNIA
DEPARTMENT OF TRANSPORTATION

TEMPORARY WATER POLLUTION CONTROL DETAILS (TEMPORARY DRAINAGE INLET PROTECTION)

NO SCALE

NSP T63 DATED AUGUST 15, 2008 SUPPLEMENTS THE STANDARD PLANS BOOK DATED MAY 2006.

NEW STANDARD PLAN NSP T63

2006 NEW STANDARD PLAN NSP T63

7-11-08

DIST	COUNTY	ROUTE	POST MILES TOTAL PROJECT	SHEET NO.	TOTAL SHEETS
04	SF	101,1	9.2/9.8, 6.8/7.1	248	567

Robert B Schott
LICENSED LANDSCAPE ARCHITECT

August 15, 2008
PLANS APPROVAL DATE

LICENSED LANDSCAPE ARCHITECT — Robert B. Schott 3825 — Signature — 11-04-08 Renewal Date — 08-11-08 Date — STATE OF CALIFORNIA

The State of California or its officers or agents shall not be responsible for the accuracy or completeness of electronic copies of this plan sheet.

To accompany plans dated 7-20-09

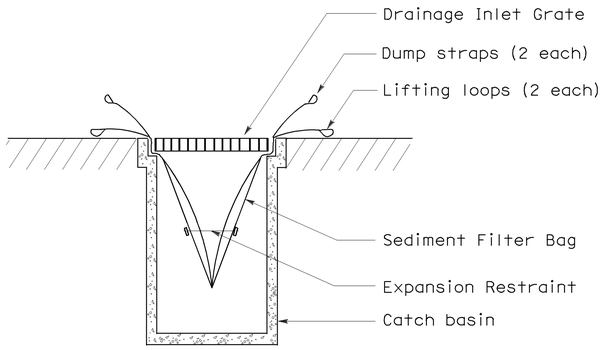

SECTION B-B

SEDIMENT FILTER BAG DETAIL

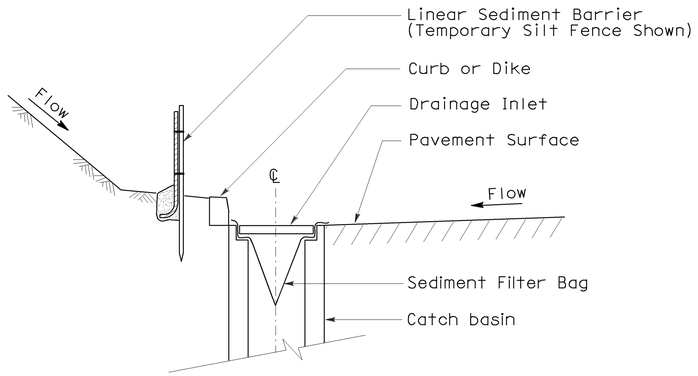

SECTION A-A

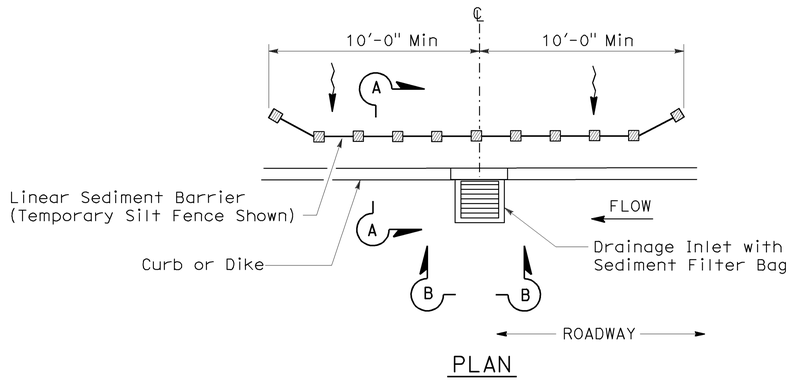

PLAN

TEMPORARY DRAINAGE INLET PROTECTION (TYPE 5) (SEDIMENT FILTER BAG)

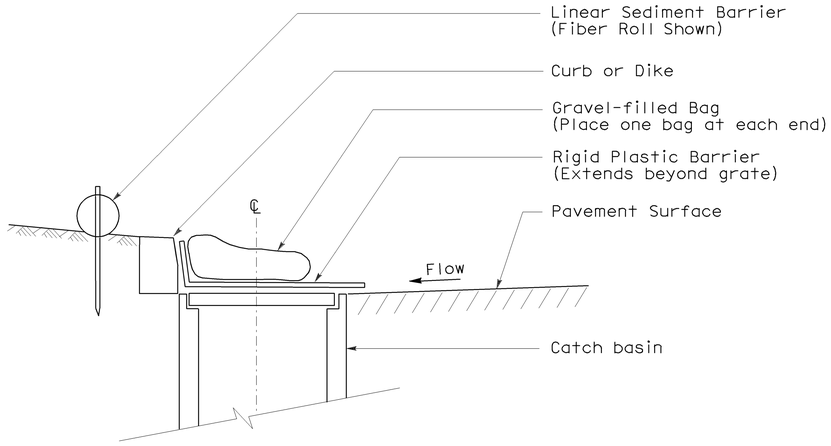

SECTION

TEMPORARY DRAINAGE INLET PROTECTION (TYPE 6A) (CATCH BASIN WITH GRATE)

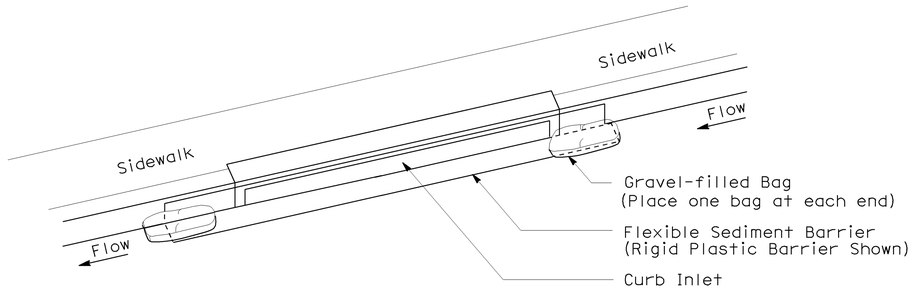

PERSPECTIVE

TEMPORARY DRAINAGE INLET PROTECTION (TYPE 6B) (CURB INLET WITHOUT GRATE)

NOTES:

1. See Standard Plan T51 for Temporary Silt Fence.
2. Dimensions may vary to fit field conditions.

STATE OF CALIFORNIA
DEPARTMENT OF TRANSPORTATION

TEMPORARY WATER POLLUTION CONTROL DETAILS (TEMPORARY DRAINAGE INLET PROTECTION)

NO SCALE

NSP T64 DATED AUGUST 15, 2008 SUPPLEMENTS THE STANDARD PLANS BOOK DATED MAY 2006.

NEW STANDARD PLAN NSP T64

2006 NEW STANDARD PLAN NSP T64

7-11-08

DIST	COUNTY	ROUTE	POST MILES TOTAL PROJECT	SHEET NO.	TOTAL SHEETS
04	SF	101,1	9.2/9.8, 6.8/7.1	249	567

Robert B Schott
LICENSED LANDSCAPE ARCHITECT

April 3, 2009
PLANS APPROVAL DATE

LICENSED LANDSCAPE ARCHITECT — Robert B. Schott 3835 — Signature — 11-30-10 Renewal Date — 2-25-09 Date — STATE OF CALIFORNIA

The State of California or its officers or agents shall not be responsible for the accuracy or completeness of electronic copies of this plan sheet.

To accompany plans dated 7-20-09

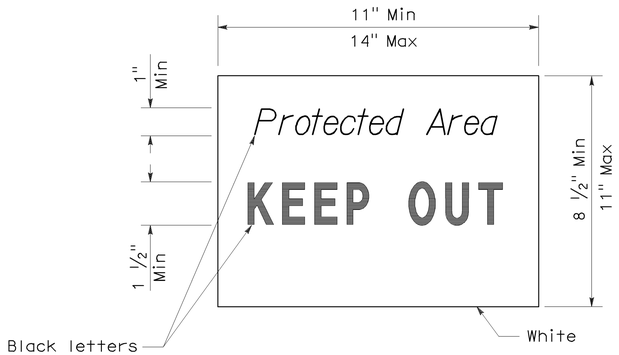

SIGN DETAIL

NOTE:

1. Temporary silt fence and temporary straw bale barrier shown for reference purposes only.

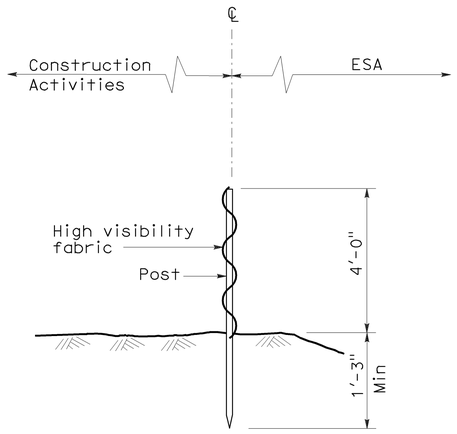

SECTION
TEMPORARY FENCE (TYPE ESA)

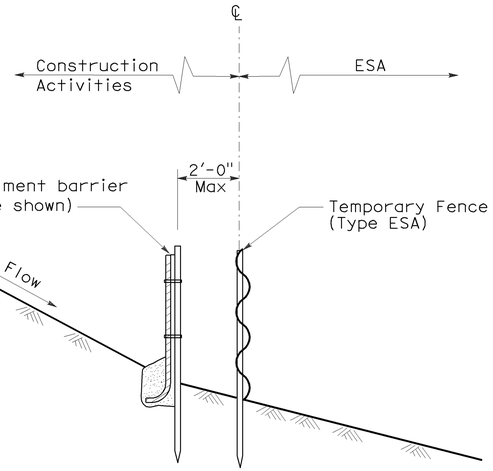

SECTION
PLACEMENT DETAIL
FOR TEMPORARY LINEAR SEDIMENT BARRIER
USED WITH TEMPORARY
FENCE (TYPE ESA)
(See Note 1)

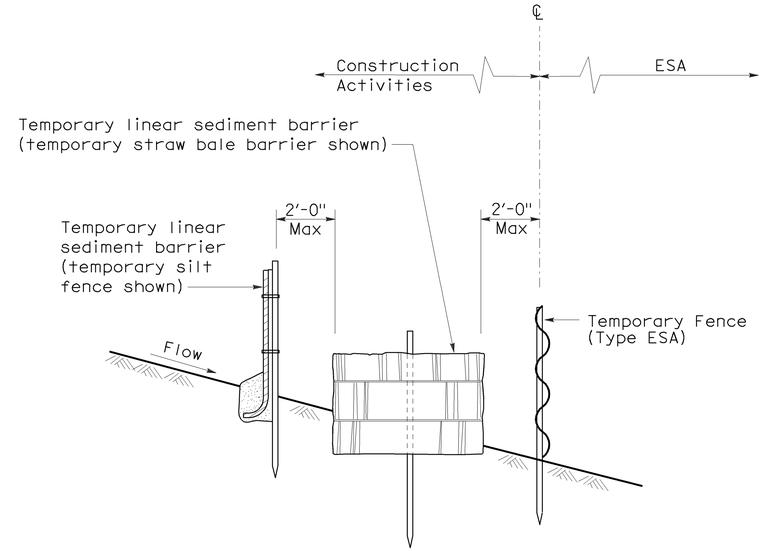

SECTION
PLACEMENT DETAIL
FOR TEMPORARY SILT FENCE
AND TEMPORARY STRAW BALE BARRIER
USED WITH TEMPORARY FENCE (TYPE ESA)
(See Note 1)

STATE OF CALIFORNIA
DEPARTMENT OF TRANSPORTATION

TEMPORARY WATER POLLUTION CONTROL DETAILS [TEMPORARY FENCE (TYPE ESA)]

NO SCALE

NSP T65 DATED APRIL 3, 2009 SUPPLEMENTS
THE STANDARD PLANS BOOK DATED MAY 2006.

NEW STANDARD PLAN NSP T65

2006 NEW STANDARD PLAN NSP T65

1-7-09

DIST	COUNTY	ROUTE	POST MILES TOTAL PROJECT	SHEET NO.	TOTAL SHEETS
04	SF	101,1	9.2/9.8, 6.8/7.1	250	567

Robert B Schott
LICENSED LANDSCAPE ARCHITECT

June 5, 2009
PLANS APPROVAL DATE

LICENSED LANDSCAPE ARCHITECT
Robert B. Schott 3625
Signature
11-30-10
Renewal Date
5-22-09
Date
STATE OF CALIFORNIA

The State of California or its officers or agents shall not be responsible for the accuracy or completeness of electronic copies of this plan sheet.

To accompany plans dated 7-20-09

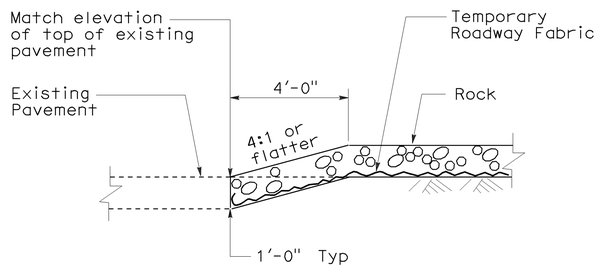

SECTION

CONFORM DETAIL

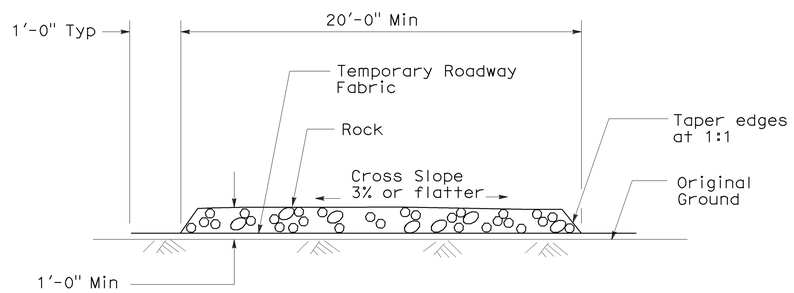

SECTION

TEMPORARY CONSTRUCTION ROADWAY

STATE OF CALIFORNIA
DEPARTMENT OF TRANSPORTATION

TEMPORARY WATER POLLUTION CONTROL DETAILS (TEMPORARY CONSTRUCTION ROADWAY)

NO SCALE

NSP T67 DATED JUNE 5, 2009 SUPPLEMENTS
THE STANDARD PLANS BOOK DATED MAY 2006.

NEW STANDARD PLAN NSP T67

2006 NEW STANDARD PLAN NSP T67

3-5-09

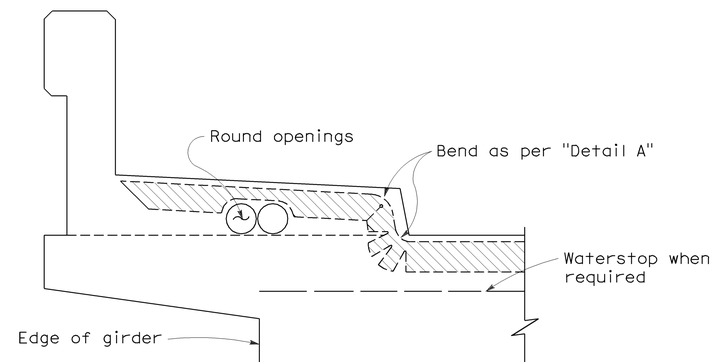

NOTE:

Type "B" seal shown. Type "A" seals to comform to the general path of seal shown, cuts for bending not required. Bend Type "A" seals 3" up into curb or barrier rail on only the low end of the seal.

CONCRETE BARRIER AND SIDEWALK

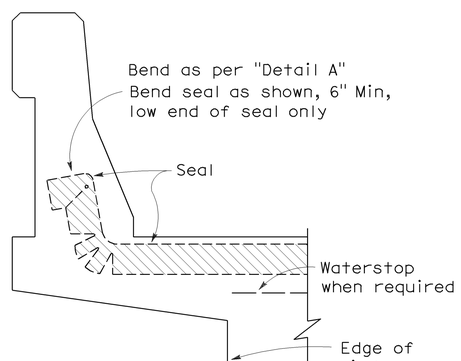

CONCRETE BARRIER

JOINT SEALS DETAILS

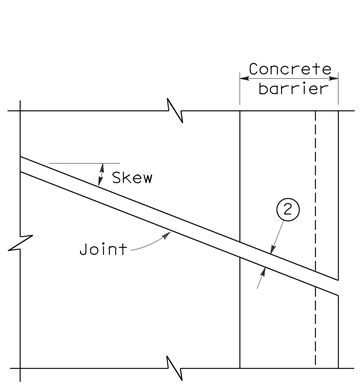

PLAN OF JOINT (SKEW ≤ 20°)

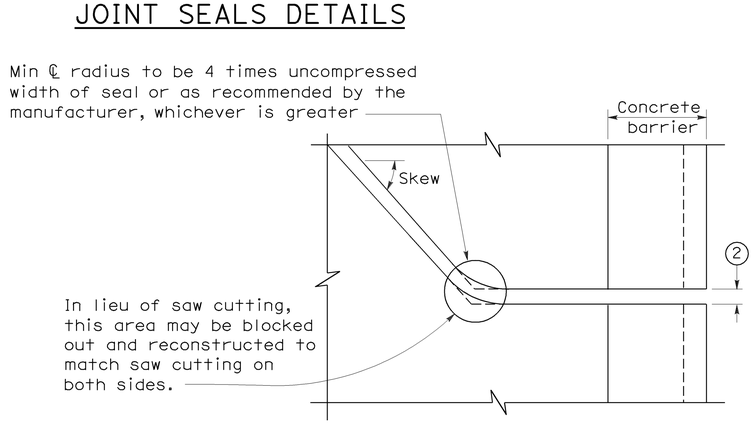

PLAN OF JOINT (SKEW > 20°)

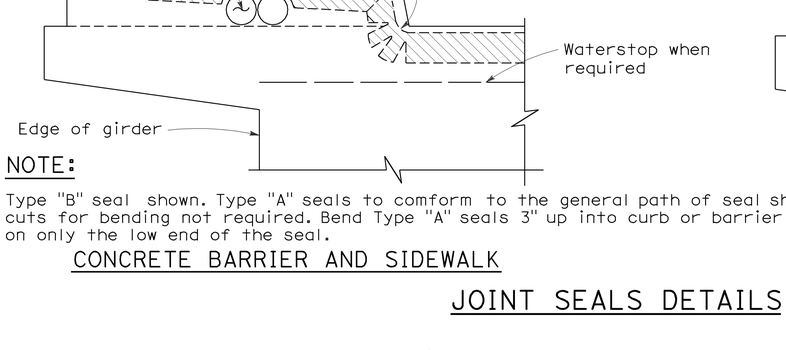

TYPE A SEAL

Movement rating : Silicone = 1" Max

TYPE AL SEAL

Longitudinal joints only

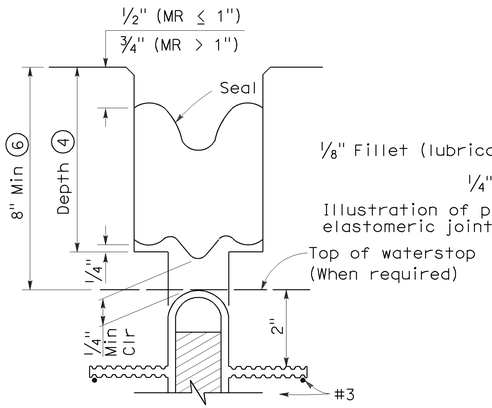

TYPE B JOINT SEAL
IN MINIMUM WIDTH POSITION (W_2)

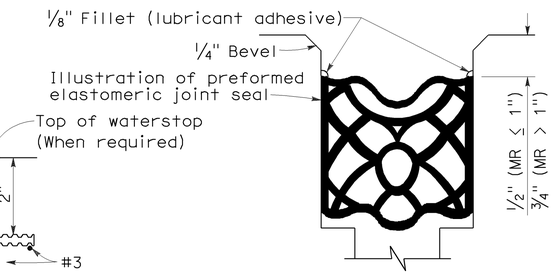

TYPE B SEAL

Movement Rating ≤ 2"

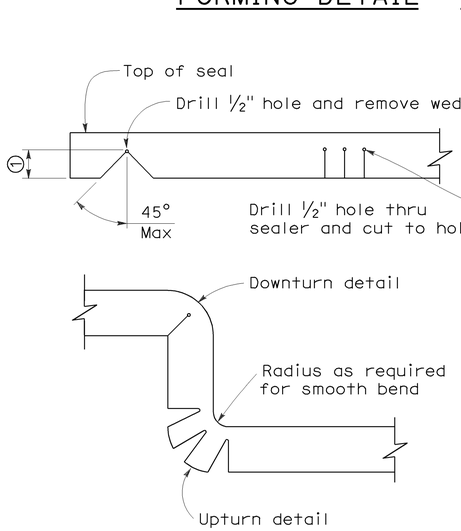

DETAIL A

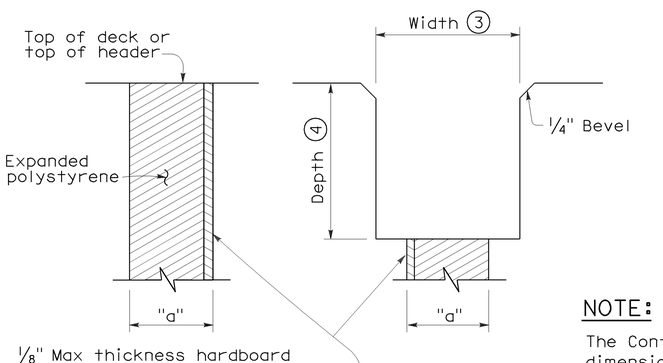

FORMING DETAIL SAWCUT DETAIL

NOTE:

The Contractor shall verify all controlling field dimensions before ordering or fabricatiing any material.

NOTES:

1. Make smooth cuts from the bottom of seal to 1½" clear of top leaving at least one complete cell between the top of the cut and top of the seal. When necessary cut back of seal to clear conduit and round openings.
2. Opening in barrier to match width of sawn deck joint.
3. Sawcut groove widths shall be as ordered by the Engineer.
4. Depth of sawcut: Type A - Depth to be 2" minimum.
   Type B - Depth to be equal to or greater than the depth of seal measured along the contact surface, when compressed to minimum width position (W_2) plus dimensions shown.
5. MR (movement rating) as shown on other plan sheets.
6. Other depths must be approved by the Engineer.

DIMENSIONS "a" OF JOINT REQUIRED

Movement Rating (MR) ⑤	Bridge Type	"a" Dimension Deck Concrete Placed		
		Winter	Fall-Spring	Summer
2"	All except CIP/PS	1½"	1¼"	¾"
	CIP/PS	1¼"	1"	½"
1½"	All except CIP/PS	1¼"	1"	½"
	CIP/PS	1"	¾"	½"
1"	All except CIP/PS	1"	¾"	½"
	CIP/PS	¾"	½"	½"
½"	All except CIP/PS	¾"	¾"	½"
	CIP/PS	½"	½"	½"

DIST	COUNTY	ROUTE	POST MILES TOTAL PROJECT	SHEET NO.	TOTAL SHEETS
04	SF	101,1	9.2/9.8, 6.8/7.1	251	567

REGISTERED CIVIL ENGINEER

Efthymios Delis
No. C51434
Exp. 6-30-08
CIVIL
REGISTERED PROFESSIONAL ENGINEER
STATE OF CALIFORNIA

October 5, 2007
PLANS APPROVAL DATE

The State of California or its officers or agents shall not be responsible for the accuracy or completeness of electronic copies of this plan sheet.

To accompany plans dated 7-20-09

STATE OF CALIFORNIA
DEPARTMENT OF TRANSPORTATION

JOINT SEALS (MAXIMUM MOVEMENT RATING = 2")

NO SCALE

RSP B6-21 DATED OCTOBER 5, 2007 SUPERSEDES STANDARD PLAN B6-21 DATED MAY 1, 2006 - PAGE 258 OF THE STANDARD PLANS BOOK DATED MAY 2006.

REVISED STANDARD PLAN RSP B6-21

2006 REVISED STANDARD PLAN RSP B6-21

5-8-07

DIST	COUNTY	ROUTE	POST MILES TOTAL PROJECT	SHEET NO.	TOTAL SHEETS
04	SF	101,1	9.2/9.8, 6.8/7.1	252	567

REGISTERED CIVIL ENGINEER

June 30, 2006
PLANS APPROVAL DATE

REGISTERED PROFESSIONAL ENGINEER
Tillat Satter
No. C42892
Exp. 03-31-08
CIVIL
STATE OF CALIFORNIA

The State of California or its officers or agents shall not be responsible for the accuracy or completeness of electronic copies of this plan sheet.

To accompany plans dated 7-20-09

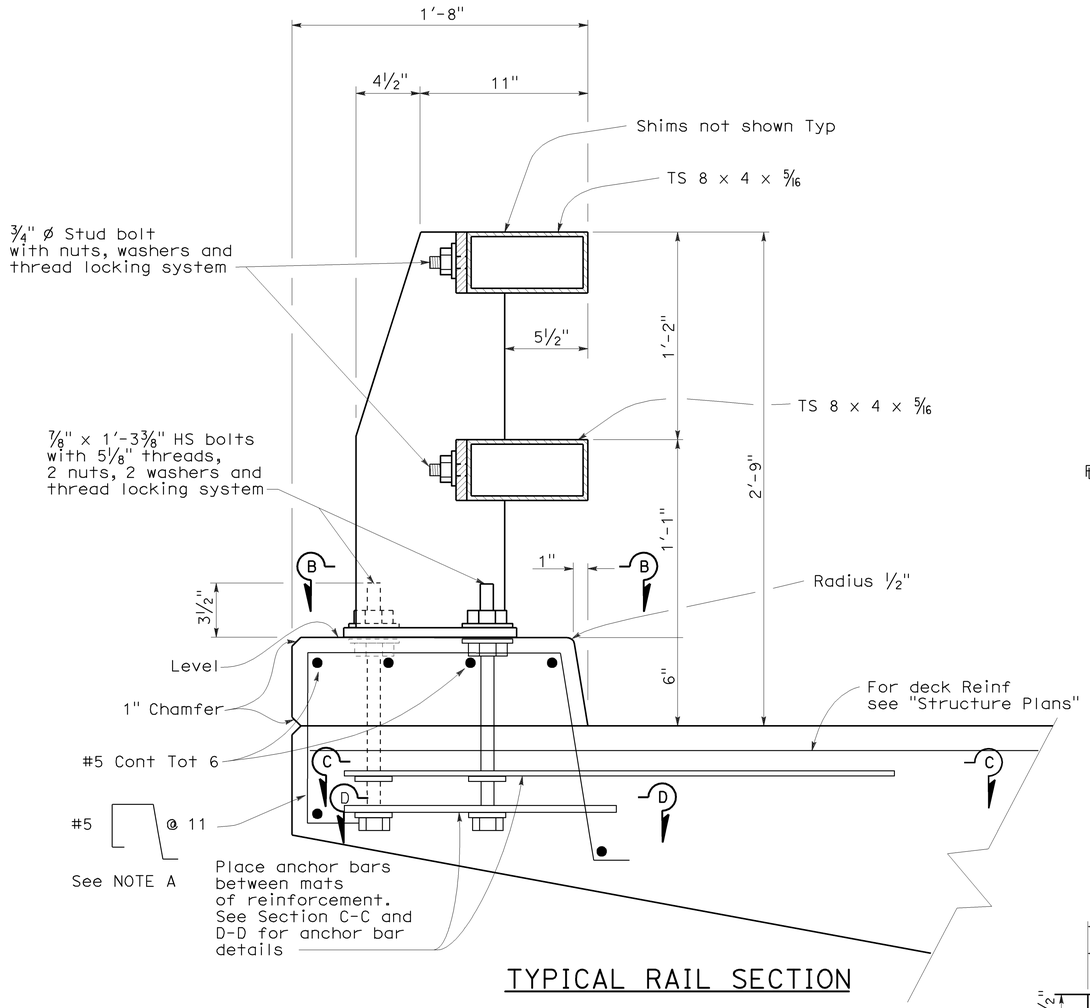

TYPICAL RAIL SECTION

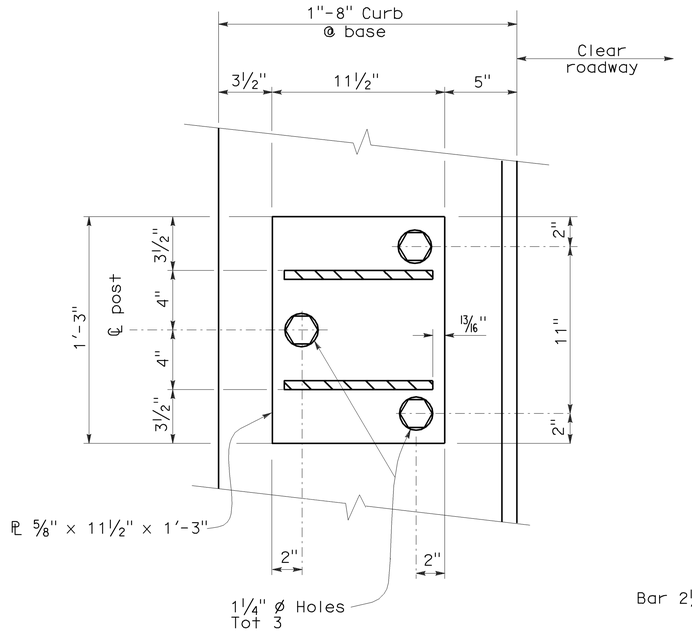

SECTION B-B

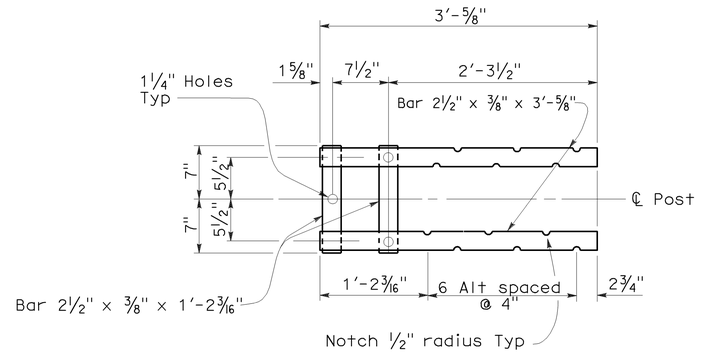

SECTION C-C
Top Anchorage

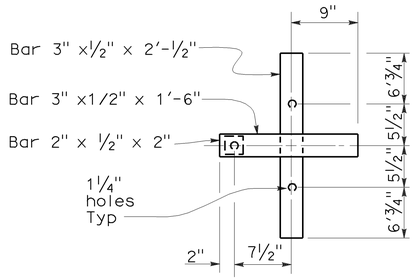

SECTION D-D
Lower Anchorage

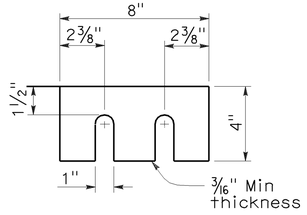

SHIMS REQUIRED FOR TOP AND BOTTOM RAIL

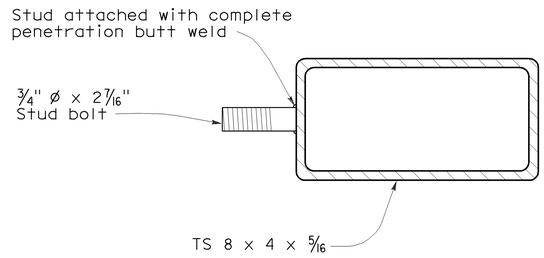

SECTION AT POST

STUD BOLT DETAIL

NOTE A

Adjust spacing to clear scupper opening by 2" if applicable.

STATE OF CALIFORNIA
DEPARTMENT OF TRANSPORTATION

CALIFORNIA ST-10 BRIDGE RAIL (SHEET 1 OF 3)

NO SCALE

RSP B11-68 DATED JUNE 30, 2006 SUPERSEDES STANDARD PLAN DATED MAY 1, 2006 - PAGE 284 OF THE STANDARD PLANS BOOK DATED MAY 2006.

REVISED STANDARD PLAN RSP B11-68

2006 REVISED STANDARD PLAN RSP B11-68

6-19-06

DIST	COUNTY	ROUTE	POST MILES TOTAL PROJECT	SHEET NO.	TOTAL SHEETS
04	SF	101,1	9.2/9.8, 6.8/7.1	253	567

Jeffery G. McRae
REGISTERED ELECTRICAL ENGINEER

REGISTERED PROFESSIONAL ENGINEER
Jeffery G. McRae
No. E14512
Exp. 6-30-08
ELECTRICAL
STATE OF CALIFORNIA

October 5, 2007
PLANS APPROVAL DATE

The State of California or its officers or agents shall not be responsible for the accuracy or completeness of electronic copies of this plan sheet.

To accompany plans dated 7-20-09

ELECTROLIERS

STANDARD TYPES
15, 15D
15 STRUCTURE
21, 21D STRUCTURE
30
31
32
35
36-20A

High mast light pole

Double Arm lighting standard

Existing electrolier

Electrolier foundation (Future installation)

NOTES:

1. Luminaires shall be 310 W HPS when installed on Type 21, 21D, 30, 31, 32, 35 and 36-20A Standards, unless otherwise specified. Luminaires shall be 200 W HPS when installed on other type standards or poles, unless otherwise specified.
2. Luminaires shall be the cutoff type, ANSI Type III medium cutoff lighting distribution, unless otherwise specified.
3. Variations noted adjacent to symbol on project plans.

Electrolier (see project notes or project plans)

Luminaire on wood pole

STANDARD NOTES:

AB	Abandon. If applied to conduit, remove conductors.
BC	Install pull box in existing conduit run.
BP	Pedestrian barricade, type as indicated on plan.
CB	Install conduit into existing pull box.
CC	Connect new and existing conduit. Remove existing conductors and install conductors as indicated.
CF	Conduit to remain for future use. Remove conductors. Install pull wire or rope.
DH	Detector handhole.
FA	Foundation to be abandoned.
IS	Install sign on signal mast arm.
NS	No slip base on standard.
PEC	Photoelectric control.
PEU	Photoelectric unit.
RC	Equipment or material to be removed and become the property of the Contractor.
RE	Remove electrolier, fuses and ballast. Tape ends of conductors.
RL	Relocate equipment.
RR	Remove and reuse equipment.
RS	Remove and salvage equipment.
SC	Splice new to existing conductors.
SD	Service disconnect.
SF	Standard to remain for future use. Remove luminaire, pole conductors, fuses and ballast.
TSP	Telephone service point.

ABBREVIATIONS AND EQUIPMENT DESIGNATIONS

PROPOSED	EXISTING	
BBS	bbs	Battery backup system
BC	bc	Bolt circle
C	C	Conduit
CCTV	cctv	Closed circuit television
CKT	ckt	Circuit
CMS	cms	Changeable message sign
DLC	dlc	Loop detector lead-in cable
EMS	ems	Extinguishable message sign
EVC	evc	Emergency vehicle cable
EVD	evd	Emergency vehicle detector
FB	fb	Flashing beacon
FBCA	fbca	Flashing beacon control assembly
FBS	fbs	Flashing beacon with slip base
FO	fo	Fiber optic
G	G	Ground (Equipment Grounding Conductor)
GFCI	GFCI	Ground fault circuit interrupt
HAR	har	Highway advisory radio
HEX	hex	Hexagonal
HPS	hps	High pressure sodium
IISNS	iisns	Internally illuminated street name sign
ISL	isl	Induction sign lighting
LED	led	Light emitting diode
LMA	lma	Luminaire mast arm
LPS	lps	Low pressure sodium
LTG	ltg	Lighting
LUM	lum	Luminaire
MAT	mat	Mast arm mounting vehicle signal faces, top attachment
MAS	mas	Mast arm mounting vehicle signal faces, side attachment
MAS-4A	mas-4A	Mast arm mounting vehicle signal faces,
MAS-4B	mas-4B	side attachment - 4 signal section
MAS-4C	mas-4C	
MAS-5A	mas-5A	Mast arm mounting vehicle signal faces,
MAS-5B	mas-5B	side attachment - 5 signal section
MC	mc	Mercury contactor
M/M	m/m	Multiple to multiple transformer
MT	mt	Conduit with pull wire or rope only
MTG	mtg	Mounting
	mv	Mercury vapor lighting fixture
N	N	Neutral (Grounded Conductor)
NC	NC	Normally closed
NO	NO	Normally open
PB	pb	Pull box
PEC	pec	Photoelectric control (Type I, II, III, IV or V as shown)
PED	ped	Pedestrian
PEU	peu	Photoelectric unit
PPB	ppb	Pedestrian push button
RL		Relocated equipment
RM	rm	Ramp metering
SB	sb	Slip base
SIC	sic	Signal interconnect cable
SIG	sig	Signal
SMA	sma	Signal mast arm
SNS	sns	Street name sign
SP	sp	Service point
TDC	tdc	Telephone demarcation cabinet
TMS	tms	Traffic monitoring station
TOS	tos	Traffic Operations System
VEH	veh	Vehicle
XFMR	xfmr	Transformer
COMM	comm	Communication
RWIS	rwis	Roadway weather information system

SOFFIT AND WALL MOUNTED LUMINAIRES

Pendant, 70 W HPS unless otherwise specified.

Flush, 70 W HPS unless otherwise specified.

Wall surface, 70 W HPS unless otherwise specified.

Existing soffit or wall luminaire to remain unmodified.

Existing soffit or wall luminaire to be modified as specified.

NOTE:

Arrow indicates "street side" of luminaire.

STATE OF CALIFORNIA
DEPARTMENT OF TRANSPORTATION

ELECTRICAL SYSTEMS (SYMBOLS AND ABBREVIATIONS)

NO SCALE

RSP ES-1A DATED OCTOBER 5, 2007 SUPERSEDES STANDARD PLAN ES-1A
DATED MAY 1, 2006 - PAGE 400 OF THE STANDARD PLANS BOOK DATED MAY 2006.

REVISED STANDARD PLAN RSP ES-1A

2006 REVISED STANDARD PLAN RSP ES-1A

7-10-07

DIST	COUNTY	ROUTE	POST MILES TOTAL PROJECT	SHEET NO.	TOTAL SHEETS
04	SF	101,1	9.2/9.8, 6.8/7.1	254	567

Jeffery G. McRae
REGISTERED ELECTRICAL ENGINEER

October 5, 2007
PLANS APPROVAL DATE

REGISTERED PROFESSIONAL ENGINEER — Jeffery G. McRae — No. E14512 — Exp. 6-30-08 — ELECTRICAL — STATE OF CALIFORNIA

The State of California or its officers or agents shall not be responsible for the accuracy or completeness of electronic copies of this plan sheet.

To accompany plans dated 7-20-09

CONDUIT

PROPOSED	EXISTING	
— — —	— — —	Lighting Conduit, unless otherwise indicated or noted
— - — - —	— - — - —	Traffic signal conduit
—C— —	—c— —	Communication conduit
—T— —	—t— —	Telephone conduit
—F— —	—f— —	Fire alarm conduit
—FO— —	—fo— —	Fiber optic conduit
— — —]	— — —]	Conduit termination (RSP ES-9A C)
R	r	Conduit riser in/on structure or service pole

SERVICE EQUIPMENT

PROPOSED	EXISTING	
—OH—	—oh—	Overhead lines
U	U	Wood pole "U" indicates utility owned
		Pole guy with anchor
		Utility transformer - ground mounted
III		Service equipment enclosure type
		Service equipment enclosure door indicates front of enclosure
T	t	Telephone demarcation cabinet

POLE-MOUNTED SERVICE DESIGNATION

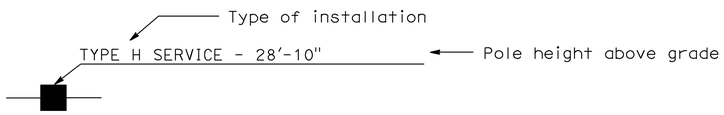

ILLUMINATED OVERHEAD SIGN

PROPOSED	EXISTING	
		Overhead sign - Single post
		Overhead sign - Two post
		Overhead sign - Mounted on structure
		Overhead sign with electrolier

SIGNAL EQUIPMENT

PROPOSED	EXISTING	
		Pedestrian signal face
		Pedestrian push button post
		Pedestrian barricade
		Vehicle signal face (with backplate, 3-Section: red, yellow and green)
		Vehicle signal face with angle visors
PV	PV	Modifications of basic symbols: "L" Indicates all non-arrow sections louvered "LG" Indicates louvered green section only "PV" Indicates 12" programmed visibility sections "8" indicates all 8" sections (only when specified)
		Type 15TS and Vehicle signal face
		Vehicle signal face with red, yellow and green left arrow sections
		Vehicle signal face with red and yellow sections and up green arrow
		Vehicle signal face (5 Section) with red, yellow and green sections and yellow and green right arrows
		Type 1 Standard and attached vehicle signal faces
		Standard with signal mast arm only and attached vehicle signal faces and internally illuminated street name sign
		Type 33 Standard, Left-turn vehicle signal face and sign
		Standard with luminaire and signal mast arms and attached vehicle signal faces
		Cantilever flashing beacon Type 9 Frame, with a sign unless otherwise specified or indicated
		Type 15-FBS Standard with two vehicle signal face sections with lens, backplate and visor with a sign
R	Y	Flashing beacon. One vehicle signal face section with lens, backplate and visor. "R" indicates red indication, "Y" indicates yellow indication
		Controller assembly. Door indicates front of cabinet

SIGNAL EQUIPMENT Cont

PROPOSED	EXISTING	
		Guard post
		Type 1 Standard with "Meter On" sign
		Emergency Vehicle detector

NOTES:

1. All signal sections shall be 12" unless shown otherwise.
2. Signal heads shall be provided with backplates unless shown otherwise.
3. Signal indication shall be LED.

STATE OF CALIFORNIA
DEPARTMENT OF TRANSPORTATION

ELECTRICAL SYSTEMS (SYMBOLS AND ABBREVIATIONS)

NO SCALE

RSP ES-1B DATED OCTOBER 5, 2007 SUPERCEDES STANDARD PLAN ES-1B
DATED MAY 1, 2006 - PAGE 401 OF THE STANDARD PLANS BOOK DATED MAY 2006.

REVISED STANDARD PLAN RSP ES-1B

2006 REVISED STANDARD PLAN RSP ES-1B

7-10-07

DIST	COUNTY	ROUTE	POST MILES TOTAL PROJECT	SHEET NO.	TOTAL SHEETS
04	SF	101,1	9.2/9.8, 6.8/7.1	255	567

Jeffery G. McRae
REGISTERED ELECTRICAL ENGINEER

REGISTERED PROFESSIONAL ENGINEER
Jeffery G. McRae
No. E14512
Exp. 6-30-08
ELECTRICAL
STATE OF CALIFORNIA

October 5, 2007
PLANS APPROVAL DATE

The State of California or its officers or agents shall not be responsible for the accuracy or completeness of electronic copies of this plan sheet.

To accompany plans dated 7-20-09

EQUIPMENT IDENTIFICATION

ILLUMINATED SIGN IDENTIFICATION NUMBER:

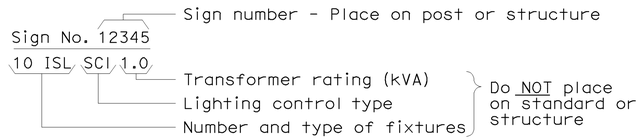

ELECTROLIER OR EQUIPMENT IDENTIFICATION NUMBER:

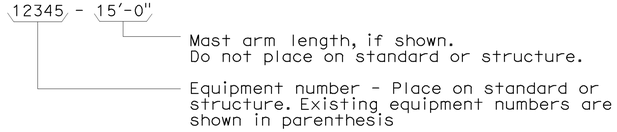

CONDUIT AND CONDUCTOR IDENTIFICATION:

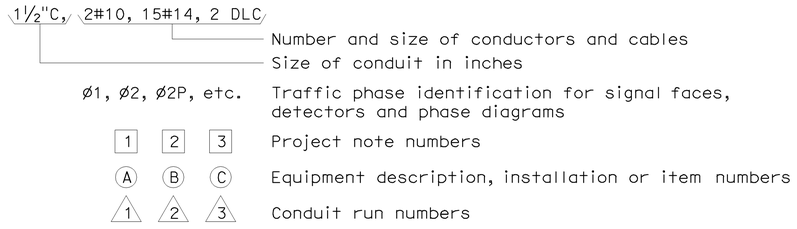

SIGNAL AND LIGHTING STANDARD (TYPICAL DESIGNATION):

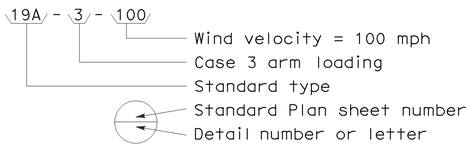

WIRING DIAGRAM LEGEND

P	Pole
CB	Circuit breaker
A	Ampere
V	Volt
M	Metered
UM	Unmetered
NB	Neutral bus
GB	Ground bus
G	Equipment grounding conductor
N	Grounded conductor (Neutral)

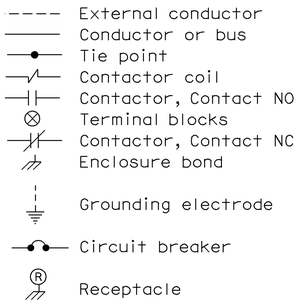

PULL BOXES

PROPOSED EXISTING

3 = No. 3½ pull box
5 = No. 5 pull box
6 = No. 6 pull box
7 = No. 7 (Ceiling pull box)
8 = No. 8 (Pendant soffit pull box)
9 = No. 9 pull box
9A = No. 9A pull box

Pull box-No. 5 unless otherwise indicated or noted.

Pull box-Additional designations or descriptions

(C) = Communications pull box
(E) = Pull box with extension
(S) = Sprinkler control pull box
(21) = Anchor bolts and conduit for future installation of Type 21 Standard
(T) = Traffic pull box

VEHICLE DETECTORS

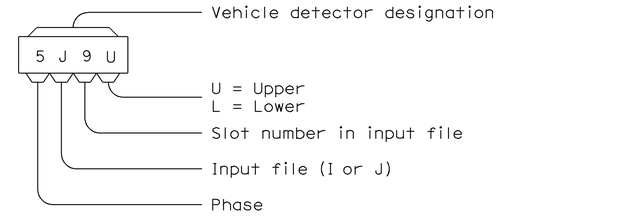

PROPOSED EXISTING

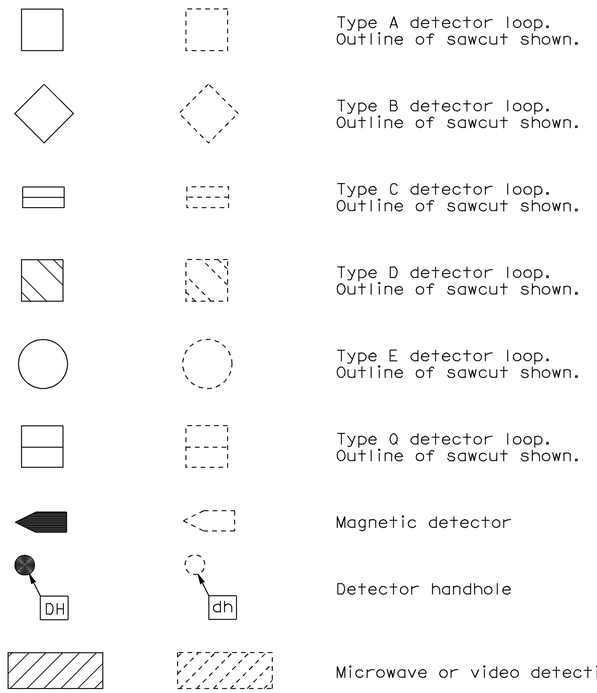

MISCELLANEOUS EQUIPMENT

PROPOSED EXISTING

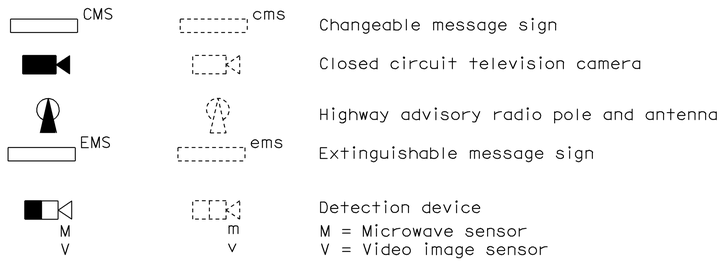

STATE OF CALIFORNIA
DEPARTMENT OF TRANSPORTATION

ELECTRICAL SYSTEMS (SYMBOLS AND ABBREVIATIONS)

NO SCALE

RSP ES-1C DATED OCTOBER 5, 2007 SUPERCEDES STANDARD PLAN ES-1C
DATED MAY 1, 2006 - PAGE 402 OF THE STANDARD PLANS BOOK DATED MAY 2006.

REVISED STANDARD PLAN RSP ES-1C

2006 REVISED STANDARD PLAN RSP ES-1C

7-10-07

DIST	COUNTY	ROUTE	POST MILES TOTAL PROJECT	SHEET NO.	TOTAL SHEETS
04	SF	101,1	9.2/9.8, 6.8/7.1	256	567

Jeffery G. McRae
REGISTERED ELECTRICAL ENGINEER

REGISTERED PROFESSIONAL ENGINEER
Jeffery G. McRae
No. E14512
Exp. 6-30-08
ELECTRICAL
STATE OF CALIFORNIA

October 5, 2007
PLANS APPROVAL DATE

The State of California or its officers or agents shall not be responsible for the accuracy or completeness of electronic copies of this plan sheet.

To accompany plans dated 7-20-09

NOTES-TYPE III SERVICE EQUIPMENT ENCLOSURES:

1. Service equipment enclosure and metering equipment shall meet the requirements of the service utility. The meter area shall have a sealable, lockable, weathertight cover that can be removed without the use of tools.

2. Service equipment enclosures shall be factory wired and conform to NEMA standards.

3. Dimensions of service equipment enclosures shall meet the requirements of the service utility.

4. The dead front panels on Type III service equipment enclosures shall have a continuous stainless steel or aluminum piano hinge. The panel in front of the breakers shall be secured with a latch or captive screws. No live parts shall be mounted on the dead front panel.

5. The exterior door shall have provisions for padlocking. The padlock hole shall be a minimum diameter of 7/16".

6. Enclosures housing transformers of more than one kVA shall have effective screened ventilation louver of not less than 50 square inches. Screen shall be stainless steel No. 304, with a No. 10 size mesh. Framed screen shall be secured with at least four bolts.

7. Fasteners on the exterior of the enclosure shall be vandal-resistant and shall not be removable from the exterior. Exterior screws, nuts, bolts and washers shall be stainless steel.

8. Landing lugs for incoming service conductors shall be compatible with either copper or aluminum conductors sized to suit the conductors shown on the plan. Landing lugs shall be copper or tin-plated aluminum. Neutral bus shall be rated for 125 A and be suitable for copper or aluminum conductors unless otherwise specified. The terminal shall include but not be limited to:

   a) Incoming terminals (landing lugs)
   b) Neutral lugs
   c) Solid neutral terminal strip

9. At least 6 standard single pole circuit breaker spaces, 3/4" nominal, shall be provided for branch circuits. Circuit breaker interiors shall be copper. Interiors of enclosure shall accept plug-in or cable-in/cable-out circuit breakers.

10. Control wiring shall be 600 V, 14 stranded machine tool wire. Where subject to flexing, 19 strand wire shall be used.

11. Main bus shall be rated for 125 A and shall be tin-plated copper.

12. A plastic laminated wiring diagram shall be provided with brass mounting eyelets and attached to the inside of the enclosure and the wiring diagram shall be affixed to the interior with a UL or ETL approved method.

13. An engraved phenolic nameplate on the dead front panel indicating the function of each circuit or device shall be installed with stainless steel rivets or stainless steel screws:

    a) Adjacent to the breaker or device with character size a minimum of 1/8".

    b) At the top of the exterior door panel indicating State system number, voltage level and number of phases with character size a minimum of 3/16".

14. The plan shows the approximate location of devices within the enclosure. Components may be rearranged, however, the "working" clearances within the service equipment enclosure shall be maintained.

15. In unpaved areas a raised portland cement concrete pad 2'-0" x 4" x width of foundation shall be constructed in front of new service equipment enclosure installation. Pad shall be set to elevation of foundation.

16. Foundation shall extend 2" minimum beyond edge of service equipment enclosure.

17. Internal bus, where shown, is typical only. Alternative design of proposed service equipment enclosure shall be submitted to the Engineer for approval.

18. Plug-in circuit breakers may be mounted in the vertical or horizontal position. Cable-in/cable-out circuit breakers shall be mounted in the vertical position.

19. Type III-AF and Type III-BF service equipment enclosures shall have the meter viewing windows located on the front side of the service equipment enclosures.

20. Type III-AR and Type III-BR service equipment enclosures shall be similarly constructed as Type III-AF and Type III-BF respectively, except the meter viewing windows shall be located on the back side of the service equipment enclosures.

21. Minimum clearance shall be required for front and back of service equipment enclosure per National Electrical Code, Article 110.26, "Spaces About Electric Equipment (600 Volts, Nominal, or Less)."

STATE OF CALIFORNIA
DEPARTMENT OF TRANSPORTATION

ELECTRICAL SYSTEMS (SERVICE EQUIPMENT NOTES TYPE III SERIES)

NO SCALE

RSP ES-2C DATED OCTOBER 5, 2007 SUPERCEDES STANDARD PLAN ES-2C
DATED MAY 1, 2006 - PAGE 405 OF THE STANDARD PLANS BOOK DATED MAY 2006.

REVISED STANDARD PLAN RSP ES-2C

2006 REVISED STANDARD PLAN RSP ES-2C

7-10-07

DIST	COUNTY	ROUTE	POST MILES TOTAL PROJECT	SHEET NO.	TOTAL SHEETS
04	SF	101,1	9.2/9.8, 6.8/7.1	257	567

Jeffery G. McRae
REGISTERED ELECTRICAL ENGINEER

October 5, 2007
PLANS APPROVAL DATE

Jeffery G. McRae
No. E14512
Exp. 6-30-08
ELECTRICAL
REGISTERED PROFESSIONAL ENGINEER
STATE OF CALIFORNIA

The State of California or its officers or agents shall not be responsible for the accuracy or completeness of electronic copies of this plan sheet.

To accompany plans dated 7-20-09

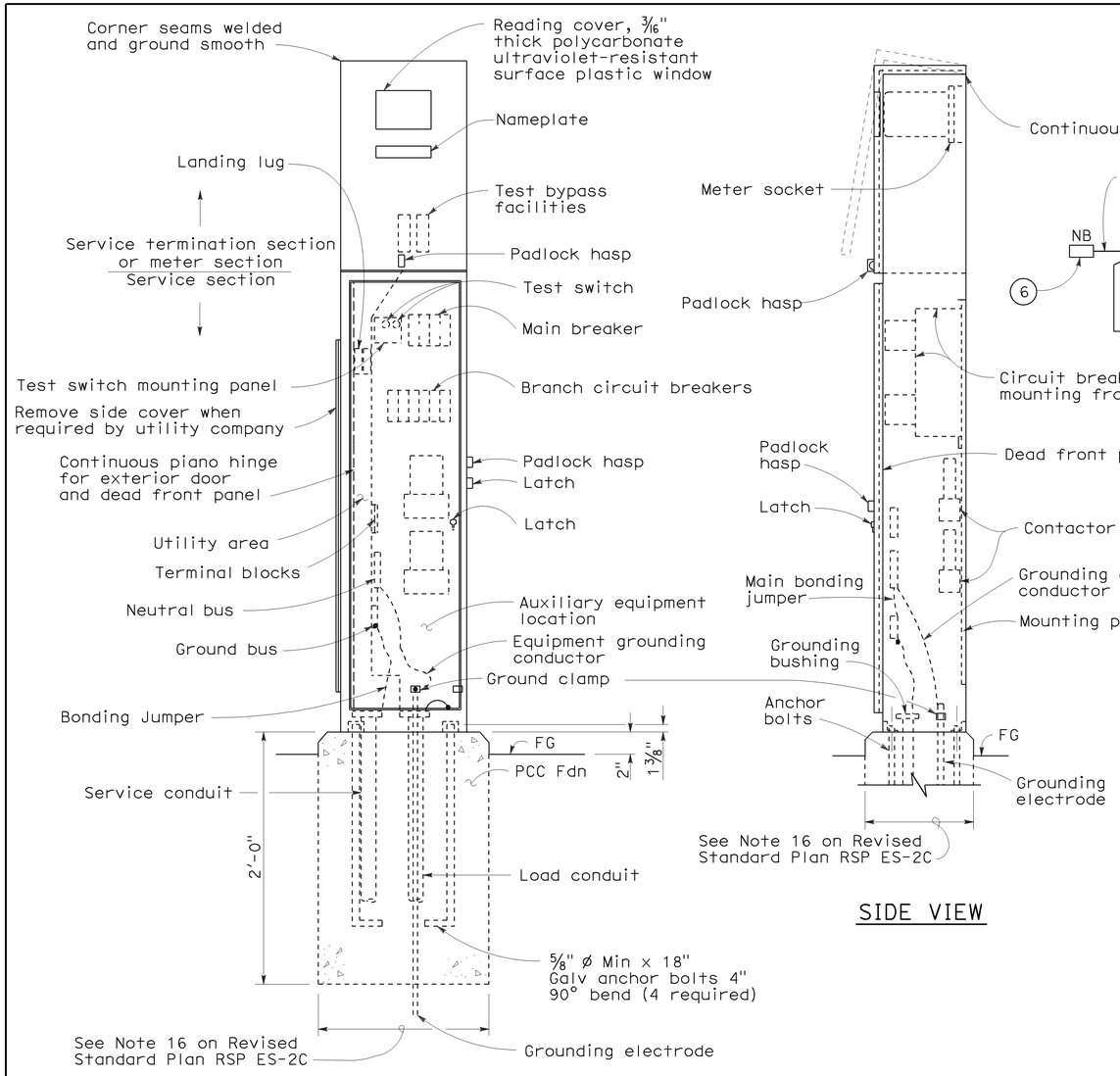

TYPE III-AF SERVICE EQUIPMENT ENCLOSURE (TYPICAL)

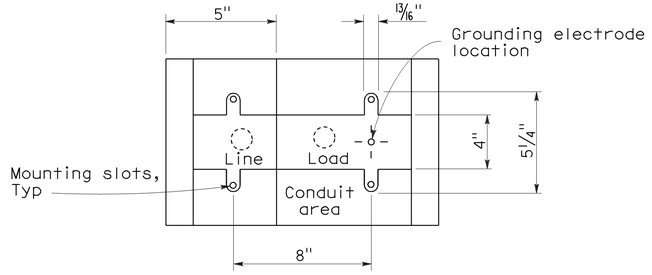

BASE FOR TYPE III-A SERVICE EQUIPMENT ENCLOSURE

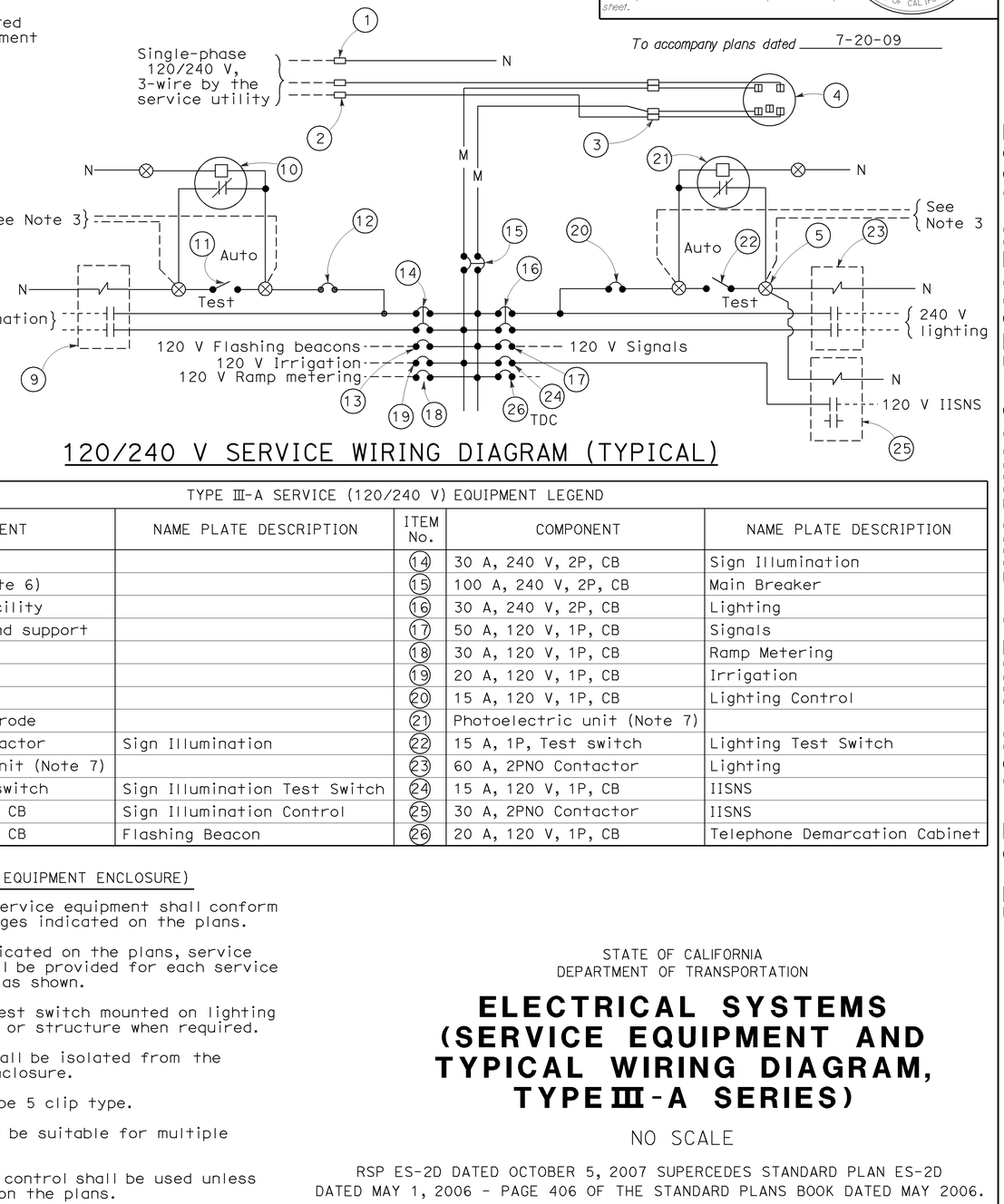

120/240 V SERVICE WIRING DIAGRAM (TYPICAL)

TYPE III-A SERVICE (120/240 V) EQUIPMENT LEGEND

ITEM No.	COMPONENT	NAME PLATE DESCRIPTION	ITEM No.	COMPONENT	NAME PLATE DESCRIPTION
(1)	Neutral lug		(14)	30 A, 240 V, 2P, CB	Sign Illumination
(2)	Landing lug (Note 6)		(15)	100 A, 240 V, 2P, CB	Main Breaker
(3)	Test bypass facility		(16)	30 A, 240 V, 2P, CB	Lighting
(4)	Meter socket and support		(17)	50 A, 120 V, 1P, CB	Signals
(5)	Terminal blocks		(18)	30 A, 120 V, 1P, CB	Ramp Metering
(6)	Neutral bus		(19)	20 A, 120 V, 1P, CB	Irrigation
(7)	Ground bus		(20)	15 A, 120 V, 1P, CB	Lighting Control
(8)	Grounding electrode		(21)	Photoelectric unit (Note 7)	
(9)	30 A, 2PNO Contactor	Sign Illumination	(22)	15 A, 1P, Test switch	Lighting Test Switch
(10)	Photoelectric unit (Note 7)		(23)	60 A, 2PNO Contactor	Lighting
(11)	15 A, 1P, Test switch	Sign Illumination Test Switch	(24)	15 A, 120 V, 1P, CB	IISNS
(12)	15 A, 120 V, 1P, CB	Sign Illumination Control	(25)	30 A, 2PNO Contactor	IISNS
(13)	15 A, 120 V, 1P, CB	Flashing Beacon	(26)	20 A, 120 V, 1P, CB	Telephone Demarcation Cabinet

NOTES: (FOR SERVICE EQUIPMENT ENCLOSURE)

1. Voltage ratings of service equipment shall conform to the service voltages indicated on the plans.
2. Unless otherwise indicated on the plans, service equipment items shall be provided for each service equipment enclosure as shown.
3. Connect to remote test switch mounted on lighting standards, sign post or structure when required.
4. Items No. (1) and (6) shall be isolated from the service equipment enclosure.
5. Meter sockets shall be 5 clip type.
6. The landing lug shall be suitable for multiple conductors.
7. Type V photoelectric control shall be used unless otherwise indicated on the plans.

STATE OF CALIFORNIA
DEPARTMENT OF TRANSPORTATION

ELECTRICAL SYSTEMS (SERVICE EQUIPMENT AND TYPICAL WIRING DIAGRAM, TYPE III-A SERIES)

NO SCALE

RSP ES-2D DATED OCTOBER 5, 2007 SUPERCEDES STANDARD PLAN ES-2D DATED MAY 1, 2006 - PAGE 406 OF THE STANDARD PLANS BOOK DATED MAY 2006.

REVISED STANDARD PLAN RSP ES-2D

2006 REVISED STANDARD PLAN RSP ES-2D

7-10-07

DIST	COUNTY	ROUTE	POST MILES TOTAL PROJECT	SHEET NO.	TOTAL SHEETS
04	SF	101,1	9.2/9.8, 6.8/7.1	258	567

Jeffery G. McRae
REGISTERED ELECTRICAL ENGINEER

REGISTERED PROFESSIONAL ENGINEER
Jeffery G. McRae
No. E14512
Exp. 6-30-08
ELECTRICAL
STATE OF CALIFORNIA

October 5, 2007
PLANS APPROVAL DATE

The State of California or its officers or agents shall not be responsible for the accuracy or completeness of electronic copies of this plan sheet.

To accompany plans dated 7-20-09

LOOP INSTALLATION PROCEDURE

1. Loops shall be centered in lanes.
2. Saw slots in pavement for loop conductors as shown in details.
3. Distance between side of loop and a lead-in saw cut from adjacent detectors shall be 2'-0" minimum. Distance between lead-in saw cuts shall be 6" minimum.
4. Bottom of saw slot shall be smooth with no sharp edges.
5. Slots shall be washed until clean, blown out and thoroughly dried before installing loop conductors.
6. Adjacent loops on the same sensor unit channel shall be wound in opposite directions.
7. Identify and tag loop circuit pairs in the pull box with loop number, start (S) and finish (F) of conductor. Identify and tag lead-in-cable with sensor number and phase.
8. Install loop conductor in slot using a 3/16" to 1/4" thick wood paddle. Hold loop conductors with wood paddles (at the bottom of the sawed slot) during sealant placement.
9. No more than 2 twisted pairs shall be installed in one sawed slot.
10. Allow additional 5'-0" of slack length of conductor for the lead-in run to pull box.
11. The additional length of each conductor for each loop shall be twisted together into a pair (6 turns per 3'-4" minimum) before being placed in the slot and conduit leading to pull box.
12. Test each loop circuit for continuity, circuit resistance and insulation resistance at the pull box before filling slots.
13. Fill slots as shown in details.
14. Splice loop conductors to lead-in-cable. Splices shall be soldered.
15. End of lead-in-cable and Type 2 loop conductor shall be waterproofed prior to installing in conduit to prevent moisture from entering the cable.
16. Lead-in-cable shall not be spliced between the pull box and the controller cabinet terminals.
17. Test each loop circuit for continuity, circuit resistance and insulation resistance at the controller cabinet location.
18. Where loop conductors are not to be spliced to a lead-in-cable, the ends of the conductors shall be taped and waterproofed with electrical insulating coating.

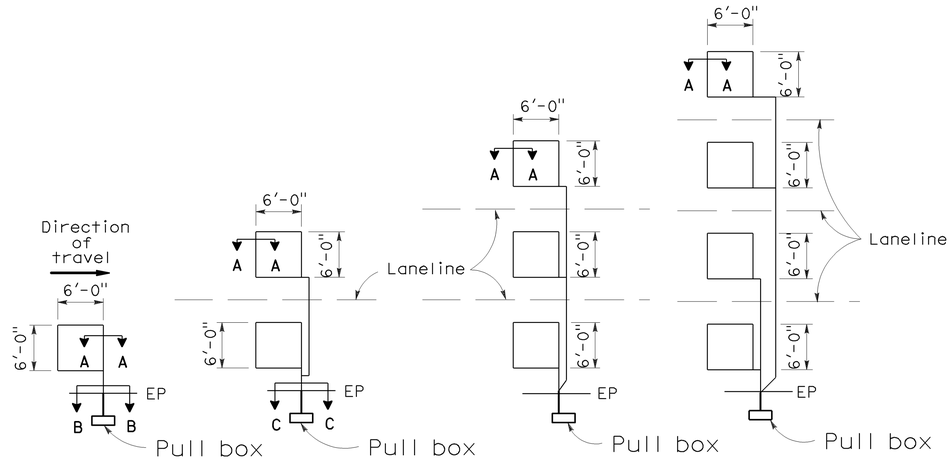

TYPE 1A INSTALLATION | TYPE 2A INSTALLATION | TYPE 3A INSTALLATION | TYPE 4A INSTALLATION

SAWCUT DETAILS

(Type A loop detector configurations illustrated)

1. 1A thru 4A = 1 Type A loop configuration in each lane.
2. 1B thru 4B = 1 Type B loop configuration in each lane.
3. 1C = 1 Type C loop configuration entering lanes as required.
4. 1D thru 4D = 1 Type D loop configuration in each lane.
5. 1E thru 4E = 1 Type E loop configuration in each lane.
6. 1Q thru 4Q = 1 Type Q loop configuration in each lane. (Use Type A, B, C, D, E or Q loop detector configurations only when specified or shown on plans)

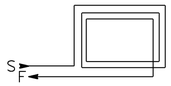

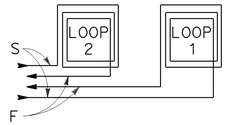

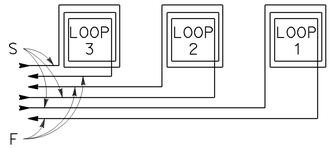

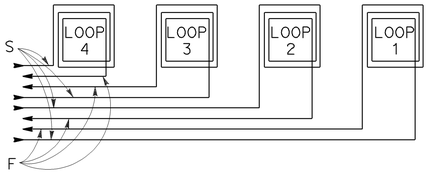

WINDING DETAILS

See Notes 6 and 7

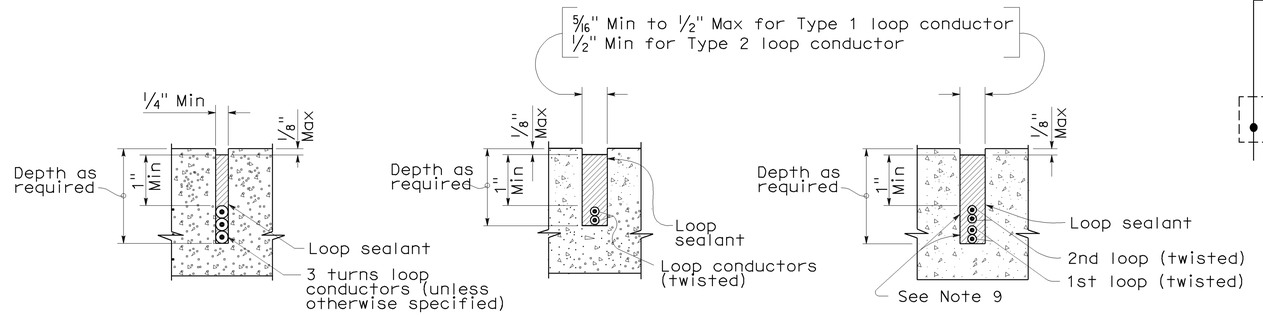

SECTION A-A | SECTION B-B | SECTION C-C

SLOT DETAILS - TYPE 1 AND TYPE 2 LOOP CONDUCTOR

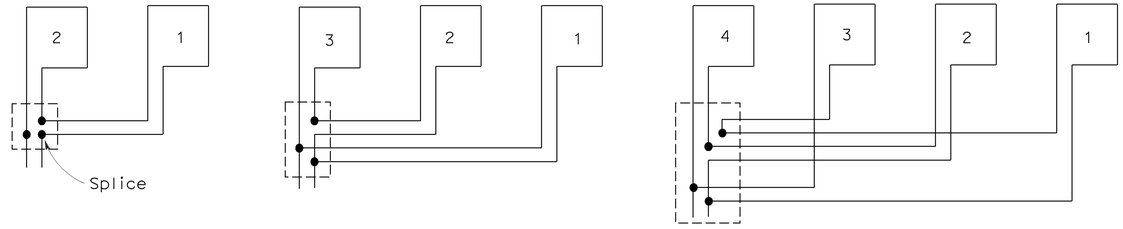

TYPICAL LOOP CONNECTIONS

(Dashed lines represent the pull box)

STATE OF CALIFORNIA
DEPARTMENT OF TRANSPORTATION

ELECTRICAL SYSTEMS (DETECTORS)

NO SCALE

RSP ES-5A DATED OCTOBER 5, 2007 SUPERCEDES STANDARD PLAN ES-5A
DATED MAY 1, 2006 - PAGE 423 OF THE STANDARD PLANS BOOK DATED MAY 2006.

REVISED STANDARD PLAN RSP ES-5A

2006 REVISED STANDARD PLAN RSP ES-5A

8-17-07

DIST	COUNTY	ROUTE	POST MILES TOTAL PROJECT	SHEET NO.	TOTAL SHEETS
04	SF	101,1	9.2/9.8, 6.8/7.1	259	567

REGISTERED CIVIL ENGINEER

October 5, 2007
PLANS APPROVAL DATE

Stanley P. Johnson
No. C57793
Exp. 3-31-08
CIVIL
REGISTERED PROFESSIONAL ENGINEER
STATE OF CALIFORNIA

The State of California or its officers or agents shall not be responsible for the accuracy or completeness of electronic copies of this plan sheet.

To accompany plans dated 7-20-09

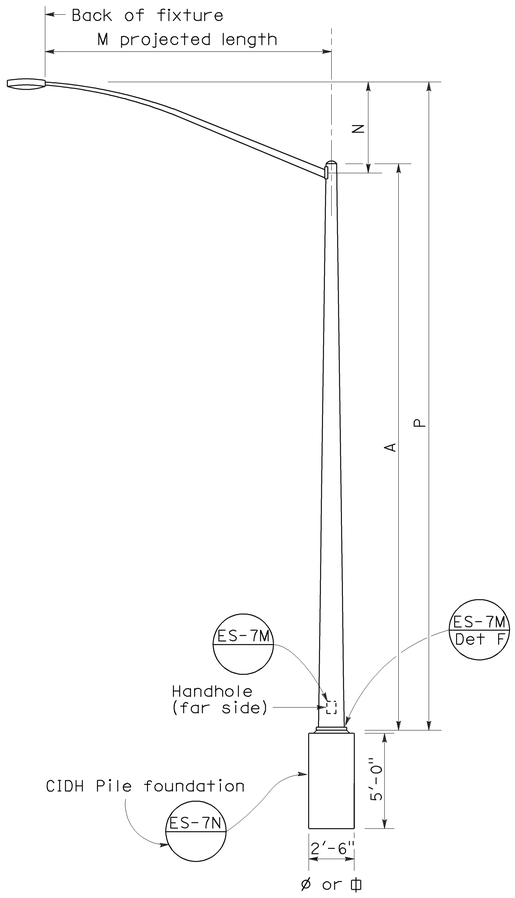

ELEVATION
TYPE 15 AND TYPE 21

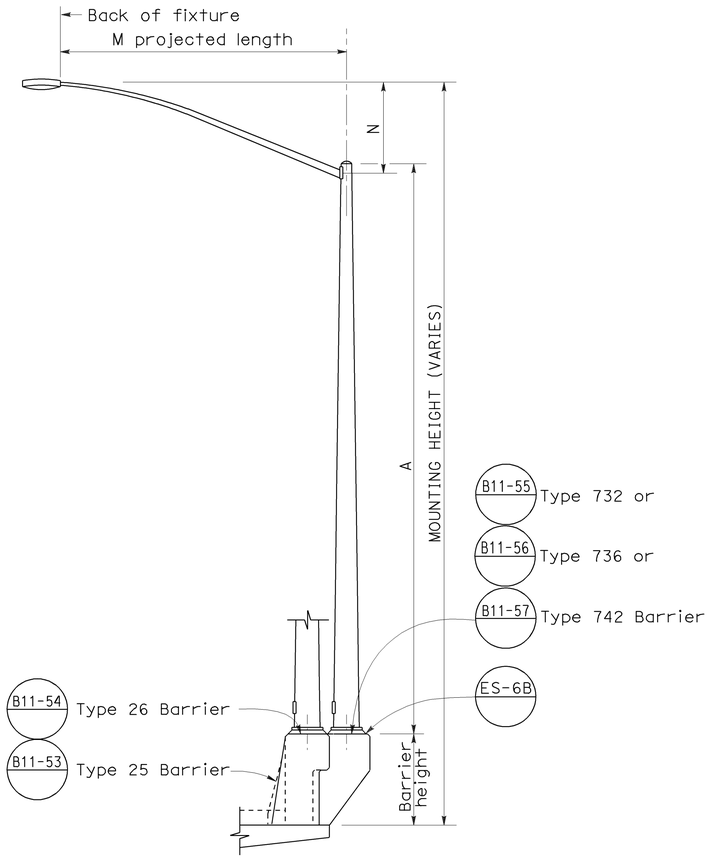

ELEVATION
TYPE 15 AND TYPE 21 BARRIER RAIL MOUNTED

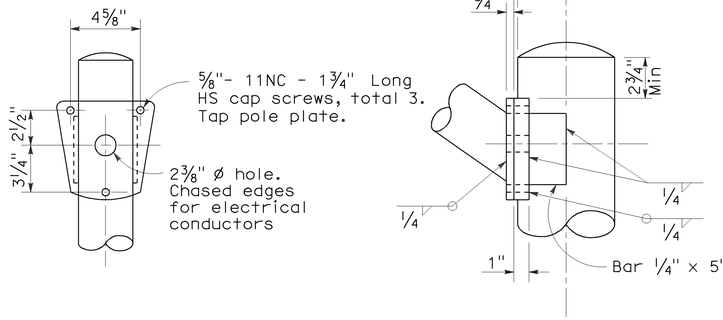

DETAIL R
LUMINAIRE ARM CONNECTION

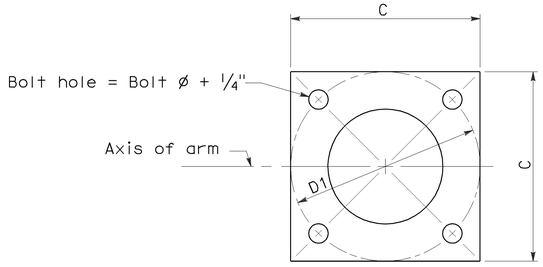

BASE PLATE

POLE TYPE	POLE DATA				BASE PLATE DATA				LUMINAIRE ARM
	A Height	Min OD		Wall Thickness	C	D1 Bolt Circle	Thick-ness	Anchor Bolts Size	
		Base	Top						
15	30′	8"	3 7/8"	0.1196"	1′-0"	1′-0"	1"	1" ø x 3′-0" x 4"*	6′ - 15′ [12′]
21	35′	8 5/8"	3 7/8"	0.1196"	1′-0"	1′-0"	1"	1 1/4"ø x 3′-0" x 4"*	6′ - 15′ [12′]

* For barrier rail bolts, see Standard Plan ES-6B.

LUMINAIRE ARM DATA					
M Projected Length	N Rise	Min OD At Pole	Nominal Thickness	P	
				Type 15	Type 21
6′-0"	2′-0"±	3 1/4"	0.1196"	31′-6"±	36′-6"±
8′-0"	2′-6"±	3 1/2"	0.1196"	32′-0"±	37′-0"±
10′-0"	3′-3"±	3 7/8"	0.1196"	32′-9"±	37′-9"±
12′-0"	4′-3"±	3 7/8"	0.1196"	33′-9"±	38′-9"±
15′-0"	4′-9"±	4 1/4"	0.1196"	34′-3"±	39′-3"±

NOTES:

1. □ Indicates arm length to be used unless otherwise noted on the plans.
2. For Type 15-SB, use Type 15 standard with Type 30 slip base plate details, see Standard Plan ES-6F.
3. For additional notes, see Standard Plan ES-7M and ES-7N.

STATE OF CALIFORNIA
DEPARTMENT OF TRANSPORTATION

ELECTRICAL SYSTEMS (LIGHTING STANDARD TYPES 15 AND 21)

NO SCALE

RSP ES-6A DATED OCTOBER 5, 2007 SUPERCEDES STANDARD PLAN ES-6A
DATED MAY 1, 2006 - PAGE 427 OF THE STANDARD PLANS BOOK DATED MAY 2006.

REVISED STANDARD PLAN RSP ES-6A

2006 REVISED STANDARD PLAN RSP ES-6A

7-10-07

DIST	COUNTY	ROUTE	POST MILES TOTAL PROJECT	SHEET NO.	TOTAL SHEETS
04	SF	101,1	9.2/9.8, 6.8/7.1	260	567

REGISTERED CIVIL ENGINEER

January 18, 2008
PLANS APPROVAL DATE

REGISTERED PROFESSIONAL ENGINEER — Stanley P. Johnson — No. C57793 — Exp. 03-31-08 CIVIL — STATE OF CALIFORNIA

The State of California or its officers or agents shall not be responsible for the accuracy or completeness of electronic copies of this plan sheet.

To accompany plans dated 7-20-09

LUMINAIRE ARM DATA

PROJECTED LENGTH	THICKNESS	MINIMUM OD @ POLE	MOUNTING HEIGHT
* 6'-0"	0.1196"	3¼"	36'-9"±
8'-0"		3½"	37'-3"±
10'-0"		3¾"	38'-0"±
12'-0"		3¾"	39'-0"±
15'-0"		4¼"	39'-6"±
** 20'-0"	0.1793"	5"	37'-0"±

* Type 30 - arm length 6'-0" - 15'-0" maximum
** Type 31 - arm lengths 20'-0"

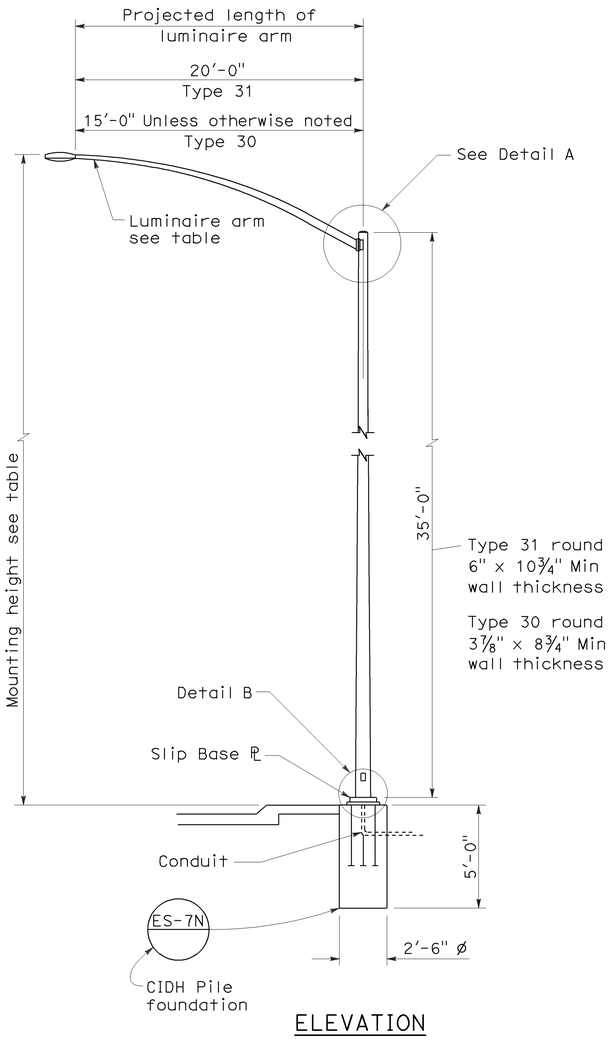

ELEVATION

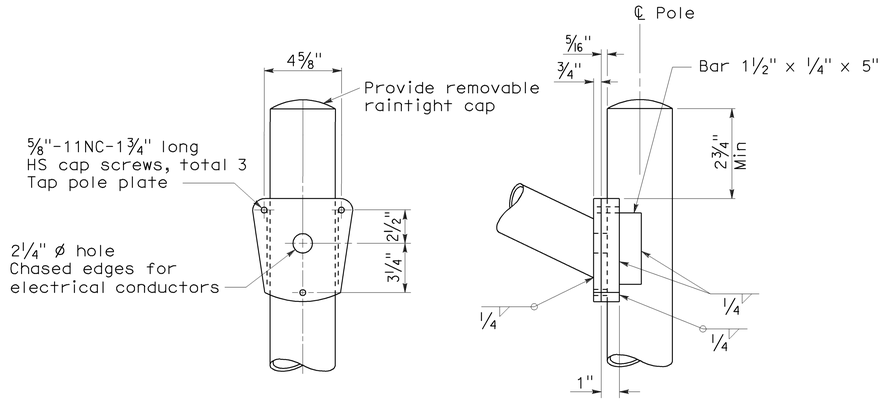

DETAIL A - TYPE 30

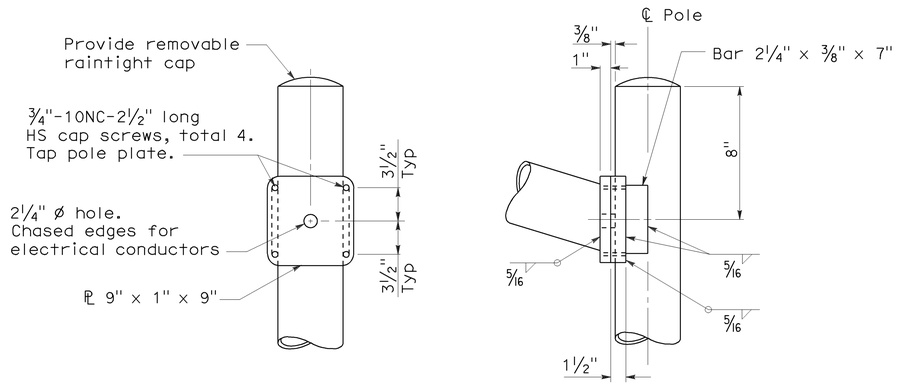

DETAIL A - TYPE 31

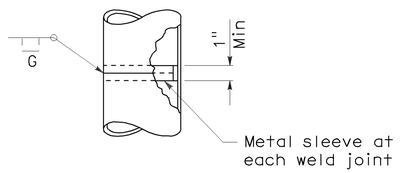

POLE SPLICE

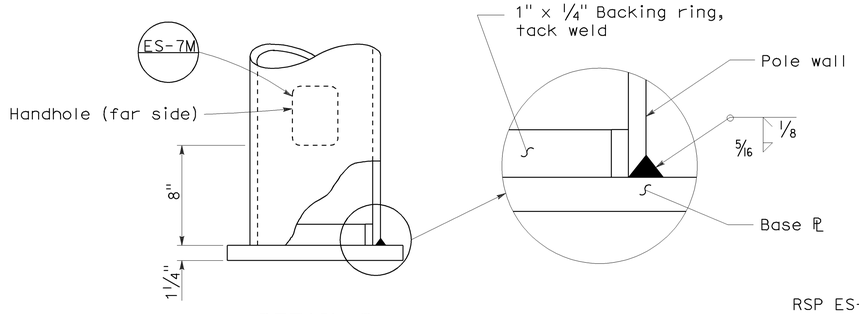

DETAIL B

NOTES:

1. Sheet steel shall have a minimum yield of 48,000 psi.
2. For slip base details see Standard Plan ES-6F.
3. For Type 30 fixed base use Type 15 base plate, and foundation shown on Revised Standard Plan RSP ES-6A. Use 1¼" Dia x 3'-6" x 4" anchor bolts.
4. For Type 31 fixed base use Type 32 base plate, anchor bolts and foundation on Standard Plan ES-6G.
5. Handhole shall be located on downstream side of traffic unless noted otherwise on plans.
6. For additional general notes refer to Standard Plan ES-7M.

STATE OF CALIFORNIA
DEPARTMENT OF TRANSPORTATION

ELECTRICAL SYSTEMS (LIGHTING STANDARD TYPES 30 AND 31)

NO SCALE

RSP ES-6E DATED JANUARY 18, 2008 SUPERCEDES STANDARD PLAN ES-6E
DATED MAY 1, 2006 - PAGE 430 OF THE STANDARD PLANS BOOK DATED MAY 2006.

REVISED STANDARD PLAN RSP ES-6E

2006 REVISED STANDARD PLAN RSP ES-6E

11-19-07

DIST	COUNTY	ROUTE	POST MILES TOTAL PROJECT	SHEET NO.	TOTAL SHEETS
04	SF	101,1	9.2/9.8, 6.8/7.1	261	567

Stanley P. Johnson
REGISTERED CIVIL ENGINEER

October 5, 2007
PLANS APPROVAL DATE

REGISTERED PROFESSIONAL ENGINEER — Stanley P. Johnson — No. C57793 — Exp. 3-31-08 — CIVIL — STATE OF CALIFORNIA

The State of California or its officers or agents shall not be responsible for the accuracy or completeness of electronic copies of this plan sheet.

To accompany plans dated 7-20-09

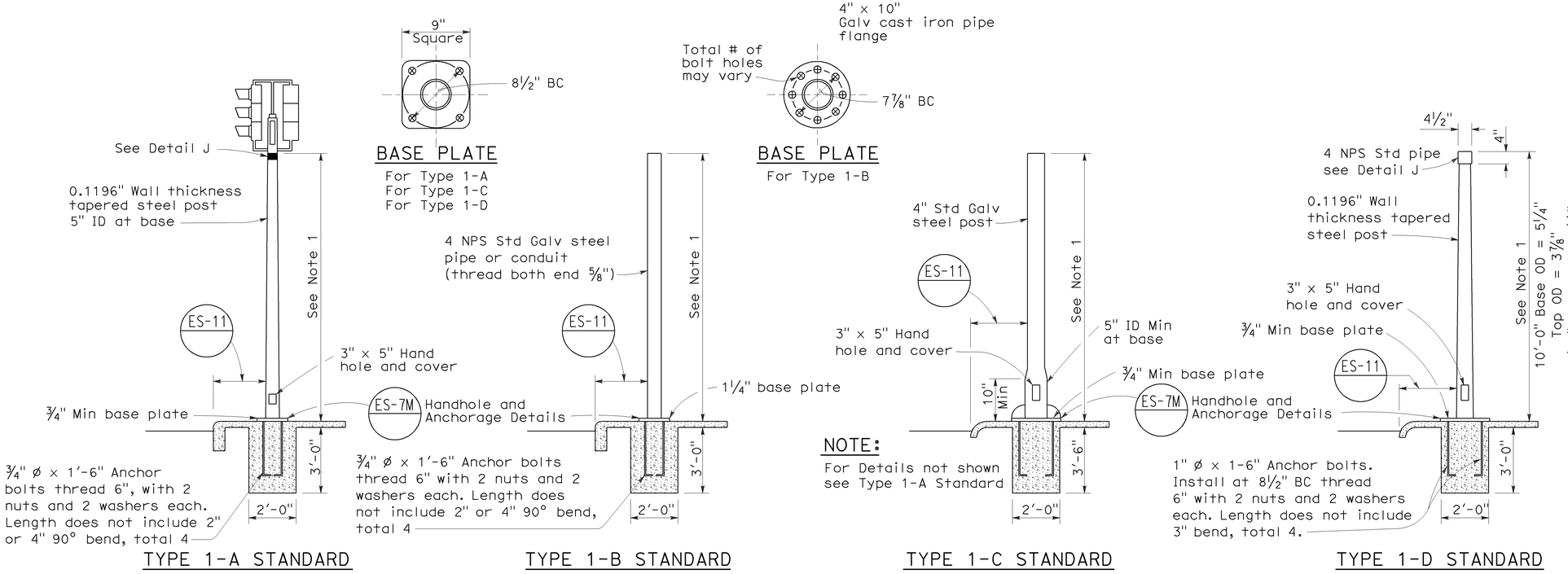

TYPE 1 SIGNAL STANDARDS

NOTES:

1. Standards shall be 10'-0" ± 2" for vehicle signals and 7'-0" ± 2" for pedestrian signals unless otherwise noted on plans.
2. Top of standards shall be 4½" OD.
3. Conduits shall extend 2" maximum above finished surface of foundation and for Types 1-A, 1-C and 1-D shall be sloped toward handhole.
4. Anchor bolts shall be bonded to conduit or grounding conductor.
5. Conduit between standard and adjacent pull box shall be 2" minimum.
6. Paint numbers on roadway side facing traffic when electrolier or post is left of direction of traffic.

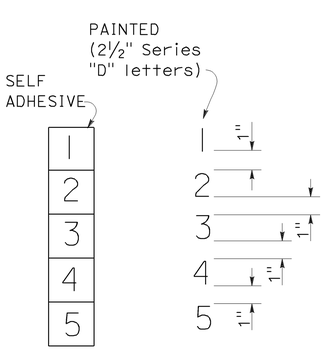

NUMBER DETAIL

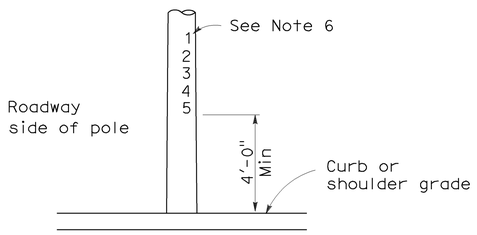

TYPICAL NUMBER FORMAT

LOCATION OF EQUIPMENT NUMBERS ON STANDARDS AND POSTS

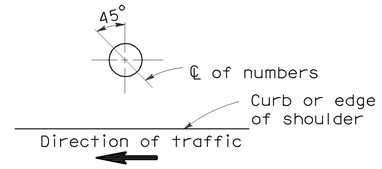

PLAN

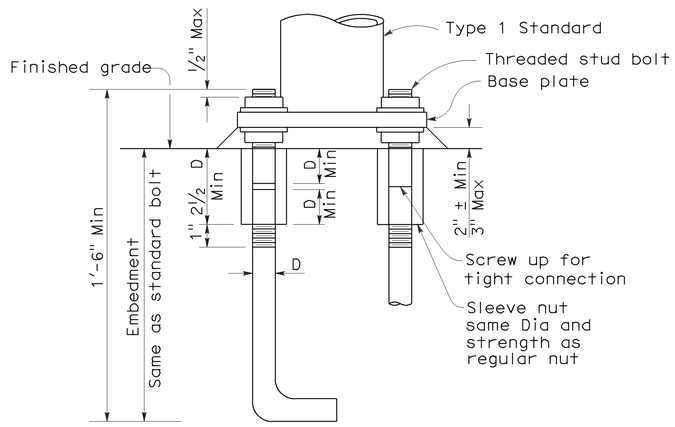

ANCHOR BOLTS WITH SLEEVE NUTS

Sleeve nuts to be used only when shown or specified on Project Plans

D = Diameter of anchor bolt

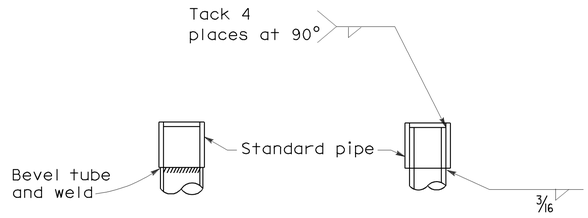

DETAIL J

Tube may be inserted into pipe or butted as required

STATE OF CALIFORNIA
DEPARTMENT OF TRANSPORTATION

ELECTRICAL SYSTEMS (SIGNAL AND LIGHTING STANDARD TYPE 1 STANDARD AND EQUIPMENT NUMBERING)

NO SCALE

RSP ES-7B DATED OCTOBER 5, 2007 SUPERCEDES STANDARD PLAN ES-7B DATED MAY 1, 2006 - PAGE 438 OF THE STANDARD PLANS BOOK DATED MAY 2006.

REVISED STANDARD PLAN RSP ES-7B

2006 REVISED STANDARD PLAN RSP ES-7B

7-10-07

DIST	COUNTY	ROUTE	POST MILES TOTAL PROJECT	SHEET NO.	TOTAL SHEETS
04	SF	101,1	9.2/9.8, 6.8/7.1	262	567

Stanley P Johnson
REGISTERED CIVIL ENGINEER

June 15, 2007
PLANS APPROVAL DATE

REGISTERED PROFESSIONAL ENGINEER — Stanley P. Johnson — No. C57793 — Exp. 3-31-08 CIVIL — STATE OF CALIFORNIA

The State of California or its officers or agents shall not be responsible for the accuracy or completeness of electronic copies of this plan sheet.

To accompany plans dated 7-20-09

2006 REVISED STANDARD PLAN RSP ES-7C

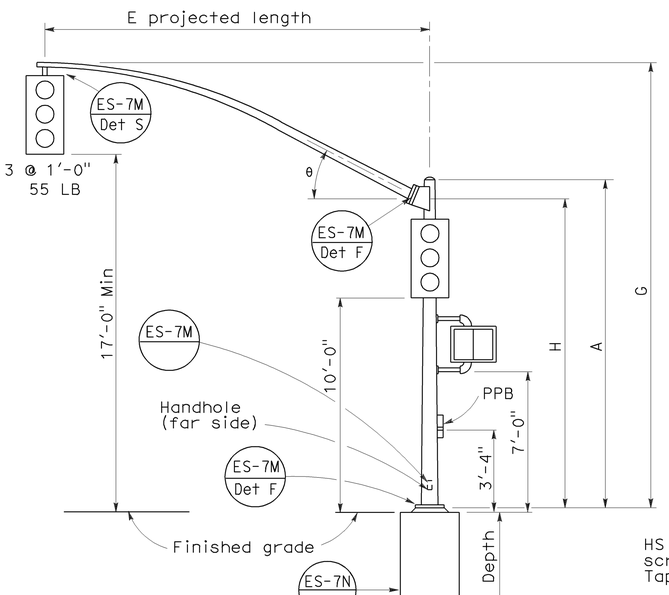

ELEVATION

TYPE 16-1-100, 18-1-100

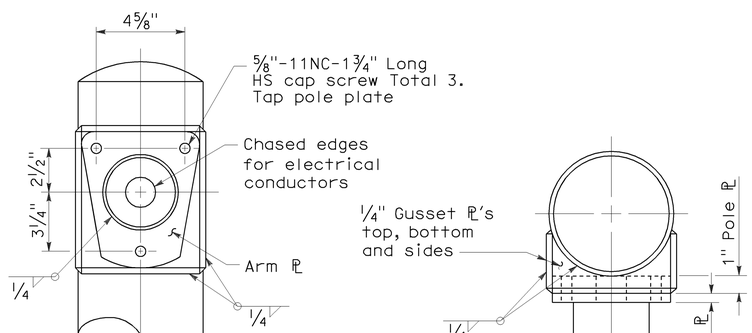

DETAIL W

LUMINAIRE ARM CONNECTION

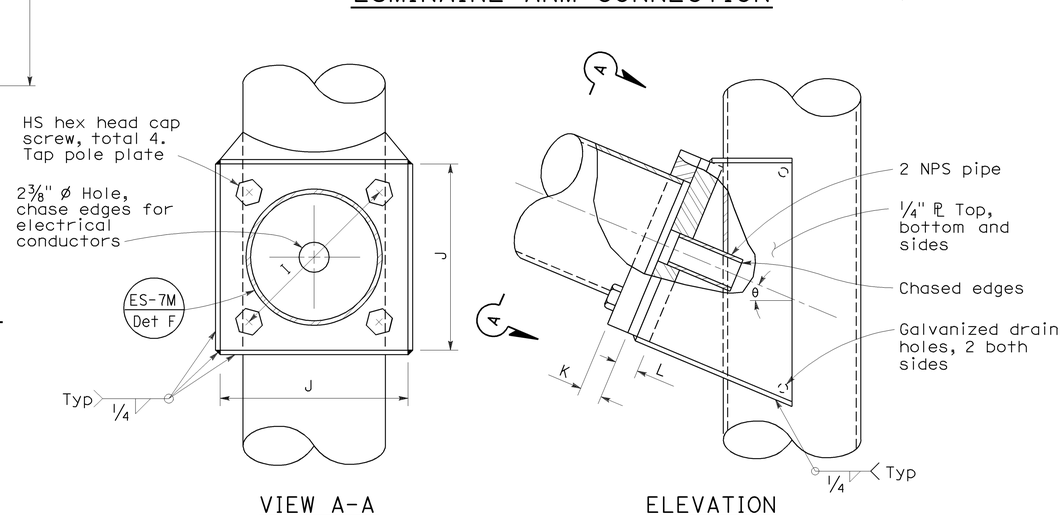

VIEW A-A

ELEVATION

SIGNAL ARM CONNECTION DETAILS

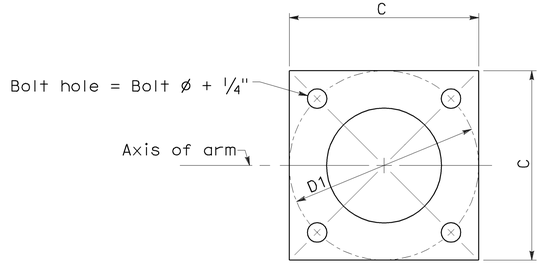

BASE PLATE

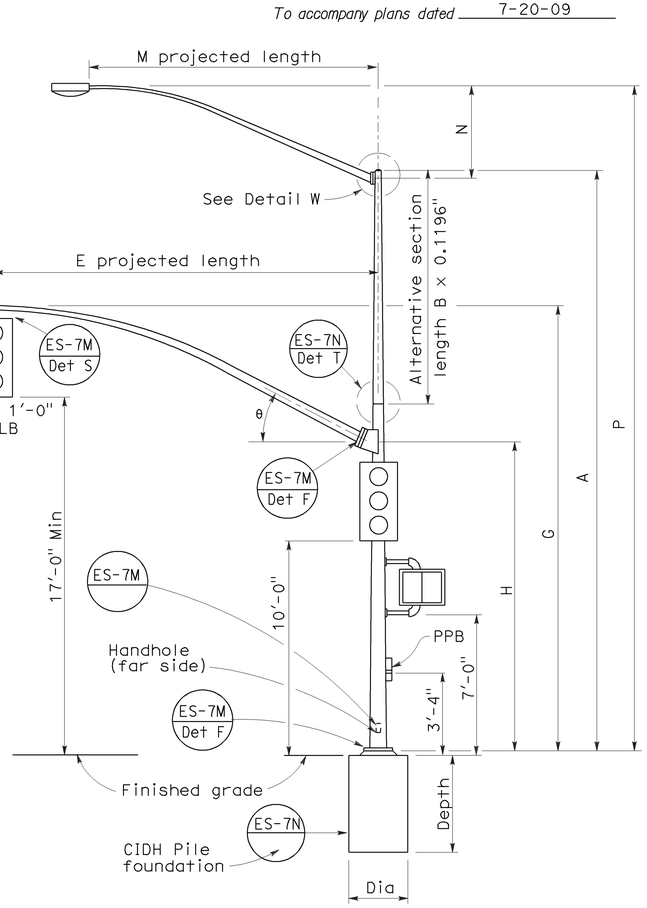

ELEVATION

TYPE 19-1-100, 19A-1-100

SIGNAL ARM DATA										
E Projected Length	G Mounting Height	H	Min OD At Pole	Thickness	I Bolt Circle	HS Cap Screws	J Plate size	K Arm ℄ Thickness	L Pole ℄ Thickness	θ
15'-0"	21'-8"±	17'-6"	7"	0.1196"	12"	1¼"-7NC-3"	1'-0"	1¼"	1½"	23°
20'-0"	21'-8"±		7⅞"							
25'-0"	22'-8"±	16'-0"	7⅝"							
30'-0"	23'-0"±		8"							

LUMINAIRE ARM DATA					
M Projected Length	N Rise	Min OD at Pole	Thickness	P Mounting Height 30'-0" Pole	P Mounting Height 35'-0" Pole
6'-0"	2'-0"±	3¼"	0.1196"	31'-6"±	36'-6"±
8'-0"	2'-6"±	3½"		32'-0"±	37'-0"±
10'-0"	3'-3"±	3⅞"		32'-9"±	37'-9"±
12'-0"	4'-3"±			33'-9"±	38'-9"±
15'-0"	4'-9"±	4¼"		34'-3"±	39'-3"±

POLE DATA								BASE PLATE DATA						CIDH PILE FOUNDATION		
Pole Type	Load Case	Wind Velocity mph	A Height	Min OD Base	Min OD Top	Thickness	Alternative Section B Length	Alternative Section Bottom	Alternative Section Top	C	D1 Bolt Circle	Thickness	Anchor Bolts Size	Luminaire Arm	Signal Arm	Diameter	Depth	Reinforced
16-1-100	1	100	18'-6"	10¾"	8¼"	0.1793"	None			1'-6"	1'-5½"	1¼"	1½" ø x 42" x 6"	None	15'-0", 20'-0"	2'-6"	7'-2"	Yes
18-1-100			17'-0"		8⅞6"		None							None				
19-1-100			30'-0"		6⅝"		10'-0"	8"	6⅝"					6'-15' 12'-0"	25'-0", 30'-0"			
19A-1-100			35'-0"		5¹⁵⁄₁₆"		15'-0"		5¹⁵⁄₁₆"					6'-15' 15'-0"				

☐ Indicates arm length to be used unless otherwise noted on plans.

STATE OF CALIFORNIA
DEPARTMENT OF TRANSPORTATION

ELECTRICAL SYSTEMS (SIGNAL AND LIGHTING STANDARD CASE 1 ARM LOADING WIND VELOCITY = 100 MPH ARM LENGTHS 15' TO 30')

NO SCALE

RSP ES-7C DATED JUNE 15, 2007 SUPERSEDES STANDARD PLAN ES-7C DATED MAY 1, 2006 - PAGE 439 OF THE STANDARD PLANS BOOK DATED MAY 2006.

REVISED STANDARD PLAN RSP ES-7C

1-26-07

DIST	COUNTY	ROUTE	POST MILES TOTAL PROJECT	SHEET NO.	TOTAL SHEETS
04	SF	101,1	9.2/9.8, 6.8/7.1	263	567

REGISTERED CIVIL ENGINEER

October 5, 2007
PLANS APPROVAL DATE

Stanley P. Johnson No. C57793 Exp. 3-31-08 CIVIL
REGISTERED PROFESSIONAL ENGINEER
STATE OF CALIFORNIA

The State of California or its officers or agents shall not be responsible for the accuracy or completeness of electronic copies of this plan sheet.

To accompany plans dated 7-20-09

2006 REVISED STANDARD PLAN RSP ES-7K

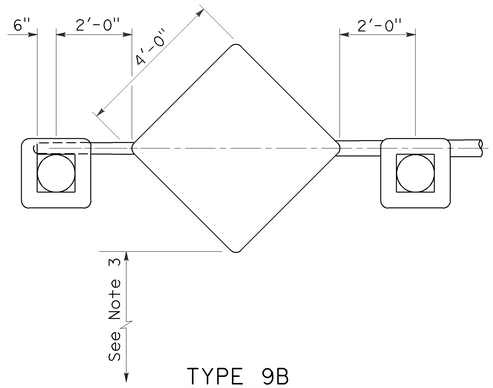

TYPE 9B

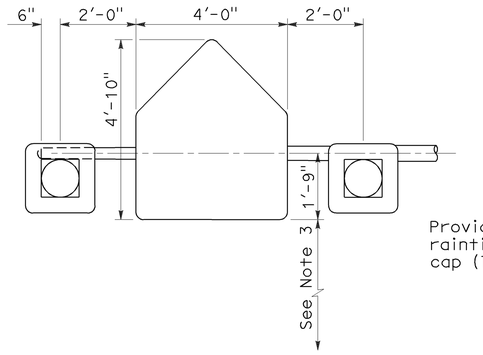

TYPE 9A

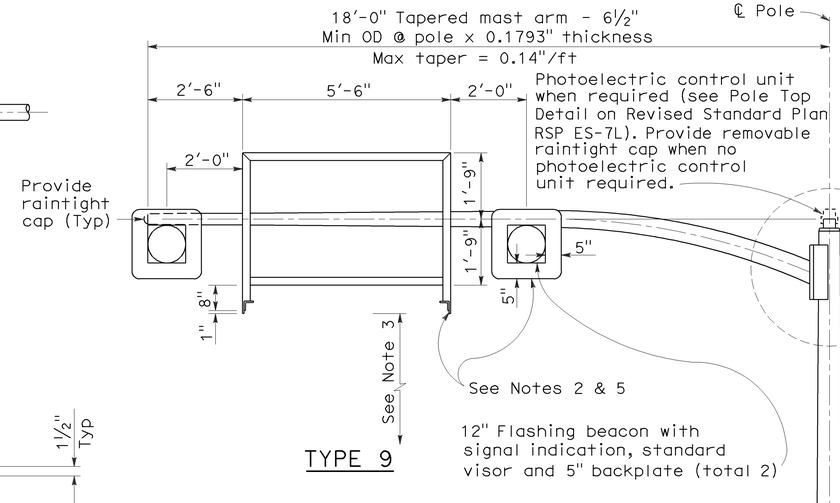

TYPE 9

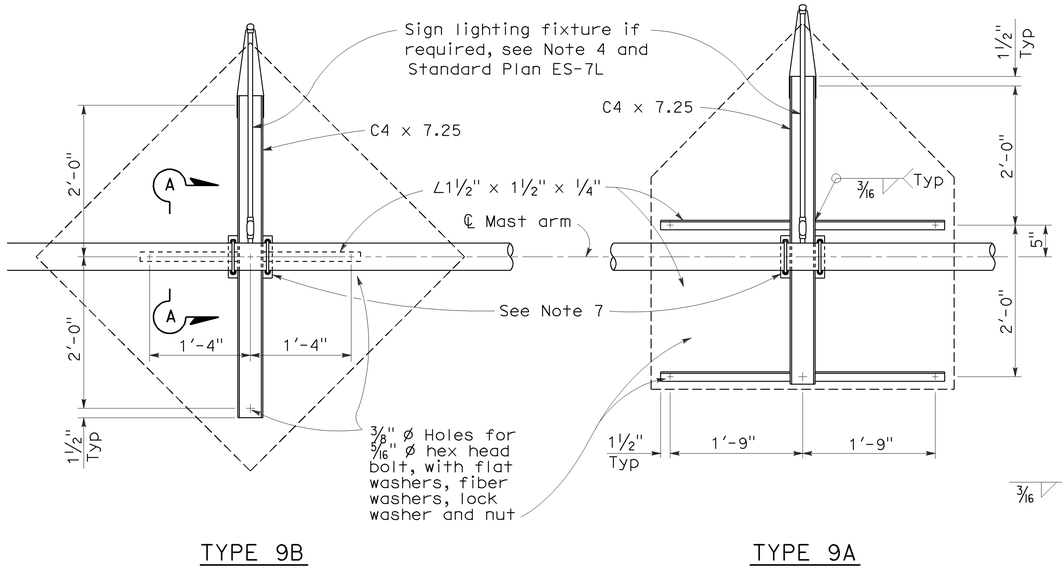

TYPE 9B

TYPE 9A

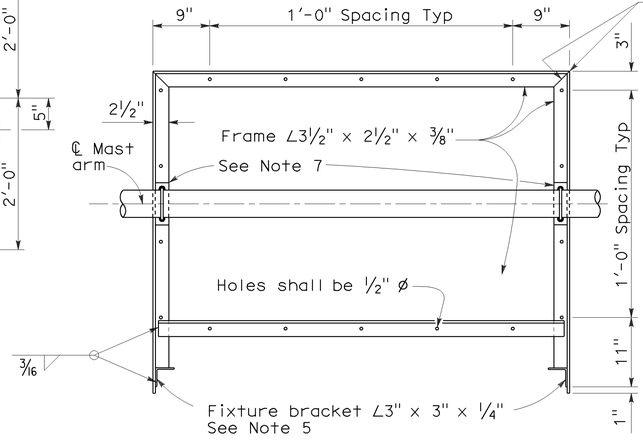

TYPE 9

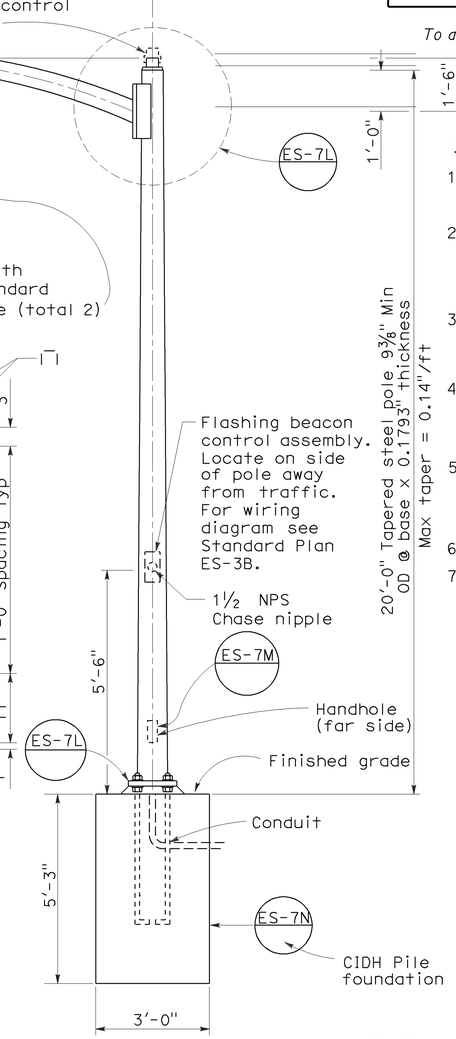

ELEVATION

NOTES:

1. Splices between fluorescent fixture sockets shall be waterproof.
2. Install flashing beacons and sign frame. Flashing beacons shall be MAT mounted on pipe tenon. (See Standard Plan ES-7M, Detail S).
3. Vertical clearance to be 17'-0" minimum between roadway and bottom of signal panel or lighting fixture bracket.
4. Special provisions or plans will indicate when sign lighting fixture is required on Type 9A or 9B sign frames.
5. Type 9 sign frames shall be provided with a 3'-0" fluorescent fixture. For fluorescent lighting details see Standard Plan ES-15B.
6. Anchor bolts shall be ASTM A-307.
7. See Revised Standard Plan RSP ES-7L for sign frame mounting details.

FRAME DETAILS

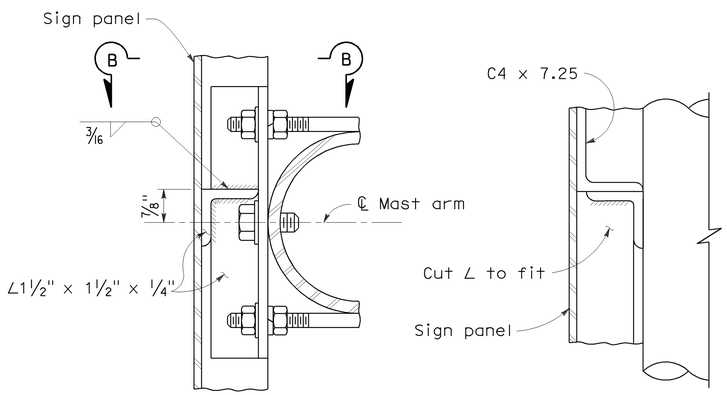

SECTION A-A

SECTION B-B

TYPE 9B

STATE OF CALIFORNIA
DEPARTMENT OF TRANSPORTATION

ELECTRICAL SYSTEMS (SIGNAL AND LIGHTING STANDARD CANTILEVER FLASHING BEACON TYPES 9, 9A AND 9B)

NO SCALE

RSP ES-7K DATED OCTOBER 5, 2007 SUPERCEDES STANDARD PLAN ES-7K
DATED MAY 1, 2006 - PAGE 447 OF THE STANDARD PLANS BOOK DATED MAY 2006.

REVISED STANDARD PLAN RSP ES-7K

7-10-07

DIST	COUNTY	ROUTE	POST MILES TOTAL PROJECT	SHEET NO.	TOTAL SHEETS
04	SF	101,1	9.2/9.8, 6.8/7.1	264	567

Jeffery G. McRae
REGISTERED ELECTRICAL ENGINEER

October 5, 2007
PLANS APPROVAL DATE

REGISTERED PROFESSIONAL ENGINEER — Jeffery G. McRae — No. E14512 — Exp. 6-30-08 — ELECTRICAL — STATE OF CALIFORNIA

The State of California or its officers or agents shall not be responsible for the accuracy or completeness of electronic copies of this plan sheet.

To accompany plans dated 7-20-09

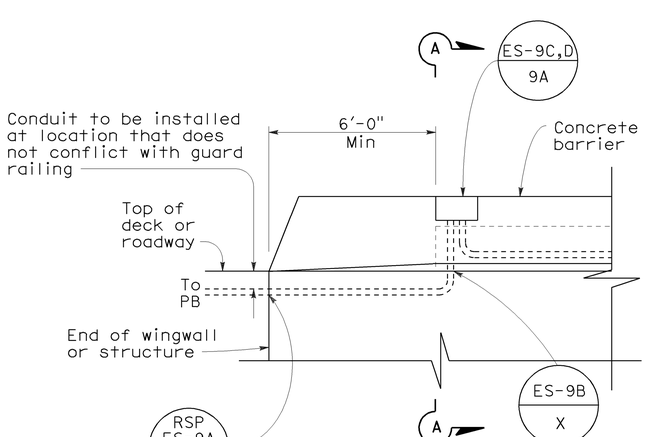

SIDEVIEW

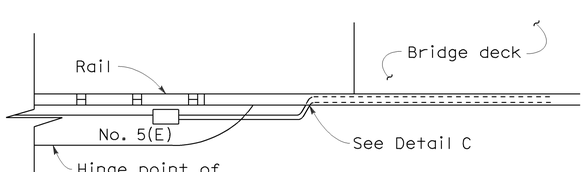

TOP VIEW

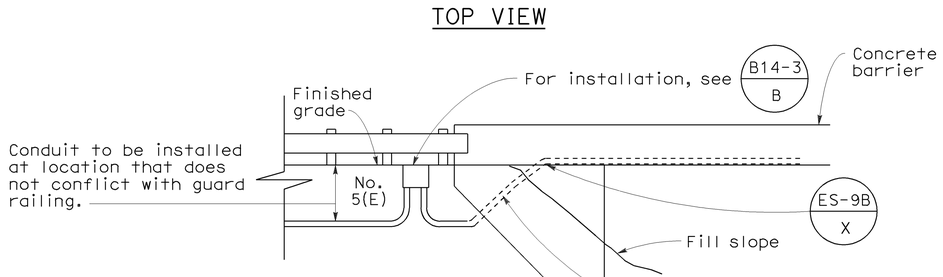

SIDE VIEW
DETAIL I
CONDUIT TERMINATION

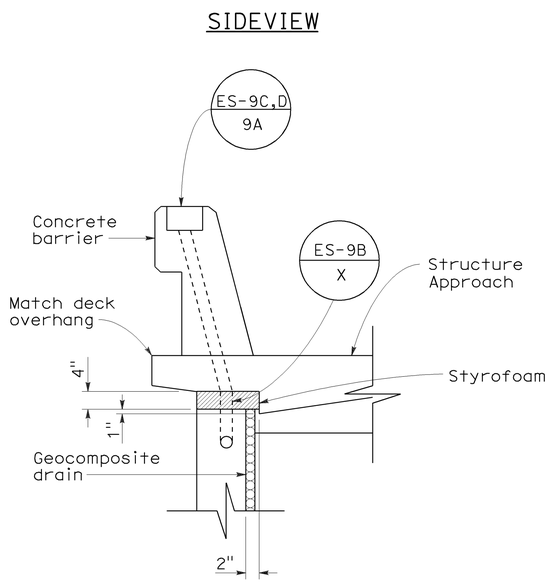

SECTION A-A

DETAIL A
CONDUIT TERMINATION

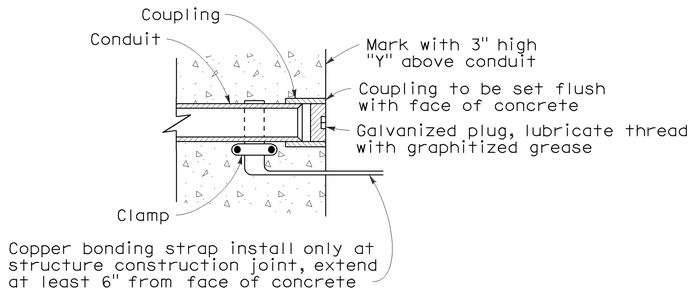

DETAIL C
CONDUIT TERMINATION

STATE OF CALIFORNIA
DEPARTMENT OF TRANSPORTATION

ELECTRICAL SYSTEMS (ELECTRICAL DETAILS STRUCTURE INSTALLATIONS)

NO SCALE

RSP ES-9A DATED OCTOBER 5, 2007 SUPERCEDES STANDARD PLAN ES-9A
DATED MAY 1, 2006 - PAGE 454 OF THE STANDARD PLANS BOOK DATED MAY 2006.

REVISED STANDARD PLAN RSP ES-9A

2006 REVISED STANDARD PLAN RSP ES-9A

7-11-07

DIST	COUNTY	ROUTE	POST MILES TOTAL PROJECT	SHEET NO.	TOTAL SHEETS
04	SF	101,1	9.2/9.8, 6.8/7.1	265	567

REGISTERED ELECTRICAL ENGINEER

October 5, 2007
PLANS APPROVAL DATE

Jeffery G. McRae
No. E14512
Exp. 6-30-08
ELECTRICAL
REGISTERED PROFESSIONAL ENGINEER
STATE OF CALIFORNIA

The State of California or its officers or agents shall not be responsible for the accuracy or completeness of electronic copies of this plan sheet.

To accompany plans dated 7-20-09

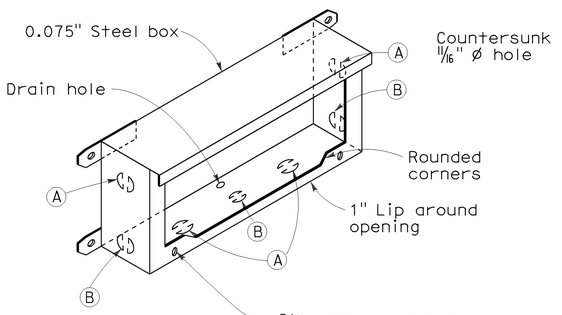

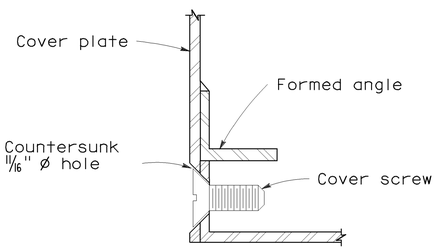

DETAIL J

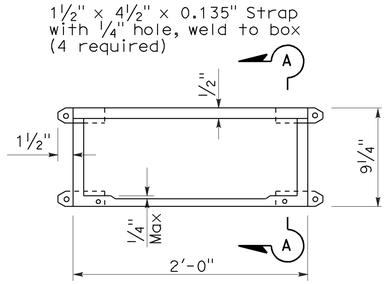

PLAN

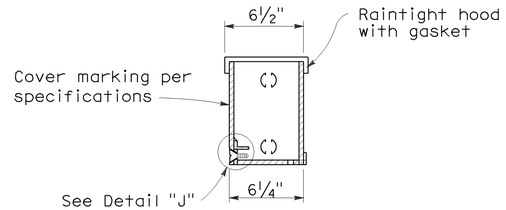

SECTION A-A

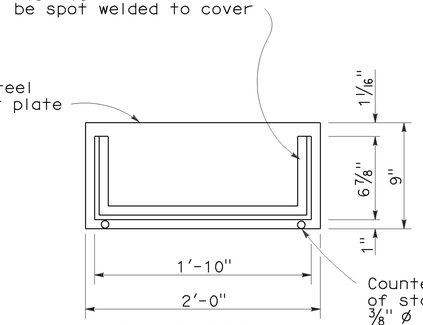

COVER DETAIL

INSTALLATION NOTE:

Box shall be parallel to top of railing. Close cover box during pouring with 1/4" plywood of sufficient size to provide 1:1 chamfer on 3 sides of cover. Upper edge of plywood shall fit against lower edge of raintight hood.

No. 9 STRUCTURE PULL BOX

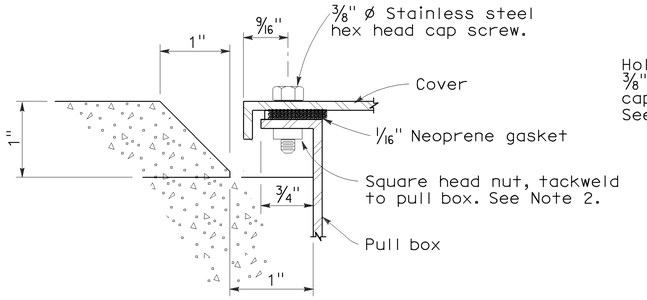

SECTION C-C

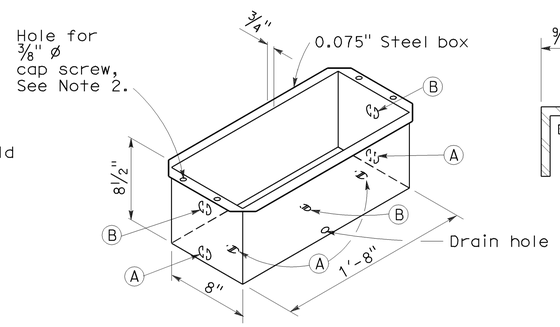

DETAIL A

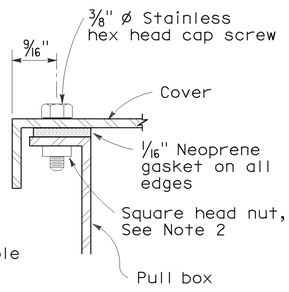

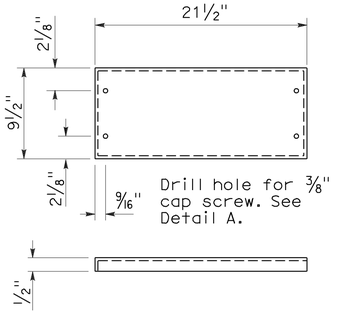

COVER DETAIL

NOTES: No. 9 and 9A Pull Box

1. Corner joints shall be lapped and secured by spot welding or riveting.
2. Where cap screws are used to attach cover to box, either of the following methods of providing adequate threading may be used:
   a. Tack weld square nut to bottom of flange (Total 4), or
   b. Tack weld a 1/4" x 5/8" x 8" bar beneath flange (Total 2).
3. Pound knockouts flat after punching.
4. Multiple size knockouts shall not be permitted.
5. Pull box covers shall be marked as shown on Standard Plan ES-8.

No. 9A STRUCTURE PULL BOX

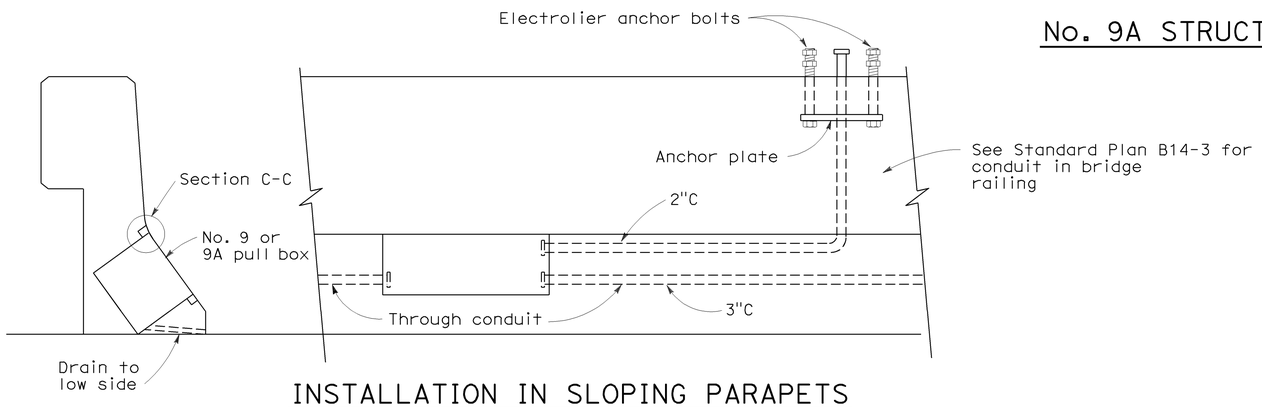

INSTALLATION IN SLOPING PARAPETS

For reinforcement in area of electrolier, see railing sheets. For electrolier anchor bolts, see Standard Plan ES-6B.

KNOCKOUT SCHEDULE
No. 9 AND 9A PULL BOX

(A) 2"C, 1 each end, 2 on bottom.

(B) 3"C, 1 each end, 1 on bottom.

STATE OF CALIFORNIA
DEPARTMENT OF TRANSPORTATION

ELECTRICAL SYSTEMS (ELECTRICAL DETAILS STRUCTURE INSTALLATIONS)

NO SCALE

RSP ES-9C DATED OCTOBER 5, 2007 SUPERCEDES STANDARD PLAN ES-9C DATED MAY 1, 2006 - PAGE 456 OF THE STANDARD PLANS BOOK DATED MAY 2006.

REVISED STANDARD PLAN RSP ES-9C

2006 REVISED STANDARD PLAN RSP ES-9C

7-26-07

DIST	COUNTY	ROUTE	POST MILES TOTAL PROJECT	SHEET NO.	TOTAL SHEETS
04	SF	101,1	9.2/9.8, 6.8/7.1	266	567

Jeffery G. McRae
REGISTERED ELECTRICAL ENGINEER

REGISTERED PROFESSIONAL ENGINEER
Jeffery G. McRae
No. E14512
Exp. 6-30-08
ELECTRICAL
STATE OF CALIFORNIA

October 5, 2007
PLANS APPROVAL DATE

The State of California or its officers or agents shall not be responsible for the accuracy or completeness of electronic copies of this plan sheet.

To accompany plans dated 7-20-09

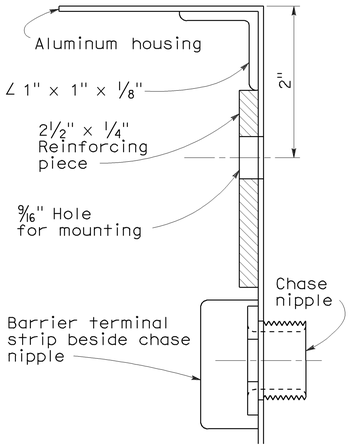

REINFORCING DETAIL

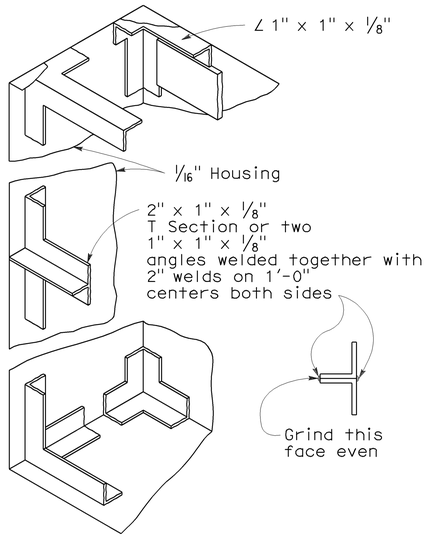

FRAMING DETAILS

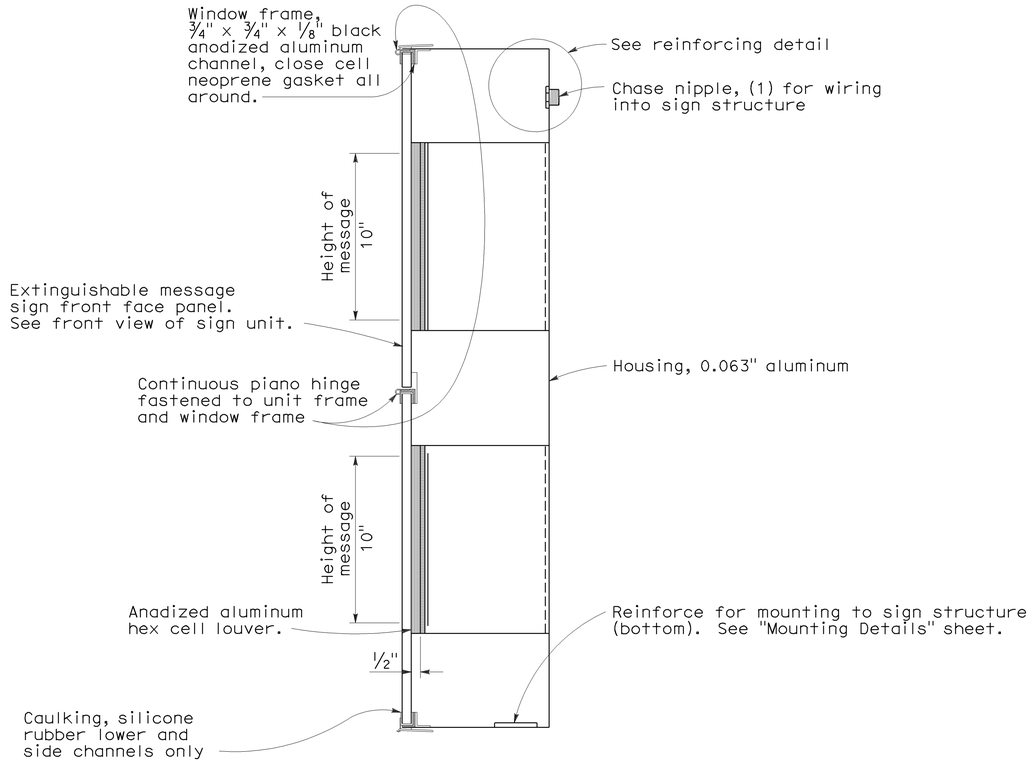

CROSS-SECTION OF SIGN

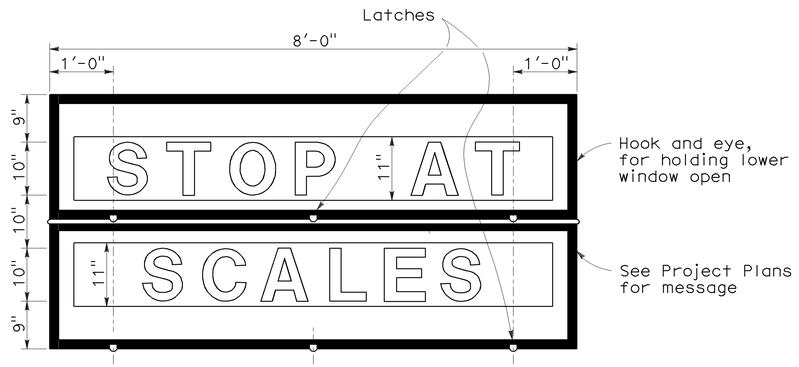

FRONT VIEW OF SIGN

Note:

See Wiring Notes and Symbols on Revised Standard Plan RSP ES-14B.

STATE OF CALIFORNIA
DEPARTMENT OF TRANSPORTATION

ELECTRICAL SYSTEMS (LED EXTINGUISHABLE MESSAGE SIGN 10" LETTERS)

NO SCALE

RSP ES-14A DATED OCTOBER 5, 2007 SUPERCEDES STANDARD PLAN ES-14A DATED MAY 1, 2006 - PAGE 466 OF THE STANDARD PLANS BOOK DATED MAY 2006.

REVISED STANDARD PLAN RSP ES-14A

2006 REVISED STANDARD PLAN RSP ES-14A

8-17-07

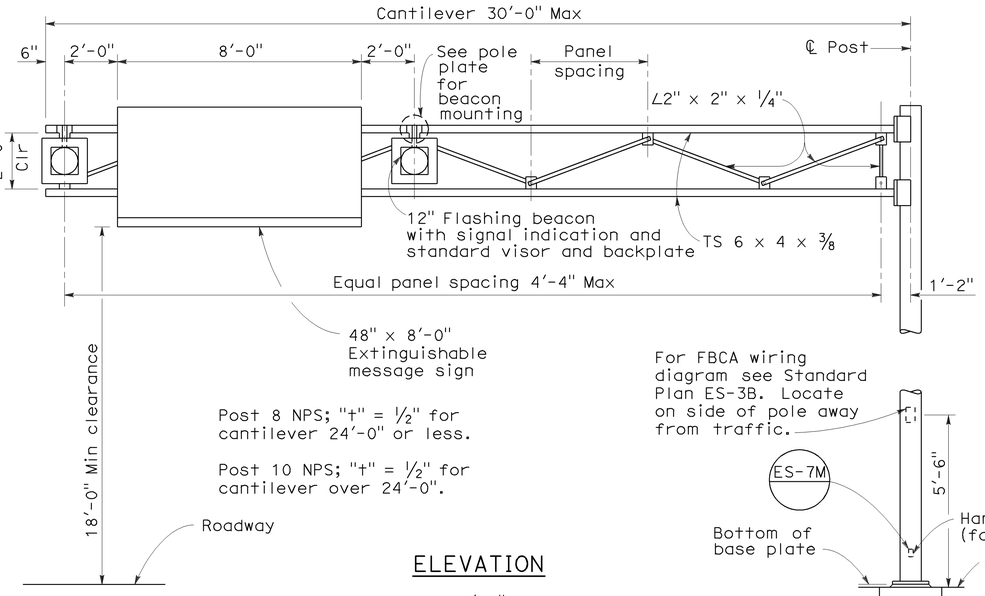

ELEVATION

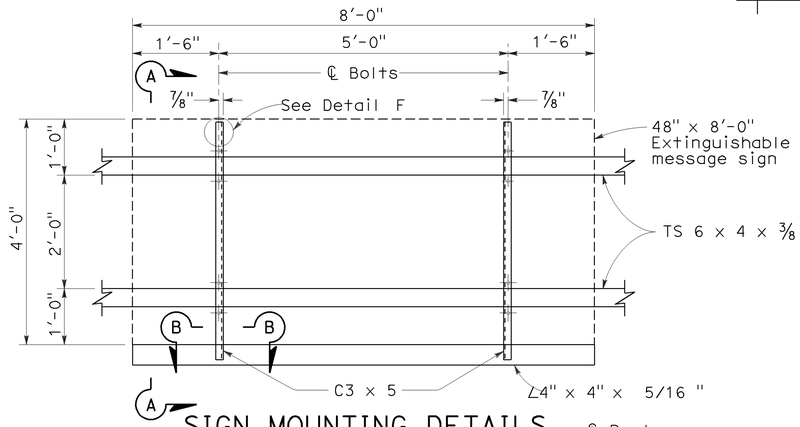

SIGN MOUNTING DETAILS

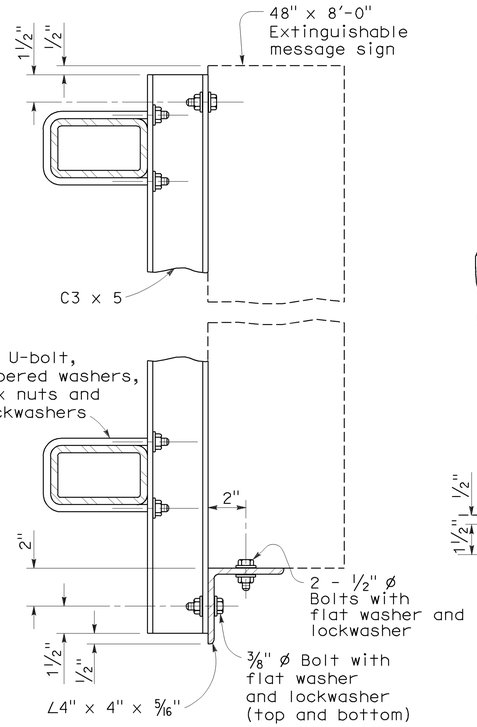

SECTION A-A

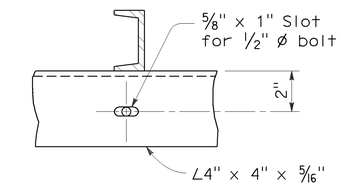

SECTION B-B

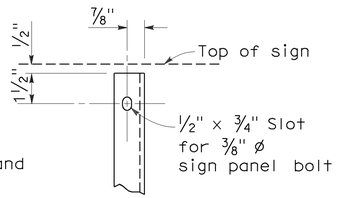

DETAIL F

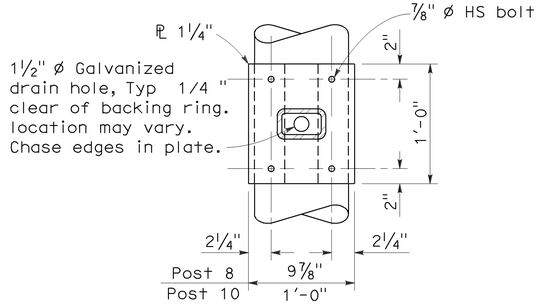

SECTION C-C

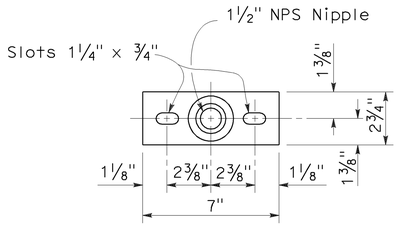

POLE PLATE DETAIL

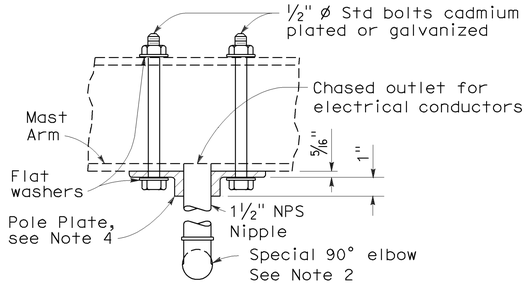

POLE PLATE FOR BEACON MOUNTING

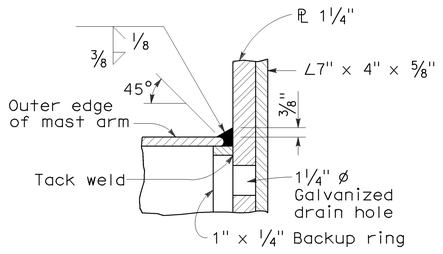

DETAIL G

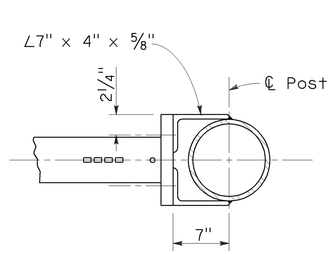

SECTION D-D

∠2" x 2" x ¼" not shown for clarity

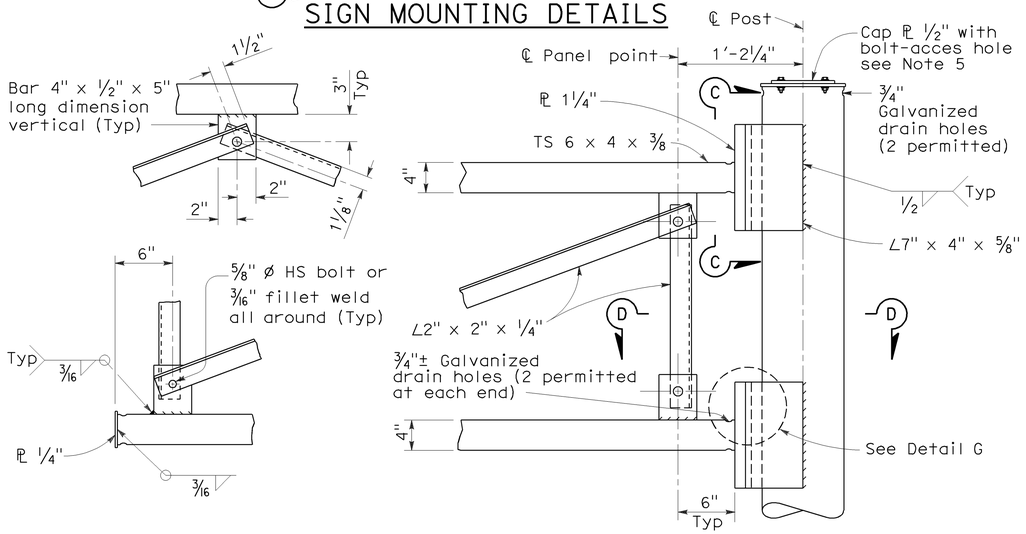

TRUSS FRAME CONNECTION DETAILS

DIST	COUNTY	ROUTE	POST MILES TOTAL PROJECT	SHEET NO.	TOTAL SHEETS
04	SF	101,1	9.2/9.8, 6.8/7.1	267	567

Stanley P. Johnson
REGISTERED CIVIL ENGINEER

October 5, 2007
PLANS APPROVAL DATE

REGISTERED PROFESSIONAL ENGINEER
Stanley P. Johnson
No. C57793
Exp. 3-31-08
CIVIL
STATE OF CALIFORNIA

The State of California or its officers or agents shall not be responsible for the accuracy or completeness of electronic copies of this plan sheet.

To accompany plans dated 7-20-09

NOTES:

1. For general notes, base plates, anchor bolts and foundations refer to Lightweight Signs, Post Details and Foundation Details sheets of the Standard Plans.
2. For details of special 90° elbow, see Standard Plans ES-4D.
3. For sign structure dimensions, see Project Plans.
4. Pole plate shall be bronze, aluminum or ductile iron as specified in the Standard Specifications.
5. For Bolt-Access Hole Details, see Overhead Signs-Truss Frame Juncture Details.

STATE OF CALIFORNIA
DEPARTMENT OF TRANSPORTATION

ELECTRICAL SYSTEMS (EXTINGUISHABLE MESSAGE SIGN AND FLASHING BEACONS)

NO SCALE

RSP ES-14C DATED OCTOBER 5, 2007 SUPERCEDES STANDARD PLAN ES-14C DATED MAY 1, 2006 - PAGE 468 OF THE STANDARD PLANS BOOK DATED MAY 2006.

REVISED STANDARD PLAN RSP ES-14C

2006 REVISED STANDARD PLAN RSP ES-14C

8-17-07

DIST	COUNTY	ROUTE	POST MILES TOTAL PROJECT	SHEET NO.	TOTAL SHEETS
04	SF	101,1	9.2/9.8, 6.8/7.1	268	567

Jeffery G. McRae
REGISTERED ELECTRICAL ENGINEER

Jeffery G. McRae
No. E14512
Exp. 6-30-08
ELECTRICAL
REGISTERED PROFESSIONAL ENGINEER
STATE OF CALIFORNIA

October 5, 2007
PLANS APPROVAL DATE

The State of California or its officers or agents shall not be responsible for the accuracy or completeness of electronic copies of this plan sheet.

To accompany plans dated 7-20-09

NOTES: (FOR LIGHTING AND SIGN ILLUMINATION CONTROL)

1. The ballast voltages of lighting fixtures and luminaires shall match line service voltages.
2. Voltage rating of photoelectric controls shall conform to the service voltage indicated on the plans.
3. Terminal strip shall be provided for wiring to fixtures.
4. Type SC1A, SC2A, SC3A controls are similar to Types SC1, SC2 and SC3 controls respectively except test switch and wiring are not required.

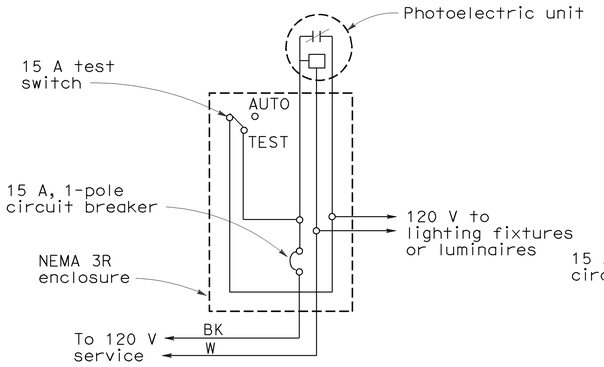

TYPE LC1 CONTROL

For 120 V unswitched circuit with no more than 800 W load.

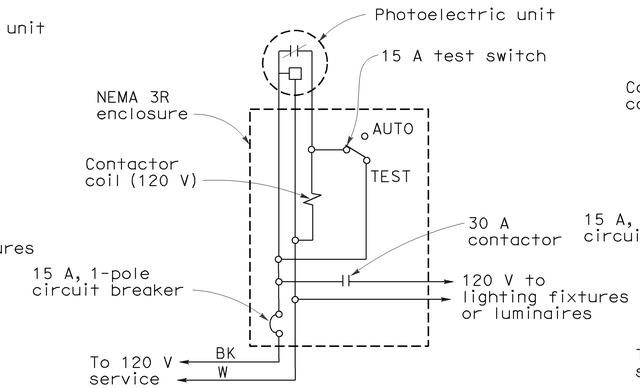

TYPE LC2 CONTROL

For 120 V unswitched circuit

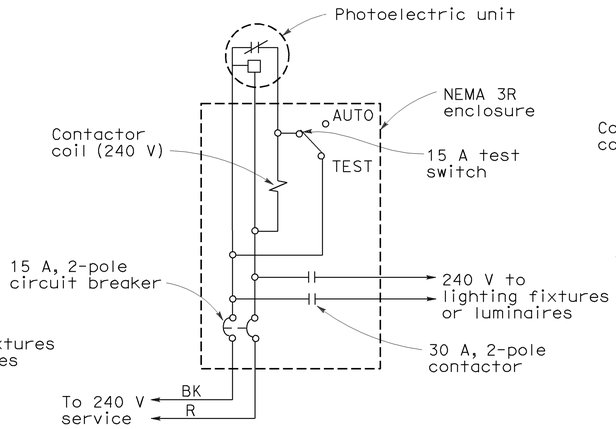

TYPE LC3 CONTROL

For 240 V and 480 V unswitched circuits

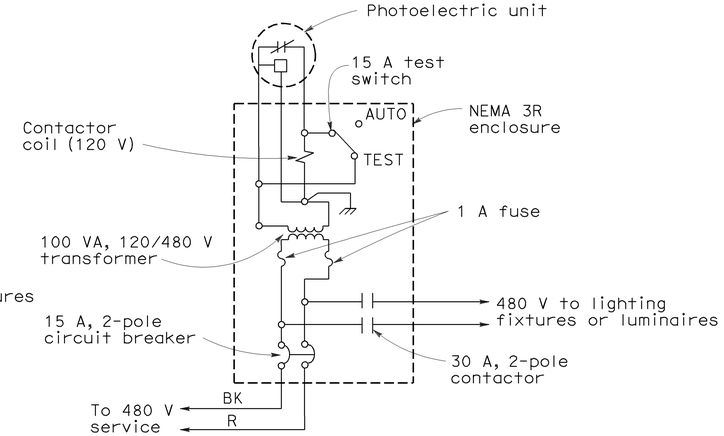

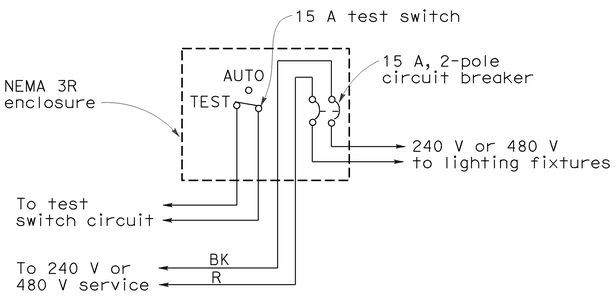

TYPE SC1 CONTROL

For 240 V or 480 V switched circuit, see Note 4 for Type SC1A

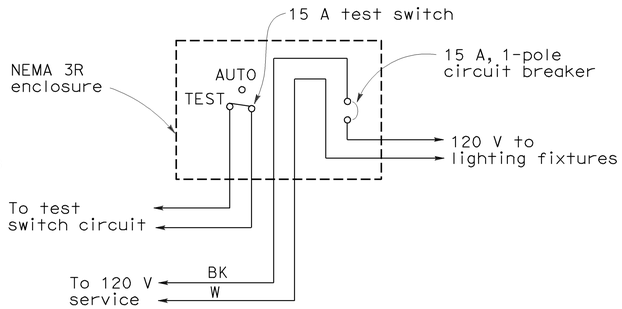

TYPE SC2 CONTROL

For 120 V switched circuit, see Note 4 for Type SC2A

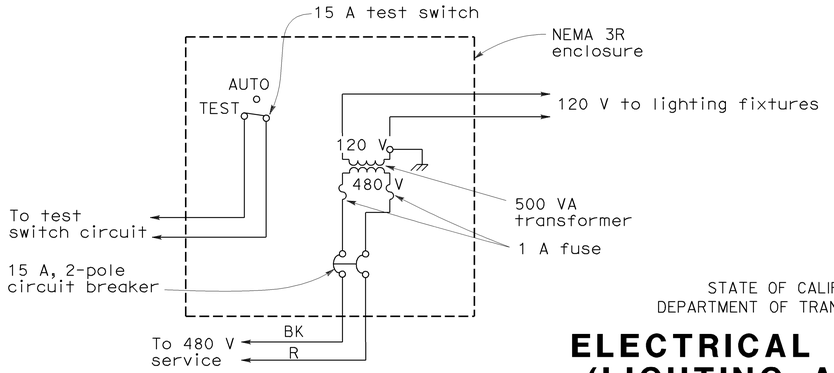

TYPE SC3 CONTROL

For 480 V switched sign circuit, see Note 4 for Type SC3A

STATE OF CALIFORNIA
DEPARTMENT OF TRANSPORTATION

ELECTRICAL SYSTEMS (LIGHTING AND SIGN ILLUMINATION CONTROL)

NO SCALE

RSP ES-15D DATED OCTOBER 5, 2007 SUPERCEDES STANDARD PLAN ES-15D DATED MAY 1, 2006 - PAGE 472 OF THE STANDARD PLANS BOOK DATED MAY 2006.

REVISED STANDARD PLAN RSP ES-15D

2006 REVISED STANDARD PLAN RSP ES-15D

9-10-07

DIST	COUNTY	ROUTE	POST MILES TOTAL PROJECT	SHEET No	TOTAL SHEETS
04	SF	101,1	9.2/9.8, 6.8/7.1	269	567

REGISTERED CIVIL ENGINEER — 6-4-09 DATE

7-20-09
PLANS APPROVAL DATE

The State of California or its officers or agents shall not be responsible for the accuracy or completeness of electronic copies of this plan sheet.

REGISTERED PROFESSIONAL ENGINEER — PHILIP E. LUTZ — No. C 55839 — Exp. 12-31-10 — CIVIL — STATE OF CALIFORNIA

N101/S1 CONNECTOR SEP. #34-0155RL
QUANTITIES

TEMPORARY SUPPORT	LUMP SUM	
BRIDGE REMOVAL, LOCATION B	LUMP SUM	
STRUCTURE EXCAVATION (BRIDGE) (NATURALLY OCCURING ASBESTOS)	3,300	CY
STRUCTURE EXCAVATION (BRIDGE) (SERPENTINE)	1,600	CY
STRUCTURE EXCAVATION (RETAINING WALL) (NATURALLY OCCURING ASBESTOS)	1,700	CY
STRUCTURE EXCAVATION (RETAINING WALL) (SERPENTINE)	1,400	CY
STRUCTURE EXCAVATION (TYPE Z-2) (AERIALLY DEPOSITED LEAD)	1,250	CY
STRUCTURE BACKFILL (BRIDGE)	1,400	CY
STRUCTURE BACKFILL (RETAINING WALL)	2,220	CY
STRUCTURAL CONCRETE, BRIDGE FOOTING	450	CY
STRUCTURAL CONCRETE, BRIDGE	1,550	CY
STRUCTURAL CONCRETE, RETAINING WALL	760	CY
STRUCTURAL CONCRETE, BRIDGE (SLAB)	470	CY
STRUCTURAL CONCRETE, APPROACH SLAB (TYPE N MODIFIED)	500	CY
ARCHITECTURAL TEXTURE (FLUTED FIN)	13,370	SQFT
DRILL AND BOND DOWEL	180	LF
JOINT SEAL (TYPE AL)	512	LF
BAR REINFORCING STEEL (BRIDGE)	556,000	LB
BAR REINFORCING STEEL (RETAINING WALL)	98,000	LB
MINOR CONCRETE (GUTTER)	663	LF
CHAIN LINK RAILING	502	LF
CONCRETE BARRIER (TYPE 60C MODIFIED)	40	LF
CONCRETE BARRIER (TYPE 60D MODIFIED)	961	LF
CALIFORNIA ST-10 BRIDGE RAIL (MODIFIED)	658	LF

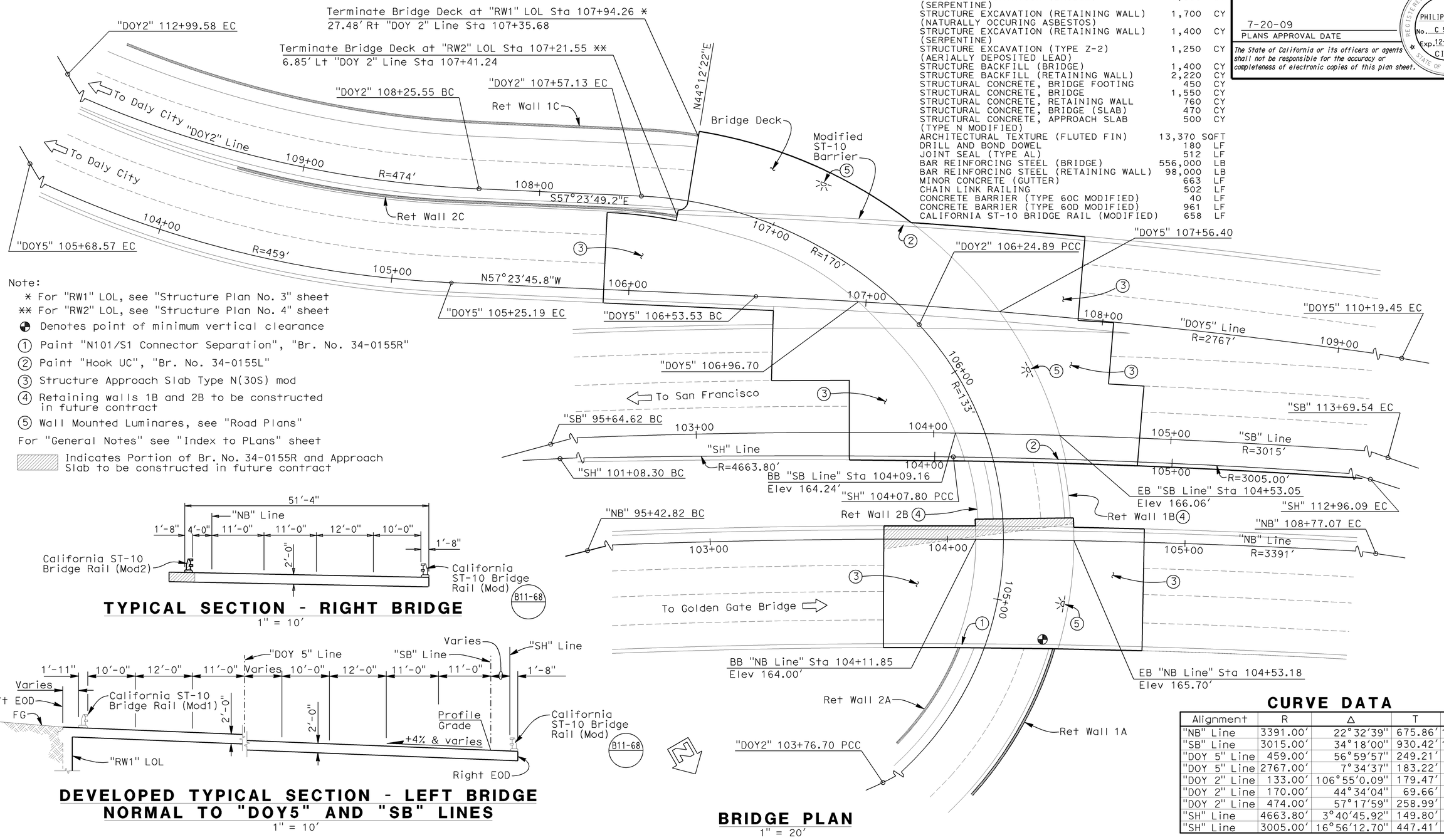

Note:

* For "RW1" LOL, see "Structure Plan No. 3" sheet

** For "RW2" LOL, see "Structure Plan No. 4" sheet

⊕ Denotes point of minimum vertical clearance

(1) Paint "N101/S1 Connector Separation", "Br. No. 34-0155R"

(2) Paint "Hook UC", "Br. No. 34-0155L"

(3) Structure Approach Slab Type N(30S) mod

(4) Retaining walls 1B and 2B to be constructed in future contract

(5) Wall Mounted Luminares, see "Road Plans"

For "General Notes" see "Index to PLans" sheet

Indicates Portion of Br. No. 34-0155R and Approach Slab to be constructed in future contract

TYPICAL SECTION - RIGHT BRIDGE

1" = 10'

DEVELOPED TYPICAL SECTION - LEFT BRIDGE NORMAL TO "DOY5" AND "SB" LINES

1" = 10'

BRIDGE PLAN

1" = 20'

CURVE DATA

Alignment	R	Δ	T	L
"NB" Line	3391.00'	22°32'39"	675.86'	1334.23'
"SB" Line	3015.00'	34°18'00"	930.42'	1804.93'
"DOY 5" Line	459.00'	56°59'57"	249.21'	456.62'
"DOY 5" Line	2767.00'	7°34'37"	183.22'	365.91'
"DOY 2" Line	133.00'	106°55'0.09"	179.47'	248.19'
"DOY 2" Line	170.00'	44°34'04"	69.66'	132.23'
"DOY 2" Line	474.00'	57°17'59"	258.99'	474.03'
"SH" Line	4663.80'	3°40'45.92"	149.80'	299.50'
"SH" Line	3005.00'	16°56'12.70"	447.41'	888.29'

majid modari
DESIGN ENGINEER

DESIGN	BY J. Railey	CHECKED G. Matthews	LOAD & RESISTANCE FACTOR DESIGN	LIVE LOADING: HL93 W/"LOW-BOY"; PERMIT DESIGN VEHICLE			
DETAILS	BY A. Onodera	CHECKED J. Railey/G. Matthews	LAYOUT	BY	CHECKED		
QUANTITIES	BY J. Railey	CHECKED M. Dumlao	SPECIFICATIONS	BY Jim Corrado	PLANS AND SPECS COMPARED		

ORIGINAL SCALE IN INCHES FOR REDUCED PLANS 0 1 2 3

STATE OF CALIFORNIA
DEPARTMENT OF TRANSPORTATION

DIVISION OF ENGINEERING SERVICES
STRUCTURE DESIGN
DESIGN BRANCH 13

CU 04
EA 163731

BRIDGE NO. 34-0155RL
POST MILE 9.31

N101/S1 CONNECTOR SEPARATION
GENERAL PLAN

DISREGARD PRINTS BEARING EARLIER REVISION DATES →

REVISION DATES: 5-28-09 | 6-04-09 | 6-12-09 | 7-11-09 | | 4-08-09 | 4-22-09 | 5-08-09 | 5-24-09 | 5-26-09

SHEET 1 OF 42

STRUCTURES DESIGN GENERAL PLAN SHEET (ENGLISH) (REV.07-24-06)

FILE => 34-0155rl-010-gp01.dgn

USERNAME => tmorlok DATE PLOTTED => 21-JUL-2009 TIME PLOTTED => 12:37

DIST	COUNTY	ROUTE	POST MILES TOTAL PROJECT	SHEET No	TOTAL SHEETS
04	SF	101,1	9.2/9.8, 6.8/7.1	270	567

REGISTERED CIVIL ENGINEER — 6-4-09 DATE

PHILIP E. LUTZ No. C55839 Exp. 12-31-10 CIVIL — REGISTERED PROFESSIONAL ENGINEER — STATE OF CALIFORNIA

7-20-09
PLANS APPROVAL DATE

The State of California or its officers or agents shall not be responsible for the accuracy or completeness of electronic copies of this plan sheet.

INDEX TO PLANS

SHT NO.	TITLE
1.	General Plan
2.	Index to Plans
3.	Structure Plan No. 1
4.	Structure Plan No. 2
5.	Structure Plan No. 3
6.	Structure Plan No. 4
7.	Deck Contours No. 1
8.	Deck Contours No. 2
9.	Demolition Plan
10.	Excavation and Backfill
11.	Staging Plan No. 1
12.	Staging Plan No. 2
13.	Temporary Support
14.	Foundation Plan
15.	Abutment 1 Layout - Left Bridge
16.	Abutment 2 Layout - Left Bridge
17.	Abutment 1 Layout - Right Bridge
18.	Abutment 2 Layout - Right Bridge
19.	Abutment Details
20.	Typical Section
21.	Slab Details Left Bridge (Top)
22.	Slab Details Left Bridge (Bottom)
23.	Slab Details Right Bridge
24.	Roadway Slab Details
25.	Retaining Wall "RW1A"&"RW1B"
26.	Retaining Wall "RW1C"
27.	Retaining Wall "RW2A"&"RW2B"
28.	Retaining Wall "RW2C"
29.	Retaining Wall "RW2" Details
30.	California ST-10 Bridge Rail (Mod1)
31.	California ST-10 Bridge Rail (Mod2)
32.	Concrete Barrier Type 60 (Mod)
33.	Architectural Treatment No. 1
34.	Architectural Treatment No. 2
35.	Architectural Treatment No. 3
36.	Structure Approach Type N(30S) (Mod)
37.	Log of Test Borings (1 of 6)
38.	Log of Test Borings (2 of 6)
39.	Log of Test Borings (3 of 6)
40.	Log of Test Borings (4 of 6)
41.	Log of Test Borings (5 of 6)
42.	Log of Test Borings (6 of 6)

STANDARD PLANS DATED JULY 2006

SHT NO.	TITLE
A10A	Abbreviations
A10B	Symbols
A62C	Limits of Payment for Excavation and Backfill - Bridge
A76A	Concrete Barrier Type 60
B0-1	Bridge Details
B0-3	Bridge Details
B0-5	Bridge Details
B3-1	Retaining Wall Type 1 - H = 4' through 30'
B3-9	Retaining Wall Details No. 2
B6-21	JOINT SEALS (MAXIMUM MOVEMENT RATING = 2")
B11-7	Chain Link Railing
B11-68	California ST-10 Bridge Rail (Sheet 1 of 3)
B11-69	California ST-10 Bridge Rail (Sheet 2 of 3)
B11-70	California ST-10 Bridge Rail (Sheet 3 of 3)

Standard Plan Sheet No.

Detail No.

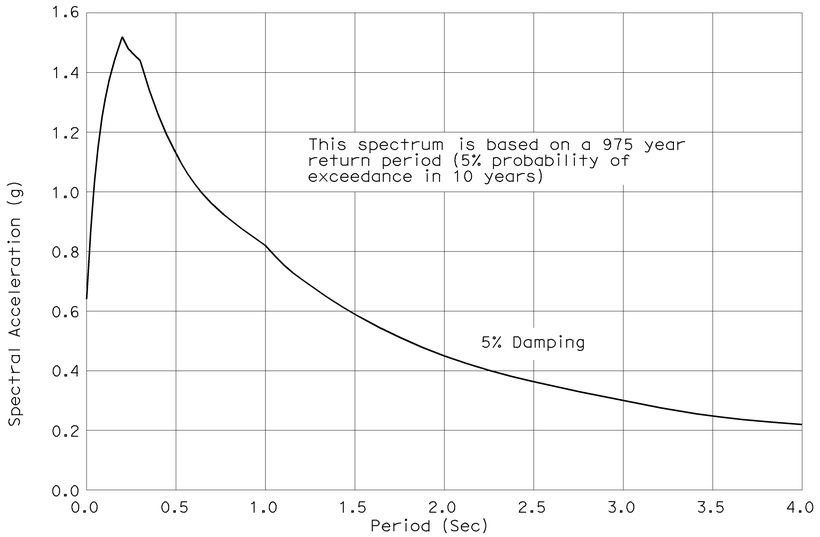

ACCELERATION RESPONSE SPECTRUM

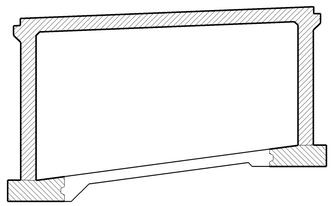

Structural Concrete, Bridge (Slab) (4,000 psi at 28 days)
Structural Concrete, Bridge Footing (4,000 psi at 28 days)
Structural Concrete, Bridge (4,000 psi at 28 days)

CONCRETE STRENGTH AND TYPE LIMITS

No scale

WORKING STRESS DESIGN (WSD)		
SUPPORT LOCATION	Permissible Gross Contact Stress (Settlement)(ksf)	Allowable Gross Bearing Capacity (ksf)
Br No. 34-0155R Abutment 1	4.5	4.8
Br No. 34-0155R Abutment 2	4.5	4.8
Br No. 34-0155L Abutment 1	4.5	4.8
Br No. 34-0155L Abutment 2	4.5	4.8

GENERAL NOTES

LOAD AND RESISTANCE FACTOR DESIGN

Superstructure with LOAD FACTOR DESIGN Substructure

DESIGN:
AASHTO LRFD Bridge Design Specifications 3rd edition with the 2005 & 2006 Interim Revisions and the California Amendments v 3.06.01; except that buried structures,earth retaining systems and end reference supports (abutments) are designed using Bridge Design Specifications LRFD Version April 2000 ('96 AASHTO w/Revisions by Caltrans)

SEISMIC DESIGN:
Caltrans Seismic Design Criteria (SDC), Version 1.4 dated June 2006

DEAD LOAD:
Includes 35 psf for future wearing surface.

LIVE LOADING:
HL93 and permit design load.

GENERAL NOTES FOR RETAINING WALLS

DESIGN:
Load Factor Design, 2004 AASHTO w/ Revisions by Caltrans Bridge Design Specifications

DESIGN DATA:
Seismec Load = .3 Dead Load

SEISMIC LOAD:
Soil — Kh = 0.3g
Kv = 0.0
Kae = Monoobe - Okabe Method
Soil Ø = 34°
v = 120 PCF

EQUIVALENT FLUID PRESSURE:
36 PCF for Determination of Toe Pressure
27 PCF for Determination of Heel Pressure

REINFORCED CONCRETE:
F'c = 3600 psi (@ 28 days)
fy = 60,000 psi

DESIGN	BY J. Railey	CHECKED G. Matthews	STATE OF CALIFORNIA DEPARTMENT OF TRANSPORTATION	DIVISION OF ENGINEERING SERVICES STRUCTURE DESIGN DESIGN BRANCH 13	BRIDGE NO. 34-0155RL	N101/S1 CONNECTOR SEPARATION	
DETAILS	BY Wei Zhang/A. Onodera	CHECKED J. Railey/G. Matthews			POST MILE 9.31	INDEX TO PLANS	
QUANTITIES	BY J. Railey	CHECKED M. Dumlao					

STRUCTURES DESIGN DETAIL SHEET (ENGLISH) (REV. 10/25/05)

ORIGINAL SCALE IN INCHES FOR REDUCED PLANS 0 1 2 3

CU 04
EA 163731

DISREGARD PRINTS BEARING EARLIER REVISION DATES →

REVISION DATES: 12-04-08 | 4-21-09 | 4-22-09 | 5-14-09 | 5-24-09 | 5-27-09 | 6-16-09 | 07-09-09

SHEET 2 OF 42

FILE => 34-0155rl-020-itp.dgn

USERNAME => tmorlok DATE PLOTTED => 21-JUL-2009 TIME PLOTTED => 11:52

DIST	COUNTY	ROUTE	POST MILES TOTAL PROJECT	SHEET No	TOTAL SHEETS
04	SF	101,1	9.2/9.8, 6.8/7.1	271	567

REGISTERED CIVIL ENGINEER — 6-4-09 DATE

PHILIP E. LUTZ No. C55839 Exp. 12-31-10 CIVIL — REGISTERED PROFESSIONAL ENGINEER — STATE OF CALIFORNIA

7-20-09
PLANS APPROVAL DATE

The State of California or its officers or agents shall not be responsible for the accuracy or completeness of electronic copies of this plan sheet.

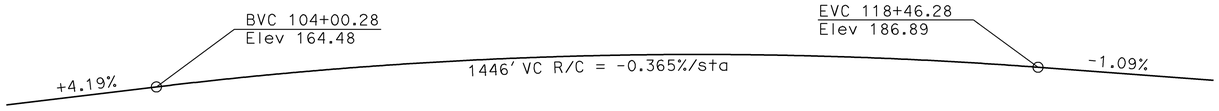

PROFILE GRADE
No Scale

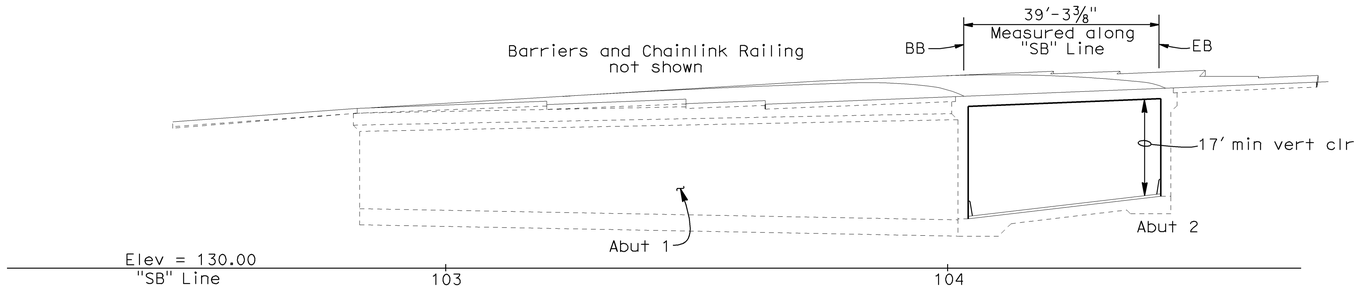

ELEVATION - LEFT BRIDGE
1" = 15'

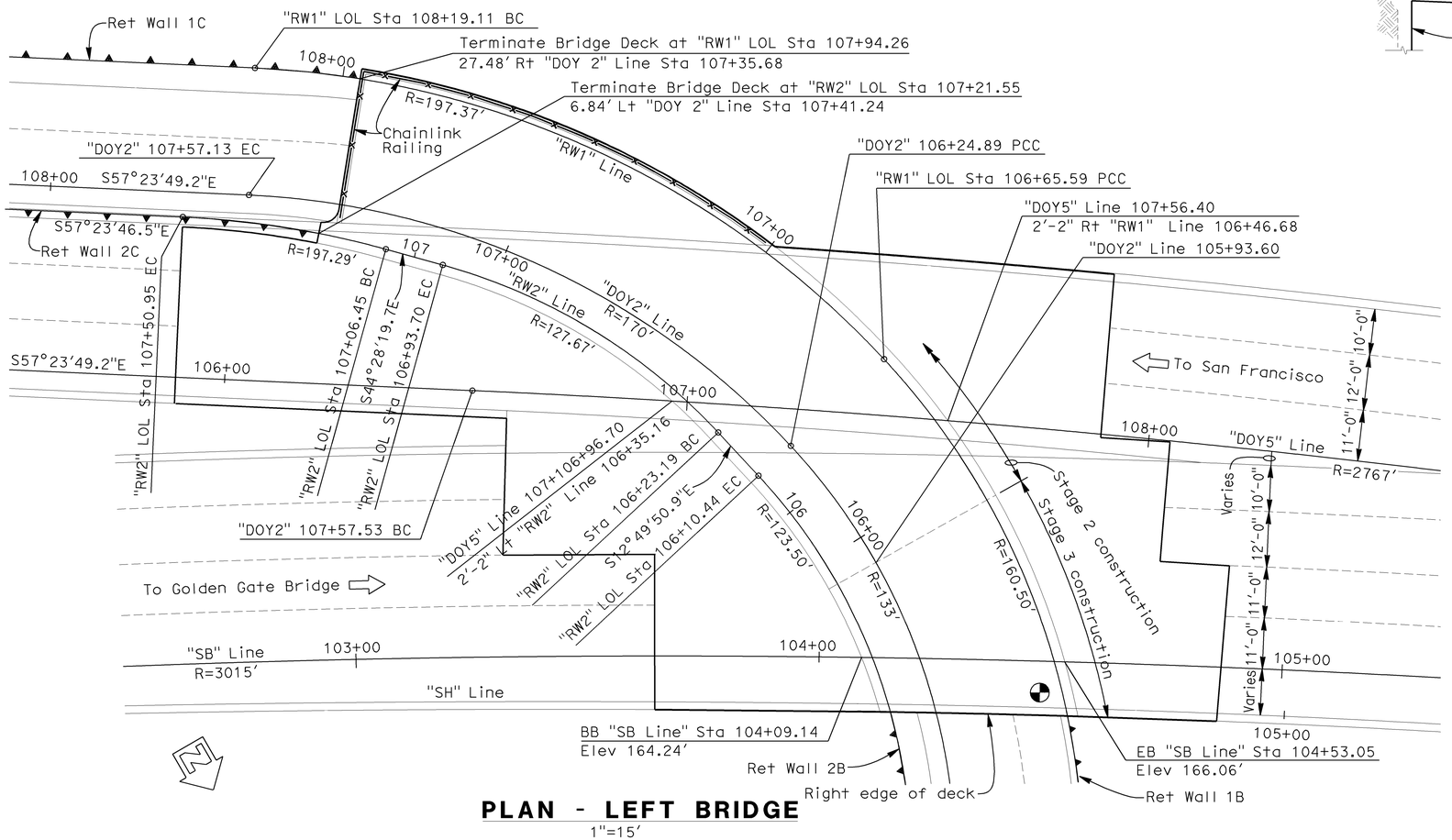

PLAN - LEFT BRIDGE
1"=15'

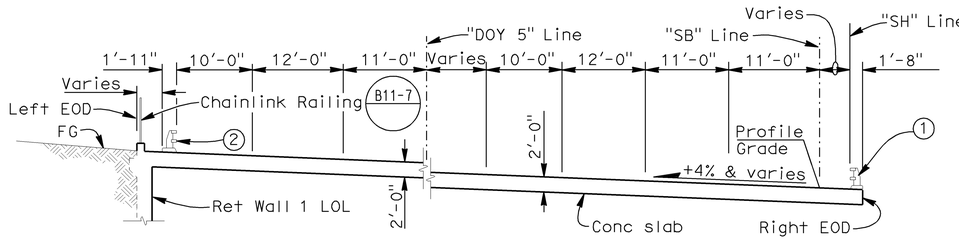

DEVELOPED TYPICAL SECTION NORMAL TO "DOY5" AND "SB" LINES
B11-68
1" = 10'

CURVE DATA

Alignment	R	Δ	T	L
"SB" Line	3015.00'	34°18'00"	930.42'	1804.93'
"DOY 5" Line	2767.00'	7°34'37"	183.22'	365.91'
"DOY 2" Line	133.00'	106°55'0.09"	179.47'	248.19'
"DOY 2" Line	170.00'	44°34'04"	69.66'	132.23'
"RW1" Line	160.50'	84°48'59"	146.60'	237.59'
"RW1" Line	197.37'	44°33'55"	80.88'	153.52'
"RW2" Line	123.50'	87°07'37"	117.46'	187.80'
"RW2" Line	127.67'	31°38'29"	36.18'	70.51'

NOTES:

1. California ST-10 Bridge Rail (Mod)
2. California ST-10 Bridge Rail (Mod1)
3. Structure Approach Type N(30S) (Mod)
4. Paint "N101/S1 Connection Separation"
5. Paint "BRIDGE NO. 34-0155L"
6. Left Bridge Constructed During Stage 2 & Stage 3

◐ Denotes point of minimum vertical clearance

DESIGN	BY J. Railey	CHECKED G. Matthews	STATE OF CALIFORNIA DEPARTMENT OF TRANSPORTATION
DETAILS	BY A. Onodera	CHECKED J. Railey/G. Matthews	DIVISION OF ENGINEERING SERVICES STRUCTURE DESIGN DESIGN BRANCH 13
QUANTITIES	BY J. Railey	CHECKED M. Dumlao	CU 04 EA 163731

BRIDGE NO. 34-0155L
POST MILE 9.31

N101/S1 CONNECTOR SEPARATION
STRUCTURE PLAN NO. 1

STRUCTURES DESIGN DETAIL SHEET (ENGLISH) (REV. 10/25/05)

ORIGINAL SCALE IN INCHES FOR REDUCED PLANS 0 1 2 3

DISREGARD PRINTS BEARING EARLIER REVISION DATES →

REVISION DATES: 12-9-08 | 1-13-09 | 1-14-09 | 1-28-09 | 5-26-09 | 07-09-09

SHEET 3 OF 42

FILE => 34-0155r1-030-sp01.dgn

USERNAME => trmorlok DATE PLOTTED => 21-JUL-2009 TIME PLOTTED => 11:52

DIST	COUNTY	ROUTE	POST MILES TOTAL PROJECT	SHEET No	TOTAL SHEETS
04	SF	101,1	9.2/9.8, 6.8/7.1	272	567

REGISTERED CIVIL ENGINEER — 6-4-09 DATE

PHILIP E. LUTZ No. C55839 Exp. 12-31-10 CIVIL — REGISTERED PROFESSIONAL ENGINEER — STATE OF CALIFORNIA

7-20-09
PLANS APPROVAL DATE

The State of California or its officers or agents shall not be responsible for the accuracy or completeness of electronic copies of this plan sheet.

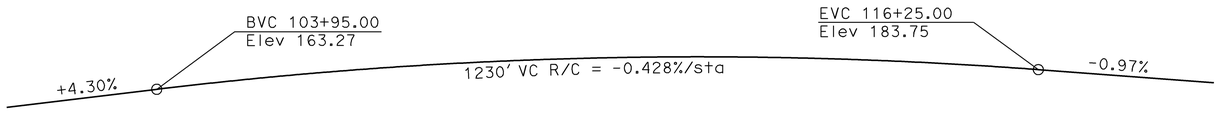

PROFILE GRADE
No Scale

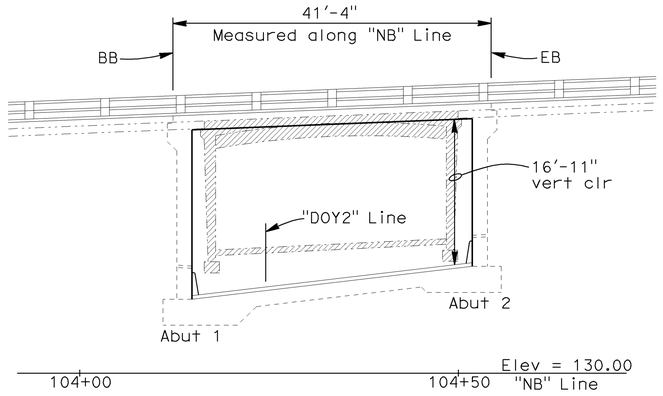

ELEVATION - RIGHT BRIDGE
1" = 10'

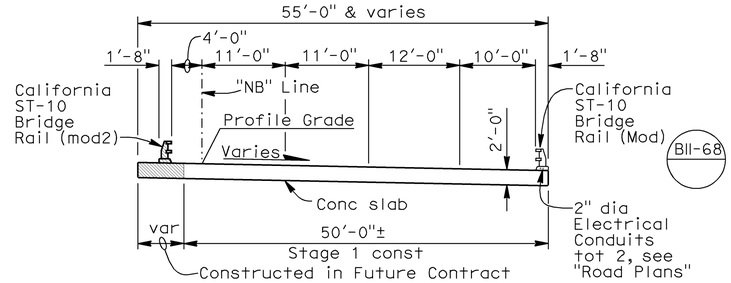

TYPICAL SECTION
1" = 10'

CURVE DATA

Alignment	R	Δ	T	L
"NB" Line	3391.00'	22°32'39"	675.86'	1334.23'
"DOY 2" Line	133.00'	106°55'0.09"	179.47'	248.19'
"RW1" Line	160.50'	84°48'59"	146.60'	237.59'
"RW2" Line	123.50'	87°07'37"	117.46'	187.80'

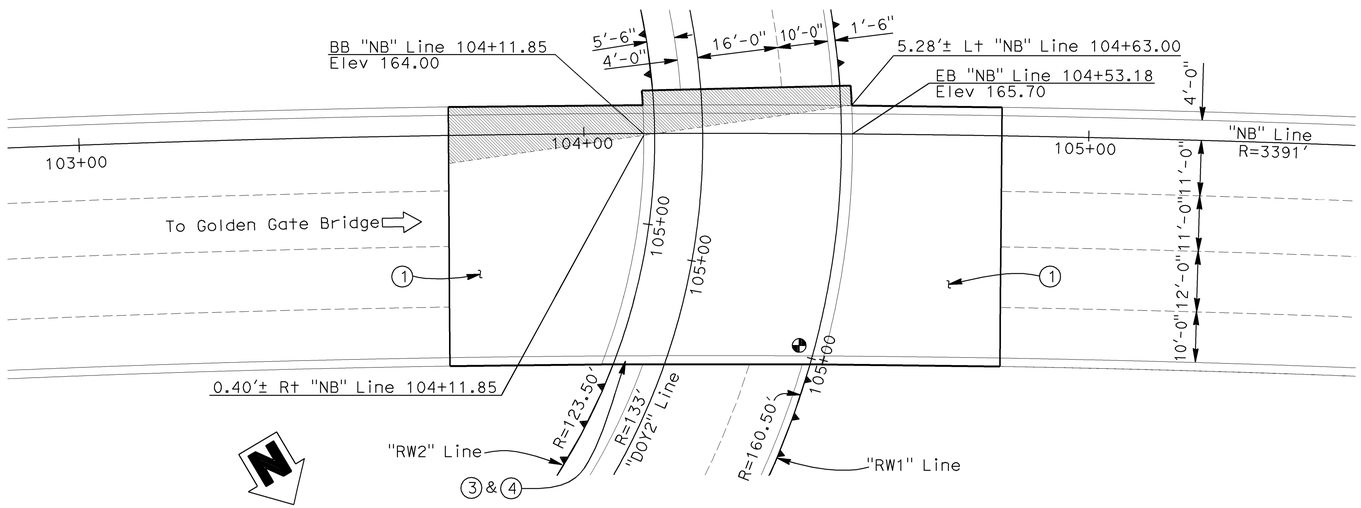

PLAN - RIGHT BRIDGE
1" = 15'

NOTES:

1. Structure Approach Type N(30S) (Mod)
2. Paint "HOOK UNDERCROSSING NB"
3. Paint "N101/S1 Connection Separation"
4. See "Construction Sequence" Sheet and "Demolition Plan" Sheet for further Details.

- Indicates Point of Minimum Vertical Clearance
- Indicates existing structure
- Indicates portion of right bridge and approach slab to be constructed in Future Contract
- Indicates bridge removal

DESIGN	BY J. Railey	CHECKED G. Matthews	STATE OF CALIFORNIA DEPARTMENT OF TRANSPORTATION	DIVISION OF ENGINEERING SERVICES STRUCTURE DESIGN DESIGN BRANCH 13	BRIDGE NO. 34-0155R; POST MILE 9.31
DETAILS	BY A. Onodera	CHECKED J. Railey/G. Matthews			
QUANTITIES	BY J. Railey	CHECKED M. Dumlao			

N101/S1 CONNECTOR SEPARATION
STRUCTURE PLAN NO. 2

STRUCTURES DESIGN DETAIL SHEET (ENGLISH) (REV. 10/25/05)

ORIGINAL SCALE IN INCHES FOR REDUCED PLANS 0 1 2 3

CU 04
EA 163731

DISREGARD PRINTS BEARING EARLIER REVISION DATES →

REVISION DATES: 12-04-08 | 1-08-09 | 1-15-09 | 4-28-09 | 5-18-09 | 5-24-09 | 07-09-09

SHEET 4 OF 42

FILE => 34-0155r1-040-sp02.dgn

USERNAME => tmorlok DATE PLOTTED => 21-JUL-2009 TIME PLOTTED => 11:52

DIST	COUNTY	ROUTE	POST MILES TOTAL PROJECT	SHEET No	TOTAL SHEETS
04	SF	101,1	9.2/9.8, 6.8/7.1	273	567

REGISTERED CIVIL ENGINEER — 6-4-09 DATE

PHILIP E. LUTZ No. C55839 Exp. 12-31-10 CIVIL — REGISTERED PROFESSIONAL ENGINEER — STATE OF CALIFORNIA

7-20-09
PLANS APPROVAL DATE

The State of California or its officers or agents shall not be responsible for the accuracy or completeness of electronic copies of this plan sheet.

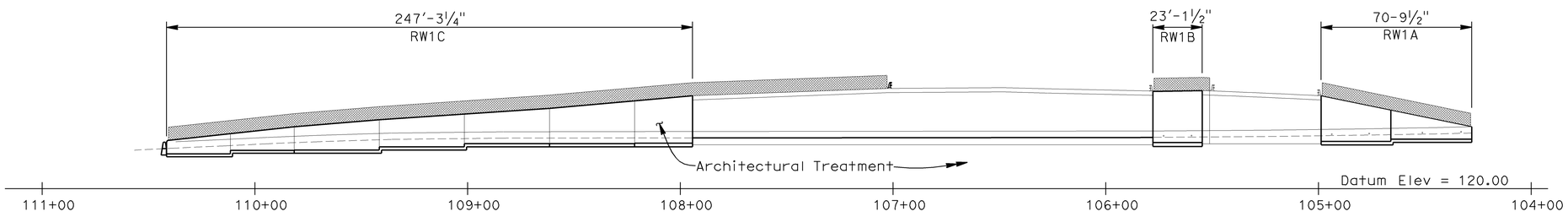

DEVELOPED ELEVATION (RW1)

1" = 30'

CURVE DATA "RW1"

R	Δ	T	L
160.50'	84°48'59"	146.60'	237.59'
197.37'	44°33'55"	80.88'	153.52'
446.50'	27°47'34"	110.47'	216.59'

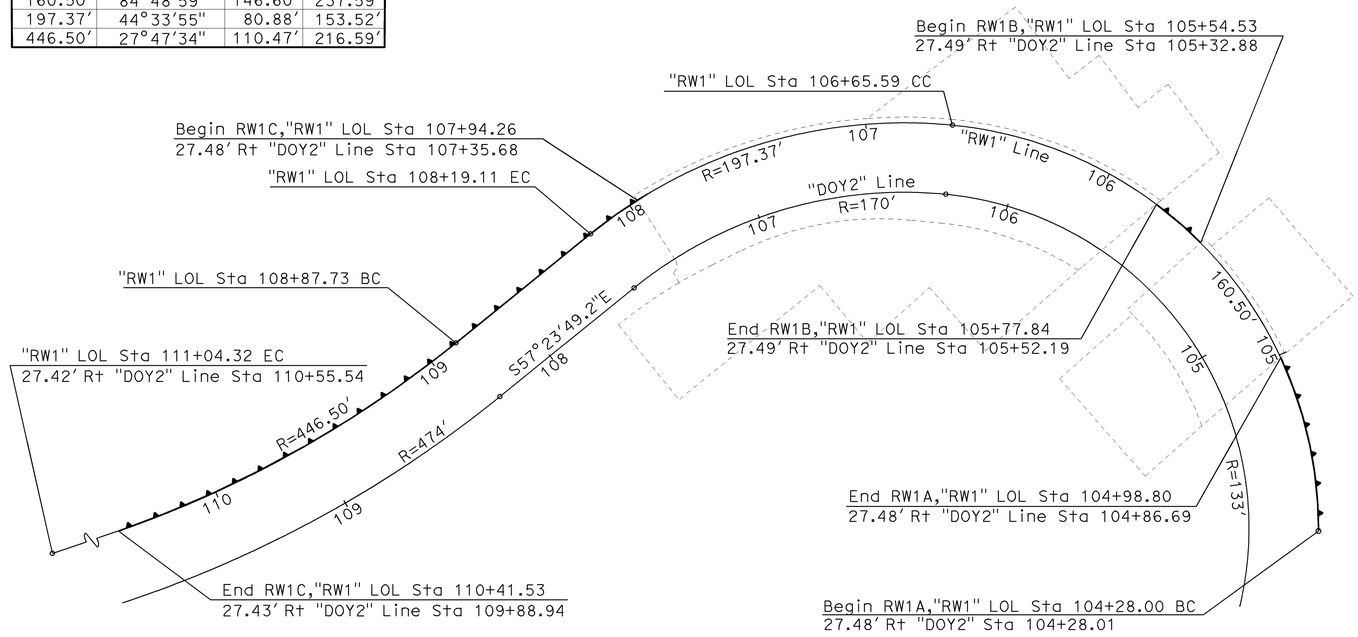

RETAINING WALL PLAN

1" = 30'

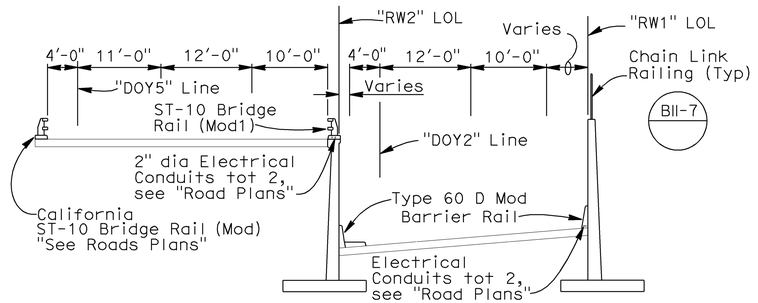

TYPICAL SECTION
RW NO. 1C AND RW NO. 2C

1" = 10'

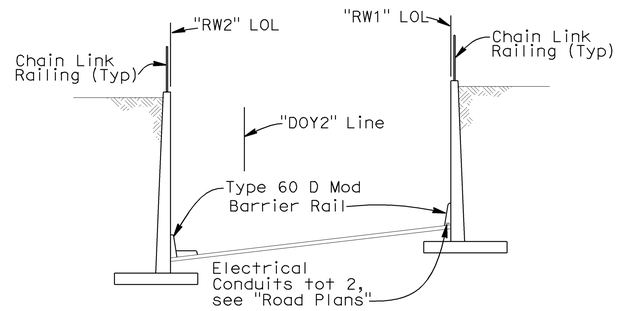

TYPICAL SECTION
RW NO. 1A, 1B AND RW NO. 2A, 2B

1" = 10'

DESIGN	BY J. Railey	CHECKED G. Matthews	STATE OF CALIFORNIA DEPARTMENT OF TRANSPORTATION	DIVISION OF ENGINEERING SERVICES STRUCTURE DESIGN DESIGN BRANCH 13	BRIDGE NO. 34-0155RL	N101/S1 CONNECTOR SEPARATION STRUCTURE PLAN NO. 3	
DETAILS	BY A. Onodera	CHECKED J. Railey/G. Matthews			POST MILE 9.31		
QUANTITIES	BY J. Railey	CHECKED M. Dumlao		CU 04 EA 163731	DISREGARD PRINTS BEARING EARLIER REVISION DATES →	REVISION DATES: 5-11-09 | 5-18-09 | 5-24-09 | 07-09-09	SHEET 5 OF 42

STRUCTURES DESIGN DETAIL SHEET (ENGLISH) (REV. 10/25/05)

ORIGINAL SCALE IN INCHES FOR REDUCED PLANS 0 1 2 3

FILE => 34-0155rl-050-sp03.dgn

USERNAME => ttmorlok DATE PLOTTED => 21-JUL-2009 TIME PLOTTED => 11:52

DIST	COUNTY	ROUTE	POST MILES TOTAL PROJECT	SHEET No	TOTAL SHEETS
04	SF	101,1	9.2/9.8, 6.8/7.1	274	567

REGISTERED CIVIL ENGINEER — 6-4-09 DATE

PHILIP E. LUTZ No. C55839 Exp. 12-31-10 CIVIL — REGISTERED PROFESSIONAL ENGINEER — STATE OF CALIFORNIA

7-20-09
PLANS APPROVAL DATE

The State of California or its officers or agents shall not be responsible for the accuracy or completeness of electronic copies of this plan sheet.

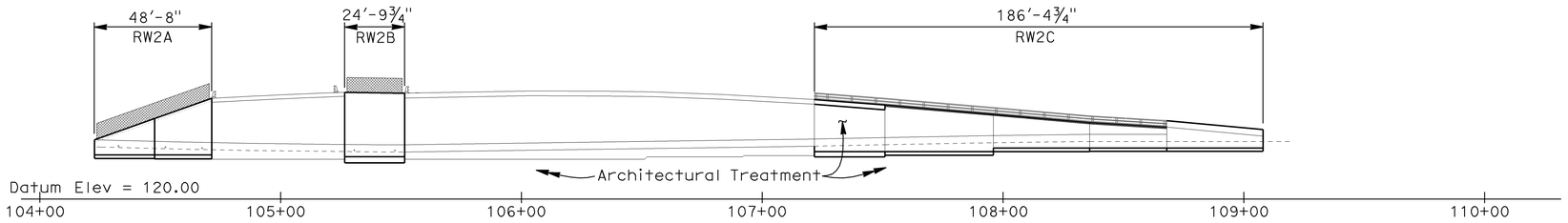

DEVELOPED ELEVATION (RW2)

1" = 30'

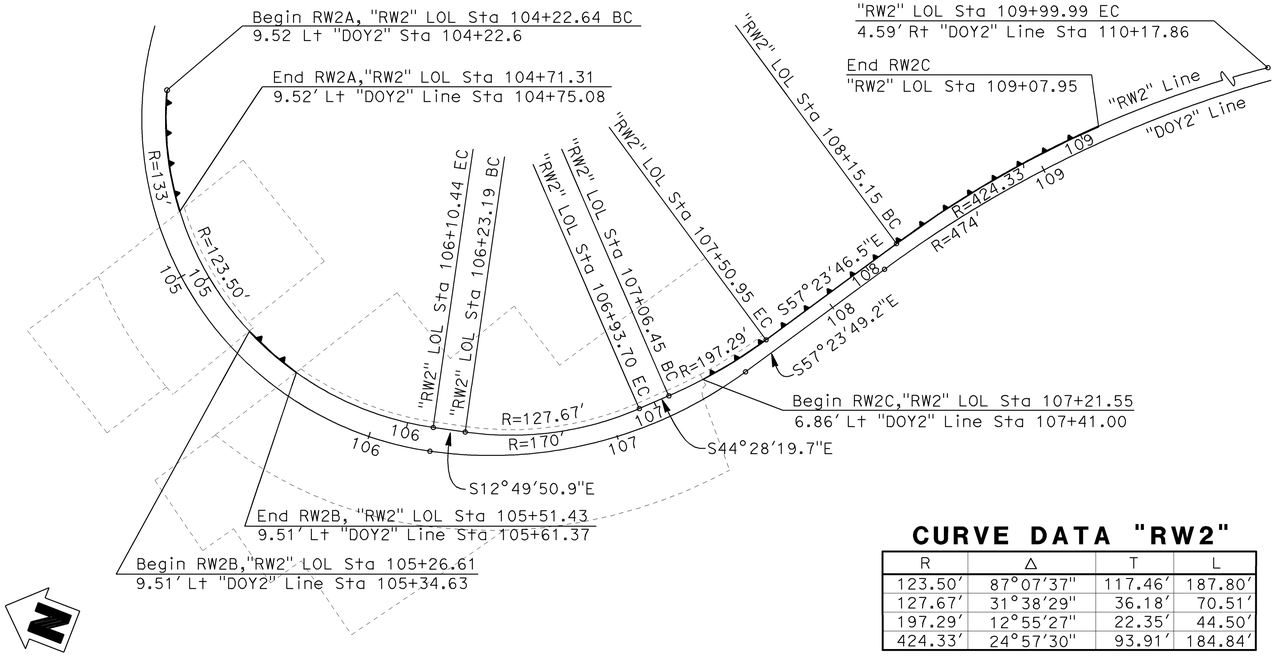

CURVE DATA "RW2"

R	Δ	T	L
123.50'	87°07'37"	117.46'	187.80'
127.67'	31°38'29"	36.18'	70.51'
197.29'	12°55'27"	22.35'	44.50'
424.33'	24°57'30"	93.91'	184.84'

RETAINING WALL PLAN

1" = 30'

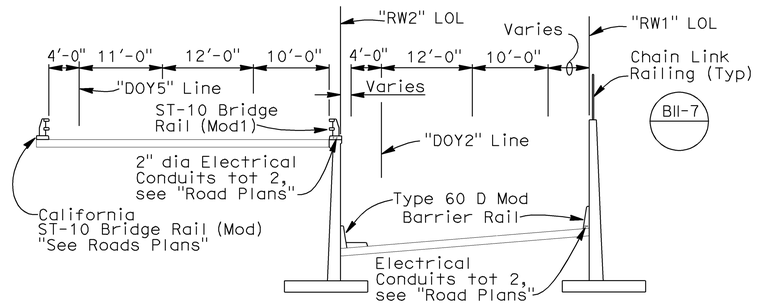

TYPICAL SECTION
RW NO. 1C AND RW NO. 2C

1" = 10'

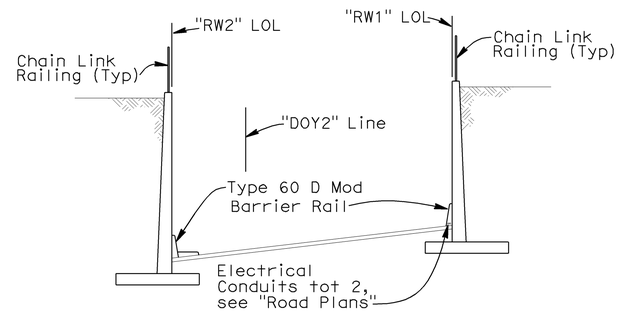

TYPICAL SECTION
RW NO. 1A, 1B AND RW NO. 2A, 2B

1" = 10'

DESIGN	BY J. Railey	CHECKED G. Matthews	STATE OF CALIFORNIA DEPARTMENT OF TRANSPORTATION	DIVISION OF ENGINEERING SERVICES STRUCTURE DESIGN DESIGN BRANCH 13	BRIDGE NO. 34-0155RL	N101/S1 CONNECTOR SEPARATION STRUCTURE PLAN NO. 4	
DETAILS	BY A. Onodera	CHECKED J. Railey/G. Matthews			POST MILE 9.31		
QUANTITIES	BY J. Railey	CHECKED M. Dumlao					

STRUCTURES DESIGN DETAIL SHEET (ENGLISH) (REV. 10/25/05)

ORIGINAL SCALE IN INCHES FOR REDUCED PLANS 0 1 2 3

CU 04
EA 163731

DISREGARD PRINTS BEARING EARLIER REVISION DATES →

REVISION DATES: 5-11-09 | 5-18-09 | 5-24-09 | 07-09-09

SHEET 6 OF 42

FILE => 34-0155rl-060-sp04.dgn

USERNAME = frmoriok DATE PLOTTED => 21-JUL-2009 TIME PLOTTED => 11:52

DIST	COUNTY	ROUTE	POST MILES TOTAL PROJECT	SHEET No	TOTAL SHEETS
04	SF	101,1	9.2/9.8, 6.8/7.1	275	567

REGISTERED CIVIL ENGINEER — 6-4-09 DATE

PHILIP E. LUTZ No. C55839 Exp. 12-31-10 CIVIL — REGISTERED PROFESSIONAL ENGINEER — STATE OF CALIFORNIA

7-20-09
PLANS APPROVAL DATE

The State of California or its officers or agents shall not be responsible for the accuracy or completeness of electronic copies of this plan sheet.

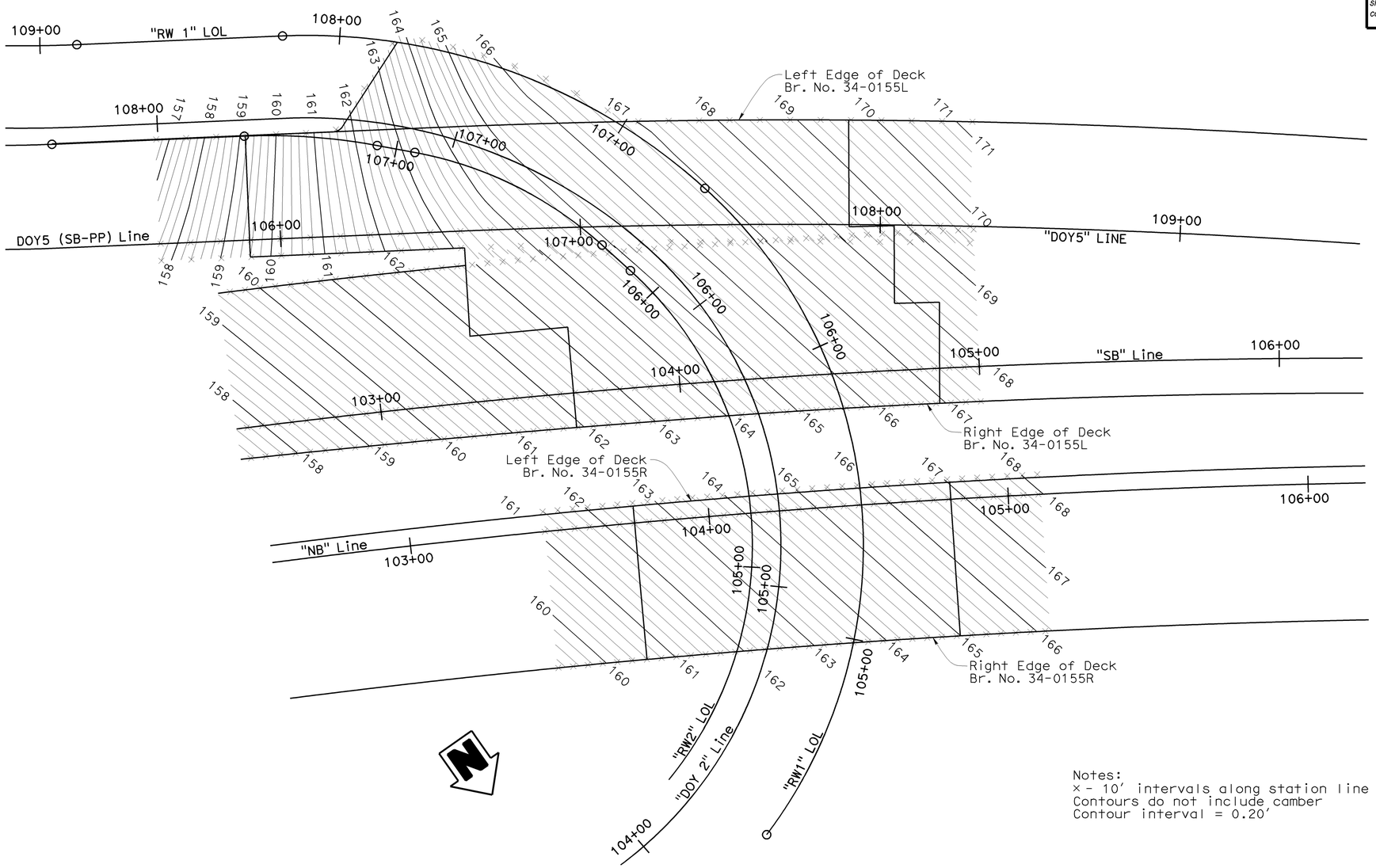

Notes:
× - 10′ intervals along station line
Contours do not include camber
Contour interval = 0.20′

DECK CONTOURS
1"=20′

DESIGN	BY J. Railey	CHECKED G. Matthews	STATE OF CALIFORNIA DEPARTMENT OF TRANSPORTATION	DIVISION OF ENGINEERING SERVICES STRUCTURE DESIGN DESIGN BRANCH 13	BRIDGE NO. 34-0155RL	N101/S1 CONNECTOR SEPARATION	
DETAILS	BY A. Onodera/E. Hallstrom	CHECKED J. Railey/G. Matthews			POST MILE 9.31	DECK CONTOURS NO. 1	
QUANTITIES	BY J. Railey	CHECKED M. Dumlao					

STRUCTURES DESIGN DETAIL SHEET (ENGLISH) (REV. 10/25/05)

ORIGINAL SCALE IN INCHES FOR REDUCED PLANS 0 1 2 3

CU 04
EA 163731

DISREGARD PRINTS BEARING EARLIER REVISION DATES →

REVISION DATES: 01-15-09 | 03-04-09 | 07-09-09

SHEET 7 OF 42

FILE => 34-0155rl-070-dcont01.dgn

USERNAME => tmorlok DATE PLOTTED => 21-JUL-2009 TIME PLOTTED => 11:52

DIST	COUNTY	ROUTE	POST MILES TOTAL PROJECT	SHEET No	TOTAL SHEETS
04	SF	101,1	9.2/9.8, 6.8/7.1	276	567

REGISTERED CIVIL ENGINEER — 6-4-09 DATE

PHILIP E. LUTZ No. C55839 Exp. 12-31-10 CIVIL — REGISTERED PROFESSIONAL ENGINEER — STATE OF CALIFORNIA

7-20-09
PLANS APPROVAL DATE

The State of California or its officers or agents shall not be responsible for the accuracy or completeness of electronic copies of this plan sheet.

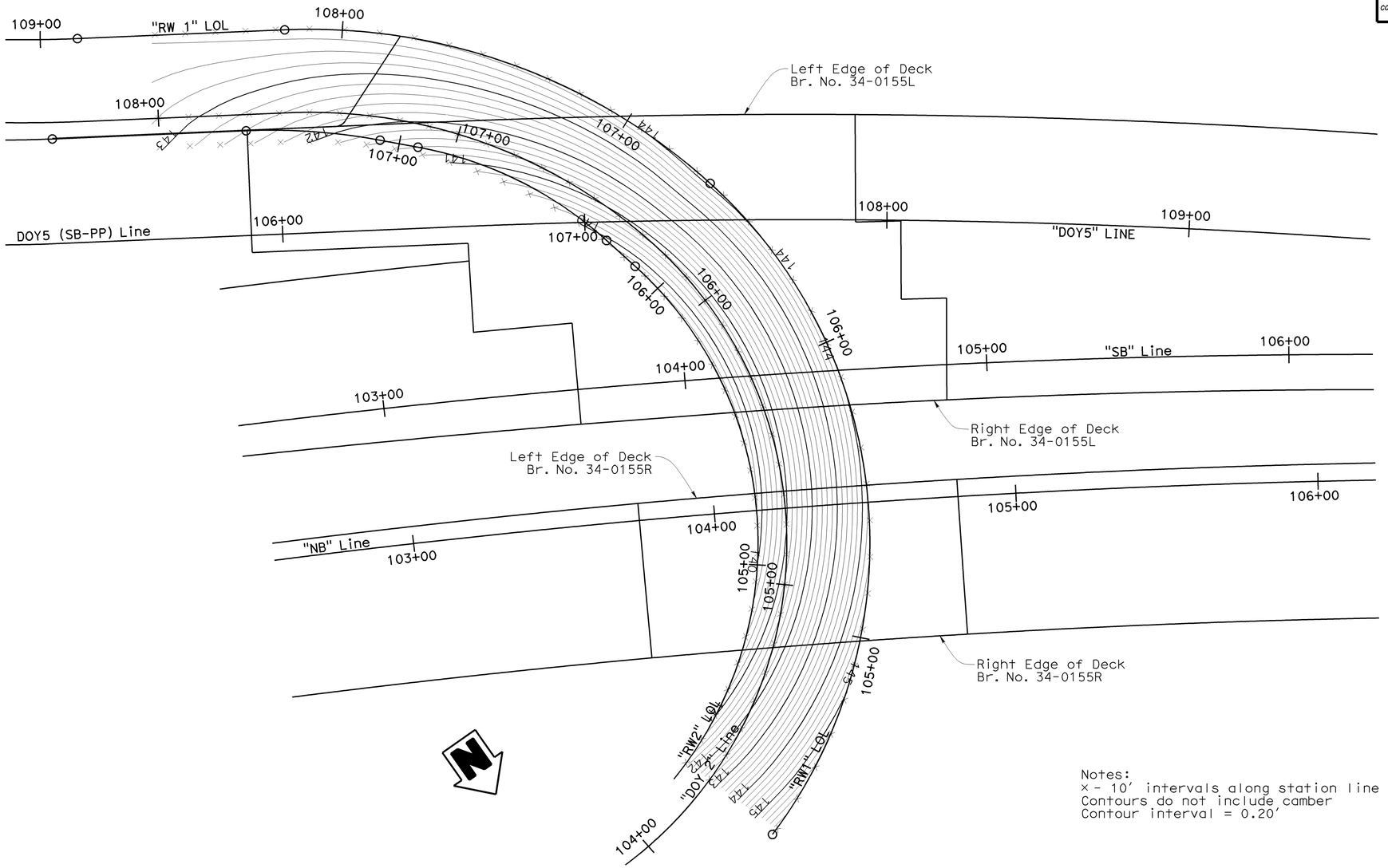

Notes:
× - 10′ intervals along station line
Contours do not include camber
Contour interval = 0.20′

DECK CONTOURS ROADWAY SLAB
1"=20′

DESIGN	BY J. Railey	CHECKED G. Matthews	STATE OF CALIFORNIA DEPARTMENT OF TRANSPORTATION	DIVISION OF ENGINEERING SERVICES STRUCTURE DESIGN DESIGN BRANCH 13	BRIDGE NO. 34-0155RL	N101/S1 CONNECTOR SEPARATION
DETAILS	BY A. Onodera/E. Hallstrom	CHECKED J. Railey/G. Matthews			POST MILE 9.31	DECK CONTOURS NO. 2
QUANTITIES	BY J. Railey	CHECKED M. Dumlao		CU 04 EA 163731		

STRUCTURES DESIGN DETAIL SHEET (ENGLISH) (REV. 10/25/05)

ORIGINAL SCALE IN INCHES FOR REDUCED PLANS 0 1 2 3

DISREGARD PRINTS BEARING EARLIER REVISION DATES →

REVISION DATES: 01-13-09 | 03-04-09 | 07-09-09

SHEET 8 OF 42

FILE => 34-0155r1-080-dcont02.dgn

USERNAME => trmorlok DATE PLOTTED => 21-JUL-2009 TIME PLOTTED => 11:52

DIST	COUNTY	ROUTE	POST MILES TOTAL PROJECT	SHEET No	TOTAL SHEETS
04	SF	101,1	9.2/9.8, 6.8/7.1	277	567

REGISTERED CIVIL ENGINEER — 6-4-09 DATE

PHILIP E. LUTZ No. C55839 Exp. 12-31-10 CIVIL — REGISTERED PROFESSIONAL ENGINEER — STATE OF CALIFORNIA

7-20-09
PLANS APPROVAL DATE

The State of California or its officers or agents shall not be responsible for the accuracy or completeness of electronic copies of this plan sheet.

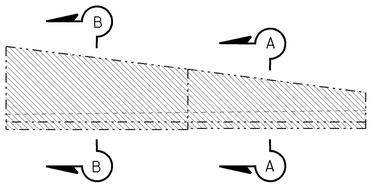

RETAINING WALL RIGHT
1"-20'-0"

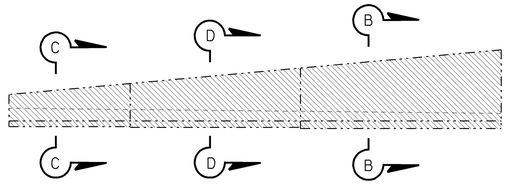

RETAINING WALL LEFT
1"-20'-0"

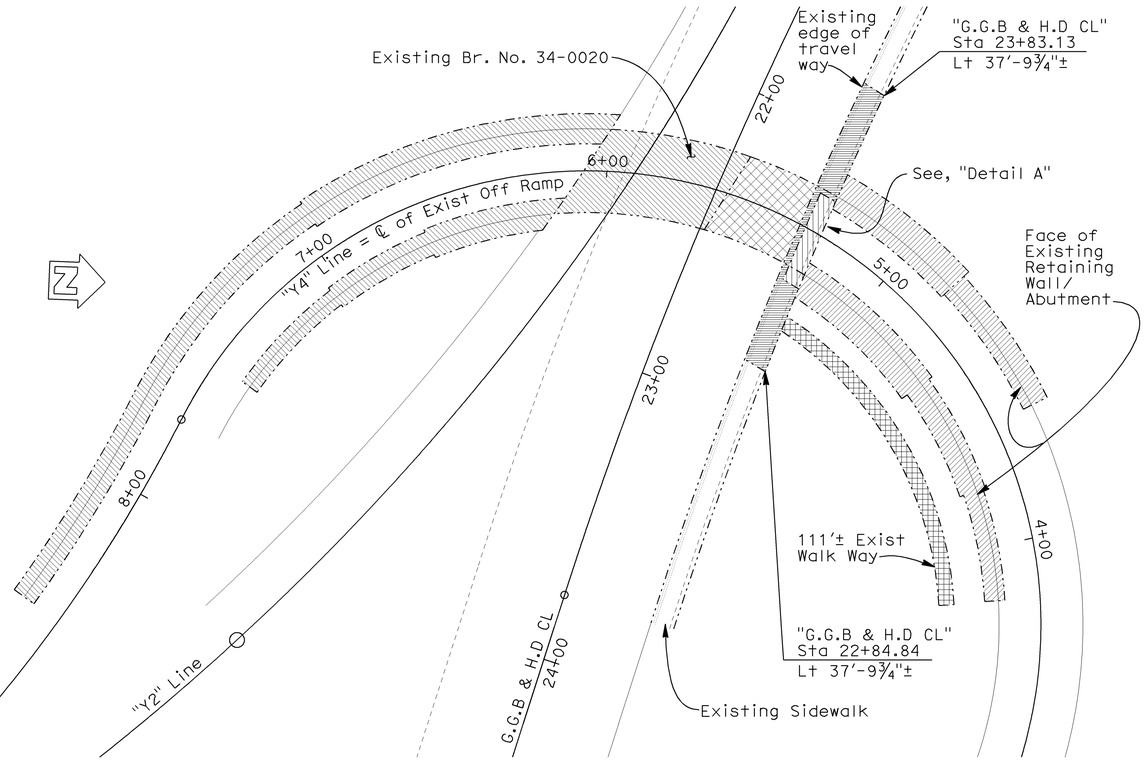

PLAN
1"=25'-0"

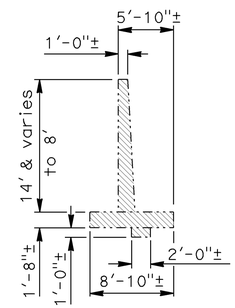

SECTION A-A
⅛"=1'-0"

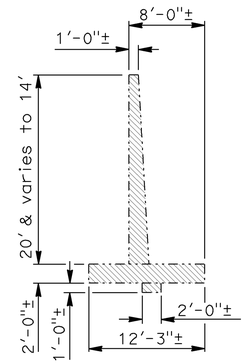

SECTION B-B
⅛"=1'-0"

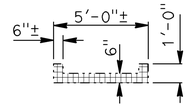

TYPICAL SECTION EXISTING WALK WAY
¼"=1'-0"

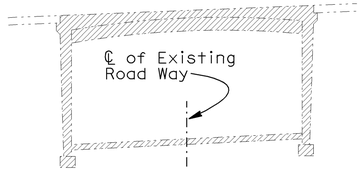

TYPICAL SECTION NORMAL TO "Y4" LINE
1" = 10'

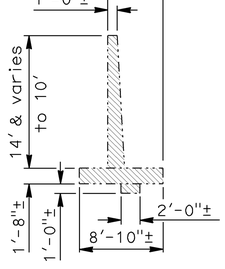

SECTION D-D
⅛"=1'-0"

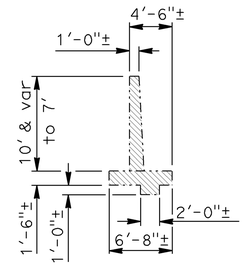

SECTION C-C
⅛"=1'-0"

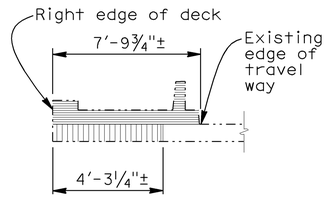

DETAIL A
¼"=1'-0"

Note:

- Indicates Limits of Payment for Concrete Removal of Existing Retaining Wall
- Indicates walk way removal
- Indicates concrete to remain in place, see Note 1
- Indicates concrete removal
- Indicates Limits of Payment for Concrete Removal of Existing Side Walk and Barrier
- Indicates Limits of Payment for Concrete Removal of Existing Bridge (Br. No. 34-0020)

1. For limits of existing bridge to remain in place, see "Temporary support" sheet

DESIGN	BY J. Railey	CHECKED G. Matthews	STATE OF CALIFORNIA DEPARTMENT OF TRANSPORTATION	DIVISION OF ENGINEERING SERVICES STRUCTURE DESIGN DESIGN BRANCH 13	BRIDGE NO. 34-0155RL / POST MILE 9.31
DETAILS	BY A. Onodera	CHECKED J. Railey/G. Matthews			
QUANTITIES	BY J. Railey	CHECKED M. Dumlao			

N101/S1 CONNECTOR SEPARATION
DEMOLITION PLAN

STRUCTURES DESIGN DETAIL SHEET (ENGLISH) (REV. 10/25/05)

ORIGINAL SCALE IN INCHES FOR REDUCED PLANS 0 1 2 3

CU 04
EA 163731

DISREGARD PRINTS BEARING EARLIER REVISION DATES →

REVISION DATES: 01-26-09 | 6-18-09 | 6-18-09 | 07-09-09

SHEET 9 OF 42

FILE => 34-0155rl-090-demo01.dgn

USERNAME => tmorrison DATE PLOTTED => 21-JUL-2009 TIME PLOTTED => 11:52

DIST	COUNTY	ROUTE	POST MILES TOTAL PROJECT	SHEET No	TOTAL SHEETS
04	SF	101,1	9.2/9.8, 6.8/7.1	278	567

Philip E. Lutz 6-4-09
REGISTERED CIVIL ENGINEER DATE

REGISTERED PROFESSIONAL ENGINEER
PHILIP E. LUTZ
No. C55839
Exp. 12-31-10
CIVIL
STATE OF CALIFORNIA

7-20-09
PLANS APPROVAL DATE

The State of California or its officers or agents shall not be responsible for the accuracy or completeness of electronic copies of this plan sheet.

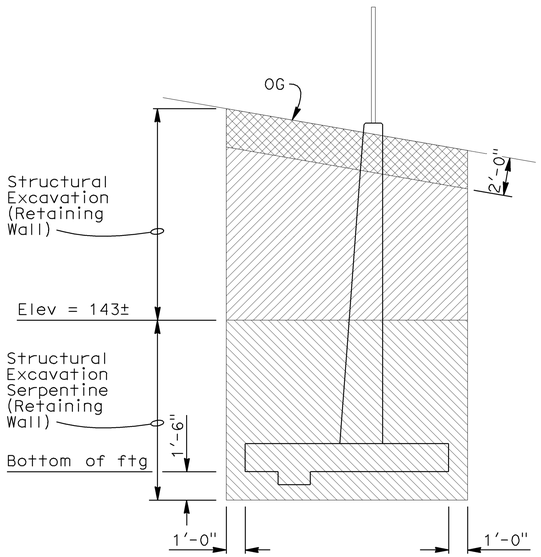

TYPICAL SECTION
RETAINING WALL
No scale

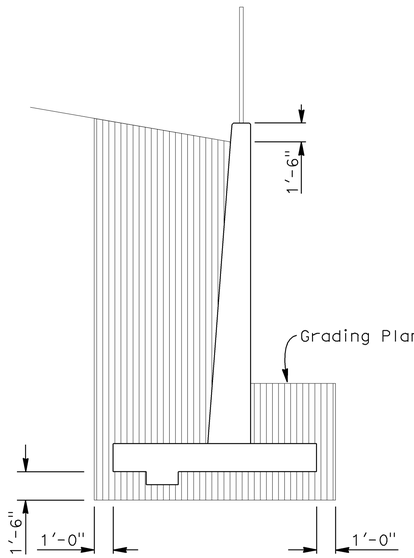

TYPICAL SECTION
RETAINING WALL
No scale

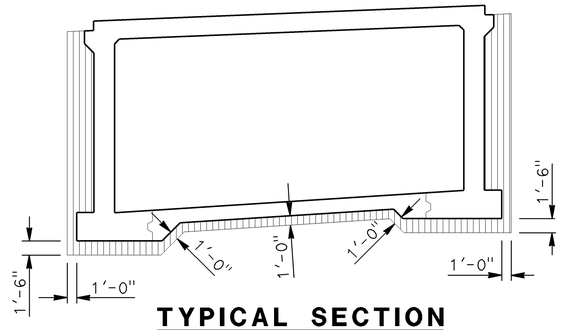

TYPICAL SECTION
BRIDGE
No scale

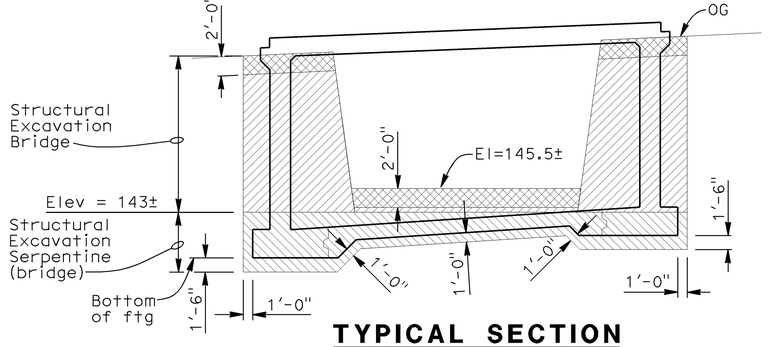

TYPICAL SECTION
BRIDGE
No scale

Note:

- Limits of Payment (Structural Excavation), Naturally Occuring Asbestos
- Limits of Payment (Serpentine Excavation)
- Limits of Payment (Structural Backfill)
- Limits of Payment (Structural Excavation-Type Z-2" Aerially Deposited Lead)

DESIGN	BY J. Railey	CHECKED G. Matthews	STATE OF CALIFORNIA DEPARTMENT OF TRANSPORTATION	DIVISION OF ENGINEERING SERVICES STRUCTURE DESIGN DESIGN BRANCH 13	BRIDGE NO. 34-0155RL; POST MILE 9.31
DETAILS	BY A. Onodera	CHECKED J. Railey/G. Matthews			
QUANTITIES	BY J. Railey	CHECKED M. Dumlao			

N101/S1 CONNECTOR SEPARATION
EXCAVATION AND BACKFILL

STRUCTURES DESIGN DETAIL SHEET (ENGLISH) (REV. 10/25/05)

ORIGINAL SCALE IN INCHES FOR REDUCED PLANS 0 1 2 3

CU 04
EA 163731

DISREGARD PRINTS BEARING EARLIER REVISION DATES

REVISION DATES: 5-14-09 | 5-24-09 | 6-18-09 | 07-09-09

SHEET 10 OF 42

FILE => 34-0155rl-095-ex-back.dgn

USERNAME => rmorlok DATE PLOTTED => 21-JUL-2009 TIME PLOTTED => 11:52

DIST	COUNTY	ROUTE	POST MILES TOTAL PROJECT	SHEET No	TOTAL SHEETS
04	SF	101,1	9.2/9.8, 6.8/7.1	279	567

REGISTERED CIVIL ENGINEER — 6-4-09 DATE

PHILIP E. LUTZ No. C55839 Exp. 12-31-10 CIVIL — REGISTERED PROFESSIONAL ENGINEER — STATE OF CALIFORNIA

7-20-09
PLANS APPROVAL DATE

The State of California or its officers or agents shall not be responsible for the accuracy or completeness of electronic copies of this plan sheet.

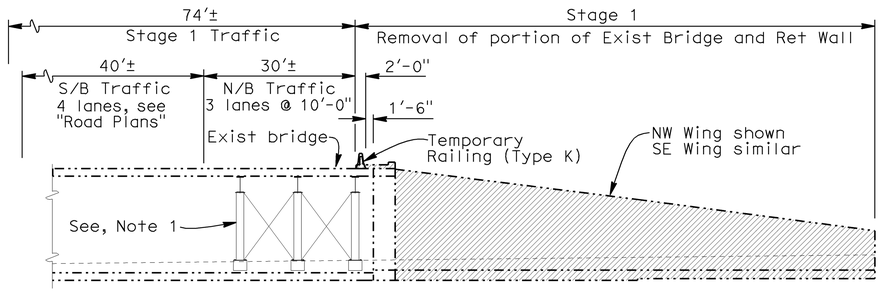

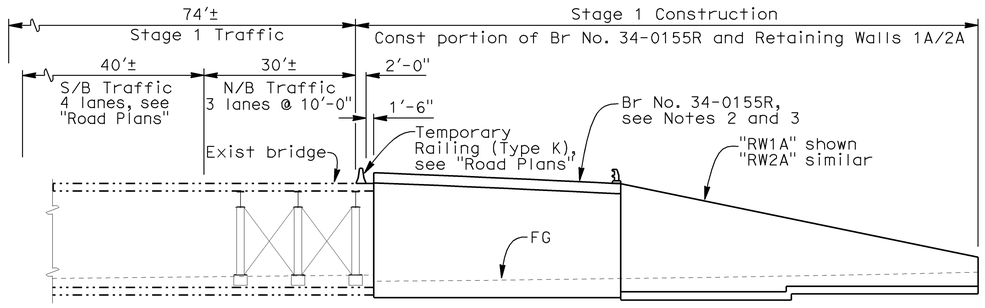

STAGE 1 (Removal)

1"=15'-0"

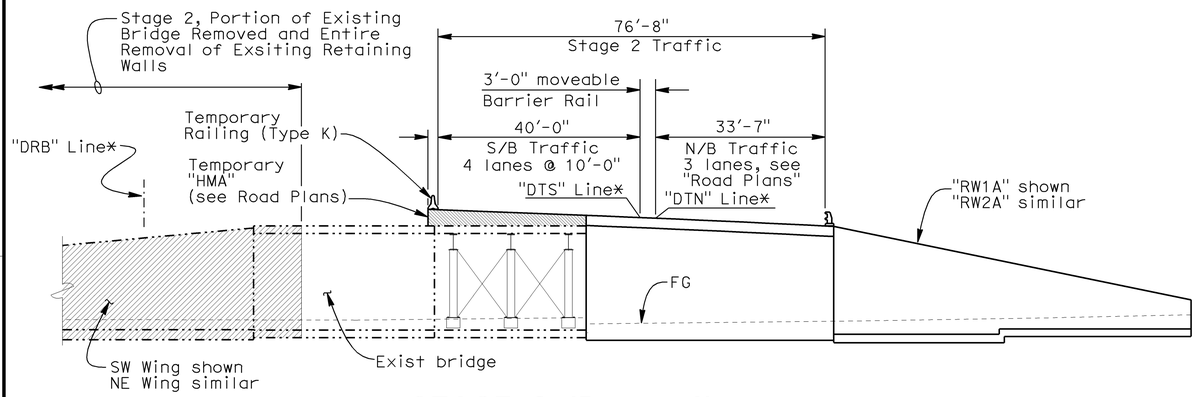

STAGE 1 (Construction)

1"=15'-0"

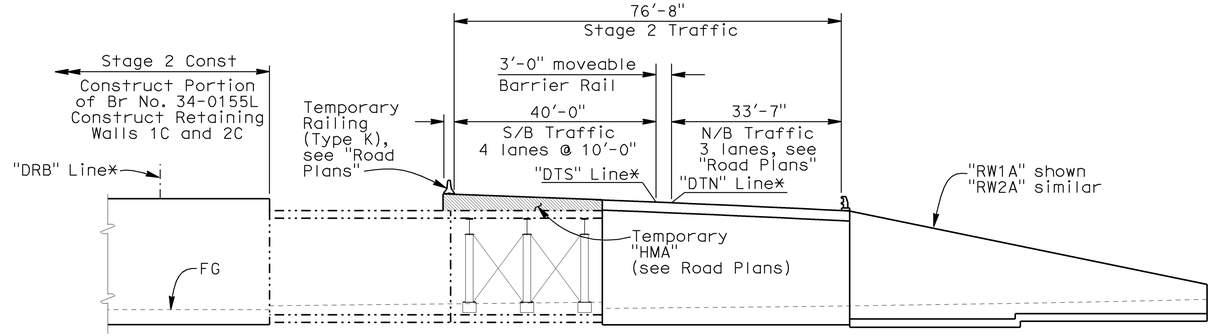

STAGE 2 (Removal)

1"=15'-0"

* Temporary Traffic Staging Alignments

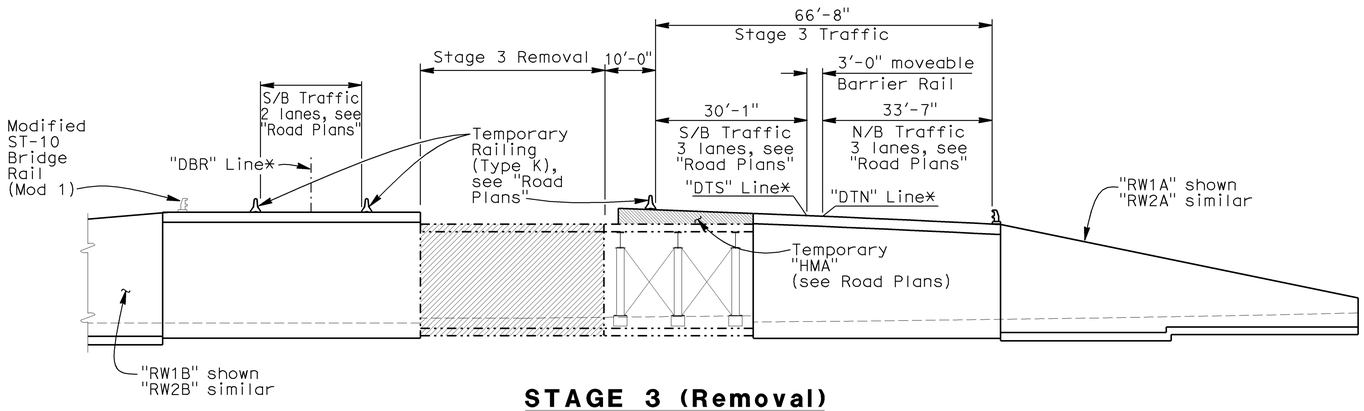

STAGE 3 (Removal)

1"=15'-0"
(Contract 3)

STAGE 2 (Construction)

1"=15'-0"

Notes:

1. Prior to construction of Retaining Walls 1A/2A and BR.NO. 34-0155R Temporary Bridge Support shall be placed. Contractor shall submit temporary support system.
2. A portion of Bridge No. 34-0155R will be constructed during Stage 1. The Remaining Portion for completion of Right Bridge will be constructed in future Contract
3. Bridge Approach Slab at EB will be constructed entirely in Stage 1. Portion of Approach Slab at BB will be constructed in Stage 1 and the remaining portion will be constructed in future contract.
4. Staging numbers are only with respect to the construction sequence of this particular bridge and do not coincide with the project wide staging, see "Road Plans" for global staging sequence

▨ Indicates Bridge and Retaining Wall Removal

·—·—· Indicates existing structure

DESIGN	BY J. Railey	CHECKED G.Matthews	STATE OF CALIFORNIA DEPARTMENT OF TRANSPORTATION	DIVISION OF ENGINEERING SERVICES STRUCTURE DESIGN DESIGN BRANCH 13	BRIDGE NO. 34-0155RL POST MILE 9.31
DETAILS	BY A. Onodera	CHECKED J. Railey/G. Matthews			
QUANTITIES	BY J. Railey	CHECKED M. Dumlao			

N101/ S1 CONNECTOR SEPARATION
STAGING PLAN NO. 1

STRUCTURES DESIGN DETAIL SHEET (ENGLISH) (REV. 10/25/05)

ORIGINAL SCALE IN INCHES FOR REDUCED PLANS 0 1 2 3

CU 04
EA 163731

DISREGARD PRINTS BEARING EARLIER REVISION DATES →

REVISION DATES: 3-04-09 | 4-28-09 | 5-11-09 | 5-13-09 | 6-16-09 | 07-08-09 | 7-11-09

SHEET 11 OF 42

FILE => 34-0155rl-100-stage01.dgn

USERNAME => rtmoriok DATE PLOTTED => 21-JUL-2009 TIME PLOTTED => 11:52

DIST	COUNTY	ROUTE	POST MILES TOTAL PROJECT	SHEET No	TOTAL SHEETS
04	SF	101,1	9.2/9.8, 6.8/7.1	280	567

REGISTERED CIVIL ENGINEER — 6-4-09 DATE

7-20-09
PLANS APPROVAL DATE

REGISTERED PROFESSIONAL ENGINEER — PHILIP E. LUTZ No. C55839 Exp. 12-31-10 CIVIL — STATE OF CALIFORNIA

The State of California or its officers or agents shall not be responsible for the accuracy or completeness of electronic copies of this plan sheet.

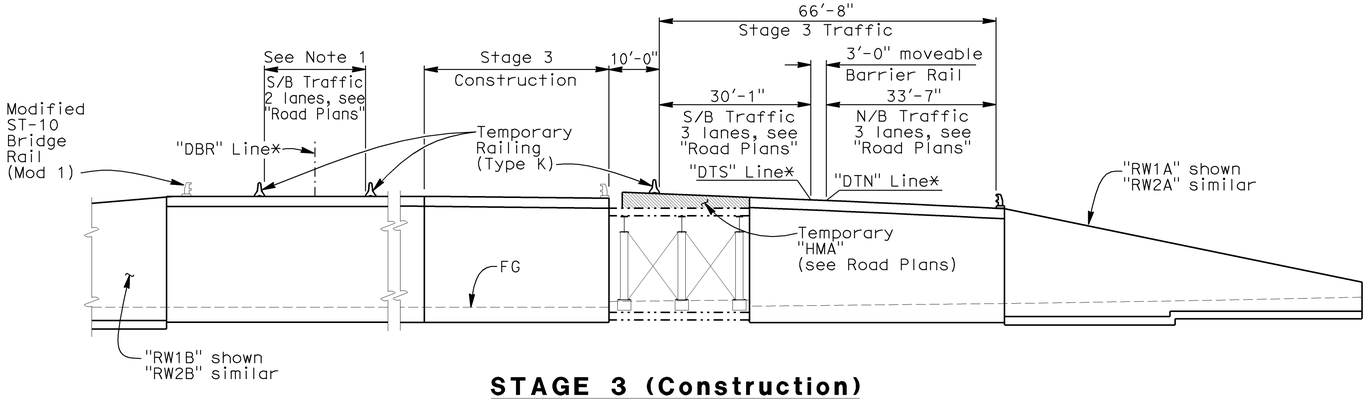

STAGE 3 (Construction)

1"=15'-0"

Notes:

1. Construct Remaining Portion of Right Bridge Approach slab and Retaining Walls "RW1B" and "RW2B" in future contract

Indicates Bridge and Retaining Wall Removal

Indicates existing structure

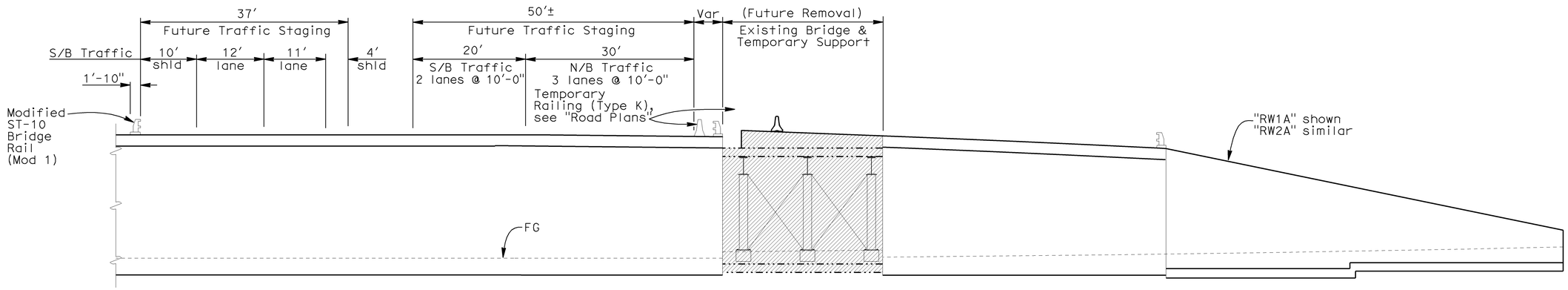

FUTURE (Removal)

1"=10'-0"

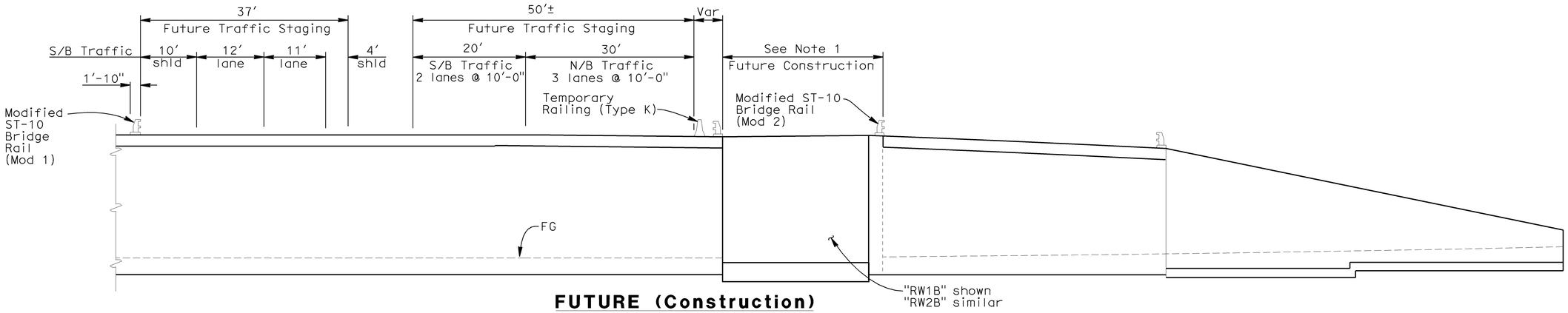

FUTURE (Construction)

1"=10'-0"

DESIGN	BY J. Railey	CHECKED G.Matthews	STATE OF CALIFORNIA DEPARTMENT OF TRANSPORTATION	DIVISION OF ENGINEERING SERVICES STRUCTURE DESIGN DESIGN BRANCH 13	BRIDGE NO. 34-0155RL	N101/S1 CONNECTOR SEPARATION
DETAILS	BY A. Onodera	CHECKED J. Railey/G. Matthews			POST MILE 9.31	STAGING PLAN NO. 2
QUANTITIES	BY J. Railey	CHECKED M. Dumlao				

STRUCTURES DESIGN DETAIL SHEET (ENGLISH) (REV. 10/25/05)

ORIGINAL SCALE IN INCHES FOR REDUCED PLANS 0 1 2 3

CU 04
EA 163731

DISREGARD PRINTS BEARING EARLIER REVISION DATES →

REVISION DATES: 3-04-09 | 4-29-09 | 5-13-09 | 6-16-09 | 07-08-09 | 7-11-09

SHEET 12 OF 42

FILE => 34-0155rl-110-stage02.dgn

USERNAME => tmorlok DATE PLOTTED => 21-JUL-2009 TIME PLOTTED => 11:53

DIST	COUNTY	ROUTE	POST MILES TOTAL PROJECT	SHEET No	TOTAL SHEETS
04	SF	101,1	9.2/9.8, 6.8/7.1	281	567

REGISTERED CIVIL ENGINEER — 6-4-09 DATE

PHILIP E. LUTZ No. C55839 Exp. 12-31-10 CIVIL — REGISTERED PROFESSIONAL ENGINEER — STATE OF CALIFORNIA

7-20-09
PLANS APPROVAL DATE

The State of California or its officers or agents shall not be responsible for the accuracy or completeness of electronic copies of this plan sheet.

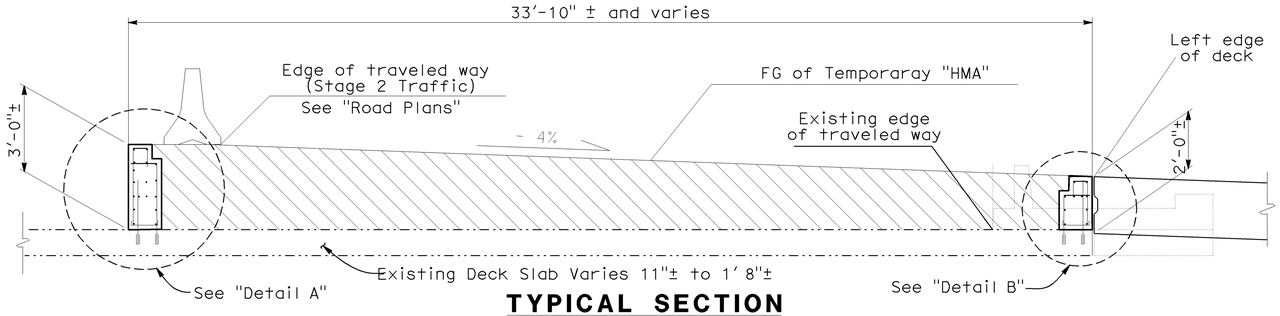

TYPICAL SECTION
3/8"=1'-0"

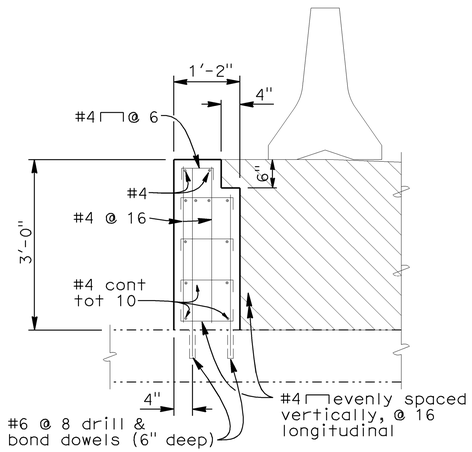

DETAIL A
3/4"=1'-0"

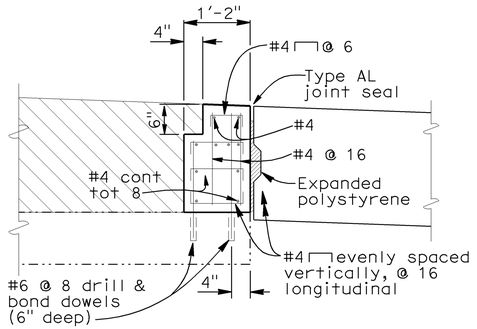

DETAIL B
3/4"=1'-0"

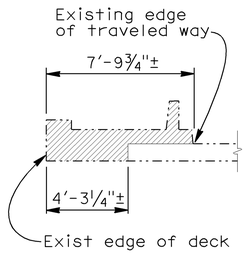

DETAIL A
1/4"=1'-0"

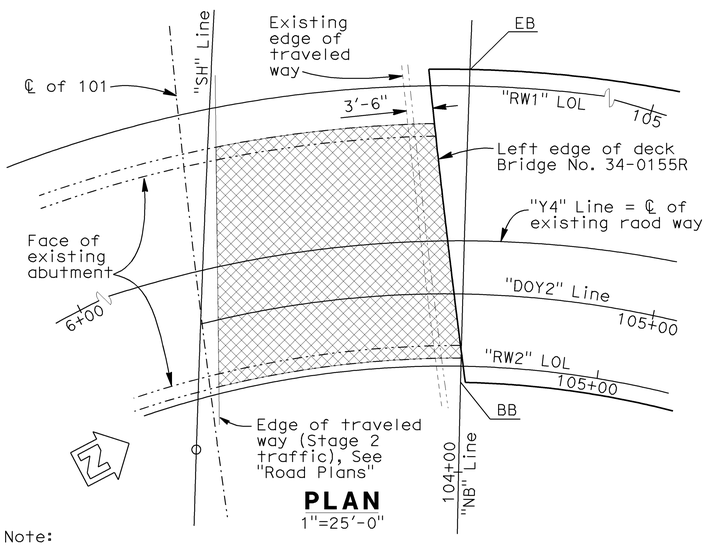

PLAN
1"=25'-0"

Note:
Indicates limits of Temporary Support System

NOTE:
THE CONTRACTOR SHALL VERIFY ALL CONTROLLING FIELD DIMENSIONS BEFORE ORDERING OR FABRICATING ANY MATERIAL.

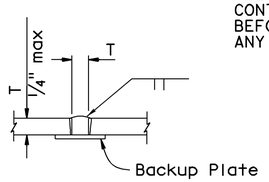

SQUARE GROOVE

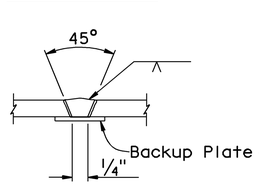

SINGLE VEE-GROOVE

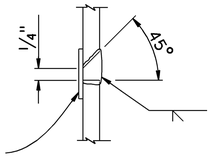

SINGLE BEVEL-GROOVE

PILE WELDING DETAIL-BUTT JOINTS

Notes:
1. Single Vee-Groove And Square Groove Permitted for all positions.
2. Single Bevel-Groove permitted for horizontal joints only

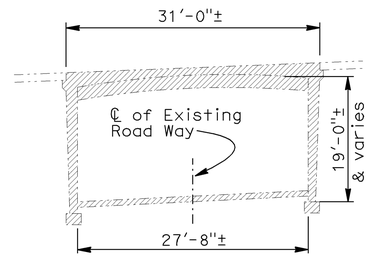

TYPICAL SECTION NORMAL TO "Y4" LINE
No scale

GENERAL NOTES LOAD FACTOR DESIGN

DESIGN:
Bridge Design Specifications
('96 AASHTO w/Revisions by Caltrans)

SEISMIC DESIGN:
Caltrans Seismic Design Criteria (SDC), Version 1.4 dated 2006

DEAD LOAD:
For additional dead load, see "Typical Section". Unit weight AL for temporary AL overlay shall = 150 PCF

LIVE LOADING:
HS 20-44 and permit design load.

CONCRETE:
fy = 60 ksi
f'c = 4.0 ksi
n = 8

STRUCTURAL STEEL TEMPORARY SUPPORT
fy = 50,000 psi

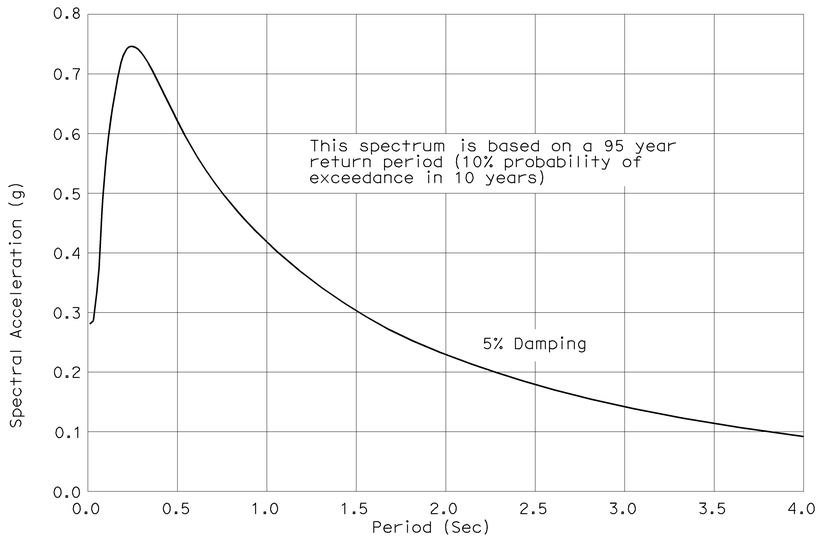

SITE SPECIFIC ACCELERATION RESPONSE SPECTRA CURVE FOR TEMP SUPPORT

DESIGN	BY J. Railey	CHECKED G. Matthews	STATE OF CALIFORNIA DEPARTMENT OF TRANSPORTATION	DIVISION OF ENGINEERING SERVICES STRUCTURE DESIGN DESIGN BRANCH 13	BRIDGE NO. 34-0155RL
DETAILS	BY A. Onodera	CHECKED J. Railey/G. Matthews			POST MILE 9.31
QUANTITIES	BY J. Railey	CHECKED M. Dumlao			

N101/S1 CONNECTOR SEPARATION
TEMPORARY SUPPORT

STRUCTURES DESIGN DETAIL SHEET (ENGLISH) (REV. 10/25/05)

ORIGINAL SCALE IN INCHES FOR REDUCED PLANS 0 1 2 3

CU 04
EA 163731

DISREGARD PRINTS BEARING EARLIER REVISION DATES →

REVISION DATES: 5-26-09 | 5-29-09 | 5-31-09 | 07-09-09

SHEET 13 OF 42

FILE => 34-0155rl-115-tempsup.dgn

USERNAME => tmorrick DATE PLOTTED => 21-JUL-2009 TIME PLOTTED => 11:53

DIST	COUNTY	ROUTE	POST MILES TOTAL PROJECT	SHEET No	TOTAL SHEETS
04	SF	101,1	9.2/9.8, 6.8/7.1	282	567

REGISTERED CIVIL ENGINEER — 6-4-09 DATE

PHILIP E. LUTZ No. C 55839 Exp. 12-31-10 CIVIL — REGISTERED PROFESSIONAL ENGINEER — STATE OF CALIFORNIA

7-20-09
PLANS APPROVAL DATE

The State of California or its officers or agents shall not be responsible for the accuracy or completeness of electronic copies of this plan sheet.

Arup PB Joint Venture
560 Mission Street
Suite 700
San Francisco, CA 94105

Note:
138.83 indicates bottom of footing elevation

"RW1" Line
"RW2" Line
"DOY2" Line
"DOY5" Line
"DOY4" Line
"SH" Line
"NB" Line
"SB" Line
"RW1" 108+87.73 BC
"RW1" 108+19.11 EC
"RW2" 108+15.15 BC
"RW2" 107+50.95 EC
"RW2" 107+06.45 BC
"RW2" 106+93.70 EC
"RW2" 106+23.19 BC
"RW2" 106+10.44 EC
"RW2" 104+22.64 BC
"RW1" 106+65.59 PCC
"DOY2" 106+36.99 POC = "DOY5" 107+13.80 POC
"DOY2" 105+70.78 POC = "SB" 104+21.70 POC
"DOY2" 105+25.28 POC = "NB" 104+23.51 POC
PCC 102+35.01
PCC 103+76.69
PCC 104+24.89
PCC 105+00.78
EC 107+57.11
EC 105+25.18
EC 104+07.80
EC 110+19.43
BC 108+25.54
BC 106+53.52
BC 101+08.30
BC 104+07.81
S 57°23'49.20" E
S 57°23'46.17" E
S 57°23'46.5" E
S 44°28'19.7" E
S 12°49'50.9" E
S 59°09'21.5" E
N 57°23'45.85" W 128.34
R=446.50'
R=424.33'
R=197.37'
R=197.29
R=127.67'
R=4663.8'
R=3005'
R=123.50'
R=160.50'
68.44
0.01
Chain Link Fence
Utility Box
ETW
EP
DI
AC
Elec
EP Pole
Sign
Elec. Boxes
PCC
Dia.=0.50
Dia.=0.83 To 0.91
Dia.=1.00
Dia.=1.25
Dia.=1.91
Dia.=1.33
Dia.=1.50
Dia.=0.50 To 1.00
Dia.=0.50 To 0.83
Dia.=0.83 To 1.50
Dia.=0.58
Dia.=2.91
Dia.=3.33
Dia.=0.58 To 3.08
Dia.=2.00
Dia.=0.41
Dia.=1.08
Dia.=2.50
Dia.=2.66
Dia.=0.50 To 3.33
Dia.=0.50 To 0.58
Dia.=1.00
Dia.=0.50 to 3.16
Dia.=0.50 To 1.41
Dia.=1.66
Dia.=1.41
Dia.=0.66
Dia.=0.83
Dia.=1.25
Dia.=1.00 To 3.16
Dia.=0.50 To 3.33
Dia.=0.75
Dia.=4.00
Dia.=0.58
2-3" PT Telecommunication
Chain Link Fence
EP/ETW
To Golden Gate Bridge
N 2,121,104.57
E 5,992,219.16
SB Route 101 to SB Route 1 Connector
NB Route 101 to NB Route 101 Connector
Route 101 (Doyle Drive)
Crash Cushion
Exist Br No. 34-0020
Exist Br No. 34-0019
12 kV PG&E Electric Line on Structure
Abut
To Downtown SF
Conc Barrier
Ret Wall
MH
Vegetation
CM-148
N 2,120,963.55
E 5,992,433.91
EL. = 161.48
CM-150
N 2,121,170.65
E 5,992,485.67
EL. = 148.80
136.61
138.11
139.61
134.94
139.90
139.74
138.25
137.58
138.07
137.53
136.60
140.54
139.77
135.10
136.72
141.00
140.48
136.55
141.71
110
109
108
107
106
105
104
103
102
111
36
35
29
28
23
34
15
33
32
37

CURVE DATA "SH"

R	Δ	T	L
4663.80′	3°40′45.8"	149.80′	299.50′
3005.00′	16°56′11.9"	447.40′	888.28′

CURVE DATA "RW1"

R	Δ	T	L
160.50′	84°48′59"	146.60′	237.59′
197.37′	44°33′55"	80.88′	153.52′
446.50′	27°47′34"	110.47′	216.59′

CURVE DATA "RW2"

R	Δ	T	L
123.50′	87°07′37"	117.46′	187.80′
127.67′	31°38′29"	36.18′	70.51′
197.29′	12°55′27"	22.35′	44.50′
424.33′	24°57′30"	93.91′	184.84′

CURVE DATA

No.	R	Δ	T	L
15	3,391.00	22°32′39"	675.87	1,334.25
23	3,015.00	34°18′00"	930.42	1,804.93
28	459.00	56°59′57"	249.21	456.62
29	2,767.00	7°34′37"	183.22	365.91
32	164.01	49°28′27"	75.57	141.62
33	132.99	53°27′40"	66.98	124.09
34	133.01	53°27′40"	66.99	124.11
35	169.98	44°33′55"	69.66	132.22
36	474.00	57°18′11"	258.99	474.06
37	505.00	45°02′45"	209.41	397.03

SURVEY CONTROL

CM-148
Fnd Mag. Nail & Shiner
9.84 FT Lt. "SB" Line
Sta. 102+93.61
N 2,120,963.55
E 5,992,433.91
Elev. = 161.48

CM-150
Fnd Mag. Nail & Washer
28.05 FT Rt. "DOY2" Line
Sta. 103+63.09
N 2,121,170.65
E 5,992,485.67
Elev. = 148.80

ALL DIMENSIONS ARE IN FEET UNLESS OTHERWISE SHOWN

PRELIMINARY INVESTIGATION SECTION

SCALE	VERT.DATUM NAVD88	PHOTOGRAMMETRY AS OF: 9/24/2008			
1"=20′	HORZ.DATUM NAD83	SURVEYED	BY Chaudhary & Assoc.	CHECKED	BY E. Lilly 3/20/09
ALIGNMENT TIES Dist.Traverse Sheet		DRAFTED	BY L. Reyes 3/20/09	CHECKED	BY E. Lilly 3/20/09

	BY	CHECKED
DESIGN	J. Railey	G. Matthews
DETAILS	A. Onodera	J. Railey/G. Matthews
QUANTITIES	J. Railey	M. Dumlao

STATE OF CALIFORNIA
DEPARTMENT OF TRANSPORTATION

DIVISION OF ENGINEERING SERVICES
STRUCTURE DESIGN
DESIGN BRANCH 13

BRIDGE NO. 34-0155LR
POST MILE 9.31

CU 04247
EA 163731

N101/S1 CONNECTOR SEPARATION
FOUNDATION PLAN

STRUCTURES FOUNDATION PLAN SHEET (ENGLISH) (REV. 10/25/05)

ORIGINAL SCALE IN INCHES FOR REDUCED PLANS 0 1 2 3

DISREGARD PRINTS BEARING EARLIER REVISION DATES

REVISION DATES: 4-17-09 | 5-7-09 | 6-02-09 | 7-11-09

SHEET 14 OF 42

FILE => 34-0155rl-120-fpl.dgn

USERNAME => ttrmorlok DATE PLOTTED => 21-JUL-2009 TIME PLOTTED => 12:54

DIST	COUNTY	ROUTE	POST MILES TOTAL PROJECT	SHEET No	TOTAL SHEETS
04	SF	101,1	9.2/9.8, 6.8/7.1	283	567

Philip E. Lutz 6-4-09
REGISTERED CIVIL ENGINEER DATE

7-20-09
PLANS APPROVAL DATE

REGISTERED PROFESSIONAL ENGINEER — PHILIP E. LUTZ — No. C55839 — Exp. 12-31-10 — CIVIL — STATE OF CALIFORNIA

The State of California or its officers or agents shall not be responsible for the accuracy or completeness of electronic copies of this plan sheet.

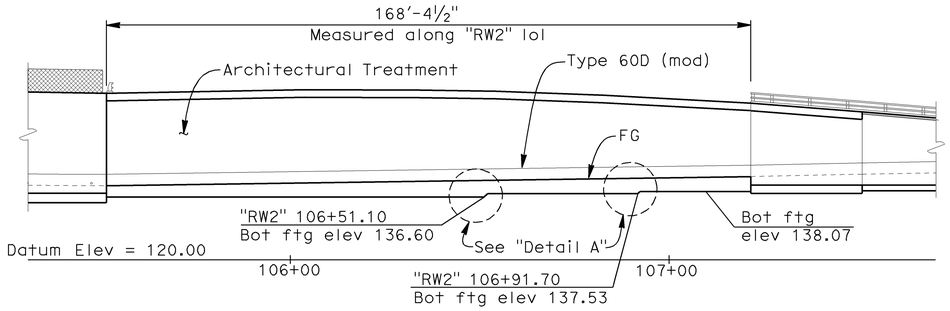

DEVELOPED ELEVATION (RW2)
1"=20'

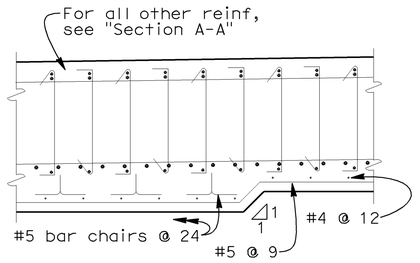

DETAIL A
½"=1'-0"

Note:
⊂ indicates bundle bar

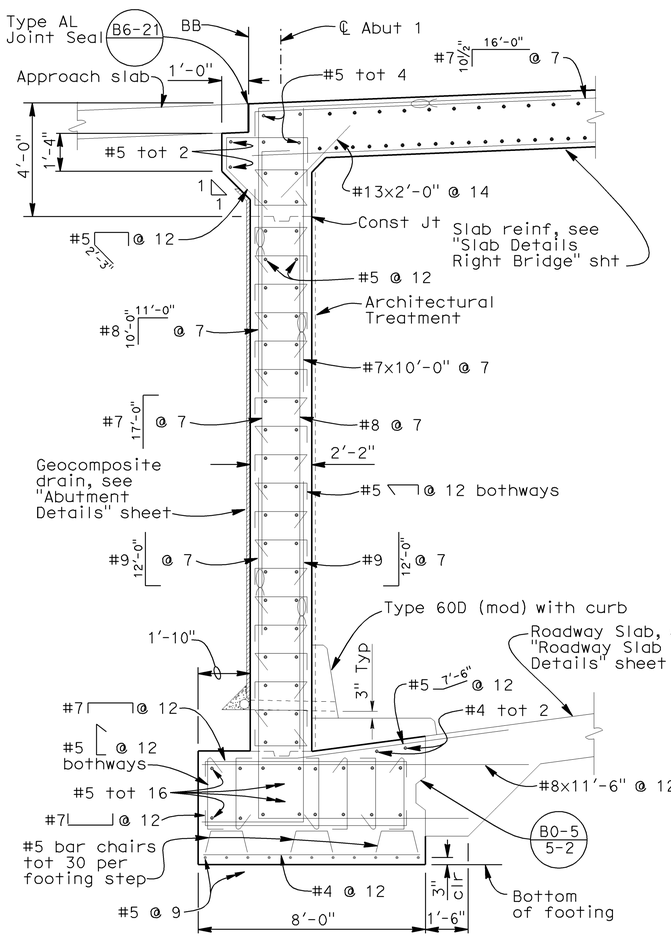

SECTION A-A
⅜"=1'-0"

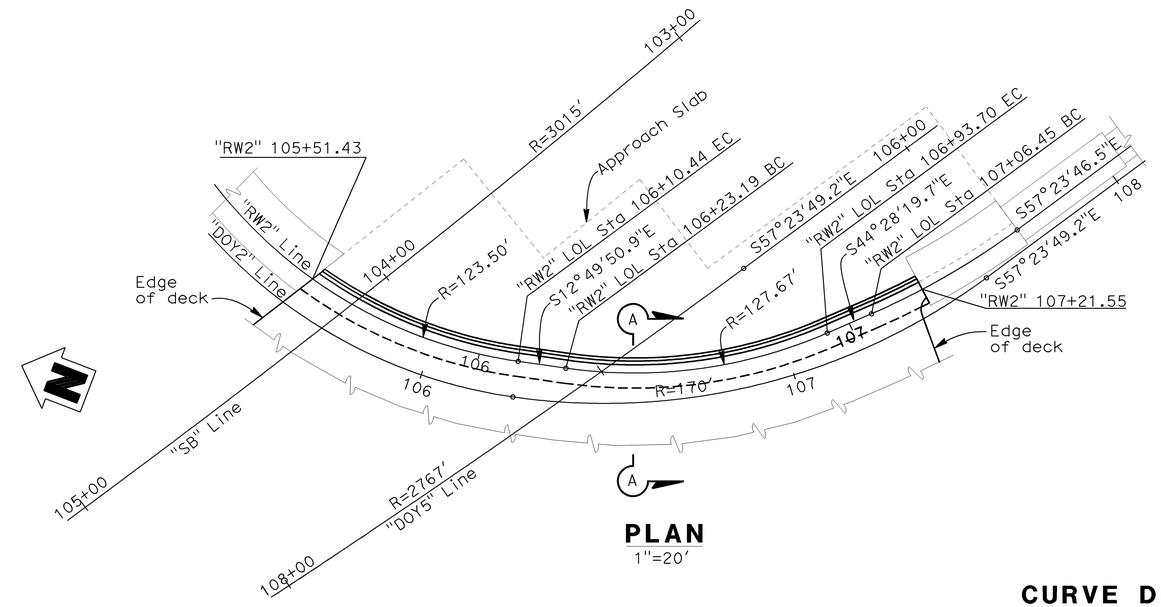

PLAN
1"=20'

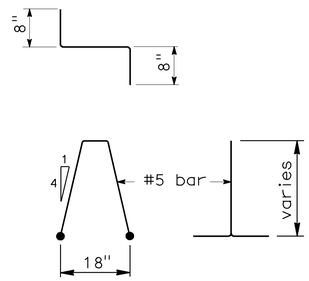

BAR CHAIR DETAIL
No scale

CURVE DATA "RW2"

R	Δ	T	L
123.50′	87°07'37"	117.46′	187.80′
127.67′	31°38'29"	36.18′	70.51′
197.29′	12°55'27"	22.35′	44.50′
424.33′	24°57'30"	93.91′	184.84′

DESIGN	BY J. Railey	CHECKED G. Matthews	STATE OF CALIFORNIA DEPARTMENT OF TRANSPORTATION	DIVISION OF ENGINEERING SERVICES STRUCTURE DESIGN DESIGN BRANCH 13	BRIDGE NO. 34-0155RL / POST MILE 9.31
DETAILS	BY A. Onodera	CHECKED J. Railey/G. Matthews			
QUANTITIES	BY J. Railey	CHECKED M. Dumlao			

N101/S1 CONNECTOR SEPARATION
ABUTMENT 1 LAYOUT - LEFT BRIDGE

STRUCTURES DESIGN DETAIL SHEET (ENGLISH) (REV. 10/25/05)

ORIGINAL SCALE IN INCHES FOR REDUCED PLANS 0 1 2 3

CU 04
EA 163731

DISREGARD PRINTS BEARING EARLIER REVISION DATES →

REVISION DATES: 12-04-08 | 5-28-09 | 5-29-09 | 6-02-09 | 07-09-09 | 7-11-09

SHEET 15 OF 42

FILE => 34-0155rl-130-abtlay01.dgn

USERNAME => tmorrison DATE PLOTTED => 21-JUL-2009 TIME PLOTTED => 11:53

DIST	COUNTY	ROUTE	POST MILES TOTAL PROJECT	SHEET No	TOTAL SHEETS
04	SF	101,1	9.2/9.8, 6.8/7.1	284	567

REGISTERED CIVIL ENGINEER — 6-4-09 DATE

PHILIP E. LUTZ No. C55839 Exp. 12-31-10 CIVIL — REGISTERED PROFESSIONAL ENGINEER — STATE OF CALIFORNIA

7-20-09
PLANS APPROVAL DATE

The State of California or its officers or agents shall not be responsible for the accuracy or completeness of electronic copies of this plan sheet.

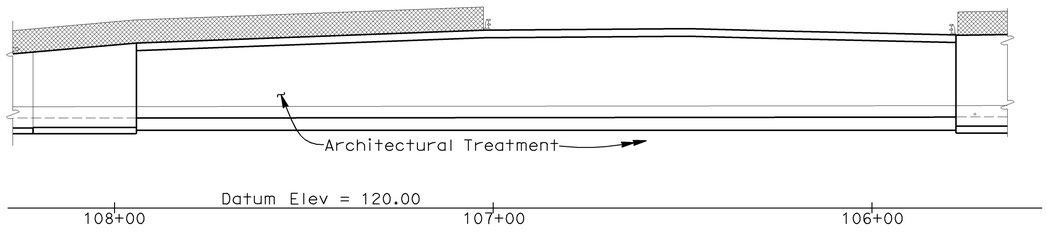

DEVELOPED ELEVATION (RW1)
1" = 20'

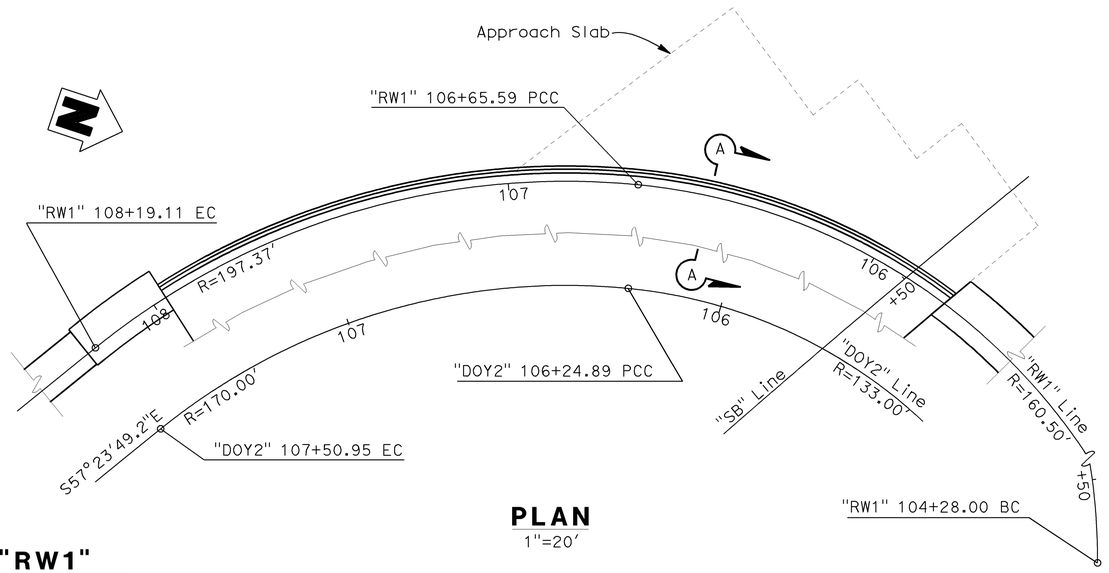

PLAN
1"=20'

CURVE DATA "RW1"

R	Δ	T	L
160.50'	84°48'59"	146.60'	237.59'
197.37'	44°33'55"	80.88'	153.52'
446.50'	27°47'34"	110.47'	216.59'

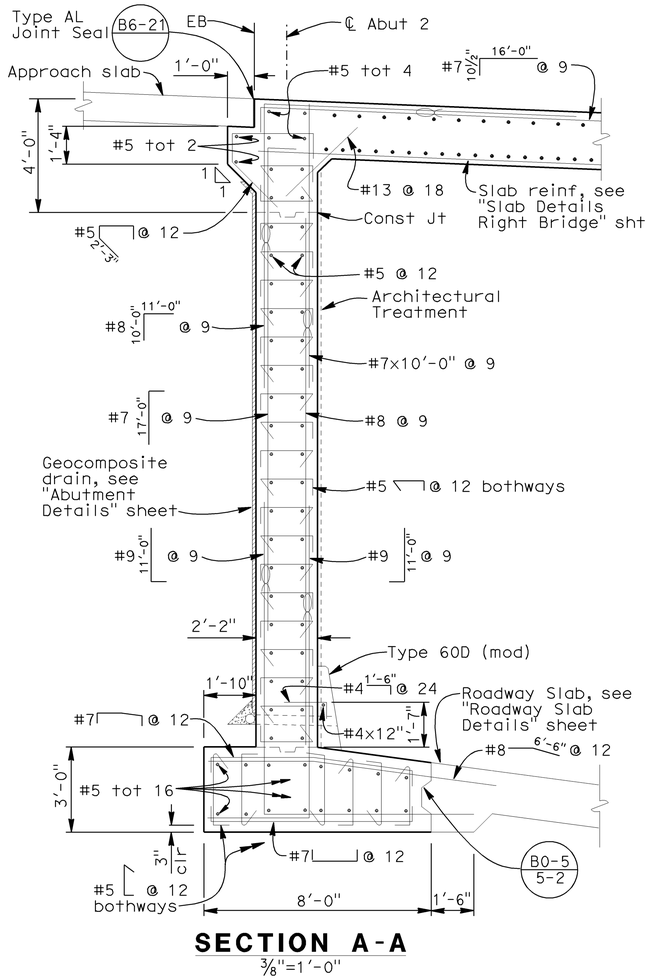

SECTION A-A
⅜"=1'-0"

Note:
indicates bundle bar

DESIGN	BY J. Railey	CHECKED G. Matthews	STATE OF CALIFORNIA DEPARTMENT OF TRANSPORTATION	DIVISION OF ENGINEERING SERVICES STRUCTURE DESIGN DESIGN BRANCH 13	BRIDGE NO. 34-0155RL	N101/S1 CONNECTOR SEPARATION
DETAILS	BY A. Onodera	CHECKED J. Railey/G. Matthews			POST MILE 9.31	ABUTMENT 2 LAYOUT - LEFT BRIDGE
QUANTITIES	BY J. Railey	CHECKED M. Dumlao				

STRUCTURES DESIGN DETAIL SHEET (ENGLISH) (REV. 10/25/05)

ORIGINAL SCALE IN INCHES FOR REDUCED PLANS 0 1 2 3

CU 04
EA 163731

DISREGARD PRINTS BEARING EARLIER REVISION DATES →

REVISION DATES: 12-04-08 | 5-28-09 | 6-02-09 | 07-09-09 | 7-11-09

SHEET 16 OF 42

FILE => 34-0155rl-140-abtlay02.dgn

USERNAME => s1335318 DATE PLOTTED => 21-JUL-2009 TIME PLOTTED => 12:12

DIST	COUNTY	ROUTE	POST MILES TOTAL PROJECT	SHEET No	TOTAL SHEETS
04	SF	101,1	9.2/9.8, 6.8/7.1	285	567

REGISTERED CIVIL ENGINEER — 6-4-09 DATE

PHILIP E. LUTZ No. C55839 Exp. 12-31-10 CIVIL — REGISTERED PROFESSIONAL ENGINEER — STATE OF CALIFORNIA

7-20-09
PLANS APPROVAL DATE

The State of California or its officers or agents shall not be responsible for the accuracy or completeness of electronic copies of this plan sheet.

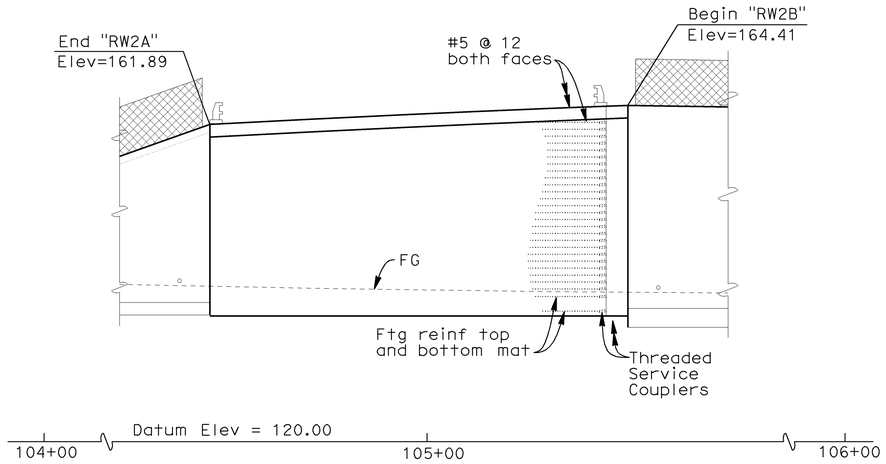

ELEVATION
1"=10'-0"

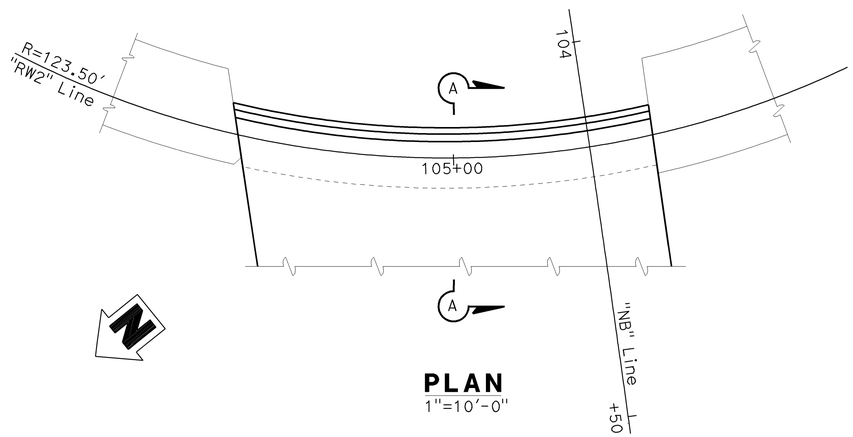

PLAN
1"=10'-0"

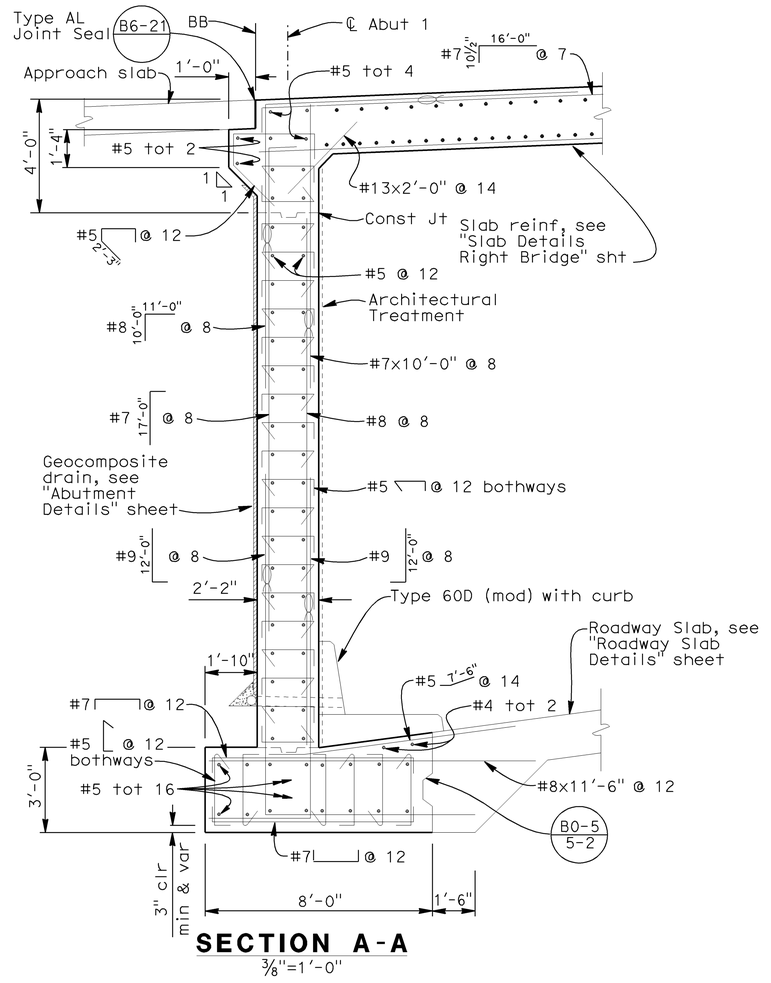

SECTION A-A
⅜"=1'-0"

Note:
⊂ indicates bundle bar

DESIGN	BY J. Railey	CHECKED G. Matthews	STATE OF CALIFORNIA DEPARTMENT OF TRANSPORTATION	DIVISION OF ENGINEERING SERVICES STRUCTURE DESIGN DESIGN BRANCH 13	BRIDGE NO. 34-0155RL	N101/S1 CONNECTOR SEPARATION
DETAILS	BY A. Onodera	CHECKED J. Railey/G. Matthews			POST MILE 9.31	ABUTMENT 1 LAYOUT - RIGHT BRIDGE
QUANTITIES	BY J. Railey	CHECKED M. Dumlao				

STRUCTURES DESIGN DETAIL SHEET (ENGLISH) (REV. 10/25/05)

ORIGINAL SCALE IN INCHES FOR REDUCED PLANS 0 1 2 3

CU 04
EA 163731

DISREGARD PRINTS BEARING EARLIER REVISION DATES →

REVISION DATES: 12-04-08 | 5-18-09 | 5-28-09 | 6-02-09 | 6-03-09 | 07-09-09 | 7-11-09

SHEET 17 OF 42

FILE => 34-0155rl-150-abtlay03.dgn

USERNAME => s135318 DATE PLOTTED => 21-JUL-2009 TIME PLOTTED => 12:22

DIST	COUNTY	ROUTE	POST MILES TOTAL PROJECT	SHEET No	TOTAL SHEETS
04	SF	101,1	9.2/9.8, 6.8/7.1	286	567

REGISTERED CIVIL ENGINEER 6-4-09 DATE

7-20-09
PLANS APPROVAL DATE

REGISTERED PROFESSIONAL ENGINEER
PHILIP E. LUTZ
No. C55839
Exp. 12-31-10
CIVIL
STATE OF CALIFORNIA

The State of California or its officers or agents shall not be responsible for the accuracy or completeness of electronic copies of this plan sheet.

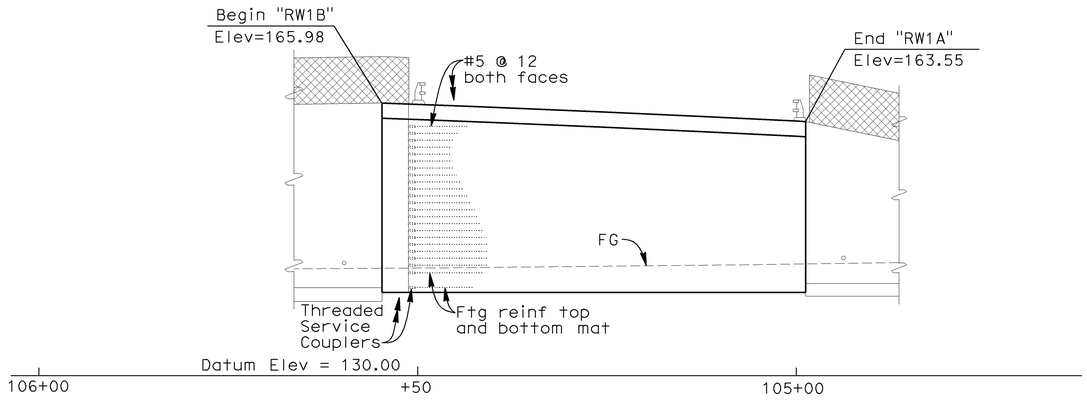

ELEVATION
1"=10'-0"

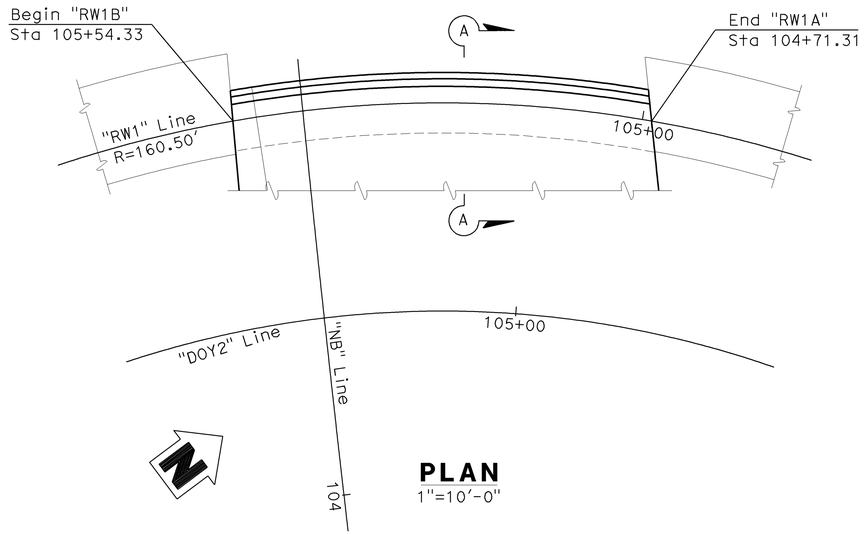

PLAN
1"=10'-0"

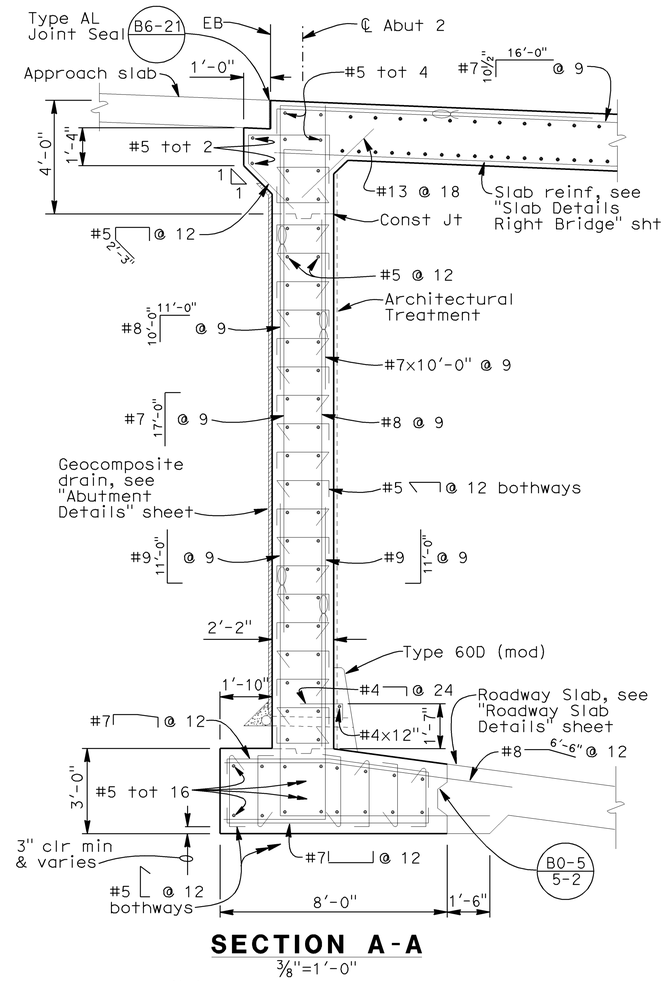

SECTION A-A
3/8"=1'-0"

Note:
∝ indicates bundle bar

DESIGN	BY J. Railey	CHECKED G. Matthews	STATE OF CALIFORNIA DEPARTMENT OF TRANSPORTATION	DIVISION OF ENGINEERING SERVICES STRUCTURE DESIGN DESIGN BRANCH 13	BRIDGE NO. 34-0155RL
DETAILS	BY A. Onodera	CHECKED J. Railey/G. Matthews			POST MILE 9.31
QUANTITIES	BY J. Railey	CHECKED M. Dumlao			

N101/S1 CONNECTOR SEPARATION
ABUTMENT 2 LAYOUT - RIGHT BRIDGE

STRUCTURES DESIGN DETAIL SHEET (ENGLISH) (REV. 10/25/05)

ORIGINAL SCALE IN INCHES FOR REDUCED PLANS 0 1 2 3

CU 04
EA 163731

DISREGARD PRINTS BEARING EARLIER REVISION DATES

REVISION DATES: 12-04-08, 5-18-09, 5-25-09, 6-02-09, 6-03-09, 07-09-09, 7-11-09

SHEET 18 OF 42

FILE => 34-0155rl-160-abtlay04.dgn

USERNAME => s135318 DATE PLOTTED => 21-JUL-2009 TIME PLOTTED => 12:22

DIST	COUNTY	ROUTE	POST MILES TOTAL PROJECT	SHEET No	TOTAL SHEETS
04	SF	101,1	9.2/9.8, 6.8/7.1	287	567

REGISTERED CIVIL ENGINEER — 6-4-09 DATE

PHILIP E. LUTZ No. C55839 Exp. 12-31-10 CIVIL — REGISTERED PROFESSIONAL ENGINEER — STATE OF CALIFORNIA

7-20-09
PLANS APPROVAL DATE

The State of California or its officers or agents shall not be responsible for the accuracy or completeness of electronic copies of this plan sheet.

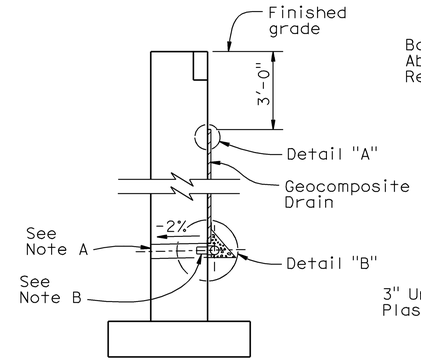

WALL SECTION

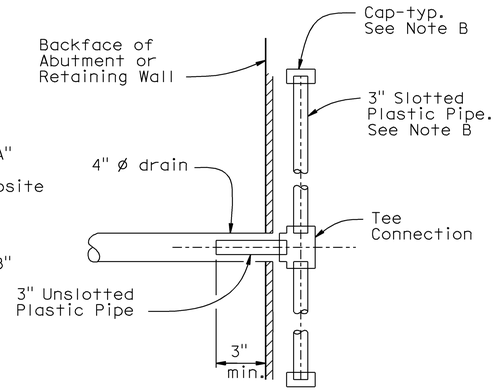

SECTION A-A

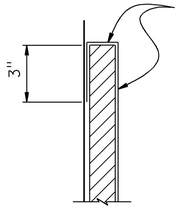

DETAIL "A"

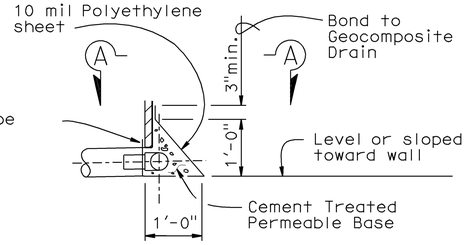

DETAIL "B"

WEEP HOLE AND GEOCOMPOSITE DRAIN

ALTERNATIVE TO BRIDGE DETAIL BO-3 / 3-1

Notes:

A. 4" ø drains at intermediate sag points and at 25' max center to center (9' c-c for Type 3 and 9'-3" c-c for Type 4 retaining walls).
For walls adjacent to sidewalks or curbs, provide 4" cast iron or asbestos cement pipe under the sidewalk to discharge through curb face.
Exposed wall drains shall be located 3"± above finished grade.

B. Geocomposite drain, cement treated permeable base, and 3"ø slotted plastic pipe continuous behind retaining wall or abutment. Cap ends of pipe. Provide "Tee" connection at each 4" ø drain.

C. Connect the low end of plastic pipe to the main outlet pipe as apprlicable.

DESIGN	BY J. Railey	CHECKED G. Matthews	STATE OF CALIFORNIA DEPARTMENT OF TRANSPORTATION	DIVISION OF ENGINEERING SERVICES STRUCTURE DESIGN DESIGN BRANCH 13	BRIDGE NO. 34-0155RL
DETAILS	BY A. Onodera	CHECKED J. Railey/G. Matthews			POST MILE 9.31
QUANTITIES	BY J. Railey	CHECKED M. Dumlao		CU 04 EA 163731	DISREGARD PRINTS BEARING EARLIER REVISION DATES → 05-28-09, 07-09-09

N101/S1 CONNECTOR SEPARATION
ABUTMENT DETAILS

STRUCTURES DESIGN DETAIL SHEET (ENGLISH) (REV. 10/25/05)

ORIGINAL SCALE IN INCHES FOR REDUCED PLANS 0 1 2 3

SHEET 19 OF 42

FILE => 34-0155r1-165-abtdet01.dgn

USERNAME => s135318 DATE PLOTTED => 21-JUL-2009 TIME PLOTTED => 12:22

DIST	COUNTY	ROUTE	POST MILES TOTAL PROJECT	SHEET No	TOTAL SHEETS
04	SF	101,1	9.2/9.8, 6.8/7.1	288	567

REGISTERED CIVIL ENGINEER — 6-4-09 DATE

PHILIP E. LUTZ No. C55839 Exp. 12-31-10 CIVIL — REGISTERED PROFESSIONAL ENGINEER — STATE OF CALIFORNIA

7-20-09
PLANS APPROVAL DATE

The State of California or its officers or agents shall not be responsible for the accuracy or completeness of electronic copies of this plan sheet.

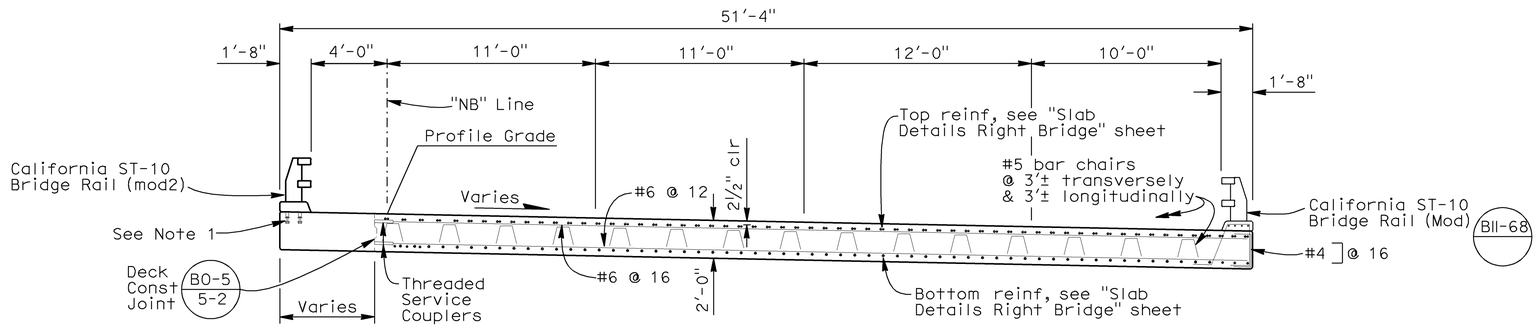

TYPICAL SECTION - RIGHT BRIDGE

¼"=1'-0"

Note:
1. Anchor Bolts, Stainless Steel Mechanical Couplers and Anchor Bars placed in Stage 1 Construction

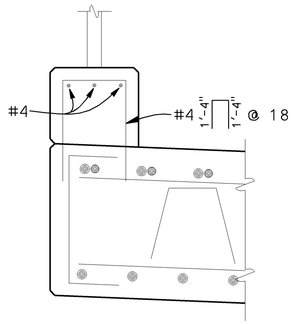

CURB DETAIL

1"=1'-0"

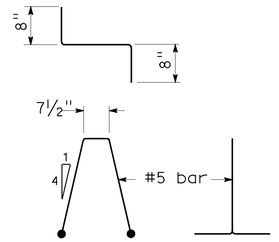

BAR CHAIR DETAIL

No scale

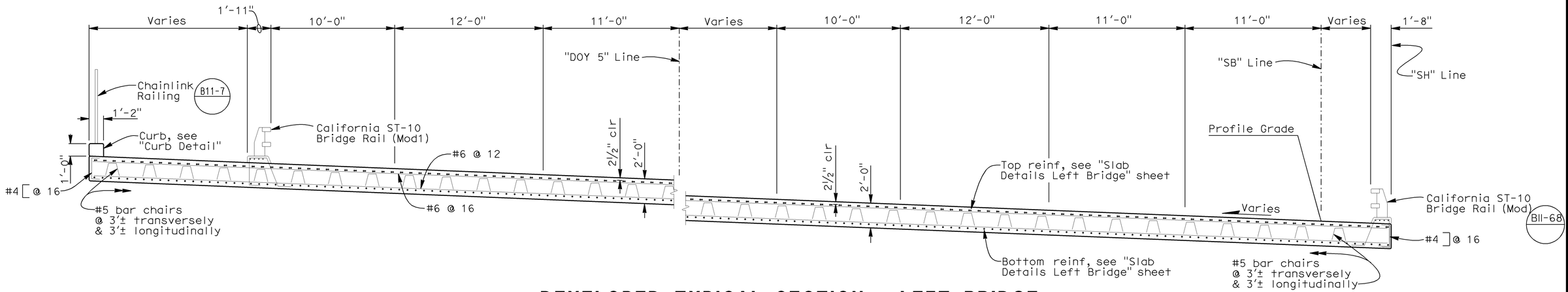

DEVELOPED TYPICAL SECTION - LEFT BRIDGE PARALLEL TO "DOY2" LINE

¼"=1'-0"

DESIGN	BY J. Railey	CHECKED G. Matthews	STATE OF CALIFORNIA DEPARTMENT OF TRANSPORTATION	DIVISION OF ENGINEERING SERVICES STRUCTURE DESIGN DESIGN BRANCH 13	BRIDGE NO. 34-0155RL	N101/S1 CONNECTOR SEPARATION	
DETAILS	BY A. Onodera	CHECKED J. Railey/G. Matthews			POST MILE 9.31	TYPICAL SECTION	
QUANTITIES	BY J. Railey	CHECKED M. Dumlao					

STRUCTURES DESIGN DETAIL SHEET (ENGLISH) (REV. 10/25/05)

ORIGINAL SCALE IN INCHES FOR REDUCED PLANS 0 1 2 3

CU 04
EA 163731

DISREGARD PRINTS BEARING EARLIER REVISION DATES →

REVISION DATES: 2-22-09 | 5-13-09 | 5-18-09 | 5-26-09 | 5-31-09 | 07-09-09

SHEET 20 OF 42

FILE => 34-0155rl-170-typsec01.dgn

USERNAME => s135318 DATE PLOTTED => 21-JUL-2009 TIME PLOTTED => 12:22

DIST	COUNTY	ROUTE	POST MILES TOTAL PROJECT	SHEET No	TOTAL SHEETS
04	SF	101,1	9.2/9.8, 6.8/7.1	289	567

REGISTERED CIVIL ENGINEER — 6-4-09 DATE

PHILIP E. LUTZ No. C55839 Exp. 12-31-10 CIVIL — REGISTERED PROFESSIONAL ENGINEER — STATE OF CALIFORNIA

7-20-09
PLANS APPROVAL DATE

The State of California or its officers or agents shall not be responsible for the accuracy or completeness of electronic copies of this plan sheet.

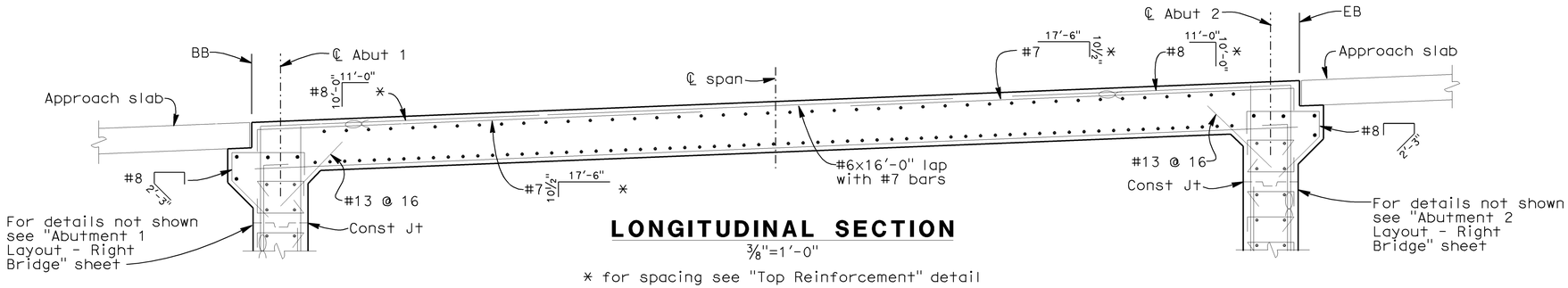

LONGITUDINAL SECTION

3/8"=1'-0"

* for spacing see "Top Reinforcement" detail

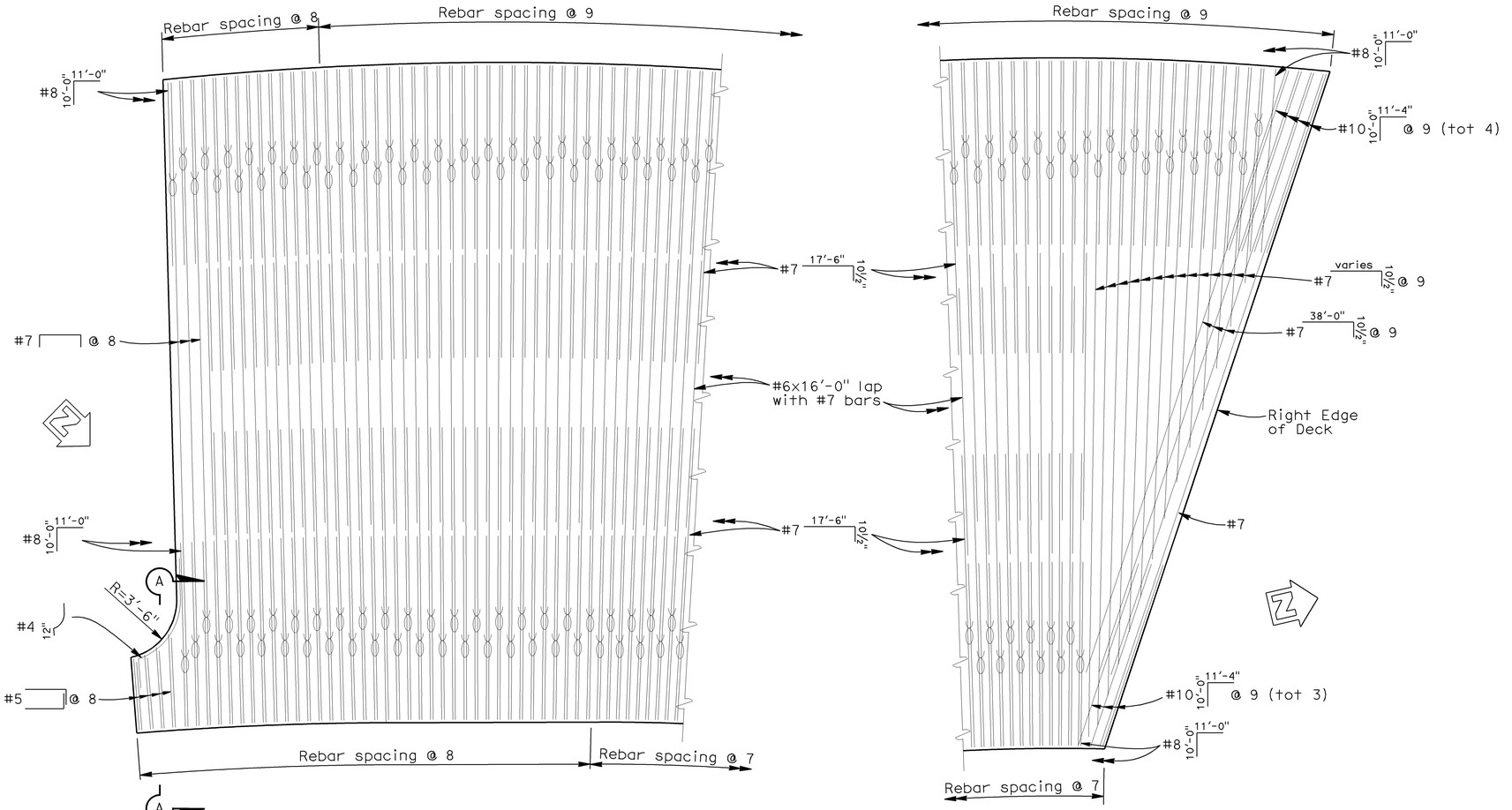

Note:
indicates bundle bar

TOP REINFORCEMENT

1/4"=1'-0"

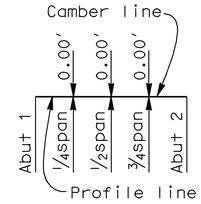

CAMBER DIAGRAM

Does not include allowance for falsework settlement

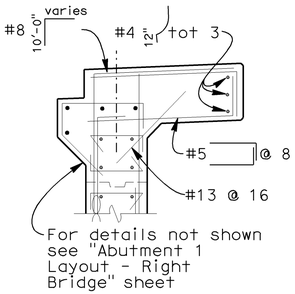

SECTION A-A

3/8"=1'-0"

DESIGN	BY J. Railey	CHECKED G. Matthews	STATE OF CALIFORNIA DEPARTMENT OF TRANSPORTATION	DIVISION OF ENGINEERING SERVICES STRUCTURE DESIGN DESIGN BRANCH 13	BRIDGE NO. 34-0155R	N101/S1 CONNECTOR SEPARATION	
DETAILS	BY A. Onodera	CHECKED J. Railey/G. Matthews			POST MILE 9.31	SLAB DETAILS LEFT BRIDGE (TOP)	
QUANTITIES	BY J. Railey	CHECKED M. Dumlao		CU 04 EA 163731	DISREGARD PRINTS BEARING EARLIER REVISION DATES →	REVISION DATES 03-25-09 07-09-09	SHEET 21 OF 42

STRUCTURES DESIGN DETAIL SHEET (ENGLISH) (REV. 10/25/05)

ORIGINAL SCALE IN INCHES FOR REDUCED PLANS 0 1 2 3

FILE => 34-0155rl-180-slab-lt-top.dgn

USERNAME => s135318 DATE PLOTTED => 21-JUL-2009 TIME PLOTTED => 12:22

DIST	COUNTY	ROUTE	POST MILES TOTAL PROJECT	SHEET No	TOTAL SHEETS
04	SF	101,1	9.2/9.8, 6.8/7.1	290	567

REGISTERED CIVIL ENGINEER — 6-4-09 DATE

PHILIP E. LUTZ No. C55839 Exp. 12-31-10 CIVIL — REGISTERED PROFESSIONAL ENGINEER — STATE OF CALIFORNIA

7-20-09
PLANS APPROVAL DATE

The State of California or its officers or agents shall not be responsible for the accuracy or completeness of electronic copies of this plan sheet.

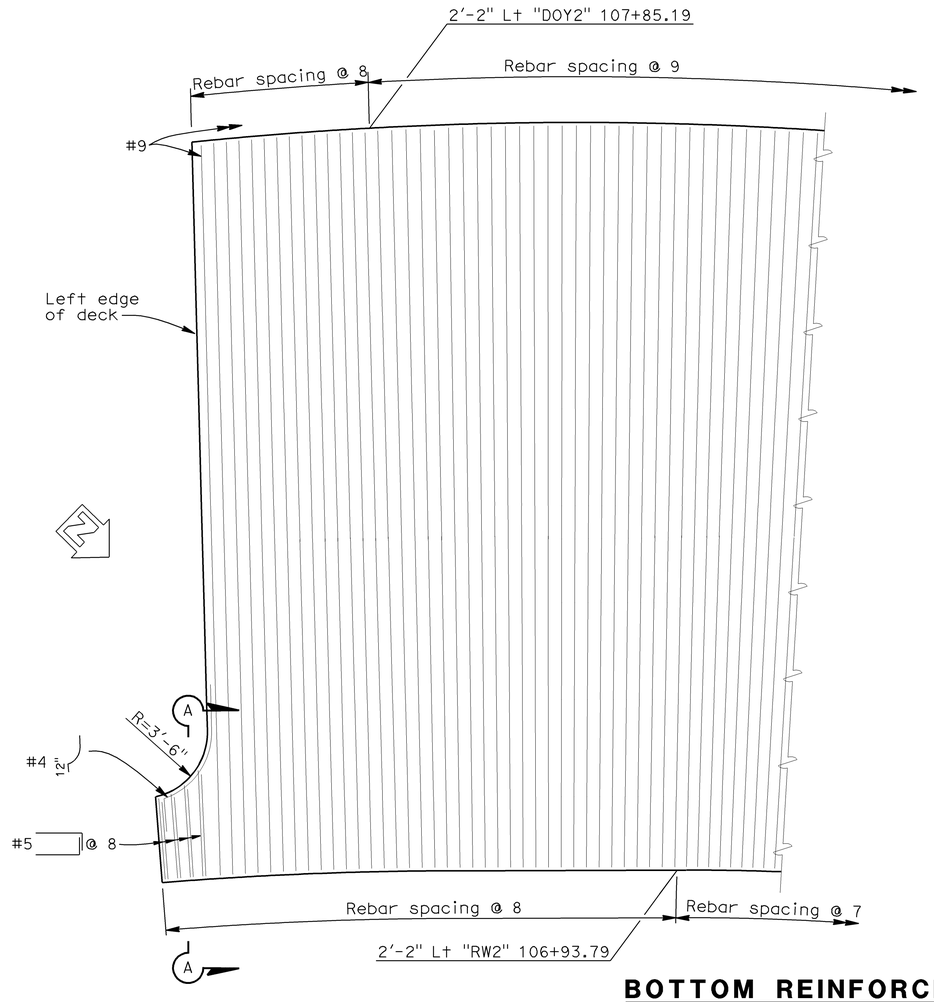

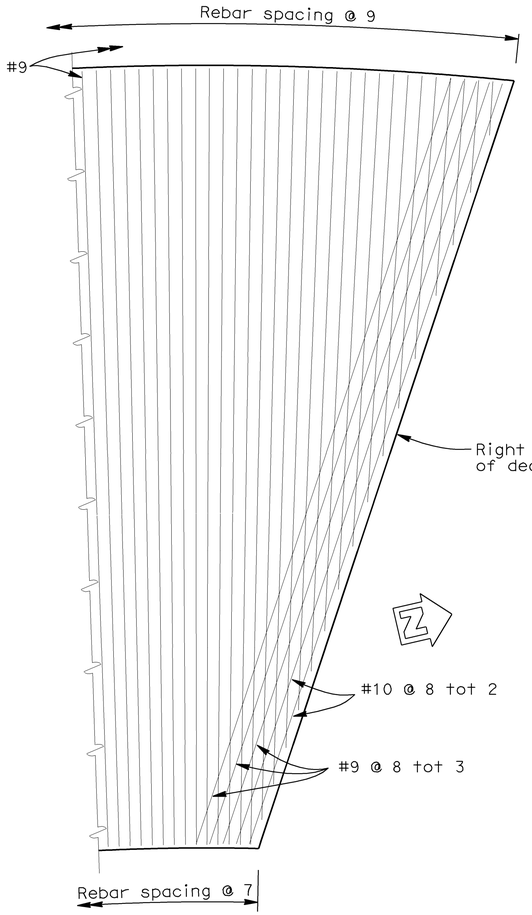

BOTTOM REINFORCEMENT

1/4"=1'-0"

Note:
For Section A-A, see "Slab Details Left Bridge (Top)" sheet

DESIGN	BY J. Railey	CHECKED G. Matthews	STATE OF CALIFORNIA DEPARTMENT OF TRANSPORTATION	DIVISION OF ENGINEERING SERVICES STRUCTURE DESIGN DESIGN BRANCH 13	BRIDGE NO. 34-0155R
DETAILS	BY A. Onodera	CHECKED J. Railey/G. Matthews			POST MILE 9.31
QUANTITIES	BY J. Railey	CHECKED M. Dumlao			

N101/S1 CONNECTOR SEPARATION
SLAB DETAILS LEFT BRIDGE (BOTTOM)

STRUCTURES DESIGN DETAIL SHEET (ENGLISH) (REV. 10/25/05)

ORIGINAL SCALE IN INCHES FOR REDUCED PLANS 0 1 2 3

CU 04
EA 163731

DISREGARD PRINTS BEARING EARLIER REVISION DATES →

REVISION DATES: 03-25-09 06-01-09 07-09-09

SHEET 22 OF 42

FILE => 34-0155rl-190-slab-lt-bot.dgn

USERNAME => s135318 DATE PLOTTED => 21-JUL-2009 TIME PLOTTED => 12:22

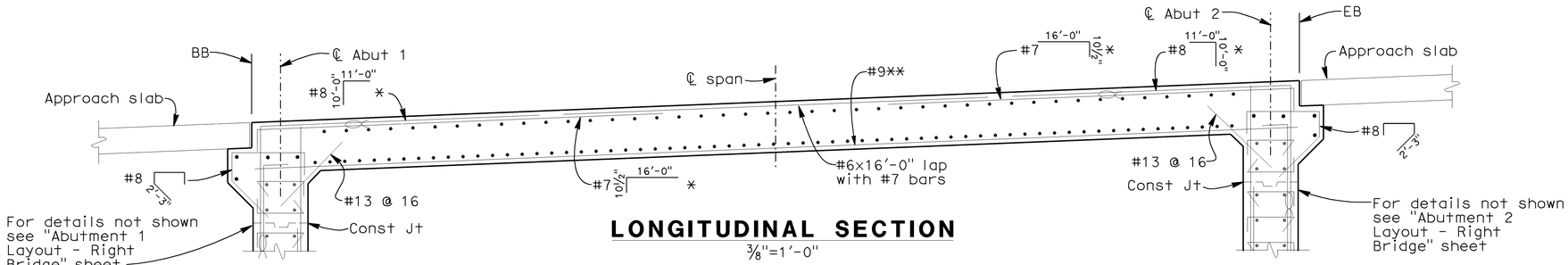

LONGITUDINAL SECTION

3/8"=1'-0"

* for spacing see "Top Reinforcement" detail
** for spacing see "Bottom Reinforcement" detail

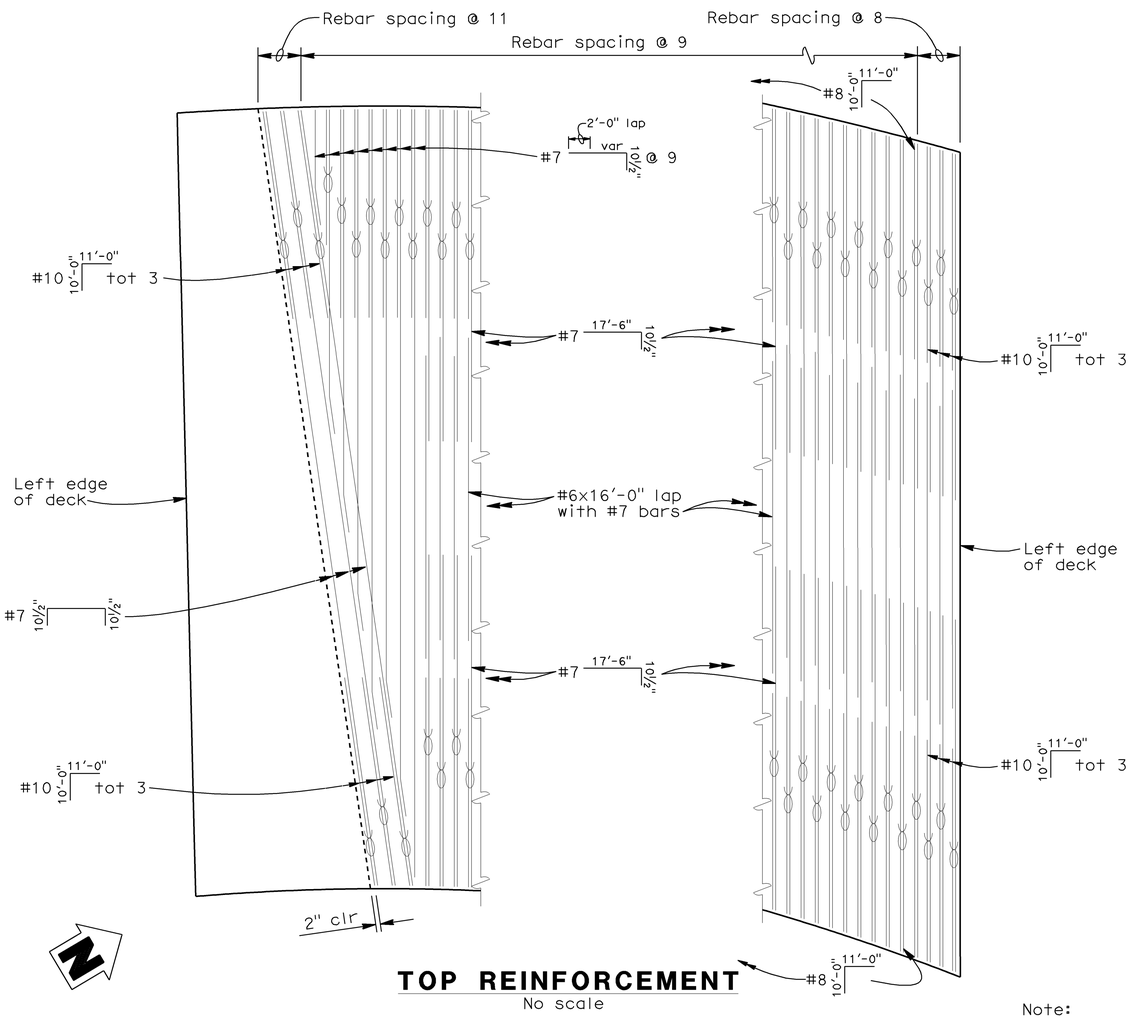

TOP REINFORCEMENT

No scale

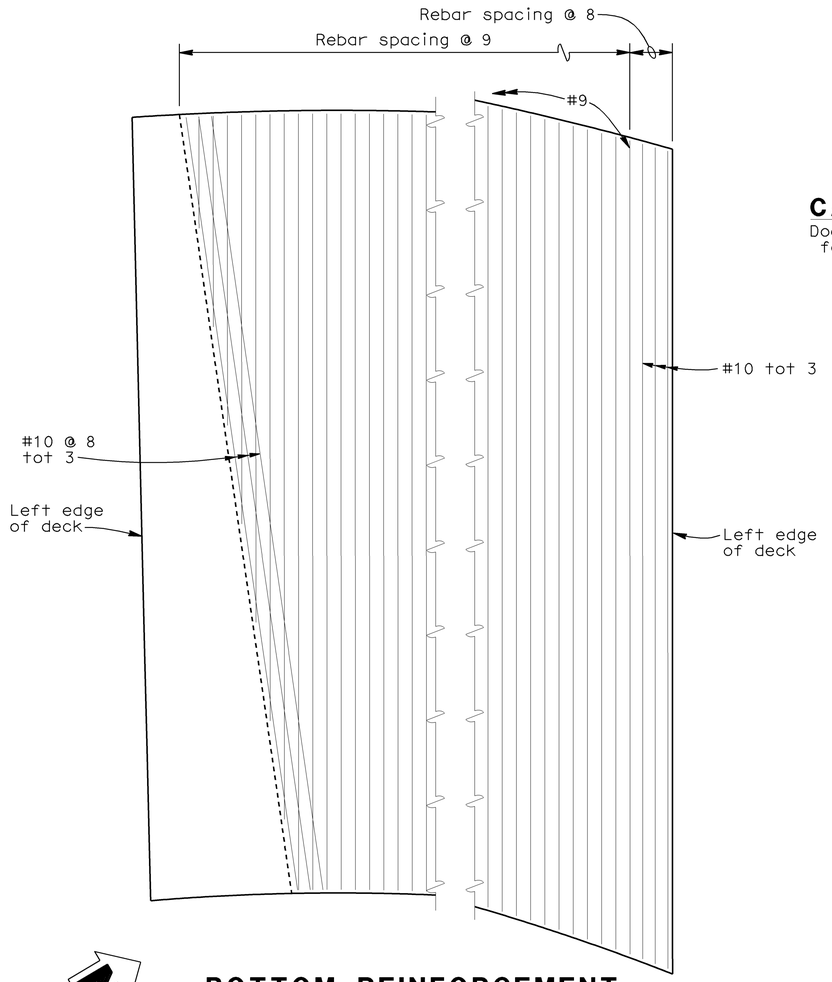

BOTTOM REINFORCEMENT

1/4"=1'-0"

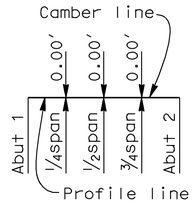

CAMBER DIAGRAM

Does not include allowance for falsework settlement

Note:
⊂⊃ indicates bundle bar

DIST	COUNTY	ROUTE	POST MILES TOTAL PROJECT	SHEET No	TOTAL SHEETS
04	SF	101,1	9.2/9.8, 6.8/7.1	291	567

REGISTERED CIVIL ENGINEER — DATE 6-4-09

PHILIP E. LUTZ No. C55839 Exp. 12-31-10 CIVIL — REGISTERED PROFESSIONAL ENGINEER — STATE OF CALIFORNIA

7-20-09
PLANS APPROVAL DATE

The State of California or its officers or agents shall not be responsible for the accuracy or completeness of electronic copies of this plan sheet.

DESIGN	J. Railey	G. Matthews	
DETAILS	A. Onodera	J. Railey/G. Matthews	
QUANTITIES	J. Railey	M. Dumlao	

STATE OF CALIFORNIA
DEPARTMENT OF TRANSPORTATION

DIVISION OF ENGINEERING SERVICES
STRUCTURE DESIGN
DESIGN BRANCH 13

CU 04
EA 163731

BRIDGE NO. 34-0155R
POST MILE 9.31

N101/S1 CONNECTOR SEPARATION
SLAB DETAILS RIGHT BRIDGE

STRUCTURES DESIGN DETAIL SHEET (ENGLISH) (REV. 10/25/05)

ORIGINAL SCALE IN INCHES FOR REDUCED PLANS 0 1 2 3

DISREGARD PRINTS BEARING EARLIER REVISION DATES →

REVISION DATES: 3-23-09 | 6-02-09 | 6-04-09 | 6-16-09 | 07-09-09

SHEET 23 OF 42

FILE => 34-0155r1-200-slab-rt.dgn

USERNAME => s135318 DATE PLOTTED => 21-JUL-2009 TIME PLOTTED => 12:22

DIST	COUNTY	ROUTE	POST MILES TOTAL PROJECT	SHEET No	TOTAL SHEETS
04	SF	101,1	9.2/9.8, 6.8/7.1	292	567

REGISTERED CIVIL ENGINEER — 6-4-09 DATE

PHILIP E. LUTZ No. C55839 Exp. 12-31-10 CIVIL — REGISTERED PROFESSIONAL ENGINEER — STATE OF CALIFORNIA

7-20-09
PLANS APPROVAL DATE

The State of California or its officers or agents shall not be responsible for the accuracy or completeness of electronic copies of this plan sheet.

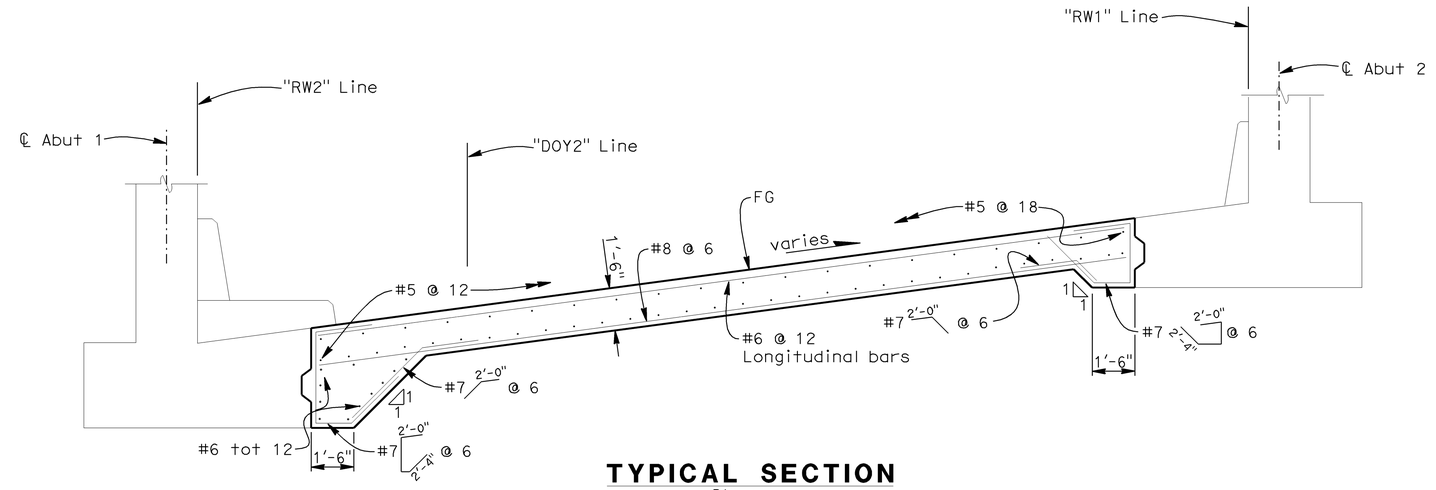

TYPICAL SECTION

3/8"=1'-0"

#6 X 42" diagonal bars Tot 8

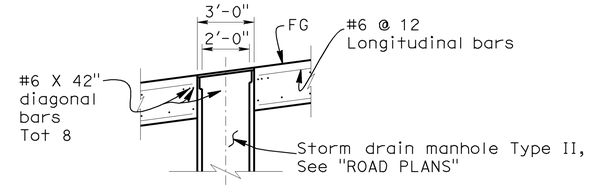

PART TYPICAL SECTION

CURVE DATA

Alignment	R	Δ	T	L
"DOY 2" Line	133.00′	106°55′0.09"	179.47′	248.19′
"DOY 2" Line	170.00′	44°34′04"	69.66′	132.23′
"DOY 2" Line	474.00′	57°17′59"	258.99′	474.03′

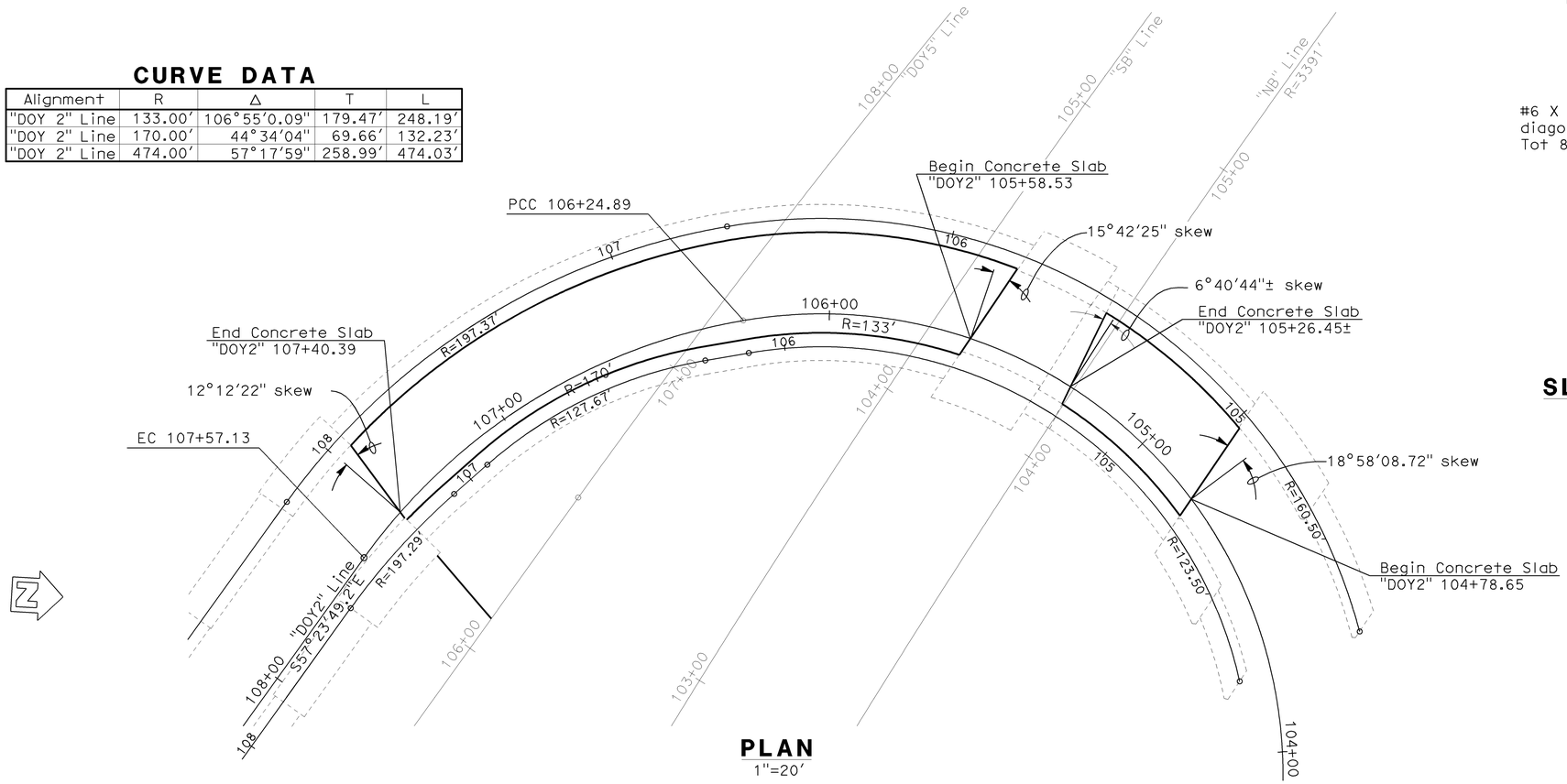

PLAN

1"=20'

#6 X 42" diagonal bars Tot 8

PLAN

SLAB DETAIL AT MANHOLE

No Scale

DESIGN	BY J. Railey	CHECKED G.Matthews	STATE OF CALIFORNIA DEPARTMENT OF TRANSPORTATION	DIVISION OF ENGINEERING SERVICES STRUCTURE DESIGN DESIGN BRANCH 13	BRIDGE NO. 34-0155RL; POST MILE 9.31
DETAILS	BY A. Onodera	CHECKED J. Railey/G. Matthews			
QUANTITIES	BY J. Railey	CHECKED M. Dumlao			

N101/S1 CONNECTOR SEPARATION
ROADWAY SLAB DETAILS

STRUCTURES DESIGN DETAIL SHEET (ENGLISH) (REV. 10/25/05)

ORIGINAL SCALE IN INCHES FOR REDUCED PLANS 0 1 2 3

CU 04
EA 163731

DISREGARD PRINTS BEARING EARLIER REVISION DATES →

REVISION DATES: 3-04-09; 5-28-09; 6-16-09; 07-09-09

SHEET 24 OF 42

FILE => 34-0155rl-210-concslab.dgn

USERNAME => s135318 DATE PLOTTED => 21-JUL-2009 TIME PLOTTED => 12:22

DIST	COUNTY	ROUTE	POST MILES TOTAL PROJECT	SHEET No	TOTAL SHEETS
04	SF	101,1	9.2/9.8, 6.8/7.1	293	567

REGISTERED CIVIL ENGINEER — 6-4-09 DATE

PHILIP E. LUTZ No. C55839 Exp. 12-31-10 CIVIL — REGISTERED PROFESSIONAL ENGINEER — STATE OF CALIFORNIA

7-20-09
PLANS APPROVAL DATE

The State of California or its officers or agents shall not be responsible for the accuracy or completeness of electronic copies of this plan sheet.

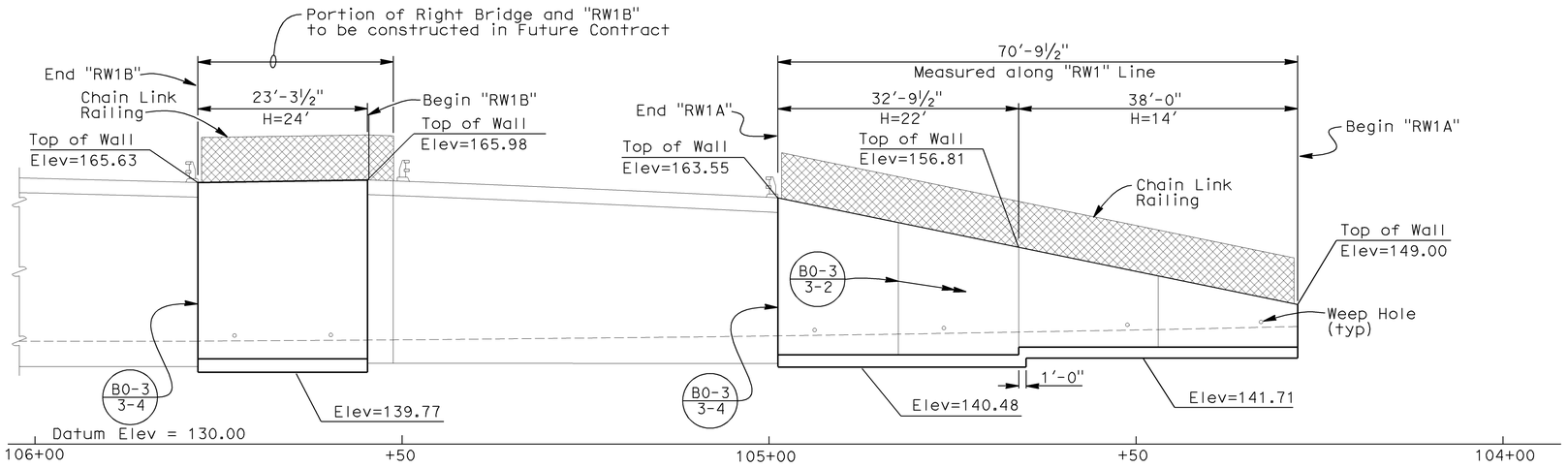

ELEVATION (RW1A and 1B)

1"=10'-0"

B3-1 B3-9

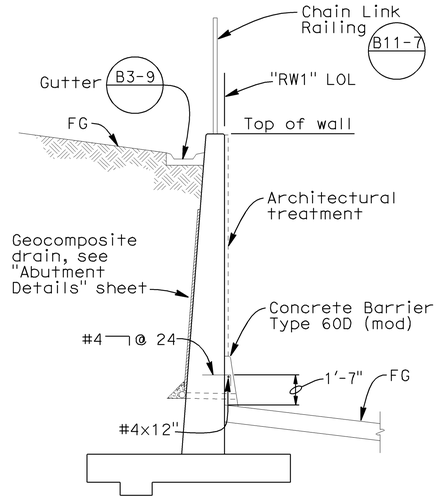

TYPICAL SECTION

1/4"=1'-0"

B3-1

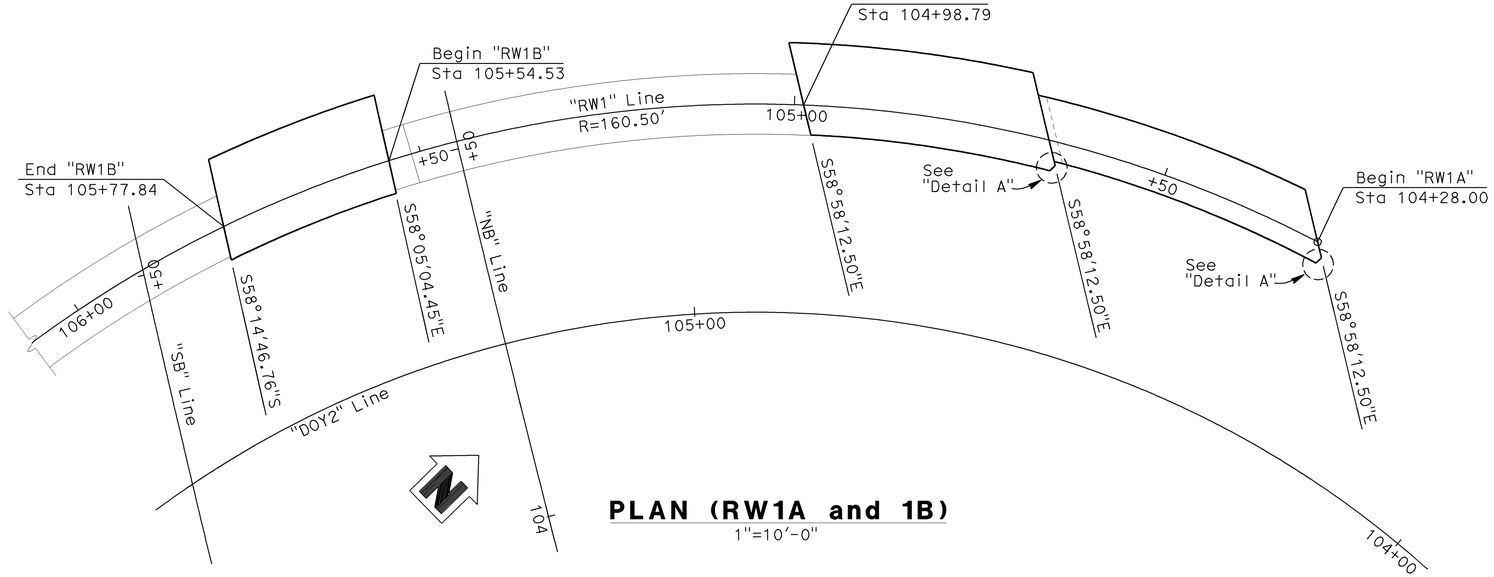

PLAN (RW1A and 1B)

1"=10'-0"

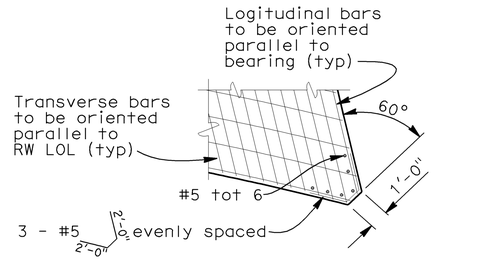

DETAIL A

No scale

DESIGN	BY J. Railey	CHECKED G.Matthews	STATE OF CALIFORNIA DEPARTMENT OF TRANSPORTATION	DIVISION OF ENGINEERING SERVICES STRUCTURE DESIGN DESIGN BRANCH 13	BRIDGE NO. 34-0155RL	N101/S1 CONNECTOR SEPARATION RETAINING WALL "RW1A"&"RW1B"	
DETAILS	BY A. Onodera	CHECKED J. Railey/G. Matthews			POST MILE 9.31		
QUANTITIES	BY J. Railey	CHECKED M. Dumlao					

STRUCTURES DESIGN DETAIL SHEET (ENGLISH) (REV. 10/25/05)

ORIGINAL SCALE IN INCHES FOR REDUCED PLANS 0 1 2 3

CU 04
EA 163731

DISREGARD PRINTS BEARING EARLIER REVISION DATES →

REVISION DATES: 12-04-08 | 5-22-09 | 5-28-09 | 6-03-09 | 07-08-09 | 7-11-09

SHEET 25 OF 42

FILE => 34-0155rl-220-rwlay01.dgn

USERNAME => s135518 DATE PLOTTED => 21-JUL-2009 TIME PLOTTED => 12:22

DIST	COUNTY	ROUTE	POST MILES TOTAL PROJECT	SHEET No	TOTAL SHEETS
04	SF	101,1	9.2/9.8, 6.8/7.1	294	567

REGISTERED CIVIL ENGINEER — 6-4-09 DATE

PLANS APPROVAL DATE — 7-20-09

REGISTERED PROFESSIONAL ENGINEER — PHILIP E. LUTZ No. C55839 Exp. 12-31-10 CIVIL — STATE OF CALIFORNIA

The State of California or its officers or agents shall not be responsible for the accuracy or completeness of electronic copies of this plan sheet.

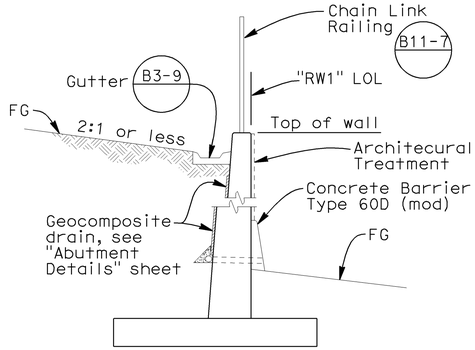

TYPICAL SECTION (B3-1)
No scale

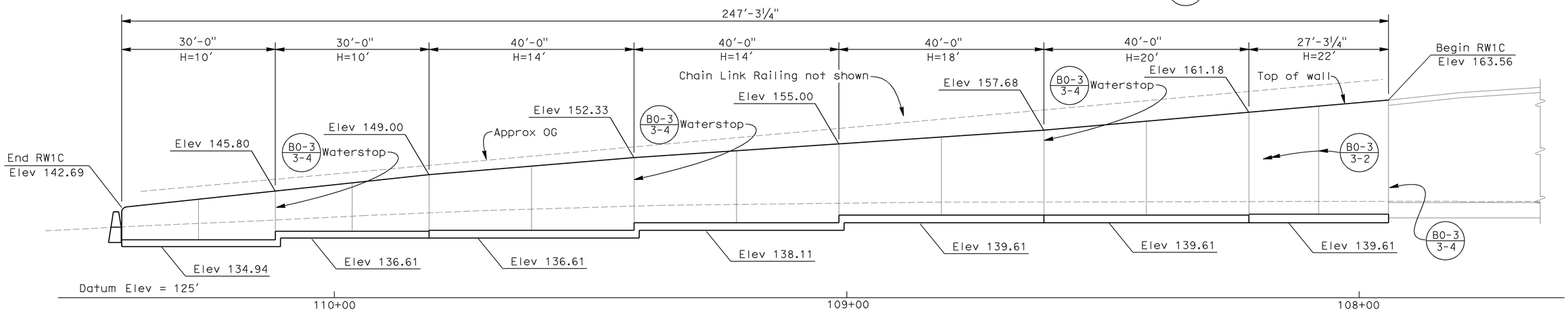

ELEVATION (RW1C) (B3-1)
1"10'

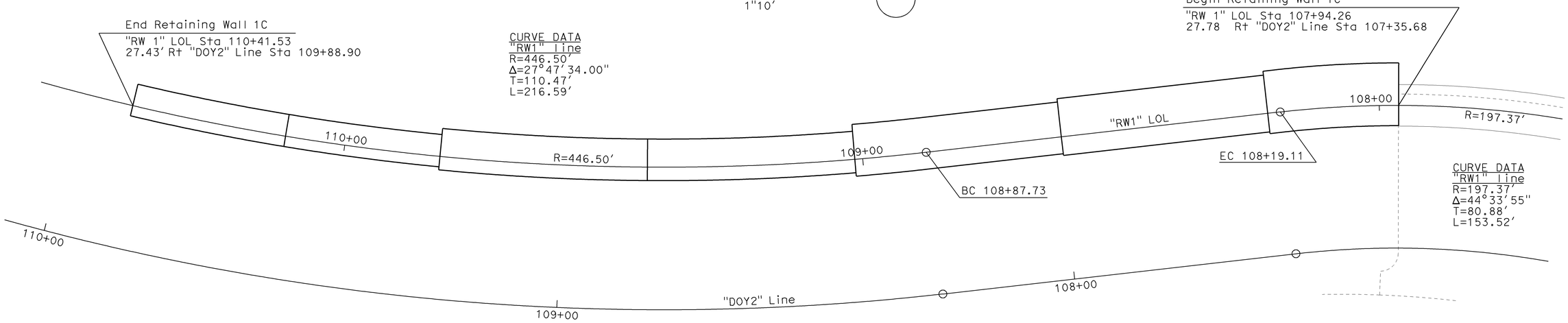

PLAN (RW1C)
1"10'

DESIGN	BY J. Railey	CHECKED G. Matthews	STATE OF CALIFORNIA DEPARTMENT OF TRANSPORTATION	DIVISION OF ENGINEERING SERVICES STRUCTURE DESIGN DESIGN BRANCH 13	BRIDGE NO. 34-0155RL	N101/S1 CONNECTOR SEPARATION	
DETAILS	BY A. Onodera	CHECKED J. Railey/G. Matthews			POST MILE 9.31	RETAINING WALL "RW1C"	
QUANTITIES	BY J. Railey	CHECKED M. Dumlao					

STRUCTURES DESIGN DETAIL SHEET (ENGLISH) (REV. 10/25/05)

ORIGINAL SCALE IN INCHES FOR REDUCED PLANS 0 1 2 3

CU 04
EA 163731

DISREGARD PRINTS BEARING EARLIER REVISION DATES →

REVISION DATES: 12-04-08 / 4-30-09 / 5-18-09 / 5-24-09 / 6-03-09 / 07-09-09 / 7-11-09

SHEET 26 OF 42

FILE => 34-0155rl-230-rwlay02.dgn

USERNAME => 613553\8 DATE PLOTTED => 21-JUL-2009 TIME PLOTTED => 12:22

DIST	COUNTY	ROUTE	POST MILES TOTAL PROJECT	SHEET No	TOTAL SHEETS
04	SF	101,1	9.2/9.8, 6.8/7.1	295	567

REGISTERED CIVIL ENGINEER — 6-4-09 DATE

PHILIP E. LUTZ No. C55839 Exp. 12-31-10 CIVIL — REGISTERED PROFESSIONAL ENGINEER — STATE OF CALIFORNIA

7-20-09
PLANS APPROVAL DATE

The State of California or its officers or agents shall not be responsible for the accuracy or completeness of electronic copies of this plan sheet.

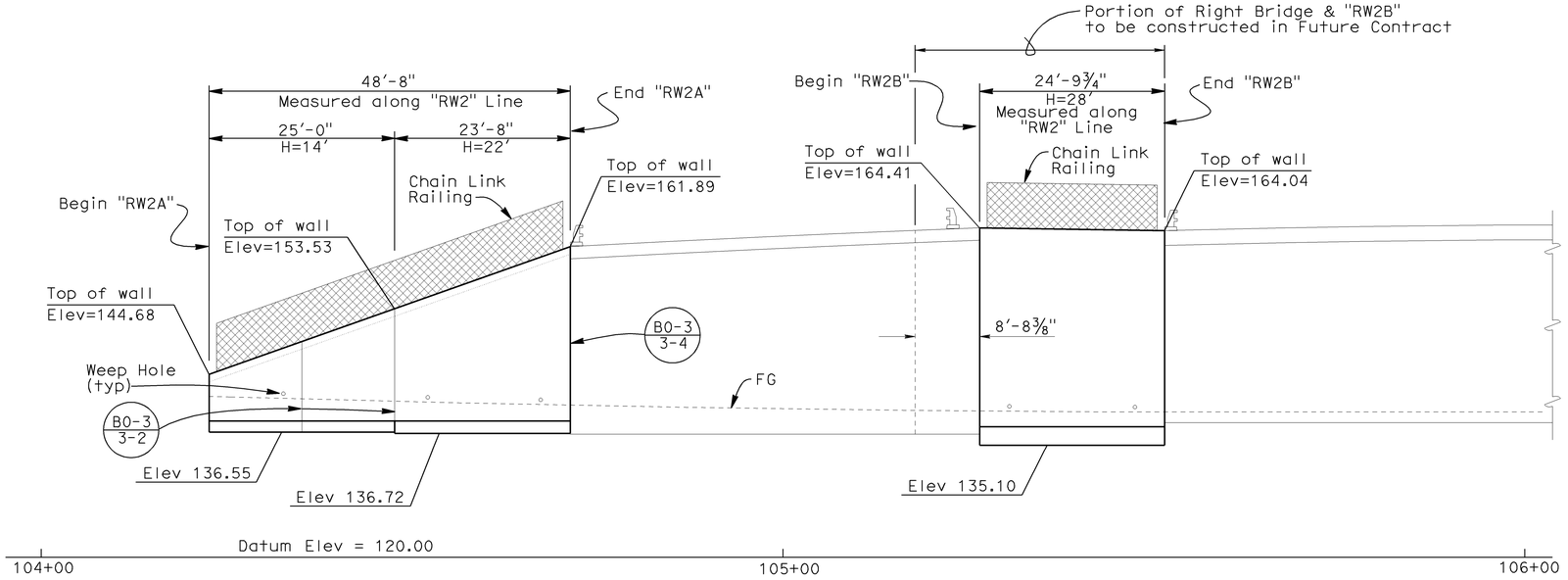

ELEVATION (RW2A & RW2B)

1"=10'-0"

B3-1 B3-9

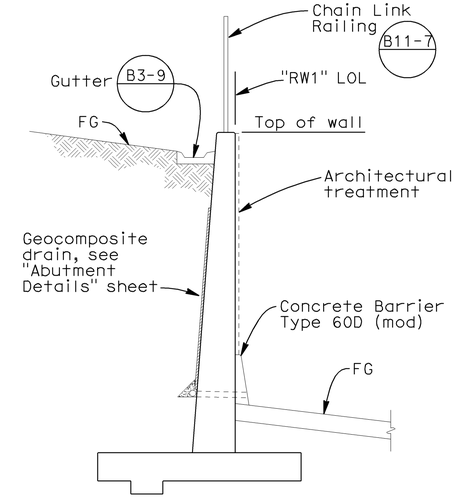

TYPICAL SECTION

¼"=1'-0"

B3-1

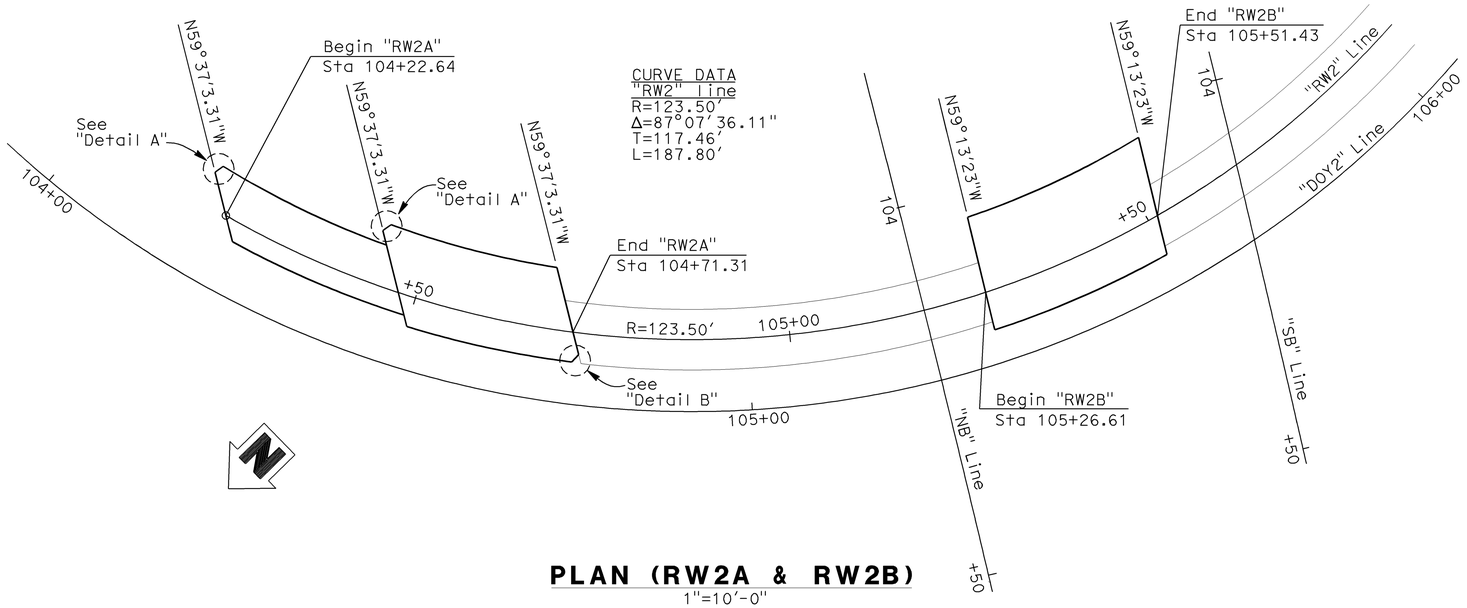

PLAN (RW2A & RW2B)

1"=10'-0"

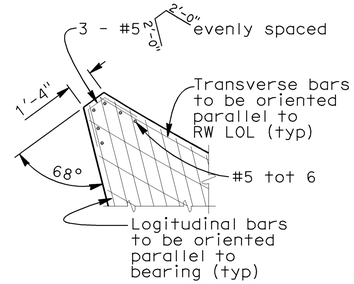

DETAIL A

No scale

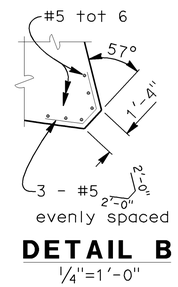

DETAIL B

¼"=1'-0"

	DESIGN	BY J. Railey	CHECKED G.Matthews	STATE OF CALIFORNIA DEPARTMENT OF TRANSPORTATION	DIVISION OF ENGINEERING SERVICES STRUCTURE DESIGN DESIGN BRANCH 13	BRIDGE NO. 34-0155RL	N101/S1 CONNECTOR SEPARATION
	DETAILS	BY A. Onodera	CHECKED J. Railey/G. Matthews			POST MILE 9.31	RETAINING WALL "RW2A" & "RW2B"
	QUANTITIES	BY J. Railey	CHECKED M. Dumlao				

STRUCTURES DESIGN DETAIL SHEET (ENGLISH) (REV. 10/25/05)

ORIGINAL SCALE IN INCHES FOR REDUCED PLANS 0 1 2 3

CU 04
EA 163731

DISREGARD PRINTS BEARING EARLIER REVISION DATES →

REVISION DATES: 12-04-08 | 5-24-09 | 5-26-09 | 6-03-09 | 07-08-09 | 07-11-09

SHEET 27 OF 42

FILE => 34-0155rl-240-rwlay03.dgn

USERNAME = s135318 DATE PLOTTED => 21-JUL-2009 TIME PLOTTED => 12:38

DIST	COUNTY	ROUTE	POST MILES TOTAL PROJECT	SHEET No	TOTAL SHEETS
04	SF	101,1	9.2/9.8, 6.8/7.1	296	567

REGISTERED CIVIL ENGINEER — 6-4-09 DATE

PHILIP E. LUTZ No. C55839 Exp. 12-31-10 CIVIL — REGISTERED PROFESSIONAL ENGINEER — STATE OF CALIFORNIA

7-20-09
PLANS APPROVAL DATE

The State of California or its officers or agents shall not be responsible for the accuracy or completeness of electronic copies of this plan sheet.

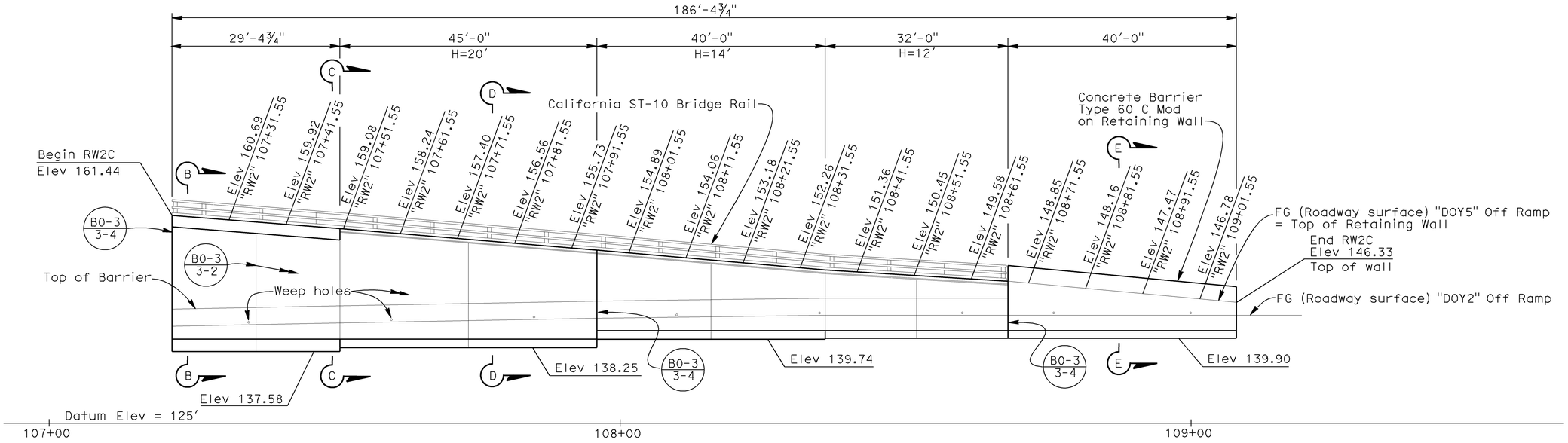

ELEVATION (RW2C)
1"=10′

Note:
1. For Sections B-B, C-C, D-D, and E-E see, "Retaining Wall "RW2C" Details" sheet

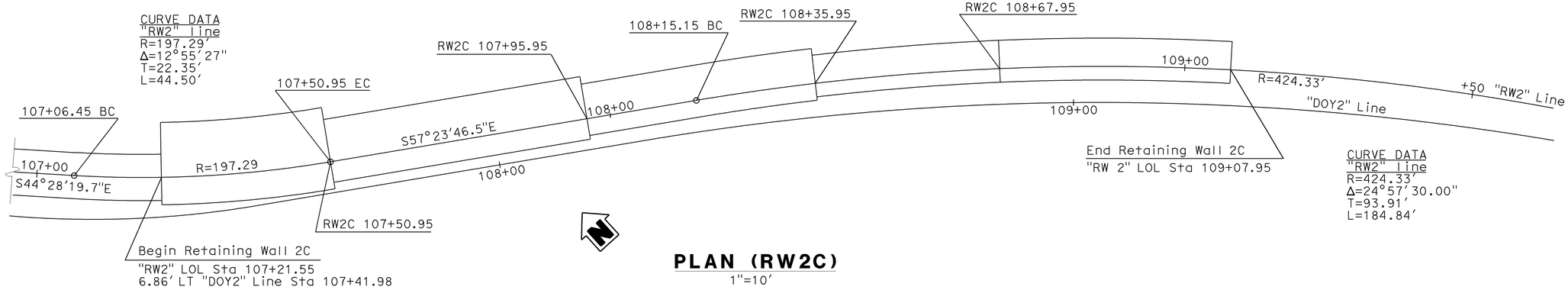

PLAN (RW2C)
1"=10′

DESIGN	BY J. Railey	CHECKED G. Matthews	STATE OF CALIFORNIA DEPARTMENT OF TRANSPORTATION	DIVISION OF ENGINEERING SERVICES STRUCTURE DESIGN DESIGN BRANCH 13	BRIDGE NO. 34-0155RL	N101/S1 CONNECTOR SEPARATION	
DETAILS	BY A. Onodera	CHECKED J. Railey/G. Matthews			POST MILE 9.31	RETAINING WALL "RW2C"	
QUANTITIES	BY J. Railey	CHECKED M. Dumlao					

STRUCTURES DESIGN DETAIL SHEET (ENGLISH) (REV. 10/25/05)

ORIGINAL SCALE IN INCHES FOR REDUCED PLANS 0 1 2 3

CU 04
EA 163731

DISREGARD PRINTS BEARING EARLIER REVISION DATES →

REVISION DATES: 12-04-08 | 5-07-09 | 5-18-09 | 5-24-09 | 6-03-09 | 6-04-09 | 6-10-09 | 07-09-09

SHEET 28 OF 42

FILE => 34-0155rl-250-rwlay04.dgn

USERNAME => s1335318 DATE PLOTTED => 21-JUL-2009 TIME PLOTTED => 12:23

DIST	COUNTY	ROUTE	POST MILES TOTAL PROJECT	SHEET No	TOTAL SHEETS
04	SF	101,1	9.2/9.8, 6.8/7.1	297	567

REGISTERED CIVIL ENGINEER — 6-4-09 DATE

PHILIP E. LUTZ No. C 55839 Exp. 12-31-10 CIVIL — REGISTERED PROFESSIONAL ENGINEER — STATE OF CALIFORNIA

7-20-09
PLANS APPROVAL DATE

The State of California or its officers or agents shall not be responsible for the accuracy or completeness of electronic copies of this plan sheet.

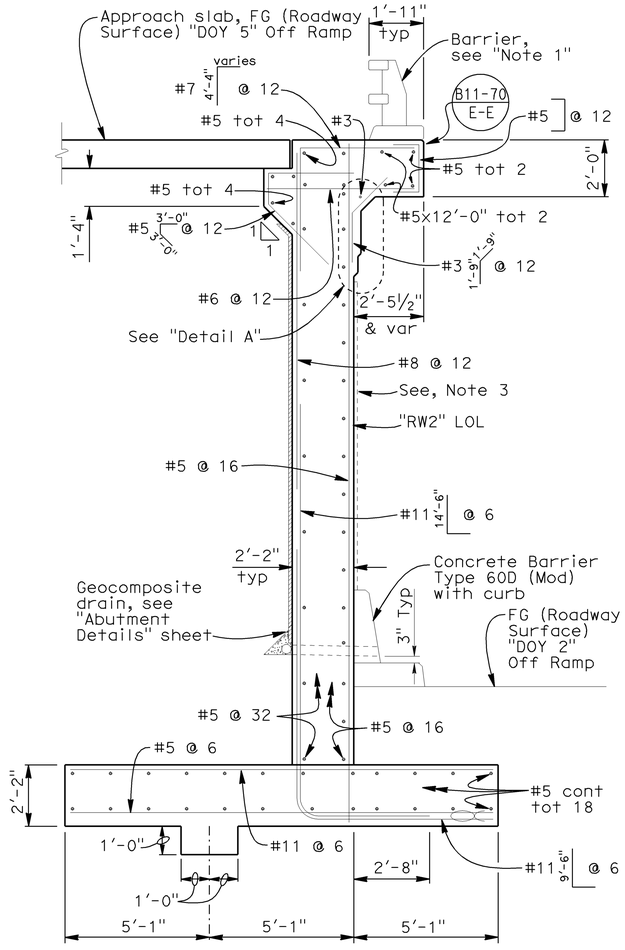

SECTION B-B B11-68 B11-69 B11-70
⅜"=1'-0"

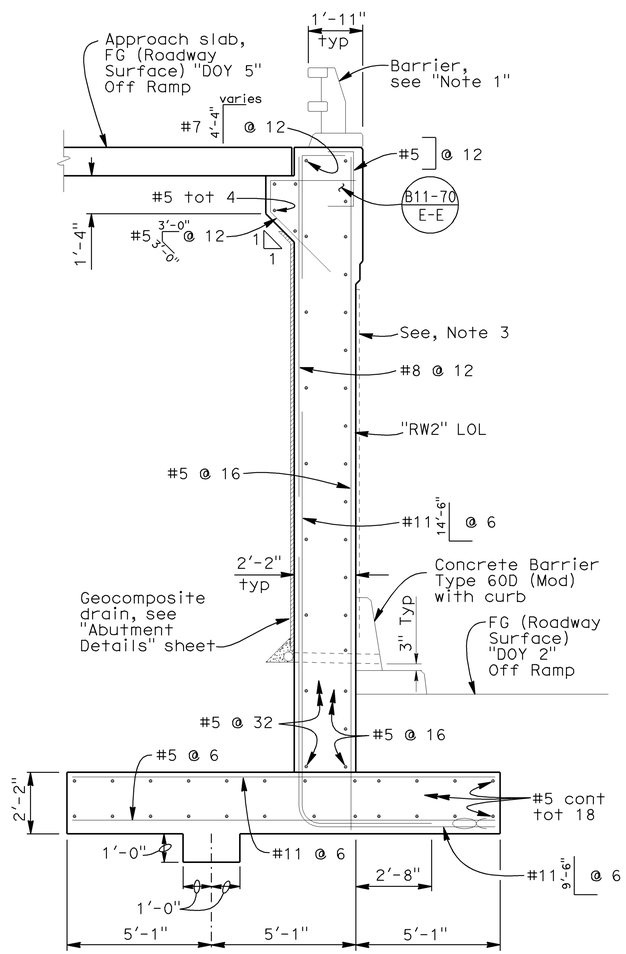

SECTION C-C B11-68 B11-69 B11-70
⅜"=1'-0"

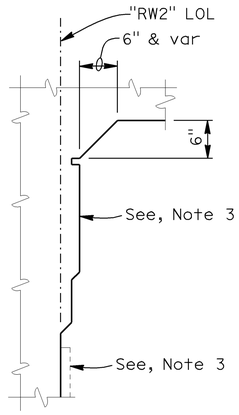

DETAIL A
1"=1'-0"

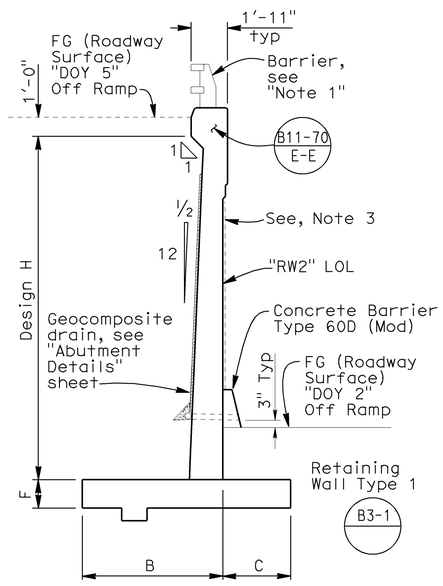

SECTION D-D B11-68 B11-69 B11-70
¼"=1'-0"

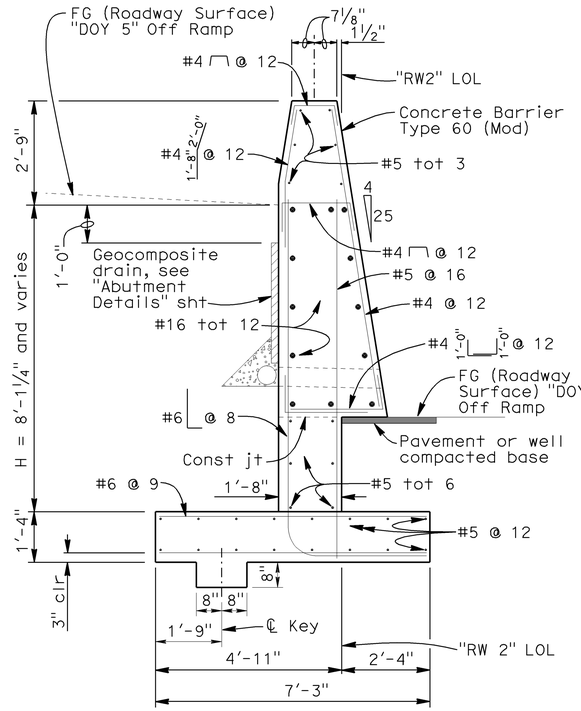

SECTION E-E
½"=1'-0"

Notes:

1. Barrier is same as California ST-10 Bridge Rail (Standard Plan B11-68), except for "curb @ base". For "curb @ base" details, see "California ST-10 Bridge Rail (Mod1)" sheet.
2. For locations of Sections B-B, C-C, D-D and E-E see, "Retaining Wall "RW2C" " sheet.
3. For Architectural Treatment, see "Architectural Treatment" sheet

Indicates bundled bars

DESIGN	BY J. Railey	CHECKED G. Matthews	STATE OF CALIFORNIA DEPARTMENT OF TRANSPORTATION	DIVISION OF ENGINEERING SERVICES STRUCTURE DESIGN DESIGN BRANCH 13	BRIDGE NO. 34-0155RL; POST MILE 9.31
DETAILS	BY A. Onodera	CHECKED Railey/Matthews/Dumlao			
QUANTITIES	BY J. Railey	CHECKED M. Dumlao/K. Ha			

N101/S1 CONNECTOR SEPARATION
RETAINING WALL "RW2" DETAILS

STRUCTURES DESIGN DETAIL SHEET (ENGLISH) (REV. 10/25/05)

ORIGINAL SCALE IN INCHES FOR REDUCED PLANS 0 1 2 3

CU 04
EA 163731

DISREGARD PRINTS BEARING EARLIER REVISION DATES

REVISION DATES: 1-28-09 | 5-06-09 | 5-24-09 | 6-10-09 | 7-11-09

SHEET 29 OF 42

FILE => 34-0155rl-260-rwdet01.dgn

USERNAME => s1355318 DATE PLOTTED => 21-JUL-2009 TIME PLOTTED => 12:23

DIST	COUNTY	ROUTE	POST MILES TOTAL PROJECT	SHEET No	TOTAL SHEETS
04	SF	101,1	9.2/9.8, 6.8/7.1	298	567

REGISTERED CIVIL ENGINEER — 6-4-09 DATE

PHILIP E. LUTZ No. C55839 Exp. 12-31-10 CIVIL — REGISTERED PROFESSIONAL ENGINEER — STATE OF CALIFORNIA

7-20-09
PLANS APPROVAL DATE

The State of California or its officers or agents shall not be responsible for the accuracy or completeness of electronic copies of this plan sheet.

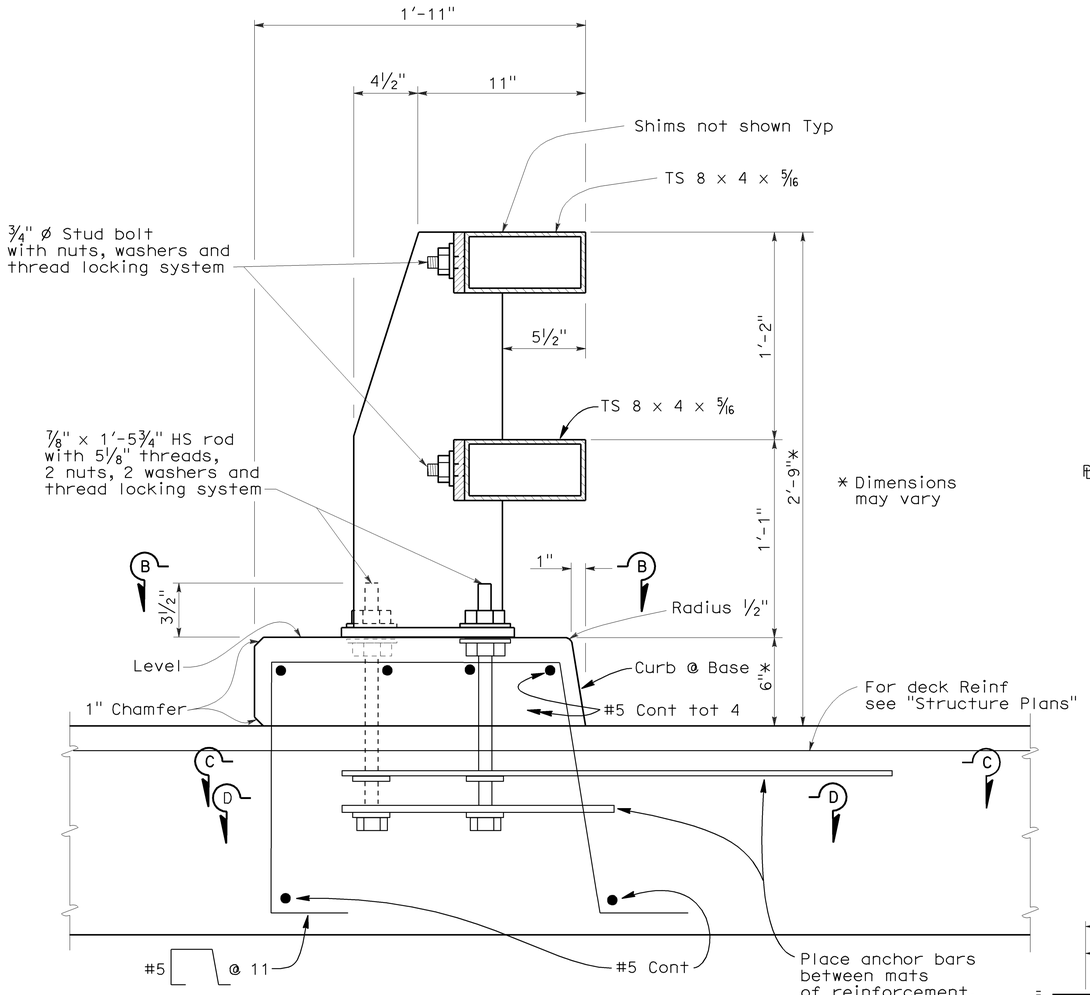

TYPICAL RAIL SECTION

On Bridge Deck 4 Approach Slab, see Note 1

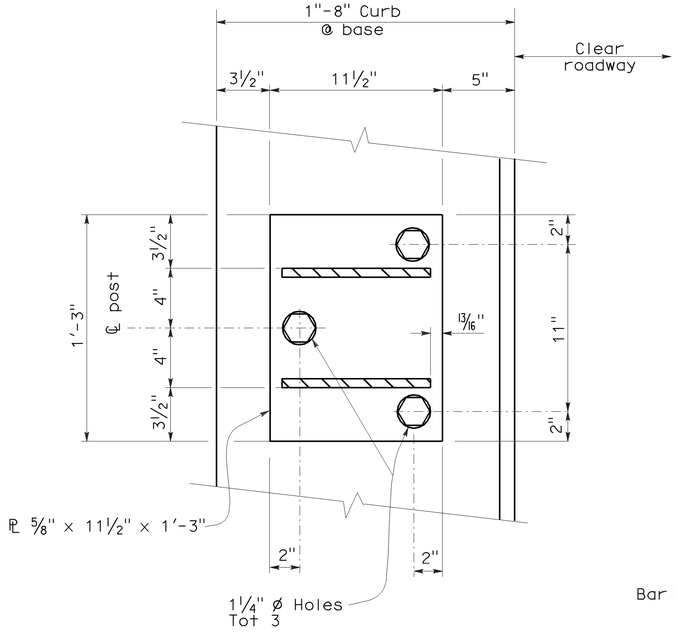

SECTION B-B

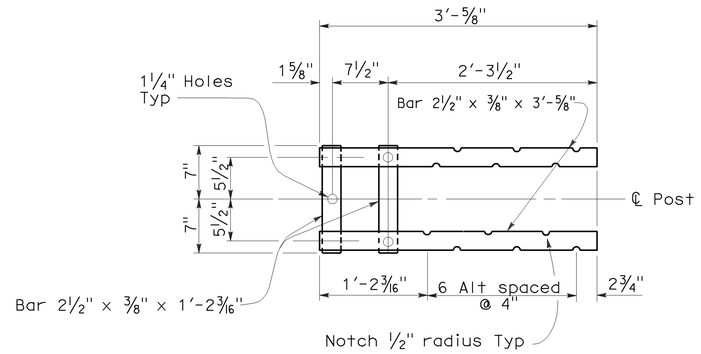

SECTION C-C

Top Anchorage

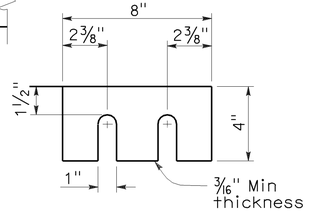

SHIMS REQUIRED FOR TOP AND BOTTOM RAIL

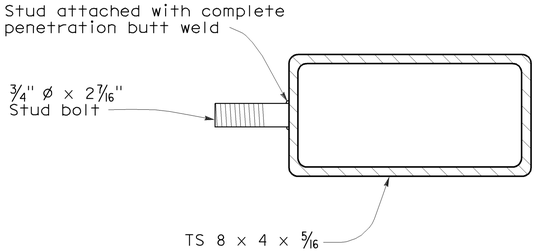

SECTION AT POST

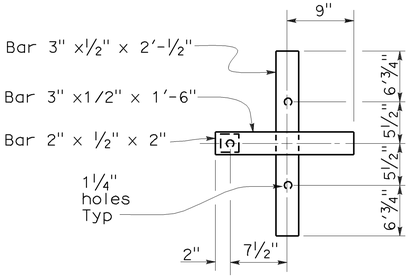

SECTION D-D

Lower Anchorage

NOTE A

Adjust spacing to clear scupper opening by 2" if appicable.

STUD BOLT DETAIL

Note:

1. California ST-10 Bridge Rail (Mod1) to be placed at left edge of deck of Bridge number 34-0155L

NO SCALE

DESIGN	BY J. Railey	CHECKED G. Matthews	STATE OF CALIFORNIA DEPARTMENT OF TRANSPORTATION	DIVISION OF ENGINEERING SERVICES STRUCTURE DESIGN DESIGN BRANCH 13	BRIDGE NO. 34-0155RL	N101/S1 CONNECTOR SEPARATION
DETAILS	BY A. Onodera	CHECKED J. Railey/G. Matthews			POST MILE 9.31	CALIFORNIA ST-10 BRIDGE RAIL (MOD1)
QUANTITIES	BY J. Railey	CHECKED M. Dumlao		CU 04 EA 163731		

STRUCTURES DESIGN DETAIL SHEET (ENGLISH) (REV. 10/25/05)

ORIGINAL SCALE IN INCHES FOR REDUCED PLANS 0 1 2 3

DISREGARD PRINTS BEARING EARLIER REVISION DATES →

REVISION DATES: 05-24-09, 07-09-09

SHEET 30 OF 42

FILE => 34-0155rl-265-bardet01.dgn

USERNAME => 163538 DATE PLOTTED => 21-JUL-2009 TIME PLOTTED => 12:23

DIST	COUNTY	ROUTE	POST MILES TOTAL PROJECT	SHEET No	TOTAL SHEETS
04	SF	101,1	9.2/9.8, 6.8/7.1	299	567

REGISTERED CIVIL ENGINEER — 6-4-09 DATE

PHILIP E. LUTZ No. C55839 Exp. 12-31-10 CIVIL — REGISTERED PROFESSIONAL ENGINEER — STATE OF CALIFORNIA

7-20-09
PLANS APPROVAL DATE

The State of California or its officers or agents shall not be responsible for the accuracy or completeness of electronic copies of this plan sheet.

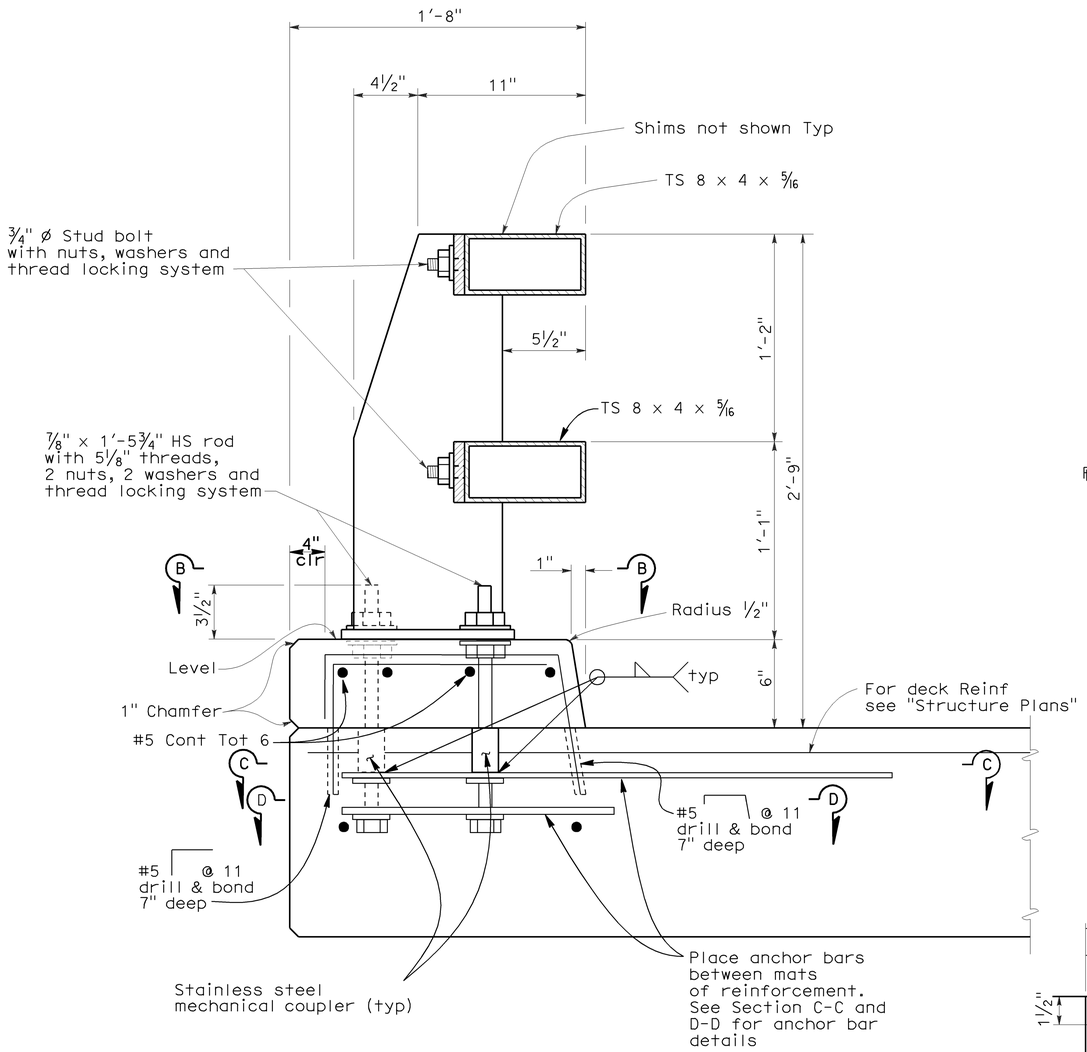

TYPICAL RAIL SECTION

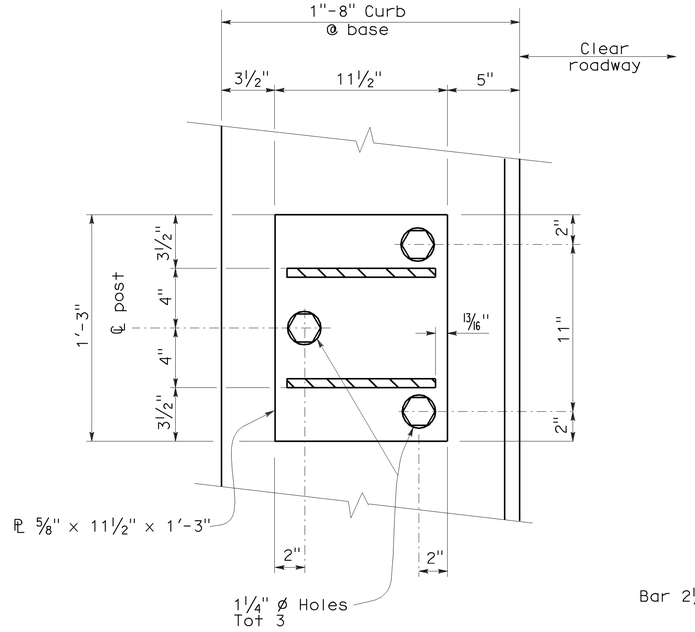

SECTION B-B

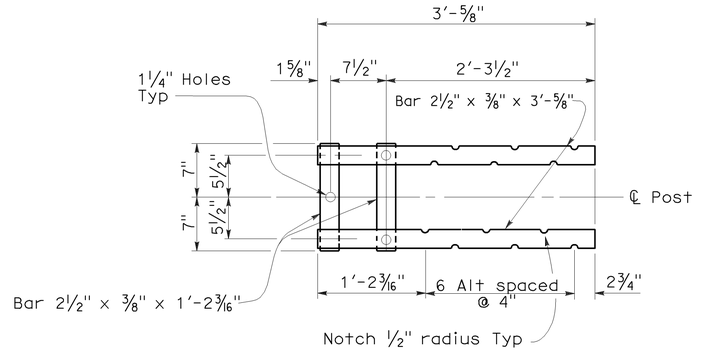

SECTION C-C
Top Anchorage

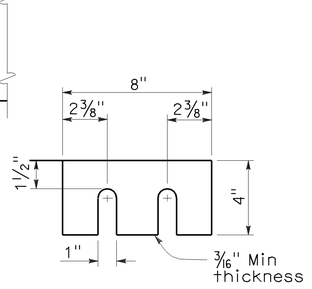

SHIMS REQUIRED FOR TOP AND BOTTOM RAIL

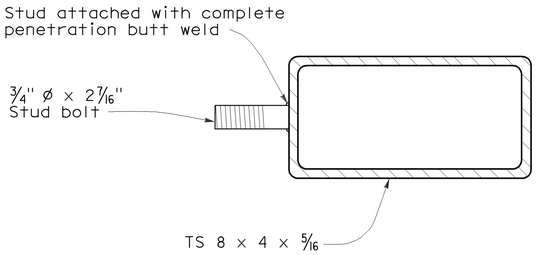

SECTION AT POST

STUD BOLT DETAIL

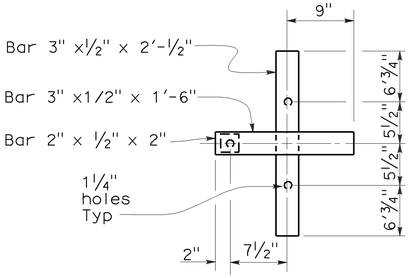

SECTION D-D
Lower Anchorage

NOTE E
Eliminate couplers in the approach slab

NO SCALE

DESIGN	BY J. Railey	CHECKED G. Matthews	STATE OF CALIFORNIA DEPARTMENT OF TRANSPORTATION	DIVISION OF ENGINEERING SERVICES STRUCTURE DESIGN DESIGN BRANCH 13	BRIDGE NO. 34-0155RL	N101/S1 CONNECTOR SEPARATION	
DETAILS	BY A. Onodera	CHECKED J. Railey/G. Matthews			POST MILE 9.31	CALIFORNIA ST-10 BRIDGE RAIL (MOD2)	
QUANTITIES	BY J. Railey	CHECKED M. Dumlao		CU 04 EA 163731	DISREGARD PRINTS BEARING EARLIER REVISION DATES →	REVISION DATES 02-05-09, 04-14-09, 07-09-09	SHEET 31 OF 42

STRUCTURES DESIGN DETAIL SHEET (ENGLISH) (REV. 10/25/05)

ORIGINAL SCALE IN INCHES FOR REDUCED PLANS 0 1 2 3

FILE => 34-0155rl-270-bardet02.dgn

USERNAME => s135318 DATE PLOTTED => 21-JUL-2009 TIME PLOTTED => 12:23

DIST	COUNTY	ROUTE	POST MILES TOTAL PROJECT	SHEET No	TOTAL SHEETS
04	SF	101,1	9.2/9.8, 6.8/7.1	300	567

REGISTERED CIVIL ENGINEER — 6-4-09 DATE

PHILIP E. LUTZ No. C 55839 Exp. 12-31-10 CIVIL — REGISTERED PROFESSIONAL ENGINEER — STATE OF CALIFORNIA

7-20-09
PLANS APPROVAL DATE

The State of California or its officers or agents shall not be responsible for the accuracy or completeness of electronic copies of this plan sheet.

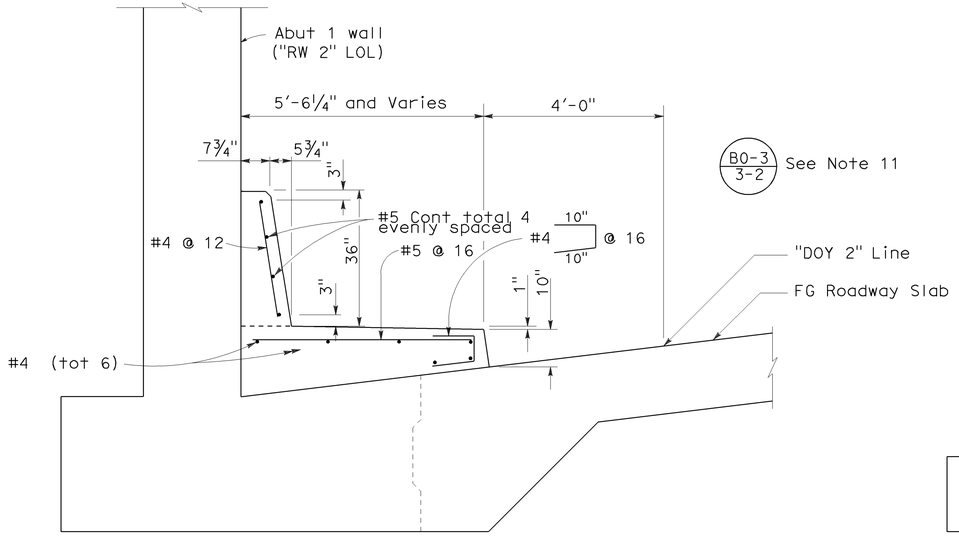

CONCRETE BARRIER TYPE 60D (MOD) with Curb

From Sta 104+71.31 to Sta 105+17.90± "RW2" LOL (Right Bridge)
From Sta 105+51.43 to Sta 107+21.55 "RW2" LOL (Left Bridge)

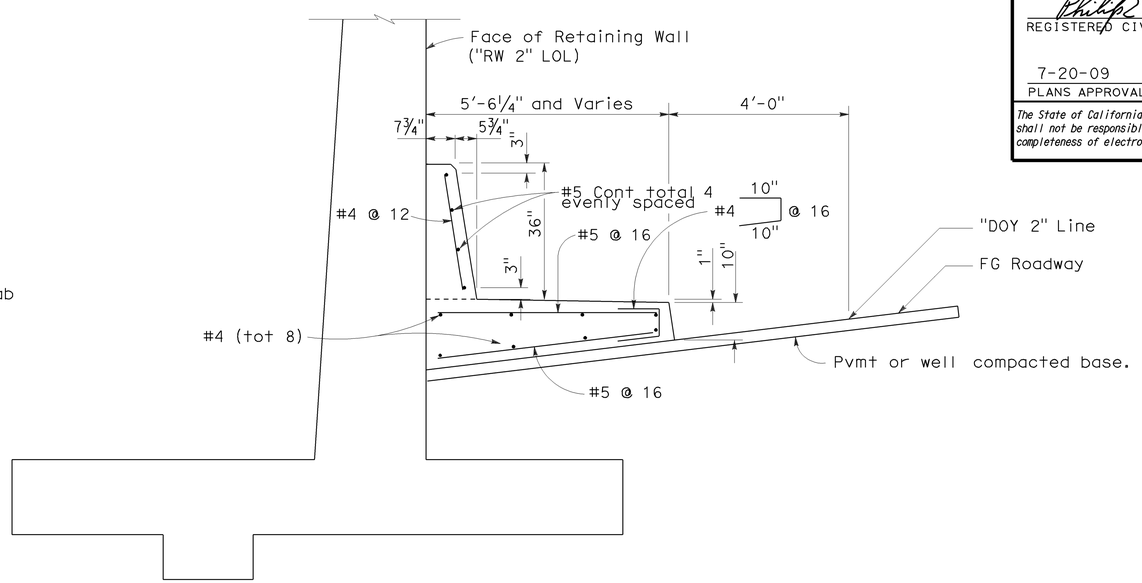

CONCRETE BARRIER TYPE 60D (MOD) with Curb

From Sta 104+22.64 to Sta 104+71.31 "RW2" LOL (RW 2A)
From Sta 107+21.55 to Sta 107+50.95 "RW2" LOL (RW 2C)

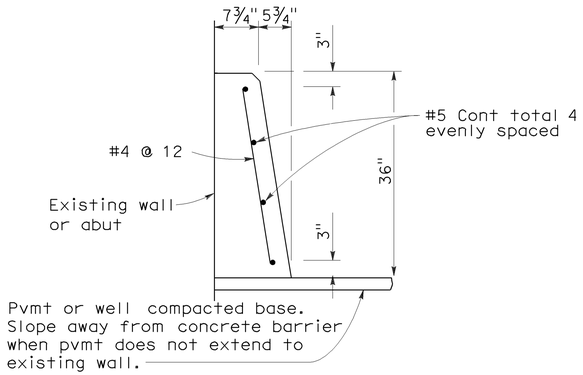

CONCRETE BARRIER TYPE 60D (MOD)

NOTES:

1. See Standard Plan A76B for details of Concrete Barrier Type 60 end anchors, connection to structures and transitions to Concrete Barrier Type 50 and Concrete Barrier Type 60S.
2. See Standard Plan A76C for Concrete Barrier Type 60 transitions at bridge column and sign pedestals.
3. Where glare screen is required on Concrete Barrier Type 60, use Concrete Barrier Type 60G.
4. Where the concrete barrier is added to the face of existing concrete structure, match existing weep holes.
5. Expansion joints in concrete barrier shall be located at all deck, pavement and principal wall joints. Expansion joint filler material shall be the same size as joint or ½" minimum.
6. Where roadway offset is greater than 1½", see Concrete Barrier Type 60C.
7. Barrier delineation to be used when required by the Special Provisions.
8. Spacing of barrier markers to match spacing of raised pavement markers on the adjacent median edgeline pavement delineation.
9. Reinforcing stirrup not required for roadway offsets less than 1'-0".
10. For roadway surfaces offset greater than 1½" to 3", no rebars required. For roadway surfaces offset greater than 3" to 8" use two #4 rebars at 3" above the lower roadway surface. For roadway surfaces offset greater than 8" to 12", use two #4 rebars at 3" above the lower roadway surface and two #4 rebars at 8" above the lower roadway surface. For roadway surfaces offset greater than 12" to 36", use two #4 rebars at 3" above the lower roadway surface and two #4 rebars at every 8" increment vertical spacing above the first two #4 rebars.
11. Provide weakened planes in curb transversely @ 12' minimum spacing

NO SCALE

DESIGN	BY J. Railey	CHECKED G. Matthews	STATE OF CALIFORNIA DEPARTMENT OF TRANSPORTATION	DIVISION OF ENGINEERING SERVICES STRUCTURE DESIGN DESIGN BRANCH 13	BRIDGE NO. 34-0155RL; POST MILE 9.31
DETAILS	BY P. Carreon	CHECKED J. Railey/G. Matthews			
QUANTITIES	BY J. Railey	CHECKED M. Dumlao			

N101/S1 CONNECTOR SEPARATION
CONCRETE BARRIER TYPE 60 (MOD)

STRUCTURES DESIGN DETAIL SHEET (ENGLISH) (REV. 10/25/05)

ORIGINAL SCALE IN INCHES FOR REDUCED PLANS 0 1 2 3

CU 04
EA 163731

DISREGARD PRINTS BEARING EARLIER REVISION DATES →

REVISION DATES: 2-5-09; 5-24-09; 07-11-09

SHEET 32 OF 42

USERNAME => s135318 DATE PLOTTED => 21-JUL-2009 TIME PLOTTED => 12:23

FILE => 34-0155rl-280-barde02.dgn

DIST	COUNTY	ROUTE	POST MILES TOTAL PROJECT	SHEET No	TOTAL SHEETS
04	SF	101,1	9.2/9.8, 6.8/7.1	301	567

REGISTERED CIVIL ENGINEER — 6-4-09 DATE

PHILIP E. LUTZ No. C 55839 Exp. 12-31-10 CIVIL — REGISTERED PROFESSIONAL ENGINEER — STATE OF CALIFORNIA

7-20-09
PLANS APPROVAL DATE

The State of California or its officers or agents shall not be responsible for the accuracy or completeness of electronic copies of this plan sheet.

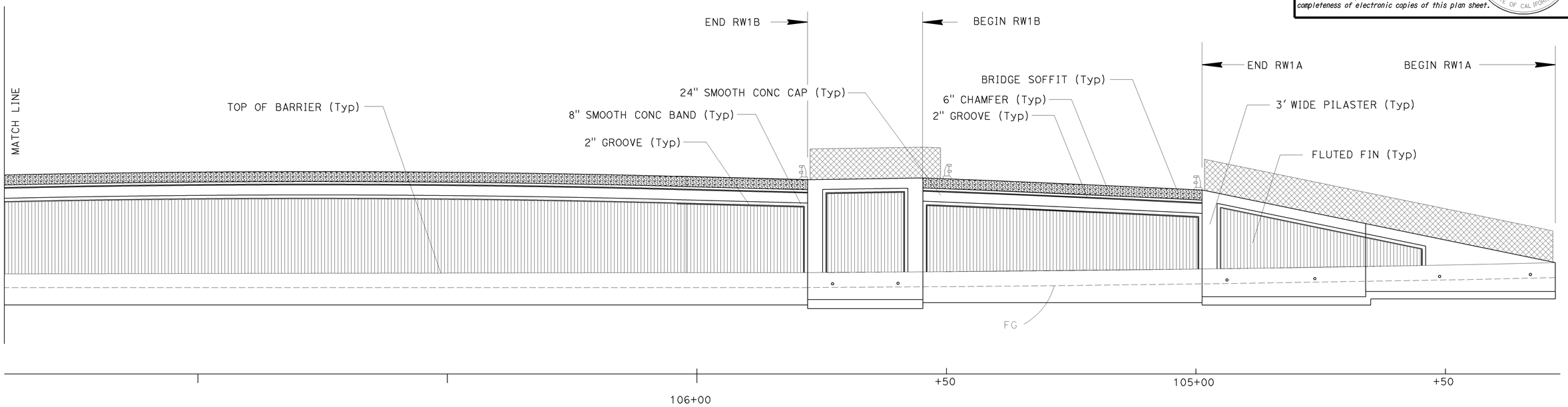

ELEVATION (RW1A and 1B)

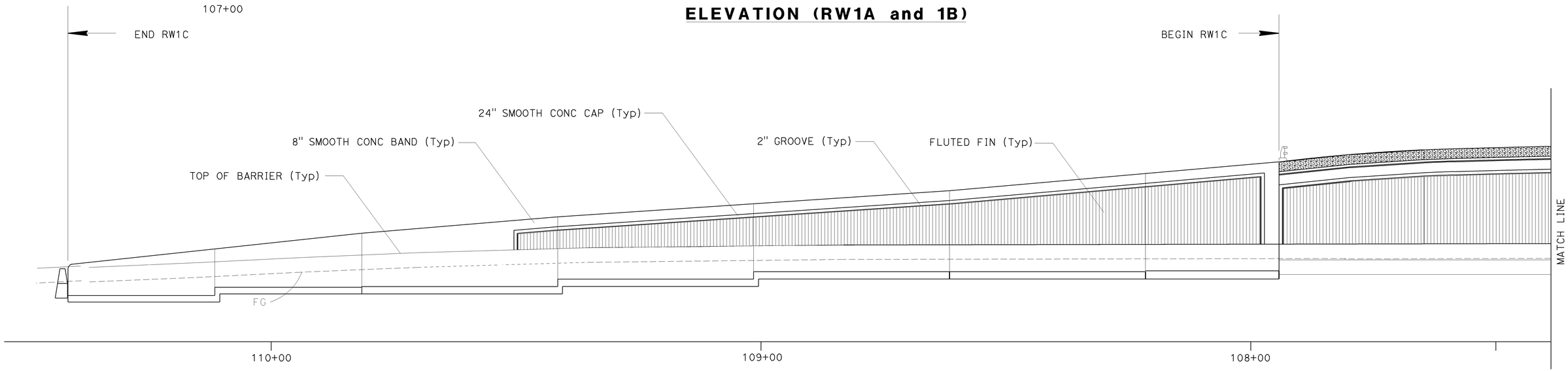

ELEVATION (RW1C)

THIS PLAN ACCURATE FOR AESTHETICS ONLY

DESIGN	BY J. Railey	CHECKED G. Matthews	STATE OF CALIFORNIA DEPARTMENT OF TRANSPORTATION	DIVISION OF ENGINEERING SERVICES STRUCTURE DESIGN DESIGN BRANCH 13	BRIDGE NO. 34-0155RL
DETAILS	BY Wei Zhang/A. Onodera	CHECKED J. Railey/G. Matthews			POST MILE 9.31
QUANTITIES	BY J. Railey	CHECKED M. Dumlao			

N101/S1 CONNECTOR SEPARATION
ARCHITECTURAL TREATMENT NO. 1

STRUCTURES DESIGN DETAIL SHEET (ENGLISH) (REV. 10/25/05)

ORIGINAL SCALE IN INCHES FOR REDUCED PLANS 0 1 2 3

CU 04
EA 163731

DISREGARD PRINTS BEARING EARLIER REVISION DATES →

REVISION DATES										SHEET	OF
5-25-09	7-11-09									33	42

FILE => 34-0155r1-283-archi01.dgn

USERNAME => tmartin DATE PLOTTED => 21-JUL-2009 TIME PLOTTED => 11:22

DIST	COUNTY	ROUTE	POST MILES TOTAL PROJECT	SHEET No	TOTAL SHEETS
04	SF	101,1	9.2/9.8, 6.8/7.1	302	567

REGISTERED CIVIL ENGINEER — DATE 6-4-09

PHILIP E. LUTZ No. C 55839 Exp. 12-31-10 CIVIL — REGISTERED PROFESSIONAL ENGINEER — STATE OF CALIFORNIA

7-20-09
PLANS APPROVAL DATE

The State of California or its officers or agents shall not be responsible for the accuracy or completeness of electronic copies of this plan sheet.

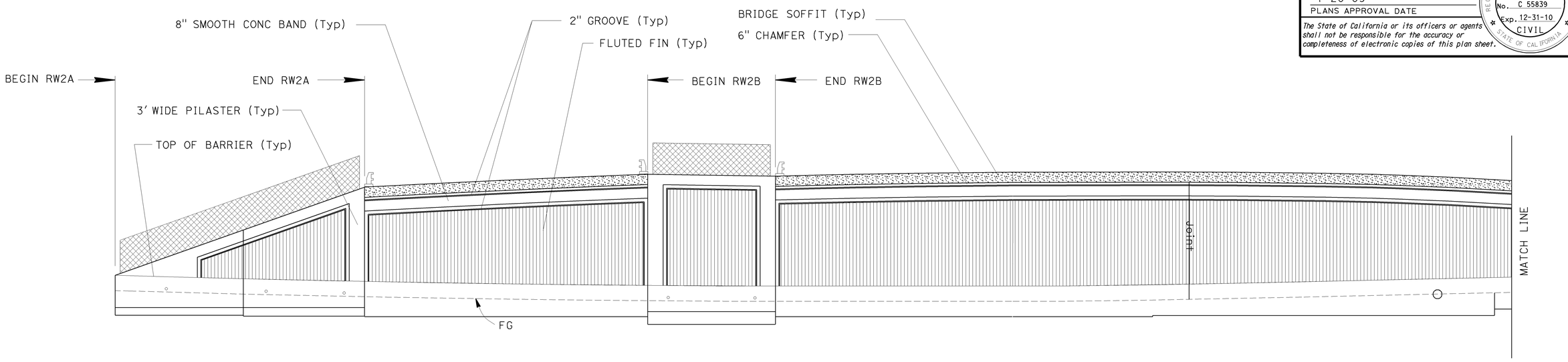

ELEVATION (RW2A & RW2B)

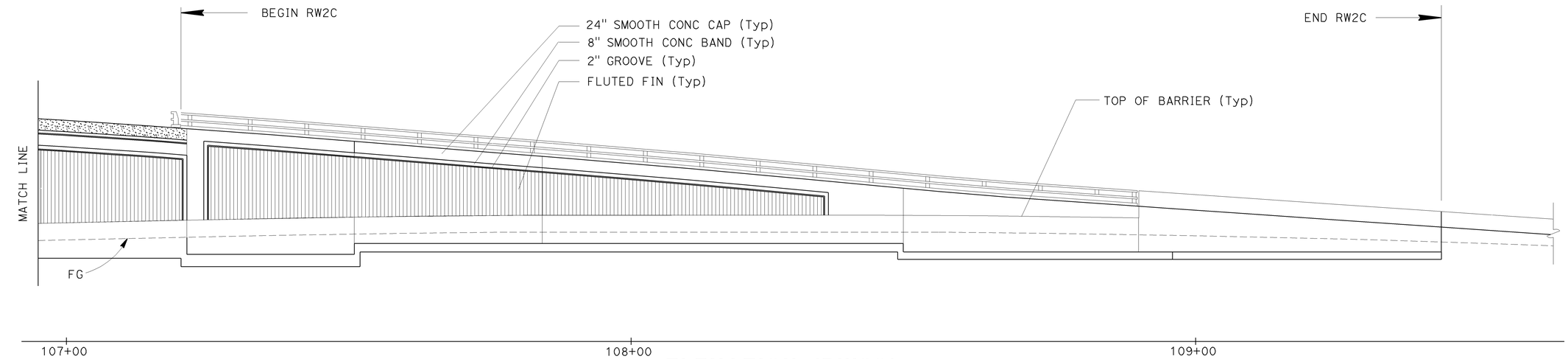

ELEVATION (RW2C)

THIS PLAN ACCURATE FOR AESTHETICS ONLY

DESIGN	BY J. Railey	CHECKED G. Matthews	STATE OF CALIFORNIA DEPARTMENT OF TRANSPORTATION
DETAILS	BY Wei Zhang/A. Onodera	CHECKED J. Railey/G. Matthews	
QUANTITIES	BY J. Railey	CHECKED M. Dumlao	

DIVISION OF ENGINEERING SERVICES STRUCTURE DESIGN
DESIGN BRANCH 13

BRIDGE NO. 34-0155RL
POST MILE 9.31

N101/S1 CONNECTOR SEPARATION
ARCHITECTURAL TREATMENT NO. 2

STRUCTURES DESIGN DETAIL SHEET (ENGLISH) (REV. 10/25/05)

ORIGINAL SCALE IN INCHES FOR REDUCED PLANS 0 1 2 3

CU 04
EA 163731

DISREGARD PRINTS BEARING EARLIER REVISION DATES →

REVISION DATES: 5-25-09 | 7-11-09

SHEET 34 OF 42

FILE => 34-0155rl-285-archi02.dgn

USERNAME => ttmartin DATE PLOTTED => 21-JUL-2009 TIME PLOTTED => 11:23

DIST	COUNTY	ROUTE	POST MILES TOTAL PROJECT	SHEET No	TOTAL SHEETS
04	SF	101,1	9.2/9.8, 6.8/7.1	303	567

REGISTERED CIVIL ENGINEER — 6-4-09 DATE

PHILIP E. LUTZ No. C 55839 Exp. 12-31-10 CIVIL — REGISTERED PROFESSIONAL ENGINEER — STATE OF CALIFORNIA

7-20-09
PLANS APPROVAL DATE

The State of California or its officers or agents shall not be responsible for the accuracy or completeness of electronic copies of this plan sheet.

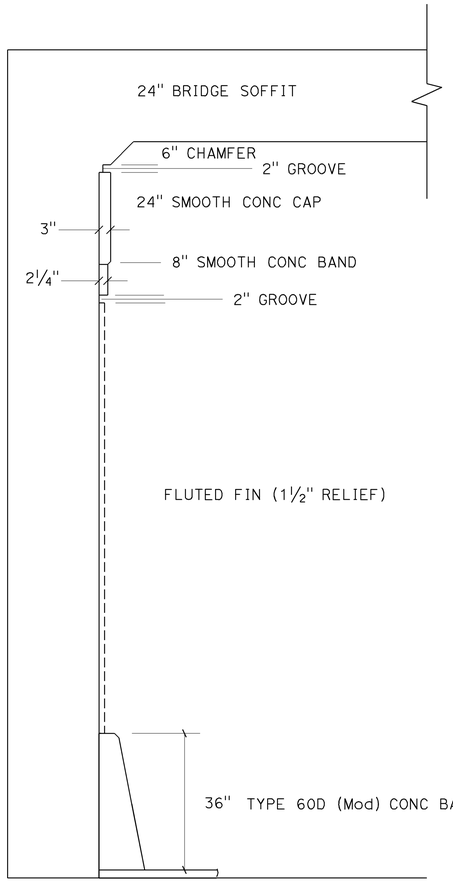

SECTION
TUNNEL WALL AESTHETICS TREATMENT

NO SCALE

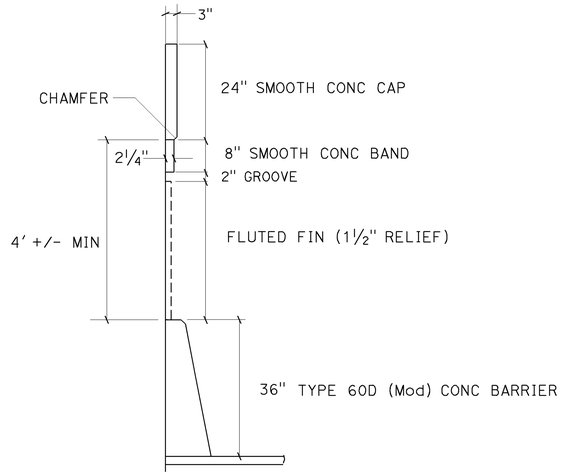

SECTION
RETAINING WALL AESTHETICS TREATMENT

NO SCALE

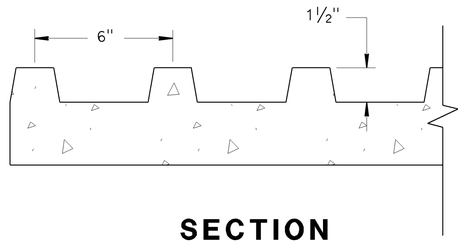

SECTION
FLUTED FIN TEXTURE

NO SCALE

NOTES:
DETAILS APPLY TO THE FOLLOWING RETAINING WALLS
1A, 1B, 1C
2A, 2B, 2C
AND THEIR INCLUDED BRIDGES

THIS PLAN ACCURATE FOR AESTHETICS ONLY

DESIGN	BY J. Railey	CHECKED G. Matthews	STATE OF CALIFORNIA DEPARTMENT OF TRANSPORTATION	DIVISION OF ENGINEERING SERVICES STRUCTURE DESIGN DESIGN BRANCH 13	BRIDGE NO. 34-0155RL
DETAILS	BY Wei Zhang/A. Onodera	CHECKED J. Railey/G. Matthews			POST MILE 9.31
QUANTITIES	BY J. Railey	CHECKED M. Dumlao			

N101/S1 CONNECTOR SEPARATION
ARCHITECTURAL TREATMENT NO. 3

STRUCTURES DESIGN DETAIL SHEET (ENGLISH) (REV. 10/25/05)

ORIGINAL SCALE IN INCHES FOR REDUCED PLANS 0 1 2 3

CU 04
EA 163731

DISREGARD PRINTS BEARING EARLIER REVISION DATES →

REVISION DATES									SHEET	OF
5-25-09	7-11-09								35	42

FILE => 34-0155rl-287-archi03.dgn

USERNAME => tmartin DATE PLOTTED => 21-JUL-2009 TIME PLOTTED => 12:42

DIST	COUNTY	ROUTE	POST MILES TOTAL PROJECT	SHEET No	TOTAL SHEETS
04	SF	101,1	9.2/9.8, 6.8/7.1	304	567

REGISTERED CIVIL ENGINEER — 6-4-09 DATE

PHILIP E. LUTZ No. C 55839 Exp. 12-31-10 CIVIL — REGISTERED PROFESSIONAL ENGINEER — STATE OF CALIFORNIA

7-20-09
PLANS APPROVAL DATE

The State of California or its officers or agents shall not be responsible for the accuracy or completeness of electronic copies of this plan sheet.

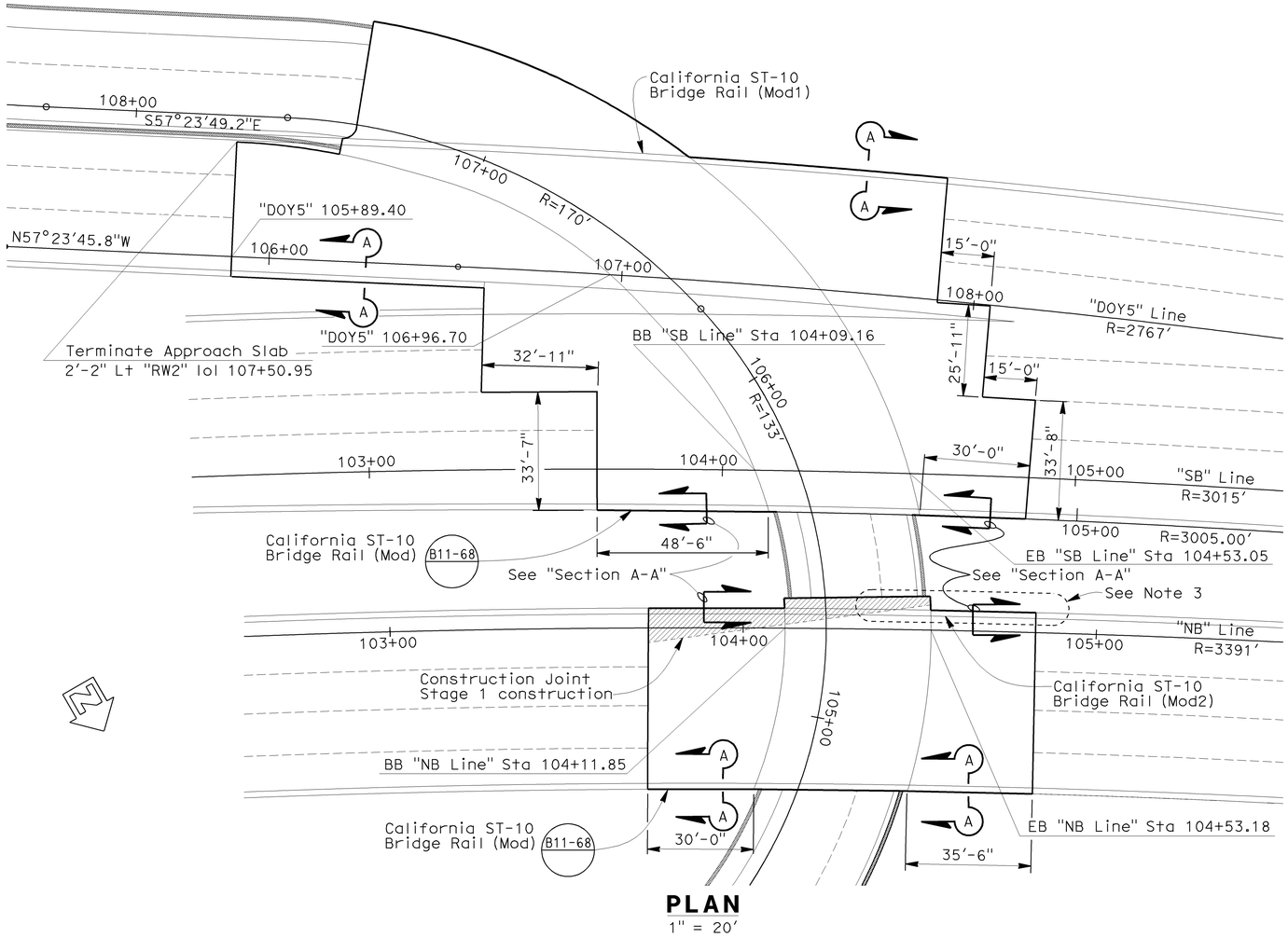

PLAN
1" = 20'

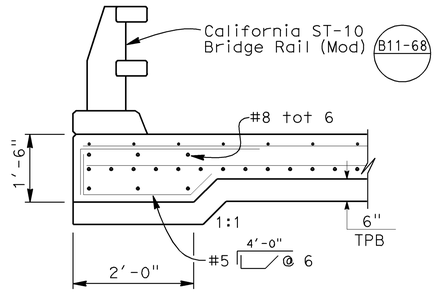

SECTION A-A
No scale

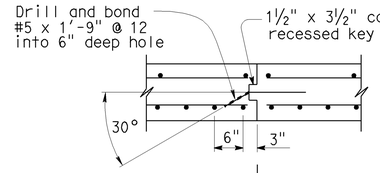

STAGE 1 CONSTRUCTION | **REMAINING PORTION OF SLAB CONSTRUCTED IN CONTRACT 7**

LONGITUDINAL CONSTRUCTION JOINT ALTERNATIVE
No scale

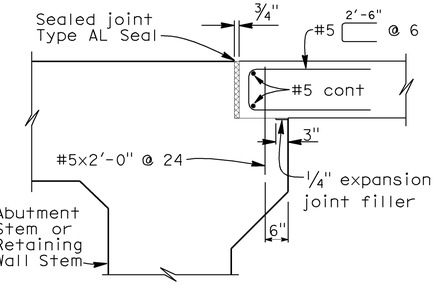

ABUTMENT TIE DETAILS
No scale

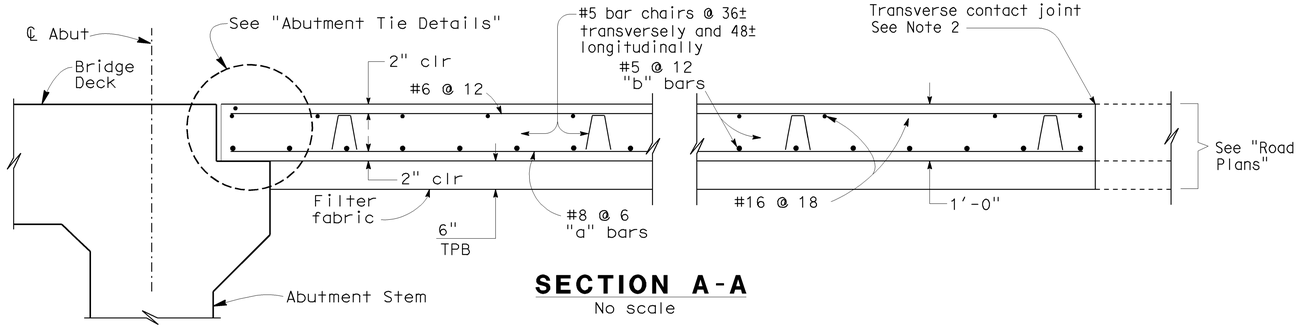

SECTION A-A
No scale

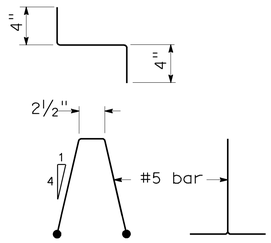

BAR CHAIR DETAIL
No scale

APPROACH SLAB TRANSVERSE CONTACT JOINT		
APPROACH SKEW	WITH AC ROADWAY PAVEMENT	WITH PCC ROADWAY PAVEMENT
< 20°	Parallel to face of paving notch	Parallel to face of paving notch

NOTES:

1. Longitudinal construction joints,when permitted by the Engineer, shall be located on lane lines.
2. For transverse contact joint with new PCC paving, refer to Standard Plan A35-A.
3. Anchor bolts, stainless steel mechanical couplers and anchor bars to be placed for California ST-10 Bridge Rail, see "California ST-10 Bridge Rail (Mod2)" sheet

DESIGN	BY J. Railey	CHECKED G. Matthews	STATE OF CALIFORNIA DEPARTMENT OF TRANSPORTATION	DIVISION OF ENGINEERING SERVICES STRUCTURE DESIGN DESIGN BRANCH 13	BRIDGE NO. 34-0155RL	N101/S1 CONNECTOR SEPARATION
DETAILS	BY A. Onodera	CHECKED J. Railey/G. Matthews			POST MILE 9.31	STRUCTURE APPROACH TYPE N(30S) (MOD)
QUANTITIES	BY J. Railey	CHECKED M. Dumlao				

STRUCTURES DESIGN DETAIL SHEET (ENGLISH) (REV. 10/25/05)

ORIGINAL SCALE IN INCHES FOR REDUCED PLANS 0 1 2 3

CU 04
EA 163731

DISREGARD PRINTS BEARING EARLIER REVISION DATES

REVISION DATES: 5-11-09 | 5-24-09 | 7-11-09

SHEET 36 OF 42

FILE => 34-0155rl-290-xs3-120e.dgn

USERNAME => rmartin DATE PLOTTED => 21-JUL-2009 TIME PLOTTED => 12:42

DIST	COUNTY	ROUTE	POST MILES TOTAL PROJECT	SHEET No	TOTAL SHEETS
04	SF	101,1	9.2/9.8, 6.8/7.1	305	567

Matthew Gaffney 6-02-09
PROFESSIONAL GEOLOGIST

7-20-09
PLANS APPROVAL DATE

PROFESSIONAL GEOLOGIST
Matthew Gaffney
No. 8045
Exp. 6-30-10
STATE OF CALIFORNIA

The State of California or its officers or agents shall not be responsible for the accuracy or completeness of electronic copies of this plan sheet.

This LOTB sheet was prepared in accordance with the Caltrans Soil & Rock Logging, Classification, & Presentation Manual (June 2007) with the exception of Section 2.3.

BENCH MARK

SURVEY CONTROL

CM-148
Fnd Mag. Nail & Shiner
9.84′ Lt "SB" Line
Sta 102+93.61
N 2,120,963.55
E 5,992,433.91
Elev = 161.48′

CM-150
Fnd Mag. Nail & Washer
28.05′ Rt "DOY2" Line
Sta 103+63.09
N 2,121,170.65
E 5,992,485.67
Elev = 148.80′

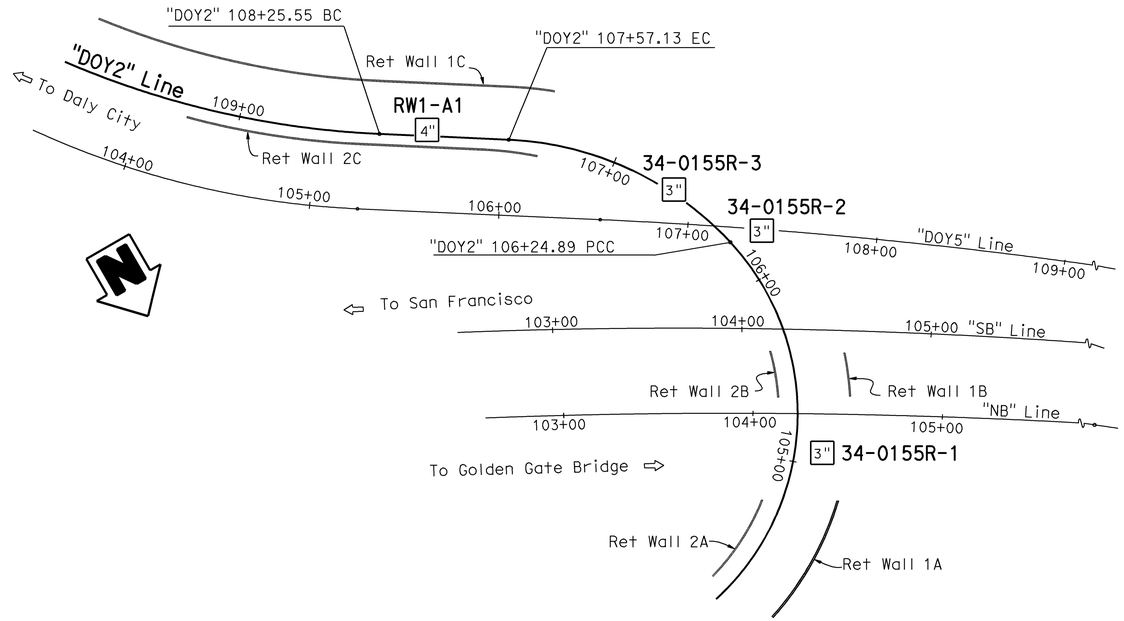

PLAN
1" = 40′

NOTE: Ground water was not measured.

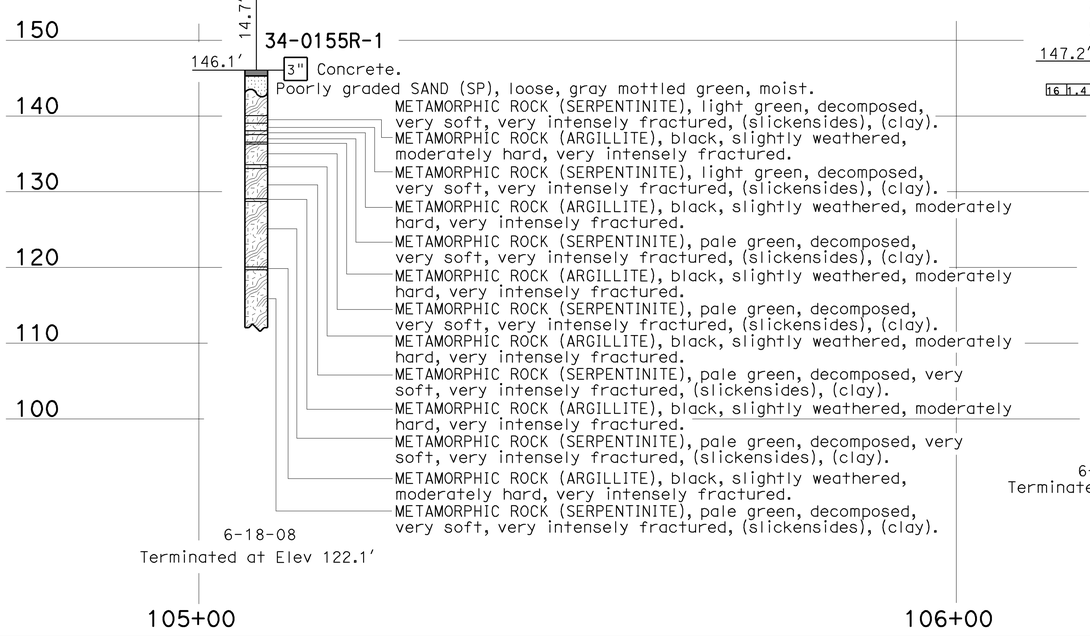

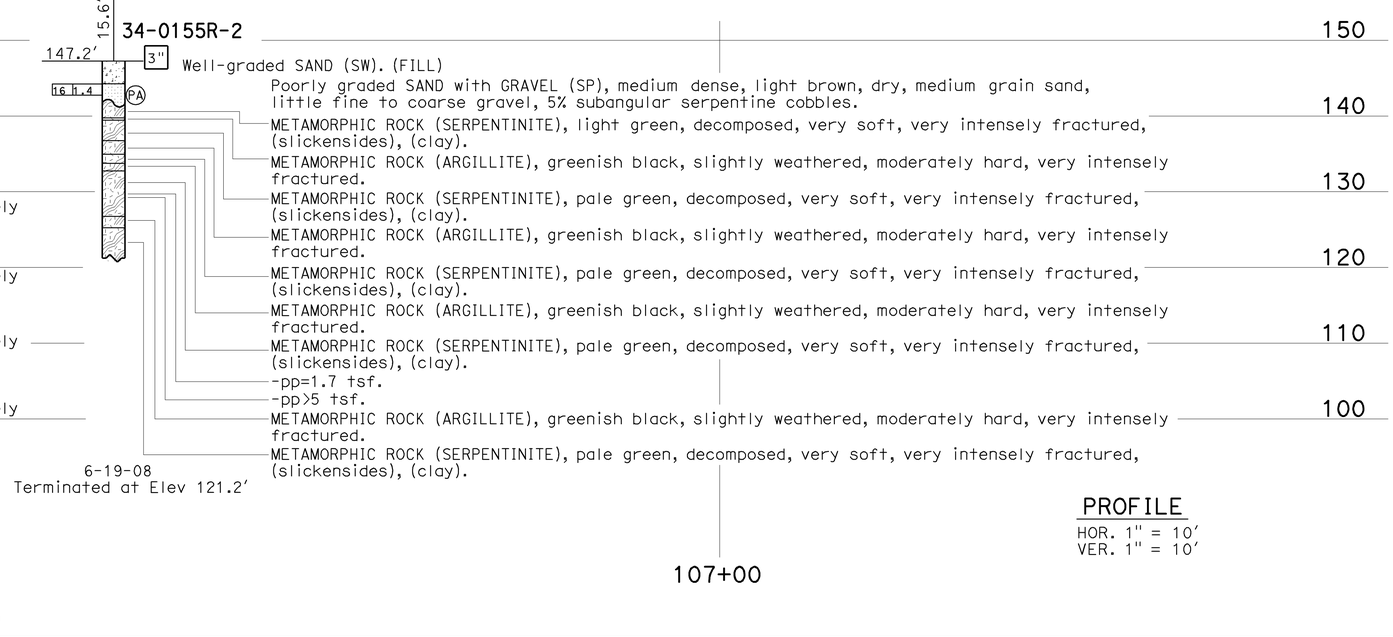

PROFILE
HOR. 1" = 10′
VER. 1" = 10′

ENGINEERING SERVICES	GEOTECHNICAL SERVICES		STATE OF CALIFORNIA DEPARTMENT OF TRANSPORTATION	DIVISION OF ENGINEERING SERVICES STRUCTURE DESIGN	BRIDGE NO. 34-0155RL	N101/S1 CONNECTOR SEPARATION
FUNCTIONAL SUPERVISOR	DRAWN BY: I.G-Remmen, F. Nguyen 4/09	FIELD INVESTIGATION BY:		DESIGN BRANCH	POST MILES 9.31	LOG OF TEST BORINGS 1 OF 6
NAME: G. Wilcox	CHECKED BY: R. Price	M. Gaffney, A. Sojourner				

OGS CIVIL LOG OF TEST BORINGS SHEET

ORIGINAL SCALE IN INCHES FOR REDUCED PLANS 0 1 2 3

CU 04
EA 163731

DISREGARD PRINTS BEARING EARLIER REVISION DATES →

REVISION DATES: 05-08-09 | 05-13-09 | 05-27-09 | 06-01-09

SHEET 37 OF 42

FILE => 34-0155rl-370-lotb01.dgn

USERNAME => tmorrin DATE PLOTTED => 21-JUL-2009 TIME PLOTTED => 11:23

DIST	COUNTY	ROUTE	POST MILES TOTAL PROJECT	SHEET No	TOTAL SHEETS
04	SF	101,1	9.2/9.8, 6.8/7.1	306	567

Matthew Gaffney 6-02-09
PROFESSIONAL GEOLOGIST

PROFESSIONAL GEOLOGIST
Matthew Gaffney
No. 8045
Exp. 6-30-10
STATE OF CALIFORNIA

7-20-09
PLANS APPROVAL DATE

The State of California or its officers or agents shall not be responsible for the accuracy or completeness of electronic copies of this plan sheet.

This LOTB sheet was prepared in accordance with the Caltrans Soil & Rock Logging, Classification, & Presentation Manual (June 2007) with the exception of Section 2.3.

FOR PLAN VIEW, SEE
"LOG OF TEST BORINGS 1 OF 6"

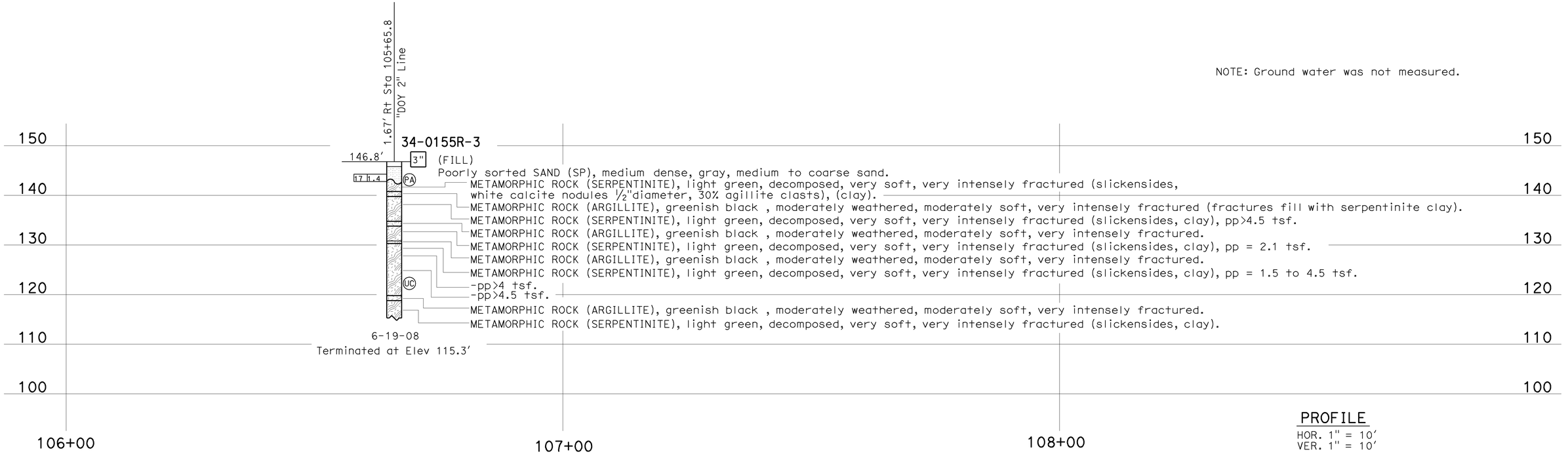

NOTE: Ground water was not measured.

PROFILE
HOR. 1" = 10'
VER. 1" = 10'

ENGINEERING SERVICES		GEOTECHNICAL SERVICES		STATE OF CALIFORNIA DEPARTMENT OF TRANSPORTATION	DIVISION OF ENGINEERING SERVICES STRUCTURE DESIGN	BRIDGE NO. 34-0155RL	N101/S1 CONNECTOR SEPARATION
FUNCTIONAL SUPERVISOR	DRAWN BY: I.G-Remmen, F. Nguyen 4/09	FIELD INVESTIGATION BY:			DESIGN BRANCH	POST MILES 9.31	LOG OF TEST BORINGS 2 OF 6
NAME: G. Wilcox	CHECKED BY: R. Price	M. Gaffney, A. Sojourner					

OGS CIVIL LOG OF TEST BORINGS SHEET

ORIGINAL SCALE IN INCHES FOR REDUCED PLANS 0 1 2 3

CU 04
EA 163731

DISREGARD PRINTS BEARING EARLIER REVISION DATES →

REVISION DATES										SHEET	OF
05-08-09	05-13-09	05-27-09	06-01-09							38	42

FILE => 34-0155rl-380-lotb02.dgn

USERNAME => tmorfin DATE PLOTTED => 21-JUL-2009 TIME PLOTTED => 11:23

DIST	COUNTY	ROUTE	POST MILES TOTAL PROJECT	SHEET No	TOTAL SHEETS
04	SF	101,1	9.2/9.8, 6.8/7.1	307	567

Matthew Gaffney 6-02-09
PROFESSIONAL GEOLOGIST

7-20-09
PLANS APPROVAL DATE

PROFESSIONAL GEOLOGIST
Matthew Gaffney
No. 8045
Exp. 6-30-10
STATE OF CALIFORNIA

The State of California or its officers or agents shall not be responsible for the accuracy or completeness of electronic copies of this plan sheet.

This LOTB sheet was prepared in accordance with the Caltrans Soil & Rock Logging, Classification, & Presentation Manual (June 2007) with the exception of Section 2.3.

FOR PLAN VIEW, SEE
"LOG OF TEST BORINGS 1 OF 6"

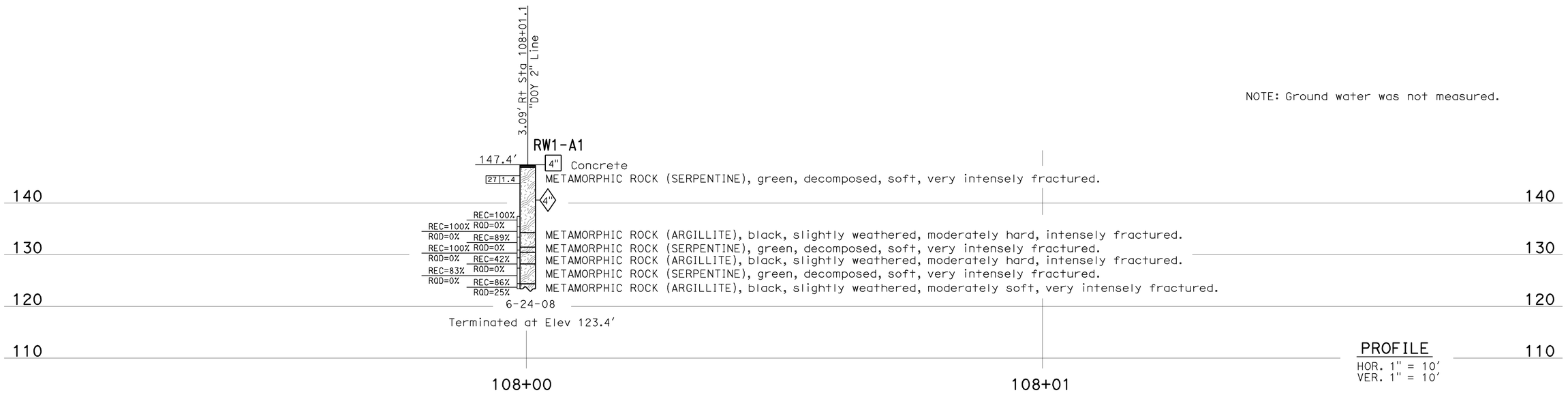

NOTE: Ground water was not measured.

PROFILE
HOR. 1" = 10'
VER. 1" = 10'

ENGINEERING SERVICES	GEOTECHNICAL SERVICES		STATE OF CALIFORNIA DEPARTMENT OF TRANSPORTATION	DIVISION OF ENGINEERING SERVICES STRUCTURE DESIGN	BRIDGE NO. 34-0155RL	N101/S1 CONNECTOR SEPARATION
FUNCTIONAL SUPERVISOR NAME: T. Pokrywka	DRAWN BY: I.G-Remmen, 4/09	FIELD INVESTIGATION BY: M. Gaffney		DESIGN BRANCH	POST MILES 9.31	LOG OF TEST BORINGS 3 OF 6
	CHECKED BY: R. Price					

OGS CIVIL LOG OF TEST BORINGS SHEET

ORIGINAL SCALE IN INCHES FOR REDUCED PLANS 0 1 2 3

CU 04
EA 163731

DISREGARD PRINTS BEARING EARLIER REVISION DATES →

REVISION DATES									SHEET	OF
~~05-08-09~~	05-13-09	06-01-09							39	42

FILE => 34-0155rl-390-lotb03.dgn

USERNAME => tmartin DATE PLOTTED => 21-JUL-2009 TIME PLOTTED => 11:23

REFERENCE: CALTRANS SOIL & ROCK LOGGING, CLASSIFICATION, AND PRESENTATION MANUAL (JUNE 2007)

DIST	COUNTY	ROUTE	POST MILES TOTAL PROJECT	SHEET No	TOTAL SHEETS
04	SF	101,1	9.2/9.8, 6.8/7.1	308	567

Matthew Gaffney 6-02-09
PROFESSIONAL GEOLOGIST

7-20-09
PLANS APPROVAL DATE

PROFESSIONAL GEOLOGIST
Matthew Gaffney
No. 8045
Exp. 6-30-10
STATE OF CALIFORNIA

The State of California or its officers or agents shall not be responsible for the accuracy or completeness of electronic copies of this plan sheet.

CEMENTATION

Description	Criteria
Weak	Crumbles or breaks with handling or little finger pressure.
Moderate	Crumbles or breaks with considerable finger pressure.
Strong	Will not crumble or break with finger pressure.

BOREHOLE IDENTIFICATION

Symbol	Hole Type	Description
Size	A	Auger Boring
Size	R P	Rotary drilled boring Rotary percussion boring (air)
Size	R	Rotary drilled diamond core
Size	HD HA	Hand driven (1-inch soil tube) Hand Auger
●	D	Dynamic Cone Penetration Boring
▲	CPT	Cone Penetration Test (ASTM D 5778-95)
⬚	O	Other

Note: Size in inches.

CONSISTENCY OF COHESIVE SOILS

Description	Unconfined Compressive Strength (tsf)	Pocket Penetrometer Measurement (tsf)	Torvane Measurement (tsf)	Field Approximation
Very Soft	< 0.25	< 0.25	< 0.12	Easily penetrated several inches by fist
Soft	0.25 to 0.50	0.25 to 0.50	0.12 to 0.25	Easily penetrated several inches by thumb
Medium Stiff	0.50 to 1.0	0.50 to 1.0	0.25 to 0.50	Penetrated several inches by thumb with moderate effort
Stiff	1 to 2	1 to 2	0.50 to 1.0	Readily indented by thumb but penetrated only with great effort
Very Stiff	2 to 4	2 to 4	1.0 to 2.0	Readily indented by thumbnail
Hard	> 4.0	> 4.0	> 2.0	Indented by thumbnail with difficulty

PLASTICITY OF FINE-GRAINED SOILS

Description	Criteria
Nonplastic	A 1/8-inch thread cannot be rolled at any water content.
Low	The thread can barely be rolled and the lump cannot be formed when drier than the plastic limit.
Medium	The thread is easy to roll and not much time is required to reach the plastic limit. The thread cannot be rerolled after reaching the plastic limit. The lump crumbles when drier than the plastic limit.
High	It takes considerable time rolling and kneading to reach the plastic limit. The thread can be rerolled several times after reaching the plastic limit. The lump can be formed without crumbling when drier than the plastic limit.

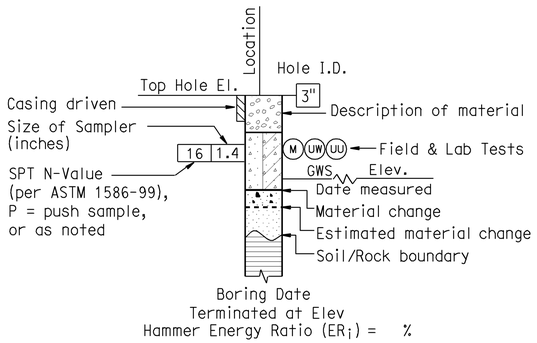

ROTARY BORING

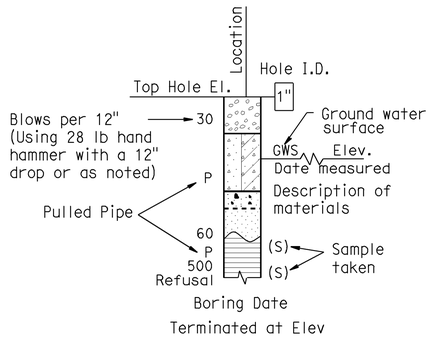

HAND BORING

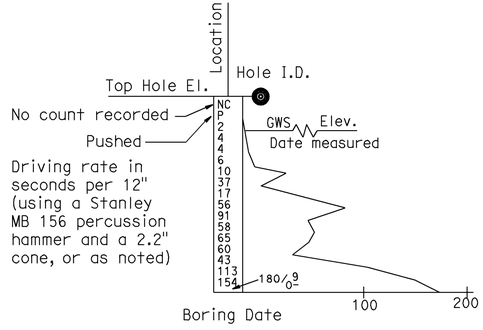

DYNAMIC CONE PENETRATION BORING

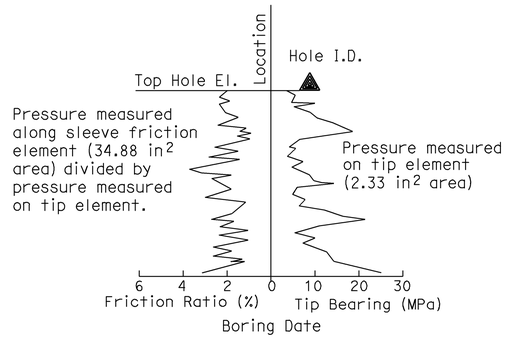

CONE PENETRATION TEST (CPT) SOUNDING

ENGINEERING SERVICES	GEOTECHNICAL SERVICES	STATE OF CALIFORNIA DEPARTMENT OF TRANSPORTATION	DIVISION OF ENGINEERING SERVICES STRUCTURE DESIGN	BRIDGE NO. 34-0155RL POST MILE 9.31	N101/S1 CONNECTOR SEPARATION
	PREPARED BY: I.G-Remmen, 5/09		DESIGN BRANCH		LOG OF TEST BORINGS 4 OF 6

GS LOTB SOIL LEGEND

ORIGINAL SCALE IN INCHES FOR REDUCED PLANS 0 1 2 3

CU 04
EA 163731

DISREGARD PRINTS BEARING EARLIER REVISION DATES

REVISION DATES: 05-13-09

SHEET 40 OF 42

FILE => 34-0155rl-400-lotb04.dgn

USERNAME => tmcmartin DATE PLOTTED => 21-JUL-2009 TIME PLOTTED => 11:23

REFERENCE: CALTRANS SOIL & ROCK LOGGING, CLASSIFICATION, AND PRESENTATION MANUAL (JUNE 2007)

GROUP SYMBOLS AND NAMES

Graphic/Symbol	Group Names	Graphic/Symbol	Group Names
GW	Well-graded GRAVEL Well-graded GRAVEL with SAND	CL	Lean CLAY Lean CLAY with SAND Lean CLAY with GRAVEL SANDY lean CLAY SANDY lean CLAY with GRAVEL GRAVELLY lean CLAY GRAVELLY lean CLAY with SAND
GP	Poorly graded GRAVEL Poorly graded GRAVEL with SAND		
GW-GM	Well-graded GRAVEL with SILT Well-graded GRAVEL with SILT and SAND	CL-ML	SILTY CLAY SILTY CLAY with SAND SILTY CLAY with GRAVEL SANDY SILTY CLAY SANDY SILTY CLAY with GRAVEL GRAVELLY SILTY CLAY GRAVELLY SILTY CLAY with SAND
GW-GC	Well-graded GRAVEL with CLAY (or SILTY CLAY) Well-graded GRAVEL with CLAY and SAND (or SILTY CLAY and SAND)		
GP-GM	Poorly graded GRAVEL with SILT Poorly graded GRAVEL with SILT and SAND	ML	SILT SILT with SAND SILT with GRAVEL SANDY SILT SANDY SILT with GRAVEL GRAVELLY SILT GRAVELLY SILT with SAND
GP-GC	Poorly graded GRAVEL with CLAY (or SILTY CLAY) Poorly graded GRAVEL with CLAY and SAND (or SILTY CLAY and SAND)		
GM	SILTY GRAVEL SILTY GRAVEL with SAND	OL	ORGANIC lean CLAY ORGANIC lean CLAY with SAND ORGANIC lean CLAY with GRAVEL SANDY ORGANIC lean CLAY SANDY ORGANIC lean CLAY with GRAVEL GRAVELLY ORGANIC lean CLAY GRAVELLY ORGANIC lean CLAY with SAND
GC	CLAYEY GRAVEL CLAYEY GRAVEL with SAND		
GC-GM	SILTY, CLAYEY GRAVEL SILTY, CLAYEY GRAVEL with SAND	OL	ORGANIC SILT ORGANIC SILT with SAND ORGANIC SILT with GRAVEL SANDY ORGANIC SILT SANDY ORGANIC SILT with GRAVEL GRAVELLY ORGANIC SILT GRAVELLY ORGANIC SILT with SAND
SW	Well-graded SAND Well-graded SAND with GRAVEL		
SP	Poorly graded SAND Poorly graded SAND with GRAVEL	CH	Fat CLAY Fat CLAY with SAND Fat CLAY with GRAVEL SANDY fat CLAY SANDY fat CLAY with GRAVEL GRAVELLY fat CLAY GRAVELLY fat CLAY with SAND
SW-SM	Well-graded SAND with SILT Well-graded SAND with SILT and GRAVEL		
SW-SC	Well-graded SAND with CLAY (or SILTY CLAY) Well-graded SAND with CLAY and GRAVEL (or SILTY CLAY and GRAVEL)	MH	Elastic SILT Elastic SILT with SAND Elastic SILT with GRAVEL SANDY elastic SILT SANDY elastic SILT with GRAVEL GRAVELLY elastic SILT GRAVELLY elastic SILT with SAND
SP-SM	Poorly graded SAND with SILT Poorly graded SAND with SILT and GRAVEL		
SP-SC	Poorly graded SAND with CLAY (or SILTY CLAY) Poorly graded SAND with CLAY and GRAVEL (or SILTY CLAY and GRAVEL)	OH	ORGANIC fat CLAY ORGANIC fat CLAY with SAND ORGANIC fat CLAY with GRAVEL SANDY ORGANIC fat CLAY SANDY ORGANIC fat CLAY with GRAVEL GRAVELLY ORGANIC fat CLAY GRAVELLY ORGANIC fat CLAY with SAND
SM	SILTY SAND SILTY SAND with GRAVEL		
SC	CLAYEY SAND CLAYEY SAND with GRAVEL	OH	ORGANIC elastic SILT ORGANIC elastic SILT with SAND ORGANIC elastic SILT with GRAVEL SANDY ORGANIC elastic SILT SANDY ORGANIC elastic SILT with GRAVEL GRAVELLY ORGANIC elastic SILT GRAVELLY ORGANIC elastic SILT with SAND
SC-SM	SILTY, CLAYEY SAND SILTY, CLAYEY SAND with GRAVEL		
PT	PEAT	OL/OH	ORGANIC SOIL ORGANIC SOIL with SAND ORGANIC SOIL with GRAVEL SANDY ORGANIC SOIL SANDY ORGANIC SOIL with GRAVEL GRAVELLY ORGANIC SOIL GRAVELLY ORGANIC SOIL with SAND
	COBBLES COBBLES and BOULDERS BOULDERS		

FIELD AND LABORATORY TESTING

- (C) Consolidation (ASTM D 2435)
- (CL) Collapse Potential (ASTM D 5333)
- (CP) Compaction Curve (CTM 216)
- (CR) Corrosivity Testing (CTM 643, CTM 422, CTM 417)
- (CU) Consolidated Undrained Triaxial (ASTM D 4767)
- (DS) Direct Shear (ASTM D 3080)
- (EI) Expansion Index (ASTM D 4829)
- (M) Moisture Content (ASTM D 2216)
- (OC) Organic Content-% (ASTM D 2974)
- (P) Permeability (CTM 220)
- (PA) Particle Size Analysis (ASTM D 422)
- (PI) Plasticity Index (AASHTO T 90) Liquid Limit (AASHTO T 89)
- (PL) Point Load Index (ASTM D 5731)
- (PM) Pressure Meter
- (PP) Pocket Penetrometer
- (R) R-Value (CTM 301)
- (SE) Sand Equivalent (CTM 217)
- (SG) Specific Gravity (AASHTO T 100)
- (SL) Shrinkage Limit (ASTM D 427)
- (SW) Swell Potential (ASTM D 4546)
- (TV) Pocket Torvane
- (UC) Unconfined Compression-Soil (ASTM D 2166) Unconfined Compression-Rock (ASTM D 2938)
- (UU) Unconsolidated Undrained Triaxial (ASTM D 2850)
- (UW) Unit Weight (ASTM D 4767)
- (VS) Vane Shear (AASHTO T 223)

DIST	COUNTY	ROUTE	POST MILES TOTAL PROJECT	SHEET No	TOTAL SHEETS
04	SF	101,1	9.2/9.8, 6.8/7.1	309	567

Matthew Gaffney 6-02-09
PROFESSIONAL GEOLOGIST

7-20-09
PLANS APPROVAL DATE

PROFESSIONAL GEOLOGIST — Matthew Gaffney No. 8045 Exp. 6-30-10 — STATE OF CALIFORNIA

The State of California or its officers or agents shall not be responsible for the accuracy or completeness of electronic copies of this plan sheet.

APPARENT DENSITY OF COHESIONLESS SOILS

Description	SPT N_{60} (Blows / 12 inches)
Very loose	0 - 4
Loose	5 - 10
Medium Dense	11 - 30
Dense	31 - 50
Very Dense	> 50

MOISTURE

Description	Criteria
Dry	Absence of moisture, dusty, dry to the touch
Moist	Damp but no visible water
Wet	Visible free water, usually soil is below water table

PERCENT OR PROPORTION OF SOILS

Description	Criteria
Trace	Particles are present but estimated to be less than 5%
Few	5 to 10%
Little	15 to 25%
Some	30 to 45%
Mostly	50 to 100%

PARTICLE SIZE

Description		Size
Boulder		> 12"
Cobble		3" to 12"
Gravel	Coarse	3/4" to 3"
	Fine	No. 4 to 3/4"
Sand	Coarse	No. 10 to No. 4
	Medium	No. 40 to No. 10
	Fine	No. 200 to No. 40

ENGINEERING SERVICES	GEOTECHNICAL SERVICES	STATE OF CALIFORNIA DEPARTMENT OF TRANSPORTATION	DIVISION OF ENGINEERING SERVICES STRUCTURE DESIGN	BRIDGE NO.	N101/S1 CONNECTOR SEPARATION
	PREPARED BY: I.G-Remmen, 5/09		DESIGN BRANCH	34-0155RL POST MILE 9.31	LOG OF TEST BORINGS 5 OF 6

GS LOTB SOIL LEGEND

ORIGINAL SCALE IN INCHES FOR REDUCED PLANS 0 1 2 3

CU 04 EA 163731

DISREGARD PRINTS BEARING EARLIER REVISION DATES →

REVISION DATES: 05-13-09

SHEET 41 OF 42

FILE => 34-0155rl-410-lotb05.dgn

USERNAME => tmartin DATE PLOTTED => 21-JUL-2009 TIME PLOTTED => 11:23

REFERENCE: CALTRANS SOIL & ROCK LOGGING, CLASSIFICATION, AND PRESENTATION MANUAL (JUNE 2007)

PERCENT CORE RECOVERY (REC) & ROCK QUALITY DESIGNATION (RQD)

$$REC = \frac{\sum \text{Length of the recovered core pieces (inches)}}{\text{Total length of core run (inches)}} \times 100\%$$

$$RQD = \frac{\sum \text{Length of intact core pieces} \geq 4"}{\text{Total length of core run (inches)}} \times 100\%$$

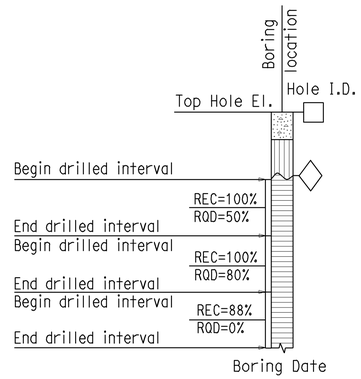

ROCK HARDNESS

Description	Criteria
Extremely Hard	Specimen cannot be scratched with a pocket knife or sharp pick; can only be chipped with repeated heavy hammer blows.
Very Hard	Specimen cannot be scratched with a pocket knife or sharp pick. Breaks with repeated heavy hammer blows.
Hard	Specimen can be scratched with a pocket knife or sharp pick with difficulty (heavy pressure). Heavy hammer blows required to break specimen.
Moderately Hard	Specimen can be scratched with pocket knife or sharp pick with light or moderate pressure. Core breaks with moderate hammer blows.
Moderately Soft	Specimen can be grooved 1/6" deep with a pocket knife or sharp pick with moderate or heavy pressure. Breaks with light hammer blow or heavy manual pressure.
Soft	Specimen can be grooved or gouged easily by a pocket knife or sharp pick with light pressure, can be scratched with fingernail. Breaks with light to moderate manual pressure.
Very Soft	Specimen can be readily indented, grooved or gouged with fingernail, or carved with a pocket knife. Breaks with light manual pressure.

FRACTURE DENSITY

Description	Observed Fracture Density
Unfractured	No fractures.
Very slightly fractured	Lengths greater than 3 feet.
Slightly fractured	Lengths from 1 to 3 feet with few lengths less than 1 foot or greater than 3 feet.
Moderately fractured	Lengths mostly in 4" to 1 foot range with most lengths about 8"
Intensely fractured	Lengths average from 1 to 4" with scattered fragmented intervals with lengths less than 4"
Very intensely fractured	Mostly chips and fragments with a few scattered short core lengths.

Combination descriptors (such as "Very intensely to intensely fractured") are used where equal distribution of both fracture density characteristics is present over a significant interval or exposure, or where characteristics are "in between" the descriptor definitions. Only two adjacent descriptors may be combined.

RELATIVE STRENGTH OF INTACT ROCK

Term	Uniaxial Compressive Strength (PSI)
Extremely Strong	> 30,000
Very Strong	14,500 - 30,000
Strong	7,000 - 14,500
Medium Strong	3,500 - 7,000
Weak	700 - 3,500
Very Weak	150 - 700
Extremely Weak	< 150

BEDDING SPACING

Description	Thickness / Spacing
Massive	Greater than 10 ft
Very thickly bedded	3 to 10 ft
Thickly bedded	1 to 3 ft
Moderately bedded	3-5/8" to 1 ft
Thinly bedded	1-1/4" to 3-5/8"
Very thinly bedded	3/8" to 1-1/4"
Laminated	Less than 3/8"

DIST	COUNTY	ROUTE	POST MILES TOTAL PROJECT	SHEET No	TOTAL SHEETS
04	SF	101,1	9.2/9.8, 6.8/7.1	310	567

Matthew Gaffney 6-02-09
PROFESSIONAL GEOLOGIST

7-20-09
PLANS APPROVAL DATE

Matthew Gaffney No. 8045 Exp. 6-30-10 PROFESSIONAL GEOLOGIST STATE OF CALIFORNIA

The State of California or its officers or agents shall not be responsible for the accuracy or completeness of electronic copies of this plan sheet.

LEGEND OF ROCK MATERIALS

- IGNEOUS ROCK
- SEDIMENTARY ROCK
- METAMORPHIC ROCK

WEATHERING DESCRIPTORS FOR INTACT ROCK

Description	Diagnostic features: Chemical Weathering-Discoloration and/or oxidation: Body of Rock	Diagnostic features: Chemical Weathering-Discoloration and/or oxidation: Fracture Surfaces	Diagnostic features: Mechanical Weathering-Grain boundary conditions (disaggregation) primarily for granitics and some coarse-grained sediments	Diagnostic features: Texture and Solutioning: Texture	Diagnostic features: Texture and Solutioning: Solutioning	General Characteristics
Fresh	No discoloration, not oxidized.	No discoloration or oxidation.	No separation, intact (tight).	No change.	No solutioning.	Hammer rings when crystalline rocks are struck.
Slightly Weathered	Discoloration or oxidation is limited to surface of, or short distance from, fractures; some feldspar crystals are dull.	Minor to complete discoloration or oxidation of most surfaces.	No visible separation, intact (tight).	Preserved.	Minor leaching of some soluble minerals may be noted.	Hammer rings when crystalline rocks are struck. Body of rock not weakened.
Moderately Weathered	Discoloration or oxidation extends from fractures usually throughout; Fe-Mg minerals are "rusty," feldspar crystals are "cloudy."	All fracture surfaces are discolored or oxidized.	Partial separation of boundaries visible.	Generally preserved.	Soluble minerals may be mostly leached.	Hammer does not ring when rock is struck. Body of rock is slightly weakened.
Intensely Weathered	Discoloration or oxidation throughout; all feldspars and Fe-Mg minerals are altered to clay to some extent; or chemical alteration produces in-situ disaggregation, see grain boundary conditions.	All fracture surfaces are discolored or oxidized, surfaces friable.	Partial separation, rock is friable; in semiarid conditions granitics are disaggregated.	Texture altered by chemical disintegration (hydration, argillation).	Leaching of soluble minerals may be complete.	Dull sound when struck with hammer, usually can be broken with moderate to heavy manual pressure or by light hammer blow without reference to planes of weakness such as incipient or hairline fractures, or veinlets. Rock is significantly weakened.
Decomposed	Discolored or oxidized throughout, but resistant minerals such as quartz may be unaltered; all feldspars and Fe-Mg minerals are completely altered to clay.		Complete separation of grain boundaries (disaggregated).	Resembles a soil, partial or complete remnant rock structure may be preserved; leaching of soluble minerals usually complete.		Can be granulated by hand. Resistant minerals such as quartz may be present as "stringers" or "dikes."

Combination descriptors (such as "slightly weathered to fresh") are permissible where equal distribution of both weathering characteristics is present over significant intervals or where characteristics present are "in between" the diagnostic feature. However, combination descriptors should not be used where significant, identifiable zones can be delineated. Only two adjacent descriptors may be combined. "Very intensely weathered" is the combination descriptor for "intensely weathered to decomposed."

ENGINEERING SERVICES	GEOTECHNICAL SERVICES	STATE OF CALIFORNIA DEPARTMENT OF TRANSPORTATION	DIVISION OF ENGINEERING SERVICES STRUCTURE DESIGN	BRIDGE NO.	N101/S1 CONNECTOR SEPARATION
	PREPARED BY: I.G-Remmen, 5/09		DESIGN BRANCH	34-0155RL POST MILE 9.31	LOG OF TEST BORINGS 6 OF 6

GS LOTB ROCK LEGEND

ORIGINAL SCALE IN INCHES FOR REDUCED PLANS 0 1 2 3

CU 04 EA 163731

DISREGARD PRINTS BEARING EARLIER REVISION DATES →

REVISION DATES	SHEET	OF
05-13-09	42	42

FILE => 34-0155r1-420-lotb06.dgn

USERNAME => tmorrin DATE PLOTTED => 21-JUL-2009 TIME PLOTTED => 11:24

DIST	COUNTY	ROUTE	POST MILES TOTAL PROJECT	SHEET No	TOTAL SHEETS
04	SF	101,1	9.2/9.8, 6.8/7.1	311	567

Philip E Lutz 06-04-09
REGISTERED CIVIL ENGINEER DATE

7-20-09
PLANS APPROVAL DATE

REGISTERED PROFESSIONAL ENGINEER — Philip E. Lutz — No. C55839 — Exp. 12-31-10 — CIVIL — STATE OF CALIFORNIA

The State of California or its officers or agents shall not be responsible for the accuracy or completeness of electronic copies of this plan sheet.

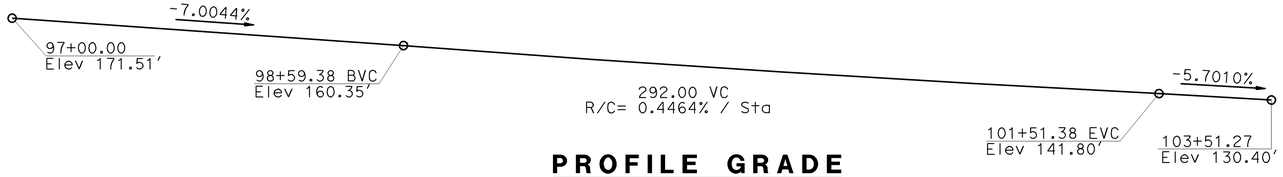

PROFILE GRADE
No Scale

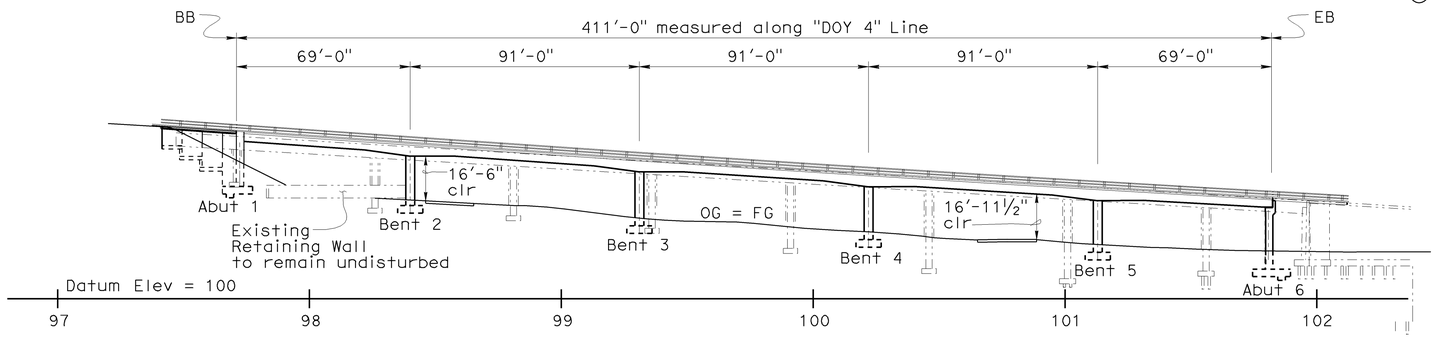

ELEVATION
1" = 30'
(Temporary Widening not shown for clarity)

NOTES

1. Paint "Br No. 34-0156"
2. Paint Br Name "Ruckman Avenue UC"
3. Structure Approach Type N(30S)(MOD)
4. California ST-10 Bridge Rail (MOD)
5. Barrier Type 50
6. Temporary Railing Type K, see "Road Plans"
7. 12" ø Storm Drain, see "Road Plans"
8. Temporary Deck Bridging
9. 2"ø electrical and communications conduit, tot 3, see "Road Plans"

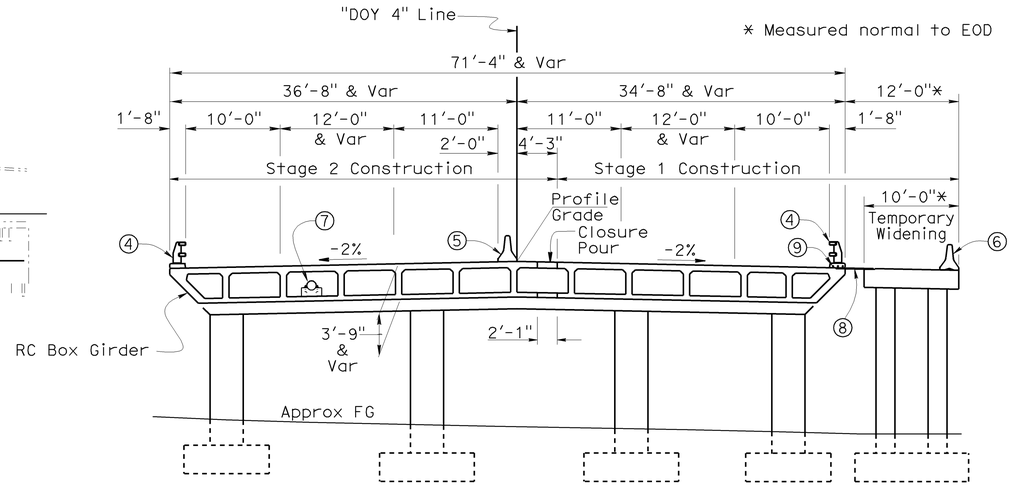

TYPICAL SECTION
⅛" = 1'

QUANTITIES

TEMPORARY DECK BRIDGING	LUMP	SUM
BRIDGE REMOVAL, LOCATION C	LUMP	SUM
BRIDGE REMOVAL, LOCATION D	LUMP	SUM
STRUCTURE EXCAVATION (BRIDGE) (NATURALLY OCCURING ASBESTOS)	1,040	CY
STRUCTURE EXCAVATION (BRIDGE) (TEMPORARY WIDENING) (NATURALLY OCCURING ASBESTOS)	135	CY
STRUCTURE EXCAVATION (TYPE Z-2) (AERIALLY DEPOSITED LEAD)	450	CY
STRUCTURE BACKFILL (BRIDGE)	1,600	CY
STRUCTURE BACKFILL (BRIDGE) (TEMPORARY WIDENING)	180	CY
STRUCTURAL CONCRETE, BRIDGE FOOTING	460	CY
STRUCTURAL CONCRETE, BRIDGE FOOTING (TEMPORARY WIDENING)	55	CY
STRUCTURAL CONCRETE, BRIDGE	2,720	CY
STRUCTURAL CONCRETE, BRIDGE (TEMPORARY WIDENING)	220	CY
STRUCTURAL CONCRETE, APPROACH SLAB (TYPE N MODIFIED)	205	CY
ARCHITECTURAL TEXTURE (FLUTED FIN)	2,770	SQFT
ARCHITECTURAL TREATMENT (2" THICK)	75	SQFT
JOINT SEAL (MR 2")	182	LF
BAR REINFORCING STEEL (BRIDGE)	1,023,000	LB
BAR REINFORCING STEEL (BRIDGE) (TEMPORARY WIDENING)	63,500	LB
CONCRETE BARRIER (TYPE 50)	472	LF
CALIFORNIA ST-10 BRIDGE RAIL (MODIFIED)	942	LF

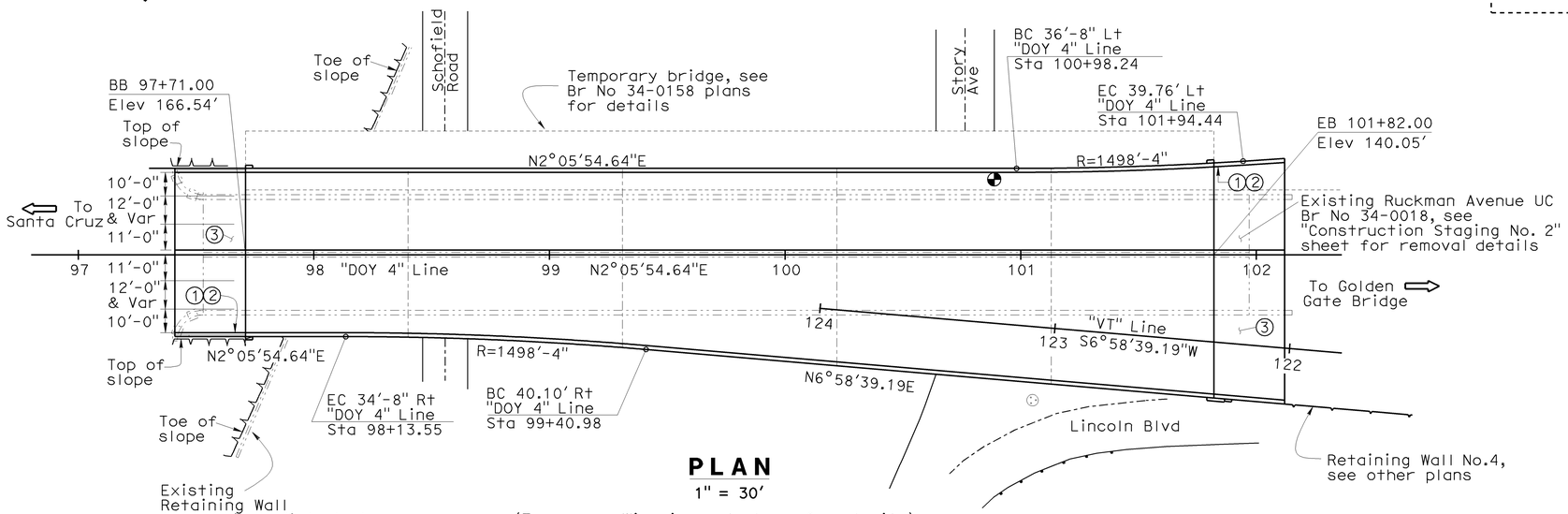

PLAN
1" = 30'
(Temporary Widening not shown for clarity)

majid modari
DESIGN ENGINEER

DESIGN	BY John E. Peterson	CHECKED Muthanna Omran	LOAD & RESISTANCE FACTOR DESIGN	LIVE LOADING: HL93 W/"LOW-BOY"; PERMIT DESIGN VEHICLE	
DETAILS	BY Tim Fairall/ Liang Ma	CHECKED Muthanna Omran	LAYOUT	BY John E. Peterson	CHECKED Muthanna Omran
QUANTITIES	BY Paotsan Wang	CHECKED Bunma Nou	SPECIFICATIONS	BY J. Corrado	PLANS AND SPECS COMPARED X

STATE OF CALIFORNIA
DEPARTMENT OF TRANSPORTATION

DIVISION OF ENGINEERING SERVICES
STRUCTURE DESIGN
DESIGN BRANCH 16

CU 04
EA 163731

BRIDGE NO. 34-0156
POST MILE 6.81

RUCKMAN AVENUE UC (REPLACE)
GENERAL PLAN

STRUCTURES DESIGN GENERAL PLAN SHEET (ENGLISH) (REV. 10/25/05)

ORIGINAL SCALE IN INCHES FOR REDUCED PLANS 0 1 2 3

DISREGARD PRINTS BEARING EARLIER REVISION DATES →

REVISION DATES: 5-06-08 | 5-08-08 | 11-10-08 | 11-13-08 | 2-26-09 | 3-4-09 | 5-18-09 | 6-4-09 | 7-11-09

SHEET 1 OF 40

STRUCTURES DESIGN GENERAL PLAN SHEET (ENGLISH) (REV.07-24-06)

FILE => 34-0156-a-gp01.dgn

DATE PLOTTED => 21-JUL-2009 TIME PLOTTED => 11:13
USERNAME = rrstrk

DIST	COUNTY	ROUTE	POST MILES TOTAL PROJECT	SHEET No	TOTAL SHEETS
04	SF	101,1	9.2/9.8, 6.8/7.1	312	567

Philip E Lutz 06-04-09
REGISTERED CIVIL ENGINEER DATE

7-20-09
PLANS APPROVAL DATE

REGISTERED PROFESSIONAL ENGINEER — Philip E. Lutz — No. C55839 — Exp. 12-31-10 — CIVIL — STATE OF CALIFORNIA

The State of California or its officers or agents shall not be responsible for the accuracy or completeness of electronic copies of this plan sheet.

INDEX TO PLANS

Sheet No.	Title
1	GENERAL PLAN
2	INDEX TO PLANS
3	DECK CONTOURS
4	FOUNDATION PLAN
5	ABUTMENT 1 LAYOUT
6	ABUTMENT 6 LAYOUT
7	ABUTMENT DETAILS NO. 1
8	ABUTMENT DETAILS NO. 2
9	ABUTMENT DETAILS NO. 3
10	BENT CAP 2 DETAILS
11	BENT CAP 3 DETAILS
12	BENT CAP 4 DETAILS
13	BENT CAP 5 DETAILS
14	BENT CAP DETAILS
15	COLUMN AND FOOTING DETAILS
16	TYPICAL SECTION NO.1
17	TYPICAL SECTION NO.2
18	TYPICAL SECTION NO.3
19	GIRDER LAYOUT NO.1
20	GIRDER LAYOUT NO.2
21	MAIN BOTTOM REINFORCEMENT
22	MAIN TOP REINFORCEMENT NO.1
23	MAIN TOP REINFORCEMENT NO.2
24	STORM DRAIN DETAILS
25	ELECTROLIER PEDESTAL DETAILS
26	STRUCTURE APPROACH TYPE N(30S)(MOD)
27	STRUCTURE APPROACH DRAINAGE DETAILS
28	TEMPORARY WIDENING LAYOUT
29	TEMPORARY WIDENING ABUTMENT DETAILS
30	TEMPORARY WIDENING BENT DETAILS
31	TEMPORARY WIDENING MAIN REINFORCEMENT
32	TEMPORARY WIDENING REINFORCEMENT DETAILS
33	CONSTRUCTION STAGING NO.1
34	CONSTRUCTION STAGING NO.2
35	LOG OF TEST BORINGS 1 OF 6
36	LOG OF TEST BORINGS 2 OF 6
37	LOG OF TEST BORINGS 3 OF 6
38	LOG OF TEST BORINGS 4 OF 6
39	LOG OF TEST BORINGS 5 OF 6
40	LOG OF TEST BORINGS 6 OF 6

STANDARD PLANS
Dated May 2006

A62C	LIMITS OF PAYMENT FOR EXCAVATION AND BACKFILL - BRIDGE
BO-1	BRIDGE DETAILS
BO-3	BRIDGE DETAILS
BO-5	BRIDGE DETAILS
BO-13	BRIDGE DETAILS
B3-1	RETAINING WALL TYPE 1
B3-8	RETAINING WALL DETAILS NO.1
B6-21	JOINT SEALS (MAXIMUM MOVEMENT RATING=2")
B7-1	BOX GIRDER DETAILS
B7-10	UTILITY OPENING - BOX GIRDER
B11-68	CALIFORNIA ST-10 BRIDGE RAIL
P-1	JOINTED PLAIN CONCRETE PAVEMENT
T3	TEMPORARY RAILING (TYPE K)

MAINLINE

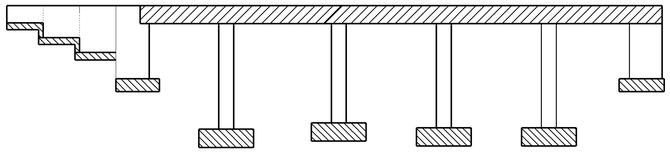

TEMPORARY WIDENING (TW)

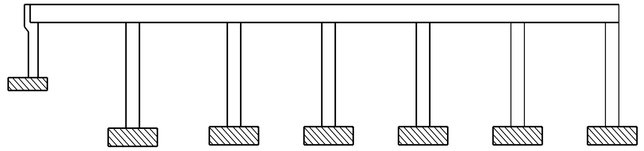

Structural Concrete, Bridge

Structural Concrete, Bridge Footing

Structural Concrete, Bridge
f'c=4500 psi @ 28 days

Structural Concrete, Bridge (Temporary Widening)

Structural Concrete, Bridge Footing (Temporary Widening)

CONCRETE STRENGTH AND TYPE LIMITS

No Scale

SPREAD FOOTING DATA TABLE

SUPPORT LOCATION	Working Stress Design (WSD)		Load Resistance and Factor Design (LRFD)		
	Permissible Gross Contact Stress (Settlement) (ksf)	Allowable Gross Bearing Capacity (ksf)	Service Permissible Net Contact Stress (Settlement) (ksf)	Strength Factored Gross Nominal Bearing Resisitance Ø=0.7 (ksf)	Extreme Event Factored Gross Nominal Bearing Resisitance Ø=1.0 (ksf)
ABUT 1-1	12	38	--	--	--
ABUT 1-2	11	36	--	--	--
ABUT 1-3	13	40	--	--	--
BENT 2-1	--	--	17.5	64	142
BENT 2-2	--	--	16	66	146
BENT 2-3	--	--	16	66	146
BENT 2-4	--	--	17.5	64	142
BENT 3-1	--	--	17.5	122	270
BENT 3-2	--	--	16	126	275
BENT 3-3	--	--	16	126	275
BENT 3-4	--	--	17.5	122	270
BENT 4-1	--	--	17	32	72
BENT 4-2	--	--	15	33	74
BENT 4-3	--	--	13.5	33.5	75
BENT 4-4	--	--	15	33	74
BENT 5-1	--	--	17	51	120
BENT 5-2	--	--	15.5	55	121
BENT 5-3	--	--	14	56	122
BENT 5-4	--	--	15.5	55	121
ABUT 6-1	9	16	--	--	--
ABUT 6-2	10	17	--	--	--
ABUT 6-3	10	18	--	--	--
ABUT 6-4	10	19	--	--	--
ABUT TW1	12	35	--	--	--
BENT TW2	--	--	19	52	116
BENT TW3	--	--	19	52	116
BENT TW4	--	--	19	95	210
BENT TW5	--	--	19	95	210
BENT TW6	--	--	19	28	62
ABUT TW7	11	34	--	--	--

GENERAL NOTES
LOAD AND RESISTANCE FACTOR DESIGN

DESIGN:

AASHTO LRFD Bridge Design Specifications, 4th edition, with California Amendments dated December 2008.

SEISMIC DESIGN:

Caltrans Seismic Design Criteria (SDC), Version 1.4 dated June 2006

DEAD LOAD:

Includes 35 psf for future wearing surface.

LIVE LOADING:

HL93 and permit design load.

SEISMIC LOADING:

Site Specific Acceleration Response Spectra Curve

This spectrum is based on a 975 year return period (5% probability of exceedance in 50 years) using Caltrans 2008 seismic hazard map

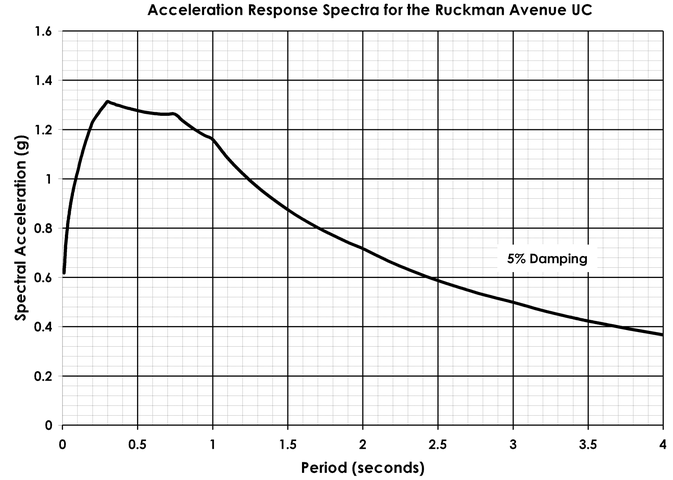

See "Temporary Widening Layout" sheet for the Site Specific ARS curve for the Temporary Widening

CONCRETE:

fy = 60 ksi
f'c = 3.6 ksi
n = 8

STRUCTURAL STEEL:

fy = ASTM A709 Grade 36

TW = Temporary Widening

DESIGN	BY John E. Peterson	CHECKED Muthanna Omran	STATE OF CALIFORNIA DEPARTMENT OF TRANSPORTATION
DETAILS	BY Liang Ma	CHECKED Muthanna Omran	
QUANTITIES	BY Bunma Nou	CHECKED Paotsan Wang	

DIVISION OF ENGINEERING SERVICES STRUCTURE DESIGN
DESIGN BRANCH 16

BRIDGE NO. 34-0156
POST MILE 6.81

RUCKMAN AVENUE UC (REPLACE)
INDEX TO PLANS

STRUCTURES DESIGN DETAIL SHEET (ENGLISH) (REV. 10/25/05)

ORIGINAL SCALE IN INCHES FOR REDUCED PLANS 0 1 2 3

CU 04
EA 163731

DISREGARD PRINTS BEARING EARLIER REVISION DATES →

REVISION DATES: 1-2-09 | 2-26-09 | 5-18-09 | 6-4-09

SHEET 2 OF 40

FILE => 34-0156-b-itp.dgn

USERNAME = tvstrk DATE PLOTTED => 21-JUL-2009 TIME PLOTTED => 11:19

DIST	COUNTY	ROUTE	POST MILES TOTAL PROJECT	SHEET No	TOTAL SHEETS
04	SF	101,1	9.2/9.8, 6.8/7.1	313	567

Philip E Lutz 06-04-09
REGISTERED CIVIL ENGINEER DATE

7-20-09
PLANS APPROVAL DATE

Philip E. Lutz No. C55839 Exp. 12-31-10 CIVIL
REGISTERED PROFESSIONAL ENGINEER STATE OF CALIFORNIA

The State of California or its officers or agents shall not be responsible for the accuracy or completeness of electronic copies of this plan sheet.

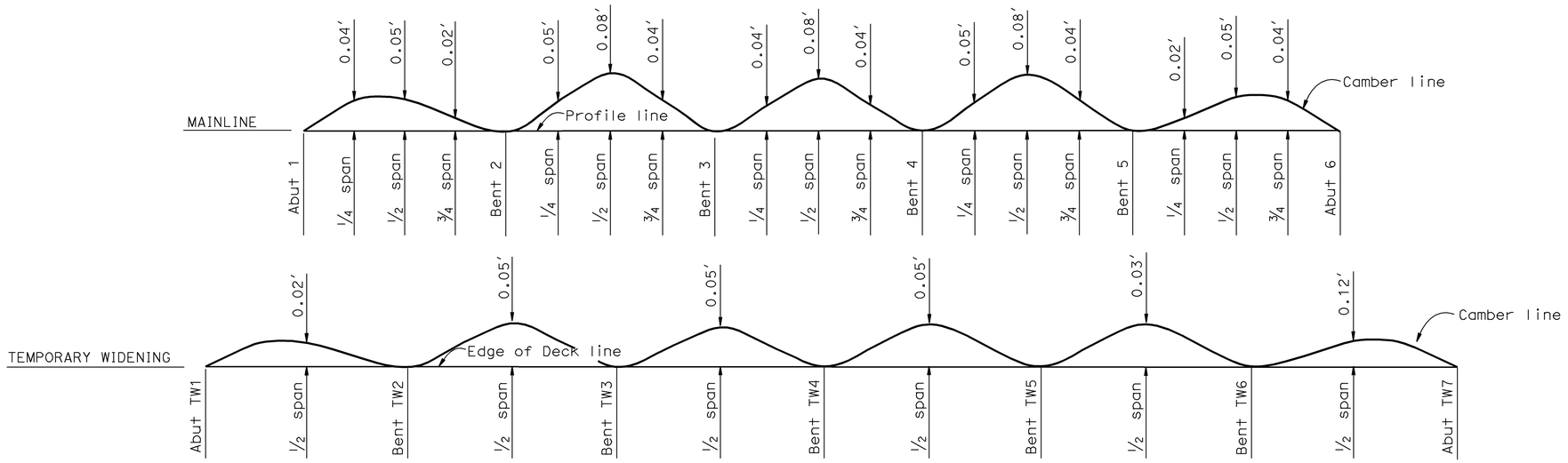

CAMBER DIAGRAM

No Scale

Notes:

0.2′ Contour Interval.
x - 10′-0" Station Increment.

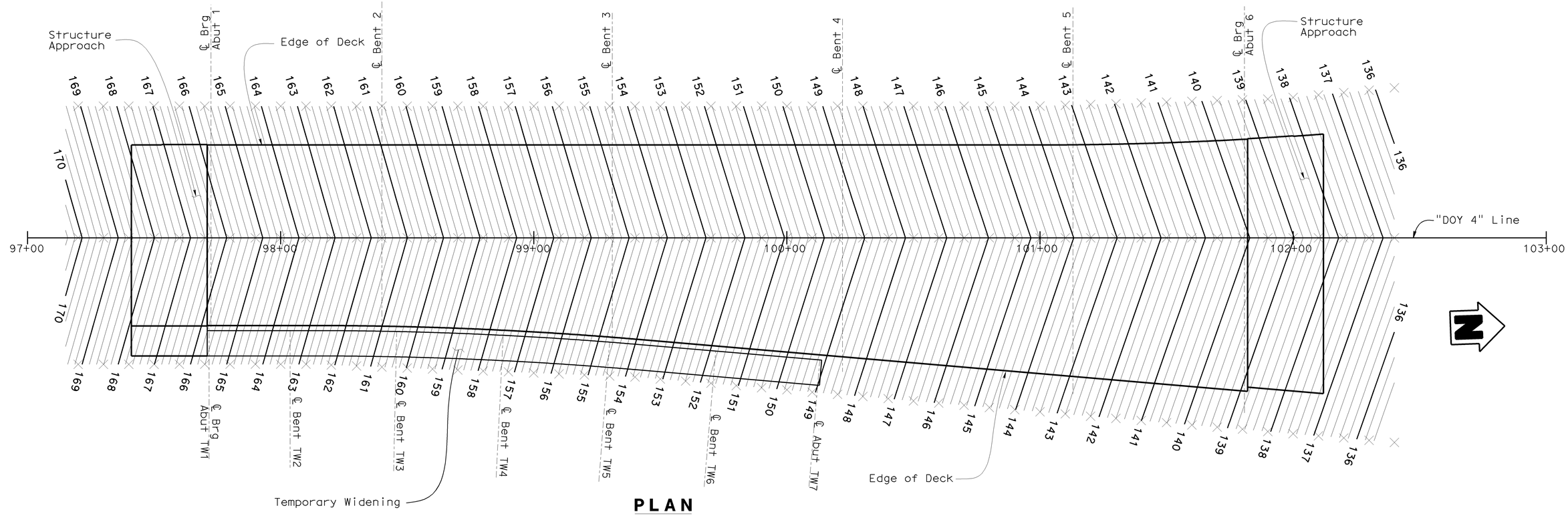

PLAN

1"= 20′

DESIGN	BY John E. Peterson	CHECKED Muthanna Omran	STATE OF CALIFORNIA DEPARTMENT OF TRANSPORTATION	DIVISION OF ENGINEERING SERVICES STRUCTURE DESIGN DESIGN BRANCH 16	BRIDGE NO. 34-0156
DETAILS	BY Liang Ma / F. Maagma	CHECKED Muthanna Omran			POST MILE 6.81
QUANTITIES	BY Bunma Nou	CHECKED Paotsan Wang			

RUCKMAN AVENUE UC (REPLACE)
DECK CONTOURS

STRUCTURES DESIGN DETAIL SHEET (ENGLISH) (REV. 10/25/05)

ORIGINAL SCALE IN INCHES FOR REDUCED PLANS 0 1 2 3

CU 04
EA 163731

DISREGARD PRINTS BEARING EARLIER REVISION DATES →

REVISION DATES: 1-5-09 | 2-26-09 | 5-18-09 | 6-4-09

SHEET 3 OF 40

FILE => 34-0156-d-dc01.dgn

USERNAME => trsirk DATE PLOTTED => 21-JUL-2009 TIME PLOTTED => 11:20

DIST	COUNTY	ROUTE	POST MILES TOTAL PROJECT	SHEET No	TOTAL SHEETS
04	SF	101,1	9.279,8, 6.8/7.1	314	567

REGISTERED CIVIL ENGINEER — 06-04-09 DATE

7-20-09
PLANS APPROVAL DATE

REGISTERED PROFESSIONAL ENGINEER — Philip E. Lutz — No. C55839 — Exp. 12-31-10 — CIVIL — STATE OF CALIFORNIA

The State of California or its officers or agents shall not be responsible for the accuracy or completeness of electronic copies of this plan sheet.

Arup PB Joint Venture
560 Mission Street
Suite 700
San Francisco, CA 94105

CURVE DATA

No.	R	Δ	T	L
(27)	8,199.94	2°29′43"	178.59	357.13
(41)	125.00	45°50′12"	20.90	41.42
(44)	1,721.89	3°11′08"	47.88	95.73
(45)	94.99	67°30′30"	63.48	111.93
(46)	420.00	5°29′23"	20.14	40.24
(47)	-	-	-	-
(48)	85.00	56°48′05"	45.96	84.27
(49)	200.00	12°12′57"	21.40	42.64
(50)	200.00	20°27′25"	36.09	71.41

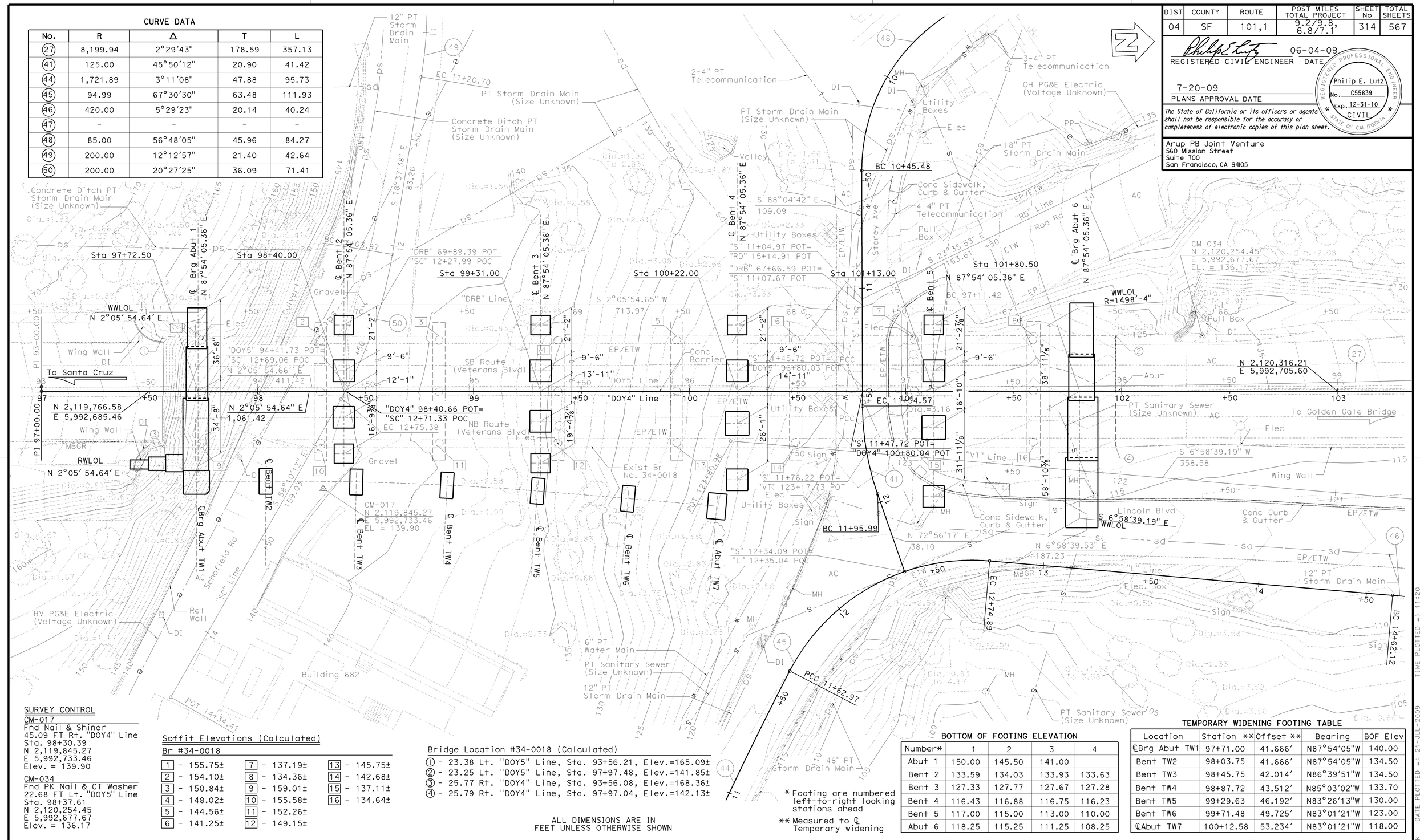

SURVEY CONTROL

CM-017
Fnd Nail & Shiner
45.09 FT Rt. "DOY4" Line
Sta. 98+30.39
N 2,119,845.27
E 5,992,733.46
Elev. = 139.90

CM-034
Fnd PK Nail & CT Washer
22.68 FT Lt. "DOY5" Line
Sta. 98+37.61
N 2,120,254.45
E 5,992,677.67
Elev. = 136.17

Soffit Elevations (Calculated)

Br #34-0018

1 - 155.75±	7 - 137.19±	13 - 145.75±
2 - 154.10±	8 - 134.36±	14 - 142.68±
3 - 150.84±	9 - 159.01±	15 - 137.11±
4 - 148.02±	10 - 155.58±	16 - 134.64±
5 - 144.56±	11 - 152.26±	
6 - 141.25±	12 - 149.15±	

Bridge Location #34-0018 (Calculated)

① - 23.38 Lt. "DOY5" Line, Sta. 93+56.21, Elev.=165.09±
② - 23.25 Lt. "DOY5" Line, Sta. 97+97.48, Elev.=141.85±
③ - 25.77 Rt. "DOY4" Line, Sta. 93+56.08, Elev.=168.36±
④ - 25.79 Rt. "DOY4" Line, Sta. 97+97.04, Elev.=142.13±

ALL DIMENSIONS ARE IN FEET UNLESS OTHERWISE SHOWN

* Footing are numbered left-to-right looking stations ahead

** Measured to ℄ Temporary widening

BOTTOM OF FOOTING ELEVATION

Number*	1	2	3	4
Abut 1	150.00	145.50	141.00	
Bent 2	133.59	134.03	133.93	133.63
Bent 3	127.33	127.77	127.67	127.28
Bent 4	116.43	116.88	116.75	116.23
Bent 5	117.00	115.00	113.00	110.00
Abut 6	118.25	115.25	111.25	108.25

TEMPORARY WIDENING FOOTING TABLE

Location	Station **	Offset **	Bearing	BOF Elev
℄Brg Abut TW1	97+71.00	41.666′	N87°54′05"W	140.00
Bent TW2	98+03.75	41.666′	N87°54′05"W	134.50
Bent TW3	98+45.75	42.014′	N86°39′51"W	134.50
Bent TW4	98+87.72	43.512′	N85°03′02"W	133.70
Bent TW5	99+29.63	46.192′	N83°26′13"W	130.00
Bent TW6	99+71.48	49.725′	N83°01′21"W	123.00
℄Abut TW7	100+12.58	53.234′	N83°01′21"W	118.00

PRELIMINARY INVESTIGATION SECTION					
SCALE 1"=20′	VERT.DATUM NAVD88	PHOTOGRAMMETRY AS OF: 9/24/2008			
	HORZ.DATUM NAD83	SURVEYED	BY Chaudhary & Assoc.	CHECKED	BY E. Lilly 3/20/09
ALIGNMENT TIES Dist.Traverse Sheet		DRAFTED	BY L. Reyes 3/20/09	CHECKED	BY E. Lilly 3/20/09

DESIGN	BY John E. Peterson	CHECKED	Muthanna Omran
DETAILS	BY Liang Ma	CHECKED	Muthanna Omran
QUANTITIES	BY Bunma Nou	CHECKED	Paotsan Wang

STATE OF CALIFORNIA
DEPARTMENT OF TRANSPORTATION

DIVISION OF ENGINEERING SERVICES
STRUCTURE DESIGN
DESIGN BRANCH 16

BRIDGE NO. 34-0156
POST MILE 6.81

RUCKMAN UC
FOUNDATION PLAN

CU 04247
EA 163731

DISREGARD PRINTS BEARING EARLIER REVISION DATES →

REVISION DATES: 5-4-09 | 5-18-09 | 6/5/09

SHEET 4 OF 40

STRUCTURES FOUNDATION PLAN SHEET (ENGLISH) (REV. 10/25/05)

ORIGINAL SCALE IN INCHES FOR REDUCED PLANS 0 1 2 3

FILE => 34-0156-e-fp01.dgn

USERNAME => trstrk DATE PLOTTED => 21-JUL-2009 TIME PLOTTED => 11:20

DIST	COUNTY	ROUTE	POST MILES TOTAL PROJECT	SHEET No	TOTAL SHEETS
04	SF	101,1	9.2/9.8, 6.8/7.1	315	567

Philip E Lutz 06-04-09
REGISTERED CIVIL ENGINEER DATE

7-20-09
PLANS APPROVAL DATE

Philip E. Lutz No. C55839 Exp. 12-31-10 CIVIL — REGISTERED PROFESSIONAL ENGINEER — STATE OF CALIFORNIA

The State of California or its officers or agents shall not be responsible for the accuracy or completeness of electronic copies of this plan sheet.

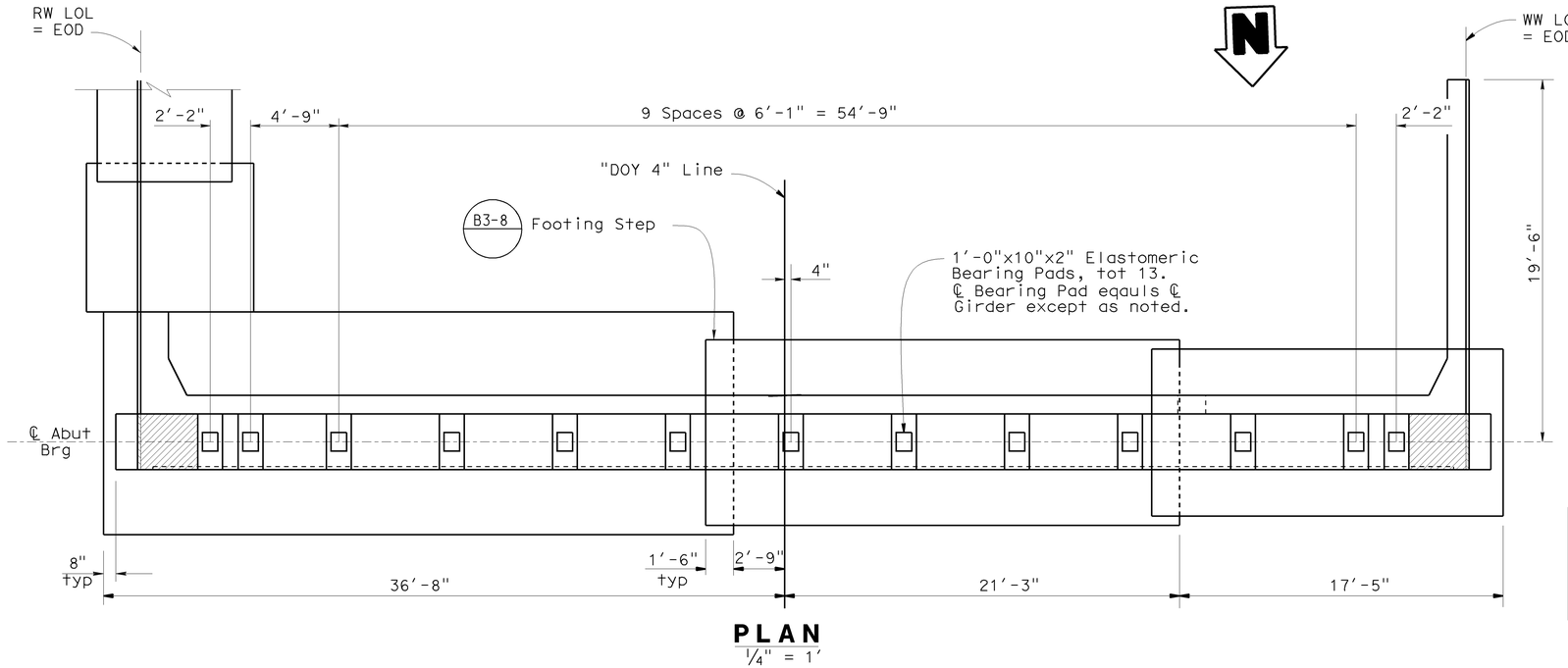

PLAN
1/4" = 1'

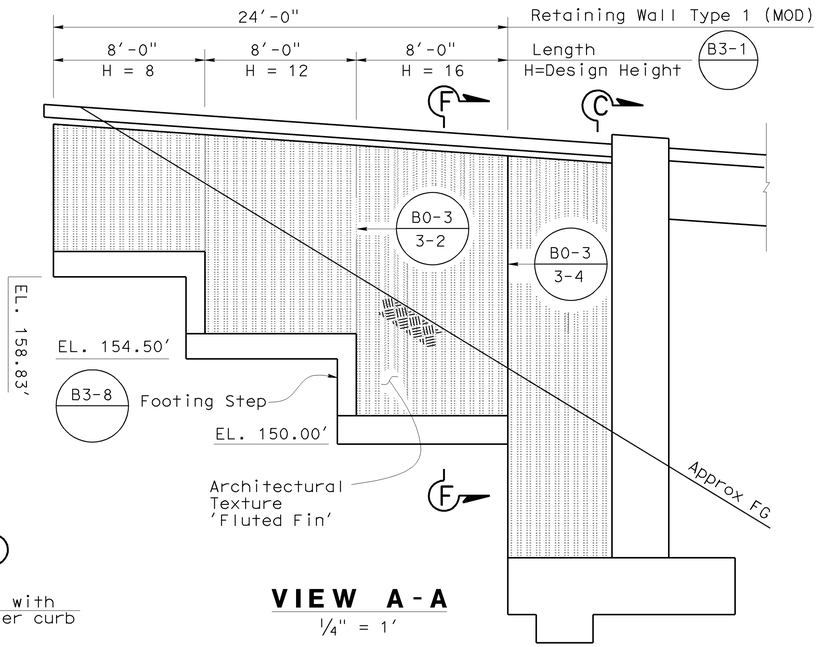

VIEW A-A
1/4" = 1'

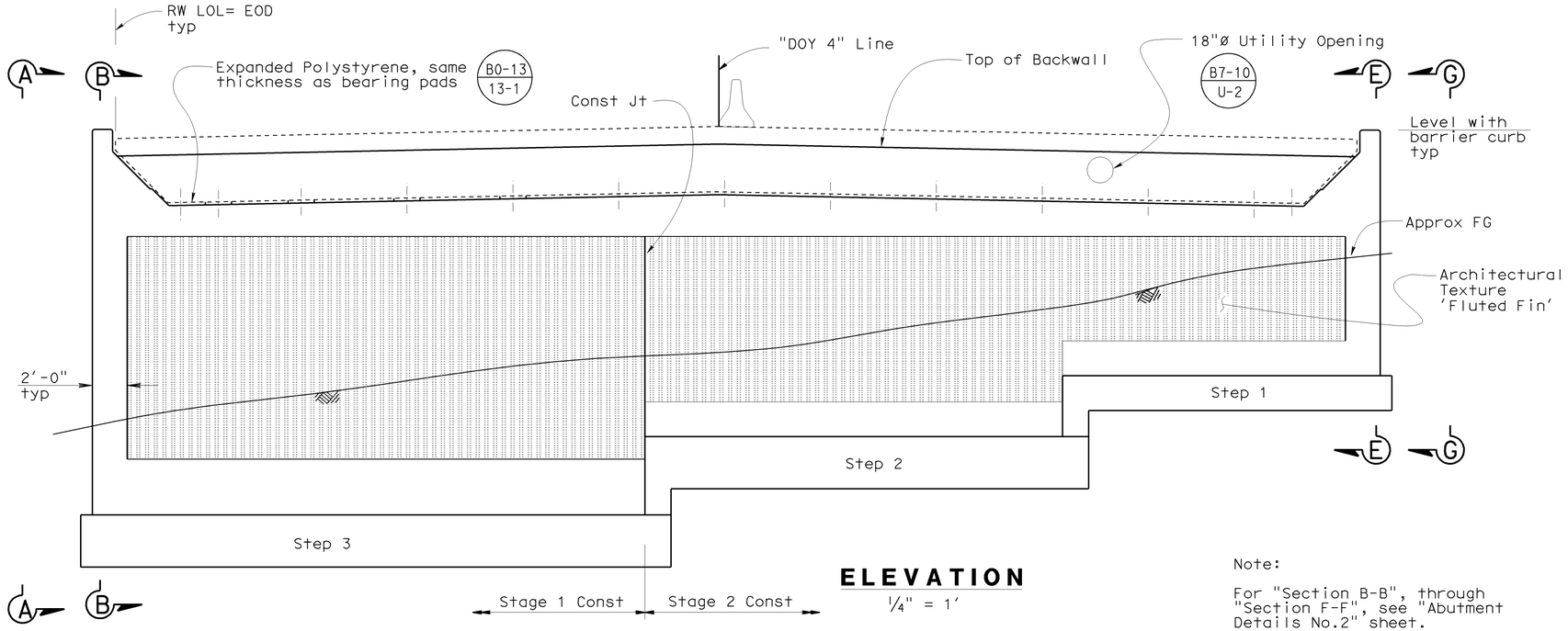

ELEVATION
1/4" = 1'

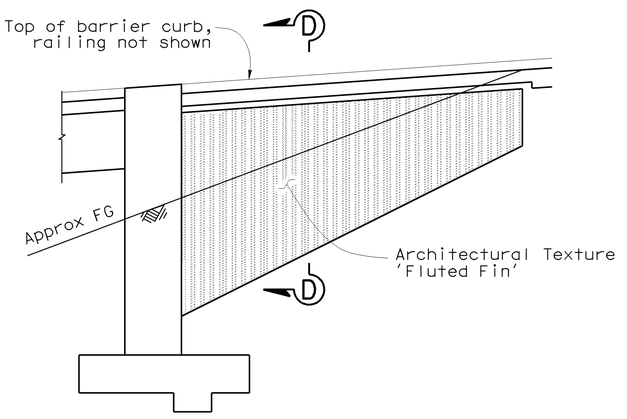

VIEW G-G
1/4" = 1'

Note:

For "Section B-B", through "Section F-F", see "Abutment Details No.2" sheet.

DESIGN	BY John E. Peterson	CHECKED Muthanna Omran	STATE OF CALIFORNIA DEPARTMENT OF TRANSPORTATION	DIVISION OF ENGINEERING SERVICES STRUCTURE DESIGN DESIGN BRANCH 16	BRIDGE NO. 34-0156
DETAILS	BY Liang Ma	CHECKED Muthanna Omran			POST MILE 6.81
QUANTITIES	BY Bunma Nou	CHECKED Paotsan Wang			

RUCKMAN AVENUE UC (REPLACE)
ABUTMENT 1 LAYOUT

STRUCTURES DESIGN DETAIL SHEET (ENGLISH) (REV. 10/25/05)

ORIGINAL SCALE IN INCHES FOR REDUCED PLANS 0 1 2 3

CU 04
EA 163731

DISREGARD PRINTS BEARING EARLIER REVISION DATES

REVISION DATES: 3-9-09 | 4-6-09 | 5-18-09 | 6-4-09

SHEET 5 OF 40

FILE => 34-0156-f_a01-1o01.dgn

USERNAME => rtrstrk DATE PLOTTED => 21-JUL-2009 TIME PLOTTED => 11:20

DIST	COUNTY	ROUTE	POST MILES TOTAL PROJECT	SHEET No	TOTAL SHEETS
04	SF	101,1	9.2/9.8, 6.8/7.1	316	567

Philip E Lutz 06-04-09
REGISTERED CIVIL ENGINEER DATE

7-20-09
PLANS APPROVAL DATE

Philip E. Lutz No. C55839 Exp. 12-31-10 CIVIL — REGISTERED PROFESSIONAL ENGINEER — STATE OF CALIFORNIA

The State of California or its officers or agents shall not be responsible for the accuracy or completeness of electronic copies of this plan sheet.

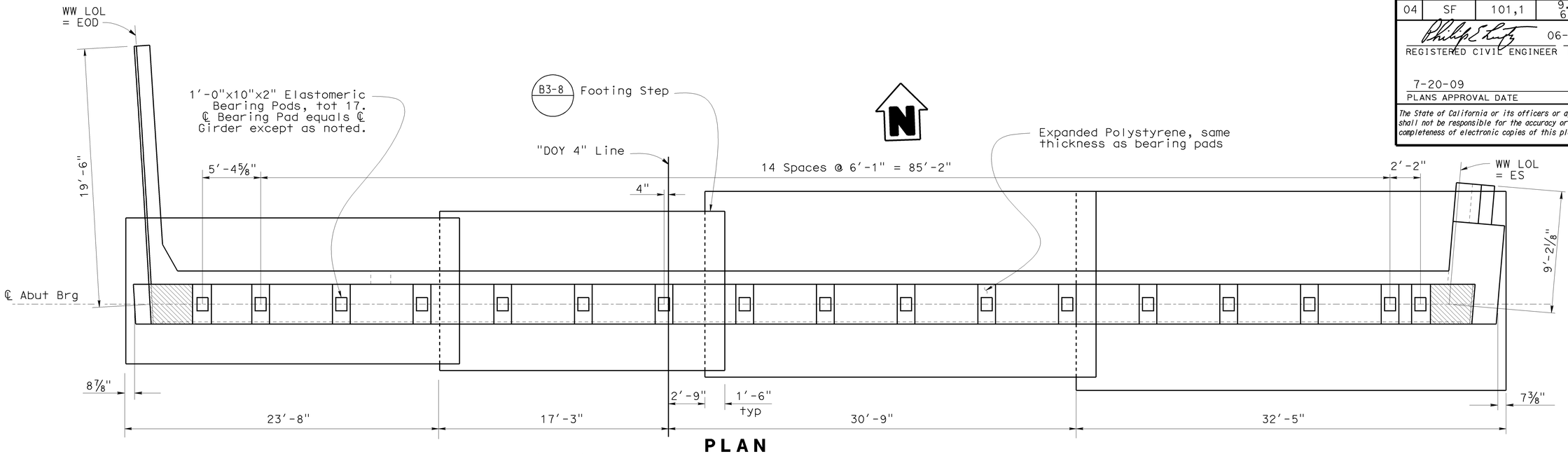

PLAN
1/4" = 1'

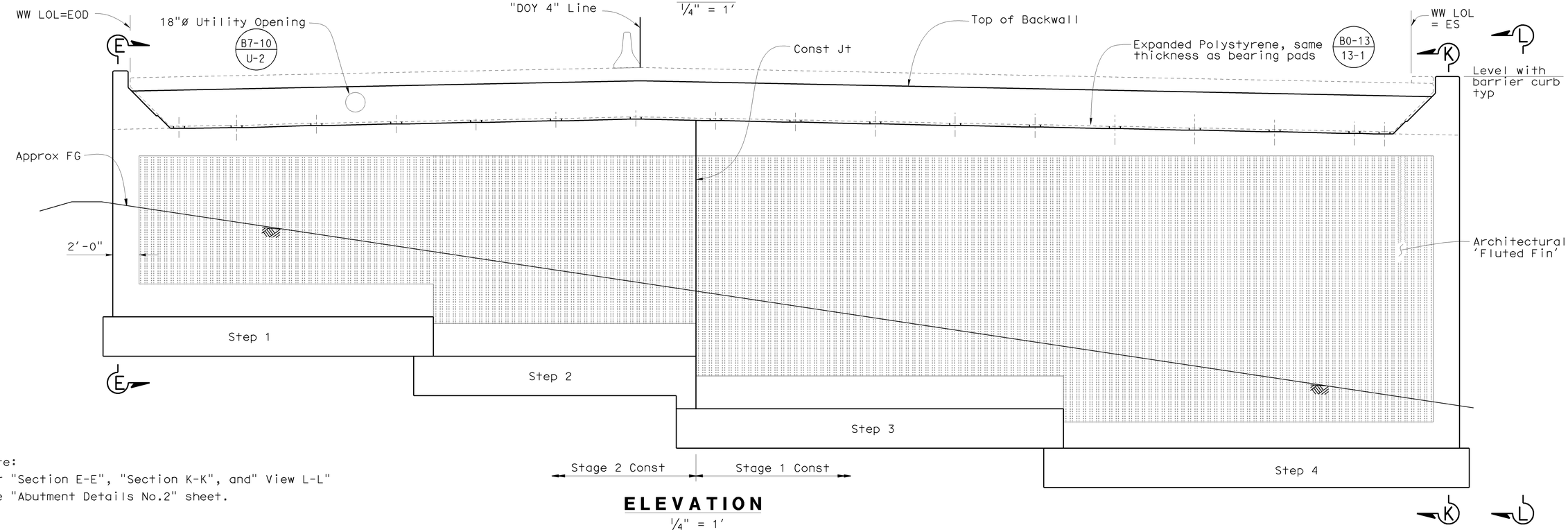

ELEVATION
1/4" = 1'

Note:
For "Section E-E", "Section K-K", and" View L-L"
see "Abutment Details No.2" sheet.

DESIGN	BY John E. Peterson	CHECKED Muthanna Omran	STATE OF CALIFORNIA DEPARTMENT OF TRANSPORTATION	DIVISION OF ENGINEERING SERVICES STRUCTURE DESIGN DESIGN BRANCH 16	BRIDGE NO. 34-0156 POST MILE 6.81
DETAILS	BY Liang Ma	CHECKED Muthanna Omran			
QUANTITIES	BY Bunma Nou	CHECKED Paotsan Wang			

RUCKMAN AVENUE UC (REPLACE)
ABUTMENT 6 LAYOUT

STRUCTURES DESIGN DETAIL SHEET (ENGLISH) (REV. 10/25/05)

ORIGINAL SCALE IN INCHES FOR REDUCED PLANS 0 1 2 3

CU 04
EA 163731

DISREGARD PRINTS BEARING EARLIER REVISION DATES →

REVISION DATES: 3-9-09 | 4-10-09 | 5-18-09 | 6-4-09

SHEET 6 OF 40

FILE => 34-0156-f_a06-1o01.dgn

USERNAME => ttistrk DATE PLOTTED => 21-JUL-2009 TIME PLOTTED => 11:20

DIST	COUNTY	ROUTE	POST MILES TOTAL PROJECT	SHEET No	TOTAL SHEETS
04	SF	101,1	9.2/9.8, 6.8/7.1	317	567

Philip E Lutz 06-04-09
REGISTERED CIVIL ENGINEER DATE

7-20-09
PLANS APPROVAL DATE

The State of California or its officers or agents shall not be responsible for the accuracy or completeness of electronic copies of this plan sheet.

REGISTERED PROFESSIONAL ENGINEER — Philip E. Lutz — No. C55839 — Exp. 12-31-10 — CIVIL — STATE OF CALIFORNIA

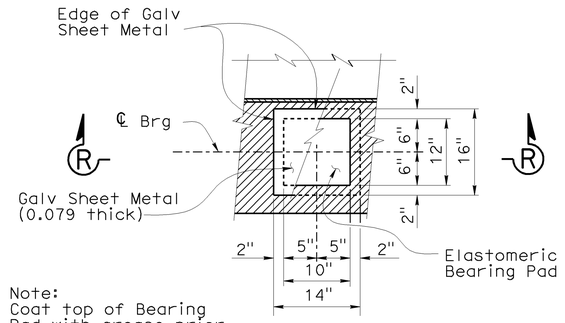

Note:
Coat top of Bearing Pad with grease prior to placing sheet metal.

PLAN

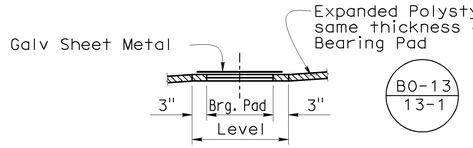

SECTION R-R

BEARING PAD DETAIL
No Scale

ABUTMENT DIMENSIONS TABLE

	ABUT 1 STEP			ABUT 6 STEP			
	1	2	3	1	2	3	4
A	2'-0"	3'-0"	3'-0"	3'-0"	3'-0"	3'-0"	3'-0"
C	2'-0"	3'-0"	3'-6"	3'-0"	3'-6"	4'-0"	5'-0"
D	5'-6"	6'-0"	7'-0"	6'-0"	7'-0"	8'-0"	10'-0"
E	2'-0"	3'-0"	3'-0"	3'-0"	3'-0"	3'-0"	3'-0"
F	1'-0"	1'-6"	1'-6"	1'-6"	1'-6"	1'-6"	1'-6"
W	9'-0"	10'-0"	12'-0"	11-0"	12'-0"	14'-0"	15'-0"
L	3'-0"	3'-6"	4'-0"	3'-6"	4'-0"	4'-6"	4'-3"
M	6'-0"	6'-0"	6'-0"	6'-0"	6'-0"	10'-6"	9'-6"
K	#8	#8	#9	#8	#9	#10	#11
N	*	10'-0"	10'-0"	10'-0"	10'-0"	15'-0"	14'-0"
P	*	#8	#8	#7	#8	#8	#8

Note:
Abutment steps are numbered left to right, looking stations ahead.

* Extend "N" to abutment seat, omit "P" bars.

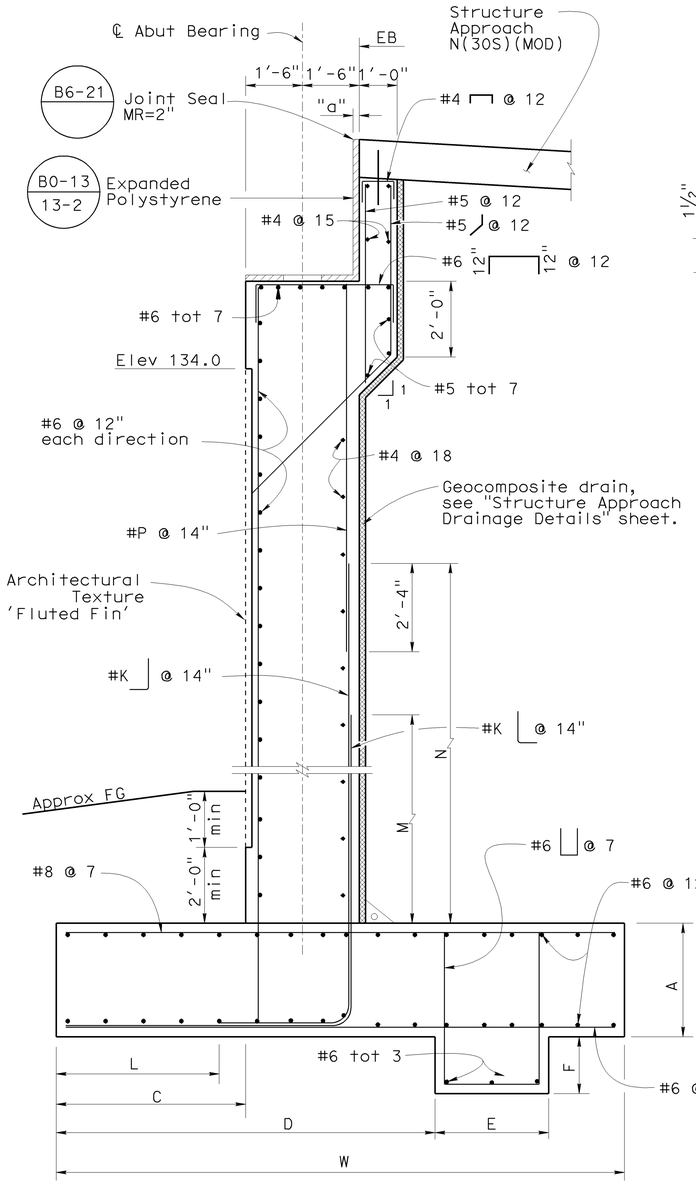

TYPICAL ABUTMENT SECTION
1/2" = 1'

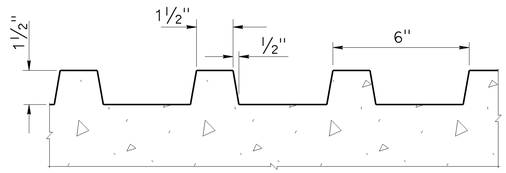

FLUTED FIN TEXTURE
No Scale

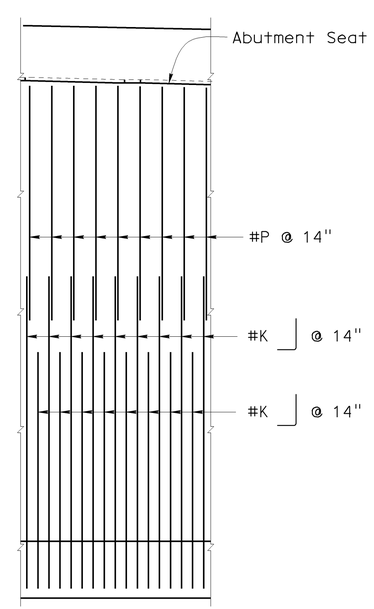

PARTIAL ELEVATION
1/4" = 1'

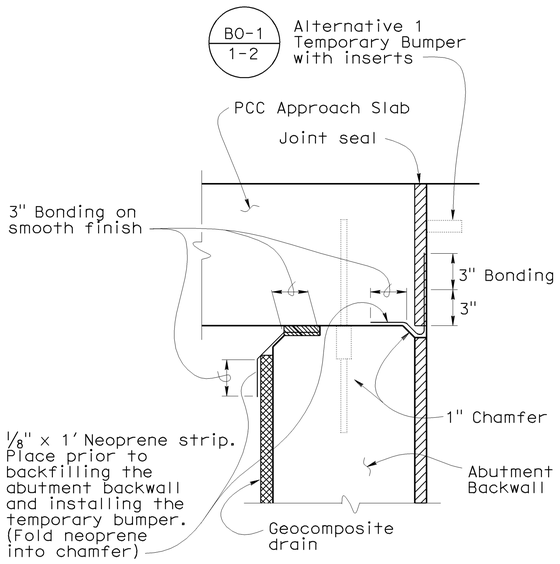

JOINT PROTECTION DETAIL
No Scale

Structure Excavation, Bridge (Naturally Occuring Asbestos)

Structure Excavation, (Type Z-2) (Aerially Deposited Lead)

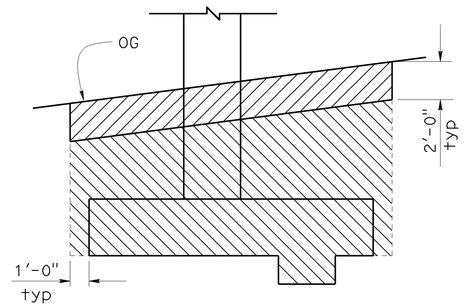

See Standard Plan A62C for additional limits of payment for excavation and backfill.

LIMITS OF EXCAVATION (TYPE Z-2)
No Scale

DESIGN	BY John E. Peterson	CHECKED Muthanna Omran	STATE OF CALIFORNIA DEPARTMENT OF TRANSPORTATION
DETAILS	BY Liang Ma	CHECKED Muthanna Omran	
QUANTITIES	BY Bunma Nou	CHECKED Paotsan Wang	

DIVISION OF ENGINEERING SERVICES STRUCTURE DESIGN
DESIGN BRANCH 16

CU 04
EA 163731

BRIDGE NO. 34-0156
POST MILE 6.81

RUCKMAN AVENUE UC (REPLACE)
ABUTMENT DETAILS No. 1

STRUCTURES DESIGN DETAIL SHEET (ENGLISH) (REV. 10/25/05)

ORIGINAL SCALE IN INCHES FOR REDUCED PLANS 0 1 2 3

DISREGARD PRINTS BEARING EARLIER REVISION DATES →

REVISION DATES: 3-13-09 | 4-16-09 | 5-18-09 | 6-8-09 | 7-11-09

SHEET 7 OF 40

FILE => 34-0156-f-a01dt01.dgn

USERNAME => tyatk DATE PLOTTED => 21-JUL-2009 TIME PLOTTED => 11:20

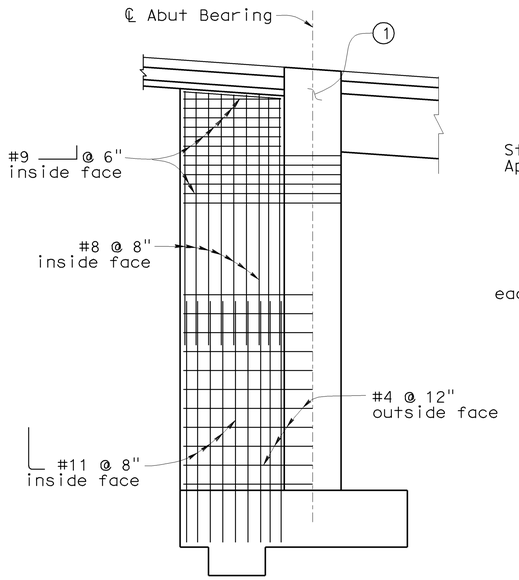

SECTION B-B

1/4" = 1'

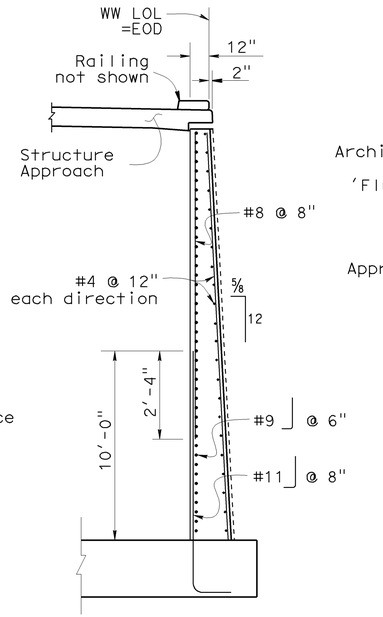

SECTION C-C

1/4" = 1'

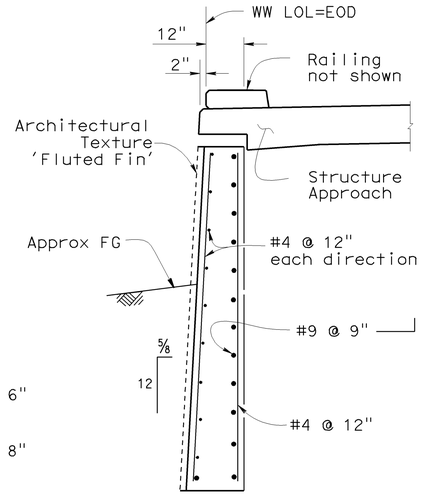

SECTION D-D

1/2" = 1'

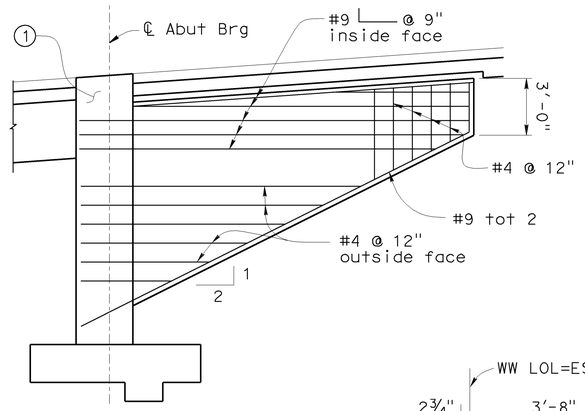

SECTION E-E

1/4" = 1'

(Abut 1 Left shown, Abut 6 Left similar)

Notes:

Geocomposite drain required but not shown at all section locations. See "Structure Approach Drainage Details" sheet for details

(1) See "Abutment Details No 3" sheet for shear key reinforcement details

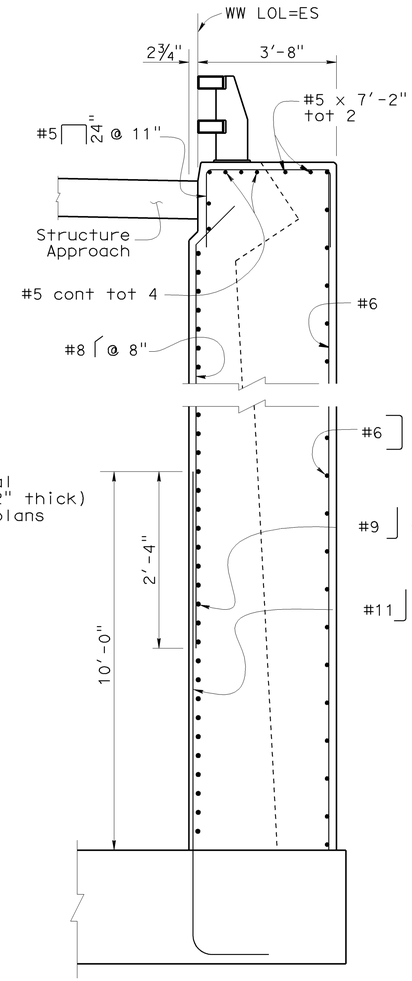

SECTION M-M

1/2" = 1'

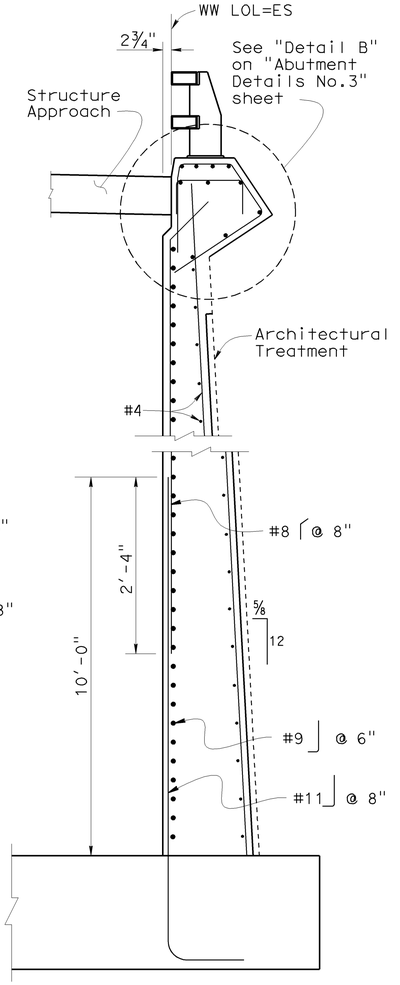

SECTION N-N

1/2" = 1'

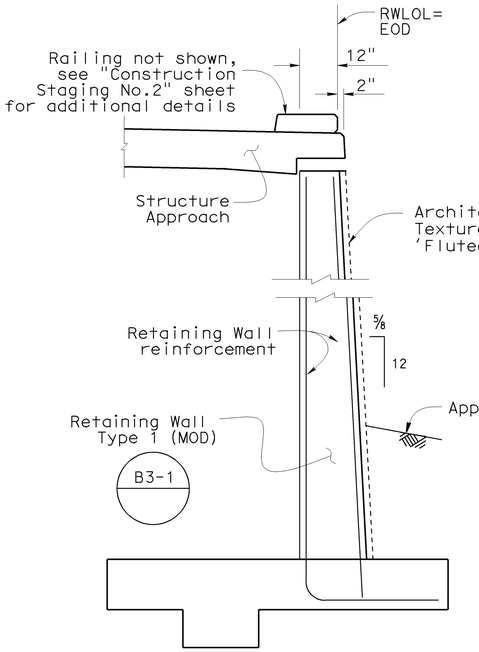

SECTION F-F

1/2" = 1'

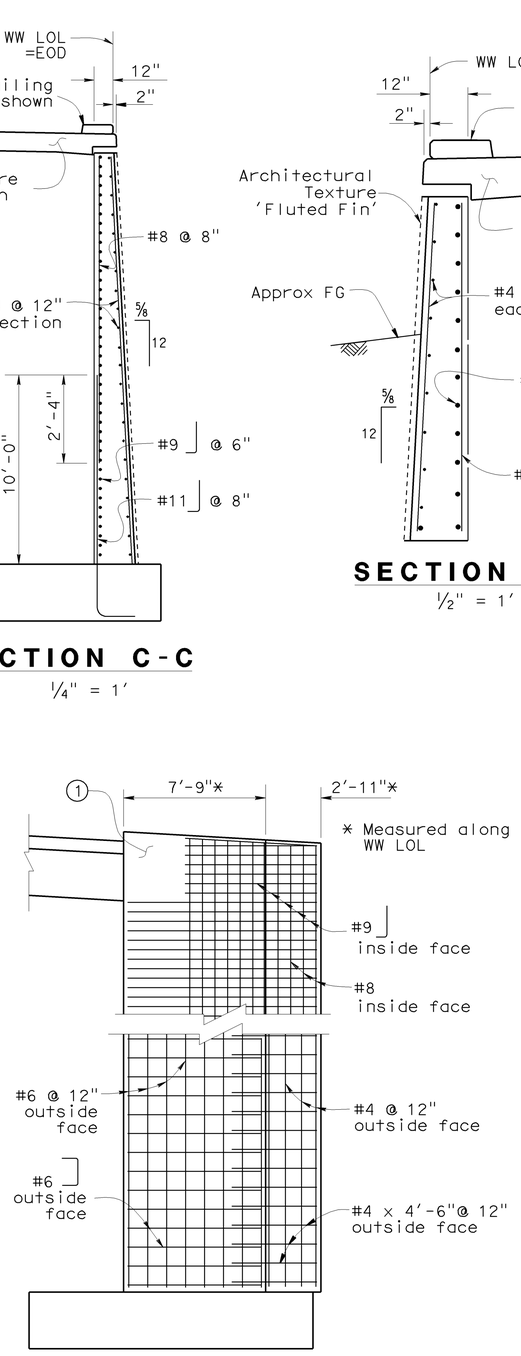

SECTION K-K

1/4" = 1'

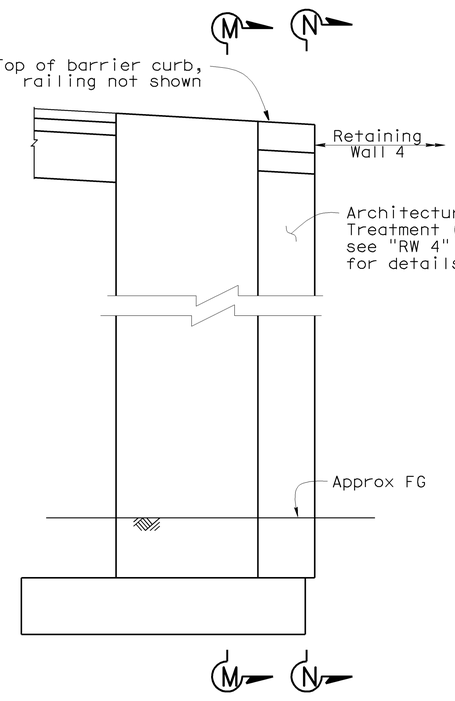

VIEW L-L

1/4" = 1'

DIST	COUNTY	ROUTE	POST MILES TOTAL PROJECT	SHEET No	TOTAL SHEETS
04	SF	101,1	9.2/9.8, 6.8/7.1	318	567

Philip E Lutz 06-04-09
REGISTERED CIVIL ENGINEER DATE

7-20-09
PLANS APPROVAL DATE

REGISTERED PROFESSIONAL ENGINEER — Philip E. Lutz — No. C55839 — Exp. 12-31-10 — CIVIL — STATE OF CALIFORNIA

The State of California or its officers or agents shall not be responsible for the accuracy or completeness of electronic copies of this plan sheet.

DESIGN	BY John E. Peterson	CHECKED Muthanna Omran	STATE OF CALIFORNIA DEPARTMENT OF TRANSPORTATION
DETAILS	BY Liang Ma	CHECKED Muthanna Omran	
QUANTITIES	BY Bunma Nou	CHECKED Paotsan Wang	

DIVISION OF ENGINEERING SERVICES STRUCTURE DESIGN
DESIGN BRANCH 16

CU 04
EA 163731

BRIDGE NO. 34-0156
POST MILE 6.81

RUCKMAN AVENUE UC (REPLACE)
ABUTMENT DETAILS No. 2

STRUCTURES DESIGN DETAIL SHEET (ENGLISH) (REV. 10/25/05)

ORIGINAL SCALE IN INCHES FOR REDUCED PLANS 0 1 2 3

DISREGARD PRINTS BEARING EARLIER REVISION DATES

REVISION DATES: 3-16-09 | 4-16-09 | 5-18-09 | 6-4-09

SHEET 8 OF 40

FILE => 34-0156-f-a01dt02.dgn

USERNAME => rtrstrk DATE PLOTTED => 21-JUL-2009 TIME PLOTTED => 11:20

DIST	COUNTY	ROUTE	POST MILES TOTAL PROJECT	SHEET No	TOTAL SHEETS
04	SF	101,1	9.2/9.8, 6.8/7.1	319	567

Philip E Lutz 06-04-09
REGISTERED CIVIL ENGINEER DATE

7-20-09
PLANS APPROVAL DATE

REGISTERED PROFESSIONAL ENGINEER — Philip E. Lutz — No. C55839 — Exp. 12-31-10 — CIVIL — STATE OF CALIFORNIA

The State of California or its officers or agents shall not be responsible for the accuracy or completeness of electronic copies of this plan sheet.

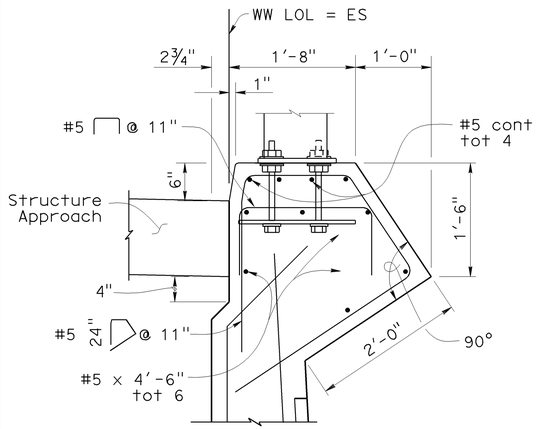

DETAIL "B"
1 " = 1'

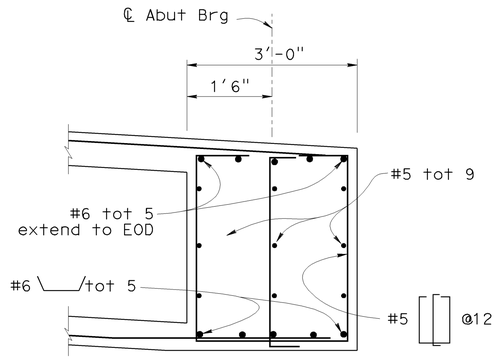

END DIAPHRAGM
¾" = 1'

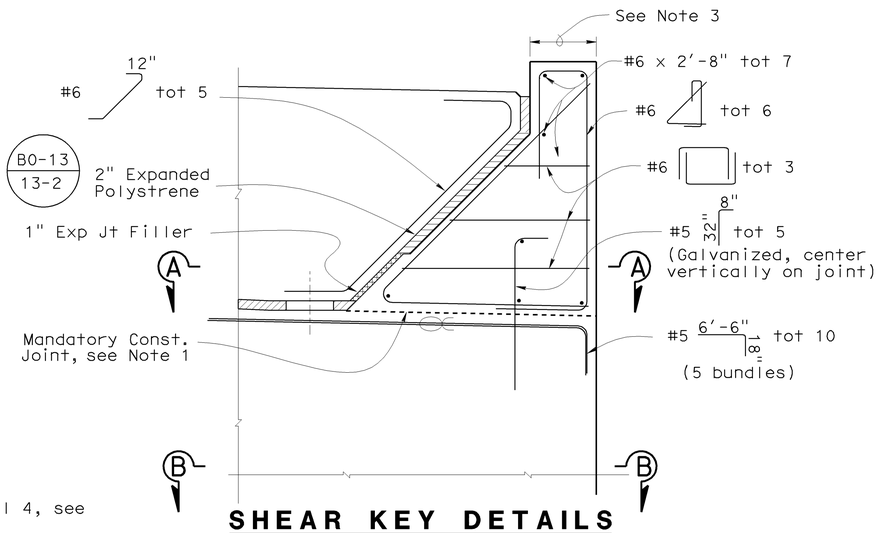

SHEAR KEY DETAILS
¾" = 1'

Notes:
1. Joint surface to be smooth finished and lined with 15 pound construction paper. Discontinue construction paper 2" from exterior faces.
2. Some wall reinforcement not shown. See "Abutment Details No.2" sheet for wall reinforcement details and for "Detail B" location.
3. 1'-2" except Abut 6 right = 1-10" measured normal to EOD

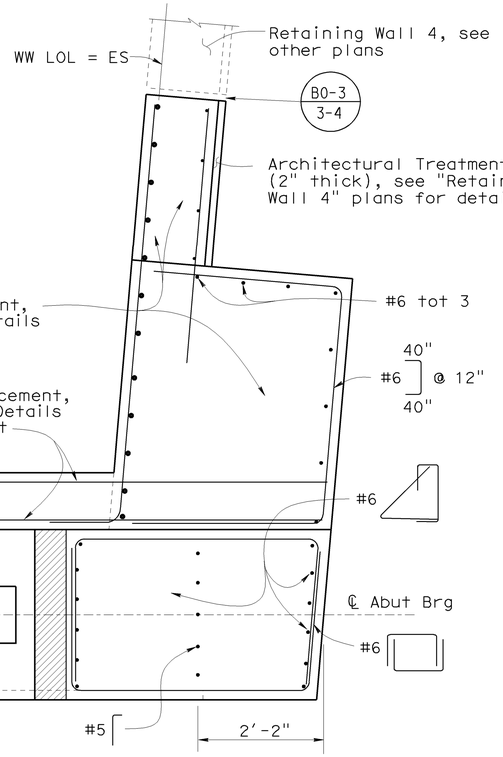

ABUTMENT 1 AND ABUTMENT 6 LEFT

ABUTMENT 6 RIGHT

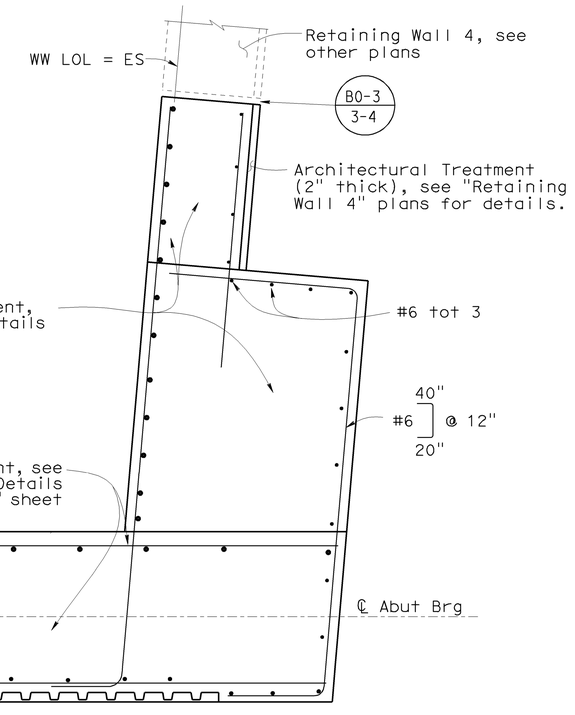

ABUTMENT 1 AND ABUTMENT 6 LEFT

ABUTMENT 6 RIGHT

SECTION A-A
¾" = 1'
(typical from seat to top of backwall)

SECTION B-B
¾" = 1'

DESIGN	BY John E. Peterson	CHECKED Muthanna Omran	STATE OF CALIFORNIA DEPARTMENT OF TRANSPORTATION	DIVISION OF ENGINEERING SERVICES STRUCTURE DESIGN DESIGN BRANCH 16	BRIDGE NO. 34-0156 / POST MILE 6.81
DETAILS	BY Liang Ma	CHECKED Muthanna Omran			
QUANTITIES	BY Bunma Nou	CHECKED Paotsan Wang			

RUCKMAN AVENUE UC (REPLACE)
ABUTMENT DETAILS No. 3

STRUCTURES DESIGN DETAIL SHEET (ENGLISH) (REV. 10/25/05)

ORIGINAL SCALE IN INCHES FOR REDUCED PLANS 0 1 2 3

CU 04
EA 163731

DISREGARD PRINTS BEARING EARLIER REVISION DATES →

REVISION DATES: 3-10-09 | 5-18-09 | 6-4-09

SHEET 9 OF 40

FILE => 34-0156-f-a01dt03.dgn

USERNAME = frstrk DATE PLOTTED => 21-JUL-2009 TIME PLOTTED => 11:20

DIST	COUNTY	ROUTE	POST MILES TOTAL PROJECT	SHEET No	TOTAL SHEETS
04	SF	101,1	9.2/9.8, 6.8/7.1	320	567

Philip E Lutz 06-04-09
REGISTERED CIVIL ENGINEER DATE

7-20-09
PLANS APPROVAL DATE

The State of California or its officers or agents shall not be responsible for the accuracy or completeness of electronic copies of this plan sheet.

REGISTERED PROFESSIONAL ENGINEER — Philip E. Lutz — No. C55839 — Exp. 12-31-10 — CIVIL — STATE OF CALIFORNIA

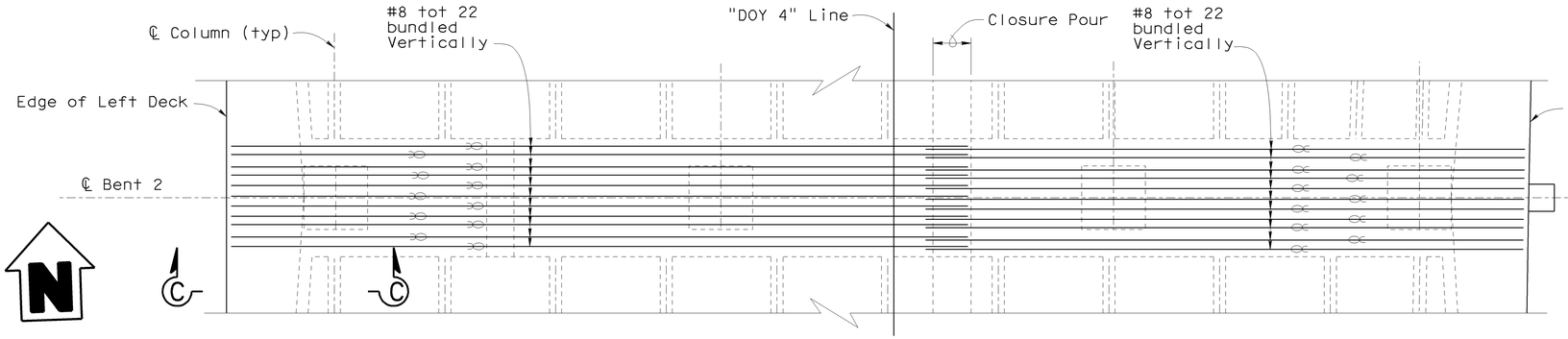

CAP TOP REINFORCEMENT

1/4" = 1'

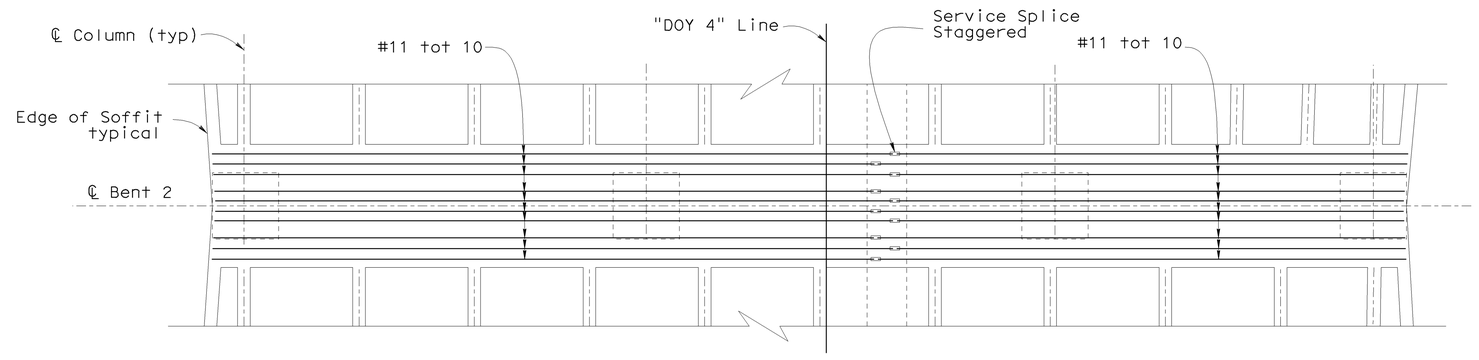

CAP BOTTOM REINFORCEMENT

1/4" = 1'

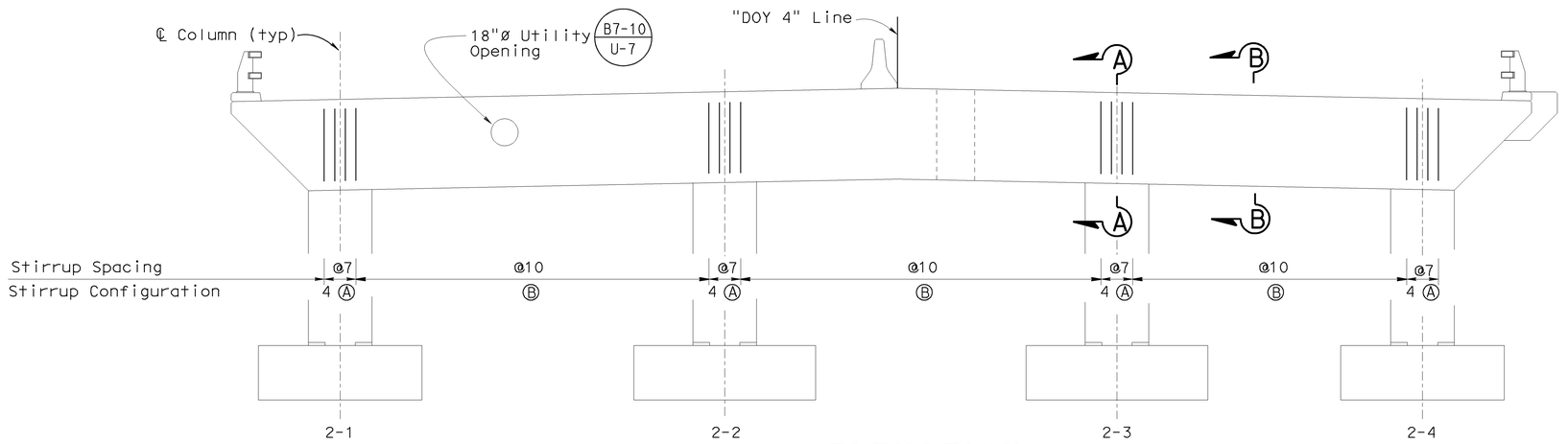

ELEVATION

1/4" = 1'

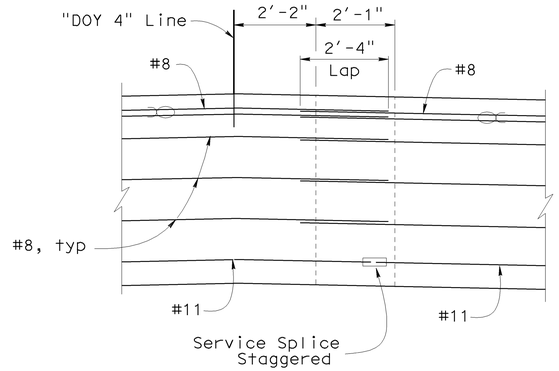

CLOSURE POUR DETAILS

1/2" = 1'

Notes:

1. For "Section A-A", "Section B-B" and "Section C-C", see "Bent Cap Details" sheet.
2. Reinforcement extending across the closure pour may be bent as necessary to clear the existing structure during Stage 1 construction.
3. 2-1 denotes Bent 2-Column 1, typical

STIRRUP CONFIGURATION

Type

Ⓐ #6

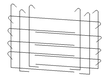

Ⓑ #6

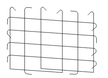

DESIGN	BY John E. Peterson	CHECKED Alireza Yazdani	STATE OF CALIFORNIA DEPARTMENT OF TRANSPORTATION	DIVISION OF ENGINEERING SERVICES STRUCTURE DESIGN DESIGN BRANCH 16	BRIDGE NO. 34-0156
DETAILS	BY Liang Ma	CHECKED Alireza Yazdani			POST MILE 6.81
QUANTITIES	BY Bunma Nou	CHECKED Paotsan Wang			

RUCKMAN AVENUE UC (REPLACE)
BENT CAP 2 DETAILS

STRUCTURES DESIGN DETAIL SHEET (ENGLISH) (REV. 10/25/05)

ORIGINAL SCALE IN INCHES FOR REDUCED PLANS 0 1 2 3

CU 04
EA 163731

DISREGARD PRINTS BEARING EARLIER REVISION DATES →

REVISION DATES: 2-13-09, 2-27-09, 3-04-09, 4-06-09, 5-18-09, 6-4-09

SHEET 10 OF 40

FILE => 34-0156-h-b01dt02.dgn

USERNAME => rtstrk DATE PLOTTED => 21-JUL-2009 TIME PLOTTED => 11:20

DIST	COUNTY	ROUTE	POST MILES TOTAL PROJECT	SHEET No	TOTAL SHEETS
04	SF	101,1	9.2/9.8, 6.8/7.1	321	567

Philip E Lutz 06-04-09
REGISTERED CIVIL ENGINEER DATE

7-20-09
PLANS APPROVAL DATE

Philip E. Lutz No. C55839 Exp. 12-31-10 CIVIL — REGISTERED PROFESSIONAL ENGINEER — STATE OF CALIFORNIA

The State of California or its officers or agents shall not be responsible for the accuracy or completeness of electronic copies of this plan sheet.

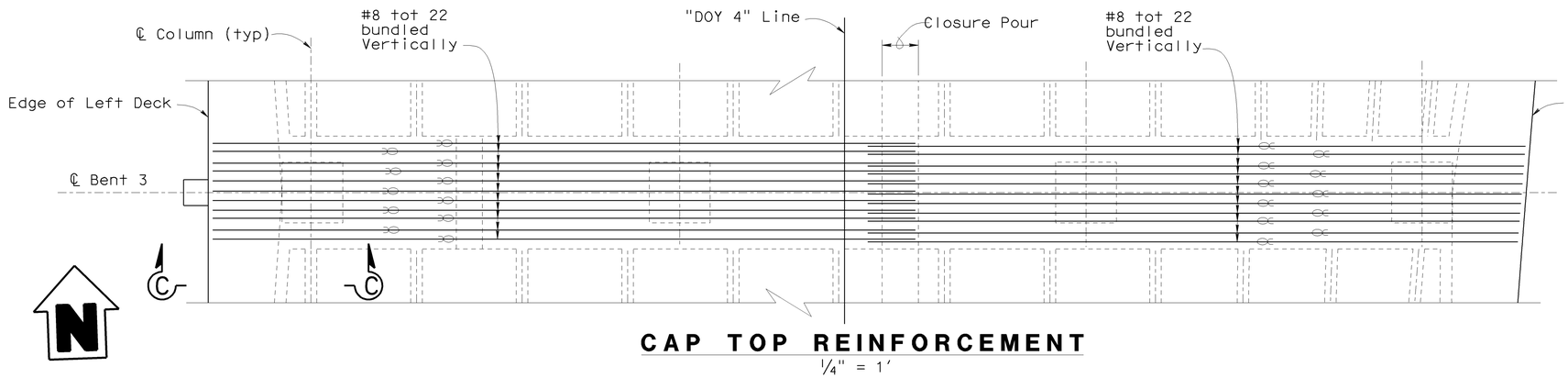

CAP TOP REINFORCEMENT

1/4" = 1'

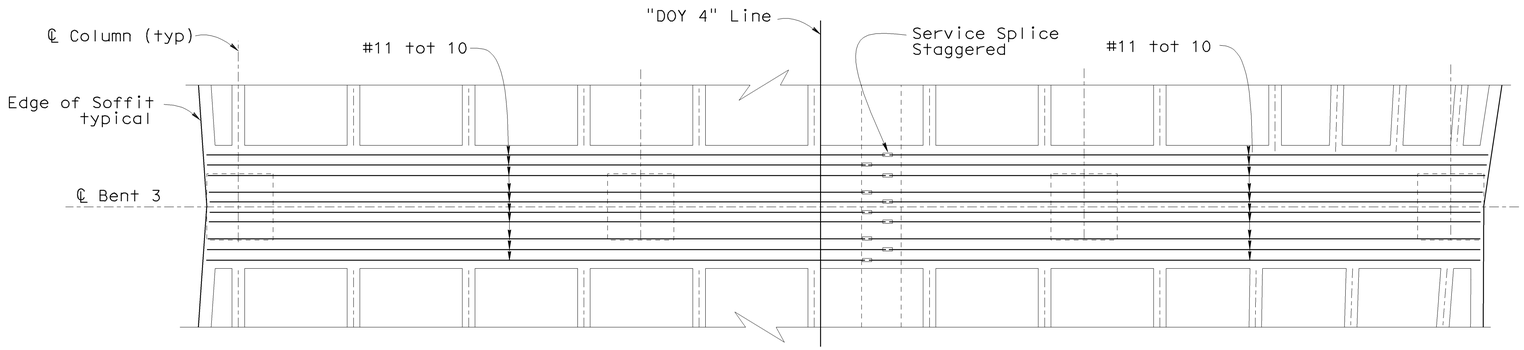

CAP BOTTOM REINFORCEMENT

1/4" = 1'

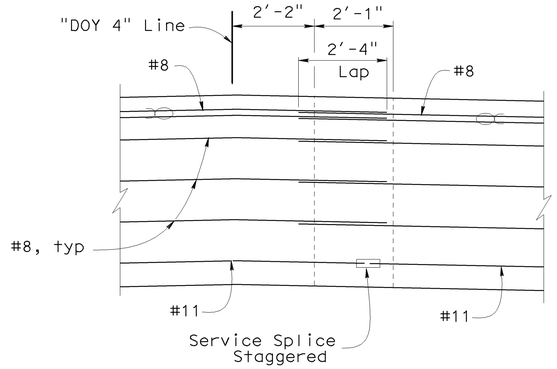

CLOSURE POUR DETAILS

1/2" = 1'

Notes:

1. For "Section A-A", "Section B-B" and "Section C-C", see "Bent Cap Details" sheet.
2. Reinforcement extending across the closure pour may be bent as necessary to clear the existing structure during Stage 1 construction.
3. 3-1 denotes Bent 3-Column1, typical

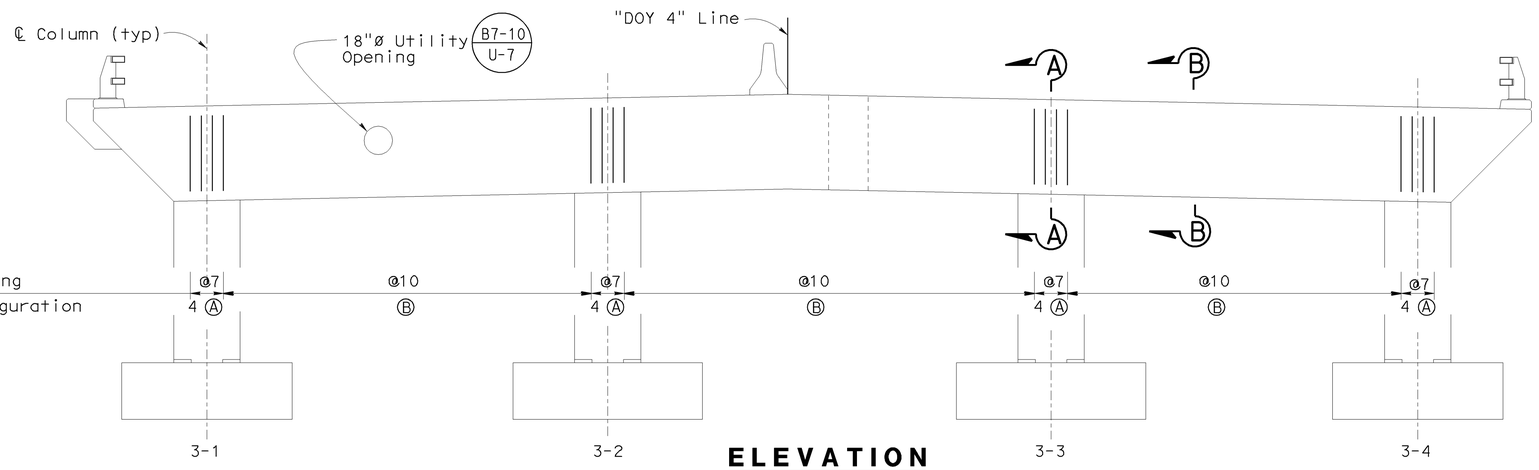

ELEVATION

1/4" = 1'

STIRRUP CONFIGURATION

Type

Ⓐ #6

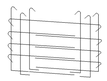

Ⓑ #6

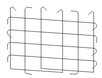

DESIGN	BY John E. Peterson	CHECKED Alireza Yazdani	STATE OF CALIFORNIA DEPARTMENT OF TRANSPORTATION	DIVISION OF ENGINEERING SERVICES STRUCTURE DESIGN DESIGN BRANCH 16	BRIDGE NO. 34-0156
DETAILS	BY Liang Ma	CHECKED Alireza Yazdani			POST MILE 6.81
QUANTITIES	BY Bunma Nou	CHECKED Paotsan Wang			

RUCKMAN AVENUE UC (REPLACE)
BENT CAP 3 DETAILS

STRUCTURES DESIGN DETAIL SHEET (ENGLISH) (REV. 10/25/05)

ORIGINAL SCALE IN INCHES FOR REDUCED PLANS 0 1 2 3

CU 04
EA 163731

DISREGARD PRINTS BEARING EARLIER REVISION DATES →

REVISION DATES: 2-06-09, 2-26-09, 3-04-09, 4-06-09, 5-18-09, 6-4-09

SHEET 11 OF 40

FILE => 34-0156-h-b01dt03.dgn

USERNAME => rtstrk DATE PLOTTED => 21-JUL-2009 TIME PLOTTED => 11:20

DIST	COUNTY	ROUTE	POST MILES TOTAL PROJECT	SHEET No	TOTAL SHEETS
04	SF	101,1	9.2/9.8, 6.8/7.1	322	567

Philip E Lutz 06-04-09
REGISTERED CIVIL ENGINEER DATE

7-20-09
PLANS APPROVAL DATE

Philip E. Lutz No. C55839 Exp. 12-31-10 CIVIL — REGISTERED PROFESSIONAL ENGINEER — STATE OF CALIFORNIA

The State of California or its officers or agents shall not be responsible for the accuracy or completeness of electronic copies of this plan sheet.

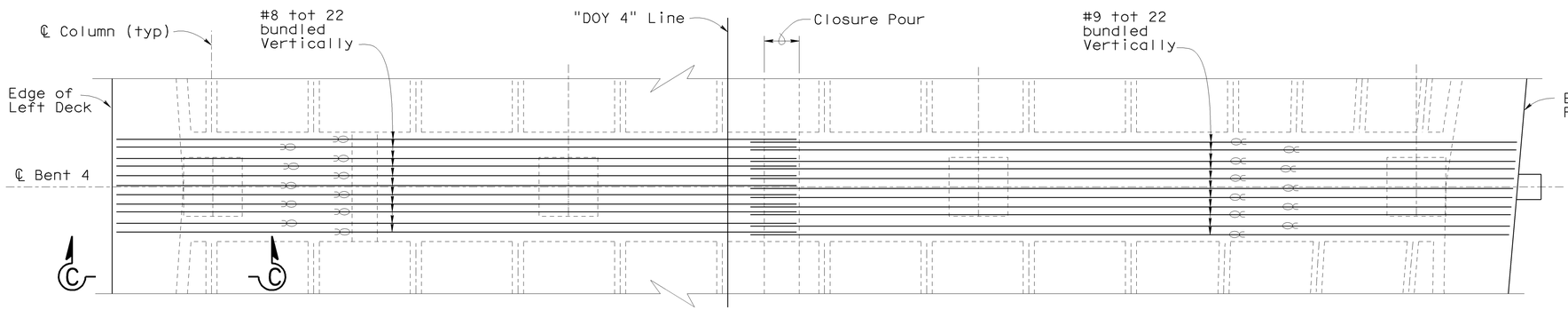

CAP TOP REINFORCEMENT
1/4" = 1'

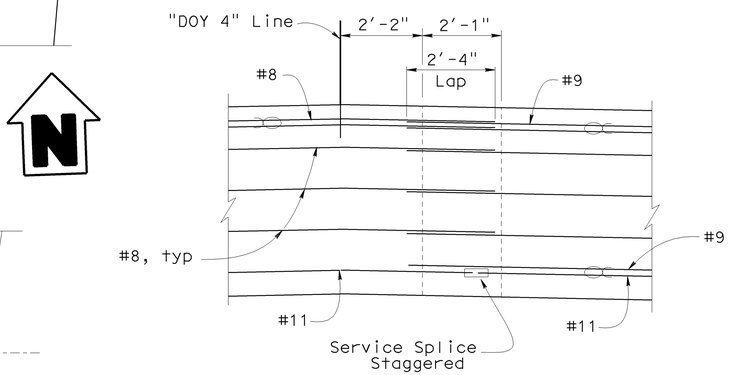

CLOSURE POUR DETAILS
1/2" = 1'

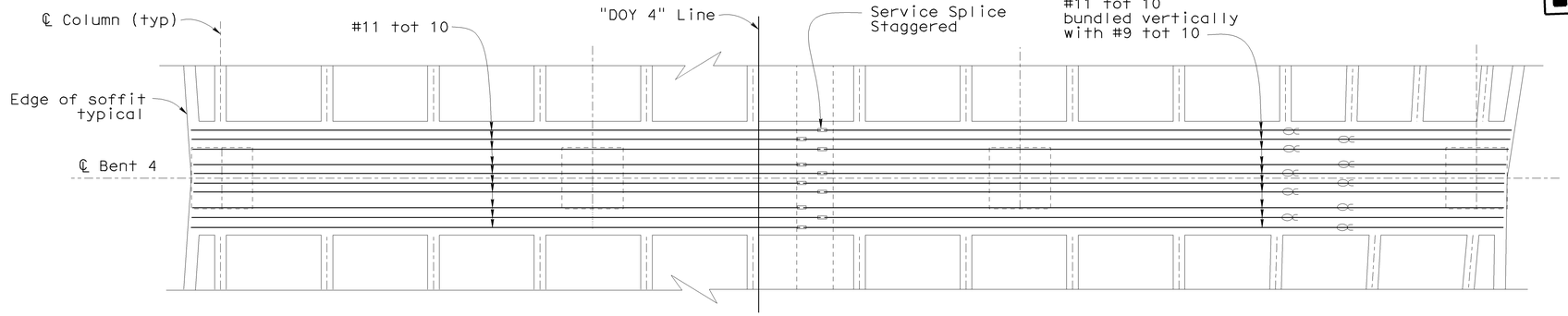

CAP BOTTOM REINFORCEMENT
1/4" = 1'

Notes:

1. For "Section A-A", "Section B-B" and "Section C-C", see "Bent Cap Details" sheet.
2. Reinforcement extending across the closure pour may be bent as necessary to clear the existing structure during Stage 1 construction.
3. 4-1 denotes Bent 4-Column1, typical

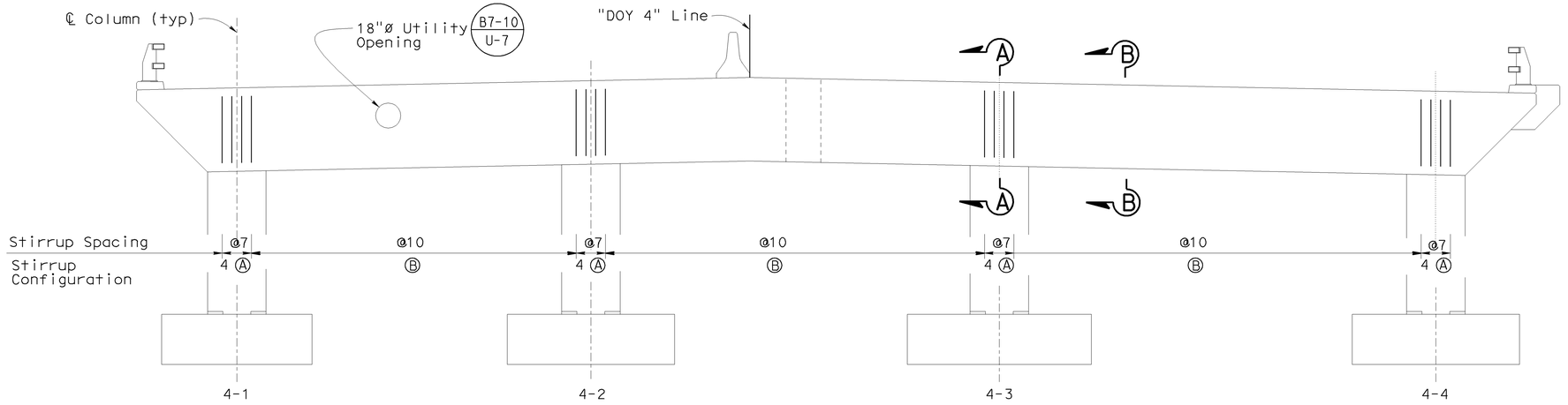

ELEVATION
1/4" = 1'

STIRRUP CONFIGURATION

Type

Ⓐ #6

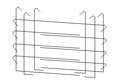

Ⓑ #6

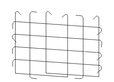

DESIGN	BY John E. Peterson	CHECKED Alireza Yazdani	STATE OF CALIFORNIA DEPARTMENT OF TRANSPORTATION	DIVISION OF ENGINEERING SERVICES STRUCTURE DESIGN DESIGN BRANCH 16	BRIDGE NO. 34-0156	RUCKMAN AVENUE UC (REPLACE)	
DETAILS	BY Liang Ma	CHECKED Alireza Yazdani			POST MILE 6.81	BENT CAP 4 DETAILS	
QUANTITIES	BY Bunma Nou	CHECKED Paotsan Wang					

STRUCTURES DESIGN DETAIL SHEET (ENGLISH) (REV. 10/25/05)

ORIGINAL SCALE IN INCHES FOR REDUCED PLANS 0 1 2 3

CU 04
EA 163731

DISREGARD PRINTS BEARING EARLIER REVISION DATES →

REVISION DATES: 2-10-09 | 3-2-09 | 3-6-09 | 4-3-09 | 5-18-09 | 6-4-09

SHEET 12 OF 40

FILE => 34-0156-h-b01dt04.dgn

USERNAME => ttrshtk DATE PLOTTED => 21-JUL-2009 TIME PLOTTED => 11:21

DIST	COUNTY	ROUTE	POST MILES TOTAL PROJECT	SHEET No	TOTAL SHEETS
04	SF	101,1	9.2/9.8, 6.8/7.1	323	567

Philip E Lutz 06-04-09
REGISTERED CIVIL ENGINEER DATE

7-20-09
PLANS APPROVAL DATE

The State of California or its officers or agents shall not be responsible for the accuracy or completeness of electronic copies of this plan sheet.

REGISTERED PROFESSIONAL ENGINEER — Philip E. Lutz — No. C55839 — Exp. 12-31-10 — CIVIL — STATE OF CALIFORNIA

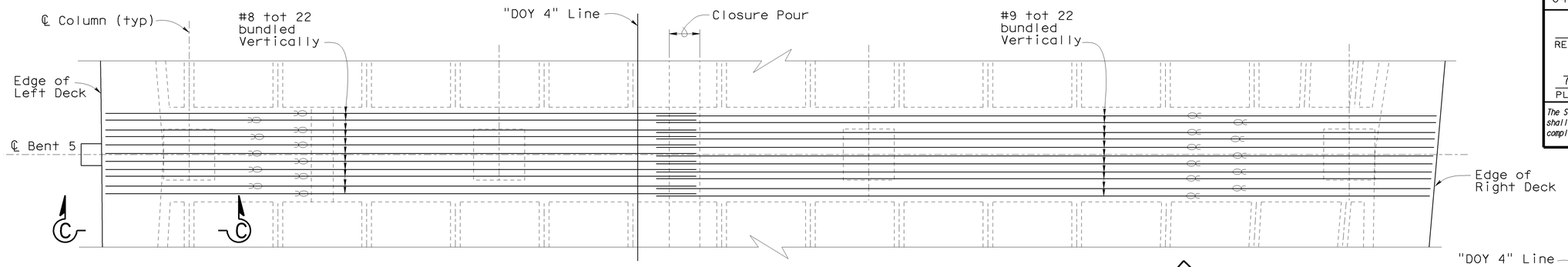

CAP TOP REINFORCEMENT

1/4" = 1'

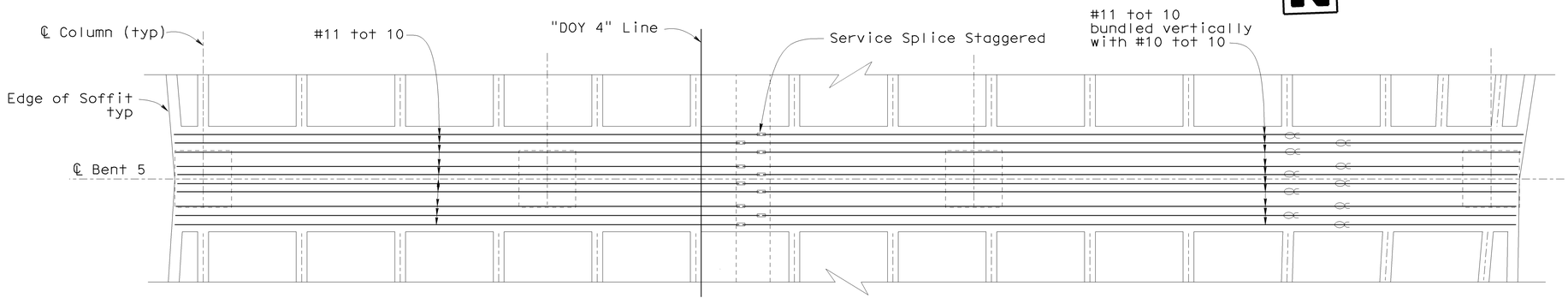

CAP BOTTOM REINFORCEMENT

1/4" = 1'

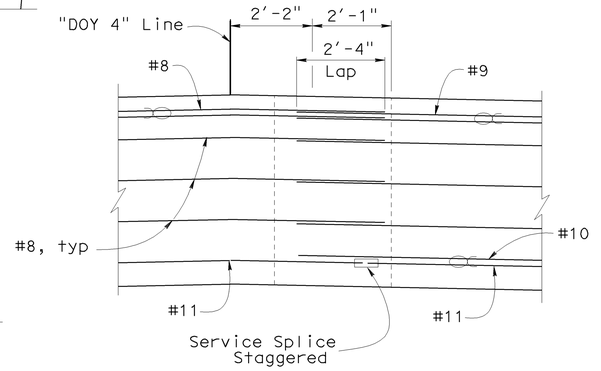

CLOSURE POUR DETAILS

1/2" = 1'

Notes:

1. For "Section A-A", "Section B-B" and "Section C-C", see "Bent Cap Details" sheet.
2. Reinforcement extending across the closure pour may be bent as necessary to clear the existing structure during Stage 1 construction.
3. 5-1 denotes Bent 5-Column1, typical

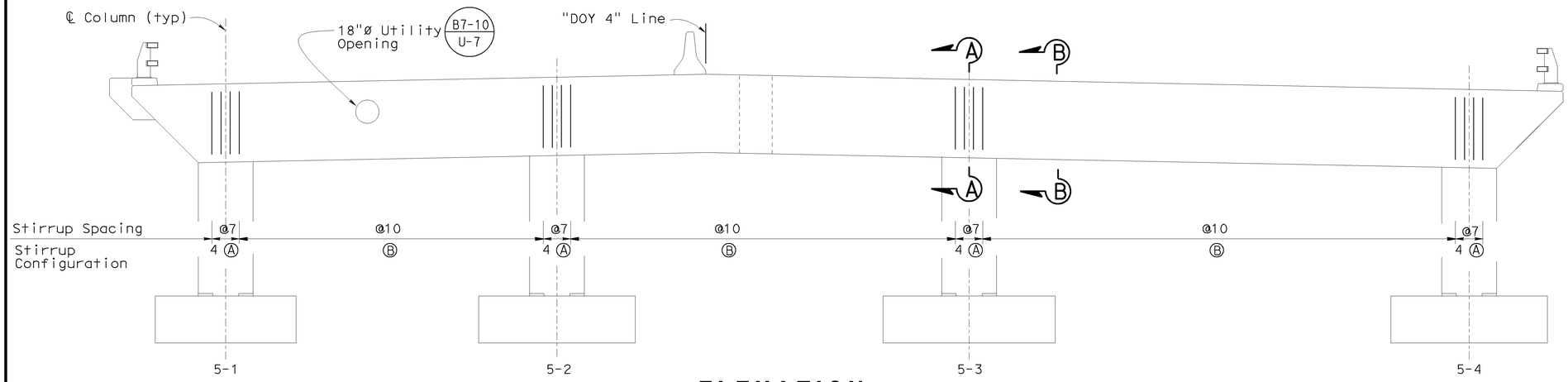

ELEVATION

1/4" = 1'

STIRRUP CONFIGURATION

Type

Ⓐ #6

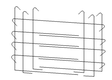

Ⓑ #6

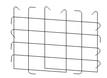

DESIGN	BY John E. Peterson	CHECKED Alireza Yazdani	STATE OF CALIFORNIA DEPARTMENT OF TRANSPORTATION	DIVISION OF ENGINEERING SERVICES STRUCTURE DESIGN DESIGN BRANCH 16	BRIDGE NO. 34-0156
DETAILS	BY Liang Ma	CHECKED Alireza Yazdani			POST MILE 6.81
QUANTITIES	BY Bunma Nou	CHECKED Paotsan Wang			

RUCKMAN AVENUE UC (REPLACE)
BENT CAP 5 DETAILS

STRUCTURES DESIGN DETAIL SHEET (ENGLISH) (REV. 10/25/05)

ORIGINAL SCALE IN INCHES FOR REDUCED PLANS 0 1 2 3

CU 04
EA 163731

DISREGARD PRINTS BEARING EARLIER REVISION DATES →

REVISION DATES: 1-28-09 | 3-2-09 | 3-6-09 | 4-7-09 | 5-18-09 | 6-4-09

SHEET 13 OF 40

FILE => 34-0156-h-b01dt05.dgn

USERNAME => ttistpk DATE PLOTTED => 21-JUL-2009 TIME PLOTTED => 11:21

DIST	COUNTY	ROUTE	POST MILES TOTAL PROJECT	SHEET No	TOTAL SHEETS
04	SF	101,1	9.2/9.8, 6.8/7.1	324	567

Philip E Lutz 06-04-09
REGISTERED CIVIL ENGINEER DATE

7-20-09
PLANS APPROVAL DATE

Philip E. Lutz No. C55839 Exp. 12-31-10 CIVIL
REGISTERED PROFESSIONAL ENGINEER STATE OF CALIFORNIA

The State of California or its officers or agents shall not be responsible for the accuracy or completeness of electronic copies of this plan sheet.

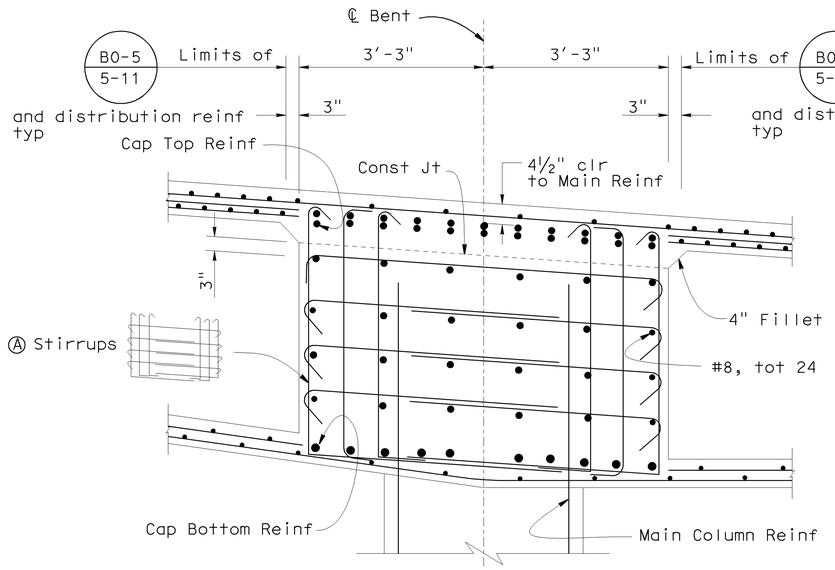

SECTION A-A
¾" = 1'

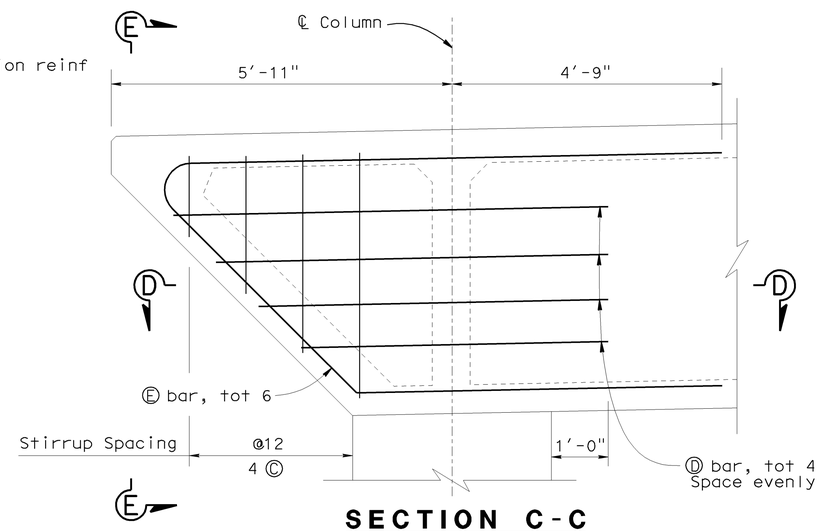

SECTION C-C
¾" = 1'
(Other Reinforcement not shown)

STIRRUP CONFIGURATION

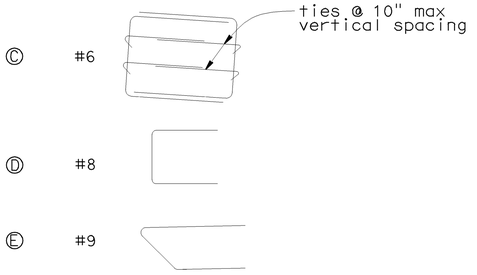

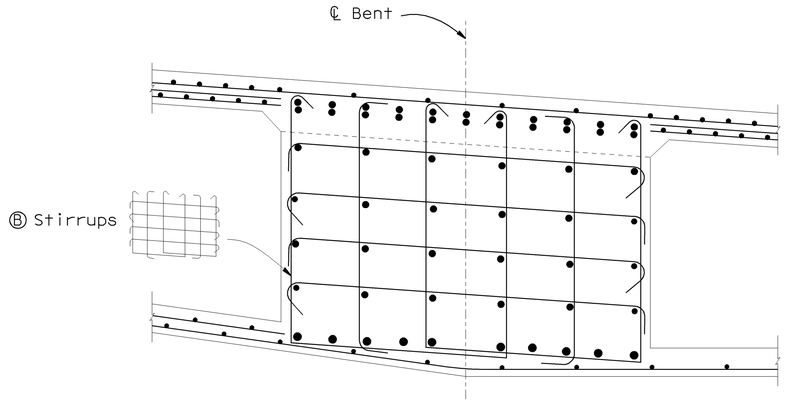

Note:
See Section A-A for details

SECTION B-B
¾" = 1'

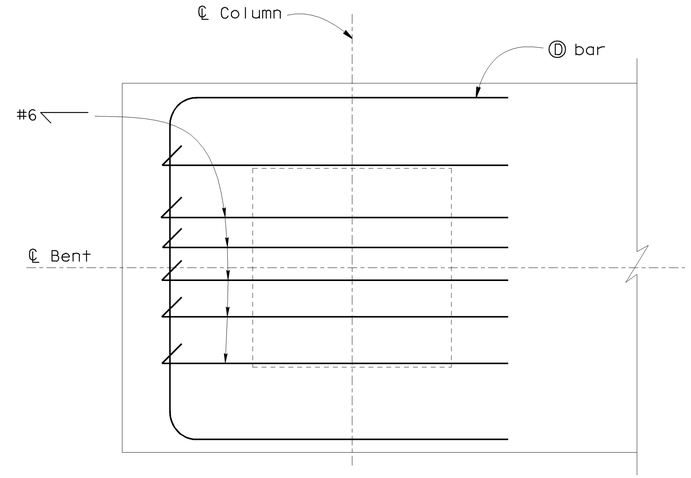

SECTION D-D
¾" = 1'
(Other Reinforcement not shown)

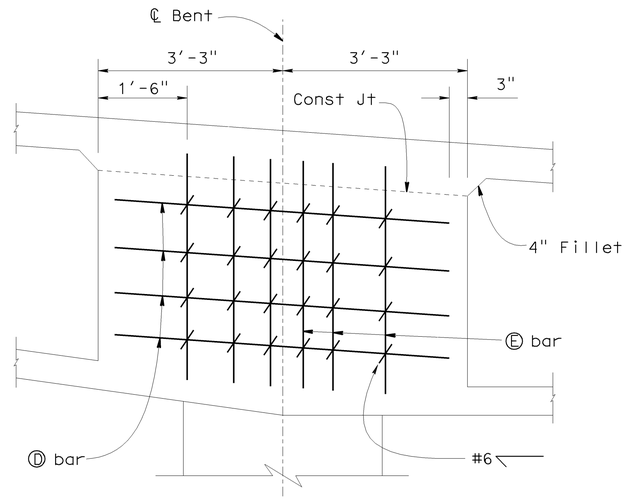

SECTION E-E
¾" = 1'
(Other Reinforcement not shown)

DESIGN	BY John E. Peterson	CHECKED Alireza Yazdani	STATE OF CALIFORNIA DEPARTMENT OF TRANSPORTATION	DIVISION OF ENGINEERING SERVICES STRUCTURE DESIGN DESIGN BRANCH 16	BRIDGE NO. 34-0156
DETAILS	BY Liang Ma	CHECKED Alireza Yazdani			POST MILE 6.81
QUANTITIES	BY Bunma Nou	CHECKED Paotsan Wang			

RUCKMAN AVENUE UC (REPLACE)
BENT CAP DETAILS

STRUCTURES DESIGN DETAIL SHEET (ENGLISH) (REV. 10/25/05)

ORIGINAL SCALE IN INCHES FOR REDUCED PLANS 0 1 2 3

CU 04
EA 163731

DISREGARD PRINTS BEARING EARLIER REVISION DATES →

REVISION DATES										SHEET	OF
2-18-09	3-3-09	5-18-09	6-4-09							14	40

FILE => 34-0156-h-b01dt06.dgn

USERNAME => ttrshtk DATE PLOTTED => 21-JUL-2009 TIME PLOTTED => 11:21

Col No. *	X (ft)	A
2-1	9	5′-3"
2-2	10	5′-3"
2-3	10	5′-3"
2-4	9	5′-3"
3-1	9	5′-3"
3-2	10	5′-3"
3-3	10	5′-3"
3-4	9	5′-3"
4-1	9	6′-3"
4-2	10	6′-3"
4-3	11	6′-3"
4-4	10	6′-3"
5-1	9	5′-3"
5-2	10	5′-3"
5-3	11	5′-6"
5-4	10	6′-3"

* 2-1 denotes Bent 2, Column 1. Columns are numbered left-to-right looking stations ahead.

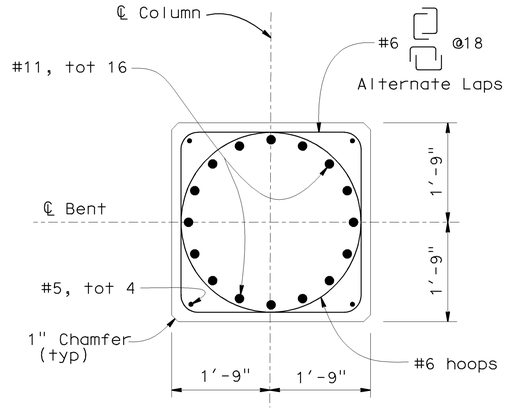

SECTION A-A

¾" = 1′

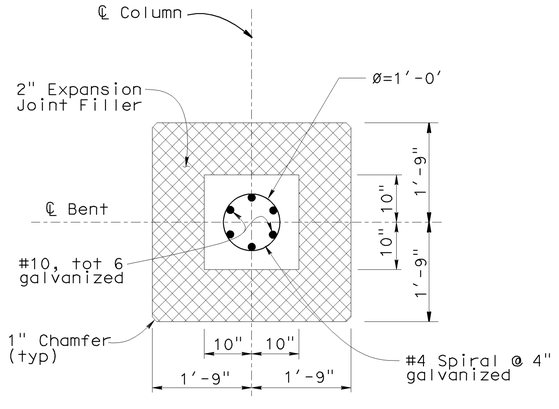

SECTION B-B

¾" = 1′

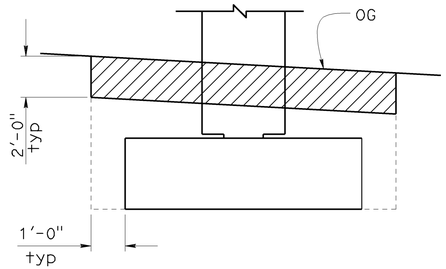

Structure Excavation, (Type Z-2) (Aerially Deposited Lead)

See Standard Plan A62C for additional limits of payment for excavation and backfill.

LIMITS OF EXCAVATION (TYPE Z-2)

No Scale

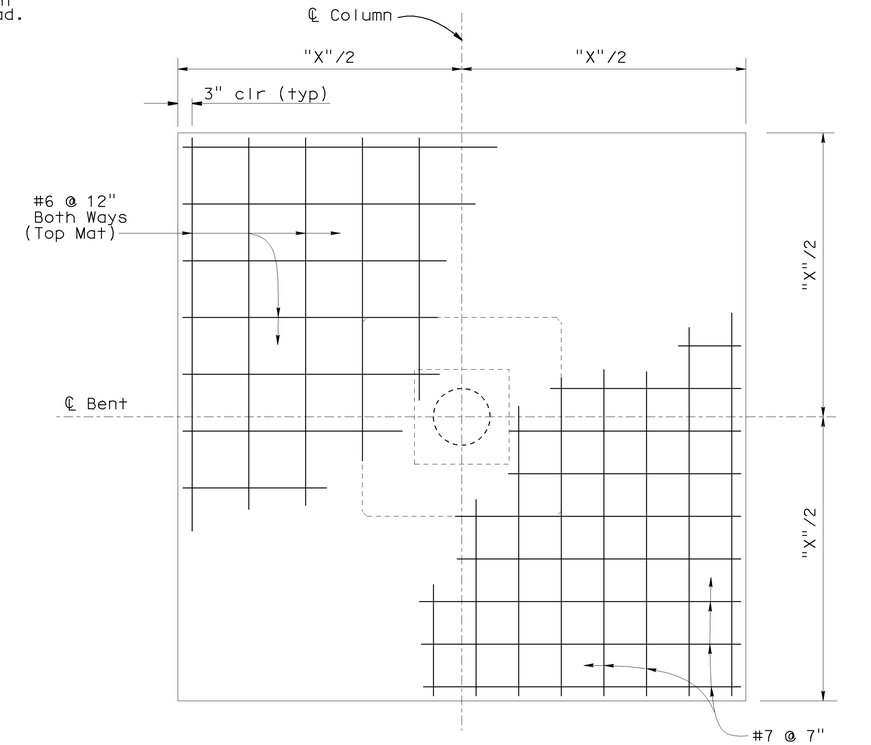

TYPICAL FOOTING DETAIL

No Scale

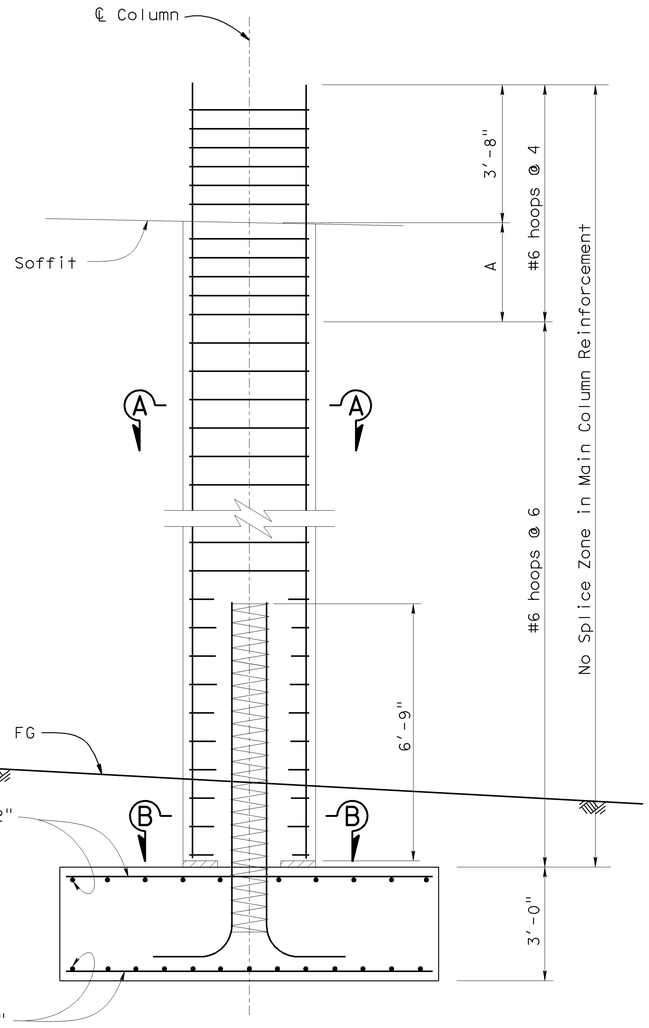

COLUMN ELEVATION

½" = 1′

DIST	COUNTY	ROUTE	POST MILES TOTAL PROJECT	SHEET No	TOTAL SHEETS
04	SF	101,1	9.2/9.8, 6.8/7.1	325	567

Philip E Lutz 06-04-09
REGISTERED CIVIL ENGINEER DATE

7-20-09
PLANS APPROVAL DATE

REGISTERED PROFESSIONAL ENGINEER — Philip E. Lutz — No. C55839 — Exp. 12-31-10 — CIVIL — STATE OF CALIFORNIA

The State of California or its officers or agents shall not be responsible for the accuracy or completeness of electronic copies of this plan sheet.

DESIGN	BY John E. Peterson	CHECKED Alireza Yazdani	STATE OF CALIFORNIA DEPARTMENT OF TRANSPORTATION
DETAILS	BY Liang Ma	CHECKED Alireza Yazdani	
QUANTITIES	BY Bunma Nou	CHECKED Paotsan Wang	

DIVISION OF ENGINEERING SERVICES STRUCTURE DESIGN
DESIGN BRANCH 16

CU 04
EA 163731

BRIDGE NO. 34-0156
POST MILE 6.81

RUCKMAN AVENUE UC (REPLACE)
COLUMN AND FOOTING DETAILS

STRUCTURES DESIGN DETAIL SHEET (ENGLISH) (REV. 10/25/05)

ORIGINAL SCALE IN INCHES FOR REDUCED PLANS 0 1 2 3

DISREGARD PRINTS BEARING EARLIER REVISION DATES →

REVISION DATES: 2-24-09 | 3-18-09 | 4-6-09 | 5-18-09 | 6-4-09

SHEET 15 OF 40

FILE => 34-0156-h-b01dt07.dgn

USERNAME => trsitk DATE PLOTTED => 21-JUL-2009 TIME PLOTTED => 11:21

FALSEWORK RELEASE

Note:

① California ST-10 Brigde Rail(MOD) typical. Center Bridge Rail Posts on each ℄ Bent, space evenly between Bents and abutments at 7'-6" maximum

Alternative 1:

Falsework shall be released as soon as permitted by the specifications. Closure pour shall naot be placed sooner than 60 days after the false-work has been released.

Alternative 1:

Falsework shall be not be release less than 28 days after the last concrete has been placed. Closure pour shall not be placed sooner than 14 days after the falsework has been released

When falsework Release Alternative 2 is used, camber values are .75 times those shown.

DIST	COUNTY	ROUTE	POST MILES TOTAL PROJECT	SHEET No	TOTAL SHEETS
04	SF	101,1	9.2/9.8, 6.8/7.1	326	567

Philip E Lutz 06-04-09
REGISTERED CIVIL ENGINEER DATE

7-20-09
PLANS APPROVAL DATE

REGISTERED PROFESSIONAL ENGINEER — Philip E. Lutz — No. C55839 — Exp. 12-31-10 — CIVIL — STATE OF CALIFORNIA

The State of California or its officers or agents shall not be responsible for the accuracy or completeness of electronic copies of this plan sheet.

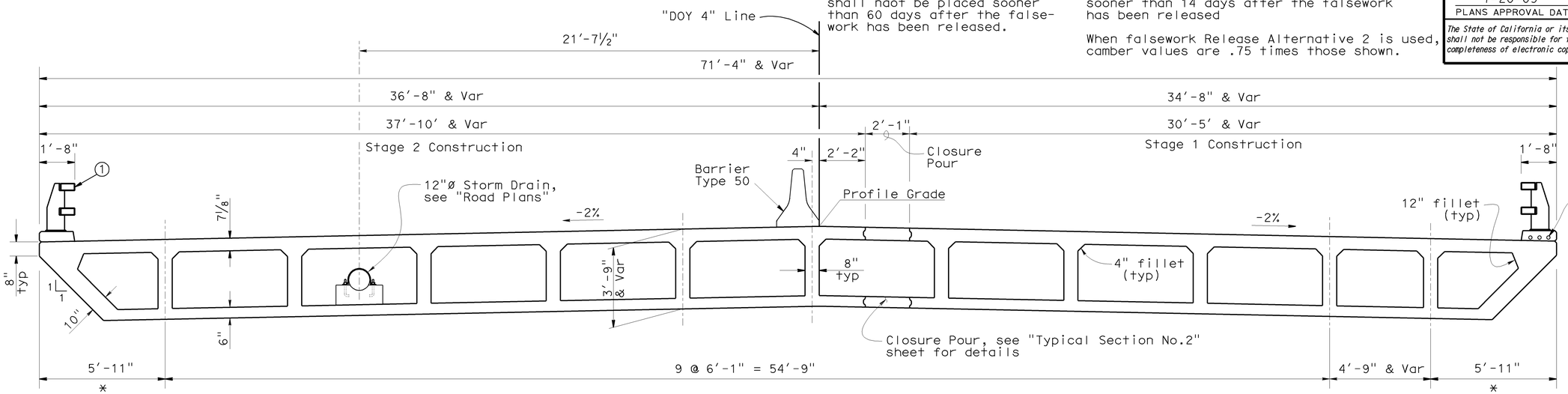

TYPICAL SECTION

⅜"= 1'

Span 1 shown, see "Typical Section No.2 and No.3" sheets for additional details

* Measured normal to edge of deck

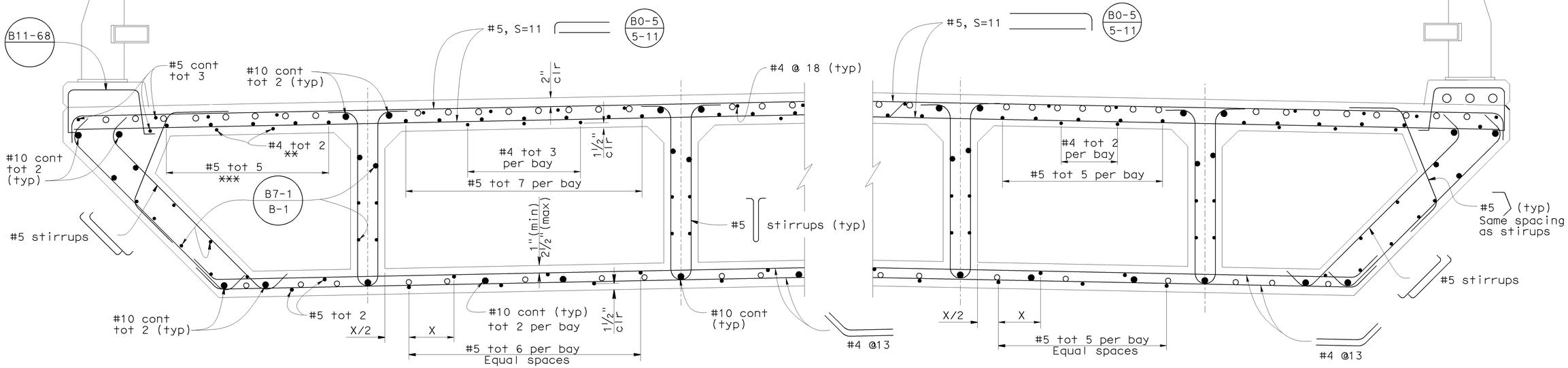

o - Indicates main reinforcement, see main reinforcement sheets for details.
** - Total 3 for span 5-left Bay.
*** - Total 7 for span 5-left Bay.

PART TYPICAL SECTION

1" = 1'

DESIGN	BY John E. Peterson	CHECKED Muthanna Omran	STATE OF CALIFORNIA DEPARTMENT OF TRANSPORTATION	DIVISION OF ENGINEERING SERVICES STRUCTURE DESIGN DESIGN BRANCH 16	BRIDGE NO. 34-0156	RUCKMAN AVENUE UC (REPLACE)	
DETAILS	BY Liang Ma	CHECKED Muthanna Omran			POST MILE 6.81	TYPICAL SECTION NO.1	
QUANTITIES	BY Bunma Nou	CHECKED Paotsan Wang		CU 04 EA 163731			

STRUCTURES DESIGN DETAIL SHEET (ENGLISH) (REV. 10/25/05)

ORIGINAL SCALE IN INCHES FOR REDUCED PLANS 0 1 2 3

DISREGARD PRINTS BEARING EARLIER REVISION DATES →

REVISION DATES: 1-7-09 | 3-3-09 | 5-18-09 | 6-4-09 | 7-11-09

SHEET 16 OF 40

FILE => 34-0156-k-ts01.dgn

USERNAME => ttrrene DATE PLOTTED => 21-JUL-2009 TIME PLOTTED => 13:46

DIST	COUNTY	ROUTE	POST MILES TOTAL PROJECT	SHEET No	TOTAL SHEETS
04	SF	101,1	9.2/9.8, 6.8/7.1	327	567

Philip E Lutz 06-04-09
REGISTERED CIVIL ENGINEER DATE

7-20-09
PLANS APPROVAL DATE

Philip E. Lutz No. C55839 Exp. 12-31-10 CIVIL — REGISTERED PROFESSIONAL ENGINEER — STATE OF CALIFORNIA

The State of California or its officers or agents shall not be responsible for the accuracy or completeness of electronic copies of this plan sheet.

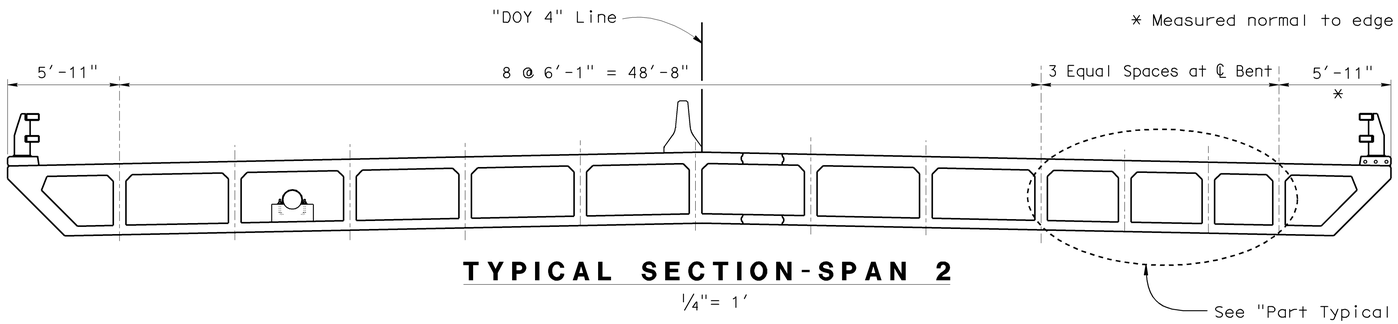

TYPICAL SECTION-SPAN 2

1/4"= 1'

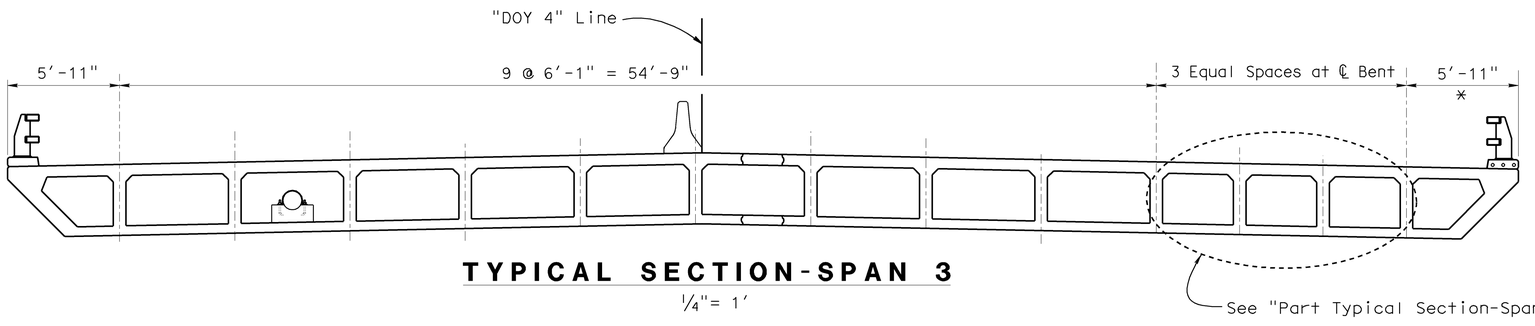

TYPICAL SECTION-SPAN 3

1/4"= 1'

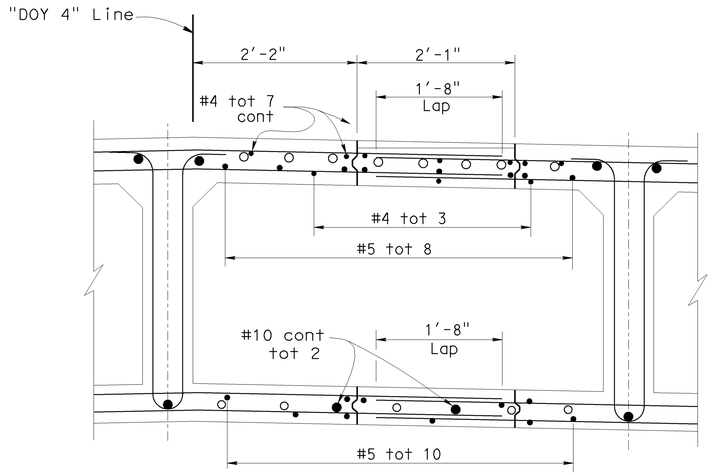

CLOSURE POUR DETAILS

1" = 1'

B0-5 5-2

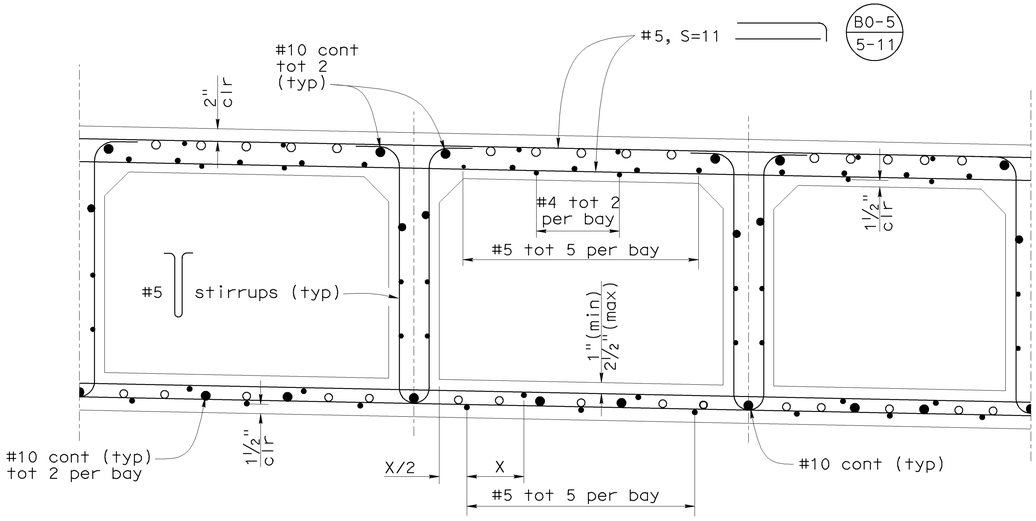

PART TYPICAL SECTION-SPAN 2

1" = 1'

(Typical 3 rightmost interior bays)

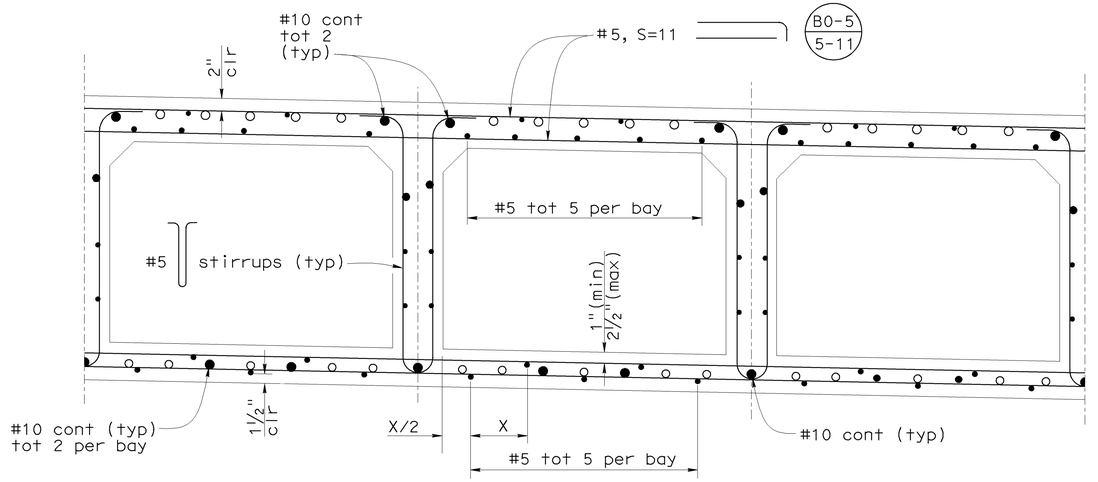

PART TYPICAL SECTION-SPAN 3

1" = 1'

(Typical 3 rightmost interior bays)

o - Indicates main reinforcement, see main reinforcement sheets.

DESIGN	BY John E. Peterson	CHECKED Muthanna Omran	STATE OF CALIFORNIA DEPARTMENT OF TRANSPORTATION	DIVISION OF ENGINEERING SERVICES STRUCTURE DESIGN DESIGN BRANCH 16	BRIDGE NO. 34-0156	RUCKMAN AVENUE UC (REPLACE)	
DETAILS	BY Liang Ma	CHECKED Muthanna Omran			POST MILE 6.81	TYPICAL SECTION NO.2	
QUANTITIES	BY Bunma Nou	CHECKED Paotsan Wang					

STRUCTURES DESIGN DETAIL SHEET (ENGLISH) (REV. 10/25/05)

ORIGINAL SCALE IN INCHES FOR REDUCED PLANS 0 1 2 3

CU 04 EA 163731

DISREGARD PRINTS BEARING EARLIER REVISION DATES →

REVISION DATES: 1-14-09 | 3-3-09 | 5-18-09 | 6-4-09

SHEET 17 OF 40

FILE => 34-0156-k-ts02.dgn

DATE PLOTTED => 21-JUL-2009 TIME PLOTTED => 13:46

USERNAME = trrene

DIST	COUNTY	ROUTE	POST MILES TOTAL PROJECT	SHEET No	TOTAL SHEETS
04	SF	101,1	9.2/9.8, 6.8/7.1	328	567

Philip E Lutz 06-04-09
REGISTERED CIVIL ENGINEER DATE

7-20-09
PLANS APPROVAL DATE

Philip E. Lutz No. C55839 Exp. 12-31-10 CIVIL
REGISTERED PROFESSIONAL ENGINEER STATE OF CALIFORNIA

The State of California or its officers or agents shall not be responsible for the accuracy or completeness of electronic copies of this plan sheet.

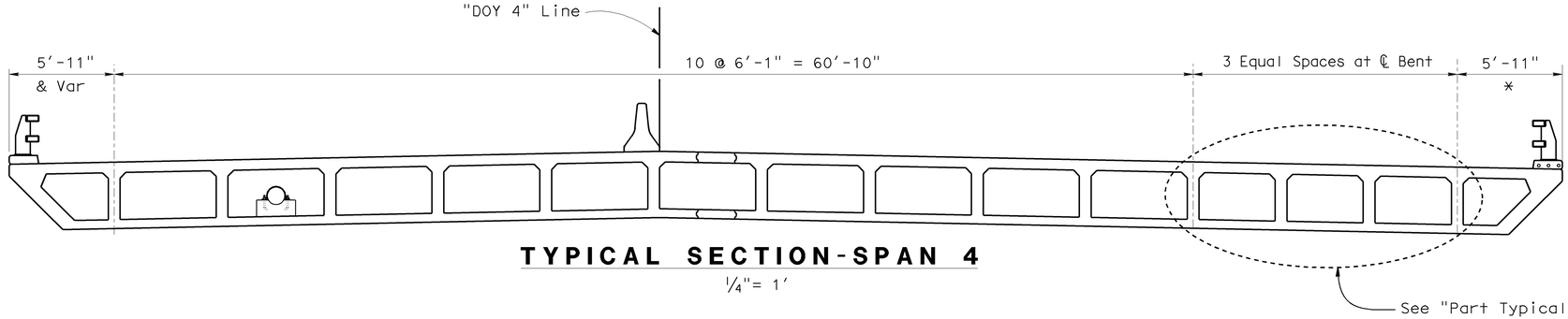

TYPICAL SECTION-SPAN 4

1/4"= 1'

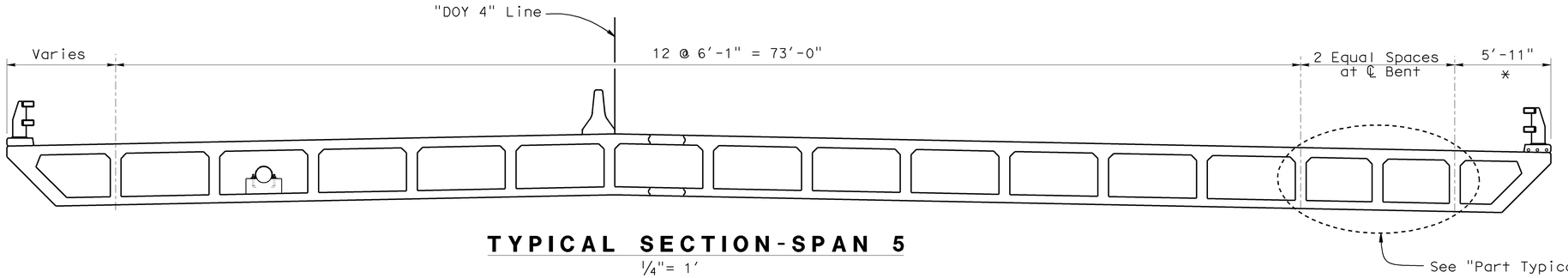

TYPICAL SECTION-SPAN 5

1/4"= 1'

* Measured normal to edge of deck

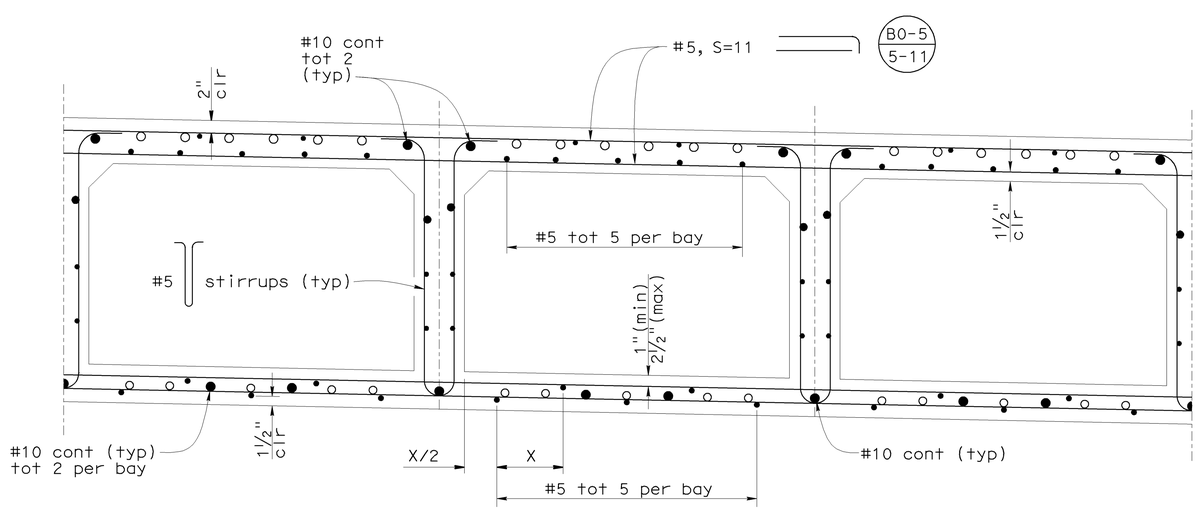

PART TYPICAL SECTION-SPAN 4

1" = 1'

(Typical 3 rightmost interior bays)

O - Indicates main reinforcement, see main reinforcement sheets.

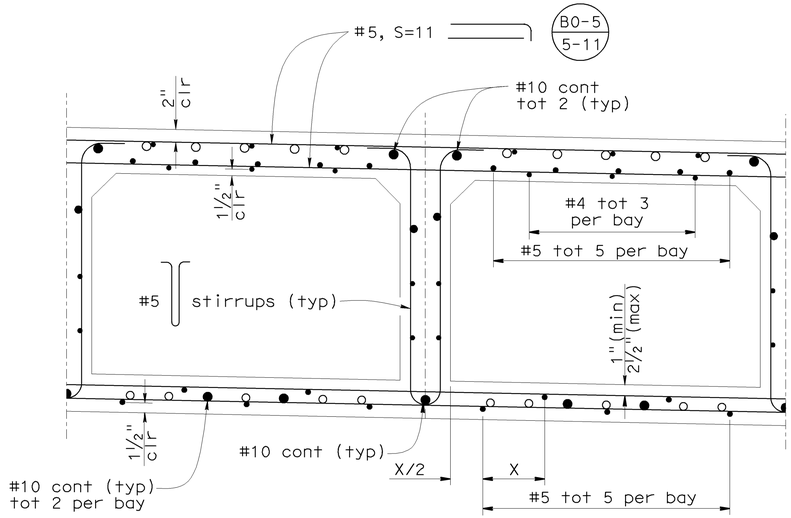

PART TYPICAL SECTION-SPAN 5

1" = 1'

(Typical 2 rightmost interior bays)

DESIGN	BY John E. Peterson	CHECKED Muthanna Omran	STATE OF CALIFORNIA DEPARTMENT OF TRANSPORTATION	DIVISION OF ENGINEERING SERVICES STRUCTURE DESIGN DESIGN BRANCH 16	BRIDGE NO. 34-0156	RUCKMAN AVENUE UC (REPLACE)	
DETAILS	BY Liang Ma	CHECKED Muthanna Omran			POST MILE 6.81	TYPICAL SECTION NO.3	
QUANTITIES	BY Bunma Nou	CHECKED Paotsan Wang					

STRUCTURES DESIGN DETAIL SHEET (ENGLISH) (REV. 10/25/05)

ORIGINAL SCALE IN INCHES FOR REDUCED PLANS 0 1 2 3

CU 04
EA 163731

FILE => 34-0156-k-ts03.dgn

DISREGARD PRINTS BEARING EARLIER REVISION DATES →

REVISION DATES										SHEET	OF
1-16-09	3-4-09	5-18-09	6-4-09							18	40

USERNAME => ttrrene DATE PLOTTED => 21-JUL-2009 TIME PLOTTED => 13:46

DIST	COUNTY	ROUTE	POST MILES TOTAL PROJECT	SHEET No	TOTAL SHEETS
04	SF	101,1	9.2/9.8, 6.8/7.1	329	567

Philip E Lutz 06-04-09
REGISTERED CIVIL ENGINEER DATE

7-20-09
PLANS APPROVAL DATE

The State of California or its officers or agents shall not be responsible for the accuracy or completeness of electronic copies of this plan sheet.

REGISTERED PROFESSIONAL ENGINEER
Philip E. Lutz
No. C55839
Exp. 12-31-10
CIVIL
STATE OF CALIFORNIA

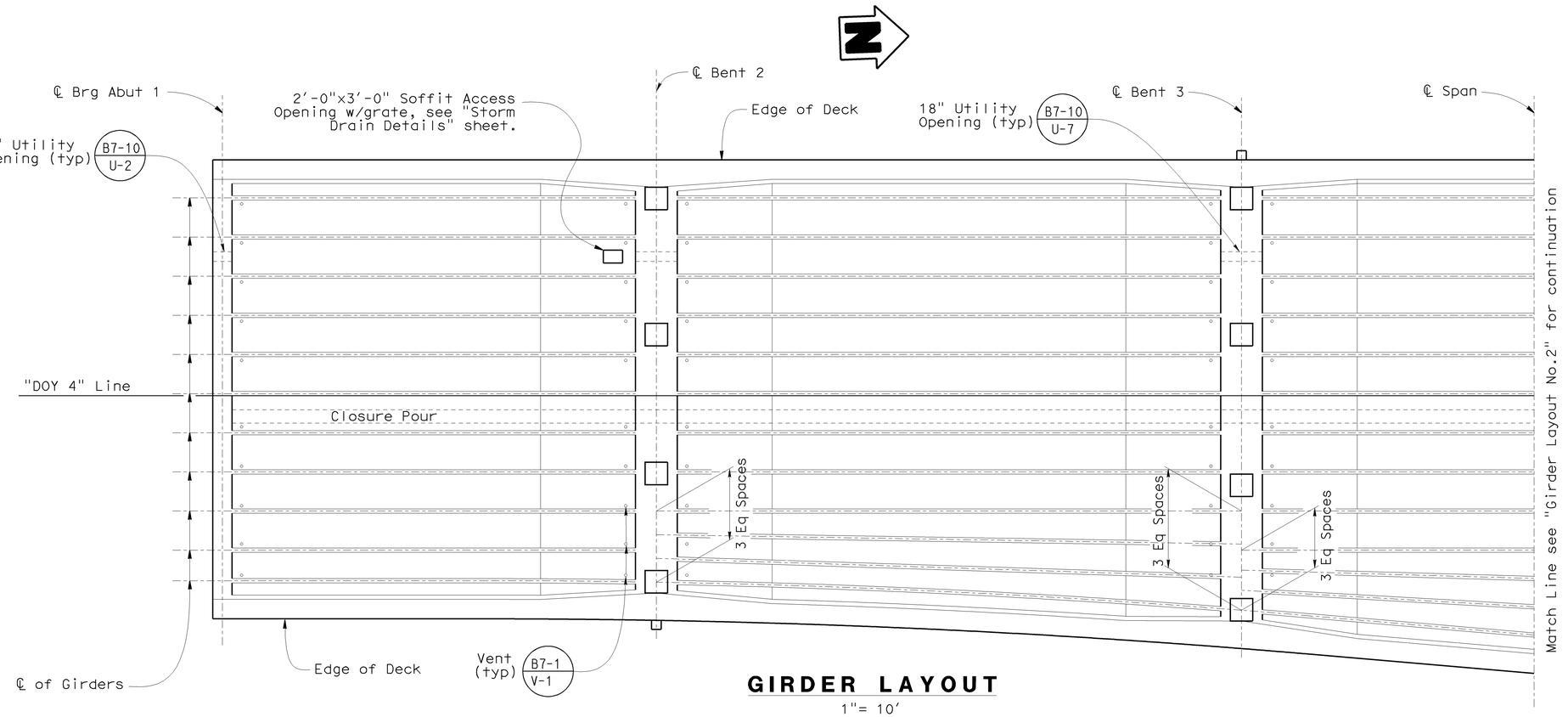

GIRDER LAYOUT

1"= 10'

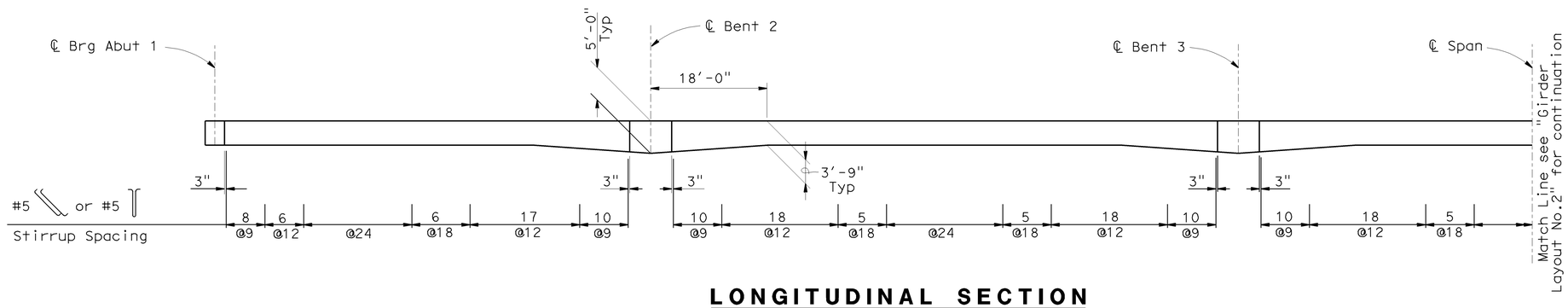

LONGITUDINAL SECTION

1"= 10'

DESIGN	BY John E. Peterson	CHECKED Muthanna Omran	STATE OF CALIFORNIA DEPARTMENT OF TRANSPORTATION	DIVISION OF ENGINEERING SERVICES STRUCTURE DESIGN DESIGN BRANCH 16	BRIDGE NO. 34-0156	RUCKMAN AVENUE UC (REPLACE)	
DETAILS	BY Liang Ma	CHECKED Muthanna Omran			POST MILE 6.81	GIRDER LAYOUT NO.1	
QUANTITIES	BY Bunma Nou	CHECKED Paotsan Wang					

STRUCTURES DESIGN DETAIL SHEET (ENGLISH) (REV. 10/25/05)

ORIGINAL SCALE IN INCHES FOR REDUCED PLANS 0 1 2 3

CU 04
EA 163731

DISREGARD PRINTS BEARING EARLIER REVISION DATES →

REVISION DATES: 1-20-09 | 3-3-09 | 4-8-09 | 5-18-09 | 6-4-09

SHEET 19 OF 40

FILE => 34-0156-1_gro01.dgn

USERNAME = rrrene DATE PLOTTED => 21-JUL-2009 TIME PLOTTED => 13:46

DIST	COUNTY	ROUTE	POST MILES TOTAL PROJECT	SHEET No	TOTAL SHEETS
04	SF	101,1	9.2/9.8, 6.8/7.1	330	567

Philip E Lutz 06-04-09
REGISTERED CIVIL ENGINEER DATE

7-20-09
PLANS APPROVAL DATE

The State of California or its officers or agents shall not be responsible for the accuracy or completeness of electronic copies of this plan sheet.

REGISTERED PROFESSIONAL ENGINEER
Philip E. Lutz
No. C55839
Exp. 12-31-10
CIVIL
STATE OF CALIFORNIA

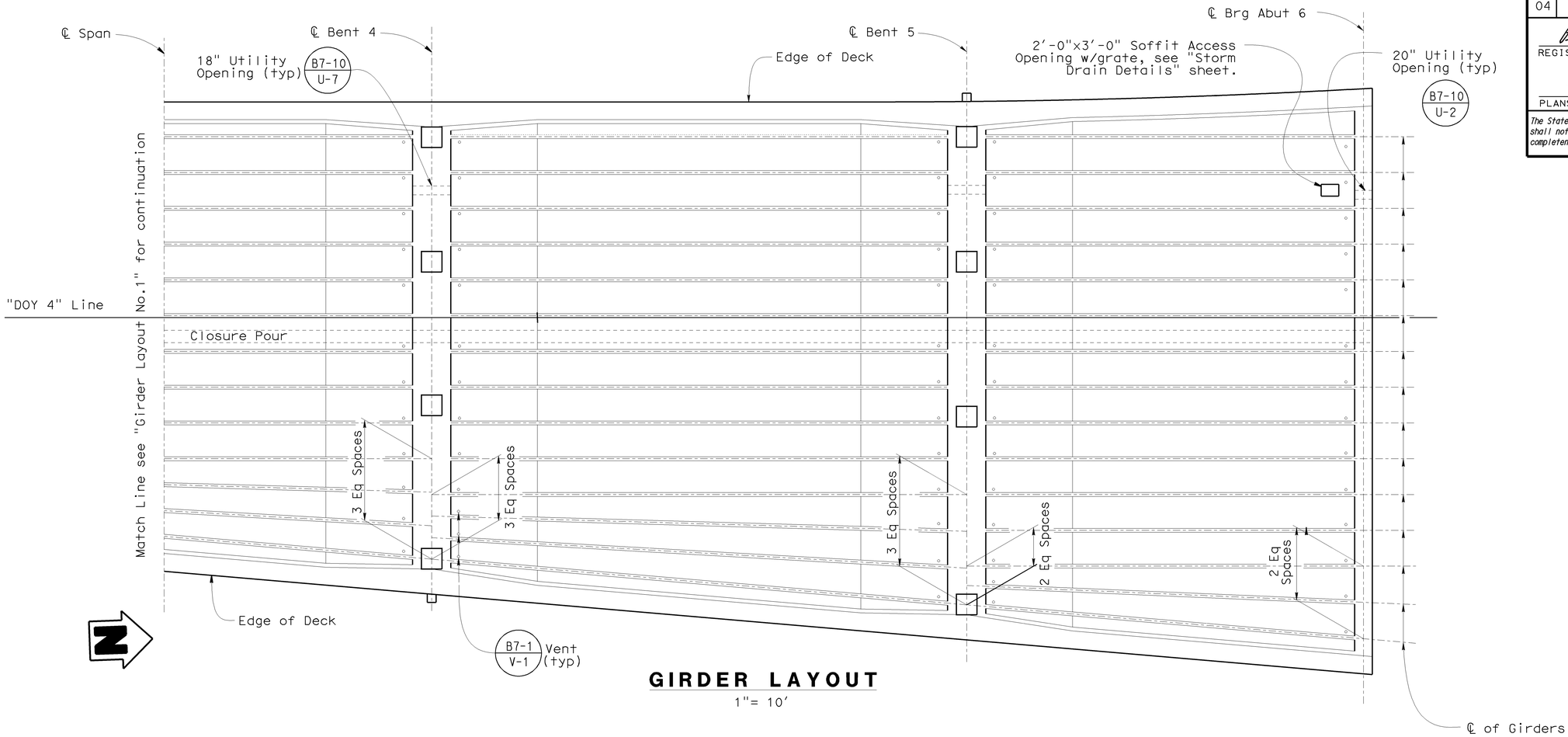

GIRDER LAYOUT

1"= 10'

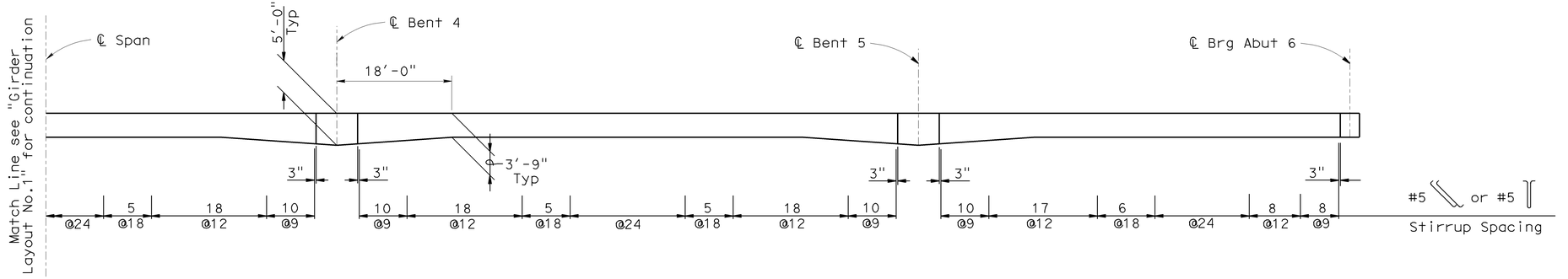

LONGITUDINAL SECTION

1"= 10'

DESIGN	BY John E. Peterson	CHECKED Muthanna Omran	STATE OF CALIFORNIA DEPARTMENT OF TRANSPORTATION	DIVISION OF ENGINEERING SERVICES STRUCTURE DESIGN DESIGN BRANCH 16	BRIDGE NO. 34-0156	RUCKMAN AVENUE UC (REPLACE)	
DETAILS	BY Liang Ma	CHECKED Muthanna Omran			POST MILE 6.81	GIRDER LAYOUT NO.2	
QUANTITIES	BY Bunma Nou	CHECKED Paotsan Wang					

STRUCTURES DESIGN DETAIL SHEET (ENGLISH) (REV. 10/25/05)

ORIGINAL SCALE IN INCHES FOR REDUCED PLANS 0 1 2 3

CU 04
EA 163731

DISREGARD PRINTS BEARING EARLIER REVISION DATES →

REVISION DATES: 1-22-09 | 4-8-09 | 5-18-09 | 6-4-09

SHEET 20 OF 40

FILE => 34-0156-1_gro02.dgn

DATE PLOTTED => 21-JUL-2009 TIME PLOTTED => 13:46
USERNAME => ttrrene

DIST	COUNTY	ROUTE	POST MILES TOTAL PROJECT	SHEET No	TOTAL SHEETS
04	SF	101,1	9.2/9.8, 6.8/7.1	331	567

Philip E Lutz 06-04-09
REGISTERED CIVIL ENGINEER DATE

7-20-09
PLANS APPROVAL DATE

REGISTERED PROFESSIONAL ENGINEER — Philip E. Lutz — No. C55839 — Exp. 12-31-10 — CIVIL — STATE OF CALIFORNIA

The State of California or its officers or agents shall not be responsible for the accuracy or completeness of electronic copies of this plan sheet.

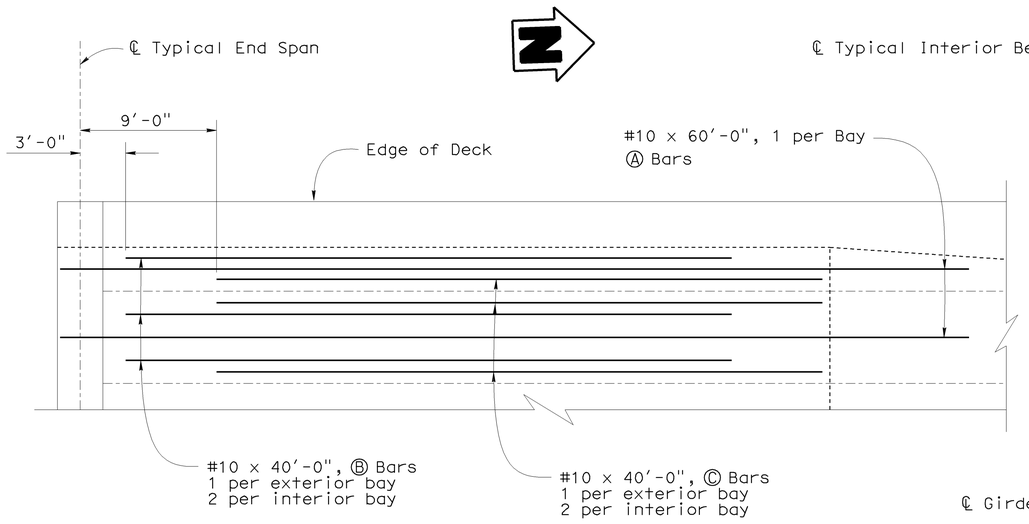

TYPICAL END SPAN REINFORCEMENT

1"= 5′

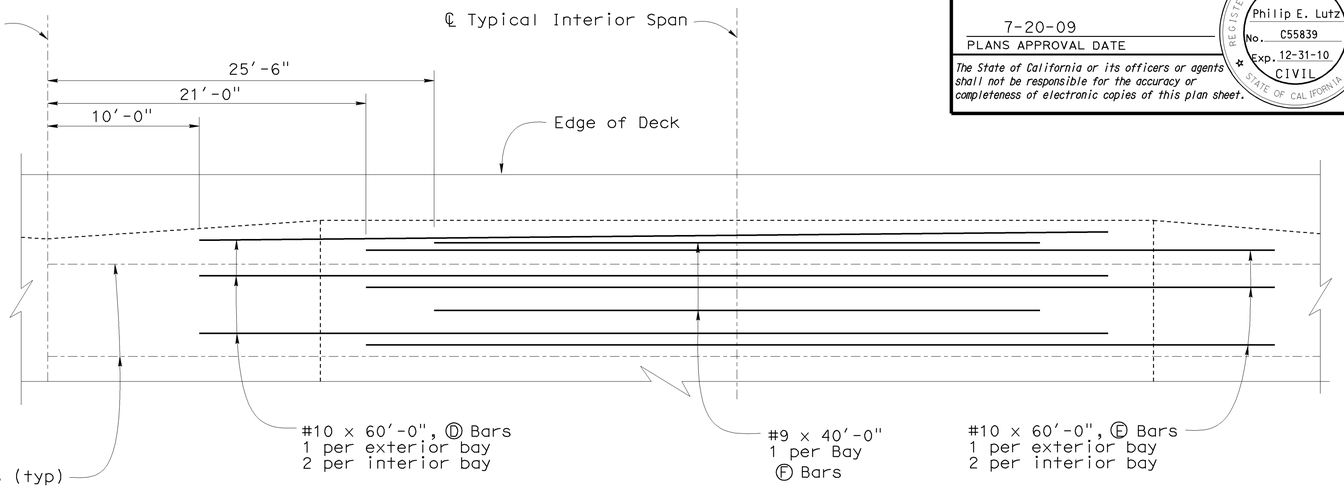

TYPICAL INTERIOR SPAN REINFORCEMENT

1"= 5′

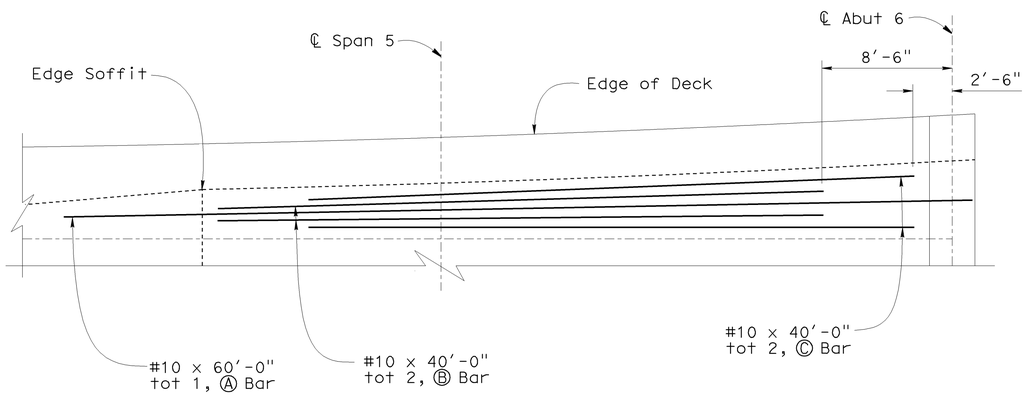

SPAN 5 LEFT REINFORCEMENT DETAILS

1"= 5′

BOTTOM REINFORCEMENT QUANTITIES

Location	Ⓐ Bars #10x60′	Ⓑ Bars #10x40′	Ⓒ Bars #10x40′	Ⓓ Bars #10x60′	Ⓔ Bars #10x60′	Ⓕ Bars #9x40′	Total
Span 1	12	21	22	——	——	——	55
Span 2	——	——	——	24	24	13	61
Span 3	——	——	——	26	26	14	66
Span 4	——	——	——	28	28	15	71
Span 5	16	31	31	——	——	——	78

DESIGN	BY John E. Peterson	CHECKED Muthanna Omran	STATE OF CALIFORNIA DEPARTMENT OF TRANSPORTATION
DETAILS	BY Liang Ma	CHECKED Muthanna Omran	
QUANTITIES	BY Bunma Nou	CHECKED Paotsan Wang	

DIVISION OF ENGINEERING SERVICES
STRUCTURE DESIGN
DESIGN BRANCH 16

CU 04
EA 163731

BRIDGE NO. 34-0156
POST MILE 6.81

RUCKMAN AVENUE UC (REPLACE)
MAIN BOTTOM REINFORCEMENT

STRUCTURES DESIGN DETAIL SHEET (ENGLISH) (REV. 10/25/05)

ORIGINAL SCALE IN INCHES FOR REDUCED PLANS 0 1 2 3

DISREGARD PRINTS BEARING EARLIER REVISION DATES →

REVISION DATES: 1-28-09 | 3-04-09 | 5-18-09 | 6-4-09

SHEET 21 OF 40

FILE => 34-0156-o-gbot01.dgn

USERNAME => trrene DATE PLOTTED => 21-JUL-2009 TIME PLOTTED => 13:46

DIST	COUNTY	ROUTE	POST MILES TOTAL PROJECT	SHEET No	TOTAL SHEETS
04	SF	101,1	9.2/9.8, 6.8/7.1	332	567

Philip E Lutz 06-04-09
REGISTERED CIVIL ENGINEER DATE

7-20-09
PLANS APPROVAL DATE

Philip E. Lutz No. C55839 Exp. 12-31-10 CIVIL — REGISTERED PROFESSIONAL ENGINEER — STATE OF CALIFORNIA

The State of California or its officers or agents shall not be responsible for the accuracy or completeness of electronic copies of this plan sheet.

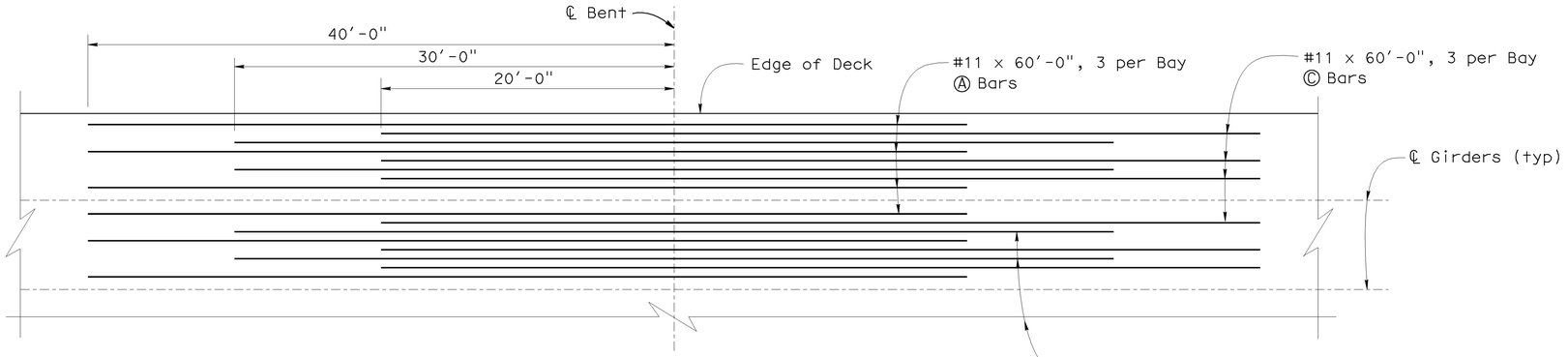

TYPICAL REINFORCEMENT

1"= 5′

Typical all exterior bays and all interior bays except as noted in reinforcement details views

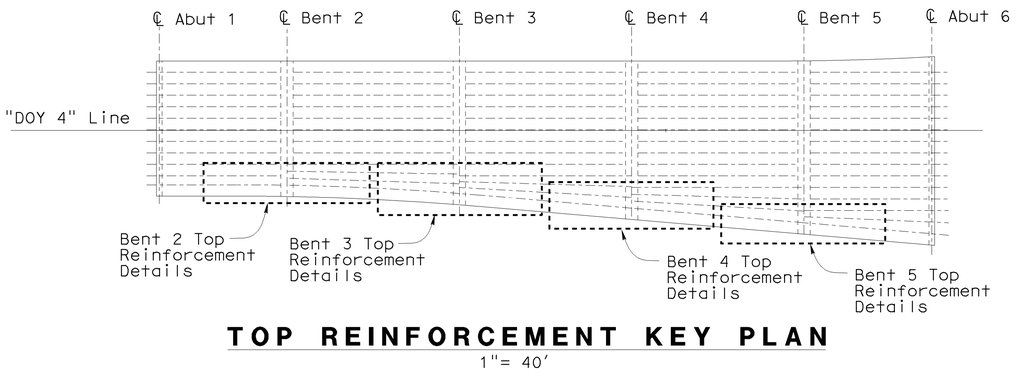

TOP REINFORCEMENT KEY PLAN

1"= 40′

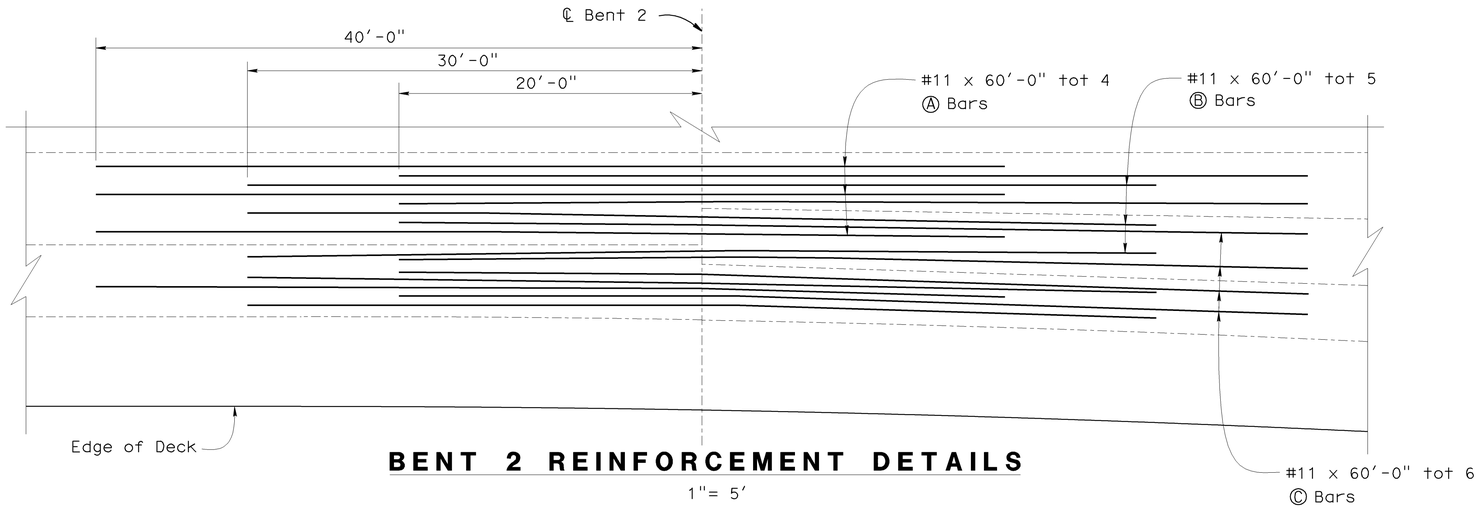

BENT 2 REINFORCEMENT DETAILS

1"= 5′

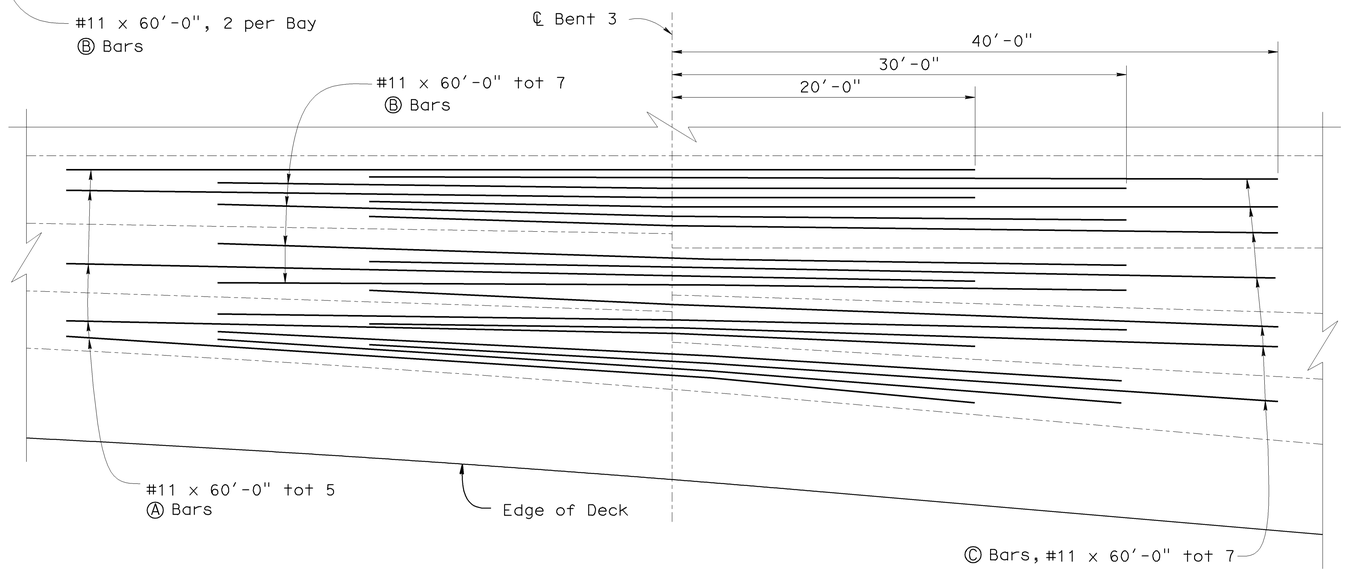

BENT 3 REINFORCEMENT DETAILS

1"= 5′

Note:

1. For bent 4 and bent 5 top reinforcement details and bar quantities, see "Main Top Reinforcement No.2" sheet.

DESIGN	BY John E. Peterson	CHECKED Muthanna Omran	STATE OF CALIFORNIA DEPARTMENT OF TRANSPORTATION	DIVISION OF ENGINEERING SERVICES STRUCTURE DESIGN DESIGN BRANCH 16	BRIDGE NO. 34-0156 / POST MILE 6.81
DETAILS	BY Liang Ma	CHECKED Muthanna Omran			
QUANTITIES	BY Bunma Nou	CHECKED Paotsan Wang			

RUCKMAN AVENUE UC (REPLACE)
MAIN TOP REINFORCEMENT NO.1

STRUCTURES DESIGN DETAIL SHEET (ENGLISH) (REV. 10/25/05)

ORIGINAL SCALE IN INCHES FOR REDUCED PLANS 0 1 2 3

CU 04
EA 163731

DISREGARD PRINTS BEARING EARLIER REVISION DATES →

REVISION DATES: 1-23-09, 3-04-09, 5-18-09, 6-4-09

SHEET 22 OF 40

FILE => 34-0156-o-gr_top01.dgn

USERNAME => trrene DATE PLOTTED => 21-JUL-2009 TIME PLOTTED => 13:46

DIST	COUNTY	ROUTE	POST MILES TOTAL PROJECT	SHEET No	TOTAL SHEETS
04	SF	101,1	9.2/9.8, 6.8/7.1	333	567

REGISTERED CIVIL ENGINEER — 06-04-09 DATE

7-20-09
PLANS APPROVAL DATE

Philip E. Lutz No. C55839 Exp. 12-31-10 CIVIL — REGISTERED PROFESSIONAL ENGINEER — STATE OF CALIFORNIA

The State of California or its officers or agents shall not be responsible for the accuracy or completeness of electronic copies of this plan sheet.

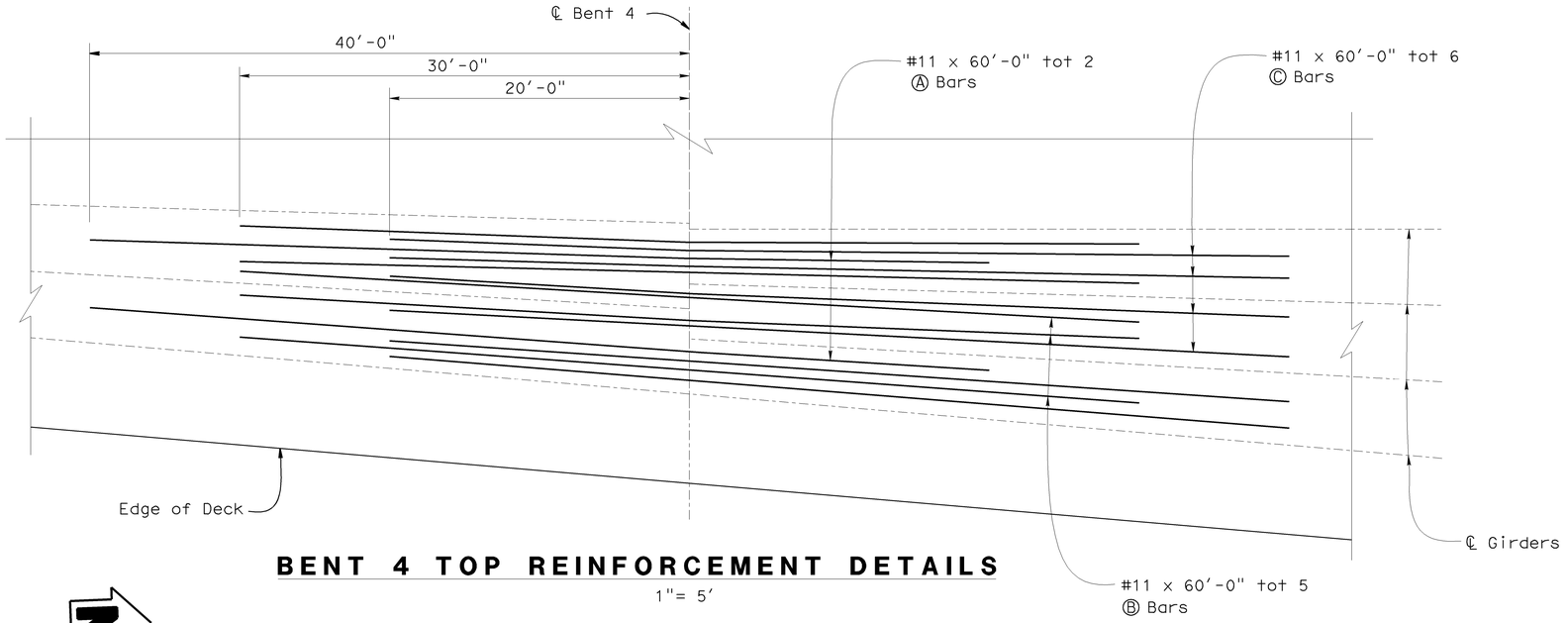

BENT 4 TOP REINFORCEMENT DETAILS

1"= 5′

TOP BAR QUANTITIES

Location	Ⓐ Bars #11x60′	Ⓑ Bars #11x60′	Ⓒ Bars #11x60′	Total
Bent 2	34	25	36	95
Bent 3	35	27	37	99
Bent 4	38	29	42	109
Bent 5	44	31	46	121

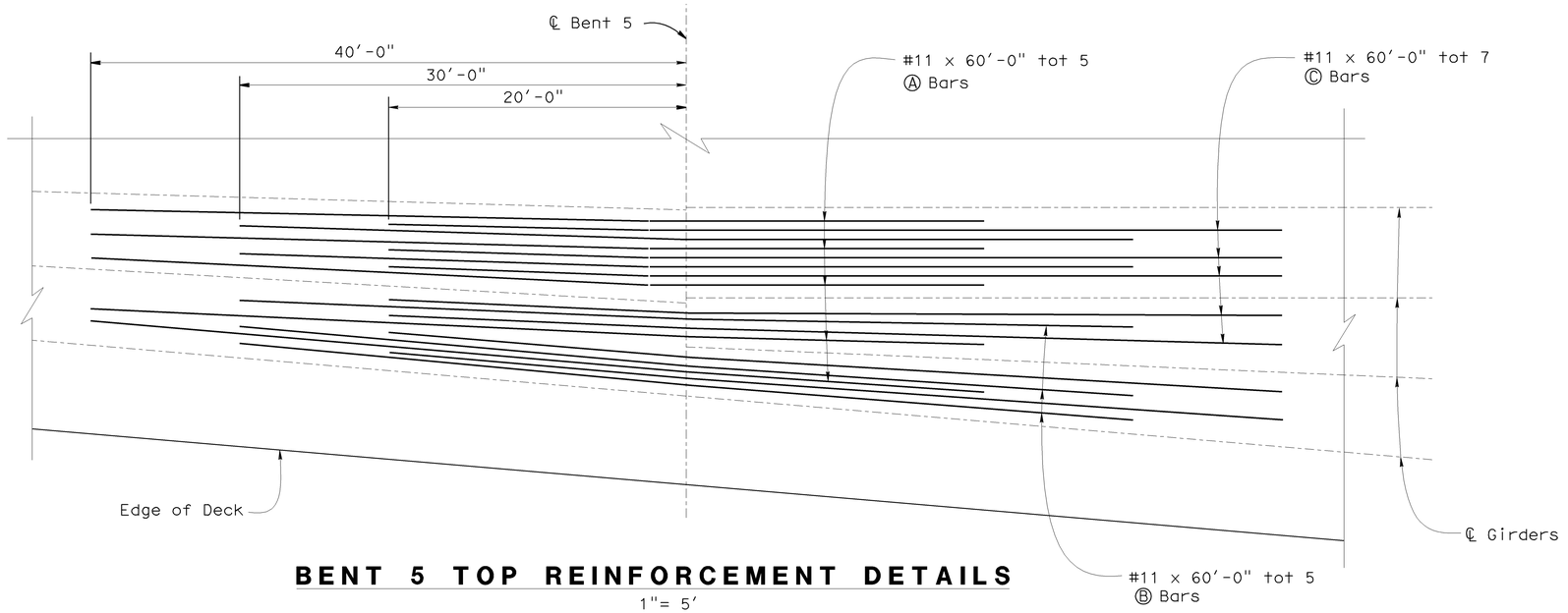

BENT 5 TOP REINFORCEMENT DETAILS

1"= 5′

DESIGN	BY John E. Peterson	CHECKED Muthanna Omran	STATE OF CALIFORNIA DEPARTMENT OF TRANSPORTATION	DIVISION OF ENGINEERING SERVICES STRUCTURE DESIGN DESIGN BRANCH 16	BRIDGE NO. 34-0156	RUCKMAN AVENUE UC (REPLACE) MAIN TOP REINFORCEMENT NO.2	
DETAILS	BY Liang Ma	CHECKED Muthanna Omran			POST MILE 6.81		
QUANTITIES	BY Bunma Nou	CHECKED Paotsan Wang					

STRUCTURES DESIGN DETAIL SHEET (ENGLISH) (REV. 10/25/05)

ORIGINAL SCALE IN INCHES FOR REDUCED PLANS 0 1 2 3

CU 04
EA 163731

DISREGARD PRINTS BEARING EARLIER REVISION DATES →

REVISION DATES: 1-27-09 | 3-04-09 | 5-18-09 | 6-4-09

SHEET 23 OF 40

FILE => 34-0156-o-gr_top02.dgn

USERNAME => ttrene DATE PLOTTED => 21-JUL-2009 TIME PLOTTED => 13:46

DIST	COUNTY	ROUTE	POST MILES TOTAL PROJECT	SHEET No	TOTAL SHEETS
04	SF	101,1	9.2/9.8, 6.8/7.1	334	567

Philip E Lutz 06-04-09
REGISTERED CIVIL ENGINEER DATE

7-20-09
PLANS APPROVAL DATE

Philip E. Lutz No. C55839 Exp. 12-31-10 CIVIL — REGISTERED PROFESSIONAL ENGINEER — STATE OF CALIFORNIA

The State of California or its officers or agents shall not be responsible for the accuracy or completeness of electronic copies of this plan sheet.

Note:
See "Road Plans", for storm drain details, including all assemblies, fittings, and casings

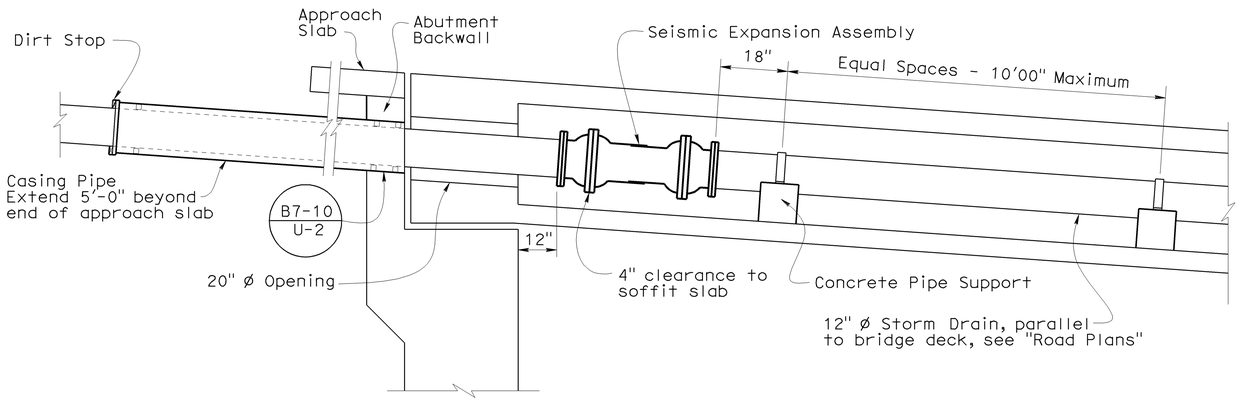

PIPE INSTALLATION AT ABUTMENTS #1 AND #6

½" = 1'

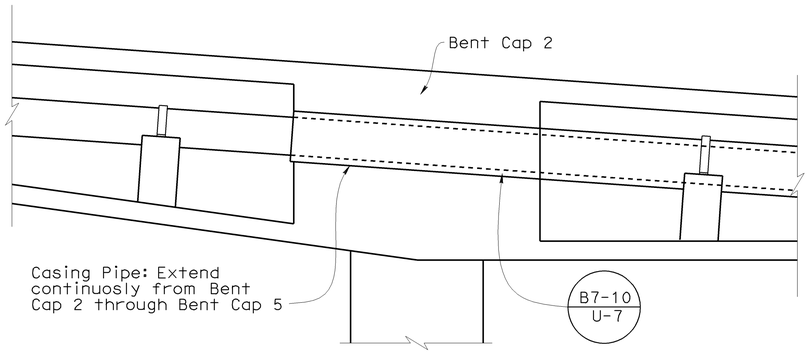

PIPE INSTALLATION AT BENT CAPS

½" = 1'

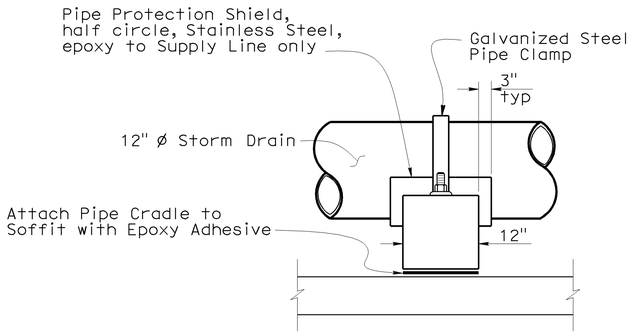

ELEVATION

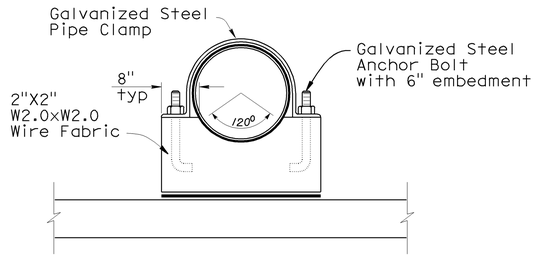

SECTION

CONCRETE PIPE SUPPORT

No Scale

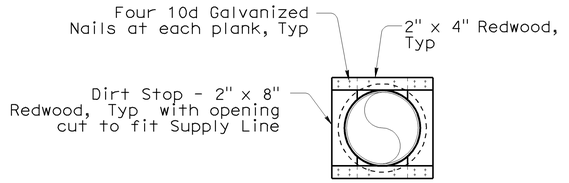

DIRT STOP DETAIL

No Scale

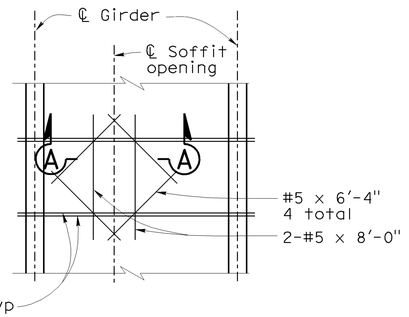

PLAN

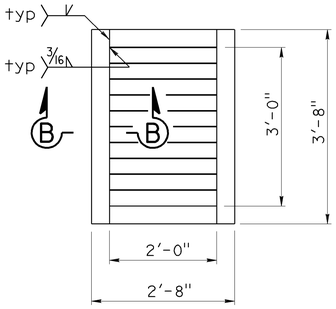

GRATE PLAN

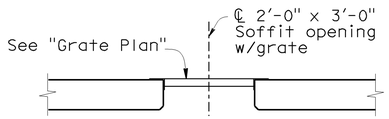

SECTION A-A

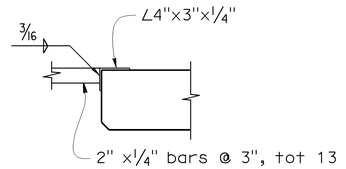

SECTION B-B

SOFFIT OPENING DETAIL

No Scale

DESIGN	BY John E. Peterson	CHECKED Muthanna Omran	STATE OF CALIFORNIA DEPARTMENT OF TRANSPORTATION	DIVISION OF ENGINEERING SERVICES STRUCTURE DESIGN DESIGN BRANCH 16	BRIDGE NO. 34-0156	RUCKMAN AVENUE UC (REPLACE)	
DETAILS	BY Liang Ma	CHECKED Muthanna Omran			POST MILE 6.81	STORM DRAIN DETAILS	
QUANTITIES	BY Bunma Nou	CHECKED Paotsan Wang		CU 04 EA 163731			

STRUCTURES DESIGN DETAIL SHEET (ENGLISH) (REV. 10/25/05)

ORIGINAL SCALE IN INCHES FOR REDUCED PLANS 0 1 2 3

DISREGARD PRINTS BEARING EARLIER REVISION DATES →

REVISION DATES: 3-3-09 | 5-6-09 | 5-18-09 | 6-4-09

SHEET 24 OF 40

FILE => 34-0156-r-ddet01.dgn

USERNAME => trrene DATE PLOTTED => 21-JUL-2009 TIME PLOTTED => 13:47

DIST	COUNTY	ROUTE	POST MILES TOTAL PROJECT	SHEET NO	TOTAL SHEETS
04	SF	101,1	9.2/9.8, 6.8/7.1	335	567

Philip E Lutz 06-04-09
REGISTERED CIVIL ENGINEER DATE

7-20-09
PLANS APPROVAL DATE

The State of California or its officers or agents shall not be responsible for the accuracy or completeness of electronic copies of this plan sheet.

REGISTERED PROFESSIONAL ENGINEER
Philip E. Lutz
No. C55839
Exp. 12-31-10
CIVIL
STATE OF CALIFORNIA

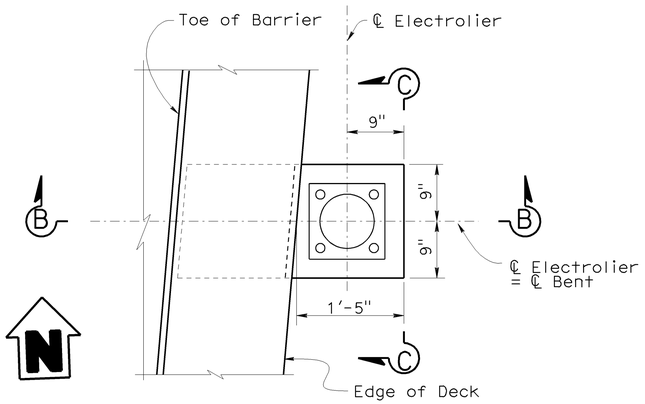

PART PLAN
1" = 1'
(Railing not shown)

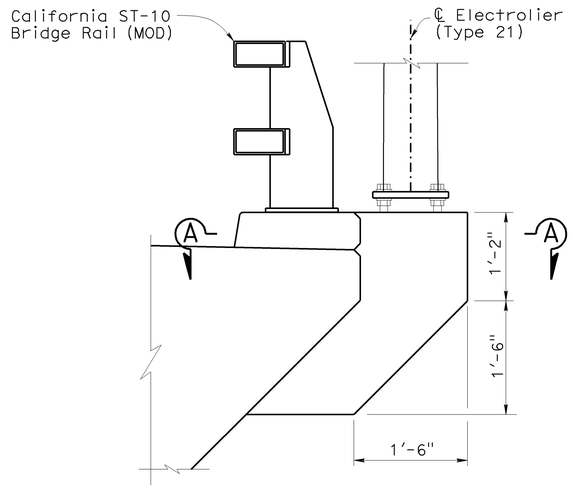

PART ELEVATION
1" = 1'

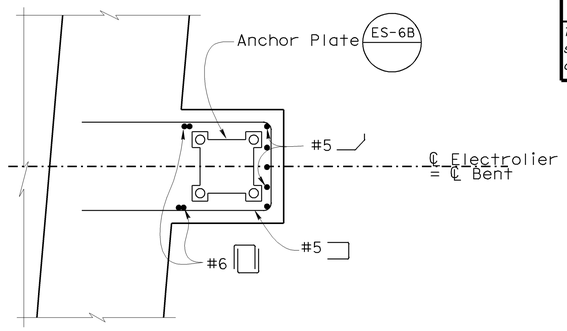

SECTION A-A
1" = 1'

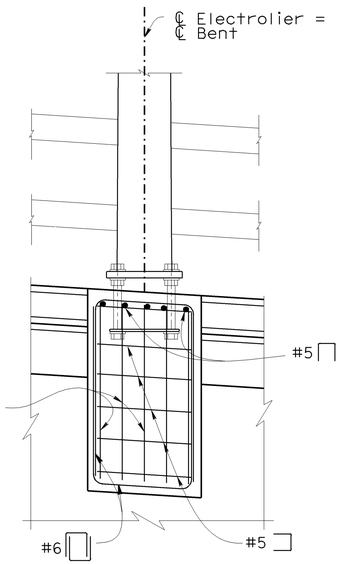

SECTION C-C
1" = 1'

BENT 4 RIGHT

BENT 2 RIGHT

BENT 3 AND 5 LEFT

SECTION B-B
1½ " = 1'

NOTES:

1. Deck, grider and barrier reinforcement not shown
2. For electrolier details not shown, see "STANDARD PLANS"
3. See "Construction Staging No.2" sheet for additional details for Bent 2 right

DESIGN	BY John E. Peterson	CHECKED Muthanna Omran	STATE OF CALIFORNIA DEPARTMENT OF TRANSPORTATION	DIVISION OF ENGINEERING SERVICES STRUCTURE DESIGN DESIGN BRANCH 16	BRIDGE NO. 34-0156
DETAILS	BY John E. Peterson	CHECKED Liang Ma			POST MILE 6.81
QUANTITIES	BY Bunma Nou	CHECKED Paotsan Wang			

RUCKMAN AVENUE UC (REPLACE)
ELECTROLIER PEDESTAL DETAILS

STRUCTURES DESIGN DETAIL SHEET (ENGLISH) (REV. 10/25/05)

ORIGINAL SCALE IN INCHES FOR REDUCED PLANS 0 1 2 3

CU 04
EA 163731

DISREGARD PRINTS BEARING EARLIER REVISION DATES

REVISION DATES										SHEET	OF
05-08-09	6-4-09									25	40

FILE => 34-0156-r-ddet02.dgn

USERNAME => tfrierso DATE PLOTTED => 21-JUL-2009 TIME PLOTTED => 13:37

DIST	COUNTY	ROUTE	POST MILES TOTAL PROJECT	SHEET No	TOTAL SHEETS
04	SF	101,1	9.2/9.8, 6.8/7.1	336	567

Philip E Lutz 06-04-09
REGISTERED CIVIL ENGINEER DATE

7-20-09
PLANS APPROVAL DATE

Philip E. Lutz No. C55839 Exp. 12-31-10 CIVIL — REGISTERED PROFESSIONAL ENGINEER — STATE OF CALIFORNIA

The State of California or its officers or agents shall not be responsible for the accuracy or completeness of electronic copies of this plan sheet.

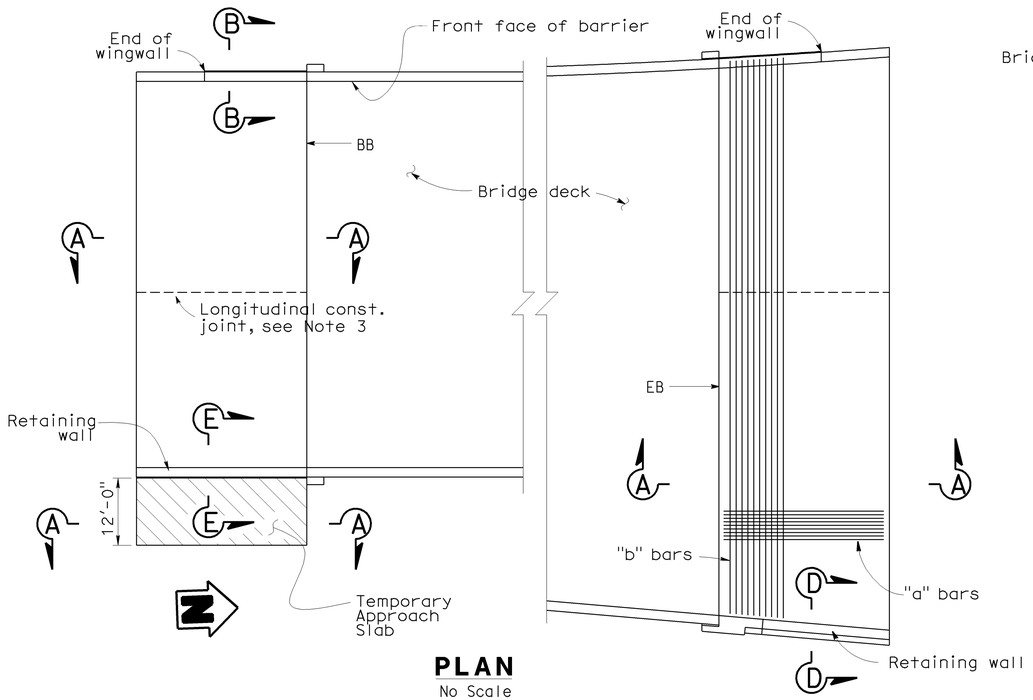

PLAN
No Scale

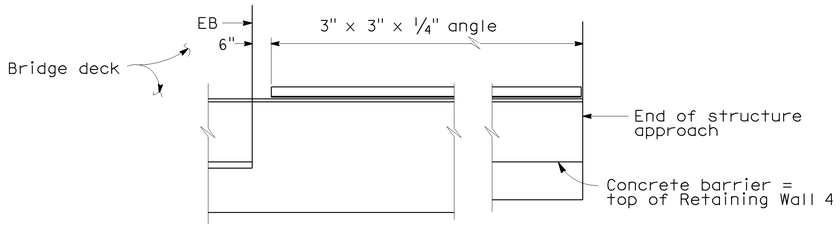

EDGE ANGLE DETAIL
½" = 1'

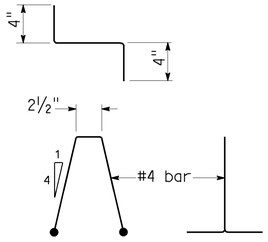

BAR CHAIR DETAIL
1½" = 1'

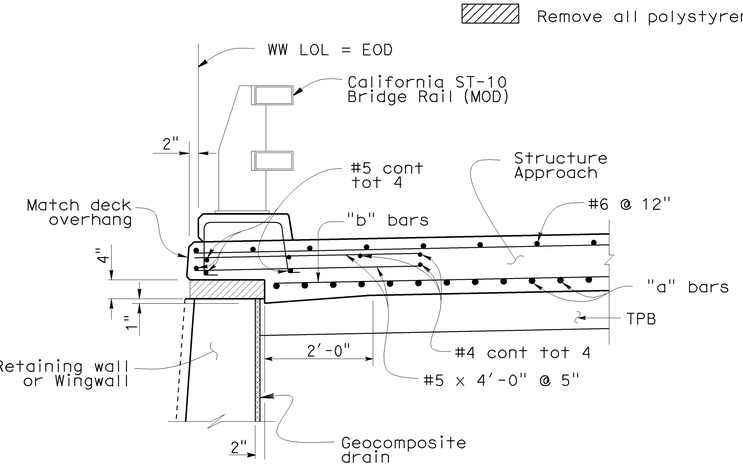

SECTION B-B
¾" = 1'

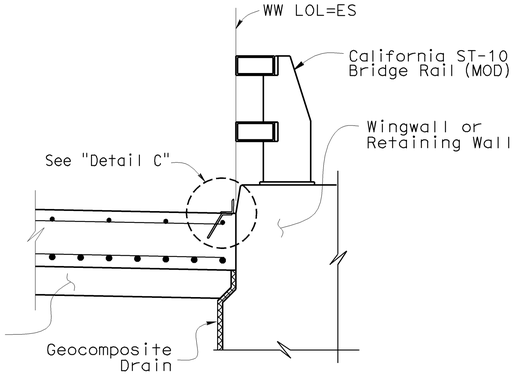

SECTION D-D
¾" = 1'

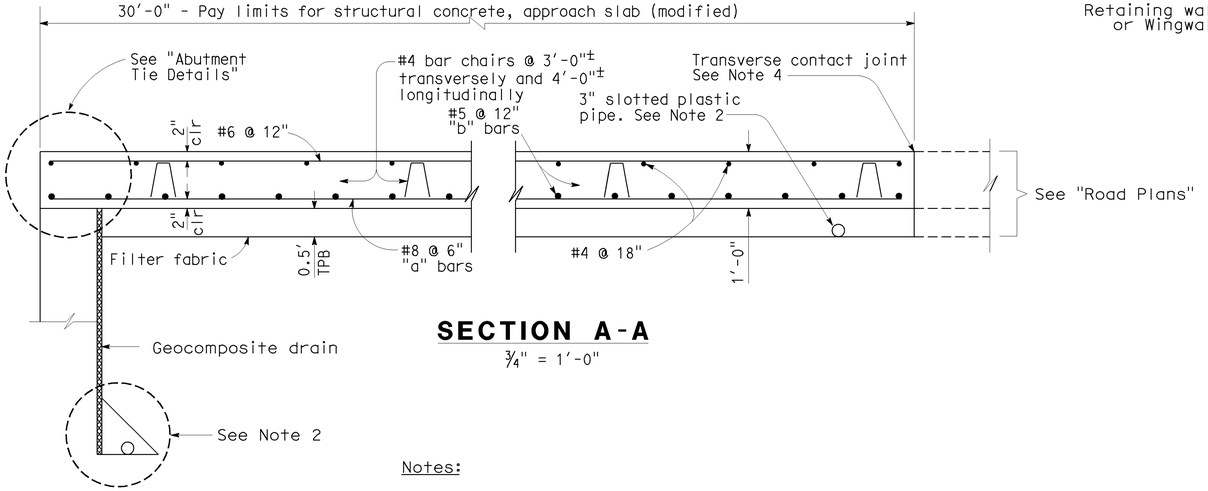

SECTION A-A
¾" = 1'-0"

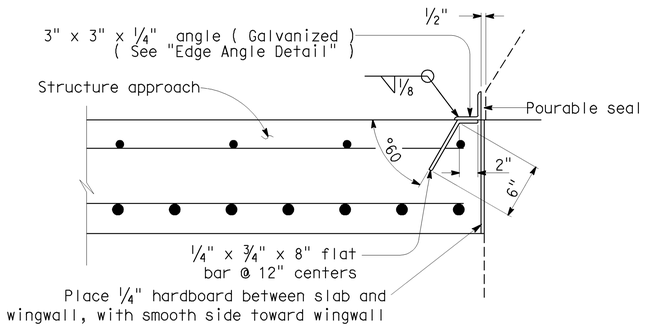

DETAIL "C"
1½" = 1'

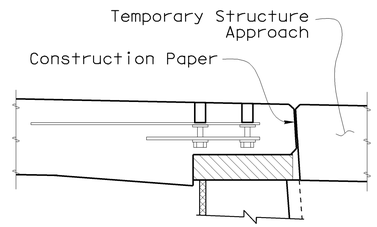

(South approach slab, right side only. See "CONSTRUCTION STAGING NO.2" sheet for addtitional details)

SECTION E-E
1" = 1'

Notes:

1. For details not shown, see Structure Plans. Adjust bar reinforcement to clear saw cut as required.
2. For drainage details, see "Structure Approach Drainage Details" sheet.
3. Longitudinal construction joints, when permitted by the Engineer, shall be located on lane lines and at construction stage limits.
4. For transverse contact joint with new PCC paving, see Standard Plan P-1.
5. Spacing of transverse reinforcement is measured along "DOY4" Line.

DESIGN	BY John E. Peterson	CHECKED Muthanna Omran	STATE OF CALIFORNIA DEPARTMENT OF TRANSPORTATION
DETAILS	BY Liang Ma	CHECKED Muthanna Omran	
QUANTITIES	BY Bunma Nou	CHECKED Paotsan Wang	

DIVISION OF ENGINEERING SERVICES STRUCTURE DESIGN
DESIGN BRANCH 16

BRIDGE NO. 34-0156
POST MILE 6.81

RUCKMAN AVENUE UC (REPLACE)
STRUCTURE APPROACH TYPE N(30S)(MOD)

CU 04
EA 163731

DISREGARD PRINTS BEARING EARLIER REVISION DATES →
REVISION DATES: 1-5-09, 2-26-09, 5-18-09, 6-4-09

SHEET 26 OF 40

STRUCTURES DESIGN DETAIL SHEET (ENGLISH) (REV. 10/25/05)

ORIGINAL SCALE IN INCHES FOR REDUCED PLANS 0 1 2 3

FILE => 34-0156-s-sa.dgn

DATE PLOTTED => 21-JUL-2009 TIME PLOTTED => 13:47
ttrone

DIST.	COUNTY	ROUTE	MILE POST TOTAL PROJECT	SHEET NO.	TOTAL SHEETS
04	SF	101,1	9.2/9.8, 6.8/7.1	337	567

Philip E Lutz 06-04-09
REGISTERED ENGINEER - CIVIL

7-20-09
PLANS APPROVAL DATE

REGISTERED PROFESSIONAL ENGINEER — Philip E. Lutz — No. C55839 — Exp. 12-31-10 — CIVIL — STATE OF CALIFORNIA

The State of California or its officers or agents shall not be responsible for the accuracy or completeness of electronic copies of this plan sheet.

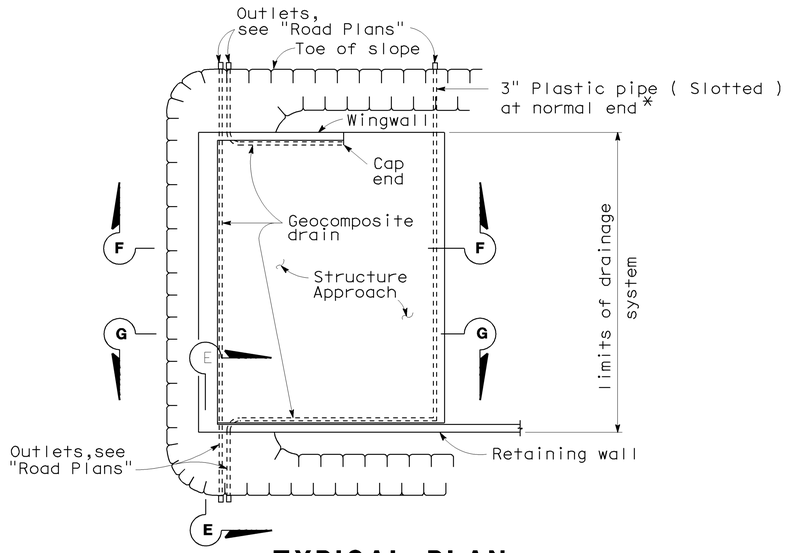

TYPICAL PLAN
1"=10'
*For pipe layout at staggered end, see "Detail B".

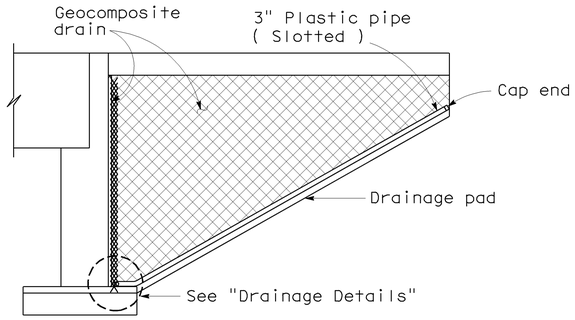

CANTILEVER WINGWALL
SECTION F-F
1/4"=1'-0"

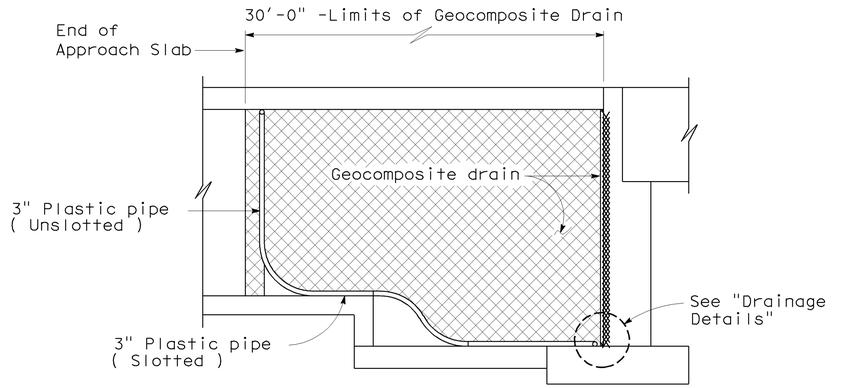

RETAINING WALL WINGWALL
SECTION G-G
1/4"=1'-0"

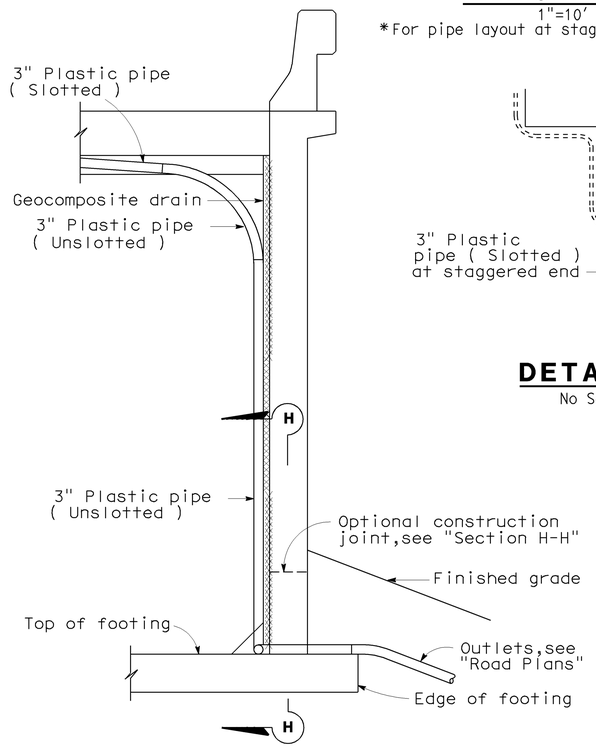

SECTION E-E
1/2"=1'-0"

NOTE: Bends and junctions in 3" plastic pipe are 30" radius min.

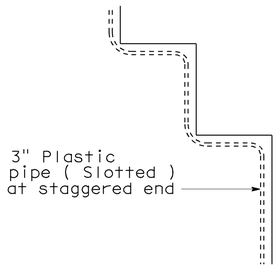

DETAIL B
No Scale

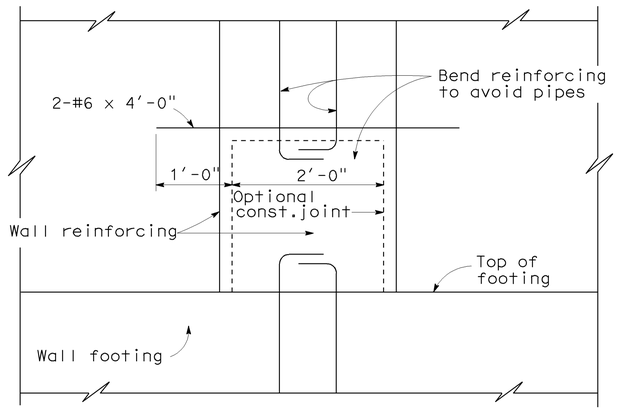

SECTION H-H
1"=1'-0"

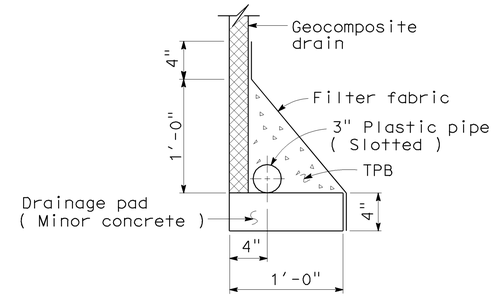

WITHOUT FOOTING

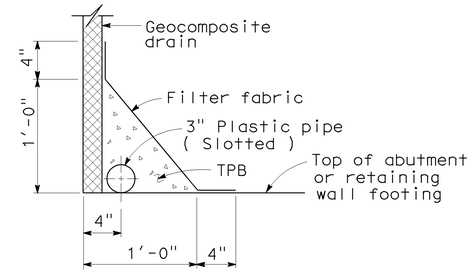

WITH FOOTING

DRAINAGE DETAILS
1 1/2"=1'-0"

STANDARD DRAWING					
RELEASE DATE 4/23/98	DESIGN	BY M.TRAFFALIS	CHECKED E.THORKILDSEN	RELEASED BY	
FILE NO. xs3-110e	DETAILS	BY R.YEE	CHECKED E.THORKILDSEN		
	SUBMITTED	BY M.HA	DRAWING DATE 4/98	OFFICE CHIEF	

STATE OF CALIFORNIA
DEPARTMENT OF TRANSPORTATION

DIVISION OF ENGINEERING SERVICES

CU CU 04
EA EA 163731

BRIDGE NO. 34-0156
MILE POST 6.81

RUCKMAN AVENUE UC (REPLACE)
STRUCTURE APPROACH DRAINAGE DETAILS

DISREGARD PRINTS BEARING EARLIER REVISION DATES

REVISION DATES (PRELIMINARY STAGE ONLY): 5-6-09, 5-18-09, 6-4-09

SHEET 27 OF 40

DS OSD 2147A (ENGLISH) (REV. X/XX/XX)

ORIGINAL SCALE IN INCHES FOR REDUCED PLANS 0 1 2 3

USERNAME => trrene

DATE PLOTTED => 21-JUL-2009 TIME PLOTTED => 13:47

34-0156-s-sadd.dgn

DIST	COUNTY	ROUTE	POST MILES TOTAL PROJECT	SHEET No	TOTAL SHEETS
04	SF	101,1	9.2/9.8, 6.8/7.1	338	567

Philip E Lutz 06-04-09
REGISTERED CIVIL ENGINEER DATE

7-20-09
PLANS APPROVAL DATE

Philip E. Lutz No. C55839 Exp. 12-31-10 CIVIL — REGISTERED PROFESSIONAL ENGINEER — STATE OF CALIFORNIA

The State of California or its officers or agents shall not be responsible for the accuracy or completeness of electronic copies of this plan sheet.

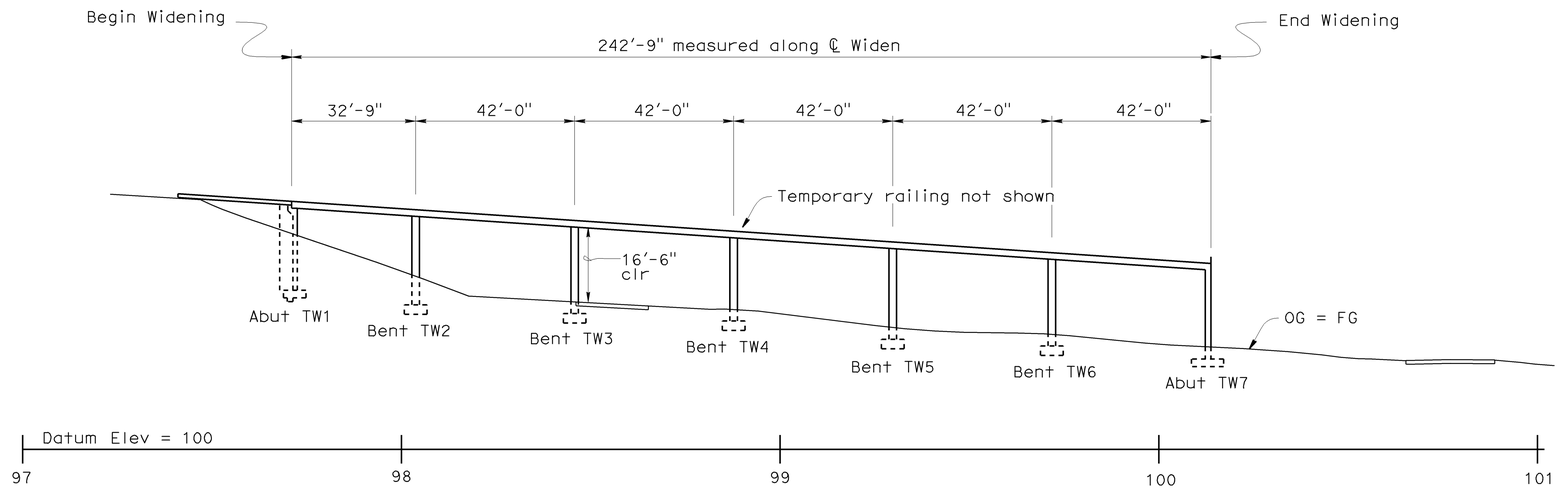

ELEVATION
1" = 20'

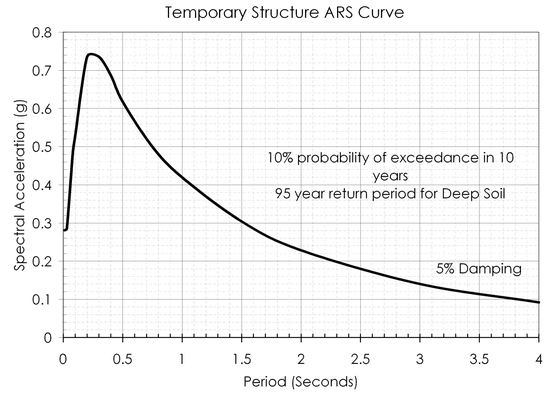

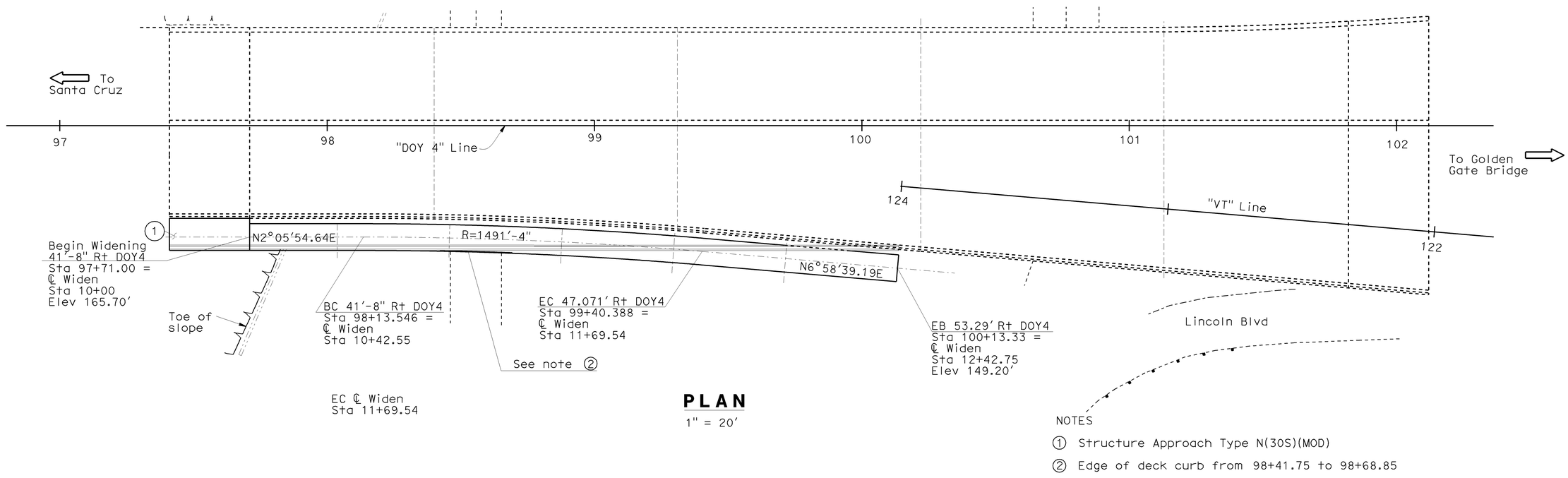

PLAN
1" = 20'

NOTES

1. Structure Approach Type N(30S)(MOD)
2. Edge of deck curb from 98+41.75 to 98+68.85

DESIGN	BY Muthanna Omran	CHECKED Alireza Yazdani	STATE OF CALIFORNIA DEPARTMENT OF TRANSPORTATION	DIVISION OF ENGINEERING SERVICES STRUCTURE DESIGN DESIGN BRANCH 16	BRIDGE NO. 34-0156	RUCKMAN AVENUE UC (REPLACE)	
DETAILS	BY Liang Ma	CHECKED Alireza Yazdani			POST MILE 6.81	TEMPORARY WIDENING LAYOUT	
QUANTITIES	BY Tanzeeba Kishwar	CHECKED Hardeep Singh					

STRUCTURES DESIGN DETAIL SHEET (ENGLISH) (REV. 10/25/05)

ORIGINAL SCALE IN INCHES FOR REDUCED PLANS 0 1 2 3

CU 04
EA 163731

DISREGARD PRINTS BEARING EARLIER REVISION DATES →

REVISION DATES: 1-2-09, 2-26-09, 5-18-09, 6-4-09

SHEET 28 OF 40

FILE => 34-0156-u-tw01.dgn

DATE PLOTTED => 21-JUL-2009 TIME PLOTTED => 13:47
USERNAME => trrene

DIST	COUNTY	ROUTE	POST MILES TOTAL PROJECT	SHEET No	TOTAL SHEETS
04	SF	101,1	9.2/9.8, 6.87/7.1	339	567

REGISTERED CIVIL ENGINEER — 06-04-09 DATE

7-20-09 PLANS APPROVAL DATE

Philip E. Lutz No. C55839 Exp. 12-31-10 CIVIL — REGISTERED PROFESSIONAL ENGINEER — STATE OF CALIFORNIA

The State of California or its officers or agents shall not be responsible for the accuracy or completeness of electronic copies of this plan sheet.

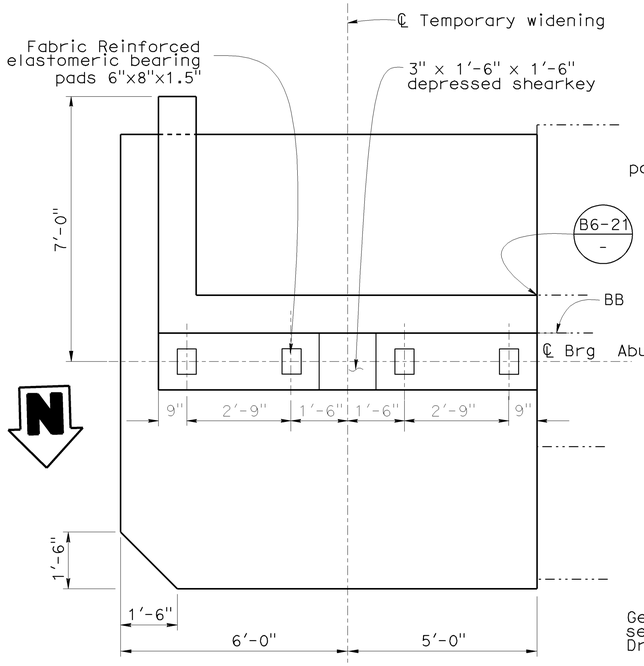

PLAN ABUT TW1

½"= 1'

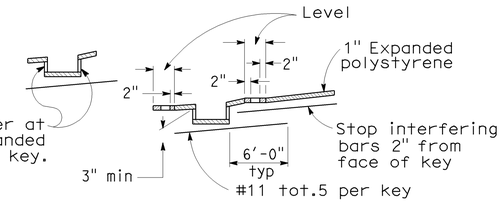

ELEVATION TYPICAL BEARING DETAILS

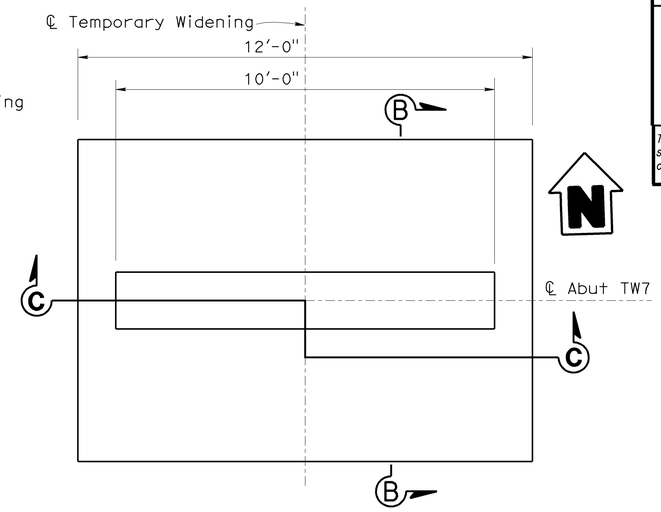

PLAN ABUT TW7

½" = 1'

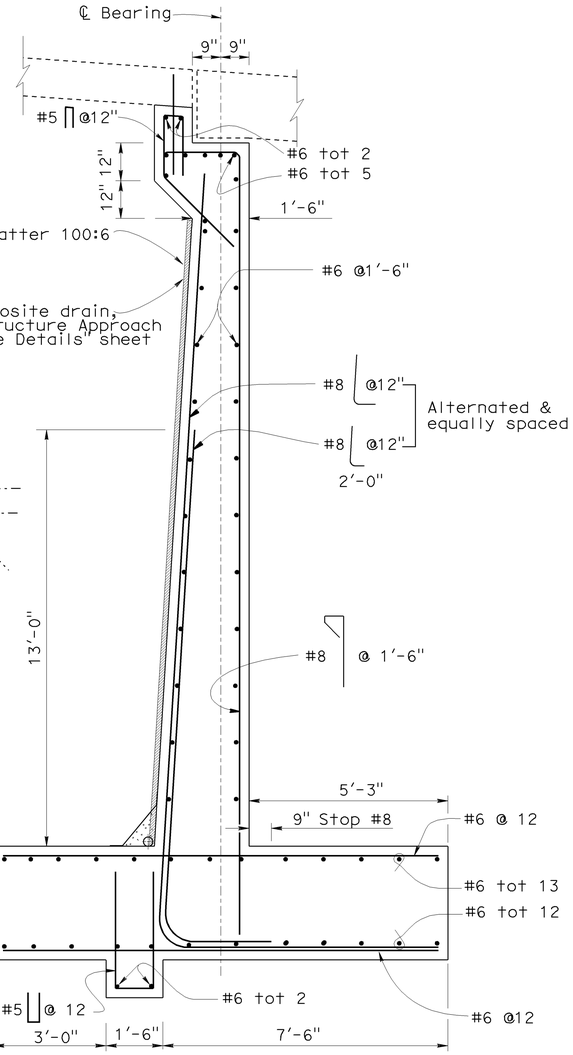

SECTION A-A

½"= 1'

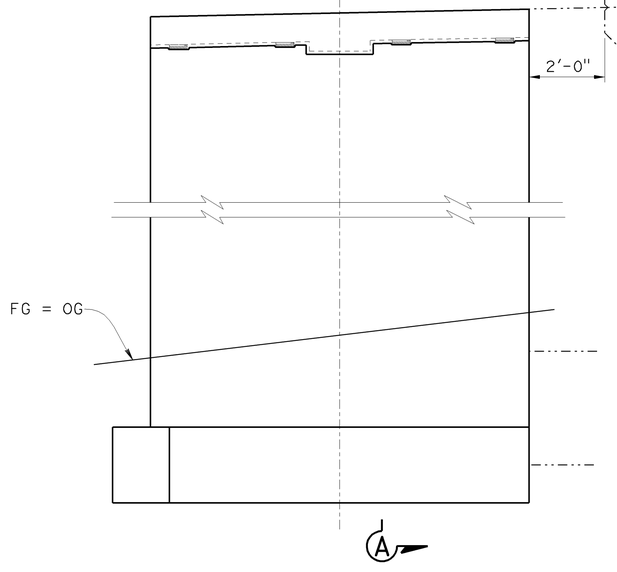

ELEVATION AT ABUT TW1

½"= 1'

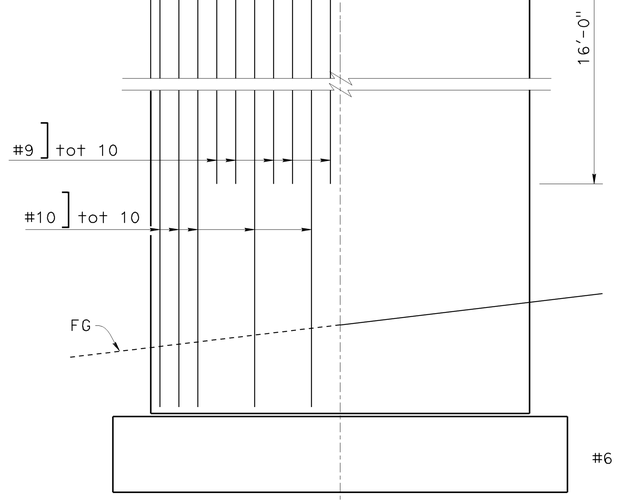

SECTION C-C AT ABUT TW7

1/2 " = 1'

Symetrical about ℄ Widening

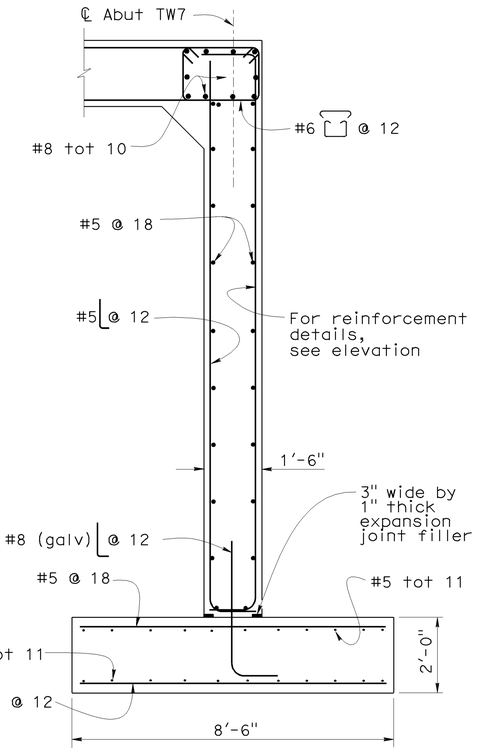

SECTION B-B

½"= 1'

	DESIGN	BY Muthanna Omran	CHECKED Alireza Yazdani	STATE OF CALIFORNIA DEPARTMENT OF TRANSPORTATION	DIVISION OF ENGINEERING SERVICES STRUCTURE DESIGN DESIGN BRANCH 16	BRIDGE NO. 34-0156	RUCKMAN AVENUE UC (REPLACE)
	DETAILS	BY Liang Ma	Alireza Yazdani			POST MILE 6.81	TEMPORARY WIDENING ABUTMENT DETAILS
	QUANTITIES	BY Tanzeeba Kishwar	CHECKED Hardeep Singh				

STRUCTURES DESIGN DETAIL SHEET (ENGLISH) (REV. 10/25/05)

ORIGINAL SCALE IN INCHES FOR REDUCED PLANS 0 1 2 3

CU 04 EA 163731

DISREGARD PRINTS BEARING EARLIER REVISION DATES →

REVISION DATES: 4-14-09, 4-22-09, 5-18-09, 6-4-09

SHEET 29 OF 40

FILE => 34-0156-u-tw02.dgn

DATE PLOTTED => 21-JUL-2009 TIME PLOTTED => 13:47

USERNAME = trrene

DIST	COUNTY	ROUTE	POST MILES TOTAL PROJECT	SHEET No	TOTAL SHEETS
04	SF	101,1	9.2/9.8, 6.8/7.1	340	567

Philip E Lutz 06-04-09
REGISTERED CIVIL ENGINEER DATE

7-20-09
PLANS APPROVAL DATE

REGISTERED PROFESSIONAL ENGINEER
Philip E. Lutz
No. C55839
Exp. 12-31-10
CIVIL
STATE OF CALIFORNIA

The State of California or its officers or agents shall not be responsible for the accuracy or completeness of electronic copies of this plan sheet.

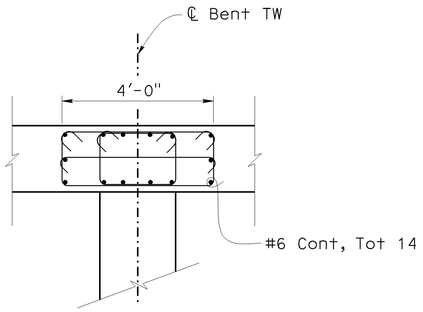

SECTION A-A
½" = 1'

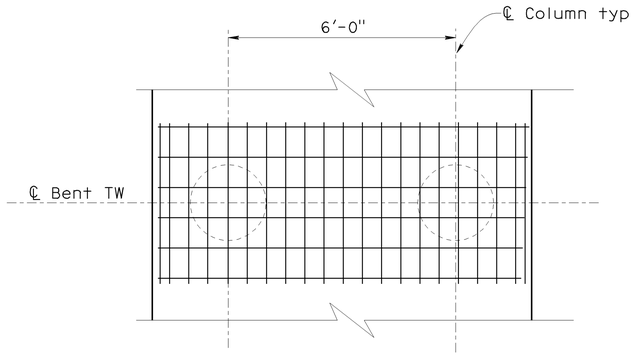

TYPICAL BENT PLAN VIEW
½" = 1'

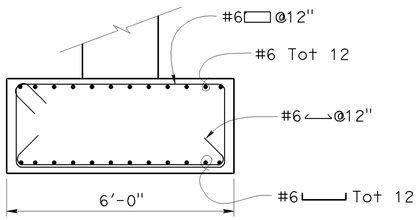

SECTION B-B
½" = 1'

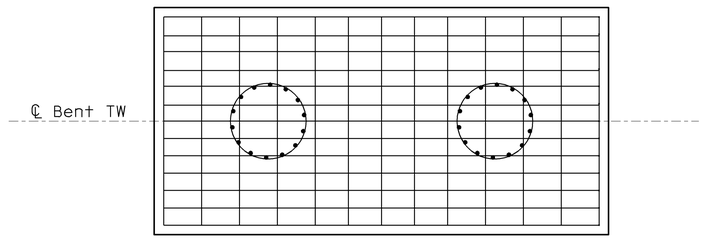

SECTION D-D
½" = 1'

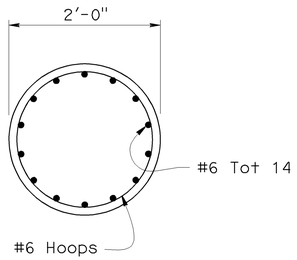

SECTION C-C
1" = 1'

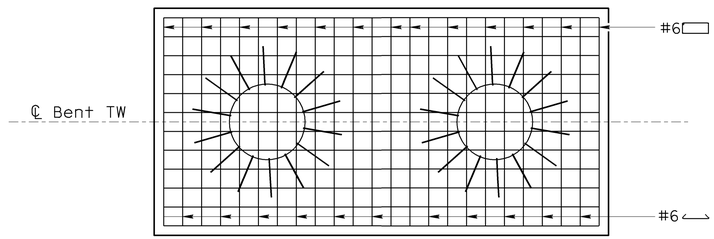

SECTION E-E
½" = 1'

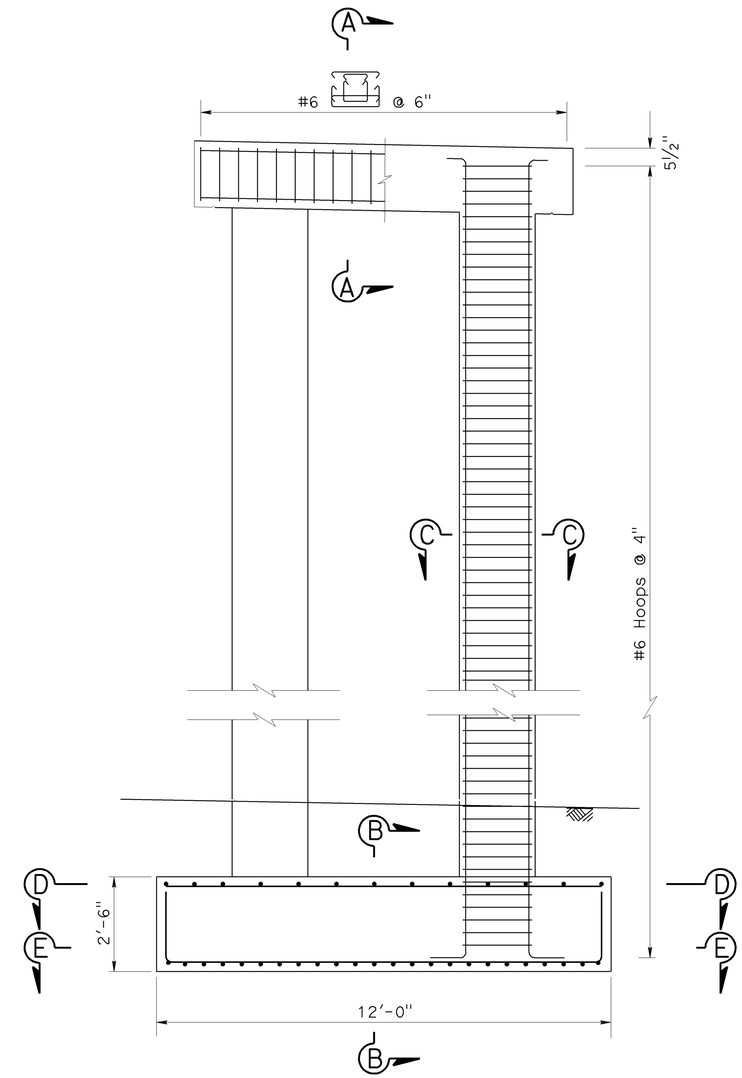

COLUMN ELEVATION
½" = 1'

DESIGN	BY Muthanna Omran	CHECKED Alireza Yazdani	STATE OF CALIFORNIA DEPARTMENT OF TRANSPORTATION	DIVISION OF ENGINEERING SERVICES STRUCTURE DESIGN DESIGN BRANCH 16	BRIDGE NO. 34-0156	RUCKMAN AVENUE UC (REPLACE)
DETAILS	BY Liang Ma	CHECKED Alireza Yazdani			POST MILE 6.81	TEMPORARY WIDENING BENT DETAILS
QUANTITIES	BY Tanzeeba Kishwar	CHECKED Hardeep Singh				

STRUCTURES DESIGN DETAIL SHEET (ENGLISH) (REV. 10/25/05)

ORIGINAL SCALE IN INCHES FOR REDUCED PLANS 0 1 2 3

CU 04
EA 163731

DISREGARD PRINTS BEARING EARLIER REVISION DATES →

REVISION DATES: 5-14-09, 5-18-09, 6-4-09

SHEET 30 OF 40

FILE => 34-0156-u-tw03.dgn

USERNAME => ttirrene DATE PLOTTED => 21-JUL-2009 TIME PLOTTED => 13:47

DIST	COUNTY	ROUTE	POST MILES TOTAL PROJECT	SHEET No	TOTAL SHEETS
04	SF	101,1	9.2/9.8, 6.8/7.1	341	567

Philip E Lutz 06-04-09
REGISTERED CIVIL ENGINEER DATE

7-20-09
PLANS APPROVAL DATE

The State of California or its officers or agents shall not be responsible for the accuracy or completeness of electronic copies of this plan sheet.

REGISTERED PROFESSIONAL ENGINEER — Philip E. Lutz — No. C55839 — Exp. 12-31-10 — CIVIL — STATE OF CALIFORNIA

NOTES:

Reinforcement details for Spans 3, 4 and 5 are similar to Span 2

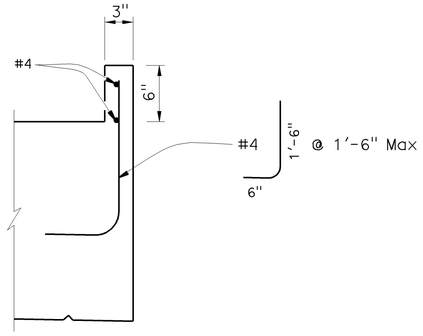

EDGE OF DECK CURB

1 1/2" = 1'

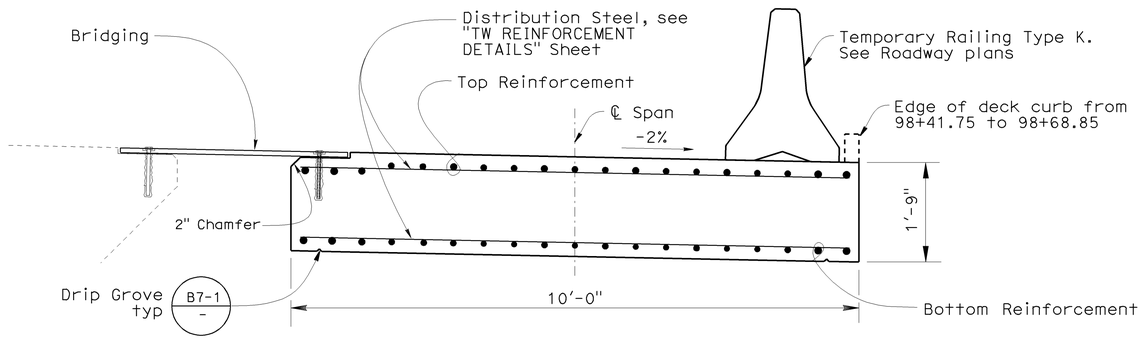

TYPICAL SECTION

¾" = 1'

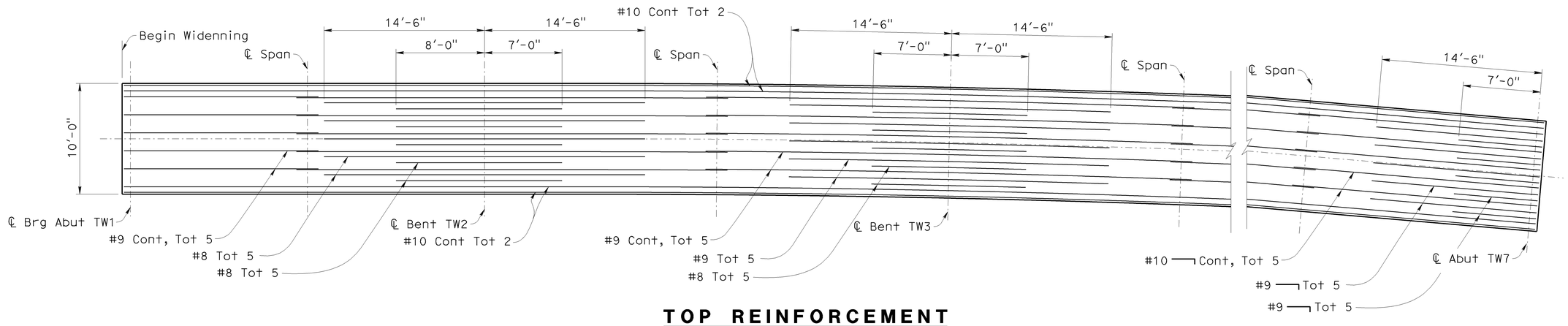

TOP REINFORCEMENT

1" = 5'

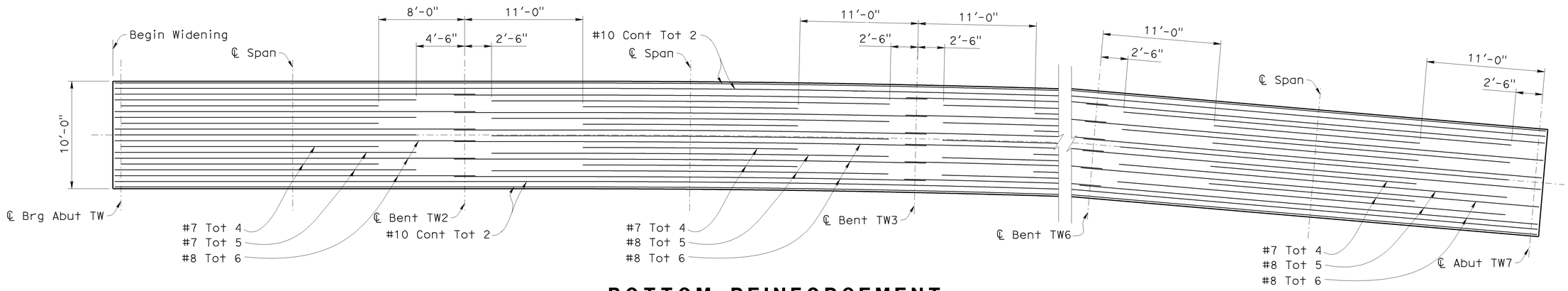

BOTTOM REINFORCEMENT

1" = 5'

DESIGN	BY Muthanna Omran	CHECKED Alireza Yazdani	STATE OF CALIFORNIA DEPARTMENT OF TRANSPORTATION	DIVISION OF ENGINEERING SERVICES STRUCTURE DESIGN DESIGN BRANCH 16	BRIDGE NO. 34-0156
DETAILS	BY Eric Hallstrom	CHECKED Alireza Yazdani			POST MILE 6.81
QUANTITIES	BY Tanzeeba Kishwar	CHECKED Hardeep Singh			

RUCKMAN AVENUE UC (REPLACE)

TEMPORARY WIDENING MAIN REINFORCEMENT

STRUCTURES DESIGN DETAIL SHEET (ENGLISH) (REV. 10/25/05)

ORIGINAL SCALE IN INCHES FOR REDUCED PLANS 0 1 2 3

CU 04
EA 163731

DISREGARD PRINTS BEARING EARLIER REVISION DATES →

REVISION DATES: 4-14-09 | 5-18-09 | 6-4-09

SHEET 31 OF 40

FILE => 34-0156-u-tw04.dgn

USERNAME = hmnguye DATE PLOTTED => 21-JUL-2009 TIME PLOTTED => 13:03

DIST	COUNTY	ROUTE	POST MILES TOTAL PROJECT	SHEET No	TOTAL SHEETS
04	SF	101,1	9.2/9.8, 6.8/7.1	342	567

Philip E Lutz 06-04-09
REGISTERED CIVIL ENGINEER DATE

7-20-09
PLANS APPROVAL DATE

REGISTERED PROFESSIONAL ENGINEER — Philip E. Lutz — No. C55839 — Exp. 12-31-10 — CIVIL — STATE OF CALIFORNIA

The State of California or its officers or agents shall not be responsible for the accuracy or completeness of electronic copies of this plan sheet.

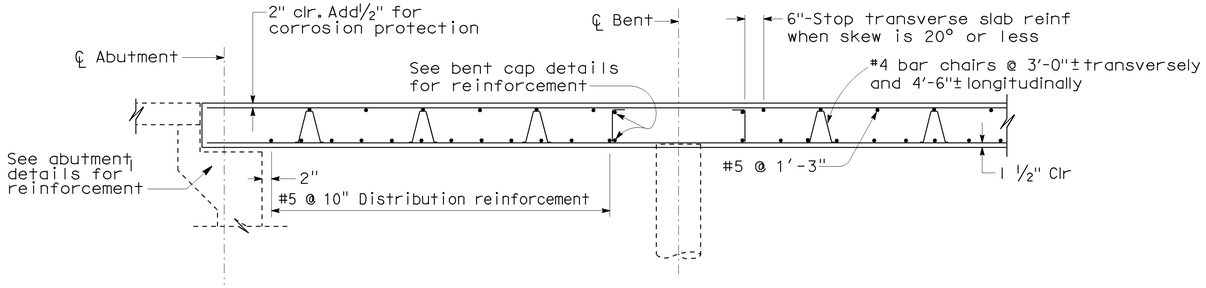

LONGITUDINAL SECTION
No Scale

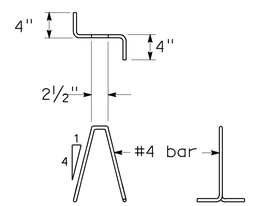

BAR CHAIR DETAIL
No Scale

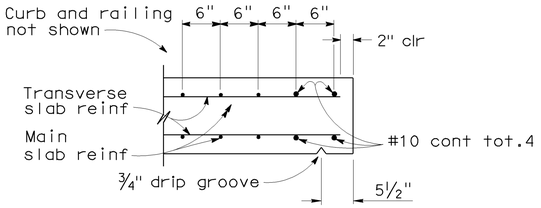

EDGE OF SLAB DETAILS
No Scale

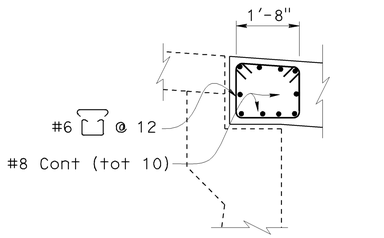

END DIAPHRAGM
1/2" = 1'

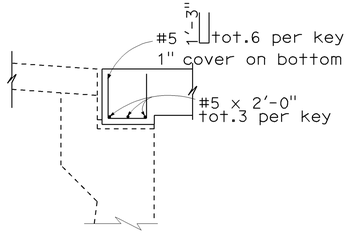

DEPRESSED KEY
1/2" = 1'

BAR SPLICE LENGTH								
Bar size	#4	#5	#6	#7	#8	#9	#10	#11
All bars, except top bars in spans over 21'-0"	1'-23"	2'-4"	2'-10"	3'-3"	3'-9"	5'-8"	6'-4"	7'-1"
Top bars in spans over 21'-0"	1'-23"	2'-4"	2'-10"	4'-5"	5'-0"	6'-5"	8'-1"	10'-0"

REINFORCEMENT NOTES:

Splices in top main bars to be located near center of span.
Splices in bottom main bars to be located near bent.
Spacing of all transverse bars is measured along ℄ roadway.
Place all transverse bars parallel to bent.

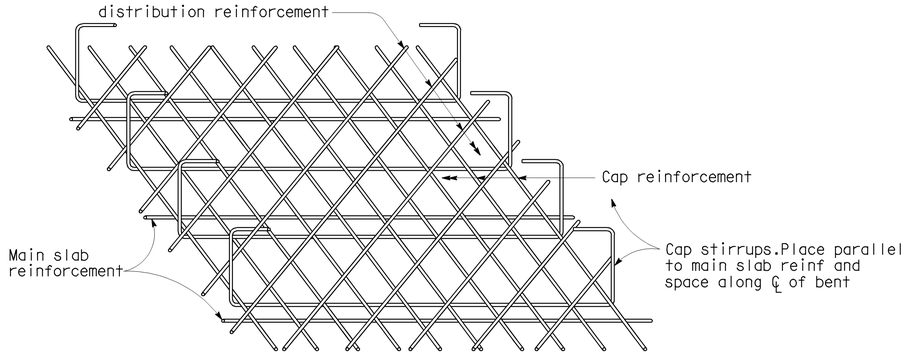

BOTTOM SLAB REINFORCEMENT AT BENT
No Scale

DESIGN	BY Muthanna Omran	CHECKED Alireza Yazdani	STATE OF CALIFORNIA DEPARTMENT OF TRANSPORTATION	DIVISION OF ENGINEERING SERVICES STRUCTURE DESIGN DESIGN BRANCH 16	BRIDGE NO. 34-0156
DETAILS	BY Liang Ma	CHECKED Alireza Yazdani			POST MILE 6.81
QUANTITIES	BY Tanzeeba Kishwar	CHECKED Hardeep Singh			

RUCKMAN AVENUE UC (REPLACE)
TEMPORARY WIDENING REINFORCEMENT DETAILS

STRUCTURES DESIGN DETAIL SHEET (ENGLISH) (REV. 10/25/05)

ORIGINAL SCALE IN INCHES FOR REDUCED PLANS 0 1 2 3

CU 04
EA 163731

DISREGARD PRINTS BEARING EARLIER REVISION DATES →

REVISION DATES: 6-14-09 | 5-18-09 | 6-4-09

SHEET 32 OF 40

FILE => 34-0156-u-tw05.dgn

USERNAME => trmoyse DATE PLOTTED => 21-JUL-2009 TIME PLOTTED => 13:03

DIST	COUNTY	ROUTE	POST MILES TOTAL PROJECT	SHEET No	TOTAL SHEETS
04	SF	101,1	9.2/9.8, 6.8/7.1	343	567

Philip E. Lutz 06-04-09
REGISTERED CIVIL ENGINEER DATE

7-20-09
PLANS APPROVAL DATE

REGISTERED PROFESSIONAL ENGINEER
Philip E. Lutz
No. C55839
Exp. 12-31-10
CIVIL
STATE OF CALIFORNIA

The State of California or its officers or agents shall not be responsible for the accuracy or completeness of electronic copies of this plan sheet.

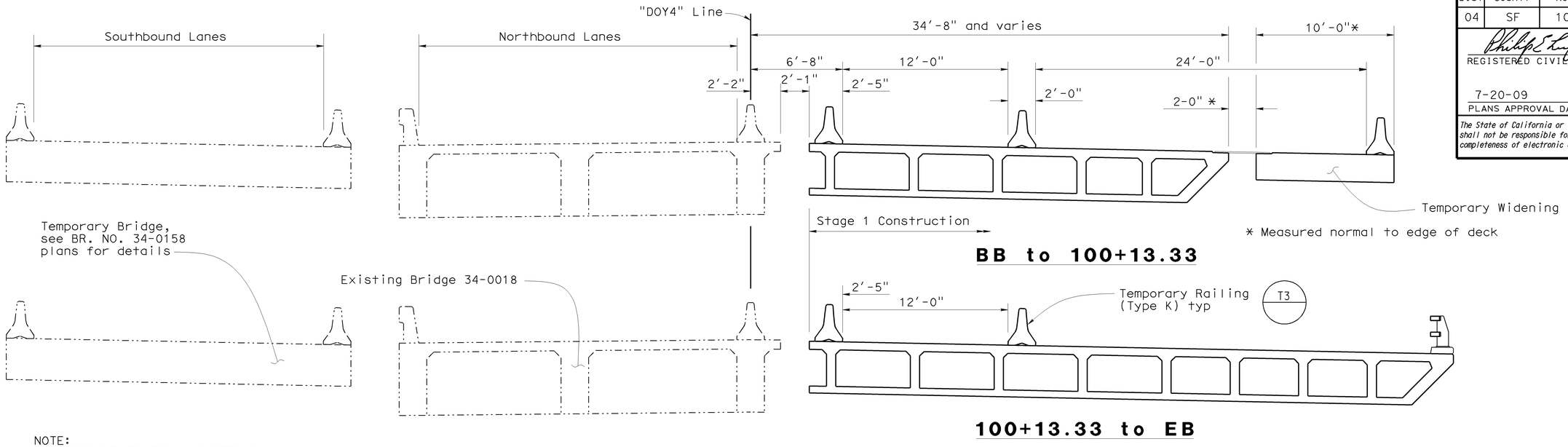

BB to 100+13.33

100+13.33 to EB

NOTE:
THE CONTRACTOR SHALL VERIFY ALL CONTROLLING FIELD DIMENSIONS BEFORE ORDERING OR FABRICATING ANY MATERIAL.

TYPICAL STAGE 1*

1/4" = 1'

* Staging numbers are only with respect to the construction sequence of this particular bridge, and do not coincide with the project wide staging. See "Road Plans" for global staging sequence.

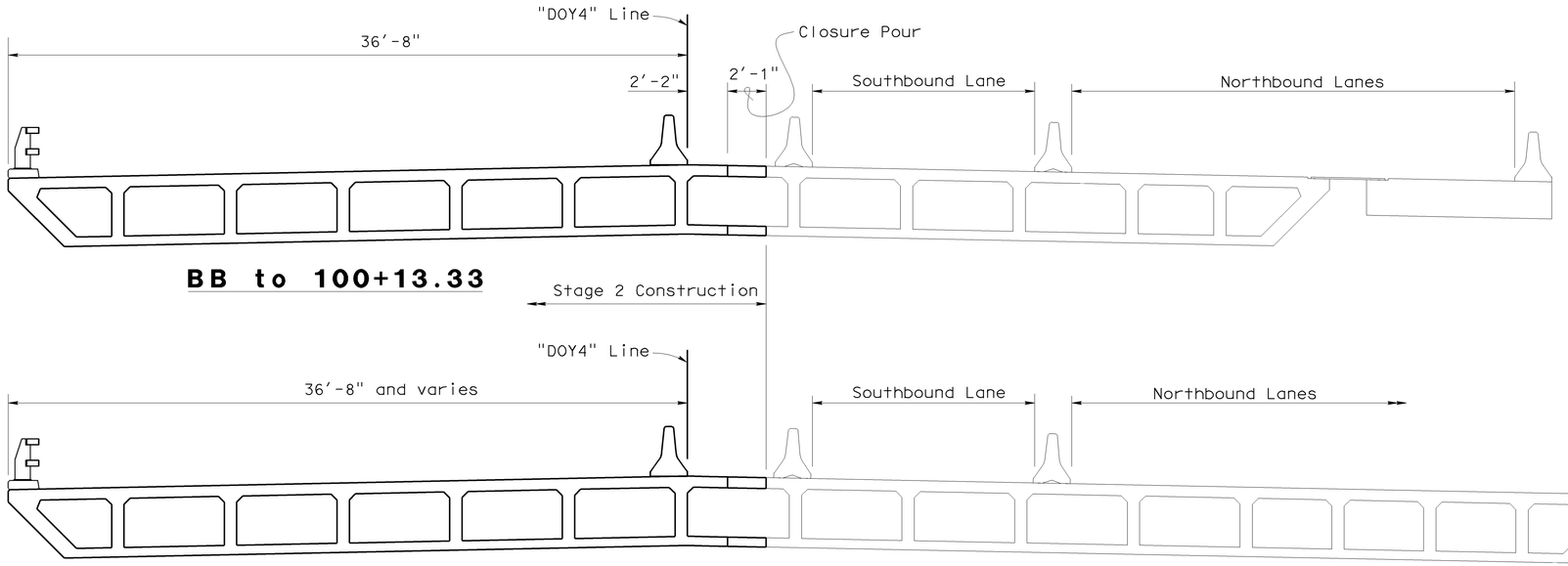

BB to 100+13.33

100+13.33 to EB

TYPICAL STAGE 2*

1/4" = 1'

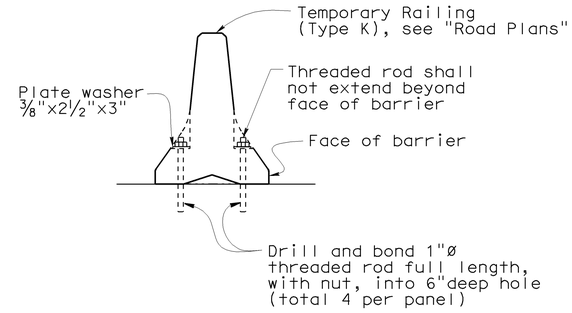

TEMPORARY RAILING ATTACHMENT DETAIL

3/4" = 1'

DESIGN	BY John E. Peterson	CHECKED Muthanna Omran	STATE OF CALIFORNIA DEPARTMENT OF TRANSPORTATION	DIVISION OF ENGINEERING SERVICES STRUCTURE DESIGN DESIGN BRANCH 16	BRIDGE NO. 34-0156	RUCKMAN AVENUE UC (REPLACE)
DETAILS	BY Liang Ma	CHECKED Muthanna Omran			POST MILE 6.81	CONSTRUCTION STAGING NO.1
QUANTITIES	BY Bunma Nou	CHECKED Paotsan Wang				

STRUCTURES DESIGN DETAIL SHEET (ENGLISH) (REV. 10/25/05)

ORIGINAL SCALE IN INCHES FOR REDUCED PLANS 0 1 2 3

CU 04
EA 163731

DISREGARD PRINTS BEARING EARLIER REVISION DATES →

REVISION DATES									SHEET	OF
4-14-09	5-18-09	6-4-09							33	40

FILE => 34-0156-v-miscdt01.dgn

USERNAME => trmnguye DATE PLOTTED => 21-JUL-2009 TIME PLOTTED => 13:03

DIST	COUNTY	ROUTE	POST MILES TOTAL PROJECT	SHEET No	TOTAL SHEETS
04	SF	101,1	9.2/9.8, 6.8/7.1	344	567

Philip E Lutz 06-04-09
REGISTERED CIVIL ENGINEER DATE

7-20-09
PLANS APPROVAL DATE

Philip E. Lutz No. C55839 Exp. 12-31-10 CIVIL — REGISTERED PROFESSIONAL ENGINEER — STATE OF CALIFORNIA

The State of California or its officers or agents shall not be responsible for the accuracy or completeness of electronic copies of this plan sheet.

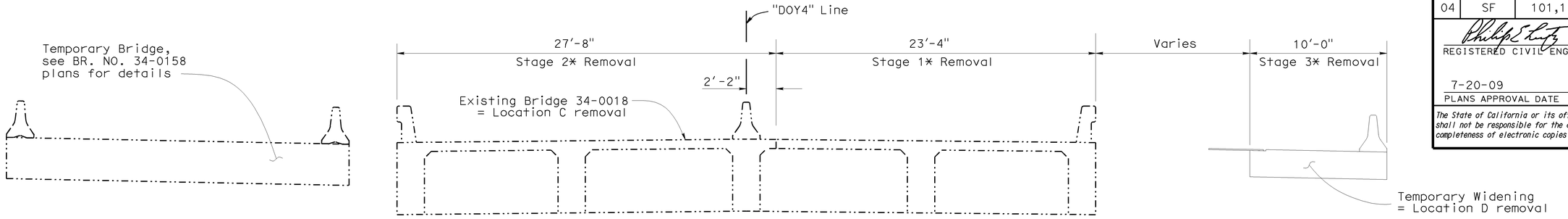

REMOVAL DIAGRAM
1/4" = 1'

NOTE:
THE CONTRACTOR SHALL VERIFY ALL CONTROLLING FIELD DIMENSIONS BEFORE ORDERING OR FABRICATING ANY MATERIAL.

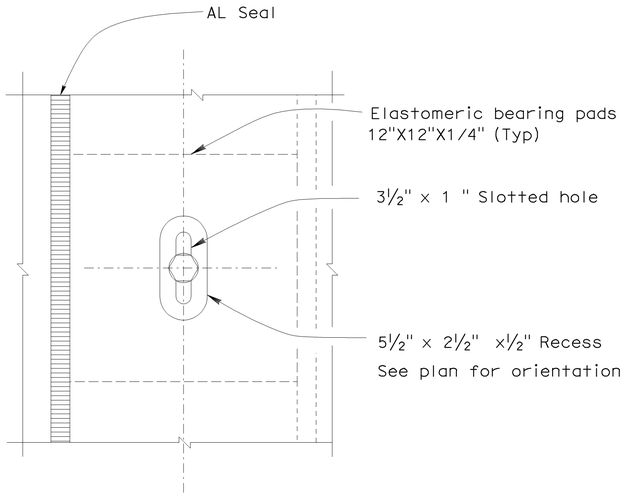

VIEW D-D
3" = 1'

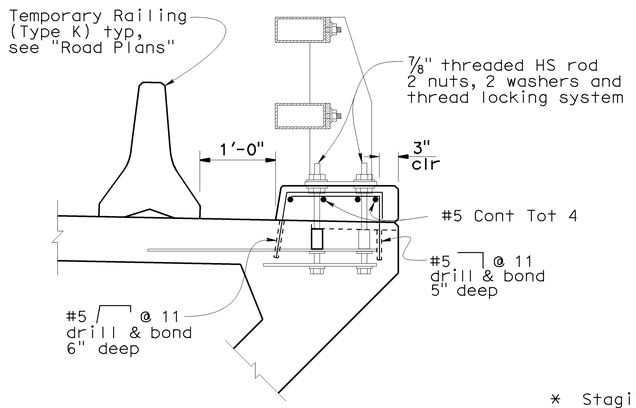

STAGE 3* CONSTRUCTION
1" = 1'
(BB to 100+14.13, Right side only)

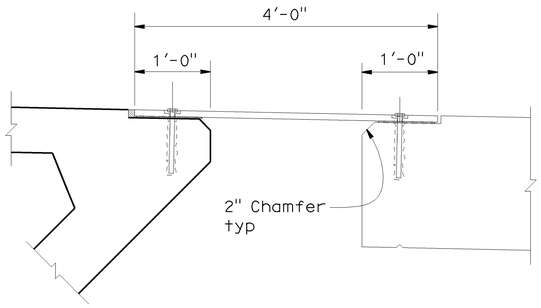

TYPICAL SECTION
1" = 1'

* Staging numbers are only with respect to the construction sequence of this particular bridge, and do not coincide with the project wide staging. See "Road Plans" for global staging sequence.

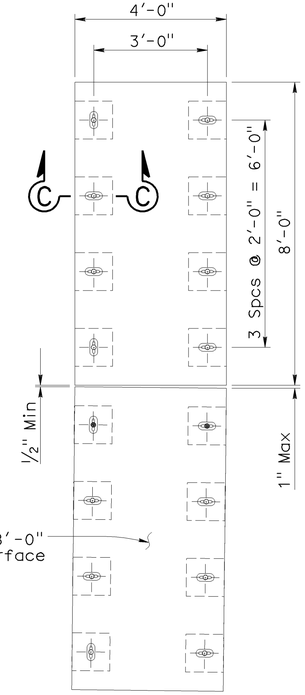

BRIDGING PLATES
½" = 1'

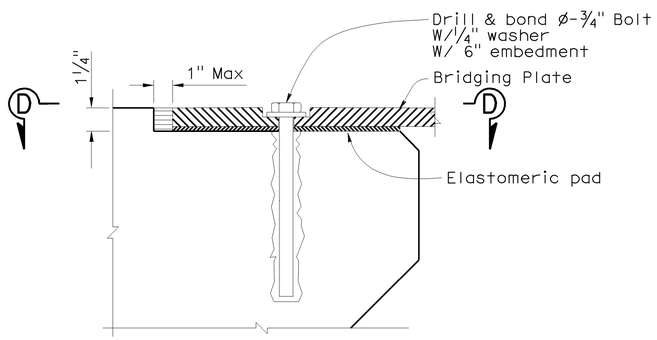

SECTION C-C
3" = 1'

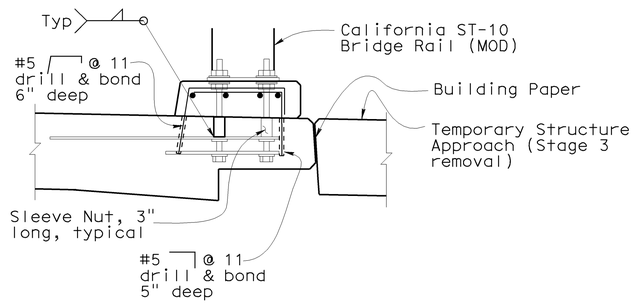

STAGE 3* CONSTRUCTION
1" = 1'
(South approach slab, right side only)

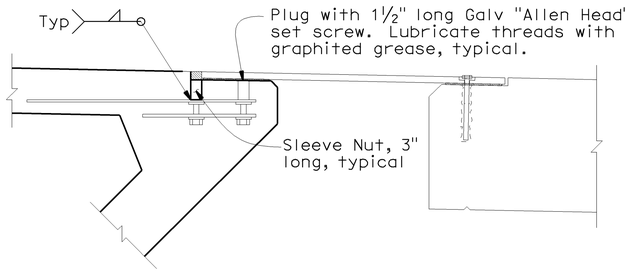

TYPICAL SECTION AT BARRIER SUPPORTS
1" = 1'

DESIGN	BY John E. Peterson	CHECKED Muthanna Omran	STATE OF CALIFORNIA DEPARTMENT OF TRANSPORTATION	DIVISION OF ENGINEERING SERVICES STRUCTURE DESIGN DESIGN BRANCH 16	BRIDGE NO. 34-0156
DETAILS	BY Liang Ma	CHECKED Muthanna Omran			POST MILE 6.81
QUANTITIES	BY Bunma Nou	CHECKED Paotsan Wang			

RUCKMAN AVENUE UC (REPLACE)
CONSTRUCTION STAGING NO. 2

STRUCTURES DESIGN DETAIL SHEET (ENGLISH) (REV. 10/25/05)

ORIGINAL SCALE IN INCHES FOR REDUCED PLANS 0 1 2 3

CU 04
EA 163731

DISREGARD PRINTS BEARING EARLIER REVISION DATES →

REVISION DATES: 1-2-09 | 2-26-09 | 5-18-09 | 6-4-09

SHEET 34 OF 40

FILE => 34-0156-v-miscdt02.dgn

USERNAME => trmnguye DATE PLOTTED => 21-JUL-2009 TIME PLOTTED => 13:04

DIST	COUNTY	ROUTE	KILOMETER POST TOTAL PROJECT	SHEET No	TOTAL SHEETS
04	SF	101,1	9.2/9.8, 6.8/7.1	345	567

CERTIFIED ENGINEERING GEOLOGIST 6-02-09

7-20-09
PLANS APPROVAL DATE

The State of California or its officers or agents shall not be responsible for the accuracy or completeness of electronic copies of this plan sheet.

PROFESSIONAL GEOLOGIST — Grant Wilcox — No. 2300 — Exp. 4-30-10 — CERTIFIED ENGINEERING GEOLOGIST — STATE OF CALIFORNIA

This LOTB sheet was prepared in accordance with the Caltrans Soil & Rock Logging, Classification, & Presentation Manual (June 2007), with the exception of section 2.3.

BENCH MARK

BM No. SF14 Elev 96.261 (1988 NAVD)

Set 1′ Caltrans brass plug in concrete, northbound Lincoln road, approximately 205′ north of the north overcrossing of Doyle Drive, on a concrete Vista Point structure, 21.1′ north of the first boolard after a bus turnout, 14.4′ southeast of a 1.3′ wide raised wall in the Vista Point structure, 2′ west of the east edge.

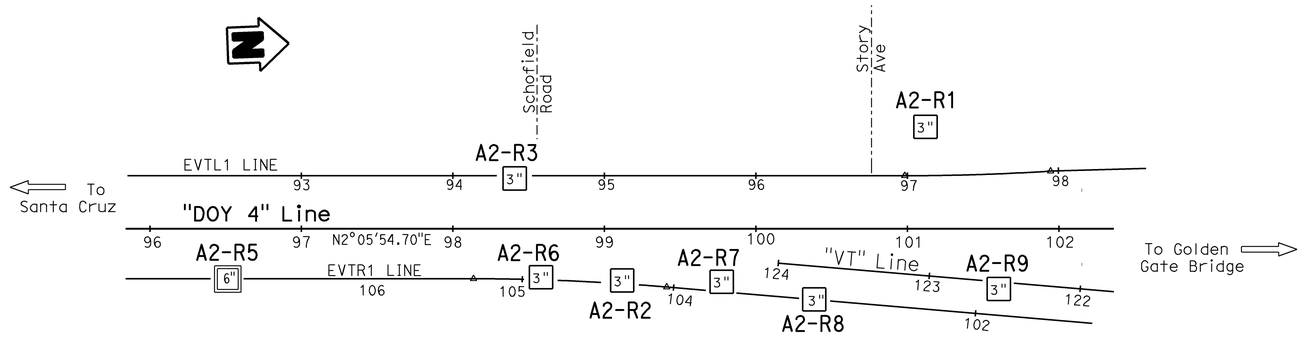

PLAN
1" = 50′

NOTE: Ground water was not measured in Borings A2-R5 and A2-R3.

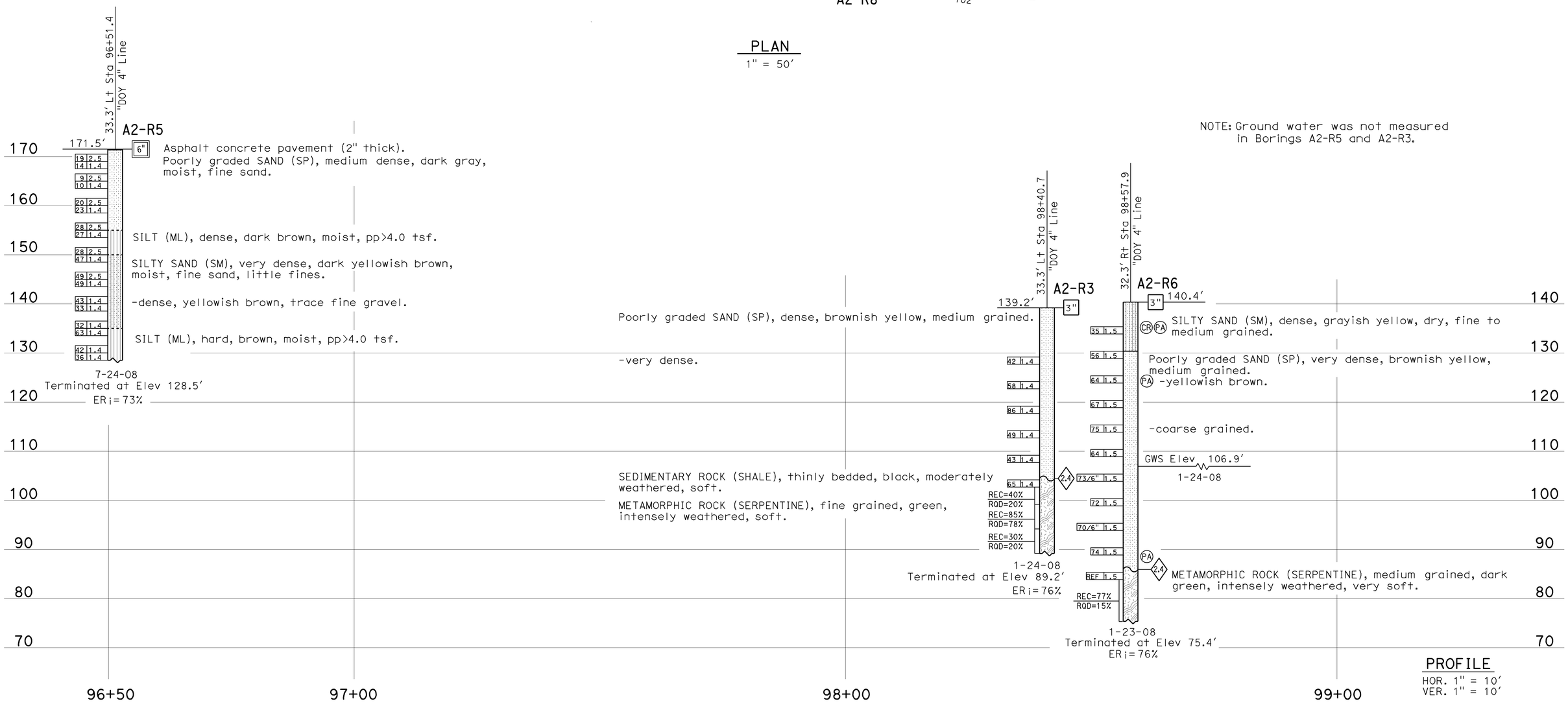

PROFILE
HOR. 1" = 10′
VER. 1" = 10′

ENGINEERING SERVICES		GEOTECHNICAL SERVICES	STATE OF CALIFORNIA DEPARTMENT OF TRANSPORTATION	DIVISION OF ENGINEERING SERVICES STRUCTURE DESIGN	BRIDGE NO. 34-0156	RUCKMAN AVENUE UC (REPLACE)
FUNCTIONAL SUPERVISOR	DRAWN BY: I.G-Remmen, 4/09	FIELD INVESTIGATION BY:		DESIGN BRANCH 16	POST MILES 6.81	LOG OF TEST BORINGS 1 OF 6
NAME: T. Pokrywka	CHECKED BY: R. Price	R. Nashed		CU 04 EA 163731	DISREGARD PRINTS BEARING EARLIER REVISION DATES →	REVISION DATES: 05-07-09, 05-11-09, 05-22-09, 06-01-09 — SHEET 35 OF 40

OGS CIVIL LOG OF TEST BORINGS SHEET

ORIGINAL SCALE IN INCHES FOR REDUCED PLANS 0 1 2 3

FILE => 34-0156-z-1tb01.dgn

USERNAME => tremguye DATE PLOTTED => 21-JUL-2009 TIME PLOTTED => 13:04

DIST	COUNTY	ROUTE	KILOMETER POST TOTAL PROJECT	SHEET No	TOTAL SHEETS
04	SF	101,1	9.2/9.8, 6.8/7.1	346	567

CERTIFIED ENGINEERING GEOLOGIST — 6-02-09

PROFESSIONAL GEOLOGIST — Grant Wilcox — No. 2300 — Exp. 4-30-10 — CERTIFIED ENGINEERING GEOLOGIST — STATE OF CALIFORNIA

7-20-09
PLANS APPROVAL DATE

The State of California or its officers or agents shall not be responsible for the accuracy or completeness of electronic copies of this plan sheet.

This LOTB sheet was prepared in accordance with the Caltrans Soil & Rock Logging, Classification, & Presentation Manual (June 2007), with the exception of section 2.3.

FOR PLAN VIEW, SEE
"LOG OF TEST BORINGS 1 OF 6"

Note: Ground water was not measured in Borings A2-R7 and A2-R8.

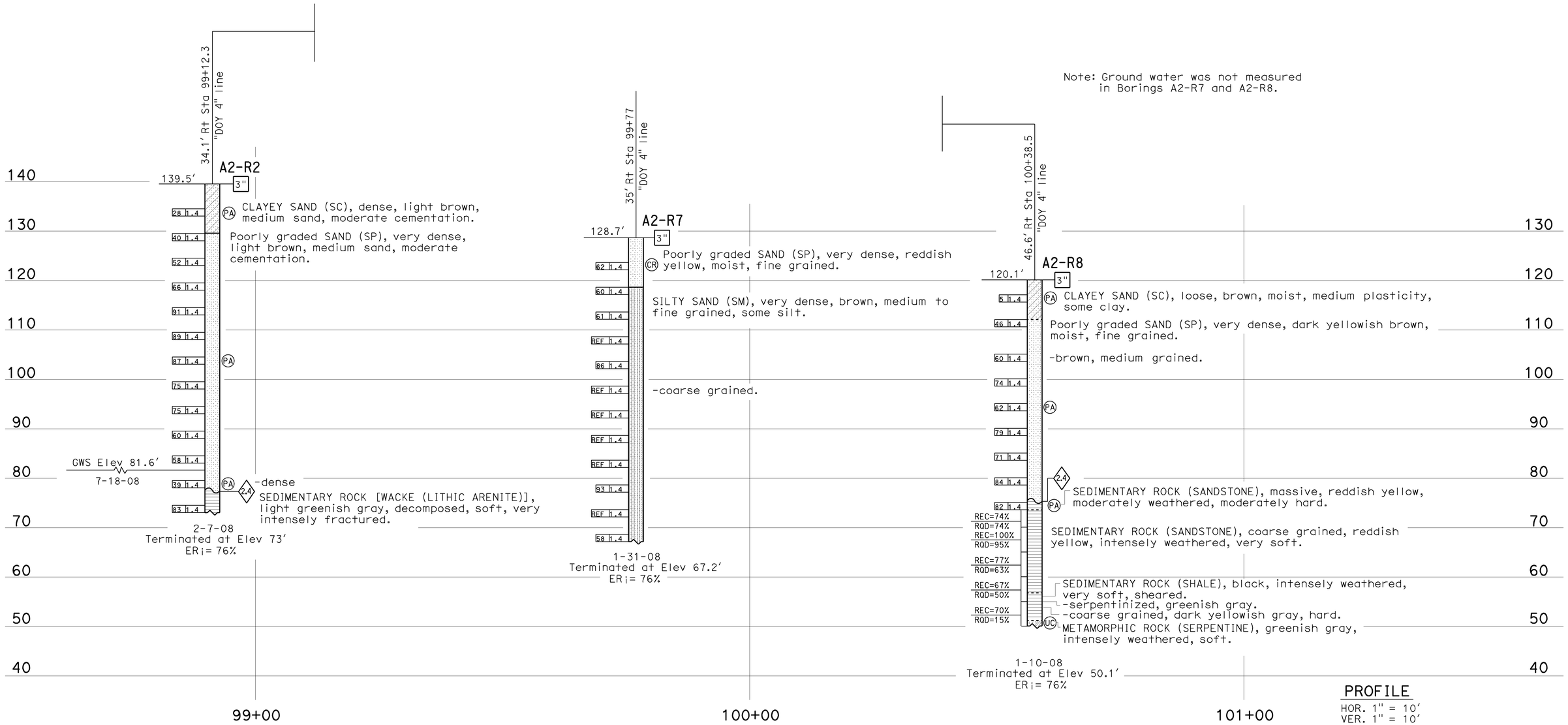

PROFILE
HOR. 1" = 10′
VER. 1" = 10′

ENGINEERING SERVICES	GEOTECHNICAL SERVICES		STATE OF CALIFORNIA DEPARTMENT OF TRANSPORTATION	DIVISION OF ENGINEERING SERVICES STRUCTURE DESIGN	BRIDGE NO.	RUCKMAN AVENUE UC (REPLACE)
FUNCTIONAL SUPERVISOR	DRAWN BY: I.G-Remmen, 4/09	FIELD INVESTIGATION BY:		DESIGN BRANCH 16	34-0156	LOG OF TEST BORINGS 2 OF 6
NAME: T. Pokrywka	CHECKED BY: R. Price	R. Nashed, E. Ortega			POST MILES 6.81	

OGS CIVIL LOG OF TEST BORINGS SHEET

ORIGINAL SCALE IN INCHES FOR REDUCED PLANS 0 1 2 3

CU 04
EA 163731

DISREGARD PRINTS BEARING EARLIER REVISION DATES →

REVISION DATES: 05-07-09 | 05-11-09 | 05-22-09 | 06-01-09

SHEET 36 OF 40

FILE => 34-0156-z-1tb02.dgn

USERNAME => rmmguye DATE PLOTTED => 21-JUL-2009 TIME PLOTTED => 13:04

DIST	COUNTY	ROUTE	KILOMETER POST TOTAL PROJECT	SHEET No	TOTAL SHEETS
04	SF	101,1	9.2/9.8, 6.8/7.1	347	567

CERTIFIED ENGINEERING GEOLOGIST 6-02-09

PROFESSIONAL GEOLOGIST — Grant Wilcox — No. 2300 — Exp. 4-30-10 — CERTIFIED ENGINEERING GEOLOGIST — STATE OF CALIFORNIA

7-20-09
PLANS APPROVAL DATE

The State of California or its officers or agents shall not be responsible for the accuracy or completeness of electronic copies of this plan sheet.

This LOTB sheet was prepared in accordance with the Caltrans Soil & Rock Logging, Classification, & Presentation Manual (June 2007) with the exception of Section 2.3.

FOR PLAN VIEW, SEE
"LOG OF TEST BORINGS 1 OF 6"

Note: Ground water was not measured in Boring A2-R1.

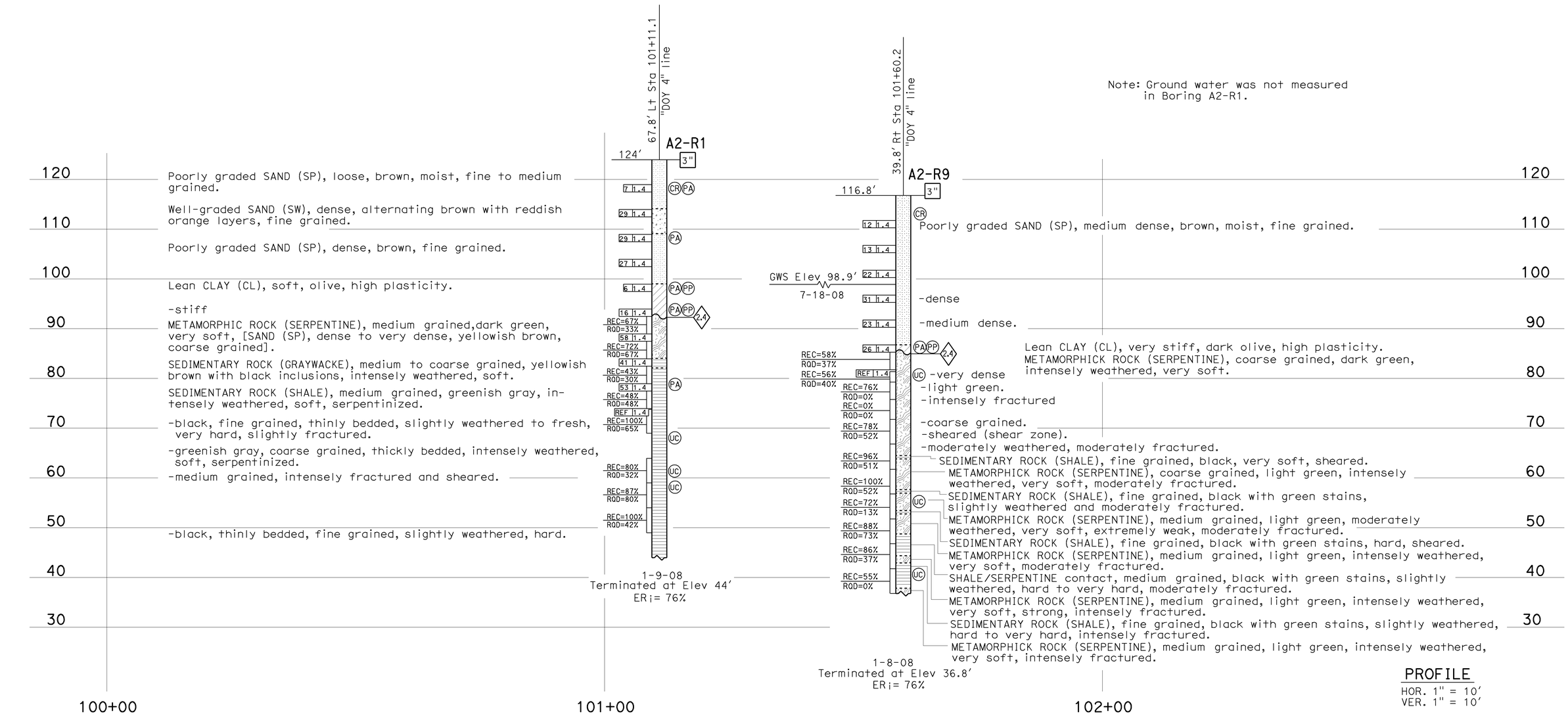

PROFILE
HOR. 1" = 10'
VER. 1" = 10'

ENGINEERING SERVICES	GEOTECHNICAL SERVICES		STATE OF CALIFORNIA DEPARTMENT OF TRANSPORTATION	DIVISION OF ENGINEERING SERVICES STRUCTURE DESIGN	BRIDGE NO.	RUCKMAN AVENUE UC (REPLACE)
FUNCTIONAL SUPERVISOR	DRAWN BY: I.G-Remmen, 4/09	FIELD INVESTIGATION BY:		DESIGN BRANCH 16	34-0156	LOG OF TEST BORINGS 3 OF 6
NAME: T. Pokrywka	CHECKED BY: R. Price	R. Nashed			POST MILES 6.81	

OGS CIVIL LOG OF TEST BORINGS SHEET

ORIGINAL SCALE IN INCHES FOR REDUCED PLANS 0 1 2 3

CU 04
EA 163731

DISREGARD PRINTS BEARING EARLIER REVISION DATES →

REVISION DATES							SHEET	OF
05-01-09	05-11-09	05-22-09	06-01-09				37	40

FILE => 34-0156-z-lltb03.dgn

USERNAME => rmmguye DATE PLOTTED => 21-JUL-2009 TIME PLOTTED => 13:04

REFERENCE: CALTRANS SOIL & ROCK LOGGING, CLASSIFICATION, AND PRESENTATION MANUAL (JUNE 2007)

DIST	COUNTY	ROUTE	KILOMETER POST TOTAL PROJECT	SHEET No	TOTAL SHEETS
04	SF	101,1	9.2/9.8, 6.8/7.1	348	567

CERTIFIED ENGINEERING GEOLOGIST 6-02-09

7-20-09
PLANS APPROVAL DATE

PROFESSIONAL GEOLOGIST — Grant Wilcox — No. 2300 — Exp. 4-30-10 — CERTIFIED ENGINEERING GEOLOGIST — STATE OF CALIFORNIA

The State of California or its officers or agents shall not be responsible for the accuracy or completeness of electronic copies of this plan sheet.

CEMENTATION

Description	Criteria
Weak	Crumbles or breaks with handling or little finger pressure.
Moderate	Crumbles or breaks with considerable finger pressure.
Strong	Will not crumble or break with finger pressure.

BOREHOLE IDENTIFICATION

Symbol	Hole Type	Description
Size	A	Auger Boring
Size	R P	Rotary drilled boring Rotary percussion boring (air)
Size	R	Rotary drilled diamond core
Size	HD HA	Hand driven (1-inch soil tube) Hand Auger
●	D	Dynamic Cone Penetration Boring
▲	CPT	Cone Penetration Test (ASTM D 5778-95)
⬚	O	Other

Note: Size in inches.

CONSISTENCY OF COHESIVE SOILS

Description	Unconfined Compressive Strength (tsf)	Pocket Penetrometer Measurement (tsf)	Torvane Measurement (tsf)	Field Approximation
Very Soft	< 0.25	< 0.25	< 0.12	Easily penetrated several inches by fist
Soft	0.25 to 0.50	0.25 to 0.50	0.12 to 0.25	Easily penetrated several inches by thumb
Medium Stiff	0.50 to 1.0	0.50 to 1.0	0.25 to 0.50	Penetrated several inches by thumb with moderate effort
Stiff	1 to 2	1 to 2	0.50 to 1.0	Readily indented by thumb but penetrated only with great effort
Very Stiff	2 to 4	2 to 4	1.0 to 2.0	Readily indented by thumbnail
Hard	> 4.0	> 4.0	> 2.0	Indented by thumbnail with difficulty

PLASTICITY OF FINE-GRAINED SOILS

Description	Criteria
Nonplastic	A 1/8-inch thread cannot be rolled at any water content.
Low	The thread can barely be rolled and the lump cannot be formed when drier than the plastic limit.
Medium	The thread is easy to roll and not much time is required to reach the plastic limit. The thread cannot be rerolled after reaching the plastic limit. The lump crumbles when drier than the plastic limit.
High	It takes considerable time rolling and kneading to reach the plastic limit. The thread can be rerolled several times after reaching the plastic limit. The lump can be formed without crumbling when drier than the plastic limit.

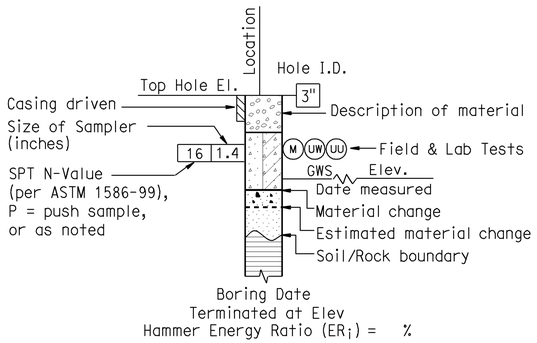

ROTARY BORING

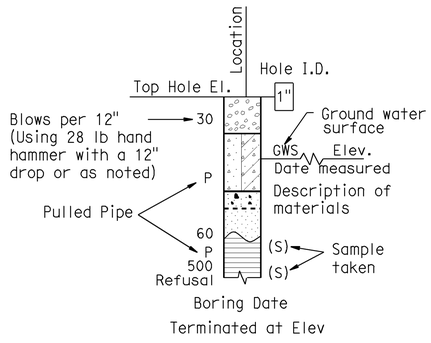

HAND BORING

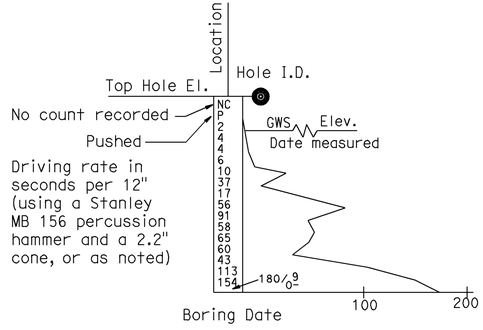

DYNAMIC CONE PENETRATION BORING

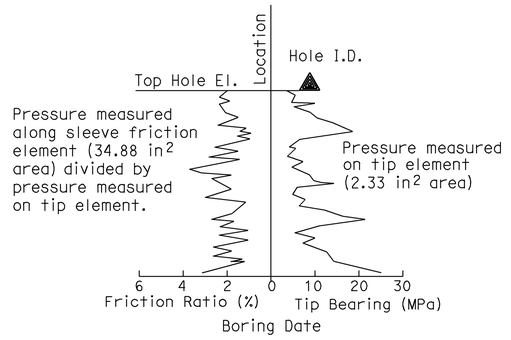

CONE PENETRATION TEST (CPT) SOUNDING

ENGINEERING SERVICES	GEOTECHNICAL SERVICES	STATE OF CALIFORNIA DEPARTMENT OF TRANSPORTATION	DIVISION OF ENGINEERING SERVICES STRUCTURE DESIGN DESIGN BRANCH 16	BRIDGE NO. 34-0156 / POST MILE 6.81	RUCKMAN AVENUE UC (REPLACE) LOG OF TEST BORINGS 4 OF 6
	PREPARED BY: I.G-Remmen, 4/09				

GS LOTB SOIL LEGEND

ORIGINAL SCALE IN INCHES FOR REDUCED PLANS 0 1 2 3

CU 04
EA 163731

DISREGARD PRINTS BEARING EARLIER REVISION DATES →

REVISION DATES

SHEET 38 OF 40

FILE => 34-0156-z-1tb04.dgn

USERNAME => tramguye DATE PLOTTED => 21-JUL-2009 TIME PLOTTED => 13:04

REFERENCE: CALTRANS SOIL & ROCK LOGGING, CLASSIFICATION, AND PRESENTATION MANUAL (JUNE 2007)

GROUP SYMBOLS AND NAMES

Graphic/Symbol	Group Names	Graphic/Symbol	Group Names
GW	Well-graded GRAVEL Well-graded GRAVEL with SAND	CL	Lean CLAY Lean CLAY with SAND Lean CLAY with GRAVEL SANDY lean CLAY SANDY lean CLAY with GRAVEL GRAVELLY lean CLAY GRAVELLY lean CLAY with SAND
GP	Poorly graded GRAVEL Poorly graded GRAVEL with SAND		
GW-GM	Well-graded GRAVEL with SILT Well-graded GRAVEL with SILT and SAND	CL-ML	SILTY CLAY SILTY CLAY with SAND SILTY CLAY with GRAVEL SANDY SILTY CLAY SANDY SILTY CLAY with GRAVEL GRAVELLY SILTY CLAY GRAVELLY SILTY CLAY with SAND
GW-GC	Well-graded GRAVEL with CLAY (or SILTY CLAY) Well-graded GRAVEL with CLAY and SAND (or SILTY CLAY and SAND)		
GP-GM	Poorly graded GRAVEL with SILT Poorly graded GRAVEL with SILT and SAND	ML	SILT SILT with SAND SILT with GRAVEL SANDY SILT SANDY SILT with GRAVEL GRAVELLY SILT GRAVELLY SILT with SAND
GP-GC	Poorly graded GRAVEL with CLAY (or SILTY CLAY) Poorly graded GRAVEL with CLAY and SAND (or SILTY CLAY and SAND)		
GM	SILTY GRAVEL SILTY GRAVEL with SAND	OL	ORGANIC lean CLAY ORGANIC lean CLAY with SAND ORGANIC lean CLAY with GRAVEL SANDY ORGANIC lean CLAY SANDY ORGANIC lean CLAY with GRAVEL GRAVELLY ORGANIC lean CLAY GRAVELLY ORGANIC lean CLAY with SAND
GC	CLAYEY GRAVEL CLAYEY GRAVEL with SAND		
GC-GM	SILTY, CLAYEY GRAVEL SILTY, CLAYEY GRAVEL with SAND	OL	ORGANIC SILT ORGANIC SILT with SAND ORGANIC SILT with GRAVEL SANDY ORGANIC SILT SANDY ORGANIC SILT with GRAVEL GRAVELLY ORGANIC SILT GRAVELLY ORGANIC SILT with SAND
SW	Well-graded SAND Well-graded SAND with GRAVEL		
SP	Poorly graded SAND Poorly graded SAND with GRAVEL	CH	Fat CLAY Fat CLAY with SAND Fat CLAY with GRAVEL SANDY fat CLAY SANDY fat CLAY with GRAVEL GRAVELLY fat CLAY GRAVELLY fat CLAY with SAND
SW-SM	Well-graded SAND with SILT Well-graded SAND with SILT and GRAVEL		
SW-SC	Well-graded SAND with CLAY (or SILTY CLAY) Well-graded SAND with CLAY and GRAVEL (or SILTY CLAY and GRAVEL)	MH	Elastic SILT Elastic SILT with SAND Elastic SILT with GRAVEL SANDY elastic SILT SANDY elastic SILT with GRAVEL GRAVELLY elastic SILT GRAVELLY elastic SILT with SAND
SP-SM	Poorly graded SAND with SILT Poorly graded SAND with SILT and GRAVEL		
SP-SC	Poorly graded SAND with CLAY (or SILTY CLAY) Poorly graded SAND with CLAY and GRAVEL (or SILTY CLAY and GRAVEL)	OH	ORGANIC fat CLAY ORGANIC fat CLAY with SAND ORGANIC fat CLAY with GRAVEL SANDY ORGANIC fat CLAY SANDY ORGANIC fat CLAY with GRAVEL GRAVELLY ORGANIC fat CLAY GRAVELLY ORGANIC fat CLAY with SAND
SM	SILTY SAND SILTY SAND with GRAVEL		
SC	CLAYEY SAND CLAYEY SAND with GRAVEL	OH	ORGANIC elastic SILT ORGANIC elastic SILT with SAND ORGANIC elastic SILT with GRAVEL SANDY ORGANIC elastic SILT SANDY ORGANIC elastic SILT with GRAVEL GRAVELLY ORGANIC elastic SILT GRAVELLY ORGANIC elastic SILT with SAND
SC-SM	SILTY, CLAYEY SAND SILTY, CLAYEY SAND with GRAVEL		
PT	PEAT	OL/OH	ORGANIC SOIL ORGANIC SOIL with SAND ORGANIC SOIL with GRAVEL SANDY ORGANIC SOIL SANDY ORGANIC SOIL with GRAVEL GRAVELLY ORGANIC SOIL GRAVELLY ORGANIC SOIL with SAND
	COBBLES COBBLES and BOULDERS BOULDERS		

FIELD AND LABORATORY TESTING

- (C) Consolidation (ASTM D 2435)
- (CL) Collapse Potential (ASTM D 5333)
- (CP) Compaction Curve (CTM 216)
- (CR) Corrosivity Testing (CTM 643, CTM 422, CTM 417)
- (CU) Consolidated Undrained Triaxial (ASTM D 4767)
- (DS) Direct Shear (ASTM D 3080)
- (EI) Expansion Index (ASTM D 4829)
- (M) Moisture Content (ASTM D 2216)
- (OC) Organic Content-% (ASTM D 2974)
- (P) Permeability (CTM 220)
- (PA) Particle Size Analysis (ASTM D 422)
- (PI) Plasticity Index (AASHTO T 90) Liquid Limit (AASHTO T 89)
- (PL) Point Load Index (ASTM D 5731)
- (PM) Pressure Meter
- (PP) Pocket Penetrometer
- (R) R-Value (CTM 301)
- (SE) Sand Equivalent (CTM 217)
- (SG) Specific Gravity (AASHTO T 100)
- (SL) Shrinkage Limit (ASTM D 427)
- (SW) Swell Potential (ASTM D 4546)
- (TV) Pocket Torvane
- (UC) Unconfined Compression-Soil (ASTM D 2166) Unconfined Compression-Rock (ASTM D 2938)
- (UU) Unconsolidated Undrained Triaxial (ASTM D 2850)
- (UW) Unit Weight (ASTM D 4767)
- (VS) Vane Shear (AASHTO T 223)

DIST	COUNTY	ROUTE	KILOMETER POST TOTAL PROJECT	SHEET No	TOTAL SHEETS
04	SF	101,1	9.2/9.8, 6.8/7.1	349	567

CERTIFIED ENGINEERING GEOLOGIST 6-02-09

7-20-09
PLANS APPROVAL DATE

Grant Wilcox No. 2300 Exp. 4-30-10 CERTIFIED ENGINEERING GEOLOGIST — PROFESSIONAL GEOLOGIST — STATE OF CALIFORNIA

The State of California or its officers or agents shall not be responsible for the accuracy or completeness of electronic copies of this plan sheet.

APPARENT DENSITY OF COHESIONLESS SOILS

Description	SPT N_{60} (Blows / 12 inches)
Very loose	0 - 4
Loose	5 - 10
Medium Dense	11 - 30
Dense	31 - 50
Very Dense	> 50

MOISTURE

Description	Criteria
Dry	Absence of moisture, dusty, dry to the touch
Moist	Damp but no visible water
Wet	Visible free water, usually soil is below water table

PERCENT OR PROPORTION OF SOILS

Description	Criteria
Trace	Particles are present but estimated to be less than 5%
Few	5 to 10%
Little	15 to 25%
Some	30 to 45%
Mostly	50 to 100%

PARTICLE SIZE

Description		Size
Boulder		> 12"
Cobble		3" to 12"
Gravel	Coarse	3/4" to 3"
	Fine	No. 4 to 3/4"
Sand	Coarse	No. 10 to No. 4
	Medium	No. 40 to No. 10
	Fine	No. 200 to No. 40

ENGINEERING SERVICES	GEOTECHNICAL SERVICES	STATE OF CALIFORNIA DEPARTMENT OF TRANSPORTATION	DIVISION OF ENGINEERING SERVICES STRUCTURE DESIGN DESIGN BRANCH 16	BRIDGE NO. 34-0156 POST MILE 6.81	RUCKMAN AVENUE UC (REPLACE) LOG OF TEST BORINGS 5 OF 6
	PREPARED BY: I.G-Remmen, 4/09				

GS LOTB SOIL LEGEND

ORIGINAL SCALE IN INCHES FOR REDUCED PLANS 0 1 2 3

CU 04 EA 163731

FILE => 34-0156-z-1tb05.dgn

DISREGARD PRINTS BEARING EARLIER REVISION DATES →

REVISION DATES

SHEET 39 OF 40

USERNAME => rtramoye DATE PLOTTED => 21-JUL-2009 TIME PLOTTED => 13:04

REFERENCE: CALTRANS SOIL & ROCK LOGGING, CLASSIFICATION, AND PRESENTATION MANUAL (JUNE 2007)

DIST	COUNTY	ROUTE	KILOMETER POST TOTAL PROJECT	SHEET No	TOTAL SHEETS
04	SF	101,1	9.2/9.8, 6.8/7.1	350	567

CERTIFIED ENGINEERING GEOLOGIST 6-02-09

7-20-09
PLANS APPROVAL DATE

PROFESSIONAL GEOLOGIST — Grant Wilcox — No. 2300 — Exp. 4-30-10 — CERTIFIED ENGINEERING GEOLOGIST — STATE OF CALIFORNIA

The State of California or its officers or agents shall not be responsible for the accuracy or completeness of electronic copies of this plan sheet.

PERCENT CORE RECOVERY (REC) & ROCK QUALITY DESIGNATION (RQD)

$$REC = \frac{\sum \text{Length of the recovered core pieces (inches)}}{\text{Total length of core run (inches)}} \times 100\%$$

$$RQD = \frac{\sum \text{Length of intact core pieces} \geq 4\text{"}}{\text{Total length of core run (inches)}} \times 100\%$$

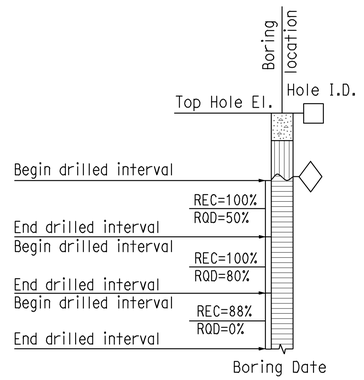

RELATIVE STRENGTH OF INTACT ROCK

Term	Uniaxial Compressive Strength (PSI)
Extremely Strong	> 30,000
Very Strong	14,500 - 30,000
Strong	7,000 - 14,500
Medium Strong	3,500 - 7,000
Weak	700 - 3,500
Very Weak	150 - 700
Extremely Weak	< 150

BEDDING SPACING

Description	Thickness / Spacing
Massive	Greater than 10 ft
Very thickly bedded	3 to 10 ft
Thickly bedded	1 to 3 ft
Moderately bedded	3-5/8" to 1 ft
Thinly bedded	1-1/4" to 3-5/8"
Very thinly bedded	3/8" to 1-1/4"
Laminated	Less than 3/8"

LEGEND OF ROCK MATERIALS

- IGNEOUS ROCK
- SEDIMENTARY ROCK
- METAMORPHIC ROCK

ROCK HARDNESS

Description	Criteria
Extremely Hard	Specimen cannot be scratched with a pocket knife or sharp pick; can only be chipped with repeated heavy hammer blows.
Very Hard	Specimen cannot be scratched with a pocket knife or sharp pick. Breaks with repeated heavy hammer blows.
Hard	Specimen can be scratched with a pocket knife or sharp pick with difficulty (heavy pressure). Heavy hammer blows required to break specimen.
Moderately Hard	Specimen can be scratched with pocket knife or sharp pick with light or moderate pressure. Core breaks with moderate hammer blows.
Moderately Soft	Specimen can be grooved 1/6" deep with a pocket knife or sharp pick with moderate or heavy pressure. Breaks with light hammer blow or heavy manual pressure.
Soft	Specimen can be grooved or gouged easily by a pocket knife or sharp pick with light pressure, can be scratched with fingernail. Breaks with light to moderate manual pressure.
Very Soft	Specimen can be readily indented, grooved or gouged with fingernail, or carved with a pocket knife. Breaks with light manual pressure.

FRACTURE DENSITY

Description	Observed Fracture Density
Unfractured	No fractures.
Very slightly fractured	Lengths greater than 3 feet.
Slightly fractured	Lengths from 1 to 3 feet with few lengths less than 1 foot or greater than 3 feet.
Moderately fractured	Lengths mostly in 4" to 1 foot range with most lengths about 8"
Intensely fractured	Lengths average from 1 to 4" with scattered fragmented intervals with lengths less than 4"
Very intensely fractured	Mostly chips and fragments with a few scattered short core lengths.

Combination descriptors (such as "Very intensely to intensely fractured") are used where equal distribution of both fracture density characteristics is present over a significant interval or exposure, or where characteristics are "in between" the descriptor definitions. Only two adjacent descriptors may be combined.

WEATHERING DESCRIPTORS FOR INTACT ROCK

Description	Diagnostic features: Chemical Weathering-Discoloration and/or oxidation — Body of Rock	Diagnostic features: Chemical Weathering-Discoloration and/or oxidation — Fracture Surfaces	Diagnostic features: Mechanical Weathering-Grain boundary conditions (disaggregation) primarily for granitics and some coarse-grained sediments	Diagnostic features: Texture and Solutioning — Texture	Diagnostic features: Texture and Solutioning — Solutioning	General Characteristics
Fresh	No discoloration, not oxidized.	No discoloration or oxidation.	No separation, intact (tight).	No change.	No solutioning.	Hammer rings when crystalline rocks are struck.
Slightly Weathered	Discoloration or oxidation is limited to surface of, or short distance from, fractures; some feldspar crystals are dull.	Minor to complete discoloration or oxidation of most surfaces.	No visible separation, intact (tight).	Preserved.	Minor leaching of some soluble minerals may be noted.	Hammer rings when crystalline rocks are struck. Body of rock not weakened.
Moderately Weathered	Discoloration or oxidation extends from fractures usually throughout; Fe-Mg minerals are "rusty," feldspar crystals are "cloudy."	All fracture surfaces are discolored or oxidized.	Partial separation of boundaries visible.	Generally preserved.	Soluble minerals may be mostly leached.	Hammer does not ring when rock is struck. Body of rock is slightly weakened.
Intensely Weathered	Discoloration or oxidation throughout; all feldspars and Fe-Mg minerals are altered to clay to some extent; or chemical alteration produces in-situ disaggregation, see grain boundary conditions.	All fracture surfaces are discolored or oxidized, surfaces friable.	Partial separation, rock is friable; in semiarid conditions granitics are disaggregated.	Texture altered by chemical disintegration (hydration, argillation).	Leaching of soluble minerals may be complete.	Dull sound when struck with hammer, usually can be broken with moderate to heavy manual pressure or by light hammer blow without reference to planes of weakness such as incipient or hairline fractures, or veinlets. Rock is significantly weakened.
Decomposed	Discolored or oxidized throughout, but resistant minerals such as quartz may be unaltered; all feldspars and Fe-Mg minerals are completely altered to clay.		Complete separation of grain boundaries (disaggregated).	Resembles a soil, partial or complete remnant rock structure may be preserved; leaching of soluble minerals usually complete.		Can be granulated by hand. Resistant minerals such as quartz may be present as "stringers" or "dikes."

Combination descriptors (such as "slightly weathered to fresh") are permissible where equal distribution of both weathering characteristics is present over significant intervals or where characteristics present are "in between" the diagnostic feature. However, combination descriptors should not be used where significant, identifiable zones can be delineated. Only two adjacent descriptors may be combined. "Very intensely weathered" is the combination descriptor for "intensely weathered to decomposed."

ENGINEERING SERVICES	GEOTECHNICAL SERVICES	STATE OF CALIFORNIA DEPARTMENT OF TRANSPORTATION	DIVISION OF ENGINEERING SERVICES STRUCTURE DESIGN DESIGN BRANCH 16	BRIDGE NO. 34-0156 POST MILE 6.81	RUCKMAN AVENUE UC (REPLACE) LOG OF TEST BORINGS 6 OF 6
	PREPARED BY: I.G-Remmen, 4/09		CU 04 EA 163731	DISREGARD PRINTS BEARING EARLIER REVISION DATES →	REVISION DATES — SHEET 40 OF 40

GS LOTB ROCK LEGEND

ORIGINAL SCALE IN INCHES FOR REDUCED PLANS 0 1 2 3

FILE => 34-0156-z-1tb06.dgn

USERNAME => trmoyle DATE PLOTTED => 21-JUL-2009 TIME PLOTTED => 13:04

DIST	COUNTY	ROUTE	POST MILES TOTAL PROJECT	SHEET No	TOTAL SHEETS
04	SF	101,1	9.2/9.8, 6.8/7.1	351	567

Ahmed Ibrahim 6-4-09
REGISTERED CIVIL ENGINEER DATE

7-20-09
PLANS APPROVAL DATE

REGISTERED PROFESSIONAL ENGINEER — AHMED M M IBRAHIM — No. S 4865 — Exp. 9-30-10 — STRUCTURAL — STATE OF CALIFORNIA

The State of California or its officers or agents shall not be responsible for the accuracy or completeness of electronic copies of this plan sheet.

EVC 86+05.24
Elev 88.47

4.20 %

BVC 104+23.06
Elev 164.82

"SB" Line PROFILE
No Scale

BVC 114+24.24
Elev 124.59

+0.30%

400.00' VC R/C = -1.00%/Sta

EVC 118+24.24
Elev 133.79

110+00.00
Elev 106.35

+4.30 %

"VT" Line PROFILE
No Scale

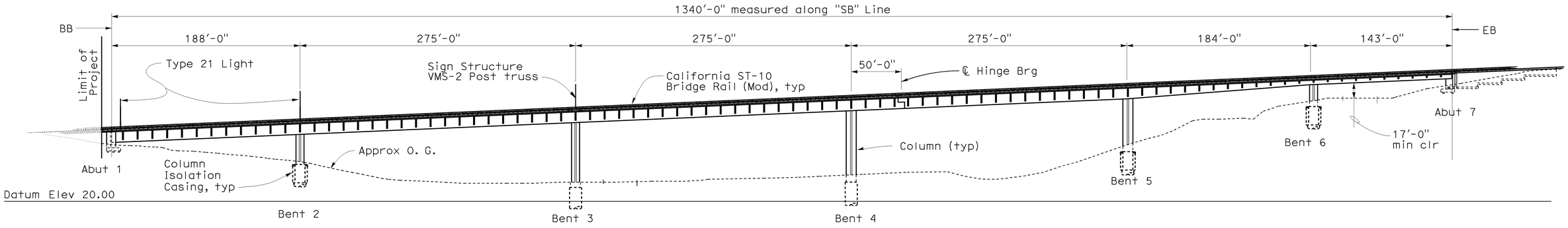

ELEVATION
1" = 50'

NOTE: For Typical Sections, see "GENERAL PLAN NO. 2" sheet.

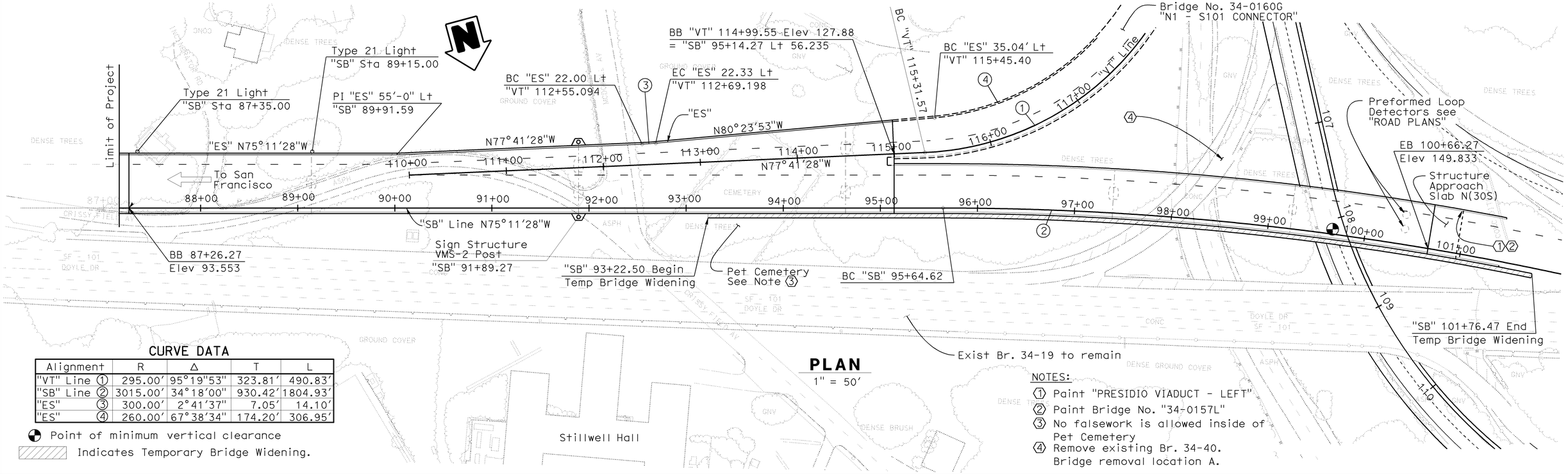

PLAN
1" = 50'

CURVE DATA

Alignment	R	Δ	T	L
"VT" Line ①	295.00'	95°19'53"	323.81'	490.83'
"SB" Line ②	3015.00'	34°18'00"	930.42'	1804.93'
"ES" ③	300.00'	2°41'37"	7.05'	14.10'
"ES" ④	260.00'	67°38'34"	174.20'	306.95'

Point of minimum vertical clearance

Indicates Temporary Bridge Widening.

NOTES:
1. Paint "PRESIDIO VIADUCT - LEFT"
2. Paint Bridge No. "34-0157L"
3. No falsework is allowed inside of Pet Cemetery
4. Remove existing Br. 34-40. Bridge removal location A.

X majid madani
DESIGN ENGINEER

DESIGN	BY Q.Zhao/P.Norboe/R.Bromemschenkel	CHECKED T.Skreslet/F.Zayati/S Barajas	LOAD & RESISTANCE FACTOR DESIGN	LIVE LOADING: HL93 W/"LOW-BOY"; PERMIT DESIGN VEHICLE	
DETAILS	BY M Lane/J Thorne/JFCasarino	CHECKED L. Wang/J Higareda/T Skreslet	LAYOUT BY Q Zhao	CHECKED A Alcantara	
QUANTITIES	BY A Alcantara	CHECKED J Han	SPECIFICATIONS BY J Corrado	PLANS AND SPECS COMPARED A M M Ibrahim	

STRUCTURES DESIGN GENERAL PLAN SHEET (ENGLISH) (REV. 10/25/05)

ORIGINAL SCALE IN INCHES FOR REDUCED PLANS 0 1 2 3

STATE OF CALIFORNIA
DEPARTMENT OF TRANSPORTATION

DIVISION OF ENGINEERING SERVICES
STRUCTURE DESIGN
DESIGN BRANCH 4

CU 04242
EA 163731

FILE => 34-0157l-aa-gp01.dgn

BRIDGE NO. 34-0157L
POST MILE 9.02

PRESIDIO VIADUCT - LEFT
GENERAL PLAN NO. 1

DISREGARD PRINTS BEARING EARLIER REVISION DATES →

REVISION DATES									SHEET	OF
6-3-09	6-18-09	7-6-09	7-13-09		5-3-05	5-12-09	5-18-09	5-20-09	5-30-05	1	114

STRUCTURES DESIGN GENERAL PLAN SHEET (ENGLISH) (REV.07-24-06)

USERNAME => trmoyle DATE PLOTTED => 21-JUL-2009 TIME PLOTTED => 13:04

DIST	COUNTY	ROUTE	POST MILES TOTAL PROJECT	SHEET No	TOTAL SHEETS
04	SF	101,1	9.2/9.8, 6.8/7.1	352	567

Ahmed Ibrahim 6-4-09
REGISTERED CIVIL ENGINEER DATE

7-20-09
PLANS APPROVAL DATE

REGISTERED PROFESSIONAL ENGINEER
AHMED M M IBRAHIM
No. S 4865
EXP. 9-30-10
STRUCTURAL
STATE OF CALIFORNIA

The State of California or its officers or agents shall not be responsible for the accuracy or completeness of electronic copies of this plan sheet.

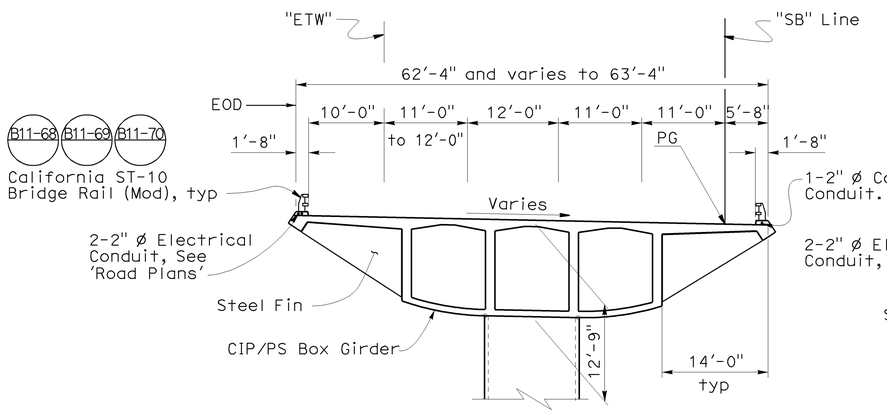

TYPICAL SECTION - STA 87+26.27 TO 90+14.91

1" = 10'

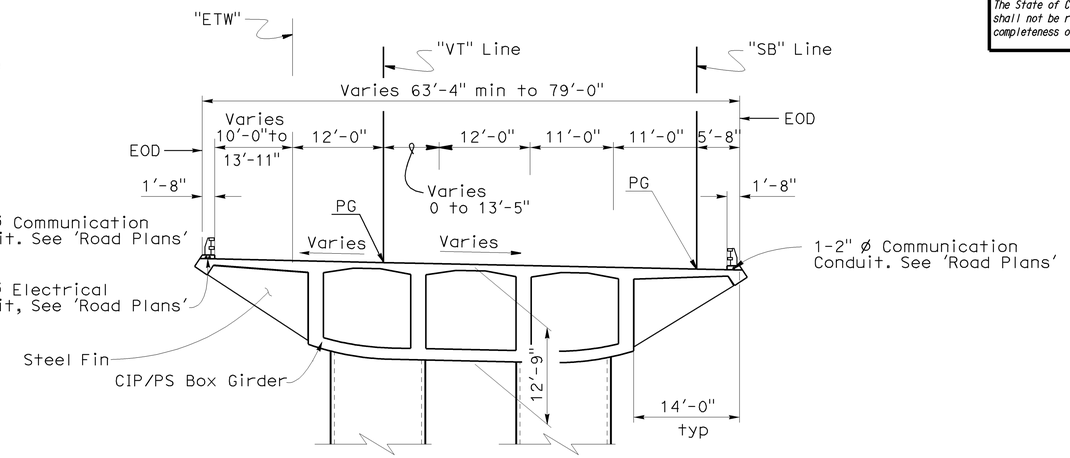

TYPICAL SECTION - STA 90+14.91 TO 93+22.50

1" = 10'

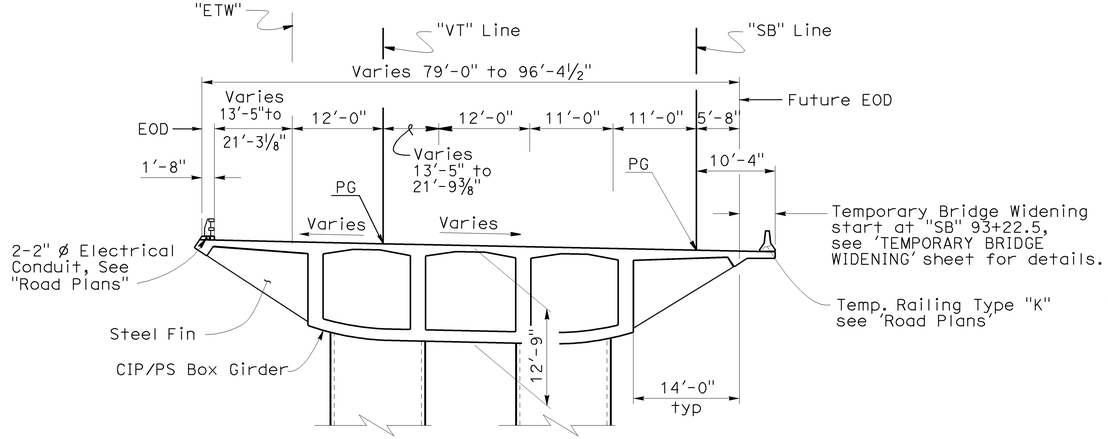

TYPICAL SECTION - STA 93+22.50 TO 95+14.27

1" = 10'

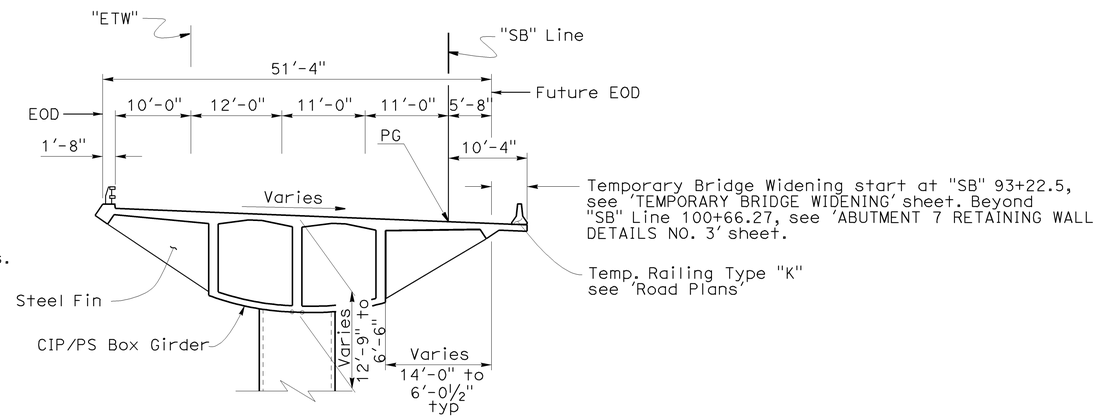

TYPICAL SECTION - STA 95+14.27 TO 100+66.27

1" = 10'

DESIGN	BY Q.Zhao/P.Norboe/R.Bromemschenkel	CHECKED T.Skreslet/F.Zayati/S Barajas	LOAD & RESISTANCE FACTOR DESIGN	LIVE LOADING: HL93 W/"LOW-BOY"; PERMIT DESIGN VEHICLE			
DETAILS	BY M. Lane/J Thorne/JFCasarino	CHECKED L. Wang/J Higareda/T Skreslet	LAYOUT	BY Q Zhao	CHECKED A Alcantara		
QUANTITIES	BY A Alcantara	CHECKED J Han	SPECIFICATIONS	BY J Corrado	PLANS AND SPECS COMPARED A M M Ibrahim		

X majid modavi
DESIGN ENGINEER

STRUCTURES DESIGN GENERAL PLAN SHEET (ENGLISH) (REV. 10/25/05)

ORIGINAL SCALE IN INCHES FOR REDUCED PLANS 0 1 2 3

STATE OF CALIFORNIA
DEPARTMENT OF TRANSPORTATION

DIVISION OF ENGINEERING SERVICES
STRUCTURE DESIGN
DESIGN BRANCH 4

CU 04242
EA 163731

FILE => 34-01571-aa-gp02.dgn

BRIDGE NO. 34-0157L
POST MILE 9.02

PRESIDIO VIADUCT - LEFT
GENERAL PLAN NO. 2

DISREGARD PRINTS BEARING EARLIER REVISION DATES →

REVISION DATES									SHEET	OF
7-18-07	1-12-09	3-31-09	4-21-09	5-8-09	5-12-09	5-18-09	5-30-09	6-15-09	2	114

STRUCTURES DESIGN GENERAL PLAN SHEET (ENGLISH) (REV.07-24-06)

USERNAME => trmoyle DATE PLOTTED => 21-JUL-2009 TIME PLOTTED => 13:04

DIST	COUNTY	ROUTE	POST MILES TOTAL PROJECT	SHEET No	TOTAL SHEETS
04	SF	101,1	9.2/9.8, 6.8/7.1	353	567

Ahmed Ibrahim 6-4-09
REGISTERED CIVIL ENGINEER DATE

7-20-09
PLANS APPROVAL DATE

REGISTERED PROFESSIONAL ENGINEER
AHMED M M IBRAHIM
No. S 4865
EXP. 9-30-10
STRUCTURAL
STATE OF CALIFORNIA

The State of California or its officers or agents shall not be responsible for the accuracy or completeness of electronic copies of this plan sheet.

NOTE:
THE CONTRACTOR SHALL VERIFY ALL CONTROLLING FIELD DIMENSIONS BEFORE ORDERING OR FABRICATING ANY MATERIAL.

PILE DATA TABLE

Location	PileType	Design Loading (kip)	Nominal Resistance		Cut-Off Elevation (ft)	Permanent Steel Casing Design Tip Elev (ft)	Design Tip Elevations (ft)	Specified Tip Elevations (ft)
			Compression	Tension				
Abut 1	24" CIDH	165	330	0	71.3	N/A	36(a)	36
Bent 2	144" CIDH (Type II) /138" CIDH (Rock Socket)	8310	20,740	0	36.0	-9	-54(a)	-54
Bent 3R	144" CIDH (Type II) /138" CIDH (Rock Socket)	5160	13,350	-2815	37.6	-121	-156(a)	-156
Bent 3L	144" CIDH (Type II) /138" CIDH (Rock Socket)	5160	13,350	-2815	37.6	-103	-146(a)	-146
Bent 4R	144" CIDH (Type II) /138" CIDH (Rock Socket)	6460	16,850	0	45.0	-30	-70(a)	-70
Bent 4L	144" CIDH (Type II) /138" CIDH (Rock Socket)	6460	16,850	0	45.0	-21	-60(a)	-60
Bent 5	138" CIDH (Rock Socket)	6420	16,700	0	66.0	N/A	6(c)	6
Bent 6	102" CIDH (Rock Socket)	4200	11,350	0	101.0	N/A	56(a)	56
Abut 7	24" CIDH (Rock Socket)	174	350	0	129.5	N/A	90(a)	90

(1) Design tip elevation is controlled by the following demands: (a) Compression, (b) Tension, (c) Lateral.
(2) The specified tip elevation shall not be raised above the design tip elevations.

INDEX TO PLANS

SHEET NO.	PLANS
1	GENERAL PLAN NO. 1
2	GENERAL PLAN NO. 2
3	INDEX TO PLANS
4	GENERAL NOTES
5	STRUCTURE EXCAVATION AND BACKFILL LIMIT
6	DECK CONTOURS NO. 1
7	DECK CONTOURS NO. 2
8	FOUNDATION PLANS NO. 1
9	FOUNDATION PLANS NO. 2
10	FOUNDATION PLANS NO. 3
11	ABUTMENT 1 LAYOUT
12	ABUTMENT 1 DETAILS NO. 1
13	ABUTMENT 1 DETAILS NO. 2
14	ABUTMENT 1 DETAILS NO. 3
15	ABUTMENT 7 LAYOUT
16	ABUTMENT 7 DETAILS NO. 1
17	ABUTMENT 7 DETAILS NO. 2
18	ABUTMENT 7 DETAILS NO. 3
19	ABUTMENT 7 RETAINING WALL LAYOUT
20	ABUTMENT 7 RETAINING WALL DETAILS NO. 1
21	ABUTMENT 7 RETAINING WALL DETAILS NO. 2
22	ABUTMENT 7 RETAINING WALL DETAILS NO. 3
23	PTFE SPHERICAL BEARING DETAILS NO.1
24	PTFE SPHERICAL BEARING DETAILS NO.2
25	BENT 2 DETAILS NO. 1
26	BENT 2 DETAILS NO. 2
27	BENT 2 DETAILS NO. 3
28	BENT 3 DETAILS NO. 1
29	BENT 3 DETAILS NO. 2
30	BENT 3 DETAILS NO. 3
31	BENT 4 DETAILS NO. 1
32	BENT 4 DETAILS NO. 2
33	BENT 4 DETAILS NO. 3
34	BENT 5 DETAILS NO. 1
35	BENT 5 DETAILS NO. 2
36	BENT 5 DETAILS NO. 3
37	BENT 6 DETAILS NO. 1
38	BENT 6 DETAILS NO. 2
39	BENT 6 DETAILS NO. 3
40	COLUMN ISOLATION DETAILS
41	TYPICAL SECTION NO. 1
42	TYPICAL SECTION NO. 2
43	TYPICAL SECTION NO. 3
44	GIRDER LAYOUT NO. 1
45	GIRDER LAYOUT NO. 2
46	GIRDER LAYOUT NO. 3
47	ADDITIONAL TOP REINFORCEMENT
48	ADDITIONAL BOTTOM REINFORCEMENT
49	GIRDER DETAILS
50	ANCHOR BLISTER DETAIL
51	TRANSVERSE PT DETAILS NO.1
52	TRANSVERSE PT DETAILS NO.2
53	HINGE LAYOUT
54	"SB" HINGE DETAILS NO. 1
55	"SB" HINGE DETAILS NO. 2
56	"SB" HINGE DETAILS NO. 3
57	"SB" HINGE DETAILS NO. 4
58	"VT" HINGE DETAILS NO. 1
59	"VT" HINGE DETAILS NO. 2
60	"VT" HINGE DETAILS NO. 3
61	"VT" HINGE DETAILS NO. 4
62	HINGE SEISMIC JOINT DETAILS NO. 1
63	HINGE SEISMIC JOINT DETAILS NO. 2
64	HINGE SEISMIC JOINT DETAILS NO. 3
65	HINGE SEISMIC JOINT DETAILS NO. 4
66	HINGE SEISMIC JOINT DETAILS NO. 5
67	HINGE SEISMIC JOINT DETAILS NO. 6
68	ABUTMENT SEISMIC JOINT DETAILS NO. 1
69	ABUTMENT SEISMIC JOINT DETAILS NO. 2
70	ABUTMENT SEISMIC JOINT DETAILS NO. 3
71	ABUTMENT SEISMIC JOINT DETAILS NO. 4
72	ABUTMENT SEISMIC JOINT DETAILS NO. 5
73	ABUTMENT SEISMIC JOINT DETAILS NO. 6
74	TEMPORARY BRIDGE WIDENING
75	STEEL FIN LAYOUT
76	STEEL FIN DETAILS NO. 1
77	STEEL FIN DETAILS NO. 2
78	DRAINAGE DETAILS NO. 1
79	DRAINAGE DETAILS NO. 2
80	DRAINAGE DETAILS NO. 3
81	DRAINAGE DETAILS NO. 4
82	LADDER DETAILS
83	SOFFIT AND TEMPORARY DECK ACCESS
84	PEDESTAL DETAILS NO. 1
85	PEDESTAL DETAILS NO. 2
86	PEDESTAL DETAILS NO. 3
87	PEDESTAL DETAILS NO. 4
88	PEDESTAL DETAILS NO. 5
89	PEDESTAL DETAILS NO. 6
90	PEDESTAL DETAILS NO. 7
91	PEDESTAL DETAILS NO. 8
92	PEDESTAL DETAILS NO. 9
93	PEDESTAL DETAILS NO. 10
94	PEDESTAL DETAILS NO. 11
95	PEDESTAL DETAILS NO. 12
96	PEDESTAL DETAILS NO. 13
97	STRUCTURE APPROACH TYPE N(30S)
98	STRUCTURE APPROACH DRAINAGE DETAILS
99	LOG OF TEST BORINGS 1 OF 16
100	LOG OF TEST BORINGS 2 OF 16
101	LOG OF TEST BORINGS 3 OF 16
102	LOG OF TEST BORINGS 4 OF 16
103	LOG OF TEST BORINGS 5 OF 16
104	LOG OF TEST BORINGS 6 OF 16
105	LOG OF TEST BORINGS 7 OF 16
106	LOG OF TEST BORINGS 8 OF 16
107	LOG OF TEST BORINGS 9 OF 16
108	LOG OF TEST BORINGS 10 OF 16
109	LOG OF TEST BORINGS 11 OF 16
110	LOG OF TEST BORINGS 12 OF 16
111	LOG OF TEST BORINGS 13 OF 16
112	LOG OF TEST BORINGS 14 OF 16
113	LOG OF TEST BORINGS 15 OF 16
114	LOG OF TEST BORINGS 16 OF 16

STANDARD PLANS DATED MAY 2006

PLAN	PLAN TITLE
A10A	ACRONYMS AND ABBREVIATIONS (A-L)
A10B	ACRONYMS AND ABBREVIATIONS (M-Z)
A62C	LIMITS OF PAYMENT FOR EXCAVATION AND BACKFILL-BRIDGE
T-3	TEMPORARY RAILING (TYPE K)
B0-1	BRIDGE DETAILS
B0-3	BRIDGE DETAILS
B0-5	BRIDGE DETAILS
B0-13	BRIDGE DETAILS
B2-3	16" AND 24" CAST-IN-DRILLED-HOLE CONCRETE PILE
B3-1	RETAINING WALL TYPE 1 - H = 4' THROUGH 30'
B3-8	RETAINING WALL TYPE 1 - H = 32' THROUGH 36'
B6-21	JOINT SEALS (MAXIMUM MOVEMENT RATING=2")
B7-1	BOX GIRDER DETAILS
B7-6	DECK DRAINS - TYPES D-1 AND D-2
B7-8	DECK DRAINAGE DETAILS
B7-11	UTILITY DETAILS
B8-5	CAST-IN-PLACE PRESTRESSED GIRDER DETAILS
B11-68	CALIFORNIA ST-10 BRIDGE RAIL (SHEET 1 OF 3)
B11-69	CALIFORNIA ST-10 BRIDGE RAIL (SHEET 2 OF 3)
B11-70	CALIFORNIA ST-10 BRIDGE RAIL (SHEET 3 OF 3)
ES-6A	LIGHTING STANDARDS TYPES 15, 21 AND 22
ES-6B	ELECTRICAL SYSTEMS (LIGHTING STANDARDS TYPES 15 AND 21, BARRIER RAIL MOUNTED DETAILS)
S-10	OVERHEAD SIGNS -TRUSS, TWO POST TYPE - BASE PLATE AND ANCHORAGE DETAILS

PRESIDIO VIADUCT (SB) #34-0157L QUANTITIES

BRIDGE REMOVAL, LOCATION A	LUMP	SUM
STRUCTURE EXCAVATION (BRIDGE) (NATURALLY OCCURING ASBESTOS)	600	CY
STRUCTURE EXCAVATION (BRIDGE)(SERPENTINE)	125	CY
STRUCTURE EXCAVATION (RETAINING WALL) (NATURALLY OCCURING ASBESTOS)	260	CY
STRUCTURE EXCAVATION (TYPE Z-2) (AERIALLY DEPOSITED LEAD)	340	CY
STRUCTURE BACKFILL (BRIDGE)	430	CY
STRUCTURE BACKFILL (RETAINING WALL) (NATURALLY OCCURING ASBESTOS)	350	CY
144" PERMANENT STEEL CASING	485	LF
24" CAST-IN-DRILLED-HOLE CONCRETE PILING	918	LF
144" CAST-IN-DRILLED-HOLE CONCRETE PILING	485	LF
24" CAST-IN-DRILLED-HOLE CONCRETE PILING (ROCK SOCKET)	790	LF
102" CAST-IN-DRILLED-HOLE CONCRETE PILING (ROCK SOCKET)	45	LF
138" CAST-IN-DRILLED-HOLE CONCRETE PILING(ROCK SOCKET)	262	LF
PRESTRESSING CAST-IN-PLACE CONCRETE	LUMP	SUM
PRESTRESSING CAST-IN-PLACE CONCRETE (TRANSVERSE)	LUMP	SUM
PRESTRESSING CAST-IN-PLACE CONCRETE (HS BARS)	LUMP	SUM
STRUCTURAL CONCRETE, BRIDGE FOOTING	160	CY
STRUCTURAL CONCRETE, BRIDGE	9,900	CY
STRUCTURAL CONCRETE, RETAINING WALL	170	CY
STRUCTURAL CONCRETE, APPROACH SLAB (TYPE N)	60	CY
ARCHITECTURAL TREATMENT (2" THICK)	2,160	SQFT
PTFE SPHERICAL BEARING	12	EA
SEISMIC JOINT (ABUTMENT 1)	LUMP	SUM
SEISMIC JOINT (ABUTMENT 7)	LUMP	SUM
SEISMIC JOINT (HINGE 1)	LUMP	SUM
BAR REINFORCING STEEL (BRIDGE)	4,392,000	LB
BAR REINFORCING STEEL (RETAINING WALL)	13,000	LB
HEADED BAR REINFORCEMENT	14,000	EA
STRUCTURAL STEEL (BRIDGE)	680,000	LB
CLEAN AND PAINT STRUCTURAL STEEL	LUMP	SUM
ISOLATION CASING	18,700	LB
MISCELLANEOUS METAL (BRIDGE)	16,800	LB
BRIDGE DECK DRAINAGE SYSTEM	19,400	LB
BRIDGE DECK DRAINAGE SYSTEM (TEMPORARY)	25,000	LB
CALIFORNIA ST-10 BRIDGE RAIL (MODIFIED)	2,008	LF

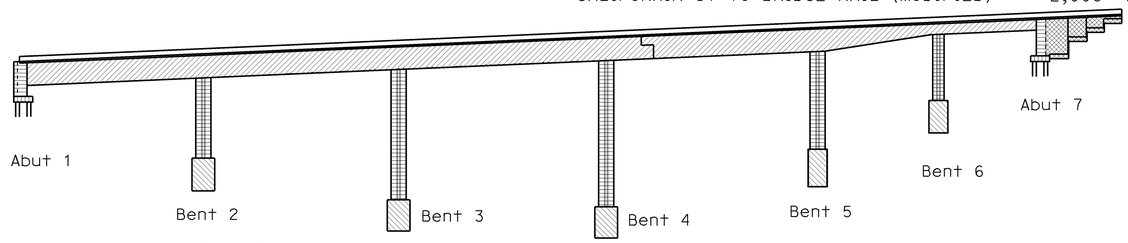

Structural Concrete, Bridge (f'c = 5 ksi : @ 28 days)
Structural Concrete, Bridge (f'c = 5 ksi : @ 28 days)
Structural Concrete, Bridge Footing (f'c = 4 ksi : @ 28 days)
Structural Concrete, Pile (f'c = 4 ksi : @ 28 days)
Structural Concrete, Retaining Wall (f'c = 4 ksi : @ 28 days)

CONCRETE STRENGTH AND TYPE LIMITS

No Scale

STANDARD PLAN SHEET NO.
DETAIL NO.

DESIGN	BY Q.Zhao/P.Norboe/R.Bromenschenkel	CHECKED T. Skreslet	
DETAILS	BY Jeff Thorne	CHECKED Q.Zhao/P.Norboe/R.Bromenschenkel	
QUANTITIES	BY A. Alcantara	CHECKED J. Han	

STATE OF CALIFORNIA
DEPARTMENT OF TRANSPORTATION

DIVISION OF ENGINEERING SERVICES
STRUCTURE DESIGN
DESIGN BRANCH 4

CU 04242
EA 163731

BRIDGE NO. 34-0157L
POST MILE 9.02

PRESIDIO VIADUCT - LEFT
INDEX TO PLANS

STRUCTURES DESIGN DETAIL SHEET (ENGLISH) (REV. 10/25/05)

ORIGINAL SCALE IN INCHES FOR REDUCED PLANS 0 1 2 3

DISREGARD PRINTS BEARING EARLIER REVISION DATES →

REVISION DATES: 4-16-09 | 7-1-09 | 7-9-09 | | 5-18-09 | 5-20-09 | 5-24-09 | 5-26-09 | 5-30-09 | 6-15-09

SHEET 3 OF 114

FILE => 34-0157l-aa-itp.dgn

USERNAME => rtrmnguye DATE PLOTTED => 21-JUL-2009 TIME PLOTTED => 13:05

DIST	COUNTY	ROUTE	POST MILES TOTAL PROJECT	SHEET No	TOTAL SHEETS
04	SF	101,1	9.2/9.8, 6.8/7.1	354	567

Ahmed Ibrahim 6-4-09
REGISTERED CIVIL ENGINEER DATE

7-20-09
PLANS APPROVAL DATE

REGISTERED PROFESSIONAL ENGINEER — AHMED M M IBRAHIM — No. S 4865 — EXP. 9-30-10 — STRUCTURAL — STATE OF CALIFORNIA

The State of California or its officers or agents shall not be responsible for the accuracy or completeness of electronic copies of this plan sheet.

GENERAL NOTES

LOAD AND RESISTANCE FACTOR DESIGN

DESIGN: AASHTO LRFD Bridge Design Specifications, 4th edition with the Interims through 2007 and the California Amendments, vDecember 2008; except that deck slab and retaining wall are designed using Bridge Design Specifications ('96 AASHTO w/Revisions by Caltrans)

SEISMIC DESIGN:
Caltrans Seismic Design Criteria (SDC), Version 1.4 dated June 2006 with enhancement as stated herein.

DEAD LOAD:
Includes 35 psf for future wearing surface.

LIVE LOADING:
HL93 and permit design load.

SEISMIC LOADING:
Recommended Acceleration Response Spectral curves for soil type B, C and D
Peak Rock Acceleration 0.6 g

REINFORCED CONCRETE:
f_y = 60 ksi
f'_c = 5.0 ksi
n = 8

Transverse Deck Slabs (Working Stress):
f_s = 20 ksi
f_c = 1.3 ksi
n = 10

STRUCTURAL STEEL: f_y = 50 ksi Unless Noted Otherwise

PLATES: ASTM A709, Grade 50

STRUCTURAL SHAPES: ASTM A500, Grade B

FABRICATION:
1. Welding of built up members shall comply with AASHTO/AWS D 1.5
2. Welding of tubular members shall comply with AWS D 1.1
3. Dimensional tolerance:

3a - Allowable variation in straightness of welded U-shape Steel Fin subassemblies shal not exceed 1/8" in 10' of total length.
3b - Allowable variations from flatness of Steel Fin Web Plate shall not exceed d/200 where "d" is the least panel dimension in inches. The out-of-plain variation from flatness of fin webs shall be determined in compliance with items 3.5.1.6 of AASHTO/AWS D 1.5

FASTENERS:
- All high-strength bolts, nuts and washers shall be zinc coated.
- Bolts - A 325; Nuts - A 563; Washers - F 436, unless noted otherwise.
- All bolted connections shall comply with RCSC "Specification for Structural Joints Using ASTM A 325 or A 490 Bolts"
- All bolts are ASTM A 325 High Strength slip-critical with threads excluded from shear planes.

PRESTRESSED CONCRETE:
Longitudinal: See Prestressing Notes on "GIRDER DETAILS" sheet.

Transverse: See Notes on "TRANSVERSE PT DETAILS NO. 1" sheet.

PILES: See "Pile Data Table" on "INDEX TO PLANS " sheet

EXPOSURE CONDITION: Marine Atmosphere

Minimum concrete cover (inches) unless shown otherwise on plan
- Footing & Pile Caps: 3"
- Walls, Columns & Cast -In-Place Piles: 3"
- Top surface of Deck Slab: 2½"
- Bottom surface of Deck Slab: 1½"
- Bottom Slab of Box Girder: 1½"
- Exposed faces of Box Girder Webs, Bent Caps, Diaphragms and Hinged Joints: 3"
- Curbs & Railings: 2½"
- Concrete surface not exposed to weather, soil or water
  Principal reinforcement: 2"
  Stirrups, Ties and Spirals: 1½"

PROJECT SPECIFIC SEISMIC DESIGN CRITERIA

PERFORMANCE MEASURES

Design Earthquake	Performance Level
Functionality Evaluation Earthquake (FEE)	Minimal damage Immediate service
Safety Evaluation Earthquake (SEE)	Repairable damage/No-Collapse Limited service

Safety Evaluation Earthquake (SEE)

Envelope of the median (50th percentile) deterministic Maximum Credible Earthquake (MCE) ARS and a probabilistic hazard ARS for an event with a mean return period of 1,000 years (i.e., 3% probability of exceedance in 75 years).

Functionality Evaluation Earthquake (FEE)

A probabilistic hazard ARS for an event with a mean return of 108 years (i.e., 50% probability of exceedance in 75 years).

Seismic Analysis and Evaluations

Displacement Demand:

Response Spectrum Analysis
Time History Analysis (Maximum of three responses)
Reduction factor of 0.75 is allowed.

Displacement Capacity:

Inelastic Static Analysis
Time History Analysis (Non-Linear)

ALLOWABLE CONCRETE STRAIN

Performance Goal	Allowable Concrete Strain
Functional performance	0.005
Safety/No-Collapse performance	67% ϵ_{cu}+

+ Ultimate Concrete Strain (ϵ_{cu}) considering confinement of the concrete core

ALLOWABLE STEEL STRAIN

Performance Goal	Reinforcement Size	Allowable Concrete Strain#
Functional performance	#10 Bars and Smaller	50% ϵ_{su}
	Bars Larger Than #10	50% ϵ_{su}
Safety/No-Collapse performance	#10 Bars and Smaller	67% ϵ_{su}
	Bars Larger Than #10	67% ϵ_{su}

Maximum Steel Strain #10 Bars and Smaller ϵ_{su} = 0.12

Maximum Steel Strain Bars Larger Than #10 ϵ_{su} = 0.09

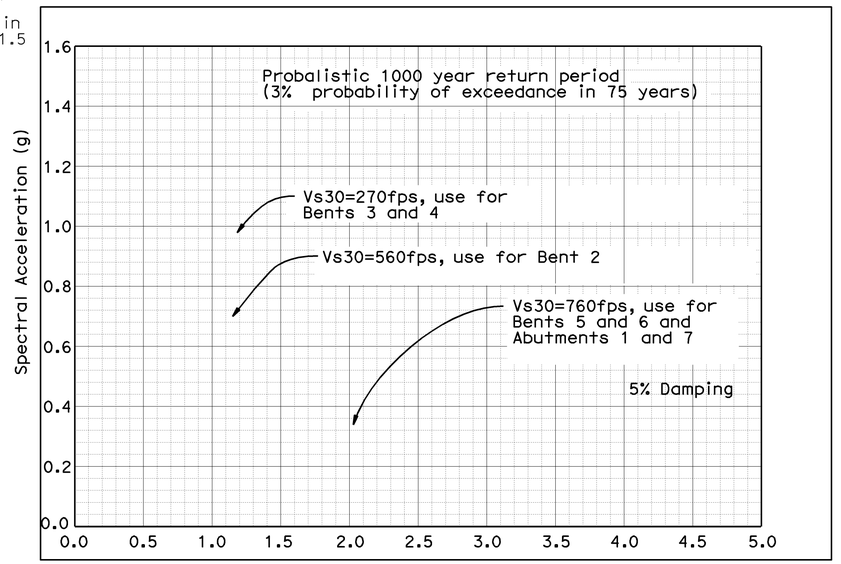

SEE ARS CURVE

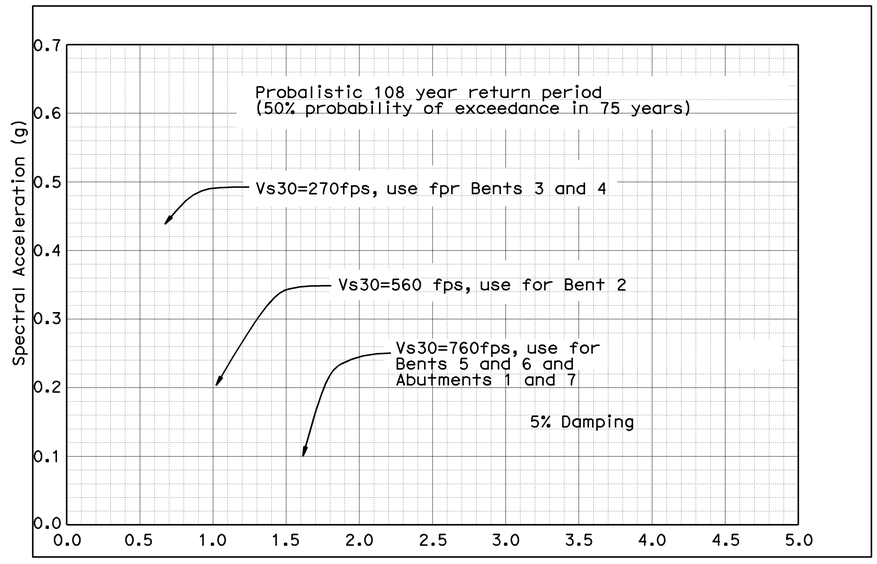

FEE ARS CURVE

	BY	CHECKED
DESIGN	A.M.M.Ibrahim	F.Zayati
DETAILS	Jeff Thorne	A.M.M.Ibrahim
QUANTITIES	A. Alcantara	J. Han

STATE OF CALIFORNIA
DEPARTMENT OF TRANSPORTATION

DIVISION OF ENGINEERING SERVICES
STRUCTURE DESIGN
DESIGN BRANCH 4

CU 04242
EA 163731

BRIDGE NO. 34-0157L
POST MILE 9.02

PRESIDIO VIADUCT - LEFT
GENERAL NOTES

STRUCTURES DESIGN DETAIL SHEET (ENGLISH) (REV. 10/25/05)

ORIGINAL SCALE IN INCHES FOR REDUCED PLANS 0 1 2 3

DISREGARD PRINTS BEARING EARLIER REVISION DATES →

REVISION DATES: 5-12-09 | 5-28-09 | 6-23-09 | 7-9-09 | 7-14-09 | 7-13-09

SHEET 4 OF 114

FILE => 34-0157l-ab-gn.dgn

USERNAME => tranguye DATE PLOTTED => 21-JUL-2009 TIME PLOTTED => 13:05

DIST	COUNTY	ROUTE	POST MILES TOTAL PROJECT	SHEET No	TOTAL SHEETS
04	SF	101,1	9.2/9.8, 6.8/7.1	355	567

Ahmed Brahim 6-4-09
REGISTERED CIVIL ENGINEER DATE

7-20-09
PLANS APPROVAL DATE

REGISTERED PROFESSIONAL ENGINEER
AHMED M M IBRAHIM
No. S 4865
EXP. 9-30-10
STRUCTURAL
STATE OF CALIFORNIA

The State of California or its officers or agents shall not be responsible for the accuracy or completeness of electronic copies of this plan sheet.

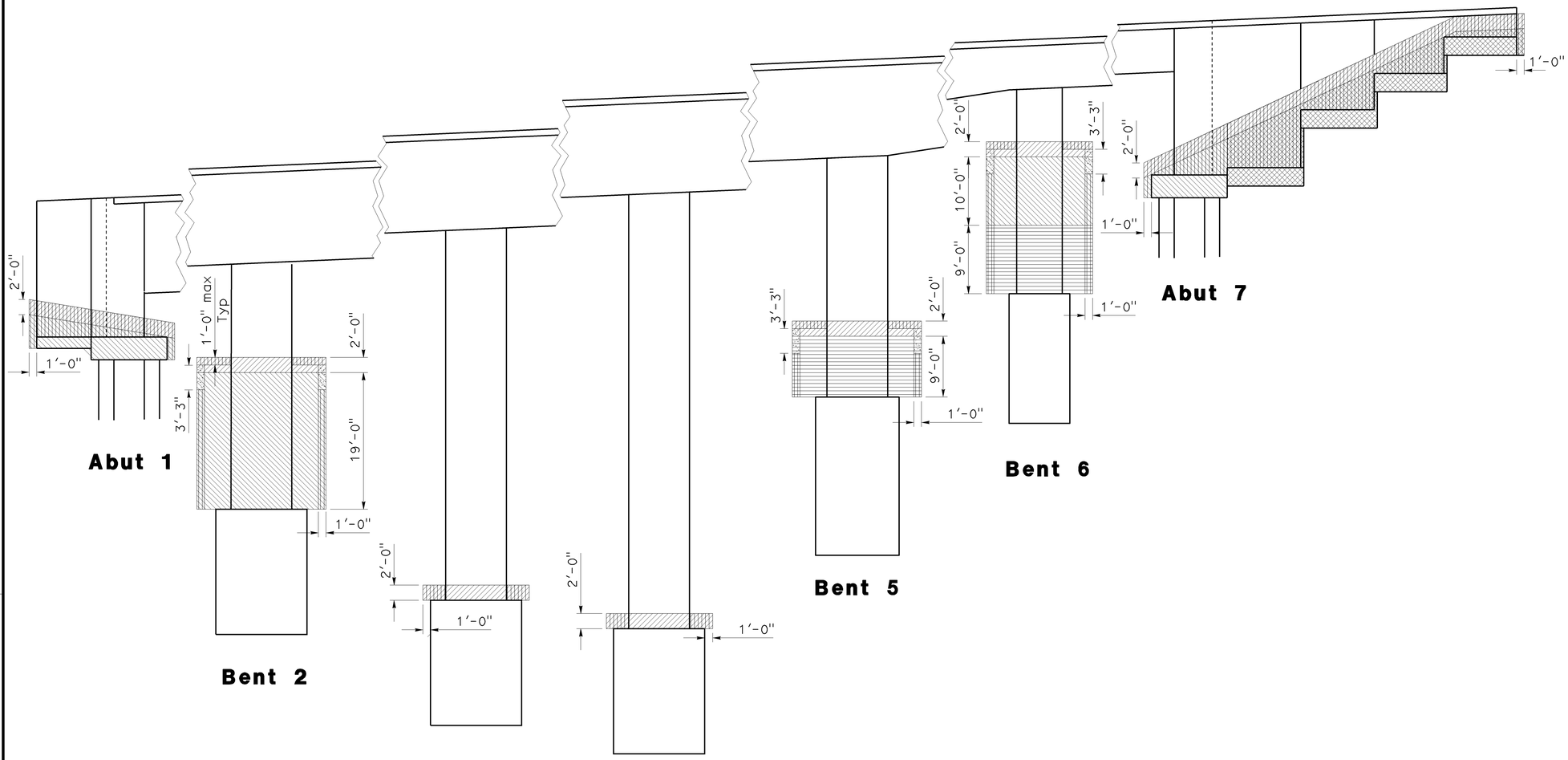

Structure excavation (Type Z-2) (Aerially Deposited Lead)

Structure excavation (Bridge)(Naturally Occuring Asbestos)

Structure excavation (Bridge Serpentine)

Structure backfill
At contractors option, lean concrete can be substituded @ side of Isolation casing

Structure excavation, retaining wall (Naturally Occuring Asbestos)

Minor Concrete

STRUCTURE EXCAVATION/BACKFILL LIMITS OF PAYMENT (TYP)

A62C

No Scale

DESIGN	BY Q. Zhao	CHECKED A. Alcantara	STATE OF CALIFORNIA DEPARTMENT OF TRANSPORTATION	DIVISION OF ENGINEERING SERVICES STRUCTURE DESIGN DESIGN BRANCH 4	BRIDGE NO. 34-0157L	PRESIDIO VIADUCT - LEFT
DETAILS	BY JFCasarino	CHECKED Q. Zhao			POST MILE 9.02	STRUCTURE EXCAVATION AND BACKFILL LIMIT
QUANTITIES	BY A. Alcantara	CHECKED J. Han		CU 04242 EA 163731		

STRUCTURES DESIGN DETAIL SHEET (ENGLISH) (REV. 10/25/05)

ORIGINAL SCALE IN INCHES FOR REDUCED PLANS 0 1 2 3

DISREGARD PRINTS BEARING EARLIER REVISION DATES →

REVISION DATES: 6-13-09

SHEET 5 OF 114

FILE => 34-0157l-ab-xback.dgn

USERNAME => trmoyse DATE PLOTTED => 21-JUL-2009 TIME PLOTTED => 13:05

DIST	COUNTY	ROUTE	POST MILES TOTAL PROJECT	SHEET No	TOTAL SHEETS
04	SF	101,1	9.2/9.8, 6.8/7.1	356	567

Ahmed Ibrahim 6-4-09
REGISTERED CIVIL ENGINEER DATE

7-20-09
PLANS APPROVAL DATE

REGISTERED PROFESSIONAL ENGINEER
AHMED M M IBRAHIM
No. S 4865
EXP. 9-30-10
STRUCTURAL
STATE OF CALIFORNIA

The State of California or its officers or agents shall not be responsible for the accuracy or completeness of electronic copies of this plan sheet.

NOTE:
THE CONTRACTOR SHALL VERIFY ALL CONTROLLING FIELD DIMENSIONS BEFORE ORDERING OR FABRICATING ANY MATERIAL.

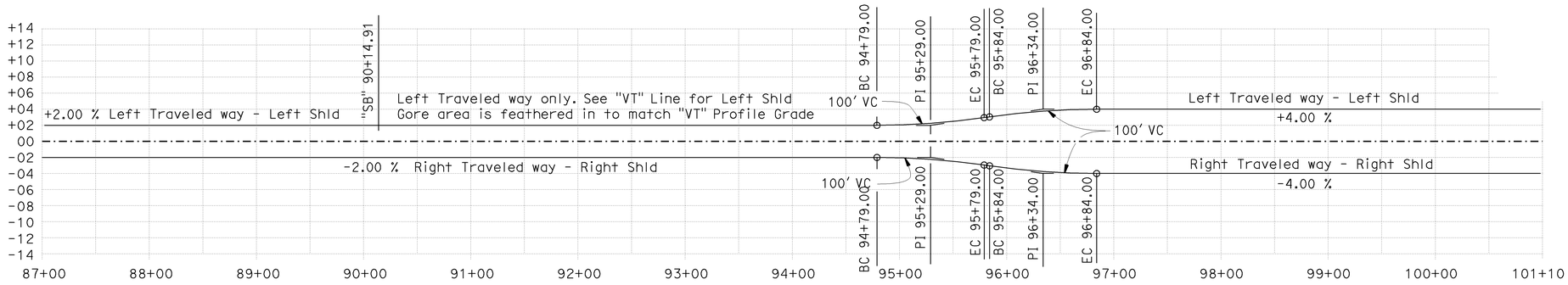

"SB" LINE SUPERELEVATION

No Scale

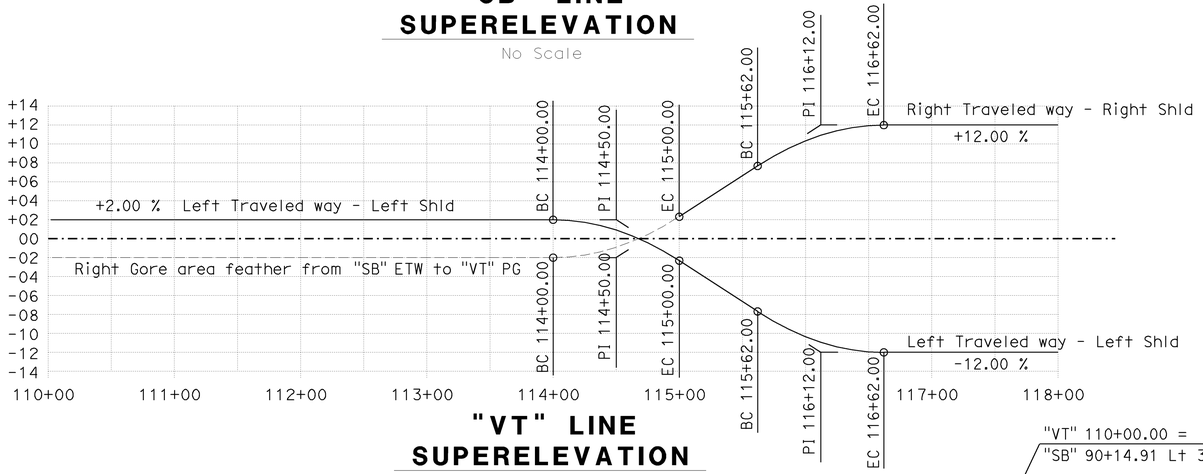

"VT" LINE SUPERELEVATION

No Scale

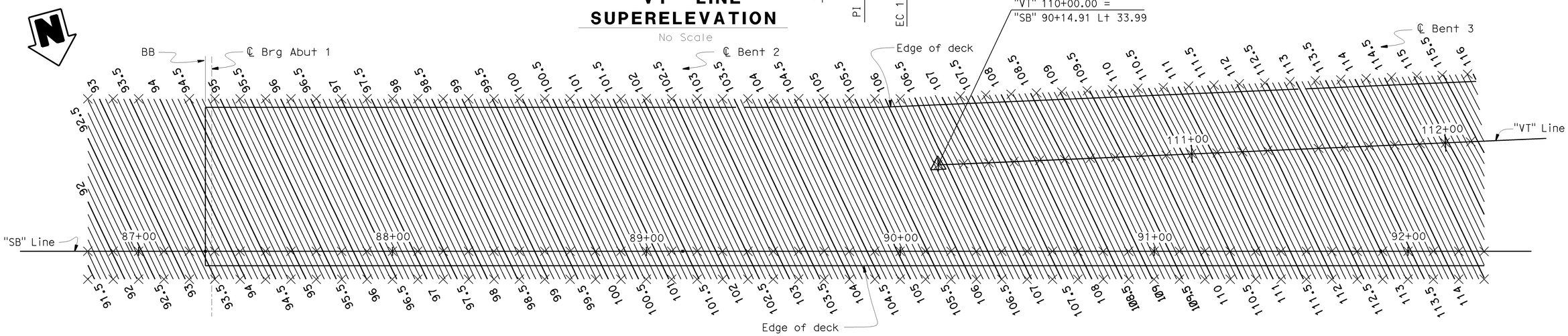

DECK CONTOURS 1

1" = 20'-0"

Notes

- ⬚ – *Indicates even foot contours.*
- × – *10' Intervals along station line.*
- *Contours do not include camber.*
- *Contour Interval = 0.10'*

DESIGN	BY O.Zhao	CHECKED A. Alcantara	STATE OF CALIFORNIA DEPARTMENT OF TRANSPORTATION	DIVISION OF ENGINEERING SERVICES STRUCTURE DESIGN DESIGN BRANCH 4	BRIDGE NO. 34-0157L	PRESIDIO VIADUCT - LEFT	
DETAILS	BY Jeff Thorne	CHECKED O.Zhao			POST MILE 9.02	DECK CONTOURS NO. 1	
QUANTITIES	BY A. Alcantara	CHECKED J. Han					

STRUCTURES DESIGN DETAIL SHEET (ENGLISH) (REV. 10/25/05)

ORIGINAL SCALE IN INCHES FOR REDUCED PLANS 0 1 2 3

CU 04242
EA 163731

DISREGARD PRINTS BEARING EARLIER REVISION DATES →

REVISION DATES: 2-27-09 | 3-3-09 | 4-28-09 | 5-12-09 | 5-28-09 | 6-15-09

SHEET 6 OF 114

FILE => 34-0157l-ac-dcon01.dgn

USERNAME => trmoguye DATE PLOTTED => 21-JUL-2009 TIME PLOTTED => 13:05

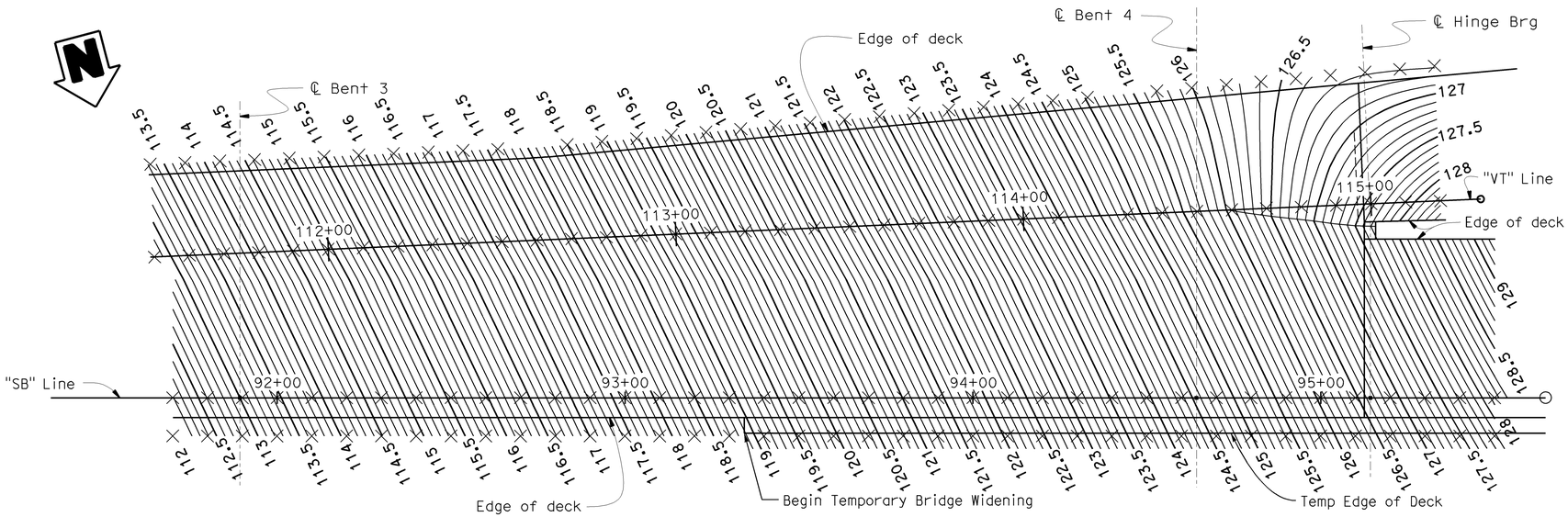

DECK CONTOURS 2

1" = 20'-0"

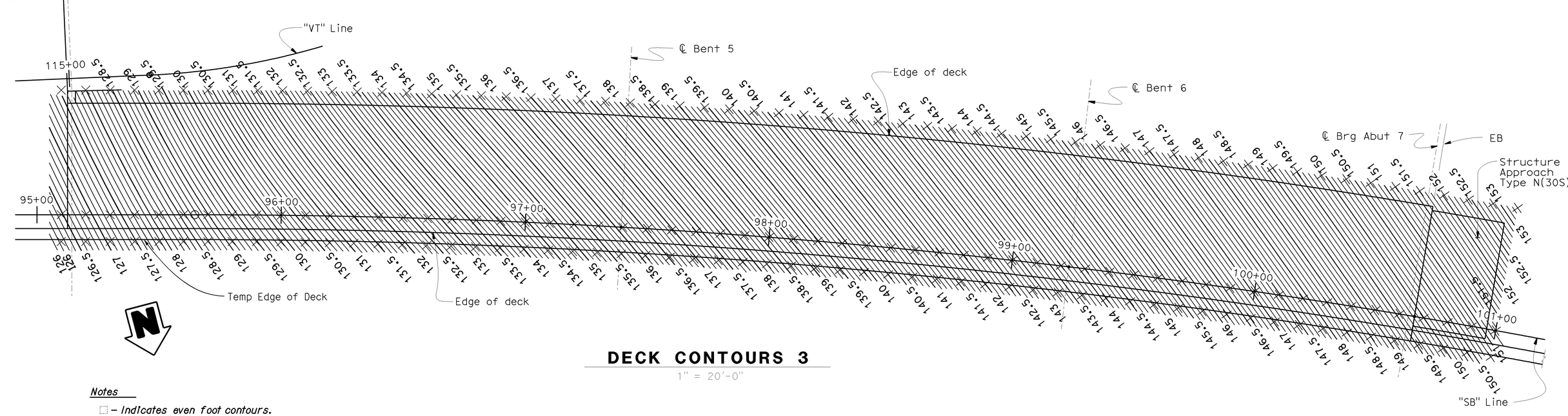

DECK CONTOURS 3

1" = 20'-0"

Notes

- ⬚ – *Indicates even foot contours.*
- × – *10' intervals along station line.*
- *Contours do not include camber.*
- *Contour Interval = 0.10'*

DIST	COUNTY	ROUTE	POST MILES TOTAL PROJECT	SHEET No	TOTAL SHEETS
04	SF	101,1	9.2/9.8, 6.8/7.1	357	567

Ahmed Ibrahim 6-4-09
REGISTERED CIVIL ENGINEER DATE

7-20-09
PLANS APPROVAL DATE

REGISTERED PROFESSIONAL ENGINEER
AHMED M M IBRAHIM
No. S 4865
EXP. 9-30-10
STRUCTURAL
STATE OF CALIFORNIA

The State of California or its officers or agents shall not be responsible for the accuracy or completeness of electronic copies of this plan sheet.

NOTE:
THE CONTRACTOR SHALL VERIFY ALL CONTROLLING FIELD DIMENSIONS BEFORE ORDERING OR FABRICATING ANY MATERIAL.

	BY	CHECKED
DESIGN	Q.Zhao	A. Alcantara
DETAILS	Jeff Thorne	Q.Zhao
QUANTITIES	A. Alcantara	J. Han

STATE OF CALIFORNIA
DEPARTMENT OF TRANSPORTATION

DIVISION OF ENGINEERING SERVICES
STRUCTURE DESIGN
DESIGN BRANCH 4

BRIDGE NO. 34-0157L
POST MILE 9.02

PRESIDIO VIADUCT - LEFT
DECK CONTOURS NO. 2

STRUCTURES DESIGN DETAIL SHEET (ENGLISH) (REV. 10/25/05)

ORIGINAL SCALE IN INCHES FOR REDUCED PLANS 0 1 2 3

CU 04242
EA 163731

DISREGARD PRINTS BEARING EARLIER REVISION DATES →

REVISION DATES: 2-27-09 | 3-3-09 | 3-20-09 | 4-28-09 | 5-12-09 | 5-28-09 | 6-15-09

SHEET 7 OF 114

FILE => 34-0157l-ac-dcon02.dgn

USERNAME => tmmgoye DATE PLOTTED => 21-JUL-2009 TIME PLOTTED => 13:05

DIST	COUNTY	ROUTE	POST MILES TOTAL PROJECT	SHEET No	TOTAL SHEETS
04	SF	101,1	9.2/9.8, 6.8/7.1	358	567

Ahmed Brahim 6-4-09
REGISTERED CIVIL ENGINEER DATE

7-20-09
PLANS APPROVAL DATE

REGISTERED PROFESSIONAL ENGINEER — AHMED M M IBRAHIM — No. S 4865 — Exp. 9-30-10 — STRUCTURAL — STATE OF CALIFORNIA

The State of California or its officers or agents shall not be responsible for the accuracy or completeness of electronic copies of this plan sheet.

Arup PB Joint Venture
560 Mission Street
Suite 700
San Francisco, CA 94105

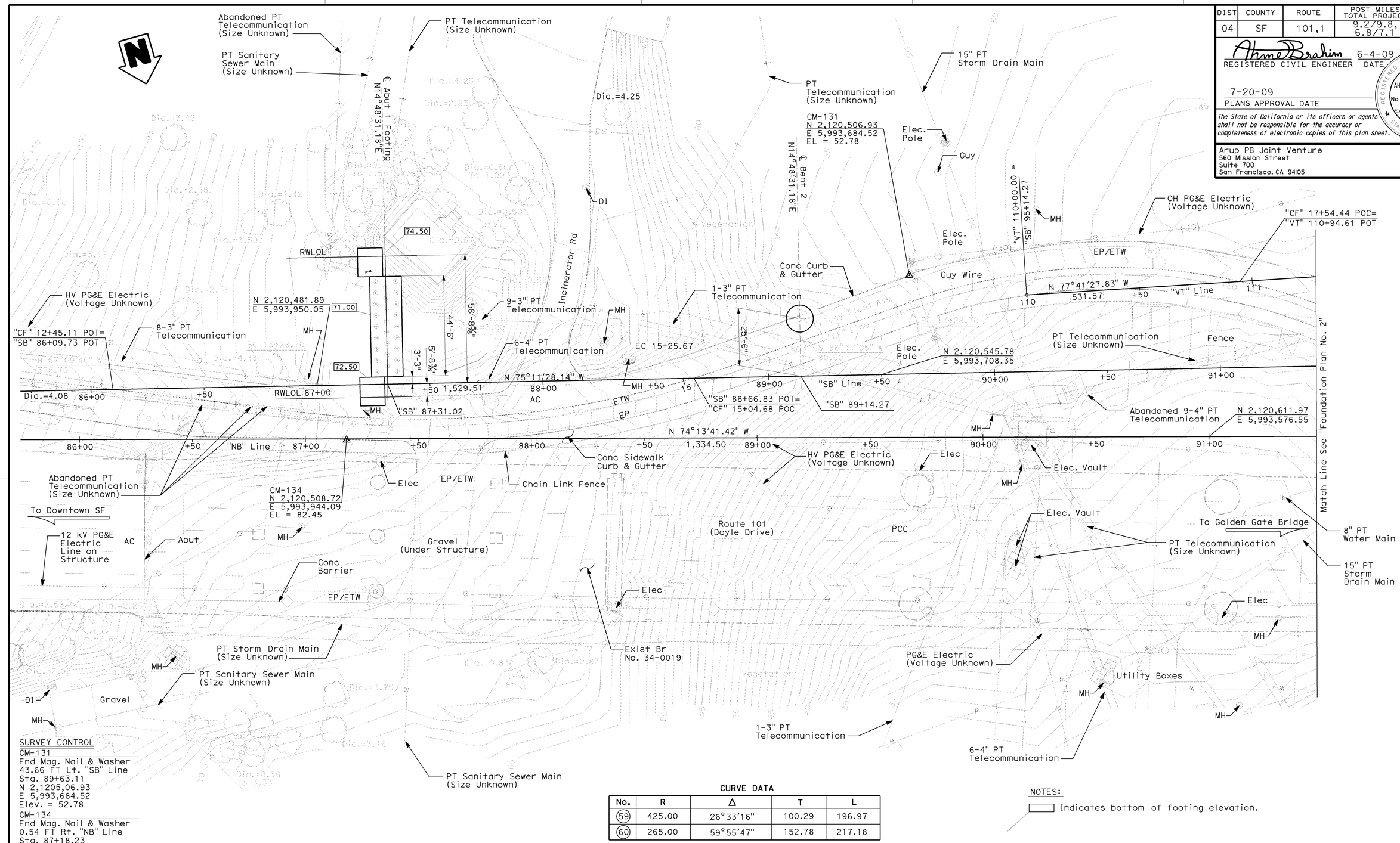

SURVEY CONTROL

CM-131
Fnd Mag. Nail & Washer
43.66 FT Lt. "SB" Line
Sta. 89+63.11
N 2,1205,06.93
E 5,993,684.52
Elev. = 52.78

CM-134
Fnd Mag. Nail & Washer
0.54 FT Rt. "NB" Line
Sta. 87+18.23
N 2,120,508.72
E 5,993,944.09
Elev. = 82.45

CURVE DATA

No.	R	Δ	T	L
(59)	425.00	26°33'16"	100.29	196.97
(60)	265.00	59°55'47"	152.78	217.18

NOTES:

☐ Indicates bottom of footing elevation.

PRELIMINARY INVESTIGATION SECTION					
SCALE	VERT.DATUM NAVD88	PHOTOGRAMMETRY AS OF: 9/24/2008			
1"=20'	HORZ.DATUM NAD83	SURVEYED	BY Chaudhary & Assoc.	CHECKED	BY E. Lilly 3/20/09
ALIGNMENT TIES Dist.Traverse Sheet		DRAFTED	BY L. Reyes 3/20/09	CHECKED	BY E. Lilly 3/20/09

DESIGN	BY Q.Zhao	CHECKED A.Alcantara
DETAILS	BY J.Thorne	CHECKED Q.Zhao
QUANTITIES	BY A. Alcantara	CHECKED J. Han

STATE OF CALIFORNIA
DEPARTMENT OF TRANSPORTATION

DIVISION OF ENGINEERING SERVICES
STRUCTURE DESIGN
DESIGN BRANCH 4

CU 04242
EA 163731

BRIDGE NO. 34-0157L
POST MILE 9.02

PRESIDIO VIADUCT - LEFT
FOUNDATION PLAN NO. 1

STRUCTURES FOUNDATION PLAN SHEET (ENGLISH) (REV. 10/25/05)

ORIGINAL SCALE IN INCHES FOR REDUCED PLANS 0 1 2 3

DISREGARD PRINTS BEARING EARLIER REVISION DATES

REVISION DATES: 3-26-09 | 4-30-09 | 5-1-09 | 5-11-09 | 5-18-09 | 5-30-09 | 6-3-09 | 7/11/09

SHEET 8 OF 114

FILE => 34-0157l-ad-fpl01.dgn

USERNAME => rmmguye DATE PLOTTED => 21-JUL-2009 TIME PLOTTED => 13:05

DIST	COUNTY	ROUTE	POST MILES TOTAL PROJECT	SHEET No	TOTAL SHEETS
04	SF	101,1	9.2/9.8, 6.8/7.1	359	567

Ahmed Ibrahim 6-4-09
REGISTERED CIVIL ENGINEER DATE

7-20-09
PLANS APPROVAL DATE

AHMED M M IBRAHIM No. S 4865 Exp. 9-30-10 STRUCTURAL REGISTERED PROFESSIONAL ENGINEER STATE OF CALIFORNIA

The State of California or its officers or agents shall not be responsible for the accuracy or completeness of electronic copies of this plan sheet.

Arup PB Joint Venture
560 Mission Street
Suite 700
San Francisco, CA 94105

NOTES:
Indicates bottom of footing elevation.

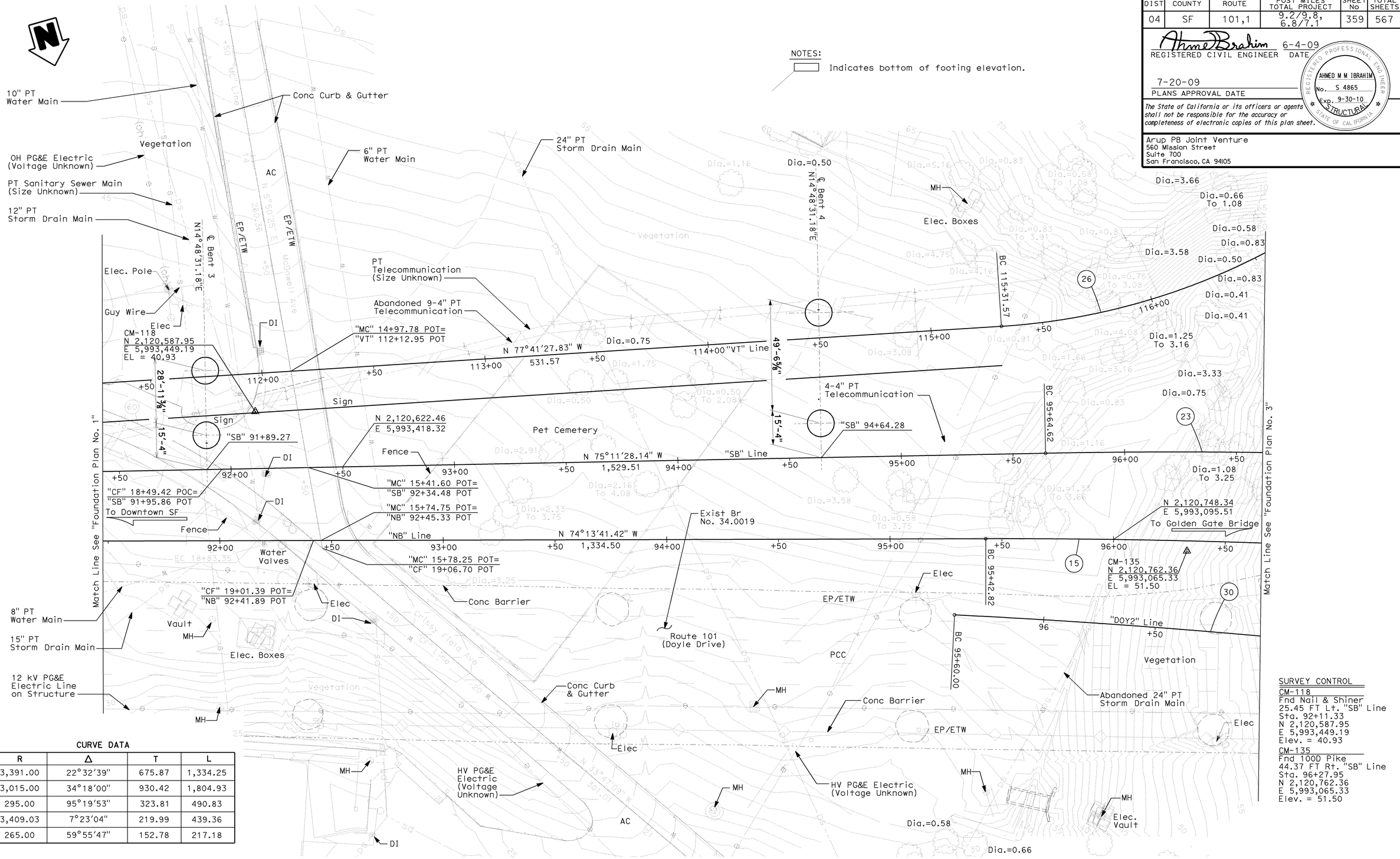

CURVE DATA

No.	R	Δ	T	L
15	3,391.00	22°32'39"	675.87	1,334.25
23	3,015.00	34°18'00"	930.42	1,804.93
26	295.00	95°19'53"	323.81	490.83
30	3,409.03	7°23'04"	219.99	439.36
60	265.00	59°55'47"	152.78	217.18

SURVEY CONTROL

CM-118
Fnd Nail & Shiner
25.45 FT Lt. "SB" Line
Sta. 92+11.33
N 2,120,587.95
E 5,993,449.19
Elev. = 40.93

CM-135
Fnd 100D Pike
44.37 FT Rt. "SB" Line
Sta. 96+27.95
N 2,120,762.36
E 5,993,065.33
Elev. = 51.50

PRELIMINARY INVESTIGATION SECTION

SCALE	VERT.DATUM NAVD88	PHOTOGRAMMETRY AS OF: 9/24/2008			
1"=20'	HORZ.DATUM NAD83	SURVEYED	BY Chaudhary & Assoc.	CHECKED	BY E. Lilly 3/20/09
ALIGNMENT TIES Dist.Traverse Sheet		DRAFTED	BY L. Reyes 3/20/09	CHECKED	BY E. Lilly 3/20/09

DESIGN	BY Q.Zhao	CHECKED A.Alcantara
DETAILS	BY J.Thorne	CHECKED Q.Zhao
QUANTITIES	BY A. Alcantara	CHECKED J. Han

STATE OF CALIFORNIA
DEPARTMENT OF TRANSPORTATION

DIVISION OF ENGINEERING SERVICES
STRUCTURE DESIGN
DESIGN BRANCH 4

CU 04242
EA 163731

BRIDGE NO. 34-0157L
POST MILE 9.02

PRESIDIO VIADUCT - LEFT
FOUNDATION PLAN NO. 2

STRUCTURES FOUNDATION PLAN SHEET (ENGLISH) (REV. 10/25/05)

ORIGINAL SCALE IN INCHES FOR REDUCED PLANS 0 1 2 3

DISREGARD PRINTS BEARING EARLIER REVISION DATES →

REVISION DATES: 3-26-09 4-24-09 5-14-09 5-30-09 6/5/09 7/11/09

SHEET 9 OF 114

FILE => 34-0157l-ad-fpl02.dgn

USERNAME => trmnguye DATE PLOTTED => 21-JUL-2009 TIME PLOTTED => 13:05

DIST	COUNTY	ROUTE	POST MILES TOTAL PROJECT	SHEET No	TOTAL SHEETS
04	SF	101,1	9.279,8, 6.8/7.1	360	567

Ahmed Ibrahim 6-4-09
REGISTERED CIVIL ENGINEER DATE

7-20-09
PLANS APPROVAL DATE

REGISTERED PROFESSIONAL ENGINEER — AHMED M M IBRAHIM — No. S 4865 — EXP. 9-30-10 — STRUCTURAL — STATE OF CALIFORNIA

The State of California or its officers or agents shall not be responsible for the accuracy or completeness of electronic copies of this plan sheet.

Arup PB Joint Venture
560 Mission Street
Suite 700
San Francisco, CA 94105

Abandoned 24" PT Storm Drain Main

Match Line See "Foundation Plan No. 2"

"VT" Line

℄ Bent 5 N18°07'39.42"E

EC 15+29.37

N 11°51'30" E 46.43

PT Sanitary Sewer (Size Unknown)

BC 15+75.80

"L" Line

"P" Line

"L" 19+12.33 POC= "SB" 98+33.13 POC

"P" 16+33.29 POC= "SB" 98+09.40 POC

PRC 18+07.34

PCC 19+02.02

PCC 16+28.03

EC 19+34.81

EC 16+64.32

Exist Br No. 34-0040G

"SB" 97+39.27

"SB" Line

"SB" 99+23.27

N 2,120,770.54
E 5,993,000.18

CM-260
N 2,120,815.59
E 5,992,885.61
EL = 101.80

NB Route 1 to SB Route 101 Connector

"NB" Line

12" PT Storm Drain Main

Elec

EP

ETW

MBGR

MH

PCC

Message Board

Comm. Boxes

Comm. Tower

℄ Bent 6 N21°37'27.39"E

"DOY4" Line

DI

NB Route 101 (Veterans Blvd)

Sign

Elec. Box

BC 107+61.42

"DOY4" 108+20.44 POC = "SB" 99+79.92 POC

"DOY4" 108+73.01 POC = "NB" 100+06.38 POC

CM-136
N 2,120,902.00
E 5,992,660.99
EL = 131.76

℄ Abut Footing N24°17'05.89"E

"DOY5" Line

AC

Utility Boxes

Culvert

SOUTH WW7 RW LOT

NORTH WW7 RW LOT

R=3060.67

R=3009.33

"SB" 100+62.27

EC 105+25.18

N 57°23'45.85" W
128.34

N 2,120,948.66
E 5,992,583.93

To Golden Gate Bridge

To Downtown SF

"DOY2" Line

PCC

Conc Barrier (Under Structure)

Conc Barrier

Route 101 (Doyle Drive)

PCC 99+99.36

12 kV PG&E Electric Line on structure

Abut

"DOY4" 109+64.52 POC = "DOY2" 100+90.78 POC

Crash Cushion

Elec. Box

Conc Barrier

Exist Br No. 34-0019

12" PT Storm Drain Main

4" PG&E Gas Main

9-3" PT Telecommunication

Lincoln Blvd

Vegetation

Dia.=3.00

PRC 102+35.07

NB Route 101 to SB Route 1 Connector

Ret Wall

Conc Barrier

Sign

20'-0"

42'-8½"

45'-8"

2'-8½"

5'-8"

137.72 | 137.72 | 141.52 | 145.72 | 148.72 | 129.00 | 132.63 | 132.63 | 136.63 | 144.8 | 140.80

CURVE DATA

No.	R	Δ	T	L
15	3,391.00	22°32'39"	675.87	1,334.25
23	3,015.00	34°18'00"	930.42	1,804.93
26	295.00	95°19'53"	323.81	490.83
28	459.00	56°59'57"	249.21	456.62
30	3,409.03	7°23'04"	219.99	439.36
31	491.98	27°27'01"	120.16	235.71
32	164.01	49°28'27"	75.57	141.62
36	474.00	57°18'11"	258.99	474.06
37	505.00	42°02'45"	209.41	397.03
54	450.01	18°21'53"	72.74	144.24
80	653.93	8°17'42"	47.42	94.67
81	214.06	8°46'42"	16.43	32.80
82	150.00	25°24'55"	33.83	66.54
83	677.00	4°25'14"	26.13	52.23
84	236.84	8°46'44"	18.18	36.29
100	3,060.70	2°12'21"	58.92	117.83
101	3009.29	2°5'28"	54.92	109.83

SURVEY CONTROL

CM-136
Fnd 100D Pike
9.29 FT Lt. "NB" Line
Sta. 100+60.51
N 2,120,902.00
E 5,992,660.99
Elev. = 131.76

CM-260
Fnd Mag. Nail & Washer
3.21 FT Lt. "NB" Line
Sta. 98+20.32
N 2,120,815.59
E 5,992,885.61
Elev. = 101.80

NOTE:
[ ] Indicated bottom of footing elevation.

PRELIMINARY INVESTIGATION SECTION

SCALE 1"=20'	VERT.DATUM NAVD88	PHOTOGRAMMETRY AS OF: 9/24/2008		
HORZ.DATUM NAD83	SURVEYED	BY Chaudhary & Assoc.	CHECKED	BY E. Lilly 3/20/09
ALIGNMENT TIES Dist.Traverse Sheet	DRAFTED	BY L. Reyes 3/20/09	CHECKED	BY E. Lilly 3/20/09

DESIGN	BY O.Zhao	CHECKED A.Alcantara
DETAILS	BY J.Thorne	CHECKED O. Zhao
QUANTITIES	BY A. Alcantara	CHECKED J. Han

STATE OF CALIFORNIA
DEPARTMENT OF TRANSPORTATION

DIVISION OF ENGINEERING SERVICES
STRUCTURE DESIGN
DESIGN BRANCH 4

BRIDGE NO. 34-0157L
POST MILE 9.02

PRESIDIO VIADUCT - LEFT
FOUNDATION PLAN NO. 3

STRUCTURES FOUNDATION PLAN SHEET (ENGLISH) (REV. 10/25/05)

ORIGINAL SCALE IN INCHES FOR REDUCED PLANS 0 1 2 3

CU 04242
EA 163731

DISREGARD PRINTS BEARING EARLIER REVISION DATES →

REVISION DATES: 3-26-09 | 4-15-09 | 4-24-09 | 4-30-09 | 5-19-09 | 5-30-09 | 6/5/09 | 7/11/09

SHEET 10 OF 114

FILE => 34-0157l-ad-fp103.dgn

USERNAME => trnnguye DATE PLOTTED => 21-JUL-2009 TIME PLOTTED => 13:05

DIST	COUNTY	ROUTE	POST MILES TOTAL PROJECT	SHEET No	TOTAL SHEETS
04	SF	101,1	9.2/9.8, 6.8/7.1	361	567

Ahmed Brahim 6-4-09
REGISTERED CIVIL ENGINEER DATE

7-20-09
PLANS APPROVAL DATE

REGISTERED PROFESSIONAL ENGINEER
AHMED M M IBRAHIM
No. S 4865
EXP. 9-30-10
STRUCTURAL
STATE OF CALIFORNIA

The State of California or its officers or agents shall not be responsible for the accuracy or completeness of electronic copies of this plan sheet.

NOTE:
THE CONTRACTOR SHALL VERIFY ALL CONTROLLING FIELD DIMENSIONS BEFORE ORDERING OR FABRICATING ANY MATERIAL.

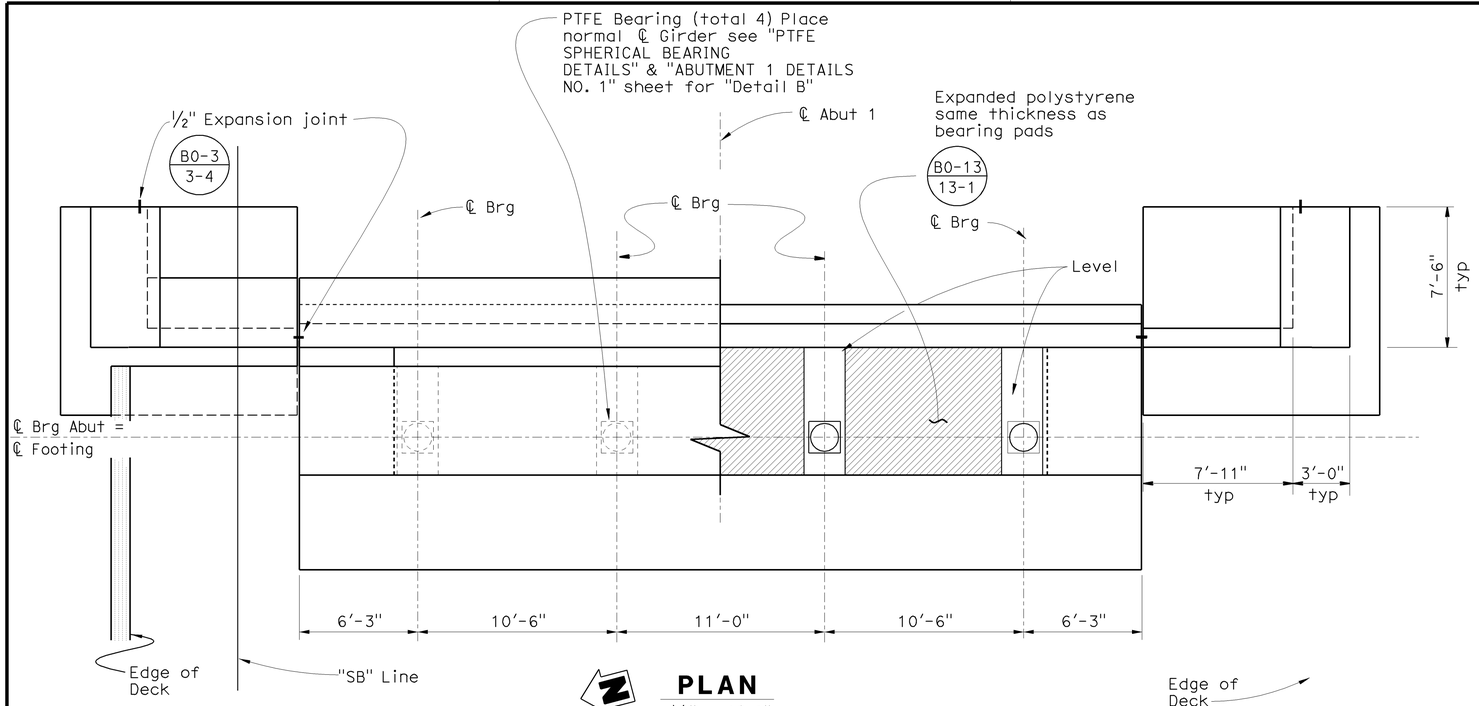

PLAN
¼" = 1'-0"

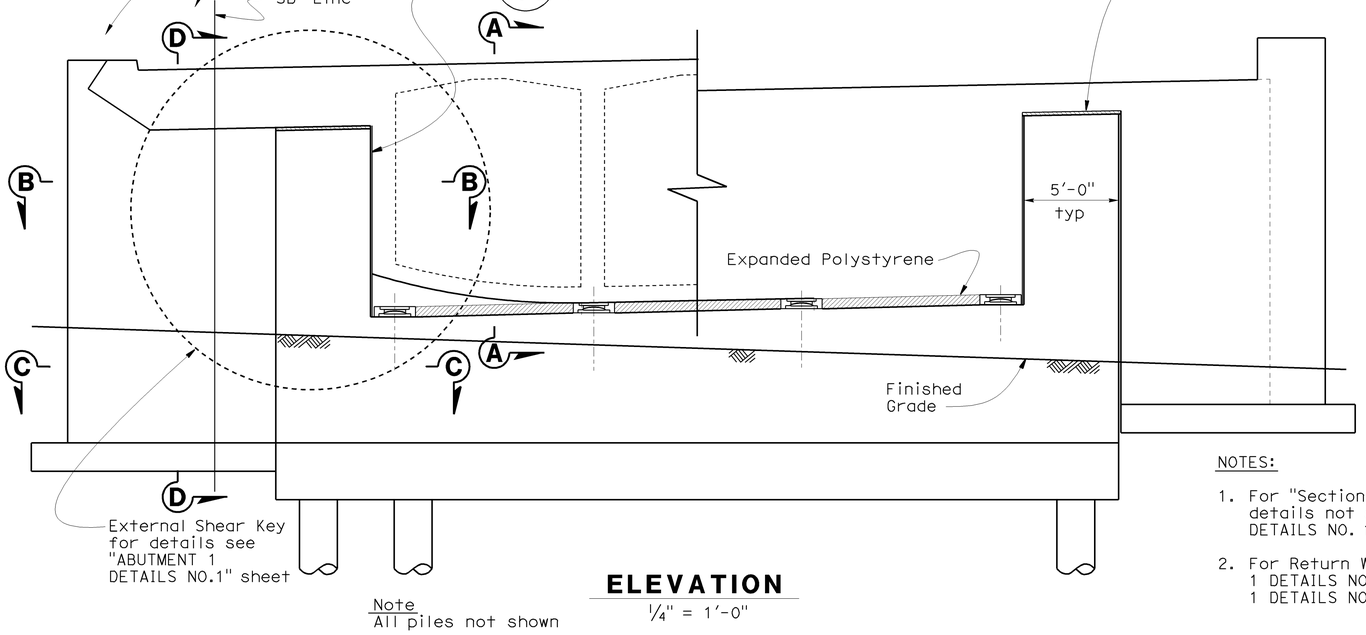

Note
All piles not shown

ELEVATION
¼" = 1'-0"

NOTES:

1. For "Section B-B", "C-C","D-D" and details not shown, see 'ABUTMENT 1 DETAILS NO. 1', and 'NO. 2' sheets.
2. For Return Wall, see 'ABUTMENT 1 DETAILS NO. 1' and 'ABUTMENT 1 DETAILS NO. 2' sheet.

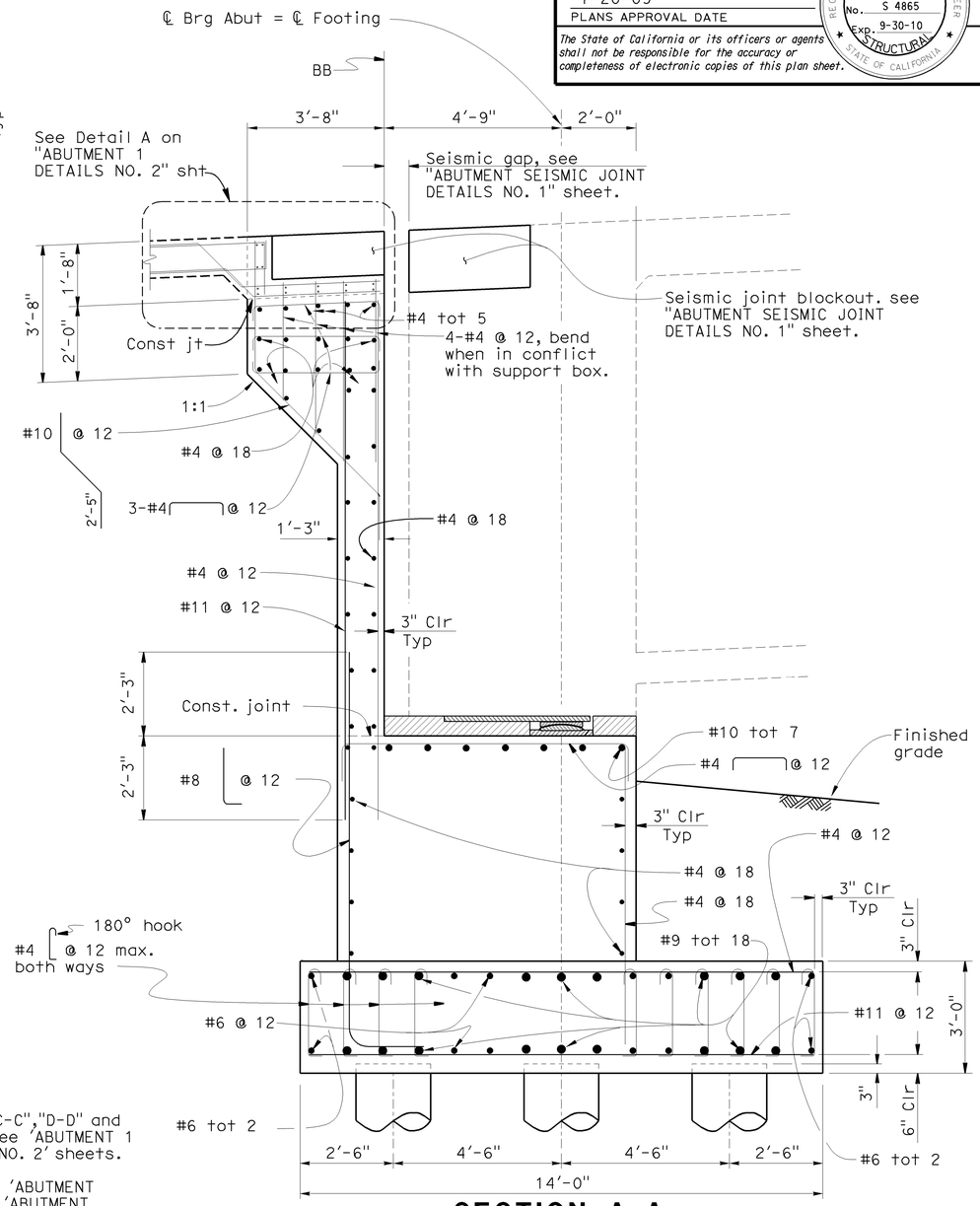

SECTION A-A
½" = 1'-0"

DESIGN	BY Li Barnard	CHECKED A.Rahbari	STATE OF CALIFORNIA DEPARTMENT OF TRANSPORTATION	DIVISION OF ENGINEERING SERVICES STRUCTURE DESIGN DESIGN BRANCH 4	BRIDGE NO. 34-0157L	PRESIDIO VIADUCT - LEFT	
DETAILS	BY Jeff Thorne/DWR	CHECKED Li Barnard			POST MILE 9.02	ABUTMENT 1 LAYOUT	
QUANTITIES	BY A. Alcantara	CHECKED J. Han		CU 04242 EA 163731	DISREGARD PRINTS BEARING EARLIER REVISION DATES →	REVISION DATES: 5-20-09, 5-28-09, 6-2-09, 6-3-09, 6-11-09, 6-16-09, 5-14-09, 5-15-09, 5-12-09	SHEET 11 OF 114

STRUCTURES DESIGN DETAIL SHEET (ENGLISH) (REV. 10/25/05)

ORIGINAL SCALE IN INCHES FOR REDUCED PLANS 0 1 2 3

FILE => 34-0157I-b-abt01_lo.dgn

USERNAME => ttmoyle DATE PLOTTED => 21-JUL-2009 TIME PLOTTED => 13:05

DIST	COUNTY	ROUTE	POST MILES TOTAL PROJECT	SHEET No	TOTAL SHEETS
04	SF	101,1	9.2/9.8, 6.8/7.1	362	567

Ahmed Brahim 6-4-09
REGISTERED CIVIL ENGINEER DATE

7-20-09
PLANS APPROVAL DATE

REGISTERED PROFESSIONAL ENGINEER — AHMED M M IBRAHIM — No. S 4865 — EXP. 9-30-10 — STRUCTURAL — STATE OF CALIFORNIA

The State of California or its officers or agents shall not be responsible for the accuracy or completeness of electronic copies of this plan sheet.

Notes:
1. Mandatory joint surface to be smooth finished and lined with 15 pound construction paper.
2. Vertical shear key reinforcement (#5 16'-8" tot 10) to be galvanized.
3. Shear key and return wall reinforcement to be discontinuous as shown.

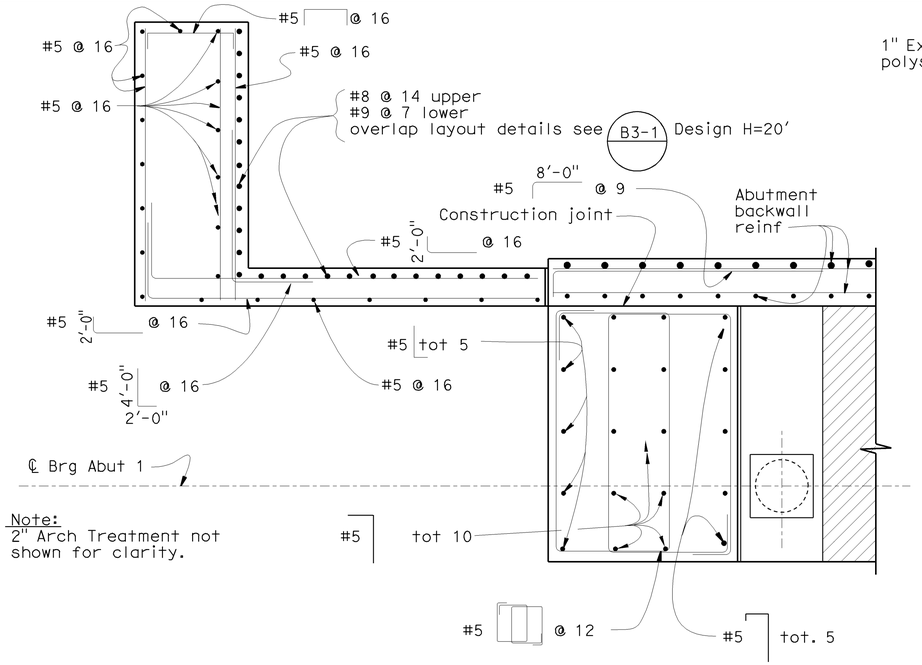

Note:
2" Arch Treatment not shown for clarity.

SECTION B-B
½" = 1'-0"
B0-3 / 3-4

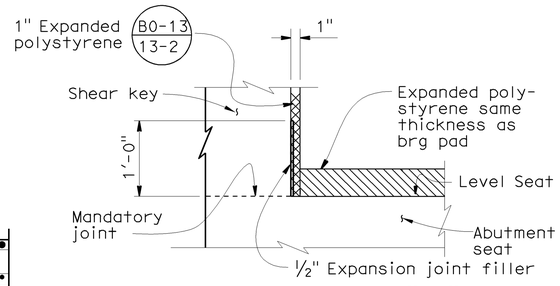

DETAIL "A"
No Scale

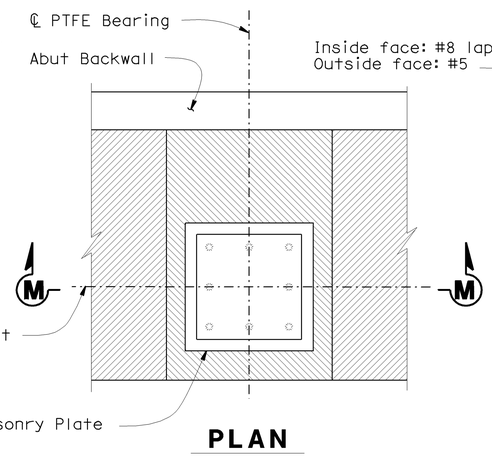

PLAN

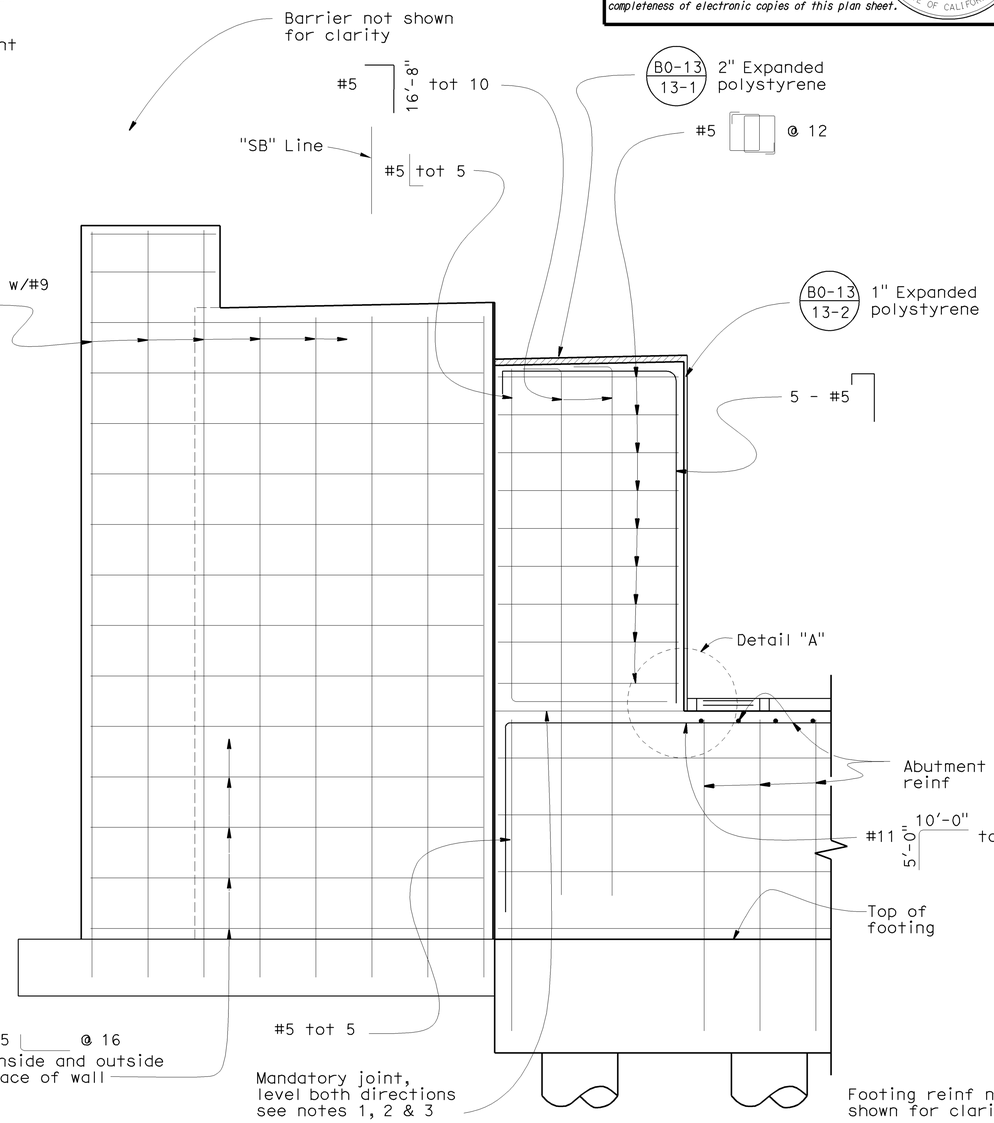

PART ELEVATION & EXTERNAL SHEAR KEY
½" = 1'-0"
(Left Shear Key shown, Right Shear Key similar.)

Note
For details and dimensions not shown, see "Section B-B"

SECTION C-C
½" = 1'-0"
B0-3 / 3-4

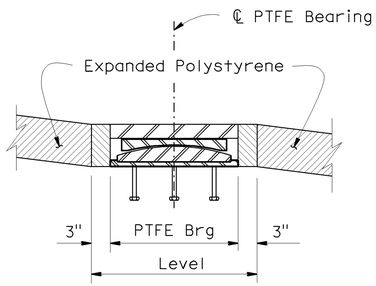

SECTION M-M

DETAIL "B"
PTFE BEARING SEAT
No Scale

NOTE:
THE CONTRACTOR SHALL VERIFY ALL CONTROLLING FIELD DIMENSIONS BEFORE ORDERING OR FABRICATING ANY MATERIAL.

DESIGN	BY L.Barnard	CHECKED A.Rahbari	STATE OF CALIFORNIA DEPARTMENT OF TRANSPORTATION
DETAILS	BY J. Thorne/M. Lane/DWR	CHECKED L.Barnard	
QUANTITIES	BY A. Alcantara	CHECKED J. Han	

DIVISION OF ENGINEERING SERVICES STRUCTURE DESIGN
DESIGN BRANCH 4

BRIDGE NO. 34-0157L
POST MILE 9.02

PRESIDIO VIADUCT - LEFT
ABUTMENT 1 DETAILS NO. 1

STRUCTURES DESIGN DETAIL SHEET (ENGLISH) (REV. 10/25/05)

ORIGINAL SCALE IN INCHES FOR REDUCED PLANS 0 1 2 3

CU 04242
EA 163731

FILE => 34-0157l-b-abt01dts01.dgn

DISREGARD PRINTS BEARING EARLIER REVISION DATES →

REVISION DATES: 3-23-09 | 6-2-09 | 6-3-09 | 6-11-09 | 6-17-09 | 5-8-09 | 5-14-09 | 5-18-09 | 5-12-09

SHEET 12 OF 114

USERNAME => trmoguye DATE PLOTTED => 21-JUL-2009 TIME PLOTTED => 13:47

NOTE:
THE CONTRACTOR SHALL VERIFY ALL CONTROLLING FIELD DIMENSIONS BEFORE ORDERING OR FABRICATING ANY MATERIAL.

DIST	COUNTY	ROUTE	POST MILES TOTAL PROJECT	SHEET No	TOTAL SHEETS
04	SF	101,1	9.2/9.8, 6.8/7.1	363	567

Ahmed Ibrahim 6-4-09
REGISTERED CIVIL ENGINEER DATE

7-20-09
PLANS APPROVAL DATE

REGISTERED PROFESSIONAL ENGINEER
AHMED M M IBRAHIM
No. S 4865
EXP. 9-30-10
STRUCTURAL
STATE OF CALIFORNIA

The State of California or its officers or agents shall not be responsible for the accuracy or completeness of electronic copies of this plan sheet.

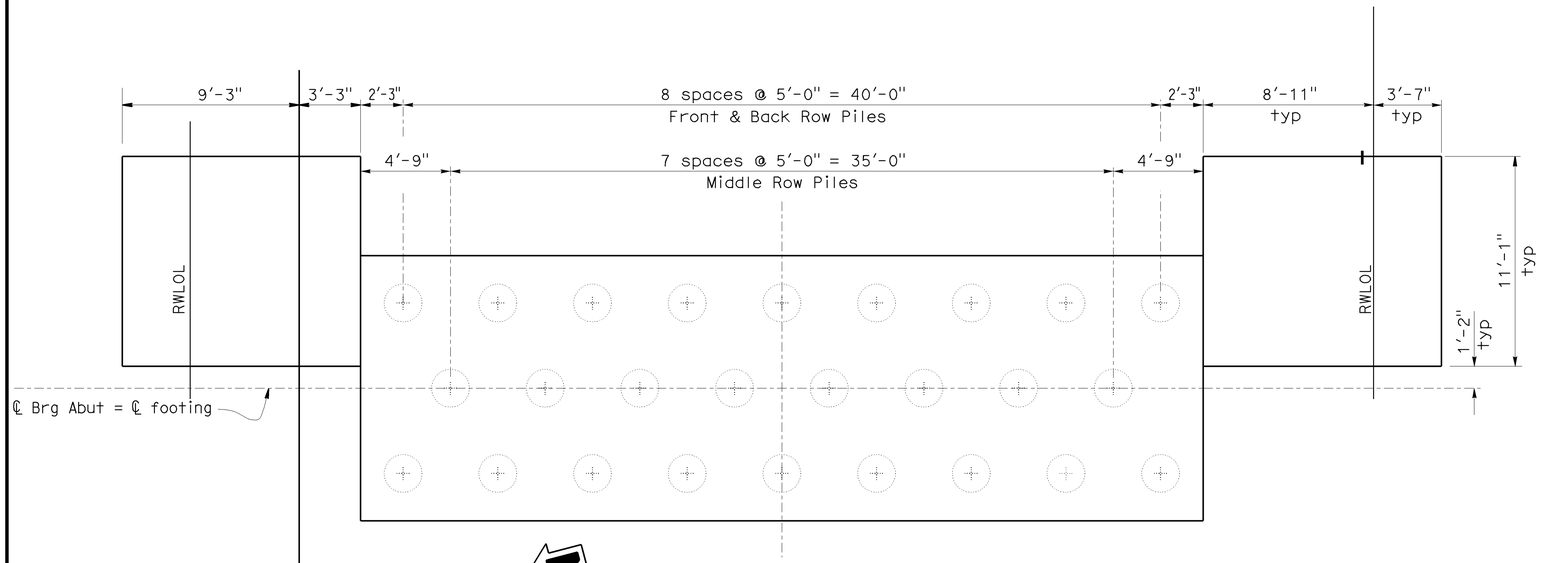

FOOTING PLAN
1/4" = 1'-0"

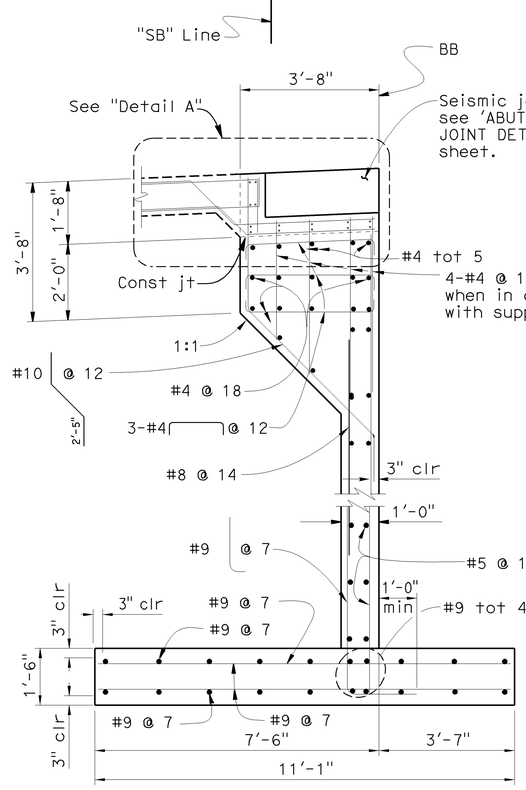

SECTION D-D
1/2" = 1'-0"

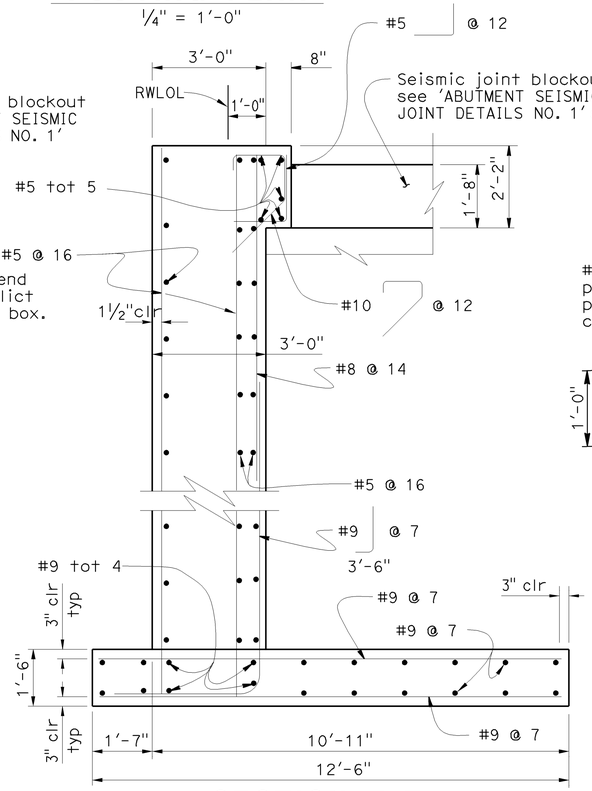

SECTION E-E
1/2" = 1'-0"

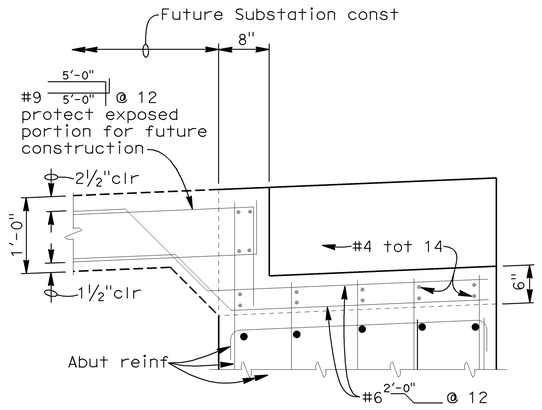

DETAIL A
1" = 1'-0"

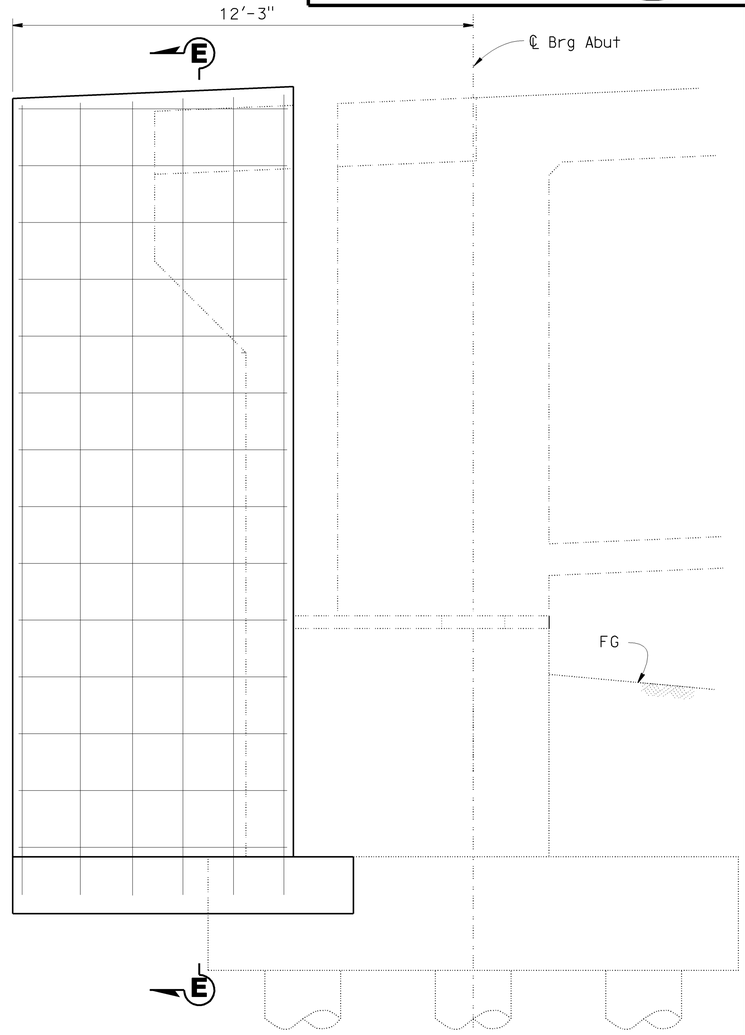

RETURN WALL ELEVATION
1/2" = 1'-0"
(Left Return Wall shown, Right Return Wall similar)

	BY	CHECKED
DESIGN	L.Barnard	A.Rahbari/A.Alcantara
DETAILS	Jeff Thorne/DWR	L.Barnard
QUANTITIES	A. Alcantara	J. Han

STATE OF CALIFORNIA
DEPARTMENT OF TRANSPORTATION

DIVISION OF ENGINEERING SERVICES
STRUCTURE DESIGN
DESIGN BRANCH 4

CU 04242
EA 163731

BRIDGE NO. 34-0157L
POST MILE 9.02

PRESIDIO VIADUCT - LEFT
ABUTMENT 1 DETAILS NO. 2

STRUCTURES DESIGN DETAIL SHEET (ENGLISH) (REV. 10/25/05)

ORIGINAL SCALE IN INCHES FOR REDUCED PLANS 0 1 2 3

DISREGARD PRINTS BEARING EARLIER REVISION DATES

REVISION DATES: 5-28-09 | 6-11-09 | 6-14-09 | 6-17-09 | | 5-15-09 | 5-12-09 | 5-21-09 | 5-28-09 | 6-2-09

SHEET 13 OF 114

FILE => 34-0157l-b-abt01dts02.dgn

USERNAME = frmnguye DATE PLOTTED => 21-JUL-2009 TIME PLOTTED => 13:47

DIST	COUNTY	ROUTE	POST MILES TOTAL PROJECT	SHEET No	TOTAL SHEETS
04	SF	101,1	9.2/9.8, 6.8/7.1	364	567

Ahmed Brahim 6-4-09
REGISTERED CIVIL ENGINEER DATE

7-20-09
PLANS APPROVAL DATE

REGISTERED PROFESSIONAL ENGINEER — AHMED M M IBRAHIM — No. S 4865 — EXP. 9-30-10 — STRUCTURAL — STATE OF CALIFORNIA

The State of California or its officers or agents shall not be responsible for the accuracy or completeness of electronic copies of this plan sheet.

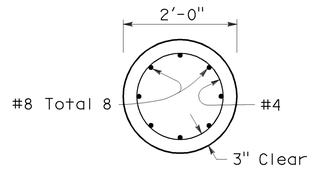

SECTION F-F

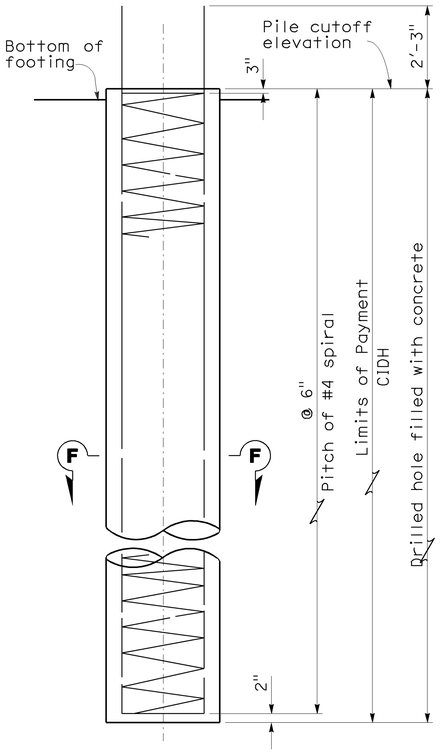

ELEVATION

24" CIDH PILE

B2-3

¾" = 1'-0"

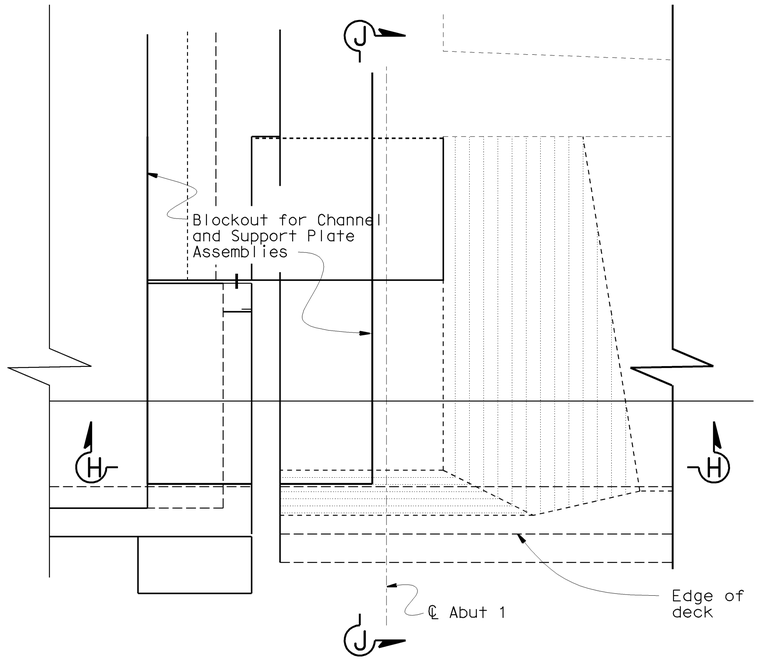

ABUTMENT 1 PART PLAN AT SEISMIC JOINT

⅜" = 1'-0"

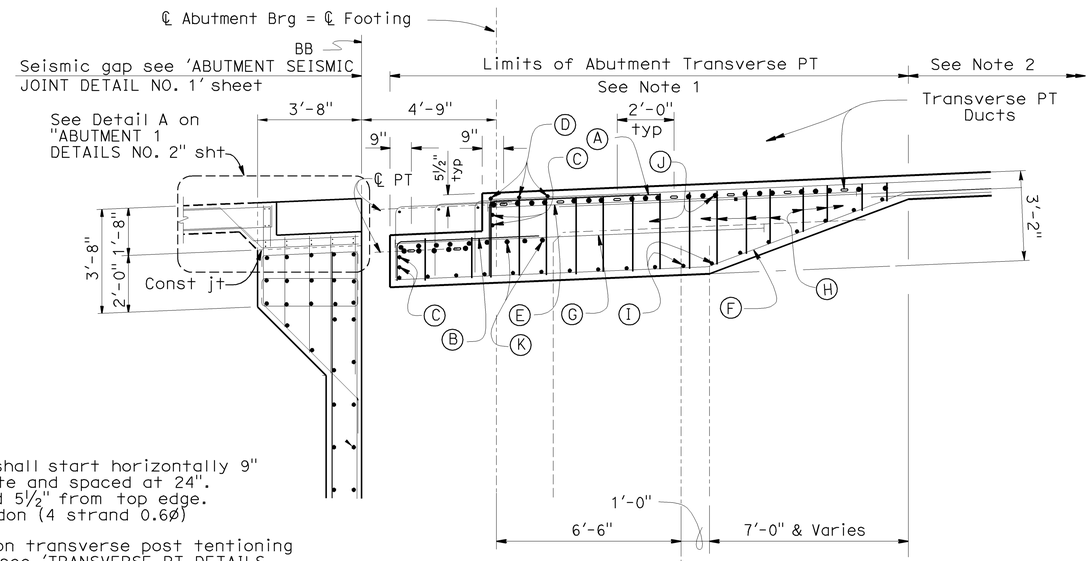

SECTION H-H

⅜" = 1'-0"

BAR LEGEND

- (A) #6 2'-0" / 6'-0" @ 6, typ each side of overhangs
- (B) #6 Vars / 5'-0" @ 12, typ each side of overhang
- (C) #5 @ 12, Cont. Extend to edge of deck
- (D) #5 tot. 3
- (E) #11 13'-0" @ 12
- (F) #5 Vars Vars @ 12
- (G) #11 11'-0" @ 12
- (H) #6 Vars @ 12 bothways, typ
- (I) #5 Vars @ 12 extend 2'-0" beyond face of exterior girder
- (J) #10 @ 6 between PT ducts, same layer & depth as transverse PT ducts, and extend to edge of deck
- (K) #11 tot 9 extend to edge of deck
- Transverse PT duct

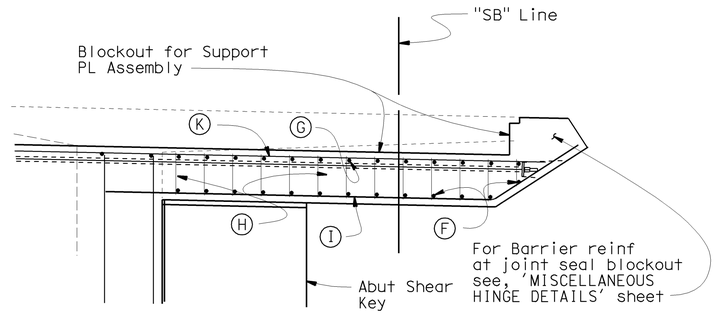

SECTION J-J

⅜" = 1'-0"

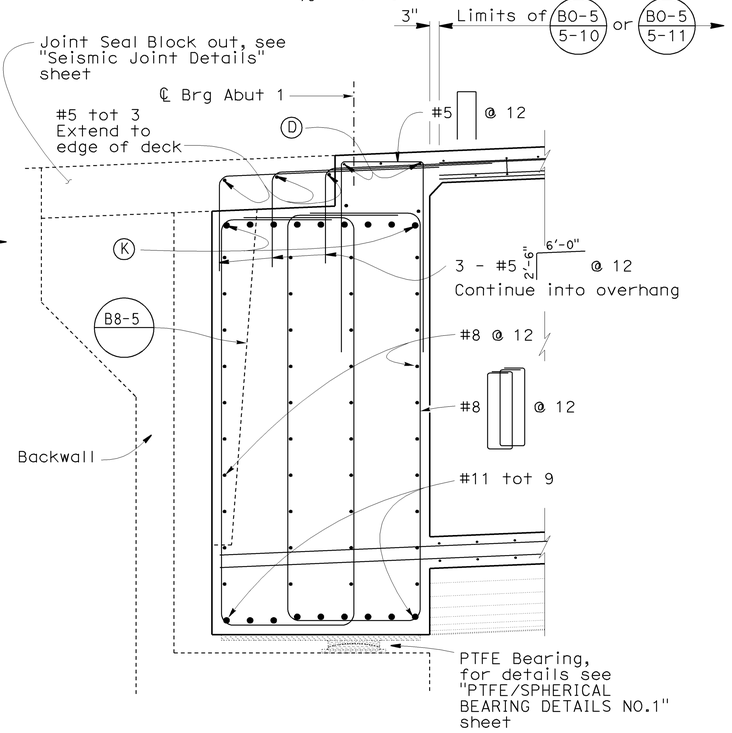

ABUTMENT 1 END DIAPHRAGM

½" = 1'-0"

Notes

1. Abutment transverse PT shall start horizontally 9" from the edge of concrete and spaced at 24". Vertically shall be placed 5½" from top edge. Pjack = 175 kips per tendon (4 strand 0.6ø)
2. For spacing and details on transverse post tentioning beyond the hinge limits, see 'TRANSVERSE PT DETAILS NO. 1' sheet.
3. For Steel Fin details, see 'STEEL FIN DETAILS' sheet.

NOTE:
THE CONTRACTOR SHALL VERIFY ALL CONTROLLING FIELD DIMENSIONS BEFORE ORDERING OR FABRICATING ANY MATERIAL.

		BY	CHECKED
DESIGN		S. Barajas	A. M.M. Ibrahim
DETAILS		Jeff Thorne	S. Barajas
QUANTITIES		A. Alcantara	J. Han

STATE OF CALIFORNIA
DEPARTMENT OF TRANSPORTATION

DIVISION OF ENGINEERING SERVICES
STRUCTURE DESIGN
DESIGN BRANCH 4

CU 04242
EA 163731

BRIDGE NO. 34-0157L
POST MILE 9.02

PRESIDIO VIADUCT - LEFT
ABUTMENT 1 DETAILS NO. 3

STRUCTURES DESIGN DETAIL SHEET (ENGLISH) (REV. 10/25/05)

ORIGINAL SCALE IN INCHES FOR REDUCED PLANS 0 1 2 3

DISREGARD PRINTS BEARING EARLIER REVISION DATES →

REVISION DATES: 2-27-09 | 3-3-09 | 3-18-09 | 5-15-09 | 5-1-09 | 6-2-09 | 6-4-09 | 6-16-09 | 6-18-09

SHEET 14 OF 114

FILE => 34-0157l-b-abt01tdts03.dgn

USERNAME => trmnguye DATE PLOTTED => 21-JUL-2009 TIME PLOTTED => 13:06

DIST	COUNTY	ROUTE	POST MILES TOTAL PROJECT	SHEET No	TOTAL SHEETS
04	SF	101,1	9.2/9.8, 6.8/7.1	365	567

Ahmed Ibrahim 6-4-09
REGISTERED CIVIL ENGINEER DATE

7-20-09
PLANS APPROVAL DATE

REGISTERED PROFESSIONAL ENGINEER
AHMED M.M. IBRAHIM
No. S 4865
Exp. 9-30-10
STRUCTURAL
STATE OF CALIFORNIA

The State of California or its officers or agents shall not be responsible for the accuracy or completeness of electronic copies of this plan sheet.

NOTE:
THE CONTRACTOR SHALL VERIFY ALL CONTROLLING FIELD DIMENSIONS BEFORE ORDERING OR FABRICATING ANY MATERIAL.

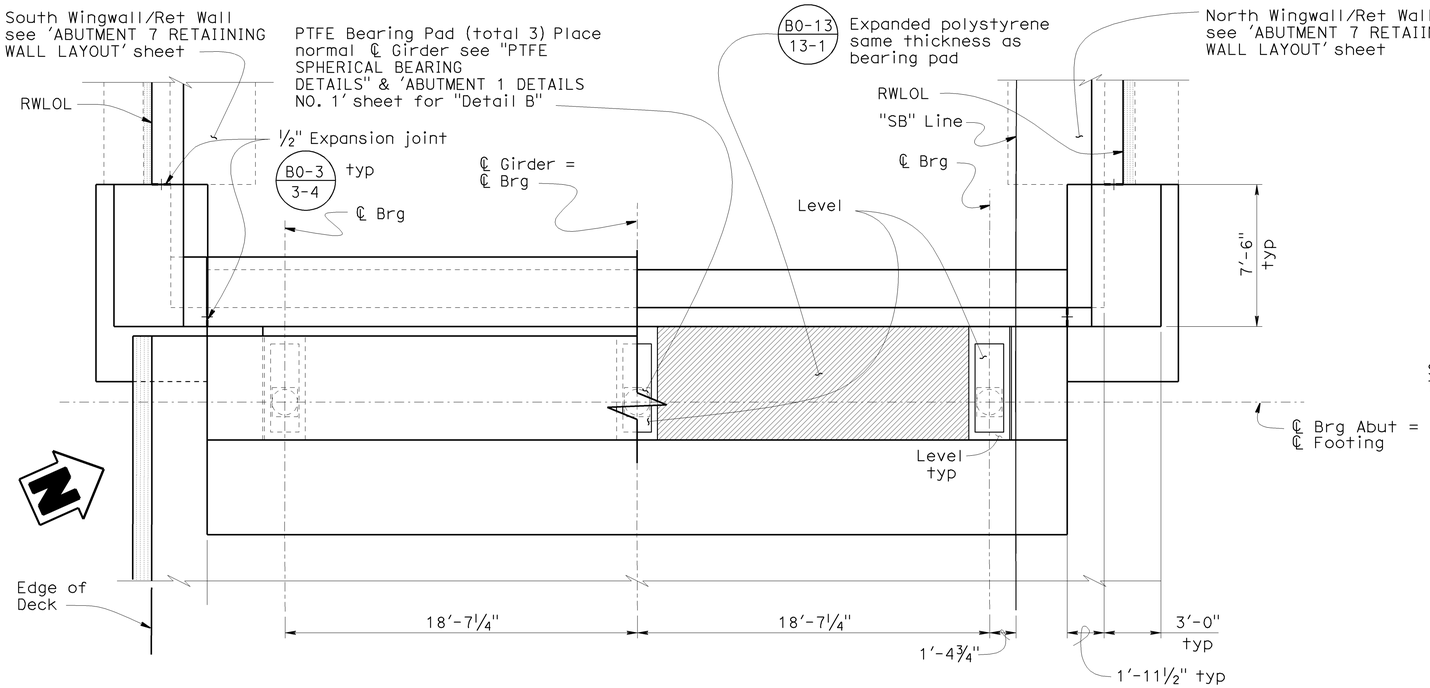

PLAN
¼" = 1'-0"

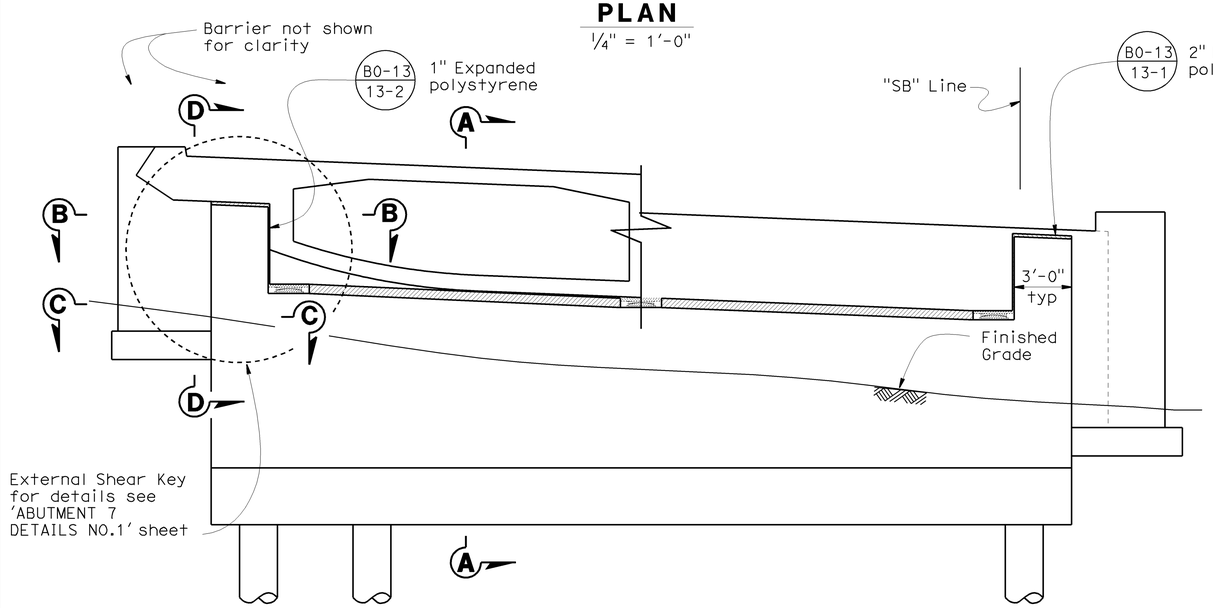

Note
All piles not shown

ELEVATION
¼" = 1'-0"

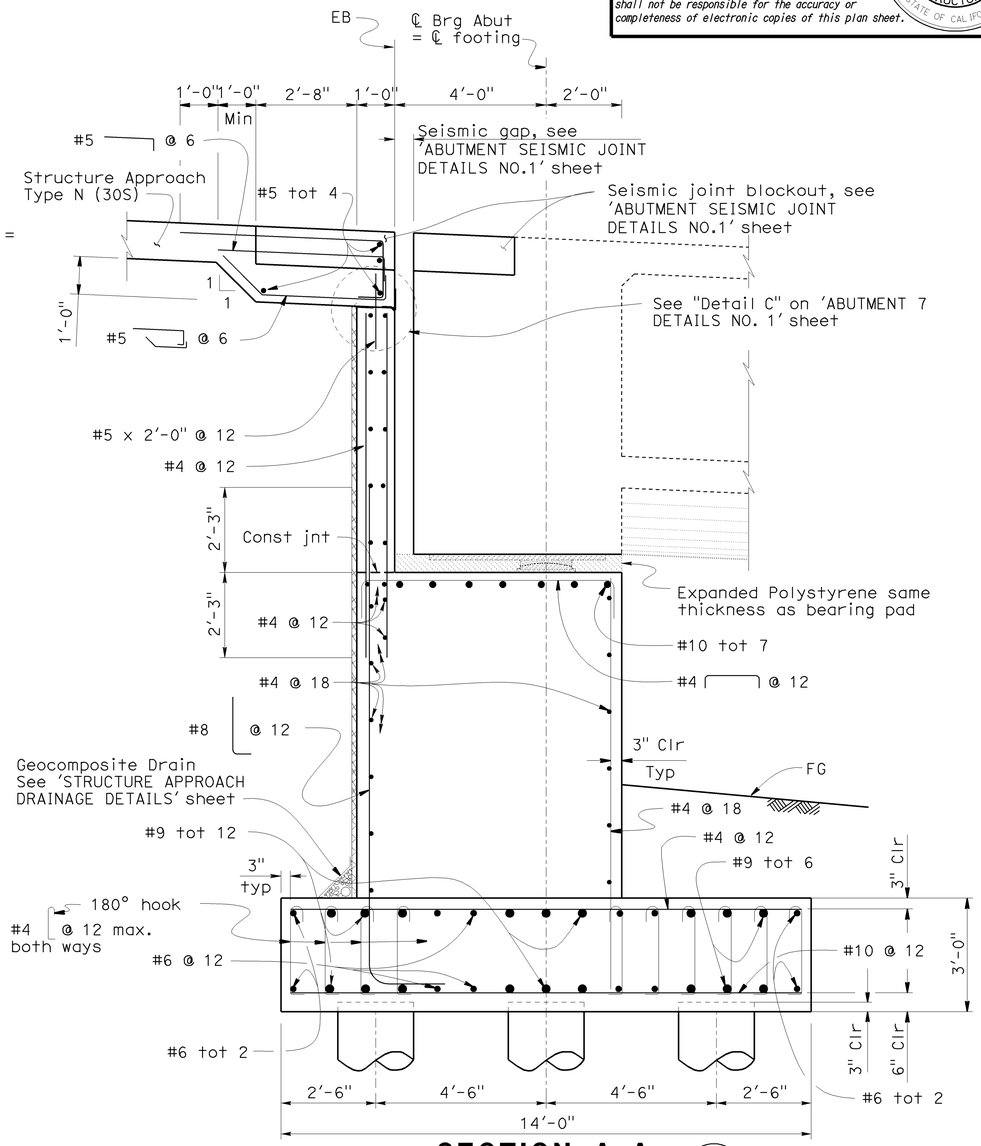

SECTION A-A
½" = 1'-0"
B0-3 3-5

Note:
1. For "Section B-B", "C-C", "D-D" and details not shown see 'ABUTMENT 7 DETAILS NO. 1' and 'ABUTMENT 7 DETAILS NO. 2' and 'ABUTMENT 7 DETAILS NO. 3' sheets.

DESIGN	BY L. Barnard	CHECKED A. Rahbari	STATE OF CALIFORNIA DEPARTMENT OF TRANSPORTATION	DIVISION OF ENGINEERING SERVICES STRUCTURE DESIGN DESIGN BRANCH 4	BRIDGE NO. 34-0157L	PRESIDIO VIADUCT - LEFT
DETAILS	BY Marvin Lane	CHECKED L. Barnard			POST MILE 9.02	ABUTMENT 7 LAYOUT
QUANTITIES	BY A. Alcantara	CHECKED J. Han		CU 04242 EA 163731		

STRUCTURES DESIGN DETAIL SHEET (ENGLISH) (REV. 10/25/05)

ORIGINAL SCALE IN INCHES FOR REDUCED PLANS 0 1 2 3

DISREGARD PRINTS BEARING EARLIER REVISION DATES →

REVISION DATES: 4-18-09 | 5-14-09 | 6-17-09 | | 5-18-09 | 5-12-09 | 5-18-09 | 5-20-09 | 5-28-09 | 6-2-09

SHEET 15 OF 114

FILE => 34-0157l-b-abt07_lo.dgn

DATE PLOTTED => 21-JUL-2009 TIME PLOTTED => 14:35
USERNAME => trilim

DIST	COUNTY	ROUTE	POST MILES TOTAL PROJECT	SHEET No	TOTAL SHEETS
04	SF	101,1	9.2/9.8, 6.8/7.1	366	567

Ahmed Brahim 6-4-09
REGISTERED CIVIL ENGINEER DATE

7-20-09
PLANS APPROVAL DATE

REGISTERED PROFESSIONAL ENGINEER
AHMED M M IBRAHIM
No. S 4865
EXP. 9-30-10
STRUCTURAL
STATE OF CALIFORNIA

The State of California or its officers or agents shall not be responsible for the accuracy or completeness of electronic copies of this plan sheet.

NOTE:
THE CONTRACTOR SHALL VERIFY ALL CONTROLLING FIELD DIMENSIONS BEFORE ORDERING OR FABRICATING ANY MATERIAL.

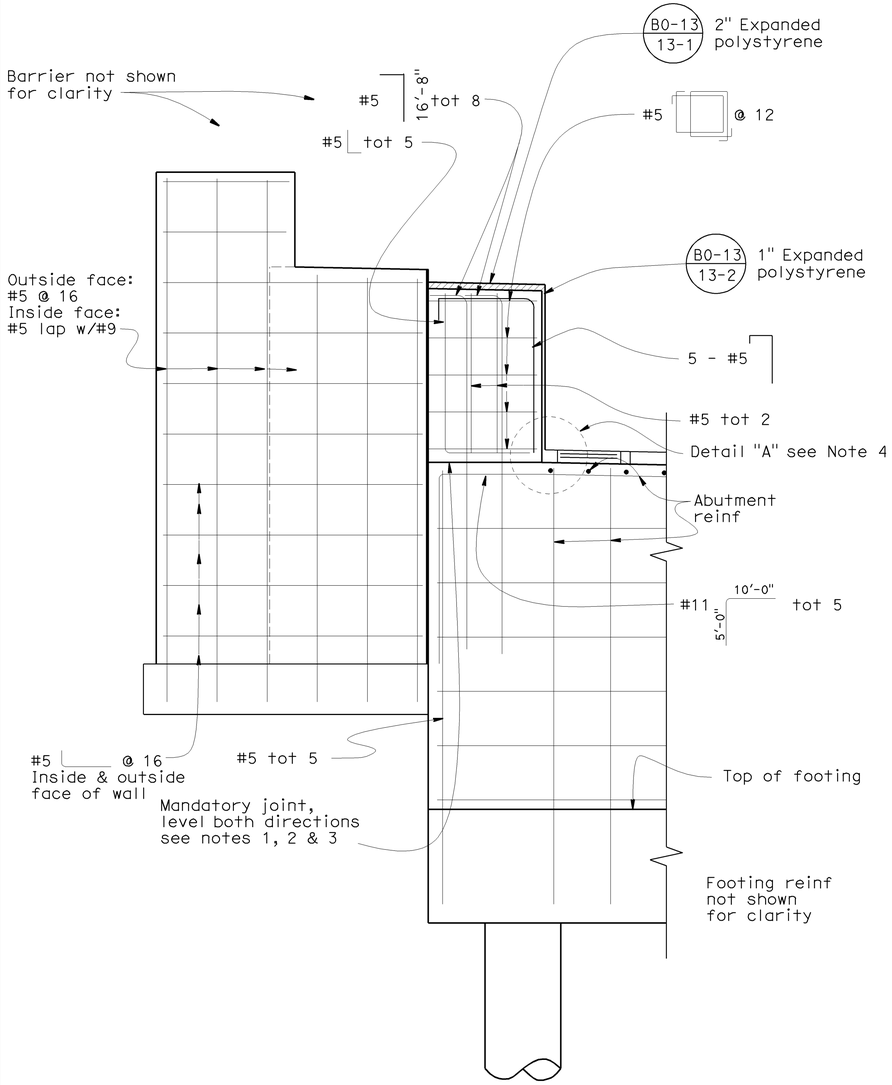

PART ELEVATION & EXTERNAL SHEAR KEY

½" = 1'-0"

(Left Shear Key shown, Right Shear Key similar)

Notes:
1. Mandatory joint surface to be smooth finished and lined with 15 pound construction paper.
2. Vertical shear key reinforcement (#5 16'-8" tot 8) to be galvanized.
3. Shear key and return wall reinforcement to be discontinuous as shown.
4. For Detail "A" see "ABUTMENT 1 DETAILS NO. 1" sheet

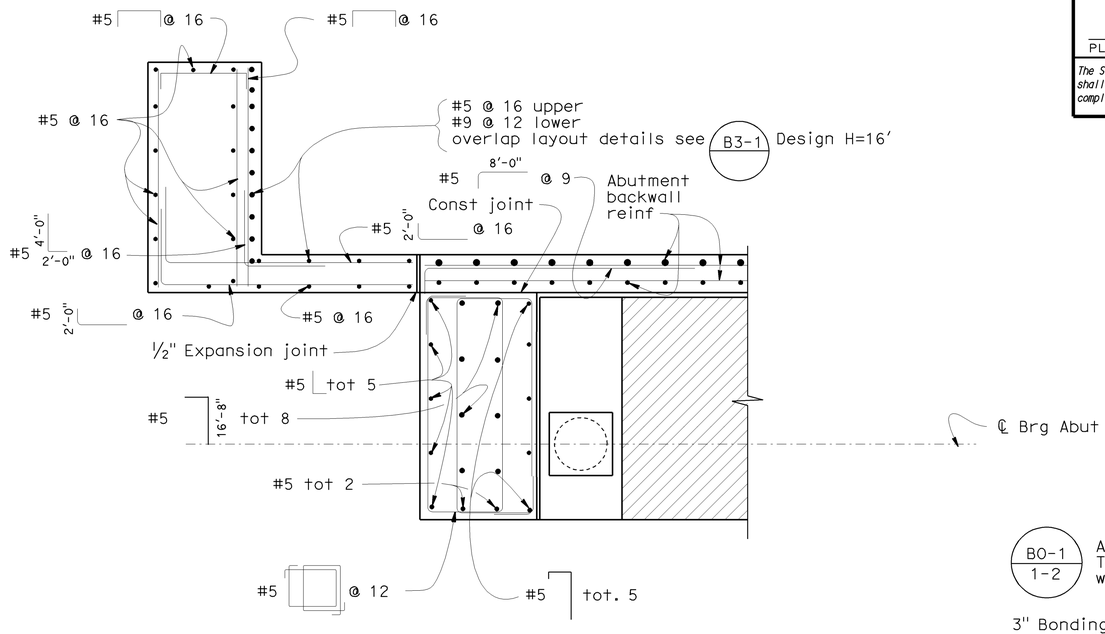

SECTION B-B

½" = 1'-0"

B0-3 3-4

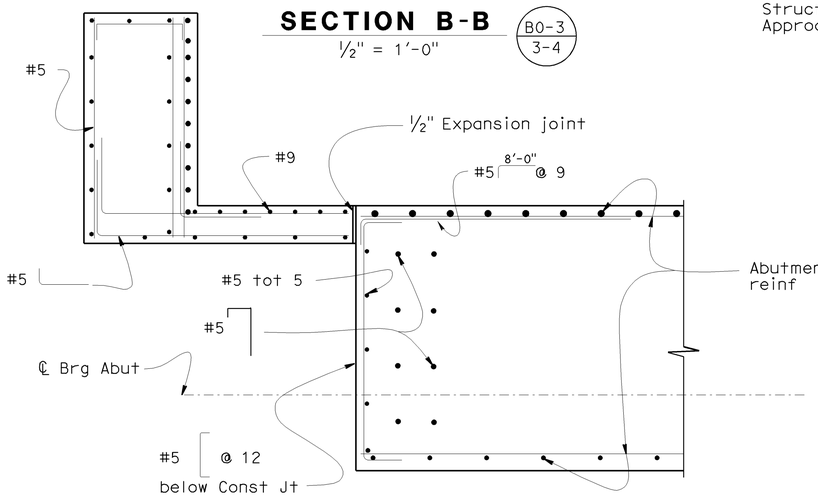

Note

For details and dimensions not shown, see "Section B-B"

SECTION C-C

½" = 1'-0"

B0-3 3-4

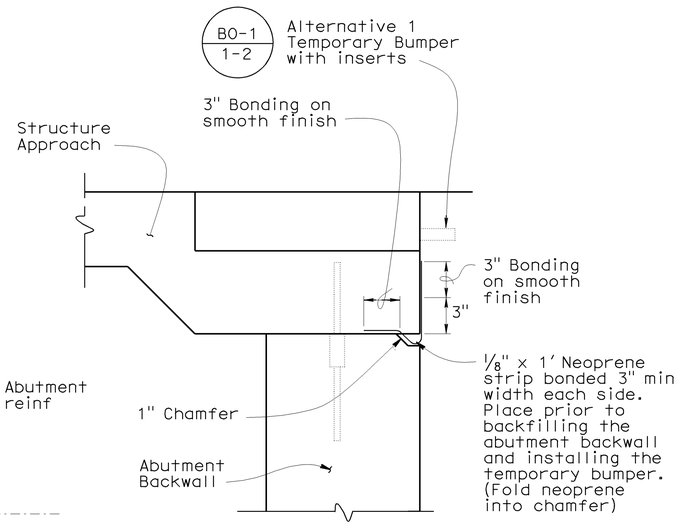

DETAIL "C"
JOINT PROTECTION DETAIL

No Scale

DESIGN	BY L.Barnard	CHECKED A.Rahbari	STATE OF CALIFORNIA DEPARTMENT OF TRANSPORTATION	DIVISION OF ENGINEERING SERVICES STRUCTURE DESIGN DESIGN BRANCH 4	BRIDGE NO. 34-0157L	PRESIDIO VIADUCT - LEFT
DETAILS	BY J. Thorne/M. Lane/G.S.	CHECKED L.Barnard			POST MILE 9.02	ABUTMENT 7 DETAILS NO. 1
QUANTITIES	BY A. Alcantara	CHECKED J. Han		CU 04242 EA 163731		

STRUCTURES DESIGN DETAIL SHEET (ENGLISH) (REV. 10/25/05)

ORIGINAL SCALE IN INCHES FOR REDUCED PLANS 0 1 2 3

DISREGARD PRINTS BEARING EARLIER REVISION DATES →

REVISION DATES: 3-24-09 | 6-1-09 | 6-3-09 | 6-11-09 | | 4-30-09 | 5-14-09 | 5-15-09 | 5-17-09 | 5-18-09

SHEET 16 OF 114

FILE => 34-0157l-b-abt07dts01.dgn

USERNAME = trrim DATE PLOTTED => 21-JUL-2009 TIME PLOTTED => 14:35

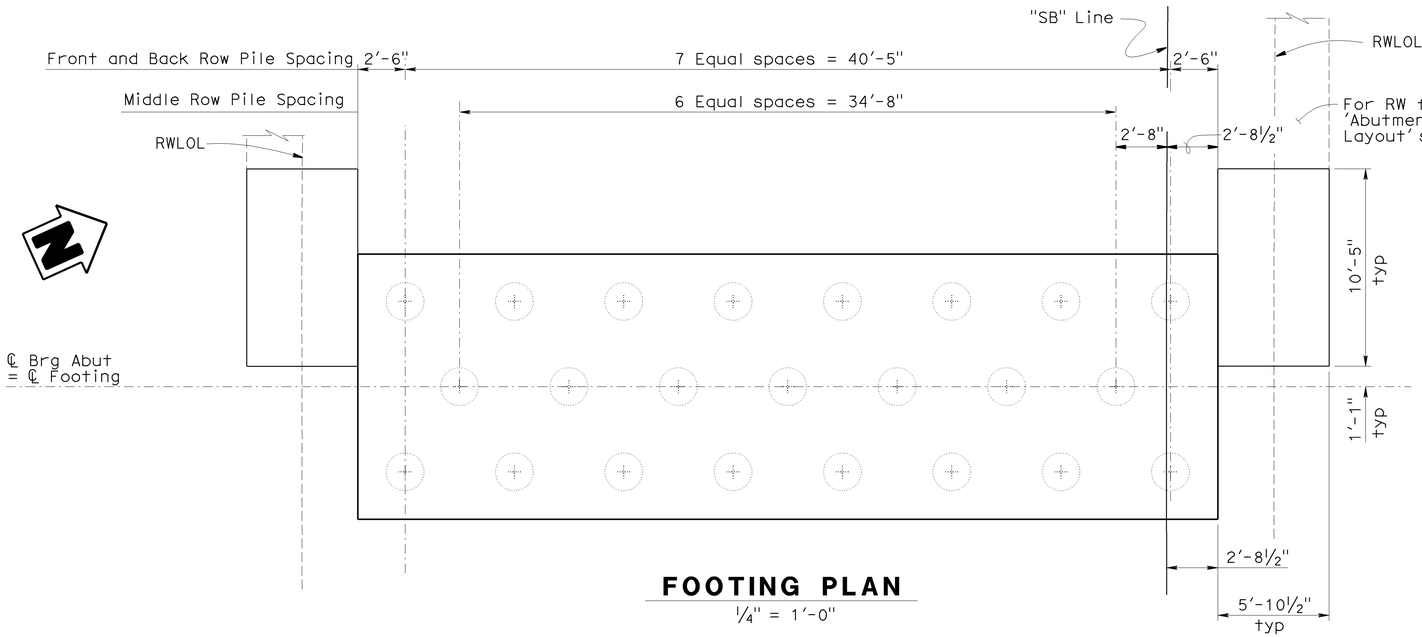

FOOTING PLAN

1/4" = 1'-0"

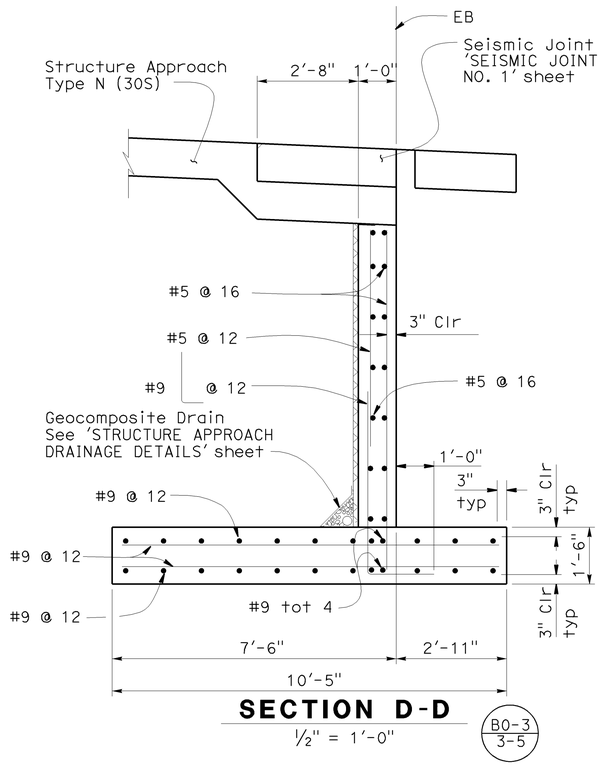

SECTION D-D

1/2" = 1'-0"

B0-3 / 3-5

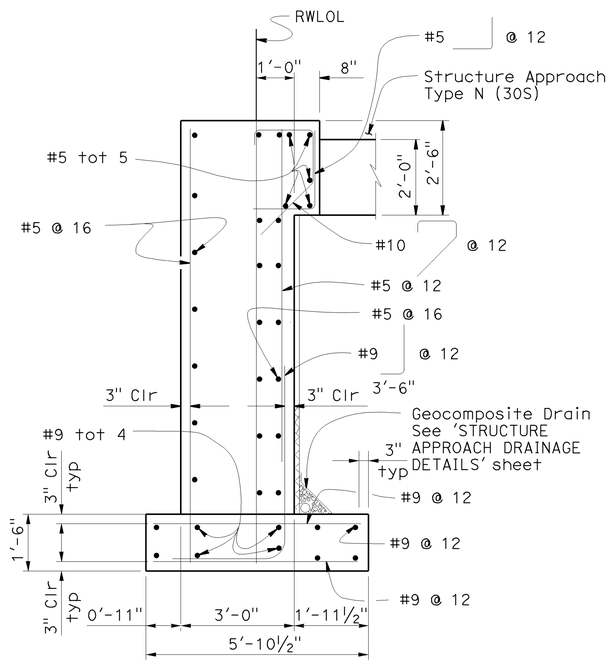

(Left Return Wall shown, for Right Return wall see "Section G-G" on 'ABUTMENT 7 RETAINING WALL DETAILS NO. 3)

SECTION E-E

1/2" = 1'-0"

B0-3 / 3-1

NOTE:
THE CONTRACTOR SHALL VERIFY ALL CONTROLLING FIELD DIMENSIONS BEFORE ORDERING OR FABRICATING ANY MATERIAL.

DIST	COUNTY	ROUTE	POST MILES TOTAL PROJECT	SHEET No	TOTAL SHEETS
04	SF	101,1	9.2/9.8, 6.8/7.1	367	567

Ahmed Ibrahim 6-4-09
REGISTERED CIVIL ENGINEER DATE

7-20-09
PLANS APPROVAL DATE

REGISTERED PROFESSIONAL ENGINEER
AHMED M M IBRAHIM
No. S 4865
EXP. 9-30-10
STRUCTURAL
STATE OF CALIFORNIA

The State of California or its officers or agents shall not be responsible for the accuracy or completeness of electronic copies of this plan sheet.

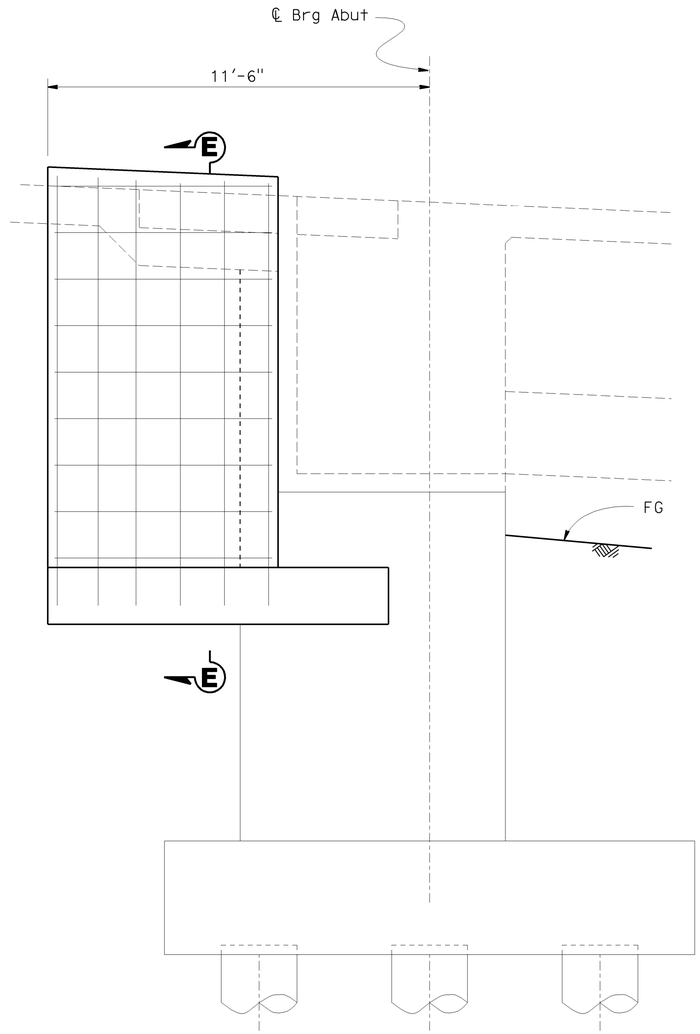

RETURN WALL ELEVATION

1/2" = 1'-0"

(Left Return Wall shown, Right Return Wall similar)

DESIGN	BY L.Barnard	CHECKED A.Rahbari/A.Alcantara	STATE OF CALIFORNIA DEPARTMENT OF TRANSPORTATION	DIVISION OF ENGINEERING SERVICES STRUCTURE DESIGN DESIGN BRANCH 4	BRIDGE NO. 34-0157L
DETAILS	BY Jeff Thorne	CHECKED L.Barnard			POST MILE 9.07
QUANTITIES	BY A. Alcantara	CHECKED J. Han			

PRESIDIO VIADUCT - LEFT
ABUTMENT 7 DETAILS NO. 2

STRUCTURES DESIGN DETAIL SHEET (ENGLISH) (REV. 10/25/05)

ORIGINAL SCALE IN INCHES FOR REDUCED PLANS 0 1 2 3

CU 04242
EA 163731

DISREGARD PRINTS BEARING EARLIER REVISION DATES →

REVISION DATES: 3-24-09 | 4-30-09 | 5-16-09 | 5-19-09 | 5-18-09 | 5-28-09 | 6-2-09 | 6-3-09 | 6-14-09

SHEET 17 OF 114

FILE => 34-0157l-b-abt07dts02.dgn

USERNAME => trlim DATE PLOTTED => 21-JUL-2009 TIME PLOTTED => 14:35

DIST	COUNTY	ROUTE	POST MILES TOTAL PROJECT	SHEET No	TOTAL SHEETS
04	SF	101,1	9.2/9.8, 6.8/7.1	368	567

Ahmed Ibrahim 6-4-09
REGISTERED CIVIL ENGINEER DATE

7-20-09
PLANS APPROVAL DATE

REGISTERED PROFESSIONAL ENGINEER — AHMED M M IBRAHIM — No. S 4865 — EXP. 9-30-10 — STRUCTURAL — STATE OF CALIFORNIA

The State of California or its officers or agents shall not be responsible for the accuracy or completeness of electronic copies of this plan sheet.

Notes

1. Abutment transverse PT shall start horizontally 9" from the edge of concrete and spaced at 24". Vertically shall be placed 5½" from top edge. Pjack = 175 kips per tendon (4 strand 0.6Ø)
2. For spacing and details on transverse PT beyond the abutment limits, see 'TRANSVERSE PT DETAILS NO. 1' sheet.
3. For Steel Fin details, see 'STEEL FIN DETAILS' sheet.

BAR LEGEND

Ⓐ #6 9'-0" 1'-10" @ 6, typ each side of overhangs

Ⓑ #6 5'-0" Vars @ 12, typ each side of overhang

Ⓒ #5 @ 12, Cont. Extend to edge of deck

Ⓓ #5 tot. 3

Ⓔ #11 12'-6" @ 12

Ⓕ #5 Vars Vars @ 12

Ⓖ #11 6'-0" @ 12

Ⓗ #6 Var. @ 12 bothways, typ

Ⓘ #5 Vars @ 12 extend 2'-0" beyond face of exterior girder

Ⓙ #10 @ 6 between PT ducts, same layer & depth as transverse PT ducts, and extend to edge of deck.

Ⓚ #11 tot 9 extend to edge of deck

Transverse PT duct

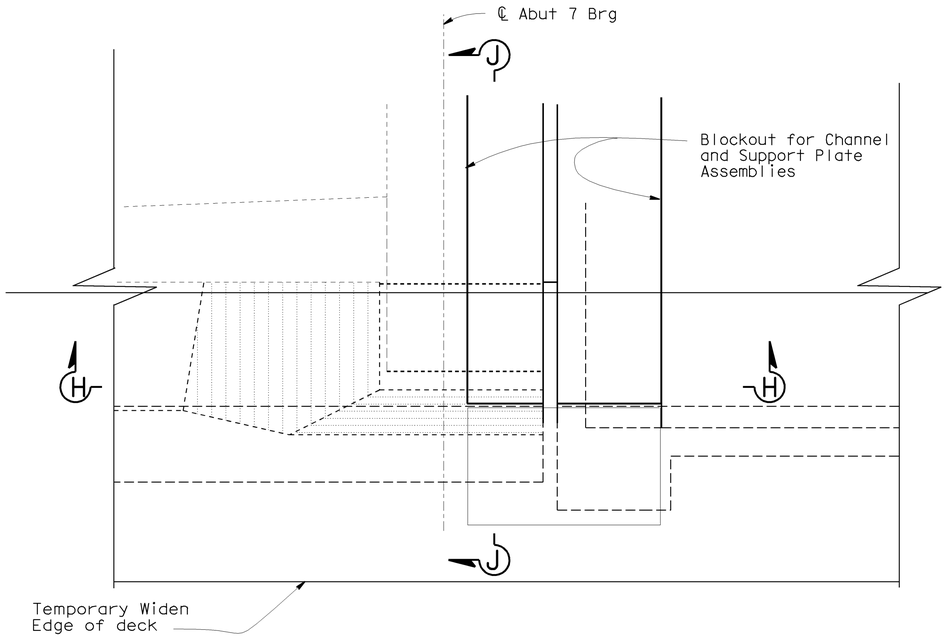

ABUTMENT 7 PART PLAN AT SEISMIC JOINT

3/8" = 1'-0"

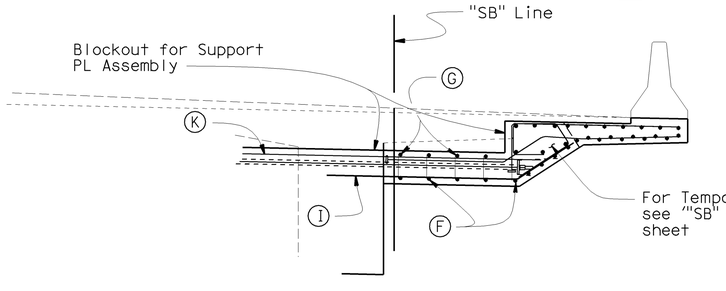

SECTION J-J

3/8" = 1'-0"

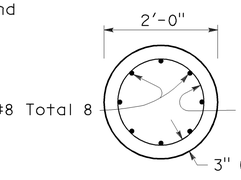

SECTION F-F

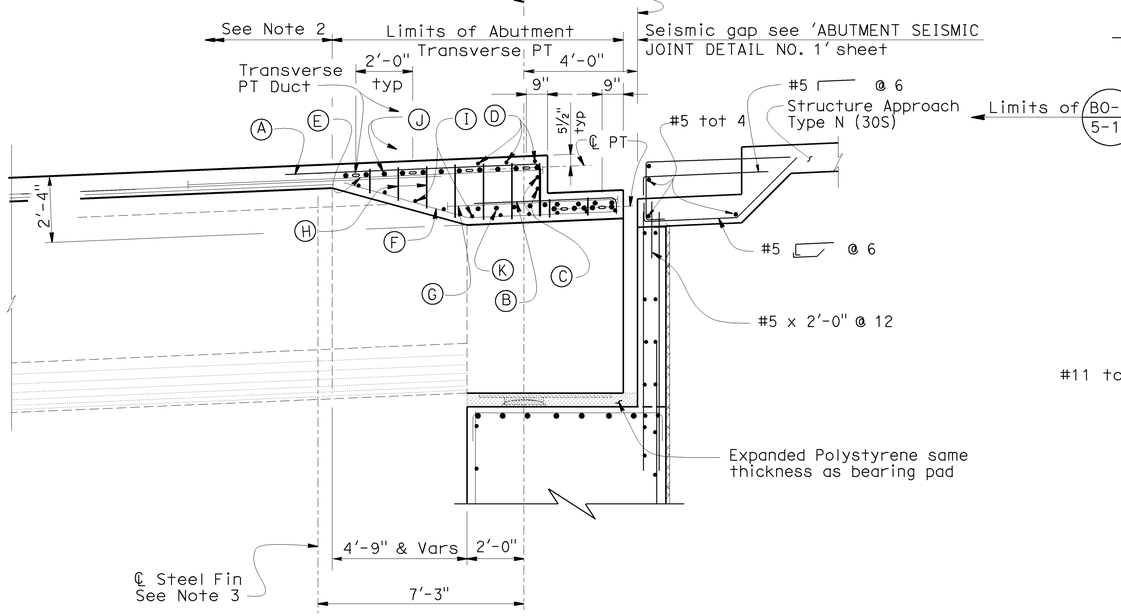

NOTE:
THE CONTRACTOR SHALL VERIFY ALL CONTROLLING FIELD DIMENSIONS BEFORE ORDERING OR FABRICATING ANY MATERIAL.

SECTION H-H

3/8" = 1'-0"

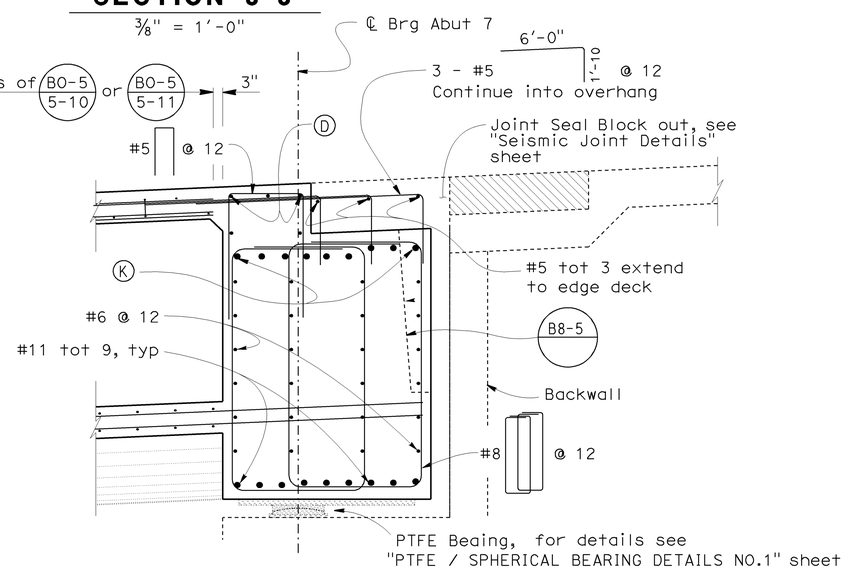

ABUTMENT 7 END DIAPHRAGM

1/2" = 1'-0"

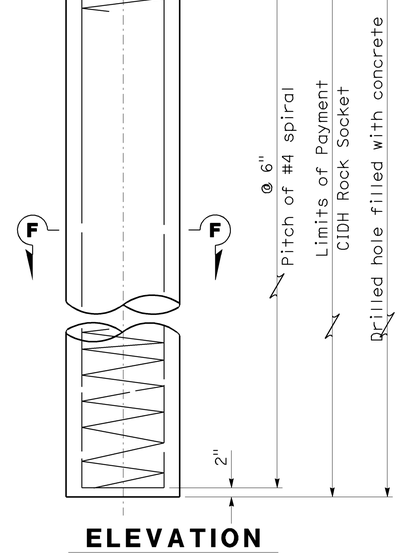

ELEVATION

24" CIDH PILE

3/4" = 1'-0"

B2-3

DESIGN	BY S. Barajas	CHECKED A. M.M. Ibrahim	STATE OF CALIFORNIA DEPARTMENT OF TRANSPORTATION
DETAILS	BY Jeff Thorne	CHECKED S. Barajas	DIVISION OF ENGINEERING SERVICES STRUCTURE DESIGN — DESIGN BRANCH 4
QUANTITIES	BY A. Alcantara	CHECKED J. Han	

BRIDGE NO. 34-0157L
POST MILE 9.02

PRESIDIO VIADUCT - LEFT
ABUTMENT 7 DETAILS NO. 3

STRUCTURES DESIGN DETAIL SHEET (ENGLISH) (REV. 10/25/05)

ORIGINAL SCALE IN INCHES FOR REDUCED PLANS 0 1 2 3

CU 04242
EA 163731

DISREGARD PRINTS BEARING EARLIER REVISION DATES →

REVISION DATES: 2-27-09 | 3-18-09 | 5-18-09 | 6-1-09 | 6-2-09 | 6-8-09 | 6-14-09 | 6-16-09 | 6-18-09

SHEET 18 OF 114

FILE => 34-0157l-b-abt07dts03.dgn

DATE PLOTTED => 21-JUL-2009 TIME PLOTTED => 14:35
USERNAME => tr1.m

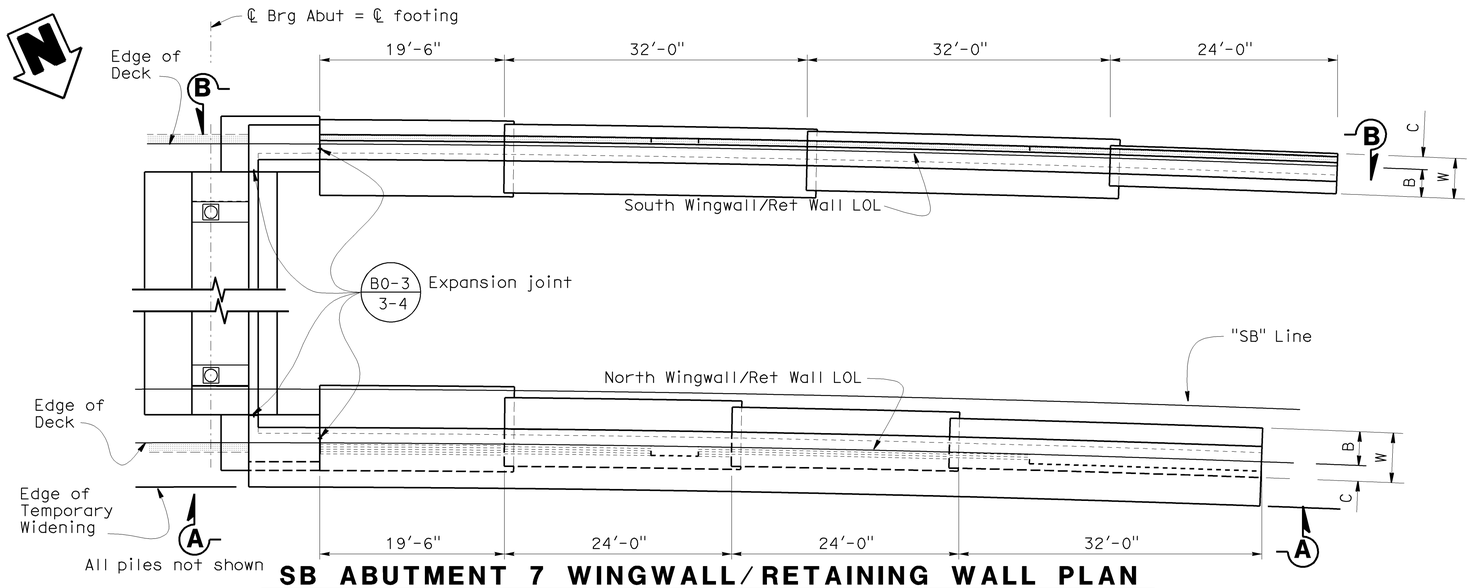

SB ABUTMENT 7 WINGWALL/RETAINING WALL PLAN

1/8" = 1'-0"

NOTE:
THE CONTRACTOR SHALL VERIFY ALL CONTROLLING FIELD DIMENSIONS BEFORE ORDERING OR FABRICATING ANY MATERIAL.

DIST	COUNTY	ROUTE	POST MILES TOTAL PROJECT	SHEET No	TOTAL SHEETS
04	SF	101,1	9.2/9.8, 6.8/7.1	369	567

Ahmed Brahim 6-4-09
REGISTERED CIVIL ENGINEER DATE

7-20-09
PLANS APPROVAL DATE

REGISTERED PROFESSIONAL ENGINEER
AHMED M M IBRAHIM
No. S 4865
EXP. 9-30-10
STRUCTURAL
STATE OF CALIFORNIA

The State of California or its officers or agents shall not be responsible for the accuracy or completeness of electronic copies of this plan sheet.

Design H	6'	8'	10'	12'	14'	16'
W	4'-3"	7'-1"	6'-3"	7'-3"	8'-0"	9'-0"
C	1'-4"	3'-5⅞"	2'-0"	2'-4"	2'-7"	2'-11"
B	2'-11"	3'-7⅛"	4'-3"	4'-11"	5'-5"	6'-1"
F	1'-4"	1'-4"	1'-4"	1'-4"	1'-6"	1'-6"
Batter	⅞:12	—	⅞:12	⅞:12	⅞:12	⅞:12
(b) bars	—	—	—	#5@16	#5@12	#5@12
(c) bars	#5@16	#5@16	#6@14	#6@8	#8@12	#9@12
(d) bars	#5@16	#5@16	#5@14	#5@8	#8@12	#9@12
Loading Case I — Toe Pressure ksf	1.9	2.1	2.5	2.8	4.3	5.1

Note: For (a), (b) and (c) bar lengths see elevation on B3-1.

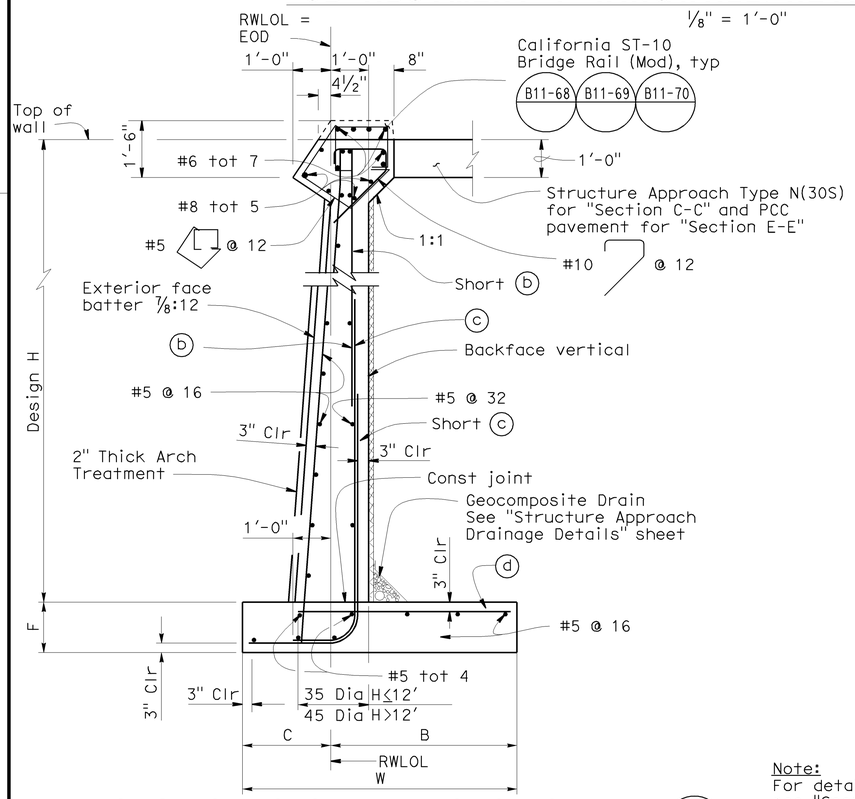

SECTION C-C AND SECTION E-E

1/2" = 1'-0"

B0-3 3-1

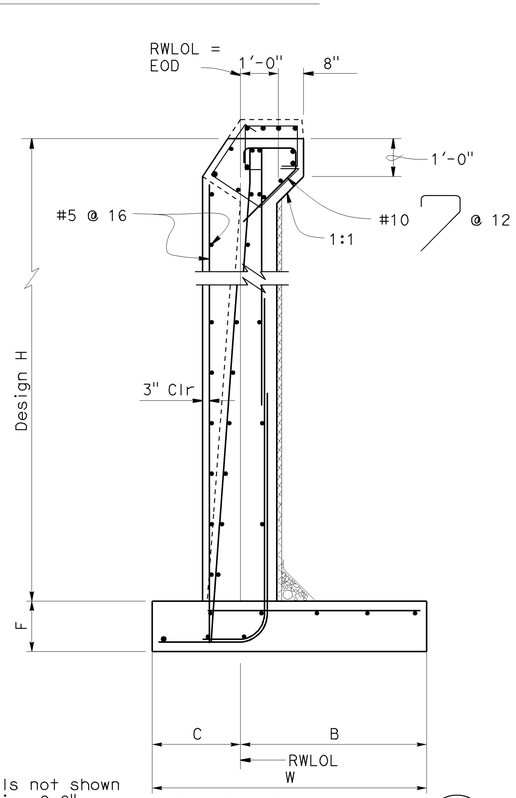

Note:
For details not shown see "Section C-C".

SECTION D-D

1/2" = 1'-0"

B0-3 3-1

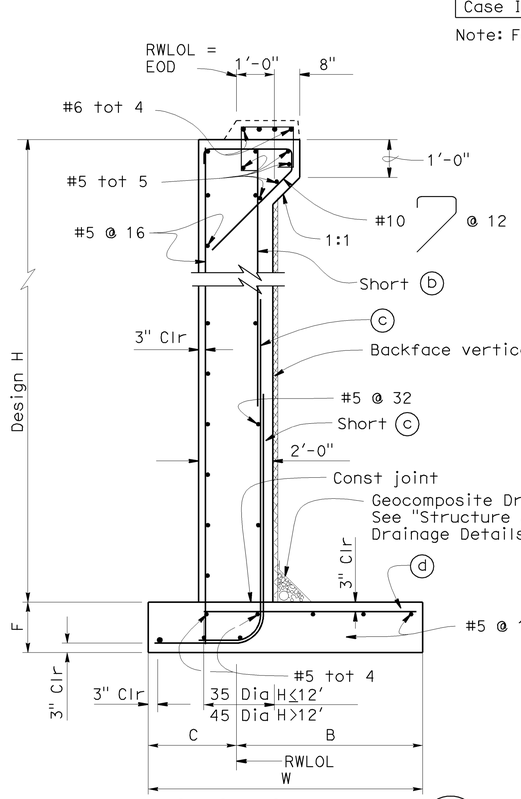

SECTION F-F

1/2" = 1'-0"

B0-1 3-1

Notes:
1. For details not shown see B3-1 - and B3-8
2. Railing not shown.
3. For "View A-A" see 'ABUTMENT 7 RETAINING WALL DETALS NO. 1' sheet.
4. For "View B-B" see 'ABUTMENT 7 RETAINING WALL DETAILS NO. 2' sheet.

DESIGN	BY L.Barnard	CHECKED A.Alcantara	STATE OF CALIFORNIA DEPARTMENT OF TRANSPORTATION	DIVISION OF ENGINEERING SERVICES STRUCTURE DESIGN DESIGN BRANCH 4	BRIDGE NO. 34-0157L
DETAILS	BY Marvin Lane	CHECKED L.Barnard			POST MILE 9.02
QUANTITIES	BY A. Alcantara	CHECKED J. Han			

PRESIDIO VIADUCT - LEFT

ABUTMENT 7 RETAINING WALL LAYOUT

STRUCTURES DESIGN DETAIL SHEET (ENGLISH) (REV. 10/25/05)

ORIGINAL SCALE IN INCHES FOR REDUCED PLANS 0 1 2 3

CU 04242
EA 163731

DISREGARD PRINTS BEARING EARLIER REVISION DATES

REVISION DATES: 5-23-09 | 5-16-09 | 5-20-09 | 6-3-09 | 6-11-09 | 6-18-09

SHEET 19 OF 114

FILE => 34-0157l-b-retwalldts01.dgn

DATE PLOTTED => 21-JUL-2009 TIME PLOTTED => 14:35
USERNAME => ttrim

DIST	COUNTY	ROUTE	POST MILES TOTAL PROJECT	SHEET No	TOTAL SHEETS
04	SF	101,1	9.2/9.8, 6.8/7.1	370	567

Ahmed Ibrahim 6-4-09
REGISTERED CIVIL ENGINEER DATE

7-20-09
PLANS APPROVAL DATE

REGISTERED PROFESSIONAL ENGINEER
AHMED M M IBRAHIM
No. S 4865
EXP. 9-30-10
STRUCTURAL
STATE OF CALIFORNIA

The State of California or its officers or agents shall not be responsible for the accuracy or completeness of electronic copies of this plan sheet.

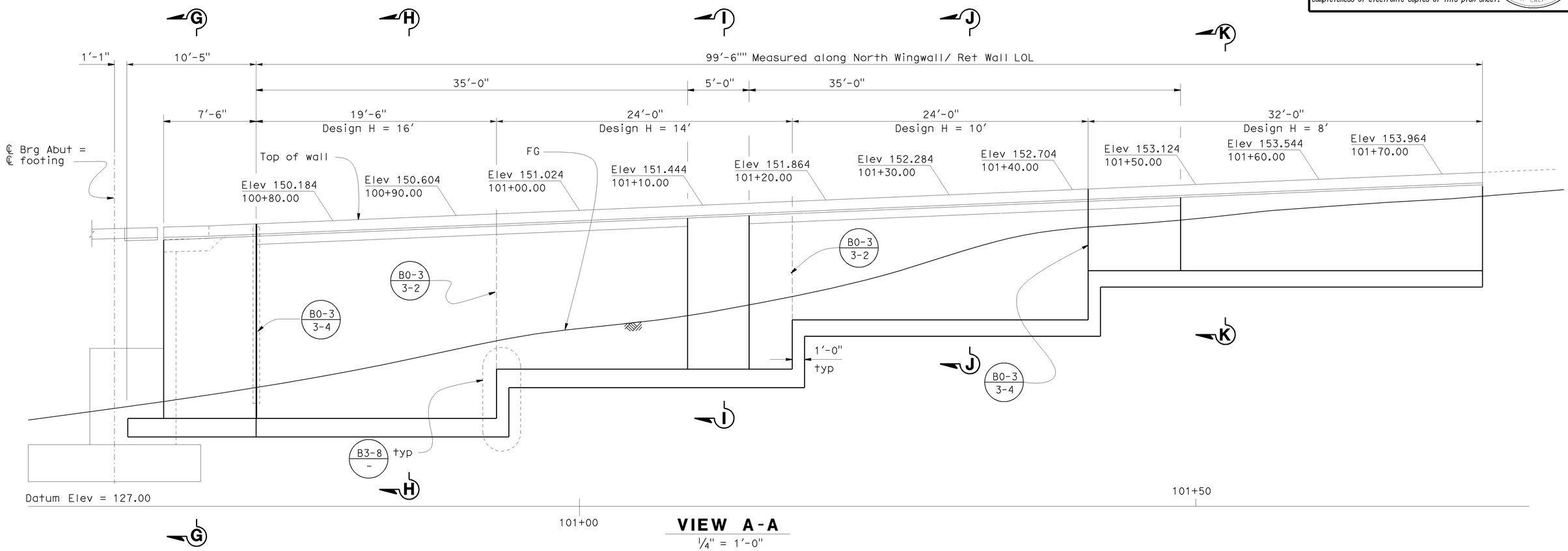

VIEW A-A
1/4" = 1'-0"

Notes:
1. For details not shown see B3-1 - and B3-8 -
2. Railing not shown.
3. For "Section G-G", "Section H-H" , "Section I-I", "Section J-J" and "Section K-K" see "ABUTMENT 7 RETAINING WALL DETAILS NO. 3" sheet

NOTE:
THE CONTRACTOR SHALL VERIFY ALL CONTROLLING FIELD DIMENSIONS BEFORE ORDERING OR FABRICATING ANY MATERIAL.

DESIGN	BY L.Barnard	CHECKED A.Alcantara	
DETAILS	BY Marvin Lane	CHECKED L.Barnard	
QUANTITIES	BY A. Alcantara	CHECKED J. Han	

STATE OF CALIFORNIA
DEPARTMENT OF TRANSPORTATION

DIVISION OF ENGINEERING SERVICES
STRUCTURE DESIGN
DESIGN BRANCH 4

CU 04242
EA 163731

BRIDGE NO. 34-0157L
POST MILE 9.02

PRESIDIO VIADUCT - LEFT
ABUTMENT 7 RETAINING WALL DETAILS NO. 1

STRUCTURES DESIGN DETAIL SHEET (ENGLISH) (REV. 10/25/05)

ORIGINAL SCALE IN INCHES FOR REDUCED PLANS 0 1 2 3

DISREGARD PRINTS BEARING EARLIER REVISION DATES →

REVISION DATES: 5-28-09 | 5-14-09 | 5-18-09 | 5-18-09 | 5-20-09 | 6-1-09 | 6-3-09 | 6-18-09

SHEET 20 OF 114

FILE => 34-0157l-b-retwalldts02.dgn

USERNAME => ttrtim DATE PLOTTED => 21-JUL-2009 TIME PLOTTED => 14:35

DIST	COUNTY	ROUTE	POST MILES TOTAL PROJECT	SHEET No	TOTAL SHEETS
04	SF	101,1	9.2/9.8, 6.8/7.1	371	567

Ahmed Brahim 6-4-09
REGISTERED CIVIL ENGINEER DATE

7-20-09
PLANS APPROVAL DATE

REGISTERED PROFESSIONAL ENGINEER
AHMED M M IBRAHIM
No. S 4865
EXP. 9-30-10
STRUCTURAL
STATE OF CALIFORNIA

The State of California or its officers or agents shall not be responsible for the accuracy or completeness of electronic copies of this plan sheet.

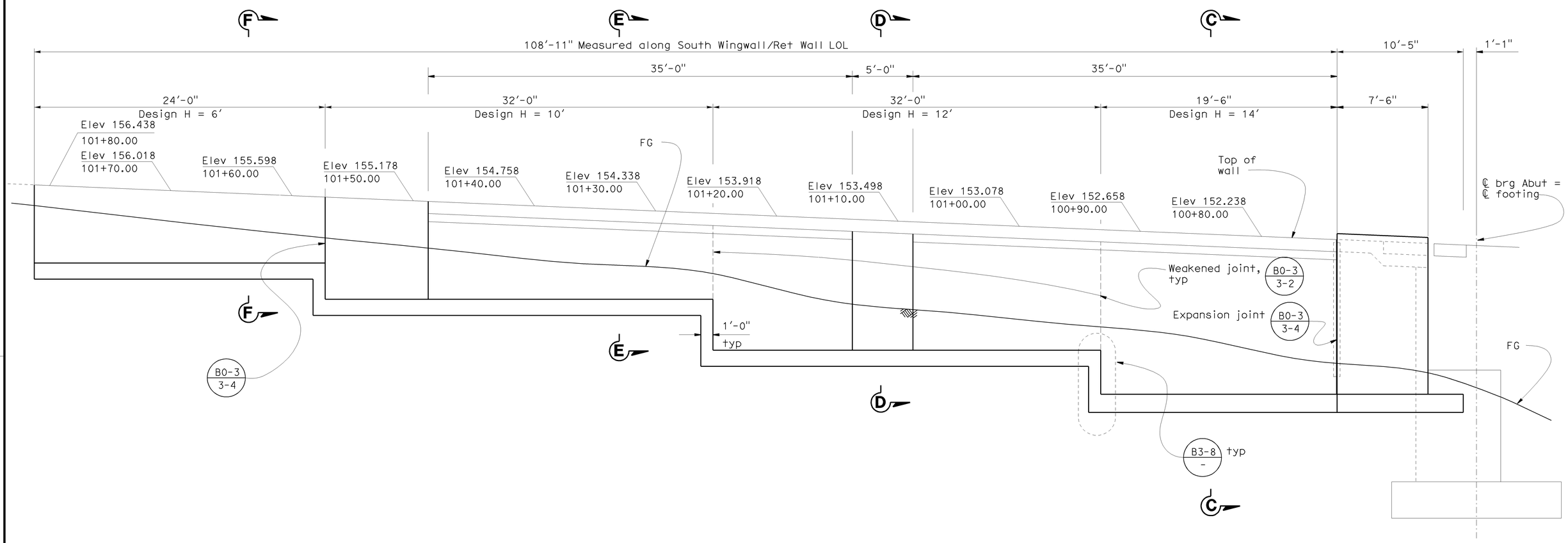

Datum Elev = 125.00

101+50

101+00

VIEW B-B

1/4" = 1'-0"

NOTE:
THE CONTRACTOR SHALL VERIFY ALL CONTROLLING FIELD DIMENSIONS BEFORE ORDERING OR FABRICATING ANY MATERIAL.

Notes:
1. For details not shown see B3-1 / - and B3-8 / -
2. Railing not shown.
3. For "Section C-C", "Section D-D" ,"Section E-E" and "Section F-F" see 'ABUTMENT 7 RETAINING WALL LAYOUT' sheet.

DESIGN	BY L. Barnard	CHECKED A. Alcantara	STATE OF CALIFORNIA DEPARTMENT OF TRANSPORTATION	DIVISION OF ENGINEERING SERVICES STRUCTURE DESIGN DESIGN BRANCH 4	BRIDGE NO. 34-0157L
DETAILS	BY Marvin Lane	CHECKED L. Barnard			POST MILE 9.02
QUANTITIES	BY A. Alcantara	CHECKED J. Han		CU 04242 EA 163731	

PRESIDIO VIADUCT - LEFT
ABUTMENT 7 RETAINING WALL DETAILS NO. 2

STRUCTURES DESIGN DETAIL SHEET (ENGLISH) (REV. 10/25/05)

ORIGINAL SCALE IN INCHES FOR REDUCED PLANS 0 1 2 3

DISREGARD PRINTS BEARING EARLIER REVISION DATES

REVISION DATES									SHEET	OF
5-18-09	5-18-09	5-18-09	6-3-09						21	114

FILE => 34-0157l-b-retwalldts03.dgn

DATE PLOTTED => 21-JUL-2009 TIME PLOTTED => 14:35
USERNAME => trlim

DIST	COUNTY	ROUTE	POST MILES TOTAL PROJECT	SHEET No	TOTAL SHEETS
04	SF	101,1	9.2/9.8, 6.8/7.1	372	567

Ahmed Ibrahim 6-4-09
REGISTERED CIVIL ENGINEER DATE

7-20-09
PLANS APPROVAL DATE

REGISTERED PROFESSIONAL ENGINEER
AHMED M M IBRAHIM
No. S 4865
EXP. 9-30-10
STRUCTURAL
STATE OF CALIFORNIA

The State of California or its officers or agents shall not be responsible for the accuracy or completeness of electronic copies of this plan sheet.

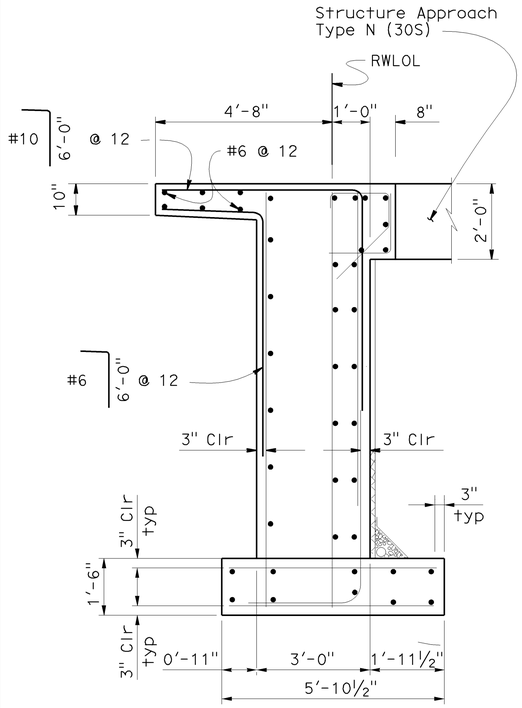

SECTION G-G

½" = 1'-0"

B0-3 / 3-1

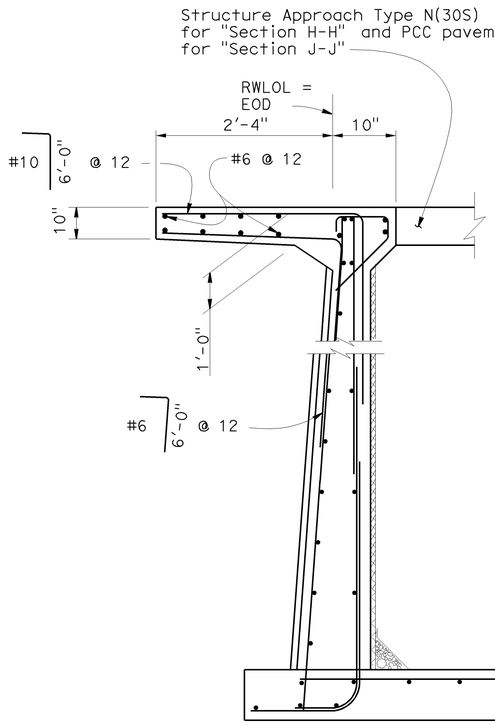

Note:
For details not shown see "Section E-E And Section E-E" on 'ABUTMENT 7 RETAINING WALL LAYOUT' sheet.

SECTION H-H & SECTION J-J

½" = 1'-0"

B0-3 / 3-1

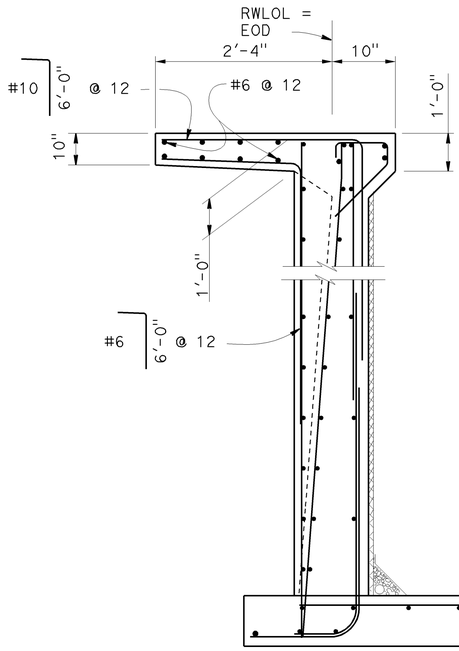

Note:
For details not shown see "Section D-D" on 'ABUTMENT 7 RETAINING WALL LAYOUT' sheet.

SECTION I-I

½" = 1'-0"

B0-3 / 3-1

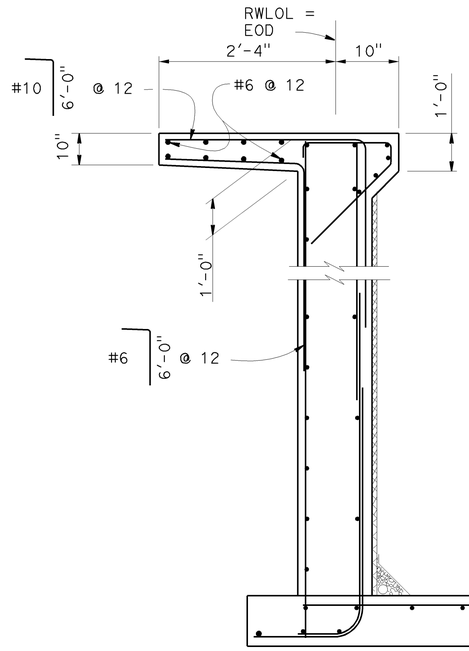

Note:
For details not shown see "Section F-F" on 'ABUTMENT 7 RETAINING WALL LAYOUT' sheet.

SECTION K-K

½" = 1'-0"

B0-3 / 3-1

NOTE:
THE CONTRACTOR SHALL VERIFY ALL CONTROLLING FIELD DIMENSIONS BEFORE ORDERING OR FABRICATING ANY MATERIAL.

Notes:
1. For details not shown see B3-1 / - and B3-8
2. Railing not shown.

DESIGN	BY L. Barnard	CHECKED A. Alcantara	STATE OF CALIFORNIA DEPARTMENT OF TRANSPORTATION	DIVISION OF ENGINEERING SERVICES STRUCTURE DESIGN DESIGN BRANCH 4	BRIDGE NO. 34-0157L
DETAILS	BY Marvin Lane	CHECKED L. Barnard			POST MILE 9.02
QUANTITIES	BY A. Alcantara	CHECKED J. Han		CU 04242 EA 163731	

PRESIDIO VIADUCT - LEFT

ABUTMENT 7 RETAINING WALL DETAILS NO. 3

STRUCTURES DESIGN DETAIL SHEET (ENGLISH) (REV. 10/25/05)

ORIGINAL SCALE IN INCHES FOR REDUCED PLANS 0 1 2 3

DISREGARD PRINTS BEARING EARLIER REVISION DATES →

REVISION DATES: 5-18-09 | 5-18-09 | 5-18-09 | 6-3-09

SHEET 22 OF 114

FILE => 34-0157l-b-retwalldts04.dgn

USERNAME => ttrim DATE PLOTTED => 21-JUL-2009 TIME PLOTTED => 14:35

DIST	COUNTY	ROUTE	POST MILES TOTAL PROJECT	SHEET No	TOTAL SHEETS
04	SF	101,1	9.2/9.8, 6.8/7.1	373	567

Ahmed Ibrahim 6-4-09
REGISTERED CIVIL ENGINEER DATE

7-20-09
PLANS APPROVAL DATE

REGISTERED PROFESSIONAL ENGINEER — AHMED M M IBRAHIM — No. S 4865 — EXP. 9-30-10 — STRUCTURAL — STATE OF CALIFORNIA

The State of California or its officers or agents shall not be responsible for the accuracy or completeness of electronic copies of this plan sheet.

NOTE:
THE CONTRACTOR SHALL VERIFY ALL CONTROLLING FIELD DIMENSIONS BEFORE ORDERING OR FABRICATING ANY MATERIAL.

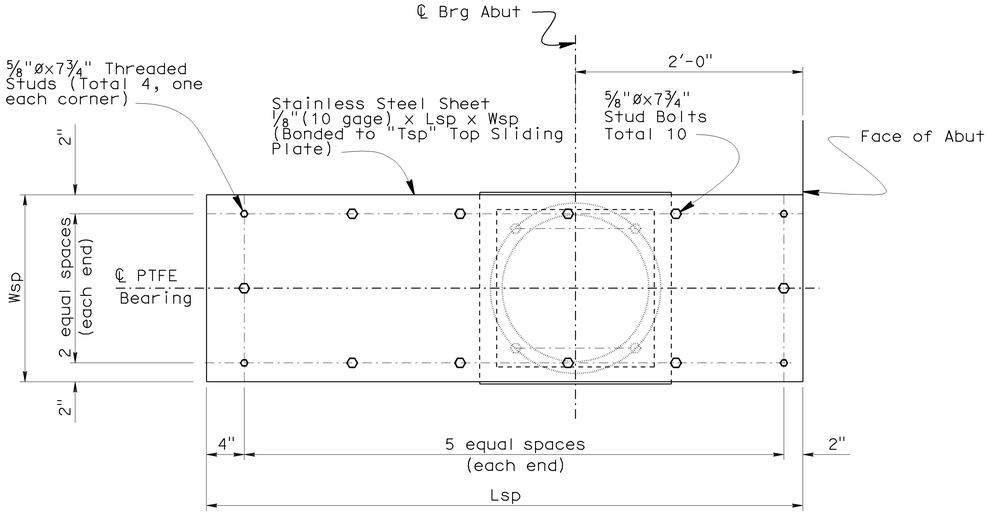

PLAN

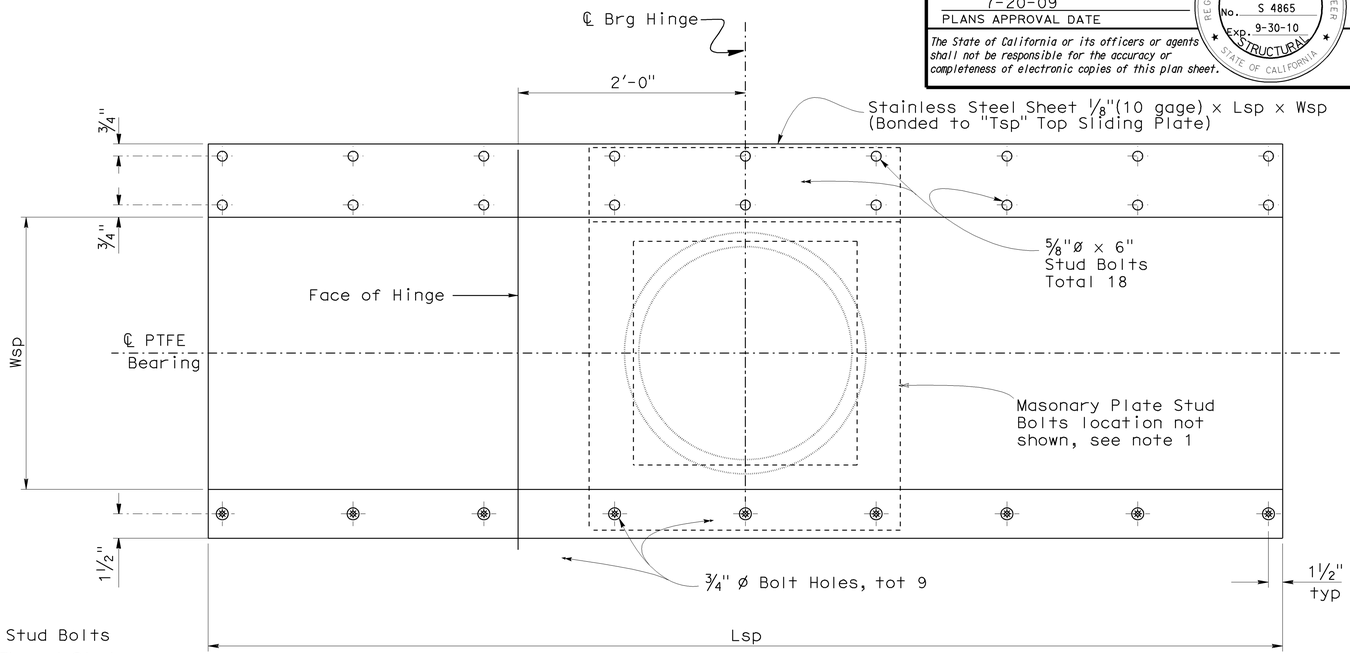

PLAN

ANOTATION

1. 5/8"øx7 3/4" Stud Bolts
2. 5/8"ø Dia Thread Stud
3. 1/4" Radius along this edge
4. Top Sliding Plate
5. Concave Plate
6. Masonry Plate
7. Convex Plate
8. Sole Plate

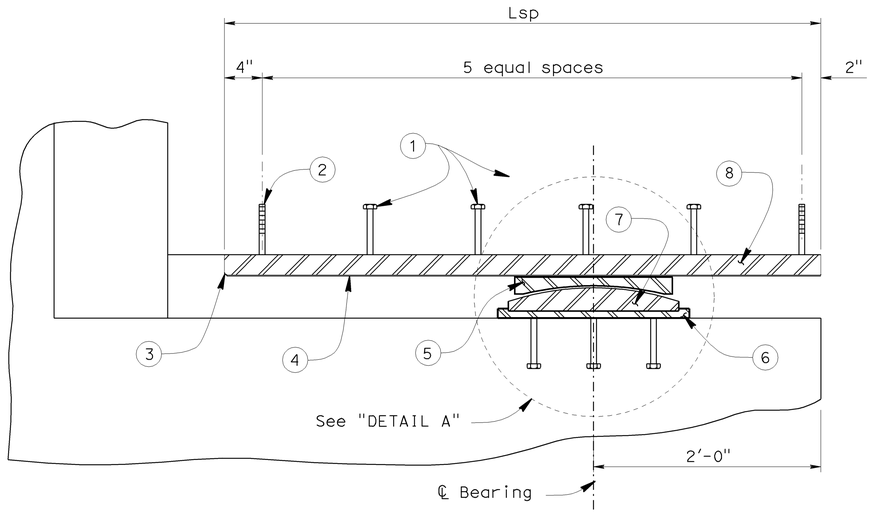

ELEVATION

PTFE AT ABUTMENTS

No Scale

Notes:
1. For "Section P-P" and "Detail A" see 'PTFE/SPHERICAL BEARING DETAILS NO. 2' sheet.
2. For details not shown see "Expansion Bearing Table" on 'PTFE/SPHERICAL BEARING DETAILS NO. 2' sheet.

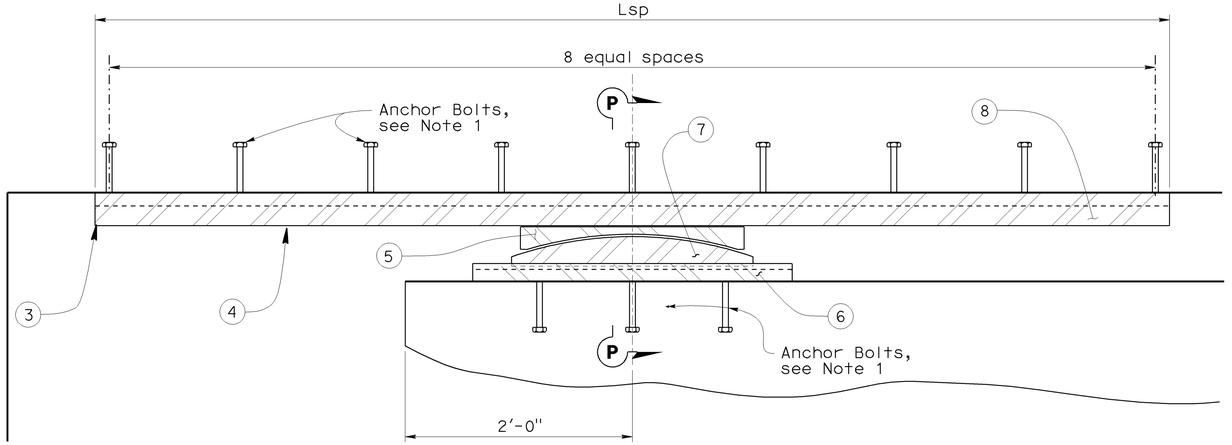

ELEVATION

PTFE AT HINGE

No Scale

DESIGN	BY A.M.M. Ibrahim/Q. Zhao	CHECKED S. Barajas	STATE OF CALIFORNIA DEPARTMENT OF TRANSPORTATION	DIVISION OF ENGINEERING SERVICES STRUCTURE DESIGN DESIGN BRANCH 4	BRIDGE NO. 34-0157L
DETAILS	BY J Thorne/M Lane/JFC	CHECKED A.M.M. Ibrahim/Q.Zhao			POST MILE 9.02
QUANTITIES	BY A. Alcantara	CHECKED J. Han			

PRESIDIO VIADUCT - LEFT

PTFE / SPHERICAL BEARING DETAILS NO. 1

STRUCTURES DESIGN DETAIL SHEET (ENGLISH) (REV. 10/25/05)

ORIGINAL SCALE IN INCHES FOR REDUCED PLANS 0 1 2 3

CU 04242
EA 163731

DISREGARD PRINTS BEARING EARLIER REVISION DATES →

REVISION DATES: 2-27-09 | 3-3-09 | 3-18-09 | 5-14-09 | 5-28-09 | 6-1-09 | 7-13-09

SHEET 23 OF 114

FILE => 34-0157l-b-xptfedts01.dgn

USERNAME => ttrtim DATE PLOTTED => 21-JUL-2009 TIME PLOTTED => 14:35

DIST	COUNTY	ROUTE	POST MILES TOTAL PROJECT	SHEET No	TOTAL SHEETS
04	SF	101,1	9.2/9.8, 6.8/7.1	374	567

Ahmed Brahim 6-4-09
REGISTERED CIVIL ENGINEER DATE

7-20-09
PLANS APPROVAL DATE

REGISTERED PROFESSIONAL ENGINEER — AHMED M M IBRAHIM — No. S 4865 — EXP. 9-30-10 — STRUCTURAL — STATE OF CALIFORNIA

The State of California or its officers or agents shall not be responsible for the accuracy or completeness of electronic copies of this plan sheet.

NOTE:
THE CONTRACTOR SHALL VERIFY ALL CONTROLLING FIELD DIMENSIONS BEFORE ORDERING OR FABRICATING ANY MATERIAL.

ANOTATIONS:

1. A325 ⅝"ø x 1½" SS bolts Apply thread locking compound
2. A325 SS Hex coupling nut (typ)
3. A325 Hex lock nut (typ)
4. A325 ⅝"ø x 5" bolt (typ)
5. ⅝"ø x 6" Studs

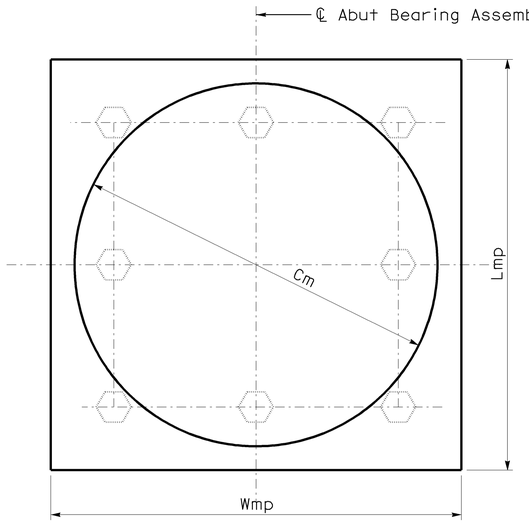

ABUTMENT MASONRY PLATE
No Scale

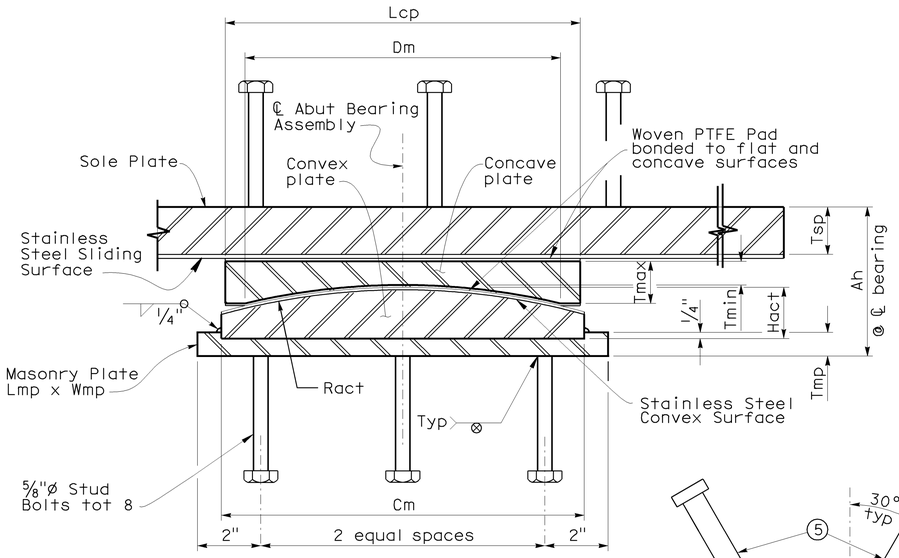

DETAIL "A"
No Scale

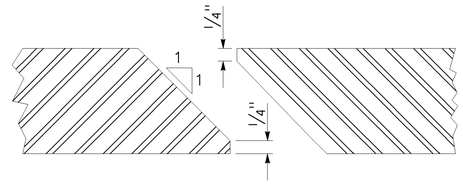

DETAIL "J"
No Scale

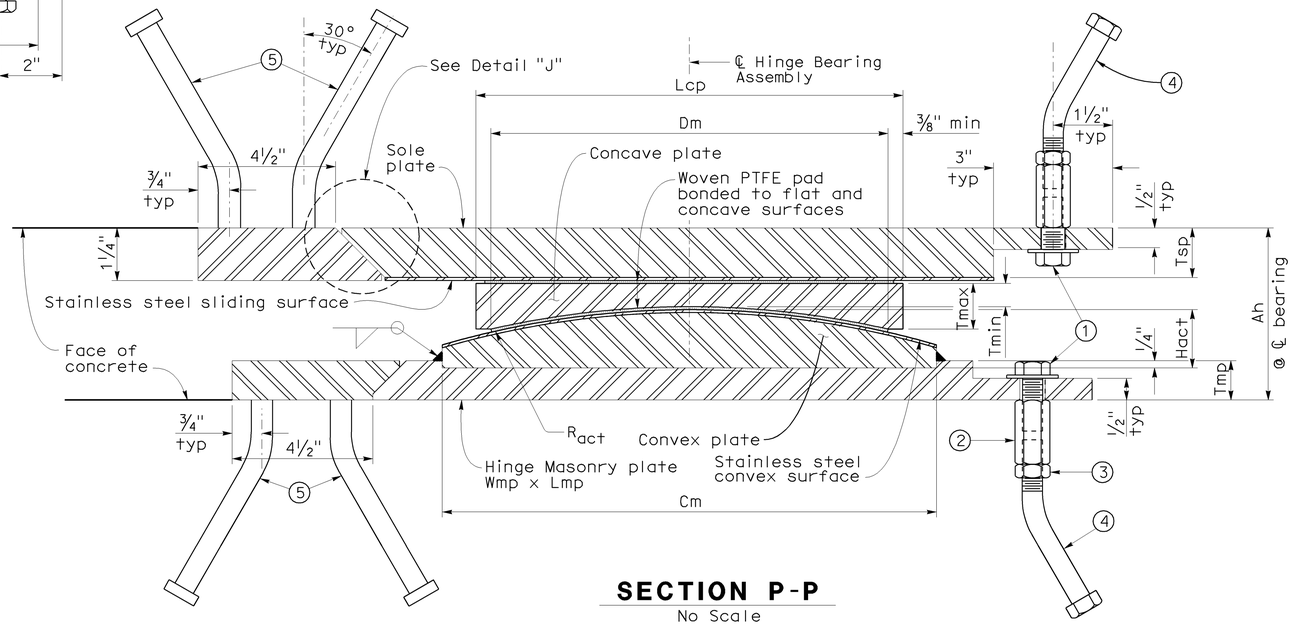

SECTION P-P
No Scale

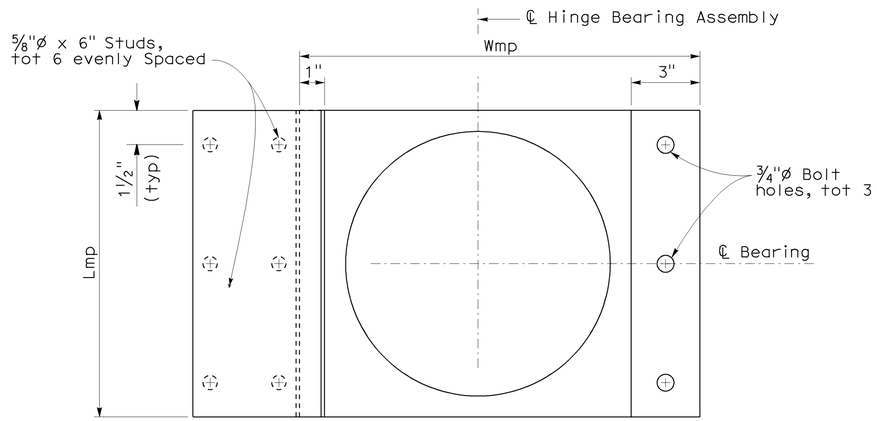

HINGE MASONRY PLATE - PLAN

EXPANSION BEARING TABLE

LOCATION	MAXIMUM VERTICAL LOAD (Kips)	MINIMUM DEAD LOAD (Kips)	DESIGN ROTATION (Radians)	CONCAVE PLATE						CONVEX PLATE		MASONRY PLATE			SOLE PLATE			ASSEMBLY HEIGHT
				WIDTH / LENGTH	FLAT PTFE AREA (in^2)	DIAMETER	SPHERICAL RADIUS	MINIMUM THICKNESS	MAXIMUM THICKNESS	DIAMETER	MAXIMUM THICKNESS	WIDTH	LENGTH	THICKNESS	WIDTH	LENGTH	THICKNESS	
				L_{cp}	A_{PTFE}	D_m	R_{act}	T_{min}	T_{max}	C_m	H_{act}	W_{mp}	L_{mp}	T_{mp}	W_{sp}	L_{sp}	T_{sp}	A_h
SB ABUT 1	648	324	0.0349	16.63	185	15.5	33.75	0.75	1.88	18.00	2.00	20.25	20.25	1.25	19.75	63	2.13	6.31
SB ABUT 7	528	264	0.0349	15.13	151	14.0	30.50	0.75	1.88	16.38	1.88	18.50	18.50	1.13	18.25	55.75	1.88	5.81
HINGE "VT"	389	195	0.0349	13.13	111	12.0	26.25	0.75	1.75	14.00	1.75	20.25	16.25	1.13	22.25	103	1.50	5.31
HINGE "SB"	1387	693	0.0349	23.63	396	22.5	36.00	0.75	2.88	25.50	3.13	31.75	27.75	1.5	32.75	113.5	3.5	9.06

	BY	CHECKED
DESIGN	L. Barnard/Q. Zhao	S. Barajas
DETAILS	J Thorne/M Lane/JFC	L. Barnard/Q. Zhao
QUANTITIES	A. Alcantara	J. Han

STATE OF CALIFORNIA
DEPARTMENT OF TRANSPORTATION

DIVISION OF ENGINEERING SERVICES
STRUCTURE DESIGN
DESIGN BRANCH 4

CU 04242
EA 163731

BRIDGE NO. 34-0157L
POST MILE 9.02

PRESIDIO VIADUCT - LEFT
PTFE / SPHERICAL BEARING DETAILS NO. 2

STRUCTURES DESIGN DETAIL SHEET (ENGLISH) (REV. 10/25/05)

ORIGINAL SCALE IN INCHES FOR REDUCED PLANS 0 1 2 3

DISREGARD PRINTS BEARING EARLIER REVISION DATES →

REVISION DATES: 2-27-09 | 3-3-09 | 3-18-09 | 5-15-09 | 5-28-09 | 7-8-09 | 7-14-09 | 7-13-09

SHEET 24 OF 114

FILE => 34-0157I-bxptfedts02.dgn

USERNAME => tr1im DATE PLOTTED => 21-JUL-2009 TIME PLOTTED => 14:36

DIST	COUNTY	ROUTE	POST MILES TOTAL PROJECT	SHEET No	TOTAL SHEETS
04	SF	101,1	9.2/9.8, 6.8/7.1	375	567

Ahmed Brahim 6-4-09
REGISTERED CIVIL ENGINEER DATE

7-20-09
PLANS APPROVAL DATE

REGISTERED PROFESSIONAL ENGINEER
AHMED M M IBRAHIM
No. S 4865
EXP. 9-30-10
STRUCTURAL
STATE OF CALIFORNIA

The State of California or its officers or agents shall not be responsible for the accuracy or completeness of electronic copies of this plan sheet.

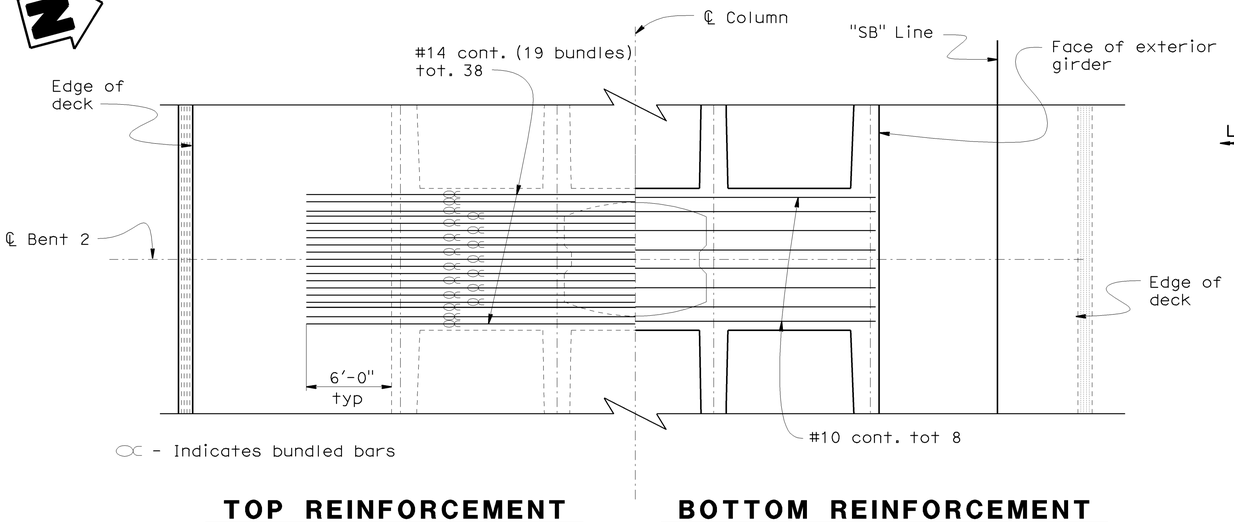

TOP REINFORCEMENT **BOTTOM REINFORCEMENT**

BENT CAP PLAN

3/16" = 1'-0"

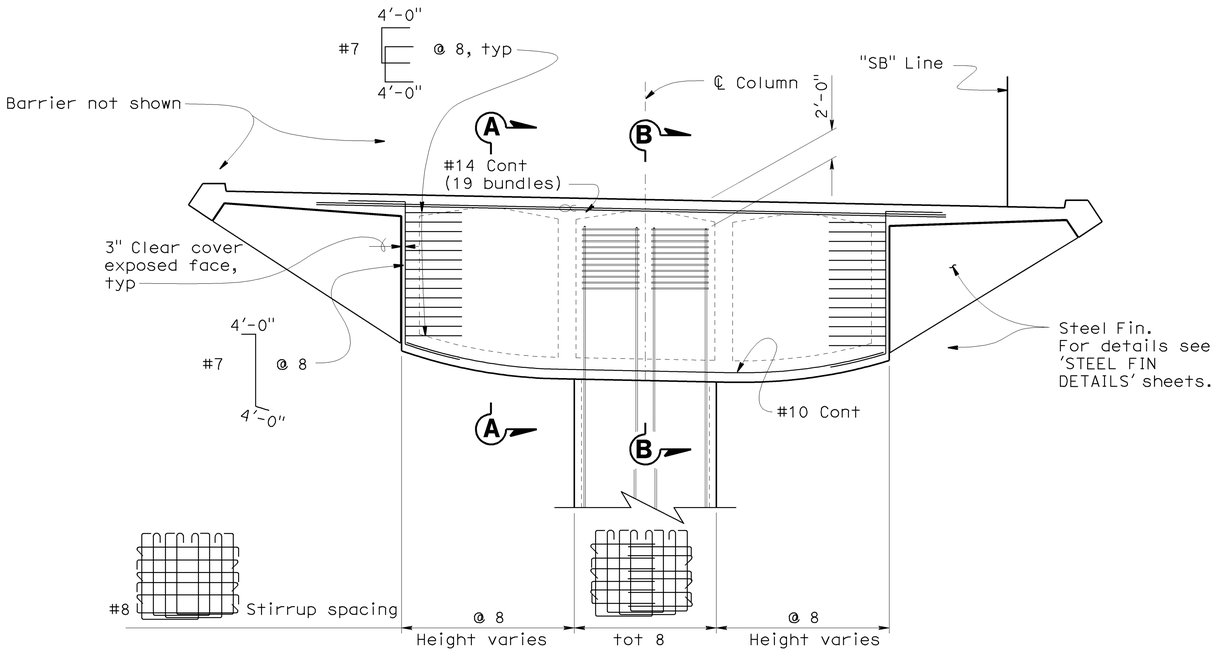

BENT CAP ELEVATION

3/16" = 1'-0"

NOTE:
THE CONTRACTOR SHALL VERIFY ALL CONTROLLING FIELD DIMENSIONS BEFORE ORDERING OR FABRICATING ANY MATERIAL.

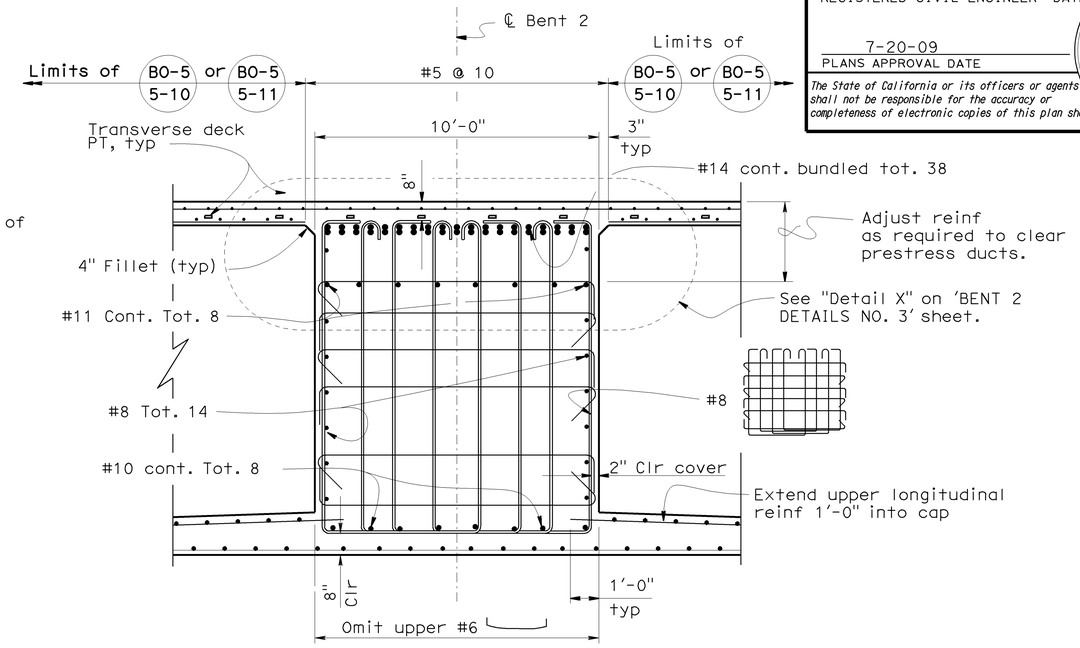

SECTION A-A

3/8" = 1'-0"

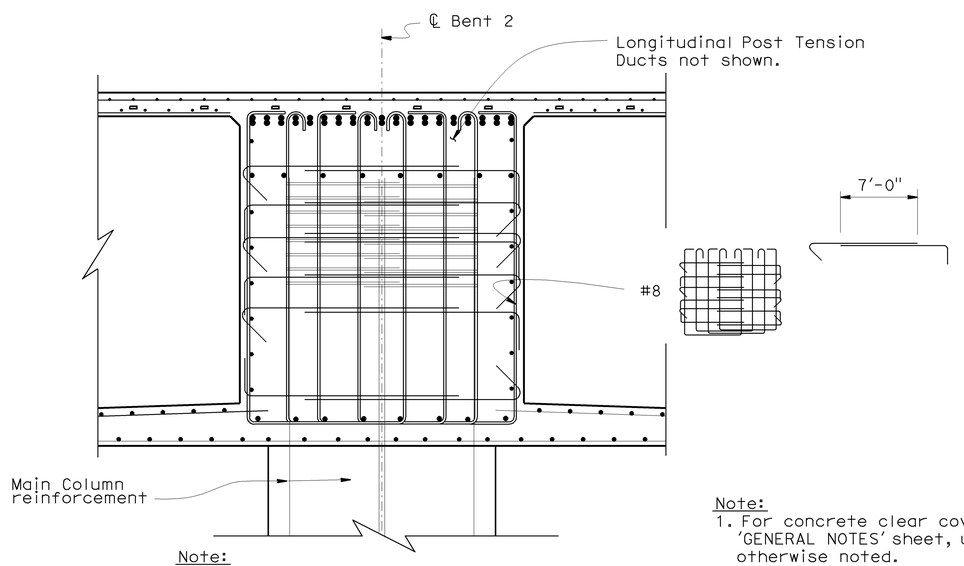

Note:
For details not shown see "Section A-A".

SECTION B-B

3/8" = 1'-0"

Note:
1. For concrete clear cover, see 'GENERAL NOTES' sheet, unless otherwise noted.

2. No Lap Splices allowed for main bent cap reinf.

DESIGN	BY A.Ahmed/R.Bromenschenkel	CHECKED H.Setberg/F.Zayati	STATE OF CALIFORNIA DEPARTMENT OF TRANSPORTATION	DIVISION OF ENGINEERING SERVICES STRUCTURE DESIGN DESIGN BRANCH 4	BRIDGE NO. 34-0157L
DETAILS	BY Marvin Lane	CHECKED A.Ahmed/R.Bromenschenkel			POST MILE 9.02
QUANTITIES	BY A. Alcantara	CHECKED J. Han			

PRESIDIO VIADUCT - LEFT
BENT 2 DETAILS NO. 1

STRUCTURES DESIGN DETAIL SHEET (ENGLISH) (REV. 10/25/05)

ORIGINAL SCALE IN INCHES FOR REDUCED PLANS 0 1 2 3

CU 04242
EA 163731

DISREGARD PRINTS BEARING EARLIER REVISION DATES

REVISION DATES: 5-7-09 5-14-09 5-18-09 5-22-09 5-26-09 5-27-09 5-31-09 6-11-09 7-9-09

SHEET 25 OF 114

FILE => 34-0157I-c-bnt2dts01.dgn

USERNAME => rtrim DATE PLOTTED => 21-JUL-2009 TIME PLOTTED => 14:36

DIST	COUNTY	ROUTE	POST MILES TOTAL PROJECT	SHEET No	TOTAL SHEETS
04	SF	101,1	9.2/9.8, 6.8/7.1	376	567

Ahmed Brahim 6-4-09
REGISTERED CIVIL ENGINEER DATE

7-20-09
PLANS APPROVAL DATE

REGISTERED PROFESSIONAL ENGINEER — AHMED M M IBRAHIM — No. S 4865 — EXP. 9-30-10 — STRUCTURAL — STATE OF CALIFORNIA

The State of California or its officers or agents shall not be responsible for the accuracy or completeness of electronic copies of this plan sheet.

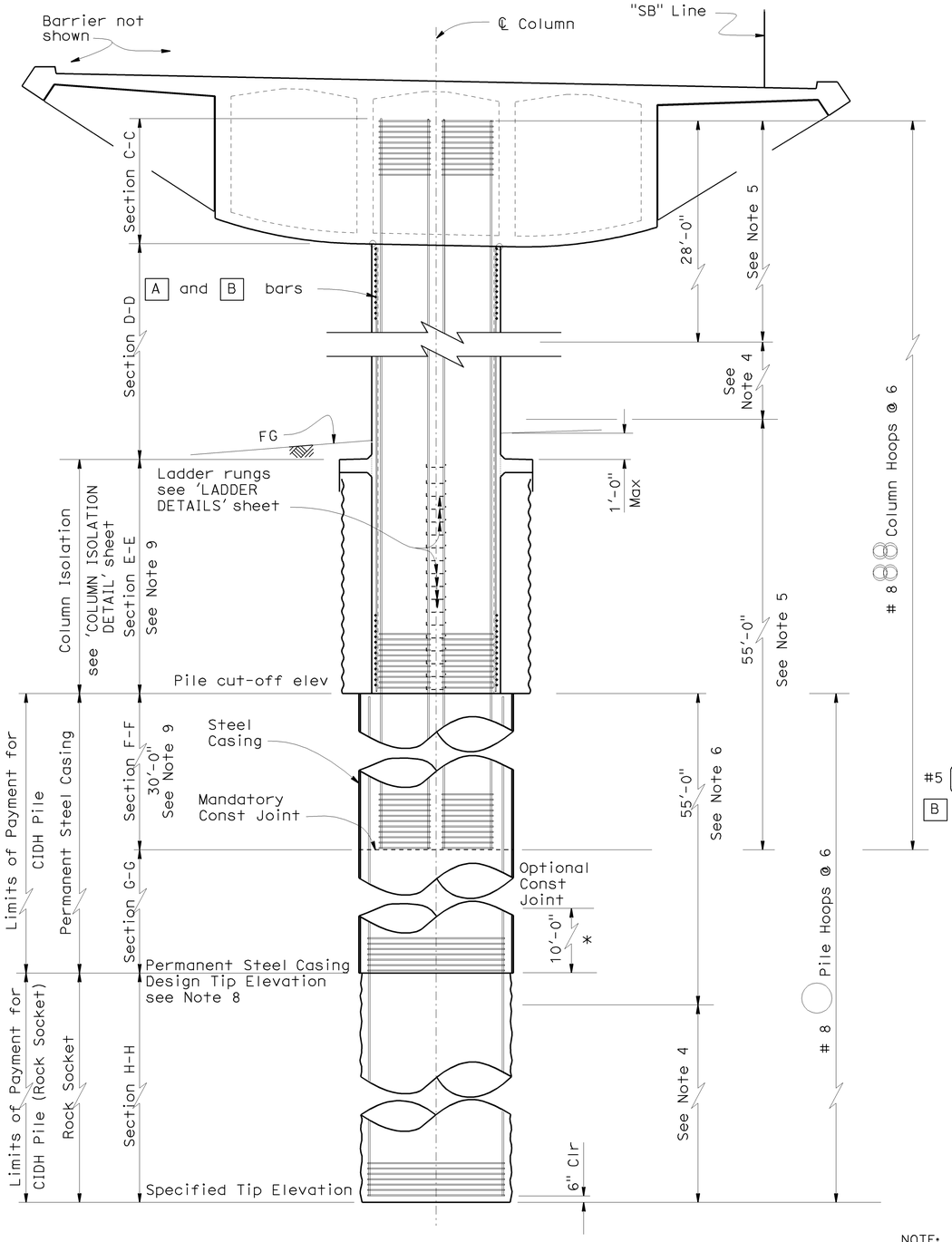

COLUMN ELEVATION

3/16" = 1'-0"

* Field adjusted

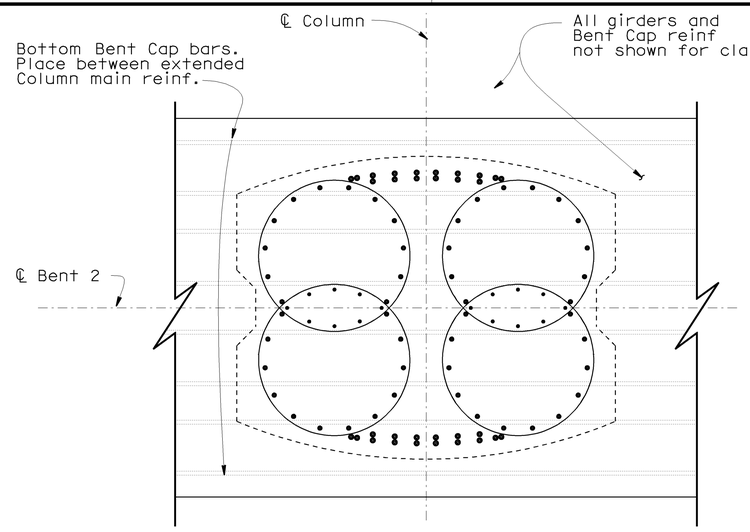

Note:
For details not shown see "Section D-D".

SECTION C-C

1/2" = 1'-0"

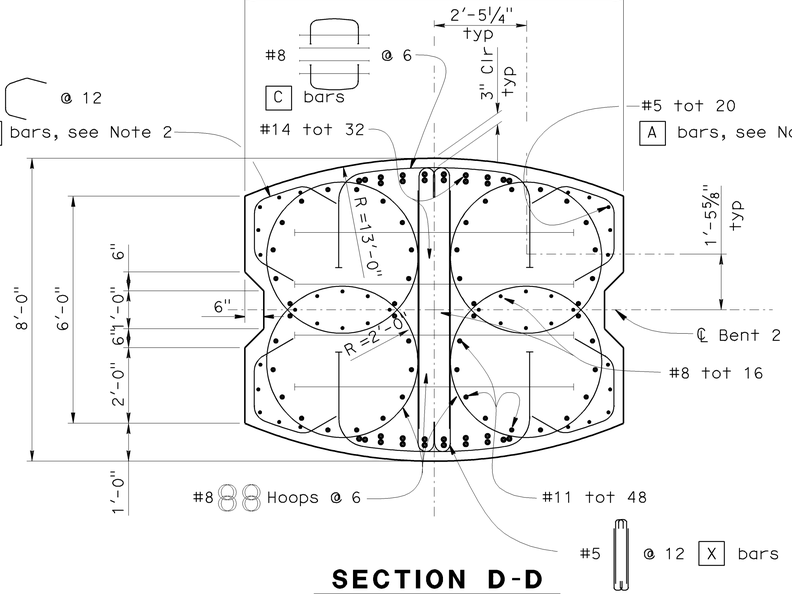

SECTION D-D

1/2" = 1'-0"

NOTE:
THE CONTRACTOR SHALL VERIFY ALL CONTROLLING FIELD DIMENSIONS BEFORE ORDERING OR FABRICATING ANY MATERIAL.

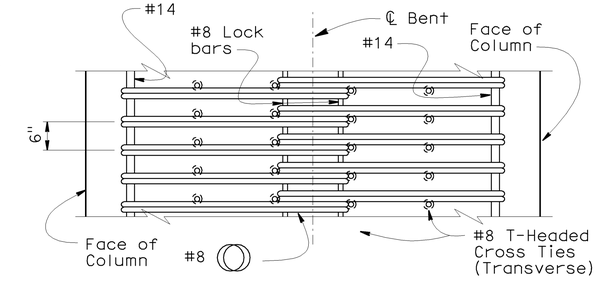

COLUMN HOOP DETAIL

No Scale

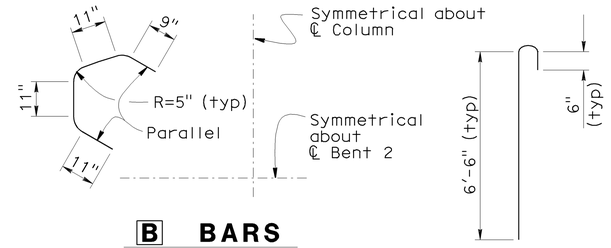

B BARS

No Scale

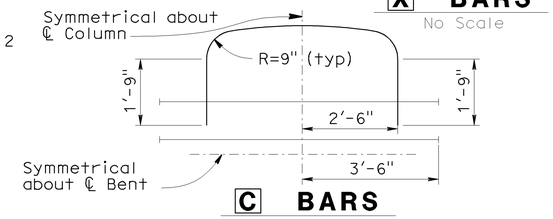

X BARS

No Scale

C BARS

No Scale

Notes:
1. For "Section E-E", "Section F-F", "Section G-G" and "Section H-H" see 'BENT 2 DETAILS NO. 3' sheet.
2. Place A and B bars between soffit and Pile Cut-Off Elevation.
3. For Pile Cut-Off data see "Pile Data Table".
4. Staggered - Ultimate Splices Allowed.
5. No splices allowed in main column reinf.
6. No splices allowed in main pile shaft reinf.
7. Place X bars between soffit and Pile Cut-off Elevation.
8. For Permanent Steel Casing Design Tip Elevation, see 'Pile Data Table' on "INDEX TO PLANS" sheet.
9. Concrete shall be poured under dry conditions.
10. Contractor shall use centralizers to maintain rebar clearance.

	BY	CHECKED
DESIGN	R.Bromenschenkel	F.Zayati
DETAILS	Marvin Lane	R.Bromenschenkel
QUANTITIES	A. Alcantara	J. Han

STATE OF CALIFORNIA
DEPARTMENT OF TRANSPORTATION

DIVISION OF ENGINEERING SERVICES
STRUCTURE DESIGN
DESIGN BRANCH 4

BRIDGE NO. 34-0157L
POST MILE 9.02

PRESIDIO VIADUCT - LEFT

BENT 2 DETAILS NO. 2

STRUCTURES DESIGN DETAIL SHEET (ENGLISH) (REV. 10/25/05)

ORIGINAL SCALE IN INCHES FOR REDUCED PLANS 0 1 2 3

CU 04242
EA 163731

DISREGARD PRINTS BEARING EARLIER REVISION DATES →

REVISION DATES: 4-10-09 | 5-18-09 | 5-22-09 | 5-28-09 | 6-12-09 | 6-16-09 | 6-17-09 | 7-7-09 | 7-8-09

SHEET 26 OF 114

FILE => 34-0157l-c-bnt2dts02.dgn

DATE PLOTTED => 21-JUL-2009 TIME PLOTTED => 14:36
USERNAME => trtlim

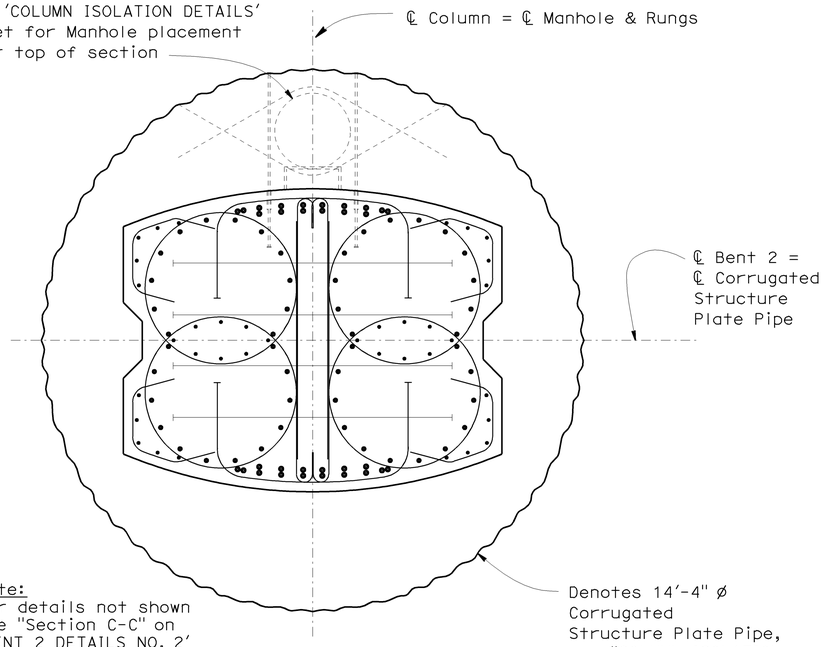

Note:
For details not shown see "Section C-C" on 'BENT 2 DETAILS NO. 2' sheet.

SECTION E-E

1/2" = 1'-0"

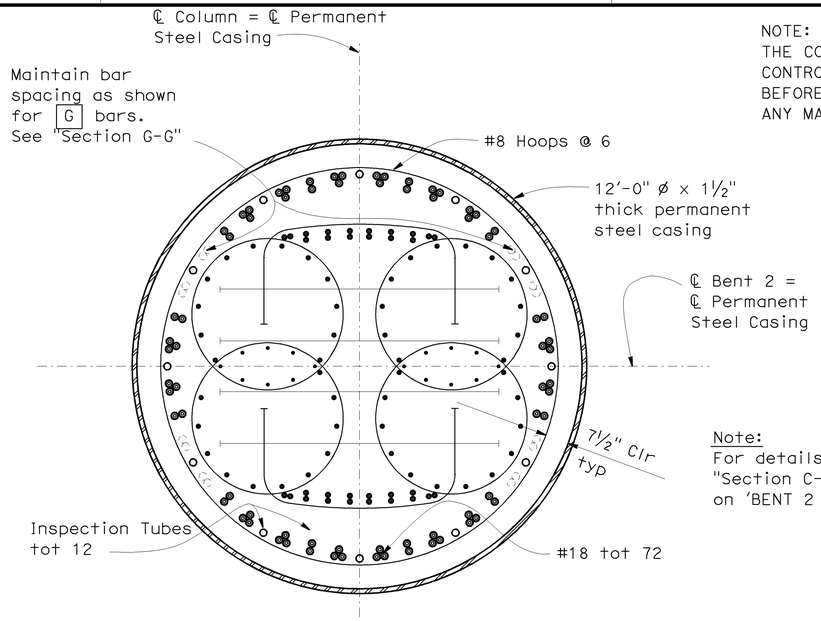

SECTION F-F

1/2" = 1'-0"

NOTE:
THE CONTRACTOR SHALL VERIFY ALL CONTROLLING FIELD DIMENSIONS BEFORE ORDERING OR FABRICATING ANY MATERIAL.

DIST	COUNTY	ROUTE	POST MILES TOTAL PROJECT	SHEET No	TOTAL SHEETS
04	SF	101,1	9.2/9.8, 6.8/7.1	377	567

Ahmed Brahim 6-4-09
REGISTERED CIVIL ENGINEER DATE

7-20-09
PLANS APPROVAL DATE

REGISTERED PROFESSIONAL ENGINEER
AHMED M M IBRAHIM
No. S 4865
EXP. 9-30-10
STRUCTURAL
STATE OF CALIFORNIA

The State of California or its officers or agents shall not be responsible for the accuracy or completeness of electronic copies of this plan sheet.

Note:
For details not shown see "Section C-C" and "Section D-D" on 'BENT 2 DETAILS NO. 2' sheet.

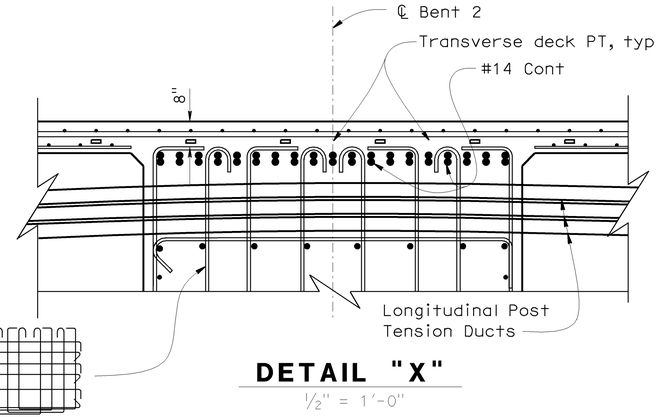

DETAIL "X"

1/2" = 1'-0"

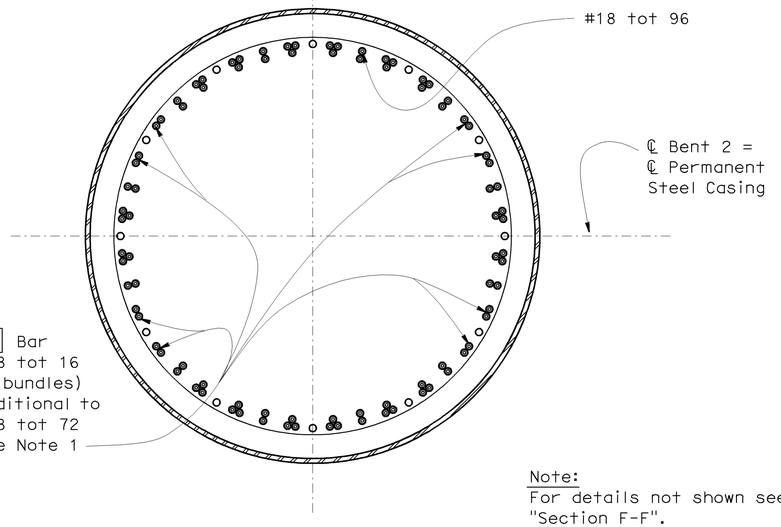

Note:
For details not shown see "Section F-F".

SECTION G-G

1/2" = 1'-0"

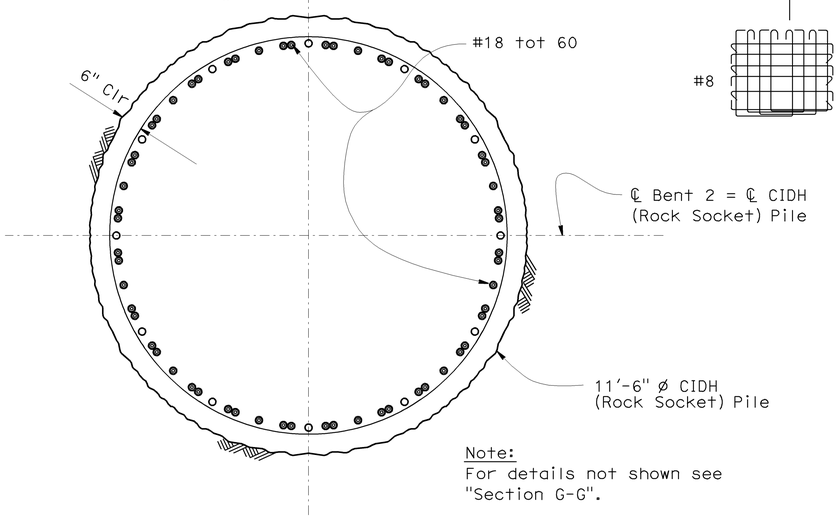

Note:
For details not shown see "Section G-G".

SECTION H-H

1/2" = 1'-0"

Note:
1. Place G bars below Mandatory Const Joint to Specified Tip Elevation.

DESIGN	BY R.Bromenschenkel	CHECKED F.Zayati	STATE OF CALIFORNIA DEPARTMENT OF TRANSPORTATION	DIVISION OF ENGINEERING SERVICES STRUCTURE DESIGN DESIGN BRANCH 4	BRIDGE NO. 34-0157L	PRESIDIO VIADUCT - LEFT
DETAILS	BY Marvin Lane	CHECKED R.Bromenschenkel			POST MILE 9.02	BENT 2 DETAILS NO. 3
QUANTITIES	BY A. Alcantara	CHECKED J. Han				

STRUCTURES DESIGN DETAIL SHEET (ENGLISH) (REV. 10/25/05)

ORIGINAL SCALE IN INCHES FOR REDUCED PLANS 0 1 2 3

CU 04242
EA 163731

DISREGARD PRINTS BEARING EARLIER REVISION DATES →

REVISION DATES: 4-3-09 | 5-26-09 | 5-27-09 | 5-30-09 | 6-12-09 | 7-8-09 | | 5-4-09 | 5-6-09 | 5-7-09

SHEET 27 OF 114

FILE => 34-0157l-c-bnt2dts03.dgn

USERNAME => trlim DATE PLOTTED => 21-JUL-2009 TIME PLOTTED => 14:36

DIST	COUNTY	ROUTE	POST MILES TOTAL PROJECT	SHEET No	TOTAL SHEETS
04	SF	101,1	9.2/9.8, 6.8/7.1	378	567

Ahmed Brahim 6-4-09
REGISTERED CIVIL ENGINEER DATE

7-20-09
PLANS APPROVAL DATE

The State of California or its officers or agents shall not be responsible for the accuracy or completeness of electronic copies of this plan sheet.

REGISTERED PROFESSIONAL ENGINEER
AHMED M M IBRAHIM
No. S 4865
EXP. 9-30-10
STRUCTURAL
STATE OF CALIFORNIA

NOTE:
THE CONTRACTOR SHALL VERIFY ALL CONTROLLING FIELD DIMENSIONS BEFORE ORDERING OR FABRICATING ANY MATERIAL.

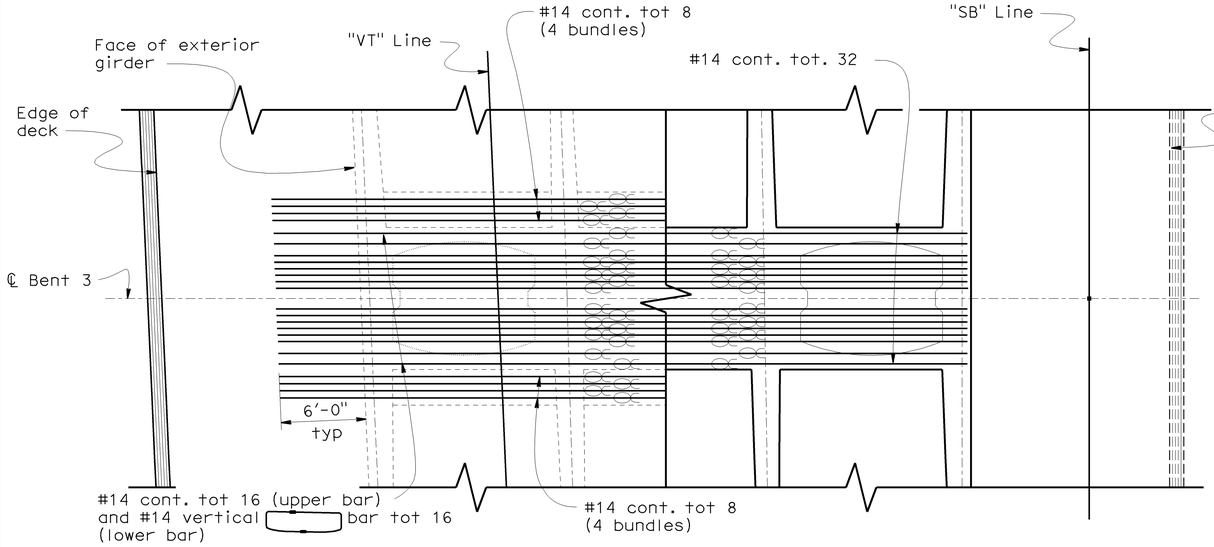

TOP REINFORCEMENT **BOTTOM REINFORCEMENT**

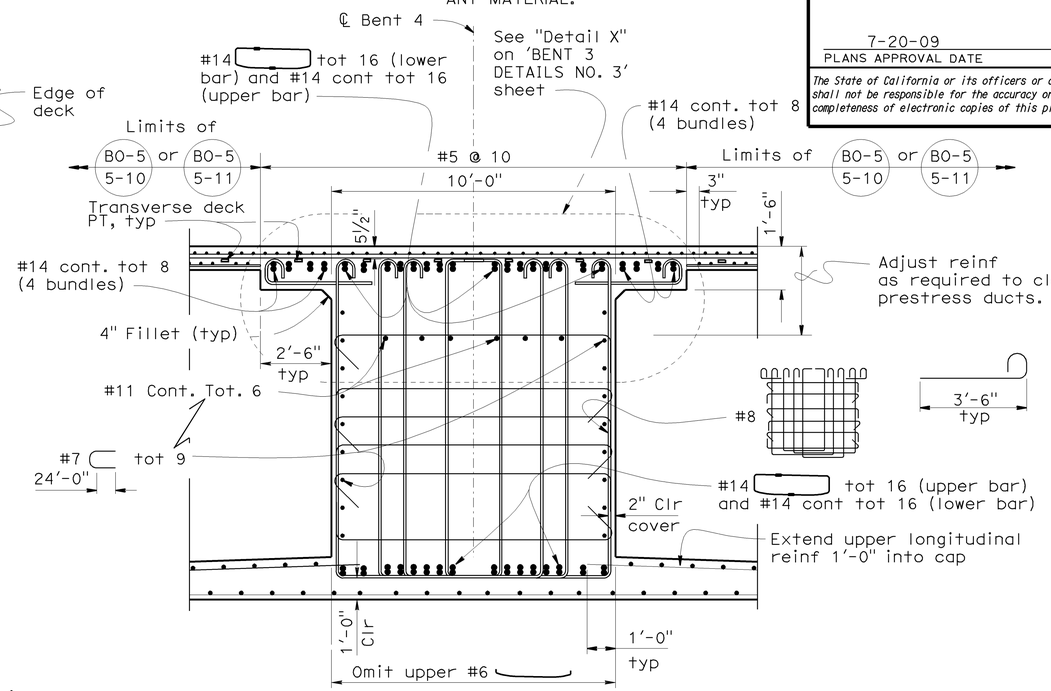

SECTION A-A
3/8" = 1'-0"

BENT CAP PLAN
3/16" = 1'-0"

℄ - Indicates bundled bars

40 - #6 12'-0" Placed at intersection between #14 vertical bar and every other #7 horizontal ∪ bar

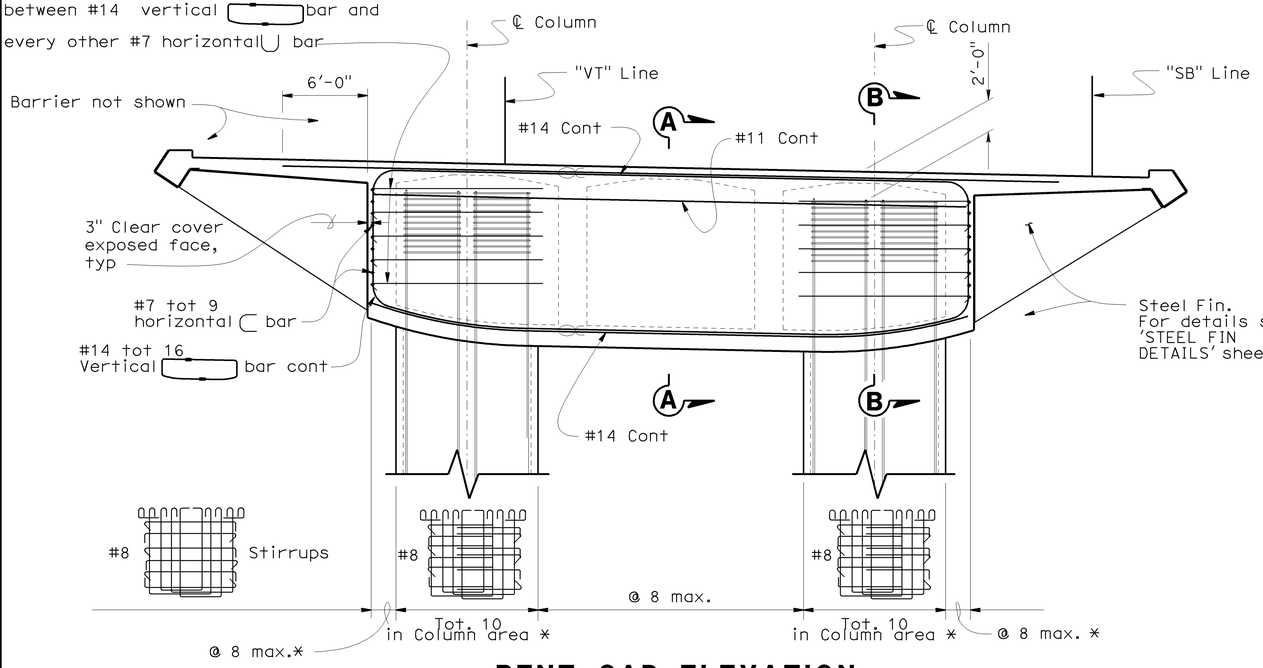

BENT CAP ELEVATION
3/16" = 1'-0"

* Height varies

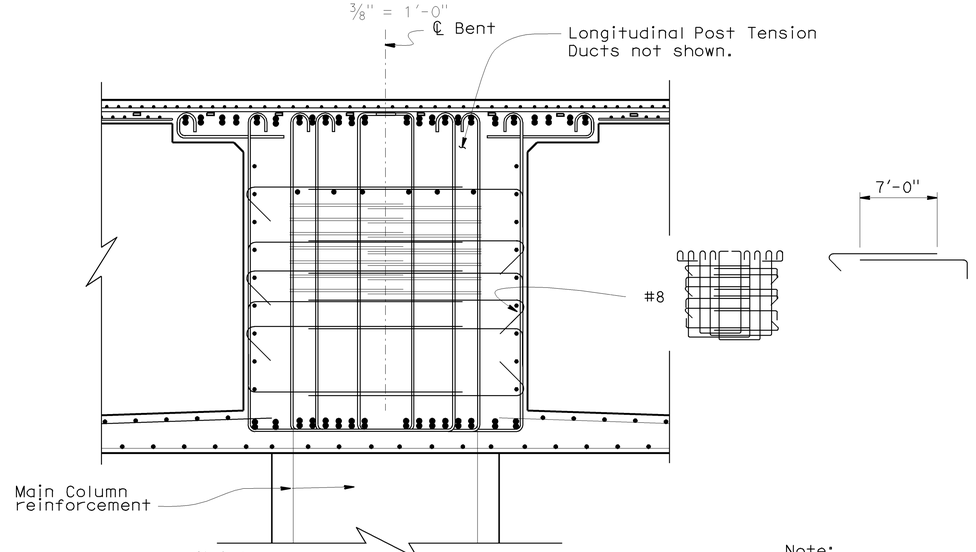

Note:
For details not shown see "Section A-A".

SECTION B-B
3/8" = 1'-0"

Note:
1. For concrete clear cover, see 'GENERAL NOTES' sheet, unless otherwise noted.

DESIGN	BY R.Bromenschenkel	CHECKED F.Zayati	STATE OF CALIFORNIA DEPARTMENT OF TRANSPORTATION	DIVISION OF ENGINEERING SERVICES STRUCTURE DESIGN DESIGN BRANCH 4	BRIDGE NO. 34-0157L
DETAILS	BY J. Thorne/M. Lane	CHECKED R.Bromenschenkel			POST MILE 9.02
QUANTITIES	BY A. Alcantara	CHECKED J. Han			

PRESIDIO VIADUCT - LEFT
BENT 3 DETAILS NO. 1

STRUCTURES DESIGN DETAIL SHEET (ENGLISH) (REV. 10/25/05)

ORIGINAL SCALE IN INCHES FOR REDUCED PLANS 0 1 2 3

CU 04242
EA 163731

DISREGARD PRINTS BEARING EARLIER REVISION DATES →

REVISION DATES: 4-10-09 | 5-22-09 | 5-30-09 | 5-31-09 | 6-11-09 | 6-16-09 | 7-7-09 | | 5-12-09 | 5-18-09

SHEET 28 OF 114

FILE => 34-0157l-c-bnt3dts01.dgn

DATE PLOTTED => 21-JUL-2009 TIME PLOTTED => 14:36
USERNAME => tt:11m

DIST	COUNTY	ROUTE	POST MILES TOTAL PROJECT	SHEET No	TOTAL SHEETS
04	SF	101,1	9.2/9.8, 6.8/7.1	379	567

Ahmed Brahim 6-4-09
REGISTERED CIVIL ENGINEER DATE

7-20-09
PLANS APPROVAL DATE

REGISTERED PROFESSIONAL ENGINEER — AHMED M M IBRAHIM — No. S 4865 — EXP. 9-30-10 — STRUCTURAL — STATE OF CALIFORNIA

The State of California or its officers or agents shall not be responsible for the accuracy or completeness of electronic copies of this plan sheet.

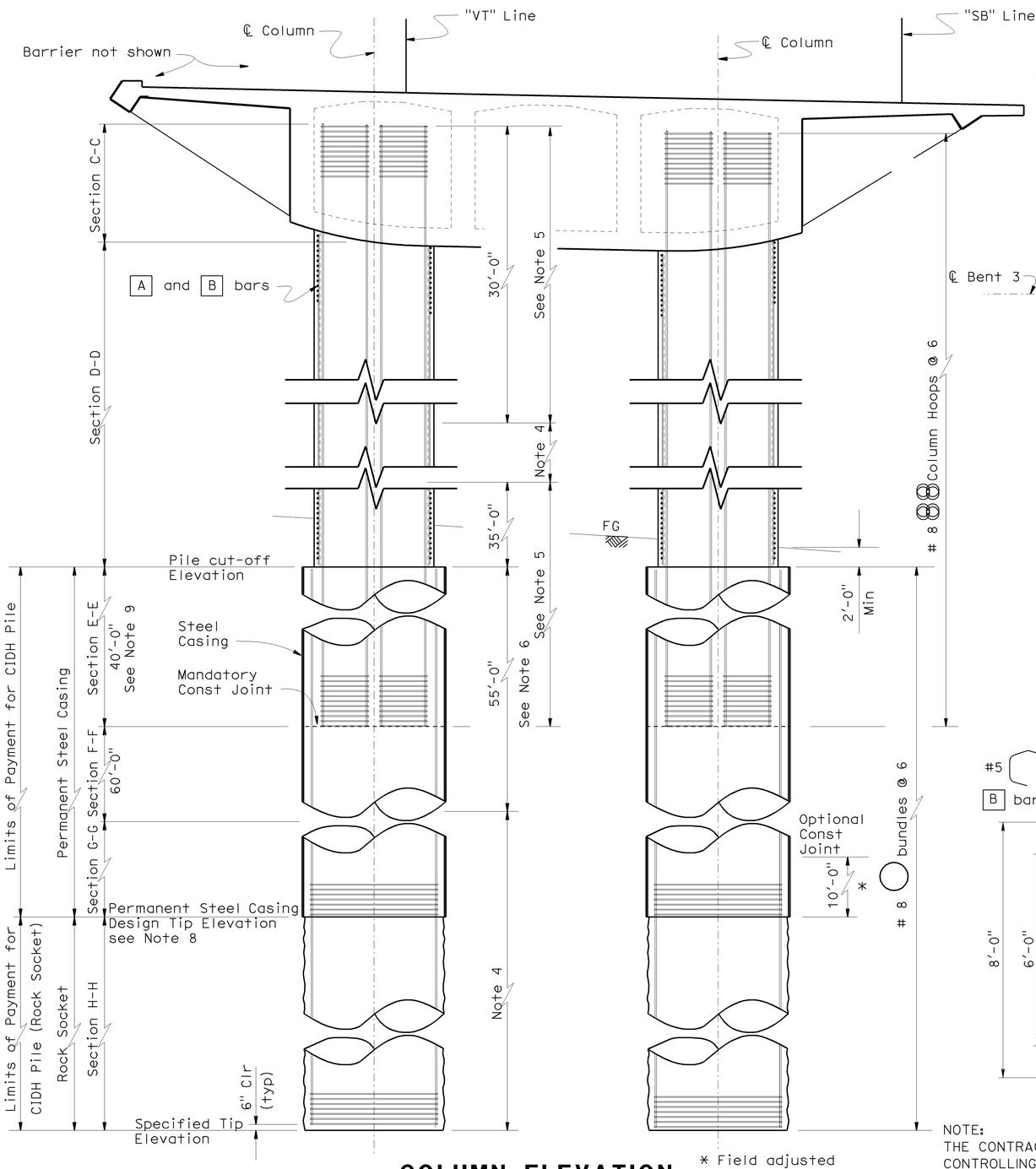

COLUMN ELEVATION

3/16" = 1'-0"

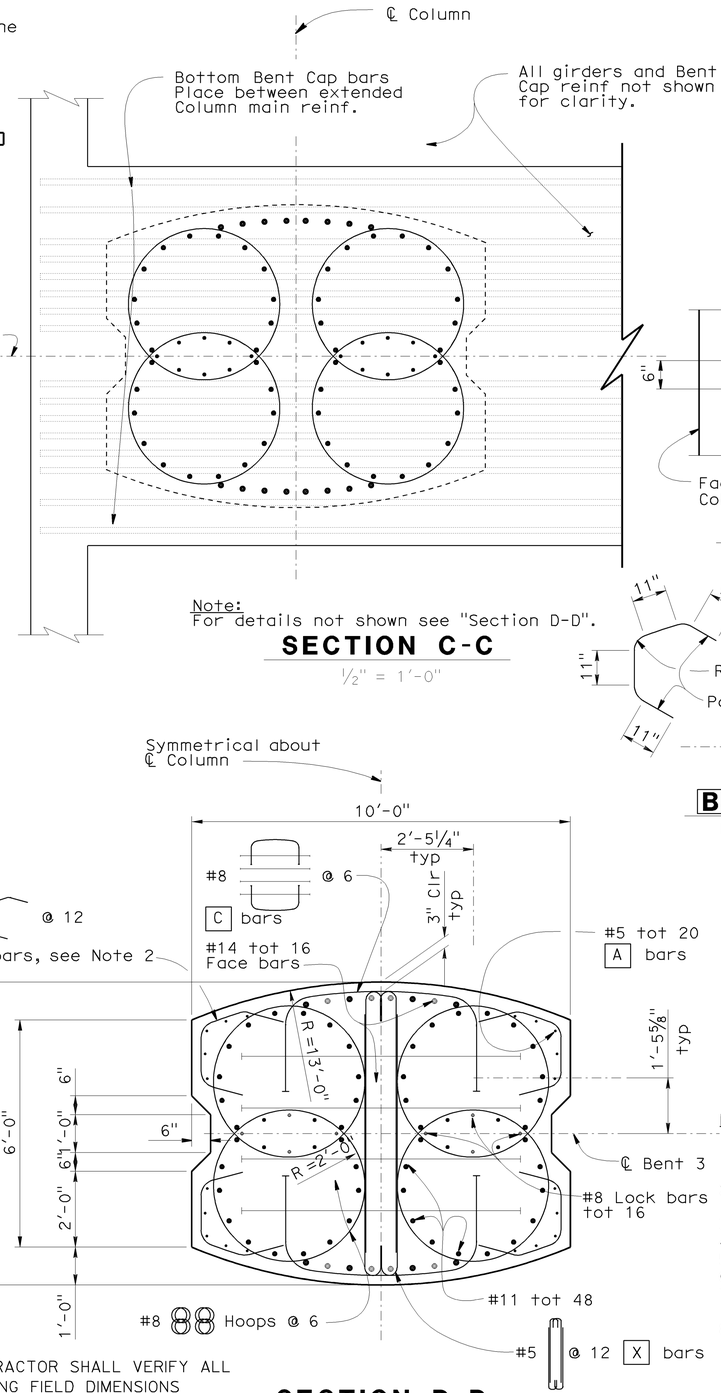

Note:
For details not shown see "Section D-D".

SECTION C-C

1/2" = 1'-0"

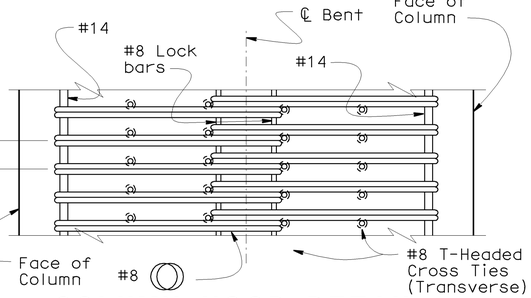

COLUMN HOOP DETAIL

No Scale

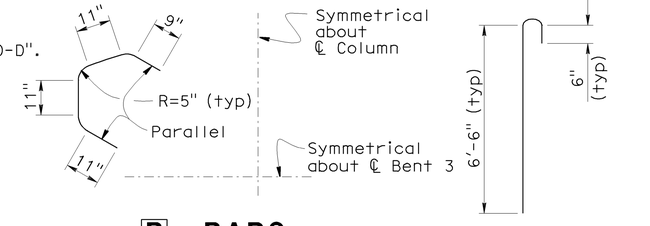

B BARS

No Scale

X BARS

No Scale

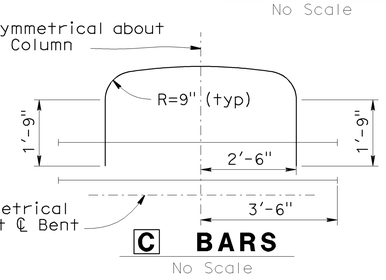

C BARS

No Scale

Symmetrical about ℄ Column

NOTE:
THE CONTRACTOR SHALL VERIFY ALL CONTROLLING FIELD DIMENSIONS BEFORE ORDERING OR FABRICATING ANY MATERIAL.

SECTION D-D

1/2" = 1'-0"

Notes:
1. For "Section E-E", "Section F-F", "Section G-G" and "Section H-H" see 'BENT 3 DETAILS NO. 3' sheet.
2. Place A and B bars between soffit and Pile Cut-Off Elevation.
3. For Pile Cut-Off data see "Pile Data Table".
4. Staggered - Ultimate Splices Allowed.
5. No splices allowed in main column reinf.
6. No splices allowed in main pile shaft reinf.
7. Place X bars between soffit and Pile Cut-off Elevation.
8. Contractor shall install Permanent Steel Casing to PSC Design Tip Elevation. See 'Pile Data Table' on "INDEX TO PLANS" sheet.
9. Concrete shall be poured under dry conditions.
10. Contractor shall use centralizers to maintain rebar clearance.

DESIGN	BY R.Bromenschenkel	CHECKED F.Zayati	
DETAILS	BY M.Lane	CHECKED R.Bromenschenkel	
QUANTITIES	BY A. Alcantara	CHECKED J. Han	

STATE OF CALIFORNIA
DEPARTMENT OF TRANSPORTATION

DIVISION OF ENGINEERING SERVICES
STRUCTURE DESIGN
DESIGN BRANCH 4

CU 04242
EA 163731

BRIDGE NO. 34-0157L
POST MILE 9.02

PRESIDIO VIADUCT - LEFT

BENT 3 DETAILS NO. 2

STRUCTURES DESIGN DETAIL SHEET (ENGLISH) (REV. 10/25/05)

ORIGINAL SCALE IN INCHES FOR REDUCED PLANS 0 1 2 3

DISREGARD PRINTS BEARING EARLIER REVISION DATES

REVISION DATES: 4-30-09 | 5-28-09 | 5-30-09 | 5-31-09 | 6-1-09 | 6-16-09 | 6-17-09 | 7-1-09 | 7-9-09

SHEET 29 OF 114

FILE => 34-0157l-c-bnt3dts02.dgn

USERNAME => rtrim DATE PLOTTED => 21-JUL-2009 TIME PLOTTED => 14:36

DIST	COUNTY	ROUTE	POST MILES TOTAL PROJECT	SHEET No	TOTAL SHEETS
04	SF	101,1	9.2/9.8, 6.8/7.1	380	567

Ahmed Ibrahim 6-4-09
REGISTERED CIVIL ENGINEER DATE

7-20-09
PLANS APPROVAL DATE

REGISTERED PROFESSIONAL ENGINEER
AHMED M M IBRAHIM
No. S 4865
EXP. 9-30-10
STRUCTURAL
STATE OF CALIFORNIA

The State of California or its officers or agents shall not be responsible for the accuracy or completeness of electronic copies of this plan sheet.

NOTE:
THE CONTRACTOR SHALL VERIFY ALL CONTROLLING FIELD DIMENSIONS BEFORE ORDERING OR FABRICATING ANY MATERIAL.

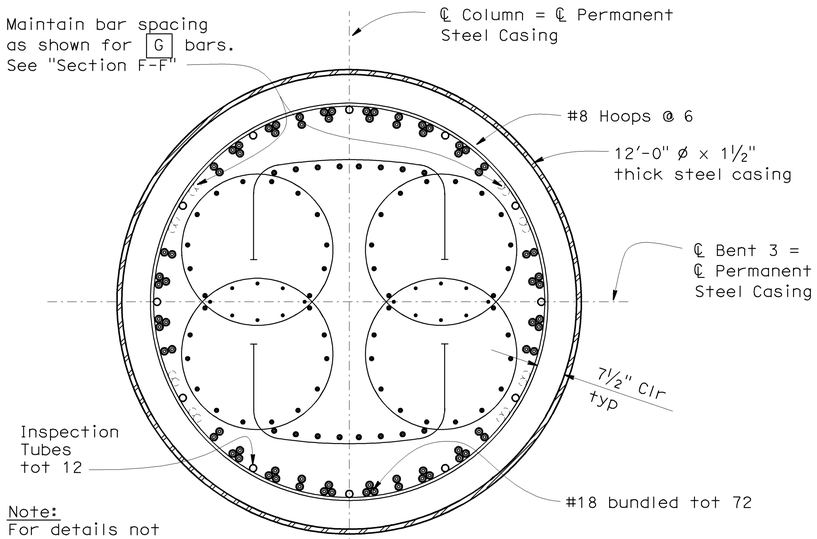

Note:
For details not shown see "Section D-D" on 'BENTS 3 DETAILS NO. 2' sheet.

SECTION E-E
½" = 1'-0"

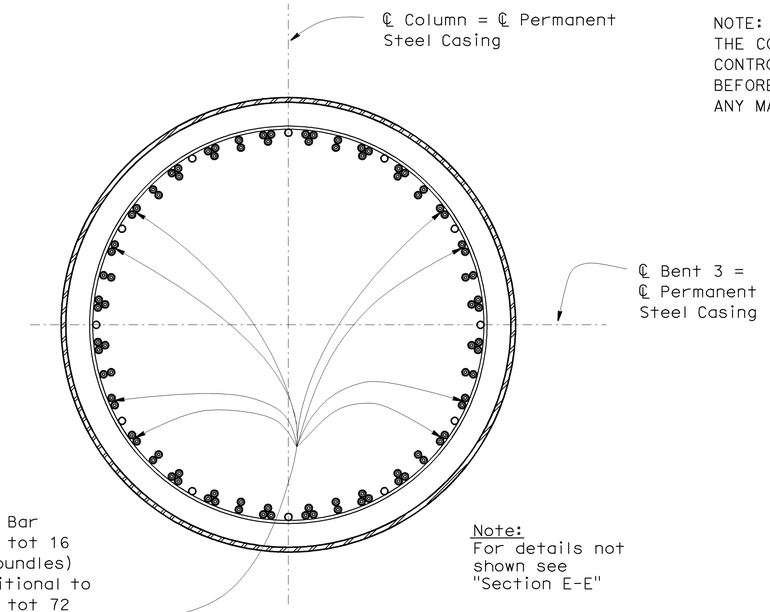

Note:
For details not shown see "Section E-E"

SECTION F-F
½" = 1'-0"

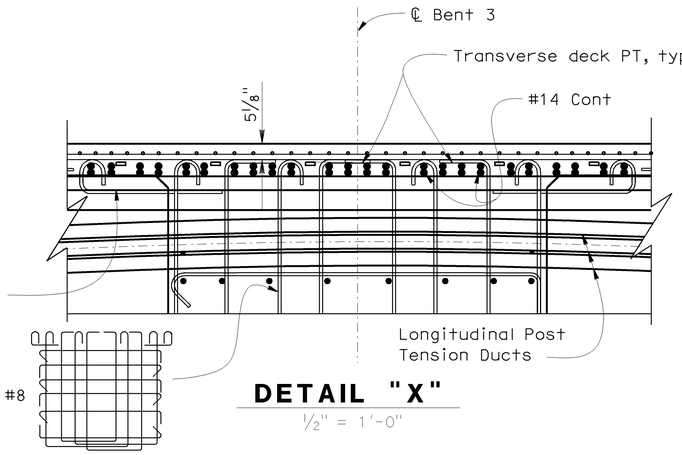

DETAIL "X"
½" = 1'-0"

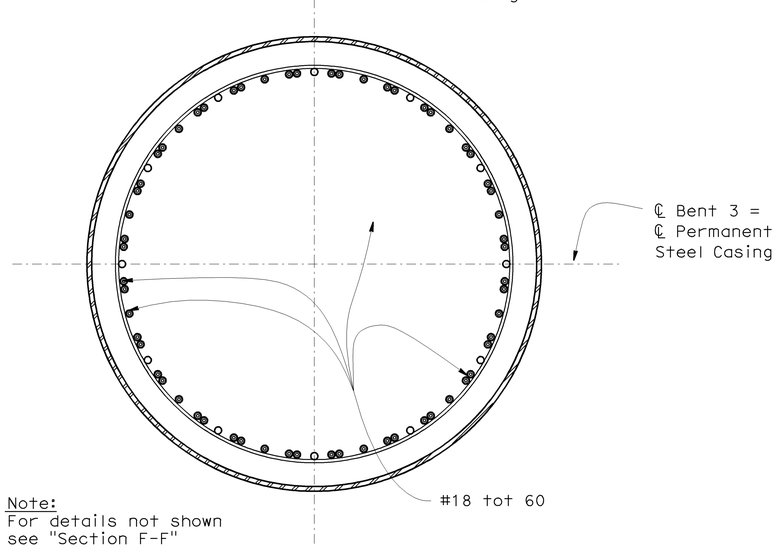

Note:
For details not shown see "Section F-F"

SECTION G-G
½" = 1'-0"

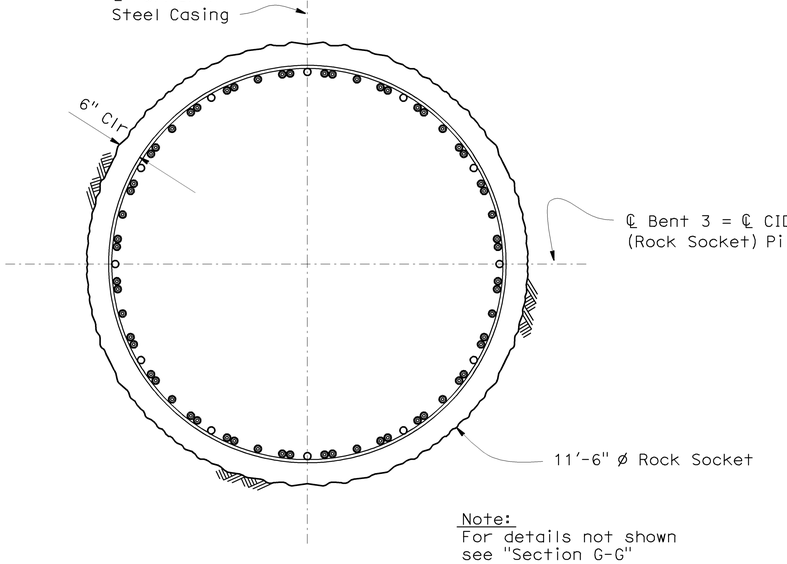

Note:
For details not shown see "Section G-G"

SECTION H-H
½" = 1'-0"

Note:
1. Place G bars below Mandatory Const Joint to Specified Tip Elevation.

DESIGN	BY R.Bromenschenkel	CHECKED F.Zayati	STATE OF CALIFORNIA DEPARTMENT OF TRANSPORTATION	DIVISION OF ENGINEERING SERVICES STRUCTURE DESIGN DESIGN BRANCH 4	BRIDGE NO. 34-0157L	PRESIDIO VIADUCT - LEFT	
DETAILS	BY M.Lane	CHECKED R.Bromenschenkel			POST MILE 9.02	BENT 3 DETAILS NO. 3	
QUANTITIES	BY A. Alcantara	CHECKED J. Han					

STRUCTURES DESIGN DETAIL SHEET (ENGLISH) (REV. 10/25/05)

ORIGINAL SCALE IN INCHES FOR REDUCED PLANS 0 1 2 3

CU 04242
EA 163731

DISREGARD PRINTS BEARING EARLIER REVISION DATES →

REVISION DATES: 3-31-09 | 5-31-09 | 5-12-09 | 4-9-09 | 6-12-09 | 7-7-09 | 7-9-09 | 7-13-09 | 5-25-09

SHEET 30 OF 114

FILE => 34-0157l-c-bnt3dts03.dgn

DATE PLOTTED => 21-JUL-2009 TIME PLOTTED => 14:36
USERNAME = trlim

DIST	COUNTY	ROUTE	POST MILES TOTAL PROJECT	SHEET No	TOTAL SHEETS
04	SF	101,1	9.2/9.8, 6.8/7.1	381	567

Ahmed Brahim 6-4-09
REGISTERED CIVIL ENGINEER DATE

7-20-09
PLANS APPROVAL DATE

REGISTERED PROFESSIONAL ENGINEER — AHMED M M IBRAHIM — No. S 4865 — EXP. 9-30-10 — STRUCTURAL — STATE OF CALIFORNIA

The State of California or its officers or agents shall not be responsible for the accuracy or completeness of electronic copies of this plan sheet.

NOTE:
THE CONTRACTOR SHALL VERIFY ALL CONTROLLING FIELD DIMENSIONS BEFORE ORDERING OR FABRICATING ANY MATERIAL.

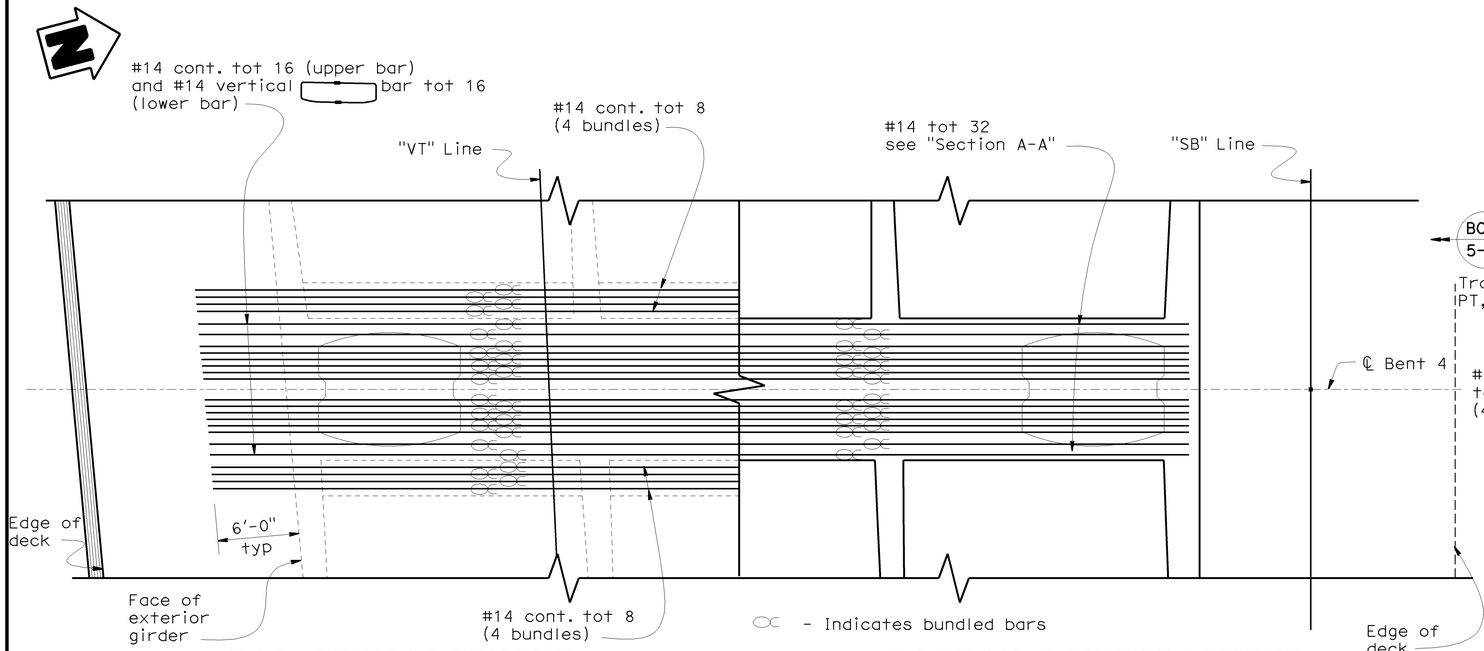

TOP REINFORCEMENT

BOTTOM REINFORCEMENT

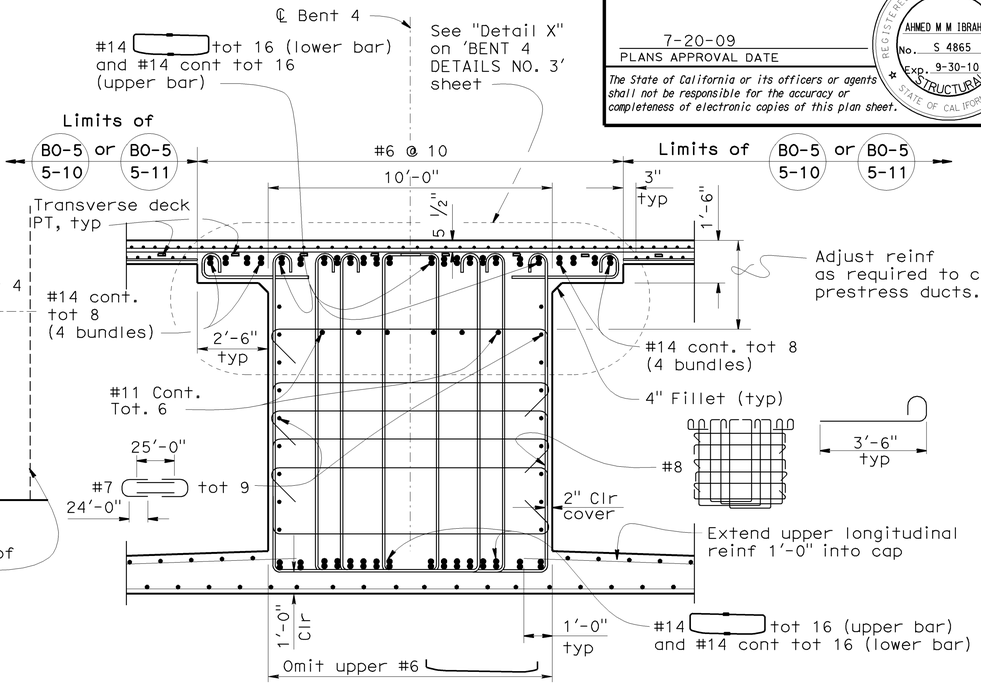

SECTION A-A

3/8" = 1'-0"

BENT CAP PLAN

3/16" = 1'-0"

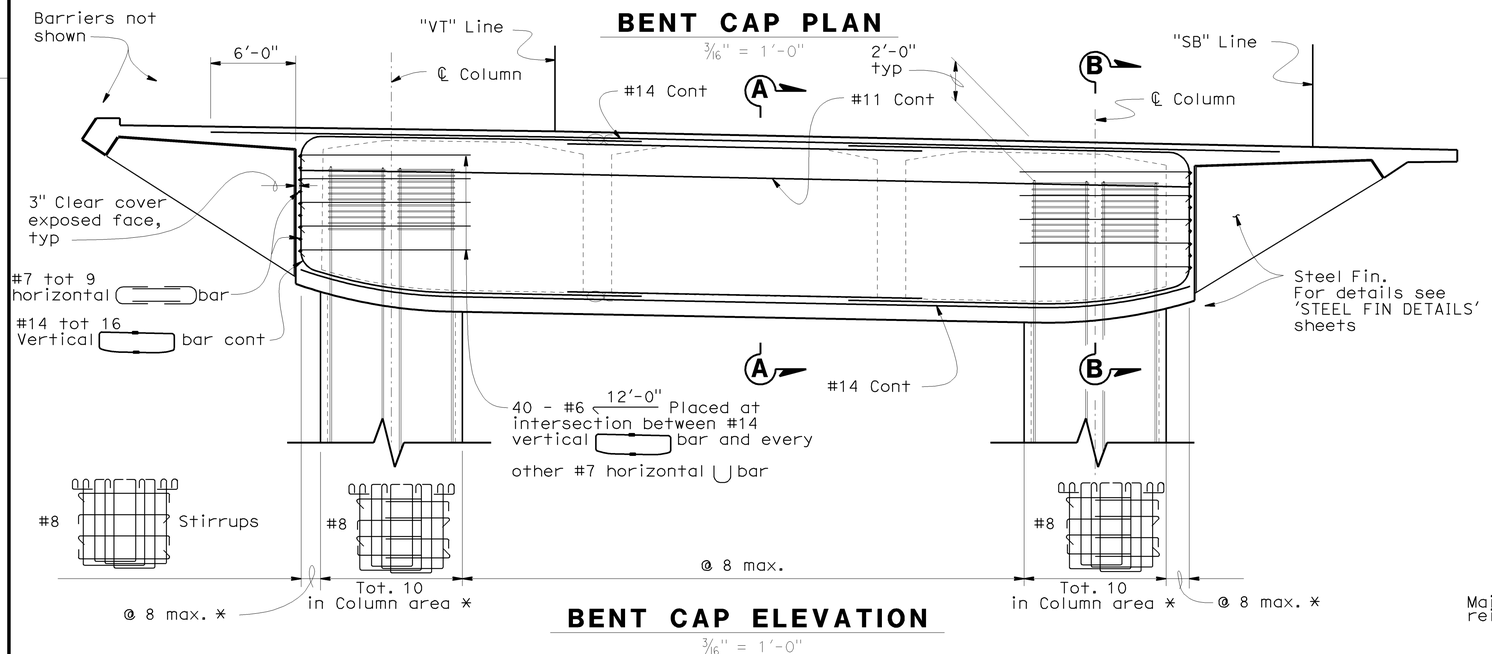

BENT CAP ELEVATION

3/16" = 1'-0"

* Height varies

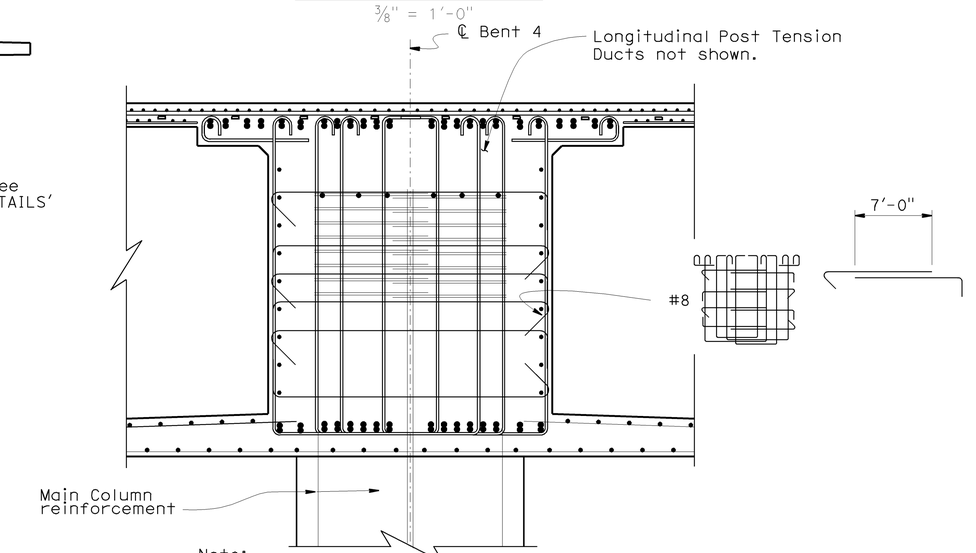

Note:
For details not shown see "Section A-A".

SECTION B-B

3/8" = 1'-0"

Note:
1. For concrete clear cover, see 'GENERAL NOTES' sheet, unless otherwise noted.

DESIGN	BY R.Bromenschenkel	CHECKED F.Zayati	STATE OF CALIFORNIA DEPARTMENT OF TRANSPORTATION	DIVISION OF ENGINEERING SERVICES STRUCTURE DESIGN DESIGN BRANCH 4	BRIDGE NO. 34-0157L
DETAILS	BY Jeff Thorne	CHECKED R.Bromenschenkel			POST MILE 9.02
QUANTITIES	BY A. Alcantara	CHECKED J. Han			

PRESIDIO VIADUCT - LEFT

BENT 4 DETAILS NO. 1

STRUCTURES DESIGN DETAIL SHEET (ENGLISH) (REV. 10/25/05)

ORIGINAL SCALE IN INCHES FOR REDUCED PLANS 0 1 2 3

CU 04242
EA 163731

FILE => 34-0157l-c-bnt4dts.dgn

DISREGARD PRINTS BEARING EARLIER REVISION DATES →

REVISION DATES: 3-31-09 | 5-22-09 | 5-30-09 | 5-31-09 | 6-12-09 | 6-16-09 | 7-7-09 | 7-13-09 | | 5-18-09

SHEET 31 OF 114

USERNAME => tfrim DATE PLOTTED => 21-JUL-2009 TIME PLOTTED => 14:36

DIST	COUNTY	ROUTE	POST MILES TOTAL PROJECT	SHEET No	TOTAL SHEETS
04	SF	101,1	9.2/9.8, 6.8/7.1	382	567

Ahmed Ibrahim 6-4-09
REGISTERED CIVIL ENGINEER DATE

7-20-09
PLANS APPROVAL DATE

REGISTERED PROFESSIONAL ENGINEER AHMED M M IBRAHIM No. S 4865 Exp. 9-30-10 STRUCTURAL STATE OF CALIFORNIA

The State of California or its officers or agents shall not be responsible for the accuracy or completeness of electronic copies of this plan sheet.

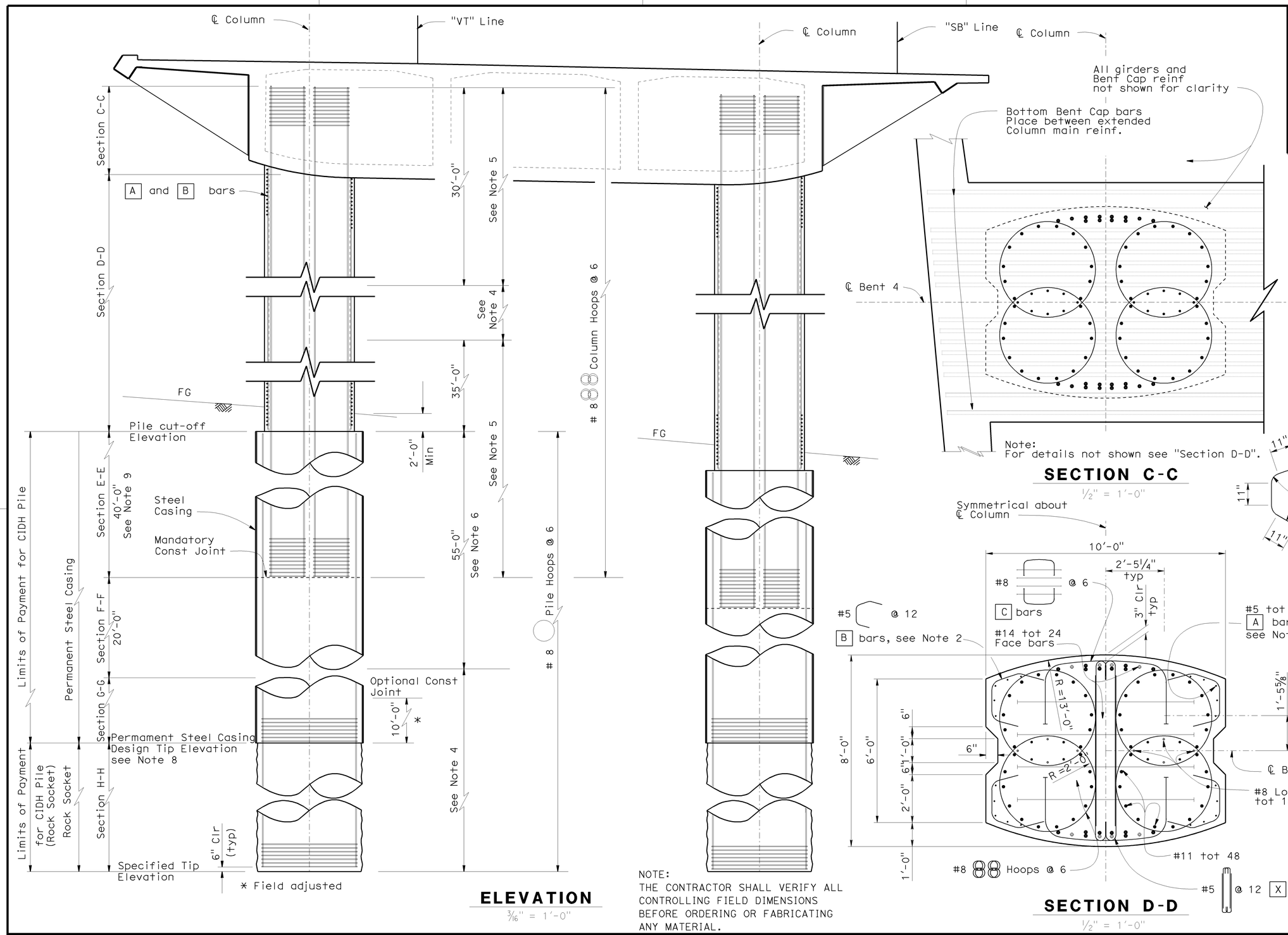

ELEVATION

3/16" = 1'-0"

NOTE:
THE CONTRACTOR SHALL VERIFY ALL CONTROLLING FIELD DIMENSIONS BEFORE ORDERING OR FABRICATING ANY MATERIAL.

SECTION C-C

1/2" = 1'-0"

SECTION D-D

1/2" = 1'-0"

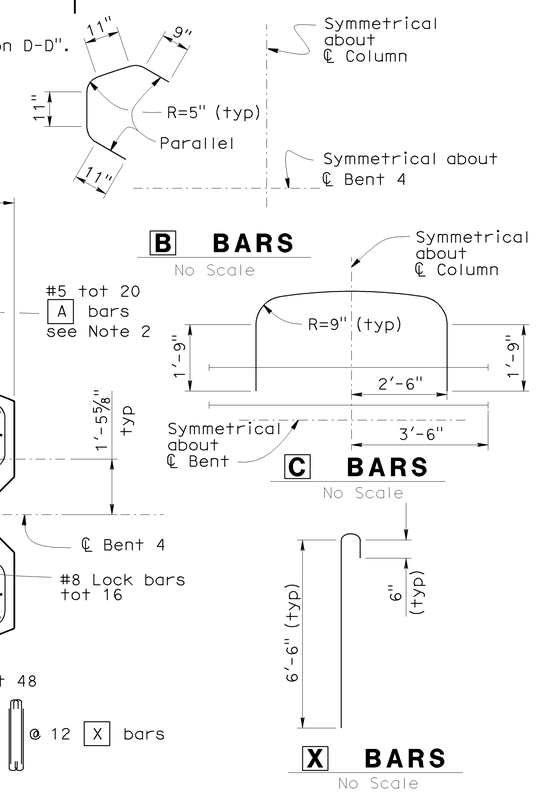

B BARS

No Scale

C BARS

No Scale

X BARS

No Scale

DESIGN	BY R.Bromenschenkel	CHECKED F.Zayati	
DETAILS	BY M.Lane	CHECKED R.Bromenschenkel	
QUANTITIES	BY A. Alcantara	CHECKED J. Han	

STATE OF CALIFORNIA
DEPARTMENT OF TRANSPORTATION

DIVISION OF ENGINEERING SERVICES
STRUCTURE DESIGN
DESIGN BRANCH 4

BRIDGE NO. 34-0157L
POST MILE 9.02

PRESIDIO VIADUCT - SOUTHBOUND

BENT 4 DETAILS NO. 2

STRUCTURES DESIGN DETAIL SHEET (ENGLISH) (REV. 10/25/05)

ORIGINAL SCALE IN INCHES FOR REDUCED PLANS 0 1 2 3

CU 04242
EA 163731

DISREGARD PRINTS BEARING EARLIER REVISION DATES

REVISION DATES 2-26-09 6-12-09 7-2-09 7-7-09 7-9-09 7-13-09 5-24-09 5-28-09 5-31-09

SHEET 32 OF 114

FILE => 34-0157l-c-bnt4dts02.dgn

USERNAME => trlim DATE PLOTTED => 21-JUL-2009 TIME PLOTTED => 14:36

DIST	COUNTY	ROUTE	POST MILES TOTAL PROJECT	SHEET No	TOTAL SHEETS
04	SF	101,1	9.2/9.8, 6.8/7.1	383	567

Ahmed Brahim 6-4-09
REGISTERED CIVIL ENGINEER DATE

7-20-09
PLANS APPROVAL DATE

REGISTERED PROFESSIONAL ENGINEER
AHMED M M IBRAHIM
No. S 4865
EXP. 9-30-10
STRUCTURAL
STATE OF CALIFORNIA

The State of California or its officers or agents shall not be responsible for the accuracy or completeness of electronic copies of this plan sheet.

NOTE:
THE CONTRACTOR SHALL VERIFY ALL CONTROLLING FIELD DIMENSIONS BEFORE ORDERING OR FABRICATING ANY MATERIAL.

Maintain bar spacing as shown for [G] bars. See "Section F-F"

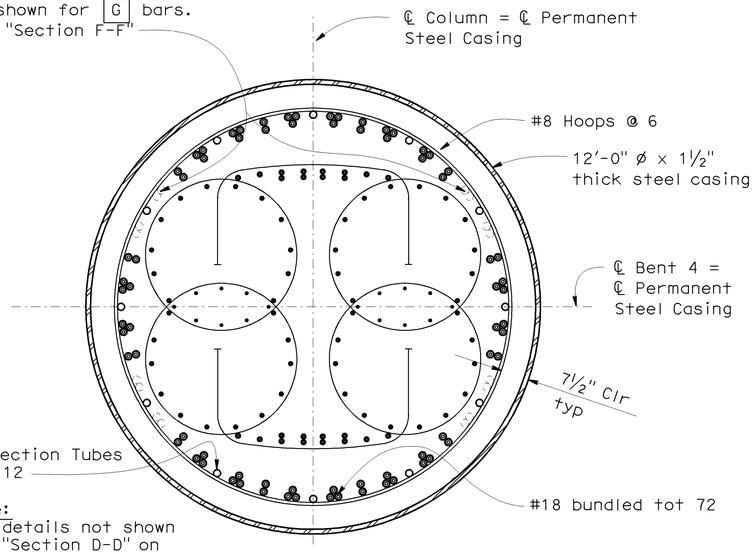

Note:
For details not shown see "Section D-D" on 'BENTS 4 DETAILS NO. 2' sheet.

SECTION E-E

½" = 1'-0"

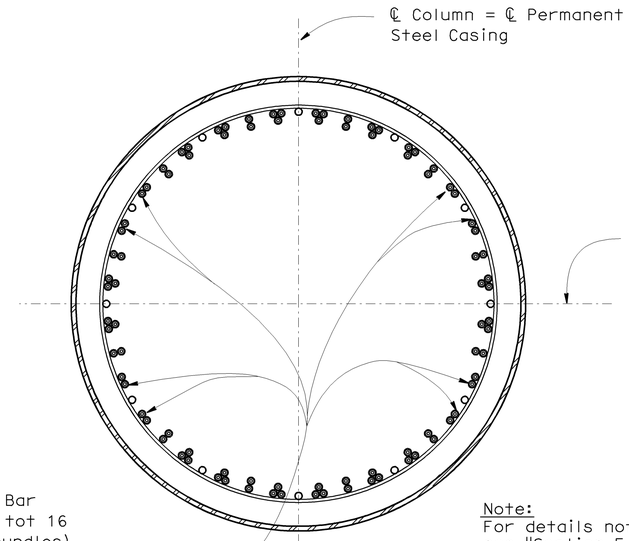

[G] Bar #18 tot 16 (8 bundles) additional to #18 tot 72 see Note 1

Note:
For details not shown see "Section E-E"

SECTION F-F

½" = 1'-0"

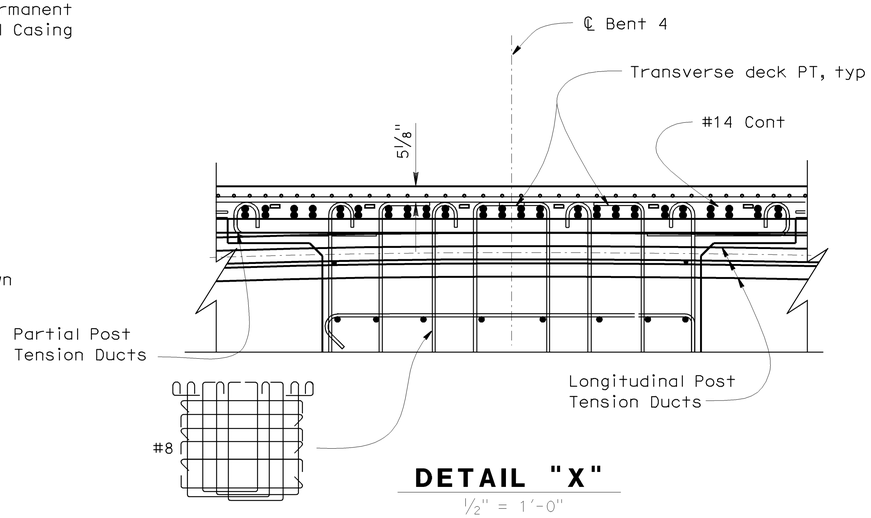

DETAIL "X"

½" = 1'-0"

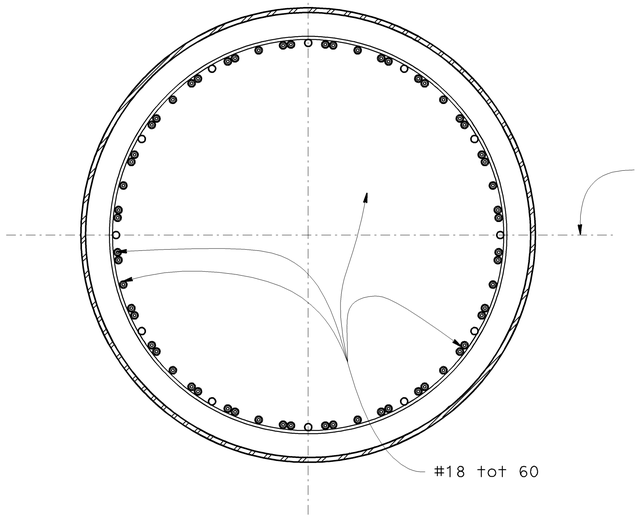

SECTION G-G

½" = 1'-0"

Note:
For details not shown see "Section F-F"

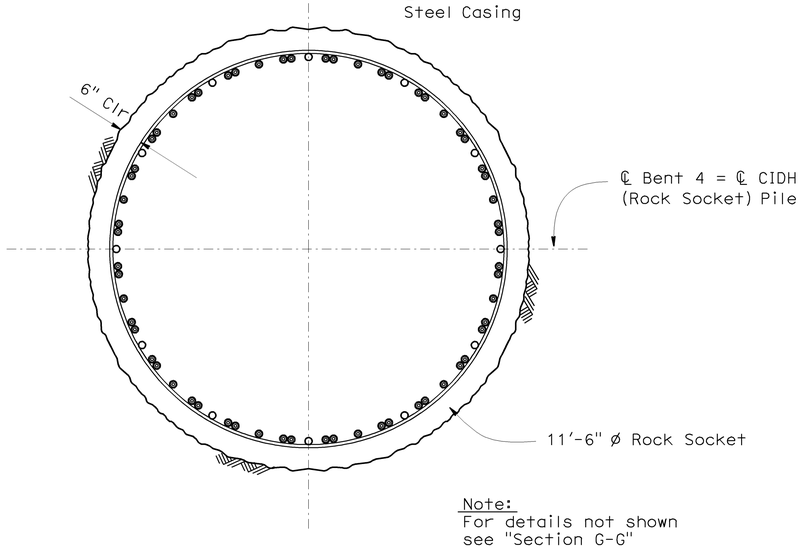

SECTION H-H

½" = 1'-0"

Note:
For details not shown see "Section G-G"

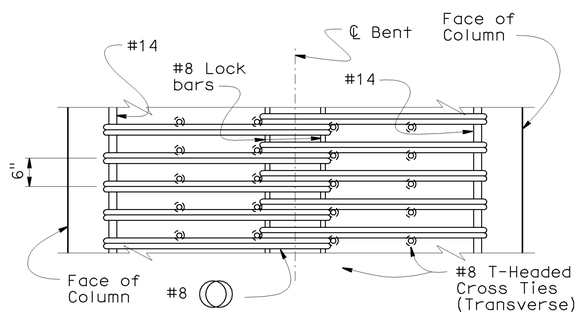

COLUMN HOOP DETAIL

No Scale

Note:
1. Place [G] bars below Mandatory Const Joint to Specified Tip Elevation.

DESIGN	BY R.Bromenschenkel	CHECKED F.Zayati	STATE OF CALIFORNIA DEPARTMENT OF TRANSPORTATION	DIVISION OF ENGINEERING SERVICES STRUCTURE DESIGN DESIGN BRANCH 4	BRIDGE NO. 34-0157L	PRESIDIO VIADUCT - SOUTHBOUND	
DETAILS	BY M.Lane	CHECKED R.Bromenschenkel			POST MILE 9.02	BENT 4 DETAILS NO. 3	
QUANTITIES	BY A. Alcantara	CHECKED J. Han					

STRUCTURES DESIGN DETAIL SHEET (ENGLISH) (REV. 10/25/05)

ORIGINAL SCALE IN INCHES FOR REDUCED PLANS 0 1 2 3

CU 04242
EA 163731

DISREGARD PRINTS BEARING EARLIER REVISION DATES →

REVISION DATES: 2-26-09 | 6-12-09 | 7-1-09 | 7-9-09 | 7-13-09 | 7-14-09 | 5-30-09 | 5-31-09 | 6-12-09

SHEET 33 OF 114

FILE => 34-0157I-c-bnt4dts03.dgn

DATE PLOTTED => 21-JUL-2009 TIME PLOTTED => 14:36
USERNAME = trrim

DIST	COUNTY	ROUTE	POST MILES TOTAL PROJECT	SHEET No	TOTAL SHEETS
04	SF	101,1	9.2/9.8, 6.8/7.1	384	567

Ahmed Brahim 6-4-09
REGISTERED CIVIL ENGINEER DATE

7-20-09
PLANS APPROVAL DATE

REGISTERED PROFESSIONAL ENGINEER — AHMED M M IBRAHIM — No. S 4865 — Exp. 9-30-10 — STATE OF CALIFORNIA

The State of California or its officers or agents shall not be responsible for the accuracy or completeness of electronic copies of this plan sheet.

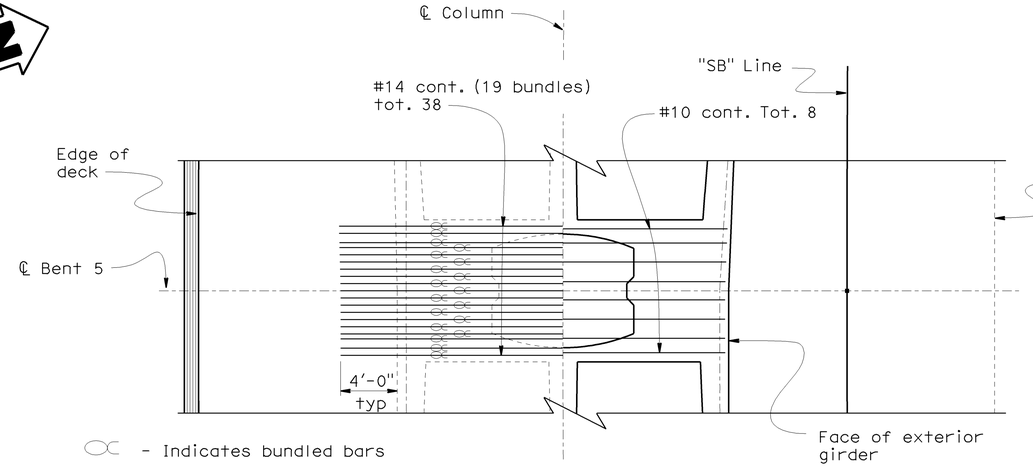

TOP REINFORCEMENT **BOTTOM REINFORCEMENT**

BENT CAP PLAN

3/16" = 1'-0"

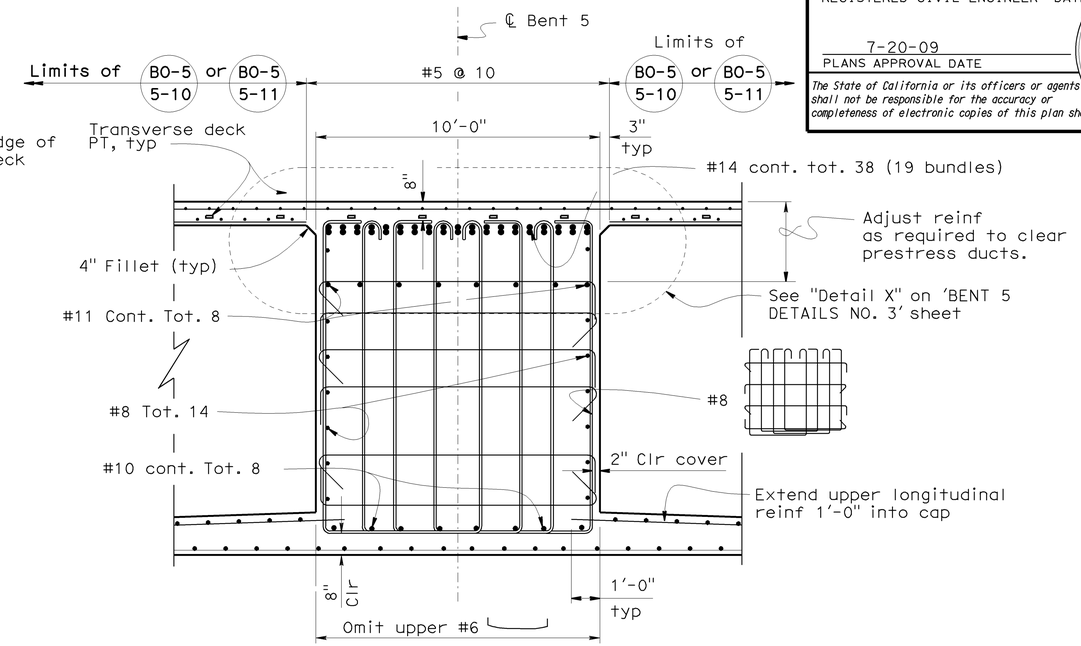

SECTION A-A

3/8" = 1'-0"

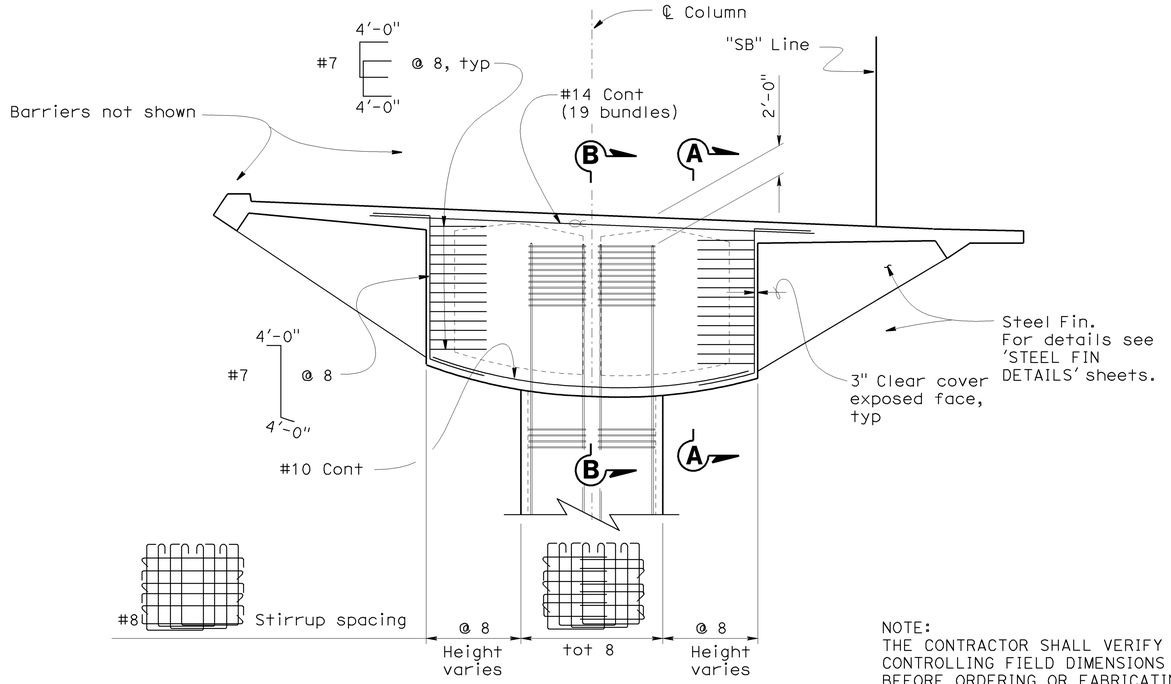

BENT CAP ELEVATION

3/16" = 1'-0"

NOTE:
THE CONTRACTOR SHALL VERIFY ALL CONTROLLING FIELD DIMENSIONS BEFORE ORDERING OR FABRICATING ANY MATERIAL.

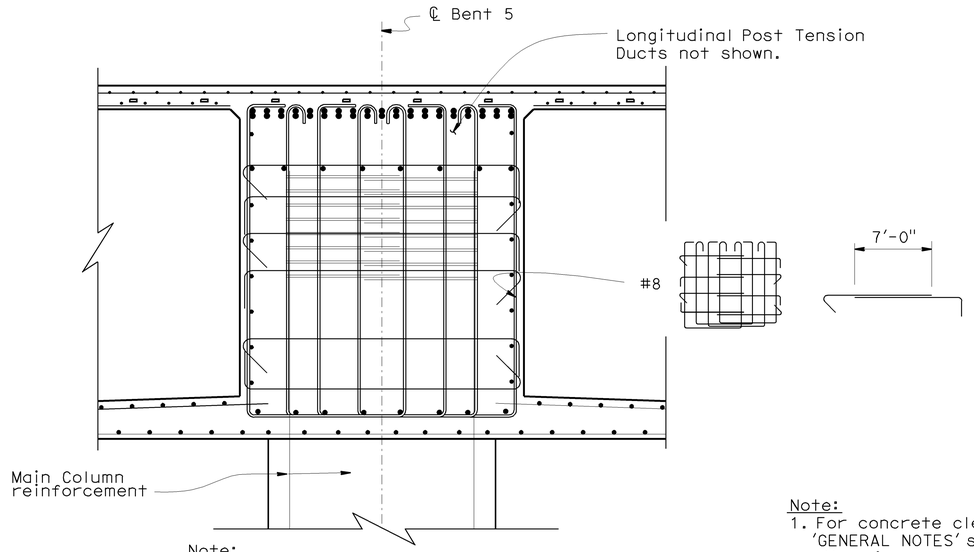

Note:
For details not shown see "Section A-A".

SECTION B-B

3/8" = 1'-0"

Note:
1. For concrete clear cover, see 'GENERAL NOTES' sheet, unless otherwise noted.
2. No Lap Splices allowed for main bent cap reinf.

DESIGN	BY A.Ahmed/B.Bromenschenkel	CHECKED H.Setberg/F.Zayati	STATE OF CALIFORNIA DEPARTMENT OF TRANSPORTATION	DIVISION OF ENGINEERING SERVICES STRUCTURE DESIGN DESIGN BRANCH 4	BRIDGE NO. 34-0157L
DETAILS	BY Marvin Lane	CHECKED A.Ahmed/B.Bromenschenkel			POST MILE 9.02
QUANTITIES	BY A. Alcantara	CHECKED J. Han			

PRESIDIO VIADUCT - LEFT
BENT 5 DETAILS NO. 1

STRUCTURES DESIGN DETAIL SHEET (ENGLISH) (REV. 10/25/05)

ORIGINAL SCALE IN INCHES FOR REDUCED PLANS 0 1 2 3

CU 04242
EA 16373

DISREGARD PRINTS BEARING EARLIER REVISION DATES →

REVISION DATES: 3-31-09, 5-22-09, 5-31-09, 6-12-09, 7-8-09, 4-24-09, 5-16-09, 5-18-09, 5-24-09

SHEET 34 OF 114

FILE => 34-0157l-c-bnt5dts01.dgn

DATE PLOTTED => 21-JUL-2009 TIME PLOTTED => 14:37
USERNAME => rtrim

DIST	COUNTY	ROUTE	POST MILES TOTAL PROJECT	SHEET No	TOTAL SHEETS
04	SF	101,1	9.2/9.8, 6.8/7.1	385	567

Ahmed Brahim 6-4-09
REGISTERED CIVIL ENGINEER DATE

7-20-09
PLANS APPROVAL DATE

REGISTERED PROFESSIONAL ENGINEER — AHMED M M IBRAHIM — No. S 4865 — EXP. 9-30-10 — STRUCTURAL — STATE OF CALIFORNIA

The State of California or its officers or agents shall not be responsible for the accuracy or completeness of electronic copies of this plan sheet.

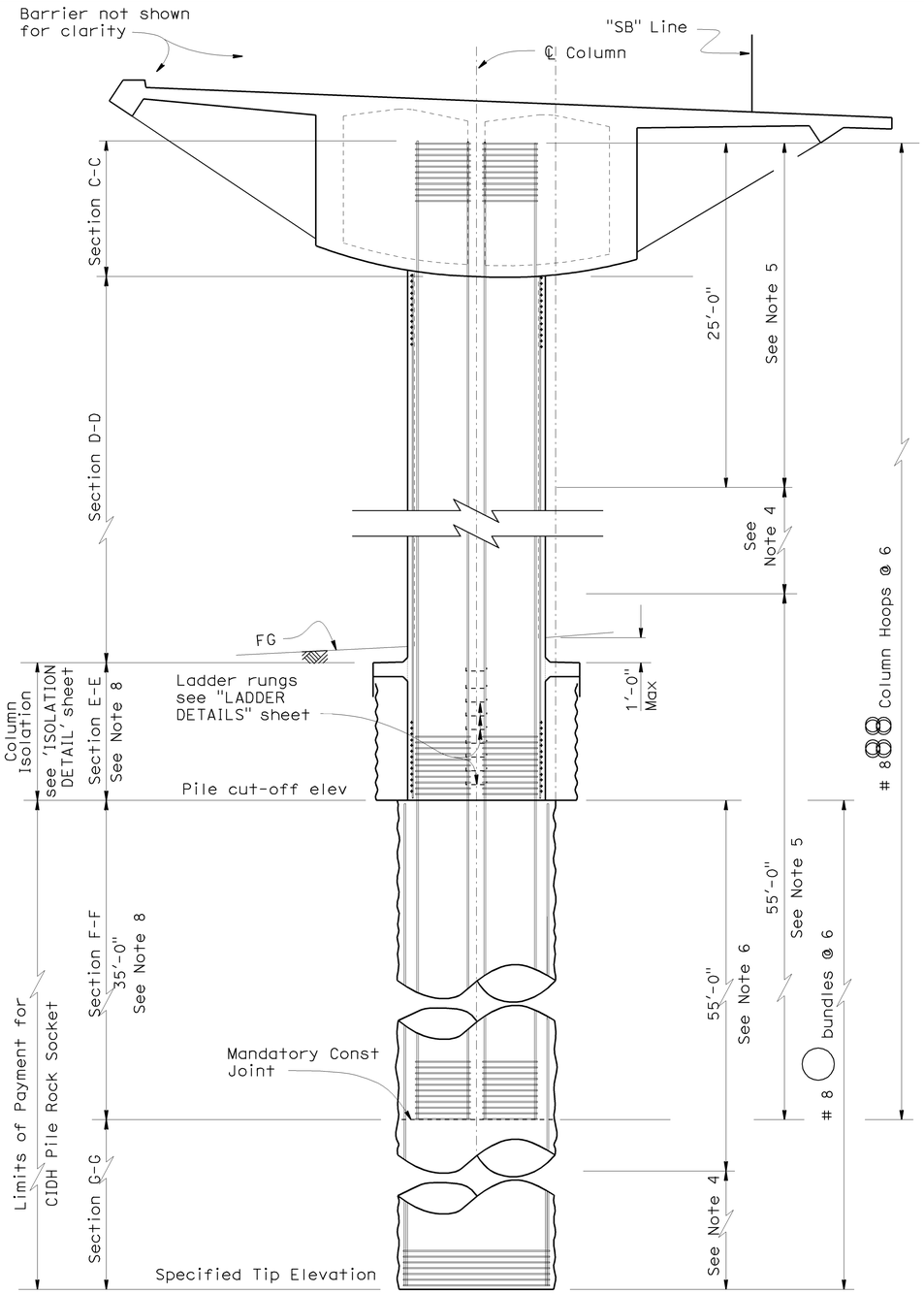

COLUMN ELEVATION

3/16" = 1'-0"

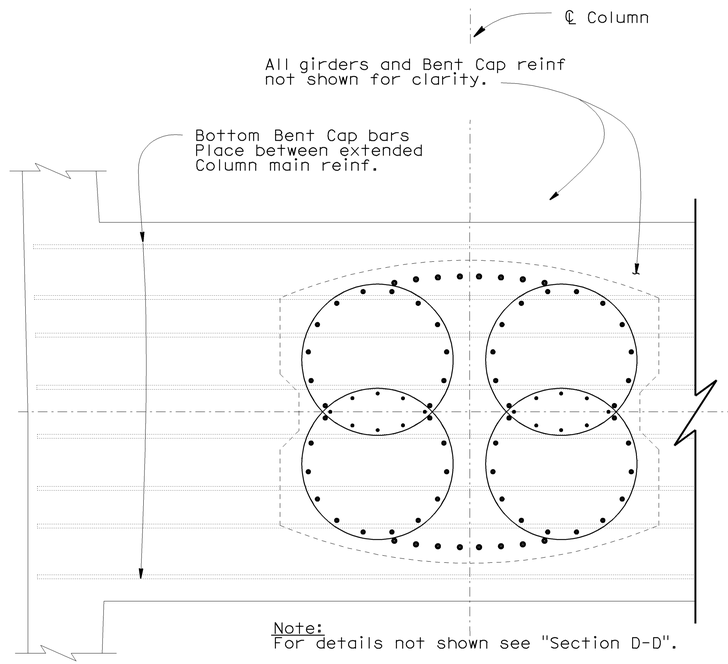

Note:
For details not shown see "Section D-D".

SECTION C-C

1/2" = 1'-0"

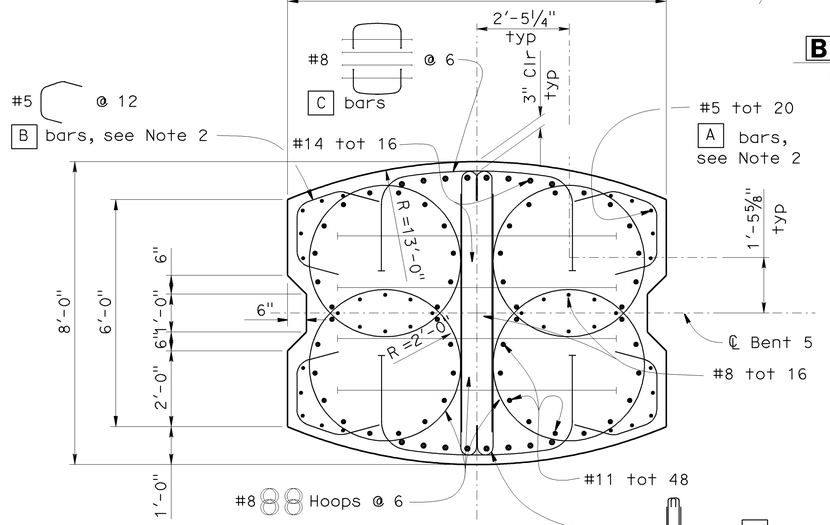

SECTION D-D

1/2" = 1'-0"

NOTE:
THE CONTRACTOR SHALL VERIFY ALL CONTROLLING FIELD DIMENSIONS BEFORE ORDERING OR FABRICATING ANY MATERIAL.

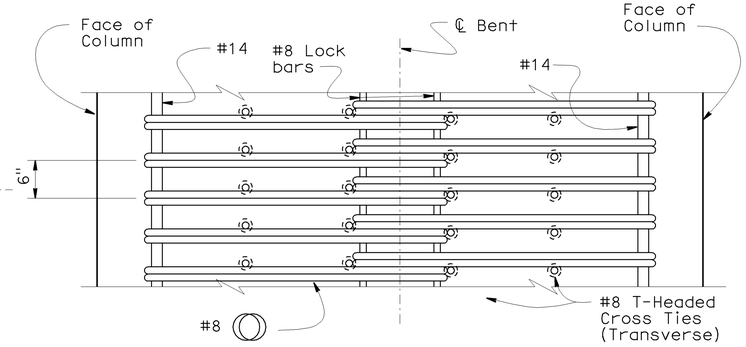

COLUMN HOOP DETAIL

No Scale

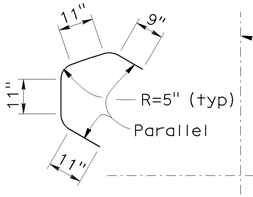

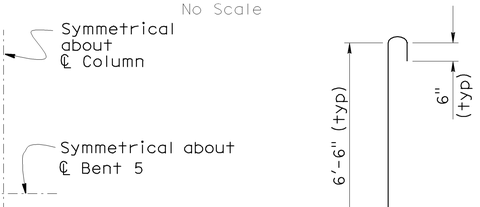

B BARS

No Scale

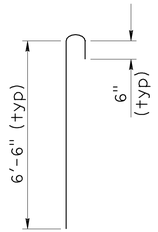

X BARS

No Scale

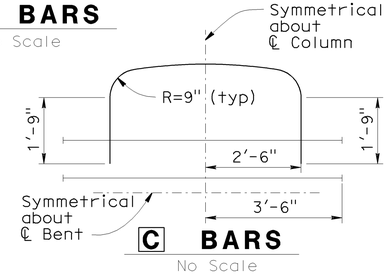

C BARS

No Scale

Notes:
1. For "Section E-E", "Section F-F" and "Section G-G" see 'BENT 5 DETAILS NO. 3' sheet.
2. Place A and B bars between soffit and Pile Cut-Off Elevation.
3. For Pile Cut-Off data see "Pile Data Table".
4. Staggered - Ultimate Splices Allowed.
5. No splices allowed in main column reinf.
6. No splices allowed in main pile shaft reinf.
7. Place X bars between soffit and Pile Cut-off Elevation.
8. Concrete shall be poured under dry conditions.
9. Contrator shall use centralizers to maintain rebar clearance.

	BY	CHECKED
DESIGN	R. Bromenschenkel	F.Zayati
DETAILS	Marvin Lane	R. Bromenschenkel
QUANTITIES	A. Alcantara	J. Han

STATE OF CALIFORNIA
DEPARTMENT OF TRANSPORTATION

DIVISION OF ENGINEERING SERVICES
STRUCTURE DESIGN
DESIGN BRANCH 4

BRIDGE NO. 34-0157L
POST MILE 9.02

PRESIDIO VIADUCT - LEFT

BENT 5 DETAILS NO. 2

STRUCTURES DESIGN DETAIL SHEET (ENGLISH) (REV. 10/25/05)

ORIGINAL SCALE IN INCHES FOR REDUCED PLANS 0 1 2 3

CU 04242
EA 163731

DISREGARD PRINTS BEARING EARLIER REVISION DATES →

REVISION DATES: 5-5-09 | 5-21-09 | 5-28-09 | 5-31-09 | 6-16-09 | 6-17-09 | 7-2-09 | 7-8-09 | | 5-18-09

SHEET 35 OF 114

FILE => 34-0157l-c-bnt5dts02.dgn

USERNAME => tr1im DATE PLOTTED => 21-JUL-2009 TIME PLOTTED => 14:37

DIST	COUNTY	ROUTE	POST MILES TOTAL PROJECT	SHEET No	TOTAL SHEETS
04	SF	101,1	9.2/9.8, 6.8/7.1	386	567

Ahmed Brahim 6-4-09
REGISTERED CIVIL ENGINEER DATE

7-20-09
PLANS APPROVAL DATE

REGISTERED PROFESSIONAL ENGINEER
AHMED M M IBRAHIM
No. S 4865
EXP. 9-30-10
STRUCTURAL
STATE OF CALIFORNIA

The State of California or its officers or agents shall not be responsible for the accuracy or completeness of electronic copies of this plan sheet.

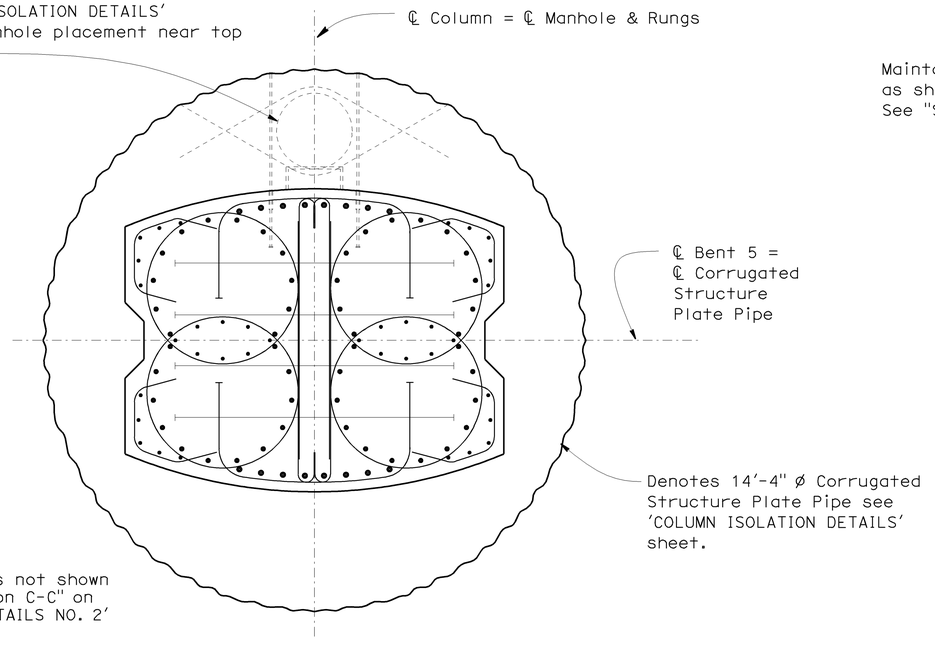

Note:
For details not shown see "Section C-C" on 'BENT 5 DETAILS NO. 2' sheet.

SECTION E-E
1/2" = 1'-0"

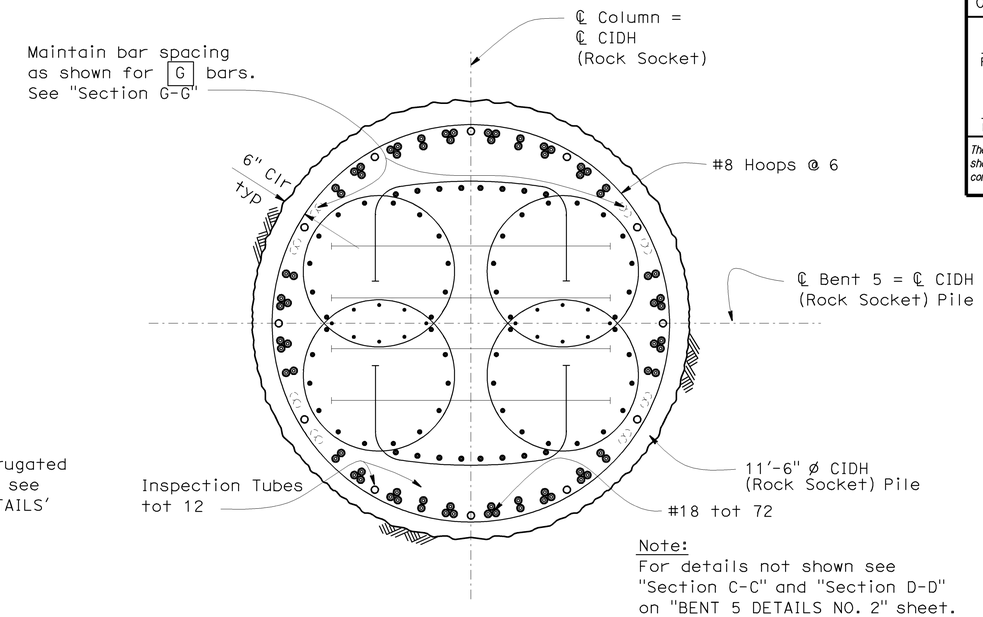

Note:
For details not shown see "Section C-C" and "Section D-D" on "BENT 5 DETAILS NO. 2" sheet.

SECTION F-F
1/2" = 1'-0"

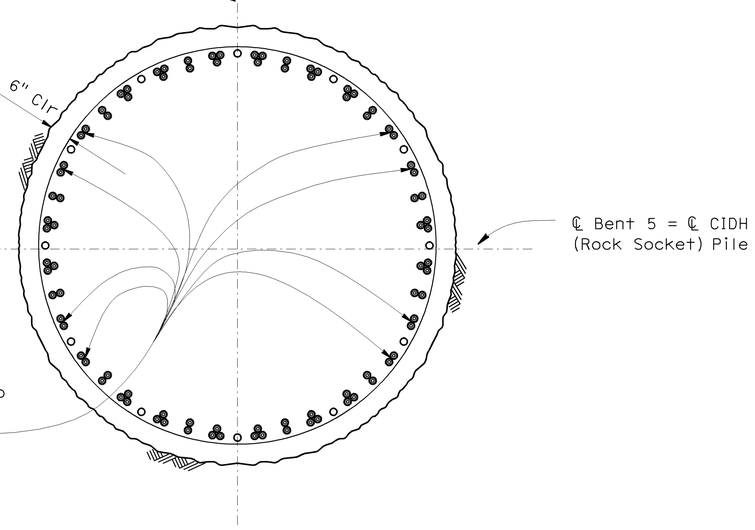

SECTION G-G
1/2" = 1'-0"

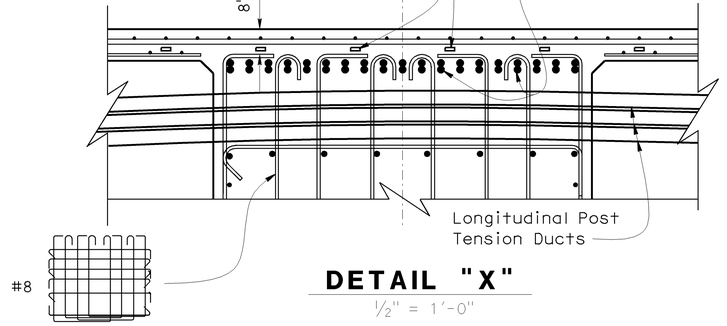

DETAIL "X"
1/2" = 1'-0"

NOTE:
THE CONTRACTOR SHALL VERIFY ALL CONTROLLING FIELD DIMENSIONS BEFORE ORDERING OR FABRICATING ANY MATERIAL.

Note:
1. Place G bars below Mandatory Const Joint to Specified Tip Elevation.

DESIGN	BY R.Bromenschenkel	CHECKED F.Zayati	STATE OF CALIFORNIA DEPARTMENT OF TRANSPORTATION	DIVISION OF ENGINEERING SERVICES STRUCTURE DESIGN DESIGN BRANCH 4	BRIDGE NO. 34-0157L	PRESIDIO VIADUCT - LEFT	
DETAILS	BY M.Lane	CHECKED R. Bromenschenkel			POST MILE 9.02	BENT 5 DETAILS NO. 3	
QUANTITIES	BY A. Alcantara	CHECKED J. Han		CU 04242 EA 163731			

STRUCTURES DESIGN DETAIL SHEET (ENGLISH) (REV. 10/25/05)

ORIGINAL SCALE IN INCHES FOR REDUCED PLANS 0 1 2 3

DISREGARD PRINTS BEARING EARLIER REVISION DATES →

REVISION DATES: 3-23-09 | 6-16-09 | 6-12-09 | 7-8-09 | | 5-24-09 | 5-26-09 | 5-27-09 | 5-31-09 | 6-12-09

SHEET 36 OF 114

FILE => 34-0157l-c-bnt5dts03.dgn

DATE PLOTTED => 21-JUL-2009 TIME PLOTTED => 14:37
USERNAME = trrim

DIST	COUNTY	ROUTE	POST MILES TOTAL PROJECT	SHEET No	TOTAL SHEETS
04	SF	101,1	9.2/9.8, 6.8/7.1	387	567

NOTE:
THE CONTRACTOR SHALL VERIFY ALL CONTROLLING FIELD DIMENSIONS BEFORE ORDERING OR FABRICATING ANY MATERIAL.

Ahmed Brahim 6-4-09
REGISTERED CIVIL ENGINEER DATE

7-20-09
PLANS APPROVAL DATE

REGISTERED PROFESSIONAL ENGINEER
AHMED M M IBRAHIM
No. S 4865
EXP. 9-30-10
STRUCTURAL
STATE OF CALIFORNIA

The State of California or its officers or agents shall not be responsible for the accuracy or completeness of electronic copies of this plan sheet.

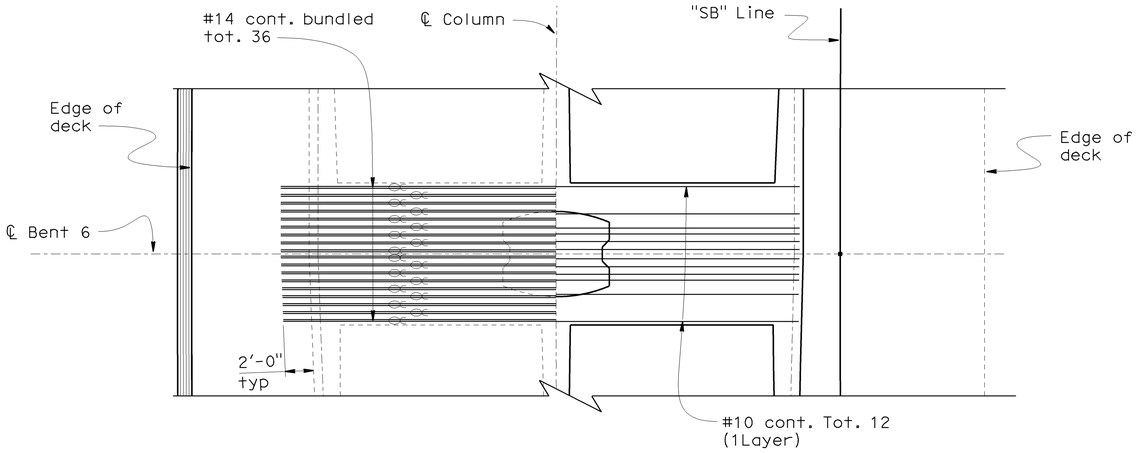

TOP REINFORCEMENT **BOTTOM REINFORCEMENT**

BENT CAP PLAN

3/16" = 1'-0"

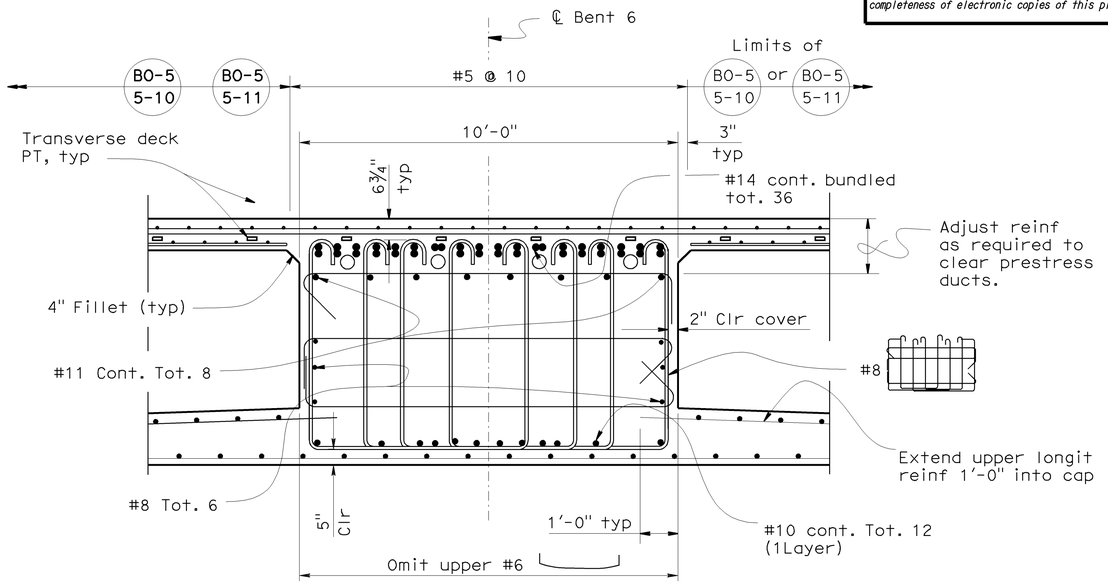

SECTION A-A

½" = 1'-0"

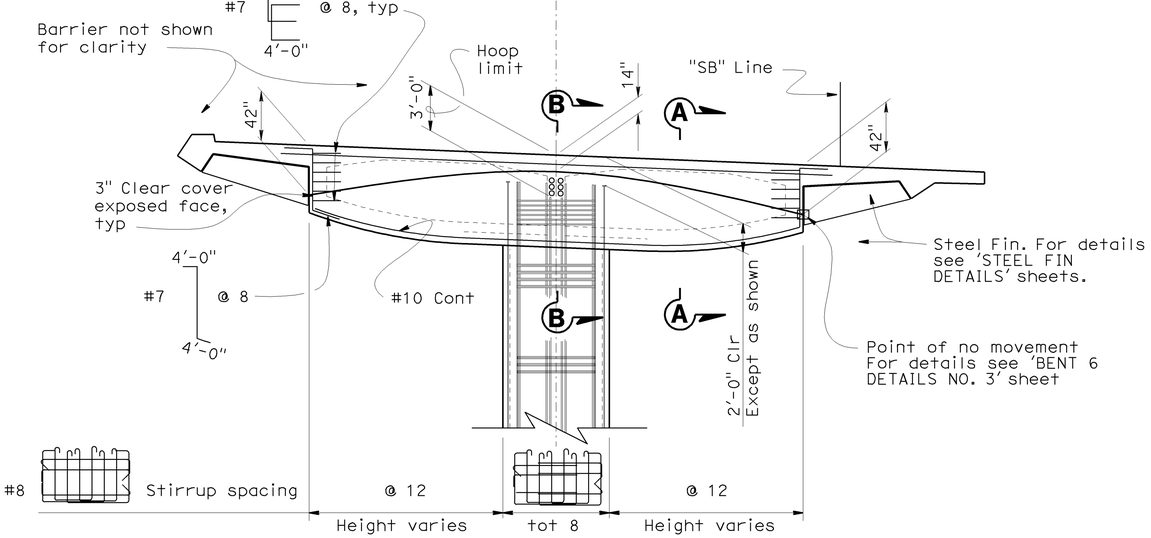

BENT CAP ELEVATION

3/16" = 1'-0"

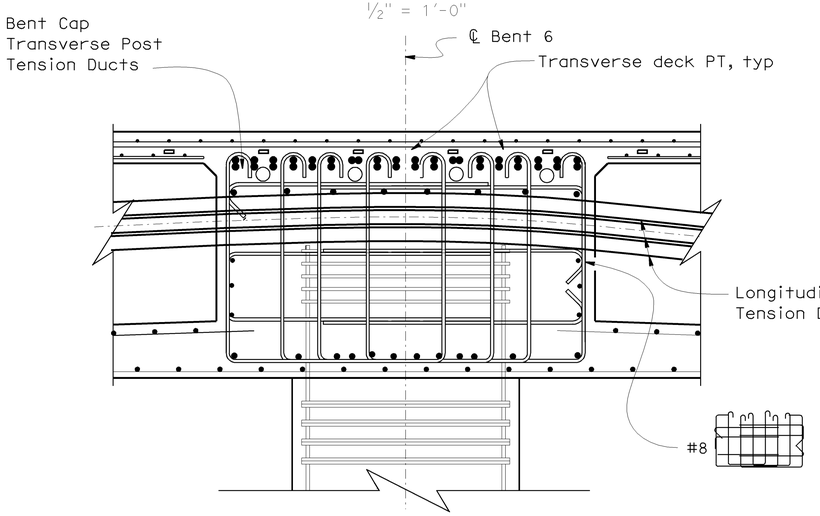

Note:
For details not shown see "Section A-A".

SECTION B-B

½" = 1'-0"

Notes:
1. For concrete clear cover, see 'GENERAL NOTES' sheet, unless otherwise noted.
2. For Partial Soffit Tendon at Span 6 see 'GIRDER DETAILS' sheet.
3. No lap splices allowed for main bent cap reinf.

DESIGN	BY A.Ahmed/R.Bromenschenkel	CHECKED H.Setberg/F.Zayati	STATE OF CALIFORNIA DEPARTMENT OF TRANSPORTATION	DIVISION OF ENGINEERING SERVICES STRUCTURE DESIGN DESIGN BRANCH 4	BRIDGE NO. 34-0157L
DETAILS	BY M.Lane	CHECKED A.Ahmed/R.Bromenschenkel			POST MILE 9.02
QUANTITIES	BY A. Alcantara	CHECKED J. Han			

PRESIDIO VIADUCT - LEFT
BENT 6 DETAILS NO. 1

STRUCTURES DESIGN DETAIL SHEET (ENGLISH) (REV. 10/25/05)

ORIGINAL SCALE IN INCHES FOR REDUCED PLANS 0 1 2 3

CU 04242
EA 163731

DISREGARD PRINTS BEARING EARLIER REVISION DATES →

REVISION DATES: 2-26-09 | 7-9-09 | 7-13-09 | 4-27-09 | 5-13-09 | 5-18-09 | 5-27-09 | 5-28-09 | 6-12-09

SHEET 37 OF 114

FILE => 34-0157l-c-bnt6dts01.dgn

USERNAME => ttrim DATE PLOTTED => 21-JUL-2009 TIME PLOTTED => 14:37

DIST	COUNTY	ROUTE	POST MILES TOTAL PROJECT	SHEET No	TOTAL SHEETS
04	SF	101,1	9.2/9.8, 6.8/7.1	388	567

Ahmed Ibrahim 6-4-09
REGISTERED CIVIL ENGINEER DATE

7-20-09
PLANS APPROVAL DATE

REGISTERED PROFESSIONAL ENGINEER — AHMED M M IBRAHIM — No. S 4865 — EXP. 9-30-10 — STRUCTURAL — STATE OF CALIFORNIA

The State of California or its officers or agents shall not be responsible for the accuracy or completeness of electronic copies of this plan sheet.

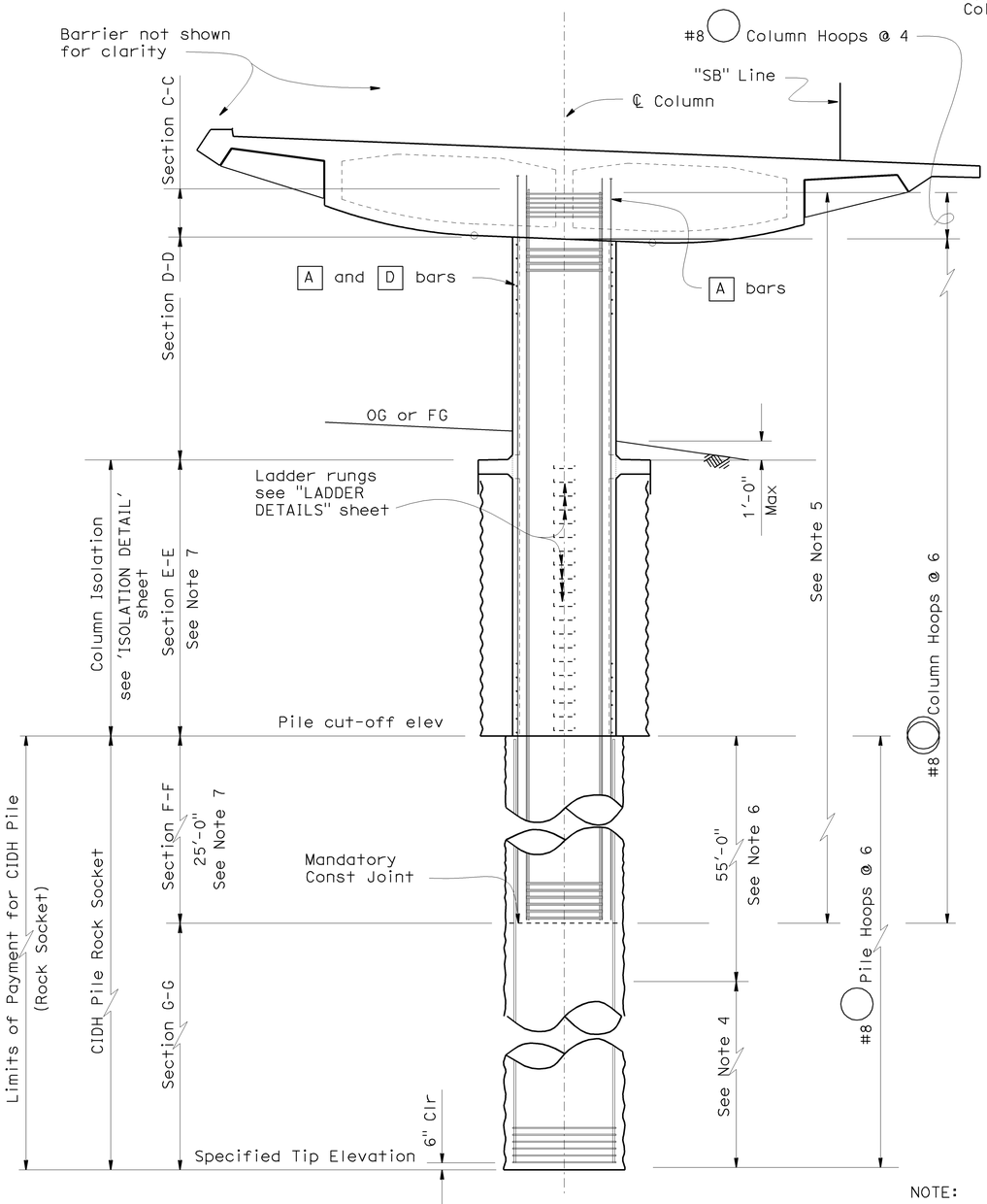

COLUMN ELEVATION

3/16" = 1'-0"

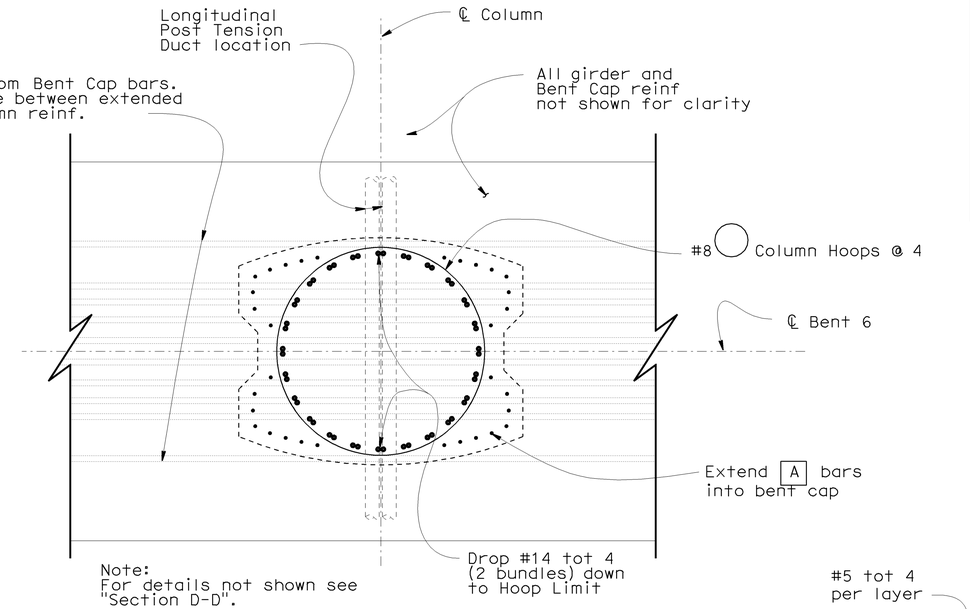

SECTION C-C

1/2" = 1'-0"

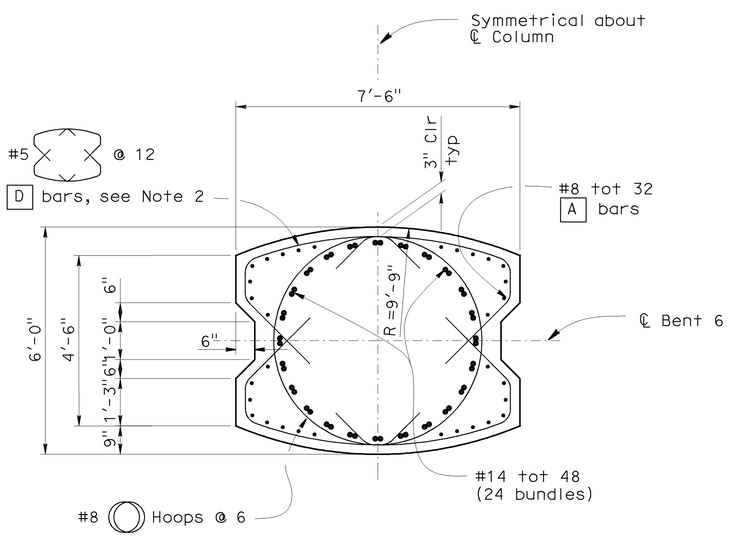

SECTION D-D

1/2" = 1'-0"

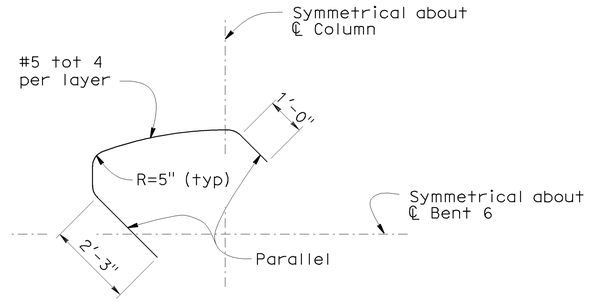

D BARS

No Scale

NOTE:
THE CONTRACTOR SHALL VERIFY ALL CONTROLLING FIELD DIMENSIONS BEFORE ORDERING OR FABRICATING ANY MATERIAL.

Notes:
1. For "Section E-E", "Section F-F" and "Section G-G" see 'BENT 6 DETAILS NO. 3' sheet.
2. Place D bars between soffit and Pile Cut-Off Elevation.
3. For Pile Cut-Off data see "Pile Data Table".
4. Staggered - Ultimate Splices Allowed.
5. No splices allowed in main column reinf.
6. No splices allowed in main pile shaft reinf.
7. Concrete shall be poured under dry conditons.
8. Contractor shall use centralizers to maintain rebar clearance.

	BY	CHECKED
DESIGN	R. Bromenschenkel/O.Zhao	F. Zayati
DETAILS	Marvin Lane	R. Bromenschenkel/O.Zhao
QUANTITIES	A. Alcantara	J. Han

STATE OF CALIFORNIA
DEPARTMENT OF TRANSPORTATION

DIVISION OF ENGINEERING SERVICES
STRUCTURE DESIGN
DESIGN BRANCH 4

BRIDGE NO. 34-0157L
POST MILE 9.02

PRESIDIO VIADUCT - LEFT
BENT 6 DETAILS NO. 2

STRUCTURES DESIGN DETAIL SHEET (ENGLISH) (REV. 10/25/05)

ORIGINAL SCALE IN INCHES FOR REDUCED PLANS 0 1 2 3

CU 04242
EA 163731

DISREGARD PRINTS BEARING EARLIER REVISION DATES

REVISION DATES: 4-16-09 | 5-31-09 | 6-16-09 | 6-17-09 | 7-2-09 | 7-8-09 | 7-13-09 | | 5-22-09 | 5-28-09

SHEET 38 OF 114

FILE => 34-0157l-c-bnt6dts02.dgn

USERNAME => rtrtim DATE PLOTTED => 21-JUL-2009 TIME PLOTTED => 14:37

DIST	COUNTY	ROUTE	POST MILES TOTAL PROJECT	SHEET No	TOTAL SHEETS
04	SF	101,1	9.2/9.8, 6.8/7.1	389	567

Ahmed Ibrahim 6-4-09
REGISTERED CIVIL ENGINEER DATE

7-20-09
PLANS APPROVAL DATE

REGISTERED PROFESSIONAL ENGINEER
AHMED M M IBRAHIM
No. S 4865
EXP. 9-30-10
STRUCTURAL
STATE OF CALIFORNIA

The State of California or its officers or agents shall not be responsible for the accuracy or completeness of electronic copies of this plan sheet.

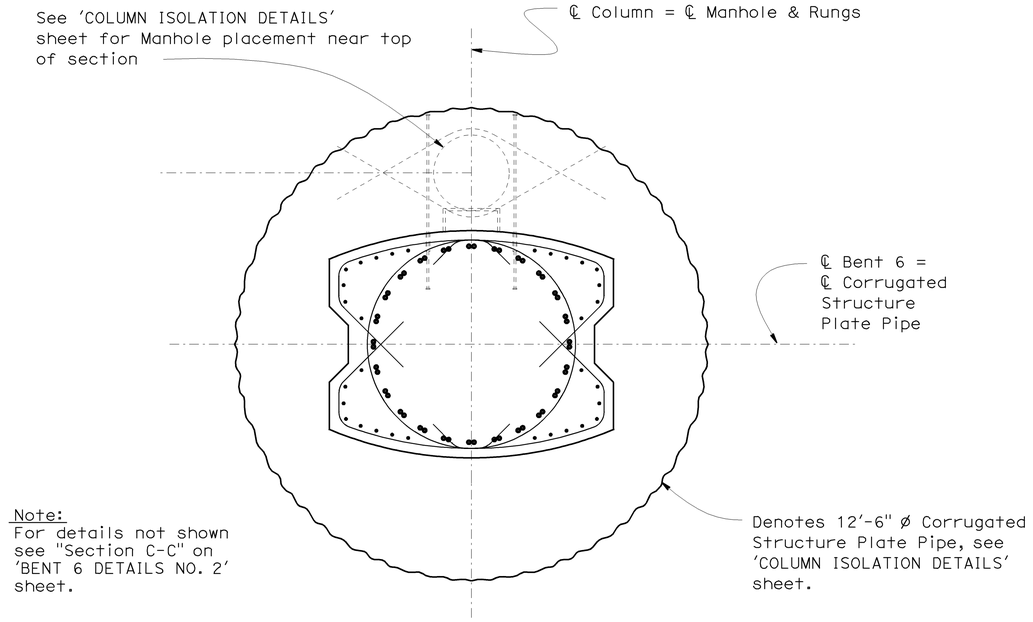

Note:
For details not shown see "Section C-C" on 'BENT 6 DETAILS NO. 2' sheet.

SECTION E-E
1/2" = 1'-0"

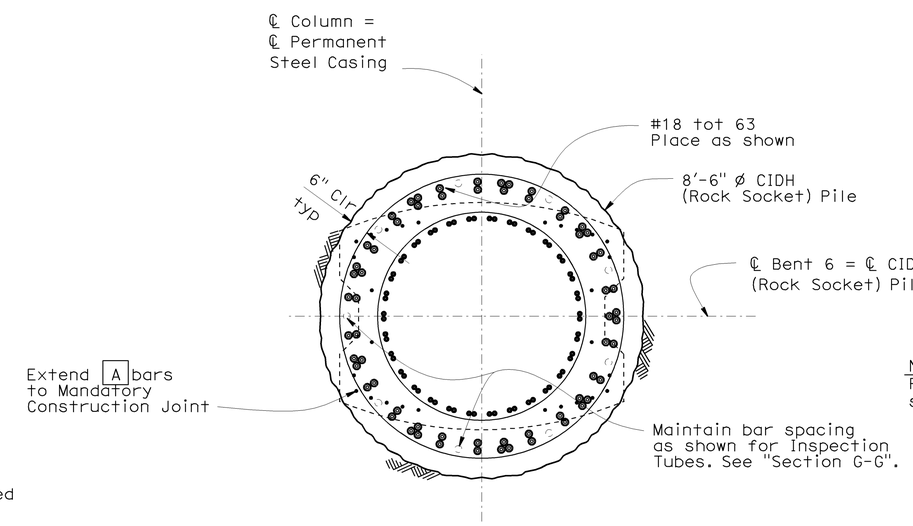

Note:
For details not shown see "Section E-E".

SECTION F-F
1/2" = 1'-0"

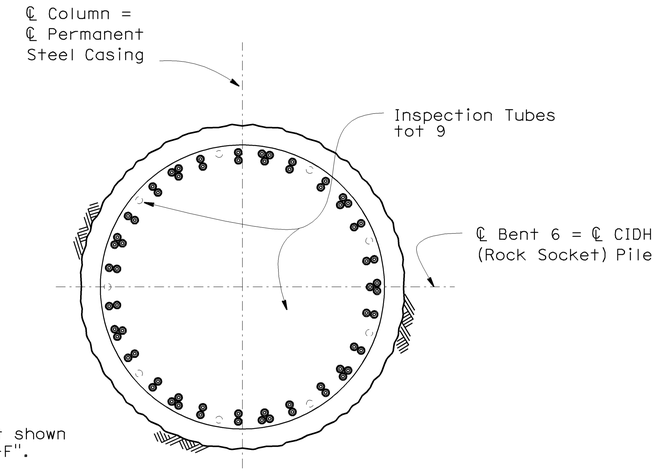

Note:
For details not shown see "Section F-F".

SECTION G-G
1/2" = 1'-0"

BENT 6 CAP
TRANSVERSE PRESTRESSING NOTES

270 KSI Low Relaxation Strand:

P_{jack} = 4700 kips

Anchor Set = 3/8 in

Total Number of Girders = 1

Distribution of prestress force (Pjack) between girders shall not exceed the ratio of 3:2. Maximum final force variation between girders shall not exceed 725 kips.

Concrete: f'_c = 5000 psi @ 28 days

f'_{ci} = 3500 psi @ time of stressing

Contractor shall submit elongation calculations based on initial stress at

⊠ = 0.829 times jacking stress.

One end stressing

NOTE:
THE CONTRACTOR SHALL VERIFY ALL CONTROLLING FIELD DIMENSIONS BEFORE ORDERING OR FABRICATING ANY MATERIAL.

DESIGN	BY R.Bromenschenkel	CHECKED F.Zayati	
DETAILS	BY M.Lane	CHECKED R.Bromenschenkel	
QUANTITIES	BY A. Alcantara	CHECKED J. Han	

STATE OF CALIFORNIA
DEPARTMENT OF TRANSPORTATION

DIVISION OF ENGINEERING SERVICES
STRUCTURE DESIGN
DESIGN BRANCH 4

CU 04242
EA 163731

BRIDGE NO. 34-0157L
POST MILE 9.02

PRESIDIO VIADUCT - LEFT
BENT 6 DETAILS NO. 3

STRUCTURES DESIGN DETAIL SHEET (ENGLISH) (REV. 10/25/05)

ORIGINAL SCALE IN INCHES FOR REDUCED PLANS 0 1 2 3

DISREGARD PRINTS BEARING EARLIER REVISION DATES →

REVISION DATES: 3-23-09 | 4-13-09 | 5-20-09 | 5-26-09 | 5-28-09 | 5-31-09 | 6-12-09 | 6-17-09

SHEET 39 OF 114

FILE => 34-0157l-c-bnt6dts03.dgn

DATE PLOTTED => 21-JUL-2009 TIME PLOTTED => 14:37
USERNAME => tfrim

DIST	COUNTY	ROUTE	POST MILES TOTAL PROJECT	SHEET No	TOTAL SHEETS
04	SF	101,1	9.2/9.8, 6.8/7.1	390	567

Ahmed Brahim 6-4-09
REGISTERED CIVIL ENGINEER DATE

7-20-09
PLANS APPROVAL DATE

AHMED M M IBRAHIM No. S 4865 Exp. 9-30-10 STRUCTURAL — REGISTERED PROFESSIONAL ENGINEER — STATE OF CALIFORNIA

The State of California or its officers or agents shall not be responsible for the accuracy or completeness of electronic copies of this plan sheet.

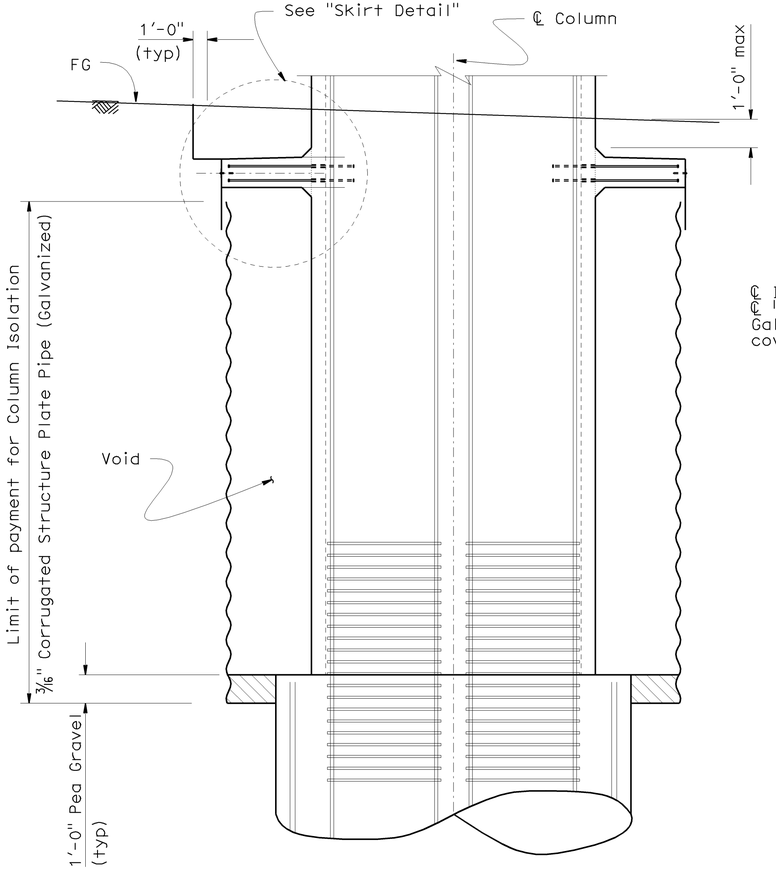

PART TYPICAL SECTION

3/8" = 1'-0"

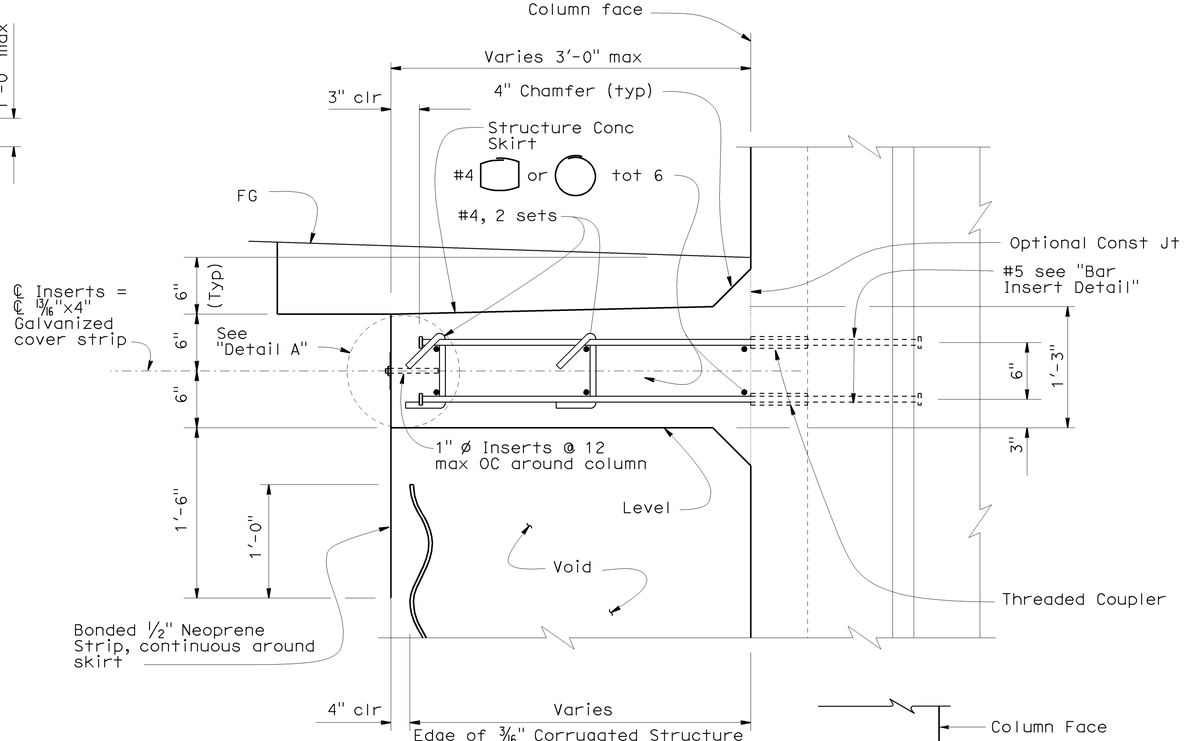

SKIRT DETAIL

1 1/2" = 1'-0"

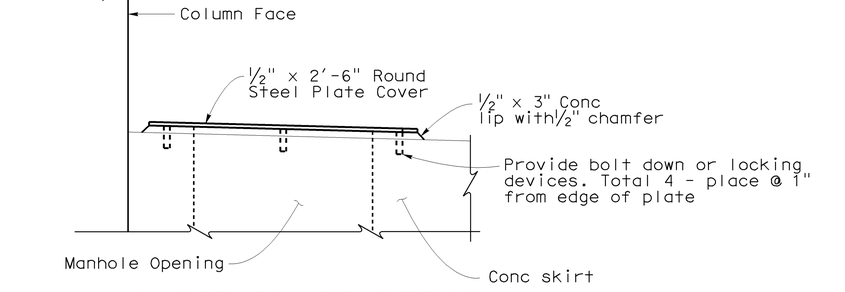

COVER PLATE DETAIL

No Scale

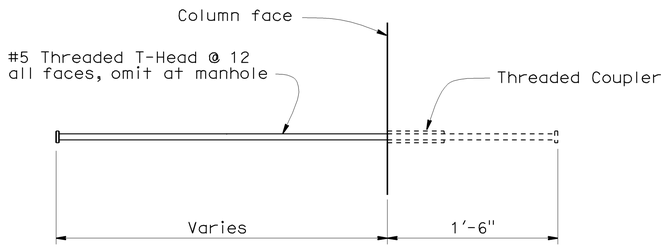

BAR INSERT DETAIL

1 1/2" = 1'-0"

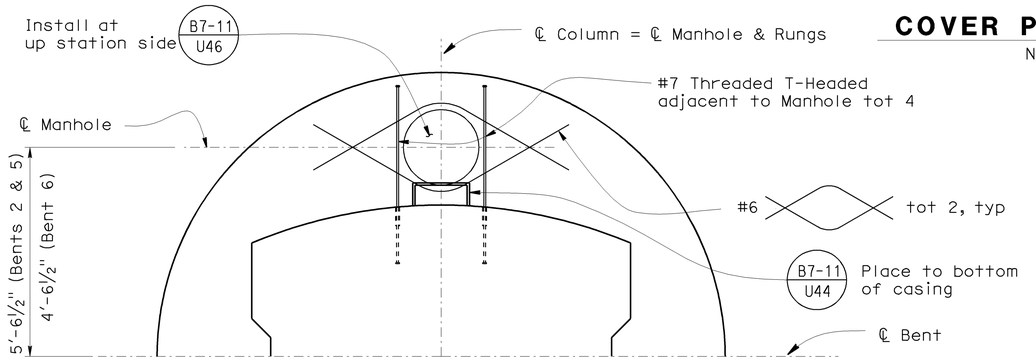

PLAN AT SKIRT

1/2" = 1'-0"

NOTE:
THE CONTRACTOR SHALL VERIFY ALL CONTROLLING FIELD DIMENSIONS BEFORE ORDERING OR FABRICATING ANY MATERIAL.

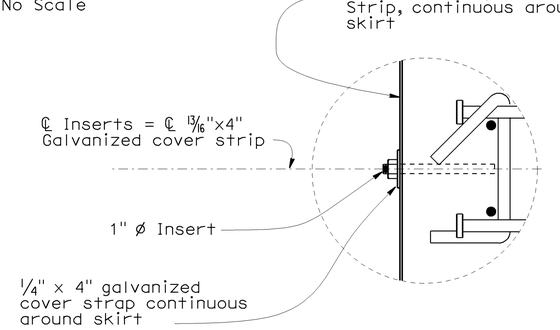

DETAIL "A"

3" = 1'-0"

DESIGN	BY R. Bromenschenkel	CHECKED T. Skreslet	STATE OF CALIFORNIA DEPARTMENT OF TRANSPORTATION
DETAILS	BY Marvin Lane	CHECKED R. Bromenschenkel	
QUANTITIES	BY A. Alcantara	CHECKED J. Han	

DIVISION OF ENGINEERING SERVICES STRUCTURE DESIGN
DESIGN BRANCH 4

BRIDGE NO. 34-0157L
POST MILE 9.02

PRESIDIO VIADUCT - LEFT
COLUMN ISOLATION DETAILS

STRUCTURES DESIGN DETAIL SHEET (ENGLISH) (REV. 10/25/05)

ORIGINAL SCALE IN INCHES FOR REDUCED PLANS 0 1 2 3

CU 04242
EA 163731

DISREGARD PRINTS BEARING EARLIER REVISION DATES →

REVISION DATES: 2-26-09 | 7-7-09 | 3-26-09 | 4-2-09 | 4-16-09 | 4-17-09 | 5-24-09 | 5-26-09 | 5-31-09 | 6-16-09

SHEET 40 OF 114

FILE => 34-0157l-c-coli.dgn

USERNAME = trrlm DATE PLOTTED => 21-JUL-2009 TIME PLOTTED => 15:01

DIST	COUNTY	ROUTE	POST MILES TOTAL PROJECT	SHEET No	TOTAL SHEETS
04	SF	101,1	9.2/9.8, 6.8/7.1	391	567

Ahmed Brahim 6-4-09
REGISTERED CIVIL ENGINEER DATE

7-20-09
PLANS APPROVAL DATE

REGISTERED PROFESSIONAL ENGINEER — AHMED M M IBRAHIM — No. S 4865 — Exp. 9-30-10 — STRUCTURAL — STATE OF CALIFORNIA

The State of California or its officers or agents shall not be responsible for the accuracy or completeness of electronic copies of this plan sheet.

Notes:

1. Conduits may be adjusted to allow placement of barrier rail reinforcement.
2. For soffit & girder flares, see 'GIRDER LAYOUT' sheets.
3. Steel Fin dimensions shown do not account for theoretical time dependant concrete variations, transverse stressing elastic shorting, and deflection of unsupported overhang.
4. For "Detail B" see "TYPICAL SECTION NO. 2" sheet.
5. Thickened overhang dimensions at or near abutments, hinges, VMS sign structure and Type 21 light are not shown.

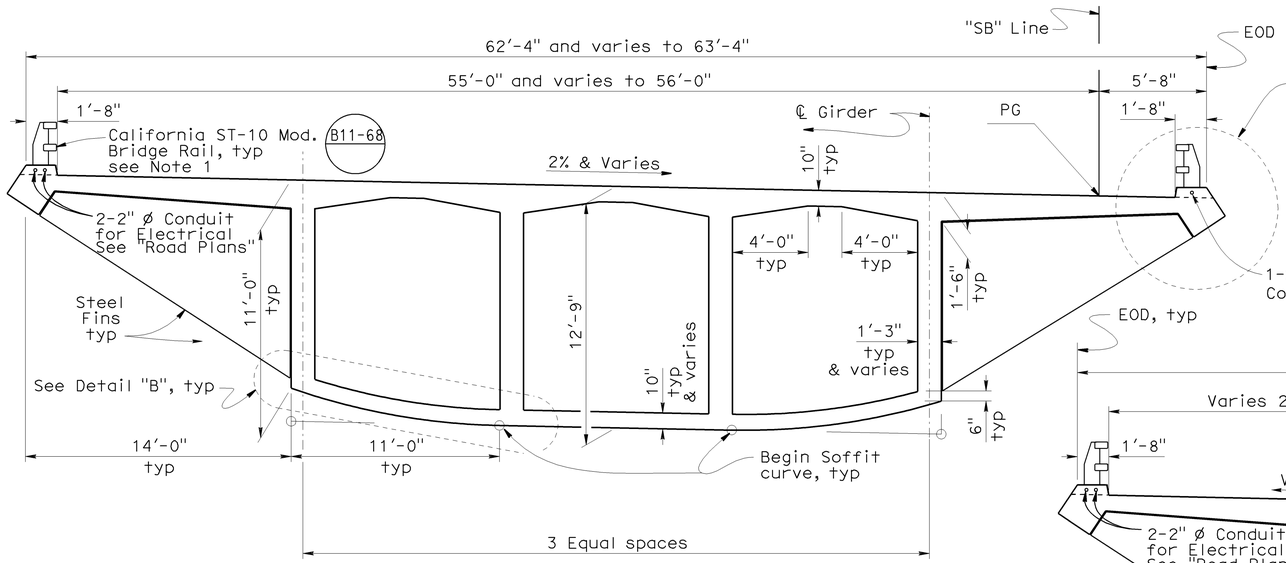

TYPICAL SECTION - STA 87+26.27 TO 90+14.91

1/4" = 1'-0"

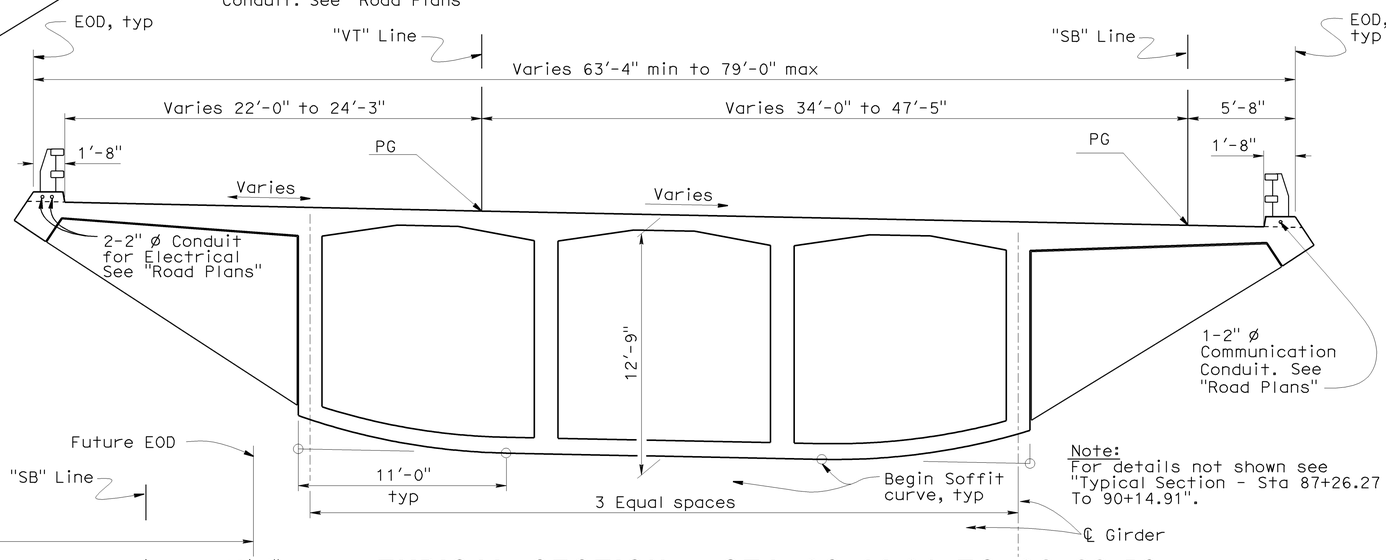

Note:
For details not shown see "Typical Section - Sta 87+26.27 To 90+14.91".

TYPICAL SECTION - STA 90+14.91 TO 93+22.50

1/4" = 1'-0"

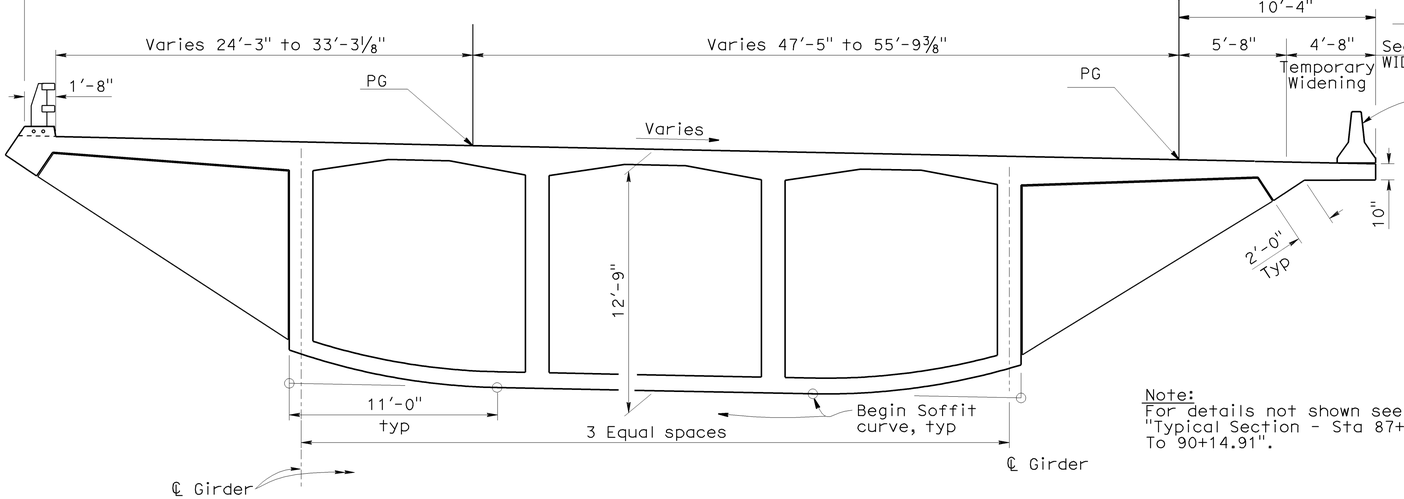

Note:
For details not shown see "Typical Section - Sta 87+26.27 To 90+14.91".

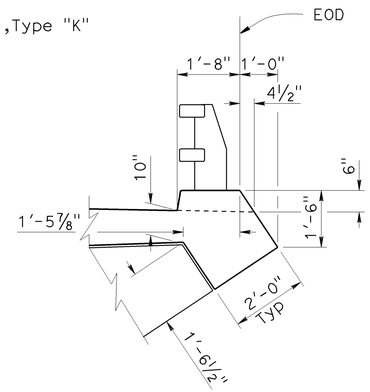

DETAIL "A"

½" = 1'-0"

NOTE:
THE CONTRACTOR SHALL VERIFY ALL CONTROLLING FIELD DIMENSIONS BEFORE ORDERING OR FABRICATING ANY MATERIAL.

TYPICAL SECTION - STA 93+22.50 TO 95+14.27

1/4" = 1'-0"

DESIGN	BY Q. Zhao/P. Norboe	CHECKED T. Skreslet	STATE OF CALIFORNIA DEPARTMENT OF TRANSPORTATION
DETAILS	BY Marvin Lane/Gary Souza	CHECKED Q. Zhao/P. Norboe	DIVISION OF ENGINEERING SERVICES STRUCTURE DESIGN — DESIGN BRANCH 4
QUANTITIES	BY A. Alcantara	CHECKED J. Han	CU 04242 EA 163731

BRIDGE NO. 34-0157L
POST MILE 9.02

PRESIDIO VIADUCT - LEFT
TYPICAL SECTION NO. 1

STRUCTURES DESIGN DETAIL SHEET (ENGLISH) (REV. 10/25/05)

ORIGINAL SCALE IN INCHES FOR REDUCED PLANS 0 1 2 3

DISREGARD PRINTS BEARING EARLIER REVISION DATES →

REVISION DATES: 2-26-09 | 3-18-09 | 3-11-09 | 3-31-09 | 5-13-09 | 5-31-09 | 6-18-09 | 7-6-09

SHEET 41 OF 114

FILE => 34-0157l-d-typ01.dgn

DATE PLOTTED => 21-JUL-2009 TIME PLOTTED => 14:53
USERNAME => rrim

DIST	COUNTY	ROUTE	POST MILES TOTAL PROJECT	SHEET No	TOTAL SHEETS
04	SF	101,1	9.2/9.8, 6.8/7.1	392	567

REGISTERED CIVIL ENGINEER — 6-4-09 DATE

AHMED M M IBRAHIM No. S 4865 EXP. 9-30-10 STRUCTURAL — REGISTERED PROFESSIONAL ENGINEER — STATE OF CALIFORNIA

7-20-09
PLANS APPROVAL DATE

The State of California or its officers or agents shall not be responsible for the accuracy or completeness of electronic copies of this plan sheet.

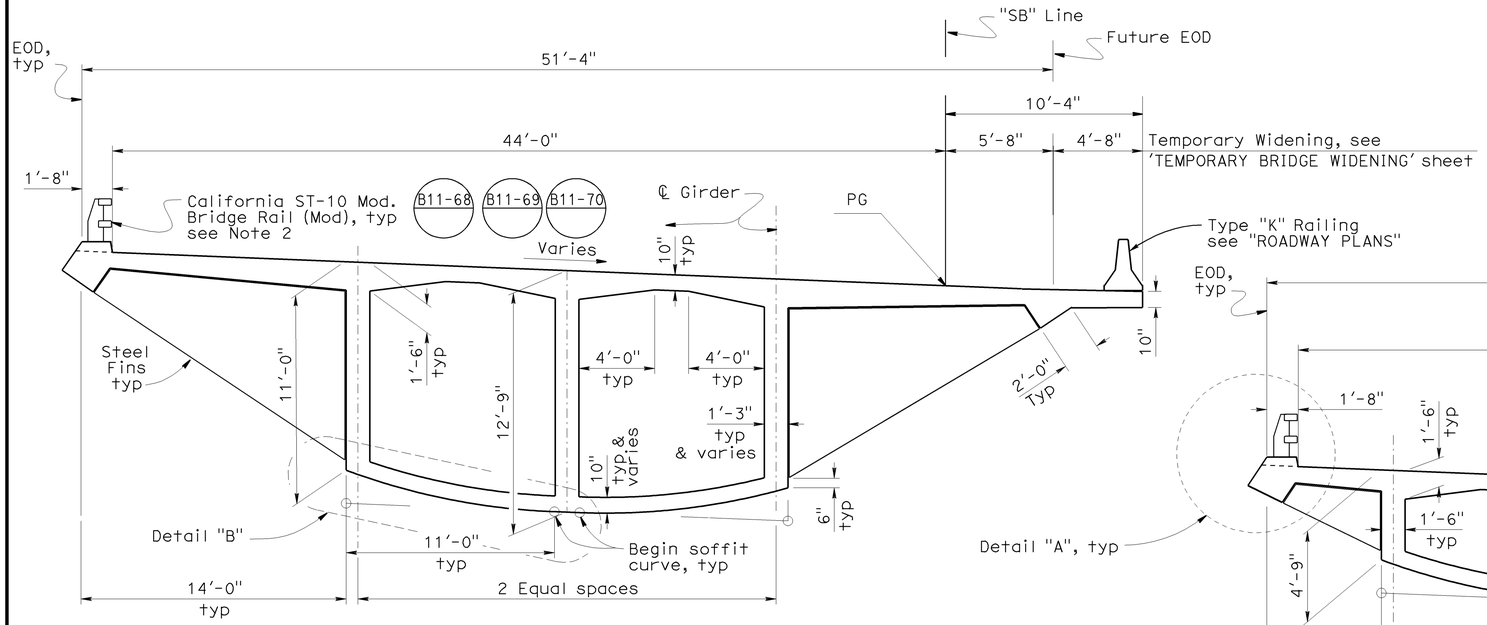

TYPICAL SECTION - STA 95+14.27 TO 97+39.27

1/4" = 1'-0"

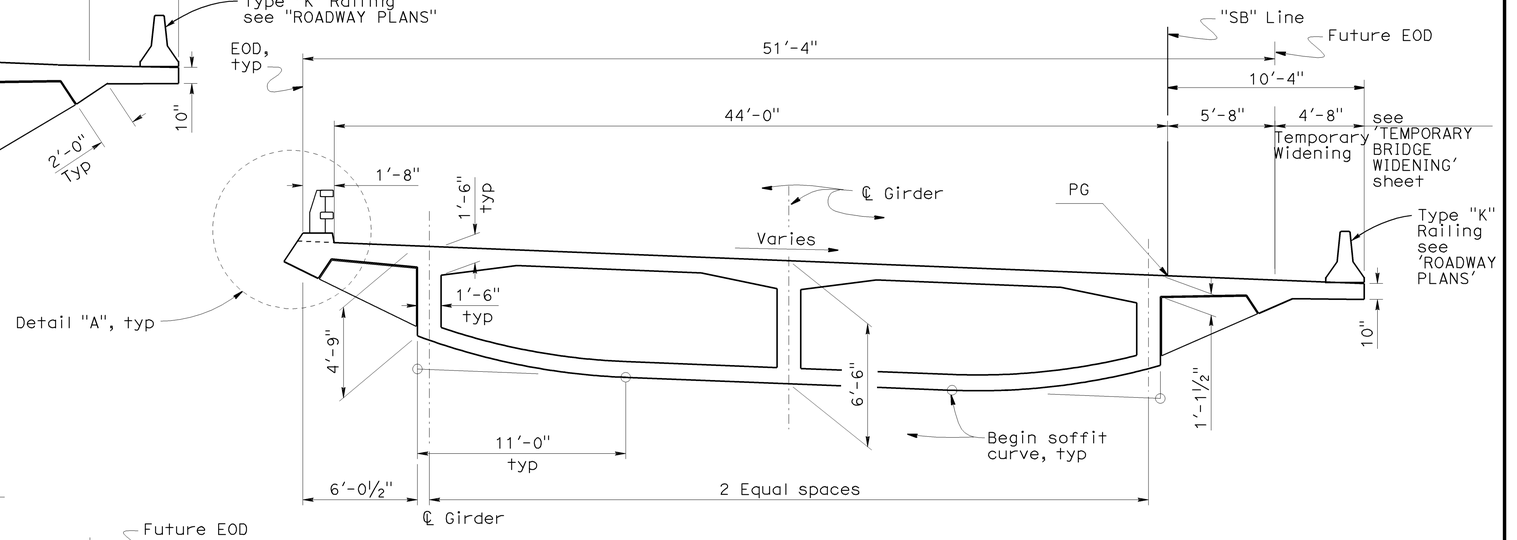

TYPICAL SECTION - STA 99+23.27 TO 100+66.27

1/4" = 1'-0"

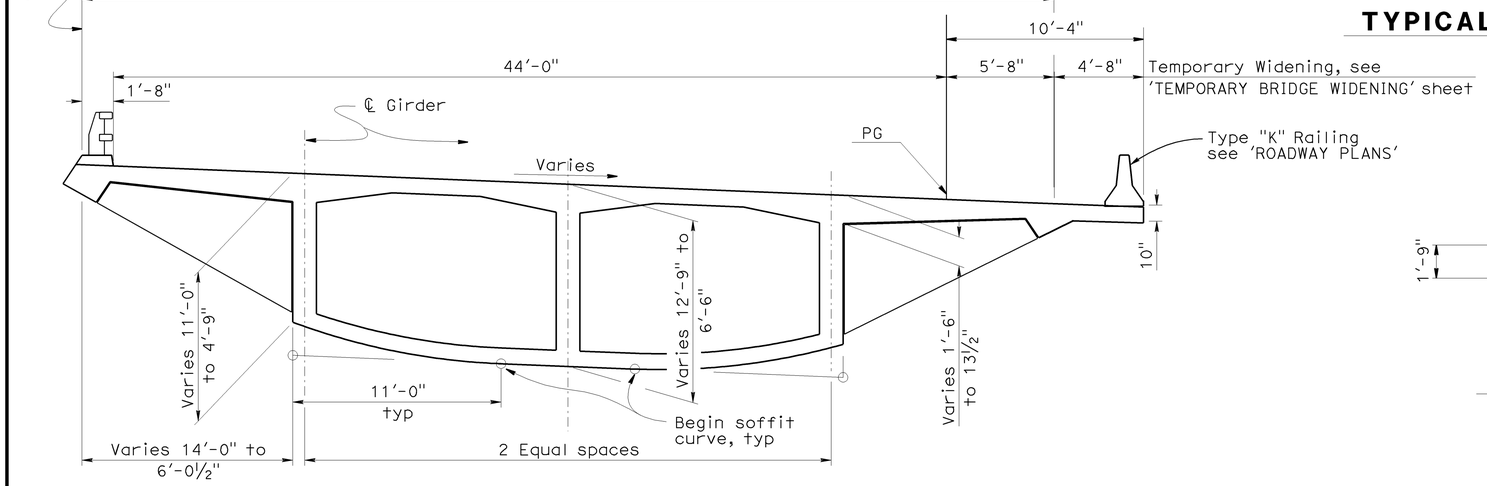

TYPICAL SECTION - STA 97+39.27 TO 99+23.27

1/4" = 1'-0"

Note:
For details not shown see "Typical Section - Sta 95+14.27 To 97+39.27".

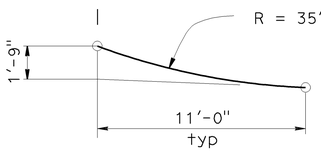

DETAIL "B"

No Scale

NOTE:
THE CONTRACTOR SHALL VERIFY ALL CONTROLLING FIELD DIMENSIONS BEFORE ORDERING OR FABRICATING ANY MATERIAL.

Note:
For details and dimensions not shown see "Typical Section - Sta 95+14.27 To 97+39.27".

Notes:

1. For "Detail A" see 'TYPICAL SECTION NO. 1' sheet.
2. Conduits may be adjusted to allow placement of barrier rail reinforcement.
3. For soffit & girder flares, see 'GIRDER LAYOUT' sheets.
4. Steel Fin dimensions shown do not account for theoretical time dependant concrete variations, transverse stressing elastic shorting, and deflection of unsupported overhang.
5. Radius provided is for vertical position, does not account for super elevation.
6. Thickened overhang dimensions at or near abutments, hinges, VMS sign structure and Type 21 light are not shown.

DESIGN	BY Q. Zhao/P. Norboe	CHECKED T. Skreslet	STATE OF CALIFORNIA DEPARTMENT OF TRANSPORTATION	DIVISION OF ENGINEERING SERVICES STRUCTURE DESIGN DESIGN BRANCH 4	BRIDGE NO. 34-0157L
DETAILS	BY Marvin Lane / JFC	CHECKED Q. Zhao/P. Norboe			POST MILE 9.02
QUANTITIES	BY A. Alcantara	CHECKED J. Han			

PRESIDIO VIADUCT - LEFT
TYPICAL SECTION NO. 2

STRUCTURES DESIGN DETAIL SHEET (ENGLISH) (REV. 10/25/05)

ORIGINAL SCALE IN INCHES FOR REDUCED PLANS 0 1 2 3

CU 04242
EA 163731

DISREGARD PRINTS BEARING EARLIER REVISION DATES →

REVISION DATES: 3-10-09 | 3-11-09 | 3-31-09 | 4-30-09 | 5-13-09 | 6-1-09 | 6-14-09 | 6-18-09 | 7-6-09

SHEET 42 OF 114

FILE => 34-0157l-d-typ02.dgn

DATE PLOTTED => 21-JUL-2009 TIME PLOTTED => 14:37
USERNAME => rtrim

DIST	COUNTY	ROUTE	POST MILES TOTAL PROJECT	SHEET No	TOTAL SHEETS
04	SF	101,1	9.2/9.8, 6.8/7.1	393	567

Ahmed Brahim 6-4-09
REGISTERED CIVIL ENGINEER DATE

7-20-09
PLANS APPROVAL DATE

REGISTERED PROFESSIONAL ENGINEER — AHMED M M IBRAHIM — No. S 4865 — Exp. 9-30-10 — STRUCTURAL — STATE OF CALIFORNIA

The State of California or its officers or agents shall not be responsible for the accuracy or completeness of electronic copies of this plan sheet.

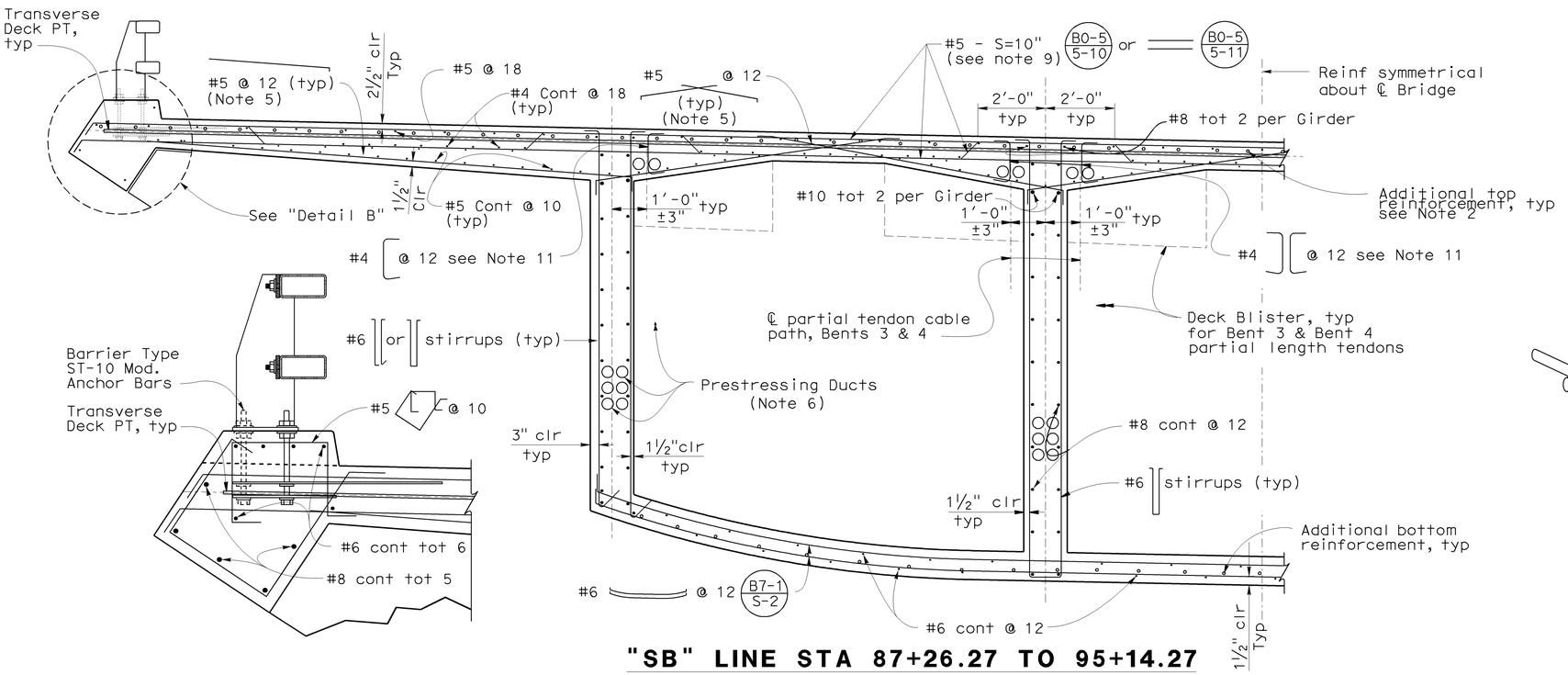

"SB" LINE STA 87+26.27 TO 95+14.27

DETAIL B

Scale: 1" = 1'-0"

Note:
For details not shown, see "Sta 87+26.27 To 95+14.27.

'SB" LINE STA 95+14.27 TO STA 100+66.27

PART TYPICAL SECTION

B0-5 B7-1 B8-5

½" = 1'-0"

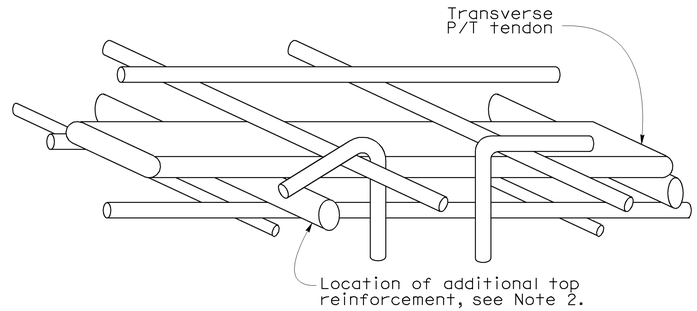

BAR LAYOUT DETAIL

No Scale

NOTES:

1. Steel Fin not shown for clarity.
2. For additional reinf, see 'ADDITIONAL TOP REINFORCEMENT ' & 'ADDITIONAL BOTTOM REINFORCEMENT' sheets.
3. Detail B is typical to all location except the temporary widening, see 'TEMPORARY BRIDGE WIDENING' sheet for details.
4. Concrete cover, see 'GENERAL NOTES' sheet unless otherwise noted.
5. Bars may be bent to allow placement of post-tensioning ducts.
6. Approximate duct arrangement shown, others possible.
7. Partial prestressing ducts, see 'GIRDER LAYOUT NO. 1' and 'GIRDER LAYOUT NO. 2' sheets for locations.
8. End anchorage assemblies for both ends to be determined by Contractor. See 'GIRDER DETAILS' sheet for additional information.
9. From Sta. 93+65.00 to 95+14.27, use #6 for deck transversee reinforcement.
10. Distribution of Span 6 partial tendons force shall be equal on both sides of the girder. Horizontal offsets from ℄ girder shall be identical.
11. Provide ties in areas of partial length tendons only. Hook around top & bottom mats.
12. For Transvers Deck PT, see 'TRANSVERSE PT DETAILS NO. 1' & 'TRANSVERSE PT DETAILS NO. 2' sheets.

NOTE:
THE CONTRACTOR SHALL VERIFY ALL CONTROLLING FIELD DIMENSIONS BEFORE ORDERING OR FABRICATING ANY MATERIAL.

DESIGN	BY Q. Zhao/P. Norboe	CHECKED T. Skreslet	
DETAILS	BY JFCasarino/GMSouza	CHECKED Q. Zhao/P. Norboe	
QUANTITIES	BY A. Alcantara	CHECKED J. Han	

STATE OF CALIFORNIA
DEPARTMENT OF TRANSPORTATION

DIVISION OF ENGINEERING SERVICES
STRUCTURE DESIGN
DESIGN BRANCH 4

CU 04242
EA 163731

BRIDGE NO. 34-0157L
POST MILE 9.02

PRESIDIO VIADUCT - LEFT
TYPICAL SECTION NO. 3

STRUCTURES DESIGN DETAIL SHEET (ENGLISH) (REV. 10/25/05)

ORIGINAL SCALE IN INCHES FOR REDUCED PLANS 0 1 2 3

DISREGARD PRINTS BEARING EARLIER REVISION DATES →

REVISION DATES: 4-3-09 | 4-20-09 | 5-14-09 | 6-1-09 | 6-14-09 | 6-16-09

SHEET 43 OF 114

FILE => 34-0157l-d-typ03.dgn

USERNAME => ttrim DATE PLOTTED => 21-JUL-2009 TIME PLOTTED => 14:37

DIST	COUNTY	ROUTE	POST MILES TOTAL PROJECT	SHEET No	TOTAL SHEETS
04	SF	101,1	9.2/9.8, 6.8/7.1	394	567

Ahmed Ibrahim 6-4-09
REGISTERED CIVIL ENGINEER DATE

7-20-09
PLANS APPROVAL DATE

REGISTERED PROFESSIONAL ENGINEER — AHMED M M IBRAHIM — No. S 4865 — EXP. 9-30-10 — STRUCTURAL — STATE OF CALIFORNIA

The State of California or its officers or agents shall not be responsible for the accuracy or completeness of electronic copies of this plan sheet.

LEGEND:

- 15 — Indicates Girder stem width in inches
- ⊠ — Indicates prestress point of no movement
- ⊢ — Indicates Jacking End
- ▶ — Indicates Dead End
- □ — Indicates Soffit Access Opening.
- ▯ — Indicates Temporary Deck Access Opening.

NOTES:

1. Soffit and temporary deck access openings are located at center of cell. See "SOFFIT AND TEMPORARY DECK ACCESS" sheet.
2. For partial length tendon anchorage, see "ANCHOR BLISTER DETAILS" sheet.

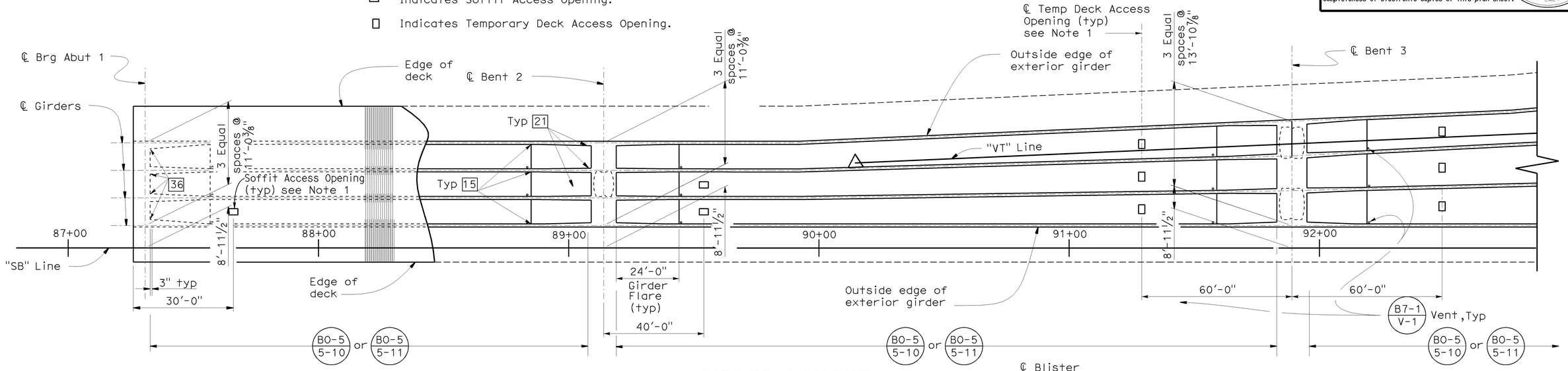

GIRDER LAYOUT

1" = 20'

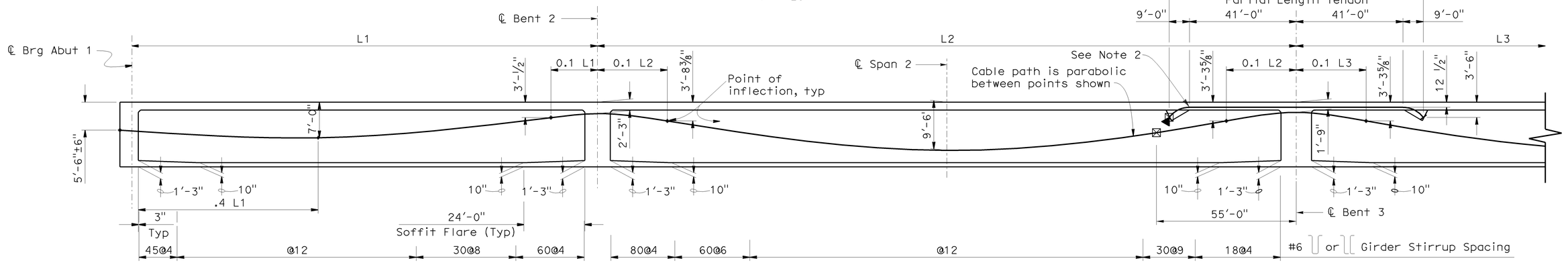

LONGITUDINAL SECTION

No Scale

NOTE:
THE CONTRACTOR SHALL VERIFY ALL CONTROLLING FIELD DIMENSIONS BEFORE ORDERING OR FABRICATING ANY MATERIAL.

DESIGN	BY P. Norboe/Q. Zhao	CHECKED T. Skreslet	STATE OF CALIFORNIA DEPARTMENT OF TRANSPORTATION	DIVISION OF ENGINEERING SERVICES STRUCTURE DESIGN DESIGN BRANCH 4	BRIDGE NO. 34-0157L
DETAILS	BY J.Thorne/M. Lane/G.S.	CHECKED P. Norboe/Q. Zhao			POST MILE 9.02
QUANTITIES	BY A. Alcantara	CHECKED J. Han			

PRESIDIO VIADUCT - LEFT
GIRDER LAYOUT NO. 1

STRUCTURES DESIGN DETAIL SHEET (ENGLISH) (REV. 10/25/05)

ORIGINAL SCALE IN INCHES FOR REDUCED PLANS 0 1 2 3

CU 04242
EA 163731

DISREGARD PRINTS BEARING EARLIER REVISION DATES →

REVISION DATES: 5-20-09 | 5-22-09 | 6-1-09 | 6-15-09 | 3-5-09 | 3-18-09 | 3-12-09 | 4-14-09 | 5-11-09 | 5-12-09

SHEET 44 OF 114

FILE => 34-0157l-ea-girlo01-1a.dgn

DATE PLOTTED => 21-JUL-2009 TIME PLOTTED => 14:43
USERNAME => tlim

DIST	COUNTY	ROUTE	POST MILES TOTAL PROJECT	SHEET No	TOTAL SHEETS
04	SF	101,1	9.2/9.8, 6.8/7.1	395	567

Ahmed Brahim 6-4-09
REGISTERED CIVIL ENGINEER DATE

7-20-09
PLANS APPROVAL DATE

REGISTERED PROFESSIONAL ENGINEER — AHMED M M IBRAHIM — No. S 4865 — EXP. 9-30-10 — STRUCTURAL — STATE OF CALIFORNIA

The State of California or its officers or agents shall not be responsible for the accuracy or completeness of electronic copies of this plan sheet.

LEGEND:

- 15 Indicates Girder stem width in inches
- Indicates prestress point of no movement
- Indicates Jacking End
- Indicates Dead End
- Indicates Soffit Access Opening.
- Indicates Temporary Deck Access Opening.

NOTES:

1. Soffit and temporary deck access openings are located at center of cell. See "SOFFIT AND TEMPORARY DECK ACCESS" sheet.
2. For partial length tendon anchorage, see "ANCHOR BLISTER DETAILS" sheet.

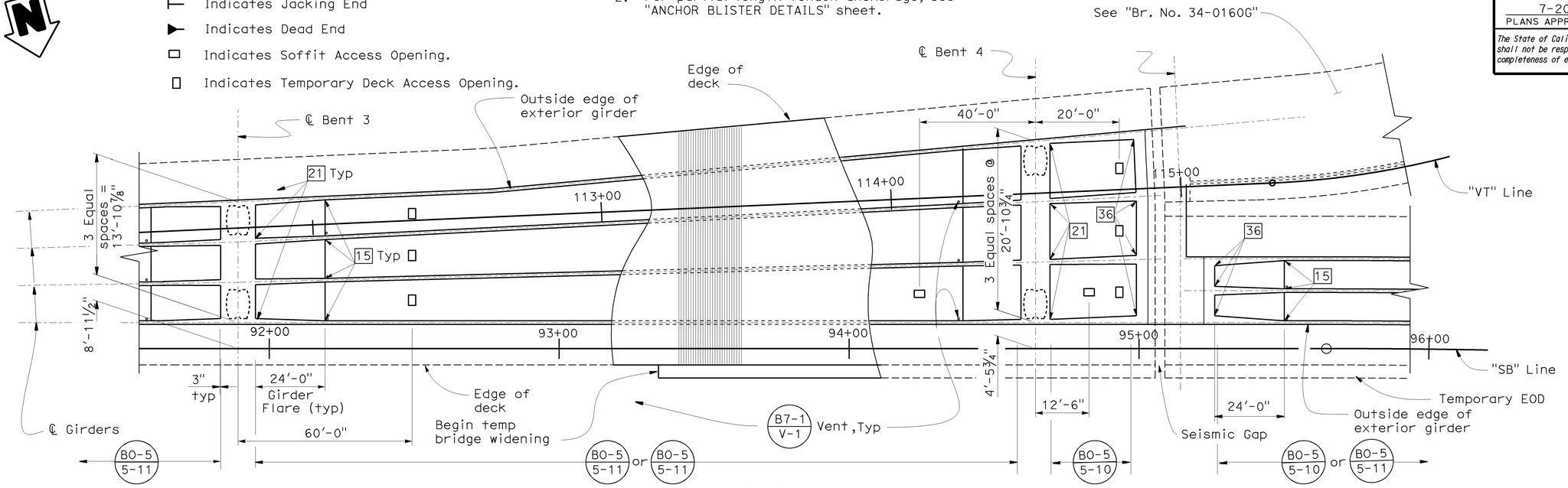

GIRDER LAYOUT

1" = 20'

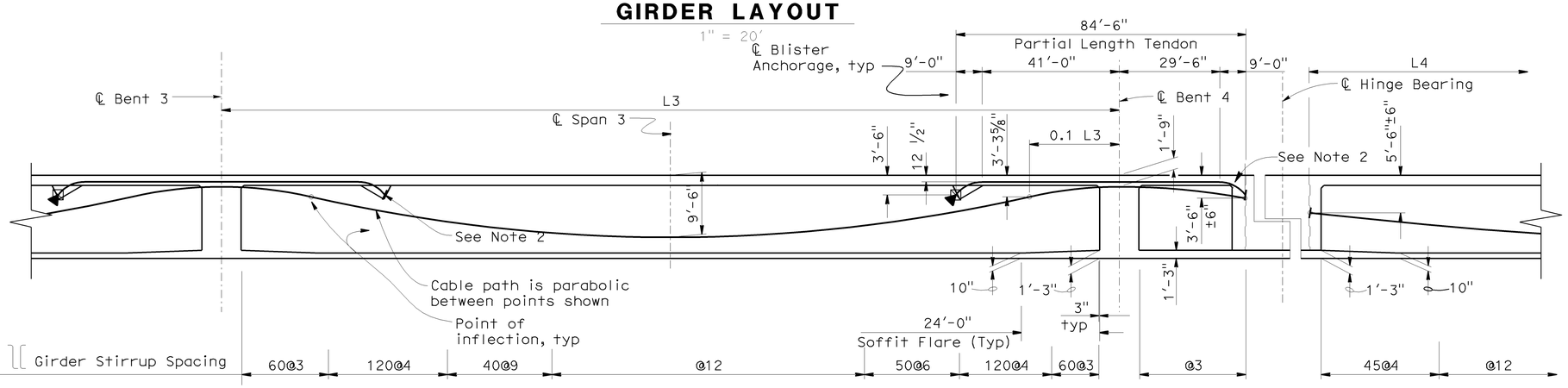

LONGITUDINAL SECTION

No Scale

NOTE:
THE CONTRACTOR SHALL VERIFY ALL CONTROLLING FIELD DIMENSIONS BEFORE ORDERING OR FABRICATING ANY MATERIAL.

DESIGN	BY P. Norboe/Q. Zhao	CHECKED T. Skreslet	STATE OF CALIFORNIA DEPARTMENT OF TRANSPORTATION	DIVISION OF ENGINEERING SERVICES STRUCTURE DESIGN — DESIGN BRANCH 4	BRIDGE NO. 34-0157L
DETAILS	BY J. Thorne/M. Lane/G.S.	CHECKED P. Norboe/Q. Zhao			POST MILE 9.02
QUANTITIES	BY A. Alcantara	CHECKED J. Han		CU 04242 EA 163731	

PRESIDIO VIADUCT - LEFT
GIRDER LAYOUT NO. 2

STRUCTURES DESIGN DETAIL SHEET (ENGLISH) (REV. 10/25/05)

ORIGINAL SCALE IN INCHES FOR REDUCED PLANS 0 1 2 3

DISREGARD PRINTS BEARING EARLIER REVISION DATES →

REVISION DATES: 2-13-09 | 5-11-09 | 5-13-09 | 5-21-09 | 5-22-09 | 6-1-09 | 7-14-09 | | 4-28-09 | 5-6-09

SHEET 45 OF 114

FILE => 34-0157l-ea-girlo02-1a.dgn

DATE PLOTTED => 21-JUL-2009 TIME PLOTTED => 14:38
USERNAME = triim

DIST	COUNTY	ROUTE	POST MILES TOTAL PROJECT	SHEET No	TOTAL SHEETS
04	SF	101,1	9.2/9.8, 6.8/7.1	396	567

REGISTERED CIVIL ENGINEER — 6-4-09 DATE

7-20-09
PLANS APPROVAL DATE

AHMED M M IBRAHIM No. S 4865 Exp. 9-30-10 STRUCTURAL — REGISTERED PROFESSIONAL ENGINEER — STATE OF CALIFORNIA

The State of California or its officers or agents shall not be responsible for the accuracy or completeness of electronic copies of this plan sheet.

LEGEND:

- 15 — Indicates Girder stem width in inches
- ⊠ — Indicates prestress point of no movement
- ⊢ — Indicates Jacking End
- ▶ — Indicates Dead End
- □ — Indicates Soffit Access Opening.
- ▯ — Indicates Temporary Deck Access Opening.

NOTES:

1. Soffit and temporary deck access openings are located at center of cell. See "SOFFIT AND TEMPORARY DECK ACCESS" sheet.
2. For partial tendon, see "ANCHOR BLISTER DETAILS" sheet
3. For Detail A, see "GIRDER DETAILS" sheet.

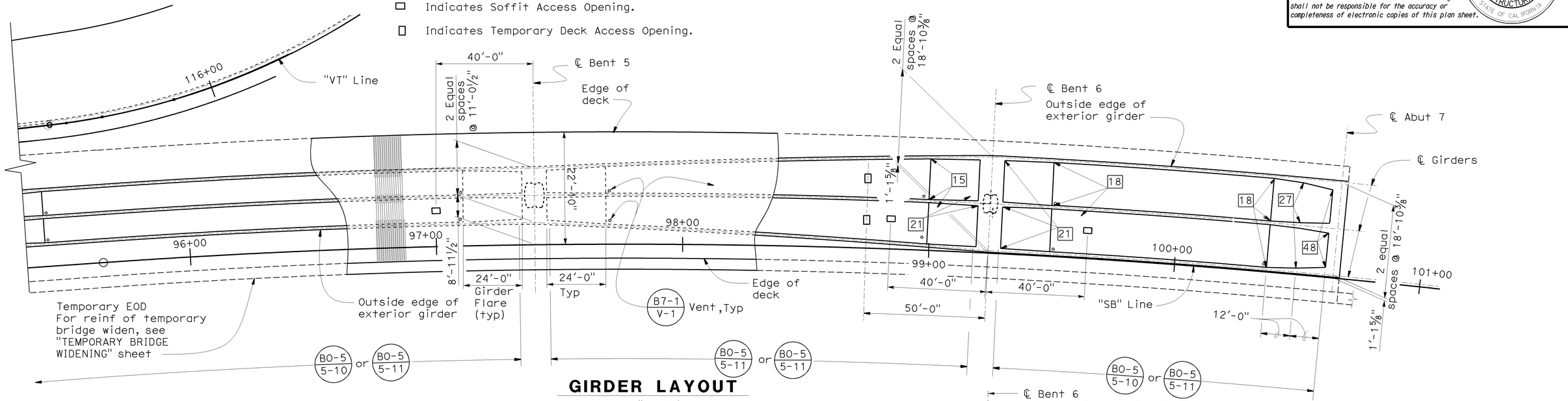

GIRDER LAYOUT

1" = 20'

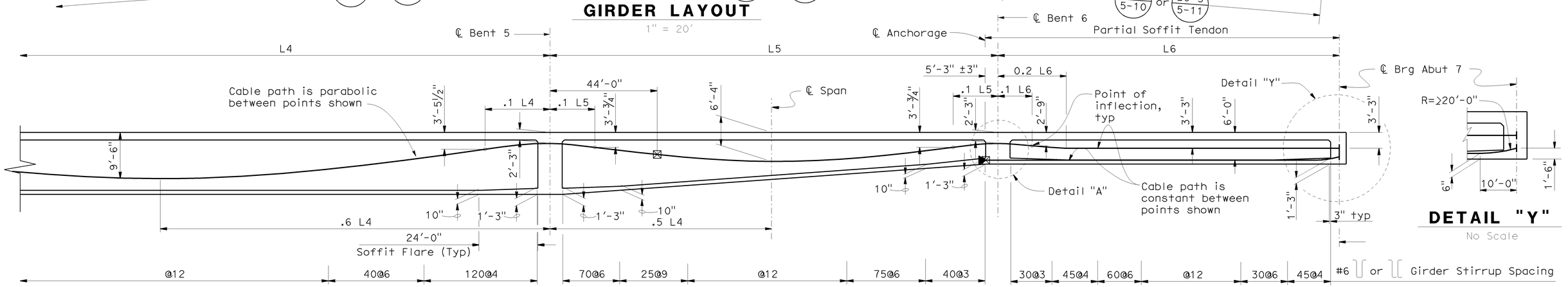

DETAIL "Y"

No Scale

LONGITUDINAL SECTION

No Scale

NOTE:
THE CONTRACTOR SHALL VERIFY ALL CONTROLLING FIELD DIMENSIONS BEFORE ORDERING OR FABRICATING ANY MATERIAL.

	BY	CHECKED
DESIGN	P. Norboe/Q. Zhao	T. Skreslet
DETAILS	J. Thorne/M. Lane/G.S.	P. Norboe/Q. Zhao
QUANTITIES	A. Alcantara	J. Han

STATE OF CALIFORNIA
DEPARTMENT OF TRANSPORTATION

DIVISION OF ENGINEERING SERVICES
STRUCTURE DESIGN
DESIGN BRANCH 4

BRIDGE NO. 34-0157L
POST MILE 9.02

PRESIDIO VIADUCT - LEFT
GIRDER LAYOUT NO. 3

STRUCTURES DESIGN DETAIL SHEET (ENGLISH) (REV. 10/25/05)

ORIGINAL SCALE IN INCHES FOR REDUCED PLANS 0 1 2 3

CU 04242
EA 163731

DISREGARD PRINTS BEARING EARLIER REVISION DATES

REVISION DATES: 2-13-09 | 2-26-09 | 5-27-09 | 5-19-09 | 5-28-09 | 6-1-09 | 3-13-09 | 4-3-09 | 4-14-09 | 4-27-09

SHEET 46 OF 114

FILE => 34-0157l-ea-girlo03-1a.dgn

DATE PLOTTED => 21-JUL-2009 TIME PLOTTED => 14:38
USERNAME => rrrim

DIST	COUNTY	ROUTE	POST MILES TOTAL PROJECT	SHEET No	TOTAL SHEETS
04	SF	101,1	9.2/9.8, 6.8/7.1	397	567

Ahmed Ibrahim 6-4-09
REGISTERED CIVIL ENGINEER DATE

7-20-09
PLANS APPROVAL DATE

REGISTERED PROFESSIONAL ENGINEER
AHMED M M IBRAHIM
No. S 4865
EXP. 9-30-10
STRUCTURAL
STATE OF CALIFORNIA

The State of California or its officers or agents shall not be responsible for the accuracy or completeness of electronic copies of this plan sheet.

Notes:

1. All bars shown on this sheet shall be spliced with "Service Splices".
2. For additional information, see "Typical Section" sheets.
3. Deck blisters and reinforcement not shown.
4. Reinforcement spacing measured along center line of bent.

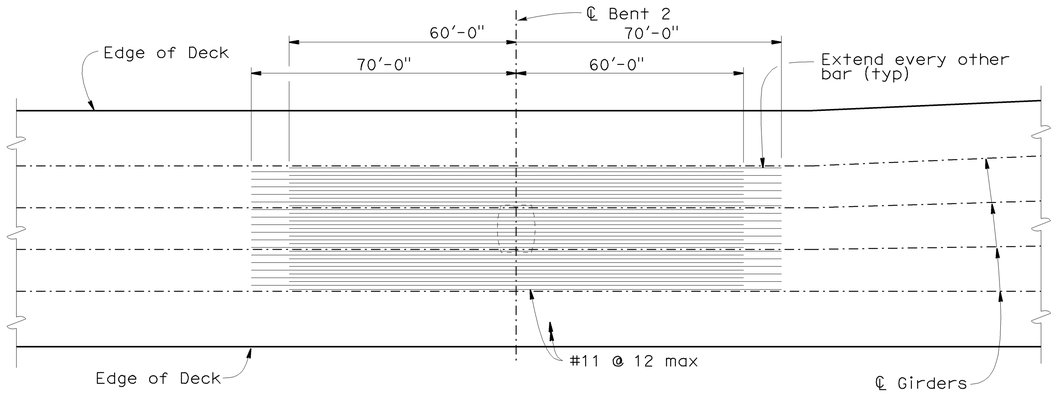

TOP REINFORCEMENT

1" = 20′

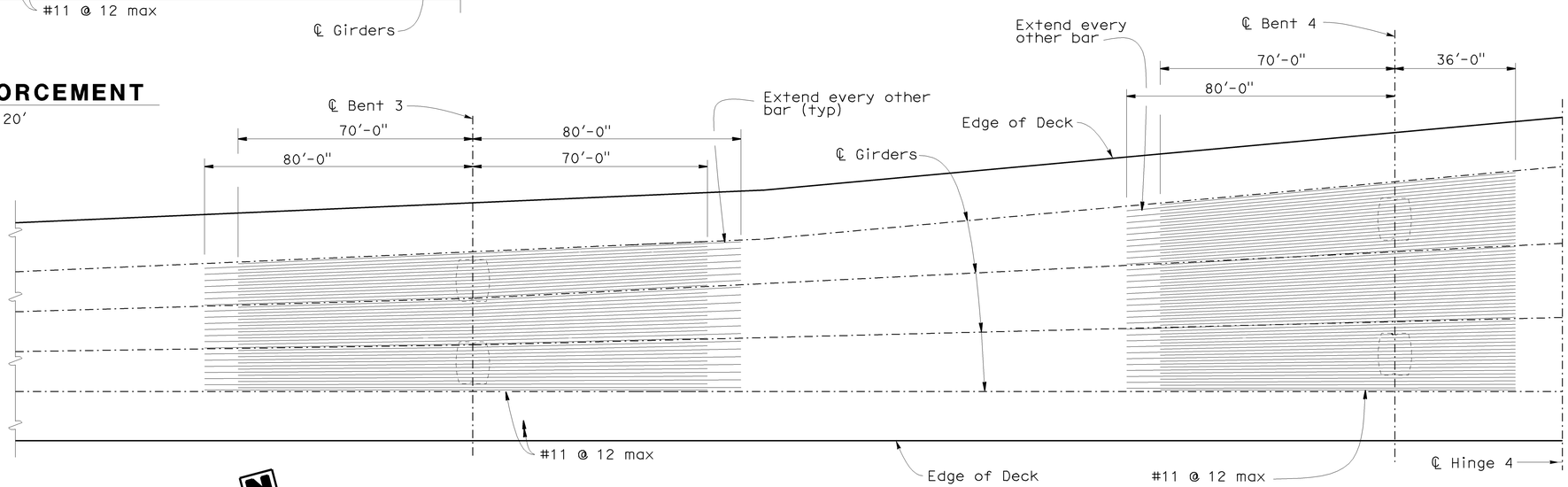

TOP REINFORCEMENT

1" = 20′

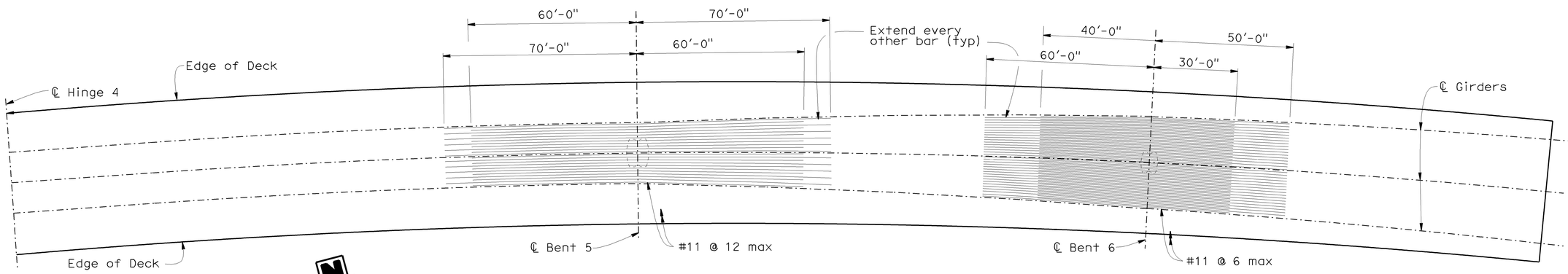

TOP REINFORCEMENT

1" = 20′

NOTE:
THE CONTRACTOR SHALL VERIFY ALL CONTROLLING FIELD DIMENSIONS BEFORE ORDERING OR FABRICATING ANY MATERIAL.

DESIGN	BY Q.Zhao/P.Norboe/R.Bromenschenkel	CHECKED T. Skreslet/F. Zayati	STATE OF CALIFORNIA DEPARTMENT OF TRANSPORTATION
DETAILS	BY A. Onodera/M. Lane	CHECKED Q.Zhao/P.Norboe/R.Bromenschenkel	
QUANTITIES	BY A. Alcantara	CHECKED J. Han	

DIVISION OF ENGINEERING SERVICES
STRUCTURE DESIGN
DESIGN BRANCH 4

CU 04242
EA 163731

BRIDGE NO. 34-0157L
POST MILE 9.02

PRESIDIO VIADUCT - LEFT
ADDITIONAL TOP REINFORCEMENT

STRUCTURES DESIGN DETAIL SHEET (ENGLISH) (REV. 10/25/05)

ORIGINAL SCALE IN INCHES FOR REDUCED PLANS 0 1 2 3

DISREGARD PRINTS BEARING EARLIER REVISION DATES →

REVISION DATES: 2-26-09 | 4-21-09 | 5-13-09 | 5-16-09 | 6-15-09 | 7-2-09 | 7-13-09

SHEET 47 OF 114

FILE => 34-0157l-eb-irreinf01.dgn

USERNAME => tr1im
DATE PLOTTED => 21-JUL-2009
TIME PLOTTED => 14:38

DIST	COUNTY	ROUTE	POST MILES TOTAL PROJECT	SHEET No	TOTAL SHEETS
04	SF	101,1	9.2/9.8, 6.8/7.1	398	567

Ahmed Ibrahim 6-4-09
REGISTERED CIVIL ENGINEER DATE

7-20-09
PLANS APPROVAL DATE

REGISTERED PROFESSIONAL ENGINEER
AHMED M M IBRAHIM
No. S 4865
EXP. 9-30-10
STRUCTURAL
STATE OF CALIFORNIA

The State of California or its officers or agents shall not be responsible for the accuracy or completeness of electronic copies of this plan sheet.

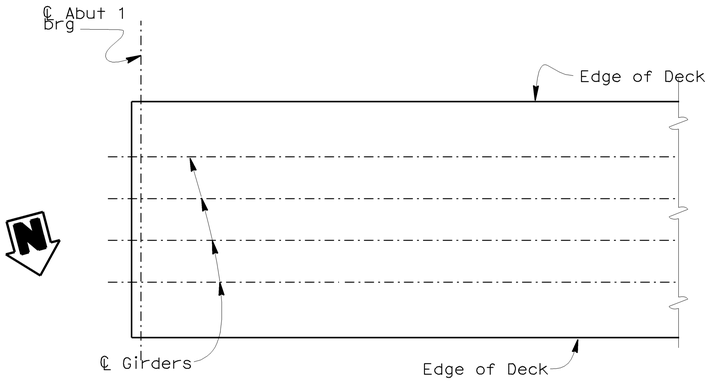

BOTTOM REINFORCEMENT
1" = 20'

Notes:

1. All bars shown on this sheet shall be spliced with "Service Splices".
2. For additional information, see "Typical Section" sheets.
3. Soffit blisters and reinforcement not shown.
4. Reinforcement spacing measured along center line of bent.

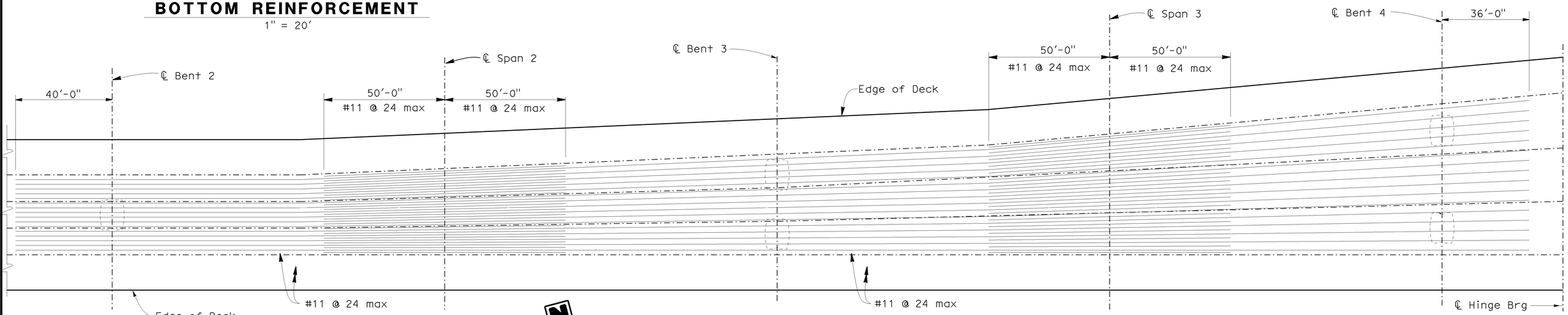

BOTTOM REINFORCEMENT
1" = 20'

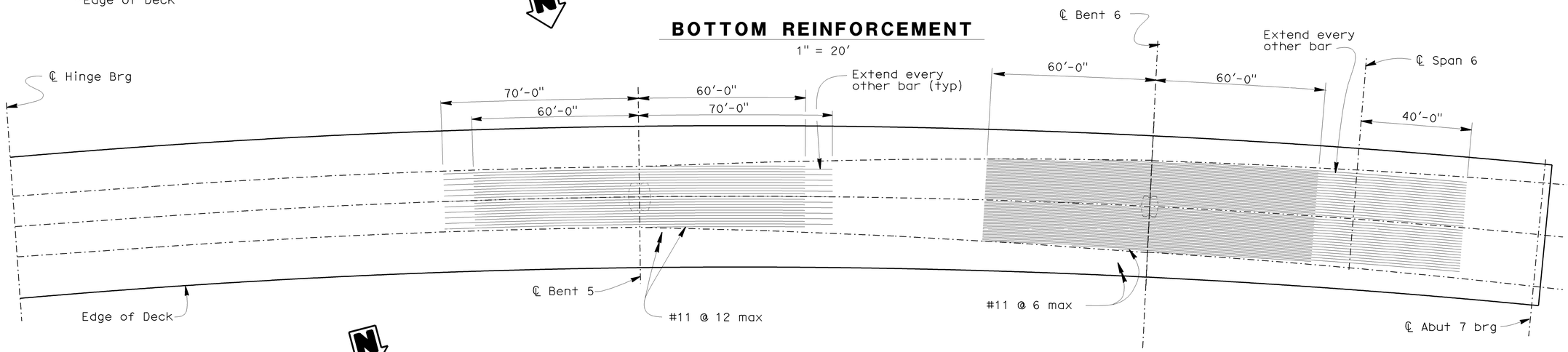

BOTTOM REINFORCEMENT
1" = 20'

NOTE:
THE CONTRACTOR SHALL VERIFY ALL CONTROLLING FIELD DIMENSIONS BEFORE ORDERING OR FABRICATING ANY MATERIAL.

DESIGN	BY Q.Zhao/P.Norboe/R.Bromenschenkel	CHECKED T. Skreslet/F. Zayati	
DETAILS	BY M Lane/A.Onodera	CHECKED Q.Zhao/P.Norboe/R.Bromenschenkel	
QUANTITIES	BY A. Alcantara	CHECKED J. Han	

STATE OF CALIFORNIA
DEPARTMENT OF TRANSPORTATION

DIVISION OF ENGINEERING SERVICES
STRUCTURE DESIGN
DESIGN BRANCH 4

CU 04242
EA 163731

BRIDGE NO. 34-0157L
POST MILE 9.02

PRESIDIO VIADUCT - LEFT
ADDITIONAL BOTTOM REINFORCEMENT

STRUCTURES DESIGN DETAIL SHEET (ENGLISH) (REV. 10/25/05)

ORIGINAL SCALE IN INCHES FOR REDUCED PLANS 0 1 2 3

DISREGARD PRINTS BEARING EARLIER REVISION DATES

REVISION DATES: 5-13-09, 6-3-09, 7-1-09, 7-3-09, 7-14-09, 7-13-09

SHEET 48 OF 114

FILE => 34-0157l-eb-irreinf02.dgn

DATE PLOTTED => 21-JUL-2009 TIME PLOTTED => 14:38
USERNAME => rtrim

DIST	COUNTY	ROUTE	POST MILES TOTAL PROJECT	SHEET No	TOTAL SHEETS
04	SF	101,1	9.2/9.8, 6.8/7.1	399	567

Ahmed Ibrahim 6-4-09
REGISTERED CIVIL ENGINEER DATE

7-20-09
PLANS APPROVAL DATE

AHMED M M IBRAHIM No. S 4865 Exp. 9-30-10 STRUCTURAL STATE OF CALIFORNIA — REGISTERED PROFESSIONAL ENGINEER

The State of California or its officers or agents shall not be responsible for the accuracy or completeness of electronic copies of this plan sheet.

PRESTRESSING NOTES

270 ksi Low Relaxation Strand:

Frame 1: (BB to Hinge)

Span Tendon Pjack = 24200 kips

Anchor Set = 3/8"

2 ends stressing from Abut 1 and Hinge

Partial Tendon @ Bent 3 Pjack = 12000 kips

Partial Tendon @ Bent 4 Pjack = 16000 kips

Anchor Set = 3/8"

One end stressing shall be performed for partial tendons

Total number of Girders = 4

Span tendon shall be stressed prior to the partial tendon

Frame 2: (Hinge to EB)

Span Tendon Pjack = 18100 kips

Anchor Set = 3/8"

2 ends stressing from Abut 7 and Hinge

Total number of Girders = 3

Partial Tendon @ Span 6 Pjack = 4000 kips

One end stressing shall be performed for partial tendons

Span tendon shall be stressed prior to the partial tendon

Concrete:

fc" = 5 ksi @ 28 days

fci" = 3.5 ksi @ time of stressing

Distribution of prestress force (Pjack) between girders shall not exceed the ratio of 3:2. Maximum final force variation between girder shall not exceed 725 kips.

Contractor shall submit elongation calculations based on initial stress at point of no movement for each group = Force coefficient x Jacking Stress.

	Frame 1			Frame 2	
Tendon Group	Span Tendon	Partial Tendon @ Bent 3	Partial Tendon @ Bent 4	Span Tendon	Partial Tendon @ Span 6
Force Coefficient	0.847	0.956	0.956	0.891	0.950

Notes:

1. For location of "Detail A", see 'GIRDER LAYOUT NO. 3" sheet.
2. Concrete anchorage encasement to have 1" min cover.
3. False work shall remain in the spans adjacents to the hinge on Frame 1 until load transfer to the hinge takes place. Should it be desirable to remove falsework prior to load transfer, the Time Dependent Camber Value table shall be modified.

NOTE:
THE CONTRACTOR SHALL VERIFY ALL CONTROLLING FIELD DIMENSIONS BEFORE ORDERING OR FABRICATING ANY MATERIAL.

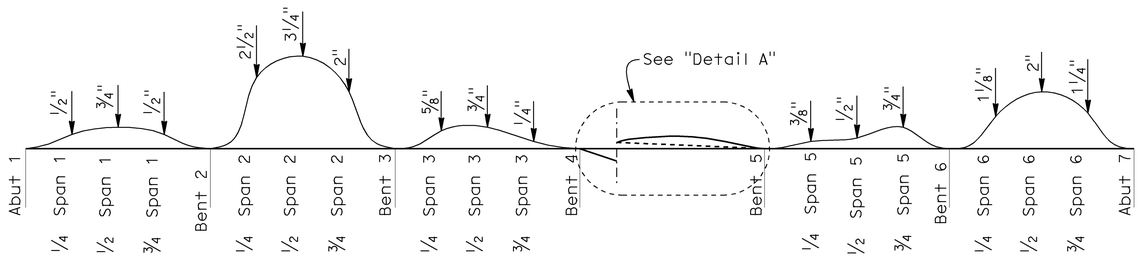

CAMBER DIAGRAM

No Scale
Does not include allowance for Falsework Settlement

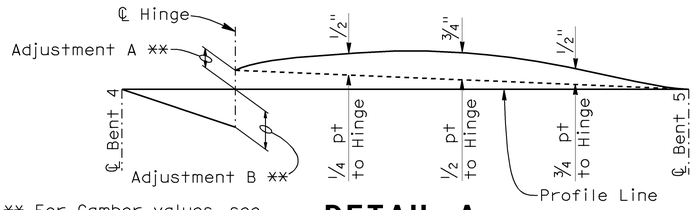

** For Camber values, see "Time Dependent Camber Value" table

DETAIL A

No Scale

TIME DEPENDENT CAMBER VALUES		
	Adjustment A	Adjustment B
30 Days	3"	2 3/4"
60 Days	2 5/8"	2 1/4"
90 Days	2 1/8"	1 3/4"
120 Days	1 7/8"	1 1/2"
180 Days	1 7/8"	1 1/2"
240 Days	1 3/4"	1 3/8"
360 Days	1 3/4"	1 1/4"
720 Days	1 1/2"	1 1/8"

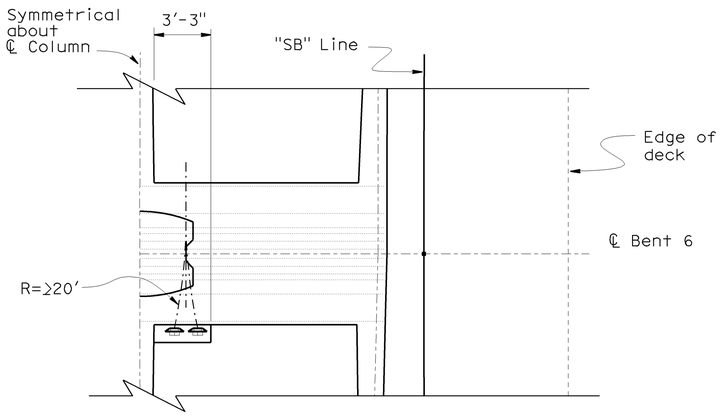

PARTIAL BENT CAP PLAN

3/16" = 1'-0"

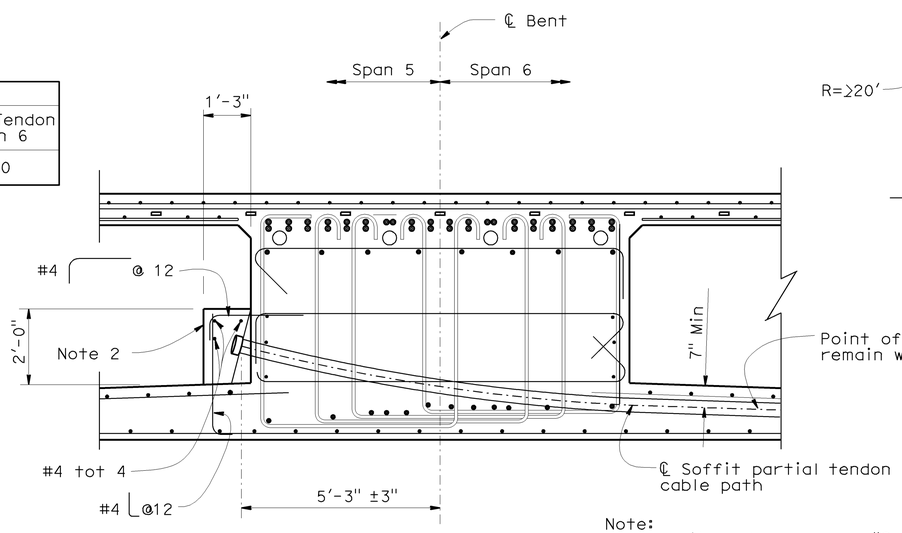

DETAIL "A"

3/16" = 1'-0"

Note:
For details not shown see "Section A-A" on "BENT 6 DETAILS NO. 1" sheet.

DESIGN	BY P. Norboe/Q. Zhao	CHECKED T. Skreslet	STATE OF CALIFORNIA DEPARTMENT OF TRANSPORTATION	DIVISION OF ENGINEERING SERVICES STRUCTURE DESIGN DESIGN BRANCH 4	BRIDGE NO. 34-0157L
DETAILS	BY JFCasarino/GMSouza	CHECKED P. Norboe/Q. Zhao			POST MILE 9.02
QUANTITIES	BY A. Alcantara	CHECKED J. Han		CU 04242 EA 163731	

PRESIDIO VIADUCT - LEFT
GIRDER DETAILS

STRUCTURES DESIGN DETAIL SHEET (ENGLISH) (REV. 10/25/05)

ORIGINAL SCALE IN INCHES FOR REDUCED PLANS 0 1 2 3

DISREGARD PRINTS BEARING EARLIER REVISION DATES

REVISION DATES: 05-06-09 | 05-07-09 | 05-15-09 | 5-26-09 | 6-1-09 | 6-3-09 | 7-14-09 | 7-13-09

SHEET 49 OF 114

FILE => 34-0157l-ec-girdet.dgn

DATE PLOTTED => 21-JUL-2009 TIME PLOTTED => 14:38
USERNAME = trim

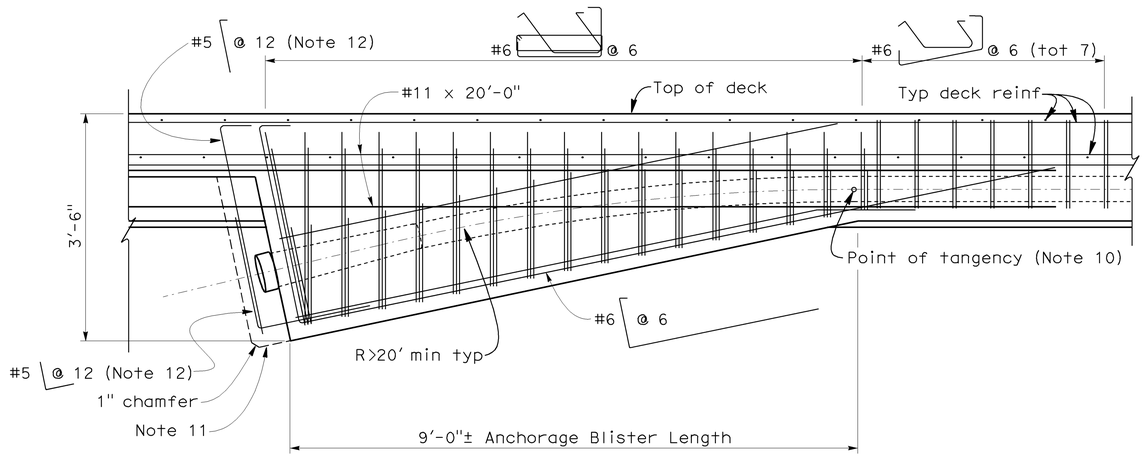

SECTION A-A

No scale

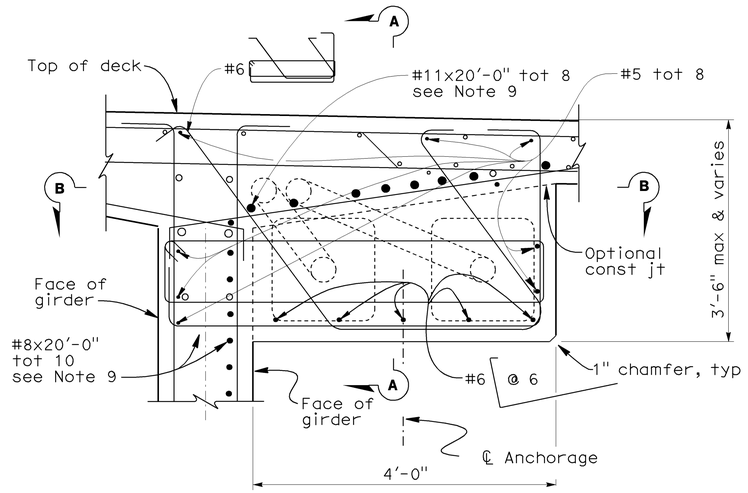

DETAIL A

1" = 1'-0"

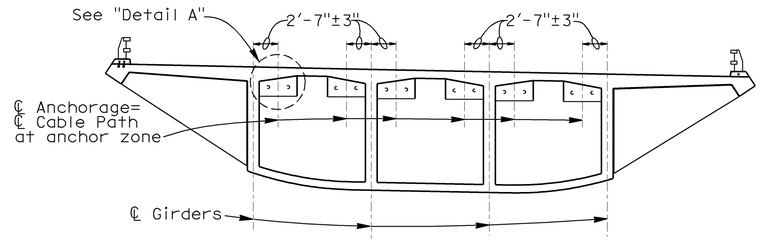

ANCHORAGE LAYOUT

1/8"=1'-0"

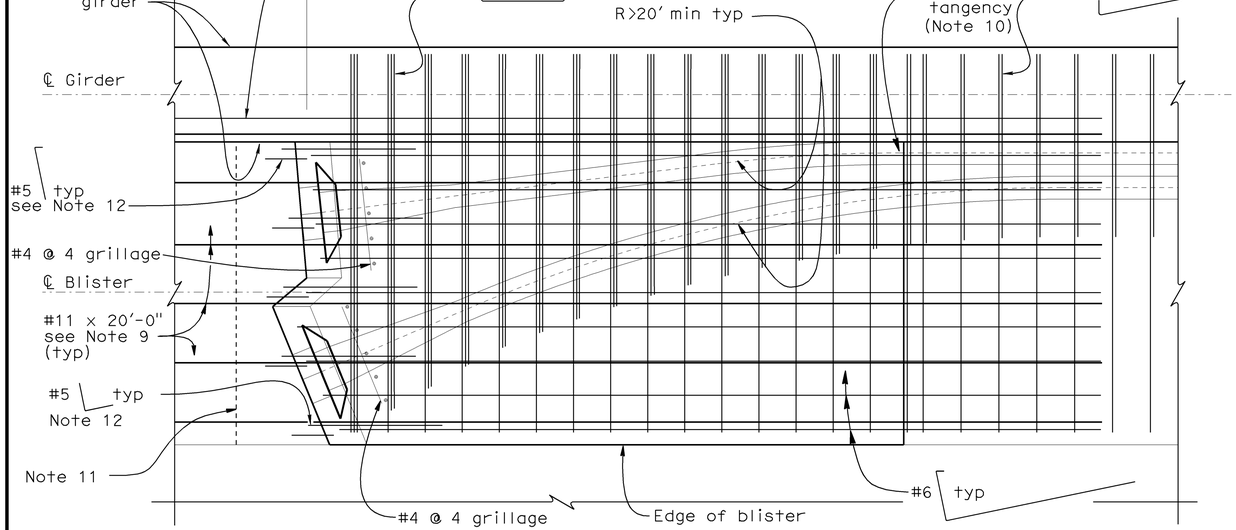

SECTION B-B

No scale

Notes:

1. Bar reinforcement interfering with prestressing tendon alignment may be adjusted, as approved by the Engineer.
2. For dimensions and reinforcement not shown, see "Typical Section" sheets.
3. Construction joint interfaces shall be roughened to a full amplitude of approximately 1/4".
4. For post-tensioning details not shown, see "Girder Reinforcement" sheets.
5. After completing all prestressing and grouting operations, the concrete anchorage encasement reinforcement shall be bent into place over the anchor heads prior to placing encasement concrete.
6. Tie spacing is measured along ℄ tendon anchorage and spaced equally over the length of the tendon anchorage.
7. Two tendon anchorage shown, others possible.
8. Exterior girder shown, interior girders similar.
9. Center bars equally about ℄ blister.
10. Point of tangency to be placed within anchor blister
11. Concrete anchorage encasement to have 1" minimum coverage
12. Bars may be bent to allow for prestressing operation

DIST	COUNTY	ROUTE	POST MILES TOTAL PROJECT	SHEET No	TOTAL SHEETS
04	SF	101,1	9.2/9.8, 6.8/7.1	400	567

Ahmed Brahim 6-4-09
REGISTERED CIVIL ENGINEER DATE

7-20-09
PLANS APPROVAL DATE

REGISTERED PROFESSIONAL ENGINEER
AHMED M M IBRAHIM
No. S 4865
Exp. 9-30-10
STRUCTURAL
STATE OF CALIFORNIA

The State of California or its officers or agents shall not be responsible for the accuracy or completeness of electronic copies of this plan sheet.

	BY	CHECKED
DESIGN	P. Norboe/Q. Zhao	T. Skreslet
DETAILS	JFCasarino/GMSouza	P. Norboe/Q. Zhao
QUANTITIES	A. Alcantara	J. Han

STATE OF CALIFORNIA
DEPARTMENT OF TRANSPORTATION

DIVISION OF ENGINEERING SERVICES
STRUCTURE DESIGN
DESIGN BRANCH 4

BRIDGE NO. 34-0157L
POST MILE 9.02

PRESIDIO VIADUCT - LEFT
ANCHOR BLISTER DETAILS

STRUCTURES DESIGN DETAIL SHEET (ENGLISH) (REV. 10/25/05)

ORIGINAL SCALE IN INCHES FOR REDUCED PLANS 0 1 2 3

CU 04242
EA 163731

DISREGARD PRINTS BEARING EARLIER REVISION DATES →

REVISION DATES: 4-8-09 | 5-15-09 | 5-18-09 | 5-20-09 | 6-3-09 | 6-17-09

SHEET 50 OF 114

FILE => 34-0157l-ee-anchr.dgn

USERNAME = trlim DATE PLOTTED => 21-JUL-2009 TIME PLOTTED => 14:38

DIST	COUNTY	ROUTE	POST MILES TOTAL PROJECT	SHEET No	TOTAL SHEETS
04	SF	101,1	9.2/9.8, 6.8/7.1	401	567

Ahmed Ibrahim 6-4-09
REGISTERED CIVIL ENGINEER DATE

7-20-09
PLANS APPROVAL DATE

REGISTERED PROFESSIONAL ENGINEER
AHMED M M IBRAHIM
No. S 4865
EXP. 9-30-10
STRUCTURAL
STATE OF CALIFORNIA

The State of California or its officers or agents shall not be responsible for the accuracy or completeness of electronic copies of this plan sheet.

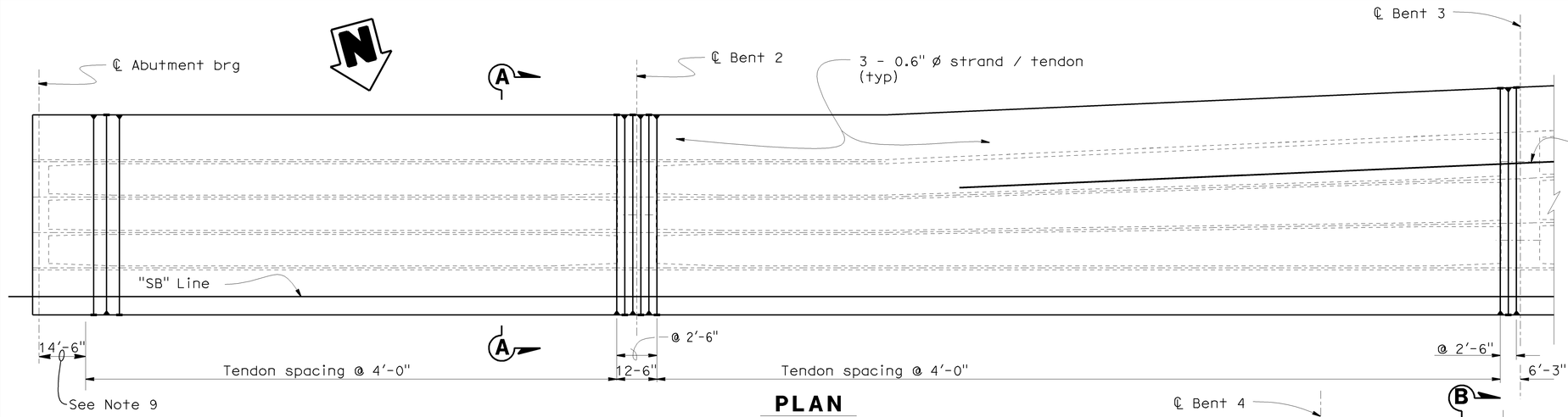

PLAN
1" = 20'

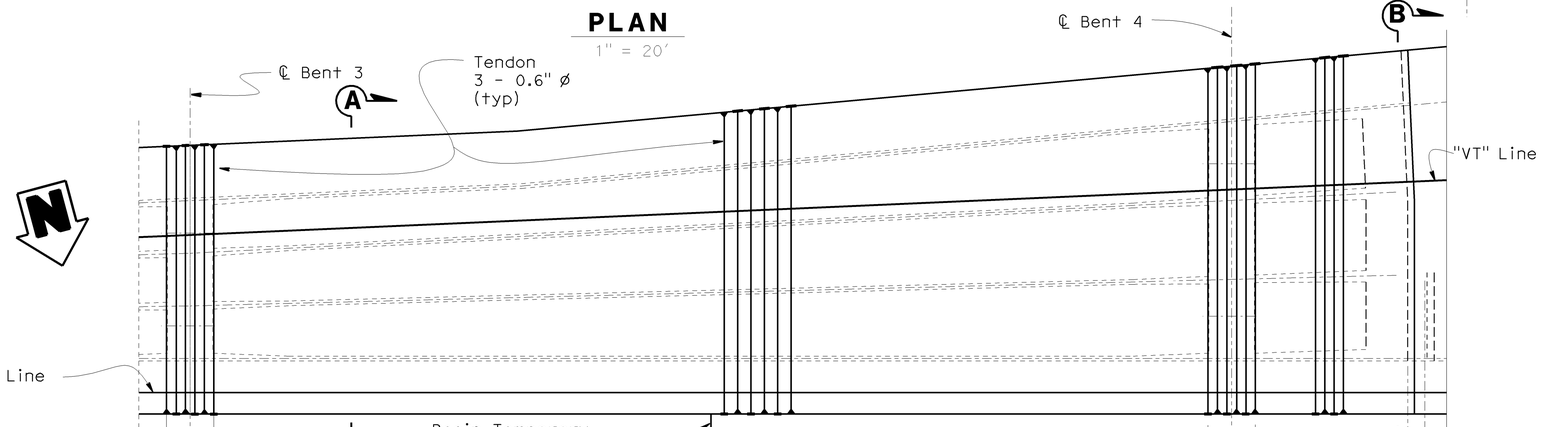

PLAN
1" = 20'

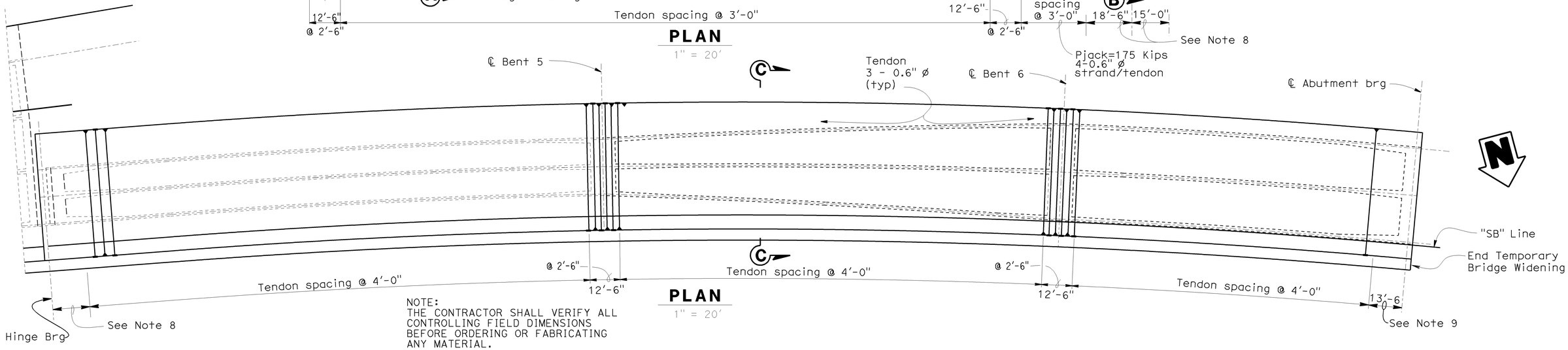

PLAN
1" = 20'

NOTE:
THE CONTRACTOR SHALL VERIFY ALL CONTROLLING FIELD DIMENSIONS BEFORE ORDERING OR FABRICATING ANY MATERIAL.

Notes:

1. 270 ksi low relaxation strand.
   Pjack = 131 kips per tendon except as noted.
   Anchor set = 1/4"
   f'ci = 3.5 ksi at time of stressing
2. Transverse tendons shall be stressed prior to longitudinal tendons being stressed.
3. One end stressing. Alternate stressing end.
4. Overhang falsework shall not be released prior to stressing the transverse tendons. Transverse stressing shall sustain overhang self-weight and no more than 50 psf of construction loading. No live loading is permitted on overhang before complete installation of steel fin system.
5. For anchorage of PT tendons, see "Transverse PT Details No. 2" sheet.
6. Adjust tendon spacing locally to clear drains and barrier anchor bolts, but not to exceed spacing shown.
7. For "Section A-A", "Section B-B" and "Section C-C" see "Transverse PT Details No. 2" sheet.
8. For tansverse PT at and/or near the hinge, see '"SB" HINGE DETAILS No. 4' and '"VT" HINGE DETAILS No. 4' sheets.
9. For transverse PT at and/or near the abutments see ABUTMENT 1 DETAILS No. 3" and "ABUTMENT 7 DETAILS No. 3" sheets.
10. Anchorage symbols as follows
    - ⊢— Jacking end
    - —▸ Dead end

DESIGN	BY S.Barajas	CHECKED A.M.M.Ibrahim	
DETAILS	BY M. Lane	CHECKED S.Barajas	
QUANTITIES	BY A. Alcantara	CHECKED J. Han	

STATE OF CALIFORNIA
DEPARTMENT OF TRANSPORTATION

DIVISION OF ENGINEERING SERVICES
STRUCTURE DESIGN
DESIGN BRANCH 4

BRIDGE NO. 34-0157L
POST MILE 9.02

PRESIDIO VIADUCT - LEFT
TRANSVERSE PT DETAILS No. 1

STRUCTURES DESIGN DETAIL SHEET (ENGLISH) (REV. 10/25/05)

ORIGINAL SCALE IN INCHES FOR REDUCED PLANS 0 1 2 3

CU 04242
EA 163731

DISREGARD PRINTS BEARING EARLIER REVISION DATES

REVISION DATES: 3-3-09 | 3-30-09 | 4-30-09 | 5-13-09 | 5-18-09 | 5-26-09 | 6-12-09 | 6-18-09 | 7-11-09

SHEET 51 OF 114

FILE => 34-0157l-f-pstten01-1a.dgn

USERNAME => ttrstrk DATE PLOTTED => 21-JUL-2009 TIME PLOTTED => 13:40

DIST	COUNTY	ROUTE	POST MILES TOTAL PROJECT	SHEET No	TOTAL SHEETS
04	SF	101,1	9.2/9.8, 6.8/7.1	402	567

Ahmed Ibrahim 6-4-09
REGISTERED CIVIL ENGINEER DATE

7-20-09
PLANS APPROVAL DATE

REGISTERED PROFESSIONAL ENGINEER
AHMED M M IBRAHIM
No. S 4865
EXP. 9-30-10
STRUCTURAL
STATE OF CALIFORNIA

The State of California or its officers or agents shall not be responsible for the accuracy or completeness of electronic copies of this plan sheet.

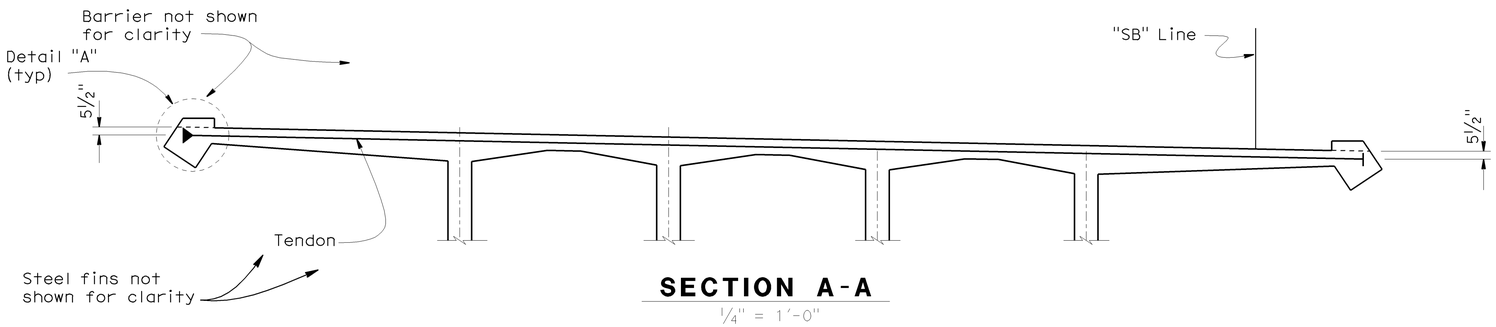

SECTION A-A
1/4" = 1'-0"

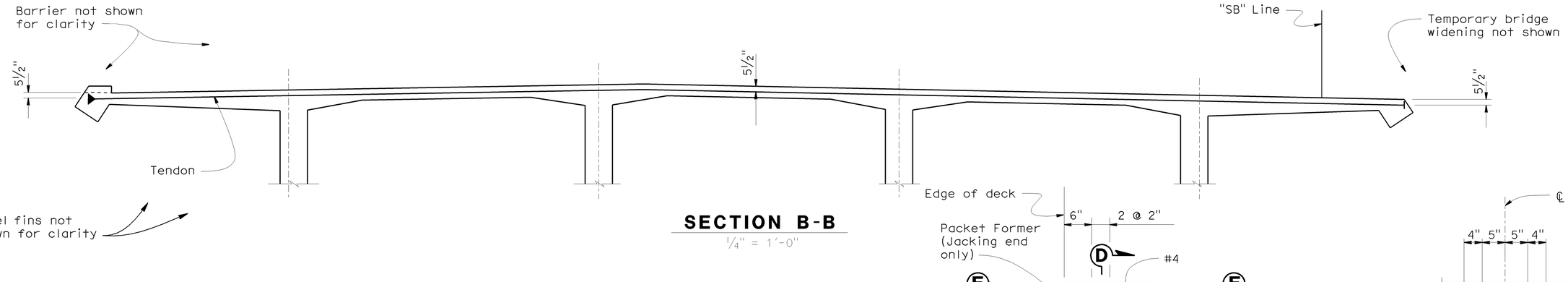

SECTION B-B
1/4" = 1'-0"

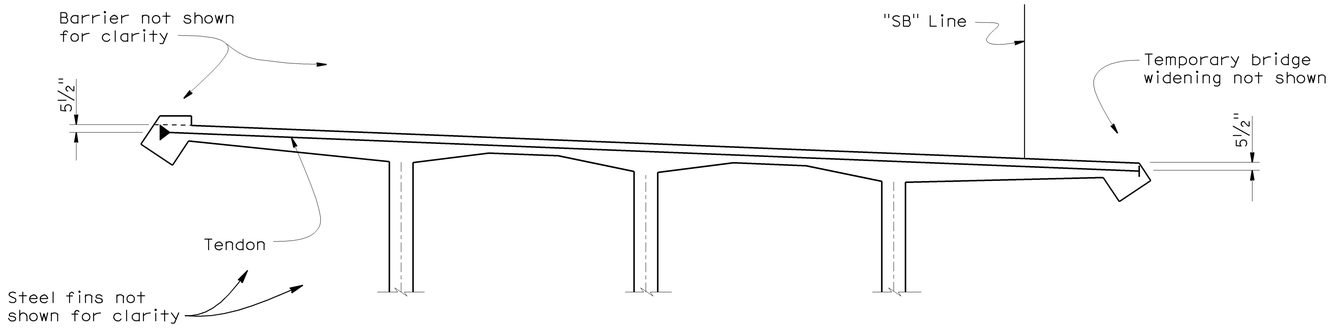

SECTION C-C
1/4" = 1'-0"

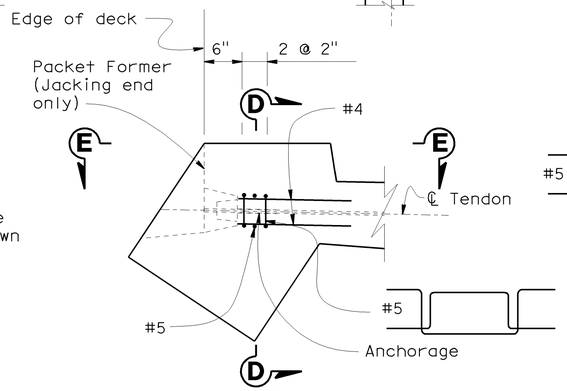

DETAIL "A"

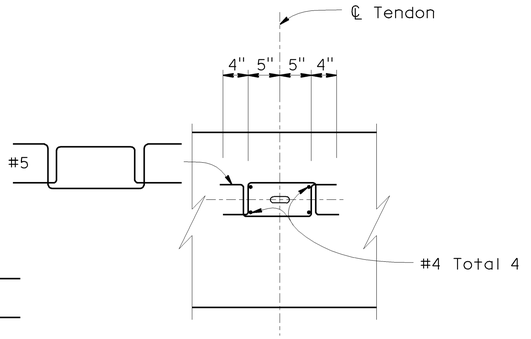

SECTION D-D

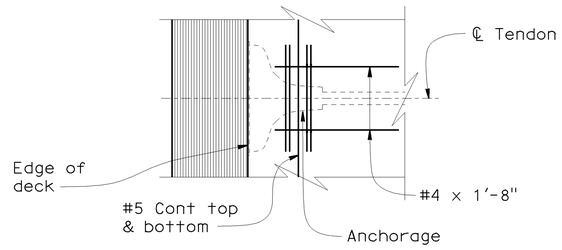

SECTION E-E

ANCHORAGE OF TRANSVERSE PT TENDONS
1" = 1'-0"

Notes:

1. Anchorage symbols are as followed

   ⊢ Indicates Jacking end

   ▶ Indicates Dead end

NOTE:
THE CONTRACTOR SHALL VERIFY ALL CONTROLLING FIELD DIMENSIONS BEFORE ORDERING OR FABRICATING ANY MATERIAL.

DESIGN	BY S. Barajas	CHECKED A. M. M. Ibrahim	STATE OF CALIFORNIA DEPARTMENT OF TRANSPORTATION
DETAILS	BY M. Lane	CHECKED S. Barajas	
QUANTITIES	BY A. Alcantara	CHECKED J. Han	

DIVISION OF ENGINEERING SERVICES STRUCTURE DESIGN
DESIGN BRANCH 4

BRIDGE NO. 34-0157L
POST MILE 9.02

PRESIDIO VIADUCT - LEFT
TRANVERSE PT DETAILS No. 2

STRUCTURES DESIGN DETAIL SHEET (ENGLISH) (REV. 10/25/05)

ORIGINAL SCALE IN INCHES FOR REDUCED PLANS 0 1 2 3

CU 04242
EA 163731

DISREGARD PRINTS BEARING EARLIER REVISION DATES →

REVISION DATES: 3-31-09 | 5-30-09 | 6-14-09 | 5-1-09 | 5-14-09 | 6-17-09

SHEET 52 OF 114

FILE => 34-0157l-f-pstten02-1a.dgn

USERNAME => trsitk DATE PLOTTED => 21-JUL-2009 TIME PLOTTED => 13:40

DIST	COUNTY	ROUTE	POST MILES TOTAL PROJECT	SHEET No	TOTAL SHEETS
04	SF	101,1	9.2/9.8, 6.8/7.1	403	567

Ahmed Ibrahim 6-4-09
REGISTERED CIVIL ENGINEER DATE

7-20-09
PLANS APPROVAL DATE

REGISTERED PROFESSIONAL ENGINEER
AHMED M M IBRAHIM
No. S 4865
EXP. 9-30-10
STRUCTURAL
STATE OF CALIFORNIA

The State of California or its officers or agents shall not be responsible for the accuracy or completeness of electronic copies of this plan sheet.

Note K

Center key between PTFE Brg pads. Place key normal to ℄ Hinge

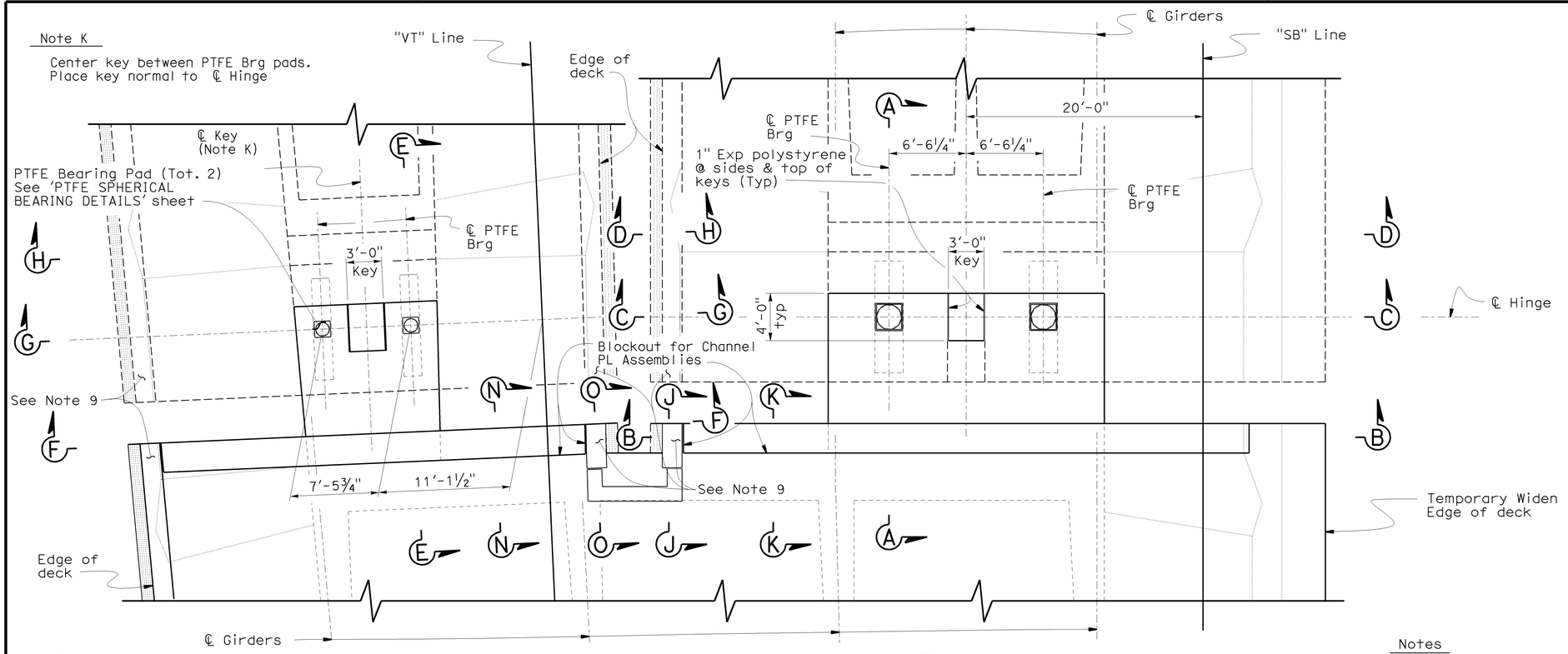

PLAN @ HINGE SEAT

3/16" = 1'-0"

B0-13 / 13-1 Expanded polystyrene all around PTFE Bearing Pad Assemblies. Match thickness of bearing assemblies

Notes

1. For "Section A-A" see '"SB" HINGE DETAILS No. 1' sheet.
2. For "Section B-B" and "Detail "A" see '"SB" HINGE DETAILS No. 2' sheet.
3. For "Section C-C" and Section D-D" see '"SB" HINGE DETAILS No. 3' sheet.
4. For "Section E-E" see '"VT" HINGE DETAILS No. 1' sheet.
5. For "Section F-F" and "Detail "B" see '"VT" HINGE DETAILS No. 2' sheet.
6. For "Section G-G" and Section H-H" see '"VT" HINGE DETAILS No. 3' sheet.
7. For "Section J-J" and Section K-K" see '"SB" HINGE DETAILS No. 3' sheet.
8. For "Section N-N" and Section O-O" see '"VT" HINGE DETAILS No. 2' sheet.
9. For California ST-10 (Mod) Barrier connections at the hinge see 'HINGE SEISMIC JOINT DETAILS No. 6' sheet.

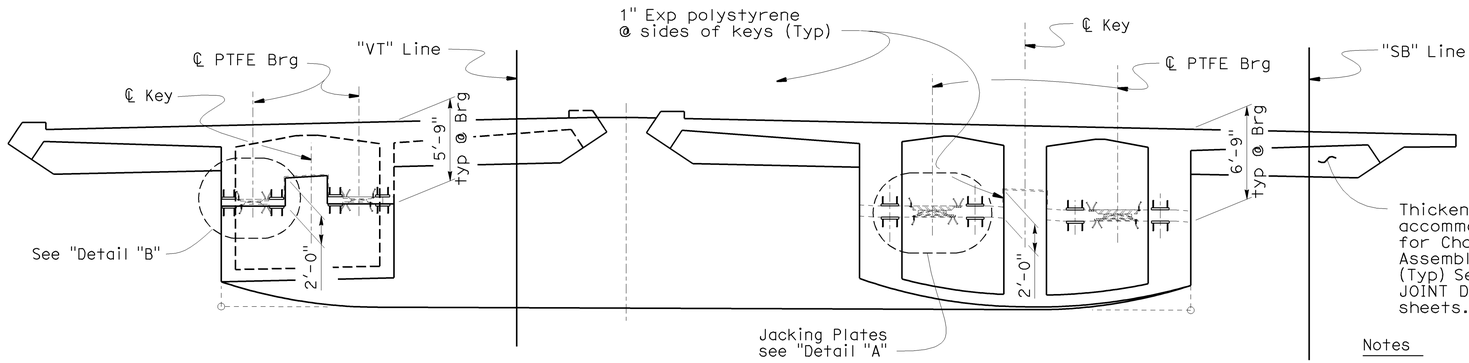

MIRROR ELEVATION @ HINGE

3/16" = 1'-0"

Notes

1. Shear keys shall be placed monolithic with hinge seat.
2. Nuts, bolts, and plate washers shall be galvanized.

NOTE:
THE CONTRACTOR SHALL VERIFY ALL CONTROLLING FIELD DIMENSIONS BEFORE ORDERING OR FABRICATING ANY MATERIAL.

DESIGN	BY Ahmed M.M. Ibrahim	CHECKED S. Barajas	
DETAILS	BY Jeff Thorne	CHECKED Ahmed M.M. Ibrahim	
QUANTITIES	BY A. Alcantara	CHECKED J. Han	

STATE OF CALIFORNIA
DEPARTMENT OF TRANSPORTATION

DIVISION OF ENGINEERING SERVICES
STRUCTURE DESIGN
DESIGN BRANCH 4

CU 04242
EA 163731

BRIDGE NO. 34-0157L
POST MILE 9.02

PRESIDIO VIADUCT - LEFT
HINGE LAYOUT

STRUCTURES DESIGN DETAIL SHEET (ENGLISH) (REV. 10/25/05)

ORIGINAL SCALE IN INCHES FOR REDUCED PLANS 0 1 2 3

DISREGARD PRINTS BEARING EARLIER REVISION DATES →

REVISION DATES: 2-27-09 | 3-3-09 | 3-12-09 | 5-16-09 | 6-3-09 | 6-12-09 | 6-16-09 | 6-18-09 | 7-12-09

SHEET 53 OF 114

FILE => 34-0157l-g-hngedts00.dgn

USERNAME => ttstrk DATE PLOTTED => 21-JUL-2009 TIME PLOTTED => 13:40

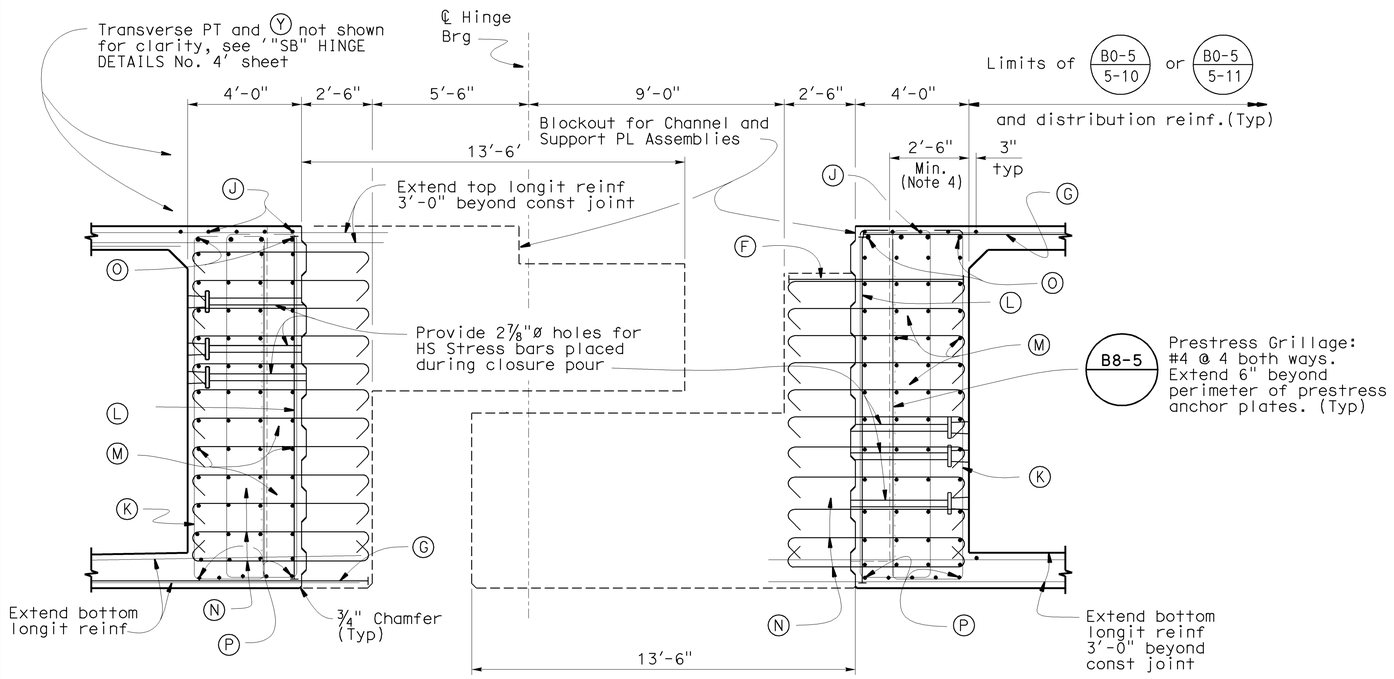

"SB" LINE
SECTION A-A (BEFORE STRESSING)

⅜" = 1'-0"

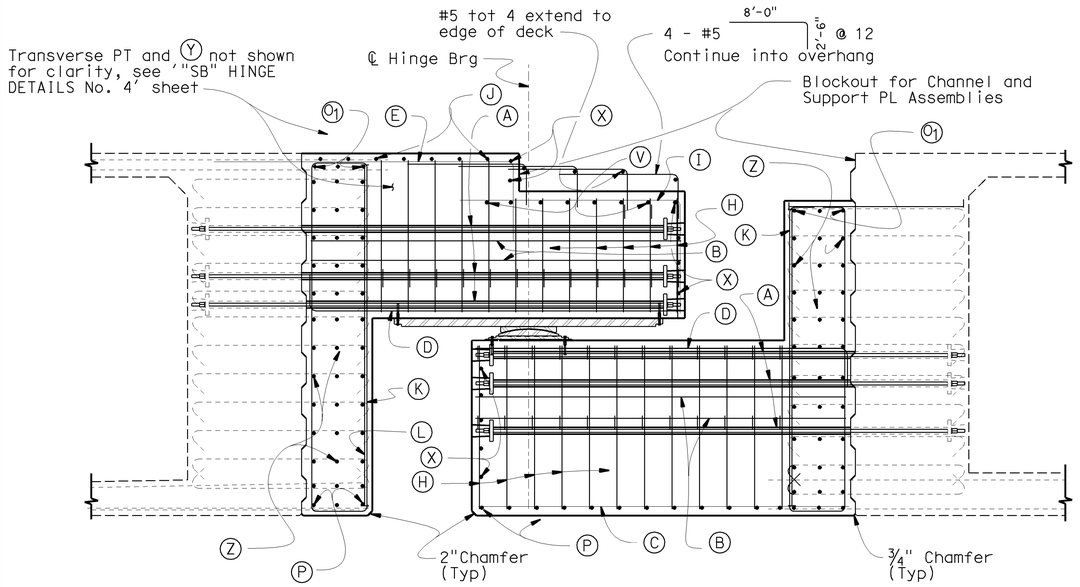

"SB" LINE
SECTION A-A (CLOSURE POUR)

⅜" = 1'-0"

NOTE:
THE CONTRACTOR SHALL VERIFY ALL CONTROLLING FIELD DIMENSIONS BEFORE ORDERING OR FABRICATING ANY MATERIAL.

DIST	COUNTY	ROUTE	POST MILES TOTAL PROJECT	SHEET No	TOTAL SHEETS
04	SF	101,1	9.2/9.8, 6.8/7.1	404	567

Ahmed Brahim 6-4-09
REGISTERED CIVIL ENGINEER DATE

7-20-09
PLANS APPROVAL DATE

REGISTERED PROFESSIONAL ENGINEER — AHMED M M IBRAHIM No. S 4865 EXP. 9-30-10 STRUCTURAL — STATE OF CALIFORNIA

The State of California or its officers or agents shall not be responsible for the accuracy or completeness of electronic copies of this plan sheet.

LEGEND "SB" - LINE

- (A) 1¾" dia. HS Rods, tot 16 per layer, (3 layers)
- (B) #6 tot. 19 per layer (2 layers), typ
- (C) #6 tot. 19
- (D) #10 17'-0" 1'-0" tot. 16, typ
- (E) #6 7'-6" 4'-0" tot. 19
- (E1) #6 2'-8" 7'-5" @ 12
- (E2) #6 2'-8" 8'-0" @ 12
- (F) #11 6'-0" @ 4
- (G) #11 12'-6" @ 4
- (H) #6 Height varies @ blockout & shear key @ 12
- (I) #6 9'-0" 4'-0" tot 19 (at shear key 9'-0" 2'-0")
- (I1) #6 9'-0" @ 12, typ each side of overhang
- (I2) #6 Varies @ 12, typ each side of overhang
- (J) #5 @ 12 extend to edge of deck
- (K) #8 (Primary Diaphragm) or (Secondary Diaphragm) @ 6, typ
- (L) #11 @ 6 (Bundle with (K)), typ
- (M) #8 @ 12, 4 per layer
- (N) #5 @ 12 (both ways)
- (O) #9 tot. 4, typ, extend to edge of deck
- (O1) #9 tot. 3, typ, extend to edge of deck
- (P) #5 1'-0" 1'-0" @ 12
- (Q) #6 4'-0" @ 6
- (R) #5 x 3'-6", tot 6
- (S) #11 18'-0" @ 12
- (S1) #11 13'-0" @ 12
- (T) #9 tot. 2
- (U) #5 13'-0" @ 12
- (U1) #5 Vars @ 12
- (U2) #5 3'-0" Vars @ 12
- (V) #5 cont, tot 7 Extend to edge of deck
- (W) #6 Var @ 12 bothways, typ
- (X) #5 @ 12 extend to edge of deck
- (X1) #5 @ 12 Vars extend 2'-0" beyond face of exterior girder
- (Y) #10 @ 6 between PT ducts, same layer & depth as transverse PT ducts and extend to edge of deck.
- (Z) #5 @ 12, 3 per layer
- Transverse PT duct
- HS bars

Notes

1. - All HS rods to be 1¾"ø and Grade 150 Ksi
   - Minimum Concrete Strength at time of Stressing f_c = 4000 psi
   - Complete all stressing using alternate pattern to 70% of ultimate stress
   - Rods to be stressed from inside structure bays
2. Bars may be placed with hooks horizontal if required for clearance.
3. Reinforcement shall be spaced along ℄ Hinge and placed normal to ℄ Hinge.
4. Minimum dimension to prestressed anchor plates.
5. For bearing details, see "PTFE / Spherical Expansion Bearing Details" sheets.
6. At Girder P/S Blockouts, place (K) & (L) in front of anchor plate.
7. 3" clear cover, typ.

DESIGN	BY Ahmed M.M. Ibrahim	CHECKED S. Barajas	
DETAILS	BY Jeff Thorne	CHECKED Ahmed M.M. Ibrahim	
QUANTITIES	BY A. Alcantara	CHECKED J. Han	

STATE OF CALIFORNIA
DEPARTMENT OF TRANSPORTATION

DIVISION OF ENGINEERING SERVICES
STRUCTURE DESIGN
DESIGN BRANCH 4

CU 04242
EA 163731

BRIDGE NO. 34-0157L
POST MILE 9.02

PRESIDIO VIADUCT - LEFT
"SB" HINGE DETAILS No. 1

STRUCTURES DESIGN DETAIL SHEET (ENGLISH) (REV. 10/25/05)

ORIGINAL SCALE IN INCHES FOR REDUCED PLANS 0 1 2 3

DISREGARD PRINTS BEARING EARLIER REVISION DATES →

REVISION DATES: 2-27-09 3-3-09 3-19-09 6-4-09 6-12-09 6-16-09 6-17-09 6-18-09 7-12-09

SHEET 54 OF 114

FILE => 34-0157l-g-hngedtsa01.dgn

USERNAME => ffrstrk DATE PLOTTED => 21-JUL-2009 TIME PLOTTED => 13:41

DIST	COUNTY	ROUTE	POST MILES TOTAL PROJECT	SHEET No	TOTAL SHEETS
04	SF	101,1	9.2/9.8, 6.8/7.1	405	567

Ahmed Ibrahim 6-4-09
REGISTERED CIVIL ENGINEER DATE

7-20-09
PLANS APPROVAL DATE

REGISTERED PROFESSIONAL ENGINEER
AHMED M M IBRAHIM
No. S 4865
EXP. 9-30-10
STRUCTURAL
STATE OF CALIFORNIA

The State of California or its officers or agents shall not be responsible for the accuracy or completeness of electronic copies of this plan sheet.

NOTE:
THE CONTRACTOR SHALL VERIFY ALL CONTROLLING FIELD DIMENSIONS BEFORE ORDERING OR FABRICATING ANY MATERIAL.

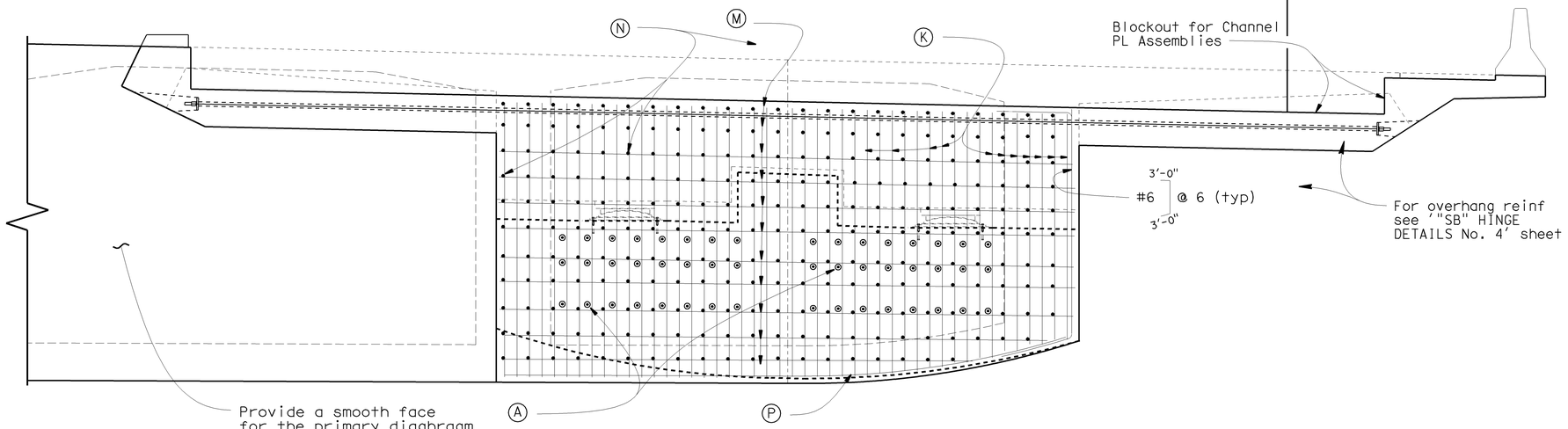

"SB" LINE SECTION B-B

3/8" = 1'-0"

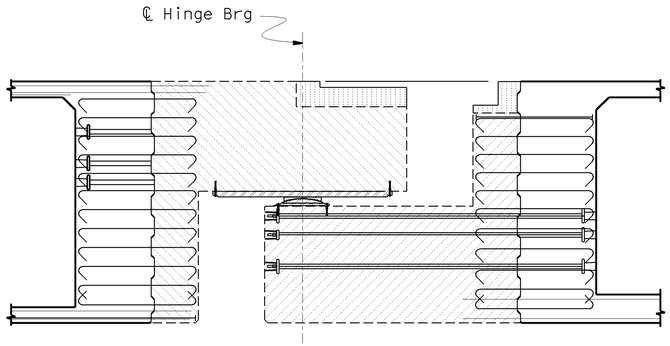

DETAIL "S"

No Scale

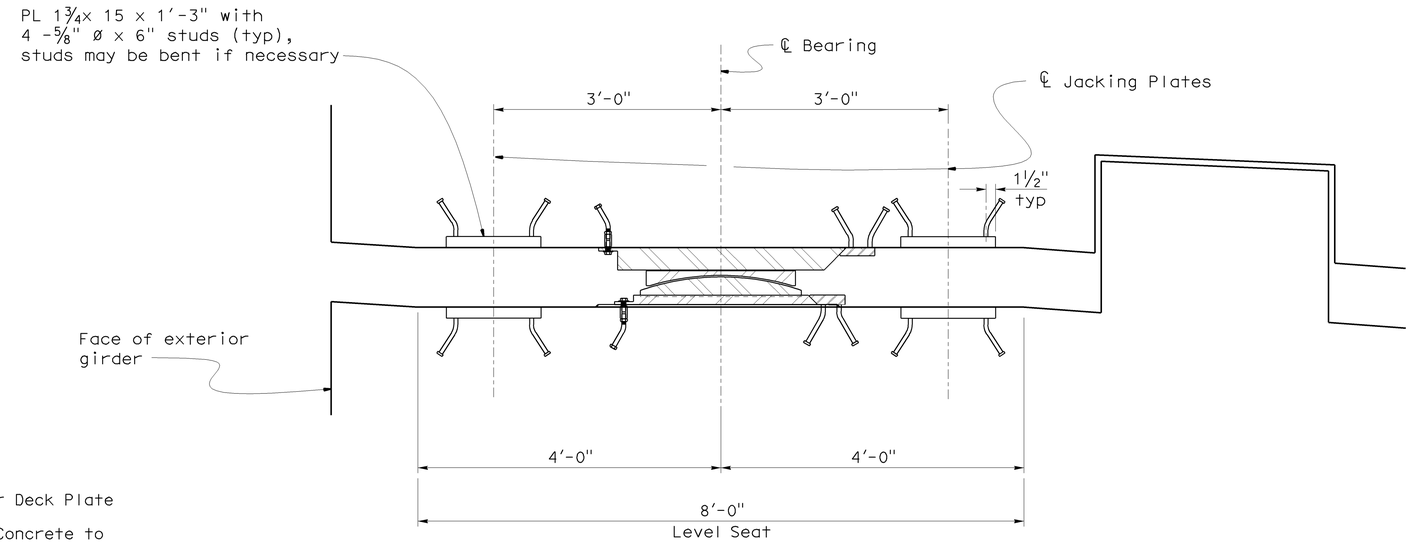

DETAIL "A"

1" = 1'-0"

Indicates blockout and closure pour for Channel & Support Plate Assemblies for Deck Plate

Indicates CIP concrete to be placed after both frames have been prestressed. Concrete to be same strength as CIP/ PS concrete.

Indicates CIP concrete to be placed after supporting side of hinge is constructed and bearings are properly positioned. Concrete to be same strength as CIP/ PS concrete. Falsework shall remain in place until concrete has attained a strength of at least 3500 psi.

DESIGN	BY Ahmed M.M. Ibrahim	CHECKED S. Barajas	STATE OF CALIFORNIA DEPARTMENT OF TRANSPORTATION	DIVISION OF ENGINEERING SERVICES STRUCTURE DESIGN DESIGN BRANCH 4	BRIDGE NO. 34-0157L
DETAILS	BY Jeff Thorne	CHECKED Ahmed M.M. Ibrahim			POST MILE 9.02
QUANTITIES	BY A. Alcantara	CHECKED J. Han		CU 04242 EA 163731	

PRESIDIO VIADUCT - LEFT
"SB" HINGE DETAILS No. 2

STRUCTURES DESIGN DETAIL SHEET (ENGLISH) (REV. 10/25/05)

ORIGINAL SCALE IN INCHES FOR REDUCED PLANS 0 1 2 3

DISREGARD PRINTS BEARING EARLIER REVISION DATES →

REVISION DATES: 2-27-09 | 3-3-09 | 3-18-09 | 5-15-09 | 6-2-09 | 6-4-09 | 6-16-09 | 6-17-09 | 7-12-09

SHEET 55 OF 114

FILE => 34-0157l-g-hngedtsa02.dgn

USERNAME = frostk DATE PLOTTED => 21-JUL-2009 TIME PLOTTED => 13:41

DIST	COUNTY	ROUTE	POST MILES TOTAL PROJECT	SHEET No	TOTAL SHEETS
04	SF	101,1	9.2/9.8, 6.8/7.1	406	567

Ahmed Ibrahim 6-4-09
REGISTERED CIVIL ENGINEER DATE

7-20-09
PLANS APPROVAL DATE

REGISTERED PROFESSIONAL ENGINEER
AHMED M M IBRAHIM
No. S 4865
EXP. 9-30-10
STRUCTURAL
STATE OF CALIFORNIA

The State of California or its officers or agents shall not be responsible for the accuracy or completeness of electronic copies of this plan sheet.

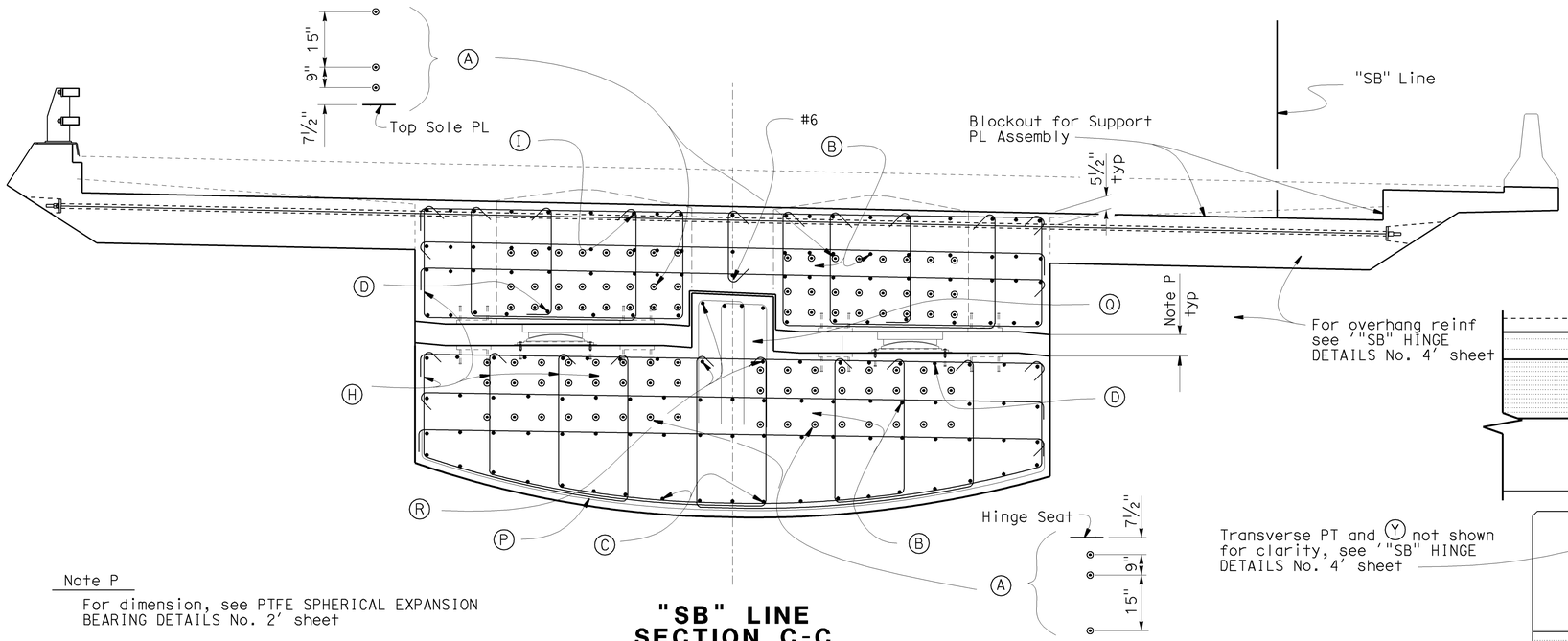

Note P

For dimension, see PTFE SPHERICAL EXPANSION BEARING DETAILS No. 2' sheet

"SB" LINE SECTION C-C

⅜" = 1'-0"

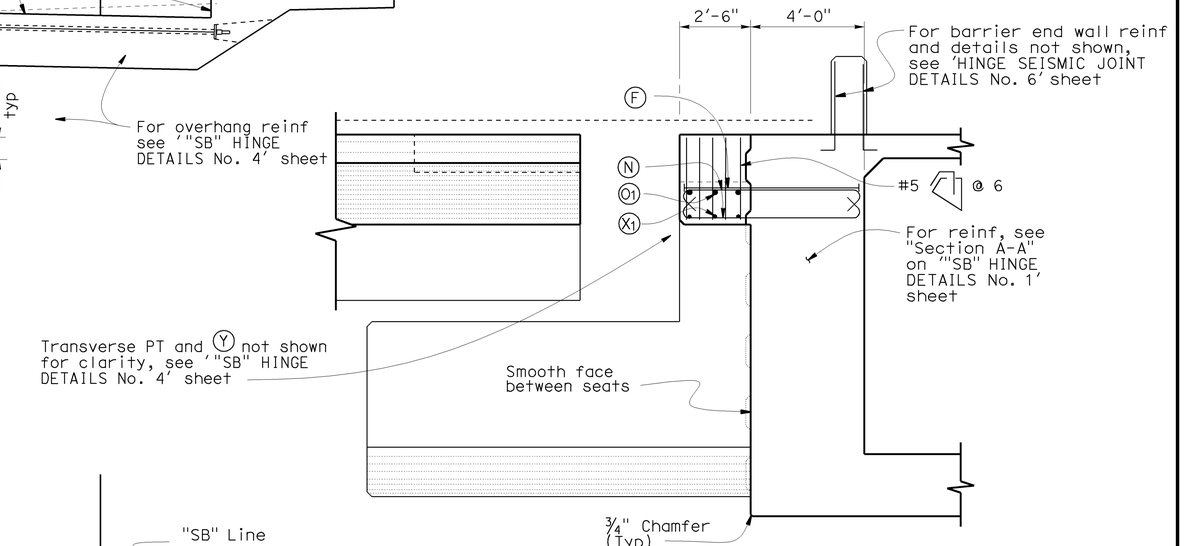

SECTION J-J

⅜" = 1'-0"

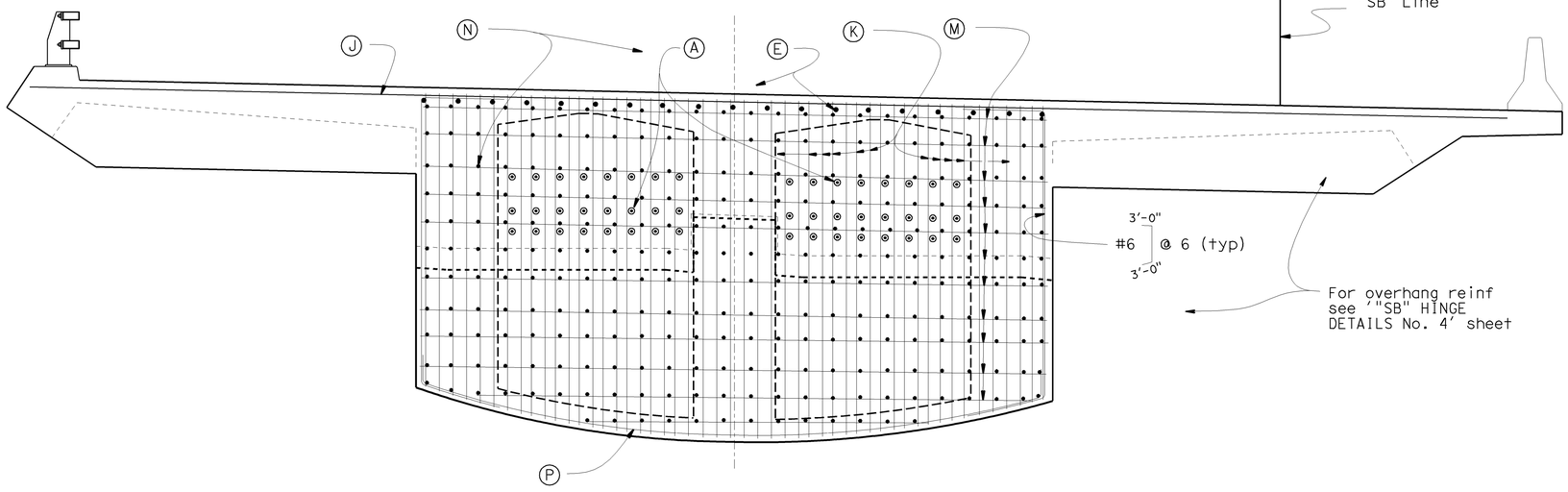

"SB" LINE SECTION D-D

⅜" = 1'-0"

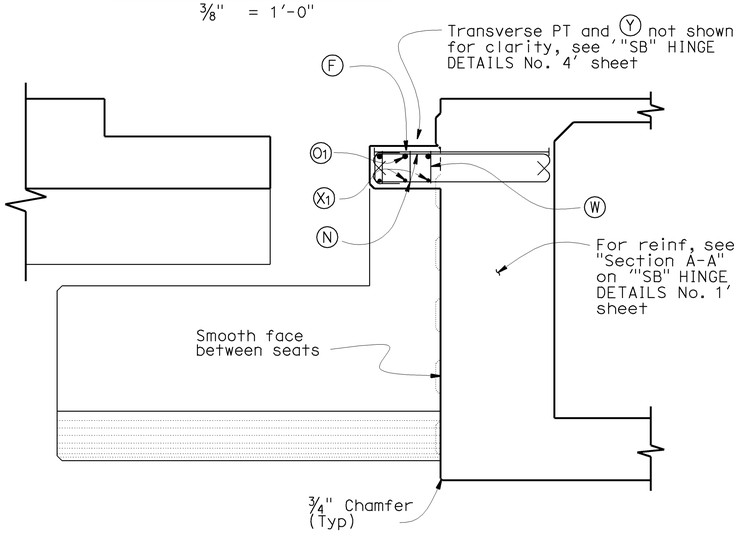

SECTION K-K

⅜" = 1'-0"

NOTE:
THE CONTRACTOR SHALL VERIFY ALL CONTROLLING FIELD DIMENSIONS BEFORE ORDERING OR FABRICATING ANY MATERIAL.

DESIGN	BY Ahmed M.M. Ibrahim	CHECKED S. Barajas	STATE OF CALIFORNIA DEPARTMENT OF TRANSPORTATION	DIVISION OF ENGINEERING SERVICES STRUCTURE DESIGN DESIGN BRANCH 4	BRIDGE NO. 34-0157L
DETAILS	BY Jeff Thorne	CHECKED Ahmed M.M. Ibrahim			POST MILE 9.02
QUANTITIES	BY A. Alcantara	CHECKED J. Han			

PRESIDIO VIADUCT - LEFT

"SB" HINGE DETAILS No. 3

STRUCTURES DESIGN DETAIL SHEET (ENGLISH) (REV. 10/25/05)

ORIGINAL SCALE IN INCHES FOR REDUCED PLANS 0 1 2 3

CU 04242
EA 163731

DISREGARD PRINTS BEARING EARLIER REVISION DATES

REVISION DATES										SHEET	OF
2-27-09	3-3-09	3-18-09	5-16-09	6-3-09	6-12-09	6-16-09	6-17-09	6-18-09	7-12-09	56	114

FILE => 34-0157l-g-hngedtsa03.dgn

USERNAME => ttestrk DATE PLOTTED => 21-JUL-2009 TIME PLOTTED => 13:41

DIST	COUNTY	ROUTE	POST MILES TOTAL PROJECT	SHEET No	TOTAL SHEETS
04	SF	101,1	9.2/9.8, 6.8/7.1	407	567

REGISTERED CIVIL ENGINEER — 6-4-09 DATE

7-20-09
PLANS APPROVAL DATE

AHMED M M IBRAHIM No. S 4865 EXP. 9-30-10 STRUCTURAL — REGISTERED PROFESSIONAL ENGINEER — STATE OF CALIFORNIA

The State of California or its officers or agents shall not be responsible for the accuracy or completeness of electronic copies of this plan sheet.

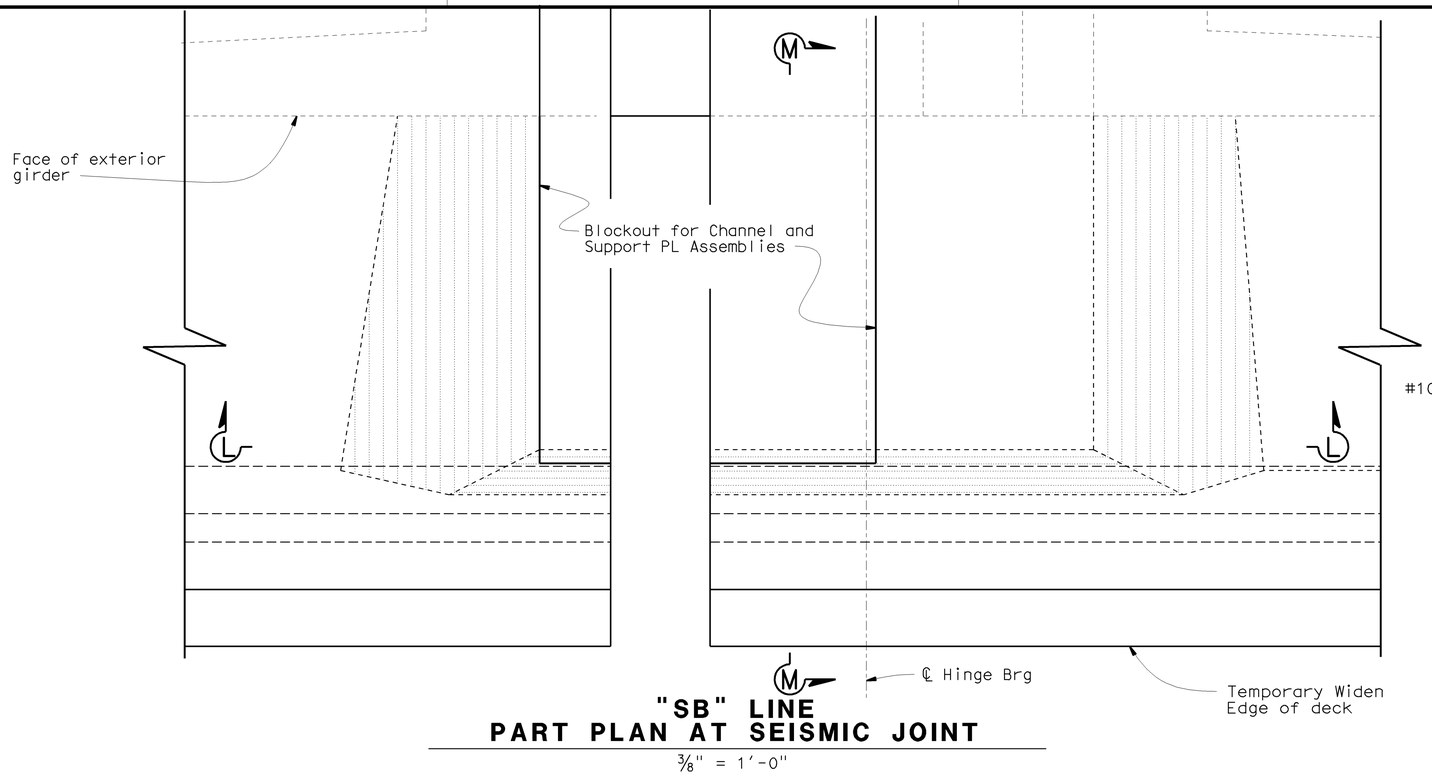

"SB" LINE PART PLAN AT SEISMIC JOINT

3/8" = 1'-0"

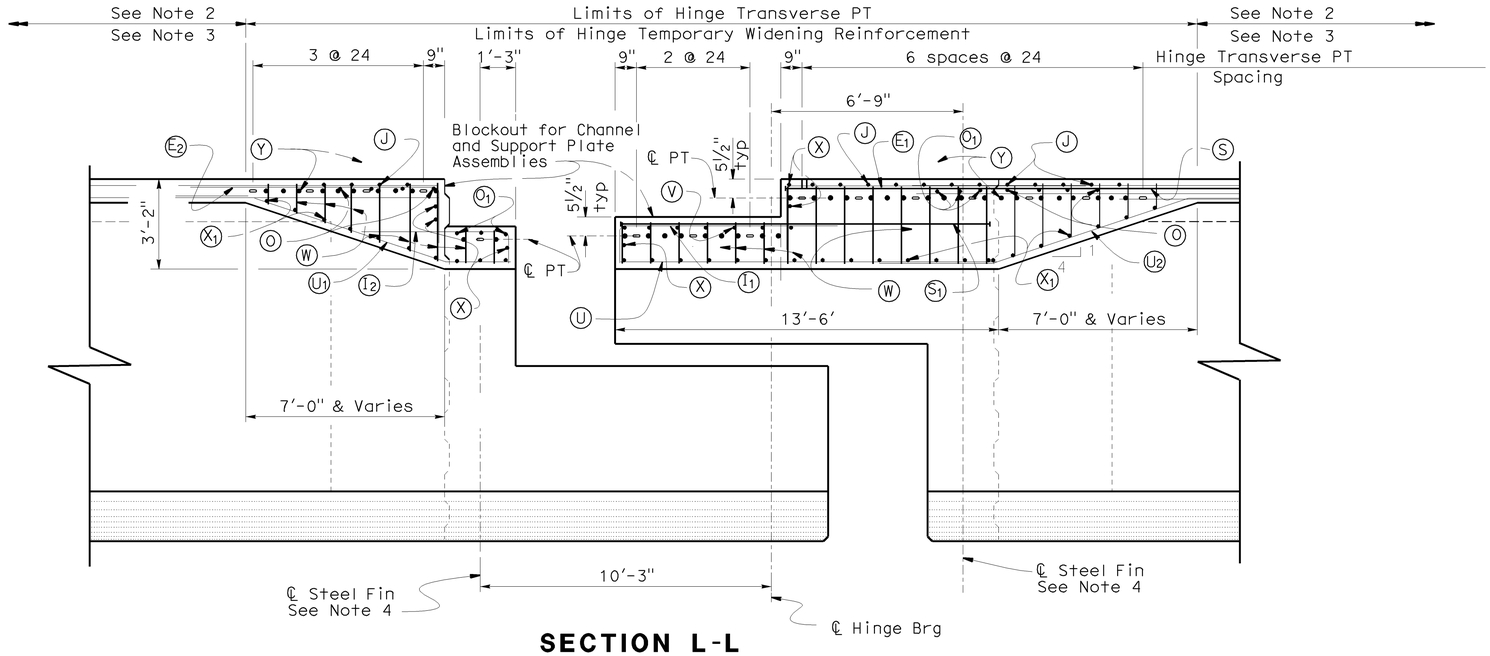

SECTION L-L

3/8" = 1'-0"

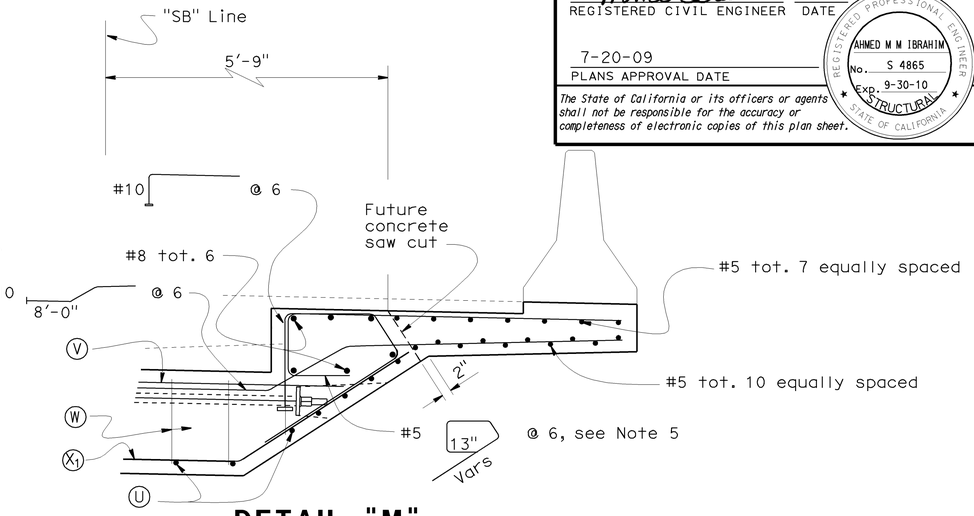

DETAIL "M"

3/4" = 1'-0"

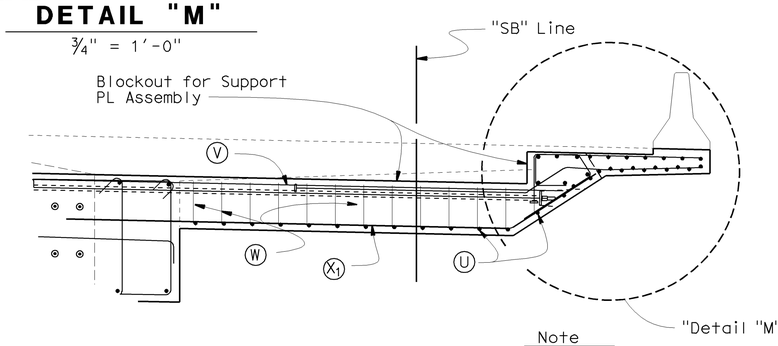

SECTION M-M

3/8" = 1'-0"

Note

Not all overhang reinf shown for clarity.

Notes

1. Hinge transverse PT shall be placed 5½" from top Pjack = 175 kips per tendon (4 strand 0.6ø)
2. For spacing and details on transverse PT beyond the hinge limits, see 'TRANSVERSE PT DETAILS No. 1' sheet.
3. For temporary widening reinforcement beyond the hinge limits, see 'TEMPORARY BRIDGE WIDENING' sheet.
4. For Steel Fin details, see 'STEEL FIN DETAILS' sheet.
5. #5 Stirrups can be bent as needed to accomodate transverse PT anchor plates.

	BY	CHECKED
DESIGN	Ahmed M.M. Ibrahim	S. Barajas
DETAILS	Jeff Thorne	Ahmed M.M. Ibrahim
QUANTITIES	A. Alcantara	J. Han

STATE OF CALIFORNIA
DEPARTMENT OF TRANSPORTATION

DIVISION OF ENGINEERING SERVICES
STRUCTURE DESIGN
DESIGN BRANCH 4

CU 04242
EA 163731

BRIDGE NO. 34-0157L
POST MILE 9.02

PRESIDIO VIADUCT - LEFT
"SB" HINGE DETAILS No. 4

STRUCTURES DESIGN DETAIL SHEET (ENGLISH) (REV. 10/25/05)

ORIGINAL SCALE IN INCHES FOR REDUCED PLANS 0 1 2 3

DISREGARD PRINTS BEARING EARLIER REVISION DATES →

REVISION DATES: 2-27-09 | 3-3-09 | 3-18-09 | 5-15-09 | 5-4-09 | 6-14-09 | 6-17-09 | 6-18-09 | 7-12-09

SHEET 57 OF 114

FILE => 34-0157l-g-hngedtsa04.dgn

USERNAME => trsitk DATE PLOTTED => 21-JUL-2009 TIME PLOTTED => 13:41

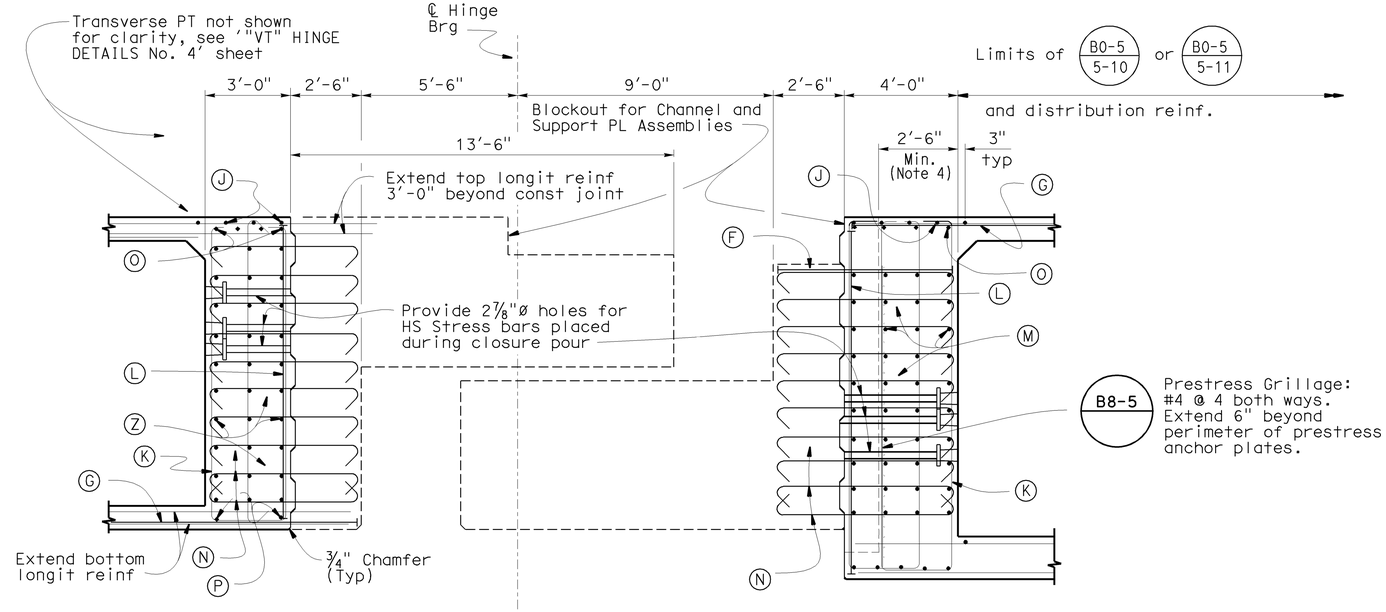

"VT" LINE
SECTION E-E (BEFORE STRESSING)

⅜" = 1'-0"

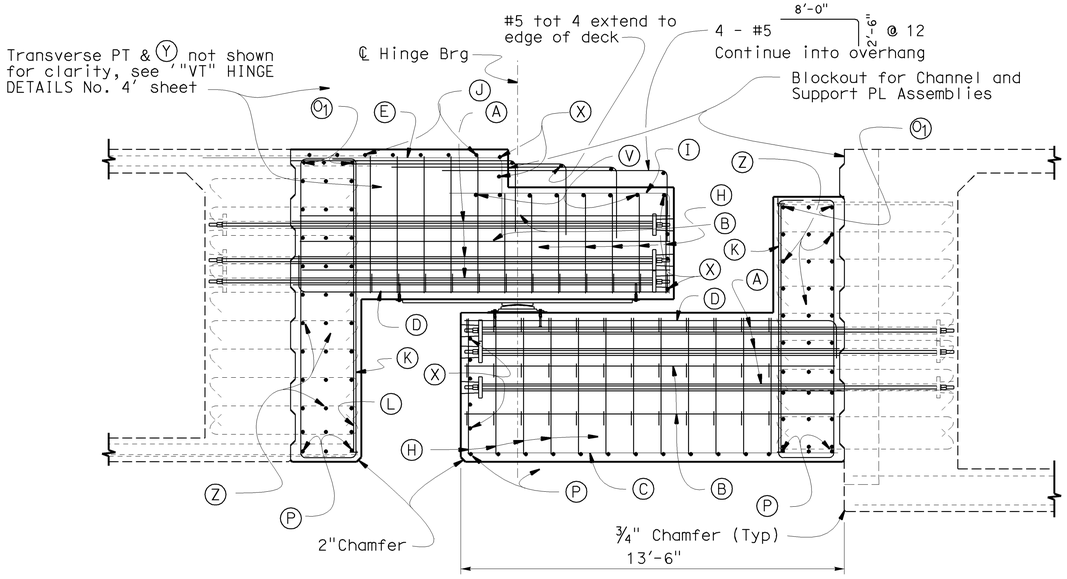

"VT" LINE
SECTION E-E (CLOSURE POUR)

⅜" = 1'-0"

NOTE:
THE CONTRACTOR SHALL VERIFY ALL CONTROLLING FIELD DIMENSIONS BEFORE ORDERING OR FABRICATING ANY MATERIAL.

DIST	COUNTY	ROUTE	POST MILES TOTAL PROJECT	SHEET No	TOTAL SHEETS
04	SF	101,1	9.2/9.8, 6.8/7.1	408	567

Ahmed Ibrahim 6-4-09
REGISTERED CIVIL ENGINEER DATE

7-20-09
PLANS APPROVAL DATE

REGISTERED PROFESSIONAL ENGINEER — AHMED M M IBRAHIM — No. S 4865 — EXP. 9-30-10 — STRUCTURAL — STATE OF CALIFORNIA

The State of California or its officers or agents shall not be responsible for the accuracy or completeness of electronic copies of this plan sheet.

LEGEND "VT" - LINE

- Ⓐ 1¾" dia. HS Rods, tot 6 per layer, (3 layers)
- Ⓑ #6 tot. 11 per layer (2 layers), typ
- Ⓒ #6 tot. 11, typ
- Ⓓ #10 17'-0" 1'-0" tot. 8, typ
- Ⓔ #6 7'-6" 4'-0" tot. 11
- Ⓔ1 #6 2'-8" 7'-5" @ 12
- Ⓔ2 #6 8'-0" @ 12
- Ⓕ #11 6'-0" @ 6
- Ⓖ #11 12'-6" @ 6
- Ⓗ #6 @ 12 (Height varies @ blockout & shear key)
- Ⓘ #6 9'-0" 4'-0" tot 11 (at shear key 9'-0" 2'-0")
- Ⓘ1 #6 9'-0" @ 12, typ each side of overhang
- Ⓘ2 #6 Varies @ 12, typ each side of overhang
- Ⓙ #5 @ 12, extend to edge of deck
- Ⓚ #8 (Primary Diaphragm) or (Secondary Diaphragm) @ 6, typ
- Ⓛ #11 @ 6 (Bundle with Ⓚ), typ
- Ⓜ #8 @ 12, 4 per layer
- Ⓝ #5 @ 12 (both ways)
- Ⓞ #9 tot. 4, typ. Extend to edge of deck
- Ⓞ1 #9 tot. 3, typ. Extend to edge of deck
- Ⓟ #5 1'-0" 1'-0" @ 12
- Ⓠ #5 4'-0" @ 12
- Ⓡ #5 x 3'-6", tot 4
- Ⓢ #11 18'-0" @ 12, typ each side of overhang
- Ⓢ1 #11 13'-0" @ 12
- Ⓣ #9 tot. 2
- Ⓤ #5 13'-0" @ 12
- Ⓤ1 #5 Vars @ 12
- Ⓤ2 #5 3'-0" Vars @ 12
- Ⓥ #5 cont, tot 7 extend to edge of deck
- Ⓦ #6 Var. @ 12 bothways, typ
- Ⓧ #5 @ 12 extend to edge of deck
- Ⓧ1 #5 Vars @ 12 extend 3'-0" beyond face of exterior girder
- Ⓨ #10 @ 6 between PT ducts, same layer & depth as transverse PT ducts and extend to edge of deck
- Ⓩ #5 @ 12, 3 per layer
- Transverse PT duct
- HS bars

Notes

1. - All HS rods to be 1¾"Ø and Grade 150 Ksi
   - Minimum Concrete Strength at time of Stressing f_c = 4000 psi
   - Complete all stressing using alternate pattern to 70% of ultimate stress
   - Rods to be stressed from inside structure bays
2. Bars may be placed with hooks horizontal if required for clearance.
3. Reinforcement shall be spaced along ℄ Hinge and placed normal to ℄ Hinge.
4. Minimum dimension to prestressed anchor plates.
5. For bearing details, see "PTFE / Spherical Expansion Bearing Details" sheets.
6. At Girder P/S Blockouts, place Ⓚ & Ⓛ in front of anchor plate.
7. 3" clear cover, typ.

	BY	CHECKED
DESIGN	Ahmed M.M. Ibrahim	S. Barajas
DETAILS	Jeff Thorne	Ahmed M.M. Ibrahim
QUANTITIES	A. Alcantara	J. Han

STATE OF CALIFORNIA
DEPARTMENT OF TRANSPORTATION

DIVISION OF ENGINEERING SERVICES
STRUCTURE DESIGN
DESIGN BRANCH 4

CU 04242
EA 163731

BRIDGE NO. 34-0157L
POST MILE 9.02

PRESIDIO VIADUCT - LEFT
"VT" HINGE DETAILS No. 1

STRUCTURES DESIGN DETAIL SHEET (ENGLISH) (REV. 10/25/05)

ORIGINAL SCALE IN INCHES FOR REDUCED PLANS 0 1 2 3

DISREGARD PRINTS BEARING EARLIER REVISION DATES →

REVISION DATES: 2-27-09 | 3-3-09 | 3-18-09 | 6-3-09 | 6-16-09 | 6-18-09 | 7-12-09

SHEET 58 OF 114

FILE => 34-0157l-g-hngedtsb01.dgn

USERNAME => ttistrk DATE PLOTTED => 21-JUL-2009 TIME PLOTTED => 13:41

DIST	COUNTY	ROUTE	POST MILES TOTAL PROJECT	SHEET No	TOTAL SHEETS
04	SF	101,1	9.2/9.8, 6.8/7.1	409	567

Ahmed Ibrahim 6-4-09
REGISTERED CIVIL ENGINEER DATE

7-20-09
PLANS APPROVAL DATE

REGISTERED PROFESSIONAL ENGINEER
AHMED M M IBRAHIM
No. S 4865
EXP. 9-30-10
STRUCTURAL
STATE OF CALIFORNIA

The State of California or its officers or agents shall not be responsible for the accuracy or completeness of electronic copies of this plan sheet.

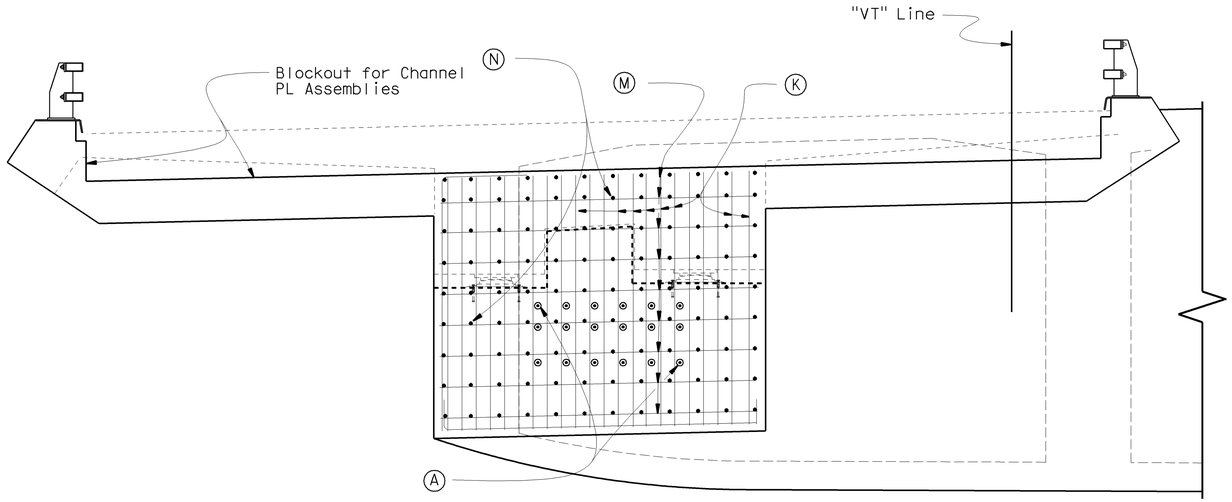

"VT" LINE SECTION F-F

3/8" = 1'-0"

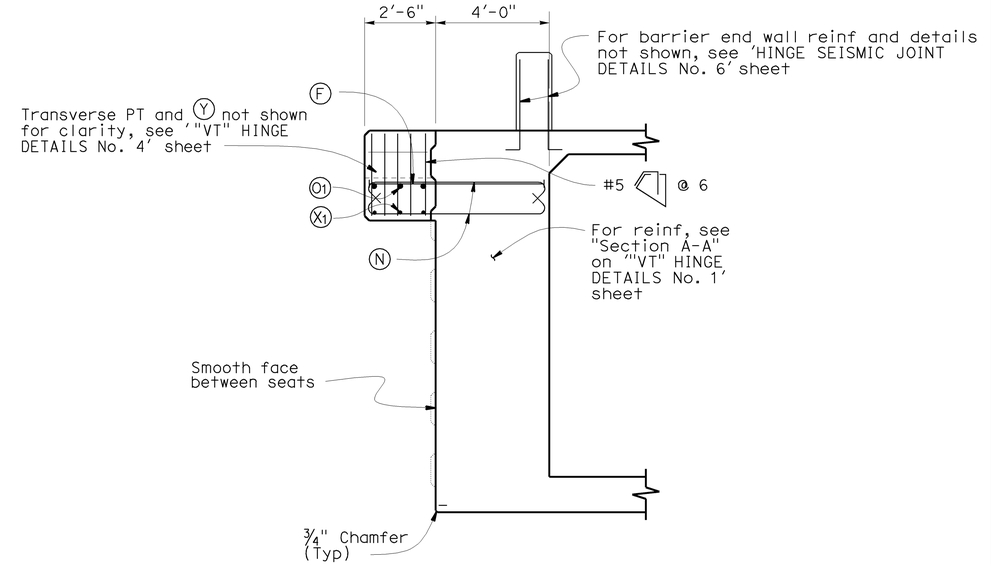

SECTION O-O

3/8" = 1'-0"

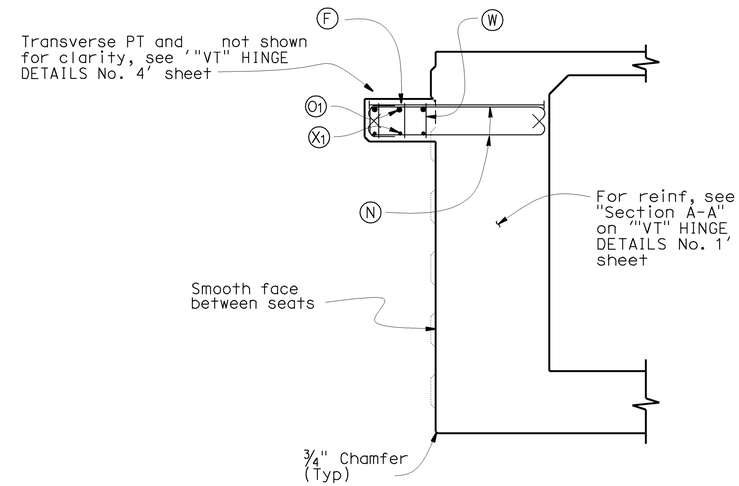

SECTION N-N

3/8" = 1'-0"

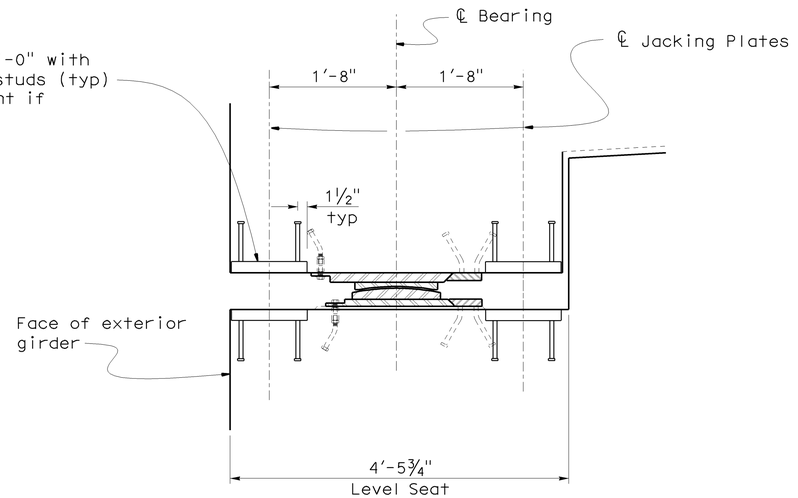

DETAIL "B"

1" = 1'-0"

NOTE:
THE CONTRACTOR SHALL VERIFY ALL CONTROLLING FIELD DIMENSIONS BEFORE ORDERING OR FABRICATING ANY MATERIAL.

DESIGN	BY Ahmed M.M. Ibrahim	CHECKED S. Barajas	STATE OF CALIFORNIA DEPARTMENT OF TRANSPORTATION	DIVISION OF ENGINEERING SERVICES STRUCTURE DESIGN DESIGN BRANCH 4	BRIDGE NO. 34-0157L	PRESIDIO VIADUCT - LEFT
DETAILS	BY Jeff Thorne	CHECKED Ahmed M.M. Ibrahim			POST MILE 9.02	"VT" HINGE DETAILS No. 2
QUANTITIES	BY A. Alcantara	CHECKED J. Han				

STRUCTURES DESIGN DETAIL SHEET (ENGLISH) (REV. 10/25/05)

ORIGINAL SCALE IN INCHES FOR REDUCED PLANS 0 1 2 3

CU 04242
EA 163731

DISREGARD PRINTS BEARING EARLIER REVISION DATES →

REVISION DATES: 2-27-09 | 3-3-09 | 3-18-09 | 5-15-09 | 6-3-09 | 6-16-09 | 6-18-09 | 7-12-09

SHEET 59 OF 114

FILE => 34-0157l-g-hngedtsb02.dgn

USERNAME => trostrk DATE PLOTTED => 21-JUL-2009 TIME PLOTTED => 13:41

DIST	COUNTY	ROUTE	POST MILES TOTAL PROJECT	SHEET No	TOTAL SHEETS
04	SF	101,1	9.2/9.8, 6.8/7.1	410	567

Ahmed Brahim 6-4-09
REGISTERED CIVIL ENGINEER DATE

7-20-09
PLANS APPROVAL DATE

REGISTERED PROFESSIONAL ENGINEER
AHMED M M IBRAHIM
No. S 4865
EXP. 9-30-10
STRUCTURAL
STATE OF CALIFORNIA

The State of California or its officers or agents shall not be responsible for the accuracy or completeness of electronic copies of this plan sheet.

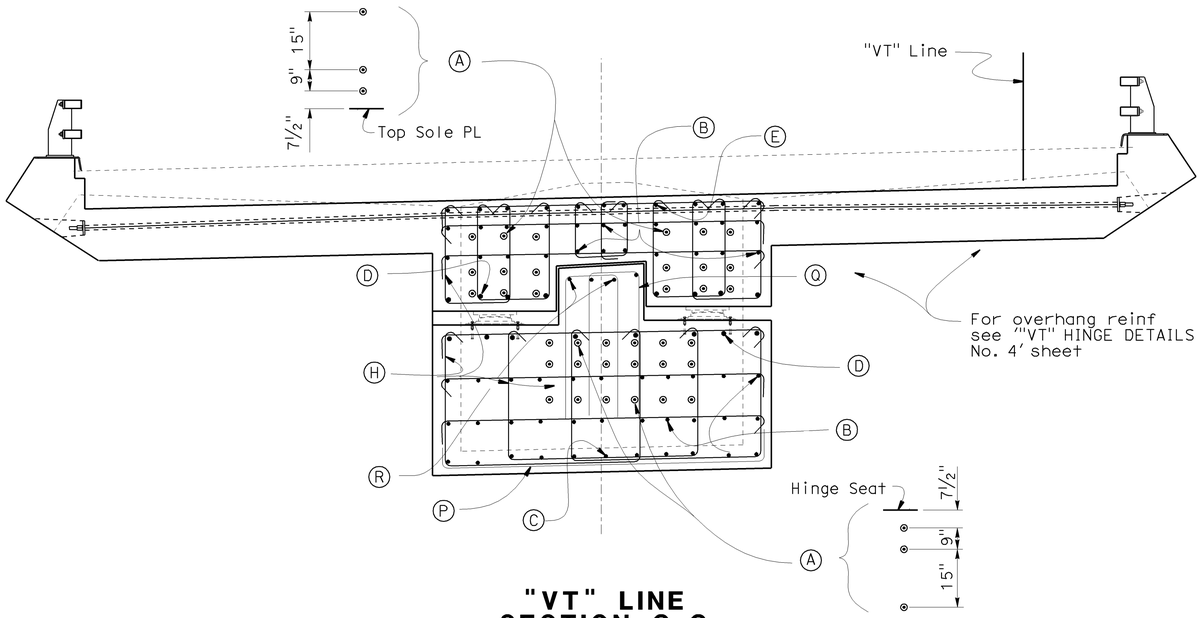

"VT" LINE SECTION G-G

3/8" = 1'-0"

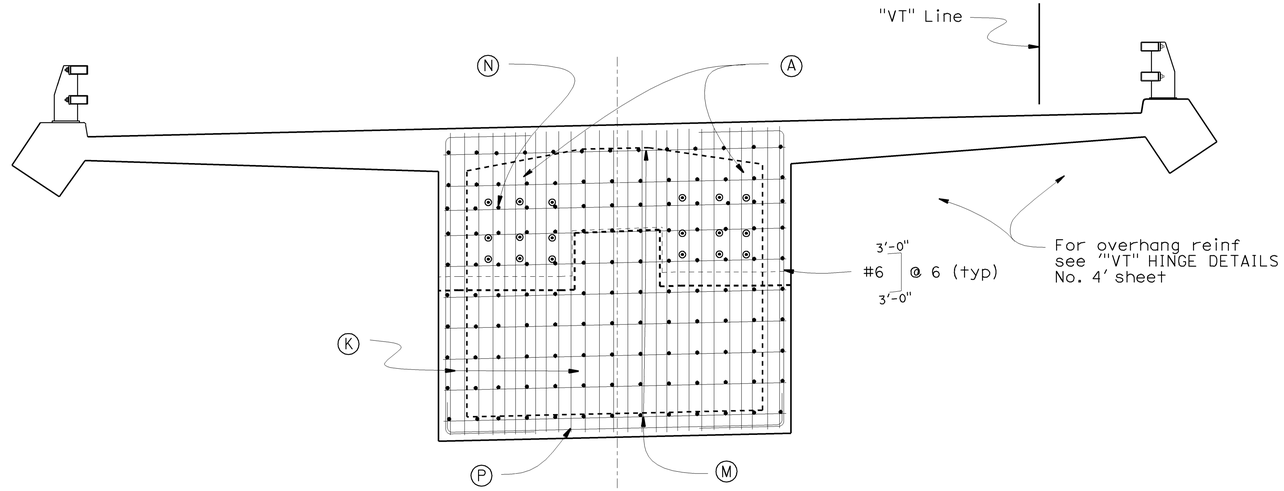

"VT" LINE SECTION H-H

3/8" = 1'-0"

NOTE:
THE CONTRACTOR SHALL VERIFY ALL CONTROLLING FIELD DIMENSIONS BEFORE ORDERING OR FABRICATING ANY MATERIAL.

DESIGN	BY Ahmed M.M. Ibrahim	CHECKED S. Barajas	STATE OF CALIFORNIA DEPARTMENT OF TRANSPORTATION	DIVISION OF ENGINEERING SERVICES STRUCTURE DESIGN DESIGN BRANCH 4	BRIDGE NO. 34-0157L
DETAILS	BY Jeff Thorne	CHECKED Ahmed M.M. Ibrahim			POST MILE 9.02
QUANTITIES	BY A. Alcantara	CHECKED J. Han			

PRESIDIO VIADUCT - LEFT
"VT" HINGE DETAILS No. 3

STRUCTURES DESIGN DETAIL SHEET (ENGLISH) (REV. 10/25/05)

ORIGINAL SCALE IN INCHES FOR REDUCED PLANS 0 1 2 3

CU 04242
EA 163731

DISREGARD PRINTS BEARING EARLIER REVISION DATES

REVISION DATES: 2-27-09 | 3-3-09 | 3-18-09 | 5-16-09 | 6-4-09 | 6-14-09 | 6-18-09

SHEET 60 OF 114

FILE => 34-0157l-g-hngedtsb03.dgn

USERNAME => ttstrk DATE PLOTTED => 21-JUL-2009 TIME PLOTTED => 13:41

DIST	COUNTY	ROUTE	POST MILES TOTAL PROJECT	SHEET No	TOTAL SHEETS
04	SF	101,1	9.2/9.8, 6.8/7.1	411	567

Ahmed Brahim 6-4-09
REGISTERED CIVIL ENGINEER DATE

7-20-09
PLANS APPROVAL DATE

REGISTERED PROFESSIONAL ENGINEER
AHMED M M IBRAHIM
No. S 4865
EXP. 9-30-10
STRUCTURAL
STATE OF CALIFORNIA

The State of California or its officers or agents shall not be responsible for the accuracy or completeness of electronic copies of this plan sheet.

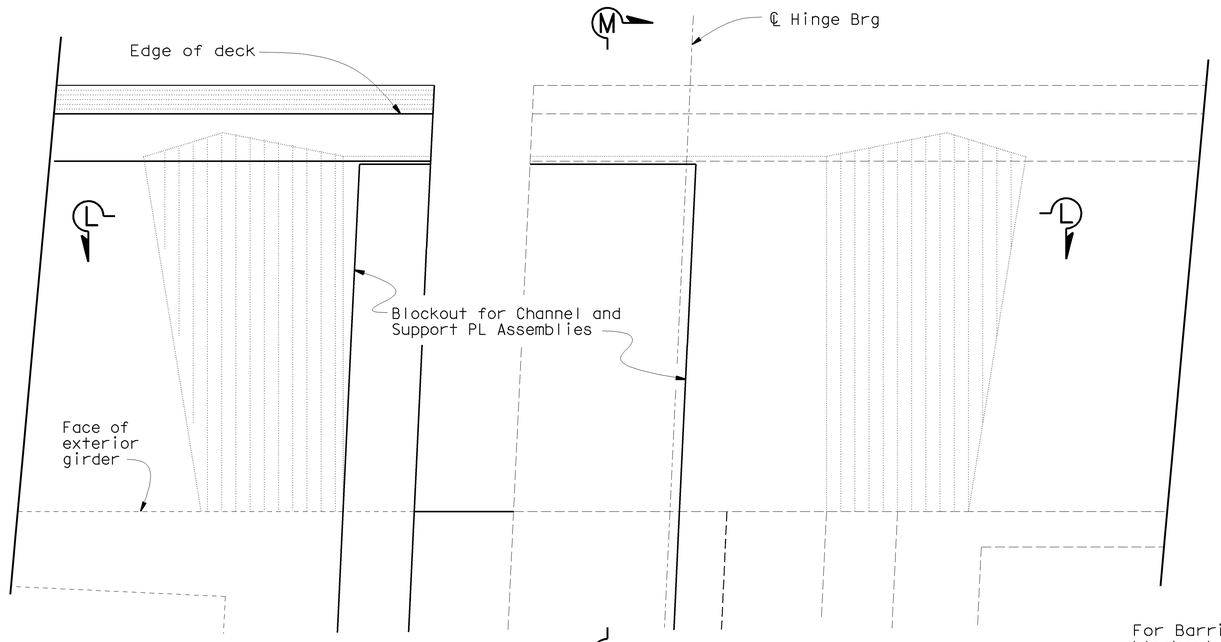

"VT" LINE PART PLAN AT SEISMIC JOINT

3/8" = 1'-0"

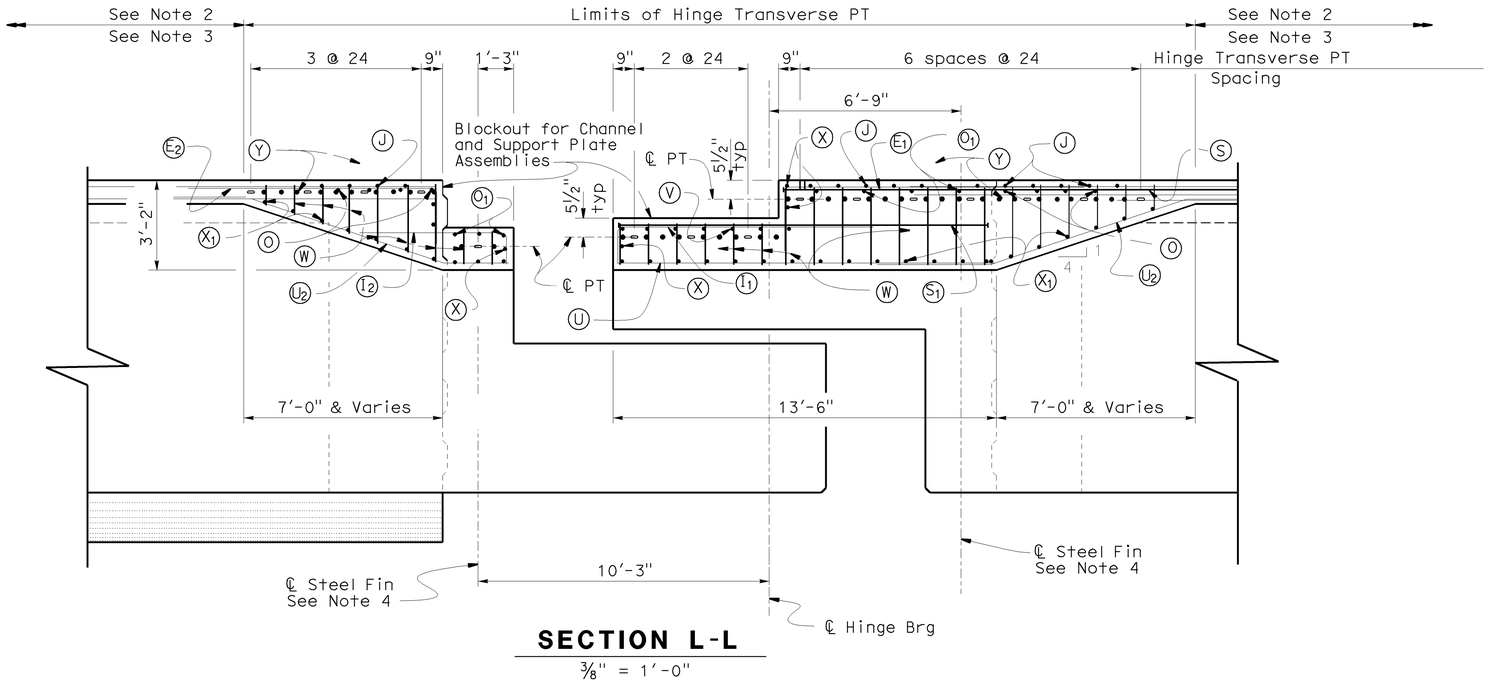

SECTION L-L

3/8" = 1'-0"

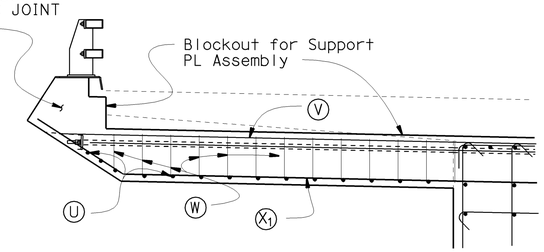

SECTION M-M

3/8" = 1'-0"

Note
Not all overhang shown for clarity.

Notes

1. Hinge transverse PT shall be placed 5½" from top . Pjack = 175 kips per tendon (4 strand 0.6ø)
2. For spacing and details on transverse PT beyond the hinge limits, see 'TRANSVERSE PT DETAILS No. 1' sheet.
3. For temporary widening reinforcement beyond the hinge limits, see 'TEMPORARY BRIDGE WIDENING' sheet.
4. For Steel Fin details, see 'STEEL FIN DETAILS' sheet.

DESIGN	BY Ahmed M.M. Ibrahim	CHECKED S. Barajas	STATE OF CALIFORNIA DEPARTMENT OF TRANSPORTATION	DIVISION OF ENGINEERING SERVICES STRUCTURE DESIGN DESIGN BRANCH 4	BRIDGE NO. 34-0157L
DETAILS	BY Jeff Thorne	CHECKED Ahmed M.M. Ibrahim			POST MILE 9.02
QUANTITIES	BY A. Alcantara	CHECKED J. Han		CU 04242 EA 163731	

PRESIDIO VIADUCT - LEFT

"VT" HINGE DETAILS No. 4

STRUCTURES DESIGN DETAIL SHEET (ENGLISH) (REV. 10/25/05)

ORIGINAL SCALE IN INCHES FOR REDUCED PLANS 0 1 2 3

DISREGARD PRINTS BEARING EARLIER REVISION DATES →

REVISION DATES: 2-27-09 | 3-3-09 | 3-18-09 | 5-15-09 | 5-4-09 | 6-14-09 | 6-16-09 | 6-18-09 | 7-12-08

SHEET 61 OF 114

FILE => 34-0157l-g-hngedtsb04.dgn

USERNAME => trsitk DATE PLOTTED => 21-JUL-2009 TIME PLOTTED => 13:46

DIST	COUNTY	ROUTE	POST MILES TOTAL PROJECT	SHEET No	TOTAL SHEETS
04	SF	101,1	9.2/9.8, 6.8/7.1	412	567

Ahmed Ibrahim 6-4-09
REGISTERED CIVIL ENGINEER DATE

7-20-09
PLANS APPROVAL DATE

REGISTERED PROFESSIONAL ENGINEER — AHMED M M IBRAHIM — No. S 4865 — EXP. 9-30-10 — STRUCTURAL — STATE OF CALIFORNIA

The State of California or its officers or agents shall not be responsible for the accuracy or completeness of electronic copies of this plan sheet.

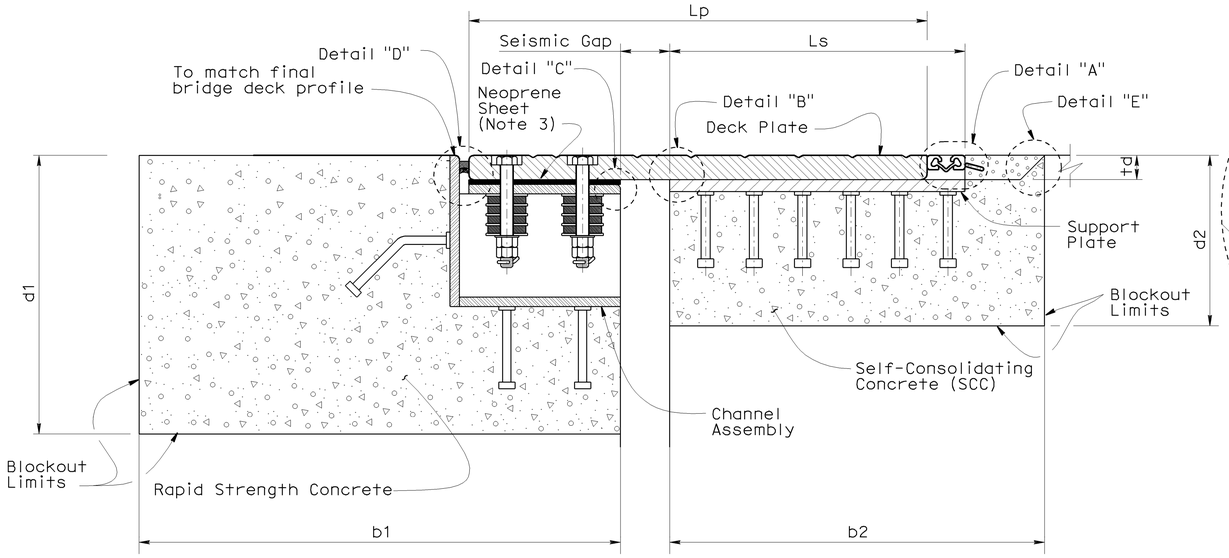

ELEVATION

No Scale

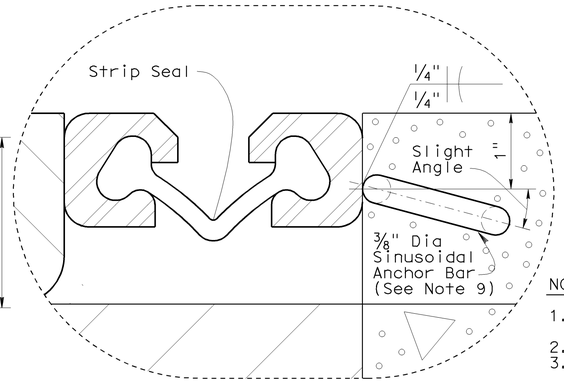

DETAIL "A"

1' = 1'-0"

NOTES:

1. Top of deck plate, elastomeric and Rapid Strength Concrete shall match top of deck profile.
2. Gland of the strip joint to be installed at end of project
3. 1½" holes in neoprene sheets shall be drilled or punched so that the neoprene is not distorted at the time of installation. See 'HINGE SEISMIC JOINT DETAILS No. 4' sheet.
4. For deck plate details see 'HINGE SEISMIC JOINT DETAILS No. 2' and "HINGE SEISMIC JOINT DETAILS No. 3" sheets.
5. For channel assembly details, see 'HINGE SEISMIC JOINT DETAILS No. 4 & 5' sheets.
6. Place deck plate, support plate and channel assembly so that full bearing is achieved between I) deck, support plates and II) deck plate and channel assembly.
7. Self-consolidating concrete (f'c= 5.0 ksi @ 56 days) shall be used in support plate blockout.
8. Rapid Strength Concrete (f'ci=2.0 ksi @ 3 hrs, f'c= 5.0 ksi @ 56 days) shall be used in channel assembly blockout.
9. The sinusoidal anchor bar may be replaced with anchor studs (see "DETAIL F").
10. For support plate details see 'HINGE SEISMIC JOINT DETAILS No. 5' sheet.
11. The top deck overlay within the seismic joint limits may be substituted by either Rapid Strength Concrete, or Self-Consolidating Concrete, or Structural Concrete Bridge with minimum=5.5 ksi at 28 days.
12. All bolts used on Hinge seismic joint shall be ASTM A449 galvanized unless noted otherwise.
13. All structure steel plate interface connection shall be made with continuous complete peretration (CJP) welds unless noted otherwise.

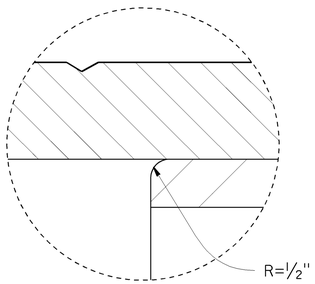

DETAIL "B"

1' = 6"

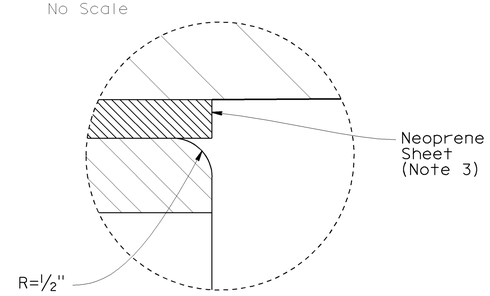

DETAIL "C"

1' = 1'-0"

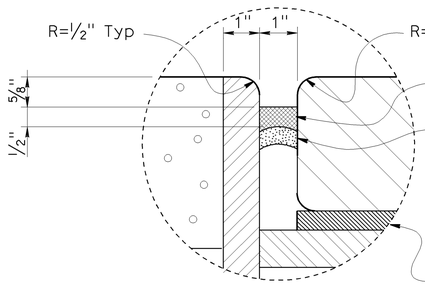

DETAIL "D"

1' = 6"

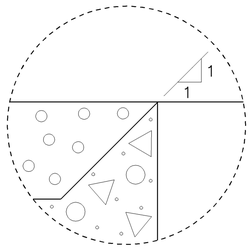

DETAIL "E"

1' = 6"

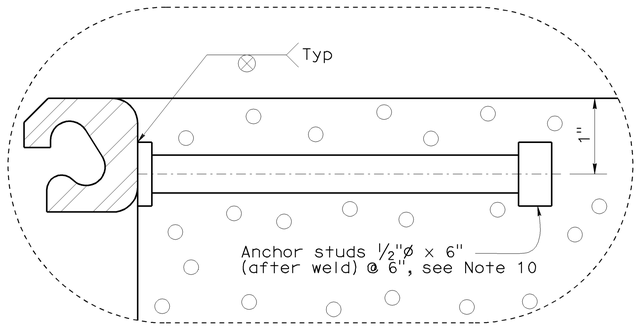

DETAIL "F"

1' = 6"

NOTE:
THE CONTRACTOR SHALL VERIFY ALL CONTROLLING FIELD DIMENSIONS BEFORE ORDERING OR FABRICATING ANY MATERIAL.

JOINT INFORMATION		
LOCATION		HINGE 1
SKEW (°)		0°
DECK ℄	THICKNESS td (in)	2½
	LENGTH Lp (in)	112
SUPPORT ℄	THICKNESS ts (in)	1
	LENGTH Ls (in)	58
COVER ℄	THICKNESS tc (in)	N/A
	LENGTH Lc (in)	N/A
SEISMIC GAP @ 70°F	(in)	42
CREEP & SHRINKAGE	(in)	4.5
TEMP OPEN	(in)	2
MCE OPEN	(in)	40
TEMP CLOSE	(in)	2
MCE CLOSE	(in)	40
d1	(in)	20
b1	(in)	30
d2	(in)	16
b2	(in)	70
STRIP JOINT	MR (in)	4

DESIGN	BY Q. Zhao	CHECKED T. Delis	STATE OF CALIFORNIA DEPARTMENT OF TRANSPORTATION
DETAILS	BY Marvin Lane	CHECKED Q. Zhao	DIVISION OF ENGINEERING SERVICES STRUCTURE DESIGN — DESIGN BRANCH 4
QUANTITIES	BY A. Alcantara	CHECKED J. Han	CU 04242 EA 163731

BRIDGE NO. 34-0157L
POST MILE 9.02

PRESIDIO VIADUCT - LEFT
HINGE SEISMIC JOINT DETAILS No. 1

STRUCTURES DESIGN DETAIL SHEET (ENGLISH) (REV. 10/25/05)

ORIGINAL SCALE IN INCHES FOR REDUCED PLANS 0 1 2 3

DISREGARD PRINTS BEARING EARLIER REVISION DATES →

REVISION DATES: 4-28-09 | 4-28-09 | 5-27-09 | 5-29-09 | 6-01-09 | 6-02-09 | 6-15-09 | 7-7-09

SHEET 62 OF 114

FILE => 34-0157l-h-sjcross01.dgn

USERNAME => ttrstrk DATE PLOTTED => 21-JUL-2009 TIME PLOTTED => 13:46

DIST	COUNTY	ROUTE	POST MILES TOTAL PROJECT	SHEET No	TOTAL SHEETS
04	SF	101,1	9.2/9.8, 6.8/7.1	413	567

Ahmed Ibrahim 6-4-09
REGISTERED CIVIL ENGINEER DATE

7-20-09
PLANS APPROVAL DATE

REGISTERED PROFESSIONAL ENGINEER
AHMED M M IBRAHIM
No. S 4865
EXP. 9-30-10
STRUCTURAL
STATE OF CALIFORNIA

The State of California or its officers or agents shall not be responsible for the accuracy or completeness of electronic copies of this plan sheet.

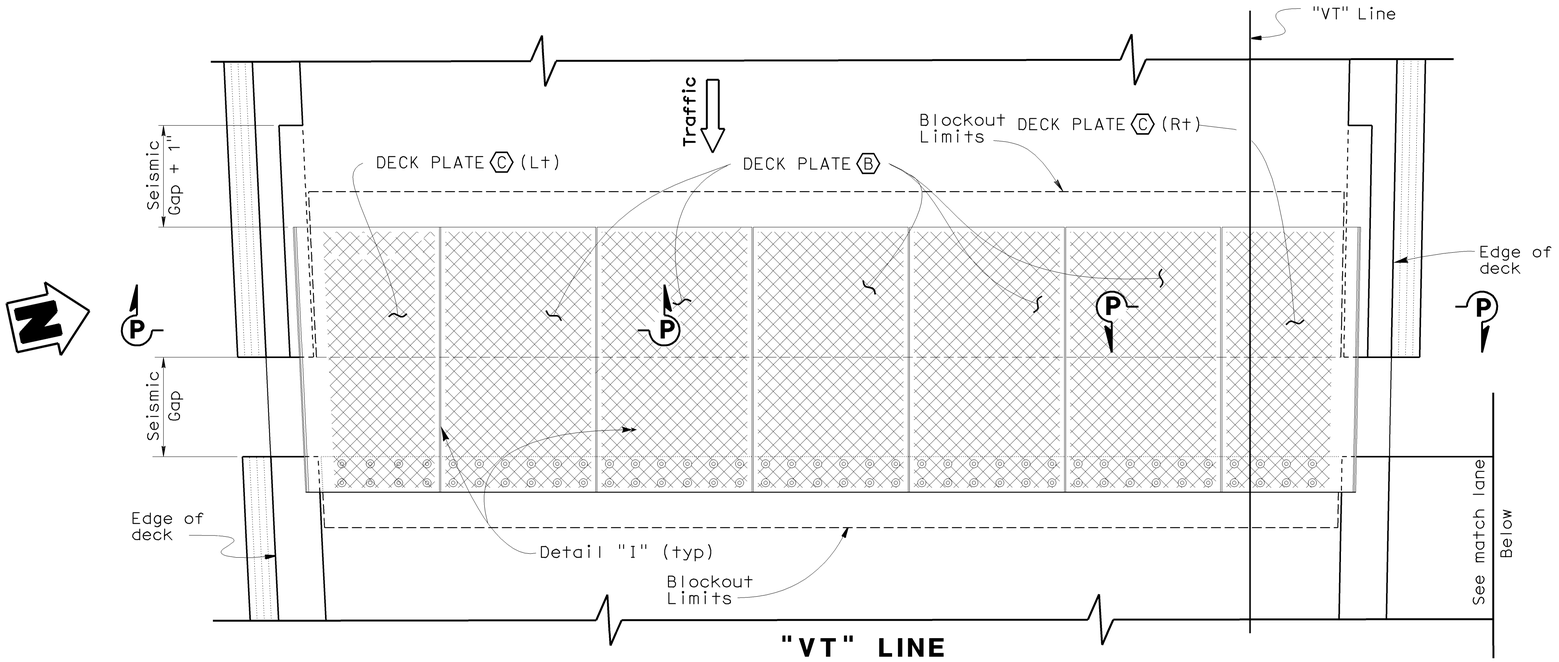

"VT" LINE
HINGE EXPANSION JOINT PLAN
3/8" = 1'-0"

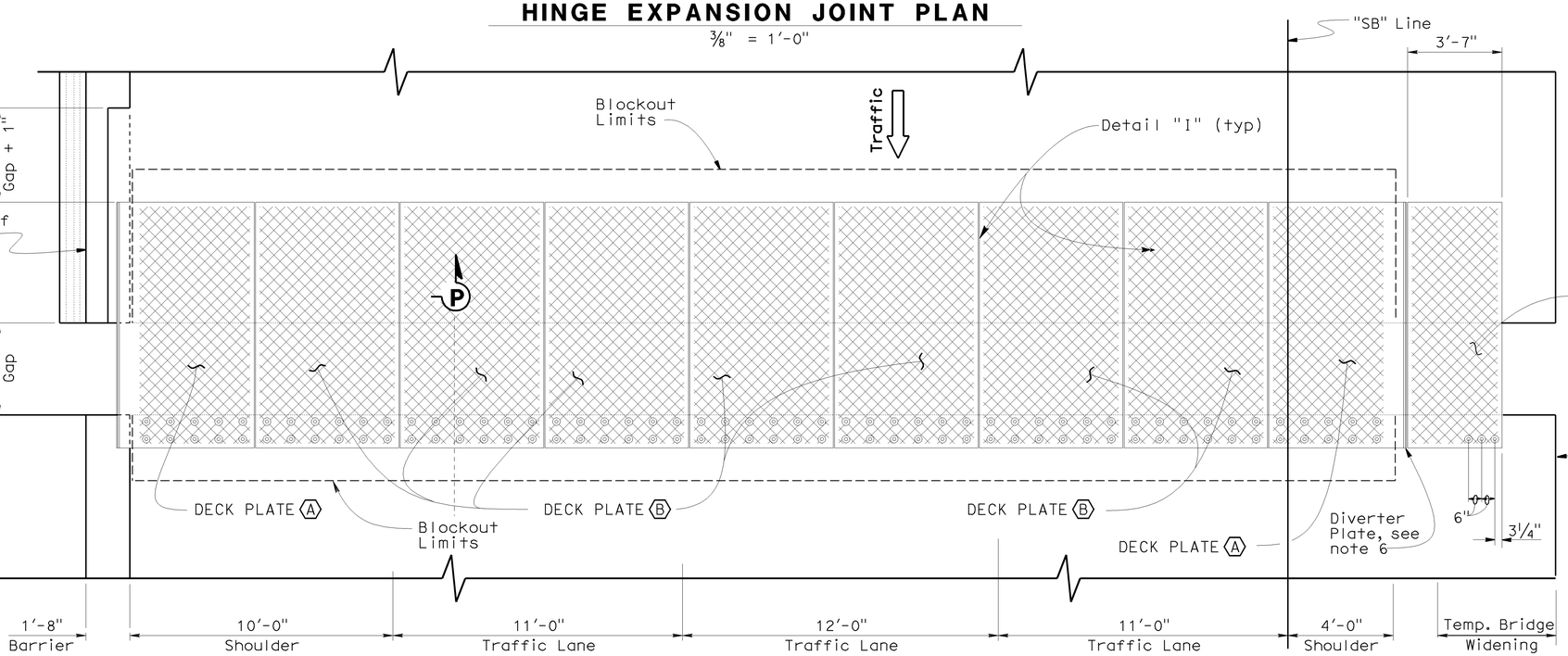

NOTE:
THE CONTRACTOR SHALL VERIFY ALL CONTROLLING FIELD DIMENSIONS BEFORE ORDERING OR FABRICATING ANY MATERIAL.

"SB" LINE
HINGE EXPANSION JOINT PLAN
3/8" = 1'-0"

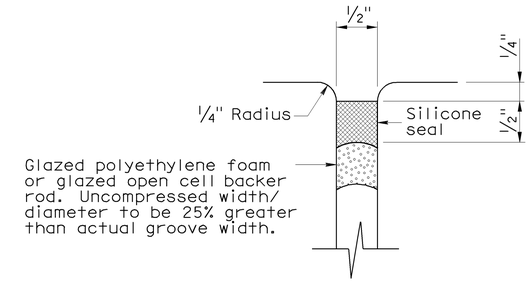

DETAIL "I"
1' = 1'-0"

NOTES:

1. For Plates A ,B & C, see "HINGE SEISMIC JOINT DETAILS No. 3" sheet.
2. Denotes deck Steel Plate with V-grooves at 45°.
3. Deck Plate A matches with Support Plate A and the Channel Assembly A (Module A) Likewise for Module B.
4. Portions of barriers are not shown for clarity.
5. For "SECTION P-P" see "HINGE SEISMIC JOINT DETAILS No. 3"
6. Diverter plate will not be installed at temp. bridge widening region, it will be installed in contract 7
7. For temp. deck plate detail, see "HINGE SEISMIC JOINT DETAILS No. 3"

DESIGN	BY Q. Zhao	CHECKED T. Delis	STATE OF CALIFORNIA DEPARTMENT OF TRANSPORTATION	DIVISION OF ENGINEERING SERVICES STRUCTURE DESIGN DESIGN BRANCH 4	BRIDGE NO. 34-0157L
DETAILS	BY Jeff Thorne	CHECKED Q. Zhao			POST MILE 9.02
QUANTITIES	BY A. Alcantara	CHECKED J. Han			

PRESIDIO VIADUCT - LEFT
HINGE SEISMIC JOINT DETAILS No. 2

STRUCTURES DESIGN DETAIL SHEET (ENGLISH) (REV. 10/25/05)

ORIGINAL SCALE IN INCHES FOR REDUCED PLANS 0 1 2 3

CU 04242
EA 163731

DISREGARD PRINTS BEARING EARLIER REVISION DATES →

REVISION DATES: 6-2-09 | 5-8-09 | 6-04-09 | 6-02-09

SHEET 63 OF 114

FILE => 34-0157l-i-sjdeckpldts01.dgn

DATE PLOTTED => 21-JUL-2009 TIME PLOTTED => 13:46
USERNAME => trsatk

DIST	COUNTY	ROUTE	POST MILES TOTAL PROJECT	SHEET No	TOTAL SHEETS
04	SF	101,1	9.2/9.8, 6.8/7.1	414	567

Ahmed Ibrahim 6-4-09
REGISTERED CIVIL ENGINEER DATE

7-20-09
PLANS APPROVAL DATE

REGISTERED PROFESSIONAL ENGINEER — AHMED M M IBRAHIM — No. S 4865 — EXP. 9-30-10 — STRUCTURAL — STATE OF CALIFORNIA

The State of California or its officers or agents shall not be responsible for the accuracy or completeness of electronic copies of this plan sheet.

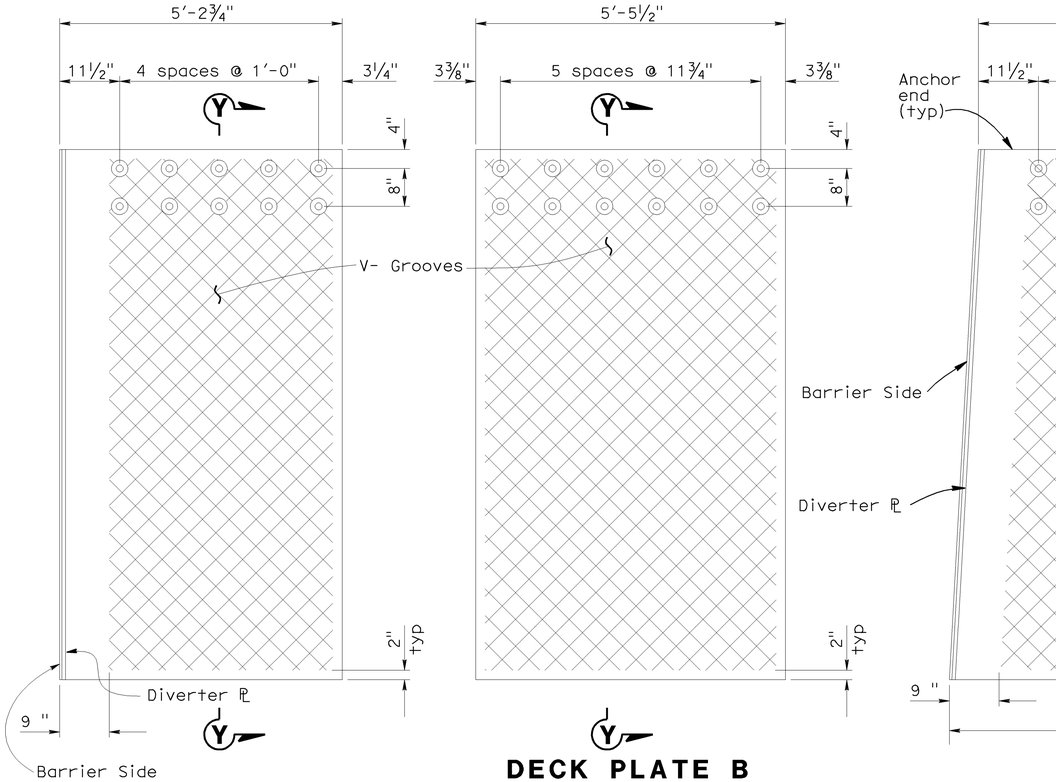

DECK PLATE A

¾"= 1'-0"

DECK PLATE B

¾"= 1'-0"

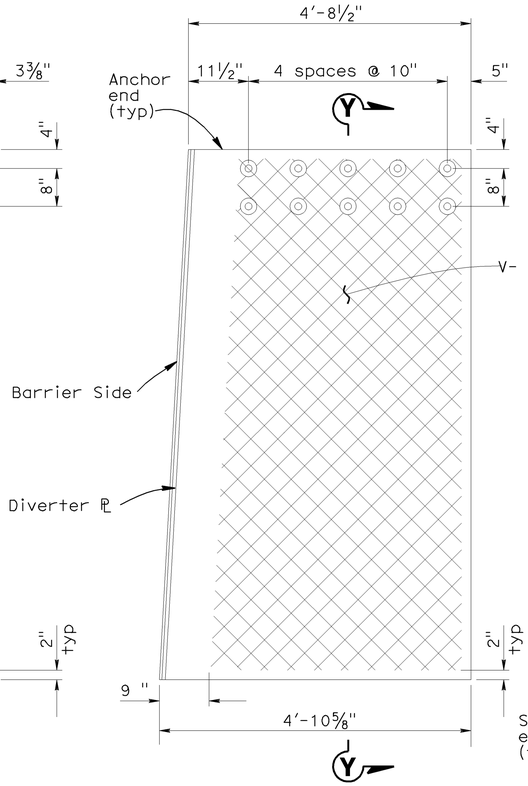

DECK PLATE C(RT)

No scale

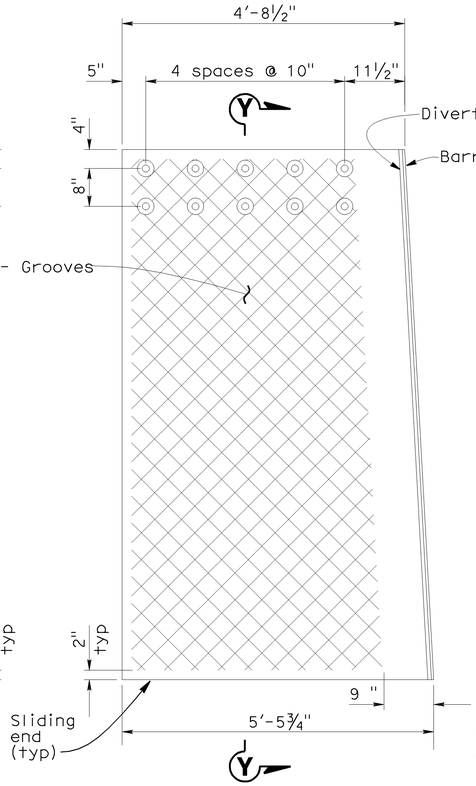

DECK PLATE C(LT)

No scale

NOTES:

1. V-Groove pattern is similar for all Plates
2. For deck plate plan see "HINGE SEISMIC JOINT DETAILS No. 2" sheet
3. For td and Lp values see joint information table on "HINGE SEISMIC JOINT DETAILS No. 1" sheet.
4. The length of the ½"x16" neoprene sheet below the deck plate is 5'-3" & 5'-6" long for module A & B. For module C, see Table A Value Z to determin the neoprene length.
5. Reinforcement not shown for clearity, please see "HINGE SEISMIC JOINT DETAILS No. 6" sheet for additional information.
6. For location of "SECTION P-P", see "HINGE SEISMIC JOINT DETAILS No. 2" sheet

TABLE A

	A	C(RT)		C(LT)	
		Anchor End	Sliding End	Anchor End	Sliding End
X	4'-7"	4'-0¾"	4'-2⅞"	4'-0¾"	4'-10"
Y	5'-2¾"	4'-8½"	4'-10⅝"	4'-8½"	5'-5¾"
Z	5'-3"	4'-8¾"	4'-10⅞"	4'-8¾"	5'-6"

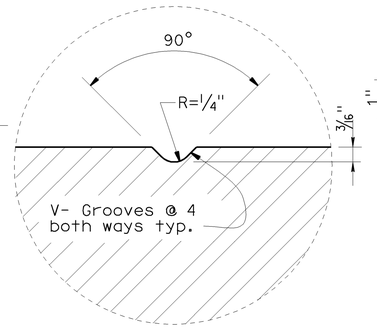

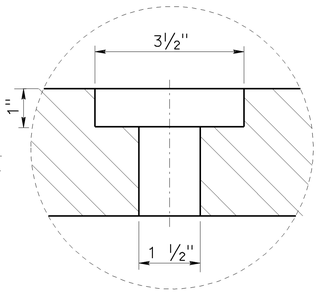

DETAIL "L"

1' = 6"

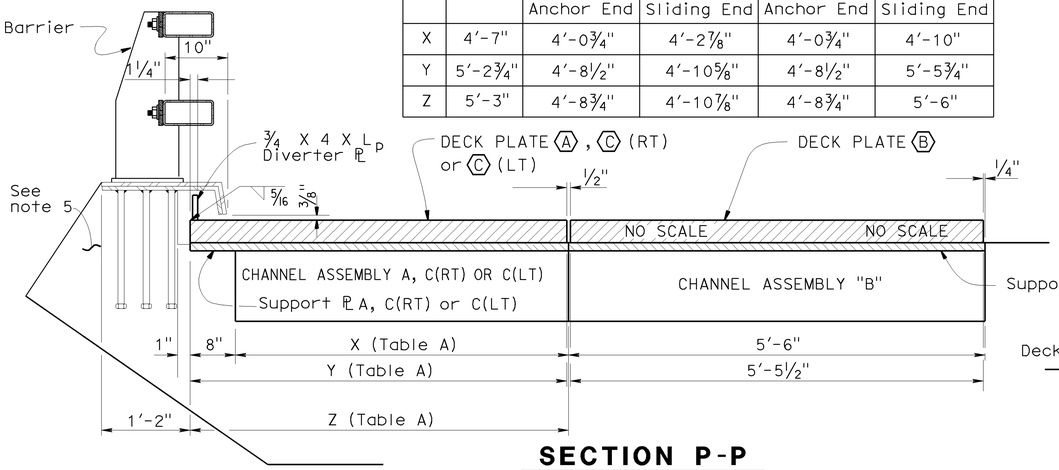

SECTION P-P

1"=1'-0"

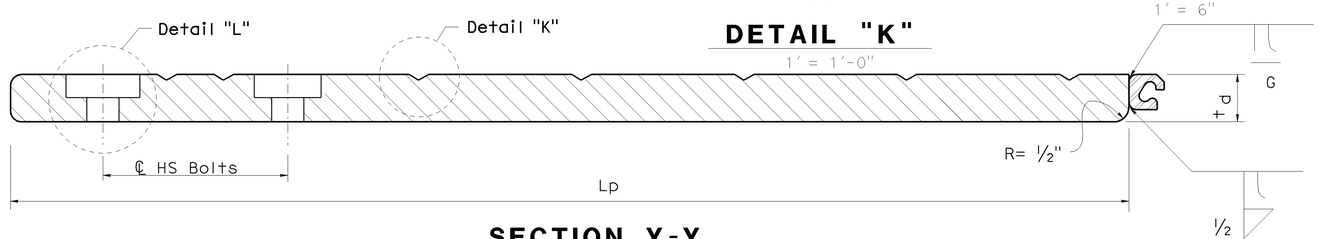

DETAIL "K"

1' = 1'-0"

SECTION Y-Y

3"=1'-0"

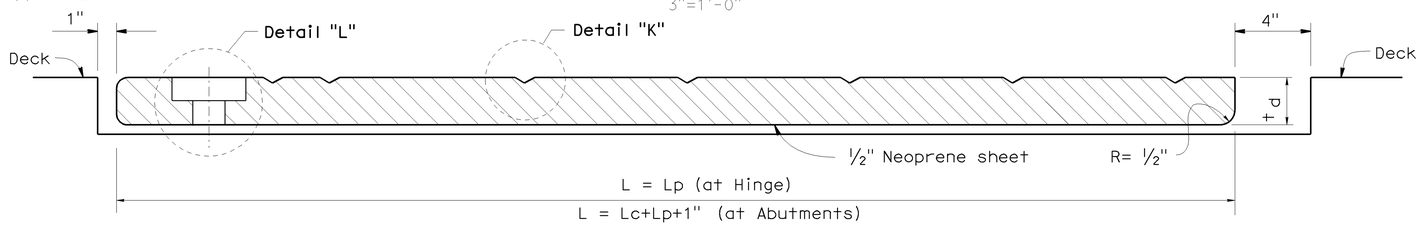

Temp. Deck Plate

3"=1'-0"

NOTE:
THE CONTRACTOR SHALL VERIFY ALL CONTROLLING FIELD DIMENSIONS BEFORE ORDERING OR FABRICATING ANY MATERIAL.

DESIGN	BY Q. Zhao	CHECKED T. Delis	
DETAILS	BY Jeff Thorne	CHECKED Q. Zhao	
QUANTITIES	BY A. Alcantara	CHECKED J. Han	

STATE OF CALIFORNIA
DEPARTMENT OF TRANSPORTATION

DIVISION OF ENGINEERING SERVICES
STRUCTURE DESIGN
DESIGN BRANCH 4

BRIDGE NO. 34-0157L
POST MILE 9.02

PRESIDIO VIADUCT - LEFT
HINGE SEISMIC JOINT DETAILS No. 3

STRUCTURES DESIGN DETAIL SHEET (ENGLISH) (REV. 10/25/05)

ORIGINAL SCALE IN INCHES FOR REDUCED PLANS 0 1 2 3

CU 04242
EA 163731

DISREGARD PRINTS BEARING EARLIER REVISION DATES →

REVISION DATES: 4-28-09 | 5-8-09 | 5-27-09 | 5-28-09 | 6-01-09 | 6-02-09 | 7-11-09

SHEET 64 OF 114

FILE => 34-0157l-i-sjdeckpldts02.dgn

USERNAME => ttstrk DATE PLOTTED => 21-JUL-2009 TIME PLOTTED => 13:47

DIST	COUNTY	ROUTE	POST MILES TOTAL PROJECT	SHEET No	TOTAL SHEETS
04	SF	101,1	9.2/9.8, 6.8/7.1	415	567

Ahmed Brahim 6-4-09
REGISTERED CIVIL ENGINEER DATE

7-20-09
PLANS APPROVAL DATE

REGISTERED PROFESSIONAL ENGINEER — AHMED M M IBRAHIM — No. S 4865 — EXP. 9-30-10 — STRUCTURAL — STATE OF CALIFORNIA

The State of California or its officers or agents shall not be responsible for the accuracy or completeness of electronic copies of this plan sheet.

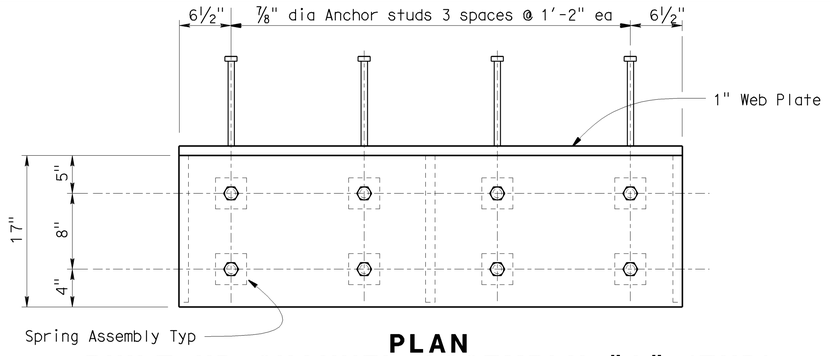

PLAN
BUILT UP CHANNEL ASSEMBLY "A" (TYP)

No scale

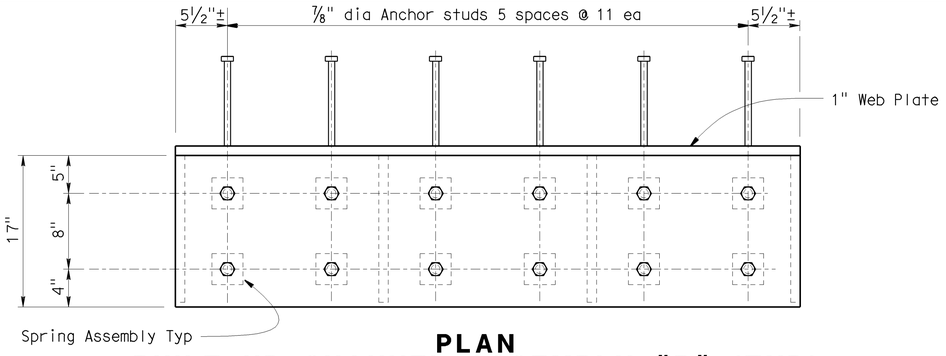

PLAN
BUILT UP CHANNEL ASSEMBLY "B" (TYP)

1½" = 1'-0"

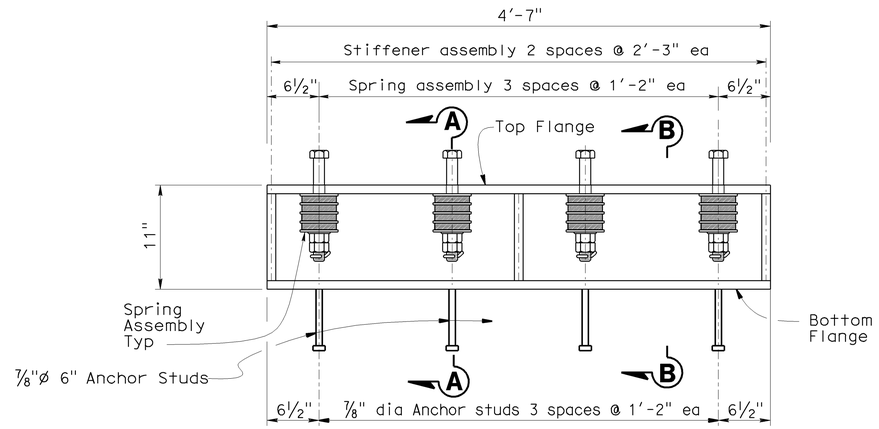

ELEVATION
BUILT UP CHANNEL ASSEMBLY "A" (TYP)

No scale

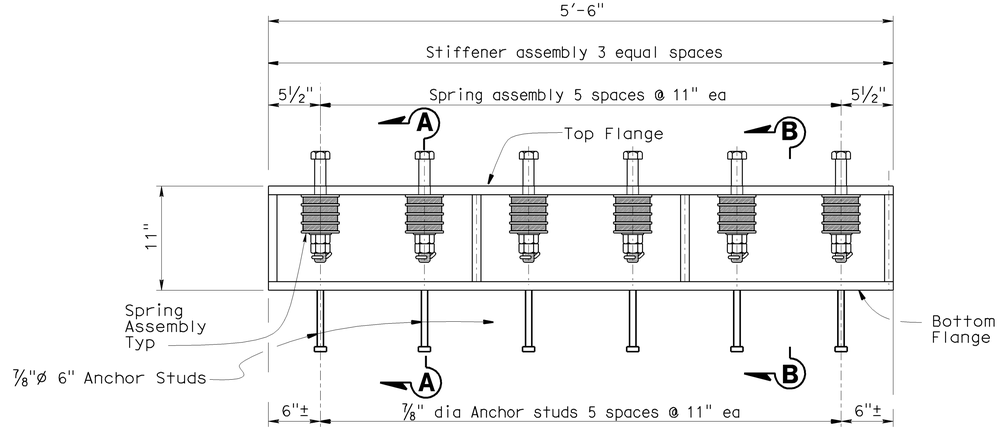

ELEVATION
BUILT UP CHANNEL ASSEMBLY "B" (TYP)

1½" = 1'-0"

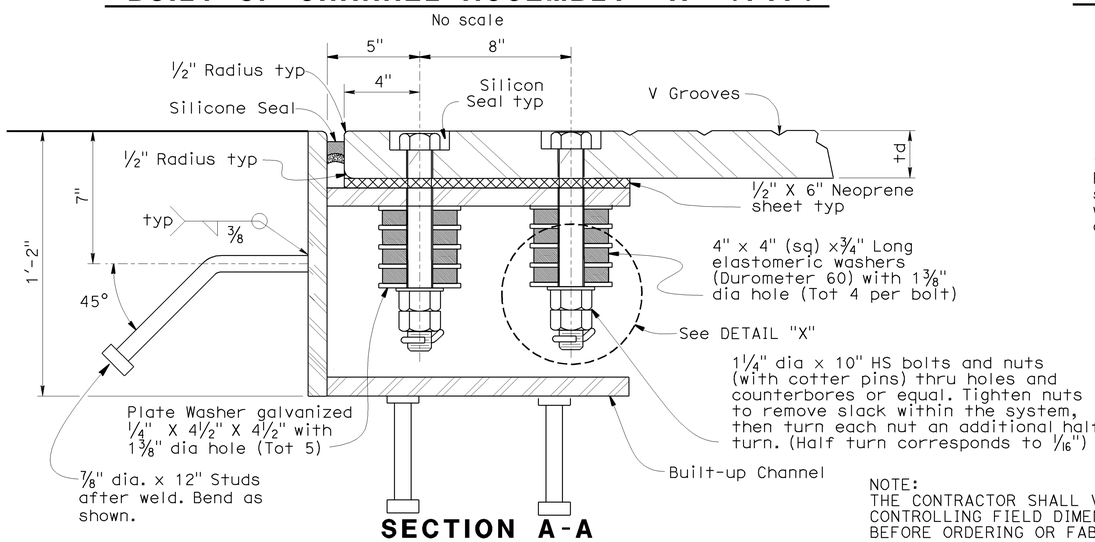

SECTION A-A

3"= 1'-0"

NOTE:
THE CONTRACTOR SHALL VERIFY ALL CONTROLLING FIELD DIMENSIONS BEFORE ORDERING OR FABRICATING ANY MATERIAL.

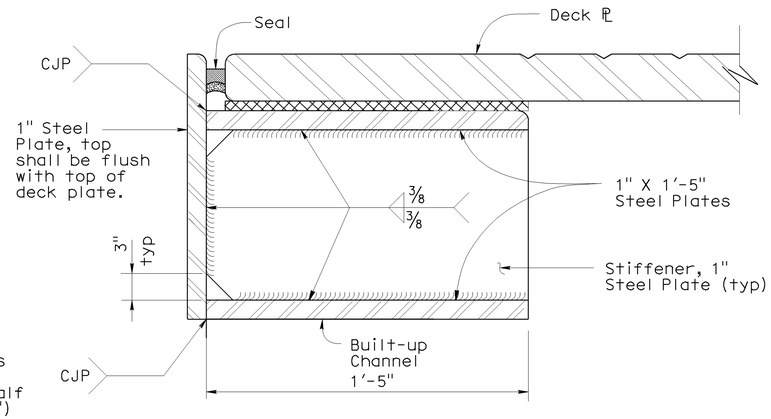

SECTION B-B

3"= 1'-0"

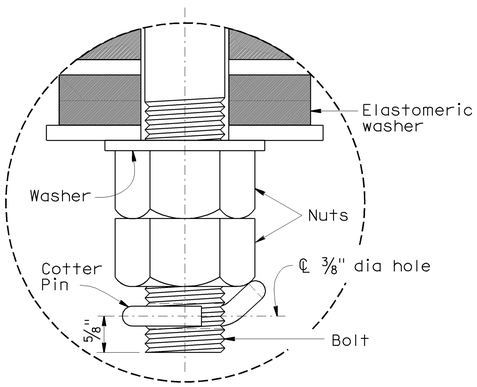

DETAIL "X"

No Scale

DESIGN	BY Q. Zhao	CHECKED T. Delis	
DETAILS	BY Jeff Thorne	CHECKED Q. Zhao	
QUANTITIES	BY A. Alcantara	CHECKED J. Han	

STATE OF CALIFORNIA
DEPARTMENT OF TRANSPORTATION

DIVISION OF ENGINEERING SERVICES
STRUCTURE DESIGN
DESIGN BRANCH 4

BRIDGE NO. 34-0157L
POST MILE 9.02

PRESIDIO VIADUCT - LEFT
HINGE SEISMIC JOINT DETAILS No. 4

STRUCTURES DESIGN DETAIL SHEET (ENGLISH) (REV. 10/25/05)

ORIGINAL SCALE IN INCHES FOR REDUCED PLANS 0 1 2 3

CU 04242
EA 163731

DISREGARD PRINTS BEARING EARLIER REVISION DATES

REVISION DATES: 4-28-09 | 5-8-09 | 5-18-09 | 5-28-09 | 5-29-09 | 6-01-09 | 6-02-09

SHEET 65 OF 114

FILE => 34-0157l-i-sjechaneldts01.dgn

DATE PLOTTED => 21-JUL-2009 TIME PLOTTED => 13:47
USERNAME = frostrk

DIST	COUNTY	ROUTE	POST MILES TOTAL PROJECT	SHEET No	TOTAL SHEETS
04	SF	101,1	9.2/9.8, 6.8/7.1	416	567

Ahmed Ibrahim 6-4-09
REGISTERED CIVIL ENGINEER DATE

7-20-09
PLANS APPROVAL DATE

REGISTERED PROFESSIONAL ENGINEER — AHMED M M IBRAHIM — No. S 4865 — EXP. 9-30-10 — STRUCTURAL — STATE OF CALIFORNIA

The State of California or its officers or agents shall not be responsible for the accuracy or completeness of electronic copies of this plan sheet.

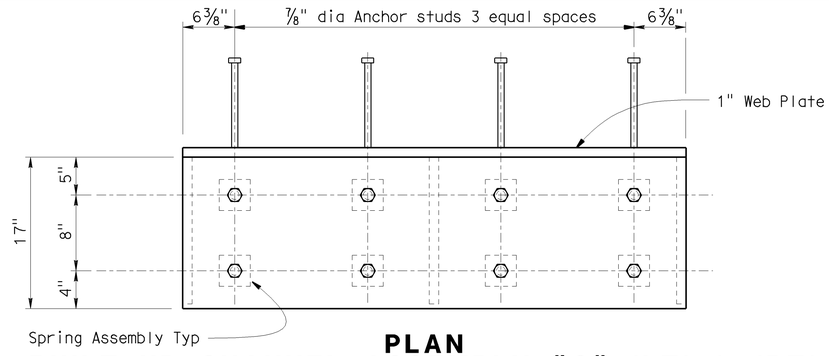

PLAN
BUILT UP CHANNEL ASSEMBLY "C" (LT) & (RT)
No scale

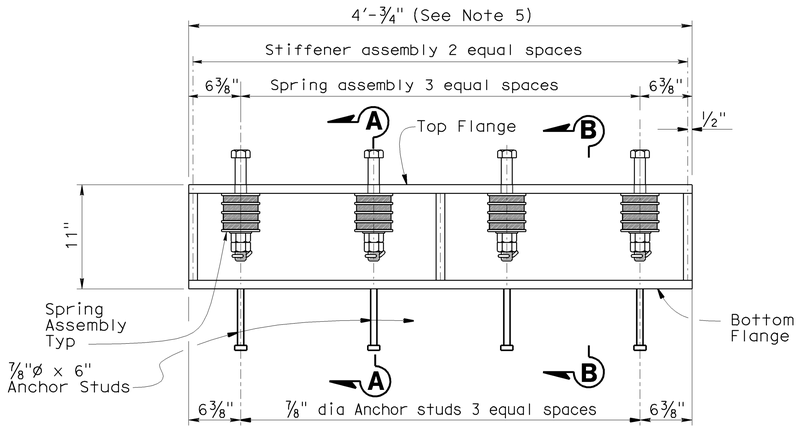

ELEVATION
BUILT UP CHANNEL ASSEMBLY "C" (LT) & (RT)
No scale

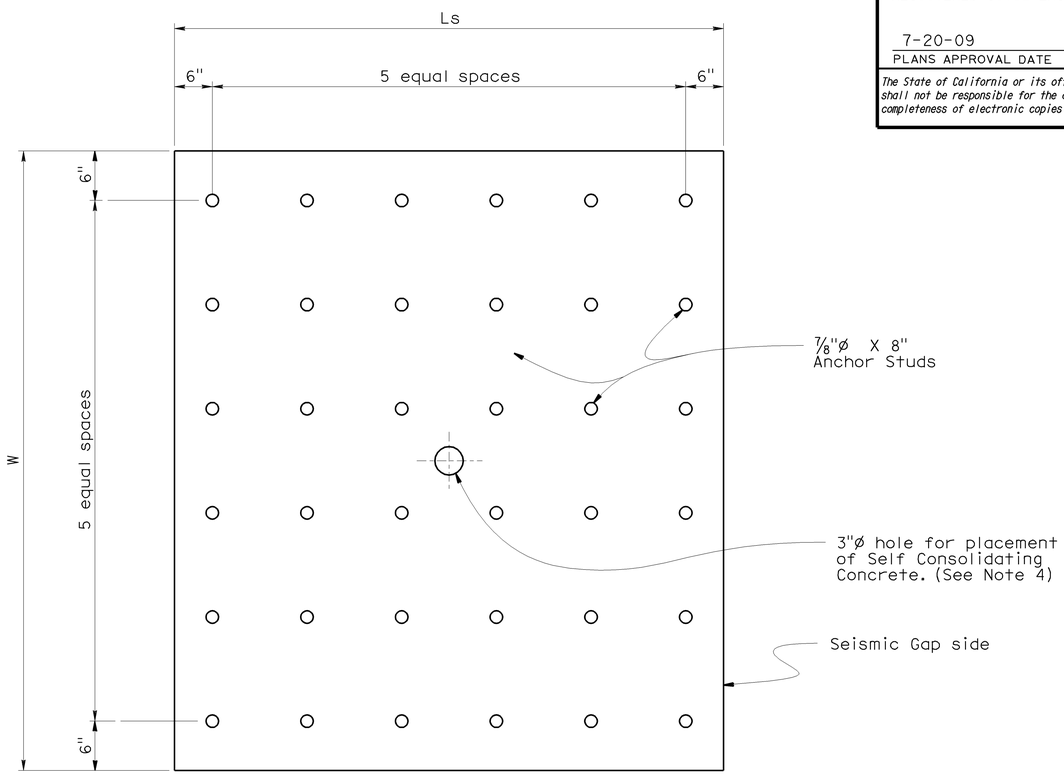

PLAN

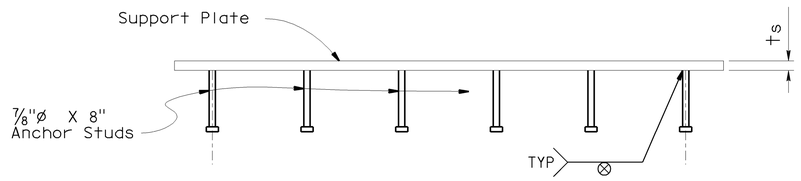

ELEVATION

SUPPORT PLATE DETAIL
1½" = 1'-0"

SUPPORT PLATE WIDTH (W)		
Module A		5'-3"
Module B		5'-6"
Module C (Rt)	Anchor End	4'-8¾"
	Sliding End	4'-10⅞"
Module C (Lt)	Anchor End	4'-8¾"
	Sliding End	5'-6"

Notes:

1. For "Section A-A" and "Section B-B" see 'HINGE SEISMIC JOINT DETAILS NO. 4' sheet.
2. For Ls and ts value, see 'HINGE SEISMIC JOINT DETAILS No. 1' sheet.
3. Support Plate B shown. Support Plate A & C similar.
4. Exact location of 3" ø to be determined prior to support plate fabrication.
5. Dimensions shown are for Channel Assembly "C"(LT) and "C"(RT) at anchor end. For exact dimensions at sliding end, see "Table A" on 'HINGE SEISMIC DETAILS No. 3' sheet.

NOTE:
THE CONTRACTOR SHALL VERIFY ALL CONTROLLING FIELD DIMENSIONS BEFORE ORDERING OR FABRICATING ANY MATERIAL.

DESIGN	BY Q. Zhao	CHECKED T. Delis	STATE OF CALIFORNIA DEPARTMENT OF TRANSPORTATION	DIVISION OF ENGINEERING SERVICES STRUCTURE DESIGN DESIGN BRANCH 4	BRIDGE NO. 34-0157L POST MILE 9.02	PRESIDIO VIADUCT - LEFT
DETAILS	BY Jeff Thorne	CHECKED Q. Zhao				HINGE SEISMIC JOINT DETAILS No. 5
QUANTITIES	BY A. Alcantara	CHECKED J. Han				

STRUCTURES DESIGN DETAIL SHEET (ENGLISH) (REV. 10/25/05)

ORIGINAL SCALE IN INCHES FOR REDUCED PLANS 0 1 2 3

CU 04242
EA 163731

DISREGARD PRINTS BEARING EARLIER REVISION DATES →

REVISION DATES: 4-28-09 | 5-8-09 | 5-18-09 | 5-28-09 | 6-01-09 | 6-02-09 | 6-15-09 | 7-7-09 | 7-11-09

SHEET 66 OF 114

FILE => 34-0157l-i-sjechaneldts02.dgn

USERNAME => rtistrk DATE PLOTTED => 21-JUL-2009 TIME PLOTTED => 13:47

DIST	COUNTY	ROUTE	POST MILES TOTAL PROJECT	SHEET No	TOTAL SHEETS
04	SF	101,1	9.2/9.8, 6.8/7.1	417	567

Ahmed Brahim 6-4-09
REGISTERED CIVIL ENGINEER DATE

7-20-09
PLANS APPROVAL DATE

REGISTERED PROFESSIONAL ENGINEER — AHMED M M IBRAHIM — No. S 4865 — EXP. 9-30-10 — STRUCTURAL — STATE OF CALIFORNIA

The State of California or its officers or agents shall not be responsible for the accuracy or completeness of electronic copies of this plan sheet.

NOTE:
THE CONTRACTOR SHALL VERIFY ALL CONTROLLING FIELD DIMENSIONS BEFORE ORDERING OR FABRICATING ANY MATERIAL.

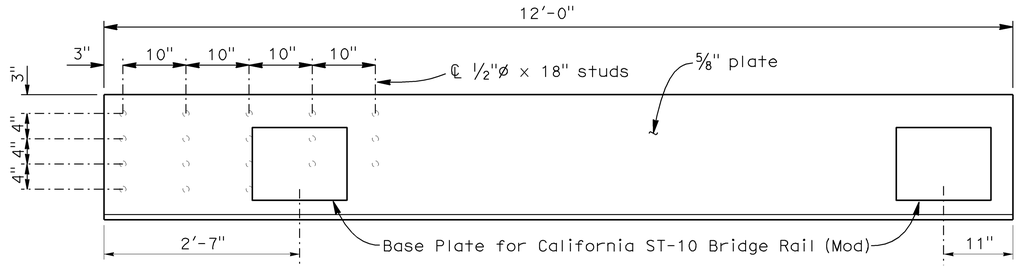

TOP PLATE PLAN
1"=1'-0"

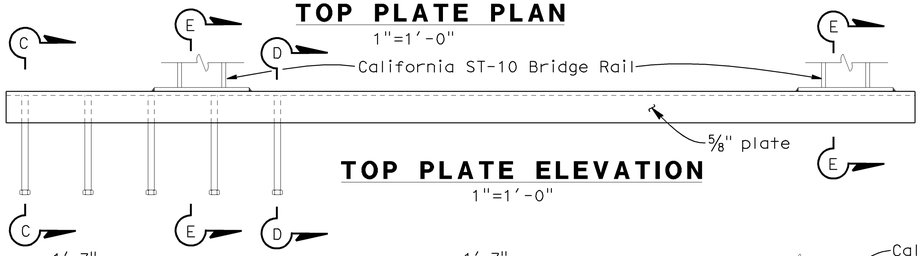

TOP PLATE ELEVATION
1"=1'-0"

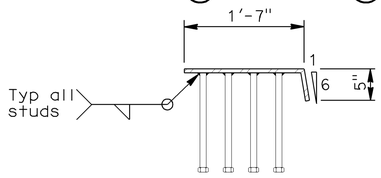

SECTION C-C
1"=1'-0"

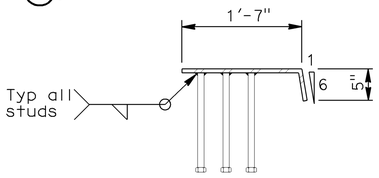

SECTION D-D
1"=1'-0"

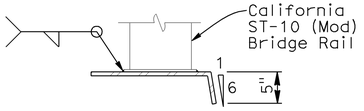

SECTION E-E
1"=1'-0"

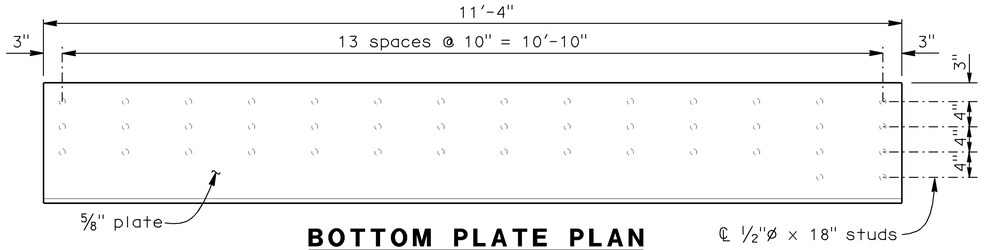

BOTTOM PLATE PLAN
1"=1'-0"

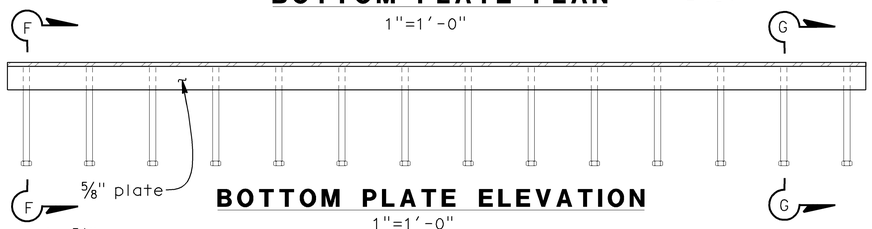

BOTTOM PLATE ELEVATION
1"=1'-0"

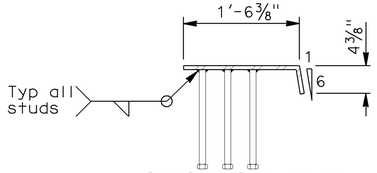

SECTION F-F
1"=1'-0"

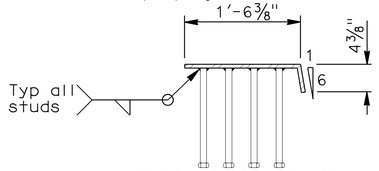

SECTION G-G
1"=1'-0"

Notes:

1. Plate assemblies are shwon at gore area. "VT" left plates assembly is similar.
2. Studs can be bent to accomodate transverse PT anchor plates as needed
3. End of California ST-10 (Mod) at gore area is shown. "VT" left barrier continues.

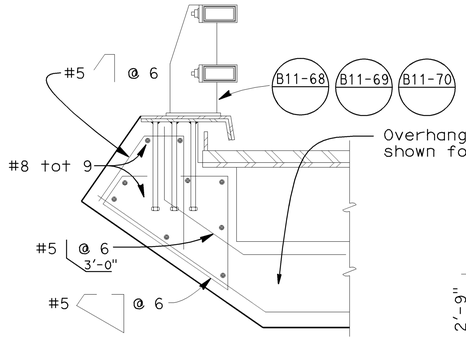

REINFORCEMENT FOR BARRIER AT JOINT SEAL BLOCKOUT
¾"=1'-0"

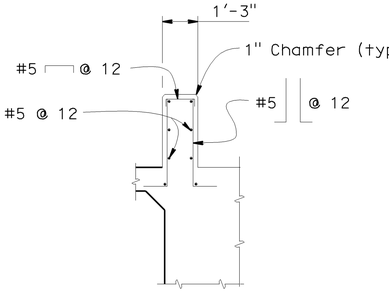

SECTION B-B
⅜"=1'-0"

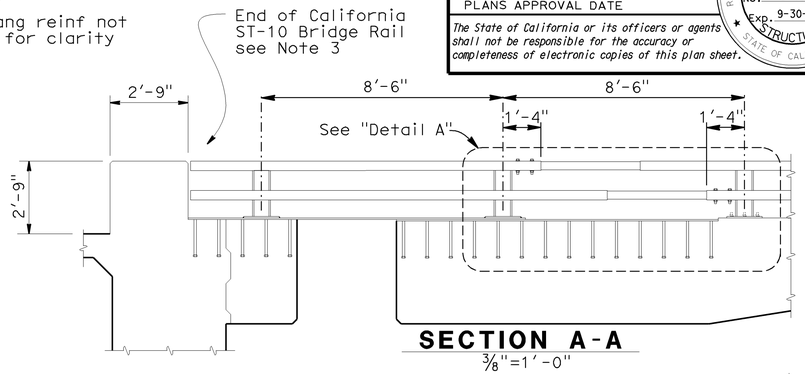

SECTION A-A
⅜"=1'-0"

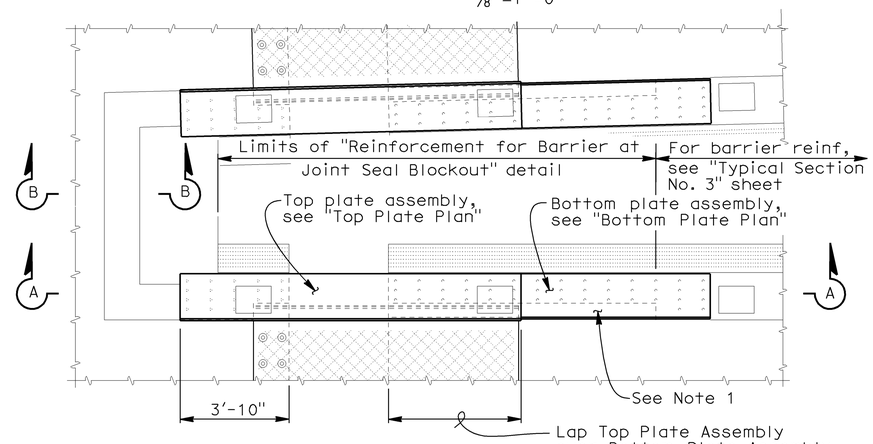

PLAN
⅜"=1'-0"
See Note 1

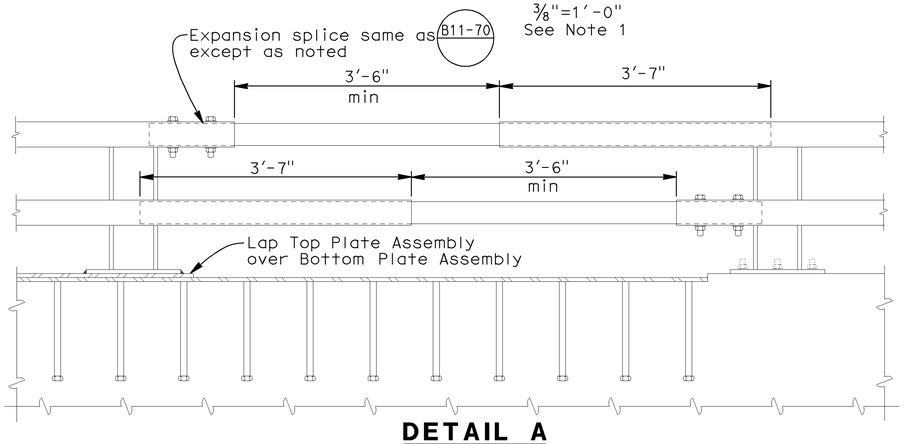

DETAIL A
1"=1'-0"

DESIGN	BY S. Barajas	CHECKED O. Zhao	STATE OF CALIFORNIA DEPARTMENT OF TRANSPORTATION	DIVISION OF ENGINEERING SERVICES STRUCTURE DESIGN DESIGN BRANCH 4	BRIDGE NO. 34-0157L
DETAILS	BY A. Onodera	CHECKED S. Barajas			POST MILE 9.02
QUANTITIES	BY S. Barajas	CHECKED J. Han		CU 04242 EA 163731	

PRESIDIO VIADUCT - LEFT
HINGE SEISMIC JOINT DETAILS No. 6

STRUCTURES DESIGN DETAIL SHEET (ENGLISH) (REV. 10/25/05)

ORIGINAL SCALE IN INCHES FOR REDUCED PLANS 0 1 2 3

DISREGARD PRINTS BEARING EARLIER REVISION DATES →

REVISION DATES: 2-27-09 | 3-18-09 | 5-16-09 | 6-4-09 | 6-14-09 | 6-16-09 | 6-17-09 | 6-18-09 | 7-11-09

SHEET 67 OF 114

FILE => 34-0157l-i-sjechaneldts02a.dgn

USERNAME => ttstrk DATE PLOTTED => 21-JUL-2009 TIME PLOTTED => 13:47

DIST	COUNTY	ROUTE	POST MILES TOTAL PROJECT	SHEET No	TOTAL SHEETS
04	SF	101,1	9.2/9.8, 6.8/7.1	418	567

REGISTERED CIVIL ENGINEER — 6-4-09 DATE

7-20-09
PLANS APPROVAL DATE

REGISTERED PROFESSIONAL ENGINEER — AHMED M M IBRAHIM — No. S 4865 — EXP. 9-30-10 — STRUCTURAL — STATE OF CALIFORNIA

The State of California or its officers or agents shall not be responsible for the accuracy or completeness of electronic copies of this plan sheet.

NOTE:
THE CONTRACTOR SHALL VERIFY ALL CONTROLLING FIELD DIMENSIONS BEFORE ORDERING OR FABRICATING ANY MATERIAL.

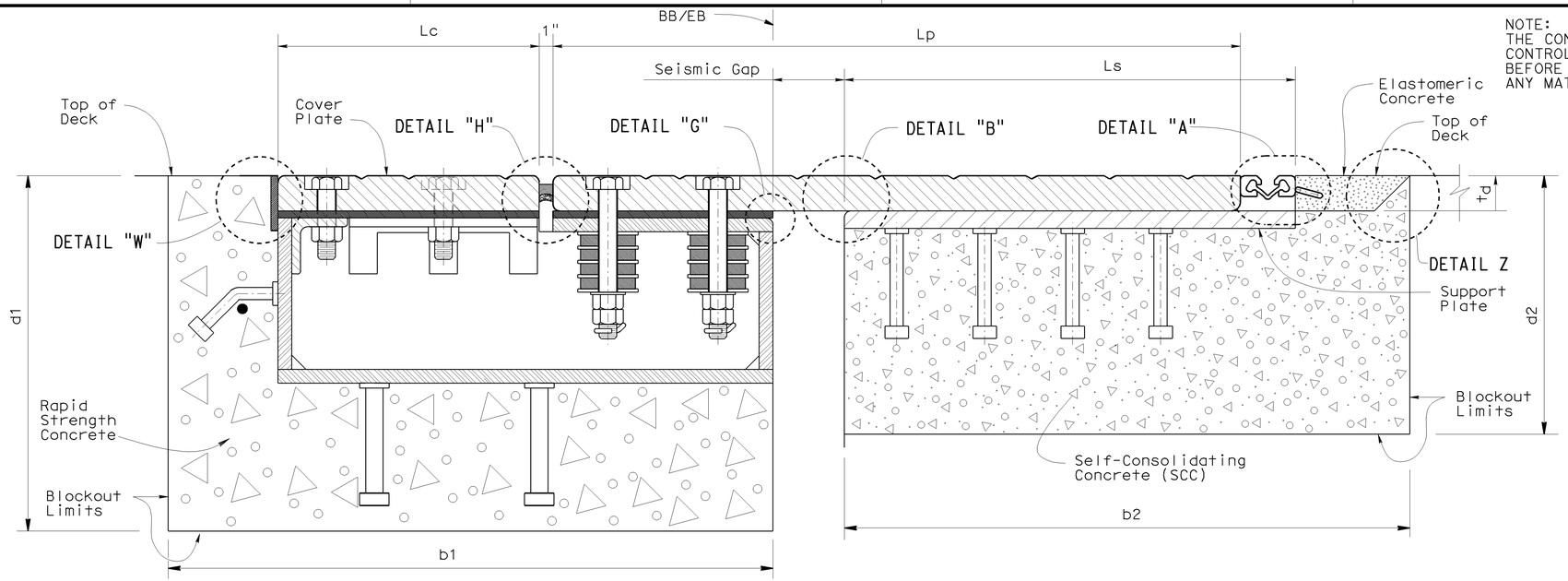

ELEVATION
1½" = 1'-0"

NOTES:

1. Top of deck plate, elastomeric and Rapid Strength Concrete concrete shall match top of deck profile.
2. Gland of strip joint to be installed at end of project
3. 1½" holes in neoprene sheets shall be drilled or punched so that the neoprene is not distorted at the time of installation. See 'ABUTMENT SEISMIC JOINT DETAILS No. 4' sheet.
4. For deck plate details see 'ABUTMENT SEISMIC JOINT DETAILS No. 2' and 'ABUTMENT SEISMIC JOINT DETAILS No. 3' sheets.
5. For mild reinforcement in blockout areas, see 'ABUTMENT 1 DETAILS No. 3' and 'ABUTMENT 7 DETAILS No. 3' sheet.
6. For channel assembly details, see 'ABUTMENT SEISMIC JOINT DETAILS No. 4' and 'ABUTMENT SEISMIC JOINT DETAILS No. 5' sheet
7. Place deck plate, support plate and channel assembly so that full bearing is achieved between I) deck, support plates and II) deck plate and channel assembly.
8. Self-consolidating concrete (f'c=5.0 ksi @ 56 days) shall be used in support plate blockout.
9. Rapid Strength Concrete (f'ci=2.0 ksi @ 3 hrs, f'c=5.0 ksi @ 56 days) shall be used in channel assembly blockout.
10. The sinusoidal anchor bar may be replaced with anchor studs (see "DETAIL C").
11. For support plate details see 'ABUTMENT SEISMIC JOINT DETAILS No. 5' sheet.
12. The top deck overlay within the seismic joint limits may be substituted by either Rapid Strength Concrete, or Self-Consolidating Concrete, or Structural Concrete Bridge with minimum=5.5 ksi at 28 days.
13. All bolts used on abutment seismic joint shall be ASTM A449 galvanized unless noted otherwise.
14. All structure steel plate interface connection shall be made with continuous complete peretration (CJP) welds unless noted otherwise.

DETAIL "A"
1'-0" = 1'-0"

DETAIL "W"
1'-0" = 6"

DETAIL "Z"
1'-0" = 6"

DETAIL "B"
1'-0" = 6"

DETAIL "C"
1'-0" = 1'-0"

DETAIL "G"
1'-0" = 1'-0"

DETAIL "H"
1'-0" = 6"

JOINT INFORMATION			
LOCATION		ABUTMENT 1	ABUTMENT 7
SKEW (°)		0°	0°
DECK ℄	THICKNESS td (in)	2½	2½
	LENGTH Lp (in)	51	56
SUPPORT ℄	THICKNESS ts (in)	1	1
	LENGTH Ls (in)	27	38
COVER ℄	THICKNESS tc (in)	1	1
	LENGTH Lc (in)	19	19
SEISMIC GAP @ 70°F	(in)	12	6
CREEP & SHRINKAGE	(in)	3	2
TEMP OPEN	(in)	1	1
MCE OPEN	(in)	11	5
TEMP CLOSE	(in)	1	1
MCE CLOSE	(in)	11	5
d1	(in)	20	20
b1	(in)	44	44
d2	(in)	16	16
b2	(in)	39	50
STRIP JOINT	MR (in)	4"	4"

	BY	CHECKED
DESIGN	Q. Zhao	T. Delis
DETAILS	Jeff Thorne	Q. Zhao
QUANTITIES	A. Alcantara	J. Han

STATE OF CALIFORNIA
DEPARTMENT OF TRANSPORTATION

DIVISION OF ENGINEERING SERVICES
STRUCTURE DESIGN
DESIGN BRANCH 4

BRIDGE NO. 34-0157L
POST MILE 9.02

PRESIDIO VIADUCT - LEFT
ABUTMENT SEISMIC JOINT DETAILS No. 1

STRUCTURES DESIGN DETAIL SHEET (ENGLISH) (REV. 10/25/05)

ORIGINAL SCALE IN INCHES FOR REDUCED PLANS 0 1 2 3

CU 04242
EA 163731

DISREGARD PRINTS BEARING EARLIER REVISION DATES →

REVISION DATES: 4-20-09 | 5-8-09 | 5-18-09 | 6-01-09 | 6-02-09 | 6-15-09

SHEET 68 OF 114

FILE => 34-0157l-i-sjechaneldts03.dgn

USERNAME = tyatrk DATE PLOTTED => 21-JUL-2009 TIME PLOTTED => 13:47

DIST	COUNTY	ROUTE	POST MILES TOTAL PROJECT	SHEET No	TOTAL SHEETS
04	SF	101,1	9.2/9.8, 6.8/7.1	419	567

Ahmed Ibrahim 6-4-09
REGISTERED CIVIL ENGINEER DATE

7-20-09
PLANS APPROVAL DATE

AHMED M M IBRAHIM
No. S 4865
EXP. 9-30-10
REGISTERED PROFESSIONAL ENGINEER
STRUCTURAL
STATE OF CALIFORNIA

The State of California or its officers or agents shall not be responsible for the accuracy or completeness of electronic copies of this plan sheet.

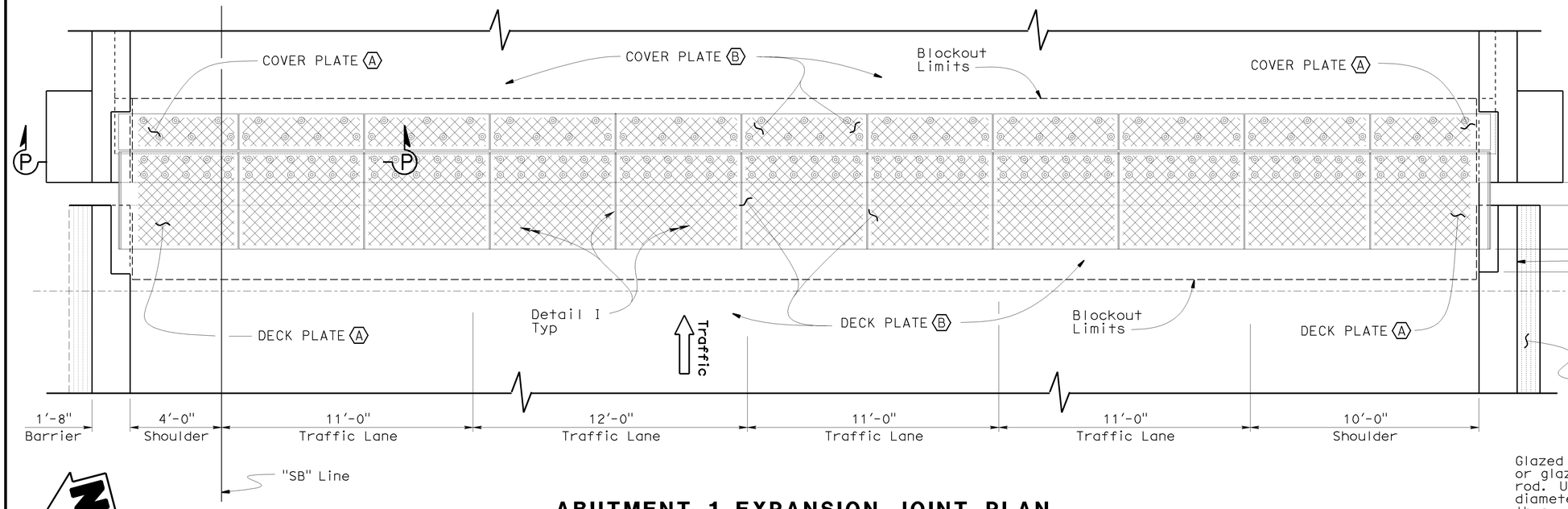

ABUTMENT 1 EXPANSION JOINT PLAN

3/8" = 1'-0"

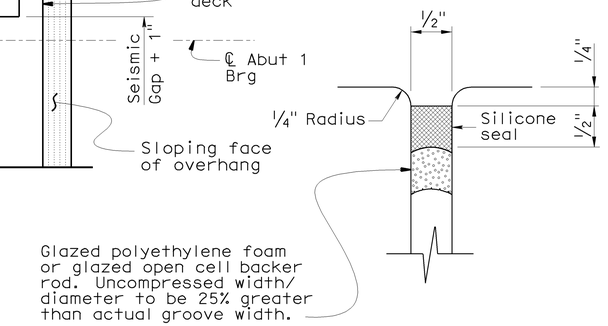

DETAIL "I"

1' = 1'-0"

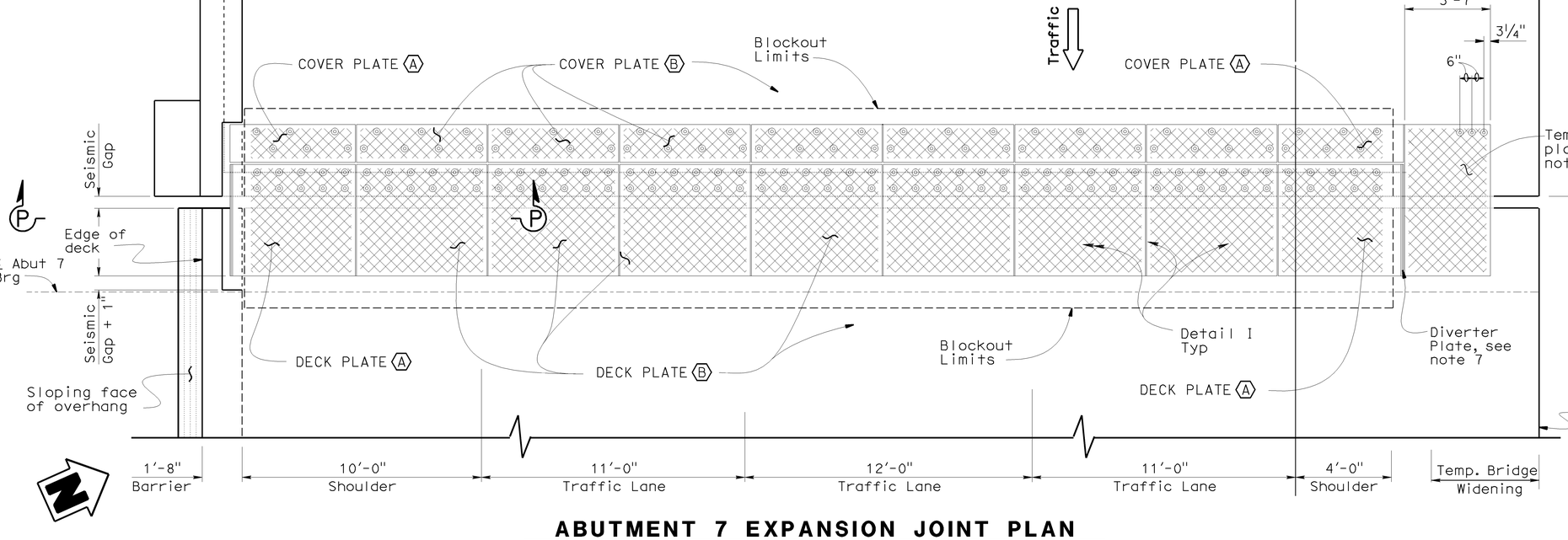

ABUTMENT 7 EXPANSION JOINT PLAN

3/8" = 1'-0"

NOTES:

1. For Plates A and B see 'ABUTMENT SEISMIC JOINT DETAILS No. 3' sheet.
2. Denotes deck Steel Plate with V-grooves at 45°.
3. Deck Plate A matches with Support Plate A and the Channel Assembly A (Module A) Likewise for Module B.
4. One Module B is placed per half traffic lane.
5. Portions of barriers are not shown for clarity.
6. For SECTION P-P see 'ABUTMENT SEISMIC JOINT DETAILS No. 3' sheet.
7. Diverter plate will not be installed at Temp. bridge widening region, it will be installed in contract 7
8. For temp. deck plate detail, see 'HINGE SEISMIC JOINT DETAILS No. 3'

NOTE:
THE CONTRACTOR SHALL VERIFY ALL CONTROLLING FIELD DIMENSIONS BEFORE ORDERING OR FABRICATING ANY MATERIAL.

DESIGN	BY Q. Zhao	CHECKED T. Delis	STATE OF CALIFORNIA DEPARTMENT OF TRANSPORTATION	DIVISION OF ENGINEERING SERVICES STRUCTURE DESIGN DESIGN BRANCH 4	BRIDGE NO. 34-0157L
DETAILS	BY Jeff Thorne	CHECKED Q. Zhao			POST MILE 9.02
QUANTITIES	BY A. Alcantara	CHECKED J. Han			

PRESIDIO VIADUCT - LEFT

ABUTMENT SEISMIC JOINT DETAILS No. 2

STRUCTURES DESIGN DETAIL SHEET (ENGLISH) (REV. 10/25/05)

ORIGINAL SCALE IN INCHES FOR REDUCED PLANS 0 1 2 3

CU 04242
EA 163731

DISREGARD PRINTS BEARING EARLIER REVISION DATES

REVISION DATES: 4-28-09 | 5-8-09 | 5-28-09 | 6-01-09 | 6-02-09 | 6-15-09

SHEET 69 OF 114

FILE => 34-0157l-i-sjechaneldts04a.dgn

USERNAME => tryothk DATE PLOTTED => 21-JUL-2009 TIME PLOTTED => 13:47

DIST	COUNTY	ROUTE	POST MILES TOTAL PROJECT	SHEET No	TOTAL SHEETS
04	SF	101,1	9.2/9.8, 6.8/7.1	420	567

Ahmed Brahim 6-4-09
REGISTERED CIVIL ENGINEER DATE

7-20-09
PLANS APPROVAL DATE

REGISTERED PROFESSIONAL ENGINEER — AHMED M M IBRAHIM — No. S 4865 — EXP. 9-30-10 — STRUCTURAL — STATE OF CALIFORNIA

The State of California or its officers or agents shall not be responsible for the accuracy or completeness of electronic copies of this plan sheet.

NOTE:
THE CONTRACTOR SHALL VERIFY ALL CONTROLLING FIELD DIMENSIONS BEFORE ORDERING OR FABRICATING ANY MATERIAL.

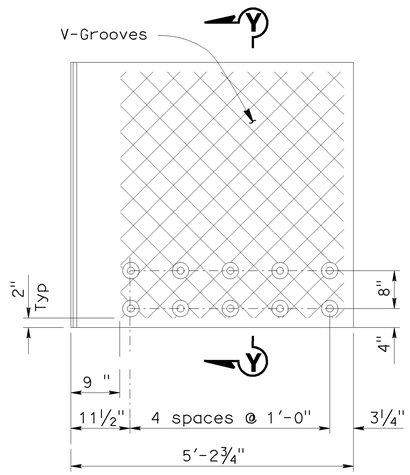

DECK PLATE A

No Scale

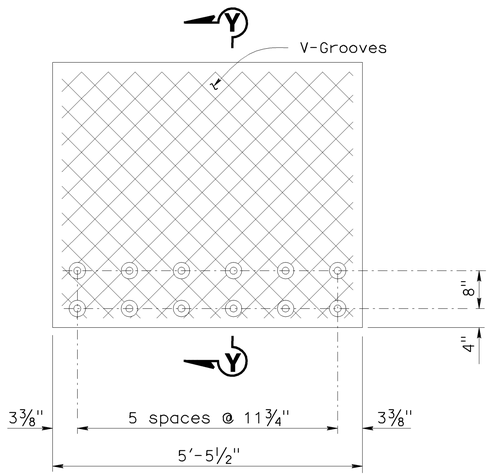

DECK PLATE B

No Scale

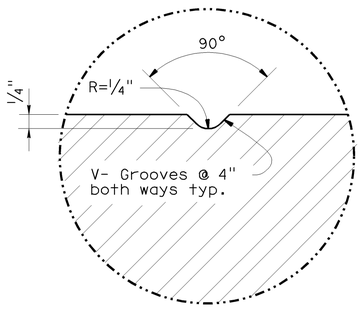

DETAIL "K"

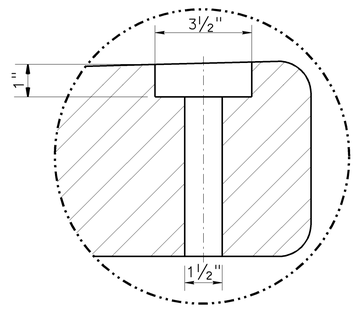

DETAIL "L"

SECTION D-D

½" = 1'-0"

NOTES:

1. V-Groove pattern is similar for all Plates
2. For deck plate plan see 'ABUTMENT SEISMIC JOINT DETAILS No. 2' sheet .
3. For td, Lp, Lc and tc values, see JOINT INFORMATION TABLE on 'ABUTMENT SEISMIC JOINT DETAILS No. 1' sheet.
4. Eye bolts can be used at set seismic screw locations for lifting of cover plates.
5. The length of the ½"x16" neoprene sheet below the deck plate is 5'-3" and 5'-6" long for Module "A" and Module "B" respectively.
6. Reinforcement not shown for clearity, please see "ABUTMENT SEISMIC JOINT DETAILS No. 6" sheet for additional information.

Note: Barrier not shown for clarity

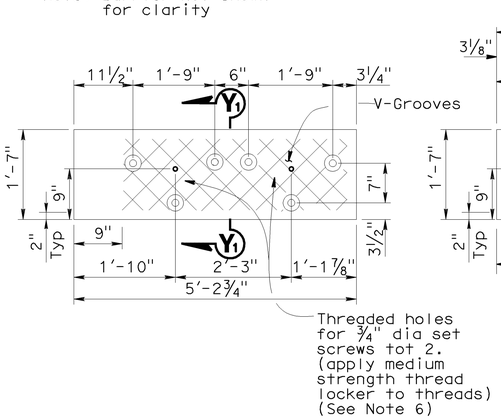

COVER PLATE A

No Scale

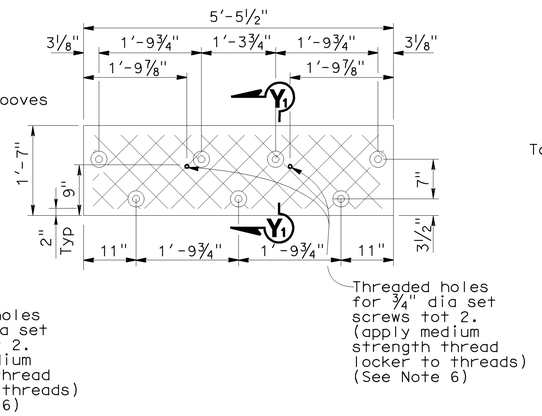

COVER PLATE B

No Scale

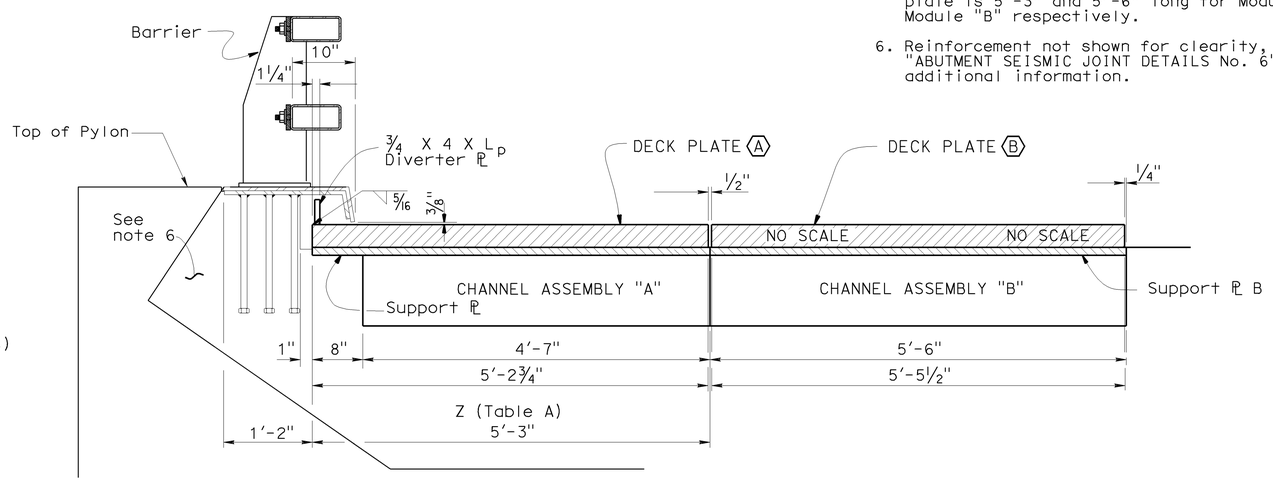

SECTION P-P

1"=1'-0"

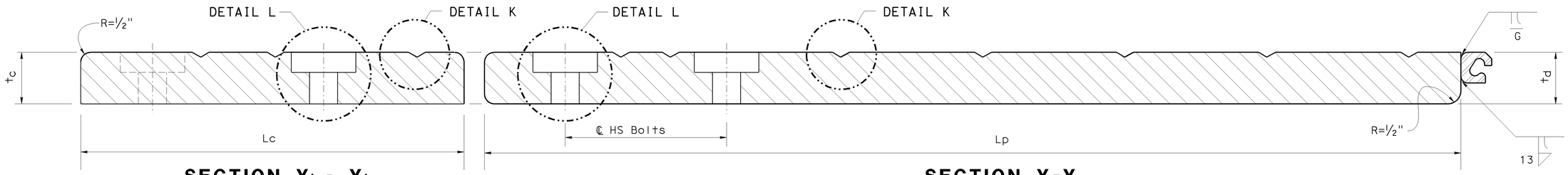

SECTION Y_1 - Y_1

No Scale

SECTION Y-Y

No Scale

DESIGN	BY Q Zhao	CHECKED T Delis	STATE OF CALIFORNIA DEPARTMENT OF TRANSPORTATION	DIVISION OF ENGINEERING SERVICES STRUCTURE DESIGN DESIGN BRANCH 4	BRIDGE NO. 34-0157L
DETAILS	BY Jeff Thorne	CHECKED Q Zhao			POST MILE X
QUANTITIES	BY A. Alcantara	CHECKED J. Han			

PRESIDIO VIADUCT - LEFT

ABUTMENT SEISMIC JOINT DETAILS No. 3

STRUCTURES DESIGN DETAIL SHEET (ENGLISH) (REV. 10/25/05)

ORIGINAL SCALE IN INCHES FOR REDUCED PLANS 0 1 2 3

CU 04
EA 163701

DISREGARD PRINTS BEARING EARLIER REVISION DATES →

REVISION DATES: 6-26-09 | 5-8-09 | 5-18-09 | 5-31-09

SHEET 70 OF 114

FILE => 34-0157l-i-sjechaneldts05.dgn

USERNAME => trsatk DATE PLOTTED => 21-JUL-2009 TIME PLOTTED => 13:47

DIST	COUNTY	ROUTE	POST MILES TOTAL PROJECT	SHEET No	TOTAL SHEETS
04	SF	101,1	9.2/9.8, 6.8/7.1	421	567

REGISTERED CIVIL ENGINEER — 6-4-09 DATE

7-20-09
PLANS APPROVAL DATE

REGISTERED PROFESSIONAL ENGINEER — AHMED M M IBRAHIM — No. S 4865 — EXP. 9-30-10 — STRUCTURAL — STATE OF CALIFORNIA

The State of California or its officers or agents shall not be responsible for the accuracy or completeness of electronic copies of this plan sheet.

NOTE:
THE CONTRACTOR SHALL VERIFY ALL CONTROLLING FIELD DIMENSIONS BEFORE ORDERING OR FABRICATING ANY MATERIAL.

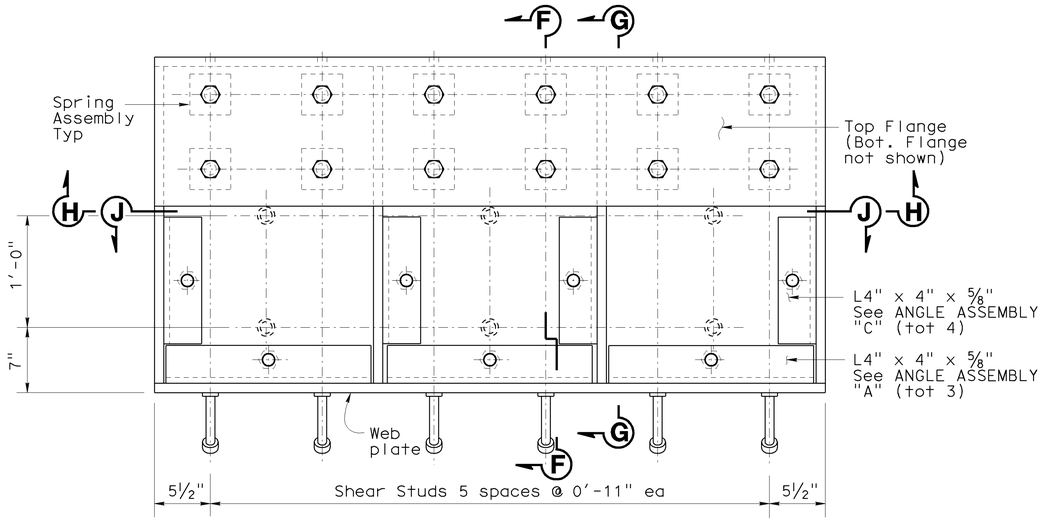

PLAN-BUILT UP CHANNEL ASSEMBLY "B" (TYP)

No Scale

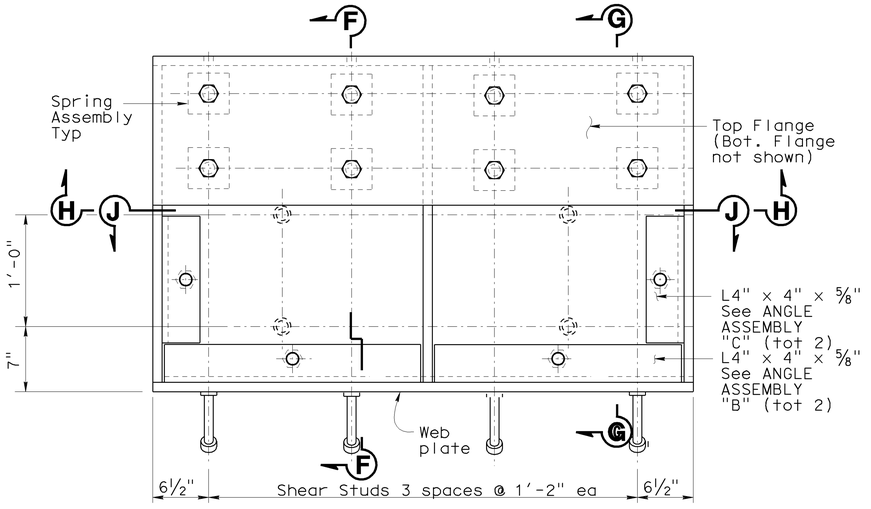

PLAN-BUILT UP CHANNEL ASSEMBLY "A" (TYP)

No Scale

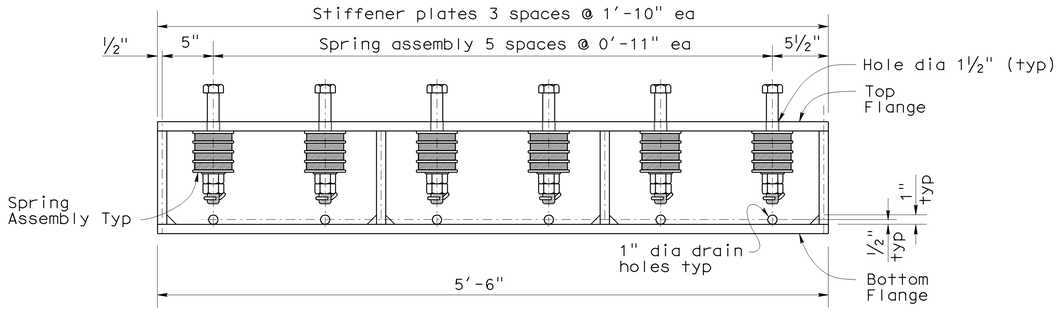

SECTION H-H - BUILT UP CHANNEL ASSEMBLY "B" (TYP)

No Scale

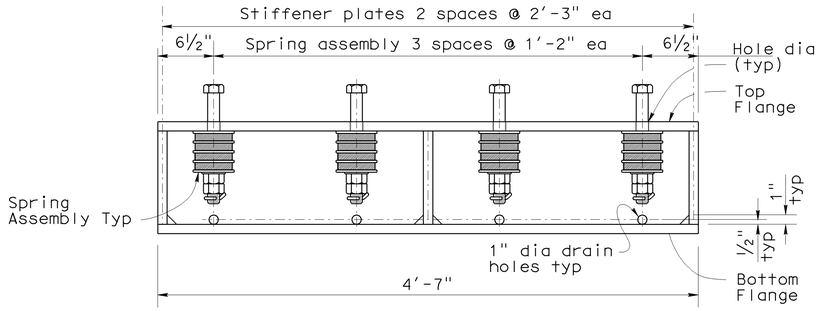

SECTION H-H - BUILT UP CHANNEL ASSEMBLY "A" (TYP)

No Scale

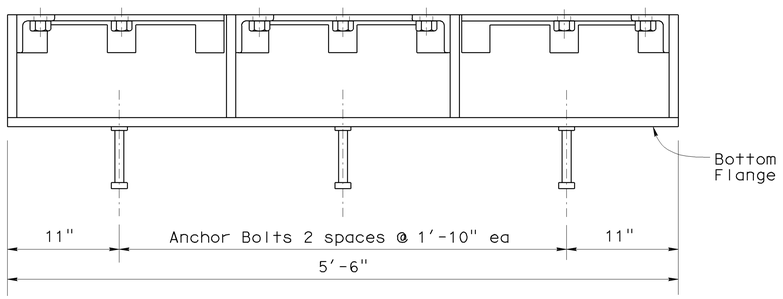

SECTION J-J - BUILT UP CHANNEL ASSEMBLY "B" (TYP)

No Scale

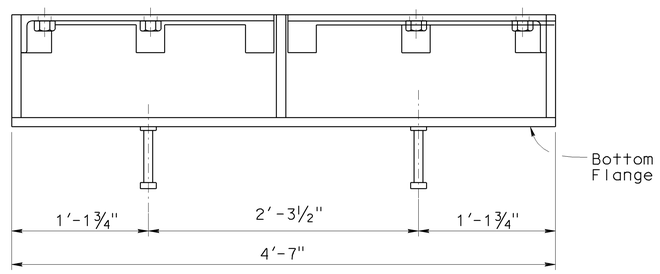

SECTION J-J - BUILT UP CHANNEL ASSEMBLY "A" (TYP)

No Scale

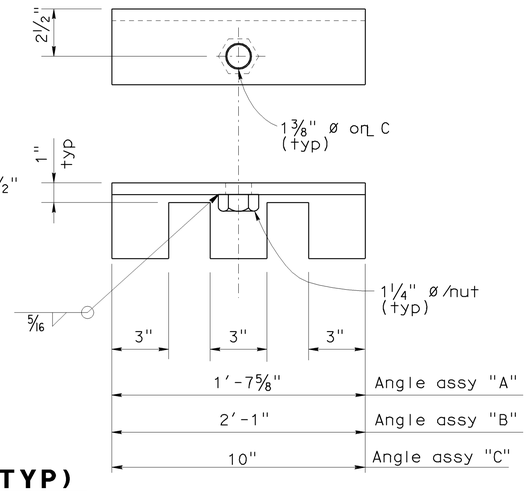

ANGLE ASSEMBLY (TYP)

NO SCALE

NOTES:

1. For SECTIONS F-F and G-G See "ABUTMENT SEISMIC JOINT DETAILS NO.5" sheet.
2. Top surfaces of L 4" X 4" X 5/8" angles and 1" steel PLs shall be on same level.

DESIGN	BY Q. Zhao	CHECKED T. Delis	STATE OF CALIFORNIA DEPARTMENT OF TRANSPORTATION	DIVISION OF ENGINEERING SERVICES STRUCTURE DESIGN DESIGN BRANCH 4	BRIDGE NO. 34-0157L	PRESIDIO VIADUCT - LEFT	
DETAILS	BY Jeff Thorne	CHECKED Q. Zhao			POST MILE 9.02	ABUTMENT SEISMIC JOINT DETAILS NO. 4	
QUANTITIES	BY A. Alcantara	CHECKED J. Han					

STRUCTURES DESIGN DETAIL SHEET (ENGLISH) (REV. 10/25/05)

ORIGINAL SCALE IN INCHES FOR REDUCED PLANS 0 1 2 3

CU 04242
EA 163731

DISREGARD PRINTS BEARING EARLIER REVISION DATES →

REVISION DATES: 4-20-09 | 5-8-09 | 5-18-09 | 6-01-09 | 6-15-09

SHEET 71 OF 114

FILE => 34-0157l-i-sjechaneldts06.dgn

USERNAME => s1355318 DATE PLOTTED => 21-JUL-2009 TIME PLOTTED => 14:32

DIST	COUNTY	ROUTE	POST MILES TOTAL PROJECT	SHEET No	TOTAL SHEETS
04	SF	101,1	9.2/9.8, 6.8/7.1	422	567

Ahmed Brahim 6-4-09
REGISTERED CIVIL ENGINEER DATE

7-20-09
PLANS APPROVAL DATE

REGISTERED PROFESSIONAL ENGINEER — AHMED M M IBRAHIM — No. S 4865 — EXP. 9-30-10 — STRUCTURAL — STATE OF CALIFORNIA

The State of California or its officers or agents shall not be responsible for the accuracy or completeness of electronic copies of this plan sheet.

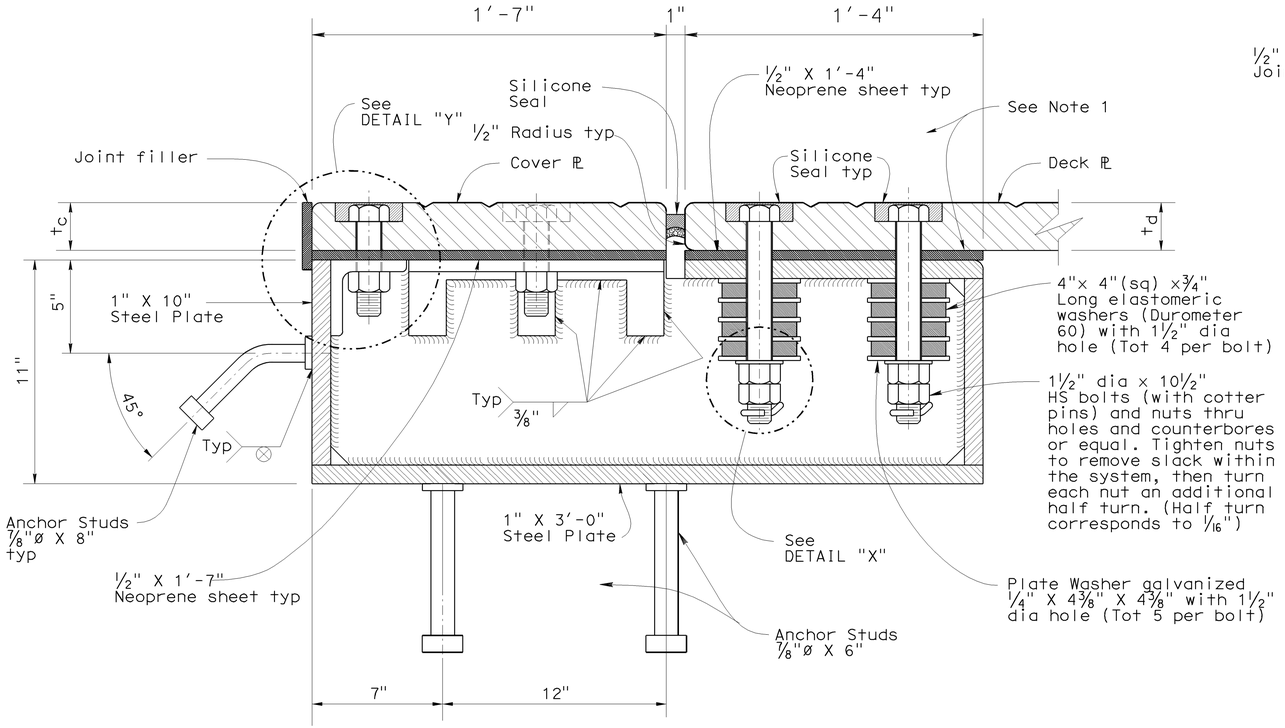

SECTION F-F

No Scale

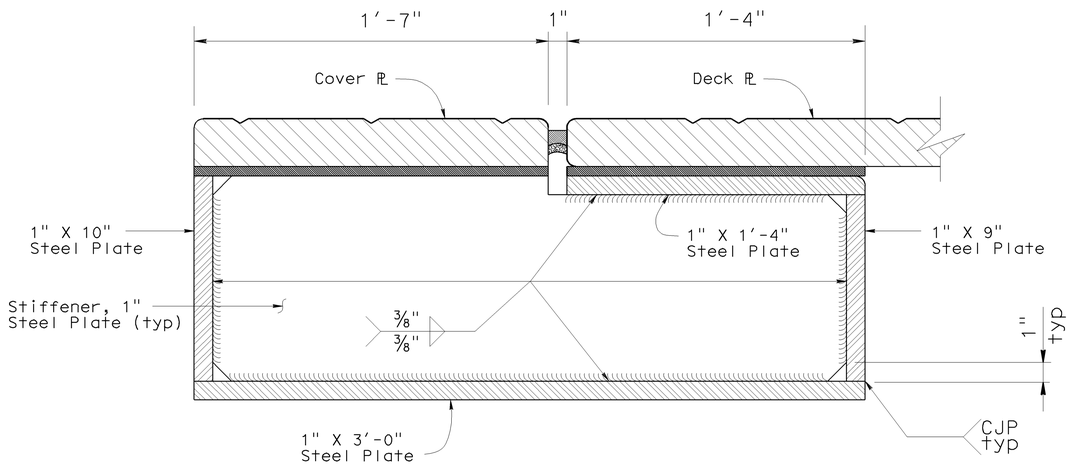

SECTION G-G

No Scale

NOTE:
THE CONTRACTOR SHALL VERIFY ALL CONTROLLING FIELD DIMENSIONS BEFORE ORDERING OR FABRICATING ANY MATERIAL.

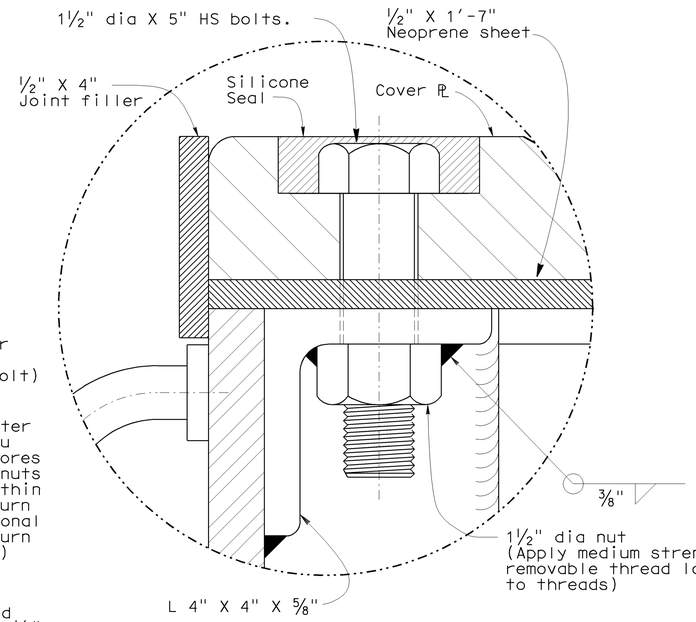

DETAIL "Y"

No Scale

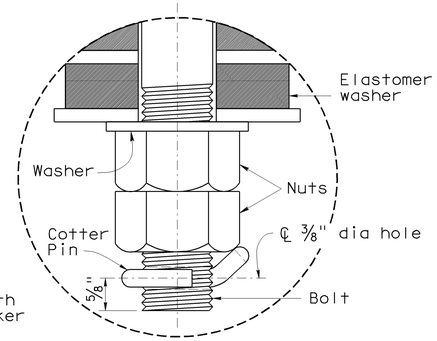

DETAIL "X"

No Scale

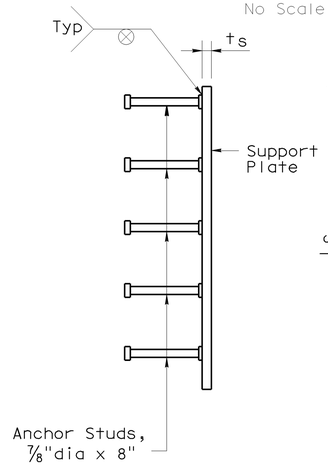

SIDE VIEW

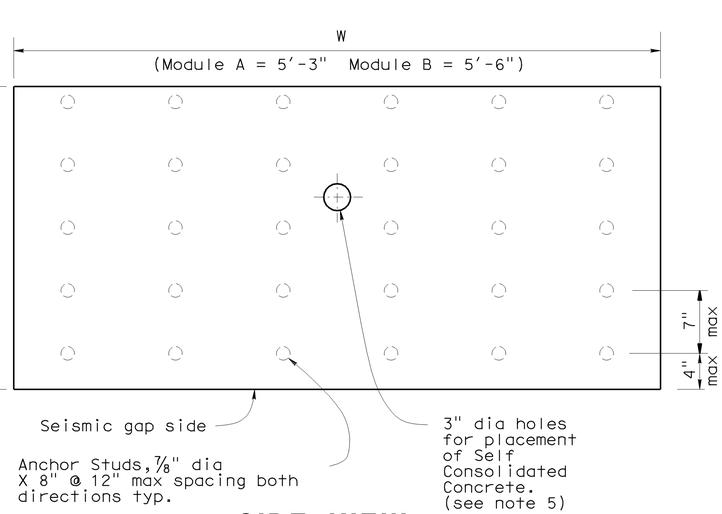

SIDE VIEW

SUPPORT PLATE DETAIL

No Scale

NOTES:

1. For Ls, ts, td & tc values see 'ABUTMENT SEISMIC JOINT DETAIL NO. 1' sheet.
2. Support Plate B shown, Support Plate A similar.
3. For V-Groove details see 'ABUTMENT SEISMIC JOINT DETAIL NO. 3' sheet.
4. Exact location of 3" dia holes to be determined prior to support plate fabrication.
5. 1½" holes in neoprene sheets shall be drilled or punched so that the neoprene is not distorted at the time of installation.

DESIGN	BY Q. Zhao	CHECKED T. Delis	STATE OF CALIFORNIA DEPARTMENT OF TRANSPORTATION	DIVISION OF ENGINEERING SERVICES STRUCTURE DESIGN DESIGN BRANCH 4	BRIDGE NO. 34-0157L
DETAILS	BY Jeff Thorne	CHECKED Q. Zhao			POST MILE 9.02
QUANTITIES	BY A. Alcantara	CHECKED J. Han			

PRESIDIO VIADUCT - LEFT

ABUTMENT SEISMIC JOINT DETAILS NO. 5

STRUCTURES DESIGN DETAIL SHEET (ENGLISH) (REV. 10/25/05)

ORIGINAL SCALE IN INCHES FOR REDUCED PLANS 0 1 2 3

CU 04242
EA 163731

DISREGARD PRINTS BEARING EARLIER REVISION DATES →

REVISION DATES: 4-20-09 | 5-8-09 | 5-18-09 | 5-27-09

SHEET 72 OF 114

FILE => 34-0157l-i-sjechaneldts07.dgn

USERNAME = s135518 DATE PLOTTED => 21-JUL-2009 TIME PLOTTED => 14:32

DIST	COUNTY	ROUTE	POST MILES TOTAL PROJECT	SHEET No	TOTAL SHEETS
04	SF	101,1	9.2/9.8, 6.8/7.1	423	567

Ahmed Brahim 6-4-09
REGISTERED CIVIL ENGINEER DATE

7-20-09
PLANS APPROVAL DATE

REGISTERED PROFESSIONAL ENGINEER — AHMED M M IBRAHIM — No. S 4865 — EXP. 9-30-10 — STRUCTURAL — STATE OF CALIFORNIA

The State of California or its officers or agents shall not be responsible for the accuracy or completeness of electronic copies of this plan sheet.

NOTE:
THE CONTRACTOR SHALL VERIFY ALL CONTROLLING FIELD DIMENSIONS BEFORE ORDERING OR FABRICATING ANY MATERIAL.

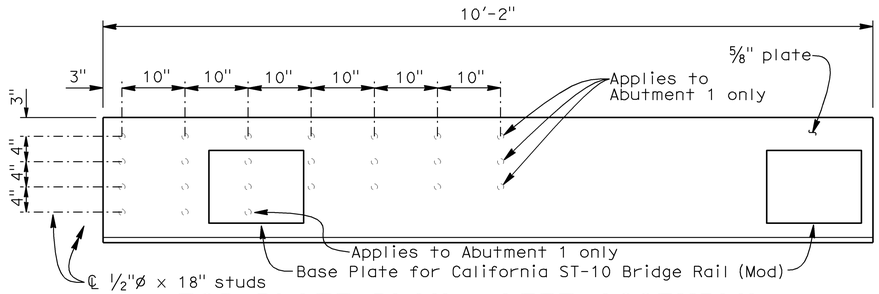

TOP PLATE PLAN - LEFT ASSEMBLY
1"=1'-0"
(See Note 1)

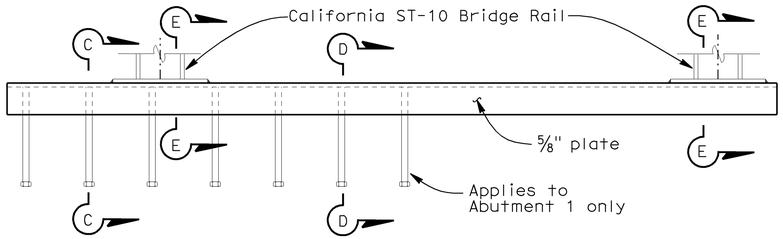

TOP PLATE ELEVATION - LEFT ASSEMBLY
1"=1'-0"
(See Note 1)

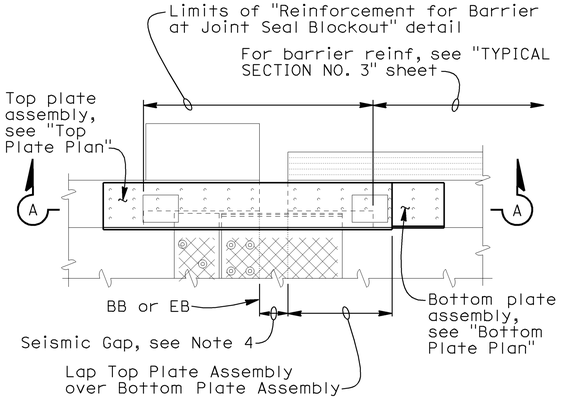

PLAN
No scale
(See Note 1)

Notes:
1. Abutment 1 left assembly shown, right assembly is opposite hand. Abutment 7 left assembly same, except mirrored and as noted, see "Bottom Plate Plan Abutment 7" detail
2. Studs can be bent to accommodate transverse PT anchor plates as needed
3. For Sections C-C, D-D, E-E, F-F and G-G, see "HINGE SEISMIC JOINT DETAILS NO. 6" sheet
4. For Seismic Gap and Joint Seal Blockout limits, see "ABUTMENT SEISMIC JOINT DETAILS NO. 1" sheet

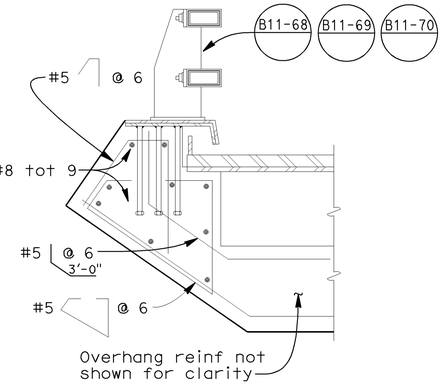

REINFORCEMENT FOR BARRIER AT JOINT SEAL BLOCKOUT
3/4"=1'-0"

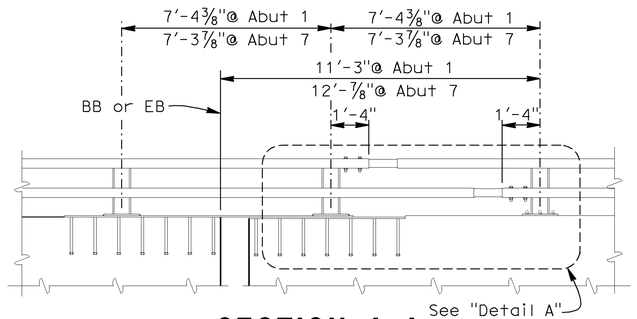

SECTION A-A
No scale

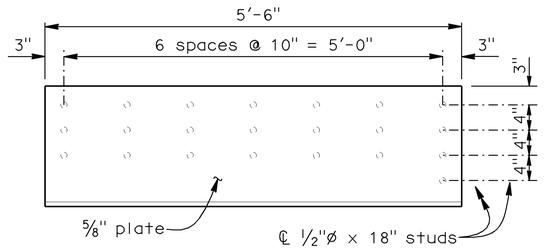

BOTTOM PLATE PLAN LEFT ASSEMBLY
1"=1'-0"
(See Note 1)

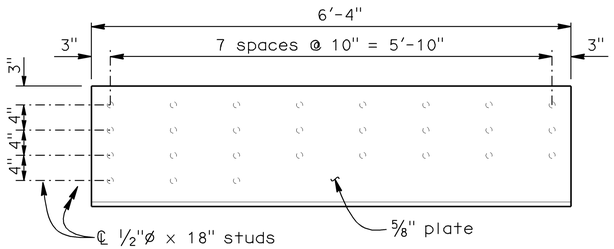

BOTTOM PLATE PLAN ABUTMENT 7
1"=1'-0"

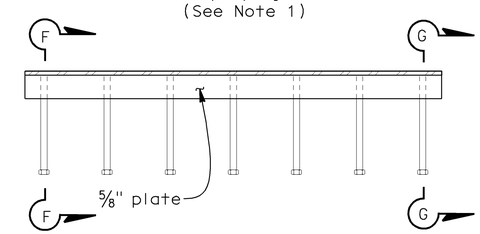

BOTTOM PLATE ELEVATION LEFT ASSEMBLY
1"=1'-0"
(See Note 1)

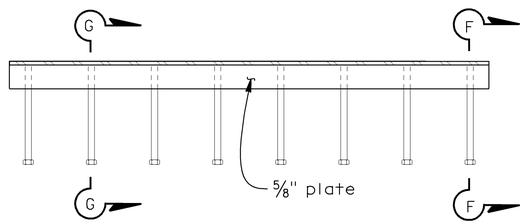

BOTTOM PLATE ELEVATION ABUTMENT 7
1"=1'-0"

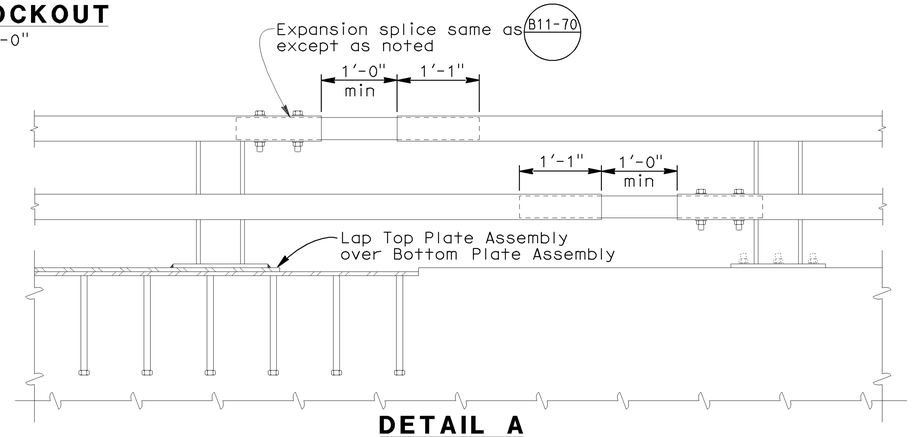

DETAIL A
No scale

DESIGN	BY S. Barajas	CHECKED Q. Zhao	STATE OF CALIFORNIA DEPARTMENT OF TRANSPORTATION	DIVISION OF ENGINEERING SERVICES STRUCTURE DESIGN DESIGN BRANCH 4	BRIDGE NO. 34-0157L
DETAILS	BY Jeff Thorne	CHECKED S. Barajas			POST MILE 9.02
QUANTITIES	BY S. Barajas	CHECKED J. Han			

PRESIDIO VIADUCT - LEFT
ABUTMENT SEISMIC JOINT DETAILS NO. 6

STRUCTURES DESIGN DETAIL SHEET (ENGLISH) (REV. 10/25/05)

ORIGINAL SCALE IN INCHES FOR REDUCED PLANS 0 1 2 3

CU 04242
EA 163731

DISREGARD PRINTS BEARING EARLIER REVISION DATES

REVISION DATES: 6-17-09, 7-08-09

SHEET 73 OF 114

FILE => 34-0157l-i-sjfbarrdtsc01.dgn

USERNAME => s135318 DATE PLOTTED => 21-JUL-2009 TIME PLOTTED => 14:32

DIST	COUNTY	ROUTE	POST MILES TOTAL PROJECT	SHEET No	TOTAL SHEETS
04	SF	101,1	9.2/9.8, 6.8/7.1	424	567

Ahmed Brahim 6-4-09
REGISTERED CIVIL ENGINEER DATE

7-20-09
PLANS APPROVAL DATE

REGISTERED PROFESSIONAL ENGINEER — AHMED M M IBRAHIM — No. S 4865 — Exp. 9-30-10 — STRUCTURAL — STATE OF CALIFORNIA

The State of California or its officers or agents shall not be responsible for the accuracy or completeness of electronic copies of this plan sheet.

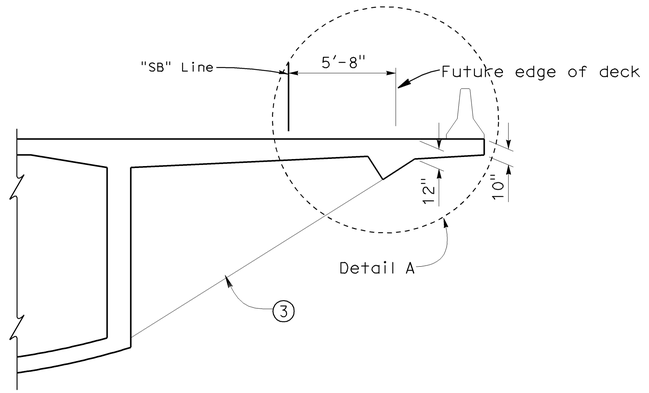

TYPICAL SECTION FOR TEMP. BRIDGE WIDENING

1/4" = 1'-0"

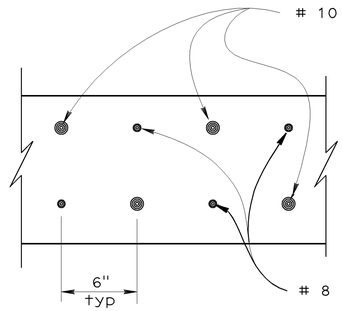

SECTION A-A

No Scale

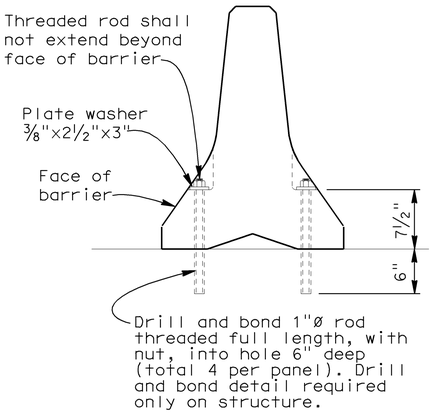

TEMPORARY K RAILING ATTACHMENT DETAILS (T3)

No Scale

NOTE:
THE CONTRACTOR SHALL VERIFY ALL CONTROLLING FIELD DIMENSIONS BEFORE ORDERING OR FABRICATING ANY MATERIAL.

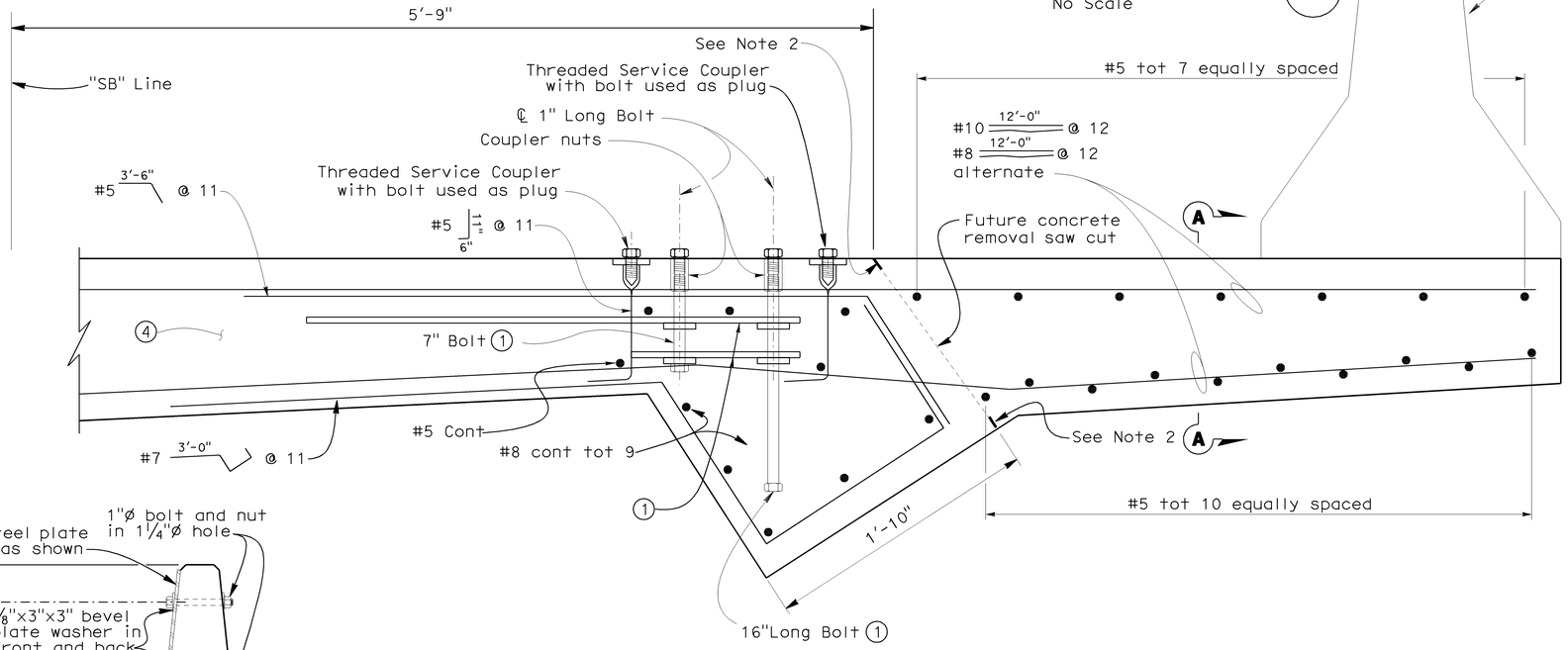

DETAIL A

2" = 1'-0"

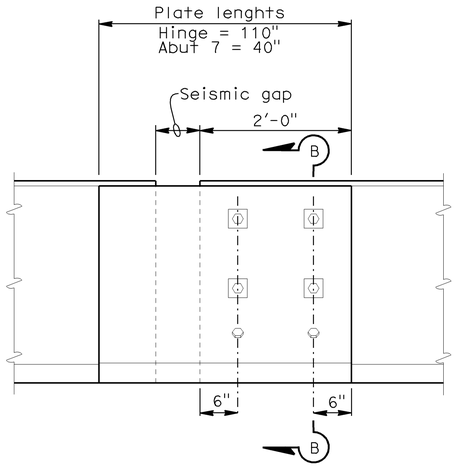

K-RAIL MODIFICATION AT SEISMIC EXP JT

1"=1'-0"

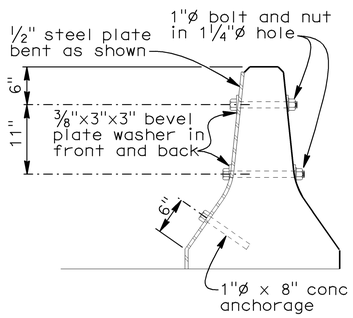

SECTION B-B

1"=1'-0"

Note:

1. For barrier details see Standard Plan B11-68
2. Provide 1 1/2" of felt paper the entire length of temporary widening
3. For Steel Fin details see "STEEL FIN DETAILS NO. 1"
4. For other deck reinforcement not shown See "TYPICAL SECTION NO. 3" sheet.

DESIGN	BY S. Barajas	CHECKED Q. Zhao	STATE OF CALIFORNIA DEPARTMENT OF TRANSPORTATION
DETAILS	BY JFCasarino/GMSouza	CHECKED S. Barajas	
QUANTITIES	BY A. Alcantara	CHECKED J. Han	

DIVISION OF ENGINEERING SERVICES STRUCTURE DESIGN
DESIGN BRANCH 4

BRIDGE NO. 34-0157L
POST MILE 9.02

PRESIDIO VIADUCT - LEFT
TEMPORARY BRIDGE WIDENING

STRUCTURES DESIGN DETAIL SHEET (ENGLISH) (REV. 10/25/05)

ORIGINAL SCALE IN INCHES FOR REDUCED PLANS 0 1 2 3

CU 04242
EA 163731

DISREGARD PRINTS BEARING EARLIER REVISION DATES →

REVISION DATES: 05-05-09 | 05-08-09 | 05-15-09 | 06-02-09 | 06-04-09 | 06-17-09

SHEET 74 OF 114

FILE => 34-0157l-j-twide.dgn

USERNAME => s1335318 DATE PLOTTED => 21-JUL-2009 TIME PLOTTED => 14:32

DIST	COUNTY	ROUTE	POST MILES TOTAL PROJECT	SHEET No	TOTAL SHEETS
04	SF	101,1	9.2/9.8, 6.8/7.1	425	567

Ahmed Brahim 6-4-09
REGISTERED CIVIL ENGINEER DATE

7-20-09
PLANS APPROVAL DATE

REGISTERED PROFESSIONAL ENGINEER
AHMED M M IBRAHIM
No. S 4865
EXP. 9-30-10
STRUCTURAL
STATE OF CALIFORNIA

The State of California or its officers or agents shall not be responsible for the accuracy or completeness of electronic copies of this plan sheet.

NOTE:
CONTRACTOR SHALL VERIFY ALL CONTROLLING FIELD DIMENSIONS BEFORE ORDERING OR FABRICATING ANY MATERIALS.

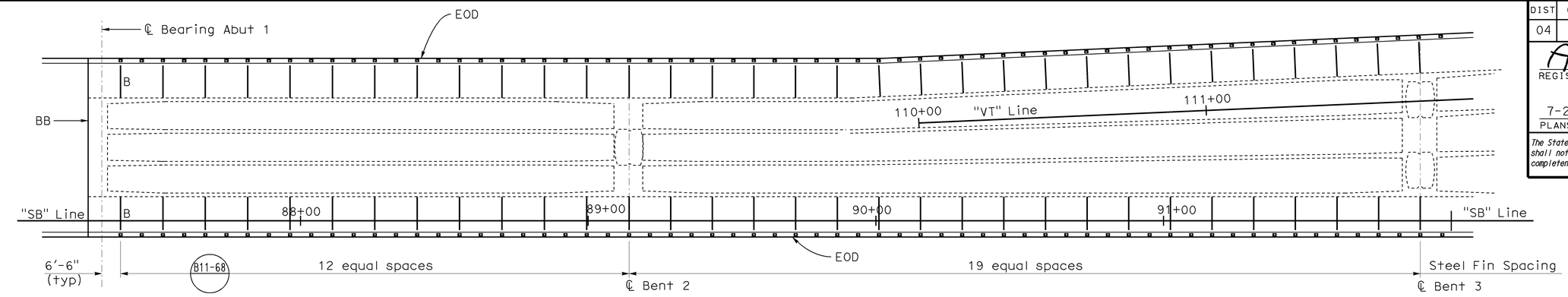

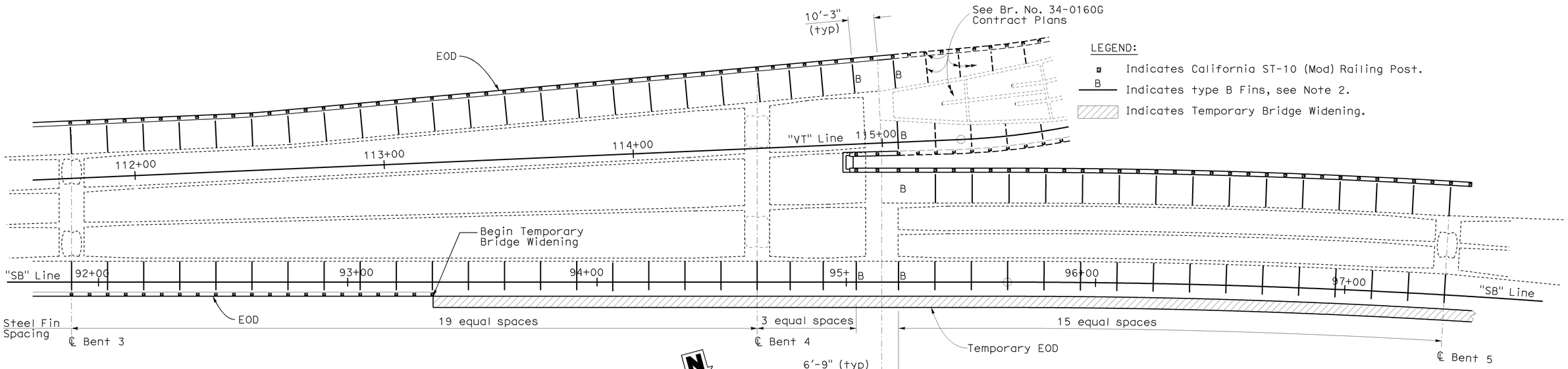

LEGEND:

- ▪ Indicates California ST-10 (Mod) Railing Post.
- B Indicates type B Fins, see Note 2.
- Indicates Temporary Bridge Widening.

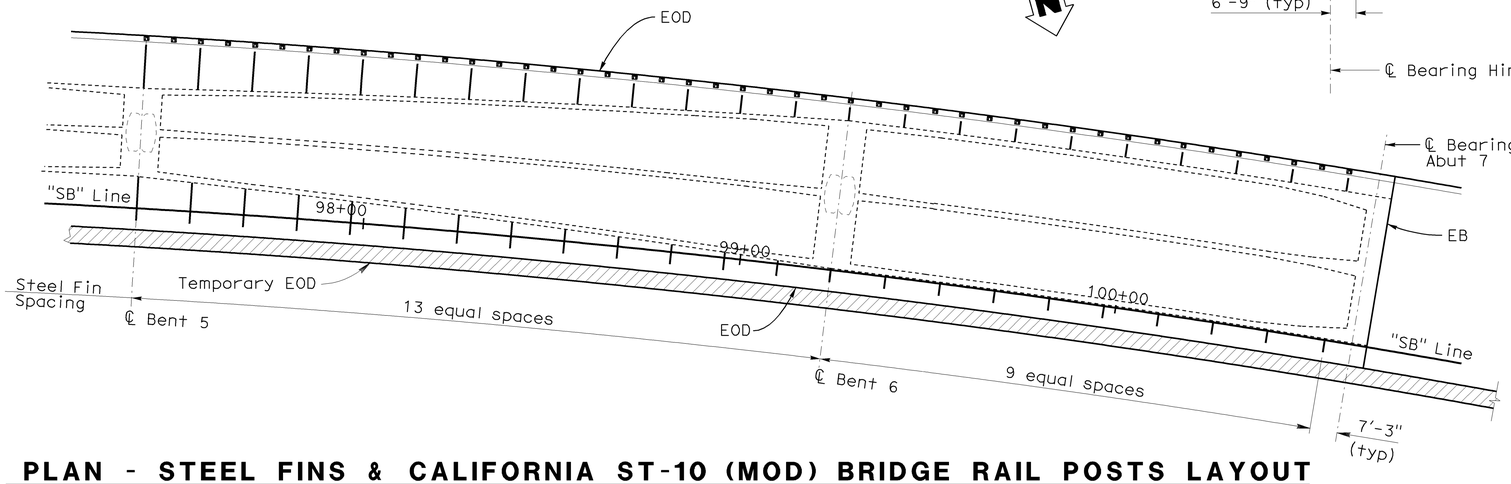

NOTES:

1. Steel Fins spacing shall be measured along edge of deck. Place Steel Fins perpendicular to edge of deck. Place one Steel Fin at every bent centerline. Steel Fins in between bent centerlines shall be spaced evenly as indicated.
2. All Steel Fins shown shall be type A except otherwise indicated. For Steel Fin type A and type B details, see "STEEL FIN DETAILS NO. 1" sheet.
3. There shall be one California ST-10 Rail (Mod) post at every Steel Fin location. One intermediate California ST-10 (Mod) Post shall be placed at equal distances between Steel Fins. For details and additional information, see "CALIFORNIA ST-10 BRIDGE RAIL" (Standard Plans) and "MISCELLANEOUS HINGE DETAILS NO. 6" sheet, respectively.

PLAN - STEEL FINS & CALIFORNIA ST-10 (MOD) BRIDGE RAIL POSTS LAYOUT

1" = 20'

	BY	CHECKED
DESIGN	A. Alcantara	Q. Zhao
DETAILS	JFCasarino	A. Alcantara
QUANTITIES	A. Alcantara	J. Han

STATE OF CALIFORNIA
DEPARTMENT OF TRANSPORTATION

DIVISION OF ENGINEERING SERVICES
STRUCTURE DESIGN
DESIGN BRANCH 4

CU 04242
EA 163731

BRIDGE NO. 34-0157L
POST MILE 9.02

PRESIDIO VIADUCT - LEFT
STEEL FIN LAYOUT

STRUCTURES DESIGN DETAIL SHEET (ENGLISH) (REV. 10/25/05)

ORIGINAL SCALE IN INCHES FOR REDUCED PLANS 0 1 2 3

DISREGARD PRINTS BEARING EARLIER REVISION DATES →

REVISION DATES: 5-9-09 | 6-10-09 | 6-18-09 | 7-8-09 | 7-14-09 | 7-13-09

SHEET 75 OF 114

FILE => 34-0157l-k-finlayout.dgn

USERNAME => s1135318 DATE PLOTTED => 21-JUL-2009 TIME PLOTTED => 14:32

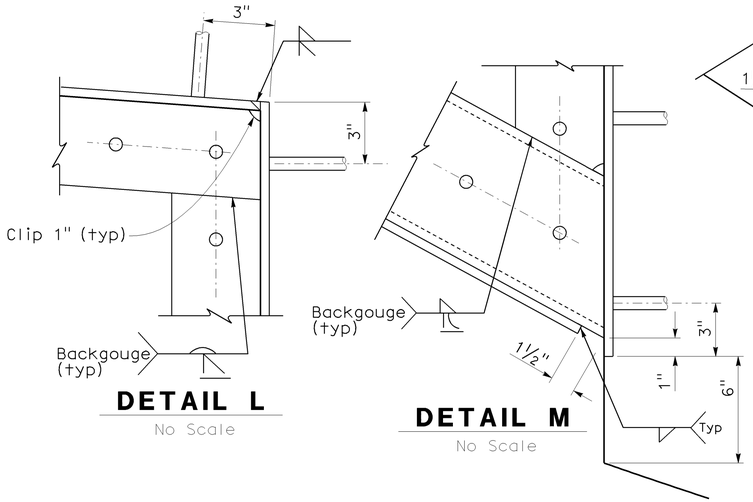

DETAIL L

No Scale

DETAIL M

No Scale

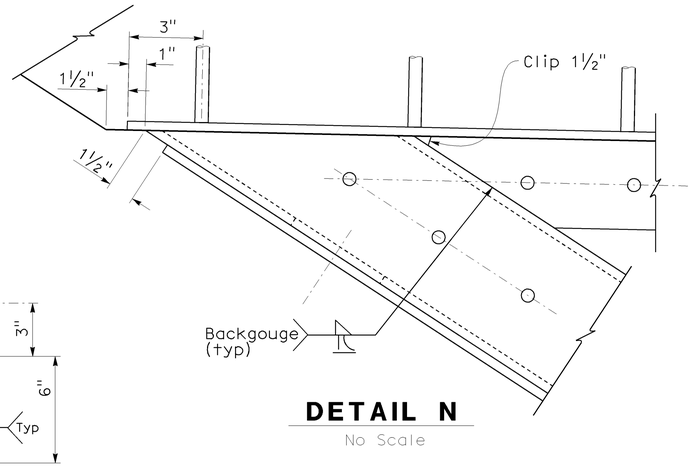

DETAIL N

No Scale

NOTES:

1. For overhang and exterior girder dimensions, see "TYPICAL SECTION NO. 1,2 & 3" sheets.
2. For Steel Fin layout, see "STEEL FIN LAYOUT" sheet.
3. For Sections A-A through E-E, see "STEEL FIN DETAILS NO. 2" sheet.
4. Studs may be bent to clear prestressing cables.
5. No live loading or construction material storage shall be allowed on the overhang prior to the complete erection of the Steel Fins.
6. Use of temporary welded attachments to the web plates shall not be permitted at any stage of fabrication or construction.
7. Steel Fins shall be shop assembled and painted prior to shipping to bridge site.
8. Steel Fins shall be supported during transportation and erection such that no damages of the web plates occur.
9. Web Plate not shown on Details K, L, M & N for clarity.
10. All bolt holes on web plates only shall have oversize holes ø = 15/16"
11. Evenly spaced between ℄ indicated, for details see "STEEL FIN DETAILS NO. 2" SHEET.

DIST	COUNTY	ROUTE	POST MILES TOTAL PROJECT	SHEET No	TOTAL SHEETS
04	SF	101,1	9.2/9.8, 6.8/7.1	426	567

Ahmed Ibrahim 6-4-09
REGISTERED CIVIL ENGINEER DATE

7-20-09
PLANS APPROVAL DATE

REGISTERED PROFESSIONAL ENGINEER
AHMED M M IBRAHIM
No. S 4865
EXP. 9-30-10
STRUCTURAL
STATE OF CALIFORNIA

The State of California or its officers or agents shall not be responsible for the accuracy or completeness of electronic copies of this plan sheet.

CONSTRUCTION SEQUENCE:

1. Completed Steel Fins subassemblies shall be preassembled in the shop prior to shipping and erecting in compliance with Section 55-3.1 "Assembly" of May 2006 Standard Specifications.
2. Steel Fins shall be erected in place prior to placement of concrete.
3. Caulk around the contact seams between the formwork and the Steel Fin plates to prevent water access inside the steel fins.
4. Pour the bridge superstructure concrete.
5. Clean and apply final coat of paint to Steel Fins.
6. Contractor may submit alternative construction sequence to the Engineer for approval.

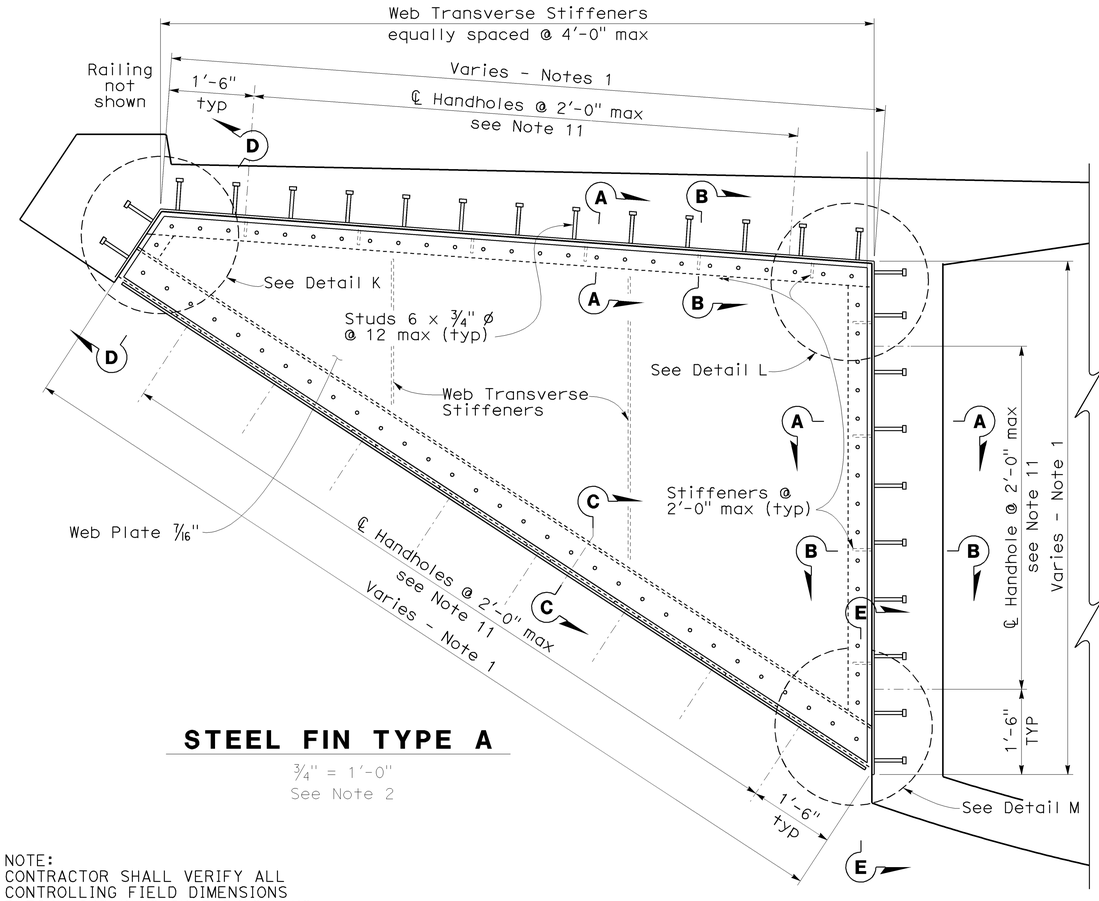

STEEL FIN TYPE A

¾" = 1'-0"
See Note 2

NOTE:
CONTRACTOR SHALL VERIFY ALL CONTROLLING FIELD DIMENSIONS BEFORE ORDERING OR FABRICATING ANY MATERIALS.

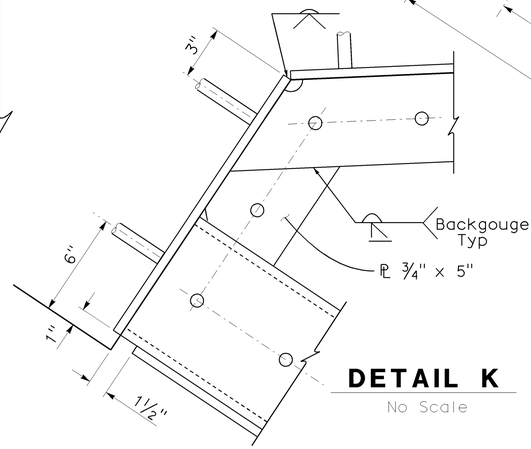

DETAIL K

No Scale

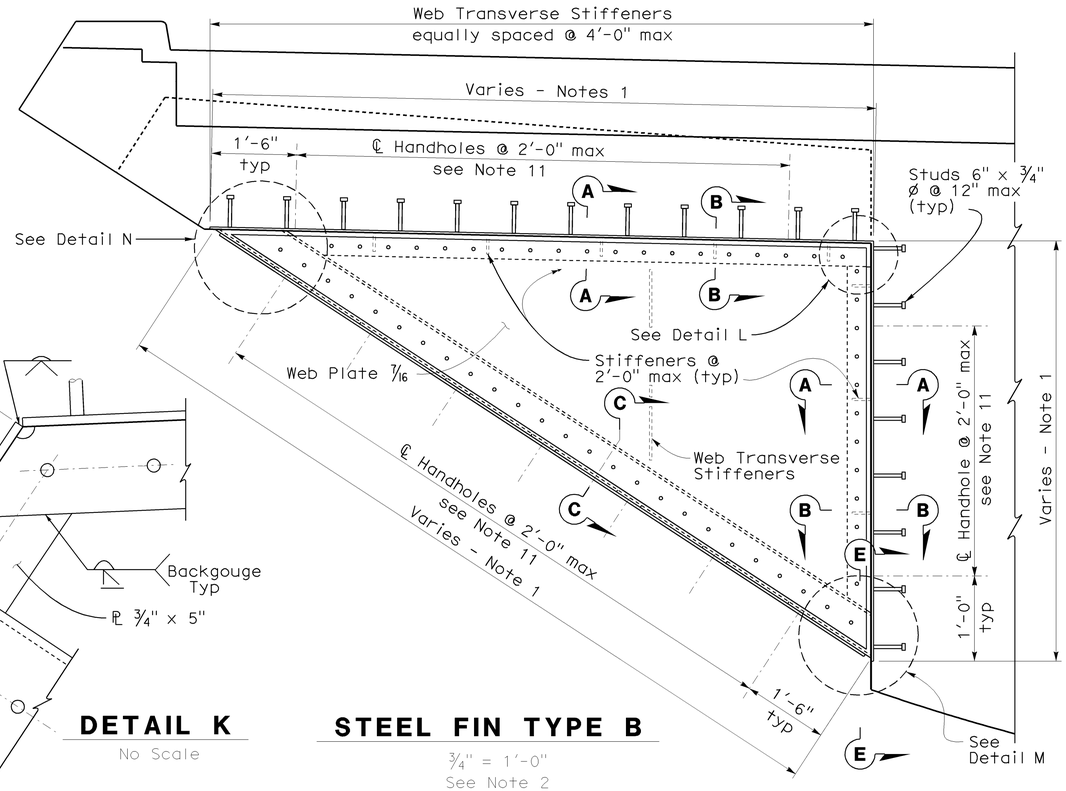

STEEL FIN TYPE B

¾" = 1'-0"
See Note 2

DESIGN	BY E. Thimmhardy	CHECKED S. Hegazi	STATE OF CALIFORNIA DEPARTMENT OF TRANSPORTATION	DIVISION OF ENGINEERING SERVICES STRUCTURE DESIGN DESIGN BRANCH 4	BRIDGE NO. 34-0157L	PRESIDIO VIADUCT - LEFT	
DETAILS	BY JFCasarino	CHECKED S. Hegazi/ E. Thimmhardy			POST MILE 9.02	STEEL FIN DETAILS NO. 1	
QUANTITIES	BY A. Alcantara	CHECKED J. Han					

STRUCTURES DESIGN DETAIL SHEET (ENGLISH) (REV. 10/25/05)

ORIGINAL SCALE IN INCHES FOR REDUCED PLANS 0 1 2 3

CU 04242
EA 163731

DISREGARD PRINTS BEARING EARLIER REVISION DATES →

REVISION DATES: 3-28-09 | 5-11-09 | 5-21-09 | 7-11-09

SHEET 76 OF 114

FILE => 34-0157I-I-fin01.dgn

USERNAME => s1335318 DATE PLOTTED => 21-JUL-2009 TIME PLOTTED => 14:32

DIST	COUNTY	ROUTE	POST MILES TOTAL PROJECT	SHEET No	TOTAL SHEETS
04	SF	101,1	9.2/9.8, 6.8/7.1	427	567

Ahmed Brahim 6-4-09
REGISTERED CIVIL ENGINEER DATE

7-20-09
PLANS APPROVAL DATE

REGISTERED PROFESSIONAL ENGINEER — AHMED M M IBRAHIM — No. S 4865 — EXP. 9-30-10 — STRUCTURAL — STATE OF CALIFORNIA

The State of California or its officers or agents shall not be responsible for the accuracy or completeness of electronic copies of this plan sheet.

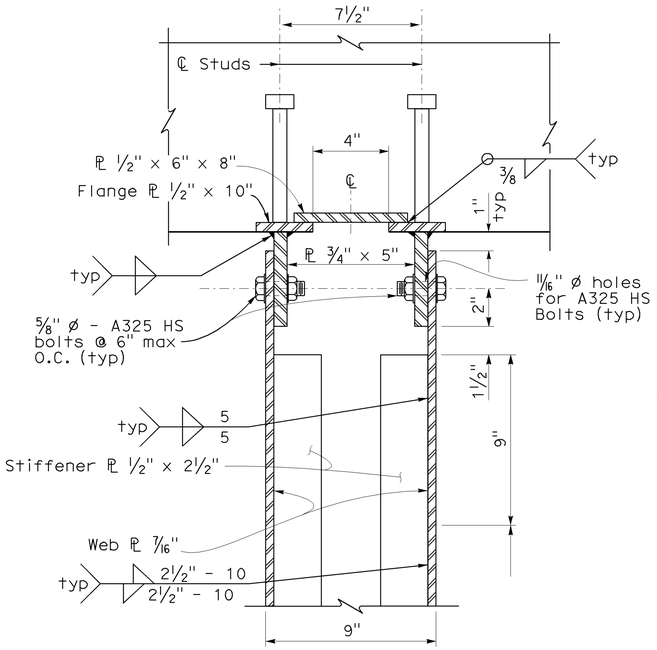

SECTION A-A

3" = 1'-0"

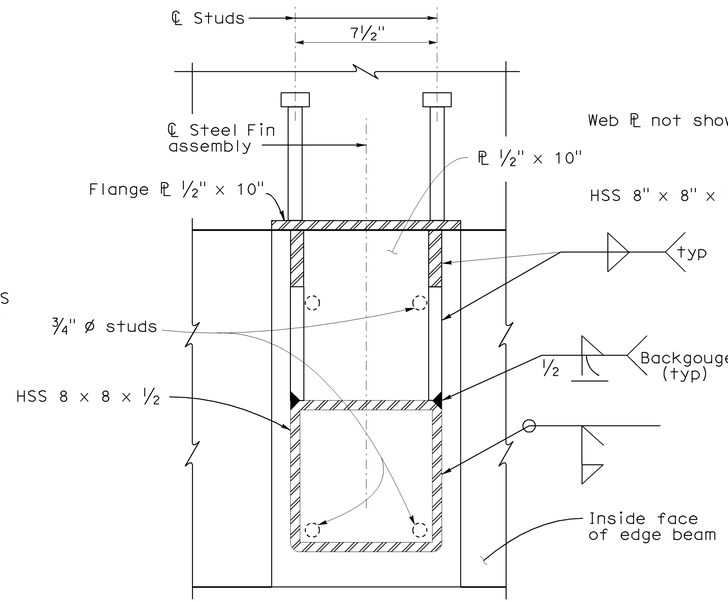

SECTION D-D

3" = 1'-0"

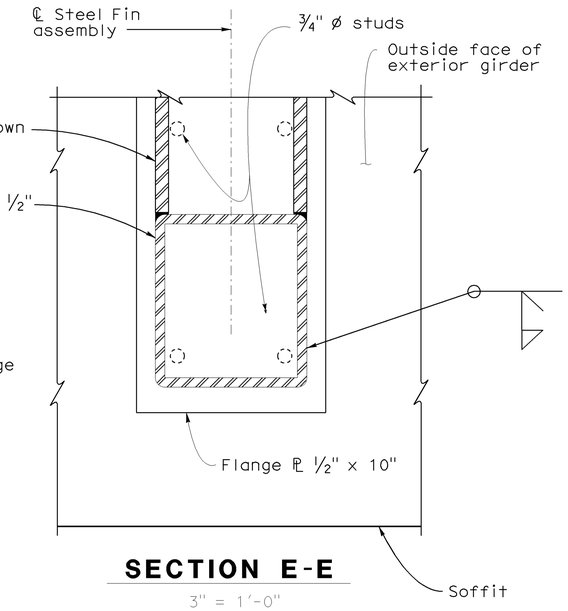

SECTION E-E

3" = 1'-0"

NOTES:

1. Cover Plates and Webs not shown in Sections D-D, E-E and K-K for clarity.
2. Weld sequence required to prevent distortions.

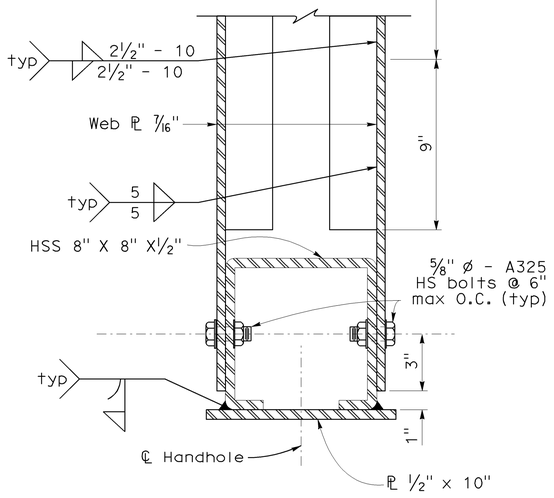

SECTION C-C

3" = 1'-0"

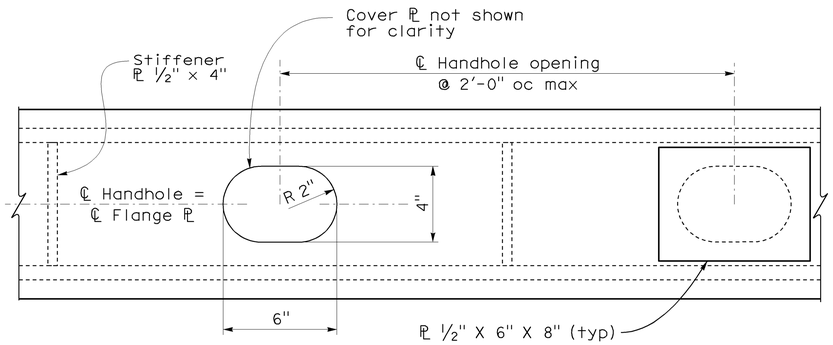

PART PLAN FLANGE PLATE

3" = 1'-0"

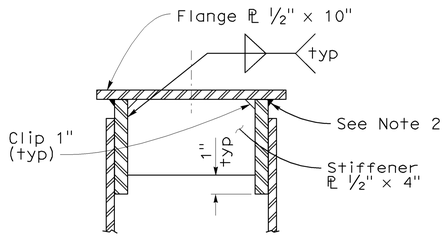

SECTION B-B

3" = 1'-0"

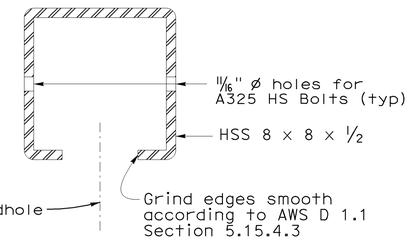

SECTION K-K

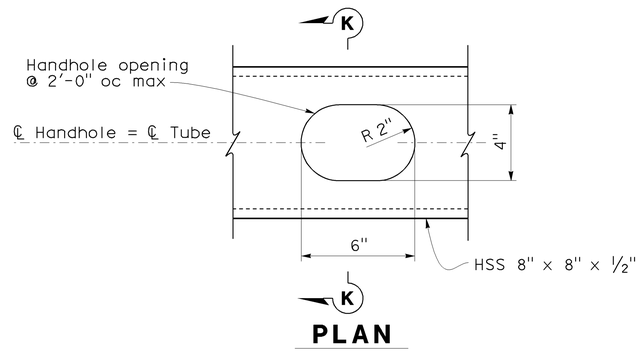

PLAN

S2

TYPICAL DETAIL OF TUBE HANDHOLE

3" = 1'-0"

NOTE:
CONTRACTOR SHALL VERIFY ALL CONTROLLING FIELD DIMENSIONS BEFORE ORDERING OR FABRICATING ANY MATERIALS.

DESIGN	BY E. Thimmhardy	CHECKED S. Hegazi	STATE OF CALIFORNIA DEPARTMENT OF TRANSPORTATION
DETAILS	BY JFCasarino	CHECKED E. Thimmhardy/ S. Hegazi	DIVISION OF ENGINEERING SERVICES STRUCTURE DESIGN — DESIGN BRANCH 4
QUANTITIES	BY A. Alcantara	CHECKED J. Han	BRIDGE NO. 34-0157L — POST MILE 9.02

PRESIDIO VIADUCT - LEFT
STEEL FIN DETAILS NO. 2

STRUCTURES DESIGN DETAIL SHEET (ENGLISH) (REV. 10/25/05)

ORIGINAL SCALE IN INCHES FOR REDUCED PLANS 0 1 2 3

CU 04242
EA 163731

DISREGARD PRINTS BEARING EARLIER REVISION DATES →

REVISION DATES: 3-26-09 | 5-11-09 | 5-21-09 | 5-31-09 | 7-11-09

SHEET 77 OF 114

FILE => 34-0157I-I-fin02.dgn

USERNAME = s1135318 DATE PLOTTED => 21-JUL-2009 TIME PLOTTED => 14:32

DIST	COUNTY	ROUTE	POST MILES TOTAL PROJECT	SHEET No	TOTAL SHEETS
04	SF	101,1	9.2/9.8, 6.8/7.1	428	567

Ahmed Brahim 6-4-09
REGISTERED CIVIL ENGINEER DATE

7-20-09
PLANS APPROVAL DATE

REGISTERED PROFESSIONAL ENGINEER
AHMED M M IBRAHIM
No. S 4865
Exp. 9-30-10
STRUCTURAL
STATE OF CALIFORNIA

The State of California or its officers or agents shall not be responsible for the accuracy or completeness of electronic copies of this plan sheet.

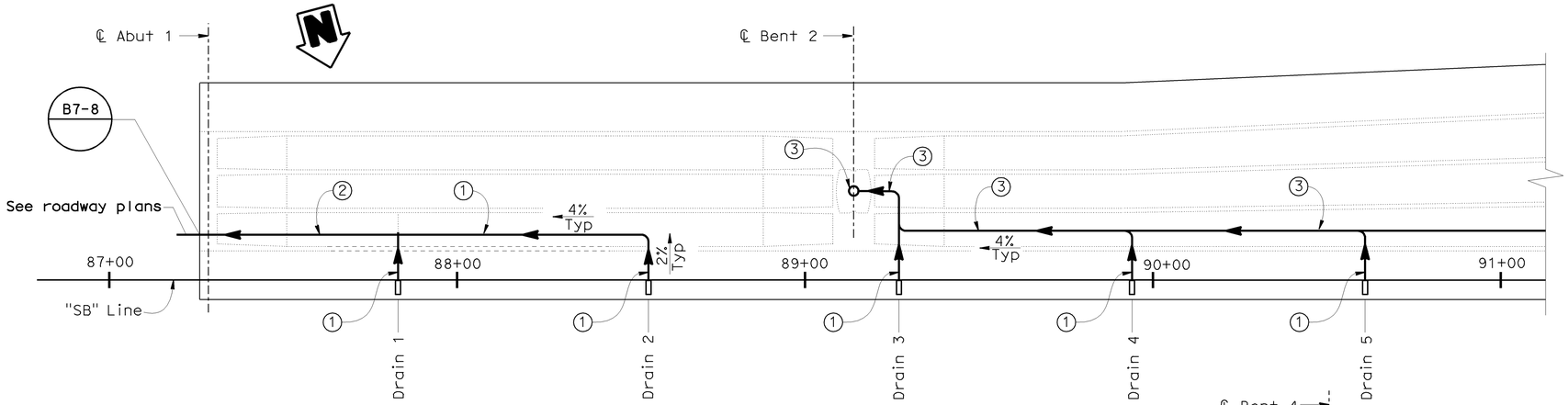

PARTIAL PLAN
1" = 20'

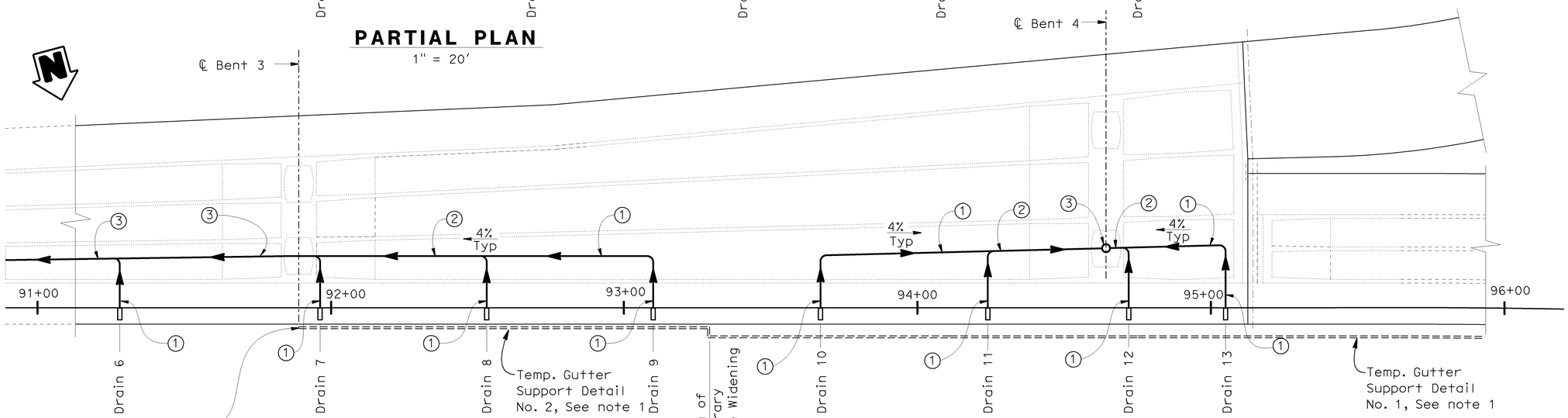

PARTIAL PLAN
1" = 20'

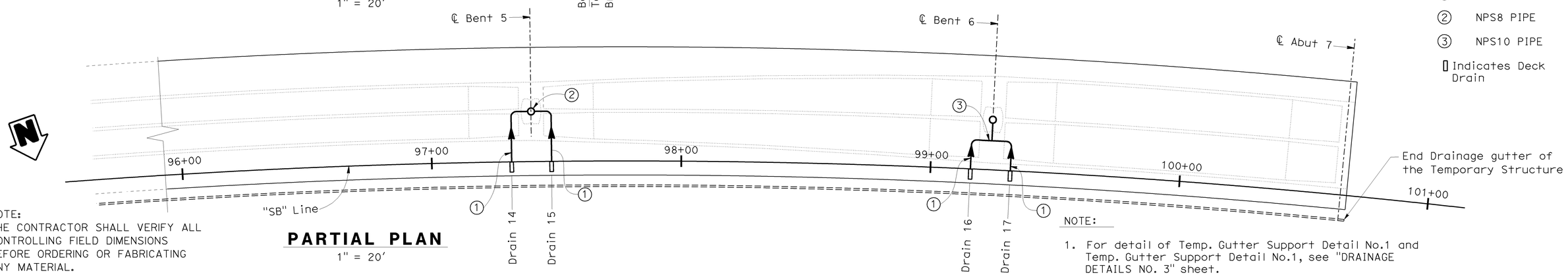

PARTIAL PLAN
1" = 20'

DRAIN Number	STATION
Drain 1	87+83.00
Drain 2	88+55.00
Drain 3	89+27.00
Drain 4	89+94.00
Drain 5	90+61.00
Drain 6	91+28.00
Drain 7	91+96.25
Drain 8	92+53.00
Drain 9	93+10.00
Drain 10	93+67.00
Drain 11	94+24.00
Drain 12	94+72.00
Drain 13	95+05.00
Drain 14	97+32.00
Drain 15	97+48.00
Drain 16	99+16.00
Drain 17	99+32.00

LEGEND:

① NPS6 PIPE

② NPS8 PIPE

③ NPS10 PIPE

▯ Indicates Deck Drain

NOTE:
THE CONTRACTOR SHALL VERIFY ALL CONTROLLING FIELD DIMENSIONS BEFORE ORDERING OR FABRICATING ANY MATERIAL.

NOTE:

1. For detail of Temp. Gutter Support Detail No.1 and Temp. Gutter Support Detail No.1, see "DRAINAGE DETAILS NO. 3" sheet.

	BY	CHECKED
DESIGN	M. Omran	Q. Zhao
DETAILS	M. Yu	M. Omran
QUANTITIES	A. Alcantara	J. Han

STATE OF CALIFORNIA
DEPARTMENT OF TRANSPORTATION

DIVISION OF ENGINEERING SERVICES
STRUCTURE DESIGN
DESIGN BRANCH 16

BRIDGE NO. 34-0157L
POST MILE 9.02

PRESIDIO VIADUCT - LEFT
DRAINAGE DETAILS NO. 1

STRUCTURES DESIGN DETAIL SHEET (ENGLISH) (REV. 10/25/05)

ORIGINAL SCALE IN INCHES FOR REDUCED PLANS 0 1 2 3

CU 04242
EA 163731

DISREGARD PRINTS BEARING EARLIER REVISION DATES →

REVISION DATES: 5-12-09 6-16-09

SHEET 78 OF 114

FILE => 34-0157l-m-ddet01.dgn

USERNAME => s1135318 DATE PLOTTED => 21-JUL-2009 TIME PLOTTED => 14:32

DIST	COUNTY	ROUTE	POST MILES TOTAL PROJECT	SHEET No	TOTAL SHEETS
04	SF	101,1	9.2/9.8, 6.8/7.1	429	567

Ahmed Ibrahim 6-4-09
REGISTERED CIVIL ENGINEER DATE

7-20-09
PLANS APPROVAL DATE

REGISTERED PROFESSIONAL ENGINEER
AHMED M M IBRAHIM
No. S 4865
EXP. 9-30-10
STRUCTURAL
STATE OF CALIFORNIA

The State of California or its officers or agents shall not be responsible for the accuracy or completeness of electronic copies of this plan sheet.

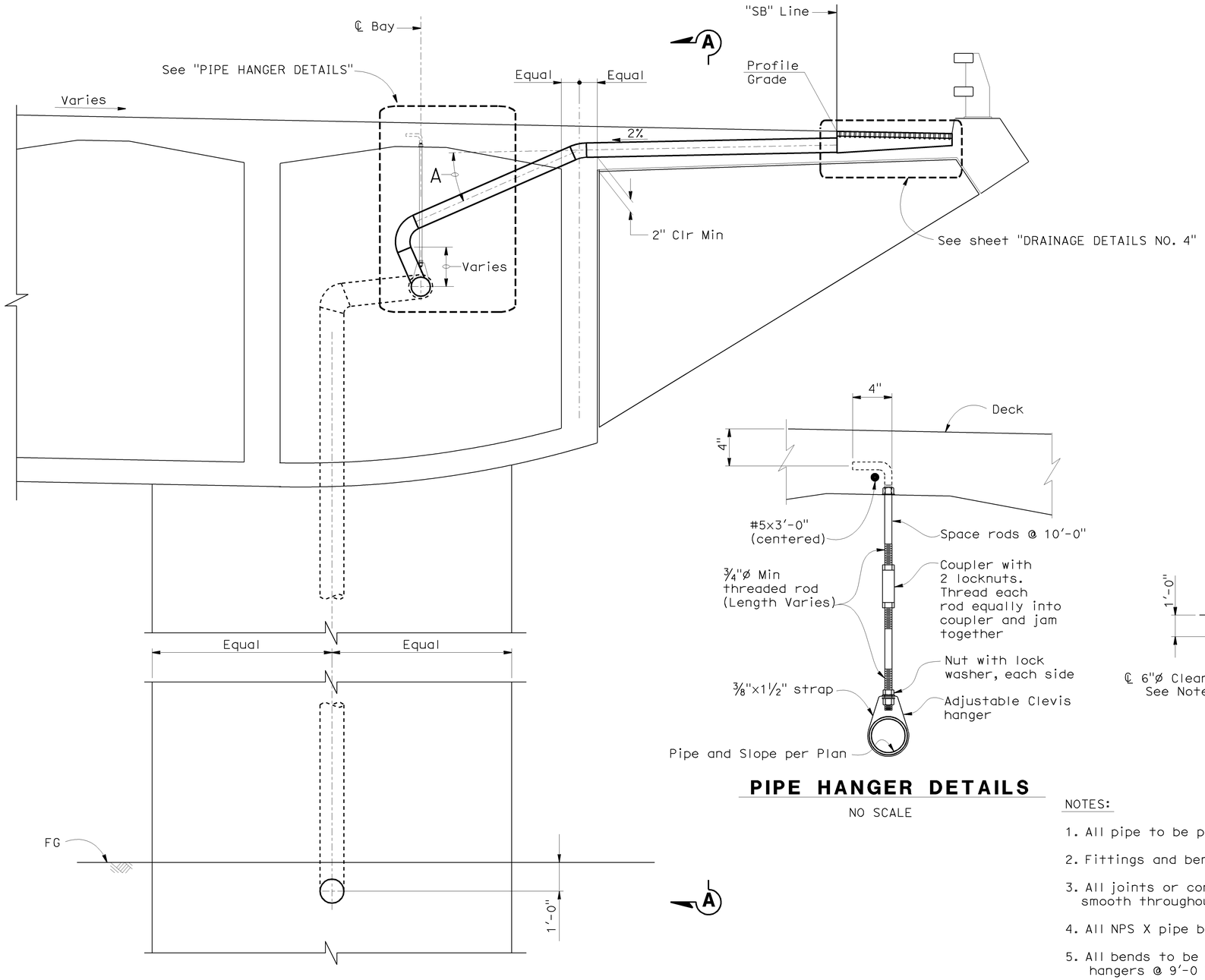

TYPICAL SECTION

½"=1'-0"

NOTE:
THE CONTRACTOR SHALL VERIFY ALL CONTROLLING FIELD DIMENSIONS BEFORE ORDERING OR FABRICATING ANY MATERIAL.

PIPE HANGER DETAILS

NO SCALE

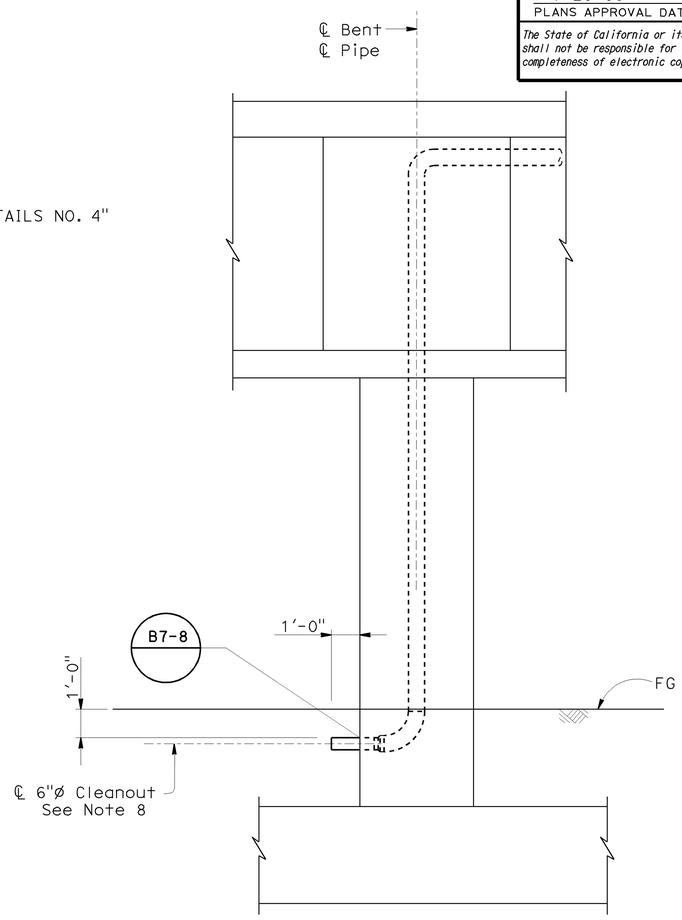

SECTION A-A

NO SCALE

NOTES:

1. All pipe to be per plan of welded steel pipe as noted and galvanized if not encased in concrete.
2. Fittings and bends shall have a minimun wall thickness of ⅛".
3. All joints or connections to be butt welded or connected by a steel pipe sleeve and to be smooth throughout inside of pipe except as noted.
4. All NPS X pipe bends to be 18" min. radius measured alog ℄ pipe.
5. All bends to be smooth. Pipe not encased in concrete to be supported by suitable galvanized hangers @ 9'-0 " max spacing throughout.
6. Galvanize deck drain assembly after fabrication.
7. Angle "A" is 15°24'30" for Drains 14 through 17 and 22°30'0" for the rest.
8. For direction and connection, see "Road Plans".

DESIGN	BY M. Omran	CHECKED S. Hagezi	STATE OF CALIFORNIA DEPARTMENT OF TRANSPORTATION
DETAILS	BY M. Yu	CHECKED M. Omran	
QUANTITIES	BY A. Alcantara	CHECKED J. Han	

DIVISION OF ENGINEERING SERVICES
STRUCTURE DESIGN
DESIGN BRANCH 4

CU 04242
EA 163731

BRIDGE NO. 34-0157L
POST MILE 9.02

PRESIDIO VIADUCT - LEFT
DRAINAGE DETAILS NO. 2

STRUCTURES DESIGN DETAIL SHEET (ENGLISH) (REV. 10/25/05)

ORIGINAL SCALE IN INCHES FOR REDUCED PLANS 0 1 2 3

DISREGARD PRINTS BEARING EARLIER REVISION DATES →

REVISION DATES: 6-15-09

SHEET 79 OF 114

FILE => 34-0157l-m-ddet02.dgn

USERNAME = s1135318 DATE PLOTTED => 21-JUL-2009 TIME PLOTTED => 14:32

DIST	COUNTY	ROUTE	POST MILES TOTAL PROJECT	SHEET No	TOTAL SHEETS
04	SF	101,1	9.2/9.8, 6.8/7.1	430	567

Ahmed Ibrahim 6-4-09
REGISTERED CIVIL ENGINEER DATE

7-20-09
PLANS APPROVAL DATE

REGISTERED PROFESSIONAL ENGINEER
AHMED M M IBRAHIM
No. S 4865
EXP. 9-30-10
STRUCTURAL
STATE OF CALIFORNIA

The State of California or its officers or agents shall not be responsible for the accuracy or completeness of electronic copies of this plan sheet.

NOTE:
THE CONTRACTOR SHALL VERIFY ALL CONTROLLING FIELD DIMENSIONS BEFORE ORDERING OR FABRICATING ANY MATERIAL.

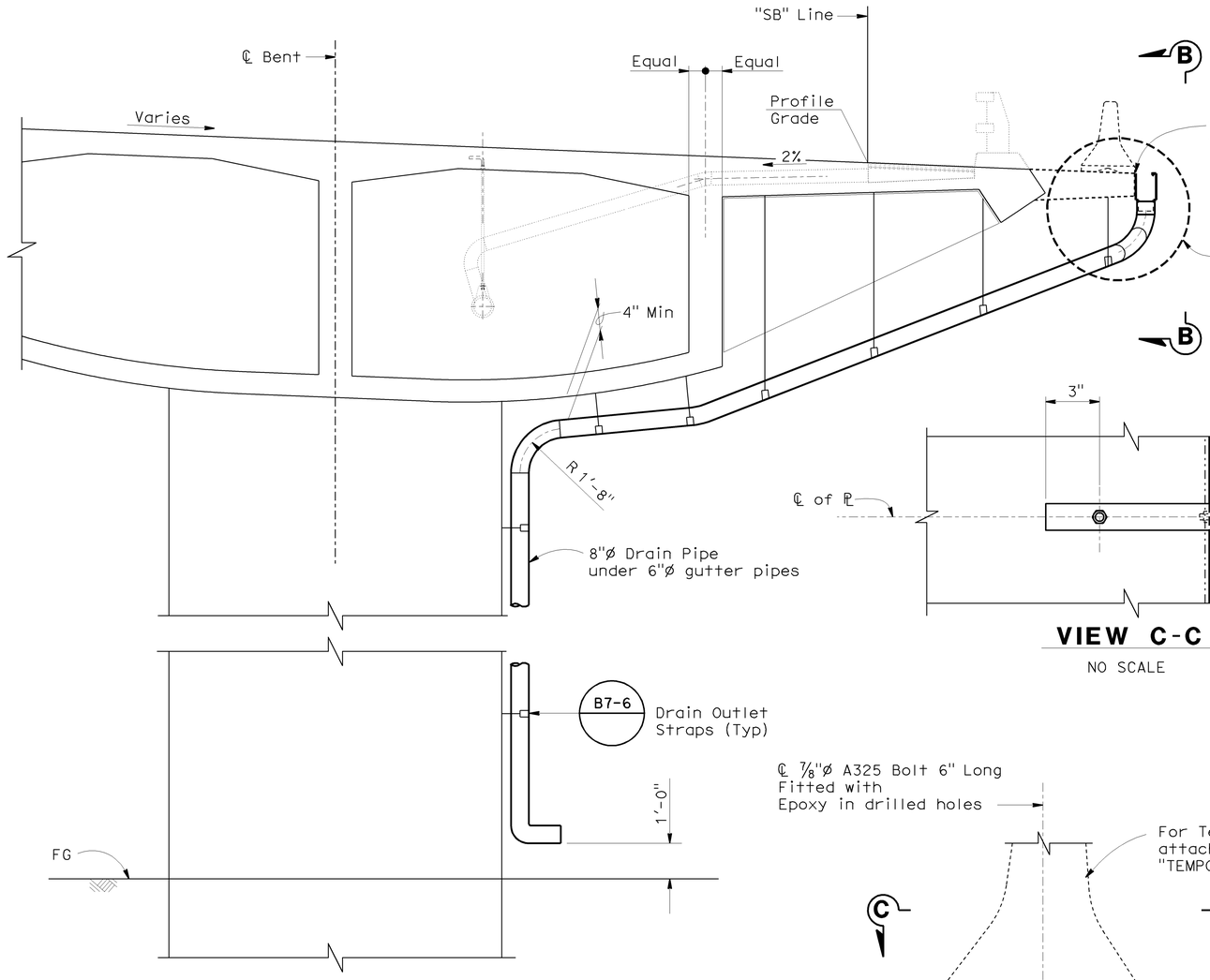

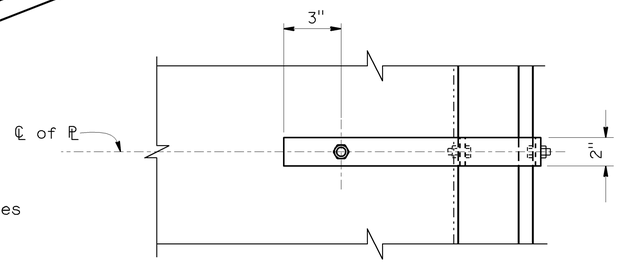

VIEW C-C
NO SCALE

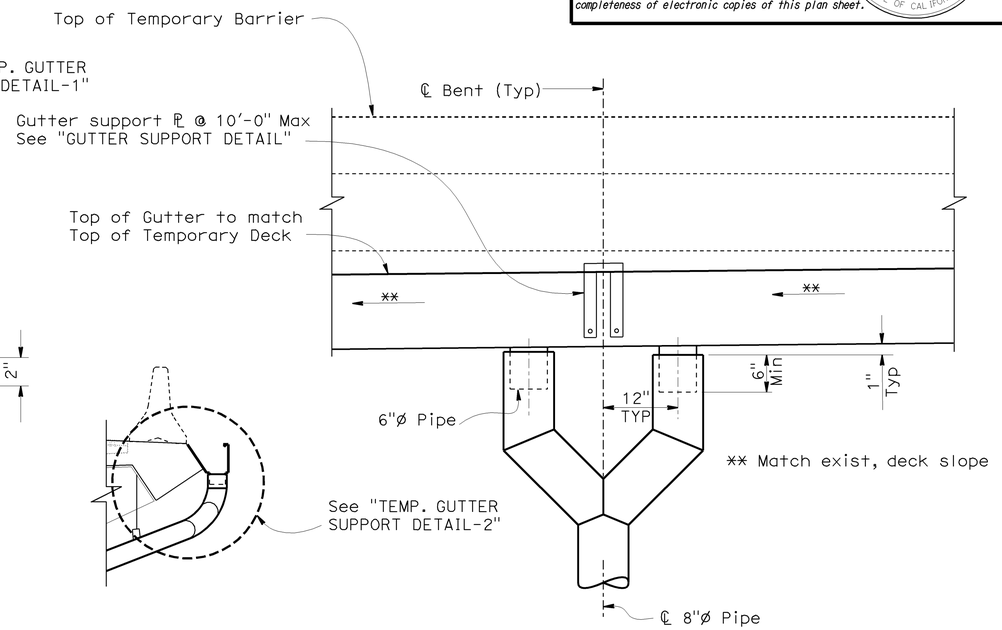

VIEW B-B
NO SCALE

SECTION WITH TYPICAL DRAINAGE OF THE TEPORARY STRUCTURE

3/8"= 1'-0"

Notes:

1. Drain pans of drains 1 through 17 shall be filled with HMA which is seperated from steel by construction paper.
2. HMA and construction paper shall be removed and drains shall be cleaned completely after ST-10 is completed.
3. Grates shall be installed only after cleaning is completed.
4. Gutter for Temporary bridge widening starts @ Sta.93+22.50 and ends @ Sta. 101+76.47

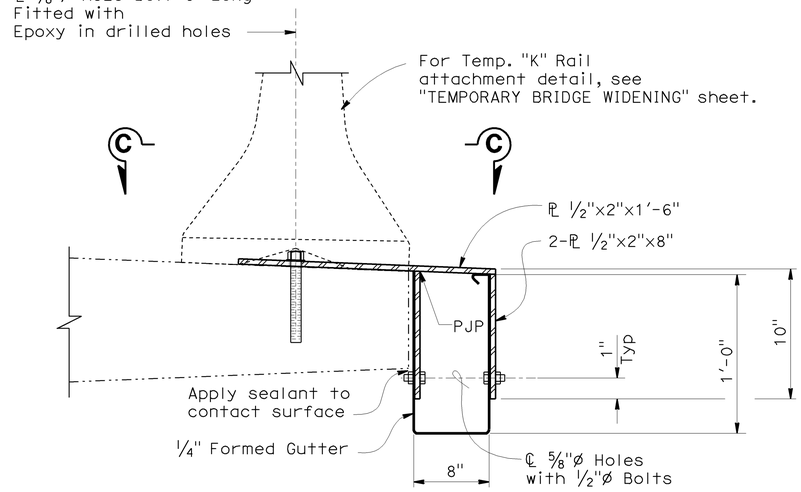

TEMP. GUTTER SUPPORT DETAIL-1
NO SCALE

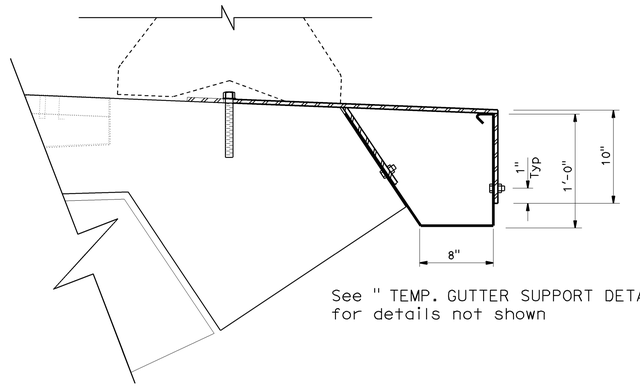

TEMP. GUTTER SUPPORT DETAIL-2
NO SCALE

DESIGN	BY M. Omran	CHECKED Q. Zhao	STATE OF CALIFORNIA DEPARTMENT OF TRANSPORTATION	DIVISION OF ENGINEERING SERVICES STRUCTURE DESIGN DESIGN BRANCH 4	BRIDGE NO. 34-0157L
DETAILS	BY M. Yu	CHECKED M. Omran			POST MILE 9.02
QUANTITIES	BY A. Alcantara	CHECKED J. Han		CU 04242 EA 163731	

PRESIDIO VIADUCT - LEFT
DRAINAGE DETAILS NO. 3

STRUCTURES DESIGN DETAIL SHEET (ENGLISH) (REV. 10/25/05)

ORIGINAL SCALE IN INCHES FOR REDUCED PLANS 0 1 2 3

DISREGARD PRINTS BEARING EARLIER REVISION DATES

REVISION DATES: 5-13-09 | 6-16-09

SHEET 80 OF 114

FILE => 34-0157l-m-ddet03.dgn

USERNAME => s135318 DATE PLOTTED => 21-JUL-2009 TIME PLOTTED => 14:32

DIST	COUNTY	ROUTE	POST MILES TOTAL PROJECT	SHEET No	TOTAL SHEETS
04	SF	101,1	9.2/9.8, 6.8/7.1	431	567

Ahmed Ibrahim 6-4-09
REGISTERED CIVIL ENGINEER DATE

7-20-09
PLANS APPROVAL DATE

REGISTERED PROFESSIONAL ENGINEER — AHMED M M IBRAHIM — No. S 4865 — Exp. 9-30-10 — STRUCTURAL — STATE OF CALIFORNIA

The State of California or its officers or agents shall not be responsible for the accuracy or completeness of electronic copies of this plan sheet.

NOTE:
THE CONTRACTOR SHALL VERIFY ALL CONTROLLING FIELD DIMENSIONS BEFORE ORDERING OR FABRICATING ANY MATERIAL.

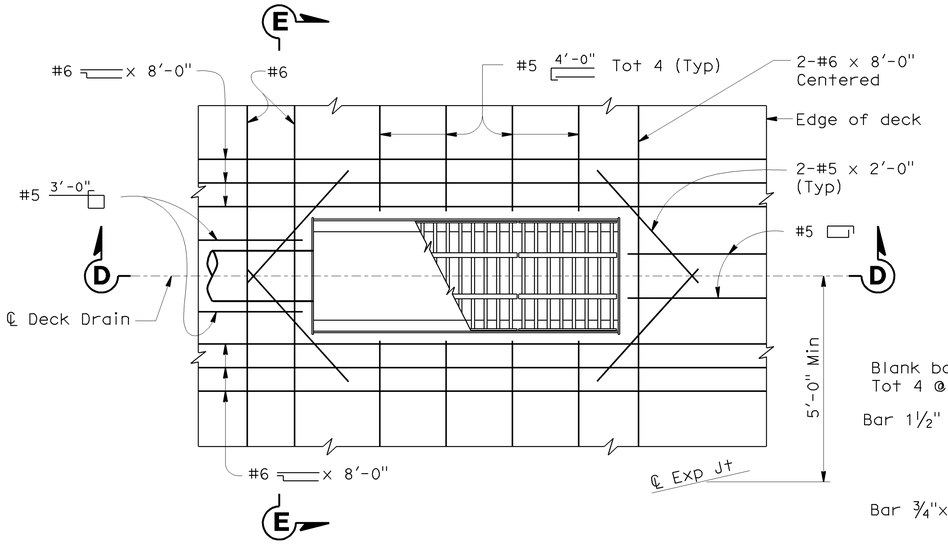

PLAN - CURB INSTALLATION

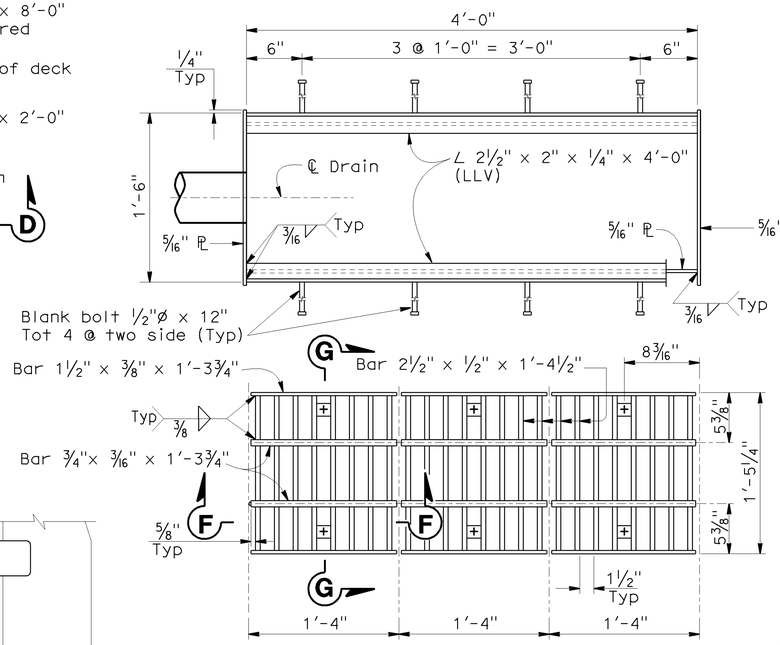

PLAN - FRAME & GRATE

Note:
Grating consists of 3 identical units except for baffle plate.
Baffle plate is required only for the grate over the 6"ø pipe

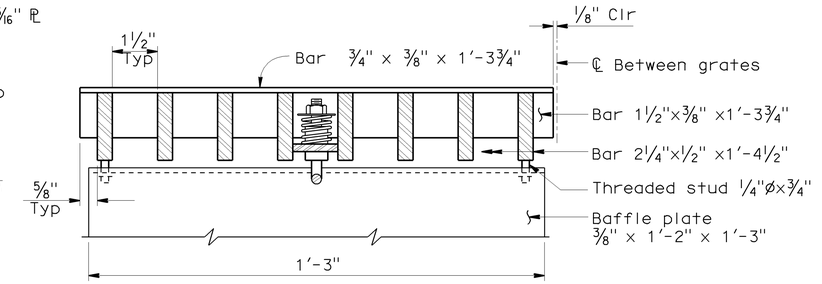

SECTION F-F

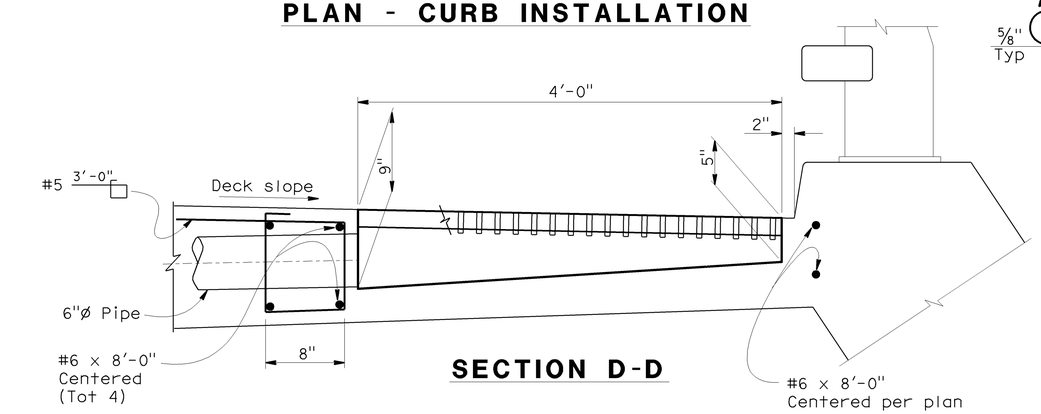

SECTION D-D

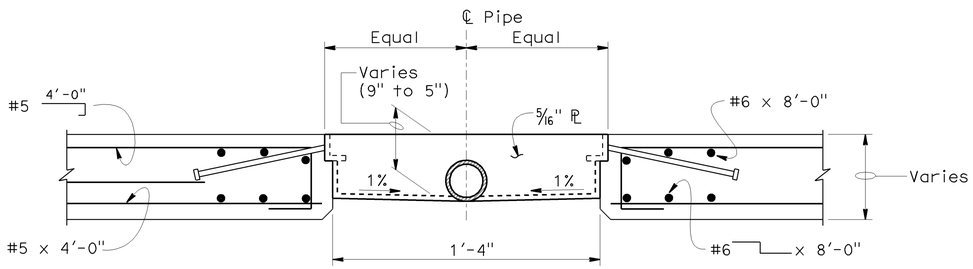

SECTION E-E

Notes:

1. Galvanize deck drain assembly after fabrication.
2. Reinforcement shown at drains is to be placeed in addition to typical slab reinforcement.
3. Typical slab reinforcement not shown

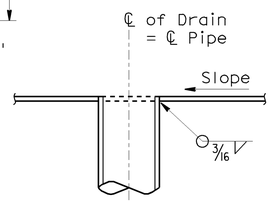

PIPE CONNECTION

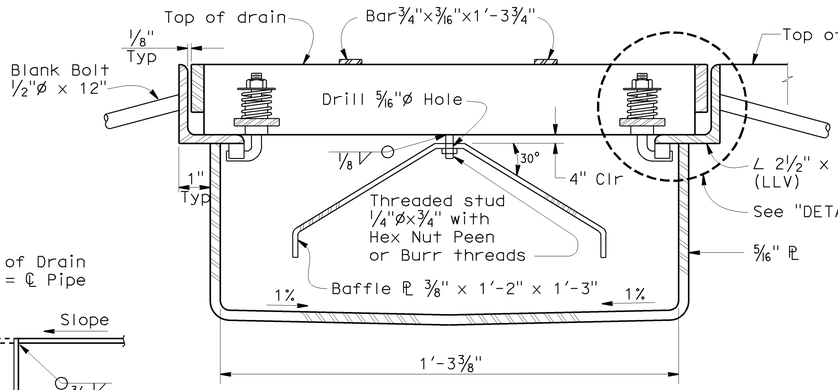

SECTION G-G (FRAME & GRATE)

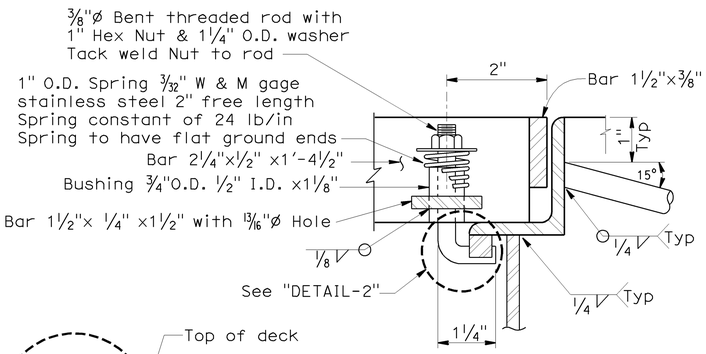

DETAIL - 1

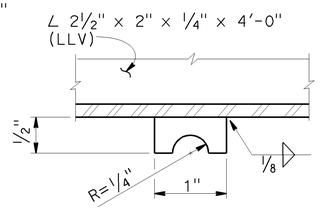

DETAIL - 2
LOCK BAR

NO SCALE

Notes:

1. Galvanize deck drain assembly after fabrication.
2. Reinforcement shown at drains is to be placeed in addition to typical slab reinforcement.
3. Typical slab reinforcement not shown

DESIGN	BY M. Omran	CHECKED S. Hagezi	STATE OF CALIFORNIA DEPARTMENT OF TRANSPORTATION	DIVISION OF ENGINEERING SERVICES STRUCTURE DESIGN DESIGN BRANCH 4	BRIDGE NO. 34-0157L	PRESIDIO VIADUCT - LEFT	
DETAILS	BY M. Yu	CHECKED M. Omran			POST MILE 9.02	DRAINAGE DETAILS NO. 4	
QUANTITIES	BY A. Alcantara	CHECKED J. Han					

STRUCTURES DESIGN DETAIL SHEET (ENGLISH) (REV. 10/25/05)

ORIGINAL SCALE IN INCHES FOR REDUCED PLANS 0 1 2 3

CU 04242
EA 163731

DISREGARD PRINTS BEARING EARLIER REVISION DATES

REVISION DATES: 5-12-09

SHEET 81 OF 114

FILE => 34-0157l-m-ddet04.dgn

USERNAME => s135318 DATE PLOTTED => 21-JUL-2009 TIME PLOTTED => 14:33

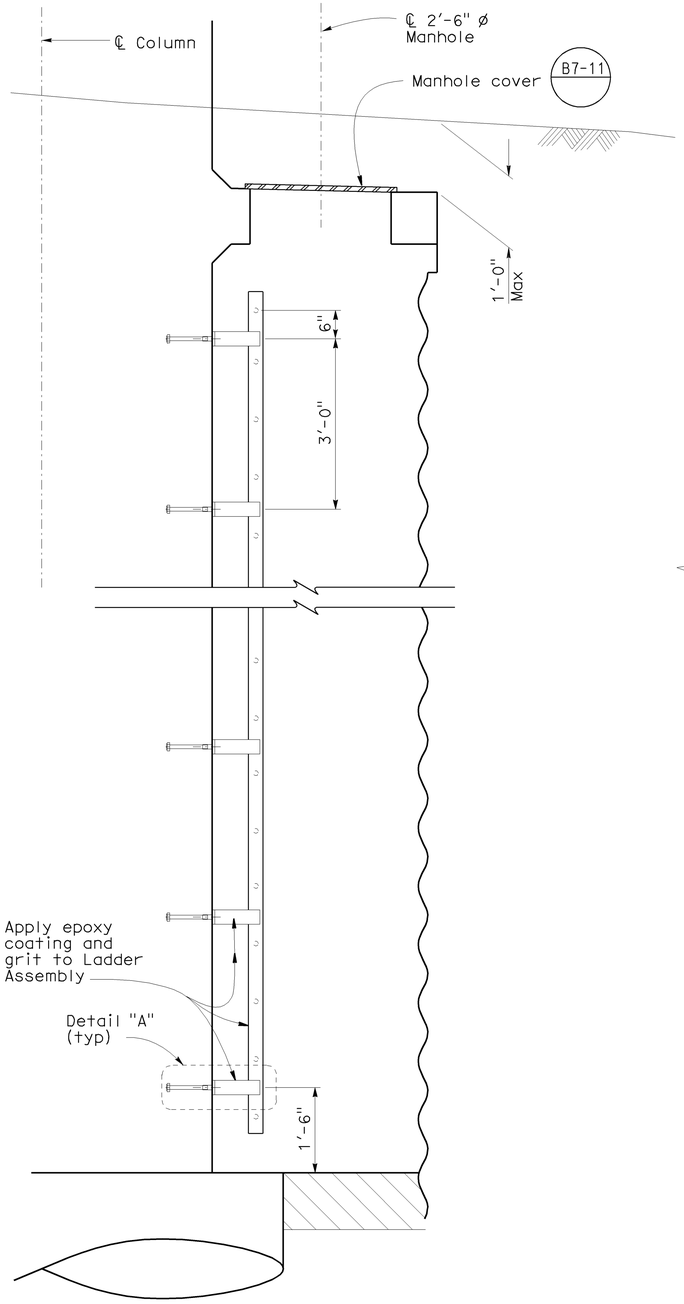

SECTION A-A

3/4"=1'-0"

NOTE:
THE CONTRACTOR SHALL VERIFY ALL CONTROLLING FIELD DIMENSIONS BEFORE ORDERING OR FABRICATING ANY MATERIAL.

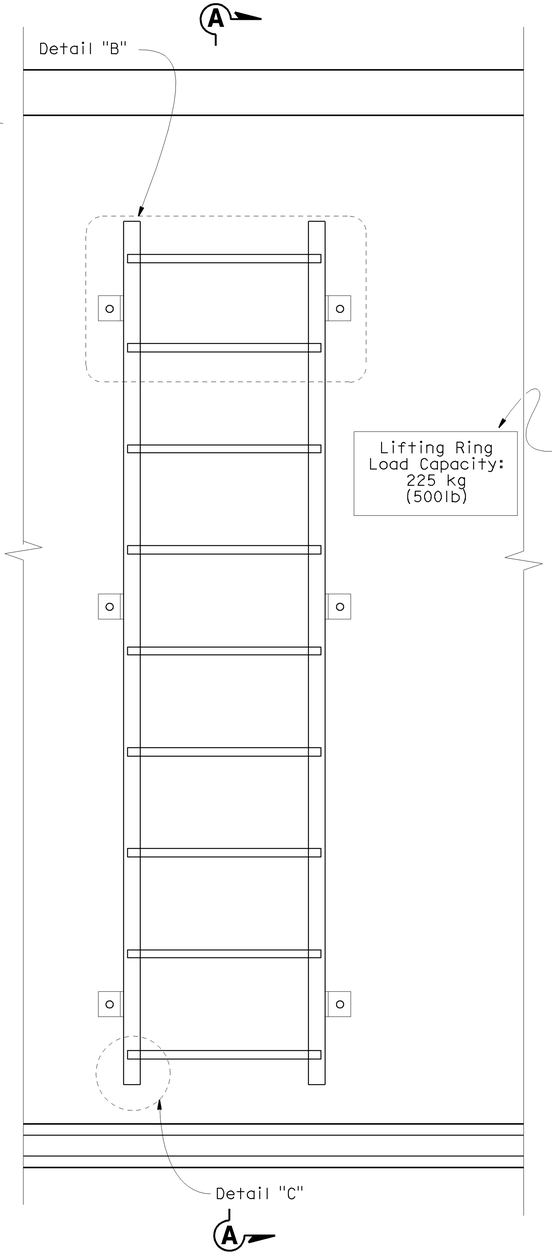

ELEVATION

3/4"=1'-0"

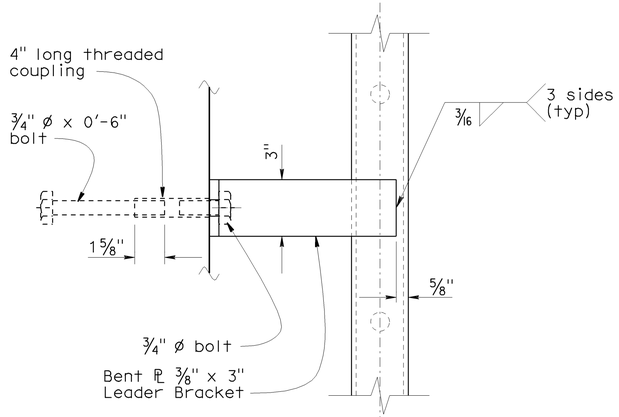

DETAIL "A"

3"=1'-0"
(Typical ladder bracket detail)

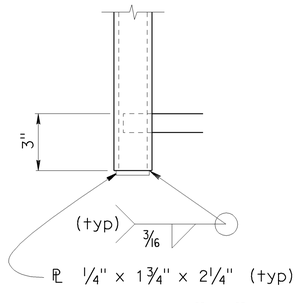

DETAIL "C"

3"=1'-0"

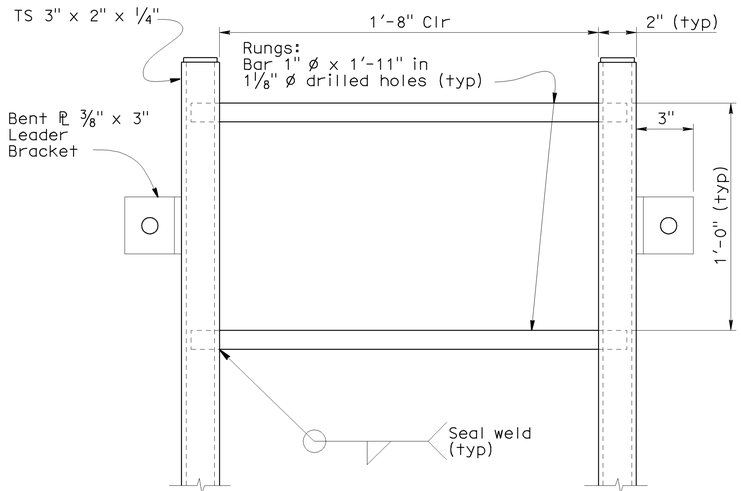

DETAIL "B"

3"=1'-0"

DIST	COUNTY	ROUTE	POST MILES TOTAL PROJECT	SHEET No	TOTAL SHEETS
04	SF	101,1	9.2/9.8, 6.8/7.1	432	567

Ahmed Ibrahim 6-4-09
REGISTERED CIVIL ENGINEER DATE

7-20-09
PLANS APPROVAL DATE

REGISTERED PROFESSIONAL ENGINEER — AHMED M M IBRAHIM — No. S 4865 — EXP. 9-30-10 — STRUCTURAL — STATE OF CALIFORNIA

The State of California or its officers or agents shall not be responsible for the accuracy or completeness of electronic copies of this plan sheet.

Note:
All steel shall be hot-dip galvanized after fabrication.

DESIGN	BY R. Bromenschenkel	CHECKED T. Skreslet	
DETAILS	BY Marvin Lane	CHECKED R. Bromenschenkel	
QUANTITIES	BY A. Alcantara	CHECKED J. Han	

STATE OF CALIFORNIA
DEPARTMENT OF TRANSPORTATION

DIVISION OF ENGINEERING SERVICES
STRUCTURE DESIGN
DESIGN BRANCH 4

CU 04242
EA 163731

BRIDGE NO. 34-0157L
POST MILE 9.02

PRESIDIO VIADUCT - LEFT
LADDER DETAILS

STRUCTURES DESIGN DETAIL SHEET (ENGLISH) (REV. 10/25/05)

ORIGINAL SCALE IN INCHES FOR REDUCED PLANS 0 1 2 3

DISREGARD PRINTS BEARING EARLIER REVISION DATES

REVISION DATES: 4-28-09 | 5-26-09 | 6-15-09

SHEET 82 OF 114

FILE => 34-0157l-n-ldet.dgn

USERNAME => s1355318 DATE PLOTTED => 21-JUL-2009 TIME PLOTTED => 14:33

DIST	COUNTY	ROUTE	POST MILES TOTAL PROJECT	SHEET No	TOTAL SHEETS
04	SF	101,1	9.2/9.8, 6.8/7.1	433	567

Ahmed Ibrahim 6-4-09
REGISTERED CIVIL ENGINEER DATE

7-20-09
PLANS APPROVAL DATE

REGISTERED PROFESSIONAL ENGINEER
AHMED M M IBRAHIM
No. S 4865
EXP. 9-30-10
STRUCTURAL
STATE OF CALIFORNIA

The State of California or its officers or agents shall not be responsible for the accuracy or completeness of electronic copies of this plan sheet.

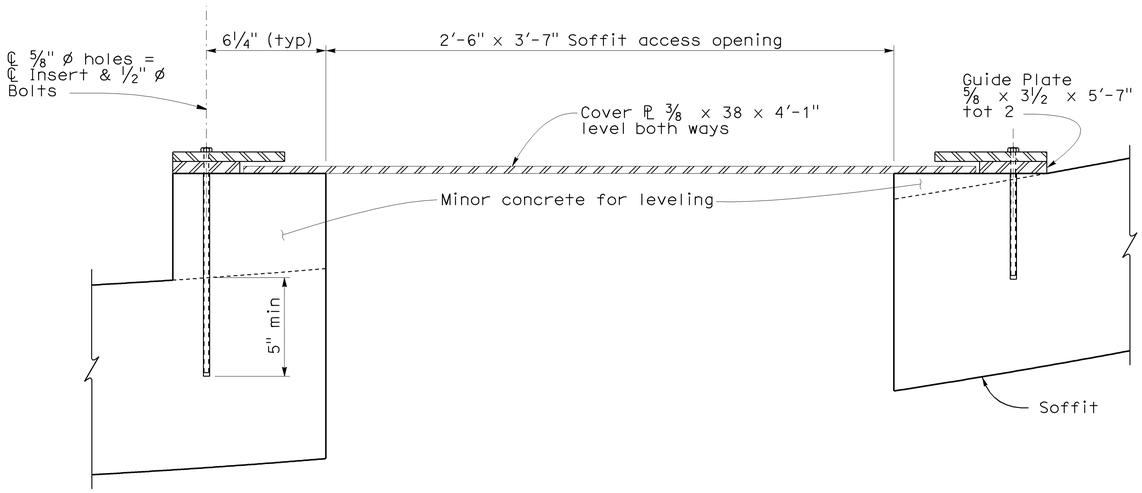

SECTION B-B

3"=1'-0"

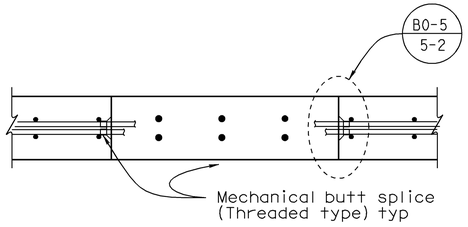

SECTION A-A

No Scale

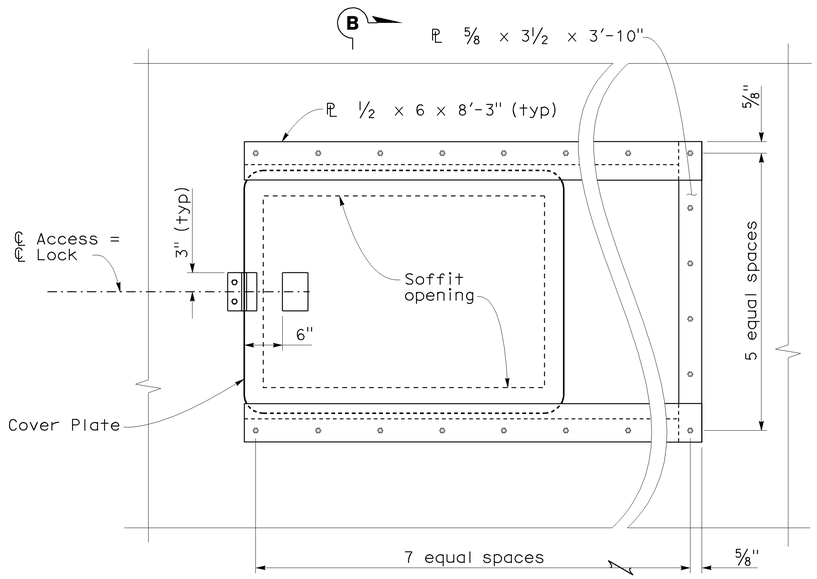

NOTE: All steel shall be hot-dip galvanized after fabrication.

SOFFIT ACCESS DETAIL

1" = 1'-0"

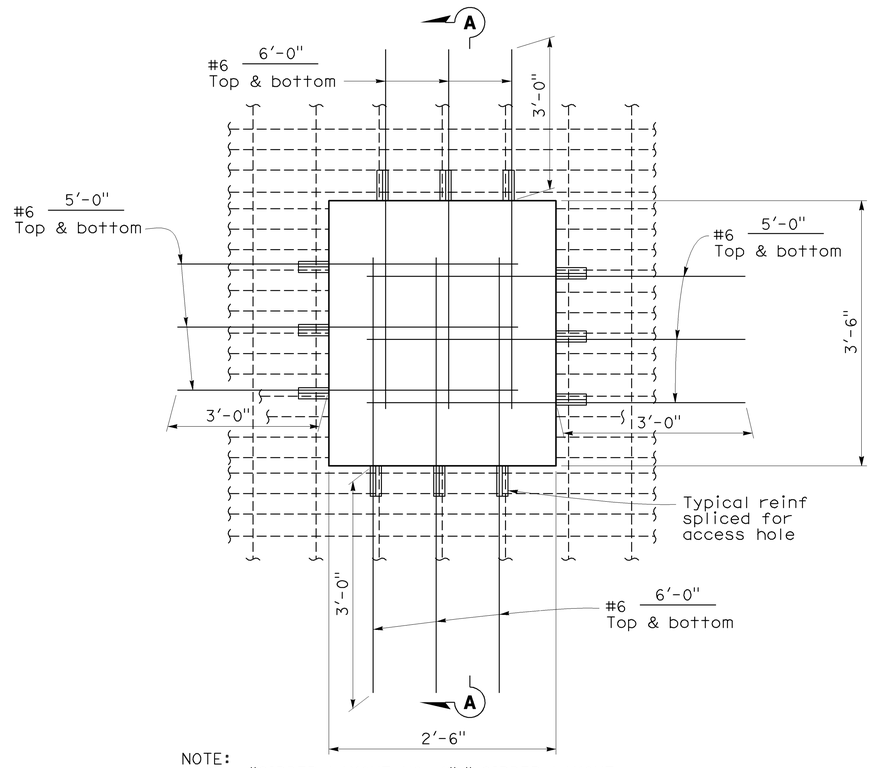

NOTE:
1. See "GIRDER LAYOUT NO. 1"," GIRDER LAYOUT NO. 2" AND "GIRDER LAYOUT NO.3" sheets for locations.

TEMPORARY DECK ACCESS HOLE TOP SLAB

No Scale

NOTE:
THE CONTRACTOR SHALL VERIFY ALL CONTROLLING FIELD DIMENSIONS BEFORE ORDERING OR FABRICATING ANY MATERIAL.

DESIGN	BY Q. Zhao	CHECKED P. Norboe	STATE OF CALIFORNIA DEPARTMENT OF TRANSPORTATION
DETAILS	BY Gary Souza	CHECKED Q. Zhao	
QUANTITIES	BY A. Alcantara	CHECKED J. Han	

DIVISION OF ENGINEERING SERVICES STRUCTURE DESIGN
DESIGN BRANCH 4

CU 04242
EA 163731

BRIDGE NO. 34-0157L
POST MILE 9.02

PRESIDIO VIADUCT - LEFT

SOFFIT AND TEMPORARY DECK ACCESS

STRUCTURES DESIGN DETAIL SHEET (ENGLISH) (REV. 10/25/05)

ORIGINAL SCALE IN INCHES FOR REDUCED PLANS 0 1 2 3

DISREGARD PRINTS BEARING EARLIER REVISION DATES →

REVISION DATES: 5-12-09 | 5-28-09 | 5-31-09

SHEET 83 OF 114

FILE => 34-0157l-o-kdet.dgn

USERNAME => s135318 DATE PLOTTED => 21-JUL-2009 TIME PLOTTED => 14:33

DIST	COUNTY	ROUTE	POST MILES TOTAL PROJECT	SHEET No	TOTAL SHEETS
04	SF	101,1	9.2/9.8, 6.8/7.1	434	567

Robert B. Giorgis Jr.
REGISTERED CIVIL ENGINEER DATE

7-20-09
PLANS APPROVAL DATE

REGISTERED PROFESSIONAL ENGINEER
ROBERT B. GIORGIS JR.
No. C60705
Exp. 12/31/10
CIVIL
STATE OF CALIFORNIA

The State of California or its officers or agents shall not be responsible for the accuracy or completeness of electronic copies of this plan sheet.

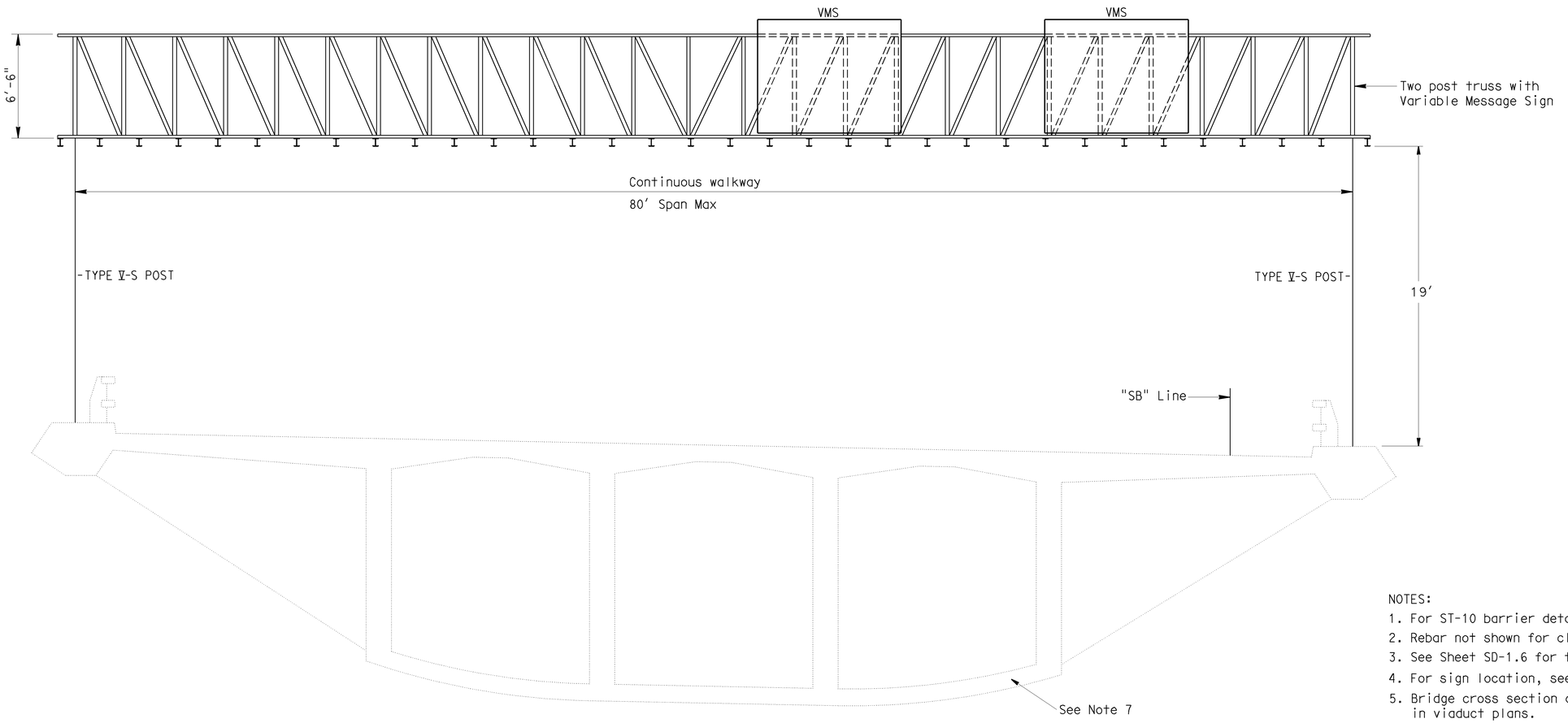

TWO POST TRUSS WITH VMS PEDESTAL

NO SCALE

NOTES:

1. For ST-10 barrier details see Viaduct plans.
2. Rebar not shown for clarity.
3. See Sheet SD-1.6 for two post truss sign structure anchorage.
4. For sign location, see "ROAD PLANS".
5. Bridge cross section details not shown. See "TYPICAL SECTION" in viaduct plans.
6. Two Post Truss Pedestal must be located at centerline of bent with Steel Rib at centerline of bent.
7. See Std Plan S1 for sign details.
8. See "STEEL RIB DETAILS" and SD 1.9 for Fin details in viaduct plans.
9. Field verify span length.
10. Superstucture cross slope not shown.
11. See Std Plan S-11 for sign structure details.

NOTE:
THE CONTRACTOR SHALL VERIFY ALL CONTROLLING FIELD DIMENSIONS BEFORE ORDERING OR FABRICATING ANY MATERIAL.

TWO POST TRUSS PEDESTAL
SD 1.1

Jeffrey B Woody
BRANCH CHIEF

	BY	CHECKED
DESIGN	BOB GIORGIS	JOHN DATILES
DETAILS	M O'LEARY	BOB GIORGIS
QUANTITIES	M O'LEARY	JOHN DATILES

STATE OF CALIFORNIA
DEPARTMENT OF TRANSPORTATION

DIVISION OF ENGINEERING SERVICES
STRUCTURE DESIGN
SPECIAL DESIGNS BRANCH

BRIDGE NO. 34-0157L
POST MILE 9.02

PRESIDIO VIADUCT - LEFT
PEDESTAL DETAILS NO. 1

STRUCTURES DESIGN SPECIAL DESIGN SHEET (ENGLISH) (REV. 10-25-05)

ORIGINAL SCALE IN INCHES FOR REDUCED PLANS 0 1 2 3

CU 04242
EA 163731

DISREGARD PRINTS BEARING EARLIER REVISION DATES →

REVISION DATES: ~~5/14/09~~ 5/18/09

SHEET 84 OF 114

FILE => 34-0157l-p-sd01.dgn

USERNAME => tmorrtin DATE PLOTTED => 23-JUL-2009 TIME PLOTTED => 07:58

DIST	COUNTY	ROUTE	POST MILES TOTAL PROJECT	SHEET No	TOTAL SHEETS
04	SF	101,1	9.2/9.8, 6.8/7.1	435	567

Robert B. Giorgis Jr.
REGISTERED CIVIL ENGINEER DATE

7-20-09
PLANS APPROVAL DATE

REGISTERED PROFESSIONAL ENGINEER
ROBERT B. GIORGIS JR.
No. C60705
Exp. 12/31/10
CIVIL
STATE OF CALIFORNIA

The State of California or its officers or agents shall not be responsible for the accuracy or completeness of electronic copies of this plan sheet.

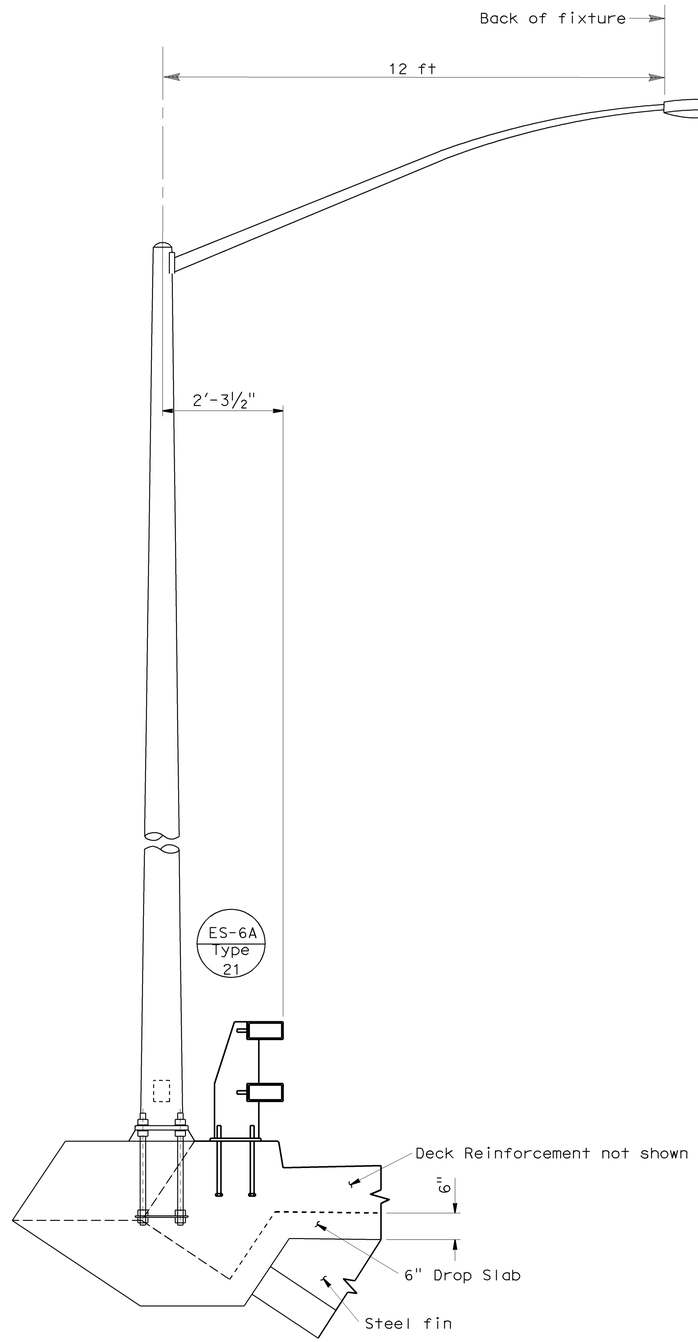

TYPE 21 PEDESTAL PRESIDIO VIADUCT

NO SCALE

Notes:

1. Rebar not shown for clarity - See sheet SD 1.7.
2. For ST-10 Barrier details see "Viaduct Plans".
3. See sheet SD 1.8 for Type 21 Anchorage details.
4. For Type 21 locations see "Road Plans".
5. Type 21 must be located at Steel Fin.

NOTE:
THE CONTRACTOR SHALL VERIFY ALL CONTROLLING FIELD DIMENSIONS BEFORE ORDERING OR FABRICATING ANY MATERIAL.

TYPE 21 PEDESTAL

SD 1.2

Geoffrey B Woody
BRANCH CHIEF

DESIGN	BY JOHN DATILES	CHECKED M O'LEARY	
DETAILS	BY T.ZOLNIKOVA	CHECKED M O'LEARY	
QUANTITIES	BY M O'LEARY	CHECKED JOHN DATILES	

STATE OF CALIFORNIA
DEPARTMENT OF TRANSPORTATION

DIVISION OF ENGINEERING SERVICES
STRUCTURE DESIGN
SPECIAL DESIGNS BRANCH

BRIDGE NO. 34-0157L
POST MILE 9.02

PRESIDIO VIADUCT - LEFT
PEDESTAL DETAILS NO. 2

STRUCTURES DESIGN SPECIAL DESIGN SHEET (ENGLISH) (REV. 10-25-05)

ORIGINAL SCALE IN INCHES FOR REDUCED PLANS 0 1 2 3

CU 04242
EA 163731

DISREGARD PRINTS BEARING EARLIER REVISION DATES →

REVISION DATES: 5/14/09 6-17-09

SHEET 85 OF 114

FILE => 34-0157l-p-sd02.dgn

USERNAME => s135318 DATE PLOTTED => 21-JUL-2009 TIME PLOTTED => 14:33

DIST	COUNTY	ROUTE	POST MILES TOTAL PROJECT	SHEET No	TOTAL SHEETS
04	SF	101,1	9.2/9.8, 6.8/7.1	436	567

Robert B Giorgis Jr
REGISTERED CIVIL ENGINEER DATE

7-20-09
PLANS APPROVAL DATE

REGISTERED PROFESSIONAL ENGINEER
ROBERT B. GIORGIS JR.
No. C60705
Exp. 12/31/10
CIVIL
STATE OF CALIFORNIA

The State of California or its officers or agents shall not be responsible for the accuracy or completeness of electronic copies of this plan sheet.

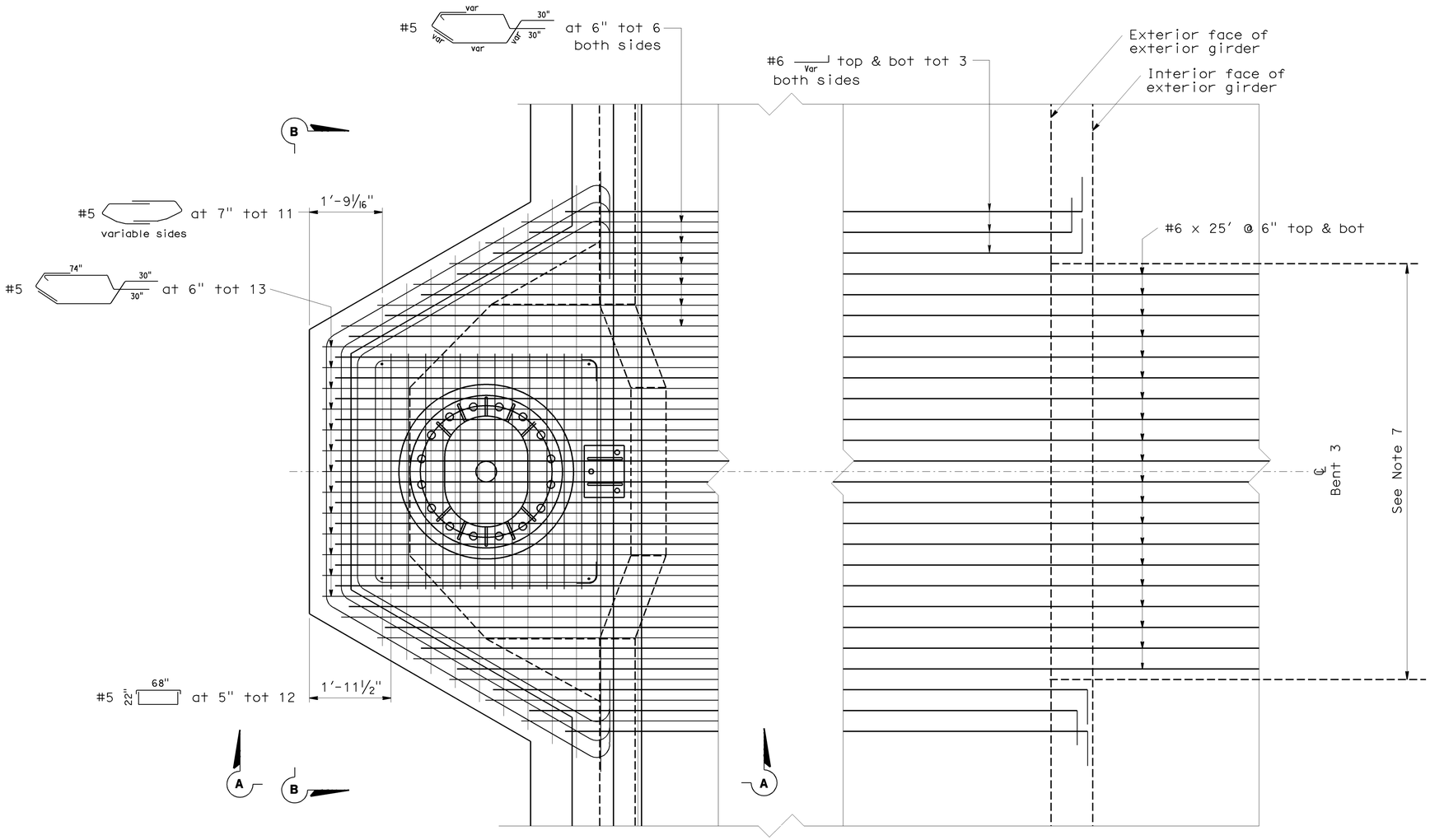

Note: Unmodified edge beam rebar and ST-10 rail anchorage shown in "Detail B" of "TYPICAL SECTION NO. 3" of PRESIDIO VIADUCT - LEFT is not included for clarity

PLAN VIEW

Notes:

1. 2" cover on pedestal rebar.
2. f'_c = 5000 psi.
3. Barrier not shown for clarity.
4. Deck rebar not shown.
5. See Sheet SD 1.6 for anchorage details not shown.
6. Transverse deck rebar and prestressing ducts not shown for clarity
7. 25 foot bars extend into bent cap with 3" cover on both sides.
8. For physical dimensions of pedestal see Sheets SD 1.10 and SD 1.11.
9. See Sheets SD 1.10 and SD 1.11 for base plate and anchorage details.
10. Steel Fin not shown for clarity.

NOTE:
THE CONTRACTOR SHALL VERIFY ALL CONTROLLING FIELD DIMENSIONS BEFORE ORDERING OR FABRICATING ANY MATERIAL.

TWO POST TRUSS PEDESTAL DETAILS 1

NO SCALE

SD 1.3

Jeffrey B Woody
BRANCH CHIEF

DESIGN	BY BOB GIORGIS	CHECKED JOHN DATILES
DETAILS	BY D W JUSTICE Jr	CHECKED BOB GIORGIS
QUANTITIES	BY M O'LEARY	CHECKED JOHN DATILES

STATE OF CALIFORNIA
DEPARTMENT OF TRANSPORTATION

DIVISION OF ENGINEERING SERVICES
STRUCTURE DESIGN
SPECIAL DESIGNS BRANCH

BRIDGE NO. 34-0157L
POST MILE 9.02

PRESIDIO VIADUCT - LEFT
PEDESTAL DETAILS NO. 3

STRUCTURES DESIGN SPECIAL DESIGN SHEET (ENGLISH) (REV. 10-25-05)

ORIGINAL SCALE IN INCHES FOR REDUCED PLANS 0 1 2 3

CU 04242
EA 163731

DISREGARD PRINTS BEARING EARLIER REVISION DATES →

REVISION DATES: 5/14/09 | 5/18/09 | 6/2/09 | 6/5/09 | 6-17-09

SHEET 86 OF 114

FILE => 34-0157l-p-sd03.dgn

USERNAME => s135318 DATE PLOTTED => 21-JUL-2009 TIME PLOTTED => 14:33

DIST	COUNTY	ROUTE	POST MILES TOTAL PROJECT	SHEET No	TOTAL SHEETS
04	SF	101,1	9.2/9.8, 6.8/7.1	437	567

Robert B Giorgis
REGISTERED CIVIL ENGINEER DATE

7-20-09
PLANS APPROVAL DATE

REGISTERED PROFESSIONAL ENGINEER
ROBERT B. GIORGIS JR.
No. C60705
Exp. 12/31/10
CIVIL
STATE OF CALIFORNIA

The State of California or its officers or agents shall not be responsible for the accuracy or completeness of electronic copies of this plan sheet.

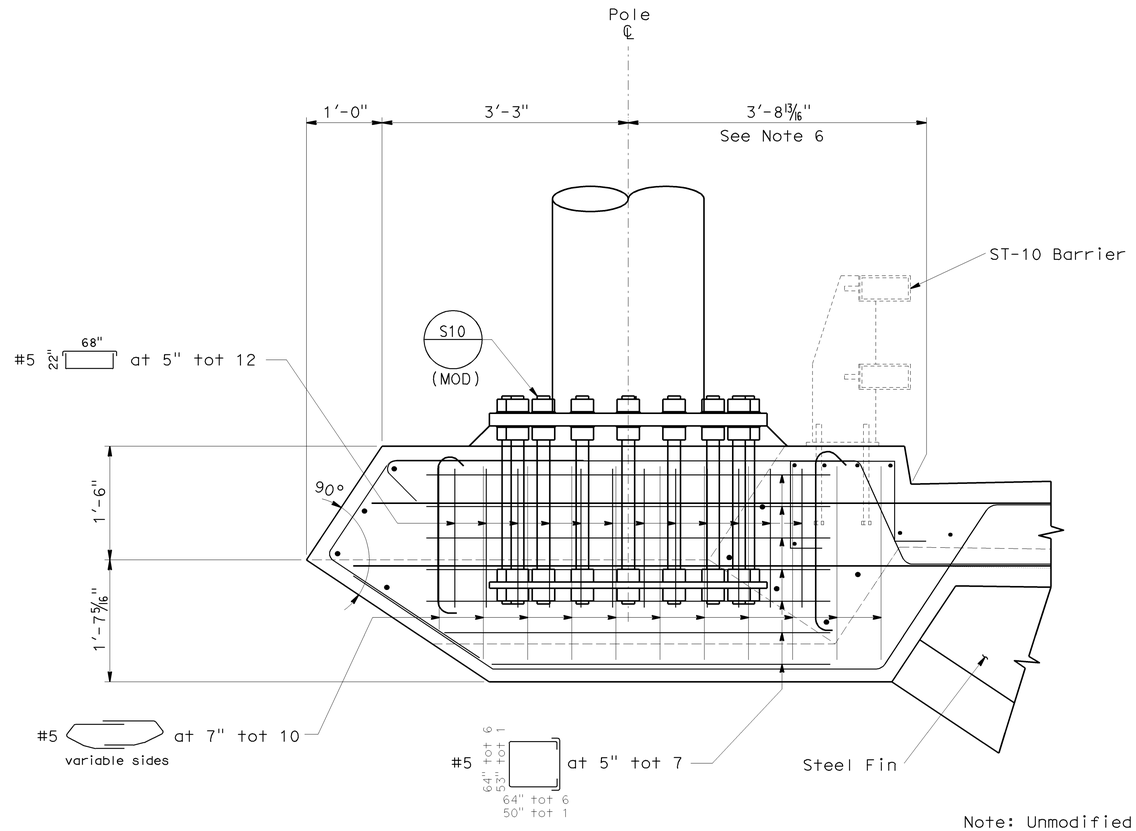

VIEW A-A

Notes:

1. 2" cover on pedestal rebar.
2. f'_c = 5000 psi.
3. For ST-10 Barrier details see "Viaduct Plans".
4. Transverse deck rebar and prestressing ducts not shown for clarity.
5. See Sheet SD 1.6 for anchorage details not shown.
6. One pedestal shall be placed on each side of Viaduct at Bent 3 ℄.
7. For Steel Fin details see "STEEL FIN DETAILS" and SD 1.9.

Note: Unmodified transverse edge beam rebar and ST-!0 rail anchorage shown in "Detail B" of "TYPICAL SECTION NO. 3" of PRESIDIO VIADUCT - LEFT is not included for clarity.

NOTE:
THE CONTRACTOR SHALL VERIFY ALL CONTROLLING FIELD DIMENSIONS BEFORE ORDERING OR FABRICATING ANY MATERIAL.

TWO POST TRUSS PEDESTAL DETAILS 2

NO SCALE

SD 1.4

Jeffrey B Woody
BRANCH CHIEF

DESIGN	BY BOB GIORGIS	CHECKED JOHN DATILES
DETAILS	BY D W JUSTICE Jr	CHECKED BOB GIORGIS
QUANTITIES	BY M O'LEARY	CHECKED JOHN DATILES

STATE OF CALIFORNIA
DEPARTMENT OF TRANSPORTATION

DIVISION OF ENGINEERING SERVICES
STRUCTURE DESIGN
SPECIAL DESIGNS BRANCH

BRIDGE NO. 34-0157L
POST MILE 9.02

PRESIDIO VIADUCT - LEFT
PEDESTAL DETAILS NO. 4

STRUCTURES DESIGN SPECIAL DESIGN SHEET (ENGLISH) (REV. 10-25-05)

ORIGINAL SCALE IN INCHES FOR REDUCED PLANS 0 1 2 3

CU 04242
EA 163731

DISREGARD PRINTS BEARING EARLIER REVISION DATES →

REVISION DATES: 5/11/09 5/18/09 6/3/09 6-8-09 6-17-09

SHEET 87 OF 114

FILE => 34-0157l-p-sd04.dgn

USERNAME => s135518 DATE PLOTTED => 21-JUL-2009 TIME PLOTTED => 14:33

DIST	COUNTY	ROUTE	POST MILES TOTAL PROJECT	SHEET No	TOTAL SHEETS
04	SF	101,1	9.2/9.8, 6.8/7.1	438	567

Robert B. Giorgis Jr.
REGISTERED CIVIL ENGINEER DATE

7-20-09
PLANS APPROVAL DATE

REGISTERED PROFESSIONAL ENGINEER
ROBERT B. GIORGIS JR.
No. C60705
Exp. 12/31/10
CIVIL
STATE OF CALIFORNIA

The State of California or its officers or agents shall not be responsible for the accuracy or completeness of electronic copies of this plan sheet.

Notes:

1. 2" cover on pedestal rebar.
2. f'_c= 5000 psi.
3. Barrier and truss post not shown for clarity.
4. Deck rebar not shown.
5. See Sheet SD 1.6 for anchorage details not shown.
6. Steel Fin not shown for clarity.

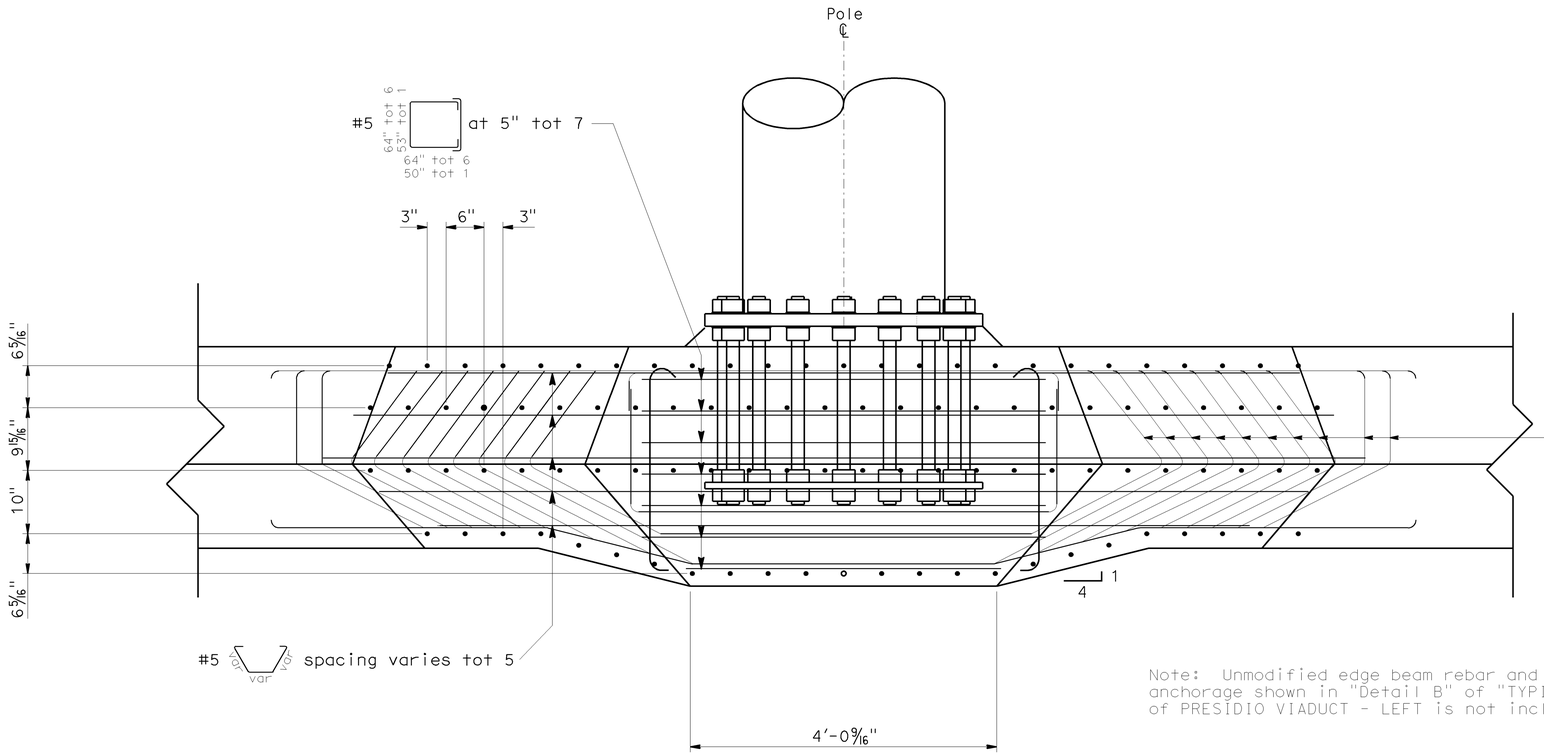

Note: Unmodified edge beam rebar and ST-10 rail anchorage shown in "Detail B" of "TYPICAL SECTION NO. 3" of PRESIDIO VIADUCT - LEFT is not included for clarity.

VIEW B-B

NOTE:
THE CONTRACTOR SHALL VERIFY ALL CONTROLLING FIELD DIMENSIONS BEFORE ORDERING OR FABRICATING ANY MATERIAL.

TWO POST TRUSS PEDESTAL DETAILS 3

NO SCALE

SD 1.5

Jeffrey B Woody
BRANCH CHIEF

DESIGN	BY BOB GIORGIS	CHECKED JOHN DATILES
DETAILS	BY D W JUSTICE Jr	CHECKED BOB GIORGIS
QUANTITIES	BY M O'LEARY	CHECKED JOHN DATILES

STATE OF CALIFORNIA
DEPARTMENT OF TRANSPORTATION

DIVISION OF ENGINEERING SERVICES
STRUCTURE DESIGN
SPECIAL DESIGNS BRANCH

BRIDGE NO. 34-0157L
POST MILE 9.02

PRESIDIO VIADUCT - LEFT
PEDESTAL DETAILS NO. 5

STRUCTURES DESIGN SPECIAL DESIGN SHEET (ENGLISH) (REV. 10-25-05)

ORIGINAL SCALE IN INCHES FOR REDUCED PLANS 0 1 2 3

CU 04242
EA 163731

DISREGARD PRINTS BEARING EARLIER REVISION DATES →

REVISION DATES: 5/14/09 5/19/09 6/3/09 6/8/09 6-17-09

SHEET 88 OF 114

FILE => 34-0157l-p-sd05.dgn

USERNAME => s135318 DATE PLOTTED => 21-JUL-2009 TIME PLOTTED => 14:33

DIST	COUNTY	ROUTE	POST MILES TOTAL PROJECT	SHEET No	TOTAL SHEETS
04	SF	101,1	9.279.8, 6.8/7.1	439	567

Robert B. Giorgis Jr.
REGISTERED CIVIL ENGINEER DATE

7-20-09
PLANS APPROVAL DATE

REGISTERED PROFESSIONAL ENGINEER — ROBERT B. GIORGIS JR. — No. C60705 — Exp. 12/31/10 — CIVIL — STATE OF CALIFORNIA

The State of California or its officers or agents shall not be responsible for the accuracy or completeness of electronic copies of this plan sheet.

TWO POST TRUSS

POST TYPE	PIPE			BASE PLATE OD AND THICKNESS	ANCHOR		
	NPS	THICKNESS	SPLIT		BOLT CIRCLE	BOLT TOTALS AND DIA	LENGTH
V-S	24	½"	8"	3′-8" x 2"	3′-2"	16 - 2"	2′-9"

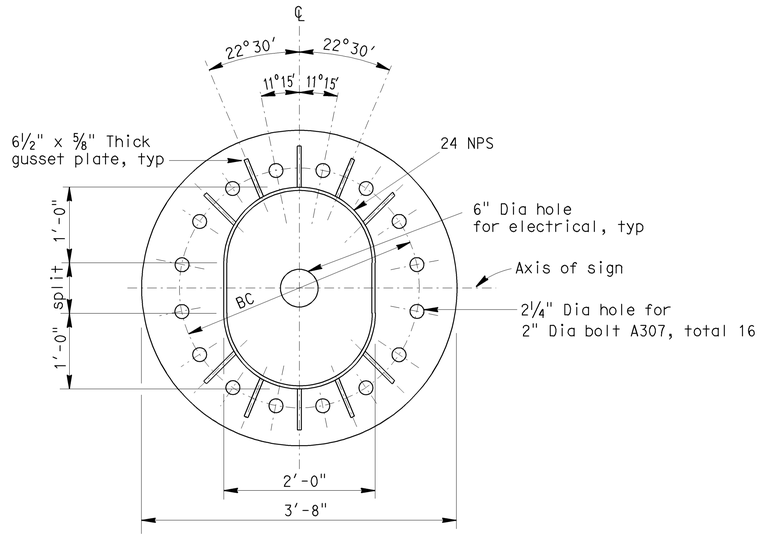

BASE PLATE 16 BOLTS (MODIFIED)

NO SCALE

Type V-S shown

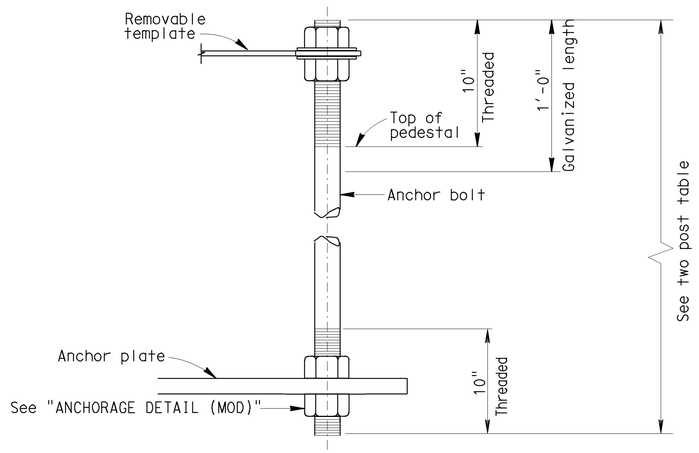

ANCHOR BOLT ASSEMBLY (MODIFIED)

Note: One bolt shown only. Other bolts same configuration around pipe sleeve. Template to match base plate anchor bolt pattern.

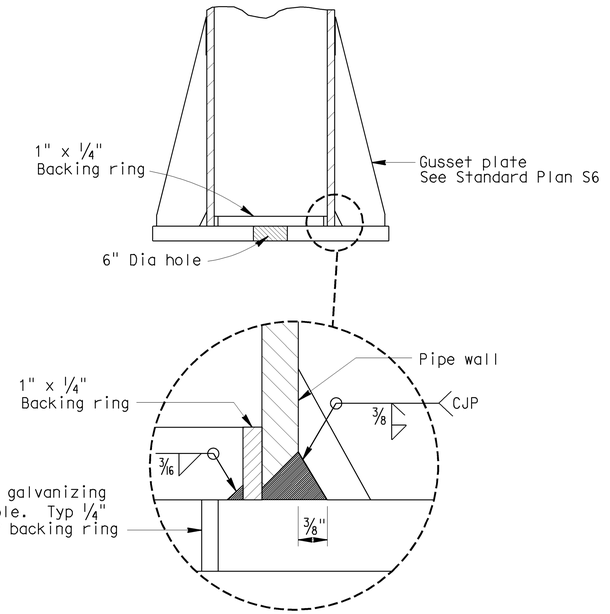

POST TO BASE PLATE CONNECTION DETAIL

NO SCALE

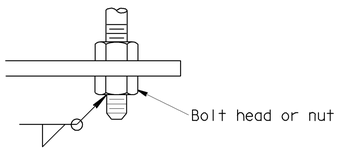

ANCHORAGE DETAIL (MOD)

NO SCALE

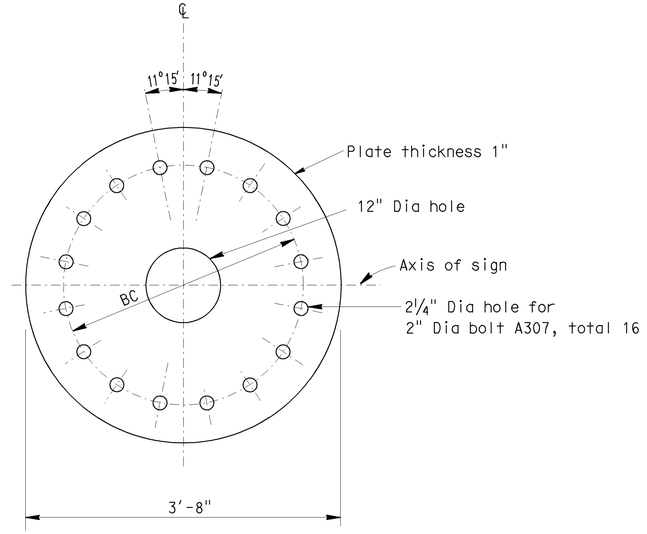

ANCHOR PLATE 16 BOLTS (MODIFIED)

Type V-S shown

Notes:

1. See Std Plan S9 for Mortar Pad Details - Use 45° for sides.
2. For details not shown, see Std Plan S10

NOTE:
THE CONTRACTOR SHALL VERIFY ALL CONTROLLING FIELD DIMENSIONS BEFORE ORDERING OR FABRICATING ANY MATERIAL.

TWO POST TRUSS PEDESTAL ANCHORAGE
STD PLAN S10 (MODIFIED)
SD 1.6

Jeffrey B Woody
BRANCH CHIEF

	BY	CHECKED
DESIGN	BOB GIORGIS	JOHN DATILES
DETAILS	M O'LEARY	BOB GIORGIS
QUANTITIES	M O'LEARY	JOHN DATILES

STATE OF CALIFORNIA
DEPARTMENT OF TRANSPORTATION

DIVISION OF ENGINEERING SERVICES
STRUCTURE DESIGN
SPECIAL DESIGNS BRANCH

BRIDGE NO. 34-0157L
POST MILE 9.02

PRESIDIO VIADUCT - LEFT
PEDESTAL DETAILS NO. 6

STRUCTURES DESIGN SPECIAL DESIGN SHEET (ENGLISH) (REV. 10-25-05)

ORIGINAL SCALE IN INCHES FOR REDUCED PLANS 0 1 2 3

CU 04242
EA 163731

DISREGARD PRINTS BEARING EARLIER REVISION DATES →

REVISION DATES: 5/21/09 | 5/19/09 | 6-17-09

SHEET 89 OF 114

FILE => 34-0157l-p-sd06.dgn

USERNAME => s1135318 DATE PLOTTED => 21-JUL-2009 TIME PLOTTED => 14:33

DIST	COUNTY	ROUTE	POST MILES TOTAL PROJECT	SHEET No	TOTAL SHEETS
04	SF	101,1	9.2/9.8, 6.8/7.1	440	567

Robert B. Giorgis Jr.
REGISTERED CIVIL ENGINEER DATE

7-20-09
PLANS APPROVAL DATE

The State of California or its officers or agents shall not be responsible for the accuracy or completeness of electronic copies of this plan sheet.

REGISTERED PROFESSIONAL ENGINEER — ROBERT B. GIORGIS JR. — No. C60705 — Exp. 12/31/10 — CIVIL — STATE OF CALIFORNIA

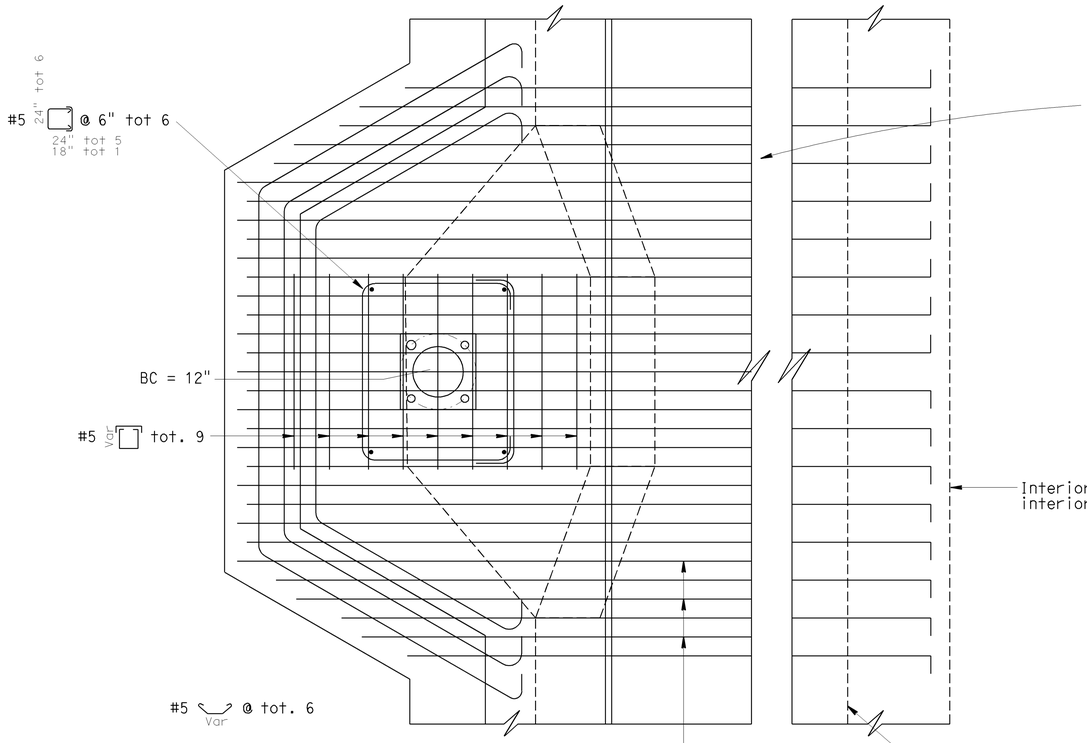

PLAN
NO SCALE

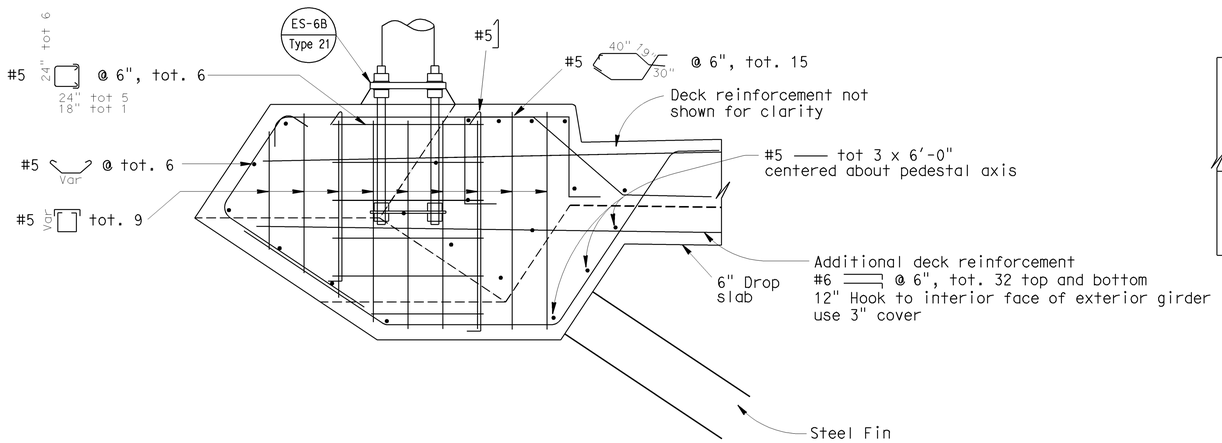

ELEVATION
NO SCALE

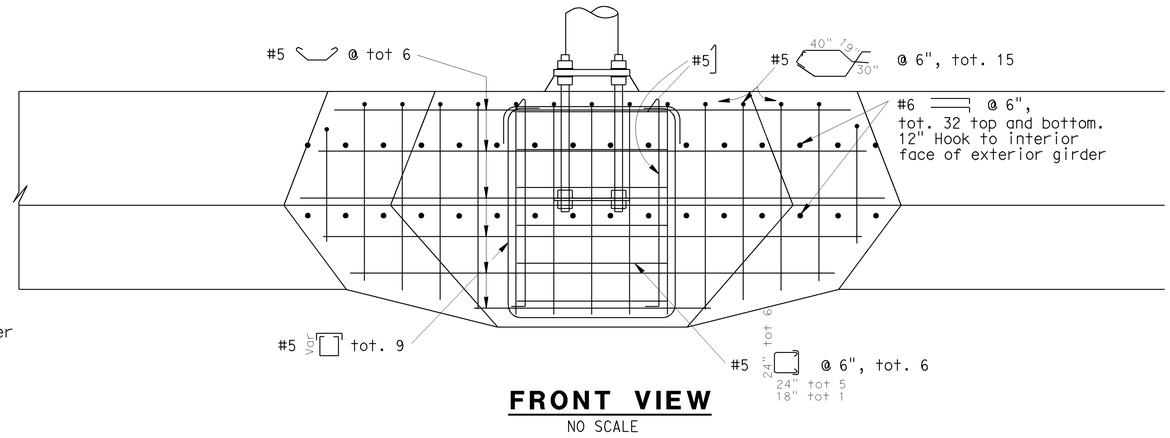

FRONT VIEW
NO SCALE

Notes:

1. Use 45° for mortar pad sides.
2. 2" cover for pedestal rebar.
3. f'_c = 5,000 psi.

NOTE:
THE CONTRACTOR SHALL VERIFY ALL CONTROLLING FIELD DIMENSIONS BEFORE ORDERING OR FABRICATING ANY MATERIAL.

TYPE 21 PEDESTAL DETAILS

SD 1.7

Jeffrey B Woody
BRANCH CHIEF

DESIGN	BY JOHN DATILES	CHECKED M O'LEARY
DETAILS	BY M O'LEARY	CHECKED JOHN DATILES
QUANTITIES	BY M O'LEARY	CHECKED JOHN DATILES

STATE OF CALIFORNIA
DEPARTMENT OF TRANSPORTATION

DIVISION OF ENGINEERING SERVICES
STRUCTURE DESIGN
SPECIAL DESIGNS BRANCH

BRIDGE NO. 34-0157L
POST MILE 9.02

PRESIDIO VIADUCT - LEFT
PEDESTAL DETAILS NO. 7

STRUCTURES DESIGN SPECIAL DESIGN SHEET (ENGLISH) (REV. 10-25-05)

ORIGINAL SCALE IN INCHES FOR REDUCED PLANS 0 1 2 3

CU 04242
EA 163731

DISREGARD PRINTS BEARING EARLIER REVISION DATES →

REVISION DATES: 5/15/09 | 5/19/09 | 6/5/09 | 6-8-09

SHEET 90 OF 114

FILE => 34-0157l-p-sd07.dgn

USERNAME => s135318 DATE PLOTTED => 21-JUL-2009 TIME PLOTTED => 14:33

DIST	COUNTY	ROUTE	POST MILES TOTAL PROJECT	SHEET No	TOTAL SHEETS
04	SF	101,1	9.279.8, 6.8/7.1	441	567

Robert B. Giorgis Jr.
REGISTERED CIVIL ENGINEER DATE

7-20-09
PLANS APPROVAL DATE

REGISTERED PROFESSIONAL ENGINEER
ROBERT B. GIORGIS JR.
No. C60705
Exp. 12/31/10
CIVIL
STATE OF CALIFORNIA

The State of California or its officers or agents shall not be responsible for the accuracy or completeness of electronic copies of this plan sheet.

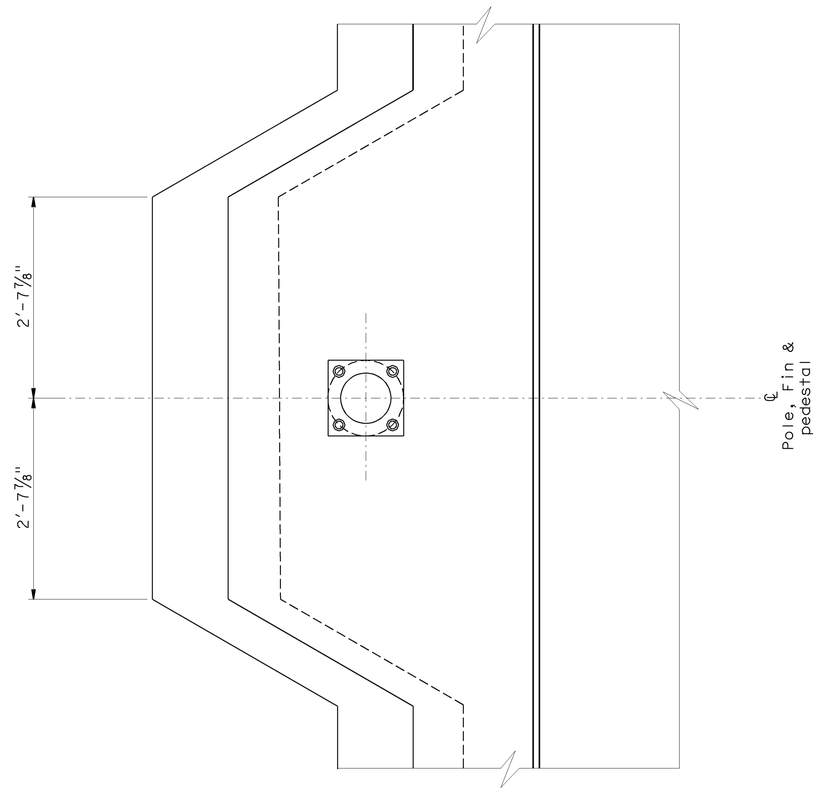

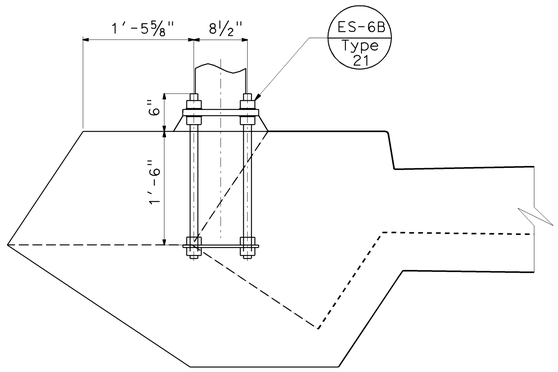

TYPE 21 ANCHOR BOLT

NO SCALE

NOTES:

1. Steel Fin not shown.
2. For steel fin details see "STEEL FIN DETAILS" in Viaduct Plans and SD 1.9.
3. See Std Plan ES-6A and ES-6B for additional anchorage information for type 21.
4. Barrier not shown.
5. For bottom contour of Type 21 pedestal see sheet SD 1.12.

NOTE:
THE CONTRACTOR SHALL VERIFY ALL CONTROLLING FIELD DIMENSIONS BEFORE ORDERING OR FABRICATING ANY MATERIAL.

TYPE 21 PEDESTAL ANCHORAGE

SD 1.8

Jeffrey B Woody
BRANCH CHIEF

DESIGN	BY JOHN DATILES	CHECKED M O'LEARY
DETAILS	BY T.ZOLNIKOVA	CHECKED M O'LEARY
QUANTITIES	BY M O'LEARY	CHECKED JOHN DATILES

STATE OF CALIFORNIA
DEPARTMENT OF TRANSPORTATION

DIVISION OF ENGINEERING SERVICES
STRUCTURE DESIGN
SPECIAL DESIGNS BRANCH

BRIDGE NO. 34-0157L
POST MILE 9.02

PRESIDIO VIADUCT - LEFT
PEDESTAL DETAILS NO. 8

STRUCTURES DESIGN SPECIAL DESIGN SHEET (ENGLISH) (REV. 10-25-05)

ORIGINAL SCALE IN INCHES FOR REDUCED PLANS 0 1 2 3

CU 04242
EA 163731

DISREGARD PRINTS BEARING EARLIER REVISION DATES →

REVISION DATES: 5/14/09 5/18/09 6/2/09 6-8-09 6-15-09

SHEET 91 OF 114

FILE => 34-0157I-p-sd08.dgn

USERNAME => ttmorfin DATE PLOTTED => 21-JUL-2009 TIME PLOTTED => 13:45

DIST	COUNTY	ROUTE	POST MILES TOTAL PROJECT	SHEET No	TOTAL SHEETS
04	SF	101,1	9.2/9.8, 6.8/7.1	442	567

Robert B. Giorgis Jr. X
REGISTERED CIVIL ENGINEER DATE

7-20-09
PLANS APPROVAL DATE

REGISTERED PROFESSIONAL ENGINEER
ROBERT B. GIORGIS JR.
No. C60705
Exp. 12/31/10
CIVIL
STATE OF CALIFORNIA

The State of California or its officers or agents shall not be responsible for the accuracy or completeness of electronic copies of this plan sheet.

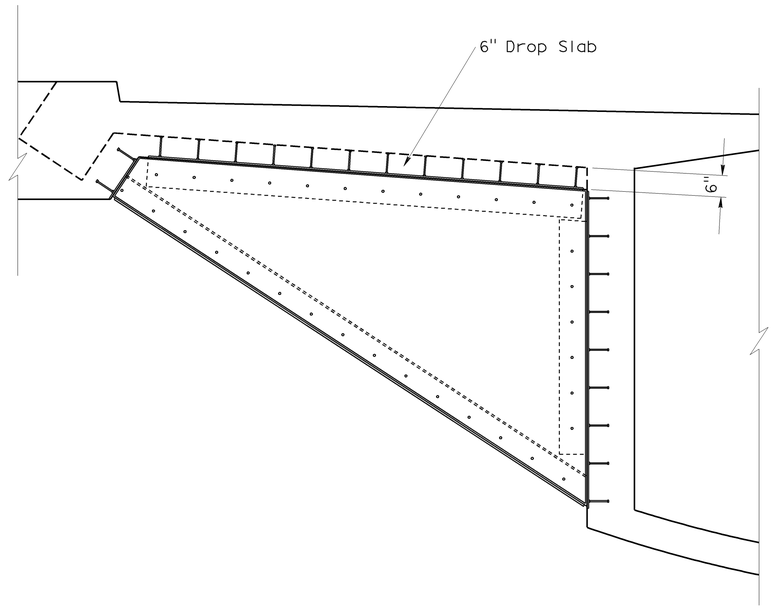

TWO POST TRUSS WITH VMS PEDESTAL AND TYPE 21 PEDESTAL DROP SLAB DETAIL

NOTES:

1. Refer to Type 21 Pedestal on SD 1.7 and Two Post truss with VMS Pedestal on SD 1.3, SD 1.4 and SD 1.5 for pedestal details.
2. Refer to "Steel Fin Details No.1" in Viaduct Plans for additional information.
3. Rebar and Barrier not shown for clarity.

NOTE:
THE CONTRACTOR SHALL VERIFY ALL CONTROLLING FIELD DIMENSIONS BEFORE ORDERING OR FABRICATING ANY MATERIAL.

DROP SLAB DETAIL 1
NO SCALE

SD 1.9

Jeffrey B Woody
BRANCH CHIEF

DESIGN	BY R GIORGIS	CHECKED M O'LEARY
DETAILS	BY M O'LEARY	CHECKED A HOUGH
QUANTITIES	BY M O'LEARY	CHECKED J DATILES

STATE OF **CALIFORNIA**
DEPARTMENT OF TRANSPORTATION

DIVISION OF ENGINEERING SERVICES
STRUCTURE DESIGN
DESIGN BRANCH **4**

BRIDGE NO. 34-0157L
POST MILE 9.02

PRESIDIO VIADUCT - LEFT
PEDESTAL DETAILS NO. 9

STRUCTURES DESIGN DETAIL SHEET (ENGLISH) (REV. 10/25/05)

ORIGINAL SCALE IN INCHES FOR REDUCED PLANS 0 1 2 3

CU 04242
EA 163731

DISREGARD PRINTS BEARING EARLIER REVISION DATES →

REVISION DATES: 3-28-09 | 5-13-09 | 5-29-09 | 6-17-09

SHEET 92 OF 114

FILE => 34-0157l-p-sd09.dgn

USERNAME => tmorfin DATE PLOTTED => 21-JUL-2009 TIME PLOTTED => 13:45

DIST	COUNTY	ROUTE	POST MILES TOTAL PROJECT	SHEET No	TOTAL SHEETS
04	SF	101,1	9.2/9.8, 6.8/7.1	443	567

Robert B. Giorgis Jr.
REGISTERED CIVIL ENGINEER DATE

7-20-09
PLANS APPROVAL DATE

REGISTERED PROFESSIONAL ENGINEER — ROBERT B. GIORGIS JR. — No. C60705 — Exp. 12/31/10 — CIVIL — STATE OF CALIFORNIA

The State of California or its officers or agents shall not be responsible for the accuracy or completeness of electronic copies of this plan sheet.

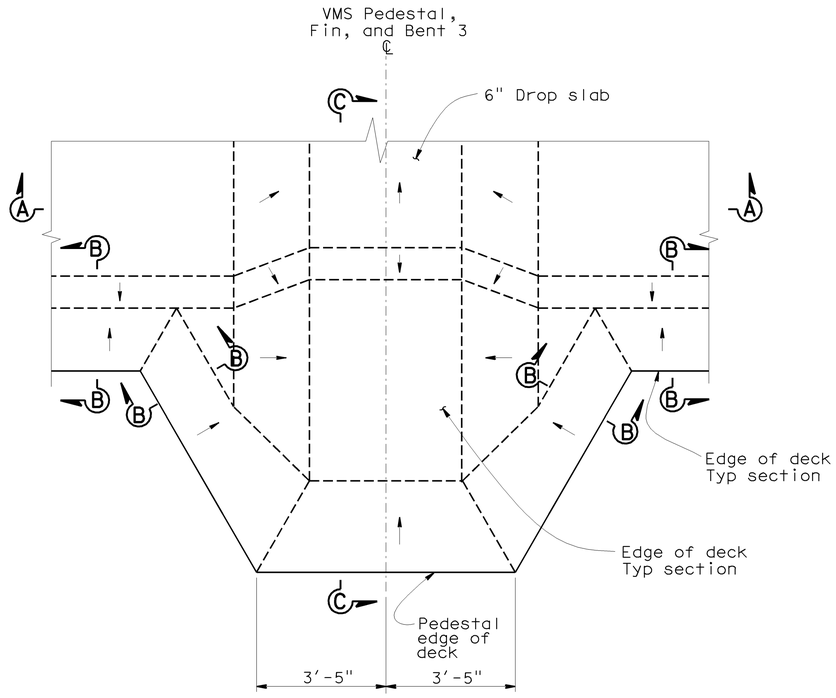

PLAN
(BOTTOM CONTOUR)

NOTE: Arrows indicate a downward direction.

NOTES:

1. For "Section B-B" see bridge details sheet "TYPICAL SECTION No. 1" "DETAIL A" in Viaduct Plans.
2. For "Section C-C" see "View A-A" on sheet SD 1.4.
3. For additional details see sheets SD 1.3, SD 1.4, and SD 1.5.

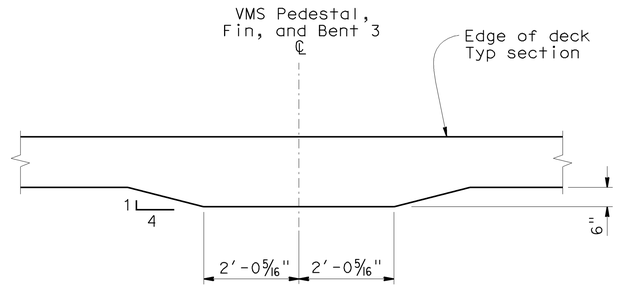

SECTION A-A

VMS PEDESTAL

NOTE:
THE CONTRACTOR SHALL VERIFY ALL CONTROLLING FIELD DIMENSIONS BEFORE ORDERING OR FABRICATING ANY MATERIAL.

DROP SLAB DETAIL 2
NO SCALE

SD 1.10

Jeffrey B Woody
BRANCH CHIEF

DESIGN	BY B GIORGIS	CHECKED M O'LEARY	
DETAILS	BY D W JUSTICE Jr	CHECKED M O'LEARY	
QUANTITIES	BY M O'LEARY	CHECKED JOHN DATILES	

STATE OF CALIFORNIA
DEPARTMENT OF TRANSPORTATION

DIVISION OF ENGINEERING SERVICES
STRUCTURE DESIGN
SPECIAL DESIGNS BRANCH

BRIDGE NO. 34-0157L
POST MILE 9.02

PRESIDIO VIADUCT - LEFT
PEDESTAL DETAILS NO. 10

STRUCTURES DESIGN SPECIAL DESIGN SHEET (ENGLISH) (REV. 10-25-05)

ORIGINAL SCALE IN INCHES FOR REDUCED PLANS 0 1 2 3

CU 04242
EA 163731

DISREGARD PRINTS BEARING EARLIER REVISION DATES →

REVISION DATES: 6-1-09 | 6-17-09

SHEET 93 OF 114

FILE => 34-0157l-p-sd10.dgn

USERNAME = rmartin DATE PLOTTED => 21-JUL-2009 TIME PLOTTED => 13:45

DIST	COUNTY	ROUTE	POST MILES TOTAL PROJECT	SHEET No	TOTAL SHEETS
04	SF	101,1	9.2/9.8, 6.8/7.1	444	567

Robert B. Giorgis
REGISTERED CIVIL ENGINEER DATE

7-20-09
PLANS APPROVAL DATE

REGISTERED PROFESSIONAL ENGINEER — ROBERT B. GIORGIS JR. — No. C60705 — Exp. 12/31/10 — CIVIL — STATE OF CALIFORNIA

The State of California or its officers or agents shall not be responsible for the accuracy or completeness of electronic copies of this plan sheet.

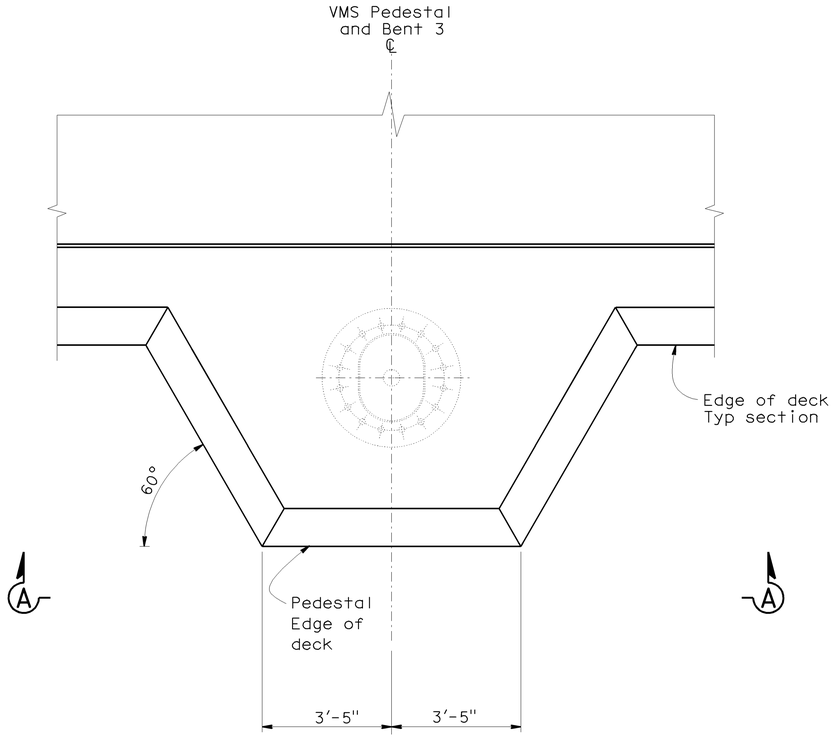

PLAN
(TOP CONTOUR)

NOTE:

1. For additional details see sheets SD 1.3, SD 1.4, SD 1.5 and SD 1.6.

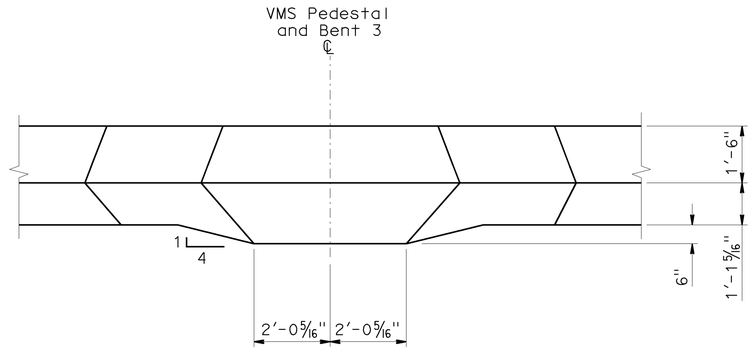

VIEW A-A

VMS PEDESTAL

DROP SLAB DETAIL 3

NO SCALE

SD 1.11

NOTE:
THE CONTRACTOR SHALL VERIFY ALL CONTROLLING FIELD DIMENSIONS BEFORE ORDERING OR FABRICATING ANY MATERIAL.

Jeffrey B Woody
BRANCH CHIEF

	BY	CHECKED
DESIGN	B GIORGIS	M O'LEARY
DETAILS	D W JUSTICE Jr	M O'LEARY
QUANTITIES	M O'LEARY	JOHN DATILES

STATE OF CALIFORNIA
DEPARTMENT OF TRANSPORTATION

DIVISION OF ENGINEERING SERVICES
STRUCTURE DESIGN
SPECIAL DESIGNS BRANCH

BRIDGE NO. 34-0157L
POST MILE 9.02

PRESIDIO VIADUCT - LEFT
PEDESTAL DETAILS NO. 11

STRUCTURES DESIGN SPECIAL DESIGN SHEET (ENGLISH) (REV. 10-25-05)

ORIGINAL SCALE IN INCHES FOR REDUCED PLANS 0 1 2 3

CU 04242
EA 163731

DISREGARD PRINTS BEARING EARLIER REVISION DATES →

REVISION DATES: 6-1-09 | 6-17-09

SHEET 94 OF 114

FILE => 34-0157l-p-sd11.dgn

USERNAME = tmorfin DATE PLOTTED => 21-JUL-2009 TIME PLOTTED => 13:45

DIST	COUNTY	ROUTE	POST MILES TOTAL PROJECT	SHEET No	TOTAL SHEETS
04	SF	101,1	9.2/9.8, 6.8/7.1	445	567

Robert B. Giorgis Jr.
REGISTERED CIVIL ENGINEER DATE

7-20-09
PLANS APPROVAL DATE

REGISTERED PROFESSIONAL ENGINEER — ROBERT B. GIORGIS JR. — No. C60705 — Exp. 12/31/10 — CIVIL — STATE OF CALIFORNIA

The State of California or its officers or agents shall not be responsible for the accuracy or completeness of electronic copies of this plan sheet.

NOTES:

1. For section B-B see bridge details sheet "TYPICAL SECTION No. 1" "DETAIL A" in Viaduct Plans.
2. For "Section C-C" see "ELEVATION" view sheet SD 1.7.
3. For additional details see sheets SD 1.7.

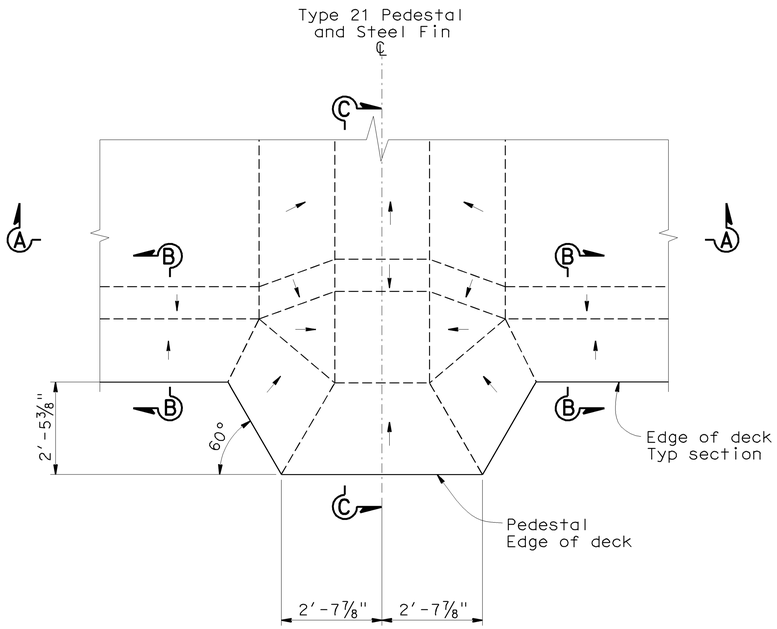

PLAN
(BOTTOM CONTOUR)

NOTE: Arrows indicate a downward direction.

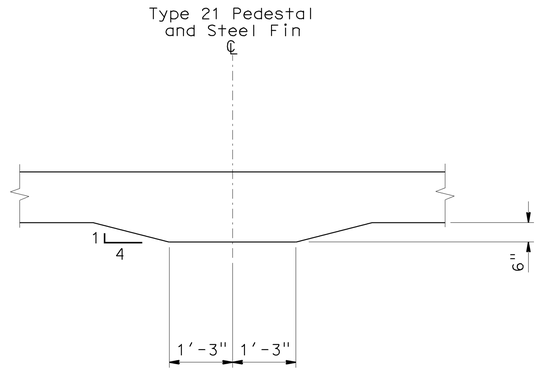

SECTION A-A

TYPE 21 PEDESTAL

NOTE:
THE CONTRACTOR SHALL VERIFY ALL CONTROLLING FIELD DIMENSIONS BEFORE ORDERING OR FABRICATING ANY MATERIAL.

DROP SLAB DETAIL 4

NO SCALE

SD 1.12

Jeffrey B Woody
BRANCH CHIEF

DESIGN	BY JOHN DATILES	CHECKED M O'LEARY
DETAILS	BY D W JUSTICE Jr	CHECKED JOHN DATILES
QUANTITIES	BY M O'LEARY	CHECKED JOHN DATILES

STATE OF CALIFORNIA
DEPARTMENT OF TRANSPORTATION

DIVISION OF ENGINEERING SERVICES
STRUCTURE DESIGN
SPECIAL DESIGNS BRANCH

BRIDGE NO. 34-0157L
POST MILE 9.02

PRESIDIO VIADUCT - LEFT
PEDESTAL DETAILS NO. 12

STRUCTURES DESIGN SPECIAL DESIGN SHEET (ENGLISH) (REV. 10-25-05)

ORIGINAL SCALE IN INCHES FOR REDUCED PLANS 0 1 2 3

CU 04242
EA 163731

DISREGARD PRINTS BEARING EARLIER REVISION DATES →

REVISION DATES: 6-17-09

SHEET 95 OF 114

FILE => 34-0157l-p-sd12.dgn

USERNAME => ttmorfin DATE PLOTTED => 21-JUL-2009 TIME PLOTTED => 13:45

DIST	COUNTY	ROUTE	POST MILES TOTAL PROJECT	SHEET No	TOTAL SHEETS
04	SF	101,1	9.2/9.8, 6.8/7.1	446	567

Robert B. Giorgis Jr.
REGISTERED CIVIL ENGINEER DATE

7-20-09
PLANS APPROVAL DATE

REGISTERED PROFESSIONAL ENGINEER
ROBERT B. GIORGIS JR.
No. C60705
Exp. 12/31/10
CIVIL
STATE OF CALIFORNIA

The State of California or its officers or agents shall not be responsible for the accuracy or completeness of electronic copies of this plan sheet.

NOTE:

1. For additional details see sheets SD 1.7.

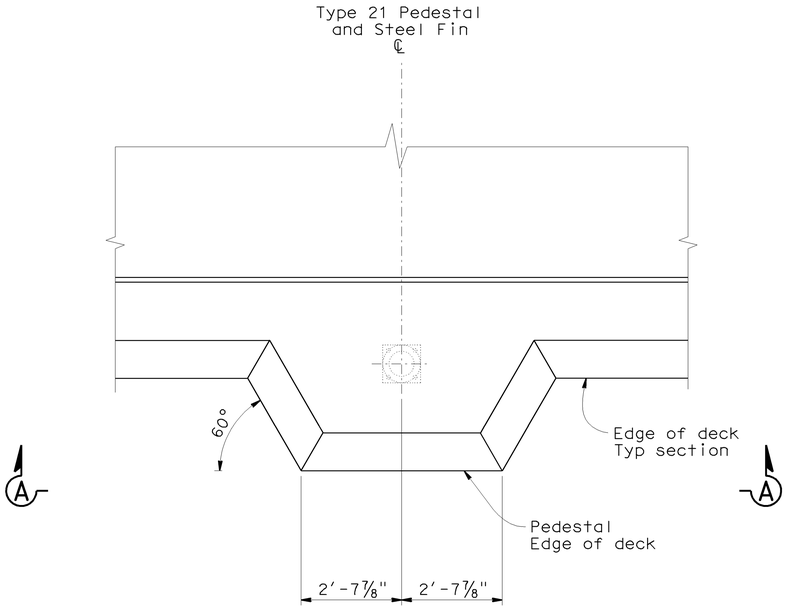

PLAN
(TOP CONTOUR)

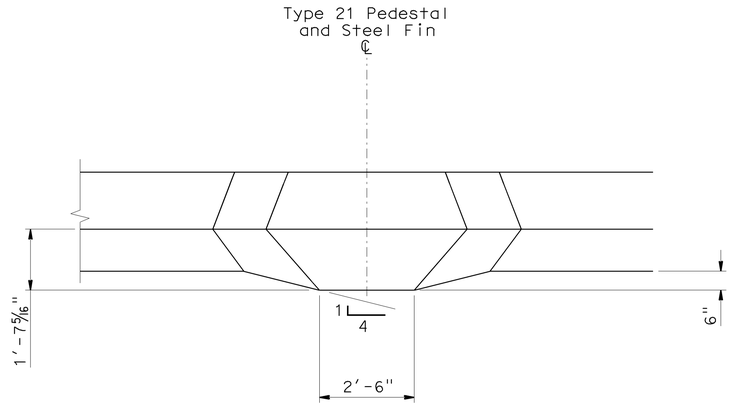

VIEW A-A

TYPE 21 PEDESTAL

NOTE:
THE CONTRACTOR SHALL VERIFY ALL CONTROLLING FIELD DIMENSIONS BEFORE ORDERING OR FABRICATING ANY MATERIAL.

DROP SLAB DETAIL 5
NO SCALE

SD 1.13

Jeffrey B Woody
BRANCH CHIEF

DESIGN	BY JOHN DATILES	CHECKED M O'LEARY
DETAILS	BY D W JUSTICE Jr	CHECKED JOHN DATILES
QUANTITIES	BY M O'LEARY	CHECKED JOHN DATILES

STATE OF **CALIFORNIA**
DEPARTMENT OF TRANSPORTATION

DIVISION OF ENGINEERING SERVICES
STRUCTURE DESIGN
SPECIAL DESIGNS BRANCH

BRIDGE NO.	PRESIDIO VIADUCT - SOUTHBOUND
34-0157L	PEDESTAL DETAILS NO. 13
POST MILE 9.02	

STRUCTURES DESIGN SPECIAL DESIGN SHEET (ENGLISH) (REV. 10-25-05)

ORIGINAL SCALE IN INCHES FOR REDUCED PLANS 0 1 2 3

CU 04242
EA 163731

DISREGARD PRINTS BEARING EARLIER REVISION DATES →

REVISION DATES: 6-17-09 | 6-17-09

SHEET 96 OF 114

FILE => 34-0157l-p-sd13.dgn

USERNAME = trmorfin DATE PLOTTED => 21-JUL-2009 TIME PLOTTED => 13:45

DIST	COUNTY	ROUTE	POST MILES TOTAL PROJECT	SHEET No	TOTAL SHEETS
04	SF	101,1	9.2/9.8, 6.8/7.1	447	567

Ahmed Brahim 6-4-09
REGISTERED CIVIL ENGINEER DATE

7-20-09
PLANS APPROVAL DATE

REGISTERED PROFESSIONAL ENGINEER
AHMED M M IBRAHIM
No. S 4865
EXP. 9-30-10
STRUCTURAL
STATE OF CALIFORNIA

The State of California or its officers or agents shall not be responsible for the accuracy or completeness of electronic copies of this plan sheet.

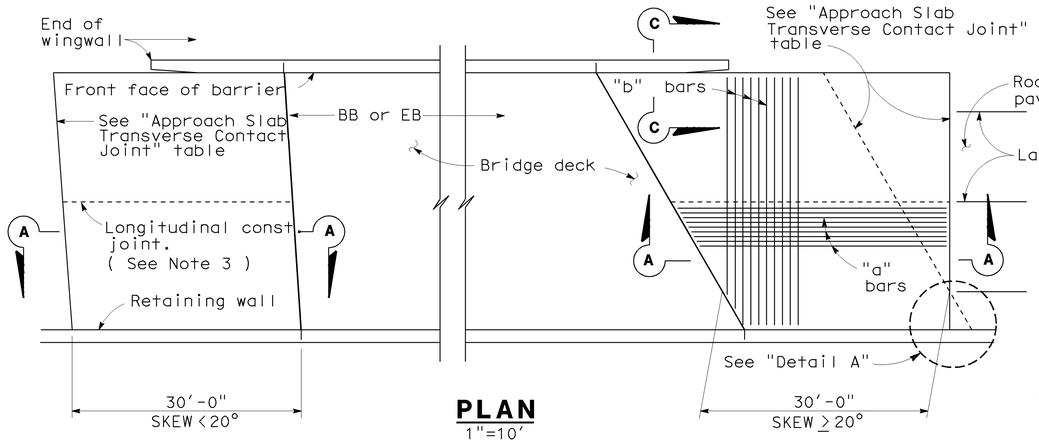

PLAN
1"=10'

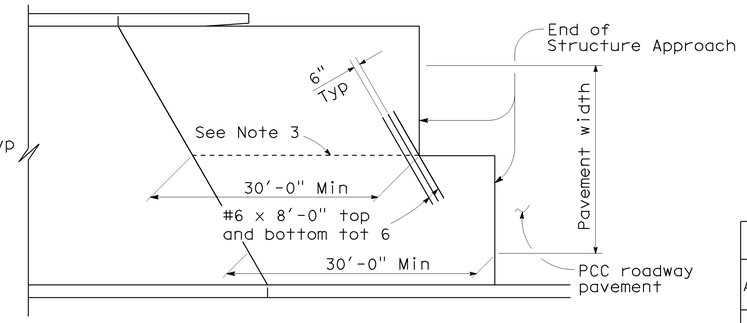

STRUCTURE APPROACH - END STAGGER DETAIL
No Scale

APPROACH SLAB TRANSVERSE CONTACT JOINT		
APPROACH SKEW	WITH AC ROADWAY PAVEMENT	WITH PCC ROADWAY PAVEMENT
< 20°	Parallel to face of paving notch	Parallel to face of paving notch
20° - 45°	Parallel to face of P N use (Detail A)	Stagger lines 24' to 36' apart.
> 45°	Parallel to face of P N use (Detail A)	Stagger at each lane line.

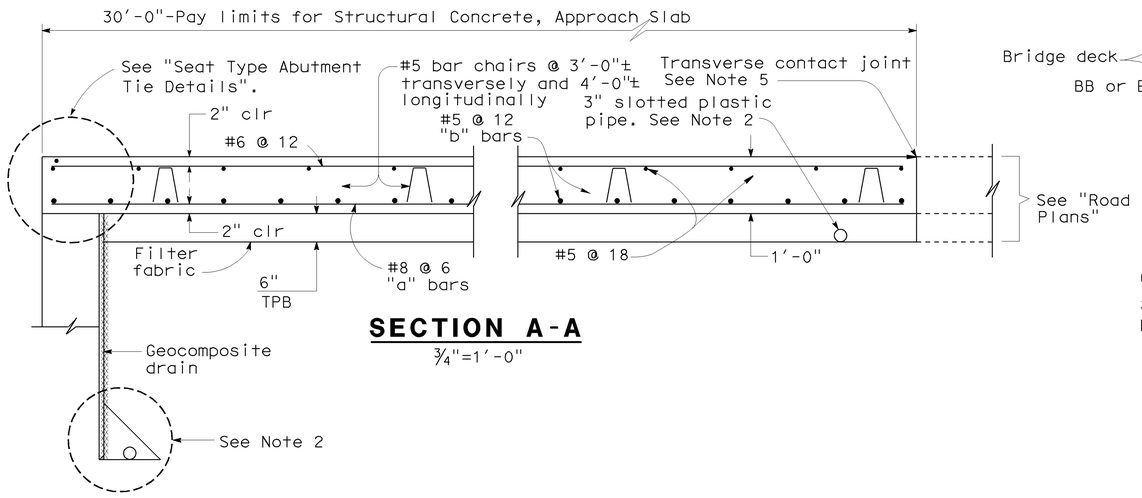

SECTION A-A
¾"=1'-0"

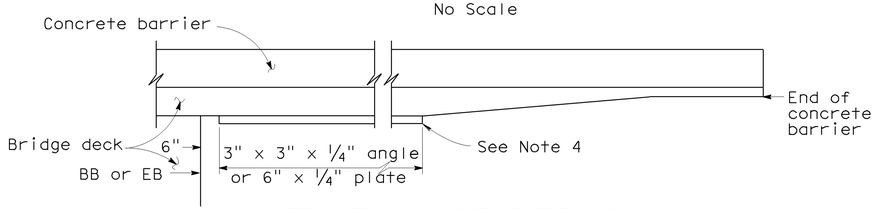

EDGE ANGLE DETAIL
½"=1'-0"

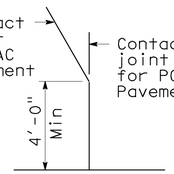

DETAIL A
No Scale

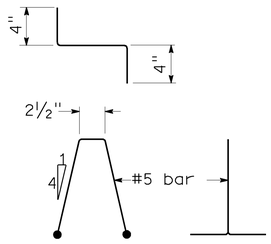

BAR CHAIR DETAIL
1½"=1'-0"

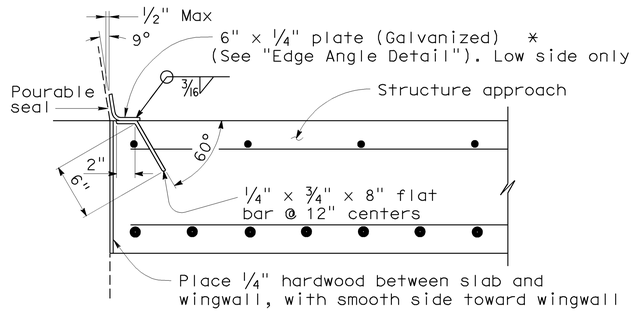

DETAIL B
1½"=1'-0"

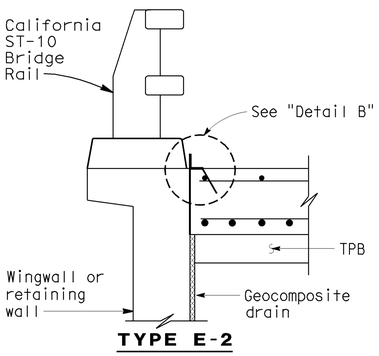

TYPE E-2

SECTION C-C
¾"=1'-0"

(Type E-1 to be used,unless otherwise shown on plans)

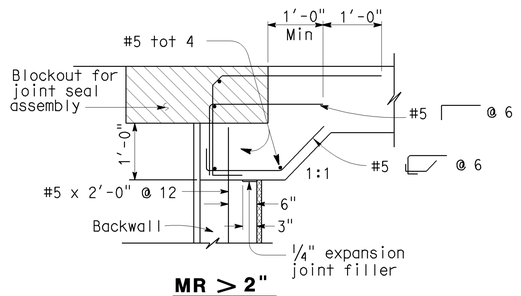

MR > 2"

SEAT TYPE ABUTMENT TIE DETAILS (SEE NOTE 1)
¾"=1'-0"

NOTES:

1. For details not shown,see Structure Plans.
2. For drainage details,see "Structure Approach Drainage Details" sheet.
3. Longitudinal construction joints,when permitted by the Engineer, shall be located on lane lines.
4. End angle or plate at beginning of barrier transition, end of wingwall or end of structure approach as applicable.
5. For transverse contact joint with new PCC paving, refer to Standard Plan P10.
6. At the contractor's option, approach slab transverse reinforcement may be placed parallel to paving notch. Spacing of transverse reinforcement is measured along ℄ roadway.

▨ Remove all polystyrene.

DESIGN	BY Q. Zhao/P. Norboe	CHECKED T. Skreslet	STATE OF CALIFORNIA DEPARTMENT OF TRANSPORTATION	DIVISION OF ENGINEERING SERVICES STRUCTURE DESIGN DESIGN BRANCH 4	BRIDGE NO. 34-0157L	PRESIDIO VIADUCT - LEFT	
DETAILS	BY A. Onodera	CHECKED Q. Zhao/P. Norboe			POST MILE 9.02	STRUCTURE APPROACH TYPE N(30S)	
QUANTITIES	BY A. Alcantara	CHECKED J. Han					

STRUCTURES DESIGN DETAIL SHEET (ENGLISH) (REV. 10/25/05)

ORIGINAL SCALE IN INCHES FOR REDUCED PLANS 0 1 2 3

CU 04242
EA 163731

DISREGARD PRINTS BEARING EARLIER REVISION DATES →

REVISION DATES: 6-15-09

SHEET 97 OF 114

FILE => 34-0157l-qa-xs3-120e.dgn

USERNAME => rmorfin DATE PLOTTED => 21-JUL-2009 TIME PLOTTED => 13:45

DIST	COUNTY	ROUTE	POST MILES TOTAL PROJECT	SHEET No	TOTAL SHEETS
04	SF	101,1	9.2/9.8, 6.8/7.1	448	567

Ahmed Ibrahim 6-4-09
REGISTERED CIVIL ENGINEER DATE

7-20-09
PLANS APPROVAL DATE

REGISTERED PROFESSIONAL ENGINEER
AHMED M M IBRAHIM
No. S 4865
EXP. 9-30-10
STRUCTURAL
STATE OF CALIFORNIA

The State of California or its officers or agents shall not be responsible for the accuracy or completeness of electronic copies of this plan sheet.

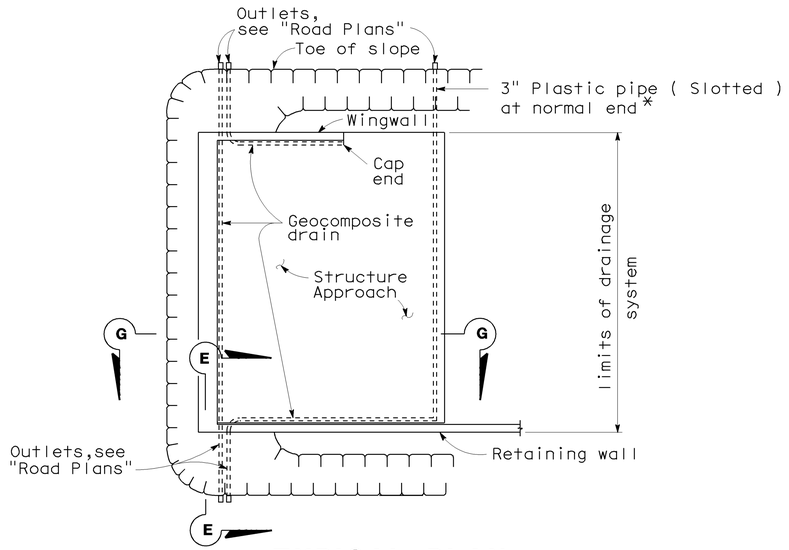

TYPICAL PLAN
1"=10'
*For pipe layout at staggered end, see "Detail B".

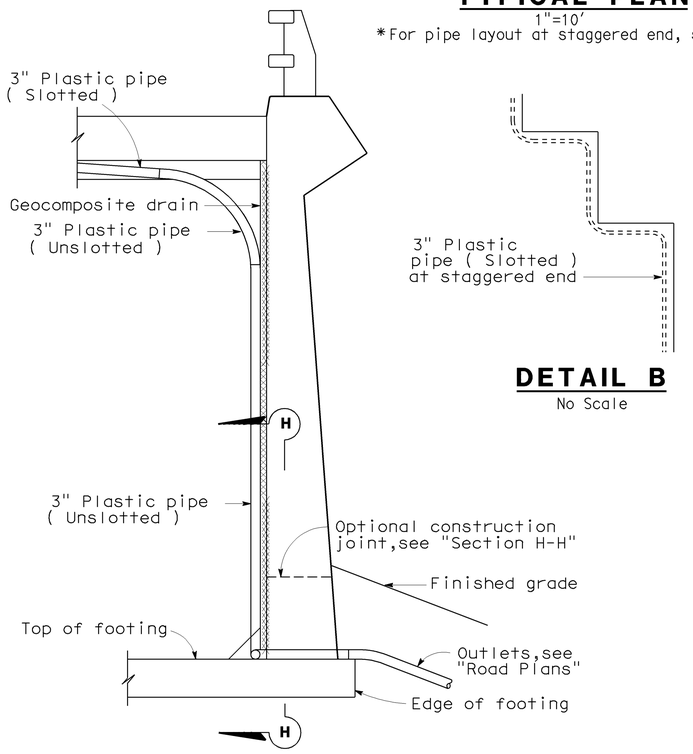

SECTION E-E
1/2"=1'-0"

NOTE: Bends and junctions in 3" plastic pipe are 30" radius min.

DETAIL B
No Scale

NOTE:
The temporary widening is not shown in temporary widen region for clarity

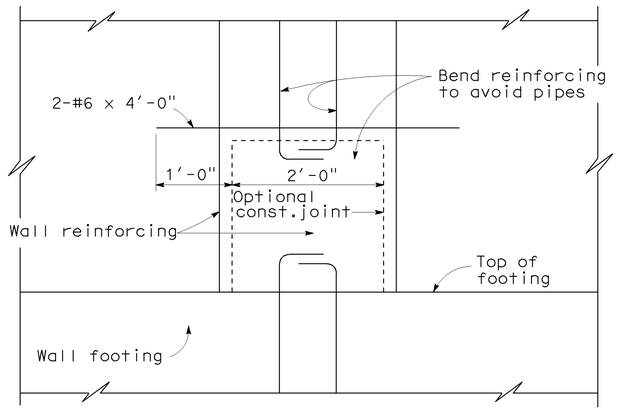

SECTION H-H
1"=1'-0"

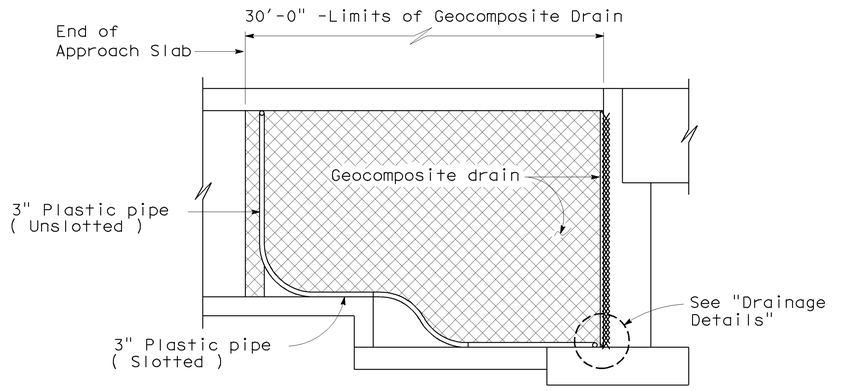

RETAINING WALL WINGWALL
SECTION G-G
1/4"=1'-0"

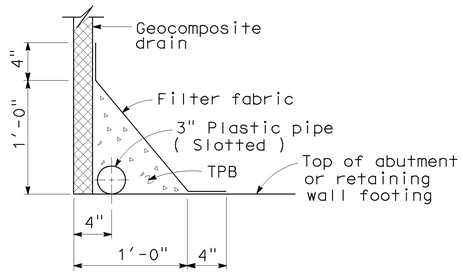

WITH FOOTING
DRAINAGE DETAILS
1 1/2"=1'-0"

DESIGN	BY Q. Zhao/P. Norboe	CHECKED T. Skreslet	STATE OF CALIFORNIA DEPARTMENT OF TRANSPORTATION	DIVISION OF ENGINEERING SERVICES STRUCTURE DESIGN DESIGN BRANCH 4	BRIDGE NO. 34-0157L
DETAILS	BY A. Onodera	CHECKED Q. Zhao/P. Norboe			POST MILE 9.02
QUANTITIES	BY A. Alcantara	CHECKED J. Han		CU 04242 EA 163731	

PRESIDIO VIADUCT - LEFT
STRUCTURE APPROACH DRAINAGE DETAILS

STRUCTURES DESIGN DETAIL SHEET (ENGLISH) (REV. 10/25/05)

ORIGINAL SCALE IN INCHES FOR REDUCED PLANS 0 1 2 3

DISREGARD PRINTS BEARING EARLIER REVISION DATES →

REVISION DATES: 6-15-09

SHEET 98 OF 114

FILE => 34-0157l-qb-xs3-110e.dgn

USERNAME => tmorton DATE PLOTTED => 21-JUL-2009 TIME PLOTTED => 13:45

DIST	COUNTY	ROUTE	POST MILES TOTAL PROJECT	SHEET No	TOTAL SHEETS
04	SF	101,1	9.2/9.8, 6.8/7.1	449	567

CERTIFIED ENGINEERING GEOLOGIST 6-02-09

7-20-09
PLANS APPROVAL DATE

REGISTERED GEOLOGIST
Grant Wilcox
No. 2300
Exp. 4-30-10
CERTIFIED ENGINEERING GEOLOGIST
STATE OF CALIFORNIA

The State of California or its officers or agents shall not be responsible for the accuracy or completeness of electronic copies of this plan sheet.

This LOTB sheet was prepared in accordance with the Caltrans Soil & Rock Logging, Classification, & Presentation Manual (June 2007) with the exception of Section 2.3.

BENCH MARK

SURVEY CONTROL

CM-131
Fnd Mag. Nail & Washer
43.66 FT Lt. "SB" Line
Sta. 89+63.11
N 2,1205,06.93
E 5,993,684.52
Elev. = 52.78

CM-134
Fnd Mag. Nail & Washer
0.54 FT Rt. "NB" Line
Sta. 87+18.23
N 2,120,508.72
E 5,993,944.09
Elev. = 82.45
NAVD 1998 Datum

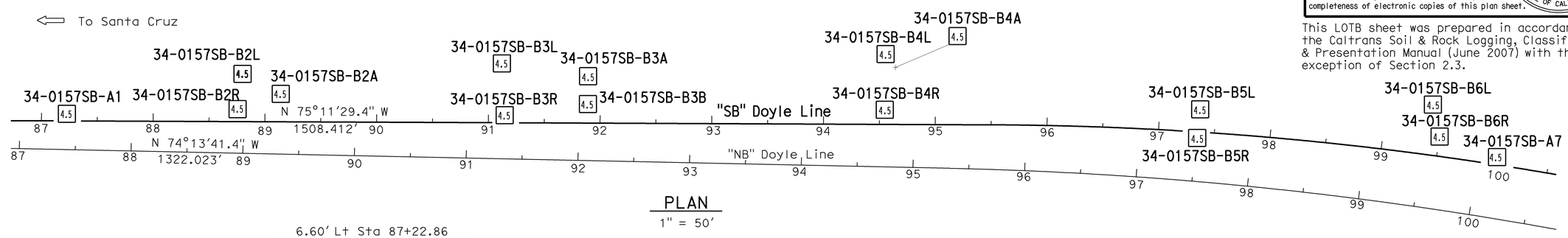

PLAN
1" = 50'

2-21-08
Terminated at Elev -19.07'
ERi = 76%
Ground water was not measured.

PROFILE
HOR. 1"=10'
VER. 1"=10'

ENGINEERING SERVICES		GEOTECHNICAL SERVICES	STATE OF CALIFORNIA DEPARTMENT OF TRANSPORTATION	DIVISION OF ENGINEERING SERVICES STRUCTURE DESIGN	BRIDGE NO.	PRESIDIO VIADUCT - LEFT
FUNCTIONAL SUPERVISOR	DRAWN BY: F. Nguyen 3/09	FIELD INVESTIGATION BY:		DESIGN BRANCH 4	34-0157L	LOG OF TEST BORINGS 1 OF 16
NAME: T. Pokrywka	CHECKED BY: R. Price	R. Nashed			POST MILES 9.02	

OGS CIVIL LOG OF TEST BORINGS SHEET

ORIGINAL SCALE IN INCHES FOR REDUCED PLANS 0 1 2 3

CU 04242
EA 163731

DISREGARD PRINTS BEARING EARLIER REVISION DATES →

REVISION DATES: 05-04-09 | 05-11-09 | 05-13-09 | 05-26-09 | 06-01-09

SHEET 99 OF 114

FILE => 34-0157l-z-lotb01.dgn

USERNAME => tmartin DATE PLOTTED => 21-JUL-2009 TIME PLOTTED => 13:45

DIST	COUNTY	ROUTE	POST MILES TOTAL PROJECT	SHEET No	TOTAL SHEETS
04	SF	101,1	9.2/9.8, 6.8/7.1	450	567

REGISTERED CIVIL ENGINEER — 6-02-09

7-20-09
PLANS APPROVAL DATE

REGISTERED PROFESSIONAL ENGINEER — Eduardo Ortega — No. C41012 — Exp. 3-31-11 — CIVIL — STATE OF CALIFORNIA

The State of California or its officers or agents shall not be responsible for the accuracy or completeness of electronic copies of this plan sheet.

This LOTB sheet was prepared in accordance with the Caltrans Soil & Rock Logging, Classification, & Presentation Manual (June 2007) with the exception of Section 2.3

FOR PLAN VIEW, SEE
"LOG OF TEST BORINGS 1 OF 16"

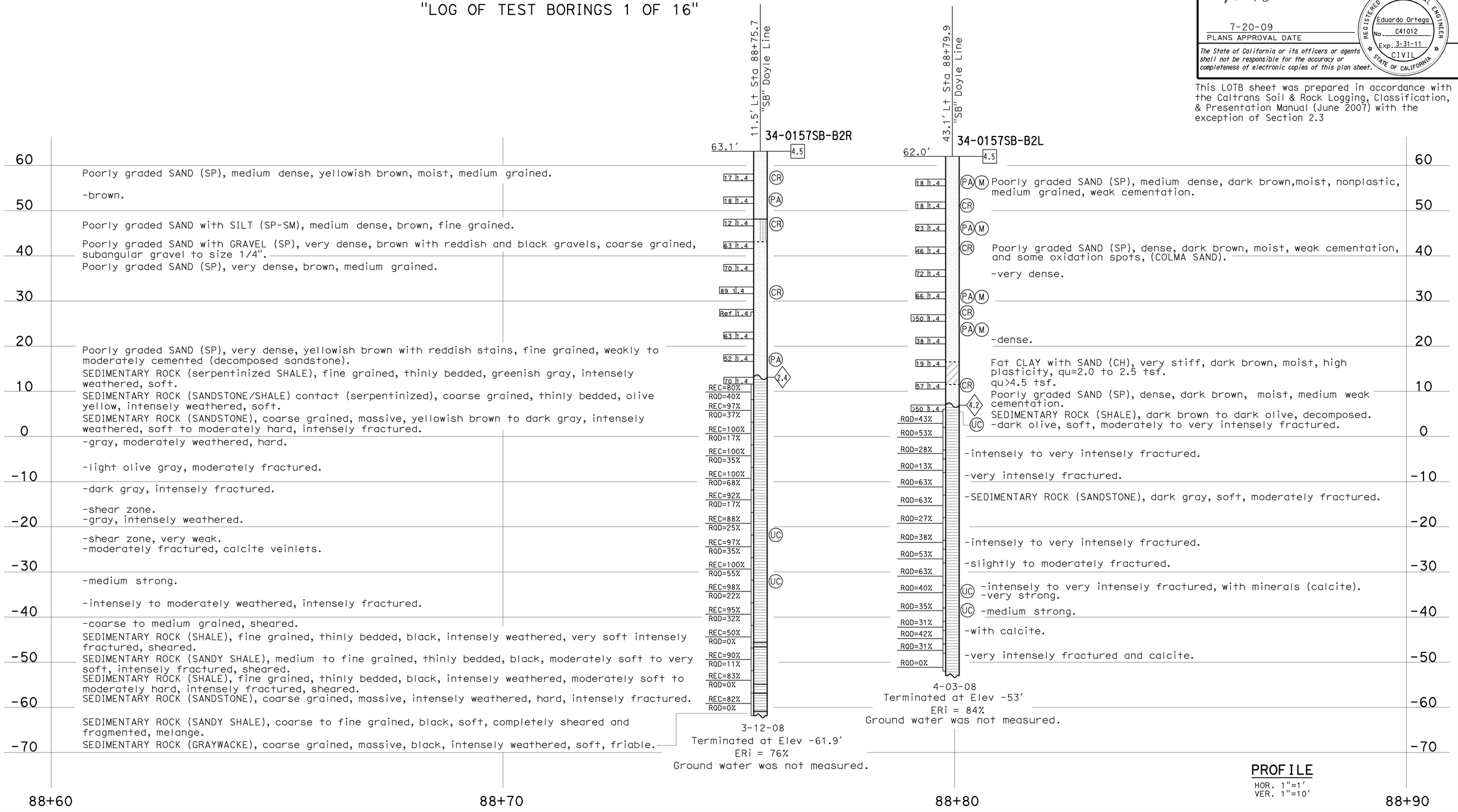

PROFILE
HOR. 1"=1'
VER. 1"=10'

ENGINEERING SERVICES	GEOTECHNICAL SERVICES	STATE OF CALIFORNIA DEPARTMENT OF TRANSPORTATION	DIVISION OF ENGINEERING SERVICES STRUCTURE DESIGN	BRIDGE NO.	PRESIDIO VIADUCT - LEFT
FUNCTIONAL SUPERVISOR NAME: M. Momenzadeh	DRAWN BY: F. Nguyen 3/09 CHECKED BY: R. Price	FIELD INVESTIGATION BY: R Nashed, E. Ortega	DESIGN BRANCH 4	34-0157L POST MILES 9.02	LOG OF TEST BORINGS 2 OF 16

OGS CIVIL LOG OF TEST BORINGS SHEET

ORIGINAL SCALE IN INCHES FOR REDUCED PLANS 0 1 2 3

CU 04242
EA 163731

DISREGARD PRINTS BEARING EARLIER REVISION DATES →

REVISION DATES: 05-04-09 | 05-11-09 | 05-21-09 | 05-26-09 | 06-01-09

SHEET 100 OF 114

FILE => 34-0157I-z-lotb02.dgn

USERNAME => ttrmorti\n DATE PLOTTED => 21-JUL-2009 TIME PLOTTED => 13:46

DIST	COUNTY	ROUTE	POST MILES TOTAL PROJECT	SHEET No	TOTAL SHEETS
04	SF	101,1	9.2/9.8, 6.8/7.1	451	567

M. Momenzadeh. 6-02-09
CERTIFIED ENGINEERING GEOLOGIST

REGISTERED GEOLOGIST
Mahmood Momenzadeh
No. 2685
Exp. 12-31-09
CERTIFIED ENGINEERING GEOLOGIST
STATE OF CALIFORNIA

7-20-09
PLANS APPROVAL DATE

The State of California or its officers or agents shall not be responsible for the accuracy or completeness of electronic copies of this plan sheet.

This LOTB sheet was prepared in accordance with the Caltrans Soil & Rock Logging, Classification, & Presentation Manual (June 2007) with the exception of Section 2.3

FOR PLAN VIEW, SEE
"LOG OF TEST BORINGS 1 OF 16"

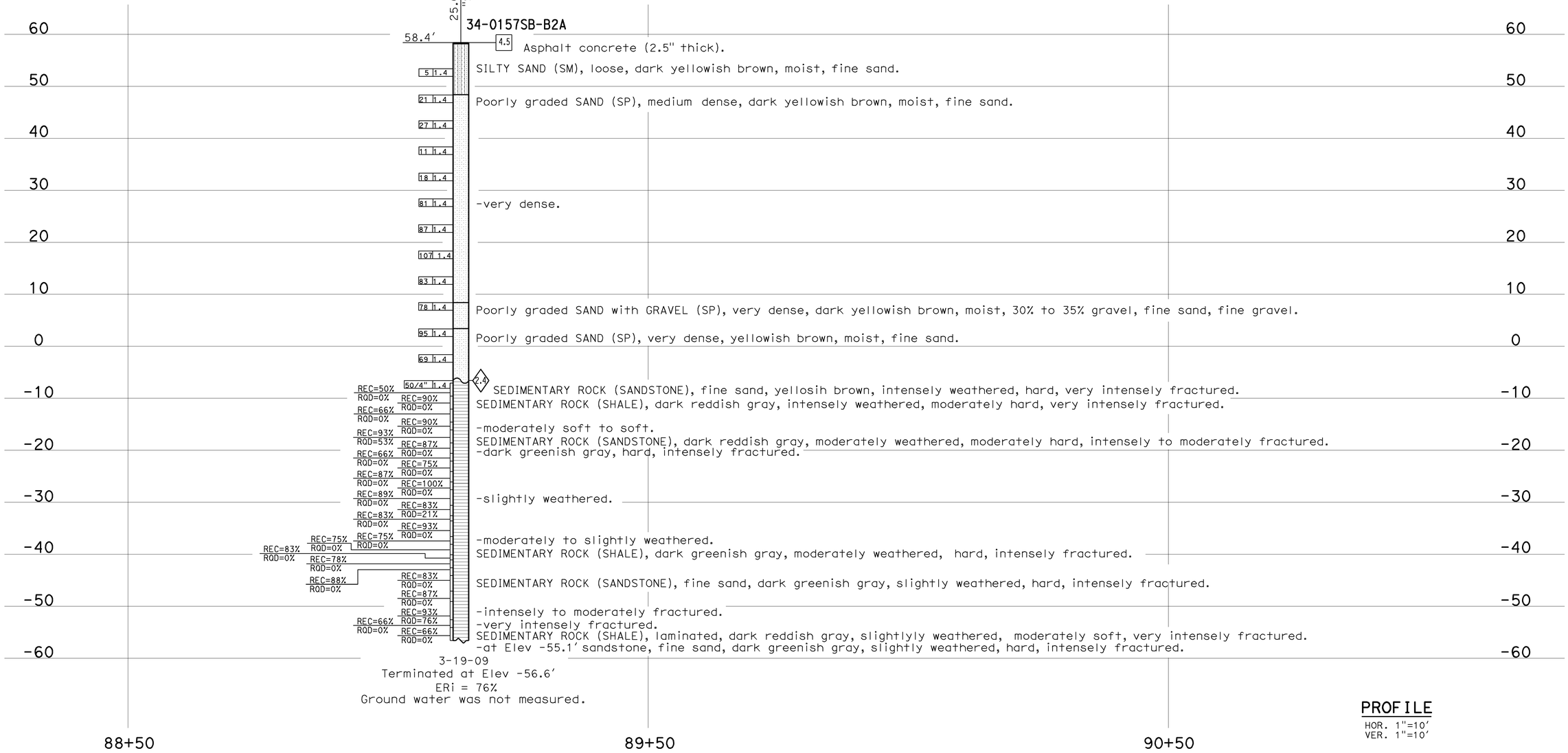

3-19-09
Terminated at Elev -56.6'
ERi = 76%
Ground water was not measured.

PROFILE
HOR. 1"=10'
VER. 1"=10'

ENGINEERING SERVICES		GEOTECHNICAL SERVICES	STATE OF CALIFORNIA DEPARTMENT OF TRANSPORTATION	DIVISION OF ENGINEERING SERVICES STRUCTURE DESIGN	BRIDGE NO. 34-0157L	PRESIDIO VIADUCT - LEFT
FUNCTIONAL SUPERVISOR	DRAWN BY: F. Nguyen 4/09	FIELD INVESTIGATION BY:		DESIGN BRANCH 4	POST MILES 9.02	LOG OF TEST BORINGS 3 OF 16
NAME: T. Pokrywka	CHECKED BY: R. Price	D. Nesbitt				

OGS CIVIL LOG OF TEST BORINGS SHEET

ORIGINAL SCALE IN INCHES FOR REDUCED PLANS 0 1 2 3

CU 04242
EA 163731

DISREGARD PRINTS BEARING EARLIER REVISION DATES →

REVISION DATES: 05-04-09 | 05-11-09 | 05-26-09 | 06-01-09

SHEET 101 OF 114

FILE => 34-0157I-z-lotb03.dgn

USERNAME => trprice DATE PLOTTED => 21-JUL-2009 TIME PLOTTED => 13:16

FOR PLAN VIEW, SEE
"LOG OF TEST BORINGS 1 OF 16"

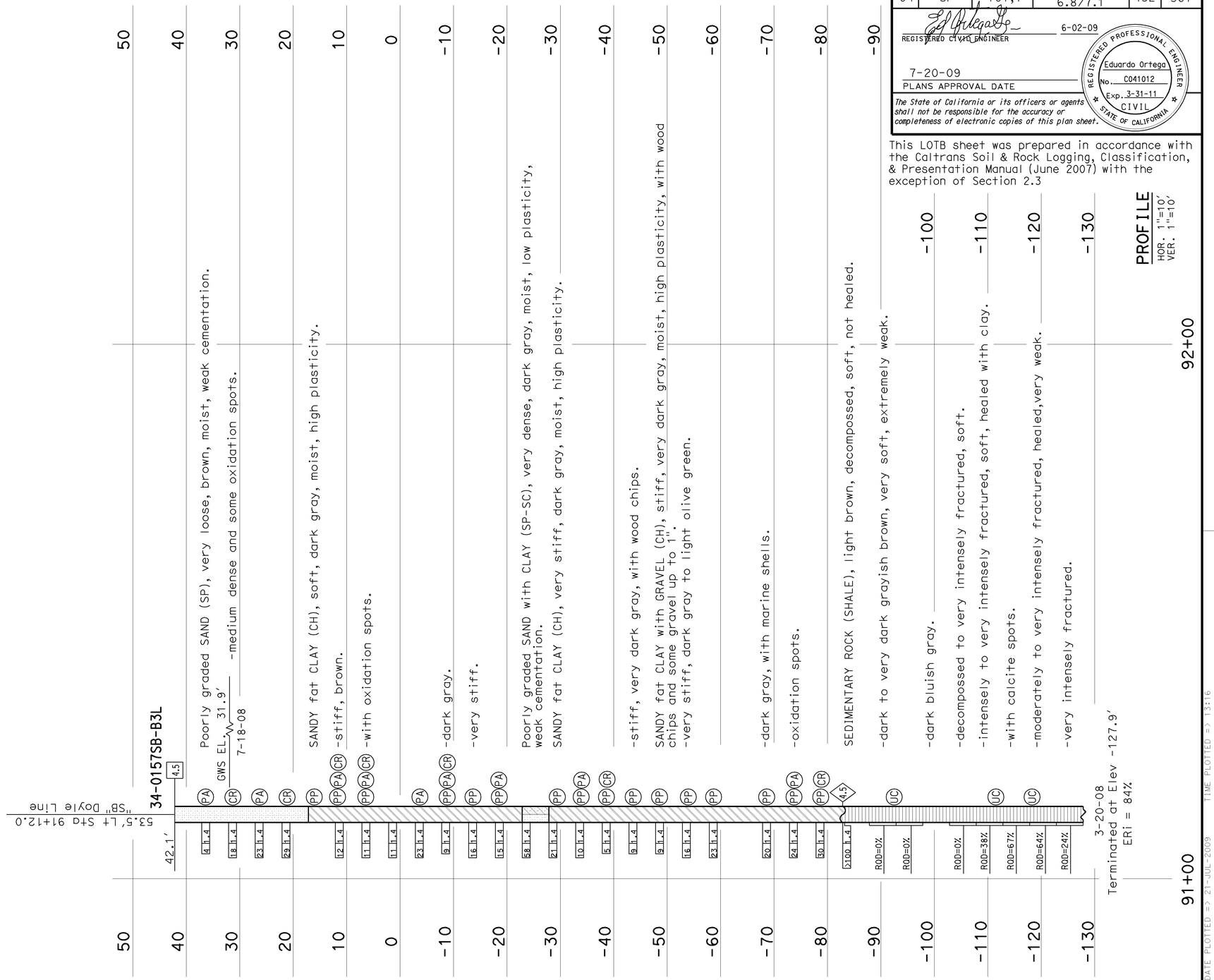

DIST	COUNTY	ROUTE	POST MILES TOTAL PROJECT	SHEET No	TOTAL SHEETS
04	SF	101,1	9.2/9.8, 6.8/7.1	452	567

REGISTERED CIVIL ENGINEER — 6-02-09

7-20-09
PLANS APPROVAL DATE

REGISTERED PROFESSIONAL ENGINEER — Eduardo Ortega — No. C041012 — Exp. 3-31-11 — CIVIL — STATE OF CALIFORNIA

The State of California or its officers or agents shall not be responsible for the accuracy or completeness of electronic copies of this plan sheet.

This LOTB sheet was prepared in accordance with the Caltrans Soil & Rock Logging, Classification, & Presentation Manual (June 2007) with the exception of Section 2.3

PROFILE
HOR. 1"=10'
VER. 1"=10'

ENGINEERING SERVICES		GEOTECHNICAL SERVICES	STATE OF CALIFORNIA DEPARTMENT OF TRANSPORTATION	DIVISION OF ENGINEERING SERVICES STRUCTURE DESIGN	BRIDGE NO. 34-0157L	PRESIDIO VIADUCT - LEFT
FUNCTIONAL SUPERVISOR	DRAWN BY: F. Nguyen 3/09	FIELD INVESTIGATION BY:		DESIGN BRANCH 4	POST MILES 9.02	LOG OF TEST BORINGS 4 OF 16
NAME: M. Momenzadeh	CHECKED BY: R. Price	E. Ortega				

OGS CIVIL LOG OF TEST BORINGS SHEET

ORIGINAL SCALE IN INCHES FOR REDUCED PLANS 0 1 2 3

CU 04242
EA 163731

DISREGARD PRINTS BEARING EARLIER REVISION DATES →

REVISION DATES: 05-04-09 | 05-11-09 | 05-26-09 | 06-01-09

SHEET 102 OF 114

FILE => 34-0157l-z-lotb04.dgn

USERNAME => ttpierce DATE PLOTTED => 21-JUL-2009 TIME PLOTTED => 13:16

FOR PLAN VIEW, SEE
"LOG OF TEST BORINGS 1 OF 16"

DIST	COUNTY	ROUTE	POST MILES TOTAL PROJECT	SHEET No	TOTAL SHEETS
04	SF	101,1	9.2/9.8, 6.8/7.1	453	567

CERTIFIED ENGINEERING GEOLOGIST — 6-02-09

7-20-09
PLANS APPROVAL DATE

REGISTERED GEOLOGIST — Grant Wilcox — No. 2300 — Exp. 4-30-10 — CERTIFIED ENGINEERING GEOLOGIST — STATE OF CALIFORNIA

The State of California or its officers or agents shall not be responsible for the accuracy or completeness of electronic copies of this plan sheet.

This LOTB sheet was prepared in accordance with the Caltrans Soil & Rock Logging, Classification, & Presentation Manual (June 2007) with the exception of Section 2.3

29.8' Lt Sta 91+14.7
"SB" Doyle Line
34-0157SB-B3R

41.0'

4.5 — Poorly graded SAND (SP), very loose, very dark grayish brown, medium grained, (beach sand).

3 blows/1.4' (PA M)

5 blows/1.4'

8 blows/1.4' (PA M)

GWS EL. 20.2' 7-18-08

17 blows/1.4' — -medium dense, (dune sand).

4 blows/1.4' (PA M PP) — Lean CLAY (CL), very soft, dark reddish gray, low plasticity, <15% fine sand.

8 blows/1.4'

SILT (ML), soft, yellowish brown with red stains (iron), non-plastic.

7 blows/1.4' (PA M) — -olive with red stains and slightly cemented.

7 blows/1.4' — SANDY SILT (ML), very soft, light yellowish brown, medium grained, non-plastic.

12 blows/1.4'

Poorly graded SAND (SP), medium dense, olive, medium grained.

10 blows/1.4' (PA M) — -gray, weakly cemented, (marine deposit).

35 blows/1.4' — -dense and moderately cemented.

17 blows/1.4' (PA M) — -medium dense.

39 blows/1.4' — -very dense.

13 blows/1.4' (PA M PP) — Fat CLAY (CH), stiff, dark gray, high plasticity.

9 blows/1.4' (PP)

9 blows/1.4' (PA M) — -organic matter wood.

17 blows/1.4'

14 blows/1.4' (PP) — Lean CLAY with SAND (CL), stiff, dark gray, low plasticity, medium grained sand.

12 blows/1.4' (PP)

19 blows/1.4' (PA M PP) — SILT (ML), medium stiff to stiff, gray, medium plasticity, weak cementation.

10 blows/1.4' (PA M PP) — Lean CLAY (CL), stiff, gray, medium plasticity.

14 blows/1.4'

20 blows/1.4' (PA M PP) — SANDY lean CLAY (CL), stiff, olive, medium plasticity, 15% medium grained sand.

23 blows/1.4'

22 blows/1.4'

4.2 — Poorly graded SAND with CLAY (SP-SC), stiff, olive yellow, medium grained, medium cementation, sub-angular gravel to size 1/4".

Ref/1.4' (UC)
REC=80%
ROD=43%
REC=85%
ROD=30%
SEDIMENTARY ROCK (GRAYWACKE), coarse grained, olive gray, intensely weathered, moderately soft, very weak, intensely fractured.

REC=10%
ROD=0%
SEDIMENTARY ROCK (SANDSTONE), coarse grained, massive, dark gray, slightly weathered, very hard, intensely fractured.

REC=100%
ROD=35%
(UC) SEDIMENTARY ROCK (SHALE), fine grained, black, moderately weathered, moderately hard, medium strong, moderately to intensely fractured.

REC=100%
ROD=38%
SEDIMENTARY ROCK (SANDSTONE), coarse grained, massive, dark gray, slightly weathered, hard, slightly fractured.

6-10-08
Terminated at Elev -119.0'
ERi = 84%

40 30 20 10 0 -10 -20 -30 -40 -50 -60 -70 -80 -90 -100 -110 -120

91+00 92+00 93+00

PROFILE
HOR. 1"=10'
VER. 1"=10'

ENGINEERING SERVICES	GEOTECHNICAL SERVICES		STATE OF CALIFORNIA DEPARTMENT OF TRANSPORTATION	DIVISION OF ENGINEERING SERVICES STRUCTURE DESIGN	BRIDGE NO. 34-0157L	PRESIDIO VIADUCT - LEFT
FUNCTIONAL SUPERVISOR NAME: T. Pokrywka	DRAWN BY: F. Nguyen 3/09	FIELD INVESTIGATION BY: R. Nashed		DESIGN BRANCH 4	POST MILES 9.02	LOG OF TEST BORINGS 5 OF 16
	CHECKED BY: R. Price					

OGS CIVIL LOG OF TEST BORINGS SHEET

ORIGINAL SCALE IN INCHES FOR REDUCED PLANS 0 1 2 3

CU 04242
EA 163731

DISREGARD PRINTS BEARING EARLIER REVISION DATES →

REVISION DATES: 05-04-09 | 05-11-09 | 05-21-09 | 05-26-09 | 06-01-09

SHEET 103 OF 114

FILE => 34-0157l-z-lotb05.dgn

USERNAME => ttpierce DATE PLOTTED => 21-JUL-2009 TIME PLOTTED => 13:16

DIST	COUNTY	ROUTE	POST MILES TOTAL PROJECT	SHEET No	TOTAL SHEETS
04	SF	101,1	9.2/9.8, 6.8/7.1	454	567

Matthew Gaffney 6-02-09
PROFESSIONAL GEOLOGIST

7-20-09
PLANS APPROVAL DATE

PROFESSIONAL GEOLOGIST
Matthew Gaffney
No. 8045
Exp. 6-30-10
STATE OF CALIFORNIA

The State of California or its officers or agents shall not be responsible for the accuracy or completeness of electronic copies of this plan sheet.

This LOTB sheet was prepared in accordance with the Caltrans Soil & Rock Logging, Classification, & Presentation Manual (June 2007) with the exception of Section 2.3

FOR PLAN VIEW, SEE
"LOG OF TEST BORINGS 1 OF 16"

42.0' Lt Sta 91+89.0
"SB" Doyle Line
34-0157SB-B3A

4-01-09
Terminated at Elev -123.4'
ERi = 84%
Ground water was not measured at time of drilling.

PROFILE
HOR. 1"=10'
VER. 1"=10'

ENGINEERING SERVICES		GEOTECHNICAL SERVICES	STATE OF CALIFORNIA DEPARTMENT OF TRANSPORTATION	DIVISION OF ENGINEERING SERVICES STRUCTURE DESIGN	BRIDGE NO. 34-0157L	PRESIDIO VIADUCT - LEFT
FUNCTIONAL SUPERVISOR NAME: G. Wilcox	DRAWN BY: F. Nguyen 4/09 CHECKED BY: R. Price	FIELD INVESTIGATION BY: M. Gaffney		DESIGN BRANCH 4	POST MILES 9.02	LOG OF TEST BORINGS 6 OF 16

OGS CIVIL LOG OF TEST BORINGS SHEET

ORIGINAL SCALE IN INCHES FOR REDUCED PLANS 0 1 2 3

CU 04242
EA 163731

DISREGARD PRINTS BEARING EARLIER REVISION DATES →

REVISION DATES: 05-04-09 | 05-11-09 | 05-26-09 | 06-01-09

SHEET 104 OF 114

FILE => 34-0157I-z-lotb06.dgn

USERNAME => ttpierce DATE PLOTTED => 21-JUL-2009 TIME PLOTTED => 13:16

FOR PLAN VIEW, SEE
"LOG OF TEST BORINGS 1 OF 16"

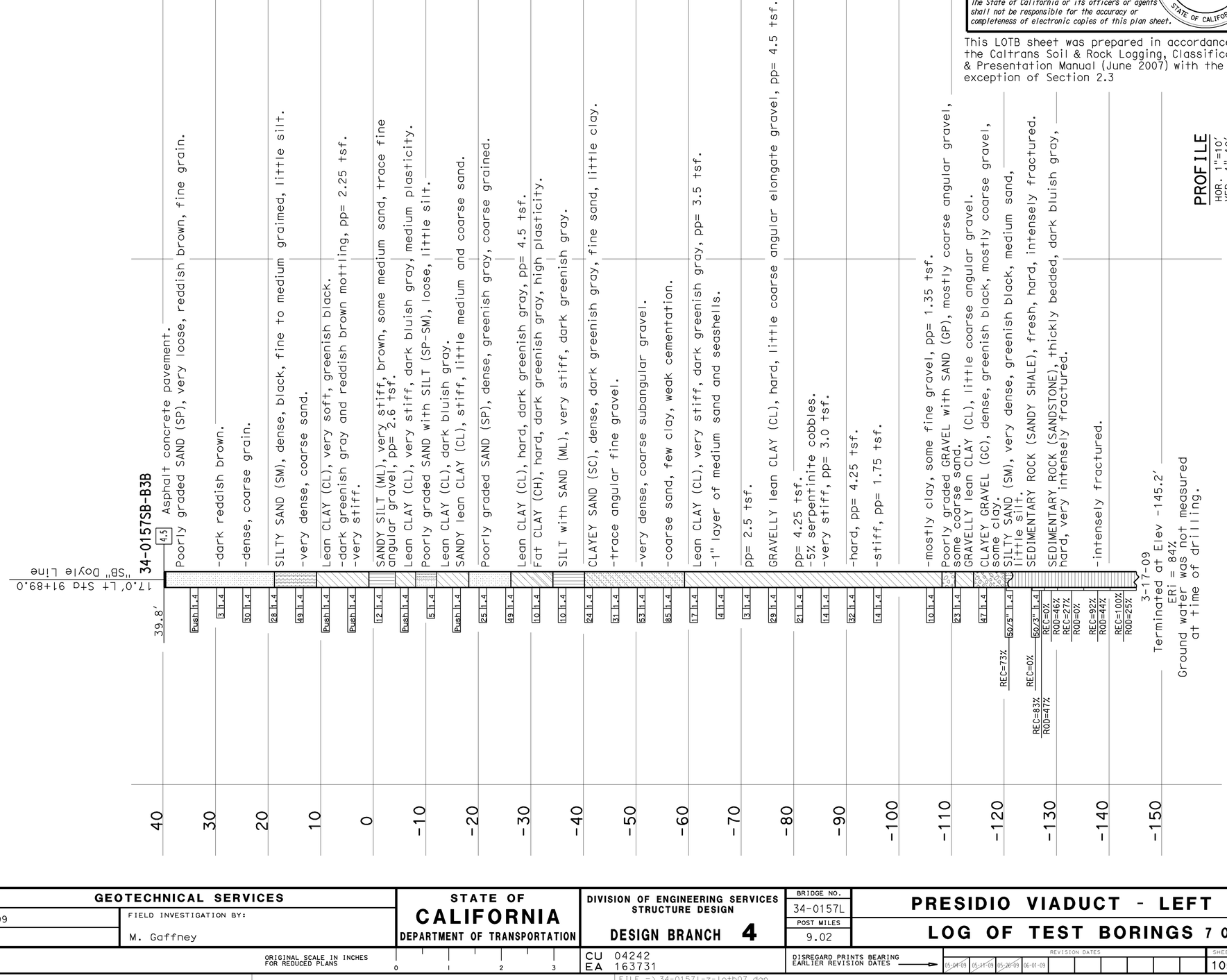

PROFILE
HOR. 1"=10'
VER. 1"=10'

DIST	COUNTY	ROUTE	POST MILES TOTAL PROJECT	SHEET No	TOTAL SHEETS
04	SF	101,1	9.2/9.8, 6.8/7.1	455	567

Matthew Gaffney 6-02-09
PROFESSIONAL GEOLOGIST

Matthew Gaffney
No. 8045
Exp. 6-30-10
PROFESSIONAL GEOLOGIST
STATE OF CALIFORNIA

7-20-09
PLANS APPROVAL DATE

The State of California or its officers or agents shall not be responsible for the accuracy or completeness of electronic copies of this plan sheet.

This LOTB sheet was prepared in accordance with the Caltrans Soil & Rock Logging, Classification, & Presentation Manual (June 2007) with the exception of Section 2.3

ENGINEERING SERVICES		GEOTECHNICAL SERVICES	STATE OF CALIFORNIA DEPARTMENT OF TRANSPORTATION	DIVISION OF ENGINEERING SERVICES STRUCTURE DESIGN	BRIDGE NO. 34-0157L	PRESIDIO VIADUCT - LEFT
FUNCTIONAL SUPERVISOR	DRAWN BY: F. Nguyen 4/09	FIELD INVESTIGATION BY:		DESIGN BRANCH 4	POST MILES 9.02	LOG OF TEST BORINGS 7 OF 16
NAME: M. Momenzadeh	CHECKED BY: R. Price	M. Gaffney				

OGS CIVIL LOG OF TEST BORINGS SHEET

ORIGINAL SCALE IN INCHES FOR REDUCED PLANS 0 1 2 3

CU 04242
EA 163731

DISREGARD PRINTS BEARING EARLIER REVISION DATES →

REVISION DATES: 05-04-09 | 05-11-09 | 05-26-09 | 06-01-09

SHEET 105 OF 114

FILE => 34-0157I-z-lotb07.dgn

USERNAME => tripierce DATE PLOTTED => 21-JUL-2009 TIME PLOTTED => 13:16

FOR PLAN VIEW, SEE
"LOG OF TEST BORINGS 1 OF 16"

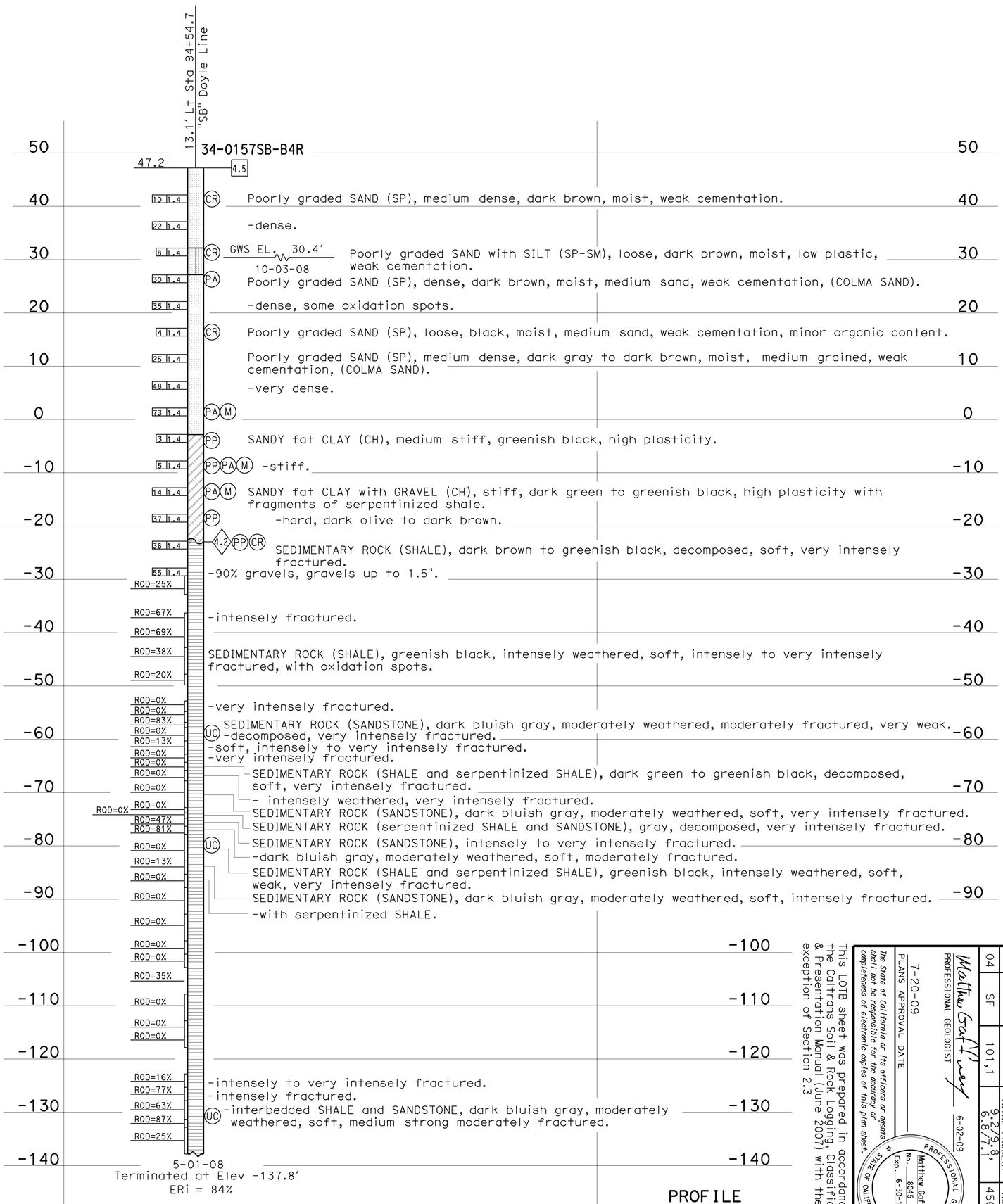

PROFILE
HOR. 1"=10'
VER. 1"=10'

This LOTB sheet was prepared in accordance with the Caltrans Soil & Rock Logging, Classification, & Presentation Manual (June 2007) with the exception of Section 2.3

Matthew Graffiney
PROFESSIONAL GEOLOGIST
6-02-09

PLANS APPROVAL DATE 7-20-09

The state or California or its officers or agents shall not be responsible for the accuracy or completeness of electronic copies of this plan sheet.

PROFESSIONAL GEOLOGIST
Matthew Graffiney
No. 8045
Exp. 6-30-10
STATE OF CALIFORNIA

DIST	COUNTY	ROUTE	POST MILES TOTAL PROJECT	SHEET NO	TOTAL SHEETS
04	SF	101,1	9.2/9.8, 6.8/7.1	456	567

ENGINEERING SERVICES
GEOTECHNICAL SERVICES
FUNCTIONAL SUPERVISOR
NAME: M. Momenzadeh
DRAWN BY: F. Nguyen 3/09
CHECKED BY: R. Price
FIELD INVESTIGATION BY: E. Ortega
OSS CIVIL LOG OF TEST BORINGS SHEET
ORIGINAL SCALE IN INCHES FOR REDUCED PLANS
0 1 2 3
STATE OF CALIFORNIA
DEPARTMENT OF TRANSPORTATION
DIVISION OF ENGINEERING SERVICES
STRUCTURE DESIGN
DESIGN BRANCH 4
CU 04242
EA 163731
FILE => 34-0157-z-lotb06.dgn
BRIDGE NO. 34-0157L
POST MILES 9.02
DISREGARD PRINTS BEARING EARLIER REVISION DATES
REVISION DATES
PRESIDIO VIADUCT - LEFT
LOG OF TEST BORINGS 8 OF 16
SHEET 106
OF 114

USERNAME => trpierce DATE PLOTTED => 21-JUL-2009 TIME PLOTTED => 13:17

DIST	COUNTY	ROUTE	POST MILES TOTAL PROJECT	SHEET No	TOTAL SHEETS
04	SF	101,1	9.2/9.8, 6.8/7.1	457	567

REGISTERED CIVIL ENGINEER 6-02-09

7-20-09
PLANS APPROVAL DATE

REGISTERED PROFESSIONAL ENGINEER — Eduardo Ortega — No. C41012 — Exp. 3-31-11 — CIVIL — STATE OF CALIFORNIA

The State of California or its officers or agents shall not be responsible for the accuracy or completeness of electronic copies of this plan sheet.

This LOTB sheet was prepared in accordance with the Caltrans Soil & Rock Logging, Classification, & Presentation Manual (June 2007) with the exception of Section 2.3

FOR PLAN VIEW, SEE
"LOG OF TEST BORINGS 1 OF 16"

63.0' Lt Sta 94+55.2
"SB" Doyle Line
34-0157SB-B4L

52.0'

4.5		
9 ft.4	CR	Poorly graded SAND (SP), medium dense, dark brown, moist, medium sand, weak cementation.
10 ft.4		
9 ft.4	CR	Poorly graded SAND with SILT (SP-SM), medium dense, dark brown, moist, low plasticiity, medium sand, weak cementation.
34 ft.4		Poorly graded SAND (SP), dense, dark brown, moist, medium sand, weak cementation,and some oxidation spots, (COLMA SAND).
44 ft.4	PA M	-very dense.
20 ft.4		-medium dense, dark gray.
40 ft.4	PA M	-very dense, dark brown.
42 ft.4		
36 ft.4	PA M	
61 ft.4	CR	
6 ft.4	PP PA M	Fat CLAY (CH), stiff, dark gray, high plasticity. qu=2.0 tsf.
13 ft.4	PP	-very stiff, qu=3.5 tsf.
11 ft.4	PP PA M	-stiff, qu=1.25 to 1.75 tsf.
2 ft.4	PP CR	-medium stiff, qu=1 tsf.
2 ft.4	PP PA M	-fat clay over decomposed shale, greenish black, qu=0.5 tsf.
>100 ft.4		-decomposed shale, greenish black.
4.2		SEDIMENTARY ROCK (SHALE), greenish black, very intensely weathered to decomposed, soft, intensely to very intensely fractured.
RQD=8%		
RQD=28%		-with serpentinized shale.
RQD=38%		-intensely to moderately fractured.
RQD=36%	UC	-weak, intensely to very intensely fractured.
RQD=26%		
RQD=8%		SEDIMENTARY ROCK (SHALE with serpentinized SHALE and SANDSTONE), greenish black, moderately weathered, soft, very intensely fractured.
RQD=9%		SEDIMENTARY ROCK (SANDSTONE), dark bluish gray, moderately weathered, soft, intensely to very intensely fractured.
RQD=0%		-very intensely fractured.
RQD=73%	UC	-medium strong, moderately fractured.
RQD=78%		SEDIMENTARY ROCK (SANDSTONE), dark bluish gray, moderately weathered, soft, moderately fractured.
RQD=0%		-very intensely fractured.
RQD=43%		-intensely to very intensely fractured and some serpentinized shale.
RQD=69%		SANDSTONE with serpentinized SHALE, greenish black to dark bluish gray, moderately weathered, soft, moderately fractured, calcite spots.
RQD=46%		SEDIMENTARY ROCK (SANDSTONE), dark bluish gray, moderately weathered, soft, intensely to very intensely fractured, with calcite spots.
RQD=33%		-very intensely fractured.
RQD=26%		
RQD=88%		-with calcite spots.

4-17-08
Terminated at El -113.0'
ERi = 84%
Ground water was not measured.

50 40 30 20 10 0 -10 -20 -30 -40 -50 -60 -70 -80 -90 -100 -110 -120

94+00 95+00 96+00

PROFILE
HOR. 1"=10'
VER. 1"=10'

ENGINEERING SERVICES	GEOTECHNICAL SERVICES	STATE OF CALIFORNIA DEPARTMENT OF TRANSPORTATION	DIVISION OF ENGINEERING SERVICES STRUCTURE DESIGN	BRIDGE NO.	PRESIDIO VIADUCT - LEFT
FUNCTIONAL SUPERVISOR	DRAWN BY: F. Nguyen 3/09		DESIGN BRANCH 4	34-0157L	LOG OF TEST BORINGS 9 OF 16
NAME: M. Momenzadeh	CHECKED BY: R. Price	FIELD INVESTIGATION BY: E. Ortega		POST MILES 9.02	

OGS CIVIL LOG OF TEST BORINGS SHEET

ORIGINAL SCALE IN INCHES FOR REDUCED PLANS 0 1 2 3

CU 04242
EA 163731

DISREGARD PRINTS BEARING EARLIER REVISION DATES →

REVISION DATES: 05-04-09 | 05-11-09 | 05-21-09 | 05-26-09 | 06-01-09

SHEET 107 OF 114

FILE => 34-0157I-z-lotb09.dgn

USERNAME => ttpierce DATE PLOTTED => 21-JUL-2009 TIME PLOTTED => 13:17

FOR PLAN VIEW, SEE
"LOG OF TEST BORINGS 1 OF 16"

DIST	COUNTY	ROUTE	POST MILES TOTAL PROJECT	SHEET No	TOTAL SHEETS
04	SF	101,1	9.2/9.8, 6.8/7.1	458	567

Matthew Gaffney 6-02-09
PROFESSIONAL GEOLOGIST

7-20-09
PLANS APPROVAL DATE

PROFESSIONAL GEOLOGIST
Matthew Gaffney
No. 8045
Exp. 6-30-10
STATE OF CALIFORNIA

The State of California or its officers or agents shall not be responsible for the accuracy or completeness of electronic copies of this plan sheet.

This LOTB sheet was prepared in accordance with the Caltrans Soil & Rock Logging, Classification, & Presentation Manual (June 2007) with the exception of Section 2.3

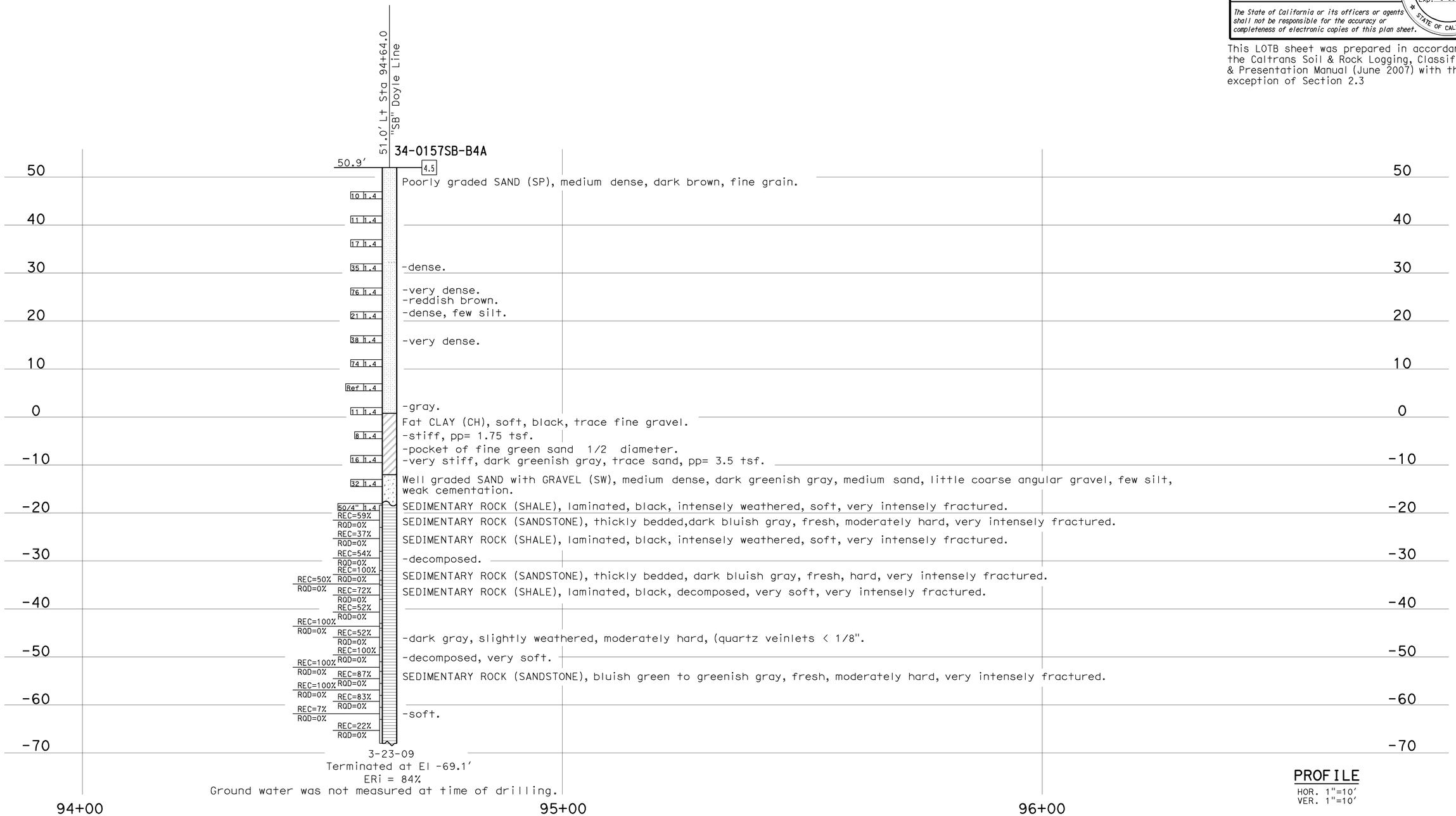

3-23-09
Terminated at El -69.1'
ERi = 84%
Ground water was not measured at time of drilling.

PROFILE
HOR. 1"=10'
VER. 1"=10'

ENGINEERING SERVICES		GEOTECHNICAL SERVICES		STATE OF CALIFORNIA DEPARTMENT OF TRANSPORTATION	DIVISION OF ENGINEERING SERVICES STRUCTURE DESIGN	BRIDGE NO. 34-0157L	PRESIDIO VIADUCT - LEFT
FUNCTIONAL SUPERVISOR	DRAWN BY: F. Nguyen 4/09	FIELD INVESTIGATION BY:			DESIGN BRANCH 4	POST MILES 9.02	LOG OF TEST BORINGS 10 OF 16
NAME: G. Wilcox	CHECKED BY: R. Price	M. Gaffney					

OGS CIVIL LOG OF TEST BORINGS SHEET

ORIGINAL SCALE IN INCHES FOR REDUCED PLANS 0 1 2 3

CU 04242
EA 163731

DISREGARD PRINTS BEARING EARLIER REVISION DATES →

REVISION DATES: 05-04-09 | 05-11-09 | 05-26-09 | 06-01-09

SHEET 108 OF 114

FILE => 34-0157I-z-lotb10.dgn

USERNAME = trpierce DATE PLOTTED => 21-JUL-2009 TIME PLOTTED => 13:17

DIST	COUNTY	ROUTE	POST MILES TOTAL PROJECT	SHEET No	TOTAL SHEETS
04	SF	101,1	9.2/9.8, 6.8/7.1	459	567

CERTIFIED ENGINEERING GEOLOGIST 6-02-09

7-20-09
PLANS APPROVAL DATE

The State of California or its officers or agents shall not be responsible for the accuracy or completeness of electronic copies of this plan sheet.

REGISTERED GEOLOGIST
Grant Wilcox
No. 2300
Exp. 4-30-10
CERTIFIED ENGINEERING GEOLOGIST
STATE OF CALIFORNIA

This LOTB sheet was prepared in accordance with the Caltrans Soil & Rock Logging, Classification, & Presentation Manual (June 2007) with the exception of Section 2.3

FOR PLAN VIEW, SEE
"LOG OF TEST BORINGS 1 OF 16"

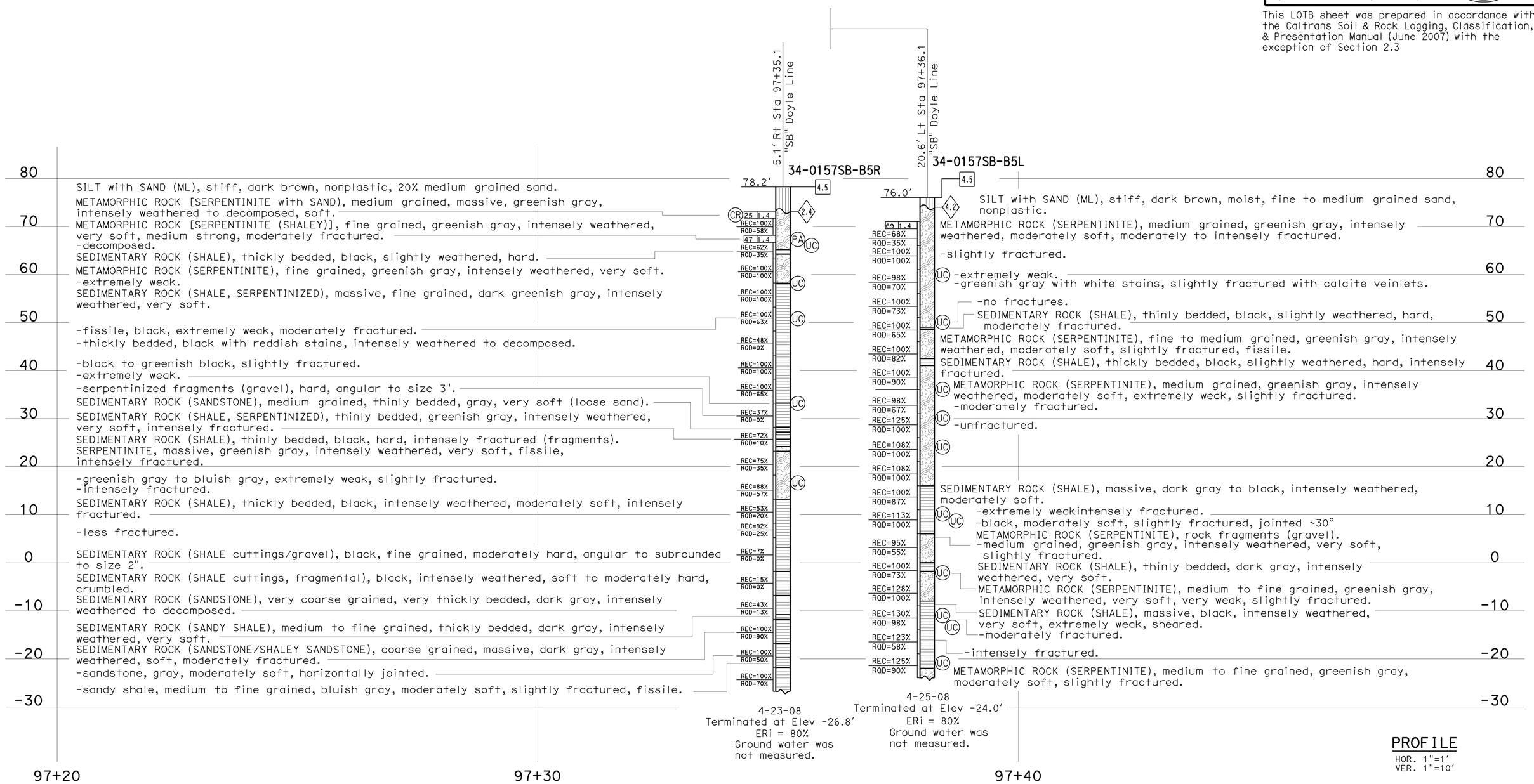

SILT with SAND (ML), stiff, dark brown, nonplastic, 20% medium grained sand.
METAMORPHIC ROCK [SERPENTINITE with SAND), medium grained, massive, greenish gray, intensely weathered to decomposed, soft.
METAMORPHIC ROCK [SERPENTINITE (SHALEY)], fine grained, greenish gray, intensely weathered, very soft, medium strong, moderately fractured.
-decomposed.
SEDIMENTARY ROCK (SHALE), thickly bedded, black, slightly weathered, hard.
METAMORPHIC ROCK (SERPENTINITE), fine grained, greenish gray, intensely weathered, very soft.
-extremely weak.
SEDIMENTARY ROCK (SHALE, SERPENTINIZED), massive, fine grained, dark greenish gray, intensely weathered, very soft.
-fissile, black, extremely weak, moderately fractured.
-thickly bedded, black with reddish stains, intensely weathered to decomposed.
-black to greenish black, slightly fractured.
-extremely weak.
-serpentinized fragments (gravel), hard, angular to size 3".
SEDIMENTARY ROCK (SANDSTONE), medium grained, thinly bedded, gray, very soft (loose sand).
SEDIMENTARY ROCK (SHALE, SERPENTINIZED), thinly bedded, greenish gray, intensely weathered, very soft, intensely fractured.
SEDIMENTARY ROCK (SHALE), thinly bedded, black, hard, intensely fractured (fragments).
SERPENTINITE, massive, greenish gray, intensely weathered, very soft, fissile, intensely fractured.
-greenish gray to bluish gray, extremely weak, slightly fractured.
-intensely fractured.
SEDIMENTARY ROCK (SHALE), thickly bedded, black, intensely weathered, moderately soft, intensely fractured.
-less fractured.
SEDIMENTARY ROCK (SHALE cuttings/gravel), black, fine grained, moderately hard, angular to subrounded to size 2".
SEDIMENTARY ROCK (SHALE cuttings, fragmental), black, intensely weathered, soft to moderately hard, crumbled.
SEDIMENTARY ROCK (SANDSTONE), very coarse grained, very thickly bedded, dark gray, intensely weathered to decomposed.
SEDIMENTARY ROCK (SANDY SHALE), medium to fine grained, thickly bedded, dark gray, intensely weathered, very soft.
SEDIMENTARY ROCK (SANDSTONE/SHALEY SANDSTONE), coarse grained, massive, dark gray, intensely weathered, soft, moderately fractured.
-sandstone, gray, moderately soft, horizontally jointed.
-sandy shale, medium to fine grained, bluish gray, moderately soft, slightly fractured, fissile.

4-23-08
Terminated at Elev -26.8'
ERi = 80%
Ground water was not measured.

SILT with SAND (ML), stiff, dark brown, moist, fine to medium grained sand, nonplastic.
METAMORPHIC ROCK (SERPENTINITE), medium grained, greenish gray, intensely weathered, moderately soft, moderately to intensely fractured.
-slightly fractured.
-extremely weak.
-greenish gray with white stains, slightly fractured with calcite veinlets.
-no fractures.
SEDIMENTARY ROCK (SHALE), thinly bedded, black, slightly weathered, hard, moderately fractured.
METAMORPHIC ROCK (SERPENTINITE), fine to medium grained, greenish gray, intensely weathered, moderately soft, slightly fractured, fissile.
SEDIMENTARY ROCK (SHALE), thickly bedded, black, slightly weathered, hard, intensely fractured.
METAMORPHIC ROCK (SERPENTINITE), medium grained, greenish gray, intensely weathered, moderately soft, extremely weak, slightly fractured.
-moderately fractured.
-unfractured.
SEDIMENTARY ROCK (SHALE), massive, dark gray to black, intensely weathered, moderately soft.
-extremely weakintensely fractured.
-black, moderately soft, slightly fractured, jointed ~30°
METAMORPHIC ROCK (SERPENTINITE), rock fragments (gravel).
-medium grained, greenish gray, intensely weathered, very soft, slightly fractured.
SEDIMENTARY ROCK (SHALE), thinly bedded, dark gray, intensely weathered, very soft.
METAMORPHIC ROCK (SERPENTINITE), medium to fine grained, greenish gray, intensely weathered, very soft, very weak, slightly fractured.
SEDIMENTARY ROCK (SHALE), massive, black, intensely weathered, very soft, extremely weak, sheared.
-moderately fractured.
-intensely fractured.
METAMORPHIC ROCK (SERPENTINITE), medium to fine grained, greenish gray, moderately soft, slightly fractured.

4-25-08
Terminated at Elev -24.0'
ERi = 80%
Ground water was not measured.

PROFILE
HOR. 1"=1'
VER. 1"=10'

ENGINEERING SERVICES		GEOTECHNICAL SERVICES	STATE OF CALIFORNIA DEPARTMENT OF TRANSPORTATION	DIVISION OF ENGINEERING SERVICES STRUCTURE DESIGN	BRIDGE NO. 34-0157L	PRESIDIO VIADUCT - LEFT
FUNCTIONAL SUPERVISOR	DRAWN BY: F. Nguyen 3/09	FIELD INVESTIGATION BY:		DESIGN BRANCH 4	POST MILES 9.02	LOG OF TEST BORINGS 11 OF 16
NAME: T. Pokrywka	CHECKED BY: R. Price	R. Nashed		CU 04242 EA 163731		

OGS CIVIL LOG OF TEST BORINGS SHEET

ORIGINAL SCALE IN INCHES FOR REDUCED PLANS 0 1 2 3

DISREGARD PRINTS BEARING EARLIER REVISION DATES →

REVISION DATES										SHEET	OF
05-04-09	05-11-09	05-21-09	05-26-09	06-01-09						109	114

FILE => 34-0157l-z-lotb11.dgn

USERNAME => tripierce DATE PLOTTED => 21-JUL-2009 TIME PLOTTED => 13:17

DIST	COUNTY	ROUTE	POST MILES TOTAL PROJECT	SHEET No	TOTAL SHEETS
04	SF	101,1	9.2/9.8, 6.8/7.1	460	567

Matthew Gaffney 6-02-09
PROFESSIONAL GEOLOGIST

PROFESSIONAL GEOLOGIST
Matthew Gaffney
No. 8045
Exp. 6-30-10
STATE OF CALIFORNIA

7-20-09
PLANS APPROVAL DATE

The State of California or its officers or agents shall not be responsible for the accuracy or completeness of electronic copies of this plan sheet.

This LOTB sheet was prepared in accordance with the Caltrans Soil & Rock Logging, Classification, & Presentation Manual (June 2007) with the exception of Section 2.3

FOR PLAN VIEW, SEE
"LOG OF TEST BORINGS 1 OF 16"

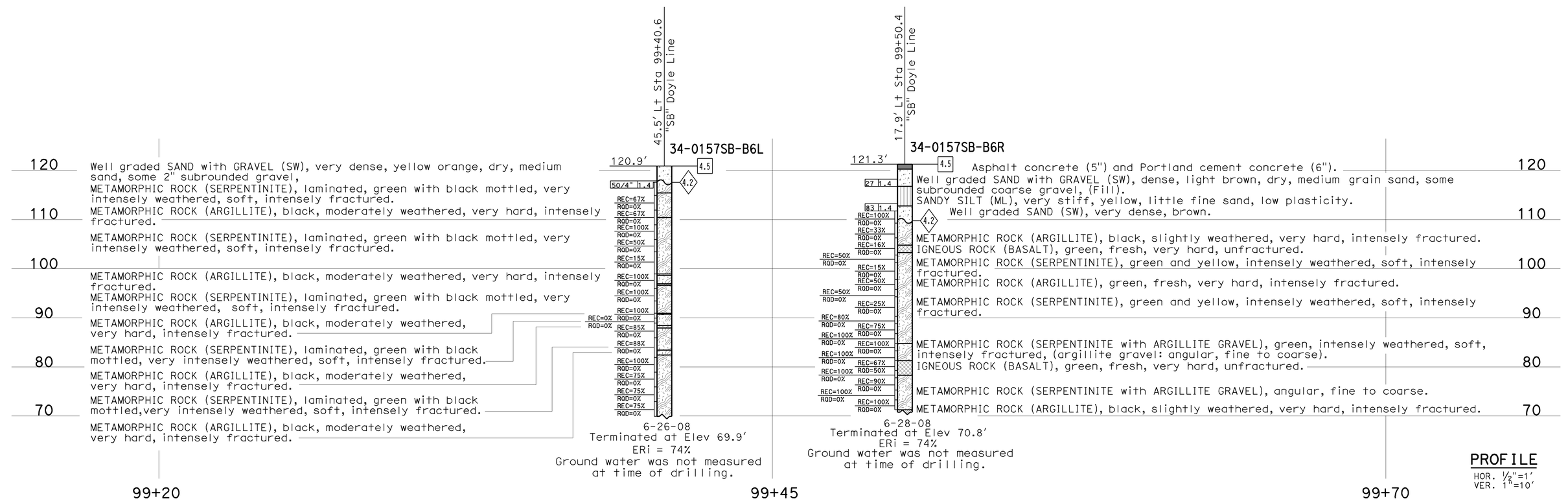

PROFILE
HOR. 1/2"=1'
VER. 1"=10'

ENGINEERING SERVICES	GEOTECHNICAL SERVICES		STATE OF CALIFORNIA DEPARTMENT OF TRANSPORTATION	DIVISION OF ENGINEERING SERVICES STRUCTURE DESIGN	BRIDGE NO.	PRESIDIO VIADUCT - LEFT
FUNCTIONAL SUPERVISOR	DRAWN BY: F. Nguyen 3/09	FIELD INVESTIGATION BY:		DESIGN BRANCH 4	34-0157L	LOG OF TEST BORINGS 12 OF 16
NAME: G. Wilcox	CHECKED BY: R. Price	M. Gaffney			POST MILES 9.02	

OGS CIVIL LOG OF TEST BORINGS SHEET

ORIGINAL SCALE IN INCHES FOR REDUCED PLANS 0 1 2 3

CU 04242
EA 163731

DISREGARD PRINTS BEARING EARLIER REVISION DATES →

REVISION DATES									SHEET	OF
05-04-09	05-11-09	05-26-09	06-01-09						110	114

FILE => 34-0157l-z-lotb12.dgn

USERNAME = ?rpierce DATE PLOTTED => 21-JUL-2009 TIME PLOTTED => 13:17

DIST	COUNTY	ROUTE	POST MILES TOTAL PROJECT	SHEET No	TOTAL SHEETS
04	SF	101,1	9.2/9.8, 6.8/7.1	461	567

Matthew Gaffney 6-02-09
PROFESSIONAL GEOLOGIST

PROFESSIONAL GEOLOGIST
Matthew Gaffney
No. 8045
Exp. 6-30-10
STATE OF CALIFORNIA

7-20-09
PLANS APPROVAL DATE

The State of California or its officers or agents shall not be responsible for the accuracy or completeness of electronic copies of this plan sheet.

This LOTB sheet was prepared in accordance with the Caltrans Soil & Rock Logging, Classification, & Presentation Manual (June 2007) with the exception of Section 2.3

FOR PLAN VIEW, SEE
"LOG OF TEST BORINGS 1 OF 16"

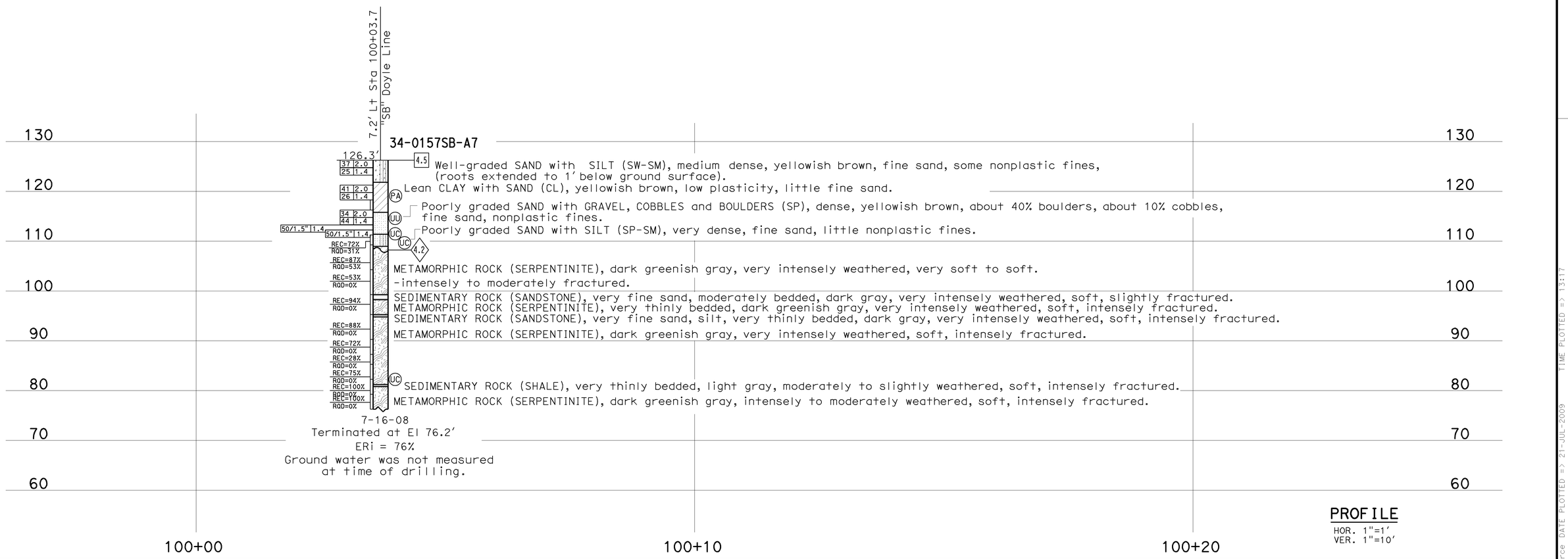

PROFILE
HOR. 1"=1'
VER. 1"=10'

ENGINEERING SERVICES	GEOTECHNICAL SERVICES		STATE OF CALIFORNIA DEPARTMENT OF TRANSPORTATION	DIVISION OF ENGINEERING SERVICES STRUCTURE DESIGN	BRIDGE NO.	PRESIDIO VIADUCT - LEFT
FUNCTIONAL SUPERVISOR	DRAWN BY: F. Nguyen 3/09	FIELD INVESTIGATION BY:		DESIGN BRANCH 4	34-0157L	LOG OF TEST BORINGS 13 OF 16
NAME: G. Wilcox	CHECKED BY: R. Price	M. Gaffney			POST MILES 9.02	
OGS CIVIL LOG OF TEST BORINGS SHEET	ORIGINAL SCALE IN INCHES FOR REDUCED PLANS 0 1 2 3		CU 04242 EA 163731	DISREGARD PRINTS BEARING EARLIER REVISION DATES →	REVISION DATES: 05-04-09, 05-11-09, 05-18-09, 05-26-09, 06-01-09	SHEET 111 OF 114

FILE => 34-0157l-z-lotb13.dgn

USERNAME = frpierce DATE PLOTTED => 21-JUL-2009 TIME PLOTTED => 13:17

REFERENCE: CALTRANS SOIL & ROCK LOGGING, CLASSIFICATION, AND PRESENTATION MANUAL (JUNE 2007)

DIST	COUNTY	ROUTE	POST MILES TOTAL PROJECT	SHEET No	TOTAL SHEETS
04	SF	101,1	9.2/9.8, 6.8/7.1	462	567

Matthew Gaffney 6-02-09
PROFESSIONAL GEOLOGIST

7-20-09
PLANS APPROVAL DATE

PROFESSIONAL GEOLOGIST
Matthew Gaffney
No. 8045
Exp. 6-30-10
STATE OF CALIFORNIA

The State of California or its officers or agents shall not be responsible for the accuracy or completeness of electronic copies of this plan sheet.

CEMENTATION

Description	Criteria
Weak	Crumbles or breaks with handling or little finger pressure.
Moderate	Crumbles or breaks with considerable finger pressure.
Strong	Will not crumble or break with finger pressure.

BOREHOLE IDENTIFICATION

Symbol	Hole Type	Description
Size	A	Auger Boring
Size	R P	Rotary drilled boring Rotary percussion boring (air)
Size	R	Rotary drilled diamond core
Size	HD HA	Hand driven (1-inch soil tube) Hand Auger
●	D	Dynamic Cone Penetration Boring
▲	CPT	Cone Penetration Test (ASTM D 5778-95)
⬚	O	Other

Note: Size in inches.

CONSISTENCY OF COHESIVE SOILS

Description	Unconfined Compressive Strength (tsf)	Pocket Penetrometer Measurement (tsf)	Torvane Measurement (tsf)	Field Approximation
Very Soft	< 0.25	< 0.25	< 0.12	Easily penetrated several inches by fist
Soft	0.25 to 0.50	0.25 to 0.50	0.12 to 0.25	Easily penetrated several inches by thumb
Medium Stiff	0.50 to 1.0	0.50 to 1.0	0.25 to 0.50	Penetrated several inches by thumb with moderate effort
Stiff	1 to 2	1 to 2	0.50 to 1.0	Readily indented by thumb but penetrated only with great effort
Very Stiff	2 to 4	2 to 4	1.0 to 2.0	Readily indented by thumbnail
Hard	> 4.0	> 4.0	> 2.0	Indented by thumbnail with difficulty

PLASTICITY OF FINE-GRAINED SOILS

Description	Criteria
Nonplastic	A 1/8-inch thread cannot be rolled at any water content.
Low	The thread can barely be rolled and the lump cannot be formed when drier than the plastic limit.
Medium	The thread is easy to roll and not much time is required to reach the plastic limit. The thread cannot be rerolled after reaching the plastic limit. The lump crumbles when drier than the plastic limit.
High	It takes considerable time rolling and kneading to reach the plastic limit. The thread can be rerolled several times after reaching the plastic limit. The lump can be formed without crumbling when drier than the plastic limit.

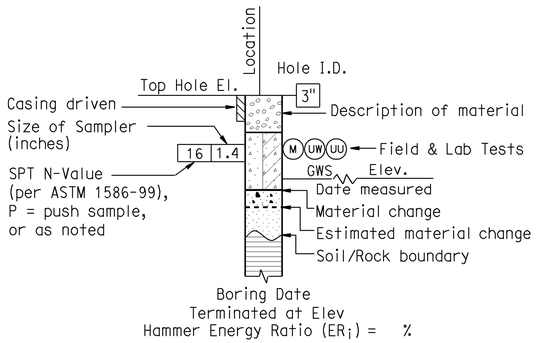

ROTARY BORING

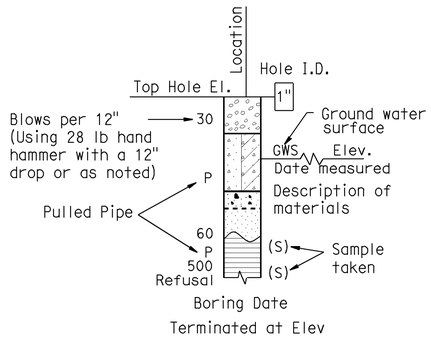

HAND BORING

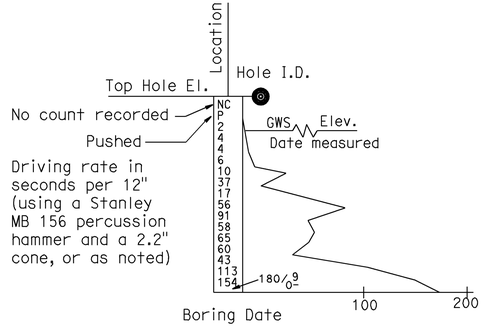

DYNAMIC CONE PENETRATION BORING

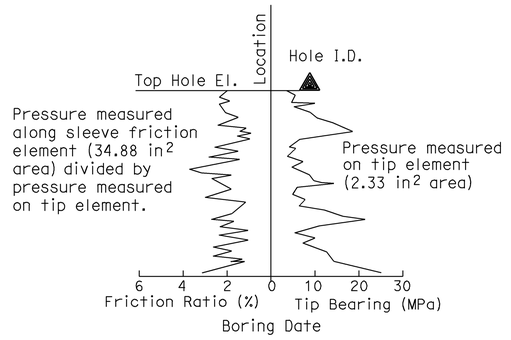

CONE PENETRATION TEST (CPT) SOUNDING

ENGINEERING SERVICES	GEOTECHNICAL SERVICES	STATE OF CALIFORNIA DEPARTMENT OF TRANSPORTATION	DIVISION OF ENGINEERING SERVICES STRUCTURE DESIGN	BRIDGE NO.	PRESIDIO VIADUCT - LEFT
	PREPARED BY: F. Nguyen 3/09		DESIGN BRANCH 4	34-0157L POST MILE 9.02	LOG OF TEST BORINGS 14 OF 16

GS LOTB SOIL LEGEND

ORIGINAL SCALE IN INCHES FOR REDUCED PLANS 0 1 2 3

CU 04242
EA 163731

DISREGARD PRINTS BEARING EARLIER REVISION DATES →

REVISION DATES

SHEET 112 OF 114

FILE => 34-0157l-z-lotb14.dgn

USERNAME => ttpierce DATE PLOTTED => 21-JUL-2009 TIME PLOTTED => 13:17

REFERENCE: CALTRANS SOIL & ROCK LOGGING, CLASSIFICATION, AND PRESENTATION MANUAL (JUNE 2007)

GROUP SYMBOLS AND NAMES

Graphic/Symbol	Group Names	Graphic/Symbol	Group Names
GW	Well-graded GRAVEL Well-graded GRAVEL with SAND	CL	Lean CLAY Lean CLAY with SAND Lean CLAY with GRAVEL SANDY lean CLAY SANDY lean CLAY with GRAVEL GRAVELLY lean CLAY GRAVELLY lean CLAY with SAND
GP	Poorly graded GRAVEL Poorly graded GRAVEL with SAND		
GW-GM	Well-graded GRAVEL with SILT Well-graded GRAVEL with SILT and SAND	CL-ML	SILTY CLAY SILTY CLAY with SAND SILTY CLAY with GRAVEL SANDY SILTY CLAY SANDY SILTY CLAY with GRAVEL GRAVELLY SILTY CLAY GRAVELLY SILTY CLAY with SAND
GW-GC	Well-graded GRAVEL with CLAY (or SILTY CLAY) Well-graded GRAVEL with CLAY and SAND (or SILTY CLAY and SAND)		
GP-GM	Poorly graded GRAVEL with SILT Poorly graded GRAVEL with SILT and SAND	ML	SILT SILT with SAND SILT with GRAVEL SANDY SILT SANDY SILT with GRAVEL GRAVELLY SILT GRAVELLY SILT with SAND
GP-GC	Poorly graded GRAVEL with CLAY (or SILTY CLAY) Poorly graded GRAVEL with CLAY and SAND (or SILTY CLAY and SAND)		
GM	SILTY GRAVEL SILTY GRAVEL with SAND	OL	ORGANIC lean CLAY ORGANIC lean CLAY with SAND ORGANIC lean CLAY with GRAVEL SANDY ORGANIC lean CLAY SANDY ORGANIC lean CLAY with GRAVEL GRAVELLY ORGANIC lean CLAY GRAVELLY ORGANIC lean CLAY with SAND
GC	CLAYEY GRAVEL CLAYEY GRAVEL with SAND		
GC-GM	SILTY, CLAYEY GRAVEL SILTY, CLAYEY GRAVEL with SAND	OL	ORGANIC SILT ORGANIC SILT with SAND ORGANIC SILT with GRAVEL SANDY ORGANIC SILT SANDY ORGANIC SILT with GRAVEL GRAVELLY ORGANIC SILT GRAVELLY ORGANIC SILT with SAND
SW	Well-graded SAND Well-graded SAND with GRAVEL		
SP	Poorly graded SAND Poorly graded SAND with GRAVEL	CH	Fat CLAY Fat CLAY with SAND Fat CLAY with GRAVEL SANDY fat CLAY SANDY fat CLAY with GRAVEL GRAVELLY fat CLAY GRAVELLY fat CLAY with SAND
SW-SM	Well-graded SAND with SILT Well-graded SAND with SILT and GRAVEL		
SW-SC	Well-graded SAND with CLAY (or SILTY CLAY) Well-graded SAND with CLAY and GRAVEL (or SILTY CLAY and GRAVEL)	MH	Elastic SILT Elastic SILT with SAND Elastic SILT with GRAVEL SANDY elastic SILT SANDY elastic SILT with GRAVEL GRAVELLY elastic SILT GRAVELLY elastic SILT with SAND
SP-SM	Poorly graded SAND with SILT Poorly graded SAND with SILT and GRAVEL		
SP-SC	Poorly graded SAND with CLAY (or SILTY CLAY) Poorly graded SAND with CLAY and GRAVEL (or SILTY CLAY and GRAVEL)	OH	ORGANIC fat CLAY ORGANIC fat CLAY with SAND ORGANIC fat CLAY with GRAVEL SANDY ORGANIC fat CLAY SANDY ORGANIC fat CLAY with GRAVEL GRAVELLY ORGANIC fat CLAY GRAVELLY ORGANIC fat CLAY with SAND
SM	SILTY SAND SILTY SAND with GRAVEL		
SC	CLAYEY SAND CLAYEY SAND with GRAVEL	OH	ORGANIC elastic SILT ORGANIC elastic SILT with SAND ORGANIC elastic SILT with GRAVEL SANDY ORGANIC elastic SILT SANDY ORGANIC elastic SILT with GRAVEL GRAVELLY ORGANIC elastic SILT GRAVELLY ORGANIC elastic SILT with SAND
SC-SM	SILTY, CLAYEY SAND SILTY, CLAYEY SAND with GRAVEL		
PT	PEAT	OL/OH	ORGANIC SOIL ORGANIC SOIL with SAND ORGANIC SOIL with GRAVEL SANDY ORGANIC SOIL SANDY ORGANIC SOIL with GRAVEL GRAVELLY ORGANIC SOIL GRAVELLY ORGANIC SOIL with SAND
	COBBLES COBBLES and BOULDERS BOULDERS		

FIELD AND LABORATORY TESTING

- (C) Consolidation (ASTM D 2435)
- (CL) Collapse Potential (ASTM D 5333)
- (CP) Compaction Curve (CTM 216)
- (CR) Corrosivity Testing (CTM 643, CTM 422, CTM 417)
- (CU) Consolidated Undrained Triaxial (ASTM D 4767)
- (DS) Direct Shear (ASTM D 3080)
- (EI) Expansion Index (ASTM D 4829)
- (M) Moisture Content (ASTM D 2216)
- (OC) Organic Content-% (ASTM D 2974)
- (P) Permeability (CTM 220)
- (PA) Particle Size Analysis (ASTM D 422)
- (PI) Plasticity Index (AASHTO T 90) Liquid Limit (AASHTO T 89)
- (PL) Point Load Index (ASTM D 5731)
- (PM) Pressure Meter
- (PP) Pocket Penetrometer
- (R) R-Value (CTM 301)
- (SE) Sand Equivalent (CTM 217)
- (SG) Specific Gravity (AASHTO T 100)
- (SL) Shrinkage Limit (ASTM D 427)
- (SW) Swell Potential (ASTM D 4546)
- (TV) Pocket Torvane
- (UC) Unconfined Compression-Soil (ASTM D 2166) Unconfined Compression-Rock (ASTM D 2938)
- (UU) Unconsolidated Undrained Triaxial (ASTM D 2850)
- (UW) Unit Weight (ASTM D 4767)
- (VS) Vane Shear (AASHTO T 223)

DIST	COUNTY	ROUTE	POST MILES TOTAL PROJECT	SHEET No	TOTAL SHEETS
04	SF	101,1	9.2/9.8, 6.8/7.1	463	567

Matthew Gaffney 6-02-09
PROFESSIONAL GEOLOGIST

PROFESSIONAL GEOLOGIST
Matthew Gaffney
No. 8045
Exp. 6-30-10
STATE OF CALIFORNIA

7-20-09
PLANS APPROVAL DATE

The State of California or its officers or agents shall not be responsible for the accuracy or completeness of electronic copies of this plan sheet.

APPARENT DENSITY OF COHESIONLESS SOILS

Description	SPT N_{60} (Blows / 12 inches)
Very loose	0 - 4
Loose	5 - 10
Medium Dense	11 - 30
Dense	31 - 50
Very Dense	> 50

MOISTURE

Description	Criteria
Dry	Absence of moisture, dusty, dry to the touch
Moist	Damp but no visible water
Wet	Visible free water, usually soil is below water table

PERCENT OR PROPORTION OF SOILS

Description	Criteria
Trace	Particles are present but estimated to be less than 5%
Few	5 to 10%
Little	15 to 25%
Some	30 to 45%
Mostly	50 to 100%

PARTICLE SIZE

Description		Size
Boulder		> 12"
Cobble		3" to 12"
Gravel	Coarse	3/4" to 3"
	Fine	No. 4 to 3/4"
Sand	Coarse	No. 10 to No. 4
	Medium	No. 40 to No. 10
	Fine	No. 200 to No. 40

ENGINEERING SERVICES	GEOTECHNICAL SERVICES	STATE OF CALIFORNIA DEPARTMENT OF TRANSPORTATION	DIVISION OF ENGINEERING SERVICES STRUCTURE DESIGN	BRIDGE NO.	PRESIDIO VIADUCT - LEFT
	PREPARED BY: F. Nguyen 3/09		DESIGN BRANCH 4	34-0157L POST MILE 9.02	LOG OF TEST BORINGS 15 OF 16

GS LOTB SOIL LEGEND

ORIGINAL SCALE IN INCHES FOR REDUCED PLANS 0 1 2 3

CU 04242
EA 163731

DISREGARD PRINTS BEARING EARLIER REVISION DATES →

REVISION DATES

SHEET 113 OF 114

FILE => 34-0157l-z-lotb15.dgn

USERNAME => ttpierce DATE PLOTTED => 21-JUL-2009 TIME PLOTTED => 13:17

REFERENCE: CALTRANS SOIL & ROCK LOGGING, CLASSIFICATION, AND PRESENTATION MANUAL (JUNE 2007)

DIST	COUNTY	ROUTE	POST MILES TOTAL PROJECT	SHEET No	TOTAL SHEETS
04	SF	101,1	9.2/9.8, 6.8/7.1	464	567

Matthew Gaffney 6-02-09
PROFESSIONAL GEOLOGIST

7-20-09
PLANS APPROVAL DATE

Matthew Gaffney No. 8045 Exp. 6-30-10
PROFESSIONAL GEOLOGIST STATE OF CALIFORNIA

The State of California or its officers or agents shall not be responsible for the accuracy or completeness of electronic copies of this plan sheet.

PERCENT CORE RECOVERY (REC) & ROCK QUALITY DESIGNATION (RQD)

$$REC = \frac{\sum \text{Length of the recovered core pieces (inches)}}{\text{Total length of core run (inches)}} \times 100\%$$

$$RQD = \frac{\sum \text{Length of intact core pieces} \geq 4"}{\text{Total length of core run (inches)}} \times 100\%$$

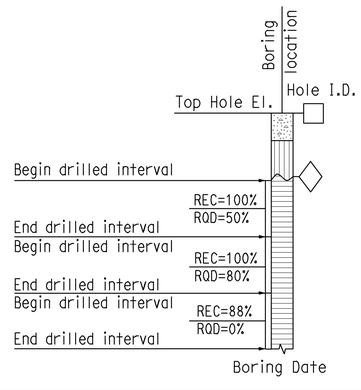

RELATIVE STRENGTH OF INTACT ROCK

Term	Uniaxial Compressive Strength (PSI)
Extremely Strong	> 30,000
Very Strong	14,500 - 30,000
Strong	7,000 - 14,500
Medium Strong	3,500 - 7,000
Weak	700 - 3,500
Very Weak	150 - 700
Extremely Weak	< 150

BEDDING SPACING

Description	Thickness / Spacing
Massive	Greater than 10 ft
Very thickly bedded	3 to 10 ft
Thickly bedded	1 to 3 ft
Moderately bedded	3-5/8" to 1 ft
Thinly bedded	1-1/4" to 3-5/8"
Very thinly bedded	3/8" to 1-1/4"
Laminated	Less than 3/8"

LEGEND OF ROCK MATERIALS

- IGNEOUS ROCK
- SEDIMENTARY ROCK
- METAMORPHIC ROCK

ROCK HARDNESS

Description	Criteria
Extremely Hard	Specimen cannot be scratched with a pocket knife or sharp pick; can only be chipped with repeated heavy hammer blows.
Very Hard	Specimen cannot be scratched with a pocket knife or sharp pick. Breaks with repeated heavy hammer blows.
Hard	Specimen can be scratched with a pocket knife or sharp pick with difficulty (heavy pressure). Heavy hammer blows required to break specimen.
Moderately Hard	Specimen can be scratched with pocket knife or sharp pick with light or moderate pressure. Core breaks with moderate hammer blows.
Moderately Soft	Specimen can be grooved 1/6" deep with a pocket knife or sharp pick with moderate or heavy pressure. Breaks with light hammer blow or heavy manual pressure.
Soft	Specimen can be grooved or gouged easily by a pocket knife or sharp pick with light pressure, can be scratched with fingernail. Breaks with light to moderate manual pressure.
Very Soft	Specimen can be readily indented, grooved or gouged with fingernail, or carved with a pocket knife. Breaks with light manual pressure.

FRACTURE DENSITY

Description	Observed Fracture Density
Unfractured	No fractures.
Very slightly fractured	Lengths greater than 3 feet.
Slightly fractured	Lengths from 1 to 3 feet with few lengths less than 1 foot or greater than 3 feet.
Moderately fractured	Lengths mostly in 4" to 1 foot range with most lengths about 8"
Intensely fractured	Lengths average from 1 to 4" with scattered fragmented intervals with lengths less than 4"
Very intensely fractured	Mostly chips and fragments with a few scattered short core lengths.

Combination descriptors (such as "Very intensely to intensely fractured") are used where equal distribution of both fracture density characteristics is present over a significant interval or exposure, or where characteristics are "in between" the descriptor definitions. Only two adjacent descriptors may be combined.

WEATHERING DESCRIPTORS FOR INTACT ROCK

Description	Diagnostic features: Chemical Weathering-Discoloration and/or oxidation — Body of Rock	Diagnostic features: Chemical Weathering-Discoloration and/or oxidation — Fracture Surfaces	Diagnostic features: Mechanical Weathering-Grain boundary conditions (disaggregation) primarily for granitics and some coarse-grained sediments	Diagnostic features: Texture and Solutioning — Texture	Diagnostic features: Texture and Solutioning — Solutioning	General Characteristics
Fresh	No discoloration, not oxidized.	No discoloration or oxidation.	No separation, intact (tight).	No change.	No solutioning.	Hammer rings when crystalline rocks are struck.
Slightly Weathered	Discoloration or oxidation is limited to surface of, or short distance from, fractures; some feldspar crystals are dull.	Minor to complete discoloration or oxidation of most surfaces.	No visible separation, intact (tight).	Preserved.	Minor leaching of some soluble minerals may be noted.	Hammer rings when crystalline rocks are struck. Body of rock not weakened.
Moderately Weathered	Discoloration or oxidation extends from fractures usually throughout; Fe-Mg minerals are "rusty," feldspar crystals are "cloudy."	All fracture surfaces are discolored or oxidized.	Partial separation of boundaries visible.	Generally preserved.	Soluble minerals may be mostly leached.	Hammer does not ring when rock is struck. Body of rock is slightly weakened.
Intensely Weathered	Discoloration or oxidation throughout; all feldspars and Fe-Mg minerals are altered to clay to some extent; or chemical alteration produces in-situ disaggregation, see grain boundary conditions.	All fracture surfaces are discolored or oxidized, surfaces friable.	Partial separation, rock is friable; in semiarid conditions granitics are disaggregated.	Texture altered by chemical disintegration (hydration, argillation).	Leaching of soluble minerals may be complete.	Dull sound when struck with hammer, usually can be broken with moderate to heavy manual pressure or by light hammer blow without reference to planes of weakness such as incipient or hairline fractures, or veinlets. Rock is significantly weakened.
Decomposed	Discolored or oxidized throughout, but resistant minerals such as quartz may be unaltered; all feldspars and Fe-Mg minerals are completely altered to clay.		Complete separation of grain boundaries (disaggregated).	Resembles a soil, partial or complete remnant rock structure may be preserved; leaching of soluble minerals usually complete.		Can be granulated by hand. Resistant minerals such as quartz may be present as "stringers" or "dikes."

Combination descriptors (such as "slightly weathered to fresh") are permissible where equal distribution of both weathering characteristics is present over significant intervals or where characteristics present are "in between" the diagnostic feature. However, combination descriptors should not be used where significant, identifiable zones can be delineated. Only two adjacent descriptors may be combined. "Very intensely weathered" is the combination descriptor for "intensely weathered to decomposed."

ENGINEERING SERVICES	GEOTECHNICAL SERVICES	STATE OF CALIFORNIA DEPARTMENT OF TRANSPORTATION	DIVISION OF ENGINEERING SERVICES STRUCTURE DESIGN DESIGN BRANCH 4	BRIDGE NO. 34-0157L POST MILE 9.02	PRESIDIO VIADUCT - LEFT LOG OF TEST BORINGS 16 OF 16
	PREPARED BY: F. Nguyen 3/09		CU 04242 EA 163731	DISREGARD PRINTS BEARING EARLIER REVISION DATES →	REVISION DATES — SHEET 114 OF 114

GS LOTB ROCK LEGEND

ORIGINAL SCALE IN INCHES FOR REDUCED PLANS 0 1 2 3

FILE => 34-0157I-z-lotb16.dgn

USERNAME => trpierce DATE PLOTTED => 21-JUL-2009 TIME PLOTTED => 13:17

DIST	COUNTY	ROUTE	POST MILES TOTAL PROJECT	SHEET No	TOTAL SHEETS
04	SF	101,1	9.2/9.8, 6.8/7.1	465	567

REGISTERED CIVIL ENGINEER — 6-4-09 DATE

PHILIP E. LUTZ No. C55839 Exp. 12-31-10 CIVIL — REGISTERED PROFESSIONAL ENGINEER — STATE OF CALIFORNIA

7-20-09
PLANS APPROVAL DATE

The State of California or its officers or agents shall not be responsible for the accuracy or completeness of electronic copies of this plan sheet.

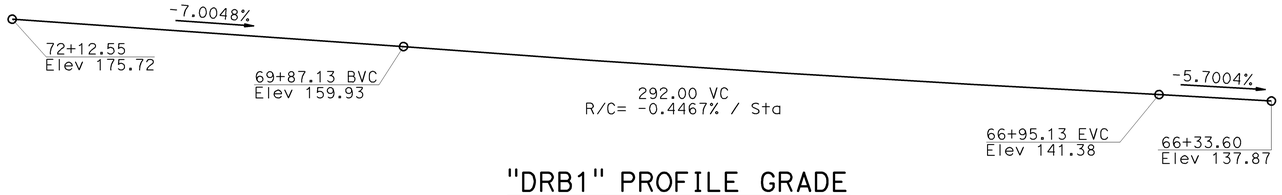

"DRB1" PROFILE GRADE

1" = 30'

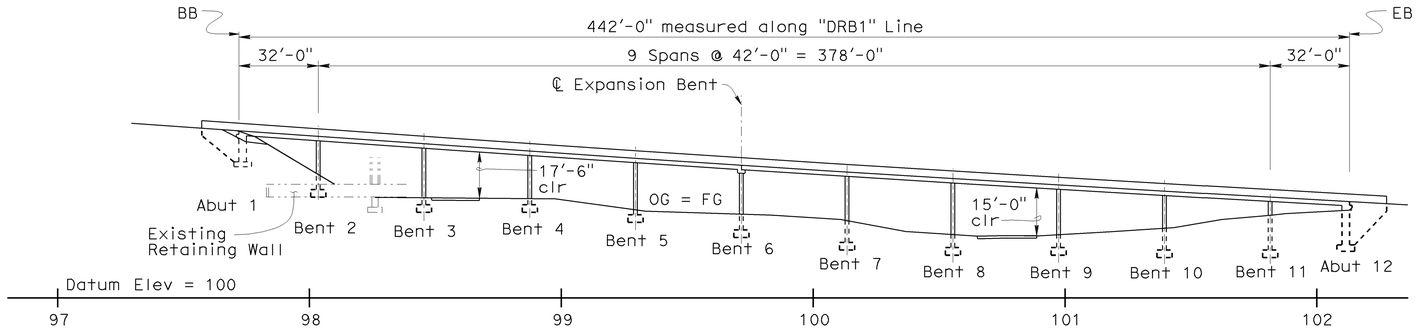

ELEVATION

1" = 30'

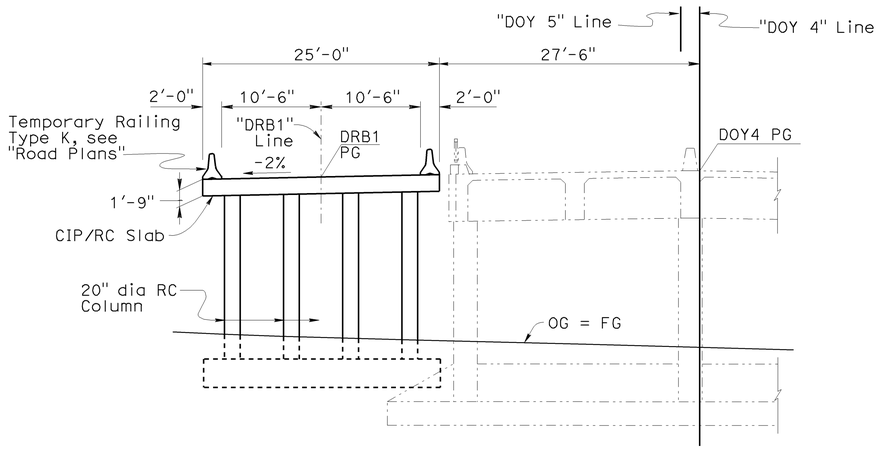

TYPICAL SECTION

1/8" = 1'-0"

RUCKMAN UC TEMP BRIDGE #34-0158
QUANTITIES

BRIDGE REMOVAL, LOCATION E	LUMP	SUM
STRUCTURE EXCAVATION (BRIDGE) (TEMPORARY BRIDGE) (NATURALLY OCCURING ASBESTOS)	500	CY
STRUCTURE EXCAVATION (TYPE Z-2) (AERIALLY DEPOSITED LEAD)	200	CY
STRUCTURE BACKFILL (BRIDGE) (TEMPORARY BRIDGE)	480	CY
STRUCTURAL CONCRETE, BRIDGE FOOTING (TEMPORARY BRIDGE)	195	CY
STRUCTURAL CONCRETE, BRIDGE (TEMPORARY BRIDGE)	880	CY
JOINT SEAL (MR 1")	50	LF
JOINT SEAL (MR 1½")	25	LF
BAR REINFORCING STEEL (BRIDGE) (TEMPORARY BRIDGE)	258,000	LB
MISCELLANEOUS METAL (BRIDGE)	10,500	LB
BRIDGE DECK DRAINAGE SYSTEM (TEMPORARY)	1,500	LB

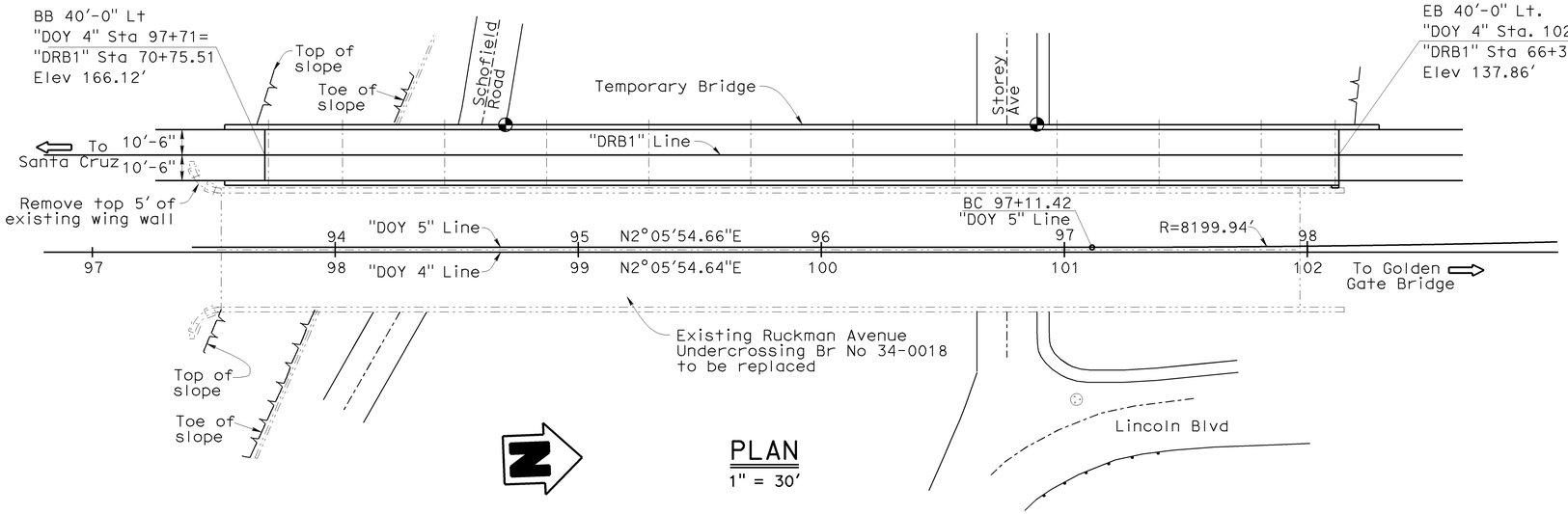

PLAN

1" = 30'

NOTES:

For Index to Plans, General Notes, Standard Plan List and Foundation Data, see "Index to Plans" sheet

Denotes point of minimum vertical clearance

Denotes existing structure

Denotes existing structure

"DRB1" Line stationing intentionally opposite

For cconstruction and removal staging, see Ruckman Avenue UC (Repalce), Bridge No. 34-0156

For Bridge Removal Limits see "Index To Plans" sheet.

For Excavation and backfill, see "Column Details" sheet.

X
DESIGN ENGINEER

DESIGN	BY P. Lutz	CHECKED M. VanDePol	LOAD & RESISTANCE FACTOR DESIGN	LIVE LOADING: HL93 W/"LOW-BOY"; PERMIT DESIGN VEHICLE		
DETAILS	BY P. Lutz/E. Hallstrom	CHECKED E. Franciliso	LAYOUT	BY P. Lutz	CHECKED E. Franciliso	
QUANTITIES	BY E. Franciliso	CHECKED M. VanDePol	SPECIFICATIONS	BY J. Corrado	PLANS AND SPECS COMPARED X	

ORIGINAL SCALE IN INCHES FOR REDUCED PLANS 0 1 2 3

STATE OF CALIFORNIA
DEPARTMENT OF TRANSPORTATION

DIVISION OF ENGINEERING SERVICES
STRUCTURE DESIGN
DESIGN BRANCH 9

CU 04242
EA 163731

BRIDGE NO. 34-0158
POST MILE 6.81

RUCKMAN UC TEMPORARY BRIDGE
GENERAL PLAN

DISREGARD PRINTS BEARING EARLIER REVISION DATES →

REVISION DATES: 2-18-09 | 3-19-09 | 4-06-09 | 4-09-09 | 4-16-09 | 4-21-09 | 5-8-09

SHEET 1 OF 20

STRUCTURES DESIGN GENERAL PLAN SHEET (ENGLISH) (REV.07-24-06)

FILE => 34-0158-a-gp01.dgn

USERNAME => ttpierce DATE PLOTTED => 21-JUL-2009 TIME PLOTTED => 13:17

DIST	COUNTY	ROUTE	POST MILES TOTAL PROJECT	SHEET No	TOTAL SHEETS
04	SF	101,1	9.2/9.8, 6.8/7.1	466	567

REGISTERED CIVIL ENGINEER — 6-4-09 DATE

PHILIP E. LUTZ No. C55839 Exp. 12-31-10 CIVIL — REGISTERED PROFESSIONAL ENGINEER — STATE OF CALIFORNIA

7-20-09
PLANS APPROVAL DATE

The State of California or its officers or agents shall not be responsible for the accuracy or completeness of electronic copies of this plan sheet.

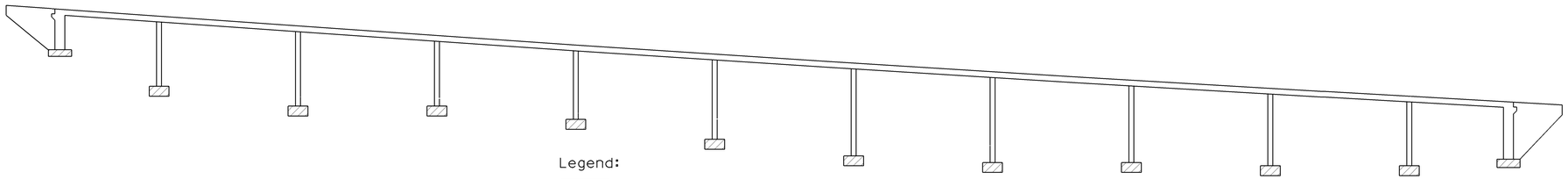

Legend:

Structural Concrete, Bridge (Temporary Bridge)
f'c = 4000 psi @ 28 days

Structural Concrete, Bridge Footing (Temporary Bridge)

CONCRETE STRENGTH AND TYPE LIMITS

No Scale

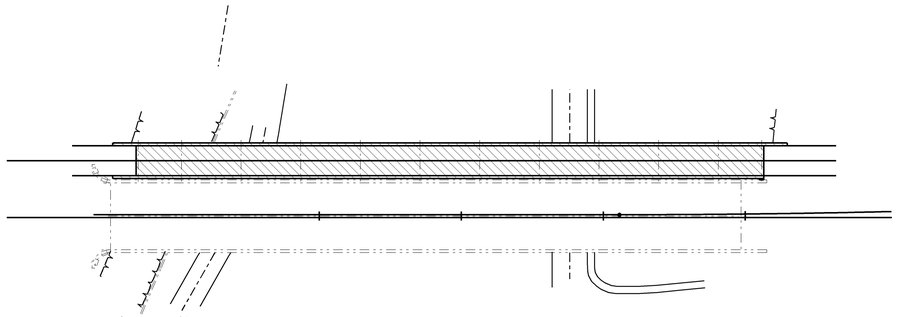

Legend:

Remove entire temporary structure upon completion of Ruckman UC Bridge Br. No. 34-0156.
Removal to include all footings.
Backfill to reflect final topography, see "Road Plans"

BRIDGE REMOVAL LIMITS

No Scale

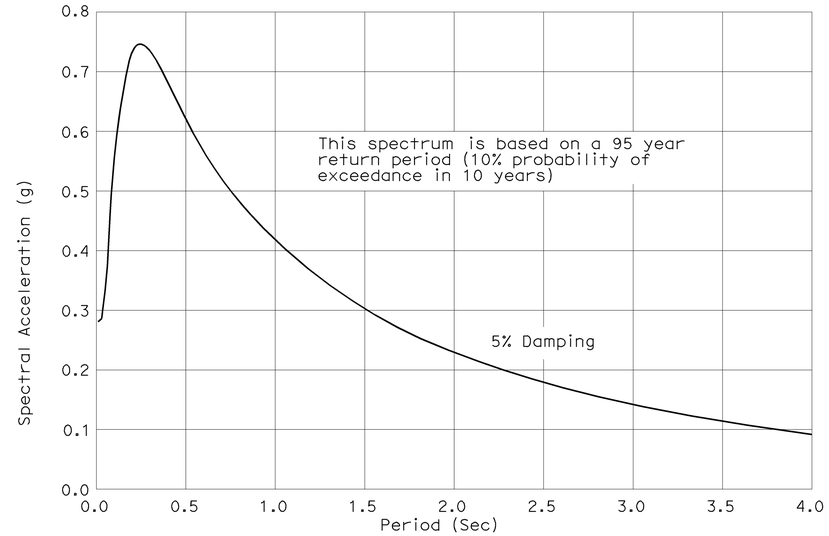

SITE SPECIFIC ACCELERATION RESPONSE SPECTRA CURVE

GENERAL NOTES

LOAD AND RESISTANCE FACTOR DESIGN

DESIGN:
AASHTO LRFD Bridge Design Specifications, Fourth Edition, and California Amendments; except abutments, bridge details taken from Standard Plans March 2006 and earlier versions, and Bridge Standards Sheets (XS Sheets) are designed using Bridge Design Specifications LFD Version April 2000 (1996 AASHTO with interim revisions and amendments by Caltrans).

SEISMIC DESIGN:
Caltrans Seismic Design Criteria (SDC), Version 1.4 dated June 2006

DEAD LOAD:
Includes 35 psf for future wearing surface. The deck load between the girders has been increased by a factor of 10% to allow for the use of steel deck forms (where appropriate).

LIVE LOADING:
HL93 and permit design load.

SEISMIC LOADING:
See "SITE SPECIFIC ACCELERATION RESPONSE SPECTRA CURVE"

CONCRETE:
fy = 60,000 psi
f'c = 4000 psi
n = 8

STANDARD PLANS DATED JULY 2006

DETAIL	DESCRIPTION
A10A	ACRONYMS AND ABBREVIATIONS A-L
A10B	ACRONYMS AND ABBREVIATIONS M-Z
A10C	SYMBOLS (SHEET 1 OF 2)
A10D	SYMBOLS (SHEET 2 OF 2)
A62C	LIMITS OF PAYMENT FOR EXCAVATION AND BACKFILL BRIDGE
B0-1	BRIDGE DETAILS
B0-3	BRIDGE DETAILS
B6-21	JOINT SEALS (MAX MOVEMENT RATING = 2")
B7-6	DECK DRAINS TYPES D-1 AND D-2
B14-3	COMMUNICATION AND SPRINKLER CONTROL CONDUIT (CONDUIT LESS THAN 4")
ES9-A	ELECTRICAL SYSTEMS (ELECTRICAL DETAILS STRUCTURE INSTALLATIONS
ES9-B	ELECTRICAL SYSTEMS (ELECTRICAL DETAILS STRUCTURE INSTALLATIONS

STANDARD PLAN SHEET NO.

DETAIL NO.

INDEX TO PLANS

SHEET NO.	TITLE
1	GENERAL PLAN
2	INDEX TO PLANS
3	DECK CONTOURS
4	FOUNDATION PLAN
5	ABUTMENT 1 DETAILS
6	ABUTMENT 12 DETAILS
7	BENT DETAILS
8	COLUMN DETAILS
9	TYPICAL SECTION
10	SLAB HINGE DETAILS
11	DRAINAGE DETAILS
12	LONGITUDINAL REINFORCEMENT
13	SLAB REINFORCEMENT DETAILS
14	CONDUIT DETAILS
15	LOG OF TEST BORINGS 1 OF 6
16	LOG OF TEST BORINGS 2 OF 6
17	LOG OF TEST BORINGS 3 OF 6
18	LOG OF TEST BORINGS 4 OF 6
19	LOG OF TEST BORINGS 5 OF 6
20	LOG OF TEST BORINGS 6 OF 6

	BY	CHECKED
DESIGN	E. Franciliso	M. VanDePol
DETAILS	E. Hallstrom	E. Franciliso
QUANTITIES	E. Franciliso	M. VanDePol

STATE OF CALIFORNIA
DEPARTMENT OF TRANSPORTATION

DIVISION OF ENGINEERING SERVICES
STRUCTURE DESIGN
DESIGN BRANCH 9

BRIDGE NO. 34-0158
POST MILE 6.81

RUCKMAN UC TEMPORARY BRIDGE
INDEX TO PLANS

STRUCTURES DESIGN DETAIL SHEET (ENGLISH) (REV. 10/25/05)

ORIGINAL SCALE IN INCHES FOR REDUCED PLANS 0 1 2 3

CU 04242
EA 163731

DISREGARD PRINTS BEARING EARLIER REVISION DATES →

REVISION DATES: 3-5-09 | 3-26-09 | 4-06-09 | 4-14-09 | 4-24-09 | 5-7-09 | 5-18-09

SHEET 2 OF 20

FILE => 34-0158-b-itp.dgn

USERNAME => trpierce DATE PLOTTED => 21-JUL-2009 TIME PLOTTED => 13:18

DIST	COUNTY	ROUTE	POST MILES TOTAL PROJECT	SHEET No	TOTAL SHEETS
04	SF	101,1	9.2/9.8, 6.8/7.1	467	567

REGISTERED CIVIL ENGINEER — 6-4-09 DATE

7-20-09
PLANS APPROVAL DATE

PHILIP E. LUTZ No. C55839 Exp. 12-31-10 CIVIL — REGISTERED PROFESSIONAL ENGINEER — STATE OF CALIFORNIA

The State of California or its officers or agents shall not be responsible for the accuracy or completeness of electronic copies of this plan sheet.

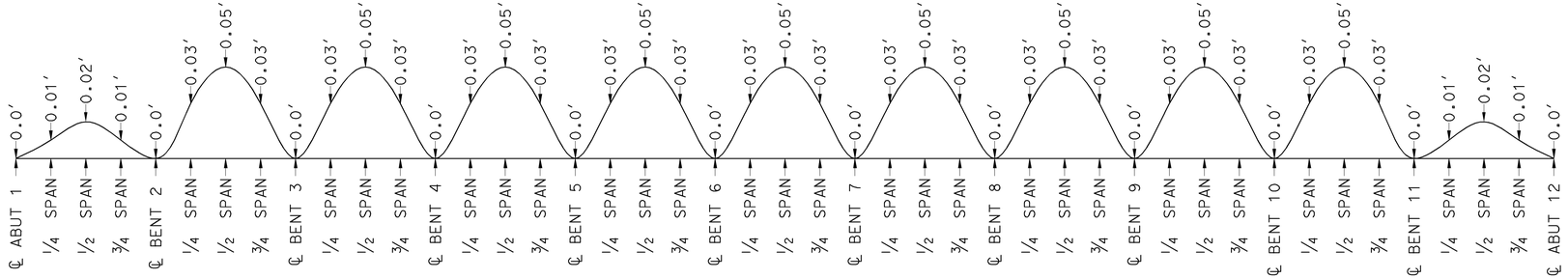

CAMBER DIAGRAM

NO SCALE

Does not include allowance for falsework settelment.

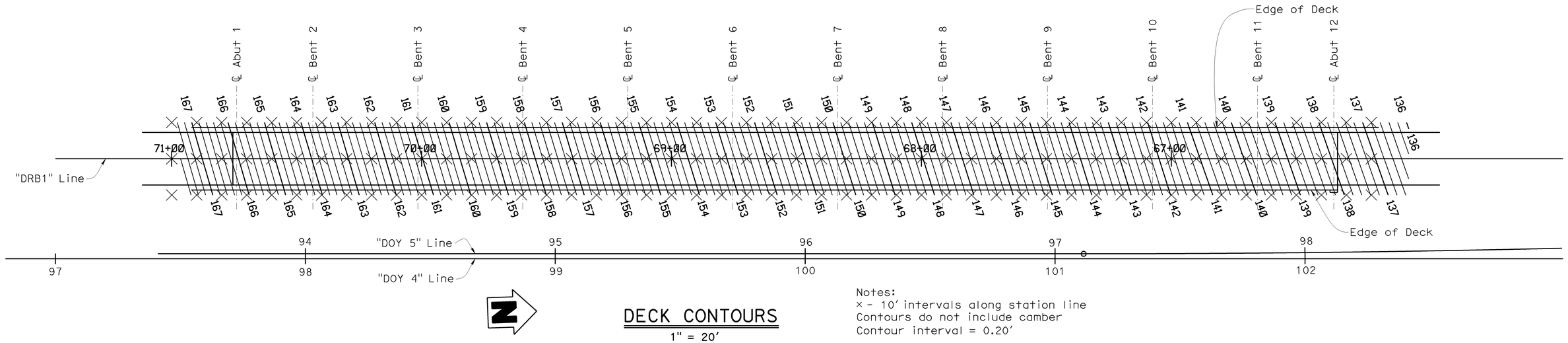

DECK CONTOURS

1" = 20′

Notes:
× - 10′ intervals along station line
Contours do not include camber
Contour interval = 0.20′

SPREAD FOOTING DATA TABLE

Location	Working Stress Design (WSD)		Load and Resistance Factor Design (LFRD)		
	Permissible Gross Contact Stress (Settlement) (ksf)	Allowable Gross Bearing Capacity (ksf)	Service Permissible Net Contact Stress (Settlement) (ksf)	Strength Factored Gross Nominal Bearing Resistance φ_b=X (ksf)	Extreme Event Factored Gross Nominal Bearing Resistance φ_b=1.00 (ksf)
Abut 1	10	30	N/A	N/A	N/A
Bent 2	N/A	N/A	12	36	40
Bent 3	N/A	N/A	12	36	40
Bent 4	N/A	N/A	12	36	40
Bent 5	N/A	N/A	15	70	90
Bent 6	N/A	N/A	15	70	90

Location	Working Stress Design (WSD)		Load and Resistance Factor Design (LFRD)		
	Permissible Gross Contact Stress (Settlement) (ksf)	Allowable Gross Bearing Capacity (ksf)	Service Permissible Net Contact Stress (Settlement) (ksf)	Strength Factored Gross Nominal Bearing Resistance φ_b=X (ksf)	Extreme Event Factored Gross Nominal Bearing Resistance φ_b=1.00 (ksf)
Bent 7	N/A	N/A	12	23	32
Bent 8	N/A	N/A	12	23	32
Bent 9	N/A	N/A	10	35	40
Bent 10	N/A	N/A	10	35	40
Bent 11	N/A	N/A	6	15	25
Abut 12	8	17	N/A	N/A	N/A

	BY	CHECKED
DESIGN	E. Franciliso	M. VanDePol
DETAILS	E. Hallstrom	E. Franciliso
QUANTITIES	E. Franciliso	M. VanDePol

STATE OF CALIFORNIA
DEPARTMENT OF TRANSPORTATION

DIVISION OF ENGINEERING SERVICES
STRUCTURE DESIGN
DESIGN BRANCH 9

BRIDGE NO. 34-0158
POST MILE 6.81

RUCKMAN UC TEMPORARY BRIDGE
DECK CONTOURS

STRUCTURES DESIGN DETAIL SHEET (ENGLISH) (REV. 10/25/05)

ORIGINAL SCALE IN INCHES FOR REDUCED PLANS 0 1 2 3

CU 04242
EA 163731

DISREGARD PRINTS BEARING EARLIER REVISION DATES →

REVISION DATES: 3-5-09 | 3-26-09 | 4-06-09 | 4-27-09 | 5-8-09 | 5-29-09

SHEET 3 OF 20

FILE => 34-0158-d-dc1.dgn

USERNAME => trpierce DATE PLOTTED => 21-JUL-2009 TIME PLOTTED => 13:18

DIST	COUNTY	ROUTE	POST MILES TOTAL PROJECT	SHEET No	TOTAL SHEETS
04	SF	101,1	9.2/9.8, 6.8/7.1	468	567

Philip E. Lutz 06-04-09
REGISTERED CIVIL ENGINEER DATE

7-20-09
PLANS APPROVAL DATE

The State of California or its officers or agents shall not be responsible for the accuracy or completeness of electronic copies of this plan sheet.

REGISTERED PROFESSIONAL ENGINEER — PHILIP E. LUTZ — No. C55839 — Exp. 12-31-10 — CIVIL — STATE OF CALIFORNIA

Arup PB Joint Venture
560 Mission Street
Suite 700
San Francisco, CA 94105

CURVE DATA

No.	R	Δ	T	L
(27)	8,199.94	2°29'43"	178.59	357.13
(41)	125.00	45°50'12"	20.90	41.42
(44)	1,721.89	3°11'08"	47.88	95.73
(45)	94.99	67°30'30"	63.48	111.93
(46)	420.00	5°29'23"	20.14	40.24
(47)	-	-	-	-
(48)	85.00	56°48'05"	45.96	84.27
(49)	200.00	12°12'57"	21.40	42.64
(50)	200.00	20°27'25"	36.09	71.41

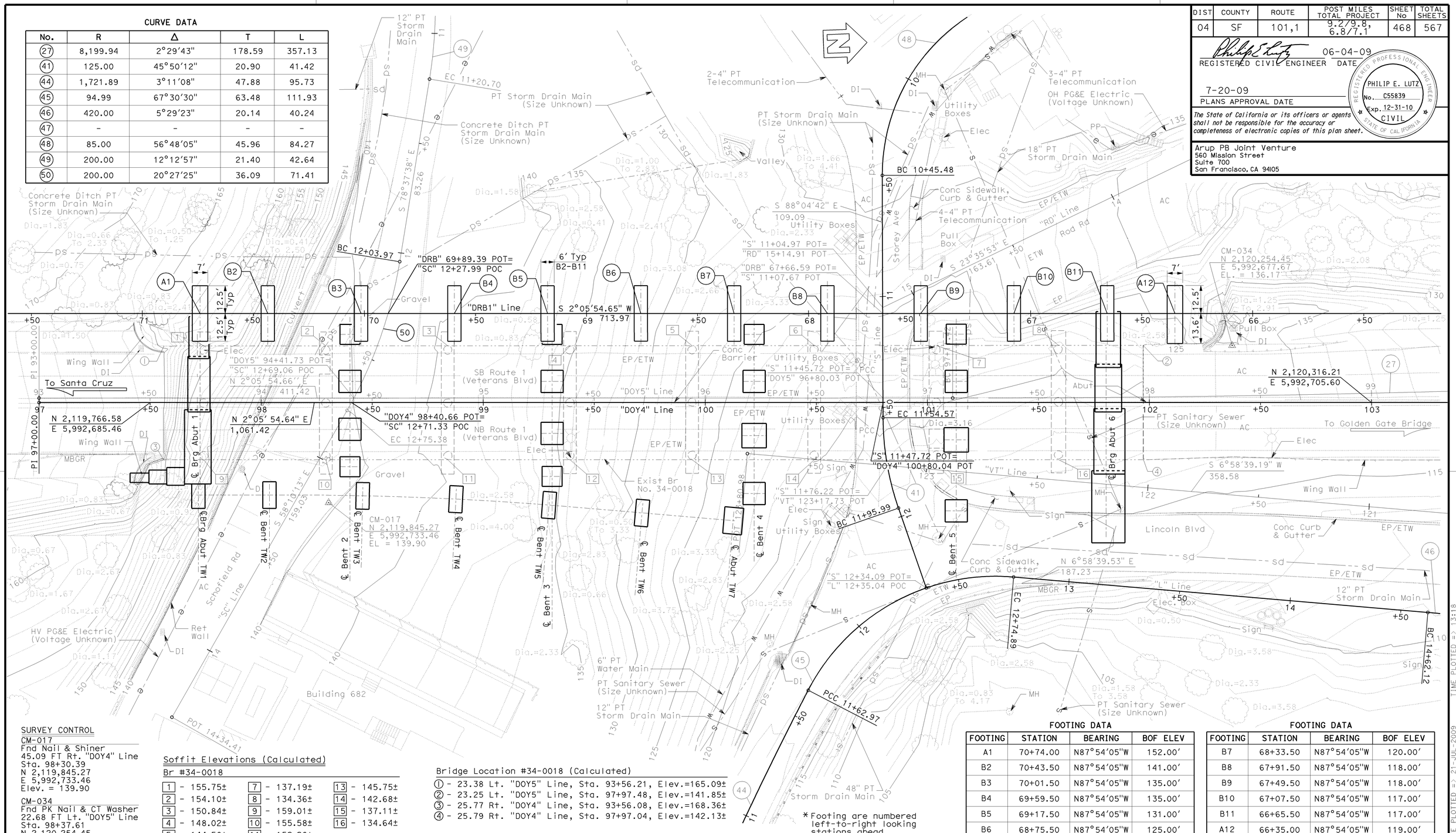

SURVEY CONTROL

CM-017
Fnd Nail & Shiner
45.09 FT Rt. "DOY4" Line
Sta. 98+30.39
N 2,119,845.27
E 5,992,733.46
Elev. = 139.90

CM-034
Fnd PK Nail & CT Washer
22.68 FT Lt. "DOY5" Line
Sta. 98+37.61
N 2,120,254.45
E 5,992,677.67
Elev. = 136.17

Soffit Elevations (Calculated)

Br #34-0018

1	155.75±	7	137.19±	13	145.75±
2	154.10±	8	134.36±	14	142.68±
3	150.84±	9	159.01±	15	137.11±
4	148.02±	10	155.58±	16	134.64±
5	144.56±	11	152.26±		
6	141.25±	12	149.15±		

Bridge Location #34-0018 (Calculated)

① - 23.38 Lt. "DOY5" Line, Sta. 93+56.21, Elev.=165.09±
② - 23.25 Lt. "DOY5" Line, Sta. 97+97.48, Elev.=141.85±
③ - 25.77 Rt. "DOY4" Line, Sta. 93+56.08, Elev.=168.36±
④ - 25.79 Rt. "DOY4" Line, Sta. 97+97.04, Elev.=142.13±

ALL DIMENSIONS ARE IN FEET UNLESS OTHERWISE SHOWN

* Footing are numbered left-to-right looking stations ahead

** Measured to ℄ Temporary widening

FOOTING DATA

FOOTING	STATION	BEARING	BOF ELEV
A1	70+74.00	N87°54'05"W	152.00'
B2	70+43.50	N87°54'05"W	141.00'
B3	70+01.50	N87°54'05"W	135.00'
B4	69+59.50	N87°54'05"W	135.00'
B5	69+17.50	N87°54'05"W	131.00'
B6	68+75.50	N87°54'05"W	125.00'

FOOTING DATA

FOOTING	STATION	BEARING	BOF ELEV
B7	68+33.50	N87°54'05"W	120.00'
B8	67+91.50	N87°54'05"W	118.00'
B9	67+49.50	N87°54'05"W	118.00'
B10	67+07.50	N87°54'05"W	117.00'
B11	66+65.50	N87°54'05"W	117.00'
A12	66+35.00	N87°54'05"W	119.00'

PRELIMINARY INVESTIGATION SECTION						DESIGN	BY E. Franciliso	CHECKED M. VanDePol
SCALE	VERT.DATUM NAVD88	PHOTOGRAMMETRY AS OF: 9/24/2008				DETAILS	BY E. Hallstrom	CHECKED E. Franciliso
1"=20'	HORZ.DATUM NAD83	SURVEYED	BY Chaudhary & Assoc.	CHECKED	BY E. Lilly 3/20/09	QUANTITIES	BY E. Franciliso	CHECKED M. VanDePol
ALIGNMENT TIES	Dist.Traverse Sheet	DRAFTED	BY L. Reyes 3/20/09	CHECKED	BY E. Lilly 3/20/09			

STATE OF **CALIFORNIA** DEPARTMENT OF TRANSPORTATION

DIVISION OF ENGINEERING SERVICES STRUCTURE DESIGN
DESIGN BRANCH 9

BRIDGE NO. 34-0158
POST MILE 6.81

RUCKMAN UC TEMPORARY BRIDGE
FOUNDATION PLAN

STRUCTURES FOUNDATION PLAN SHEET (ENGLISH) (REV. 10/25/05)

ORIGINAL SCALE IN INCHES FOR REDUCED PLANS 0 1 2 3

CU 04242
EA 163731

DISREGARD PRINTS BEARING EARLIER REVISION DATES →

REVISION DATES: 05-06-09 | 5-8-09 | 6/5/09

SHEET 4 OF 20

FILE => 34-0158-e-fp01.dgn

USERNAME => frpierce DATE PLOTTED => 21-JUL-2009 TIME PLOTTED => 13:18

DIST	COUNTY	ROUTE	POST MILES TOTAL PROJECT	SHEET No	TOTAL SHEETS
04	SF	101,1	9.2/9.8, 6.8/7.1	469	567

REGISTERED CIVIL ENGINEER — 6-4-09 DATE

PHILIP E. LUTZ No. C55839 Exp. 12-31-10 CIVIL — REGISTERED PROFESSIONAL ENGINEER — STATE OF CALIFORNIA

7-20-09
PLANS APPROVAL DATE

The State of California or its officers or agents shall not be responsible for the accuracy or completeness of electronic copies of this plan sheet.

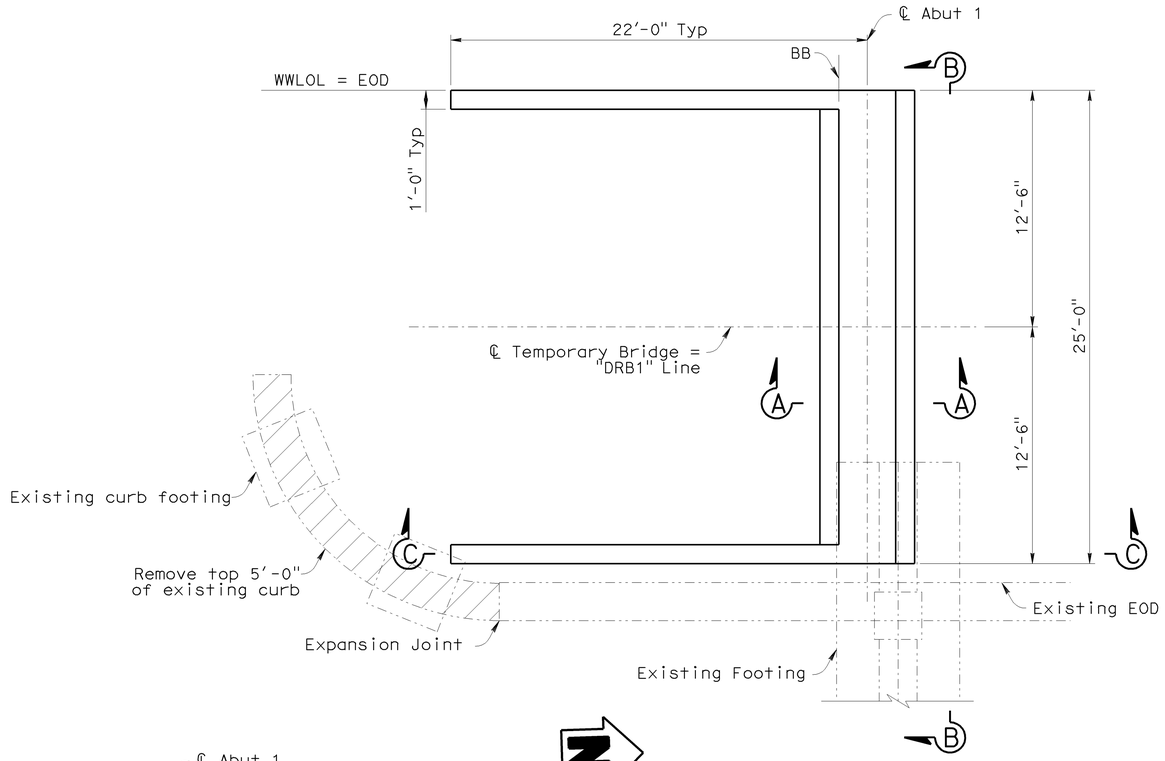

ABUT 1 LAYOUT
1/4"=1'-0"

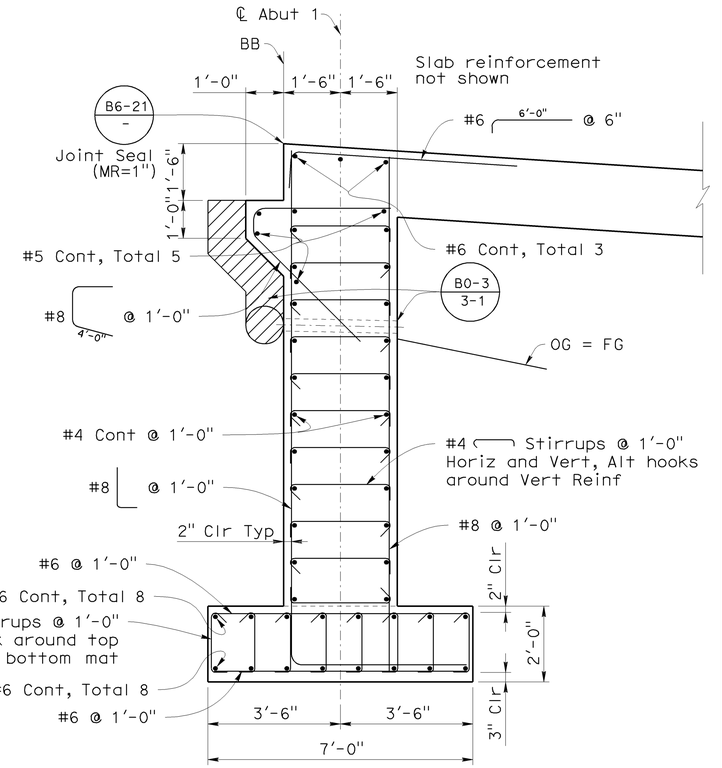

SECTION A-A
1/2"=1'-0"

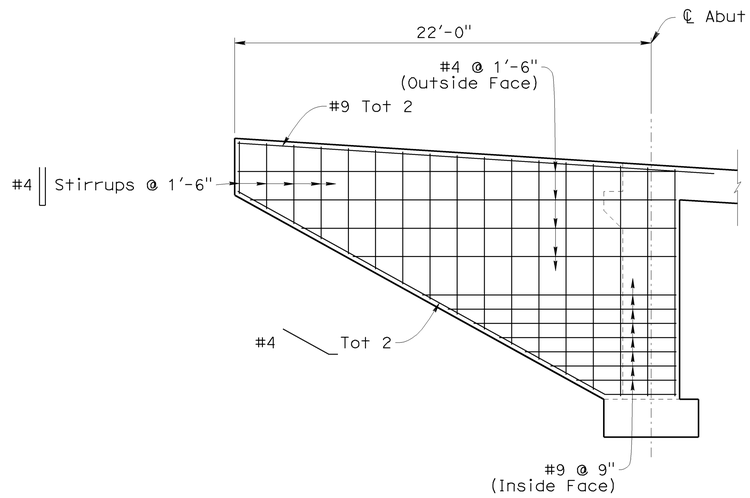

SECTION C-C
1/4"=1'-0"

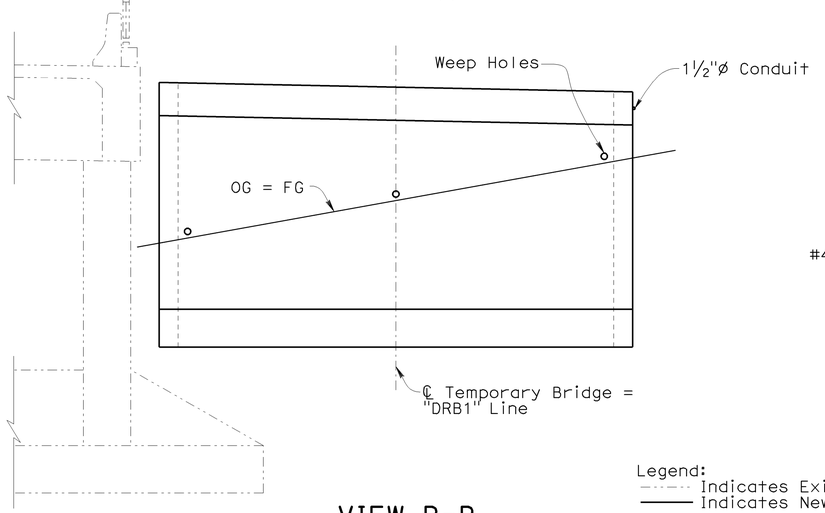

VIEW B-B
1/4"=1'-0"

Legend:
- Indicates Existing Bridge
- Indicates New Bridge
- Indicates bridge removal, For additional bridge removal details, see "RUCKMAN UC (REPLACE)" bridge plans elsewhere in this contract

DESIGN	BY E. Franciliso	CHECKED M. VanDePol	STATE OF CALIFORNIA DEPARTMENT OF TRANSPORTATION	DIVISION OF ENGINEERING SERVICES STRUCTURE DESIGN DESIGN BRANCH 9	BRIDGE NO. 34-0158	RUCKMAN UC TEMPORARY BRIDGE
DETAILS	BY E. Hallstrom	CHECKED E. Franciliso			POST MILE 6.81	ABUTMENT 1 DETAILS
QUANTITIES	BY E. Franciliso	CHECKED M. VanDePol				

STRUCTURES DESIGN DETAIL SHEET (ENGLISH) (REV. 10/25/05)

ORIGINAL SCALE IN INCHES FOR REDUCED PLANS 0 1 2 3

CU 04242
EA 163731

DISREGARD PRINTS BEARING EARLIER REVISION DATES →

REVISION DATES: 3-9-09 | 4-2-09 | 4-16-09 | 5-8-09

SHEET 5 OF 20

FILE => 34-0158-f-a1o01.dgn

USERNAME => trpierce DATE PLOTTED => 21-JUL-2009 TIME PLOTTED => 13:18

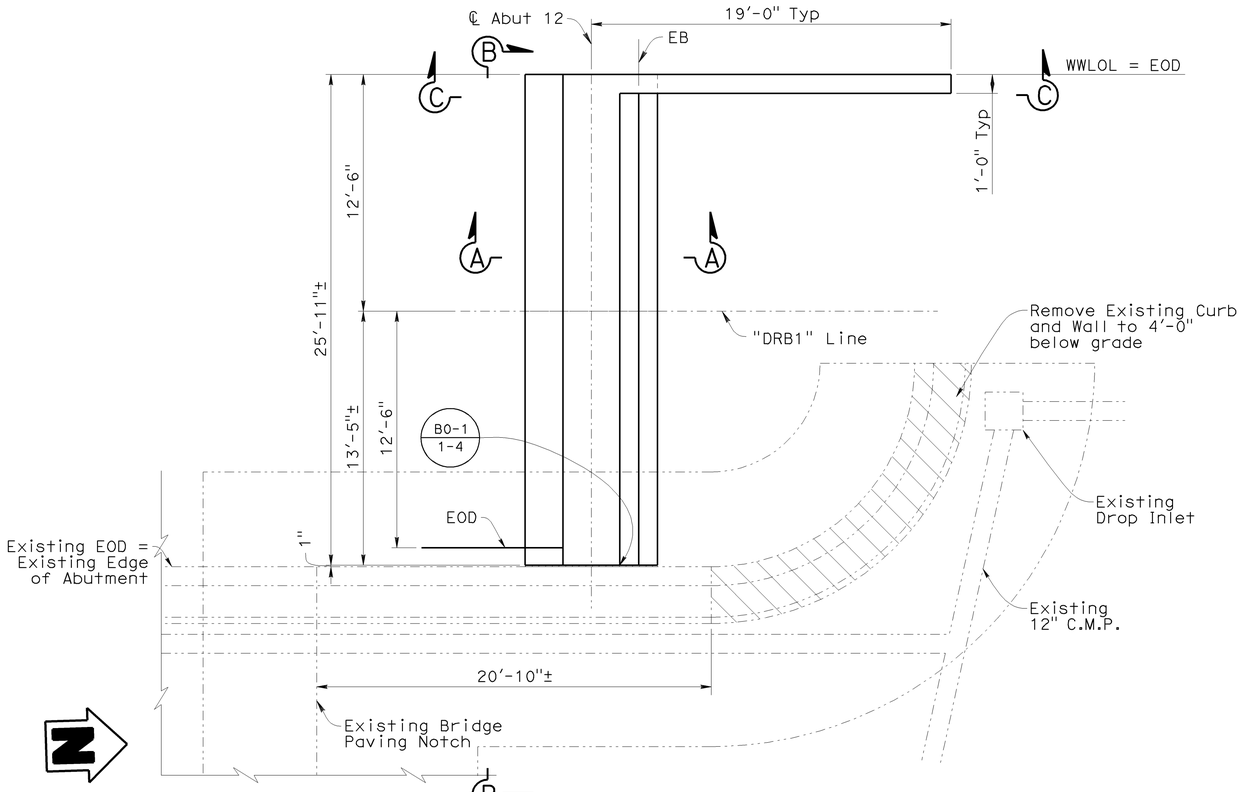

PLAN @ ABUT 12

1/4" = 1'-0"

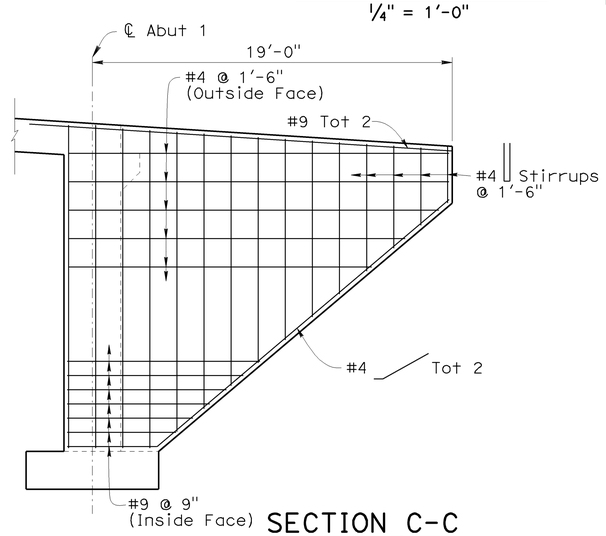

SECTION C-C

1/4"=1'-0"

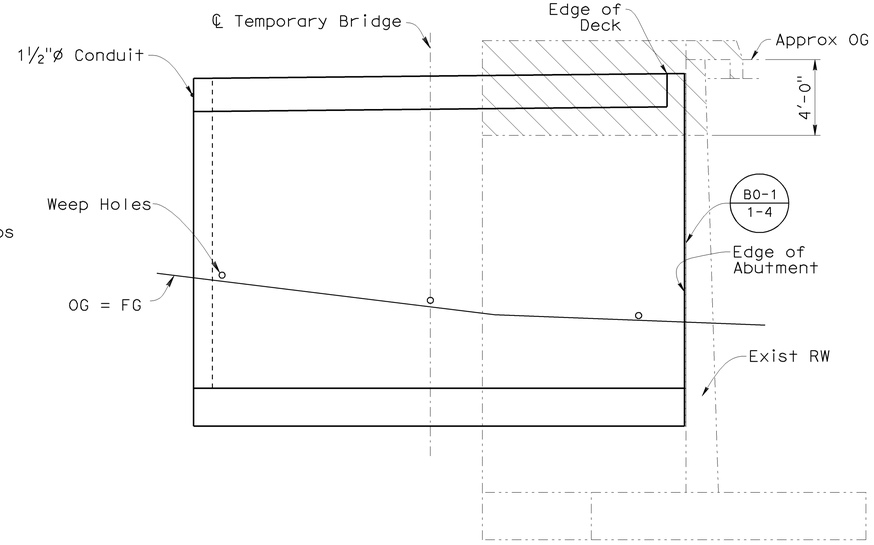

VIEW B-B

1/4" = 1'-0"

Existing barrier not shown
Temporary Rail Type K not shown

Legend:
- Indicates Existing Bridge
- Indicates New Bridge
- Indicates limits of bridge removal. For additional bridge removal details, See "RUCKMAN UC (REPLACE)" bridge plans elsewhere in this contract.

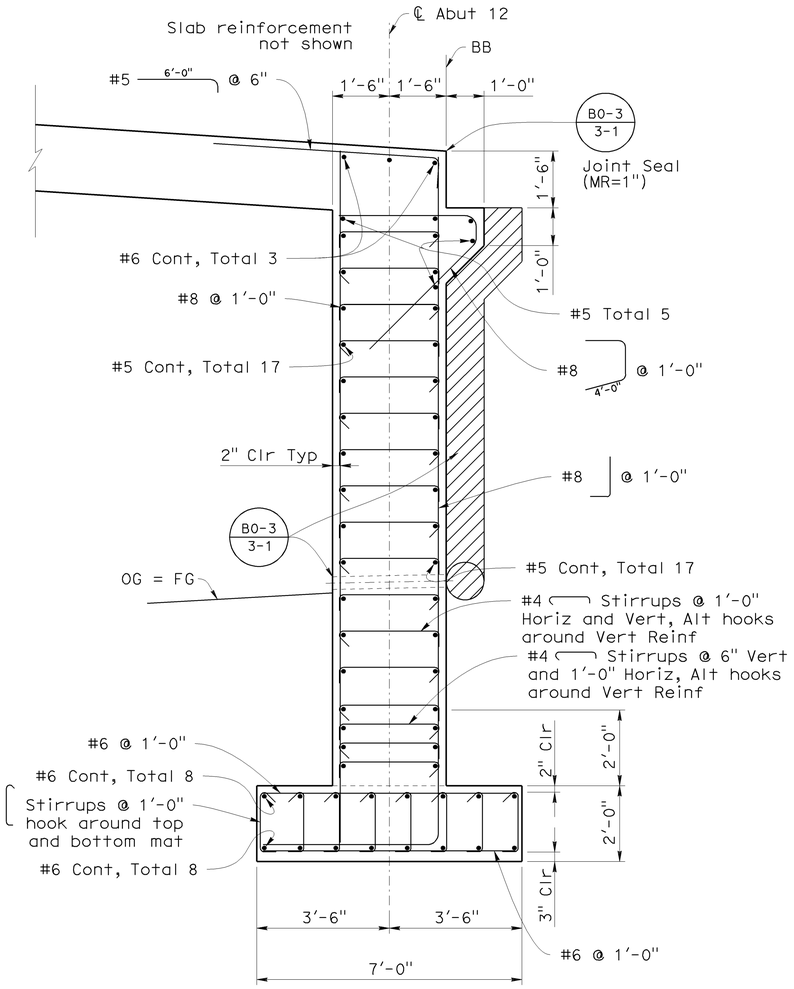

SECTION A-A

1/4" = 1'-0"

DIST	COUNTY	ROUTE	POST MILES TOTAL PROJECT	SHEET No	TOTAL SHEETS
04	SF	101,1	9.2/9.8, 6.8/7.1	470	567

REGISTERED CIVIL ENGINEER — 6-4-09 DATE

PHILIP E. LUTZ No. C55839 Exp. 12-31-10 CIVIL — REGISTERED PROFESSIONAL ENGINEER — STATE OF CALIFORNIA

7-20-09
PLANS APPROVAL DATE

The State of California or its officers or agents shall not be responsible for the accuracy or completeness of electronic copies of this plan sheet.

DESIGN	BY E. Franciliso	CHECKED M. VanDePol	
DETAILS	BY E. Hallstrom	CHECKED E. Franciliso	
QUANTITIES	BY E. Franciliso	CHECKED M. VanDePol	

STATE OF CALIFORNIA
DEPARTMENT OF TRANSPORTATION

DIVISION OF ENGINEERING SERVICES
STRUCTURE DESIGN
DESIGN BRANCH 9

BRIDGE NO. 34-0158
POST MILE 6.81

RUCKMAN UC TEMPORARY BRIDGE
ABUTMENT 12 DETAILS

STRUCTURES DESIGN DETAIL SHEET (ENGLISH) (REV. 10/25/05)

ORIGINAL SCALE IN INCHES FOR REDUCED PLANS 0 1 2 3

CU 04242
EA 163731

DISREGARD PRINTS BEARING EARLIER REVISION DATES →

REVISION DATES: 3-9-09 | 4-16-09 | 4-16-09 | 4-30-09 | 5-7-09

SHEET 6 OF 20

FILE => 34-0158-f-alo12.dgn

USERNAME => ttpierce DATE PLOTTED => 21-JUL-2009 TIME PLOTTED => 13:18

DIST	COUNTY	ROUTE	POST MILES TOTAL PROJECT	SHEET No	TOTAL SHEETS
04	SF	101,1	9.2/9.8, 6.8/7.1	471	567

REGISTERED CIVIL ENGINEER — 6-4-09 DATE

PHILIP E. LUTZ No. C55839 Exp. 12-31-10 CIVIL — REGISTERED PROFESSIONAL ENGINEER — STATE OF CALIFORNIA

7-20-09
PLANS APPROVAL DATE

The State of California or its officers or agents shall not be responsible for the accuracy or completeness of electronic copies of this plan sheet.

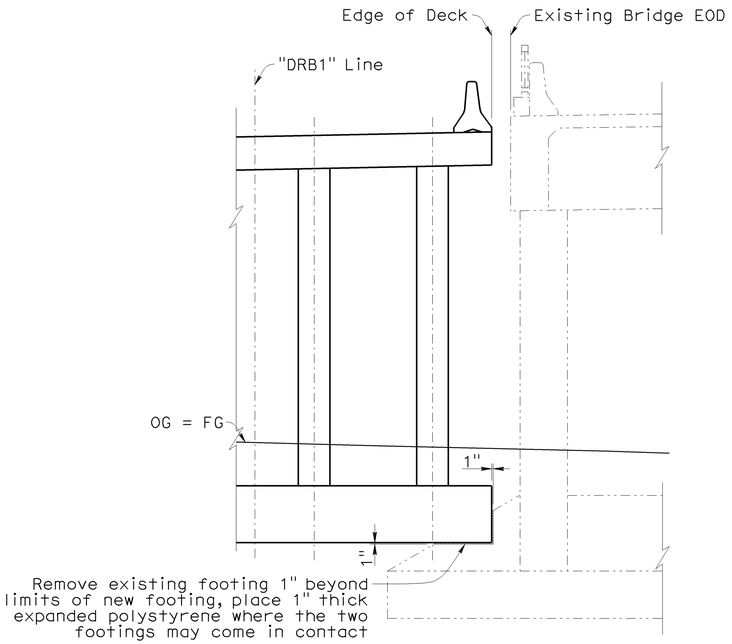

PART ELEVATION @ BENT 4
1/4"=1'-0"

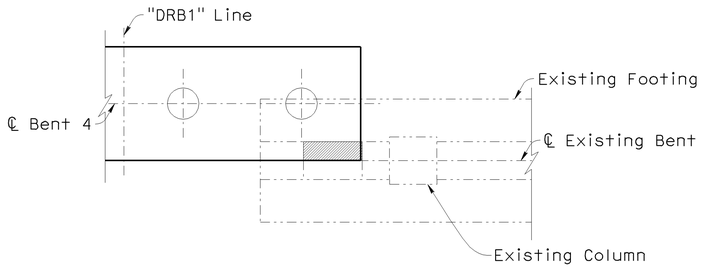

PART PLAN @ BENT 4
1/4"=1'-0"

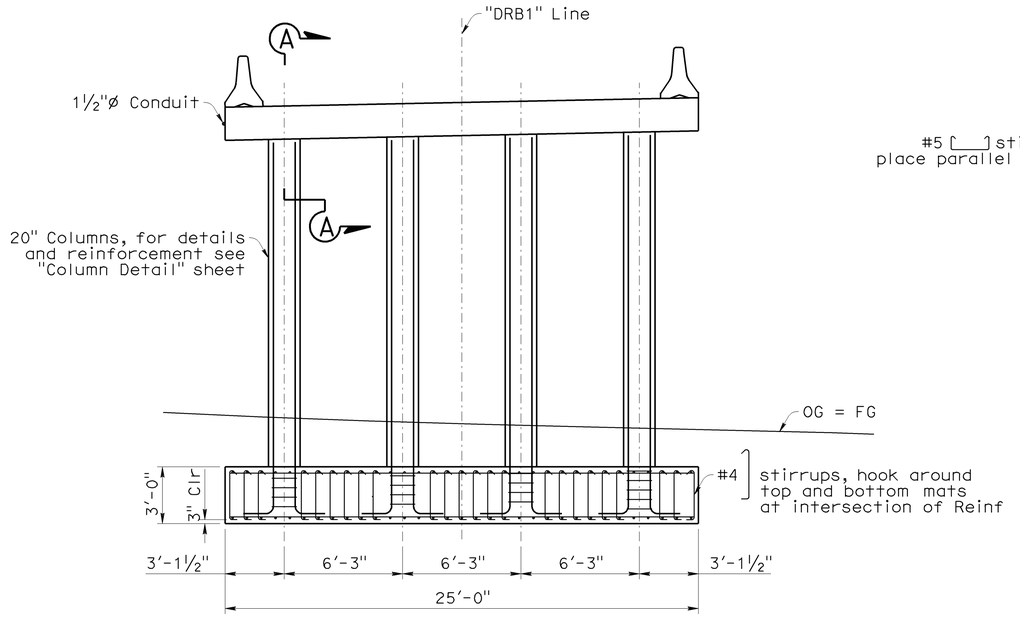

ELEVATION
1/4"=1'-0"

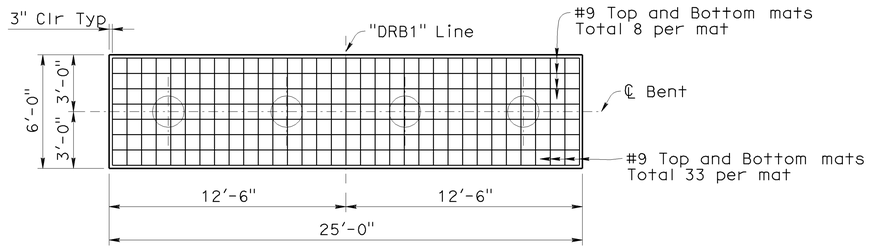

PLAN
1/4"=1'-0"

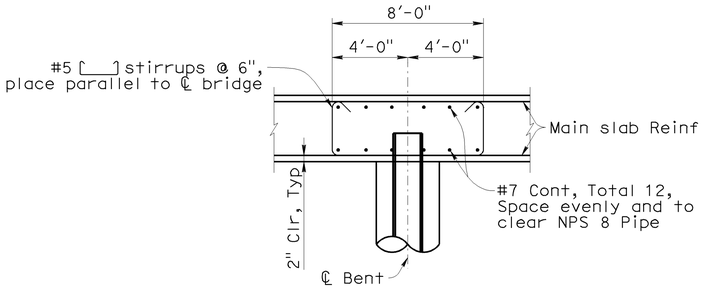

SECTION A-A
½"=1'-0"

Legend:
Indicates Existing Bridge
Indicates New Bridge

DESIGN	BY E. Franciliso	CHECKED M. VanDePol	STATE OF CALIFORNIA DEPARTMENT OF TRANSPORTATION	DIVISION OF ENGINEERING SERVICES STRUCTURE DESIGN DESIGN BRANCH 9	BRIDGE NO. 34-0158	RUCKMAN UC TEMPORARY BRIDGE	
DETAILS	BY E. Hallstrom	CHECKED E. Franciliso			POST MILE 6.81	BENT DETAILS	
QUANTITIES	BY E. Franciliso	CHECKED M. VanDePol		CU 04242 EA 163731			

STRUCTURES DESIGN DETAIL SHEET (ENGLISH) (REV. 10/25/05)

ORIGINAL SCALE IN INCHES FOR REDUCED PLANS 0 1 2 3

DISREGARD PRINTS BEARING EARLIER REVISION DATES →

REVISION DATES: 4-16-09 | 4-14-09 | 4-16-09 | 4-30-09 | 5-7-09

SHEET 7 OF 20

FILE => 34-0158-h-b_1o.dgn

USERNAME => ttpierce DATE PLOTTED => 21-JUL-2009 TIME PLOTTED => 13:18

DIST	COUNTY	ROUTE	POST MILES TOTAL PROJECT	SHEET No	TOTAL SHEETS
04	SF	101,1	9.2/9.8, 6.8/7.1	472	567

REGISTERED CIVIL ENGINEER — 6-4-09 DATE

PHILIP E. LUTZ No. C55839 Exp. 12-31-10 CIVIL — REGISTERED PROFESSIONAL ENGINEER — STATE OF CALIFORNIA

7-20-09
PLANS APPROVAL DATE

The State of California or its officers or agents shall not be responsible for the accuracy or completeness of electronic copies of this plan sheet.

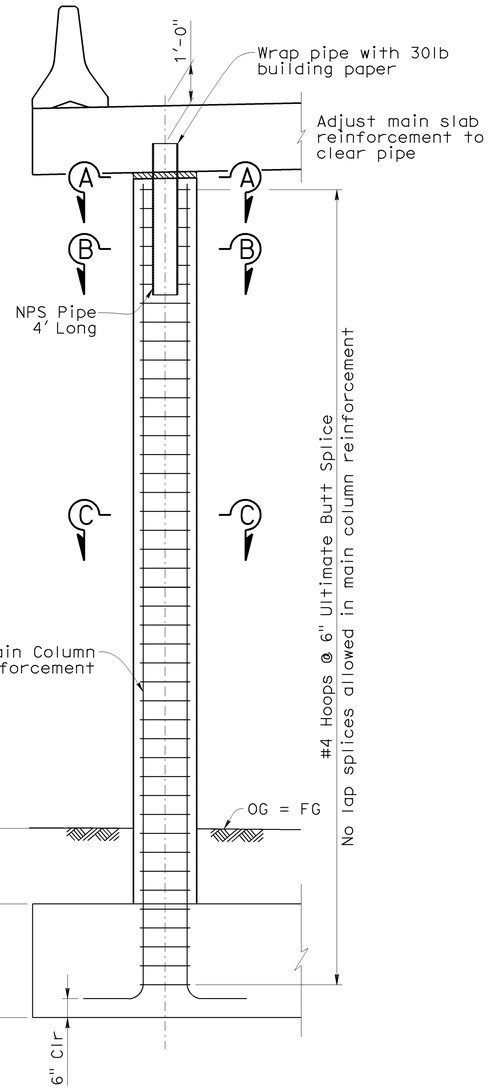

COLUMN DETAIL
1/2"=1'-0"

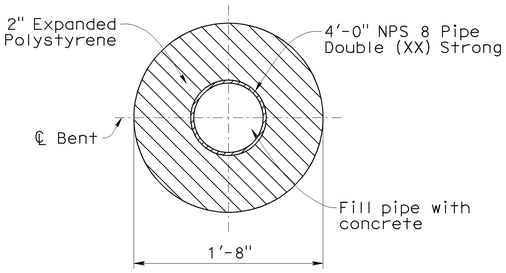

SECTION A-A
1½"=1'-0"

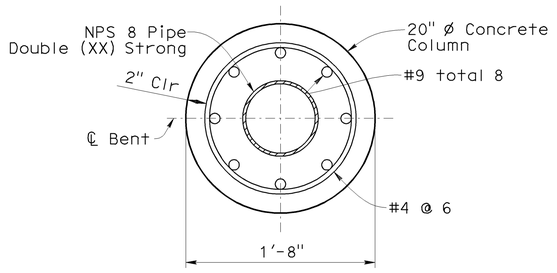

SECTION B-B
1½"=1'-0"

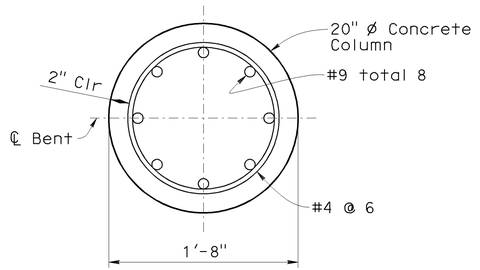

SECTION C-C
1½"=1'-0"

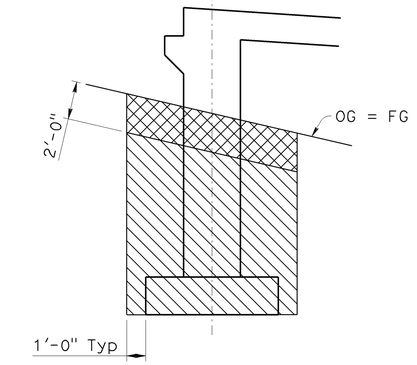

TYPICAL ABUT EXCAVATION
NO SCALE

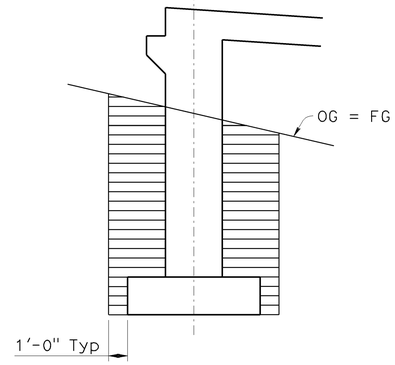

TYPICAL ABUT BACKFILL
NO SCALE

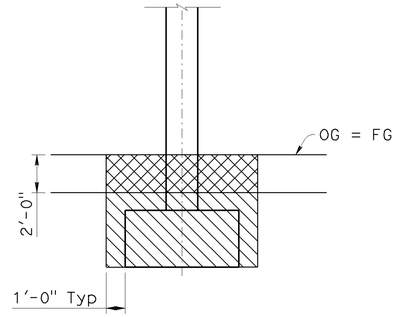

TYPICAL BENT EXCAVATION
NO SCALE

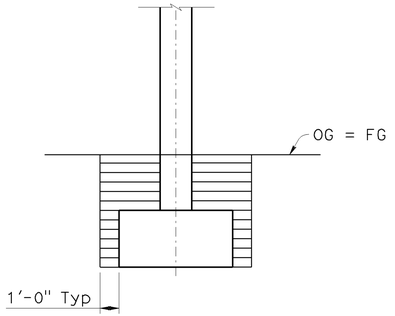

TYPICAL BENT BACKFILL
NO SCALE

Legend:

- Indicates Excavation, Bridge (Naturally Occuring Asbestos)
- Indicates Excavation, Type Z-2
- Indicates Backfill, Bridge

DESIGN	BY E. Franciliso	CHECKED M. VanDePol	STATE OF CALIFORNIA DEPARTMENT OF TRANSPORTATION	DIVISION OF ENGINEERING SERVICES STRUCTURE DESIGN DESIGN BRANCH 9	BRIDGE NO. 34-0158
DETAILS	BY E. Hallstrom	CHECKED E. Franciliso			POST MILE 6.81
QUANTITIES	BY E. Franciliso	CHECKED M. VanDePol			

RUCKMAN UC TEMPORARY UC BRIDGE
COLUMN DETAILS

STRUCTURES DESIGN DETAIL SHEET (ENGLISH) (REV. 10/25/05)

ORIGINAL SCALE IN INCHES FOR REDUCED PLANS 0 1 2 3

CU 04242
EA 163731

DISREGARD PRINTS BEARING EARLIER REVISION DATES →

REVISION DATES: 2-18-09 | 4-09-09 | 4-16-09 | 4-30-09 | 5-7-09

SHEET 8 OF 20

FILE => 34-0158-j-cdt01.dgn

USERNAME => trpierce DATE PLOTTED => 21-JUL-2009 TIME PLOTTED => 13:18

DIST	COUNTY	ROUTE	POST MILES TOTAL PROJECT	SHEET No	TOTAL SHEETS
04	SF	101,1	9.2/9.8, 6.8/7.1	473	567

REGISTERED CIVIL ENGINEER — 6-4-09 DATE

PHILIP E. LUTZ No. C55839 Exp. 12-31-10 CIVIL — REGISTERED PROFESSIONAL ENGINEER — STATE OF CALIFORNIA

7-20-09
PLANS APPROVAL DATE

The State of California or its officers or agents shall not be responsible for the accuracy or completeness of electronic copies of this plan sheet.

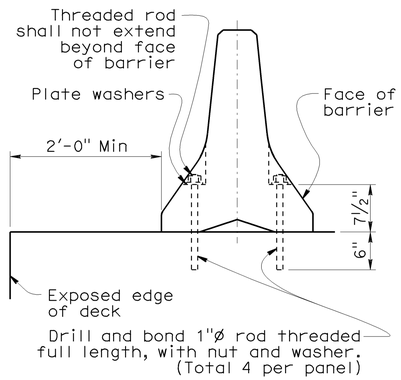

TYPE K RAILING ATTACHMENT

NO SCALE

Notes:
Typical section as viewed looking upstation along "DOY4" line.

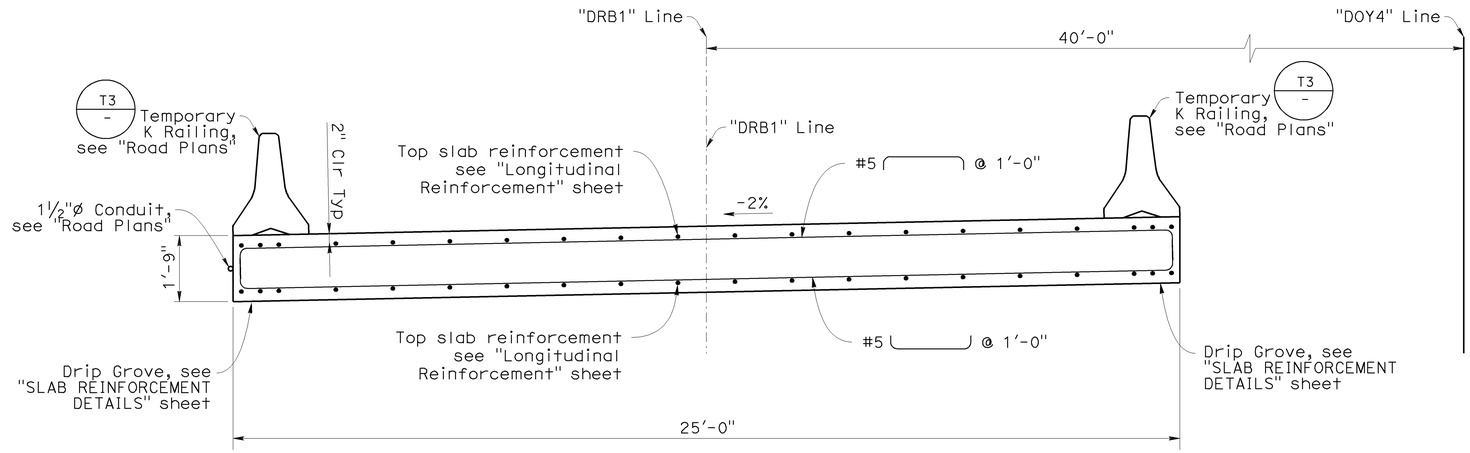

TYPICAL SECTION

½"=1'-0"

DESIGN	BY E. Franciliso	CHECKED M. VanDePol	STATE OF CALIFORNIA DEPARTMENT OF TRANSPORTATION	DIVISION OF ENGINEERING SERVICES STRUCTURE DESIGN DESIGN BRANCH 9	BRIDGE NO. 34-0158	RUCKMAN UC TEMPORARY BRIDGE
DETAILS	BY E. Hallstrom	CHECKED E. Franciliso			POST MILE 6.81	TYPICAL SECTION
QUANTITIES	BY E. Franciliso	CHECKED M. VanDePol				

STRUCTURES DESIGN DETAIL SHEET (ENGLISH) (REV. 10/25/05)

ORIGINAL SCALE IN INCHES FOR REDUCED PLANS 0 1 2 3

CU 04242
EA 163731

DISREGARD PRINTS BEARING EARLIER REVISION DATES →

REVISION DATES: 2-18-09, 3-19-09, 4-9-09, 4-30-09, 5-8-09

SHEET 9 OF 20

FILE => 34-0158-K-ts01.dgn

USERNAME => ttpierce DATE PLOTTED => 21-JUL-2009 TIME PLOTTED => 13:18

DIST	COUNTY	ROUTE	POST MILES TOTAL PROJECT	SHEET No	TOTAL SHEETS
04	SF	101,1	9.2/9.8, 6.8/7.1	474	567

REGISTERED CIVIL ENGINEER — 6-4-09 DATE

7-20-09
PLANS APPROVAL DATE

REGISTERED PROFESSIONAL ENGINEER — PHILIP E. LUTZ — No. C55839 — Exp. 12-31-10 — CIVIL — STATE OF CALIFORNIA

The State of California or its officers or agents shall not be responsible for the accuracy or completeness of electronic copies of this plan sheet.

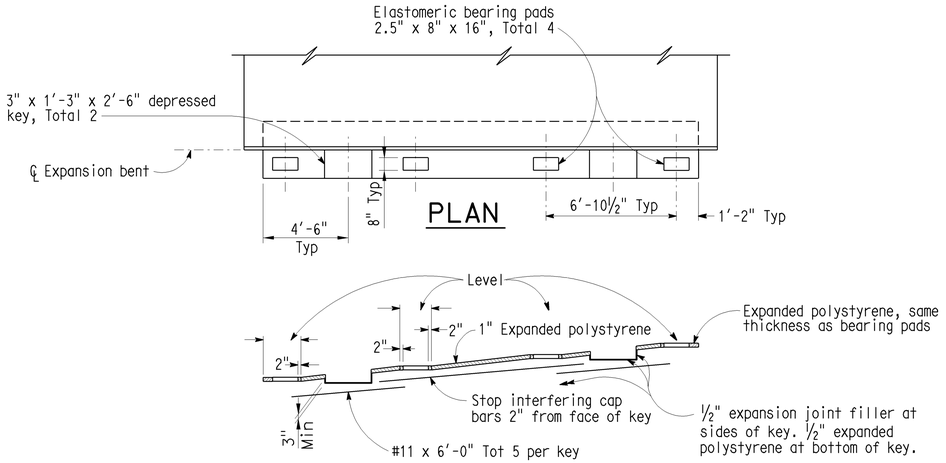

ELEVATION
TYPICAL BEARING DETAILS

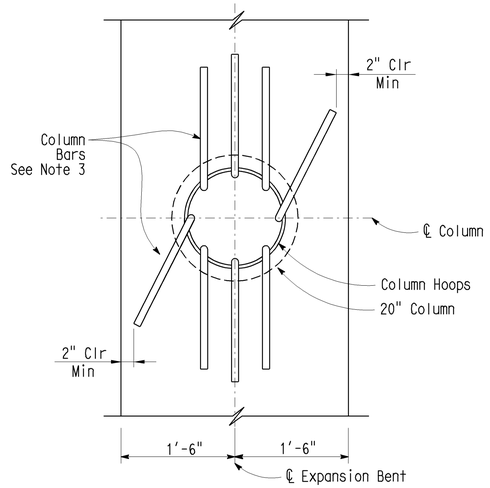

Reinforcement shown at full width

SECTION B-B

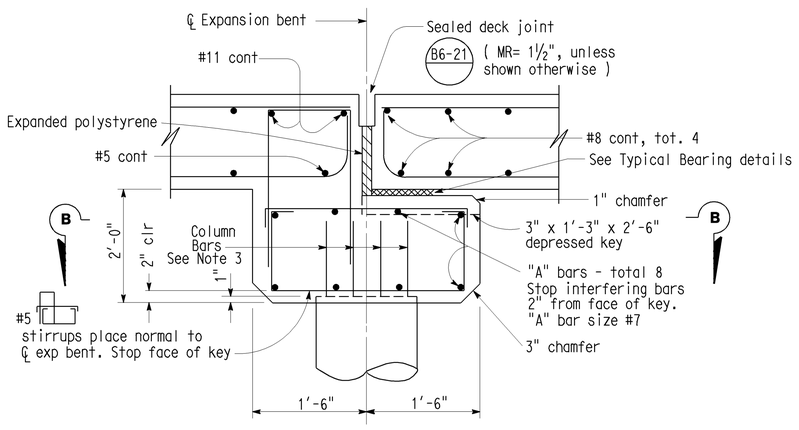

SECTION A-A

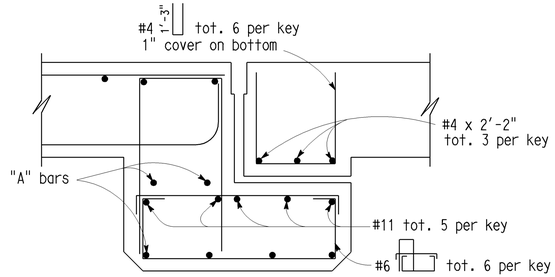

DEPRESSED KEY

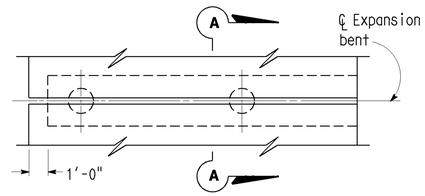

PART PLAN
No Skew

HINGE AT BENT

Notes:

1. All anchor bars shall be placed parallel to ℄ roadway.
2. *Base width of concrete barrier +1"
3. Place end hook of Column Bars parrallel to ℄ of Expansion Bent, except where noted

DESIGN	BY E. Franciliso	CHECKED M. VanDePol	STATE OF CALIFORNIA DEPARTMENT OF TRANSPORTATION	DIVISION OF ENGINEERING SERVICES STRUCTURE DESIGN DESIGN BRANCH 9	BRIDGE NO. 34-0158	RUCKMAN UC TEMPORARY BRIDGE	
DETAILS	BY E. Hallstrom	CHECKED E. Franciliso			POST MILE 6.81	SLAB HINGE DETAILS	
QUANTITIES	BY E. Franciliso	CHECKED M. VanDePol					

ORIGINAL SCALE IN INCHES FOR REDUCED PLANS 0 1 2 3

CU 04242
EA 163731

DISREGARD PRINTS BEARING EARLIER REVISION DATES →

REVISION DATES										SHEET	OF
4-24-09	5-7-09	5-14-09								10	20

STRUCTURES DESIGN DETAIL SHEET (ENGLISH) (REV. 10/25/05)

FILE => 34-0158-n-hing.dgn

USERNAME => trpierce DATE PLOTTED => 21-JUL-2009 TIME PLOTTED => 13:18

DIST	COUNTY	ROUTE	POST MILES TOTAL PROJECT	SHEET No	TOTAL SHEETS
04	SF	101,1	9.2/9.8, 6.8/7.1	475	567

REGISTERED CIVIL ENGINEER — 6-4-09 DATE

PHILIP E. LUTZ No. C55839 Exp. 12-31-10 CIVIL — REGISTERED PROFESSIONAL ENGINEER — STATE OF CALIFORNIA

7-20-09
PLANS APPROVAL DATE

The State of California or its officers or agents shall not be responsible for the accuracy or completeness of electronic copies of this plan sheet.

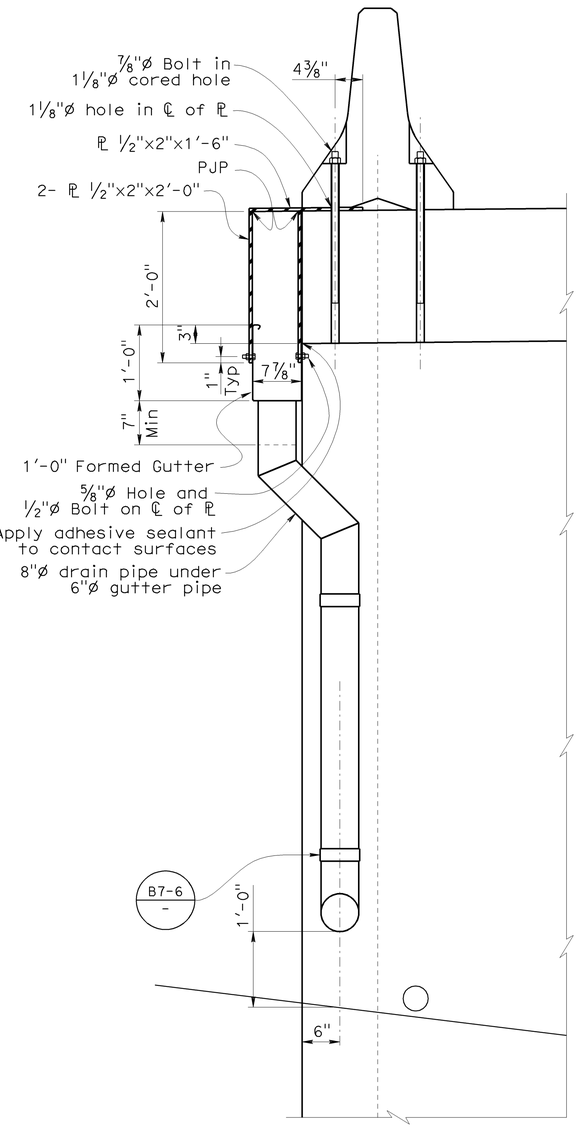

DETAIL B
1"=1'-0"

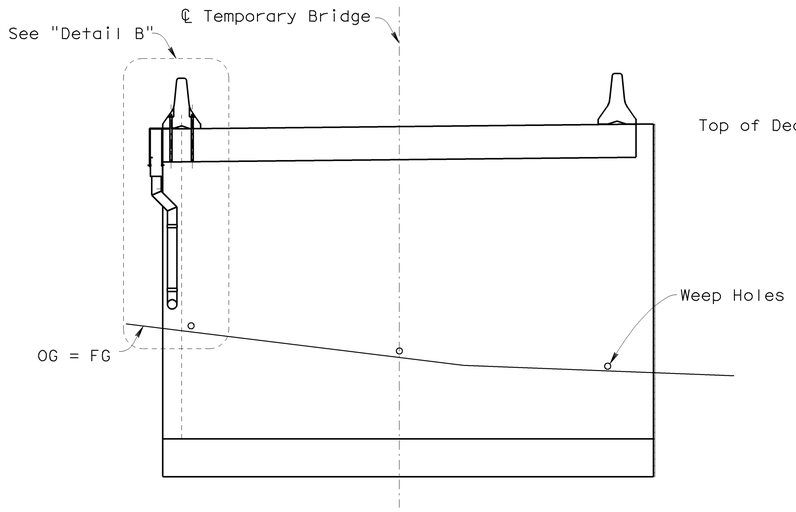

VIEW A-A
1/4"=1'-0"

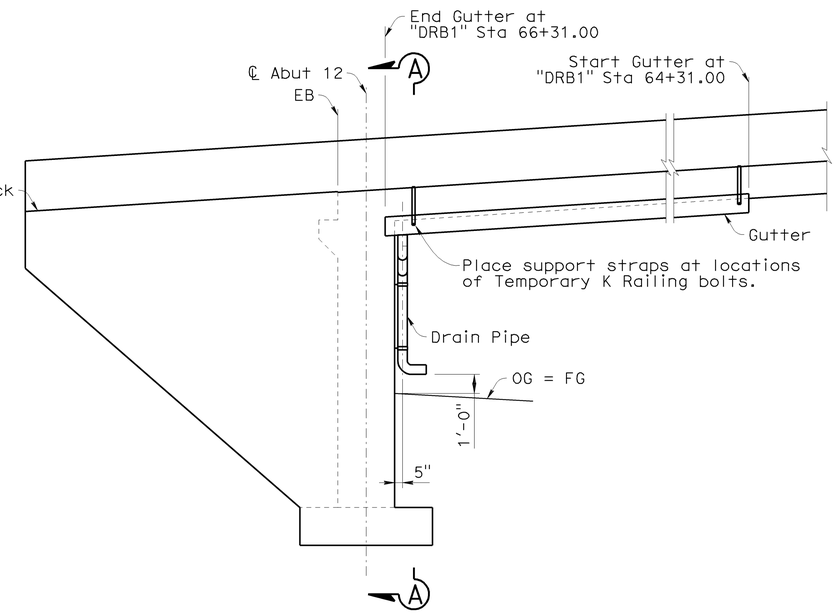

(Looking From West)
ABUTMENT 12 ELEVATION
1/4"=1'-0"

DESIGN	BY E. Franciliso	CHECKED M. VanDePol	STATE OF CALIFORNIA DEPARTMENT OF TRANSPORTATION	DIVISION OF ENGINEERING SERVICES STRUCTURE DESIGN DESIGN BRANCH 9	BRIDGE NO. 34-0158	RUCKMAN UC TEMPORARY BRIDGE	
DETAILS	BY E. Hallstrom	CHECKED E. Franciliso			POST MILE 6.81	DRAINAGE DETAILS	
QUANTITIES	BY E. Franciliso	CHECKED M. VanDePol		CU 04242 EA 163731			

STRUCTURES DESIGN DETAIL SHEET (ENGLISH) (REV. 10/25/05)

ORIGINAL SCALE IN INCHES FOR REDUCED PLANS 0 1 2 3

DISREGARD PRINTS BEARING EARLIER REVISION DATES →

REVISION DATES: 3-9-09 | 4-10-09 | 4-14-09 | 4-30-09 | 5-7-09

SHEET 11 OF 20

FILE => 34-0158-r-ddet.dgn

USERNAME = rpierce DATE PLOTTED => 21-JUL-2009 TIME PLOTTED => 13:18

DIST	COUNTY	ROUTE	POST MILES TOTAL PROJECT	SHEET No	TOTAL SHEETS
04	SF	101,1	9.2/9.8, 6.8/7.1	476	567

REGISTERED CIVIL ENGINEER — 6-4-09 DATE

PHILIP E. LUTZ No. C55839 Exp. 12-31-10 CIVIL — REGISTERED PROFESSIONAL ENGINEER — STATE OF CALIFORNIA

7-20-09
PLANS APPROVAL DATE

The State of California or its officers or agents shall not be responsible for the accuracy or completeness of electronic copies of this plan sheet.

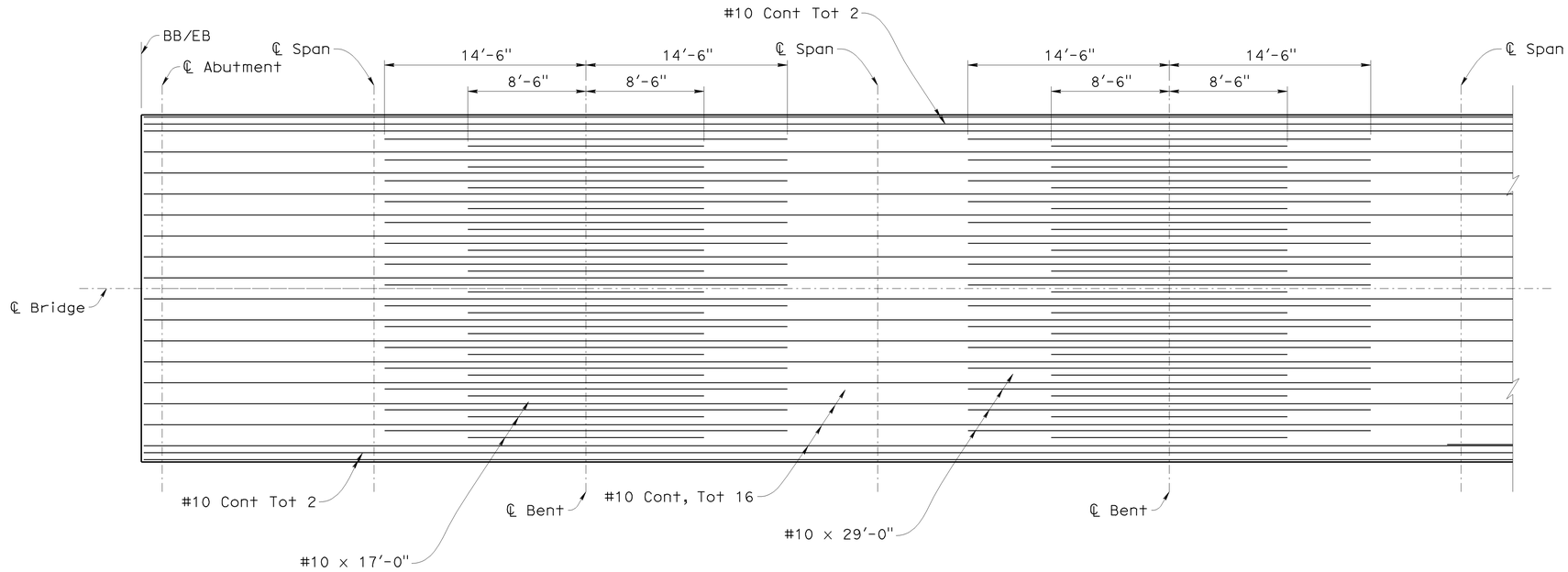

TOP REINFORCEMENT

1" = 5′

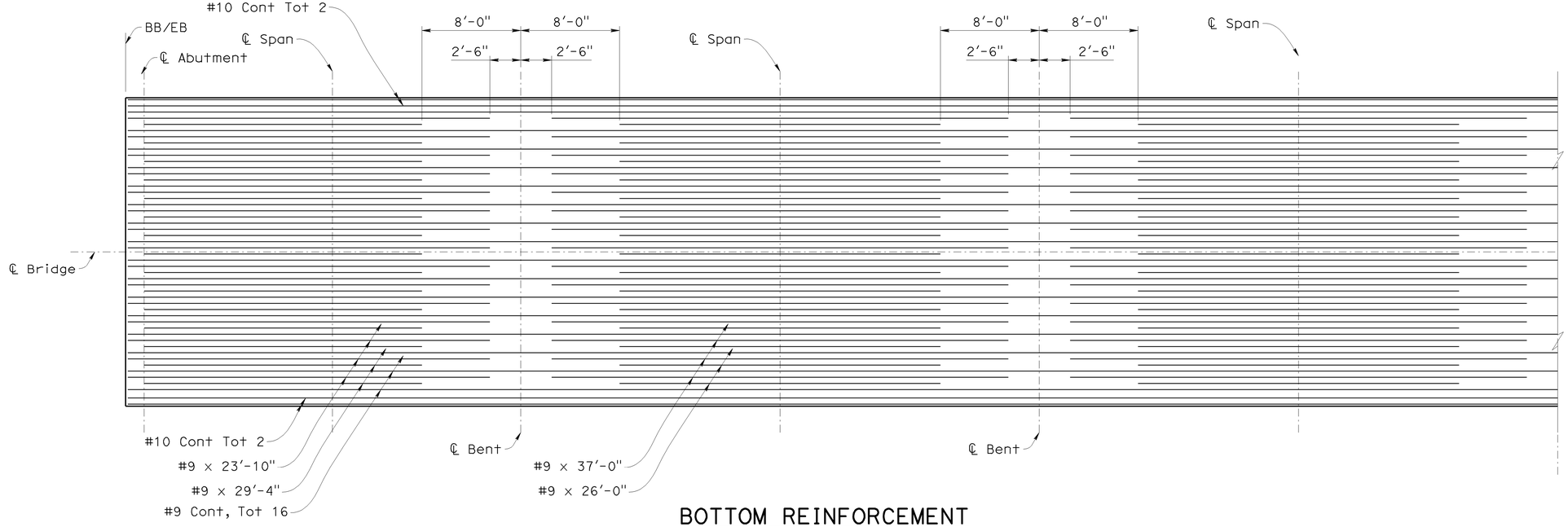

BOTTOM REINFORCEMENT

1" = 5′

DESIGN	BY E. Franciliso	CHECKED M. VanDePol	STATE OF CALIFORNIA DEPARTMENT OF TRANSPORTATION	DIVISION OF ENGINEERING SERVICES STRUCTURE DESIGN DESIGN BRANCH 9	BRIDGE NO. 34-0158	RUCKMAN UC TEMPORARY BRIDGE	
DETAILS	BY E. Hallstrom	CHECKED E. Franciliso			POST MILE 6.81	LONGITUDINAL REINFORCEMENT	
QUANTITIES	BY E. Franciliso	CHECKED M. VanDePol					

STRUCTURES DESIGN DETAIL SHEET (ENGLISH) (REV. 10/25/05)

ORIGINAL SCALE IN INCHES FOR REDUCED PLANS 0 1 2 3

CU 04242
EA 163731

DISREGARD PRINTS BEARING EARLIER REVISION DATES →

REVISION DATES: 3-2-09 | 3-19-09 | 4-9-09 | 4-30-09 | 5-7-09

SHEET 12 OF 20

FILE => 34-0158-w-lorein.dgn

USERNAME => rmoriok DATE PLOTTED => 21-JUL-2009 TIME PLOTTED => 13:31

RELEASED 11-20-97

DIST	COUNTY	ROUTE	POST MILES TOTAL PROJECT	SHEET No	TOTAL SHEETS
04	SF	101,1	9.2/9.8, 6.8/7.1	477	567

REGISTERED CIVIL ENGINEER — 6-4-09 DATE

7-20-09
PLANS APPROVAL DATE

The State of California or its officers or agents shall not be responsible for the accuracy or completeness of electronic copies of this plan sheet.

REGISTERED PROFESSIONAL ENGINEER — PHILIP E. LUTZ — No. C55839 — Exp. 12-31-09 — CIVIL — STATE OF CALIFORNIA

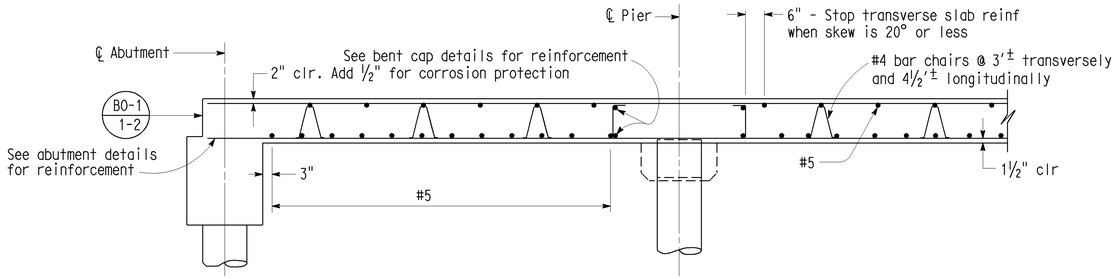

LONGITUDINAL SECTION ⚠1

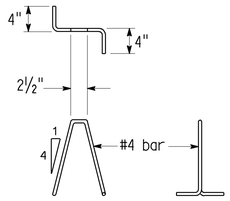

BAR CHAIR DETAIL

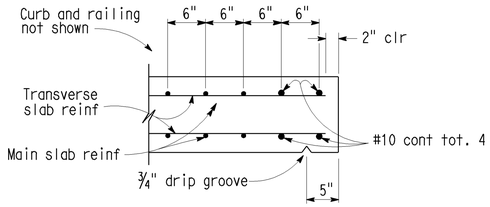

EDGE OF SLAB DETAILS

BAR SPLICE LENGTH								
Bar size	#4	#5	#6	#7	#8	#9	#10	#11
All bars, except top bars in spans over 24'	23"	28"	34"	39"	45"	68"	76"	85"
Top bars in spans over 24'	23"	28"	34"	53"	60"	77"	97"	120"

Reinforcement notes:

Splices in top main bars to be located near center of span.
Splices in bottom main bars to be located near bent.
Spacing of all transverse bars is measured along ℄ roadway.
~~Skew 0° to 20°:~~ Place all transverse bars parallel to bent.
~~Skew over 20°: Place transverse slab bars perpendicular to ℄ bridge. See details at right and below.~~ ⚠1

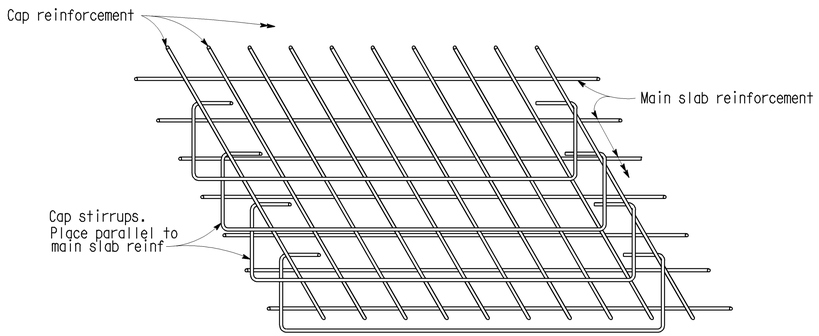

TOP SLAB REINFORCEMENT AT BENT ⚠1

~~Note: View for main span over 24'.~~
~~Bar placement similar for spans under 24'~~

⚠1 **GENERAL NOTES LOAD FACTOR DESIGN**

DESIGN: Bridge Design Specifications
(1983 AASHTO with Interims and Revisions by Caltrans)

DEAD LOAD: Includes 35 psf for future wearing surface.

LIVE LOADING: HS20-44 and alternative and permit design load.

REINFORCED CONCRETE: fy = 60,000 psi
f'c = 3,250 psi
n = 9

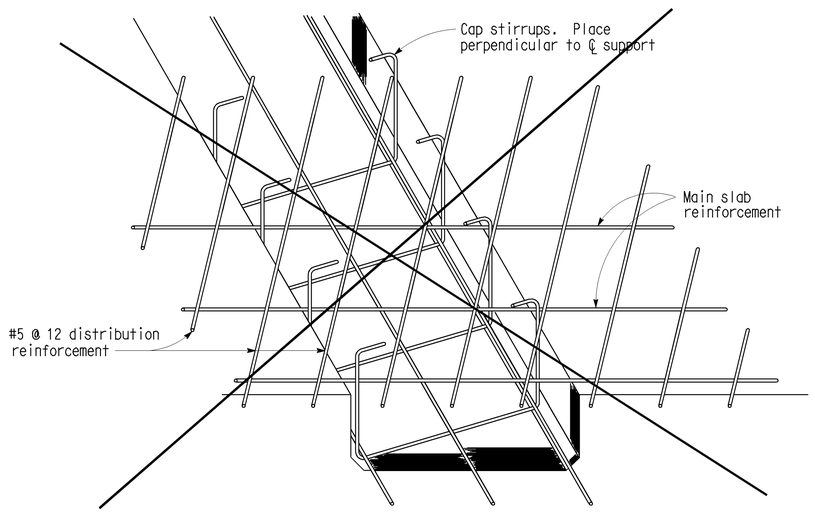

DROPPED CAP ⚠1

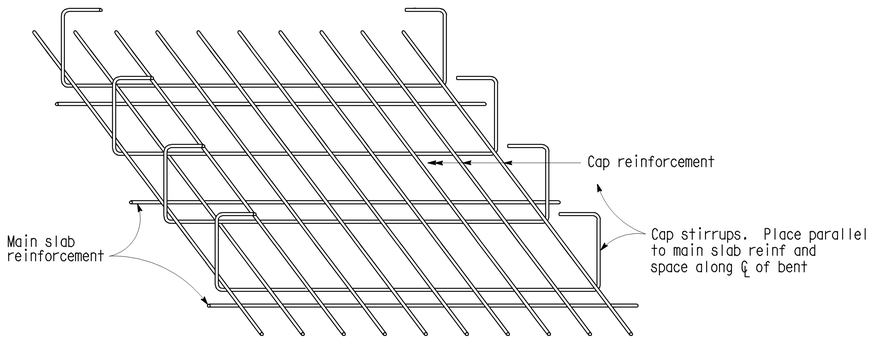

FLUSH CAP ⚠1

BOTTOM SLAB REINFORCEMENT AT BENT

STANDARD DRAWING

FILE NO. XS 12-55	DESIGN	BY L.Y. LEE	CHECKED T. FARNAN	APPROVAL RECOMMENDED BY
DESIGN DATE 8/86	DETAILS	BY R. YEE	CHECKED T. FARNAN	DESIGN SUPERVISOR
	SUBMITTED BY R.S. WATANABE			

DS OSD 2147A (CADD 7/97)

⚠1 MODIFIED DETAIL

ORIGINAL SCALE IN INCHES FOR REDUCED PLANS 0 1 2 3

STATE OF CALIFORNIA
DEPARTMENT OF TRANSPORTATION

DIVISION OF STRUCTURES
STRUCTURE DESIGN 9

CU 04242
EA 163731

BRIDGE NO.	34-0158
POST MILE	6.81

RUCKMAN UC TEMPORARY BRIDGE

SLAB REINFORCEMENT DETAILS

DISREGARD PRINTS BEARING EARLIER REVISION DATES →

REVISION DATES (PRELIMINARY STAGE ONLY)									SHEET	OF
4-9-09	4-30-09	5-7-09							13	20

FILE => 34-0158-w-srd.dgn

XS1255.DGN VI=1

USERNAME => tmorlok DATE PLOTTED => 21-JUL-2009 TIME PLOTTED => 13:31

DIST	COUNTY	ROUTE	POST MILES TOTAL PROJECT	SHEET No	TOTAL SHEETS
04	SF	101,1	9.2/9.8, 6.8/7.1	478	567

REGISTERED CIVIL ENGINEER — 6-4-09 DATE

PHILIP E. LUTZ No. C55839 Exp. 12-31-10 CIVIL — REGISTERED PROFESSIONAL ENGINEER — STATE OF CALIFORNIA

7-20-09
PLANS APPROVAL DATE

The State of California or its officers or agents shall not be responsible for the accuracy or completeness of electronic copies of this plan sheet.

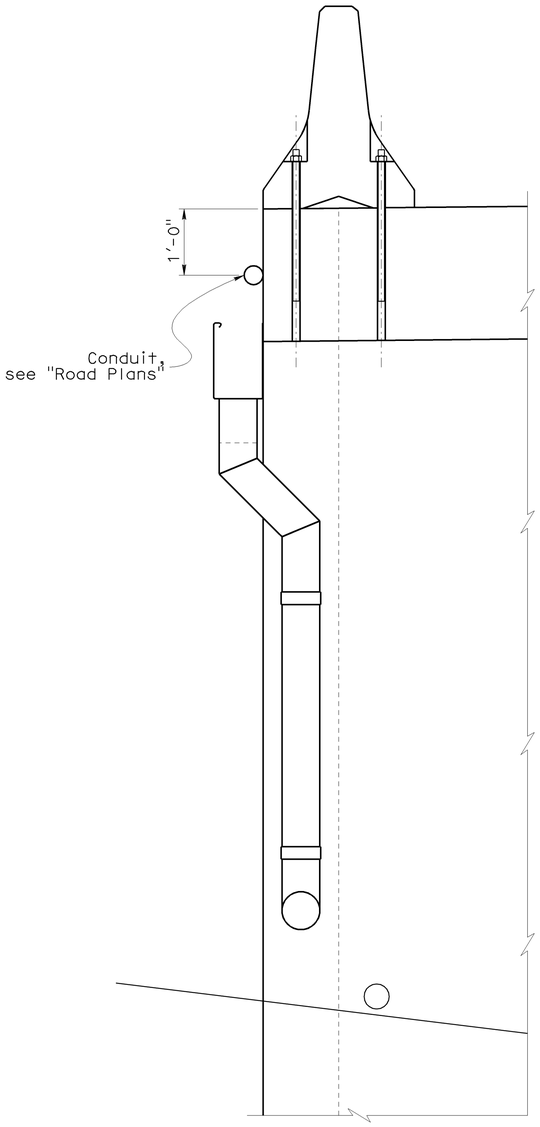

DETAIL B
1"=1'-0"

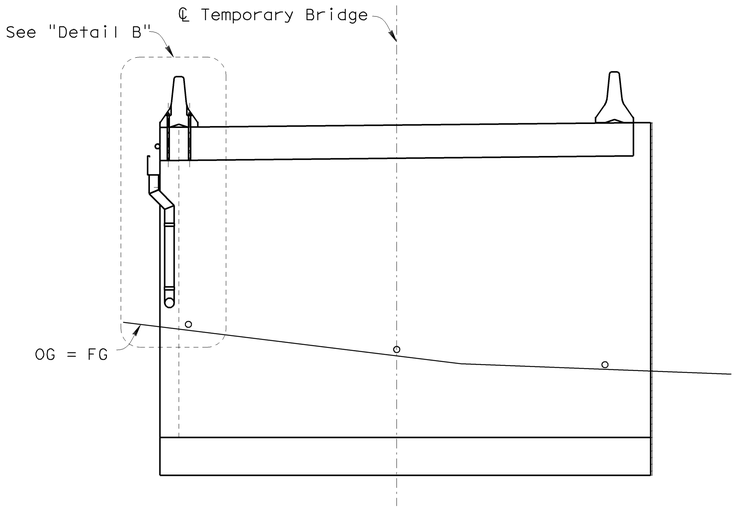

VIEW A-A
¼"=1'-0"

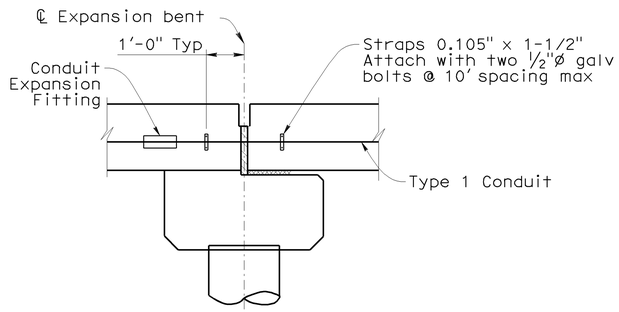

(Looking From West)
BENT 6 ELEVATION
½"=1'-0"

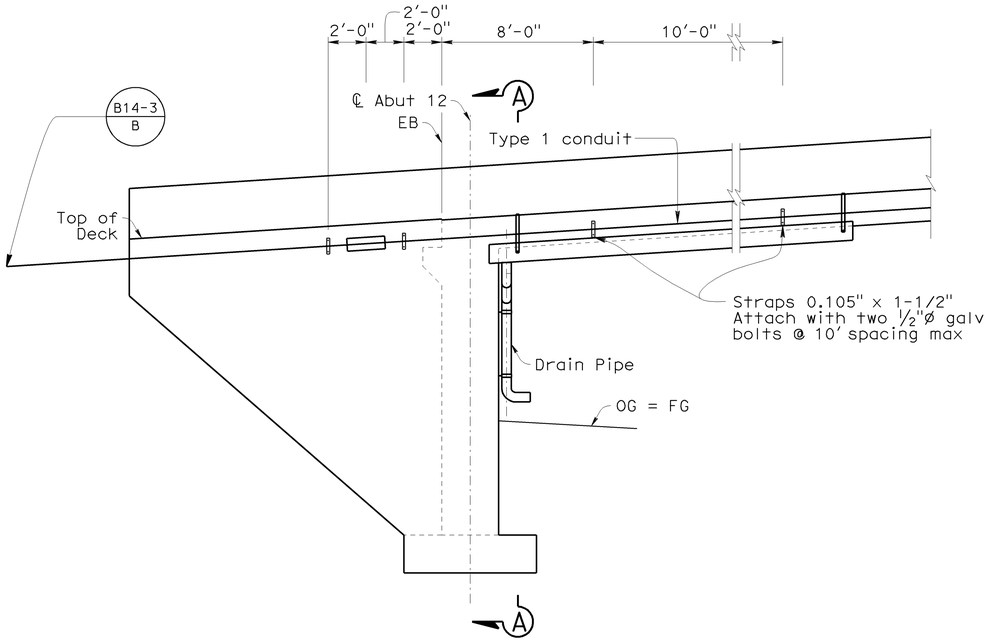

(Looking From West)
ABUTMENT 12 ELEVATION
¼"=1'-0"

DESIGN	BY E. Franciliso	CHECKED M. VanDePol	STATE OF CALIFORNIA DEPARTMENT OF TRANSPORTATION	DIVISION OF ENGINEERING SERVICES STRUCTURE DESIGN DESIGN BRANCH 9	BRIDGE NO. 34-0158
DETAILS	BY E. Hallstrom	CHECKED E. Franciliso			POST MILE 6.81
QUANTITIES	BY E. Franciliso	CHECKED M. VanDePol			

RUCKMAN UC TEMPORARY BRIDGE
CONDUIT DETAILS

STRUCTURES DESIGN DETAIL SHEET (ENGLISH) (REV. 10/25/05)

ORIGINAL SCALE IN INCHES FOR REDUCED PLANS 0 1 2 3

CU 04242
EA 163731

DISREGARD PRINTS BEARING EARLIER REVISION DATES →

REVISION DATES: 4-30-09, 5-8-09

SHEET 14 OF 20

FILE => 34-0158-x-condet.dgn

USERNAME => tmorlok DATE PLOTTED => 21-JUL-2009 TIME PLOTTED => 13:31

DIST	COUNTY	ROUTE	KILOMETER POST TOTAL PROJECT	SHEET No	TOTAL SHEETS
04	SF	101,1	9.2/9.8, 6.8/7.1	479	567

CERTIFIED ENGINEERING GEOLOGIST 6-02-09

7-20-09
PLANS APPROVAL DATE

The State of California or its officers or agents shall not be responsible for the accuracy or completeness of electronic copies of this plan sheet.

PROFESSIONAL GEOLOGIST — Grant Wilcox — No. 2300 — Exp. 4-30-10 — CERTIFIED ENGINEERING GEOLOGIST — STATE OF CALIFORNIA

This LOTB sheet was prepared in accordance with the Caltrans Soil & Rock Logging, Classification, & Presentation Manual (June 2007) with the exception of Section 2.3.

BENCH MARK

BM No. SF14 Elev 96.261 (1988 NAVD)

Set 1′ Caltrans brass plug in concrete, northbound Lincoln road, approximately 205′ north of the north overcrossing of Doyle Drive, on a concrete Vista Point structure, 21.1′ north of the first boolard after a bus turnout, 14.4′ southeast of a 1.3′ wide raised wall in the Vista Point structure, 2′ west of the east edge.

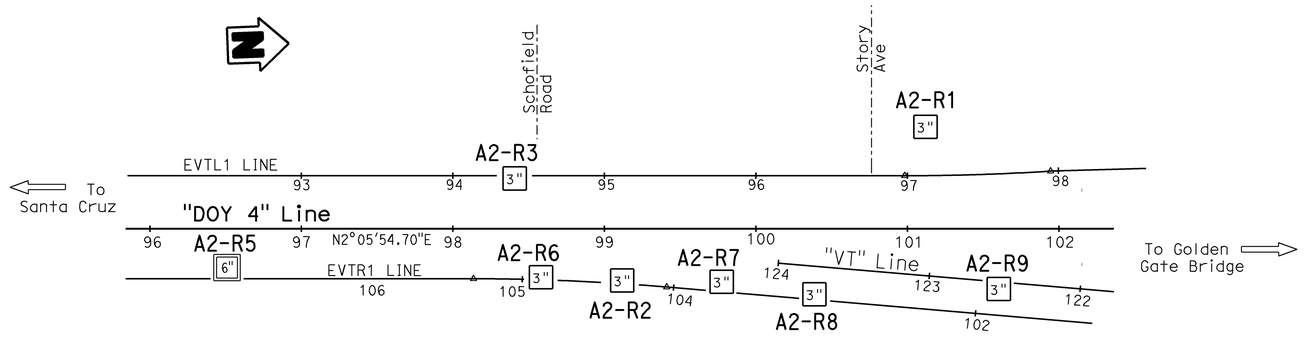

PLAN
1" = 50′

Note: Ground water was not measured in Borings A2-R5 and A2-R3.

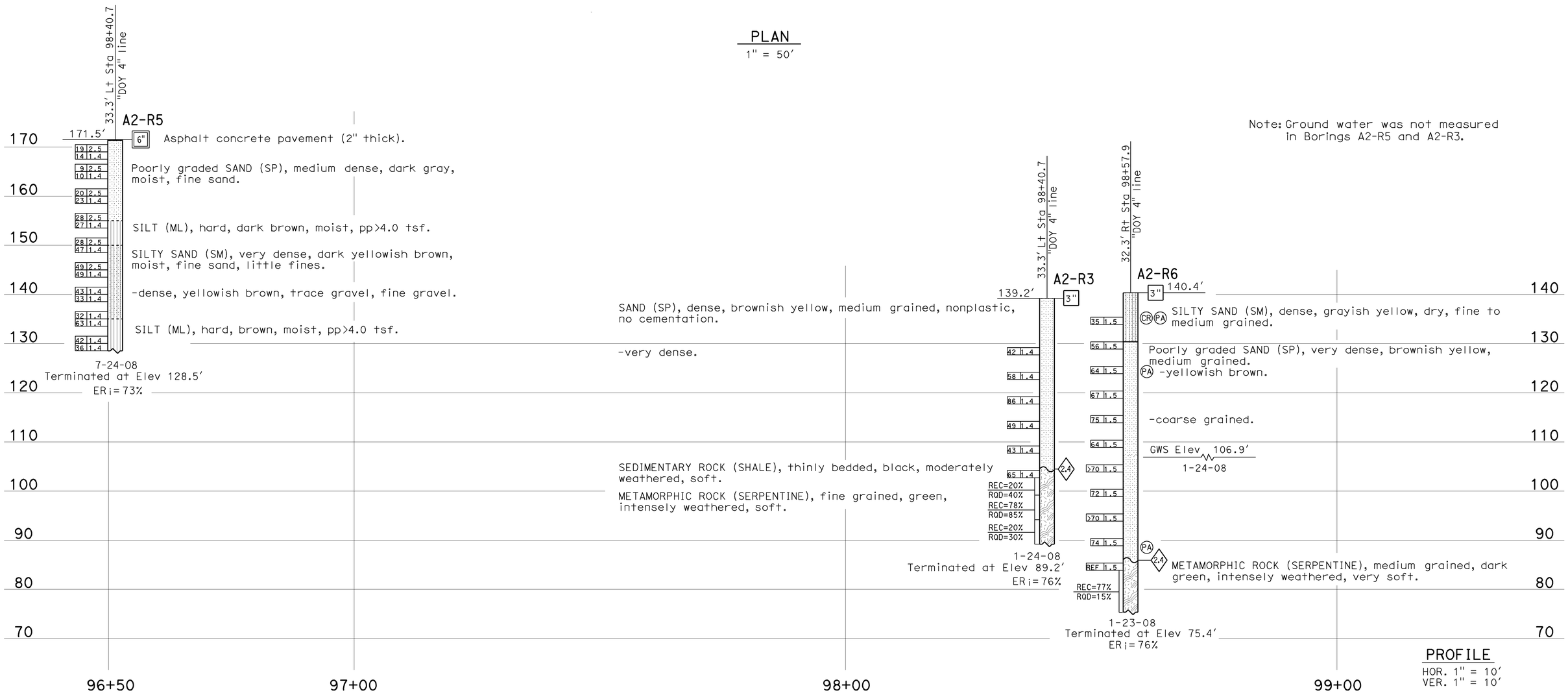

PROFILE
HOR. 1" = 10′
VER. 1" = 10′

ENGINEERING SERVICES		GEOTECHNICAL SERVICES	STATE OF CALIFORNIA DEPARTMENT OF TRANSPORTATION	DIVISION OF ENGINEERING SERVICES STRUCTURE DESIGN DESIGN BRANCH 9	BRIDGE NO. 34-0158	RUCKMAN UC TEMPORARY BRIDGE
FUNCTIONAL SUPERVISOR NAME: T. Pokrywka	DRAWN BY: I.G-Remmen, 4/09	FIELD INVESTIGATION BY: R. Nashed			POST MILES 6.81	LOG OF TEST BORINGS 1 OF 6
	CHECKED BY: R. Price			CU 04 EA 163701	DISREGARD PRINTS BEARING EARLIER REVISION DATES →	REVISION DATES: 05-07-09, 05-11-09, 05-22-09, 06-01-09 — SHEET 15 OF 20

OGS CIVIL LOG OF TEST BORINGS SHEET

ORIGINAL SCALE IN INCHES FOR REDUCED PLANS 0 1 2 3

FILE => 34-0158-z-lotb01.dgn

USERNAME => trmorlok DATE PLOTTED => 21-JUL-2009 TIME PLOTTED => 13:31

DIST	COUNTY	ROUTE	KILOMETER POST TOTAL PROJECT	SHEET No	TOTAL SHEETS
04	SF	101,1	9.2/9.8, 6.8/7.1	480	567

CERTIFIED ENGINEERING GEOLOGIST — 6-02-09

PROFESSIONAL GEOLOGIST — Grant Wilcox — No. 2300 — Exp. 4-30-10 — CERTIFIED ENGINEERING GEOLOGIST — STATE OF CALIFORNIA

7-20-09
PLANS APPROVAL DATE

The State of California or its officers or agents shall not be responsible for the accuracy or completeness of electronic copies of this plan sheet.

This LOTB sheet was prepared in accordance with the Caltrans Soil & Rock Logging, Classification, & Presentation Manual (June 2007) with the exception of Section 2.3.

FOR PLAN VIEW, SEE
"LOG OF TEST BORINGS 1 OF 6"

Note: Ground water was not measured in Borings A2-R7 and A2-R8.

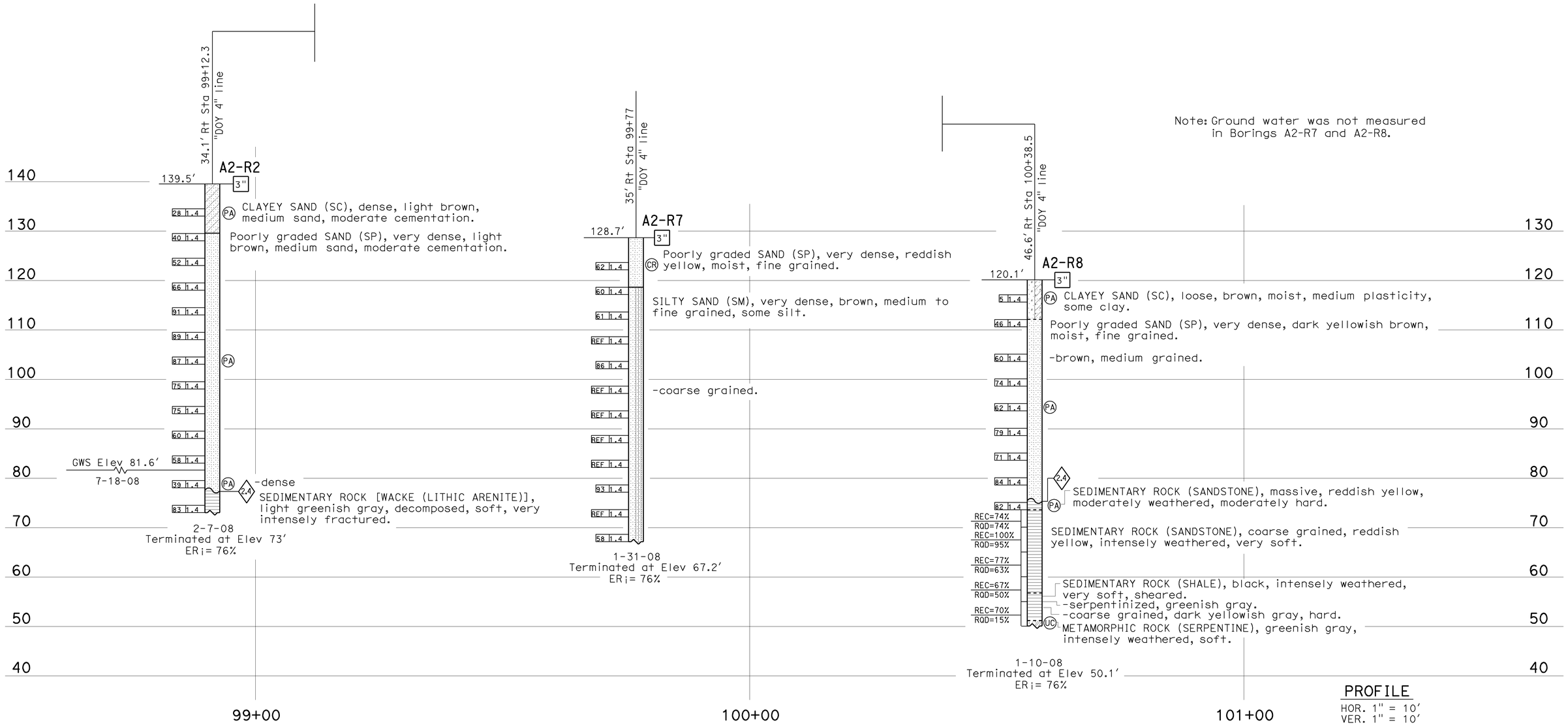

PROFILE
HOR. 1" = 10′
VER. 1" = 10′

ENGINEERING SERVICES	GEOTECHNICAL SERVICES		STATE OF CALIFORNIA DEPARTMENT OF TRANSPORTATION	DIVISION OF ENGINEERING SERVICES STRUCTURE DESIGN	BRIDGE NO. 34-0158	RUCKMAN UC TEMPORARY BRIDGE
FUNCTIONAL SUPERVISOR	DRAWN BY: I.G-Remmen, 4/09	FIELD INVESTIGATION BY:		DESIGN BRANCH 9	POST MILES 6.81	LOG OF TEST BORINGS 2 OF 6
NAME: T. Pokrywka	CHECKED BY: R. Price	R. Nashed, E. Ortega				

OGS CIVIL LOG OF TEST BORINGS SHEET

ORIGINAL SCALE IN INCHES FOR REDUCED PLANS 0 1 2 3

CU 04
EA 163701

DISREGARD PRINTS BEARING EARLIER REVISION DATES →

REVISION DATES: 05-07-09 | 05-11-09 | 05-22-09 | 06-01-09

SHEET 16 OF 20

FILE => 34-0158-z-lotb02.dgn

USERNAME => rtmorlok DATE PLOTTED => 21-JUL-2009 TIME PLOTTED => 13:31

DIST	COUNTY	ROUTE	KILOMETER POST TOTAL PROJECT	SHEET No	TOTAL SHEETS
04	SF	101,1	9.2/9.8, 6.8/7.1	481	567

CERTIFIED ENGINEERING GEOLOGIST 6-02-09

PROFESSIONAL GEOLOGIST — Grant Wilcox — No. 2300 — Exp. 4-30-10 — CERTIFIED ENGINEERING GEOLOGIST — STATE OF CALIFORNIA

7-20-09
PLANS APPROVAL DATE

The State of California or its officers or agents shall not be responsible for the accuracy or completeness of electronic copies of this plan sheet.

This LOTB sheet was prepared in accordance with the Caltrans Soil & Rock Logging, Classification, & Presentation Manual (June 2007) with the exception of Section 2.3.

FOR PLAN VIEW, SEE
"LOG OF TEST BORINGS 1 OF 6"

Note: Ground water was not measured in Borings A2-R1.

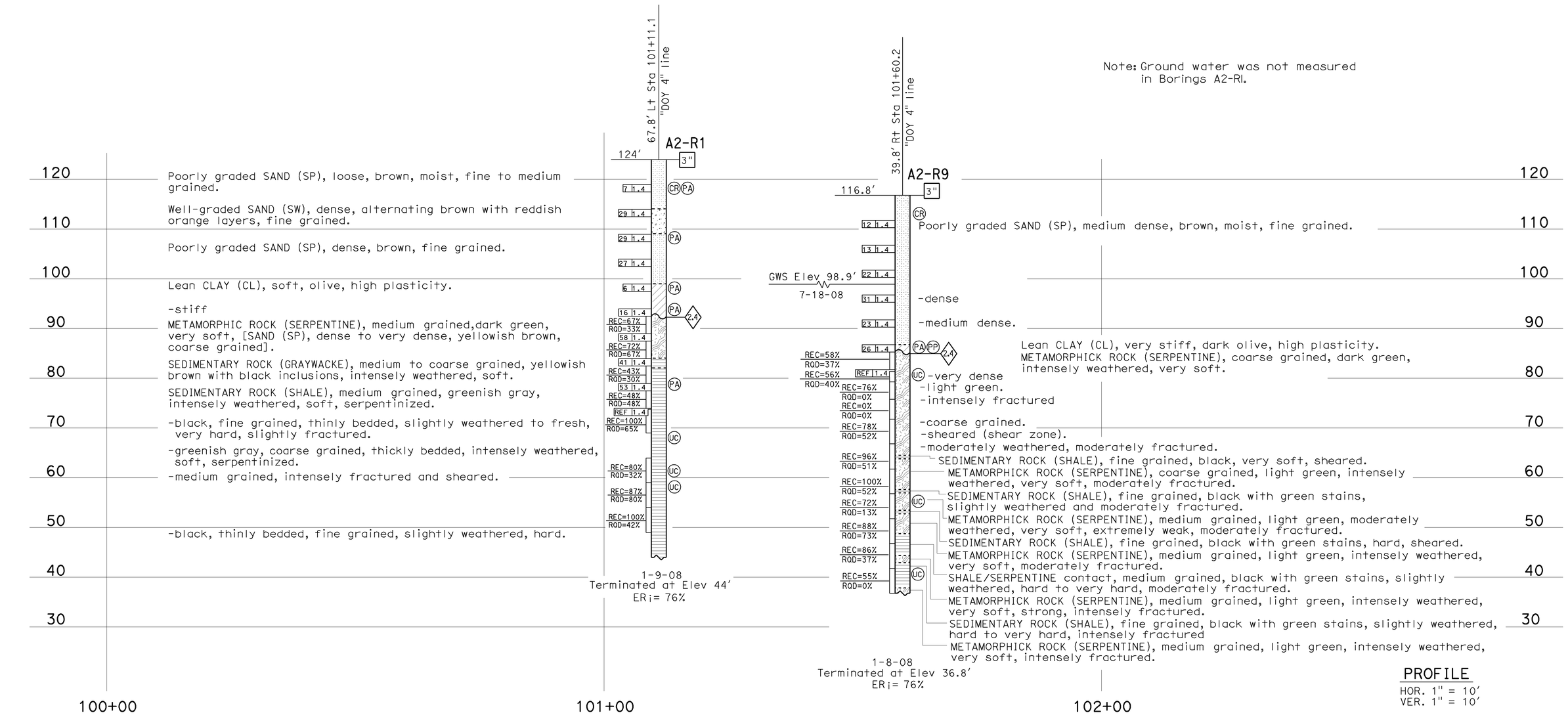

Poorly graded SAND (SP), loose, brown, moist, fine to medium grained.

Well-graded SAND (SW), dense, alternating brown with reddish orange layers, fine grained.

Poorly graded SAND (SP), dense, brown, fine grained.

Lean CLAY (CL), soft, olive, high plasticity.

-stiff

METAMORPHIC ROCK (SERPENTINE), medium grained,dark green, very soft, [SAND (SP), dense to very dense, yellowish brown, coarse grained].

SEDIMENTARY ROCK (GRAYWACKE), medium to coarse grained, yellowish brown with black inclusions, intensely weathered, soft.

SEDIMENTARY ROCK (SHALE), medium grained, greenish gray, intensely weathered, soft, serpentinized.

-black, fine grained, thinly bedded, slightly weathered to fresh, very hard, slightly fractured.

-greenish gray, coarse grained, thickly bedded, intensely weathered, soft, serpentinized.

-medium grained, intensely fractured and sheared.

-black, thinly bedded, fine grained, slightly weathered, hard.

Poorly graded SAND (SP), medium dense, brown, moist, fine grained.

Lean CLAY (CL), very stiff, dark olive, high plasticity.
METAMORPHICK ROCK (SERPENTINE), coarse grained, dark green, intensely weathered, very soft.

SEDIMENTARY ROCK (SHALE), fine grained, black, very soft, sheared.
METAMORPHICK ROCK (SERPENTINE), coarse grained, light green, intensely weathered, very soft, moderately fractured.
SEDIMENTARY ROCK (SHALE), fine grained, black with green stains, slightly weathered and moderately fractured.
METAMORPHICK ROCK (SERPENTINE), medium grained, light green, moderately weathered, very soft, extremely weak, moderately fractured.
SEDIMENTARY ROCK (SHALE), fine grained, black with green stains, hard, sheared.
METAMORPHICK ROCK (SERPENTINE), medium grained, light green, intensely weathered, very soft, moderately fractured.
SHALE/SERPENTINE contact, medium grained, black with green stains, slightly weathered, hard to very hard, moderately fractured.
METAMORPHICK ROCK (SERPENTINE), medium grained, light green, intensely weathered, very soft, strong, intensely fractured.
SEDIMENTARY ROCK (SHALE), fine grained, black with green stains, slightly weathered, hard to very hard, intensely fractured
METAMORPHICK ROCK (SERPENTINE), medium grained, light green, intensely weathered, very soft, intensely fractured.

PROFILE
HOR. 1" = 10'
VER. 1" = 10'

ENGINEERING SERVICES	GEOTECHNICAL SERVICES		STATE OF CALIFORNIA DEPARTMENT OF TRANSPORTATION	DIVISION OF ENGINEERING SERVICES STRUCTURE DESIGN	BRIDGE NO.	RUCKMAN UC TEMPORARY BRIDGE
FUNCTIONAL SUPERVISOR	DRAWN BY: I.G-Remmen, 4/09	FIELD INVESTIGATION BY:		DESIGN BRANCH 9	34-0158	LOG OF TEST BORINGS 3 OF 6
NAME: T. Pokrywka	CHECKED BY: R. Price	R. Nashed			POST MILES 6.81	

OGS CIVIL LOG OF TEST BORINGS SHEET

ORIGINAL SCALE IN INCHES FOR REDUCED PLANS 0 1 2 3

CU 04
EA 163701

DISREGARD PRINTS BEARING EARLIER REVISION DATES →

REVISION DATES: 05-01-09 | 05-11-09 | 05-22-09 | 06-01-09

SHEET 17 OF 20

FILE => 34-0158-z-lotb03.dgn

USERNAME => rtmorlok DATE PLOTTED => 21-JUL-2009 TIME PLOTTED => 13:31

REFERENCE: CALTRANS SOIL & ROCK LOGGING, CLASSIFICATION, AND PRESENTATION MANUAL (JUNE 2007)

DIST	COUNTY	ROUTE	KILOMETER POST TOTAL PROJECT	SHEET No	TOTAL SHEETS
04	SF	101,1	9.2/9.8, 6.8/7.1	482	567

CERTIFIED ENGINEERING GEOLOGIST 6-02-09

7-20-09
PLANS APPROVAL DATE

PROFESSIONAL GEOLOGIST — Grant Wilcox — No. 2300 — Exp. 4-30-10 — CERTIFIED ENGINEERING GEOLOGIST — STATE OF CALIFORNIA

The State of California or its officers or agents shall not be responsible for the accuracy or completeness of electronic copies of this plan sheet.

CEMENTATION

Description	Criteria
Weak	Crumbles or breaks with handling or little finger pressure.
Moderate	Crumbles or breaks with considerable finger pressure.
Strong	Will not crumble or break with finger pressure.

BOREHOLE IDENTIFICATION

Symbol	Hole Type	Description
Size	A	Auger Boring
Size	R P	Rotary drilled boring Rotary percussion boring (air)
Size	R	Rotary drilled diamond core
Size	HD HA	Hand driven (1-inch soil tube) Hand Auger
●	D	Dynamic Cone Penetration Boring
▲	CPT	Cone Penetration Test (ASTM D 5778-95)
⬚	O	Other

Note: Size in inches.

CONSISTENCY OF COHESIVE SOILS

Description	Unconfined Compressive Strength (tsf)	Pocket Penetrometer Measurement (tsf)	Torvane Measurement (tsf)	Field Approximation
Very Soft	< 0.25	< 0.25	< 0.12	Easily penetrated several inches by fist
Soft	0.25 to 0.50	0.25 to 0.50	0.12 to 0.25	Easily penetrated several inches by thumb
Medium Stiff	0.50 to 1.0	0.50 to 1.0	0.25 to 0.50	Penetrated several inches by thumb with moderate effort
Stiff	1 to 2	1 to 2	0.50 to 1.0	Readily indented by thumb but penetrated only with great effort
Very Stiff	2 to 4	2 to 4	1.0 to 2.0	Readily indented by thumbnail
Hard	> 4.0	> 4.0	> 2.0	Indented by thumbnail with difficulty

PLASTICITY OF FINE-GRAINED SOILS

Description	Criteria
Nonplastic	A 1/8-inch thread cannot be rolled at any water content.
Low	The thread can barely be rolled and the lump cannot be formed when drier than the plastic limit.
Medium	The thread is easy to roll and not much time is required to reach the plastic limit. The thread cannot be rerolled after reaching the plastic limit. The lump crumbles when drier than the plastic limit.
High	It takes considerable time rolling and kneading to reach the plastic limit. The thread can be rerolled several times after reaching the plastic limit. The lump can be formed without crumbling when drier than the plastic limit.

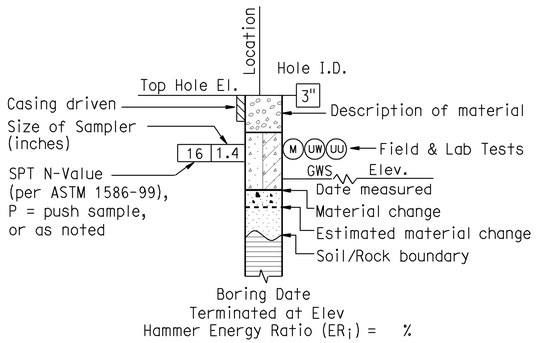

ROTARY BORING

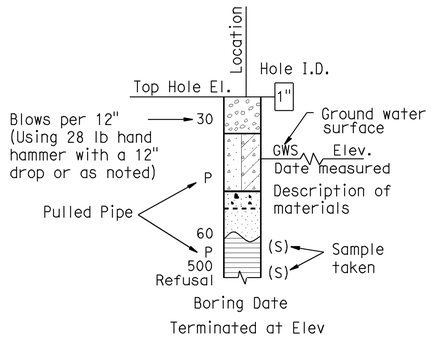

HAND BORING

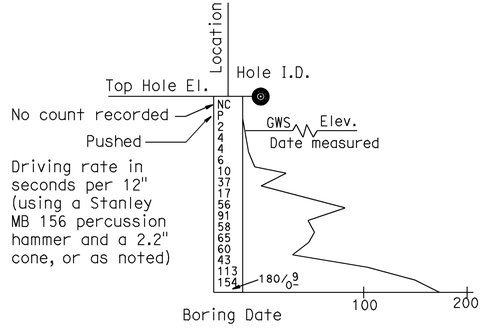

DYNAMIC CONE PENETRATION BORING

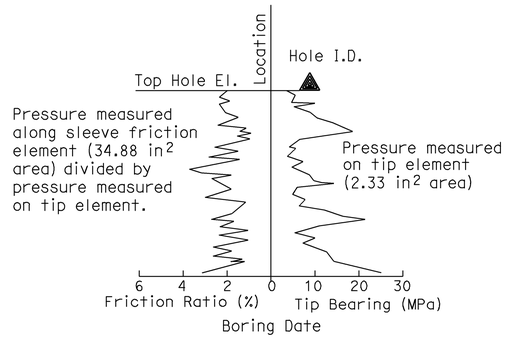

CONE PENETRATION TEST (CPT) SOUNDING

ENGINEERING SERVICES	GEOTECHNICAL SERVICES	STATE OF CALIFORNIA DEPARTMENT OF TRANSPORTATION	DIVISION OF ENGINEERING SERVICES STRUCTURE DESIGN	BRIDGE NO.	RUCKMAN UC TEMPORARY BRIDGE
	PREPARED BY: I.G-Remmen, 4/09		DESIGN BRANCH 9	34-0158	LOG OF TEST BORINGS 4 OF 6
				POST MILE 6.81	

GS LOTB SOIL LEGEND

ORIGINAL SCALE IN INCHES FOR REDUCED PLANS 0 1 2 3

CU 04
EA 163701

DISREGARD PRINTS BEARING EARLIER REVISION DATES →

REVISION DATES

SHEET 18 OF 20

FILE => 34-0158-z-lotb04.dgn

USERNAME => ttmorlok DATE PLOTTED => 21-JUL-2009 TIME PLOTTED => 13:31

REFERENCE: CALTRANS SOIL & ROCK LOGGING, CLASSIFICATION, AND PRESENTATION MANUAL (JUNE 2007)

GROUP SYMBOLS AND NAMES

Graphic/Symbol	Group Names	Graphic/Symbol	Group Names
GW	Well-graded GRAVEL Well-graded GRAVEL with SAND	CL	Lean CLAY Lean CLAY with SAND Lean CLAY with GRAVEL SANDY lean CLAY SANDY lean CLAY with GRAVEL GRAVELLY lean CLAY GRAVELLY lean CLAY with SAND
GP	Poorly graded GRAVEL Poorly graded GRAVEL with SAND		
GW-GM	Well-graded GRAVEL with SILT Well-graded GRAVEL with SILT and SAND	CL-ML	SILTY CLAY SILTY CLAY with SAND SILTY CLAY with GRAVEL SANDY SILTY CLAY SANDY SILTY CLAY with GRAVEL GRAVELLY SILTY CLAY GRAVELLY SILTY CLAY with SAND
GW-GC	Well-graded GRAVEL with CLAY (or SILTY CLAY) Well-graded GRAVEL with CLAY and SAND (or SILTY CLAY and SAND)		
GP-GM	Poorly graded GRAVEL with SILT Poorly graded GRAVEL with SILT and SAND	ML	SILT SILT with SAND SILT with GRAVEL SANDY SILT SANDY SILT with GRAVEL GRAVELLY SILT GRAVELLY SILT with SAND
GP-GC	Poorly graded GRAVEL with CLAY (or SILTY CLAY) Poorly graded GRAVEL with CLAY and SAND (or SILTY CLAY and SAND)		
GM	SILTY GRAVEL SILTY GRAVEL with SAND	OL	ORGANIC lean CLAY ORGANIC lean CLAY with SAND ORGANIC lean CLAY with GRAVEL SANDY ORGANIC lean CLAY SANDY ORGANIC lean CLAY with GRAVEL GRAVELLY ORGANIC lean CLAY GRAVELLY ORGANIC lean CLAY with SAND
GC	CLAYEY GRAVEL CLAYEY GRAVEL with SAND		
GC-GM	SILTY, CLAYEY GRAVEL SILTY, CLAYEY GRAVEL with SAND	OL	ORGANIC SILT ORGANIC SILT with SAND ORGANIC SILT with GRAVEL SANDY ORGANIC SILT SANDY ORGANIC SILT with GRAVEL GRAVELLY ORGANIC SILT GRAVELLY ORGANIC SILT with SAND
SW	Well-graded SAND Well-graded SAND with GRAVEL		
SP	Poorly graded SAND Poorly graded SAND with GRAVEL	CH	Fat CLAY Fat CLAY with SAND Fat CLAY with GRAVEL SANDY fat CLAY SANDY fat CLAY with GRAVEL GRAVELLY fat CLAY GRAVELLY fat CLAY with SAND
SW-SM	Well-graded SAND with SILT Well-graded SAND with SILT and GRAVEL		
SW-SC	Well-graded SAND with CLAY (or SILTY CLAY) Well-graded SAND with CLAY and GRAVEL (or SILTY CLAY and GRAVEL)	MH	Elastic SILT Elastic SILT with SAND Elastic SILT with GRAVEL SANDY elastic SILT SANDY elastic SILT with GRAVEL GRAVELLY elastic SILT GRAVELLY elastic SILT with SAND
SP-SM	Poorly graded SAND with SILT Poorly graded SAND with SILT and GRAVEL		
SP-SC	Poorly graded SAND with CLAY (or SILTY CLAY) Poorly graded SAND with CLAY and GRAVEL (or SILTY CLAY and GRAVEL)	OH	ORGANIC fat CLAY ORGANIC fat CLAY with SAND ORGANIC fat CLAY with GRAVEL SANDY ORGANIC fat CLAY SANDY ORGANIC fat CLAY with GRAVEL GRAVELLY ORGANIC fat CLAY GRAVELLY ORGANIC fat CLAY with SAND
SM	SILTY SAND SILTY SAND with GRAVEL		
SC	CLAYEY SAND CLAYEY SAND with GRAVEL	OH	ORGANIC elastic SILT ORGANIC elastic SILT with SAND ORGANIC elastic SILT with GRAVEL SANDY ORGANIC elastic SILT SANDY ORGANIC elastic SILT with GRAVEL GRAVELLY ORGANIC elastic SILT GRAVELLY ORGANIC elastic SILT with SAND
SC-SM	SILTY, CLAYEY SAND SILTY, CLAYEY SAND with GRAVEL		
PT	PEAT	OL/OH	ORGANIC SOIL ORGANIC SOIL with SAND ORGANIC SOIL with GRAVEL SANDY ORGANIC SOIL SANDY ORGANIC SOIL with GRAVEL GRAVELLY ORGANIC SOIL GRAVELLY ORGANIC SOIL with SAND
	COBBLES COBBLES and BOULDERS BOULDERS		

FIELD AND LABORATORY TESTING

- (C) Consolidation (ASTM D 2435)
- (CL) Collapse Potential (ASTM D 5333)
- (CP) Compaction Curve (CTM 216)
- (CR) Corrosivity Testing (CTM 643, CTM 422, CTM 417)
- (CU) Consolidated Undrained Triaxial (ASTM D 4767)
- (DS) Direct Shear (ASTM D 3080)
- (EI) Expansion Index (ASTM D 4829)
- (M) Moisture Content (ASTM D 2216)
- (OC) Organic Content-% (ASTM D 2974)
- (P) Permeability (CTM 220)
- (PA) Particle Size Analysis (ASTM D 422)
- (PI) Plasticity Index (AASHTO T 90) Liquid Limit (AASHTO T 89)
- (PL) Point Load Index (ASTM D 5731)
- (PM) Pressure Meter
- (PP) Pocket Penetrometer
- (R) R-Value (CTM 301)
- (SE) Sand Equivalent (CTM 217)
- (SG) Specific Gravity (AASHTO T 100)
- (SL) Shrinkage Limit (ASTM D 427)
- (SW) Swell Potential (ASTM D 4546)
- (TV) Pocket Torvane
- (UC) Unconfined Compression-Soil (ASTM D 2166) Unconfined Compression-Rock (ASTM D 2938)
- (UU) Unconsolidated Undrained Triaxial (ASTM D 2850)
- (UW) Unit Weight (ASTM D 4767)
- (VS) Vane Shear (AASHTO T 223)

DIST	COUNTY	ROUTE	KILOMETER POST TOTAL PROJECT	SHEET No	TOTAL SHEETS
04	SF	101,1	9.2/9.8, 6.8/7.1	483	567

CERTIFIED ENGINEERING GEOLOGIST 6-02-09

7-20-09
PLANS APPROVAL DATE

PROFESSIONAL GEOLOGIST — Grant Wilcox No. 2300 Exp. 4-30-10 — CERTIFIED ENGINEERING GEOLOGIST — STATE OF CALIFORNIA

The State of California or its officers or agents shall not be responsible for the accuracy or completeness of electronic copies of this plan sheet.

APPARENT DENSITY OF COHESIONLESS SOILS

Description	SPT N_{60} (Blows / 12 inches)
Very loose	0 - 4
Loose	5 - 10
Medium Dense	11 - 30
Dense	31 - 50
Very Dense	> 50

MOISTURE

Description	Criteria
Dry	Absence of moisture, dusty, dry to the touch
Moist	Damp but no visible water
Wet	Visible free water, usually soil is below water table

PERCENT OR PROPORTION OF SOILS

Description	Criteria
Trace	Particles are present but estimated to be less than 5%
Few	5 to 10%
Little	15 to 25%
Some	30 to 45%
Mostly	50 to 100%

PARTICLE SIZE

Description		Size
Boulder		> 12"
Cobble		3" to 12"
Gravel	Coarse	3/4" to 3"
	Fine	No. 4 to 3/4"
Sand	Coarse	No. 10 to No. 4
	Medium	No. 40 to No. 10
	Fine	No. 200 to No. 40

ENGINEERING SERVICES	GEOTECHNICAL SERVICES	STATE OF CALIFORNIA DEPARTMENT OF TRANSPORTATION	DIVISION OF ENGINEERING SERVICES STRUCTURE DESIGN DESIGN BRANCH 9	BRIDGE NO. 34-0158 POST MILE 6.81	RUCKMAN UC TEMPORARY BRIDGE LOG OF TEST BORINGS 5 OF 6
	PREPARED BY: I.G-Remmen, 4/09				

GS LOTB SOIL LEGEND

ORIGINAL SCALE IN INCHES FOR REDUCED PLANS 0 1 2 3

CU 04 EA 163701

DISREGARD PRINTS BEARING EARLIER REVISION DATES →

REVISION DATES

SHEET 19 OF 20

FILE => 34-0158-z-lotb05.dgn

USERNAME => tmorlok DATE PLOTTED => 21-JUL-2009 TIME PLOTTED => 13:32

REFERENCE: CALTRANS SOIL & ROCK LOGGING, CLASSIFICATION, AND PRESENTATION MANUAL (JUNE 2007)

DIST	COUNTY	ROUTE	KILOMETER POST TOTAL PROJECT	SHEET No	TOTAL SHEETS
04	SF	101,1	9.2/9.8, 6.8/7.1	484	567

CERTIFIED ENGINEERING GEOLOGIST 6-02-09

7-20-09
PLANS APPROVAL DATE

The State of California or its officers or agents shall not be responsible for the accuracy or completeness of electronic copies of this plan sheet.

PROFESSIONAL GEOLOGIST — Grant Wilcox — No. 2300 — Exp. 4-30-10 — CERTIFIED ENGINEERING GEOLOGIST — STATE OF CALIFORNIA

PERCENT CORE RECOVERY (REC) & ROCK QUALITY DESIGNATION (RQD)

$$REC = \frac{\sum \text{Length of the recovered core pieces (inches)}}{\text{Total length of core run (inches)}} \times 100\%$$

$$RQD = \frac{\sum \text{Length of intact core pieces} \geq 4\text{"}}{\text{Total length of core run (inches)}} \times 100\%$$

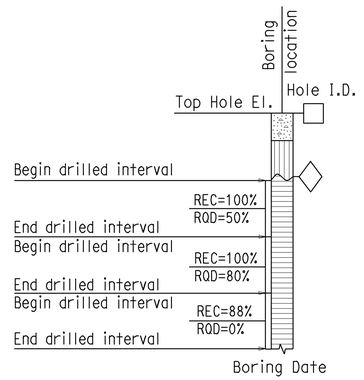

RELATIVE STRENGTH OF INTACT ROCK

Term	Uniaxial Compressive Strength (PSI)
Extremely Strong	> 30,000
Very Strong	14,500 - 30,000
Strong	7,000 - 14,500
Medium Strong	3,500 - 7,000
Weak	700 - 3,500
Very Weak	150 - 700
Extremely Weak	< 150

BEDDING SPACING

Description	Thickness / Spacing
Massive	Greater than 10 ft
Very thickly bedded	3 to 10 ft
Thickly bedded	1 to 3 ft
Moderately bedded	3-5/8" to 1 ft
Thinly bedded	1-1/4" to 3-5/8"
Very thinly bedded	3/8" to 1-1/4"
Laminated	Less than 3/8"

LEGEND OF ROCK MATERIALS

- IGNEOUS ROCK
- SEDIMENTARY ROCK
- METAMORPHIC ROCK

ROCK HARDNESS

Description	Criteria
Extremely Hard	Specimen cannot be scratched with a pocket knife or sharp pick; can only be chipped with repeated heavy hammer blows.
Very Hard	Specimen cannot be scratched with a pocket knife or sharp pick. Breaks with repeated heavy hammer blows.
Hard	Specimen can be scratched with a pocket knife or sharp pick with difficulty (heavy pressure). Heavy hammer blows required to break specimen.
Moderately Hard	Specimen can be scratched with pocket knife or sharp pick with light or moderate pressure. Core breaks with moderate hammer blows.
Moderately Soft	Specimen can be grooved 1/6" deep with a pocket knife or sharp pick with moderate or heavy pressure. Breaks with light hammer blow or heavy manual pressure.
Soft	Specimen can be grooved or gouged easily by a pocket knife or sharp pick with light pressure, can be scratched with fingernail. Breaks with light to moderate manual pressure.
Very Soft	Specimen can be readily indented, grooved or gouged with fingernail, or carved with a pocket knife. Breaks with light manual pressure.

FRACTURE DENSITY

Description	Observed Fracture Density
Unfractured	No fractures.
Very slightly fractured	Lengths greater than 3 feet.
Slightly fractured	Lengths from 1 to 3 feet with few lengths less than 1 foot or greater than 3 feet.
Moderately fractured	Lengths mostly in 4" to 1 foot range with most lengths about 8"
Intensely fractured	Lengths average from 1 to 4" with scattered fragmented intervals with lengths less than 4"
Very intensely fractured	Mostly chips and fragments with a few scattered short core lengths.

Combination descriptors (such as "Very intensely to intensely fractured") are used where equal distribution of both fracture density characteristics is present over a significant interval or exposure, or where characteristics are "in between" the descriptor definitions. Only two adjacent descriptors may be combined.

WEATHERING DESCRIPTORS FOR INTACT ROCK

Description	Diagnostic features: Chemical Weathering-Discoloration and/or oxidation — Body of Rock	Diagnostic features: Chemical Weathering-Discoloration and/or oxidation — Fracture Surfaces	Diagnostic features: Mechanical Weathering-Grain boundary conditions (disaggregation) primarily for granitics and some coarse-grained sediments	Diagnostic features: Texture and Solutioning — Texture	Diagnostic features: Texture and Solutioning — Solutioning	General Characteristics
Fresh	No discoloration, not oxidized.	No discoloration or oxidation.	No separation, intact (tight).	No change.	No solutioning.	Hammer rings when crystalline rocks are struck.
Slightly Weathered	Discoloration or oxidation is limited to surface of, or short distance from, fractures; some feldspar crystals are dull.	Minor to complete discoloration or oxidation of most surfaces.	No visible separation, intact (tight).	Preserved.	Minor leaching of some soluble minerals may be noted.	Hammer rings when crystalline rocks are struck. Body of rock not weakened.
Moderately Weathered	Discoloration or oxidation extends from fractures usually throughout; Fe-Mg minerals are "rusty," feldspar crystals are "cloudy."	All fracture surfaces are discolored or oxidized.	Partial separation of boundaries visible.	Generally preserved.	Soluble minerals may be mostly leached.	Hammer does not ring when rock is struck. Body of rock is slightly weakened.
Intensely Weathered	Discoloration or oxidation throughout; all feldspars and Fe-Mg minerals are altered to clay to some extent; or chemical alteration produces in-situ disaggregation, see grain boundary conditions.	All fracture surfaces are discolored or oxidized, surfaces friable.	Partial separation, rock is friable; in semiarid conditions granitics are disaggregated.	Texture altered by chemical disintegration (hydration, argillation).	Leaching of soluble minerals may be complete.	Dull sound when struck with hammer, usually can be broken with moderate to heavy manual pressure or by light hammer blow without reference to planes of weakness such as incipient or hairline fractures, or veinlets. Rock is significantly weakened.
Decomposed	Discolored or oxidized throughout, but resistant minerals such as quartz may be unaltered; all feldspars and Fe-Mg minerals are completely altered to clay.		Complete separation of grain boundaries (disaggregated).	Resembles a soil, partial or complete remnant rock structure may be preserved; leaching of soluble minerals usually complete.		Can be granulated by hand. Resistant minerals such as quartz may be present as "stringers" or "dikes."

Combination descriptors (such as "slightly weathered to fresh") are permissible where equal distribution of both weathering characteristics is present over significant intervals or where characteristics present are "in between" the diagnostic feature. However, combination descriptors should not be used where significant, identifiable zones can be delineated. Only two adjacent descriptors may be combined. "Very intensely weathered" is the combination descriptor for "intensely weathered to decomposed."

ENGINEERING SERVICES	GEOTECHNICAL SERVICES	STATE OF CALIFORNIA DEPARTMENT OF TRANSPORTATION	DIVISION OF ENGINEERING SERVICES STRUCTURE DESIGN	BRIDGE NO.	RUCKMAN UC TEMPORARY BRIDGE
	PREPARED BY: I.G-Remmen, 4/09		DESIGN BRANCH	34-0158	LOG OF TEST BORINGS 6 OF 6
				POST MILE 6.81	

GS LOTB ROCK LEGEND

ORIGINAL SCALE IN INCHES FOR REDUCED PLANS 0 1 2 3

CU 04
EA 163701

DISREGARD PRINTS BEARING EARLIER REVISION DATES →

REVISION DATES

SHEET 20 OF 20

FILE => 34-0158-z-lotb06.dgn

USERNAME => tmorlok DATE PLOTTED => 21-JUL-2009 TIME PLOTTED => 13:32

DIST	COUNTY	ROUTE	POST MILES TOTAL PROJECT	SHEET No	TOTAL SHEETS
04	SF	101,1	9.2/9.8, 6.8/7.1	485	567

Ahmed Brahim 6-4-09
REGISTERED CIVIL ENGINEER DATE

7-20-09
PLANS APPROVAL DATE

REGISTERED PROFESSIONAL ENGINEER — AHMED M M IBRAHIM — No. S 4865 — Exp. 9-30-10 — STRUCTURAL — STATE OF CALIFORNIA

The State of California or its officers or agents shall not be responsible for the accuracy or completeness of electronic copies of this plan sheet.

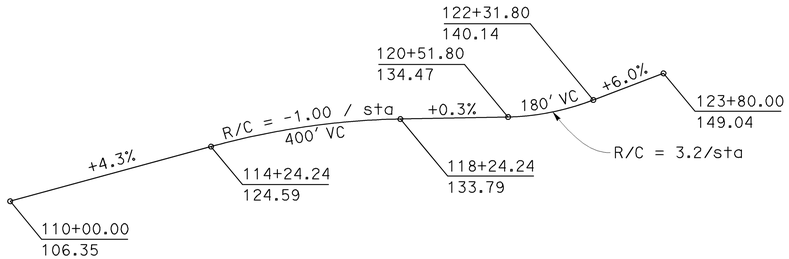

PROFILE GRADE
No Scale

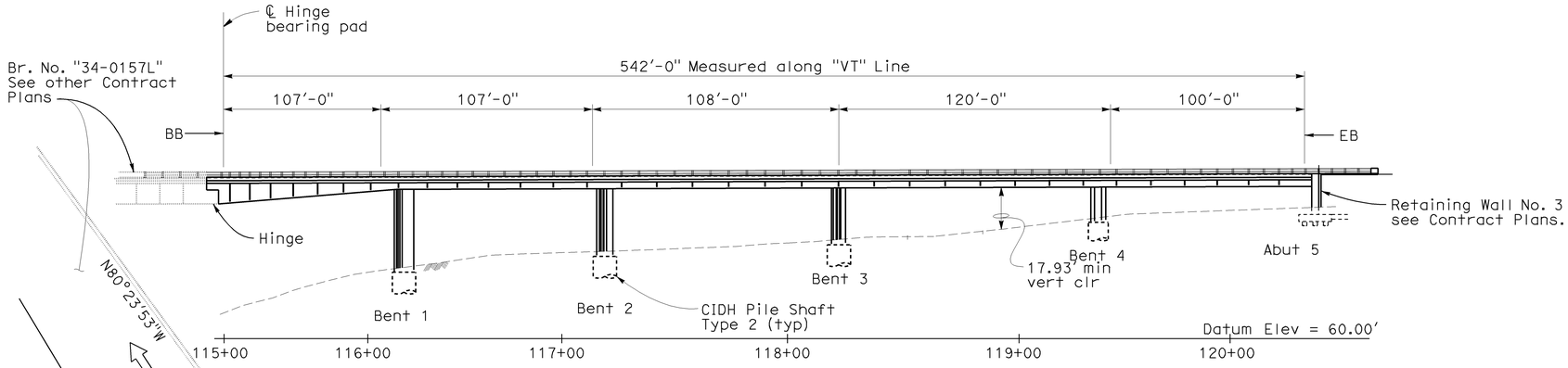

ELEVATION
1" = 30'

CURVE DATA

Alignment	R	Δ	T	L
"VT" Line ①	295.00'	95°19'51"	323.81'	490.83'
"L" Line ②	420.00'	5°29'23"	20.14'	40.24'
"L" Line ③	610.00'	15°05'52"	80.84'	160.74'
"L" Line ④	450.01'	18°21'53"	72.74'	144.24'
ETW ⑤	260.00'	67°38'34"	174.20'	306.95'
ETW ⑥	400.00'	19°11'32"	67.63'	133.99'

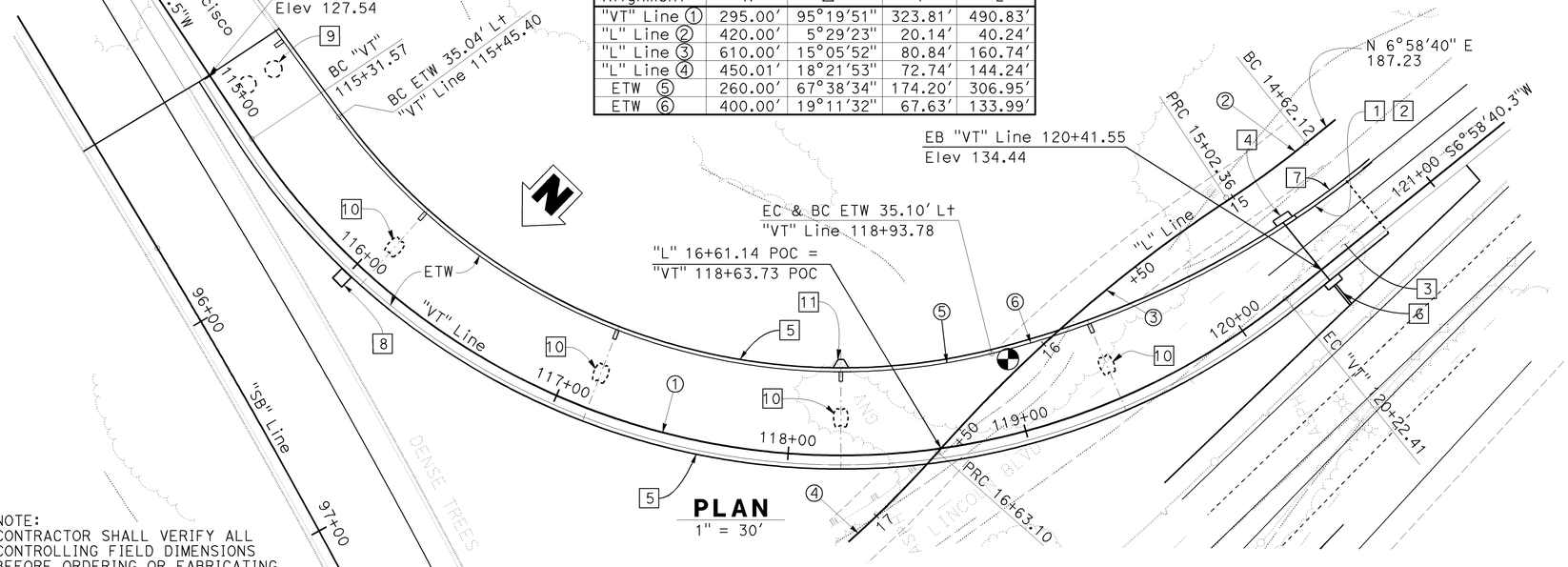

PLAN
1" = 30'

NOTE:
CONTRACTOR SHALL VERIFY ALL CONTROLLING FIELD DIMENSIONS BEFORE ORDERING OR FABRICATING ANY MATERIALS.

N1-S101 CONNECTOR #34-0160G
QUANTITIES

STRUCTURE EXCAVATION (BRIDGE) (NATURALLY OCCURING ASBESTOS)	195	CY
STRUCTURE EXCAVATION (BRIDGE)(SERPENTINE)	80	CY
STRUCTURE EXCAVATION (TYPE Z-2) (AERIALLY DEPOSITED LEAD)	80	CY
STRUCTURE BACKFILL (BRIDGE)	240	CY
108" PERMANENT STEEL CASING	43	LF
24" CAST-IN-DRILLED-HOLE CONCRETE PILING	390	LF
108" CAST-IN-DRILLED-HOLE CONCRETE PILING	43	LF
24" CAST-IN-DRILLED-HOLE CONCRETE PILING (ROCK SOCKET)	399	LF
102" CAST-IN-DRILLED-HOLE CONCRETE PILING (ROCK SOCKET)	160	LF
PRESTRESSING CAST-IN-PLACE CONCRETE (TRANSVERSE)	LUMP	SUM
STRUCTURAL CONCRETE, BRIDGE FOOTING	52	CY
STRUCTURAL CONCRETE, BRIDGE	2,430	CY
STRUCTURAL CONCRETE, APPROACH SLAB (TYPE N)	40	CY
JOINT SEAL (MR 1½")	35	LF
BAR REINFORCING STEEL (BRIDGE)	1,570,000	LB
HEADED BAR REINFORCEMENT	220	EA
STRUCTURAL STEEL (BRIDGE)	127,000	LB
CLEAN AND PAINT STRUCTURAL STEEL	LUMP	SUM
ISOLATION CASING	11,600	LB
MISCELLANEOUS METAL (BRIDGE)	2,700	LB
BRIDGE DECK DRAINAGE SYSTEM	5,500	LB
CALIFORNIA ST-10 BRIDGE RAIL (MODIFIED)	1,036	LF

NOTES:

1. Paint "N1-S101 Connector"
2. Paint "Br. No. 34-0160G"
3. Structure Approach Slab N(30S)
4. Concrete Pilaster
5. California ST-10 (Mod) Bridge Rail
6. Retaining Wall 3, see "Contract Plans"
7. Retaining Wall 4, see "Contract Plans"
8. Future Type 1-B Foundation Sta 116+00
9. Performed loop detectors, see "Road Plans"
10. Paint Bent Number
11. Type 21 Pedestal Light

LEGEND:

- Indicates location of minimum vertical clearance
- Indicates Deck Drain

X majid madani
DESIGN ENGINEER

	BY	CHECKED
DESIGN	Sameh Hegazi	A.Alcantara/L.Wang
DETAILS	JFCasarino	Sameh Hegazi
QUANTITIES	Sameh Hegazi	Margie Thach

LOAD & RESISTANCE FACTOR DESIGN — LIVE LOADING: HL93 W/"LOW-BOY"; PERMIT DESIGN VEHICLE

	BY	CHECKED
LAYOUT	Sameh Hegazi	Amador Alcantara
SPECIFICATIONS	Jim Corrado	PLANS AND SPECS COMPARED Ahmed M M Ibrahim

STATE OF CALIFORNIA
DEPARTMENT OF TRANSPORTATION

DIVISION OF ENGINEERING SERVICES
STRUCTURE DESIGN
DESIGN BRANCH 4

CU 04242
EA 163731

BRIDGE NO. 34-0160G
POST MILE 9.18

N1-S101 CONNECTOR
GENERAL PLAN

STRUCTURES DESIGN GENERAL PLAN SHEET (ENGLISH) (REV. 10/25/05)

ORIGINAL SCALE IN INCHES FOR REDUCED PLANS 0 1 2 3

FILE => 34-0160_01gp.dgn

DISREGARD PRINTS BEARING EARLIER REVISION DATES →

REVISION DATES: 12-4-08 | 1-31-09 | 2-28-09 | 3-3-09 | 4-28-09 | 5-18-09 | 5-21-09 | 7-11-09

SHEET 1 OF 44

STRUCTURES DESIGN GENERAL PLAN SHEET (ENGLISH) (REV.07-24-06)

USERNAME => ?rtmorton DATE PLOTTED => 21-JUL-2009 TIME PLOTTED => 13:32

DIST	COUNTY	ROUTE	POST MILES TOTAL PROJECT	SHEET No	TOTAL SHEETS
04	SF	101,1	9.2/9.8, 6.8/7.1	486	567

Ahmed Ibrahim 6-4-09
REGISTERED CIVIL ENGINEER DATE

7-20-09
PLANS APPROVAL DATE

REGISTERED PROFESSIONAL ENGINEER
AHMED M M IBRAHIM
No. S 4865
EXP. 9-30-10
STRUCTURAL
STATE OF CALIFORNIA

The State of California or its officers or agents shall not be responsible for the accuracy or completeness of electronic copies of this plan sheet.

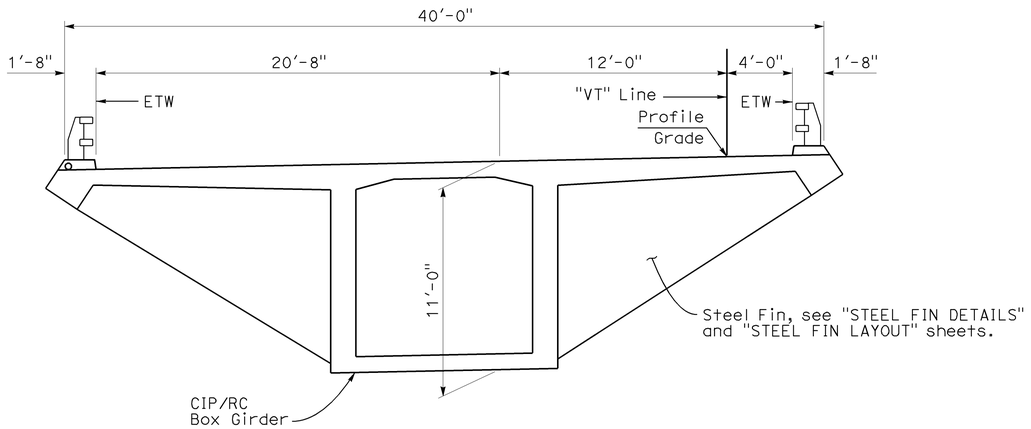

AT HINGE

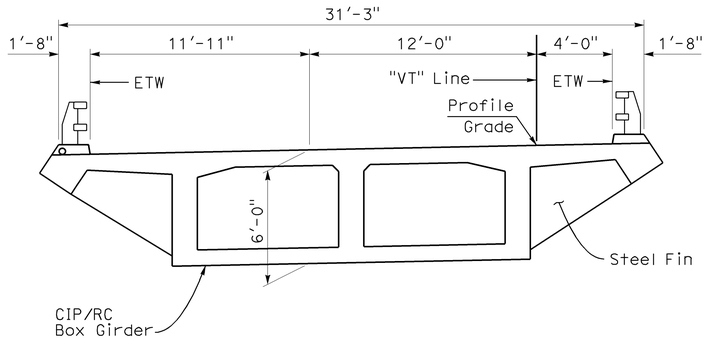

AT ABUTMENT 5

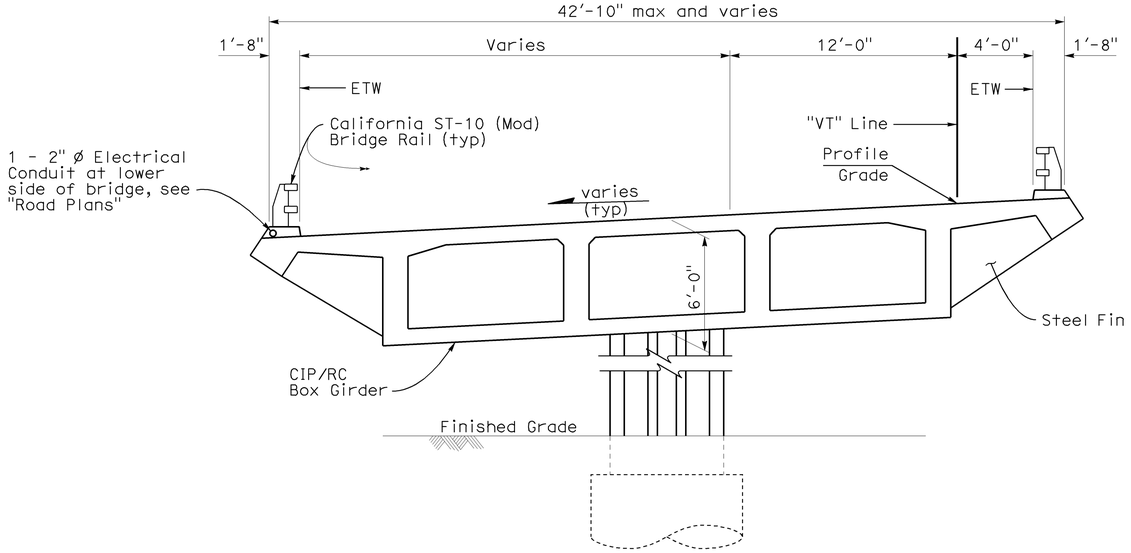

AT BENTS 2,3 & 4

NOTE:
CONTRACTOR SHALL VERIFY ALL CONTROLLING FIELD DIMENSIONS BEFORE ORDERING OR FABRICATING ANY MATERIALS.

TYPICAL SECTIONS

1/4"=1'-0"

X majid madani
DESIGN ENGINEER

DESIGN	BY Sameh Hegazi	CHECKED Amador Alcantara	LOAD & RESISTANCE FACTOR DESIGN	LIVE LOADING: HL93 W/"LOW-BOY"; PERMIT DESIGN VEHICLE	
DETAILS	BY JFCasarino	CHECKED Sameh Hegazi	LAYOUT	BY Sameh Hegazi	CHECKED Amador Alcantara
QUANTITIES	BY Sameh Hegazi	CHECKED Margie Thach	SPECIFICATIONS	BY Jim Corrado	PLANS AND SPECS COMPARED Ahmed M M Ibrahim

STATE OF CALIFORNIA
DEPARTMENT OF TRANSPORTATION

DIVISION OF ENGINEERING SERVICES
STRUCTURE DESIGN
DESIGN BRANCH 4

BRIDGE NO. 34-0160G
POST MILE 9.18

N1-S101 CONNECTOR
GENERAL PLAN NO. 2

CU 04242
EA 163731

DISREGARD PRINTS BEARING EARLIER REVISION DATES →

REVISION DATES: 5-2-09 | 5-14-09 | 5-23-09

SHEET 2 OF 44

STRUCTURES DESIGN GENERAL PLAN SHEET (ENGLISH) (REV. 10/25/05)

ORIGINAL SCALE IN INCHES FOR REDUCED PLANS 0 1 2 3

FILE => 34-0160_02gp.dgn

STRUCTURES DESIGN GENERAL PLAN SHEET (ENGLISH) (REV.07-24-06)

USERNAME => ttmarlok DATE PLOTTED => 21-JUL-2009 TIME PLOTTED => 13:32

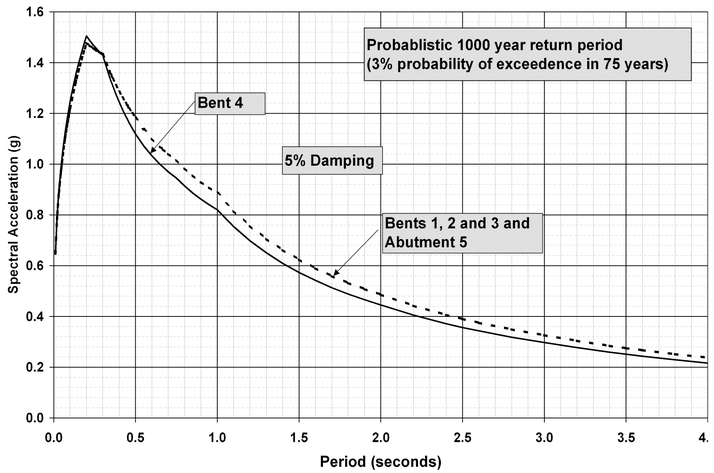

ARS CURVE

No Scale

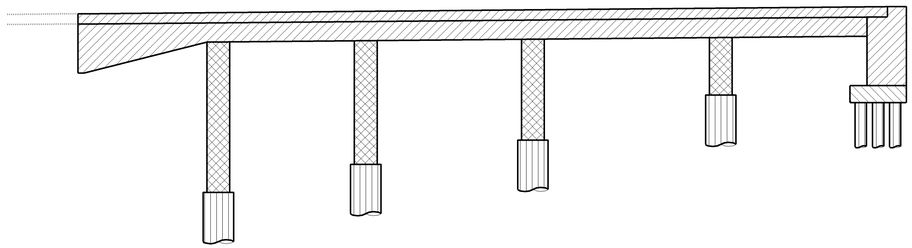

Structure Concrete Bridge (f'c = 5.0 Ksi at 28 days)

CIDH Concrete Pile (f'c = 5.0 Ksi at 28 days)

Structure Concrete, Columns (f'c = 5.0 Ksi at 28 days)

Structure Concrete Bridge Footing (f'c = 5.0 Ksi at 28 days)

CONCRETE STRENGTH AND TYPE LIMITS

No Scale

PILE DATA TABLE

Location	Pile Type	Design Load (Service Load) (kp)	Nominal Resistance (kp)		Tip Elevation (ft)		Cut Off Elevation (ft)	Steel Casing Tip Elevation (ft)
			Compression	Tension	Design	Specified		
Bent 1	108" CIDH / 102" CIDH (Rock Socket)	3005	6040	0	-7(a)	-7	62	34
Bent 2	108" CIDH / 102" CIDH (Rock Socket)	2729	5470	0	17(a)	17	72	57
Bent 3	102" CIDH (Rock Socket)	2905	5840	0	36(a)	36	76	-
Bent 4	102" CIDH (Rock Socket)	2963	5940	0	42(a)	42	81	-
Abut 5	24" CIDH / 24" CIDH (Rock Socket)	102	190	0	65(a)	65	106.5	-

NOTE:
CONTRACTOR SHALL VERIFY ALL CONTROLLING FIELD DIMENSIONS BEFORE ORDERING OR FABRICATING ANY MATERIALS.

NOTES:

1. Design Tip Elevations for Bents and Abutment are controlled by (a) Compression.
2. The Specified Tip Elevations shall not be raised above the design tip elevation.

GENERAL NOTES

LOAD RESISTANCE FACTOR DESIGN

DESIGN: AASHTO LRFD Bridge Design Specifications, 4th edition with the Interims through 2007 and the California Amendments, vDecember 2008; except that deck slab and retaining wall are designed using Bridge Design Specifications ('96 AASHTO w/Revisions by Caltrans)

SEISMIC DESIGN: CALTRANS SEISMIC DESIGN CRITERIA (SDC) Version 1.4, June 2006

DEAD LOAD: Includes 35 lb/ft^2 for Future Wearing Surface

LIVE LOAD: HL93 and Alternative and Permit Design Load P15

SEISMIC LOAD: Recomended ARS Curve for soil type B as shown.

REINFORCED CONCRETE: f_y = 60 ksi
f'_c = 5.0 ksi (except as shown on Concrete Strength & Type Limits Diagram)

STRUCTURAL STEEL: f_y = 50 ksi Unless Noted Otherwise

PLATES: ASTM A709, Grade 50

STRUCTURAL SHAPES: ASTM A500, Grade B

FABRICATION:
1. Welding of built up members shall comply with AASHTO/AWS D 1.5
2. Welding of tubular members shall comply with AWS D 1.1
3. Dimensional tolerance:

3a - Allowable variation in straightness of welded U-shape Steel Fin subassemblies shal not exceed 1/8" in 10' of total length.
3b - Allowable variations from flatness of Steel Fin Web Plate shall not exceed d/200 where "d" is the least panel dimension in inches. The out-of-plain variation from flatness of fin webs shall be determined in compliance with items 3.5.1.6 of AASHTO/AWS D 1.5

FASTENERS:
- All high-strength bolts, nuts and washers shall be zinc coated.
- Bolts - A 325; Nuts - A 563; Washers - F 436, unless noted otherwise.
- All bolted connections shall comply with RCSC "Specification for Structural Joints Using ASTM A 325 or A 490 Bolts"
- All bolts are ASTM A 325 High Strength slip-critical with threads excluded from shear planes.

PILES: See "Pile Data Table"

EXPOSURE CONDITION: Marine Atmosphere

Minimum concrete cover (unless otherwise noted)
- Footing & Pile Caps: 3"
- Walls, Columns & Cast -In-Place Piles: 3"
- Top surface of Deck Slab: 2½"
- Bottom surface of Deck Slab: 1½"
- Bottom Slab of Box Girder: 1½"
- Exposed faces of Box Girder, Webs, Bent Caps, Diaphragms and Hinged Joints: 3"
- Curbs & Railings: 2½"
- Concrete surface not exposed to weather, soil or water
  - Principal reinforcement: 2"
  - Stirrups, Ties and Spirals: 1½"

STANDARD PLAN SHEET NO.

DETAIL NO.

DIST	COUNTY	ROUTE	POST MILES TOTAL PROJECT	SHEET No	TOTAL SHEETS
04	SF	101,1	9.2/9.8, 6.8/7.1	487	567

Ahmed Brahim 6-4-09
REGISTERED CIVIL ENGINEER DATE

7-20-09
PLANS APPROVAL DATE

REGISTERED PROFESSIONAL ENGINEER
AHMED M M IBRAHIM
No. S 4865
EXP. 9-30-10
STRUCTURAL
STATE OF CALIFORNIA

The State of California or its officers or agents shall not be responsible for the accuracy or completeness of electronic copies of this plan sheet.

INDEX TO PLANS

SHEET NO.	PLANS
1	GENERAL PLAN NO. 1
2	GENERAL PLAN NO. 2
3	INDEX TO PLANS
4	DECK CONTOURS
5	FOUNDATION PLANS
6	ABUTMENT 5 LAYOUT
7	ABUTMENT DETAILS NO. 1
8	ABUTMENT DETAILS NO. 2
9	BENT DETAILS
10	COLUMN DETAILS NO. 1
11	COLUMN DETAILS NO. 2
12	COLUMN ISOLATION DETAILS
13	TYPICAL SECTION NO. 1
14	TYPICAL SECTION NO. 2
15	TYPICAL SECTION NO. 3
16	STEEL FIN DETAILS NO. 1
17	STEEL FIN DETAILS NO. 2
18	GIRDER LAYOUT NO. 1
19	GIRDER LAYOUT NO. 2
20	TRANSVERSE POST TENSIONING
21	HINGE DIAPHRAGM DETAILS
22	DECK REINFORCEMENT - TOP
23	DECK REINFORCEMENT - BOTTOM
24	SOFFIT REINFORCEMENT - TOP
25	SOFFIT REINFORCEMENT - BOTTOM
26	DECK DRAINAGE DETAILS NO. 1
27	DECK DRAINAGE DETAILS NO. 2
28	DECK AND SOFFIT ACCESS
29	LADDER DETAILS
30	PEDESTAL DETAILS NO. 1
31	PEDESTAL DETAILS NO. 2
32	PEDESTAL DETAILS NO. 3
33	PEDESTAL DETAILS NO. 4
34	PEDESTAL DETAILS NO. 5
35	PEDESTAL DETAILS NO. 6
36	STEEL FIN LAYOUT
37	STRUCTURE APPROACH TYPE N(30S)
38	STRUCTURE APPROACH DRAINAGE
39	LOG OF TEST BORINGS 1 OF 6
40	LOG OF TEST BORINGS 2 OF 6
41	LOG OF TEST BORINGS 3 OF 6
42	LOG OF TEST BORINGS 4 OF 6
43	LOG OF TEST BORINGS 5 OF 6
44	LOG OF TEST BORINGS 6 OF 6

STANDARD PLANS DATED MAY 2006

PLAN	PLAN TITLE
A 10A	ACRONYMS AND ABBREVIATIONS (A-L)
A 10B	ACRONYMS AND ABBREVIATIONS (M-Z)
B0-1	BRIDGE DETAILS
B0-5	BRIDGE DETAILS
B0-13	BRIDGE DETAILS
B2-3	16" AND 24" CAST-IN-DRILL HOLE CONC PILE
B3-1	RETAINING WALL TYPE 1
B6-21	JOINT SEAL MR=2"
B7-1	BOX GIRDER DETAILS
B7-7	DECK DRAIN TYPE D-3
B7-8	DECK DRAINAGE DETAILS
B7-11	UTILITY DETAILS
B11-68	CALIFORNIA ST-10 BRIDGE RAIL (1 OF 3)
B11-69	CALIFORNIA ST-10 BRIDGE RAIL (2 OF 3)
B11-70	CALIFORNIA ST-10 BRIDGE RAIL (3 OF 3)
ES-6B	LIGHTING STANDARDS TYPE 15 AND 21
	BARRIER RAIL MOUNTED DETAILS
S-2	OVERHEAD SIGNS - TRUSS, SINGLE POST TYPE, POST TYPES II THROUGH IX

DESIGN	BY S. Hegazi	CHECKED A. Alcantara	STATE OF CALIFORNIA DEPARTMENT OF TRANSPORTATION
DETAILS	BY JFCasarino	CHECKED S. Hegazi	
QUANTITIES	BY S. Hegazi	CHECKED M. Thach	

DIVISION OF ENGINEERING SERVICES STRUCTURE DESIGN
DESIGN BRANCH 4

BRIDGE NO. 34-0160G
POST MILE 9.18

N1 - S101 CONNECTOR

INDEX TO PLANS

STRUCTURES DESIGN DETAIL SHEET (ENGLISH) (REV. 10/25/05)

ORIGINAL SCALE IN INCHES FOR REDUCED PLANS 0 1 2 3

CU 04242
EA 163731

DISREGARD PRINTS BEARING EARLIER REVISION DATES →

REVISION DATES: 12-18-08, 4-21-09, 5-2-09, 5-18-09, 5-23-09, 5-29-09, 7-11-09

SHEET 3 OF 44

FILE => 34-0160_03itp.dgn

USERNAME => ttmorton DATE PLOTTED => 21-JUL-2009 TIME PLOTTED => 13:32

DIST	COUNTY	ROUTE	POST MILES TOTAL PROJECT	SHEET No	TOTAL SHEETS
04	SF	101,1	9.2/9.8, 6.8/7.1	488	567

Ahmed Ibrahim 6-4-09
REGISTERED CIVIL ENGINEER DATE

7-20-09
PLANS APPROVAL DATE

The State of California or its officers or agents shall not be responsible for the accuracy or completeness of electronic copies of this plan sheet.

REGISTERED PROFESSIONAL ENGINEER
AHMED M M IBRAHIM
No. S 4865
Exp. 9-30-10
STRUCTURAL
STATE OF CALIFORNIA

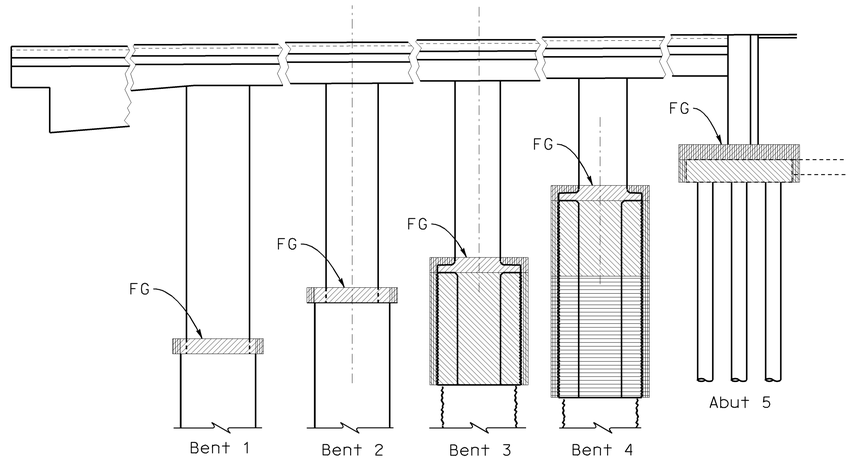

Structure excavation bridge (Type Z-2, aerially deposited lead, top 2 ft)
Structure excavation bridge (Naturally occuring asbestos)
Structure excavation bridge (Serpentine)
Structure backfill bridge

STRUCTURE EXCAVATION/BACKFILL LIMITS OF PAYMENT (TYP)

No Scale

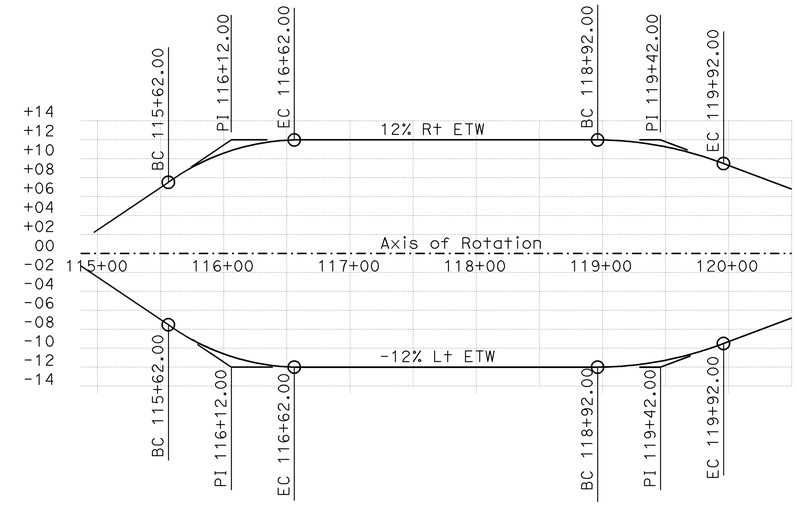

SUPERELEVATION

No Scale

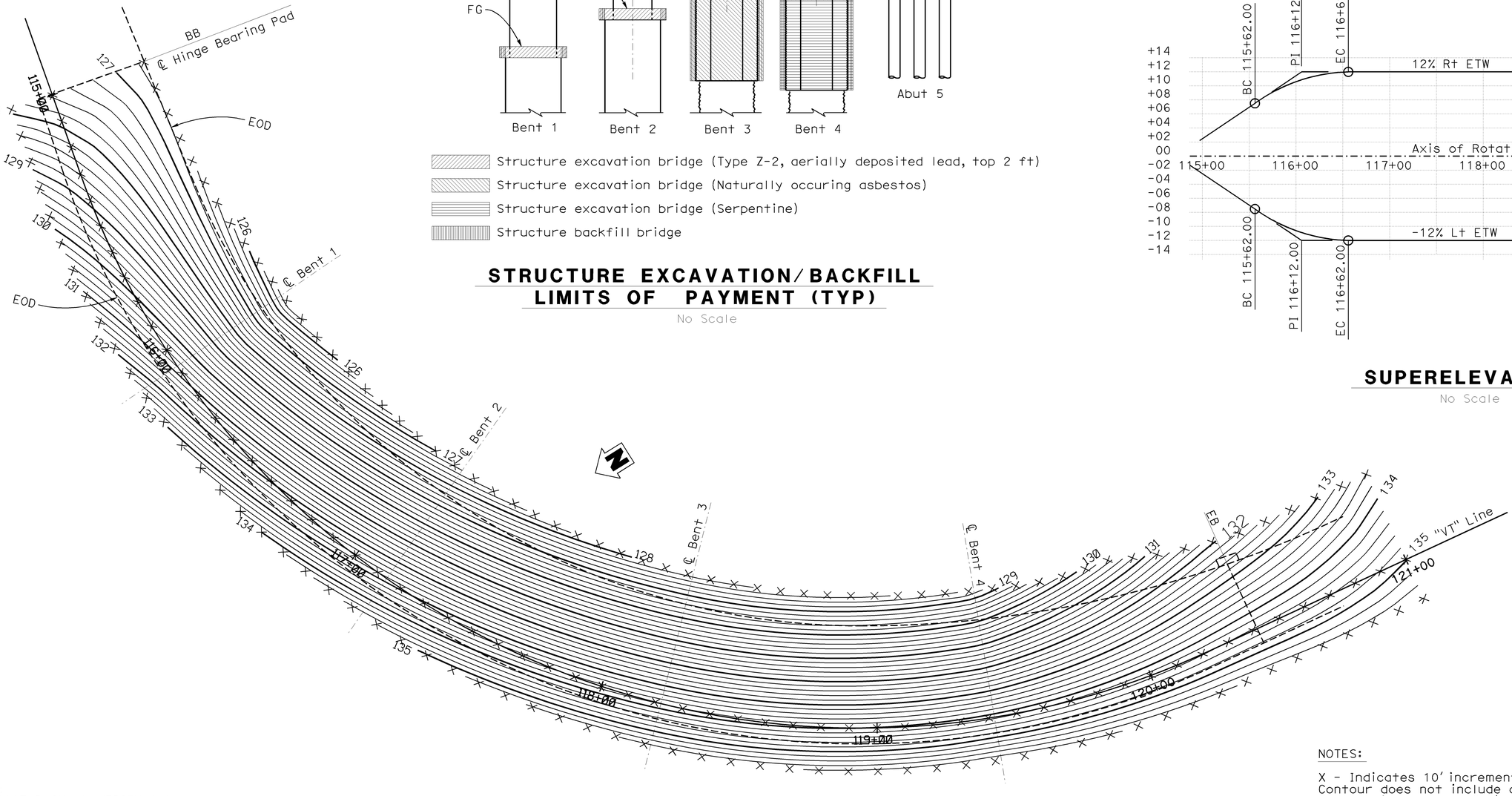

DECK CONTOURS

1" = 20'

NOTES:

X - Indicates 10' increments along station line.
Contour does not include camber.
Contour interval = 0.2'

NOTE:
CONTRACTOR SHALL VERIFY ALL CONTROLLING FIELD DIMENSIONS BEFORE ORDERING OR FABRICATING ANY MATERIALS.

	BY	CHECKED
DESIGN	A. Alcantara	S. Hegazi
DETAILS	JFCasarino	L. Wang
QUANTITIES	S. Hegazi	M. Thach

STATE OF CALIFORNIA
DEPARTMENT OF TRANSPORTATION

DIVISION OF ENGINEERING SERVICES
STRUCTURE DESIGN
DESIGN BRANCH 4

BRIDGE NO. 34-0160G
POST MILE 9.18

N1 - S101 CONNECTOR
DECK CONTOURS

STRUCTURES DESIGN DETAIL SHEET (ENGLISH) (REV. 10/25/05)

ORIGINAL SCALE IN INCHES FOR REDUCED PLANS 0 1 2 3

CU 04242
EA 163731

DISREGARD PRINTS BEARING EARLIER REVISION DATES

REVISION DATES 2-14-09 5-23-09 6-11-09

SHEET 4 OF 44

FILE => 34-0160_04dcon.dgn

USERNAME => trmariak DATE PLOTTED => 21-JUL-2009 TIME PLOTTED => 13:47

DIST	COUNTY	ROUTE	POST MILES TOTAL PROJECT	SHEET No	TOTAL SHEETS
04	SF	101,1	9.2/9.8, 6.8/7.1	489	567

REGISTERED CIVIL ENGINEER — 6-4-09 DATE

7-20-09
PLANS APPROVAL DATE

REGISTERED PROFESSIONAL ENGINEER — AHMED M M IBRAHIM — No. S 4865 — Exp. 9-30-10 — STRUCTURAL — STATE OF CALIFORNIA

The State of California or its officers or agents shall not be responsible for the accuracy or completeness of electronic copies of this plan sheet.

Arup PB Joint Venture
560 Mission Street
Suite 700
San Francisco, CA 94105

NOTE:
CONTRACTOR SHALL VERIFY ALL CONTROLLING FIELD DIMENSIONS BEFORE ORDERING OR FABRICATING ANY MATERIALS.

NOTES:

All conflicted utility lines with foundation shall be relocated before any excavation

Indicates bottom of footing elevation.

CURVE DATA

No.	R	Δ	T	L	No.	R	Δ	T	L
(15)	3,391.00	22°32'39"	675.87	1,334.25	(46)	420.00	5°29'23"	20.14	40.24
(23)	3,015.00	34°18'00"	930.42	1,804.93	(54)	450.01	18°21'53"	72.74	144.24
(27)	8,199.94	2°29'43"	178.59	357.13	(55)	260.00	37°45'09"	88.90	171.32
(28)	459.00	56°59'57"	249.21	456.62	(61)	145.00	39°48'35"	52.50	100.75
(36)	474.00	57°18'11"	258.99	474.06	(80)	653.93	8°17'42"	47.42	94.67
(41)	720.00	8°08'49"	51.28	102.38	(82)	150.00	25°24'55"	33.83	66.54
(42)	610.00	15°05'52"	80.84	160.74	(85)	175.00	12°56'40"	19.85	39.54
(43)	105.00	23°20'52"	21.69	42.79	(86)	140.00	7°40'36"	9.39	18.76

SURVEY CONTROL

CM-135
Fnd 100D Pike
44.37 FT Rt. "SB" Line
Sta. 96+27.95
N 2,120,762.36
E 5,993,065.33
Elev. = 51.50

CM-132
Fnd Iron Pipe
25.61 FT Rt. "L" Line
Sta. 15+64.09
N 2,120,435.54
E 5,993,065.33
Elev. = 103.90

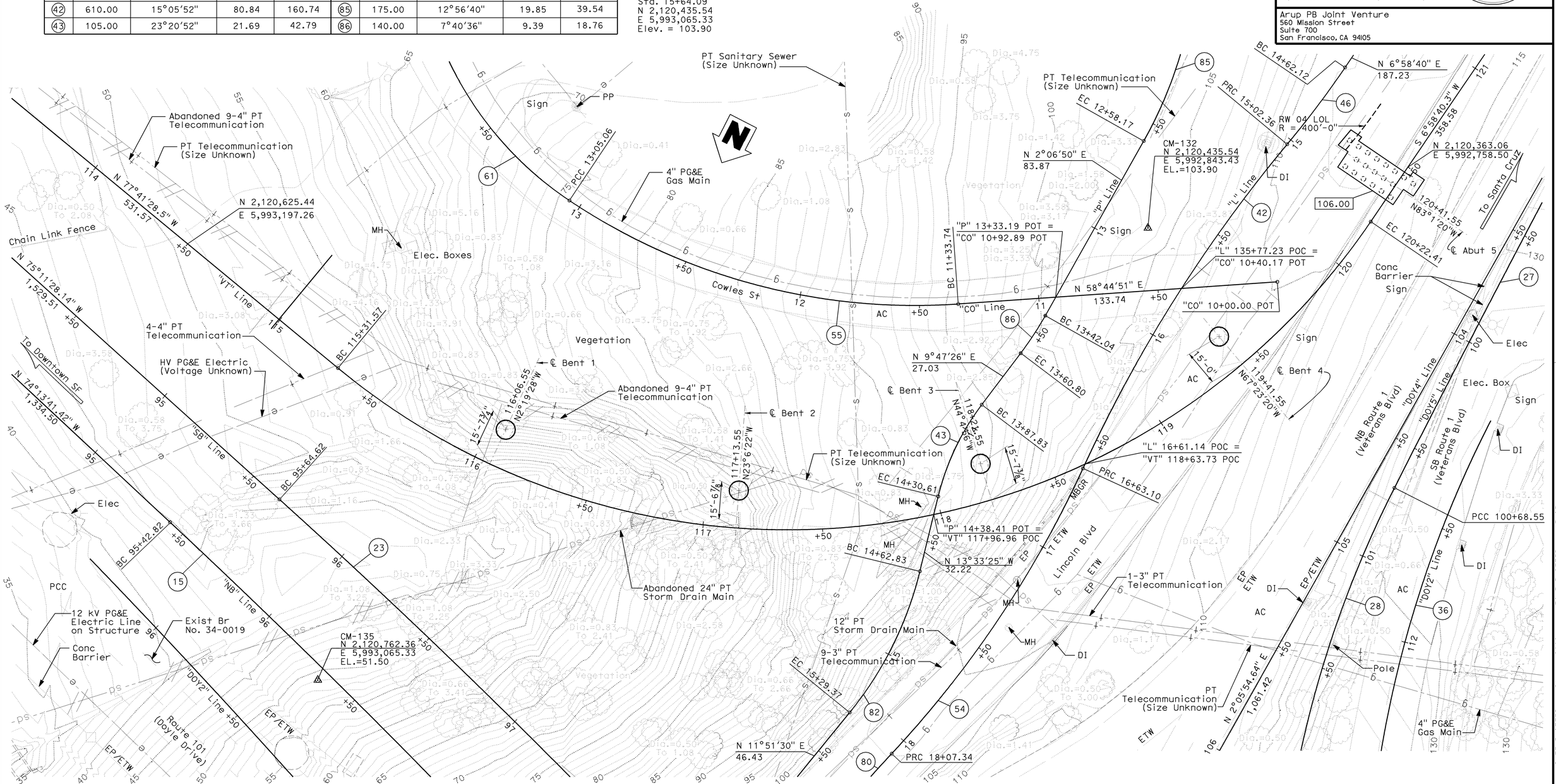

PRELIMINARY INVESTIGATION SECTION						DESIGN	BY S. Hegazi	CHECKED A. Alcantara
SCALE 1"=20'	VERT.DATUM NAVD88	PHOTOGRAMMETRY AS OF: 9/24/2008				DETAILS	BY JFCasarino	CHECKED L. Wang
	HORZ.DATUM NAD83	SURVEYED	BY Chaudhary & Assoc.	CHECKED	BY E. Lilly 3/20/09	QUANTITIES	BY S. Hegazi	CHECKED M. Thach
ALIGNMENT TIES Dist.Traverse Sheet		DRAFTED	BY L. Reyes 3/20/09	CHECKED	BY E. Lilly 3/20/09			

STATE OF CALIFORNIA
DEPARTMENT OF TRANSPORTATION

DIVISION OF ENGINEERING SERVICES
STRUCTURE DESIGN
DESIGN BRANCH 4

BRIDGE NO. 34-0160G
POST MILE 9.18

N1-S101 CONNECTOR
FOUNDATION PLAN

STRUCTURES FOUNDATION PLAN SHEET (ENGLISH) (REV. 10/25/05)

ORIGINAL SCALE IN INCHES FOR REDUCED PLANS 0 1 2 3

CU 04242
EA 163731

DISREGARD PRINTS BEARING EARLIER REVISION DATES →

REVISION DATES: 5-28-09 | 6-24-09 | 5-28-09 | 5-28-09 | 6-8-09 | 7-11-09

SHEET 5 OF 44

FILE => 34-0160_05fpl.dgn

USERNAME => trmguye DATE PLOTTED => 21-JUL-2009 TIME PLOTTED => 13:25

DIST	COUNTY	ROUTE	POST MILES TOTAL PROJECT	SHEET No	TOTAL SHEETS
04	SF	101,1	9.2/9.8, 6.8/7.1	490	567

Ahmed Brahim 6-4-09
REGISTERED CIVIL ENGINEER DATE

7-20-09
PLANS APPROVAL DATE

REGISTERED PROFESSIONAL ENGINEER
AHMED M M IBRAHIM
No. S 4865
EXP. 9-30-10
STRUCTURAL
STATE OF CALIFORNIA

The State of California or its officers or agents shall not be responsible for the accuracy or completeness of electronic copies of this plan sheet.

NOTES:

1. For footing elevation, see "PILE DATA TABLE" on "INDEX TO PLAN" sheet.
2. Other structures in project, see "Contract Plans."
3. For details, see "ABUTMENT DETAILS NO. 1" sheet.
4. For Section C-C, see "ABUTMENT DETAILS NO. 2" sheet.

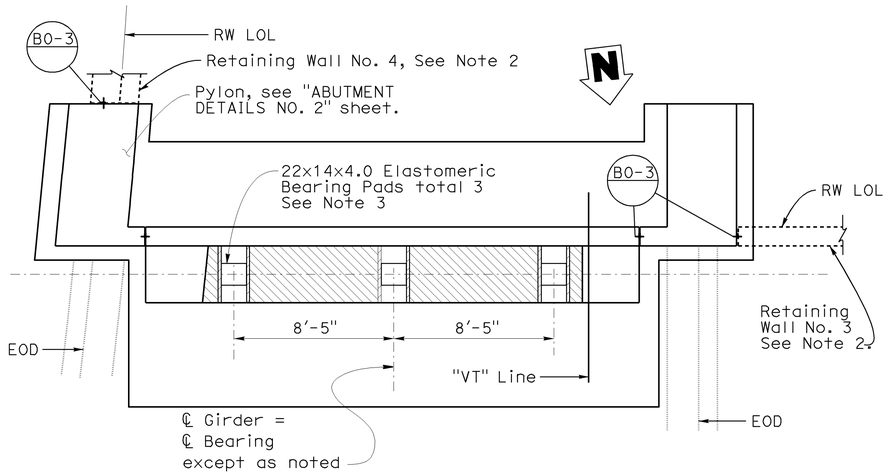

PLAN
1/4" = 1'-0"

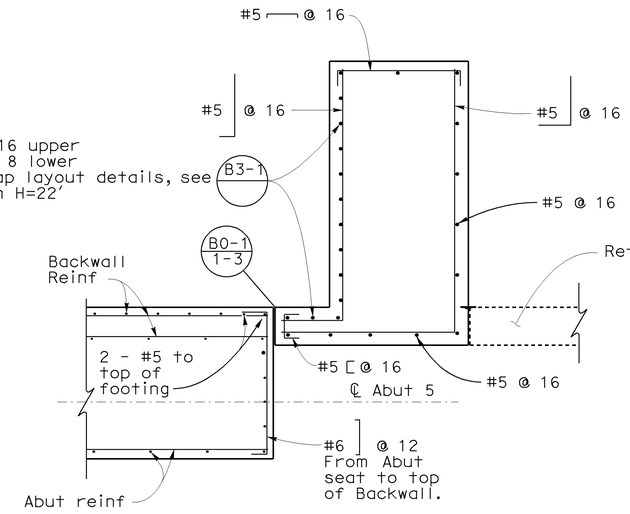

SECTION A-A
1/2" = 1'-0"

Note: For shear key reinf, see "ABUTMENT DETAILS NO. 1" sheet.

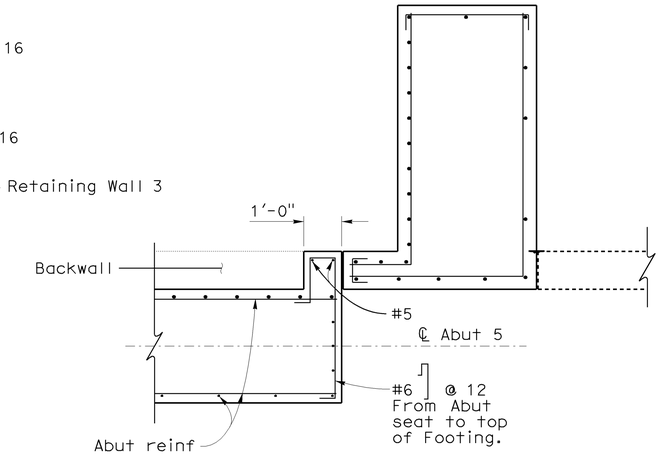

SECTION B-B
1/2" = 1'-0"

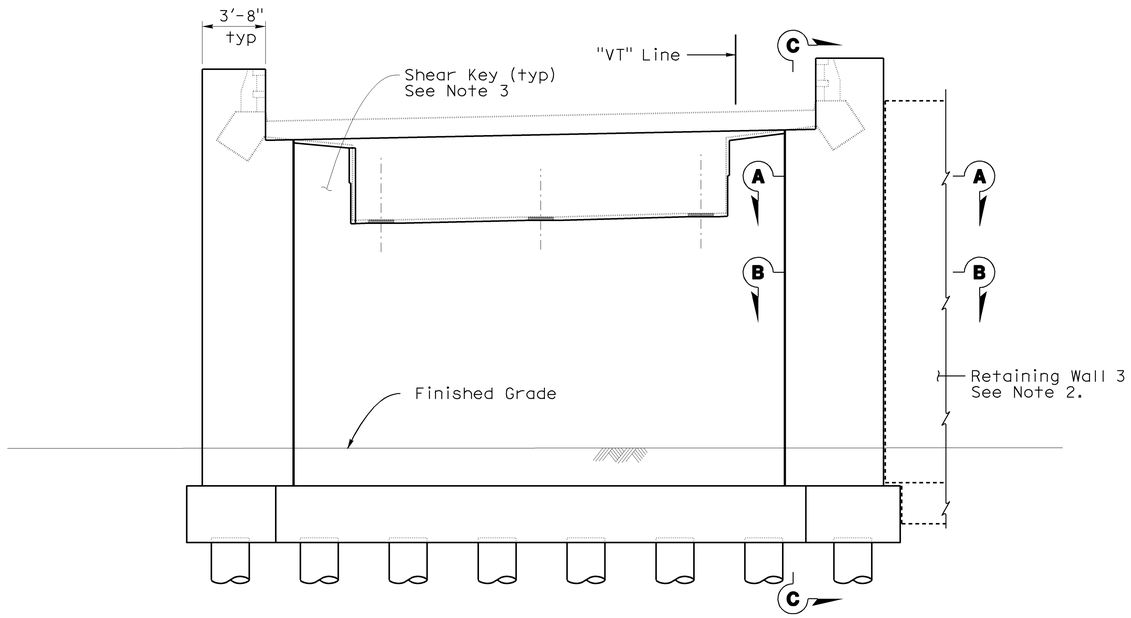

ELEVATION
1/4" = 1'-0"

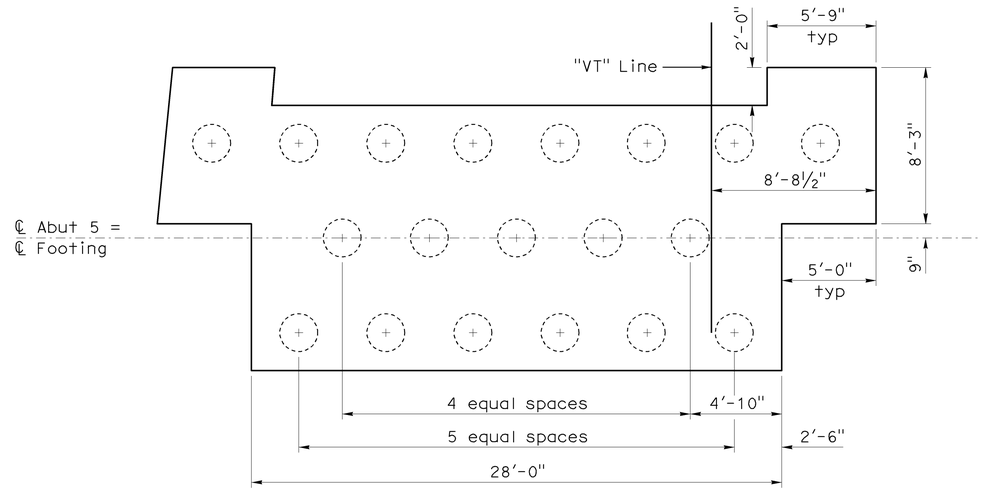

FOOTING PLAN
1/4" = 1'-0"

NOTE:
CONTRACTOR SHALL VERIFY ALL CONTROLLING FIELD DIMENSIONS BEFORE ORDERING OR FABRICATING ANY MATERIALS.

	BY	CHECKED
DESIGN	S. Hegazi/A. Alcantara	Ben Nguyen
DETAILS	JFCasarino	S. Hegazi
QUANTITIES	S. Hegazi	M. Thach

STATE OF CALIFORNIA
DEPARTMENT OF TRANSPORTATION

DIVISION OF ENGINEERING SERVICES
STRUCTURE DESIGN
DESIGN BRANCH 4

BRIDGE NO. 34-0160G
POST MILE 9.18

N1 - S101 CONNECTOR
ABUTMENT 5 LAYOUT

STRUCTURES DESIGN DETAIL SHEET (ENGLISH) (REV. 10/25/05)

ORIGINAL SCALE IN INCHES FOR REDUCED PLANS 0 1 2 3

CU 04242
EA 163731

DISREGARD PRINTS BEARING EARLIER REVISION DATES →

REVISION DATES: 12-16-08 | 3-27-09 | 4-22-09 | 5-18-09 | 5-22-09 | 7-11-09

SHEET 6 OF 44

FILE => 34-0160_06abut1.dgn

USERNAME => trmnguye DATE PLOTTED => 21-JUL-2009 TIME PLOTTED => 13:26

DIST	COUNTY	ROUTE	POST MILES TOTAL PROJECT	SHEET No	TOTAL SHEETS
04	SF	101,1	9.2/9.8, 6.8/7.1	491	567

Ahmed Ibrahim 6-4-09
REGISTERED CIVIL ENGINEER DATE

7-20-09
PLANS APPROVAL DATE

REGISTERED PROFESSIONAL ENGINEER — AHMED M M IBRAHIM — No. S 4865 — Exp. 9-30-10 — STRUCTURAL — STATE OF CALIFORNIA

The State of California or its officers or agents shall not be responsible for the accuracy or completeness of electronic copies of this plan sheet.

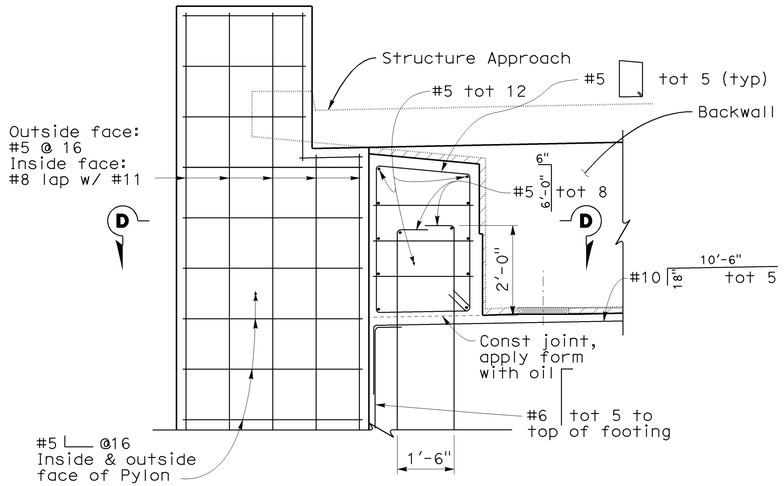

Note: Left key reinf shown, right key reinf similar.
Abut reinforcement not shown.

PART ELEVATION & SHEAR KEY

½" = 1'-0"

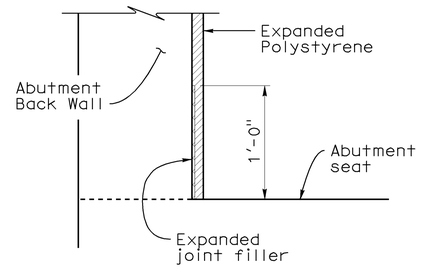

BACK WALL BASE DETAIL

BO-13 13-2

1½" = 1'-0"

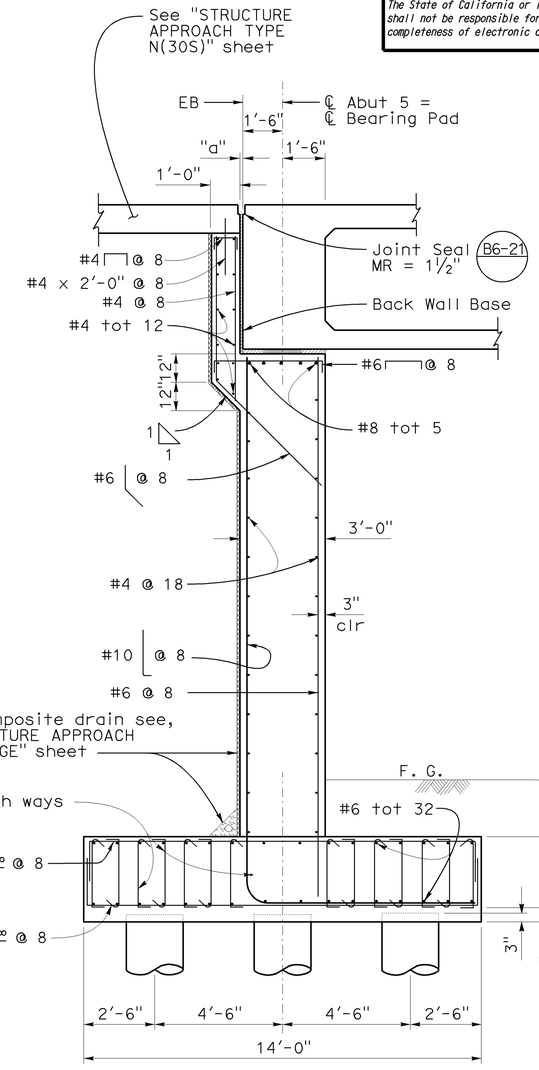

ABUTMENT SECTION

⅜" = 1'-0"

NOTES:

1. Coat top of Bearing Pad with grease prior to placing sheet metal.

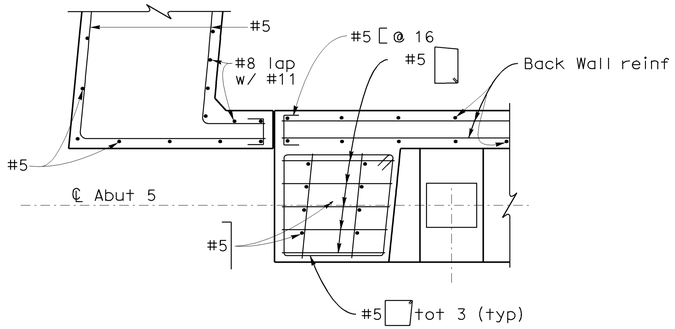

SECTION D-D

½" = 1'-0"

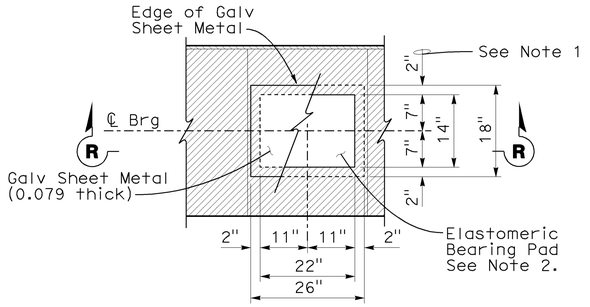

PLAN

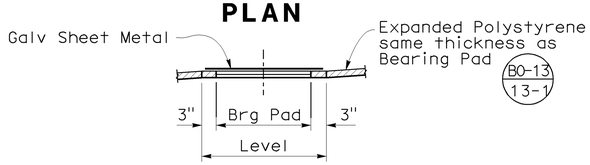

SECTION R-R

BEARING PAD DETAIL

No Scale
Details typical at all bearing pads.

NOTE:
CONTRACTOR SHALL VERIFY ALL CONTROLLING FIELD DIMENSIONS BEFORE ORDERING OR FABRICATING ANY MATERIALS.

DESIGN	BY S. Hegazi/A. Alcantara	CHECKED B. Nguyen	STATE OF CALIFORNIA DEPARTMENT OF TRANSPORTATION	DIVISION OF ENGINEERING SERVICES STRUCTURE DESIGN DESIGN BRANCH 4	BRIDGE NO. 34-0160G	N1 - S101 CONNECTOR	
DETAILS	BY JFCasarino	CHECKED S. Hegazi			POST MILE 9.18	ABUTMENT DETAILS NO. 1	
QUANTITIES	BY S. Hegazi	CHECKED M. Thach					

STRUCTURES DESIGN DETAIL SHEET (ENGLISH) (REV. 10/25/05)

ORIGINAL SCALE IN INCHES FOR REDUCED PLANS 0 1 2 3

CU 04242
EA 163731

DISREGARD PRINTS BEARING EARLIER REVISION DATES →

REVISION DATES: 5-22-09 | 5-18-09 | 5-18-09 | 5-22-09 | 5-27-09

SHEET 7 OF 44

FILE => 34-0160_07abutd1.dgn

USERNAME => trmoguye DATE PLOTTED => 21-JUL-2009 TIME PLOTTED => 13:26

DIST	COUNTY	ROUTE	POST MILES TOTAL PROJECT	SHEET No	TOTAL SHEETS
04	SF	101,1	9.2/9.8, 6.8/7.1	492	567

Ahmed Brahim 6-4-09
REGISTERED CIVIL ENGINEER DATE

7-20-09
PLANS APPROVAL DATE

REGISTERED PROFESSIONAL ENGINEER
AHMED M M IBRAHIM
No. S 4865
Exp. 9-30-10
STRUCTURAL
STATE OF CALIFORNIA

The State of California or its officers or agents shall not be responsible for the accuracy or completeness of electronic copies of this plan sheet.

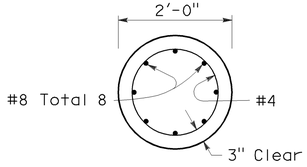

SECTION F-F

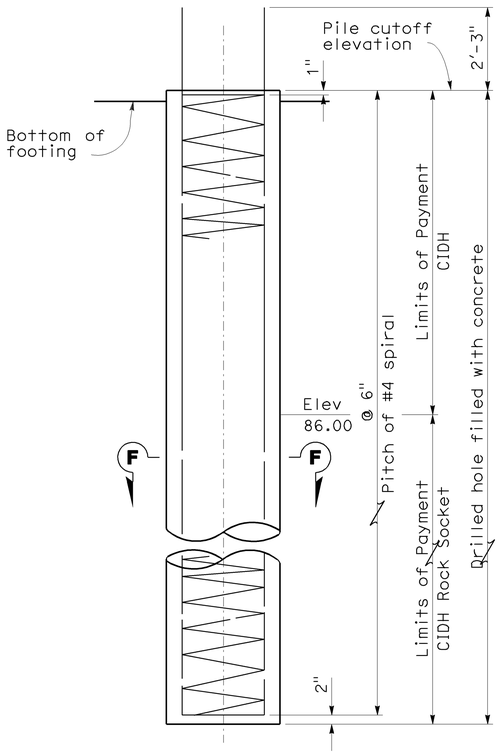

ELEVATION

24" CIDH PILE

B2-3

¾" = 1'-0"

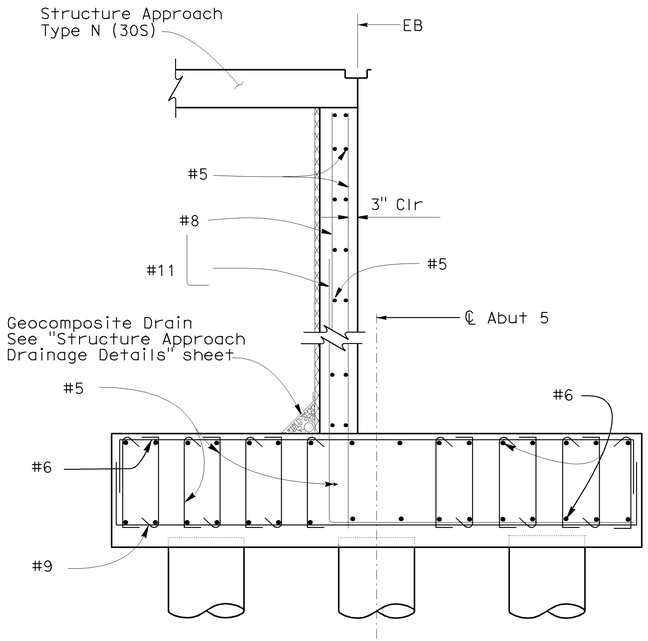

SECTION C-C

½" = 1'-0"

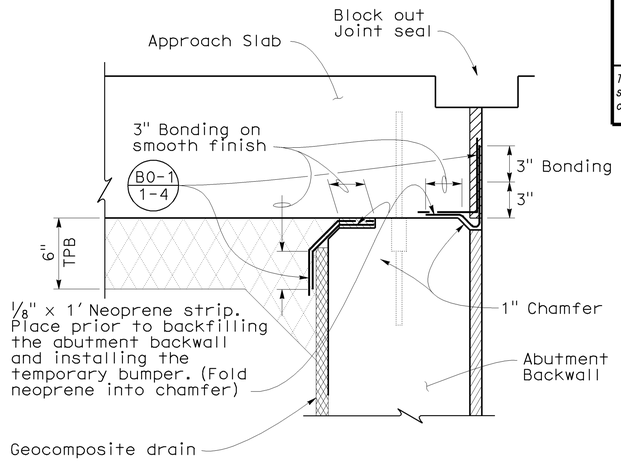

JOINT PROTECTION DETAIL

No Scale

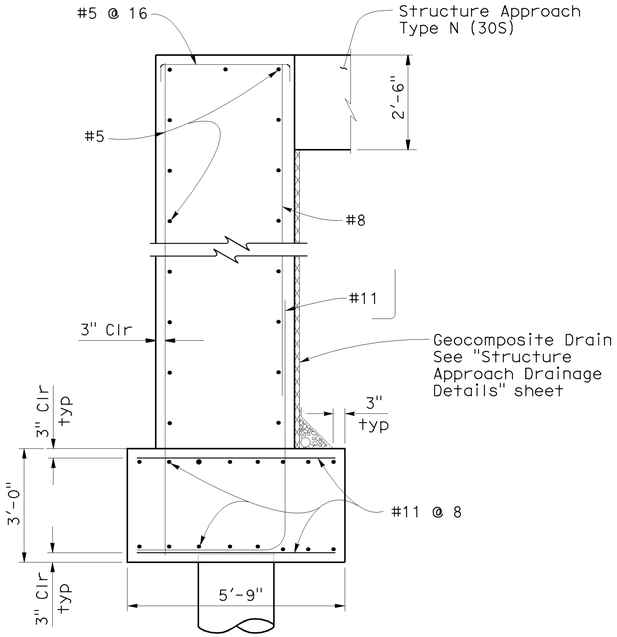

SECTION E-E

½" = 1'-0"

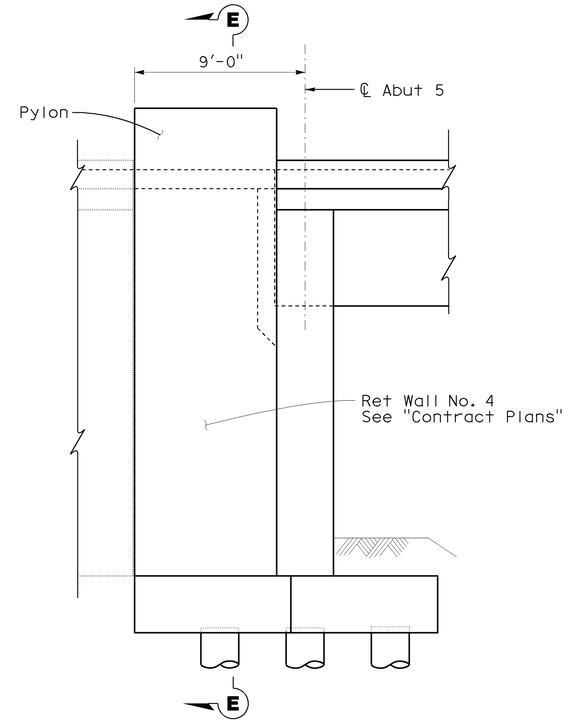

RETURN WALL

¼" = 1'-0"

NOTE:
CONTRACTOR SHALL VERIFY ALL CONTROLLING FIELD DIMENSIONS BEFORE ORDERING OR FABRICATING ANY MATERIALS.

DESIGN	BY S. Hegazi/A. Alcantara	CHECKED B. Nguyen	STATE OF CALIFORNIA DEPARTMENT OF TRANSPORTATION	DIVISION OF ENGINEERING SERVICES STRUCTURE DESIGN DESIGN BRANCH 4	BRIDGE NO. 34-0160G
DETAILS	BY JFCasarino	CHECKED S. Hegazi			POST MILE 9.18
QUANTITIES	BY S. Hegazi	CHECKED M. Thach		CU 04242 EA 163731	

N1 - S101 CONNECTOR
ABUTMENT DETAILS NO. 2

STRUCTURES DESIGN DETAIL SHEET (ENGLISH) (REV. 10/25/05)

ORIGINAL SCALE IN INCHES FOR REDUCED PLANS 0 1 2 3

DISREGARD PRINTS BEARING EARLIER REVISION DATES →

REVISION DATES: 5-6-09 | 5-18-09 | 6-2-09 | 6-16-09

SHEET 8 OF 44

FILE => 34-0160_08abutd2.dgn

USERNAME => ttmnguye DATE PLOTTED => 21-JUL-2009 TIME PLOTTED => 13:26

DIST	COUNTY	ROUTE	POST MILES TOTAL PROJECT	SHEET No	TOTAL SHEETS
04	SF	101,1	9.2/9.8, 6.8/7.1	493	567

Ahmed Ibrahim 6-4-09
REGISTERED CIVIL ENGINEER DATE

7-20-09
PLANS APPROVAL DATE

REGISTERED PROFESSIONAL ENGINEER
AHMED M M IBRAHIM
No. S 4865
Exp. 9-30-10
STRUCTURAL
STATE OF CALIFORNIA

The State of California or its officers or agents shall not be responsible for the accuracy or completeness of electronic copies of this plan sheet.

DIMENSION TABLE

LOCATION	W	L
Bent 1	42'-10"	15'-0"
Bent 2	42'-7"	15'-0"
Bent 3	42'-8"	15'-0"
Bent 4	41'-2"	14'-6"

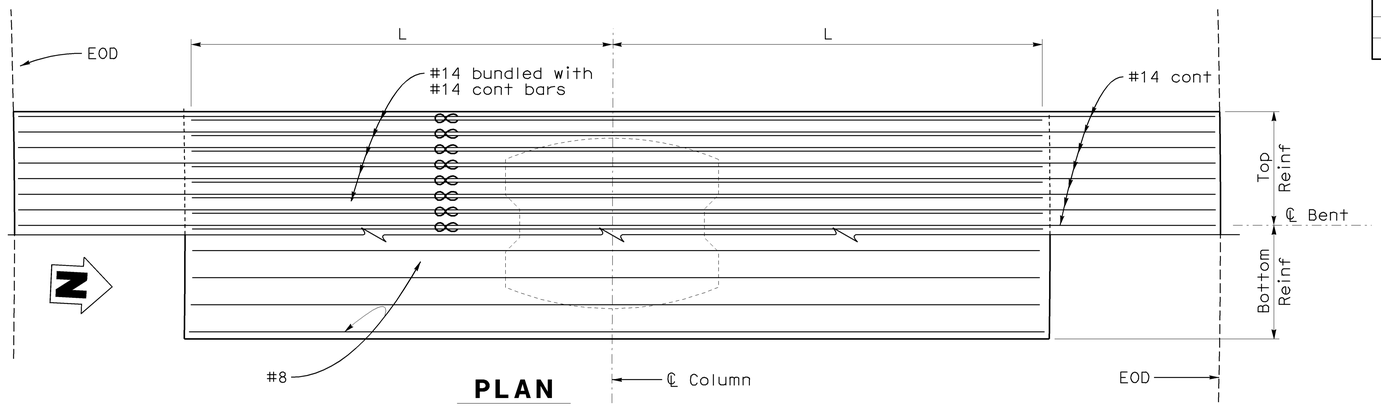

PLAN
3/8" = 1'-0"

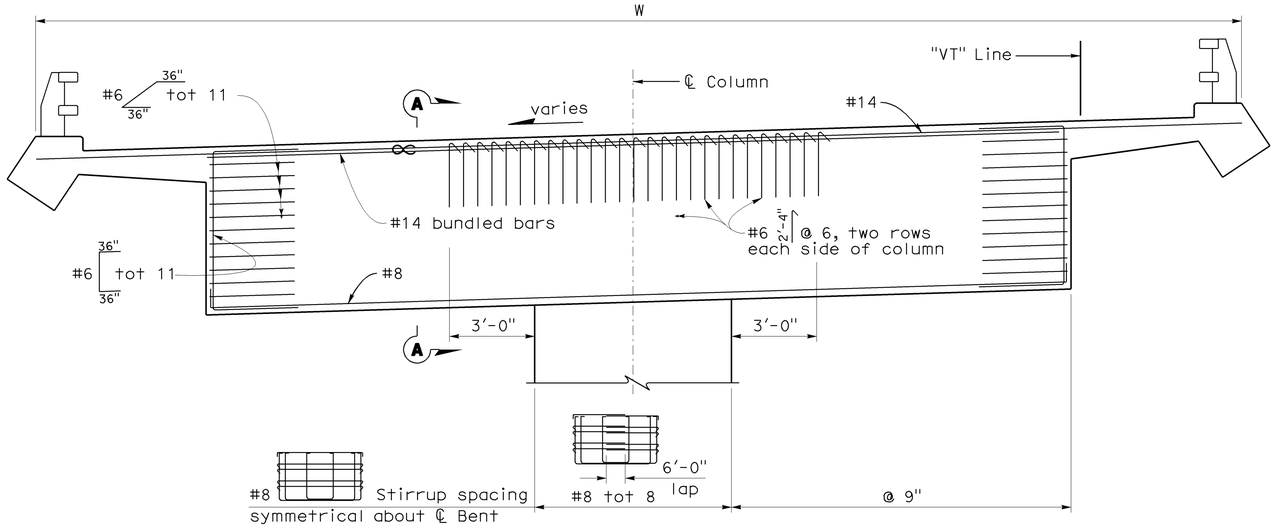

BENT ELEVATION
3/8" = 1'-0"

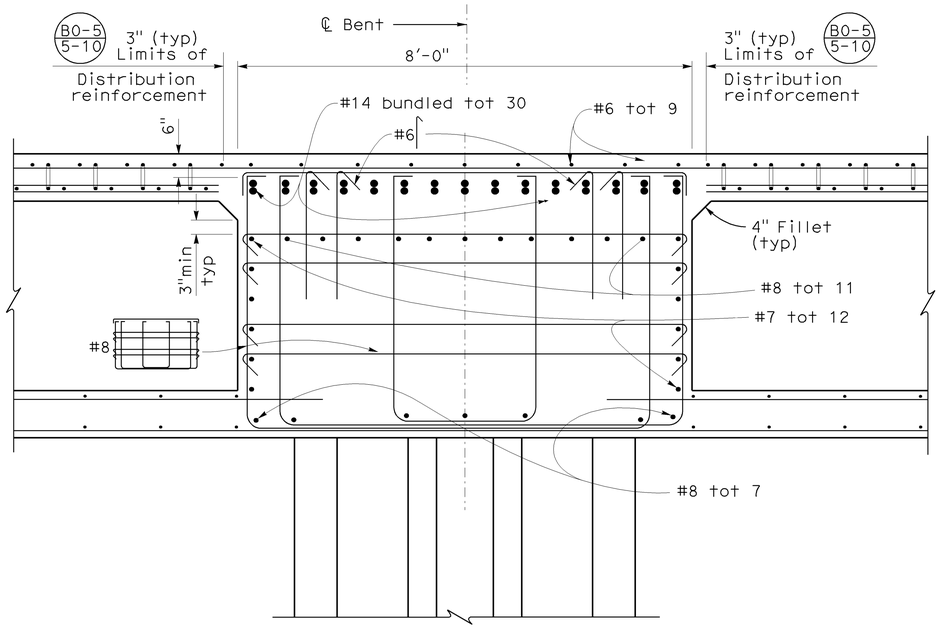

SECTION A-A
3/4" = 1'-0"

NOTE:
CONTRACTOR SHALL VERIFY ALL CONTROLLING FIELD DIMENSIONS BEFORE ORDERING OR FABRICATING ANY MATERIALS.

	BY	CHECKED
DESIGN	S. Hegazi/D. Lee	L. Barnard/ J. Zha
DETAILS	JFCasarino	S. Hegazi
QUANTITIES	S. Hegazi	M. Thach

STATE OF CALIFORNIA
DEPARTMENT OF TRANSPORTATION

DIVISION OF ENGINEERING SERVICES
STRUCTURE DESIGN
DESIGN BRANCH 4

CU 04242
EA 163731

BRIDGE NO. 34-0160G
POST MILE 9.18

N1 - S101 CONNECTOR
BENT DETAILS

STRUCTURES DESIGN DETAIL SHEET (ENGLISH) (REV. 10/25/05)

ORIGINAL SCALE IN INCHES FOR REDUCED PLANS 0 1 2 3

DISREGARD PRINTS BEARING EARLIER REVISION DATES →

REVISION DATES: 1-7-09 | 3-9-09 | 5-6-09 | 5-18-09 | 5-23-09 | 6-2-09

SHEET 9 OF 44

FILE => 34-0160_09bntd.dgn

USERNAME => trmoguye DATE PLOTTED => 21-JUL-2009 TIME PLOTTED => 13:26

DIST	COUNTY	ROUTE	POST MILES TOTAL PROJECT	SHEET No	TOTAL SHEETS
04	SF	101,1	9.2/9.8, 6.8/7.1	494	567

Ahmed Ibrahim 6-4-09
REGISTERED CIVIL ENGINEER DATE

7-20-09
PLANS APPROVAL DATE

REGISTERED PROFESSIONAL ENGINEER
AHMED M M IBRAHIM
No. S 4865
Exp. 9-30-10
STRUCTURAL
STATE OF CALIFORNIA

The State of California or its officers or agents shall not be responsible for the accuracy or completeness of electronic copies of this plan sheet.

DIMENSION TABLE

LOCATION	H1
Bent 1	24'-9"
Bent 2	21'-9"

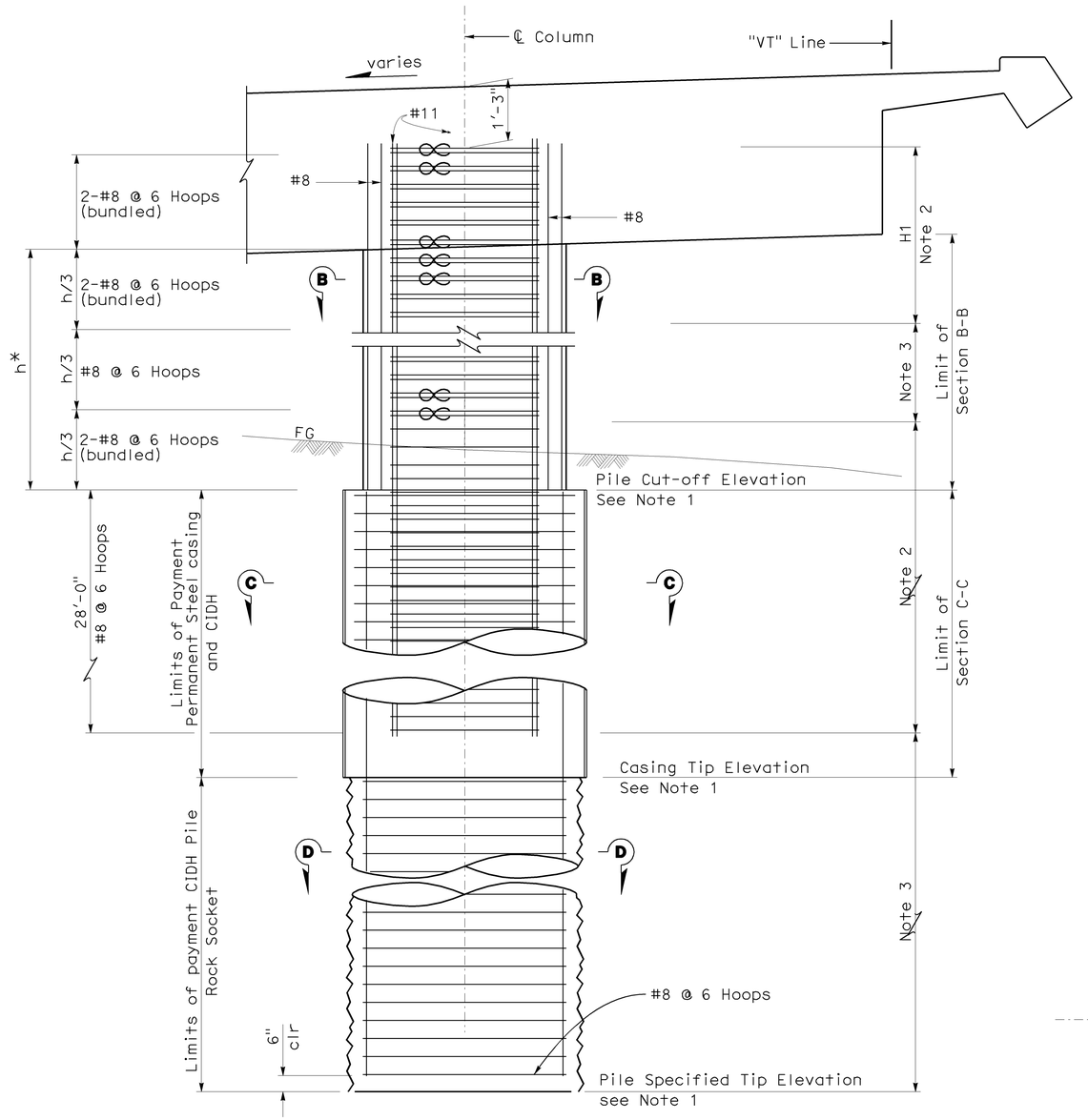

h* = Column height (Pile Cut-off to Soffit)

COLUMN ELEVATION (BENTS 1 & 2)

3/8" = 1'-0"

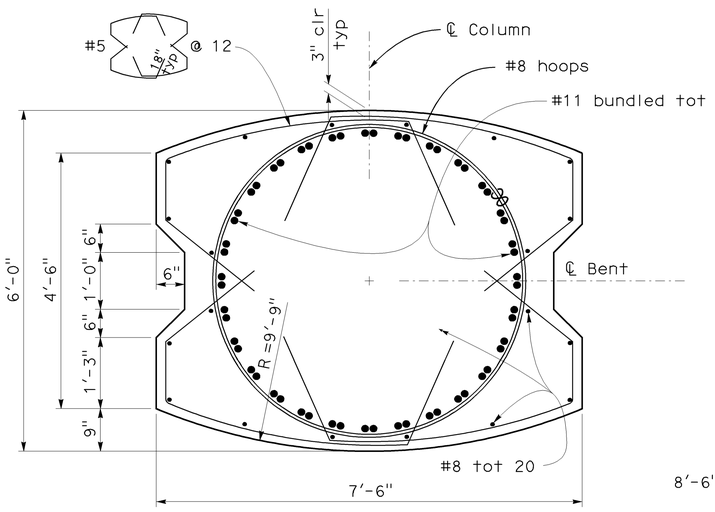

SECTION B-B

3/4" = 1'-0"

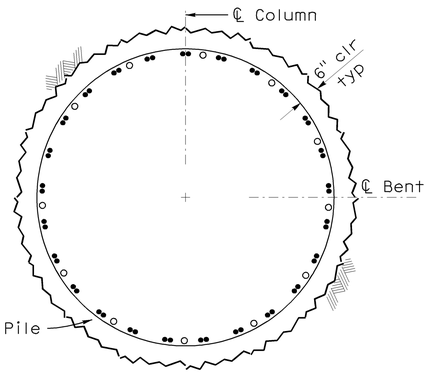

SECTION D-D

1/2" = 1'-0"

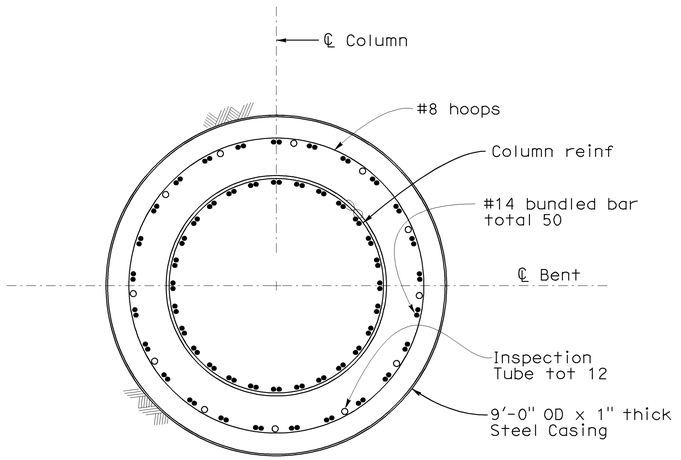

SECTION C-C

1/2" = 1'-0"

NOTES:

1. For foundation elevations, see "PILE DATA TABLE" on "INDEX TO PLAN" sheet.
2. No splices allowed in column / pile shaft main reinf.
3. Staggered "Ultimate Splices" allowed.
4. Lap splice in main bent cap reinforcement is not allowed.
5. #8 Hoops are "Ultimate" splice.

NOTE:
CONTRACTOR SHALL VERIFY ALL CONTROLLING FIELD DIMENSIONS BEFORE ORDERING OR FABRICATING ANY MATERIALS.

DESIGN	BY S. Hegazi/D. Lee	CHECKED L. Barnard/J. Zha	STATE OF CALIFORNIA DEPARTMENT OF TRANSPORTATION
DETAILS	BY JFCasarino	CHECKED S. Hegazi	
QUANTITIES	BY S. Hegazi	CHECKED M. Thach	

DIVISION OF ENGINEERING SERVICES STRUCTURE DESIGN
DESIGN BRANCH 4

BRIDGE NO. 34-0160G
POST MILE 9.18

N1 - S101 CONNECTOR
COLUMN DETAILS NO. 1

STRUCTURES DESIGN DETAIL SHEET (ENGLISH) (REV. 10/25/05)

ORIGINAL SCALE IN INCHES FOR REDUCED PLANS 0 1 2 3

CU 04242
EA 163731

DISREGARD PRINTS BEARING EARLIER REVISION DATES →

REVISION DATES: 1-2-09 | 3-9-09 | 5-6-09 | 5-18-09 | 5-28-09 | 5-29-09 | 7-11-09

SHEET 10 OF 44

FILE => 34-0160_10colld1.dgn

USERNAME => trmoguye DATE PLOTTED => 21-JUL-2009 TIME PLOTTED => 13:26

DIST	COUNTY	ROUTE	POST MILES TOTAL PROJECT	SHEET No	TOTAL SHEETS
04	SF	101,1	9.2/9.8, 6.8/7.1	495	567

Ahmed Ibrahim 6-4-09
REGISTERED CIVIL ENGINEER DATE

7-20-09
PLANS APPROVAL DATE

REGISTERED PROFESSIONAL ENGINEER
AHMED M M IBRAHIM
No. S 4865
Exp. 9-30-10
STRUCTURAL
STATE OF CALIFORNIA

The State of California or its officers or agents shall not be responsible for the accuracy or completeness of electronic copies of this plan sheet.

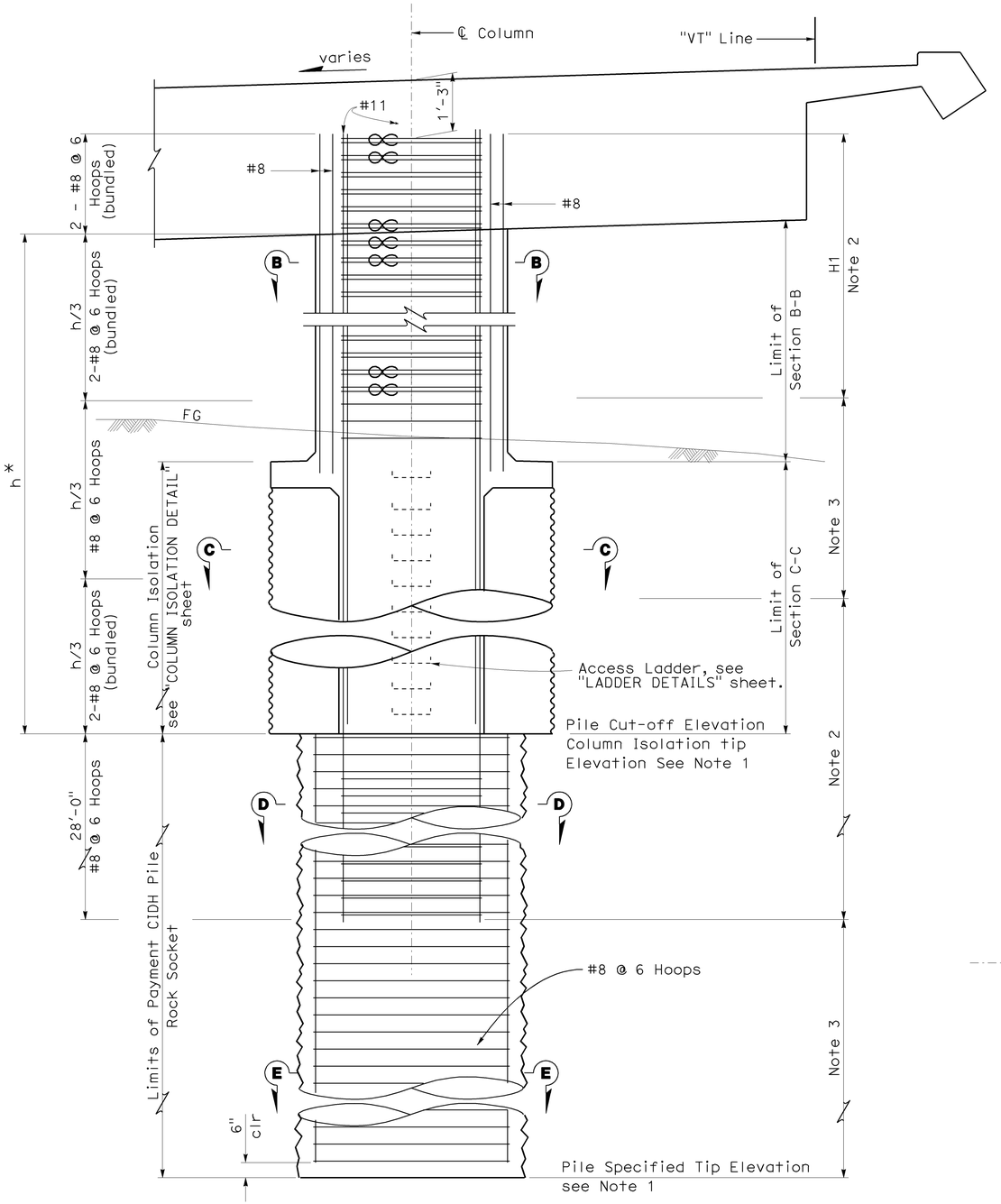

COLUMN ELEVATION (BENTS 3 & 4)

3/8" = 1'-0"

h = Column height (Pile Cut-off Elevation to Soffit)

NOTE:
CONTRACTOR SHALL VERIFY ALL CONTROLLING FIELD DIMENSIONS BEFORE ORDERING OR FABRICATING ANY MATERIALS.

DIMENSION TABLE

LOCATION	H1
Bent 3	15'-9"
Bent 4	10'-9"

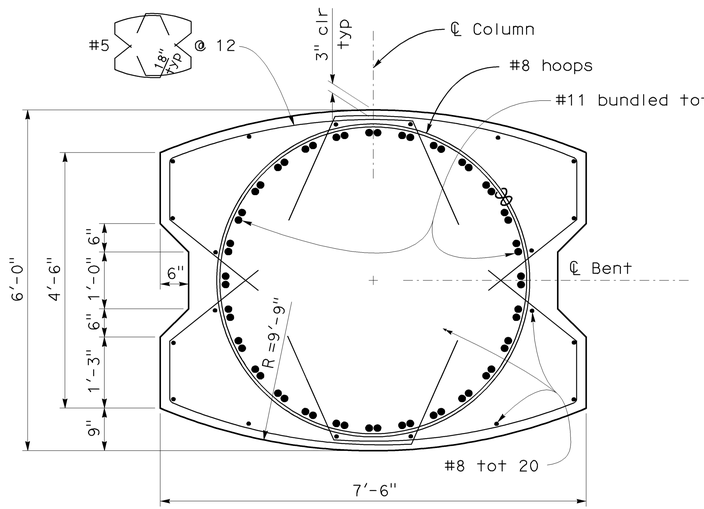

SECTION B-B

3/4" = 1'-0"

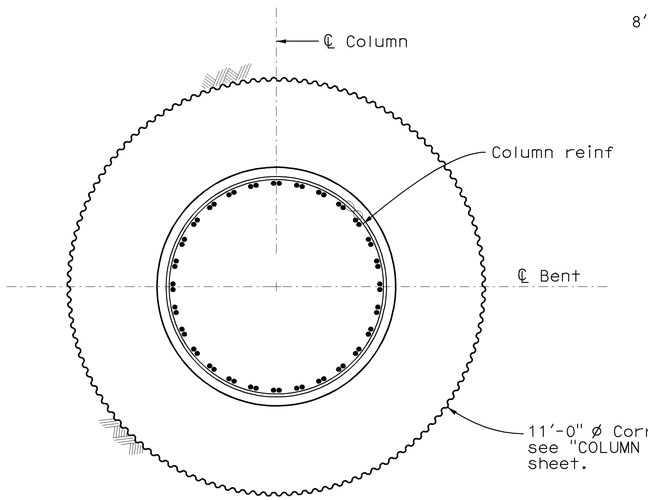

SECTION C-C

1/2" = 1'-0"

NOTES:

1. For foundation elevations, see "PILE DATA TABLE" on "INDEX TO PLAN" sheet.
2. No splices allowed in column / pile shaft main reinf.
3. Staggered "Ultimate Splices" allowed.
4. Lap splice in main bent cap reinforcement is not allowed.
5. #8 Hoops are "Ultimate" splice.
6. The concrete skirt should be covered by the Finished Grade at 1'-0" max.

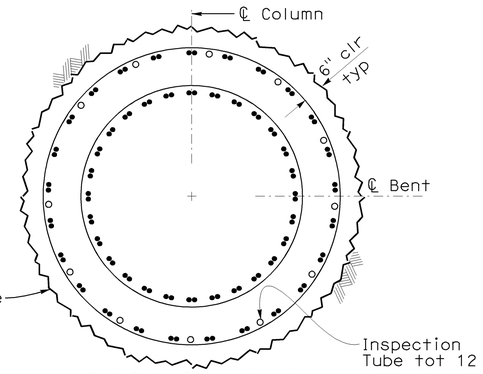

SECTION D-D

1/2" = 1'-0"

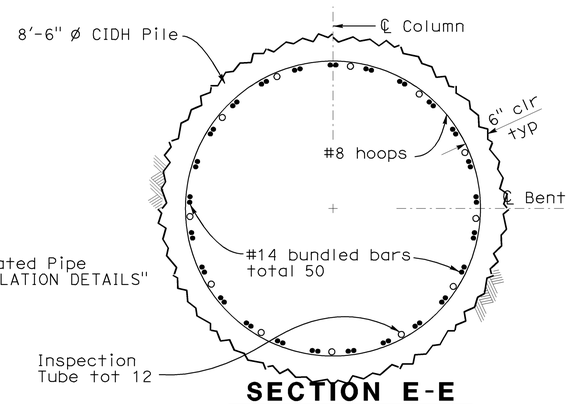

SECTION E-E

1/2" = 1'-0"

DESIGN	BY S. Hegazi/D. Lee	CHECKED L. Barnard/J. Zha	STATE OF CALIFORNIA DEPARTMENT OF TRANSPORTATION	DIVISION OF ENGINEERING SERVICES STRUCTURE DESIGN DESIGN BRANCH 4	BRIDGE NO. 34-0160G
DETAILS	BY JFCasarino	CHECKED S. Hegazi			POST MILE 9.18
QUANTITIES	BY S. Hegazi	CHECKED M. Thach		CU 04242 EA 163731	

N1 - S101 CONNECTOR
COLUMN DETAILS NO. 2

STRUCTURES DESIGN DETAIL SHEET (ENGLISH) (REV. 10/25/05)

ORIGINAL SCALE IN INCHES FOR REDUCED PLANS 0 1 2 3

DISREGARD PRINTS BEARING EARLIER REVISION DATES

REVISION DATES: 5-14-09 5-23-09 5-29-09 7-11-09

SHEET 11 OF 44

FILE => 34-0160_11cold2.dgn

USERNAME => ttmnguye DATE PLOTTED => 21-JUL-2009 TIME PLOTTED => 13:26

DIST	COUNTY	ROUTE	POST MILES TOTAL PROJECT	SHEET No	TOTAL SHEETS
04	SF	101,1	9.2/9.8, 6.8/7.1	496	567

Ahmed Ibrahim 6-4-09
REGISTERED CIVIL ENGINEER DATE

7-20-09
PLANS APPROVAL DATE

REGISTERED PROFESSIONAL ENGINEER — AHMED M.M. IBRAHIM — No. S 4865 — Exp. 9-30-10 — STRUCTURAL — STATE OF CALIFORNIA

The State of California or its officers or agents shall not be responsible for the accuracy or completeness of electronic copies of this plan sheet.

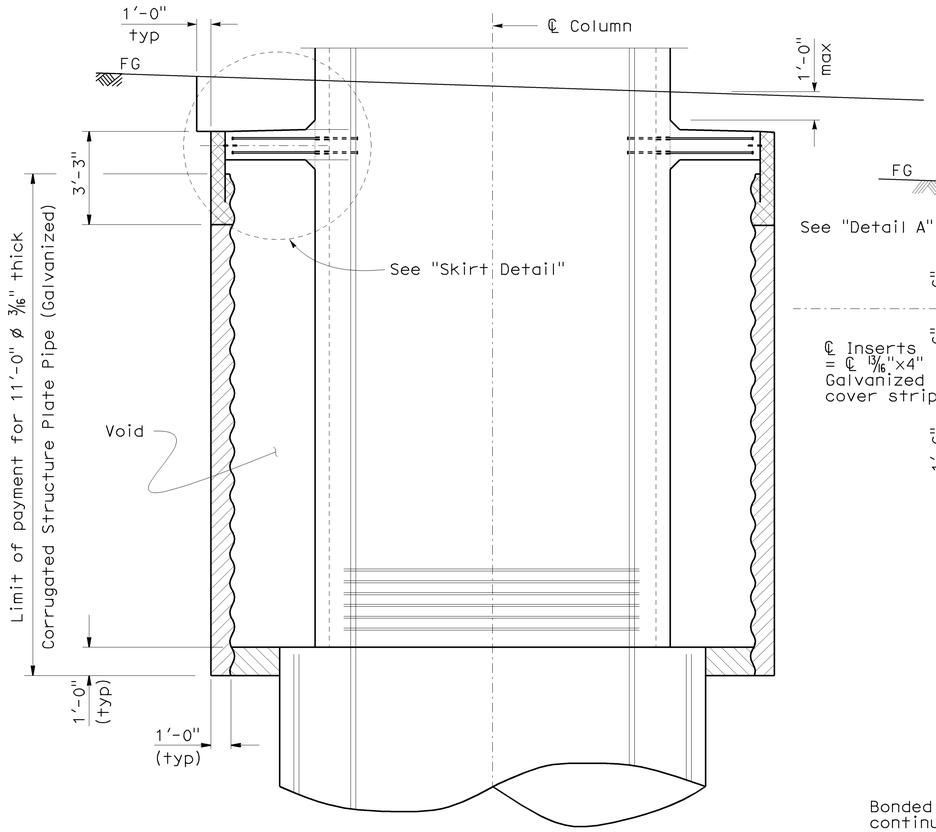

PART TYPICAL SECTION

3/8" = 1'-0"

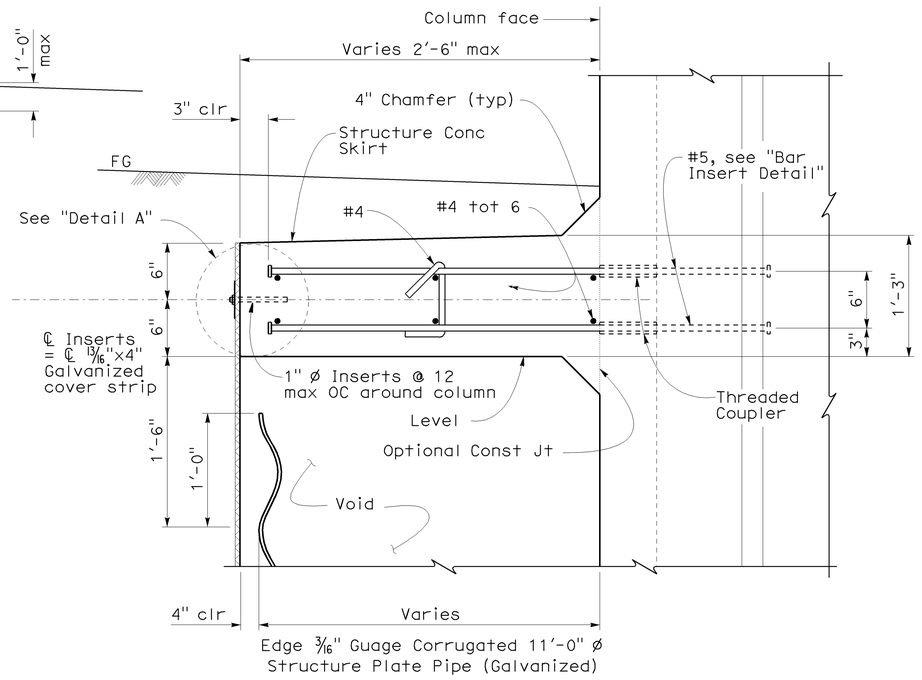

SKIRT DETAIL

1 1/2" = 1'-0"

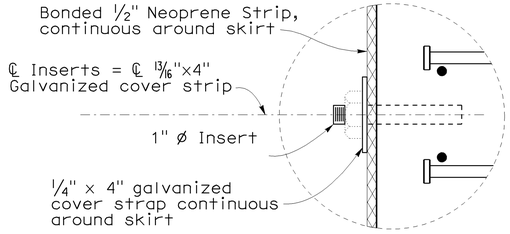

DETAIL "A"

3" = 1'-0"

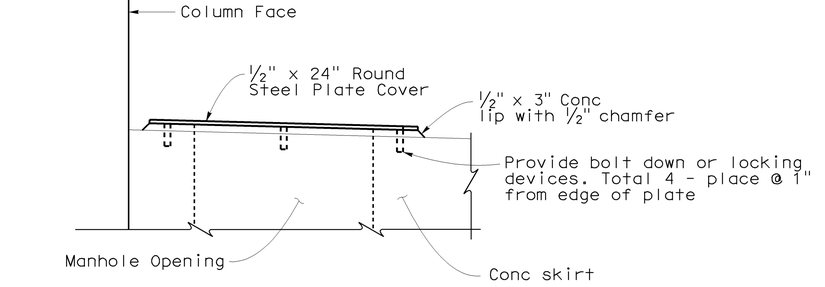

COVER PLATE DETAIL

No Scale

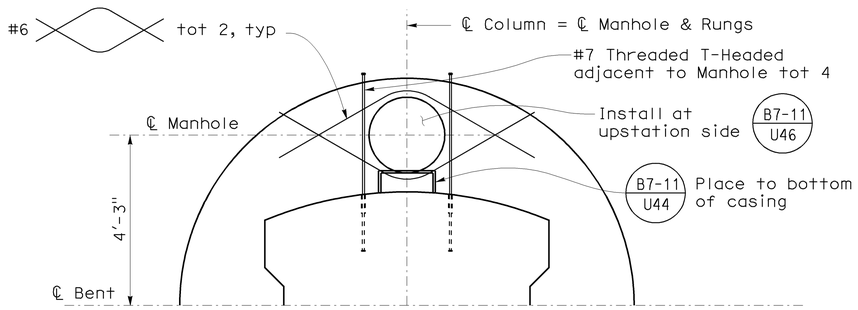

PLAN AT SKIRT

1/2" = 1'-0"

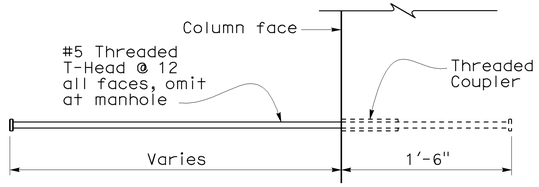

BAR INSERT DETAIL

1 1/2" = 1'-0"

LEGEND:

- Denotes Limits of Payment for structure Backfill (typ) At the contractors option, lean concrete can be substituted.
- Denotes Limits of Payment for Pea Gravel (typ)
- Denotes Limits of Payment for minor concrete

NOTE:
CONTRACTOR SHALL VERIFY ALL CONTROLLING FIELD DIMENSIONS BEFORE ORDERING OR FABRICATING ANY MATERIALS.

DESIGN	BY S. Hegazi	CHECKED L. Wang	STATE OF CALIFORNIA DEPARTMENT OF TRANSPORTATION	DIVISION OF ENGINEERING SERVICES STRUCTURE DESIGN DESIGN BRANCH 4	BRIDGE NO. 34-0160G; POST MILE 9.18
DETAILS	BY JFCasarino	CHECKED S. Hegazi			
QUANTITIES	BY S. Hegazi	CHECKED M. Thach			

N1 - S101 CONNECTOR
COLUMN ISOLATION DETAILS

STRUCTURES DESIGN DETAIL SHEET (ENGLISH) (REV. 10/25/05)

ORIGINAL SCALE IN INCHES FOR REDUCED PLANS 0 1 2 3

CU 04242
EA 163731

DISREGARD PRINTS BEARING EARLIER REVISION DATES →

REVISION DATES: 4-17-09; 5-29-09; 5-29-09; 7-11-09

SHEET 12 OF 44

FILE => 34-0160_12isod.dgn

USERNAME => trmgoye DATE PLOTTED => 21-JUL-2009 TIME PLOTTED => 13:26

DIST	COUNTY	ROUTE	POST MILES TOTAL PROJECT	SHEET No	TOTAL SHEETS
04	SF	101,1	9.2/9.8, 6.8/7.1	497	567

Ahmed Brahim 6-4-09
REGISTERED CIVIL ENGINEER DATE

7-20-09
PLANS APPROVAL DATE

REGISTERED PROFESSIONAL ENGINEER — AHMED M M IBRAHIM — No. S 4865 — EXP. 9-30-10 — STRUCTURAL — STATE OF CALIFORNIA

The State of California or its officers or agents shall not be responsible for the accuracy or completeness of electronic copies of this plan sheet.

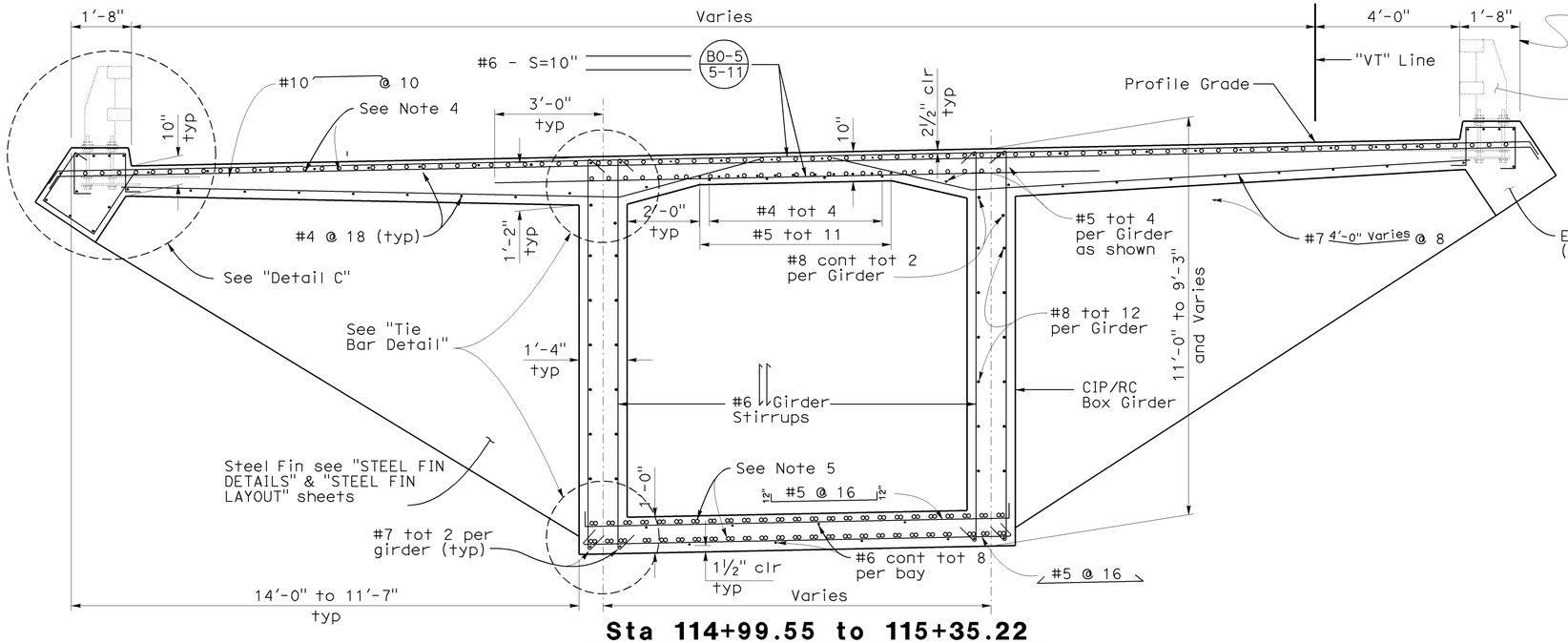

Sta 114+99.55 to 115+35.22

Scale: ½" = 1'-0"

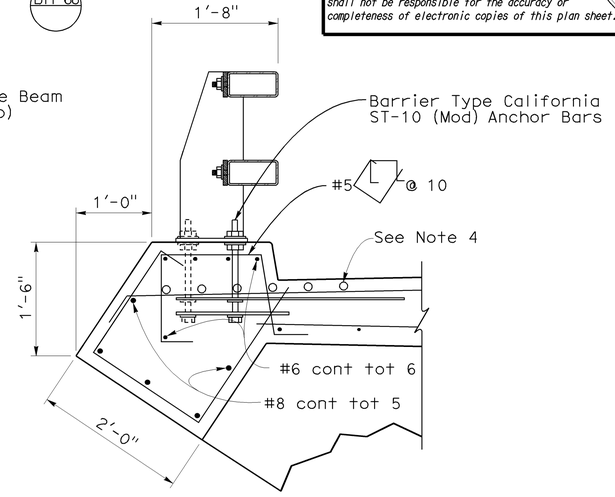

Note: Detail is typical to all locations.

DETAIL C

Scale: 1" = 1'-0"

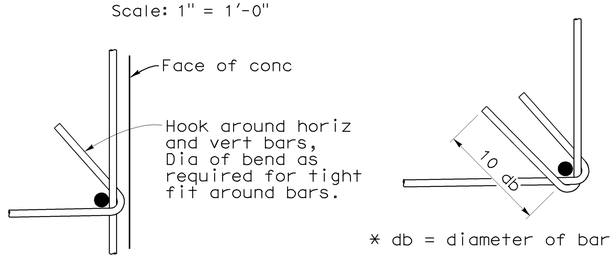

* db = diameter of bar

Note: Detail is typical to all locations.

TIE BAR DETAIL

No scale

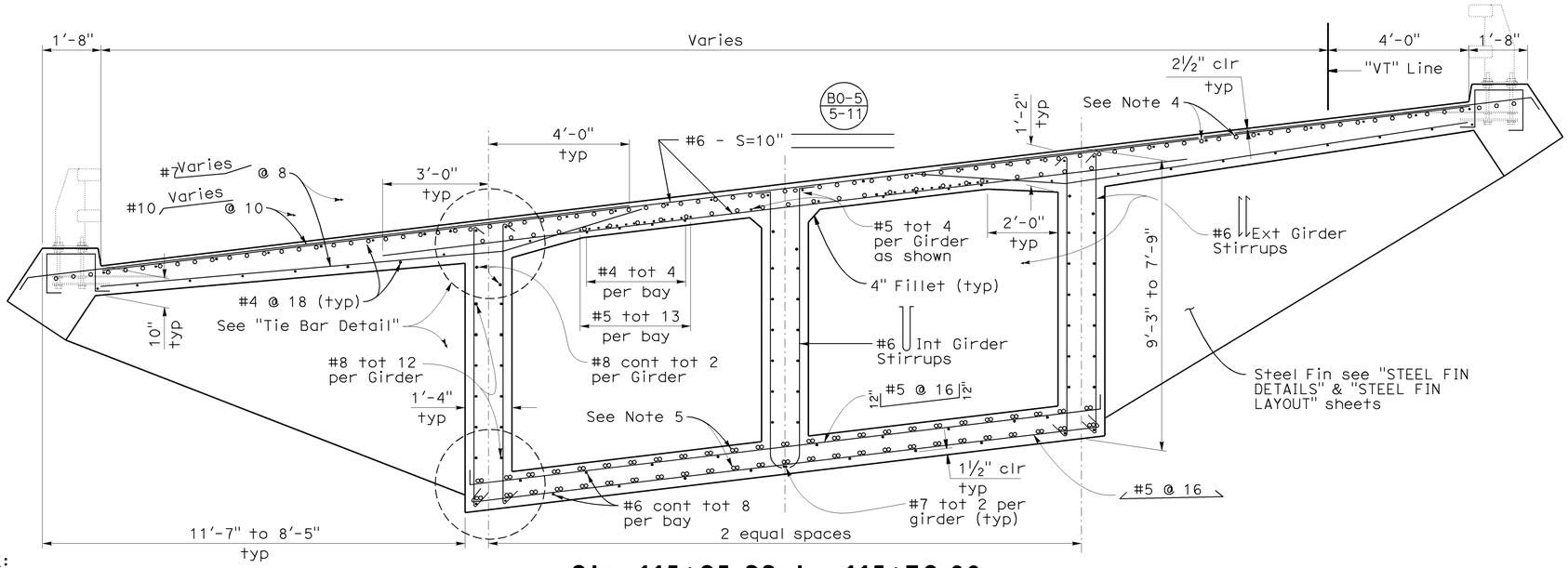

Sta 115+35.22 to 115+70.89

Scale: ½" = 1'-0"

NOTE:
CONTRACTOR SHALL VERIFY ALL CONTROLLING FIELD DIMENSIONS BEFORE ORDERING OR FABRICATING ANY MATERIALS.

B0-5 B7-1 B8-5 B11-68

NOTES:

1. See "GIRDER LAYOUT" sheet for stirrup spacing.
2. For continuous bars, use Service Lap Splice.
3. Min concrete cover, see "General Notes" on "INDEX TO PLAN" sheet.
4. Top reinf, see "GIRDER REINFORCEMENT -DECK" sheets.
5. Bottom reinf, see "GIRDER REINFORCEMENT - SOFFIT" sheets.

DESIGN	BY Sameh Hegazi	CHECKED L. N. Do	STATE OF CALIFORNIA DEPARTMENT OF TRANSPORTATION	DIVISION OF ENGINEERING SERVICES STRUCTURE DESIGN DESIGN BRANCH 4	BRIDGE NO. 34-0160G
DETAILS	BY JFCasarino	CHECKED L. Wang			POST MILE 9.18
QUANTITIES	BY S. Hegazi	CHECKED M. Thach			

N1 - S101 CONNECTOR
TYPICAL SECTION NO. 1

STRUCTURES DESIGN DETAIL SHEET (ENGLISH) (REV. 10/25/05)

ORIGINAL SCALE IN INCHES FOR REDUCED PLANS 0 1 2 3

CU 04242
EA 163731

DISREGARD PRINTS BEARING EARLIER REVISION DATES →

REVISION DATES: 2-3-09 | 3-16-09 | 4-29-09 | 5-18-09 | 5-23-09

SHEET 13 OF 44

FILE => 34-0160_13typ1.dgn

USERNAME => trmgoye DATE PLOTTED => 21-JUL-2009 TIME PLOTTED => 13:26

DIST	COUNTY	ROUTE	POST MILES TOTAL PROJECT	SHEET No	TOTAL SHEETS
04	SF	101,1	9.2/9.8, 6.8/7.1	498	567

Ahmed Ibrahim 6-4-09
REGISTERED CIVIL ENGINEER DATE

7-20-09
PLANS APPROVAL DATE

REGISTERED PROFESSIONAL ENGINEER
AHMED M M IBRAHIM
No. S 4865
Exp. 9-30-10
STRUCTURAL
STATE OF CALIFORNIA

The State of California or its officers or agents shall not be responsible for the accuracy or completeness of electronic copies of this plan sheet.

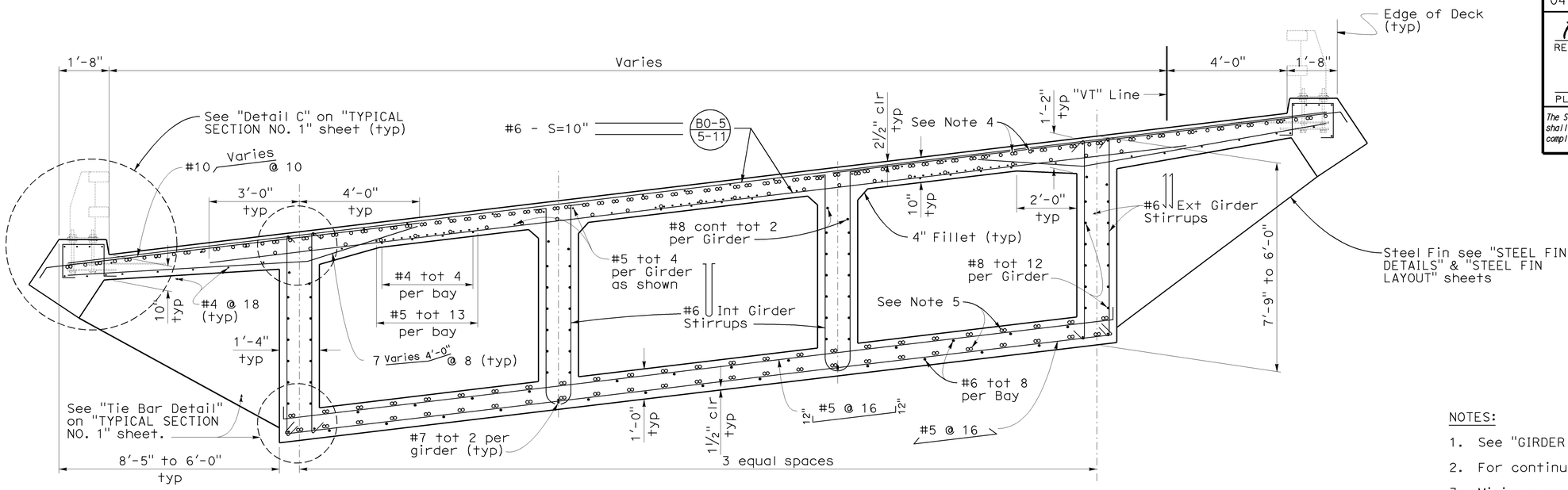

Sta 115+70.89 to 116+06.55

NOTES:

1. See "GIRDER LAYOUT" sheet for stirrup spacing.
2. For continuous bars, use Service Lap Splice.
3. Minimum concrete cover, see "General Notes" on "INDEX TO PLAN" sheet.
4. Top reinf, see "GIRDER REINFORCEMENT -DECK" sheets.
5. Bottom reinf, see "GIRDER REINFORCEMENT - SOFFIT" sheets.

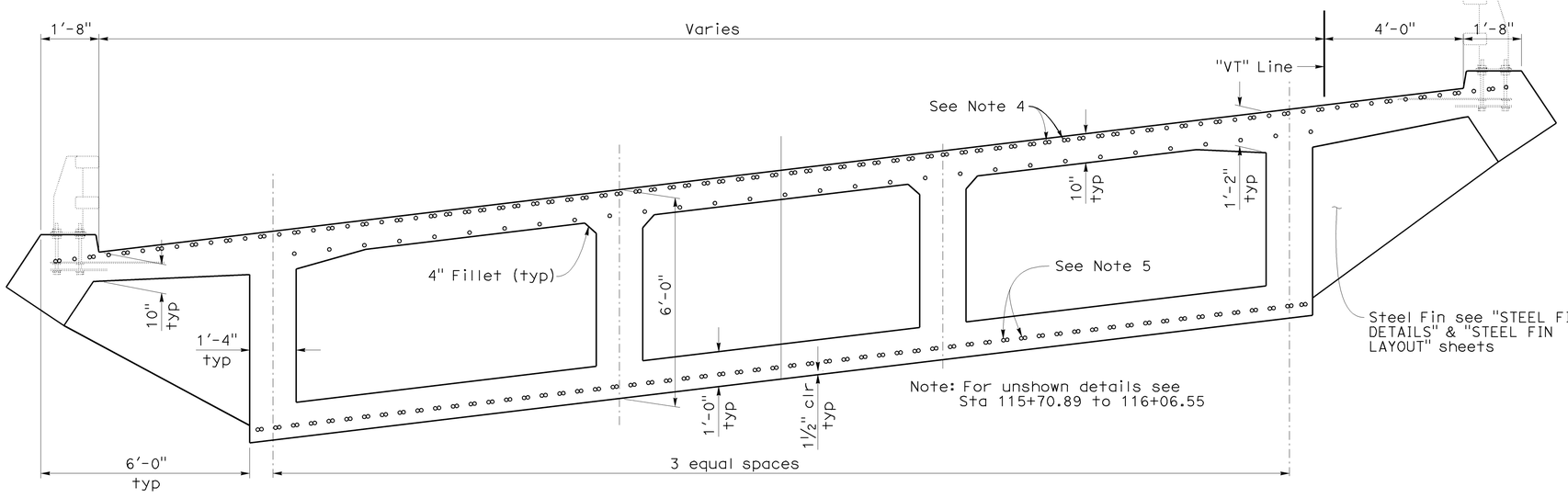

Sta 116+06.55 to 119+41.55

Scale: ½" = 1'-0"

B0-5 B7-1 B8-5 B11-68

NOTE:
CONTRACTOR SHALL VERIFY ALL CONTROLLING FIELD DIMENSIONS BEFORE ORDERING OR FABRICATING ANY MATERIALS.

DESIGN	BY S. Hegazi	CHECKED L. N. Do	STATE OF CALIFORNIA DEPARTMENT OF TRANSPORTATION	DIVISION OF ENGINEERING SERVICES STRUCTURE DESIGN DESIGN BRANCH 4	BRIDGE NO. 34-0160G; POST MILE 9.18
DETAILS	BY JFCasarino	CHECKED L. Wang			
QUANTITIES	BY S. Hegazi	CHECKED M. Thach			

N1 - S101 CONNECTOR
TYPICAL SECTION NO. 2

STRUCTURES DESIGN DETAIL SHEET (ENGLISH) (REV. 10/25/05)

ORIGINAL SCALE IN INCHES FOR REDUCED PLANS 0 1 2 3

CU 04242
EA 163731

DISREGARD PRINTS BEARING EARLIER REVISION DATES →

REVISION DATES: 2-8-09; 5-1-09; 5-18-09; 5-23-09; 5-30-09

SHEET 14 OF 44

FILE => 34-0160_14typ2.dgn

USERNAME => ttmngoye DATE PLOTTED => 21-JUL-2009 TIME PLOTTED => 13:26

DIST	COUNTY	ROUTE	POST MILES TOTAL PROJECT	SHEET No	TOTAL SHEETS
04	SF	101,1	9.2/9.8, 6.8/7.1	499	567

Ahmed Ibrahim 6-4-09
REGISTERED CIVIL ENGINEER DATE

7-20-09
PLANS APPROVAL DATE

REGISTERED PROFESSIONAL ENGINEER — AHMED M M IBRAHIM — No. S 4865 — Exp. 9-30-10 — STRUCTURAL — STATE OF CALIFORNIA

The State of California or its officers or agents shall not be responsible for the accuracy or completeness of electronic copies of this plan sheet.

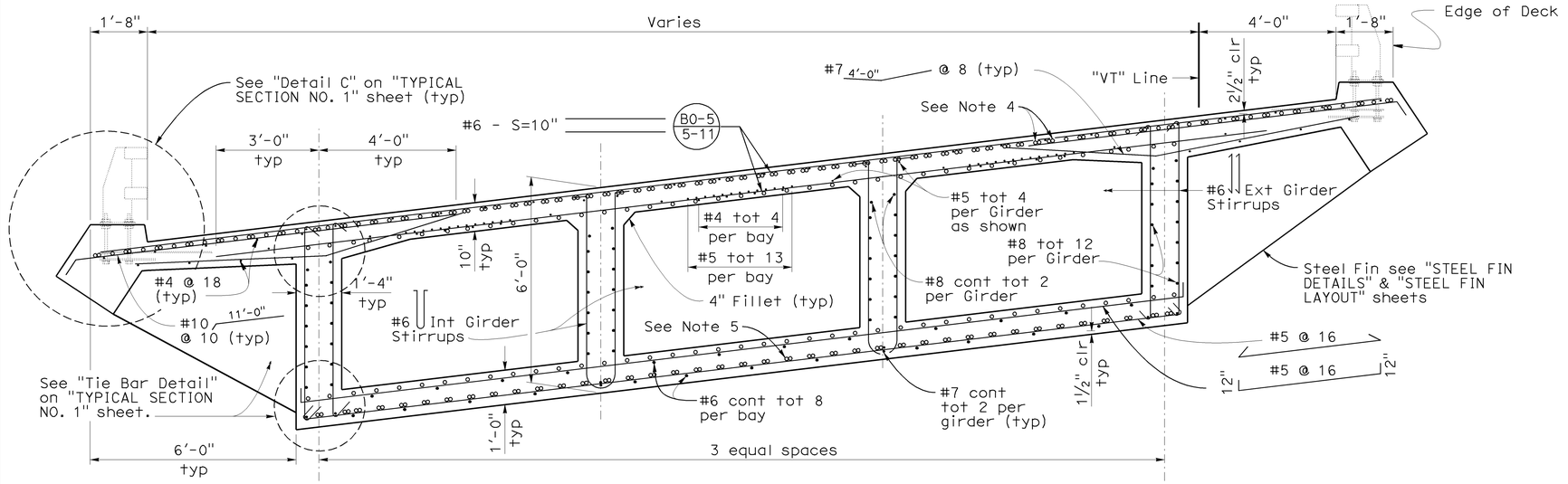

Sta 119+41.55 to 120+08.22

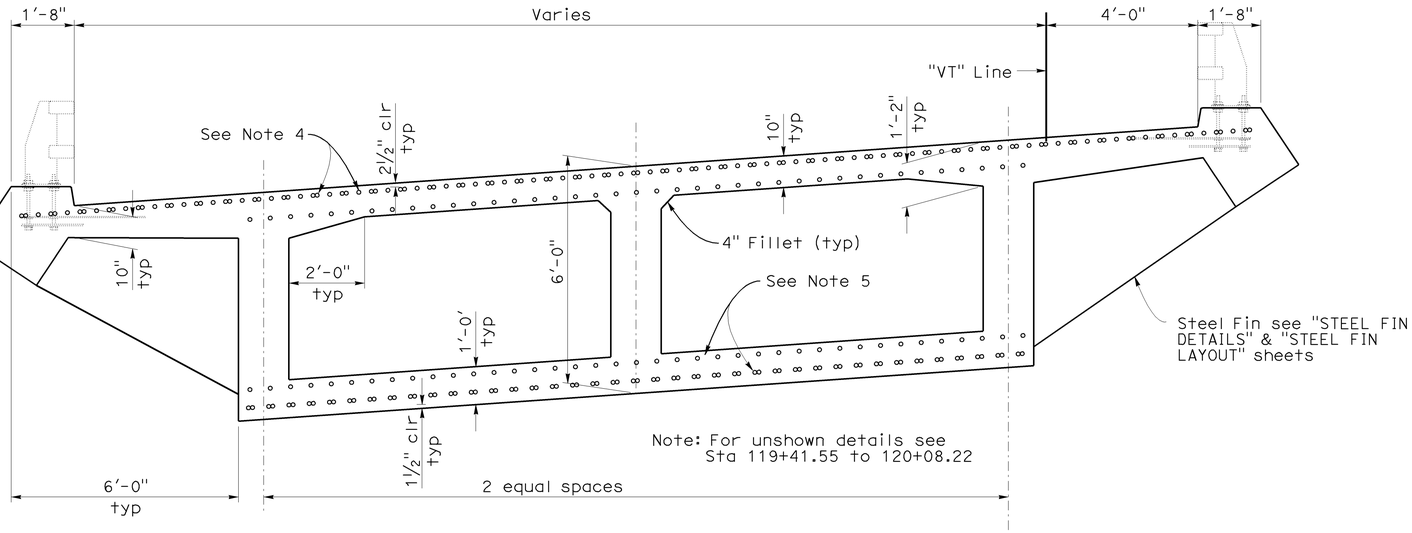

Sta 120+08.22 to 120+41.55

Scale: ½" = 1'-0"

B0-5 B7-1 B8-5 B11-68

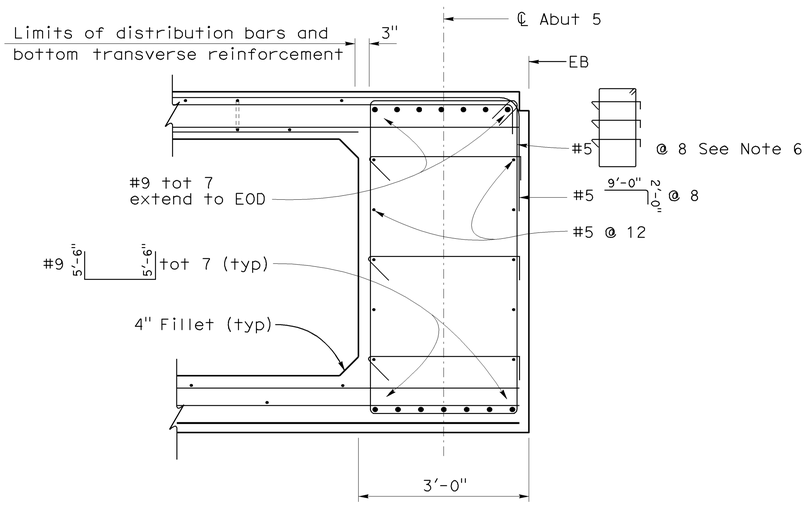

END DIAPHRAGM

¾" = 1'-0"

NOTES:

1. See "GIRDER LAYOUT" sheet for stirrup spacing.
2. For continuous bars, use Service Lap Splice.
3. Minimum concrete cover, see "General Notes" on "INDEX TO PLAN" sheet.
4. Top reinf, see "GIRDER REINFORCEMENT -DECK" sheets.
5. Bottom reinf, see "GIRDER REINFORCEMENT - SOFFIT" sheets.
6. Place parallel to ℄ Girder and spaced along ℄ Brg Abut.

NOTE:
CONTRACTOR SHALL VERIFY ALL CONTROLLING FIELD DIMENSIONS BEFORE ORDERING OR FABRICATING ANY MATERIALS.

DESIGN	BY S. Hegazi	CHECKED L. N. Do	STATE OF CALIFORNIA DEPARTMENT OF TRANSPORTATION
DETAILS	BY JFCasarino	CHECKED L. Wang	
QUANTITIES	BY S. Hegazi	CHECKED M. Thach	

DIVISION OF ENGINEERING SERVICES STRUCTURE DESIGN
DESIGN BRANCH 4

BRIDGE NO. 34-0160G
POST MILE 9.18

N1 - S101 CONNECTOR
TYPICAL SECTION NO. 3

STRUCTURES DESIGN DETAIL SHEET (ENGLISH) (REV. 10/25/05)

ORIGINAL SCALE IN INCHES FOR REDUCED PLANS 0 1 2 3

CU 04242
EA 163731

DISREGARD PRINTS BEARING EARLIER REVISION DATES

REVISION DATES: 2-9-09 | 4-21-09 | 5-18-09 | 5-23-09

SHEET 15 OF 44

FILE => 34-0160_15typ3.dgn

USERNAME = frmnguye DATE PLOTTED => 21-JUL-2009 TIME PLOTTED => 13:26

DIST	COUNTY	ROUTE	POST MILES TOTAL PROJECT	SHEET No	TOTAL SHEETS
04	SF	101,1	9.2/9.8, 6.8/7.1	500	567

Ahmed Ibrahim 6-4-09
REGISTERED CIVIL ENGINEER DATE

7-20-09
PLANS APPROVAL DATE

REGISTERED PROFESSIONAL ENGINEER — AHMED M.M. IBRAHIM — No. S 4865 — EXP. 9-30-10 — STRUCTURAL — STATE OF CALIFORNIA

The State of California or its officers or agents shall not be responsible for the accuracy or completeness of electronic copies of this plan sheet.

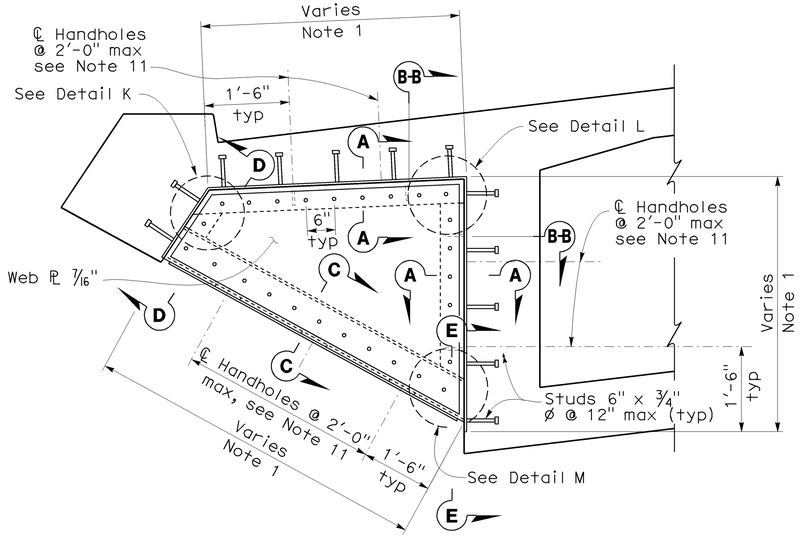

STEEL FIN TYPE A

3/4" = 1'-0"
See Note 2

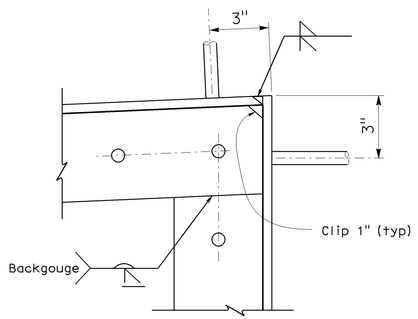

DETAIL L

No Scale

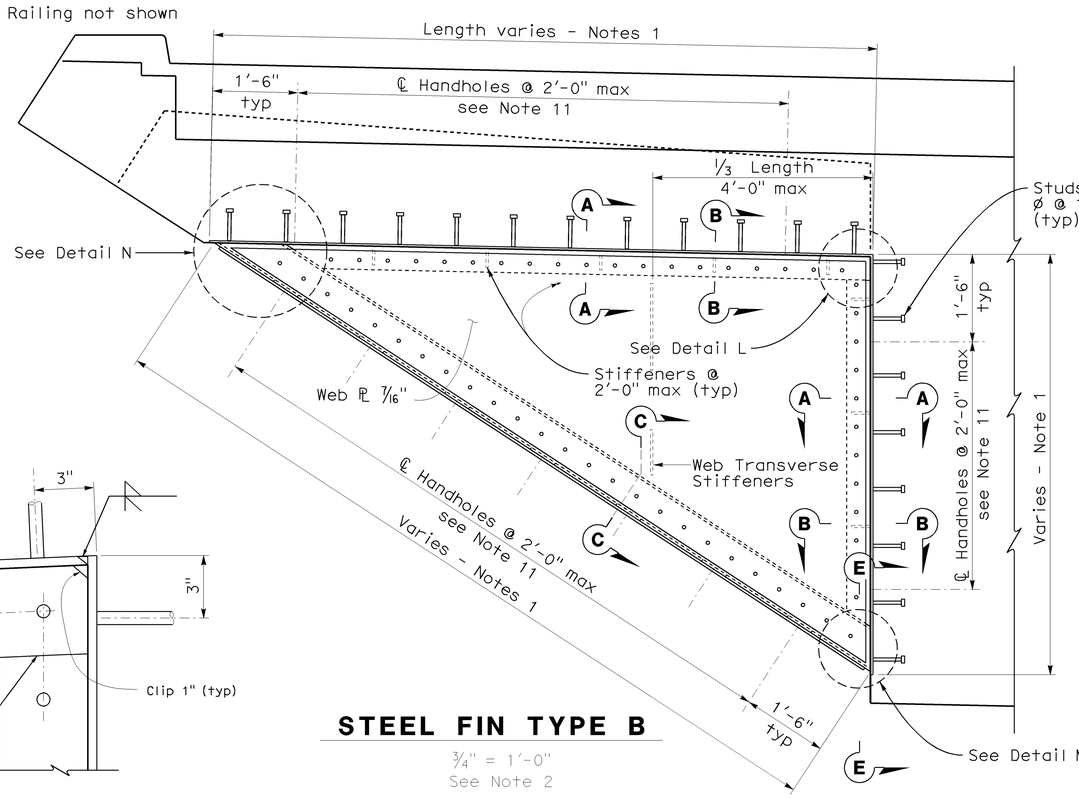

STEEL FIN TYPE B

3/4" = 1'-0"
See Note 2

NOTES:

1. For overhang and exterior girder dimensions, see "TYPICAL SECTION NO. 1,2 & 3" sheets.
2. For Steel Fin layout, see "STEEL FIN LAYOUT" sheet.
3. For Sections A-A through E-E, see "STEEL FIN DETAILS NO. 2" sheet.
4. Studs may be bent to clear prestressing cables.
5. No live loading or construction material storage shall be allowed on the overhang prior to the complete erection of the Steel Fins.
6. Use of temporary welded attachments to the web plates shall not be permitted at any stage of fabrication or construction.
7. Steel Fins shall be shop assembled and painted prior to shipping to bridge site.
8. Steel Fins shall be supported during transportation and erection such that no damages of the web plates occur.
9. Web Plate not shown on Details K, L, M & N for clarity.
10. All bolt holes on web plates only shall have oversize holes ø = 15/16"
11. Evenly spaced between ℄ indicated, for details see "STEEL FIN DETAILS NO. 2" SHEET.

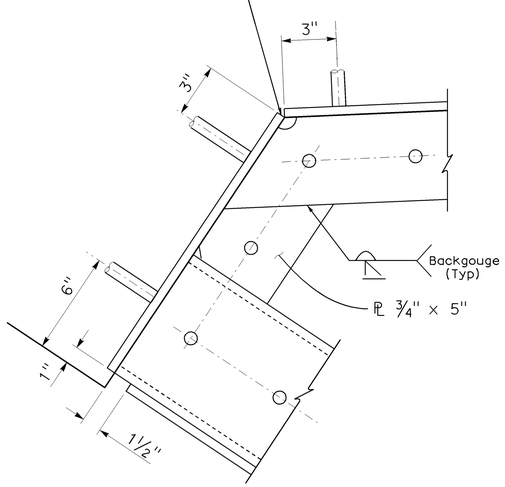

DETAIL K

No Scale

NOTE:
CONTRACTOR SHALL VERIFY ALL CONTROLLING FIELD DIMENSIONS BEFORE ORDERING OR FABRICATING ANY MATERIALS.

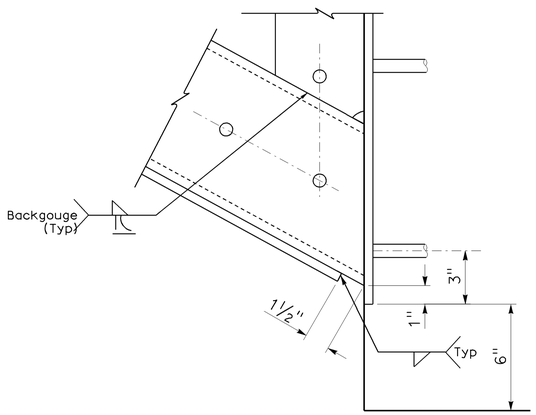

DETAIL M

No Scale

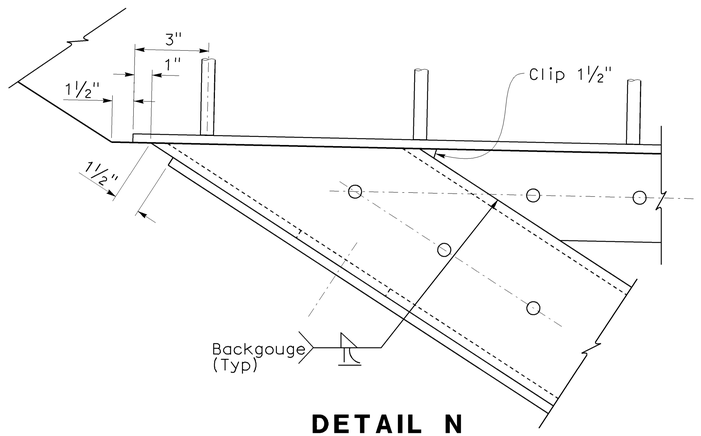

DETAIL N

No Scale

CONSTRUCTION SEQUENCE:

1. Completed Steel Fins subassemblies shall be preassembled in the shop prior to shipping and erecting in compliance with Section 55-3.1 "Assembly" of May 2006 Standard Specifications.
2. Steel Fins shall be erected in place prior to placement of concrete.
3. Caulk around the contact seams between the formwork and the Steel Fin plates to prevent water access inside the steel fins.
4. Pour the bridge superstructure concrete.
5. Clean and apply final coat of paint to Steel Fins.
6. Contractor may submit alternative construction sequence to the Engineer for approval.

DESIGN	BY E.Thimmhardy	CHECKED S. Hegazi	STATE OF CALIFORNIA DEPARTMENT OF TRANSPORTATION	DIVISION OF ENGINEERING SERVICES STRUCTURE DESIGN DESIGN BRANCH 4	BRIDGE NO. 34-0160G; POST MILE 9.18
DETAILS	BY JFCasarino	CHECKED E.Thimmhardy			
QUANTITIES	BY S. Hegazi	CHECKED M. Thach			

N1 - S101 CONNECTOR
STEEL FIN DETAILS NO. 1

STRUCTURES DESIGN DETAIL SHEET (ENGLISH) (REV. 10/25/05)

ORIGINAL SCALE IN INCHES FOR REDUCED PLANS 0 1 2 3

CU 04242
EA 163731

DISREGARD PRINTS BEARING EARLIER REVISION DATES →

REVISION DATES: ~~5-28-09~~ ~~5-13-09~~ ~~5-18-09~~ ~~5-19-09~~ ~~5-23-09~~ ~~5-28-09~~ ~~6-17-09~~ 7-11-09

SHEET 16 OF 44

FILE => 34-0160_16find1.dgn

USERNAME => rrmnguye DATE PLOTTED => 21-JUL-2009 TIME PLOTTED => 13:26

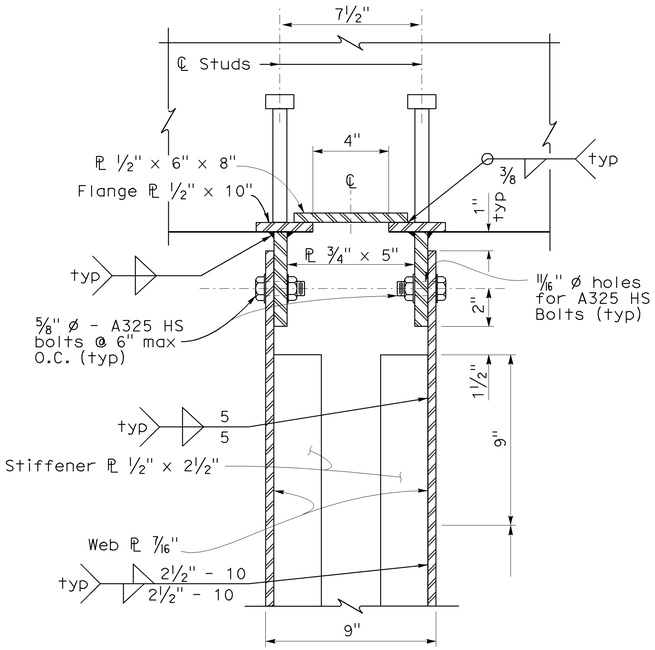

SECTION A-A

3" = 1'-0"

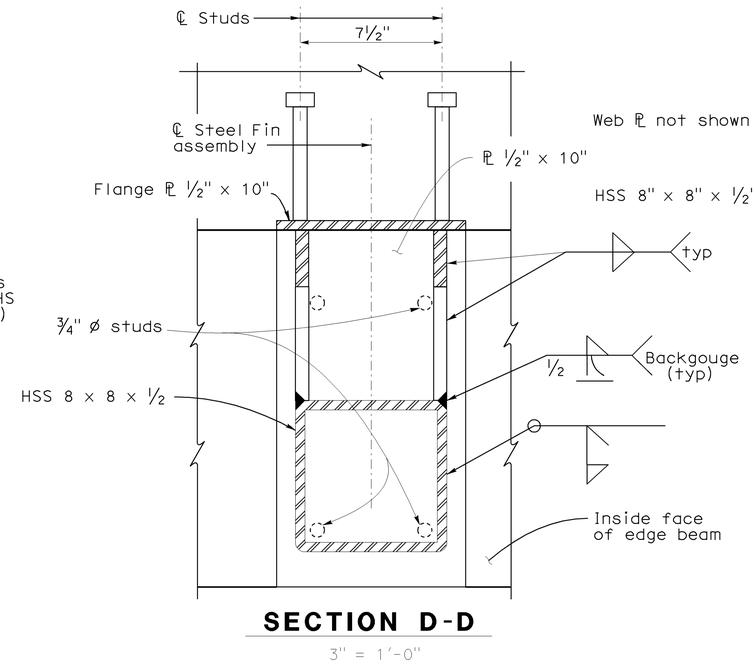

SECTION D-D

3" = 1'-0"

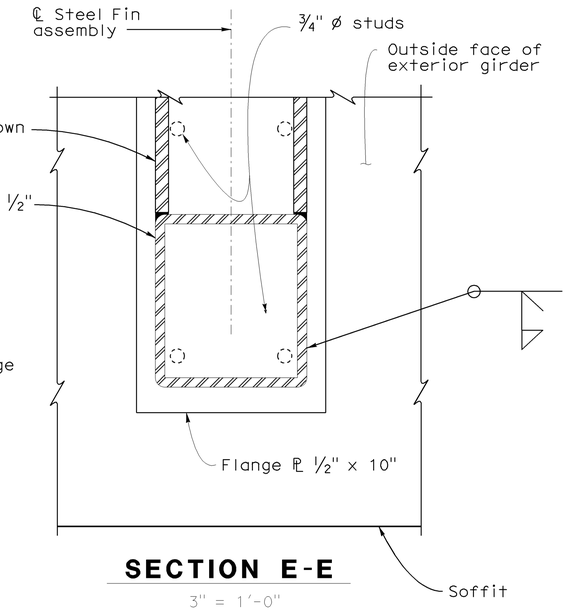

SECTION E-E

3" = 1'-0"

NOTES:

1. Cover Plates and Webs not shown in Sections D-D, E-E and K-K for clarity.
2. Weld sequence required to prevent distortions.

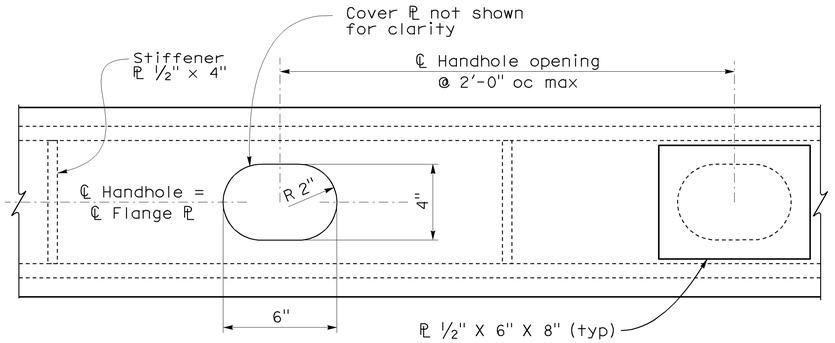

PART PLAN FLANGE PLATE

3" = 1'-0"

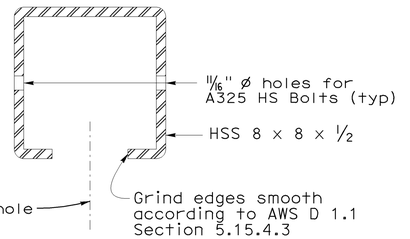

SECTION K-K

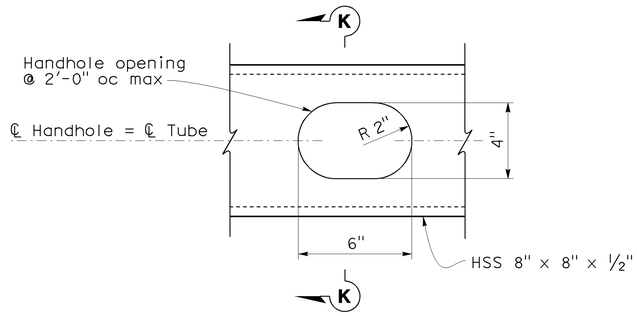

PLAN

S2

TYPICAL DETAIL OF TUBE HANDHOLE

3" = 1'-0"

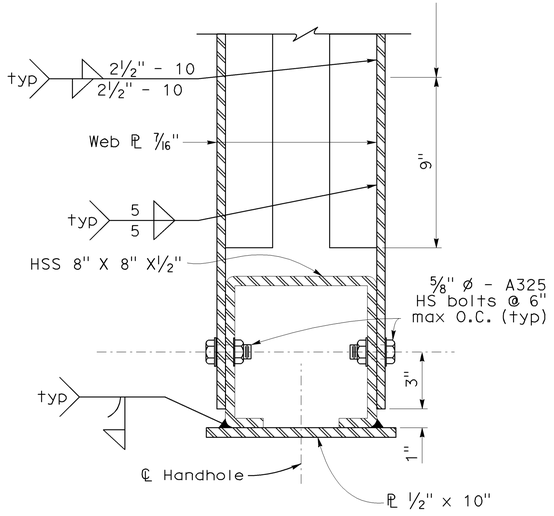

SECTION C-C

3" = 1'-0"

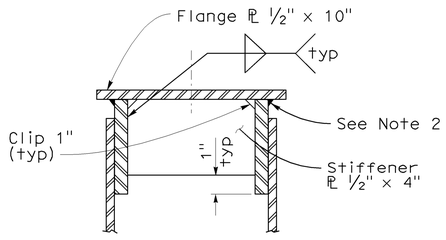

SECTION B-B

3" = 1'-0"

NOTE:
CONTRACTOR SHALL VERIFY ALL CONTROLLING FIELD DIMENSIONS BEFORE ORDERING OR FABRICATING ANY MATERIALS.

DIST	COUNTY	ROUTE	POST MILES TOTAL PROJECT	SHEET No	TOTAL SHEETS
04	SF	101,1	9.2/9.8, 6.8/7.1	501	567

Ahmed Brahim 6-4-09
REGISTERED CIVIL ENGINEER DATE

7-20-09
PLANS APPROVAL DATE

REGISTERED PROFESSIONAL ENGINEER — AHMED M.M. IBRAHIM — No. S 4865 — EXP. 9-30-10 — STRUCTURAL — STATE OF CALIFORNIA

The State of California or its officers or agents shall not be responsible for the accuracy or completeness of electronic copies of this plan sheet.

DESIGN	BY E.Thimmhardy	CHECKED S. Hegazi	STATE OF CALIFORNIA DEPARTMENT OF TRANSPORTATION
DETAILS	BY JFCasarino	CHECKED S. Hegazi	
QUANTITIES	BY S. Hegazi	CHECKED M. Thach	

DIVISION OF ENGINEERING SERVICES STRUCTURE DESIGN
DESIGN BRANCH 4

BRIDGE NO. 34-0160G
POST MILE 9.18

N1 - S101 CONNECTOR
STEEL FIN DETAILS NO. 2

STRUCTURES DESIGN DETAIL SHEET (ENGLISH) (REV. 10/25/05)

ORIGINAL SCALE IN INCHES FOR REDUCED PLANS 0 1 2 3

CU 04242
EA 163731

DISREGARD PRINTS BEARING EARLIER REVISION DATES →

REVISION DATES: 3-28-09 | 5-13-09 | 5-18-09 | 5-19-09 | 5-23-09 | 5-26-09 | 6-17-09 | 7-11-09

SHEET 17 OF 44

FILE => 34-0160_17find2.dgn

USERNAME = trmnguye DATE PLOTTED => 21-JUL-2009 TIME PLOTTED => 13:27

DIST	COUNTY	ROUTE	POST MILES TOTAL PROJECT	SHEET No	TOTAL SHEETS
04	SF	101,1	9.2/9.8, 6.8/7.1	502	567

Ahmed Ibrahim 6-4-09
REGISTERED CIVIL ENGINEER DATE

7-20-09
PLANS APPROVAL DATE

REGISTERED PROFESSIONAL ENGINEER — AHMED M M IBRAHIM — No. S 4865 — Exp. 9-30-10 — STRUCTURAL — STATE OF CALIFORNIA

The State of California or its officers or agents shall not be responsible for the accuracy or completeness of electronic copies of this plan sheet.

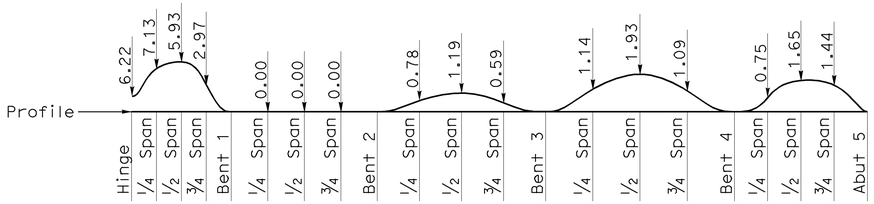

CAMBER DIAGRAM

No Scale

Does not include allowance for Falsework Settlement

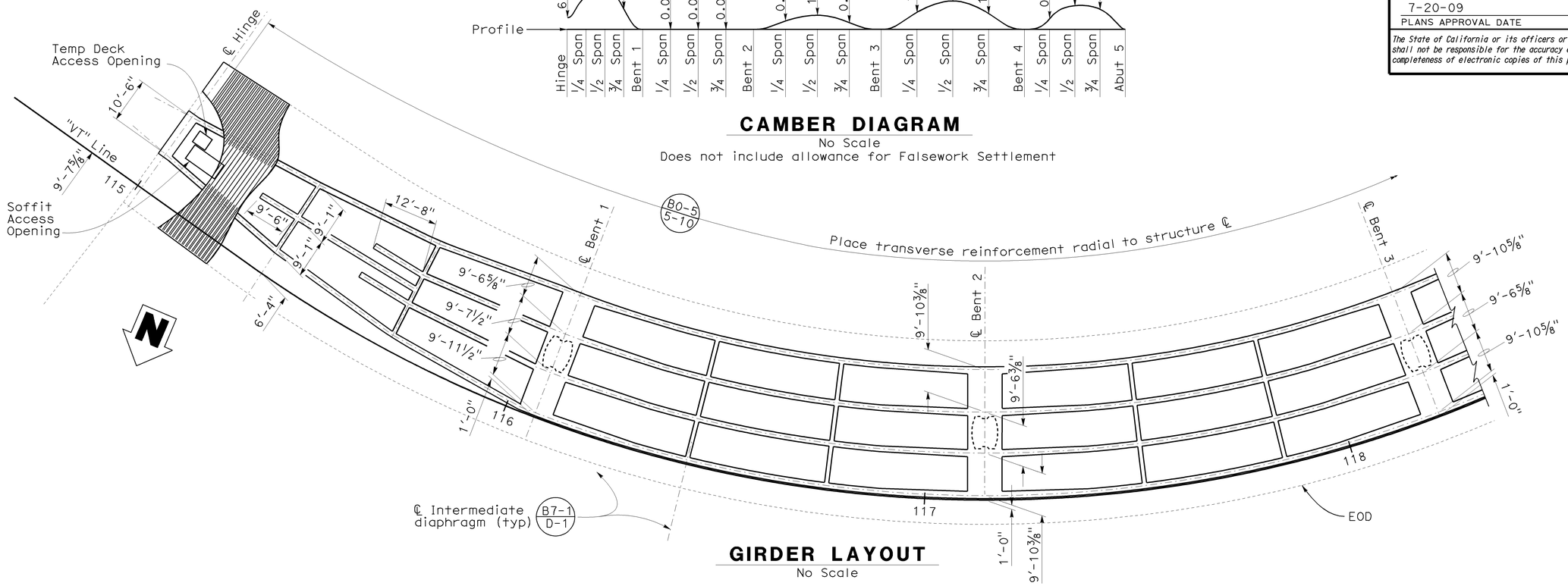

GIRDER LAYOUT

No Scale

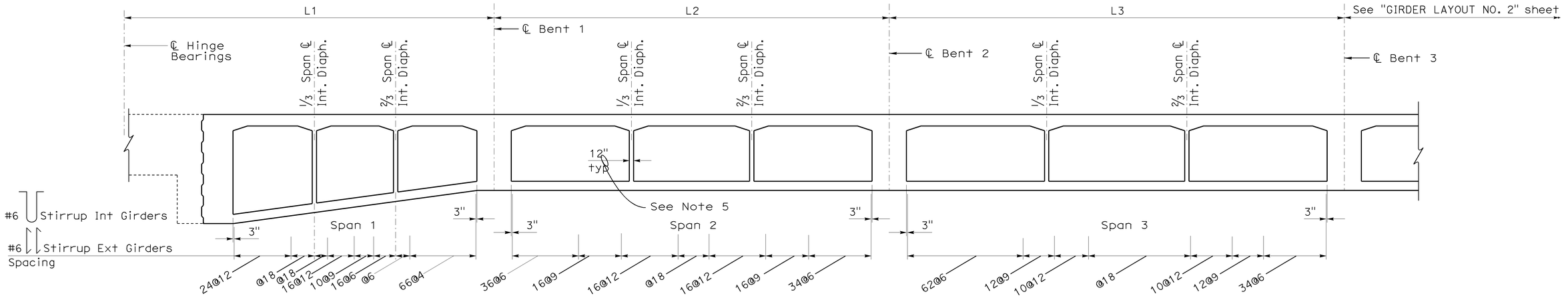

LONGITUDINAL SECTION

No Scale

NOTE:
CONTRACTOR SHALL VERIFY ALL CONTROLLING FIELD DIMENSIONS BEFORE ORDERING OR FABRICATING ANY MATERIALS.

NOTE:
See "GIRDER LAYOUT NO. 2" sheet for notes.

DESIGN	BY Sameh Hegazi	CHECKED L. N. Do	STATE OF CALIFORNIA DEPARTMENT OF TRANSPORTATION	DIVISION OF ENGINEERING SERVICES STRUCTURE DESIGN DESIGN BRANCH 4	BRIDGE NO. 34-0160G
DETAILS	BY JFCasarino	CHECKED S. Hegazi			POST MILE 9.18
QUANTITIES	BY S. Hegazi	CHECKED M. Thach		CU 04242 EA 163731	

N1 - S101 CONNECTOR
GIRDER LAYOUT NO. 1

STRUCTURES DESIGN DETAIL SHEET (ENGLISH) (REV. 10/25/05)

ORIGINAL SCALE IN INCHES FOR REDUCED PLANS 0 1 2 3

DISREGARD PRINTS BEARING EARLIER REVISION DATES →

REVISION DATES: 12-28-06 | 2-13-09 | 3-26-09 | 3-5-09 | 5-12-09 | 5-18-09 | 5-26-09

SHEET 18 OF 44

FILE => 34-0160_18gir11.dgn

USERNAME => frmoguye DATE PLOTTED => 21-JUL-2009 TIME PLOTTED => 13:27

DIST	COUNTY	ROUTE	POST MILES TOTAL PROJECT	SHEET No	TOTAL SHEETS
04	SF	101,1	9.2/9.8, 6.8/7.1	503	567

Ahmed Ibrahim 6-4-09
REGISTERED CIVIL ENGINEER DATE

7-20-09
PLANS APPROVAL DATE

REGISTERED PROFESSIONAL ENGINEER
AHMED M M IBRAHIM
No. S 4865
Exp. 9-30-10
STRUCTURAL
STATE OF CALIFORNIA

The State of California or its officers or agents shall not be responsible for the accuracy or completeness of electronic copies of this plan sheet.

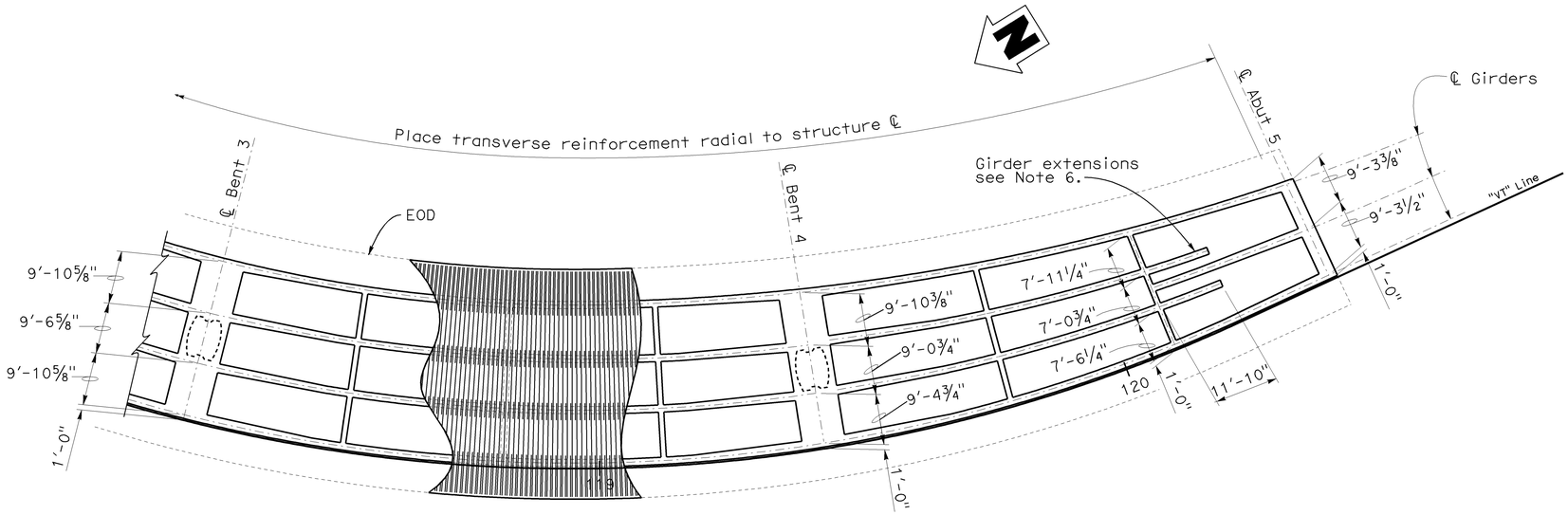

GIRDER LAYOUT
No Scale

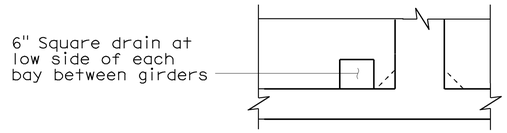

VIEW B-B

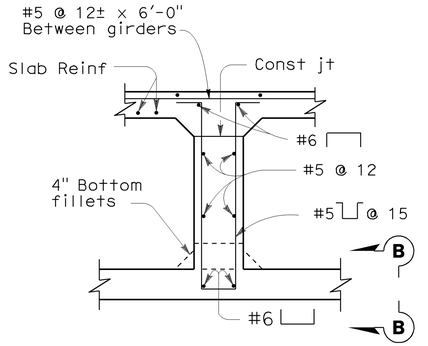

INTERMEDIATE DIAPHRAGM
No Scale

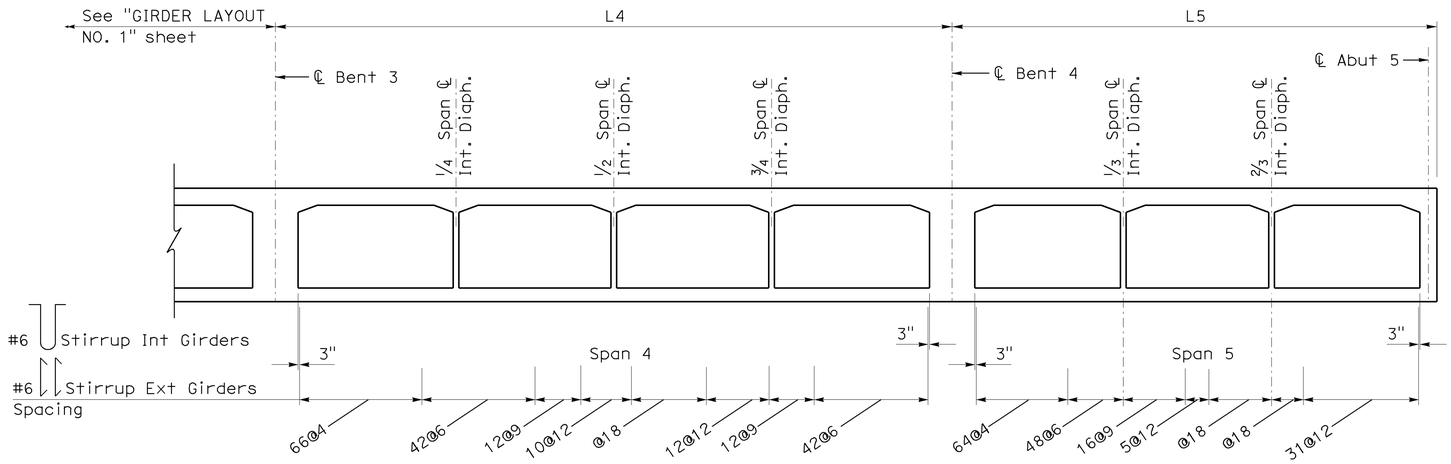

LONGITUDINAL SECTION
No Scale

NOTES:

1. "L" is Girder length measured along ℄ of Girders.
2. Soffit access opening, see "DECK AND SOFFIT ACCESS" sheet.
3. For deck drainage, see "DRAINAGE DETAILS" sheets.
4. Intermediate Diaphragm dimension supersedes stem width shown on Standard Plan B7-1, Detail D-1.
5. Intermediate Diaphragms are vertical.
6. Interior girder extensions shown at the two end spans shall have the same stirrup spacing of the same girder before the extension. Dimensions are from face of int diaphragm to end of int girder.

NOTE:
CONTRACTOR SHALL VERIFY ALL CONTROLLING FIELD DIMENSIONS BEFORE ORDERING OR FABRICATING ANY MATERIALS.

DESIGN	BY Sameh Hegazi	CHECKED L. N. Do	STATE OF CALIFORNIA DEPARTMENT OF TRANSPORTATION
DETAILS	BY JFCasarino	CHECKED S. Hegazi	
QUANTITIES	BY S. Hegazi	CHECKED M. Thach	

DIVISION OF ENGINEERING SERVICES STRUCTURE DESIGN
DESIGN BRANCH 4

BRIDGE NO. 34-0160G
POST MILE 9.18

N1 - S101 CONNECTOR
GIRDER LAYOUT NO. 2

STRUCTURES DESIGN DETAIL SHEET (ENGLISH) (REV. 10/25/05)

ORIGINAL SCALE IN INCHES FOR REDUCED PLANS 0 1 2 3

CU 04242
EA 163731

DISREGARD PRINTS BEARING EARLIER REVISION DATES →

REVISION DATES: 12-28-08 | 2-13-09 | 2-26-09 | 3-5-09 | 5-12-09 | 5-18-09 | 5-27-09

SHEET 19 OF 44

FILE => 34-0160_19gir12.dgn

USERNAME = trmoguye DATE PLOTTED => 21-JUL-2009 TIME PLOTTED => 13:27

DIST	COUNTY	ROUTE	POST MILES TOTAL PROJECT	SHEET No	TOTAL SHEETS
04	SF	101,1	9.2/9.8, 6.8/7.1	504	567

Ahmed Brahim 6-4-09
REGISTERED CIVIL ENGINEER DATE

7-20-09
PLANS APPROVAL DATE

The State of California or its officers or agents shall not be responsible for the accuracy or completeness of electronic copies of this plan sheet.

REGISTERED PROFESSIONAL ENGINEER
AHMED M M IBRAHIM
No. S 4865
Exp. 9-30-10
STRUCTURAL
STATE OF CALIFORNIA

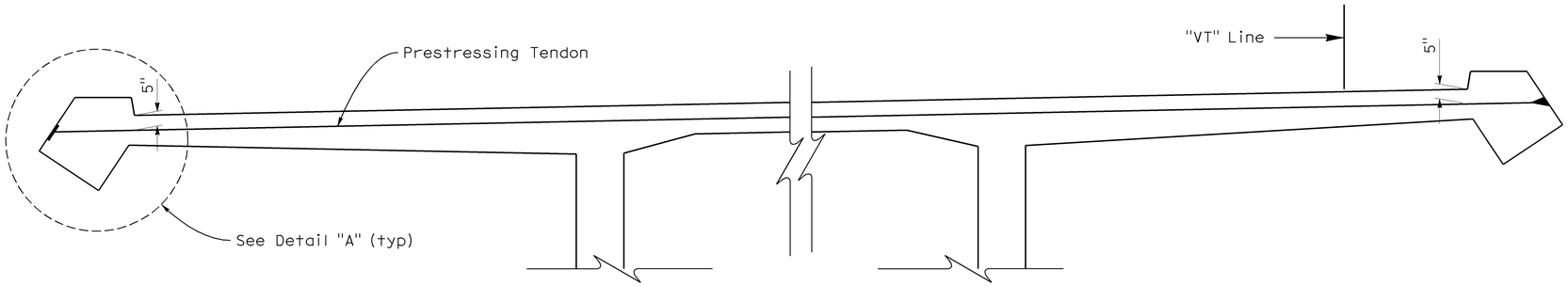

PRESTRESS TYPICAL SECTION

1/2" = 1'-0"

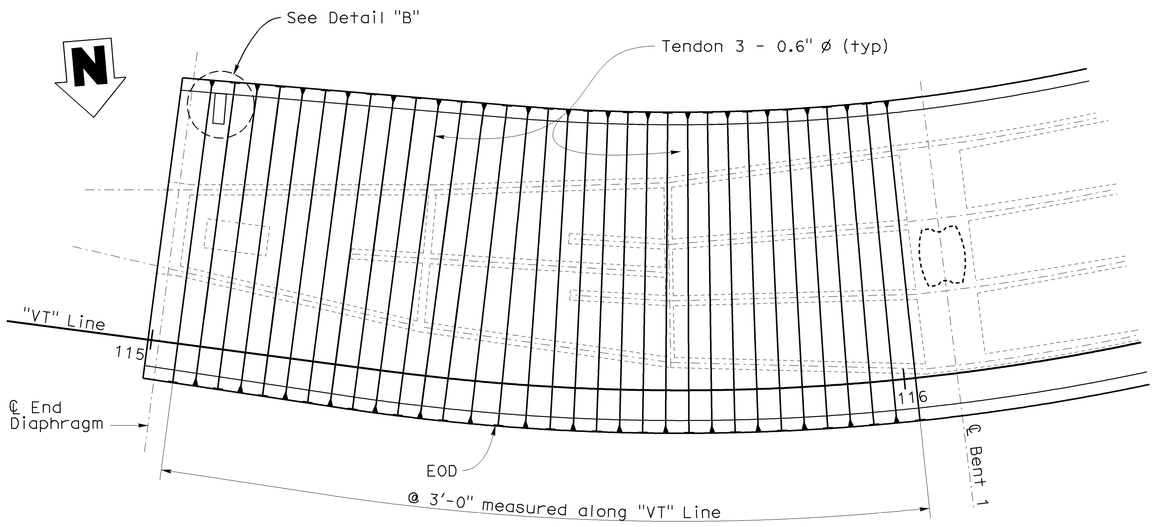

POST TENSION LAYOUT

1" = 10'

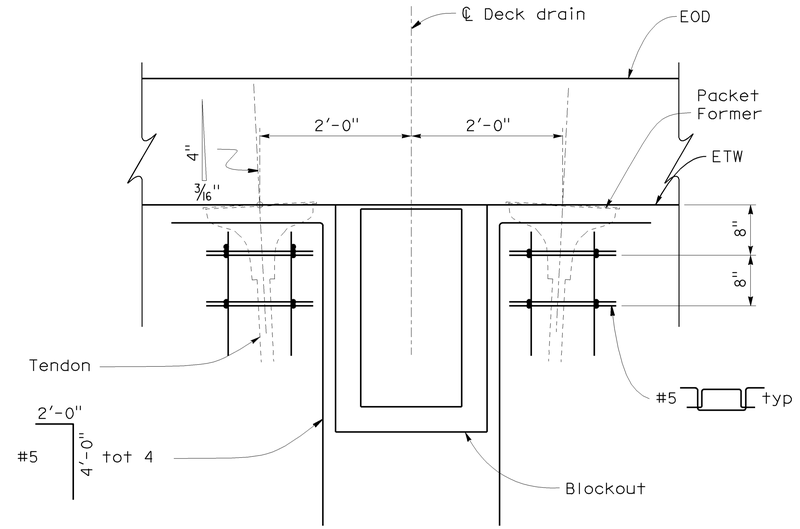

DETAIL "B"

1" = 1'-0"

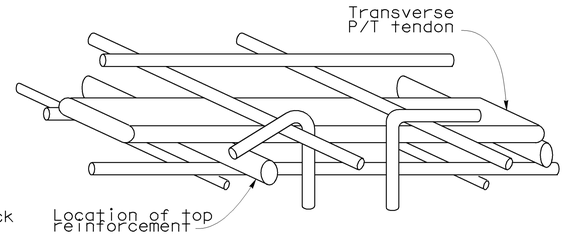

BAR LAYOUT DETAIL

No Scale

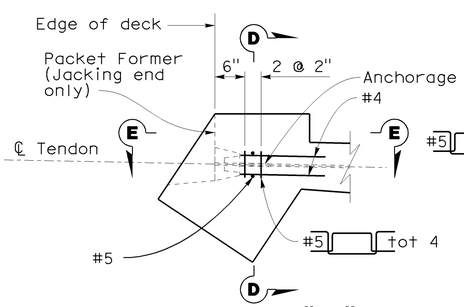

DETAIL "A"

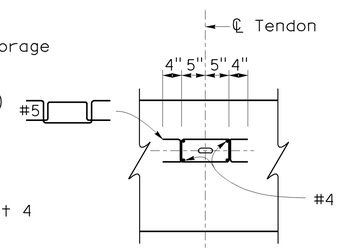

SECTION D-D

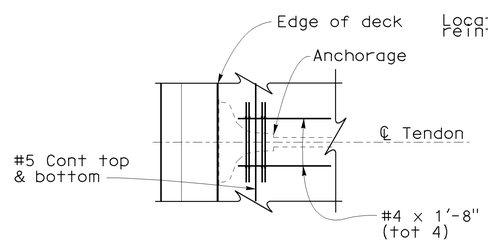

SECTION E-E

ANCHORAGE OF TRANSVERSE PT TENDONS

3/4" = 1'-0"

NOTES:

1. 270 ksi low relaxation strand. Pjack = 131 kips per tendon except as noted. Anchor set = 1/4"
2. One end stressing. Alternate stressing end.
3. Falsework shall not be released prior to stressing the transverse tendons.
4. Adjust tendon spacing locally to clear drains and barrier anchor bolts, but in no case the tendon spacing shall be more than 4 feet.
5. For tansverse PT at the hinge, see "Br. No 34-0157L Plans.
6. Extend prestressed tendons to the outside face of the edge beam
7. All Tendons shall be perpendicular to "VT" Line.

LEGEND:

Jacking end

Dead end

NOTE:
CONTRACTOR SHALL VERIFY ALL CONTROLLING FIELD DIMENSIONS BEFORE ORDERING OR FABRICATING ANY MATERIALS.

	BY	CHECKED
DESIGN	S. Barajas	L. Wang
DETAILS	JFCasarino	S. Hegazi
QUANTITIES	S. Hegazi	M. Thach

STATE OF CALIFORNIA
DEPARTMENT OF TRANSPORTATION

DIVISION OF ENGINEERING SERVICES
STRUCTURE DESIGN
DESIGN BRANCH 4

BRIDGE NO. 34-0160G
POST MILE 9.18

N1 - S101 CONNECTOR
TRANSVERSE POST TENSIONING

STRUCTURES DESIGN DETAIL SHEET (ENGLISH) (REV. 10/25/05)

ORIGINAL SCALE IN INCHES FOR REDUCED PLANS 0 1 2 3

CU 04242
EA 163731

DISREGARD PRINTS BEARING EARLIER REVISION DATES

REVISION DATES: 5-2-09 5-18-09 5-22-09

SHEET 20 OF 44

FILE => 34-0160_20trans.dgn

USERNAME => trmnguye DATE PLOTTED => 21-JUL-2009 TIME PLOTTED => 13:27

DIST	COUNTY	ROUTE	POST MILES TOTAL PROJECT	SHEET No	TOTAL SHEETS
04	SF	101,1	9.2/9.8, 6.8/7.1	505	567

Ahmed Brahim 6-4-09
REGISTERED CIVIL ENGINEER DATE

7-20-09
PLANS APPROVAL DATE

REGISTERED PROFESSIONAL ENGINEER
AHMED M M IBRAHIM
No. S 4865
Exp. 9-30-10
STRUCTURAL
STATE OF CALIFORNIA

The State of California or its officers or agents shall not be responsible for the accuracy or completeness of electronic copies of this plan sheet.

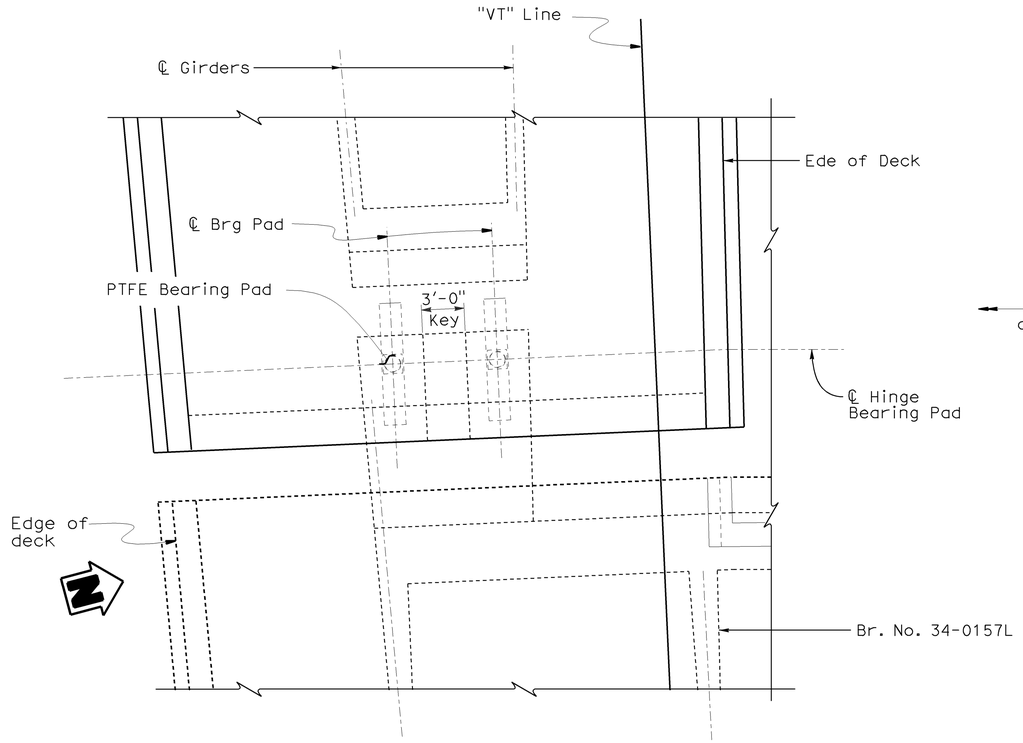

PLAN AT HINGE SEAT

3/16" = 1'-0"

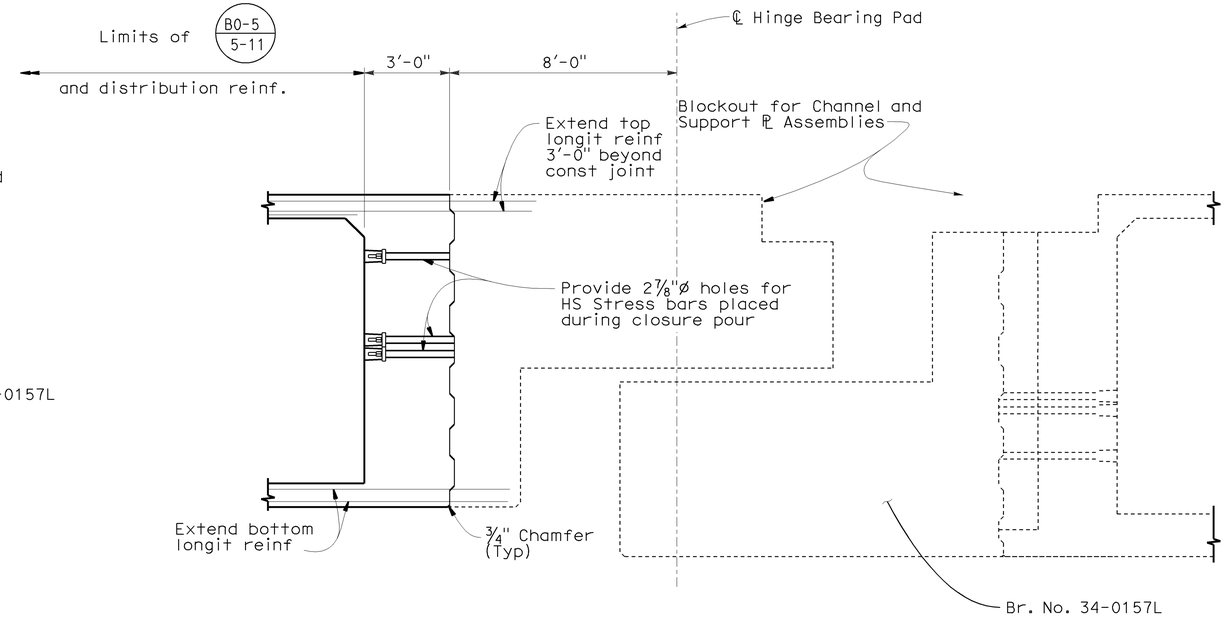

ONRAMP TO SOUTHBOUND
HINGE DIAPHRAGM SECTION (BEFORE STRESSING)

3/8" = 1'-0"

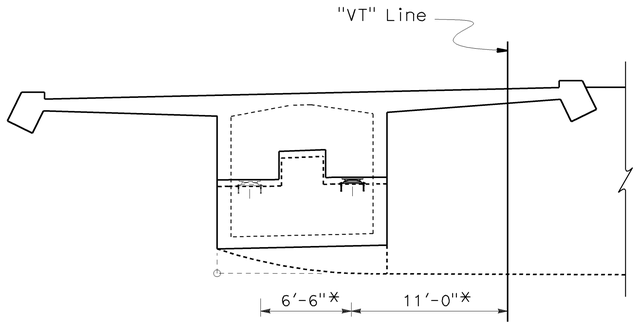

* - Indicates measured normal to "VT" Line along ℄ Hinge

ELEVATION AT HINGE

3/16" = 1'-0"

NOTES:

1. For unshown details and reinforcement, see "PRESIDIO VIADUCT - LEFT" plans.

NOTE:
CONTRACTOR SHALL VERIFY ALL CONTROLLING FIELD DIMENSIONS BEFORE ORDERING OR FABRICATING ANY MATERIALS.

	BY	CHECKED
DESIGN	S. Hegazi	L. Wang
DETAILS	JFCasarino	S. Hegazi
QUANTITIES	S. Hegazi	M. Thach

STATE OF CALIFORNIA
DEPARTMENT OF TRANSPORTATION

DIVISION OF ENGINEERING SERVICES
STRUCTURE DESIGN
DESIGN BRANCH 4

BRIDGE NO. 34-0160G
POST MILE 9.18

N1 - S101 CONNECTOR
HINGE DIAPHRAGM DETAILS

STRUCTURES DESIGN DETAIL SHEET (ENGLISH) (REV. 10/25/05)

ORIGINAL SCALE IN INCHES FOR REDUCED PLANS 0 1 2 3

CU 04242
EA 163731

DISREGARD PRINTS BEARING EARLIER REVISION DATES →

REVISION DATES: 2-14-09 | 3-12-09 | 5-18-09 | 5-21-09

SHEET 21 OF 44

FILE => 34-0160_21hinge1.dgn

USERNAME => hmnguye DATE PLOTTED => 21-JUL-2009 TIME PLOTTED => 13:27

DIST	COUNTY	ROUTE	POST MILES TOTAL PROJECT	SHEET No	TOTAL SHEETS
04	SF	101,1	9.2/9.8, 6.8/7.1	506	567

Ahmed Brahim 6-4-09
REGISTERED CIVIL ENGINEER DATE

7-20-09
PLANS APPROVAL DATE

REGISTERED PROFESSIONAL ENGINEER
AHMED M M IBRAHIM
No. S 4865
Exp. 9-30-10
STRUCTURAL
STATE OF CALIFORNIA

The State of California or its officers or agents shall not be responsible for the accuracy or completeness of electronic copies of this plan sheet.

NOTES:

1. Right side shown, reinforcement symmetrical about ℄ bridge.
2. All bars are evenly spaced within the limits shown.
3. #10 @ 6 (total 40) bundled with #10 cont.
4. #10 @ 12 (total 23) bundled with #10 cont.

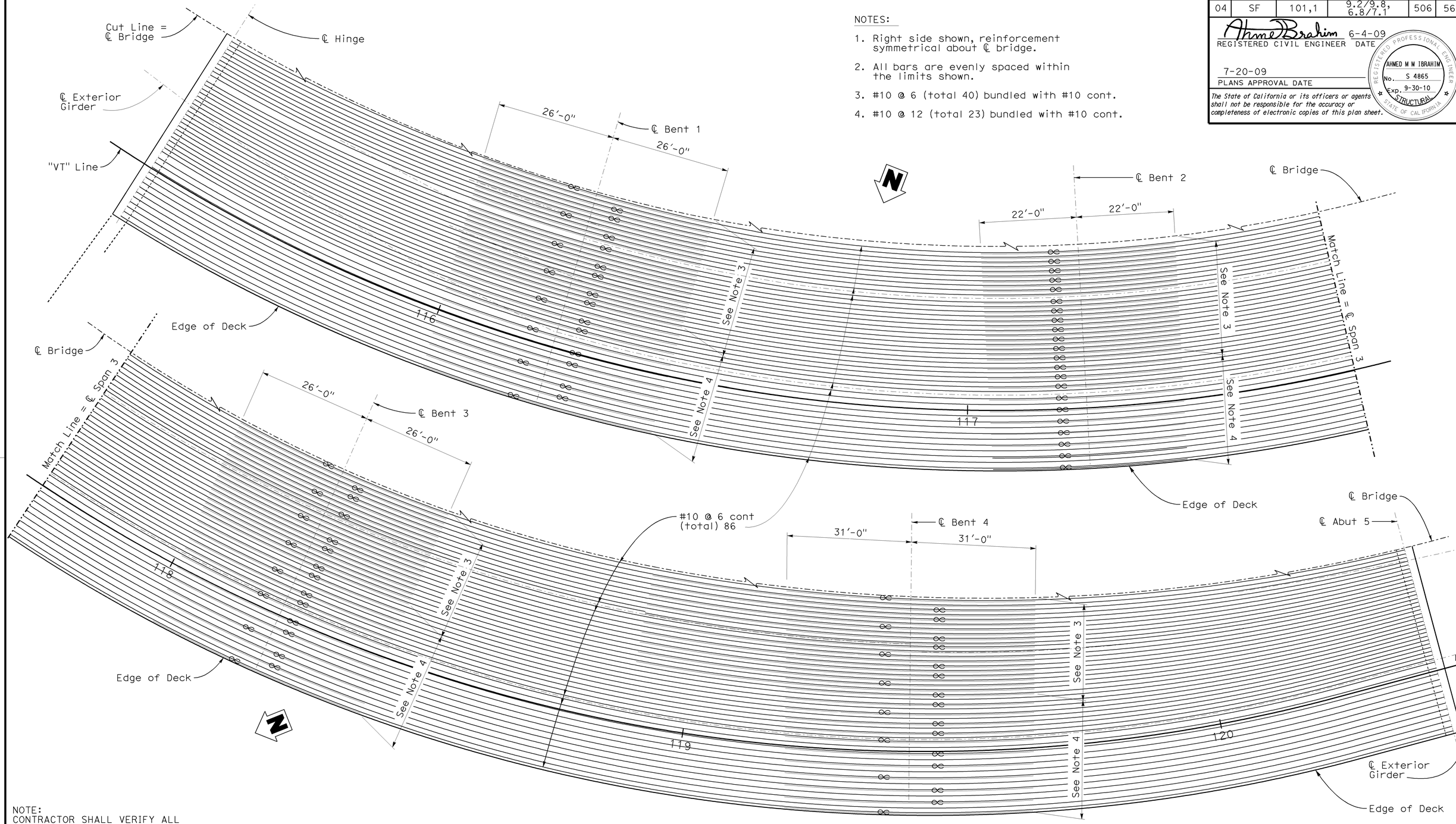

NOTE:
CONTRACTOR SHALL VERIFY ALL CONTROLLING FIELD DIMENSIONS BEFORE ORDERING OR FABRICATING ANY MATERIALS.

DESIGN	BY S. Hegazi/D. Lee	CHECKED L.N.Do/J.Zha/L.Wang	STATE OF CALIFORNIA DEPARTMENT OF TRANSPORTATION	DIVISION OF ENGINEERING SERVICES STRUCTURE DESIGN DESIGN BRANCH 4	BRIDGE NO. 34-0160G; POST MILE 9.18
DETAILS	BY JFCasarino	CHECKED S. Hegazi			
QUANTITIES	BY S. Hegazi	CHECKED M. Thach			

N1 - S101 CONNECTOR
DECK REINFORCEMENT-TOP

STRUCTURES DESIGN DETAIL SHEET (ENGLISH) (REV. 10/25/05)

ORIGINAL SCALE IN INCHES FOR REDUCED PLANS 0 1 2 3

CU 04242
EA 163731

DISREGARD PRINTS BEARING EARLIER REVISION DATES →

REVISION DATES										SHEET	OF
2-14-09	3-12-09	5-18-09	5-23-09	5-30-09						22	44

FILE => 34-0160_22dreint.dgn

USERNAME => ttmanguye DATE PLOTTED => 21-JUL-2009 TIME PLOTTED => 13:27

DIST	COUNTY	ROUTE	POST MILES TOTAL PROJECT	SHEET No	TOTAL SHEETS
04	SF	101,1	9.2/9.8, 6.8/7.1	507	567

Ahmed Ibrahim 6-4-09
REGISTERED CIVIL ENGINEER DATE

7-20-09
PLANS APPROVAL DATE

REGISTERED PROFESSIONAL ENGINEER
AHMED M M IBRAHIM
No. S 4865
Exp. 9-30-10
STRUCTURAL
STATE OF CALIFORNIA

The State of California or its officers or agents shall not be responsible for the accuracy or completeness of electronic copies of this plan sheet.

NOTES:

1. Right side shown, reinforcement symmetrical about ℄ bridge.
2. All bars are evenly spaced within the limits shown.

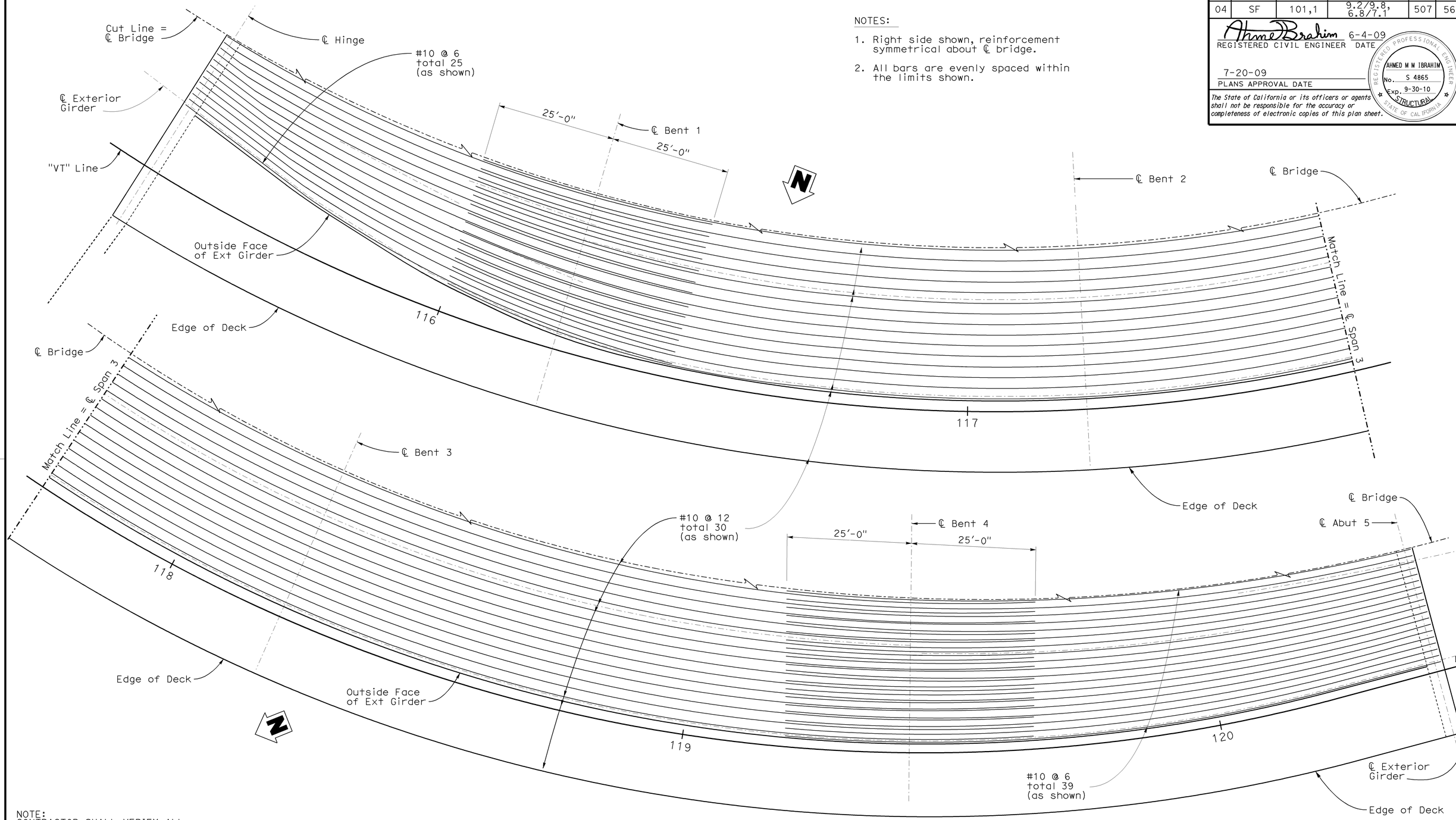

NOTE:
CONTRACTOR SHALL VERIFY ALL CONTROLLING FIELD DIMENSIONS BEFORE ORDERING OR FABRICATING ANY MATERIALS.

	BY	CHECKED
DESIGN	S. Hegazi/D. Lee	L.N.Do/J.Zha/L.Wang
DETAILS	JFCasarino	S. Hegazi
QUANTITIES	S. Hegazi	M. Thach

STATE OF CALIFORNIA
DEPARTMENT OF TRANSPORTATION

DIVISION OF ENGINEERING SERVICES
STRUCTURE DESIGN
DESIGN BRANCH 4

BRIDGE NO. 34-0160G
POST MILE 9.18

N1 - S101 CONNECTOR
DECK REINFORCEMENT-BOTTOM

STRUCTURES DESIGN DETAIL SHEET (ENGLISH) (REV. 10/25/05)

ORIGINAL SCALE IN INCHES FOR REDUCED PLANS 0 1 2 3

CU 04242
EA 163731

DISREGARD PRINTS BEARING EARLIER REVISION DATES →

REVISION DATES: 2-14-09 3-12-09 4-27-09 5-6-09 5-18-09 5-23-09

SHEET 23 OF 44

FILE => 34-0160_23dreinb.dgn

USERNAME => hmnguye DATE PLOTTED => 21-JUL-2009 TIME PLOTTED => 13:27

DIST	COUNTY	ROUTE	POST MILES TOTAL PROJECT	SHEET No	TOTAL SHEETS
04	SF	101,1	9.2/9.8, 6.8/7.1	508	567

Ahmed Brahim 6-4-09
REGISTERED CIVIL ENGINEER DATE

7-20-09
PLANS APPROVAL DATE

REGISTERED PROFESSIONAL ENGINEER
AHMED M M IBRAHIM
No. S 4865
Exp. 9-30-10
STRUCTURAL
STATE OF CALIFORNIA

The State of California or its officers or agents shall not be responsible for the accuracy or completeness of electronic copies of this plan sheet.

NOTES:

1. Right side shown, reinforcement symmetrical about ℄ bridge.
2. All bars are evenly spaced within the limits shown.

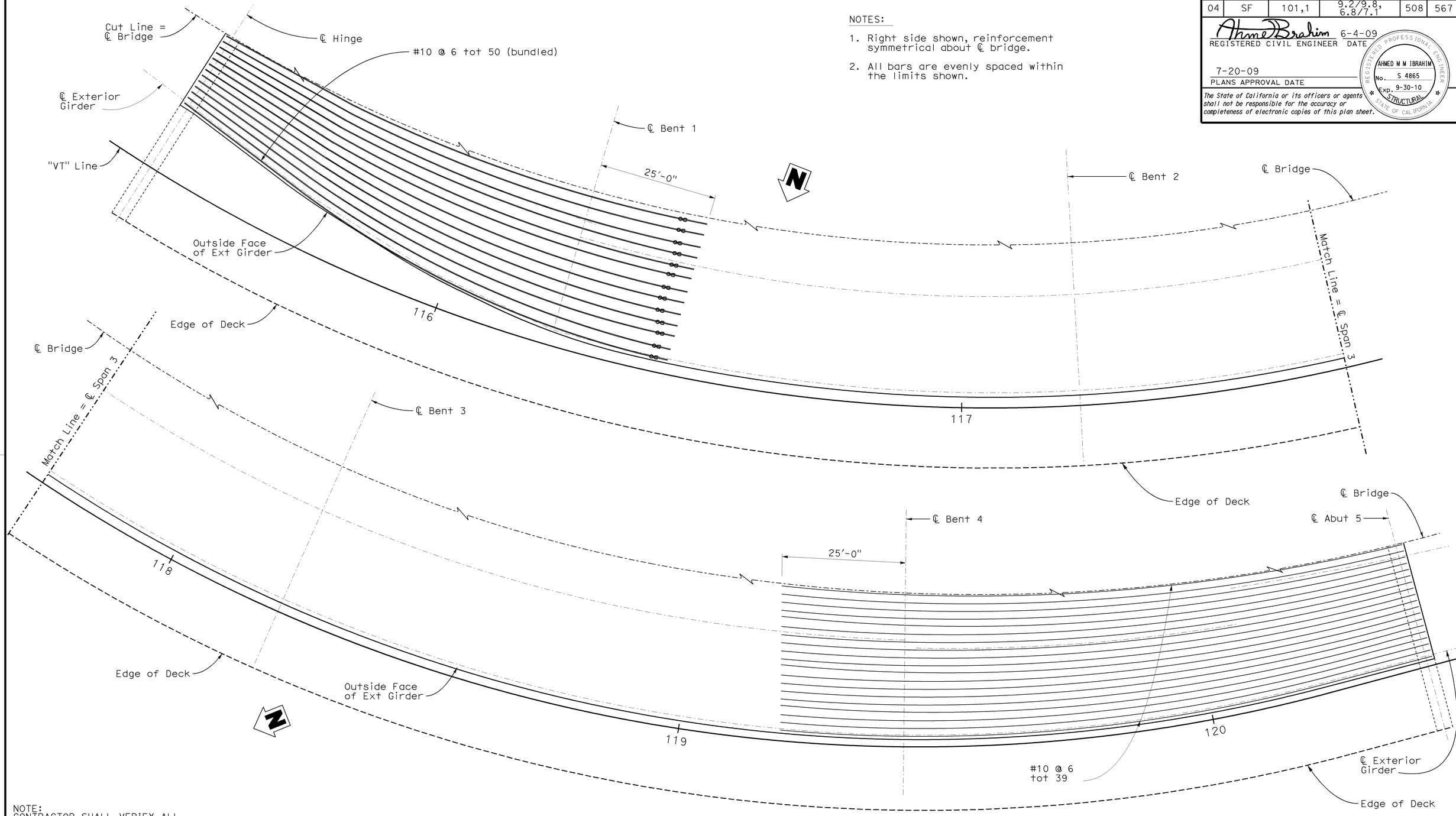

NOTE:
CONTRACTOR SHALL VERIFY ALL CONTROLLING FIELD DIMENSIONS BEFORE ORDERING OR FABRICATING ANY MATERIALS.

DESIGN	BY S. Hegazi/D. Lee	CHECKED L.N.Do/J.Zha/L.Wang	STATE OF CALIFORNIA DEPARTMENT OF TRANSPORTATION	DIVISION OF ENGINEERING SERVICES STRUCTURE DESIGN DESIGN BRANCH 4	BRIDGE NO. 34-0160G
DETAILS	BY JFCasarino	CHECKED S. Hegazi			POST MILE X
QUANTITIES	BY S. Hegazi	CHECKED M. Thach			

N1 - S101 CONNECTOR
SOFFIT REINFORCEMENT-TOP

STRUCTURES DESIGN DETAIL SHEET (ENGLISH) (REV. 10/25/05)

ORIGINAL SCALE IN INCHES FOR REDUCED PLANS 0 1 2 3

CU 04242
EA 163731

DISREGARD PRINTS BEARING EARLIER REVISION DATES →

REVISION DATES: 4-30-09 | 5-6-09 | 5-18-09 | 5-23-09

SHEET 24 OF 44

FILE => 34-0160_24sreint.dgn

USERNAME => ttmaguye DATE PLOTTED => 21-JUL-2009 TIME PLOTTED => 13:27

DIST	COUNTY	ROUTE	POST MILES TOTAL PROJECT	SHEET No	TOTAL SHEETS
04	SF	101,1	9.2/9.8, 6.8/7.1	509	567

Ahmed Ibrahim 6-4-09
REGISTERED CIVIL ENGINEER DATE

7-20-09
PLANS APPROVAL DATE

REGISTERED PROFESSIONAL ENGINEER
AHMED M M IBRAHIM
No. S 4865
Exp. 9-30-10
STRUCTURAL
STATE OF CALIFORNIA

The State of California or its officers or agents shall not be responsible for the accuracy or completeness of electronic copies of this plan sheet.

NOTES:

1. Right side shown, reinforcement symmetrical about ℄ bridge.
2. All bars are evenly spaced within the limits shown.

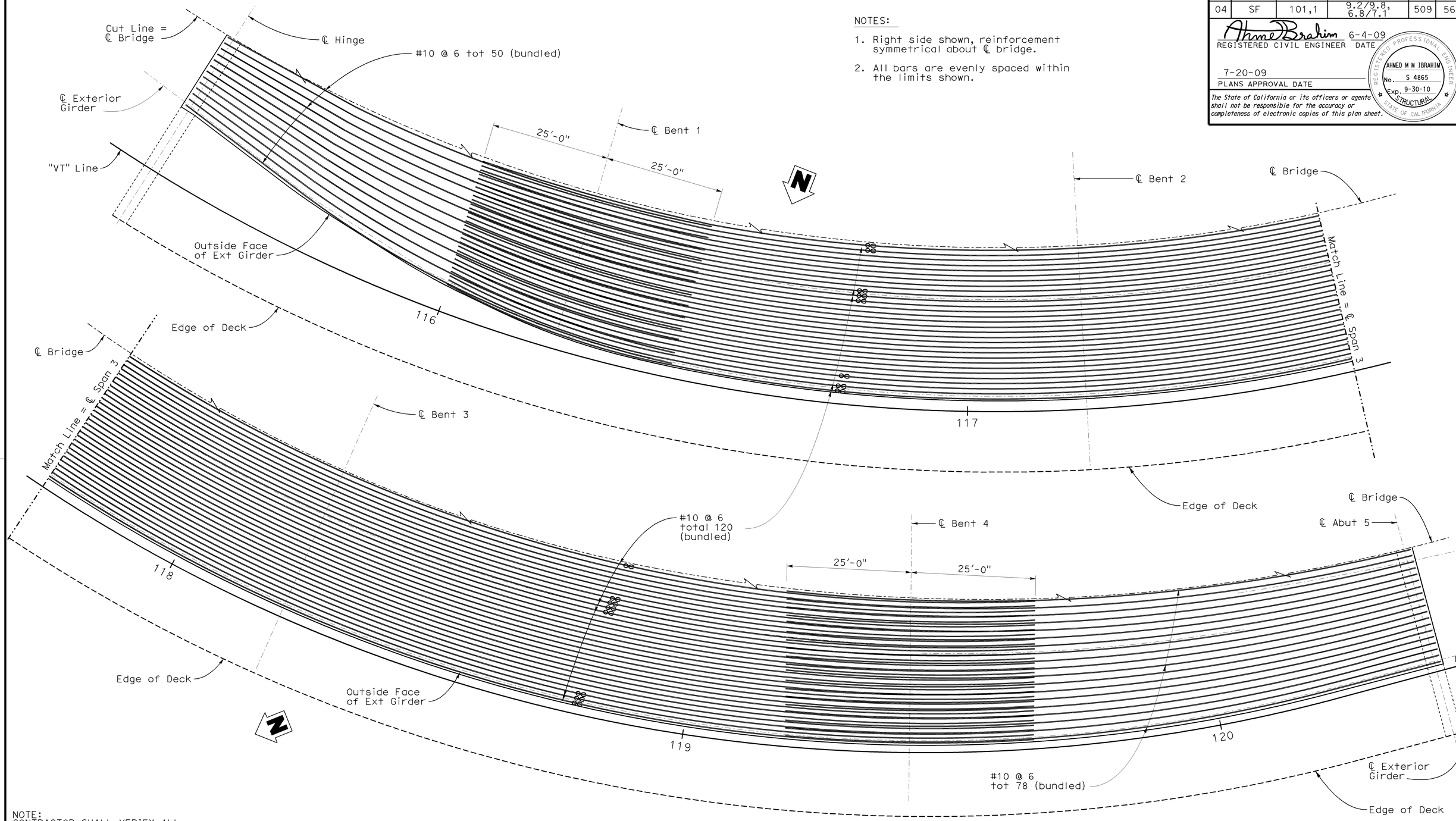

NOTE:
CONTRACTOR SHALL VERIFY ALL CONTROLLING FIELD DIMENSIONS BEFORE ORDERING OR FABRICATING ANY MATERIALS.

DESIGN	BY S. Hegazi/D. Lee	CHECKED L.N.Do/J.Zha/L.Wang	STATE OF CALIFORNIA DEPARTMENT OF TRANSPORTATION	DIVISION OF ENGINEERING SERVICES STRUCTURE DESIGN DESIGN BRANCH 4	BRIDGE NO. 34-0160G
DETAILS	BY JFCasarino	CHECKED S. Hegazi			POST MILE 9.18
QUANTITIES	BY S. Hegazi	CHECKED M. Thach			

N1 - S101 CONNECTOR
SOFFIT REINFORCEMENT-BOTTOM

STRUCTURES DESIGN DETAIL SHEET (ENGLISH) (REV. 10/25/05)

ORIGINAL SCALE IN INCHES FOR REDUCED PLANS 0 1 2 3

CU 04242
EA 163731

DISREGARD PRINTS BEARING EARLIER REVISION DATES →

REVISION DATES: 4-28-09 | 5-1-09 | 5-18-09 | 5-23-09

SHEET 25 OF 44

FILE => 34-0160_25sreinb.dgn

USERNAME = frmnguye DATE PLOTTED => 21-JUL-2009 TIME PLOTTED => 13:27

DIST	COUNTY	ROUTE	POST MILES TOTAL PROJECT	SHEET No	TOTAL SHEETS
04	SF	101,1	9.2/9.8, 6.8/7.1	510	567

Ahmed Brahim 6-4-09
REGISTERED CIVIL ENGINEER DATE

7-20-09
PLANS APPROVAL DATE

The State of California or its officers or agents shall not be responsible for the accuracy or completeness of electronic copies of this plan sheet.

REGISTERED PROFESSIONAL ENGINEER
AHMED M M IBRAHIM
No. S 4865
Exp. 9-30-10
STRUCTURAL
STATE OF CALIFORNIA

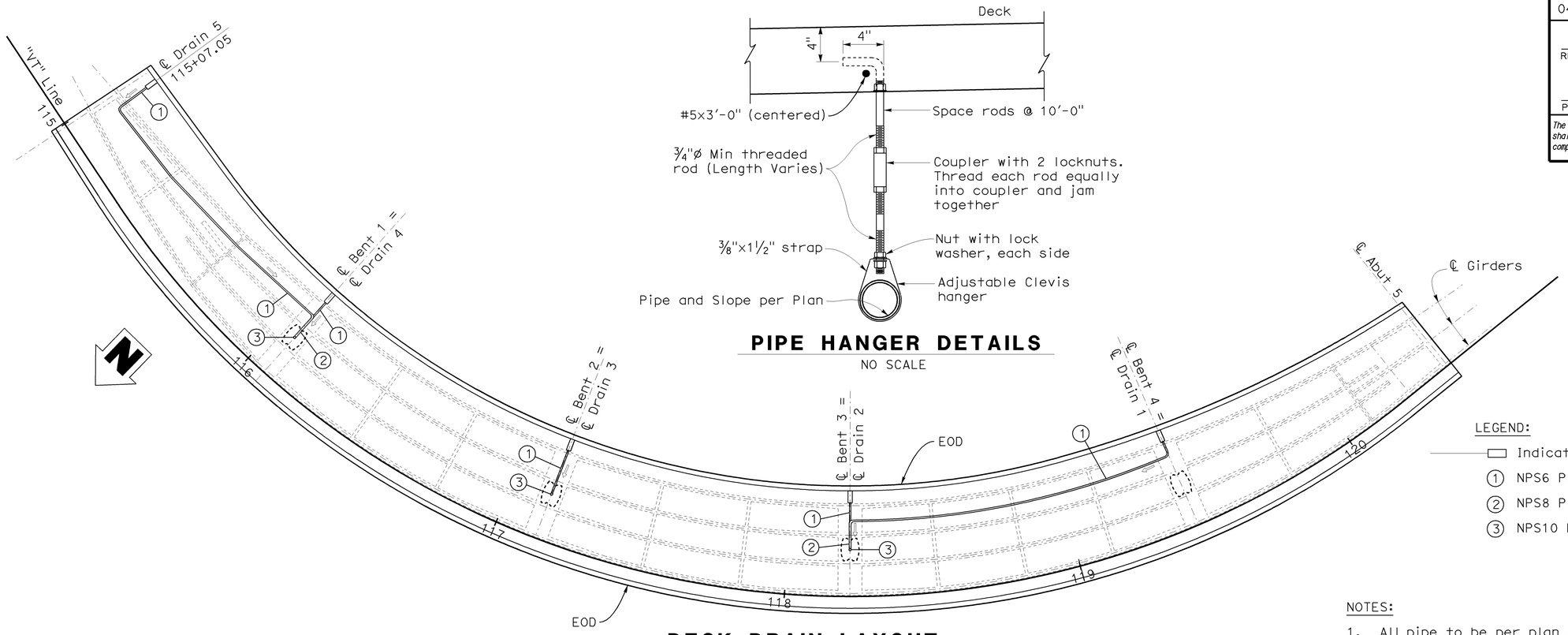

DECK DRAIN LAYOUT
No Scale

PIPE HANGER DETAILS
NO SCALE

LEGEND:

- ▭ Indicates Deck Drain with location.
- ① NPS6 Pipe
- ② NPS8 Pipe
- ③ NPS10 Pipe

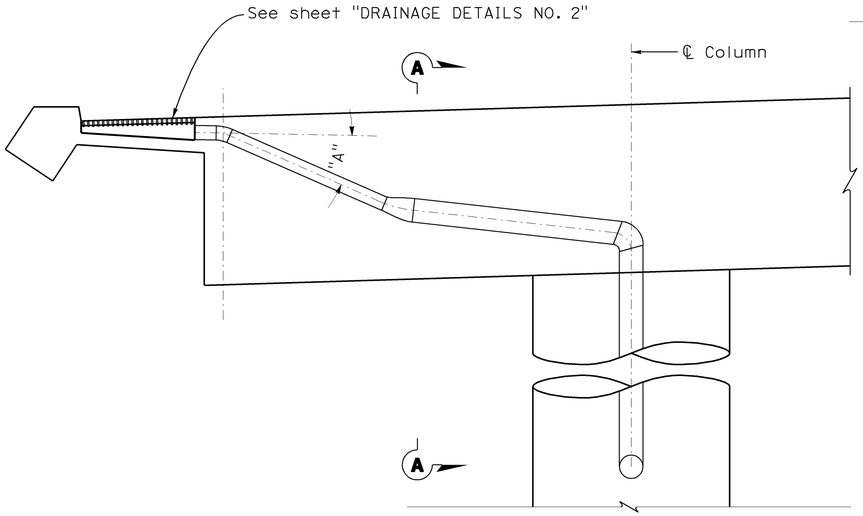

TYPICAL SECTION
No Scale

NOTE:
CONTRACTOR SHALL VERIFY ALL CONTROLLING FIELD DIMENSIONS BEFORE ORDERING OR FABRICATING ANY MATERIALS.

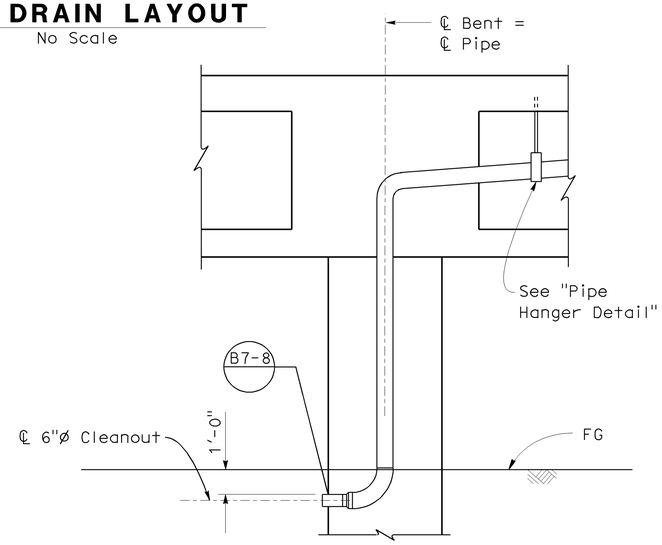

SECTION A-A
NO SCALE

NOTES:

1. All pipe to be per plan of welded steel pipe as noted and galvanized if not encased in concrete.
2. Fittings and bends shall have a minimum wall thickness of ⅛".
3. All joints or connections to be butt welded or connected by a steel pipe sleeve and to be smooth throughout inside of pipe except as noted.
4. All NPS X pipe bends to be 18" min. radius measured along ℄ pipe.
5. All bends to be smooth. Pipe not encased in concrete to be supported by suitable galvanized hangers @ 9'-0" max spacing throughout.
6. Galvanize deck drain assembly after fabrication.
7. Angle "A" is 15° for Drains 1 through 4 and 23° for the rest.
8. Drain pans of drains 1 through 5 shall be filled with AC which is separated from steel by construction paper.
9. AC and construction paper shall be removed and drains shall be cleaned completely after California ST-10 (Mod) is completed.
10. Grates shall be installed only after cleaning is completed.
11. For direction of pipe and falls, see "ROAD PLANS".

DESIGN	BY M. Khalaf	CHECKED S. Hegazi	STATE OF CALIFORNIA DEPARTMENT OF TRANSPORTATION
DETAILS	BY JFCasarino	CHECKED S. Hegazi	DIVISION OF ENGINEERING SERVICES STRUCTURE DESIGN — DESIGN BRANCH 4
QUANTITIES	BY S. Hegazi	CHECKED M. Thach	

BRIDGE NO. 34-0160G
POST MILE 9.18

N1 - S101 CONNECTOR
DECK DRAINAGE DETAILS NO. 1

STRUCTURES DESIGN DETAIL SHEET (ENGLISH) (REV. 10/25/05)

ORIGINAL SCALE IN INCHES FOR REDUCED PLANS 0 1 2 3

CU 04242
EA 163731

DISREGARD PRINTS BEARING EARLIER REVISION DATES

REVISION DATES: 4-28-09 | 5-5-09 | 5-18-09 | 5-23-09

SHEET 26 OF 44

FILE => 34-0160_26ddra1.dgn

USERNAME => trmngoye DATE PLOTTED => 21-JUL-2009 TIME PLOTTED => 13:27

DIST	COUNTY	ROUTE	POST MILES TOTAL PROJECT	SHEET No	TOTAL SHEETS
04	SF	101,1	9.2/9.8, 6.8/7.1	511	567

Ahmed Brahim 6-4-09
REGISTERED CIVIL ENGINEER DATE

7-20-09
PLANS APPROVAL DATE

REGISTERED PROFESSIONAL ENGINEER — AHMED M M IBRAHIM — No. S 4865 — Exp. 9-30-10 — STRUCTURAL — STATE OF CALIFORNIA

The State of California or its officers or agents shall not be responsible for the accuracy or completeness of electronic copies of this plan sheet.

NOTE:
CONTRACTOR SHALL VERIFY ALL CONTROLLING FIELD DIMENSIONS BEFORE ORDERING OR FABRICATING ANY MATERIALS.

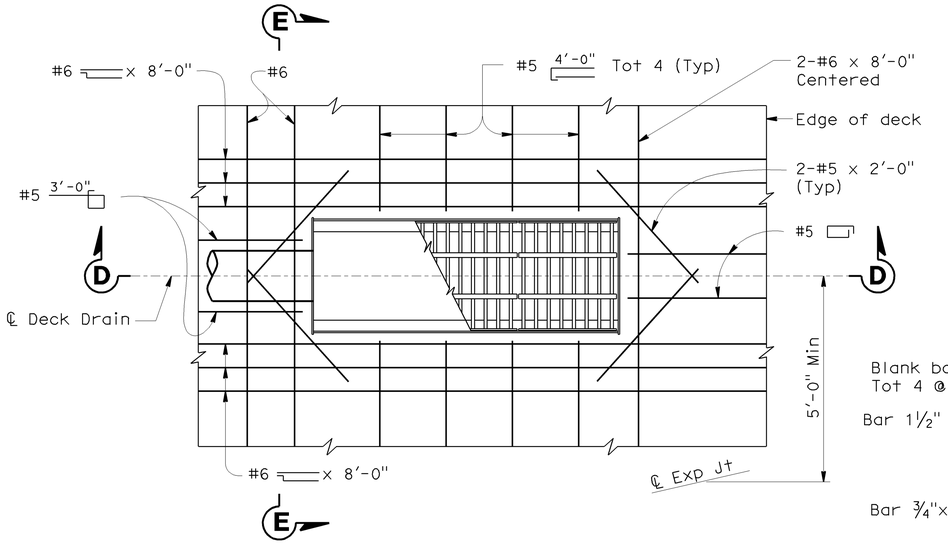

PLAN - CURB INSTALLATION

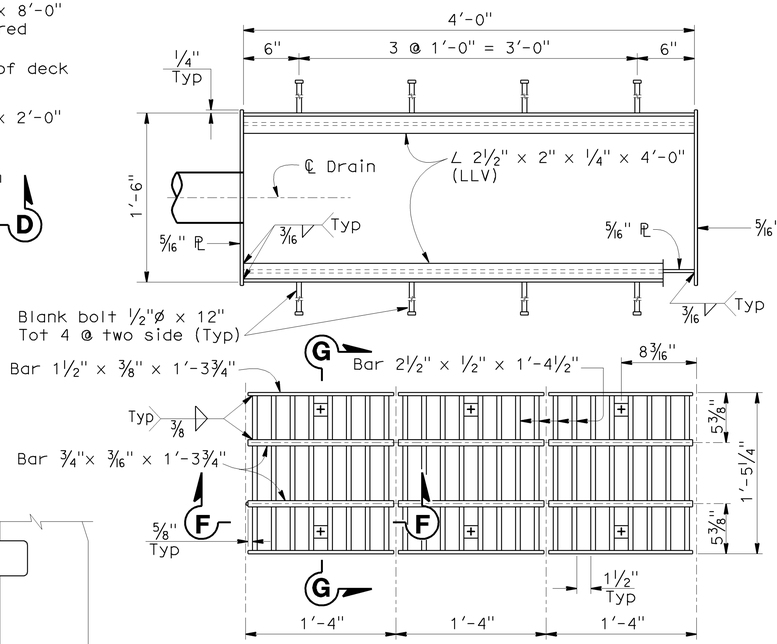

PLAN - FRAME & GRATE

Note:
Grating consists of 3 identical units except for baffle plate.
Baffle plate is required only for the grate over the 6"ø pipe

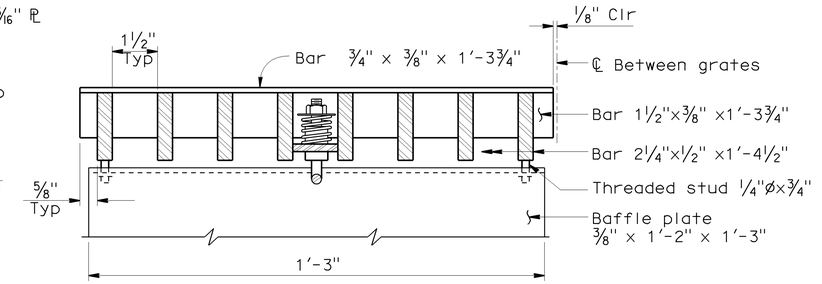

SECTION F-F

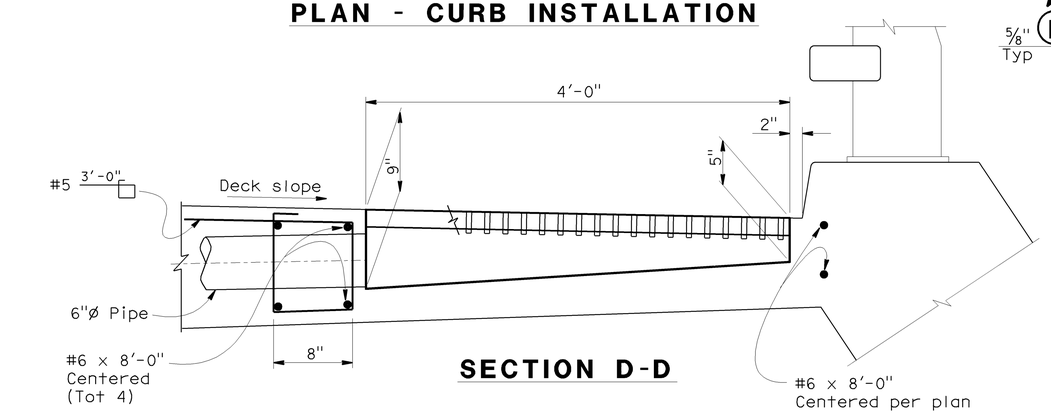

SECTION D-D

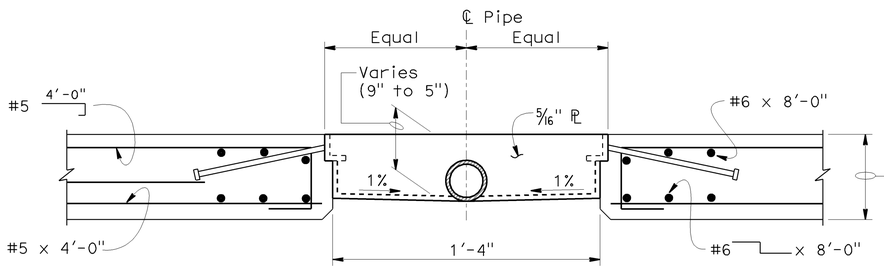

SECTION E-E

Notes:

1. Galvanize deck drain assembly after fabrication.
2. Reinforcement shown at drains is to be placeed in addition to typical slab reinforcement.
3. Typical slab reinforcement not shown

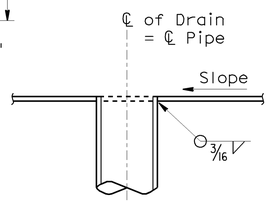

PIPE CONNECTION

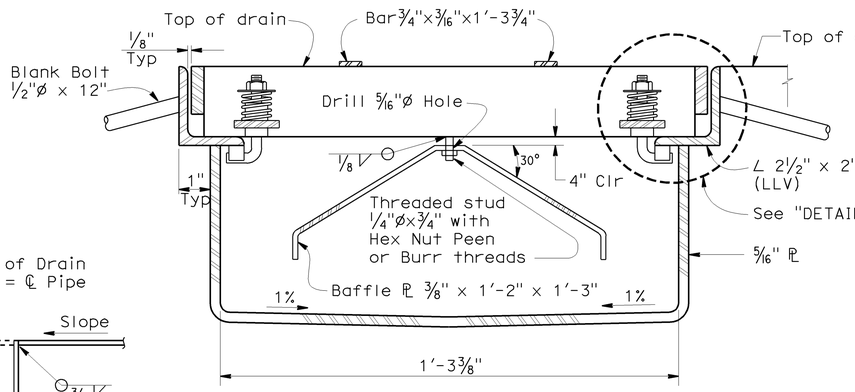

SECTION G-G (FRAME & GRATE)

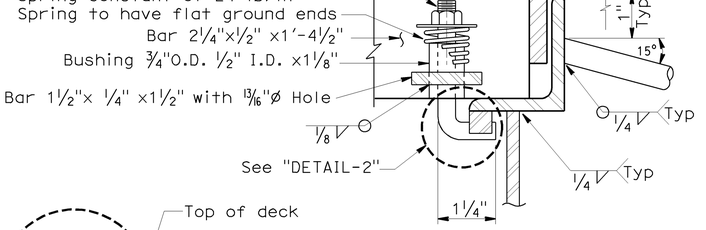

DETAIL - 1

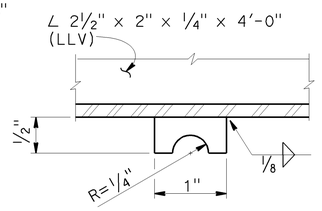

DETAIL - 2

LOCK BAR

NO SCALE

DESIGN	BY M. Omran	CHECKED S. Hegazi	STATE OF CALIFORNIA DEPARTMENT OF TRANSPORTATION	DIVISION OF ENGINEERING SERVICES STRUCTURE DESIGN DESIGN BRANCH 4	BRIDGE NO. 34-0160G	N1 - S101 CONNECTOR	
DETAILS	BY M. Yu	CHECKED S. Hegazi			POST MILE 9.18	DECK DRAINAGE DETAILS NO. 2	
QUANTITIES	BY S. Hegazi	CHECKED M. Thach					

STRUCTURES DESIGN DETAIL SHEET (ENGLISH) (REV. 10/25/05)

ORIGINAL SCALE IN INCHES FOR REDUCED PLANS 0 1 2 3

CU 04242
EA 163731

DISREGARD PRINTS BEARING EARLIER REVISION DATES

REVISION DATES										SHEET	OF
5-8-09	5-18-09									27	44

FILE => 34-0160_27ddra2.dgn

USERNAME => prbierce DATE PLOTTED => 21-JUL-2009 TIME PLOTTED => 13:49

DIST	COUNTY	ROUTE	POST MILES TOTAL PROJECT	SHEET No	TOTAL SHEETS
04	SF	101,1	9.2/9.8, 6.8/7.1	512	567

Ahmed Ibrahim 6-4-09
REGISTERED CIVIL ENGINEER DATE

7-20-09
PLANS APPROVAL DATE

REGISTERED PROFESSIONAL ENGINEER
AHMED M M IBRAHIM
No. S 4865
Exp. 9-30-10
STRUCTURAL
STATE OF CALIFORNIA

The State of California or its officers or agents shall not be responsible for the accuracy or completeness of electronic copies of this plan sheet.

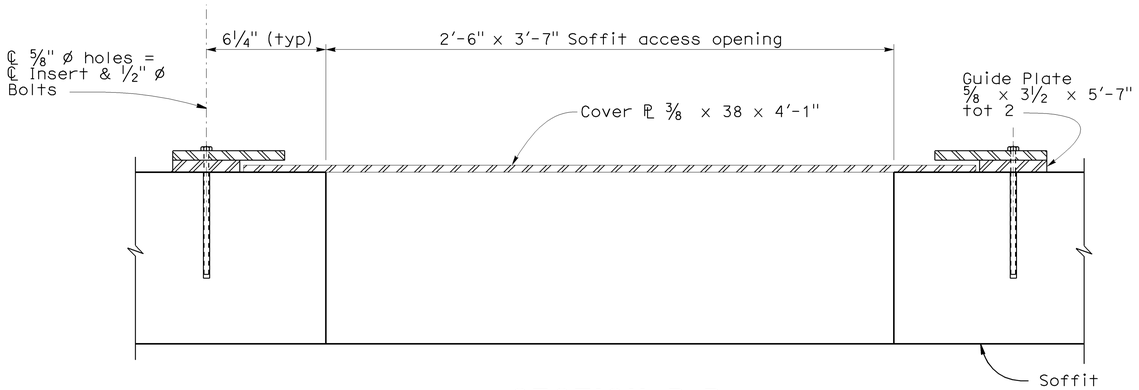

SECTION B-B
3"=1'-0"

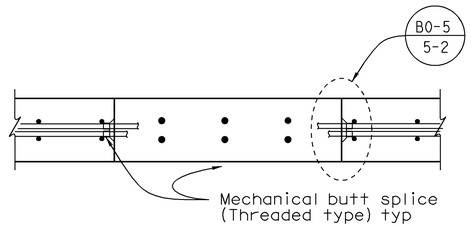

SECTION A-A

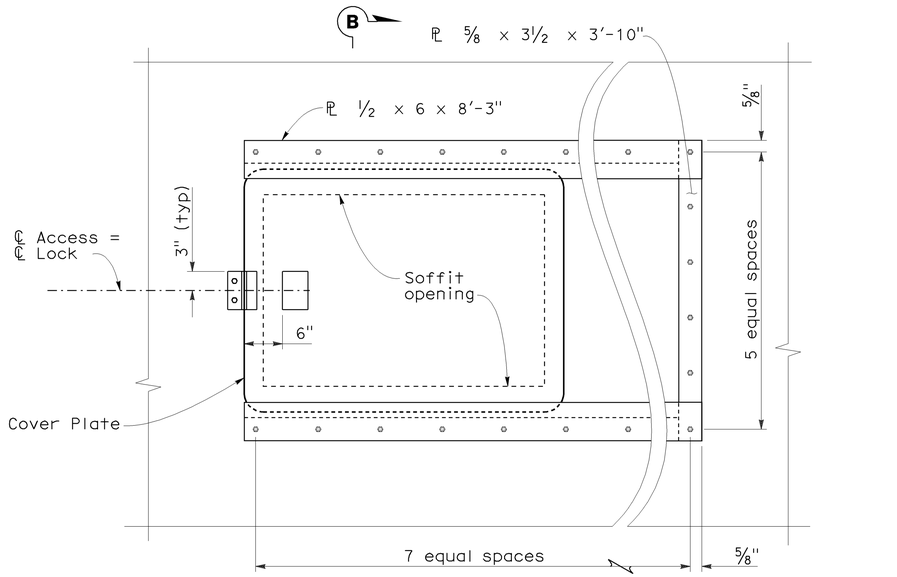

NOTE: All steel shall be hot-dip galvanized after fabrication.

SOFFIT ACCESS DETAIL
1" = 1'-0"

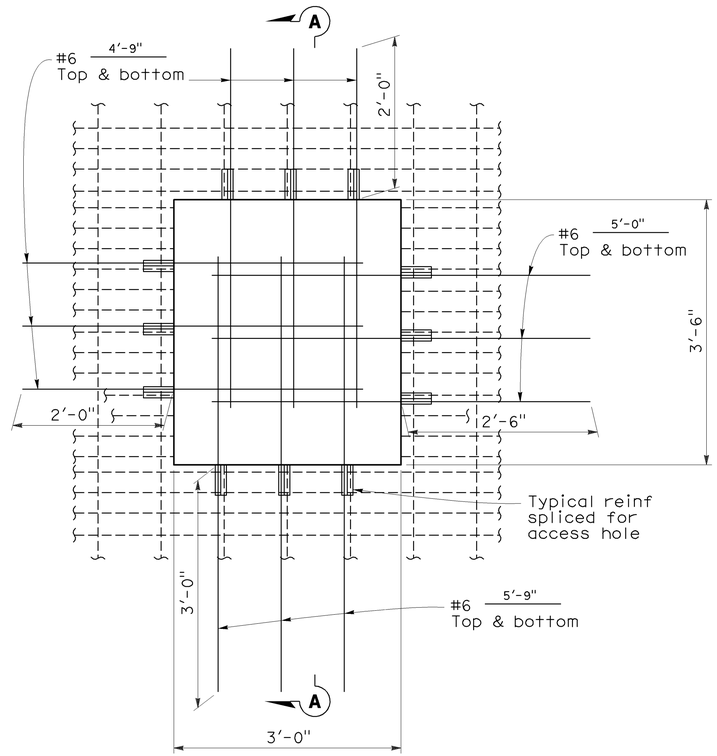

NOTE: See "GIRDER LAYOUT" sheets for locations.

TEMPORARY DECK ACCESS HOLE TOP SLAB
No Scale

NOTE:
CONTRACTOR SHALL VERIFY ALL CONTROLLING FIELD DIMENSIONS BEFORE ORDERING OR FABRICATING ANY MATERIALS.

DESIGN	BY S. Hegazi	CHECKED L. Wang	STATE OF CALIFORNIA DEPARTMENT OF TRANSPORTATION	DIVISION OF ENGINEERING SERVICES STRUCTURE DESIGN DESIGN BRANCH 4	BRIDGE NO. 34-0160G
DETAILS	BY JFCasarino	CHECKED S. Hegazi			POST MILE 9.18
QUANTITIES	BY S. Hegazi	CHECKED M. Thach			

N1 - S101 CONNECTOR
DECK AND SOFFIT ACCESS

STRUCTURES DESIGN DETAIL SHEET (ENGLISH) (REV. 10/25/05)

ORIGINAL SCALE IN INCHES FOR REDUCED PLANS 0 1 2 3

CU 04242
EA 163731

DISREGARD PRINTS BEARING EARLIER REVISION DATES →

REVISION DATES: 5-8-09 | 5-18-09

SHEET 28 OF 44

FILE => 34-0160_28access.dgn

USERNAME => trpierce DATE PLOTTED => 21-JUL-2009 TIME PLOTTED => 13:49

DIST	COUNTY	ROUTE	POST MILES TOTAL PROJECT	SHEET No	TOTAL SHEETS
04	SF	101,1	9.279, 6.87/1.1	513	567

Ahmed Ibrahim 6-4-09
REGISTERED CIVIL ENGINEER DATE

7-20-09
PLANS APPROVAL DATE

REGISTERED PROFESSIONAL ENGINEER
AHMED M.M. IBRAHIM
No. S 4865
EXP. 9-30-10
STRUCTURAL
STATE OF CALIFORNIA

The State of California or its officers or agents shall not be responsible for the accuracy or completeness of electronic copies of this plan sheet.

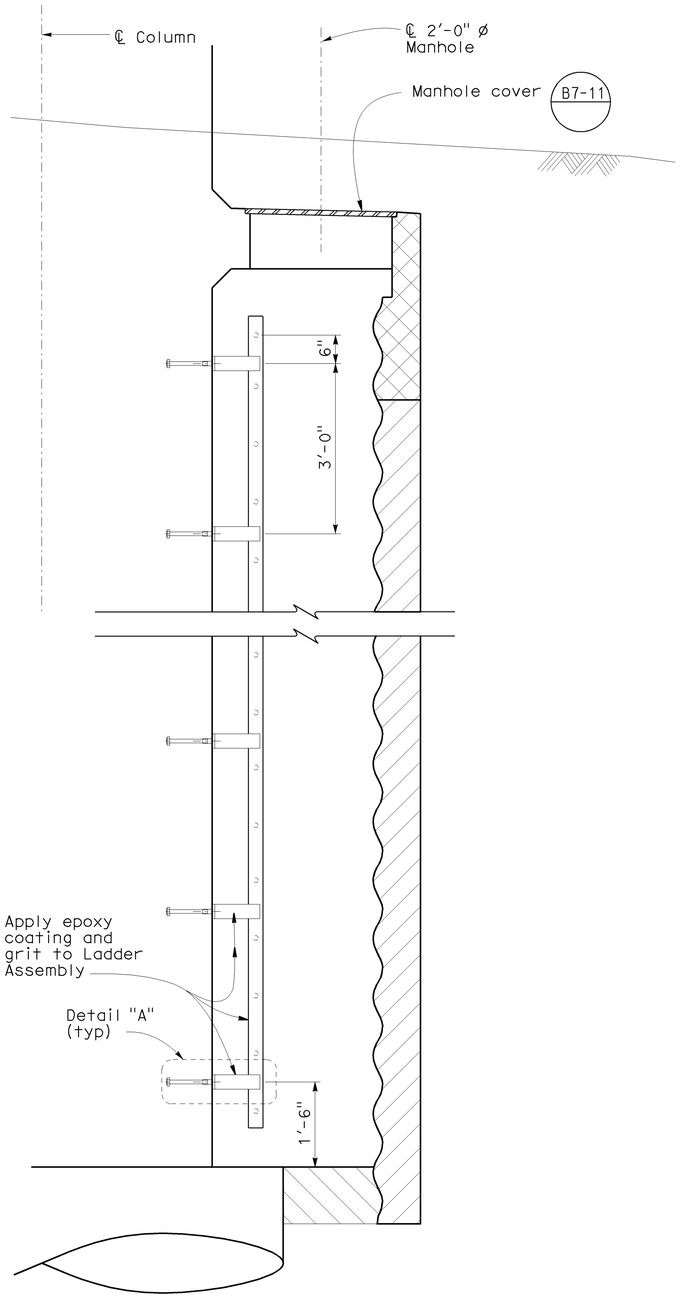

SECTION AT LADDER

3/4"=1'-0"

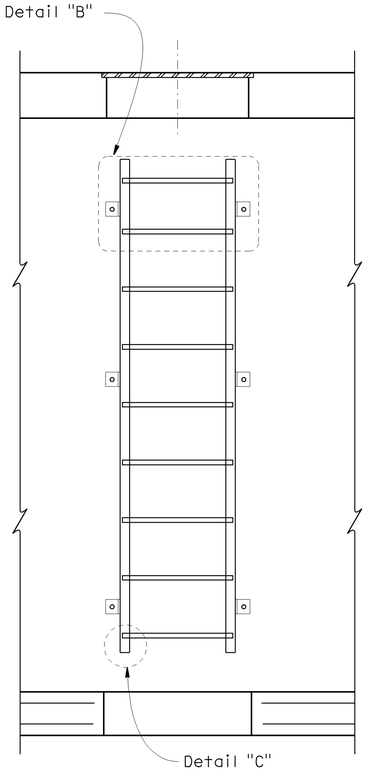

ACCESS LADDER DETAILS

3/4"=1'-0"

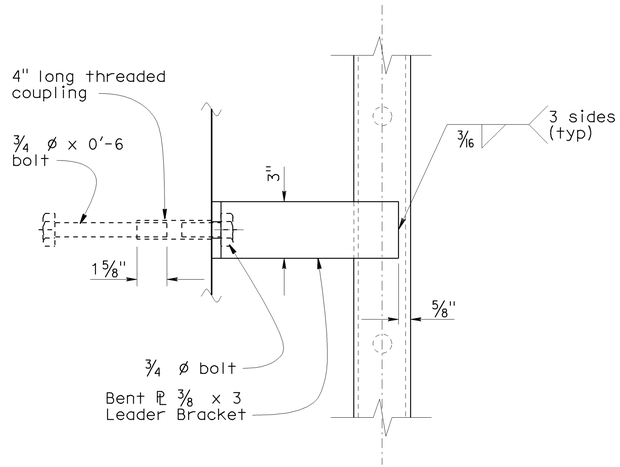

DETAIL "A"

3"=1'-0"
(Typical ladder bracket detail)

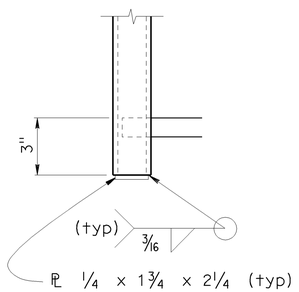

DETAIL "C"

3"=1'-0"

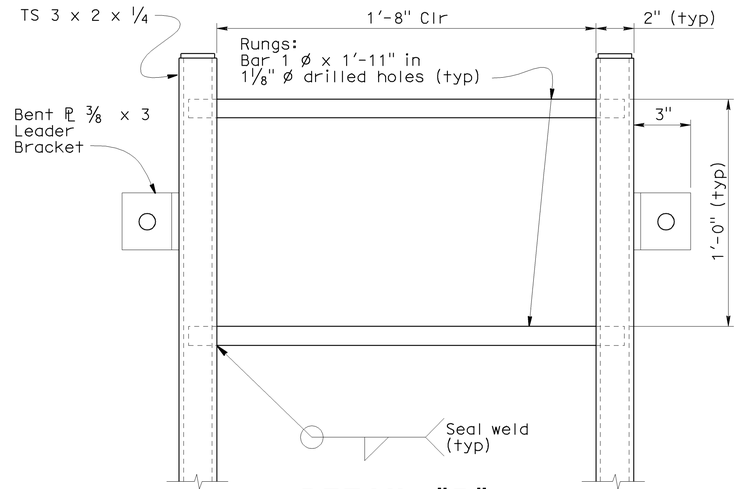

DETAIL "B"

3"=1'-0"

NOTE:
CONTRACTOR SHALL VERIFY ALL CONTROLLING FIELD DIMENSIONS BEFORE ORDERING OR FABRICATING ANY MATERIALS.

Note:
All steel shall be hot-dip galvanized after fabrication.

DESIGN	BY S. Hegazi	CHECKED L. Wang	STATE OF CALIFORNIA DEPARTMENT OF TRANSPORTATION	DIVISION OF ENGINEERING SERVICES STRUCTURE DESIGN DESIGN BRANCH 4	BRIDGE NO. 34-0160G POST MILE 9.18
DETAILS	BY JFCasarino	CHECKED S. Hegazi			
QUANTITIES	BY S. Hegazi	CHECKED M. Thach			

N1 - S101 CONNECTOR
LADDER DETAILS

STRUCTURES DESIGN DETAIL SHEET (ENGLISH) (REV. 10/25/05)

ORIGINAL SCALE IN INCHES FOR REDUCED PLANS 0 1 2 3

CU 04242
EA 163731

DISREGARD PRINTS BEARING EARLIER REVISION DATES

REVISION DATES: 4-23-09 | 5-12-09 | 5-18-09

SHEET 29 OF 44

FILE => 34-0160_29ladd.dgn

USERNAME => ttpierce DATE PLOTTED => 21-JUL-2009 TIME PLOTTED => 13:49

DIST	COUNTY	ROUTE	POST MILES TOTAL PROJECT	SHEET No	TOTAL SHEETS
04	SF	101,1	9.2/9.8, 6.8/7.1	514	567

Robert B. Giorgis Jr.
REGISTERED CIVIL ENGINEER DATE

7-20-09
PLANS APPROVAL DATE

REGISTERED PROFESSIONAL ENGINEER
ROGER B. GIORGIS JR.
No. C60705
Exp. 12/31/10
CIVIL
STATE OF CALIFORNIA

The State of California or its officers or agents shall not be responsible for the accuracy or completeness of electronic copies of this plan sheet.

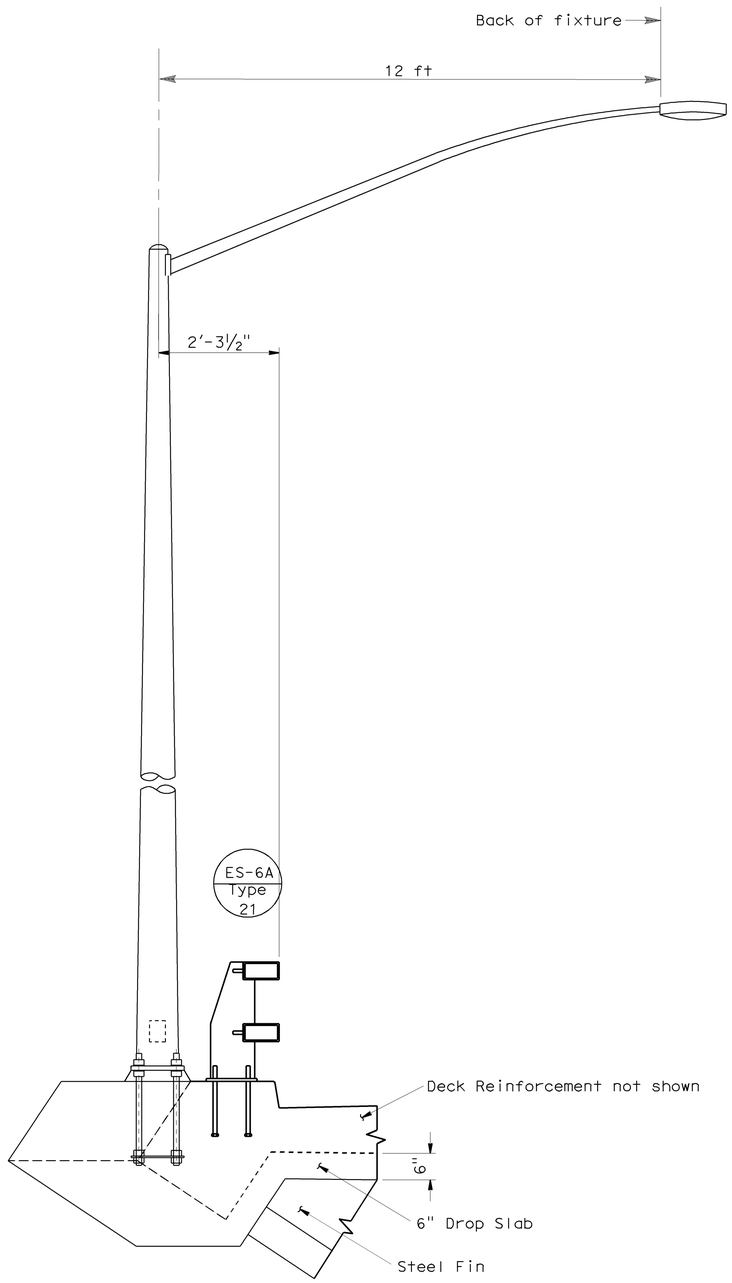

TYPE 21 PEDESTAL PRESIDIO VIADUCT

NO SCALE

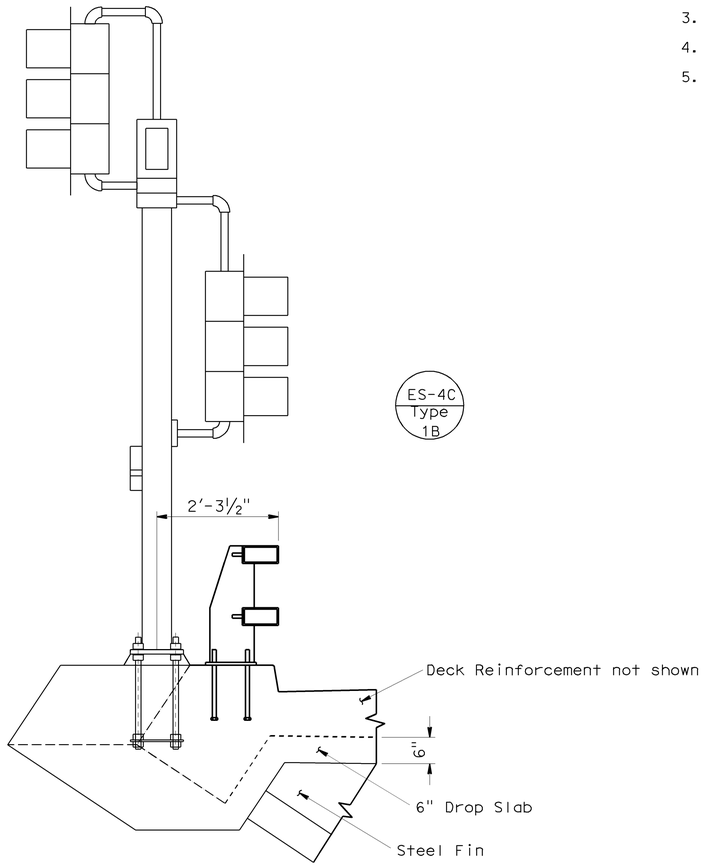

TYPE 1B PEDESTAL N1-S101 CONNECTOR

NO SCALE

NOTES:

1. Rebar not shown for clarity - See sheet SD 5.2.
2. For California ST-10 (Mod) Barrier Details see "Typical Section No. 1" sheet.
3. See sheet SD 5.3 for anchorage detail.
4. For light / pole locations see "Road Plans".
5. Type 21 / Type 1B must be located at centerline of Steel Fin.

NOTE:
THE CONTRACTOR SHALL VERIFY ALL CONTROLLING FIELD DIMENSIONS BEFORE ORDERING OR FABRICATING ANY MATERIAL.

TYPE 21 / TYPE 1B PEDESTAL

SD 5.1

Jeffrey B Woody
BRANCH CHIEF

DESIGN	BY JOHN DATILES	CHECKED M O'LEARY	STATE OF CALIFORNIA DEPARTMENT OF TRANSPORTATION
DETAILS	BY T.ZOLNIKOVA	CHECKED M O'LEARY	
QUANTITIES	BY M O'LEARY	CHECKED JOHN DATILES	

DIVISION OF ENGINEERING SERVICES
STRUCTURE DESIGN
SPECIAL DESIGNS BRANCH

BRIDGE NO. 34-0160G
POST MILE 9.18

N1 - S101 CONNECTOR
PEDESTAL DETAILS NO. 1

STRUCTURES DESIGN SPECIAL DESIGN SHEET (ENGLISH) (REV. 10-25-05)

ORIGINAL SCALE IN INCHES FOR REDUCED PLANS 0 1 2 3

CU 04242
EA 163731

DISREGARD PRINTS BEARING EARLIER REVISION DATES →

REVISION DATES										SHEET	OF
5/14/09	6-15-09									30	44

FILE => 34-0160_30ped1.dgn

USERNAME => tripierce DATE PLOTTED => 21-JUL-2009 TIME PLOTTED => 13:49

DIST	COUNTY	ROUTE	POST MILES TOTAL PROJECT	SHEET No	TOTAL SHEETS
04	SF	101,1	9.2/9.8, 6.8/7.1	515	567

Robert B. Giorgis Jr.
REGISTERED CIVIL ENGINEER DATE

7-20-09
PLANS APPROVAL DATE

The State of California or its officers or agents shall not be responsible for the accuracy or completeness of electronic copies of this plan sheet.

REGISTERED PROFESSIONAL ENGINEER — ROBERT B. GIORGIS JR. — No. C60705 — Exp. 12/31/10 — CIVIL — STATE OF CALIFORNIA

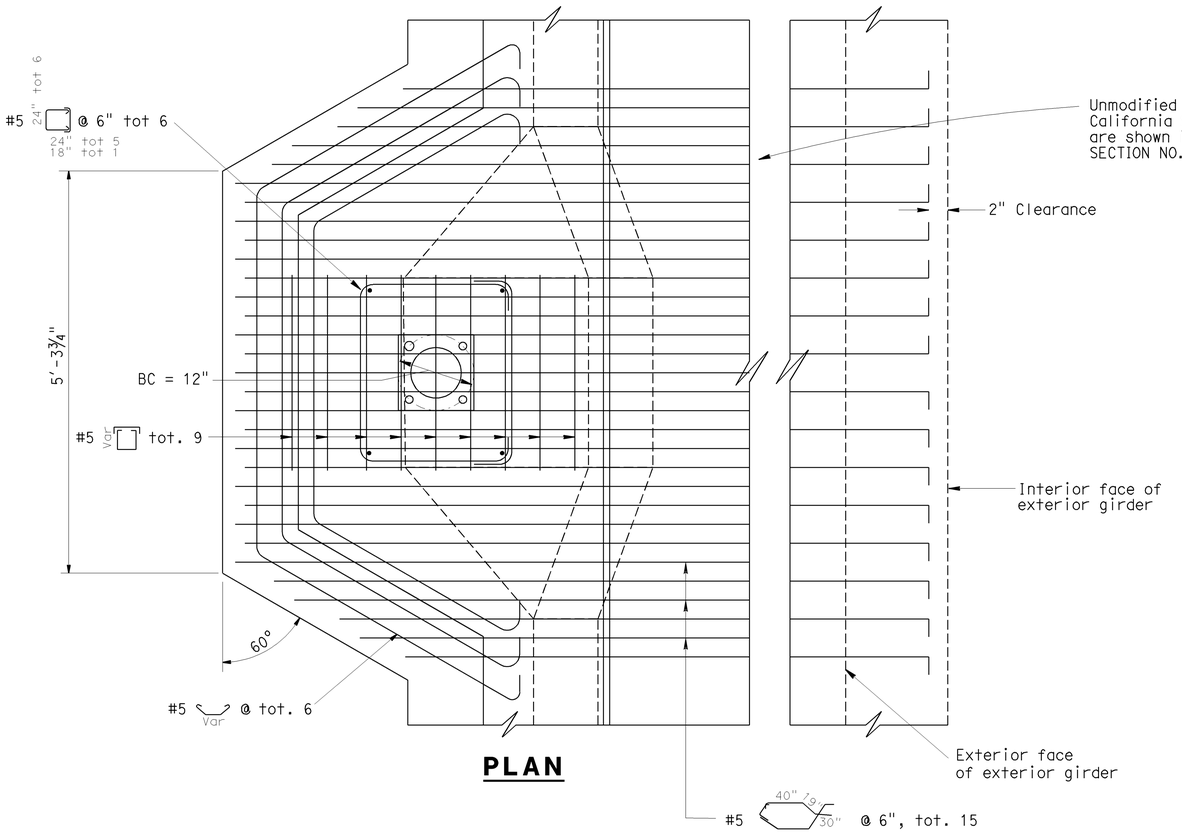

PLAN

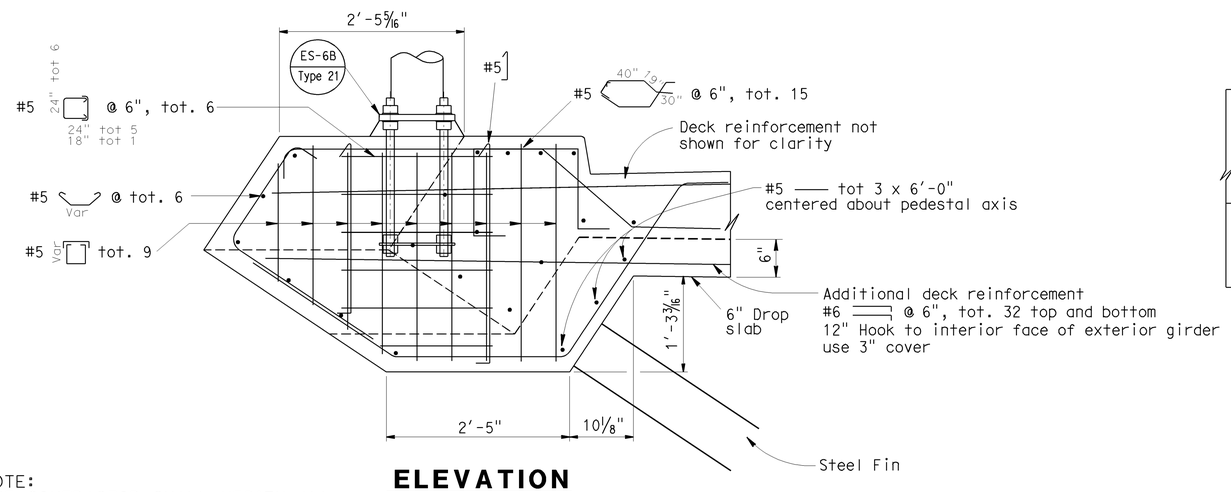

ELEVATION

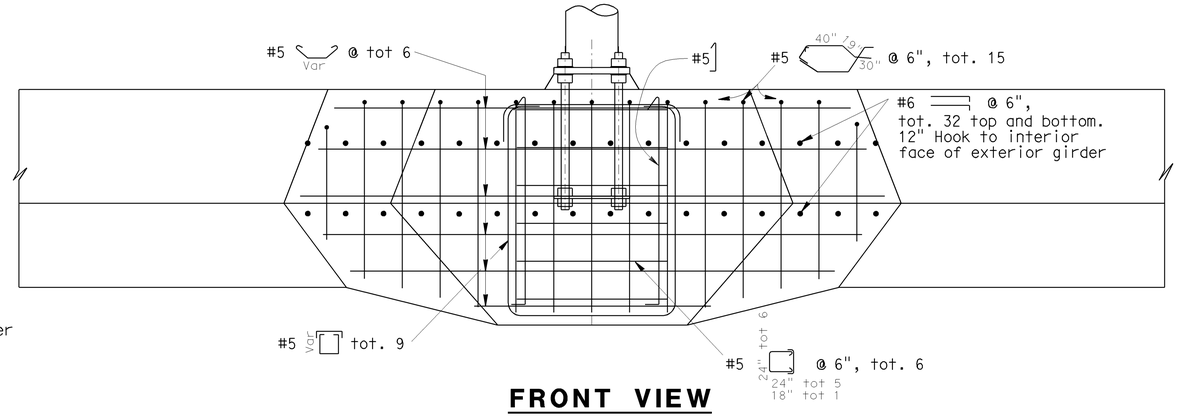

FRONT VIEW

NOTES:

1. Use 45° for mortar pad sides.
2. 3" cover for pedestal rebar.

NOTE:
THE CONTRACTOR SHALL VERIFY ALL CONTROLLING FIELD DIMENSIONS BEFORE ORDERING OR FABRICATING ANY MATERIAL.

TYPE 21 / TYPE 1B PEDESTAL DETAILS

NO SCALE

SD 5.2

Jeffrey B Woody
BRANCH CHIEF

DESIGN	BY JOHN DATILES	CHECKED M O'LEARY
DETAILS	BY M O'LEARY	CHECKED JOHN DATILES
QUANTITIES	BY M O'LEARY	CHECKED JOHN DATILES

STATE OF CALIFORNIA
DEPARTMENT OF TRANSPORTATION

DIVISION OF ENGINEERING SERVICES
STRUCTURE DESIGN
SPECIAL DESIGNS BRANCH

BRIDGE NO. 34-0160G
POST MILE 9.18

N1 - S101 CONNECTOR
PEDESTAL DETAILS NO. 2

STRUCTURES DESIGN SPECIAL DESIGN SHEET (ENGLISH) (REV. 10-25-05)

ORIGINAL SCALE IN INCHES FOR REDUCED PLANS 0 1 2 3

CU 04242
EA 163731

DISREGARD PRINTS BEARING EARLIER REVISION DATES →

REVISION DATES: 5/15/09 5/17/09 6/4/09 6-17-09

SHEET 31 OF 44

FILE => 34-0160_31ped2.dgn

USERNAME => ttpierce DATE PLOTTED => 21-JUL-2009 TIME PLOTTED => 13:49

DIST	COUNTY	ROUTE	POST MILES TOTAL PROJECT	SHEET No	TOTAL SHEETS
04	SF	101,1	9.2/9.8, 6.8/7.1	516	567

Robert B. Giorgis Jr.
REGISTERED CIVIL ENGINEER DATE

7-20-09
PLANS APPROVAL DATE

REGISTERED PROFESSIONAL ENGINEER — ROBERT B. GIORGIS JR. — No. C60705 — Exp. 12/31/10 — CIVIL — STATE OF CALIFORNIA

The State of California or its officers or agents shall not be responsible for the accuracy or completeness of electronic copies of this plan sheet.

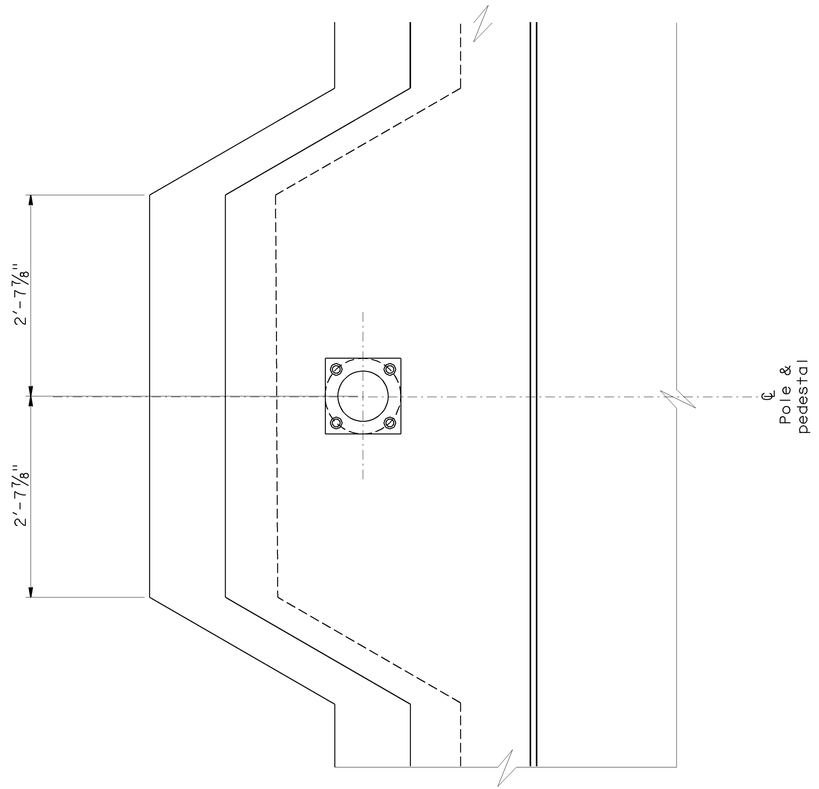

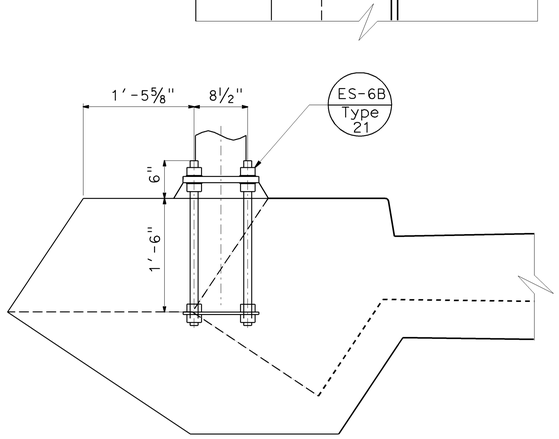

TYPE 21 ANCHOR BOLT

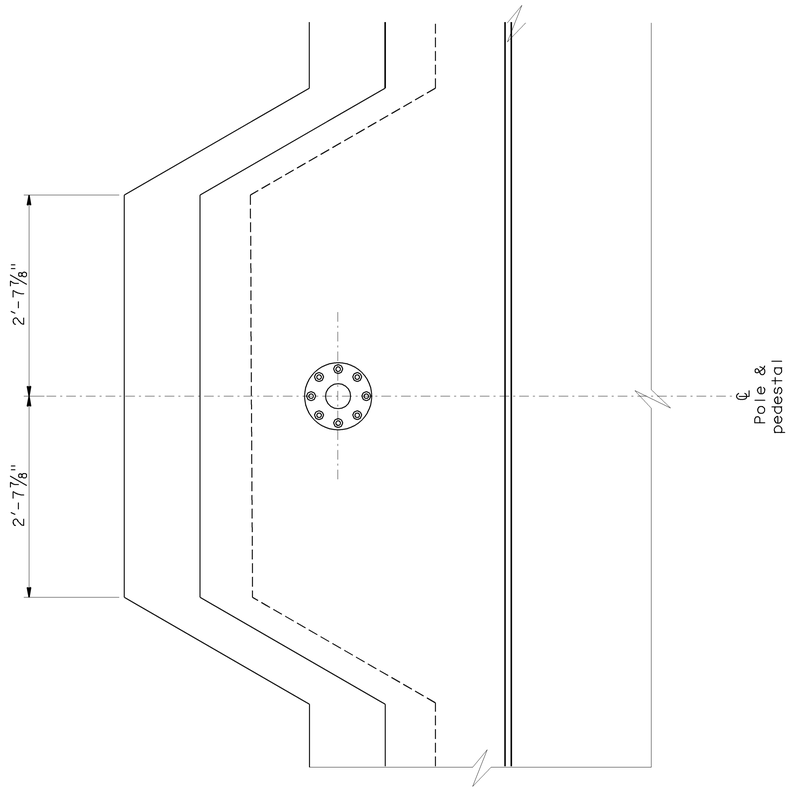

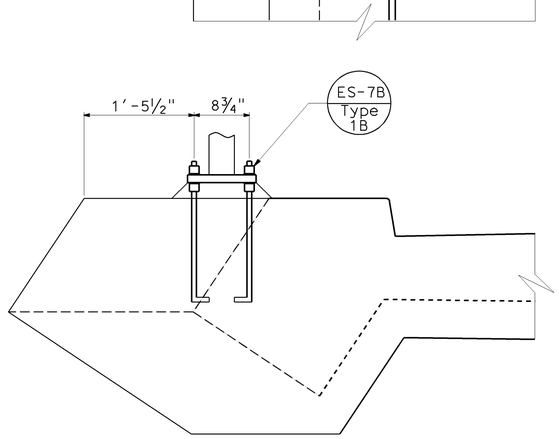

TYPE 1B ANCHOR BOLT

NOTES:

1. Steel fin not shown.
2. For steel fin details see "STEEL FIN DETAILS" and SD 5.3.
3. See Std Plan ES-6A and ES-6B for additional anchorage information for type 21.
4. Barrier not shown.
5. For bottom contour of Type 21/Type 1B pedestal see sheet SD 5.6.

NOTE:
THE CONTRACTOR SHALL VERIFY ALL CONTROLLING FIELD DIMENSIONS BEFORE ORDERING OR FABRICATING ANY MATERIAL.

TYPE 21 / TYPE 1B PEDESTAL ANCHORAGE

NO SCALE

SD 5.3

Jeffrey B Woody
BRANCH CHIEF

DESIGN	BY JOHN DATILES	CHECKED M O'LEARY
DETAILS	BY T.ZOLNIKOVA	CHECKED M O'LEARY
QUANTITIES	BY M O'LEARY	CHECKED JOHN DATILES

STATE OF CALIFORNIA
DEPARTMENT OF TRANSPORTATION

DIVISION OF ENGINEERING SERVICES
STRUCTURE DESIGN
SPECIAL DESIGNS BRANCH

BRIDGE NO. 34-0160G
POST MILE 9.18

N1 - S101 CONNECTOR
PEDESTAL DETAILS NO. 3

STRUCTURES DESIGN SPECIAL DESIGN SHEET (ENGLISH) (REV. 10-25-05)

ORIGINAL SCALE IN INCHES FOR REDUCED PLANS 0 1 2 3

CU 04242
EA 163731

DISREGARD PRINTS BEARING EARLIER REVISION DATES →

REVISION DATES: 5/14/09 5/18/09 6/2/09 6/8/09

SHEET 32 OF 44

FILE => 34-0160_32ped3.dgn

USERNAME => ttpierce DATE PLOTTED => 21-JUL-2009 TIME PLOTTED => 13:49

DIST	COUNTY	ROUTE	POST MILES TOTAL PROJECT	SHEET No	TOTAL SHEETS
04	SF	101,1	9.2/9.8, 6.8/7.1	517	567

Robert B. Giorgis Jr.
REGISTERED CIVIL ENGINEER DATE

7-20-09
PLANS APPROVAL DATE

REGISTERED PROFESSIONAL ENGINEER
ROBERT B. GIORGIS JR.
No. C60705
Exp. 12/31/10
CIVIL
STATE OF CALIFORNIA

The State of California or its officers or agents shall not be responsible for the accuracy or completeness of electronic copies of this plan sheet.

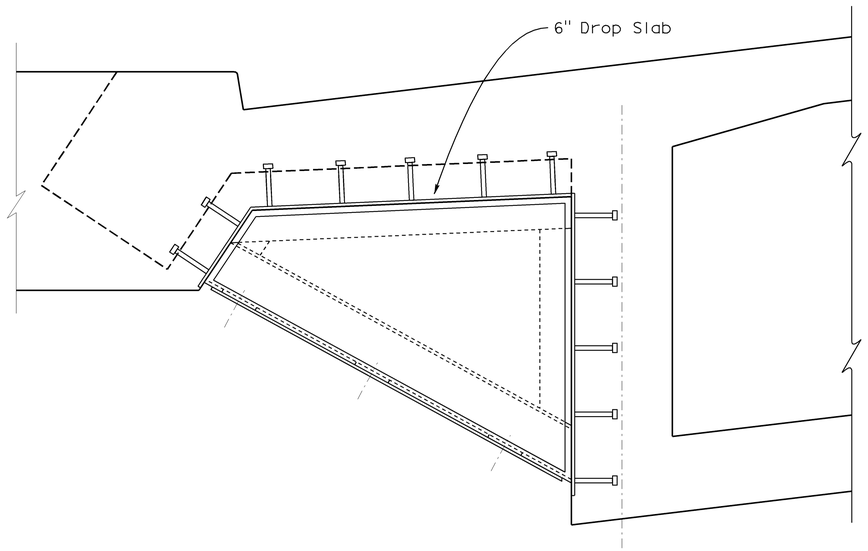

VMS - TYPE 21 AND TYPE 1B DROP SLAB DETAIL

NOTES:

1. Refer to Type 21 Pedestal and 1B Pedestal for pedestal details.
2. Refer to "Steel Fin Details" for addtional information.

NOTE:

The contractor shall verify all controlling field dimensions before ordering or fabricating any materials.

DROP SLAB DETAIL 1
NO SCALE

SD 5.4

Jeffrey B Woody
BRANCH CHIEF

DESIGN	BY R GIORGIS	CHECKED M O'LEARY
DETAILS	BY M O'LEARY	CHECKED A HOUGH
QUANTITIES	BY M O'LEARY	CHECKED J DATILES

STATE OF **CALIFORNIA**
DEPARTMENT OF TRANSPORTATION

DIVISION OF ENGINEERING SERVICES
STRUCTURE DESIGN
SPECIAL DESIGNS BRANCH

BRIDGE NO. 34-0160G
POST MILE 9.18

N1 - S101 CONNECTOR
PRDESTAL DETAILS NO. 4

STRUCTURES DESIGN DETAIL SHEET (ENGLISH) (REV. 10/25/05)

ORIGINAL SCALE IN INCHES FOR REDUCED PLANS 0 1 2 3

CU 04242
EA 163731

DISREGARD PRINTS BEARING EARLIER REVISION DATES →

REVISION DATES										SHEET	OF
5-28-09	5-13-09	5-21-09	6-17-09							33	44

FILE => 34-0160_33ped4.dgn

USERNAME => trpierce DATE PLOTTED => 21-JUL-2009 TIME PLOTTED => 13:50

DIST	COUNTY	ROUTE	POST MILES TOTAL PROJECT	SHEET No	TOTAL SHEETS
04	SF	101,1	9.2/9.8, 6.8/7.1	518	567

Robert B. Giorgis Jr.
REGISTERED CIVIL ENGINEER DATE

7-20-09
PLANS APPROVAL DATE

REGISTERED PROFESSIONAL ENGINEER
ROBERT B. GIORGIS JR.
No. C60705
Exp. 12/31/10
CIVIL
STATE OF CALIFORNIA

The State of California or its officers or agents shall not be responsible for the accuracy or completeness of electronic copies of this plan sheet.

NOTES:

1. For "SECTION B-B" see "TYPICAL SECTION NO 1" "Detail C"
2. For "SECTION C-C" see "ELEVATION" sheet SD 5.2.
3. For additional details see sheets SD 5.2.

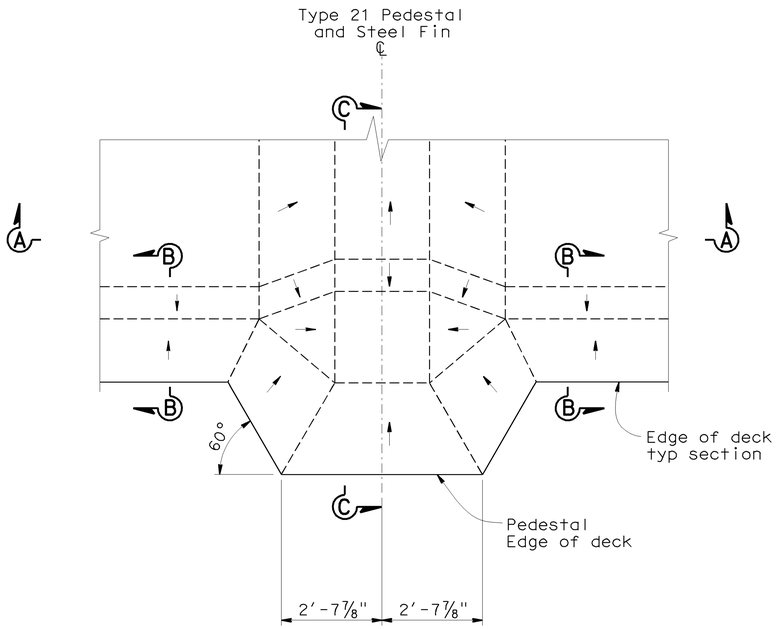

PLAN
(BOTTOM CONTOUR)

NOTE: Arrows indicate a downward direction.

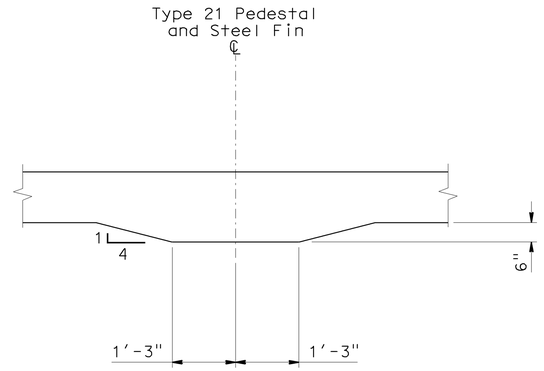

SECTION A-A

TYPE 21 / TYPE 1B PEDESTAL

NOTE:
THE CONTRACTOR SHALL VERIFY ALL CONTROLLING FIELD DIMENSIONS BEFORE ORDERING OR FABRICATING ANY MATERIAL.

DROP SLAB DETAIL 2
NO SCALE

SD 5.5

Jeffrey B Woody
BRANCH CHIEF

DESIGN	BY JOHN DATILES	CHECKED M O'LEARY
DETAILS	BY D W JUSTICE Jr	CHECKED JOHN DATILES
QUANTITIES	BY M O'LEARY	CHECKED JOHN DATILES

STATE OF CALIFORNIA
DEPARTMENT OF TRANSPORTATION

DIVISION OF ENGINEERING SERVICES
STRUCTURE DESIGN
SPECIAL DESIGNS BRANCH

CU 04242
EA 163731

BRIDGE NO. 34-0160G
POST MILE 9.18

N1 - S101 CONNECTOR
PEDESTAL DETAILS NO. 5

STRUCTURES DESIGN SPECIAL DESIGN SHEET (ENGLISH) (REV. 10-25-05)

ORIGINAL SCALE IN INCHES FOR REDUCED PLANS 0 1 2 3

DISREGARD PRINTS BEARING EARLIER REVISION DATES →

REVISION DATES: 6-1-09 | 6-17-09

SHEET 34 OF 44

FILE => 34-0160_34ped5.dgn

USERNAME => ttpierce DATE PLOTTED => 21-JUL-2009 TIME PLOTTED => 13:50

DIST	COUNTY	ROUTE	POST MILES TOTAL PROJECT	SHEET No	TOTAL SHEETS
04	SF	101,1	9.2/9.8, 6.8/7.1	519	567

Robert B. Giorgis Jr.
REGISTERED CIVIL ENGINEER DATE

7-20-09
PLANS APPROVAL DATE

REGISTERED PROFESSIONAL ENGINEER — ROBERT B. GIORGIS JR. — No. C60705 — Exp. 12/31/10 — CIVIL — STATE OF CALIFORNIA

The State of California or its officers or agents shall not be responsible for the accuracy or completeness of electronic copies of this plan sheet.

NOTE:

1. For additional details see sheets SD 5.2

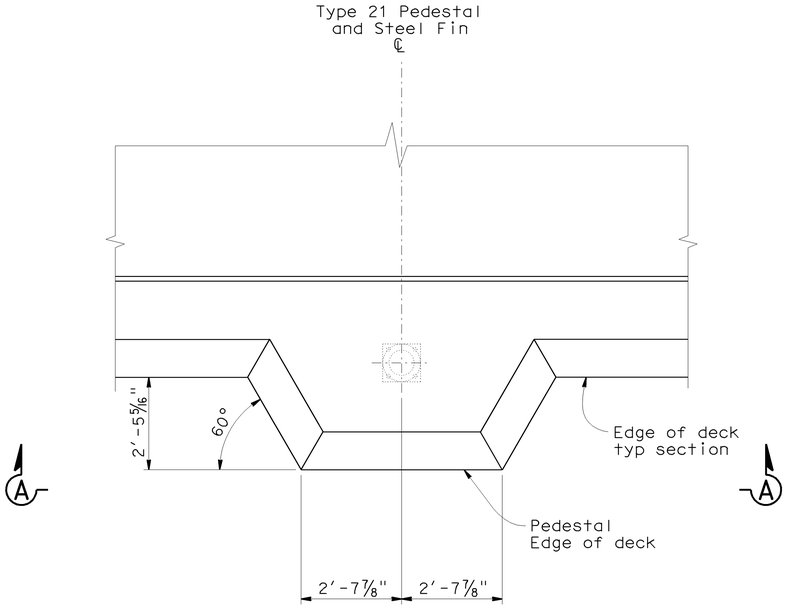

PLAN
(TOP CONTOUR)

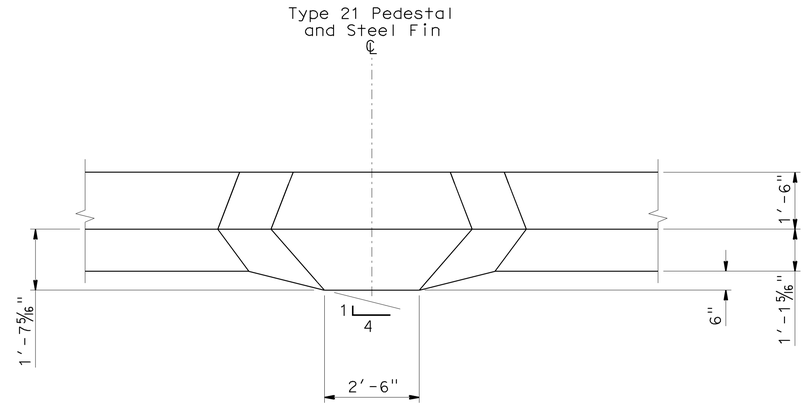

VIEW A-A

TYPE 21 / TYPE 1B PEDESTAL

NOTE:
THE CONTRACTOR SHALL VERIFY ALL CONTROLLING FIELD DIMENSIONS BEFORE ORDERING OR FABRICATING ANY MATERIAL.

DROP SLAB DETAIL 3
NO SCALE
SD 5.6

Jeffrey B Woody
BRANCH CHIEF

DESIGN	BY JOHN DATILES	CHECKED M O'LEARY
DETAILS	BY D W JUSTICE Jr	CHECKED JOHN DATILES
QUANTITIES	BY M O'LEARY	CHECKED JOHN DATILES

STATE OF CALIFORNIA
DEPARTMENT OF TRANSPORTATION

DIVISION OF ENGINEERING SERVICES
STRUCTURE DESIGN
SPECIAL DESIGNS BRANCH

BRIDGE NO. 34-0160G
POST MILE 9.18

N1 - S101 CONNECTOR
PEDESTAL DETAILS NO. 6

STRUCTURES DESIGN SPECIAL DESIGN SHEET (ENGLISH) (REV. 10-25-05)

ORIGINAL SCALE IN INCHES FOR REDUCED PLANS 0 1 2 3

CU 04242
EA 163731

DISREGARD PRINTS BEARING EARLIER REVISION DATES →

REVISION DATES: 6-3-09 | 6-17-09

SHEET 35 OF 44

FILE => 34-0160_35ped6.dgn

USERNAME = trpierce DATE PLOTTED => 21-JUL-2009 TIME PLOTTED => 13:50

DIST	COUNTY	ROUTE	POST MILES TOTAL PROJECT	SHEET No	TOTAL SHEETS
04	SF	101,1	9.2/9.8, 6.8/7.1	520	567

Ahmed Brahim 6-4-09
REGISTERED CIVIL ENGINEER DATE

7-20-09
PLANS APPROVAL DATE

REGISTERED PROFESSIONAL ENGINEER
AHMED M M IBRAHIM
No. S 4865
EXP. 9-30-10
STRUCTURAL
STATE OF CALIFORNIA

The State of California or its officers or agents shall not be responsible for the accuracy or completeness of electronic copies of this plan sheet.

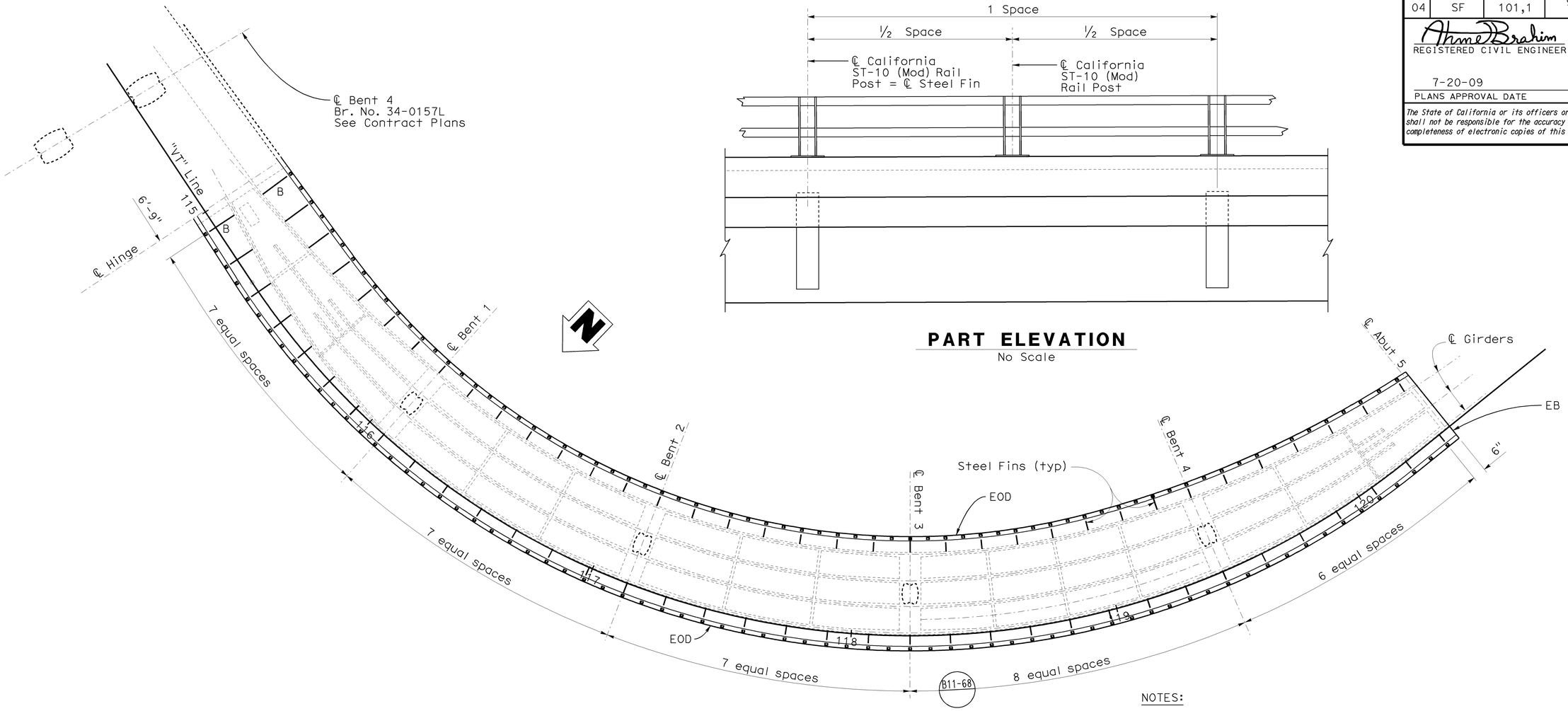

LAYOUT
No Scale

PART ELEVATION
No Scale

NOTES:

1. Steel Fins spacing shall be measured along edge of deck.
2. Place Steel Fins perpedicular to edge of deck.
3. Place one Steel Fin at every bent centerline. Steel Fins in between bent centerlines shall be spaced evenly.
4. All Steel Fins shown shall be Type A except otherwise indicated. For Steel Fin details, see "STEEL FIN DETAIL NO. 1" sheet.
5. There shall be one California ST-10 Rail (Mod) post at every Steel Fin location.
6. One intermediate California ST-10 (Mod) shall be placed at equal distances between Steel Fins.

LEGEND:

▪ Indicates California ST-10 (Mod) Railing Post.

B Indicates Type B Fins, see Note 4.

NOTE:
CONTRACTOR SHALL VERIFY ALL CONTROLLING FIELD DIMENSIONS BEFORE ORDERING OR FABRICATING ANY MATERIALS.

DESIGN	BY A Alcantara	CHECKED S. Hegazi	STATE OF CALIFORNIA DEPARTMENT OF TRANSPORTATION	DIVISION OF ENGINEERING SERVICES STRUCTURE DESIGN DESIGN BRANCH 4	BRIDGE NO. 34-0160G	N1 - S101 CONNECTOR
DETAILS	BY JFCasarino	CHECKED S. Hegazi			POST MILE 9.18	STEEL FIN LAYOUT
QUANTITIES	BY S. Hegazi	CHECKED M. Thach				

STRUCTURES DESIGN DETAIL SHEET (ENGLISH) (REV. 10/25/05)

ORIGINAL SCALE IN INCHES FOR REDUCED PLANS 0 1 2 3

CU 04242
EA 163731

DISREGARD PRINTS BEARING EARLIER REVISION DATES →

REVISION DATES: 5-8-09 | 6-3-09 | 6-11-09

SHEET 36 OF 44

FILE => 34-0160_36finlayout.dgn

USERNAME => tmihkest DATE PLOTTED => 22-JUL-2009 TIME PLOTTED => 10:49

DIST.	COUNTY	ROUTE	MILE POST TOTAL PROJECT	SHEET NO.	TOTAL SHEETS
04	SF	101,1	9.2/9.8, 6.8/7.1	521	567

Ahmed Brahim 6-4-09
REGISTERED ENGINEER - CIVIL

7-20-09
PLANS APPROVAL DATE

REGISTERED PROFESSIONAL ENGINEER — AHMED M M IBRAHIM — No. S 4865 — Exp. 9-30-10 — STRUCTURAL — STATE OF CALIFORNIA

The State of California or its officers or agents shall not be responsible for the accuracy or completeness of electronic copies of this plan sheet.

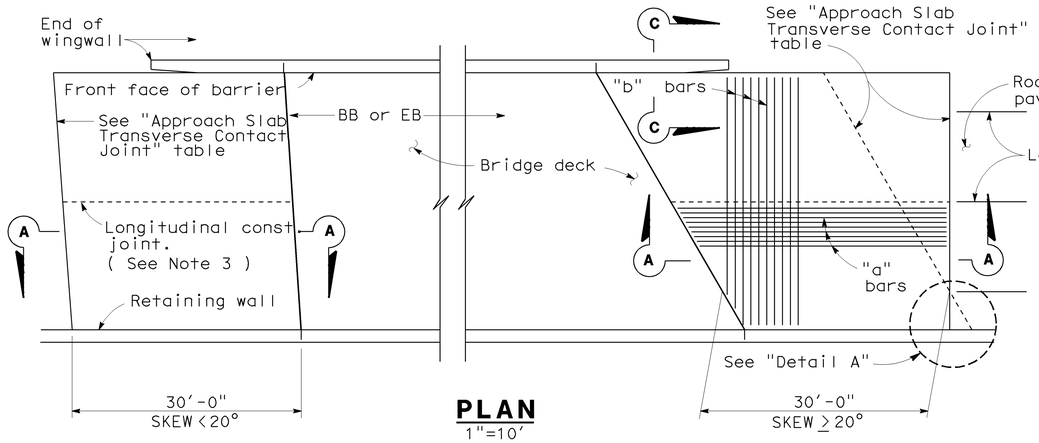

PLAN
1"=10'

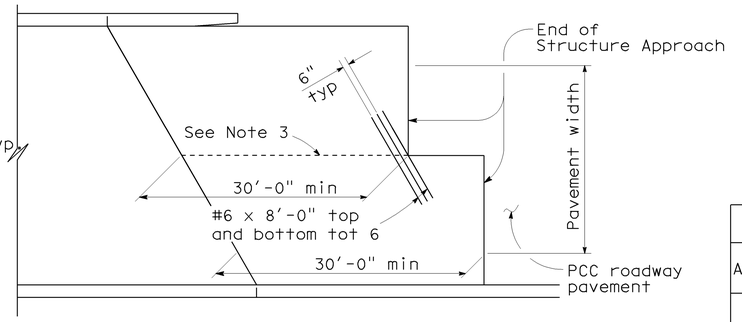

STRUCTURE APPROACH - END STAGGER DETAIL
No Scale

APPROACH SLAB TRANSVERSE CONTACT JOINT		
APPROACH SKEW	WITH AC ROADWAY PAVEMENT	WITH PCC ROADWAY PAVEMENT
< 20°	Parallel to face of paving notch	Parallel to face of paving notch
20° - 45°	Parallel to face of P N use (Detail A)	Stagger lines 24' to 36' apart.
> 45°	Parallel to face of P N use (Detail A)	Stagger at each lane line.

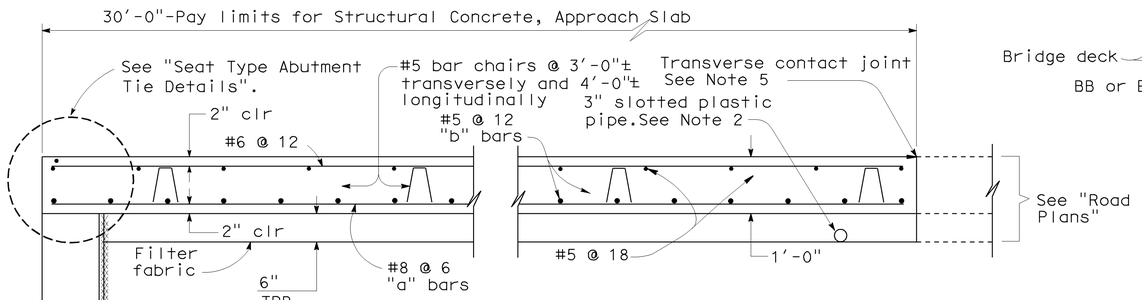

SECTION A-A
¾"=1'-0"

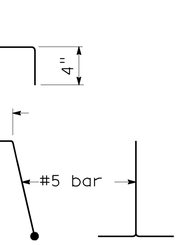

BAR CHAIR DETAIL
1½"=1'-0"

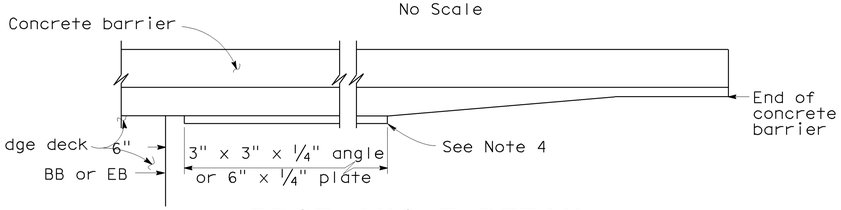

EDGE ANGLE DETAIL
½"=1'-0"

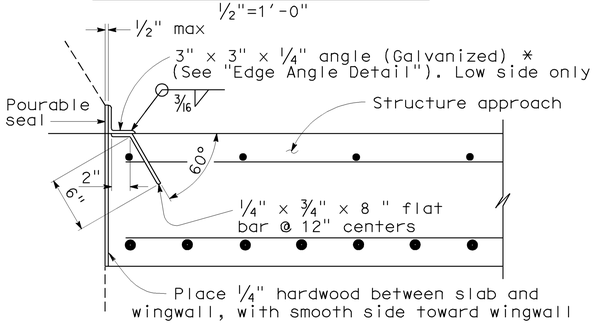

***(TO BE USED WITH TYPE 25 OR TYPE 27 CONCRETE BARRIER)**

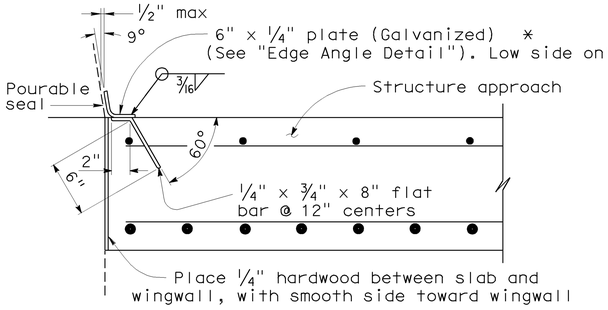

***(TO BE USED WITH TYPE 732 OR TYPE 736 CONCRETE BARRIER)**

NOTE:
CONTRACTOR SHALL VERIFY ALL CONTROLLING FIELD DIMENSIONS BEFORE ORDERING OR FABRICATING ANY MATERIALS.

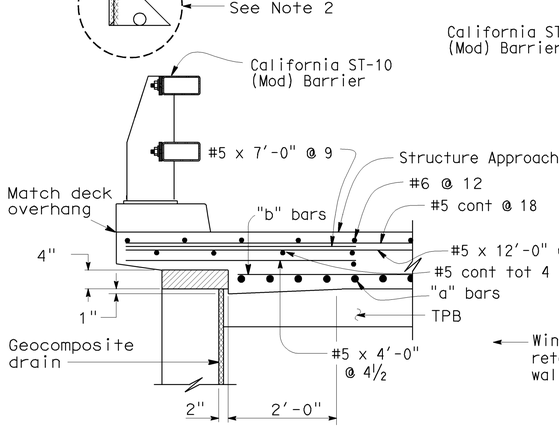

TYPE E-1 ◇1

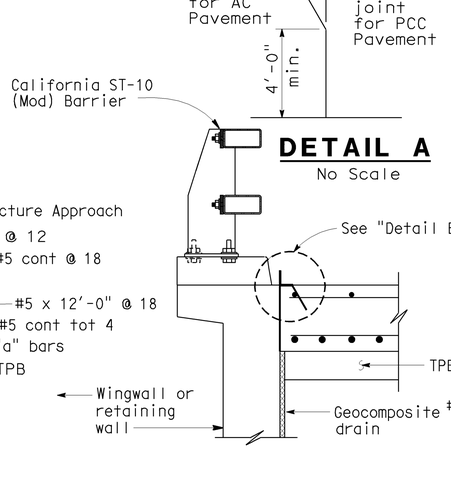

TYPE E-2 ◇1

DETAIL A
No Scale

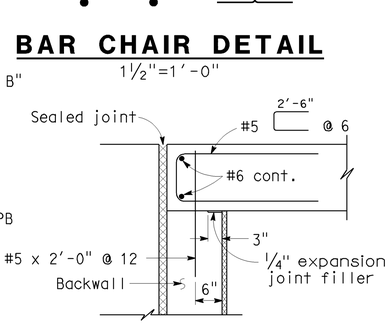

MR ≤ 2"

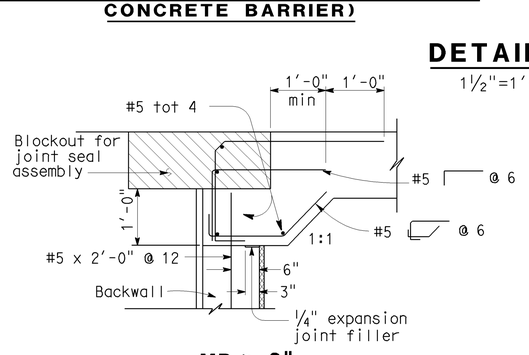

MR > 2"

DETAIL B
1½"=1'-0"

SEAT TYPE ABUTMENT TIE DETAILS (SEE NOTE 1)
¾"=1'-0"

SECTION C-C
¾"=1'-0"
(Type E-1 to be used,unless otherwise shown on plans)

NOTES:

1. For details not shown,see Structure Plans. For MR ≤ 2",adjust bar reinforcement to clear a sawcut for sealed joint,when required.
2. For drainage details,see "Structure Approach Drainage Details" sheet.
3. Longitudinal construction joints,when permitted by the Engineer, shall be located on lane lines.
4. End angle or plate at beginning of barrier transition, end of wingwall or end of structure approach as applicable.
5. For transverse contact joint with new PCC paving, refer to Standard Plan P10.
6. At the contractor's option, approach slab transverse reinforcement may be placed parallel to paving notch. Spacing of transverse reinforcement is measured along ℄ roadway.

Remove all polystyrene.

SPECIAL DETAILS

STANDARD DRAWING

RELEASE DATE	REVISED	DESIGN	BY M.TRAFFALIS	CHECKED E.THORKILDSEN	RELEASED BY
FILE NO.	xs3-120e	DETAILS	BY R.YEE	CHECKED E.THORKILDSEN	OFFICE CHIEF
		SUBMITTED	BY M.HA	DRAWING DATE 4/98	

◇1 Modified detail

STATE OF CALIFORNIA
DEPARTMENT OF TRANSPORTATION

DIVISION OF ENGINEERING SERVICES

CU 04242
EA 163731

BRIDGE NO.	34-0160G
MILE POST	9.18

N1-S101 CONNECTOR
STRUCTURE APPROACH TYPE N(30S)

DISREGARD PRINTS BEARING EARLIER REVISION DATES →

REVISION DATES (PRELIMINARY STAGE ONLY): 1-15-09, 5-18-09, 5-25-09

SHEET 37 OF 44

DS OSD 2147A (ENGLISH) (REV. X/XX/XX)

ORIGINAL SCALE IN INCHES FOR REDUCED PLANS 0 1 2 3

DATE PLOTTED => 21-JUL-2009 TIME PLOTTED => 13:50

USERNAME => trpierce

34-0160_37n30s.dgn

DIST.	COUNTY	ROUTE	MILE POST TOTAL PROJECT	SHEET NO.	TOTAL SHEETS
04	SF	101,1	9.2/9.8, 6.8/7.1	522	567

NOTE:
CONTRACTOR SHALL VERIFY ALL CONTROLLING FIELD DIMENSIONS BEFORE ORDERING OR FABRICATING ANY MATERIALS.

Ahmed Ibrahim 6-4-09
REGISTERED ENGINEER - CIVIL

7-20-09
PLANS APPROVAL DATE

REGISTERED PROFESSIONAL ENGINEER
AHMED M M IBRAHIM
No. S 4865
Exp. 9-30-10
STRUCTURAL
STATE OF CALIFORNIA

The State of California or its officers or agents shall not be responsible for the accuracy or completeness of electronic copies of this plan sheet.

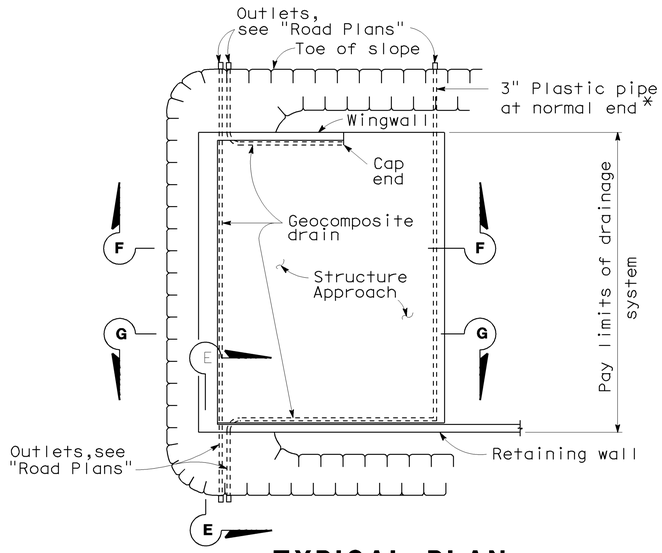

TYPICAL PLAN
1"=10'
*For pipe layout at staggered end, see "Detail B".

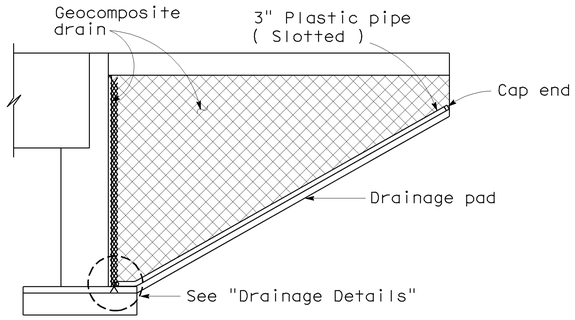

CANTILEVER WINGWALL
SECTION F-F
1/4"=1'-0"

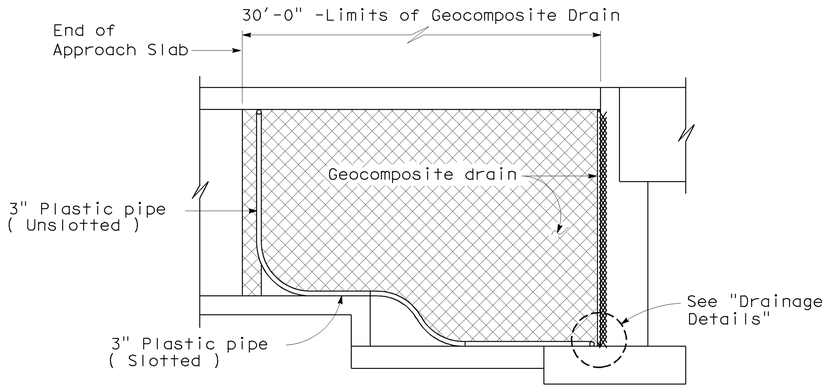

RETAINING WALL WINGWALL
SECTION G-G
1/4"=1'-0"

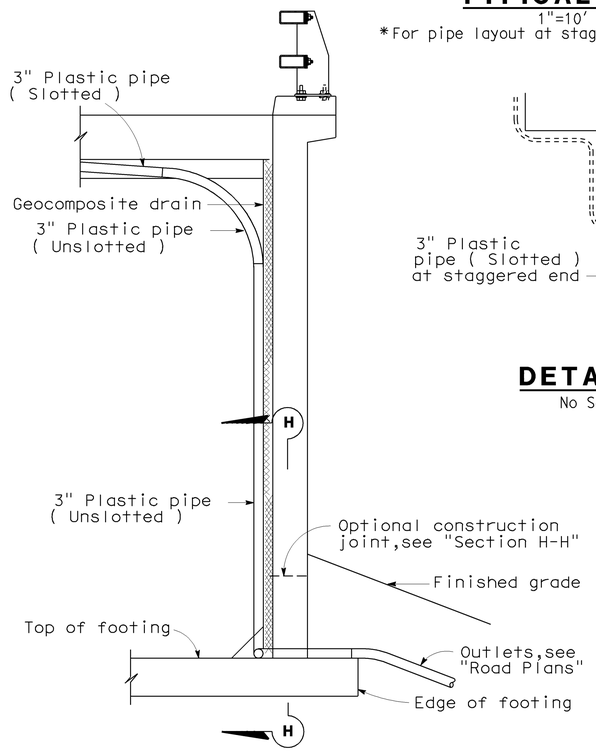

SECTION E-E ⟨1⟩
1/2"=1'-0"

NOTE: Bends and junctions in 3" plastic pipe are 30" radius min.

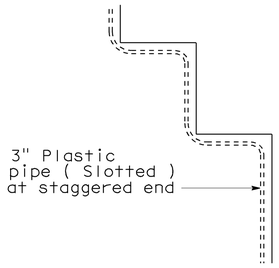

DETAIL B
No Scale

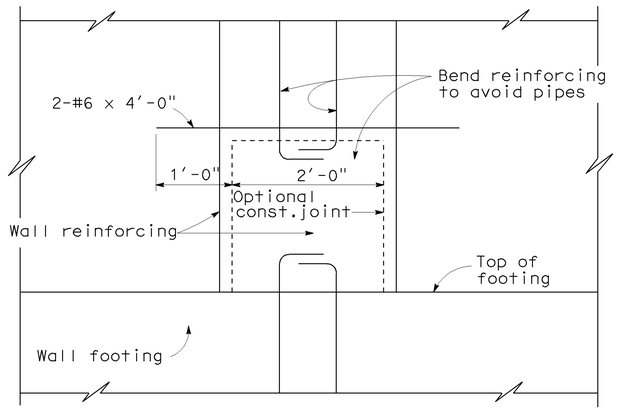

SECTION H-H
1"=1'-0"

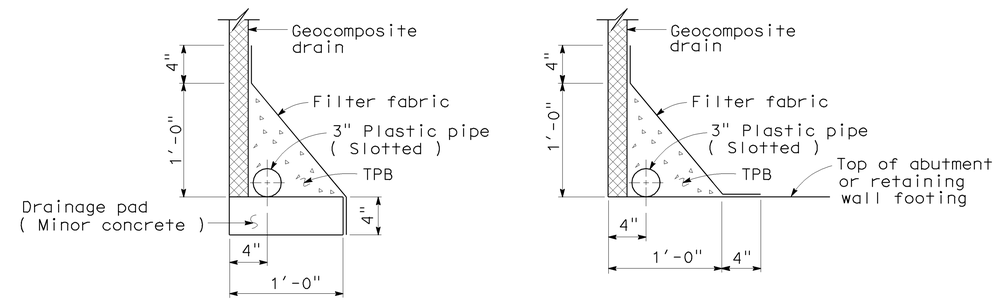

WITHOUT FOOTING | WITH FOOTING

DRAINAGE DETAILS
1 1/2"=1'-0"

SPECIAL DETAILS

STANDARD DRAWING

RELEASE DATE	REVISED	DESIGN	BY M.TRAFFALIS	CHECKED E.THORKILDSEN	RELEASED BY
FILE NO.	xs3-110e	DETAILS	BY R.YEE	CHECKED E.THORKILDSEN	
		SUBMITTED	BY M.HA	DRAWING DATE 4/98	OFFICE CHIEF

⟨1⟩ Modified Barrier

STATE OF CALIFORNIA
DEPARTMENT OF TRANSPORTATION

DIVISION OF ENGINEERING SERVICES

CU 04242
EA 163731

BRIDGE NO. 34-0160G
MILE POST 9.18

N1-S101 CONNECTOR
STRUCTURE APPROACH DRAINAGE

DISREGARD PRINTS BEARING EARLIER REVISION DATES →
REVISION DATES (PRELIMINARY STAGE ONLY): 5-18-09

SHEET 38 OF 44

DS OSD 2147A (ENGLISH) (REV. X/XX/XX)

ORIGINAL SCALE IN INCHES FOR REDUCED PLANS 0 1 2 3

USERNAME => trpierce

DATE PLOTTED => 21-JUL-2009 TIME PLOTTED => 13:50

34-0160_38drain.dgn

DIST	COUNTY	ROUTE	KILOMETER POST TOTAL PROJECT	SHEET No	TOTAL SHEETS
04	SF	101,1	9.2/9.8, 6.8/7.1	523	567

CERTIFIED ENGINEERING GEOLOGIST — 6-02-09

7-20-09
PLANS APPROVAL DATE

The State of California or its officers or agents shall not be responsible for the accuracy or completeness of electronic copies of this plan sheet.

PROFESSIONAL GEOLOGIST — Grant Wilcox — No. 2300 — Exp. 4-30-10 — CERTIFIED ENGINEERING GEOLOGIST — STATE OF CALIFORNIA

This LOTB sheet was prepared in accordance with the Caltrans Soil & Rock Logging, Classification, & Presentation Manual (June 2007) with the exception of Section 2.3

BENCH MARK

SURVEY CONTROL

CM-135

Fnd 100D Pike
44.37′ Rt "SB" Line
Sta 96+27.95
N 2,120,762.36
E 5,993,065.33
Elev = 51.50′

CM-132

Fnd Iron Pipe
7.46′ Rt "L" Line
Sta 13+46.60
N 2,120,435.54
E 5,993,065.33
Elev = 103.90′

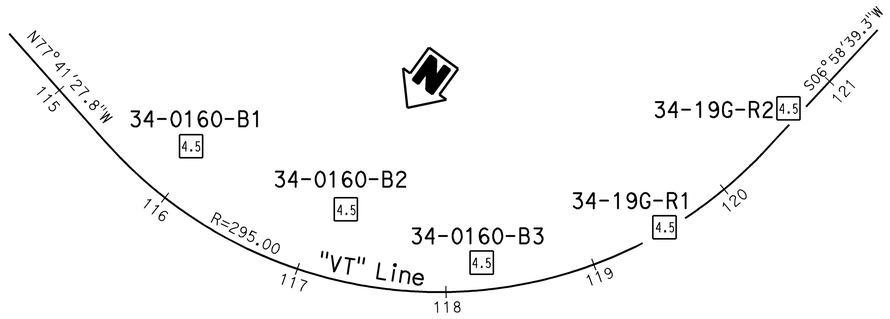

Note: Ground water was not measured.

PLAN

1" =50′

PROFILE

HOR. 1"=10′
VER. 1"=10′

ENGINEERING SERVICES	GEOTECHNICAL SERVICES		STATE OF CALIFORNIA DEPARTMENT OF TRANSPORTATION	DIVISION OF ENGINEERING SERVICES STRUCTURE DESIGN	BRIDGE NO. 34-0160G	N1-S101 CONNECTOR
FUNCTIONAL SUPERVISOR NAME: T. Pokrywka	DRAWN BY: W. Tang/F. Nguyen 5/09	FIELD INVESTIGATION BY: R. Nashed		DESIGN BRANCH 4	POST MILES 9.18	LOG OF TEST BORINGS 1 OF 6
	CHECKED BY: R. Price					

OGS CIVIL LOG OF TEST BORINGS SHEET

ORIGINAL SCALE IN INCHES FOR REDUCED PLANS 0 1 2 3

CU 04242
EA 163731

DISREGARD PRINTS BEARING EARLIER REVISION DATES →

REVISION DATES: 05-11-09 | 05-27-09 | 06-01-09

SHEET 39 OF 44

FILE => 34-0160_391ob1.dgn

USERNAME => trpierce DATE PLOTTED => 21-JUL-2009 TIME PLOTTED => 13:50

DIST	COUNTY	ROUTE	KILOMETER POST TOTAL PROJECT	SHEET No	TOTAL SHEETS
04	SF	101,1	9.2/9.8, 6.8/7.1	524	567

CERTIFIED ENGINEERING GEOLOGIST 6-02-09

7-20-09
PLANS APPROVAL DATE

The State of California or its officers or agents shall not be responsible for the accuracy or completeness of electronic copies of this plan sheet.

PROFESSIONAL GEOLOGIST — Grant Wilcox — No. 2300 — Exp. 4-30-10 — CERTIFIED ENGINEERING GEOLOGIST — STATE OF CALIFORNIA

This LOTB sheet was prepared in accordance with the Caltrans Soil & Rock Logging, Classification, & Presentation Manual (June 2007) with the exception of Section 2.3.

FOR PLAN VIEW, SEE
"LOG OF TEST BORINGS 1 OF 6"

Notes:
1. Ground water was not encountered in Boring 34-0160-B3.
2. Ground water was not measured in Boring 34-0160-B2

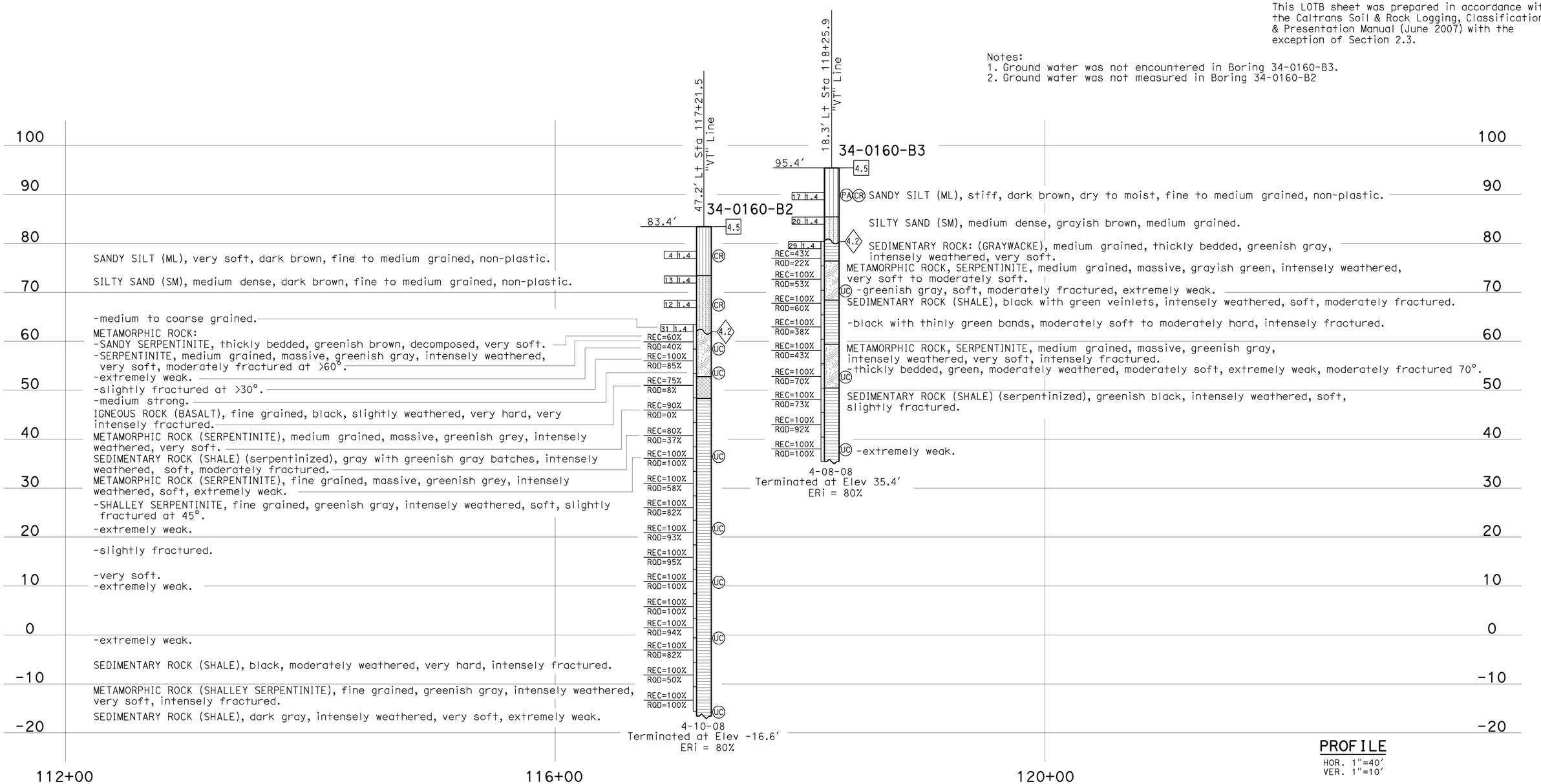

PROFILE
HOR. 1"=40'
VER. 1"=10'

ENGINEERING SERVICES		GEOTECHNICAL SERVICES	STATE OF CALIFORNIA DEPARTMENT OF TRANSPORTATION	DIVISION OF ENGINEERING SERVICES STRUCTURE DESIGN	BRIDGE NO. 34-0160G	N1-S101 CONNECTOR
FUNCTIONAL SUPERVISOR NAME: T. Pokrywka	DRAWN BY: W. Tang/F. Nguyen 5/09	FIELD INVESTIGATION BY: R. Nashed		DESIGN BRANCH 4	POST MILES 9.18	LOG OF TEST BORINGS 2 OF 6
OGS CIVIL LOG OF TEST BORINGS SHEET	CHECKED BY: R. Price	ORIGINAL SCALE IN INCHES FOR REDUCED PLANS 0 1 2 3	CU 04242 EA 163731	DISREGARD PRINTS BEARING EARLIER REVISION DATES →	REVISION DATES 05-11-09 05-22-09 06-01-09	SHEET 40 OF 44

FILE => 34-0160_401ob2.dgn

USERNAME => rtpierce DATE PLOTTED => 21-JUL-2009 TIME PLOTTED => 13:51

DIST	COUNTY	ROUTE	KILOMETER POST TOTAL PROJECT	SHEET No	TOTAL SHEETS
04	SF	101,1	9.2/9.8, 6.8/7.1	525	567

CERTIFIED ENGINEERING GEOLOGIST — 6-02-09

PROFESSIONAL GEOLOGIST — Grant Wilcox — No. 2300 — Exp. 4-30-10 — CERTIFIED ENGINEERING GEOLOGIST — STATE OF CALIFORNIA

7-20-09
PLANS APPROVAL DATE

The State of California or its officers or agents shall not be responsible for the accuracy or completeness of electronic copies of this plan sheet.

This LOTB sheet was prepared in accordance with the Caltrans Soil & Rock Logging, Classification, & Presentation Manual (June 2007) with the exception of Section 2.3.

FOR PLAN VIEW, SEE
"LOG OF TEST BORINGS 1 OF 6"

Note: Ground water was not measured in Borings 34-19G-R1 and 34-19G-R2.

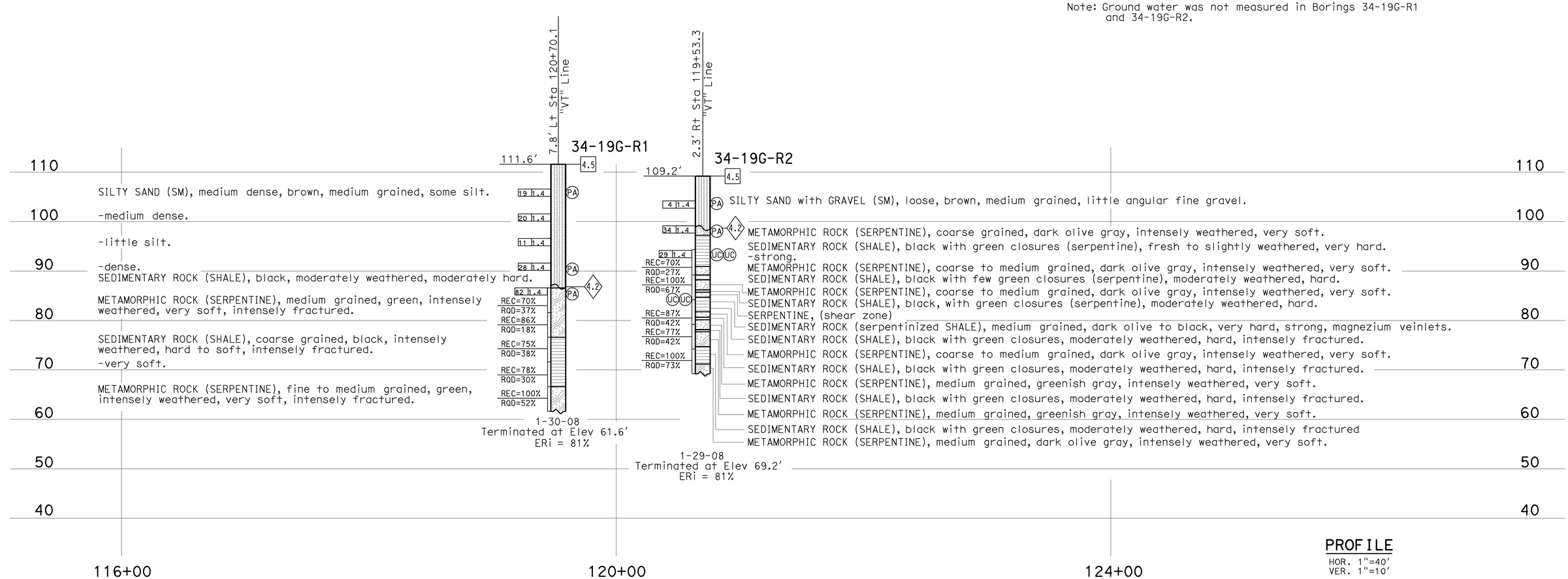

PROFILE
HOR. 1"=40'
VER. 1"=10'

ENGINEERING SERVICES		GEOTECHNICAL SERVICES	STATE OF CALIFORNIA DEPARTMENT OF TRANSPORTATION	DIVISION OF ENGINEERING SERVICES STRUCTURE DESIGN	BRIDGE NO.	N1-S101 CONNECTOR
FUNCTIONAL SUPERVISOR	DRAWN BY: W. Tang/F. Nguyen 5/09	FIELD INVESTIGATION BY:		DESIGN BRANCH 4	34-0160G	LOG OF TEST BORINGS 3 OF 6
NAME: T. Pokrywka	CHECKED BY: R. Price	R. Nashed			POST MILES 9.18	

OGS CIVIL LOG OF TEST BORINGS SHEET

ORIGINAL SCALE IN INCHES FOR REDUCED PLANS 0 1 2 3

CU 04242
EA 163731

DISREGARD PRINTS BEARING EARLIER REVISION DATES →

REVISION DATES: 05-11-09 | 06-01-09

SHEET 41 OF 44

FILE => 34-0160_411ob3.dgn

USERNAME => ttpierce DATE PLOTTED => 21-JUL-2009 TIME PLOTTED => 13:51

REFERENCE: CALTRANS SOIL & ROCK LOGGING, CLASSIFICATION, AND PRESENTATION MANUAL (JUNE 2007)

DIST	COUNTY	ROUTE	KILOMETER POST TOTAL PROJECT	SHEET No	TOTAL SHEETS
04	SF	101,1	9.2/9.8, 6.8/7.1	526	567

CERTIFIED ENGINEERING GEOLOGIST 6-02-09

7-20-09
PLANS APPROVAL DATE

PROFESSIONAL GEOLOGIST — Grant Wilcox — No. 2300 — Exp. 4-30-10 — CERTIFIED ENGINEERING GEOLOGIST — STATE OF CALIFORNIA

The State of California or its officers or agents shall not be responsible for the accuracy or completeness of electronic copies of this plan sheet.

CEMENTATION

Description	Criteria
Weak	Crumbles or breaks with handling or little finger pressure.
Moderate	Crumbles or breaks with considerable finger pressure.
Strong	Will not crumble or break with finger pressure.

BOREHOLE IDENTIFICATION

Symbol	Hole Type	Description
Size	A	Auger Boring
Size	R P	Rotary drilled boring Rotary percussion boring (air)
Size	R	Rotary drilled diamond core
Size	HD HA	Hand driven (1-inch soil tube) Hand Auger
●	D	Dynamic Cone Penetration Boring
▲	CPT	Cone Penetration Test (ASTM D 5778-95)
⬚	O	Other

Note: Size in inches.

CONSISTENCY OF COHESIVE SOILS

Description	Unconfined Compressive Strength (tsf)	Pocket Penetrometer Measurement (tsf)	Torvane Measurement (tsf)	Field Approximation
Very Soft	< 0.25	< 0.25	< 0.12	Easily penetrated several inches by fist
Soft	0.25 to 0.50	0.25 to 0.50	0.12 to 0.25	Easily penetrated several inches by thumb
Medium Stiff	0.50 to 1.0	0.50 to 1.0	0.25 to 0.50	Penetrated several inches by thumb with moderate effort
Stiff	1 to 2	1 to 2	0.50 to 1.0	Readily indented by thumb but penetrated only with great effort
Very Stiff	2 to 4	2 to 4	1.0 to 2.0	Readily indented by thumbnail
Hard	> 4.0	> 4.0	> 2.0	Indented by thumbnail with difficulty

PLASTICITY OF FINE-GRAINED SOILS

Description	Criteria
Nonplastic	A 1/8-inch thread cannot be rolled at any water content.
Low	The thread can barely be rolled and the lump cannot be formed when drier than the plastic limit.
Medium	The thread is easy to roll and not much time is required to reach the plastic limit. The thread cannot be rerolled after reaching the plastic limit. The lump crumbles when drier than the plastic limit.
High	It takes considerable time rolling and kneading to reach the plastic limit. The thread can be rerolled several times after reaching the plastic limit. The lump can be formed without crumbling when drier than the plastic limit.

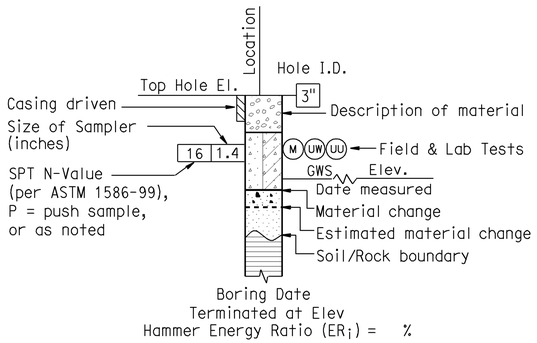

ROTARY BORING

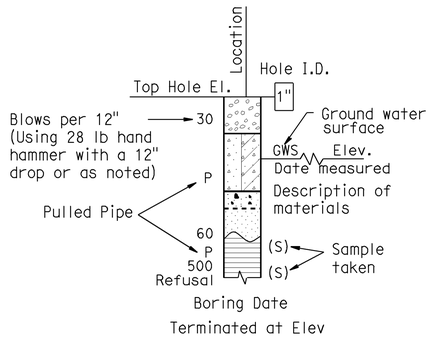

HAND BORING

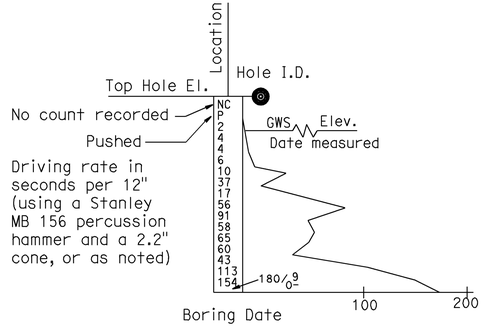

DYNAMIC CONE PENETRATION BORING

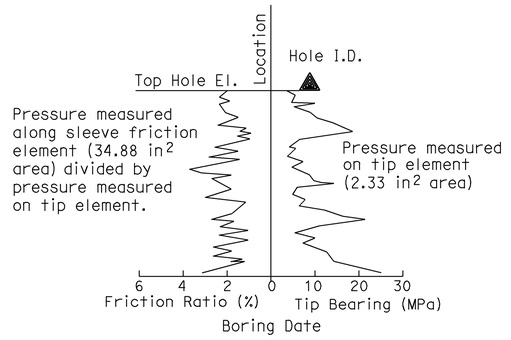

CONE PENETRATION TEST (CPT) SOUNDING

ENGINEERING SERVICES	GEOTECHNICAL SERVICES	STATE OF CALIFORNIA DEPARTMENT OF TRANSPORTATION	DIVISION OF ENGINEERING SERVICES STRUCTURE DESIGN	BRIDGE NO.	N1-S101 CONNECTOR
	PREPARED BY: F. Nguyen 5/09		DESIGN BRANCH 4	34-0160G POST MILE 9.18	LOG OF TEST BORINGS 4 OF 6

GS LOTB SOIL LEGEND

ORIGINAL SCALE IN INCHES FOR REDUCED PLANS 0 1 2 3

CU 04242
EA 163731

DISREGARD PRINTS BEARING EARLIER REVISION DATES →

REVISION DATES

SHEET 42 OF 44

FILE => 34-0160_421ob4.dgn

USERNAME => ttmirkes1 DATE PLOTTED => 21-JUL-2009 TIME PLOTTED => 13:37

REFERENCE: CALTRANS SOIL & ROCK LOGGING, CLASSIFICATION, AND PRESENTATION MANUAL (JUNE 2007)

GROUP SYMBOLS AND NAMES

Graphic/Symbol	Group Names
GW	Well-graded GRAVEL Well-graded GRAVEL with SAND
GP	Poorly graded GRAVEL Poorly graded GRAVEL with SAND
GW-GM	Well-graded GRAVEL with SILT Well-graded GRAVEL with SILT and SAND
GW-GC	Well-graded GRAVEL with CLAY (or SILTY CLAY) Well-graded GRAVEL with CLAY and SAND (or SILTY CLAY and SAND)
GP-GM	Poorly graded GRAVEL with SILT Poorly graded GRAVEL with SILT and SAND
GP-GC	Poorly graded GRAVEL with CLAY (or SILTY CLAY) Poorly graded GRAVEL with CLAY and SAND (or SILTY CLAY and SAND)
GM	SILTY GRAVEL SILTY GRAVEL with SAND
GC	CLAYEY GRAVEL CLAYEY GRAVEL with SAND
GC-GM	SILTY, CLAYEY GRAVEL SILTY, CLAYEY GRAVEL with SAND
SW	Well-graded SAND Well-graded SAND with GRAVEL
SP	Poorly graded SAND Poorly graded SAND with GRAVEL
SW-SM	Well-graded SAND with SILT Well-graded SAND with SILT and GRAVEL
SW-SC	Well-graded SAND with CLAY (or SILTY CLAY) Well-graded SAND with CLAY and GRAVEL (or SILTY CLAY and GRAVEL)
SP-SM	Poorly graded SAND with SILT Poorly graded SAND with SILT and GRAVEL
SP-SC	Poorly graded SAND with CLAY (or SILTY CLAY) Poorly graded SAND with CLAY and GRAVEL (or SILTY CLAY and GRAVEL)
SM	SILTY SAND SILTY SAND with GRAVEL
SC	CLAYEY SAND CLAYEY SAND with GRAVEL
SC-SM	SILTY, CLAYEY SAND SILTY, CLAYEY SAND with GRAVEL
PT	PEAT
	COBBLES COBBLES and BOULDERS BOULDERS

Graphic/Symbol	Group Names
CL	Lean CLAY Lean CLAY with SAND Lean CLAY with GRAVEL SANDY lean CLAY SANDY lean CLAY with GRAVEL GRAVELLY lean CLAY GRAVELLY lean CLAY with SAND
CL-ML	SILTY CLAY SILTY CLAY with SAND SILTY CLAY with GRAVEL SANDY SILTY CLAY SANDY SILTY CLAY with GRAVEL GRAVELLY SILTY CLAY GRAVELLY SILTY CLAY with SAND
ML	SILT SILT with SAND SILT with GRAVEL SANDY SILT SANDY SILT with GRAVEL GRAVELLY SILT GRAVELLY SILT with SAND
OL	ORGANIC lean CLAY ORGANIC lean CLAY with SAND ORGANIC lean CLAY with GRAVEL SANDY ORGANIC lean CLAY SANDY ORGANIC lean CLAY with GRAVEL GRAVELLY ORGANIC lean CLAY GRAVELLY ORGANIC lean CLAY with SAND
OL	ORGANIC SILT ORGANIC SILT with SAND ORGANIC SILT with GRAVEL SANDY ORGANIC SILT SANDY ORGANIC SILT with GRAVEL GRAVELLY ORGANIC SILT GRAVELLY ORGANIC SILT with SAND
CH	Fat CLAY Fat CLAY with SAND Fat CLAY with GRAVEL SANDY fat CLAY SANDY fat CLAY with GRAVEL GRAVELLY fat CLAY GRAVELLY fat CLAY with SAND
MH	Elastic SILT Elastic SILT with SAND Elastic SILT with GRAVEL SANDY elastic SILT SANDY elastic SILT with GRAVEL GRAVELLY elastic SILT GRAVELLY elastic SILT with SAND
OH	ORGANIC fat CLAY ORGANIC fat CLAY with SAND ORGANIC fat CLAY with GRAVEL SANDY ORGANIC fat CLAY SANDY ORGANIC fat CLAY with GRAVEL GRAVELLY ORGANIC fat CLAY GRAVELLY ORGANIC fat CLAY with SAND
OH	ORGANIC elastic SILT ORGANIC elastic SILT with SAND ORGANIC elastic SILT with GRAVEL SANDY ORGANIC elastic SILT SANDY ORGANIC elastic SILT with GRAVEL GRAVELLY ORGANIC elastic SILT GRAVELLY ORGANIC elastic SILT with SAND
OL/OH	ORGANIC SOIL ORGANIC SOIL with SAND ORGANIC SOIL with GRAVEL SANDY ORGANIC SOIL SANDY ORGANIC SOIL with GRAVEL GRAVELLY ORGANIC SOIL GRAVELLY ORGANIC SOIL with SAND

FIELD AND LABORATORY TESTING

- (C) Consolidation (ASTM D 2435)
- (CL) Collapse Potential (ASTM D 5333)
- (CP) Compaction Curve (CTM 216)
- (CR) Corrosivity Testing (CTM 643, CTM 422, CTM 417)
- (CU) Consolidated Undrained Triaxial (ASTM D 4767)
- (DS) Direct Shear (ASTM D 3080)
- (EI) Expansion Index (ASTM D 4829)
- (M) Moisture Content (ASTM D 2216)
- (OC) Organic Content-% (ASTM D 2974)
- (P) Permeability (CTM 220)
- (PA) Particle Size Analysis (ASTM D 422)
- (PI) Plasticity Index (AASHTO T 90) Liquid Limit (AASHTO T 89)
- (PL) Point Load Index (ASTM D 5731)
- (PM) Pressure Meter
- (PP) Pocket Penetrometer
- (R) R-Value (CTM 301)
- (SE) Sand Equivalent (CTM 217)
- (SG) Specific Gravity (AASHTO T 100)
- (SL) Shrinkage Limit (ASTM D 427)
- (SW) Swell Potential (ASTM D 4546)
- (TV) Pocket Torvane
- (UC) Unconfined Compression-Soil (ASTM D 2166) Unconfined Compression-Rock (ASTM D 2938)
- (UU) Unconsolidated Undrained Triaxial (ASTM D 2850)
- (UW) Unit Weight (ASTM D 4767)
- (VS) Vane Shear (AASHTO T 223)

DIST	COUNTY	ROUTE	KILOMETER POST TOTAL PROJECT	SHEET No	TOTAL SHEETS
04	SF	101,1	9.2/9.8, 6.8/7.1	527	567

CERTIFIED ENGINEERING GEOLOGIST 6-02-09

7-20-09
PLANS APPROVAL DATE

PROFESSIONAL GEOLOGIST — Grant Wilcox — No. 2300 — Exp. 4-30-10 — CERTIFIED ENGINEERING GEOLOGIST — STATE OF CALIFORNIA

The State of California or its officers or agents shall not be responsible for the accuracy or completeness of electronic copies of this plan sheet.

APPARENT DENSITY OF COHESIONLESS SOILS

Description	SPT N_{60} (Blows / 12 inches)
Very loose	0 - 4
Loose	5 - 10
Medium Dense	11 - 30
Dense	31 - 50
Very Dense	> 50

MOISTURE

Description	Criteria
Dry	Absence of moisture, dusty, dry to the touch
Moist	Damp but no visible water
Wet	Visible free water, usually soil is below water table

PERCENT OR PROPORTION OF SOILS

Description	Criteria
Trace	Particles are present but estimated to be less than 5%
Few	5 to 10%
Little	15 to 25%
Some	30 to 45%
Mostly	50 to 100%

PARTICLE SIZE

Description		Size
Boulder		> 12"
Cobble		3" to 12"
Gravel	Coarse	3/4" to 3"
	Fine	No. 4 to 3/4"
Sand	Coarse	No. 10 to No. 4
	Medium	No. 40 to No. 10
	Fine	No. 200 to No. 40

ENGINEERING SERVICES	GEOTECHNICAL SERVICES	STATE OF CALIFORNIA DEPARTMENT OF TRANSPORTATION	DIVISION OF ENGINEERING SERVICES STRUCTURE DESIGN	BRIDGE NO.	N1-S101 CONNECTOR
	PREPARED BY: F. Nguyen 5/09		DESIGN BRANCH 4	34-0160G	LOG OF TEST BORINGS 5 OF 6
				POST MILE 9.18	

GS LOTB SOIL LEGEND

ORIGINAL SCALE IN INCHES FOR REDUCED PLANS 0 1 2 3

CU 04242
EA 163731

DISREGARD PRINTS BEARING EARLIER REVISION DATES →

REVISION DATES

SHEET 43 OF 44

FILE => 34-0160_431ob5.dgn

USERNAME => tmirkes| DATE PLOTTED => 21-JUL-2009 TIME PLOTTED => 13:37

REFERENCE: CALTRANS SOIL & ROCK LOGGING, CLASSIFICATION, AND PRESENTATION MANUAL (JUNE 2007)

DIST	COUNTY	ROUTE	KILOMETER POST TOTAL PROJECT	SHEET No	TOTAL SHEETS
04	SF	101,1	9.2/9.8, 6.8/7.1	528	567

CERTIFIED ENGINEERING GEOLOGIST 6-02-09

7-20-09
PLANS APPROVAL DATE

PROFESSIONAL GEOLOGIST — Grant Wilcox — No. 2300 — Exp. 4-30-10 — CERTIFIED ENGINEERING GEOLOGIST — STATE OF CALIFORNIA

The State of California or its officers or agents shall not be responsible for the accuracy or completeness of electronic copies of this plan sheet.

PERCENT CORE RECOVERY (REC) & ROCK QUALITY DESIGNATION (RQD)

$$REC = \frac{\sum \text{Length of the recovered core pieces (inches)}}{\text{Total length of core run (inches)}} \times 100\%$$

$$RQD = \frac{\sum \text{Length of intact core pieces} \geq 4\text{"}}{\text{Total length of core run (inches)}} \times 100\%$$

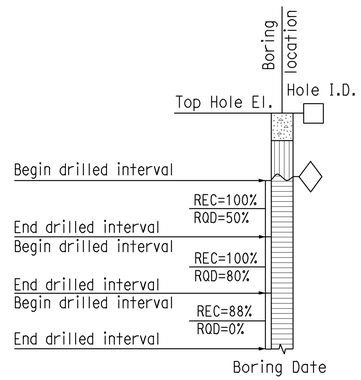

RELATIVE STRENGTH OF INTACT ROCK

Term	Uniaxial Compressive Strength (PSI)
Extremely Strong	> 30,000
Very Strong	14,500 - 30,000
Strong	7,000 - 14,500
Medium Strong	3,500 - 7,000
Weak	700 - 3,500
Very Weak	150 - 700
Extremely Weak	< 150

BEDDING SPACING

Description	Thickness / Spacing
Massive	Greater than 10 ft
Very thickly bedded	3 to 10 ft
Thickly bedded	1 to 3 ft
Moderately bedded	3-5/8" to 1 ft
Thinly bedded	1-1/4" to 3-5/8"
Very thinly bedded	3/8" to 1-1/4"
Laminated	Less than 3/8"

LEGEND OF ROCK MATERIALS

- IGNEOUS ROCK
- SEDIMENTARY ROCK
- METAMORPHIC ROCK

ROCK HARDNESS

Description	Criteria
Extremely Hard	Specimen cannot be scratched with a pocket knife or sharp pick; can only be chipped with repeated heavy hammer blows.
Very Hard	Specimen cannot be scratched with a pocket knife or sharp pick. Breaks with repeated heavy hammer blows.
Hard	Specimen can be scratched with a pocket knife or sharp pick with difficulty (heavy pressure). Heavy hammer blows required to break specimen.
Moderately Hard	Specimen can be scratched with pocket knife or sharp pick with light or moderate pressure. Core breaks with moderate hammer blows.
Moderately Soft	Specimen can be grooved 1/6" deep with a pocket knife or sharp pick with moderate or heavy pressure. Breaks with light hammer blow or heavy manual pressure.
Soft	Specimen can be grooved or gouged easily by a pocket knife or sharp pick with light pressure, can be scratched with fingernail. Breaks with light to moderate manual pressure.
Very Soft	Specimen can be readily indented, grooved or gouged with fingernail, or carved with a pocket knife. Breaks with light manual pressure.

FRACTURE DENSITY

Description	Observed Fracture Density
Unfractured	No fractures.
Very slightly fractured	Lengths greater than 3 feet.
Slightly fractured	Lengths from 1 to 3 feet with few lengths less than 1 foot or greater than 3 feet.
Moderately fractured	Lengths mostly in 4" to 1 foot range with most lengths about 8"
Intensely fractured	Lengths average from 1 to 4" with scattered fragmented intervals with lengths less than 4"
Very intensely fractured	Mostly chips and fragments with a few scattered short core lengths.

Combination descriptors (such as "Very intensely to intensely fractured") are used where equal distribution of both fracture density characteristics is present over a significant interval or exposure, or where characteristics are "in between" the descriptor definitions. Only two adjacent descriptors may be combined.

WEATHERING DESCRIPTORS FOR INTACT ROCK

Description	Diagnostic features: Chemical Weathering-Discoloration and/or oxidation — Body of Rock	Diagnostic features: Chemical Weathering-Discoloration and/or oxidation — Fracture Surfaces	Diagnostic features: Mechanical Weathering-Grain boundary conditions (disaggregation) primarily for granitics and some coarse-grained sediments	Diagnostic features: Texture and Solutioning — Texture	Diagnostic features: Texture and Solutioning — Solutioning	General Characteristics
Fresh	No discoloration, not oxidized.	No discoloration or oxidation.	No separation, intact (tight).	No change.	No solutioning.	Hammer rings when crystalline rocks are struck.
Slightly Weathered	Discoloration or oxidation is limited to surface of, or short distance from, fractures; some feldspar crystals are dull.	Minor to complete discoloration or oxidation of most surfaces.	No visible separation, intact (tight).	Preserved.	Minor leaching of some soluble minerals may be noted.	Hammer rings when crystalline rocks are struck. Body of rock not weakened.
Moderately Weathered	Discoloration or oxidation extends from fractures usually throughout; Fe-Mg minerals are "rusty," feldspar crystals are "cloudy."	All fracture surfaces are discolored or oxidized.	Partial separation of boundaries visible.	Generally preserved.	Soluble minerals may be mostly leached.	Hammer does not ring when rock is struck. Body of rock is slightly weakened.
Intensely Weathered	Discoloration or oxidation throughout; all feldspars and Fe-Mg minerals are altered to clay to some extent; or chemical alteration produces in-situ disaggregation, see grain boundary conditions.	All fracture surfaces are discolored or oxidized, surfaces friable.	Partial separation, rock is friable; in semiarid conditions granitics are disaggregated.	Texture altered by chemical disintegration (hydration, argillation).	Leaching of soluble minerals may be complete.	Dull sound when struck with hammer, usually can be broken with moderate to heavy manual pressure or by light hammer blow without reference to planes of weakness such as incipient or hairline fractures, or veinlets. Rock is significantly weakened.
Decomposed	Discolored or oxidized throughout, but resistant minerals such as quartz may be unaltered; all feldspars and Fe-Mg minerals are completely altered to clay.		Complete separation of grain boundaries (disaggregated).	Resembles a soil, partial or complete remnant rock structure may be preserved; leaching of soluble minerals usually complete.		Can be granulated by hand. Resistant minerals such as quartz may be present as "stringers" or "dikes."

Combination descriptors (such as "slightly weathered to fresh") are permissible where equal distribution of both weathering characteristics is present over significant intervals or where characteristics present are "in between" the diagnostic feature. However, combination descriptors should not be used where significant, identifiable zones can be delineated. Only two adjacent descriptors may be combined. "Very intensely weathered" is the combination descriptor for "intensely weathered to decomposed."

ENGINEERING SERVICES	GEOTECHNICAL SERVICES	STATE OF CALIFORNIA DEPARTMENT OF TRANSPORTATION	DIVISION OF ENGINEERING SERVICES STRUCTURE DESIGN	BRIDGE NO.	N1-S101 CONNECTOR
	PREPARED BY: F. Nguyen 5/09		DESIGN BRANCH 4	34-0160G	LOG OF TEST BORINGS 6 OF 6
				POST MILE 9.18	

GS LOTB ROCK LEGEND

ORIGINAL SCALE IN INCHES FOR REDUCED PLANS 0 1 2 3

CU 04242
EA 163731

DISREGARD PRINTS BEARING EARLIER REVISION DATES →

REVISION DATES	SHEET	OF
6-3-09	44	44

FILE => 34-0160_441ob6.dgn

USERNAME => tmikesl DATE PLOTTED => 21-JUL-2009 TIME PLOTTED => 13:38

DIST	COUNTY	ROUTE	POST MILES TOTAL PROJECT	SHEET No	TOTAL SHEETS
04	SF	101,1	9.2/9.8, 6.8/7.1	529	567

Philip E. Lutz 06-04-09
REGISTERED CIVIL ENGINEER DATE

7-20-09
PLANS APPROVAL DATE

The State of California or its officers or agents shall not be responsible for the accuracy or completeness of electronic copies of this plan sheet.

REGISTERED PROFESSIONAL ENGINEER
Philip E. Lutz
No. C55839
Exp. 12-31-10
CIVIL
STATE OF CALIFORNIA

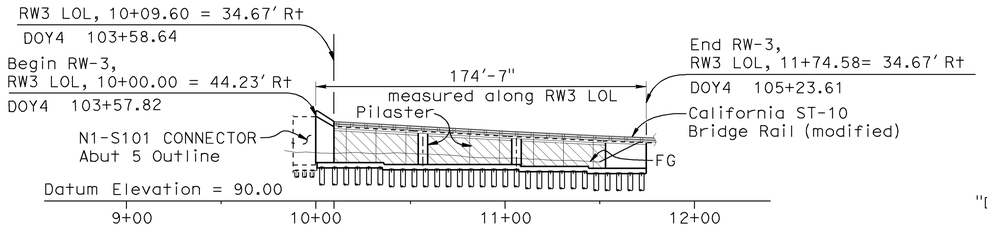

DEVELOPED ELEVATION

1"=40'-0"

LEGEND :

Denotes limits of Architectural Treament (Pattern to be determined)

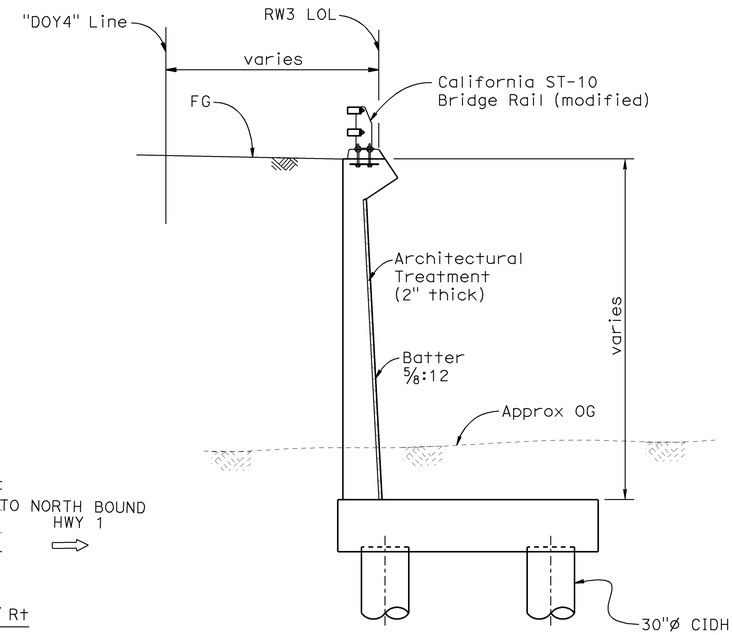

TYPICAL SECTION

¼"=1'-0"

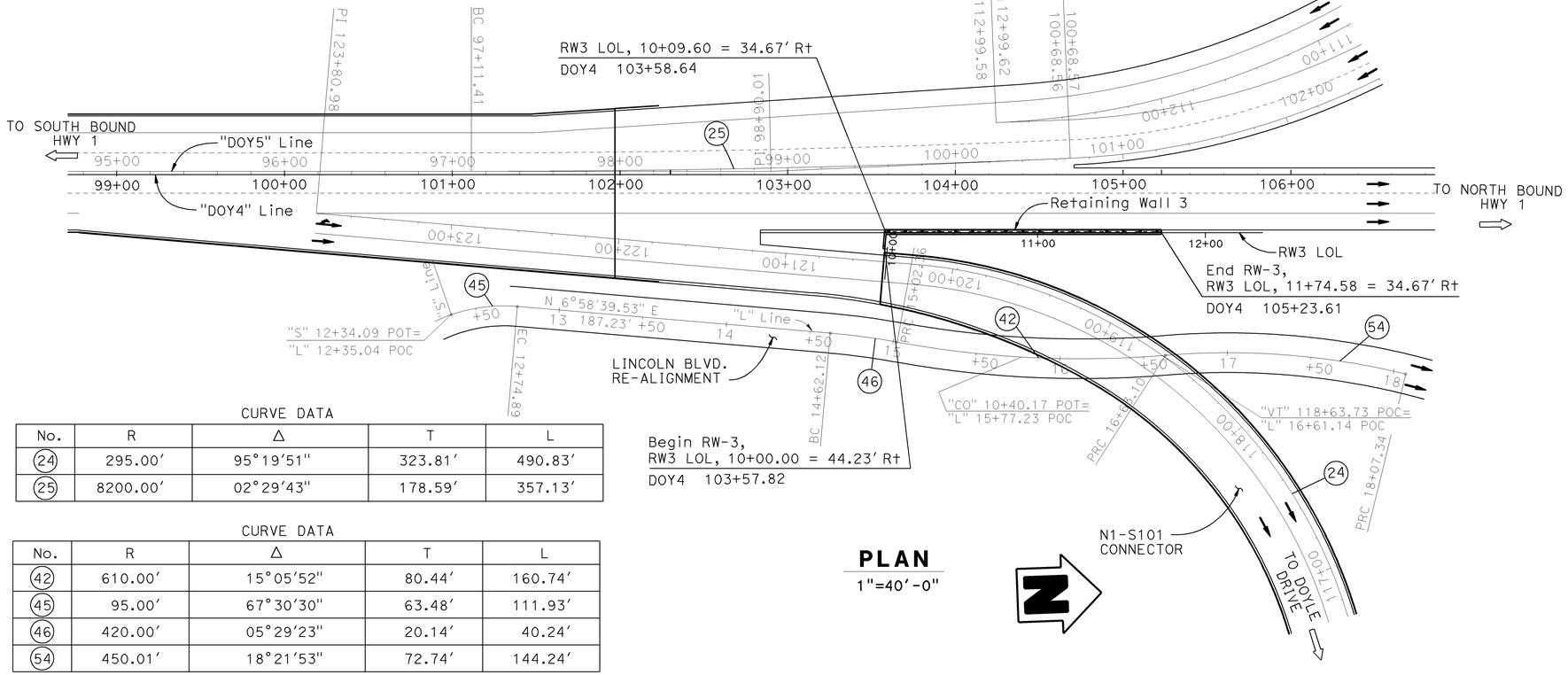

PLAN

1"=40'-0"

CURVE DATA

No.	R	Δ	T	L
(24)	295.00'	95°19'51"	323.81'	490.83'
(25)	8200.00'	02°29'43"	178.59'	357.13'

CURVE DATA

No.	R	Δ	T	L
(42)	610.00'	15°05'52"	80.44'	160.74'
(45)	95.00'	67°30'30"	63.48'	111.93'
(46)	420.00'	05°29'23"	20.14'	40.24'
(54)	450.01'	18°21'53"	72.74'	144.24'

QUANTITIES

STRUCTURE EXCAVATION (RETAINING WALL) (NATURALLY OCCURING ASBESTOS)	240	CY
STRUCTURE EXCAVATION (TYPE Z-2) (AERIALLY DEPOSITED LEAD)	175	CY
STRUCTURE BACKFILL (RETAINING WALL)	400	CY
30" CAST-IN-DRILLED-HOLE CONCRETE PILING	1,850	LF
STRUCTURAL CONCRETE, RETAINING WALL	400	CY
ARCHITECTURAL TREATMENT (2" THICK)	1,820	SQFT
BAR REINFORCING STEEL (RETAINING WALL)	111,000	LB
CALIFORNIA ST-10 BRIDGE RAIL (MODIFIED)	173	LF

majid modani
DESIGN ENGINEER

DESIGN	BY Phil Lutz	CHECKED Nasser Tachta	LOAD & RESISTANCE FACTOR DESIGN		
DETAILS	BY Carlo Cancino	CHECKED Nasser Tachta	LAYOUT	BY Nasser Tachta	CHECKED Phil Lutz
QUANTITIES	BY B. Thach	CHECKED Nasser Tachta	SPECIFICATIONS	BY X	PLANS AND SPECS COMPARED X

ORIGINAL SCALE IN INCHES FOR REDUCED PLANS 0 1 2 3

STATE OF CALIFORNIA
DEPARTMENT OF TRANSPORTATION

DIVISION OF ENGINEERING SERVICES
STRUCTURE DESIGN
DESIGN BRANCH 9

CU 04242
EA 163731

BRIDGE NO. 34E0011
POST MILE 6.95

RETAINING WALL NO. 3
GENERAL PLAN

DISREGARD PRINTS BEARING EARLIER REVISION DATES →

REVISION DATES: 04-15-09 | 05-06-09 | 05-21-09 | 06-04-09 | 06-15-09 | 07-08-09

SHEET 1 OF 15

FILE => 34e0011-a-gp.dgn

USERNAME = frmitkes DATE PLOTTED => 21-JUL-2009 TIME PLOTTED => 13:38

STRUCTURES DESIGN GENERAL PLAN SHEET (ENGLISH) (REV.07-24-06)

DIST	COUNTY	ROUTE	POST MILES TOTAL PROJECT	SHEET No	TOTAL SHEETS
04	SF	101,1	9.2/9.8, 6.8/7.1	530	567

REGISTERED CIVIL ENGINEER — 06-04-09 DATE

Philip E. Lutz, No. C55839, Exp. 12-31-10, CIVIL — REGISTERED PROFESSIONAL ENGINEER — STATE OF CALIFORNIA

7-20-09
PLANS APPROVAL DATE

The State of California or its officers or agents shall not be responsible for the accuracy or completeness of electronic copies of this plan sheet.

INDEX TO PLANS

SHEET NO.	TITLE
1	GENERAL PLAN
2	INDEX TO PLAN
3	FOUNDATION PLAN
4	STRUCTURE PLAN NO. 1
5	STRUCTURE PLAN NO. 2
6	STRUCTURE PLAN NO. 3
7	STRUCTURE PLAN NO. 4
8	ST-10 (MODIFIED) DETAILS NO. 1
9	ST-10 (MODIFIED) DETAILS NO. 2
10	DRAINAGE DETAILS
11	LOG OF TEST BORINGS 1 OF 5
12	LOG OF TEST BORINGS 2 OF 5
13	LOG OF TEST BORINGS 3 OF 5
14	LOG OF TEST BORINGS 4 OF 5
15	LOG OF TEST BORINGS 5 OF 5

STANDARD PLANS DATED MAY 2006

PLAN NO.	PLAN TITLE
A10A	ACRONYMS AND ABBREVIATIONS (SHEET 1 OF 2)
A10B	ACRONYMS AND ABBREVIATIONS (SHEET 2 OF 2)
A62B	LIMITS OF PAYMENT FOR EXCAVATION AND BACKFILL
B0-3	BRIDGE DETAILS
B11-68	CALIFORNIA ST-10 BRIDGE RAIL (SHEET 1 OF 3)
B11-69	CALIFORNIA ST-10 BRIDGE RAIL (SHEET 2 OF 3)
B11-70	CALIFORNIA ST-10 BRIDGE RAIL (SHEET 3 OF 3)

GENERAL NOTES
LOAD FACTOR DESIGN

DESIGN : Load Factor Design, 2004 AASTO with Revisions
By California Bridge Design Specification

DESIGN DATA :

SEISMIC LOAD : 0.3 DEAD LOAD
SEISMIC LOAD : SOIL
kh = 0.39
kv = 0.0
kae : Moronabe - Okabe Method
soil ø = 34° ,γ = 120 pcf

EQUIVALENT FLUID PRESSURE :
= 36 pcf for determination of toe pressure
= 27 pcf for determination of heel pressure

LOADING CASE : Level ground with 240 psf surcharge

CONCRETE : REINFORCED CONCRETE, f'c = 3600 psi
fy = 60,00 psi

PILE DATA TABLE

LOCATION		PILE TYPE	PILE CUT-OFF ELEV (ft)	PILE TIP ELEV (ft)
RW 3	Sta. 103+60.33 to Sta. 103+96.33	30"ø CIDH	+107.5	+72.5
	Sta. 103+96.33 to Sta. 104+68.33	30"ø CIDH	+106.5	+71.5
	Sta. 104+68.33 to Sta. 105+06.33	30"ø CIDH	+105.5	+75.5
	Sta. 105+06.33 to Sta. 105+34.33	30"ø CIDH	+104.5	+74.5

LEGEND :

Indicates Structure Excavation, Retaining Wall (Naturally Occuring Asbestos)

Indicates Structure Backfill, Retaining Wall

Indicates Structure Excavation, Type Z-2

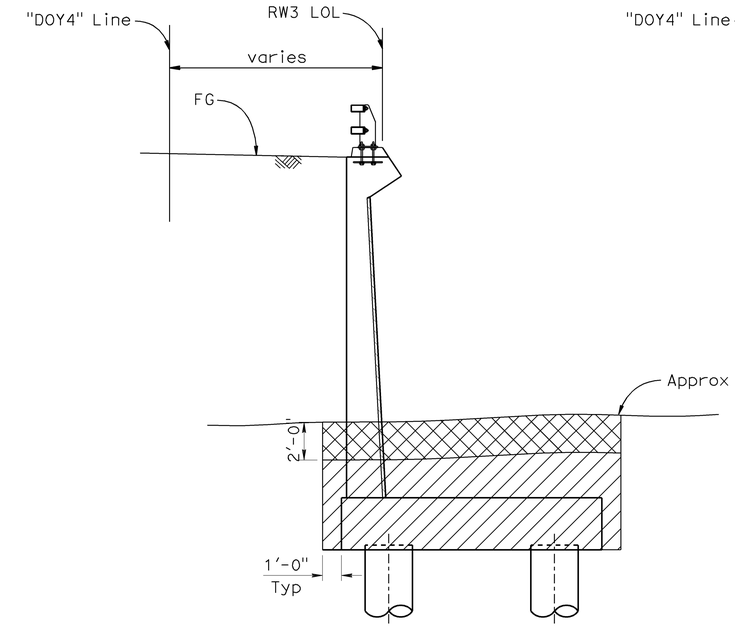

EXCAVATION LIMITS
No Scale

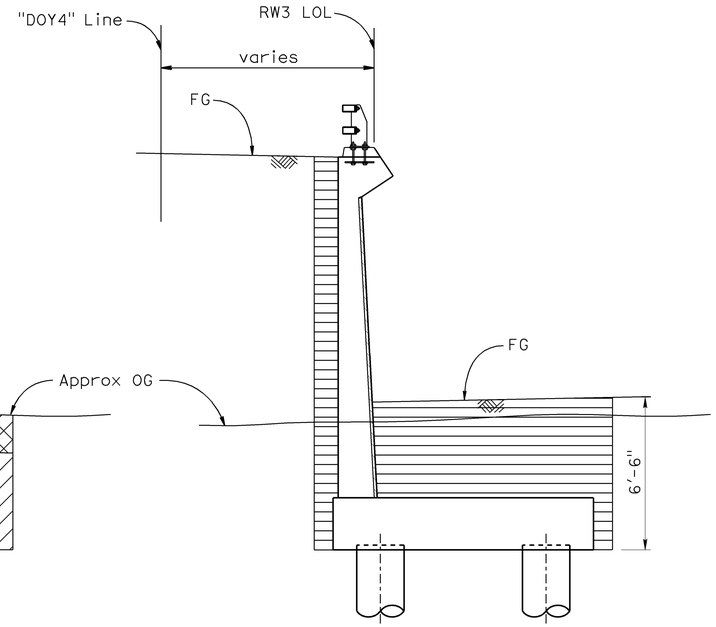

BACKFILL LIMITS
No Scale

DESIGN	BY Phil Lutz	CHECKED Nasser Tachta	STATE OF CALIFORNIA DEPARTMENT OF TRANSPORTATION	DIVISION OF ENGINEERING SERVICES STRUCTURE DESIGN DESIGN BRANCH 9	BRIDGE NO. 34E0011
DETAILS	BY Carlo Cancino	CHECKED Nasser Tachta			POST MILE 6.95
QUANTITIES	BY B. Thach	CHECKED Nasser Tachta			

RETAINING WALL NO. 3
INDEX TO PLAN

STRUCTURES DESIGN DETAIL SHEET (ENGLISH) (REV. 10/25/05)

ORIGINAL SCALE IN INCHES FOR REDUCED PLANS 0 1 2 3

CU 04242
EA 163731

DISREGARD PRINTS BEARING EARLIER REVISION DATES →

REVISION DATES: 04-15-09 | 05-06-09 | 05-21-09 | 05-26-09 | 06-01-09 | 06-04-09 | 06-15-09 | 07-08-09

SHEET 2 OF 15

FILE => 34e0011-b-itp.dgn

USERNAME => ttmirkes1 DATE PLOTTED => 21-JUL-2009 TIME PLOTTED => 13:38

DIST	COUNTY	ROUTE	POST MILES TOTAL PROJECT	SHEET No	TOTAL SHEETS
04	SF	101,1	9.2/9.8, 6.8/7.1	531	567

REGISTERED CIVIL ENGINEER — 06-04-09 DATE

Philip E. Lutz No. C55839 Exp. 12-31-10 CIVIL — REGISTERED PROFESSIONAL ENGINEER — STATE OF CALIFORNIA

7-20-09
PLANS APPROVAL DATE

The State of California or its officers or agents shall not be responsible for the accuracy or completeness of electronic copies of this plan sheet.

Arup PB Joint Venture
560 Mission Street
Suite 700
San Francisco, CA 94105

CURVE DATA

No.	R	Δ	T	L
26	295.00	95°19'53"	323.81	490.83
27	8,199.94	2°29'43"	178.59	357.13
28	459.00	56°59'57"	249.21	456.62
36	474.00	57°18'11"	258.99	474.06
42	610.00	15°05'52"	80.84	160.74
43	105.00	23°20'52"	21.69	42.79
45	95.00	67°30'30"	63.48	111.93
46	420.00	5°29'23"	20.14	40.24
48	85.00	56°48'05"	45.96	84.27
51	190.00	12°04'47"	20.10	40.06
52	65.00	65°39'55"	41.94	74.49
54	450.01	18°21'53"	72.74	144.24
80	653.93	8°17'42"	47.42	94.67
82	150.00	25°24'55"	33.83	66.54
83	677.00	4°25'14"	26.13	52.23
85	175.00	12°56'40"	19.85	39.54
86	140.00	7°40'36"	9.39	18.76
87	343.00	7°26'29"	22.31	44.55

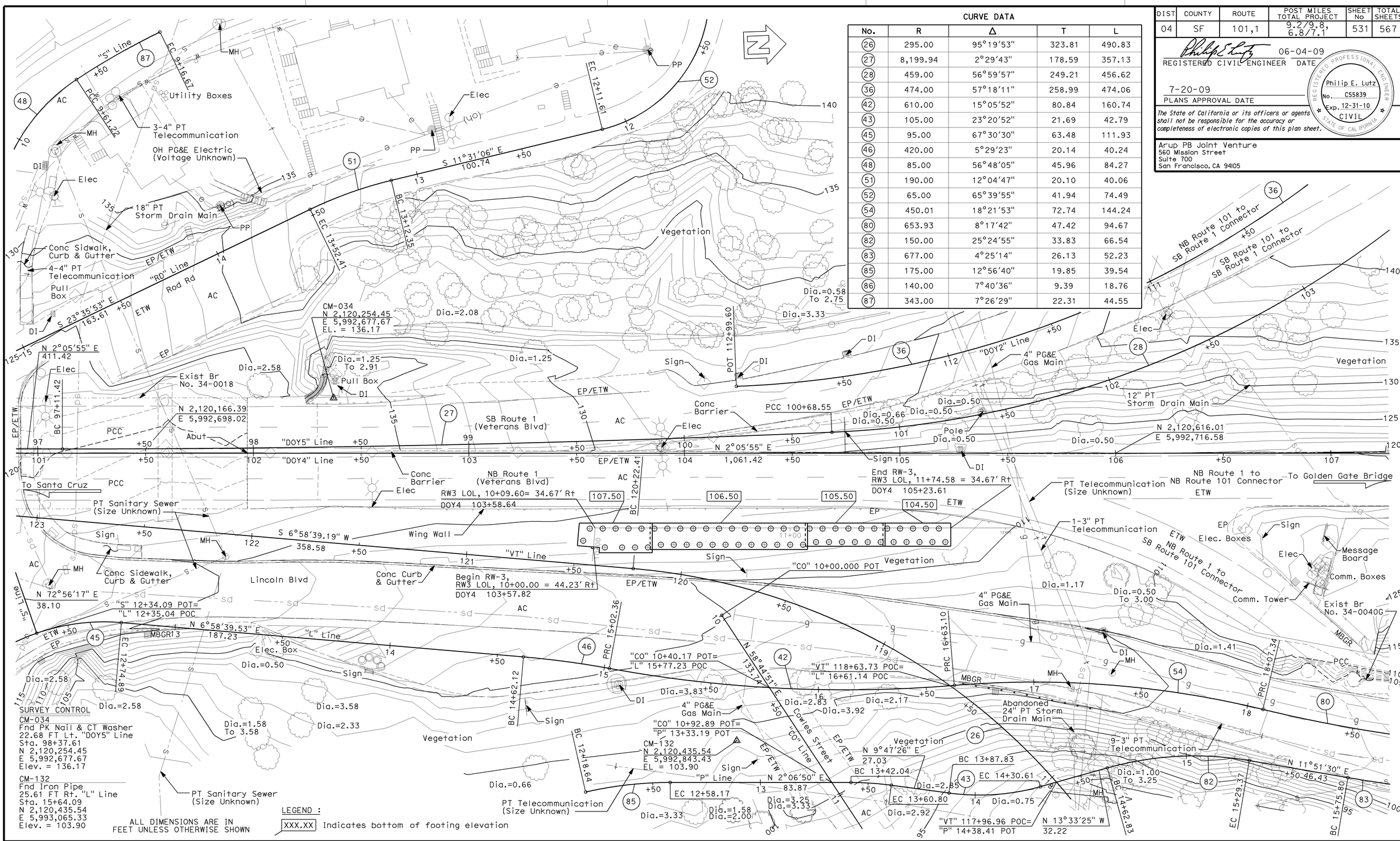

PRELIMINARY INVESTIGATION SECTION						DESIGN	BY Phil Lutz	CHECKED Nasser Tachta
SCALE	VERT.DATUM NAVD88	PHOTOGRAMMETRY AS OF: 9/24/2008				DETAILS	BY Carlo Cancino	CHECKED Nasser Tachta
1"=20'	HORZ.DATUM NAD83	SURVEYED	BY Chaudhary & Assoc.	CHECKED	BY E. Lilly 3/20/09	QUANTITIES	BY B. Thach	CHECKED Nasser Tachta
ALIGNMENT TIES	Dist.Traverse Sheet	DRAFTED	BY L. Reyes 3/20/09	CHECKED	BY E. Lilly 3/20/09			

STATE OF CALIFORNIA
DEPARTMENT OF TRANSPORTATION

DIVISION OF ENGINEERING SERVICES
STRUCTURE DESIGN
DESIGN BRANCH 9

BRIDGE NO. 34E0011
POST MILE 6.95

RETAINING WALL NO. 3
FOUNDATION PLAN

CU 04242
EA 163731

STRUCTURES FOUNDATION PLAN SHEET (ENGLISH) (REV. 10/25/05)

ORIGINAL SCALE IN INCHES FOR REDUCED PLANS 0 1 2 3

DISREGARD PRINTS BEARING EARLIER REVISION DATES →

REVISION DATES										SHEET	OF
04-15-09	05-05-09	06-04-09	06-17-09	07-13-09						3	15

FILE => 34e0011-c-fp1.dgn

USERNAME => tmrikesl DATE PLOTTED => 21-JUL-2009 TIME PLOTTED => 13:38

DIST	COUNTY	ROUTE	POST MILES TOTAL PROJECT	SHEET No	TOTAL SHEETS
04	SF	101,1	9.2/9.8, 6.8/7.1	532	567

REGISTERED CIVIL ENGINEER — 06-04-09 DATE

Philip E. Lutz, No. C55839, Exp. 12-31-10, CIVIL — REGISTERED PROFESSIONAL ENGINEER — STATE OF CALIFORNIA

7-20-09
PLANS APPROVAL DATE

The State of California or its officers or agents shall not be responsible for the accuracy or completeness of electronic copies of this plan sheet.

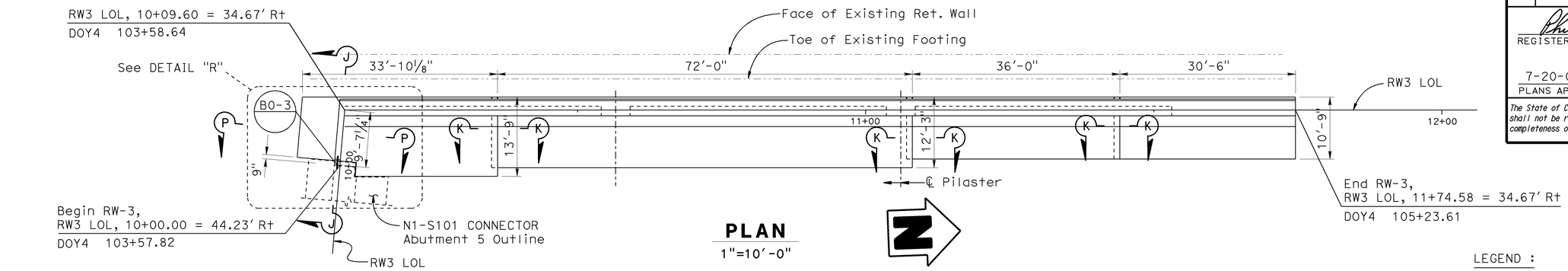

PLAN
1"=10'-0"

LEGEND :

Denotes Pile (30"ø)

Denotes limits of Architectural Treament (Pattern to be determined)

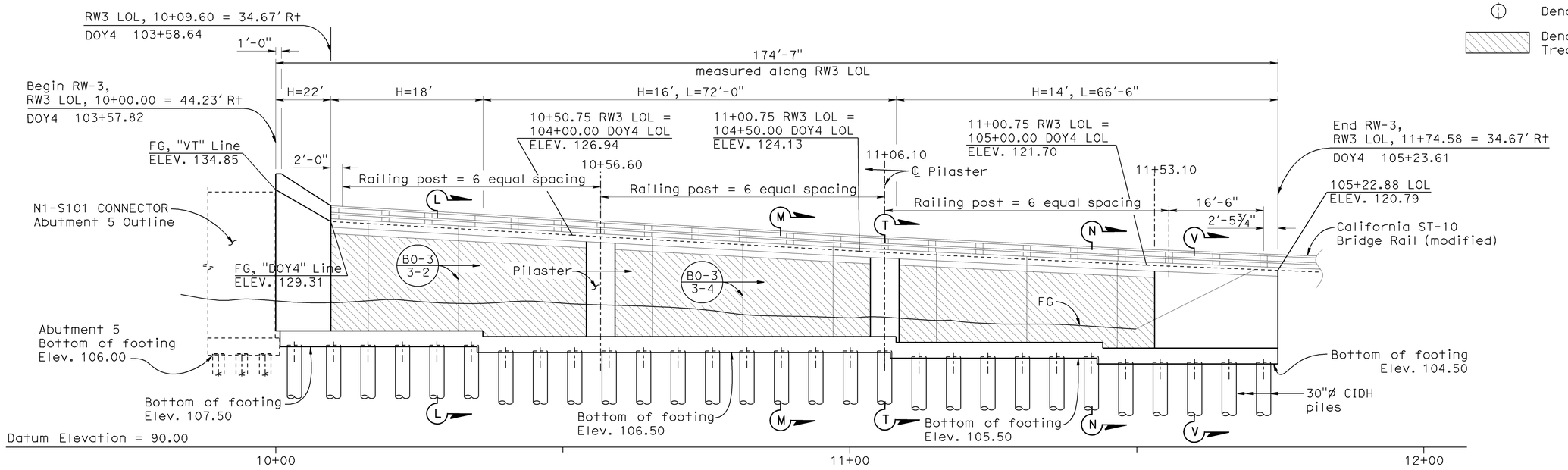

DEVELOPED ELEVATION
1"=10'-0"

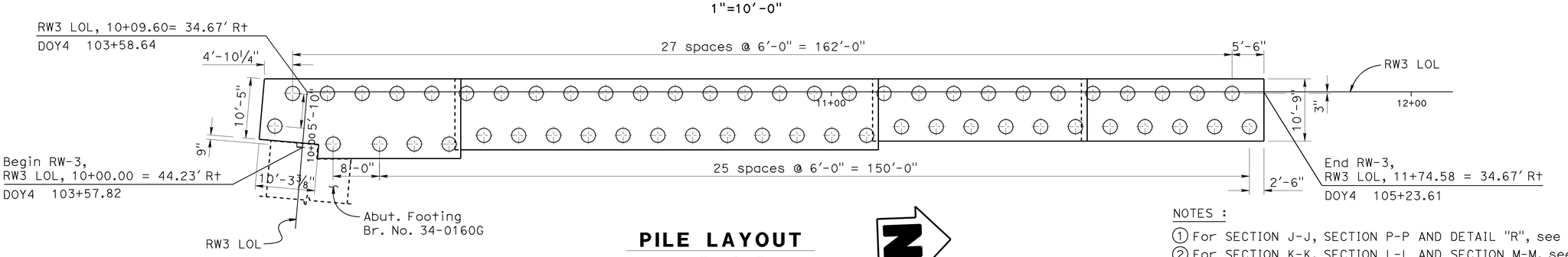

PILE LAYOUT
1"=10'-0"

NOTES :

1. For SECTION J-J, SECTION P-P AND DETAIL "R", see "STRUCTURE PLAN NO. 2" sheet.
2. For SECTION K-K, SECTION L-L AND SECTION M-M, see "STRUCTURE PLAN NO. 3" sheet.
3. For SECTION N-N AND SECTION T-T, see "STRUCTURE PLAN NO. 4" sheet.
4. For SECTION V-V, see "ST-10 (MOD) DETAILS NO. 1" sheet.

DESIGN	BY Phil Lutz	CHECKED Nasser Tachta	STATE OF CALIFORNIA DEPARTMENT OF TRANSPORTATION	DIVISION OF ENGINEERING SERVICES STRUCTURE DESIGN DESIGN BRANCH 9	BRIDGE NO. 34E0011
DETAILS	BY Carlo Cancino	CHECKED Nasser Tachta			POST MILE 6.95
QUANTITIES	BY B. Thach	CHECKED Nasser Tachta		CU 04242 EA 163731	

RETAINING WALL NO. 3
STRUCTURE PLAN NO. 1

STRUCTURES DESIGN DETAIL SHEET (ENGLISH) (REV. 10/25/05)

ORIGINAL SCALE IN INCHES FOR REDUCED PLANS 0 1 2 3

DISREGARD PRINTS BEARING EARLIER REVISION DATES

REVISION DATES: 04-15-09 | 05-07-09 | 05-21-09 | 06-04-09 | 06-17-09 | 07-08-09

SHEET 4 OF 15

FILE => 34e0011-c-sp1.dgn

USERNAME => ttmirkes DATE PLOTTED => 21-JUL-2009 TIME PLOTTED => 13:38

DIST	COUNTY	ROUTE	POST MILES TOTAL PROJECT	SHEET No	TOTAL SHEETS
04	SF	101,1	9.2/9.8, 6.8/7.1	533	567

REGISTERED CIVIL ENGINEER — 06-04-09 DATE

7-20-09
PLANS APPROVAL DATE

REGISTERED PROFESSIONAL ENGINEER — Philip E. Lutz — No. C55839 — Exp. 12-31-10 — CIVIL — STATE OF CALIFORNIA

The State of California or its officers or agents shall not be responsible for the accuracy or completeness of electronic copies of this plan sheet.

NOTE:

For location of SECTION J-J, SECTION P-P AND DETAIL "R", see "STRUCTURE PLAN NO. 1" sheet.

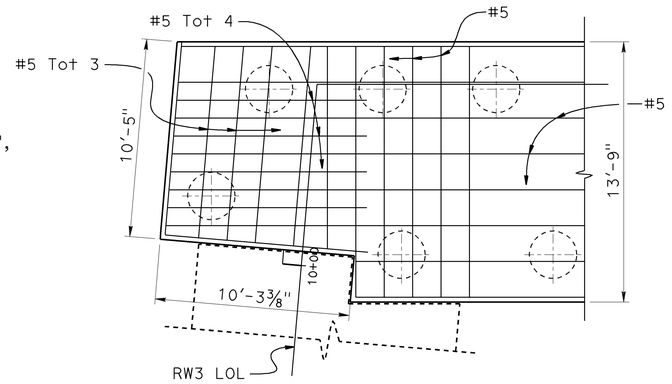

DETAIL R (TOP REINFORCEMENT)

¼"=1'-0"

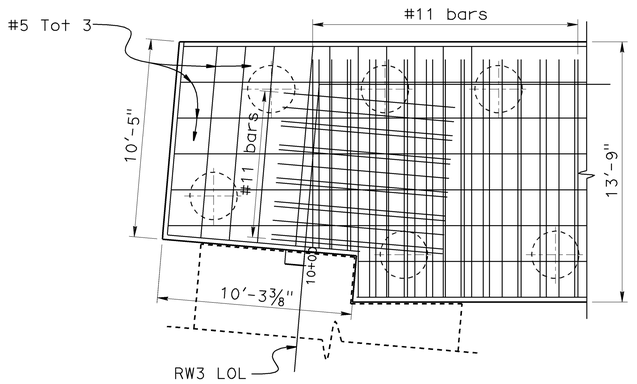

DETAIL R (BOTTOM REINFORCEMENT)

¼"=1'-0"

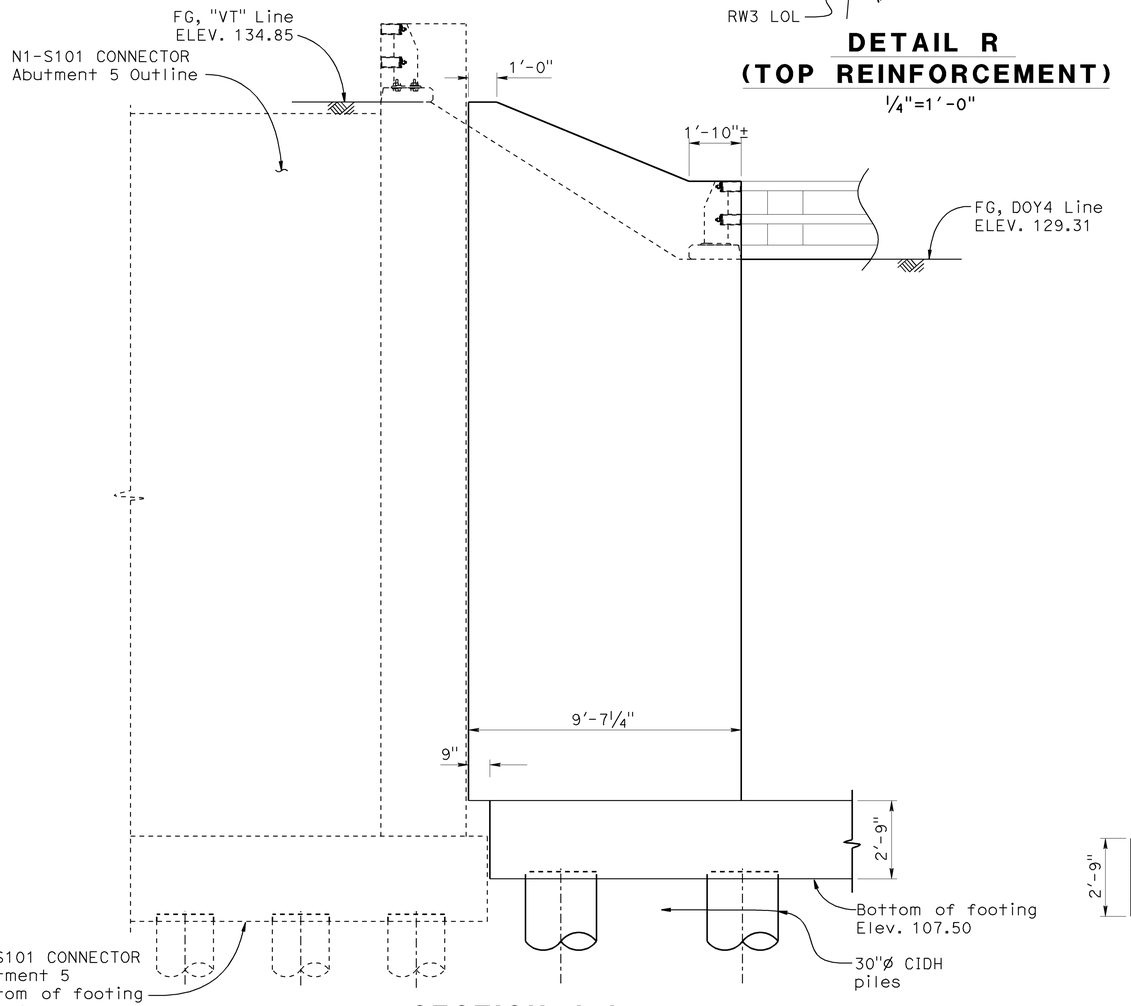

SECTION J-J

⅜"=1'-0"

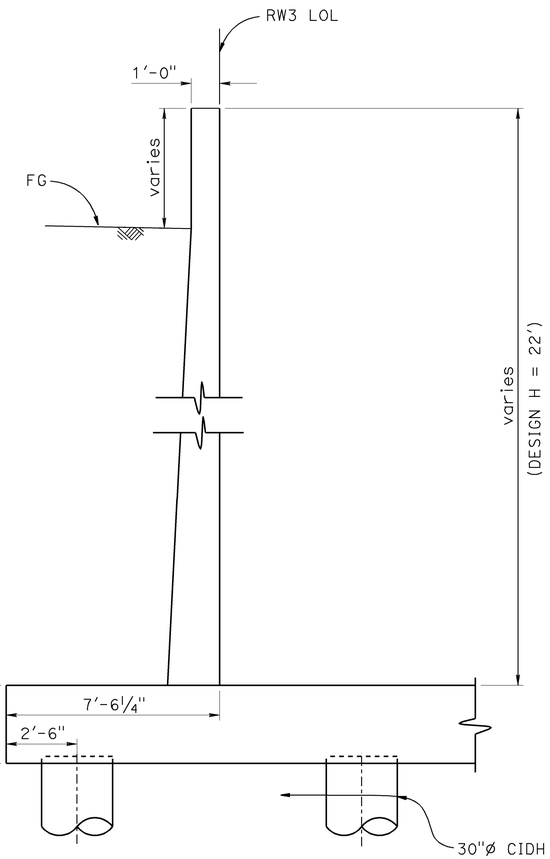

SECTION P-P

⅜"=1'-0"

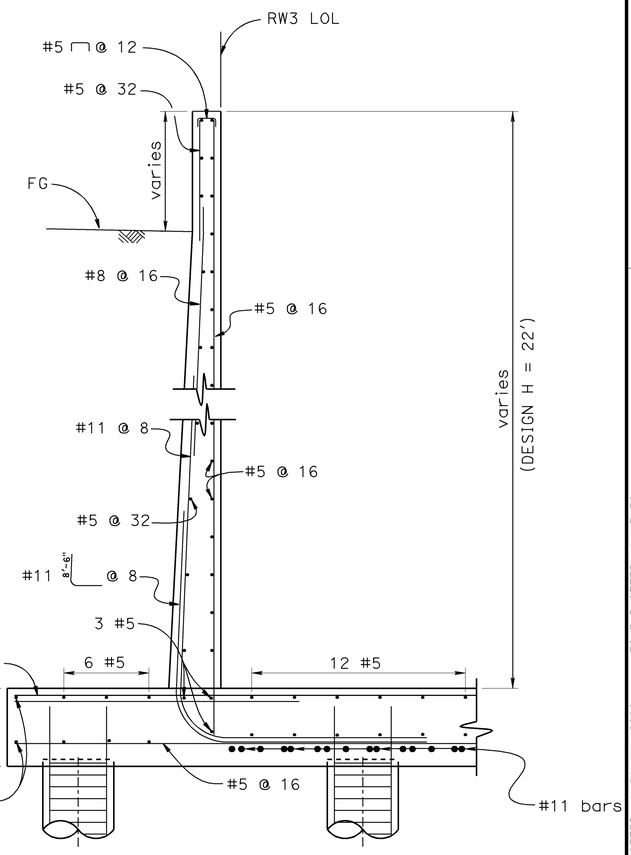

SECTION P-P WALL REINFORCEMENT

⅜"=1'-0"

DESIGN	BY Phil Lutz	CHECKED Nasser Tachta	STATE OF CALIFORNIA DEPARTMENT OF TRANSPORTATION	DIVISION OF ENGINEERING SERVICES STRUCTURE DESIGN DESIGN BRANCH 9	BRIDGE NO. 34E0011	RETAINING WALL NO. 3	
DETAILS	BY Carlo Cancino	CHECKED Nasser Tachta			POST MILE 6.95	STRUCTURE PLAN NO. 2	
QUANTITIES	BY B. Thach	CHECKED Nasser Tachta		CU 04242 EA 163731			

STRUCTURES DESIGN DETAIL SHEET (ENGLISH) (REV. 10/25/05)

ORIGINAL SCALE IN INCHES FOR REDUCED PLANS 0 1 2 3

DISREGARD PRINTS BEARING EARLIER REVISION DATES →

REVISION DATES: 04-15-09 | 05-05-09 | 06-04-09 | 06-17-09 | 07-08-09

SHEET 5 OF 15

FILE => 34e0011-c-sp2.dgn

USERNAME => timrkes1 DATE PLOTTED => 21-JUL-2009 TIME PLOTTED => 13:38

DIST	COUNTY	ROUTE	POST MILES TOTAL PROJECT	SHEET No	TOTAL SHEETS
04	SF	101,1	9.2/9.8, 6.8/7.1	534	567

Philip E Lutz 06-04-09
REGISTERED CIVIL ENGINEER DATE

7-20-09
PLANS APPROVAL DATE

The State of California or its officers or agents shall not be responsible for the accuracy or completeness of electronic copies of this plan sheet.

REGISTERED PROFESSIONAL ENGINEER — Philip E. Lutz — No. C55839 — Exp. 12-31-10 — CIVIL — STATE OF CALIFORNIA

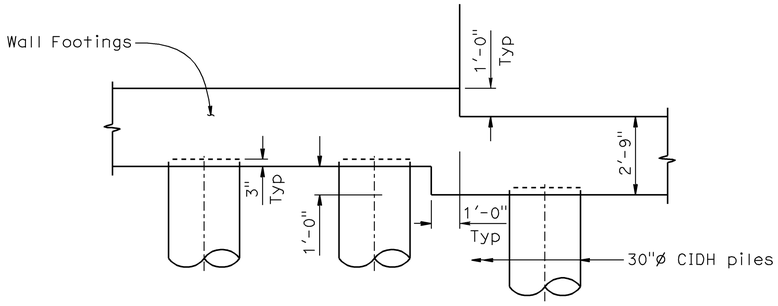

SECTION K-K
3/8"=1'-0"

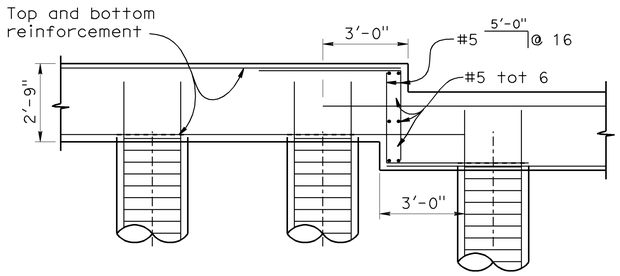

FOOTING STEP REINFORCEMENT
3/8"=1'-0"

NOTES :

1. For SECTION W-W see "STRUCTURE PLAN NO. 3" sheet.
2. For DETAIL "A" see "ST-10 (MOD) DETAILS NO. 1." sheet.
3. For DETAIL "C" see "STRUCTURE PLAN NO. 4." sheet.
4. For location of SECTION L-L, SECTION M-M AND SECTION K-K, see "STRUCTURE PLAN NO. 1." sheet.

LEGEND :

Denotes limits of Architectural Treament (Pattern to be determined)

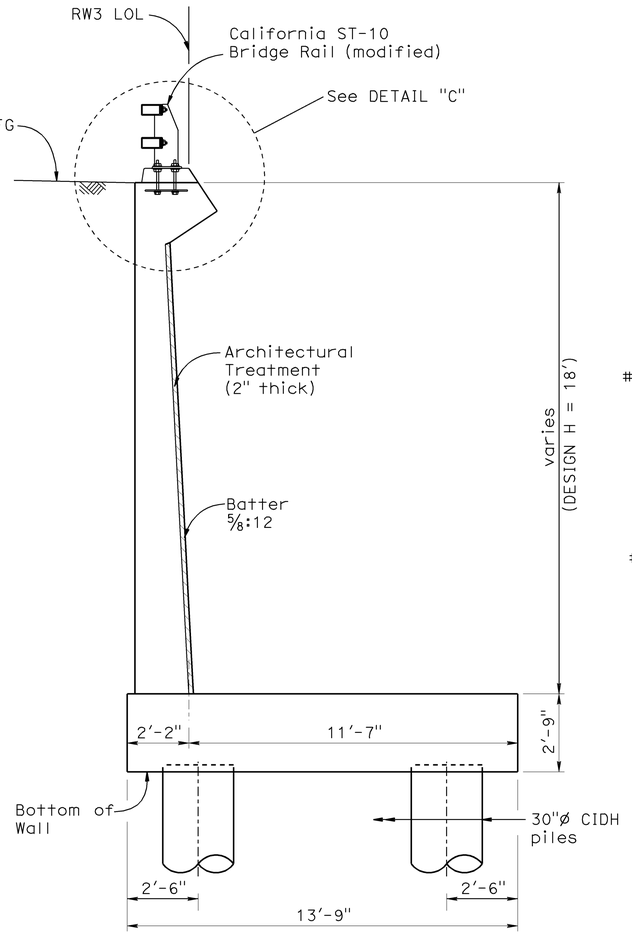

SECTION L-L
3/8"=1'-0"

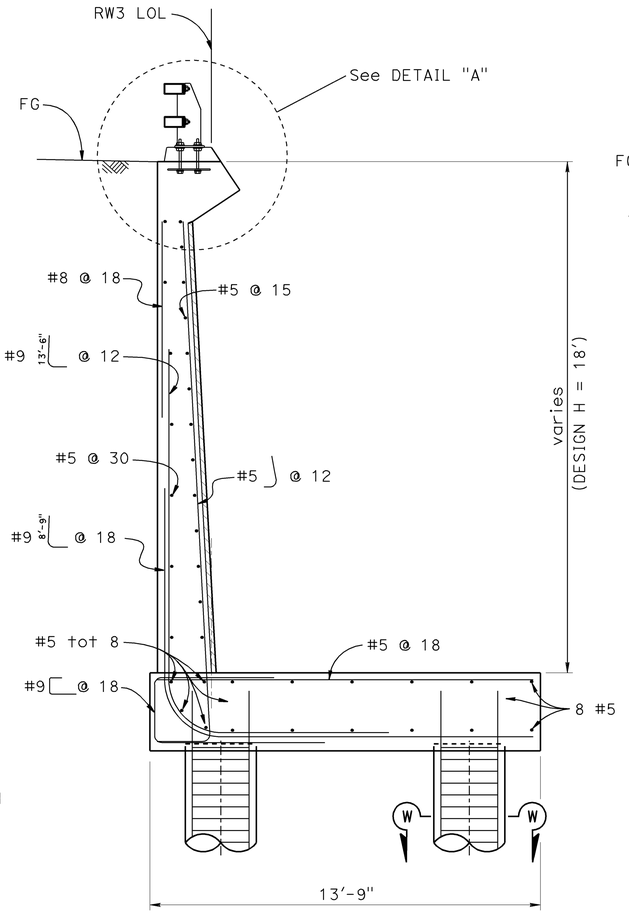

SECTION L-L WALL REINFORCEMENT
3/8"=1'-0"

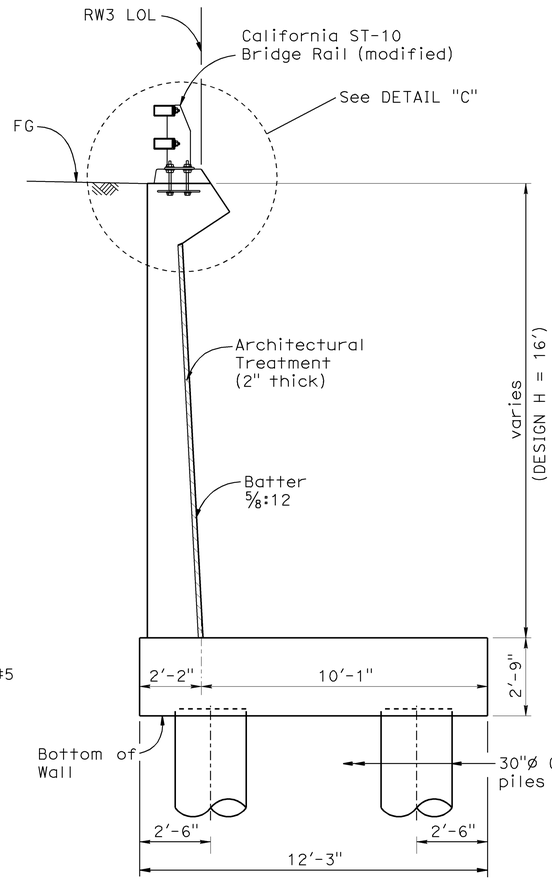

SECTION M-M
3/8"=1'-0"

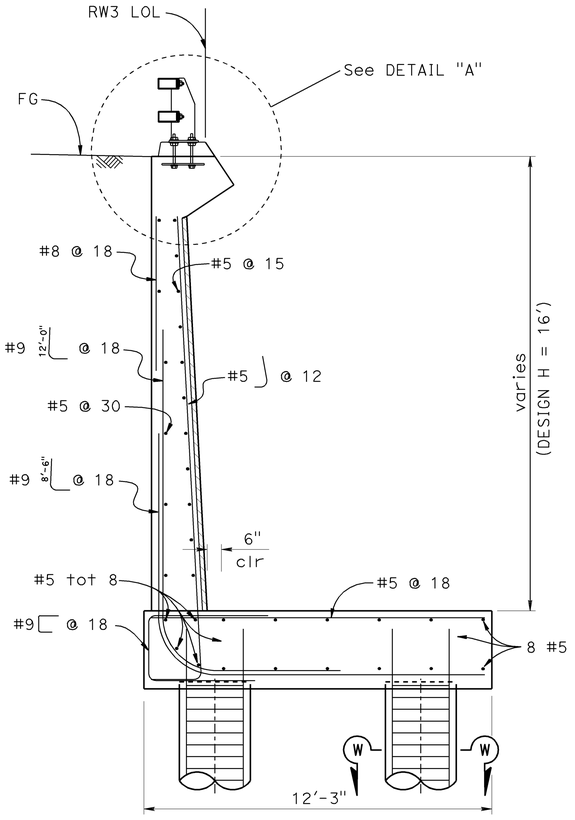

SECTION M-M WALL REINFORCEMENT
3/8"=1'-0"

DESIGN	BY Phil Lutz	CHECKED Nasser Tachta	STATE OF CALIFORNIA DEPARTMENT OF TRANSPORTATION	DIVISION OF ENGINEERING SERVICES STRUCTURE DESIGN DESIGN BRANCH 9	BRIDGE NO. 34E0011	RETAINING WALL NO. 3 STRUCTURE PLAN NO. 3	
DETAILS	BY Carlo Cancino	CHECKED Nasser Tachta			POST MILE 6.95		
QUANTITIES	BY B. Thach	CHECKED Nasser Tachta		CU 04242 EA 163731			

STRUCTURES DESIGN DETAIL SHEET (ENGLISH) (REV. 10/25/05)

ORIGINAL SCALE IN INCHES FOR REDUCED PLANS 0 1 2 3

DISREGARD PRINTS BEARING EARLIER REVISION DATES

REVISION DATES: 04-15-09 | 05-05-09 | 06-04-09 | 07-08-09

SHEET 6 OF 15

FILE => 34e0011-c-sp3.dgn

USERNAME = frmitest DATE PLOTTED => 21-JUL-2009 TIME PLOTTED => 13:38

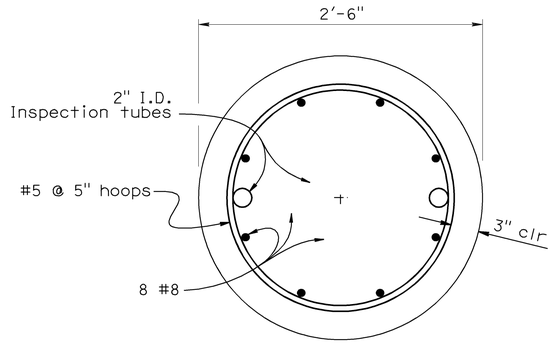

SECTION W-W

1½"=1'-0"

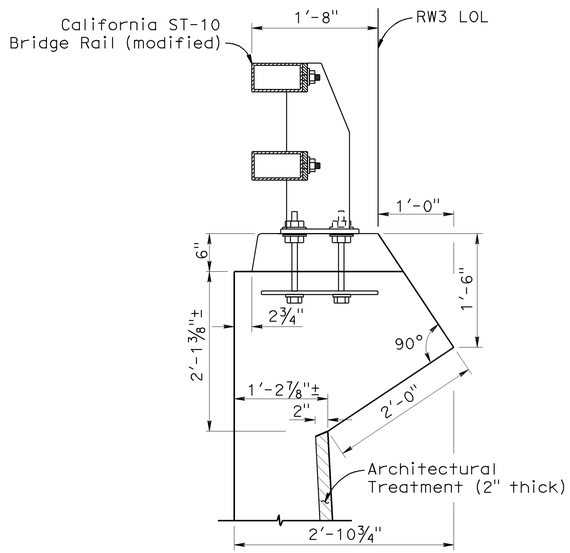

DETAIL "C"

1"=1'-0"

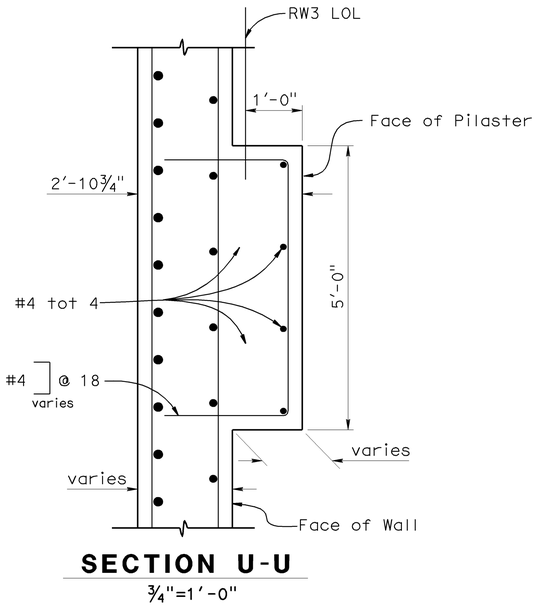

SECTION U-U

¾"=1'-0"

NOTES :

1. For DETAIL "A" see "ST-10 DETAILS NO. 1." sheet.
2. For location of SECTION N-N AND SECTION T-T, see "STRUCTURE PLAN NO. 1." sheet.

LEGEND :

Denotes limits of Architectural Treament (Pattern to be determined)

DIST	COUNTY	ROUTE	POST MILES TOTAL PROJECT	SHEET No	TOTAL SHEETS
04	SF	101,1	9.2/9.8, 6.8/7.1	535	567

REGISTERED CIVIL ENGINEER — 06-04-09 DATE

Philip E. Lutz, No. C55839, Exp. 12-31-10, CIVIL — REGISTERED PROFESSIONAL ENGINEER — STATE OF CALIFORNIA

7-20-09
PLANS APPROVAL DATE

The State of California or its officers or agents shall not be responsible for the accuracy or completeness of electronic copies of this plan sheet.

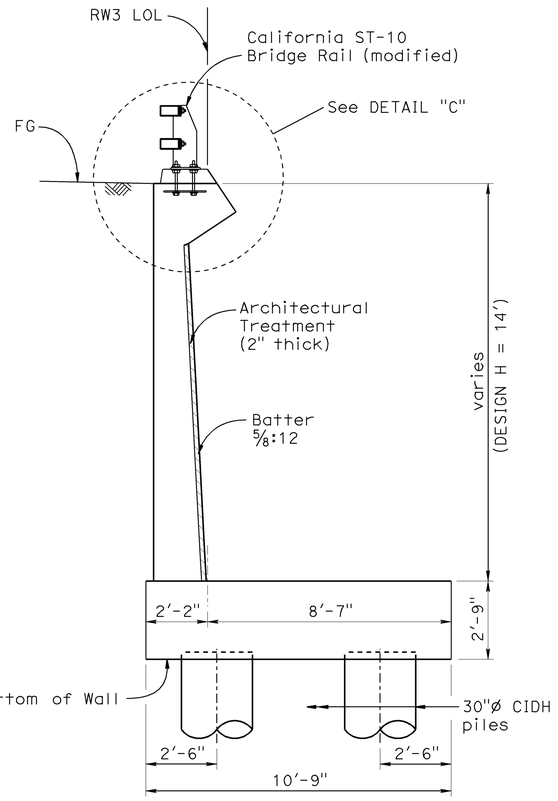

SECTION N-N

⅜"=1'-0"

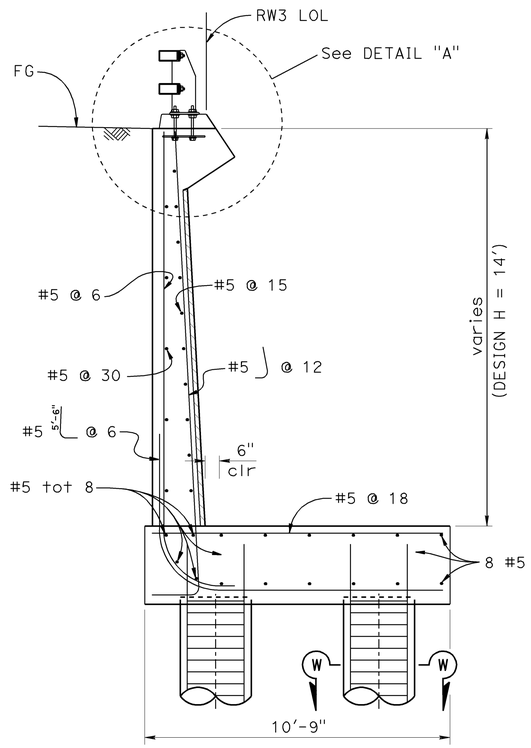

SECTION N-N WALL REINFORCEMENT

⅜"=1'-0"

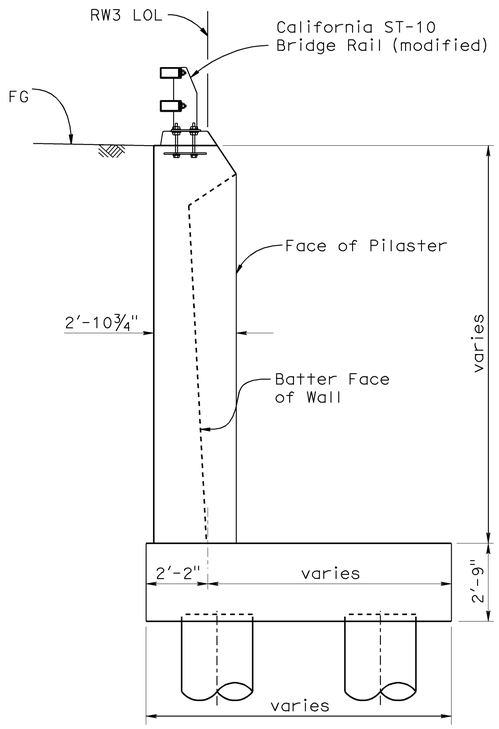

SECTION T-T
(PILASTER SECTION)

⅜"=1'-0"

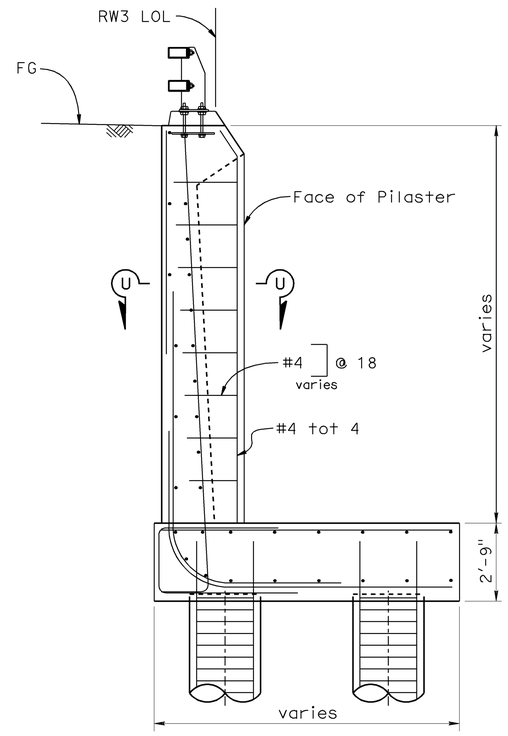

SECTION T-T
PILASTER REINFORCEMENT
(PILASTER SECTION)

⅜"=1'-0"

	BY	CHECKED
DESIGN	Phil Lutz	Nasser Tachta
DETAILS	Carlo Cancino	Nasser Tachta
QUANTITIES	B. Thach	Nasser Tachta

STATE OF CALIFORNIA
DEPARTMENT OF TRANSPORTATION

DIVISION OF ENGINEERING SERVICES
STRUCTURE DESIGN
DESIGN BRANCH 9

BRIDGE NO. 34E0011
POST MILE 6.95

RETAINING WALL NO. 3
STRUCTURE PLAN NO. 4

STRUCTURES DESIGN DETAIL SHEET (ENGLISH) (REV. 10/25/05)

ORIGINAL SCALE IN INCHES FOR REDUCED PLANS 0 1 2 3

CU 04242
EA 163731

DISREGARD PRINTS BEARING EARLIER REVISION DATES →

REVISION DATES: 04-15-09 | 05-06-09 | 06-04-09 | 07-08-09

SHEET 7 OF 15

FILE => 34e0011-c-sp4.dgn

USERNAME => tmmikesl DATE PLOTTED => 21-JUL-2009 TIME PLOTTED => 13:38

DIST	COUNTY	ROUTE	POST MILES TOTAL PROJECT	SHEET No	TOTAL SHEETS
04	SF	101,1	9.2/9.8, 6.8/7.1	536	567

Philip E Lutz 06-04-09
REGISTERED CIVIL ENGINEER DATE

7-20-09
PLANS APPROVAL DATE

The State of California or its officers or agents shall not be responsible for the accuracy or completeness of electronic copies of this plan sheet.

REGISTERED PROFESSIONAL ENGINEER — Philip E. Lutz — No. C55839 — Exp. 12-31-10 — CIVIL — STATE OF CALIFORNIA

NOTE:

For location of SECTION V-V, see "STRUCTURE PLAN NO. 1" sheet.

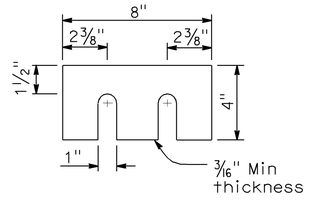

SHIMS REQUIRED FOR TOP AND BOTTOM RAIL

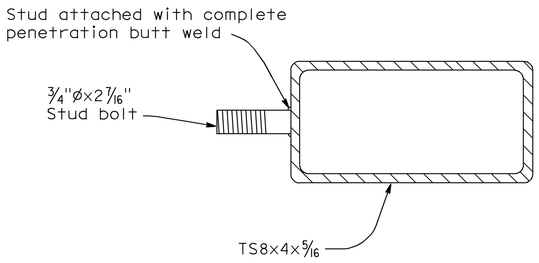

SECTION AT POST

STUD BOLT DETAIL

No Scale

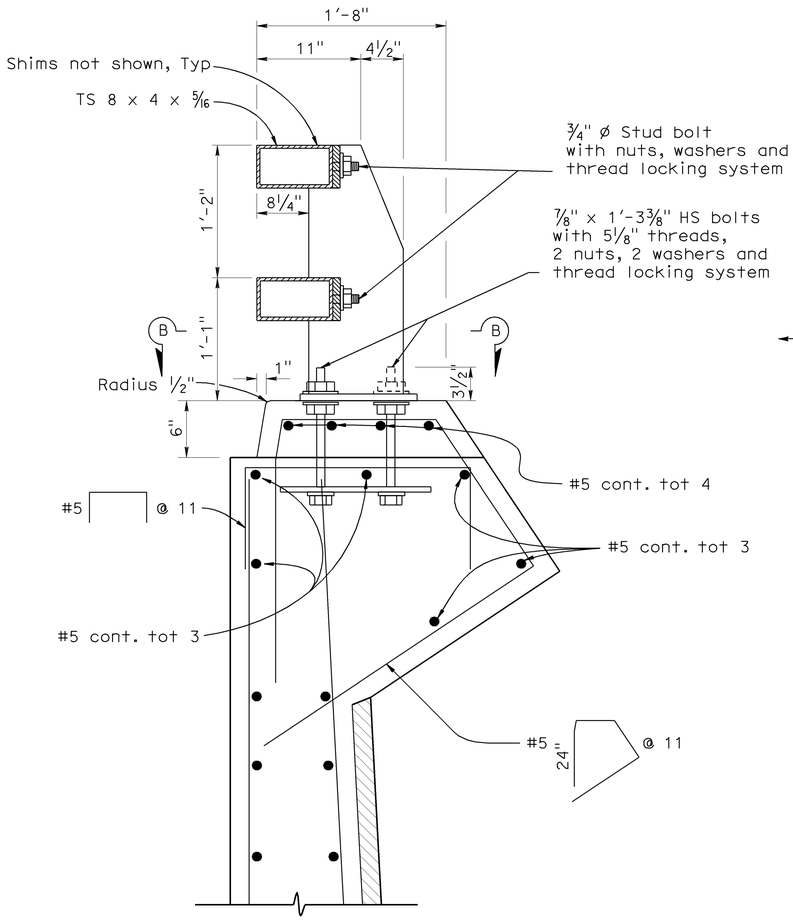

DETAIL "A"

No Scale

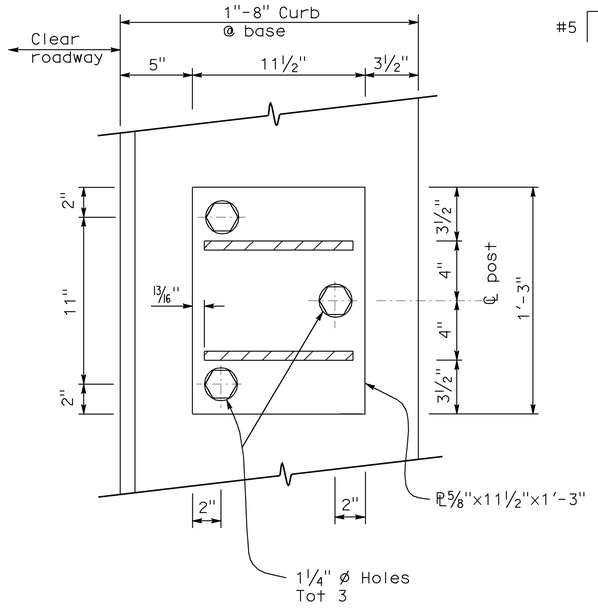

SECTION B-B

No Scale

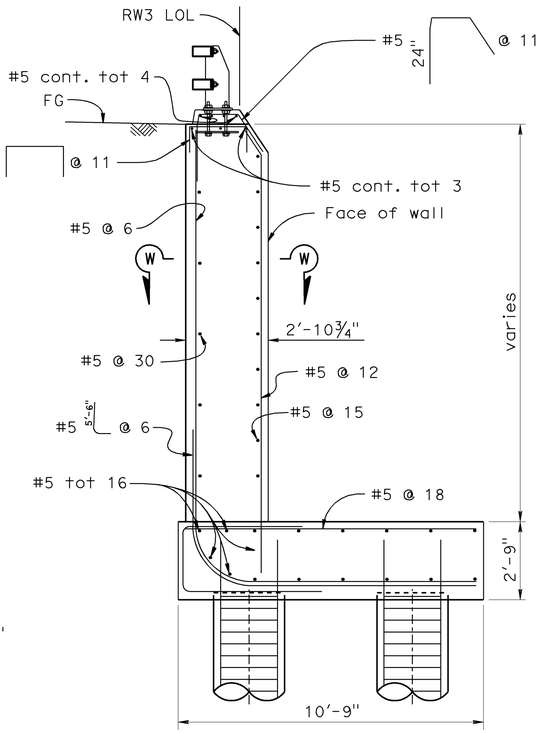

SECTION V-V

(Sta. 11+53.10 to 11+74.58)

3/8"=1'-0"

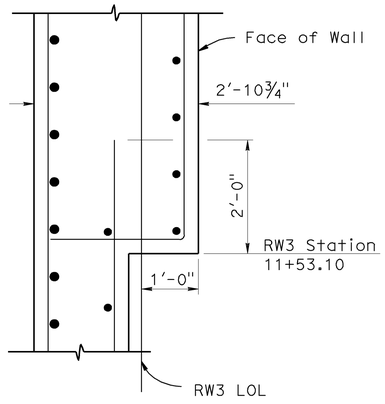

SECTION W-W

3/4"=1'-0"

DESIGN	BY Phil Lutz	CHECKED Nasser Tachta	STATE OF CALIFORNIA DEPARTMENT OF TRANSPORTATION
DETAILS	BY Carlo Cancino	CHECKED Nasser Tachta	DIVISION OF ENGINEERING SERVICES STRUCTURE DESIGN DESIGN BRANCH 9
QUANTITIES	BY B. Thach	CHECKED Nasser Tachta	BRIDGE NO. 34E0011 POST MILE 6.95

RETAINING WALL NO. 3

ST-10 (MOD) DETAILS NO. 1

STRUCTURES DESIGN DETAIL SHEET (ENGLISH) (REV. 10/25/05)

ORIGINAL SCALE IN INCHES FOR REDUCED PLANS 0 1 2 3

CU 04242
EA 163731

DISREGARD PRINTS BEARING EARLIER REVISION DATES

REVISION DATES: 04-15-09, 05-06-09, 06-04-09, 07-08-09

SHEET 8 OF 15

FILE => 34e0011-d-det01.dgn

USERNAME = frmitesi DATE PLOTTED => 21-JUL-2009 TIME PLOTTED => 13:38

DIST	COUNTY	ROUTE	POST MILES TOTAL PROJECT	SHEET No	TOTAL SHEETS
04	SF	101,1	9.2/9.8, 6.8/7.1	537	567

REGISTERED CIVIL ENGINEER — 06-04-09 DATE

7-20-09
PLANS APPROVAL DATE

REGISTERED PROFESSIONAL ENGINEER — Philip E. Lutz — No. C55839 — Exp. 12-31-10 — CIVIL — STATE OF CALIFORNIA

The State of California or its officers or agents shall not be responsible for the accuracy or completeness of electronic copies of this plan sheet.

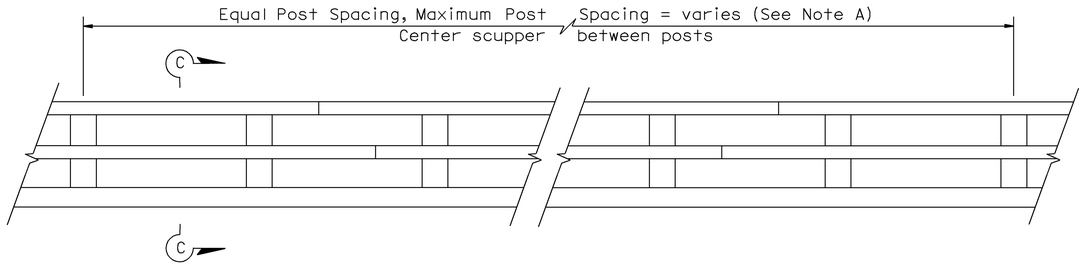

NOTE A:
Post spacing and/or block length to be adjusted to fit retaining wall length

RAILING ELEVATION
No Scale

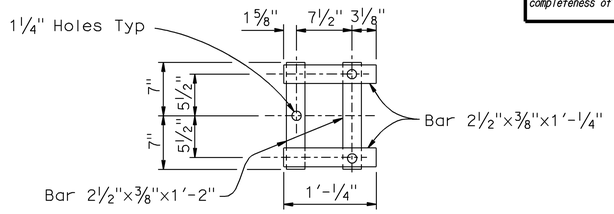

WALL ANCHOR PLATE
No Scale

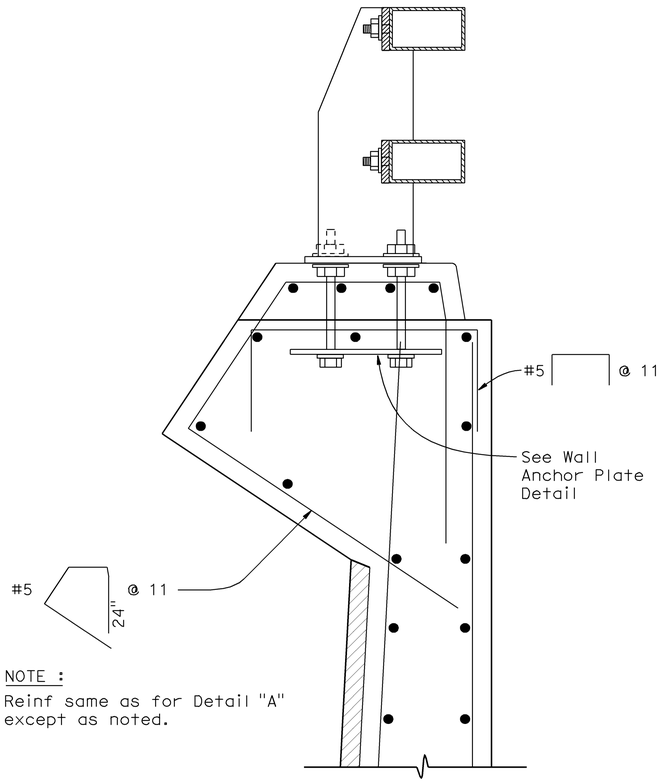

NOTE :
Reinf same as for Detail "A" except as noted.

SECTION C-C
No Scale

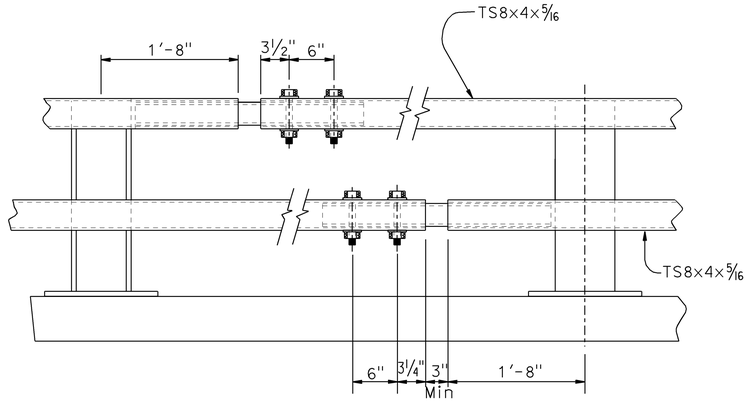

EXPANSION SPLICE
No Scale

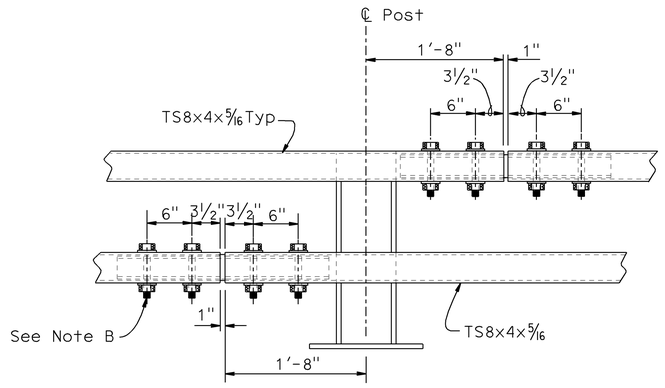

STANDARD SPLICE
No Scale

NOTE B:
Use ¾"ø x 5⁄16"
HS bolts with washers, fully tensioned.
1" holes in rail Typ

DESIGN	BY Phil Lutz	CHECKED Nasser Tachta	STATE OF CALIFORNIA DEPARTMENT OF TRANSPORTATION	DIVISION OF ENGINEERING SERVICES STRUCTURE DESIGN DESIGN BRANCH 9	BRIDGE NO. 34E0011	RETAINING WALL NO. 3
DETAILS	BY Carlo Cancino	CHECKED Nasser Tachta			POST MILE 6.95	ST-10 (MOD) DETAILS NO. 2
QUANTITIES	BY B. Thach	CHECKED Nasser Tachta				

STRUCTURES DESIGN DETAIL SHEET (ENGLISH) (REV. 10/25/05)

ORIGINAL SCALE IN INCHES FOR REDUCED PLANS 0 1 2 3

CU 04242
EA 163731

DISREGARD PRINTS BEARING EARLIER REVISION DATES →

REVISION DATES: 04-15-09 | 05-06-09 | 06-04-09 | 07-08-09

SHEET 9 OF 15

FILE => 34e0011-d-det02.dgn

USERNAME => tmirkes| DATE PLOTTED => 21-JUL-2009 TIME PLOTTED => 13:38

DIST	COUNTY	ROUTE	POST MILES TOTAL PROJECT	SHEET No	TOTAL SHEETS
04	SF	101,1	9.2/9.8, 6.8/7.1	538	567

REGISTERED CIVIL ENGINEER — 06-04-09 DATE

Philip E. Lutz No. C55839 Exp. 12-31-10 CIVIL — REGISTERED PROFESSIONAL ENGINEER — STATE OF CALIFORNIA

7-20-09
PLANS APPROVAL DATE

The State of California or its officers or agents shall not be responsible for the accuracy or completeness of electronic copies of this plan sheet.

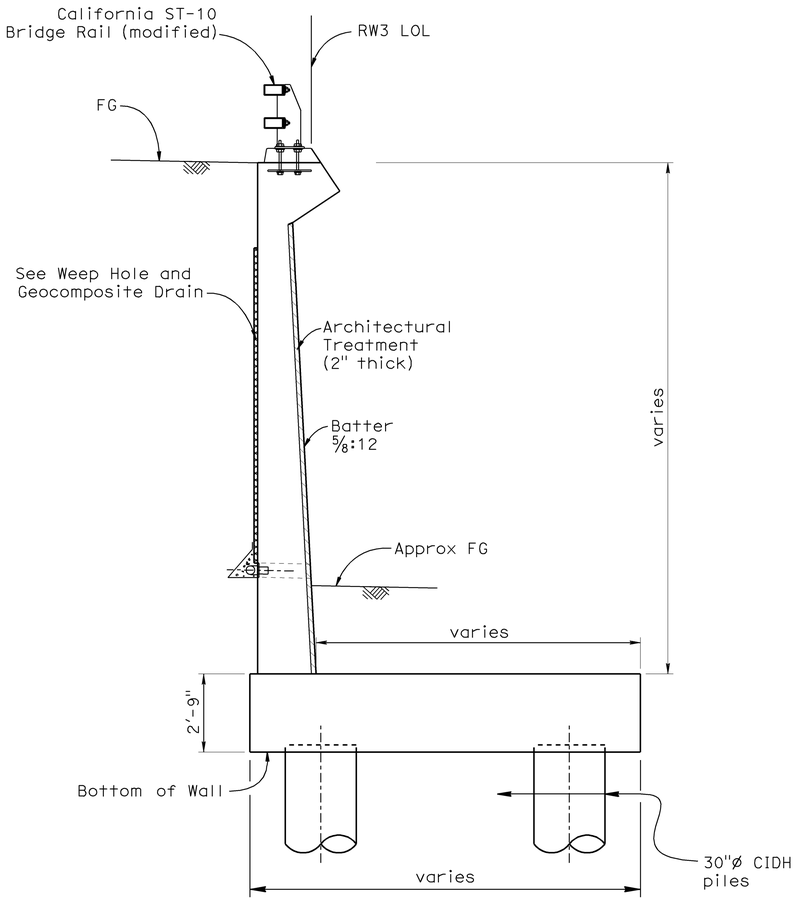

TYPICAL SECTION

3/8"=1'-0"

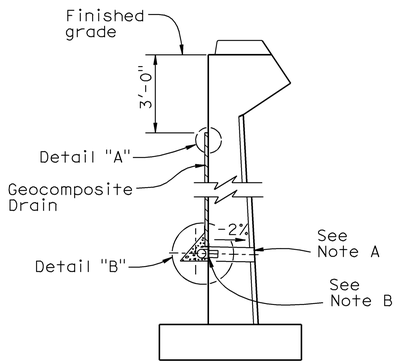

WALL SECTION

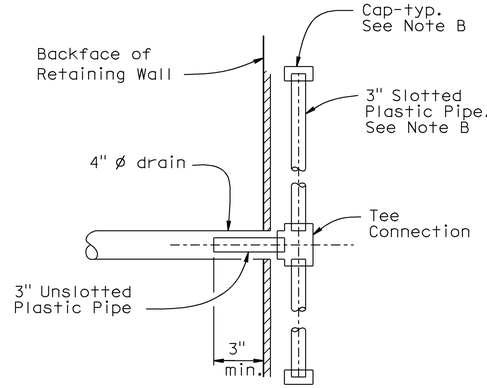

SECTION A-A

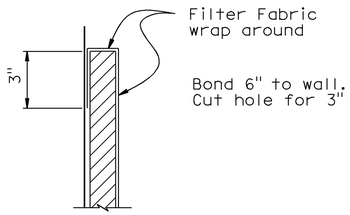

DETAIL "A"

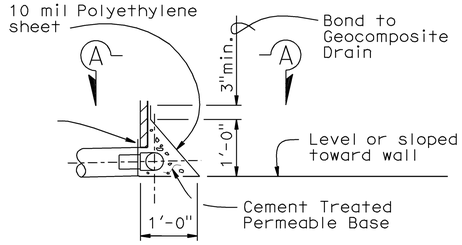

DETAIL "B"

WEEP HOLE AND GEOCOMPOSITE DRAIN

NOTES:

A. 4" ø drains at intermediate sag points and at 25' max center to center (9' c-c for Type 3 and 9'-3" c-c for Type 4 retaining walls).
For walls adjacent to sidewalks or curbs, provide 4" cast iron or asbestos cement pipe under the sidewalk to discharge through curb face.
Exposed wall drains shall be located 3"± above finished grade.

B. Geocomposite drain, cement treated permeable base, and 3"ø slotted plastic pipe continuous behind retaining wall or abutment. Cap ends of pipe. Provide "Tee" connection at each 4" ø drain.

C. Connect the low end of plastic pipe to the main outlet pipe as applicable.

DESIGN	BY Phil Lutz	CHECKED Nasser Tachta	STATE OF CALIFORNIA DEPARTMENT OF TRANSPORTATION	DIVISION OF ENGINEERING SERVICES STRUCTURE DESIGN DESIGN BRANCH 9	BRIDGE NO. 34E0011	RETAINING WALL NO. 3	
DETAILS	BY Carlo Cancino	CHECKED Nasser Tachta			POST MILE 6.95	DRAINAGE DETAILS	
QUANTITIES	BY B. Thach	CHECKED Nasser Tachta					

STRUCTURES DESIGN DETAIL SHEET (ENGLISH) (REV. 10/25/05)

ORIGINAL SCALE IN INCHES FOR REDUCED PLANS 0 1 2 3

CU 04242
EA 163731

DISREGARD PRINTS BEARING EARLIER REVISION DATES →

REVISION DATES: 04-15-09 | 05-06-09 | 06-04-09 | 07-08-09

SHEET 10 OF 15

FILE => 34e0011-d-det03.dgn

USERNAME => tmrikesl DATE PLOTTED => 21-JUL-2009 TIME PLOTTED => 13:39

DIST	COUNTY	ROUTE	POST MILES TOTAL PROJECT	SHEET No	TOTAL SHEETS
04	SF	101,1	9.2/9.8, 6.8/7.1	539	567

CERTIFIED ENGINEERING GEOLOGIST 6-02-09

7-20-09
PLANS APPROVAL DATE

The State of California or its officers or agents shall not be responsible for the accuracy or completeness of electronic copies of this plan sheet.

REGISTERED GEOLOGIST — Grant Wilcox — No. 2300 — Exp. 4-30-10 — CERTIFIED ENGINEERING GEOLOGIST — STATE OF CALIFORNIA

This LOTB sheet was prepared in accordance with the Caltrans Soil & Rock Logging, Classification, & Presentation Manual (June 2007) with the exception of Section 2.3.

BENCH MARK

SURVEY CONTROL

CM-034
Fnd PK Nail & CT Washer
22.68 Ft Lt "DOY5" Line
Sta 98+37.61
N 2,120,254.45
E 5,992,677.67
Elev = 136.17

CM-132
Fnd Iron Pipe
7.46 Ft Rt "L" Line
Sta 13+46.60
N 2,120,435.54
E 5,993,065.33
Elev = 103.90'

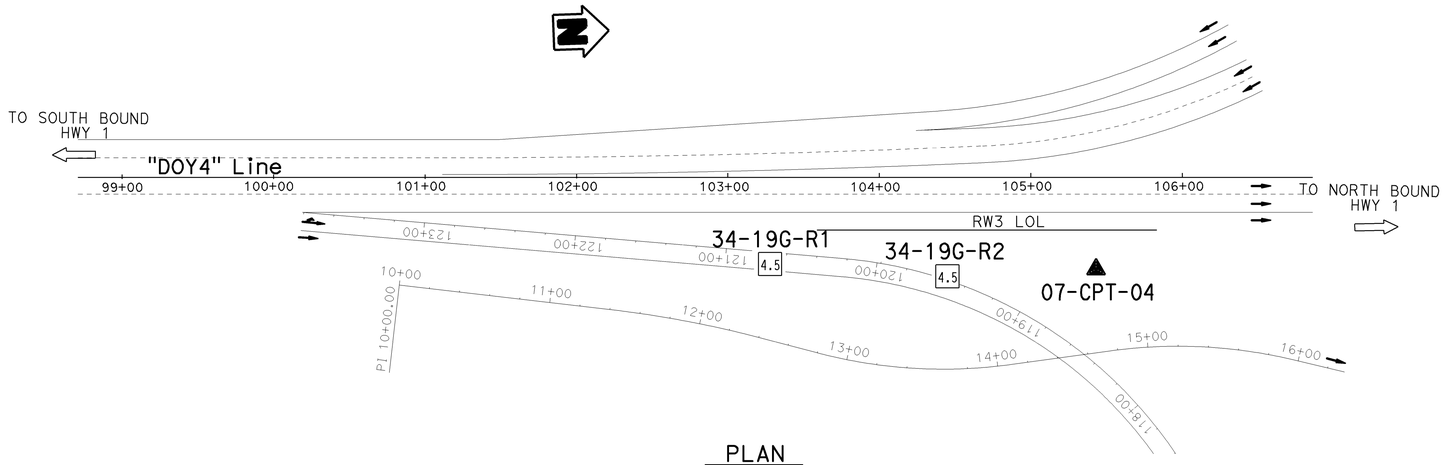

PLAN
1" = 50'

Note: Ground water was not measured.

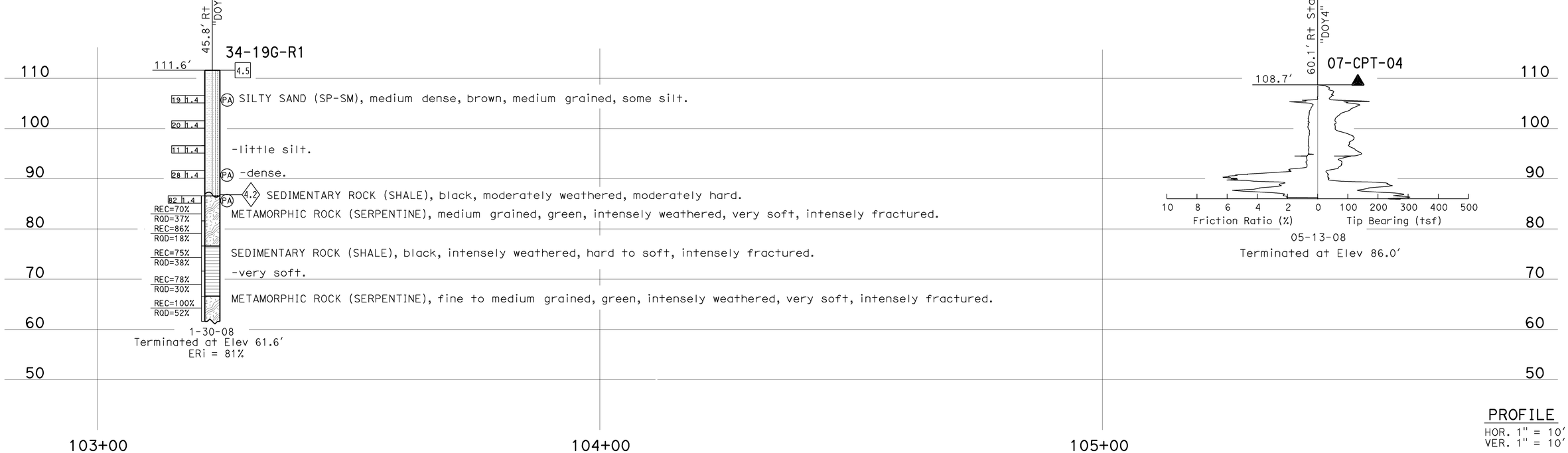

PROFILE
HOR. 1" = 10'
VER. 1" = 10'

ENGINEERING SERVICES		GEOTECHNICAL SERVICES		STATE OF CALIFORNIA DEPARTMENT OF TRANSPORTATION	DIVISION OF ENGINEERING SERVICES STRUCTURE DESIGN	BRIDGE NO. 34E0011	RETAINING WALL NO. 3
FUNCTIONAL SUPERVISOR	DRAWN BY: I.G-Remmen, 5/09	FIELD INVESTIGATION BY:			DESIGN BRANCH 9	POST MILES 6.95	LOG OF TEST BORINGS 1 OF 5
NAME: T. Pokrywka	CHECKED BY: R. Price	R. Nashed					

OGS CIVIL LOG OF TEST BORINGS SHEET

ORIGINAL SCALE IN INCHES FOR REDUCED PLANS 0 1 2 3

CU 04
EA 163731

DISREGARD PRINTS BEARING EARLIER REVISION DATES →

REVISION DATES: 05-13-09 | 05-22-09 | 06-01-09

SHEET 11 OF 15

FILE => 34e0011-d-lob01.dgn

USERNAME => tmikesl DATE PLOTTED => 21-JUL-2009 TIME PLOTTED => 13:50

DIST	COUNTY	ROUTE	POST MILES TOTAL PROJECT	SHEET No	TOTAL SHEETS
04	SF	101,1	9.2/9.8, 6.8/7.1	540	567

CERTIFIED ENGINEERING GEOLOGIST 6-02-09

7-20-09
PLANS APPROVAL DATE

REGISTERED GEOLOGIST
Grant Wilcox
No. 2300
Exp. 4-30-10
CERTIFIED ENGINEERING GEOLOGIST
STATE OF CALIFORNIA

The State of California or its officers or agents shall not be responsible for the accuracy or completeness of electronic copies of this plan sheet.

This LOTB sheet was prepared in accordance with the Caltrans Soil & Rock Logging, Classification, & Presentation Manual (June 2007) with the exception of Section 2.3.

FOR PLAN VIEW, SEE
"LOG OF TEST BORINGS 1 OF 5"

Note: Ground water was, not measured.

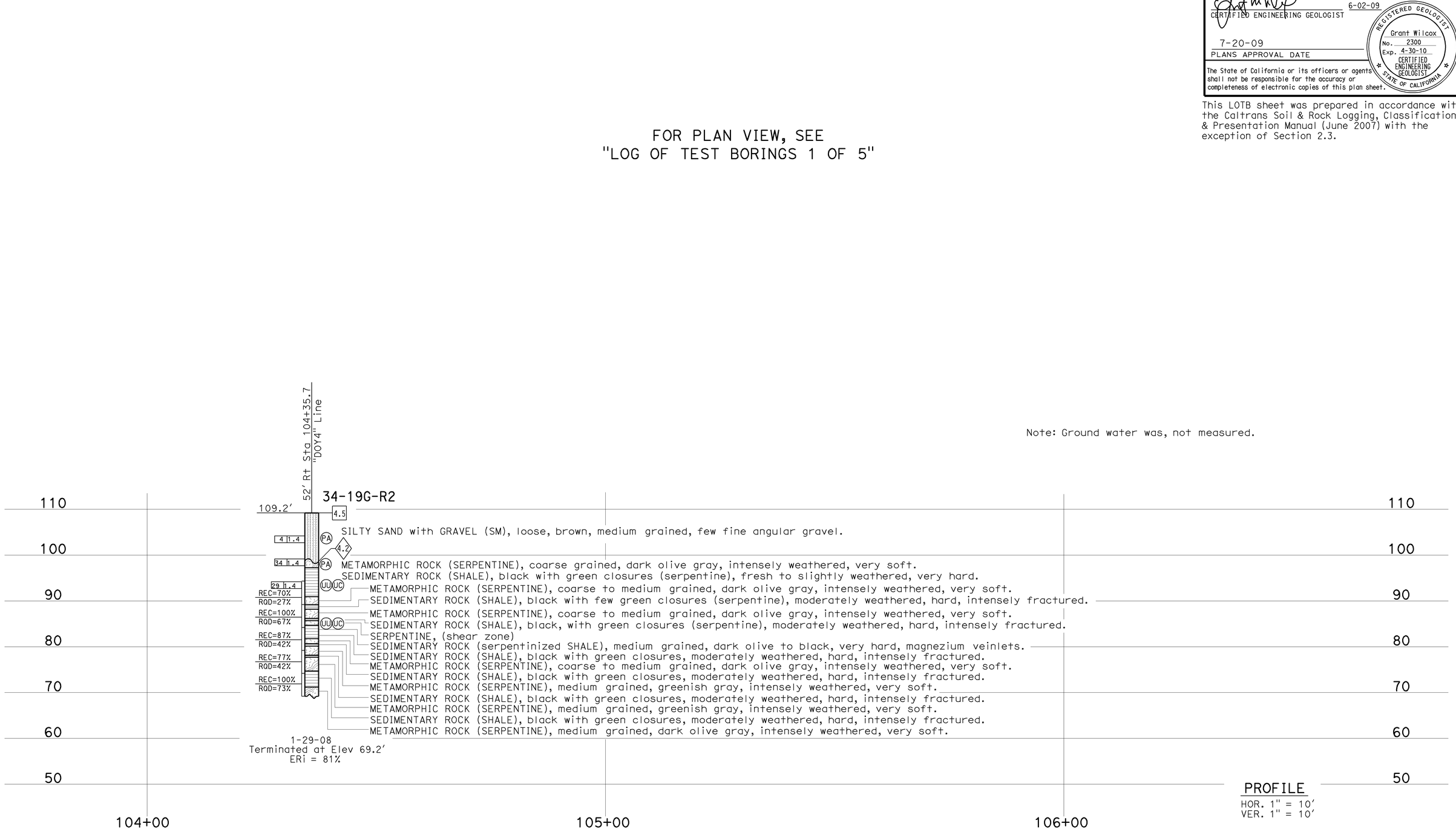

PROFILE
HOR. 1" = 10'
VER. 1" = 10'

ENGINEERING SERVICES	GEOTECHNICAL SERVICES		STATE OF CALIFORNIA DEPARTMENT OF TRANSPORTATION	DIVISION OF ENGINEERING SERVICES STRUCTURE DESIGN	BRIDGE NO. 34E0011	RETAINING WALL NO. 3
FUNCTIONAL SUPERVISOR	DRAWN BY: I.G-Remmen, 5/09	FIELD INVESTIGATION BY:		DESIGN BRANCH 9	POST MILES 6.95	LOG OF TEST BORINGS 2 OF 5
NAME: T. Pokrywka	CHECKED BY: R. Price	R. Nashed, D. Nesbitt				

OGS CIVIL LOG OF TEST BORINGS SHEET

ORIGINAL SCALE IN INCHES FOR REDUCED PLANS 0 1 2 3

CU 04
EA 163731

DISREGARD PRINTS BEARING EARLIER REVISION DATES →

REVISION DATES: 05-13-09 | 05-22-09 | 06-01-09

SHEET 12 OF 15

FILE => 34e0011-d-lob02.dgn

USERNAME => tmikesl DATE PLOTTED => 21-JUL-2009 TIME PLOTTED => 13:50

REFERENCE: CALTRANS SOIL & ROCK LOGGING, CLASSIFICATION, AND PRESENTATION MANUAL (JUNE 2007)

DIST	COUNTY	ROUTE	POST MILES TOTAL PROJECT	SHEET No	TOTAL SHEETS
04	SF	101,1	9.2/9.8, 6.8/7.1	541	567

CERTIFIED ENGINEERING GEOLOGIST 6-02-09

7-20-09
PLANS APPROVAL DATE

REGISTERED GEOLOGIST — Grant Wilcox — No. 2300 — Exp. 4-30-10 — CERTIFIED ENGINEERING GEOLOGIST — STATE OF CALIFORNIA

The State of California or its officers or agents shall not be responsible for the accuracy or completeness of electronic copies of this plan sheet.

CEMENTATION

Description	Criteria
Weak	Crumbles or breaks with handling or little finger pressure.
Moderate	Crumbles or breaks with considerable finger pressure.
Strong	Will not crumble or break with finger pressure.

BOREHOLE IDENTIFICATION

Symbol	Hole Type	Description
Size	A	Auger Boring
Size	R P	Rotary drilled boring Rotary percussion boring (air)
Size	R	Rotary drilled diamond core
Size	HD HA	Hand driven (1-inch soil tube) Hand Auger
●	D	Dynamic Cone Penetration Boring
▲	CPT	Cone Penetration Test (ASTM D 5778-95)
⬚	O	Other

Note: Size in inches.

CONSISTENCY OF COHESIVE SOILS

Description	Unconfined Compressive Strength (tsf)	Pocket Penetrometer Measurement (tsf)	Torvane Measurement (tsf)	Field Approximation
Very Soft	< 0.25	< 0.25	< 0.12	Easily penetrated several inches by fist
Soft	0.25 to 0.50	0.25 to 0.50	0.12 to 0.25	Easily penetrated several inches by thumb
Medium Stiff	0.50 to 1.0	0.50 to 1.0	0.25 to 0.50	Penetrated several inches by thumb with moderate effort
Stiff	1 to 2	1 to 2	0.50 to 1.0	Readily indented by thumb but penetrated only with great effort
Very Stiff	2 to 4	2 to 4	1.0 to 2.0	Readily indented by thumbnail
Hard	> 4.0	> 4.0	> 2.0	Indented by thumbnail with difficulty

PLASTICITY OF FINE-GRAINED SOILS

Description	Criteria
Nonplastic	A 1/8-inch thread cannot be rolled at any water content.
Low	The thread can barely be rolled and the lump cannot be formed when drier than the plastic limit.
Medium	The thread is easy to roll and not much time is required to reach the plastic limit. The thread cannot be rerolled after reaching the plastic limit. The lump crumbles when drier than the plastic limit.
High	It takes considerable time rolling and kneading to reach the plastic limit. The thread can be rerolled several times after reaching the plastic limit. The lump can be formed without crumbling when drier than the plastic limit.

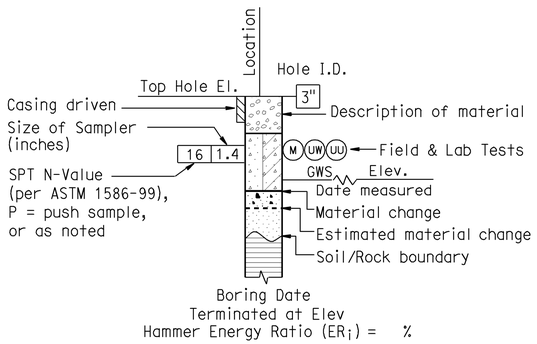

ROTARY BORING

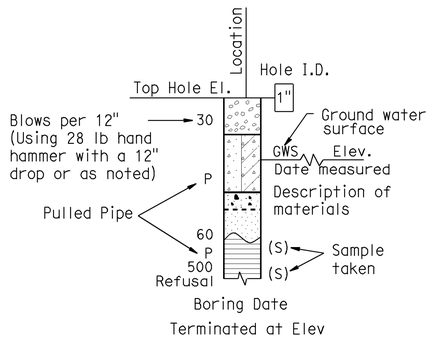

HAND BORING

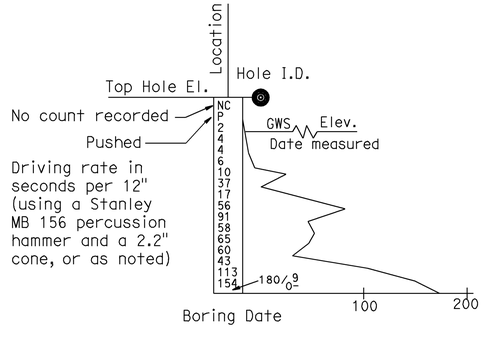

DYNAMIC CONE PENETRATION BORING

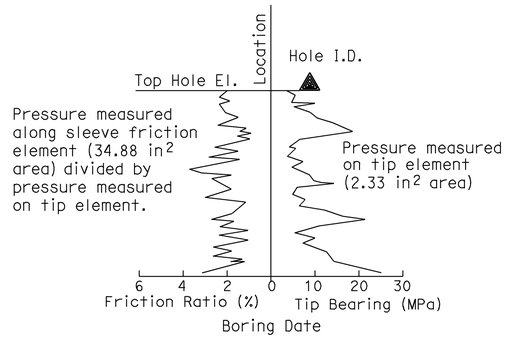

CONE PENETRATION TEST (CPT) SOUNDING

ENGINEERING SERVICES	GEOTECHNICAL SERVICES	STATE OF CALIFORNIA DEPARTMENT OF TRANSPORTATION	DIVISION OF ENGINEERING SERVICES STRUCTURE DESIGN DESIGN BRANCH 9	BRIDGE NO. 34E0011 / POST MILE 6.95	RETAINING WALL NO. 3 LOG OF TEST BORINGS 3 OF 5
	PREPARED BY: I.G-Remmen, 5/09				

GS LOTB SOIL LEGEND

ORIGINAL SCALE IN INCHES FOR REDUCED PLANS 0 1 2 3

CU 04
EA 163731

DISREGARD PRINTS BEARING EARLIER REVISION DATES →

REVISION DATES	SHEET	OF
05-22-09	13	15

FILE => 34e0011-d-lob03.dgn

USERNAME => ttmirkes1 DATE PLOTTED => 21-JUL-2009 TIME PLOTTED => 13:50

REFERENCE: CALTRANS SOIL & ROCK LOGGING, CLASSIFICATION, AND PRESENTATION MANUAL (JUNE 2007)

GROUP SYMBOLS AND NAMES

Graphic/Symbol	Group Names	Graphic/Symbol	Group Names
GW	Well-graded GRAVEL Well-graded GRAVEL with SAND	CL	Lean CLAY Lean CLAY with SAND Lean CLAY with GRAVEL SANDY lean CLAY SANDY lean CLAY with GRAVEL GRAVELLY lean CLAY GRAVELLY lean CLAY with SAND
GP	Poorly graded GRAVEL Poorly graded GRAVEL with SAND		
GW-GM	Well-graded GRAVEL with SILT Well-graded GRAVEL with SILT and SAND	CL-ML	SILTY CLAY SILTY CLAY with SAND SILTY CLAY with GRAVEL SANDY SILTY CLAY SANDY SILTY CLAY with GRAVEL GRAVELLY SILTY CLAY GRAVELLY SILTY CLAY with SAND
GW-GC	Well-graded GRAVEL with CLAY (or SILTY CLAY) Well-graded GRAVEL with CLAY and SAND (or SILTY CLAY and SAND)		
GP-GM	Poorly graded GRAVEL with SILT Poorly graded GRAVEL with SILT and SAND	ML	SILT SILT with SAND SILT with GRAVEL SANDY SILT SANDY SILT with GRAVEL GRAVELLY SILT GRAVELLY SILT with SAND
GP-GC	Poorly graded GRAVEL with CLAY (or SILTY CLAY) Poorly graded GRAVEL with CLAY and SAND (or SILTY CLAY and SAND)		
GM	SILTY GRAVEL SILTY GRAVEL with SAND	OL	ORGANIC lean CLAY ORGANIC lean CLAY with SAND ORGANIC lean CLAY with GRAVEL SANDY ORGANIC lean CLAY SANDY ORGANIC lean CLAY with GRAVEL GRAVELLY ORGANIC lean CLAY GRAVELLY ORGANIC lean CLAY with SAND
GC	CLAYEY GRAVEL CLAYEY GRAVEL with SAND		
GC-GM	SILTY, CLAYEY GRAVEL SILTY, CLAYEY GRAVEL with SAND	OL	ORGANIC SILT ORGANIC SILT with SAND ORGANIC SILT with GRAVEL SANDY ORGANIC SILT SANDY ORGANIC SILT with GRAVEL GRAVELLY ORGANIC SILT GRAVELLY ORGANIC SILT with SAND
SW	Well-graded SAND Well-graded SAND with GRAVEL		
SP	Poorly graded SAND Poorly graded SAND with GRAVEL	CH	Fat CLAY Fat CLAY with SAND Fat CLAY with GRAVEL SANDY fat CLAY SANDY fat CLAY with GRAVEL GRAVELLY fat CLAY GRAVELLY fat CLAY with SAND
SW-SM	Well-graded SAND with SILT Well-graded SAND with SILT and GRAVEL		
SW-SC	Well-graded SAND with CLAY (or SILTY CLAY) Well-graded SAND with CLAY and GRAVEL (or SILTY CLAY and GRAVEL)	MH	Elastic SILT Elastic SILT with SAND Elastic SILT with GRAVEL SANDY elastic SILT SANDY elastic SILT with GRAVEL GRAVELLY elastic SILT GRAVELLY elastic SILT with SAND
SP-SM	Poorly graded SAND with SILT Poorly graded SAND with SILT and GRAVEL		
SP-SC	Poorly graded SAND with CLAY (or SILTY CLAY) Poorly graded SAND with CLAY and GRAVEL (or SILTY CLAY and GRAVEL)	OH	ORGANIC fat CLAY ORGANIC fat CLAY with SAND ORGANIC fat CLAY with GRAVEL SANDY ORGANIC fat CLAY SANDY ORGANIC fat CLAY with GRAVEL GRAVELLY ORGANIC fat CLAY GRAVELLY ORGANIC fat CLAY with SAND
SM	SILTY SAND SILTY SAND with GRAVEL		
SC	CLAYEY SAND CLAYEY SAND with GRAVEL	OH	ORGANIC elastic SILT ORGANIC elastic SILT with SAND ORGANIC elastic SILT with GRAVEL SANDY ORGANIC elastic SILT SANDY ORGANIC elastic SILT with GRAVEL GRAVELLY ORGANIC elastic SILT GRAVELLY ORGANIC elastic SILT with SAND
SC-SM	SILTY, CLAYEY SAND SILTY, CLAYEY SAND with GRAVEL		
PT	PEAT	OL/OH	ORGANIC SOIL ORGANIC SOIL with SAND ORGANIC SOIL with GRAVEL SANDY ORGANIC SOIL SANDY ORGANIC SOIL with GRAVEL GRAVELLY ORGANIC SOIL GRAVELLY ORGANIC SOIL with SAND
	COBBLES COBBLES and BOULDERS BOULDERS		

FIELD AND LABORATORY TESTING

- (C) Consolidation (ASTM D 2435)
- (CL) Collapse Potential (ASTM D 5333)
- (CP) Compaction Curve (CTM 216)
- (CR) Corrosivity Testing (CTM 643, CTM 422, CTM 417)
- (CU) Consolidated Undrained Triaxial (ASTM D 4767)
- (DS) Direct Shear (ASTM D 3080)
- (EI) Expansion Index (ASTM D 4829)
- (M) Moisture Content (ASTM D 2216)
- (OC) Organic Content-% (ASTM D 2974)
- (P) Permeability (CTM 220)
- (PA) Particle Size Analysis (ASTM D 422)
- (PI) Plasticity Index (AASHTO T 90) Liquid Limit (AASHTO T 89)
- (PL) Point Load Index (ASTM D 5731)
- (PM) Pressure Meter
- (PP) Pocket Penetrometer
- (R) R-Value (CTM 301)
- (SE) Sand Equivalent (CTM 217)
- (SG) Specific Gravity (AASHTO T 100)
- (SL) Shrinkage Limit (ASTM D 427)
- (SW) Swell Potential (ASTM D 4546)
- (TV) Pocket Torvane
- (UC) Unconfined Compression-Soil (ASTM D 2166) Unconfined Compression-Rock (ASTM D 2938)
- (UU) Unconsolidated Undrained Triaxial (ASTM D 2850)
- (UW) Unit Weight (ASTM D 4767)
- (VS) Vane Shear (AASHTO T 223)

DIST	COUNTY	ROUTE	POST MILES TOTAL PROJECT	SHEET No	TOTAL SHEETS
04	SF	101,1	9.2/9.8, 6.8/7.1	542	567

CERTIFIED ENGINEERING GEOLOGIST 6-02-09

7-20-09
PLANS APPROVAL DATE

REGISTERED GEOLOGIST — Grant Wilcox — No. 2300 — Exp. 4-30-10 — CERTIFIED ENGINEERING GEOLOGIST — STATE OF CALIFORNIA

The State of California or its officers or agents shall not be responsible for the accuracy or completeness of electronic copies of this plan sheet.

APPARENT DENSITY OF COHESIONLESS SOILS

Description	SPT N_{60} (Blows / 12 inches)
Very loose	0 - 4
Loose	5 - 10
Medium Dense	11 - 30
Dense	31 - 50
Very Dense	> 50

MOISTURE

Description	Criteria
Dry	Absence of moisture, dusty, dry to the touch
Moist	Damp but no visible water
Wet	Visible free water, usually soil is below water table

PERCENT OR PROPORTION OF SOILS

Description	Criteria
Trace	Particles are present but estimated to be less than 5%
Few	5 to 10%
Little	15 to 25%
Some	30 to 45%
Mostly	50 to 100%

PARTICLE SIZE

Description		Size
Boulder		> 12"
Cobble		3" to 12"
Gravel	Coarse	3/4" to 3"
	Fine	No. 4 to 3/4"
Sand	Coarse	No. 10 to No. 4
	Medium	No. 40 to No. 10
	Fine	No. 200 to No. 40

ENGINEERING SERVICES	GEOTECHNICAL SERVICES	STATE OF CALIFORNIA DEPARTMENT OF TRANSPORTATION	DIVISION OF ENGINEERING SERVICES STRUCTURE DESIGN DESIGN BRANCH 9	BRIDGE NO. 34E0011 POST MILE 6.95	RETAINING WALL NO. 3 LOG OF TEST BORINGS 4 OF 5
	PREPARED BY: I.G-Remmen, 5/09		CU 04 EA 163731	DISREGARD PRINTS BEARING EARLIER REVISION DATES →	REVISION DATES: 05-22-09 / SHEET 14 OF 15

GS LOTB SOIL LEGEND

ORIGINAL SCALE IN INCHES FOR REDUCED PLANS 0 1 2 3

FILE => 34e0011-d-lob04.dgn

USERNAME => trmrkes| DATE PLOTTED => 21-JUL-2009 TIME PLOTTED => 13:51

REFERENCE: CALTRANS SOIL & ROCK LOGGING, CLASSIFICATION, AND PRESENTATION MANUAL (JUNE 2007)

DIST	COUNTY	ROUTE	POST MILES TOTAL PROJECT	SHEET No	TOTAL SHEETS
04	SF	101,1	9.2/9.8, 6.8/7.1	543	567

CERTIFIED ENGINEERING GEOLOGIST 6-02-09

7-20-09
PLANS APPROVAL DATE

The State of California or its officers or agents shall not be responsible for the accuracy or completeness of electronic copies of this plan sheet.

REGISTERED GEOLOGIST
Grant Wilcox
No. 2300
Exp. 4-30-10
CERTIFIED ENGINEERING GEOLOGIST
STATE OF CALIFORNIA

PERCENT CORE RECOVERY (REC) & ROCK QUALITY DESIGNATION (RQD)

$$REC = \frac{\sum \text{Length of the recovered core pieces (inches)}}{\text{Total length of core run (inches)}} \times 100\%$$

$$RQD = \frac{\sum \text{Length of intact core pieces} \geq 4\text{"}}{\text{Total length of core run (inches)}} \times 100\%$$

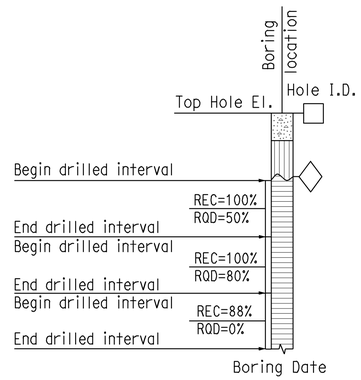

RELATIVE STRENGTH OF INTACT ROCK

Term	Uniaxial Compressive Strength (PSI)
Extremely Strong	> 30,000
Very Strong	14,500 - 30,000
Strong	7,000 - 14,500
Medium Strong	3,500 - 7,000
Weak	700 - 3,500
Very Weak	150 - 700
Extremely Weak	< 150

BEDDING SPACING

Description	Thickness / Spacing
Massive	Greater than 10 ft
Very thickly bedded	3 to 10 ft
Thickly bedded	1 to 3 ft
Moderately bedded	3-5/8" to 1 ft
Thinly bedded	1-1/4" to 3-5/8"
Very thinly bedded	3/8" to 1-1/4"
Laminated	Less than 3/8"

LEGEND OF ROCK MATERIALS

- IGNEOUS ROCK
- SEDIMENTARY ROCK
- METAMORPHIC ROCK

ROCK HARDNESS

Description	Criteria
Extremely Hard	Specimen cannot be scratched with a pocket knife or sharp pick; can only be chipped with repeated heavy hammer blows.
Very Hard	Specimen cannot be scratched with a pocket knife or sharp pick. Breaks with repeated heavy hammer blows.
Hard	Specimen can be scratched with a pocket knife or sharp pick with difficulty (heavy pressure). Heavy hammer blows required to break specimen.
Moderately Hard	Specimen can be scratched with pocket knife or sharp pick with light or moderate pressure. Core breaks with moderate hammer blows.
Moderately Soft	Specimen can be grooved 1/6" deep with a pocket knife or sharp pick with moderate or heavy pressure. Breaks with light hammer blow or heavy manual pressure.
Soft	Specimen can be grooved or gouged easily by a pocket knife or sharp pick with light pressure, can be scratched with fingernail. Breaks with light to moderate manual pressure.
Very Soft	Specimen can be readily indented, grooved or gouged with fingernail, or carved with a pocket knife. Breaks with light manual pressure.

FRACTURE DENSITY

Description	Observed Fracture Density
Unfractured	No fractures.
Very slightly fractured	Lengths greater than 3 feet.
Slightly fractured	Lengths from 1 to 3 feet with few lengths less than 1 foot or greater than 3 feet.
Moderately fractured	Lengths mostly in 4" to 1 foot range with most lengths about 8"
Intensely fractured	Lengths average from 1 to 4" with scattered fragmented intervals with lengths less than 4"
Very intensely fractured	Mostly chips and fragments with a few scattered short core lengths.

Combination descriptors (such as "Very intensely to intensely fractured") are used where equal distribution of both fracture density characteristics is present over a significant interval or exposure, or where characteristics are "in between" the descriptor definitions. Only two adjacent descriptors may be combined.

WEATHERING DESCRIPTORS FOR INTACT ROCK

Description	Diagnostic features: Chemical Weathering-Discoloration and/or oxidation: Body of Rock	Diagnostic features: Chemical Weathering-Discoloration and/or oxidation: Fracture Surfaces	Diagnostic features: Mechanical Weathering-Grain boundary conditions (disaggregation) primarily for granitics and some coarse-grained sediments	Diagnostic features: Texture and Solutioning: Texture	Diagnostic features: Texture and Solutioning: Solutioning	General Characteristics
Fresh	No discoloration, not oxidized.	No discoloration or oxidation.	No separation, intact (tight).	No change.	No solutioning.	Hammer rings when crystalline rocks are struck.
Slightly Weathered	Discoloration or oxidation is limited to surface of, or short distance from, fractures; some feldspar crystals are dull.	Minor to complete discoloration or oxidation of most surfaces.	No visible separation, intact (tight).	Preserved.	Minor leaching of some soluble minerals may be noted.	Hammer rings when crystalline rocks are struck. Body of rock not weakened.
Moderately Weathered	Discoloration or oxidation extends from fractures usually throughout; Fe-Mg minerals are "rusty," feldspar crystals are "cloudy."	All fracture surfaces are discolored or oxidized.	Partial separation of boundaries visible.	Generally preserved.	Soluble minerals may be mostly leached.	Hammer does not ring when rock is struck. Body of rock is slightly weakened.
Intensely Weathered	Discoloration or oxidation throughout; all feldspars and Fe-Mg minerals are altered to clay to some extent; or chemical alteration produces in-situ disaggregation, see grain boundary conditions.	All fracture surfaces are discolored or oxidized, surfaces friable.	Partial separation, rock is friable; in semiarid conditions granitics are disaggregated.	Texture altered by chemical disintegration (hydration, argillation).	Leaching of soluble minerals may be complete.	Dull sound when struck with hammer, usually can be broken with moderate to heavy manual pressure or by light hammer blow without reference to planes of weakness such as incipient or hairline fractures, or veinlets. Rock is significantly weakened.
Decomposed	Discolored or oxidized throughout, but resistant minerals such as quartz may be unaltered; all feldspars and Fe-Mg minerals are completely altered to clay.		Complete separation of grain boundaries (disaggregated).	Resembles a soil, partial or complete remnant rock structure may be preserved; leaching of soluble minerals usually complete.		Can be granulated by hand. Resistant minerals such as quartz may be present as "stringers" or "dikes."

Combination descriptors (such as "slightly weathered to fresh") are permissible where equal distribution of both weathering characteristics is present over significant intervals or where characteristics present are "in between" the diagnostic feature. However, combination descriptors should not be used where significant, identifiable zones can be delineated. Only two adjacent descriptors may be combined. "Very intensely weathered" is the combination descriptor for "intensely weathered to decomposed."

ENGINEERING SERVICES	GEOTECHNICAL SERVICES	STATE OF CALIFORNIA DEPARTMENT OF TRANSPORTATION	DIVISION OF ENGINEERING SERVICES STRUCTURE DESIGN	BRIDGE NO.	RETAINING WALL NO. 3
	PREPARED BY: I.G-Remmen, 5/09		DESIGN BRANCH 9	34E0011	LOG OF TEST BORINGS 5 OF 5
				POST MILE 6.95	

GS LOTB ROCK LEGEND

ORIGINAL SCALE IN INCHES FOR REDUCED PLANS 0 1 2 3

CU 04
EA 163731

DISREGARD PRINTS BEARING EARLIER REVISION DATES →

REVISION DATES: 06-22-09

SHEET 15 OF 15

FILE => 34e0011-d-lob05.dgn

USERNAME => tmikesl DATE PLOTTED => 21-JUL-2009 TIME PLOTTED => 13:51

DIST	COUNTY	ROUTE	POST MILES TOTAL PROJECT	SHEET No	TOTAL SHEETS
04	SF	101,1	9.2/9.8, 6.8/7.1	544	567

Philip E Lutz 06-04-09
REGISTERED CIVIL ENGINEER DATE

7-20-09
PLANS APPROVAL DATE

REGISTERED PROFESSIONAL ENGINEER — Philip E. Lutz — No. C55839 — Exp. 12-31-10 — CIVIL — STATE OF CALIFORNIA

The State of California or its officers or agents shall not be responsible for the accuracy or completeness of electronic copies of this plan sheet.

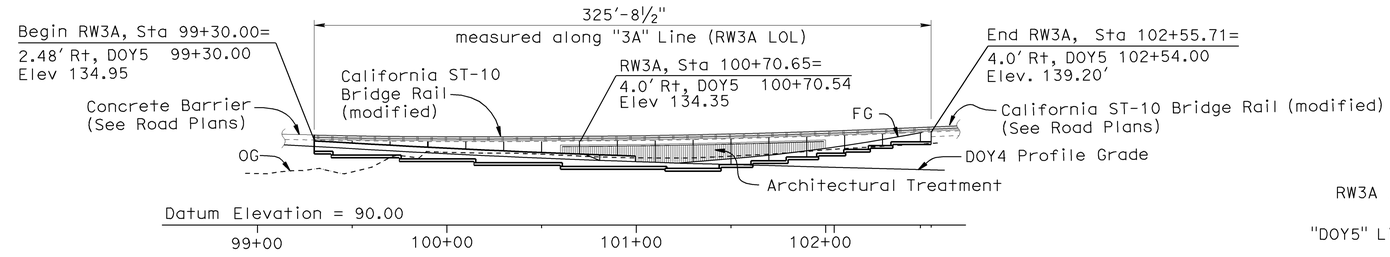

DEVELOPED ELEVATION

1"=40'-0"

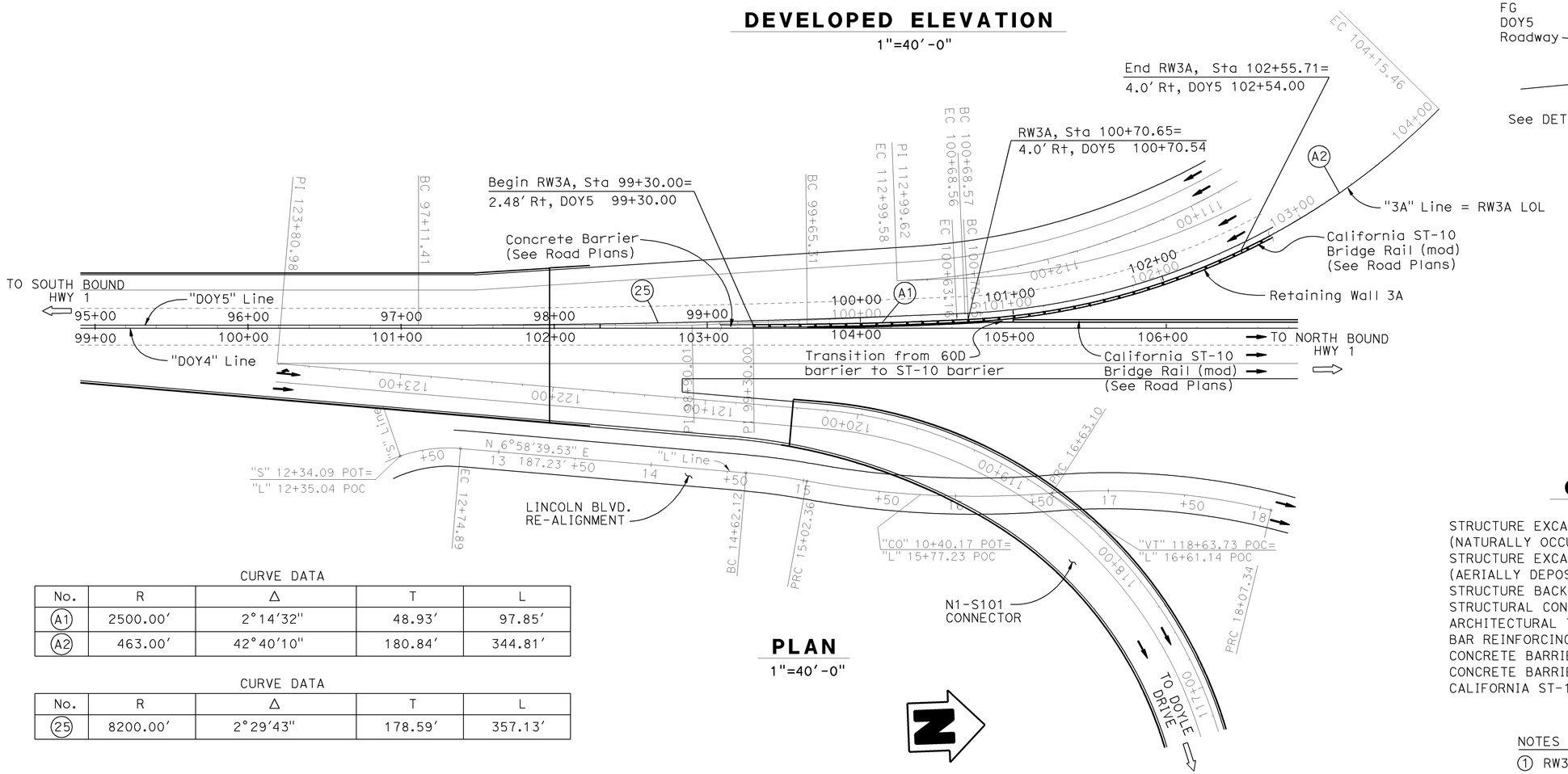

PLAN

1"=40'-0"

CURVE DATA

No.	R	Δ	T	L
A1	2500.00'	2°14'32"	48.93'	97.85'
A2	463.00'	42°40'10"	180.84'	344.81'

CURVE DATA

No.	R	Δ	T	L
25	8200.00'	2°29'43"	178.59'	357.13'

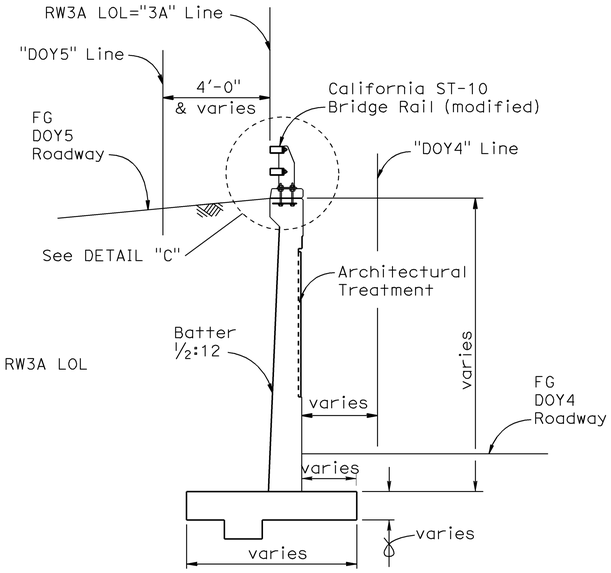

TYPICAL SECTION

¼"=1'-0"

QUANTITIES

STRUCTURE EXCAVATION (RETAINING WALL) (NATURALLY OCCURING ASBESTOS)	700	CY
STRUCTURE EXCAVATION (TYPE Z-2) (AERIALLY DEPOSITED LEAD)	220	CY
STRUCTURE BACKFILL (RETAINING WALL)	710	CY
STRUCTURAL CONCRETE, RETAINING WALL	375	CY
ARCHITECTURAL TEXTURE (FLUTED FIN)	2,000	SQFT
BAR REINFORCING STEEL (RETAINING WALL)	36,000	LB
CONCRETE BARRIER (TYPE 60D MODIFIED)	27	LF
CONCRETE BARRIER (TYPE 60D)	143	LF
CALIFORNIA ST-10 BRIDGE RAIL (MODIFIED)	326	LF

NOTES :

1. RW3A LOL is shifted by 1'-8" from face of wall.
2. For DETAIL "C" see "STRUCTURE PLAN NO. 2" sheet.

majid modari
DESIGN ENGINEER

DESIGN	BY Phil Lutz	CHECKED Nasser Tachta	LFD OR SERVICE LOAD DESIGN		
DETAILS	BY Carlo Cancino	CHECKED Nasser Tachta	LAYOUT	BY Nasser Tachta	CHECKED Phil Lutz
QUANTITIES	BY B. Thach	CHECKED Nasser Tachta	SPECIFICATIONS	BY X	PLANS AND SPECS COMPARED X

STATE OF CALIFORNIA
DEPARTMENT OF TRANSPORTATION

DIVISION OF ENGINEERING SERVICES
STRUCTURE DESIGN
DESIGN BRANCH 9

BRIDGE NO. 34E0012
POST MILE 6.96

RETAINING WALL NO. 3A
GENERAL PLAN

ORIGINAL SCALE IN INCHES FOR REDUCED PLANS 0 1 2 3

CU 04242
EA 163731

DISREGARD PRINTS BEARING EARLIER REVISION DATES →

REVISION DATES										SHEET	OF
05-07-09	05-14-09	06-15-09	06-17-09	07-09-09						1	11

STRUCTURES DESIGN GENERAL PLAN SHEET (ENGLISH) (REV.07-24-06)

FILE => 34e0012-a-gp.dgn

USERNAME => frmitest DATE PLOTTED => 21-JUL-2009 TIME PLOTTED => 13:51

DIST	COUNTY	ROUTE	POST MILES TOTAL PROJECT	SHEET No	TOTAL SHEETS
04	SF	101,1	9.2/9.8, 6.8/7.1	545	567

REGISTERED CIVIL ENGINEER — 06-04-09 DATE

7-20-09
PLANS APPROVAL DATE

REGISTERED PROFESSIONAL ENGINEER — Philip E. Lutz — No. C55839 — Exp. 12-31-10 — CIVIL — STATE OF CALIFORNIA

The State of California or its officers or agents shall not be responsible for the accuracy or completeness of electronic copies of this plan sheet.

INDEX TO PLANS

SHEET No.	TITLE
1	GENERAL PLAN
2	INDEX TO PLAN
3	FOUNDATION PLAN
4	STRUCTURE PLAN No. 1
5	STRUCTURE PLAN No. 2
6	STRUCTURE PLAN No. 3
7	RW DETAILS
8	ST-10 (MODIFIED) DETAILS No. 1
9	ST-10 (MODIFIED) DETAILS No. 2
10	DRAINAGE DETAILS
11	ARCHITECTURAL TREATMENT DETAILS

STANDARD PLANS DATED MAY 2006

PLAN No.	PLAN TITLE
A10A	ACRONYMS AND ABBREVIATIONS (SHEET 1 OF 2)
A10B	ACRONYMS AND ABBREVIATIONS (SHEET 2 OF 2)
A62B	LIMITS OF PAYMNET FOR EXCAVATION AND BACKFILL
A76A	CONCRETE BARRIER TYPE 60
B0-3	BRIDGE DETAILS
B11-68	CALIFORNIA ST-10 BRIDGE RAIL (SHEET 1 OF 3)
B11-69	CALIFORNIA ST-10 BRIDGE RAIL (SHEET 2 OF 3)
B11-70	CALIFORNIA ST-10 BRIDGE RAIL (SHEET 3 OF 3)

STANDARD PLAN No.

DETAIL No.

GENERAL NOTES
LOAD FACTOR DESIGN

DESIGN : Load Factor Design, 2004 AASTO with Revisions
By California Bridge Design Specification

DESIGN DATA :

SEISMIC LOAD : 0.3 DEAD LOAD
SEISMIC LOAD : SOIL
kh = 0.39
kv = 0.0
kae : Moronabe - Okabe Method
soil ø = 34° ,γ = 120 pcf

EQUIVALENT FLUID PRESSURE :
= 36 pcf for determination of toe pressure
= 27 pcf for determination of heel pressure

LOADING CASE : Level ground with 240 psf surcharge

CONCRETE : REINFORCED CONCRETE, f'c = 3600 psi
fy = 60,00 psi

LEGEND:

Indicates Structure Excavation, Retaining Wall (Naturally Occuring Asbestos)

Indicates Structure Backfill, Retaining Wall

Indicates Structure Excavation, Type Z-2

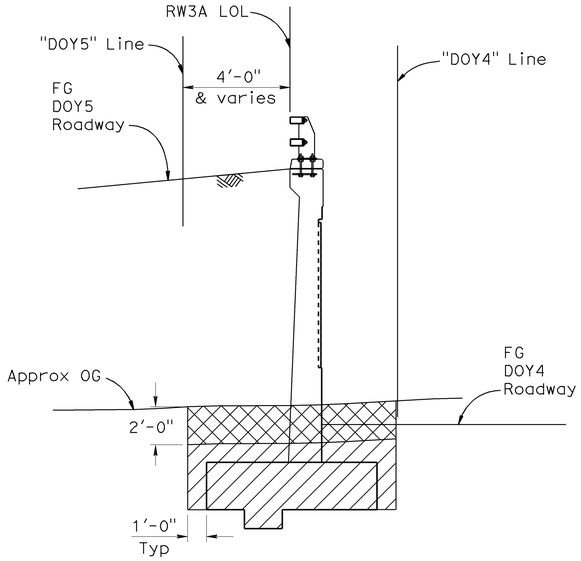

EXCAVATION LIMITS
No Scale

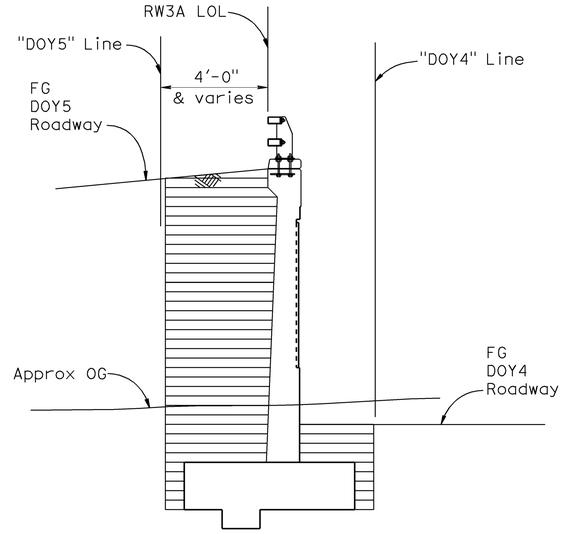

BACKFILL LIMITS
No Scale

DESIGN	BY Phil Lutz	CHECKED Nasser Tachta	STATE OF CALIFORNIA DEPARTMENT OF TRANSPORTATION	DIVISION OF ENGINEERING SERVICES STRUCTURE DESIGN DESIGN BRANCH 9	BRIDGE NO. 34E0012	RETAINING WALL NO. 3A	
DETAILS	BY Carlo Cancino	CHECKED Nasser Tachta			POST MILE 6.96	INDEX TO PLAN	
QUANTITIES	BY B. Thach	CHECKED Nasser Tachta					

STRUCTURES DESIGN DETAIL SHEET (ENGLISH) (REV. 10/25/05)

ORIGINAL SCALE IN INCHES FOR REDUCED PLANS 0 1 2 3

CU 04242
EA 163731

DISREGARD PRINTS BEARING EARLIER REVISION DATES →

REVISION DATES: 05-14-09 | 05-26-09 | 05-29-09 | 06-15-09 | 07-09-09

SHEET 2 OF 11

FILE => 34e0012-b-itp.dgn

USERNAME = trmartin DATE PLOTTED => 23-JUL-2009 TIME PLOTTED => 07:58

DIST	COUNTY	ROUTE	POST MILES TOTAL PROJECT	SHEET No	TOTAL SHEETS
04	SF	101,1	9.2/9.8, 6.8/7.1	546	567

REGISTERED CIVIL ENGINEER — DATE 06-04-09

Philip E. Lutz No. C55839 Exp. 12-31-10 CIVIL — REGISTERED PROFESSIONAL ENGINEER — STATE OF CALIFORNIA

7-20-09
PLANS APPROVAL DATE

The State of California or its officers or agents shall not be responsible for the accuracy or completeness of electronic copies of this plan sheet.

Arup PB Joint Venture
560 Mission Street
Suite 700
San Francisco, CA 94105

CURVE DATA

No.	R	Δ	T	L
26	295.00	95°19'53"	323.81	490.83
27	8,199.94	2°29'43"	178.59	357.13
28	459.00	56°59'57"	249.21	456.62
36	474.00	57°18'11"	258.99	474.06
42	610.00	15°05'52"	80.84	160.74
43	105.00	23°20'52"	21.69	42.79
45	95.00	67°30'30"	63.48	111.93
46	420.00	5°29'23"	20.14	40.24
48	85.00	56°48'05"	45.96	84.27
51	190.00	12°04'47"	20.10	40.06
52	65.00	65°39'55"	41.94	74.49
54	450.01	18°21'53"	72.74	144.24
80	653.93	8°17'42"	47.42	94.67
82	150.00	25°24'55"	33.83	66.54
83	677.00	4°25'14"	26.13	52.23
85	175.00	12°56'40"	19.85	39.54
86	140.00	7°40'36"	9.39	18.76
87	343.00	7°26'29"	22.31	44.55

SURVEY CONTROL

CM-034
Fnd PK Nail & CT Washer
22.68 FT Lt. "DOY5" Line
Sta. 98+37.61
N 2,120,254.45
E 5,992,677.67
Elev. = 136.17

CM-132
Fnd Iron Pipe
25.61 FT Rt. "L" Line
Sta. 15+64.09
N 2,120,435.54
E 5,993,065.33
Elev. = 103.90

ALL DIMENSIONS ARE IN FEET UNLESS OTHERWISE SHOWN

LEGEND :
XXX.XX Indicates bottom of footing elevation

PRELIMINARY INVESTIGATION SECTION						DESIGN	BY Phil Lutz	CHECKED Nasser Tachta
SCALE 1"=20'	VERT.DATUM NAVD88	PHOTOGRAMMETRY AS OF: 9/24/2008				DETAILS	BY Carlo Cancino	CHECKED Nasser Tachta
	HORZ.DATUM NAD83	SURVEYED	BY Chaudhary & Assoc.	CHECKED	BY E. Lilly 3/20/09	QUANTITIES	BY B. Thach	CHECKED Nasser Tachta
	ALIGNMENT TIES Dist.Traverse Sheet	DRAFTED	BY L. Reyes 3/20/09	CHECKED	BY E. Lilly 3/20/09			

STATE OF CALIFORNIA
DEPARTMENT OF TRANSPORTATION

DIVISION OF ENGINEERING SERVICES
STRUCTURE DESIGN
DESIGN BRANCH 9

CU 04242
EA 163731

BRIDGE NO. 34E0012
POST MILE 6.96

RETAINING WALL NO. 3A
FOUNDATION PLAN

STRUCTURES FOUNDATION PLAN SHEET (ENGLISH) (REV. 10/25/05)

ORIGINAL SCALE IN INCHES FOR REDUCED PLANS 0 1 2 3

DISREGARD PRINTS BEARING EARLIER REVISION DATES →

REVISION DATES: 06-18-09 | 07-13-09

SHEET 3 OF 11

FILE => 34e0012-c-fpl.dgn

USERNAME = ?rmikesl DATE PLOTTED => 21-JUL-2009 TIME PLOTTED => 13:51

NOTES :

1. For SECTION F-F see "STRUCTURE PLAN NO. 3" sheet.
2. For DETAIL "Y" see "STRUCTURE PLAN NO. 3" sheet.

DIST	COUNTY	ROUTE	POST MILES TOTAL PROJECT	SHEET No	TOTAL SHEETS
04	SF	101,1	9.2/9.8, 6.8/7.1	547	567

Philip E. Lutz 06-04-09
REGISTERED CIVIL ENGINEER DATE

7-20-09
PLANS APPROVAL DATE

REGISTERED PROFESSIONAL ENGINEER — Philip E. Lutz — No. C55839 — Exp. 12-31-10 — CIVIL — STATE OF CALIFORNIA

The State of California or its officers or agents shall not be responsible for the accuracy or completeness of electronic copies of this plan sheet.

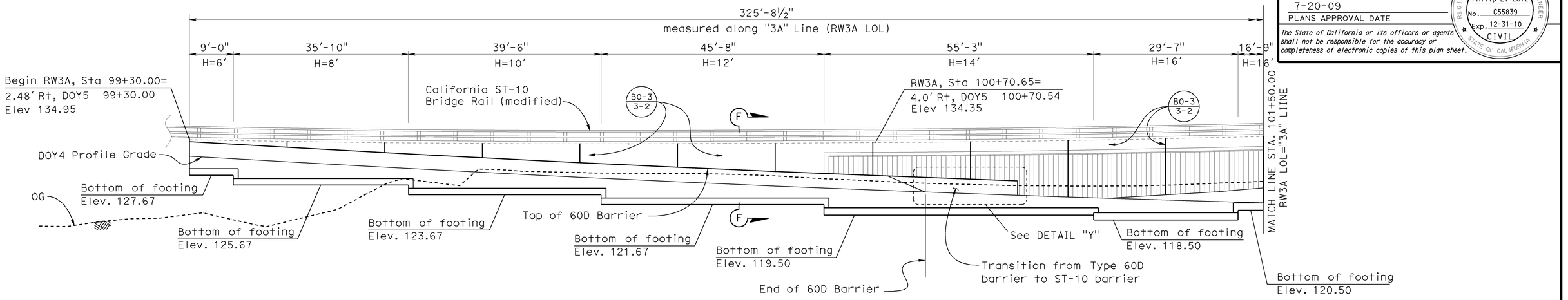

PART DEVELOPED ELEVATION

1"=10'-0"

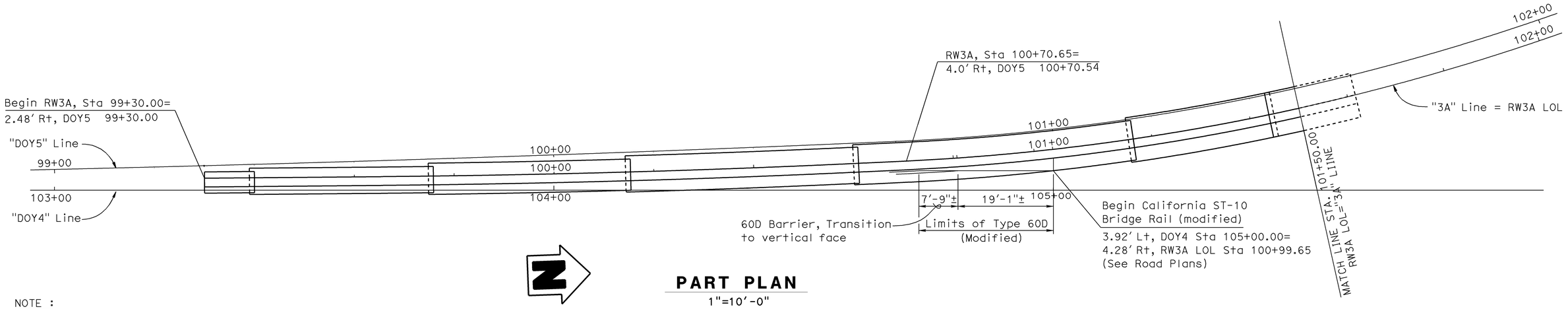

PART PLAN

1"=10'-0"

NOTE :

For wall footing dimensions see "RW DETAILS" sheet.

DESIGN	BY Phil Lutz	CHECKED Nasser Tachta	STATE OF CALIFORNIA DEPARTMENT OF TRANSPORTATION	DIVISION OF ENGINEERING SERVICES STRUCTURE DESIGN DESIGN BRANCH 9	BRIDGE NO. 34E0012	RETAINING WALL NO. 3A
DETAILS	BY Carlo Cancino	CHECKED Nasser Tachta			POST MILE 6.96	STRUCTURE PLAN NO. 1
QUANTITIES	BY B. Thach	CHECKED Nasser Tachta				

STRUCTURES DESIGN DETAIL SHEET (ENGLISH) (REV. 10/25/05)

ORIGINAL SCALE IN INCHES FOR REDUCED PLANS 0 1 2 3

CU 04242
EA 163731

DISREGARD PRINTS BEARING EARLIER REVISION DATES →

REVISION DATES: 05-04-09 | 05-14-09 | 05-22-09 | 06-15-09

SHEET 4 OF 11

FILE => 34e0012-c-sp1.dgn

USERNAME => tmathesi DATE PLOTTED => 21-JUL-2009 TIME PLOTTED => 13:51

DIST	COUNTY	ROUTE	POST MILES TOTAL PROJECT	SHEET No	TOTAL SHEETS
04	SF	101,1	9.2/9.8, 6.8/7.1	548	567

REGISTERED CIVIL ENGINEER — 06-04-09 DATE

Philip E. Lutz No. C55839 Exp. 12-31-10 CIVIL — REGISTERED PROFESSIONAL ENGINEER — STATE OF CALIFORNIA

7-20-09
PLANS APPROVAL DATE

The State of California or its officers or agents shall not be responsible for the accuracy or completeness of electronic copies of this plan sheet.

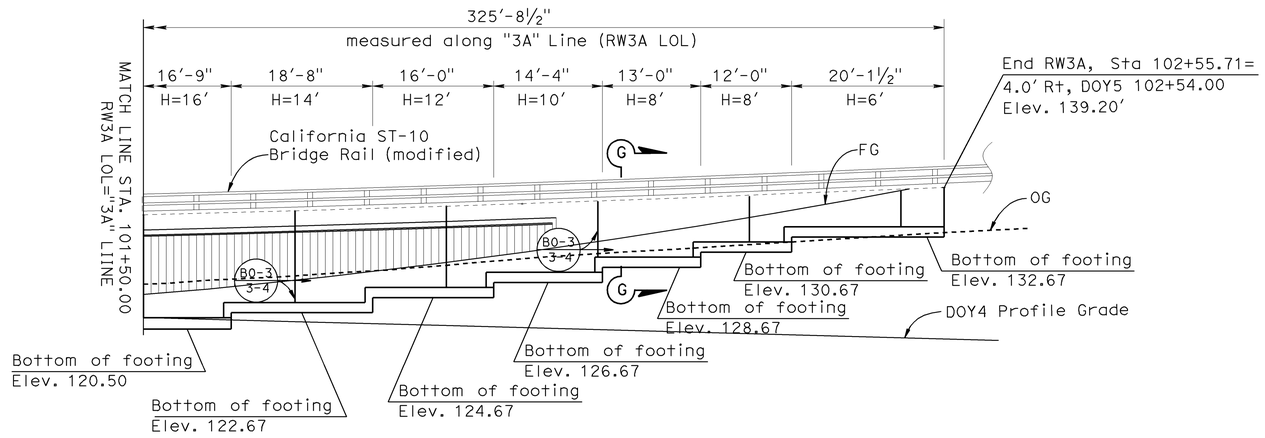

PART DEVELOPED ELEVATION

1"=10'-0"

NOTE :

① For SECTION G-G see "STRUCTURE PLAN NO. 3" sheet.

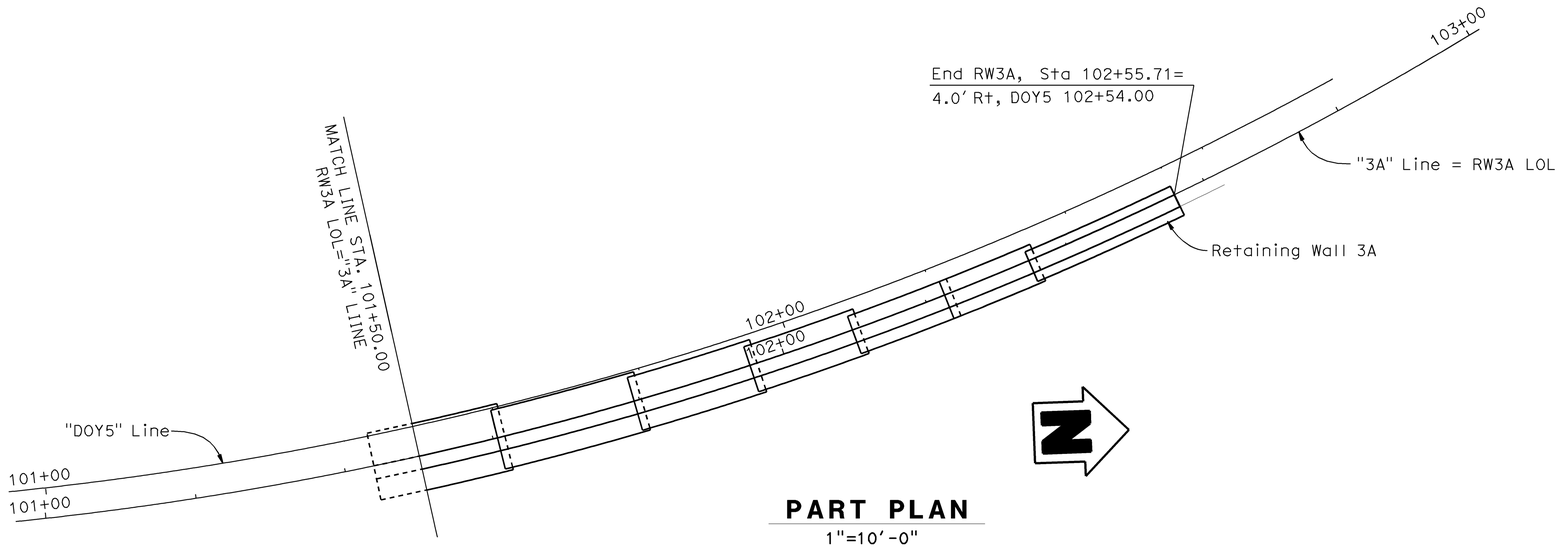

PART PLAN

1"=10'-0"

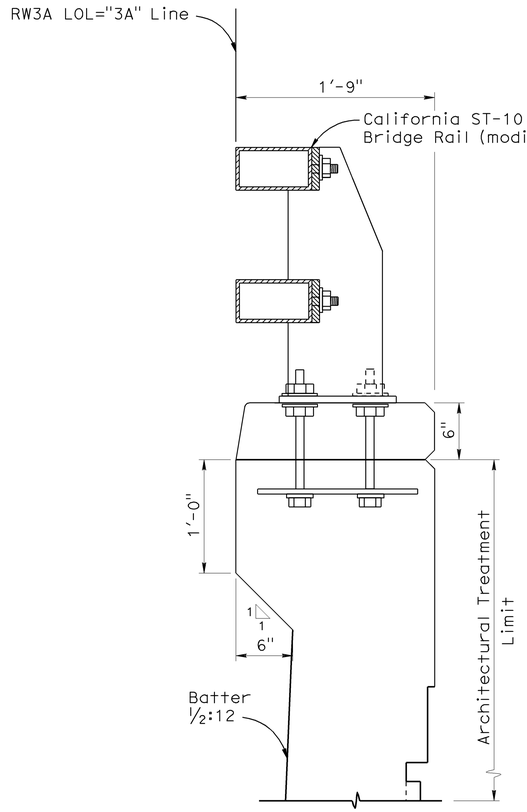

DETAIL "C"

1½"=1'-0"

NOTE :

For wall footing dimensions see "RW DETAILS" sheet.

DESIGN	BY Phil Lutz	CHECKED Nasser Tachta	STATE OF CALIFORNIA DEPARTMENT OF TRANSPORTATION	DIVISION OF ENGINEERING SERVICES STRUCTURE DESIGN DESIGN BRANCH 9	BRIDGE NO. 34E0012
DETAILS	BY Carlo Cancino	CHECKED Nasser Tachta			POST MILE 6.96
QUANTITIES	BY B. Thach	CHECKED Nasser Tachta			

RETAINING WALL NO. 3A
STRUCTURE PLAN NO. 2

STRUCTURES DESIGN DETAIL SHEET (ENGLISH) (REV. 10/25/05)

ORIGINAL SCALE IN INCHES FOR REDUCED PLANS 0 1 2 3

CU 04242
EA 163731

DISREGARD PRINTS BEARING EARLIER REVISION DATES →

REVISION DATES: 05-07-09 | 05-14-09

SHEET 5 OF 11

FILE => 34e0012-c-sp2.dgn

USERNAME => tmikesl DATE PLOTTED => 21-JUL-2009 TIME PLOTTED => 13:51

DIST	COUNTY	ROUTE	POST MILES TOTAL PROJECT	SHEET No	TOTAL SHEETS
04	SF	101,1	9.2/9.8, 6.8/7.1	549	567

REGISTERED CIVIL ENGINEER — 06-04-09 DATE

Philip E. Lutz No. C55839 Exp. 12-31-10 CIVIL — REGISTERED PROFESSIONAL ENGINEER — STATE OF CALIFORNIA

7-20-09
PLANS APPROVAL DATE

The State of California or its officers or agents shall not be responsible for the accuracy or completeness of electronic copies of this plan sheet.

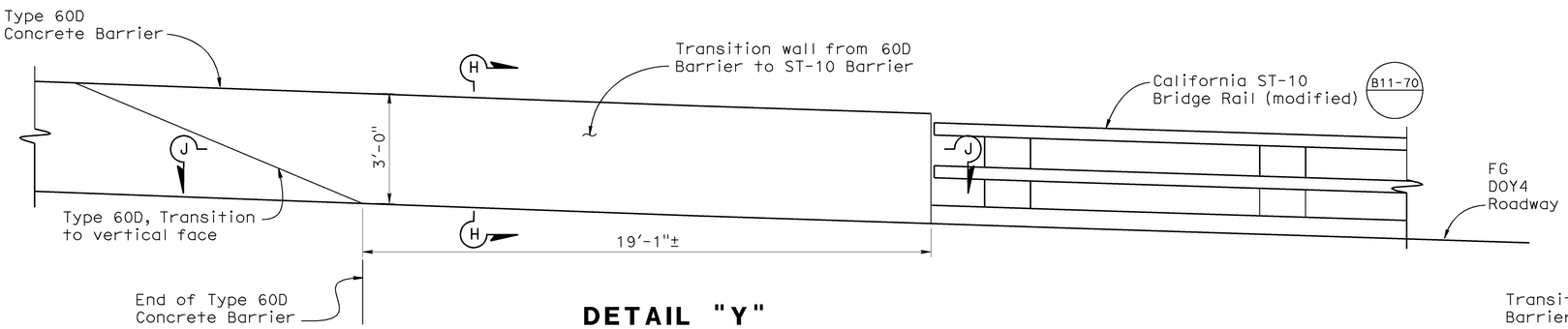

DETAIL "Y"
No Scale

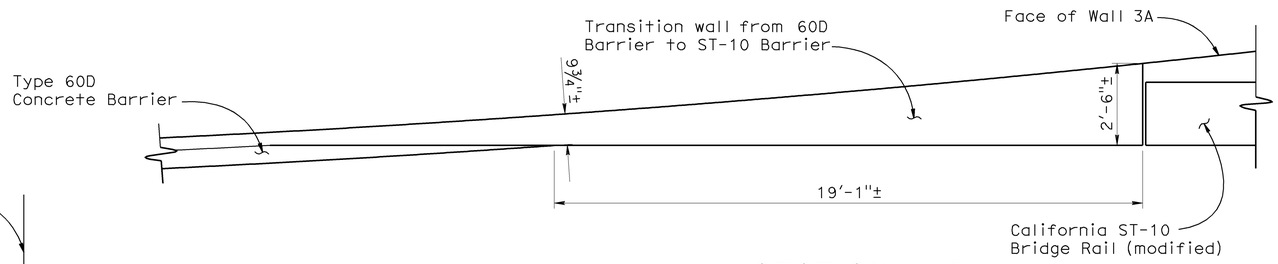

SECTION J-J
No Scale

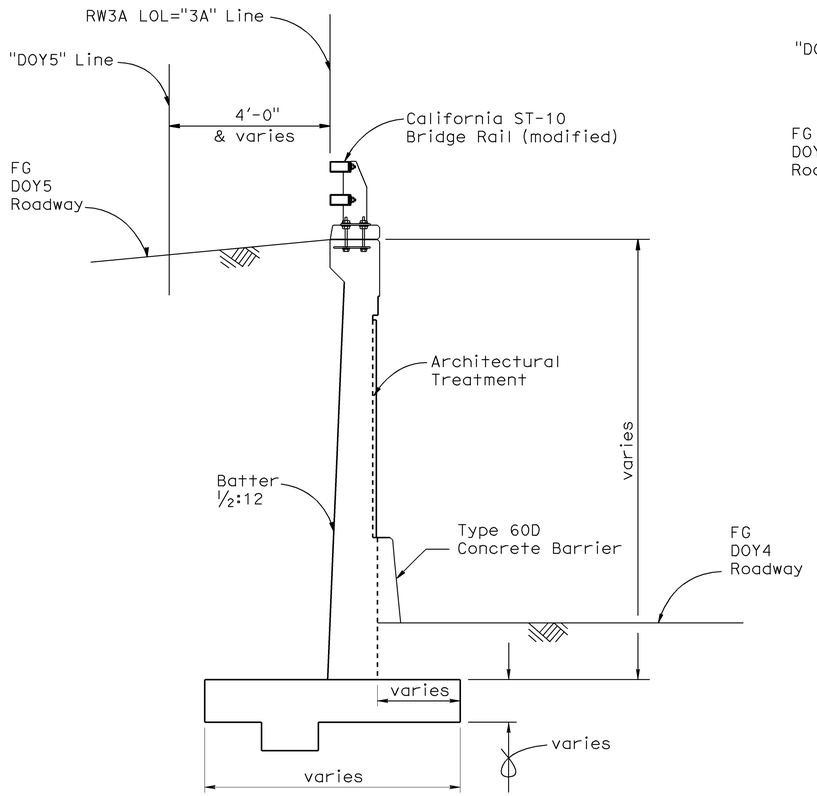

SECTION F-F
⅜"=1'-0"

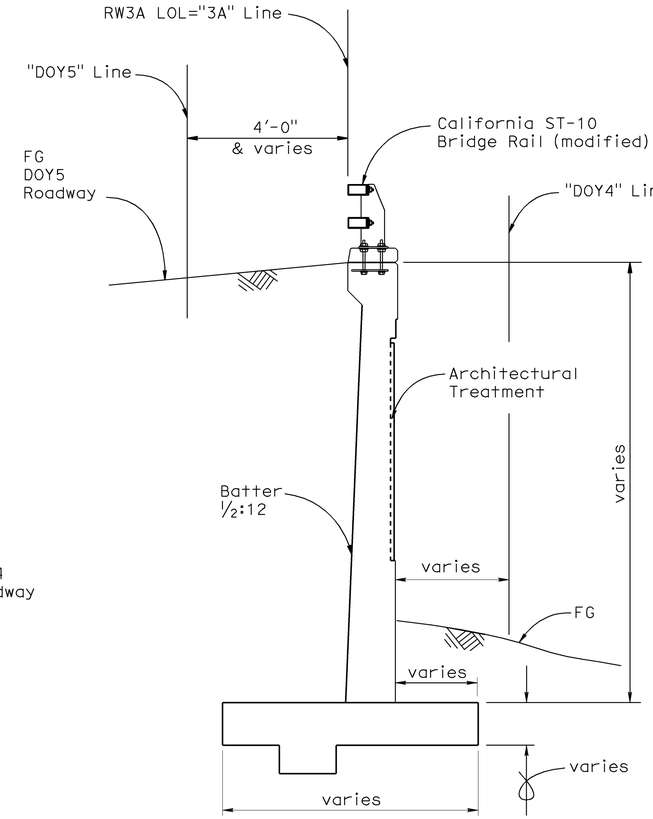

SECTION G-G
⅜"=1'-0"

SECTION H-H
1"=1'-0"

DESIGN	BY Phil Lutz	CHECKED Nasser Tachta	STATE OF CALIFORNIA DEPARTMENT OF TRANSPORTATION	DIVISION OF ENGINEERING SERVICES STRUCTURE DESIGN DESIGN BRANCH 9	BRIDGE NO. 34E0012	RETAINING WALL NO. 3A
DETAILS	BY Carlo Cancino	CHECKED Nasser Tachta			POST MILE 6.96	STRUCTURE PLAN NO. 3
QUANTITIES	BY B. Thach	CHECKED Nasser Tachta		CU 04242 EA 163731	DISREGARD PRINTS BEARING EARLIER REVISION DATES →	REVISION DATES: X

STRUCTURES DESIGN DETAIL SHEET (ENGLISH) (REV. 10/25/05)

ORIGINAL SCALE IN INCHES FOR REDUCED PLANS 0 1 2 3

FILE => 34e0012-c-sp2_a.dgn

SHEET 6 OF 11

USERNAME => rtmillest DATE PLOTTED => 21-JUL-2009 TIME PLOTTED => 13:51

DIST	COUNTY	ROUTE	POST MILES TOTAL PROJECT	SHEET No	TOTAL SHEETS
04	SF	101,1	9.2/9.8, 6.8/7.1	550	567

REGISTERED CIVIL ENGINEER — 06-04-09 DATE

Philip E. Lutz No. C55839 Exp. 12-31-10 CIVIL — REGISTERED PROFESSIONAL ENGINEER — STATE OF CALIFORNIA

7-20-09
PLANS APPROVAL DATE

The State of California or its officers or agents shall not be responsible for the accuracy or completeness of electronic copies of this plan sheet.

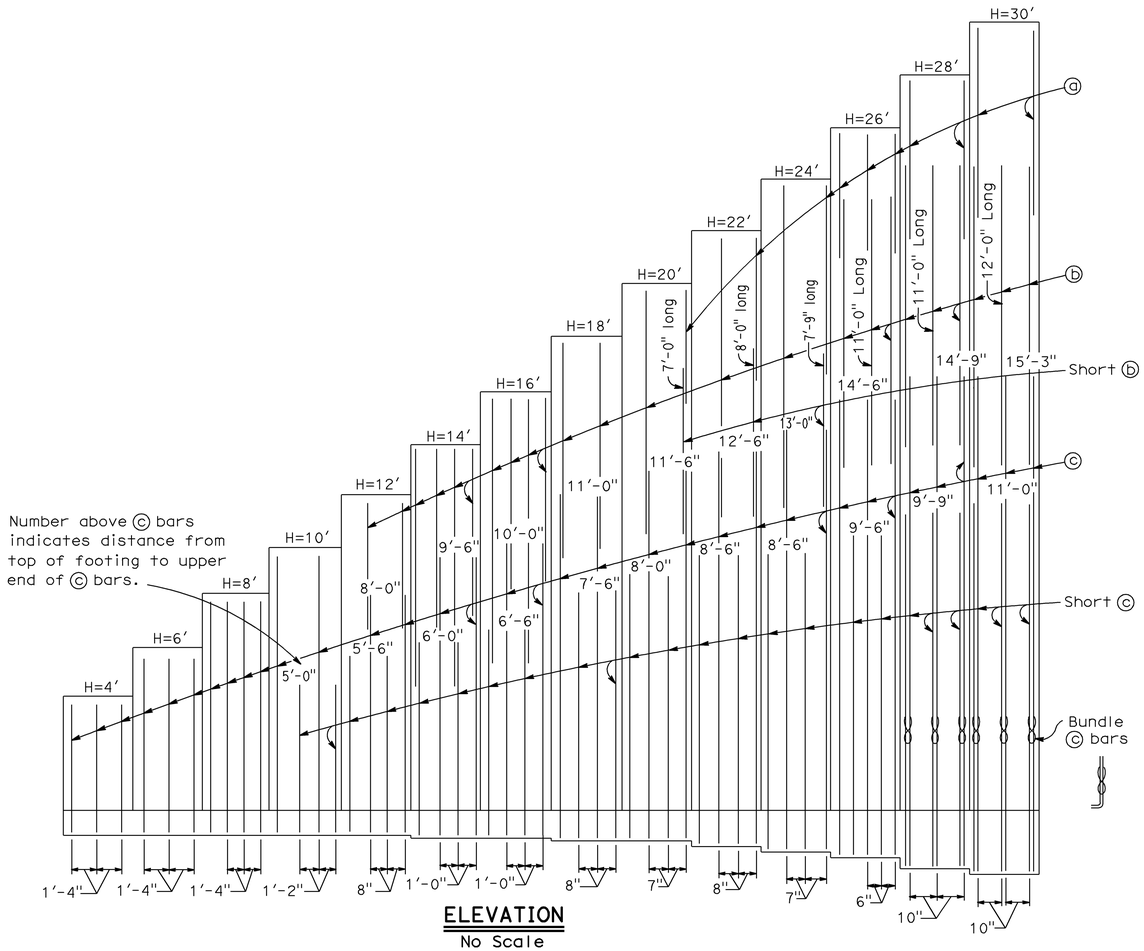

ELEVATION
No Scale

TABLE OF REINFORCING STEEL DIMENSIONS AND DATA															
Design H		4′	6′	8′	10′	12′	14′	16′	18′	20′	22′	24′	26′	28′	30′
W		3′-3"	4′-3"	5′-3"	6′-3"	7′-3"	8′-0"	9′-0"	10′-0"	11′-0"	12′-1"	13′-3"	14′-3"	15′-3"	16′-9"
C		1′-0"	1′-4"	1′-8"	2′-0"	2′-4"	2′-7"	2′-11"	3′-3"	3′-7"	3′-11"	4′-5"	4′-9"	5′-1"	5′-5"
B		2′-3"	2′-11"	3′-7"	4′-3"	4′-11"	5′-5"	6′-1"	6′-9"	7′-5"	8′-2"	8′-10"	9′-6"	10′-2"	11′-4"
F		1′-4"	1′-4"	1′-4"	1′-4"	1′-4"	1′-6"	1′-6"	1′-6"	1′-6"	1′-8"	1′-10"	2′-2"	2′-6"	2′-9"
Batter		½:12	½:12	½:12	½:12	½:12	½:12	½:12	½:12	½:12	½:12	⅝:12	¾:12	¾:12	⅞:12
ⓐ bars		—	—	—	—	—	—	—	—	#5 @ 28	#5 @ 32	#5 @ 28	#5 @ 12	#5 @ 20	#8 @ 20
ⓑ bars		—	—	—	—	#5 @ 16	#5 @ 12	#5 @ 12	#6 @ 16	#8 @ 14	#8 @ 16	#8 @ 14	#8 @ 12	#8 @ 10	#9 @ 10
ⓒ bars		#5 @ 16	#5 @ 16	#5 @ 16	#6 @ 14	#6 @ 8	#8 @ 12	#9 @ 12	#9 @ 8	#9 @ 7	#11 @ 8	#11 @ 7	#11 @ 6	#11 @ 10ɣ	#11 @ 10ɣ
ⓓ bars		#5 @ 16	#5 @ 16	#5 @ 16	#5 @ 14	#5 @ 8	#8 @ 12	#9 @ 12	#9 @ 8	#9 @ 7	#11 @ 8	#11 @ 7	#11 @ 6	#11 @ 10ɣ	#11 @ 10ɣ
Total ⓔ bars		6-#6	6-#6	6-#6	12-#6	12-#6	12-#6	12-#6	8-#6	8-#6	8-#6	6-#6	6-#6	6-#6	6-#6
Total ⓕ bars		—	—	—	6-#6	6-#6	6-#6	6-#6	6-#6	6-#6	6-#6	4-#5	4-#5	4-#5	4-#5
Loading Case I	Toe Pressure ksf	1.7	1.9	2.2	2.5	2.8	3.3	3.5	4.0	4.3	4.6	4.9	5.3	5.7	6.3
Loading Case II	Toe Pressure ksf	1.1	1.5	2.0	2.3	2.7	3.3	3.7	4.2	4.7	5.5	6.0	6.5	7.1	7.5
Loading Case III	Toe Pressure ksf	1.4	1.7	2.1	2.5	2.9	3.4	3.8	4.3	4.8	5.4	5.8	6.5	7.2	7.5

ɣ Denotes a bundle of 2 bars

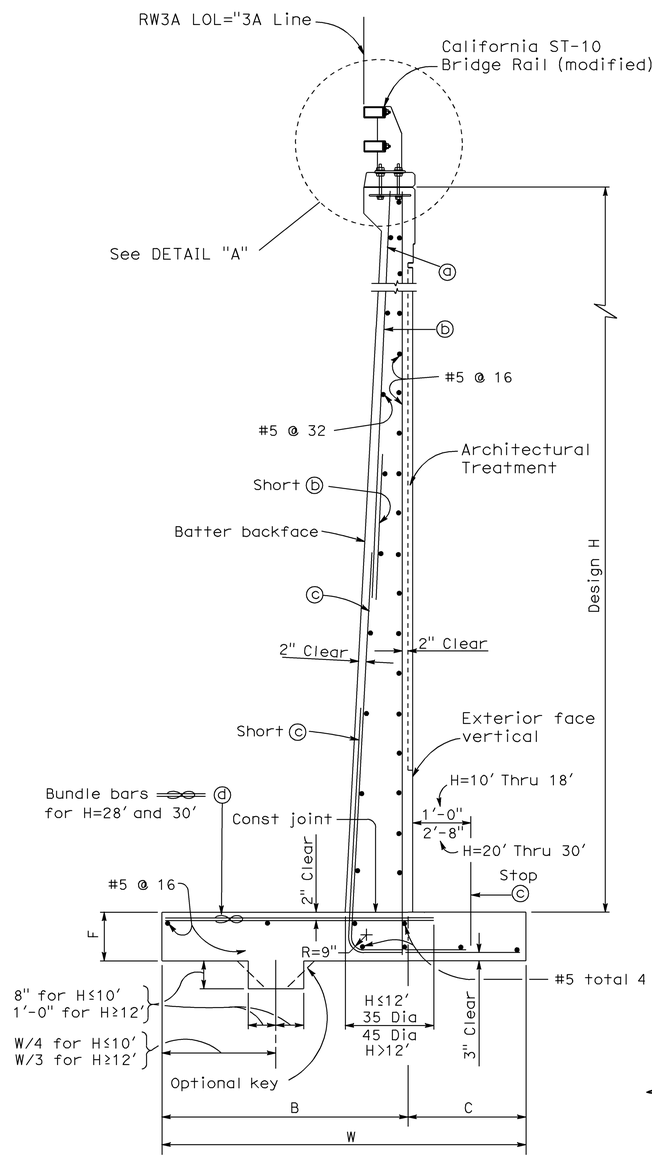

SPREAD FOOTING
TYPICAL SECTION
No Scale

NOTES :
1. RW3A LOL is shifted by 1′-8" from face of Wall.
2. For DETAIL "A" see "ST-10 (MOD) DETAILS NO. 1" sheet.

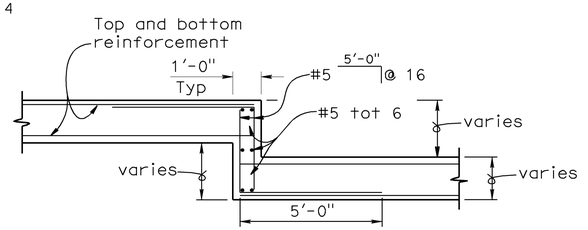

FOOTING STEP REINFORCEMENT
⅜"=1′-0"

NOTES:
1. For details not shown and drainage notes see B3-8
2. For wall stem joint details see B0-3 / 3-3 and B0-3 / 3-4
3. For pile footing for design H=4′ use same footing dimensions as for design H=6′.

RETAINING WALL - TYPE 1
H=4' THROUGH 30'

DESIGN	BY Phil Lutz	CHECKED Nasser Tachta	STATE OF CALIFORNIA DEPARTMENT OF TRANSPORTATION	DIVISION OF ENGINEERING SERVICES STRUCTURE DESIGN DESIGN BRANCH 9	BRIDGE NO. 34E0012	RETAINING WALL NO. 3A	
DETAILS	BY Carlo Cancino	CHECKED Nasser Tachta			POST MILE 6.96	RW DETAILS	
QUANTITIES	BY B. Thach	CHECKED Nasser Tachta		CU 04242 EA 163731			

STRUCTURES DESIGN DETAIL SHEET (ENGLISH) (REV. 10/25/05)

ORIGINAL SCALE IN INCHES FOR REDUCED PLANS 0 1 2 3

DISREGARD PRINTS BEARING EARLIER REVISION DATES →

REVISION DATES: X

SHEET 7 OF 11

FILE => 34e0012-c-sp3.dgn

USERNAME => rtmirkes | DATE PLOTTED => 21-JUL-2009 TIME PLOTTED => 13:51

DIST	COUNTY	ROUTE	POST MILES TOTAL PROJECT	SHEET No	TOTAL SHEETS
04	SF	101,1	9.2/9.8, 6.8/7.1	551	567

REGISTERED CIVIL ENGINEER — 06-04-09 DATE

Philip E. Lutz, No. C55839, Exp. 12-31-10, CIVIL — REGISTERED PROFESSIONAL ENGINEER — STATE OF CALIFORNIA

7-20-09
PLANS APPROVAL DATE

The State of California or its officers or agents shall not be responsible for the accuracy or completeness of electronic copies of this plan sheet.

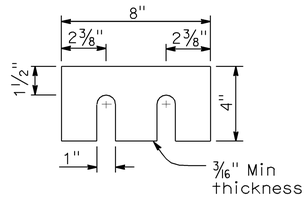

SHIMS REQUIRED FOR TOP AND BOTTOM RAIL

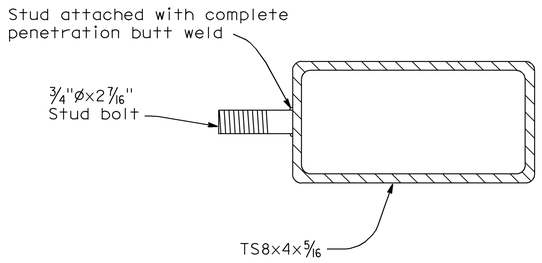

SECTION AT POST

STUD BOLT DETAIL

No Scale

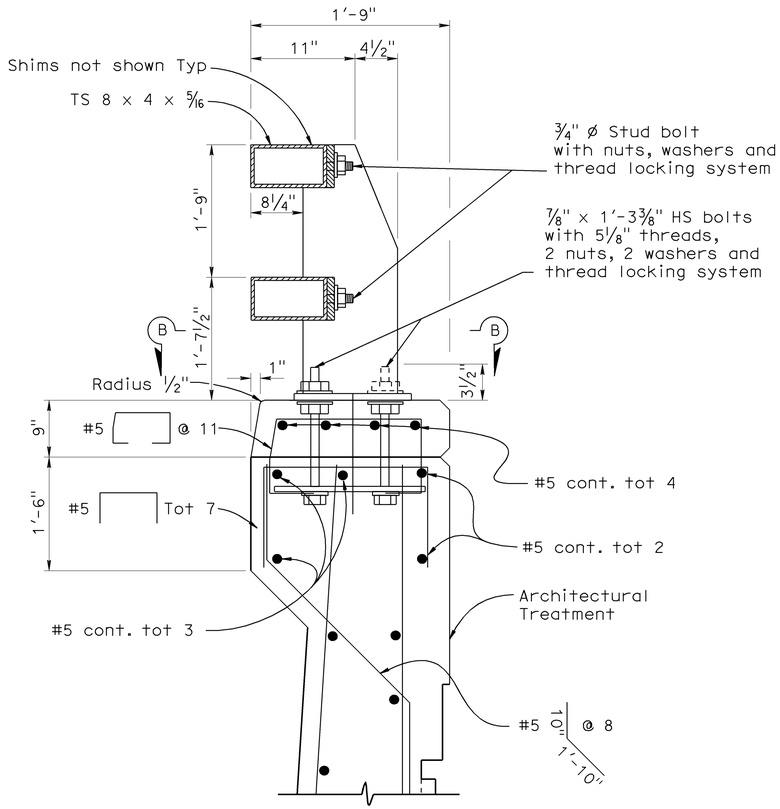

DETAIL "A"

No Scale

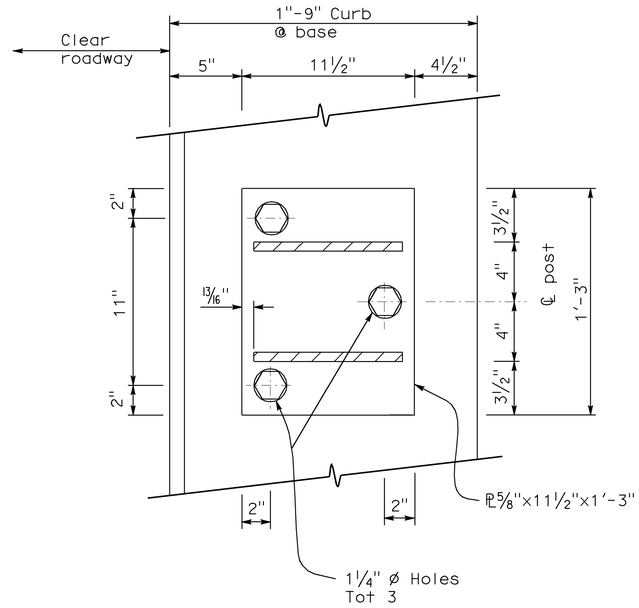

SECTION B-B

No Scale

DESIGN	BY Phil Lutz	CHECKED Nasser Tachta	STATE OF CALIFORNIA DEPARTMENT OF TRANSPORTATION	DIVISION OF ENGINEERING SERVICES STRUCTURE DESIGN DESIGN BRANCH 9	BRIDGE NO. 34E0012	RETAINING WALL NO. 3A	
DETAILS	BY Carlo Cancino	CHECKED Nasser Tachta			POST MILE 6.96	ST-10 (MOD) DETAILS NO. 1	
QUANTITIES	BY B. Thach	CHECKED Nasser Tachta					

STRUCTURES DESIGN DETAIL SHEET (ENGLISH) (REV. 10/25/05)

ORIGINAL SCALE IN INCHES FOR REDUCED PLANS 0 1 2 3

CU 04242
EA 163731

DISREGARD PRINTS BEARING EARLIER REVISION DATES →

REVISION DATES: X

SHEET 8 OF 11

FILE => 34e0012-d-det01.dgn

USERNAME => ttpierce DATE PLOTTED => 21-JUL-2009 TIME PLOTTED => 14:04

DIST	COUNTY	ROUTE	POST MILES TOTAL PROJECT	SHEET No	TOTAL SHEETS
04	SF	101,1	9.2/9.8, 6.8/7.1	552	567

REGISTERED CIVIL ENGINEER — 06-04-09 DATE

REGISTERED PROFESSIONAL ENGINEER — Philip E. Lutz, No. C55839, Exp. 12-31-10, CIVIL, STATE OF CALIFORNIA

7-20-09
PLANS APPROVAL DATE

The State of California or its officers or agents shall not be responsible for the accuracy or completeness of electronic copies of this plan sheet.

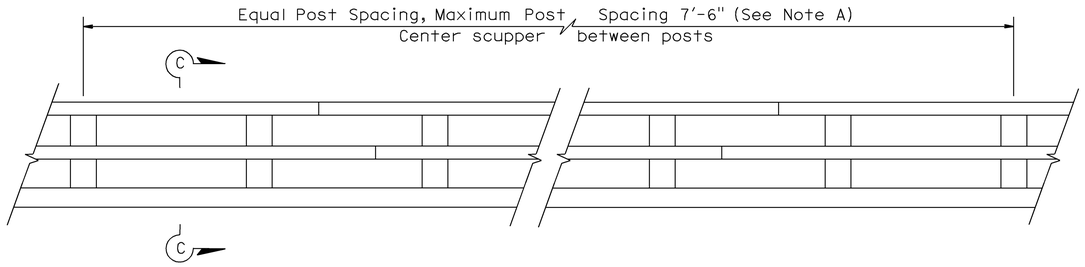

RAILING ELEVATION

No Scale

NOTE A:
Post spacing and/or block length to be adjusted to fit retaining wall length

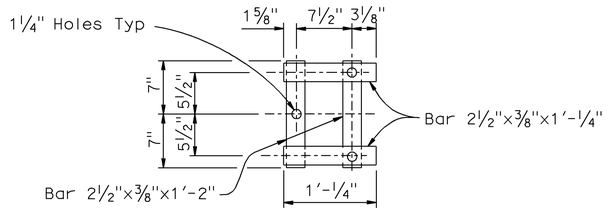

WALL ANCHOR PLATE

No Scale

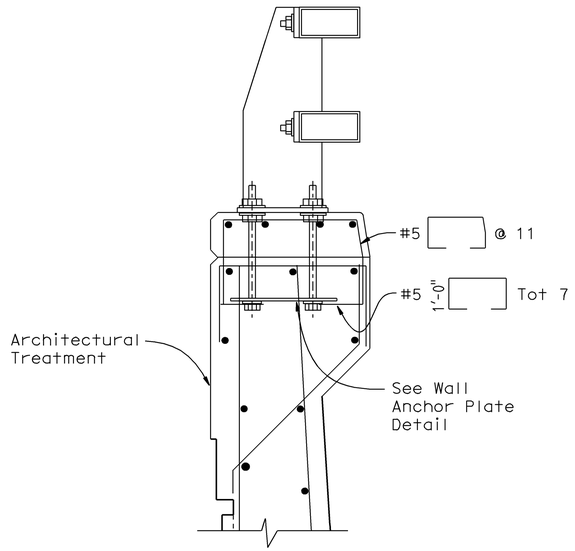

SECTION C-C

No Scale

NOTE :
Reinf same as for Detail "A" except as noted.

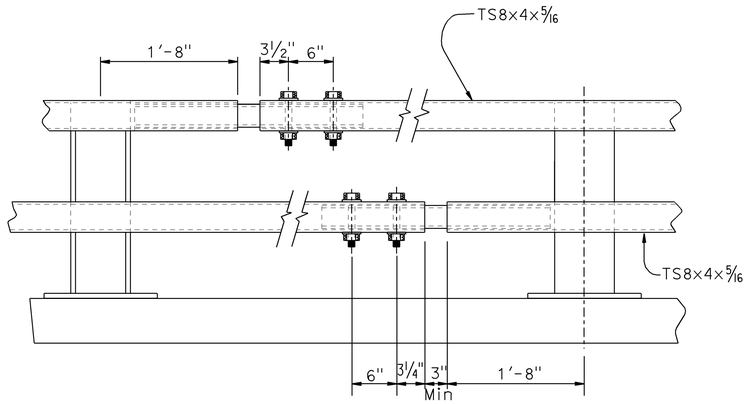

EXPANSION SPLICE

No Scale

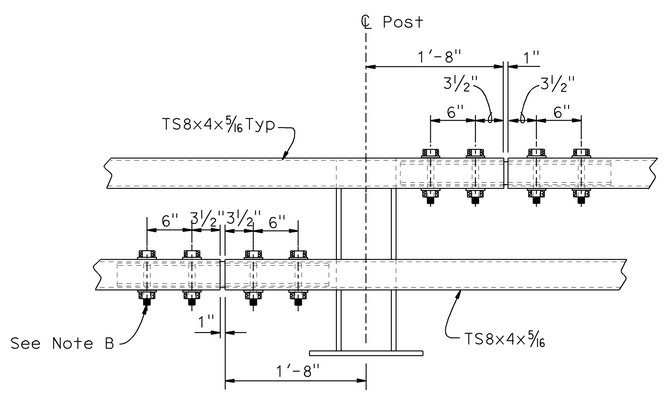

STANDARD SPLICE

No Scale

NOTE B:
Use ¾"Ø x 5⁄16"
HS bolts with washers, fully tensioned.
1" holes in rail Typ

DESIGN	BY Phil Lutz	CHECKED Nasser Tachta	STATE OF CALIFORNIA DEPARTMENT OF TRANSPORTATION	DIVISION OF ENGINEERING SERVICES STRUCTURE DESIGN DESIGN BRANCH 9	BRIDGE NO. 34E0012	RETAINING WALL NO. 3A
DETAILS	BY Carlo Cancino	CHECKED Nasser Tachta			POST MILE 6.96	ST-10 (MOD) DETAILS NO. 2
QUANTITIES	BY B. Thach	CHECKED Nasser Tachta				

STRUCTURES DESIGN DETAIL SHEET (ENGLISH) (REV. 10/25/05)

ORIGINAL SCALE IN INCHES FOR REDUCED PLANS 0 1 2 3

CU 04242
EA 163731

DISREGARD PRINTS BEARING EARLIER REVISION DATES →

REVISION DATES: X

SHEET 9 OF 11

FILE => 34e0012-d-det02.dgn

USERNAME => ttpierce DATE PLOTTED => 21-JUL-2009 TIME PLOTTED => 14:04

DIST	COUNTY	ROUTE	POST MILES TOTAL PROJECT	SHEET No	TOTAL SHEETS
04	SF	101,1	9.2/9.8, 6.8/7.1	553	567

REGISTERED CIVIL ENGINEER — 06-04-09 DATE

Philip E. Lutz No. C55839 Exp. 12-31-10 CIVIL — REGISTERED PROFESSIONAL ENGINEER — STATE OF CALIFORNIA

7-20-09
PLANS APPROVAL DATE

The State of California or its officers or agents shall not be responsible for the accuracy or completeness of electronic copies of this plan sheet.

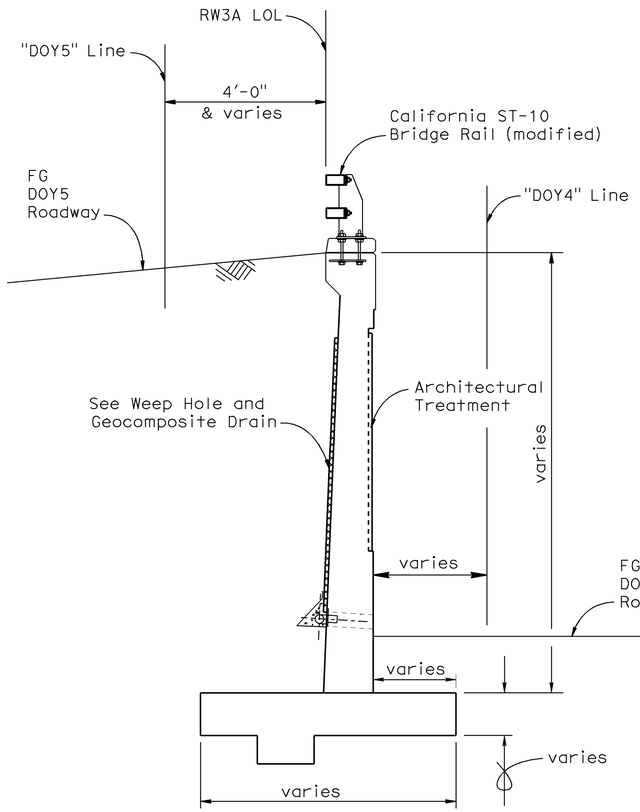

TYPICAL SECTION

3/8"=1'-0"

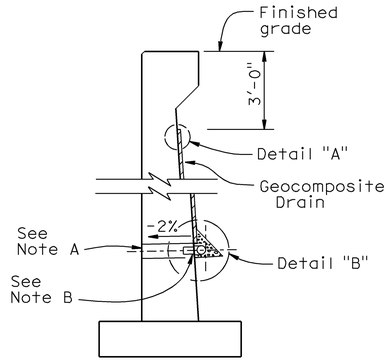

WALL SECTION

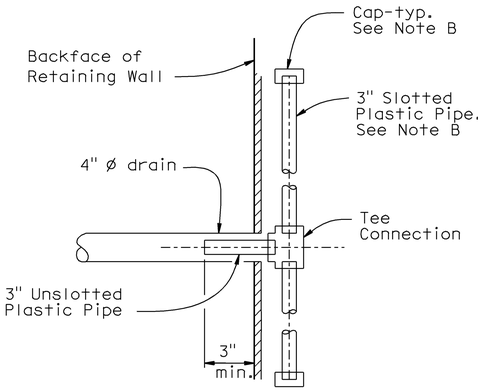

SECTION A-A

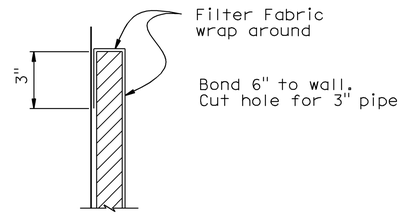

DETAIL "A"

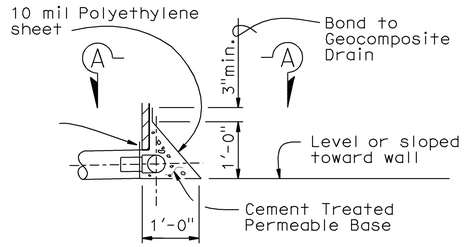

DETAIL "B"

WEEP HOLE AND GEOCOMPOSITE DRAIN

NOTES:

A. 4" ø drains at intermediate sag points and at 25' max center to center (9' c-c for Type 3 and 9'-3" c-c for Type 4 retaining walls).
For walls adjacent to sidewalks or curbs, provide 4" cast iron or asbestos cement pipe under the sidewalk to discharge through curb face.
Exposed wall drains shall be located 3"± above finished grade.

B. Geocomposite drain, cement treated permeable base, and 3"ø slotted plastic pipe continuous behind retaining wall or abutment. Cap ends of pipe. Provide "Tee" connection at each 4" ø drain.

C. Connect the low end of plastic pipe to the main outlet pipe as applicable.

DESIGN	BY Phil Lutz	CHECKED Nasser Tachta	STATE OF CALIFORNIA DEPARTMENT OF TRANSPORTATION	DIVISION OF ENGINEERING SERVICES STRUCTURE DESIGN DESIGN BRANCH 9	BRIDGE NO. 34E0012	RETAINING WALL NO. 3A	
DETAILS	BY Carlo Cancino	CHECKED Nasser Tachta			POST MILE 6.96	DRAINAGE DETAILS	
QUANTITIES	BY B. Thach	CHECKED Nasser Tachta					

STRUCTURES DESIGN DETAIL SHEET (ENGLISH) (REV. 10/25/05)

ORIGINAL SCALE IN INCHES FOR REDUCED PLANS 0 1 2 3

CU 04242
EA 163731

DISREGARD PRINTS BEARING EARLIER REVISION DATES →

REVISION DATES: X

SHEET 10 OF 11

FILE => 34e0012-d-det03.dgn

USERNAME => trpierce DATE PLOTTED => 21-JUL-2009 TIME PLOTTED => 14:04

DIST	COUNTY	ROUTE	POST MILES TOTAL PROJECT	SHEET No	TOTAL SHEETS
04	SF	101,1	9.2/9.8, 6.8/7.1	554	567

REGISTERED CIVIL ENGINEER — 06-04-09 DATE

7-20-09
PLANS APPROVAL DATE

The State of California or its officers or agents shall not be responsible for the accuracy or completeness of electronic copies of this plan sheet.

REGISTERED PROFESSIONAL ENGINEER — Philip E. Lutz — No. C55839 — Exp. 12-31-10 — CIVIL — STATE OF CALIFORNIA

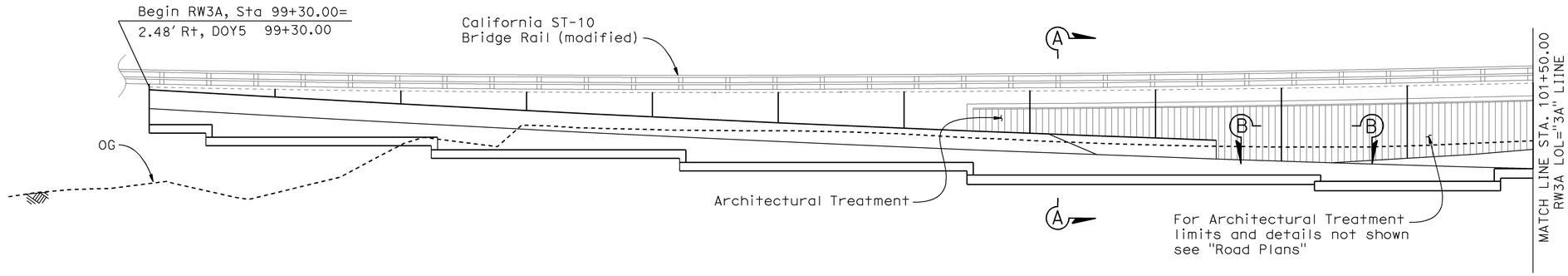

PART DEVELOPED ELEVATION

1"=10'-0"

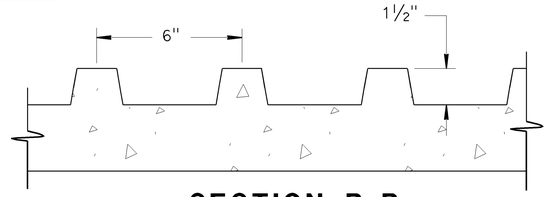

SECTION B-B
FLUTED FIN TEXTURE

No Scale

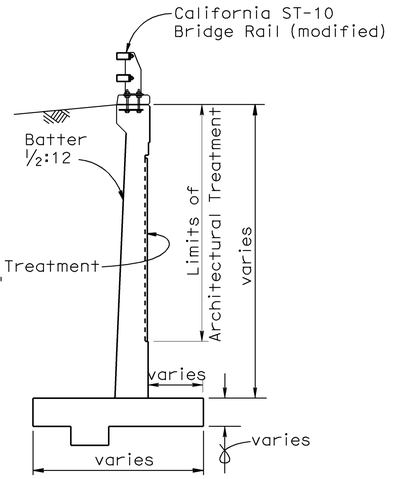

SECTION A-A

¼"=1'-0"

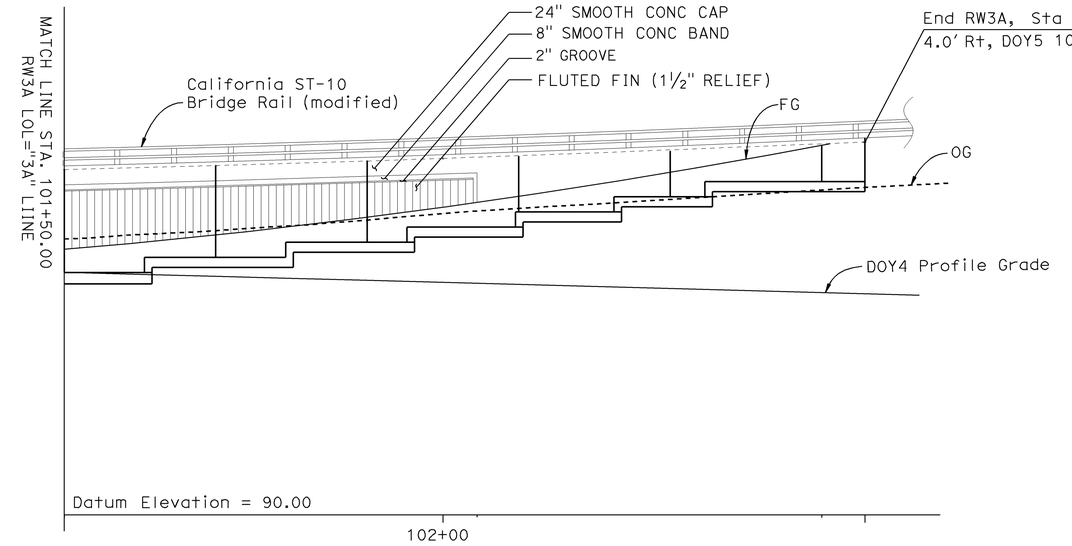

PART DEVELOPED ELEVATION

1"=10'-0"

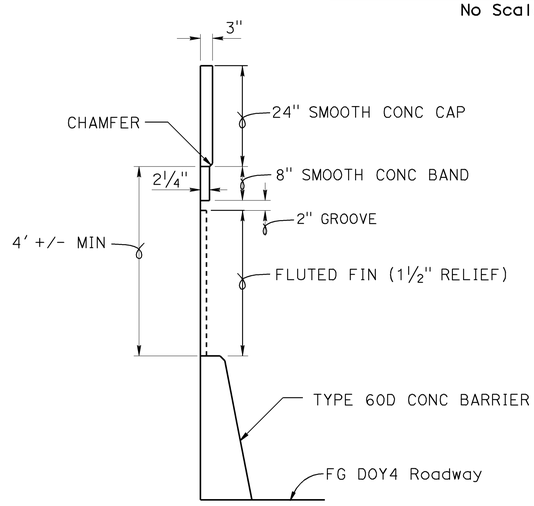

DETAIL "X"
AESTHETICS TREATMENT
(STA 100+60.00 to STA 100+91.00±)

No Scale

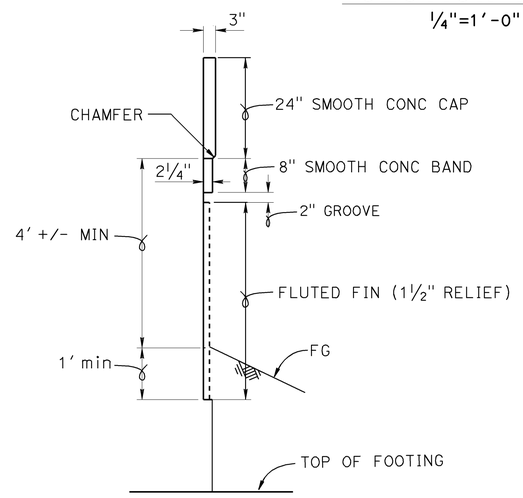

DETAIL "X"
AESTHETICS TREATMENT
(STA 101+06.50 to STA 102+04.50)

No Scale

DESIGN	BY Phil Lutz	CHECKED Nasser Tachta	STATE OF CALIFORNIA DEPARTMENT OF TRANSPORTATION	DIVISION OF ENGINEERING SERVICES STRUCTURE DESIGN DESIGN BRANCH 9	BRIDGE NO. 34E0012	RETAINING WALL NO. 3A
DETAILS	BY Carlo Cancino	CHECKED Nasser Tachta			POST MILE 6.96	ARCHITECTURAL TREATMENT DETAILS
QUANTITIES	BY B. Thach	CHECKED Nasser Tachta				

STRUCTURES DESIGN DETAIL SHEET (ENGLISH) (REV. 10/25/05)

ORIGINAL SCALE IN INCHES FOR REDUCED PLANS 0 1 2 3

CU 04242
EA 163731

DISREGARD PRINTS BEARING EARLIER REVISION DATES →

REVISION DATES

SHEET	OF
11	11

FILE => 34e0012-e-dest.dgn

USERNAME => ttpierce DATE PLOTTED => 21-JUL-2009 TIME PLOTTED => 14:04

LEGEND:

Denotes limits of Architectural Treament (Pattern to be determined)

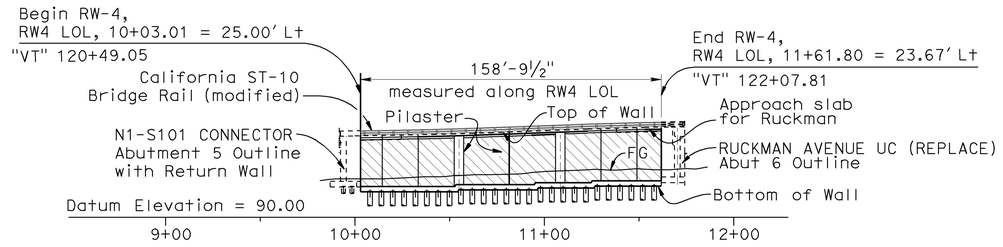

MIRRORED DEVELOPED ELEVATION

1"=40'-0"

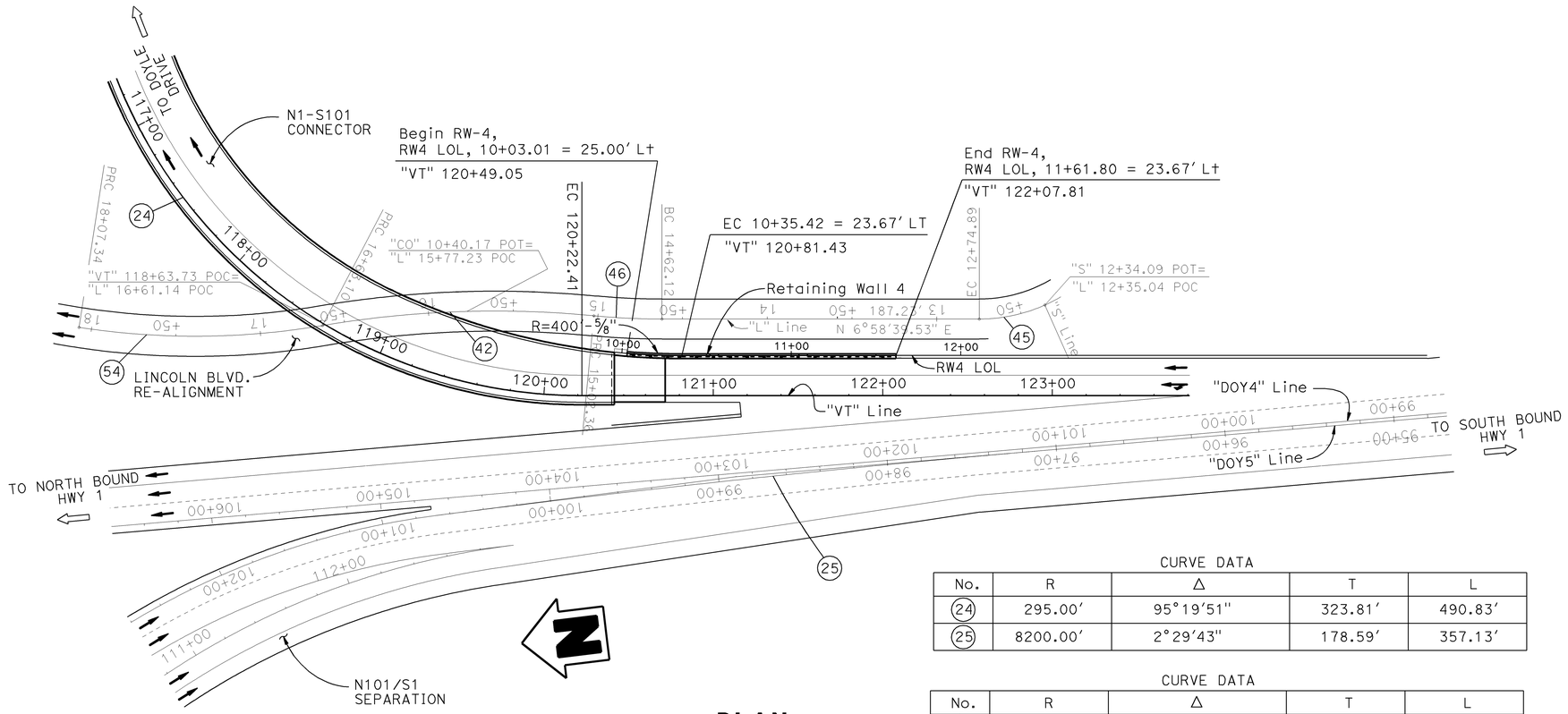

PLAN

1"=40'-0"

CURVE DATA

No.	R	Δ	T	L
(24)	295.00'	95°19'51"	323.81'	490.83'
(25)	8200.00'	2°29'43"	178.59'	357.13'

CURVE DATA

No.	R	Δ	T	L
(42)	610.00'	15°05'52"	80.44'	160.74'
(45)	95.00'	67°30'30"	63.48'	111.93'
(46)	420.00'	05°29'23"	20.14'	40.24'
(54)	450.01'	18°21'53"	72.74'	144.24'

QUANTITIES:

STRUCTURE EXCAVATION (RETAINING WALL) (NATURALLY OCCURING ASBESTOS)	850	CY
STRUCTURE EXCAVATION (TYPE Z-2) (AERIALLY DEPOSITED LEAD)	270	CY
STRUCTURE BACKFILL (RETAINING WALL)	1,950	CY
30" CAST-IN-DRILLED-HOLE CONCRETE PILING	3.150	LF
STRUCTURAL CONCRETE, RETAINING WALL	690	CY
ARCHITECTURAL TREATMENT (2" THICK)	3,450	SQFT
BAR REINFORCING STEEL (RETAINING WALL)	235,000	LB
CALIFORNIA ST-10 BRIDGE RAIL (MODIFIED)	162	LF

DIST	COUNTY	ROUTE	POST MILES TOTAL PROJECT	SHEET No	TOTAL SHEETS
04	SF	101,1	9.2/9.8, 6.8/7.1	555	567

Philip E. Lutz 06-04-09
REGISTERED CIVIL ENGINEER DATE

7-20-09
PLANS APPROVAL DATE

The State of California or its officers or agents shall not be responsible for the accuracy or completeness of electronic copies of this plan sheet.

REGISTERED PROFESSIONAL ENGINEER
Philip E. Lutz
No. C55839
Exp. 12-31-10
CIVIL
STATE OF CALIFORNIA

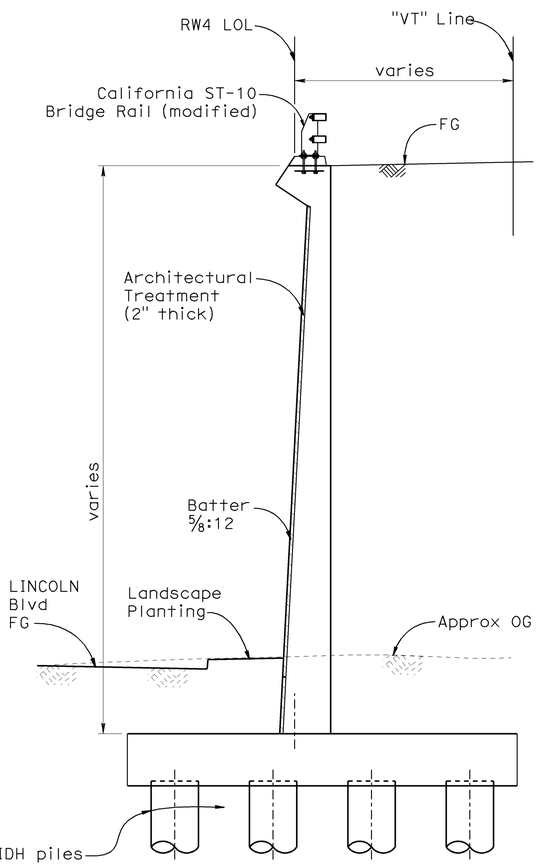

TYPICAL SECTION

¼"=1'-0"

NOTE:

Drainage for landscape planting to be installed in future replacement planting contract.

majid modari DESIGN ENGINEER	DESIGN	BY Phil Lutz	CHECKED Nasser Tachta	LOAD & RESISTANCE FACTOR DESIGN			STATE OF CALIFORNIA DEPARTMENT OF TRANSPORTATION	DIVISION OF ENGINEERING SERVICES STRUCTURE DESIGN DESIGN BRANCH 9	BRIDGE NO. 34E0013 POST MILE 6.90	RETAINING WALL NO. 4 GENERAL PLAN
	DETAILS	BY Carlo Cancino	CHECKED Nasser Tachta	LAYOUT	BY Nasser Tachta	CHECKED Phil Lutz				
	QUANTITIES	BY B. Thach	CHECKED Nasser Tachta	SPECIFICATIONS	BY X	PLANS AND SPECS COMPARED X				

ORIGINAL SCALE IN INCHES FOR REDUCED PLANS 0 1 2 3

CU 04242
EA 163731

DISREGARD PRINTS BEARING EARLIER REVISION DATES →

REVISION DATES: 04-17-09 | 05-14-09 | 05-22-09 | 06-01-09 | 06-15-09 | 06-17-09 | 07-09-09

SHEET 1 OF 13

STRUCTURES DESIGN GENERAL PLAN SHEET (ENGLISH) (REV.07-24-06)

FILE => 34e0013-a-gp.dgn

USERNAME = tmorton DATE PLOTTED => 21-JUL-2009 TIME PLOTTED => 14:17

DIST	COUNTY	ROUTE	POST MILES TOTAL PROJECT	SHEET No	TOTAL SHEETS
04	SF	101,1	9.2/9.8, 6.8/7.1	556	567

REGISTERED CIVIL ENGINEER — 06-04-09 DATE

Philip E. Lutz No. C55839 Exp. 12-31-10 CIVIL — REGISTERED PROFESSIONAL ENGINEER — STATE OF CALIFORNIA

7-20-09
PLANS APPROVAL DATE

The State of California or its officers or agents shall not be responsible for the accuracy or completeness of electronic copies of this plan sheet.

INDEX TO PLANS

SHEET No.	TITLE
1	GENERAL PLAN
2	INDEX TO PLAN
3	FOUNDATION PLAN
4	STRUCTURE PLAN No. 1
5	STRUCTURE PLAN No. 2
6	STRUCTURE PLAN No. 3
7	ST-10 (MODIFIED) DETAILS No. 1
8	ST-10 (MODIFIED) DETAILS No. 2
9	DRAINAGE DETAILS
10	LOG OF TEST BORINGS 1 OF 4
11	LOG OF TEST BORINGS 2 OF 4
12	LOG OF TEST BORINGS 3 OF 4
13	LOG OF TEST BORINGS 4 OF 4

STANDARD PLANS DATED MAY 2006

PLAN No.	PLAN TITLE
A10A	ACRONYMS AND ABBREVIATIONS (SHEET 1 OF 2)
A10B	ACRONYMS AND ABBREVIATIONS (SHEET 2 OF 2)
A62B	LIMITS OF PAYMENT FOR EXCAVATION AND BACKFILL
B0-3	BRIDGE DETAILS
B11-68	CALIFORNIA ST-10 BRIDGE RAIL (1 OF 3)
B11-69	CALIFORNIA ST-10 BRIDGE RAIL (2 OF 3)
B11-70	CALIFORNIA ST-10 BRIDGE RAIL (3 OF 3)

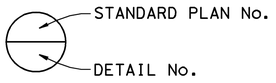

PILE DATA TABLE

LOCATION		PILE TYPE	PILE CUT-OFF ELEV (ft)	PILE TIP ELEV (ft)
RW 4	Sta. 120+48.38	30"Ø CIDH	+103.5	+73.5
	Sta. 120+82.41	30"Ø CIDH	+104.5	+74.5
	Sta. 121+18.41	30"Ø CIDH	+105.5	+75.5
	Sta. 121+94.50	30"Ø CIDH	+106.5	+76.5

LEGEND:

- Indicates Structure Excavation, Retaining Wall (Naturally occuring asbestos)
- Indicates Structure Backfill, Retaining Wall
- Indicates Structure Excavation, Type Z-2

GENERAL NOTES
LOAD FACTOR DESIGN

DESIGN : Load Factor Design, 2004 AASTO with Revisions By California Bridge Design Specification

DESIGN DATA :

SEISMIC LOAD : 0.3 DEAD LOAD

SEISMIC LOAD : SOIL
kh = 0.39
kv = 0.0
kae : Moronabe - Okabe Method
soil Ø = 34° ,γ = 120 pcf

EQUIVALENT FLUID PRESSURE :
= 36 pcf for determination of toe pressure
= 27 pcf for determination of heel pressure

LOADING CASE : Level ground with 240 psf surcharge

CONCRETE : REINFORCED CONCRETE, f'c = 3600 psi
fy = 60,00 psi

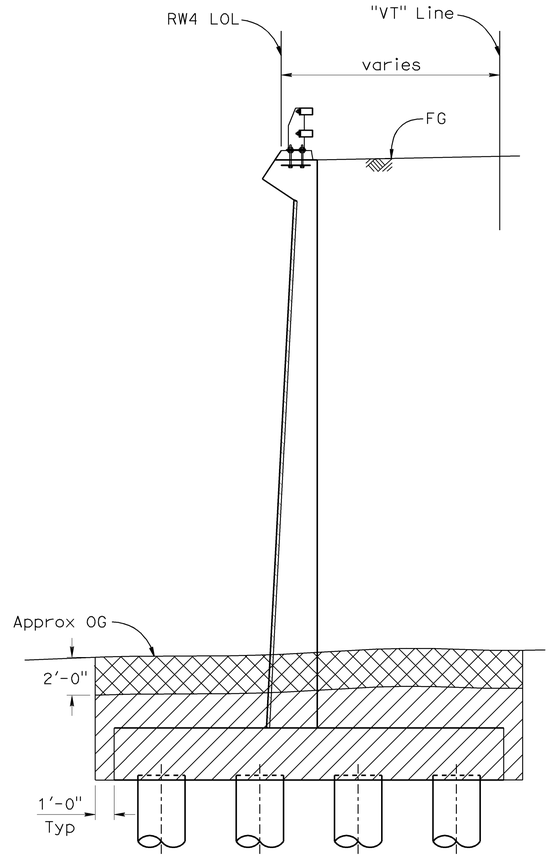

EXCAVATION LIMITS
No Scale

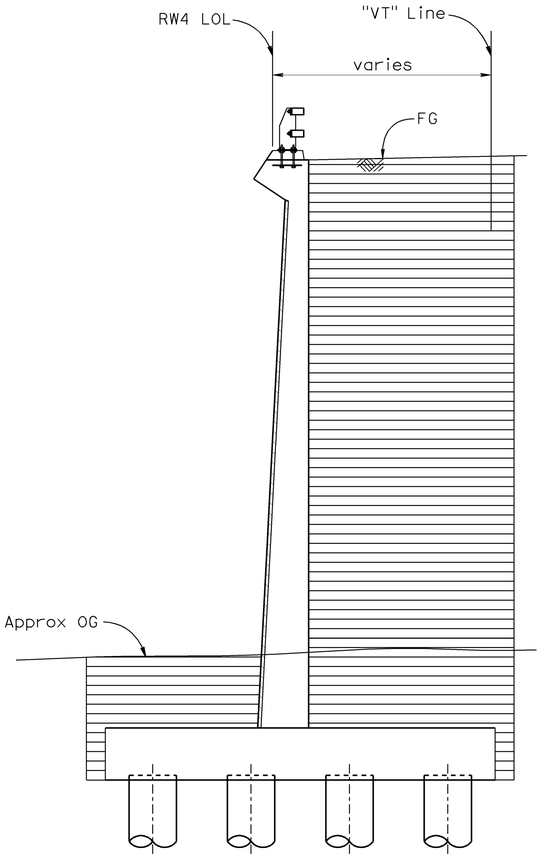

BACKFILL LIMITS
No Scale

	DESIGN	BY Phil Lutz	CHECKED Nasser Tachta	STATE OF CALIFORNIA DEPARTMENT OF TRANSPORTATION	DIVISION OF ENGINEERING SERVICES STRUCTURE DESIGN DESIGN BRANCH 9	BRIDGE NO. 34E0013	RETAINING WALL NO. 4
	DETAILS	BY Carlo Cancino	CHECKED Nasser Tachta			POST MILE 6.90	INDEX TO PLAN
	QUANTITIES	BY B. Thach	CHECKED Nasser Tachta				

STRUCTURES DESIGN DETAIL SHEET (ENGLISH) (REV. 10/25/05)

ORIGINAL SCALE IN INCHES FOR REDUCED PLANS 0 1 2 3

CU 04242
EA 163731

DISREGARD PRINTS BEARING EARLIER REVISION DATES →

REVISION DATES: 04-17-09 | 04-24-09 | 05-18-09 | 05-22-09 | 06-01-09 | 06-15-09 | 07-09-09

SHEET 2 OF 13

FILE => 34e0013-b-itp.dgn

USERNAME => tmartin DATE PLOTTED => 23-JUL-2009 TIME PLOTTED => 07:58

DIST	COUNTY	ROUTE	POST MILES TOTAL PROJECT	SHEET No	TOTAL SHEETS
04	SF	101,1	9.279, 6.8/7.1	557	567

Philip E. Lutz 06-04-09
REGISTERED CIVIL ENGINEER DATE

7-20-09
PLANS APPROVAL DATE

The State of California or its officers or agents shall not be responsible for the accuracy or completeness of electronic copies of this plan sheet.

REGISTERED PROFESSIONAL ENGINEER
Philip E. Lutz
No. C55839
Exp. 12-31-10
CIVIL
STATE OF CALIFORNIA

Arup PB Joint Venture
560 Mission Street
Suite 700
San Francisco, CA 94105

CURVE DATA

No.	R	Δ	T	L	No.	R	Δ	T	L
26	295.00	95°19'53"	323.81	490.83	45	94.99	67°30'30"	63.48	111.93
27	8,199.94	2°29'43"	178.59	357.13	46	420.00	5°29'23"	20.14	40.24
28	459.00	56°59'57"	249.21	456.62	48	85.00	56°48'05"	45.96	84.27
36	474.00	57°18'11"	258.99	474.06	54	450.01	18°21'53"	72.74	144.24
41	125.00	45°50'12"	20.90	41.42	55	385.00	37°45'09"	88.90	171.32
42	610.00	15°05'52"	80.84	160.74	82	150.00	25°24'55"	33.83	66.54
43	105.00	23°20'52"	21.69	42.79	85	175.00	12°56'40"	19.85	39.54
44	1,721.89	3°11'08"	47.88	95.73	86	140.00	7°40'36"	9.39	18.76

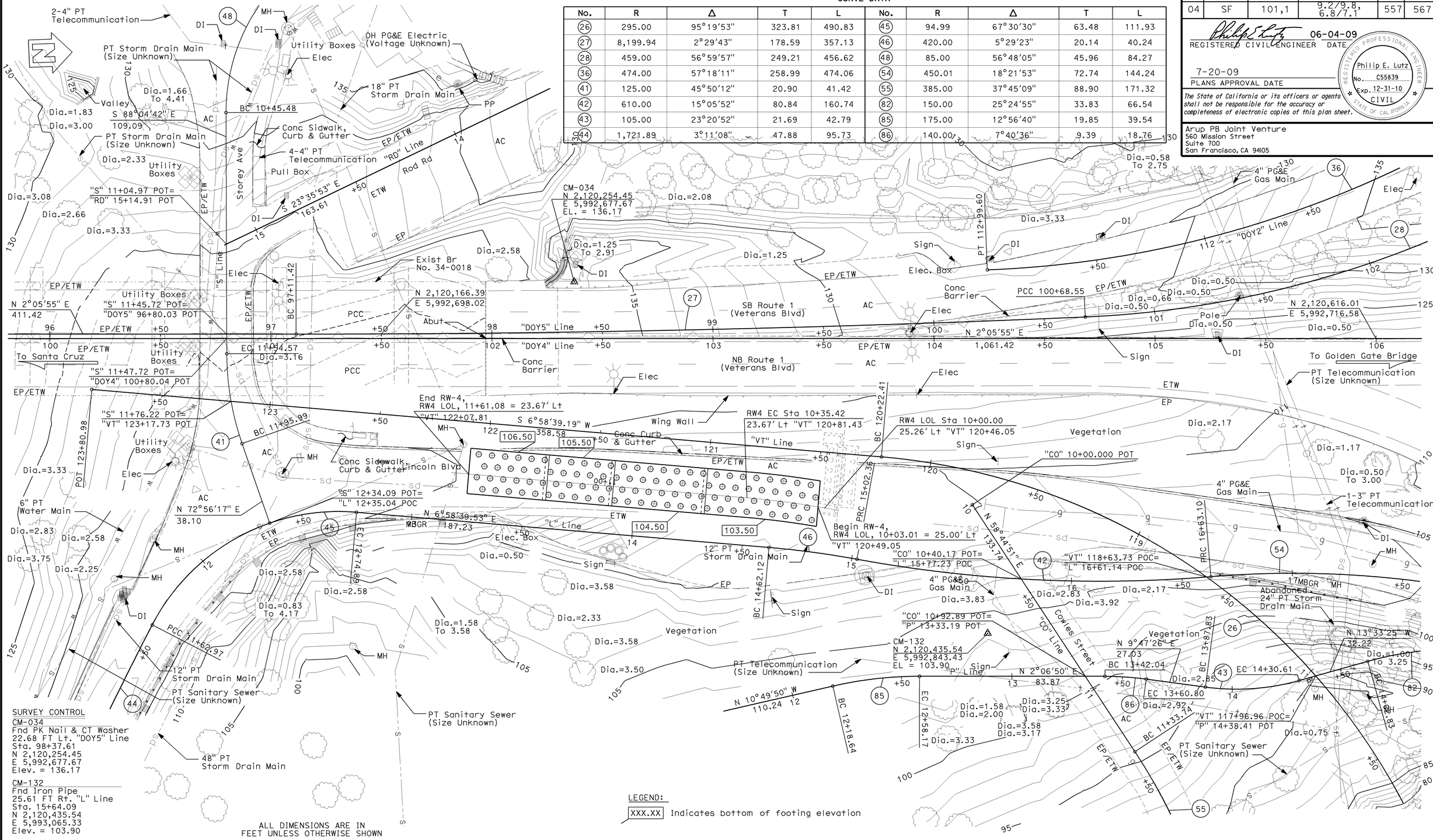

SURVEY CONTROL

CM-034
Fnd PK Nail & CT Washer
22.68 FT Lt. "DOY5" Line
Sta. 98+37.61
N 2,120,254.45
E 5,992,677.67
Elev. = 136.17

CM-132
Fnd Iron Pipe
25.61 FT Rt. "L" Line
Sta. 15+64.09
N 2,120,435.54
E 5,993,065.33
Elev. = 103.90

LEGEND:
XXX.XX Indicates bottom of footing elevation

ALL DIMENSIONS ARE IN FEET UNLESS OTHERWISE SHOWN

PRELIMINARY INVESTIGATION SECTION						DESIGN	BY Phil Lutz	CHECKED Nasser Tachta
SCALE 1"=20'	VERT.DATUM NAVD88	PHOTOGRAMMETRY AS OF: 9/24/2008				DETAILS	BY Carlo Cancino	CHECKED Nasser Tachta
	HORZ.DATUM NAD83	SURVEYED	BY Chaudhary & Assoc.	CHECKED	BY E. Lilly 3/20/09	QUANTITIES	BY B. Thach	CHECKED Nasser Tachta
ALIGNMENT TIES Dist.Traverse Sheet		DRAFTED	BY L. Reyes 3/20/09	CHECKED	BY E. Lilly 3/20/09			

STATE OF CALIFORNIA
DEPARTMENT OF TRANSPORTATION

DIVISION OF ENGINEERING SERVICES
STRUCTURE DESIGN
DESIGN BRANCH 9

CU 04242
EA 163731

BRIDGE NO. 34E0013
POST MILE 6.90

RETAINING WALL NO. 4
FOUNDATION PLAN

STRUCTURES FOUNDATION PLAN SHEET (ENGLISH) (REV. 10/25/05)

ORIGINAL SCALE IN INCHES FOR REDUCED PLANS 0 1 2 3

DISREGARD PRINTS BEARING EARLIER REVISION DATES →

REVISION DATES								SHEET	OF
04-17-09	05-05-09	06-17-09	07-13-09					3	13

FILE => 34e0013-c-fp1.dgn

USERNAME => tmartin DATE PLOTTED => 21-JUL-2009 TIME PLOTTED => 14:17

DIST	COUNTY	ROUTE	POST MILES TOTAL PROJECT	SHEET No	TOTAL SHEETS
04	SF	101,1	9.2/9.8, 6.8/7.1	558	567

Philip E Lutz 06-04-09
REGISTERED CIVIL ENGINEER DATE

7-20-09
PLANS APPROVAL DATE

Philip E. Lutz No. C55839 Exp. 12-31-10 CIVIL — REGISTERED PROFESSIONAL ENGINEER — STATE OF CALIFORNIA

The State of California or its officers or agents shall not be responsible for the accuracy or completeness of electronic copies of this plan sheet.

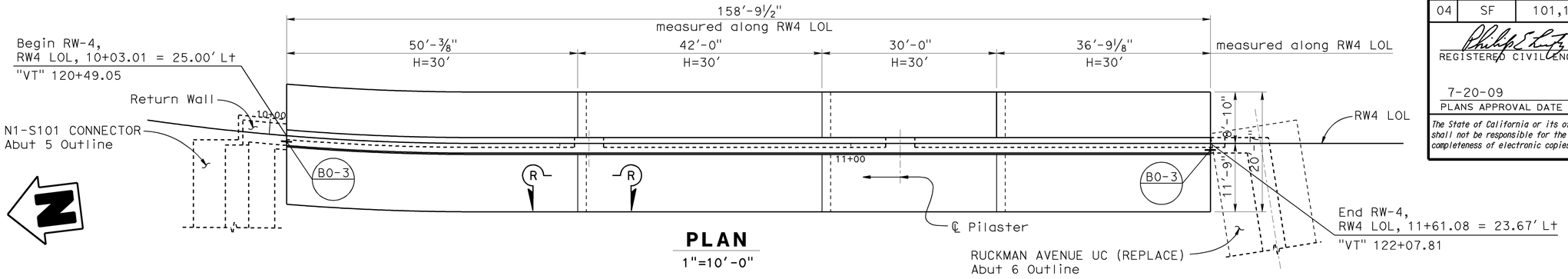

PLAN
1"=10′-0"

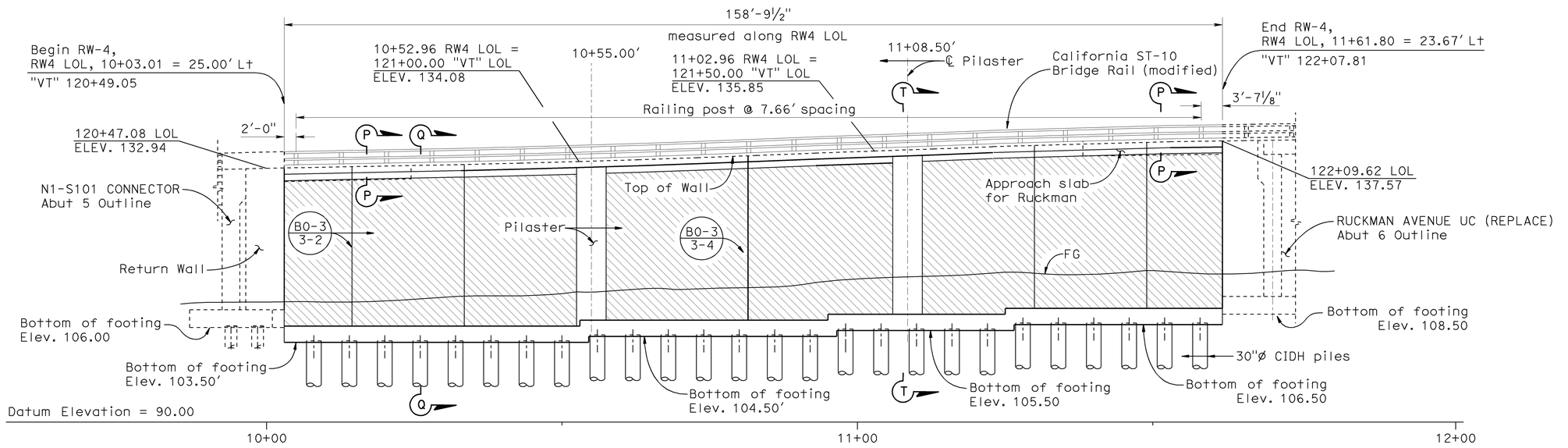

MIRRORED DEVELOPED ELEVATION
1"=10′-0"

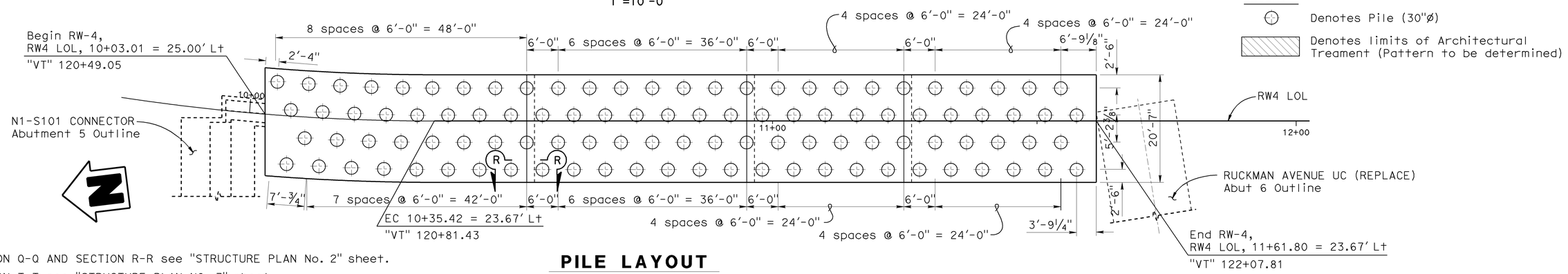

PILE LAYOUT
1"=10′-0"

NOTES:
1. For SECTION Q-Q AND SECTION R-R see "STRUCTURE PLAN No. 2" sheet.
2. For SECTION T-T see "STRUCTURE PLAN NO. 3" sheet.
3. For SECTION P-P see "ST-10 (MOD) DETAILS No. 1" sheet.

	BY	CHECKED
DESIGN	Phil Lutz	Nasser Tachta
DETAILS	Carlo Cancino	Nasser Tachta
QUANTITIES	B. Thach	Nasser Tachta

STATE OF CALIFORNIA
DEPARTMENT OF TRANSPORTATION

DIVISION OF ENGINEERING SERVICES
STRUCTURE DESIGN
DESIGN BRANCH 9

BRIDGE NO. 34E0013
POST MILE 6.90

RETAINING WALL NO. 4
STRUCTURE PLAN NO. 1

STRUCTURES DESIGN DETAIL SHEET (ENGLISH) (REV. 10/25/05)

ORIGINAL SCALE IN INCHES FOR REDUCED PLANS 0 1 2 3

CU 04242
EA 163731

DISREGARD PRINTS BEARING EARLIER REVISION DATES

REVISION DATES: 04-15-09 | 05-14-09 | 05-22-09 | 06-01-09 | 06-17-09 | 07-09-09

SHEET 4 OF 13

FILE => 34e0013-c-sp1.dgn

USERNAME = trmartin DATE PLOTTED => 21-JUL-2009 TIME PLOTTED => 14:17

DIST	COUNTY	ROUTE	POST MILES TOTAL PROJECT	SHEET No	TOTAL SHEETS
04	SF	101,1	9.2/9.8, 6.8/7.1	559	567

Philip E. Lutz 06-04-09
REGISTERED CIVIL ENGINEER DATE

7-20-09
PLANS APPROVAL DATE

REGISTERED PROFESSIONAL ENGINEER — Philip E. Lutz — No. C55839 — Exp. 12-31-10 — CIVIL — STATE OF CALIFORNIA

The State of California or its officers or agents shall not be responsible for the accuracy or completeness of electronic copies of this plan sheet.

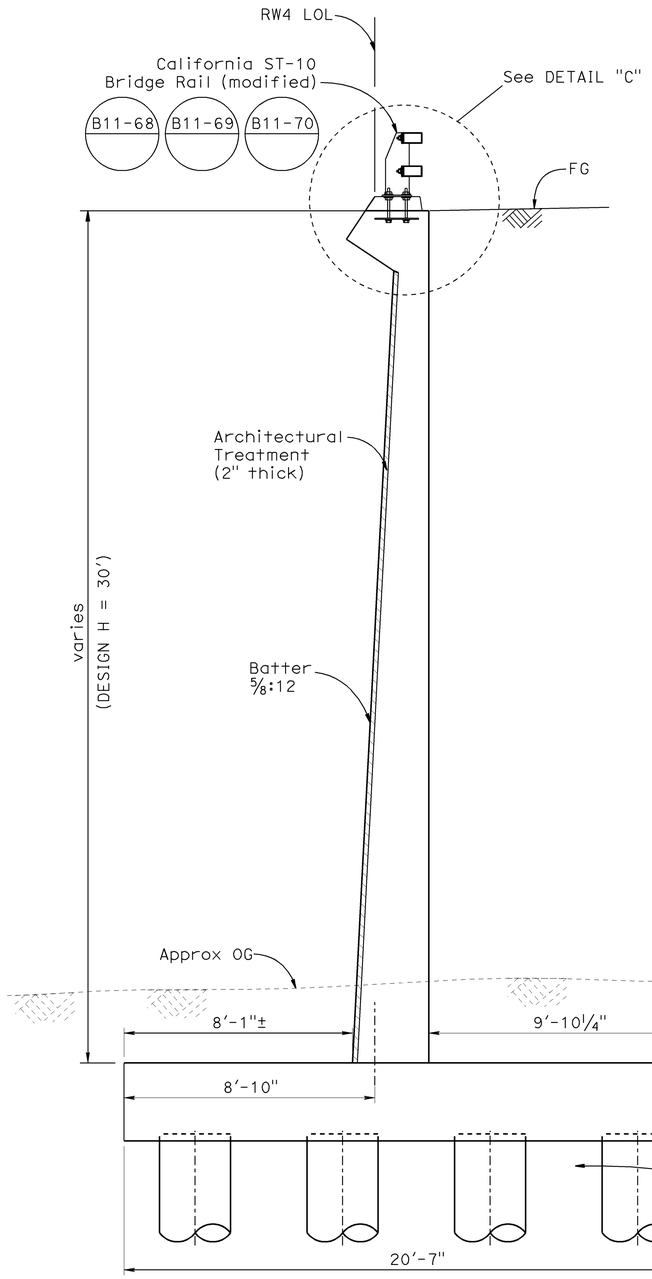

SECTION Q-Q
(TYPICAL SECTION)
3/8"=1'-0"

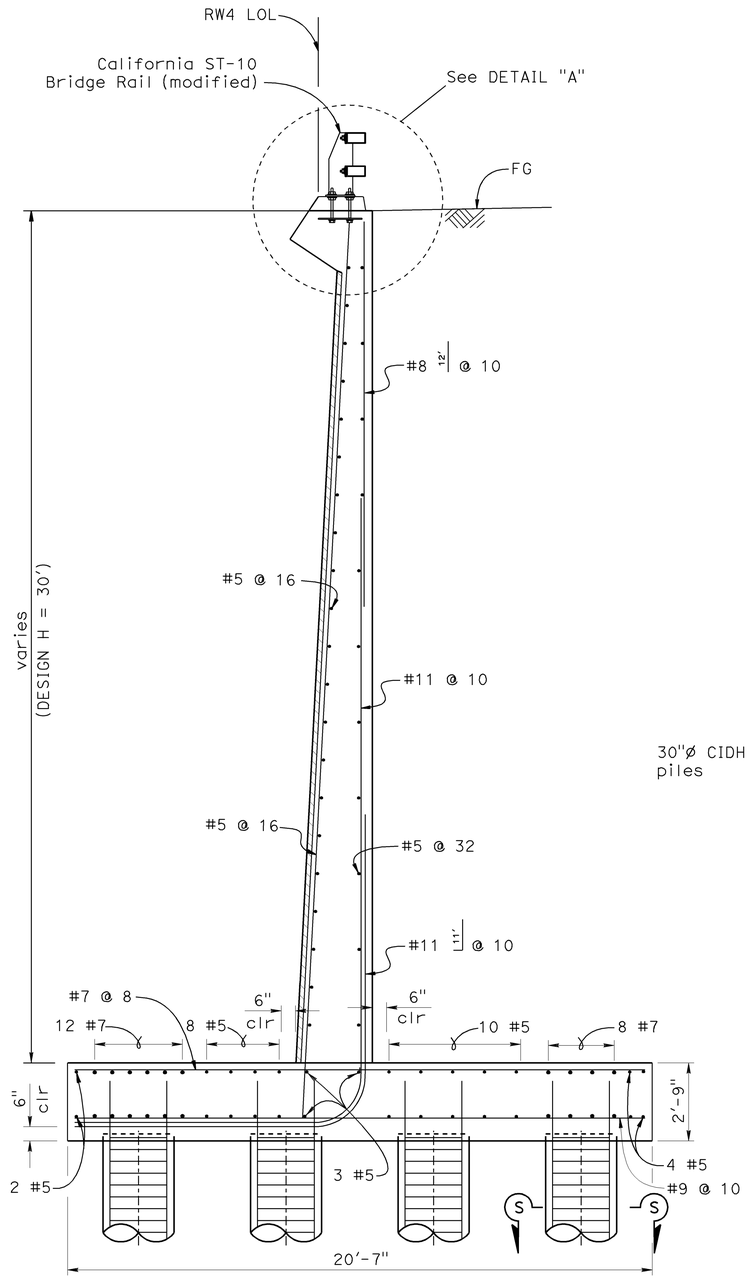

SECTION Q-Q WALL REINFORCEMET
(TYPICAL SECTION)
3/8"=1'-0"

NOTES:
1. For DETAIL "A" see "ST-10 (MOD) DETAILS No. 1" sheet.
2. For DETAIL "C" see "STRUCTURE PLAN No. 3" sheet.
3. For SECTION S-S see "STRUCTURE PLAN No. 3" sheet.

LEGEND:

Denotes limits of Architectural Treament (Pattern to be determined)

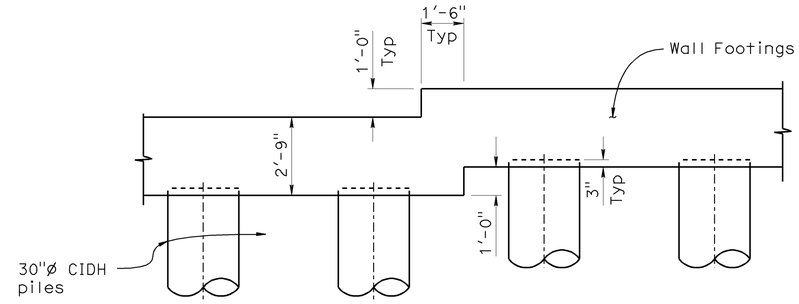

SECTION R-R
3/8"=1'-0"

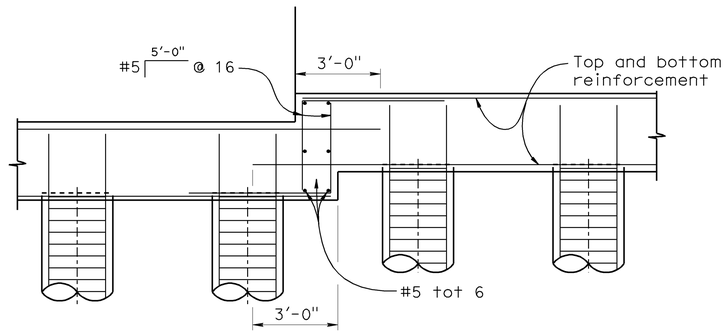

FOOTING STEP REINFORCEMET
3/8"=1'-0"

DESIGN	BY Phil Lutz	CHECKED Nasser Tachta	STATE OF CALIFORNIA DEPARTMENT OF TRANSPORTATION	DIVISION OF ENGINEERING SERVICES STRUCTURE DESIGN DESIGN BRANCH 9	BRIDGE NO. 34E0013	RETAINING WALL NO. 4	
DETAILS	BY Carlo Cancino	CHECKED Nasser Tachta			POST MILE 6.90	STRUCTURE PLAN NO. 2	
QUANTITIES	BY B. Thach	CHECKED Nasser Tachta					

STRUCTURES DESIGN DETAIL SHEET (ENGLISH) (REV. 10/25/05)

ORIGINAL SCALE IN INCHES FOR REDUCED PLANS 0 1 2 3

CU 04242
EA 163731

DISREGARD PRINTS BEARING EARLIER REVISION DATES →

REVISION DATES: 04-15-09 | 04-30-09 | 05-22-09 | 07-09-09

SHEET 5 OF 13

FILE => 34e0013-c-sp2.dgn

USERNAME => rmorfin DATE PLOTTED => 21-JUL-2009 TIME PLOTTED => 14:17

DIST	COUNTY	ROUTE	POST MILES TOTAL PROJECT	SHEET No	TOTAL SHEETS
04	SF	101,1	9.2/9.8, 6.8/7.1	560	567

REGISTERED CIVIL ENGINEER — 06-04-09 DATE

7-20-09
PLANS APPROVAL DATE

Philip E. Lutz
No. C55839
Exp. 12-31-10
CIVIL
REGISTERED PROFESSIONAL ENGINEER
STATE OF CALIFORNIA

The State of California or its officers or agents shall not be responsible for the accuracy or completeness of electronic copies of this plan sheet.

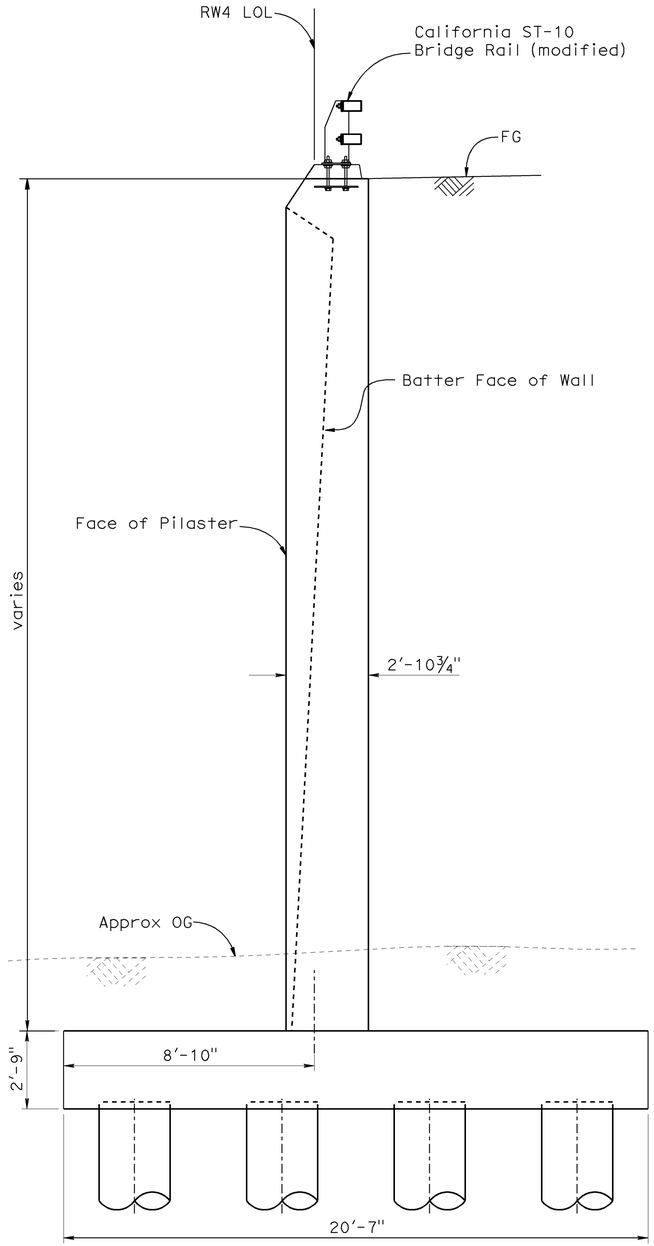

SECTION T-T
(TYPICAL SECTION)
3/8"=1'-0"

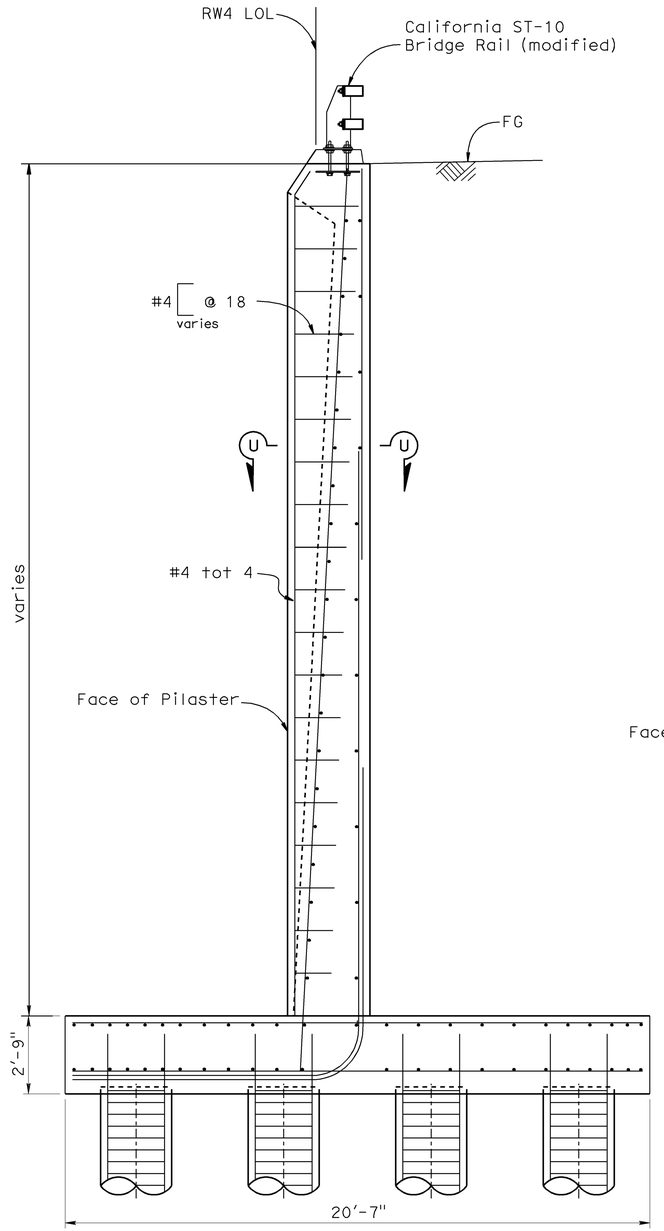

PILASTER REINFORCEMET
(TYPICAL SECTION)
3/8"=1'-0"

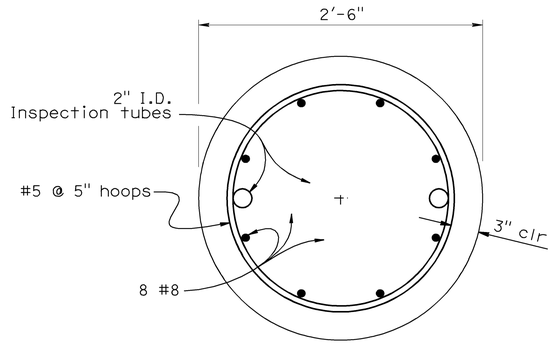

SECTION S-S
1½"=1'-0"

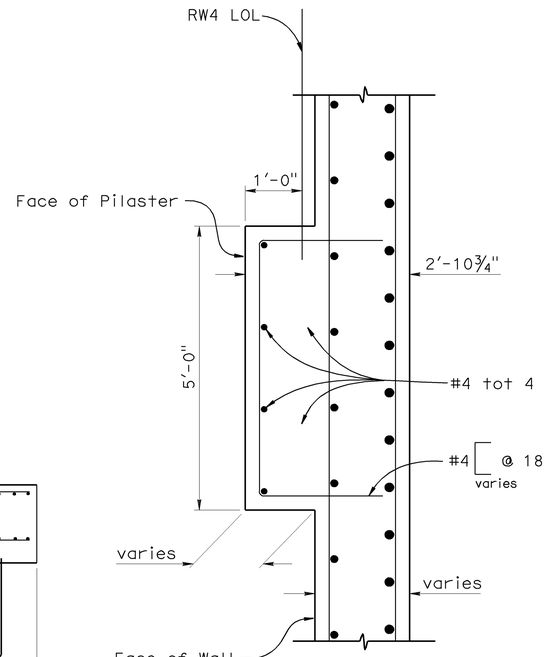

SECTION U-U
¾"=1'-0"

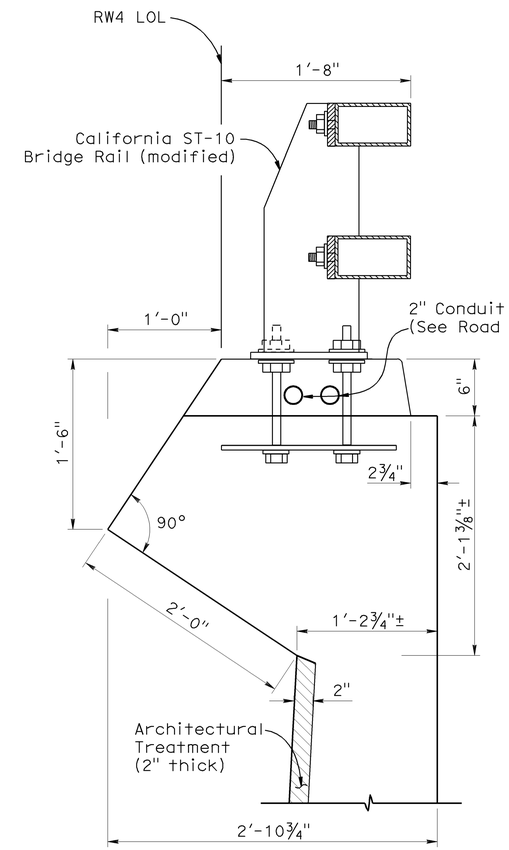

DETAIL "C"
1½"=1'-0"

DESIGN	BY Phil Lutz	CHECKED Nasser Tachta	STATE OF CALIFORNIA DEPARTMENT OF TRANSPORTATION	DIVISION OF ENGINEERING SERVICES STRUCTURE DESIGN DESIGN BRANCH 9	BRIDGE NO. 34E0013	RETAINING WALL NO. 4
DETAILS	BY Carlo Cancino	CHECKED Nasser Tachta			POST MILE 6.90	STRUCTURE PLAN NO. 3
QUANTITIES	BY B. Thach	CHECKED Nasser Tachta				

STRUCTURES DESIGN DETAIL SHEET (ENGLISH) (REV. 10/25/05)

ORIGINAL SCALE IN INCHES FOR REDUCED PLANS 0 1 2 3

CU 04242
EA 163731

DISREGARD PRINTS BEARING EARLIER REVISION DATES →

REVISION DATES: 04-15-09 | 05-06-09 | 07-09-09

SHEET 6 OF 13

FILE => 34e0013-c-sp3.dgn

USERNAME => tmartin DATE PLOTTED => 21-JUL-2009 TIME PLOTTED => 14:17

DIST	COUNTY	ROUTE	POST MILES TOTAL PROJECT	SHEET No	TOTAL SHEETS
04	SF	101,1	9.2/9.8, 6.8/7.1	561	567

REGISTERED CIVIL ENGINEER — 06-04-09 DATE

Philip E. Lutz No. C55839 Exp. 12-31-10 CIVIL — REGISTERED PROFESSIONAL ENGINEER — STATE OF CALIFORNIA

7-20-09
PLANS APPROVAL DATE

The State of California or its officers or agents shall not be responsible for the accuracy or completeness of electronic copies of this plan sheet.

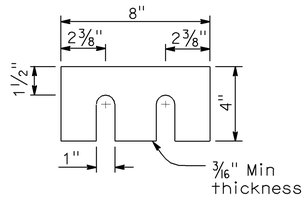

SHIMS REQUIRED FOR TOP AND BOTTOM RAIL

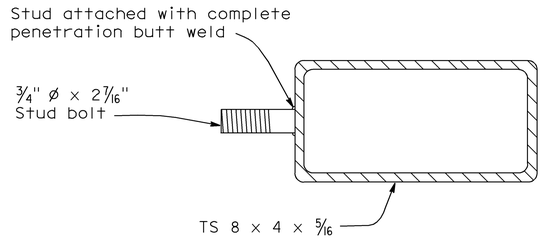

SECTION AT POST

STUD BOLT DETAIL

No Scale

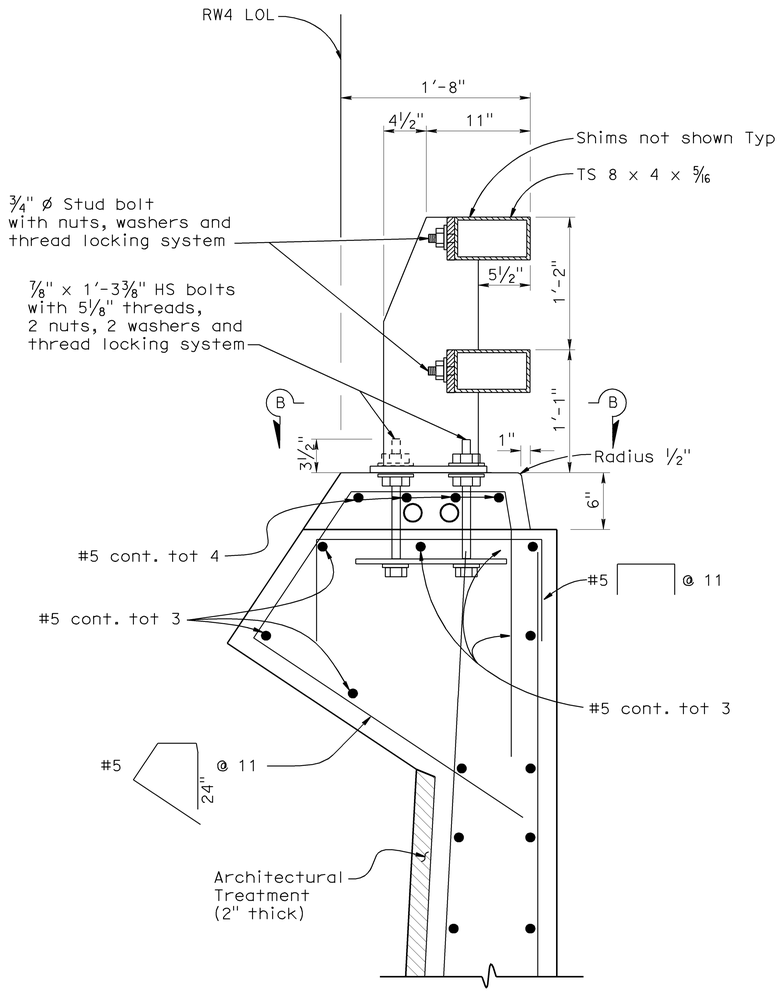

DETAIL "A"

No Scale

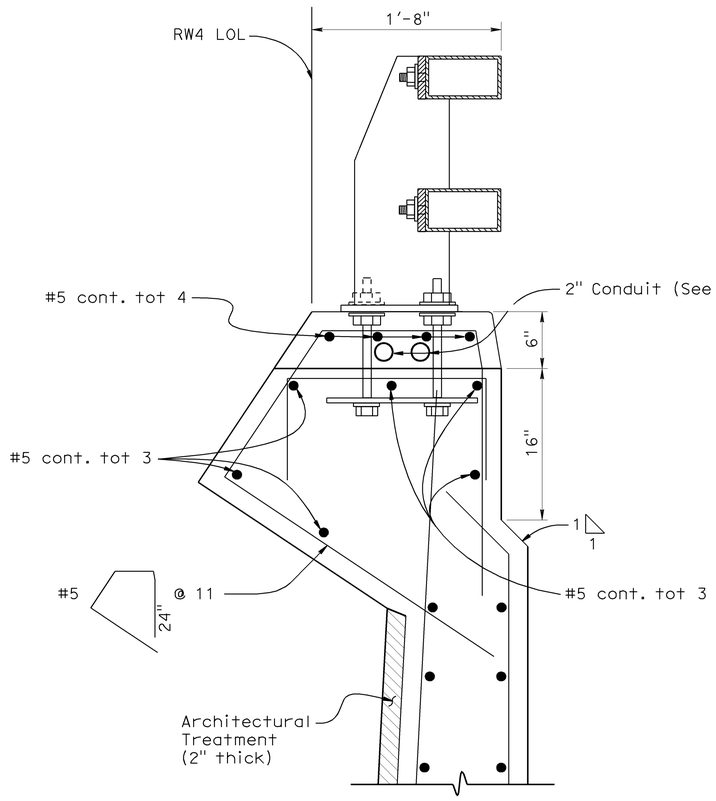

SECTION P-P (APPROACH SLAB SECTION) *

No Scale

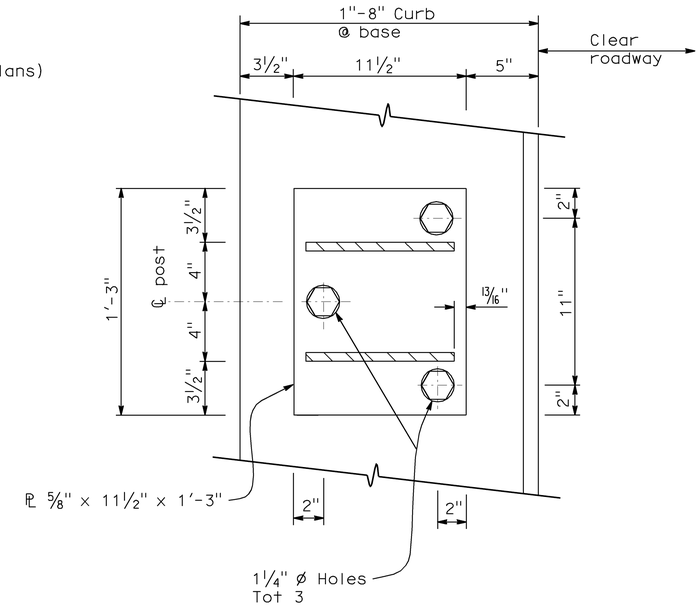

SECTION B-B

No Scale

* NOTE: This section applies only to approach slab limits

DESIGN	BY Phil Lutz	CHECKED Nasser Tachta	STATE OF CALIFORNIA DEPARTMENT OF TRANSPORTATION	DIVISION OF ENGINEERING SERVICES STRUCTURE DESIGN DESIGN BRANCH 9	BRIDGE NO. 34E0013	RETAINING WALL NO. 4	
DETAILS	BY Carlo Cancino	CHECKED Nasser Tachta			POST MILE 6.90	ST-10 (MOD) DETAILS NO. 1	
QUANTITIES	BY B. Thach	CHECKED Nasser Tachta					

STRUCTURES DESIGN DETAIL SHEET (ENGLISH) (REV. 10/25/05)

ORIGINAL SCALE IN INCHES FOR REDUCED PLANS 0 1 2 3

CU 04242
EA 163731

DISREGARD PRINTS BEARING EARLIER REVISION DATES →

REVISION DATES: 04-15-09 | 05-06-09 | 07-09-09

SHEET 7 OF 13

FILE => 34e0013-d-det01.dgn

USERNAME = rmorriok DATE PLOTTED => 21-JUL-2009 TIME PLOTTED => 13:57

DIST	COUNTY	ROUTE	POST MILES TOTAL PROJECT	SHEET No	TOTAL SHEETS
04	SF	101,1	9.2/9.8, 6.8/7.1	562	567

REGISTERED CIVIL ENGINEER — 06-04-09 DATE

Philip E. Lutz, No. C55839, Exp. 12-31-10, CIVIL — REGISTERED PROFESSIONAL ENGINEER — STATE OF CALIFORNIA

7-20-09
PLANS APPROVAL DATE

The State of California or its officers or agents shall not be responsible for the accuracy or completeness of electronic copies of this plan sheet.

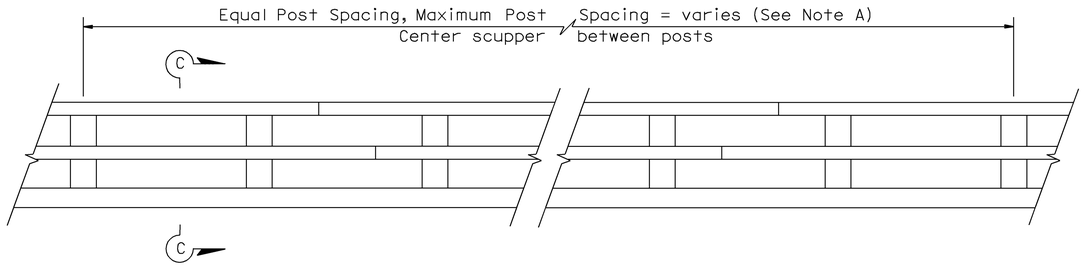

NOTE A:
Post spacing and/or block length to be adjusted to fit retaining wall length

RAILING ELEVATION
No Scale

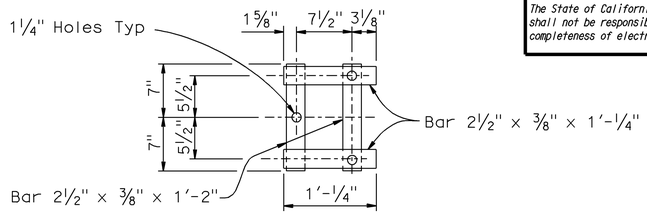

WALL ANCHOR PLATE
No Scale

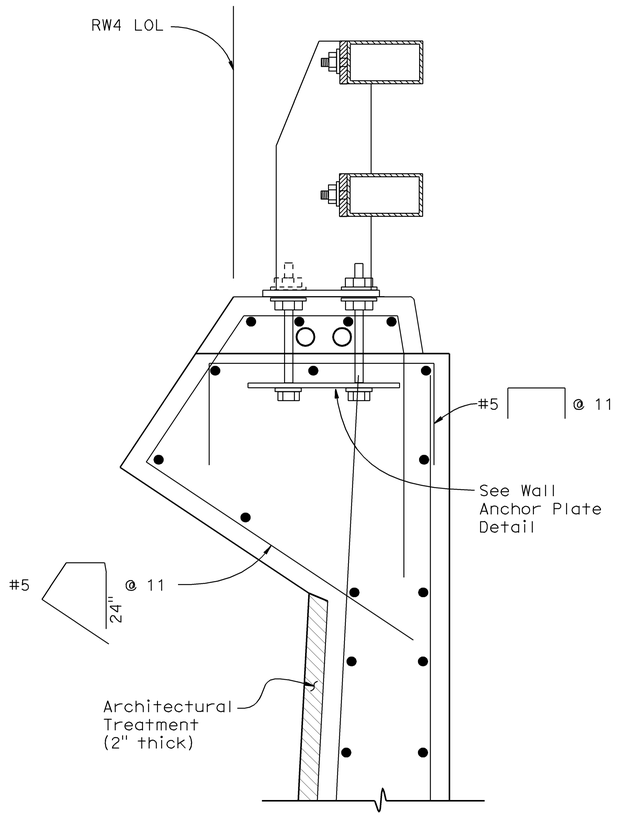

NOTE :
Reinf same as for Detail "A" except as noted.

SECTION C-C
No Scale

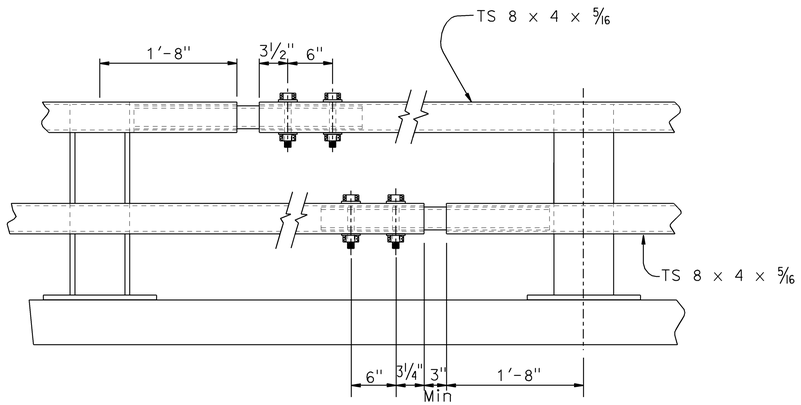

EXPANSION SPLICE
No Scale

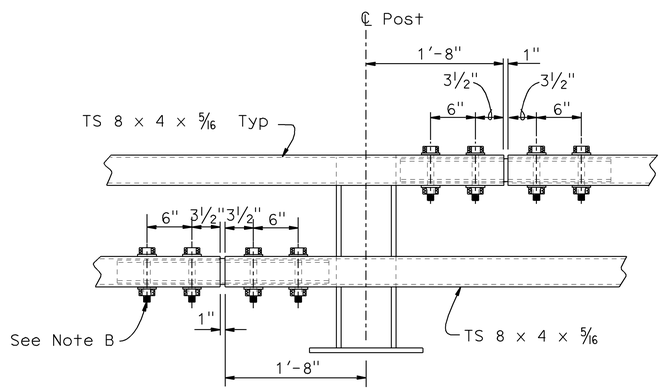

STANDARD SPLICE
No Scale

NOTE B:
Use ¾" ø x 5⁵⁄₁₆"
HS bolts with washers, fully tensioned.
1" holes in rail Typ

DESIGN	BY Phil Lutz	CHECKED Nasser Tachta	STATE OF CALIFORNIA DEPARTMENT OF TRANSPORTATION	DIVISION OF ENGINEERING SERVICES STRUCTURE DESIGN DESIGN BRANCH 9	BRIDGE NO. 34E0013	RETAINING WALL NO. 4	
DETAILS	BY Carlo Cancino	CHECKED Nasser Tachta			POST MILE 6.90	ST-10 (MOD) DETAILS NO. 2	
QUANTITIES	BY B. Thach	CHECKED Nasser Tachta					

STRUCTURES DESIGN DETAIL SHEET (ENGLISH) (REV. 10/25/05)

ORIGINAL SCALE IN INCHES FOR REDUCED PLANS 0 1 2 3

CU 04242
EA 163731

DISREGARD PRINTS BEARING EARLIER REVISION DATES →

REVISION DATES: 04-15-09, 05-06-09, 07-09-09

SHEET 8 OF 13

FILE => 34e0013-d-det02.dgn

USERNAME = tmorlok DATE PLOTTED => 21-JUL-2009 TIME PLOTTED => 13:57

DIST	COUNTY	ROUTE	POST MILES TOTAL PROJECT	SHEET No	TOTAL SHEETS
04	SF	101,1	9.2/9.8, 6.8/7.1	563	567

REGISTERED CIVIL ENGINEER — 06-04-09 DATE

Philip E. Lutz No. C55839 Exp. 12-31-10 CIVIL — REGISTERED PROFESSIONAL ENGINEER — STATE OF CALIFORNIA

7-20-09
PLANS APPROVAL DATE

The State of California or its officers or agents shall not be responsible for the accuracy or completeness of electronic copies of this plan sheet.

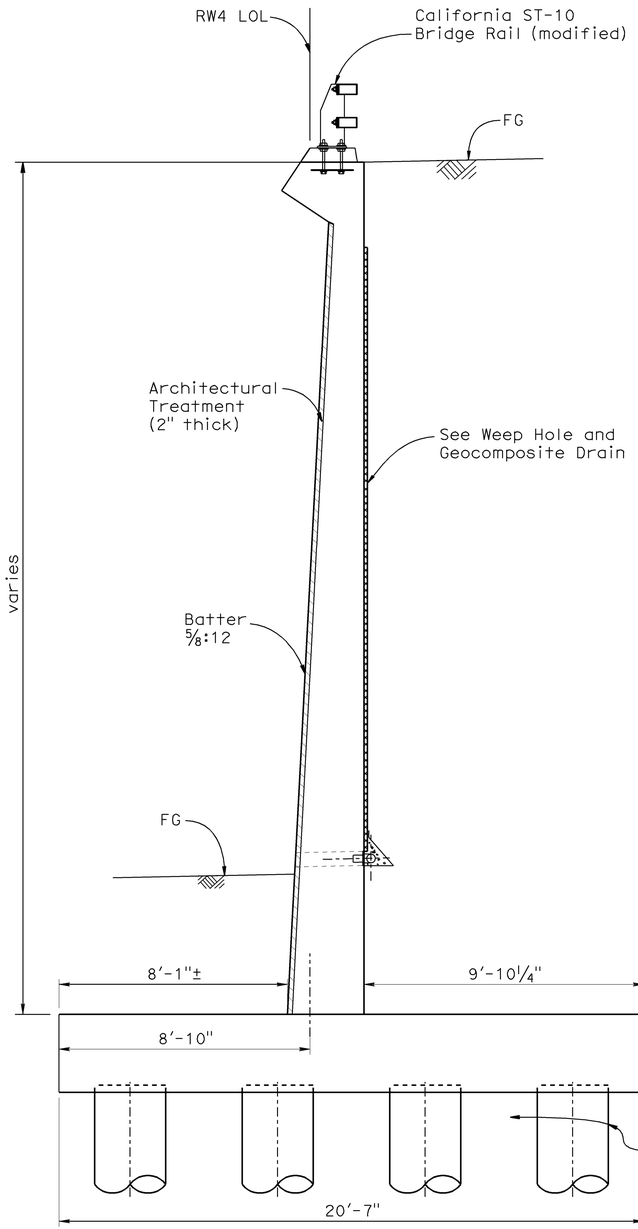

TYPICAL SECTION

3/8"=1'-0"

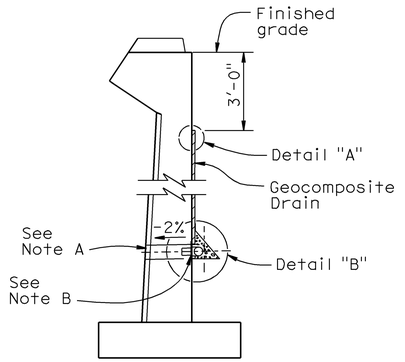

WALL SECTION

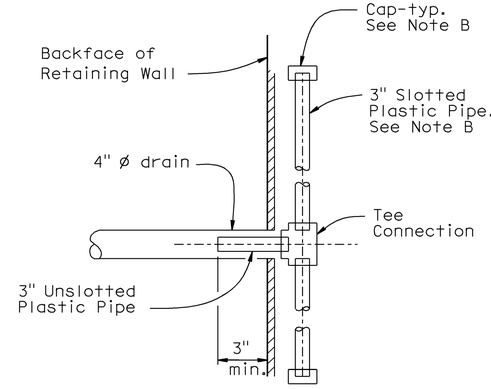

SECTION A-A

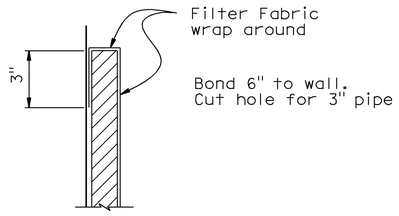

DETAIL "A"

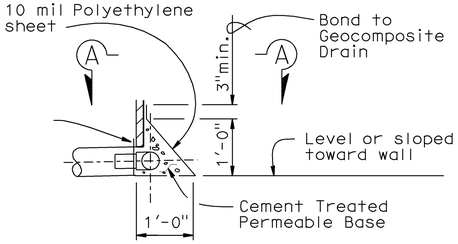

DETAIL "B"

WEEP HOLE AND GEOCOMPOSITE DRAIN

NOTES:

A. 4" ø drains at intermediate sag points and at 25' max center to center (9' c-c for Type 3 and 9'-3" c-c for Type 4 retaining walls).
For walls adjacent to sidewalks or curbs, provide 4" cast iron or asbestos cement pipe under the sidewalk to discharge through curb face.
Exposed wall drains shall be located 3"± above finished grade.

B. Geocomposite drain, cement treated permeable base, and 3"ø slotted plastic pipe continuous behind retaining wall or abutment. Cap ends of pipe. Provide "Tee" connection at each 4" ø drain.

C. Connect the low end of plastic pipe to the main outlet pipe as applicable.

DESIGN	BY Phil Lutz	CHECKED Nasser Tachta	STATE OF CALIFORNIA DEPARTMENT OF TRANSPORTATION	DIVISION OF ENGINEERING SERVICES STRUCTURE DESIGN DESIGN BRANCH 9	BRIDGE NO. 34E0013	RETAINING WALL NO. 4
DETAILS	BY Carlo Cancino	CHECKED Nasser Tachta			POST MILE 6.90	DRAINAGE DETAILS
QUANTITIES	BY B. Thach	CHECKED Nasser Tachta				

STRUCTURES DESIGN DETAIL SHEET (ENGLISH) (REV. 10/25/05)

ORIGINAL SCALE IN INCHES FOR REDUCED PLANS 0 1 2 3

CU 04242
EA 163731

DISREGARD PRINTS BEARING EARLIER REVISION DATES →

REVISION DATES: 04-15-09 | 05-06-09 | 07-09-09

SHEET 9 OF 13

FILE => 34e0013-d-det03.dgn

USERNAME => tmarlok DATE PLOTTED => 21-JUL-2009 TIME PLOTTED => 13:57

DIST	COUNTY	ROUTE	POST MILES TOTAL PROJECT	SHEET No	TOTAL SHEETS
04	SF	101,1	9.2/9.8, 6.8/7.1	564	567

CERTIFIED ENGINEERING GEOLOGIST 6-02-09

7-20-09
PLANS APPROVAL DATE

The State of California or its officers or agents shall not be responsible for the accuracy or completeness of electronic copies of this plan sheet.

REGISTERED GEOLOGIST
Grant Wilcox
No. 2300
Exp. 4-30-10
CERTIFIED ENGINEERING GEOLOGIST
STATE OF CALIFORNIA

This LOTB sheet was prepared in accordance with the Caltrans Soil & Rock Logging, Classification, & Presentation Manual (June 2007) with the exception of Section 2.3.

BENCH MARK

SURVEY CONTROL

CM-034
Fnd PK Nail & CT Washer
22.68 FT Lt. "DOY5" Line
Sta. 98+37.61
N 2,120,254.45
E 5,992,677.67
Elev. = 136.17

CM-132
Fnd Iron Pipe
7.46 FT Rt. "L" Line
Sta. 13+46.60
N 2,120,435.54
E 5,993,065.33
Elev. = 103.90

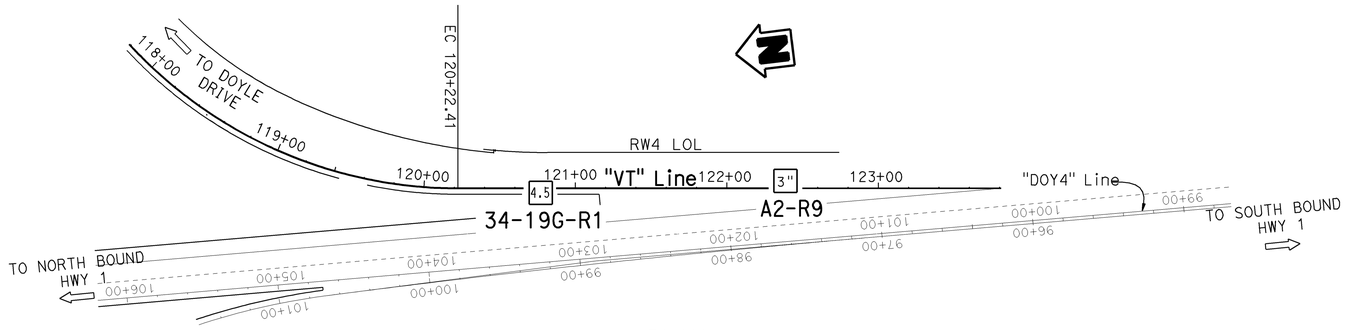

PLAN
1" = 50'

Note: Ground water was not measured in Boring No. 34-19G-R1.

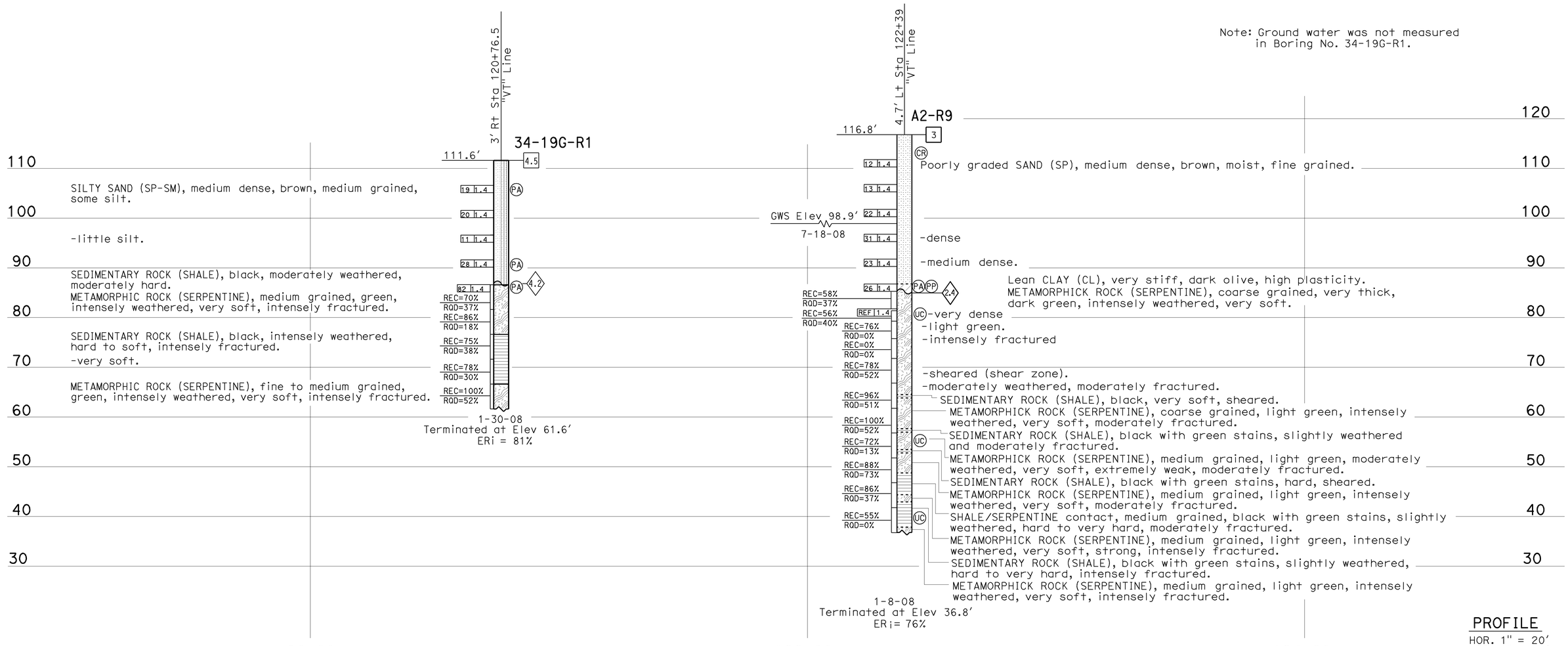

PROFILE
HOR. 1" = 20'
VER. 1" = 10'

ENGINEERING SERVICES		GEOTECHNICAL SERVICES	STATE OF CALIFORNIA DEPARTMENT OF TRANSPORTATION	DIVISION OF ENGINEERING SERVICES STRUCTURE DESIGN	BRIDGE NO.	RETAINING WALL NO. 4
FUNCTIONAL SUPERVISOR	DRAWN BY: I.G-Remmen 5/09	FIELD INVESTIGATION BY:		DESIGN BRANCH 9	34E0013	LOG OF TEST BORINGS 1 OF 4
NAME: T. Pokrywka	CHECKED BY: R. Price	R. Nashed			POST MILES 6.90	

OGS CIVIL LOG OF TEST BORINGS SHEET

ORIGINAL SCALE IN INCHES FOR REDUCED PLANS 0 1 2 3

CU 04
EA 163731

DISREGARD PRINTS BEARING EARLIER REVISION DATES →

REVISION DATES: 05-14-09 | 05-22-09 | 06-01-09

SHEET 10 OF 13

FILE => 34e0013-e-lob01.dgn

USERNAME => ttmorlok DATE PLOTTED => 21-JUL-2009 TIME PLOTTED => 13:57

REFERENCE: CALTRANS SOIL & ROCK LOGGING, CLASSIFICATION, AND PRESENTATION MANUAL (JUNE 2007)

DIST	COUNTY	ROUTE	POST MILES TOTAL PROJECT	SHEET No	TOTAL SHEETS
04	SF	101,1	9.2/9.8, 6.8/7.1	565	567

CERTIFIED ENGINEERING GEOLOGIST 6-02-09

7-20-09
PLANS APPROVAL DATE

REGISTERED GEOLOGIST — Grant Wilcox — No. 2300 — Exp. 4-30-10 — CERTIFIED ENGINEERING GEOLOGIST — STATE OF CALIFORNIA

The State of California or its officers or agents shall not be responsible for the accuracy or completeness of electronic copies of this plan sheet.

CEMENTATION

Description	Criteria
Weak	Crumbles or breaks with handling or little finger pressure.
Moderate	Crumbles or breaks with considerable finger pressure.
Strong	Will not crumble or break with finger pressure.

BOREHOLE IDENTIFICATION

Symbol	Hole Type	Description
Size	A	Auger Boring
Size	R P	Rotary drilled boring Rotary percussion boring (air)
Size	R	Rotary drilled diamond core
Size	HD HA	Hand driven (1-inch soil tube) Hand Auger
●	D	Dynamic Cone Penetration Boring
▲	CPT	Cone Penetration Test (ASTM D 5778-95)
⬚	O	Other

Note: Size in inches.

CONSISTENCY OF COHESIVE SOILS

Description	Unconfined Compressive Strength (tsf)	Pocket Penetrometer Measurement (tsf)	Torvane Measurement (tsf)	Field Approximation
Very Soft	< 0.25	< 0.25	< 0.12	Easily penetrated several inches by fist
Soft	0.25 to 0.50	0.25 to 0.50	0.12 to 0.25	Easily penetrated several inches by thumb
Medium Stiff	0.50 to 1.0	0.50 to 1.0	0.25 to 0.50	Penetrated several inches by thumb with moderate effort
Stiff	1 to 2	1 to 2	0.50 to 1.0	Readily indented by thumb but penetrated only with great effort
Very Stiff	2 to 4	2 to 4	1.0 to 2.0	Readily indented by thumbnail
Hard	> 4.0	> 4.0	> 2.0	Indented by thumbnail with difficulty

PLASTICITY OF FINE-GRAINED SOILS

Description	Criteria
Nonplastic	A 1/8-inch thread cannot be rolled at any water content.
Low	The thread can barely be rolled and the lump cannot be formed when drier than the plastic limit.
Medium	The thread is easy to roll and not much time is required to reach the plastic limit. The thread cannot be rerolled after reaching the plastic limit. The lump crumbles when drier than the plastic limit.
High	It takes considerable time rolling and kneading to reach the plastic limit. The thread can be rerolled several times after reaching the plastic limit. The lump can be formed without crumbling when drier than the plastic limit.

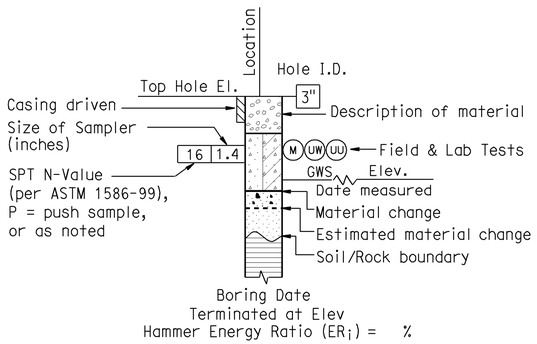

ROTARY BORING

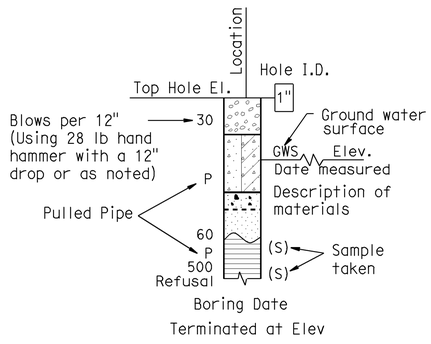

HAND BORING

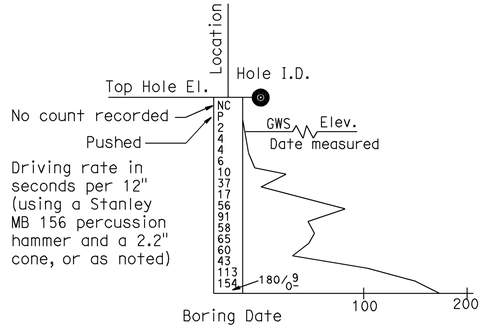

DYNAMIC CONE PENETRATION BORING

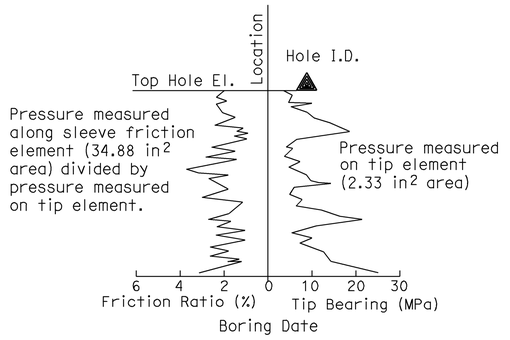

CONE PENETRATION TEST (CPT) SOUNDING

ENGINEERING SERVICES	GEOTECHNICAL SERVICES	STATE OF CALIFORNIA DEPARTMENT OF TRANSPORTATION	DIVISION OF ENGINEERING SERVICES STRUCTURE DESIGN	BRIDGE NO. 34E0013	RETAINING WALL NO. 4
	PREPARED BY: I.G-Remmen, 5/09		DESIGN BRANCH 9	POST MILE 6.90	LOG OF TEST BORINGS 2 OF 4

GS LOTB SOIL LEGEND

ORIGINAL SCALE IN INCHES FOR REDUCED PLANS 0 1 2 3

CU 04
EA 163731

DISREGARD PRINTS BEARING EARLIER REVISION DATES →

REVISION DATES: 05-22-09

SHEET 11 OF 13

FILE => 34e0013-e-lob02.dgn

USERNAME => ttmorlok DATE PLOTTED => 21-JUL-2009 TIME PLOTTED => 13:58

REFERENCE: CALTRANS SOIL & ROCK LOGGING, CLASSIFICATION, AND PRESENTATION MANUAL (JUNE 2007)

GROUP SYMBOLS AND NAMES

Graphic/Symbol	Group Names	Graphic/Symbol	Group Names
GW	Well-graded GRAVEL Well-graded GRAVEL with SAND	CL	Lean CLAY Lean CLAY with SAND Lean CLAY with GRAVEL SANDY lean CLAY SANDY lean CLAY with GRAVEL GRAVELLY lean CLAY GRAVELLY lean CLAY with SAND
GP	Poorly graded GRAVEL Poorly graded GRAVEL with SAND		
GW-GM	Well-graded GRAVEL with SILT Well-graded GRAVEL with SILT and SAND	CL-ML	SILTY CLAY SILTY CLAY with SAND SILTY CLAY with GRAVEL SANDY SILTY CLAY SANDY SILTY CLAY with GRAVEL GRAVELLY SILTY CLAY GRAVELLY SILTY CLAY with SAND
GW-GC	Well-graded GRAVEL with CLAY (or SILTY CLAY) Well-graded GRAVEL with CLAY and SAND (or SILTY CLAY and SAND)		
GP-GM	Poorly graded GRAVEL with SILT Poorly graded GRAVEL with SILT and SAND	ML	SILT SILT with SAND SILT with GRAVEL SANDY SILT SANDY SILT with GRAVEL GRAVELLY SILT GRAVELLY SILT with SAND
GP-GC	Poorly graded GRAVEL with CLAY (or SILTY CLAY) Poorly graded GRAVEL with CLAY and SAND (or SILTY CLAY and SAND)		
GM	SILTY GRAVEL SILTY GRAVEL with SAND	OL	ORGANIC lean CLAY ORGANIC lean CLAY with SAND ORGANIC lean CLAY with GRAVEL SANDY ORGANIC lean CLAY SANDY ORGANIC lean CLAY with GRAVEL GRAVELLY ORGANIC lean CLAY GRAVELLY ORGANIC lean CLAY with SAND
GC	CLAYEY GRAVEL CLAYEY GRAVEL with SAND		
GC-GM	SILTY, CLAYEY GRAVEL SILTY, CLAYEY GRAVEL with SAND	OL	ORGANIC SILT ORGANIC SILT with SAND ORGANIC SILT with GRAVEL SANDY ORGANIC SILT SANDY ORGANIC SILT with GRAVEL GRAVELLY ORGANIC SILT GRAVELLY ORGANIC SILT with SAND
SW	Well-graded SAND Well-graded SAND with GRAVEL		
SP	Poorly graded SAND Poorly graded SAND with GRAVEL	CH	Fat CLAY Fat CLAY with SAND Fat CLAY with GRAVEL SANDY fat CLAY SANDY fat CLAY with GRAVEL GRAVELLY fat CLAY GRAVELLY fat CLAY with SAND
SW-SM	Well-graded SAND with SILT Well-graded SAND with SILT and GRAVEL		
SW-SC	Well-graded SAND with CLAY (or SILTY CLAY) Well-graded SAND with CLAY and GRAVEL (or SILTY CLAY and GRAVEL)	MH	Elastic SILT Elastic SILT with SAND Elastic SILT with GRAVEL SANDY elastic SILT SANDY elastic SILT with GRAVEL GRAVELLY elastic SILT GRAVELLY elastic SILT with SAND
SP-SM	Poorly graded SAND with SILT Poorly graded SAND with SILT and GRAVEL		
SP-SC	Poorly graded SAND with CLAY (or SILTY CLAY) Poorly graded SAND with CLAY and GRAVEL (or SILTY CLAY and GRAVEL)	OH	ORGANIC fat CLAY ORGANIC fat CLAY with SAND ORGANIC fat CLAY with GRAVEL SANDY ORGANIC fat CLAY SANDY ORGANIC fat CLAY with GRAVEL GRAVELLY ORGANIC fat CLAY GRAVELLY ORGANIC fat CLAY with SAND
SM	SILTY SAND SILTY SAND with GRAVEL		
SC	CLAYEY SAND CLAYEY SAND with GRAVEL	OH	ORGANIC elastic SILT ORGANIC elastic SILT with SAND ORGANIC elastic SILT with GRAVEL SANDY ORGANIC elastic SILT SANDY ORGANIC elastic SILT with GRAVEL GRAVELLY ORGANIC elastic SILT GRAVELLY ORGANIC elastic SILT with SAND
SC-SM	SILTY, CLAYEY SAND SILTY, CLAYEY SAND with GRAVEL		
PT	PEAT	OL/OH	ORGANIC SOIL ORGANIC SOIL with SAND ORGANIC SOIL with GRAVEL SANDY ORGANIC SOIL SANDY ORGANIC SOIL with GRAVEL GRAVELLY ORGANIC SOIL GRAVELLY ORGANIC SOIL with SAND
	COBBLES COBBLES and BOULDERS BOULDERS		

FIELD AND LABORATORY TESTING

- (C) Consolidation (ASTM D 2435)
- (CL) Collapse Potential (ASTM D 5333)
- (CP) Compaction Curve (CTM 216)
- (CR) Corrosivity Testing (CTM 643, CTM 422, CTM 417)
- (CU) Consolidated Undrained Triaxial (ASTM D 4767)
- (DS) Direct Shear (ASTM D 3080)
- (EI) Expansion Index (ASTM D 4829)
- (M) Moisture Content (ASTM D 2216)
- (OC) Organic Content-% (ASTM D 2974)
- (P) Permeability (CTM 220)
- (PA) Particle Size Analysis (ASTM D 422)
- (PI) Plasticity Index (AASHTO T 90) Liquid Limit (AASHTO T 89)
- (PL) Point Load Index (ASTM D 5731)
- (PM) Pressure Meter
- (PP) Pocket Penetrometer
- (R) R-Value (CTM 301)
- (SE) Sand Equivalent (CTM 217)
- (SG) Specific Gravity (AASHTO T 100)
- (SL) Shrinkage Limit (ASTM D 427)
- (SW) Swell Potential (ASTM D 4546)
- (TV) Pocket Torvane
- (UC) Unconfined Compression-Soil (ASTM D 2166) Unconfined Compression-Rock (ASTM D 2938)
- (UU) Unconsolidated Undrained Triaxial (ASTM D 2850)
- (UW) Unit Weight (ASTM D 4767)
- (VS) Vane Shear (AASHTO T 223)

DIST	COUNTY	ROUTE	POST MILES TOTAL PROJECT	SHEET No	TOTAL SHEETS
04	SF	101,1	9.2/9.8, 6.8/7.1	566	567

CERTIFIED ENGINEERING GEOLOGIST 6-02-09

7-20-09
PLANS APPROVAL DATE

REGISTERED GEOLOGIST — Grant Wilcox — No. 2300 — Exp. 4-30-10 — CERTIFIED ENGINEERING GEOLOGIST — STATE OF CALIFORNIA

The State of California or its officers or agents shall not be responsible for the accuracy or completeness of electronic copies of this plan sheet.

APPARENT DENSITY OF COHESIONLESS SOILS

Description	SPT N_{60} (Blows / 12 inches)
Very loose	0 - 4
Loose	5 - 10
Medium Dense	11 - 30
Dense	31 - 50
Very Dense	> 50

MOISTURE

Description	Criteria
Dry	Absence of moisture, dusty, dry to the touch
Moist	Damp but no visible water
Wet	Visible free water, usually soil is below water table

PERCENT OR PROPORTION OF SOILS

Description	Criteria
Trace	Particles are present but estimated to be less than 5%
Few	5 to 10%
Little	15 to 25%
Some	30 to 45%
Mostly	50 to 100%

PARTICLE SIZE

Description		Size
Boulder		> 12"
Cobble		3" to 12"
Gravel	Coarse	3/4" to 3"
	Fine	No. 4 to 3/4"
Sand	Coarse	No. 10 to No. 4
	Medium	No. 40 to No. 10
	Fine	No. 200 to No. 40

ENGINEERING SERVICES	GEOTECHNICAL SERVICES	STATE OF CALIFORNIA DEPARTMENT OF TRANSPORTATION	DIVISION OF ENGINEERING SERVICES STRUCTURE DESIGN	BRIDGE NO.	RETAINING WALL NO. 4
	PREPARED BY: I.G-Remmen, 5/09		DESIGN BRANCH 9	34E0013	LOG OF TEST BORINGS 3 OF 4
				POST MILE 6.90	

GS LOTB SOIL LEGEND

ORIGINAL SCALE IN INCHES FOR REDUCED PLANS 0 1 2 3

CU 04
EA 163731

DISREGARD PRINTS BEARING EARLIER REVISION DATES

REVISION DATES: 05-22-09

SHEET 12 OF 13

FILE => 34e0013-e-lob03.dgn

USERNAME => tmarlok DATE PLOTTED => 21-JUL-2009 TIME PLOTTED => 13:58

REFERENCE: CALTRANS SOIL & ROCK LOGGING, CLASSIFICATION, AND PRESENTATION MANUAL (JUNE 2007)

DIST	COUNTY	ROUTE	POST MILES TOTAL PROJECT	SHEET No	TOTAL SHEETS
04	SF	101,1	9.2/9.8, 6.8/7.1	567	567

CERTIFIED ENGINEERING GEOLOGIST 6-02-09

7-20-09
PLANS APPROVAL DATE

The State of California or its officers or agents shall not be responsible for the accuracy or completeness of electronic copies of this plan sheet.

REGISTERED GEOLOGIST
Grant Wilcox
No. 2300
Exp. 4-30-10
CERTIFIED ENGINEERING GEOLOGIST
STATE OF CALIFORNIA

PERCENT CORE RECOVERY (REC) & ROCK QUALITY DESIGNATION (RQD)

$$REC = \frac{\sum \text{Length of the recovered core pieces (inches)}}{\text{Total length of core run (inches)}} \times 100\%$$

$$RQD = \frac{\sum \text{Length of intact core pieces} \geq 4\text{"}}{\text{Total length of core run (inches)}} \times 100\%$$

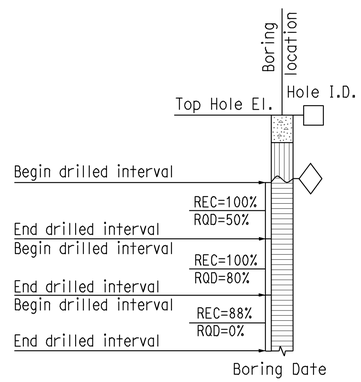

RELATIVE STRENGTH OF INTACT ROCK

Term	Uniaxial Compressive Strength (PSI)
Extremely Strong	> 30,000
Very Strong	14,500 - 30,000
Strong	7,000 - 14,500
Medium Strong	3,500 - 7,000
Weak	700 - 3,500
Very Weak	150 - 700
Extremely Weak	< 150

BEDDING SPACING

Description	Thickness / Spacing
Massive	Greater than 10 ft
Very thickly bedded	3 to 10 ft
Thickly bedded	1 to 3 ft
Moderately bedded	3-5/8" to 1 ft
Thinly bedded	1-1/4" to 3-5/8"
Very thinly bedded	3/8" to 1-1/4"
Laminated	Less than 3/8"

LEGEND OF ROCK MATERIALS

- IGNEOUS ROCK
- SEDIMENTARY ROCK
- METAMORPHIC ROCK

ROCK HARDNESS

Description	Criteria
Extremely Hard	Specimen cannot be scratched with a pocket knife or sharp pick; can only be chipped with repeated heavy hammer blows.
Very Hard	Specimen cannot be scratched with a pocket knife or sharp pick. Breaks with repeated heavy hammer blows.
Hard	Specimen can be scratched with a pocket knife or sharp pick with difficulty (heavy pressure). Heavy hammer blows required to break specimen.
Moderately Hard	Specimen can be scratched with pocket knife or sharp pick with light or moderate pressure. Core breaks with moderate hammer blows.
Moderately Soft	Specimen can be grooved 1/6" deep with a pocket knife or sharp pick with moderate or heavy pressure. Breaks with light hammer blow or heavy manual pressure.
Soft	Specimen can be grooved or gouged easily by a pocket knife or sharp pick with light pressure, can be scratched with fingernail. Breaks with light to moderate manual pressure.
Very Soft	Specimen can be readily indented, grooved or gouged with fingernail, or carved with a pocket knife. Breaks with light manual pressure.

FRACTURE DENSITY

Description	Observed Fracture Density
Unfractured	No fractures.
Very slightly fractured	Lengths greater than 3 feet.
Slightly fractured	Lengths from 1 to 3 feet with few lengths less than 1 foot or greater than 3 feet.
Moderately fractured	Lengths mostly in 4" to 1 foot range with most lengths about 8"
Intensely fractured	Lengths average from 1 to 4" with scattered fragmented intervals with lengths less than 4"
Very intensely fractured	Mostly chips and fragments with a few scattered short core lengths.

Combination descriptors (such as "Very intensely to intensely fractured") are used where equal distribution of both fracture density characteristics is present over a significant interval or exposure, or where characteristics are "in between" the descriptor definitions. Only two adjacent descriptors may be combined.

WEATHERING DESCRIPTORS FOR INTACT ROCK

Description	Diagnostic features: Chemical Weathering-Discoloration and/or oxidation: Body of Rock	Diagnostic features: Chemical Weathering-Discoloration and/or oxidation: Fracture Surfaces	Diagnostic features: Mechanical Weathering-Grain boundary conditions (disaggregation) primarily for granitics and some coarse-grained sediments	Diagnostic features: Texture and Solutioning: Texture	Diagnostic features: Texture and Solutioning: Solutioning	General Characteristics
Fresh	No discoloration, not oxidized.	No discoloration or oxidation.	No separation, intact (tight).	No change.	No solutioning.	Hammer rings when crystalline rocks are struck.
Slightly Weathered	Discoloration or oxidation is limited to surface of, or short distance from, fractures; some feldspar crystals are dull.	Minor to complete discoloration or oxidation of most surfaces.	No visible separation, intact (tight).	Preserved.	Minor leaching of some soluble minerals may be noted.	Hammer rings when crystalline rocks are struck. Body of rock not weakened.
Moderately Weathered	Discoloration or oxidation extends from fractures usually throughout; Fe-Mg minerals are "rusty," feldspar crystals are "cloudy."	All fracture surfaces are discolored or oxidized.	Partial separation of boundaries visible.	Generally preserved.	Soluble minerals may be mostly leached.	Hammer does not ring when rock is struck. Body of rock is slightly weakened.
Intensely Weathered	Discoloration or oxidation throughout; all feldspars and Fe-Mg minerals are altered to clay to some extent; or chemical alteration produces in-situ disaggregation, see grain boundary conditions.	All fracture surfaces are discolored or oxidized, surfaces friable.	Partial separation, rock is friable; in semiarid conditions granitics are disaggregated.	Texture altered by chemical disintegration (hydration, argillation).	Leaching of soluble minerals may be complete.	Dull sound when struck with hammer, usually can be broken with moderate to heavy manual pressure or by light hammer blow without reference to planes of weakness such as incipient or hairline fractures, or veinlets. Rock is significantly weakened.
Decomposed	Discolored or oxidized throughout, but resistant minerals such as quartz may be unaltered; all feldspars and Fe-Mg minerals are completely altered to clay.		Complete separation of grain boundaries (disaggregated).	Resembles a soil, partial or complete remnant rock structure may be preserved; leaching of soluble minerals usually complete.		Can be granulated by hand. Resistant minerals such as quartz may be present as "stringers" or "dikes."

Combination descriptors (such as "slightly weathered to fresh") are permissible where equal distribution of both weathering characteristics is present over significant intervals or where characteristics present are "in between" the diagnostic feature. However, combination descriptors should not be used where significant, identifiable zones can be delineated. Only two adjacent descriptors may be combined. "Very intensely weathered" is the combination descriptor for "intensely weathered to decomposed."

ENGINEERING SERVICES	GEOTECHNICAL SERVICES	STATE OF CALIFORNIA DEPARTMENT OF TRANSPORTATION	DIVISION OF ENGINEERING SERVICES STRUCTURE DESIGN	BRIDGE NO.	RETAINING WALL NO. 4
	PREPARED BY: I.G-Remmen, 5/09		DESIGN BRANCH 9	34E0013	LOG OF TEST BORINGS 4 OF 4
				POST MILE 6.90	

GS LOTB ROCK LEGEND

ORIGINAL SCALE IN INCHES FOR REDUCED PLANS 0 1 2 3

CU 04
EA 163731

DISREGARD PRINTS BEARING EARLIER REVISION DATES →

REVISION DATES: 06-22-09

SHEET 13 OF 13

FILE => 34e0013-e-lob04.dgn

USERNAME => tmorlok DATE PLOTTED => 21-JUL-2009 TIME PLOTTED => 13:58