ATTACHMENT 1

INDEX OF PLANS

STATE OF CALIFORNIA
DEPARTMENT OF TRANSPORTATION

PROJECT PLANS FOR CONSTRUCTION ON
STATE HIGHWAY

IN THE CITY AND COUNTY OF SAN FRANCISCO
ON ROUTE 101
BETWEEN MARSHALL ST AND LUNDEEN ST

TO BE SUPPLEMENTED BY STANDARD PLANS DATED MAY 2006

DIST	COUNTY	ROUTE	POST MILES TOTAL PROJECT	SHEET NO.	TOTAL SHEETS
04	SF	101	8.4		

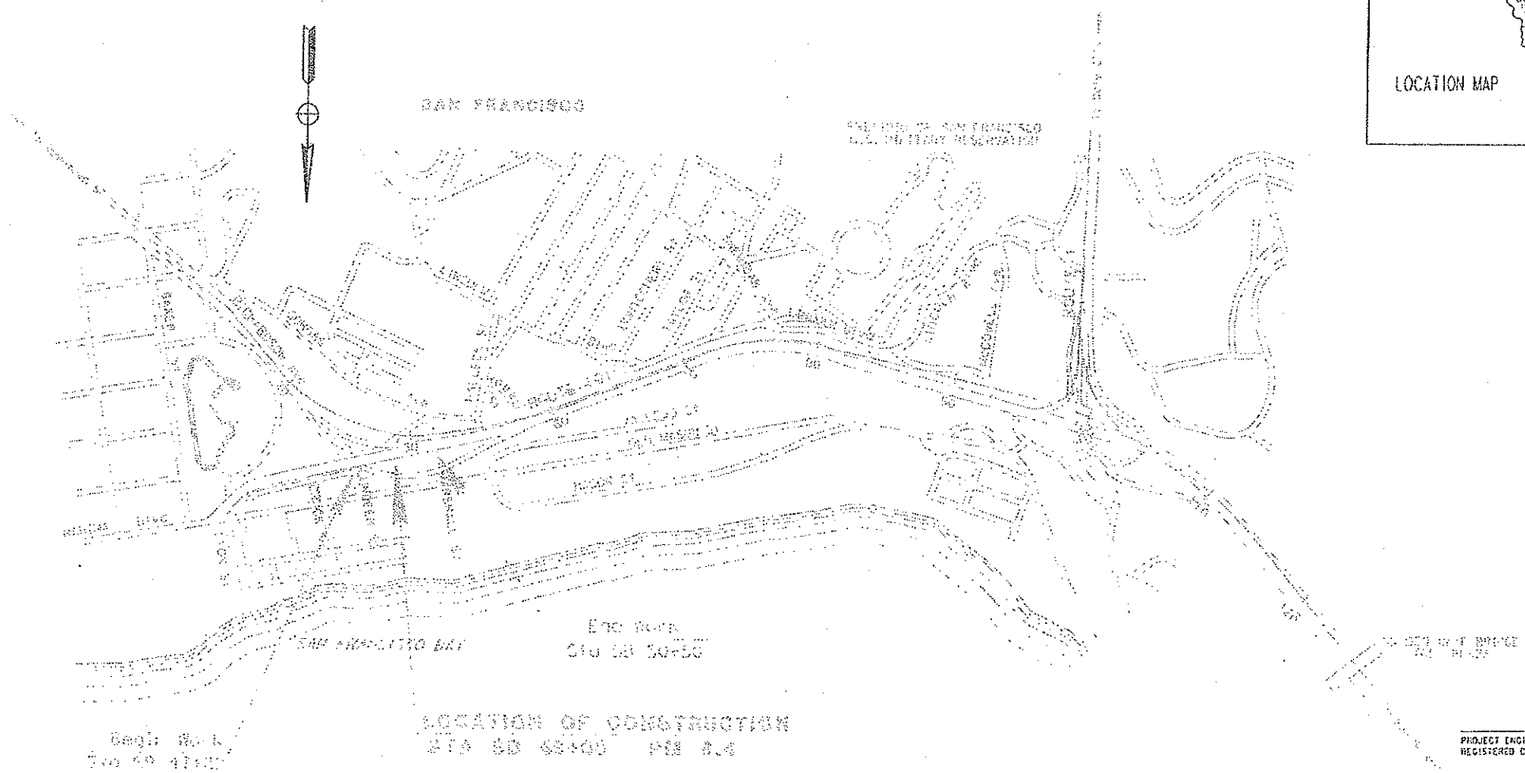

PROJECT ENGINEER DATE
REGISTERED CIVIL ENGINEER

PLANS APPROVAL DATE

THE STATE OF CALIFORNIA OR ITS OFFICERS OR AGENTS SHALL NOT BE RESPONSIBLE FOR THE ACCURACY OR COMPLETENESS OF SCANNED COPIES OF THIS PLAN SHEET.

THE CONTRACTOR SHALL POSSESS THE CLASS (OR CLASSES) OF LICENSE AS SPECIFIED IN THE "NOTICE TO BIDDERS."

PROJECT MANAGER
DESIGN ENGINEER

BORDER LAST REVISED 8/1/2008 | CALTRANS WEB SITE IS: HTTP://WWW.DOT.CA.GOV/ | RELATIVE BORDER SCALE IS IN INCHES 0 1 2 3 | USERNAME => $USER DGN FILE => $REQUEST

CONTRACT No. [illegible]
CU 04242 | EA 1637J1

LAST REVISION 05-22-09 | DATE PLOTTED => $DATE TIME PLOTTED => $TIME

1637J1 geotech title.dgn 5/23/2009 6:36:45 AM

ATTACHMENT 1

DIST	COUNTY	ROUTE	POST MILES TOTAL PROJECT	SHEET No	TOTAL SHEETS
04	SF	101			

REGISTERED CIVIL ENGINEER 06-29-09 DATE

PLANS APPROVAL DATE

REGISTERED PROFESSIONAL ENGINEER PHILIP E. LUTZ No. C55839 Exp. 12-31-10 CIVIL STATE OF CALIFORNIA

The State of California or its officers or agents shall not be responsible for the accuracy or completeness of electronic copies of this plan sheet.

To get to the Caltrans web site, go to: http://www.dot.ca.gov

INDEX TO PLANS

SHEET NO.	TITLE
1.	GENERAL PLAN
2.	PILE DETAILS

GENERAL NOTES
LOAD AND RESISTANCE FACTOR DESIGN

DESIGN: Load Factor Design, 2004 AASHTO with Revisions By California Bridge Design SPecifications

REINFORCED CONCRETE: f'c = 3600 psi (@ 28 days)
fy = 60,000 psi

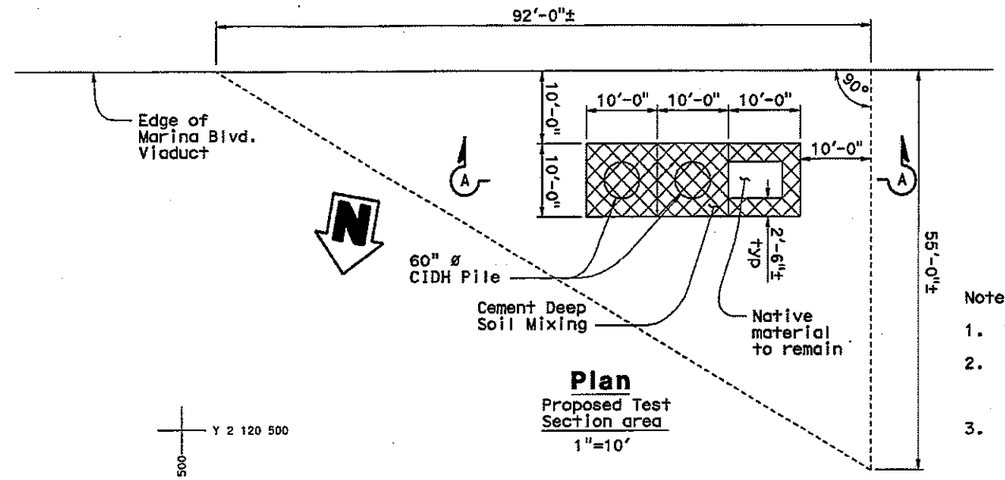

Plan
Proposed Test Section area
1"=10'

Notes:

1. Test Pile location to be determined by the Engineer
2. Piles to be placed in center of 10'x10' Cement Deep Soil Mixing cell as shown in the Proposed Test Section area.
3. Piles to be placed such that the pile cut-off elevation is a minimum of 3' below final grade.

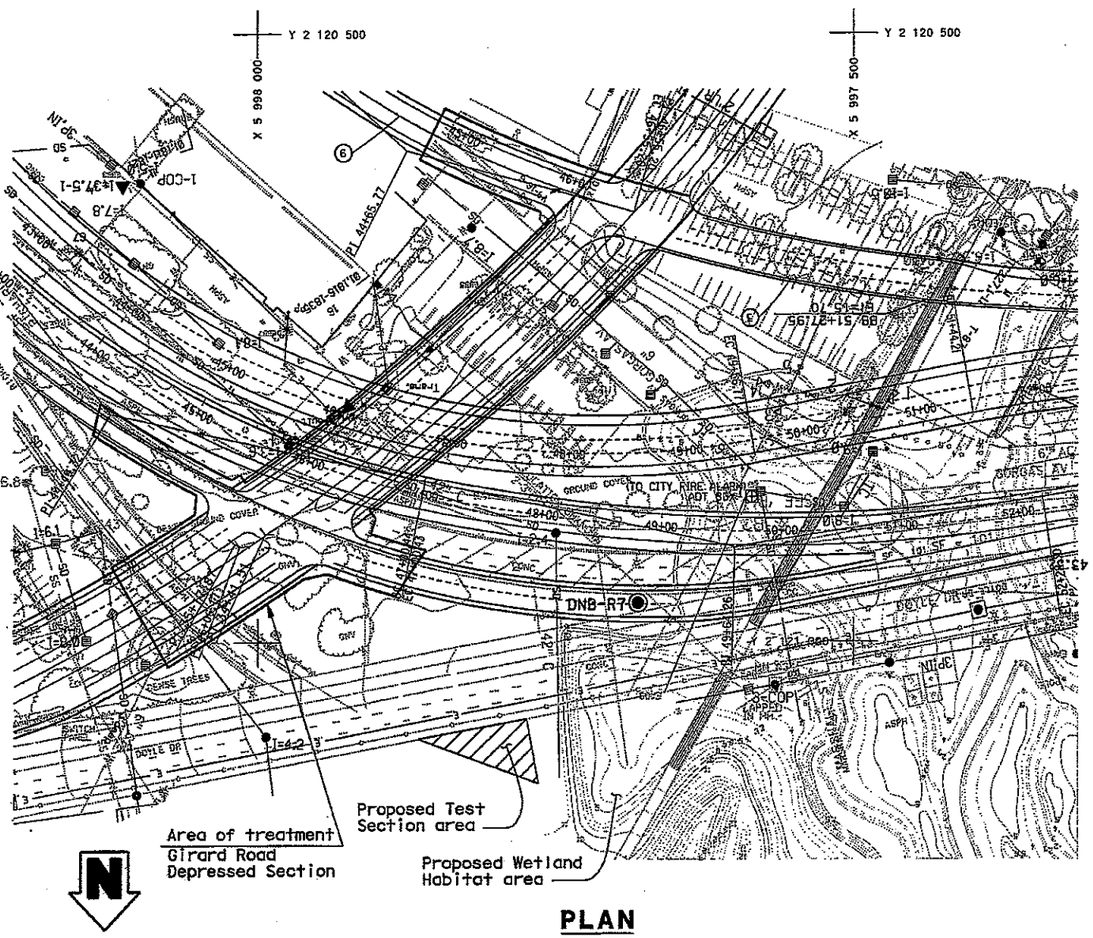

PLAN
1"=60'

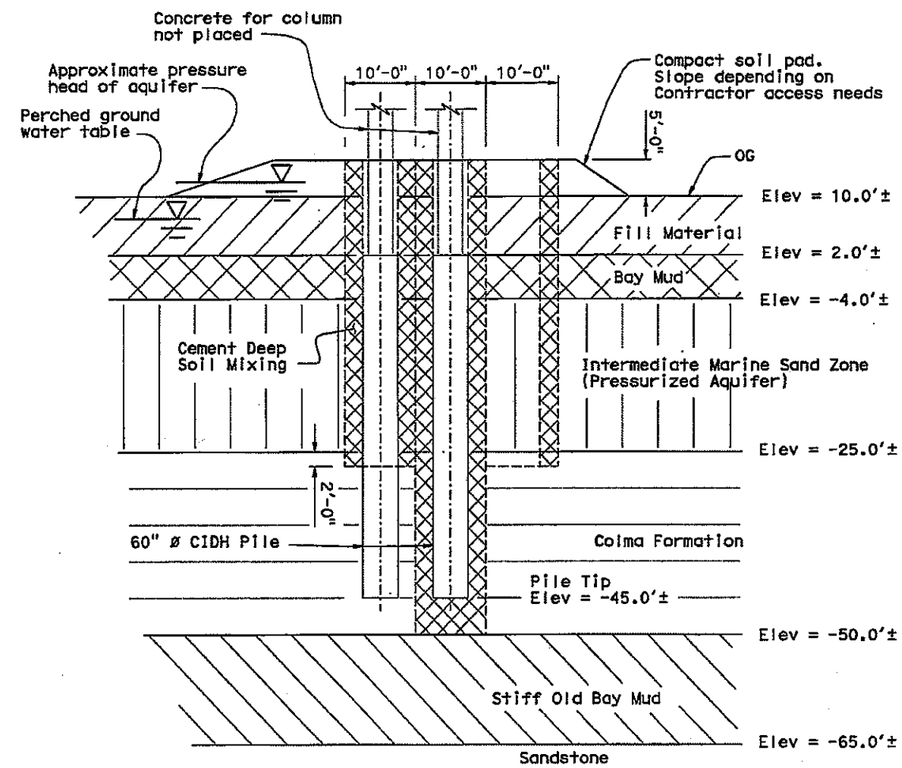

TYPICAL SECTION
(SECTION A-A)
1"=10'

Gordon Danke DESIGN ENGINEER	DESIGN	BY P. Lutz	CHECKED E. Francilisa	LOAD & RESISTANCE FACTOR DESIGN	LIVE LOADING: HL93 W/"LOW-BOY"; PERMIT DESIGN VEHICLE
	DETAILS	BY P. Lutz	CHECKED E. Francilisa	LAYOUT BY P. Lutz	CHECKED E. Francilisa
	QUANTITIES	BY P. Lutz	CHECKED E. Francilisa	SPECIFICATIONS BY X	PLANS AND SPECS COMPARED X

STATE OF CALIFORNIA
DEPARTMENT OF TRANSPORTATION

DIVISION OF ENGINEERING SERVICES
STRUCTURE DESIGN
DESIGN BRANCH 9

BRIDGE NO.
TEST PILE
POST MILE

CEMENT DEEP SOIL MIXING AND CAST IN DRILLED HOLE TESTS
GENERAL PLAN

STRUCTURES DESIGN GENERAL PLAN SHEET (ENGLISH) (REV. 10/25/05)

ORIGINAL SCALE IN INCHES FOR REDUCED PLANS 0 1 2 3

CU 04
EA 1637J1

FILE => Test Pile GP.dgn

DISREGARD PRINTS BEARING EARLIER REVISION DATES

REVISION DATES 05-22-09 09-29-09

SHEET 1 OF 2

STRUCTURES DESIGN GENERAL PLAN SHEET (ENGLISH) (REV.07-24-06)

USERNAME => plutz DATE PLOTTED => 10-SEP-2009 TIME PLOTTED => 14:00

ATTACHMENT 1

DIST	COUNTY	ROUTE	POST MILES TOTAL PROJECT	SHEET No.	TOTAL SHEETS
04	SF	101			

REGISTERED CIVIL ENGINEER X DATE

PLANS APPROVAL DATE

REGISTERED PROFESSIONAL ENGINEER PHILIP E. LUTZ No. C55839 Exp. 12-31-10 CIVIL STATE OF CALIFORNIA

The State of California or its officers or agents shall not be responsible for the accuracy or completeness of electronic copies of this plan sheet.

To get to the Caltrans web site, go to: http://www.dot.ca.gov

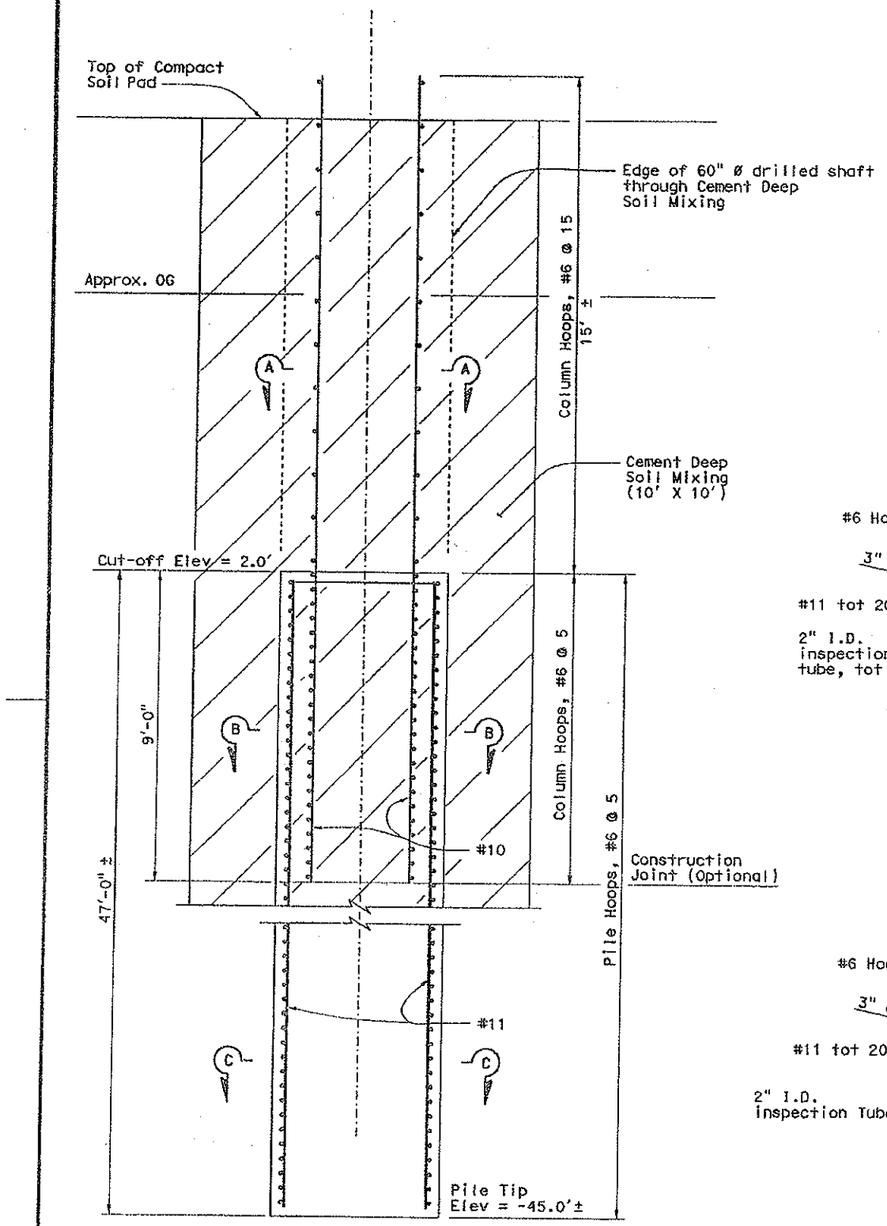

ELEVATION

½" = 1"

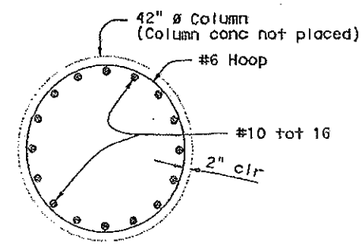

SECTION A-A

½" = 1"

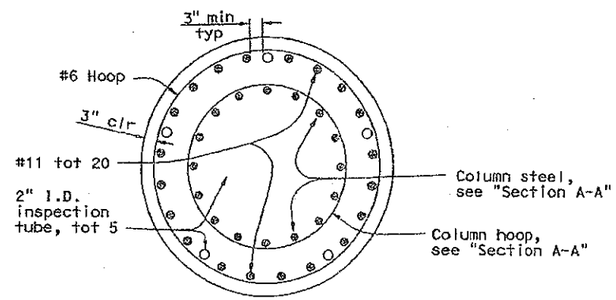

SECTION B-B

½" = 1"

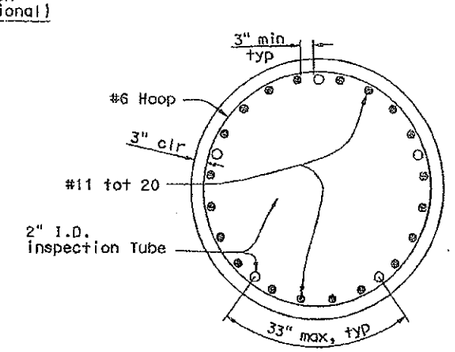

SECTION C-C

½" = 1"

Notes:

1. Column concrete not to be placed.
2. Column rebar to extend a minimum of 2' above top of Compact Soil Pad
3. Column rebar to be cut at Pile cut-off elevation upon completion of the Test Pile installation.
4. Following column rebar removal, Cement Deep Soil Mixing material to be removed to a depth of at least 2' below final grade for the proposed Wetland Habitat.
5. Void created by removal of Cement Deep Soil Mixing material to be backfilled to approximat soil density of original site. Compact Soil Pad to be removed to approximate finished grade of site prior to commencement of work.

	BY	CHECKED
DESIGN	P. Lutz	E. Franciliso
DETAILS	P. Lutz	E. Franciliso
QUANTITIES	P. Lutz	E. Franciliso

STATE OF CALIFORNIA
DEPARTMENT OF TRANSPORTATION

DIVISION OF ENGINEERING SERVICES
STRUCTURE DESIGN
DESIGN BRANCH 9

BRIDGE NO. TEST PILE
POST MILE

CEMENT DEEP SOIL MIXING AND CAST IN DRILLED HOLE TESTS

PILE DETAILS

STRUCTURES DESIGN DETAIL SHEET (ENGLISH) (REV. 10/25/05)

ORIGINAL SCALE IN INCHES FOR REDUCED PLANS 0 1 2 3

CU 04
EA 1637J1

DISREGARD PRINTS BEARING EARLIER REVISION DATES 05-21-09 05-21-09

REVISION DATES

SHEET 2 OF 2

[FILE => Test Pile Details.dgn

USERNAME => p1utz DATE PLOTTED => 29-MAY-2009 TIME PLOTTED => 12:12