Dist	COUNTY	ROUTE	POST MILES TOTAL PROJECT	SHEET No.	TOTAL SHEETS
04	SF	101,1	9.2/9.8, 6.8/7.1	55	567

REGISTERED CIVIL ENGINEER 6-09-09 DATE

7-20-09
PLANS APPROVAL DATE

REGISTERED PROFESSIONAL ENGINEER JOHN EDWARD KARN JR No. C66743 Exp. 9-30-10 CIVIL STATE OF CALIFORNIA

THE STATE OF CALIFORNIA OR ITS OFFICERS OR AGENTS SHALL NOT BE RESPONSIBLE FOR THE ACCURACY OR COMPLETENESS OF SCANNED COPIES OF THIS PLAN SHEET.

Arup PB JV
560 Mission Street, Suite 700
San Francisco, CA 94105

NOTES:

1. FOR ACCURATE RIGHT OF WAY AND ACCESS DATA, CONTACT RIGHT OF WAY ENGINEERING AT THE DISTRICT OFFICE.
2. FOR NOTES, LEGENDS, AND ABBREVIATIONS SEE SHEET D-1.

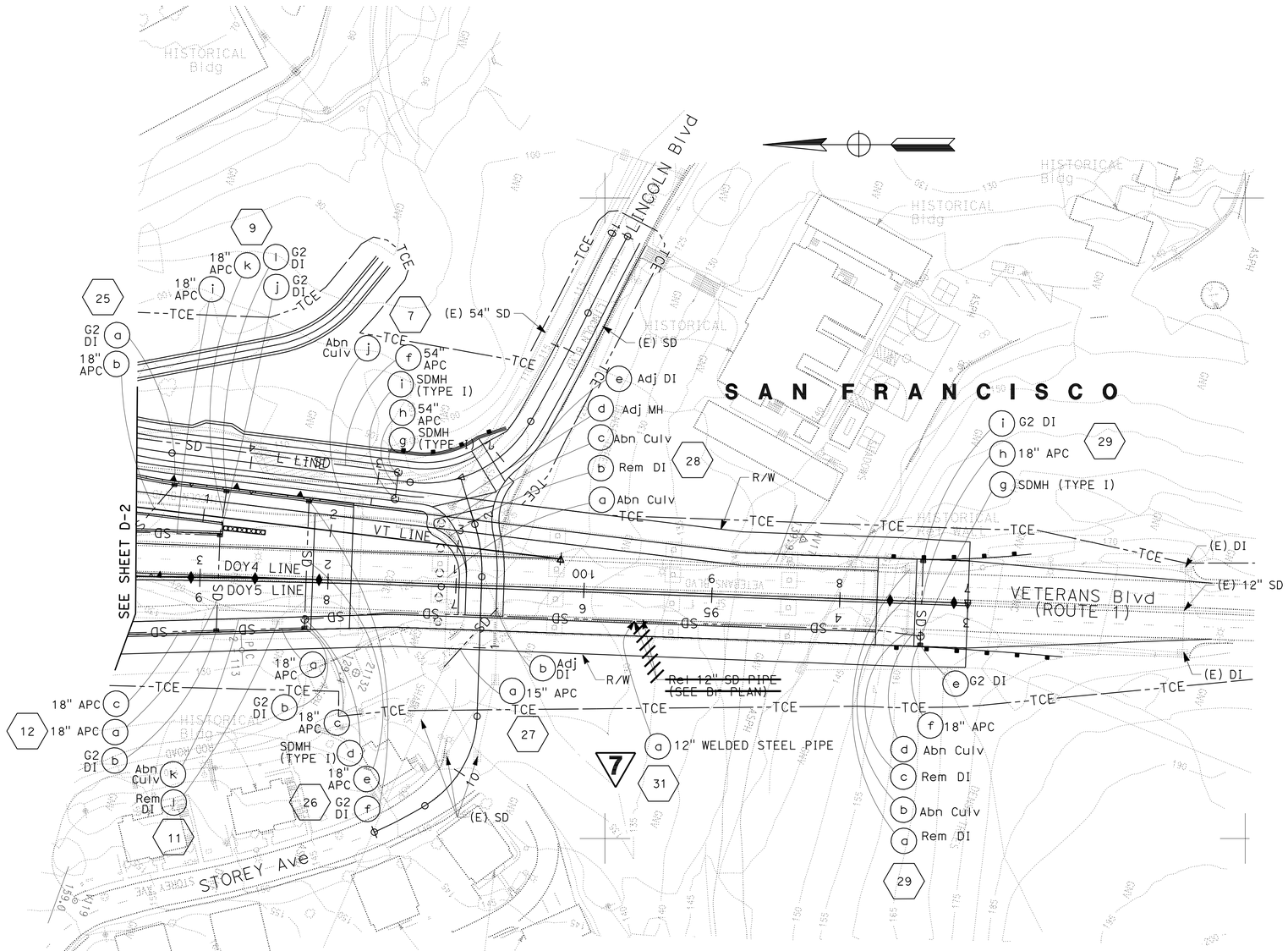

7 REVISED PER ADDENDUM No. 7 DATED SEPTEMBER 25, 2009

THIS PLAN ACCURATE FOR DRAINAGE WORK ONLY

DRAINAGE PLAN

SCALE 1" = 50'

D-3

STATE OF CALIFORNIA - DEPARTMENT OF TRANSPORTATION

Caltrans

CONSULTANT FUNCTIONAL SUPERVISOR: ABOLFAZL EMADZADEH

CALCULATED-DESIGNED BY: MANISH DALIA/JACK MONG

CHECKED BY: DUANNE GILMORE

REVISED BY: ML/KM

DATE REVISED: 6/09/09

LAST REVISION 06-08-09

DATE PLOTTED => 25-SEP-2009
TIME PLOTTED => 09:45

BORDER LAST REVISED 4/11/2008

RELATIVE BORDER SCALE IS IN INCHES 0 1 2 3

USERNAME => trmikesl
DGN FILE => 416373ia003.add

CU 04242

EA 163731

Dist	COUNTY	ROUTE	POST MILES TOTAL PROJECT	SHEET No.	TOTAL SHEETS
04	SF	101,1	9.2/9.8, 6.8/7.1	67	567

REGISTERED CIVIL ENGINEER 6-09-09 DATE

7-20-09
PLANS APPROVAL DATE

REGISTERED PROFESSIONAL ENGINEER JOHN EDWARD KARN JR No. C66743 Exp. 9-30-10 CIVIL STATE OF CALIFORNIA

THE STATE OF CALIFORNIA OR ITS OFFICERS OR AGENTS SHALL NOT BE RESPONSIBLE FOR THE ACCURACY OR COMPLETENESS OF SCANNED COPIES OF THIS PLAN SHEET.

Arup PB JV
560 Mission Street, Suite 700
San Francisco, CA 94105

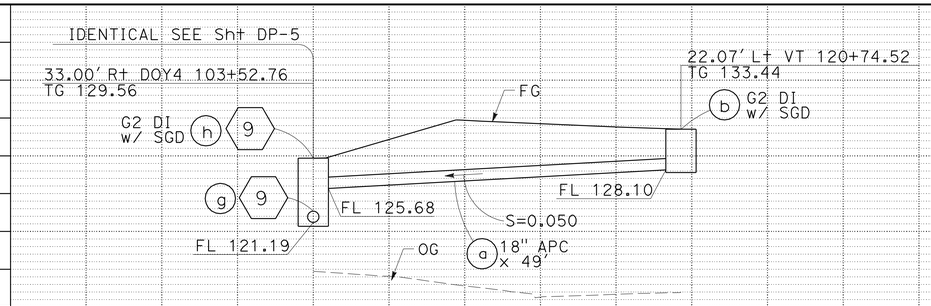

DRAINAGE SYSTEM No. 25

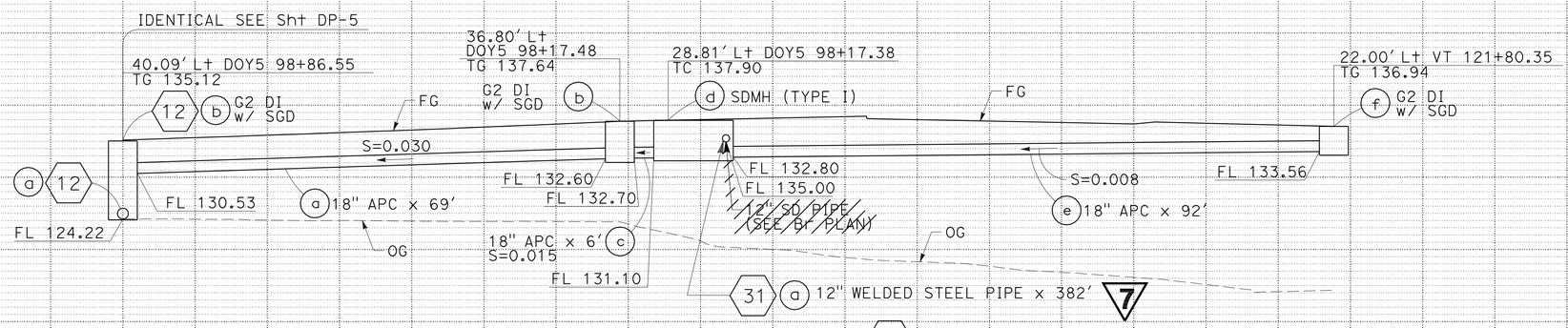

DRAINAGE SYSTEM No. 26

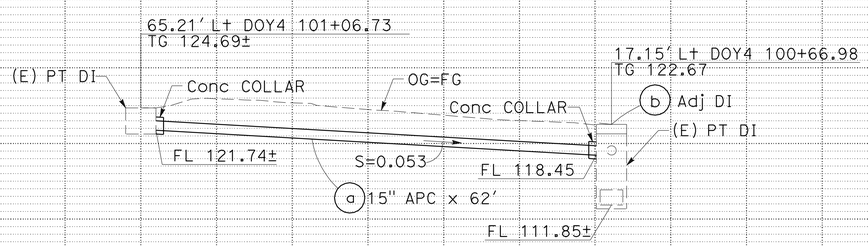

DRAINAGE SYSTEM No. 27

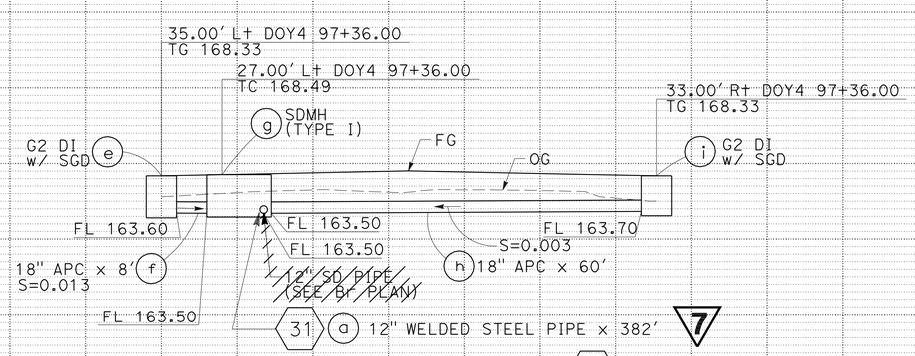

DRAINAGE SYSTEM No. 29

DRAINAGE PROFILE
SCALE: 1"=10' Horiz
1"=10' Vert

7 **REVISED PER ADDENDUM No. 7 DATED SEPTEMBER 25, 2009**

DP-9

STATE OF CALIFORNIA - DEPARTMENT OF TRANSPORTATION
Caltrans

CONSULTANT FUNCTIONAL SUPERVISOR: ABOLFAZL EMADZADEH
CALCULATED-DESIGNED BY: MANISH DALIA/JACK MONG
CHECKED BY: DUANNE GILMORE
REVISED BY: ML/KM
DATE REVISED: 6/09/09

LAST REVISION 06-08-09
DATE PLOTTED => 25-SEP-2009
TIME PLOTTED => 09:45

NOTE:

1. FOR NOTES AND LEGEND SEE DQ-1.

Dist	COUNTY	ROUTE	POST MILES TOTAL PROJECT	SHEET No.	TOTAL SHEETS
04	SF	101,1	9.2/9.8, 6.8/7.1	84	567

REGISTERED CIVIL ENGINEER 6-09-09 DATE

7-20-09
PLANS APPROVAL DATE

REGISTERED PROFESSIONAL ENGINEER JOHN EDWARD KARN JR No. C66743 Exp. 9-30-10 CIVIL STATE OF CALIFORNIA

THE STATE OF CALIFORNIA OR ITS OFFICERS OR AGENTS SHALL NOT BE RESPONSIBLE FOR THE ACCURACY OR COMPLETENESS OF SCANNED COPIES OF THIS PLAN SHEET.

Arup PB JV
560 Mission Street, Suite 700
San Francisco, CA 94105

7

12" WELDED STEEL PIPE (0.250" THICK)	DRAINAGE SYSTEM No.	DRAINAGE UNIT	ABANDON CULVERT	REMOVE CULVERT	REMOVE INLET	REMOVE CONCRETE	ADJUST MANHOLE TO GRADE	ADJUST INLET TO GRADE	SAND BACKFILL	DITCH EXCAVATION	MINOR CONCRETE: MINOR STRUCTURE	MINOR CONCRETE: BACKFILL	MINOR CONCRETE: DITCH LINING	MINOR CONCRETE: MISCELLANEOUS CONSTRUCTION	ALTERNATIVE PIPE CULVERT: 12"	15"	18"	30"	54"	12" CSP (0.079" THICK)	18" CSP (0.079" THICK)	30" CSP (0.079" THICK)	8" WSP	ROCK SLOPE PROTECTION (1/4 T, METHOD B)	RSP FABRIC (CLASS 8)	FRAME & GRATE (TYPE 24-12) (N)	FRAME & GRATE (TYPE 24-12X) (N)	FRAME & COVER (DETAIL U45) (N)	MISCELLANEOUS IRON AND STEEL	CONCRETE COLLAR (N)	MAXIMUM PIPE COVER (N)	HEIGHT OF DRAINAGE STRUCTURE (N)	PIPE JOINT CLASSIFICATION	DESCRIPTION	STATION	DRAINAGE UNIT	DRAINAGE SYSTEM No.	DRAINAGE PROFILE SHEET No.	DRAINAGE PLAN SHEET No.
LF			LF		EA	CY	EA	LF	CY						LF									CY	SF	EA			LBS	EA	LF							
	30	a	31						2.1																									ABANDON CULVERT	33.46′ R+ DOY4 118+62.31 TO 4.72′ R+ DOY4 118+75.04	a	30		D-4
		b			1																													REMOVE INLET	4.72′ R+ DOY4 118+75.04	b			
		c	38						2.5																									ABANDON CULVERT	4.72′ R+ DOY4 118+75.04 TO 31.05′ L+ DOY4 118+63.58	c			
		d			1																													REMOVE INLET	31.05′ L+ DOY4 118+63.58	d			
		e	52						3.4																									ABANDON CULVERT	31.05′ L+ DOY4 118+63.58 TO 13.06′ R+ SB 109+23.14	e			
382	31	a	7																															12" WSP	27.00′ L+ DOY4 97+36.00 TO 28.81 L+ DOY5 98+17.38 (SEE Br PLANS) 7	a	31		D-3
382	SHEET TOTAL		121		2				8.0																														
382	GRAND TOTAL		2660	403	26	49	2	2.0	325.5	40	192.8	10	40	33	140	62	3246	487	408	151	457	183	45	14	274	38	2	28	24611	14									

DRAINAGE QUANTITIES

NO SCALE

7 REVISED PER ADDENDUM No. 7 DATED SEPTEMBER 25, 2009

DQ-11

MANISH DALIA/JACK MONG	ML/KM	CALCULATED-DESIGNED BY	CHECKED BY
DUANNE GILMORE	6/09/09	CONSULTANT FUNCTIONAL SUPERVISOR	
REVISED BY		ABOLFAZL EMADZADEH	
DATE REVISED			

STATE OF CALIFORNIA - DEPARTMENT OF TRANSPORTATION

Caltrans

LAST REVISION 06-08-09 DATE PLOTTED => 25-SEP-2009 TIME PLOTTED => 09:46

Dist	COUNTY	ROUTE	POST MILES TOTAL PROJECT	SHEET No.	TOTAL SHEETS
04	SF	101,1	9.2/9.8, 6.8/7.1	99A	567

REGISTERED CIVIL ENGINEER 6-08-09 DATE

7-20-09
PLANS APPROVAL DATE

REGISTERED PROFESSIONAL ENGINEER Jerilyn L. Struven No. 49964 Exp. 12-31-10 CIVIL STATE OF CALIFORNIA

THE STATE OF CALIFORNIA OR ITS OFFICERS OR AGENTS SHALL NOT BE RESPONSIBLE FOR THE ACCURACY OR COMPLETENESS OF SCANNED COPIES OF THIS PLAN SHEET.

7

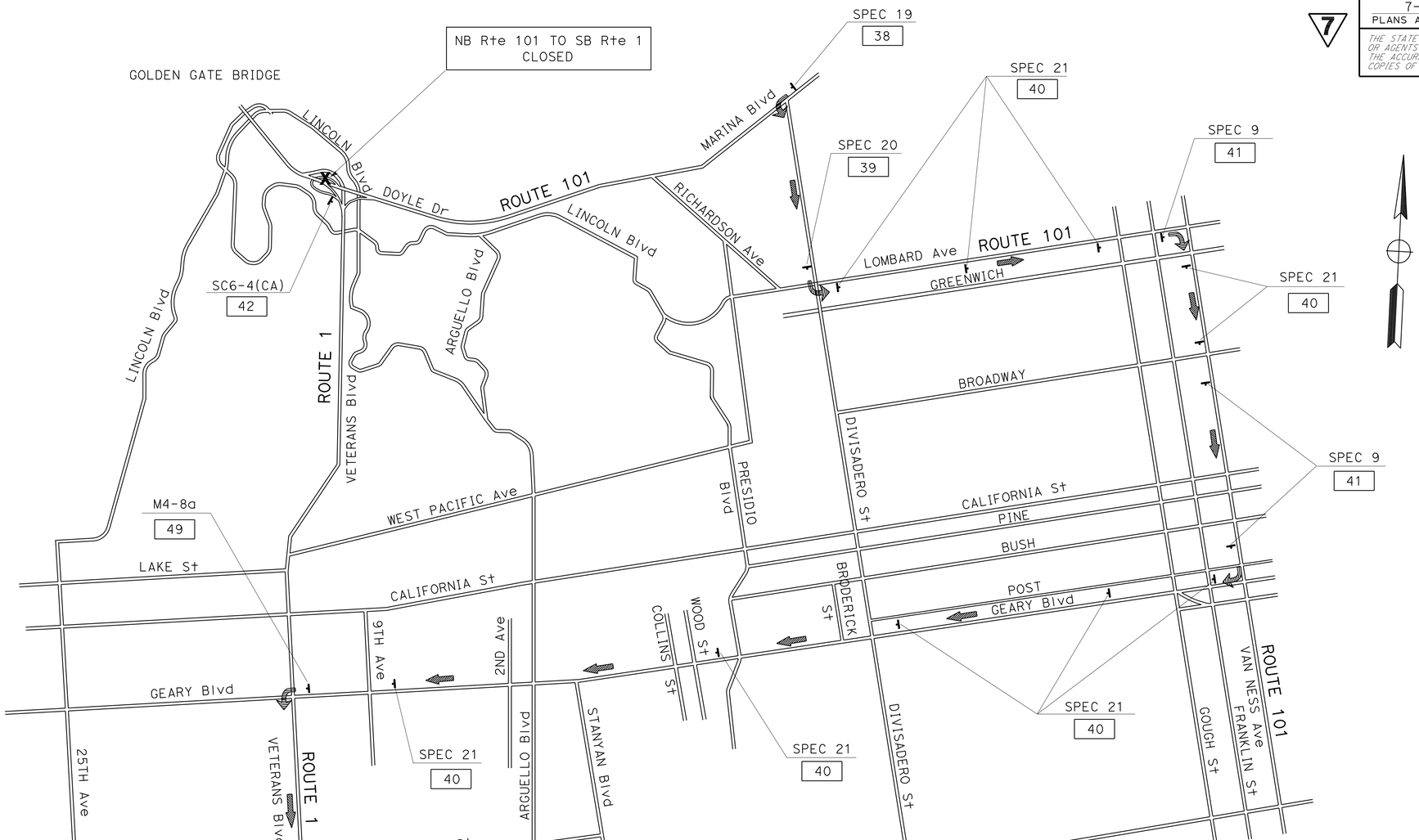

DETOUR

NB Rte 101 TO SB Rte 1 CONNECTOR CLOSED

7 **ADDED PER ADDENDUM No. 7 DATED SEPTEMBER 25, 2009**

THIS PLAN ACCURATE FOR CONSTRUCTION AREA SIGN WORK ONLY

CONSTRUCTION AREA SIGNS

NO SCALE

CS-11

STATE OF CALIFORNIA - DEPARTMENT OF TRANSPORTATION

Caltrans **TRAFFIC**

FUNCTIONAL SUPERVISOR: ROLAND AU-YEUNG

CALCULATED-DESIGNED BY: ULICES F. VEGA

CHECKED BY: LILY Y. TING

REVISED BY: UV

DATE REVISED: 6/10/09

LAST REVISION: 09-17-09

DATE PLOTTED => 25-SEP-2009

TIME PLOTTED => 09:46

BORDER LAST REVISED 4/11/2008

RELATIVE BORDER SCALE IS IN INCHES 0 1 2 3

USERNAME => trmikesl

DGN FILE => 4163731a011.add

CU 04242

EA 163731

Dist	COUNTY	ROUTE	POST MILES TOTAL PROJECT	SHEET No.	TOTAL SHEETS
04	SF	101,1	9.2/9.8, 6.8/7.1	99B	567

REGISTERED CIVIL ENGINEER 6-08-09 DATE

7-20-09
PLANS APPROVAL DATE

REGISTERED PROFESSIONAL ENGINEER Jerilyn L. Struven No. 49964 Exp. 12-31-10 CIVIL STATE OF CALIFORNIA

THE STATE OF CALIFORNIA OR ITS OFFICERS OR AGENTS SHALL NOT BE RESPONSIBLE FOR THE ACCURACY OR COMPLETENESS OF SCANNED COPIES OF THIS PLAN SHEET.

7

DETOUR

NB Rte 1 TO SB Rte 101 CONNECTOR CLOSED

7 **ADDED PER ADDENDUM No. 7 DATED SEPTEMBER 25, 2009**

THIS PLAN ACCURATE FOR CONSTRUCTION AREA SIGN WORK ONLY

CONSTRUCTION AREA SIGNS

NO SCALE

CS-12

REVISED BY	UV	ULICES F. VEGA	FUNCTIONAL SUPERVISOR
DATE REVISED	6/10/09	LILY Y. TING	ROLAND AU-YEUNG
CALCULATED-DESIGNED BY		STATE OF CALIFORNIA - DEPARTMENT OF TRANSPORTATION	
CHECKED BY		Caltrans TRAFFIC	

LAST REVISION 09-17-09 | DATE PLOTTED => 25-SEP-2009 | TIME PLOTTED => 09:46

Dist	COUNTY	ROUTE	POST MILES TOTAL PROJECT	SHEET No.	TOTAL SHEETS
04	SF	101,1	9.2/9.8, 6.8/7.1	99C	567

REGISTERED CIVIL ENGINEER 6-08-09 DATE

7-20-09
PLANS APPROVAL DATE

REGISTERED PROFESSIONAL ENGINEER Jerilyn L. Struven No. 49964 Exp. 12-31-10 CIVIL STATE OF CALIFORNIA

THE STATE OF CALIFORNIA OR ITS OFFICERS OR AGENTS SHALL NOT BE RESPONSIBLE FOR THE ACCURACY OR COMPLETENESS OF SCANNED COPIES OF THIS PLAN SHEET.

7

CONSTRUCTION AREA SIGNS

SIGN No.	CODE	PANEL SIZE (INCH x INCH)	SIGN MESSAGE	No. OF SIGNS EA	POST SIZE (EA - INCH x INCH)	REMARKS
38	SPEC 19	48 x 36	SB 1 - 19th AVE - RAMP CLOSED	1	1 - 4 x 6	
39	SPEC 20	42 x 36	DETOUR - 1 SOUTH - 19th AVE	1	1 - 4 x 6	
40	SPEC 21	42 x 36	DETOUR - 1 SOUTH - 19th AVE	10	1 - 4 x 6	
41	SPEC 9	42 x 30	DETOUR - 1 SOUTH - 19th AVE	3	1 - 4 x 6	
42	SC 6-4 (CA)	48 x 60	ROAD (RAMP) - CLOSED - (DATES)	2	1 - 4 x 6	
43	SPEC 22	78 x 54	101 SOUTH - LOMBARD ST - RAMP	1	1 - 4 x 6	
44	SPEC 23	48 x 36	DETOUR - 101 SOUTH - LOMBARD ST	2	1 - 4 x 6	
45	SPEC 24	48 x 36	DETOUR - 101 SOUTH - LOMBARD ST	4	1 - 4 x 6	
46	SPEC 25	48 x 42	DETOUR - LOMBARD ST - 101	2	1 - 4 x 6	
47	SPEC 26	48 x 24	DETOUR - LOMBARD ST	1	1 - 4 x 6	
48	SPEC 27	48 x 24	DETOUR - LOMBARD ST	3	1 - 4 x 6	
49	M 4-8a	24 x 18	END DETOUR	2	1 - 4 x 4	

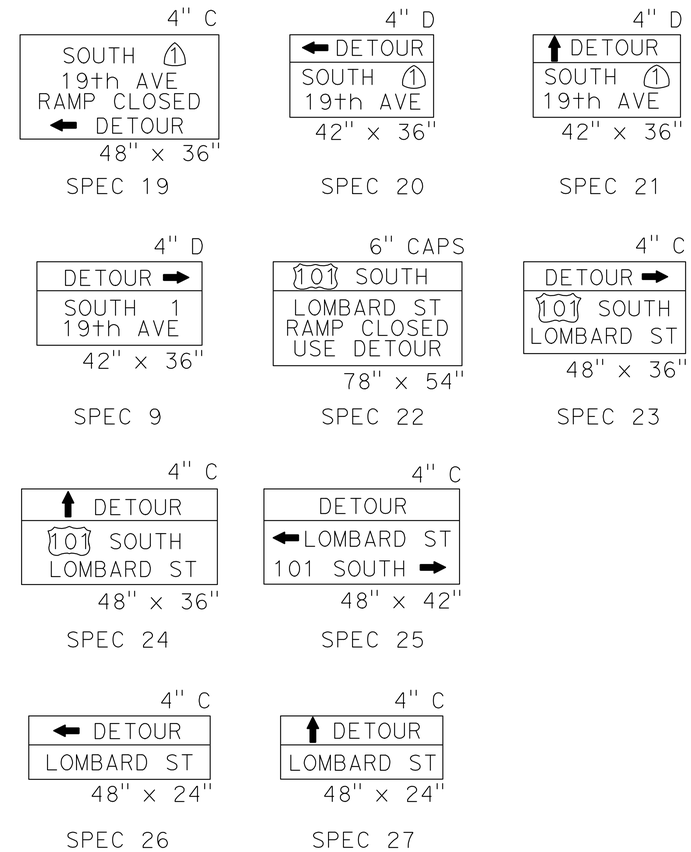

7 **ADDED PER ADDENDUM No. 7 DATED SEPTEMBER 25, 2009**

THIS PLAN ACCURATE FOR CONSTRUCTION AREA SIGN WORK ONLY

CONSTRUCTION AREA SIGNS

NO SCALE

CS-13

STATE OF CALIFORNIA - DEPARTMENT OF TRANSPORTATION
Caltrans **TRAFFIC**

FUNCTIONAL SUPERVISOR: ROLAND AU-YEUNG
CALCULATED-DESIGNED BY: ULICES F. VEGA
CHECKED BY: LILY Y. TING
REVISED BY: UV
DATE REVISED: 6/10/09

LAST REVISION 09-17-09 | DATE PLOTTED => 25-SEP-2009 | TIME PLOTTED => 09:46

Dist	COUNTY	ROUTE	POST MILES TOTAL PROJECT	SHEET No.	TOTAL SHEETS
04	SF	101,1	9.2/9.8, 6.8/7.1	99D	567

REGISTERED CIVIL ENGINEER 8-11-09 DATE

7-20-09
PLANS APPROVAL DATE

REGISTERED PROFESSIONAL ENGINEER Jerilyn L. Struven No. 49964 Exp. 12-31-10 CIVIL STATE OF CALIFORNIA

THE STATE OF CALIFORNIA OR ITS OFFICERS OR AGENTS SHALL NOT BE RESPONSIBLE FOR THE ACCURACY OR COMPLETENESS OF SCANNED COPIES OF THIS PLAN SHEET.

7

CONSTRUCTON AREA SIGNS

SIGN	MESSAGE	PANEL SIZE (INCH x INCH)
R11-2	ROAD CLOSED	48 x 30
R11-4	ROAD CLOSED TO THRU TRAFFIC	60 x 30
SC6-4(CA)	(ROAD) CLOSED (DATE)	48 x 60
OM1-3	TYPE N MARKER	18 x 18
R9-3a	NO PEDESTRIAN CROSSING	18 x 18
SPEC 1	SIDEWALK CLOSED AHEAD	36 x 18
SPEC 2	SIDEWALK CLOSED	36 x 18

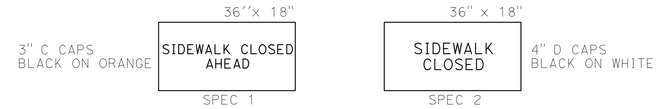

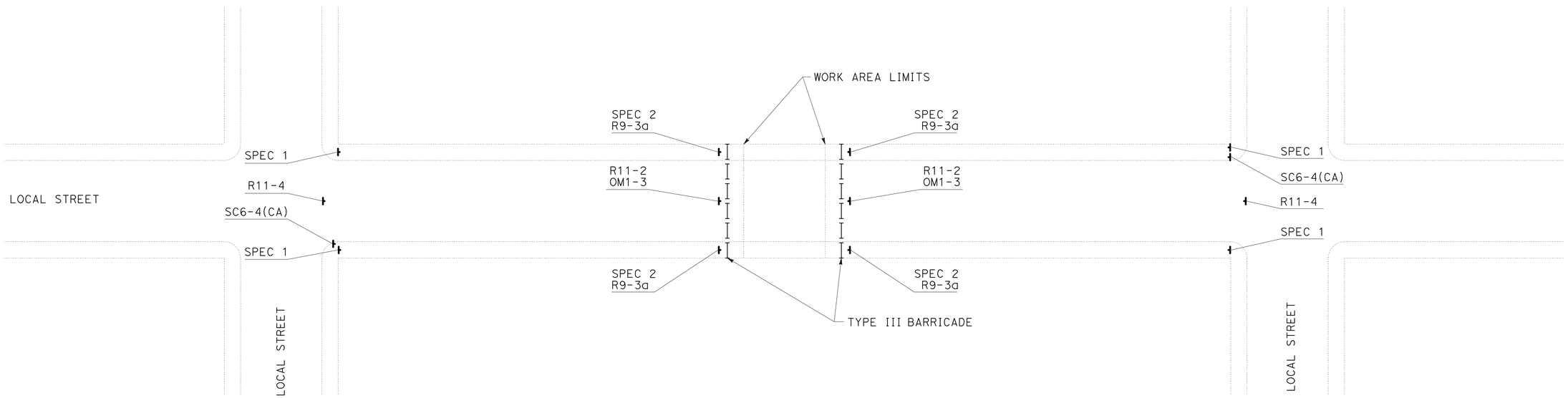

STREET AND SIDEWALK CLOSURES
(TYPICAL)

7 **ADDED PER ADDENDUM No. 7 DATED SEPTEMBER 25, 2009**

NOTES, ABBREVIATIONS AND LEGEND, SEE SHEET CS-1

THIS PLAN ACCURATE FOR CONSTRUCTION AREA SIGN WORK ONLY

CONSTRUCTION AREA SIGNS
NO SCALE

CS-14

ULICES VEGA	UV
LILY TING	8/01/09
ROLAND AU-YEUNG	

REVISED BY / DATE REVISED
CALCULATED-DESIGNED BY / CHECKED BY
FUNCTIONAL SUPERVISOR

STATE OF CALIFORNIA - DEPARTMENT OF TRANSPORTATION
Caltrans
TRAFFIC

LAST REVISION 09-21-09
DATE PLOTTED => 25-SEP-2009
TIME PLOTTED => 09:46

Dist	COUNTY	ROUTE	POST MILES TOTAL PROJECT	SHEET No.	TOTAL SHEETS
04	SF	101,1	9.2/9.8, 6.8/7.1	100	567

REGISTERED CIVIL ENGINEER 6-08-09 DATE

7-20-09
PLANS APPROVAL DATE

REGISTERED PROFESSIONAL ENGINEER Hossein Khodabakhsh No. 71650 Exp. 12-31-09 CIVIL STATE OF CALIFORNIA

THE STATE OF CALIFORNIA OR ITS OFFICERS OR AGENTS SHALL NOT BE RESPONSIBLE FOR THE ACCURACY OR COMPLETENESS OF SCANNED COPIES OF THIS PLAN SHEET.

FOR ACCURATE RIGHT OF WAY AND ACCESS DATA, CONTACT RIGHT OF WAY ENGINEERING AT THE DISTRICT OFFICE.

TRAFFIC HANDLING - STAGE 1 PER LANE CLOSURE CHART

GENERAL NOTE:

1. FOR TRAFFIC DETOUR AND SIGNING, SEE DETOUR PLANS AND SIGNING PLANS.
2. TRAFFIC STRIPE REMOVAL LIMITS ARE IN THE AREA CONFLICTING BETWEEN THE EXISTING ROADWAY AND THE STAGE CONSTRUCTION ROAD.

AA — TRAFFIC REMAINS ON Exist LANES WITH LANE CLOSURES DURING ALLOWABLE HOURS.

7 BB — CONSTRUCT LINCOLN Blvd, PROMENADE AND COWLES REALIGNMENT. ~~CLOSE LINCOLN Blvd FOR REALIGNMENT.~~ REFER TO SPECIAL PROVISIONS FOR ALLOWABLE LANE CLOSURES.

CC — CLOSE SB VETERANS Blvd EXIT RAMP FOR N101/S1 CONNECTOR SEPARATION (Br No. 34-0155R) CONSTRUCTION.

DD — CLOSE CRISSY FIELD Ave FOR VIADUCT CONSTRUCTION.

1 EE — CLOSE NB 1 TO SB 101 CONNECTOR RAMP.

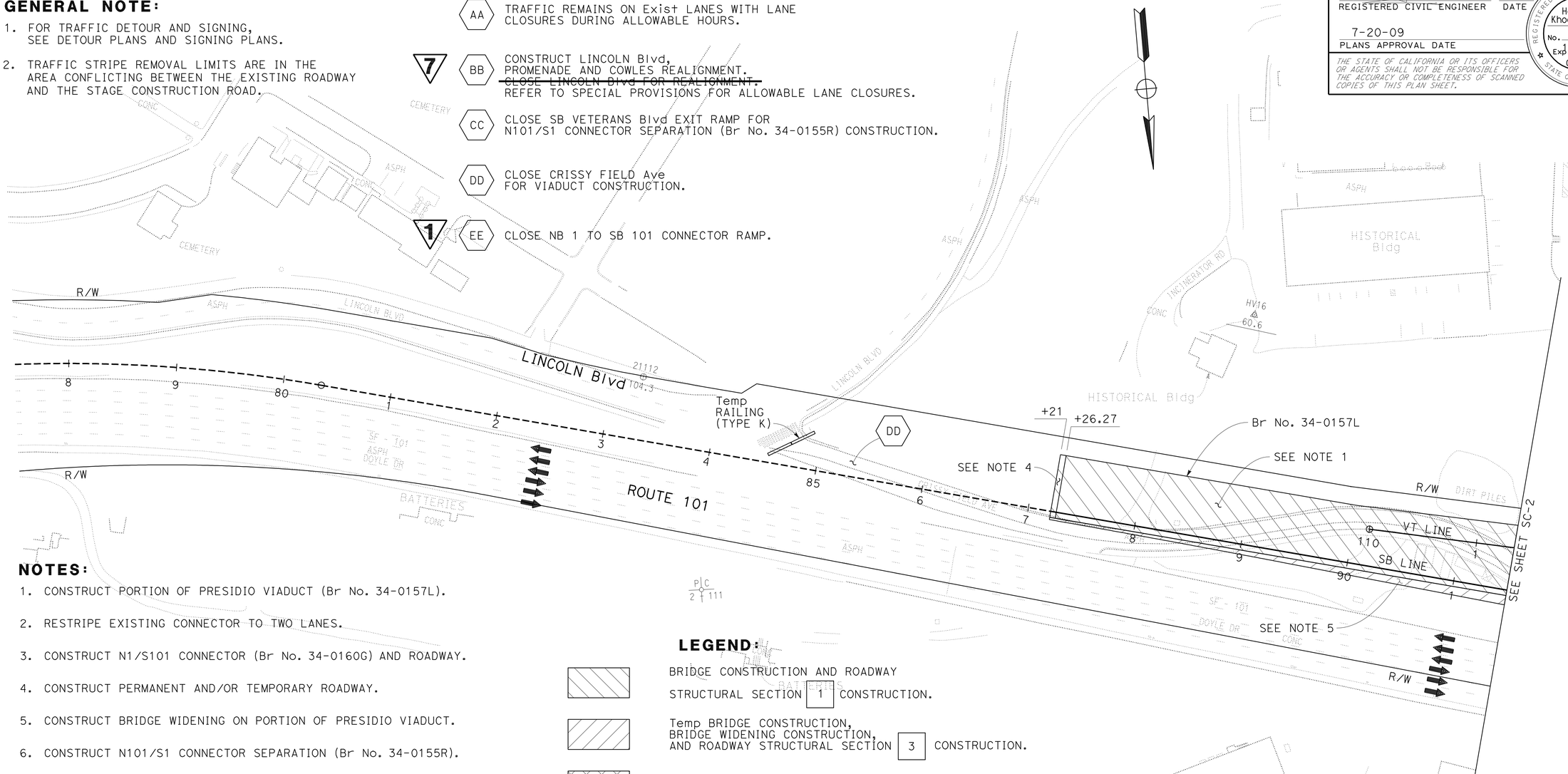

NOTES:

1. CONSTRUCT PORTION OF PRESIDIO VIADUCT (Br No. 34-0157L).
2. RESTRIPE EXISTING CONNECTOR TO TWO LANES.
3. CONSTRUCT N1/S101 CONNECTOR (Br No. 34-0160G) AND ROADWAY.
4. CONSTRUCT PERMANENT AND/OR TEMPORARY ROADWAY.
5. CONSTRUCT BRIDGE WIDENING ON PORTION OF PRESIDIO VIADUCT.
6. CONSTRUCT N101/S1 CONNECTOR SEPARATION (Br No. 34-0155R).
7. CONSTRUCT RUCKMAN UC TEMPORARY BRIDGE (Br No. 34-0158).
8. CONSTRUCT RETAINING WALL No. 3.
9. CONSTRUCT RETAINING WALL No. 4.
10. CONSTRUCT PORTION OF RETAINING WALL No. 1.
11. CONSTRUCT PORTION OF RETAINING WALL No. 2.

1 ~~12. REMOVE Exist NB 1 TO SB 101 CONNECTOR. CONTRACTOR SHALL COMPLETE CONSTRUCTION OF BRIDGE No. 34-0155R AND ROADWAY WIDENING FROM 32' Rt DTN 101160 TO 32' Rt DTN 110140 AND OPEN MAINLINE NB 101 AND SB 101 TO TRAFFIC ON STAGE 1. PHASE 3 BEFORE REMOVING NB 1 TO SB 101 CONNECTOR.~~

1 12. CONSTRUCT CIDH PILES AND OTHER SUBSTRUCTURE WORK FOR PRESIDIO VIADUCT (Br No. 34-0157L) PRIOR TO REMOVAL OF EXISTING NB 1 TO SB 101 CONNECTOR. CONSTRUCT SUPERSTRUCTURE OF PRESIDIO VIADUCT (Br No. 34-0157L) IN STAGE 1 PHASE 3 AFTER REMOVAL OF EXISTING NB 1 TO SB 101 CONNECTOR.

LEGEND:

- BRIDGE CONSTRUCTION AND ROADWAY STRUCTURAL SECTION [1] CONSTRUCTION.
- Temp BRIDGE CONSTRUCTION, BRIDGE WIDENING CONSTRUCTION, AND ROADWAY STRUCTURAL SECTION [3] CONSTRUCTION.
- REMOVAL
- HMA RESURFACING, ROADWAY STRUCTURAL SECTION [2] [4] [5] CONSTRUCTION.
- Temp RAILING (TYPE K)
- DIRECTION OF TRAFFIC
- (No.) PAVEMENT DELINEATION DETAIL
- CHANGE OF PAVEMENT DELINEATION DETAILS
- (No.) CURVE DATA
- [No.] CONSTRUCTION AREA SIGN NUMBER

7 **REVISED PER ADDENDUM No. 7 DATED SEPTEMBER 25, 2009**

1 **REVISED PER ADDENDUM No. 1 DATED AUGUST 13, 2009**

THIS PLAN ACCURATE FOR STAGE CONSTRUCTION AND TRAFFIC HANDLING WORK ONLY

STAGE CONSTRUCTION AND TRAFFIC HANDLING PLAN

STAGE 1 - PHASE 1

SCALE: 1'' = 50'

SC-1

CALCULATED-DESIGNED BY	GEORGE GIN
CHECKED BY	ROGER DAYOAN
FUNCTIONAL SUPERVISOR	ABOLFAZL EMADZADEH
REVISED BY	GG
DATE REVISED	6/10/09

STATE OF CALIFORNIA - DEPARTMENT OF TRANSPORTATION
Caltrans DESIGN

LAST REVISION 06-08-09 | DATE PLOTTED => 25-SEP-2009 | TIME PLOTTED => 09:46

Dist	COUNTY	ROUTE	POST MILES TOTAL PROJECT	SHEET No.	TOTAL SHEETS
04	SF	101,1	9.2/9.8, 6.8/7.1	104	567

REGISTERED CIVIL ENGINEER 6-08-09 DATE

7-20-09
PLANS APPROVAL DATE

REGISTERED PROFESSIONAL ENGINEER Hossein Khodabakhsh No. 71650 Exp. 12-31-09 CIVIL STATE OF CALIFORNIA

THE STATE OF CALIFORNIA OR ITS OFFICERS OR AGENTS SHALL NOT BE RESPONSIBLE FOR THE ACCURACY OR COMPLETENESS OF SCANNED COPIES OF THIS PLAN SHEET.

FOR ACCURATE RIGHT OF WAY AND ACCESS DATA, CONTACT RIGHT OF WAY ENGINEERING AT THE DISTRICT OFFICE.

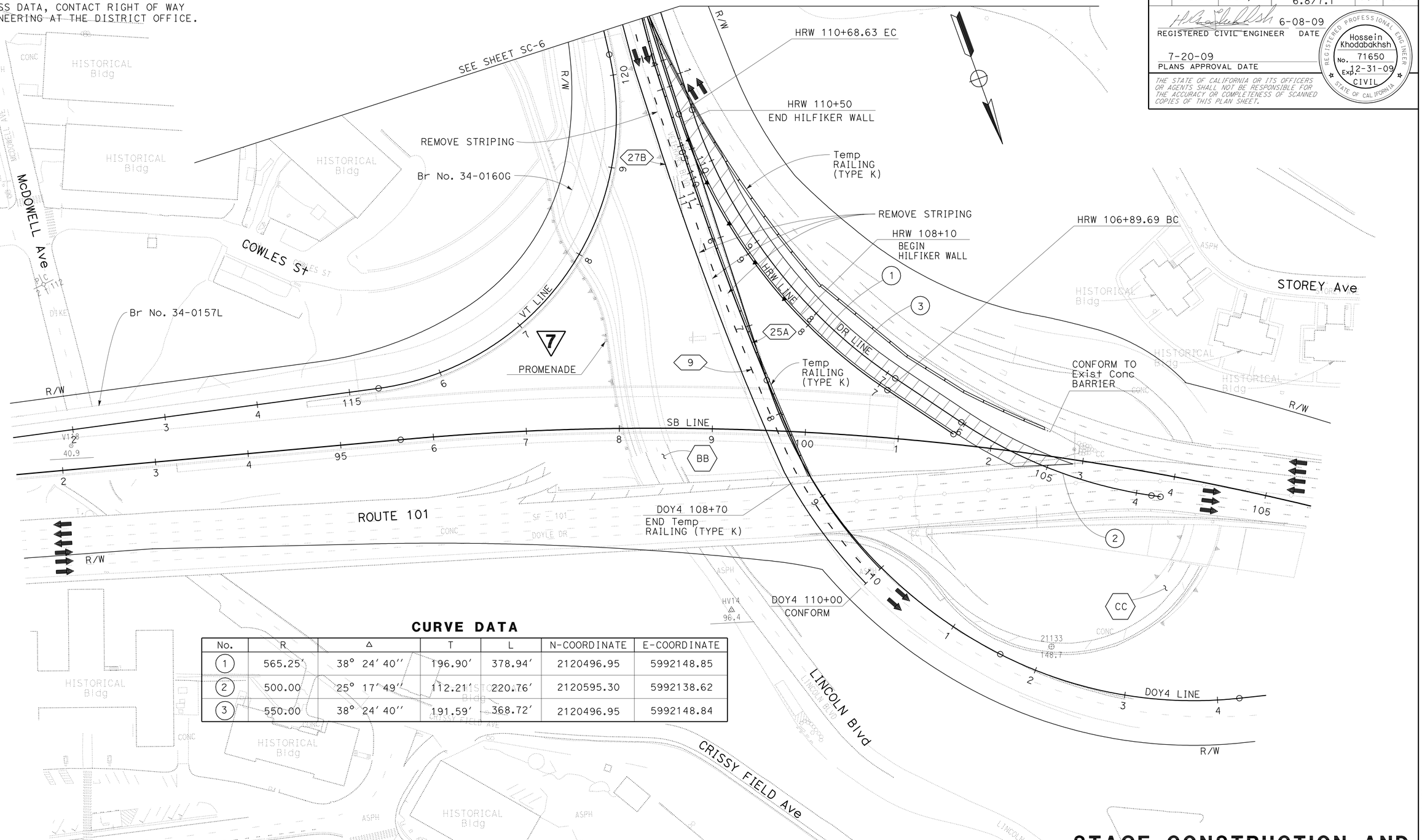

CURVE DATA

No.	R	Δ	T	L	N-COORDINATE	E-COORDINATE
1	565.25′	38° 24′ 40″	196.90′	378.94′	2120496.95	5992148.85
2	500.00	25° 17′ 49″	112.21′	220.76′	2120595.30	5992138.62
3	550.00	38° 24′ 40″	191.59′	368.72′	2120496.95	5992148.84

7 **REVISED PER ADDENDUM No. 7 DATED SEPTEMBER 25, 2009**

FOR NOTES, ABBREVIATIONS &/OR LEGEND, SEE SHEET SC-1

THIS PLAN ACCURATE FOR STAGE CONSTRUCTION AND TRAFFIC HANDLING WORK ONLY

STAGE CONSTRUCTION AND TRAFFIC HANDLING PLAN
STAGE 1 - PHASE 2

SCALE: 1″ = 50′

SC-5

REVISED BY	DATE REVISED
GG	6/10/09

GEORGE GIN — ROGER DAYOAN — CALCULATED-DESIGNED BY — CHECKED BY — FUNCTIONAL SUPERVISOR: ABOLFAZL EMADZADEH

STATE OF CALIFORNIA - DEPARTMENT OF TRANSPORTATION — Caltrans — DESIGN

LAST REVISION: DATE PLOTTED => 25-SEP-2009 TIME PLOTTED => 09:47 — 06-09-09

Dist	COUNTY	ROUTE	POST MILES TOTAL PROJECT	SHEET No.	TOTAL SHEETS
04	SF	101,1	9.2/9.8, 6.8/7.1	110	567

REGISTERED CIVIL ENGINEER 6-08-09 DATE

7-20-09
PLANS APPROVAL DATE

REGISTERED PROFESSIONAL ENGINEER Hossein Khodabakhsh No. 71650 Exp. 12-31-09 CIVIL STATE OF CALIFORNIA

THE STATE OF CALIFORNIA OR ITS OFFICERS OR AGENTS SHALL NOT BE RESPONSIBLE FOR THE ACCURACY OR COMPLETENESS OF SCANNED COPIES OF THIS PLAN SHEET.

FOR ACCURATE RIGHT OF WAY AND ACCESS DATA, CONTACT RIGHT OF WAY ENGINEERING AT THE DISTRICT OFFICE.

TRAFFIC HANDLING -STAGE 2 PER LANE CLOSURE CHART

AA CLOSE SB VETERANS Blvd OFF-RAMP FOR N101/S1 CONNECTOR SEPARATION (Br No. 34-0155L) CONSTRUCTION. FOR TRAFFIC DETOUR AND SIGNING, SEE CS SHEETS.

NOTES:

7

1. CONSTRUCT PERMANENT AND/OR Temp ROADWAY.

~~2. CONSTRUCT N101/S1 CONNECTOR SEPARATION (Br No. 34-0155L).~~

~~3. CONSTRUCT RETAINING WALL No. 1.~~

~~4. CONSTRUCT RETAINING WALL No. 2.~~

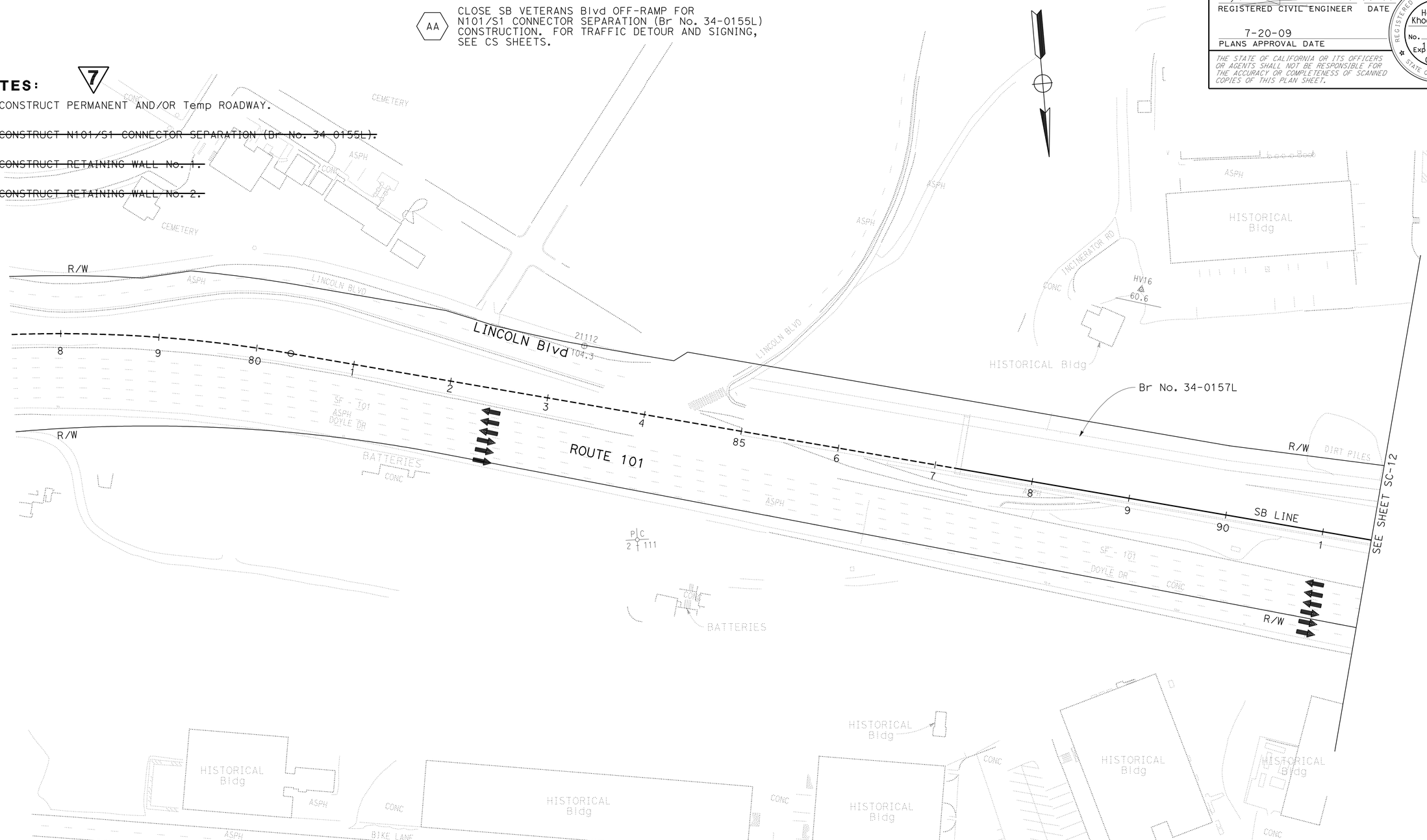

7 REVISED PER ADDENDUM No. 7 DATED SEPTEMBER 25, 2009

FOR ABBREVIATIONS &/OR LEGEND, SEE SHEET SC-1

THIS PLAN ACCURATE FOR STAGE CONSTRUCTION AND TRAFFIC HANDLING WORK ONLY

STAGE CONSTRUCTION AND TRAFFIC HANDLING PLAN
STAGE 2

SCALE: 1'' = 50'

SC-11

STATE OF CALIFORNIA - DEPARTMENT OF TRANSPORTATION
Caltrans DESIGN

FUNCTIONAL SUPERVISOR: ABOLFAZL EMADZADEH
CALCULATED-DESIGNED BY: GEORGE GIN
CHECKED BY: ROGER DAYOAN
REVISED BY: GG
DATE REVISED: 6/10/09

LAST REVISION 06-09-09
DATE PLOTTED => 25-SEP-2009
TIME PLOTTED => 09:47

BORDER LAST REVISED 4/11/2008
RELATIVE BORDER SCALE IS IN INCHES 0 1 2 3
USERNAME => trmikesl
DGN FILE => 416373ma011.dgn
CU 04242
EA 163731

Dist	COUNTY	ROUTE	POST MILES TOTAL PROJECT	SHEET No.	TOTAL SHEETS
04	SF	101,1	9.2/9.8, 6.8/7.1	111	567

REGISTERED CIVIL ENGINEER 6-08-09 DATE

7-20-09
PLANS APPROVAL DATE

REGISTERED PROFESSIONAL ENGINEER Hossein Khodabakhsh No. 71650 Exp. 12-31-09 CIVIL STATE OF CALIFORNIA

THE STATE OF CALIFORNIA OR ITS OFFICERS OR AGENTS SHALL NOT BE RESPONSIBLE FOR THE ACCURACY OR COMPLETENESS OF SCANNED COPIES OF THIS PLAN SHEET.

FOR ACCURATE RIGHT OF WAY AND ACCESS DATA, CONTACT RIGHT OF WAY ENGINEERING AT THE DISTRICT OFFICE.

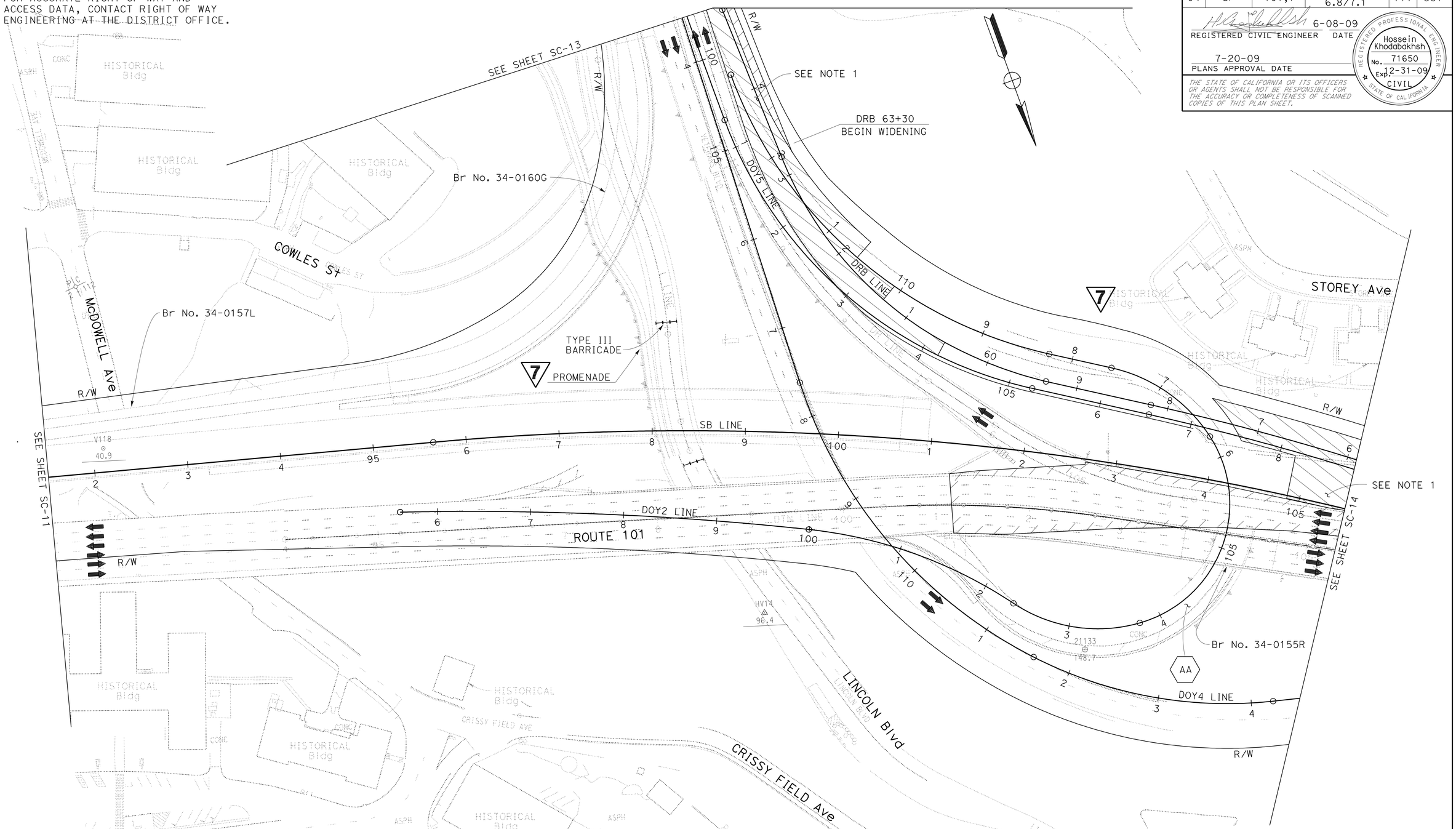

7 **REVISED PER ADDENDUM No. 7 DATED SEPTEMBER 25, 2009**

FOR NOTES, SEE SHEET SC-11

FOR ABBREVIATIONS &/OR LEGEND, SEE SHEET SC-1

THIS PLAN ACCURATE FOR STAGE CONSTRUCTION AND TRAFFIC HANDLING WORK ONLY

STAGE CONSTRUCTION AND TRAFFIC HANDLING PLAN

STAGE 2

SCALE: 1'' = 50'

SC-12

STATE OF CALIFORNIA - DEPARTMENT OF TRANSPORTATION

Caltrans® **DESIGN**

FUNCTIONAL SUPERVISOR: ABOLFAZL EMADZADEH

CALCULATED-DESIGNED BY: GEORGE GIN

CHECKED BY: ROGER DAYOAN

REVISED BY: GG

DATE REVISED: 6/10/09

LAST REVISION DATE PLOTTED => 25-SEP-2009
TIME PLOTTED => 09:47
06-10-09

Dist	COUNTY	ROUTE	POST MILES TOTAL PROJECT	SHEET No.	TOTAL SHEETS
04	SF	101,1	9.2/9.8, 6.8/7.1	114	567

REGISTERED CIVIL ENGINEER 6-08-09 DATE

7-20-09
PLANS APPROVAL DATE

REGISTERED PROFESSIONAL ENGINEER Hossein Khodabakhsh No. 71650 Exp. 12-31-09 CIVIL STATE OF CALIFORNIA

THE STATE OF CALIFORNIA OR ITS OFFICERS OR AGENTS SHALL NOT BE RESPONSIBLE FOR THE ACCURACY OR COMPLETENESS OF SCANNED COPIES OF THIS PLAN SHEET.

FOR ACCURATE RIGHT OF WAY AND ACCESS DATA, CONTACT RIGHT OF WAY ENGINEERING AT THE DISTRICT OFFICE.

TRAFFIC HANDLING - STAGE 3 PER LANE CLOSURE CHART

AA SHIFT SB ROUTE 101/1 TRAFFIC.

BB SHIFT NB ROUTE 1 TRAFFIC.

CC CLOSE SB VETERANS Blvd OFF-RAMP FOR ROADWAY CONSTRUCTION. FOR TRAFFIC DETOUR AND SIGNING, SEE SHEET CS-4.

7

NOTES:

1. REMOVE ROADWAY.
2. CONSTRUCT RETAINING WALL No. 1 ~~PORTION OF PRESIDIO VIADUCT (Br No. 34-0157L) AND ROADWAY.~~
3. CONSTRUCT RETAINING WALL No. 2 ~~PORTION OF PRESIDIO VIADUCT WIDENING.~~
4. CONSTRUCT PERMANENT AND/OR Temp ROADWAY.
5. REGRADE TO MATCH PERMANENT DOY5 ROADWAY; NIGHT WORK ONLY. RESTRIPE TO CONFORM Br No. 34-0158 RUCKMAN UC (Temp).
6. CONSTRUCT PORTION OF N101/S1 CONNECTOR SEPARATION (Br No. 34-0155L).

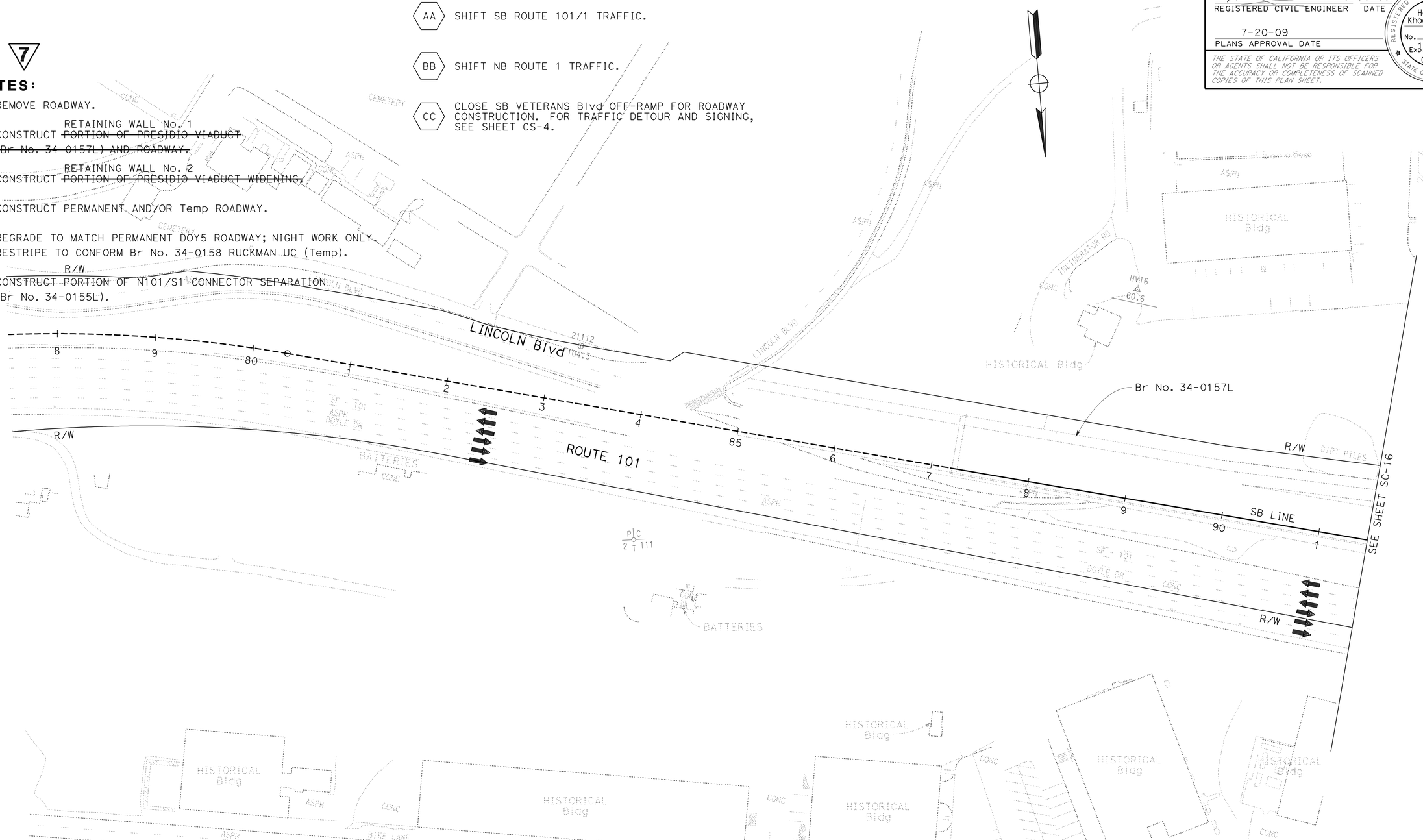

7 REVISED PER ADDENDUM No. 7 DATED SEPTEMBER 25, 2009

FOR ABBREVIATIONS &/OR LEGEND, SEE SHEET SC-1

THIS PLAN ACCURATE FOR STAGE CONSTRUCTION AND TRAFFIC HANDLING WORK ONLY

STAGE CONSTRUCTION AND TRAFFIC HANDLING PLAN

STAGE 3

SCALE: 1'' = 50'

SC-15

STATE OF CALIFORNIA - DEPARTMENT OF TRANSPORTATION
Caltrans® DESIGN

FUNCTIONAL SUPERVISOR: ABOLFAZL EMADZADEH
CALCULATED-DESIGNED BY: GEORGE GIN
CHECKED BY: ROGER DAYOAN
REVISED BY: GG
DATE REVISED: 6/10/09

LAST REVISION 06-11-09
DATE PLOTTED => 25-SEP-2009
TIME PLOTTED => 09:47

BORDER LAST REVISED 4/11/2008
RELATIVE BORDER SCALE IS IN INCHES 0 1 2 3
USERNAME => trmikesl
DGN FILE => 416373ma015.add
CU 04242
EA 163731

Dist	COUNTY	ROUTE	POST MILES TOTAL PROJECT	SHEET No.	TOTAL SHEETS
04	SF	101,1	9.2/9.8, 6.8/7.1	115	567

REGISTERED CIVIL ENGINEER 6-08-09 DATE

7-20-09
PLANS APPROVAL DATE

REGISTERED PROFESSIONAL ENGINEER Hossein Khodabakhsh No. 71650 Exp. 12-31-09 CIVIL STATE OF CALIFORNIA

THE STATE OF CALIFORNIA OR ITS OFFICERS OR AGENTS SHALL NOT BE RESPONSIBLE FOR THE ACCURACY OR COMPLETENESS OF SCANNED COPIES OF THIS PLAN SHEET.

FOR ACCURATE RIGHT OF WAY AND ACCESS DATA, CONTACT RIGHT OF WAY ENGINEERING AT THE DISTRICT OFFICE.

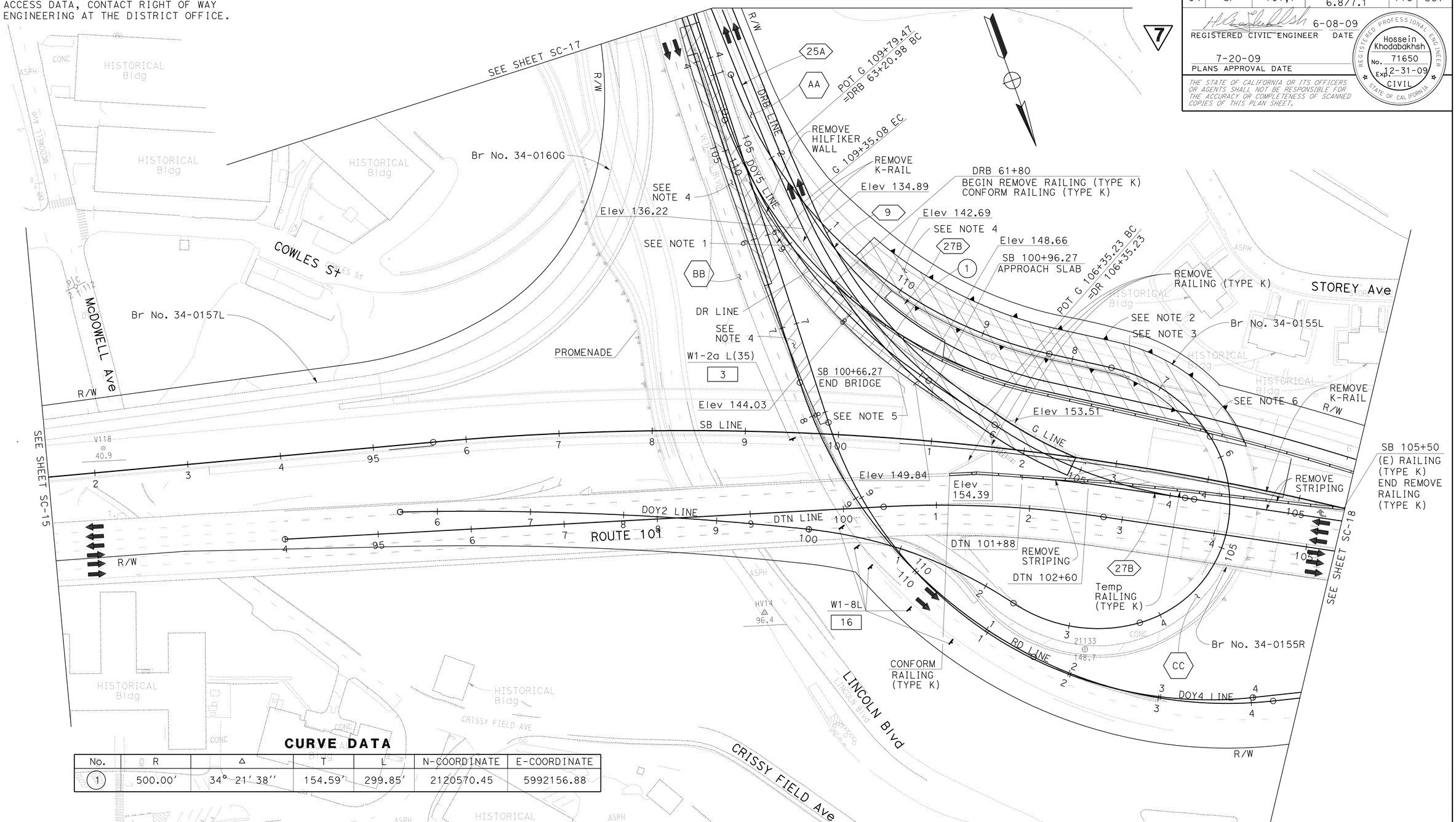

CURVE DATA

No.	R	Δ	T	L	N-COORDINATE	E-COORDINATE
1	500.00'	34° 21' 38''	154.59'	299.85'	2120570.45	5992156.88

7 **REVISED PER ADDENDUM No. 7 DATED SEPTEMBER 25, 2009**

FOR NOTES, SEE SHEET SC-15

FOR ABBREVIATIONS &/OR LEGEND, SEE SHEET SC-1

THIS PLAN ACCURATE FOR STAGE CONSTRUCTION AND TRAFFIC HANDLING WORK ONLY

STAGE CONSTRUCTION AND TRAFFIC HANDLING PLAN

STAGE 3

SCALE: 1'' = 50'

SC-16

STATE OF CALIFORNIA - DEPARTMENT OF TRANSPORTATION
Caltrans® DESIGN

FUNCTIONAL SUPERVISOR: ABOLFAZL EMADZADEH
CALCULATED-DESIGNED BY: GEORGE GIN
CHECKED BY: ROGER DAYOAN
REVISED BY: GG
DATE REVISED: 6/10/09

LAST REVISION DATE PLOTTED => 25-SEP-2009
06-09-09 TIME PLOTTED => 11:32

Dist	COUNTY	ROUTE	POST MILES TOTAL PROJECT	SHEET No.	TOTAL SHEETS
04	SF	101,1	9.2/9.8, 6.8/7.1	117	567

REGISTERED CIVIL ENGINEER 6-08-09 DATE

7-20-09
PLANS APPROVAL DATE

REGISTERED PROFESSIONAL ENGINEER Hossein Khodabakhsh No. 71650 Exp. 12-31-09 CIVIL STATE OF CALIFORNIA

THE STATE OF CALIFORNIA OR ITS OFFICERS OR AGENTS SHALL NOT BE RESPONSIBLE FOR THE ACCURACY OR COMPLETENESS OF SCANNED COPIES OF THIS PLAN SHEET.

FOR ACCURATE RIGHT OF WAY AND ACCESS DATA, CONTACT RIGHT OF WAY ENGINEERING AT THE DISTRICT OFFICE.

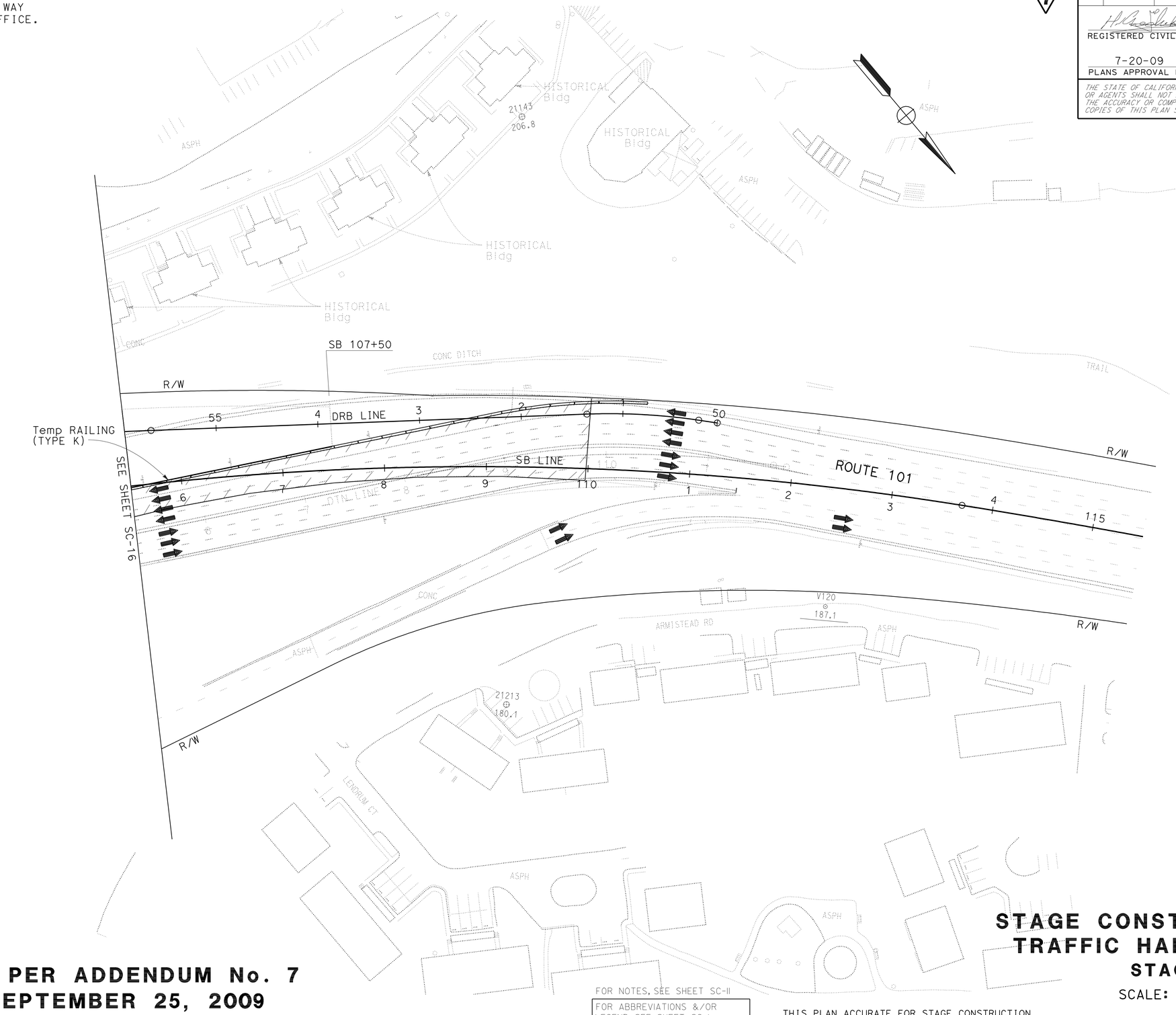

7 REVISED PER ADDENDUM No. 7 DATED SEPTEMBER 25, 2009

FOR NOTES, SEE SHEET SC-11

FOR ABBREVIATIONS &/OR LEGEND, SEE SHEET SC-1

THIS PLAN ACCURATE FOR STAGE CONSTRUCTION AND TRAFFIC HANDLING WORK ONLY

STAGE CONSTRUCTION AND TRAFFIC HANDLING PLAN

STAGE 3

SCALE: 1'' = 50'

SC-18

STATE OF CALIFORNIA - DEPARTMENT OF TRANSPORTATION

Caltrans DESIGN

FUNCTIONAL SUPERVISOR: ABOLFAZL EMADZADEH

CALCULATED-DESIGNED BY: GEORGE GIN

CHECKED BY: ROGER DAYOAN

REVISED BY: GG

DATE REVISED: 6/10/09

LAST REVISION 06-10-09 | DATE PLOTTED => 25-SEP-2009 | TIME PLOTTED => 10:53

BORDER LAST REVISED 4/11/2008

RELATIVE BORDER SCALE IS IN INCHES 0 1 2 3

USERNAME => trmikesl
DGN FILE => 416373ma014.add

CU 04242

EA 163731

Dist	COUNTY	ROUTE	POST MILES TOTAL PROJECT	SHEET No.	TOTAL SHEETS
04	SF	101,1	9.2/9.8, 6.8/7.1	118	567

REGISTERED CIVIL ENGINEER 6-08-09 DATE

7-20-09
PLANS APPROVAL DATE

REGISTERED PROFESSIONAL ENGINEER Hossein Khodabakhsh No. 71650 Exp. 12-31-09 CIVIL STATE OF CALIFORNIA

THE STATE OF CALIFORNIA OR ITS OFFICERS OR AGENTS SHALL NOT BE RESPONSIBLE FOR THE ACCURACY OR COMPLETENESS OF SCANNED COPIES OF THIS PLAN SHEET.

FOR ACCURATE RIGHT OF WAY AND ACCESS DATA, CONTACT RIGHT OF WAY ENGINEERING AT THE DISTRICT OFFICE.

TRAFFIC HANDLING - STAGE 4 PER LANE CLOSURE CHART

AA — SHIFT NB PARK PRESIDIO Blvd TRAFFIC.

BB — TRAFFIC REMAINS ON Exist LANES WITH LANE CLOSURES DURING ALLOWABLE HOURS.

CC — CLOSE VETERANS Blvd OFF-RAMP. FOR TRAFFIC DETOUR AND SIGNING, SEE SHEET CS-4.

NOTES:

7

1. REGRADE ROADWAY.
2. CONSTRUCT PORTION OF RUCKMAN UC (Br No. 34-0156) AND NB ROUTE 1 ROADWAY.
3. CONSTRUCT Temp RUCKMAN UC BRIDGE WIDENING.
4. ~~CONSTRUCT PORTION OF PRESIDIO VIADUCT (Br No. 34-0157L) AND ROADWAY.~~
5. ~~CONSTRUCT PORTION OF PRESIDIO VIADUCT WIDENING.~~
4. ~~6.~~ REMOVE TEMPORARY ROADWAY.
5. ~~7.~~ CONSTRUCT PERMANENT AND/OR Temp ROADWAY.
6. ~~8.~~ CONSTRUCT PORTION OF N101/S1 CONNECTOR SEPARATION (Br No. 34-0155L)

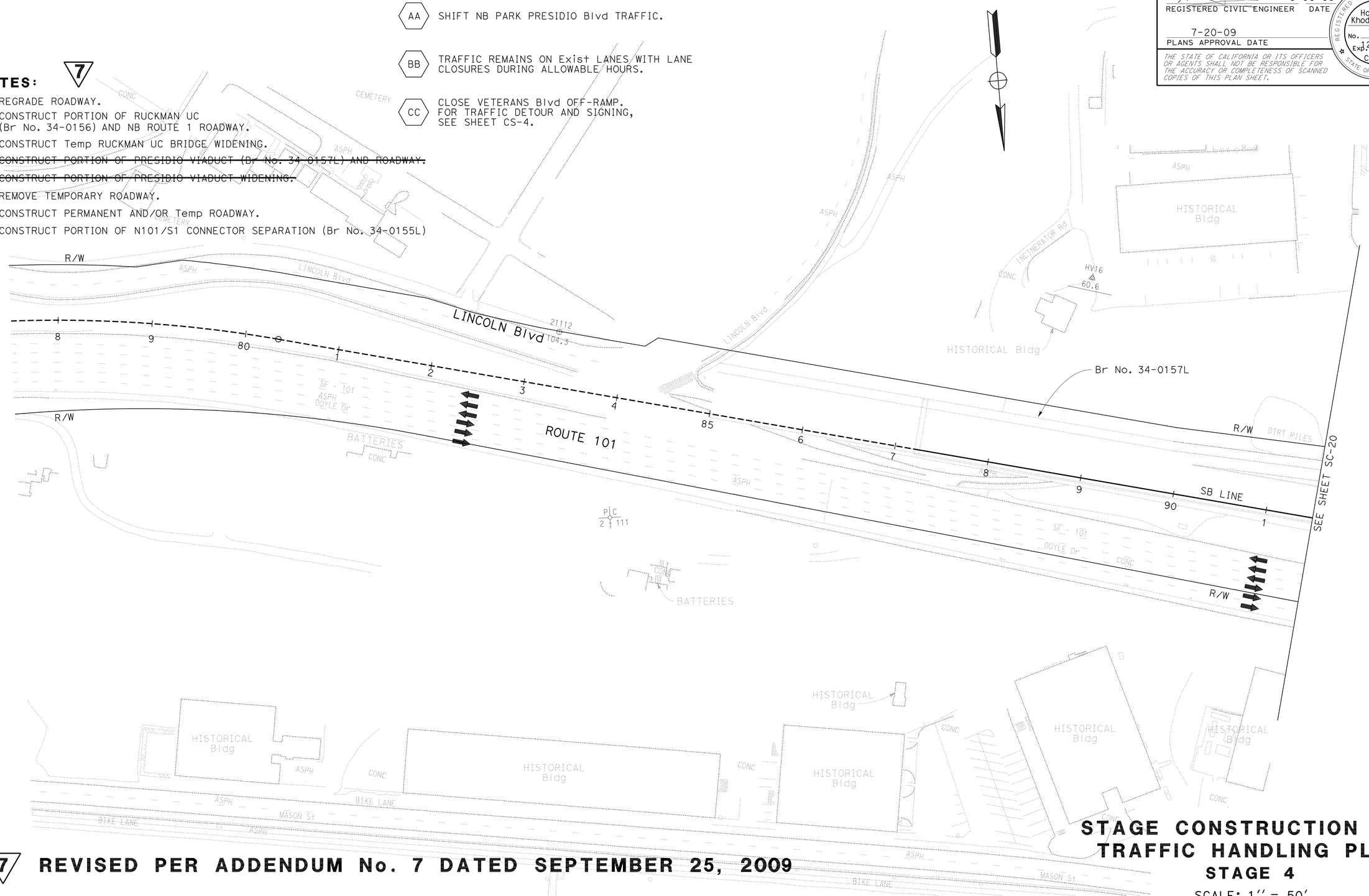

7 REVISED PER ADDENDUM No. 7 DATED SEPTEMBER 25, 2009

FOR ABBREVIATIONS &/OR LEGEND, SEE SHEET SC-1

THIS PLAN ACCURATE FOR STAGE CONSTRUCTION AND TRAFFIC HANDLING WORK ONLY

STAGE CONSTRUCTION AND TRAFFIC HANDLING PLAN
STAGE 4

SCALE: 1'' = 50'

SC-19

REVISED BY	DATE REVISED
GG	6/10/09

CALCULATED-DESIGNED BY: GEORGE GIN
CHECKED BY: ROGER DAYOAN
FUNCTIONAL SUPERVISOR: ABOLFAZL EMADZADEH

STATE OF CALIFORNIA - DEPARTMENT OF TRANSPORTATION
Caltrans
DESIGN

LAST REVISION 06-11-09 | DATE PLOTTED => 25-SEP-2009 | TIME PLOTTED => 09:48

Dist	COUNTY	ROUTE	POST MILES TOTAL PROJECT	SHEET No.	TOTAL SHEETS
04	SF	101,1	9.2/9.8, 6.8/7.1	119	567

REGISTERED CIVIL ENGINEER 6-08-09 DATE

7-20-09
PLANS APPROVAL DATE

REGISTERED PROFESSIONAL ENGINEER Hossein Khodabakhsh No. 71650 Exp. 12-31-09 CIVIL STATE OF CALIFORNIA

THE STATE OF CALIFORNIA OR ITS OFFICERS OR AGENTS SHALL NOT BE RESPONSIBLE FOR THE ACCURACY OR COMPLETENESS OF SCANNED COPIES OF THIS PLAN SHEET.

FOR ACCURATE RIGHT OF WAY AND ACCESS DATA, CONTACT RIGHT OF WAY ENGINEERING AT THE DISTRICT OFFICE.

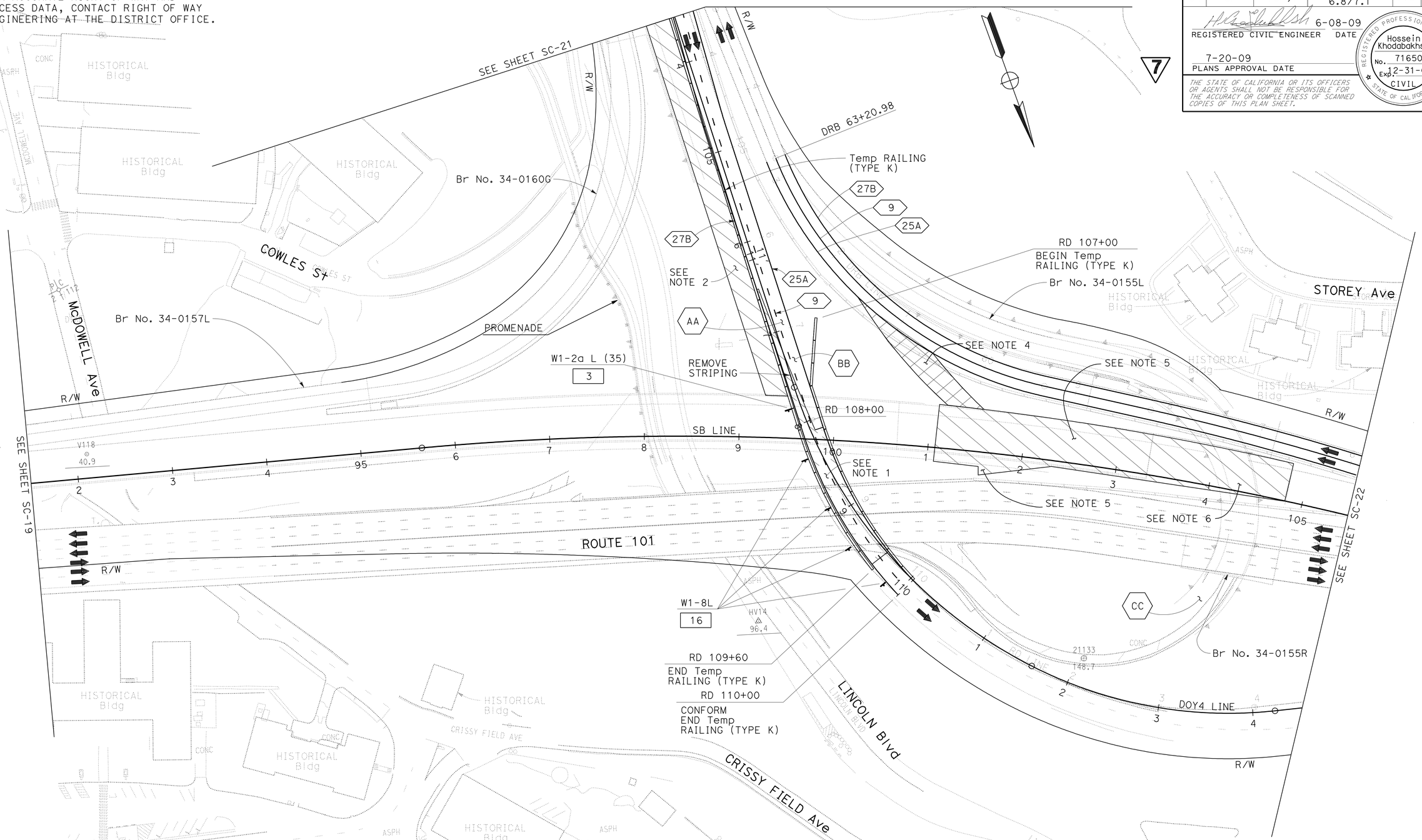

7 **REVISED PER ADDENDUM No. 7 DATED SEPTEMBER 25, 2009**

FOR NOTES, SEE SHEET SC-19

FOR ABBREVIATIONS &/OR LEGEND, SEE SHEET SC-1

THIS PLAN ACCURATE FOR STAGE CONSTRUCTION AND TRAFFIC HANDLING WORK ONLY

STAGE CONSTRUCTION AND TRAFFIC HANDLING PLAN

STAGE 4

SCALE: 1'' = 50'

SC-20

LAST REVISION	DATE PLOTTED => 25-SEP-2009
06-02-09	TIME PLOTTED => 11:33

STATE OF CALIFORNIA - DEPARTMENT OF TRANSPORTATION

Caltrans®

DESIGN

FUNCTIONAL SUPERVISOR: ABOLFAZL EMADZADEH

CALCULATED-DESIGNED BY: GEORGE GIN

CHECKED BY: ROGER DAYOAN

REVISED BY: GG

DATE REVISED: 6/10/09

BORDER LAST REVISED 4/11/2008

RELATIVE BORDER SCALE IS IN INCHES 0 1 2 3

USERNAME => trmikesl
DGN FILE => 416373ma020.add

CU 04242

EA 163731

FOR ACCURATE RIGHT OF WAY AND
ACCESS DATA, CONTACT RIGHT OF WAY
ENGINEERING AT THE DISTRICT OFFICE.

Dist	COUNTY	ROUTE	POST MILES TOTAL PROJECT	SHEET No.	TOTAL SHEETS
04	SF	101,1	9.2/9.8, 6.8/7.1	121	567

REGISTERED CIVIL ENGINEER 6-08-09 DATE

7-20-09
PLANS APPROVAL DATE

REGISTERED PROFESSIONAL ENGINEER Hossein Khodabakhsh No. 71650 Exp. 12-31-09 CIVIL STATE OF CALIFORNIA

THE STATE OF CALIFORNIA OR ITS OFFICERS OR AGENTS SHALL NOT BE RESPONSIBLE FOR THE ACCURACY OR COMPLETENESS OF SCANNED COPIES OF THIS PLAN SHEET.

7

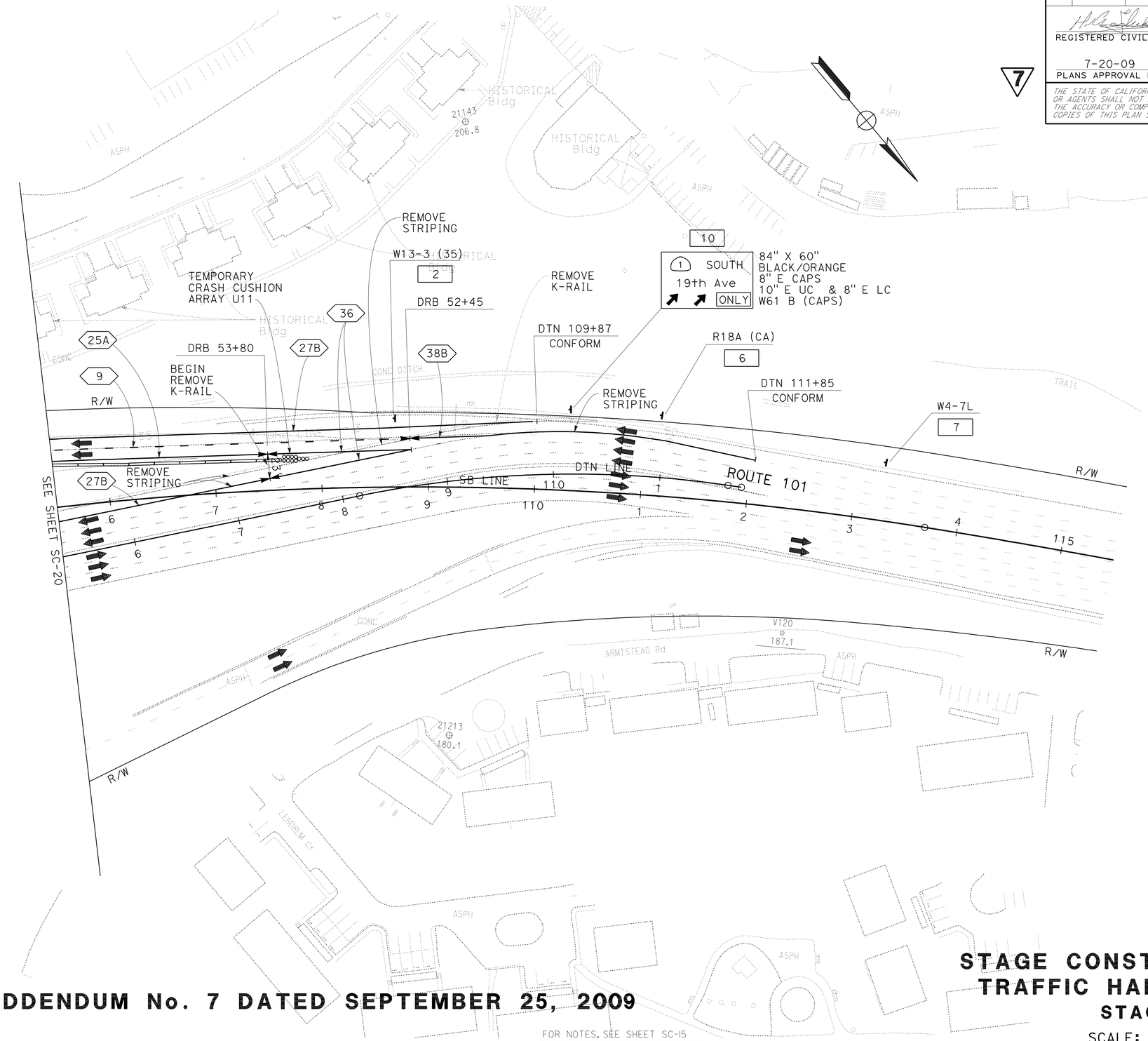

7 **REVISED PER ADDENDUM No. 7 DATED SEPTEMBER 25, 2009**

FOR NOTES, SEE SHEET SC-15

FOR ABBREVIATIONS &/OR LEGEND, SEE SHEET SC-1

THIS PLAN ACCURATE FOR STAGE CONSTRUCTION AND TRAFFIC HANDLING WORK ONLY

STAGE CONSTRUCTION AND TRAFFIC HANDLING PLAN

STAGE 4

SCALE: 1'' = 50'

SC-22

STATE OF CALIFORNIA - DEPARTMENT OF TRANSPORTATION	
Caltrans® DESIGN	
FUNCTIONAL SUPERVISOR	ABOLFAZL EMADZADEH
CALCULATED-DESIGNED BY	GEORGE GIN
CHECKED BY	ROGER DAYOAN
REVISED BY	GG
DATE REVISED	6/10/09

LAST REVISION 06-09-09
DATE PLOTTED => 25-SEP-2009
TIME PLOTTED => 09:48

Dist	COUNTY	ROUTE	POST MILES TOTAL PROJECT	SHEET No.	TOTAL SHEETS
04	SF	101,1	9.2/9.8, 6.8/7.1	138	567

REGISTERED CIVIL ENGINEER 6-08-09 DATE

7-20-09
PLANS APPROVAL DATE

REGISTERED PROFESSIONAL ENGINEER Hossein Khodabakhsh No. 71650 Exp. 12-31-09 CIVIL STATE OF CALIFORNIA

THE STATE OF CALIFORNIA OR ITS OFFICERS OR AGENTS SHALL NOT BE RESPONSIBLE FOR THE ACCURACY OR COMPLETENESS OF SCANNED COPIES OF THIS PLAN SHEET.

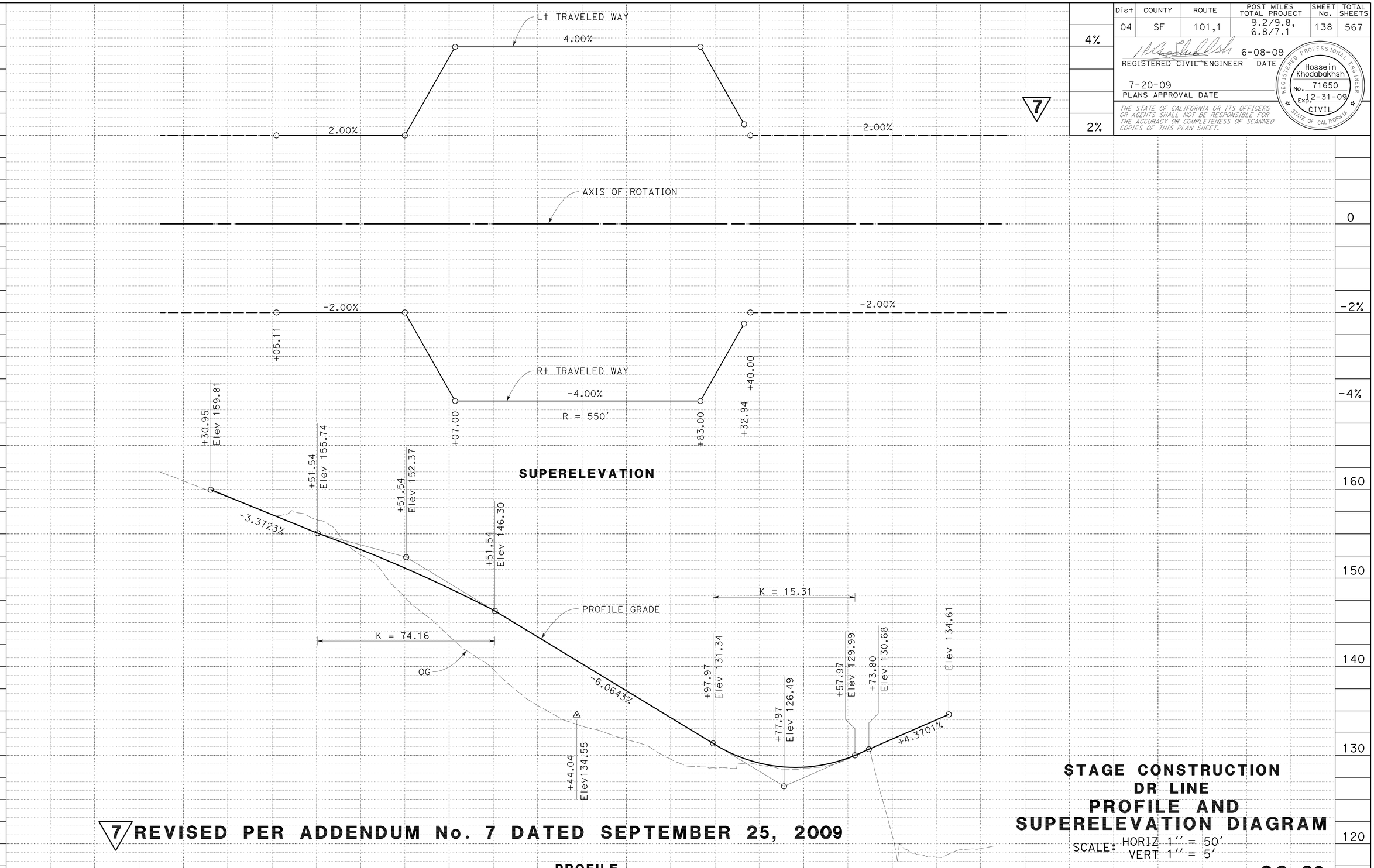

7 REVISED PER ADDENDUM No. 7 DATED SEPTEMBER 25, 2009

STAGE CONSTRUCTION
DR LINE
PROFILE AND SUPERELEVATION DIAGRAM

SCALE: HORIZ 1'' = 50'
VERT 1'' = 5'

SC-39

STATION	4	105	6	7	8	9	110	1	2	3	TOTAL
CY Exc											
CY Emb											

STATE OF CALIFORNIA - DEPARTMENT OF TRANSPORTATION
Caltrans DESIGN

FUNCTIONAL SUPERVISOR: ABOLFAZL EMADZADEH
CALCULATED-DESIGNED BY: GEORGE GIN
CHECKED BY: ROGER DAYOAN
REVISED BY: GG
DATE REVISED: 6/10/09

LAST REVISION 06-09-09 | DATE PLOTTED => 25-SEP-2009 | TIME PLOTTED => 09:49

DIST	COUNTY	ROUTE	POST MILES TOTAL PROJECT	SHEET No	TOTAL SHEETS
04	SF	101,1	9.2/9.8, 6.8/7.1	353	567

REGISTERED CIVIL ENGINEER — DATE 6-4-09

7-20-09
PLANS APPROVAL DATE

The State of California or its officers or agents shall not be responsible for the accuracy or completeness of electronic copies of this plan sheet.

REGISTERED PROFESSIONAL ENGINEER — AHMED M M IBRAHIM — No. S 4865 — EXP. 9-30-10 — STRUCTURAL — STATE OF CALIFORNIA

NOTE:
THE CONTRACTOR SHALL VERIFY ALL CONTROLLING FIELD DIMENSIONS BEFORE ORDERING OR FABRICATING ANY MATERIAL.

STANDARD PLANS DATED MAY 2006

PLAN	PLAN TITLE
A10A	ACRONYMS AND ABBREVIATIONS (A-L)
A10B	ACRONYMS AND ABBREVIATIONS (M-Z)
A62C	LIMITS OF PAYMENT FOR EXCAVATION AND BACKFILL-BRIDGE
T-3	TEMPORARY RAILING (TYPE K)
B0-1	BRIDGE DETAILS
B0-3	BRIDGE DETAILS
B0-5	BRIDGE DETAILS
B0-13	BRIDGE DETAILS
B2-3	16" AND 24" CAST-IN-DRILLED-HOLE CONCRETE PILE
B3-1	RETAINING WALL TYPE 1 - H = 4' THROUGH 30'
B3-8	RETAINING WALL TYPE 1 - H = 32' THROUGH 36'
B6-21	JOINT SEALS (MAXIMUM MOVEMENT RATING=2")
B7-1	BOX GIRDER DETAILS
B7-6	DECK DRAINS - TYPES D-1 AND D-2
B7-8	DECK DRAINAGE DETAILS
B7-11	UTILITY DETAILS
B8-5	CAST-IN-PLACE PRESTRESSED GIRDER DETAILS
B11-68	CALIFORNIA ST-10 BRIDGE RAIL (SHEET 1 OF 3)
B11-69	CALIFORNIA ST-10 BRIDGE RAIL (SHEET 2 OF 3)
B11-70	CALIFORNIA ST-10 BRIDGE RAIL (SHEET 3 OF 3)
ES-6A	LIGHTING STANDARDS TYPES 15, 21 AND 22
ES-6B	ELECTRICAL SYSTEMS (LIGHTING STANDARDS TYPES 15 AND 21, BARRIER RAIL MOUNTED DETAILS)
S-10	OVERHEAD SIGNS -TRUSS, TWO POST TYPE - BASE PLATE AND ANCHORAGE DETAILS

INDEX TO PLANS

SHEET NO.	PLANS
1	GENERAL PLAN NO. 1
2	GENERAL PLAN NO. 2
3	INDEX TO PLANS
4	GENERAL NOTES NO. 1
5	GENERAL NOTES NO. 2
6	DECK CONTOURS NO. 1
7	DECK CONTOURS NO. 2
8	FOUNDATION PLANS NO. 1
9	FOUNDATION PLANS NO. 2
10	FOUNDATION PLANS NO. 3
11	ABUTMENT 1 LAYOUT
12	ABUTMENT 1 DETAILS NO. 1
13	ABUTMENT 1 DETAILS NO. 2
14	ABUTMENT 1 DETAILS NO. 3
15	ABUTMENT 7 LAYOUT
16	ABUTMENT 7 DETAILS NO. 1
17	ABUTMENT 7 DETAILS NO. 2
18	ABUTMENT 7 DETAILS NO. 3
19	ABUTMENT 7 RETAINING WALL LAYOUT
20	ABUTMENT 7 RETAINING WALL DETAILS NO. 1
21	ABUTMENT 7 RETAINING WALL DETAILS NO. 2
22	ABUTMENT 7 RETAINING WALL DETAILS NO. 3
23	PTFE SPHERICAL BEARING DETAILS NO.1
24	PTFE SPHERICAL BEARING DETAILS NO.2
25	BENT 2 DETAILS NO. 1
26	BENT 2 DETAILS NO. 2
27	BENT 2 DETAILS NO. 3
28	BENT 3 DETAILS NO. 1
29	BENT 3 DETAILS NO. 2
5 30	BENT 3 DETAILS NO. 3
31	BENT 4 DETAILS NO. 1
32	BENT 4 DETAILS NO. 2
33	BENT 4 DETAILS NO. 3
34	BENT 5 DETAILS NO. 1 ← 33A-I BENT DETAILS ALTERNATIVE B
35	BENT 5 DETAILS NO. 2
36	BENT 5 DETAILS NO. 3
37	BENT 6 DETAILS NO. 1
38	BENT 6 DETAILS NO. 2
39	BENT 6 DETAILS NO. 3
40	COLUMN ISOLATION DETAILS
41	TYPICAL SECTION NO. 1
42	TYPICAL SECTION NO. 2
43	TYPICAL SECTION NO. 3
44	GIRDER LAYOUT NO. 1
45	GIRDER LAYOUT NO. 2
46	GIRDER LAYOUT NO. 3
47	ADDITIONAL TOP REINFORCEMENT
48	ADDITIONAL BOTTOM REINFORCEMENT
49	GIRDER DETAILS
50	ANCHOR BLISTER DETAIL
51	TRANSVERSE PT DETAILS NO.1
52	TRANSVERSE PT DETAILS NO.2
53	HINGE LAYOUT
54	"SB" HINGE DETAILS NO. 1
55	"SB" HINGE DETAILS NO. 2
56	"SB" HINGE DETAILS NO. 3
57	"SB" HINGE DETAILS NO. 4

INDEX TO PLANS

SHEET NO.	PLANS
58	"VT" HINGE DETAILS NO. 1
59	"VT" HINGE DETAILS NO. 2
60	"VT" HINGE DETAILS NO. 3
61	"VT" HINGE DETAILS NO. 4
62	HINGE SEISMIC JOINT DETAILS NO. 1
63	HINGE SEISMIC JOINT DETAILS NO. 2
64	HINGE SEISMIC JOINT DETAILS NO. 3
65	HINGE SEISMIC JOINT DETAILS NO. 4
66	HINGE SEISMIC JOINT DETAILS NO. 5
67	HINGE SEISMIC JOINT DETAILS NO. 6
68	ABUTMENT SEISMIC JOINT DETAILS NO. 1
69	ABUTMENT SEISMIC JOINT DETAILS NO. 2
70	ABUTMENT SEISMIC JOINT DETAILS NO. 3
71	ABUTMENT SEISMIC JOINT DETAILS NO. 4
72	ABUTMENT SEISMIC JOINT DETAILS NO. 5
73	ABUTMENT SEISMIC JOINT DETAILS NO. 6
74	TEMPORARY BRIDGE WIDENING
75	STEEL FIN LAYOUT
76	STEEL FIN DETAILS NO. 1
77	STEEL FIN DETAILS NO. 2
78	DRAINAGE DETAILS NO. 1
79	DRAINAGE DETAILS NO. 2
80	DRAINAGE DETAILS NO. 3
81	DRAINAGE DETAILS NO. 4
82	LADDER DETAILS
83	SOFFIT AND TEMPORARY DECK ACCESS
84	PEDESTAL DETAILS NO. 1
85	PEDESTAL DETAILS NO. 2
86	PEDESTAL DETAILS NO. 3
87	PEDESTAL DETAILS NO. 4
88	PEDESTAL DETAILS NO. 5
89	PEDESTAL DETAILS NO. 6
90	PEDESTAL DETAILS NO. 7
91	PEDESTAL DETAILS NO. 8
92	PEDESTAL DETAILS NO. 9
93	PEDESTAL DETAILS NO. 10
94	PEDESTAL DETAILS NO. 11
95	PEDESTAL DETAILS NO. 12
96	PEDESTAL DETAILS NO. 13
97	STRUCTURE APPROACH TYPE N(30S)
98	STRUCTURE APPROACH DRAINAGE DETAILS
99	LOG OF TEST BORINGS 1 OF 16
100	LOG OF TEST BORINGS 2 OF 16
101	LOG OF TEST BORINGS 3 OF 16
102	LOG OF TEST BORINGS 4 OF 16
103	LOG OF TEST BORINGS 5 OF 16
104	LOG OF TEST BORINGS 6 OF 16
105	LOG OF TEST BORINGS 7 OF 16
106	LOG OF TEST BORINGS 8 OF 16
107	LOG OF TEST BORINGS 9 OF 16
108	LOG OF TEST BORINGS 10 OF 16
109	LOG OF TEST BORINGS 11 OF 16
110	LOG OF TEST BORINGS 12 OF 16
111	LOG OF TEST BORINGS 13 OF 16
112	LOG OF TEST BORINGS 14 OF 16
113	LOG OF TEST BORINGS 15 OF 16
114	LOG OF TEST BORINGS 16 OF 16

STANDARD PLAN SHEET NO.
DETAIL NO.

1 REVISED PER ADDENDUM No. 1 DATED AUGUST 13, 2009

5 REVISED PER ADDENDUM No. 5 DATED SEPTEMBER 10, 2009

7 REVISED PER ADDENDUM No. 7 DATED SEPTEMBER 25, 2009

PRESIDIO VIADUCT (SB) #34-0157L
QUANTITIES (ALTERNATIVE A)

BRIDGE REMOVAL, LOCATION A	LUMP	SUM
STRUCTURE EXCAVATION (BRIDGE) (NATURALLY OCCURING ASBESTOS)	600	CY
STRUCTURE EXCAVATION (BRIDGE)(SERPENTINE)	125	CY
STRUCTURE EXCAVATION (RETAINING WALL) (NATURALLY OCCURING ASBESTOS)	260	CY
STRUCTURE EXCAVATION (TYPE Z-2) (AERIALLY DEPOSITED LEAD)	340	CY
STRUCTURE BACKFILL (BRIDGE)	430	CY
STRUCTURE BACKFILL (RETAINING WALL)	350	CY
5 ~~(NATURALLY OCCURING ASBESTOS)~~		
144" PERMANENT STEEL CASING	485	LF
24" CAST-IN-DRILLED-HOLE CONCRETE PILING	918	LF
144" CAST-IN-DRILLED-HOLE CONCRETE PILING	485	LF
24" CAST-IN-DRILLED-HOLE CONCRETE PILING (ROCK SOCKET)	790	LF
102" CAST-IN-DRILLED-HOLE CONCRETE PILING (ROCK SOCKET)	45	LF
138" CAST-IN-DRILLED-HOLE CONCRETE PILING(ROCK SOCKET)	262	LF
PRESTRESSING CAST-IN-PLACE CONCRETE	LUMP	SUM
PRESTRESSING CAST-IN-PLACE CONCRETE (TRANSVERSE)	LUMP	SUM
PRESTRESSING CAST-IN-PLACE CONCRETE (HS BARS)	LUMP	SUM
STRUCTURAL CONCRETE, BRIDGE FOOTING	160	CY
STRUCTURAL CONCRETE, BRIDGE	9,900	CY
STRUCTURAL CONCRETE, RETAINING WALL	170	CY
STRUCTURAL CONCRETE, APPROACH SLAB (TYPE N)	60	CY
1 ~~ARCHITECTURAL TREATMENT (2" THICK)~~	~~2,160~~	~~SQFT~~
PTFE SPHERICAL BEARING	12	EA
SEISMIC JOINT (ABUTMENT 1)	LUMP	SUM
SEISMIC JOINT (ABUTMENT 7)	LUMP	SUM
SEISMIC JOINT (HINGE 1)	LUMP	SUM
BAR REINFORCING STEEL (BRIDGE)	4,392,000	LB
BAR REINFORCING STEEL (RETAINING WALL)	13,000	LB
HEADED BAR REINFORCEMENT	14,000	EA
7 STRUCTURAL STEEL (BRIDGE)	470,000 ~~680,000~~	LB
CLEAN AND PAINT STRUCTURAL STEEL	LUMP	SUM
ISOLATION CASING	18,700	LB
MISCELLANEOUS METAL (BRIDGE)	12,000 ~~16,800~~	LB
BRIDGE DECK DRAINAGE SYSTEM	19,400	LB
BRIDGE DECK DRAINAGE SYSTEM (TEMPORARY)	25,000	LB
CALIFORNIA ST-10 BRIDGE RAIL (MODIFIED)	2,008	LF
5 ARCHITECTURAL TEXTURE (LIGHT BOARD FINISH)	980	SQFT

5 PRESIDIO VIADUCT (SB) #34-0157L
QUANTITIES (ALTERNATIVE B)

BRIDGE REMOVAL, LOCATION A	LUMP	SUM
STRUCTURE EXCAVATION (BRIDGE) (NATURALLY OCCURING ASBESTOS)	600	CY
STRUCTURE EXCAVATION (BRIDGE) (SERPENTINE)	125	CY
STRUCTURE EXCAVATION (RETAINING WALL) (NATURALLY OCCURING ASBESTOS)	260	CY
STRUCTURE EXCAVATION (TYPE Z-2) (AERIALLY DEPOSITED LEAD)	340	CY
STRUCTURE BACKFILL (BRIDGE)	430	CY
STRUCTURE BACKFILL (RETAINING WALL)	350	CY
123" PERMANENT STEEL CASING	485	LF
24" CAST-IN-DRILLED-HOLE CONCRETE PILING	918	LF
123" CAST-IN-DRILLED-HOLE CONCRETE PILING	485	LF
24" CAST-IN-DRILLED-HOLE CONCRETE PILING (ROCK SOCKET)	790	LF
102" CAST-IN-DRILLED-HOLE CONCRETE PILING (ROCK SOCKET)	45	LF
114" CAST-IN-DRILLED-HOLE CONCRETE PILING (ROCK SOCKET)	278	LF
138" CAST-IN-DRILLED-HOLE CONCRETE PILING(ROCK SOCKET)	60	LF
PRESTRESSING CAST-IN-PLACE CONCRETE	LUMP	SUM
PRESTRESSING CAST-IN-PLACE CONCRETE (TRANSVERSE)	LUMP	SUM
PRESTRESSING CAST-IN-PLACE CONCRETE (HS BARS)	LUMP	SUM
STRUCTURAL CONCRETE, BRIDGE FOOTING	160	CY
STRUCTURAL CONCRETE, BRIDGE	9,900	CY
STRUCTURAL CONCRETE, RETAINING WALL	170	CY
STRUCTURAL CONCRETE, APPROACH SLAB (TYPE N)	60	CY
ARCHITECTURAL TEXTURE (LIGHT BOARD FINISH)	980	SQFT
PTFE SPHERICAL BEARING	12	EA
SEISMIC JOINT (ABUTMENT 1)	LUMP	SUM
SEISMIC JOINT (ABUTMENT 7)	LUMP	SUM
SEISMIC JOINT (HINGE 1)	LUMP	SUM
BAR REINFORCING STEEL (BRIDGE)	4,100,000	LB
BAR REINFORCING STEEL (RETAINING WALL)	13,000	LB
HEADED BAR REINFORCEMENT	19,000	EA
STRUCTURAL STEEL (BRIDGE)	470,000 ~~680,000~~	LB
CLEAN AND PAINT STRUCTURAL STEEL	LUMP	SUM
ISOLATION CASING	19,200	LB
MISCELLANEOUS METAL (BRIDGE)	12,000 ~~18,400~~	LB
BRIDGE DECK DRAINAGE SYSTEM	19,400	LB
BRIDGE DECK DRAINAGE SYSTEM (TEMPORARY)	25,000	LB
CALIFORNIA ST-10 BRIDGE RAIL (MODIFIED)	2,008	LF

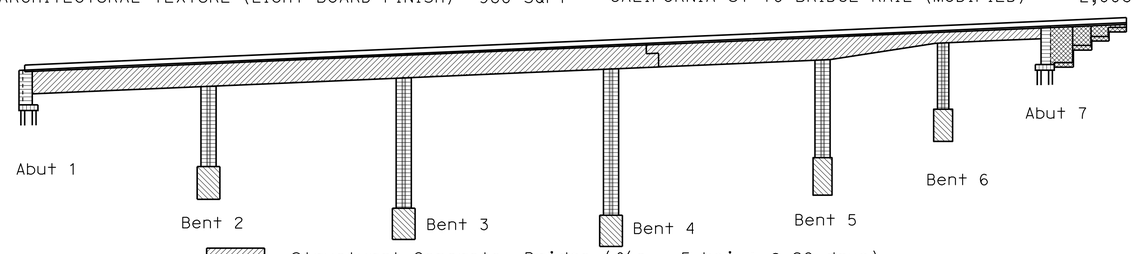

Structural Concrete, Bridge (f'c = 5 ksi : @ 28 days)
Structural Concrete, Bridge (f'c = 5 ksi : @ 28 days)
Structural Concrete, Bridge Footing (f'c = 4 ksi : @ 28 days)
Structural Concrete, Pile (f'c = 4 ksi : @ 28 days)
Structural Concrete, Retaining Wall (f'c = 4 ksi : @ 28 days)

CONCRETE STRENGTH AND TYPE LIMITS

No Scale

	BY	CHECKED
DESIGN	Q.Zhao/P.Norboe/R.Bromenschenkel	T. Skreslet
DETAILS	Jeff Thorne	Q.Zhao/P.Norboe/R.Bromenschenkel
QUANTITIES	A. Alcantara	J. Han

STATE OF CALIFORNIA
DEPARTMENT OF TRANSPORTATION

DIVISION OF ENGINEERING SERVICES
STRUCTURE DESIGN
DESIGN BRANCH 4

BRIDGE NO. 34-0157L
POST MILE 9.02

PRESIDIO VIADUCT - LEFT
INDEX TO PLANS

STRUCTURES DESIGN DETAIL SHEET (ENGLISH) (REV. 10/25/05)

ORIGINAL SCALE IN INCHES FOR REDUCED PLANS 0 1 2 3

CU 04242
EA 163731

DISREGARD PRINTS BEARING EARLIER REVISION DATES

REVISION DATES: ~~4-16-09~~ ~~7-1-09~~ ~~7-9-09~~ ~~9-2-09~~ 9-5-09 ~~5-24-09~~ ~~5-26-09~~ ~~5-30-09~~ ~~6-12-09~~

SHEET 3 OF 114

FILE => 34-0157l-aa-1tp.add

USERNAME => trmikesl DATE PLOTTED => 25-SEP-2009 TIME PLOTTED => 09:49

DIST	COUNTY	ROUTE	POST MILES TOTAL PROJECT	SHEET No	TOTAL SHEETS
04	SF	101,1	9.2/9.8, 6.8/7.1	354	567

REGISTERED CIVIL ENGINEER 6-4-09 DATE

7-20-09
PLANS APPROVAL DATE

REGISTERED PROFESSIONAL ENGINEER AHMED M M IBRAHIM No. S 4865 EXP. 9-30-10 STRUCTURAL STATE OF CALIFORNIA

The State of California or its officers or agents shall not be responsible for the accuracy or completeness of electronic copies of this plan sheet.

GENERAL NOTES
LOAD AND RESISTANCE FACTOR DESIGN

DESIGN: AASHTO LRFD Bridge Design Specifications, 4th edition with the Interims through 2007 and the California Amendments, vDecember 2008; except that deck slab and retaining wall are designed using Bridge Design Specifications ('96 AASHTO w/Revisions by Caltrans)

SEISMIC DESIGN:
Caltrans Seismic Design Criteria (SDC), Version 1.4 dated June 2006 with enhancement as stated herein.

DEAD LOAD:
Includes 35 psf for future wearing surface.

LIVE LOADING:
HL93 and permit design load.

SEISMIC LOADING:
Recommended Acceleration Response Spectral curves for soil type B, C and D and Site Specific Response as shown. 5

REINFORCED CONCRETE:
fy = 60 ksi, ASTM A706
f'c = 5.0 ksi
n = 8

Transverse Deck Slabs (Working Stress):
fs = 20 ksi
fc = 1.3 ksi
n = 10

STRUCTURAL STEEL: 7

Steel Casing and Shear Ring :	ASTM A252, Grade 3	f_y = 45 ksi
Plates and Structural Shapes:	ASTM A709, Grade 50	f_y = 50 ksi
Structural Tubes :	ASTM A501, Grade B	f_y = 50 ksi

FIN FABRICATION: 7
1. Welding of structural shapes and built up members shall comply with AASHTO/AWS D 1.5 - 2008
2. Welding of tubular members shall comply with AWS D 1.1 - 2008
3. Dimensional tolerances:

3a - Allowable variation in straightness of Steel Fin subassemblies shal not exceed 1/8" in 10' of total length.
3b - Allowable variations from flatness of Steel Fin Web Plate shall not exceed D/250 where "D" is the least panel dimension in inches. The out-of-plain variation from flatness of fin web plate shall be determined in compliance with item 3.5.1.6 of AASHTO/AWS D 1.5

FASTENERS: 7
- All high-strength bolts, nuts and washers shall be zinc coated.
- Bolts - A 325; Nuts - A 563; Washers - F 436, unless noted otherwise.
- All bolted connections shall comply with RCSC "Specification for Structural Joints Using ASTM A 325 or A 490 Bolts"
- All bolts are ASTM A 325 High Strength with threads excluded from shear planes.
- All bolted connections are slip critical.
- Contact surfaces of members connected by HS bolts shall be Class B coating.

PRESTRESSED CONCRETE:
Longitudinal: See Prestressing Notes on "GIRDER DETAILS" sheet.

Transverse: See Notes on "TRANSVERSE PT DETAILS NO. 1" sheet.

PILES: See "Pile Data Table" on "GENERAL NOTES NO. 2 " sheet

EXPOSURE CONDITION: Marine Atmosphere 7

Minimum concrete cover (inches) unless shown otherwise on plan
- Footing & Pile Caps: 3"
- Walls, Columns & Cast -In-Place Piles: 3"
- Top surface of Deck Slab: 2½"
- Bottom surface of Deck Slab: 1½"
- Bottom Slab of Box Girder: 1½"
- Exposed faces of Box Girder Webs, Bent Caps, Diaphragms and Hinged Joints: 3"
- Curbs & Railings: 2½"
- Concrete surface not exposed to weather, soil or water
  Principal reinforcement: 2"
  Stirrups, Ties and Spirals: 1½"

PROJECT SPECIFIC SEISMIC DESIGN CRITERIA

PERFORMANCE MEASURES

Design Earthquake	Performance Level
Functionality Evaluation Earthquake (FEE)	Minimal damage Immediate service
Safety Evaluation Earthquake (SEE)	Repairable damage/No-Collapse Limited service

Safety Evaluation Earthquake (SEE)
Envelope of the median (50th percentile) deterministic Maximum Credible Earthquake (MCE) ARS and a probabilistic hazard ARS for an event with a mean return period of 1,000 years (i.e., 3% probability of exceedance in 75 years).

Functionality Evaluation Earthquake (FEE)
A probabilistic hazard ARS for an event with a mean return of 108 years (i.e., 50% probability of exceedance in 75 years).

Seismic Analysis and Evaluations

Displacement Demand:
Response Spectrum Analysis
Time History Analysis (Maximum of three responses)
Site Specific Reduction factor of 0.75 is allowed 5

Displacement Capacity:
Inelastic Static Analysis
Time History Analysis (Non-Linear)

ALLOWABLE CONCRETE STRAIN

Performance Goal	Allowable Concrete Strain
Functional performance	0.005
Safety/No-Collapse performance	67% ϵ_{cu}+

+ Ultimate Concrete Strain (ϵ_{cu}) considering confinement of the concrete core

ALLOWABLE STEEL STRAIN

Performance Goal	Reinforcement Size	Allowable Concrete Strain#
Functional performance	#10 Bars and Smaller	50% ϵ_{su}
	Bars Larger Than #10	50% ϵ_{su}
Safety/No-Collapse performance	#10 Bars and Smaller	67% ϵ_{su}
	Bars Larger Than #10	67% ϵ_{su}

Maximum Steel Strain #10 Bars and Smaller ϵ_{su} = 0.12

Maximum Steel Strain Bars Larger Than #10 ϵ_{su} = 0.09

5 **REVISED PER ADDENDUM No. 5 DATED SEPTEMBER 10, 2009**

7 **REVISED PER ADDENDUM No. 7 DATED SEPTEMBER 25, 2009**

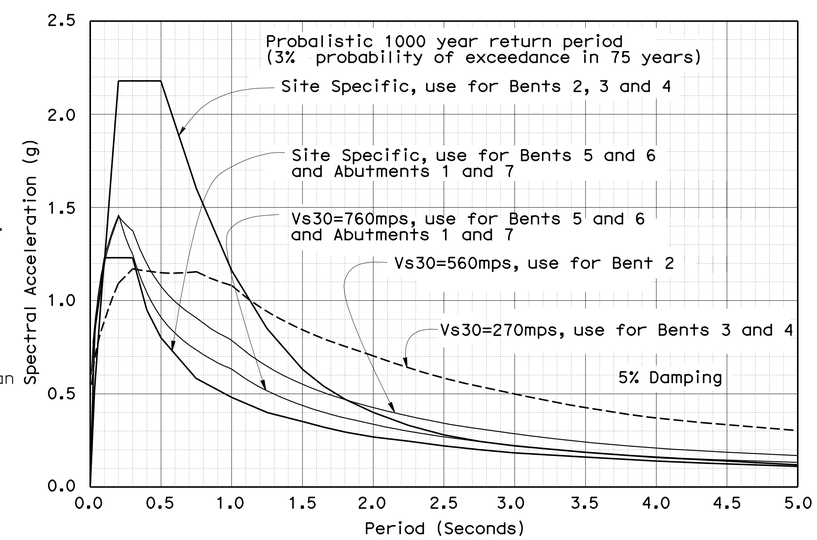

SEE ARS CURVE 5

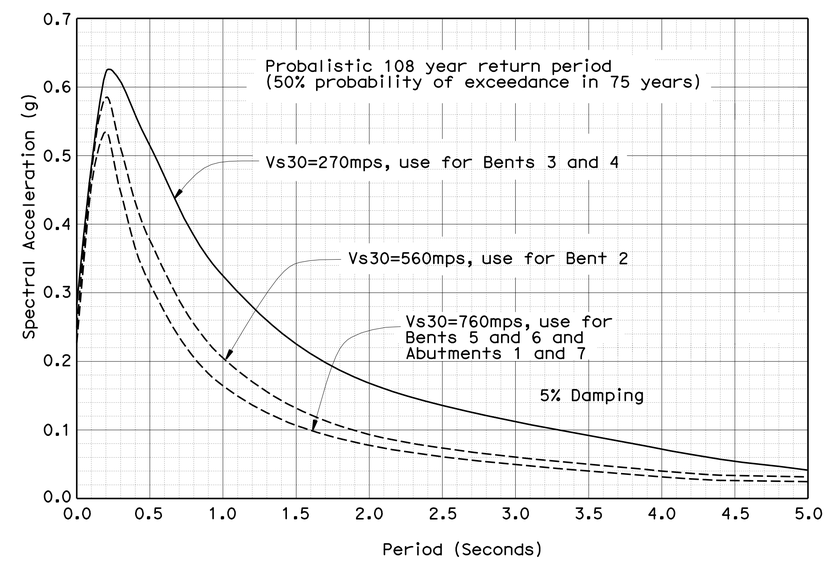

FEE ARS CURVE 5

	BY	CHECKED
DESIGN	A.M.M.Ibrahim	F.Zayati
DETAILS	Jeff Thorne	A.M.M.Ibrahim
QUANTITIES	A. Alcantara	J. Han

STATE OF CALIFORNIA
DEPARTMENT OF TRANSPORTATION

DIVISION OF ENGINEERING SERVICES
STRUCTURE DESIGN
DESIGN BRANCH 4

BRIDGE NO. 34-0157L
POST MILE 9.02

PRESIDIO VIADUCT - LEFT
GENERAL NOTES NO. 1

STRUCTURES DESIGN DETAIL SHEET (ENGLISH) (REV. 10/25/05)

ORIGINAL SCALE IN INCHES FOR REDUCED PLANS 0 1 2 3

CU 04242
EA 163731

DISREGARD PRINTS BEARING EARLIER REVISION DATES

REVISION DATES: 5-12-09 5-18-09 6-18-09 7-9-09 7-14-09 7-18-09 9-1-09 9-8-09 9-22-09

SHEET 4 OF 114

FILE => 34-0157l-ab-gn.add

USERNAME => trmikes1 DATE PLOTTED => 25-SEP-2009 TIME PLOTTED => 09:49

DIST	COUNTY	ROUTE	POST MILES TOTAL PROJECT	SHEET No	TOTAL SHEETS
04	SF	101,1	9.2/9.8, 6.8/7.1	372	567

Ahmed Ibrahim 6-4-09
REGISTERED CIVIL ENGINEER DATE

7-20-09
PLANS APPROVAL DATE

REGISTERED PROFESSIONAL ENGINEER
AHMED M M IBRAHIM
No. S 4865
Exp. 9-30-10
STRUCTURAL
STATE OF CALIFORNIA

The State of California or its officers or agents shall not be responsible for the accuracy or completeness of electronic copies of this plan sheet.

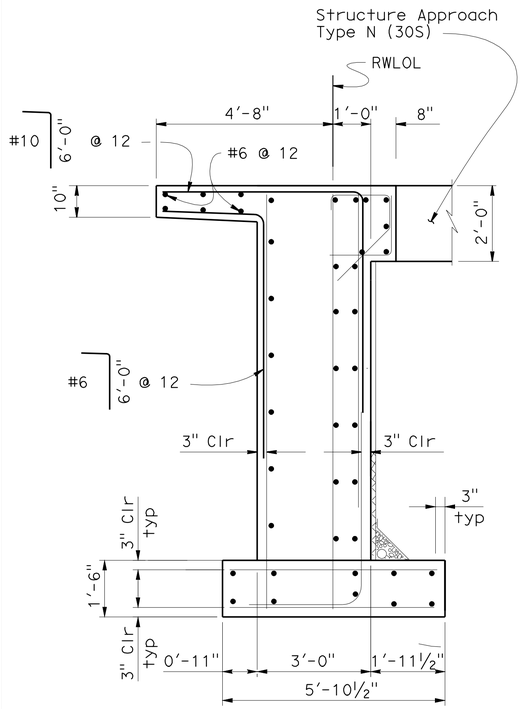

SECTION G-G (B0-3 / 3-1)
½" = 1'-0"

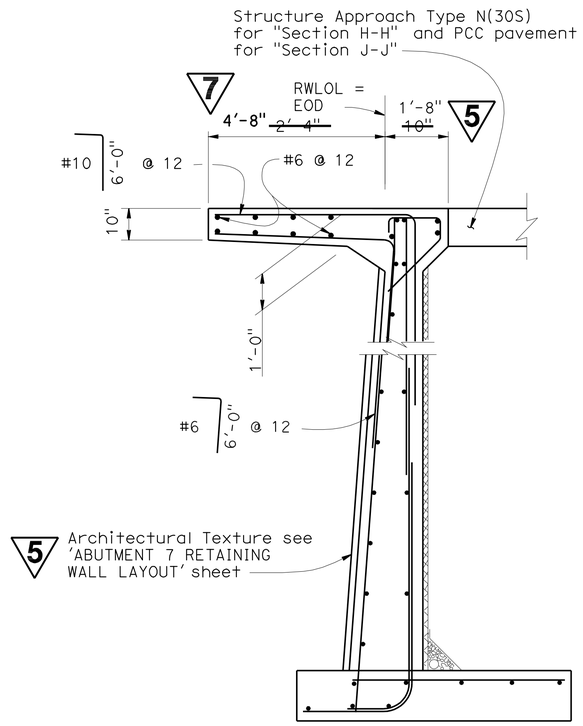

Note:
For details not shown see "Section E-E And Section E-E" on 'ABUTMENT 7 RETAINING WALL LAYOUT' sheet.

SECTION H-H & SECTION J-J (B0-3 / 3-1)
½" = 1'-0"

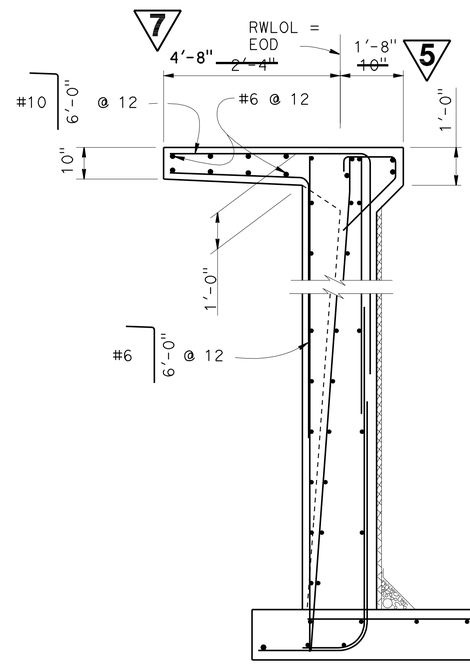

Note:
For details not shown see "Section D-D" on 'ABUTMENT 7 RETAINING WALL LAYOUT' sheet.

SECTION I-I (B0-3 / 3-1)
½" = 1'-0"

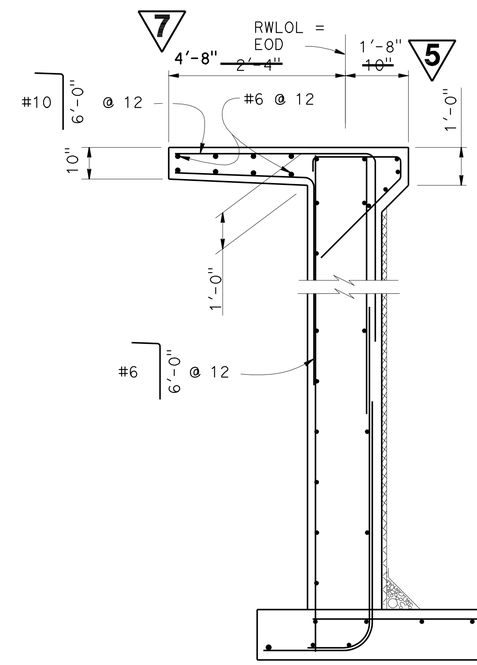

Note:
For details not shown see "Section F-F" on 'ABUTMENT 7 RETAINING WALL LAYOUT' sheet.

SECTION K-K (B0-3 / 3-1)
½" = 1'-0"

NOTE:
THE CONTRACTOR SHALL VERIFY ALL CONTROLLING FIELD DIMENSIONS BEFORE ORDERING OR FABRICATING ANY MATERIAL.

7 **REVISED PER ADDENDUM No. 7 DATED SEPTEMBER 25, 2009**

5 **REVISED PER ADDENDUM No. 5 DATED SEPTEMBER 10, 2009**

Notes:
1. For details not shown see B3-1 / - and B3-8
2. Railing not shown.

DESIGN	BY L. Barnard	CHECKED A. Alcantara	
DETAILS	BY Marvin Lane	CHECKED L. Barnard	
QUANTITIES	BY A. Alcantara	CHECKED J. Han	

STATE OF CALIFORNIA
DEPARTMENT OF TRANSPORTATION

DIVISION OF ENGINEERING SERVICES
STRUCTURE DESIGN
DESIGN BRANCH 4

BRIDGE NO. 34-0157L
POST MILE 9.02

PRESIDIO VIADUCT - LEFT
ABUTMENT 7 RETAINING WALL DETAILS NO. 3

STRUCTURES DESIGN DETAIL SHEET (ENGLISH) (REV. 10/25/05)

ORIGINAL SCALE IN INCHES FOR REDUCED PLANS 0 1 2 3

CU 04242
EA 163731

DISREGARD PRINTS BEARING EARLIER REVISION DATES

REVISION DATES: 5-15-09 5-16-09 5-18-09 6-3-09

SHEET 22 OF 114

FILE => 34-0157l-b-retwalldts04.add

USERNAME => trmikest DATE PLOTTED => 25-SEP-2009 TIME PLOTTED => 09:50

DIST	COUNTY	ROUTE	POST MILES TOTAL PROJECT	SHEET No	TOTAL SHEETS
04	SF	101,1	9.2/9.8, 6.8/7.1	426	567

REGISTERED CIVIL ENGINEER 6-4-09 DATE

7-20-09
PLANS APPROVAL DATE

The State of California or its officers or agents shall not be responsible for the accuracy or completeness of electronic copies of this plan sheet.

REGISTERED PROFESSIONAL ENGINEER AHMED M M IBRAHIM No. S 4865 EXP. 9-30-10 STRUCTURAL STATE OF CALIFORNIA

7

NOTES:

1. For overhang and exterior girder dimensions, see "TYPICAL SECTION NO. 1 & 2" sheets.
2. For Steel Fin layout, see "STEEL FIN LAYOUT " sheet.
3. For Sections A-A through E-E, and Detail M, N and P, see "STEEL FIN DETAILS NO. 2" sheet.
4. Studs may be bent to clear prestressing cables.
5. No live loading or construction material storage shall be allowed on the overhang prior to the complete erection of the Steel Fins.
6. Use of temporary welded attachments to the web plates shall not be permitted at any stage of fabrication or construction.
7. Steel Fins shall be shop assembled and painted prior to shipping to bridge site.
8. Steel Fins shall be supported during transportation and erection such that no damages of the web plates occur.
9. All Web Plates shall be fabricated in one piece with no butt welds.
10. All bolt holes on web plates only shall have oversize holes ø = 13/16"
11. Bolt holes spacing shall be maximum 6" OC (Typ)

CONSTRUCTION SEQUENCE:

1. Completed Steel Fins subassemblies shall be preassembled in the shop prior to shipping and erecting in compliance with Section 55-3.16 "Assembly" of May 2006 Standard Specifications.
2. Steel Fins shall be erected in place prior to placement of concrete.
3. Caulk around the contact seams between the formwork and the Steel Fins.
4. Pour the bridge superstructure concrete.
5. Clean and apply final coat of paint to Steel Fins.
6. Contractor may submit alternative construction sequence to the Engineer for approval.

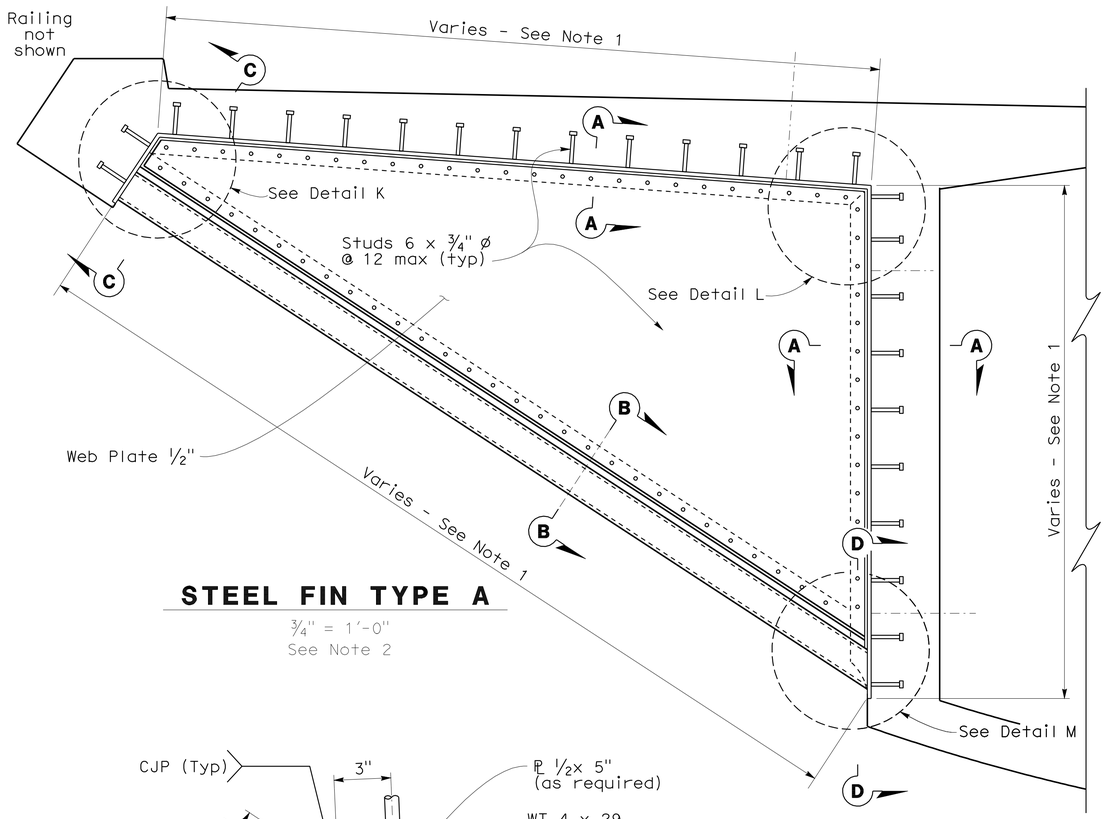

STEEL FIN TYPE A

¾" = 1'-0"
See Note 2

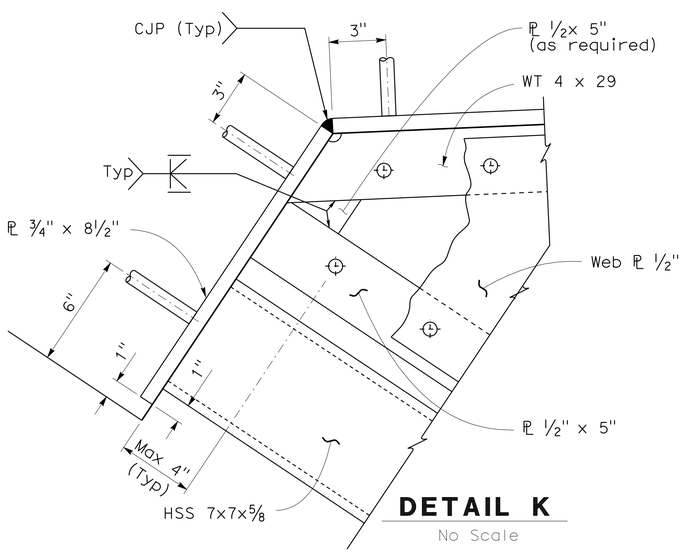

DETAIL K

No Scale

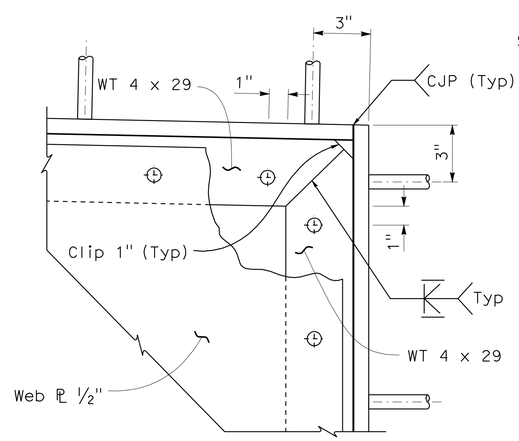

DETAIL L

No Scale

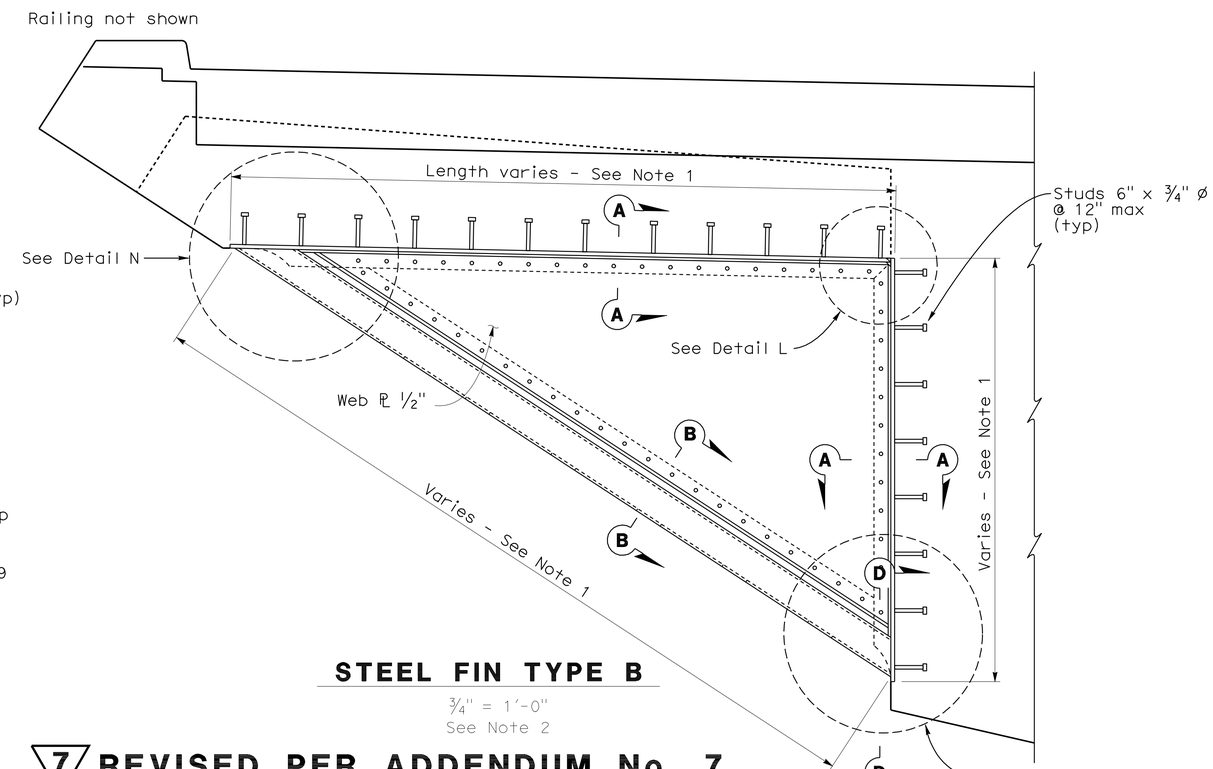

STEEL FIN TYPE B

¾" = 1'-0"
See Note 2

NOTE:
CONTRACTOR SHALL VERIFY ALL CONTROLLING FIELD DIMENSIONS BEFORE ORDERING OR FABRICATING ANY MATERIALS.

7 **REVISED PER ADDENDUM No. 7 DATED SEPTEMBER 25, 2009**

	BY	CHECKED
DESIGN	E. Thimmhardy	S. Hegazi
DETAILS	JFCasarino/ J Thorne	E. Thimmhardy
QUANTITIES	A. Alcantara	S. Hegazi

STATE OF CALIFORNIA DEPARTMENT OF TRANSPORTATION

DIVISION OF ENGINEERING SERVICES STRUCTURE DESIGN DESIGN BRANCH 4

BRIDGE NO. 34-0157L
POST MILE 9.02

PRESIDIO VIADUCT - LEFT
STEEL FIN DETAILS NO. 1

STRUCTURES DESIGN DETAIL SHEET (ENGLISH) (REV. 10/25/05)

ORIGINAL SCALE IN INCHES FOR REDUCED PLANS 0 1 2 3

CU 04242
EA 163731

DISREGARD PRINTS BEARING EARLIER REVISION DATES

REVISION DATES: 3-28-09 5-11-09 5-21-09 7-14-09 9-20-09 9-23-09 9-22-09

SHEET 76 OF 114

FILE => 34-0157I-I-fin01.add

USERNAME => trmikesi DATE PLOTTED => 25-SEP-2009 TIME PLOTTED => 09:50

DIST	COUNTY	ROUTE	POST MILES TOTAL PROJECT	SHEET No	TOTAL SHEETS
04	SF	101,1	9.2/9.8, 6.8/7.1	427	567

REGISTERED CIVIL ENGINEER 6-4-09 DATE

7-20-09
PLANS APPROVAL DATE

REGISTERED PROFESSIONAL ENGINEER AHMED M M IBRAHIM No. S 4865 EXP. 9-30-10 STRUCTURAL STATE OF CALIFORNIA

The State of California or its officers or agents shall not be responsible for the accuracy or completeness of electronic copies of this plan sheet.

7

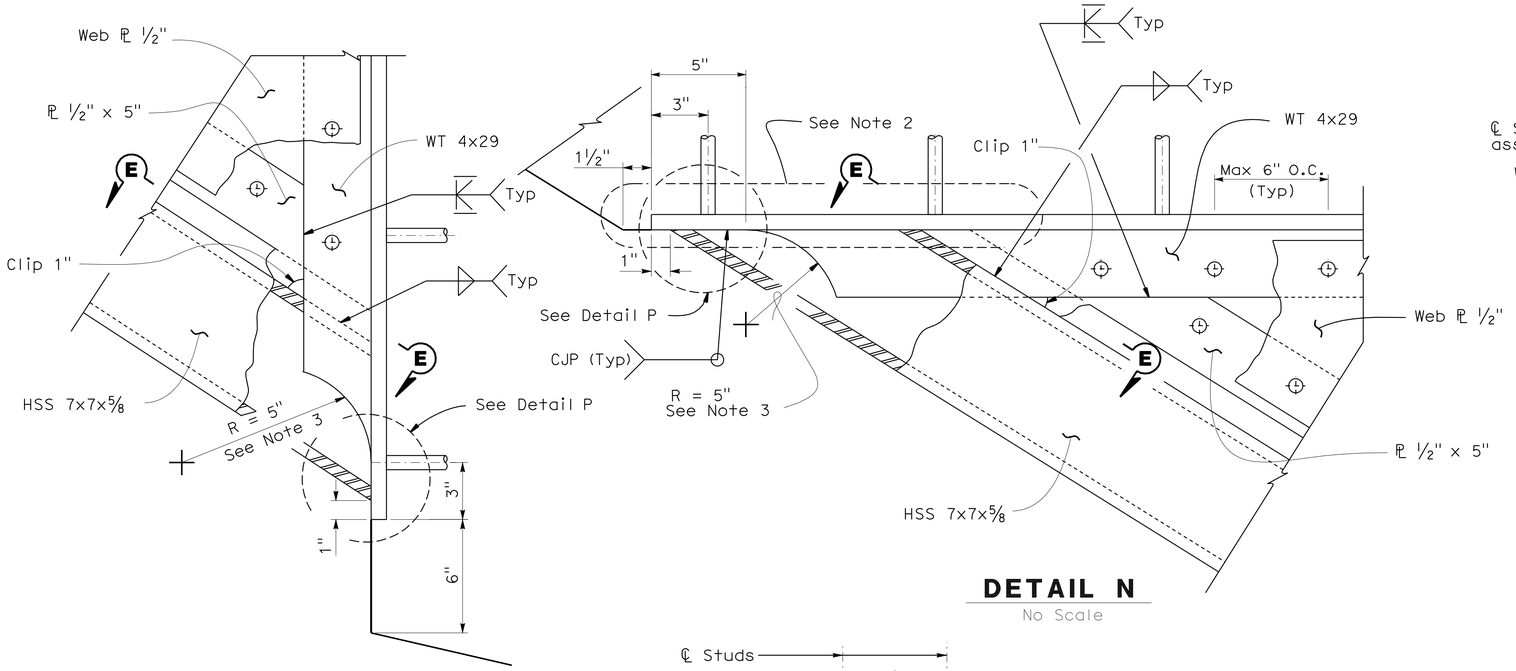

DETAIL M
No Scale

DETAIL N
No Scale

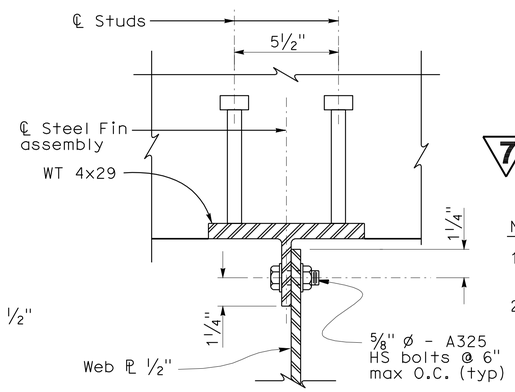

SECTION A-A
3" = 1'-0"

NOTES:

1. Weld sequence required to prevent distortions.
2. Profile of HSS 7x7x5/8 connection to WT 4x29 flange shall comply with "Figure 3.10 - Prequalified Joint Details for CJP Groove welds in Tubular T-, Y-, and K- Connections - Concave Improved Profile for Fatique (see 3.13.4) " of AWS D1.1/D1.1M:2008.
3. Grind smooth in longitudinal (stress direction) Grind flush with the WT flange after WT 4x29 web removal.

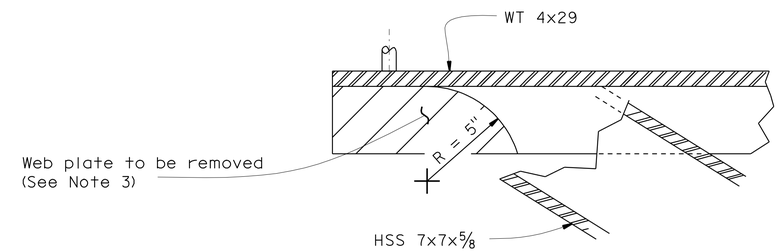

DETAIL P
No Scale

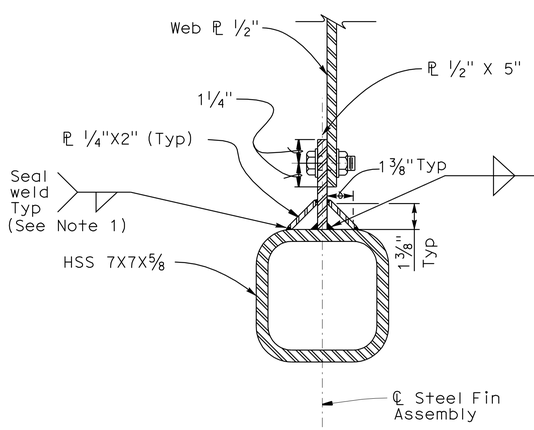

SECTION B-B
3" = 1'-0"

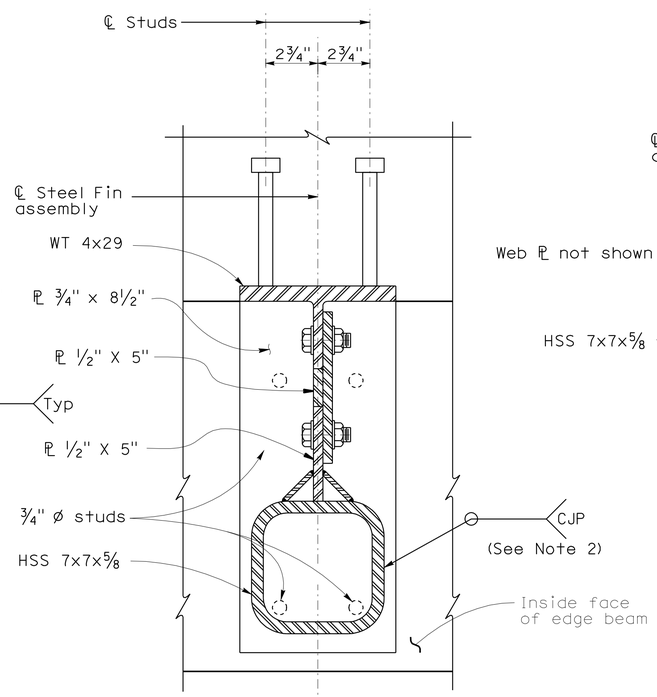

SECTION C-C
3" = 1'-0"

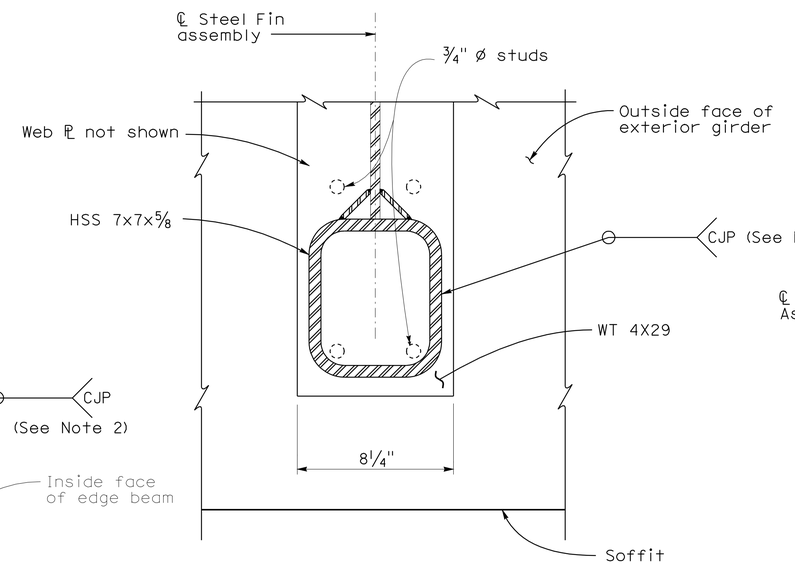

SECTION D-D
3" = 1'-0"

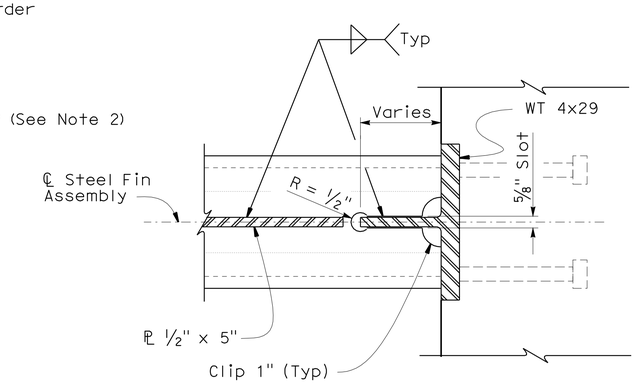

SECTION E-E
3" = 1'-0"

NOTE:
CONTRACTOR SHALL VERIFY ALL CONTROLLING FIELD DIMENSIONS BEFORE ORDERING OR FABRICATING ANY MATERIALS.

7 **REVISED PER ADDENDUM No. 7 DATED SEPTEMBER 25, 2009**

	BY	CHECKED
DESIGN	E. Thimmhardy	S. Hegazi
DETAILS	JFCasarino / J Thorne	E. Thimmhardy
QUANTITIES	A. Alcantara	S. Hegazi

STATE OF CALIFORNIA
DEPARTMENT OF TRANSPORTATION

DIVISION OF ENGINEERING SERVICES
STRUCTURE DESIGN
DESIGN BRANCH 4

BRIDGE NO. 34-0157L
POST MILE 9.02

PRESIDIO VIADUCT - LEFT
STEEL FIN DETAILS NO. 2

STRUCTURES DESIGN DETAIL SHEET (ENGLISH) (REV. 10/25/05)

ORIGINAL SCALE IN INCHES FOR REDUCED PLANS 0 1 2 3

CU 04242
EA 163731

DISREGARD PRINTS BEARING EARLIER REVISION DATES

REVISION DATES: 3-28-09 5-11-09 5-21-09 5-31-09 7-11-09 9-20-09 9-24-09 9-22-09

SHEET 77 OF 114

FILE => 34-0157I-I-fin02.dgn

USERNAME => trmikest DATE PLOTTED => 25-SEP-2009 TIME PLOTTED => 09:50

DIST	COUNTY	ROUTE	POST MILES TOTAL PROJECT	SHEET No	TOTAL SHEETS
04	SF	101,1	9.2/9.8, 6.8/7.1	485	567

REGISTERED CIVIL ENGINEER 6-4-09 DATE

7-20-09
PLANS APPROVAL DATE

The State of California or its officers or agents shall not be responsible for the accuracy or completeness of electronic copies of this plan sheet.

REGISTERED PROFESSIONAL ENGINEER AHMED M M IBRAHIM No. S 4865 Exp. 9-30-10 STRUCTURAL STATE OF CALIFORNIA

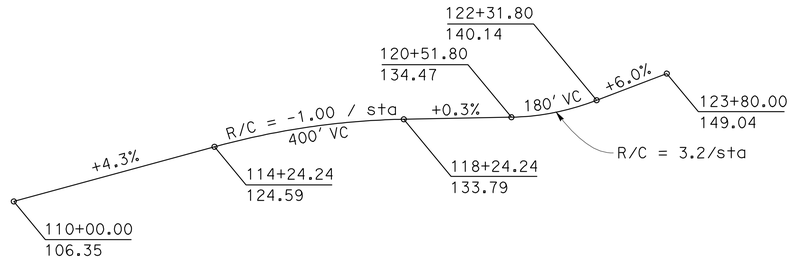

PROFILE GRADE
No Scale

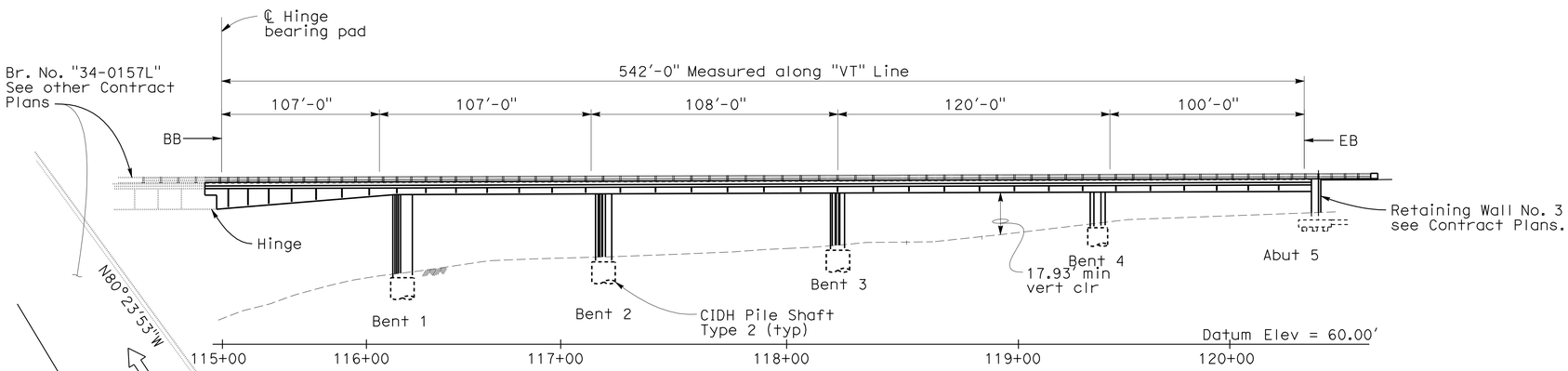

ELEVATION
1" = 30'

CURVE DATA

Alignment	R	Δ	T	L
"VT" Line ①	295.00'	95°19'51"	323.81'	490.83'
"L" Line ②	420.00'	5°29'23"	20.14'	40.24'
"L" Line ③	610.00'	15°05'52"	80.84'	160.74'
"L" Line ④	450.01'	18°21'53"	72.74'	144.24'
ETW ⑤	260.00'	67°38'34"	174.20'	306.95'
ETW ⑥	400.00'	19°11'32"	67.63'	133.99'

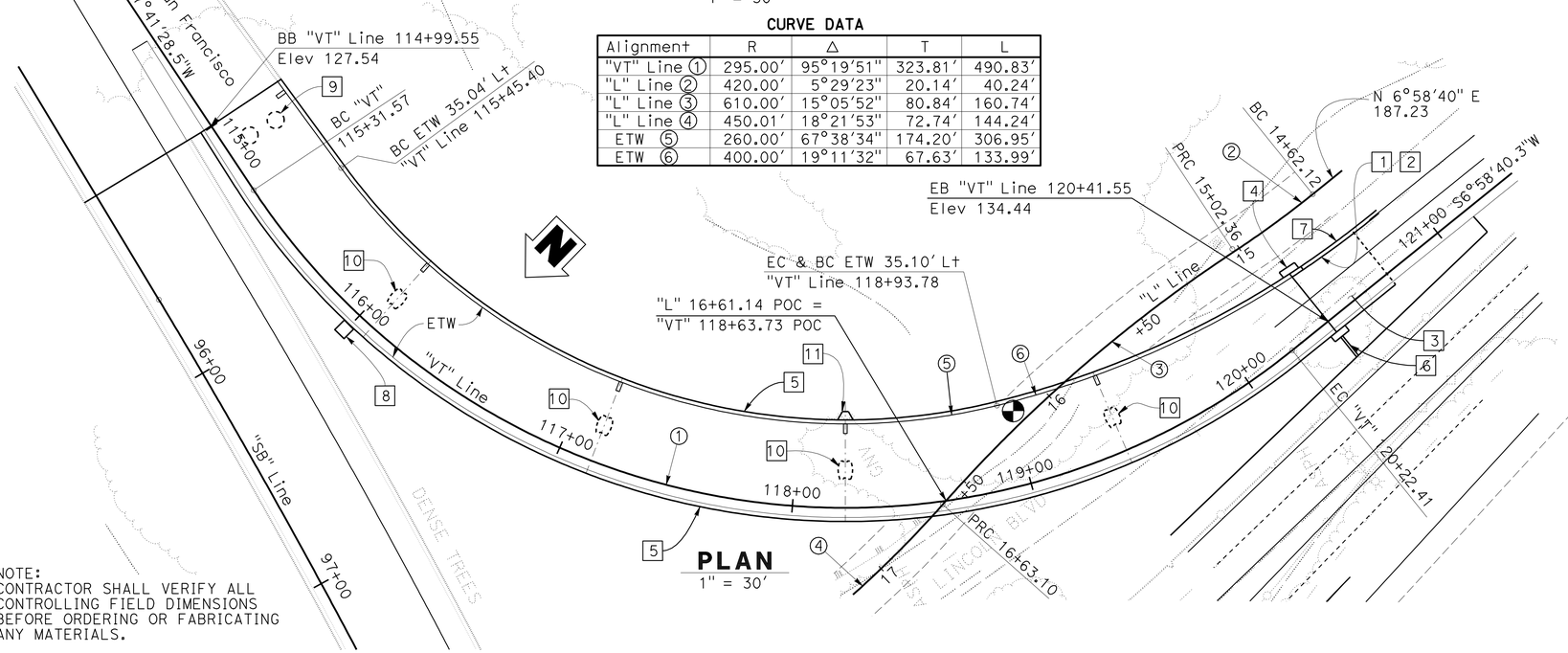

PLAN
1" = 30'

NOTE:
CONTRACTOR SHALL VERIFY ALL CONTROLLING FIELD DIMENSIONS BEFORE ORDERING OR FABRICATING ANY MATERIALS.

N1-S101 CONNECTOR #34-0160G
QUANTITIES

STRUCTURE EXCAVATION (BRIDGE) (NATURALLY OCCURING ASBESTOS)	195	CY
STRUCTURE EXCAVATION (BRIDGE)(SERPENTINE)	80	CY
STRUCTURE EXCAVATION (TYPE Z-2) (AERIALLY DEPOSITED LEAD)	80	CY
STRUCTURE BACKFILL (BRIDGE)	240	CY
108" PERMANENT STEEL CASING	43	LF
24" CAST-IN-DRILLED-HOLE CONCRETE PILING	390	LF
108" CAST-IN-DRILLED-HOLE CONCRETE PILING	43	LF
24" CAST-IN-DRILLED-HOLE CONCRETE PILING (ROCK SOCKET)	399	LF
102" CAST-IN-DRILLED-HOLE CONCRETE PILING (ROCK SOCKET)	160	LF
PRESTRESSING CAST-IN-PLACE CONCRETE (TRANSVERSE)	LUMP	SUM
STRUCTURAL CONCRETE, BRIDGE FOOTING	52	CY
STRUCTURAL CONCRETE, BRIDGE	2,430	CY
STRUCTURAL CONCRETE, APPROACH SLAB (TYPE N)	40	CY
JOINT SEAL (MR 1½")	35	LF
BAR REINFORCING STEEL (BRIDGE)	1,570,000	LB
HEADED BAR REINFORCEMENT	220	EA
STRUCTURAL STEEL (BRIDGE)	71,000 ~~127,000~~	LB
CLEAN AND PAINT STRUCTURAL STEEL	LUMP	SUM
ISOLATION CASING	11,600	LB
MISCELLANEOUS METAL (BRIDGE)	2,700	LB
BRIDGE DECK DRAINAGE SYSTEM	5,500	LB
CALIFORNIA ST-10 BRIDGE RAIL (MODIFIED)	1,036	LF

7

NOTES:

1. Paint "N1-S101 Connector"
2. Paint "Br. No. 34-0160G"
3. Structure Approach Slab N(30S)
4. Concrete Pilaster
5. California ST-10 (Mod) Bridge Rail
6. Retaining Wall 3, see "Contract Plans"
7. Retaining Wall 4, see "Contract Plans"
8. Future Type 1-B Foundation Sta 116+00
9. Performed loop detectors, see "Road Plans"
10. Paint Bent Number
11. Type 21 Pedestal Light

LEGEND:

Indicates location of minimum vertical clearance
Indicates Deck Drain

7 **REVISED PER ADDENDUM No. 7 DATED SEPTEMBER 25, 2009**

X Majid Madani
DESIGN ENGINEER

	BY	CHECKED
DESIGN	Sameh Hegazi	A.Alcantara/L.Wang
DETAILS	JFCasarino	Sameh Hegazi
QUANTITIES	Sameh Hegazi	Margie Thach

LOAD & RESISTANCE FACTOR DESIGN — LIVE LOADING: HL93 W/"LOW-BOY"; PERMIT DESIGN VEHICLE

	BY	CHECKED
LAYOUT	Sameh Hegazi	Amador Alcantara
SPECIFICATIONS	Jim Corrado	PLANS AND SPECS COMPARED Ahmed M M Ibrahim

STATE OF CALIFORNIA DEPARTMENT OF TRANSPORTATION

DIVISION OF ENGINEERING SERVICES STRUCTURE DESIGN DESIGN BRANCH 4

BRIDGE NO. 34-0160G
POST MILE 9.18

N1-S101 CONNECTOR
GENERAL PLAN

STRUCTURES DESIGN GENERAL PLAN SHEET (ENGLISH) (REV. 10/25/05)

ORIGINAL SCALE IN INCHES FOR REDUCED PLANS 0 1 2 3

CU 04242
EA 163731

DISREGARD PRINTS BEARING EARLIER REVISION DATES

REVISION DATES: 12-4-08 1-31-09 2-28-09 3-3-09 4-28-09 5-18-09 5-27-09 7-17-09 9-22-09

SHEET 1 OF 44

FILE => 34-0160_01gp.add

STRUCTURES DESIGN GENERAL PLAN SHEET (ENGLISH) (REV.07-24-06)

USERNAME => trmikesl DATE PLOTTED => 25-SEP-2009 TIME PLOTTED => 09:50

DIST	COUNTY	ROUTE	POST MILES TOTAL PROJECT	SHEET No	TOTAL SHEETS
04	SF	101,1	9.2/9.8, 6.8/7.1	487	567

REGISTERED CIVIL ENGINEER — DATE 6-4-09

7-20-09
PLANS APPROVAL DATE

REGISTERED PROFESSIONAL ENGINEER — AHMED M M IBRAHIM — No. S 4865 — EXP. 9-30-10 — STRUCTURAL — STATE OF CALIFORNIA

The State of California or its officers or agents shall not be responsible for the accuracy or completeness of electronic copies of this plan sheet.

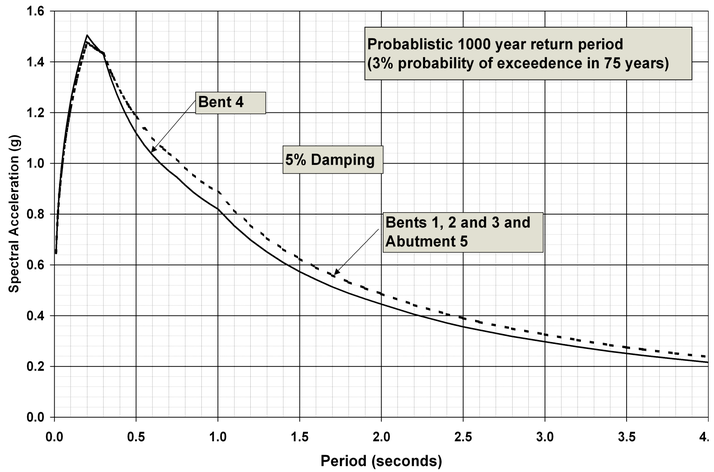

ARS CURVE

No Scale

7 **REVISED PER ADDENDUM No. 7 DATED SEPTEMBER 25, 2009**

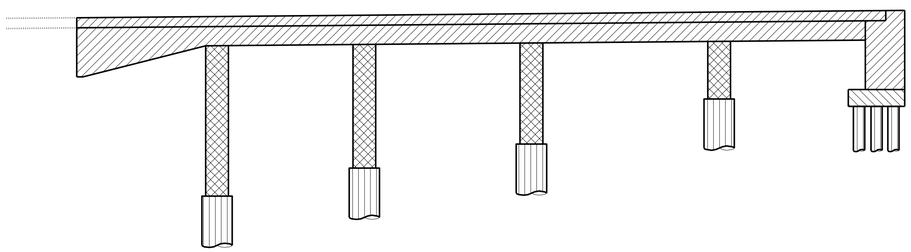

Structure Concrete Bridge (f'c = 5.0 Ksi at 28 days)

CIDH Concrete Pile (f'c = 5.0 Ksi at 28 days)

Structure Concrete, Columns (f'c = 5.0 Ksi at 28 days)

Structure Concrete Bridge Footing (f'c = 5.0 Ksi at 28 days)

CONCRETE STRENGTH AND TYPE LIMITS

No Scale

PILE DATA TABLE

Location	Pile Type	Design Load (Service Load) (kp)	Nominal Resistance (kp)		Tip Elevation (ft)		Cut Off Elevation (ft)	Steel Casing Tip Elevation (ft)
			Compression	Tension	Design	Specified		
Bent 1	108" CIDH / 102" CIDH (Rock Socket)	3005	6040	0	-7(a)	-7	62	34
Bent 2	108" CIDH / 102" CIDH (Rock Socket)	2729	5470	0	17(a)	17	72	57
Bent 3	102" CIDH (Rock Socket)	2905	5840	0	36(a)	36	76	-
Bent 4	102" CIDH (Rock Socket)	2963	5940	0	42(a)	42	81	-
Abut 5	24" CIDH / 24" CIDH (Rock Socket)	102	190	0	65(a)	65	106.5	-

NOTE:
CONTRACTOR SHALL VERIFY ALL CONTROLLING FIELD DIMENSIONS BEFORE ORDERING OR FABRICATING ANY MATERIALS.

NOTES:

1. Design Tip Elevations for Bents and Abutment are controlled by (a) Compression.
2. The Specified Tip Elevations shall not be raised above the design tip elevation.

GENERAL NOTES

LOAD AND RESISTANCE FACTOR DESIGN

DESIGN: AASHTO LRFD Bridge Design Specifications, 4th edition with the Interims through 2007 and the California Amendments, vDecember 2008; except that deck slab and retaining wall are designed using Bridge Design Specifications ('96 AASHTO w/Revisions by Caltrans)

SEISMIC DESIGN: CALTRANS SEISMIC DESIGN CRITERIA (SDC) Version 1.4, June 2006

DEAD LOAD: Includes 35 lb/ft^2 for Future Wearing Surface

LIVE LOAD: HL93 and Alternative and Permit Design Load P15

SEISMIC LOAD: Recomended ARS Curve for soil type B as shown.

REINFORCED CONCRETE: f_y = 60 ksi, ASTM A706
f'_c = 5.0 ksi (except as shown on Concrete Strength & Type Limits Diagram)

STRUCTURAL STEEL:

7

Steel Casing	:	ASTM A252, Grade 3	f_y = 45 ksi
Plates and Structural Shapes	:	ASTM A709, Grade 50	f_y = 50 ksi
Structural Tubes	:	ASTM A501, Grade B	f_y = 50 ksi

FIN FABRICATION:

7

1. Welding of structural shapes and built up members shall comply with AASHTO/AWS D 1.5 - 2008
2. Welding of tubular members shall comply with AWS D 1.1 - 2008
3. Dimensional tolerances:

3a - Allowable variation in straightness of Steel Fin subassemblies shal not exceed 1/8" in 10' of total length.
3b - Allowable variations from flatness of Steel Fin Web Plate shall not exceed D/250 where "D" is the least panel dimension in inches. The out-of-plain variation from flatness of fin web plate shall be determined in compliance with item 3.5.1.6 of AASHTO/AWS D 1.5

FASTENERS:

7

- All high-strength bolts, nuts and washers shall be zinc coated.
- Bolts - A 325; Nuts - A 563; Washers - F 436, unless noted otherwise.
- All bolted connections shall comply with RCSC "Specification for Structural Joints Using ASTM A 325 or A 490 Bolts"
- All bolts are ASTM A 325 High Strength with threads excluded from shear planes.
- All bolted connections are slip critical.
- Contact surfaces of members connected by HS bolts shall be Class B coating.

PILES: See "Pile Data Table"

EXPOSURE CONDITION: Marine Atmosphere

Minimum concrete cover (unless otherwise noted)
- Footing & Pile Caps: 3"
- Walls, Columns & Cast -In-Place Piles: 3"
- Top surface of Deck Slab: 2½"
- Bottom surface of Deck Slab: 1½"
- Bottom Slab of Box Girder: 1½"
- Exposed faces of Box Girder, Webs, Bent Caps, Diaphragms and Hinged Joints: 3"
- Curbs & Railings: 2½"
- Concrete surface not exposed to weather, soil or water
  - Principal reinforcement: 2"
  - Stirrups, Ties and Spirals: 1½"

STANDARD PLAN SHEET NO.

DETAIL NO.

INDEX TO PLANS

SHEET NO.	PLANS
1	GENERAL PLAN NO. 1
2	GENERAL PLAN NO. 2
3	INDEX TO PLANS
4	DECK CONTOURS
5	FOUNDATION PLANS
6	ABUTMENT 5 LAYOUT
7	ABUTMENT DETAILS NO. 1
8	ABUTMENT DETAILS NO. 2
9	BENT DETAILS
10	COLUMN DETAILS NO. 1
11	COLUMN DETAILS NO. 2
12	COLUMN ISOLATION DETAILS
13	TYPICAL SECTION NO. 1
14	TYPICAL SECTION NO. 2
15	TYPICAL SECTION NO. 3
16	STEEL FIN DETAILS NO. 1
17	STEEL FIN DETAILS NO. 2
18	GIRDER LAYOUT NO. 1
19	GIRDER LAYOUT NO. 2
20	TRANSVERSE POST TENSIONING
21	HINGE DIAPHRAGM DETAILS
22	DECK REINFORCEMENT - TOP
23	DECK REINFORCEMENT - BOTTOM
24	SOFFIT REINFORCEMENT - TOP
25	SOFFIT REINFORCEMENT - BOTTOM
26	DECK DRAINAGE DETAILS NO. 1
27	DECK DRAINAGE DETAILS NO. 2
28	DECK AND SOFFIT ACCESS
29	LADDER DETAILS
30	PEDESTAL DETAILS NO. 1
31	PEDESTAL DETAILS NO. 2
32	PEDESTAL DETAILS NO. 3
33	PEDESTAL DETAILS NO. 4
34	PEDESTAL DETAILS NO. 5
35	PEDESTAL DETAILS NO. 6
36	STEEL FIN LAYOUT
37	STRUCTURE APPROACH TYPE N(30S)
38	STRUCTURE APPROACH DRAINAGE
39	LOG OF TEST BORINGS 1 OF 6
40	LOG OF TEST BORINGS 2 OF 6
41	LOG OF TEST BORINGS 3 OF 6
42	LOG OF TEST BORINGS 4 OF 6
43	LOG OF TEST BORINGS 5 OF 6
44	LOG OF TEST BORINGS 6 OF 6

STANDARD PLANS DATED MAY 2006

PLAN	PLAN TITLE
A 10A	ACRONYMS AND ABBREVIATIONS (A-L)
A 10B	ACRONYMS AND ABBREVIATIONS (M-Z)
B0-1	BRIDGE DETAILS
B0-5	BRIDGE DETAILS
B0-13	BRIDGE DETAILS
B2-3	16" AND 24" CAST-IN-DRILL HOLE CONC PILE
B3-1	RETAINING WALL TYPE 1
B6-21	JOINT SEAL MR=2"
B7-1	BOX GIRDER DETAILS
B7-7	DECK DRAIN TYPE D-3
B7-8	DECK DRAINAGE DETAILS
B7-11	UTILITY DETAILS
B11-68	CALIFORNIA ST-10 BRIDGE RAIL (1 OF 3)
B11-69	CALIFORNIA ST-10 BRIDGE RAIL (2 OF 3)
B11-70	CALIFORNIA ST-10 BRIDGE RAIL (3 OF 3)
ES-6B	LIGHTING STANDARDS TYPE 15 AND 21 BARRIER RAIL MOUNTED DETAILS
S-2	OVERHEAD SIGNS - TRUSS, SINGLE POST TYPE, POST TYPES II THROUGH IX

	BY	CHECKED
DESIGN	S. Hegazi	A. Alcantara
DETAILS	JFCasarino	S. Hegazi
QUANTITIES	S. Hegazi	M. Thach

STATE OF CALIFORNIA
DEPARTMENT OF TRANSPORTATION

DIVISION OF ENGINEERING SERVICES
STRUCTURE DESIGN
DESIGN BRANCH 4

BRIDGE NO. 34-0160G
POST MILE 9.18

N1 - S101 CONNECTOR

INDEX TO PLANS

STRUCTURES DESIGN DETAIL SHEET (ENGLISH) (REV. 10/25/05)

ORIGINAL SCALE IN INCHES FOR REDUCED PLANS 0 1 2 3

CU 04242
EA 163731

DISREGARD PRINTS BEARING EARLIER REVISION DATES → 12-18-08 4-21-09 5-2-09 5-18-09 5-21-09 5-28-09 7-14-09 9-22-09

SHEET 3 OF 44

FILE => 34-0160_03itp.add

USERNAME => tmikesi DATE PLOTTED => 25-SEP-2009 TIME PLOTTED => 09:51

DIST	COUNTY	ROUTE	POST MILES TOTAL PROJECT	SHEET No	TOTAL SHEETS
04	SF	101,1	9.2/9.8, 6.8/7.1	500	567

REGISTERED CIVIL ENGINEER 6-4-09 DATE

7-20-09
PLANS APPROVAL DATE

REGISTERED PROFESSIONAL ENGINEER AHMED M.M. IBRAHIM No. S 4865 Exp. 9-30-10 STRUCTURAL STATE OF CALIFORNIA

The State of California or its officers or agents shall not be responsible for the accuracy or completeness of electronic copies of this plan sheet.

7

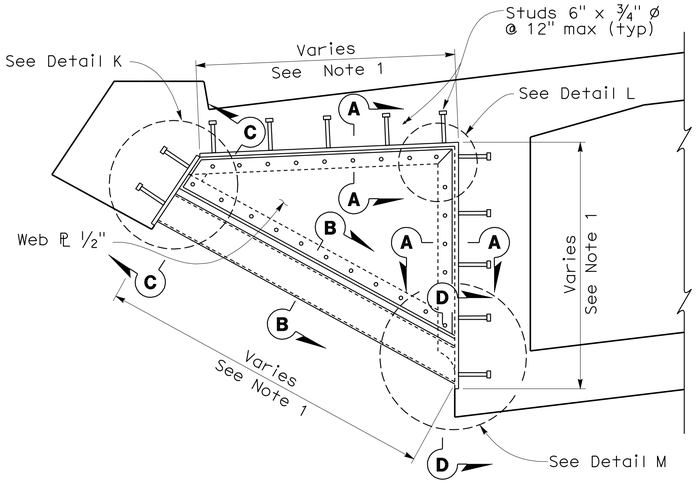

STEEL FIN TYPE A

¾" = 1'-0"
See Note 2

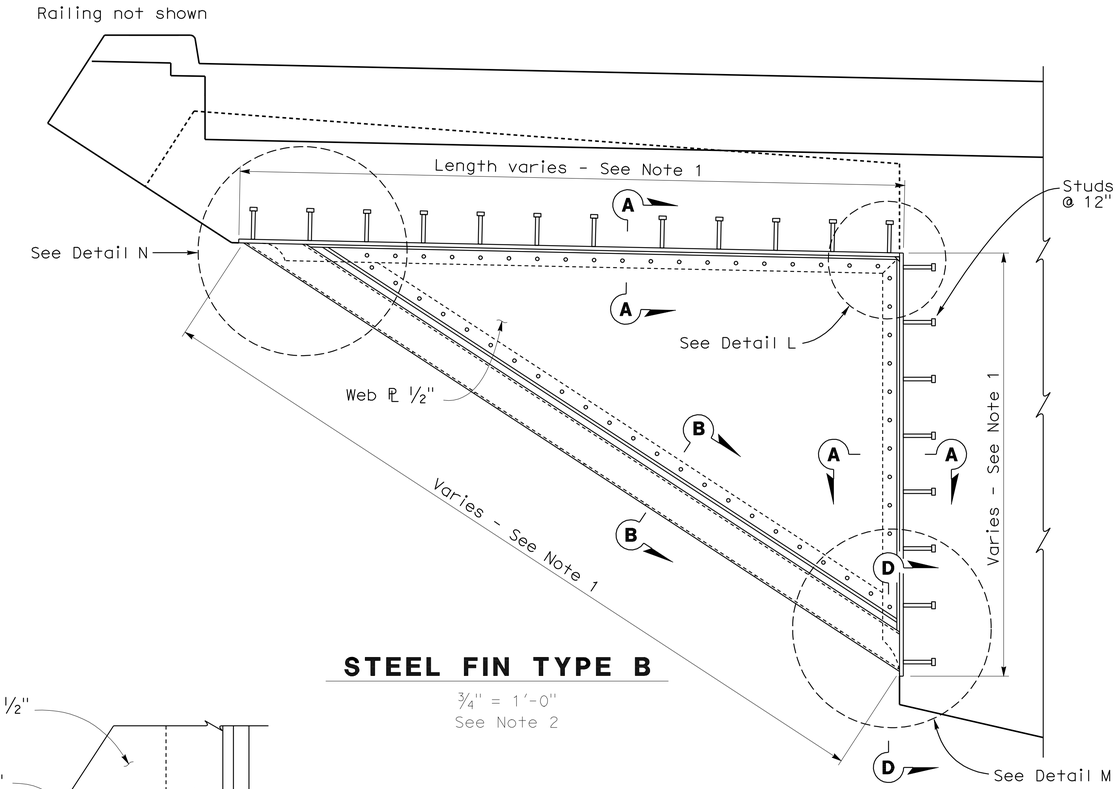

STEEL FIN TYPE B

¾" = 1'-0"
See Note 2

NOTES:

1. For overhang and exterior girder dimensions, see "TYPICAL SECTION NO. 1 & 2" and "GENERAL PLAN NO. 2" sheets
2. For Steel Fin layout, see "STEEL FIN LAYOUT" sheet.
3. For Sections A-A through E-E, and Detail N & P see "STEEL FIN DETAILS NO. 2" sheet.
4. Studs may be bent to clear prestressing cables.
5. No live loading or construction material storage shall be allowed on the overhang prior to the complete erection of the Steel Fins.
6. Use of temporary welded attachments to the web plates shall not be permitted at any stage of fabrication or construction.
7. Steel Fins shall be shop assembled and painted prior to shipping to bridge site.
8. Steel Fins shall be supported during transportation and erection such that no damages of the web plates occur.
9. All Web Plates shall be fabricated in one piece with no butt welds.
10. All bolt holes on web plates only shall have oversize holes ø = 13/16"
11. Bolt holes spacing shall be maximum 6" OC (Typ)

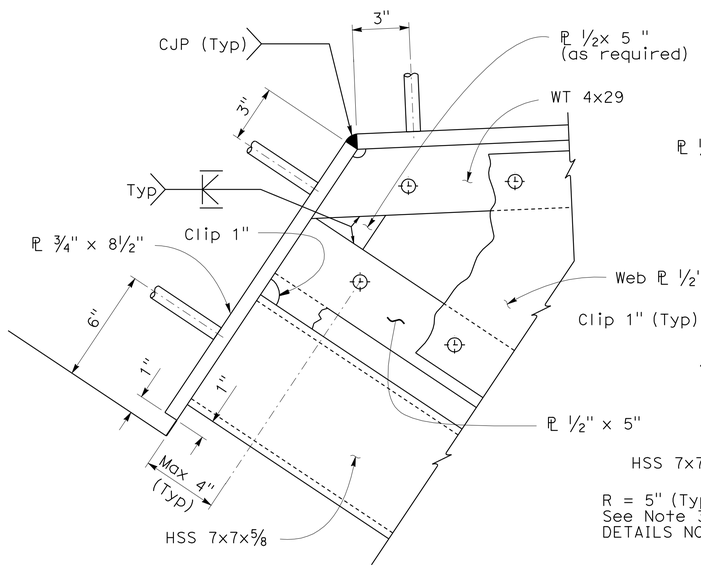

DETAIL K

No Scale

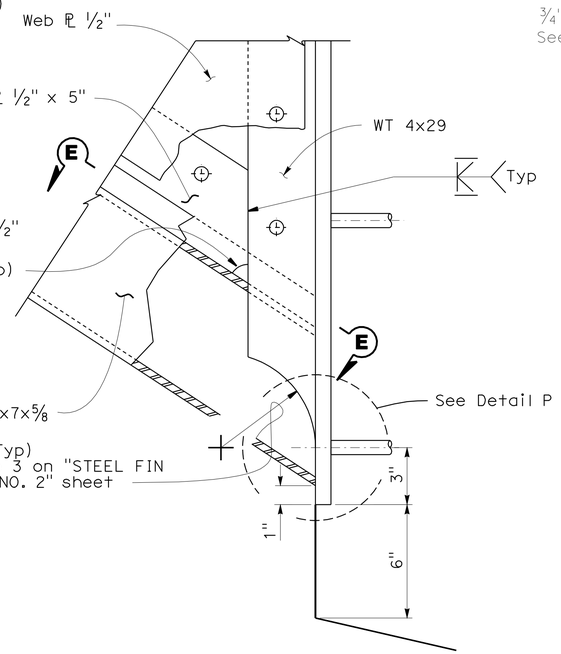

DETAIL M

No Scale

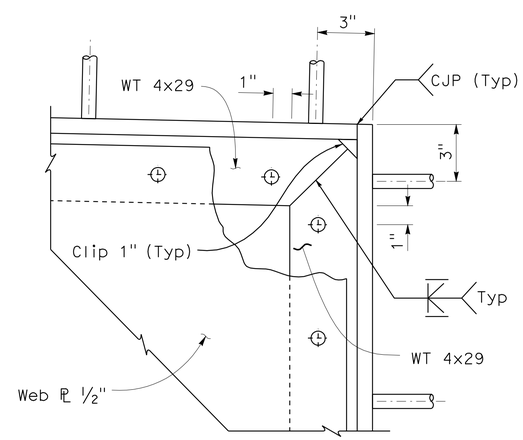

DETAIL L

No Scale

CONSTRUCTION SEQUENCE:

1. Completed Steel Fins subassemblies shall be preassembled in the shop prior to shipping and erecting in compliance with Section 55-3.16 "Assembly" of May 2006 Standard Specifications.
2. Steel Fins shall be erected in place prior to placement of concrete.
3. Caulk around the contact seams between the formwork and the Steel Fins.
4. Pour the bridge superstructure concrete.
5. Clean and apply final coat of paint to Steel Fins.
6. Contractor may submit alternative construction sequence to the Engineer for approval.

NOTE:
CONTRACTOR SHALL VERIFY ALL CONTROLLING FIELD DIMENSIONS BEFORE ORDERING OR FABRICATING ANY MATERIALS.

7 **REVISED PER ADDENDUM No. 7 DATED SEPTEMBER 25, 2009**

	BY	CHECKED
DESIGN	E.Thimmhardy	S. Hegazi
DETAILS	JFCasarino / J thorne	E.Thimmhardy
QUANTITIES	S. Hegazi	M. Thach

STATE OF CALIFORNIA
DEPARTMENT OF TRANSPORTATION

DIVISION OF ENGINEERING SERVICES
STRUCTURE DESIGN
DESIGN BRANCH 4

BRIDGE NO. 34-0160G
POST MILE 9.18

N1 - S101 CONNECTOR

STEEL FIN DETAILS NO. 1

STRUCTURES DESIGN DETAIL SHEET (ENGLISH) (REV. 10/25/05)

ORIGINAL SCALE IN INCHES FOR REDUCED PLANS 0 1 2 3

CU 04242
EA 163731

DISREGARD PRINTS BEARING EARLIER REVISION DATES

REVISION DATES: 3-28-09 5-18-09 5-18-09 5-19-09 5-29-09 5-26-09 6-12-09 7-17-09 9-18-09 9-22-09

SHEET 16 OF 44

FILE => 34-0160_16find1.add

USERNAME => trmikes1 DATE PLOTTED => 25-SEP-2009 TIME PLOTTED => 09:51

DIST	COUNTY	ROUTE	POST MILES TOTAL PROJECT	SHEET No	TOTAL SHEETS
04	SF	101,1	9.2/9.8, 6.8/7.1	501	567

REGISTERED CIVIL ENGINEER — DATE 6-4-09

7-20-09
PLANS APPROVAL DATE

The State of California or its officers or agents shall not be responsible for the accuracy or completeness of electronic copies of this plan sheet.

REGISTERED PROFESSIONAL ENGINEER — AHMED M.M. IBRAHIM — No. S 4865 — EXP. 9-30-10 — STRUCTURAL — STATE OF CALIFORNIA

7

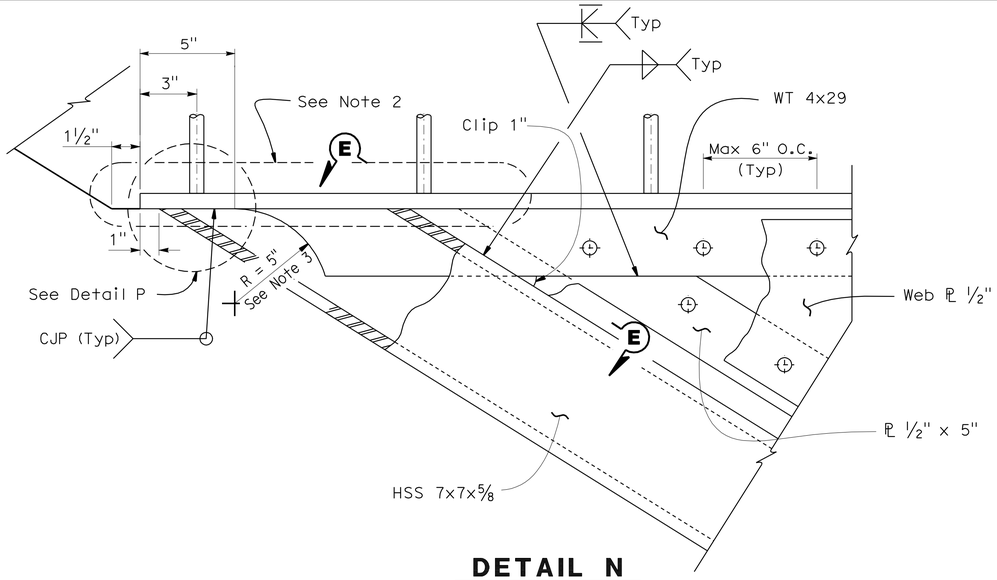

DETAIL N
No Scale

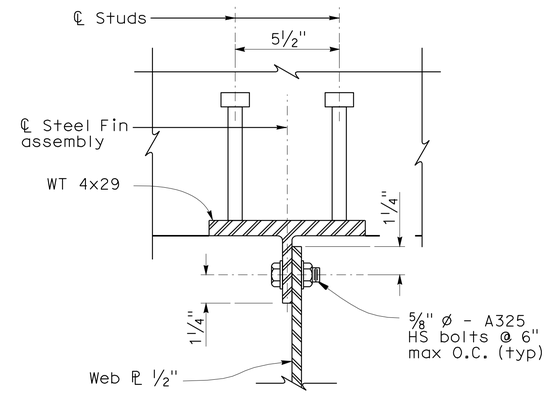

SECTION A-A
3" = 1'-0"

NOTES:

1. Weld sequence required to prevent distortions.
2. Profile of HSS 7x7x⅝ connection to WT 4x29 flange shall comply with "Figure 3.10 - Prequalified Joint Details for CJP Groove welds in Tubular T-, Y-, and K- Connections - Concave Improved Profile for Fatigue (see 3.13.4)" of AWS D1.1/D1.1M:2008.
3. Grind smooth in longitudinal (stress direction) Grind flush with the WT flange after WT 4x29 web removal.

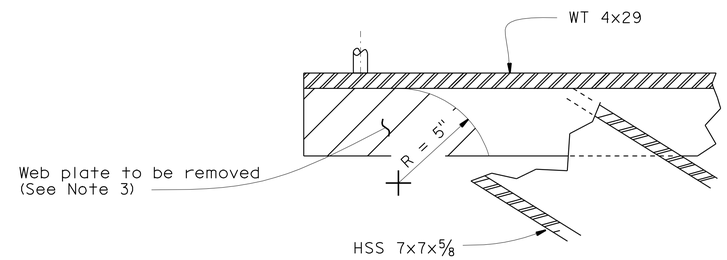

DETAIL P
No Scale

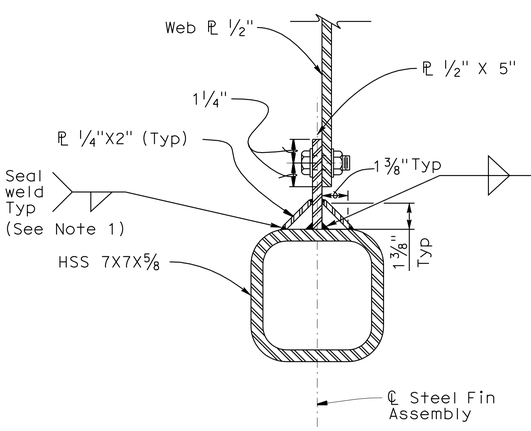

SECTION B-B
3" = 1'-0"

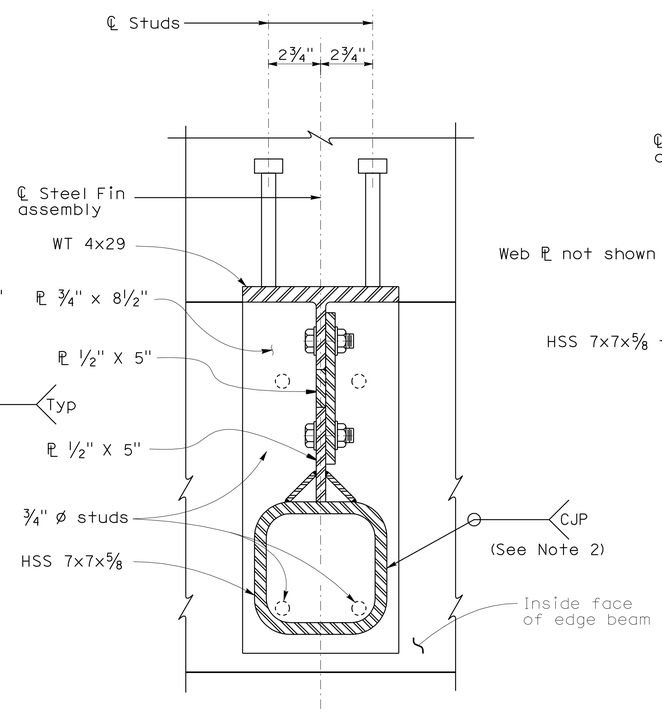

SECTION C-C
3" = 1'-0"

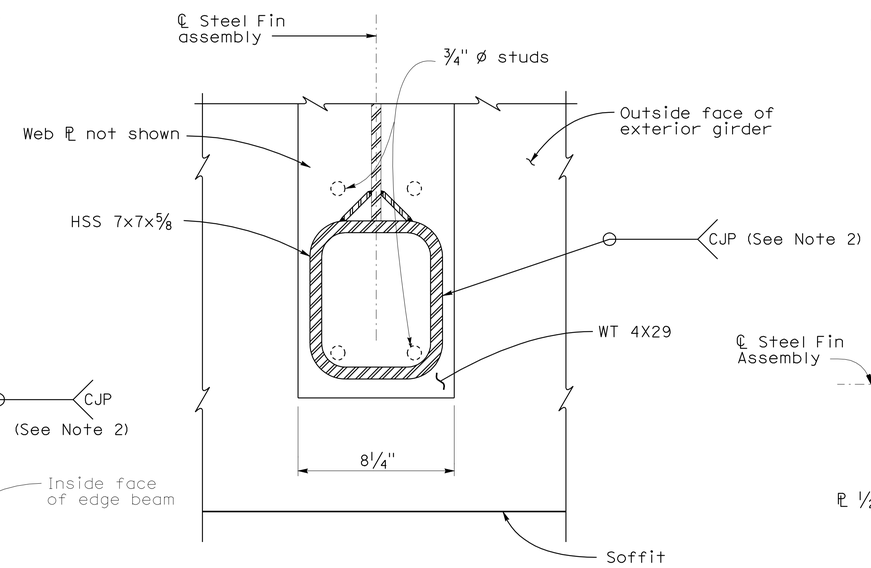

SECTION D-D
3" = 1'-0"

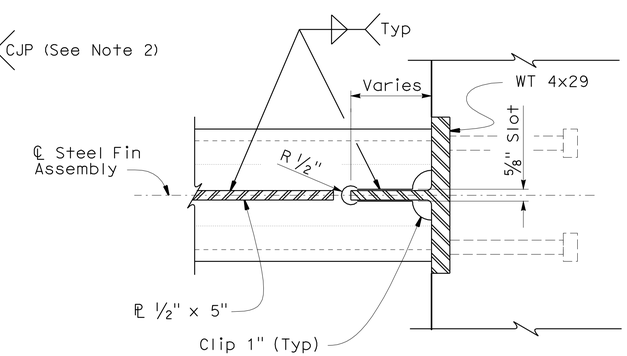

SECTION E-E
3" = 1'-0"

NOTE:
CONTRACTOR SHALL VERIFY ALL CONTROLLING FIELD DIMENSIONS BEFORE ORDERING OR FABRICATING ANY MATERIALS.

7 **REVISED PER ADDENDUM No. 7 DATED SEPTEMBER 25, 2009**

	BY	CHECKED
DESIGN	E.Thimmhardy	S. Hegazi
DETAILS	JFCasarino/J Thorne	E.Thimmhardy
QUANTITIES	S. Hegazi	M. Thach

STATE OF CALIFORNIA
DEPARTMENT OF TRANSPORTATION

DIVISION OF ENGINEERING SERVICES
STRUCTURE DESIGN
DESIGN BRANCH 4

BRIDGE NO. 34-0160G
POST MILE 9.18

N1 - S101 CONNECTOR
STEEL FIN DETAILS NO. 2

STRUCTURES DESIGN DETAIL SHEET (ENGLISH) (REV. 10/25/05)

ORIGINAL SCALE IN INCHES FOR REDUCED PLANS 0 1 2 3

CU 04242
EA 163731

DISREGARD PRINTS BEARING EARLIER REVISION DATES

REVISION DATES: 3-26-09 5-18-09 5-18-09 5-18-09 5-28-09 5-28-09 6-17-09 7-17-09 9-18-09 9-22-09

SHEET 17 OF 44

FILE => 34-0160_17find2.add

USERNAME => trmikest DATE PLOTTED => 25-SEP-2009 TIME PLOTTED => 09:51