DIST	COUNTY	ROUTE	POST MILES TOTAL PROJECT	SHEET No	TOTAL SHEETS
04	SF	101,1	9.2/9.8, 6.8/7.1	353	567

Ahmed Ibrahim 6-4-09
REGISTERED CIVIL ENGINEER DATE

7-20-09
PLANS APPROVAL DATE

REGISTERED PROFESSIONAL ENGINEER AHMED M M IBRAHIM No. S 4865 EXP. 9-30-10 STRUCTURAL STATE OF CALIFORNIA

The State of California or its officers or agents shall not be responsible for the accuracy or completeness of electronic copies of this plan sheet.

NOTE:
THE CONTRACTOR SHALL VERIFY ALL CONTROLLING FIELD DIMENSIONS BEFORE ORDERING OR FABRICATING ANY MATERIAL.

STANDARD PLANS DATED MAY 2006

PLAN	PLAN TITLE
A10A	ACRONYMS AND ABBREVIATIONS (A-L)
A10B	ACRONYMS AND ABBREVIATIONS (M-Z)
A62C	LIMITS OF PAYMENT FOR EXCAVATION AND BACKFILL-BRIDGE
T-3	TEMPORARY RAILING (TYPE K)
B0-1	BRIDGE DETAILS
B0-3	BRIDGE DETAILS
B0-5	BRIDGE DETAILS
B0-13	BRIDGE DETAILS
B2-3	16" AND 24" CAST-IN-DRILLED-HOLE CONCRETE PILE
B3-1	RETAINING WALL TYPE 1 - H = 4' THROUGH 30'
B3-8	RETAINING WALL TYPE 1 - H = 32' THROUGH 36'
B6-21	JOINT SEALS (MAXIMUM MOVEMENT RATING=2")
B7-1	BOX GIRDER DETAILS
B7-6	DECK DRAINS - TYPES D-1 AND D-2
B7-8	DECK DRAINAGE DETAILS
B7-11	UTILITY DETAILS
B8-5	CAST-IN-PLACE PRESTRESSED GIRDER DETAILS
B11-68	CALIFORNIA ST-10 BRIDGE RAIL (SHEET 1 OF 3)
B11-69	CALIFORNIA ST-10 BRIDGE RAIL (SHEET 2 OF 3)
B11-70	CALIFORNIA ST-10 BRIDGE RAIL (SHEET 3 OF 3)
ES-6A	LIGHTING STANDARDS TYPES 15, 21 AND 22
ES-6B	ELECTRICAL SYSTEMS (LIGHTING STANDARDS TYPES 15 AND 21, BARRIER RAIL MOUNTED DETAILS)
S-10	OVERHEAD SIGNS -TRUSS, TWO POST TYPE - BASE PLATE AND ANCHORAGE DETAILS

INDEX TO PLANS

SHEET NO.	PLANS
1	GENERAL PLAN NO. 1
2	GENERAL PLAN NO. 2
3	INDEX TO PLANS
4	GENERAL NOTES NO. 1
5	GENERAL NOTES NO. 2
6	DECK CONTOURS NO. 1
7	DECK CONTOURS NO. 2
8	FOUNDATION PLANS NO. 1
9	FOUNDATION PLANS NO. 2
10	FOUNDATION PLANS NO. 3
11	ABUTMENT 1 LAYOUT
12	ABUTMENT 1 DETAILS NO. 1
13	ABUTMENT 1 DETAILS NO. 2
14	ABUTMENT 1 DETAILS NO. 3
15	ABUTMENT 7 LAYOUT
16	ABUTMENT 7 DETAILS NO. 1
17	ABUTMENT 7 DETAILS NO. 2
18	ABUTMENT 7 DETAILS NO. 3
19	ABUTMENT 7 RETAINING WALL LAYOUT
20	ABUTMENT 7 RETAINING WALL DETAILS NO. 1
21	ABUTMENT 7 RETAINING WALL DETAILS NO. 2
22	ABUTMENT 7 RETAINING WALL DETAILS NO. 3
23	PTFE SPHERICAL BEARING DETAILS NO.1
24	PTFE SPHERICAL BEARING DETAILS NO.2
25	BENT 2 DETAILS NO. 1
26	BENT 2 DETAILS NO. 2
27	BENT 2 DETAILS NO. 3
28	BENT 3 DETAILS NO. 1
29	BENT 3 DETAILS NO. 2
30	BENT 3 DETAILS NO. 3
31	BENT 4 DETAILS NO. 1
32	BENT 4 DETAILS NO. 2
33	BENT 4 DETAILS NO. 3
34	BENT 5 DETAILS NO. 1 ← 33A-I BENT DETAILS ALTERNATIVE B
35	BENT 5 DETAILS NO. 2
36	BENT 5 DETAILS NO. 3
37	BENT 6 DETAILS NO. 1
38	BENT 6 DETAILS NO. 2
39	BENT 6 DETAILS NO. 3
40	COLUMN ISOLATION DETAILS
41	TYPICAL SECTION NO. 1
42	TYPICAL SECTION NO. 2
43	TYPICAL SECTION NO. 3
44	GIRDER LAYOUT NO. 1
45	GIRDER LAYOUT NO. 2
46	GIRDER LAYOUT NO. 3
47	ADDITIONAL TOP REINFORCEMENT
48	ADDITIONAL BOTTOM REINFORCEMENT
49	GIRDER DETAILS
50	ANCHOR BLISTER DETAIL
51	TRANSVERSE PT DETAILS NO.1
52	TRANSVERSE PT DETAILS NO.2
53	HINGE LAYOUT
54	"SB" HINGE DETAILS NO. 1
55	"SB" HINGE DETAILS NO. 2
56	"SB" HINGE DETAILS NO. 3
57	"SB" HINGE DETAILS NO. 4
58	"VT" HINGE DETAILS NO. 1
59	"VT" HINGE DETAILS NO. 2
60	"VT" HINGE DETAILS NO. 3
61	"VT" HINGE DETAILS NO. 4
62	HINGE SEISMIC JOINT DETAILS NO. 1
63	HINGE SEISMIC JOINT DETAILS NO. 2
64	HINGE SEISMIC JOINT DETAILS NO. 3
65	HINGE SEISMIC JOINT DETAILS NO. 4
66	HINGE SEISMIC JOINT DETAILS NO. 5
67	HINGE SEISMIC JOINT DETAILS NO. 6
68	ABUTMENT SEISMIC JOINT DETAILS NO. 1
69	ABUTMENT SEISMIC JOINT DETAILS NO. 2
70	ABUTMENT SEISMIC JOINT DETAILS NO. 3
71	ABUTMENT SEISMIC JOINT DETAILS NO. 4
72	ABUTMENT SEISMIC JOINT DETAILS NO. 5
73	ABUTMENT SEISMIC JOINT DETAILS NO. 6
74	TEMPORARY BRIDGE WIDENING
75	STEEL FIN LAYOUT
76	STEEL FIN DETAILS NO. 1
77	STEEL FIN DETAILS NO. 2
78	DRAINAGE DETAILS NO. 1
79	DRAINAGE DETAILS NO. 2
80	DRAINAGE DETAILS NO. 3
81	DRAINAGE DETAILS NO. 4
82	LADDER DETAILS
83	SOFFIT AND TEMPORARY DECK ACCESS
84	PEDESTAL DETAILS NO. 1
85	PEDESTAL DETAILS NO. 2
86	PEDESTAL DETAILS NO. 3
87	PEDESTAL DETAILS NO. 4
88	PEDESTAL DETAILS NO. 5
89	PEDESTAL DETAILS NO. 6
90	PEDESTAL DETAILS NO. 7
91	PEDESTAL DETAILS NO. 8
92	PEDESTAL DETAILS NO. 9
93	PEDESTAL DETAILS NO. 10
94	PEDESTAL DETAILS NO. 11
95	PEDESTAL DETAILS NO. 12
96	PEDESTAL DETAILS NO. 13
97	STRUCTURE APPROACH TYPE N(30S)
98	STRUCTURE APPROACH DRAINAGE DETAILS
99	LOG OF TEST BORINGS 1 OF 16
100	LOG OF TEST BORINGS 2 OF 16
101	LOG OF TEST BORINGS 3 OF 16
102	LOG OF TEST BORINGS 4 OF 16
103	LOG OF TEST BORINGS 5 OF 16
104	LOG OF TEST BORINGS 6 OF 16
105	LOG OF TEST BORINGS 7 OF 16
106	LOG OF TEST BORINGS 8 OF 16
107	LOG OF TEST BORINGS 9 OF 16
108	LOG OF TEST BORINGS 10 OF 16
109	LOG OF TEST BORINGS 11 OF 16
110	LOG OF TEST BORINGS 12 OF 16
111	LOG OF TEST BORINGS 13 OF 16
112	LOG OF TEST BORINGS 14 OF 16
113	LOG OF TEST BORINGS 15 OF 16
114	LOG OF TEST BORINGS 16 OF 16

STANDARD PLAN SHEET NO.
DETAIL NO.

1 REVISED PER ADDENDUM No. 1 DATED AUGUST 13, 2009

5 REVISED PER ADDENDUM No. 5 DATED SEPTEMBER 10, 2009

PRESIDIO VIADUCT (SB) #34-0157L
QUANTITIES (ALTERNATIVE A)

BRIDGE REMOVAL, LOCATION A	LUMP	SUM
STRUCTURE EXCAVATION (BRIDGE) (NATURALLY OCCURING ASBESTOS)	600	CY
STRUCTURE EXCAVATION (BRIDGE)(SERPENTINE)	125	CY
STRUCTURE EXCAVATION (RETAINING WALL) (NATURALLY OCCURING ASBESTOS)	260	CY
STRUCTURE EXCAVATION (TYPE Z-2) (AERIALLY DEPOSITED LEAD)	340	CY
STRUCTURE BACKFILL (BRIDGE)	430	CY
STRUCTURE BACKFILL (RETAINING WALL)	350	CY
~~(NATURALLY OCCURING ASBESTOS)~~		
144" PERMANENT STEEL CASING	485	LF
24" CAST-IN-DRILLED-HOLE CONCRETE PILING	918	LF
144" CAST-IN-DRILLED-HOLE CONCRETE PILING	485	LF
24" CAST-IN-DRILLED-HOLE CONCRETE PILING (ROCK SOCKET)	790	LF
102" CAST-IN-DRILLED-HOLE CONCRETE PILING (ROCK SOCKET)	45	LF
138" CAST-IN-DRILLED-HOLE CONCRETE PILING(ROCK SOCKET)	262	LF
PRESTRESSING CAST-IN-PLACE CONCRETE	LUMP	SUM
PRESTRESSING CAST-IN-PLACE CONCRETE (TRANSVERSE)	LUMP	SUM
PRESTRESSING CAST-IN-PLACE CONCRETE (HS BARS)	LUMP	SUM
STRUCTURAL CONCRETE, BRIDGE FOOTING	160	CY
STRUCTURAL CONCRETE, BRIDGE	9,900	CY
STRUCTURAL CONCRETE, RETAINING WALL	170	CY
STRUCTURAL CONCRETE, APPROACH SLAB (TYPE N)	60	CY
~~ARCHITECTURAL TREATMENT (2" THICK)~~	~~2,160~~	~~SQFT~~
PTFE SPHERICAL BEARING	12	EA
SEISMIC JOINT (ABUTMENT 1)	LUMP	SUM
SEISMIC JOINT (ABUTMENT 7)	LUMP	SUM
SEISMIC JOINT (HINGE 1)	LUMP	SUM
BAR REINFORCING STEEL (BRIDGE)	4,392,000	LB
BAR REINFORCING STEEL (RETAINING WALL)	13,000	LB
HEADED BAR REINFORCEMENT	14,000	EA
STRUCTURAL STEEL (BRIDGE)	680,000	LB
CLEAN AND PAINT STRUCTURAL STEEL	LUMP	SUM
ISOLATION CASING	18,700	LB
MISCELLANEOUS METAL (BRIDGE)	16,800	LB
BRIDGE DECK DRAINAGE SYSTEM	19,400	LB
BRIDGE DECK DRAINAGE SYSTEM (TEMPORARY)	25,000	LB
CALIFORNIA ST-10 BRIDGE RAIL (MODIFIED)	2,008	LF
ARCHITECTURAL TEXTURE (LIGHT BOARD FINISH)	980	SQFT

PRESIDIO VIADUCT (SB) #34-0157L
QUANTITIES (ALTERNATIVE B)

BRIDGE REMOVAL, LOCATION A	LUMP	SUM
STRUCTURE EXCAVATION (BRIDGE) (NATURALLY OCCURING ASBESTOS)	600	CY
STRUCTURE EXCAVATION (BRIDGE) (SERPENTINE)	125	CY
STRUCTURE EXCAVATION (RETAINING WALL) (NATURALLY OCCURING ASBESTOS)	260	CY
STRUCTURE EXCAVATION (TYPE Z-2) (AERIALLY DEPOSITED LEAD)	340	CY
STRUCTURE BACKFILL (BRIDGE)	430	CY
STRUCTURE BACKFILL (RETAINING WALL)	350	CY
123" PERMANENT STEEL CASING	485	LF
24" CAST-IN-DRILLED-HOLE CONCRETE PILING	918	LF
123" CAST-IN-DRILLED-HOLE CONCRETE PILING	485	LF
24" CAST-IN-DRILLED-HOLE CONCRETE PILING (ROCK SOCKET)	790	LF
102" CAST-IN-DRILLED-HOLE CONCRETE PILING (ROCK SOCKET)	45	LF
114" CAST-IN-DRILLED-HOLE CONCRETE PILING (ROCK SOCKET)	278	LF
138" CAST-IN-DRILLED-HOLE CONCRETE PILING(ROCK SOCKET)	60	LF
PRESTRESSING CAST-IN-PLACE CONCRETE	LUMP	SUM
PRESTRESSING CAST-IN-PLACE CONCRETE (TRANSVERSE)	LUMP	SUM
PRESTRESSING CAST-IN-PLACE CONCRETE (HS BARS)	LUMP	SUM
STRUCTURAL CONCRETE, BRIDGE FOOTING	160	CY
STRUCTURAL CONCRETE, BRIDGE	9,900	CY
STRUCTURAL CONCRETE, RETAINING WALL	170	CY
STRUCTURAL CONCRETE, APPROACH SLAB (TYPE N)	60	CY
ARCHITECTURAL TEXTURE (LIGHT BOARD FINISH)	980	SQFT
PTFE SPHERICAL BEARING	12	EA
SEISMIC JOINT (ABUTMENT 1)	LUMP	SUM
SEISMIC JOINT (ABUTMENT 7)	LUMP	SUM
SEISMIC JOINT (HINGE 1)	LUMP	SUM
BAR REINFORCING STEEL (BRIDGE)	4,100,000	LB
BAR REINFORCING STEEL (RETAINING WALL)	13,000	LB
HEADED BAR REINFORCEMENT	19,000	EA
STRUCTURAL STEEL (BRIDGE)	680,000	LB
CLEAN AND PAINT STRUCTURAL STEEL	LUMP	SUM
ISOLATION CASING	19,200	LB
MISCELLANEOUS METAL (BRIDGE)	18,400	LB
BRIDGE DECK DRAINAGE SYSTEM	19,400	LB
BRIDGE DECK DRAINAGE SYSTEM (TEMPORARY)	25,000	LB
CALIFORNIA ST-10 BRIDGE RAIL (MODIFIED)	2,008	LF

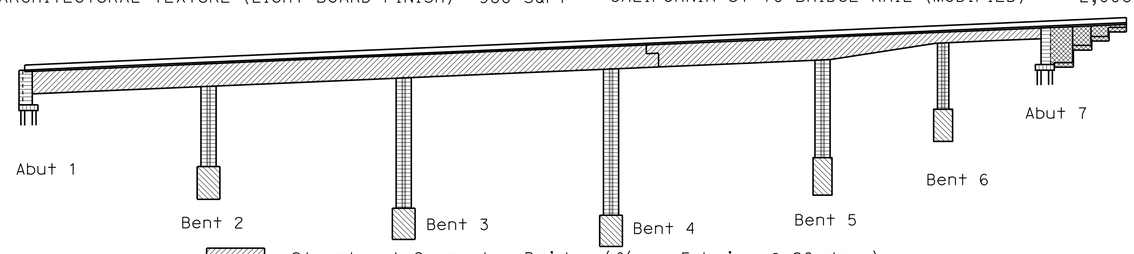

Structural Concrete, Bridge (f'c = 5 ksi : @ 28 days)
Structural Concrete, Bridge (f'c = 5 ksi : @ 28 days)
Structural Concrete, Bridge Footing (f'c = 4 ksi : @ 28 days)
Structural Concrete, Pile (f'c = 4 ksi : @ 28 days)
Structural Concrete, Retaining Wall (f'c = 4 ksi : @ 28 days)

CONCRETE STRENGTH AND TYPE LIMITS

No Scale

	BY	CHECKED
DESIGN	Q.Zhao/P.Norboe/R.Bromenschenkel	T. Skreslet
DETAILS	Jeff Thorne	Q.Zhao/P.Norboe/R.Bromenschenkel
QUANTITIES	A. Alcantara	J. Han

STATE OF CALIFORNIA
DEPARTMENT OF TRANSPORTATION

DIVISION OF ENGINEERING SERVICES
STRUCTURE DESIGN
DESIGN BRANCH 4

BRIDGE NO. 34-0157L
POST MILE 9.02

PRESIDIO VIADUCT - LEFT
INDEX TO PLANS

STRUCTURES DESIGN DETAIL SHEET (ENGLISH) (REV. 10/25/05)

ORIGINAL SCALE IN INCHES FOR REDUCED PLANS 0 1 2 3

CU 04242
EA 163731

DISREGARD PRINTS BEARING EARLIER REVISION DATES

REVISION DATES: ~~4-16-09~~ ~~7-1-09~~ ~~7-9-09~~ ~~9-2-09~~ 9-5-09 ~~5-24-09~~ ~~5-26-09~~ ~~5-30-09~~ ~~6-12-09~~

SHEET 3 OF 114

FILE => 34-0157l-aa-1tp.add

USERNAME => trlenard DATE PLOTTED => 10-SEP-2009 TIME PLOTTED => 05:11

DIST	COUNTY	ROUTE	POST MILES TOTAL PROJECT	SHEET No	TOTAL SHEETS
04	SF	101,1	9.2/9.8, 6.8/7.1	354	567

REGISTERED CIVIL ENGINEER 6-4-09 DATE

7-20-09
PLANS APPROVAL DATE

REGISTERED PROFESSIONAL ENGINEER AHMED M M IBRAHIM No. S 4865 EXP. 9-30-10 STRUCTURAL STATE OF CALIFORNIA

The State of California or its officers or agents shall not be responsible for the accuracy or completeness of electronic copies of this plan sheet.

GENERAL NOTES

LOAD AND RESISTANCE FACTOR DESIGN

DESIGN: AASHTO LRFD Bridge Design Specifications, 4th edition with the Interims through 2007 and the California Amendments, vDecember 2008; except that deck slab and retaining wall are designed using Bridge Design Specifications ('96 AASHTO w/Revisions by Caltrans)

SEISMIC DESIGN:
Caltrans Seismic Design Criteria (SDC), Version 1.4 dated June 2006 with enhancement as stated herein.

DEAD LOAD:
Includes 35 psf for future wearing surface.

LIVE LOADING:
HL93 and permit design load.

SEISMIC LOADING:
Recommended Acceleration Response Spectral curves for soil type B, C and D and Site Specific Response as shown. 5

REINFORCED CONCRETE:
fy = 60 ksi
f'c = 5.0 ksi
n = 8

Transverse Deck Slabs (Working Stress):
fs = 20 ksi
fc = 1.3 ksi
n = 10

STRUCTURAL STEEL: f_y = 50 ksi Unless Noted Otherwise

PLATES: ASTM A709, Grade 50

STRUCTURAL SHAPES: ASTM A500, Grade B

FABRICATION:
1. Welding of built up members shall comply with AASHTO/AWS D 1.5
2. Welding of tubular members shall comply with AWS D 1.1
3. Dimensional tolerance:

3a - Allowable variation in straightness of welded U-shape Steel Fin subassemblies shal not exceed 1/8" in 10' of total length.
3b - Allowable variations from flatness of Steel Fin Web Plate shall not exceed d/200 where "d" is the least panel dimension in inches. The out-of-plain variation from flatness of fin webs shall be determined in compliance with items 3.5.1.6 of AASHTO/AWS D 1.5

FASTENERS:
- All high-strength bolts, nuts and washers shall be zinc coated.
- Bolts - A 325; Nuts - A 563; Washers - F 436, unless noted otherwise.
- All bolted connections shall comply with RCSC "Specification for Structural Joints Using ASTM A 325 or A 490 Bolts"
- All bolts are ASTM A 325 High Strength slip-critical with threads excluded from shear planes.

PRESTRESSED CONCRETE:
Longitudinal: See Prestressing Notes on "GIRDER DETAILS" sheet.

Transverse: See Notes on "TRANSVERSE PT DETAILS NO. 1" sheet.

PILES: See "Pile Data Table" on "INDEX TO PLANS " sheet

EXPOSURE CONDITION: Marine Atmosphere

Minimum concrete cover (inches) unless shown otherwise on plan
- Footing & Pile Caps: 3"
- Walls, Columns & Cast -In-Place Piles: 3"
- Top surface of Deck Slab: 2½"
- Bottom surface of Deck Slab: 1½"
- Bottom Slab of Box Girder: 1½"
- Exposed faces of Box Girder Webs, Bent Caps, Diaphragms and Hinged Joints: 3"
- Curbs & Railings: 2½"
- Concrete surface not exposed to weather, soil or water
  Principal reinforcement: 2"
  Stirrups, Ties and Spirals: 1½"

PROJECT SPECIFIC SEISMIC DESIGN CRITERIA

PERFORMANCE MEASURES

Design Earthquake	Performance Level
Functionality Evaluation Earthquake (FEE)	Minimal damage Immediate service
Safety Evaluation Earthquake (SEE)	Repairable damage/No-Collapse Limited service

Safety Evaluation Earthquake (SEE)

Envelope of the median (50th percentile) deterministic Maximum Credible Earthquake (MCE) ARS and a probabilistic hazard ARS for an event with a mean return period of 1,000 years (i.e., 3% probability of exceedance in 75 years).

Functionality Evaluation Earthquake (FEE)

A probabilistic hazard ARS for an event with a mean return of 108 years (i.e., 50% probability of exceedance in 75 years).

Seismic Analysis and Evaluations

Displacement Demand:

Response Spectrum Analysis
Time History Analysis (Maximum of three responses)
Site Specific Reduction factor of 0.75 is allowed 5

Displacement Capacity:

Inelastic Static Analysis
Time History Analysis (Non-Linear)

ALLOWABLE CONCRETE STRAIN

Performance Goal	Allowable Concrete Strain
Functional performance	0.005
Safety/No-Collapse performance	67% ϵ_{cu} +

+ Ultimate Concrete Strain (ϵ_{cu}) considering confinement of the concrete core

ALLOWABLE STEEL STRAIN

Performance Goal	Reinforcement Size	Allowable Concrete Strain #
Functional performance	#10 Bars and Smaller	50% ϵ_{su}
	Bars Larger Than #10	50% ϵ_{su}
Safety/No-Collapse performance	#10 Bars and Smaller	67% ϵ_{su}
	Bars Larger Than #10	67% ϵ_{su}

Maximum Steel Strain #10 Bars and Smaller ϵ_{su} = 0.12

Maximum Steel Strain Bars Larger Than #10 ϵ_{su} = 0.09

5 **REVISED PER ADDENDUM No. 5 DATED SEPTEMBER 10, 2009**

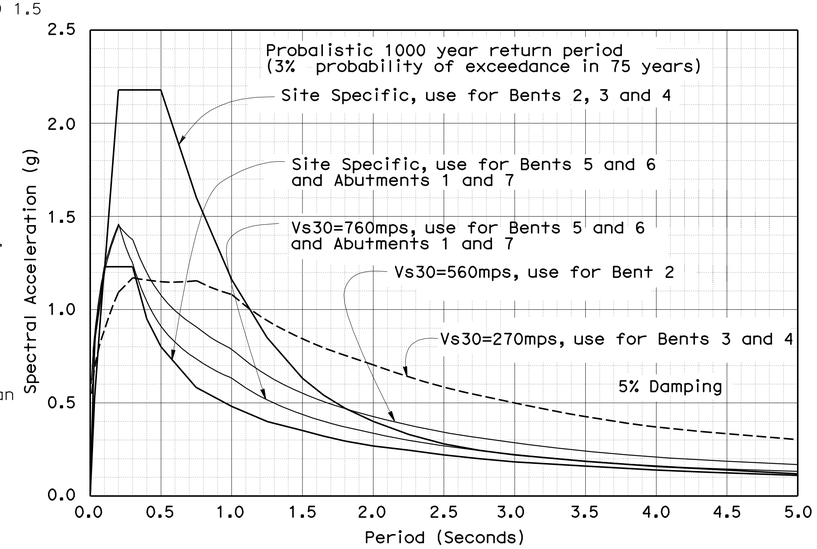

SEE ARS CURVE 5

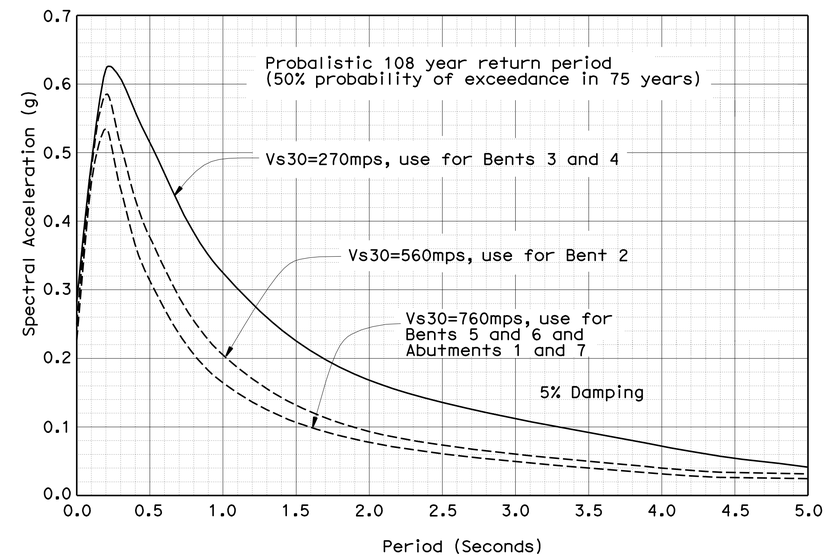

FEE ARS CURVE 5

DESIGN	BY A.M.M.Ibrahim	CHECKED F.Zayati	
DETAILS	BY Jeff Thorne	CHECKED A.M.M.Ibrahim	
QUANTITIES	BY A. Alcantara	CHECKED J. Han	

STATE OF CALIFORNIA
DEPARTMENT OF TRANSPORTATION

DIVISION OF ENGINEERING SERVICES
STRUCTURE DESIGN
DESIGN BRANCH 4

BRIDGE NO. 34-0157L
POST MILE 9.02

PRESIDIO VIADUCT - LEFT
GENERAL NOTES NO. 1

STRUCTURES DESIGN DETAIL SHEET (ENGLISH) (REV. 10/25/05)

ORIGINAL SCALE IN INCHES FOR REDUCED PLANS 0 1 2 3

CU 04242
EA 163731

DISREGARD PRINTS BEARING EARLIER REVISION DATES

REVISION DATES: 5-12-09, 5-18-09, 6-18-09, 7-3-09, 7-14-09, 7-13-09, 9-1-09, 9-8-09

SHEET 4 OF 114

FILE => 34-0157l-ab-gn.add

USERNAME => friehard DATE PLOTTED => 10-SEP-2009 TIME PLOTTED => 05:12

DIST	COUNTY	ROUTE	POST MILES TOTAL PROJECT	SHEET No	TOTAL SHEETS
04	SF	101,1	9.2/9.8, 6.8/7.1	355	567

REGISTERED CIVIL ENGINEER 6-4-09 DATE

7-20-09
PLANS APPROVAL DATE

REGISTERED PROFESSIONAL ENGINEER AHMED M M IBRAHIM No. S 4865 EXP. 9-30-10 STRUCTURAL STATE OF CALIFORNIA

The State of California or its officers or agents shall not be responsible for the accuracy or completeness of electronic copies of this plan sheet.

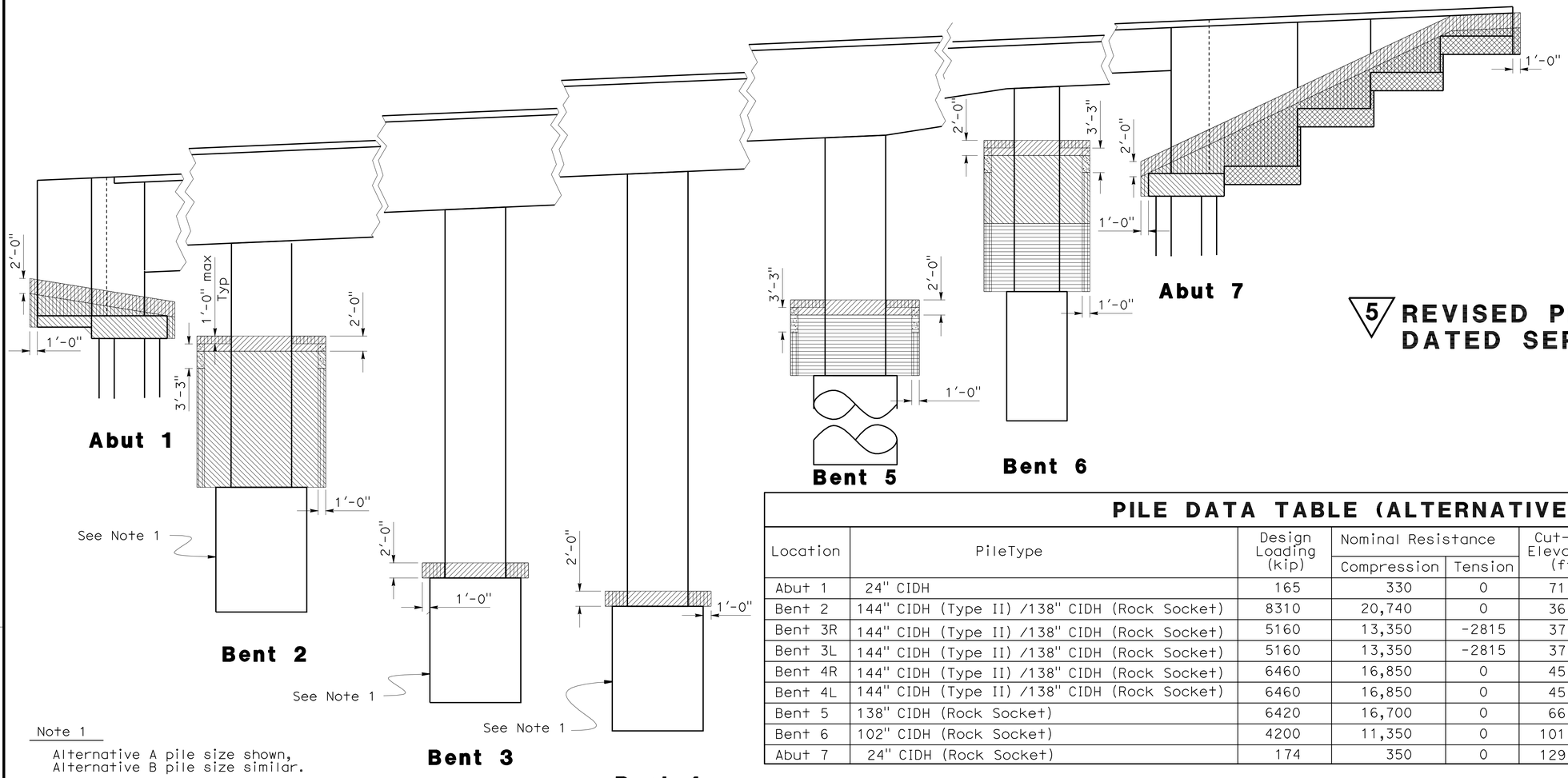

Note 1

Alternative A pile size shown,
Alternative B pile size similar.

5 REVISED PER ADDENDUM No. 5 DATED SEPTEMBER 10, 2009

PILE DATA TABLE (ALTERNATIVE A)

Location	PileType	Design Loading (kip)	Nominal Resistance		Cut-Off Elevation (ft)	Permanent Steel Casing Design Tip Elev (ft)	Design Tip Elevations (ft)	Specified Tip Elevations (ft)
			Compression	Tension				
Abut 1	24" CIDH	165	330	0	71.3	N/A	36(a)	36
Bent 2	144" CIDH (Type II) /138" CIDH (Rock Socket)	8310	20,740	0	36.0	-9	-54(a)	-54
Bent 3R	144" CIDH (Type II) /138" CIDH (Rock Socket)	5160	13,350	-2815	37.6	-121	-156(a)	-156
Bent 3L	144" CIDH (Type II) /138" CIDH (Rock Socket)	5160	13,350	-2815	37.6	-103	-146(a)	-146
Bent 4R	144" CIDH (Type II) /138" CIDH (Rock Socket)	6460	16,850	0	45.0	-30	-70(a)	-70
Bent 4L	144" CIDH (Type II) /138" CIDH (Rock Socket)	6460	16,850	0	45.0	-21	-60(a)	-60
Bent 5	138" CIDH (Rock Socket)	6420	16,700	0	66.0	N/A	6(c)	6
Bent 6	102" CIDH (Rock Socket)	4200	11,350	0	101.0	N/A	56(a)	56
Abut 7	24" CIDH (Rock Socket)	174	350	0	129.5	N/A	90(a)	90

PILE DATA TABLE (ALTERNATIVE B) 5

Location	PileType	Design Loading (kip)	Nominal Resistance		Cut-Off Elevation (ft)	Permanent Steel Casing Design Tip Elev (ft)	Design Tip Elevations (ft)	Specified Tip Elevations (ft)
			Compression	Tension				
Abut 1	24" CIDH	165	330	0	71.3	N/A	36(a)	36
Bent 2	123" CIDH (Type II) /114" CIDH (Rock Socket)	8350	20,800	0	36.0	-9	-70(a)	-70
Bent 3R	123" CIDH (Type II) /114" CIDH (Rock Socket)	5100	13,200	-2259	37.6	-121	-164(a)	-164
Bent 3L	123" CIDH (Type II) /114" CIDH (Rock Socket)	7080	13,200	-2259	37.6	-103	-154(a)	-154
Bent 4R	123" CIDH (Type II) /114" CIDH (Rock Socket)	7080	18,200	0	45.0	-30	-92(a)	-92
Bent 4L	123" CIDH (Type II) /114" CIDH (Rock Socket)	7080	18,200	0	45.0	-21	-82(a)	-82
Bent 5	138" CIDH (Rock Socket)	6470	16,800	0	70.0	N/A	10(c)	10
Bent 6	102" CIDH (Rock Socket)	4240	11,500	0	95.0	N/A	50(a)	50
Abut 7	24" CIDH (Rock Socket)	174	350	0	129.5	N/A	90(a)	90

(1) Design tip elevation is controlled by the following demands: (a) Compression, (b) Tension, (c) Lateral.
(2) The specified tip elevation shall not be raised above the design tip elevations.

Structure excavation (Type Z-2) (Aerially Deposited Lead)

Structure excavation (Bridge)(Naturally Occuring Asbestos)

Structure excavation (Bridge Serpentine)

Structure backfill
At contractors option, lean concrete can be substituded @ side of Isolation casing

Structure excavation, retaining wall (Naturally Occuring Asbestos)

Minor Concrete

STRUCTURE EXCAVATION/BACKFILL LIMITS OF PAYMENT (TYP)

A62C

No Scale

	BY	CHECKED
DESIGN	Q. Zhao	A. Alcantara
DETAILS	JFCasarino	Q. Zhao
QUANTITIES	A. Alcantara	J. Han

STATE OF CALIFORNIA
DEPARTMENT OF TRANSPORTATION

DIVISION OF ENGINEERING SERVICES
STRUCTURE DESIGN
DESIGN BRANCH 4

BRIDGE NO. 34-0157L
POST MILE 9.02

PRESIDIO VIADUCT - LEFT
GENERAL NOTES NO. 2

STRUCTURES DESIGN DETAIL SHEET (ENGLISH) (REV. 10/25/05)

ORIGINAL SCALE IN INCHES FOR REDUCED PLANS 0 1 2 3

CU 04242
EA 163731

DISREGARD PRINTS BEARING EARLIER REVISION DATES 6-3-09 9-2-09 9-8-09

REVISION DATES

SHEET 5 OF 114

FILE => 34-0157l-ab-xback.add

USERNAME => trienard DATE PLOTTED => 10-SEP-2009 TIME PLOTTED => 05:12

DIST	COUNTY	ROUTE	POST MILES TOTAL PROJECT	SHEET No	TOTAL SHEETS
04	SF	101,1	9.2/9.8, 6.8/7.1	369	567

REGISTERED CIVIL ENGINEER 6-4-09 DATE

7-20-09
PLANS APPROVAL DATE

REGISTERED PROFESSIONAL ENGINEER AHMED M M IBRAHIM No. S 4865 EXP. 9-30-10 STRUCTURAL STATE OF CALIFORNIA

The State of California or its officers or agents shall not be responsible for the accuracy or completeness of electronic copies of this plan sheet.

NOTE:
THE CONTRACTOR SHALL VERIFY ALL CONTROLLING FIELD DIMENSIONS BEFORE ORDERING OR FABRICATING ANY MATERIAL.

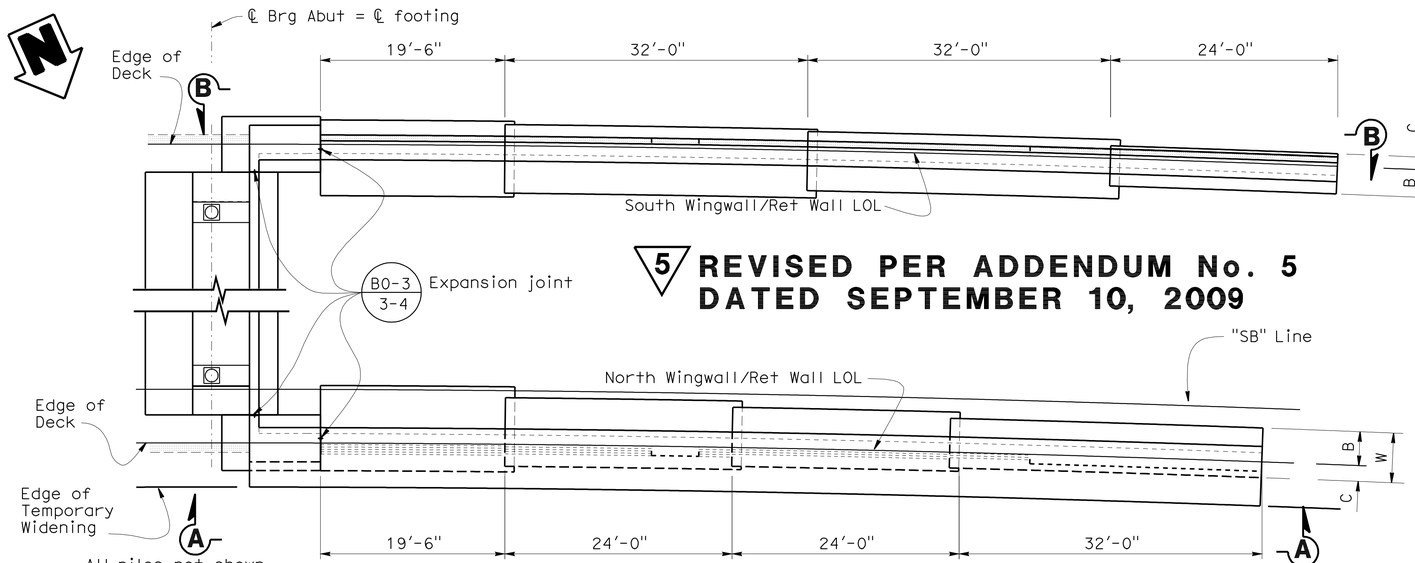

5 REVISED PER ADDENDUM No. 5 DATED SEPTEMBER 10, 2009

SB ABUTMENT 7 WINGWALL/RETAINING WALL PLAN

1/8" = 1'-0"

Design H	6'	8'	10'	12'	14'	16'
W	4'-3"	7'-1"	6'-3"	7'-3"	8'-0"	9'-0"
C	1'-4"	3'-5 7/8"	2'-0"	2'-4"	2'-7"	2'-11"
B	2'-11"	3'-7 1/8"	4'-3"	4'-11"	5'-5"	6'-1"
F	1'-4"	1'-4"	1'-4"	1'-4"	1'-6"	1'-6"
Batter	7/8:12	—	7/8:12	7/8:12	7/8:12	7/8:12
(b) bars	—	—	—	#5@16	#5@12	#5@12
(c) bars	#5@16	#5@16	#6@14	#6@8	#8@12	#9@12
(d) bars	#5@16	#5@16	#5@14	#5@8	#8@12	#9@12
Loading Case I — Toe Pressure ksf	1.9	2.1	2.5	2.8	4.3	5.1

Note: For (a), (b) and (c) bar lengths see elevation on (B3-1).

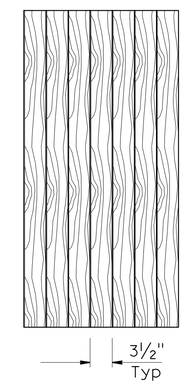

ELEVATION

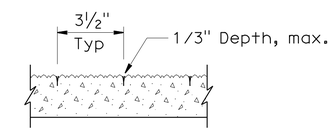

SECTION

5 ARCHITECTURAL TEXTURE (LIGHT BOARD FINISH)

No Scale

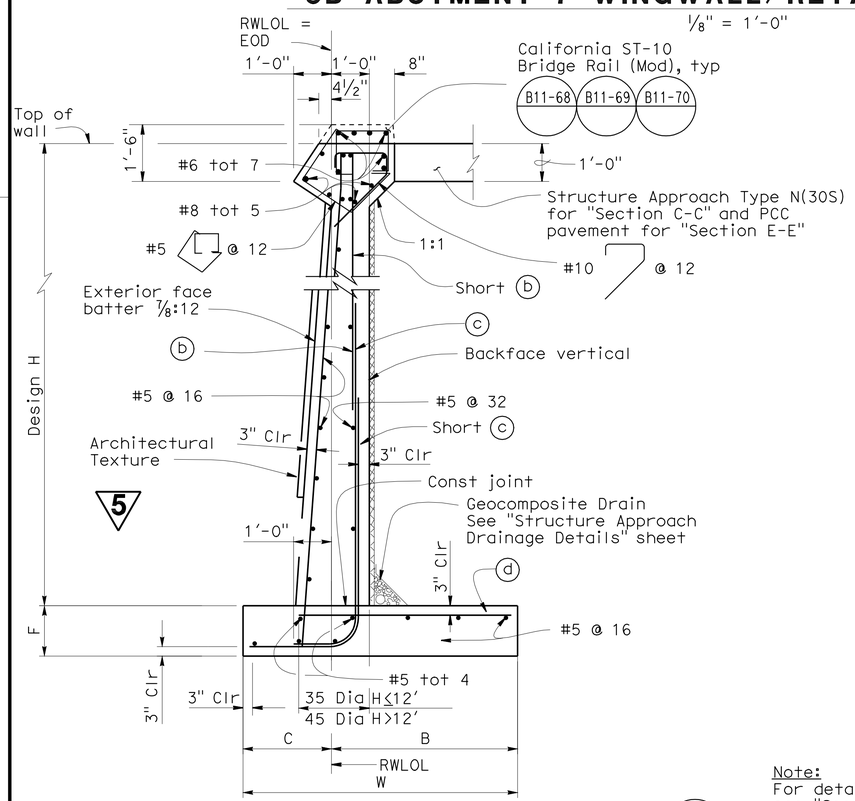

SECTION C-C AND SECTION E-E

(B0-3 / 3-1)

1/2" = 1'-0"

Note:
For details not shown see "Section C-C".

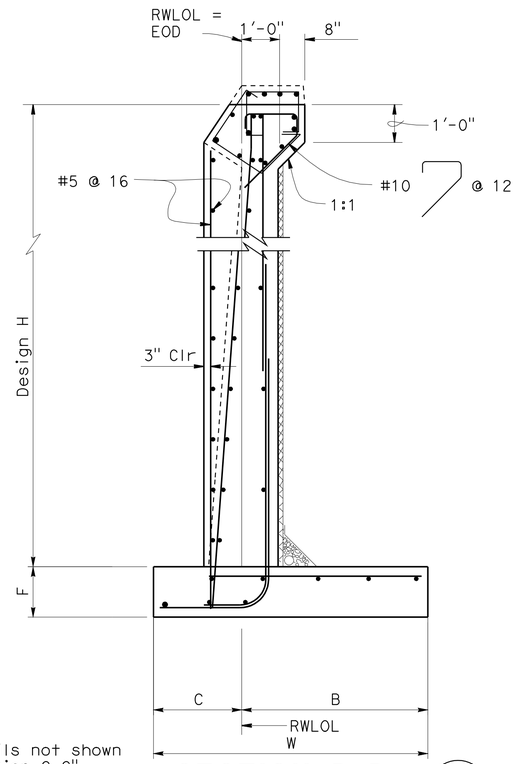

SECTION D-D

(B0-3 / 3-1)

1/2" = 1'-0"

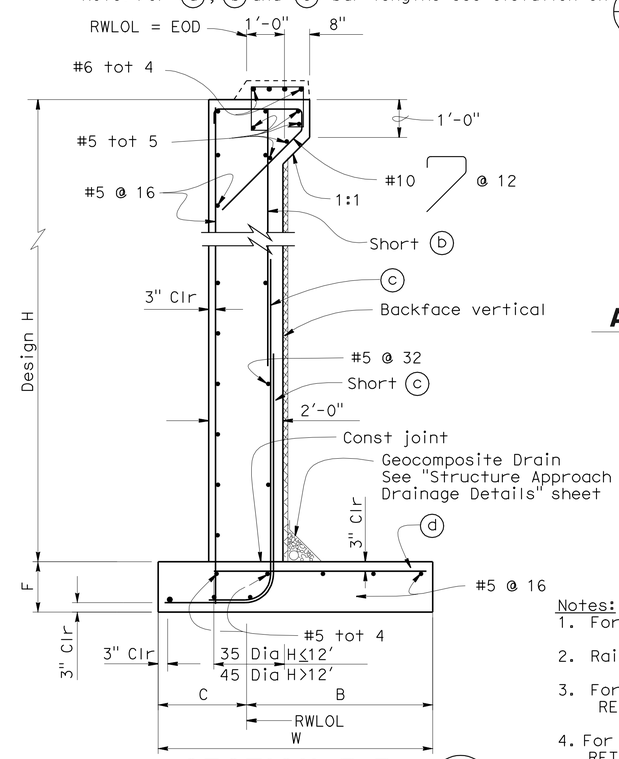

SECTION F-F

(B0-1 / 3-1)

1/2" = 1'-0"

Notes:
1. For details not shown see (B3-1 / -) and (B3-8)
2. Railing not shown.
3. For "View A-A" see 'ABUTMENT 7 RETAINING WALL DETALS NO. 1' sheet.
4. For "View B-B" see 'ABUTMENT 7 RETAINING WALL DETAILS NO. 2' sheet.

	BY	CHECKED
DESIGN	L.Barnard	A.Alcantara
DETAILS	Marvin Lane	L.Barnard
QUANTITIES	A. Alcantara	J. Han

STATE OF CALIFORNIA
DEPARTMENT OF TRANSPORTATION

DIVISION OF ENGINEERING SERVICES
STRUCTURE DESIGN
DESIGN BRANCH 4

BRIDGE NO. 34-0157L
POST MILE 9.02

PRESIDIO VIADUCT - LEFT
ABUTMENT 7 RETAINING WALL LAYOUT

STRUCTURES DESIGN DETAIL SHEET (ENGLISH) (REV. 10/25/05)

ORIGINAL SCALE IN INCHES FOR REDUCED PLANS 0 1 2 3

CU 04242
EA 163731

DISREGARD PRINTS BEARING EARLIER REVISION DATES

REVISION DATES: 3-23-09 5-18-09 5-28-09 6-3-09 6-11-09 6-18-09 9-6-09

SHEET 19 OF 114

FILE => 34-0157l-b-retwalldts01.add

USERNAME => friehard DATE PLOTTED => 10-SEP-2009 TIME PLOTTED => 05:12

5 REVISED PER ADDENDUM No. 5 DATED SEPTEMBER 10, 2009

DIST	COUNTY	ROUTE	POST MILES TOTAL PROJECT	SHEET No	TOTAL SHEETS
04	SF	101,1	9.2/9.8, 6.8/7.1	370	567

REGISTERED CIVIL ENGINEER 6-4-09 DATE

7-20-09
PLANS APPROVAL DATE

REGISTERED PROFESSIONAL ENGINEER AHMED M M IBRAHIM No. S 4865 EXP. 9-30-10 STRUCTURAL STATE OF CALIFORNIA

The State of California or its officers or agents shall not be responsible for the accuracy or completeness of electronic copies of this plan sheet.

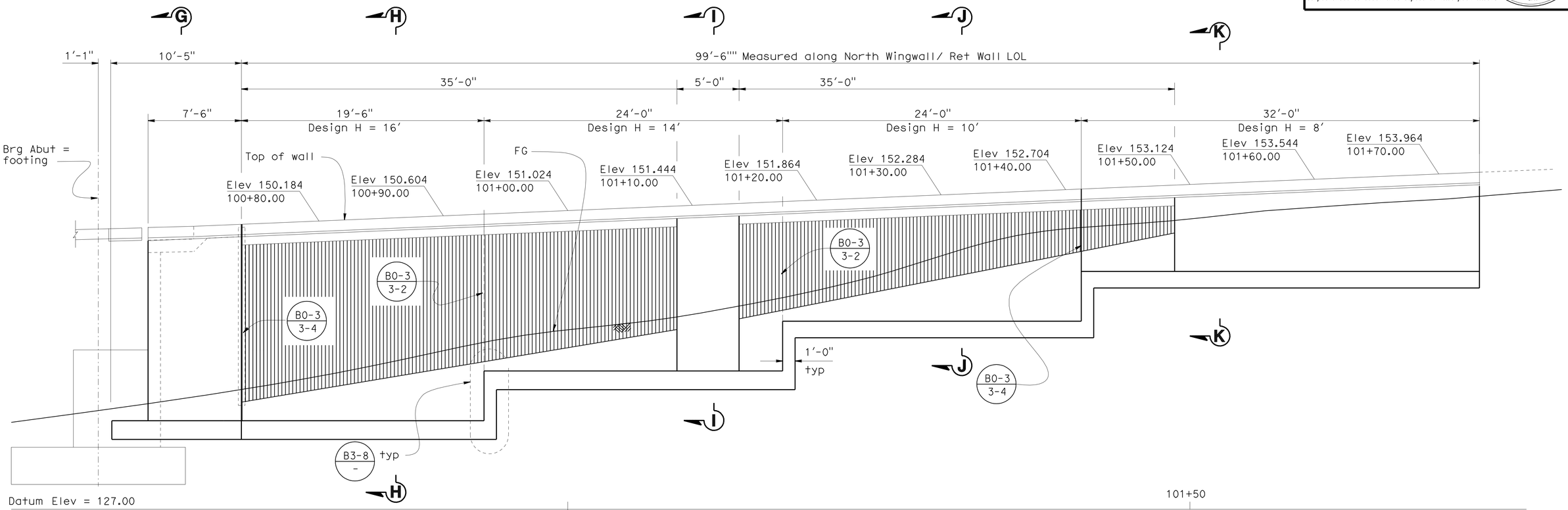

VIEW A-A

1/4" = 1'-0"

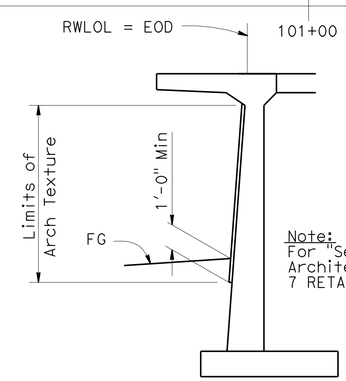

Note:
For "Section" and "Elevation" of Architectural Texture, see 'ABUTMENT 7 RETAINING WALL LAYOUT' sheet

SECTION
RETAINING WALL ARCHITECTURAL TEXTURE

1/4" = 1'-0"

Notes:
1. For details not shown see B3-1 - and B3-8 -
2. Railing not shown.
3. For "Section G-G", "Section H-H", "Section I-I", "Section J-J" and "Section K-K" see "ABUTMENT 7 RETAINING WALL DETAILS NO. 3" sheet

Denotes limits of Architectural Texture (Light Board Finish)

NOTE:
THE CONTRACTOR SHALL VERIFY ALL CONTROLLING FIELD DIMENSIONS BEFORE ORDERING OR FABRICATING ANY MATERIAL.

	BY	CHECKED
DESIGN	L.Barnard	A.Alcantara
DETAILS	Marvin Lane	L.Barnard
QUANTITIES	A. Alcantara	J. Han

STATE OF CALIFORNIA
DEPARTMENT OF TRANSPORTATION

DIVISION OF ENGINEERING SERVICES
STRUCTURE DESIGN
DESIGN BRANCH 4

BRIDGE NO. 34-0157L
POST MILE 9.02

PRESIDIO VIADUCT - LEFT
ABUTMENT 7 RETAINING WALL DETAILS NO. 1

STRUCTURES DESIGN DETAIL SHEET (ENGLISH) (REV. 10/25/05)

ORIGINAL SCALE IN INCHES FOR REDUCED PLANS 0 1 2 3

CU 04242
EA 163731

DISREGARD PRINTS BEARING EARLIER REVISION DATES

REVISION DATES: 3-23-09 5-14-09 5-18-09 5-20-09 6-3-09 6-3-09 6-18-09 9-5-09

SHEET 20 OF 114

FILE => 34-0157l-b-retwalldts02.add

USERNAME => trienard DATE PLOTTED => 10-SEP-2009 TIME PLOTTED => 05:12

5 REVISED PER ADDENDUM No. 5 DATED SEPTEMBER 10, 2009

DIST	COUNTY	ROUTE	POST MILES TOTAL PROJECT	SHEET No	TOTAL SHEETS
04	SF	101,1	9.2/9.8, 6.8/7.1	371	567

REGISTERED CIVIL ENGINEER 6-4-09 DATE

7-20-09
PLANS APPROVAL DATE

REGISTERED PROFESSIONAL ENGINEER AHMED M M IBRAHIM No. S 4865 EXP. 9-30-10 STRUCTURAL STATE OF CALIFORNIA

The State of California or its officers or agents shall not be responsible for the accuracy or completeness of electronic copies of this plan sheet.

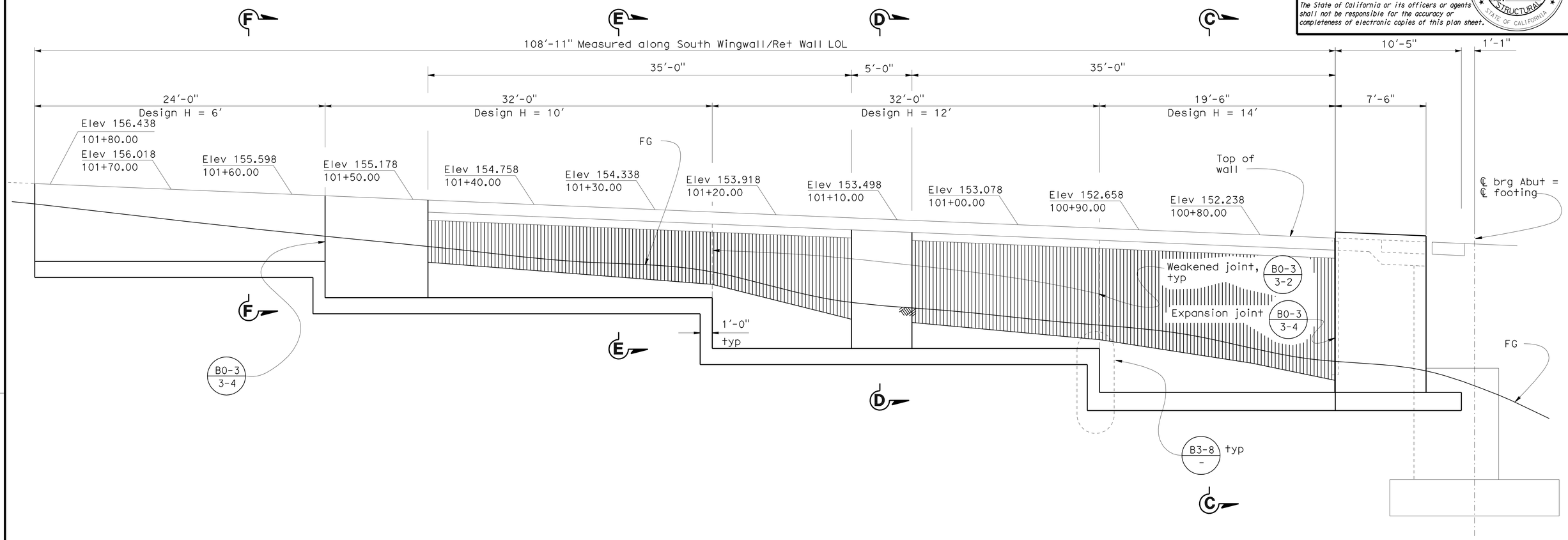

VIEW B-B

1/4" = 1'-0"

Note:
For "Section" and "Elevation" of Architectural Texture, see 'ABUTMENT 7 RETAINING WALL LAYOUT' sheet

SECTION

RETAINING WALL ARCHITECTURAL TEXTURE

1/4" = 1'-0"

NOTE:
THE CONTRACTOR SHALL VERIFY ALL CONTROLLING FIELD DIMENSIONS BEFORE ORDERING OR FABRICATING ANY MATERIAL.

Notes:
1. For details not shown see B3-1 - and B3-8 -
2. Railing not shown.
3. For "Section C-C", "Section D-D", "Section E-E" and "Section F-F" see 'ABUTMENT 7 RETAINING WALL LAYOUT' sheet.

Denotes limits of Architectural Texture (Light Board Finish)

	BY	CHECKED
DESIGN	L. Barnard	A. Alcantara
DETAILS	Marvin Lane	L. Barnard
QUANTITIES	A. Alcantara	J. Han

STATE OF CALIFORNIA
DEPARTMENT OF TRANSPORTATION

DIVISION OF ENGINEERING SERVICES
STRUCTURE DESIGN
DESIGN BRANCH 4

BRIDGE NO. 34-0157L
POST MILE 9.02

PRESIDIO VIADUCT - LEFT

ABUTMENT 7 RETAINING WALL DETAILS NO. 2

STRUCTURES DESIGN DETAIL SHEET (ENGLISH) (REV. 10/25/05)

ORIGINAL SCALE IN INCHES FOR REDUCED PLANS 0 1 2 3

CU 04242
EA 163731

DISREGARD PRINTS BEARING EARLIER REVISION DATES

REVISION DATES: 5-15-09 5-16-09 5-18-09 6-3-09 9-5-09

SHEET 21 OF 114

FILE => 34-0157l-b-retwalldts03.dgn

USERNAME => trlenard DATE PLOTTED => 10-SEP-2009 TIME PLOTTED => 05:12

DIST	COUNTY	ROUTE	POST MILES TOTAL PROJECT	SHEET No	TOTAL SHEETS
04	SF	101,1	9.2/9.8, 6.8/7.1	372	567

REGISTERED CIVIL ENGINEER 6-4-09 DATE

7-20-09
PLANS APPROVAL DATE

REGISTERED PROFESSIONAL ENGINEER AHMED M M IBRAHIM No. S 4865 EXP. 9-30-10 STRUCTURAL STATE OF CALIFORNIA

The State of California or its officers or agents shall not be responsible for the accuracy or completeness of electronic copies of this plan sheet.

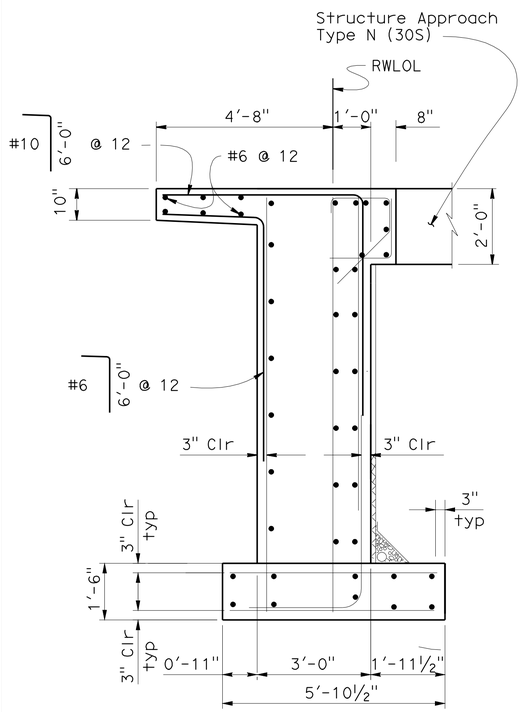

SECTION G-G (B0-3 / 3-1)
½" = 1'-0"

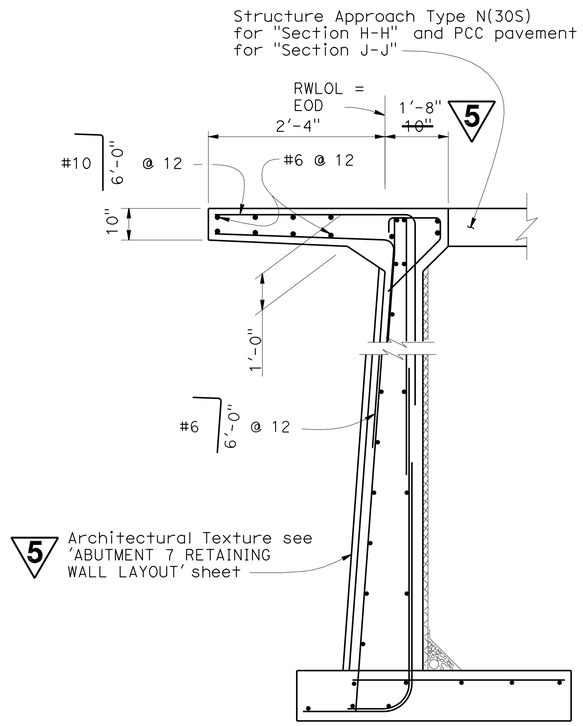

Note:
For details not shown see "Section E-E And Section E-E" on 'ABUTMENT 7 RETAINING WALL LAYOUT' sheet.

SECTION H-H & SECTION J-J (B0-3 / 3-1)
½" = 1'-0"

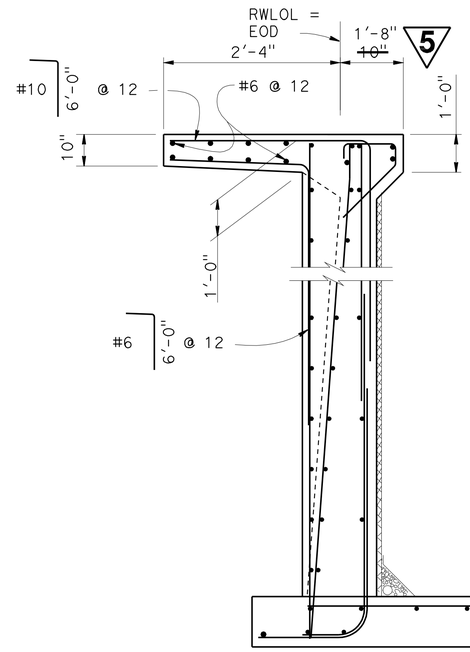

Note:
For details not shown see "Section D-D" on 'ABUTMENT 7 RETAINING WALL LAYOUT' sheet.

SECTION I-I (B0-3 / 3-1)
½" = 1'-0"

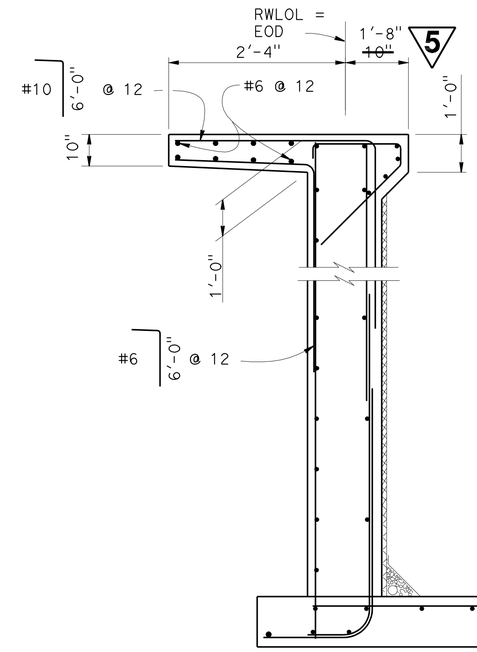

Note:
For details not shown see "Section F-F" on 'ABUTMENT 7 RETAINING WALL LAYOUT' sheet.

SECTION K-K (B0-3 / 3-1)
½" = 1'-0"

NOTE:
THE CONTRACTOR SHALL VERIFY ALL CONTROLLING FIELD DIMENSIONS BEFORE ORDERING OR FABRICATING ANY MATERIAL.

5 **REVISED PER ADDENDUM No. 5 DATED SEPTEMBER 10, 2009**

Notes:
1. For details not shown see (B3-1 / -) and (B3-8)
2. Railing not shown.

DESIGN	BY L. Barnard	CHECKED A. Alcantara	
DETAILS	BY Marvin Lane	CHECKED L. Barnard	
QUANTITIES	BY A. Alcantara	CHECKED J. Han	

STATE OF CALIFORNIA
DEPARTMENT OF TRANSPORTATION

DIVISION OF ENGINEERING SERVICES
STRUCTURE DESIGN
DESIGN BRANCH 4

BRIDGE NO. 34-0157L
POST MILE 9.02

PRESIDIO VIADUCT - LEFT
ABUTMENT 7 RETAINING WALL DETAILS NO. 3

STRUCTURES DESIGN DETAIL SHEET (ENGLISH) (REV. 10/25/05)

ORIGINAL SCALE IN INCHES FOR REDUCED PLANS 0 1 2 3

CU 04242
EA 163731

DISREGARD PRINTS BEARING EARLIER REVISION DATES

REVISION DATES: 5-15-09 5-18-09 5-18-09 6-3-09

SHEET 22 OF 114

FILE => 34-0157l-b-retwalldts04.add

USERNAME => frlenard DATE PLOTTED => 10-SEP-2009 TIME PLOTTED => 05:12

DIST	COUNTY	ROUTE	POST MILES TOTAL PROJECT	SHEET No	TOTAL SHEETS
04	SF	101,1	9.2/9.8, 6.8/7.1	375	567

REGISTERED CIVIL ENGINEER 6-4-09 DATE

7-20-09
PLANS APPROVAL DATE

REGISTERED PROFESSIONAL ENGINEER AHMED M M IBRAHIM No. S 4865 Exp. 9-30-10 STRUCTURAL STATE OF CALIFORNIA

The State of California or its officers or agents shall not be responsible for the accuracy or completeness of electronic copies of this plan sheet.

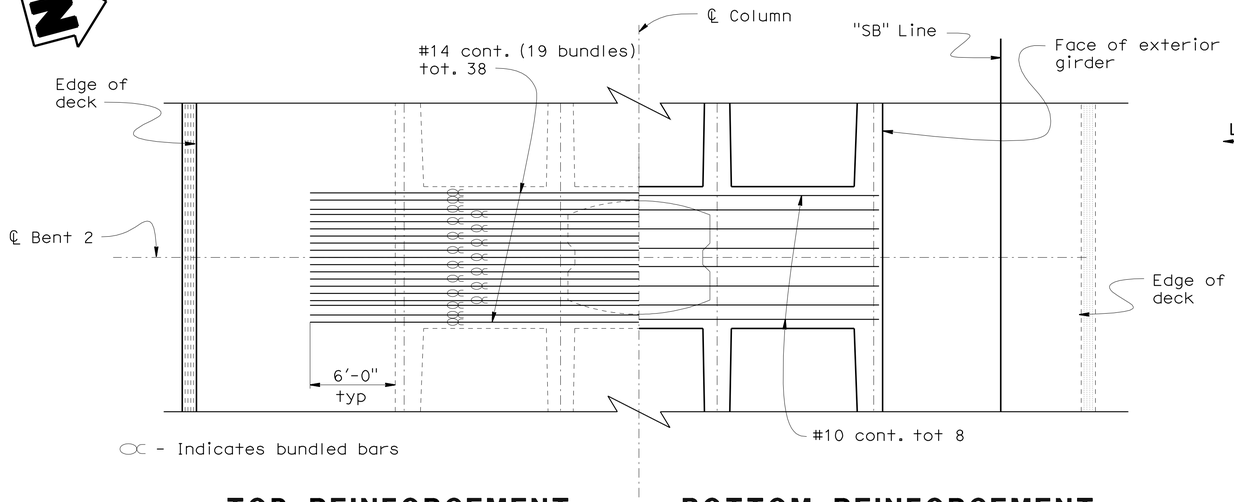

TOP REINFORCEMENT **BOTTOM REINFORCEMENT**

BENT CAP PLAN

3/16" = 1'-0"

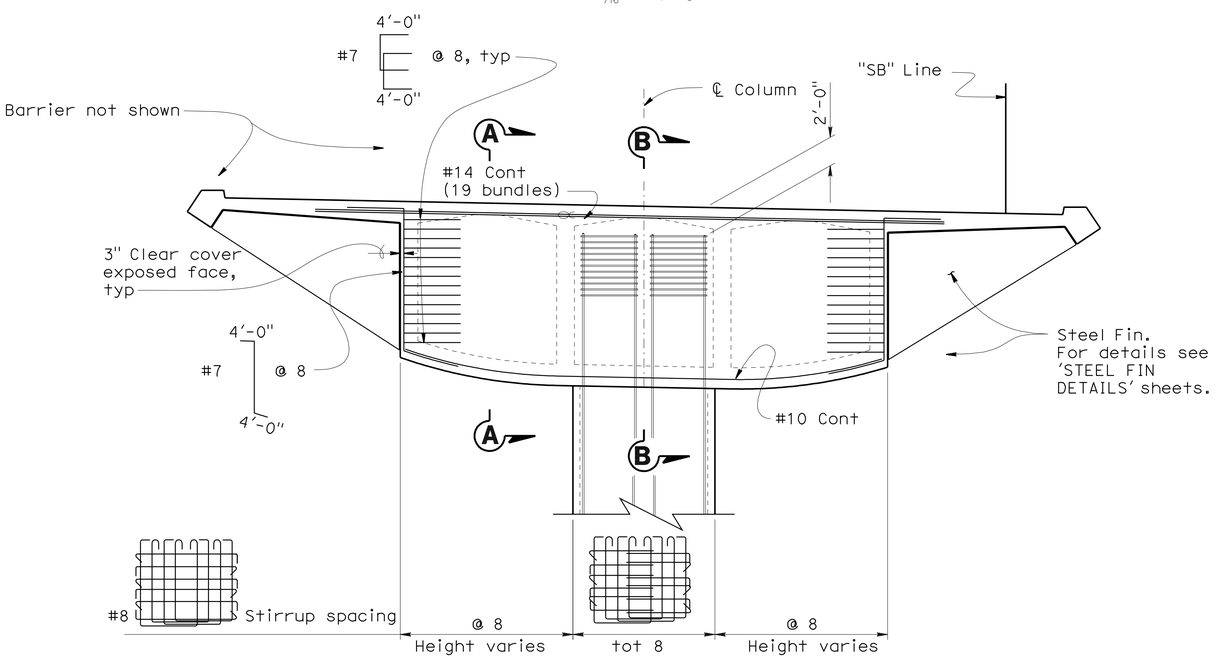

BENT CAP ELEVATION

3/16" = 1'-0"

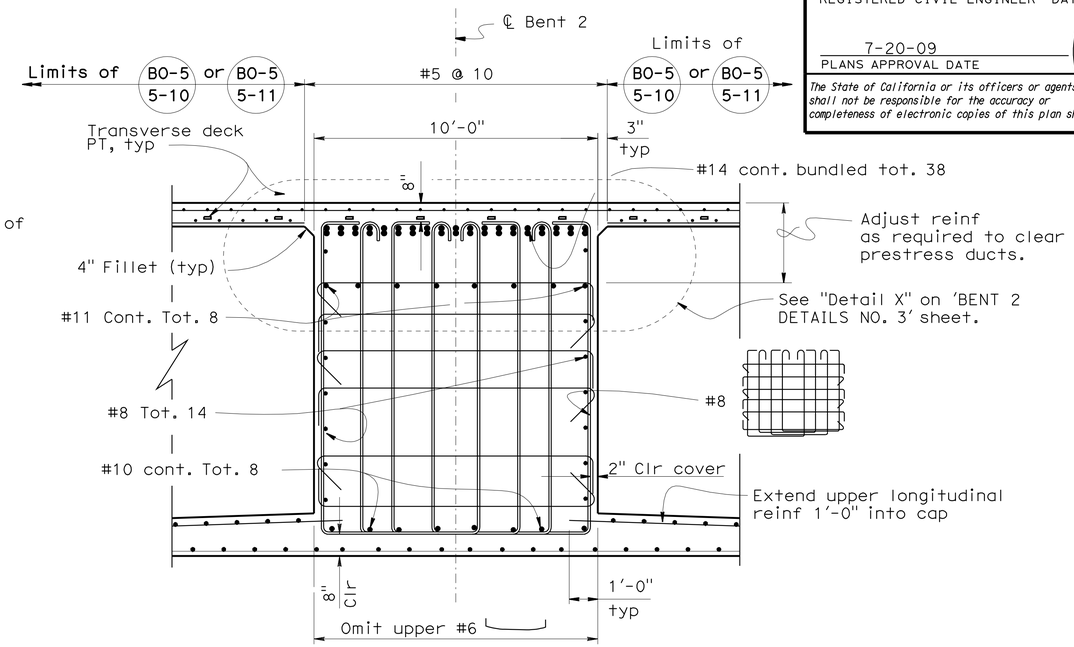

SECTION A-A

3/8" = 1'-0"

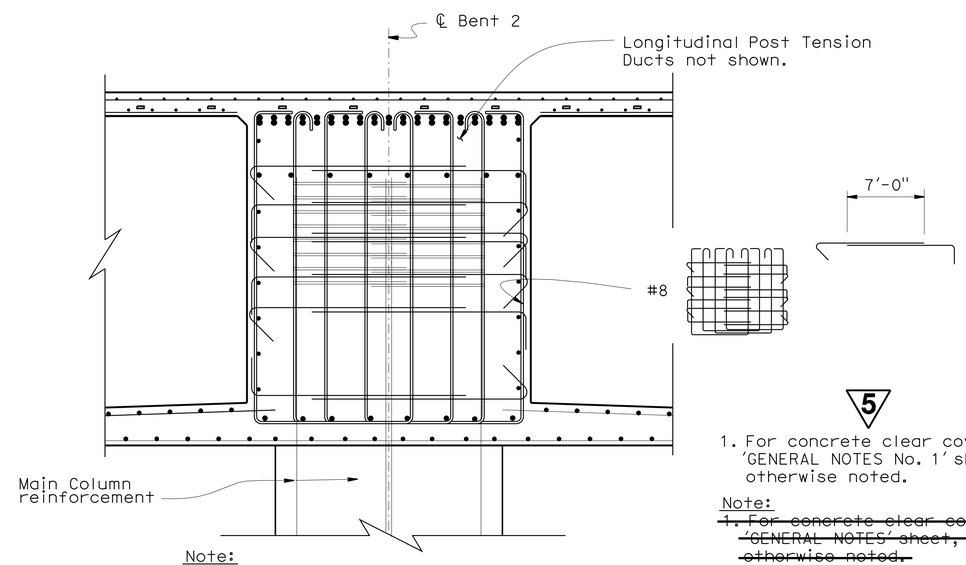

Note:
For details not shown see "Section A-A".

SECTION B-B

3/8" = 1'-0"

NOTE:
THE CONTRACTOR SHALL VERIFY ALL CONTROLLING FIELD DIMENSIONS BEFORE ORDERING OR FABRICATING ANY MATERIAL.

5

REVISED PER ADDENDUM No. 5 DATED SEPTEMBER 10, 2009

5

1. For concrete clear cover, see 'GENERAL NOTES No. 1' sheet, unless otherwise noted.

Note:
~~1. For concrete clear cover, see 'GENERAL NOTES' sheet, unless otherwise noted.~~

2. No Lap Splices allowed for main bent cap reinf.

	BY	CHECKED
DESIGN	A.Ahmed/R.Bromenschenkel	H.Setberg/F.Zayati
DETAILS	Marvin Lane	A.Ahmed/R.Bromenschenkel
QUANTITIES	A. Alcantara	J. Han

STATE OF CALIFORNIA
DEPARTMENT OF TRANSPORTATION

DIVISION OF ENGINEERING SERVICES
STRUCTURE DESIGN
DESIGN BRANCH 4

BRIDGE NO. 34-0157L
POST MILE 9.02

ALTERNATIVE A
PRESIDIO VIADUCT - LEFT
BENT 2 DETAILS NO. 1

STRUCTURES DESIGN DETAIL SHEET (ENGLISH) (REV. 10/25/05)

ORIGINAL SCALE IN INCHES FOR REDUCED PLANS 0 1 2 3

CU 04242
EA 163731

DISREGARD PRINTS BEARING EARLIER REVISION DATES

REVISION DATES: 5-7-09 5-18-09 5-19-09 5-22-09 5-26-09 5-27-09 5-31-09 6-11-09 7-9-09

SHEET 25 OF 114

FILE => 34-0157l-c-bnt2dts01.dds

USERNAME => rtrenard DATE PLOTTED => 10-SEP-2009 TIME PLOTTED => 05:13

DIST	COUNTY	ROUTE	POST MILES TOTAL PROJECT	SHEET No	TOTAL SHEETS
04	SF	101,1	9.2/9.8, 6.8/7.1	376	567

REGISTERED CIVIL ENGINEER 6-4-09 DATE

7-20-09
PLANS APPROVAL DATE

REGISTERED PROFESSIONAL ENGINEER AHMED M M IBRAHIM No. S 4865 Exp. 9-30-10 STRUCTURAL STATE OF CALIFORNIA

The State of California or its officers or agents shall not be responsible for the accuracy or completeness of electronic copies of this plan sheet.

5

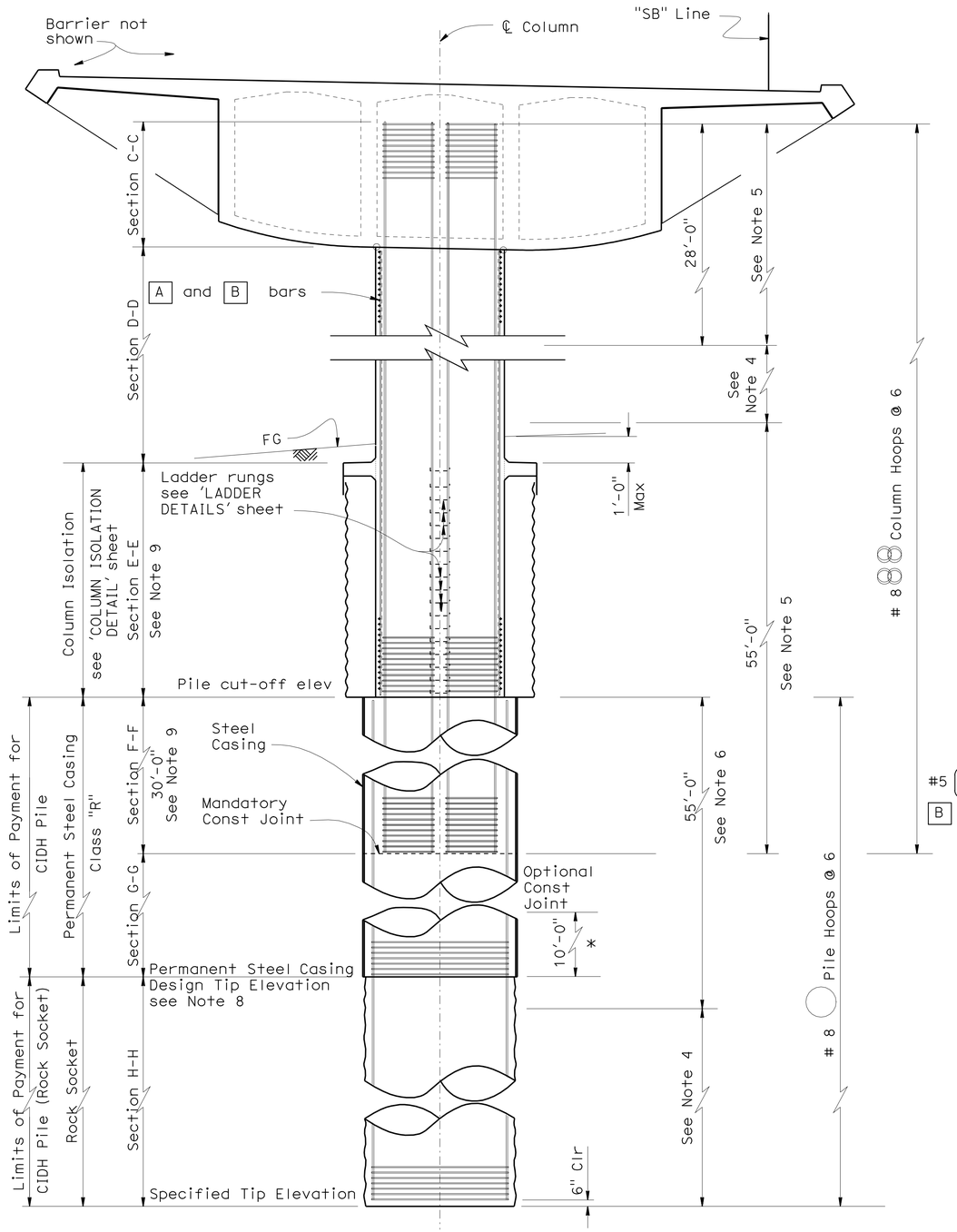

COLUMN ELEVATION

3/16" = 1'-0"

* Field adjusted

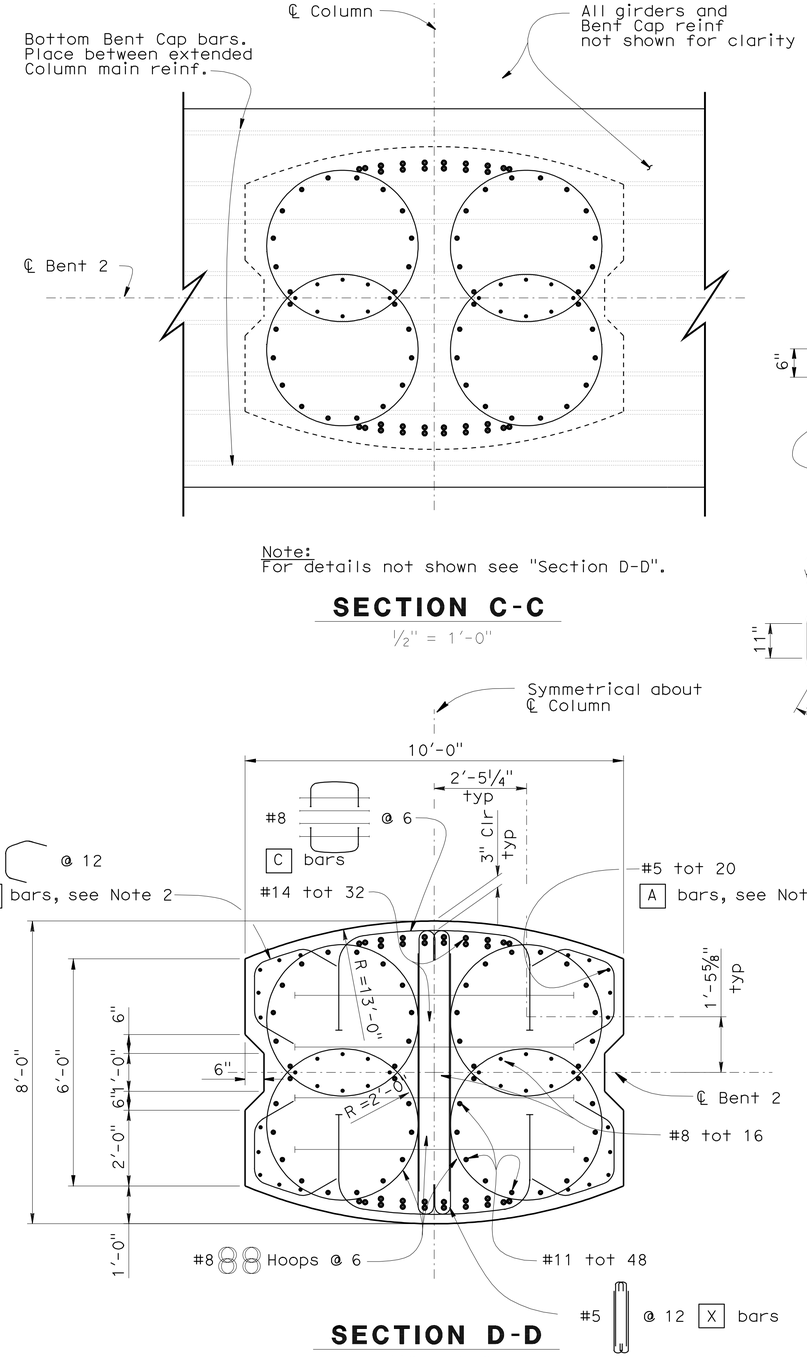

Note:
For details not shown see "Section D-D".

SECTION C-C

½" = 1'-0"

SECTION D-D

½" = 1'-0"

NOTE:
THE CONTRACTOR SHALL VERIFY ALL CONTROLLING FIELD DIMENSIONS BEFORE ORDERING OR FABRICATING ANY MATERIAL.

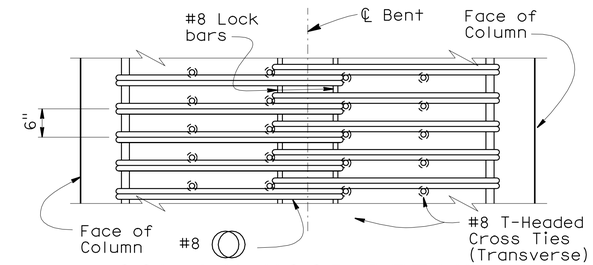

COLUMN HOOP DETAIL

No Scale

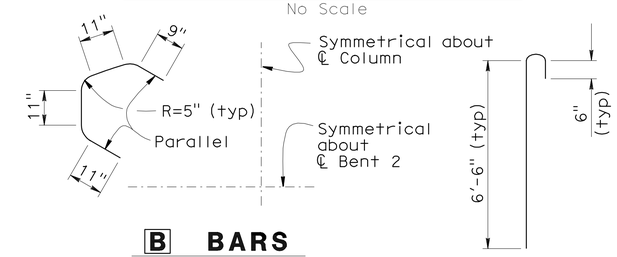

B BARS

No Scale

X BARS

No Scale

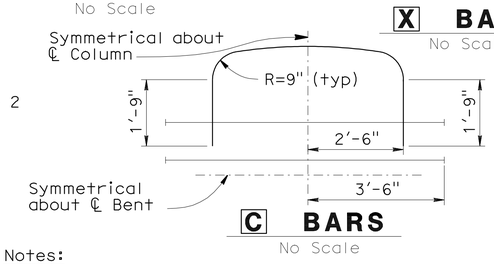

C BARS

No Scale

Notes:

1. For "Section E-E", "Section F-F", "Section G-G" and "Section H-H" see 'BENT 2 DETAILS NO. 3' sheet.
2. Place A and B bars between soffit and Pile Cut-Off Elevation.
3. For Pile Cut-Off data see "Pile Data Table".
4. Staggered - Ultimate Splices Allowed.
5. No splices allowed in main column reinf.
6. No splices allowed in main pile shaft reinf.
7. Place X bars between soffit and Pile Cut-off Elevation.
8. For Permanent Steel Casing Design Tip Elevation, see 'Pile Data Table' on "GENERAL NOTES No. 2" sheet.
9. Concrete shall be poured under dry conditions.
10. Contractor shall use centralizers to maintain rebar clearance.

5 **REVISED PER ADDENDUM No. 5 DATED SEPTEMBER 10, 2009**

	BY	CHECKED
DESIGN	R.Bromenschenkel	F.Zayati
DETAILS	Marvin Lane	R.Bromenschenkel
QUANTITIES	A. Alcantara	J. Han

STATE OF CALIFORNIA
DEPARTMENT OF TRANSPORTATION

DIVISION OF ENGINEERING SERVICES
STRUCTURE DESIGN
DESIGN BRANCH 4

BRIDGE NO. 34-0157L
POST MILE 9.02

ALTERNATIVE A

PRESIDIO VIADUCT - LEFT

BENT 2 DETAILS NO. 2

STRUCTURES DESIGN DETAIL SHEET (ENGLISH) (REV. 10/25/05)

ORIGINAL SCALE IN INCHES FOR REDUCED PLANS 0 1 2 3

CU 04242
EA 163731

DISREGARD PRINTS BEARING EARLIER REVISION DATES

REVISION DATES: 4-10-09 5-14-09 5-22-09 5-30-09 6-12-09 6-16-09 6-17-09 7-7-09 7-8-09

SHEET 26 OF 114

FILE => 34-0157l-c-bnt2dts02.add

USERNAME => trlenard DATE PLOTTED => 10-SEP-2009 TIME PLOTTED => 06:13

DIST	COUNTY	ROUTE	POST MILES TOTAL PROJECT	SHEET No	TOTAL SHEETS
04	SF	101,1	9.2/9.8, 6.8/7.1	377	567

REGISTERED CIVIL ENGINEER 6-4-09 DATE

7-20-09
PLANS APPROVAL DATE

REGISTERED PROFESSIONAL ENGINEER AHMED M M IBRAHIM No. S 4865 Exp. 9-30-10 STRUCTURAL STATE OF CALIFORNIA

The State of California or its officers or agents shall not be responsible for the accuracy or completeness of electronic copies of this plan sheet.

NOTE:
THE CONTRACTOR SHALL VERIFY ALL CONTROLLING FIELD DIMENSIONS BEFORE ORDERING OR FABRICATING ANY MATERIAL.

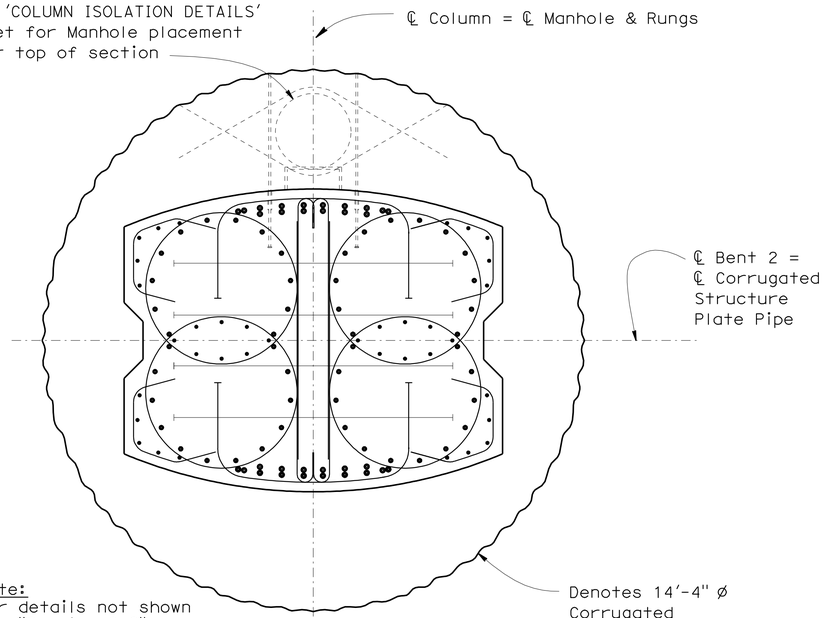

Note:
For details not shown see "Section C-C" on 'BENT 2 DETAILS NO. 2' sheet.

SECTION E-E
½" = 1'-0"

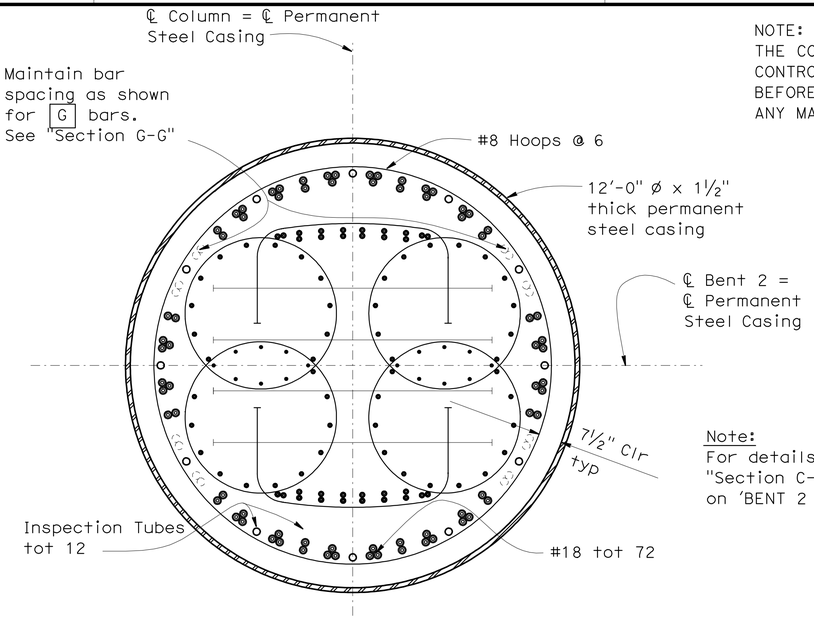

Note:
For details not shown see "Section C-C" and "Section D-D" on 'BENT 2 DETAILS NO. 2' sheet.

SECTION F-F
½" = 1'-0"

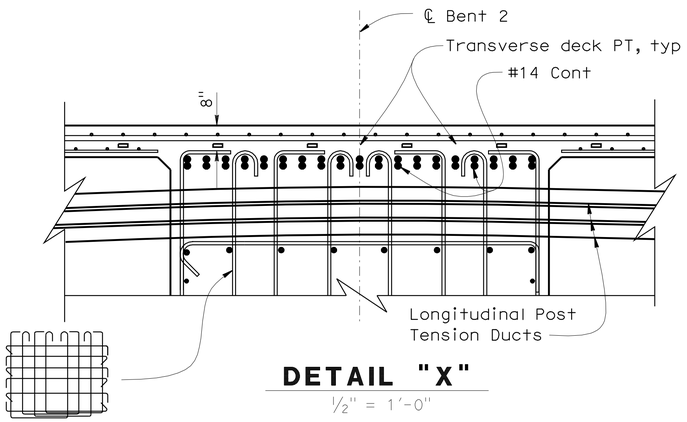

DETAIL "X"
½" = 1'-0"

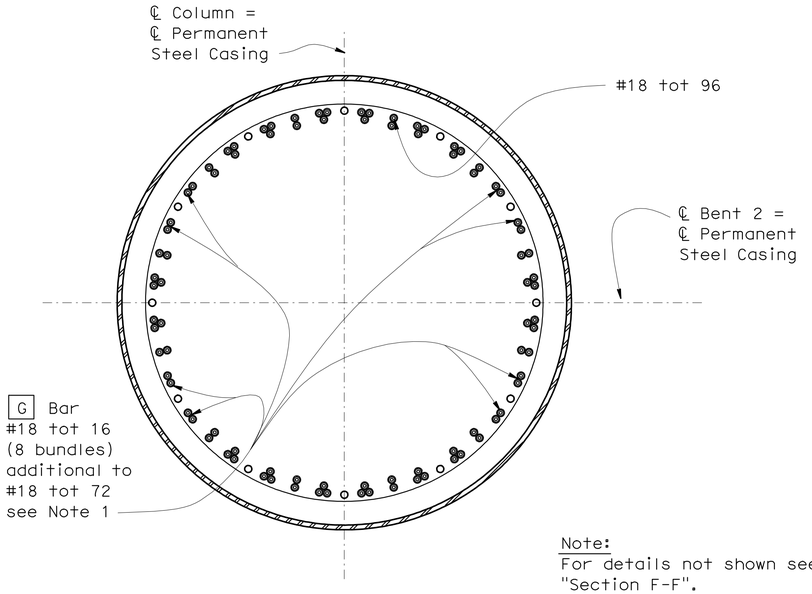

Note:
For details not shown see "Section F-F".

SECTION G-G
½" = 1'-0"

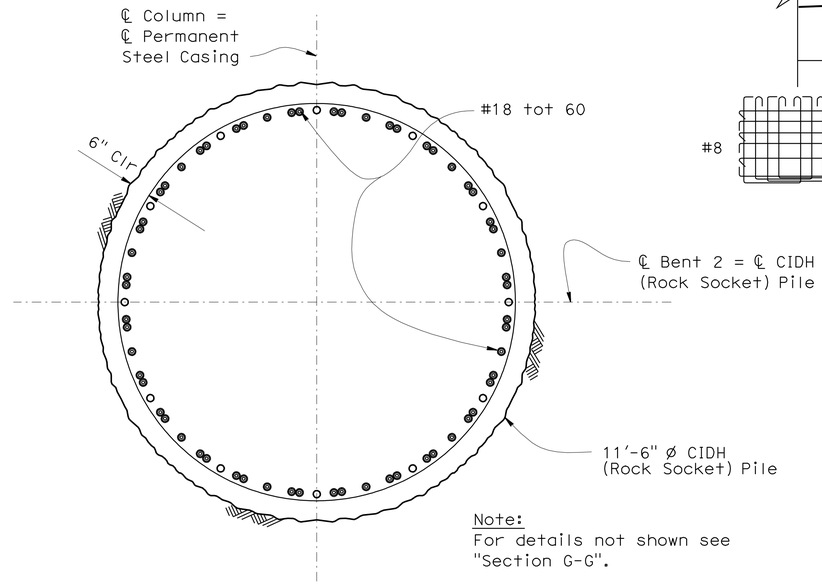

Note:
For details not shown see "Section G-G".

SECTION H-H
½" = 1'-0"

Note:
1. Place G bars below Mandatory Const Joint to Specified Tip Elevation.

5 **REVISED PER ADDENDUM No. 5 DATED SEPTEMBER 10, 2009**

5

	BY	CHECKED
DESIGN	R.Bromenschenkel	F.Zayati
DETAILS	Marvin Lane	R.Bromenschenkel
QUANTITIES	A. Alcantara	J. Han

STATE OF CALIFORNIA
DEPARTMENT OF TRANSPORTATION

DIVISION OF ENGINEERING SERVICES
STRUCTURE DESIGN
DESIGN BRANCH 4

BRIDGE NO. 34-0157L
POST MILE 9.02

ALTERNATIVE A
PRESIDIO VIADUCT - LEFT
BENT 2 DETAILS NO. 3

STRUCTURES DESIGN DETAIL SHEET (ENGLISH) (REV. 10/25/05)

ORIGINAL SCALE IN INCHES FOR REDUCED PLANS 0 1 2 3

CU 04242
EA 163731

DISREGARD PRINTS BEARING EARLIER REVISION DATES

REVISION DATES: ~~4-3-09~~ ~~5-26-09~~ ~~5-27-09~~ ~~5-30-09~~ ~~6-12-09~~ 7-8-09 ~~5-4-09~~ ~~5-6-09~~ ~~5-7-09~~

SHEET 27 OF 114

FILE => 34-0157l-c-bnt2dts03.dgn

USERNAME => trlenard DATE PLOTTED => 10-SEP-2009 TIME PLOTTED => 05:13

DIST	COUNTY	ROUTE	POST MILES TOTAL PROJECT	SHEET No	TOTAL SHEETS
04	SF	101,1	9.2/9.8, 6.8/7.1	378	567

REGISTERED CIVIL ENGINEER 6-4-09 DATE

7-20-09
PLANS APPROVAL DATE

The State of California or its officers or agents shall not be responsible for the accuracy or completeness of electronic copies of this plan sheet.

REGISTERED PROFESSIONAL ENGINEER AHMED M M IBRAHIM No. S 4865 EXP. 9-30-10 STRUCTURAL STATE OF CALIFORNIA

NOTE:
THE CONTRACTOR SHALL VERIFY ALL CONTROLLING FIELD DIMENSIONS BEFORE ORDERING OR FABRICATING ANY MATERIAL.

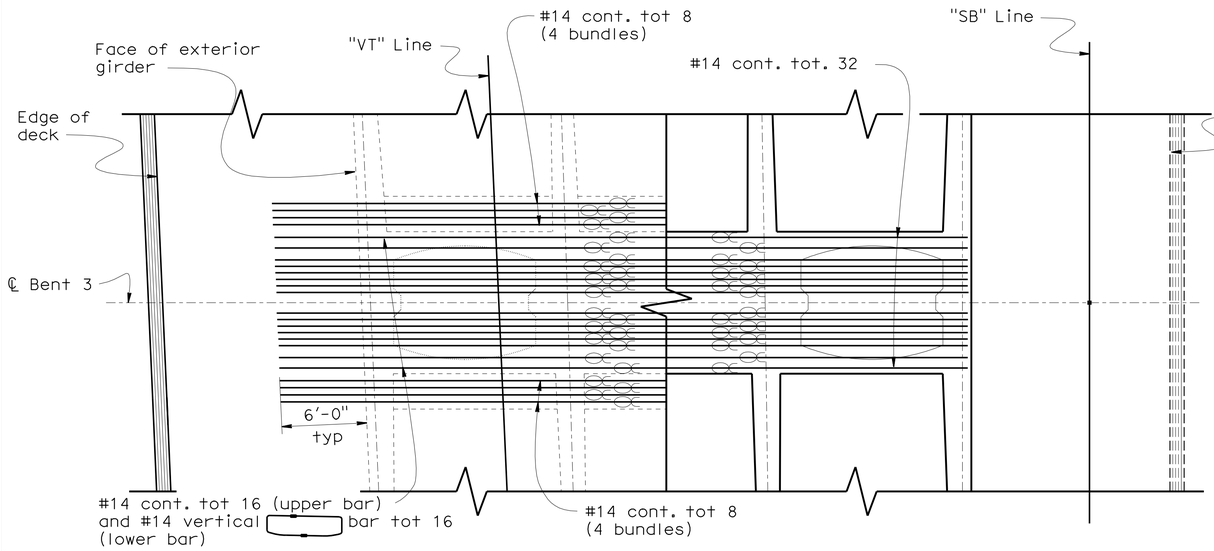

TOP REINFORCEMENT **BOTTOM REINFORCEMENT**

BENT CAP PLAN

3/16" = 1'-0"

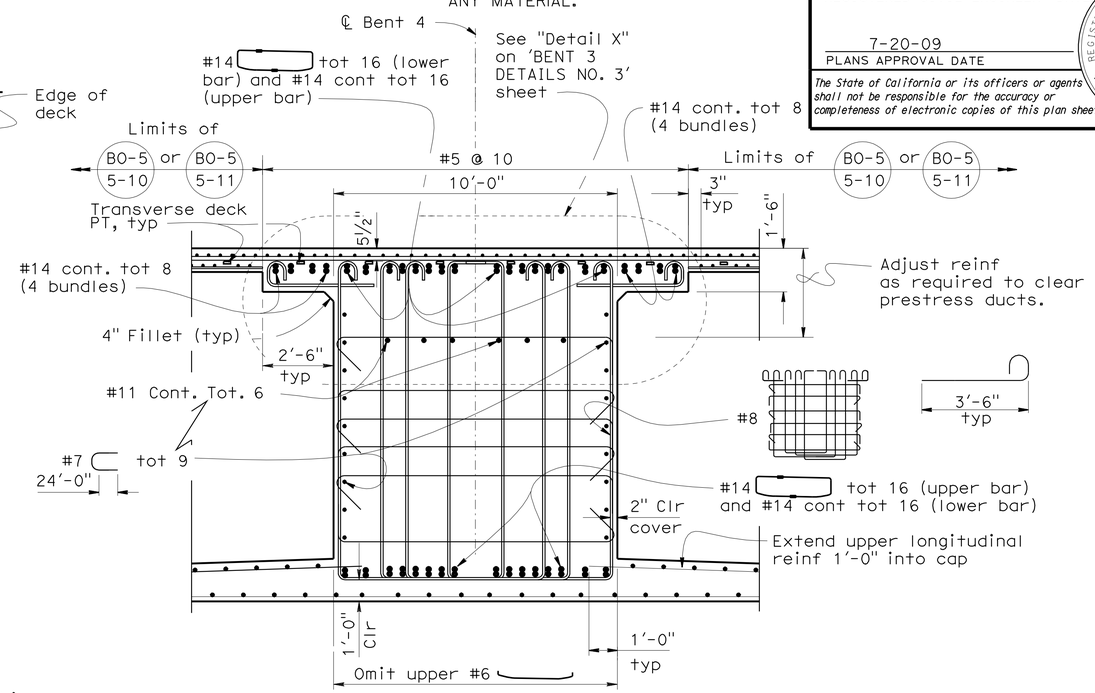

SECTION A-A

3/8" = 1'-0"

℄ - Indicates bundled bars

40 - #6 12'-0" Placed at intersection between #14 vertical bar and every other #7 horizontal bar

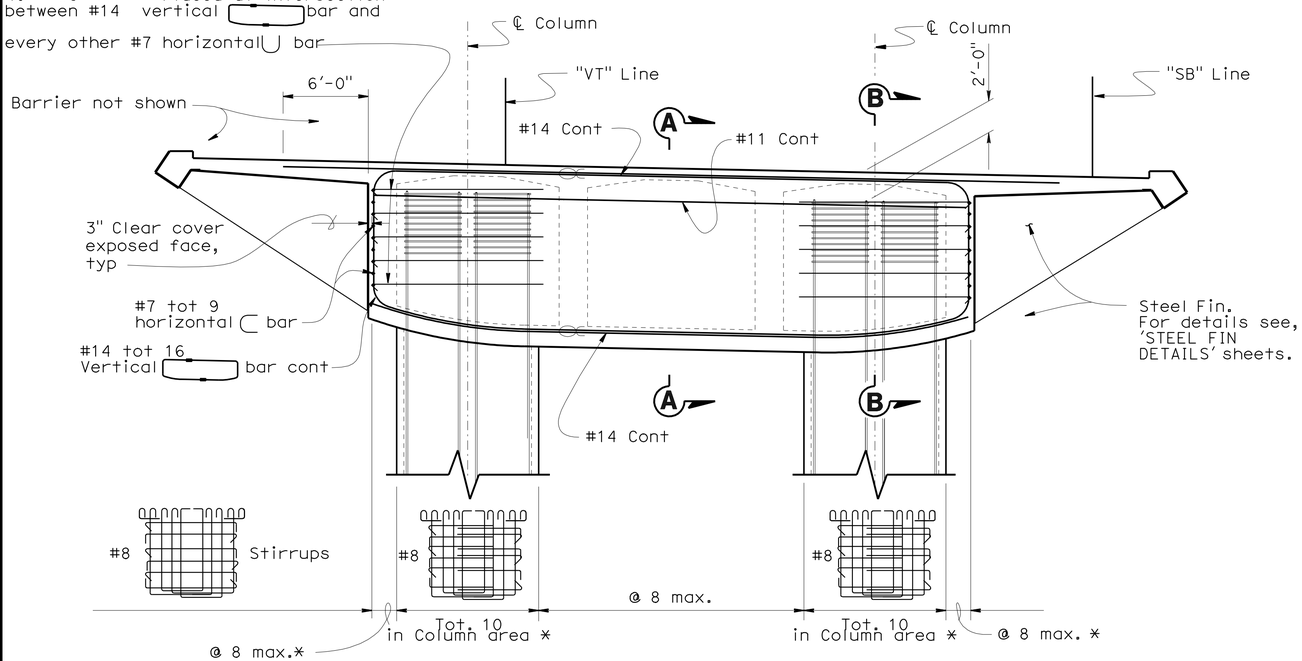

BENT CAP ELEVATION

3/16" = 1'-0"

* Height varies

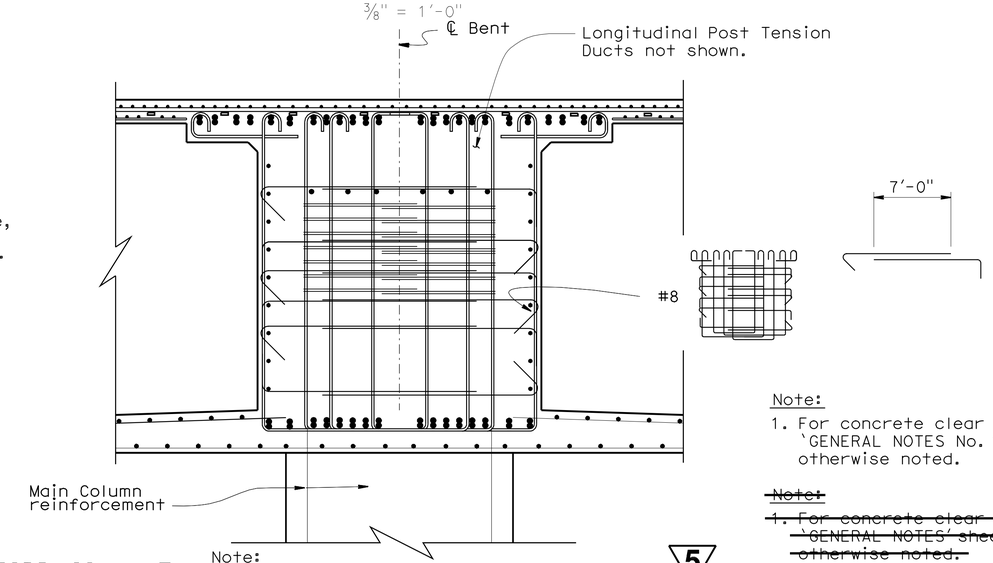

Note:
For details not shown see "Section A-A".

SECTION B-B

3/8" = 1'-0"

Note:
1. For concrete clear cover, see 'GENERAL NOTES No. 1' sheet, unless otherwise noted.

~~Note:~~
~~1. For concrete clear cover, see 'GENERAL NOTES' sheet, unless otherwise noted.~~

5 REVISED PER ADDENDUM No. 5 DATED SEPTEMBER 10, 2009

5

	BY	CHECKED
DESIGN	R.Bromenschenkel	F.Zayati
DETAILS	J. Thorne/M. Lane	R.Bromenschenkel
QUANTITIES	A. Alcantara	J. Han

STATE OF CALIFORNIA DEPARTMENT OF TRANSPORTATION

DIVISION OF ENGINEERING SERVICES STRUCTURE DESIGN DESIGN BRANCH 4

BRIDGE NO. 34-0157L
POST MILE 9.02

ALTERNATIVE A
PRESIDIO VIADUCT - LEFT
BENT 3 DETAILS NO. 1

STRUCTURES DESIGN DETAIL SHEET (ENGLISH) (REV. 10/25/05)

ORIGINAL SCALE IN INCHES FOR REDUCED PLANS 0 1 2 3

CU 04242
EA 163731

DISREGARD PRINTS BEARING EARLIER REVISION DATES

REVISION DATES: ~~4-10-09~~ ~~5-22-09~~ ~~5-30-09~~ ~~5-31-09~~ ~~6-11-09~~ ~~6-16-09~~ 7-7-09 ~~5-12-09~~ ~~5-18-09~~

SHEET 28 OF 114

FILE => 34-0157I-c-bnt3dts01.dgn

USERNAME => rtrenard DATE PLOTTED => 10-SEP-2009 TIME PLOTTED => 05:13

DIST	COUNTY	ROUTE	POST MILES TOTAL PROJECT	SHEET No	TOTAL SHEETS
04	SF	101,1	9.2/9.8, 6.8/7.1	379	567

REGISTERED CIVIL ENGINEER — DATE 6-4-09

7-20-09
PLANS APPROVAL DATE

REGISTERED PROFESSIONAL ENGINEER — AHMED M M IBRAHIM — No. S 4865 — EXP. 9-30-10 — STRUCTURAL — STATE OF CALIFORNIA

The State of California or its officers or agents shall not be responsible for the accuracy or completeness of electronic copies of this plan sheet.

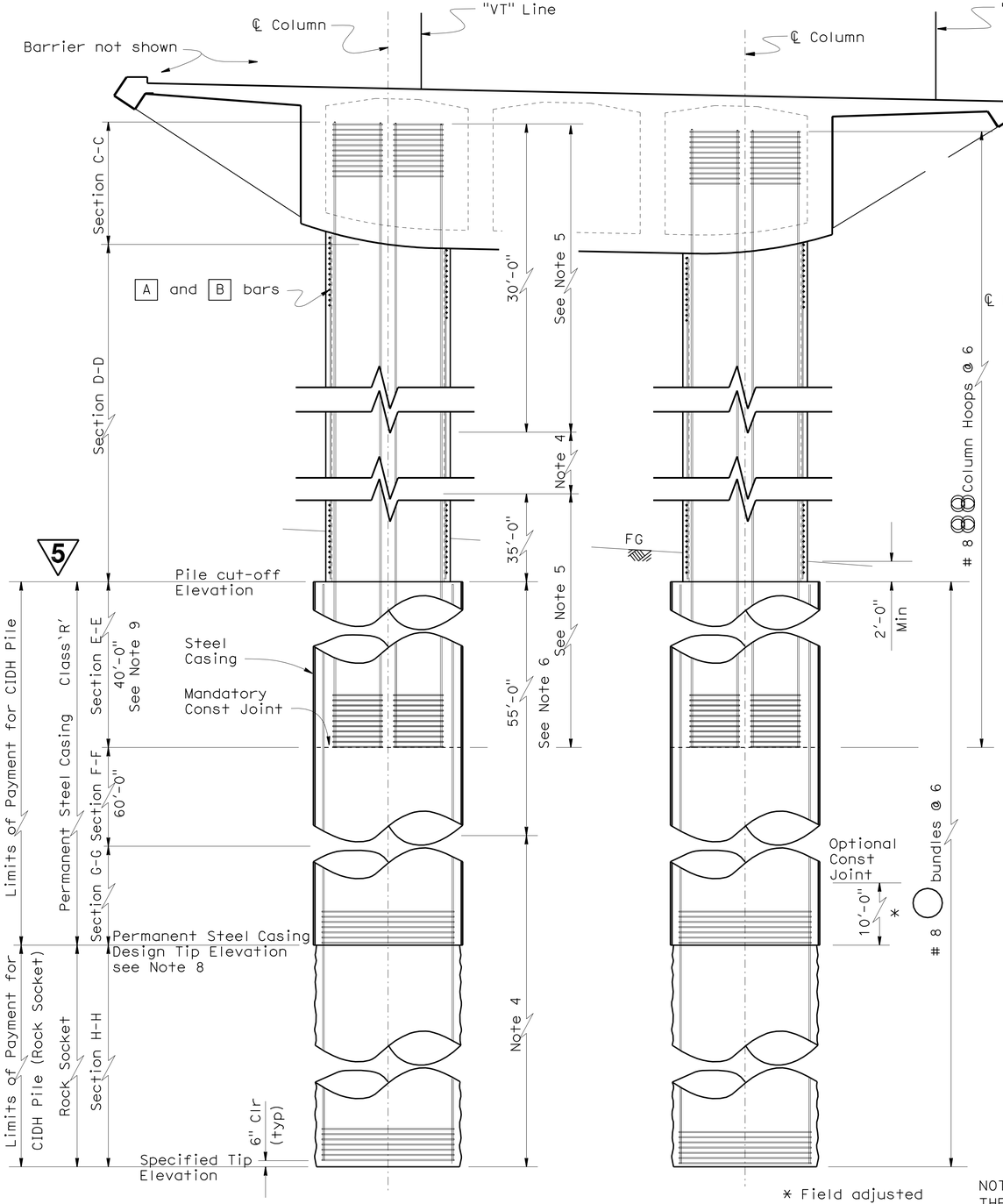

COLUMN ELEVATION

3/16" = 1'-0"

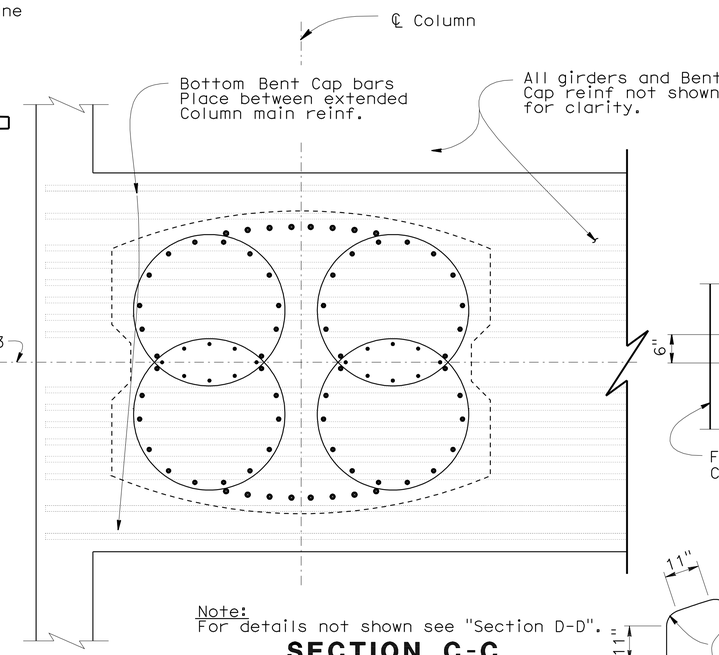

Note:
For details not shown see "Section D-D".

SECTION C-C

1/2" = 1'-0"

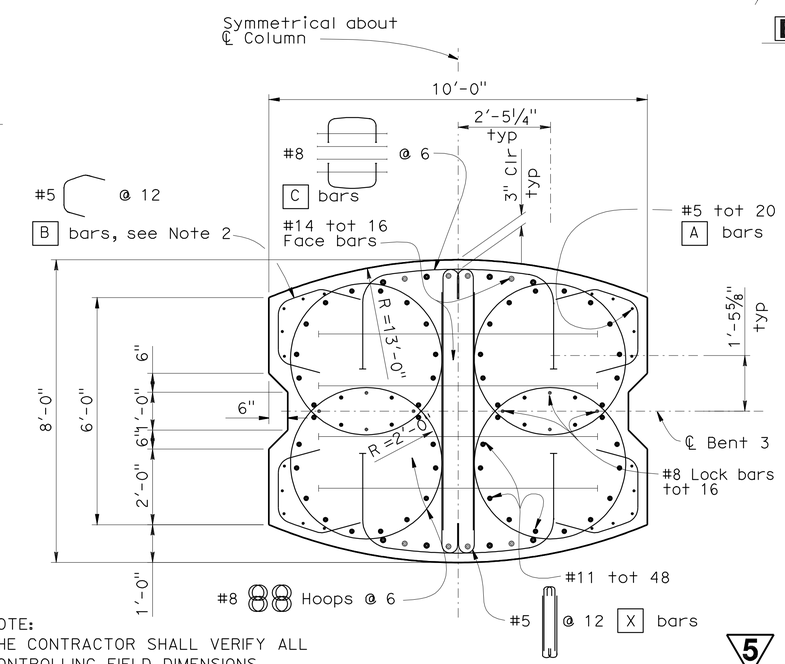

SECTION D-D

1/2" = 1'-0"

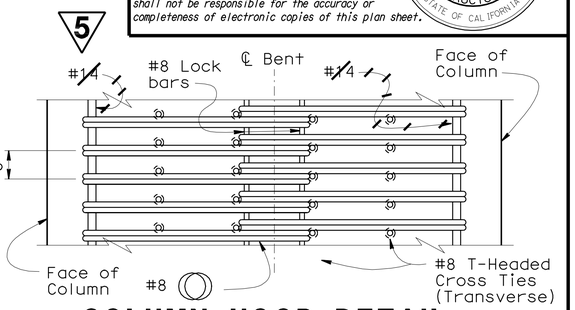

COLUMN HOOP DETAIL

No Scale

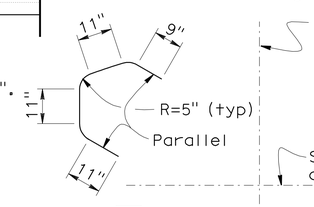

B BARS

No Scale

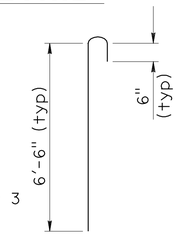

X BARS

No Scale

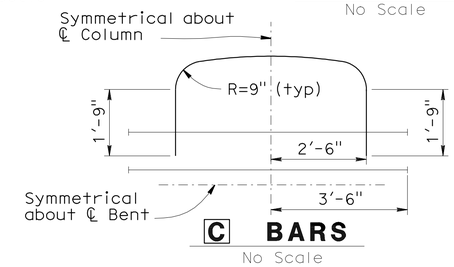

C BARS

No Scale

Notes:
1. For "Section E-E", "Section F-F", "Section G-G" and "Section H-H" see 'BENT 3 DETAILS NO. 3' sheet.
2. Place A and B bars between soffit and Pile Cut-Off Elevation.
3. For Pile Cut-Off data see "Pile Data Table".
4. Staggered - Ultimate Splices Allowed.
5. No splices allowed in main column reinf.
6. No splices allowed in main pile shaft reinf.
7. Place X bars between soffit and Pile Cut-off Elevation.
8. Contractor shall install Permanent Steel Casing to PSC Design Tip Elevation. See 'Pile Data Table' on ~~"INDEX TO PLANS"~~ "General Notes No. 2" sheet.
9. Concrete shall be poured under dry conditions.
10. Contractor shall use centralizers to maintain rebar clearance.

NOTE:
THE CONTRACTOR SHALL VERIFY ALL CONTROLLING FIELD DIMENSIONS BEFORE ORDERING OR FABRICATING ANY MATERIAL.

5 **REVISED PER ADDENDUM No. 5 DATED SEPTEMBER 10, 2009**

	BY	CHECKED
DESIGN	R.Bromenschenkel	F.Zayati
DETAILS	M.Lane	R.Bromenschenkel
QUANTITIES	A. Alcantara	J. Han

STATE OF CALIFORNIA
DEPARTMENT OF TRANSPORTATION

DIVISION OF ENGINEERING SERVICES
STRUCTURE DESIGN
DESIGN BRANCH 4

BRIDGE NO. 34-0157L
POST MILE 9.02

ALTERNATIVE A
PRESIDIO VIADUCT - LEFT
BENT 3 DETAILS NO. 2

STRUCTURES DESIGN DETAIL SHEET (ENGLISH) (REV. 10/25/05)

ORIGINAL SCALE IN INCHES FOR REDUCED PLANS 0 1 2 3

CU 04242
EA 163731

DISREGARD PRINTS BEARING EARLIER REVISION DATES

REVISION DATES: 4-10-09 5-28-09 5-30-09 5-31-09 6-13-09 6-16-09 6-17-09 7-1-09 7-9-09

SHEET 29 OF 114

FILE => 34-0157l-c-bnt3dts02.dds

USERNAME => friehard DATE PLOTTED => 10-SEP-2009 TIME PLOTTED => 05:13

DIST	COUNTY	ROUTE	POST MILES TOTAL PROJECT	SHEET No	TOTAL SHEETS
04	SF	101,1	9.2/9.8, 6.8/7.1	380	567

REGISTERED CIVIL ENGINEER 6-4-09 DATE

7-20-09
PLANS APPROVAL DATE

REGISTERED PROFESSIONAL ENGINEER AHMED M M IBRAHIM No. S 4865 EXP. 9-30-10 STRUCTURAL STATE OF CALIFORNIA

The State of California or its officers or agents shall not be responsible for the accuracy or completeness of electronic copies of this plan sheet.

NOTE:
THE CONTRACTOR SHALL VERIFY ALL CONTROLLING FIELD DIMENSIONS BEFORE ORDERING OR FABRICATING ANY MATERIAL.

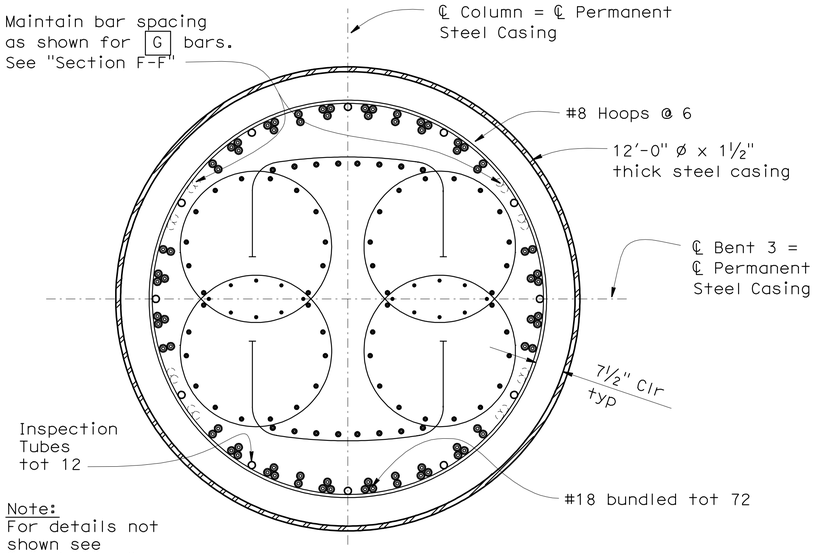

Note:
For details not shown see "Section D-D" on 'BENTS 3 DETAILS NO. 2' sheet.

SECTION E-E
½" = 1'-0"

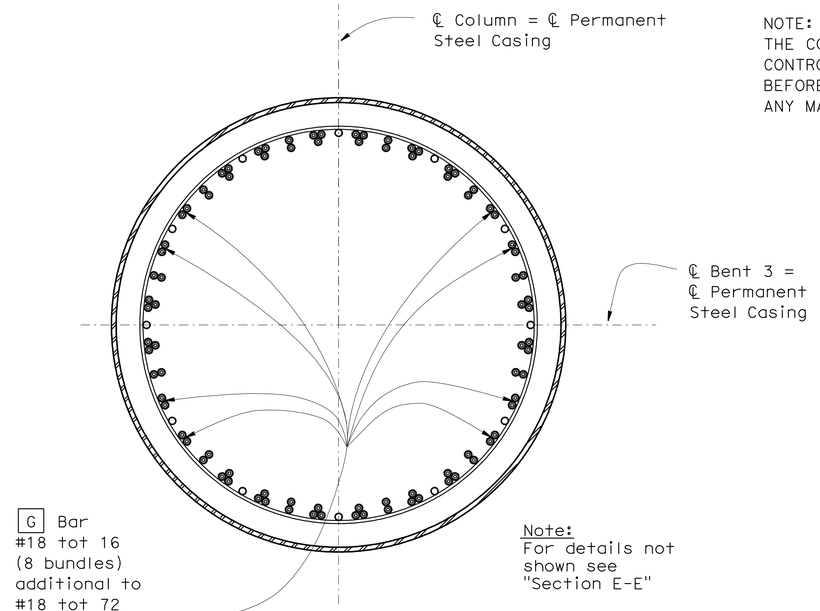

Note:
For details not shown see "Section E-E"

SECTION F-F
½" = 1'-0"

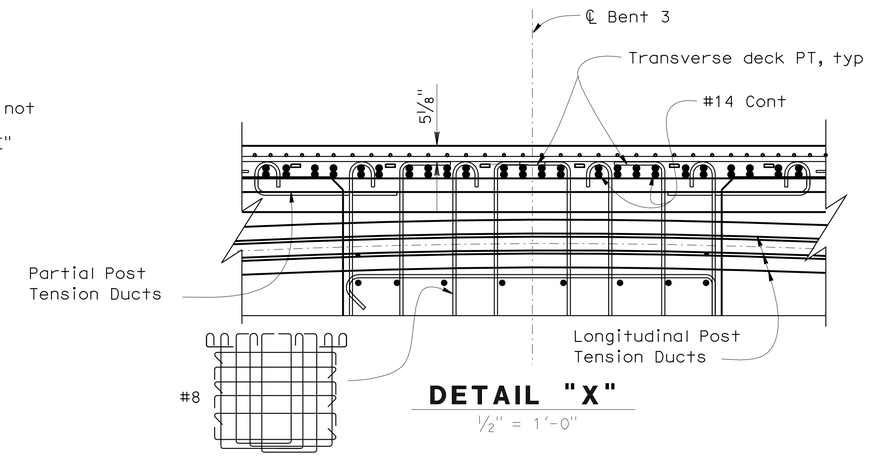

DETAIL "X"
½" = 1'-0"

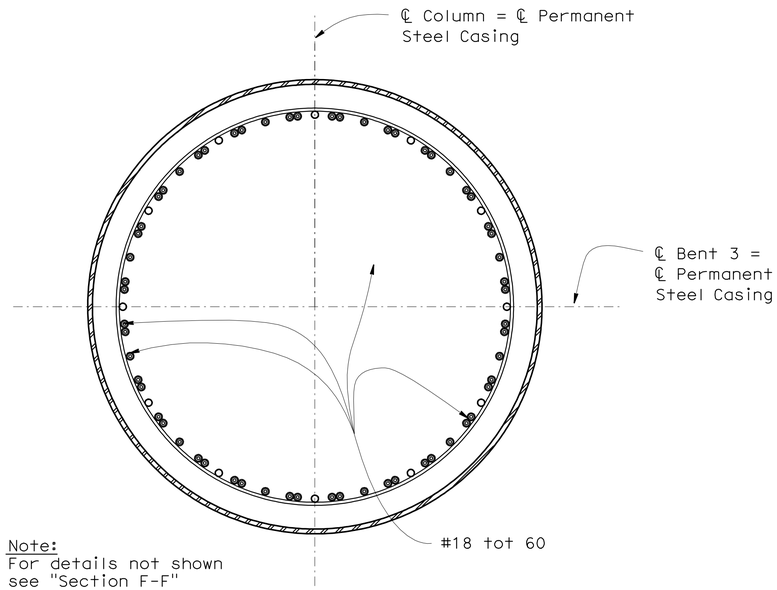

Note:
For details not shown see "Section F-F"

SECTION G-G
½" = 1'-0"

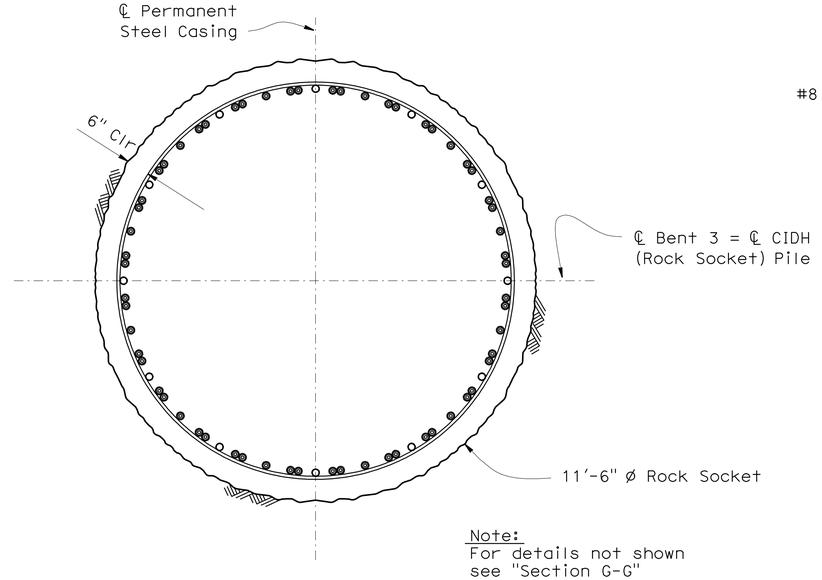

Note:
For details not shown see "Section G-G"

SECTION H-H
½" = 1'-0"

Note:
1. Place G bars below Mandatory Const Joint to Specified Tip Elevation.

5 **REVISED PER ADDENDUM No. 5 DATED SEPTEMBER 10, 2009**

5

	BY	CHECKED
DESIGN	R.Bromenschenkel	F.Zayati
DETAILS	M.Lane	R.Bromenschenkel
QUANTITIES	A. Alcantara	J. Han

STATE OF CALIFORNIA
DEPARTMENT OF TRANSPORTATION

DIVISION OF ENGINEERING SERVICES
STRUCTURE DESIGN
DESIGN BRANCH 4

BRIDGE NO. 34-0157L
POST MILE 9.02

ALTERNATIVE A
PRESIDIO VIADUCT - LEFT
BENT 3 DETAILS NO. 3

STRUCTURES DESIGN DETAIL SHEET (ENGLISH) (REV. 10/25/05)

ORIGINAL SCALE IN INCHES FOR REDUCED PLANS 0 1 2 3

CU 04242
EA 163731

DISREGARD PRINTS BEARING EARLIER REVISION DATES

REVISION DATES: 3-31-09 5-31-09 5-12-09 4-9-09 6-12-09 7-3-09 7-9-09 7-13-09 5-25-09

SHEET 30 OF 114

FILE => 34-0157l-c-bnt3dts03.dgn

USERNAME => trlenard DATE PLOTTED => 10-SEP-2009 TIME PLOTTED => 05:14

DIST	COUNTY	ROUTE	POST MILES TOTAL PROJECT	SHEET No	TOTAL SHEETS
04	SF	101,1	9.2/9.8, 6.8/7.1	381	567

REGISTERED CIVIL ENGINEER 6-4-09 DATE

7-20-09
PLANS APPROVAL DATE

REGISTERED PROFESSIONAL ENGINEER AHMED M M IBRAHIM No. S 4865 EXP. 9-30-10 STRUCTURAL STATE OF CALIFORNIA

The State of California or its officers or agents shall not be responsible for the accuracy or completeness of electronic copies of this plan sheet.

NOTE:
THE CONTRACTOR SHALL VERIFY ALL CONTROLLING FIELD DIMENSIONS BEFORE ORDERING OR FABRICATING ANY MATERIAL.

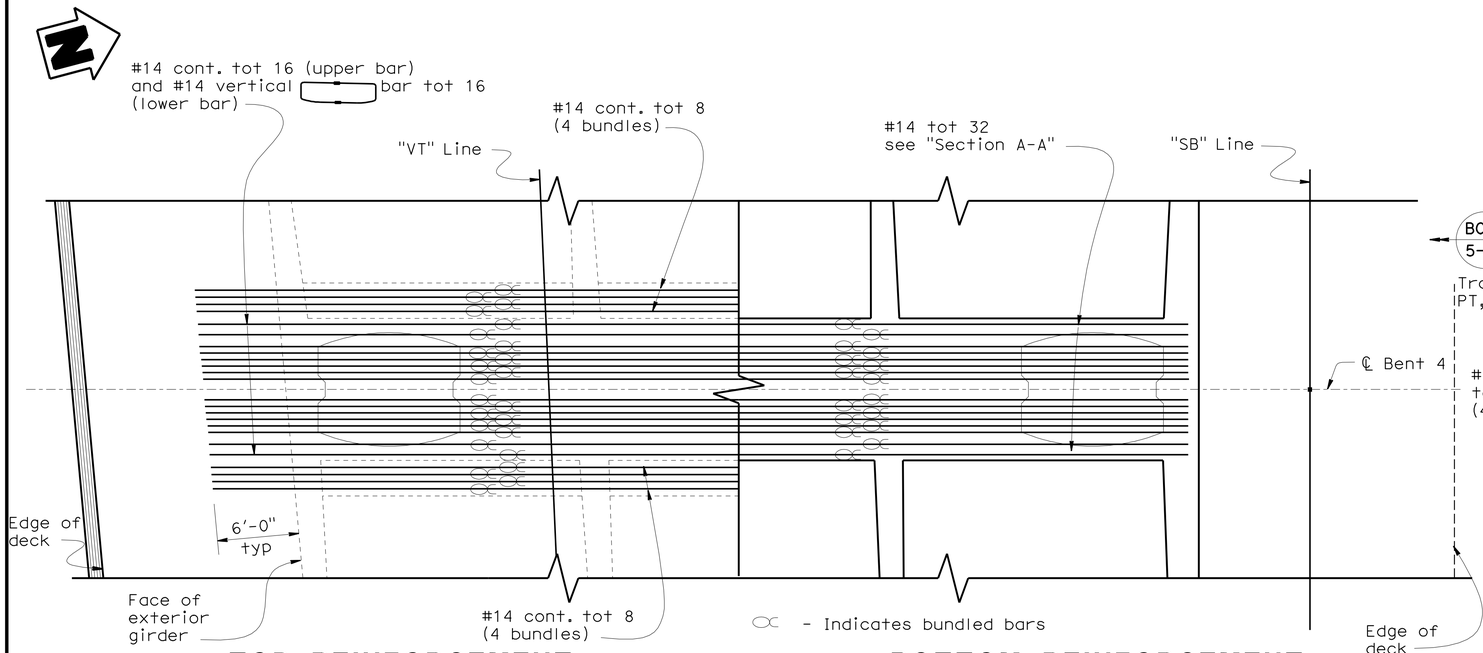

TOP REINFORCEMENT

BOTTOM REINFORCEMENT

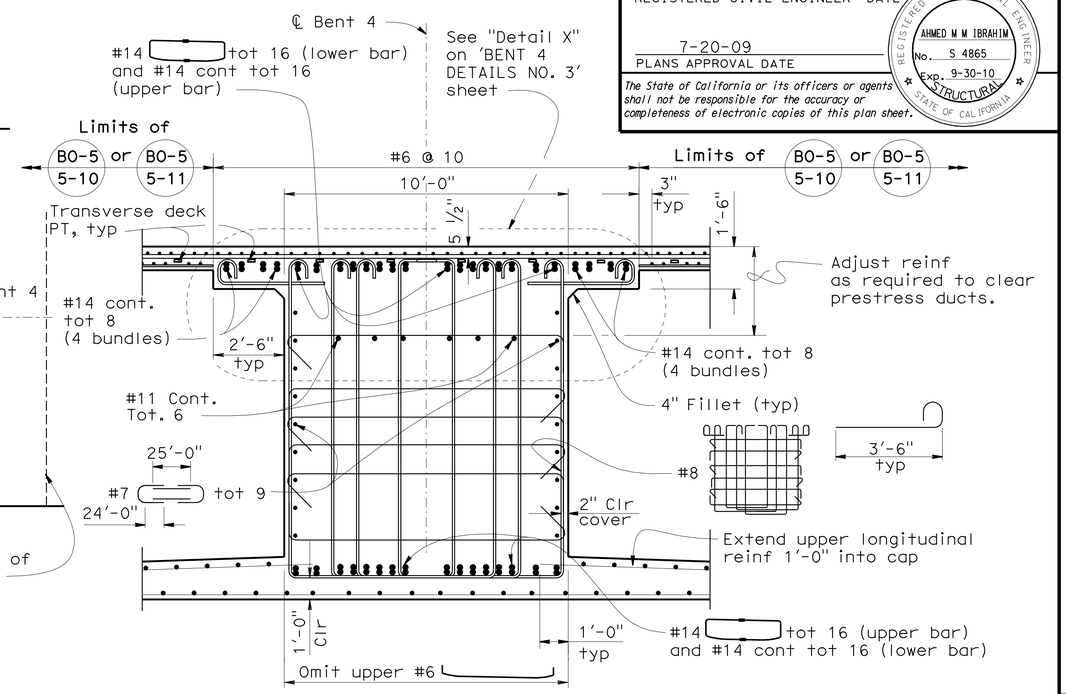

SECTION A-A

3/8" = 1'-0"

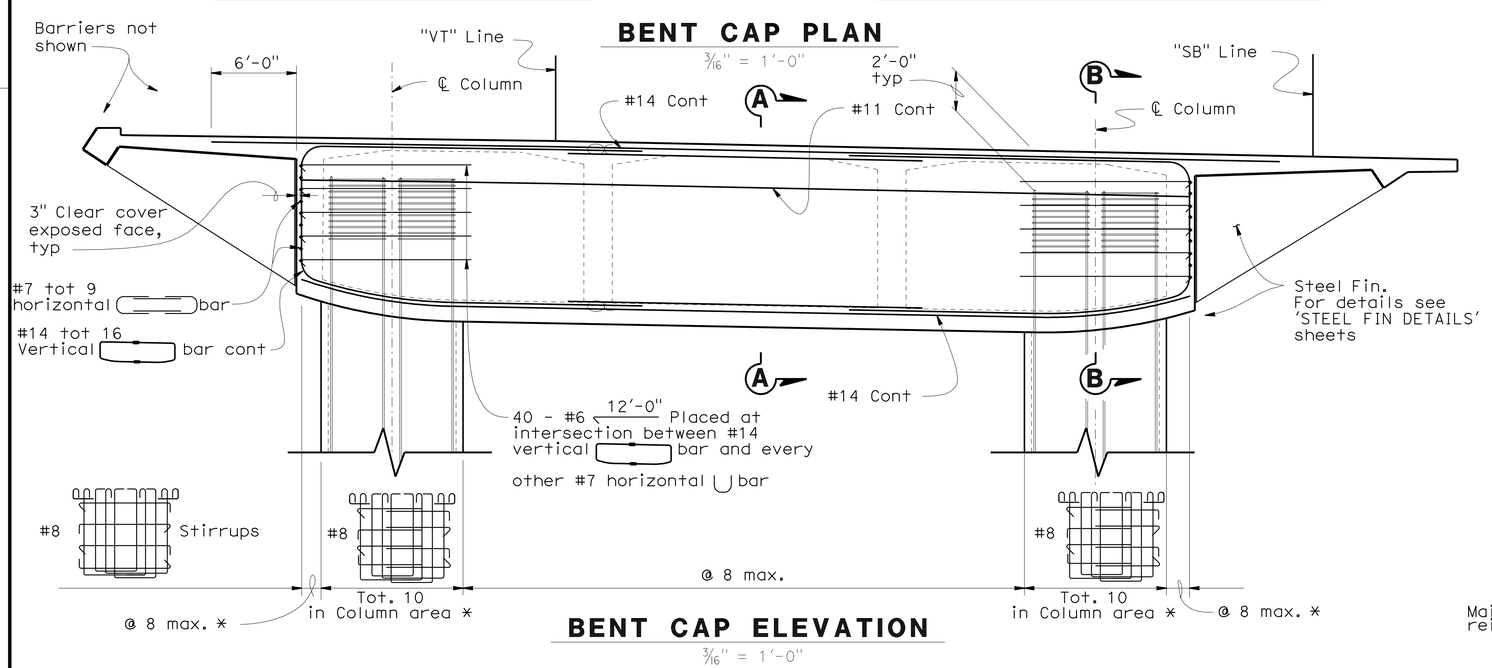

BENT CAP PLAN

3/16" = 1'-0"

BENT CAP ELEVATION

3/16" = 1'-0"

* Height varies

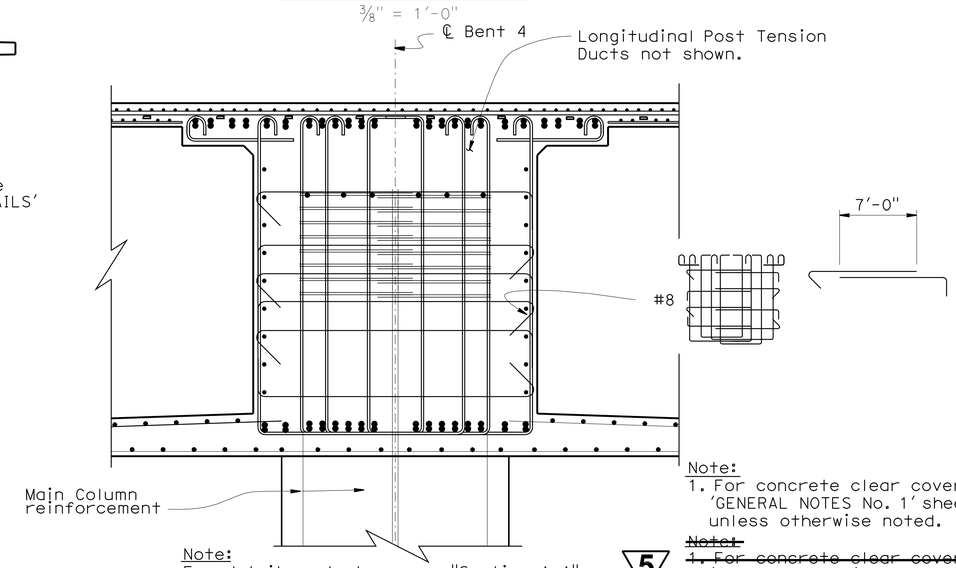

Note:
For details not shown see "Section A-A".

SECTION B-B

3/8" = 1'-0"

Note:
1. For concrete clear cover, see 'GENERAL NOTES No. 1' sheet, unless otherwise noted.

~~Note:~~
~~1. For concrete clear cover, see 'GENERAL NOTES' sheet, unless otherwise noted.~~

5 **REVISED PER ADDENDUM No. 5 DATED SEPTEMBER 10, 2009**

5

ALTERNATIVE A

	BY	CHECKED
DESIGN	R.Bromenschenkel	F.Zayati
DETAILS	Jeff Thorne	R.Bromenschenkel
QUANTITIES	A. Alcantara	J. Han

STATE OF CALIFORNIA
DEPARTMENT OF TRANSPORTATION

DIVISION OF ENGINEERING SERVICES
STRUCTURE DESIGN
DESIGN BRANCH 4

BRIDGE NO. 34-0157L
POST MILE 9.02

PRESIDIO VIADUCT - LEFT

BENT 4 DETAILS NO. 1

STRUCTURES DESIGN DETAIL SHEET (ENGLISH) (REV. 10/25/05)

ORIGINAL SCALE IN INCHES FOR REDUCED PLANS 0 1 2 3

CU 04242
EA 163731

DISREGARD PRINTS BEARING EARLIER REVISION DATES

REVISION DATES: ~~3-31-09~~ ~~5-22-09~~ ~~5-30-09~~ ~~5-31-09~~ ~~6-12-09~~ ~~6-16-09~~ ~~7-7-09~~ 7-13-09 ~~5-18-09~~

SHEET 31 OF 114

FILE => 34-0157l-c-bnt4dts.add

USERNAME => trienard DATE PLOTTED => 10-SEP-2009 TIME PLOTTED => 05:14

DIST	COUNTY	ROUTE	POST MILES TOTAL PROJECT	SHEET No	TOTAL SHEETS
04	SF	101,1	9.2/9.8, 6.8/7.1	382	567

REGISTERED CIVIL ENGINEER — DATE 6-4-09

7-20-09
PLANS APPROVAL DATE

REGISTERED PROFESSIONAL ENGINEER — AHMED M M IBRAHIM — No. S 4865 — EXP. 9-30-10 — STRUCTURAL — STATE OF CALIFORNIA

The State of California or its officers or agents shall not be responsible for the accuracy or completeness of electronic copies of this plan sheet.

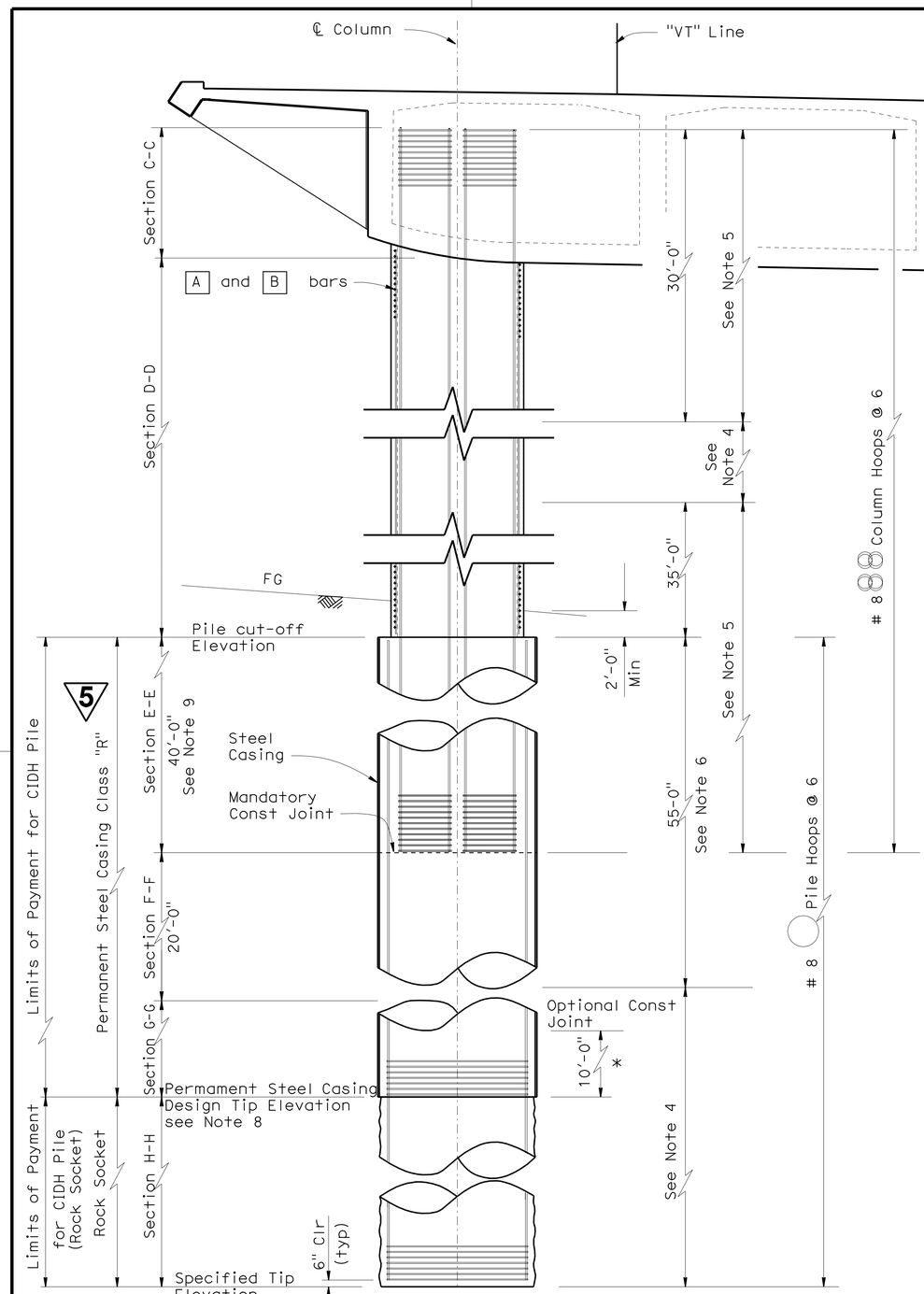

* Field adjusted

ELEVATION
3/16" = 1'-0"

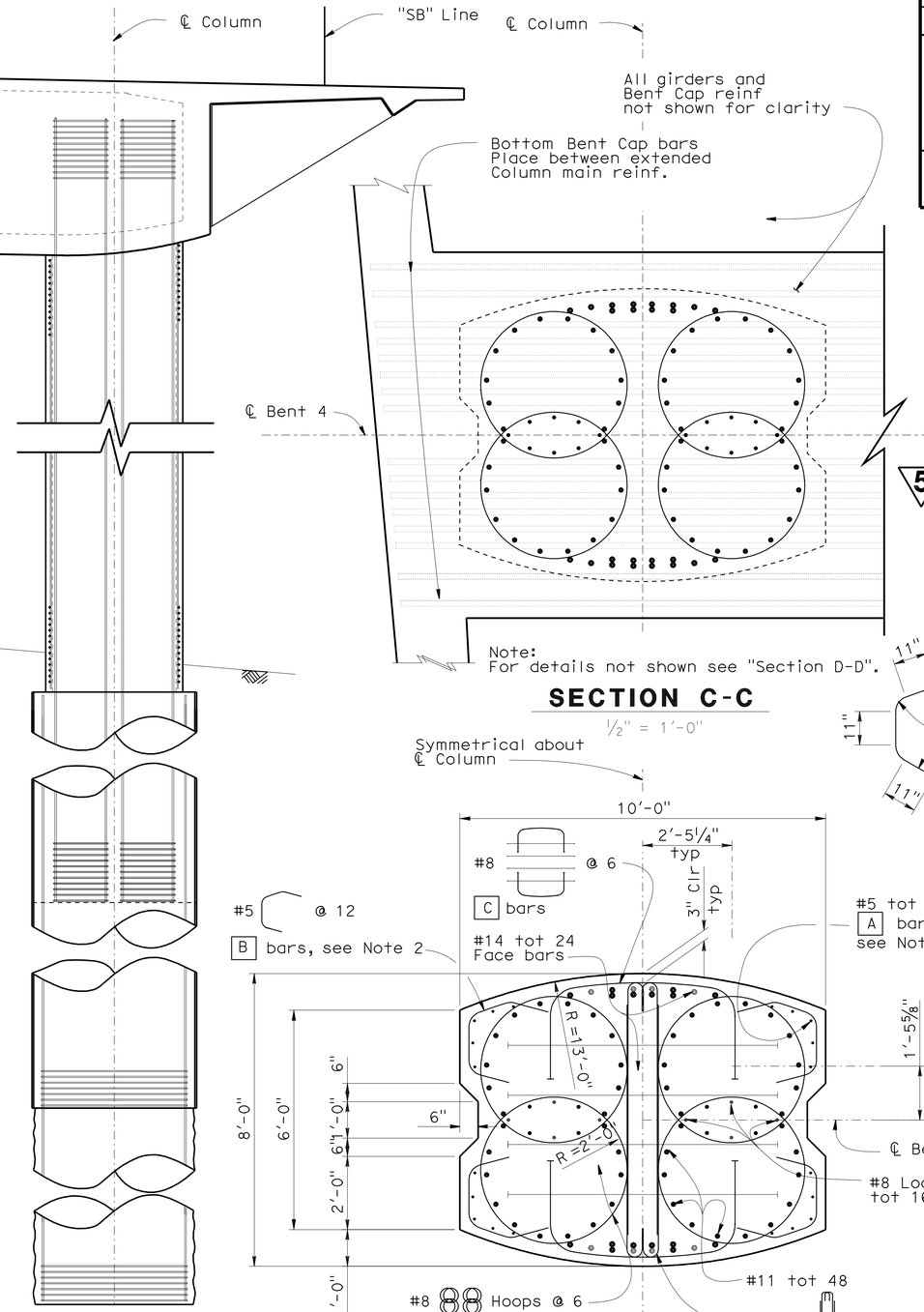

SECTION C-C
1/2" = 1'-0"

SECTION D-D
1/2" = 1'-0"

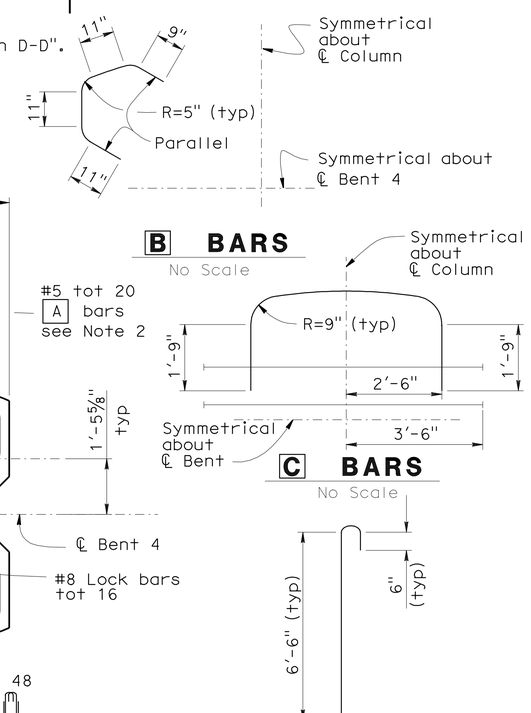

B BARS
No Scale

C BARS
No Scale

X BARS
No Scale

Notes:
1. For "Section E-E", "Section F-F", "Section G-G" and "Section H-H" see 'BENT 4 DETAILS NO. 3' sheet.
2. Place A and B bars between Soffit and Pile Cut-Off Elevation.
3. For Pile Cut-Off data see "Pile Data Table".
4. Staggered - Ultimate Splices Allowed.
5. No splices allowed in main column reinf.
6. No splices allowed in main pile shaft reinf.
7. Place X bars between soffit and Pile Cut-off Elevation.
8. ~~Contractor shall install Permanent Steel Casing to PSC Design Tip Elevation. See 'Pile Data Table' on "INDEX TO PLANS" sheet.~~
9. Concrete shall be poured under dry conditions.
10. Contractor shall use centralizers to maintain rebar clearance.
8. Contractor shall install Permanent Steel Casing to PSC Design Tip Elevation. See 'Pile Data Table' on "GENERAL NOTES No. 2" sheet.

5 **REVISED PER ADDENDUM No. 5 DATED SEPTEMBER 10, 2009**

NOTE:
THE CONTRACTOR SHALL VERIFY ALL CONTROLLING FIELD DIMENSIONS BEFORE ORDERING OR FABRICATING ANY MATERIAL.

	BY	CHECKED
DESIGN	R.Bromenschenkel	F.Zayati
DETAILS	M.Lane	R.Bromenschenkel
QUANTITIES	A. Alcantara	J. Han

STATE OF CALIFORNIA
DEPARTMENT OF TRANSPORTATION

DIVISION OF ENGINEERING SERVICES
STRUCTURE DESIGN
DESIGN BRANCH 4

CU 04242
EA 163731

BRIDGE NO. 34-0157L
POST MILE 9.02

DISREGARD PRINTS BEARING EARLIER REVISION DATES

REVISION DATES: 2-26-09 6-12-09 7-7-09 7-7-09 7-9-09 7-13-09 5-24-09 5-28-09 5-31-09

SHEET 32 OF 114

ALTERNATIVE A
PRESIDIO VIADUCT - ~~SOUTHBOUND~~ LEFT
BENT 4 DETAILS NO. 2

STRUCTURES DESIGN DETAIL SHEET (ENGLISH) (REV. 10/25/05)

ORIGINAL SCALE IN INCHES FOR REDUCED PLANS 0 1 2 3

FILE => 34-0157l-c-bnt4dts02.dd

USERNAME => trlenard DATE PLOTTED => 10-SEP-2009 TIME PLOTTED => 05:14

DIST	COUNTY	ROUTE	POST MILES TOTAL PROJECT	SHEET No	TOTAL SHEETS
04	SF	101,1	9.2/9.8, 6.8/7.1	383	567

REGISTERED CIVIL ENGINEER — DATE 6-4-09

7-20-09
PLANS APPROVAL DATE

REGISTERED PROFESSIONAL ENGINEER — AHMED M M IBRAHIM — No. S 4865 — EXP. 9-30-10 — STRUCTURAL — STATE OF CALIFORNIA

The State of California or its officers or agents shall not be responsible for the accuracy or completeness of electronic copies of this plan sheet.

NOTE:
THE CONTRACTOR SHALL VERIFY ALL CONTROLLING FIELD DIMENSIONS BEFORE ORDERING OR FABRICATING ANY MATERIAL.

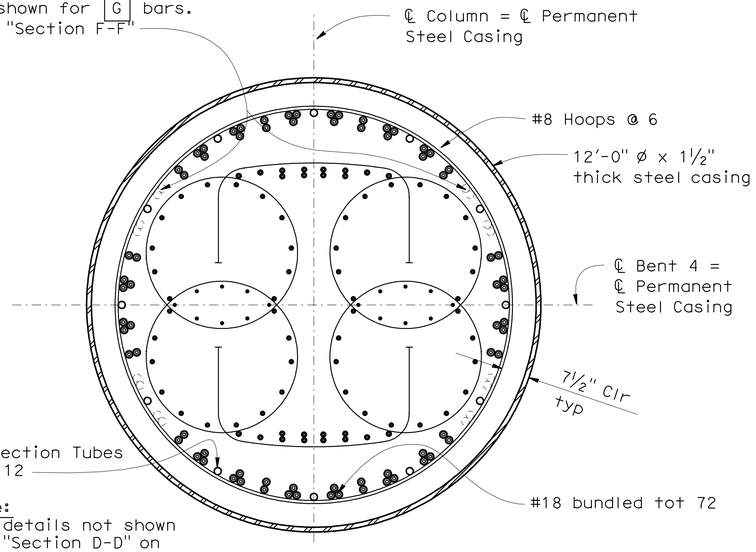

Note:
For details not shown see "Section D-D" on 'BENTS 4 DETAILS NO. 2' sheet.

SECTION E-E
½" = 1'-0"

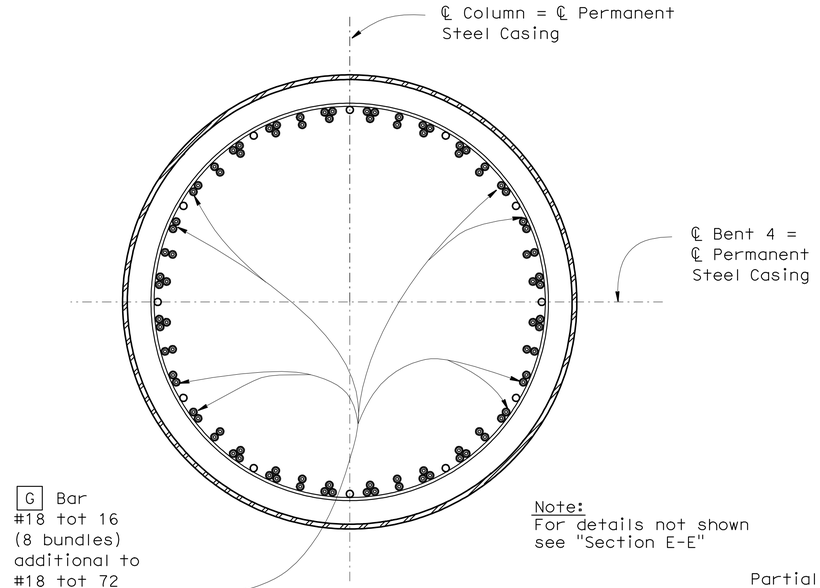

Note:
For details not shown see "Section E-E"

SECTION F-F
½" = 1'-0"

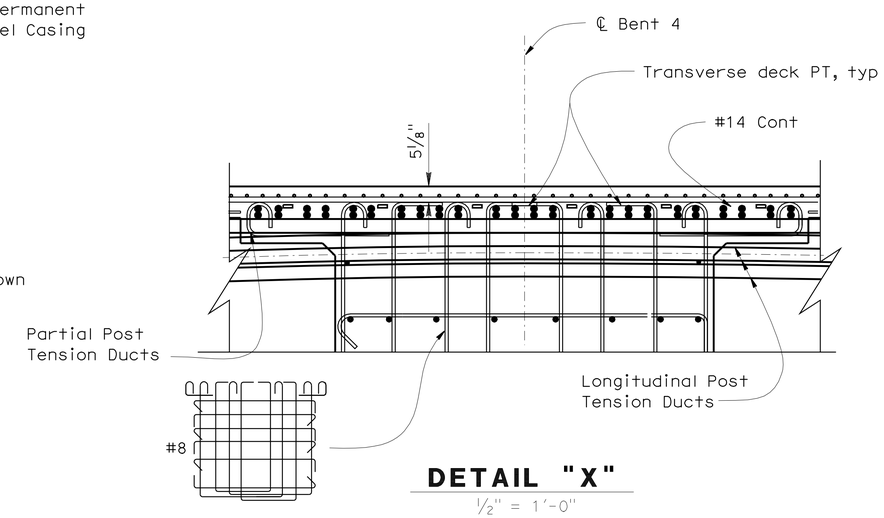

DETAIL "X"
½" = 1'-0"

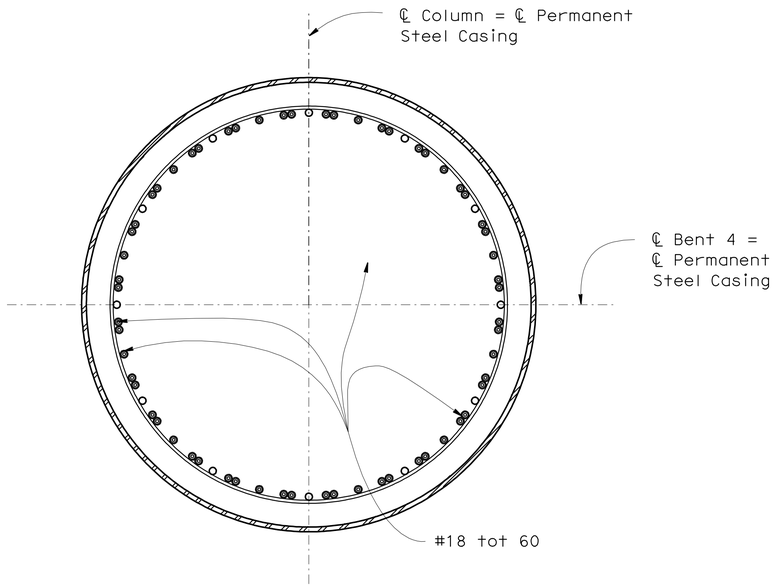

SECTION G-G
½" = 1'-0"

Note:
For details not shown see "Section F-F"

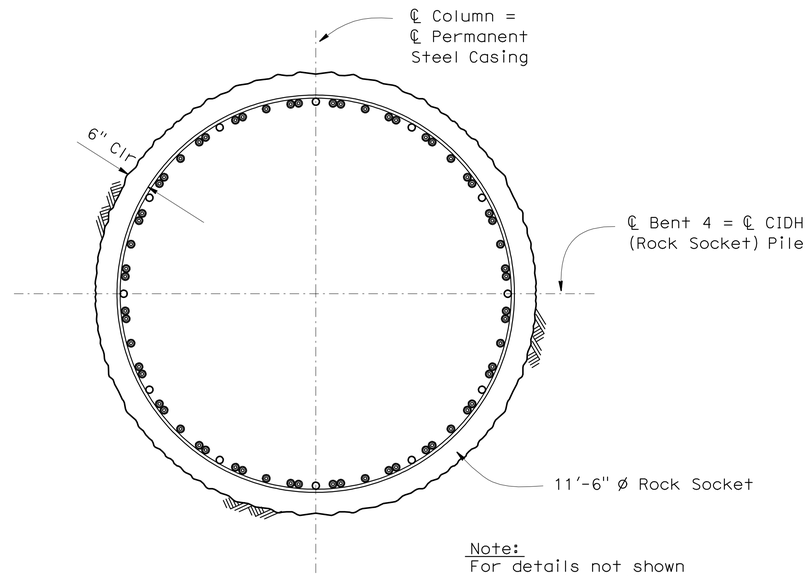

SECTION H-H
½" = 1'-0"

Note:
For details not shown see "Section G-G"

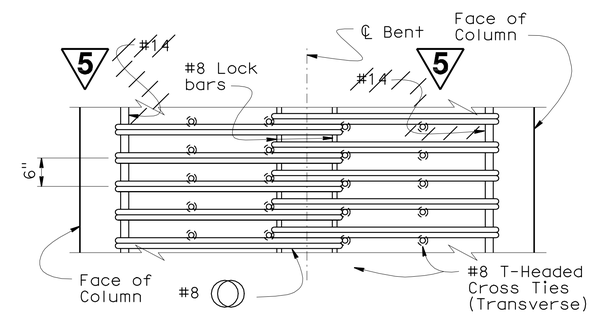

COLUMN HOOP DETAIL
No Scale

Note:
1. Place G bars below Mandatory Const Joint to Specified Tip Elevation.

5 **REVISED PER ADDENDUM No. 5 DATED SEPTEMBER 10, 2009**

	BY	CHECKED
DESIGN	R.Bromenschenkel	F.Zayati
DETAILS	M.Lane	R.Bromenschenkel
QUANTITIES	A. Alcantara	J. Han

STATE OF CALIFORNIA
DEPARTMENT OF TRANSPORTATION

DIVISION OF ENGINEERING SERVICES
STRUCTURE DESIGN
DESIGN BRANCH 4

BRIDGE NO. 34-0157L
POST MILE 9.02

ALTERNATIVE A
PRESIDIO VIADUCT - ~~SOUTHBOUND~~ LEFT
BENT 4 DETAILS NO. 3

STRUCTURES DESIGN DETAIL SHEET (ENGLISH) (REV. 10/25/05)

ORIGINAL SCALE IN INCHES FOR REDUCED PLANS 0 1 2 3

CU 04242
EA 163731

DISREGARD PRINTS BEARING EARLIER REVISION DATES

REVISION DATES: 2-26-09, 6-12-09, 7-1-09, 7-3-09, 7-13-09, 7-14-09, 5-30-09, 5-31-09, 6-12-09

SHEET 33 OF 114

FILE => 34-0157l-c-bnt4dts03.add

USERNAME => trlenard DATE PLOTTED => 10-SEP-2009 TIME PLOTTED => 05:14

DIST	COUNTY	ROUTE	POST MILES TOTAL PROJECT	SHEET No	TOTAL SHEETS
04	SF	101,1	9.2/9.8, 6.8/7.1	383A	567

REGISTERED CIVIL ENGINEER — DATE 6-4-09

7-20-09
PLANS APPROVAL DATE

The State of California or its officers or agents shall not be responsible for the accuracy or completeness of electronic copies of this plan sheet.

REGISTERED PROFESSIONAL ENGINEER — AHMED M M IBRAHIM — No. S 4865 — EXP. 9-30-10 — STRUCTURAL — STATE OF CALIFORNIA

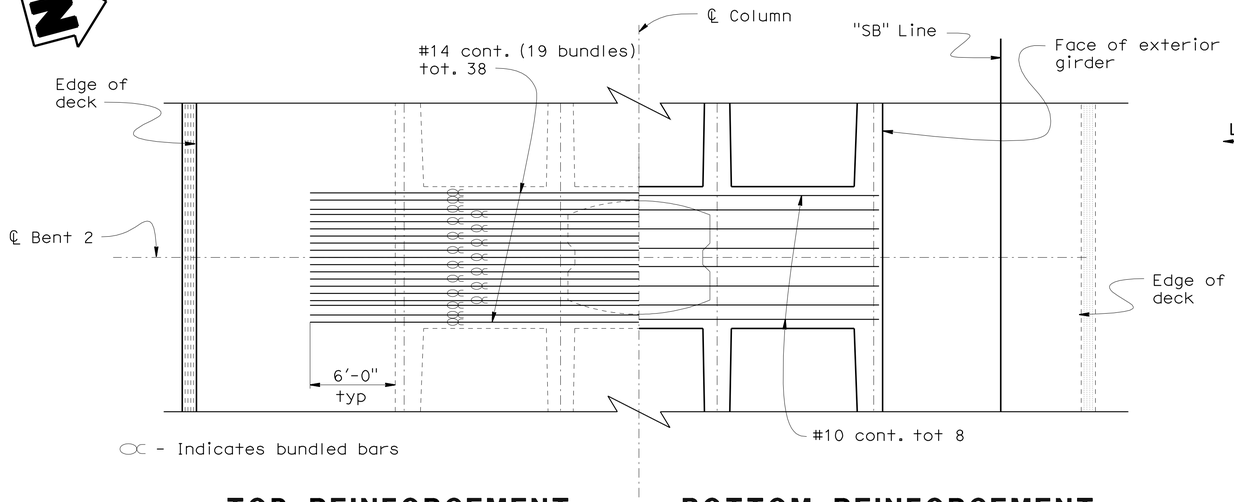

TOP REINFORCEMENT **BOTTOM REINFORCEMENT**

BENT CAP PLAN

3/16" = 1'-0"

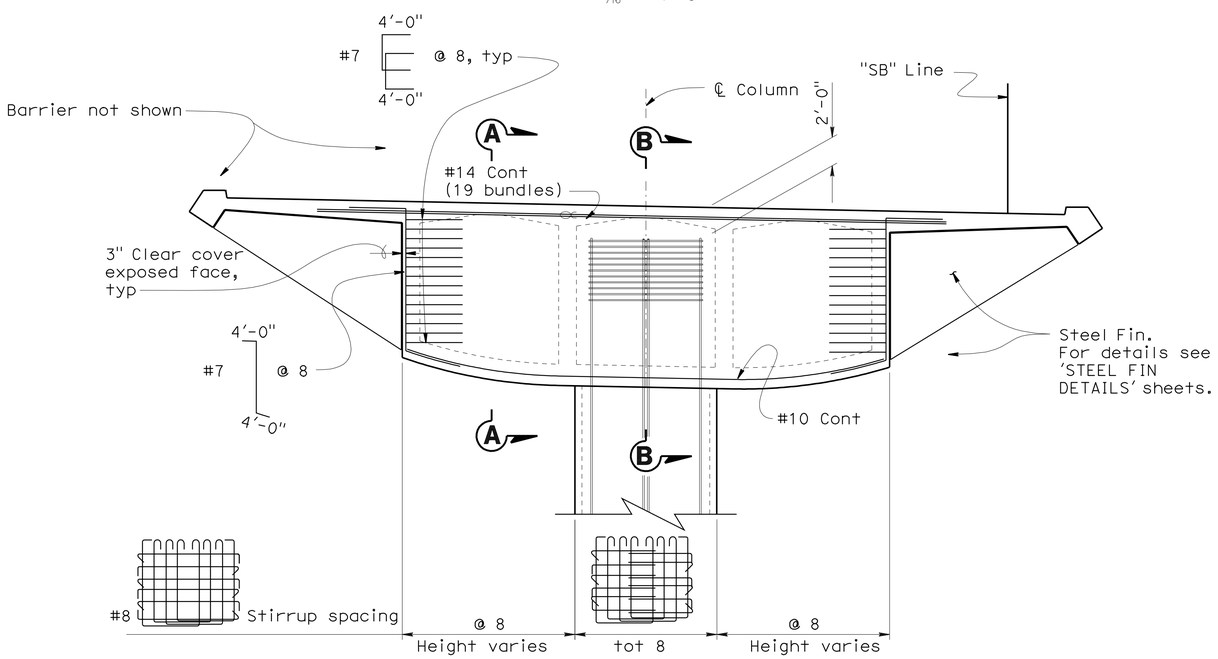

BENT CAP ELEVATION

3/16" = 1'-0"

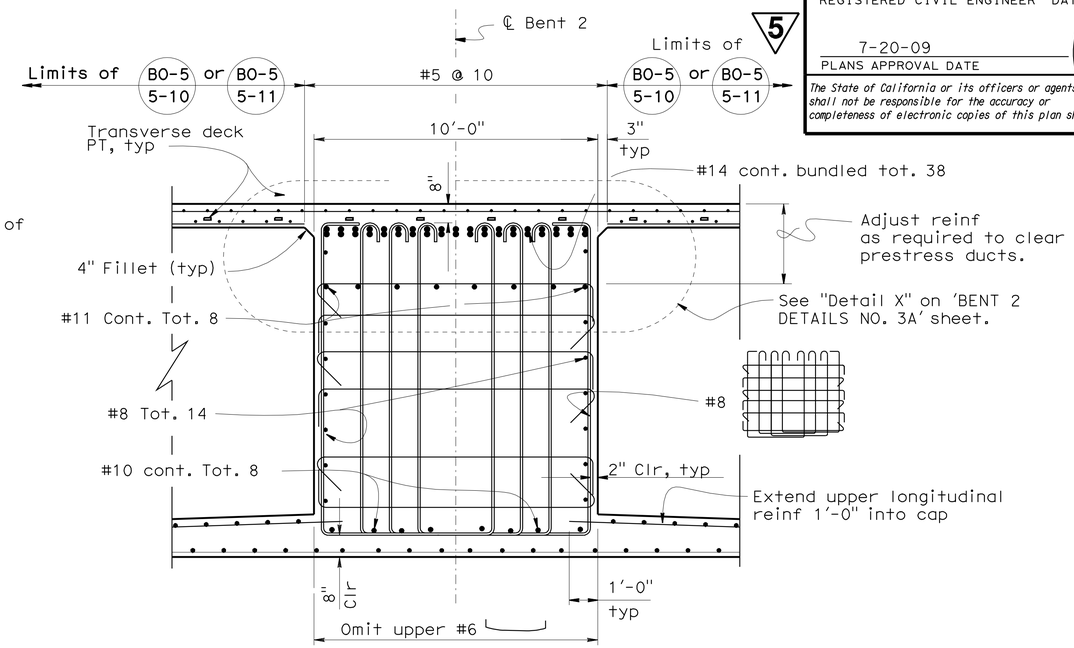

SECTION A-A

3/8" = 1'-0"

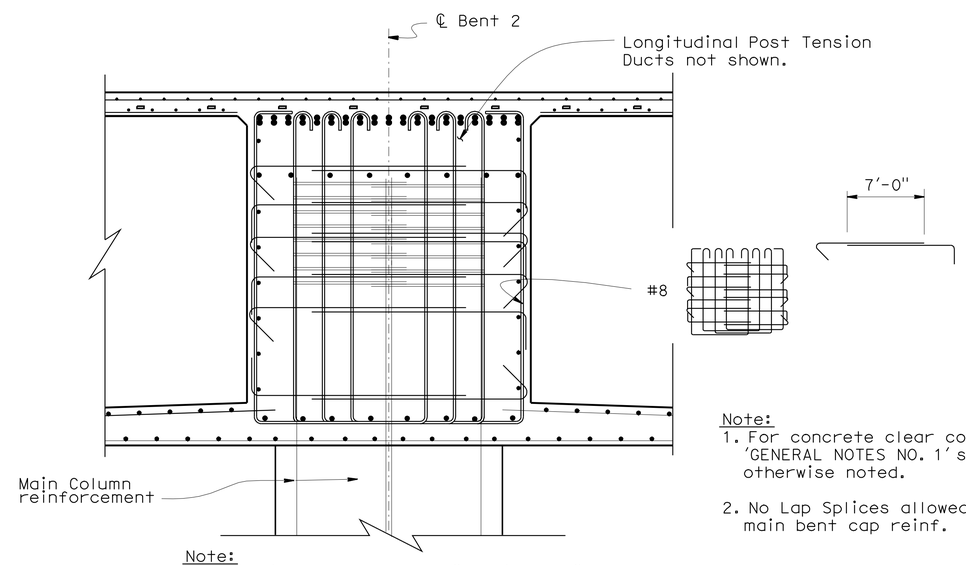

Note:
For details not shown see "Section A-A".

SECTION B-B

3/8" = 1'-0"

Note:
1. For concrete clear cover, see 'GENERAL NOTES NO. 1' sheet, unless otherwise noted.
2. No Lap Splices allowed for main bent cap reinf.

NOTE:
THE CONTRACTOR SHALL VERIFY ALL CONTROLLING FIELD DIMENSIONS BEFORE ORDERING OR FABRICATING ANY MATERIAL.

5 **ADDED PER ADDENDUM No. 5 DATED SEPTEMBER 10, 2009**

	BY	CHECKED
DESIGN	A.Ahmed/R.Bromenschenkel	H.Setberg/F.Zayati
DETAILS	Marvin Lane	A.Ahmed/R.Bromenschenkel
QUANTITIES	A. Alcantara	J. Han

STATE OF CALIFORNIA
DEPARTMENT OF TRANSPORTATION

DIVISION OF ENGINEERING SERVICES
STRUCTURE DESIGN
DESIGN BRANCH 4

BRIDGE NO. 34-0157L
POST MILE 9.02

ALTERNATIVE B
PRESIDIO VIADUCT - LEFT
BENT 2 DETAILS NO. 1A

STRUCTURES DESIGN DETAIL SHEET (ENGLISH) (REV. 10/25/05)

ORIGINAL SCALE IN INCHES FOR REDUCED PLANS 0 1 2 3

CU 04242
EA 163731

DISREGARD PRINTS BEARING EARLIER REVISION DATES

REVISION DATES: 5-1-09, 8-28-09, 9-2-09, 9-3-09, 5-22-09, 5-31-09, 6-11-09, 7-9-09, 8-28-09

SHEET 33A OF 114

FILE => 34-0157l-c-bnt2dts01a.add

USERNAME => rlenard DATE PLOTTED => 10-SEP-2009 TIME PLOTTED => 05:56

DIST	COUNTY	ROUTE	POST MILES TOTAL PROJECT	SHEET No	TOTAL SHEETS
04	SF	101,1	9.2/9.8, 6.8/7.1	383B	567

REGISTERED CIVIL ENGINEER 6-4-09 DATE

7-20-09
PLANS APPROVAL DATE

The State of California or its officers or agents shall not be responsible for the accuracy or completeness of electronic copies of this plan sheet.

REGISTERED PROFESSIONAL ENGINEER AHMED M M IBRAHIM No. S 4865 EXP. 9-30-10 STRUCTURAL STATE OF CALIFORNIA

5

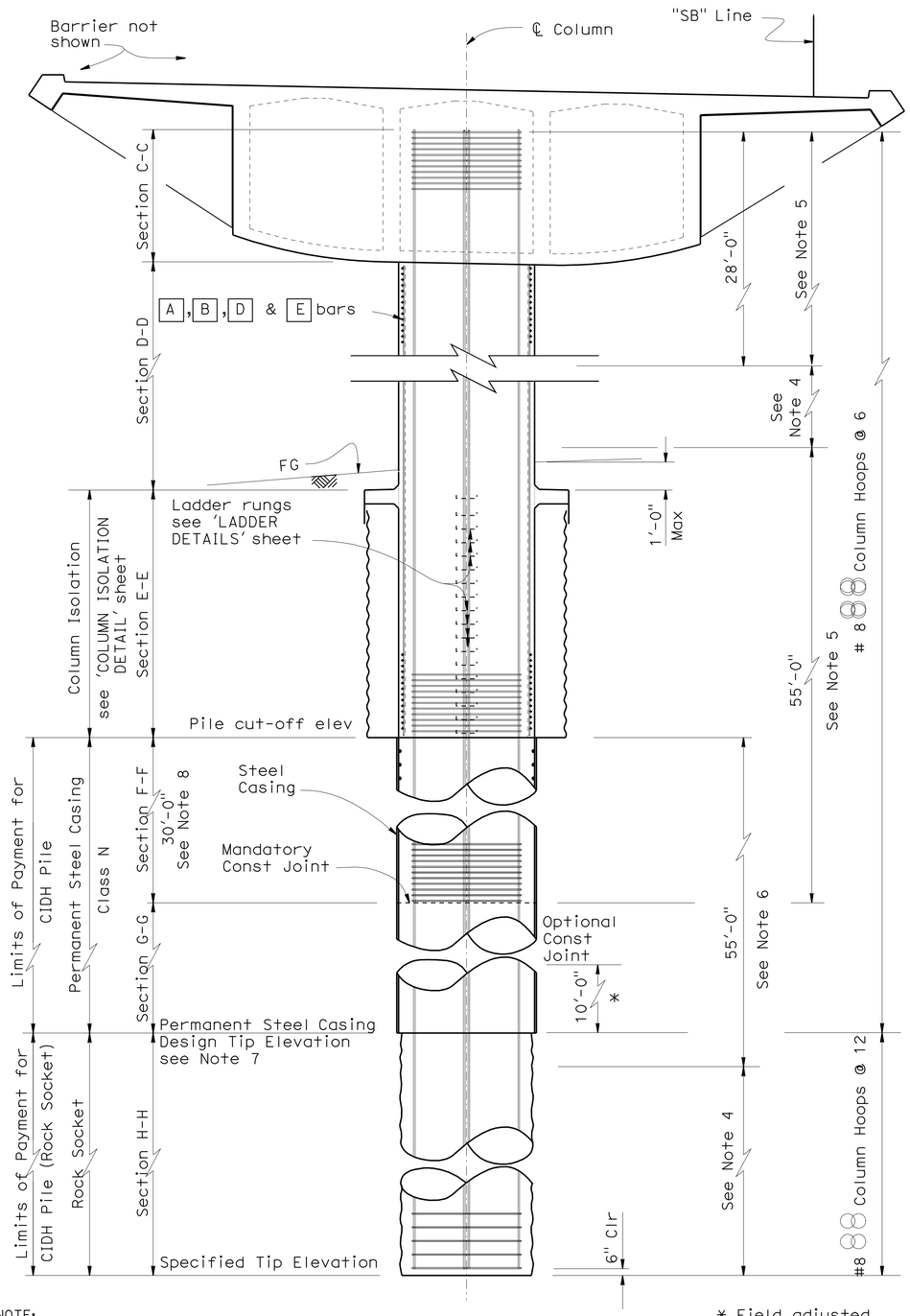

NOTE:
THE CONTRACTOR SHALL VERIFY ALL CONTROLLING FIELD DIMENSIONS BEFORE ORDERING OR FABRICATING ANY MATERIAL.

COLUMN ELEVATION

3/16" = 1'-0"

* Field adjusted

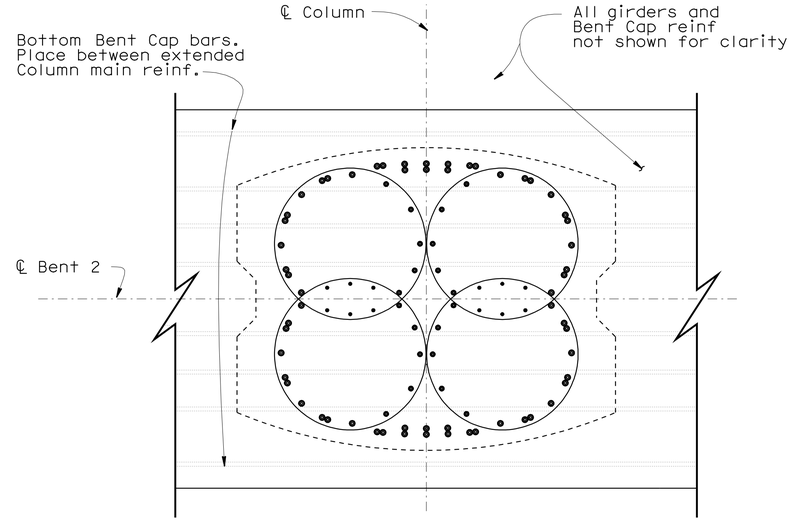

Note:
For details not shown see "Section D-D".

SECTION C-C

1/2" = 1'-0"

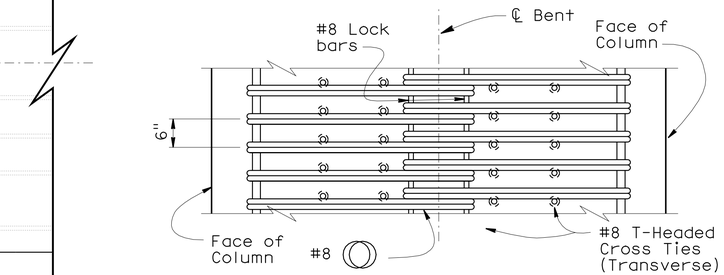

COLUMN HOOP DETAIL

No Scale

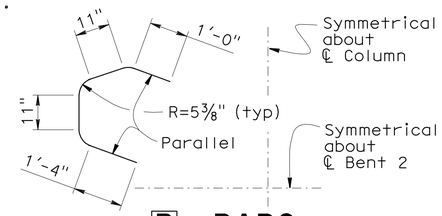

B BARS

No Scale

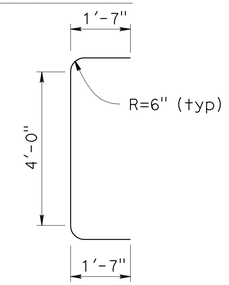

D BARS

No Scale

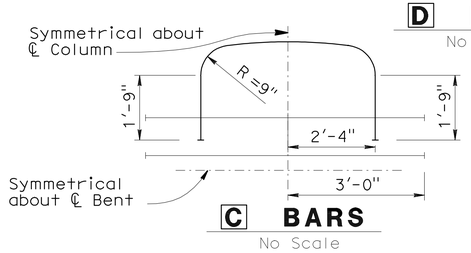

C BARS

No Scale

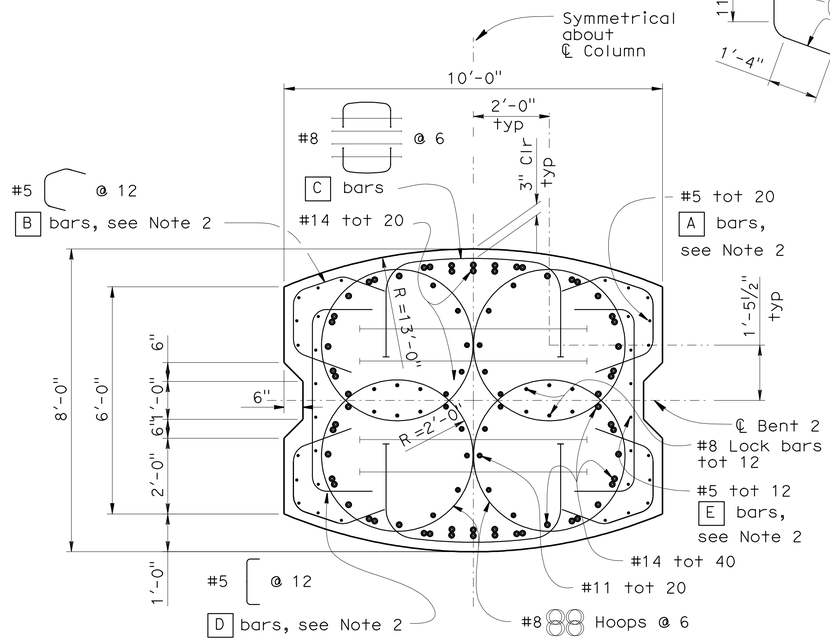

SECTION D-D

1/2" = 1'-0"

Notes:
1. For "Section E-E", "Section F-F", "Section G-G" and "Section H-H" see 'BENT 2 DETAILS NO. 3A' sheet.
2. Place A, B, D, and E bars between soffit and Pile Cut-Off Elevation.
3. For Pile Cut-Off data see "Pile Data Table".
4. Staggered - Ultimate Splices Allowed.
5. No splices allowed in main column reinf.
6. No splices allowed in main pile shaft reinf.
7. For Permanent Steel Casing Design Tip Elevation, see 'Pile Data Table' on "GENERAL NOTES NO. 2" sheet.
8. Concrete shall be poured under dry conditions.
9. Contractor shall use centralizers to maintain rebar clearance.

5 **ADDED PER ADDENDUM No. 5 DATED SEPTEMBER 10, 2009**

DESIGN	BY R.Bromenschenkel/Q.Zhao	CHECKED A. Ahmed	
DETAILS	BY Marvin Lane	CHECKED R.Bromenschenkel/Q.Zhao	
QUANTITIES	BY A. Alcantara	CHECKED J. Han	

STATE OF CALIFORNIA
DEPARTMENT OF TRANSPORTATION

DIVISION OF ENGINEERING SERVICES
STRUCTURE DESIGN
DESIGN BRANCH 4

BRIDGE NO. 34-0157L
POST MILE 9.02

ALTERNATIVE B
PRESIDIO VIADUCT - LEFT
BENT 2 DETAILS NO. 2A

STRUCTURES DESIGN DETAIL SHEET (ENGLISH) (REV. 10/25/05)

ORIGINAL SCALE IN INCHES FOR REDUCED PLANS 0 1 2 3

CU 04242
EA 163731

DISREGARD PRINTS BEARING EARLIER REVISION DATES

REVISION DATES: 4-10-09, 8-26-09, 8-28-09, 8-30-09, 8-31-09, 9-2-09, 9-8-09, 7-7-09, 7-8-09

SHEET 33B OF 114

FILE => 34-0157l-c-bnt2dts02a.add

USERNAME => Trlenard DATE PLOTTED => 10-SEP-2009 TIME PLOTTED => 05:15

DIST	COUNTY	ROUTE	POST MILES TOTAL PROJECT	SHEET No	TOTAL SHEETS
04	SF	101,1	9.2/9.8, 6.8/7.1	383C	567

REGISTERED CIVIL ENGINEER 6-4-09 DATE

7-20-09
PLANS APPROVAL DATE

REGISTERED PROFESSIONAL ENGINEER AHMED M M IBRAHIM No. S 4865 Exp. 9-30-10 STRUCTURAL STATE OF CALIFORNIA

The State of California or its officers or agents shall not be responsible for the accuracy or completeness of electronic copies of this plan sheet.

5

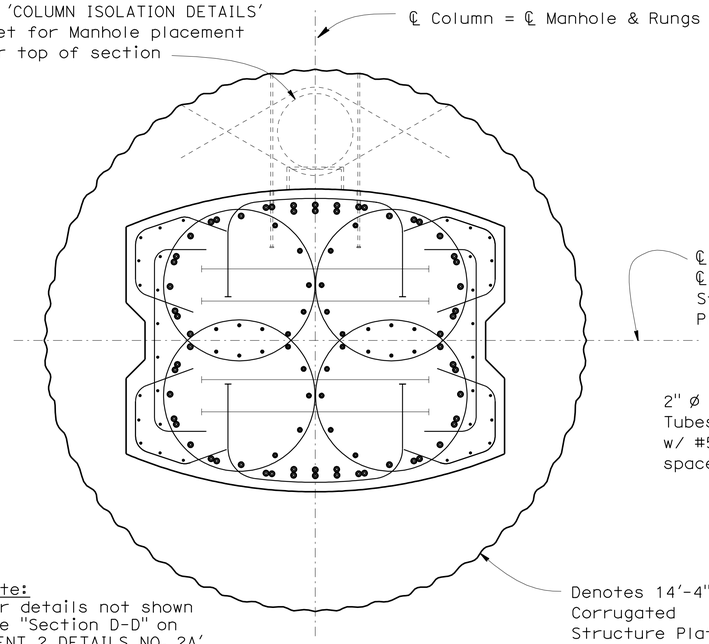

Note:
For details not shown see "Section D-D" on 'BENT 2 DETAILS NO. 2A' sheet.

SECTION E-E
½" = 1'-0"

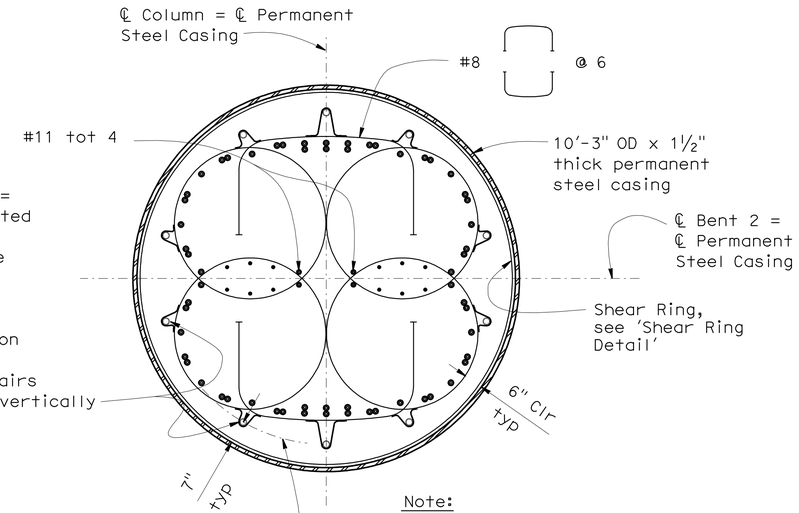

Note:
For details not shown see "Section D-D" on 'BENT 2 DETAILS NO. 2A' sheet.

SECTION F-F
½" = 1'-0"

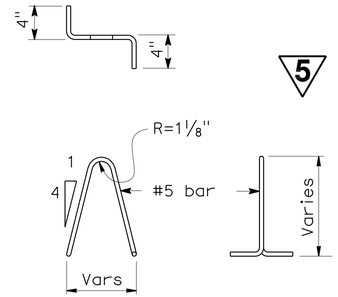

BAR CHAIR DETAIL
No Scale

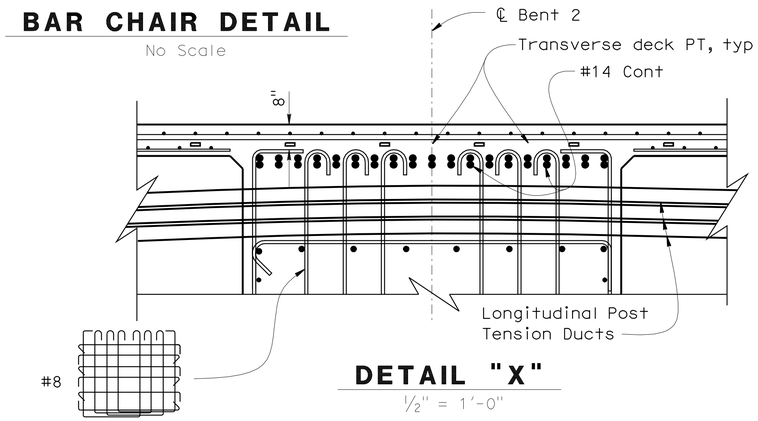

DETAIL "X"
½" = 1'-0"

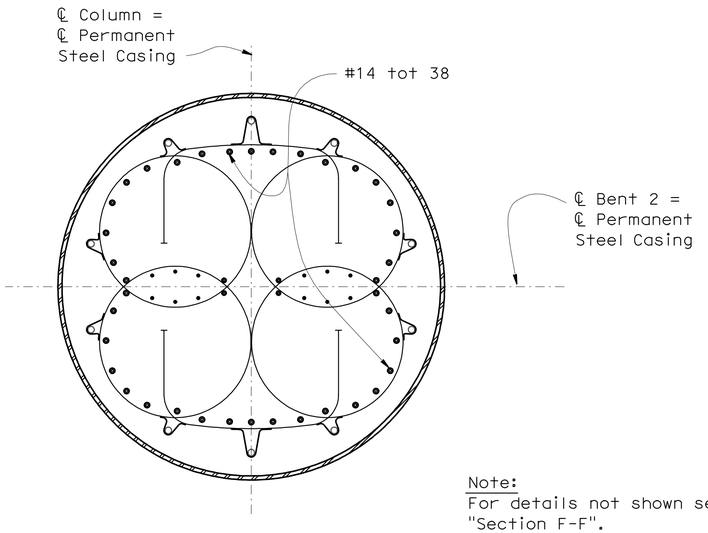

Note:
For details not shown see "Section F-F".

SECTION G-G
½" = 1'-0"

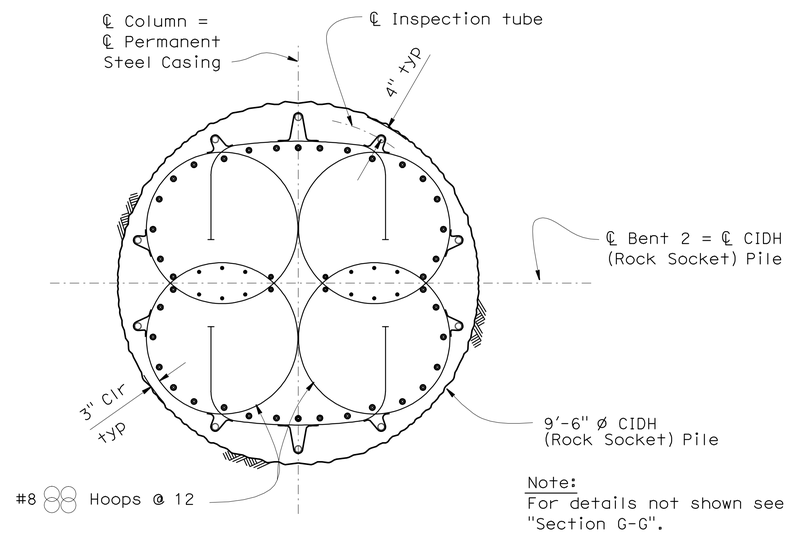

Note:
For details not shown see "Section G-G".

SECTION H-H
½" = 1'-0"

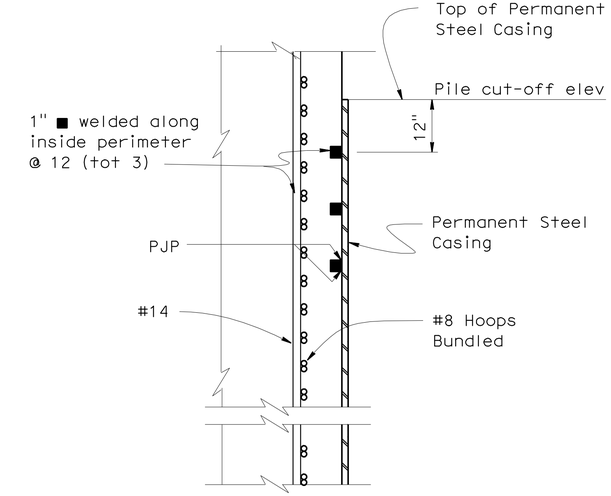

SHEAR RING DETAIL
¾"=1'-0"

Notes:
1. Inspection tubes shall be protected in place during placement of rebar cage.
2. Inspection tubes shall be placed as shown.

NOTE:
THE CONTRACTOR SHALL VERIFY ALL CONTROLLING FIELD DIMENSIONS BEFORE ORDERING OR FABRICATING ANY MATERIAL.

5 **ADDED PER ADDENDUM No. 5 DATED SEPTEMBER 10, 2009**

	BY	CHECKED
DESIGN	R.Bromenschenkel/Q.Zhao	A. Ahmed
DETAILS	Marvin Lane	R.Bromenschenkel/Q.Zhao
QUANTITIES	A. Alcantara	J. Han

STATE OF CALIFORNIA DEPARTMENT OF TRANSPORTATION

DIVISION OF ENGINEERING SERVICES STRUCTURE DESIGN DESIGN BRANCH 4

BRIDGE NO. 34-0157L
POST MILE 9.02

ALTERNATIVE B
PRESIDIO VIADUCT - LEFT
BENT 2 DETAILS NO. 3A

STRUCTURES DESIGN DETAIL SHEET (ENGLISH) (REV. 10/25/05)

ORIGINAL SCALE IN INCHES FOR REDUCED PLANS 0 1 2 3

CU 04242
EA 163731

DISREGARD PRINTS BEARING EARLIER REVISION DATES

REVISION DATES: 4-3-09 9-8-09 5-30-09 6-17-09 7-8-09 8-26-09 8-30-09 8-31-09 9-2-09

SHEET 33C OF 114

FILE => 34-0157l-c-bnt2dts03a.add

USERNAME => trienard DATE PLOTTED => 10-SEP-2009 TIME PLOTTED => 05:15

DIST	COUNTY	ROUTE	POST MILES TOTAL PROJECT	SHEET No	TOTAL SHEETS
04	SF	101,1	9.2/9.8, 6.8/7.1	383D	567

Ahmed Ibrahim 6-4-09
REGISTERED CIVIL ENGINEER DATE

7-20-09
PLANS APPROVAL DATE

REGISTERED PROFESSIONAL ENGINEER AHMED M M IBRAHIM No. S 4865 Exp. 9-30-10 STRUCTURAL STATE OF CALIFORNIA

The State of California or its officers or agents shall not be responsible for the accuracy or completeness of electronic copies of this plan sheet.

NOTE:
THE CONTRACTOR SHALL VERIFY ALL CONTROLLING FIELD DIMENSIONS BEFORE ORDERING OR FABRICATING ANY MATERIAL.

5

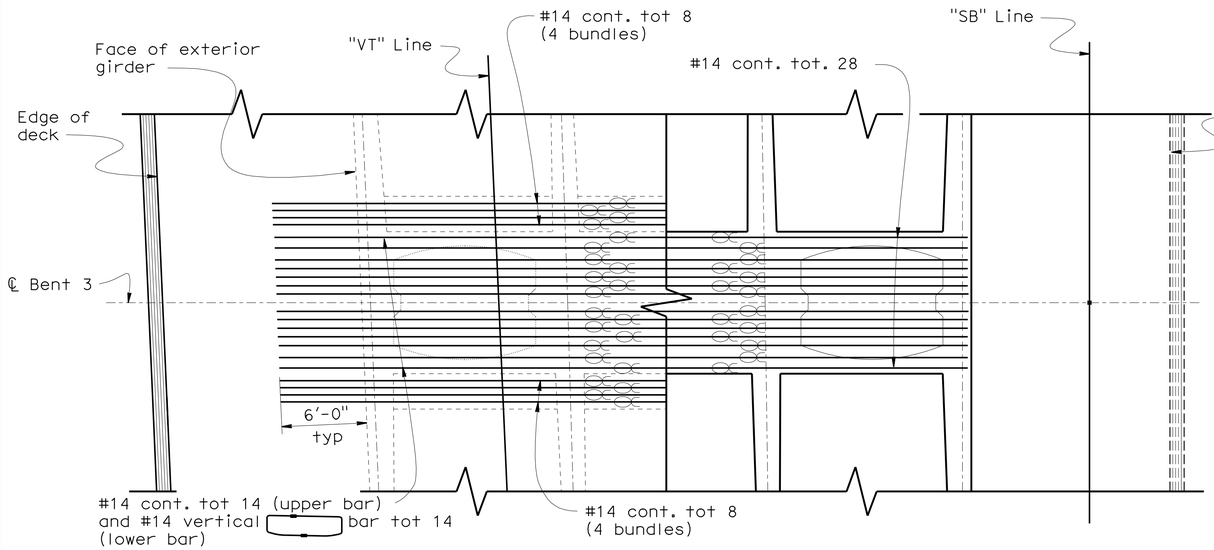

TOP REINFORCEMENT **BOTTOM REINFORCEMENT**

BENT CAP PLAN

3/16" = 1'-0"

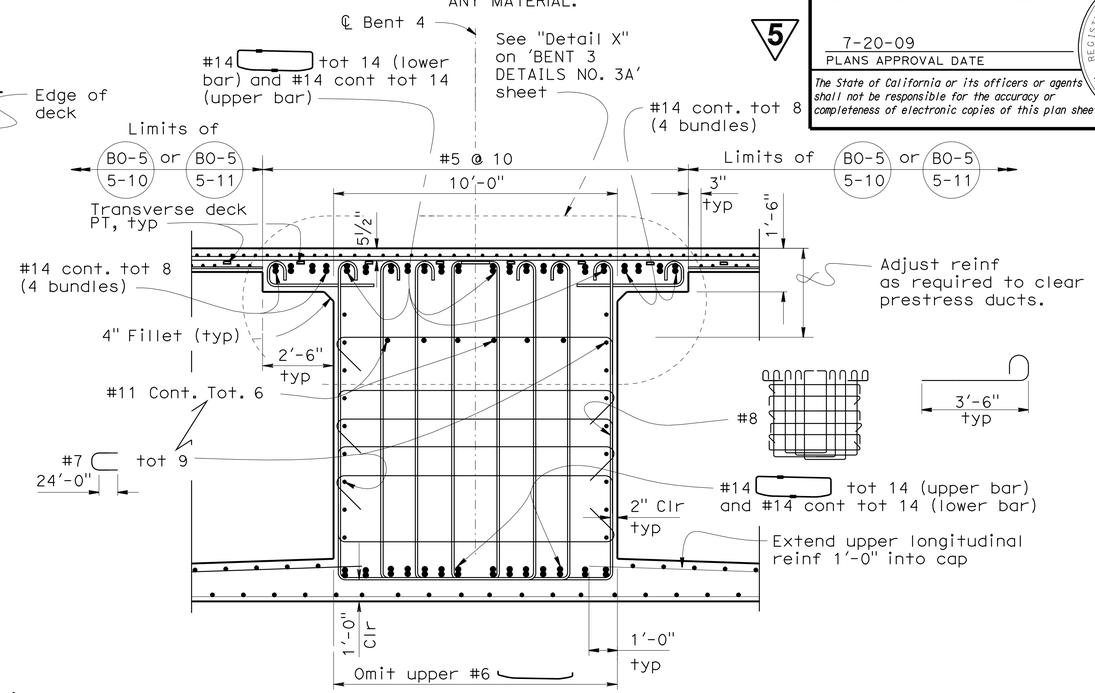

SECTION A-A

3/8" = 1'-0"

℄ Indicates bundled bars

35 - #6 12'-0" Placed at intersection between #14 vertical bar and every other #7 horizontal bar

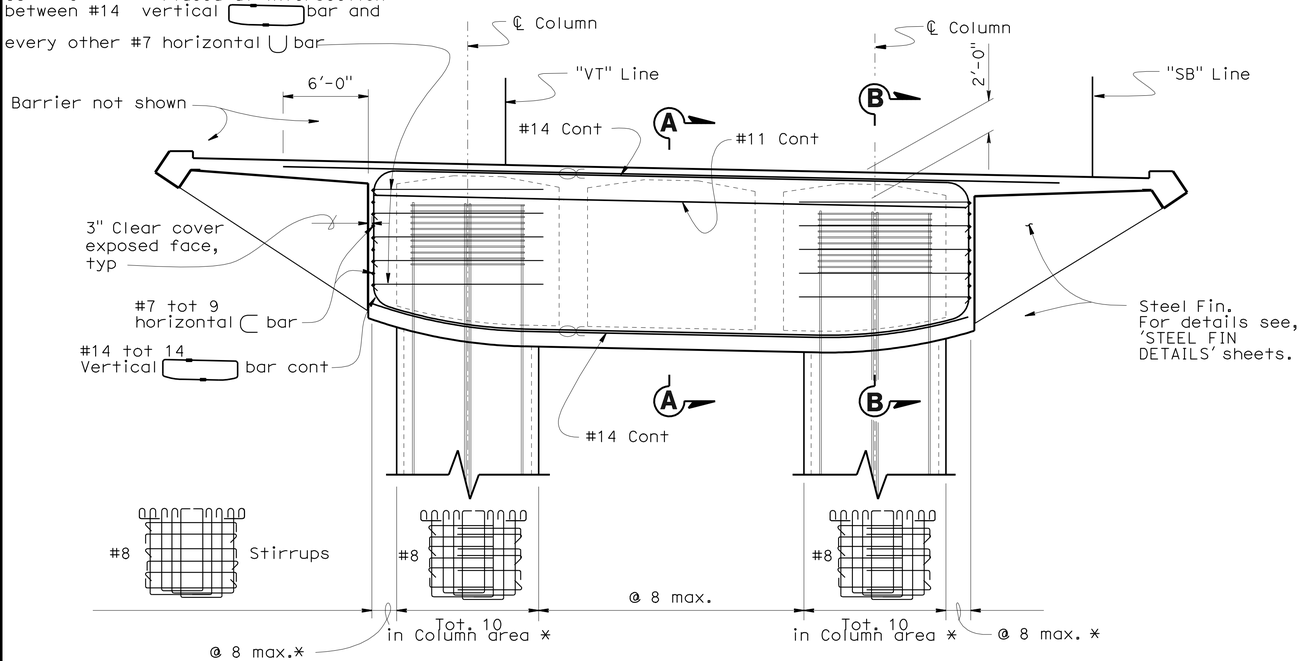

BENT CAP ELEVATION

3/16" = 1'-0"

* Height varies

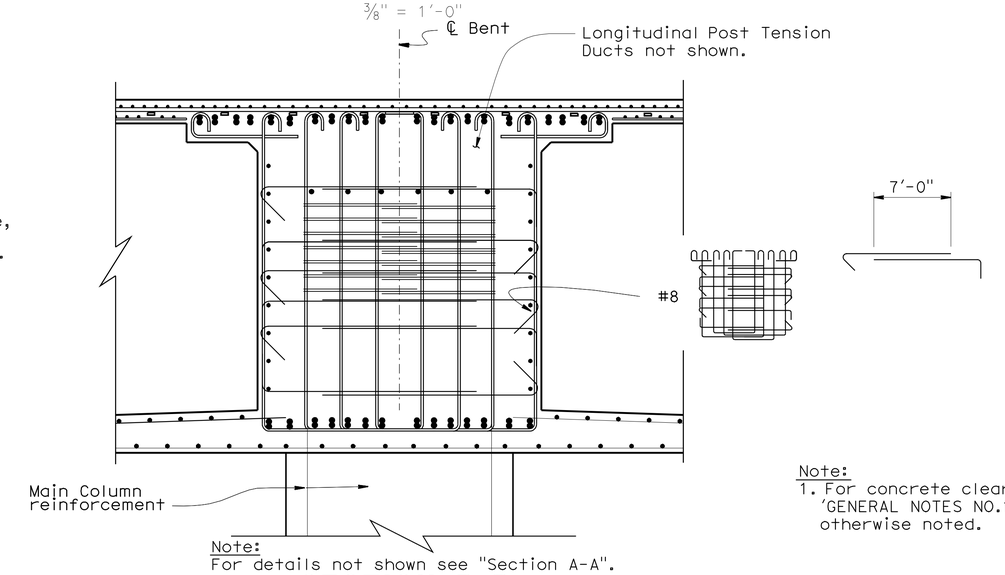

Note:
For details not shown see "Section A-A".

SECTION B-B

3/8" = 1'-0"

Note:
1. For concrete clear cover, see 'GENERAL NOTES NO.1' sheet, unless otherwise noted.

5 **ADDED PER ADDENDUM No. 5 DATED SEPTEMBER 10, 2009**

	BY	CHECKED
DESIGN	R.Bromenschenkel/Q.Zhao	A. Ahmed
DETAILS	J. Thorne/M. Lane	R.Bromenschenkel/Q. Zhao
QUANTITIES	A. Alcantara	J. Han

STATE OF CALIFORNIA DEPARTMENT OF TRANSPORTATION

DIVISION OF ENGINEERING SERVICES STRUCTURE DESIGN DESIGN BRANCH 4

BRIDGE NO. 34-0157L
POST MILE 9.02

ALTERNATIVE B
PRESIDIO VIADUCT - LEFT
BENT 3 DETAILS NO. 1A

STRUCTURES DESIGN DETAIL SHEET (ENGLISH) (REV. 10/25/05)

ORIGINAL SCALE IN INCHES FOR REDUCED PLANS 0 1 2 3

CU 04242
EA 163731

DISREGARD PRINTS BEARING EARLIER REVISION DATES

REVISION DATES: 4-10-09 9-2-09 9-3-09 9-8-09 6-16-09 7-7-09 8-28-09 8-29-09 8-31-09

SHEET 33D OF 114

FILE => 34-0157I-c-bnt3dts01a.add

USERNAME => trlenard DATE PLOTTED => 10-SEP-2009 TIME PLOTTED => 05:15

DIST	COUNTY	ROUTE	POST MILES TOTAL PROJECT	SHEET No	TOTAL SHEETS
04	SF	101,1	9.2/9.8, 6.8/7.1	383E	567

REGISTERED CIVIL ENGINEER — DATE 6-4-09

7-20-09
PLANS APPROVAL DATE

REGISTERED PROFESSIONAL ENGINEER — AHMED M M IBRAHIM — No. S 4865 — EXP. 9-30-10 — STRUCTURAL — STATE OF CALIFORNIA

The State of California or its officers or agents shall not be responsible for the accuracy or completeness of electronic copies of this plan sheet.

5 **ADDED PER ADDENDUM No. 5 DATED SEPTEMBER 10, 2009**

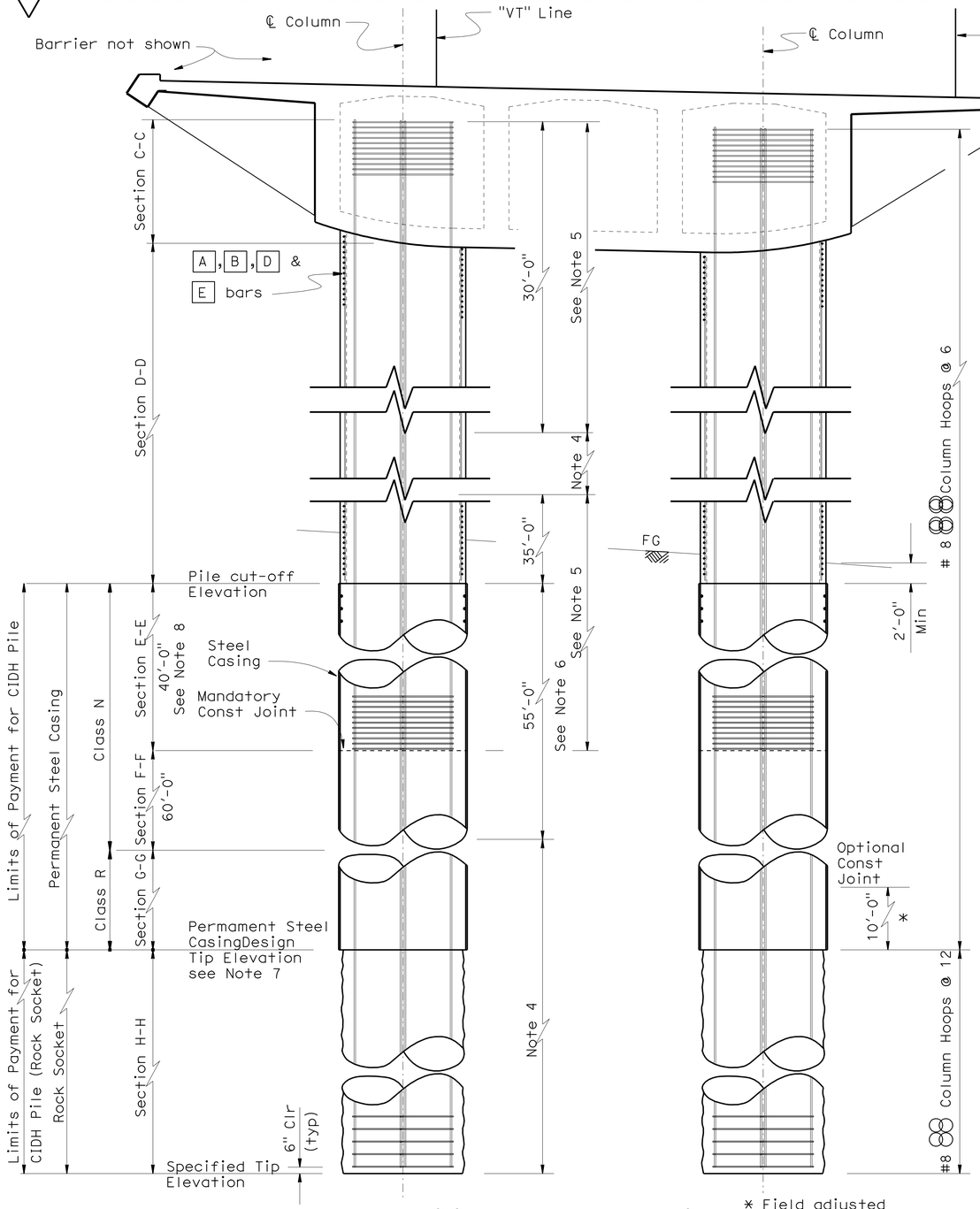

COLUMN ELEVATION

3/16" = 1'-0"

* Field adjusted

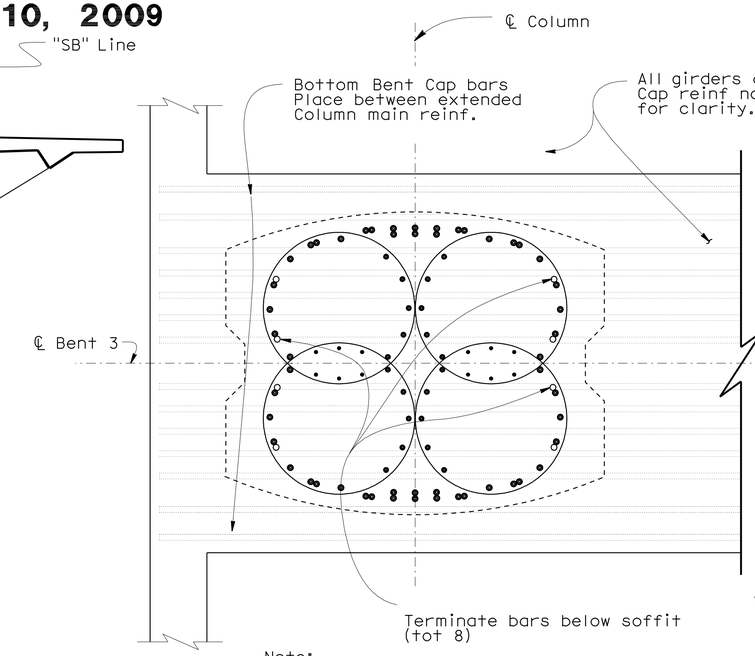

Note:
For details not shown see "Section D-D".

SECTION C-C

1/2" = 1'-0"

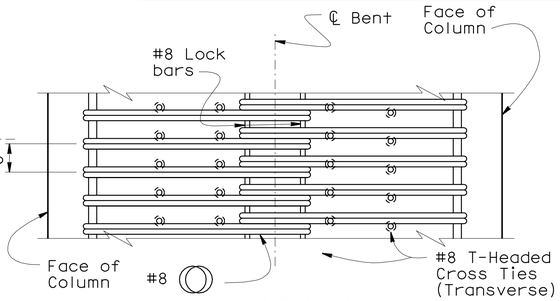

COLUMN HOOP DETAIL

No Scale

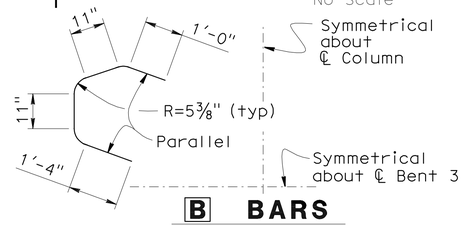

B BARS

No Scale

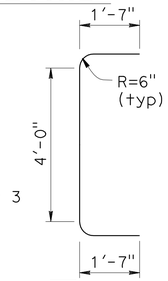

D BARS

No Scale

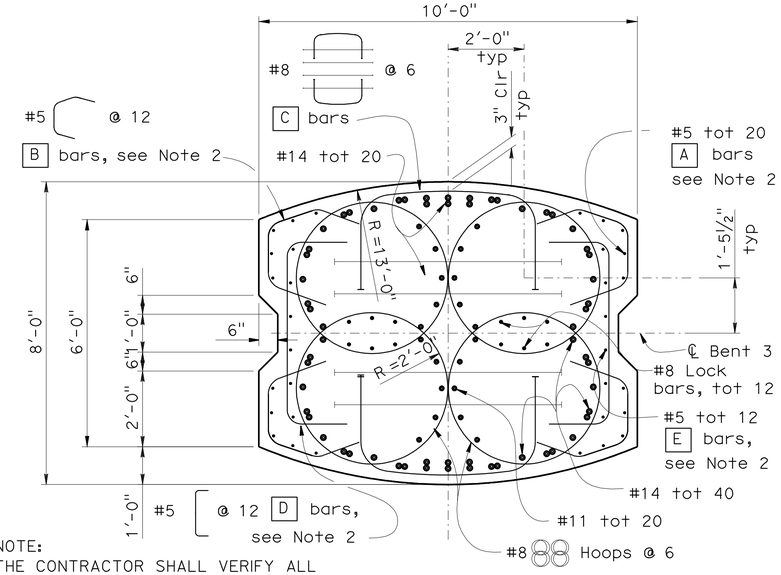

SECTION D-D

1/2" = 1'-0"

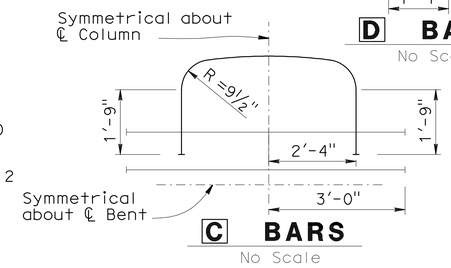

C BARS

No Scale

NOTE:
THE CONTRACTOR SHALL VERIFY ALL CONTROLLING FIELD DIMENSIONS BEFORE ORDERING OR FABRICATING ANY MATERIAL.

Notes:
1. For "Section E-E", "Section F-F", "Section G-G" and "Section H-H" see 'BENT 3 DETAILS NO. 3A' sheet.
2. Place A, B, D, and E bars between soffit and Pile Cut-Off Elevation.
3. For Pile Cut-Off data see "Pile Data Table".
4. Staggered - Ultimate Splices Allowed.
5. No splices allowed in main column reinf.
6. No splices allowed in main pile shaft reinf.
7. For Permanent Steel Casing Design Tip Elevation, see 'Pile Data Table' on "GENERAL NOTES NO. 2" sheet.
8. Concrete shall be poured under dry conditions.
9. Contractor shall use centralizers to maintain rebar clearance.

	BY	CHECKED
DESIGN	R.Bromenschenkel/Q.Zhao	A. Ahmed
DETAILS	M.Lane	R.Bromenschenkel/Q. Zhao
QUANTITIES	A. Alcantara	J. Han

STATE OF CALIFORNIA
DEPARTMENT OF TRANSPORTATION

DIVISION OF ENGINEERING SERVICES
STRUCTURE DESIGN
DESIGN BRANCH 4

BRIDGE NO. 34-0157L
POST MILE 9.02

ALTERNATIVE B

PRESIDIO VIADUCT - LEFT

BENT 3 DETAILS NO. 2A

STRUCTURES DESIGN DETAIL SHEET (ENGLISH) (REV. 10/25/05)

ORIGINAL SCALE IN INCHES FOR REDUCED PLANS 0 1 2 3

CU 04242
EA 163731

DISREGARD PRINTS BEARING EARLIER REVISION DATES

REVISION DATES: 4-10-09 8-26-09 8-28-09 8-28-09 8-30-09 8-31-09 9-2-09 9-8-09 1-8-09

SHEET 33E OF 114

FILE => 34-0157l-c-bnt3dts02a.add

USERNAME => trlenard DATE PLOTTED => 10-SEP-2009 TIME PLOTTED => 05:15

DIST	COUNTY	ROUTE	POST MILES TOTAL PROJECT	SHEET No	TOTAL SHEETS
04	SF	101,1	9.2/9.8, 6.8/7.1	383F	567

REGISTERED CIVIL ENGINEER — DATE 6-4-09

7-20-09
PLANS APPROVAL DATE

REGISTERED PROFESSIONAL ENGINEER — AHMED M M IBRAHIM — No. S 4865 — Exp. 9-30-10 — STRUCTURAL — STATE OF CALIFORNIA

The State of California or its officers or agents shall not be responsible for the accuracy or completeness of electronic copies of this plan sheet.

5

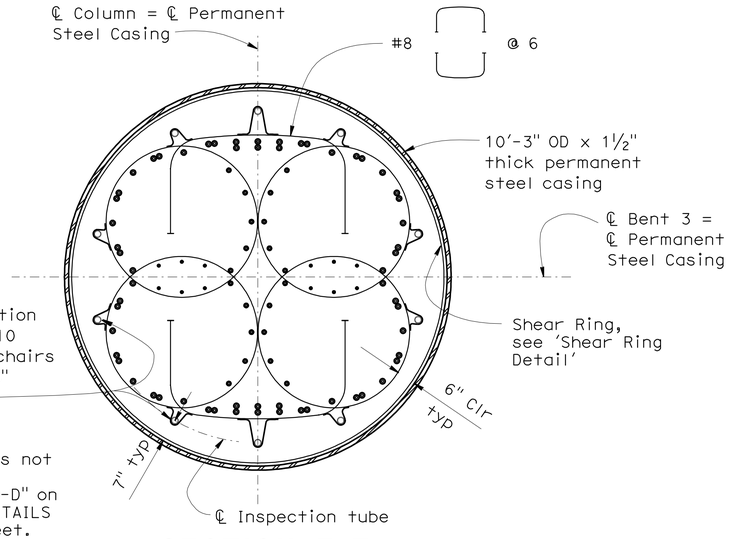

Note:
For details not shown see "Section D-D" on 'BENT 3 DETAILS NO. 2A' sheet.

SECTION E-E

½" = 1'-0"

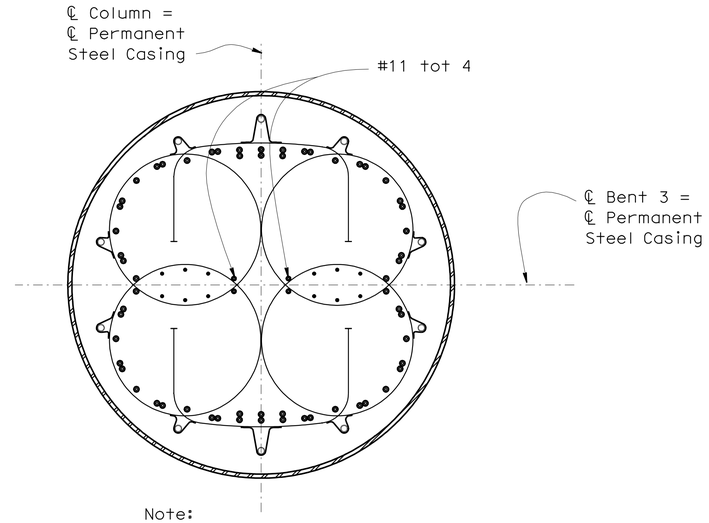

Note:
For details not shown see "Section E-E".

SECTION F-F

½" = 1'-0"

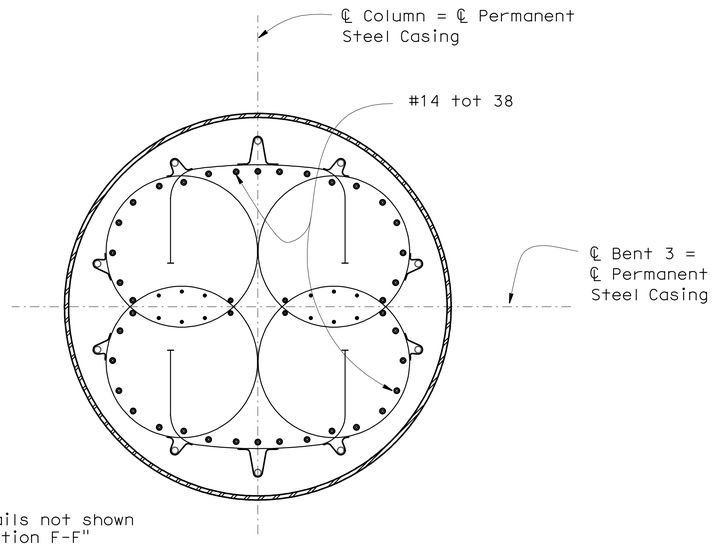

Note:
For details not shown see "Section F-F"

SECTION G-G

½" = 1'-0"

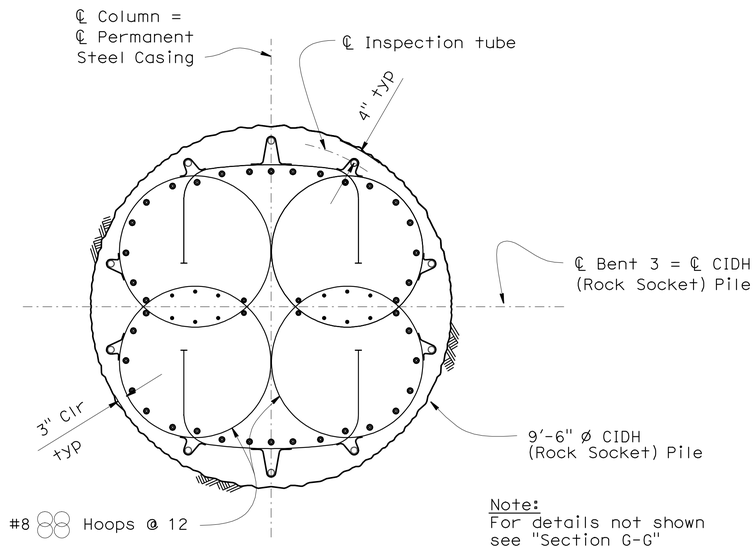

Note:
For details not shown see "Section G-G"

SECTION H-H

½" = 1'-0"

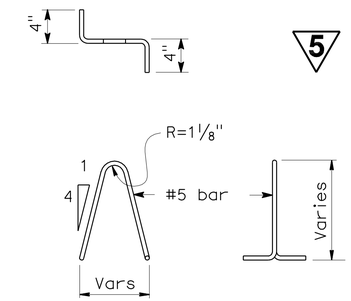

BAR CHAIR DETAIL

No Scale

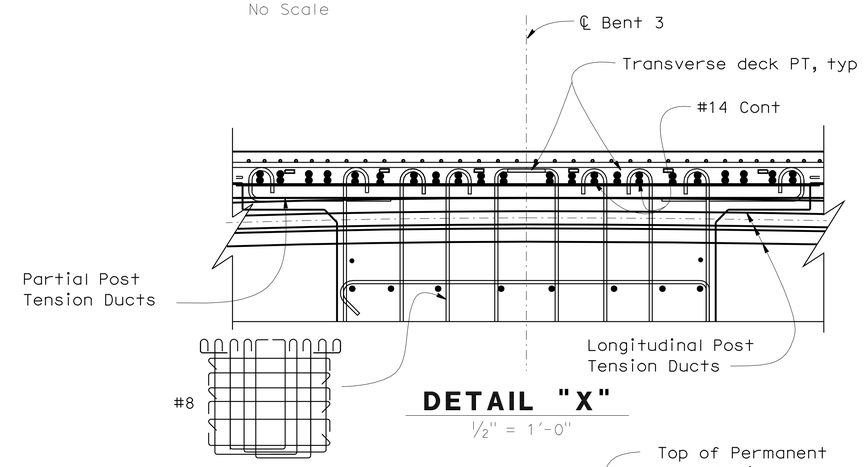

DETAIL "X"

½" = 1'-0"

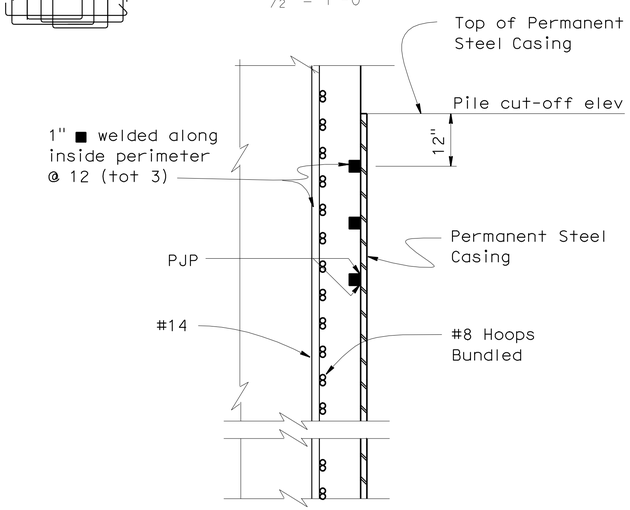

SHEAR RING DETAIL

¾"=1'-0"

NOTE:
THE CONTRACTOR SHALL VERIFY ALL CONTROLLING FIELD DIMENSIONS BEFORE ORDERING OR FABRICATING ANY MATERIAL.

Notes:
1. Inspection tubes shall be protected in place during placement of rebar cage.
2. Inspection tubes shall be placed as shown.

5 **ADDED PER ADDENDUM No. 5 DATED SEPTEMBER 10, 2009**

	BY	CHECKED
DESIGN	R.Bromenschenkel/Q.Zhao	A. Ahmed
DETAILS	M.Lane	R.Bromenschenkel/Q.Zhao
QUANTITIES	A. Alcantara	J. Han

STATE OF CALIFORNIA
DEPARTMENT OF TRANSPORTATION

DIVISION OF ENGINEERING SERVICES
STRUCTURE DESIGN
DESIGN BRANCH 4

CU 04242
EA 163731

BRIDGE NO. 34-0157L
POST MILE 9.02

ALTERNATIVE B
PRESIDIO VIADUCT - LEFT
BENT 3 DETAILS NO. 3A

STRUCTURES DESIGN DETAIL SHEET (ENGLISH) (REV. 10/25/05)

ORIGINAL SCALE IN INCHES FOR REDUCED PLANS 0 1 2 3

DISREGARD PRINTS BEARING EARLIER REVISION DATES

REVISION DATES: 3-31-09 9-2-09 9-3-09 9-8-09 7-3-09 7-9-09 7-13-09 8-27-09 8-30-09

SHEET 33F OF 114

FILE => 34-0157l-c-bnt3dts03a.add

USERNAME => trienard DATE PLOTTED => 10-SEP-2009 TIME PLOTTED => 05:15

DIST	COUNTY	ROUTE	POST MILES TOTAL PROJECT	SHEET No	TOTAL SHEETS
04	SF	101,1	9.2/9.8, 6.8/7.1	383G	567

REGISTERED CIVIL ENGINEER 6-4-09 DATE

7-20-09
PLANS APPROVAL DATE

The State of California or its officers or agents shall not be responsible for the accuracy or completeness of electronic copies of this plan sheet.

REGISTERED PROFESSIONAL ENGINEER AHMED M M IBRAHIM No. S 4865 Exp. 9-30-10 STRUCTURAL STATE OF CALIFORNIA

NOTE:
THE CONTRACTOR SHALL VERIFY ALL CONTROLLING FIELD DIMENSIONS BEFORE ORDERING OR FABRICATING ANY MATERIAL.

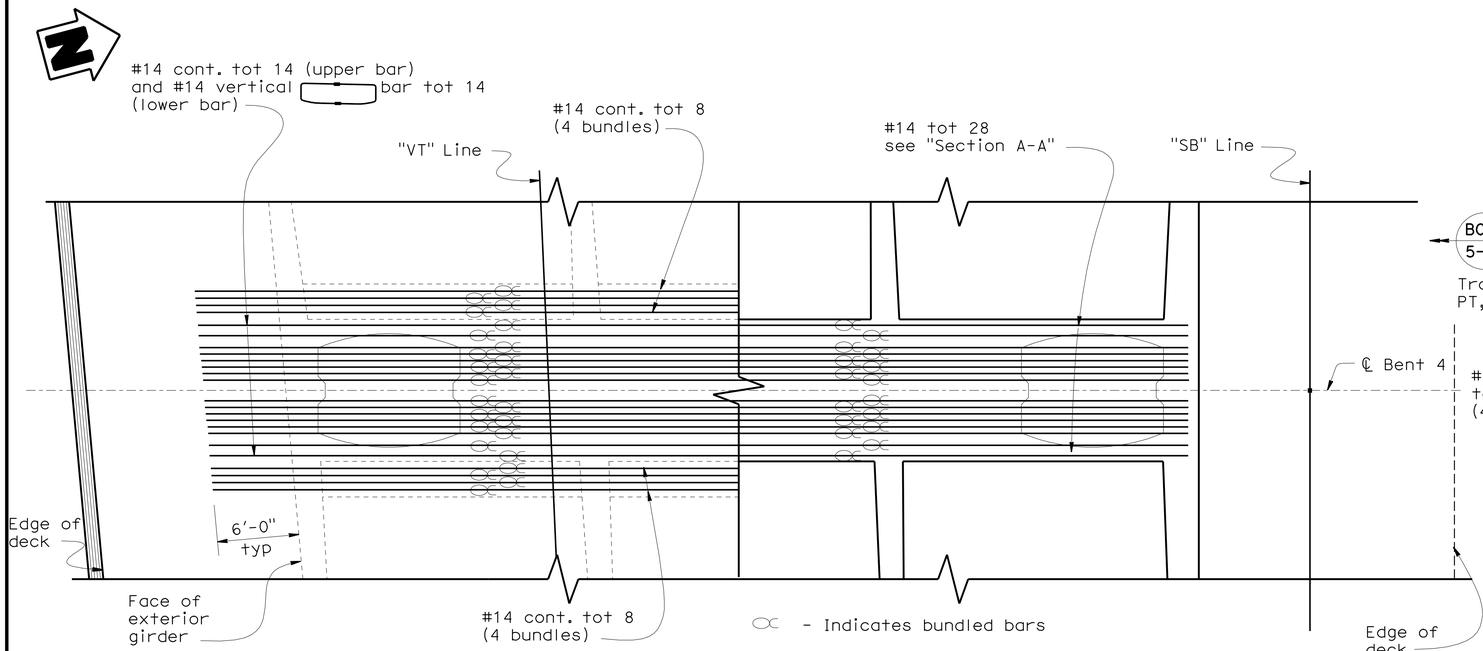

TOP REINFORCEMENT

BOTTOM REINFORCEMENT

BENT CAP PLAN

3/16" = 1'-0"

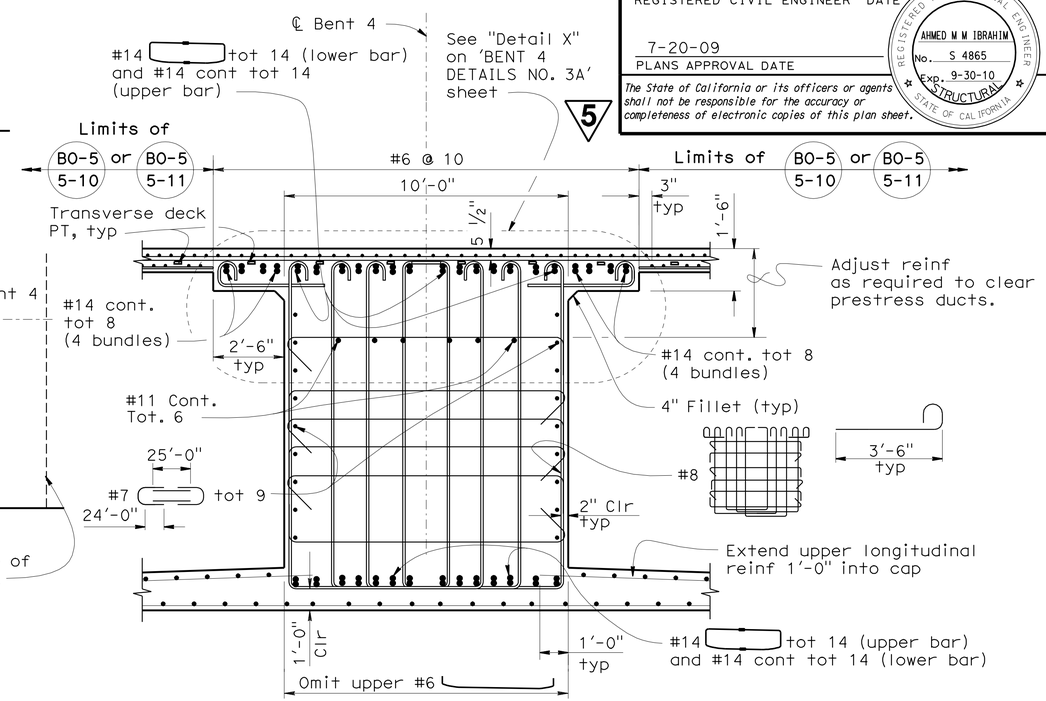

SECTION A-A

3/8" = 1'-0"

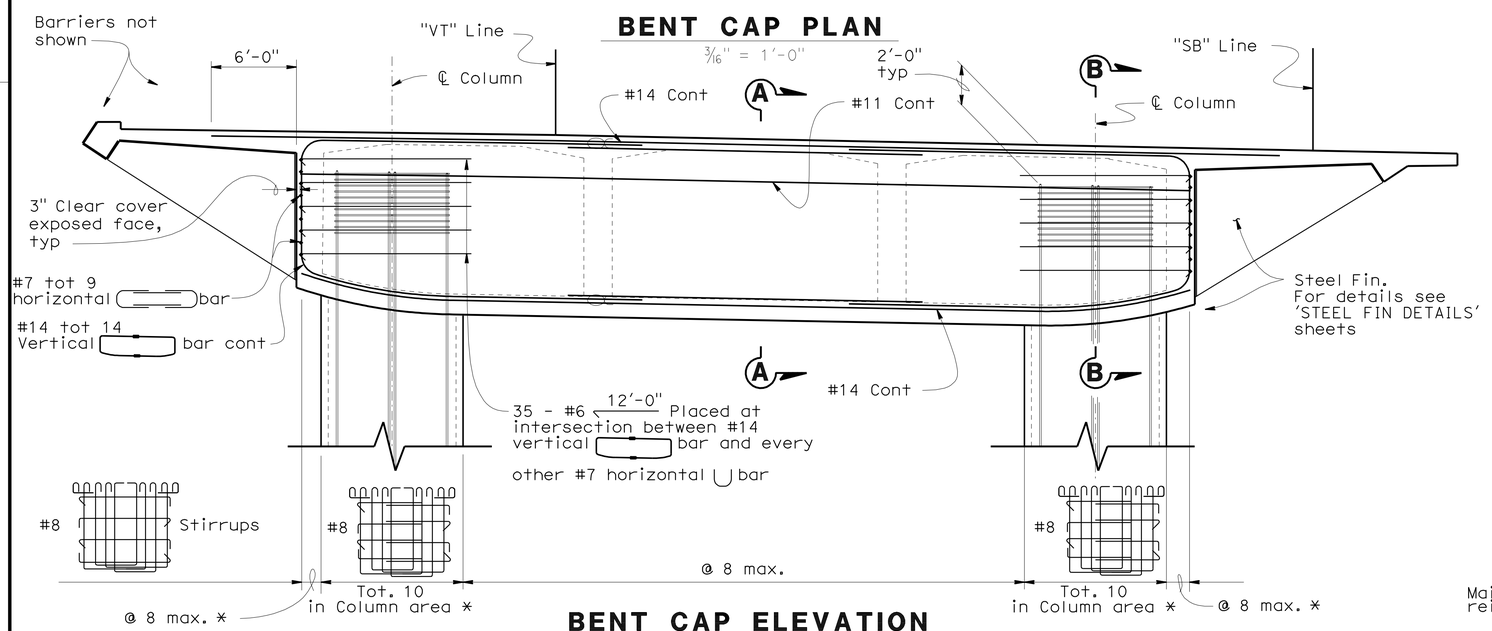

BENT CAP ELEVATION

3/16" = 1'-0"

* Height varies

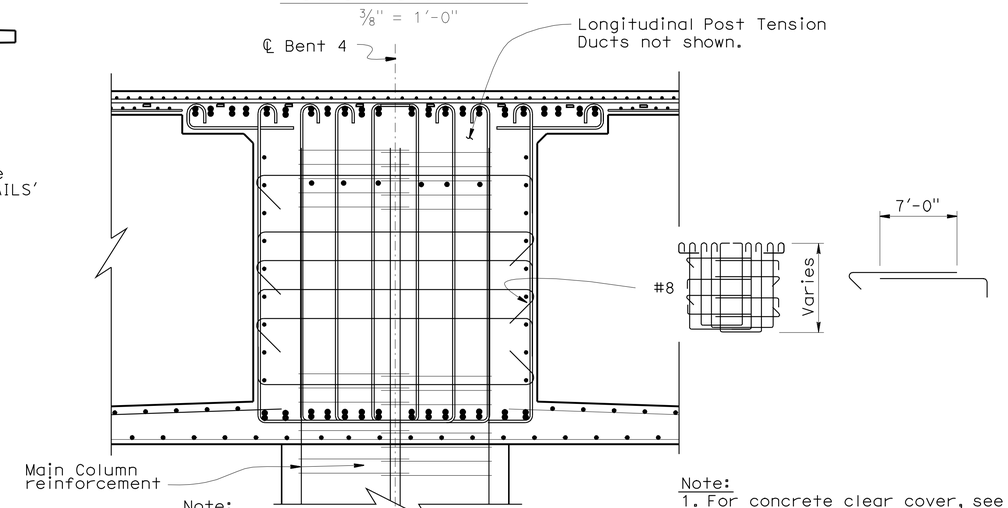

Note:
For details not shown see "Section A-A".

SECTION B-B

3/8" = 1'-0"

Note:
1. For concrete clear cover, see 'GENERAL NOTES NO. 1' sheet, unless otherwise noted.

5 **ADDED PER ADDENDUM No. 5 DATED SEPTEMBER 10, 2009**

	BY	CHECKED
DESIGN	R.Bromenschenkel/Q.Zhao	A. Ahmed
DETAILS	Jeff Thorne	R.Bromenschenkel/Q.Zhao
QUANTITIES	A. Alcantara	J. Han

STATE OF CALIFORNIA
DEPARTMENT OF TRANSPORTATION

DIVISION OF ENGINEERING SERVICES
STRUCTURE DESIGN
DESIGN BRANCH 4

BRIDGE NO. 34-0157L
POST MILE 9.02

ALTERNATIVE B

PRESIDIO VIADUCT - LEFT

BENT 4 DETAILS NO. 1A

STRUCTURES DESIGN DETAIL SHEET (ENGLISH) (REV. 10/25/05)

ORIGINAL SCALE IN INCHES FOR REDUCED PLANS 0 1 2 3

CU 04242
EA 163731

DISREGARD PRINTS BEARING EARLIER REVISION DATES

REVISION DATES: 3-31-09 8-31-09 9-2-09 9-3-09 9-8-09 7-7-09 7-13-09 8-25-09 8-28-09

SHEET 33G OF 114

FILE => 34-0157l-c-bnt4dts0.add

USERNAME => trienard DATE PLOTTED => 10-SEP-2009 TIME PLOTTED => 05:16

DIST	COUNTY	ROUTE	POST MILES TOTAL PROJECT	SHEET No	TOTAL SHEETS
04	SF	101,1	9.2/9.8, 6.8/7.1	383H	567

REGISTERED CIVIL ENGINEER — DATE 6-4-09

7-20-09
PLANS APPROVAL DATE

REGISTERED PROFESSIONAL ENGINEER — AHMED M M IBRAHIM — No. S 4865 — EXP. 9-30-10 — STRUCTURAL — STATE OF CALIFORNIA

The State of California or its officers or agents shall not be responsible for the accuracy or completeness of electronic copies of this plan sheet.

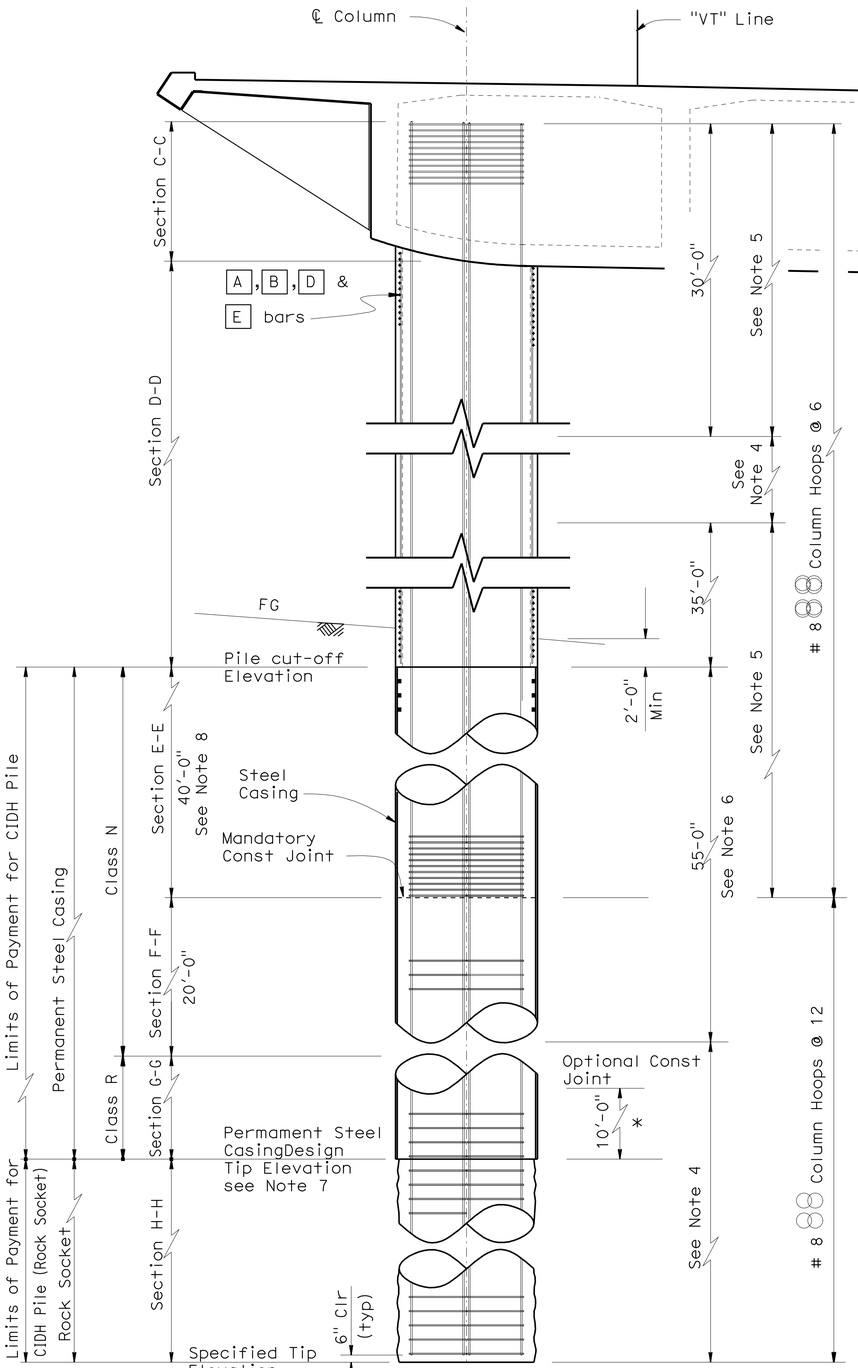

* Field adjusted

ELEVATION

3/16" = 1'-0"

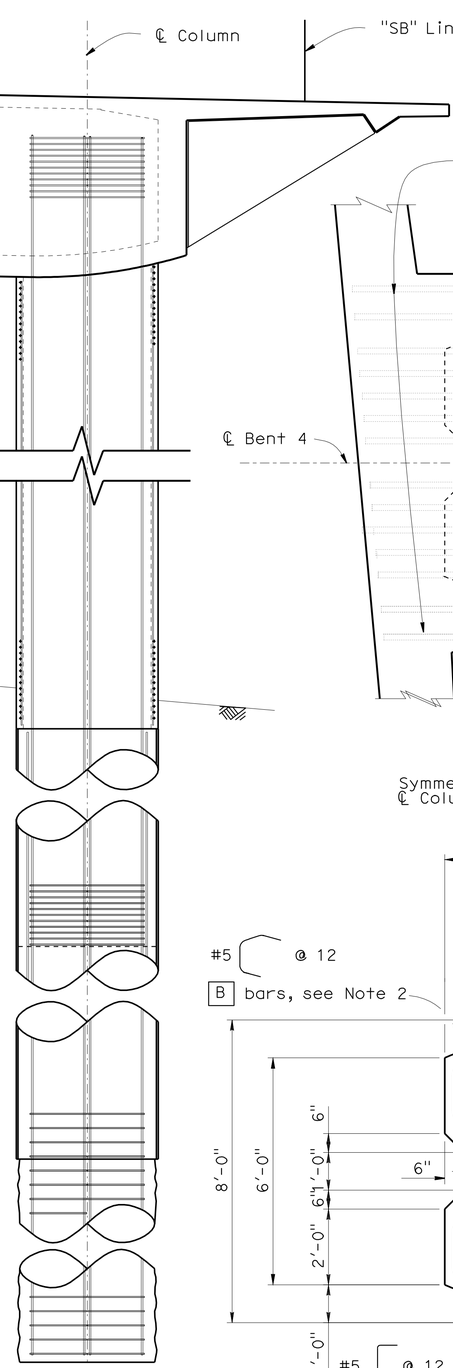

NOTE:
THE CONTRACTOR SHALL VERIFY ALL CONTROLLING FIELD DIMENSIONS BEFORE ORDERING OR FABRICATING ANY MATERIAL.

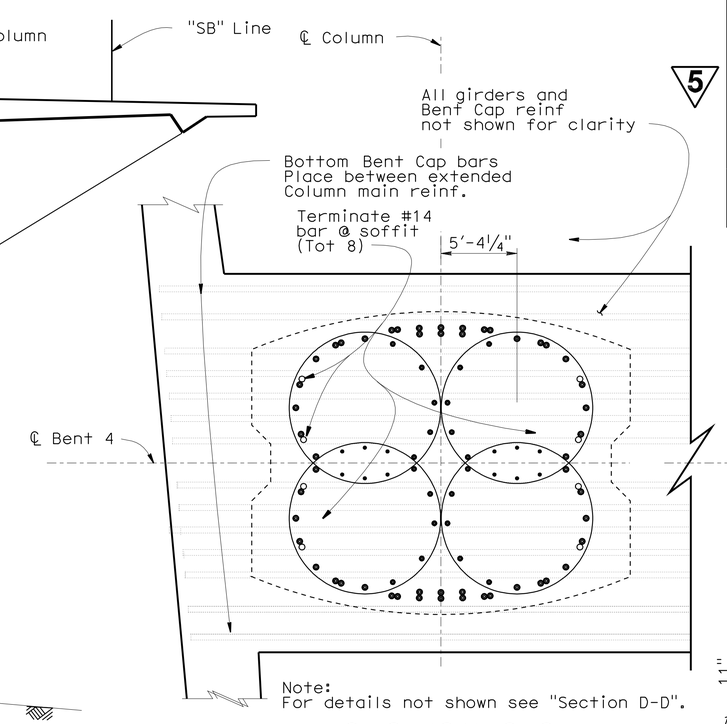

Note:
For details not shown see "Section D-D".

SECTION C-C

½" = 1'-0"

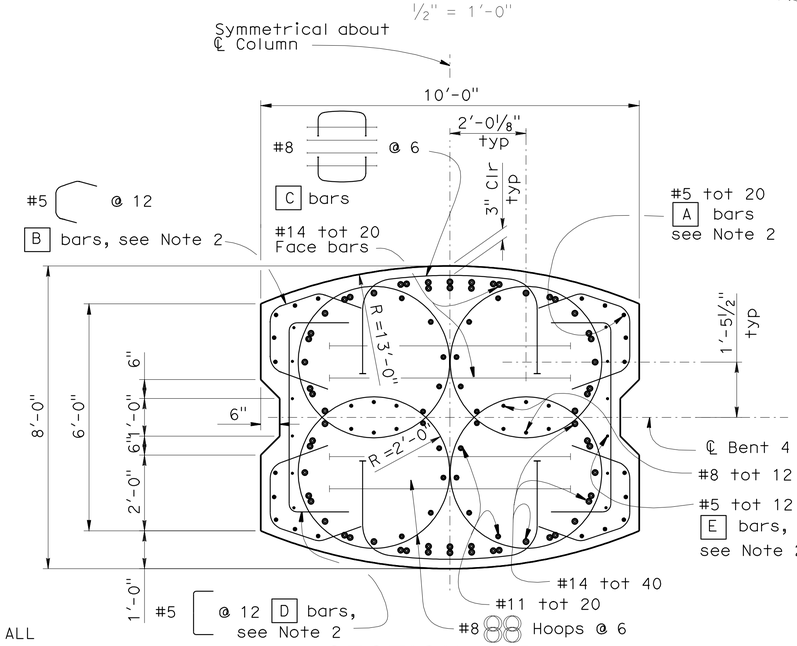

SECTION D-D

½" = 1'-0"

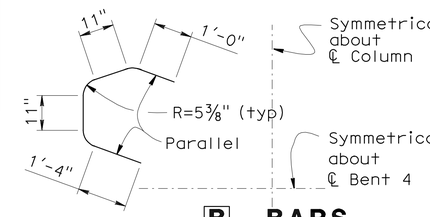

B BARS

No Scale

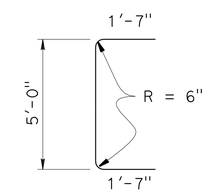

D BARS

No Scale

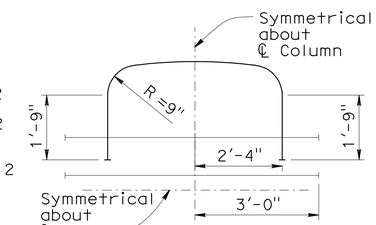

C BARS

No Scale

Notes:
1. For "Section E-E", "Section F-F", "Section G-G" and "Section H-H" see 'BENT 4 DETAILS NO. 3A' sheet.
2. Place A, B, D and E bars between Soffit and Pile Cut-Off Elevation.
3. For Pile Cut-Off data see "Pile Data Table".
4. Staggered - Ultimate Splices Allowed.
5. No splices allowed in main column reinf.
6. No splices allowed in main pile shaft reinf.
7. For Permanent Steel Casing Design Tip Elevation. See 'Pile Data Table' on "GENERAL NOTES NO. 2" sheet.
8. Concrete shall be poured under dry conditions.
9. Contractor shall use centralizers to maintain rebar clearance.

5 **ADDED PER ADDENDUM No. 5 DATED SEPTEMBER 10, 2009**

	BY	CHECKED
DESIGN	R.Bromenschenkel/Q.Zhao	A. Ahmed
DETAILS	M. Lane / J. Thorne	R.Bromenschenkel/Q.Zhao
QUANTITIES	A. Alcantara	J. Han

STATE OF CALIFORNIA DEPARTMENT OF TRANSPORTATION

DIVISION OF ENGINEERING SERVICES STRUCTURE DESIGN — DESIGN BRANCH 4

BRIDGE NO. 34-0157L — POST MILE 9.02

ALTERNATIVE B
PRESIDIO VIADUCT - LEFT
BENT 4 DETAILS NO. 2A

STRUCTURES DESIGN DETAIL SHEET (ENGLISH) (REV. 10/25/05)

ORIGINAL SCALE IN INCHES FOR REDUCED PLANS 0 1 2 3

CU 04242
EA 163731

DISREGARD PRINTS BEARING EARLIER REVISION DATES

REVISION DATES: 2-26-09 9-1-09 9-8-09 7-9-09 7-13-09 8-25-09 8-28-09 8-31-09 9-2-09

SHEET 33H OF 114

FILE => 34-0157l-c-bnt4dts02a.add

USERNAME => friehard DATE PLOTTED => 10-SEP-2009 TIME PLOTTED => 05:16

DIST	COUNTY	ROUTE	POST MILES TOTAL PROJECT	SHEET No	TOTAL SHEETS
04	SF	101,1	9.2/9.8, 6.8/7.1	383I	567

REGISTERED CIVIL ENGINEER 6-4-09 DATE

7-20-09
PLANS APPROVAL DATE

REGISTERED PROFESSIONAL ENGINEER AHMED M M IBRAHIM No. S 4865 Exp. 9-30-10 STRUCTURAL STATE OF CALIFORNIA

The State of California or its officers or agents shall not be responsible for the accuracy or completeness of electronic copies of this plan sheet.

5

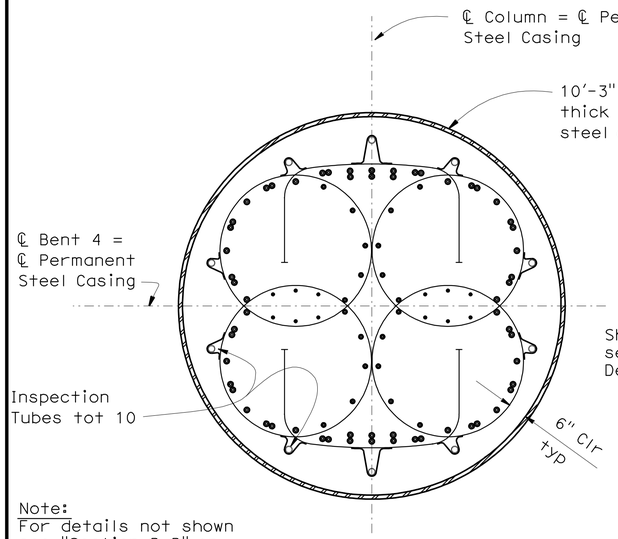

Note:
For details not shown see "Section D-D" on 'BENTS 4 DETAILS NO. 2A' sheet.

SECTION E-E

½" = 1'-0"

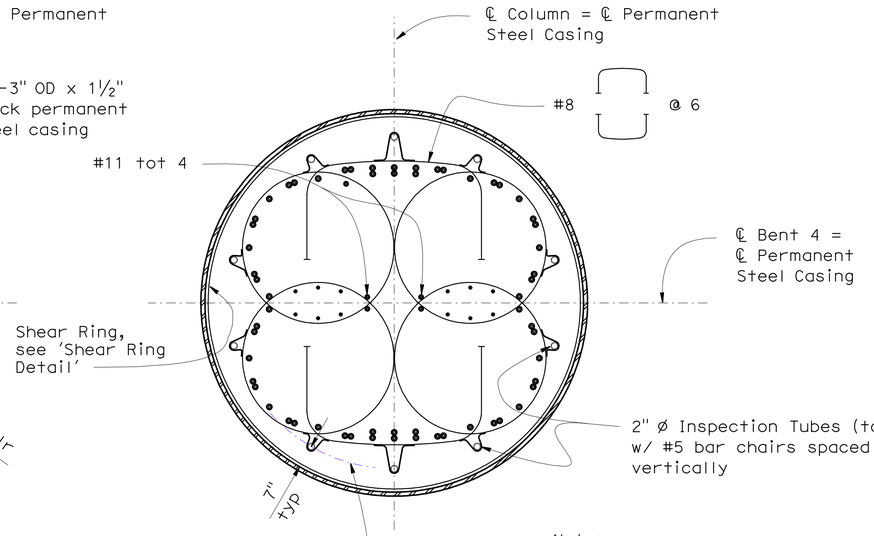

Note:
For details not shown see "Section E-E"

SECTION F-F

½" = 1'-0"

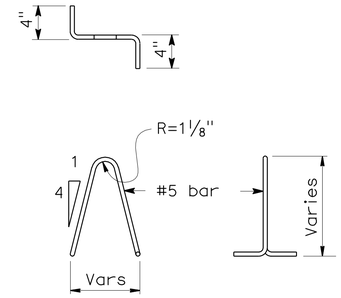

BAR CHAIR DETAIL

No Scale

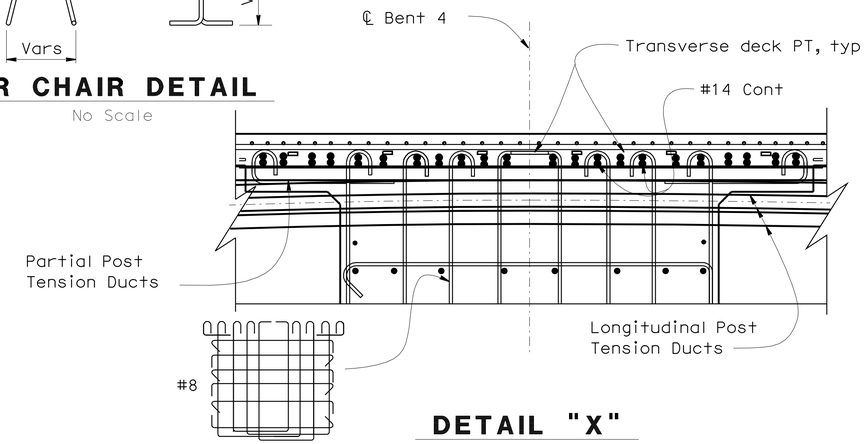

DETAIL "X"

½" = 1'-0"

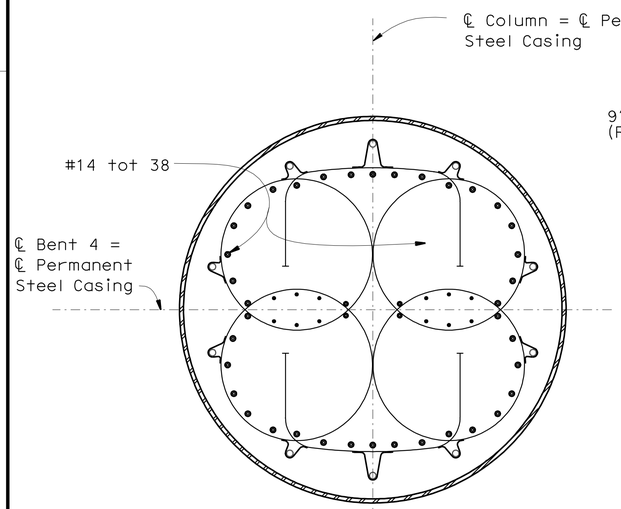

Note:
For details not shown see "Section F-F"

SECTION G-G

½" = 1'-0"

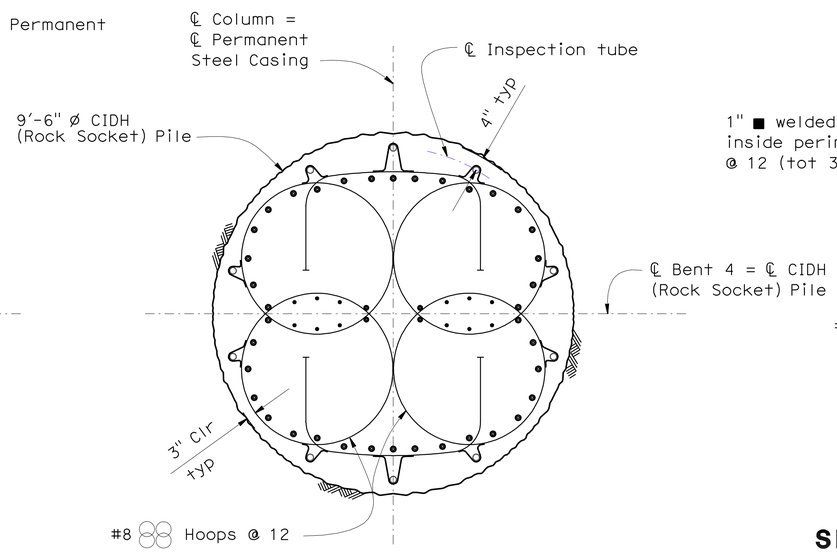

Note:
For details not shown see "Section G-G"

SECTION H-H

½" = 1'-0"

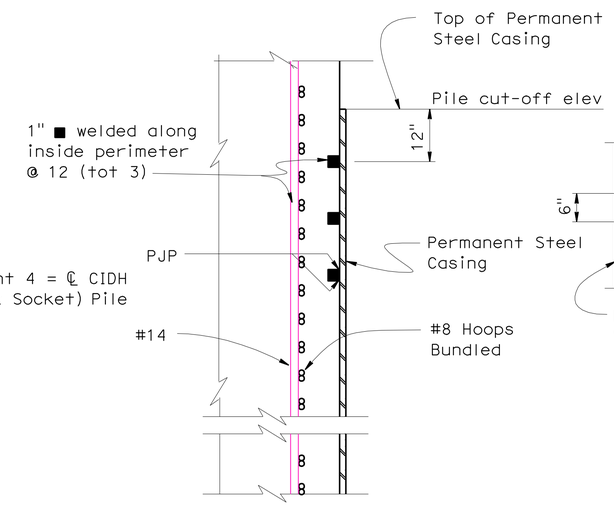

SHEAR RING DETAIL

No Frickin' Scale

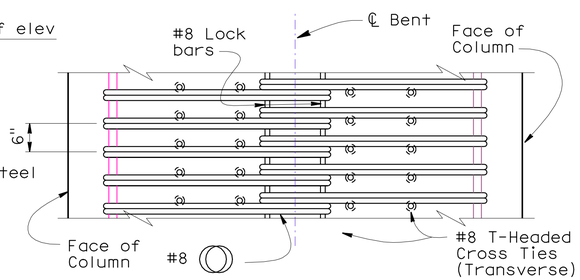

COLUMN HOOP DETAIL

No Scale

Notes:
1. Inspection tubes shall be protected in place during placement of rebar cage.
2. Inspection tubes shall be placed as shown.

NOTE:
THE CONTRACTOR SHALL VERIFY ALL CONTROLLING FIELD DIMENSIONS BEFORE ORDERING OR FABRICATING ANY MATERIAL.

5 **ADDED PER ADDENDUM No. 5 DATED SEPTEMBER 10, 2009**

	BY	CHECKED
DESIGN	R.Bromenschenkel/Q.Zhao	A. Ahmed
DETAILS	M. Lane / J. Thorne	R.Bromenschenkel/Q.Zhao
QUANTITIES	A. Alcantara	J. Han

STATE OF CALIFORNIA DEPARTMENT OF TRANSPORTATION

DIVISION OF ENGINEERING SERVICES STRUCTURE DESIGN DESIGN BRANCH 4

BRIDGE NO. 34-0157L
POST MILE 9.02

ALTERNATIVE B

PRESIDIO VIADUCT - LEFT

BENT 4 DETAILS NO. 3A

STRUCTURES DESIGN DETAIL SHEET (ENGLISH) (REV. 10/25/05)

ORIGINAL SCALE IN INCHES FOR REDUCED PLANS 0 1 2 3

CU 04242
EA 163731

DISREGARD PRINTS BEARING EARLIER REVISION DATES

REVISION DATES: 7-20-09 9-1-09 9-8-09 7-14-09 7-14-09 8-26-09 8-28-09 8-31-09 9-2-09

SHEET 33I OF 114

FILE => 34-0157I-c-bnt4dts03a.add

USERNAME => tfrenard DATE PLOTTED => 10-SEP-2009 TIME PLOTTED => 05:16

DIST	COUNTY	ROUTE	POST MILES TOTAL PROJECT	SHEET No	TOTAL SHEETS
04	SF	101,1	9.2/9.8, 6.8/7.1	404	567

REGISTERED CIVIL ENGINEER — DATE 6-4-09

7-20-09
PLANS APPROVAL DATE

The State of California or its officers or agents shall not be responsible for the accuracy or completeness of electronic copies of this plan sheet.

REGISTERED PROFESSIONAL ENGINEER — AHMED M M IBRAHIM — No. S 4865 — Exp. 9-30-10 — STRUCTURAL — STATE OF CALIFORNIA

NOTE:
THE CONTRACTOR SHALL VERIFY ALL CONTROLLING FIELD DIMENSIONS BEFORE ORDERING OR FABRICATING ANY MATERIAL.

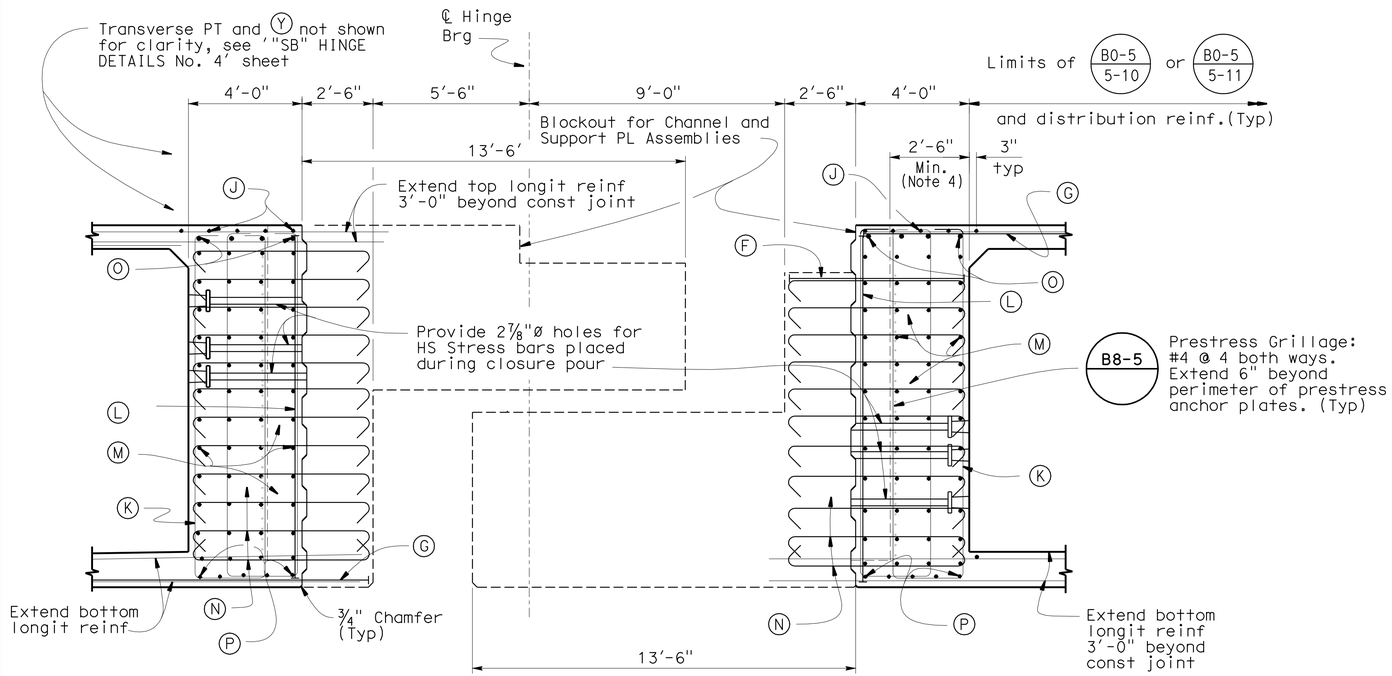

"SB" LINE SECTION A-A (BEFORE STRESSING)

⅜" = 1'-0"

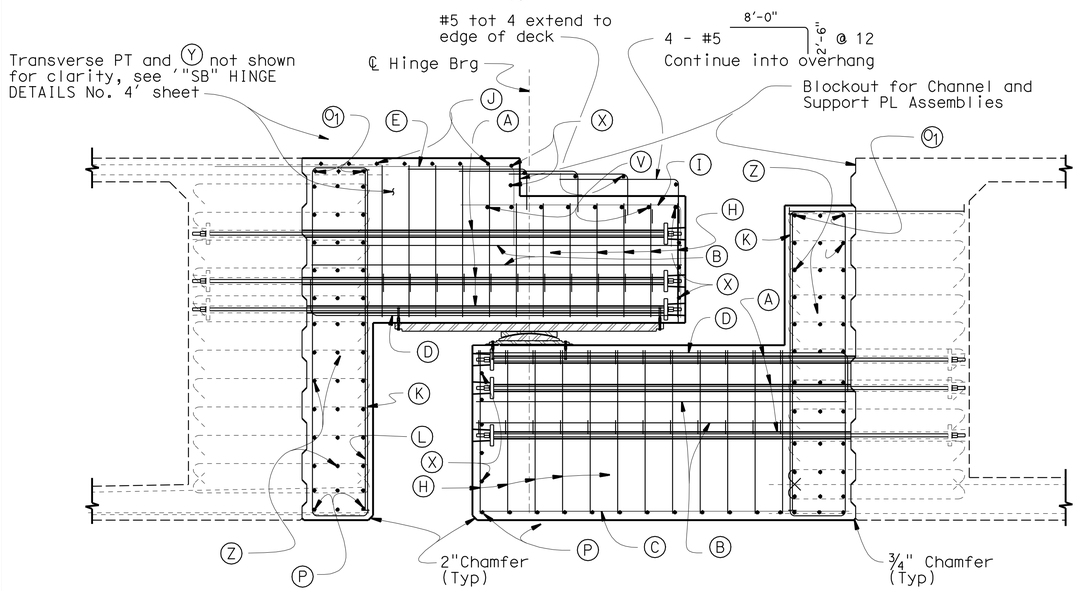

"SB" LINE SECTION A-A (CLOSURE POUR)

⅜" = 1'-0"

LEGEND "SB" - LINE

- (A) 1¾" dia. HS Rods, tot 16 per layer, (3 layers)
- (B) #6 tot. 19 per layer (2 layers), typ
- (C) #6 tot. 19
- (D) #10 17'-0" 1'-0" tot. 16, typ
- (E) #6 7'-6" 4'-0" tot. 19
- (E1) #6 2'-8" 7'-5" @ 12
- (E2) #6 2'-8" 8'-0" @ 12
- (F) #11 6'-0" @ 4
- (G) #11 12'-6" @ 4
- (H) #6 Height varies @ blockout & shear key @ ~~12~~ 6" (5)
- (I) #6 9'-0" 4'-0" tot 19 (at shear key 9'-0" 2'-0")
- (I1) #6 9'-0" @ 12, typ each side of overhang
- (I2) #6 Varies @ 12, typ each side of overhang
- (J) #5 @ 12 extend to edge of deck
- (K) #8 (Primary Diaphragm) or (Secondary Diaphragm) @ 6, typ
- (L) #11 @ 6 (Bundle with (K)), typ
- (M) #8 @ 12, 4 per layer
- (N) #5 @ 12 (both ways)
- (O) #9 tot. 4, typ, extend to edge of deck
- (O1) #9 tot. 3, typ, extend to edge of deck
- (P) #5 1'-0" 1'-0" @ 12
- (Q) #6 4'-0" @ 6
- (R) #5 x 3'-6", tot 6
- (S) #11 18'-0" @ 12
- (S1) #11 13'-0" @ 12
- (T) #9 tot. 2
- (U) #5 13'-0" @ 12
- (U1) #5 Vars @ 12
- (U2) #5 3'-0" Vars @ 12
- (V) #5 cont, tot 7 Extend to edge of deck
- (W) #6 Var @ 12 bothways, typ
- (X) #5 @ 12 extend to edge of deck
- (X1) #5 @ 12 Vars extend 2'-0" beyond face of exterior girder
- (Y) #10 @ 6 between PT ducts, same layer & depth as transverse PT ducts and extend to edge of deck.
- (Z) #5 @ 12, 3 per layer
- Transverse PT duct
- HS bars

Notes

1. - All HS rods to be 1¾"Ø and Grade 150 Ksi
   - Minimum Concrete Strength at time of Stressing f_c = 4000 psi
   - Complete all stressing using alternate pattern to 70% of ultimate stress
   - Rods to be stressed from inside structure bays
2. Bars may be placed with hooks horizontal if required for clearance.
3. Reinforcement shall be spaced along ℄ Hinge and placed normal to ℄ Hinge.
4. Minimum dimension to prestressed anchor plates.
5. For bearing details, see "PTFE / Spherical Expansion Bearing Details" sheets.
6. At Girder P/S Blockouts, place (K) & (L) in front of anchor plate.
7. 3" clear cover, typ.

(5) **REVISED PER ADDENDUM No. 5 DATED SEPTEMBER 10, 2009**

DESIGN	BY Ahmed M.M. Ibrahim	CHECKED S. Barajas	
DETAILS	BY Jeff Thorne	CHECKED Ahmed M.M. Ibrahim	
QUANTITIES	BY A. Alcantara	CHECKED J. Han	

STATE OF CALIFORNIA DEPARTMENT OF TRANSPORTATION

DIVISION OF ENGINEERING SERVICES STRUCTURE DESIGN — DESIGN BRANCH 4

BRIDGE NO. 34-0157L — POST MILE 9.02

PRESIDIO VIADUCT - LEFT

"SB" HINGE DETAILS No. 1

STRUCTURES DESIGN DETAIL SHEET (ENGLISH) (REV. 10/25/05)

ORIGINAL SCALE IN INCHES FOR REDUCED PLANS 0 1 2 3

CU 04242
EA 163731

DISREGARD PRINTS BEARING EARLIER REVISION DATES — REVISION DATES 2-27-09 3-3-09 3-18-09 5-4-09 5-12-09 5-18-09 6-12-09 6-18-09 7-12-09

SHEET 54 OF 114

FILE => 34-0157l-g-hngedtsa01.add

USERNAME => friehard DATE PLOTTED => 10-SEP-2009 TIME PLOTTED => 05:16

DIST	COUNTY	ROUTE	POST MILES TOTAL PROJECT	SHEET No	TOTAL SHEETS
04	SF	101,1	9.2/9.8, 6.8/7.1	494	567

REGISTERED CIVIL ENGINEER — DATE 6-4-09

7-20-09
PLANS APPROVAL DATE

REGISTERED PROFESSIONAL ENGINEER — AHMED M M IBRAHIM — No. S 4865 — Exp. 9-30-10 — STRUCTURAL — STATE OF CALIFORNIA

The State of California or its officers or agents shall not be responsible for the accuracy or completeness of electronic copies of this plan sheet.

DIMENSION TABLE

LOCATION	H1
Bent 1	24'-9"
Bent 2	21'-9"

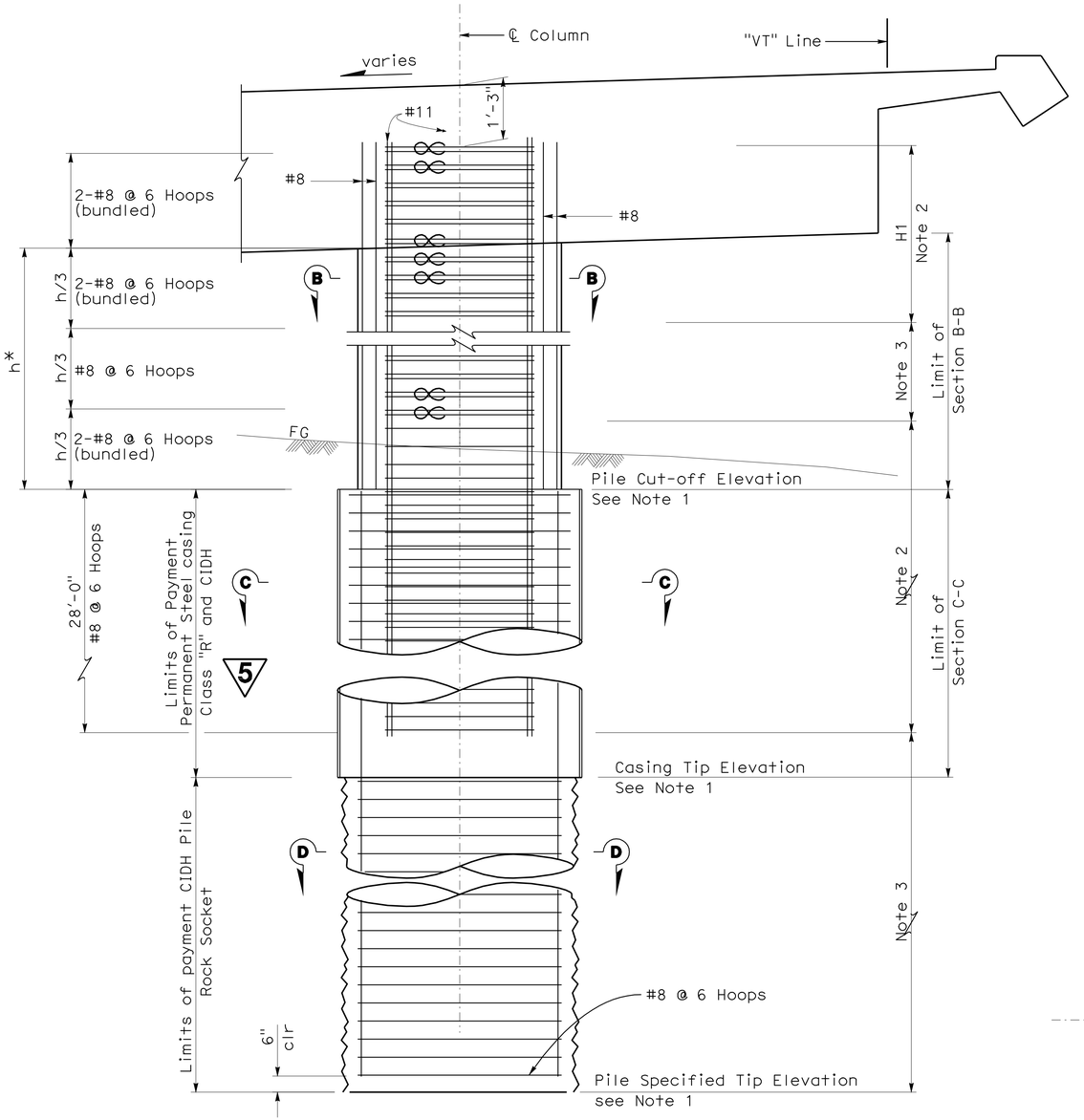

h* = Column height (Pile Cut-off to Soffit)

COLUMN ELEVATION (BENTS 1 & 2)

3/8" = 1'-0"

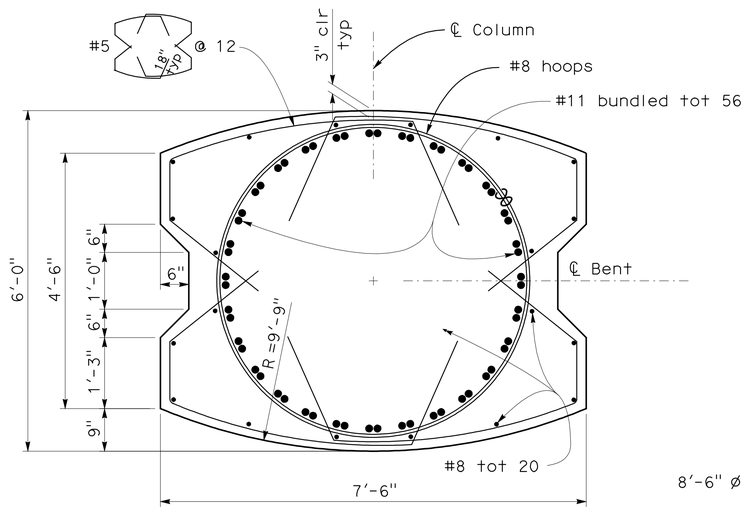

SECTION B-B

3/4" = 1'-0"

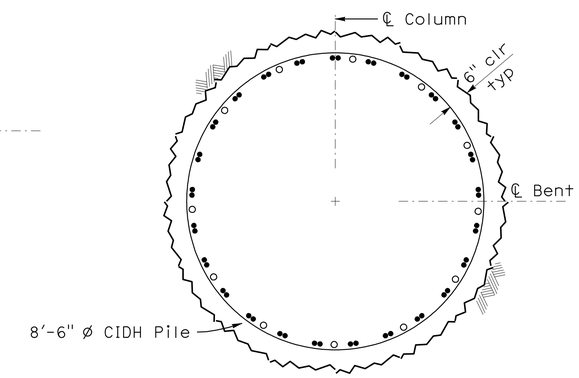

SECTION D-D

1/2" = 1'-0"

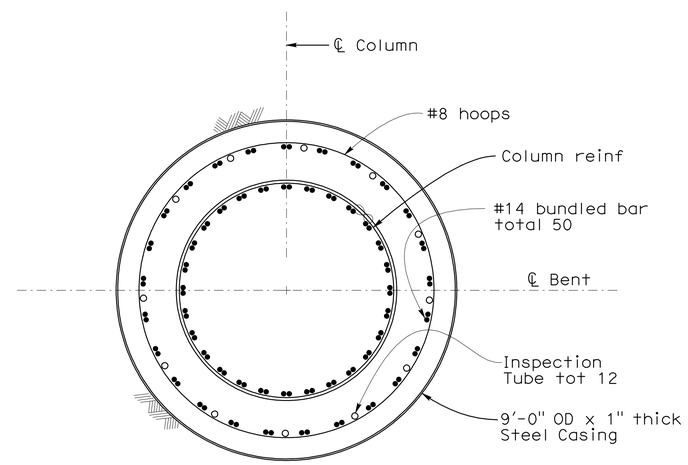

SECTION C-C

1/2" = 1'-0"

NOTES:

1. For foundation elevations, see "PILE DATA TABLE" on "INDEX TO PLAN" sheet.
2. No splices allowed in column / pile shaft main reinf.
3. Staggered "Ultimate Splices" allowed.
4. Lap splice in main bent cap reinforcement is not allowed.
5. #8 Hoops are "Ultimate" splice.

NOTE:
CONTRACTOR SHALL VERIFY ALL CONTROLLING FIELD DIMENSIONS BEFORE ORDERING OR FABRICATING ANY MATERIALS.

5 **REVISED PER ADDENDUM No. 5 DATED SEPTEMBER 10, 2009**

	BY	CHECKED
DESIGN	S. Hegazi/D. Lee	L. Barnard/J. Zha
DETAILS	JFCasarino	S. Hegazi
QUANTITIES	S. Hegazi	M. Thach

STATE OF CALIFORNIA DEPARTMENT OF TRANSPORTATION

DIVISION OF ENGINEERING SERVICES STRUCTURE DESIGN — DESIGN BRANCH 4

BRIDGE NO. 34-0160G
POST MILE 9.18

N1 - S101 CONNECTOR
COLUMN DETAILS NO. 1

STRUCTURES DESIGN DETAIL SHEET (ENGLISH) (REV. 10/25/05)

ORIGINAL SCALE IN INCHES FOR REDUCED PLANS 0 1 2 3

CU 04242
EA 163731

DISREGARD PRINTS BEARING EARLIER REVISION DATES — REVISION DATES: 1-7-09, 3-6-09, 5-6-09, 5-18-09, 5-29-09, 5-29-09, 7-11-09

SHEET 10 OF 44

FILE => 34-0160_10cold1.add

USERNAME => trienard DATE PLOTTED => 10-SEP-2009 TIME PLOTTED => 05:16

DIST	COUNTY	ROUTE	POST MILES TOTAL PROJECT	SHEET No	TOTAL SHEETS
04	SF	101,1	9.2/9.8, 6.8/7.1	529	567

REGISTERED CIVIL ENGINEER 06-04-09 DATE

7-20-09
PLANS APPROVAL DATE

Philip E. Lutz No. C55839 Exp. 12-31-10 CIVIL — REGISTERED PROFESSIONAL ENGINEER — STATE OF CALIFORNIA

The State of California or its officers or agents shall not be responsible for the accuracy or completeness of electronic copies of this plan sheet.

5 **REVISED PER ADDENDUM No. 5 DATED SEPTEMBER 10, 2009**

5 LEGEND :

- Denotes limits of Architectural Texture (Light Board Finish)
- Denotes limits of Removal of existing retaining wall, see Road Plans
- Denotes existing retaining wall

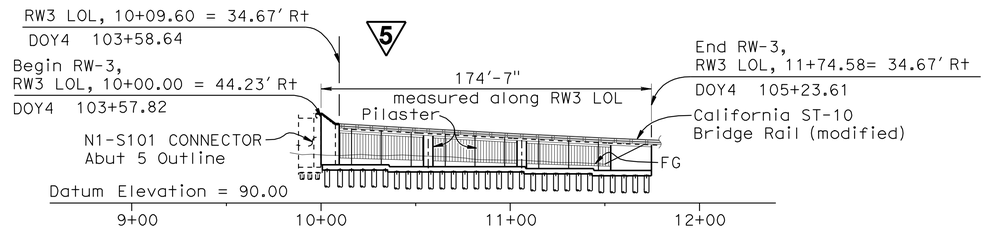

DEVELOPED ELEVATION

1"=40'-0"

5 Note:

1. Remove top of existing Type 1 retaining wall to a depth of at least 3'-0" below finish grade. Retaining wall begins at approximately 26' Rt. DOY4 Sta. 102+06 and ends at approximately 59' Rt. DOY4 Sta. 106+30. See ROAD PLANS

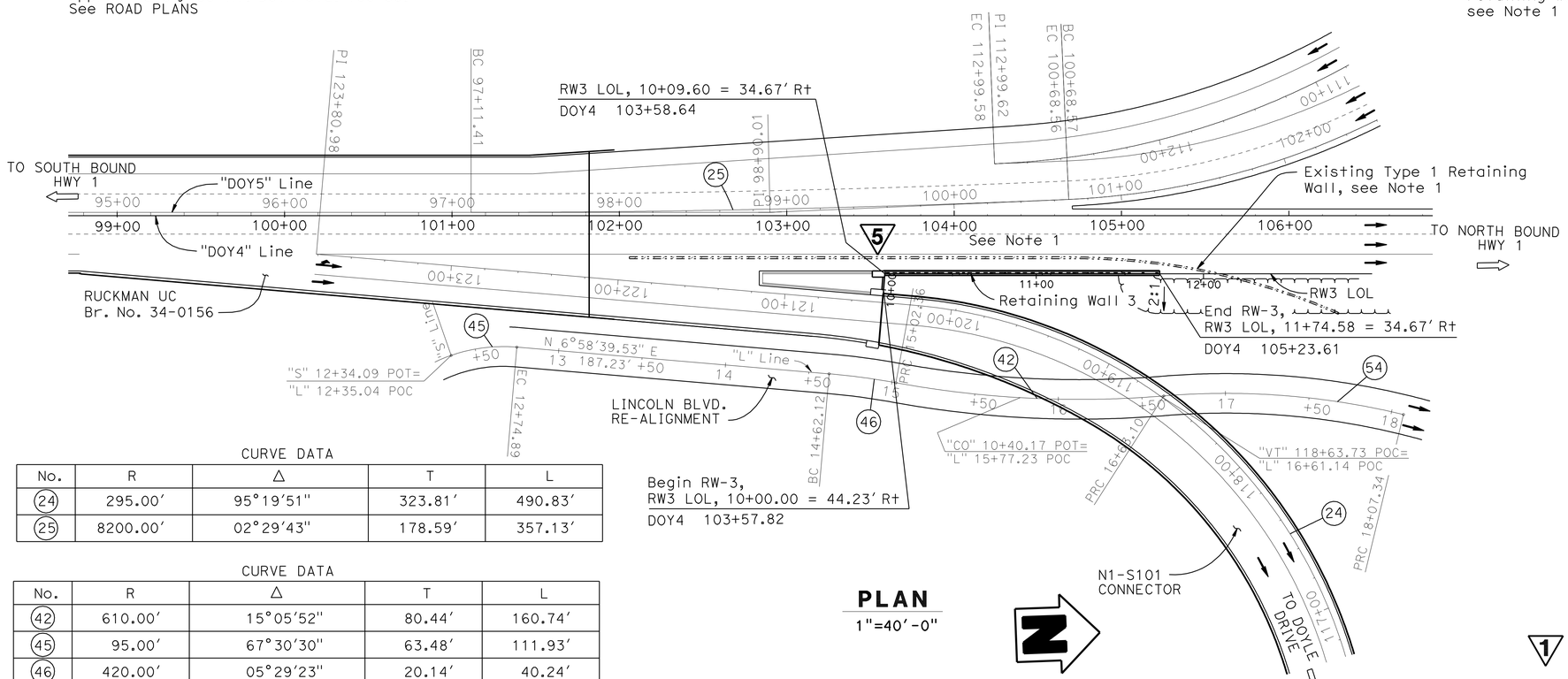

CURVE DATA

No.	R	Δ	T	L
24	295.00'	95°19'51"	323.81'	490.83'
25	8200.00'	02°29'43"	178.59'	357.13'

CURVE DATA

No.	R	Δ	T	L
42	610.00'	15°05'52"	80.44'	160.74'
45	95.00'	67°30'30"	63.48'	111.93'
46	420.00'	05°29'23"	20.14'	40.24'
54	450.01'	18°21'53"	72.74'	144.24'

PLAN

1"=40'-0"

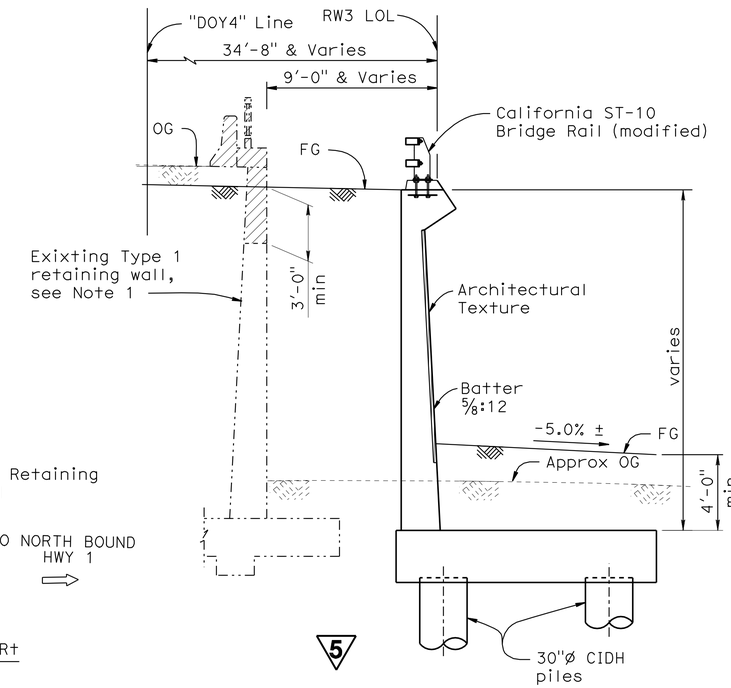

TYPICAL SECTION

1/4"=1'-0"

QUANTITIES

STRUCTURE EXCAVATION (RETAINING WALL) (NATURALLY OCCURING ASBESTOS)	240	CY
STRUCTURE EXCAVATION (TYPE Z-2) (AERIALLY DEPOSITED LEAD)	175	CY
STRUCTURE BACKFILL (RETAINING WALL)	400	CY
30" CAST-IN-DRILLED-HOLE CONCRETE PILING	1,850	LF
STRUCTURAL CONCRETE, RETAINING WALL	400	CY
~~ARCHITECTURAL TREATMENT (2" THICK)~~	~~1,820~~	~~SQFT~~
BAR REINFORCING STEEL (RETAINING WALL)	111,000	LB
CALIFORNIA ST-10 BRIDGE RAIL (MODIFIED)	173	LF
ARCHITECTURAL TEXTURE (LIGHT BOARD FINISH)	1,820	SQFT

1 **REVISED PER ADDENDUM No. 1 DATED AUGUST 13, 2009** 5

DESIGN	BY Phil Lutz	CHECKED Nasser Tachta	LOAD & RESISTANCE FACTOR DESIGN		
DETAILS	BY Carlo Cancino	CHECKED Nasser Tachta	LAYOUT	BY Nasser Tachta	CHECKED Phil Lutz
QUANTITIES	BY B. Thach	CHECKED Nasser Tachta	SPECIFICATIONS	BY X	PLANS AND SPECS COMPARED X

Mozid Madani
DESIGN ENGINEER

STATE OF CALIFORNIA
DEPARTMENT OF TRANSPORTATION

DIVISION OF ENGINEERING SERVICES
STRUCTURE DESIGN
DESIGN BRANCH 9

CU 04242
EA 163731

BRIDGE NO. 34E0011
POST MILE 6.95

RETAINING WALL NO. 3
GENERAL PLAN

ORIGINAL SCALE IN INCHES FOR REDUCED PLANS 0 1 2 3

DISREGARD PRINTS BEARING EARLIER REVISION DATES

REVISION DATES: ~~04-15-09~~ ~~05-06-09~~ ~~05-21-09~~ ~~06-04-09~~ ~~06-15-09~~ 07-08-09

SHEET 1 OF 15

STRUCTURES DESIGN GENERAL PLAN SHEET (ENGLISH) (REV.07-24-06)

FILE => 34e0011-a-gp.add

USERNAME => trlenord DATE PLOTTED => 10-SEP-2009 TIME PLOTTED => 05:17

DIST	COUNTY	ROUTE	POST MILES TOTAL PROJECT	SHEET No	TOTAL SHEETS
04	SF	101,1	9.2/9.8, 6.8/7.1	532	567

REGISTERED CIVIL ENGINEER 06-04-09 DATE

7-20-09
PLANS APPROVAL DATE

The State of California or its officers or agents shall not be responsible for the accuracy or completeness of electronic copies of this plan sheet.

REGISTERED PROFESSIONAL ENGINEER Philip E. Lutz No. C55839 Exp. 12-31-10 CIVIL STATE OF CALIFORNIA

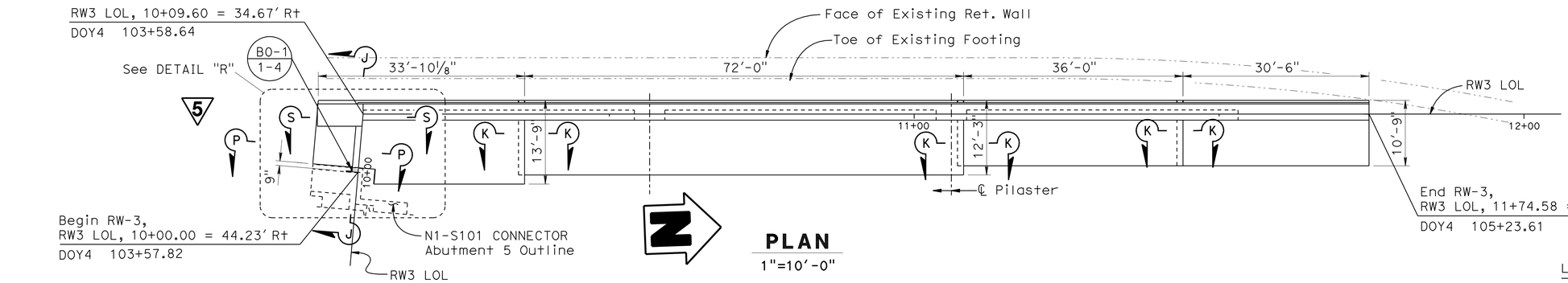

PLAN

1"=10'-0"

LEGEND :

- Denotes Pile (30"ø)
- Denotes limits of Architectural Texture (Light Board Finish)
- Denotes existing retaining wall

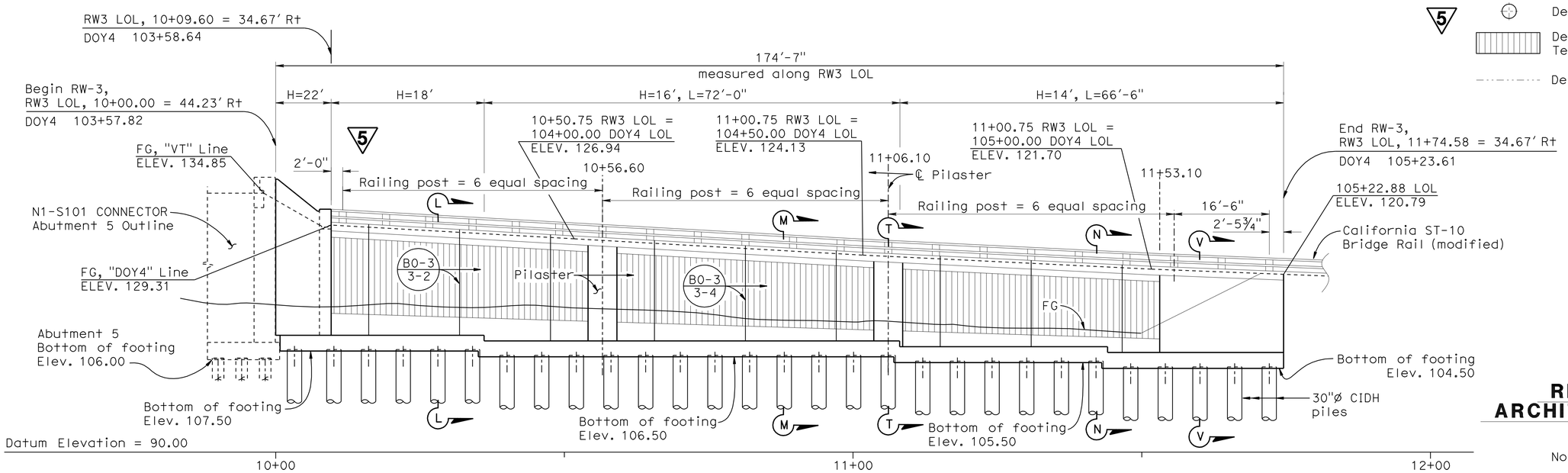

DEVELOPED ELEVATION

1"=10'-0"

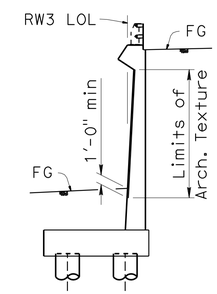

SECTION RETAINING WALL ARCHITECTURAL TEXTURE

1/8"=1'-0"

Note:

For "SECTION" and "ELEVATION' of Architectural Texture, see "Structure Plan No. 2 sheet

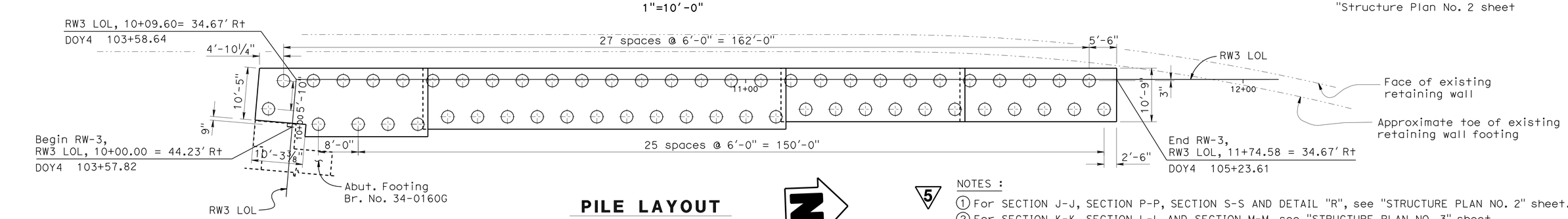

PILE LAYOUT

1"=10'-0"

NOTES :

1. For SECTION J-J, SECTION P-P, SECTION S-S AND DETAIL "R", see "STRUCTURE PLAN NO. 2" sheet.
2. For SECTION K-K, SECTION L-L AND SECTION M-M, see "STRUCTURE PLAN NO. 3" sheet.
3. For SECTION N-N AND SECTION T-T, see "STRUCTURE PLAN NO. 4" sheet.
4. For SECTION V-V, see "ST-10 (MOD) DETAILS NO. 1" sheet.

REVISED PER ADDENDUM No. 5 DATED SEPTEMBER 10, 2009

	BY	CHECKED
DESIGN	Phil Lutz	Nasser Tachta
DETAILS	Carlo Cancino	Nasser Tachta
QUANTITIES	B. Thach	Nasser Tachta

STATE OF CALIFORNIA
DEPARTMENT OF TRANSPORTATION

DIVISION OF ENGINEERING SERVICES
STRUCTURE DESIGN
DESIGN BRANCH 9

BRIDGE NO. 34E0011
POST MILE 6.95

RETAINING WALL NO. 3
STRUCTURE PLAN NO. 1

STRUCTURES DESIGN DETAIL SHEET (ENGLISH) (REV. 10/25/05)

ORIGINAL SCALE IN INCHES FOR REDUCED PLANS 0 1 2 3

CU 04242
EA 163731

DISREGARD PRINTS BEARING EARLIER REVISION DATES

REVISION DATES: 04-15-09, 05-07-09, 05-21-09, 06-04-09, 06-17-09, 07-08-09

SHEET 4 OF 15

FILE => 34e0011-c-sp1.add

USERNAME => trlenard DATE PLOTTED => 10-SEP-2009 TIME PLOTTED => 05:17

DIST	COUNTY	ROUTE	POST MILES TOTAL PROJECT	SHEET No	TOTAL SHEETS
04	SF	101,1	9.2/9.8, 6.8/7.1	533	567

REGISTERED CIVIL ENGINEER 06-04-09 DATE

7-20-09
PLANS APPROVAL DATE

REGISTERED PROFESSIONAL ENGINEER Philip E. Lutz No. C55839 Exp. 12-31-10 CIVIL STATE OF CALIFORNIA

The State of California or its officers or agents shall not be responsible for the accuracy or completeness of electronic copies of this plan sheet.

NOTE:

1. For location of "SECTION J-J", "SECTION P-P", "SECTION S-S" and "DETAIL R", see "STRUCTURE PLAN NO. 1" sheet.
2. For concrete barrier details, see "N1-S101 Connector (VT Gore Area)" Plans, "California ST-10 Barrier Transition" sheet.

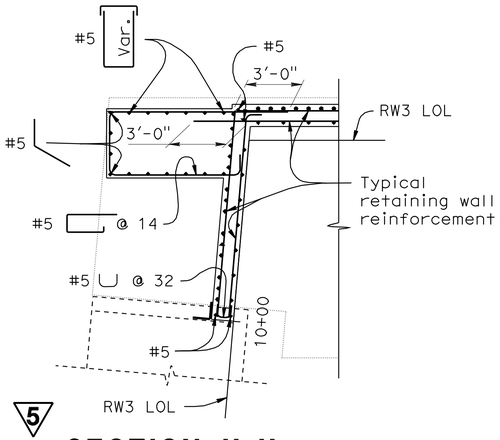

5 SECTION U-U
1/4"=1'-0"

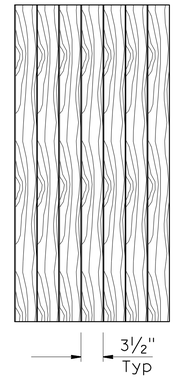

ELEVATION

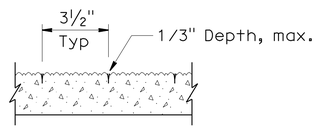

SECTION

5 ARCHITECTURAL TEXTURE (LIGHT BOARD FINISH)
No Scale

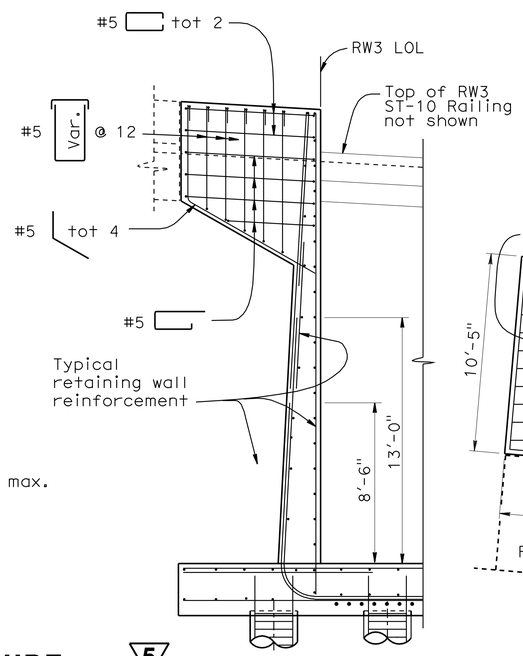

5 SECTION S-S REINFORCEMENT
1/4"=1'-0"

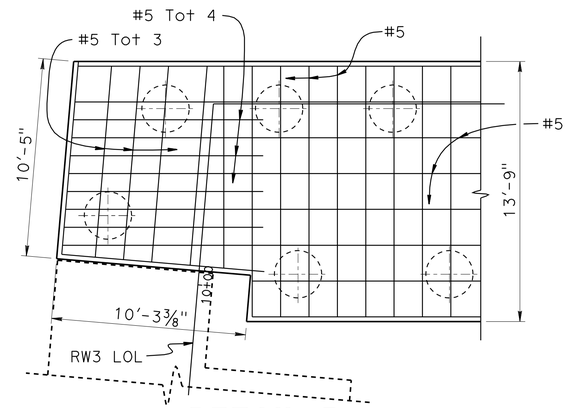

DETAIL R
(TOP REINFORCEMENT)
1/4"=1'-0"

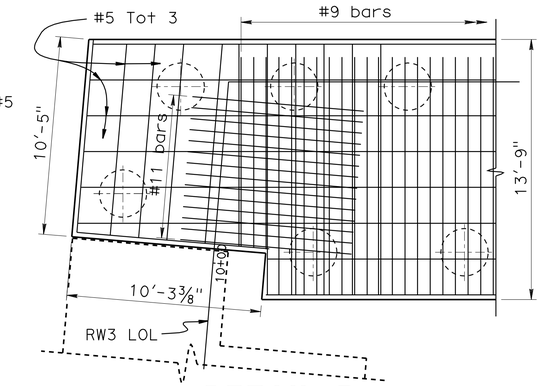

DETAIL R
(BOTTOM REINFORCEMENT)
1/4"=1'-0"

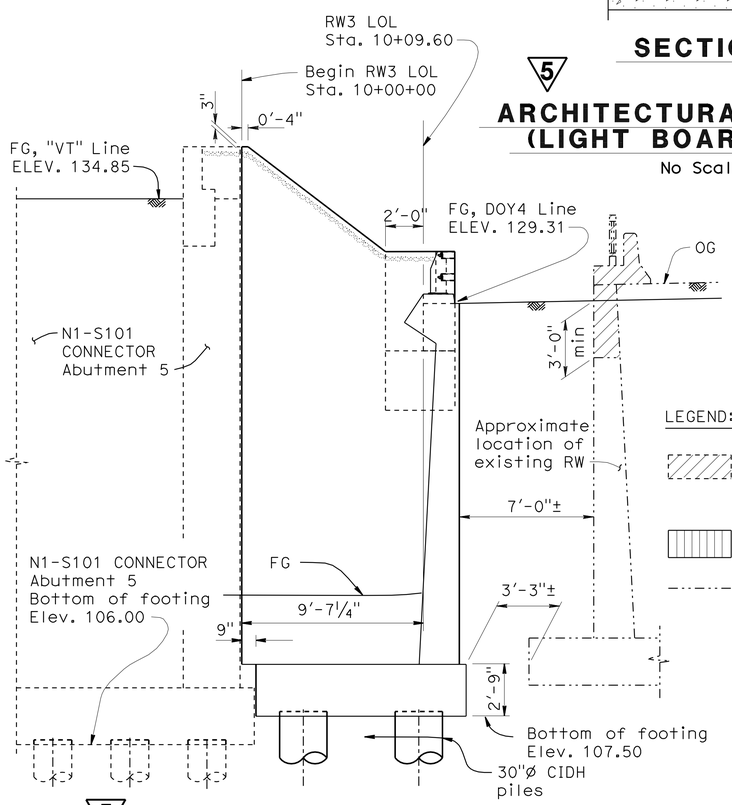

5 SECTION J-J
1/4"=1'-0"

LEGEND:

5

Denotes removal of portion of existing retaining wall, see Road Plans

Denotes limits of Architectural Texture (Light Board Form)

Denotes existing retaining wall

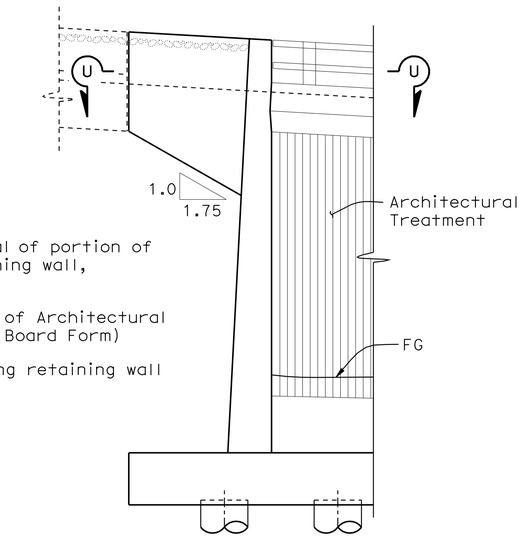

5 SECTION S-S
1/4"=1'-0"

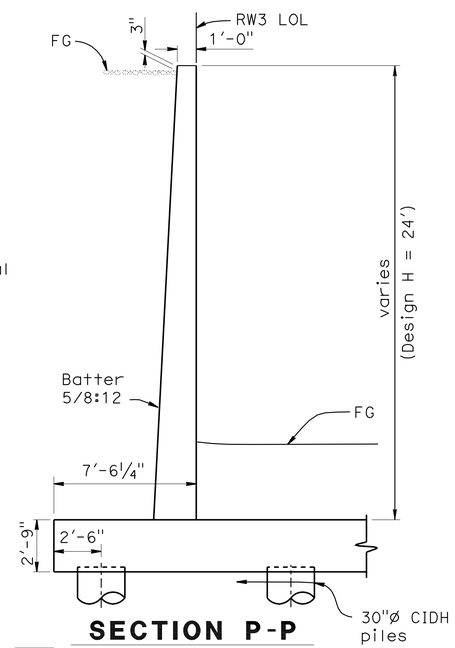

5 SECTION P-P
1/4"=1'-0"

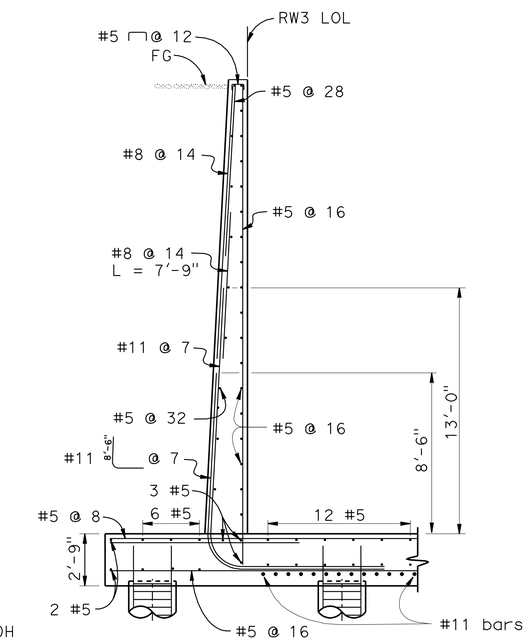

5 SECTION P-P WALL REINFORCEMENT
1/4"=1'-0"

5 REVISED PER ADDENDUM No. 5 DATED SEPTEMBER 10, 2009

	BY	CHECKED
DESIGN	Phil Lutz	Nasser Tachta
DETAILS	Carlo Cancino	Nasser Tachta
QUANTITIES	B. Thach	Nasser Tachta

STATE OF CALIFORNIA
DEPARTMENT OF TRANSPORTATION

DIVISION OF ENGINEERING SERVICES
STRUCTURE DESIGN
DESIGN BRANCH 9

BRIDGE NO. 34E0011
POST MILE 6.95

RETAINING WALL NO. 3
STRUCTURE PLAN NO. 2

STRUCTURES DESIGN DETAIL SHEET (ENGLISH) (REV. 10/25/05)

ORIGINAL SCALE IN INCHES FOR REDUCED PLANS 0 1 2 3

CU 04242
EA 163731

DISREGARD PRINTS BEARING EARLIER REVISION DATES

REVISION DATES: 04-17-09 05-05-09 06-04-09 06-17-09 07-08-09

SHEET 5 OF 15

FILE => 34e0011-c-sp2.add

USERNAME => friemard DATE PLOTTED => 10-SEP-2009 TIME PLOTTED => 05:17

DIST	COUNTY	ROUTE	POST MILES TOTAL PROJECT	SHEET No	TOTAL SHEETS
04	SF	101,1	9.2/9.8, 6.8/7.1	555	567

REGISTERED CIVIL ENGINEER 06-04-09 DATE

7-20-09
PLANS APPROVAL DATE

REGISTERED PROFESSIONAL ENGINEER Philip E. Lutz No. C55839 Exp. 12-31-10 CIVIL STATE OF CALIFORNIA

The State of California or its officers or agents shall not be responsible for the accuracy or completeness of electronic copies of this plan sheet.

5 LEGEND :

Denotes limits of Architectural Texture (Light Board Finish)

Denotes existing retaining wall

QUANTITIES:

STRUCTURE EXCAVATION (RETAINING WALL) (NATURALLY OCCURING ASBESTOS)	850	CY
STRUCTURE EXCAVATION (TYPE Z-2) (AERIALLY DEPOSITED LEAD)	270	CY
STRUCTURE BACKFILL (RETAINING WALL)	1,950	CY
30" CAST-IN-DRILLED-HOLE CONCRETE PILING	3.150	LF
STRUCTURAL CONCRETE, RETAINING WALL	690	CY
1 ~~ARCHITECTURAL TREATMENT (2" THICK)~~	~~3,450~~	~~SQFT~~
BAR REINFORCING STEEL (RETAINING WALL)	235,000	LB
CALIFORNIA ST-10 BRIDGE RAIL (MODIFIED)	162	LF
5 ARCHITECTURAL TEXTURE (LIGHT BOARD FINISH)	3,450	SQFT

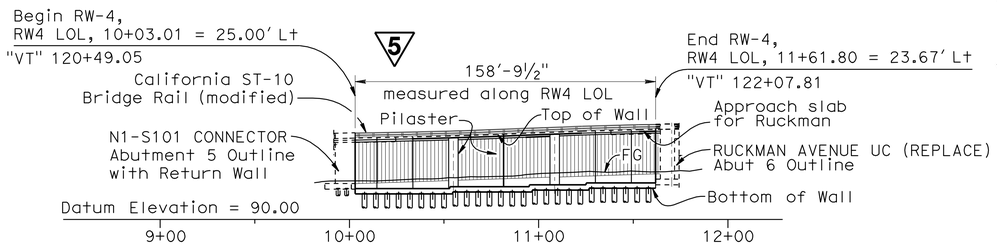

MIRRORED DEVELOPED ELEVATION

1"=40'-0"

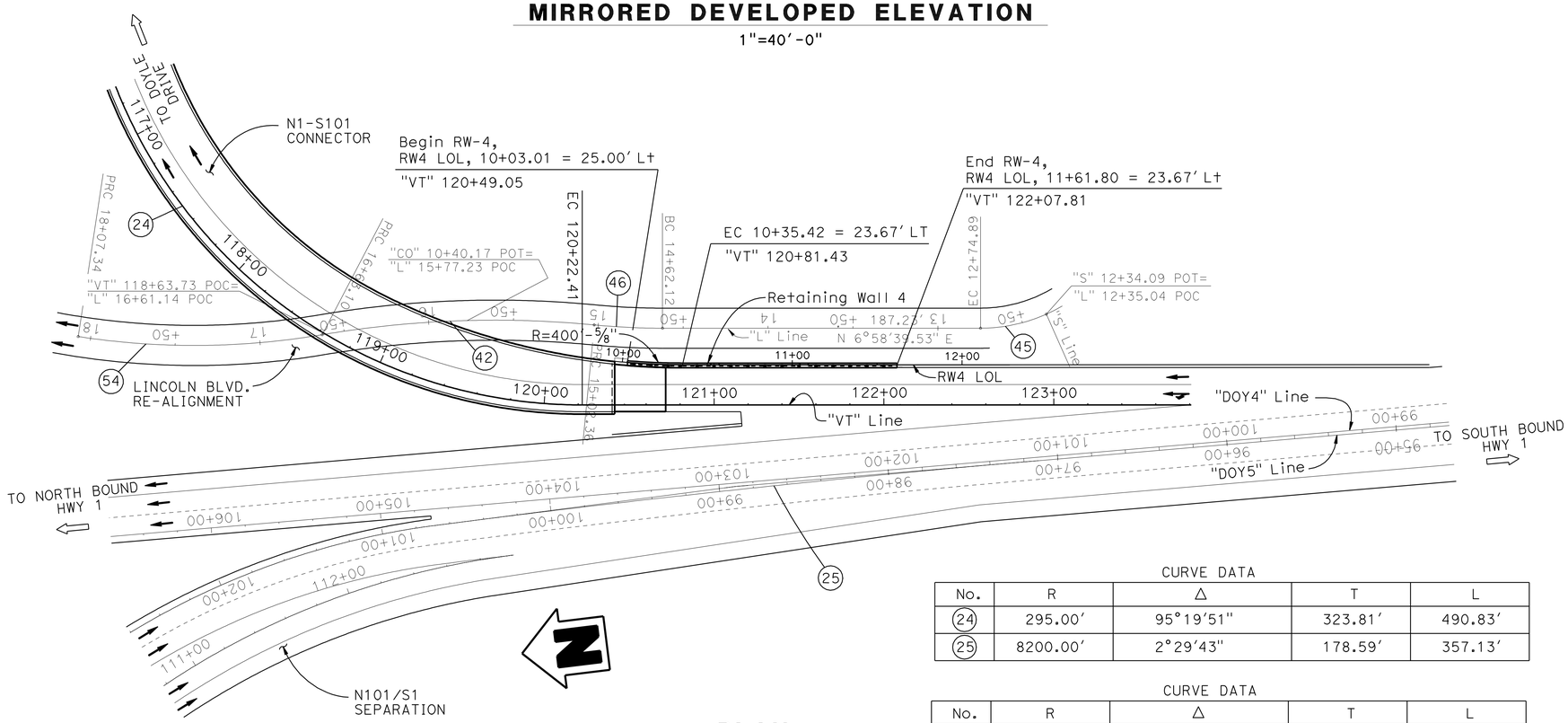

PLAN

1"=40'-0"

CURVE DATA

No.	R	Δ	T	L
24	295.00'	95°19'51"	323.81'	490.83'
25	8200.00'	2°29'43"	178.59'	357.13'

CURVE DATA

No.	R	Δ	T	L
42	610.00'	15°05'52"	80.44'	160.74'
45	95.00'	67°30'30"	63.48'	111.93'
46	420.00'	05°29'23"	20.14'	40.24'
54	450.01'	18°21'53"	72.74'	144.24'

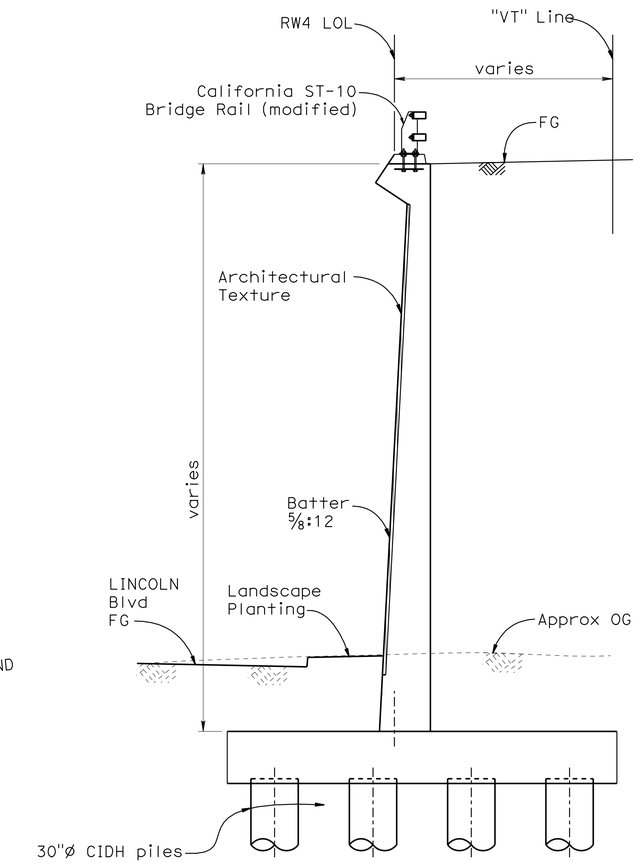

5 **TYPICAL SECTION**

¼"=1'-0"

NOTE:

Drainage for landscape planting to be installed in future replacement planting contract.

5 **REVISED PER ADDENDUM No. 5 DATED SEPTEMBER 10, 2009**

1 **REVISED PER ADDENDUM No. 1 DATED AUGUST 13, 2009**

DESIGN ENGINEER: Majid Madani	DESIGN	BY Phil Lutz	CHECKED Nasser Tachta	LOAD & RESISTANCE FACTOR DESIGN	
	DETAILS	BY Carlo Cancino	CHECKED Nasser Tachta	LAYOUT: BY Nasser Tachta	CHECKED Phil Lutz
	QUANTITIES	BY B. Thach	CHECKED Nasser Tachta	SPECIFICATIONS: BY X	PLANS AND SPECS COMPARED X

STATE OF CALIFORNIA DEPARTMENT OF TRANSPORTATION

DIVISION OF ENGINEERING SERVICES STRUCTURE DESIGN DESIGN BRANCH 9

BRIDGE NO. 34E0013 POST MILE 6.90

RETAINING WALL NO. 4
GENERAL PLAN

ORIGINAL SCALE IN INCHES FOR REDUCED PLANS 0 1 2 3

CU 04242
EA 163731

DISREGARD PRINTS BEARING EARLIER REVISION DATES

REVISION DATES: 04-17-09 05-14-09 05-22-09 06-01-09 06-15-09 06-17-09 07-09-09

SHEET 1 OF 13

STRUCTURES DESIGN GENERAL PLAN SHEET (ENGLISH) (REV.07-24-06)

FILE => 34e0013-a-gp.add

USERNAME => trlenard DATE PLOTTED => 10-SEP-2009 TIME PLOTTED => 05:17

DIST	COUNTY	ROUTE	POST MILES TOTAL PROJECT	SHEET No	TOTAL SHEETS
04	SF	101,1	9.2/9.8, 6.8/7.1	558	567

REGISTERED CIVIL ENGINEER 06-04-09 DATE

7-20-09
PLANS APPROVAL DATE

REGISTERED PROFESSIONAL ENGINEER Philip E. Lutz No. C55839 Exp. 12-31-10 CIVIL STATE OF CALIFORNIA

The State of California or its officers or agents shall not be responsible for the accuracy or completeness of electronic copies of this plan sheet.

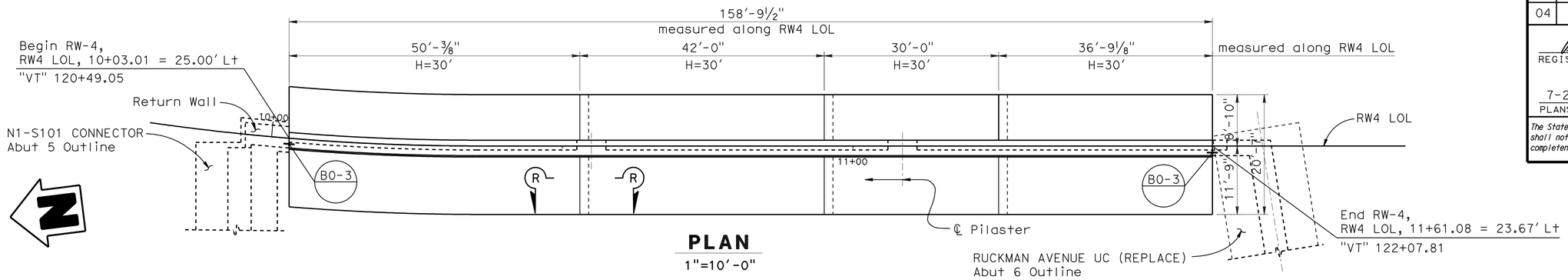

PLAN

1"=10'-0"

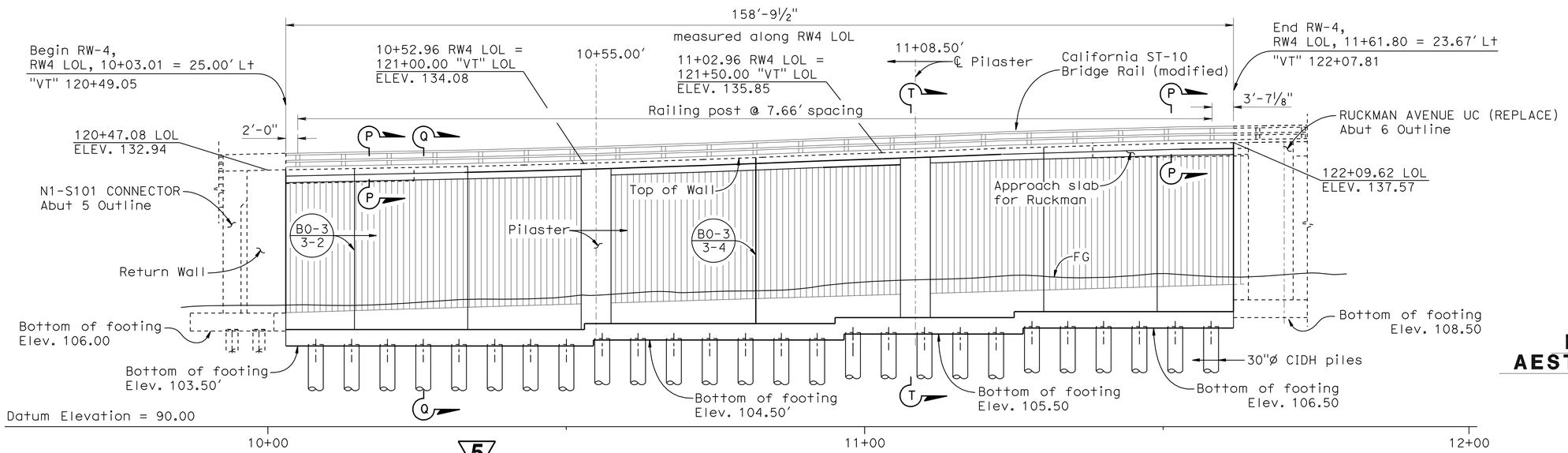

5 **MIRRORED DEVELOPED ELEVATION**

1"=10'-0"

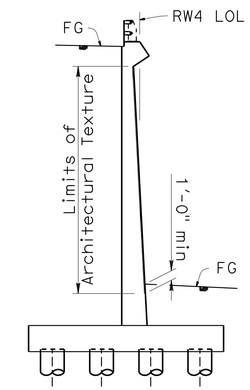

SECTION
RETAINING WALL
AESTHETICS TREATMENT

5 ⅛"=1'-0"

Note:

For "SECTION" and "ELEVATION" of Architectural Texture, see "Structure Plan No. 2 sheet

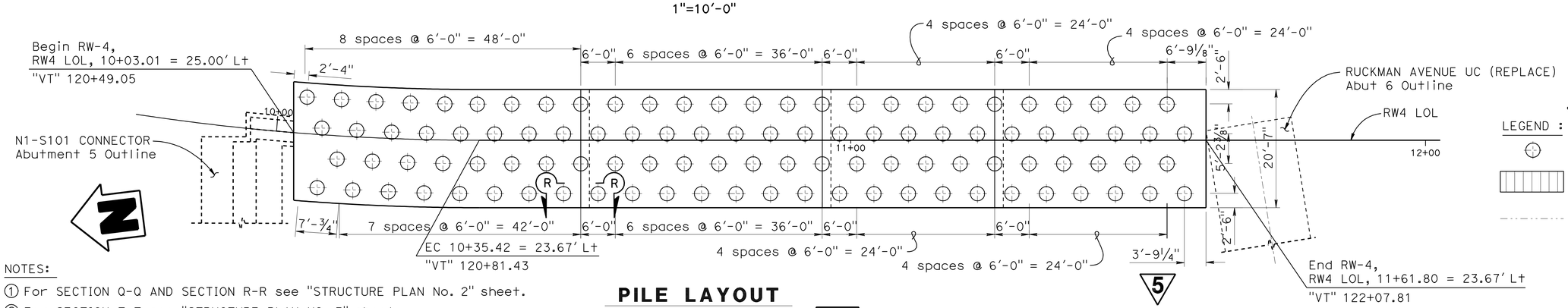

PILE LAYOUT

1"=10'-0"

LEGEND : 5

- Denotes Pile (30"ø)
- Denotes limits of Architectural Texture (Light Board Finish)
- Denotes existing retaining wall

NOTES:

① For SECTION Q-Q AND SECTION R-R see "STRUCTURE PLAN No. 2" sheet.

② For SECTION T-T see "STRUCTURE PLAN NO. 3" sheet.

③ For SECTION P-P see "ST-10 (MOD) DETAILS No. 1" sheet.

5 **REVISED PER ADDENDUM No. 5 DATED SEPTEMBER 10, 2009**

	BY	CHECKED
DESIGN	Phil Lutz	Nasser Tachta
DETAILS	Carlo Cancino	Nasser Tachta
QUANTITIES	B. Thach	Nasser Tachta

STATE OF CALIFORNIA
DEPARTMENT OF TRANSPORTATION

DIVISION OF ENGINEERING SERVICES
STRUCTURE DESIGN
DESIGN BRANCH 9

BRIDGE NO. 34E0013
POST MILE 6.90

RETAINING WALL NO. 4
STRUCTURE PLAN NO. 1

STRUCTURES DESIGN DETAIL SHEET (ENGLISH) (REV. 10/25/05)

ORIGINAL SCALE IN INCHES FOR REDUCED PLANS 0 1 2 3

CU 04242
EA 163731

DISREGARD PRINTS BEARING EARLIER REVISION DATES

REVISION DATES: 04-13-09 05-14-09 05-22-09 06-04-09 06-17-09 07-09-09

SHEET 4 OF 13

FILE => 34e0013-c-sp1.add

USERNAME => trlenard DATE PLOTTED => 10-SEP-2009 TIME PLOTTED => 05:17

DIST	COUNTY	ROUTE	POST MILES TOTAL PROJECT	SHEET No	TOTAL SHEETS
04	SF	101,1	9.2/9.8, 6.8/7.1	559	567

REGISTERED CIVIL ENGINEER 06-04-09 DATE

7-20-09
PLANS APPROVAL DATE

REGISTERED PROFESSIONAL ENGINEER Philip E. Lutz No. C55839 Exp. 12-31-10 CIVIL STATE OF CALIFORNIA

The State of California or its officers or agents shall not be responsible for the accuracy or completeness of electronic copies of this plan sheet.

NOTES:

1. For DETAIL "A" see "ST-10 (MOD) DETAILS No. 1" sheet.
2. For DETAIL "C" see "STRUCTURE PLAN No. 3" sheet.
3. For SECTION S-S see "STRUCTURE PLAN No. 3" sheet.

LEGEND:

Denotes limits of Architectural Texture (Light Board Finish)

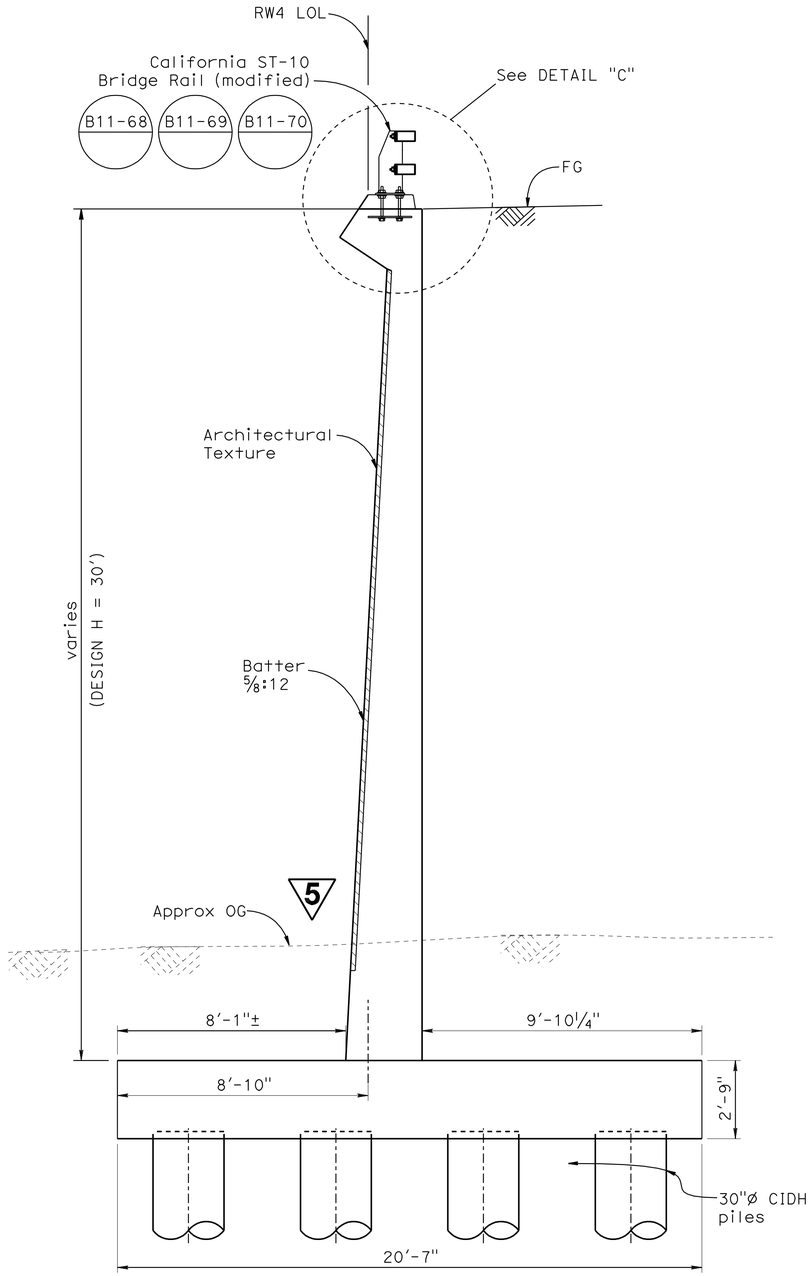

SECTION Q-Q
(TYPICAL SECTION)
3/8"=1'-0"

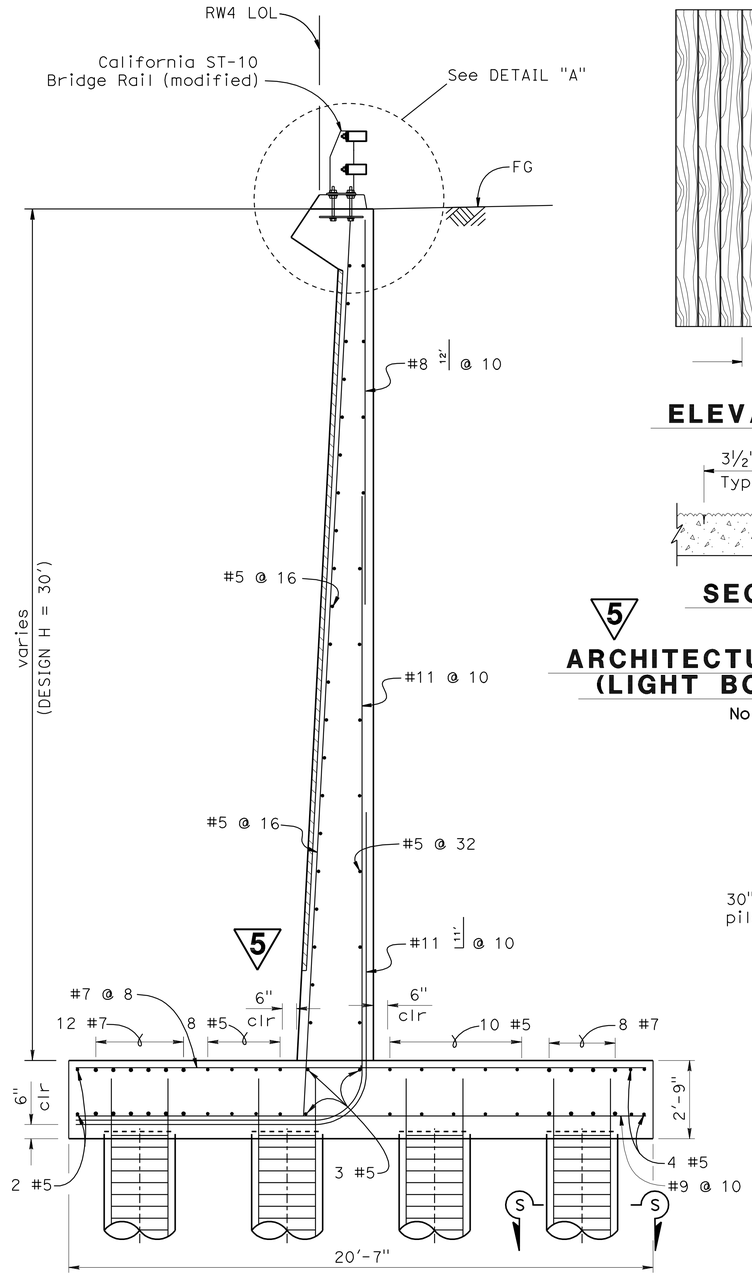

SECTION Q-Q WALL REINFORCEMET
(TYPICAL SECTION)
3/8"=1'-0"

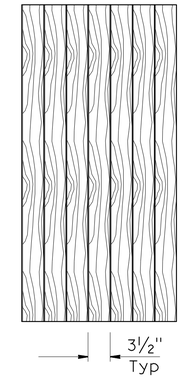

ELEVATION

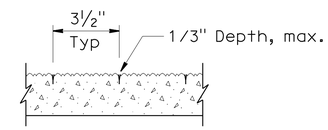

SECTION

5

ARCHITECTURAL TEXTURE
(LIGHT BOARD FINISH)
No Scale

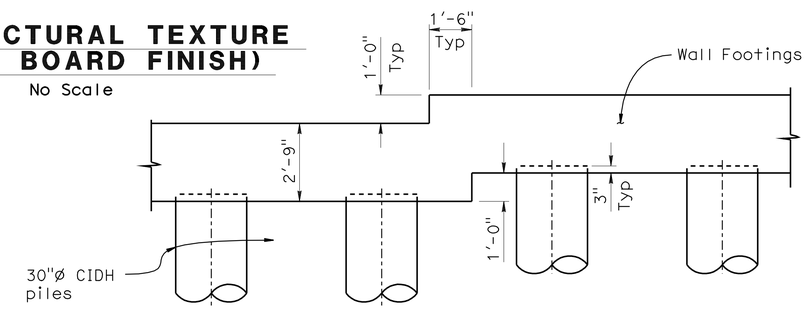

SECTION R-R
3/8"=1'-0"

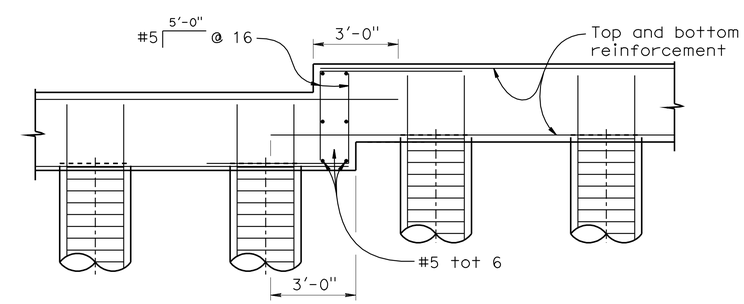

FOOTING STEP REINFORCEMET
3/8"=1'-0"

5 **REVISED PER ADDENDUM No. 5 DATED SEPTEMBER 10, 2009**

	BY	CHECKED
DESIGN	Phil Lutz	Nasser Tachta
DETAILS	Carlo Cancino	Nasser Tachta
QUANTITIES	B. Thach	Nasser Tachta

STATE OF CALIFORNIA DEPARTMENT OF TRANSPORTATION

DIVISION OF ENGINEERING SERVICES STRUCTURE DESIGN DESIGN BRANCH 9

BRIDGE NO. 34E0013
POST MILE 6.90

RETAINING WALL NO. 4
STRUCTURE PLAN NO. 2

STRUCTURES DESIGN DETAIL SHEET (ENGLISH) (REV. 10/25/05)

ORIGINAL SCALE IN INCHES FOR REDUCED PLANS 0 1 2 3

CU 04242
EA 163731

DISREGARD PRINTS BEARING EARLIER REVISION DATES

REVISION DATES: 04-15-09 04-30-09 05-22-09 07-09-09

SHEET 5 OF 13

FILE => 34e0013-c-sp2.add

USERNAME => trlenard DATE PLOTTED => 10-SEP-2009 TIME PLOTTED => 05:17