GOLDEN LINK PARTNERS

PRESIDIO PARKWAY

VOLUME 2 | PART 2 | Technical Submission
Preliminary Master Design Submittal Plans

September 13, 2010
ON BEHALF OF GOLDEN LINK PARTNERS

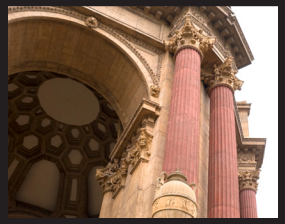

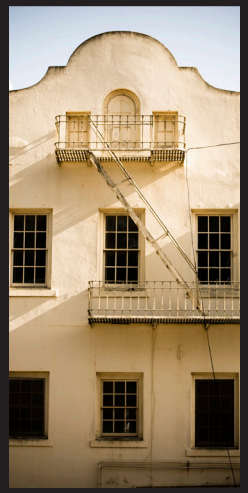

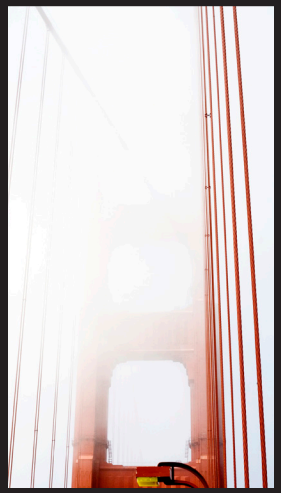

DISTRICT	ROUTE	POST MILES	SHEET No.	TOTAL SHEETS
4	101, 1	8.0/9.8 6.8/7.1	1	128

GOLDEN LINK PARTNERS

PRESIDIO PARKWAY PROJECT

PUBLIC PRIVATE AGREEMENT

PROPOSAL PLANS FOR CONSTRUCTION ON

STATE HIGHWAY

IN THE CITY AND COUNTY OF SAN FRANCISCO ON ROUTE 101 AND 1 MAIN POST TUNNELS, NORTHBOUND BATTERY TUNNEL, GIRARD INTERCHANGE, AND NORTHBOUND HIGH VIADUCT

INDEX OF PLANS

SHEET No.	DESCRIPTION
1	TITLE AND LOCATION MAP
2-6	TYPICAL CROSS SECTIONS
7	KEY MAP AND LINE INDEX
8-17	LAYOUTS
18-26	PROFILE
27-41	CONSTRUCTION DETAILS
42-74	DRAINAGE PLANS
75-84	UTILITY PLANS
85-96	TUNNEL ELECTRICAL
97-99	TUNNEL FIRE PROTECTION
100-103	TUNNEL VENTILATION
STRUCTURE PLANS	
104-105	NORTHBOUND HIGH VIADUCT
106	VETERANS OFF RAMP
107-109	NORTHBOUND BATTERY TUNNEL
110-115	MAIN POST TUNNEL
116	TENNESSEE HOLLOW - SB
117	TENNESSEE HOLLOW - NB
118	GIRARD ROAD UNDERCROSSING - SB
119	GIRARD ROAD UNDERCROSSING - NB
120	GIRARD ROAD DEPRESSED ROADWAY
121-122	GIRARD NORTHBOUND-RAMP
123	GORGAS RAMP
124	MAIN POST SUBSTATION
125-128	STRUCTURES TYPICAL CROSS SECTIONS

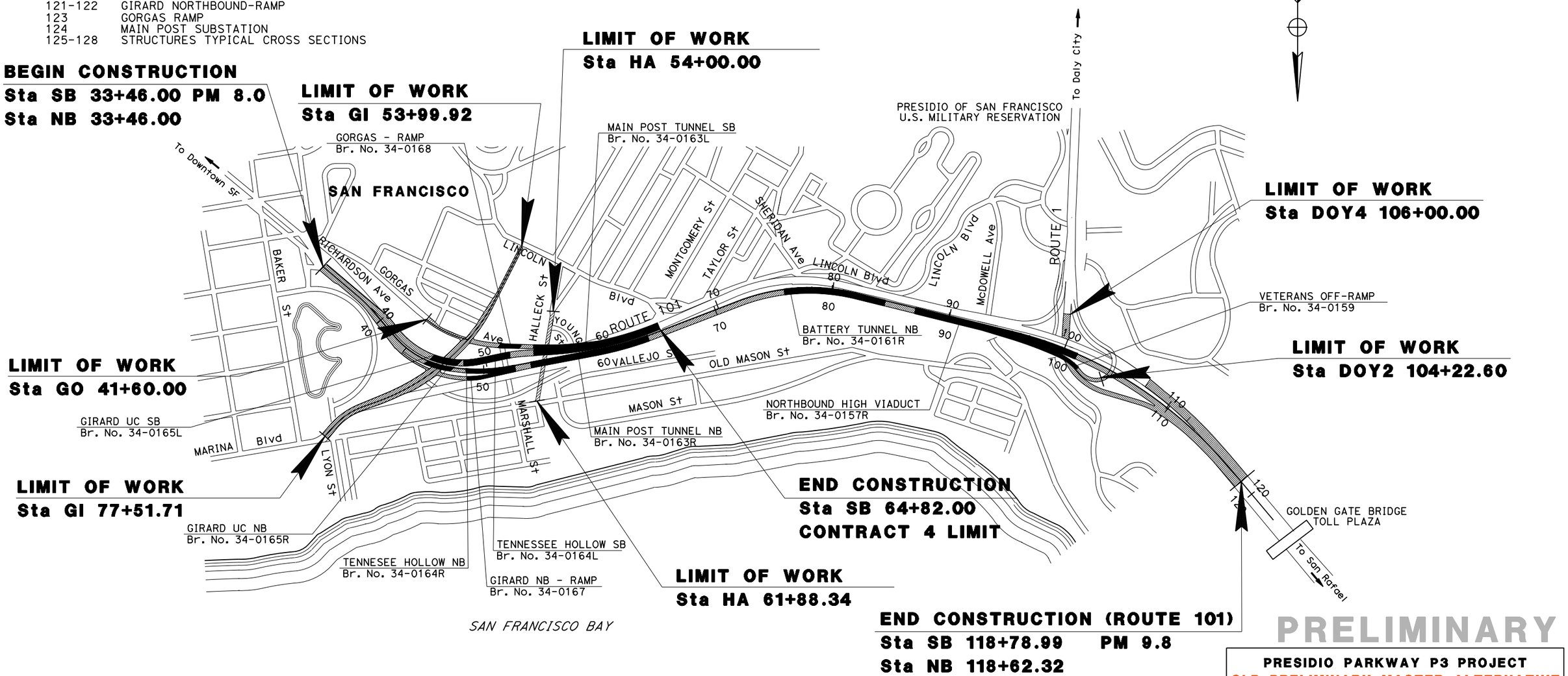

PRELIMINARY

PRESIDIO PARKWAY P3 PROJECT
GLP PRELIMINARY MASTER ALTERNATIVE

NO SCALE

RELATIVE BORDER SCALE IS IN INCHES 0 1 2 3

USERNAME => $USER$
DGN FILE => $FILE$

LAST REVISION 00-00-00

TIME PLOTTED => $TIME$

DATE PLOTTED => $DATE$

DISTRICT	ROUTE	POST MILES	SHEET No.	TOTAL SHEETS
4	101, 1	8.0/9.8 6.8/7.1	2	128

GOLDEN LINK PARTNERS

NOTES:

1. DIMENSIONS OF THE PAVEMENT STRUCTURES (STRUCTURAL SECTIONS) ARE SUBJECT TO TOLERANCES SPECIFIED IN THE STANDARD SPECIFICATIONS.
2. SEE STRUCTURAL PLANS FOR BRIDGE LOCATION AND DETAIL.

RIGID PAVEMENT STRUCTURAL SECTIONS

TI	R-VALUE	SUBGRADE TYPE	1
12	10 TO 40	TYPE II SOIL	0.75′ CRCP
			0.25′ HMA
			0.60′ AS

FLEXIBLE PAVEMENT STRUCTURAL SECTIONS

		2
12	30	0.80′ HMA
		1.25′ AB

TI	R-VALUE	3	4
11/11.5	30	0.70′ HMA	0.70′ HMA
		1.25′ AB	1.25′ AB
			1.50′ CI 3 PM (BLANKET)

HMA = HOT MIX ASPHALT - TYPE A OR TYPE B
AB = CI 2 AGGREGATE BASE
PM = PERMEABLE MATERIAL
AS = CI 4 AGGREGATE SUBBASE

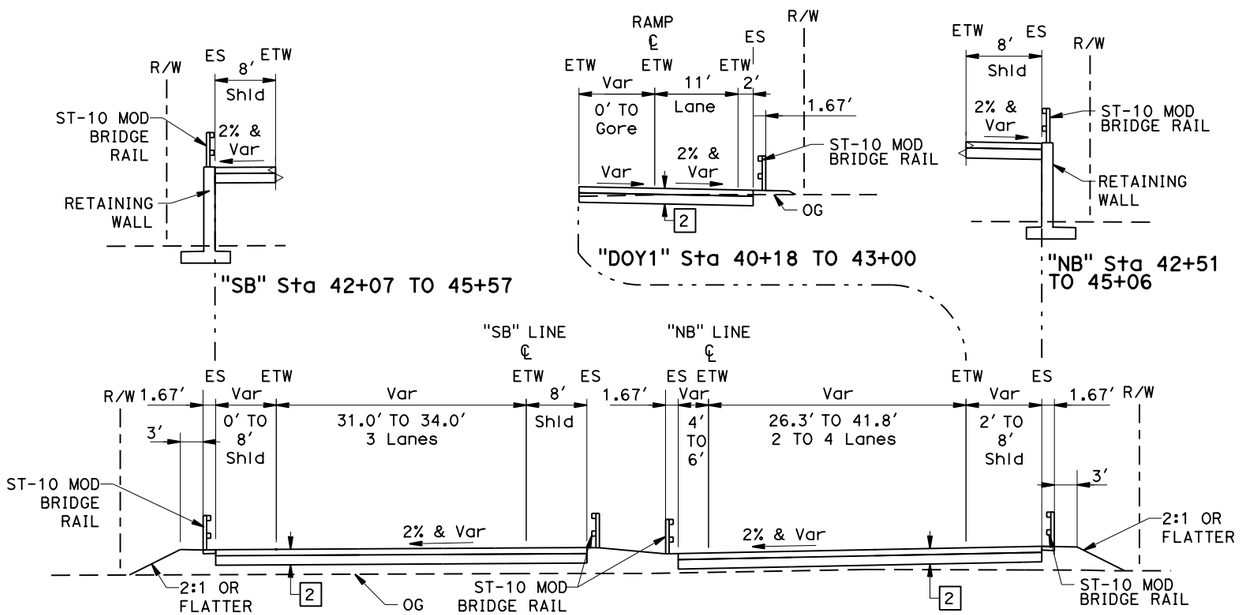

"NB" LINE & "SB" LINE

"NB" Sta 38+72 TO 44+95 "SB" Sta 38+72 TO 45+02

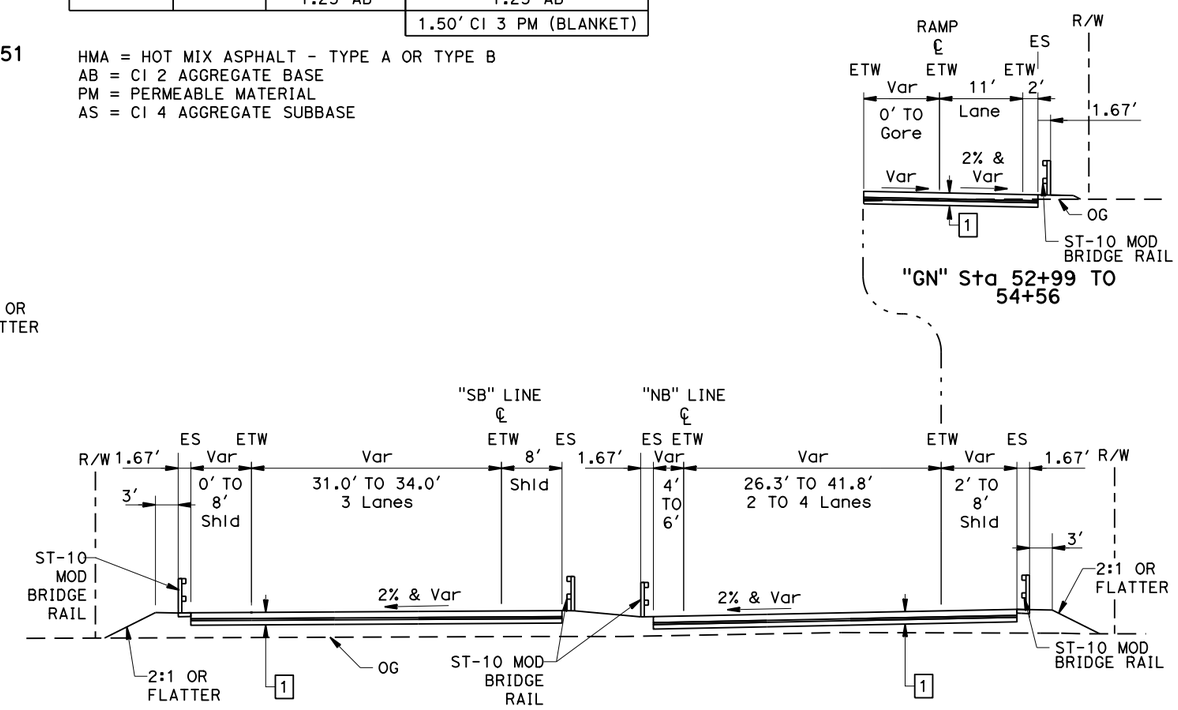

"NB" LINE & "SB" LINE

"NB" Sta 52+90 TO 53+95 "SB" Sta 52+34 TO 54+05
"NB" Sta 47+79 TO 48+19

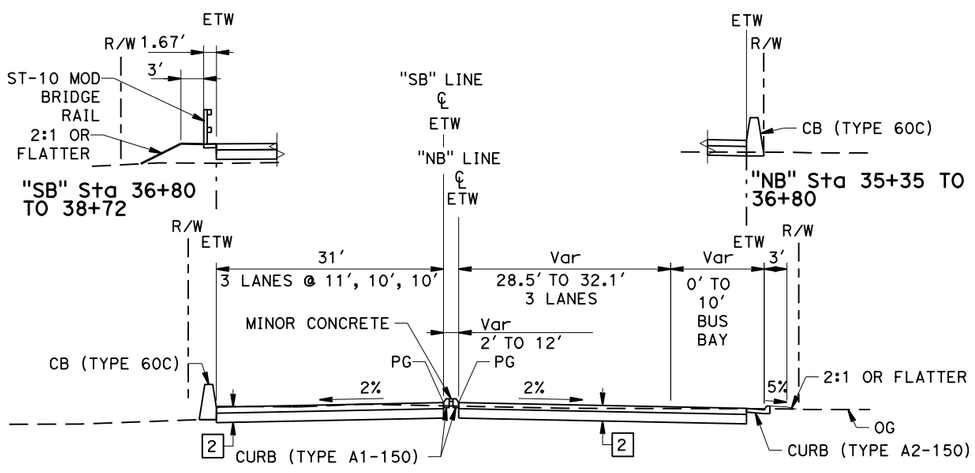

"NB" LINE & "SB" LINE

"NB" Sta 33+46 TO 38+72
"SB" Sta 33+46 TO 38+72

PRELIMINARY

PRESIDIO PARKWAY P3 PROJECT
GLP PRELIMINARY MASTER ALTERNATIVE

TYPICAL CROSS SECTIONS

NO SCALE

X-1

DISTRICT	ROUTE	POST MILES	SHEET No.	TOTAL SHEETS
4	101, 1	8.0/9.8 6.8/7.1	3	128

GOLDEN LINK PARTNERS

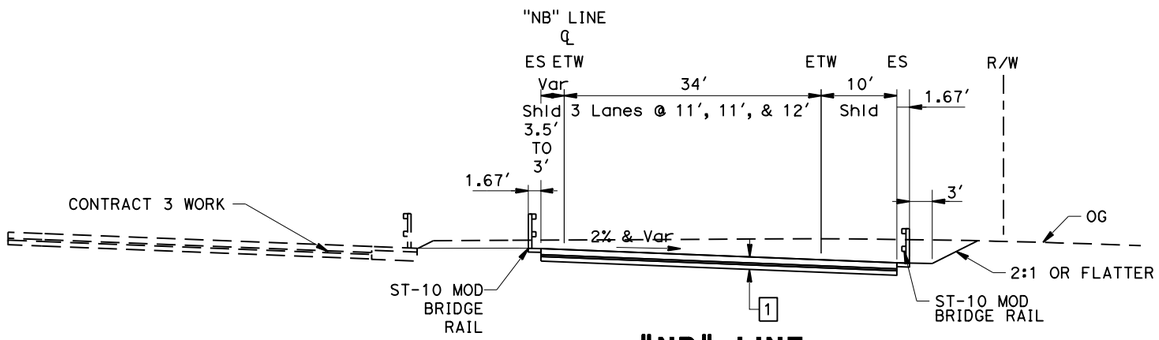

"NB" LINE

"NB" Sta 101+46 TO 104+80

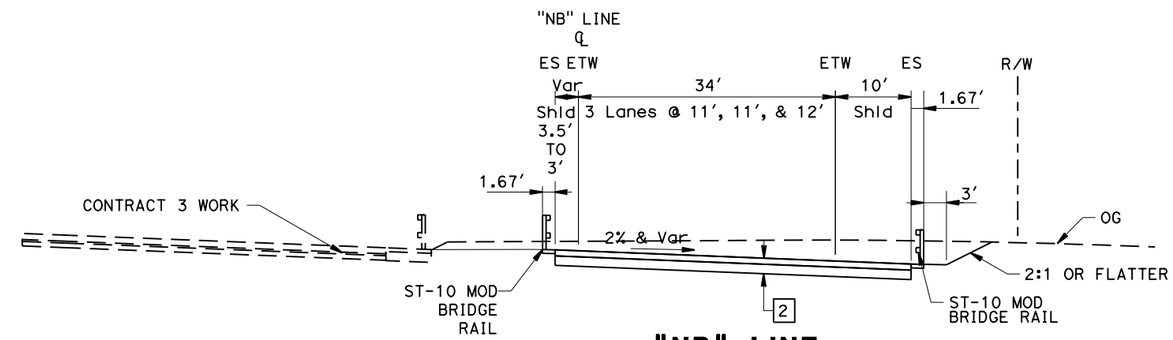

"NB" LINE

"NB" Sta 104+80 TO 107+50

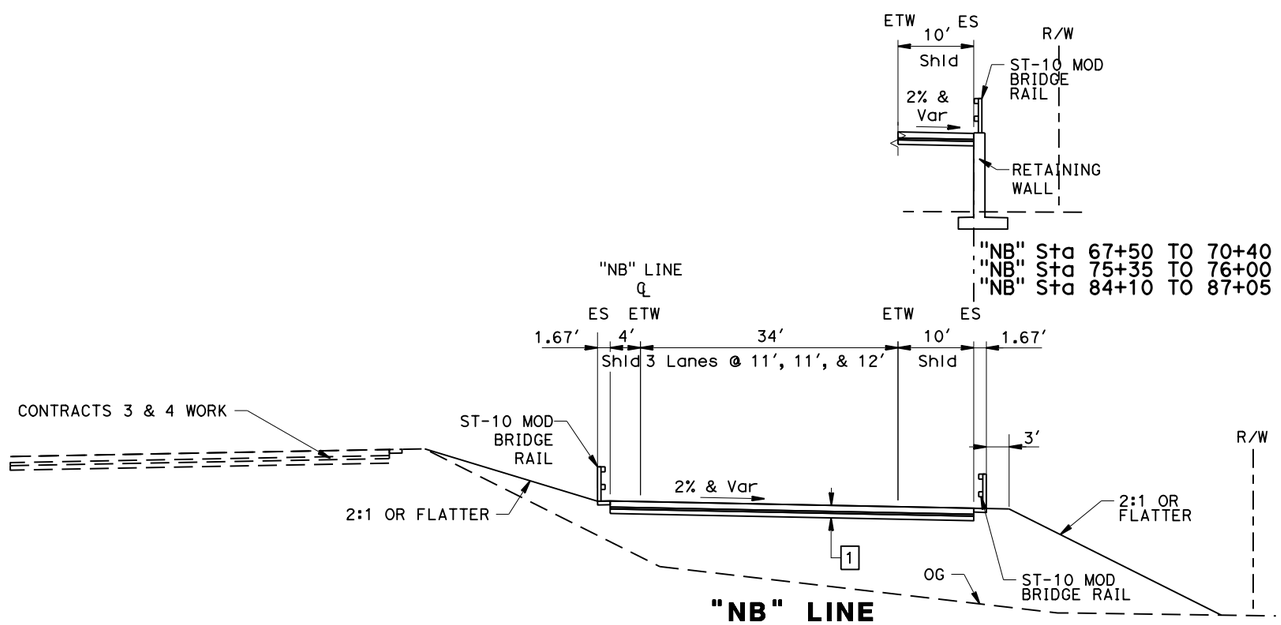

"NB" LINE

"NB" Sta 63+95 TO 76+00
"NB" Sta 84+55 TO 86+87

PRELIMINARY

PRESIDIO PARKWAY P3 PROJECT
GLP PRELIMINARY MASTER ALTERNATIVE

TYPICAL CROSS SECTIONS

NO SCALE

X-2

DISTRICT	ROUTE	POST MILES	SHEET No.	TOTAL SHEETS
4	101, 1	8.0/9.8 6.8/7.1	4	128

GOLDEN LINK PARTNERS

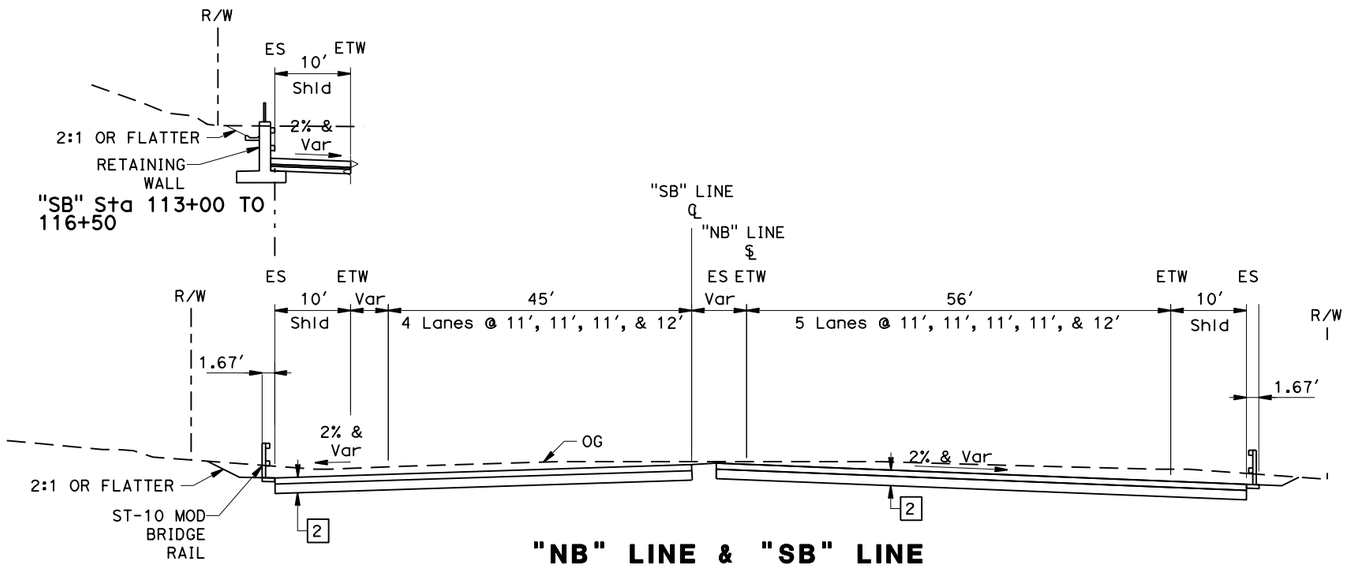

"NB" LINE & "SB" LINE

"NB" Sta 112+93 TO 118+62
"SB" Sta 113+00 TO 118+79

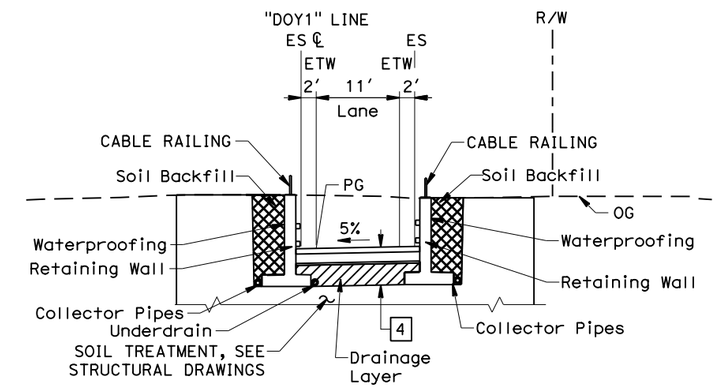

"DOY1" LINE

"DOY1" Sta 45+09 TO 45+40

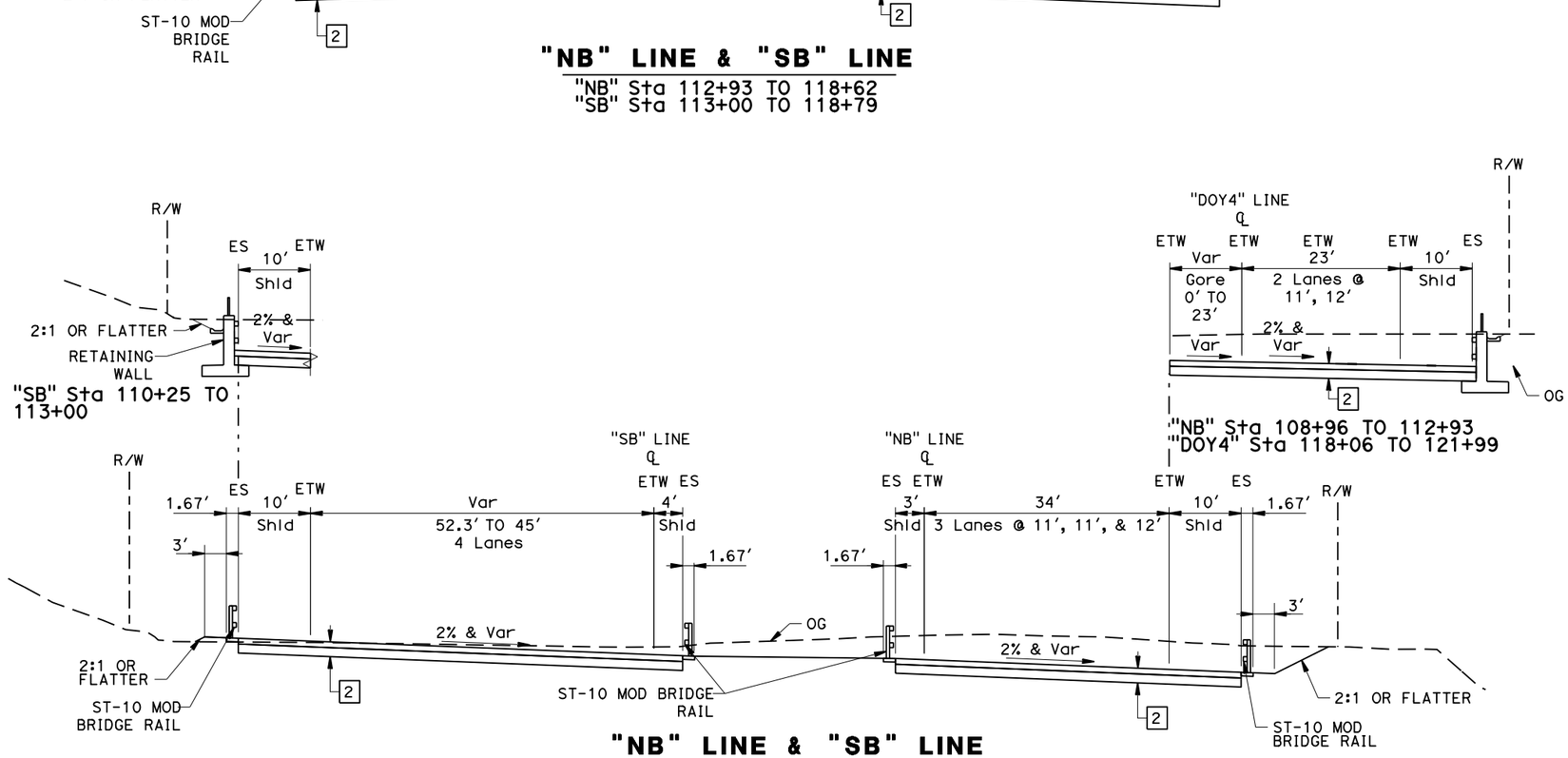

"NB" LINE & "SB" LINE

"NB" Sta 107+50 TO 112+93
"SB" Sta 107+50 TO 113+00

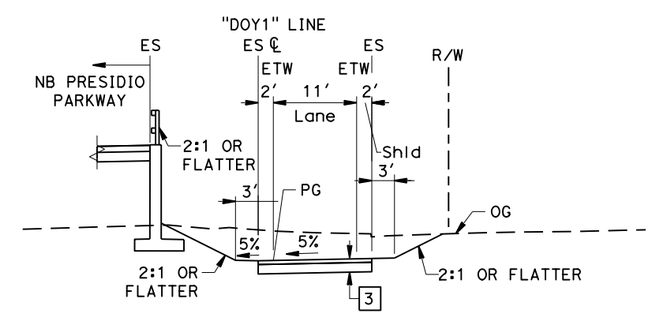

"DOY1" LINE

"DOY1" Sta 43+00 TO 45+09

PRELIMINARY

PRESIDIO PARKWAY P3 PROJECT
GLP PRELIMINARY MASTER ALTERNATIVE

TYPICAL CROSS SECTIONS

NO SCALE

X-3

DISTRICT	ROUTE	POST MILES	SHEET No.	TOTAL SHEETS
4	101, 1	8.0/9.8 6.8/7.1	5	128

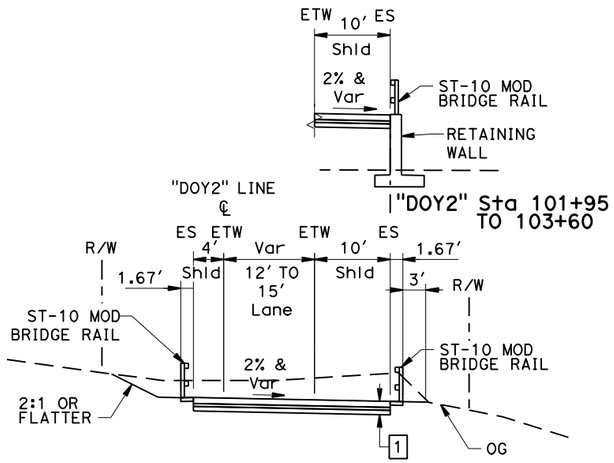

"DOY2" LINE

"DOY2" Sta 101+95 TO 104+23

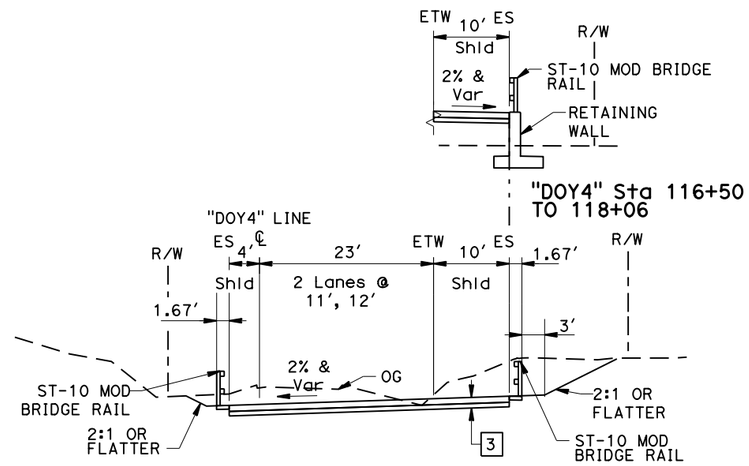

"DOY4" LINE

"DOY4" Sta 106+00 TO 118+06

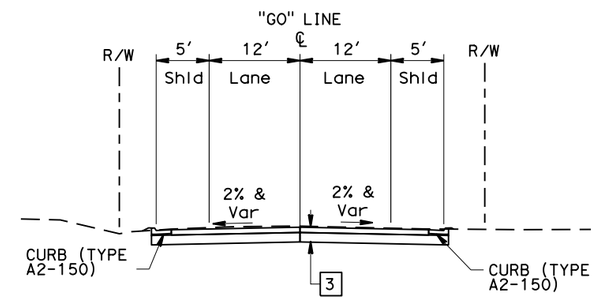

"GO" LINE

"GO" Sta 41+60 TO 46+20

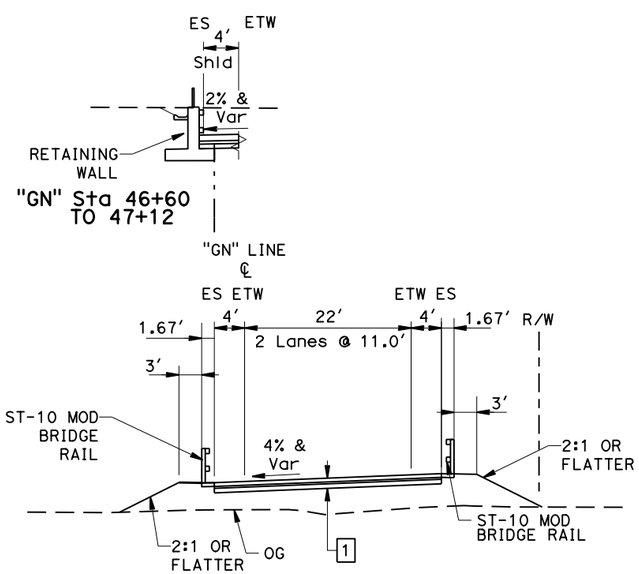

"GN" LINE

"GN" Sta 46+60 TO 48+60

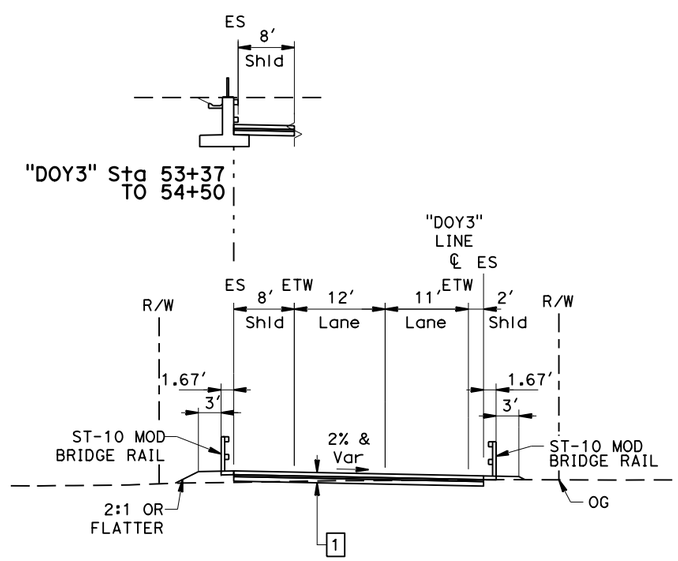

"DOY3" LINE

"DOY3" Sta 49+28 TO 51+33
"DOY3" Sta 53+37 TO 54+50

PRELIMINARY

PRESIDIO PARKWAY P3 PROJECT
GLP PRELIMINARY MASTER ALTERNATIVE

TYPICAL CROSS SECTIONS

NO SCALE

X-4

DISTRICT	ROUTE	POST MILES	SHEET No.	TOTAL SHEETS
4	101, 1	8.0/9.8 6.8/7.1	6	128

GOLDEN LINK PARTNERS

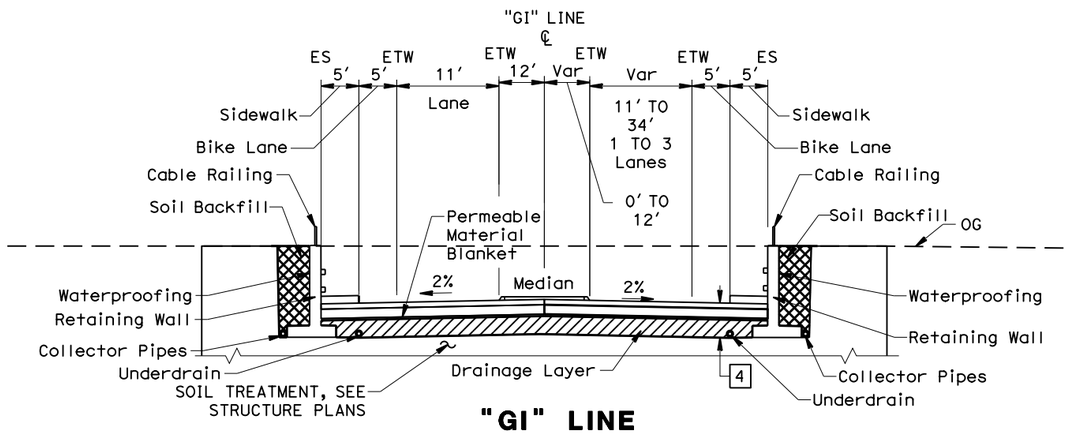

"GI" LINE

"GI" Sta 64+65 TO 67+15

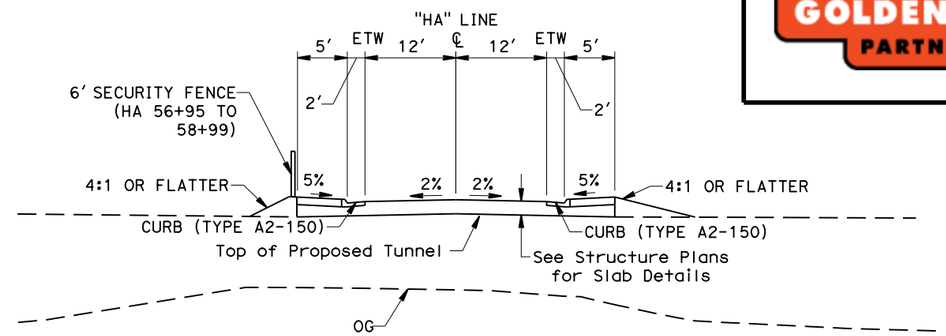

"HA" LINE

"HA" Sta 56+95 TO 58+79

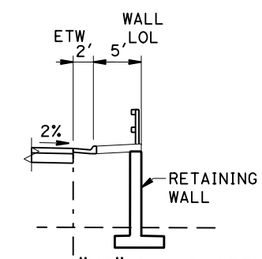

"HA" Sta 54+77 TO 56+95

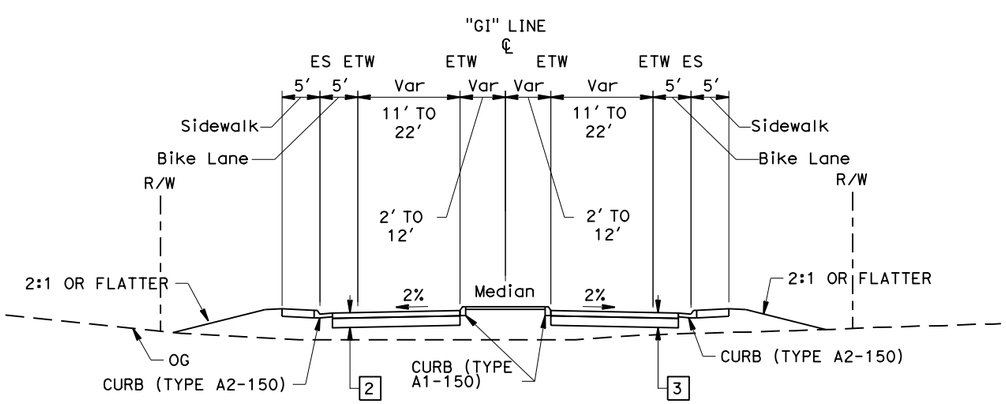

"GI" LINE

"GI" Sta 54+00 TO 64+65
"GI" Sta 67+15 TO 77+52

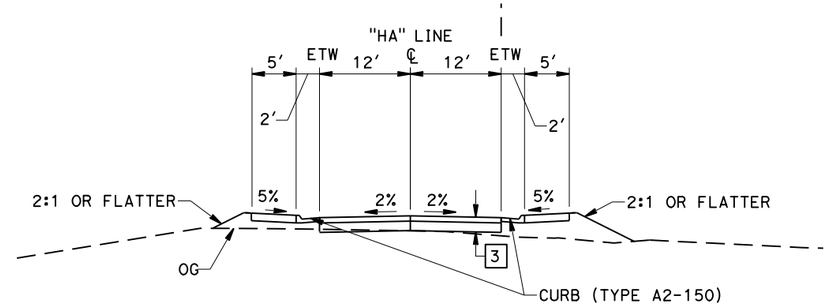

"HA" LINE

"HA" Sta 54+00 TO 56+95
"HA" Sta 58+79 TO 61+88

PRELIMINARY

PRESIDIO PARKWAY P3 PROJECT
GLP PRELIMINARY MASTER ALTERNATIVE

TYPICAL CROSS SECTIONS

NO SCALE

X-5

DISTRICT	ROUTE	POST MILES	SHEET No.	TOTAL SHEETS
4	101, 1	8.0/9.8 6.8/7.1	7	128

GOLDEN LINK PARTNERS

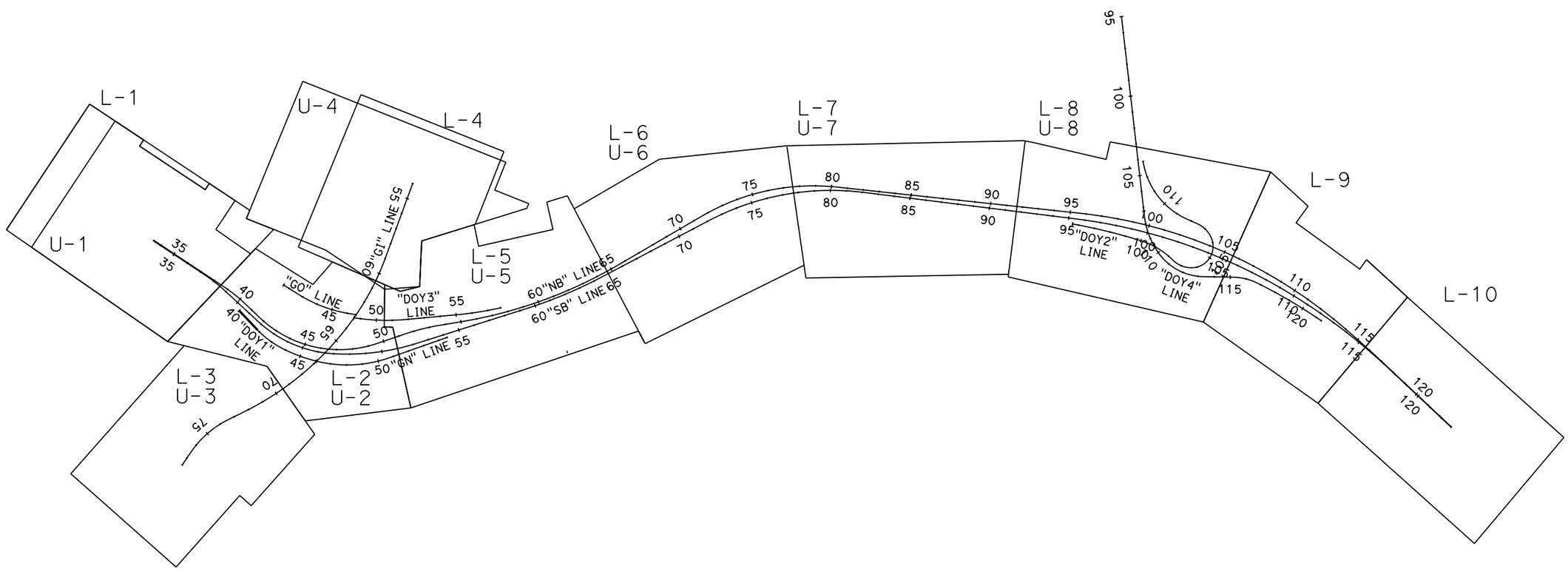

PRELIMINARY

PRESIDIO PARKWAY P3 PROJECT
GLP PRELIMINARY MASTER ALTERNATIVE

KEY MAP AND LINE INDEX

NO SCALE

K-1

DISTRICT	ROUTE	POST MILES	SHEET No.	TOTAL SHEETS
4	101, 1	8.0/9.8 6.8/7.1	8	128

GOLDEN LINK PARTNERS

CURVE DATA

NO	R	Δ	T	L	N-COORDINATE	E-COORDINATE
1	1000.00′	09°15′01"	80.90′	161.45′	2120999.939	5999253.822

ABBREVIATIONS:

ETW EDGE OF TRAVEL WAY

R/W PERMANENT EASEMENT

NOTES:

1. SEE BRIDGE PLANS AND TUNNEL PLANS FOR ADDITIONAL DETAILS (INSTALLATION OF BRIDGE RAILING ST-10 MOD)
2. COORDINATE VALUES SHOWN ARE CCS NAD-83, ZONE 29R. ELEVATIONS ARE BASED ON NAD-88.

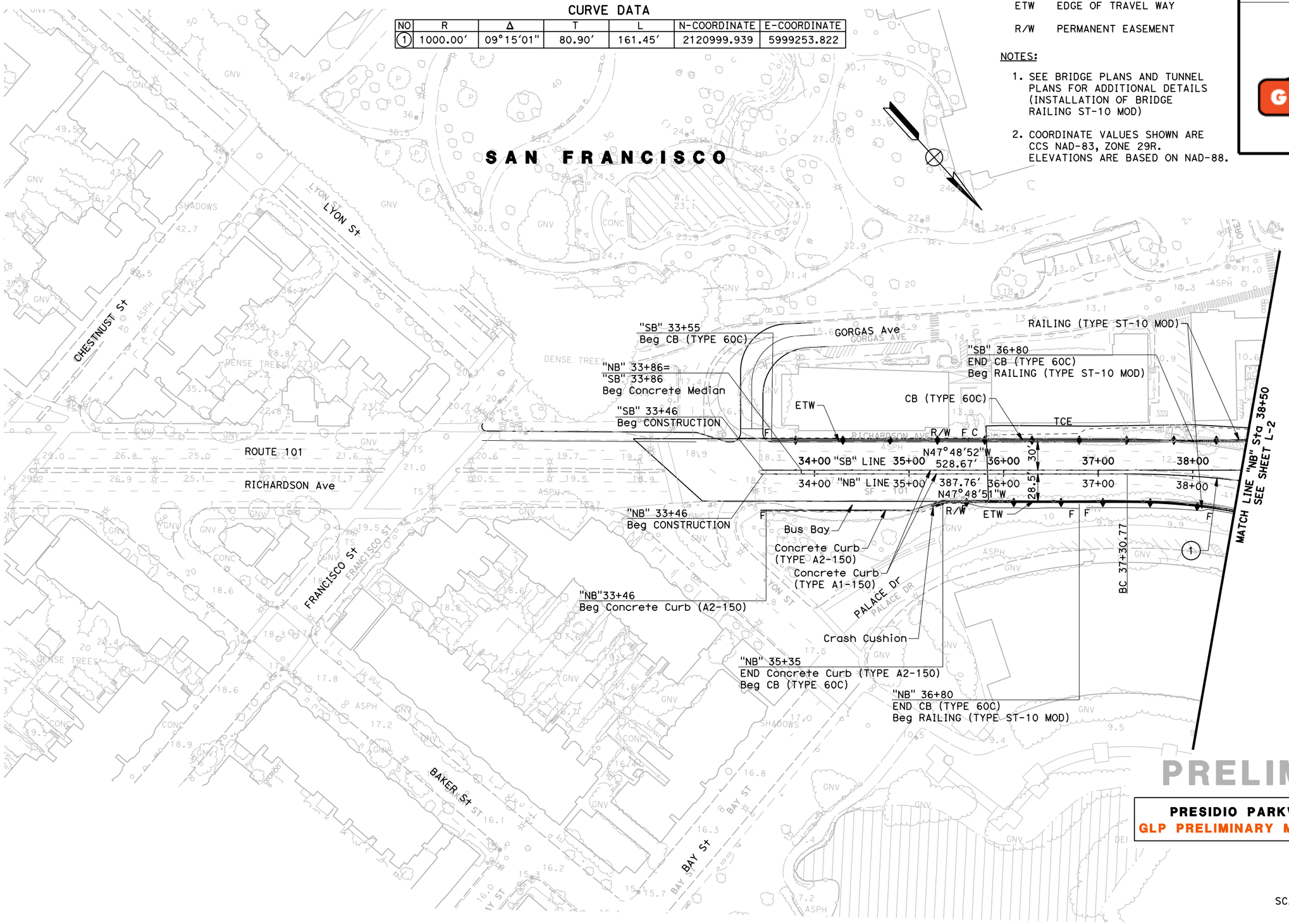

PRELIMINARY

PRESIDIO PARKWAY P3 PROJECT
GLP PRELIMINARY MASTER ALTERNATIVE

LAYOUT

SCALE : 1"=50′

L-1

DISTRICT	ROUTE	POST MILES	SHEET No.	TOTAL SHEETS
4	101, 1	8.0/9.8 6.8/7.1	9	128

GOLDEN LINK PARTNERS

CURVE DATA

NO	R	Δ	T	L	N-COORDINATE	E-COORDINATE
1	568.00′	19°02′50"	95.29′	188.82′	21203727.211	5998252.611
2	984.00′	19°02′50"	95.29′	188.82′	21203727.211	5998252.611
3	790.00′	33°25′15"	237.17′	460.81′	2120168.203	5997667.330
4	759.00′	39°33′50"	272.99′	524.10′	2120125.009	5997701.322
5	1440.00′	20°45′50"	263.82′	521.85′	2119458.577	5997561.219
6	968.00′	10°09′39"	86.06′	171.67′	2121067.335	5999125.245
7	725.00′	62°25′24"	439.28′	789.88′	2120130.931	5997582.531
8	1834.00′	28°55′49"	473.11′	789.88′	2119393.232	5999021.430
9	853.00′	25°54′59"	196.28′	385.84′	2119822.675	5997462.657
10	1312.00′	14°19′29"	164.87′	328.02′	2119414.082	5997302.688

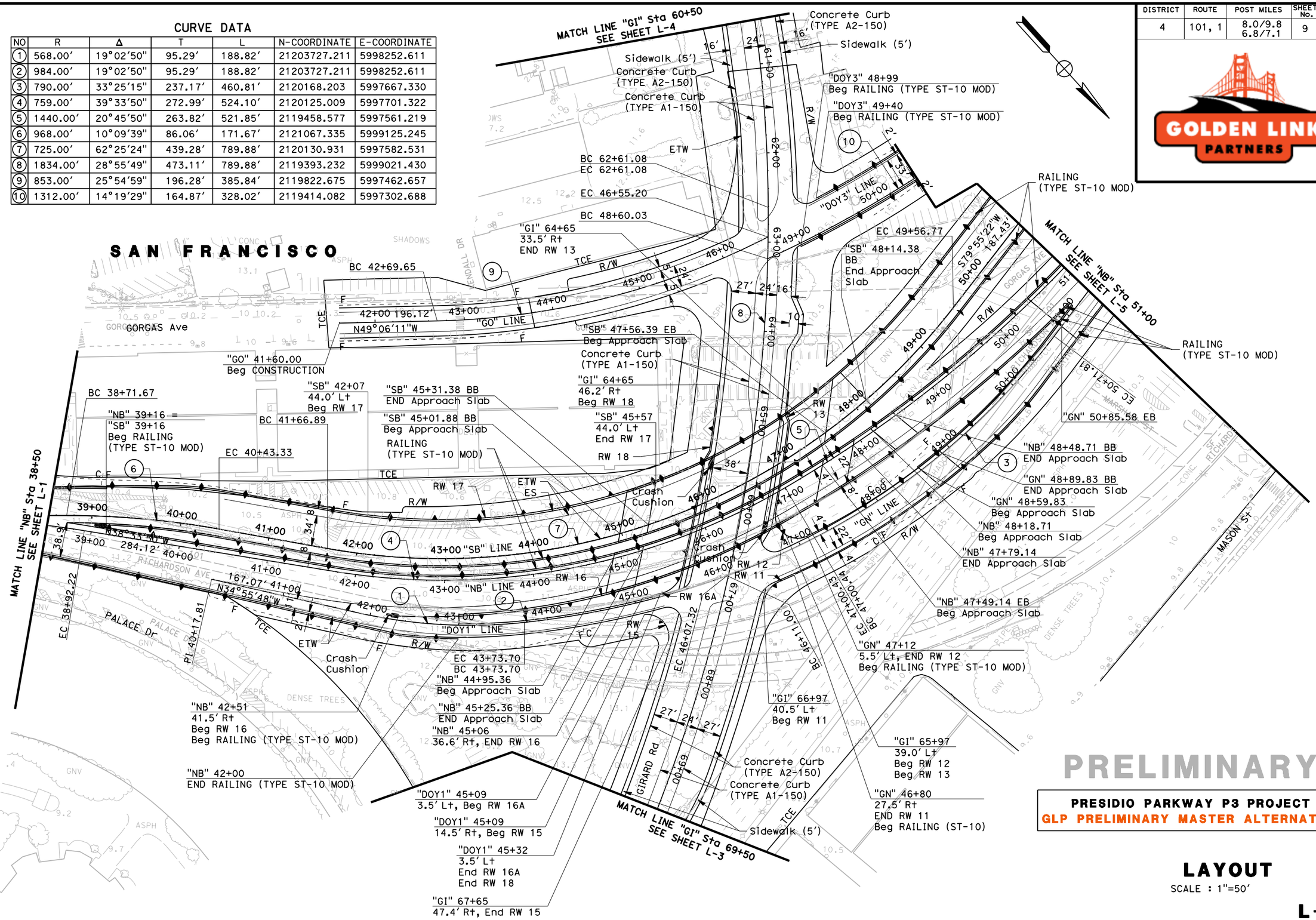

PRELIMINARY

PRESIDIO PARKWAY P3 PROJECT
GLP PRELIMINARY MASTER ALTERNATIVE

LAYOUT

SCALE : 1"=50′

L-2

DISTRICT	ROUTE	POST MILES	SHEET No.	TOTAL SHEETS
4	101, 1	8.0/9.8 6.8/7.1	10	128

GOLDEN LINK PARTNERS

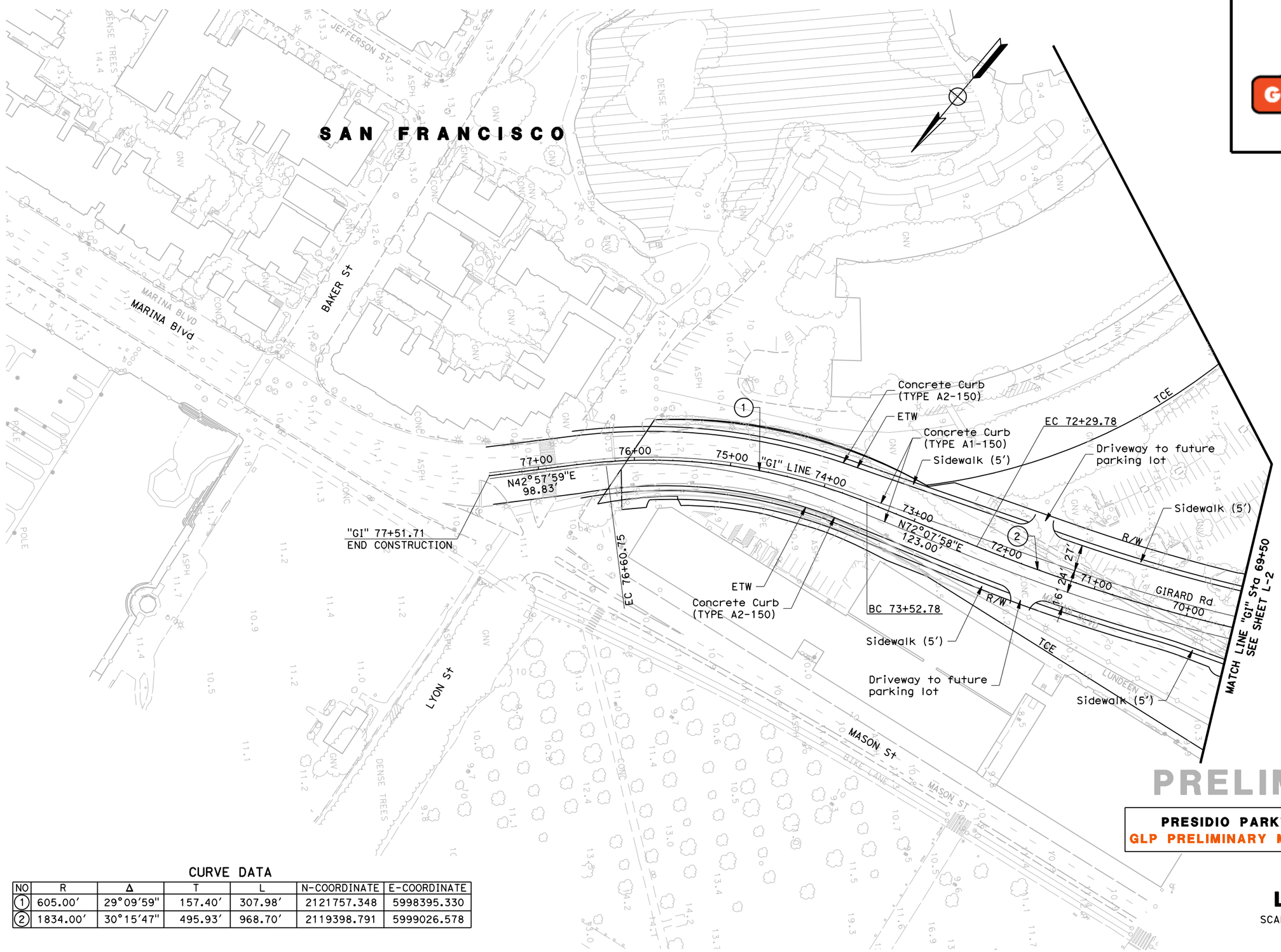

PRELIMINARY

PRESIDIO PARKWAY P3 PROJECT
GLP PRELIMINARY MASTER ALTERNATIVE

CURVE DATA

NO	R	Δ	T	L	N-COORDINATE	E-COORDINATE
1	605.00'	29°09'59"	157.40'	307.98'	2121757.348	5998395.330
2	1834.00'	30°15'47"	495.93'	968.70'	2119398.791	5999026.578

LAYOUT

SCALE : 1"=50'

L-3

RELATIVE BORDER SCALE IS IN INCHES 0 1 2 3

USERNAME => $USER$
DGN FILE => $FILE$

LAST REVISION 00-00-00

TIME PLOTTED => $TIME$

DATE PLOTTED => $DATE$

DISTRICT	ROUTE	POST MILES	SHEET No.	TOTAL SHEETS
4	101, 1	8.0/9.8 6.8/7.1	11	128

GOLDEN LINK PARTNERS

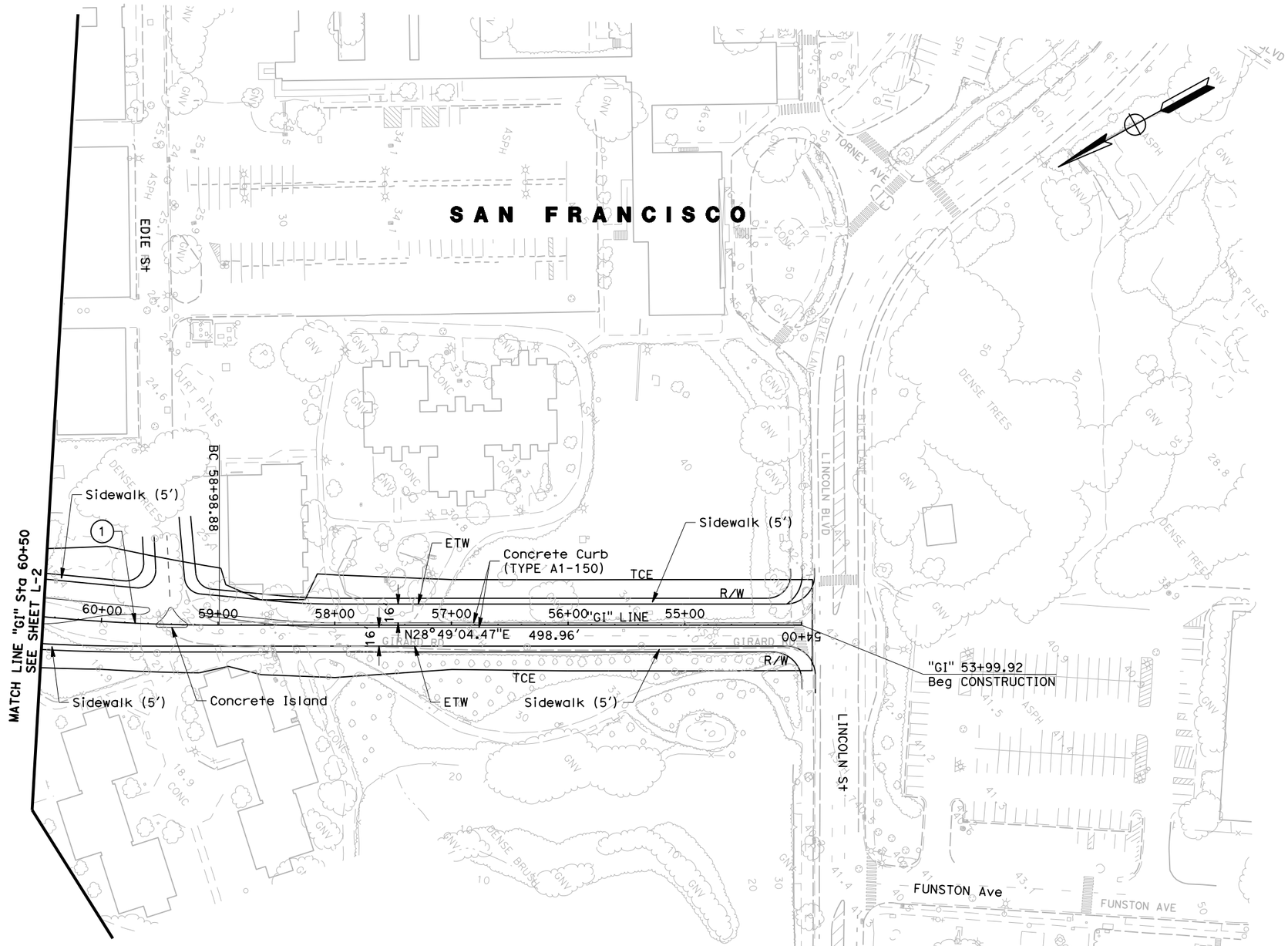

CURVE DATA

NO	R	Δ	T	L	N-COORDINATE	E-COORDINATE
1	1590.00'	03°36'13"	204.42'	406.62'	2119561.009	5998844.880

PRELIMINARY

PRESIDIO PARKWAY P3 PROJECT
GLP PRELIMINARY MASTER ALTERNATIVE

LAYOUT

SCALE : 1"=50'

L-4

RELATIVE BORDER SCALE IS IN INCHES 0 1 2 3

USERNAME => $USER$
DGN FILE => $FILE$

LAST REVISION 00-00-00

TIME PLOTTED => $TIME$

DATE PLOTTED => $DATE$

DISTRICT	ROUTE	POST MILES	SHEET No.	TOTAL SHEETS
4	101, 1	8.0/9.8 6.8/7.1	12	128

GOLDEN LINK PARTNERS

CURVE DATA

NO	R	Δ	T	L	N-COORDINATE	E-COORDINATE
1	1440.00′	20°45′50"	263.82′	521.85′	2119458.577	5997561.219
2	2900.00′	10°12′23"	258.98′	516.59′	2117905.809	5996132.927
3	1345.00′	09°20′14"	109.84′	219.19′	2122136.202	5997162.646
4	2884.00′	20°51′30"	530.83′	1049.90′	2117905.805	5996020.178
5	1312.00′	14°19′29"	164.87′	328.02′	2119414.082	5997302.688
6	2040.00′	07°36′08"	135.54′	270.67′	2118705.972	5996937.142

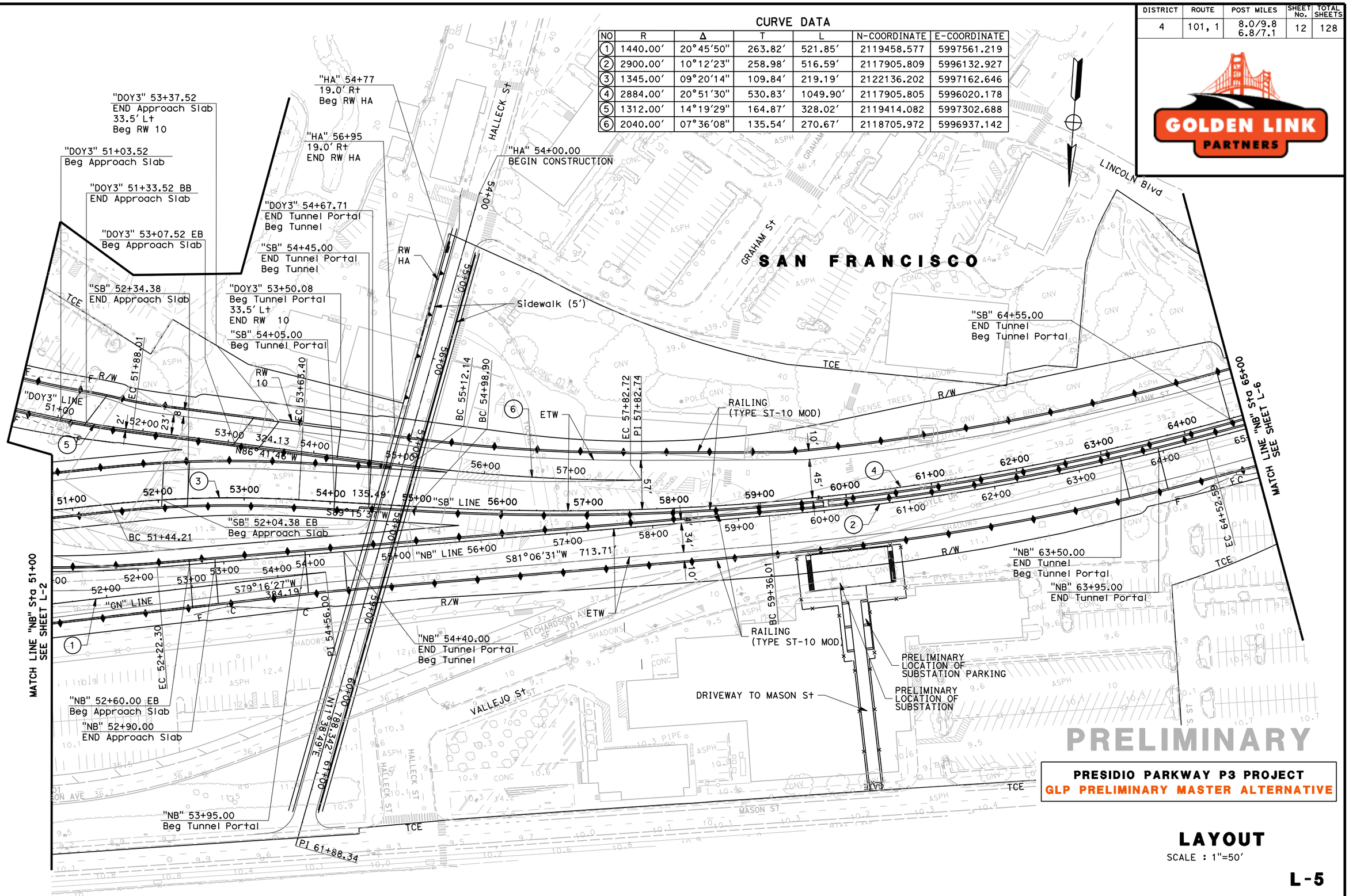

PRESIDIO PARKWAY P3 PROJECT
GLP PRELIMINARY MASTER ALTERNATIVE

LAYOUT

SCALE : 1"=50′

L-5

DISTRICT	ROUTE	POST MILES	SHEET No.	TOTAL SHEETS
4	101, 1	8.0/9.8 6.8/7.1	13	128

GOLDEN LINK PARTNERS

CURVE DATA

NO	R	Δ	T	L	N-COORDINATE	E-COORDINATE
1	1639.00′	34°52′11"	514.73′	997.48′	2121946.901	5994880.147
2	1380.00′	36°24′24"	453.81′	876.88′	2121646.104	5994945.576

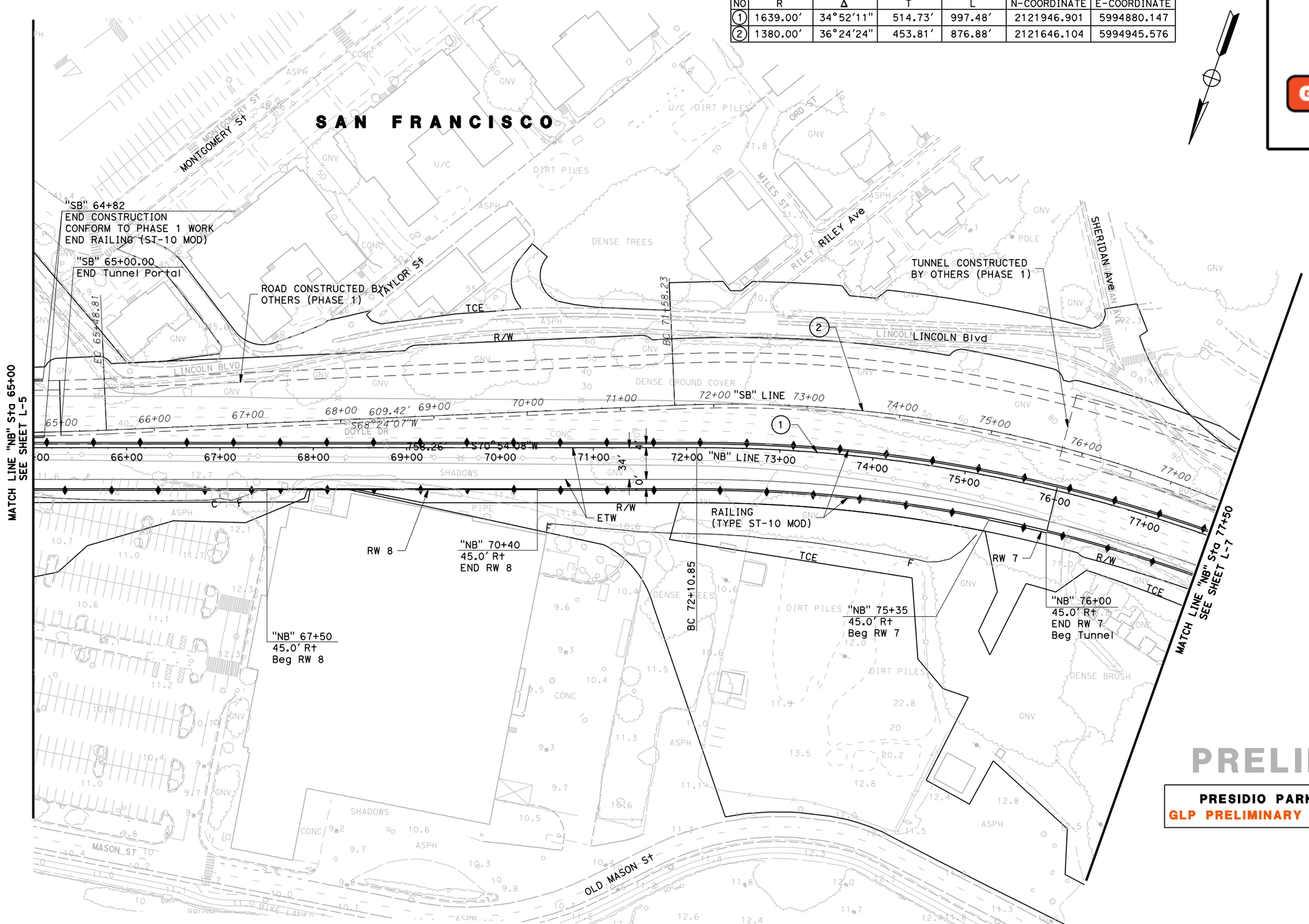

PRELIMINARY

PRESIDIO PARKWAY P3 PROJECT
GLP PRELIMINARY MASTER ALTERNATIVE

LAYOUT

SCALE : 1"=50′

L-6

RELATIVE BORDER SCALE IS IN INCHES 0 1 2 3

USERNAME => $USER$
DGN FILE => $FILE$

LAST REVISION 00-00-00

TIME PLOTTED => $TIME$

DATE PLOTTED => $DATE$

DISTRICT	ROUTE	POST MILES	SHEET No.	TOTAL SHEETS
4	101, 1	8.0/9.8 6.8/7.1	14	128

GOLDEN LINK PARTNERS

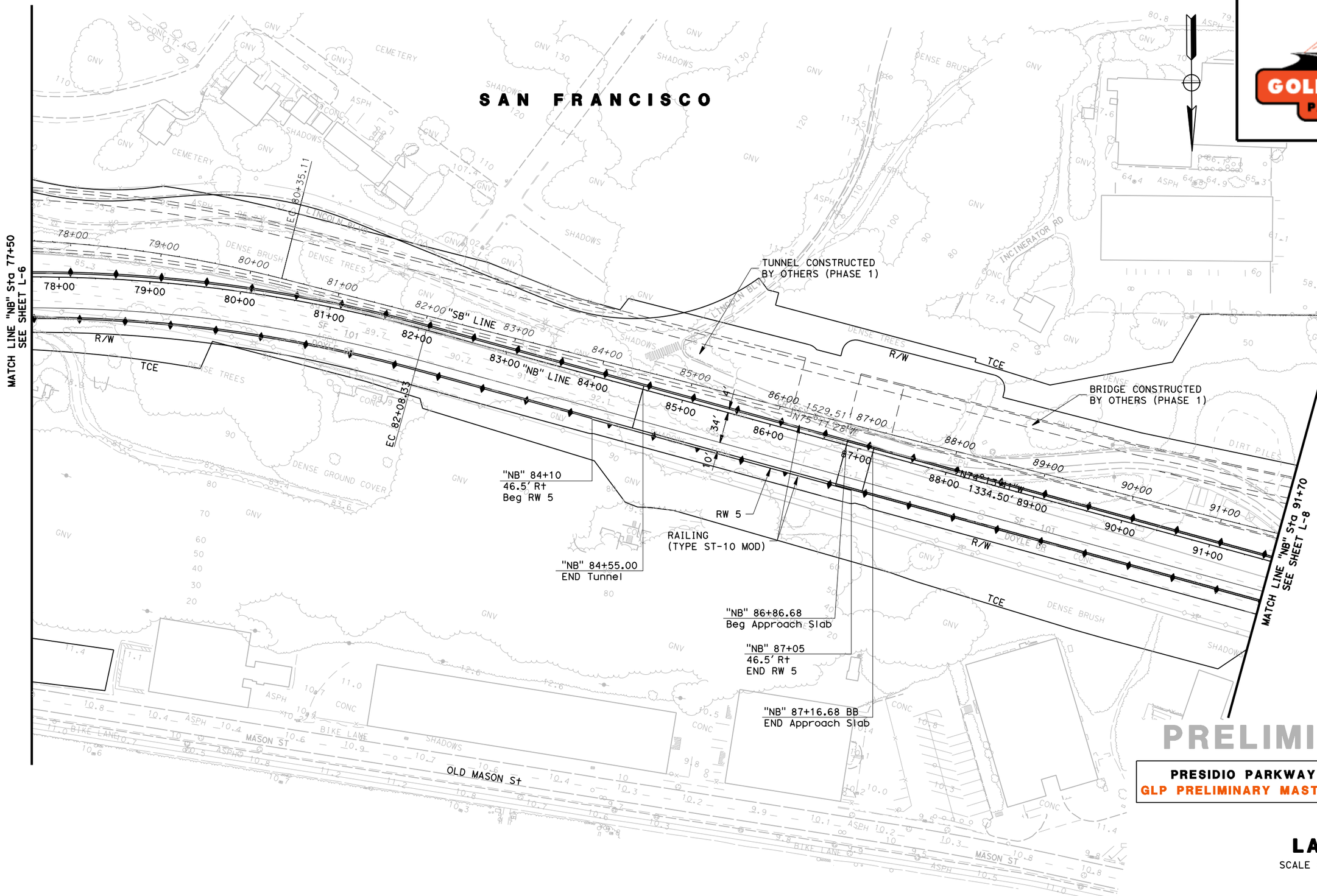

PRELIMINARY

PRESIDIO PARKWAY P3 PROJECT
GLP PRELIMINARY MASTER ALTERNATIVE

LAYOUT

SCALE : 1"=50'

L-7

RELATIVE BORDER SCALE IS IN INCHES 0 1 2 3

USERNAME => kmagee
DGN FILE => IP_PWP:dms00422\Layouts2D.dgn

LAST REVISION 00-00-00

TIME PLOTTED => 12:49

DATE PLOTTED => 09-SEP-2010

DISTRICT	ROUTE	POST MILES	SHEET No.	TOTAL SHEETS
4	101, 1	8.0/9.8 6.8/7.1	15	128

GOLDEN LINK PARTNERS

CURVE DATA

NO	R	Δ	T	L	N-COORDINATE	E-COORDINATE
1	3409.00′	07°23′01"	219.96′	439.31′	2123989.711	5994267.898
2	492.00′	27°27′55"	120.23′	235.85′	2121078.288	5992588.096
3	164.00′	49°28′52"	75.57′	141.63′	2120980.887	5992456.153
4	133.00′	106°55′09"	179.47′	248.19′	2121011.808	5992458.361
5	505.00′	25°06′30"	112.46′	221.30′	2120765.959	5992233.301
6	3391.00′	22°32′31"	675.80′	1334.12′	2123995.670	5994072.094
7	456.00′	48°31′42"	205.55′	386.22′	2120801.461	5992267.074

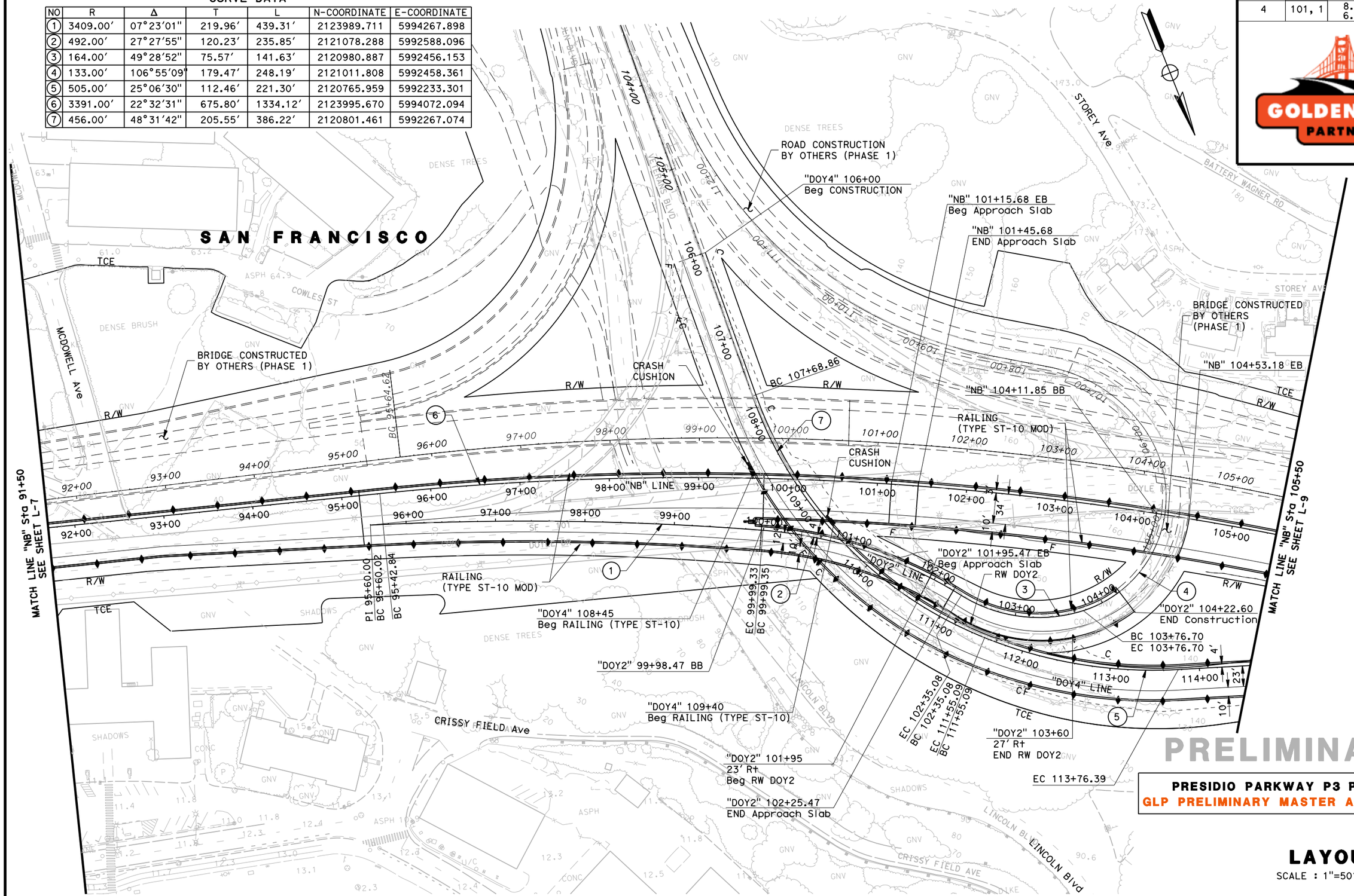

PRELIMINARY

PRESIDIO PARKWAY P3 PROJECT
GLP PRELIMINARY MASTER ALTERNATIVE

LAYOUT

SCALE : 1"=50′

L-8

RELATIVE BORDER SCALE IS IN INCHES 0 1 2 3

USERNAME => $USER$
DGN FILE => $FILE$

LAST REVISION 00-00-00

TIME PLOTTED => $TIME$

DATE PLOTTED => $DATE$

DISTRICT	ROUTE	POST MILES	SHEET No.	TOTAL SHEETS
4	101, 1	8.0/9.8 6.8/7.1	16	128

GOLDEN LINK PARTNERS

CURVE DATA

NO	R	Δ	T	L	N-COORDINATE	E-COORDINATE
1	3670.00′	13°34′08"	436.61′	869.14′	2124214.581	5994245.065
2	3015.00′	34°18′04"	930.45′	1804.98′	2123617.728	5993884.772
3	7381.00′	02°46′22"	178.64′	357.21′	2126475.757	5997185.321
4	675.00′	14°32′42"	86.14′	171.36′	2121646.104	5992320.164
5	1658.19′	11°47′50"	171.32′	341.42′	2122805.493	5992855.749

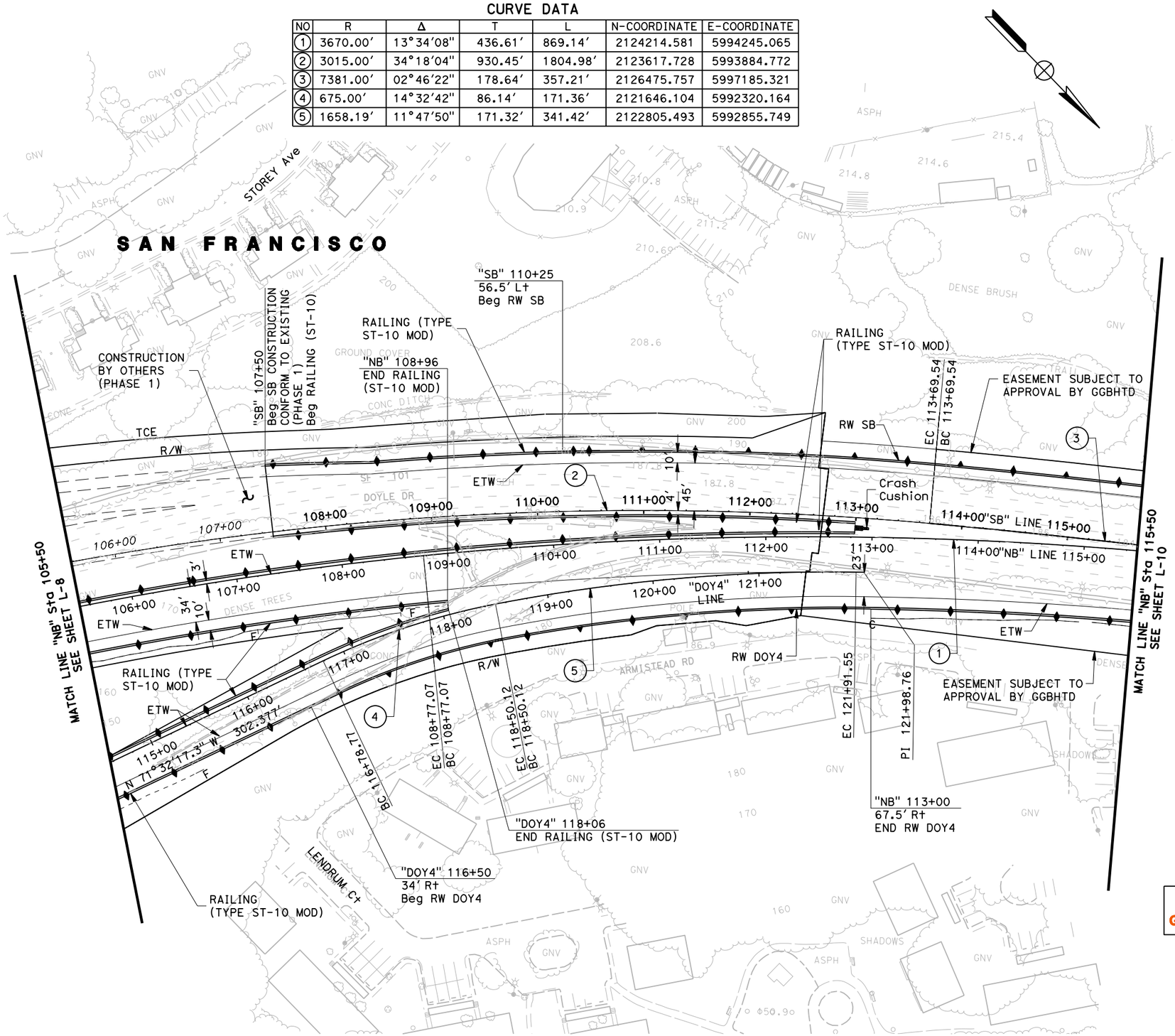

PRELIMINARY

PRESIDIO PARKWAY P3 PROJECT
GLP PRELIMINARY MASTER ALTERNATIVE

LAYOUT

SCALE : 1"=50′

L-9

DISTRICT	ROUTE	POST MILES	SHEET No.	TOTAL SHEETS
4	101, 1	8.0/9.8 6.8/7.1	17	128

GOLDEN LINK PARTNERS

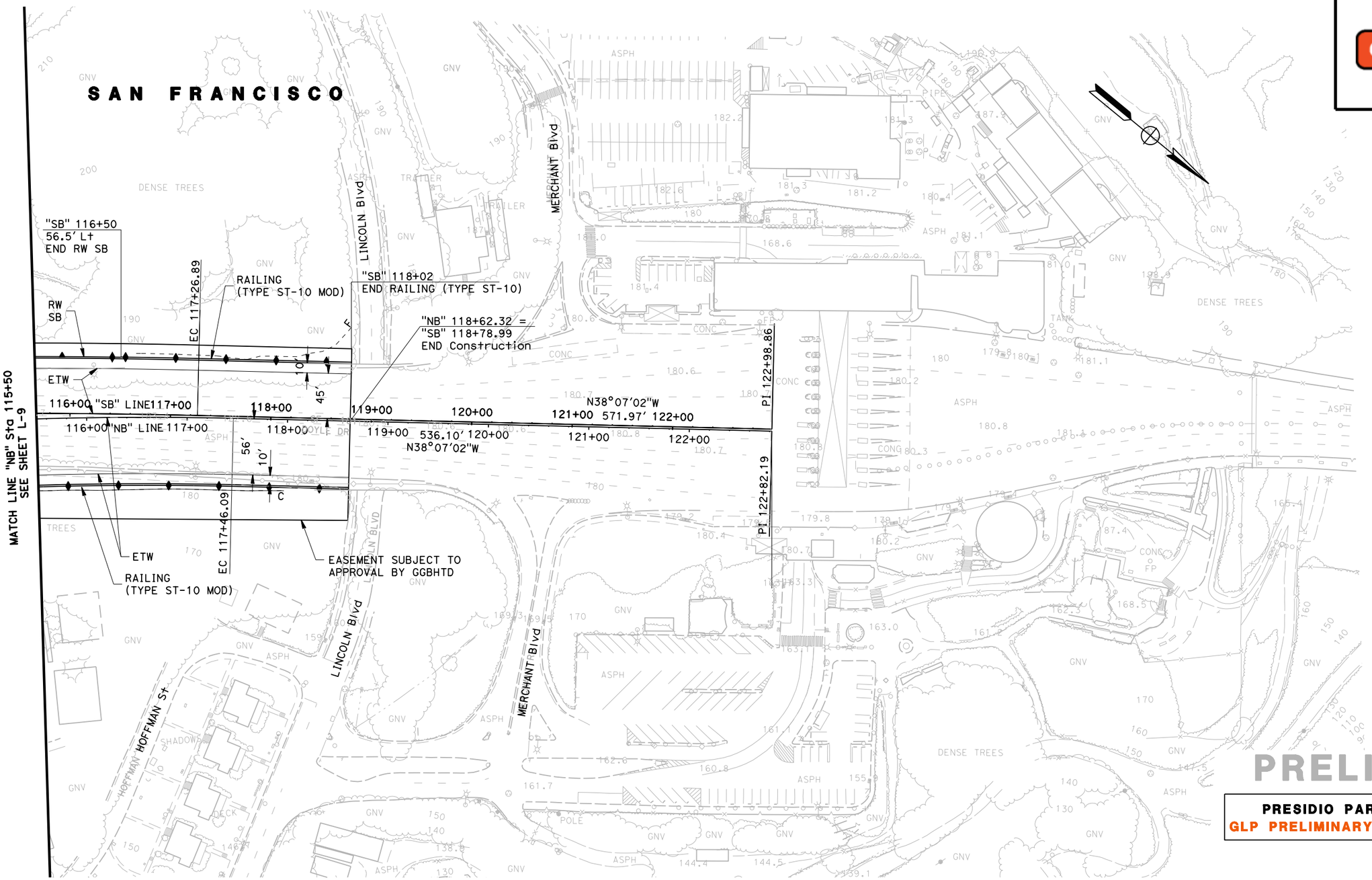

PRELIMINARY

PRESIDIO PARKWAY P3 PROJECT
GLP PRELIMINARY MASTER ALTERNATIVE

LAYOUT

SCALE : 1"=50'

L-10

RELATIVE BORDER SCALE IS IN INCHES 0 1 2 3

USERNAME => $USER$
DGN FILE => $FILE$

LAST REVISION 00-00-00

TIME PLOTTED => $TIME$

DATE PLOTTED => $DATE$

DISTRICT	ROUTE	POST MILES	SHEET No.	TOTAL SHEETS
4	101, 1	8.0/9.8 6.8/7.1	18	128

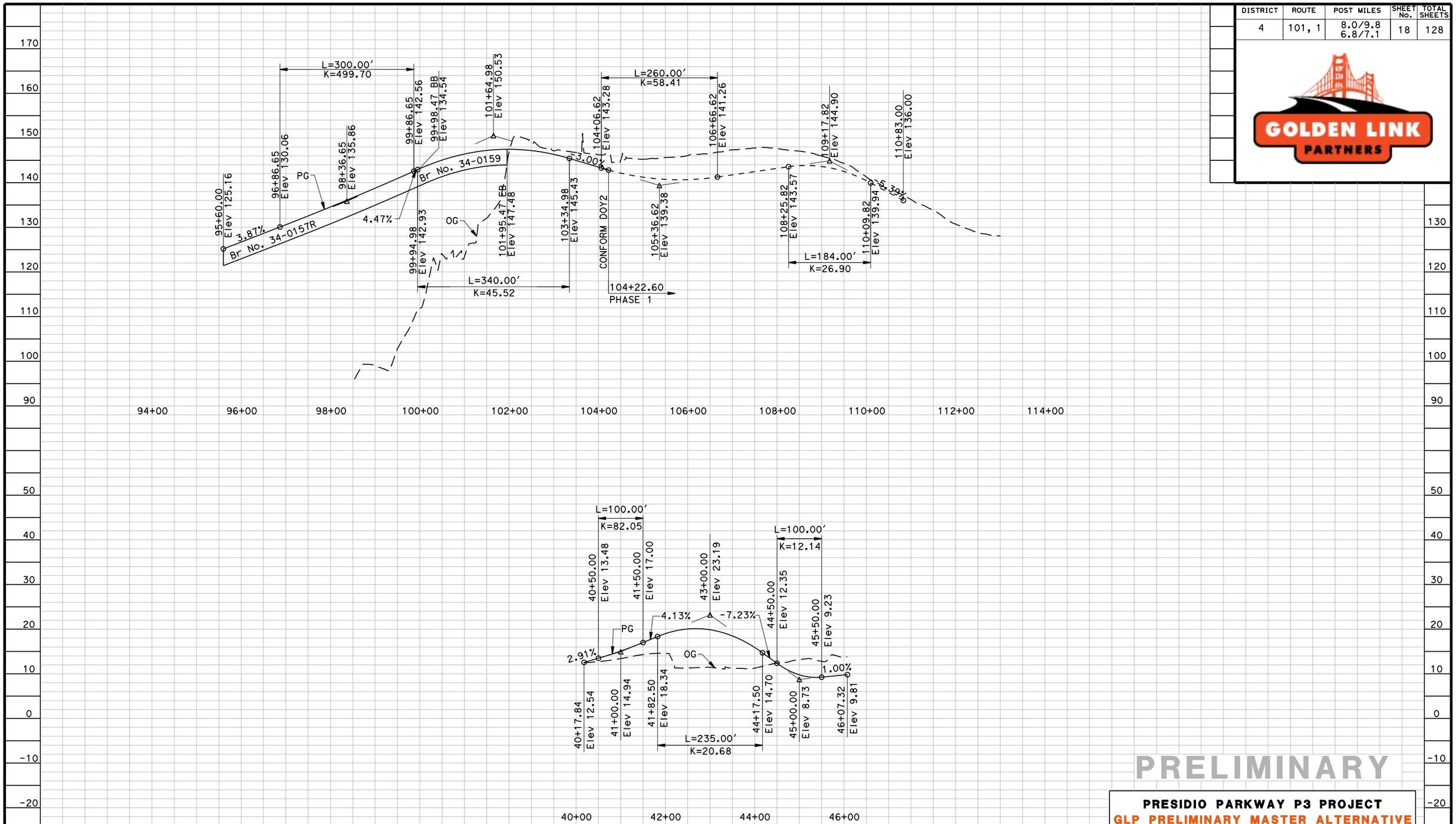

DOY1 LINE

PRELIMINARY

PRESIDIO PARKWAY P3 PROJECT
GLP PRELIMINARY MASTER ALTERNATIVE

PROFILE

SCALE HORIZ 1"=200'
VERT 1"=20'

P-1

DISTRICT	ROUTE	POST MILES	SHEET No.	TOTAL SHEETS
4	101, 1	8.0/9.8 6.8/7.1	19	128

GOLDEN LINK PARTNERS

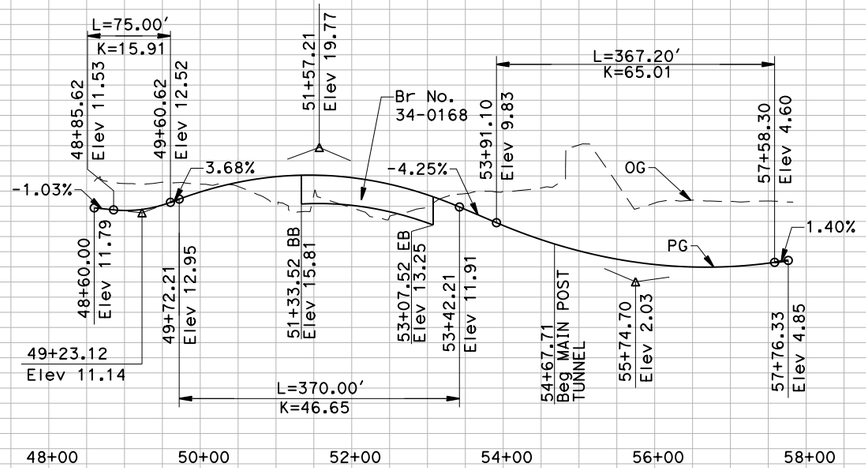

DOY3 LINE

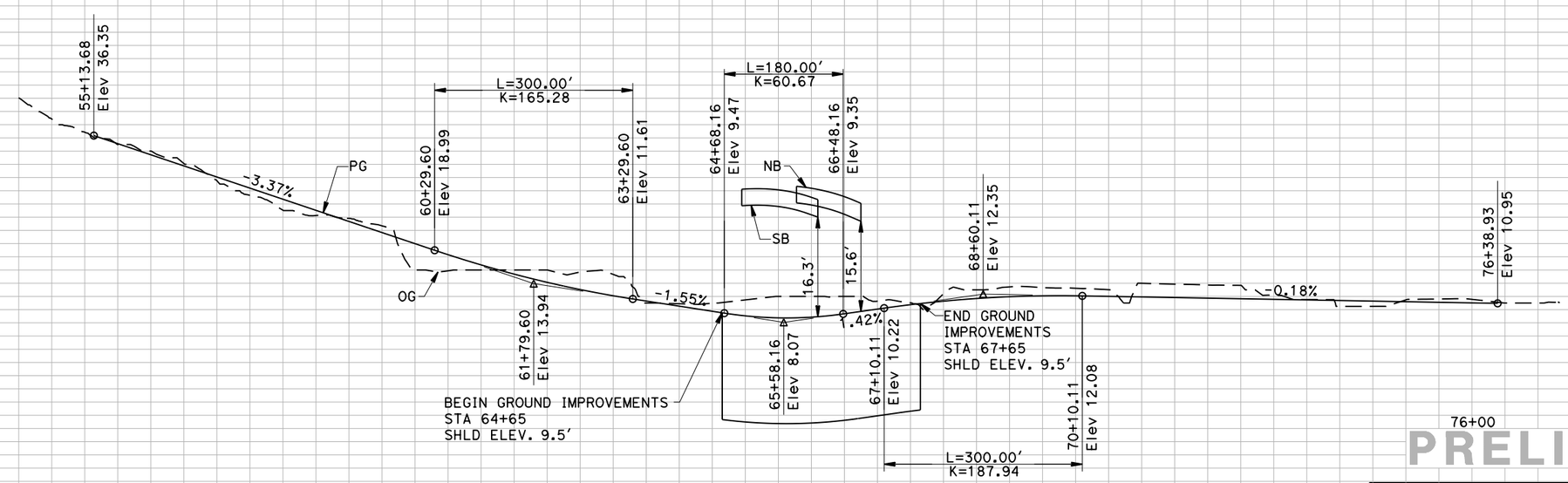

GI LINE

PRELIMINARY

PRESIDIO PARKWAY P3 PROJECT
GLP PRELIMINARY MASTER ALTERNATIVE

PROFILE

SCALE HORIZ 1"=200'
VERT 1"=20'

P-2

RELATIVE BORDER SCALE IS IN INCHES 0 1 2 3

USERNAME => $USER$
DGN FILE => $FILE$

LAST REVISION 00-00-00

TIME PLOTTED => $TIME$

DATE PLOTTED => $DATE$

DISTRICT	ROUTE	POST MILES	SHEET No.	TOTAL SHEETS
4	101, 1	8.0/9.8 6.8/7.1	20	128

GOLDEN LINK PARTNERS

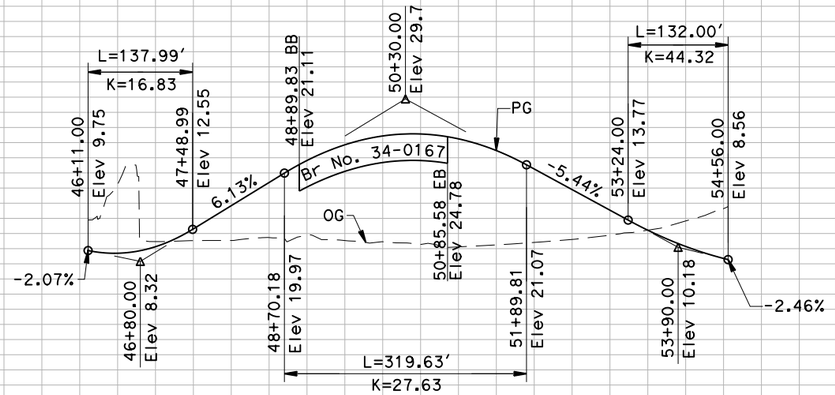

GN LINE

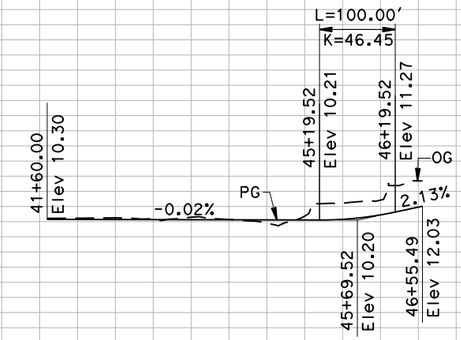

GO LINE

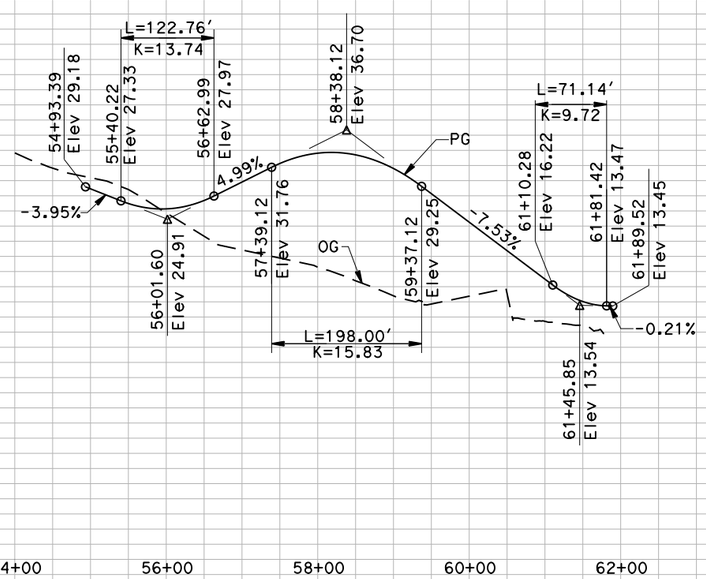

HA LINE

PRELIMINARY

PRESIDIO PARKWAY P3 PROJECT
GLP PRELIMINARY MASTER ALTERNATIVE

PROFILE

SCALE HORIZ 1"=200'
VERT 1"=20'

P-3

DISTRICT	ROUTE	POST MILES	SHEET No.	TOTAL SHEETS
4	101, 1	8.0/9.8 6.8/7.1	21	128

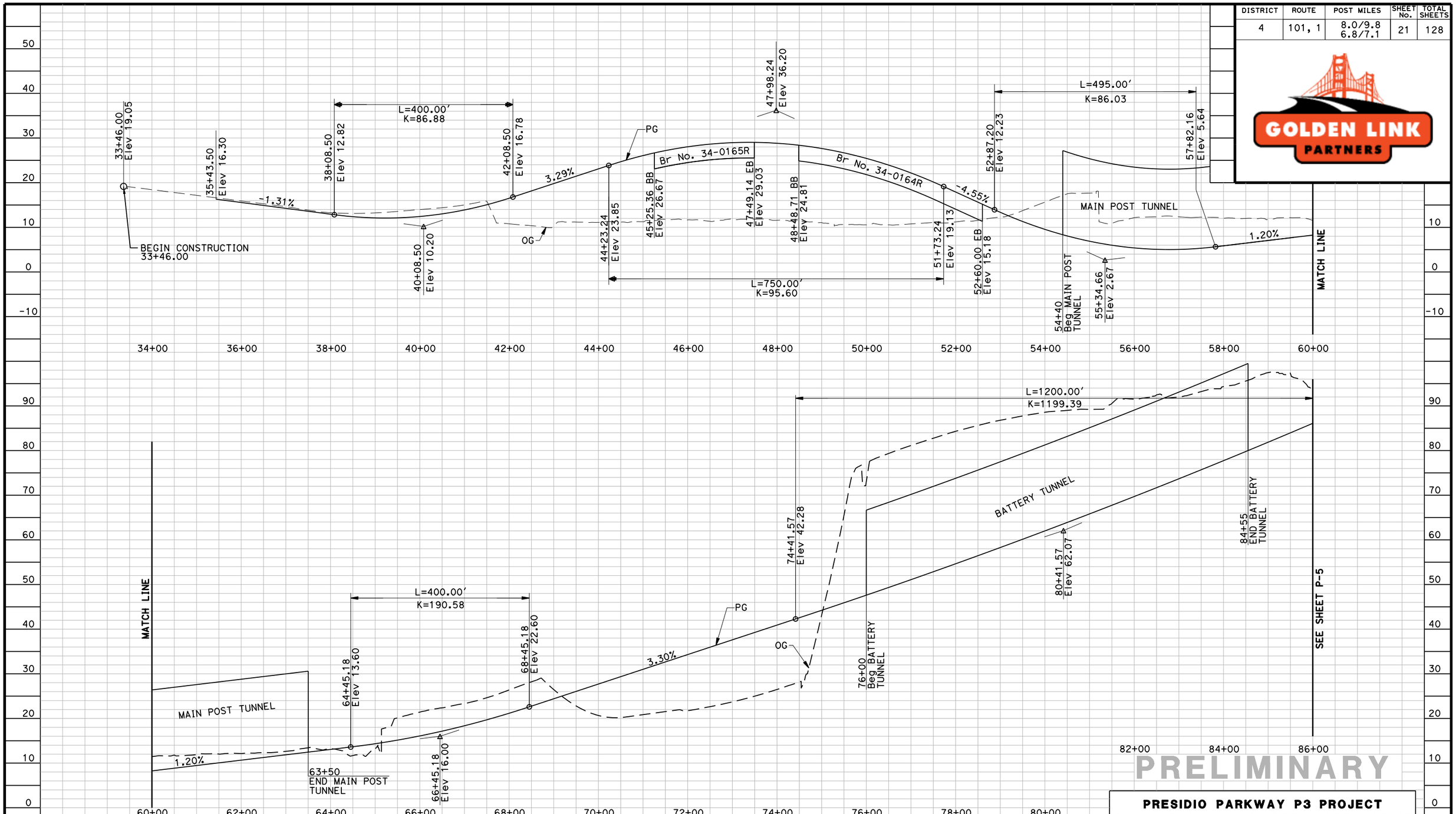

PRELIMINARY

PRESIDIO PARKWAY P3 PROJECT
GLP PRELIMINARY MASTER ALTERNATIVE

NB LINE

PROFILE

SCALE HORIZ 1"=200'
VERT 1"=20'

P-4

RELATIVE BORDER SCALE IS IN INCHES 0 1 2 3

USERNAME => $USER$
DGN FILE => $FILE$

LAST REVISION 00-00-00

TIME PLOTTED => $TIME$

DATE PLOTTED => $DATE$

DISTRICT	ROUTE	POST MILES	SHEET No.	TOTAL SHEETS
4	101, 1	8.0/9.8 6.8/7.1	22	128

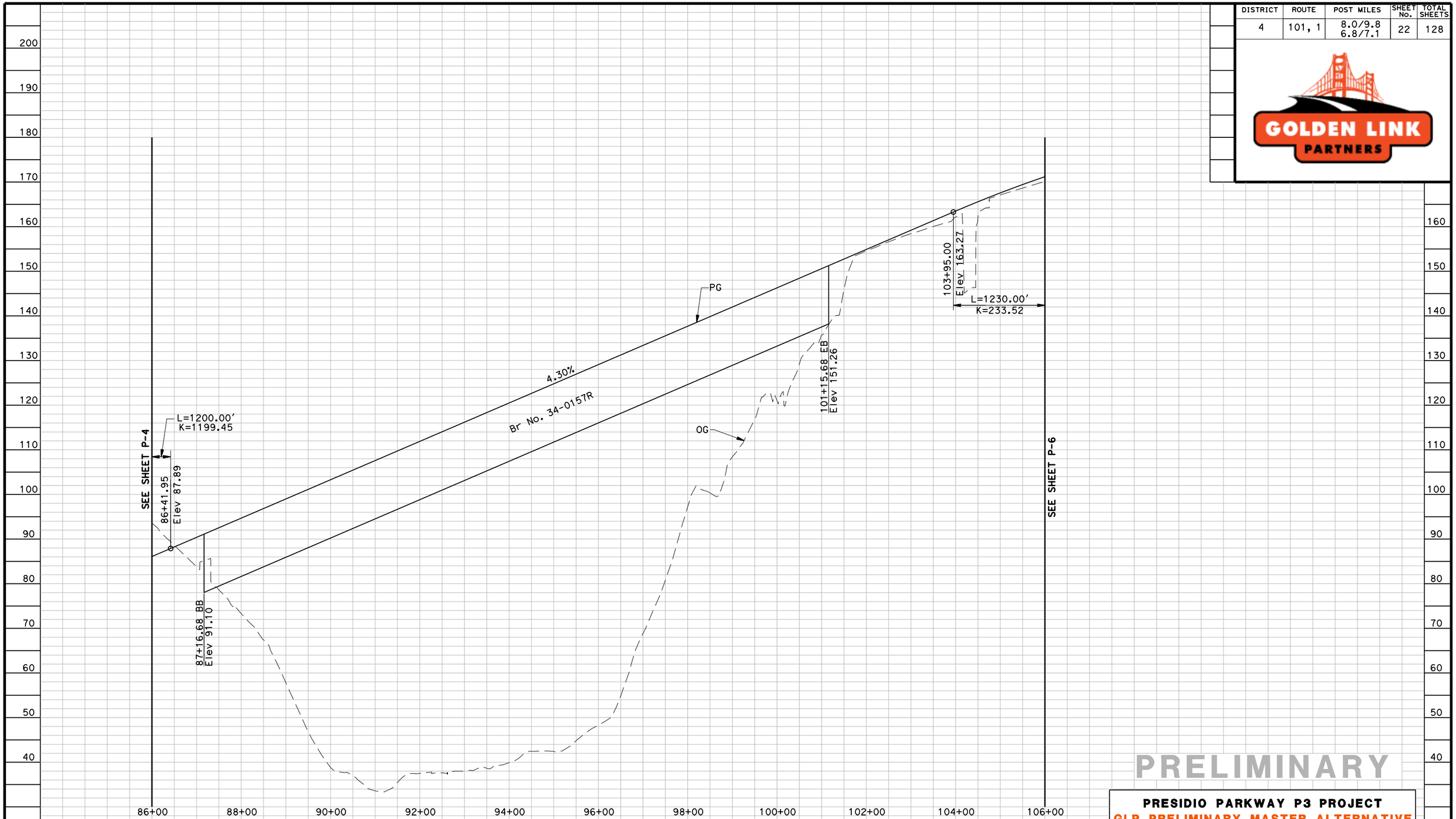

NB LINE

PRELIMINARY

PRESIDIO PARKWAY P3 PROJECT
GLP PRELIMINARY MASTER ALTERNATIVE

PROFILE

SCALE HORIZ 1"=200′
VERT 1"=20′

P-5

DISTRICT	ROUTE	POST MILES	SHEET No.	TOTAL SHEETS
4	101, 1	8.0/9.8 6.8/7.1	23	128

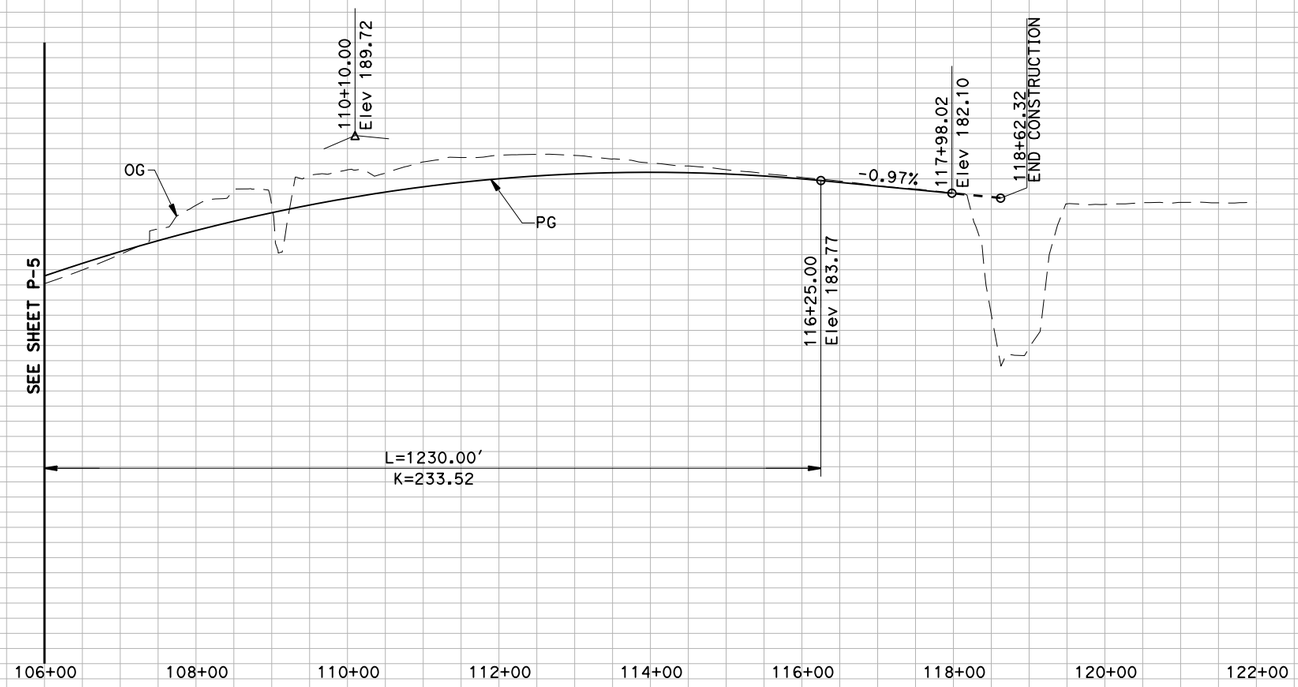

NB LINE

PRELIMINARY

PRESIDIO PARKWAY P3 PROJECT
GLP PRELIMINARY MASTER ALTERNATIVE

PROFILE

SCALE HORIZ 1"=200'
VERT 1"=20'

P-6

DISTRICT	ROUTE	POST MILES	SHEET No.	TOTAL SHEETS
4	101, 1	8.0/9.8 6.8/7.1	24	128

GOLDEN LINK PARTNERS

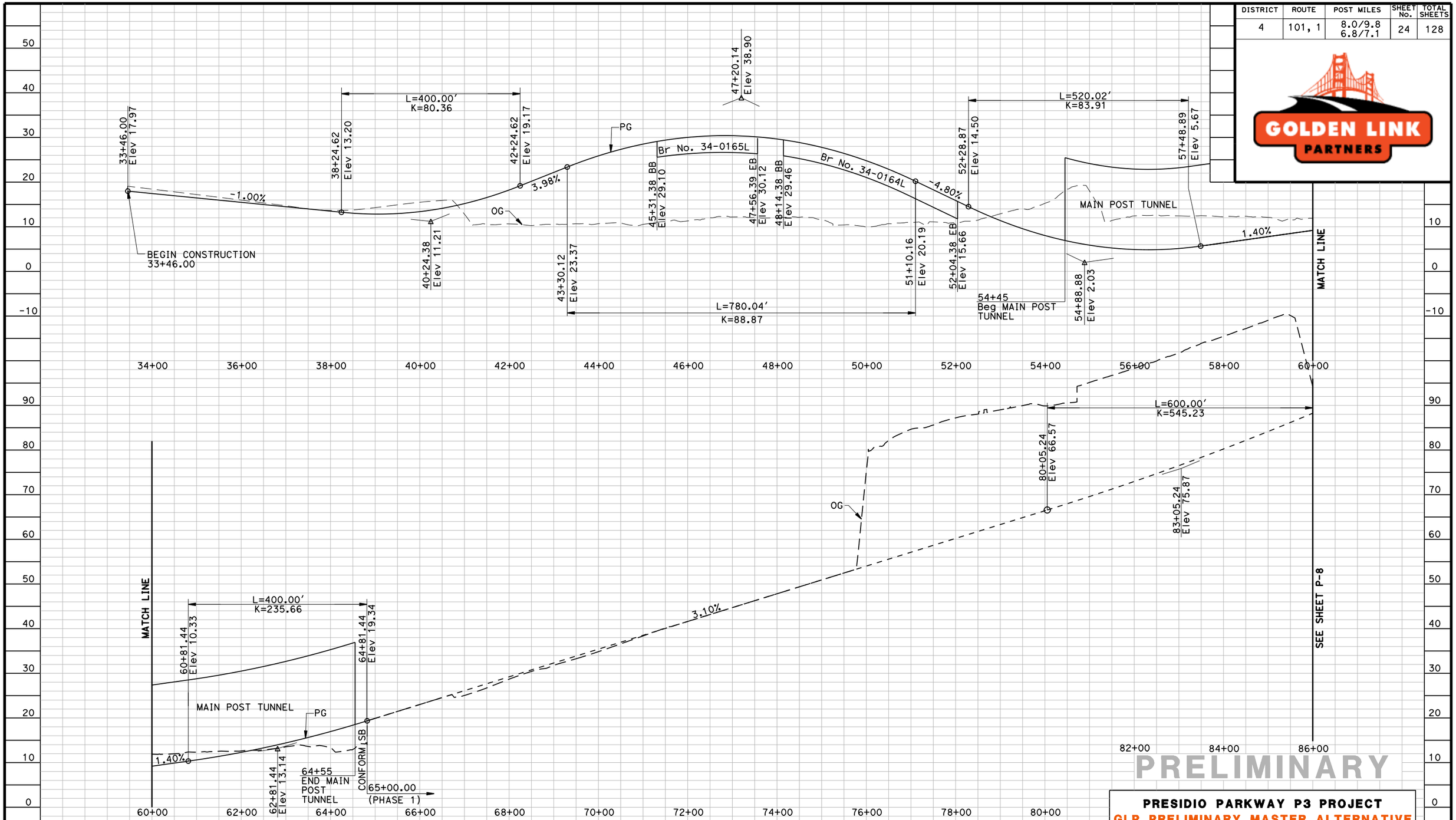

PRESIDIO PARKWAY P3 PROJECT
GLP PRELIMINARY MASTER ALTERNATIVE

SB LINE

PROFILE

SCALE HORIZ 1"=200'
VERT 1"=20'

P-7

RELATIVE BORDER SCALE IS IN INCHES 0 1 2 3

USERNAME => $USER$
DGN FILE => $FILE$

LAST REVISION 00-00-00

TIME PLOTTED => $TIME$

DATE PLOTTED => $DATE$

DISTRICT	ROUTE	POST MILES	SHEET No.	TOTAL SHEETS
4	101, 1	8.0/9.8 6.8/7.1	25	128

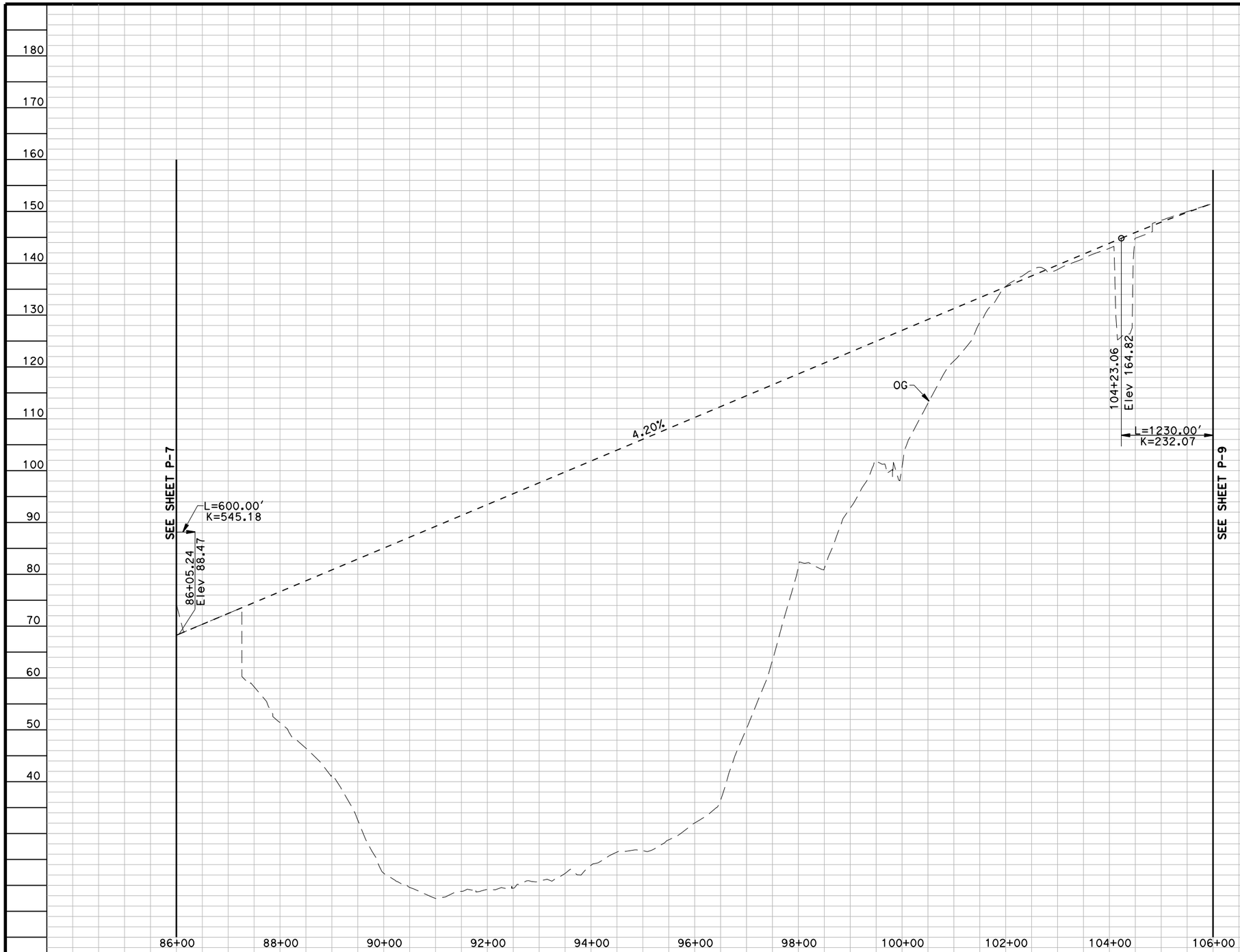

SB LINE

PRELIMINARY

PRESIDIO PARKWAY P3 PROJECT
GLP PRELIMINARY MASTER ALTERNATIVE

PROFILE

SCALE HORIZ 1"=200'
VERT 1"=20'

P-8

RELATIVE BORDER SCALE IS IN INCHES 0 1 2 3

USERNAME => $USER$
DGN FILE => $FILE$

LAST REVISION 00-00-00

TIME PLOTTED => $TIME$

DATE PLOTTED => $DATE$

DISTRICT	ROUTE	POST MILES	SHEET No.	TOTAL SHEETS
4	101, 1	8.0/9.8 6.8/7.1	26	128

GOLDEN LINK PARTNERS

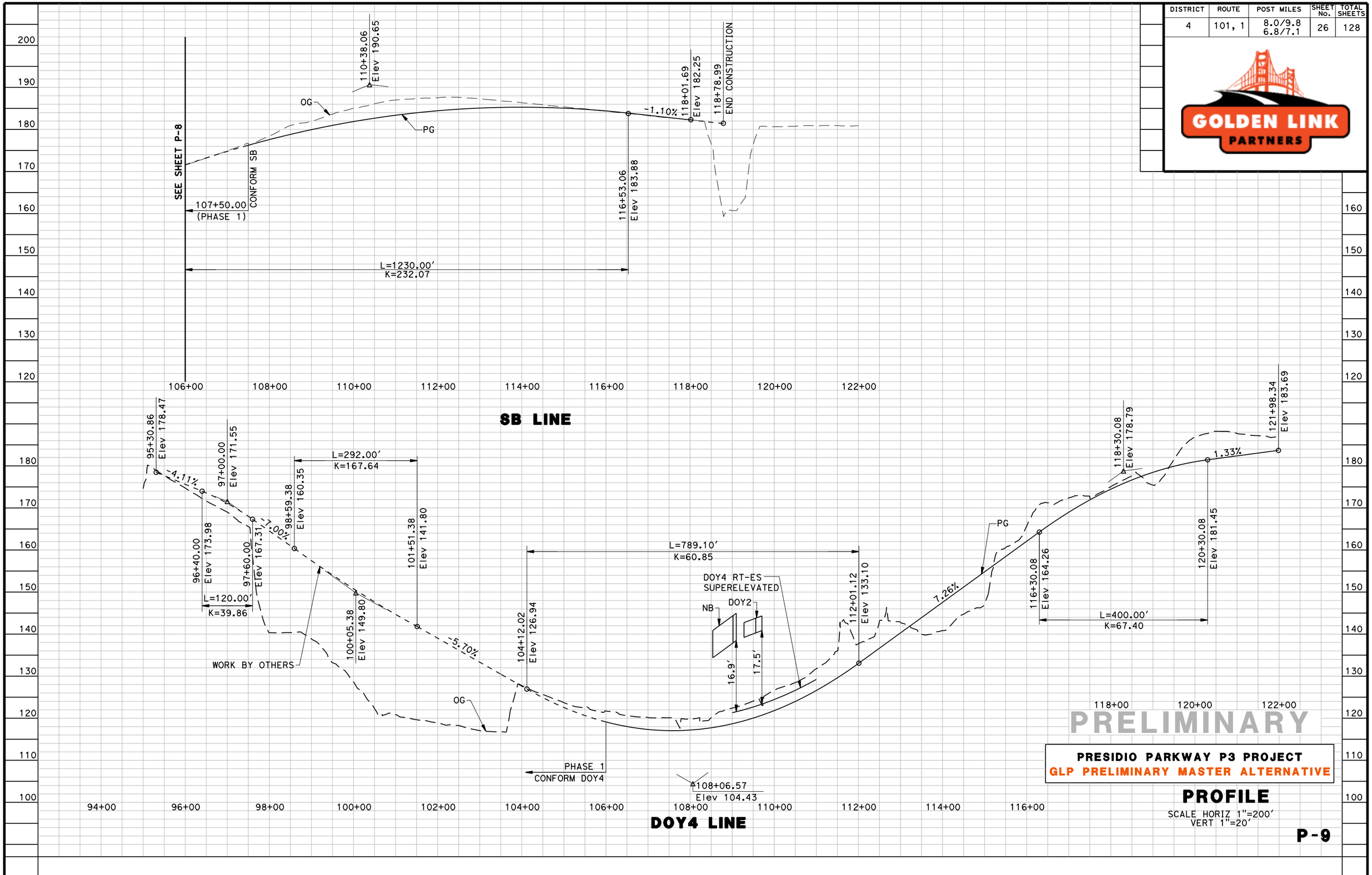

PRESIDIO PARKWAY P3 PROJECT

GLP PRELIMINARY MASTER ALTERNATIVE

PROFILE

SCALE HORIZ 1"=200'
VERT 1"=20'

P-9

RELATIVE BORDER SCALE IS IN INCHES 0 1 2 3

USERNAME => $USER$
DGN FILE => $FILE$

LAST REVISION 00-00-00

TIME PLOTTED => $TIME$

DATE PLOTTED => $DATE$

DISTRICT	ROUTE	POST MILES	SHEET No.	TOTAL SHEETS
4	101, 1	8.0/9.8 6.8/7.1	27	128

GOLDEN LINK PARTNERS

SAN FRANCISCO

LEGEND:

SIGN

SIGNAL POLE

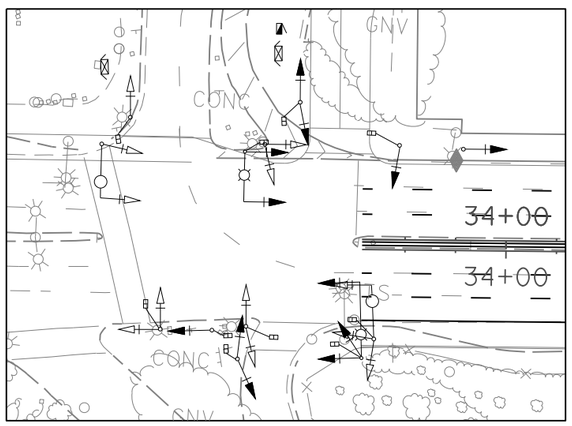

DETAIL 1

Scale: 1"=30'

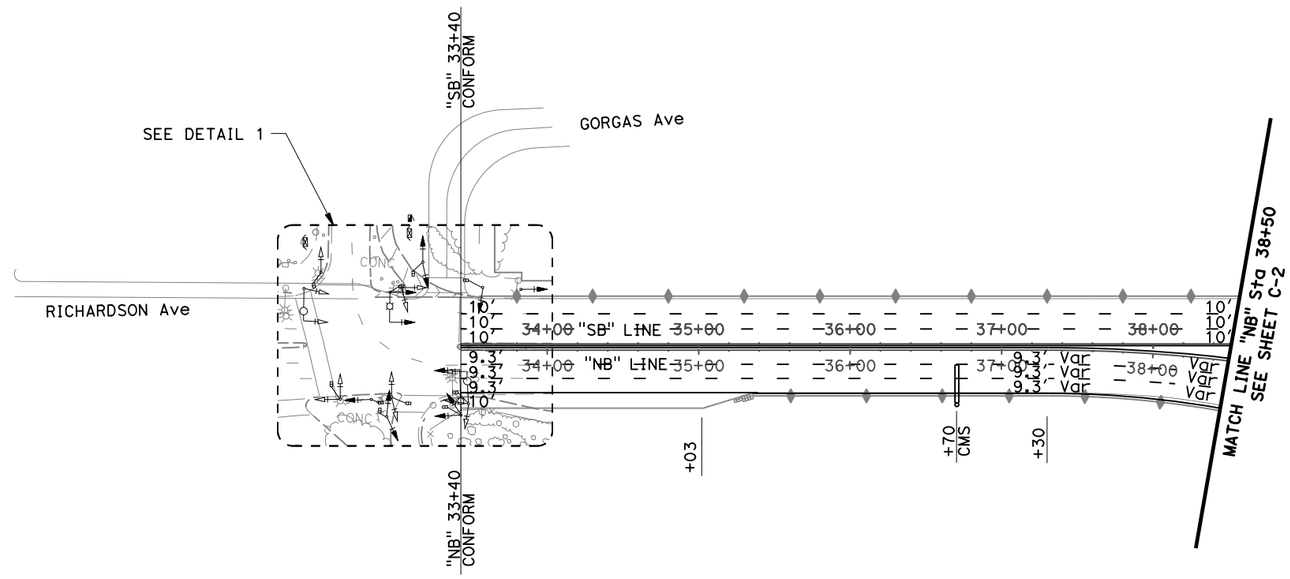

PRELIMINARY

PRESIDIO PARKWAY P3 PROJECT

GLP PRELIMINARY MASTER ALTERNATIVE

LANE DIMENSIONS, SIGNAL POLES & SIGN STRUCTURES

SCALE : 1"=50'

C-1

RELATIVE BORDER SCALE IS IN INCHES 0 1 2 3

USERNAME => $USER$
DGN FILE => $FILE$

LAST REVISION 00-00-00

TIME PLOTTED => $TIME$

DATE PLOTTED => $DATE$

DISTRICT	ROUTE	POST MILES	SHEET No.	TOTAL SHEETS
4	101, 1	8.0/9.8 6.8/7.1	28	128

GOLDEN LINK PARTNERS

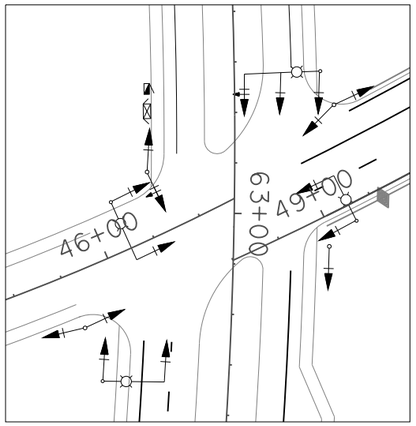

DETAIL 1
Scale: 1"=30'

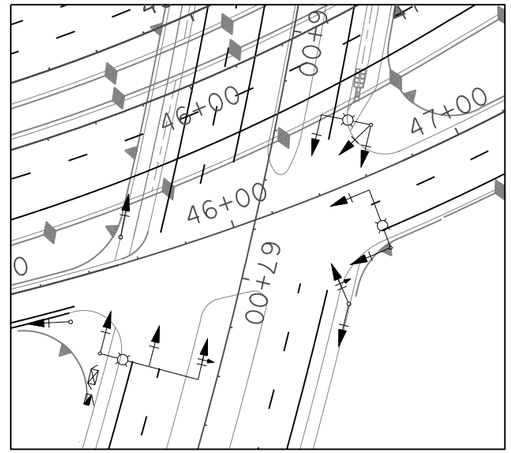

DETAIL 2
Scale: 1"=30'

S A N F R A N C I S C O

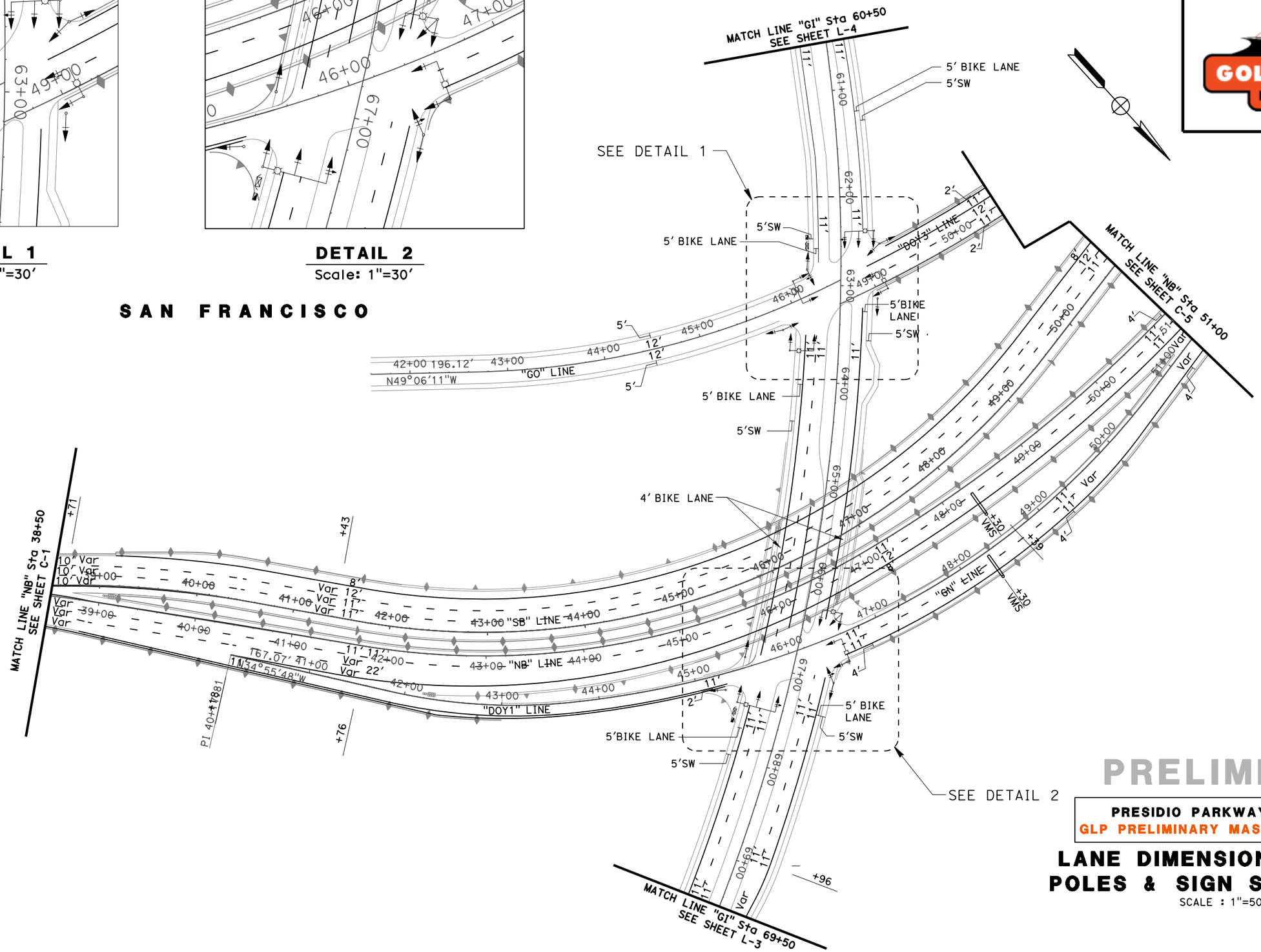

PRELIMINARY

PRESIDIO PARKWAY P3 PROJECT
GLP PRELIMINARY MASTER ALTERNATIVE

LANE DIMENSIONS, SIGNAL POLES & SIGN STRUCTURES

SCALE : 1"=50'

C-2

RELATIVE BORDER SCALE IS IN INCHES 0 1 2 3

USERNAME => $USER$
DGN FILE => $FILE$

LAST REVISION 00-00-00

TIME PLOTTED => $TIME$

DATE PLOTTED => $DATE$

DISTRICT	ROUTE	POST MILES	SHEET No.	TOTAL SHEETS
4	101, 1	8.0/9.8 6.8/7.1	29	128

GOLDEN LINK PARTNERS

SAN FRANCISCO

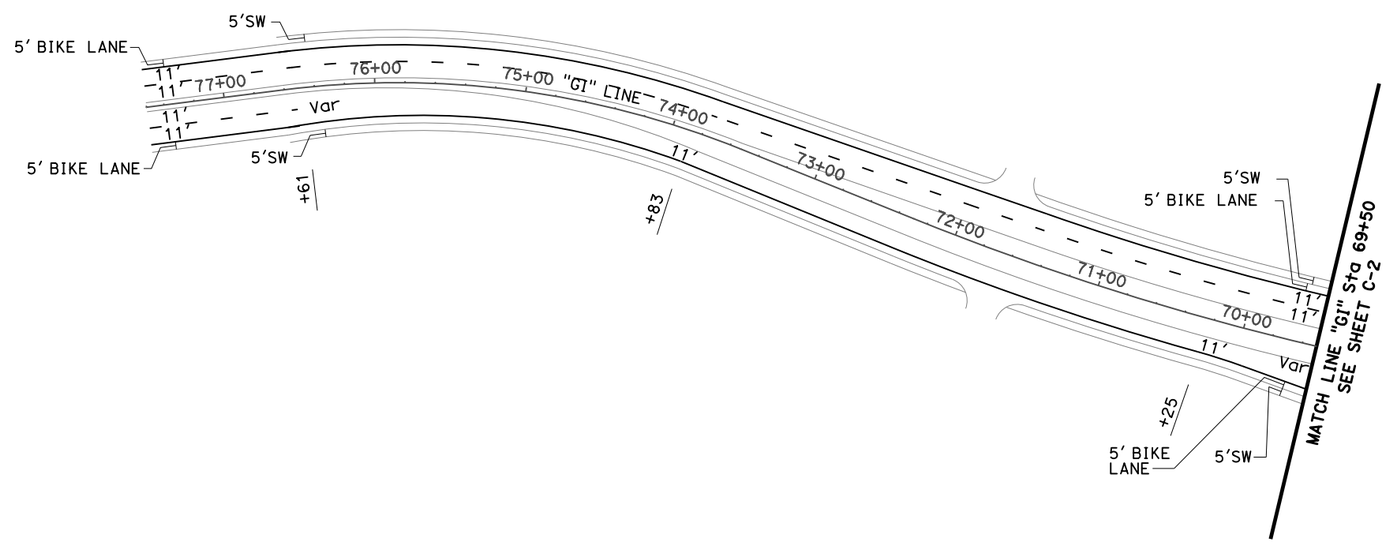

PRELIMINARY

PRESIDIO PARKWAY P3 PROJECT
GLP PRELIMINARY MASTER ALTERNATIVE

LANE DIMENSIONS, SIGNAL POLES & SIGN STRUCTURES

SCALE : 1"=50'

C-3

DISTRICT	ROUTE	POST MILES	SHEET No.	TOTAL SHEETS
4	101, 1	8.0/9.8 6.8/7.1	30	128

GOLDEN LINK PARTNERS

SAN FRANCISCO

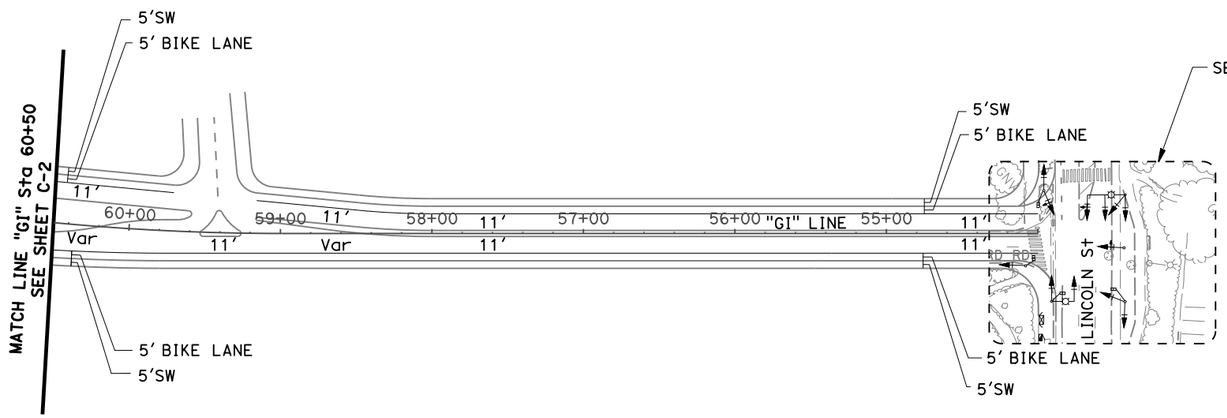

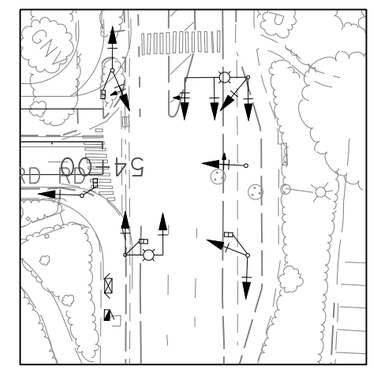

DETAIL 1
Scale: 1"=30'

PRELIMINARY

PRESIDIO PARKWAY P3 PROJECT
GLP PRELIMINARY MASTER ALTERNATIVE

LANE DIMENSIONS, SIGNAL POLES & SIGN STRUCTURES

SCALE : 1"=50'

C-4

DISTRICT	ROUTE	POST MILES	SHEET No.	TOTAL SHEETS
4	101, 1	8.0/9.8 6.8/7.1	31	128

GOLDEN LINK PARTNERS

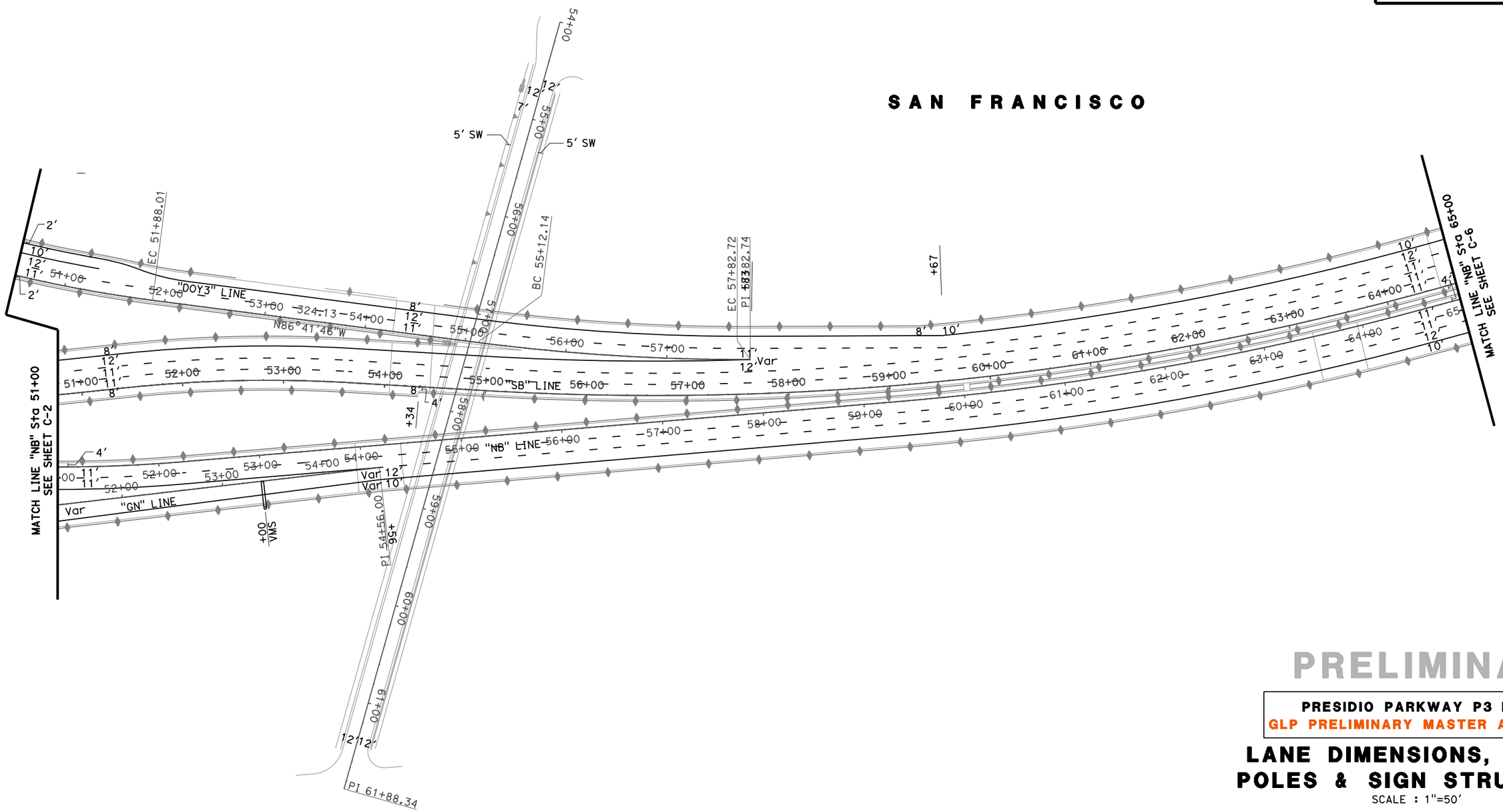

PRELIMINARY

PRESIDIO PARKWAY P3 PROJECT
GLP PRELIMINARY MASTER ALTERNATIVE

LANE DIMENSIONS, SIGNAL POLES & SIGN STRUCTURES

SCALE : 1"=50'

C-5

RELATIVE BORDER SCALE IS IN INCHES 0 1 2 3

USERNAME => $USER$
DGN FILE => $FILE$

LAST REVISION 00-00-00

TIME PLOTTED => $TIME$

DATE PLOTTED => $DATE$

DISTRICT	ROUTE	POST MILES	SHEET No.	TOTAL SHEETS
4	101, 1	8.0/9.8 6.8/7.1	32	128

GOLDEN LINK PARTNERS

SAN FRANCISCO

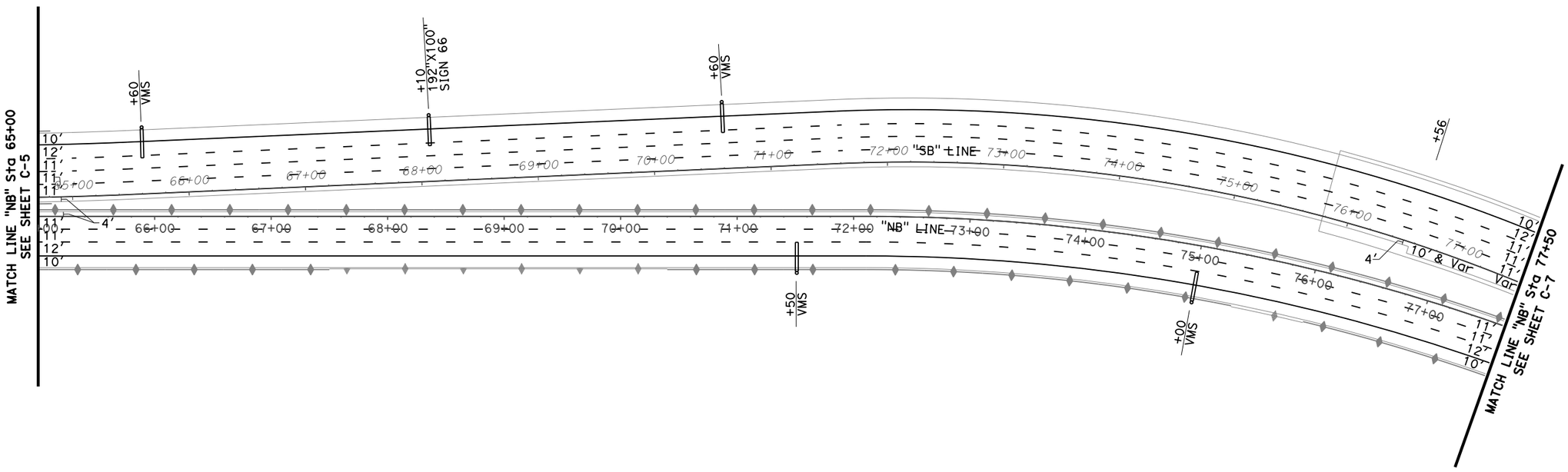

PRELIMINARY

PRESIDIO PARKWAY P3 PROJECT
GLP PRELIMINARY MASTER ALTERNATIVE

LANE DIMENSIONS, SIGNAL POLES & SIGN STRUCTURES

SCALE : 1"=50'

C-6

RELATIVE BORDER SCALE IS IN INCHES 0 1 2 3

USERNAME => $USER$
DGN FILE => $FILE$

LAST REVISION 00-00-00

TIME PLOTTED => $TIME$

DATE PLOTTED => $DATE$

DISTRICT	ROUTE	POST MILES	SHEET No.	TOTAL SHEETS
4	101, 1	8.0/9.8 6.8/7.1	33	128

GOLDEN LINK PARTNERS

SAN FRANCISCO

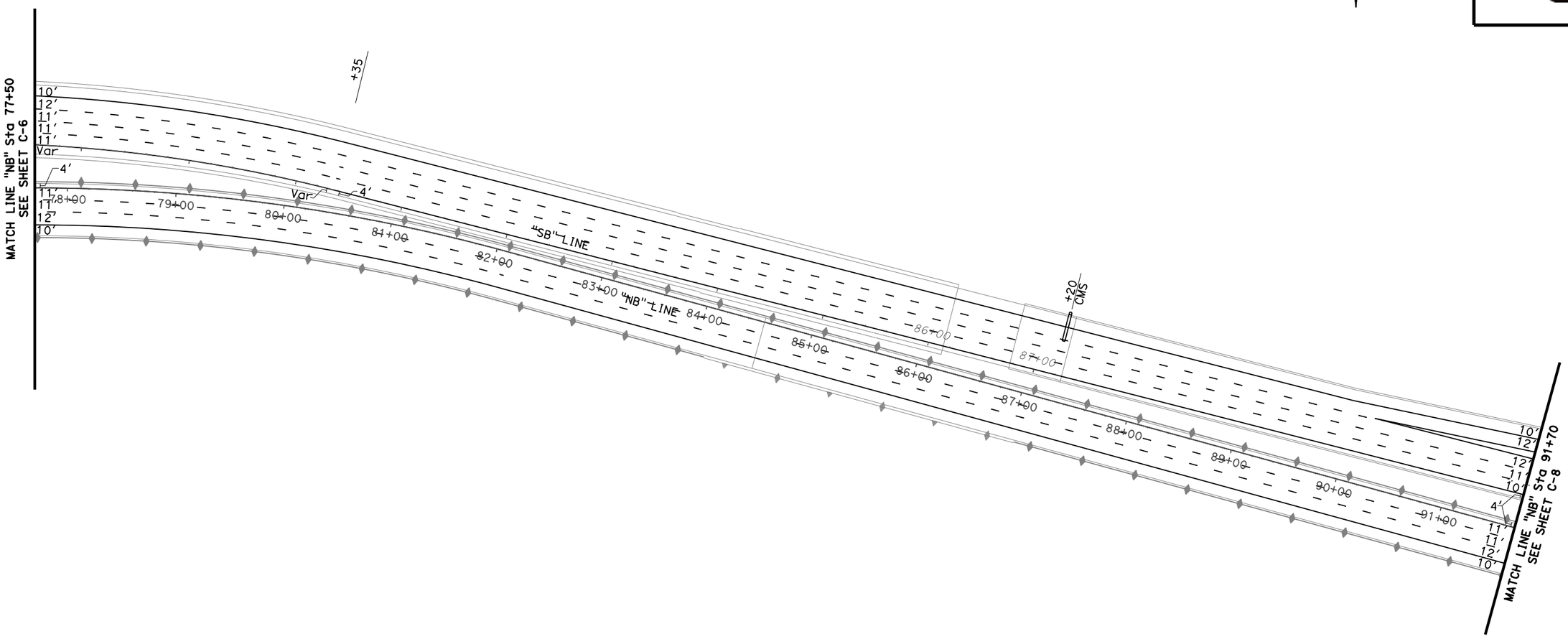

PRELIMINARY

PRESIDIO PARKWAY P3 PROJECT
GLP PRELIMINARY MASTER ALTERNATIVE

LANE DIMENSIONS, SIGNAL POLES & SIGN STRUCTURES

SCALE : 1"=50'

C-7

DISTRICT	ROUTE	POST MILES	SHEET No.	TOTAL SHEETS
4	101, 1	8.0/9.8 6.8/7.1	34	128

GOLDEN LINK PARTNERS

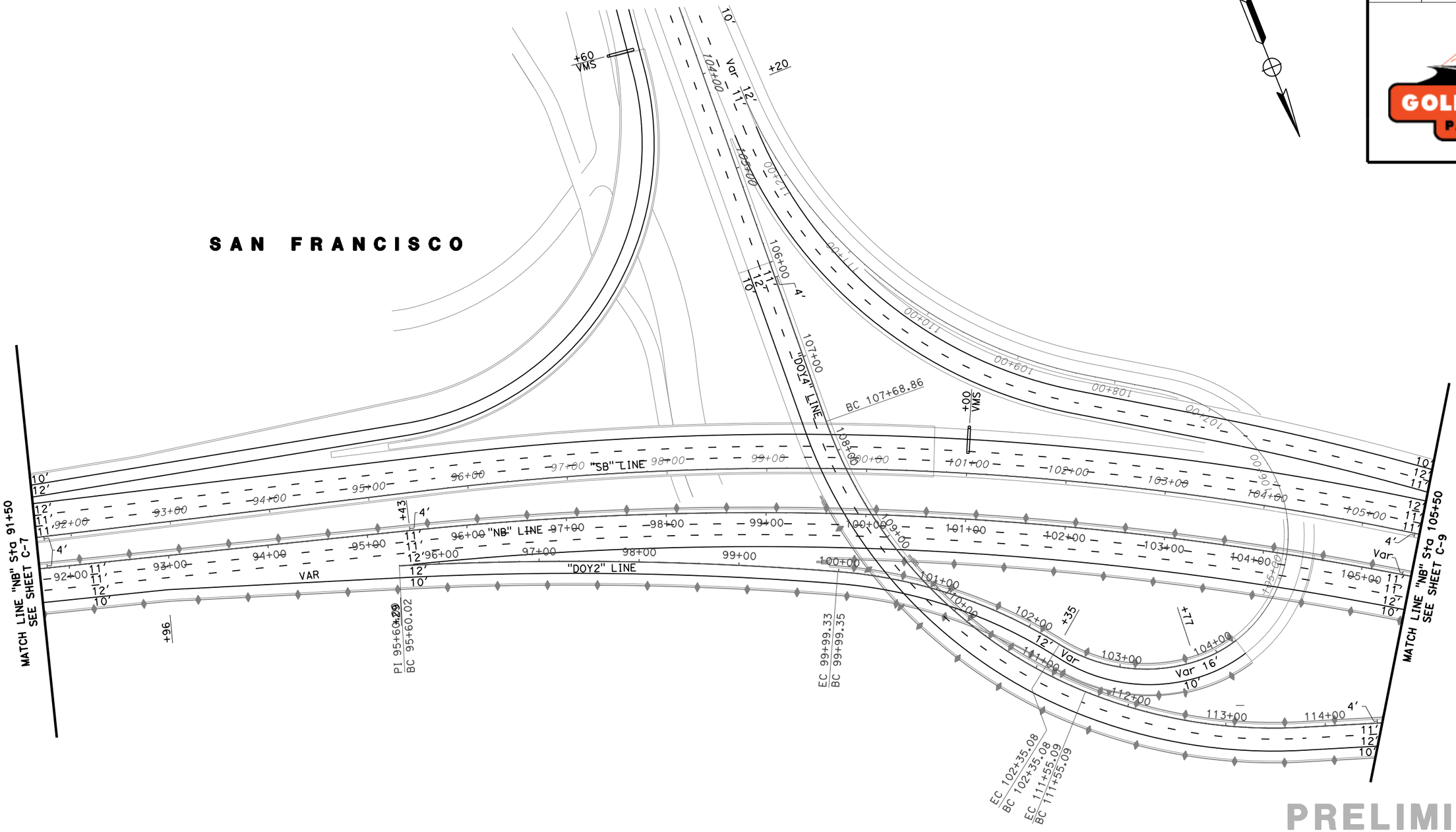

PRELIMINARY

PRESIDIO PARKWAY P3 PROJECT
GLP PRELIMINARY MASTER ALTERNATIVE

LANE DIMENSIONS, SIGNAL POLES & SIGN STRUCTURES

SCALE : 1"=50'

C-8

RELATIVE BORDER SCALE IS IN INCHES 0 1 2 3

USERNAME => $USER$
DGN FILE => $FILE$

LAST REVISION 00-00-00

TIME PLOTTED => $TIME$

DATE PLOTTED => $DATE$

DISTRICT	ROUTE	POST MILES	SHEET No.	TOTAL SHEETS
4	101, 1	8.0/9.8 6.8/7.1	35	128

GOLDEN LINK PARTNERS

SAN FRANCISCO

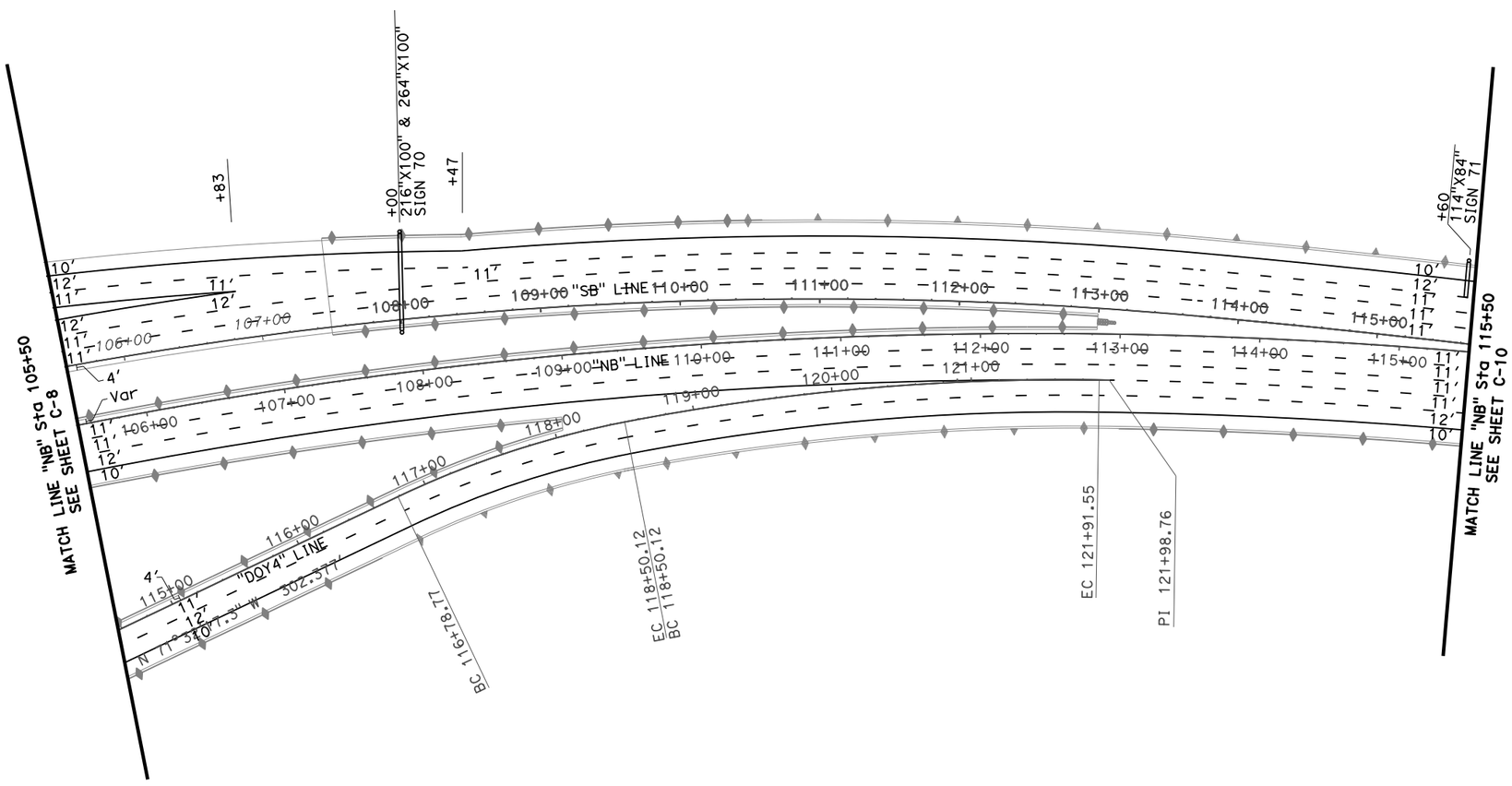

PRELIMINARY

PRESIDIO PARKWAY P3 PROJECT
GLP PRELIMINARY MASTER ALTERNATIVE

LANE DIMENSIONS, SIGNAL POLES & SIGN STRUCTURES

SCALE : 1"=50'

C-9

DISTRICT	ROUTE	POST MILES	SHEET No.	TOTAL SHEETS
4	101, 1	8.0/9.8 6.8/7.1	36	128

GOLDEN LINK PARTNERS

SAN FRANCISCO

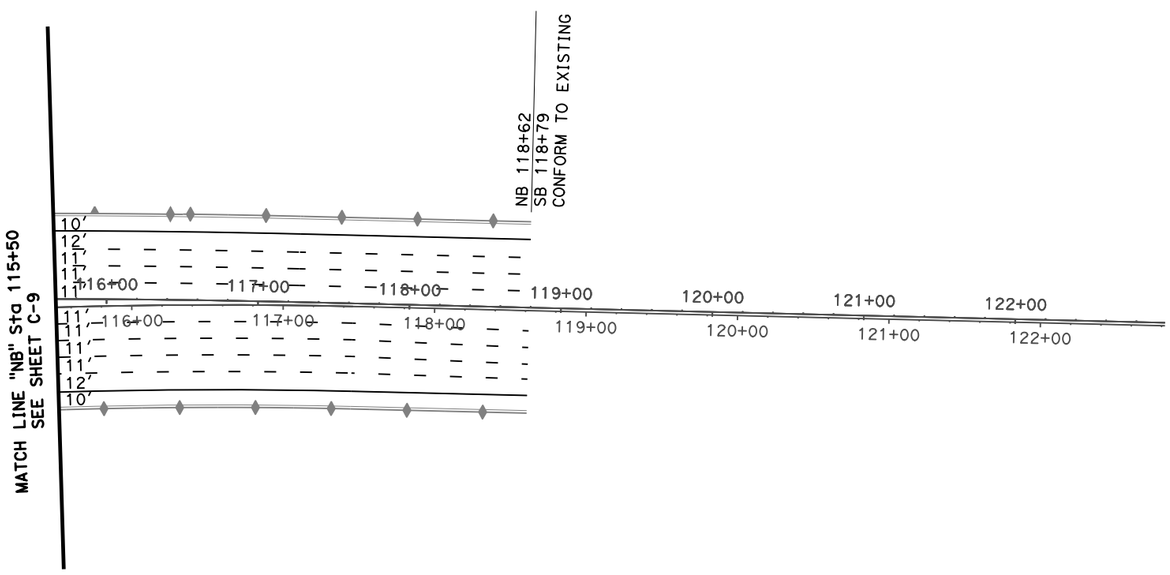

PRELIMINARY

PRESIDIO PARKWAY P3 PROJECT
GLP PRELIMINARY MASTER ALTERNATIVE

LANE DIMENSIONS, SIGNAL POLES & SIGN STRUCTURES

SCALE : 1"=50'

C-10

DISTRICT	ROUTE	POST MILES	SHEET No.	TOTAL SHEETS
4	101, 1	8.0/9.8 6.8/7.1	37	128

GOLDEN LINK PARTNERS

Retaining Wall	Begin Sta. (ft)	End Sta. (ft)	Type of Wall	Approximate Elevation/Depth of Competent Soils beneath Wall (ft, NAVD88)	Comment
RW DOY2	101+95 DOY2	103+60 DOY2	Cut	1-2 feet below existing grade	---
RW DOY4	116+50 DOY4	113+00 NB	Cut	1-2 feet below existing grade	---
RW SB	110+25 SB	116+50 SB	Cut	1-2 feet below existing grade	---
RW 5	84+10 NB	87+05 NB	Cut/Fill	+91 (2-3 feet below existing grade)	---
RW 7	75+35 NB	76+00 NB	Cut	---	Wall to be founded on CDSM. Exact depth of CDSM layer to be determined
RW 8	67+50 NB	70+40 NB	Cut/Fill	---	Wall to be founded on CDSM. Exact depth of CDSM layer to be determined
RW 10	53+37 DOY3	53+50 DOY3	Primarily Cut	-3 (17-18 feet below existing grade)	---
RW HA	54+77 HA	56+95 HA	Cut (Shoring)	---	Wall to be founded on CDSM. Exact depth of CDSM layer to be determined
RW 12	65+97 GI	47+12 GN	Cut	---	Wall to be founded on CDSM. Depth of CDSM layer 16 feet (min)
RW 13	64+65 GI	64+97 GI	Cut	-14 (25-260,0 feet below existing grade)	Wall to be founded on CDSM. Depth of CDSM layer 16 feet (min)
RW 15	45+09 DOY1	67+65 GI	Cut	---	Wall to be founded on CDSM. Depth of CDSM layer 16 feet (min)
RW 16	42+51 NB	45+06 NB	Fill	---	Wall to be founded on CDSM. Depth of CDSM layer 16 feet (min)
RW 16A	45+09 DOY1	45+32 DOY1	Cut	---	Wall to be founded on CDSM. Depth of CDSM layer 16 feet (min)
RW 17	42+07 SB	45+57 SB	Fill	---	Wall to be founded on CDSM. Depth of CDSM layer 16 feet (min)
RW 18	64+65 GI	45+32 DOY1	Cut	-14 (25-26 feet below existing grade)	Wall to be founded on CDSM. Depth of CDSM layer 16 feet (min)

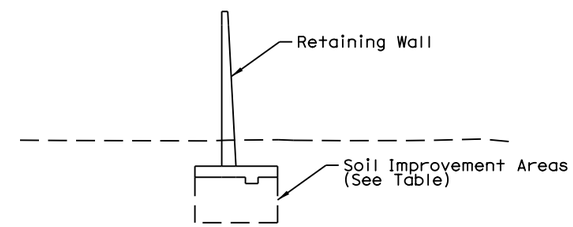

SOIL IMPROVEMENT UNDER RETAINING WALLS

NO SCALE

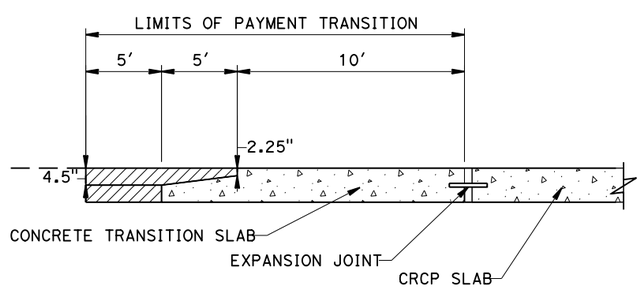

HMA TAPER TO CRCP PAVEMENT LONGITUDINAL SECTION

NO SCALE

PRELIMINARY

PRESIDIO PARKWAY P3 PROJECT
GLP PRELIMINARY MASTER ALTERNATIVE

CONSTRUCTION DETAILS

NO SCALE

C-11

DISTRICT	ROUTE	POST MILES	SHEET No.	TOTAL SHEETS
4	101, 1	8.0/9.8 6.8/7.1	38	128

GOLDEN LINK PARTNERS

LEGEND

- Permit to Enter - Subject to Approval by GGBHTD
- Available After 10/1/11
- Available After NTPS
- Temporary Construction Easement
- Available After 3/1/12
- Caltrans - Developer Cannot Use
- Available After Detour is Removed
- Environmentally Sensitive Areas

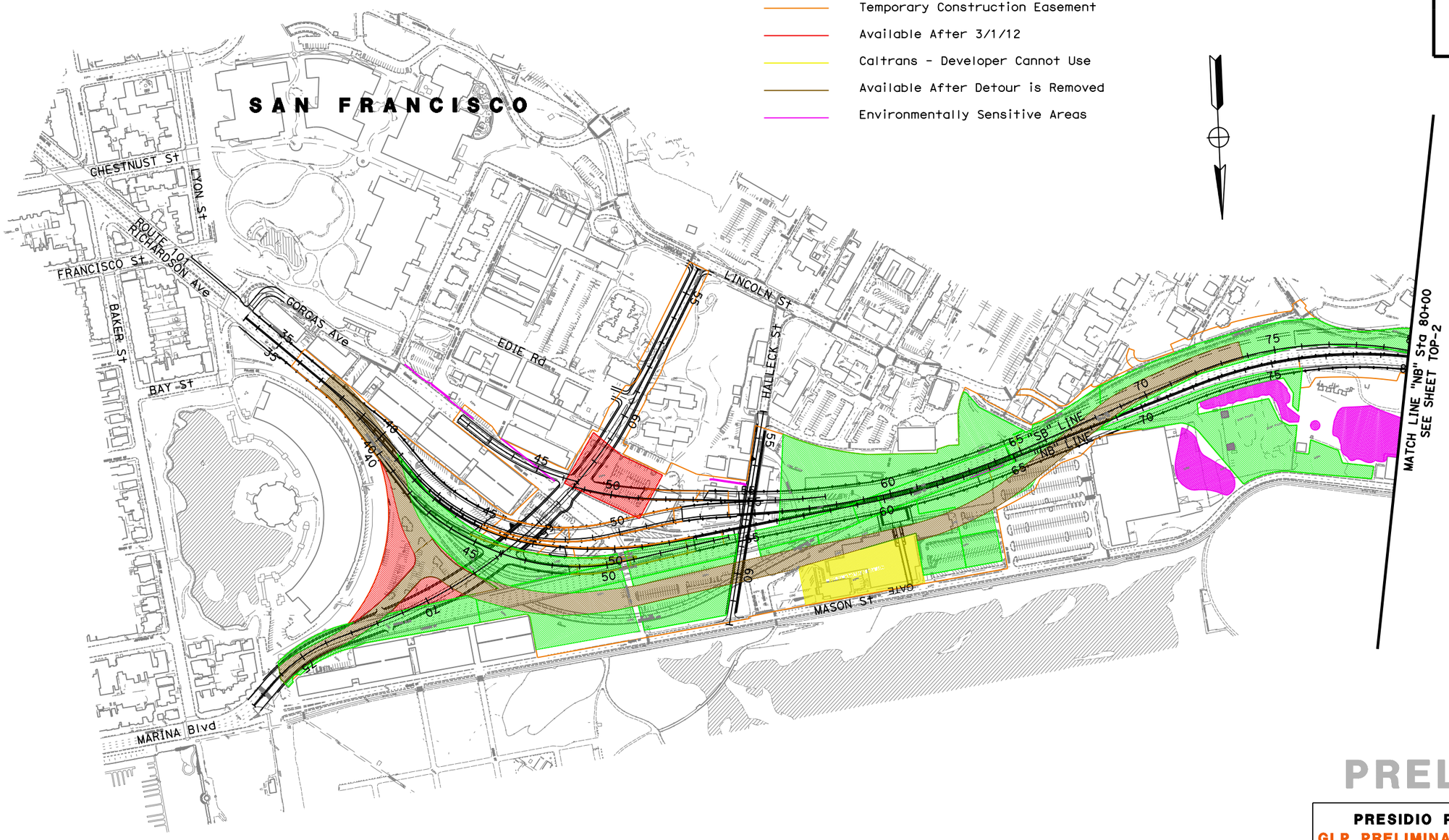

PRELIMINARY

PRESIDIO PARKWAY P3 PROJECT
GLP PRELIMINARY MASTER ALTERNATIVE

CONSTRUCTION DETAILS
TCE OCCUPATION PLAN

SCALE : 1"=200'

C-12

RELATIVE BORDER SCALE IS IN INCHES 0 1 2 3

USERNAME => $USER$
DGN FILE => $FILE$

LAST REVISION 00-00-00

TIME PLOTTED => $TIME$

DATE PLOTTED => $DATE$

DISTRICT	ROUTE	POST MILES	SHEET No.	TOTAL SHEETS
4	101, 1	8.0/9.8 6.8/7.1	39	128

GOLDEN LINK PARTNERS

LEGEND

- Permit to Enter - Subject to Approval by GGBHTD
- Available After 10/1/11
- Available After 8/30/12 or Contract 4 Completion Acceptance (If Sooner)
- Temporary Construction Easement
- Available After 3/1/12
- Caltrans - Developer Cannot Use
- Available After Detour is Removed
- Environmentally Sensitive Areas

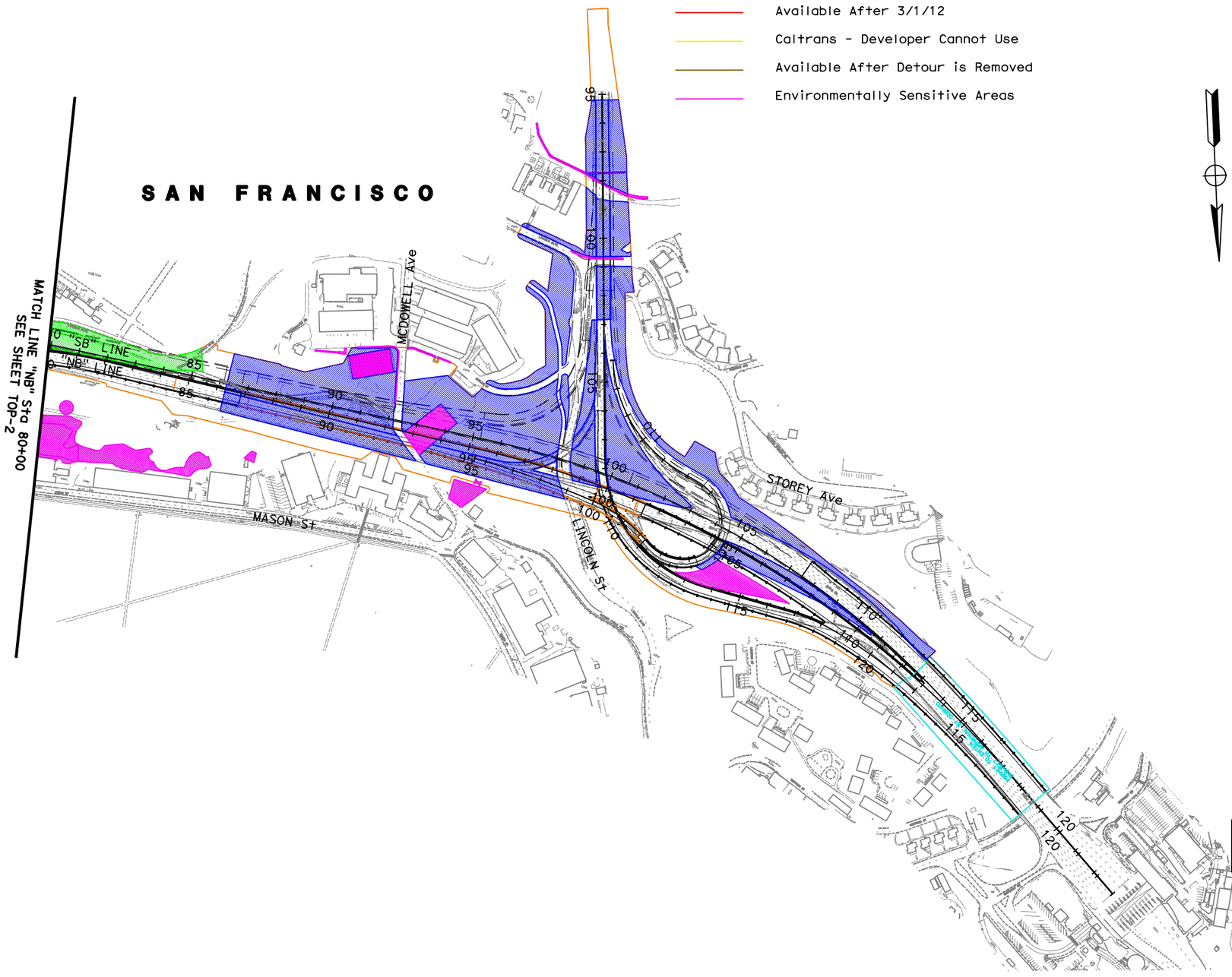

PRELIMINARY

PRESIDIO PARKWAY P3 PROJECT
GLP PRELIMINARY MASTER ALTERNATIVE

CONSTRUCTION DETAILS
TCE OCCUPATION PLAN

SCALE : 1"=200'

C-13

DISTRICT	ROUTE	POST MILES	SHEET No.	TOTAL SHEETS
4	101, 1	8.0/9.8 6.8/7.1	40	128

NOTES:

1. RAILING COLOR SHALL BE INTERNATIONAL ORANGE ALONG PRESIDIO PARKWAY CORRIDOR AND GREEN WITHIN THE INTERCHANGE. DEPARTMENT SHALL SPECIFY GREEN COLOR.

GOLDEN LINK PARTNERS

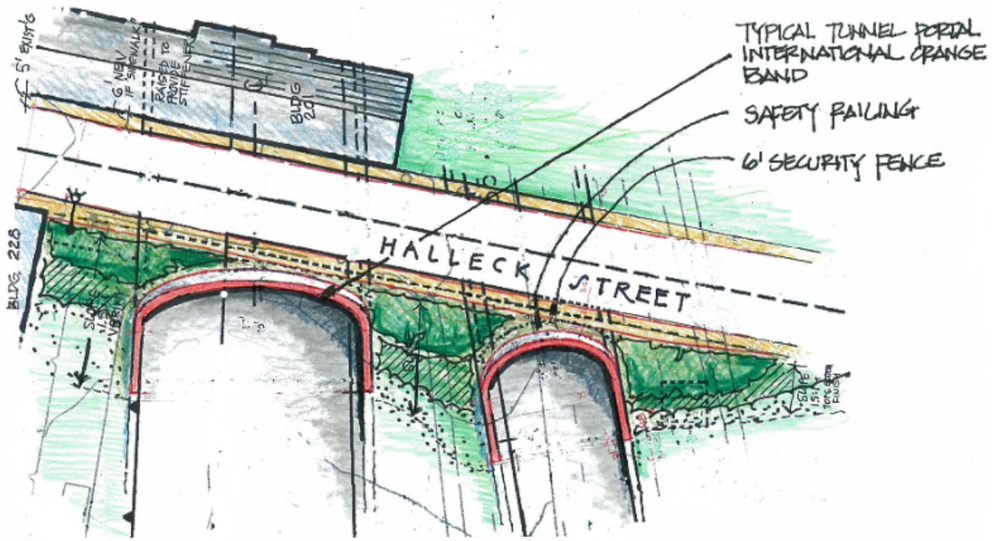

Tunnel Portal Plan View

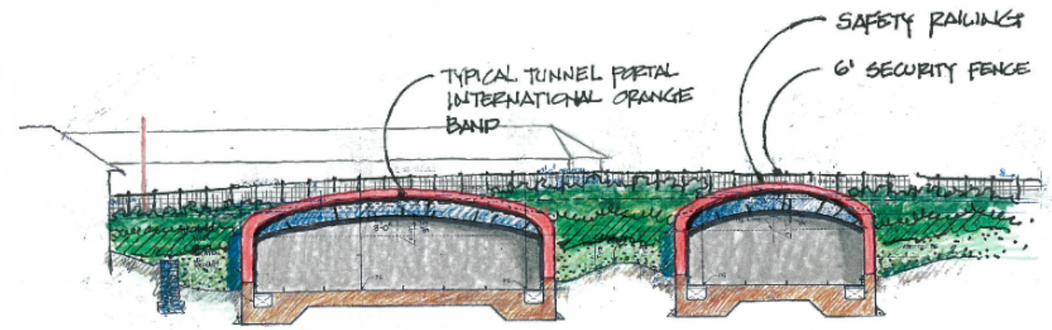

Tunnel Portal Elevation

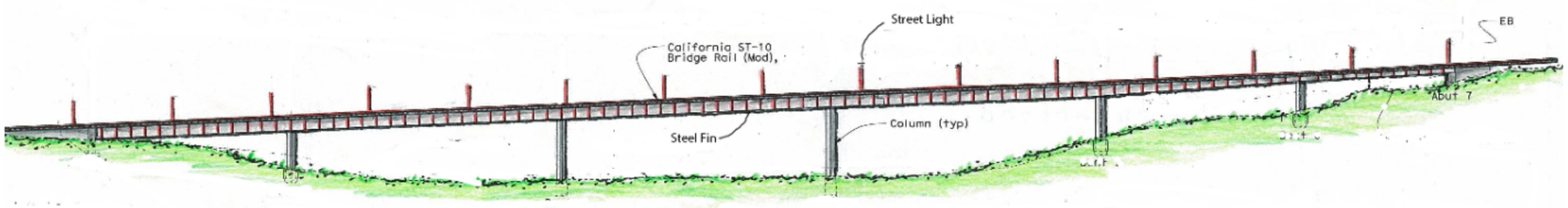

High Viaduct Elevation

PRELIMINARY

PRESIDIO PARKWAY P3 PROJECT
GLP PRELIMINARY MASTER ALTERNATIVE

ARCHITECTURAL AESTHETICS

NO SCALE

C-14

DISTRICT	ROUTE	POST MILES	SHEET No.	TOTAL SHEETS
4	101, 1	8.0/9.8 6.8/7.1	41	128

GOLDEN LINK PARTNERS

NOTES:

1. RAILING COLOR SHALL BE INTERNATIONAL ORANGE ALONG PRESIDIO PARKWAY CORRIDOR AND GREEN WITHIN THE INTERCHANGE. DEPARTMENT SHALL SPECIFY GREEN COLOR.

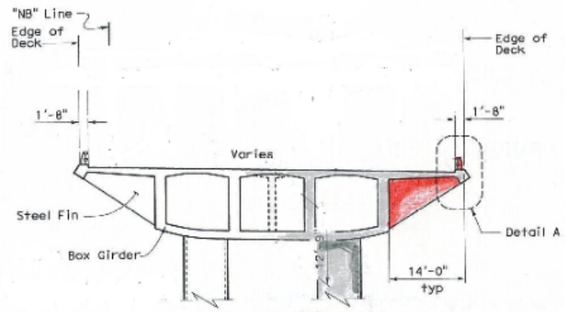

High Viaduct Section

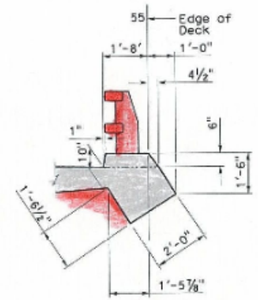

DETAIL A

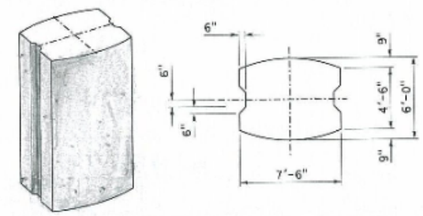

Typical Column Detail

NO SCALE

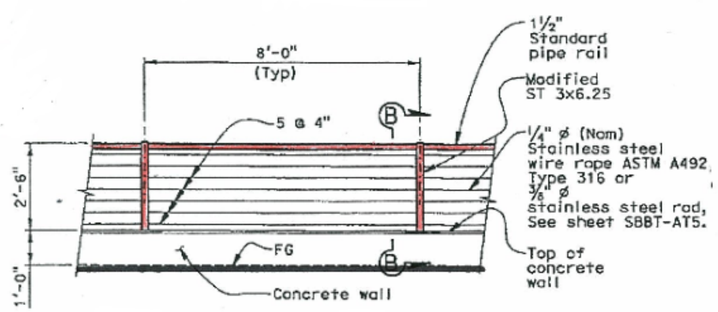

Safety Railing

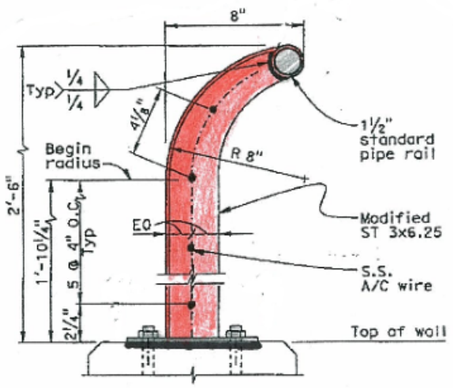

Section B-B

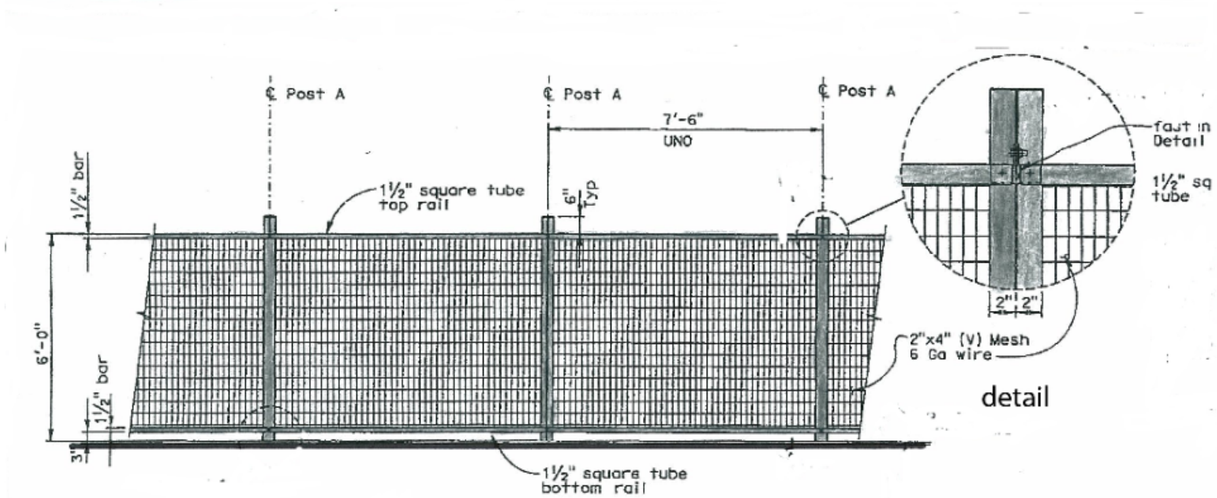

detail

Security Fence

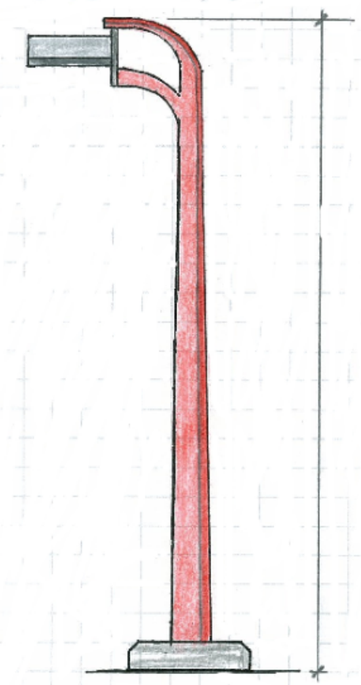

Street Light Detail

NOTE: LIGHT FIXTURES SHALL MATCH PHASE 1 CONTRACT. STREET LIGHT DETAIL SHOWN FOR HISTORICAL CONTEXT

PRELIMINARY

PRESIDIO PARKWAY P3 PROJECT
GLP PRELIMINARY MASTER ALTERNATIVE

ARCHITECTURAL AESTHETICS

NO SCALE

C-15

DISTRICT	ROUTE	POST MILES	SHEET No.	TOTAL SHEETS
4	101, 1	8.0/9.8 6.8/7.1	42	128

GOLDEN LINK PARTNERS

FOR COMPLETE RIGHT OF WAY AND ACCURATE ACCESS DATA, SEE RIGHT OF WAY RECORD MAPS AT DISTRICT OFFICE.

LEGEND:

- No. — DRAINAGE SYSTEM No.
- x — DRAINAGE UNIT
- Exist INLET
- INLET
- Adj INLET
- Prop MANHOLE
- Exist MANHOLE
- TEE
- sd — Exist STORM DRAIN PIPE
- SD — STORM DRAIN PIPE
- FORCE MAIN
- FES
- RSP
- GRADE TO DRAIN
- DITCH / GUTTER FLOW LINE
- BIOFILTRATION SWALE

ABBREVIATIONS:

G2 MH	MODIFIED G2 MANHOLE
SGD	STANDARD GUTTER DEPRESSION
TCE	TEMPORARY CONSTRUCTION EASEMENT
w/	WITH

NOTES:

1. FOR UTILITIES, SEE UTILITY PLANS.
2. FOR FINISHED GRADE ELEVATIONS, SEE PROFILES, AND CONSTRUCTION DETAILS.
3. STATION AND OFFSET TIES TO DRAINAGE STRUCTURES ARE MEASURED AS SHOWN IN THE DETAILS SHEETS.
4. LOCATIONS OF EXISTING DRAINAGE FACILITIES ARE APPROXIMATE. VERIFY LOCATION AND ELEVATION OF EXISTING DRAINAGE FACILITIES PRIOR TO MODIFYING.
5. TOP OF GRATE ELEVATION INCLUDES STANDARD GUTTER DEPRESSION, WHERE SGD IS SPECIFIED, SEE PROFILE SHEETS.

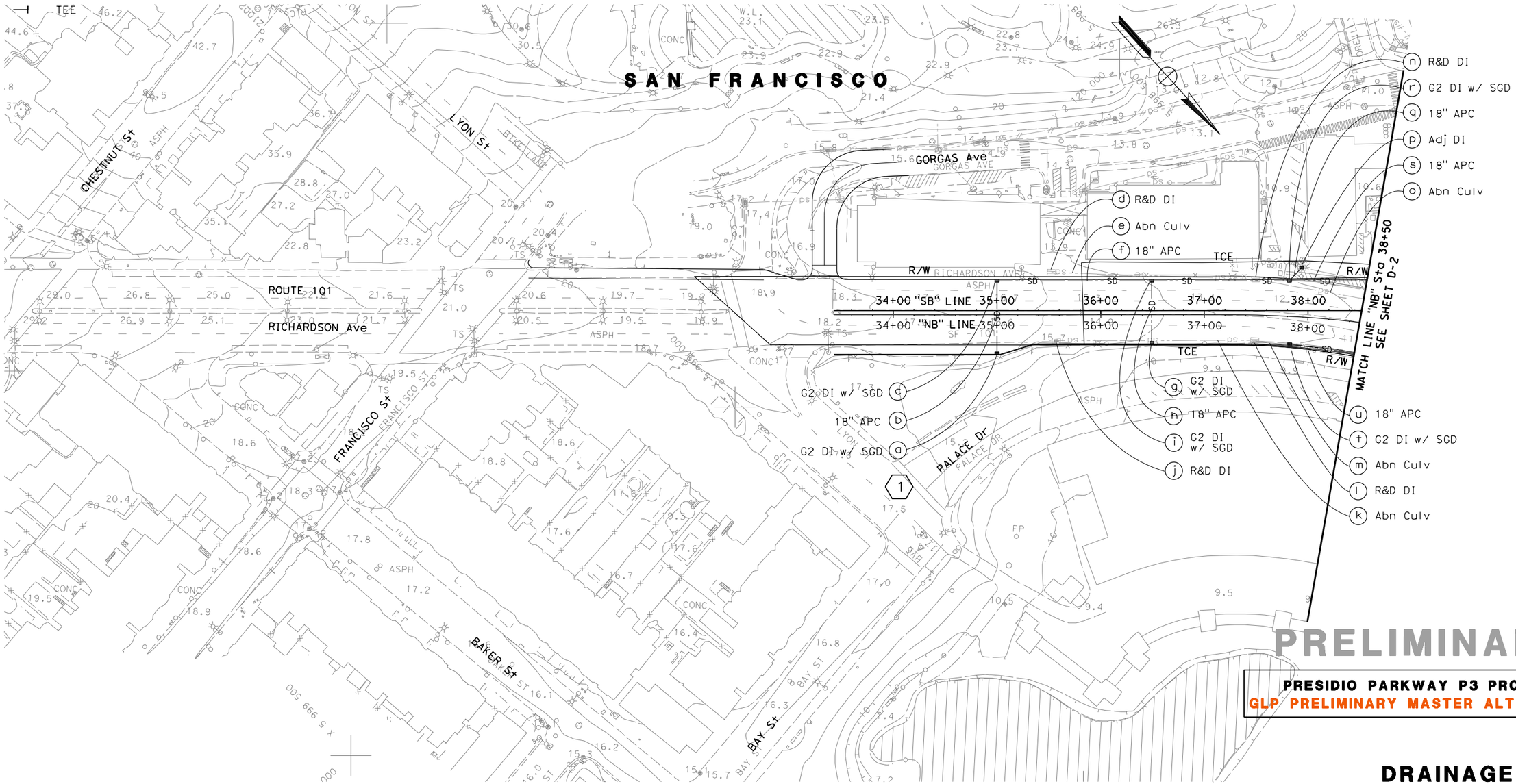

PRELIMINARY

PRESIDIO PARKWAY P3 PROJECT
GLP PRELIMINARY MASTER ALTERNATIVE

DRAINAGE PLAN

SCALE : 1"=50'

D-1

DISTRICT	ROUTE	POST MILES	SHEET No.	TOTAL SHEETS
4	101, 1	8.0/9.8 6.8/7.1	43	128

GOLDEN LINK PARTNERS

NOTES:

SUFFICIENT SPACE WAS NOT AVAILABLE TO LABEL ALL DRAINAGE ITEMS WITHIN A SINGLE SHEET, THEREFORE REMAINING DRAINAGE ITEMS ARE LABELED IN D-2b, D-2c, D-2d, D-2e.

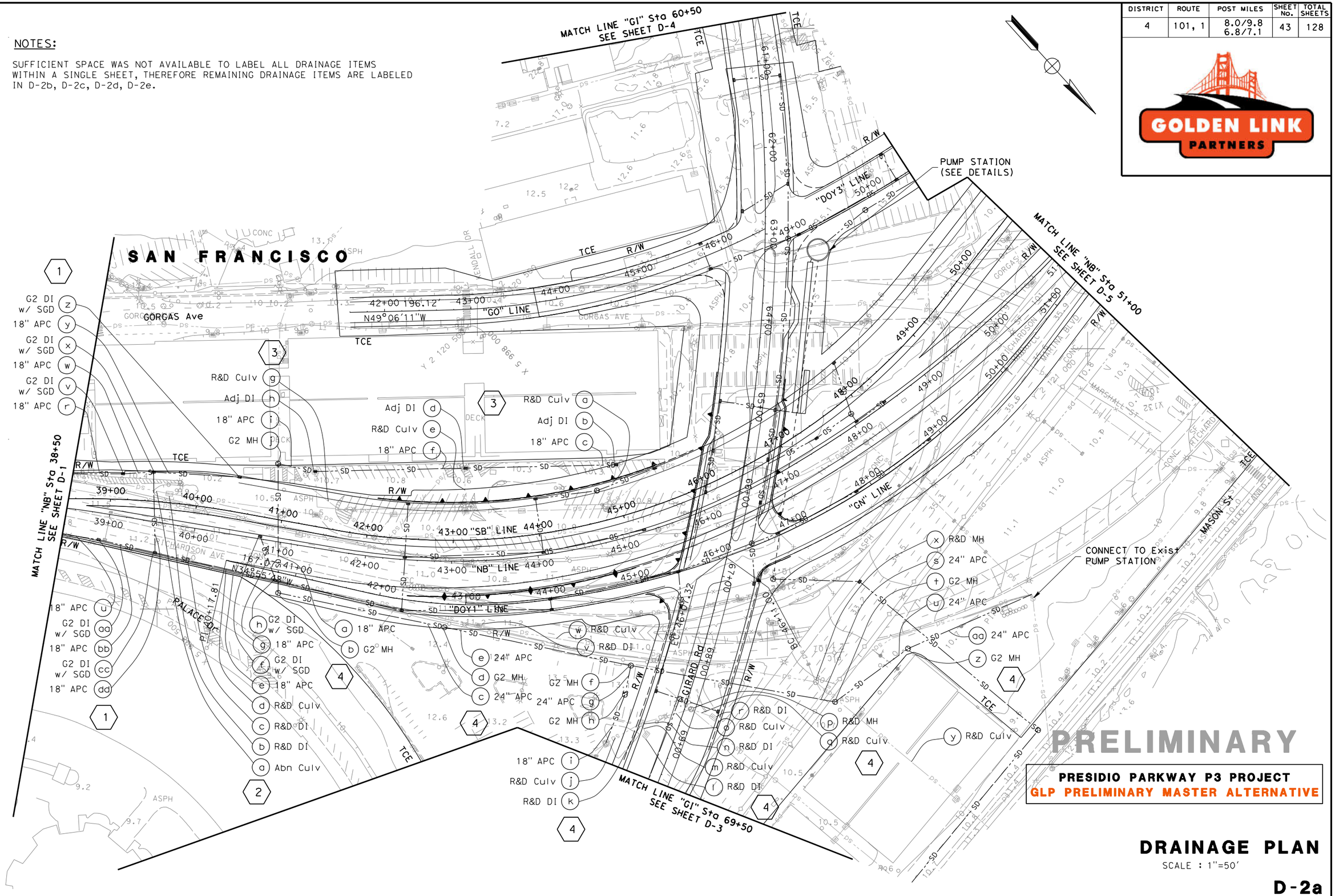

PRESIDIO PARKWAY P3 PROJECT
GLP PRELIMINARY MASTER ALTERNATIVE

DRAINAGE PLAN

SCALE : 1"=50'

D-2a

RELATIVE BORDER SCALE IS IN INCHES 0 1 2 3

USERNAME => $USER$
DGN FILE => $FILE$

LAST REVISION 00-00-00

TIME PLOTTED => $TIME$

DATE PLOTTED => $DATE$

DISTRICT	ROUTE	POST MILES	SHEET No.	TOTAL SHEETS
4	101, 1	8.0/9.8 6.8/7.1	44	128

GOLDEN LINK PARTNERS

NOTES:

SUFFICIENT SPACE WAS NOT AVAILABLE TO LABEL ALL DRAINAGE ITEMS WITHIN A SINGLE SHEET, THEREFORE REMAINING DRAINAGE ITEMS ARE LABELED IN D-2a, D-2c, D-2d, D-2e.

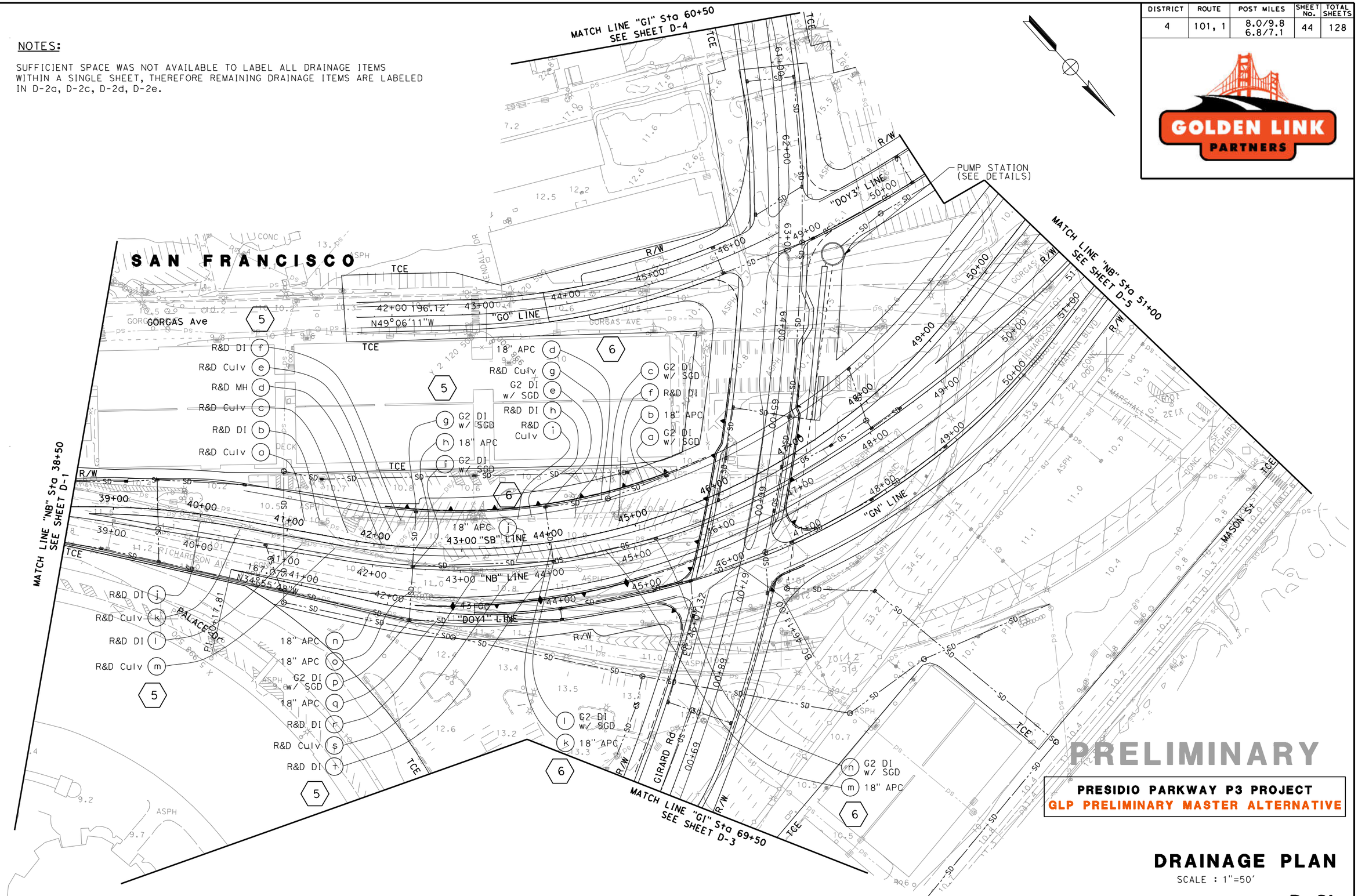

PRELIMINARY

PRESIDIO PARKWAY P3 PROJECT
GLP PRELIMINARY MASTER ALTERNATIVE

DRAINAGE PLAN

SCALE : 1"=50'

D-2b

RELATIVE BORDER SCALE IS IN INCHES 0 1 2 3

USERNAME => $USER$
DGN FILE => $FILE$

LAST REVISION 00-00-00

TIME PLOTTED => $TIME$

DATE PLOTTED => $DATE$

DISTRICT	ROUTE	POST MILES	SHEET No.	TOTAL SHEETS
4	101, 1	8.0/9.8 6.8/7.1	45	128

GOLDEN LINK PARTNERS

NOTES:

SUFFICIENT SPACE WAS NOT AVAILABLE TO LABEL ALL DRAINAGE ITEMS WITHIN A SINGLE SHEET, THEREFORE REMAINING DRAINAGE ITEMS ARE LABELED IN D-2a, D-2b, D-2d, D-2e.

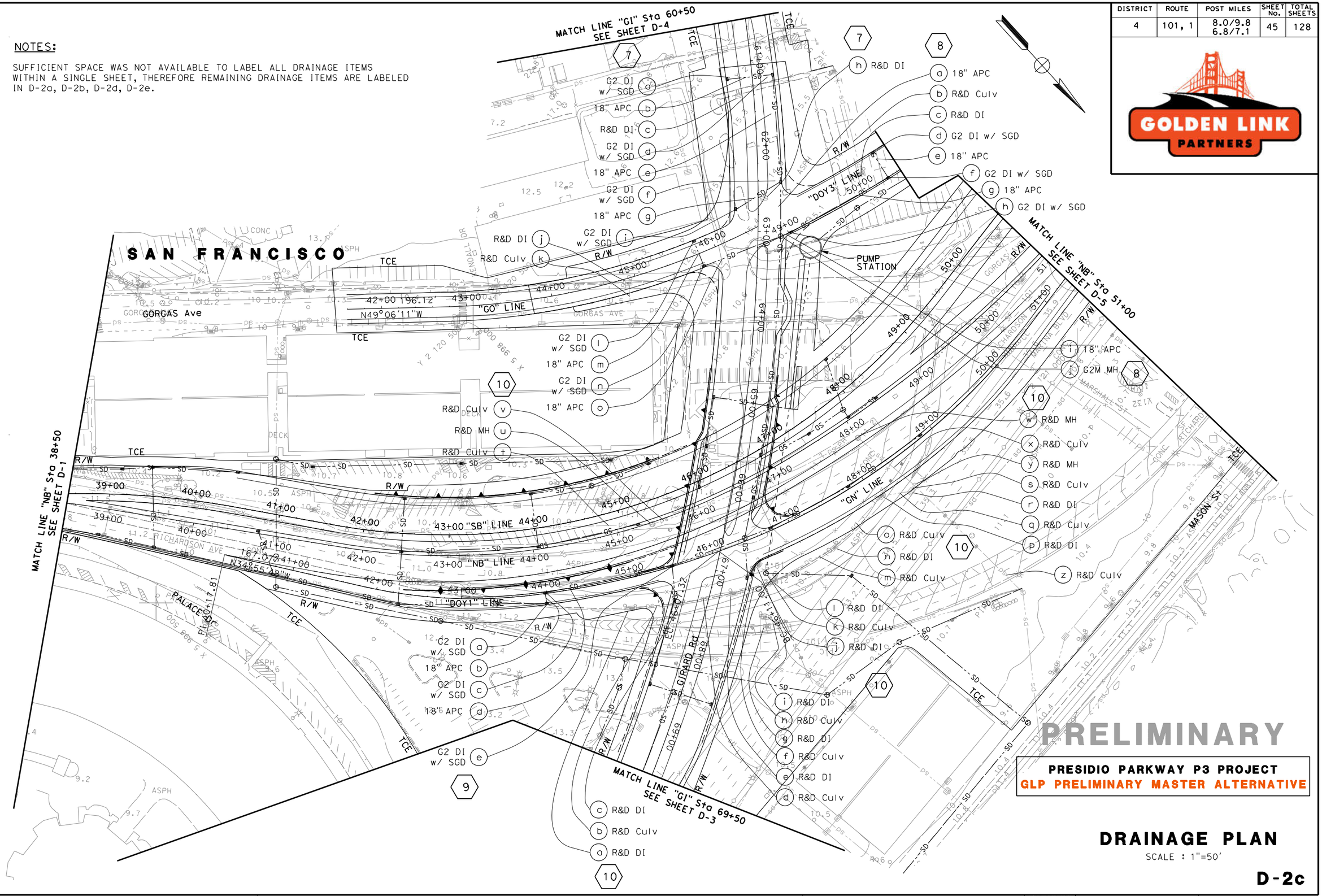

PRELIMINARY

PRESIDIO PARKWAY P3 PROJECT
GLP PRELIMINARY MASTER ALTERNATIVE

DRAINAGE PLAN

SCALE : 1"=50'

D-2c

RELATIVE BORDER SCALE IS IN INCHES 0 1 2 3

USERNAME => $USER$
DGN FILE => $FILE$

LAST REVISION 00-00-00

TIME PLOTTED => $TIME$

DATE PLOTTED => $DATE$

DISTRICT	ROUTE	POST MILES	SHEET No.	TOTAL SHEETS
4	101, 1	8.0/9.8 6.8/7.1	46	128

GOLDEN LINK PARTNERS

NOTES:

SUFFICIENT SPACE WAS NOT AVAILABLE TO LABEL ALL DRAINAGE ITEMS WITHIN A SINGLE SHEET, THEREFORE REMAINING DRAINAGE ITEMS ARE LABELED IN D-2a, D-2b, D-2c, D-2e.

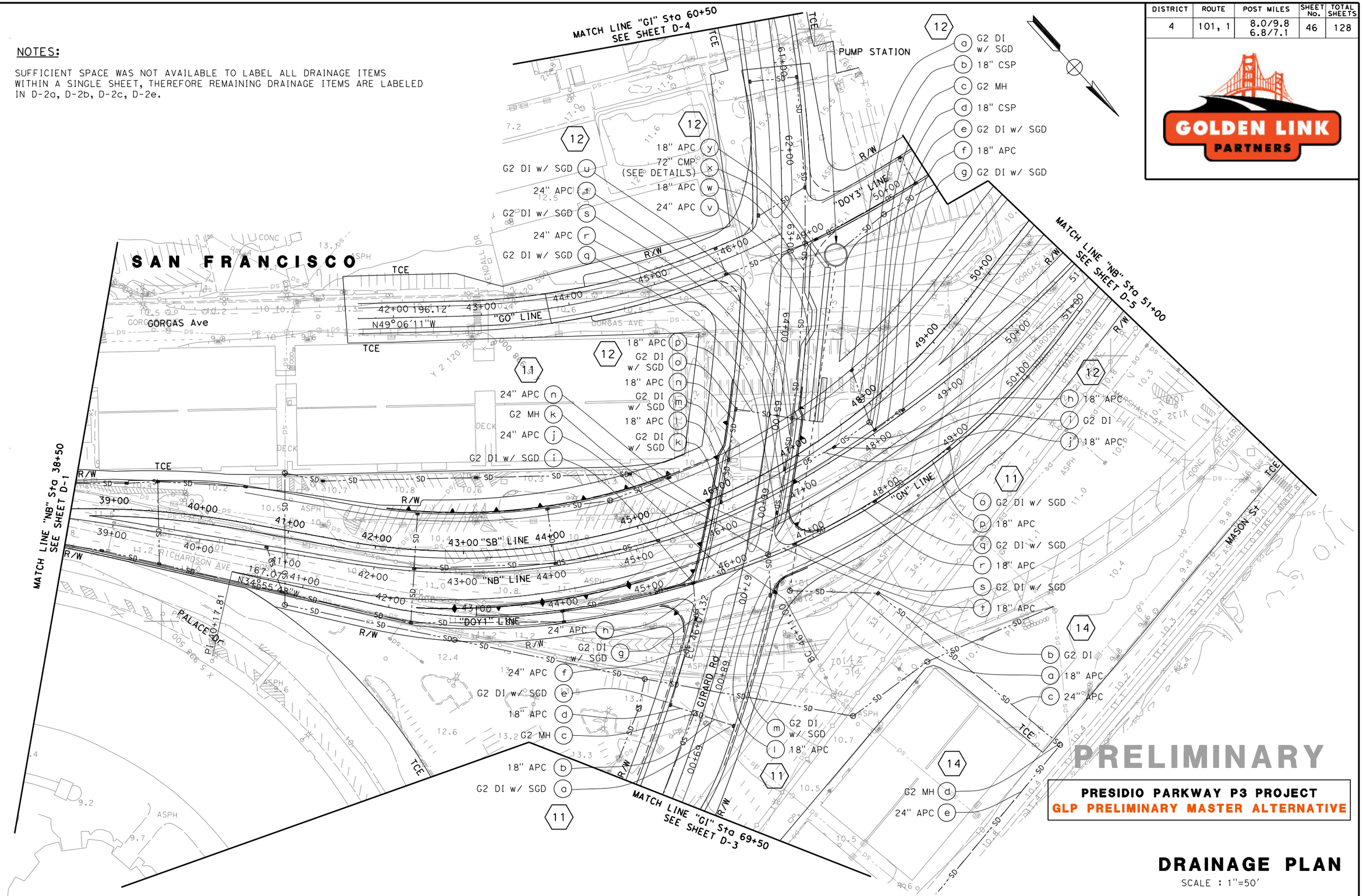

PRESIDIO PARKWAY P3 PROJECT
GLP PRELIMINARY MASTER ALTERNATIVE

DRAINAGE PLAN

SCALE : 1"=50'

D-2d

RELATIVE BORDER SCALE IS IN INCHES 0 1 2 3

USERNAME => $USER$
DGN FILE => $FILE$

LAST REVISION 00-00-00

TIME PLOTTED => $TIME$

DATE PLOTTED => $DATE$

DISTRICT	ROUTE	POST MILES	SHEET No.	TOTAL SHEETS
4	101, 1	8.0/9.8 6.8/7.1	47	128

GOLDEN LINK PARTNERS

NOTES:

SUFFICIENT SPACE WAS NOT AVAILABLE TO LABEL ALL DRAINAGE ITEMS WITHIN A SINGLE SHEET, THEREFORE REMAINING DRAINAGE ITEMS ARE LABELED IN D-2a, D-2b, D-2c, D-2d.

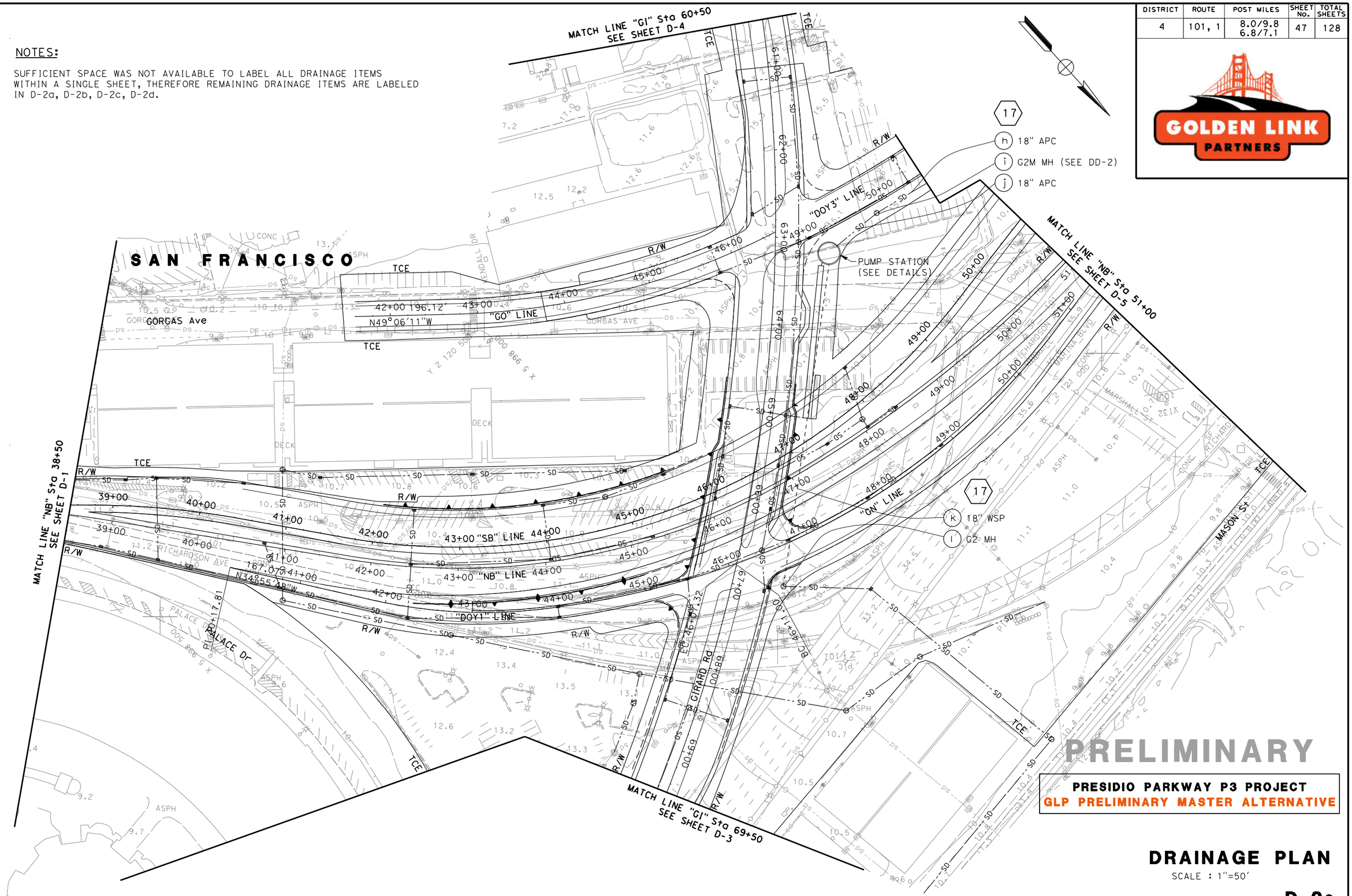

PRESIDIO PARKWAY P3 PROJECT
GLP PRELIMINARY MASTER ALTERNATIVE

DRAINAGE PLAN

SCALE : 1"=50'

D-2e

RELATIVE BORDER SCALE IS IN INCHES 0 1 2 3

USERNAME => $USER$
DGN FILE => $FILE$

LAST REVISION 00-00-00

TIME PLOTTED => $TIME$

DATE PLOTTED => $DATE$

DISTRICT	ROUTE	POST MILES	SHEET No.	TOTAL SHEETS
4	101, 1	8.0/9.8 6.8/7.1	48	128

GOLDEN LINK PARTNERS

PRELIMINARY

PRESIDIO PARKWAY P3 PROJECT
GLP PRELIMINARY MASTER ALTERNATIVE

DRAINAGE PLAN

SCALE : 1"=50'

D-3

RELATIVE BORDER SCALE IS IN INCHES 0 1 2 3

USERNAME => $USER$
DGN FILE => $FILE$

LAST REVISION 00-00-00

TIME PLOTTED => $TIME$

DATE PLOTTED => $DATE$

DISTRICT	ROUTE	POST MILES	SHEET No.	TOTAL SHEETS
4	101, 1	8.0/9.8 6.8/7.1	49	128

GOLDEN LINK PARTNERS

PRELIMINARY

PRESIDIO PARKWAY P3 PROJECT
GLP PRELIMINARY MASTER ALTERNATIVE

DRAINAGE PLAN

SCALE : 1"=50'

D-4

RELATIVE BORDER SCALE IS IN INCHES 0 1 2 3

USERNAME => $USER$
DGN FILE => $FILE$

LAST REVISION 00-00-00

TIME PLOTTED => $TIME$

DATE PLOTTED => $DATE$

DISTRICT	ROUTE	POST MILES	SHEET No.	TOTAL SHEETS
4	101, 1	8.0/9.8 6.8/7.1	50	128

GOLDEN LINK PARTNERS

NOTES:

1. SUFFICIENT SPACE WAS NOT AVAILABLE TO LABEL ALL DRAINAGE ITEMS WITHIN A SINGLE SHEET, THEREFORE REMAINING DRAINAGE ITEMS ARE LABELED IN D-5b.
2. JACK & BORE THE PIPE UNDER TENNESSEE HOLLOW.

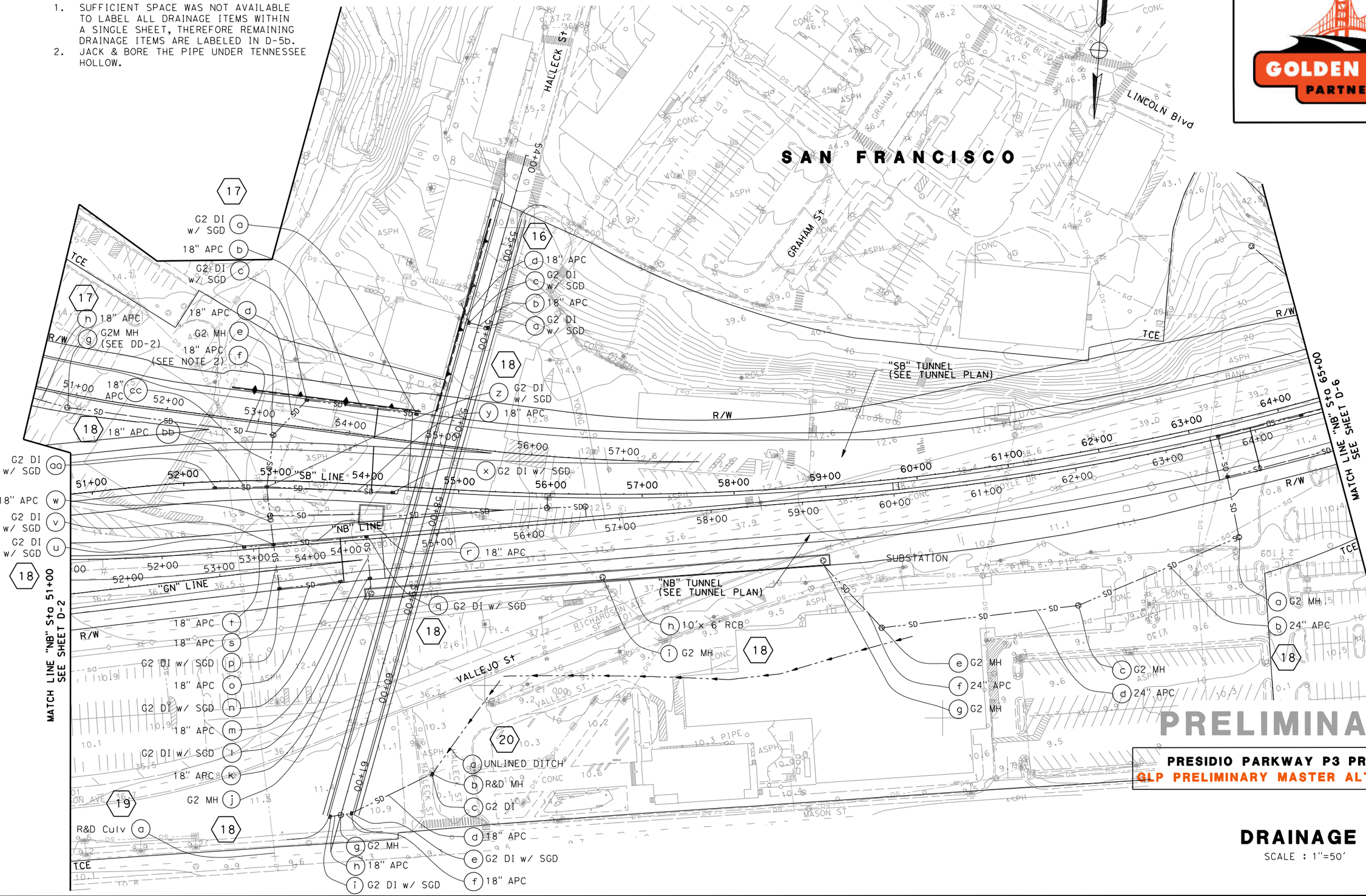

PRESIDIO PARKWAY P3 PROJECT
GLP PRELIMINARY MASTER ALTERNATIVE

DRAINAGE PLAN

SCALE : 1"=50'

D-5a

RELATIVE BORDER SCALE IS IN INCHES 0 1 2 3

USERNAME => $USER$
DGN FILE => $FILE$

LAST REVISION 00-00-00

TIME PLOTTED => $TIME$

DATE PLOTTED => $DATE$

DISTRICT	ROUTE	POST MILES	SHEET No.	TOTAL SHEETS
4	101, 1	8.0/9.8 6.8/7.1	51	128

GOLDEN LINK PARTNERS

NOTES:

SUFFICIENT SPACE WAS NOT AVAILABLE TO LABEL ALL DRAINAGE ITEMS WITHIN A SINGLE SHEET, THEREFORE REMAINING DRAINAGE ITEMS ARE LABELED IN D-5a.

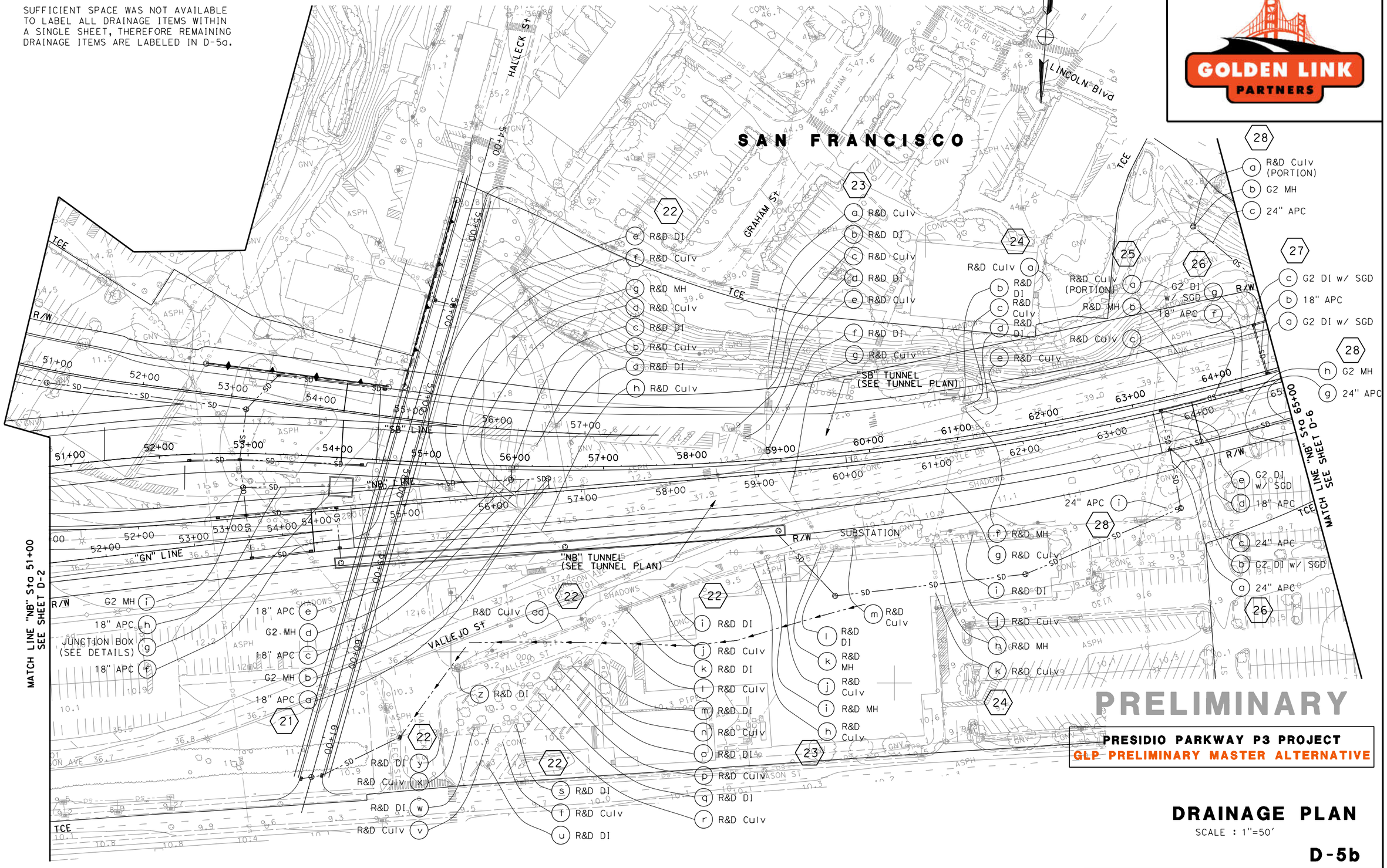
SAN FRANCISCO
LINCOLN Blvd
HALLECK St
GRAHAM St
VALLEJO St
"SB" LINE
"NB" LINE
"GN" LINE
"SB" TUNNEL (SEE TUNNEL PLAN)
"NB" TUNNEL (SEE TUNNEL PLAN)
SUBSTATION
JUNCTION BOX (SEE DETAILS)
MATCH LINE "NB" Sta 51+00 SEE SHEET D-2
MATCH LINE "NB" Sta 65+00 SEE SHEET D-6
R/W
TCE
22
23
24
25
26
27
28
21
a R&D Culv
b R&D DI
c R&D Culv
d R&D DI
e R&D Culv
f R&D DI
g R&D Culv
h R&D Culv
i R&D DI
j R&D Culv
k R&D DI
l R&D Culv
m R&D DI
n R&D Culv
o R&D DI
p R&D Culv
q R&D DI
r R&D Culv
s R&D DI
t R&D Culv
u R&D DI
v R&D Culv
w R&D DI
x R&D Culv
y R&D DI
z R&D DI
aa R&D Culv
R&D Culv (PORTION)
G2 DI w/ SGD
18" APC
24" APC
G2 MH
R&D MH
G2 DI w/ SGD
18" APC
G2 DI w/ SGD
G2 MH
24" APC
G2 MH
18" APC
G2 MH
18" APC
G2 MH
18" APC
18" APC
R&D MH
R&D Culv
R&D MH
R&D Culv
R&D MH
R&D Culv
R&D DI
R&D Culv
R&D DI
R&D Culv
R&D DI

DISTRICT	ROUTE	POST MILES	SHEET No.	TOTAL SHEETS
4	101, 1	8.0/9.8 6.8/7.1	52	128

GOLDEN LINK PARTNERS

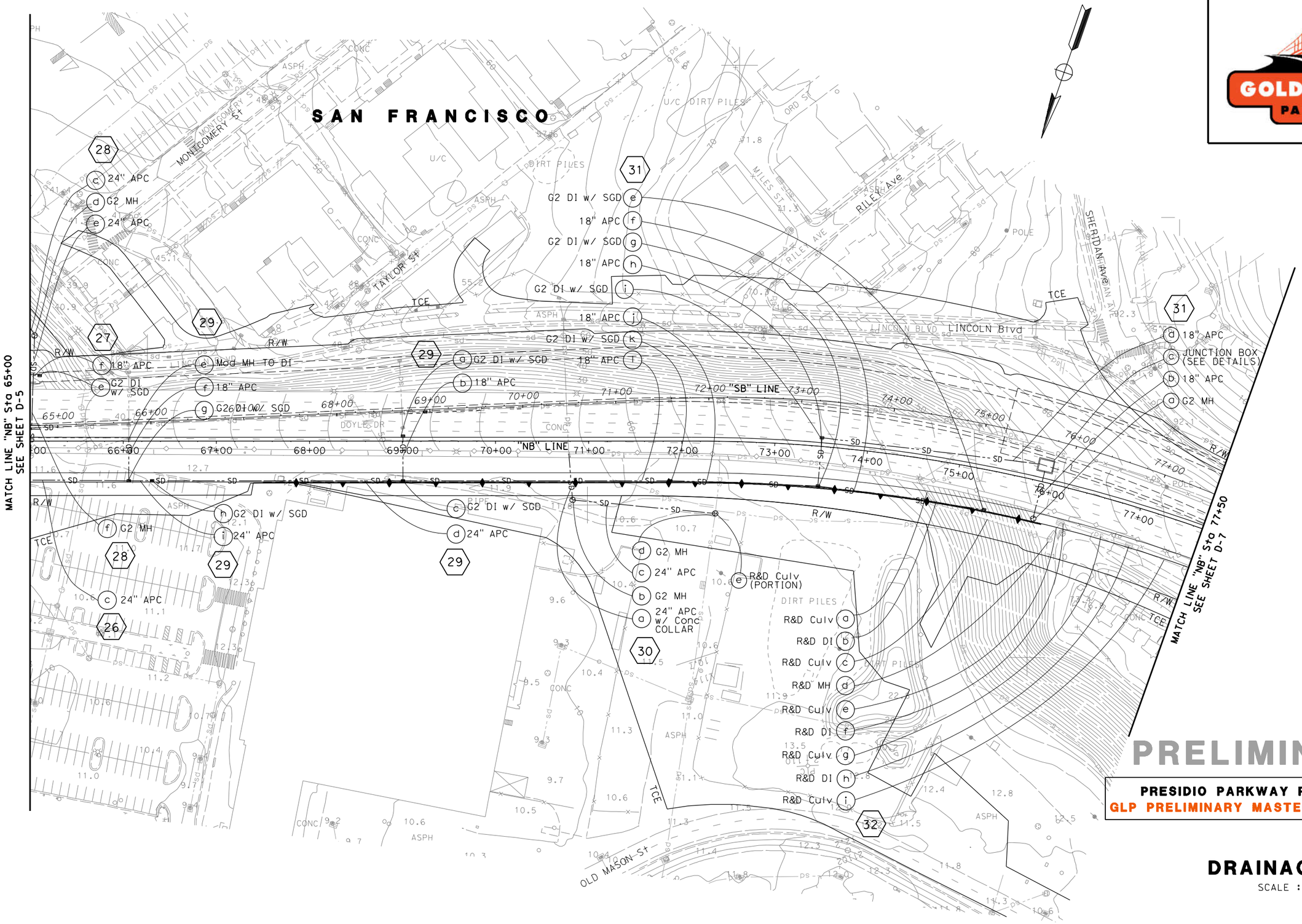

PRELIMINARY

PRESIDIO PARKWAY P3 PROJECT
GLP PRELIMINARY MASTER ALTERNATIVE

DRAINAGE PLAN

SCALE : 1"=50'

D-6

RELATIVE BORDER SCALE IS IN INCHES 0 1 2 3

USERNAME => $USER$
DGN FILE => $FILE$

LAST REVISION 00-00-00

TIME PLOTTED => $TIME$

DATE PLOTTED => $DATE$

DISTRICT	ROUTE	POST MILES	SHEET No.	TOTAL SHEETS
4	101, 1	8.0/9.8 6.8/7.1	53	128

GOLDEN LINK PARTNERS

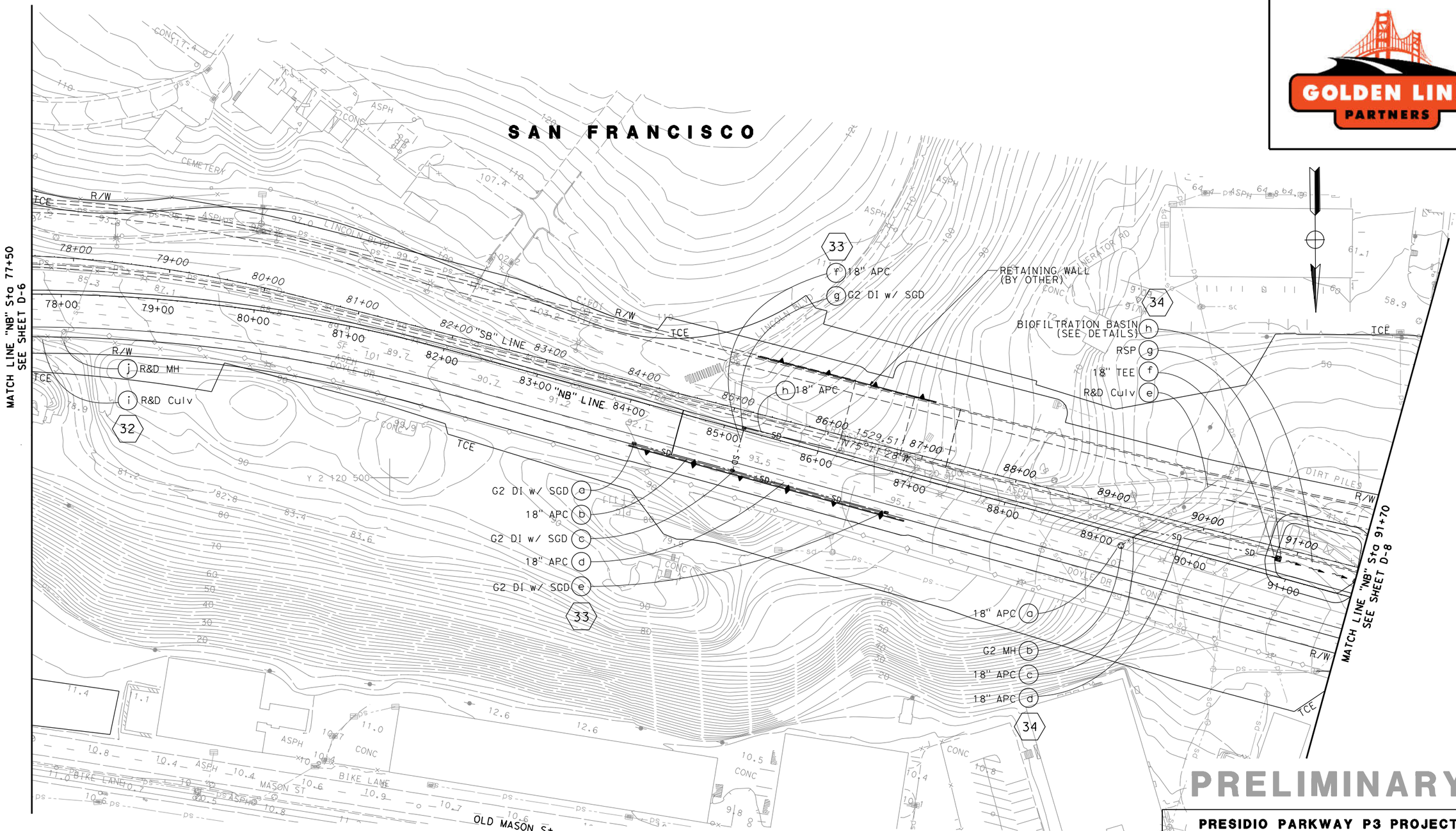

PRELIMINARY

PRESIDIO PARKWAY P3 PROJECT
GLP PRELIMINARY MASTER ALTERNATIVE

DRAINAGE PLAN

SCALE : 1"=50'

D-7

RELATIVE BORDER SCALE IS IN INCHES 0 1 2 3

USERNAME => $USER$
DGN FILE => $FILE$

LAST REVISION 00-00-00

TIME PLOTTED => $TIME$

DATE PLOTTED => $DATE$

DISTRICT	ROUTE	POST MILES	SHEET No.	TOTAL SHEETS
4	101, 1	8.0/9.8 6.8/7.1	54	128

GOLDEN LINK PARTNERS

PRELIMINARY

PRESIDIO PARKWAY P3 PROJECT

GLP PRELIMINARY MASTER ALTERNATIVE

DRAINAGE PLAN

SCALE : 1"=50'

D-8

RELATIVE BORDER SCALE IS IN INCHES 0 1 2 3

USERNAME => $USER$
DGN FILE => $FILE$

LAST REVISION 00-00-00

TIME PLOTTED => $TIME$

DATE PLOTTED => $DATE$

DISTRICT	ROUTE	POST MILES	SHEET No.	TOTAL SHEETS
4	101, 1	8.0/9.8 6.8/7.1	55	128

GOLDEN LINK PARTNERS

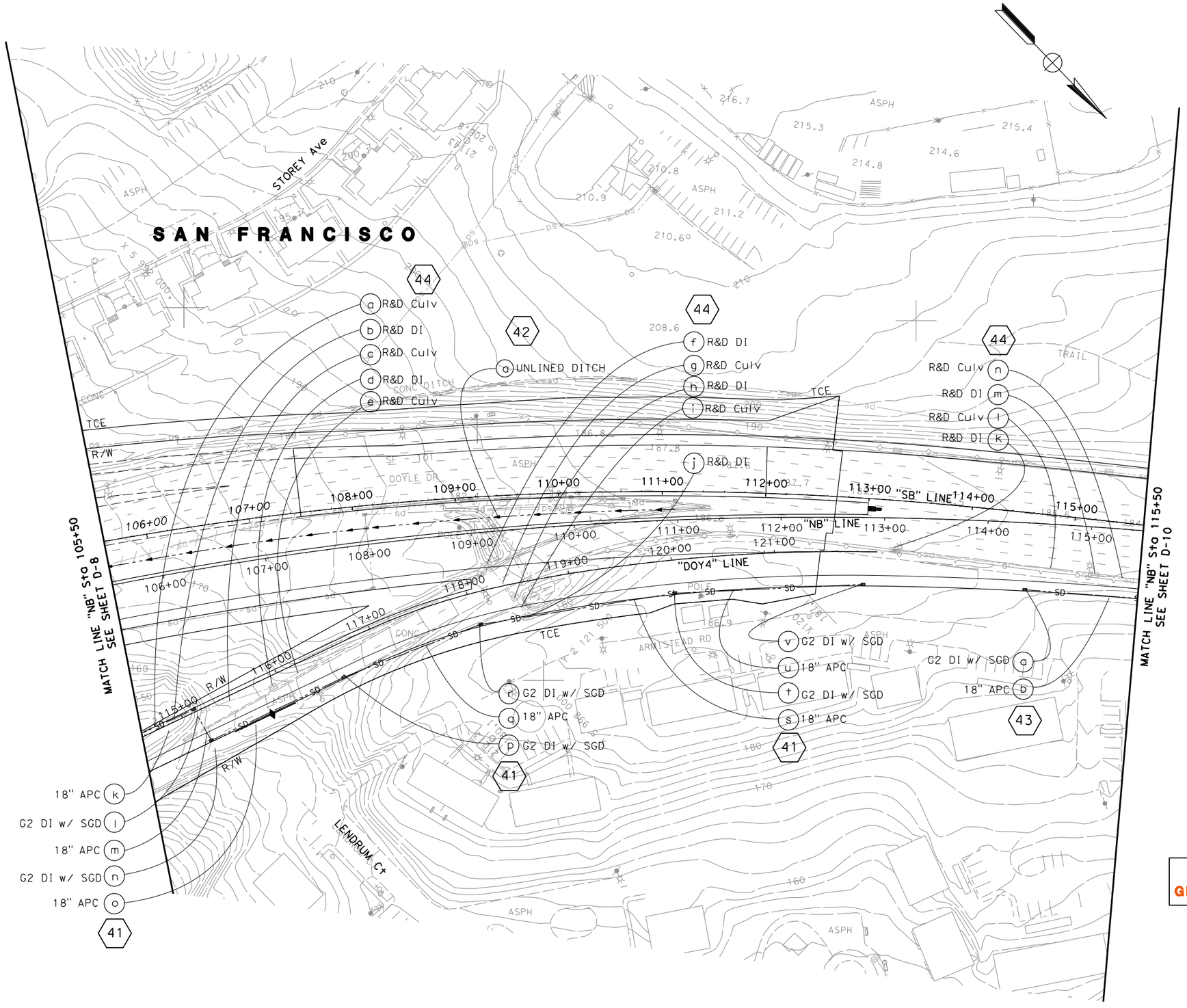

PRELIMINARY

PRESIDIO PARKWAY P3 PROJECT
GLP PRELIMINARY MASTER ALTERNATIVE

DRAINAGE PLAN

SCALE : 1"=50'

D-9

RELATIVE BORDER SCALE IS IN INCHES 0 1 2 3

USERNAME => $USER$
DGN FILE => $FILE$

LAST REVISION 00-00-00

TIME PLOTTED => $TIME$

DATE PLOTTED => $DATE$

DISTRICT	ROUTE	POST MILES	SHEET No.	TOTAL SHEETS
4	101, 1	8.0/9.8 6.8/7.1	56	128

GOLDEN LINK PARTNERS

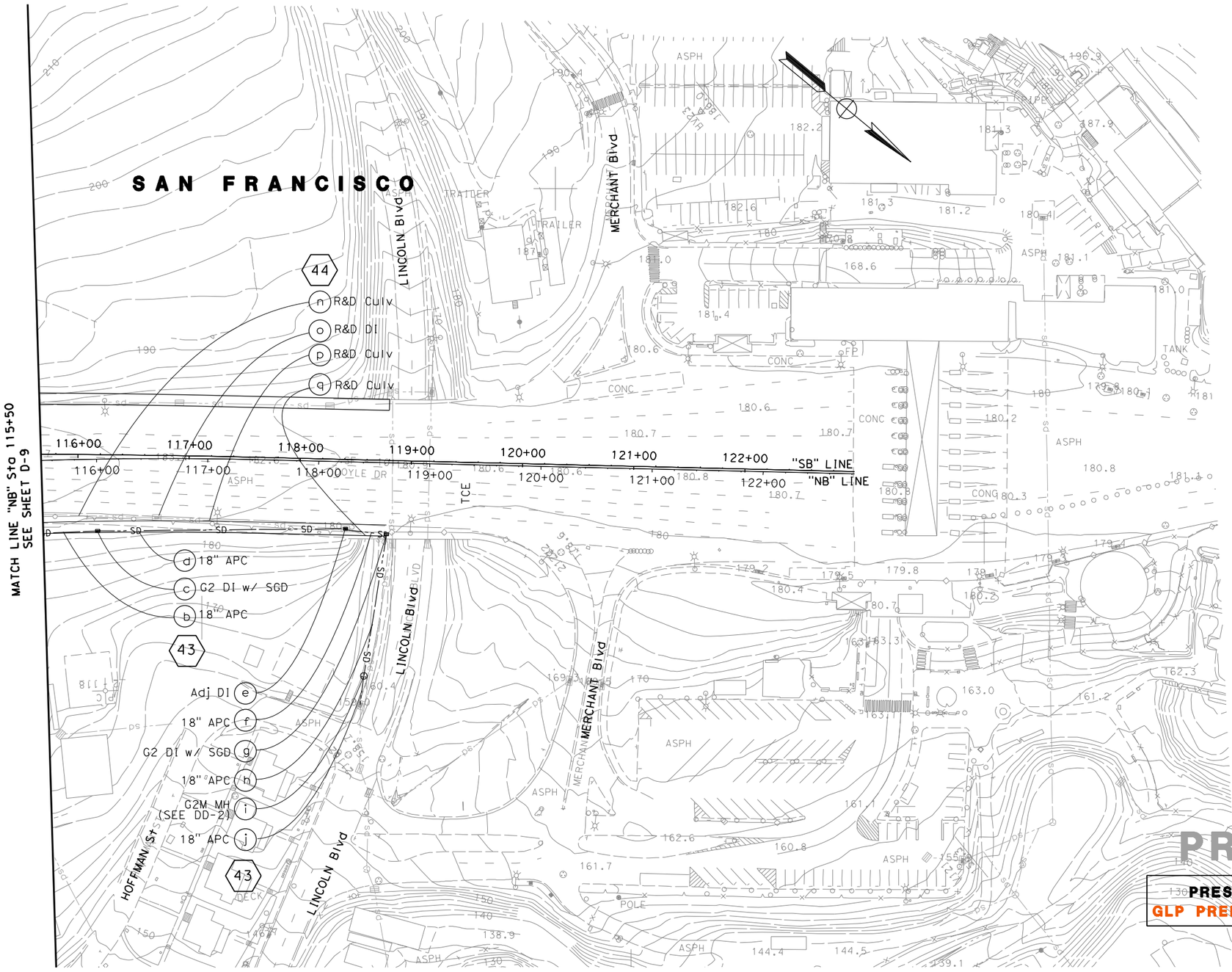

PRELIMINARY

PRESIDIO PARKWAY P3 PROJECT
GLP PRELIMINARY MASTER ALTERNATIVE

DRAINAGE PLAN

SCALE : 1"=50'

D-10

RELATIVE BORDER SCALE IS IN INCHES 0 1 2 3

USERNAME => $USER$
DGN FILE => $FILE$

LAST REVISION 00-00-00

TIME PLOTTED => $TIME$

DATE PLOTTED => $DATE$

DISTRICT	ROUTE	POST MILES	SHEET No.	TOTAL SHEETS
4	101, 1	8.0/9.8 6.8/7.1	57	128

GOLDEN LINK PARTNERS

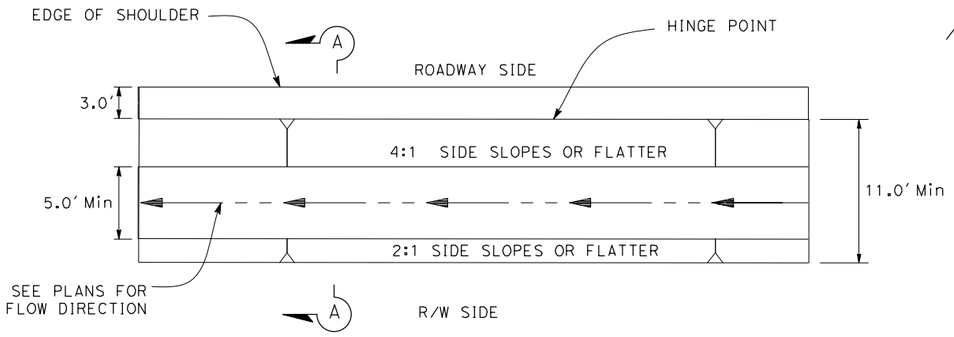

PLAN

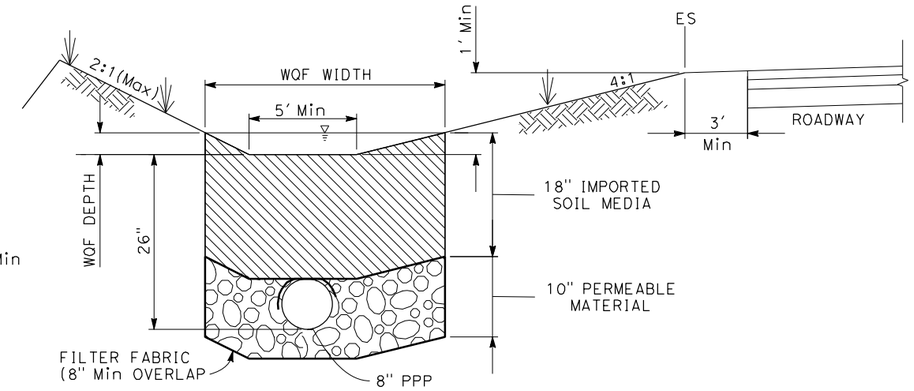

SECTION A-A

BIOFILTRATION SWALE DETAIL

ACRONYM:

WQF WATER QUALITY FLOW

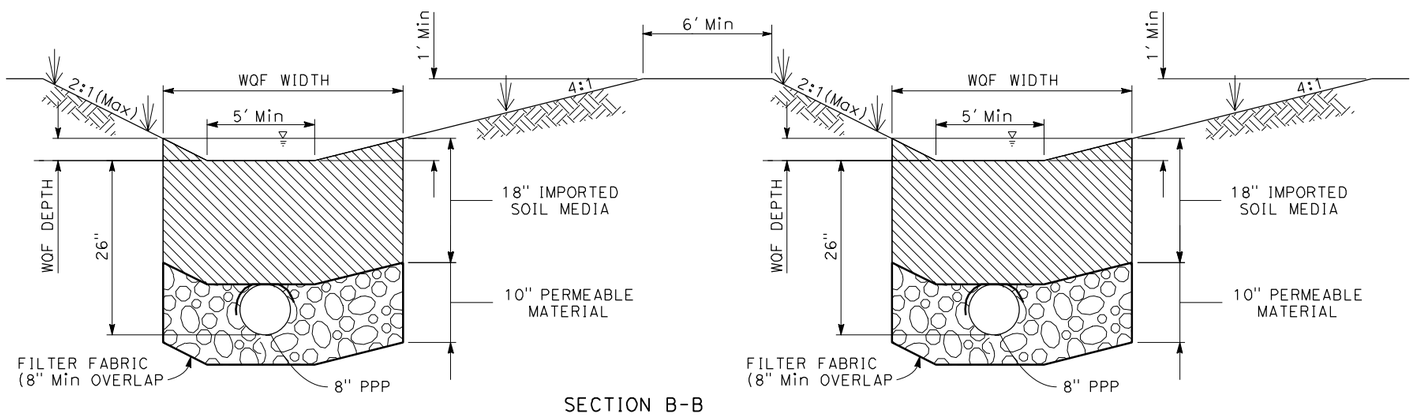

SECTION B-B

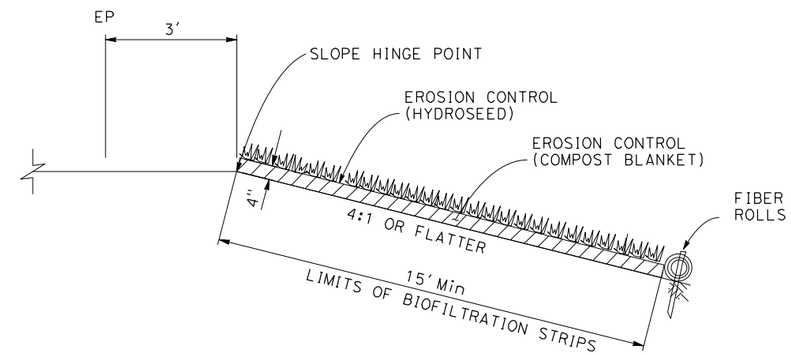

SECTION

BIOFILTRATION STRIP

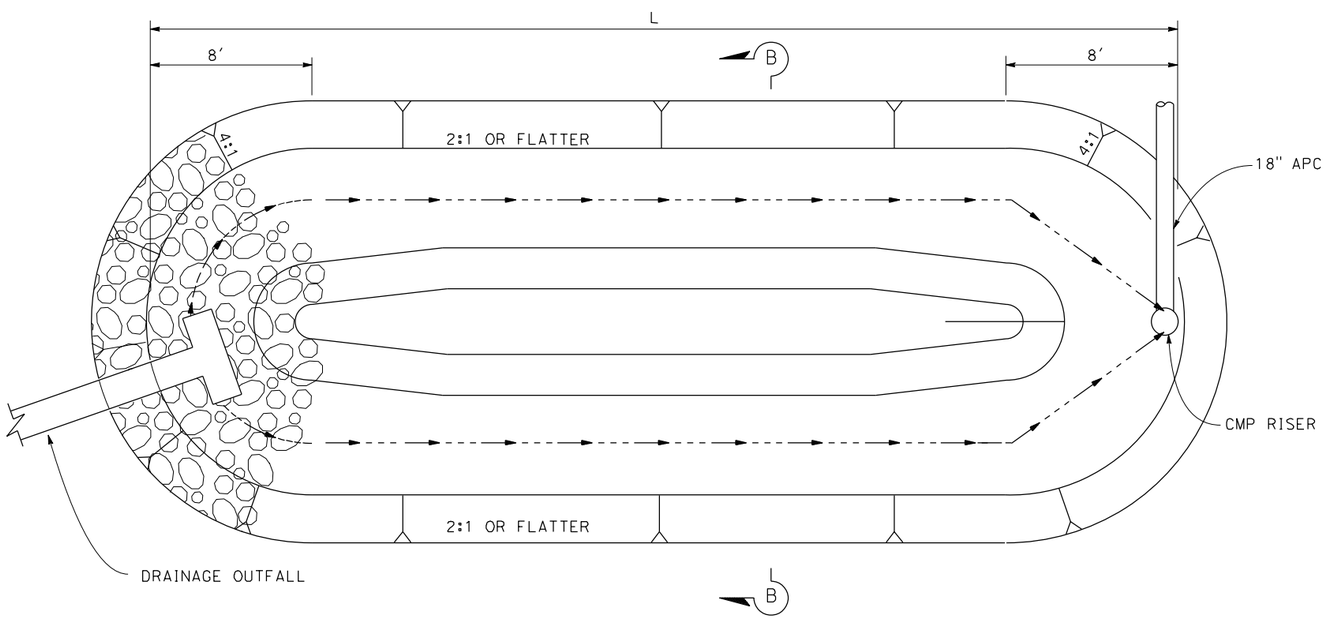

DOUBLE BIOFILTRATION SWALE DETAIL

PRELIMINARY

PRESIDIO PARKWAY P3 PROJECT
GLP PRELIMINARY MASTER ALTERNATIVE

DRAINAGE DETAILS

SCALE : NONE

DD-1

RELATIVE BORDER SCALE IS IN INCHES 0 1 2 3

USERNAME => $USER$
DGN FILE => $FILE$

LAST REVISION 00-00-00

TIME PLOTTED => $TIME$

DATE PLOTTED => $DATE$

DISTRICT	ROUTE	POST MILES	SHEET No.	TOTAL SHEETS
4	101, 1	8.0/9.8 6.8/7.1	58	128

GOLDEN LINK PARTNERS

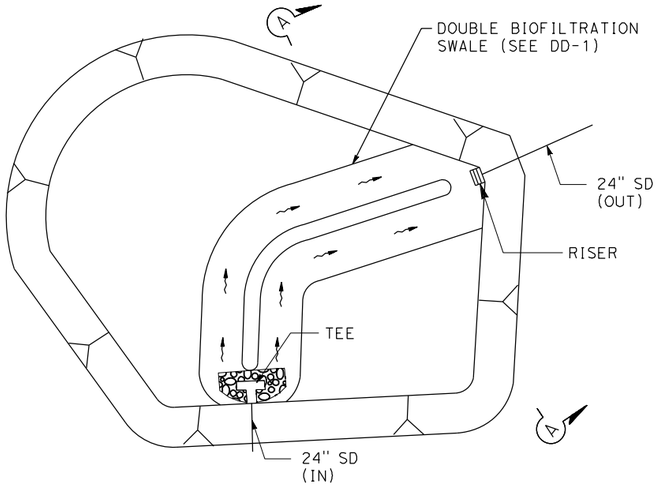

BIOFILTRATION BASIN B (PLAN)

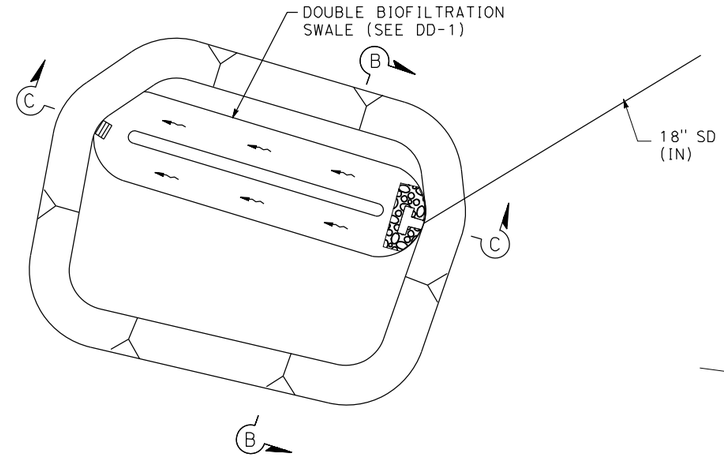

BIOFILTRATION BASIN A (PLAN)

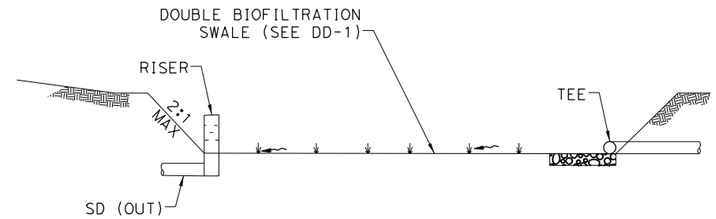

SECTION C-C

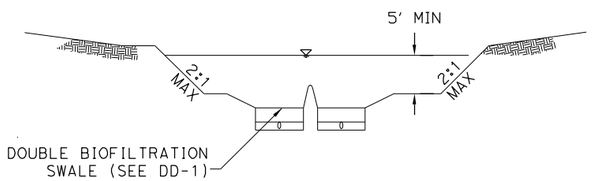

SECTION A-A

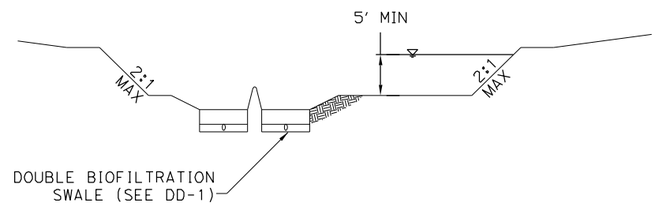

SECTION B-B

DETENTION BASIN & BIOFILTRATION SWALE DETAIL

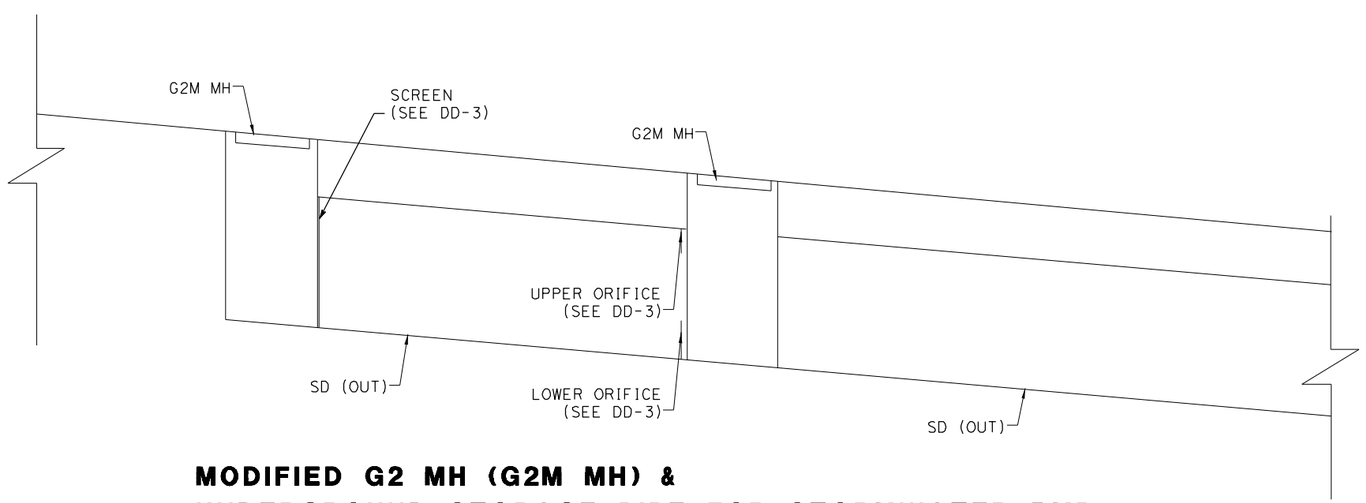

MODIFIED G2 MH (G2M MH) & UNDERGROUND STORAGE PIPE FOR STORMWATER BMPs

PRELIMINARY

PRESIDIO PARKWAY P3 PROJECT
GLP PRELIMINARY MASTER ALTERNATIVE

DRAINAGE DETAILS

SCALE : NONE

DD-2

DISTRICT	ROUTE	POST MILES	SHEET No.	TOTAL SHEETS
4	101, 1	8.0/9.8 6.8/7.1	59	128

GOLDEN LINK PARTNERS

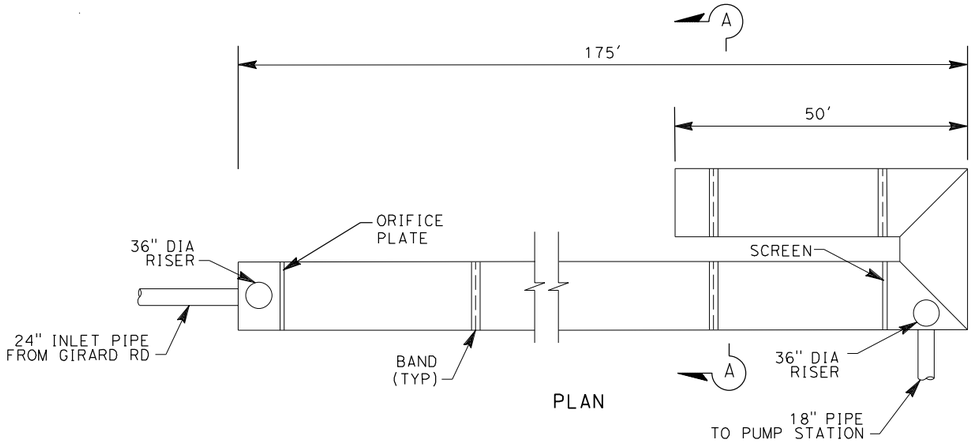

PLAN

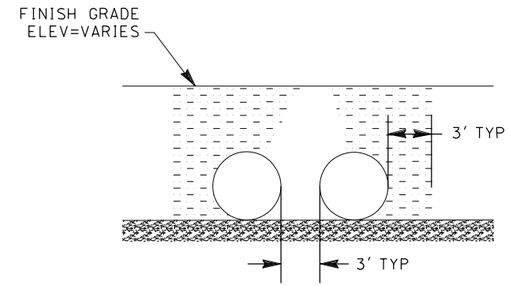

SECTION A-A

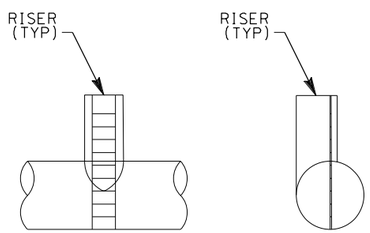

RISER DETAIL

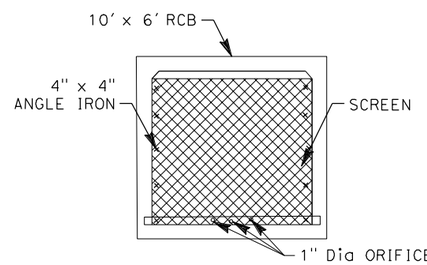

SECTION B-B

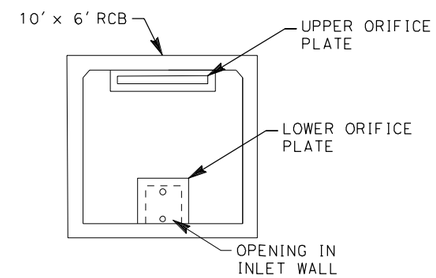

SECTION C-C

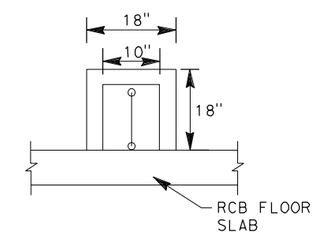

LOWER ORIFICE PLATE

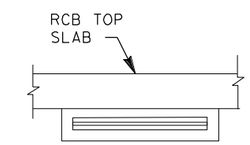

UPPER ORIFICE PLATE

72" CMP UNDERGROUND DETENTION SYSTEM ASSEMBLY W/ ORIFICE PLATE

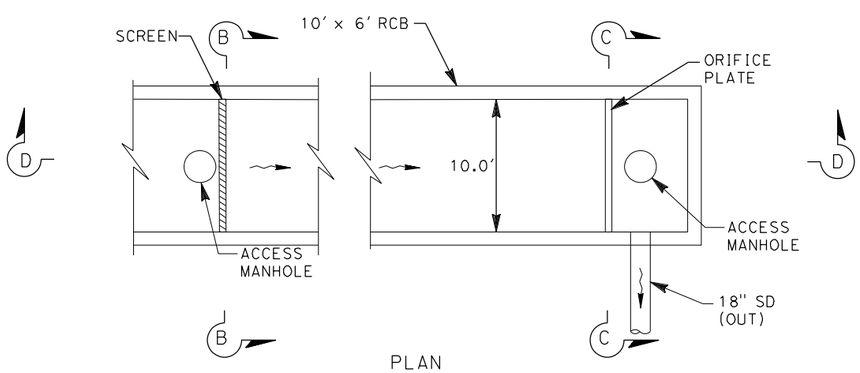

PLAN

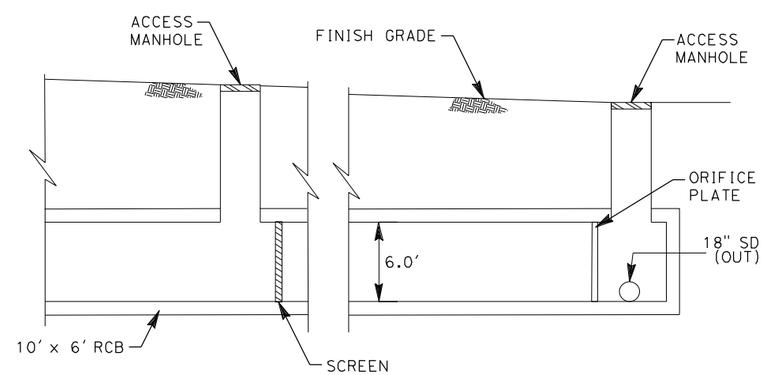

SECTION D-D

10'x6' RCB UNDERGROUND DETENTION

PRELIMINARY

PRESIDIO PARKWAY P3 PROJECT
GLP PRELIMINARY MASTER ALTERNATIVE

DRAINAGE DETAILS

SCALE : NONE

DD-3

DISTRICT	ROUTE	POST MILES	SHEET No.	TOTAL SHEETS
4	101, 1	8.0/9.8 6.8/7.1	60	128

GOLDEN LINK PARTNERS

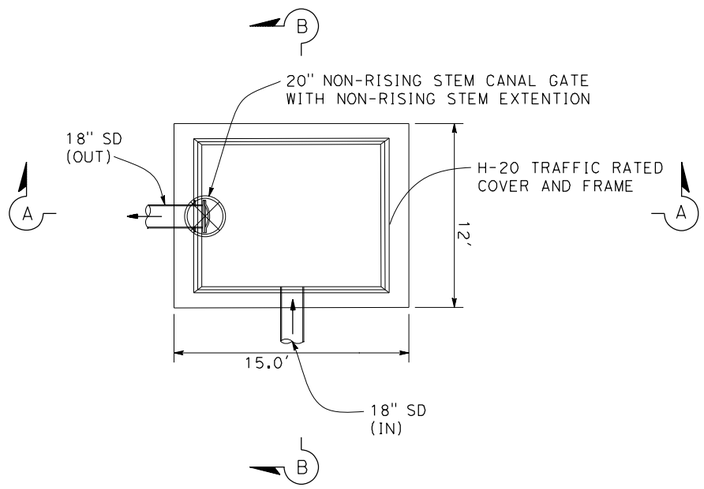

PLAN

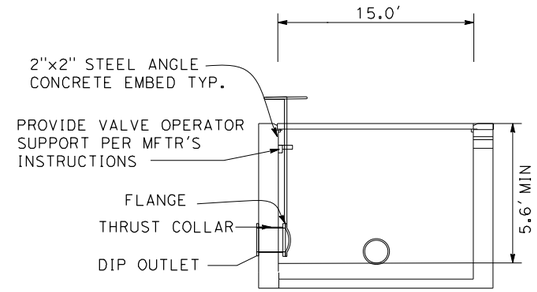

SECTION A-A

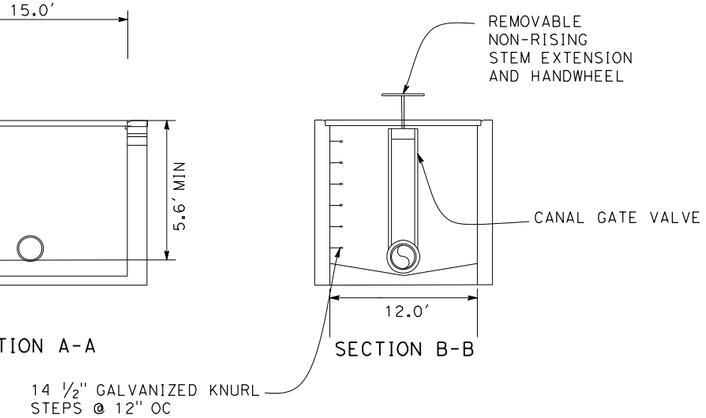

SECTION B-B

JUNCTION BOX DETAIL
(NB BATTERY TUNNEL)

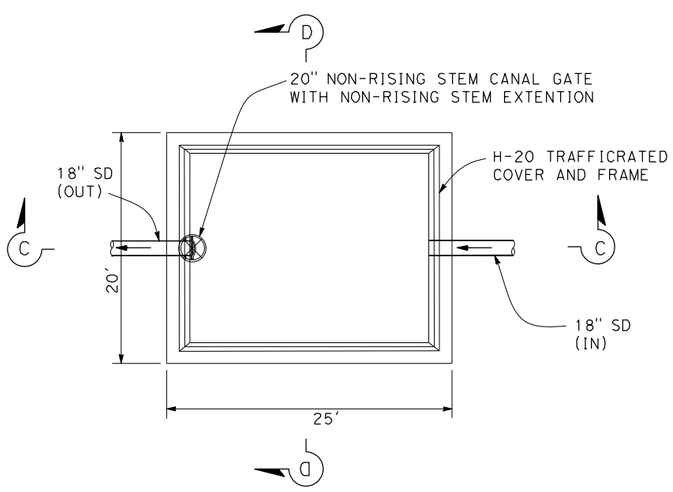

PLAN

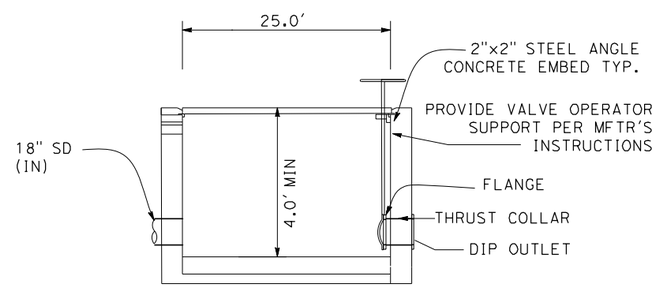

SECTION C-C

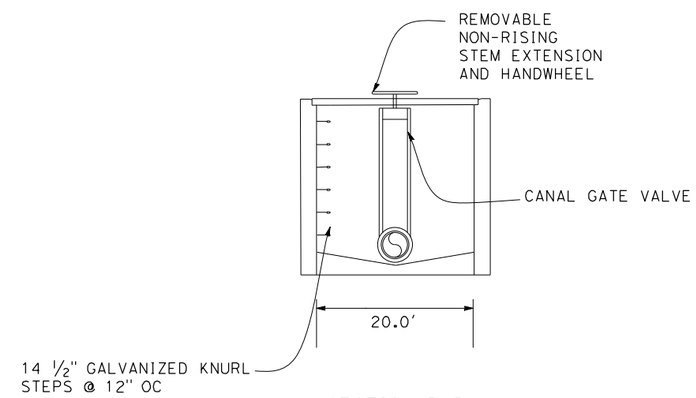

SECTION D-D

JUNCTION BOX DETAIL
(NB & SB MAIN POST TUNNELS)

PRELIMINARY

PRESIDIO PARKWAY P3 PROJECT
GLP PRELIMINARY MASTER ALTERNATIVE

DRAINAGE DETAILS

SCALE : NONE

DD-4

DISTRICT	ROUTE	POST MILES	SHEET No.	TOTAL SHEETS
4	101, 1	8.0/9.8 6.8/7.1	61	128

GOLDEN LINK PARTNERS

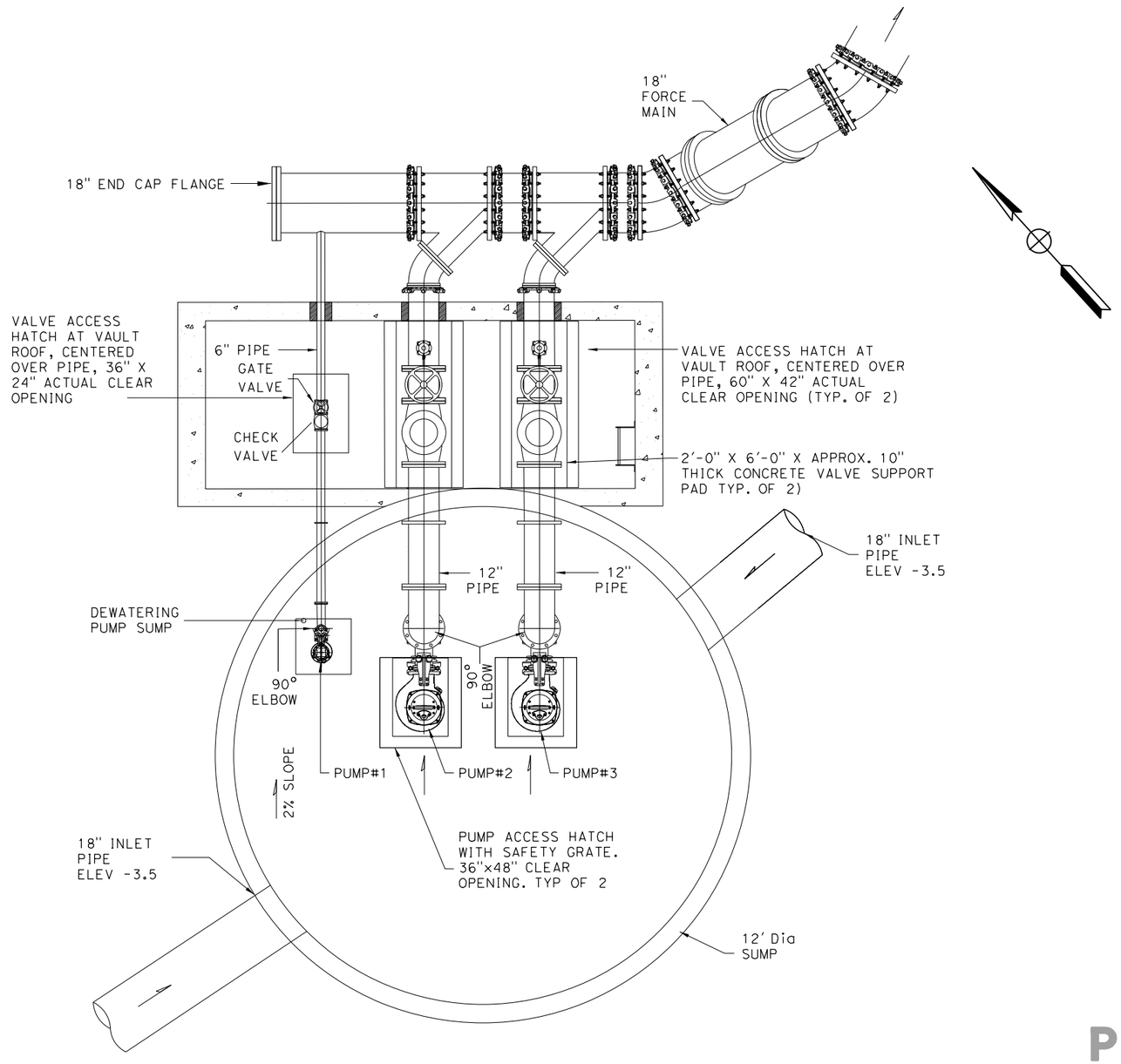

PUMP STATION FLOOR PLAN

PRELIMINARY

PRESIDIO PARKWAY P3 PROJECT
GLP PRELIMINARY MASTER ALTERNATIVE

DRAINAGE DETAILS

NO SCALE

DD-5

RELATIVE BORDER SCALE IS IN INCHES 0 1 2 3

USERNAME => $USER$
DGN FILE => $FILE$

LAST REVISION 00-00-00

TIME PLOTTED => $TIME$

DATE PLOTTED => $DATE$

DISTRICT	ROUTE	POST MILES	SHEET No.	TOTAL SHEETS
4	101, 1	8.0/9.8 6.8/7.1	62	128

GOLDEN LINK PARTNERS

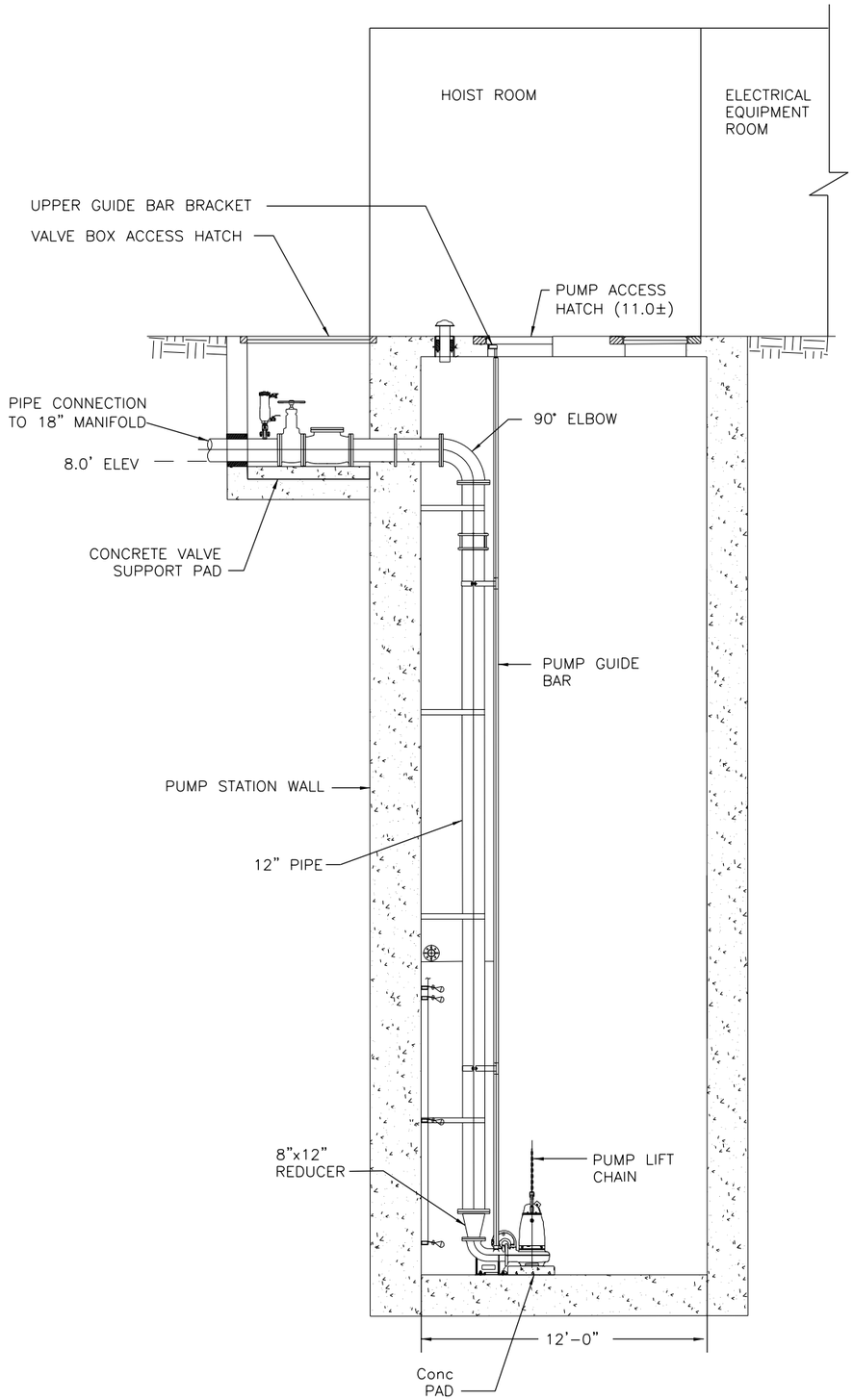

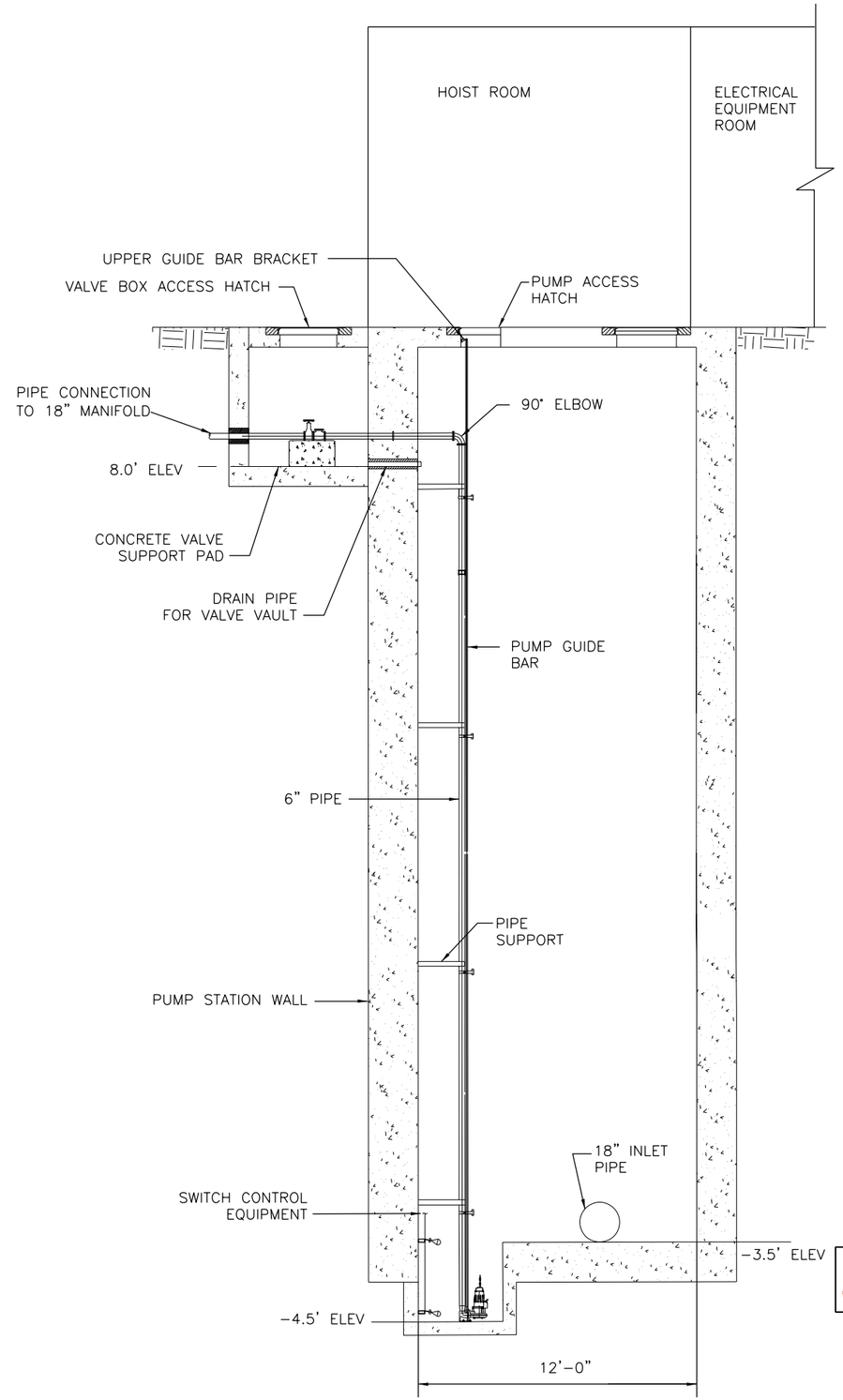

PUMP STATION EVATION VIEW

PRESIDIO PARKWAY P3 PROJECT
GLP PRELIMINARY MASTER ALTERNATIVE

DRAINAGE DETAILS

SCALE : NONE

DD-6

RELATIVE BORDER SCALE IS IN INCHES 0 1 2 3

USERNAME => $USER$
DGN FILE => $FILE$

LAST REVISION 00-00-00

TIME PLOTTED => $TIME$

DATE PLOTTED => $DATE$

DISTRICT	ROUTE	POST MILES	SHEET No.	TOTAL SHEETS
4	101, 1	8.0/9.8 6.8/7.1	63	128

GOLDEN LINK PARTNERS

FOR COMPLETE RIGHT OF WAY AND ACCURATE ACCESS DATA, SEE RIGHT OF WAY RECORD MAPS AT DISTRICT OFFICE.

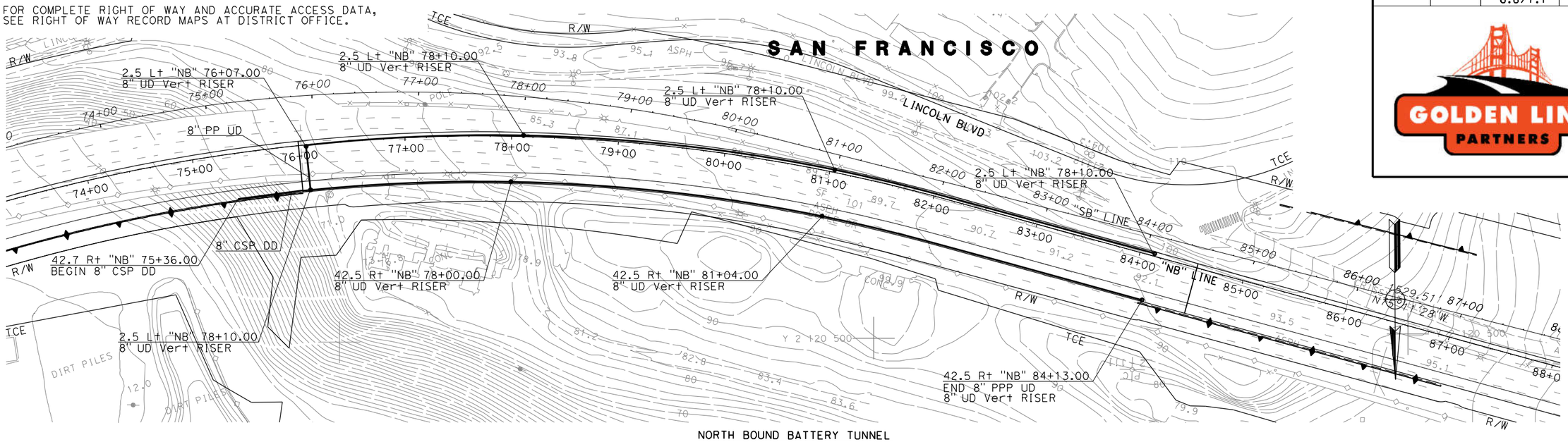

NORTH BOUND BATTERY TUNNEL

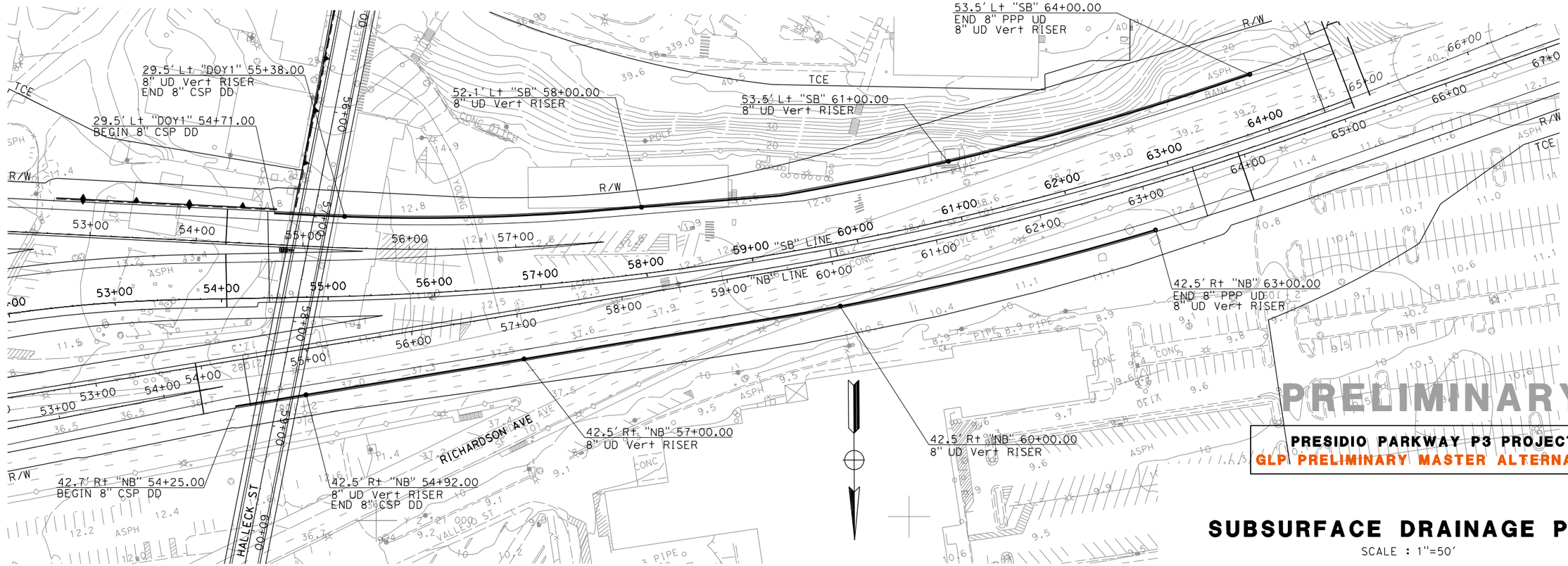

NORTH BOUND AND SOUTH BOUND MAIN POST TUNNEL

PRELIMINARY

PRESIDIO PARKWAY P3 PROJECT

GLP PRELIMINARY MASTER ALTERNATIVE

SUBSURFACE DRAINAGE PLAN

SCALE : 1"=50'

SB-1

RELATIVE BORDER SCALE IS IN INCHES 0 1 2 3

USERNAME => $USER$
DGN FILE => $FILE$

LAST REVISION 00-00-00

TIME PLOTTED => $TIME$

DATE PLOTTED => $DATE$

DISTRICT	ROUTE	POST MILES	SHEET No.	TOTAL SHEETS
4	101, 1	8.0/9.8 6.8/7.1	64	128

GOLDEN LINK PARTNERS

FOR COMPLETE RIGHT OF WAY AND ACCURATE ACCESS DATA,
SEE RIGHT OF WAY RECORD MAPS AT DISTRICT OFFICE.

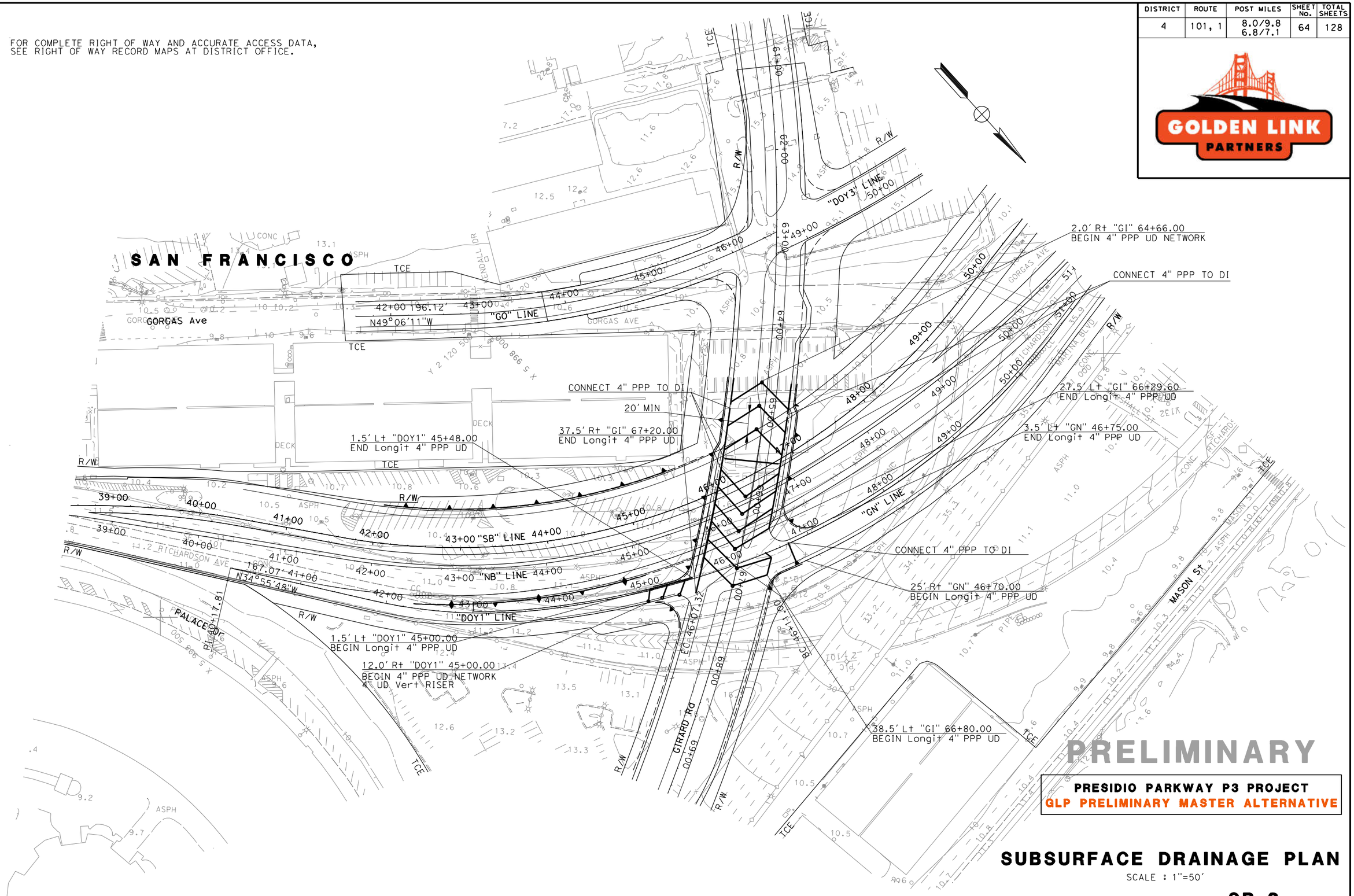

SUBSURFACE DRAINAGE PLAN

SCALE : 1"=50'

SB-2

SEE SB-1 FOR ABBREVIATIONS NOTES

RELATIVE BORDER SCALE IS IN INCHES 0 1 2 3

USERNAME => $USER$
DGN FILE => $FILE$

LAST REVISION 00-00-00

TIME PLOTTED => $TIME$

DATE PLOTTED => $DATE$

FOR COMPLETE RIGHT OF WAY AND ACCURATE ACCESS DATA,
SEE RIGHT OF WAY RECORD MAPS AT DISTRICT OFFICE.

DISTRICT	ROUTE	POST MILES	SHEET No.	TOTAL SHEETS
4	101, 1	8.0/9.8 6.8/7.1	65	128

GOLDEN LINK PARTNERS

LEGEND:

- DRAINAGE AREA
- FLOW DIRECTION
- Exist INLET
- INLET
- Adj INLET
- Prop MANHOLE
- Exist MANHOLE
- Exist STORM DRAIN PIPE
- STORM DRAIN PIPE
- FES
- RSP
- GRADE TO DRAIN
- DITCH / GUTTER FLOW LINE

ABBREVIATIONS:

TCE TEMPORARY CONSTRUCTION EASEMENT
w/ WITH

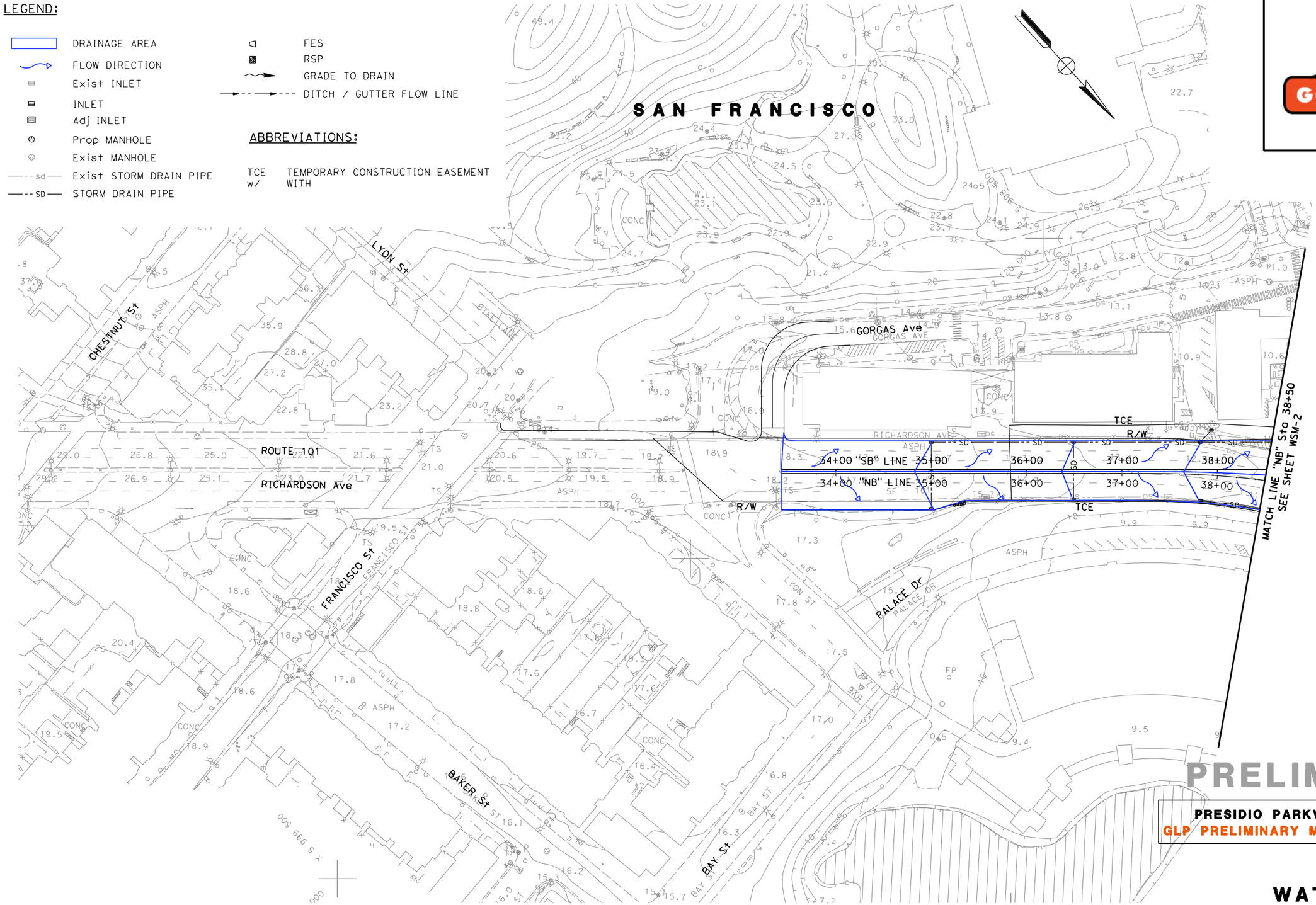

PRELIMINARY

PRESIDIO PARKWAY P3 PROJECT
GLP PRELIMINARY MASTER ALTERNATIVE

WATERSHED MAP

SCALE : 1"=50'

WSM-1

RELATIVE BORDER SCALE IS IN INCHES 0 1 2 3

USERNAME => $USER$
DGN FILE => $FILE$

LAST REVISION 00-00-00

TIME PLOTTED => $TIME$

DATE PLOTTED => $DATE$

DISTRICT	ROUTE	POST MILES	SHEET No.	TOTAL SHEETS
4	101, 1	8.0/9.8 6.8/7.1	66	128

GOLDEN LINK PARTNERS

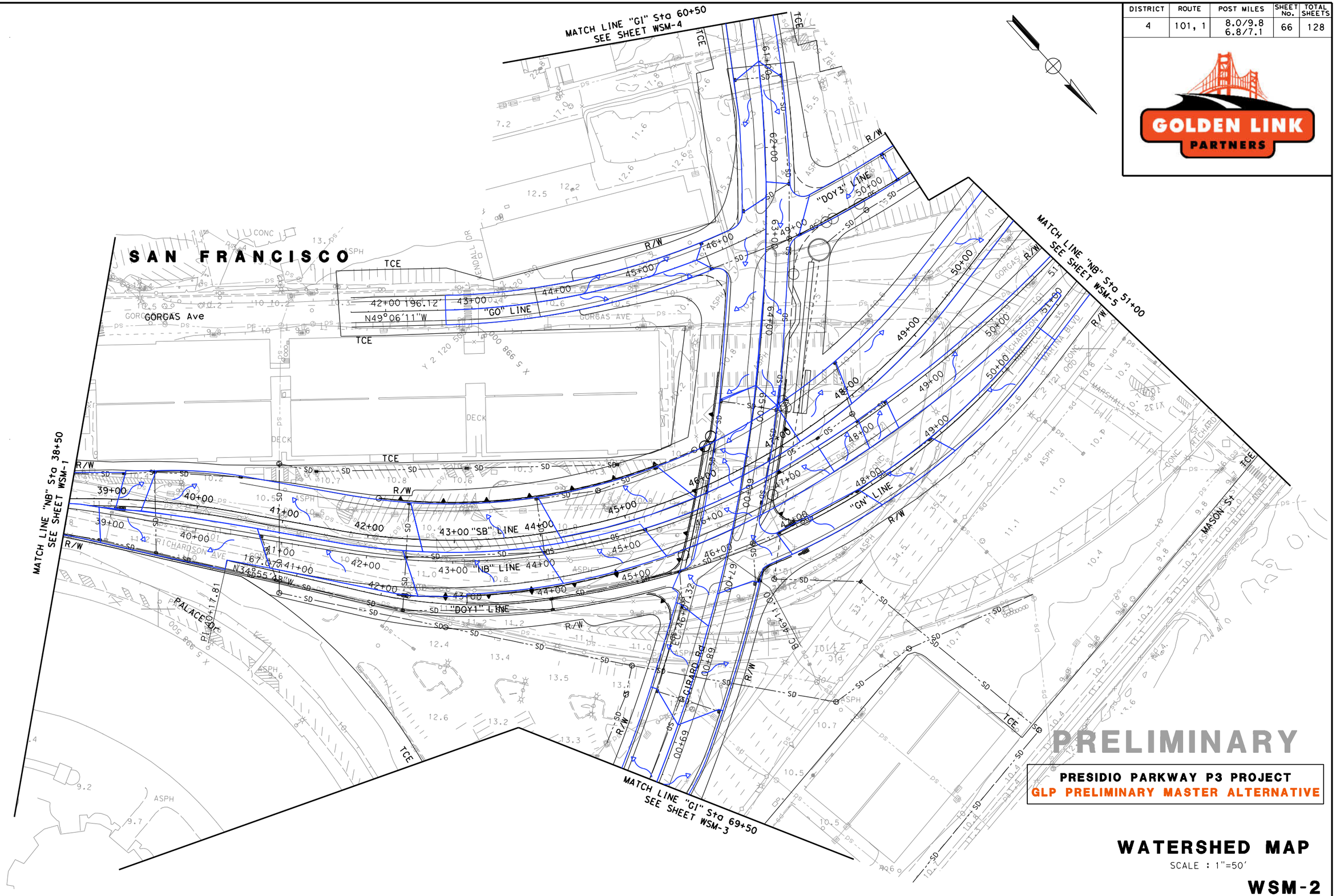

PRESIDIO PARKWAY P3 PROJECT

GLP PRELIMINARY MASTER ALTERNATIVE

WATERSHED MAP

SCALE : 1"=50'

WSM-2

RELATIVE BORDER SCALE IS IN INCHES 0 1 2 3

USERNAME => $USER$
DGN FILE => $FILE$

LAST REVISION 00-00-00

TIME PLOTTED => $TIME$

DATE PLOTTED => $DATE$

DISTRICT	ROUTE	POST MILES	SHEET No.	TOTAL SHEETS
4	101, 1	8.0/9.8 6.8/7.1	67	128

GOLDEN LINK PARTNERS

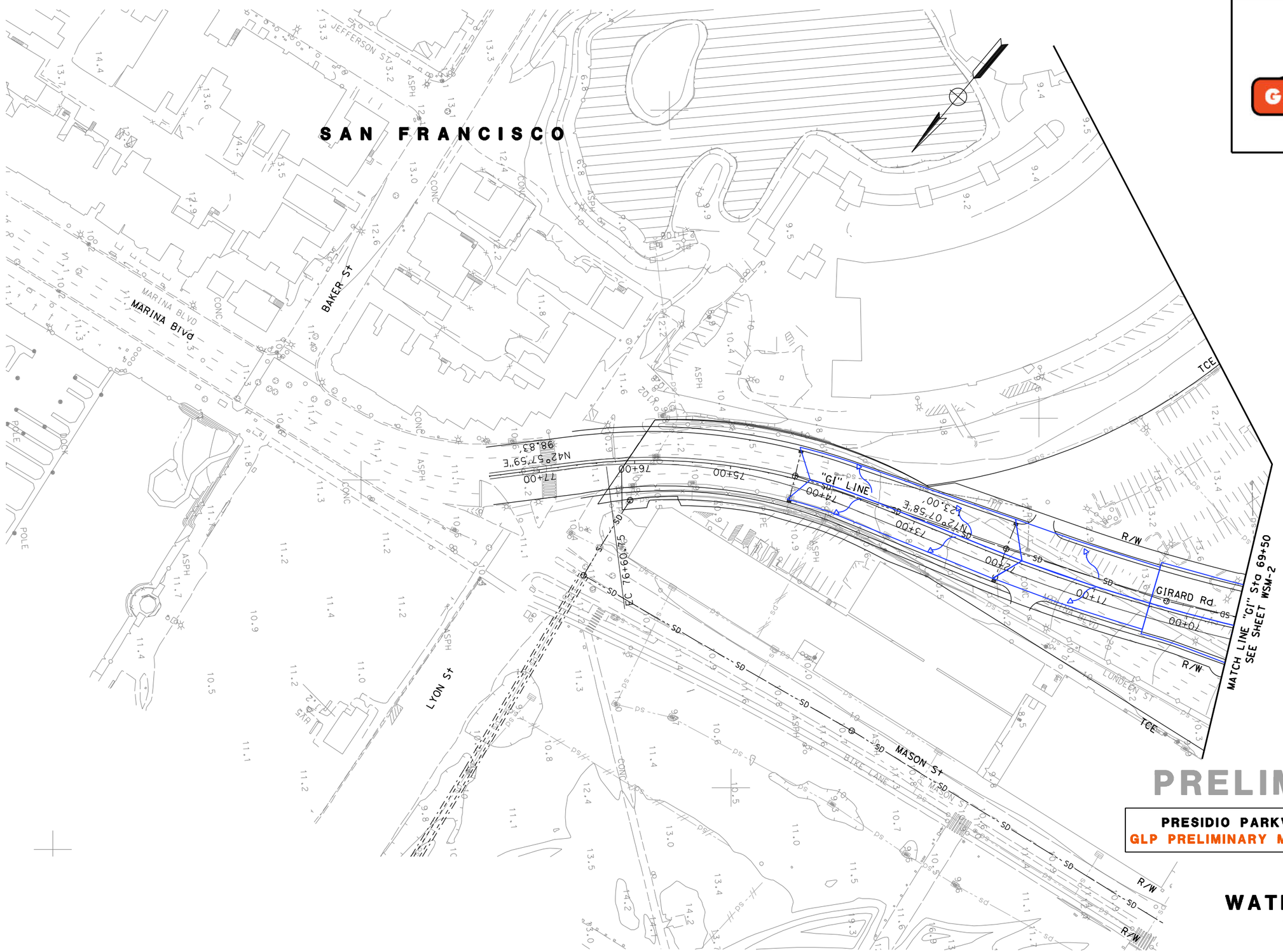

PRELIMINARY

PRESIDIO PARKWAY P3 PROJECT
GLP PRELIMINARY MASTER ALTERNATIVE

WATERSHED MAP

SCALE : 1"=50'

WSM-3

RELATIVE BORDER SCALE IS IN INCHES 0 1 2 3

USERNAME => $USER$
DGN FILE => $FILE$

LAST REVISION 00-00-00

TIME PLOTTED => $TIME$

DATE PLOTTED => $DATE$

DISTRICT	ROUTE	POST MILES	SHEET No.	TOTAL SHEETS
4	101, 1	8.0/9.8 6.8/7.1	68	128

GOLDEN LINK PARTNERS

PRELIMINARY

PRESIDIO PARKWAY P3 PROJECT

GLP PRELIMINARY MASTER ALTERNATIVE

WATERSHED MAP

SCALE : 1"=50'

WSM-4

RELATIVE BORDER SCALE IS IN INCHES 0 1 2 3

USERNAME => $USER$
DGN FILE => $FILE$

LAST REVISION 00-00-00

TIME PLOTTED => $TIME$

DATE PLOTTED => $DATE$

DISTRICT	ROUTE	POST MILES	SHEET No.	TOTAL SHEETS
4	101, 1	8.0/9.8 6.8/7.1	69	128

GOLDEN LINK PARTNERS

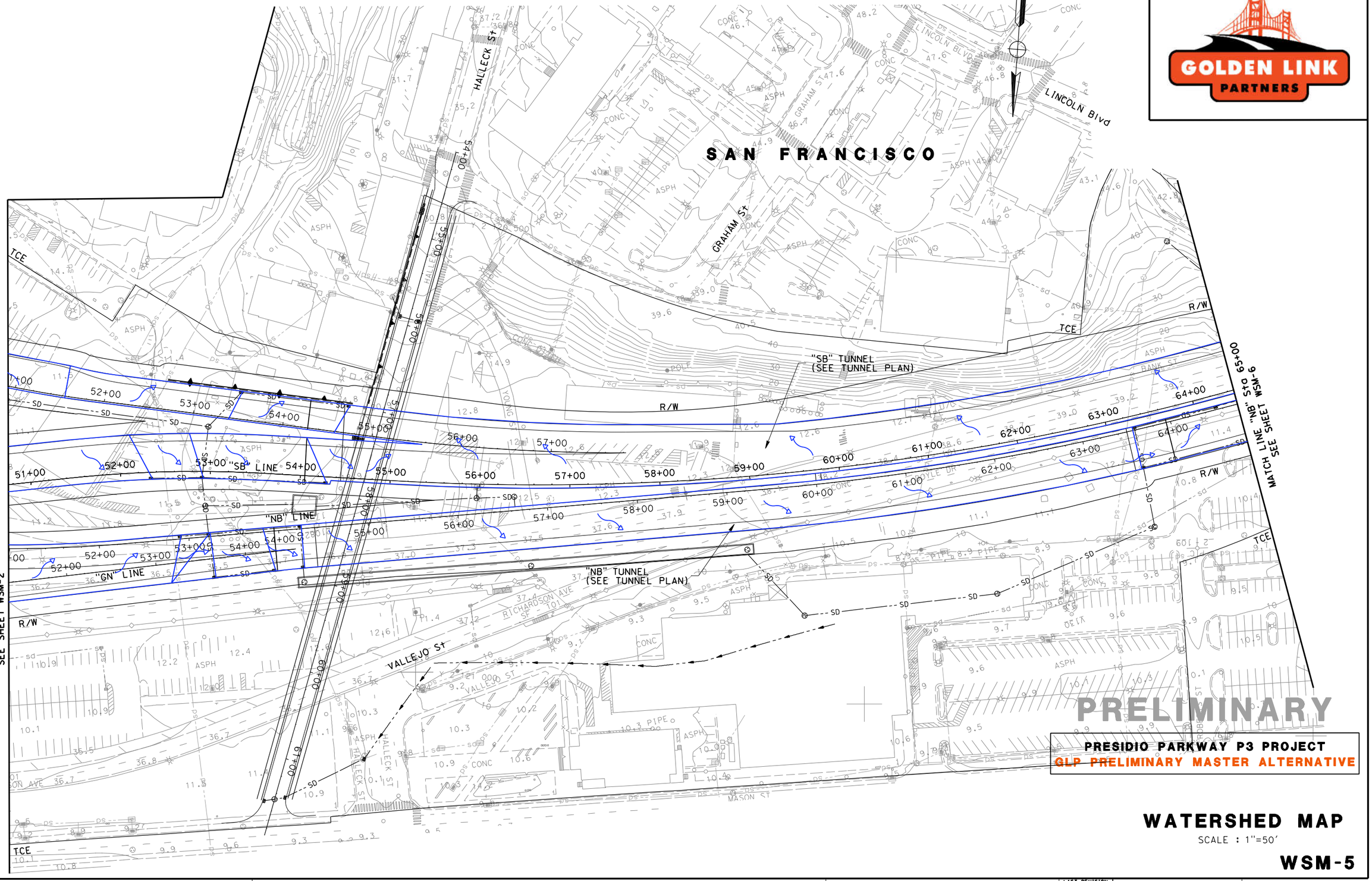

PRESIDIO PARKWAY P3 PROJECT

GLP PRELIMINARY MASTER ALTERNATIVE

WATERSHED MAP

SCALE : 1"=50'

WSM-5

RELATIVE BORDER SCALE IS IN INCHES 0 1 2 3

USERNAME => $USER$
DGN FILE => $FILE$

LAST REVISION 00-00-00

TIME PLOTTED => $TIME$

DATE PLOTTED => $DATE$

DISTRICT	ROUTE	POST MILES	SHEET No.	TOTAL SHEETS
4	101, 1	8.0/9.8 6.8/7.1	70	128

GOLDEN LINK PARTNERS

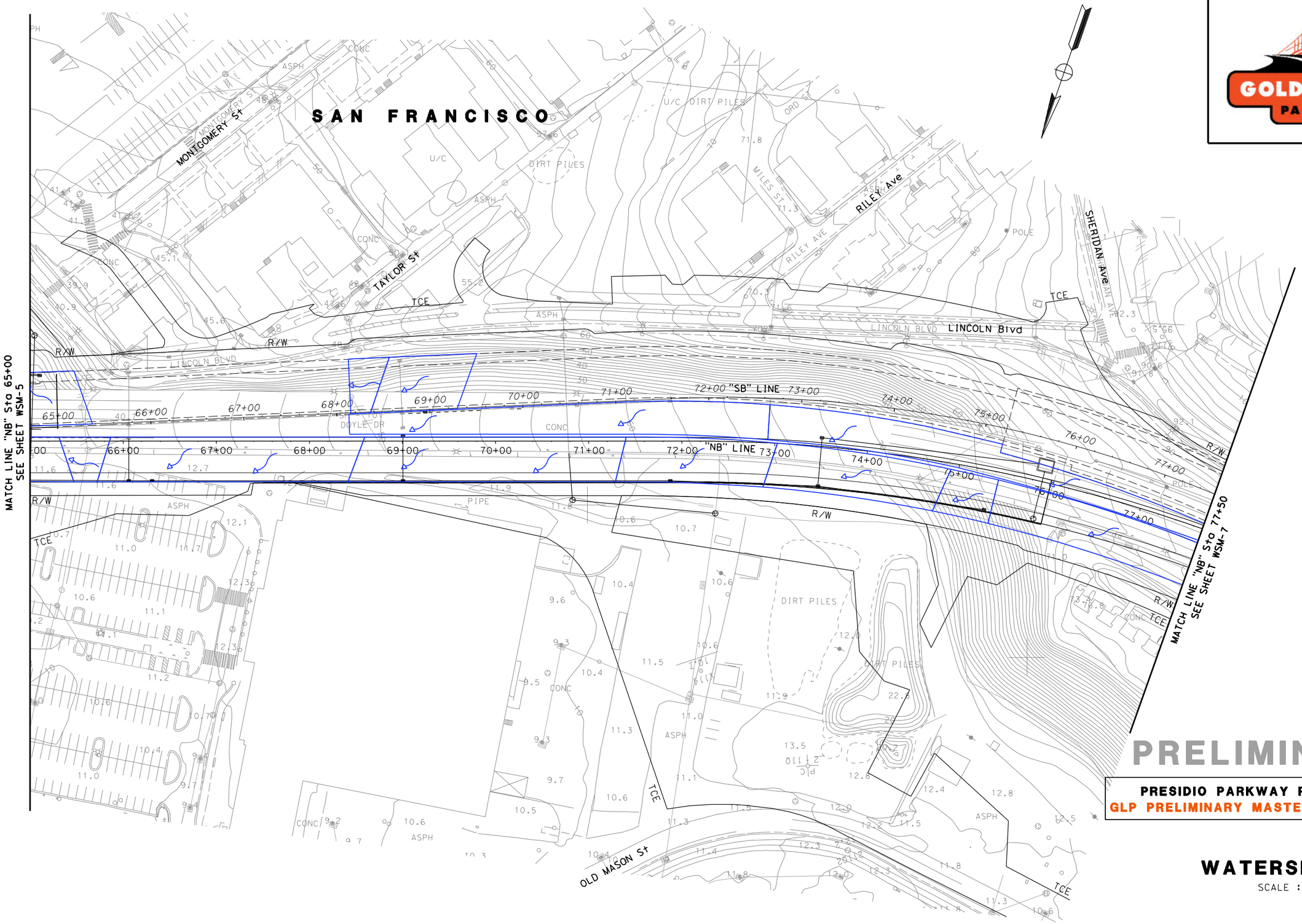

PRELIMINARY

PRESIDIO PARKWAY P3 PROJECT
GLP PRELIMINARY MASTER ALTERNATIVE

WATERSHED MAP

SCALE : 1"=50'

WSM-6

RELATIVE BORDER SCALE IS IN INCHES 0 1 2 3

USERNAME => $USER$
DGN FILE => $FILE$

LAST REVISION 00-00-00

TIME PLOTTED => $TIME$

DATE PLOTTED => $DATE$

DISTRICT	ROUTE	POST MILES	SHEET No.	TOTAL SHEETS
4	101, 1	8.0/9.8 6.8/7.1	71	128

GOLDEN LINK PARTNERS

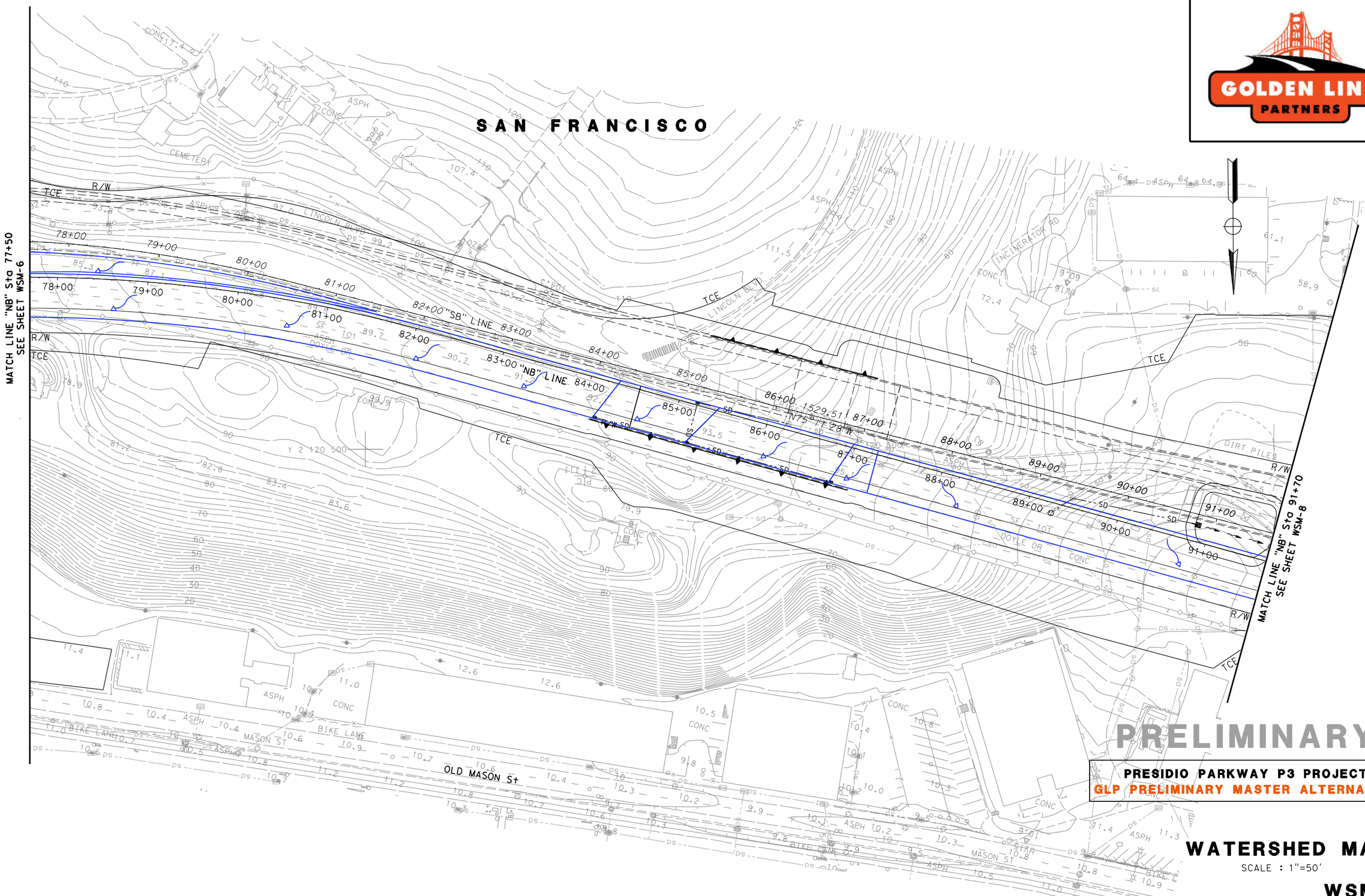

PRELIMINARY

PRESIDIO PARKWAY P3 PROJECT

GLP PRELIMINARY MASTER ALTERNATIVE

WATERSHED MAP

SCALE : 1"=50'

WSM-7

RELATIVE BORDER SCALE IS IN INCHES 0 1 2 3

USERNAME => $USER$
DGN FILE => $FILE$

LAST REVISION 00-00-00

TIME PLOTTED => $TIME$

DATE PLOTTED => $DATE$

DISTRICT	ROUTE	POST MILES	SHEET No.	TOTAL SHEETS
4	101, 1	8.0/9.8 6.8/7.1	72	128

GOLDEN LINK PARTNERS

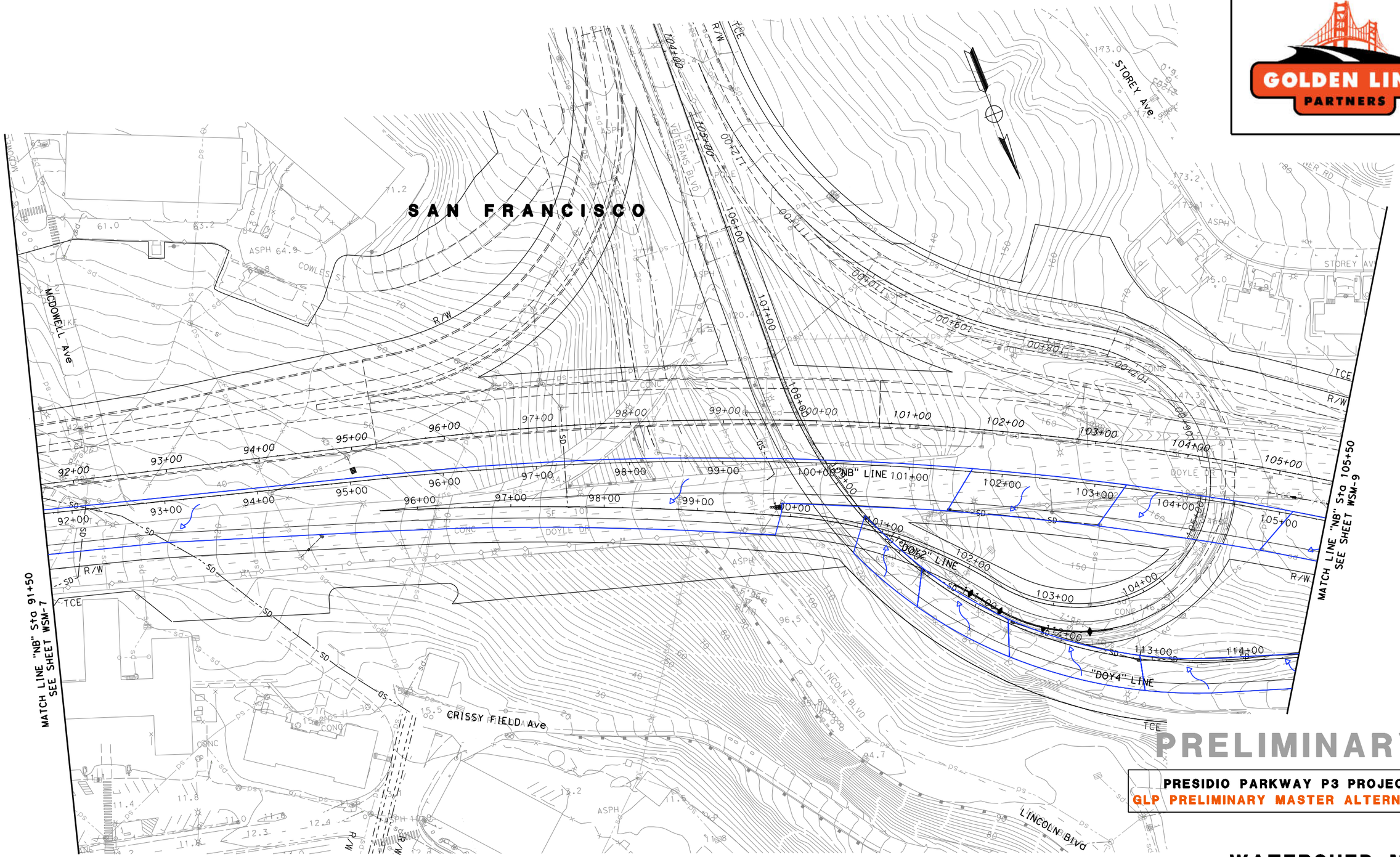

PRELIMINARY

PRESIDIO PARKWAY P3 PROJECT

GLP PRELIMINARY MASTER ALTERNATIVE

WATERSHED MAP

SCALE : 1"=50'

WSM-8

RELATIVE BORDER SCALE IS IN INCHES 0 1 2 3

USERNAME => $USER$
DGN FILE => $FILE$

LAST REVISION 00-00-00

TIME PLOTTED => $TIME$

DATE PLOTTED => $DATE$

DISTRICT	ROUTE	POST MILES	SHEET No.	TOTAL SHEETS
4	101, 1	8.0/9.8 6.8/7.1	73	128

GOLDEN LINK PARTNERS

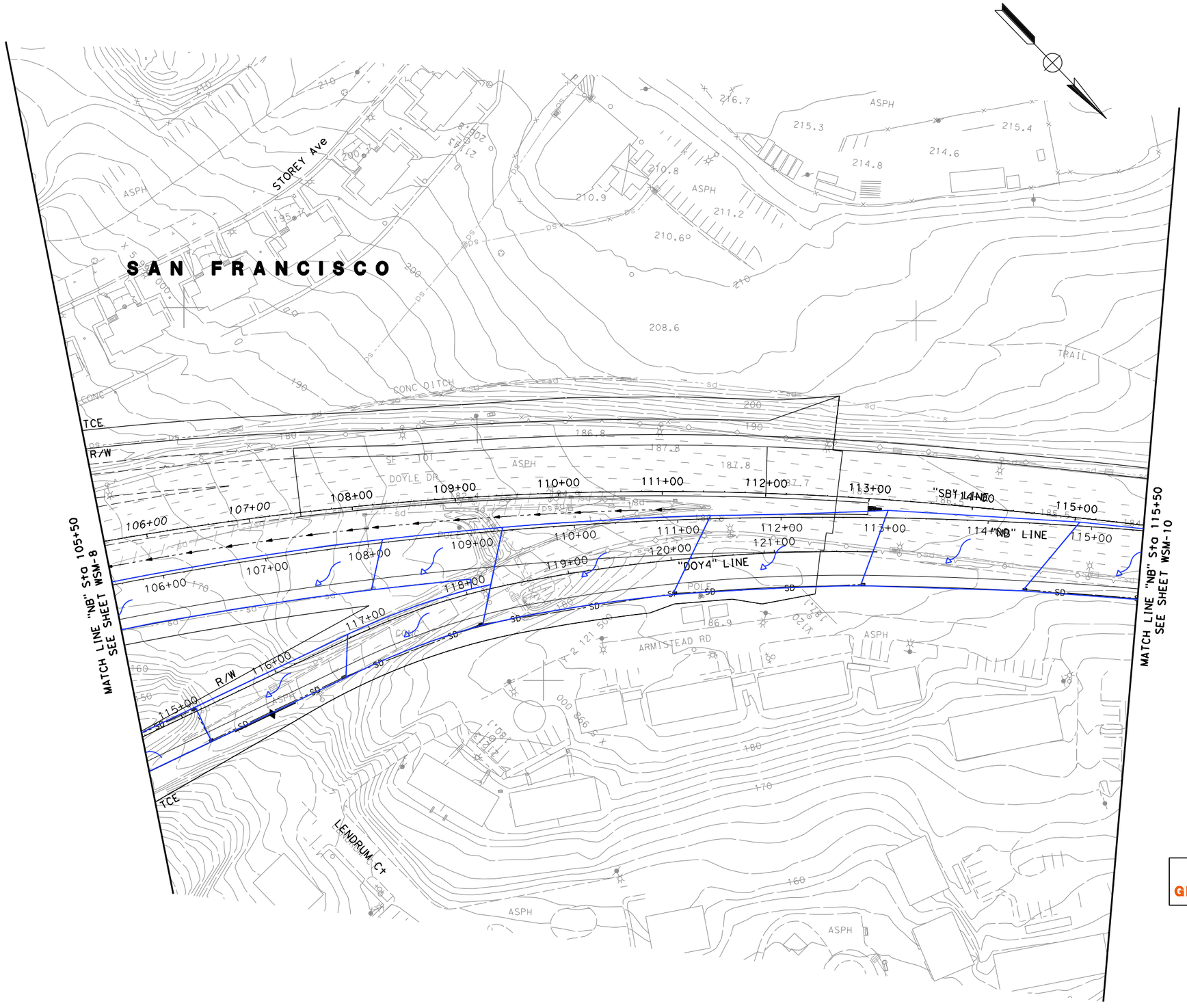

PRELIMINARY

PRESIDIO PARKWAY P3 PROJECT
GLP PRELIMINARY MASTER ALTERNATIVE

WATERSHED MAP

SCALE : 1"=50'

WSM-9

RELATIVE BORDER SCALE IS IN INCHES 0 1 2 3

USERNAME => $USER$
DGN FILE => $FILE$

LAST REVISION 00-00-00

TIME PLOTTED => $TIME$

DATE PLOTTED => $DATE$

DISTRICT	ROUTE	POST MILES	SHEET No.	TOTAL SHEETS
4	101, 1	8.0/9.8 6.8/7.1	74	128

GOLDEN LINK PARTNERS

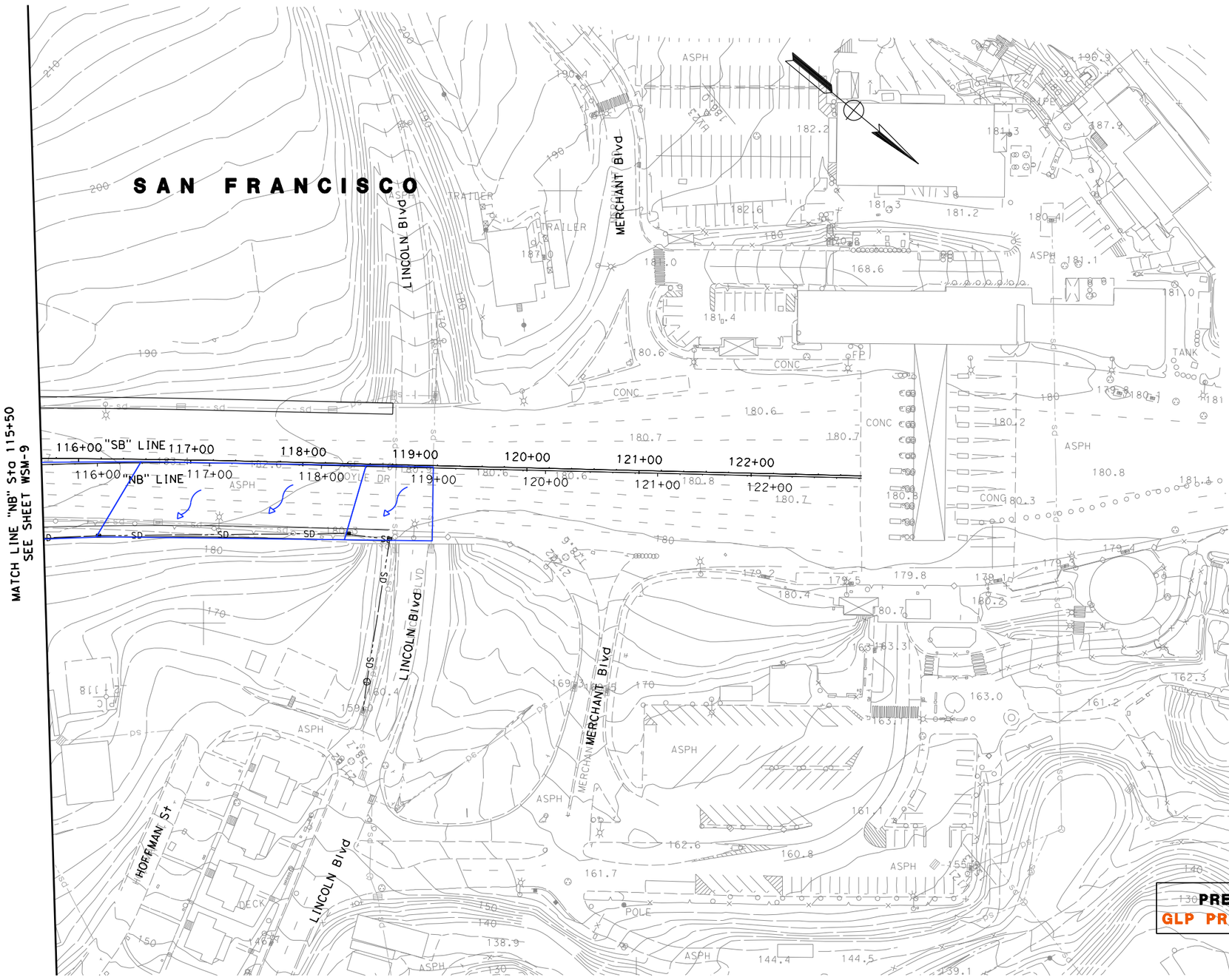

PRESIDIO PARKWAY P3 PROJECT
GLP PRELIMINARY MASTER ALTERNATIVE

WATERSHED MAP

SCALE : 1"=50'

WSM-10

RELATIVE BORDER SCALE IS IN INCHES 0 1 2 3

USERNAME => $USER$
DGN FILE => $FILE$

LAST REVISION 00-00-00

TIME PLOTTED => $TIME$

DATE PLOTTED => $DATE$

DISTRICT	ROUTE	POST MILES	SHEET No.	TOTAL SHEETS
4	101, 1	8.0/9.8 6.8/7.1	75	128

GOLDEN LINK PARTNERS

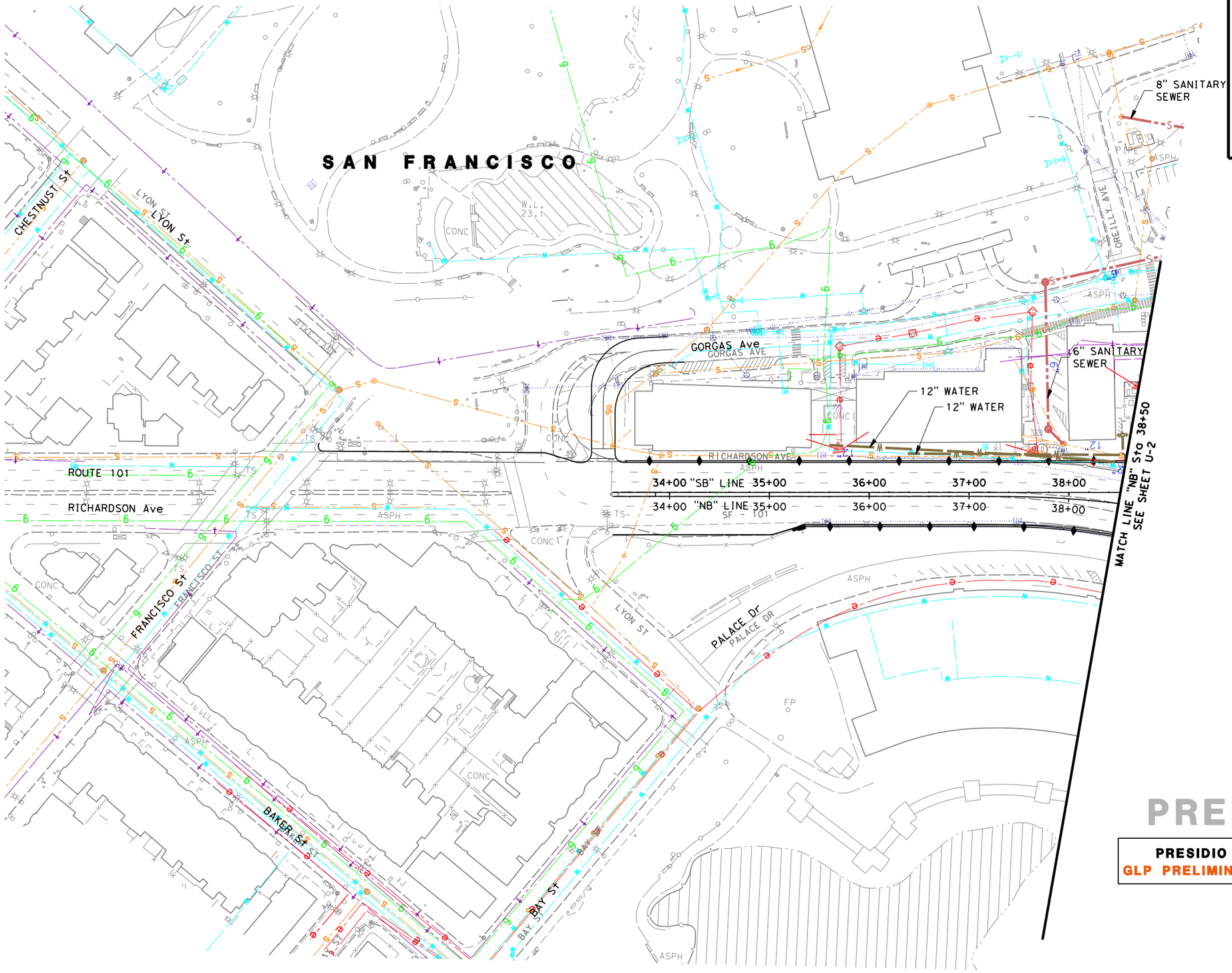

PRELIMINARY

PRESIDIO PARKWAY P3 PROJECT
GLP PRELIMINARY MASTER ALTERNATIVE

UTILITY PLAN

SCALE : 1"=50'

U-1

RELATIVE BORDER SCALE IS IN INCHES 0 1 2 3

USERNAME => $USER$
DGN FILE => $FILE$

LAST REVISION 00-00-00

TIME PLOTTED => $TIME$

DATE PLOTTED => $DATE$

DISTRICT	ROUTE	POST MILES	SHEET No.	TOTAL SHEETS
4	101, 1	8.0/9.8 6.8/7.1	76	128

GOLDEN LINK PARTNERS

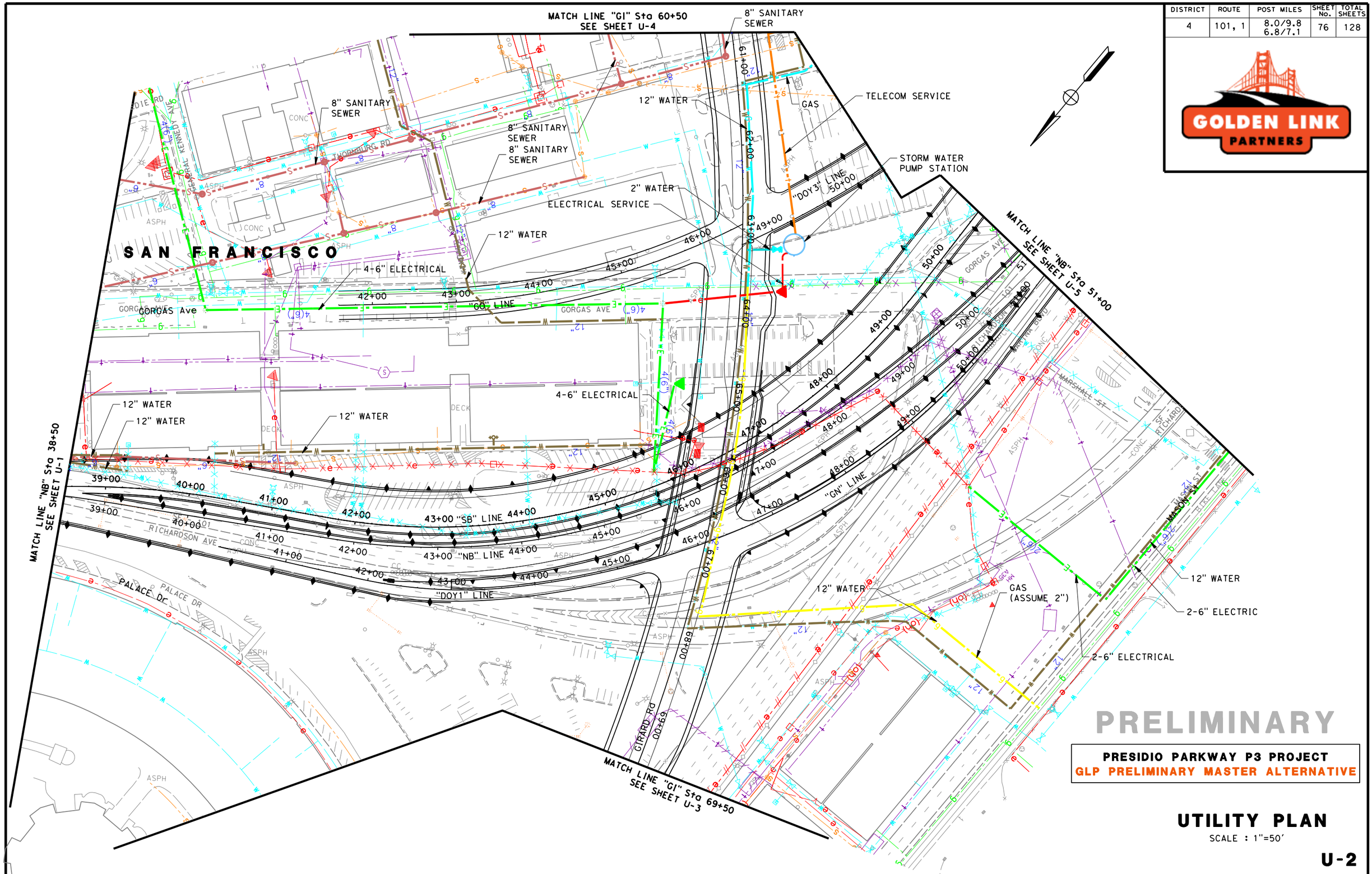

PRELIMINARY

PRESIDIO PARKWAY P3 PROJECT
GLP PRELIMINARY MASTER ALTERNATIVE

UTILITY PLAN

SCALE : 1"=50'

U-2

RELATIVE BORDER SCALE IS IN INCHES 0 1 2 3

USERNAME => $USER$
DGN FILE => $FILE$

LAST REVISION 00-00-00

TIME PLOTTED => $TIME$

DATE PLOTTED => $DATE$

DISTRICT	ROUTE	POST MILES	SHEET No.	TOTAL SHEETS
4	101, 1	8.0/9.8 6.8/7.1	77	128

GOLDEN LINK PARTNERS

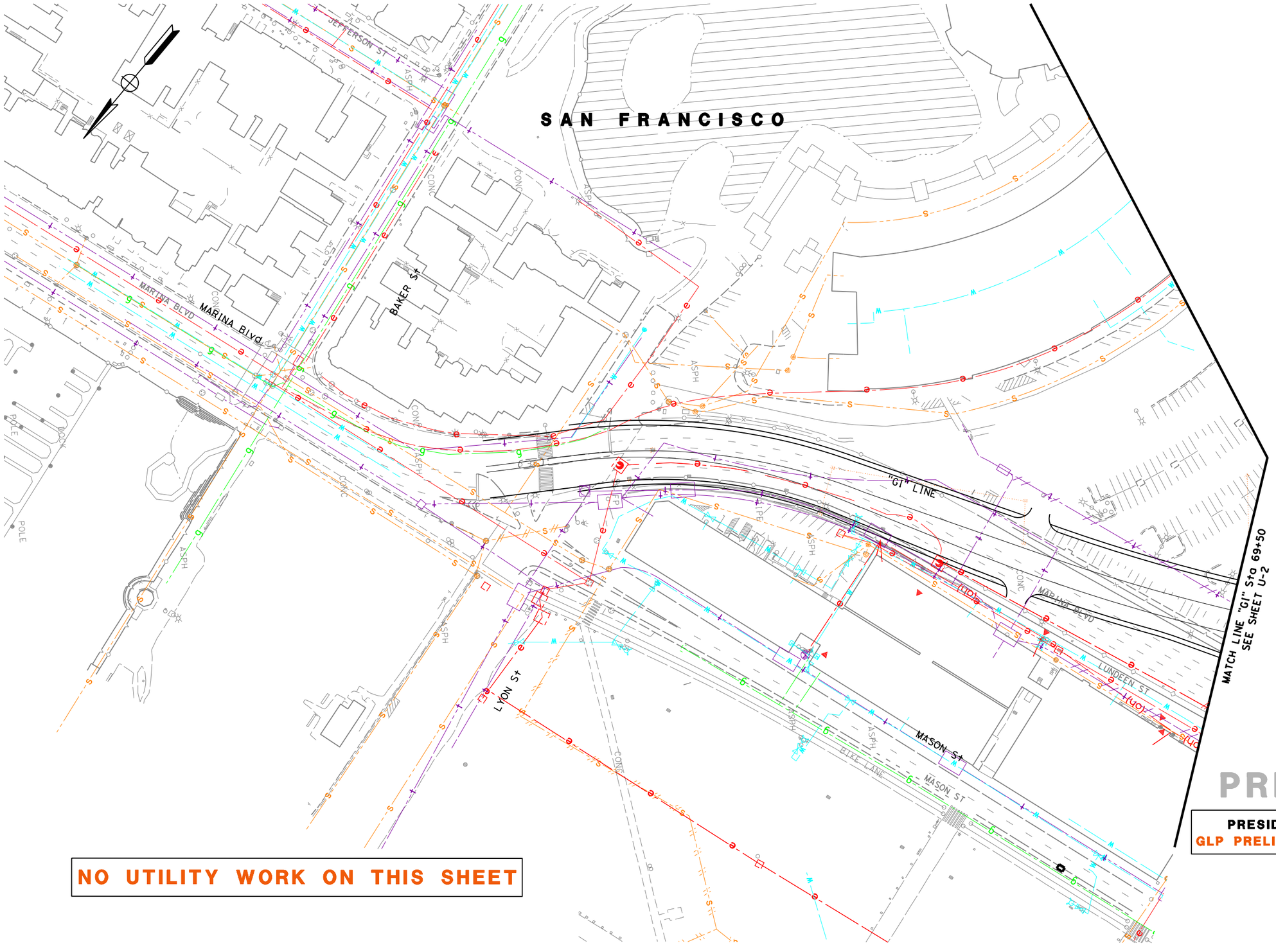

NO UTILITY WORK ON THIS SHEET

PRELIMINARY

PRESIDIO PARKWAY P3 PROJECT
GLP PRELIMINARY MASTER ALTERNATIVE

UTILITY PLAN

SCALE : 1"=50'

U-3

RELATIVE BORDER SCALE IS IN INCHES 0 1 2 3

USERNAME => $USER$
DGN FILE => $FILE$

LAST REVISION 00-00-00

TIME PLOTTED => $TIME$

DATE PLOTTED => $DATE$

DISTRICT	ROUTE	POST MILES	SHEET No.	TOTAL SHEETS
4	101, 1	8.0/9.8 6.8/7.1	78	128

GOLDEN LINK PARTNERS

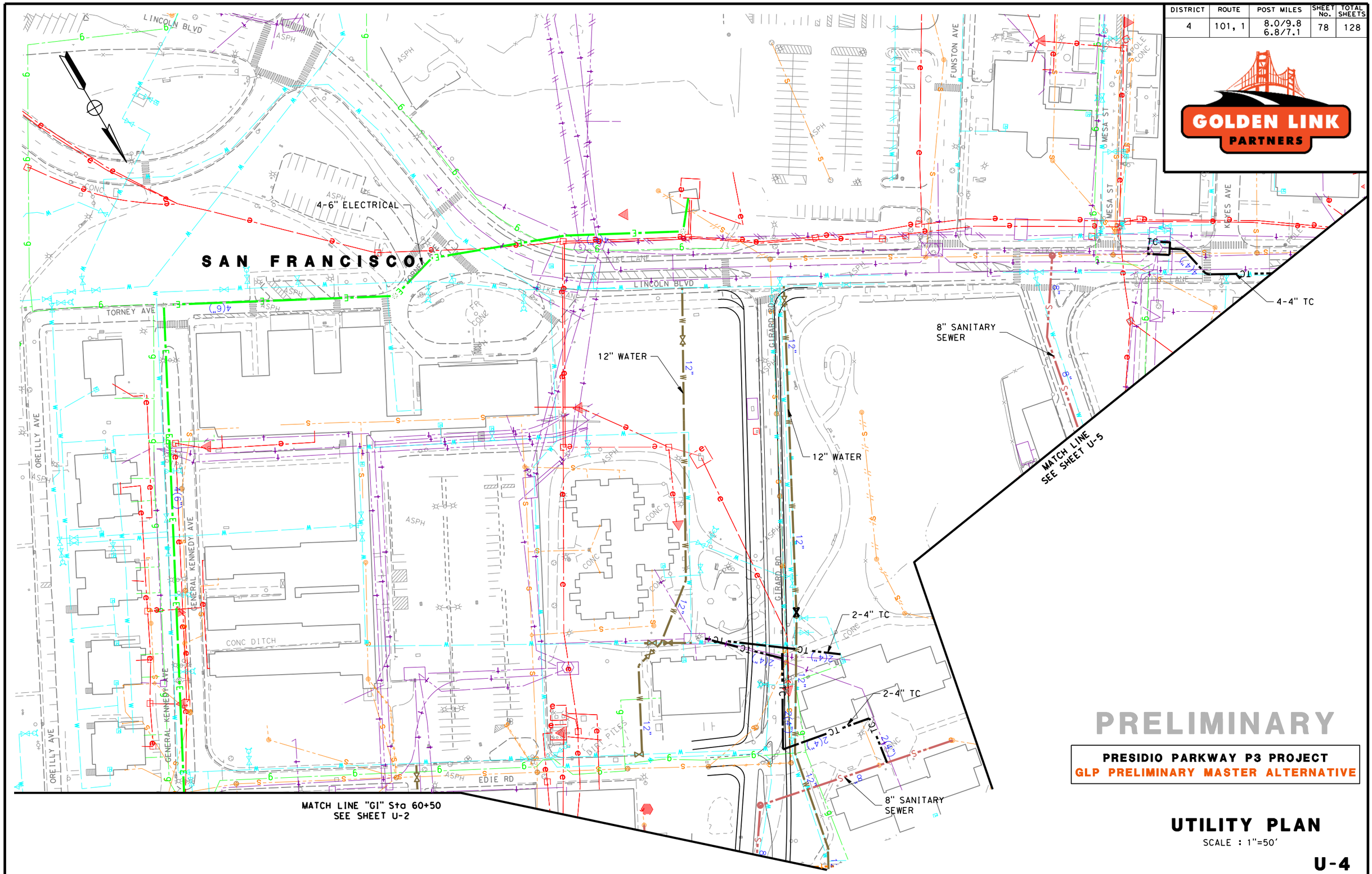

PRELIMINARY

PRESIDIO PARKWAY P3 PROJECT
GLP PRELIMINARY MASTER ALTERNATIVE

UTILITY PLAN

SCALE : 1"=50'

U-4

RELATIVE BORDER SCALE IS IN INCHES 0 1 2 3

USERNAME => $USER$
DGN FILE => $FILE$

LAST REVISION 00-00-00

TIME PLOTTED => $TIME$

DATE PLOTTED => $DATE$

DISTRICT	ROUTE	POST MILES	SHEET No.	TOTAL SHEETS
4	101, 1	8.0/9.8 6.8/7.1	79	128

GOLDEN LINK PARTNERS

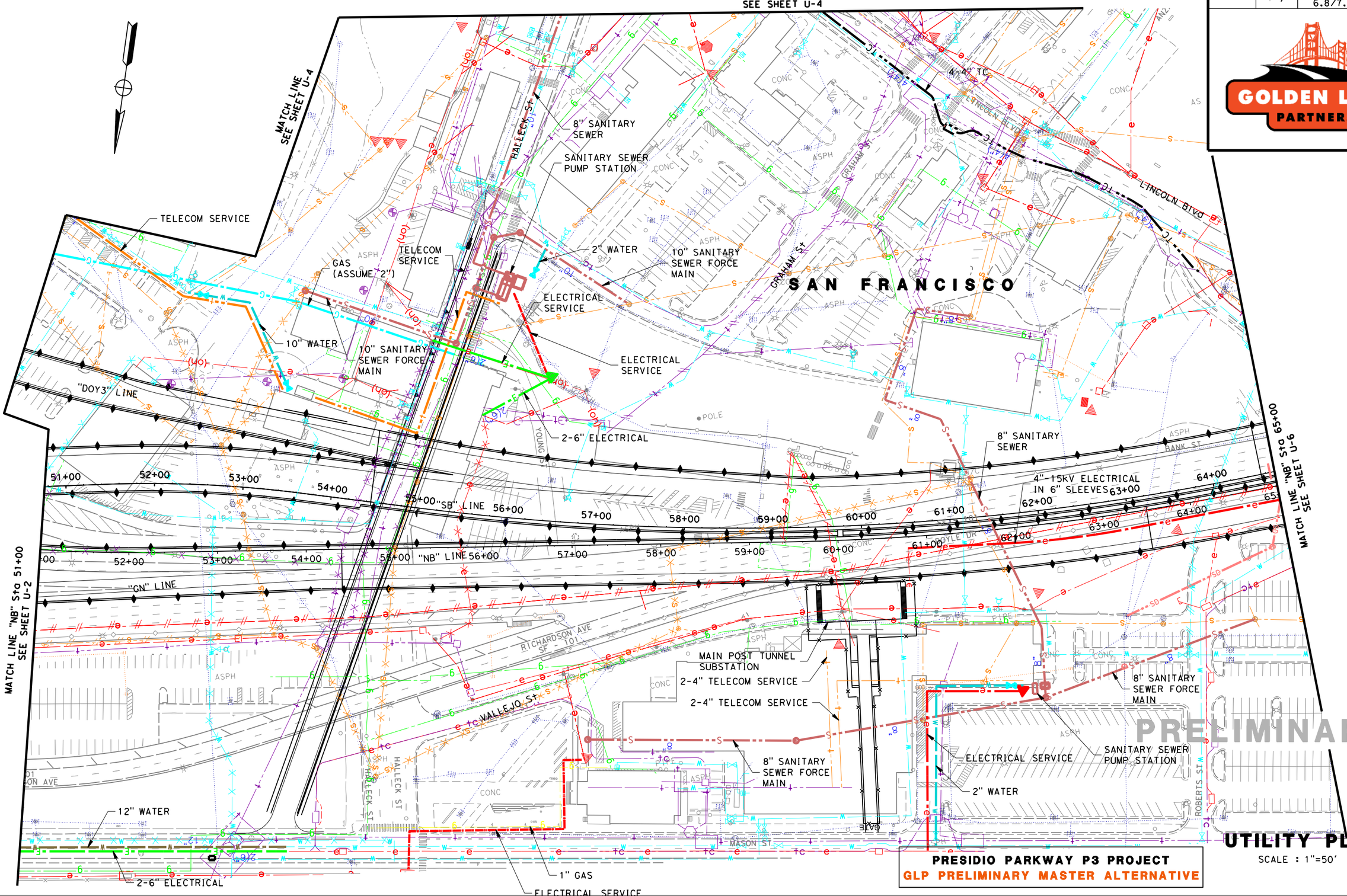

UTILITY PLAN

SCALE : 1"=50'

PRESIDIO PARKWAY P3 PROJECT

GLP PRELIMINARY MASTER ALTERNATIVE

U-5

RELATIVE BORDER SCALE IS IN INCHES 0 1 2 3

USERNAME => $USER$
DGN FILE => $FILE$

LAST REVISION 00-00-00

TIME PLOTTED => $TIME$

DATE PLOTTED => $DATE$

DISTRICT	ROUTE	POST MILES	SHEET No.	TOTAL SHEETS
4	101, 1	8.0/9.8 6.8/7.1	80	128

GOLDEN LINK PARTNERS

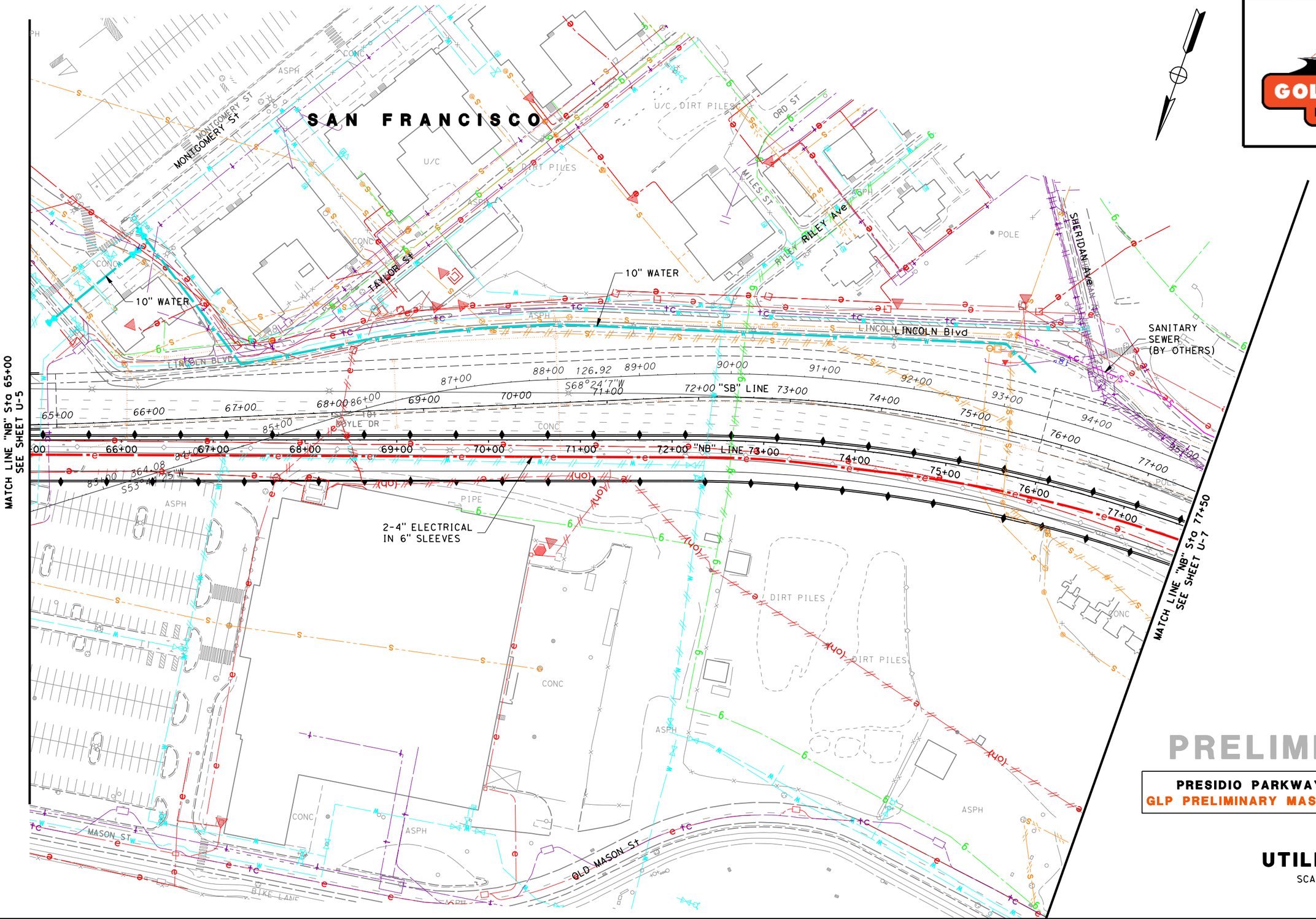

PRELIMINARY

PRESIDIO PARKWAY P3 PROJECT
GLP PRELIMINARY MASTER ALTERNATIVE

UTILITY PLAN

SCALE : 1"=50'

U-6

RELATIVE BORDER SCALE IS IN INCHES 0 1 2 3

USERNAME => $USER$
DGN FILE => $FILE$

LAST REVISION 00-00-00

TIME PLOTTED => $TIME$

DATE PLOTTED => $DATE$

DISTRICT	ROUTE	POST MILES	SHEET No.	TOTAL SHEETS
4	101, 1	8.0/9.8 6.8/7.1	81	128

GOLDEN LINK PARTNERS

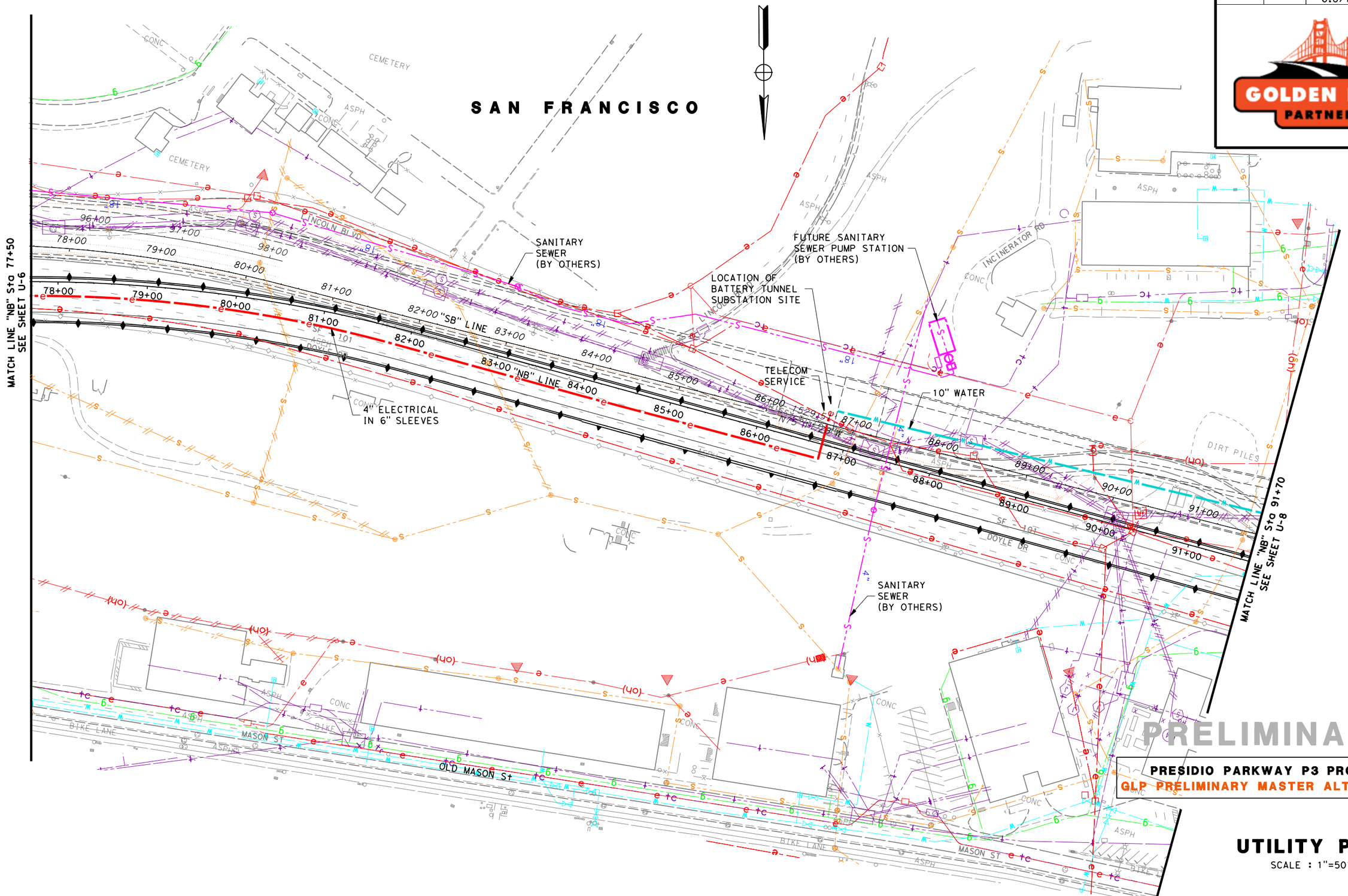

PRELIMINARY

PRESIDIO PARKWAY P3 PROJECT

GLP PRELIMINARY MASTER ALTERNATIVE

UTILITY PLAN

SCALE : 1"=50'

U-7

RELATIVE BORDER SCALE IS IN INCHES 0 1 2 3

USERNAME => $USER$
DGN FILE => $FILE$

LAST REVISION 00-00-00

TIME PLOTTED => $TIME$

DATE PLOTTED => $DATE$

DISTRICT	ROUTE	POST MILES	SHEET No.	TOTAL SHEETS
4	101, 1	8.0/9.8 6.8/7.1	82	128

GOLDEN LINK PARTNERS

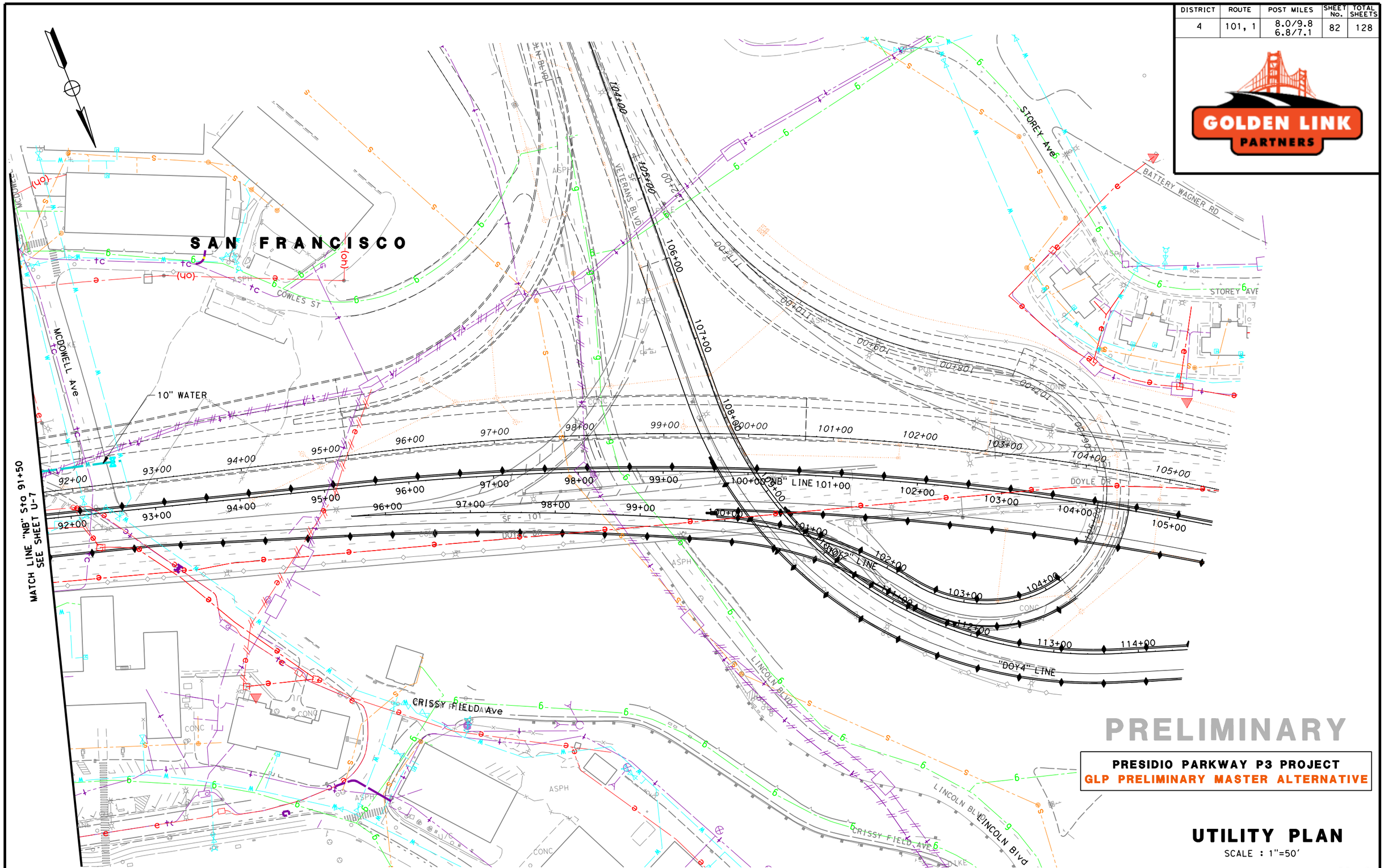

PRELIMINARY

PRESIDIO PARKWAY P3 PROJECT
GLP PRELIMINARY MASTER ALTERNATIVE

UTILITY PLAN

SCALE : 1"=50'

U-8

RELATIVE BORDER SCALE IS IN INCHES 0 1 2 3

USERNAME => $USER$
DGN FILE => $FILE$

LAST REVISION 00-00-00

TIME PLOTTED => $TIME$

DATE PLOTTED => $DATE$

DISTRICT	ROUTE	POST MILES	SHEET No.	TOTAL SHEETS
4	101, 1	8.0/9.8 6.8/7.1	83	128

GOLDEN LINK PARTNERS

Presidio Parkway
Utility Conflict Matrix
Indicative Preliminary Design

UTILITIES TO BE ABANDONED FROM IPD UTILITY PLANS

	Sheet	Size	Utility	Owner	Length (LF)	Construction Phasing	Material	Min. Cover	Misc. Appurtenances	Comment
1	U2		Water	Presidio Trust	1170	2				
2	U2		Electrical	Presidio Trust	1100	2				
3	U2		Water	Presidio Trust	720	2				
4	U2		Telephone	Presidio Trust	490	2				
5	U2		Telephone	Presidio Trust	190	2				
6	U2		Water	Presidio Trust	1040	2				
7	U2		Water	Presidio Trust	500	2				
8	U5		Water	Presidio Trust	370	2				
9	U5		Sanitary Sewer	Presidio Trust	1680	2				
10	U5		Sanitary Sewer	Presidio Trust	320	2				
11	U5		Telephone	Presidio Trust	880	2				
12	U5		Electrical	Presidio Trust	290	2				PH-E09: 3:6", PH-E10: 2:4"
13	U2		Gas	PG&E	1100	2				Not shown in Caltrans documents

PROPOSED UTILITIES FROM IPD UTILITY PLANS

	Sheet	Size	Utility	Owner*	Length (LF)	Construction Phasing	Material	Min. Cover	Misc. Appurtenances	Comment
1	U1,U2	12"	Water	Presidio Trust	355	2	DIP	16"		
2	U1,U2	12"	Water	Presidio Trust	306	2	DIP	36"	1 fire hydrant	
3	U1,U2	6"	Sanitary Sewer	Presidio Trust	904	2	PVC SDR 26	n/a	5 new MH, tie-in to 3 existing MH	
4	U1,U2,U4	6"	Sanitary Sewer	Presidio Trust	267	2	PVC SDR 26	n/a	2 new MH, tie-in to into 1 existing MH	
5	U1,U2,U4	8"	Sanitary Sewer	Presidio Trust	1253	2	PVC SDR 26	n/a	6 new MH, tie-in to 4 existing MH	
6	U2	12"	Water	Presidio Trust	522	2	DIP	36"	1 fire hydrant	
7	U2,U4	12"	Water	Presidio Trust	581	2	DIP	36"	3 valves	
8	U4	12"	Water	Presidio Trust	598	2	DIP	36"	5 valves	
9	U2-U5	12"	Water	Presidio Trust	2590	2	DIP	36"	2 valves	
10	U2,U5	2(6")	Electrical	Presidio Trust	738	2	PVC	24"	1 vault box	Conduits shall be backfilled with red colored concrete 2" below the pavement surface.
11	U5	10"	Sanitary Sewer	Presidio Trust	484	2	PVC SDR 26	n/a	5 new MH, tie-in to 1 existing MH	Sanitary Sewer Pump Station #1
		8"	Sanitary Sewer Force Main	Presidio Trust	544	2	Steel	n/a	1 new MH	
12	U5	2(6")	Electrical	Presidio Trust	231	2	PVC	24"	1 transformer	Conduits shall be backfilled with red colored concrete 2" below the pavement surface.
13	U5	8"	Sanitary Sewer	Presidio Trust	773	2	PVC SDR 26	n/a	4 new MH, tie-in to 1 existing MH	Sanitary Sewer Pump Station #2
		8"	Sanitary Sewer Force Main	Presidio Trust	577	2	Steel	36"		
14	U5	4(4")	Telecom	Presidio Trust	653	2	PVC	24"	1 hand hole, 1 vault	
17	U2	4(6")	Electrical	Presidio Trust	2394	2	PVC	24"	6 vault boxes and 1 transformer	Conduits shall be backfilled with red colored concrete 2" below the pavement surface.
18	U2,U5		Gas	PG&E	794	2		36"		
19	U4	2(4")	Telecom	Presidio Trust	537	2		24"		

PRELIMINARY

PRESIDIO PARKWAY P3 PROJECT
GLP PRELIMINARY MASTER ALTERNATIVE

UTILITY MATRIX

SCALE : 1"=50'

U-9

DISTRICT	ROUTE	POST MILES	SHEET No.	TOTAL SHEETS
4	101, 1	8.0/9.8 6.8/7.1	84	128

GOLDEN LINK PARTNERS

Presidio Parkway
Utility Conflict Matrix
Indicative Preliminary Design
8/13/2010

PROPOSED UTILITIES AND SERVICES FROM INTERPRETATION OF IPD DESIGN SCOPE

	Sheet	Size	Utility	Owner	Construction Phasing	Length (LF)	Material	Min. Cover	Misc. Appurtenances	Comment
1	U2		Gas	PG&E	2	846				
2	U2	4"	Electrical Service - Storm Water Pump Station	Presidio Trust	2	140	PVC	18"	2 vault boxes, 1 transformer	Conduit shall be backfilled with red colored concrete 2" below the pavement surface.
3	U2	2"	Water Service - Storm Water Pump Station	Presidio Trust	2	76	Steel	24"	3 fittings, 2 valves + valve boxes	
4	U2,U5	4"	Telecom Service - Storm Water Pump Station	Presidio Trust	2	643	PVC	24"	3 handholes	Capability to add 3 1-1/4" inner ducts
5	U5	10"	Fire Service Line - Main Post Tunnel East End	Presidio Trust	2	179	DIP	36"	3 fittings, 1 valve + valve box	Connects to new 12" main on Girard Rd. Pipe should be constructed on sand bed, sand shall be placed one foot minimum above top of the pipe.
6	U5	4"	Telecom Service - SS Pump Station #1	Presidio Trust	2	330	PVC	24"	2 handholes	Capability to add 3 1-1/4" inner ducts
7	U5	4"	Electrical Service - SS Pump Station #1	Presidio Trust	2	97	PVC	18"	2 vault boxes, 1 transformer	Conduit shall be backfilled with red colored concrete 2" below the pavement surface.
8	U5	2"	Water Service - SS Pump Station #1	Presidio Trust	2	43	Steel	24"	3 fittings, 2 valves + valve boxes	
9	U5	1"	B603 - New Gas Service	PG&E	2	252	Steel	18"	2 valves	Tie-in to existing gas line on Mason St
10	U5	4"	B603 - New Electrical Service	Presidio Trust	2	317	PVC	18"	2 vault boxes	Connect to existing B603 transformer. Conduit shall be backfilled with red colored concrete 2" below the pavement surface.
11	U5	4"	Telecom Service - SS Pump Station #2	Presidio Trust	2	432	PVC	24"	2 handholes	Capability to add 3 1-1/4" inner ducts
12	U5	4"	Electrical Service - SS Pump Station #2	Presidio Trust	2	285	PVC	18"	2 vault boxes, 1 transformer	Conduit shall be backfilled with red colored concrete 2" below the pavement surface.
13	U5	2"	Water Service - SS Pump Station #2	Presidio Trust	2	278	Steel	24"	3 fittings, 2 valves + valve boxes	
14	U5	2-4"	Battery Substation/Main Post	Presidio Trust	2	550	PVC	24"	1 vault box	Conduit shall be backfilled with red colored concrete 2" below the
15	U6	10"	Fire Service Line - Main Post Tunnel West End	Presidio Trust	2	142	DIP	36"	3 fittings, 2 valve + valve box	Connects to Battery Tunnel East end fire service line at tie in to existing 12". Pipe should be constructed on sand bed, sand shall be placed one foot minimum above top of the pipe.
16	U6	10"	Fire Service Line - Battery Tunnel East End	Presidio Trust	2	1071	DIP	36"	4 fittings, 1 valve + valve box	Connect to existing 12" water main with 12"x12"x10" tee. Pipe should be constructed on sand bed, sand shall be placed one foot minimum above top of the pipe.
17	U6	2-4"	Battery Substation/Main Post Substation High Voltage Connection - Underground between Battery Tunnel and Main Post Tunnel	Presidio Trust	2	1200	PVC	24"	3 vault boxes	Conduit shall be backfilled with red colored concrete 2" below the pavement surface.
18	U7	2-4"	Battery Substation/Main Post Substation High Voltage Connection - in Battery Tunnel	Presidio Trust	2	1100	PVC	24"	1 vault box	Conduit shall be backfilled with red colored concrete 2" below the pavement surface.
19	U7	4"	Battery Substation Telecom	Presidio Trust	2	11	PVC	24"	2 handholes	Capability to add 3 1-1/4" inner ducts. Connects substation to telecom monitoring system in Battery Tunnel
20	U7,U8	10"	Fire Service Line - Battery Tunnel West End	Presidio Trust	2	583	DIP	24"	3 fittings, 1 valve + valve box	Connect to existing 10" water main with 10" tee. Pipe should be constructed on sand bed, sand shall be placed one foot minimum above top of the pipe.

PRELIMINARY

PRESIDIO PARKWAY P3 PROJECT
GLP PRELIMINARY MASTER ALTERNATIVE

UTILITY MATRIX

SCALE : 1"=50'

U-10

DISTRICT	ROUTE	POST MILES	SHEET No.	TOTAL SHEETS
4	101, 1	8.0/9.8 6.8/7.1	85	128

GOLDEN LINK PARTNERS

CONDUIT AND CONDUCTOR SCHEDULE

#	DESCRIPTION
1	3-1/2"C, 4 #350kcmil & 1#3 G. - 15kV
2	3"C, 3 #1 & 1#6 G. - 15kV
3	10 SETS OF 3"C, 4 #500kcmil & 1#500kcmil G.
4	6 SETS OF 3"C, 4 #500kcmil & 1#250kcmil G.
5	3 SETS OF 3"C, 4 #500kcmil & 1#250kcmil G.
6	2 SETS OF 3"C, 4 #500kcmil & 1#2/0 G.
7	2 SETS OF 3"C, 3 #500kcmil & 1#1/0 G.
8	2 SETS OF 2-1/2"C, 3 #250kcmil & 1#1/0 G.
9	3-1/2"C, 3 #2/0 & 1#6 G. - 15kV
10	13 SETS OF 3"C, 4 #500kcmil & 1#750kcmil G.
11	7 SETS OF 3"C, 4 #500kcmil & 1#350kcmil G.
12	3"C, 3 #500kcmil & 1#1/0 G.
13	2-1/2"C, 3 #250kcmil & 1#1/0 G.
14	1-1/4"C, 4 #2 & 1#8 G.
15	2 SETS OF 2"C, 4 #3/0 & 1#3 G.
16	NOT USED
17	NOT USED
18	NOT USED
19	2"C, 3 #2/0 & 1#4 G.
20	1-1/4"C, 4 #2 & 1#8 G.
21	¾"C, 3 #8 & 1#8 G.
22	1-1/4"C, 4 #2 & 1#8 G.
23	1-1/4"C, 4 #2 & 1#8 G.
24	1"C, 3 #4 & 1#8 G.
25	1-1/2"C, 4#1/0 & 1#6 G.
26	2"C, 4#3/0 & 1#6 G.
27	NOT USED.
28	1-1/4"C, 4 #2 & 1#8 G.
29	2 SETS OF 2"C, 4 #3/0 & 1#3 G.
30	1-1/4"C, 4 #2 & 1#8 G.
31	1-1/4"C, 4 #2 & 1#8 G.
32	1-1/4"C, 4 #2 & 1#8 G.
33	2"C, 3 #2/0 & 1#4 G.
34	1-1/4"C, 4 #2 & 1#8 G.
35	¾"C, 3 #8 & 1#8 G.
36	1-1/4"C, 4 #2 & 1#8 G.
37	1-1/4"C, 4 #2 & 1#8 G.
38	1"C, 3 #4 & 1#8 G.
39	2"C, 4 #2/0 & 1#8 G.
40	2"C, 4 #3/0 & 1#6 G.
41	2 SETS OF 2"C, 4 #2/0 & 1#4 G.
42	1-1/4"C, 3 #2 & 1#8 G.
43	¾"C, 3 #10 & 1#10 G.
44	1-1/2"C, 3 #1/0 & 1#6 G.
45	1-1/2"C, 3 #1/0 & 1#6 G.
46	2 SETS OF 2"C, 4#2/0 & 1#4 G.

ABBREVIATIONS

A	AMPS
C	CONDUIT
DISC. SW.	DISCONNECT SWITCH
G	GROUND
kcmil	THOUSAND CIRCULAR MIL
kVA	KILOVOLT AMPS
MCC	MOTOR CONTROL CENTER
MV	MEDIUM VOLTAGE
PH	PHASE
P	POLE
UPS	UNINTERRUPTIBLE POWER SUPPLY
FTC	FIRE TELEPHONE CABINET

LEGEND

EXISTING PROPOSED

- TRANSFORMER
- 2500A /3P — CIRCUIT BREAKER WITH RATING
- TVSS — TRANSIENT VOLTAGE SURGE SUPPRESSOR
- SS — MOTOR SOFT STARTER
- 125 — MOTOR OR PUMP, HORSEPOWER INDICATED
- UPS
- 400 HPS DAYTIME LUMINAIRE
- M — MEDIUM LIGHTING LEVEL
- L — LOW LIGHTING LEVEL
- 150 HPS NIGHTTIME LUMINAIRE
- # — CONDUIT DESIGNATION
- FUSED DISCONNECT SWITCH
- PANELBOARD
- FUTURE PANELBOARD

PRELIMINARY

PRESIDIO PARKWAY P3 PROJECT
GLP PRELIMINARY MASTER ALTERNATIVE

TUNNELS

ELECTRICAL ABBREVIATIONS AND LEGEND

SCALE AS SHOWN

EL-1

DISTRICT	ROUTE	POST MILES	SHEET No.	TOTAL SHEETS
4	101, 1	8.0/9.8 6.8/7.1	86	128

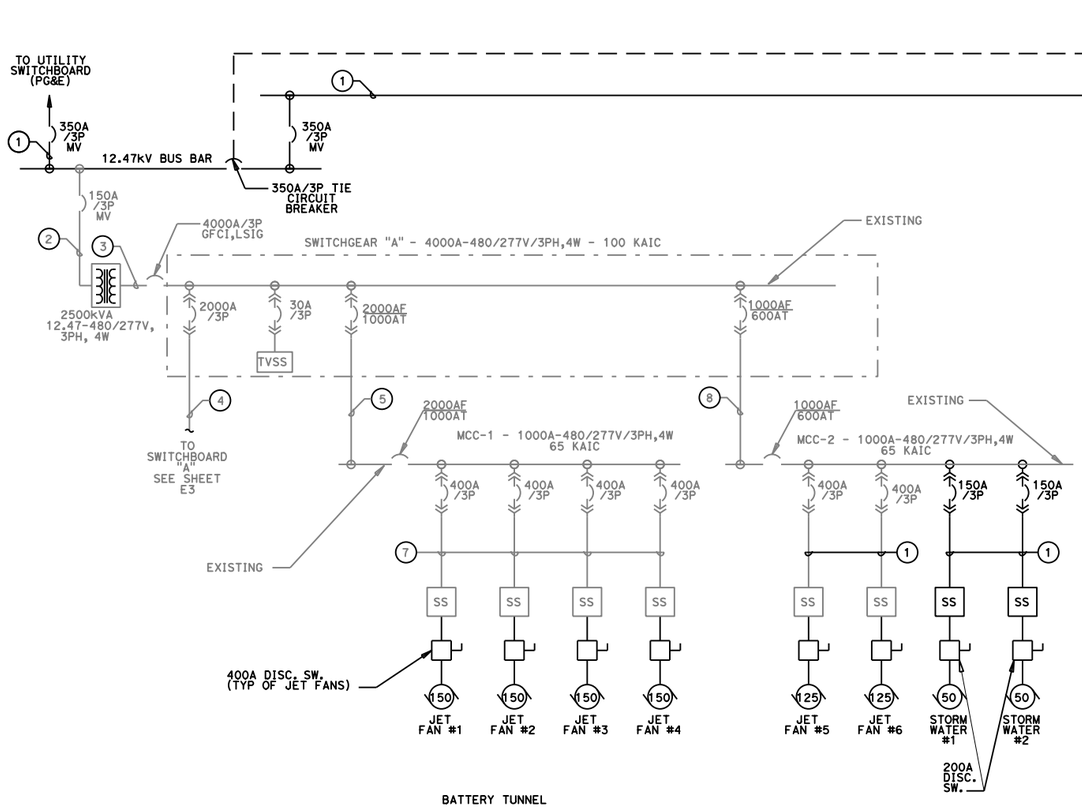

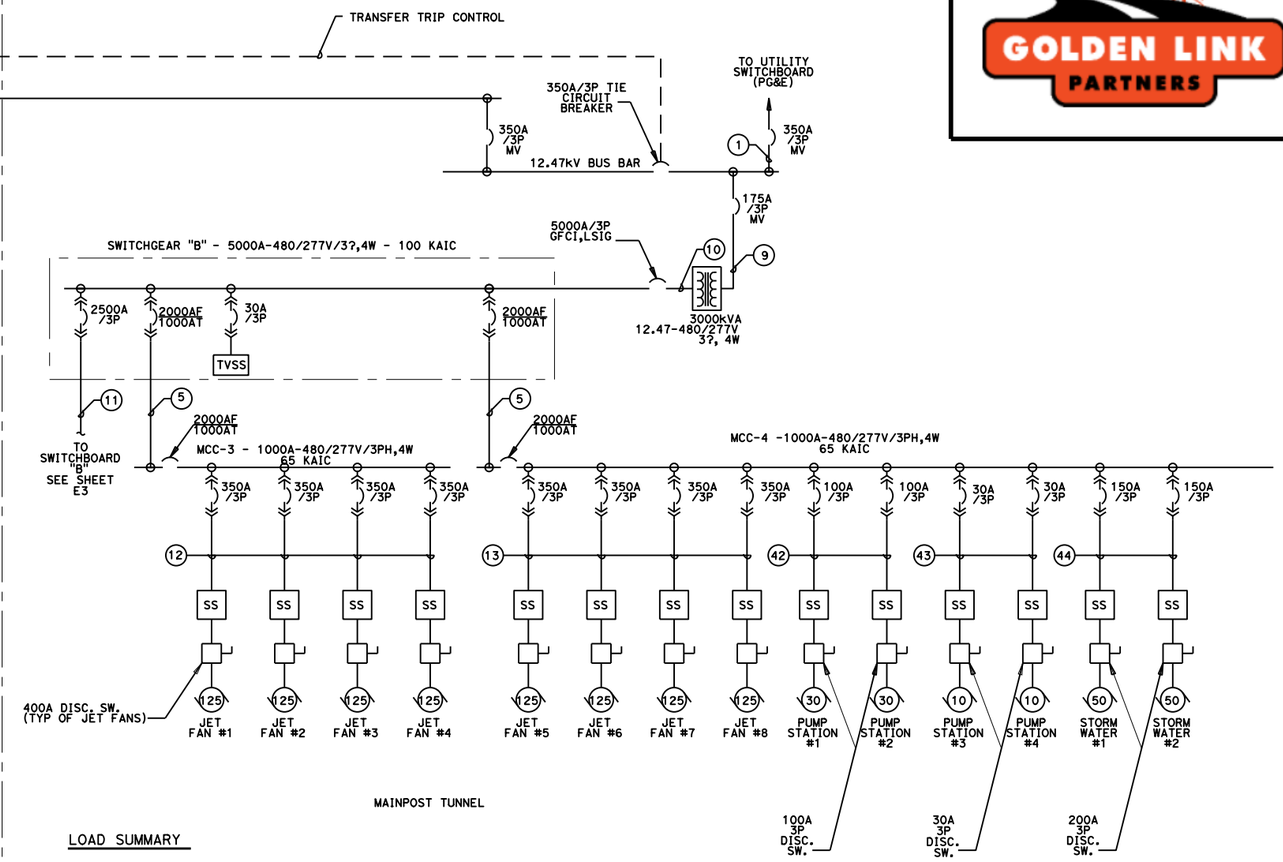

LOAD SUMMARY

LIGHTING	643.0 kVA	
TRAILERS	166.2 kVA	
FIELD TOS, SCADA, MISC. EQUIP.	212.7 kVA	
STORM WATER PUMP #1	41.1 kVA	
STORM WATER PUMP #2	0.0 kVA	NON-COINCIDENTAL
JET FANS #1	142.7 kVA	
JET FANS #2	142.7 kVA	
JET FANS #3	142.7 kVA	
JET FANS #4	142.7 kVA	
JET FANS #5	142.7 kVA	
JET FANS #6	0.0 kVA	NON-COINCIDENTAL
OTHER LOADS	332.7 kVA	
TOTAL	2109.2 kVA 2538.14 AMP @ 480V/3PHASE	

NOTE:

LIGHTING CONTROL CIRCUITS FROM MCC-1 AND MCC-2 AS DEPICTED ON CONTRACT 4 NOT SHOWN.

LOAD SUMMARY

LIGHTING	964.0 kVA	
TRAILERS	166.2 kVA	
FIELD TOS, SCADA, MISC. EQUIP.	212.7 kVA	
PUMP #1	31.7 kVA	
PUMP #2	0.0 kVA	NON-COINCIDENTAL
PUMP #3	11.1 kVA	
PUMP #4	0.0 kVA	NON-COINCIDENTAL
STORM WATER PUMP #1	11.1 kVA	
STORM WATER PUMP #2	0.0 kVA	NON-COINCIDENTAL
JET FANS #1	123.6 kVA	
JET FANS #2	123.6 kVA	
JET FANS #3	123.6 kVA	
JET FANS #4	123.6 kVA	
JET FANS #5	123.6 kVA	
JET FANS #6	123.6 kVA	
JET FANS #7	0.0 kVA	NON-COINCIDENTAL
JET FANS #8	0.0 kVA	NON-COINCIDENTAL
OTHER LOADS	332.7 kVA	
TOTAL	2511.5 kVA 3022.26 AMP @ 480V/3PHASE	

PRELIMINARY

PRESIDIO PARKWAY P3 PROJECT
GLP PRELIMINARY MASTER ALTERNATIVE

TUNNELS

ELECTRICAL LOAD SUMMARY

SCALE AS SHOWN

EL-2

DISTRICT	ROUTE	POST MILES	SHEET No.	TOTAL SHEETS
4	101, 1	8.0/9.8 6.8/7.1	87	128

GOLDEN LINK PARTNERS

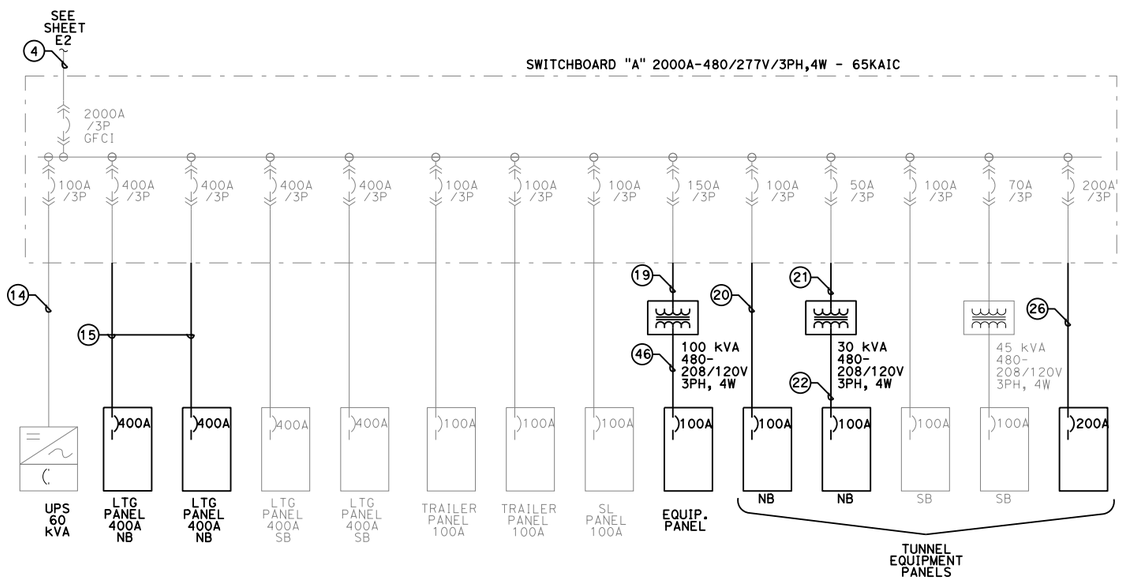

BATTERY TUNNEL

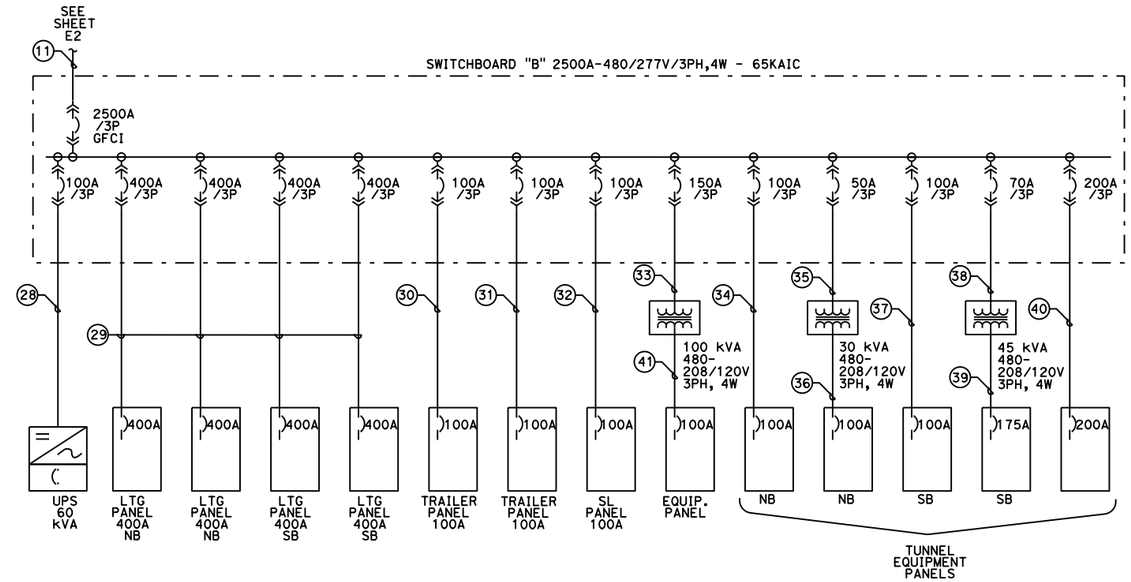

MAINPOST TUNNEL

PRELIMINARY

PRESIDIO PARKWAY P3 PROJECT
GLP PRELIMINARY MASTER ALTERNATIVE

TUNNELS

ELECTRICAL SWITCHBOARD

SCALE AS SHOWN

EL-3

RELATIVE BORDER SCALE IS IN INCHES 0 1 2 3

USERNAME => $USER$
DGN FILE => $FILE$

LAST REVISION 00-00-00

TIME PLOTTED => $TIME$

DATE PLOTTED => $DATE$

DISTRICT	ROUTE	POST MILES	SHEET No.	TOTAL SHEETS
4	101, 1	8.0/9.8 6.8/7.1	88	128

GOLDEN LINK PARTNERS

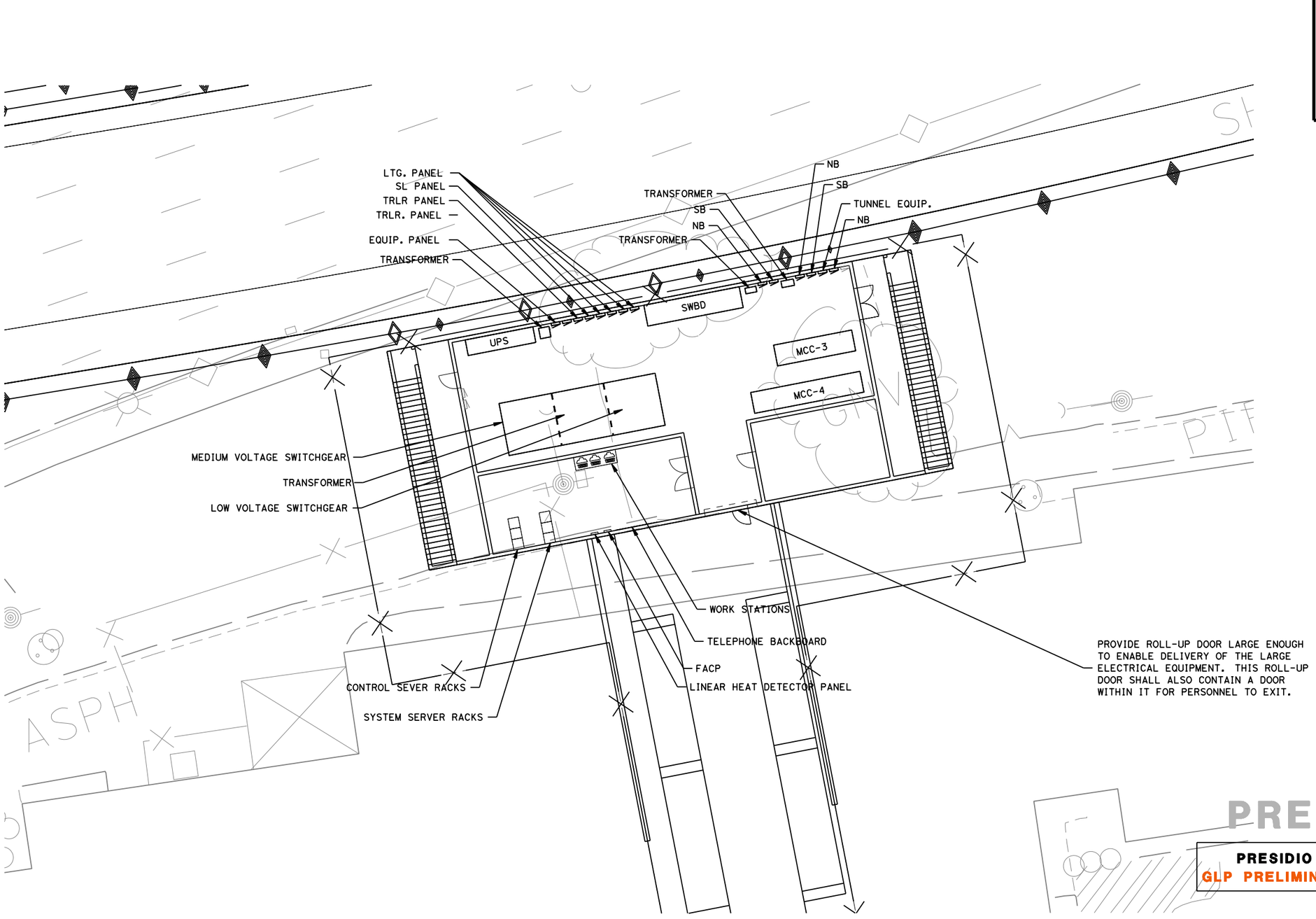

PRELIMINARY

PRESIDIO PARKWAY P3 PROJECT
GLP PRELIMINARY MASTER ALTERNATIVE

ELECTRICAL SUBSTATION PLAN

SCALE : 1"=10'

EL-4

DISTRICT	ROUTE	POST MILES	SHEET No.	TOTAL SHEETS
4	101, 1	8.0/9.8 6.8/7.1	89	128

GOLDEN LINK PARTNERS

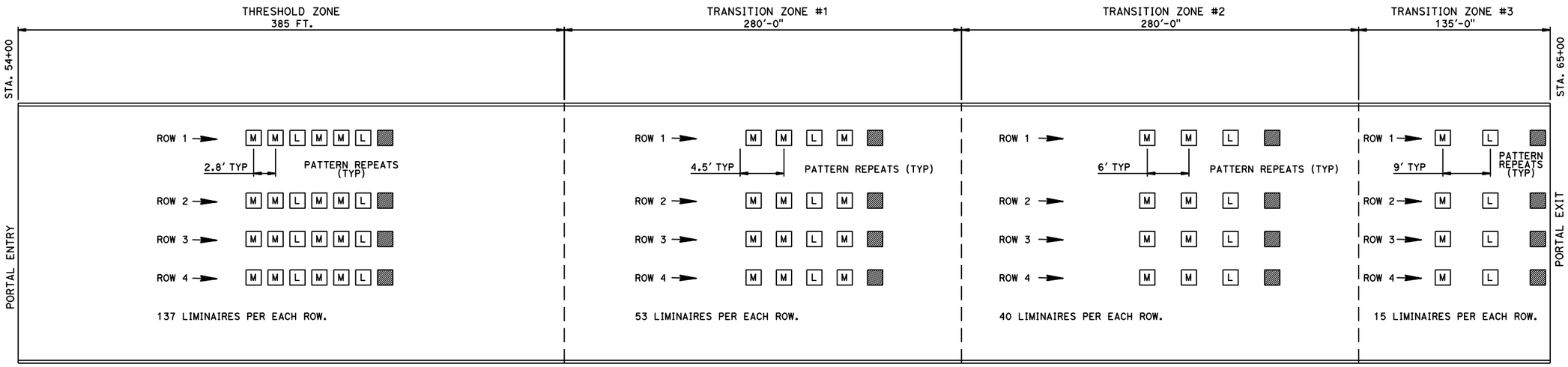

PRELIMINARY

PRESIDIO PARKWAY P3 PROJECT
GLP PRELIMINARY MASTER ALTERNATIVE

BRIDGE NO. 34-0163R

MAIN POST TUNNEL NB

TUNNEL LIGHTING SCHEMATIC LAYOUT

SCALE AS SHOWN

EL-5

DISTRICT	ROUTE	POST MILES	SHEET No.	TOTAL SHEETS
4	101, 1	8.0/9.8 6.8/7.1	90	128

GOLDEN LINK PARTNERS

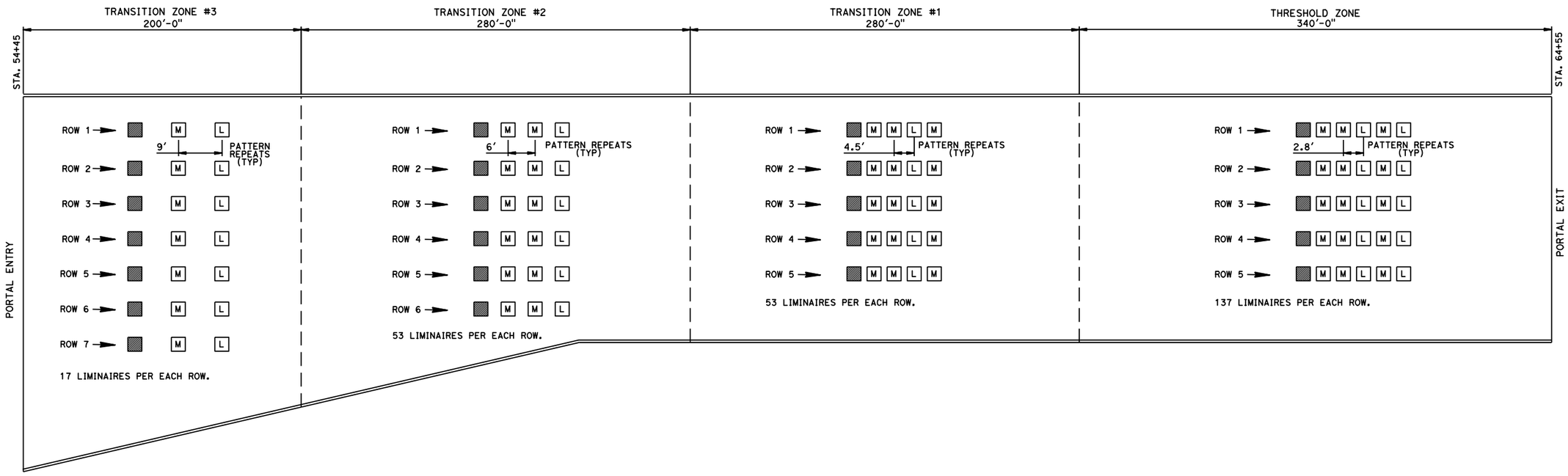

PRELIMINARY

PRESIDIO PARKWAY P3 PROJECT
GLP PRELIMINARY MASTER ALTERNATIVE

MAIN POST TUNNEL SB
BRIDGE NO. 34-0163L

TUNNEL LIGHTING SCHEMATIC LAYOUT

SCALE AS SHOWN

EL-6

DISTRICT	ROUTE	POST MILES	SHEET No.	TOTAL SHEETS
4	101, 1	8.0/9.8 6.8/7.1	91	128

GOLDEN LINK PARTNERS

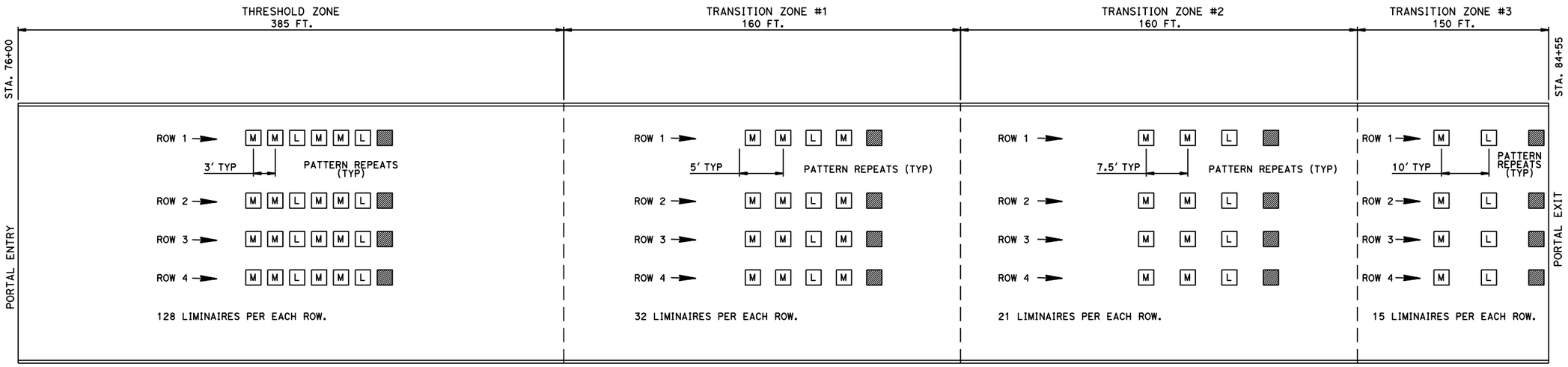

PRELIMINARY

PRESIDIO PARKWAY P3 PROJECT
GLP PRELIMINARY MASTER ALTERNATIVE

BATTERY TUNNEL NB

BRIDGE NO. 34-0161R

TUNNEL LIGHTING SCHEMATIC LAYOUT

SCALE AS SHOWN

EL-7

DISTRICT	ROUTE	POST MILES	SHEET No.	TOTAL SHEETS
4	101, 1	8.0/9.8 6.8/7.1	92	128

GOLDEN LINK PARTNERS

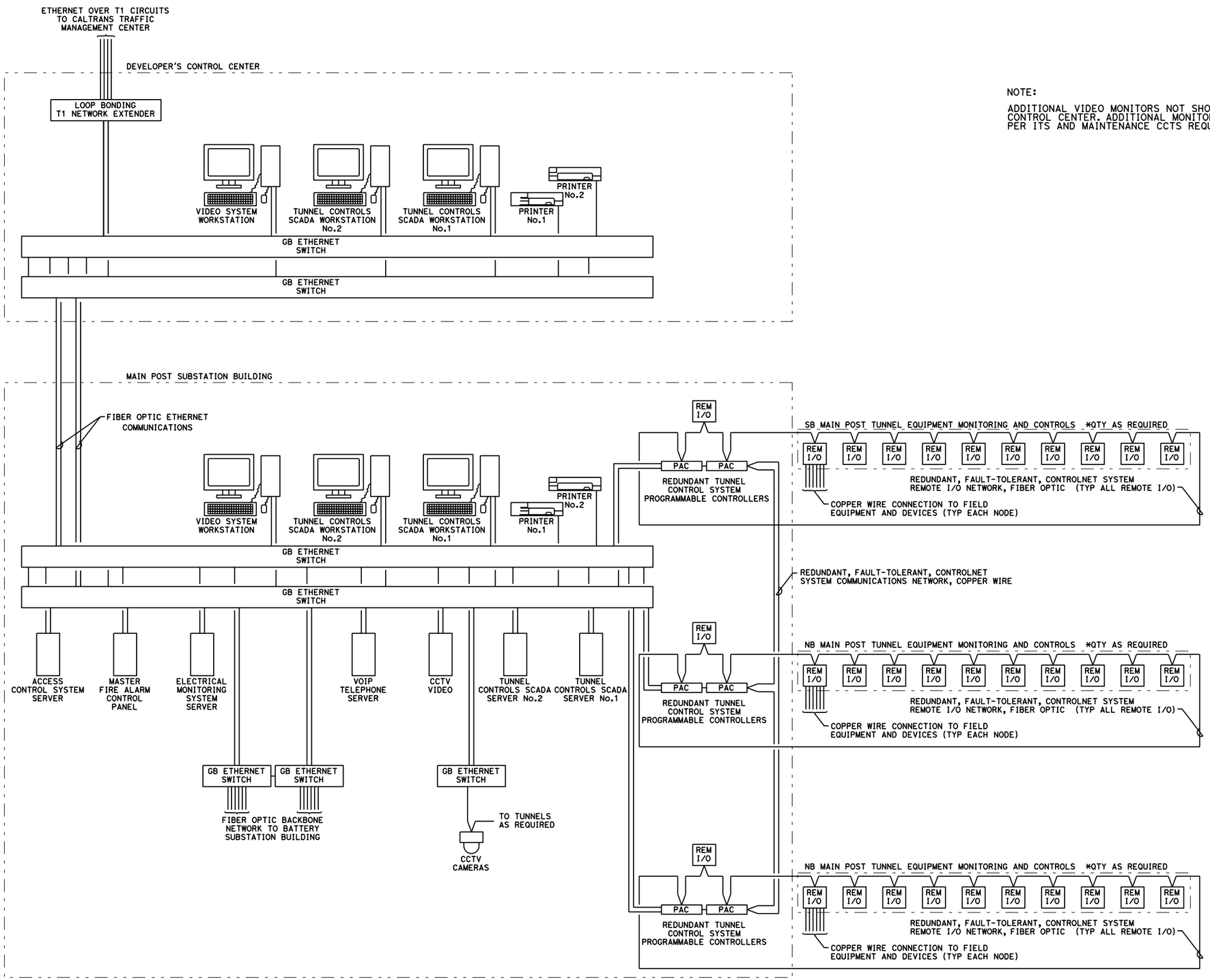

NOTE:

ADDITIONAL VIDEO MONITORS NOT SHOWN IN DEVELOPMENT CONTROL CENTER. ADDITIONAL MONITORS WILL BE PROVIDED PER ITS AND MAINTENANCE CCTS REQUIREMENTS.

PRELIMINARY

PRESIDIO PARKWAY P3 PROJECT
GLP PRELIMINARY MASTER ALTERNATIVE

MAIN POST TUNNEL
BRIDGE NO. 34-0163L/R

CONTROL DIAGRAM
NOT TO SCALE

EL-8

DISTRICT	ROUTE	POST MILES	SHEET No.	TOTAL SHEETS
4	101, 1	8.0/9.8 6.8/7.1	93	128

GOLDEN LINK PARTNERS

PRELIMINARY

PRESIDIO PARKWAY P3 PROJECT
GLP PRELIMINARY MASTER ALTERNATIVE

BRIDGE NO. 34-0161R

BATTERY TUNNEL DUCTBANK & FTC NICHE ELECTRICAL PLAN

SCALE: 1"=30'

EP-1

RELATIVE BORDER SCALE IS IN INCHES 0 1 2 3

USERNAME => kmagee
DGN FILE => IP_PWP:dms70012\45708-EL-EP01.dgn

LAST REVISION 00-00-00

TIME PLOTTED => 17:12

DATE PLOTTED => 09-SEP-2010

DISTRICT	ROUTE	POST MILES	SHEET No.	TOTAL SHEETS
4	101, 1	8.0/9.8 6.8/7.1	94	128

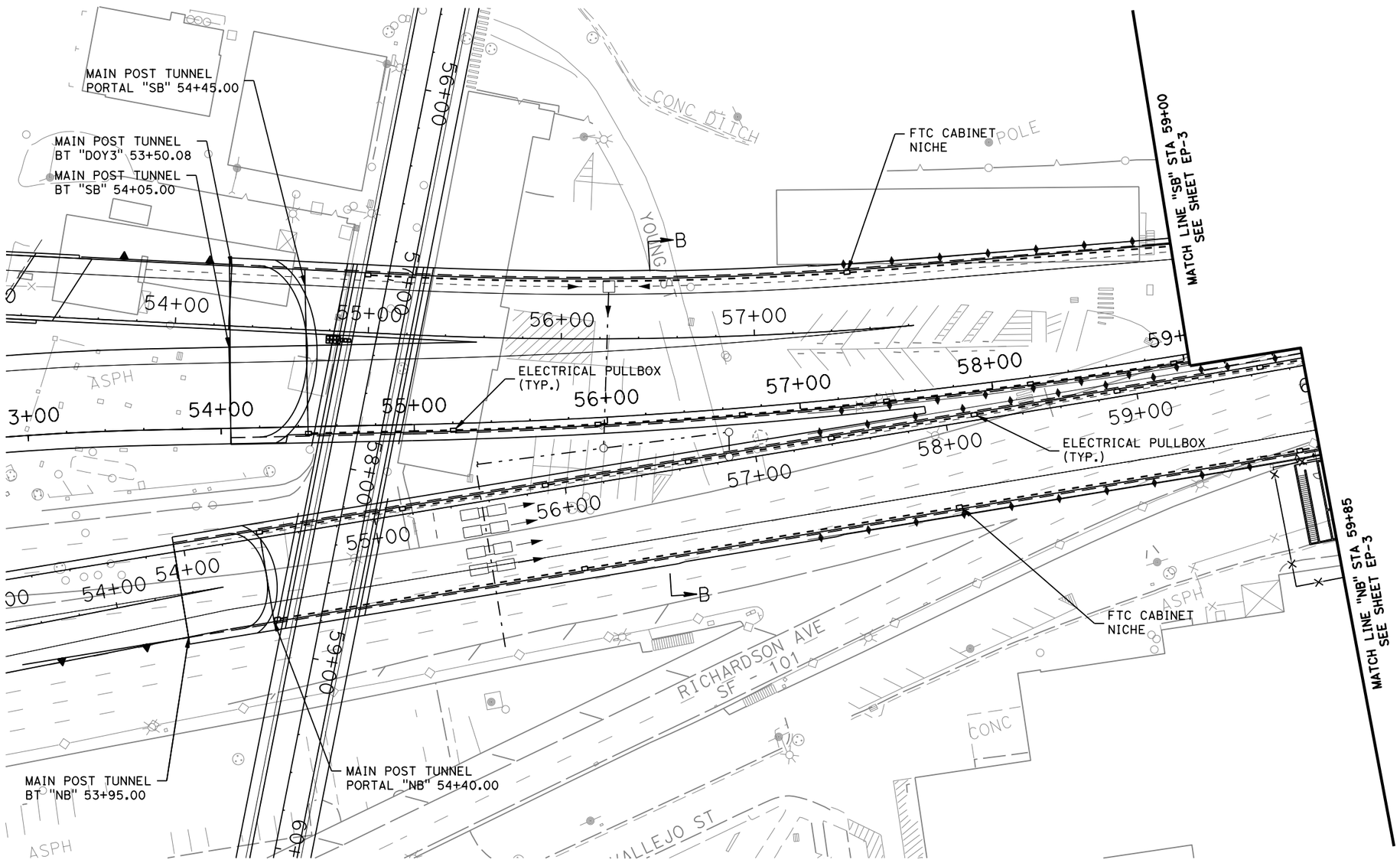

PRELIMINARY

PRESIDIO PARKWAY P3 PROJECT
GLP PRELIMINARY MASTER ALTERNATIVE

BRIDGE NO. 34-0163L/R

MAIN POST TUNNEL
DUCTBANK & FTC NICHE

ELECTRICAL PLAN

SCALE: 1"=30'

EP-2

RELATIVE BORDER SCALE IS IN INCHES 0 1 2 3

USERNAME => kmagee
DGN FILE => IP_PWP:dms70012\45708-EL-EP02.dgn

LAST REVISION 00-00-00

TIME PLOTTED => 13:29

DATE PLOTTED => 07-SEP-2010

DISTRICT	ROUTE	POST MILES	SHEET No.	TOTAL SHEETS
4	101, 1	8.0/9.8 6.8/7.1	95	128

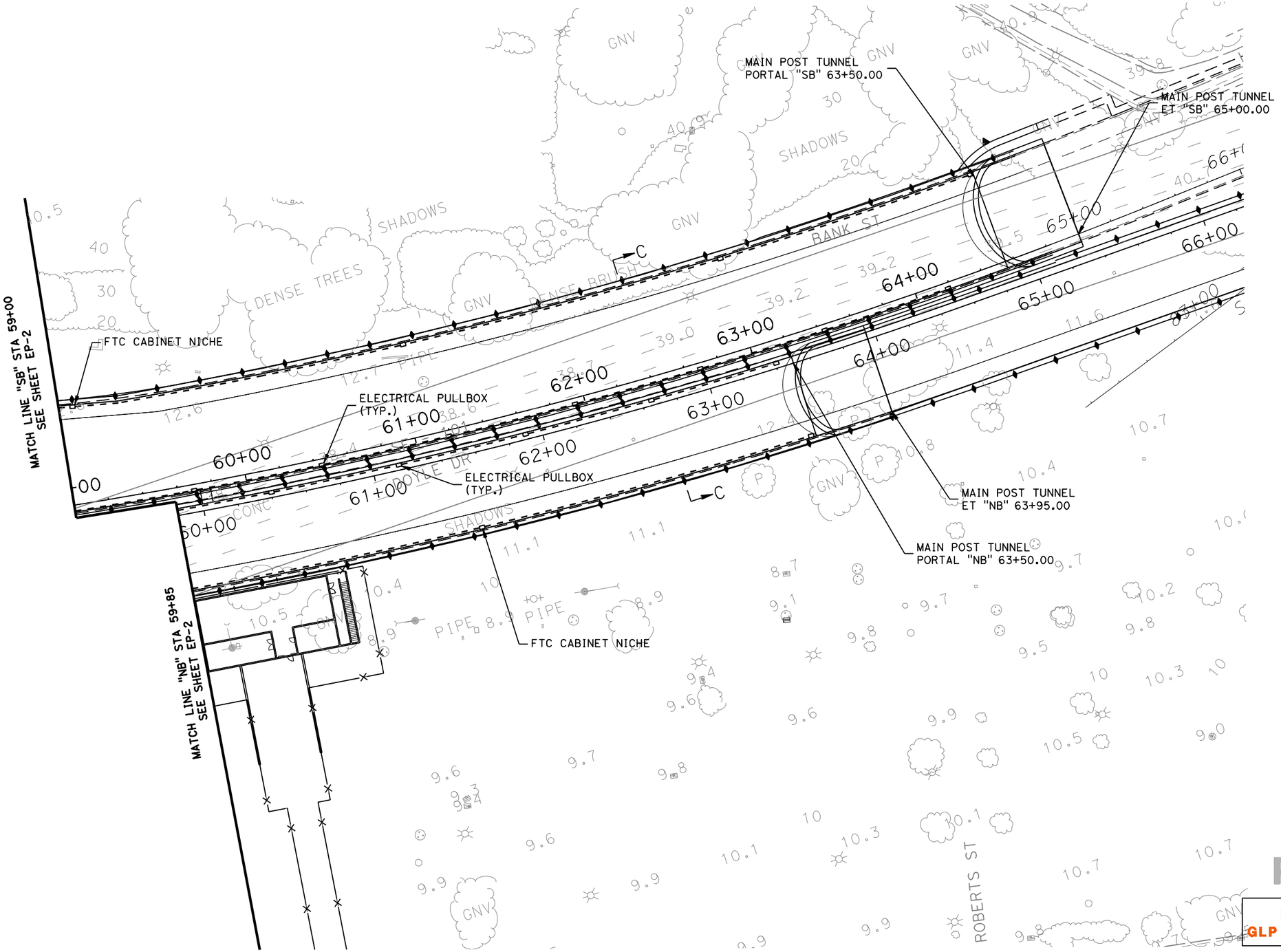

PLAN
1"=30'

PRELIMINARY

PRESIDIO PARKWAY P3 PROJECT
GLP PRELIMINARY MASTER ALTERNATIVE

BRIDGE NO. 34-0163L/R

MAIN POST TUNNEL
DUCTBANK & FTC NICHE

ELECTRICAL PLAN

SCALE: 1"=30'

EP-3

RELATIVE BORDER SCALE IS IN INCHES 0 1 2 3

USERNAME => kmagee
DGN FILE => IP_PWP:dms70012\45708-EP-EP03.dgn

LAST REVISION 00-00-00

TIME PLOTTED => 13:29

DATE PLOTTED => 07-SEP-2010

DISTRICT	ROUTE	POST MILES	SHEET No.	TOTAL SHEETS
4	101, 1	8.0/9.8 6.8/7.1	96	128

GOLDEN LINK PARTNERS

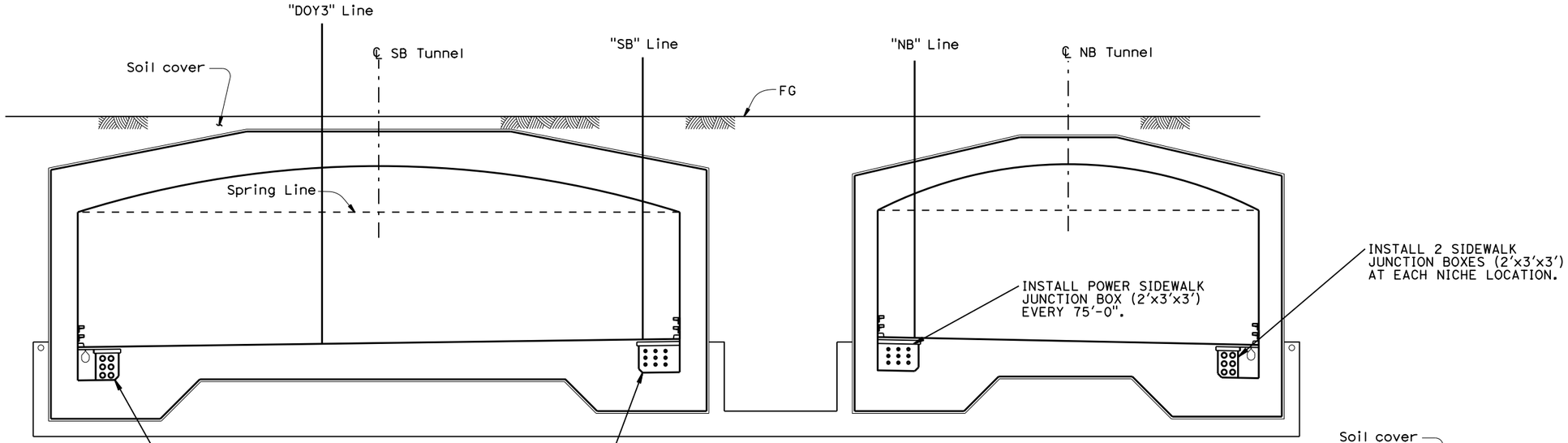

SECTION B-B
1/8" = 1'-0"

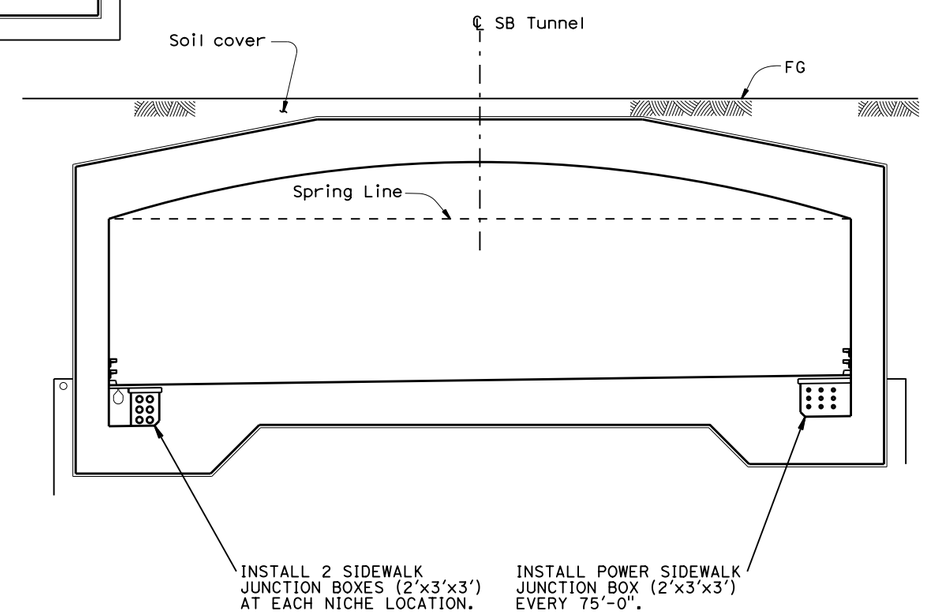

SECTION A-A
1/8" = 1'-0"

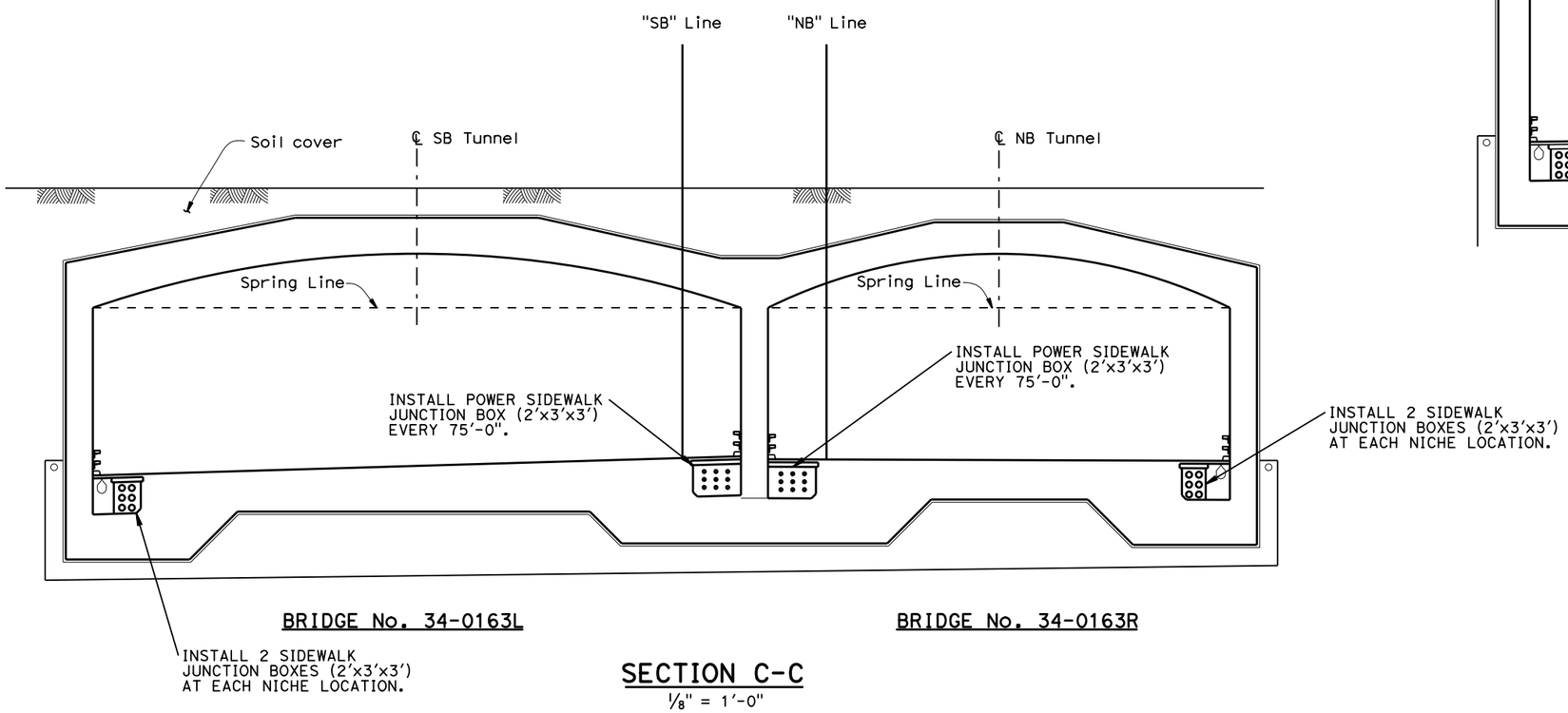

SECTION C-C
1/8" = 1'-0"

PRELIMINARY

PRESIDIO PARKWAY P3 PROJECT
GLP PRELIMINARY MASTER ALTERNATIVE

BRIDGE NO. 34-0163L/R

MAIN POST TUNNEL

TYPICAL ELECTRICAL SECTIONS

SCALE AS SHOWN

EP-4

DISTRICT	ROUTE	POST MILES	SHEET No.	TOTAL SHEETS
4	101, 1	8.0/9.8 6.8/7.1	97	128

GOLDEN LINK PARTNERS

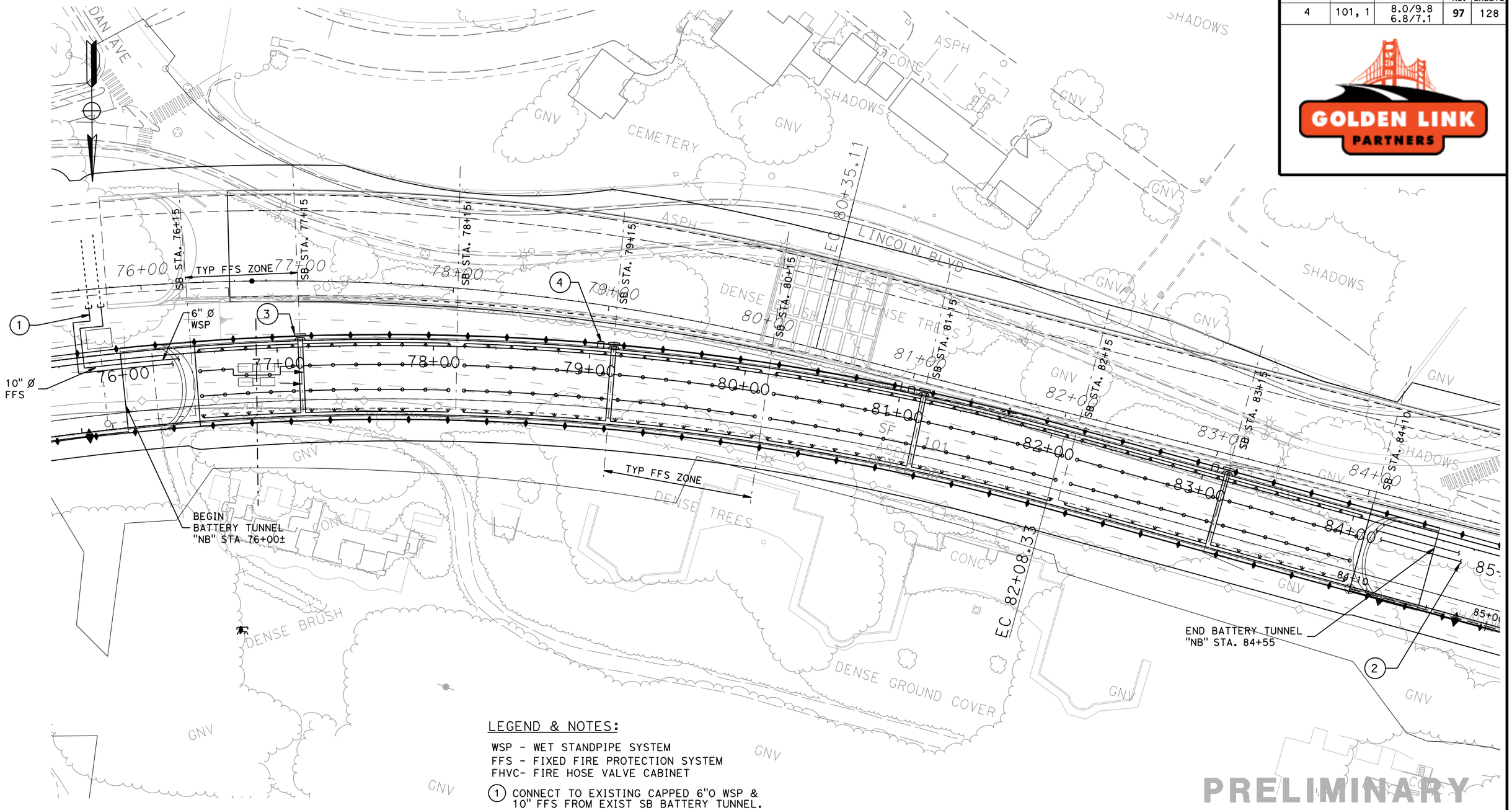

LEGEND & NOTES:

WSP - WET STANDPIPE SYSTEM
FFS - FIXED FIRE PROTECTION SYSTEM
FHVC- FIRE HOSE VALVE CABINET

1. CONNECT TO EXISTING CAPPED 6"O WSP & 10" FFS FROM EXIST SB BATTERY TUNNEL.
2. EXTEND TO EXIST CAPPED 6"O WSP & 10" FFS LOCATED OUTSIDE THE WEST PORTAL OF THE SB BATTERY TUNNEL.
3. TYPICAL DELUGE VALVE NICHE
4. TYPICAL FHVC NICHE

—o— TYPICAL PENDANT SPRINKLER HEAD

—✱— TYPICAL SIDEWALL SPRINKLER HEAD

PRELIMINARY

PRESIDIO PARKWAY P3 PROJECT
GLP PRELIMINARY MASTER ALTERNATIVE

BRIDGE NO. 34-0161R

BATTERY TUNNEL

FIRE PROTECTION PLAN

SCALE: 1"=30'

FP-1

DISTRICT	ROUTE	POST MILES	SHEET No.	TOTAL SHEETS
4	101, 1	8.0/9.8 6.8/7.1	98	128

GOLDEN LINK PARTNERS

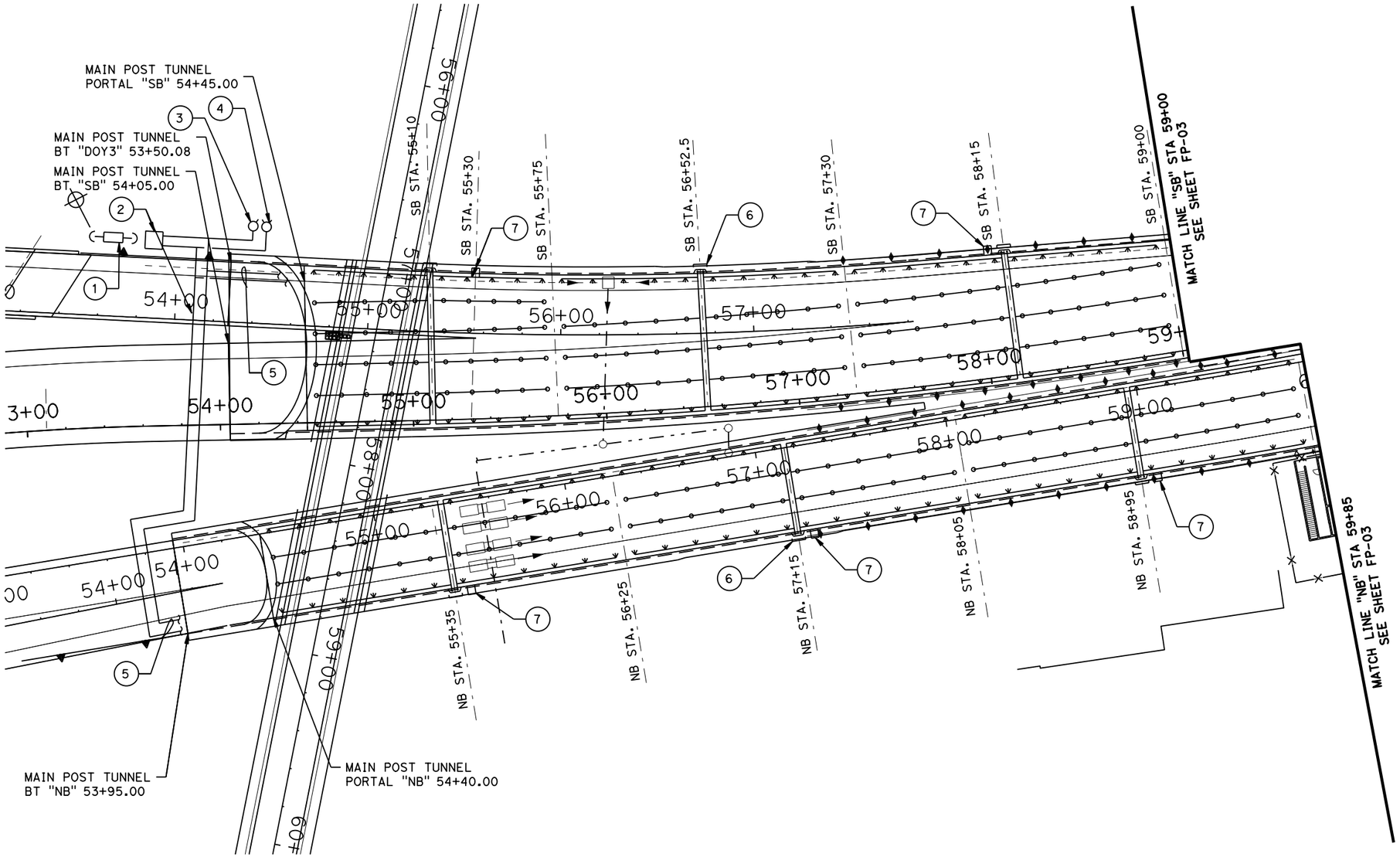

LEGEND & NOTES:

1. 10" REDUCED PRESSURE BACK FLOW PREVENTER ASSEMBLY.
2. CHECK VALVE VAULT
3. STANDPIPE SYSTEM FDC
4. FFS FDC
5. 6" Ø WSP & 10" Ø FFS PIPES CONTINUE EMBEDDED IN INVERT SLAB OF EACH MAIN POST TUNNEL
6. TYP DELUGE VALVE NICHE SHOWN SCHEMATICALLY WITHOUT REGARD TO WALL PREFERENCE.
7. TYPICAL FHVC NICHE

—o— TYPICAL PENDANT SPRINKLER HEAD

—x— TYPICAL SIDEWALL SPRINKLER HEAD

PRELIMINARY

PRESIDIO PARKWAY P3 PROJECT
GLP PRELIMINARY MASTER ALTERNATIVE

BRIDGE NO. 34-0163L/R

MAIN POST TUNNEL

FIRE PROTECTION PLAN

SCALE: 1"=30'

FP-2

DISTRICT	ROUTE	POST MILES	SHEET No.	TOTAL SHEETS
4	101, 1	8.0/9.8 6.8/7.1	99	128

GOLDEN LINK PARTNERS

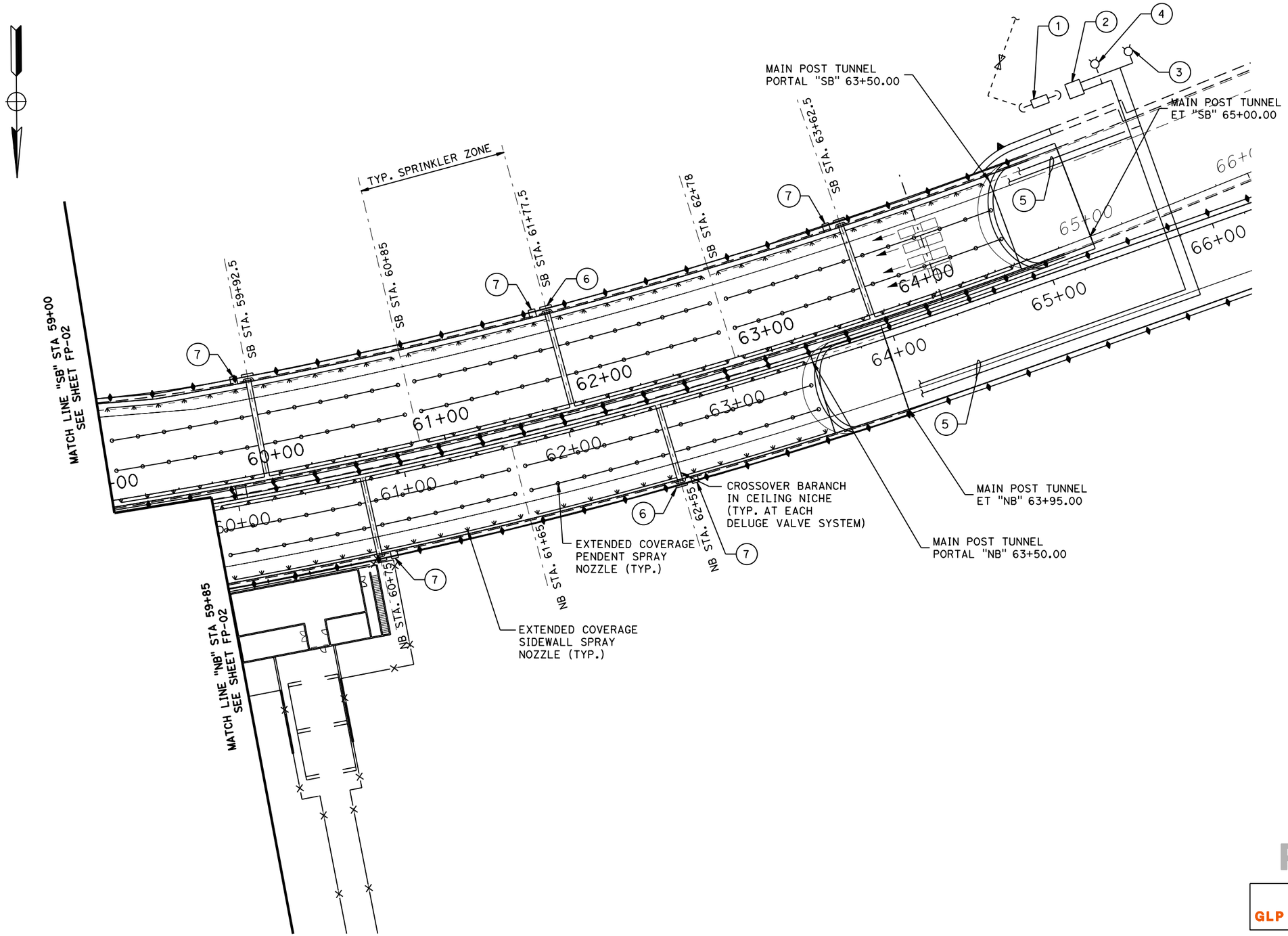

PLAN
1"=30'

LEGEND & NOTES:

1. 10" REDUCED PRESSURE BACK FLOW PREVENTER ASSEMBLY.
2. CHECK VALVE VAULT
3. STANDPIPE SYSTEM FDC
4. FFS FDC
5. 6" Ø WSP & 10" Ø FFS PIPES CONTINUE EMBEDDED IN INVERT SLAB OF EACH MAIN POST TUNNEL
6. TYP DELUGE VALVE NICHE SHOWN SCHEMATICALLY WITHOUT REGARD TO WALL PREFERENCE.
7. TYPICAL FHVC NICHE

—⊙— TYPICAL PENDANT SPRINKLER HEAD

—✕— TYPICAL SIDEWALL SPRINKLER HEAD

PRELIMINARY

PRESIDIO PARKWAY P3 PROJECT
GLP PRELIMINARY MASTER ALTERNATIVE

BRIDGE NO. 34-0163L/R

MAIN POST TUNNEL

FIRE PROTECTION PLAN

SCALE: 1"=30'

FP-3

RELATIVE BORDER SCALE IS IN INCHES 0 1 2 3

USERNAME => kmagee
DGN FILE => IP_PWP:dms70012\45708-FP-FP03.dgn

LAST REVISION 00-00-00

TIME PLOTTED => 17:19

DATE PLOTTED => 09-SEP-2010

DISTRICT	ROUTE	POST MILES	SHEET No.	TOTAL SHEETS
4	101, 1	8.0/9.8 6.8/7.1	100	128

GOLDEN LINK PARTNERS

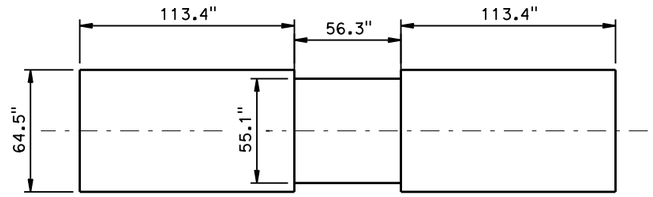

TYPICAL JET FAN DIMENSIONS
PLAN VIEW

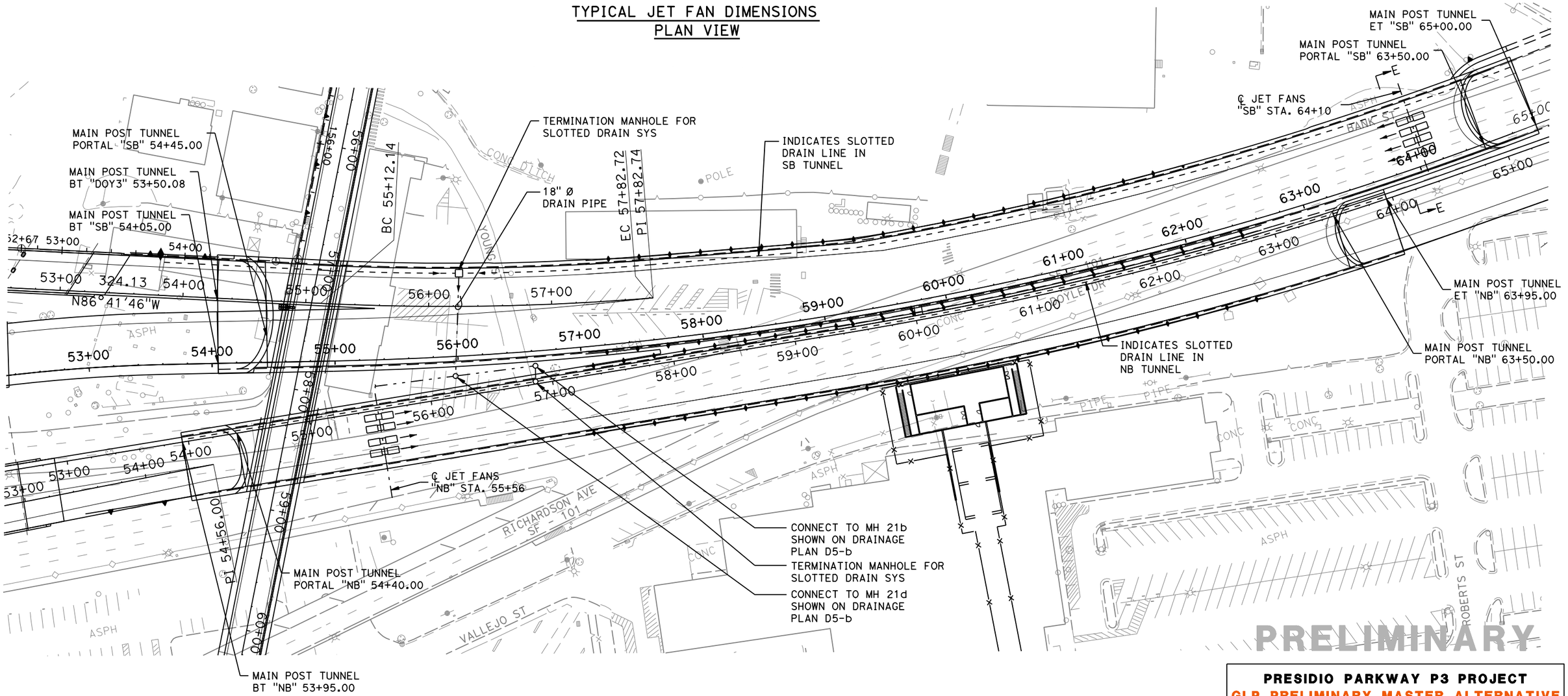

PRESIDIO PARKWAY P3 PROJECT
GLP PRELIMINARY MASTER ALTERNATIVE

BRIDGE NO. 34-0163L/R

MAIN POST TUNNEL

VENTILATION & DRAINAGE

SCALE: 1"=40'

ME-1

RELATIVE BORDER SCALE IS IN INCHES 0 1 2 3

USERNAME => kmagee
DGN FILE => IP_PWP:dms70012\45708-ME-ME01.dgn

LAST REVISION 00-00-00

TIME PLOTTED => 12:42

DATE PLOTTED => 07-SEP-2010

DISTRICT	ROUTE	POST MILES	SHEET No.	TOTAL SHEETS
4	101, 1	8.0/9.8 6.8/7.1	101	128

GOLDEN LINK PARTNERS

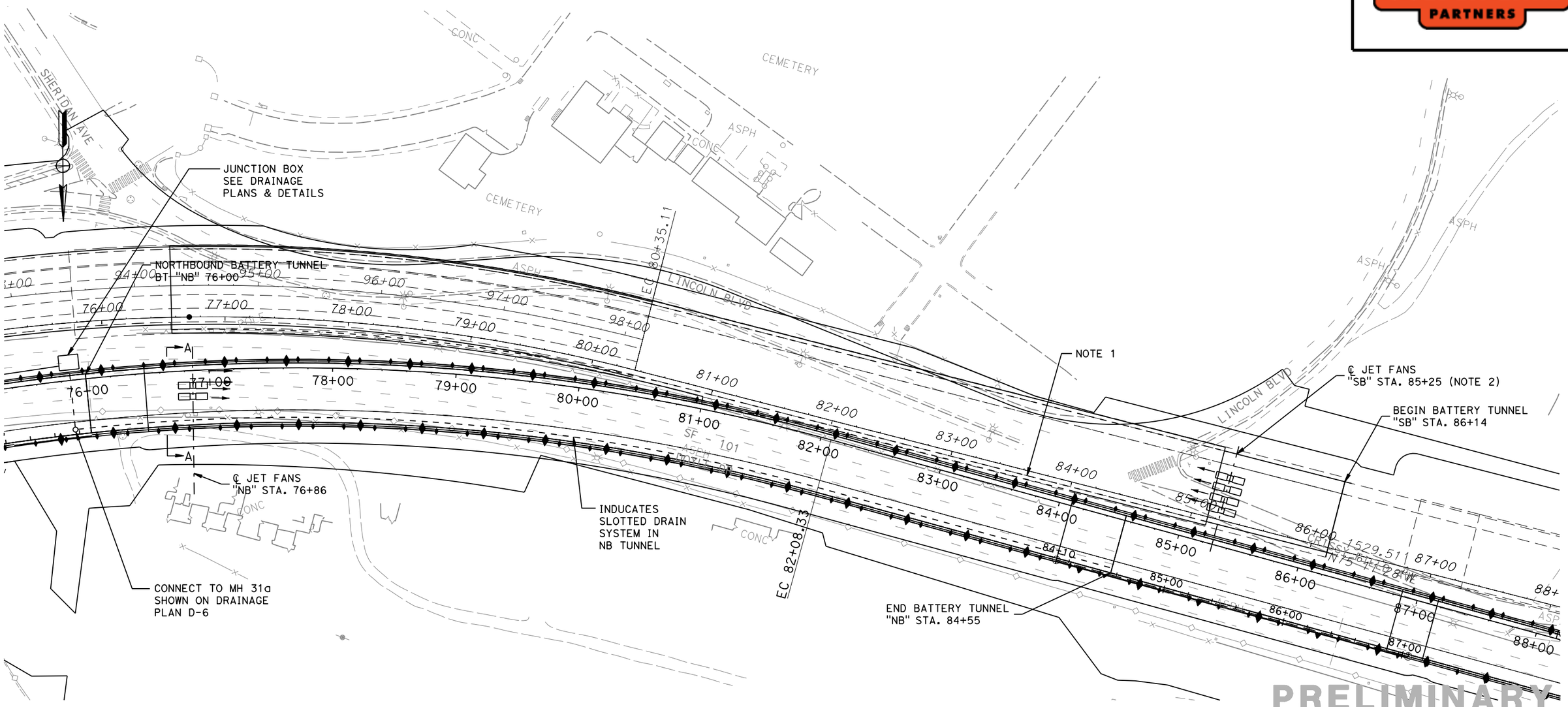

PRELIMINARY

NOTES:

1 THE SLOTTED DRAIN SYSTEM FOR THE SB BATTERY TUNNEL IS PROVIDED UNDER AN EARLIER CONTRACT.

2 THE INSERTS IN THE CONCRETE CEILING TO SUPPORT THE JET FANS ARE PROVIDED UNDER THE PHASE 1 CONTRACT. SEE SHT SBBT-ST34 OF CONTRACT A.

PRESIDIO PARKWAY P3 PROJECT
GLP PRELIMINARY MASTER ALTERNATIVE

BRIDGE NO. 34-0161R

BATTERY TUNNEL

VENTILATION & DRAINAGE

SCALE: 1"=40'

ME-2

DISTRICT	ROUTE	POST MILES	SHEET No.	TOTAL SHEETS
4	101, 1	8.0/9.8 6.8/7.1	102	128

GOLDEN LINK PARTNERS

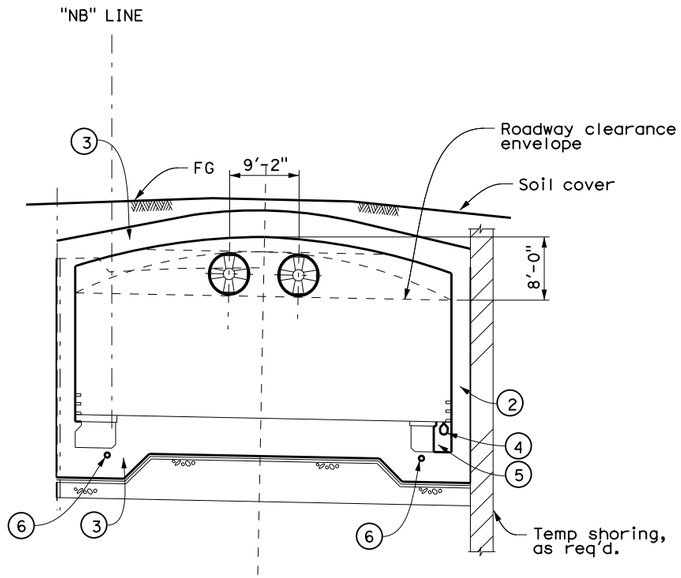

SECTION A-A

Scale: 1"=10' (AT JET FANS)

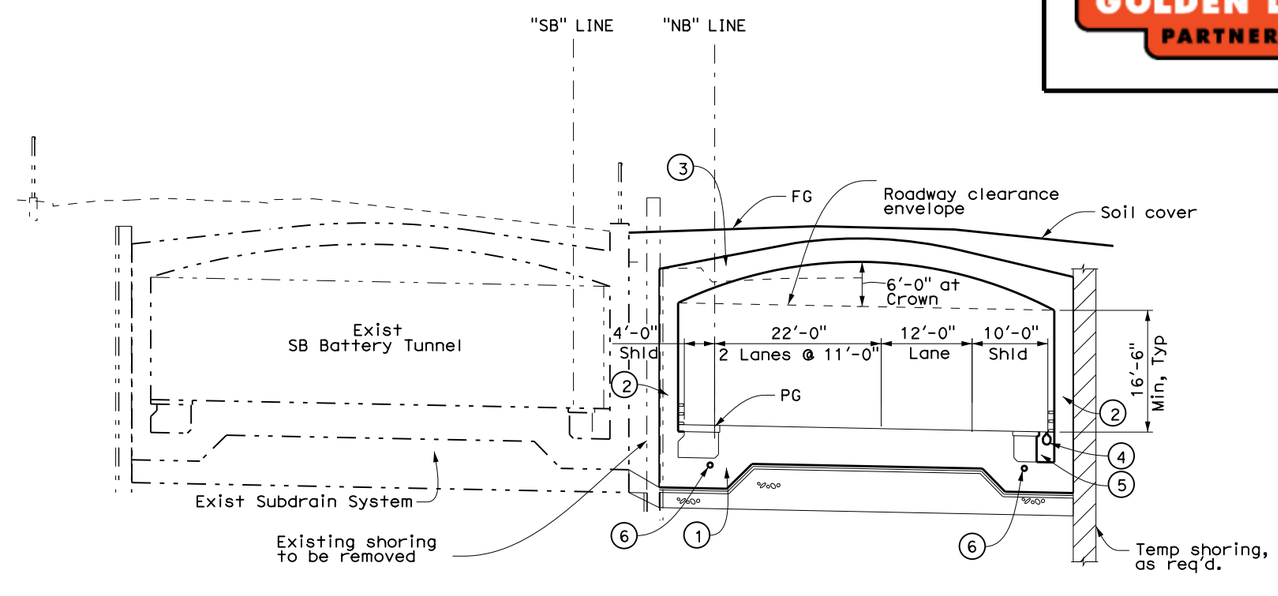

SECTION B-B

Scale: 1"=10'

LEGEND:

1. Cast-In-Place Concrete Tunnel invert slab
2. Cast-In-Place Concrete Tunnel wall
3. Cast-In-Place Concrete Tunnel roof slab
4. Roadway Drainage system
5. Utility ductbank
6. 4"Ø Ductbank Drain

PRELIMINARY

PRESIDIO PARKWAY P3 PROJECT
GLP PRELIMINARY MASTER ALTERNATIVE

BRIDGE NO. 34-0161R

NORTHBOUND BATTERY TUNNEL

MECHANICAL SECTIONS No.2

SCALE AS SHOWN

ME-3

DISTRICT	ROUTE	POST MILES	SHEET No.	TOTAL SHEETS
4	101, 1	8.0/9.8 6.8/7.1	103	128

GOLDEN LINK PARTNERS

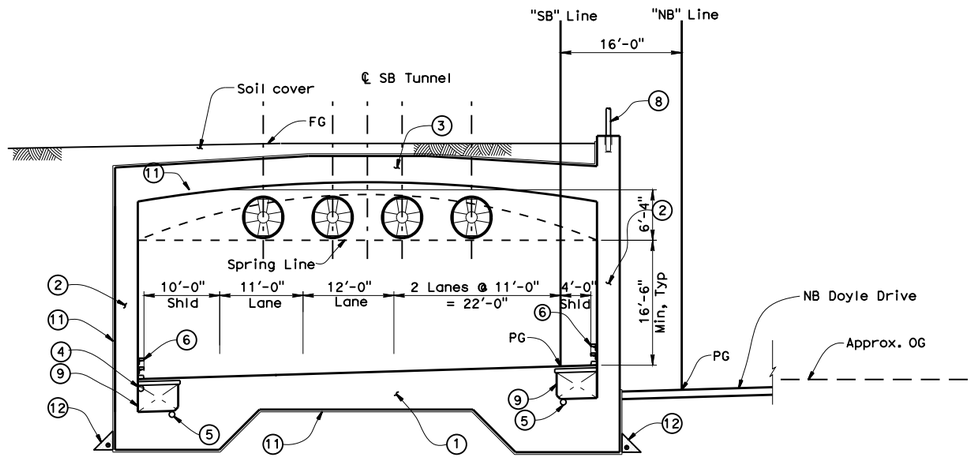

BRIDGE No. 34-0163L

SECTION E-E

1/8" = 1'-0"

LEGEND:

1. Cast-In-Place Concrete Tunnel invert slab
2. Cast-In-Place Concrete Tunnel wall
3. Cast-In-Place Concrete Tunnel roof slab
4. Roadway Drainage Slot
5. Ductbank Drain
6. Wall Mounted California ST-10 Bridge Rail
8. Architectural fence
9. Utility ductbank
11. Waterproofing system
12. Drain System

PRELIMINARY

PRESIDIO PARKWAY P3 PROJECT
GLP PRELIMINARY MASTER ALTERNATIVE

BRIDGE NO. 34-0163L/R

MAIN POST TUNNEL

MECHANICAL SECTIONS 3

SCALE AS SHOWN

ME-4

DISTRICT	ROUTE	POST MILES	SHEET No.	TOTAL SHEETS
4	101, 1	8.0/9.8 6.8/7.1	104	128

GOLDEN LINK PARTNERS

"NB" Line PROFILE

No Scale

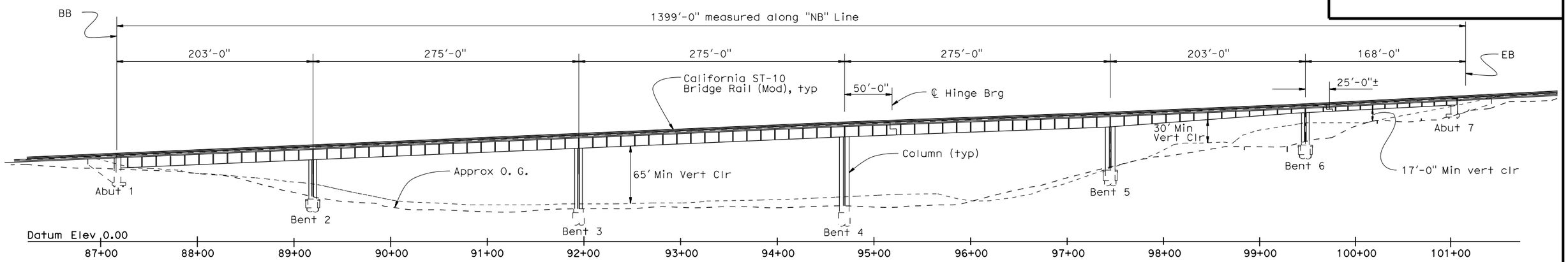

ELEVATION

1" = 50'

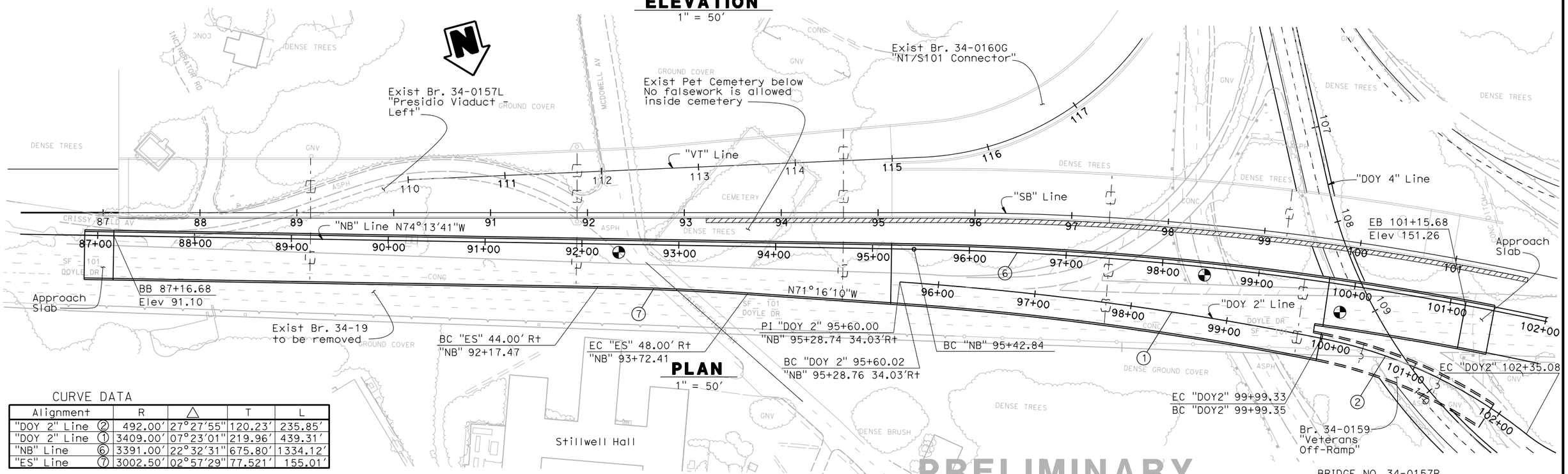

PLAN

1" = 50'

CURVE DATA

Alignment	R	△	T	L
"DOY 2" Line ②	492.00'	27°27'55"	120.23'	235.85'
"DOY 2" Line ①	3409.00'	07°23'01"	219.96'	439.31'
"NB" Line ⑥	3391.00'	22°32'31"	675.80'	1334.12'
"ES" Line ⑦	3002.50'	02°57'29"	77.521'	155.01'

LEGEND

Point of minimum vertical clearance

Indicates Existing Temporary Bridge Widening constructed in Phase 1. Widening to to be removed and California ST-10 Bridge Rail (Mod) constructed.

PRELIMINARY

PRESIDIO PARKWAY P3 PROJECT

GLP PRELIMINARY MASTER ALTERNATIVE

BRIDGE NO. 34-0157R

NORTHBOUND HIGH VIADUCT

GENERAL PLAN

SCALE AS SHOWN

ST-1

RELATIVE BORDER SCALE IS IN INCHES 0 1 2 3

USERNAME => $USER$
DGN FILE => $FILE$

LAST REVISION 00-00-00

TIME PLOTTED => $TIME$

DATE PLOTTED => $DATE$

DISTRICT	ROUTE	POST MILES	SHEET No.	TOTAL SHEETS
4	101, 1	8.0/9.8 6.8/7.1	105	128

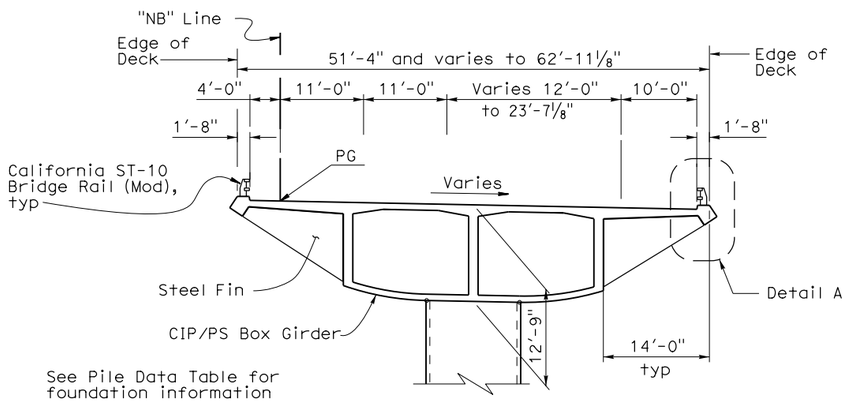

TYPICAL SECTION - STA 87+16.68 TO 95+19.68

1" = 10'

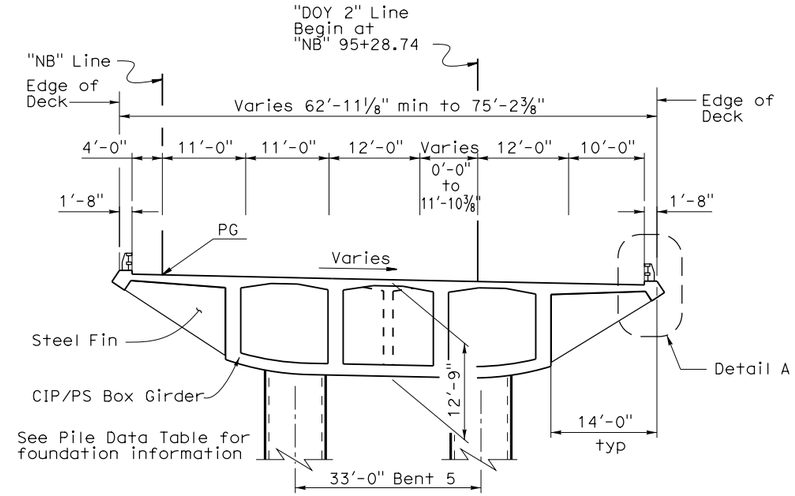

TYPICAL SECTION - STA 95+19.68 TO 97+44.68

1" = 10'

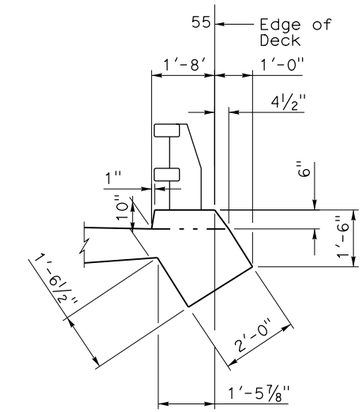

DETAIL A

1" = 1'-0"

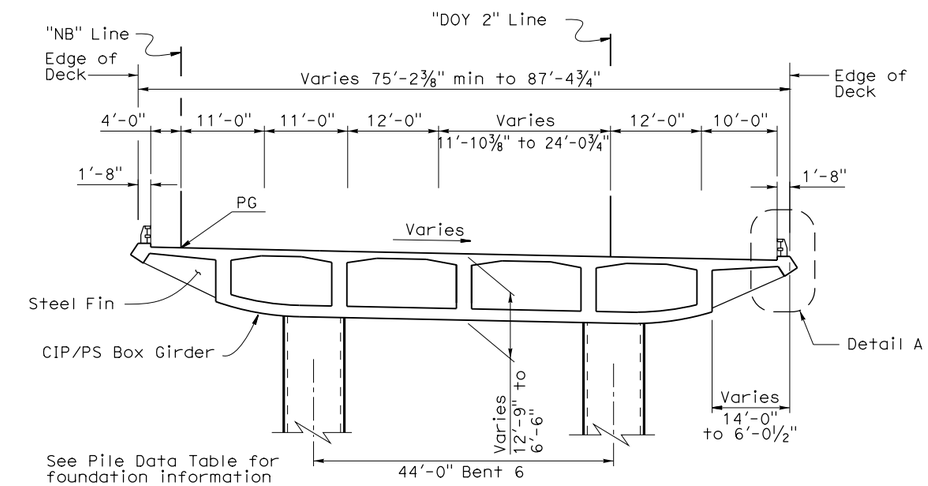

TYPICAL SECTION - STA 97+44.68 TO 99+72.68

1" = 10'

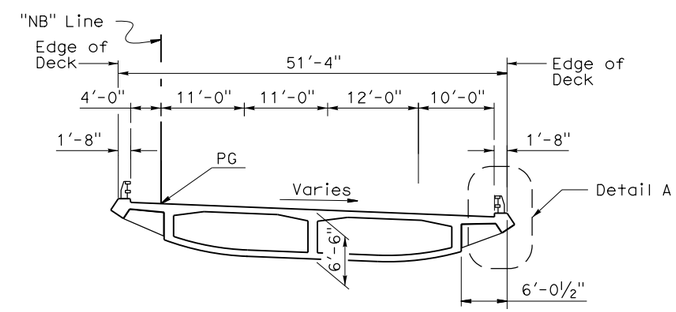

TYPICAL SECTION - STA 99+72.68 to 101+15.68

1" = 10'

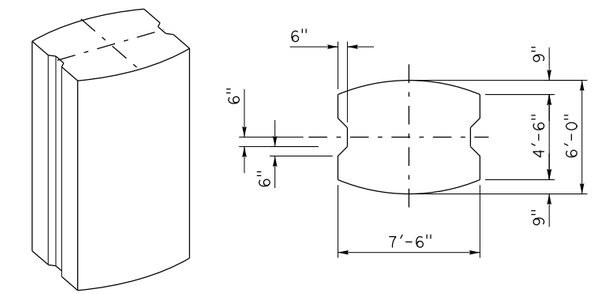

SMALL COLUMN SECTION

COLUMN ARCHITECTURAL DETAILS

NO SCALE

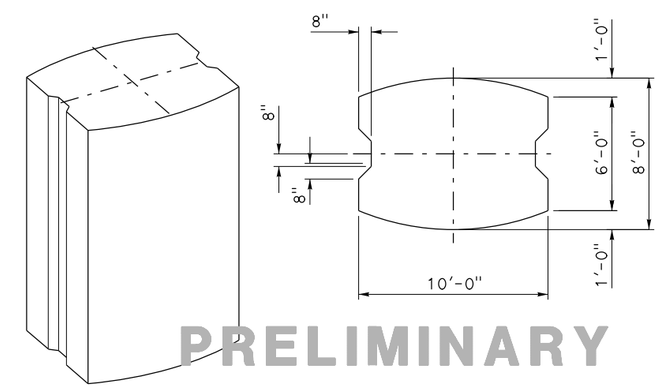

PRELIMINARY

LARGE COLUMN SECTION

COLUMN ARCHITECTURAL DETAILS

NO SCALE

PILE DATA TABLE (ALTERNATIVE A)

Location	Pile Type	Cut-Off Elevation (ft)	Permanent Steel Casting Estimated Tip Elev (ft)	Estimated Tip Elevations (ft)
Abut 1	24" CIDH	70	N/A	15
Bent 2	144" CIDH (Type II)/138" CIDH (Rock Socket)	35	-24	-70
Bent 3	144" CIDH (Type II)/138" CIDH (Rock Socket)	30	-121	-182
Bent 4	144" CIDH (Type II)/138" CIDH (Rock Socket)	30	-33	-87
Bent 5	138" CIDH (Rock Socket)	63	N/A	10
Bent 6	102" CIDH (Rock Socket)	90	N/A	37
Abut 7	24" CIDH	130	N/A	85

PILE DATA TABLE (ALTERNATIVE B)

Location	Pile Type	Cut-Off Elevation (ft)	Permanent Steel Casting Estimated Tip Elev (ft)	Estimated Tip Elevations (ft)
Abut 1	24" CIDH	70	N/A	15
Bent 2	118" CIDH (Type II)/112" CIDH (Rock Socket)	35	-24	-87
Bent 3	118" CIDH (Type II)/112" CIDH (Rock Socket)	30	-121	-198
Bent 4	118" CIDH (Type II)/112" CIDH (Rock Socket)	30	-33	-108
Bent 5	138" CIDH (Rock Socket)	63	N/A	-4
Bent 6	102" CIDH (Rock Socket)	90	N/A	23
Abut 7	24" CIDH	130	N/A	85

BRIDGE NO. 34-0157R

NORTHBOUND HIGH VIADUCT

TYPICAL SECTIONS

SCALE AS SHOWN

ST-2

PRESIDIO PARKWAY P3 PROJECT
GLP PRELIMINARY MASTER ALTERNATIVE

DISTRICT	ROUTE	POST MILES	SHEET No.	TOTAL SHEETS
4	101, 1	8.0/9.8 6.8/7.1	106	128

GOLDEN LINK PARTNERS

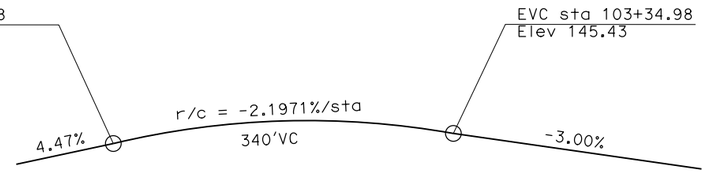

PROFILE GRADE
No Scale

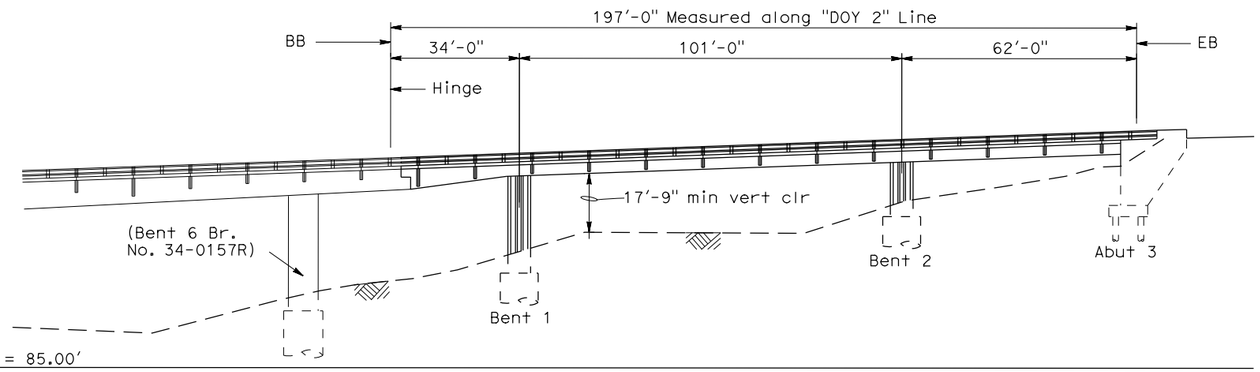

ELEVATION
1" = 20'

PILE DATA TABLE				
Location	Pile Type	Cut-Off Elevation (ft)	Permanent Steel Casting Estimated Tip Elev (ft)	Estimated Tip Elevations (ft)
Bent 1	102" CIDH (Rock Socket)	110	N/A	63
Bent 2	108" CIDH (Type II)/102" CIDH (Rock Socket)	125	112	70
Abut 3	24" CIDH	125	N/A	83

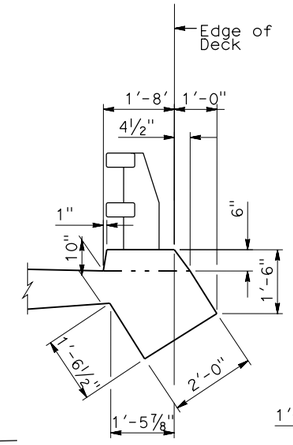

DETAIL A
½" = 1'-0"

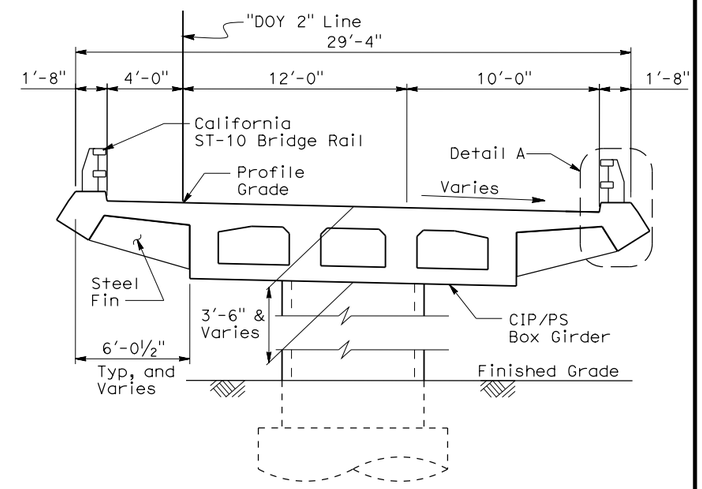

TYPICAL SECTION
¼" = 1'-0"

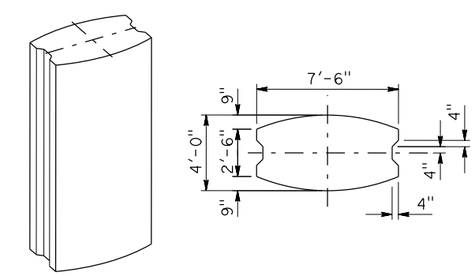

COLUMN ARCHITECTURAL DETAILS
NO SCALE

PRELIMINARY

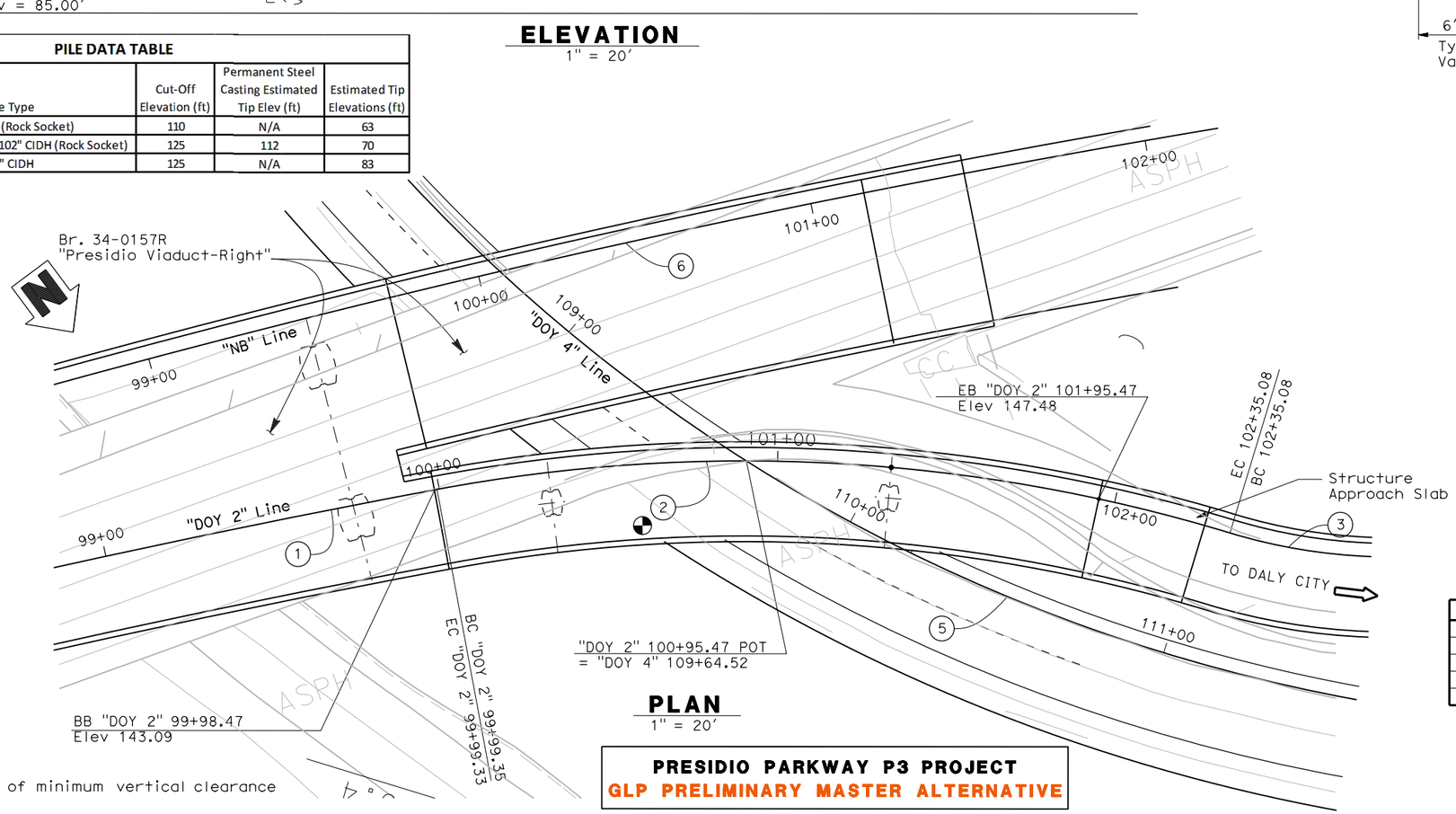

PLAN
1" = 20'

Indicates point of minimum vertical clearance

CURVE DATA

Alignment		R	Δ	T	L
"DOY 2" Line	1	3409.00'	07°23'01"	219.96'	439.31'
"DOY 2" Line	2	492.00'	27°27'55"	120.23'	235.85'
"DOY 2" Line	3	164.00'	49°28'52"	75.57'	141.63'
"DOY 4" Line	5	456.00'	48°31'42"	205.55'	386.22'
"NB" Line	6	3391.00'	22°32'31"	675.80'	1334.12'

PRESIDIO PARKWAY P3 PROJECT
GLP PRELIMINARY MASTER ALTERNATIVE

BRIDGE NO. 34-0159
VETERANS OFF RAMP
GENERAL PLAN
SCALE AS SHOWN

ST-3

DISTRICT	ROUTE	POST MILES	SHEET No.	TOTAL SHEETS
4	101, 1	8.0/9.8 6.8/7.1	107	128

GOLDEN LINK PARTNERS

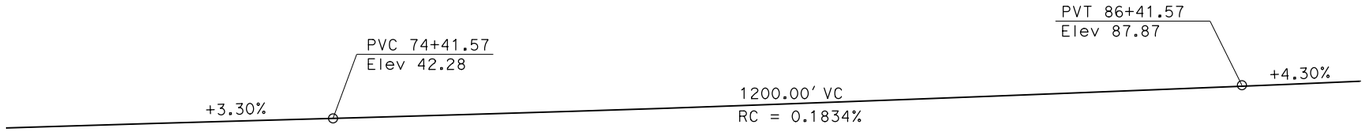

PROFILE GRADE 'NB' LINE

No Scale

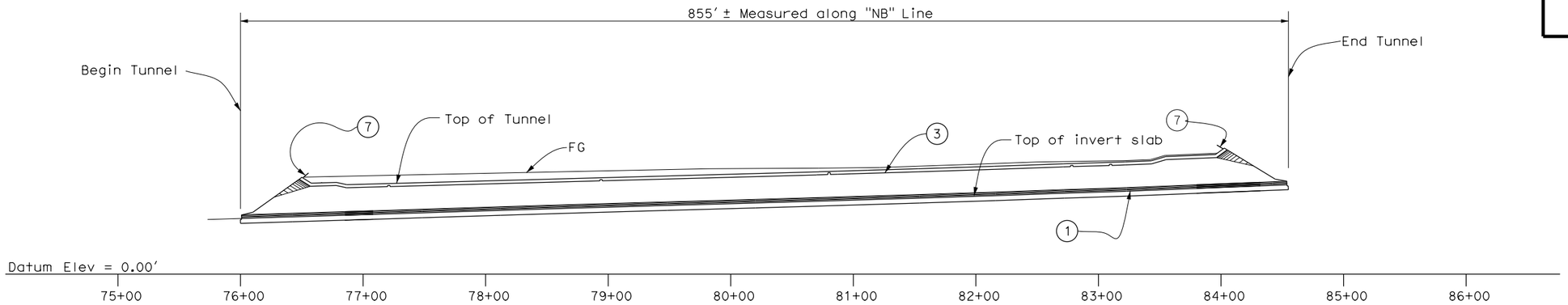

ELEVATION

Scale: 1"=50'

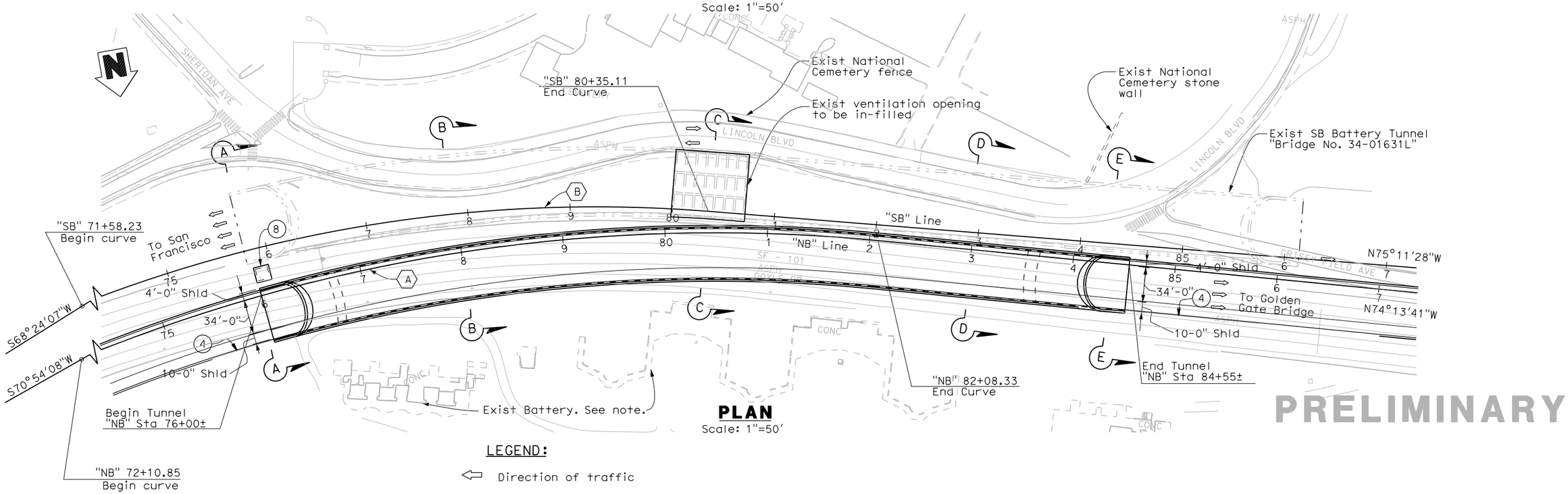

PLAN

Scale: 1"=50'

LEGEND:

- ⇦ Direction of traffic
- (1) Cast-in-place concrete tunnel invert slab
- (3) Cast-in-place concrete tunnel roof slab
- (4) Retaining Wall, for full Retaining Wall Layouts, see Dwgs L-6, L-7.
- (7) Safety railing
- (8) Drain Sump

PRESIDIO PARKWAY P3 PROJECT
GLP PRELIMINARY MASTER ALTERNATIVE

BRIDGE NO. 34-0161R

NORTHBOUND BATTERY TUNNEL

GENERAL PLAN

SCALE AS SHOWN

ST-4

DISTRICT	ROUTE	POST MILES	SHEET No.	TOTAL SHEETS
4	101, 1	8.0/9.8 6.8/7.1	108	128

GOLDEN LINK PARTNERS

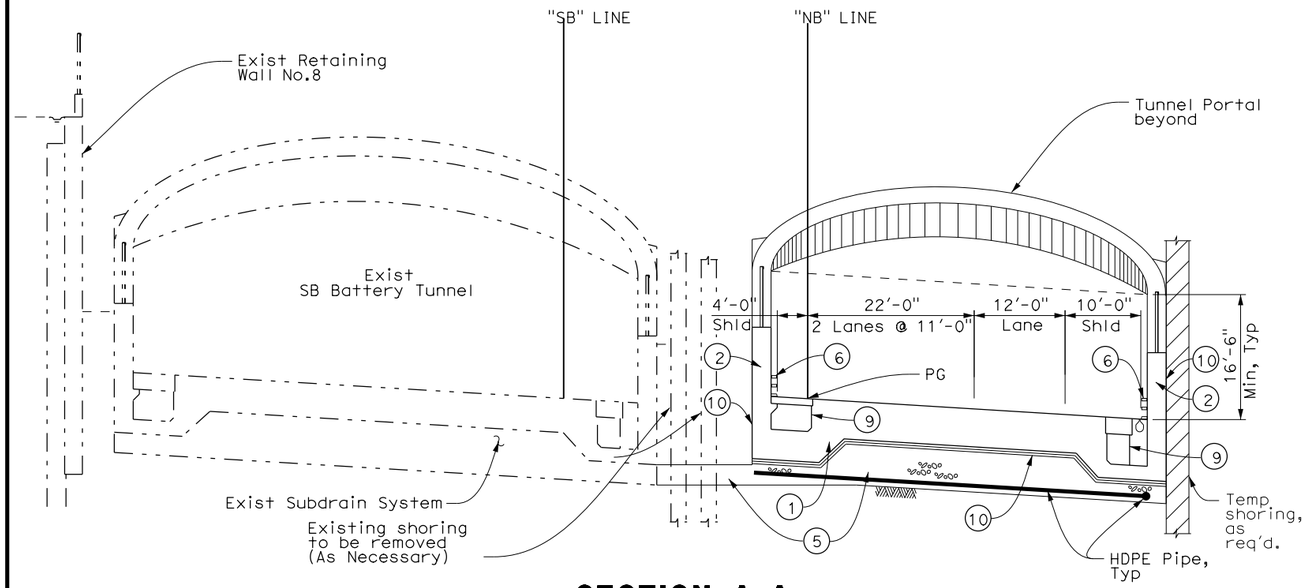

SECTION A-A

Scale: 1"=10'

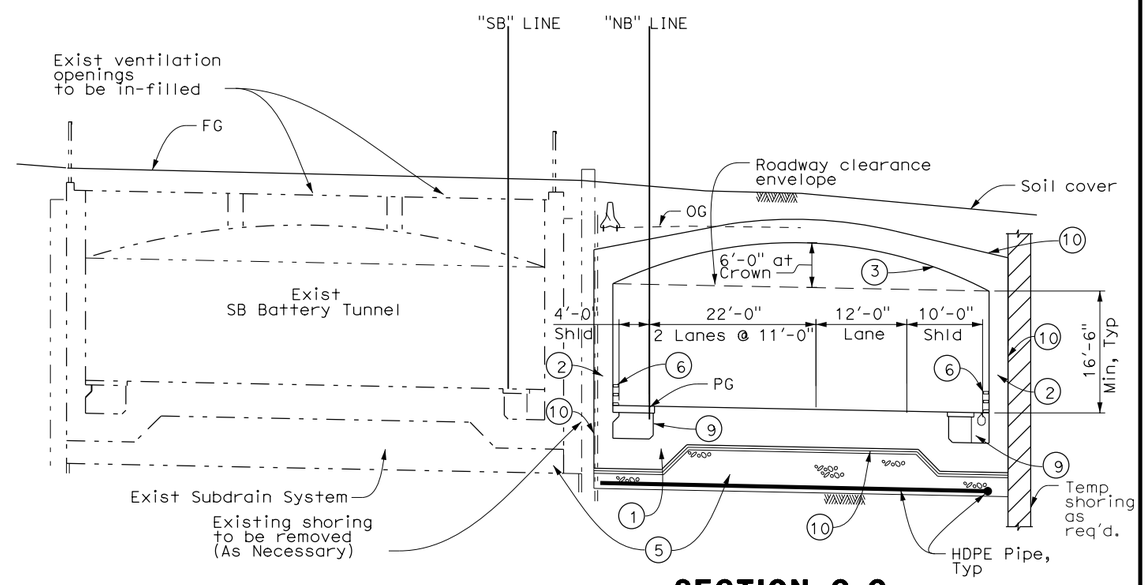

SECTION C-C

Scale: 1"=10'

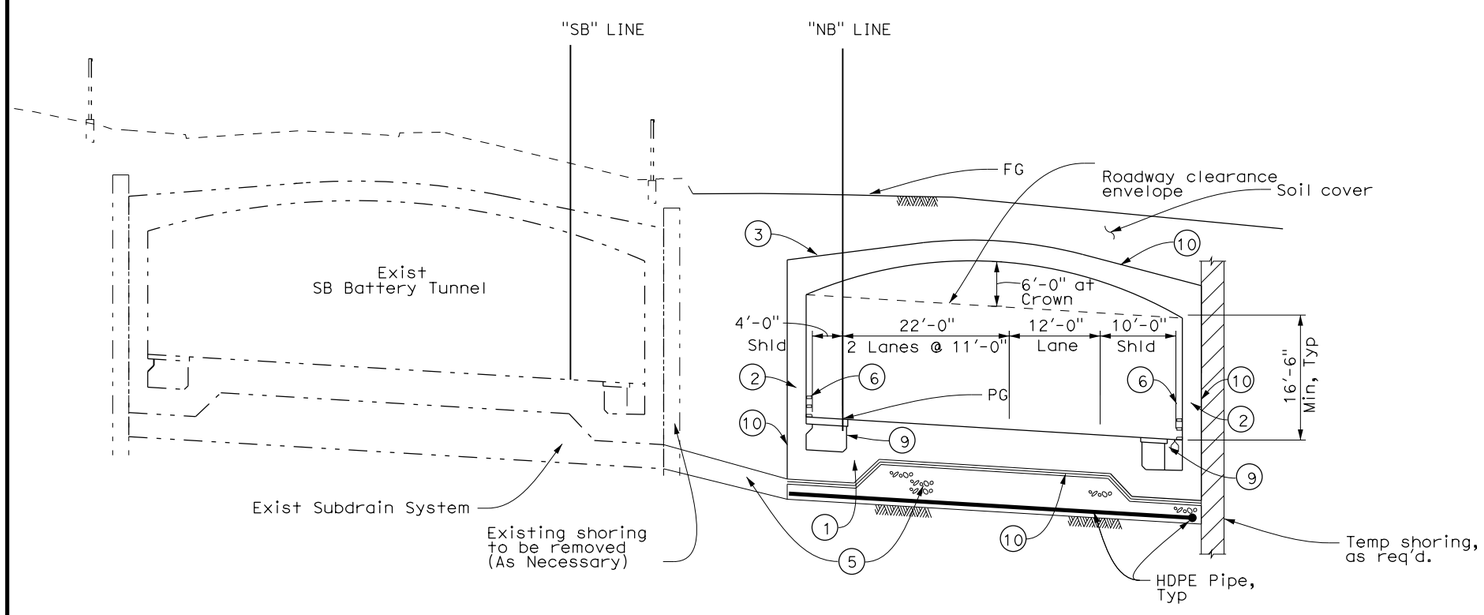

SECTION B-B

Scale: 1"=10'

LEGEND:

1. Cast-In-Place Concrete Tunnel invert slab
2. Cast-In-Place Concrete Tunnel wall
3. Cast-In-Place Concrete Tunnel roof slab
5. Aggregate Base and Sub-drain system with HDPE Pipe
6. Wall Mounted California ST-10 Bridge Rail
8. Architectural fence
9. Utility ductbank w/ slot drain
10. Waterproofing system and geocomposite drain

PRELIMINARY

PRESIDIO PARKWAY P3 PROJECT
GLP PRELIMINARY MASTER ALTERNATIVE

BRIDGE NO. 34-0161R

NORTHBOUND BATTERY TUNNEL

TYPICAL SECTIONS No.1

SCALE AS SHOWN

ST-5

DISTRICT	ROUTE	POST MILES	SHEET No.	TOTAL SHEETS
4	101, 1	8.0/9.8 6.8/7.1	109	128

GOLDEN LINK PARTNERS

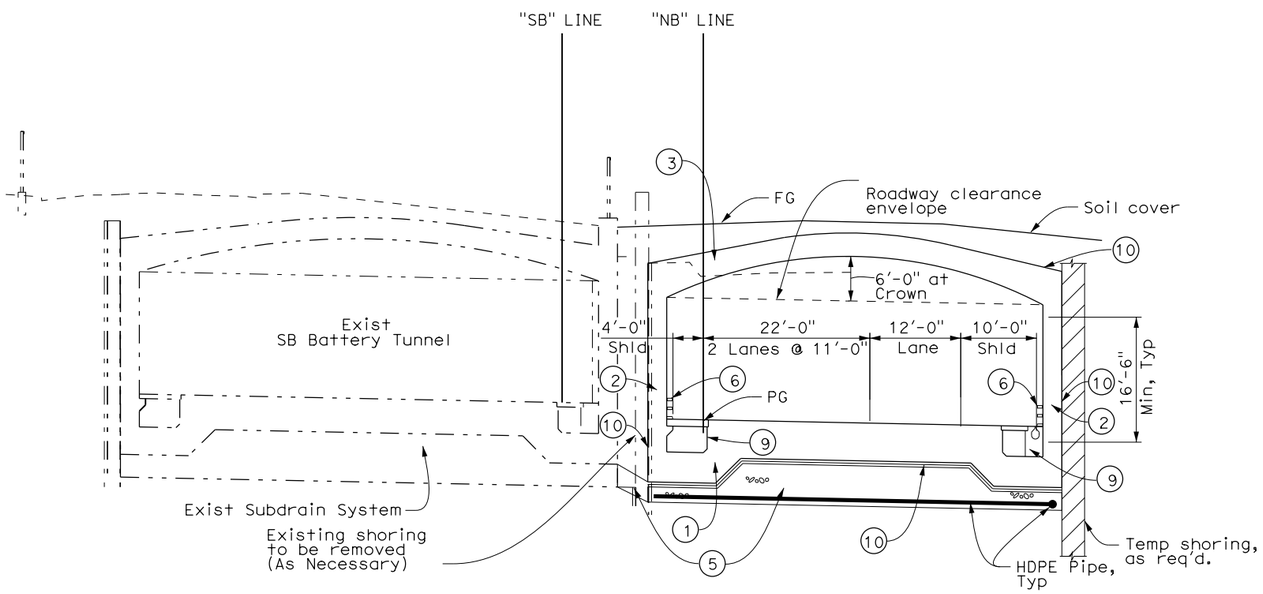

SECTION D-D

Scale: 1"=10'

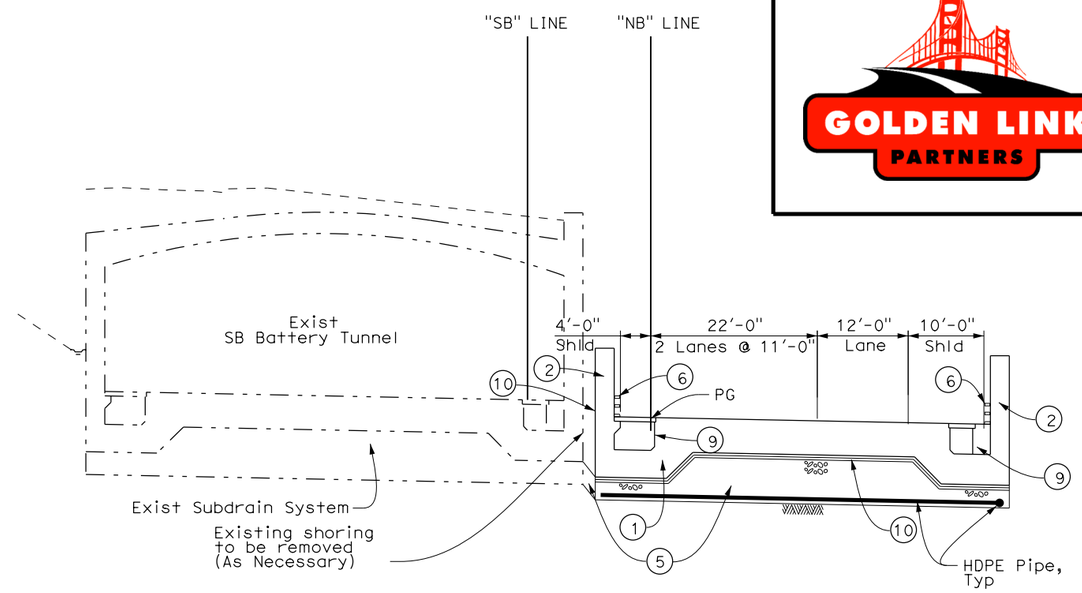

SECTION E-E

Scale: 1"=10'

LEGEND:

1. Cast-In-Place Concrete Tunnel invert slab
2. Cast-In-Place Concrete Tunnel wall
3. Cast-In-Place Concrete Tunnel roof slab
5. Aggregate Base and Sub-drain system with HDPE Pipe
6. Wall Mounted California ST-10 Bridge Rail
8. Architectural fence
9. Utility ductbank w/ slot drain
10. Waterproofing system and geocomposite drain

PRELIMINARY

PRESIDIO PARKWAY P3 PROJECT
GLP PRELIMINARY MASTER ALTERNATIVE

BRIDGE NO. 34-0161R

NORTHBOUND BATTERY TUNNEL

TYPICAL SECTIONS No.2

SCALE AS SHOWN

ST-6

DISTRICT	ROUTE	POST MILES	SHEET No.	TOTAL SHEETS
4	101, 1	8.0/9.8 6.8/7.1	110	128

GOLDEN LINK PARTNERS

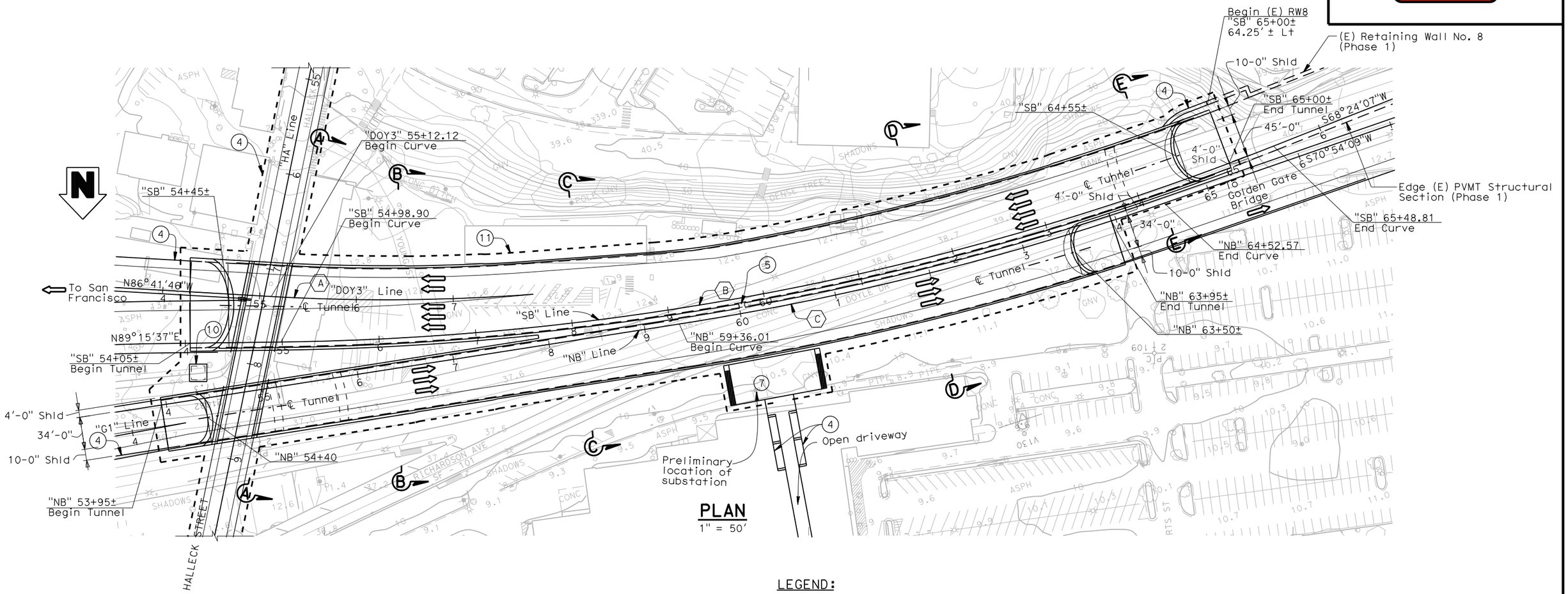

LEGEND:

Direction of traffic

1. Cast-in-place concrete tunnel invert slab
3. Cast-in-place concrete tunnel roof slab
4. Retaining Wall
   For full Retaining Wall Layouts, see Dwg L-5
5. Cross Passage
7. Substation (Preliminary Location)
8. Architectural Fence
10. Drainage Sump
11. Approximate limits of cellular CDSM ground improvement

Note: For Elevation / Profile Grades of alignments, see "Elevation & Profile Grades" sheet ST-7A.

PRELIMINARY

PRESIDIO PARKWAY P3 PROJECT
GLP PRELIMINARY MASTER ALTERNATIVE

BRIDGE NO. 34-0163L/R

MAIN POST TUNNEL

GENERAL PLAN

SCALE AS SHOWN

ST-7

DISTRICT	ROUTE	POST MILES	SHEET No.	TOTAL SHEETS
4	101, 1	8.0/9.8 6.8/7.1	111	128

GOLDEN LINK PARTNERS

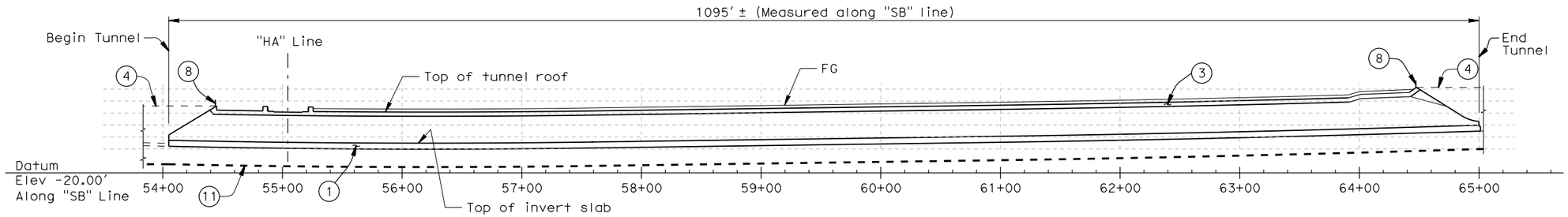

ALONG "SB" TUNNEL

ELEVATION

1" = 50'

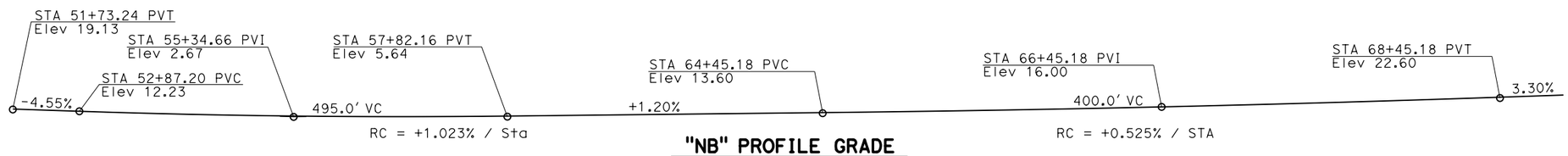

"NB" PROFILE GRADE

NO SCALE

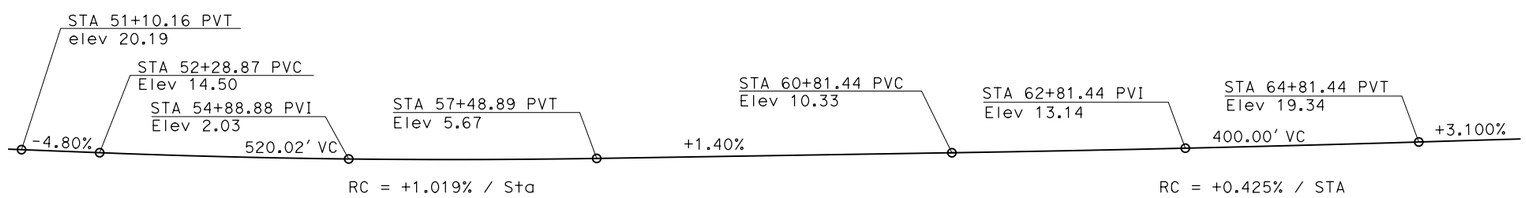

"SB" PROFILE GRADE

NO SCALE

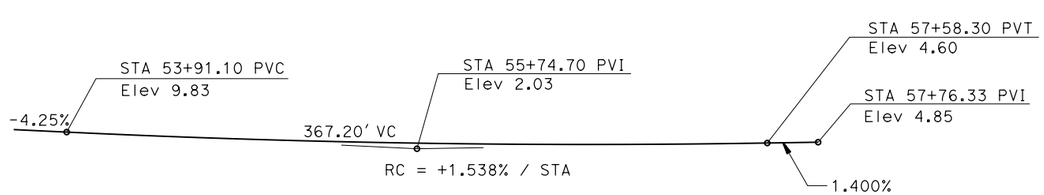

"DOY3" PROFILE GRADE

NO SCALE

Note: For Main Post Tunnel Plan, see "General Plan" Sheet ST-7.

LEGEND:

1. Cast-in-place concrete tunnel invert slab
3. Cast-in-place concrete tunnel roof slab
4. Retaining Wall
   For full Retaining Wall Layouts, see Dwg L-5
8. Architectural Fence
11. Approximate limits of cellular CDSM ground improvement

PRELIMINARY

PRESIDIO PARKWAY P3 PROJECT
GLP PRELIMINARY MASTER ALTERNATIVE

BRIDGE NO. 34-0163L/R

MAIN POST TUNNEL

ELEVATION & PROFILE GRADES

SCALE AS SHOWN

ST-7A

DISTRICT	ROUTE	POST MILES	SHEET No.	TOTAL SHEETS
4	101, 1	8.0/9.8 6.8/7.1	112	128

GOLDEN LINK PARTNERS

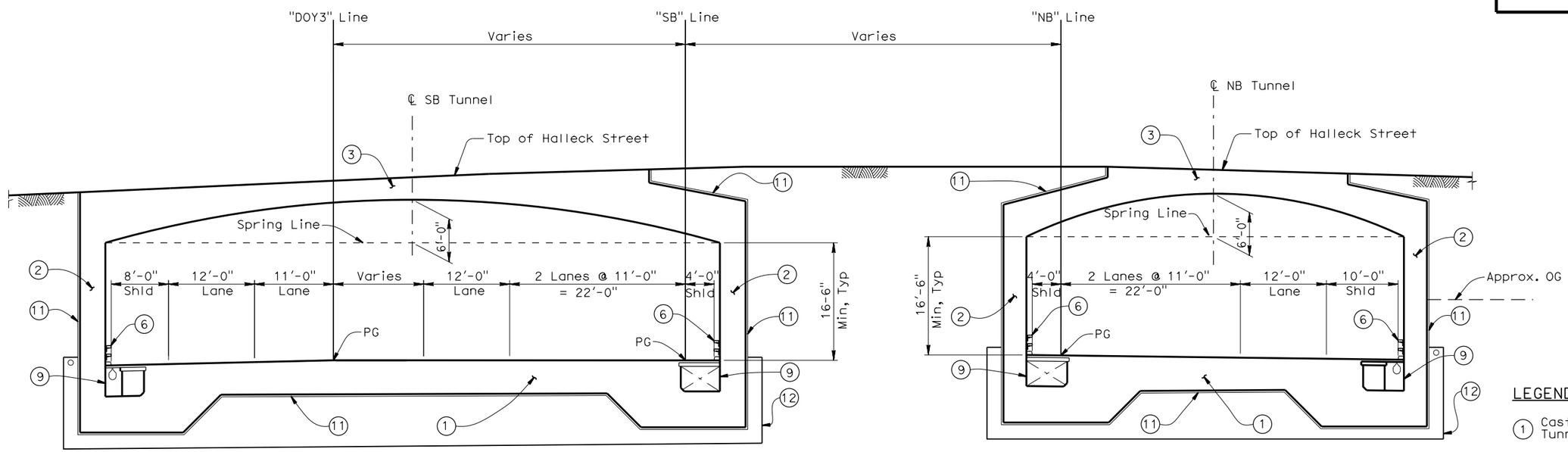

BRIDGE No. 34-0163L

BRIDGE No. 34-0163R

SECTION A-A at HALLECK STREET

1/8" = 1'-0"

LEGEND:

1. Cast-In-Place Concrete Tunnel invert slab
2. Cast-In-Place Concrete Tunnel wall
3. Cast-In-Place Concrete Tunnel roof slab
6. Wall Mounted California ST-10 Bridge Rail
8. Architectural fence
9. Utility ductbank w/ slot drain
11. Waterproofing system and Geocomposite Drain
12. Permeable material w/ non-woven filter fabric Drain System and pipe

PRELIMINARY

PRESIDIO PARKWAY P3 PROJECT
GLP PRELIMINARY MASTER ALTERNATIVE

MAIN POST TUNNEL

TYPICAL SECTIONS 1

SCALE AS SHOWN

ST-8

DISTRICT	ROUTE	POST MILES	SHEET No.	TOTAL SHEETS
4	101, 1	8.0/9.8 6.8/7.1	113	128

GOLDEN LINK PARTNERS

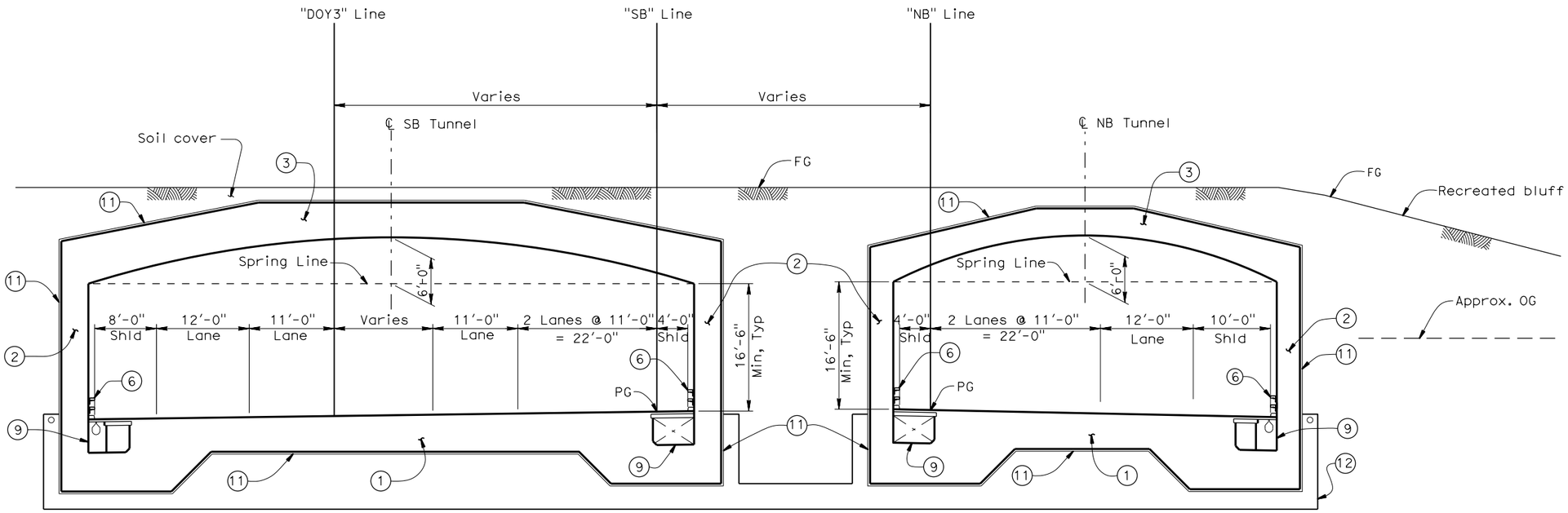

BRIDGE No. 34-0163L

BRIDGE No. 34-0163R

SECTION B-B

1/8" = 1'-0"

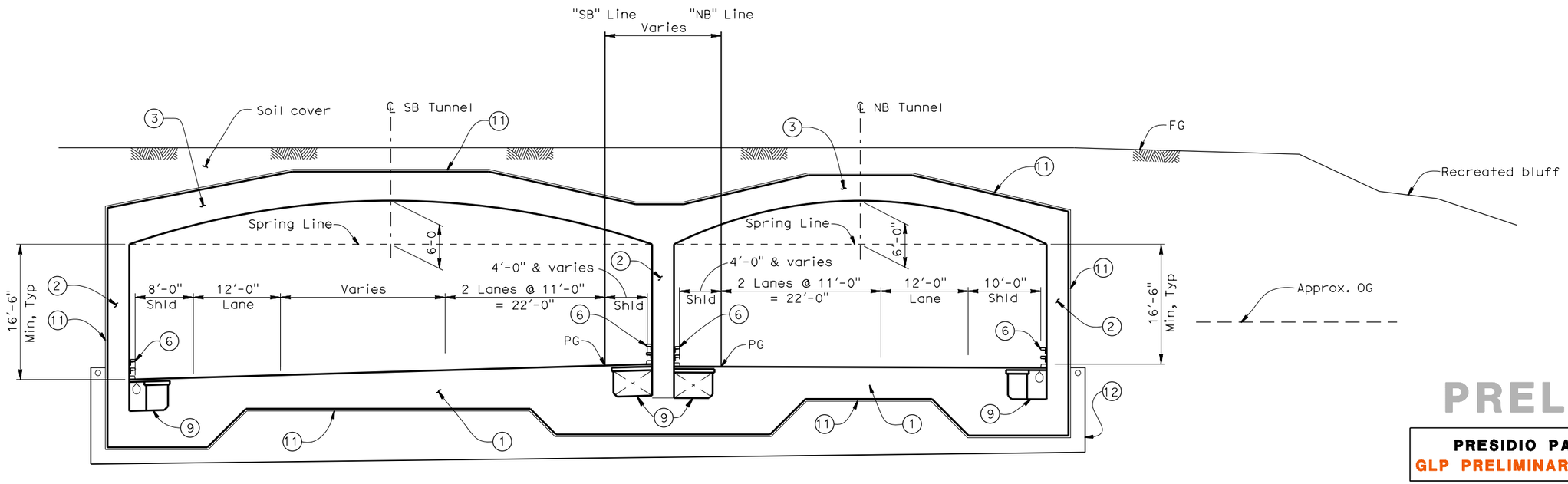

BRIDGE No. 34-0163L

BRIDGE No. 34-0163R

SECTION C-C

1/8" = 1'-0"

LEGEND:

1. Cast-In-Place Concrete Tunnel invert slab
2. Cast-In-Place Concrete Tunnel wall
3. Cast-In-Place Concrete Tunnel roof slab
6. Wall Mounted California ST-10 Bridge Rail
8. Architectural fence
9. Utility ductbank w/ slot drain
11. Waterproofing system and Geocomposite Drain
12. Permeable material w/ non-woven filter fabric Drain System and pipe

PRELIMINARY

PRESIDIO PARKWAY P3 PROJECT
GLP PRELIMINARY MASTER ALTERNATIVE

BRIDGE NO. 34-0163L/R

MAIN POST TUNNEL

TYPICAL SECTIONS 2

SCALE AS SHOWN

ST-9

DISTRICT	ROUTE	POST MILES	SHEET No.	TOTAL SHEETS
4	101, 1	8.0/9.8 6.8/7.1	114	128

GOLDEN LINK PARTNERS

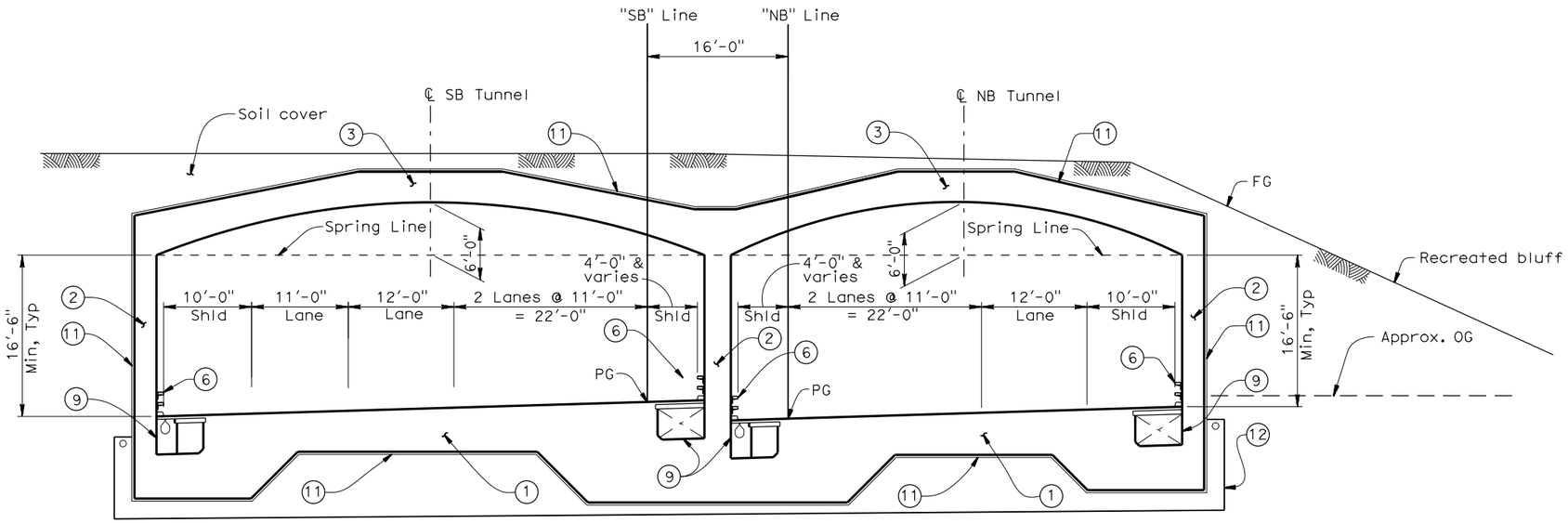

BRIDGE No. 34-0163L

SECTION D-D

1/8" = 1'-0"

BRIDGE No. 34-0163R

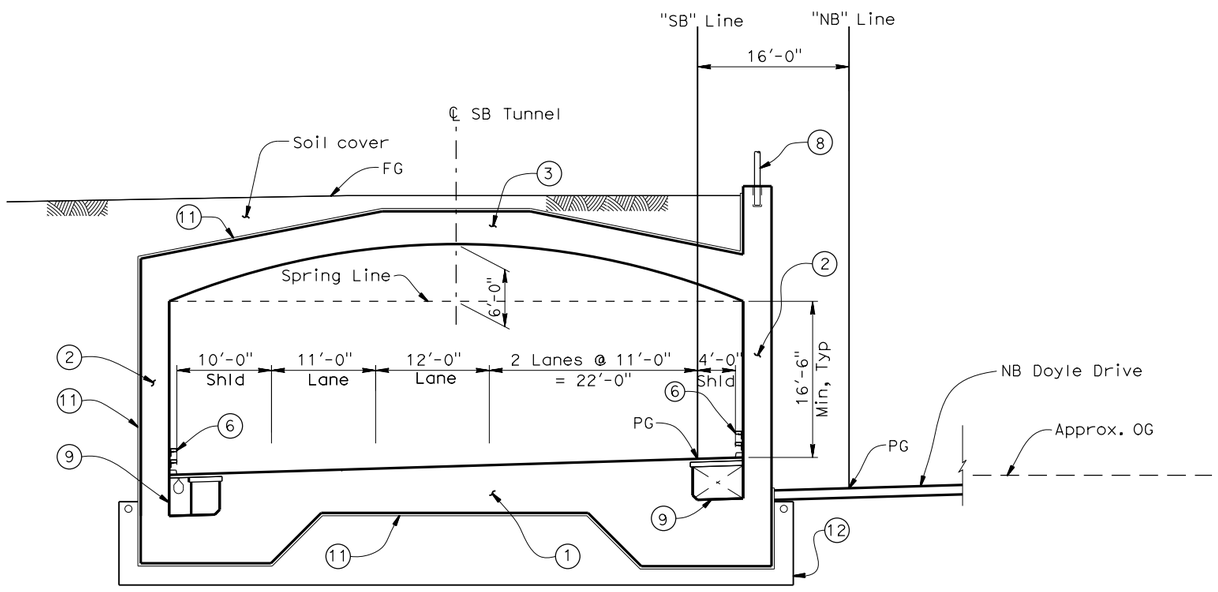

BRIDGE No. 34-0163L

SECTION E-E

1/8" = 1'-0"

LEGEND:

1. Cast-In-Place Concrete Tunnel invert slab
2. Cast-In-Place Concrete Tunnel wall
3. Cast-In-Place Concrete Tunnel roof slab
6. Wall Mounted California ST-10 Bridge Rail
8. Architectural fence
9. Utility ductbank w/ slot drain
11. Waterproofing system and Geocomposite Drain
12. Permeable material w/ non-woven filter fabric Drain System and pipe

PRELIMINARY

PRESIDIO PARKWAY P3 PROJECT
GLP PRELIMINARY MASTER ALTERNATIVE

BRIDGE NO. 34-0163L/R

MAIN POST TUNNEL

TYPICAL SECTIONS 3

SCALE AS SHOWN

ST-10

DISTRICT	ROUTE	POST MILES	SHEET No.	TOTAL SHEETS
4	101, 1	8.0/9.8 6.8/7.1	115	128

GOLDEN LINK PARTNERS

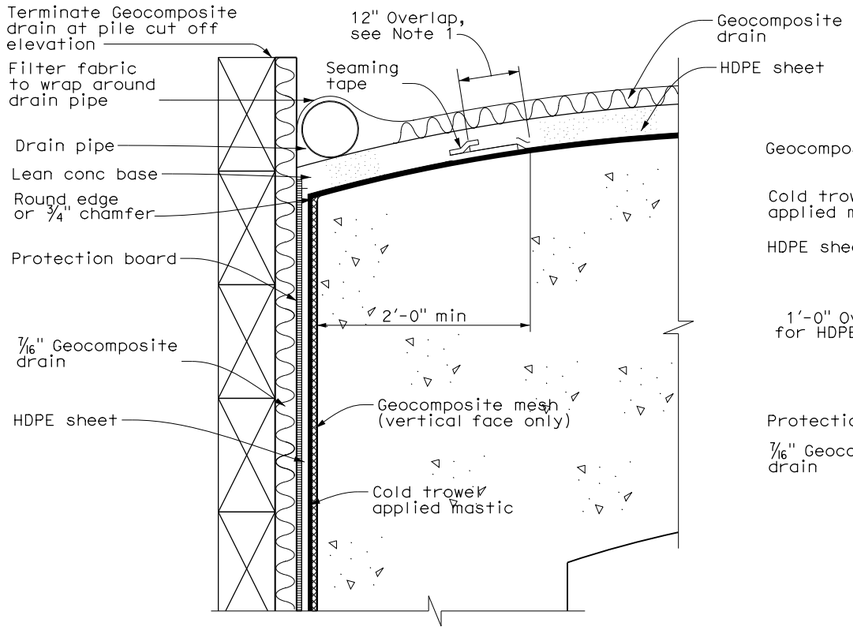

ROOF WATERPROOFING DETAIL
No scale

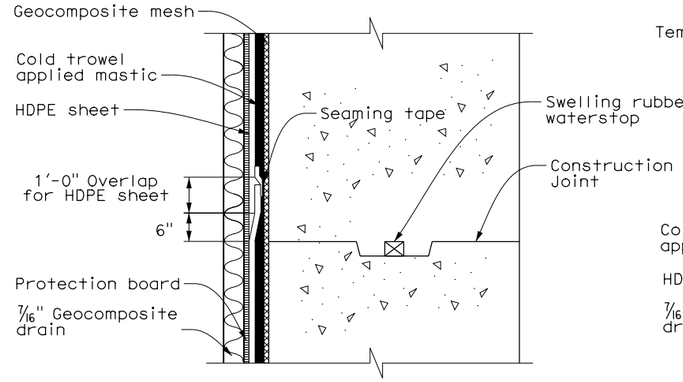

TUNNEL WALL WATERPROOFING DETAIL
No scale

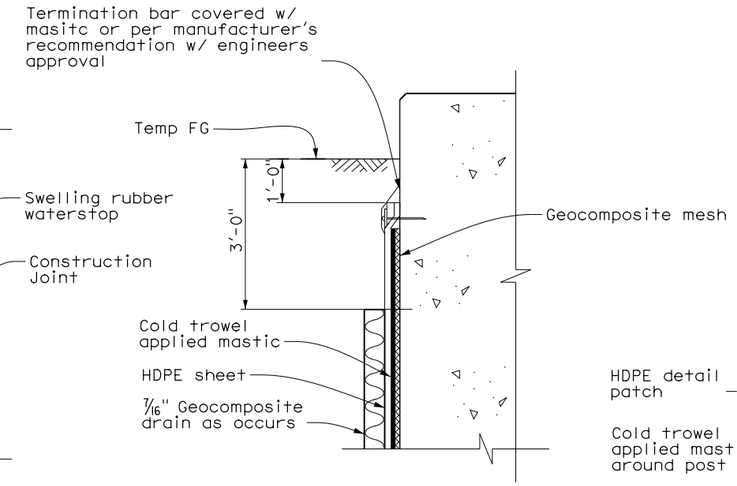

WATERPROOFING TERMINATION DETAIL
No scale

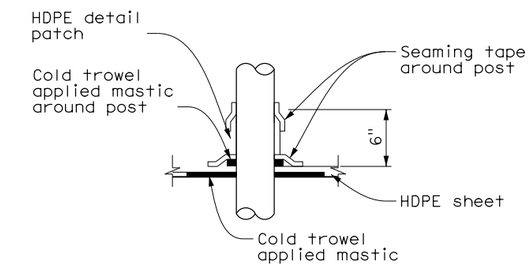

PENETRATION WATERPROOFING DETAIL
No scale

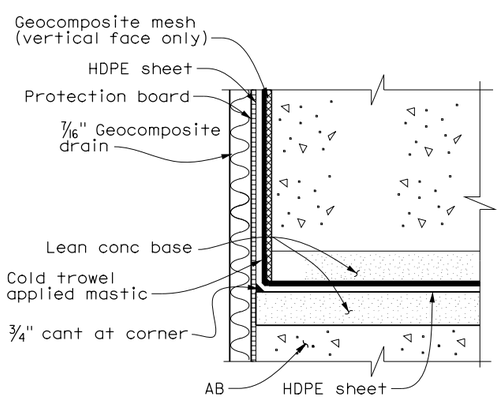

INVERT SLAB WATERPROOFING DETAIL
No scale

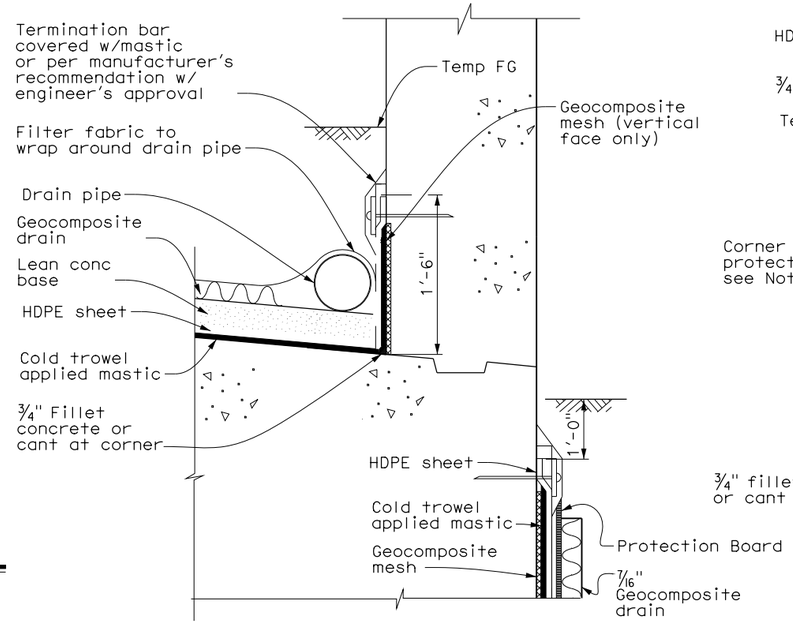

PARAPET WATERPROOFING DETAIL
No scale

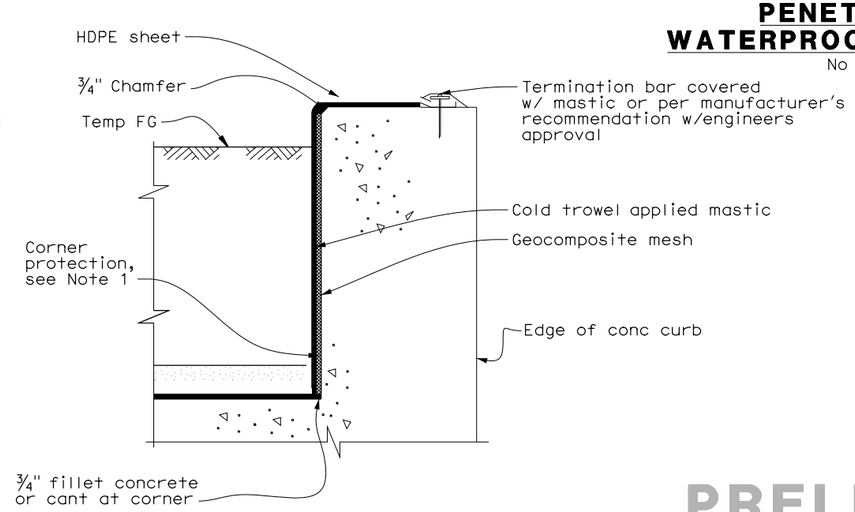

WALL WATERPROOFING DETAIL
No scale

PRELIMINARY

PRESIDIO PARKWAY P3 PROJECT
GLP PRELIMINARY MASTER ALTERNATIVE

TUNNEL WATERPROOFING DETAILS

ST-10W

DISTRICT	ROUTE	POST MILES	SHEET No.	TOTAL SHEETS
4	101, 1	8.0/9.8 6.8/7.1	116	128

GOLDEN LINK PARTNERS

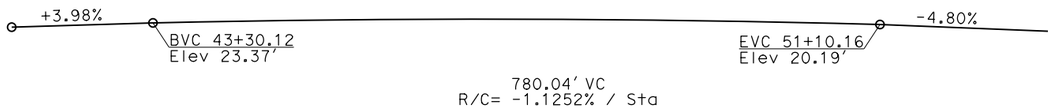

PROFILE GRADE
No Scale

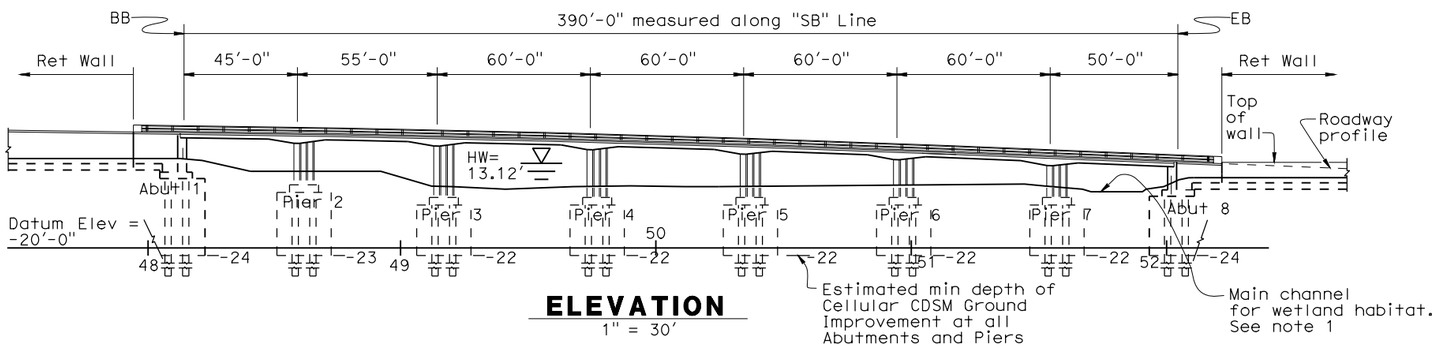

ELEVATION
1" = 30'

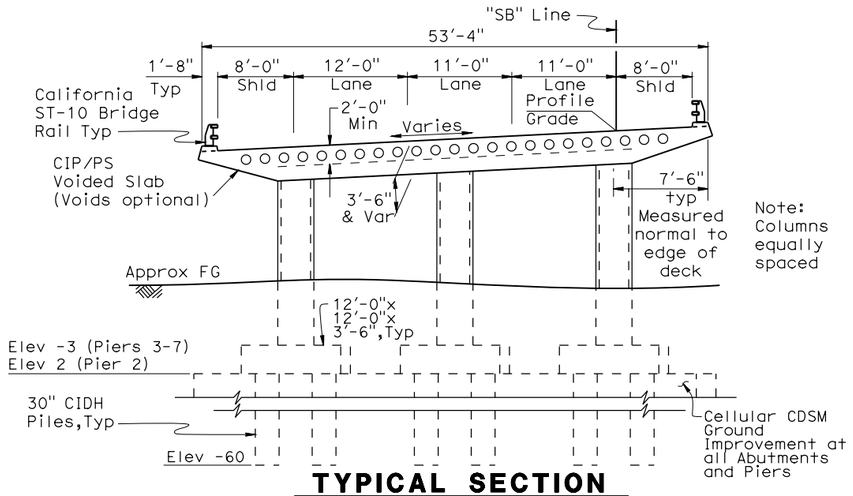

TYPICAL SECTION
1/8" = 1'-0"

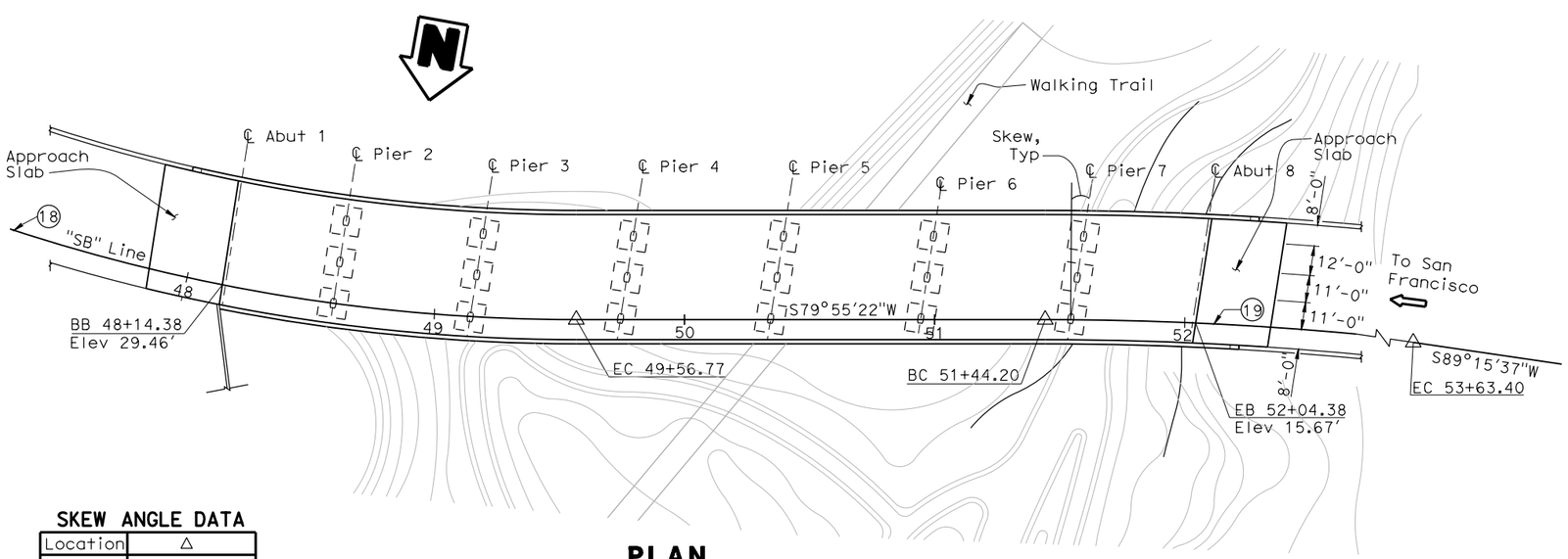

PLAN
1" = 30'

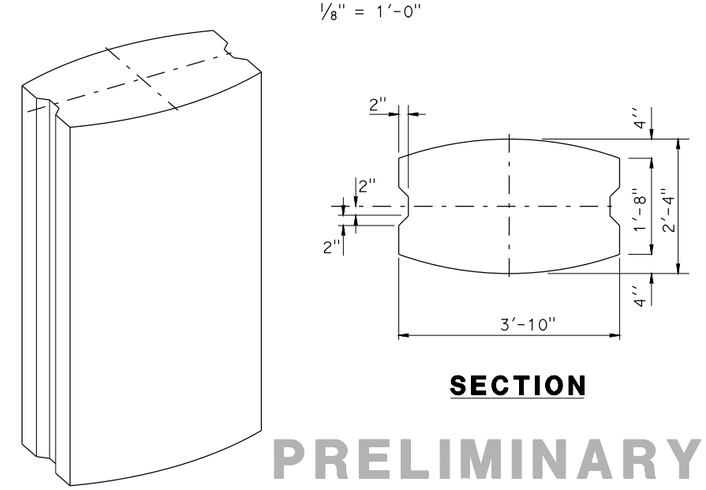

SECTION

PRELIMINARY

COLUMN ARCHITECTURAL DETAILS
NO SCALE

SKEW ANGLE DATA

Location	Δ
Abut 1	2°19'57"
Pier 2	1°7'30"
Pier 3	5°28'18"
Piers 4 thru 6	8°49'18"
Pier 7	8°23'17"
Abut 8	6°18'42"

CURVE DATA

Curve	R	Δ	T	L
18	725.00'	62°25'24"	439.28'	789.88'
19	1345.00'	9°20'14"	109.84'	219.19'

NOTES:

1. The Presidio Trust has plans to develop independently of this project a future wetland habitat and trail system to be located beneath the bridge. The bridge design shall accommodate Presidio Trust plans for the future wetland habitat and trail system.

PRESIDIO PARKWAY P3 PROJECT
GLP PRELIMINARY MASTER ALTERNATIVE

BRIDGE NO. 34-0164L

TENNESSEE HOLLOW - SB

GENERAL PLAN

SCALE AS SHOWN

ST-11

DISTRICT	ROUTE	POST MILES	SHEET No.	TOTAL SHEETS
4	101, 1	8.0/9.8 6.8/7.1	117	128

GOLDEN LINK PARTNERS

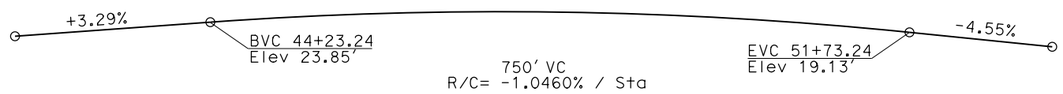

PROFILE GRADE
No Scale

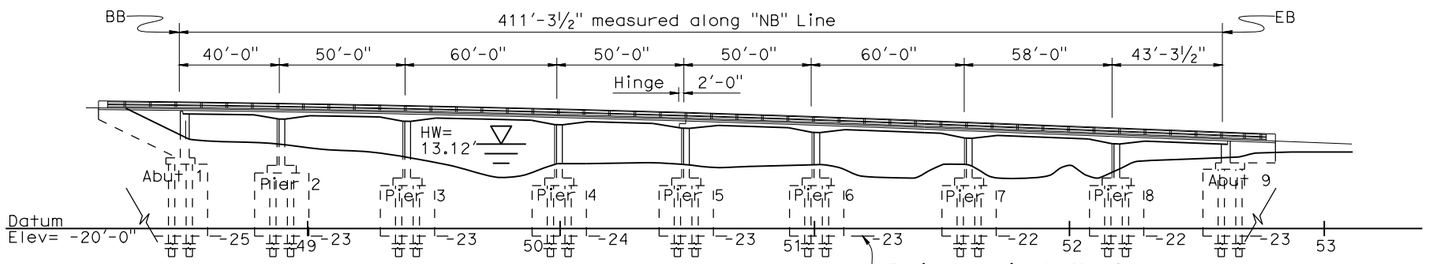

ELEVATION
1" = 30'

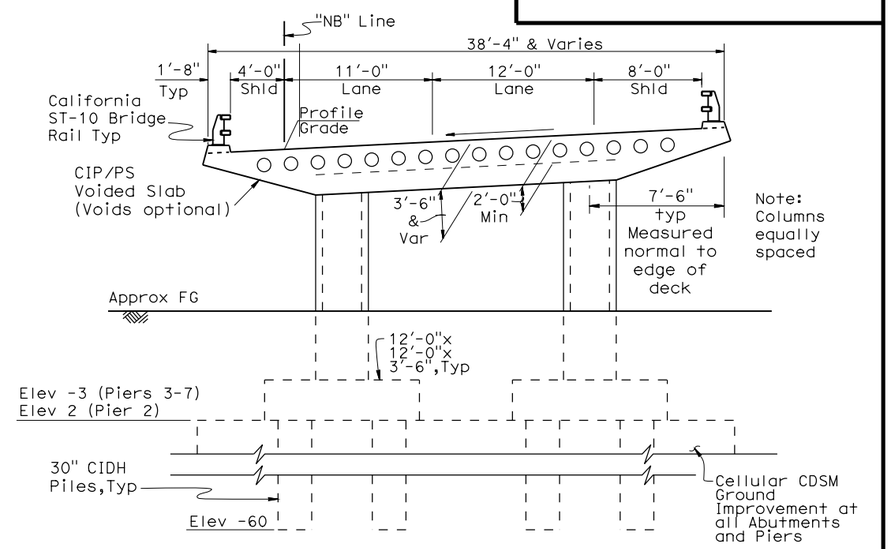

SECTION AT PIER 2
3/16" = 1'-0"

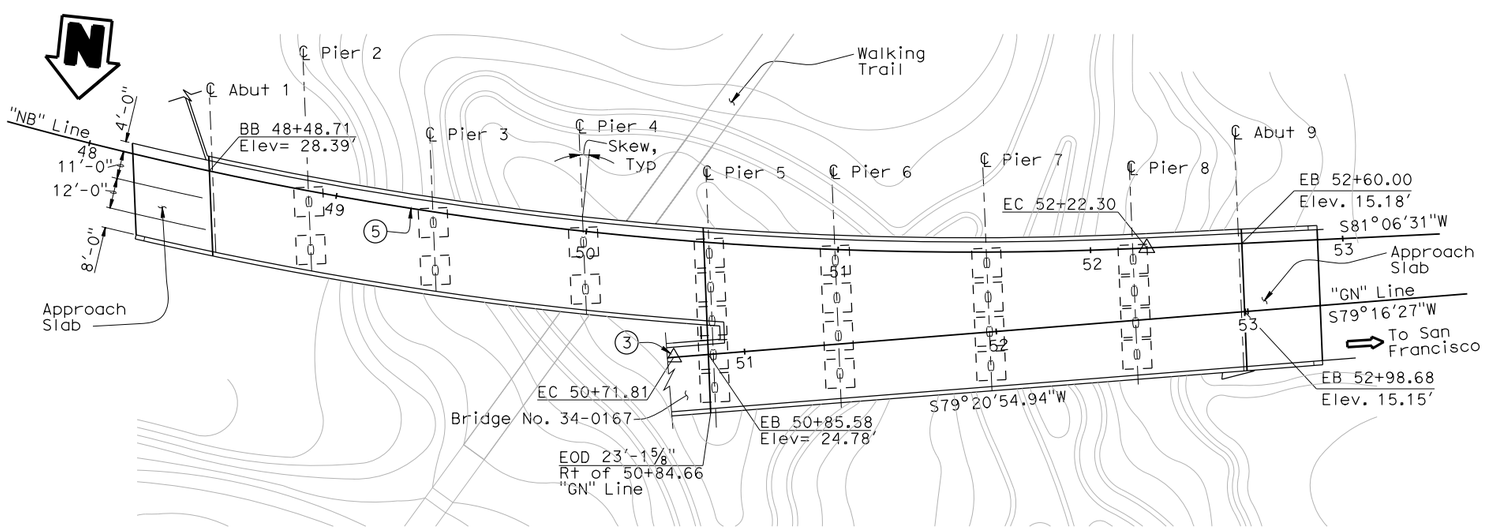

PLAN
1" = 30'

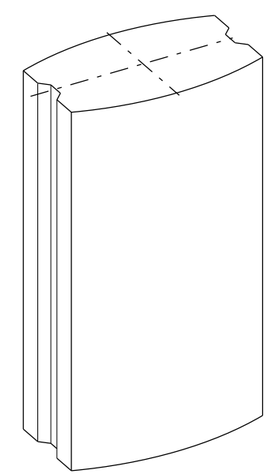

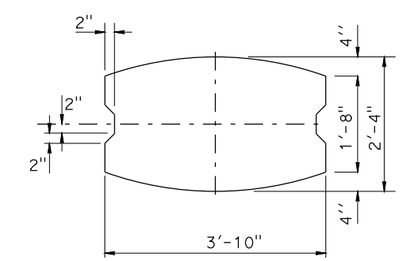

SECTION
PRELIMINARY

COLUMN ARCHITECTURAL DETAILS
NO SCALE

SKEW ANGLE DATA

Location	Δ
Abut 1	14°24'53"
Pier 2	12°52'29"
Pier 3	10°53'07"
Pier 4	8°29'52"
Pier 5	6°30'30"

SKEW ANGLE DATA

Location	Δ
Pier 6	4°31'08"
Pier 7	2°07'54"
Pier 8	0°10'34"
Abut 9	0°23'53"

CURVE DATA

Line	R	Δ	T	L
5	1440.00'	20°45'50"	263.82'	521.85'
3	790.00'	33°25'15"	237.17'	460.81'

NOTES:

1. The Presidio Trust has plans to develop independently of this project a future wetland habitat and trail system to be located beneath the bridge. The bridge design shall accommodate Presidio Trust plans for the future wetland habitat and trail system.

PRESIDIO PARKWAY P3 PROJECT
GLP PRELIMINARY MASTER ALTERNATIVE

BRIDGE NO. 34-0164R

TENNESSEE HOLLOW - NB

GENERAL PLAN

SCALE AS SHOWN

ST-12

DISTRICT	ROUTE	POST MILES	SHEET No.	TOTAL SHEETS
4	101, 1	8.0/9.8 6.8/7.1	118	128

GOLDEN LINK PARTNERS

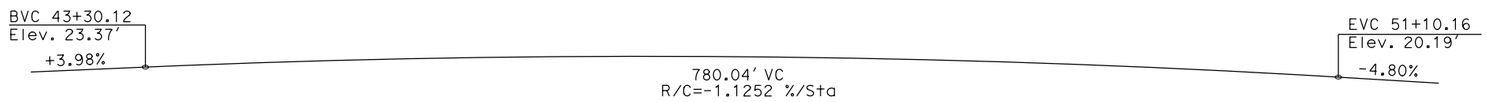

PROFILE GRADE
No Scale

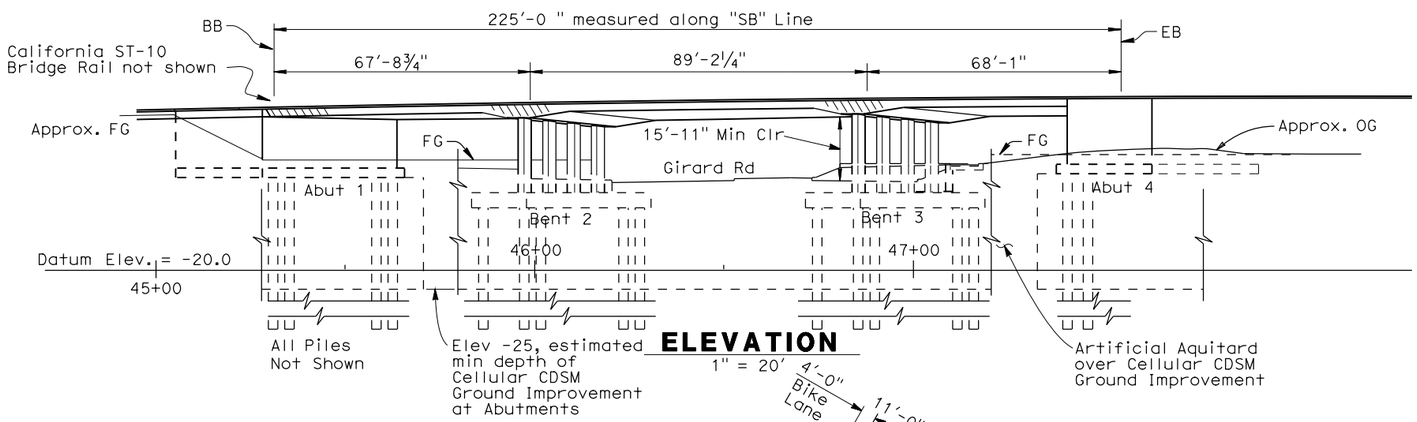

ELEVATION
1" = 20'

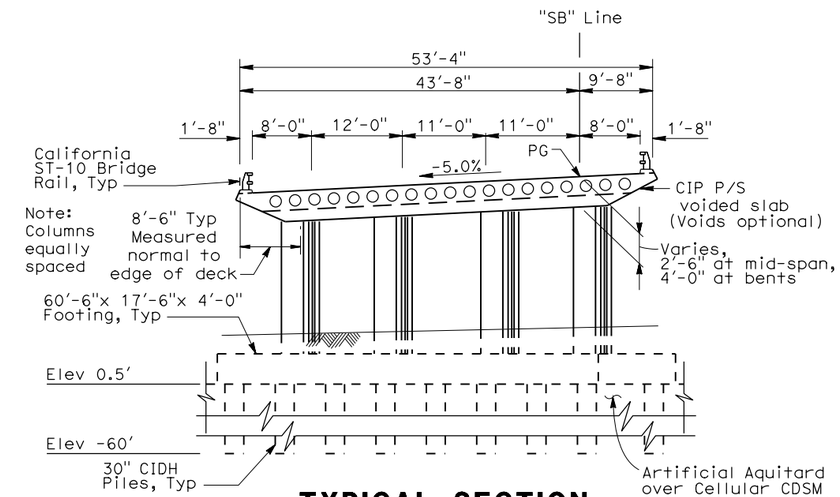

TYPICAL SECTION
1"=10'-0"

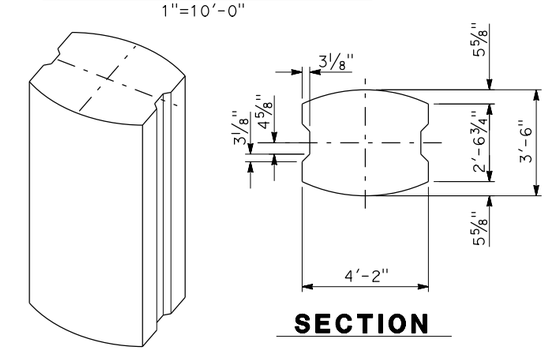

SECTION

COLUMN ARCHITECTURAL DETAILS
No Scale

PRELIMINARY

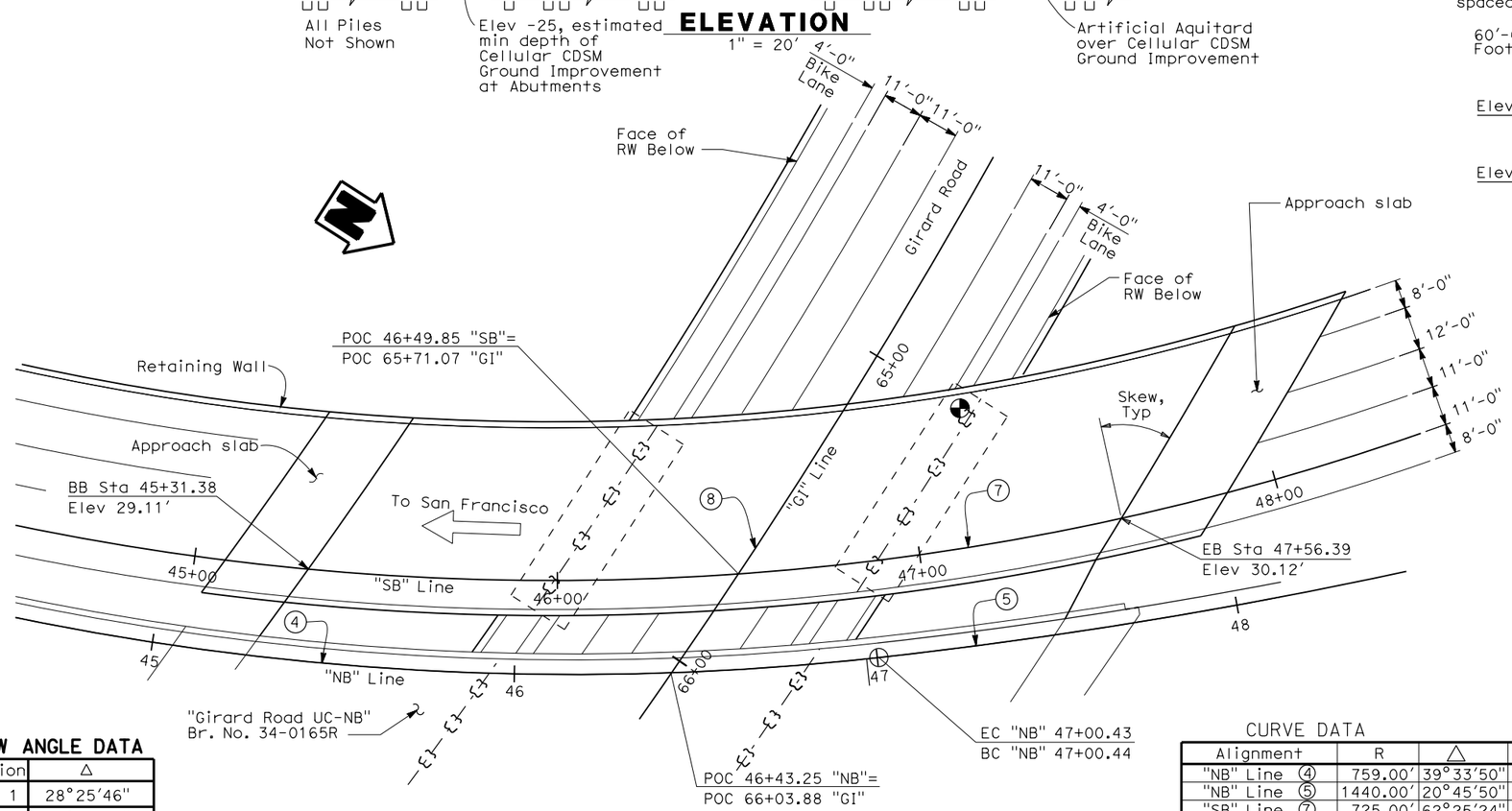

PLAN
1" = 20'

SKEW ANGLE DATA

Location	Δ
Abut 1	28°25'46"
Bent 2	33°46'56"
Bent 3	38°36'31"
Abut 4	43°59'21"

CURVE DATA

Alignment	R	Δ	T	L
"NB" Line ④	759.00'	39°33'50"	272.99'	524.10'
"NB" Line ⑤	1440.00'	20°45'50"	263.82'	521.85'
"SB" Line ⑦	725.00'	62°25'24"	439.28'	789.88'
"GI" Line ⑧	1834.00'	28°55'49"	473.11'	926.04'

LEGEND

◐ Denotes point of minimum vertical clearance

PRESIDIO PARKWAY P3 PROJECT
GLP PRELIMINARY MASTER ALTERNATIVE

BRIDGE NO. 34-0165L

GIRARD ROAD UNDERCROSSING - SB

GENERAL PLAN

SCALE AS SHOWN

ST-13

DISTRICT	ROUTE	POST MILES	SHEET No.	TOTAL SHEETS
4	101, 1	8.0/9.8 6.8/7.1	119	128

GOLDEN LINK PARTNERS

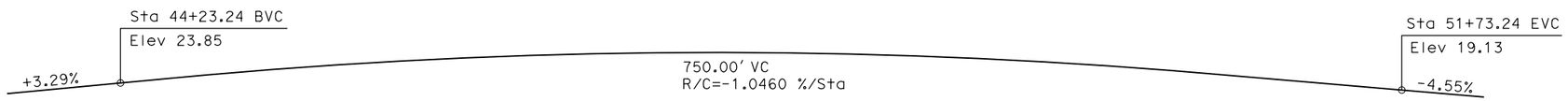

PROFILE GRADE
No Scale

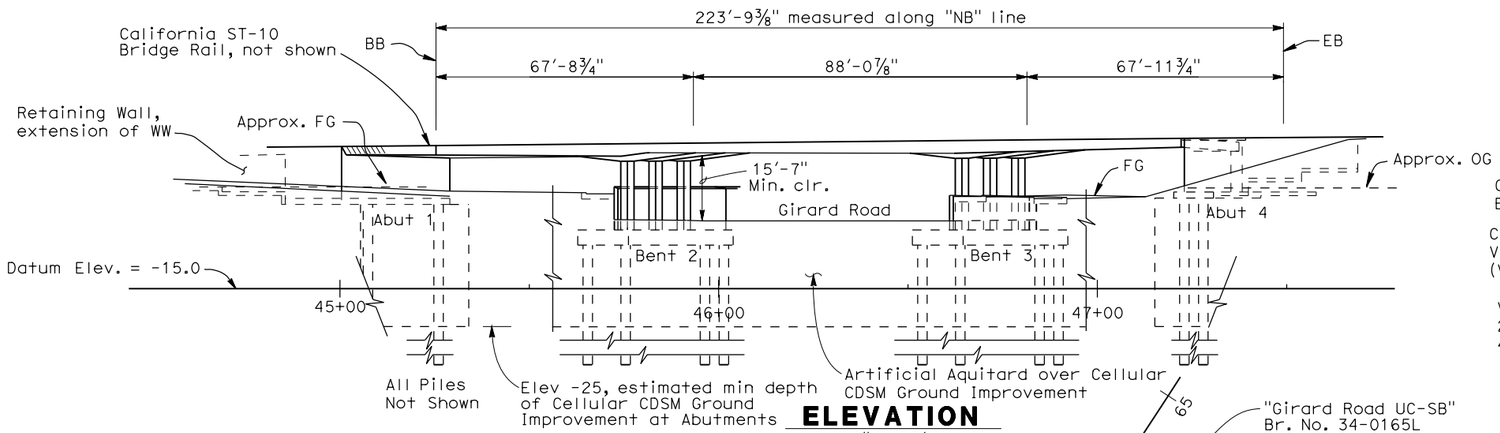

ELEVATION
1" = 20'

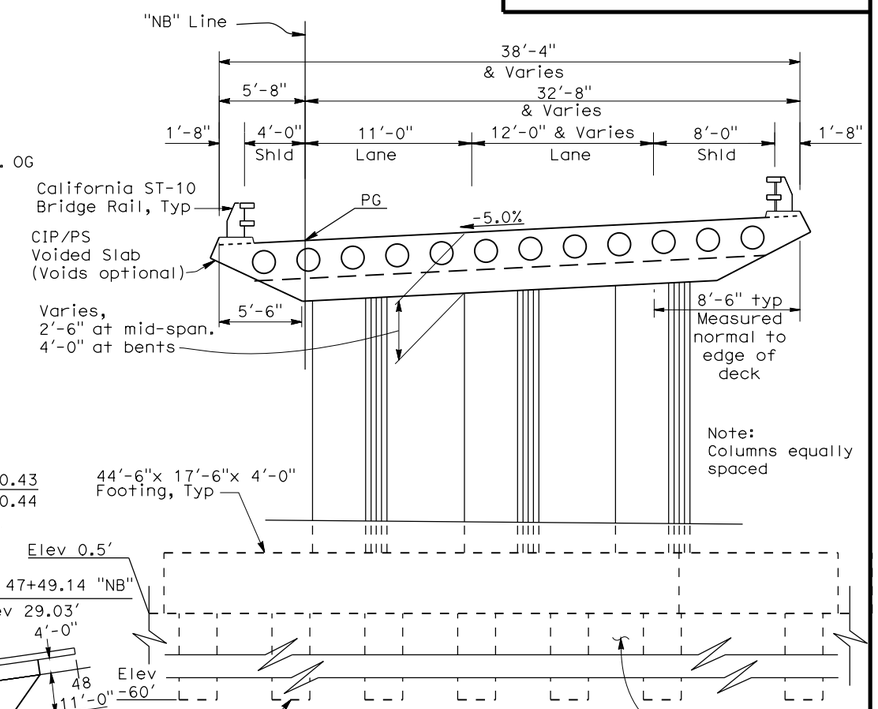

TYPICAL SECTION
1" = 5'

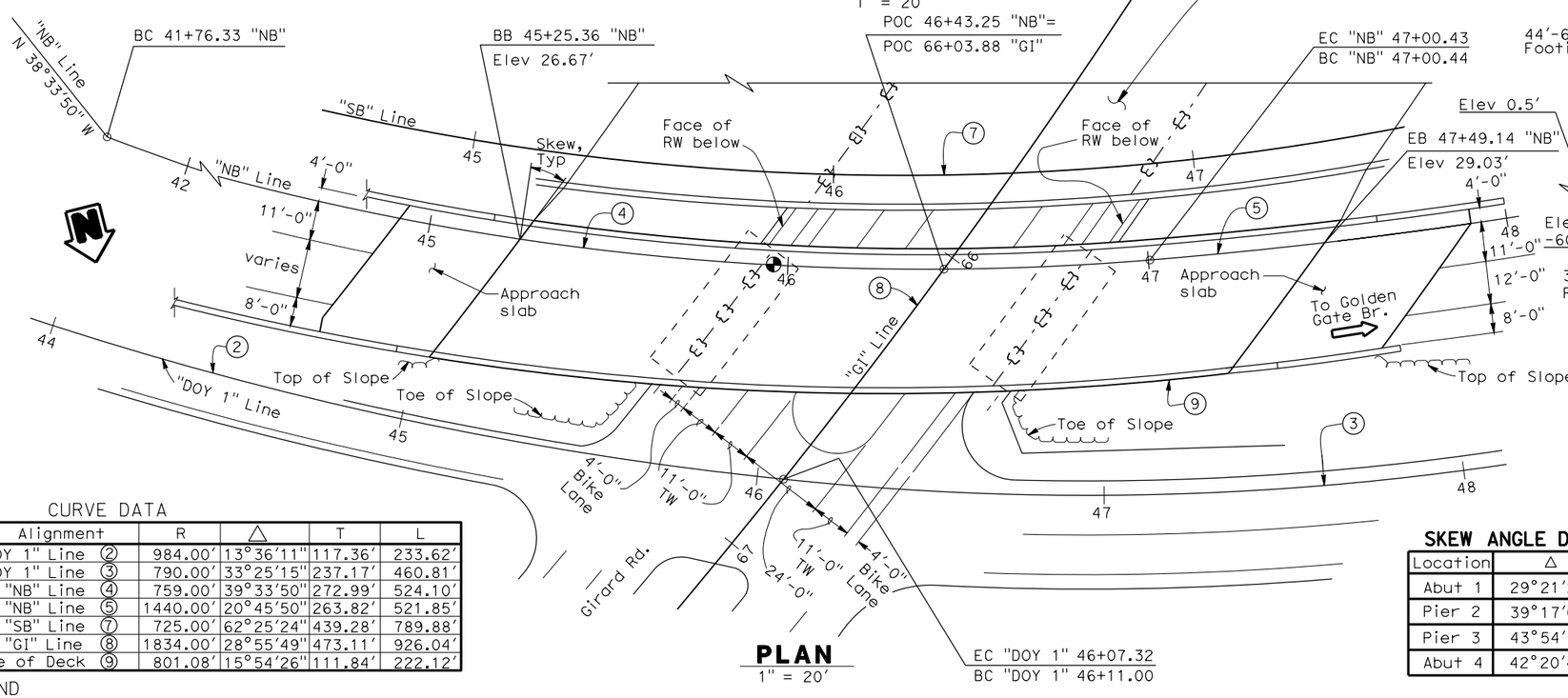

PLAN
1" = 20'

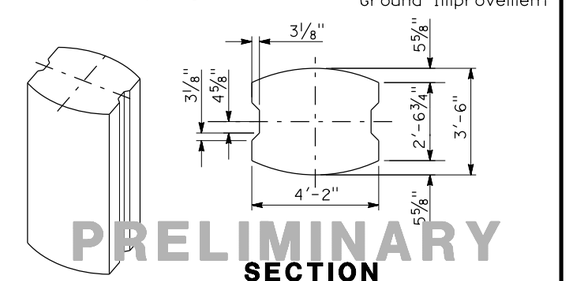

PRELIMINARY

SECTION

COLUMN ARCHITECTURAL DETAILS
No Scale

CURVE DATA

Alignment	R	Δ	T	L
"DOY 1" Line ②	984.00'	13°36'11"	117.36'	233.62'
"DOY 1" Line ③	790.00'	33°25'15"	237.17'	460.81'
"NB" Line ④	759.00'	39°33'50"	272.99'	524.10'
"NB" Line ⑤	1440.00'	20°45'50"	263.82'	521.85'
"SB" Line ⑦	725.00'	62°25'24"	439.28'	789.88'
"GI" Line ⑧	1834.00'	28°55'49"	473.11'	926.04'
Edge of Deck ⑨	801.08'	15°54'26"	111.84'	222.12'

SKEW ANGLE DATA

Location	Δ
Abut 1	29°21'29"
Pier 2	39°17'04"
Pier 3	43°54'51"
Abut 4	42°20'45"

LEGEND

◐ Denotes point of minimum vertical clearance

PRESIDIO PARKWAY P3 PROJECT
GLP PRELIMINARY MASTER ALTERNATIVE

BRIDGE NO. 34-0165R

GIRARD ROAD UNDERCROSSING - NB

GENERAL PLAN

SCALE AS SHOWN

ST-14

RELATIVE BORDER SCALE IS IN INCHES 0 1 2 3

USERNAME => $USER$
DGN FILE => $FILE$

LAST REVISION 00-00-00

TIME PLOTTED => $TIME$

DATE PLOTTED => $DATE$

DISTRICT	ROUTE	POST MILES	SHEET No.	TOTAL SHEETS
4	101, 1	8.0/9.8 6.8/7.1	120	128

GOLDEN LINK PARTNERS

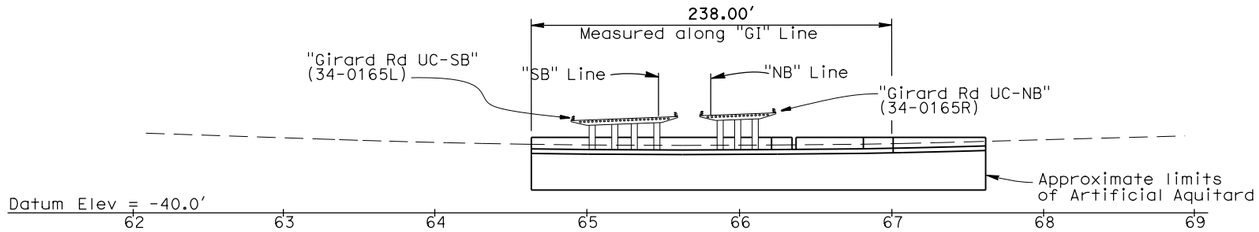

NORTH WALL SECTION-ELEVATION VIEW

1"=50'

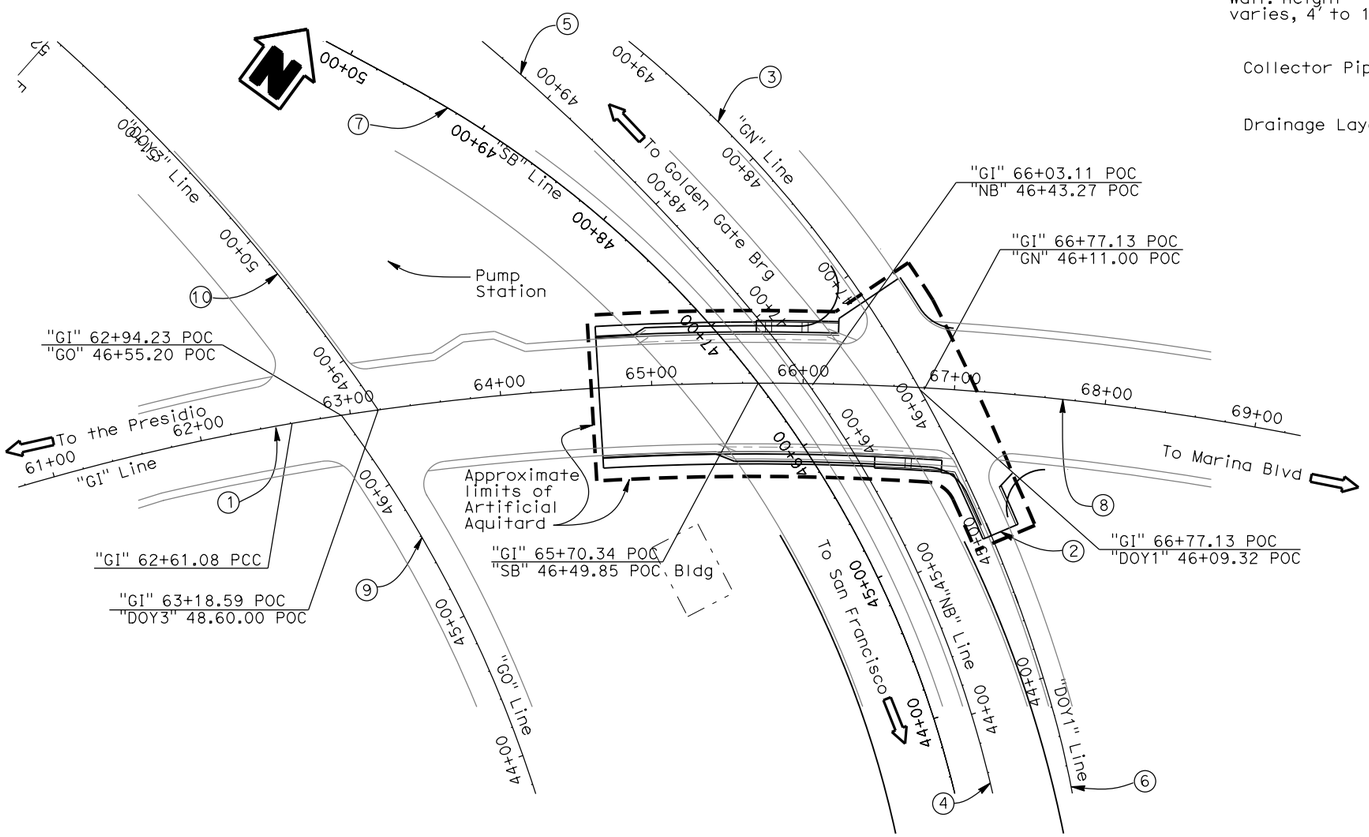

PLAN

1"=50'

Note: For Curve Data 1-10, see LAYOUT dwg L-2.

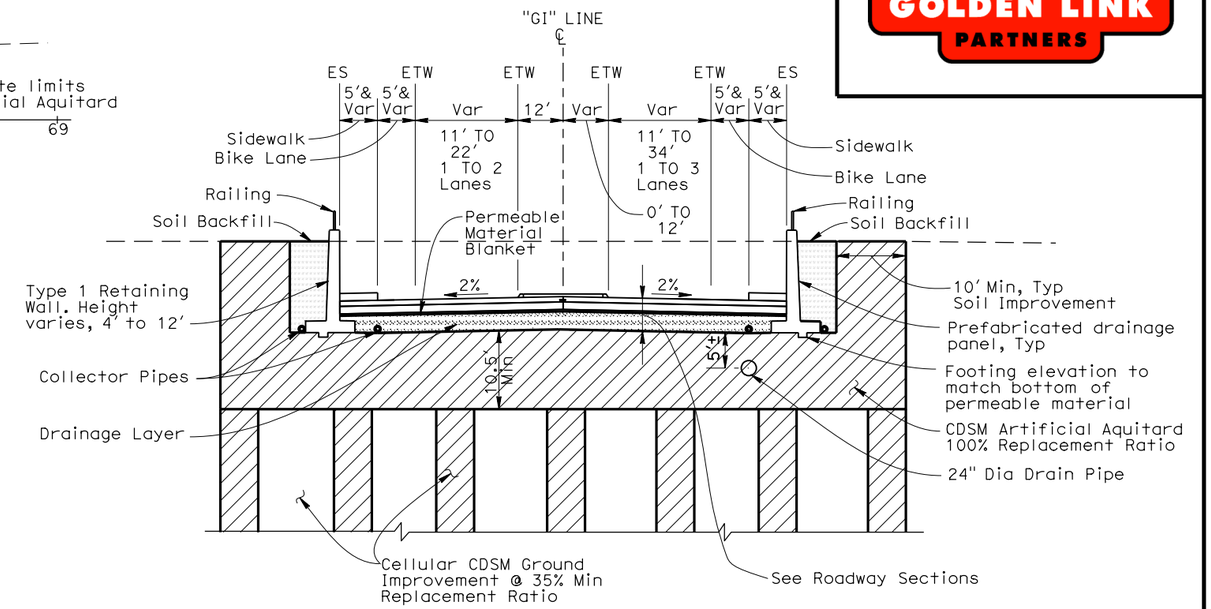

TYPICAL SECTION

PRELIMINARY

PRESIDIO PARKWAY P3 PROJECT
GLP PRELIMINARY MASTER ALTERNATIVE

BRIDGE NO. 34-0166

GIRARD ROAD DEPRESSED ROADWAY

GENERAL PLAN

SCALE AS SHOWN

ST-15

RELATIVE BORDER SCALE IS IN INCHES 0 1 2 3

USERNAME => $USER$
DGN FILE => $FILE$

LAST REVISION 00-00-00

TIME PLOTTED => $TIME$

DATE PLOTTED => $DATE$

DISTRICT	ROUTE	POST MILES	SHEET No.	TOTAL SHEETS
4	101, 1	8.0/9.8 6.8/7.1	121	128

GOLDEN LINK PARTNERS

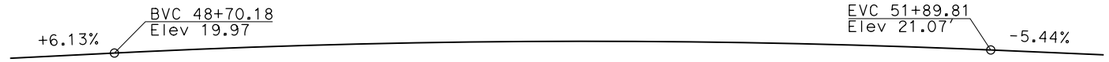

319.63' VC
R/C= -3.6198% / Sta

PROFILE GRADE
No Scale

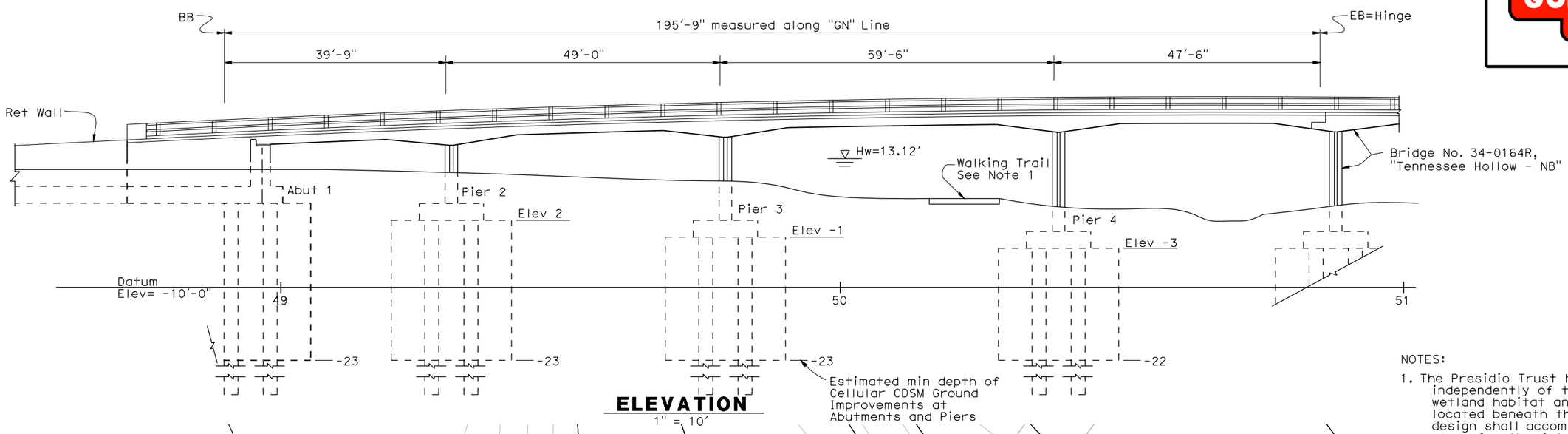

ELEVATION
1" = 10'

NOTES:

1. The Presidio Trust has plans to develop independently of this project a future wetland habitat and trail system to be located beneath the bridge. The bridge design shall accommodate Presidio Trust plans for the future wetland habitat and trail system.

2. For "Sections" see "General Plan No. 2"

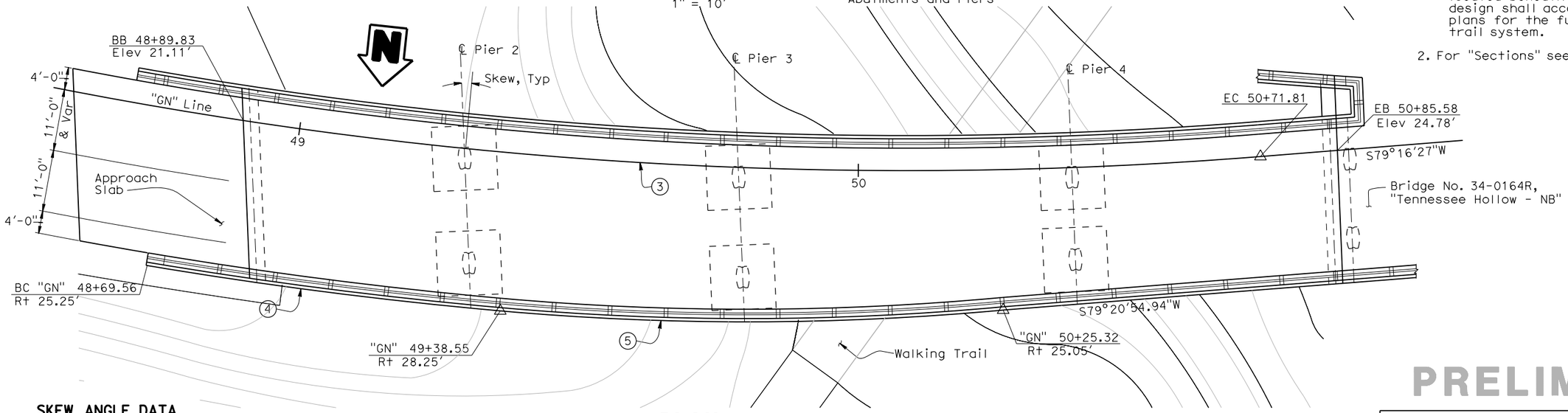

PLAN
1" = 10'

SKEW ANGLE DATA

Location	Δ
Abut 1	10°52'27"
Pier 2	8°05'01"
Pier 3	4°31'47"
Pier 4	0°12'52"
℄ Hinge	2°13'55"

CURVE DATA

Line	R	Δ	T	L
"GN" Line (3)	790.00'	33°25'15"	237.17'	460.81'
Edge of deck (4)	818.25'	4°28'12"	31.94'	63.84'
Edge of deck (5)	496.25'	10°22'21"	45.04'	89.84'

PRELIMINARY

PRESIDIO PARKWAY P3 PROJECT
GLP PRELIMINARY MASTER ALTERNATIVE

BRIDGE NO. 34-0167
GIRARD NORTHBOUND-RAMP
GENERAL PLAN No.1
SCALE AS SHOWN

ST-16

DISTRICT	ROUTE	POST MILES	SHEET No.	TOTAL SHEETS
4	101, 1	8.0/9.8 6.8/7.1	122	128

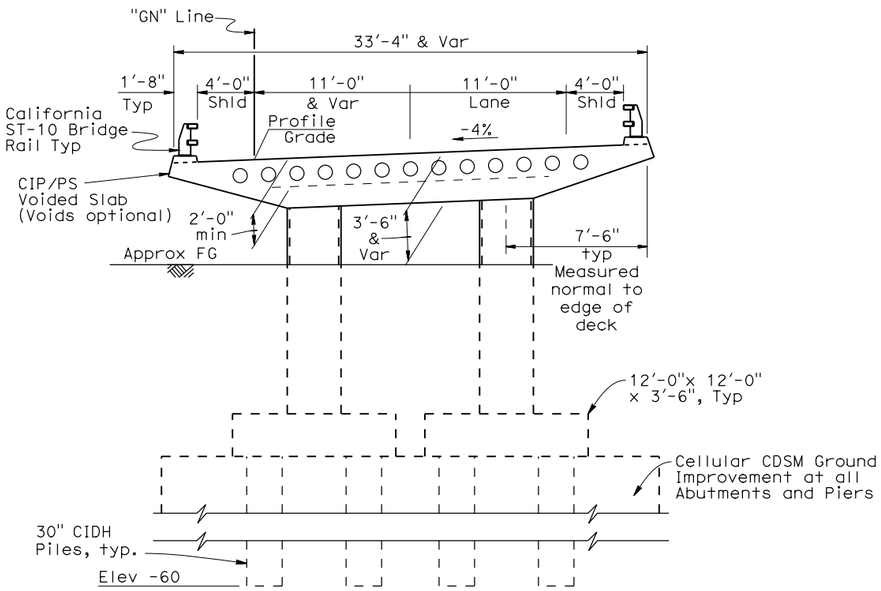

TYPICAL SECTION

3/16" = 1'-0"

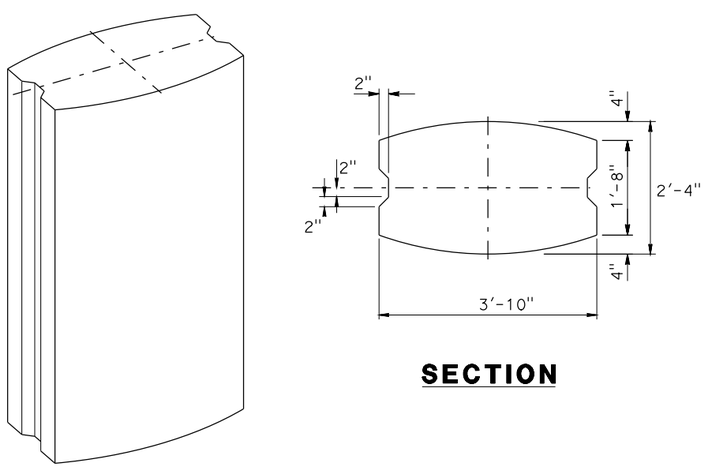

SECTION

COLUMN ARCHITECTURAL DETAILS

NO SCALE

PRELIMINARY

PRESIDIO PARKWAY P3 PROJECT

GLP PRELIMINARY MASTER ALTERNATIVE

BRIDGE NO. 34-0167

GIRARD NORTHBOUND-RAMP

GENERAL PLAN No.2

SCALE AS SHOWN

ST-17

DISTRICT	ROUTE	POST MILES	SHEET No.	TOTAL SHEETS
4	101, 1	8.0/9.8 6.8/7.1	123	128

GOLDEN LINK PARTNERS

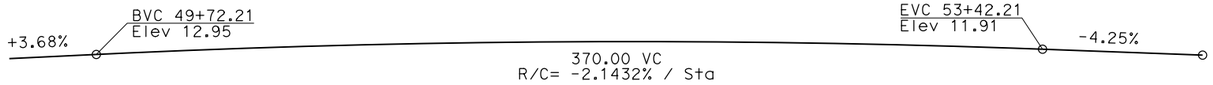

PROFILE GRADE
No Scale

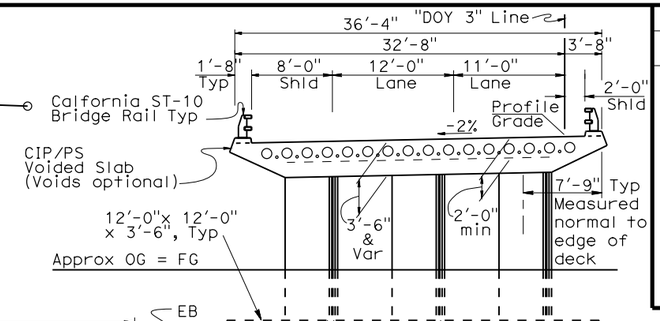

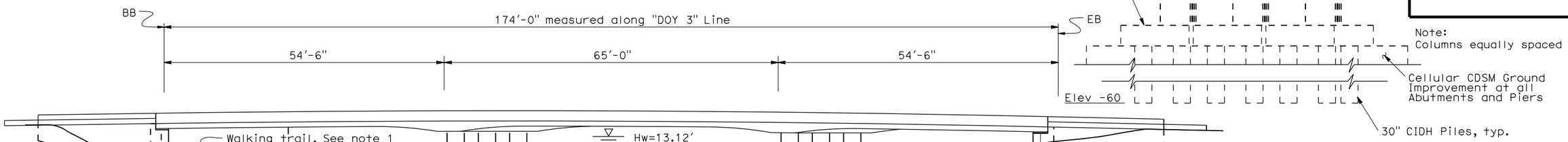

TYPICAL SECTION
3/4" = 1'-0"

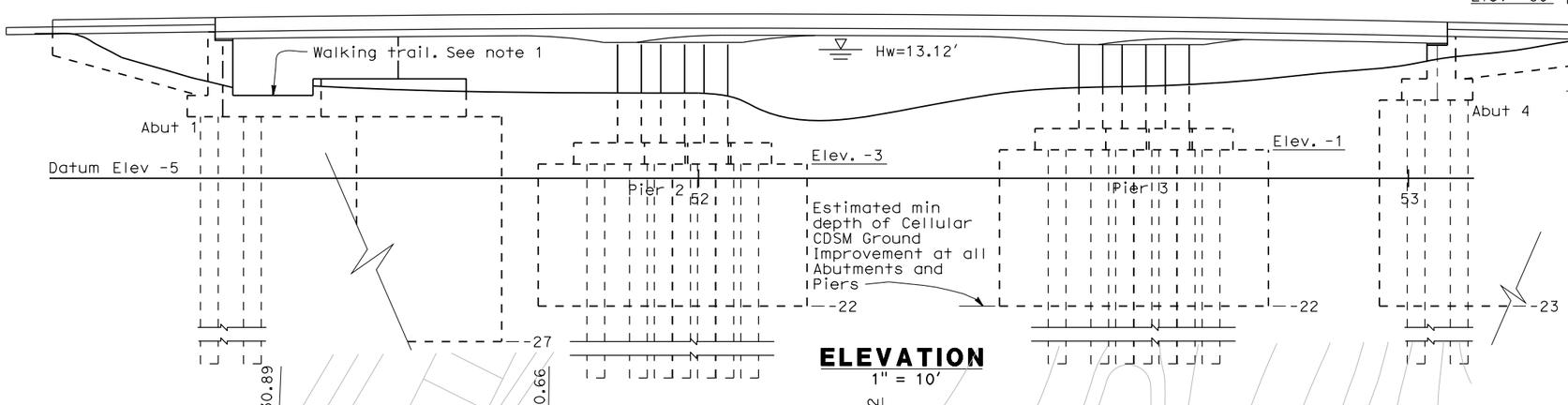

ELEVATION
1" = 10'

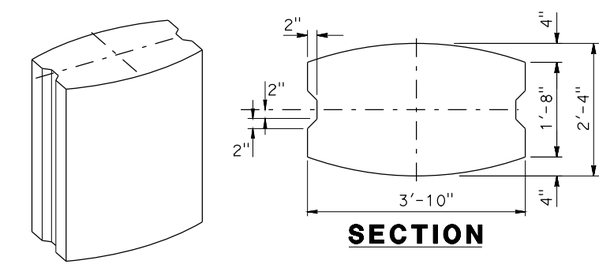

SECTION

COLUMN ARCHITECTURAL DETAILS
NO SCALE

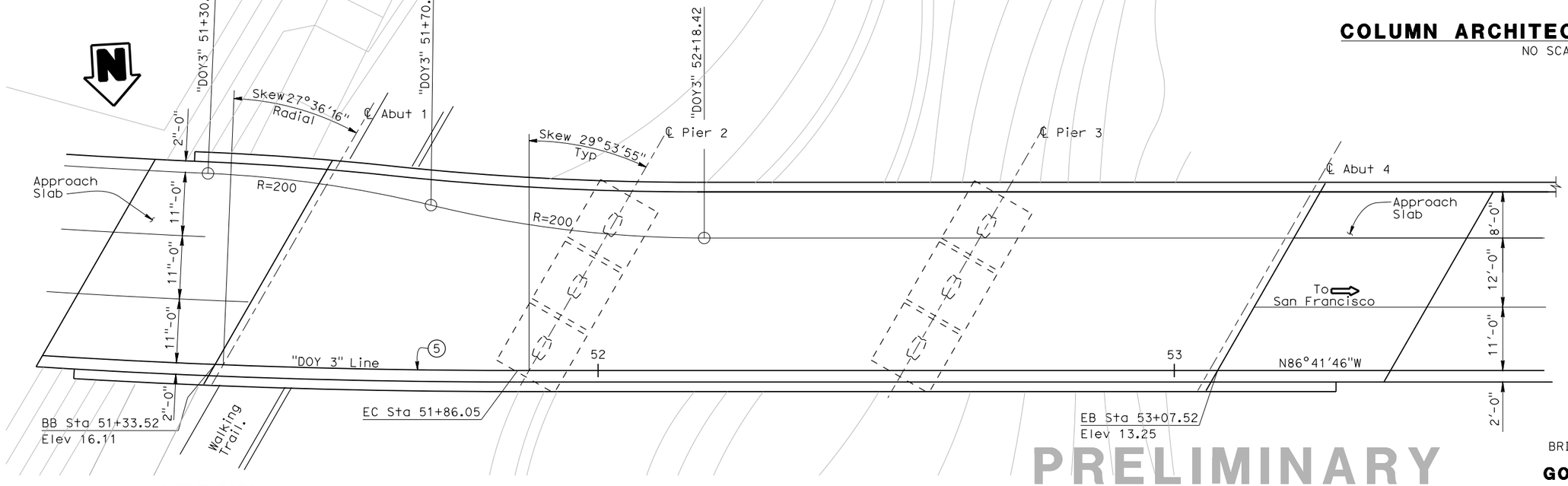

PLAN
1" = 10'

NOTES:

1. The Presidio Trust has plans to develop independently of this project a future wetland habitat and trail system to be located beneath the bridge. The bridge design shall accommodate Presidio Trust plans for the future wetland habitat and trail system.

CURVE DATA

Line	R	Δ	T	L
"DOY 3" Line (5)	1312.00'	14°19'29"	164.87'	328.02'

PRELIMINARY

PRESIDIO PARKWAY P3 PROJECT
GLP PRELIMINARY MASTER ALTERNATIVE

BRIDGE NO. 34-0168

GORGAS RAMP

GENERAL PLAN

SCALE AS SHOWN

ST-18

RELATIVE BORDER SCALE IS IN INCHES 0 1 2 3

USERNAME => $USER$
DGN FILE => $FILE$

LAST REVISION 00-00-00

TIME PLOTTED => $TIME$

DATE PLOTTED => $DATE$

DISTRICT	ROUTE	POST MILES	SHEET No.	TOTAL SHEETS
4	101, 1	8.0/9.8 6.8/7.1	124	128

GOLDEN LINK PARTNERS

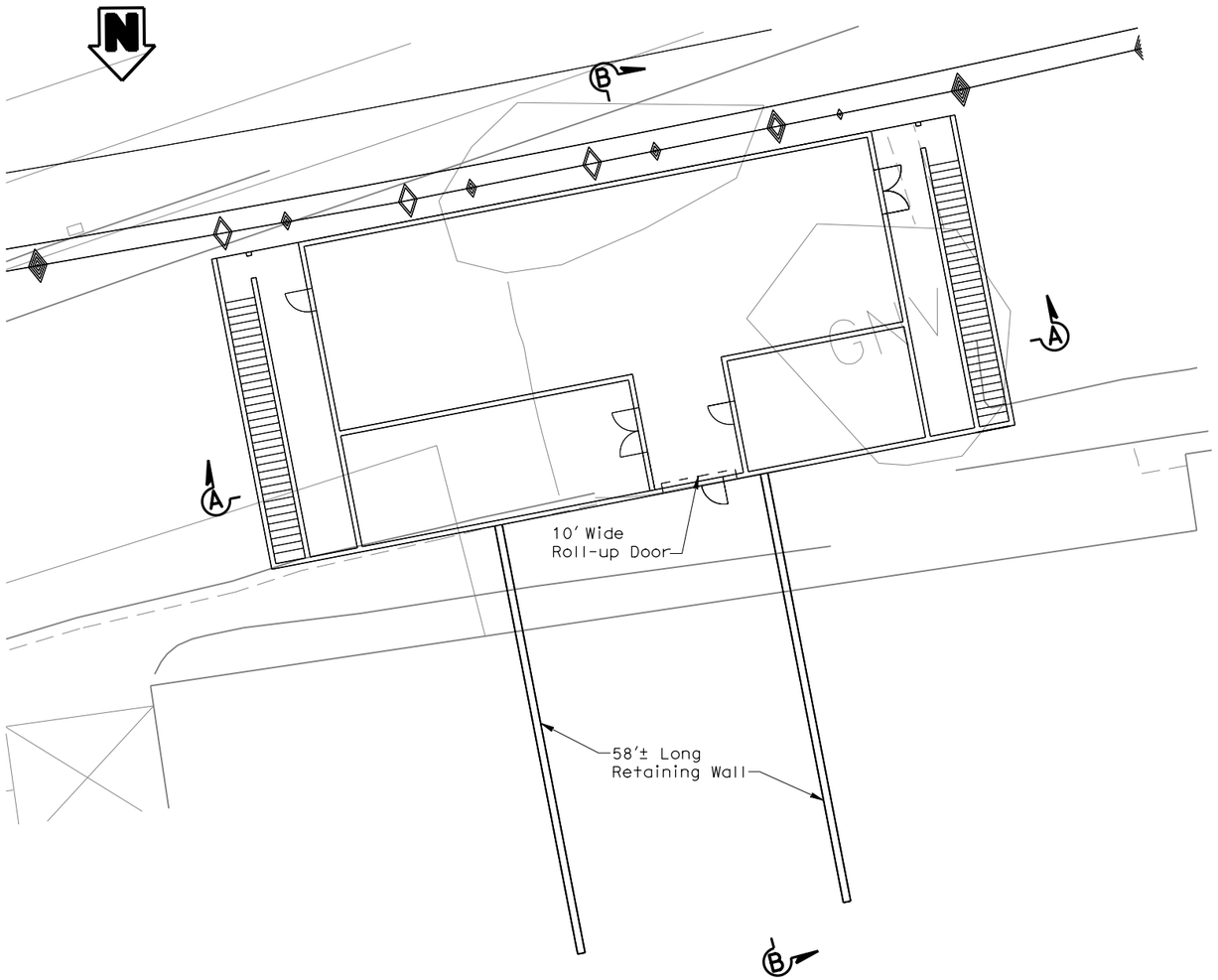

Note: For Electrical and Mechanical Details, see dwg EL-04.

PLAN

Scale: 1"=10'

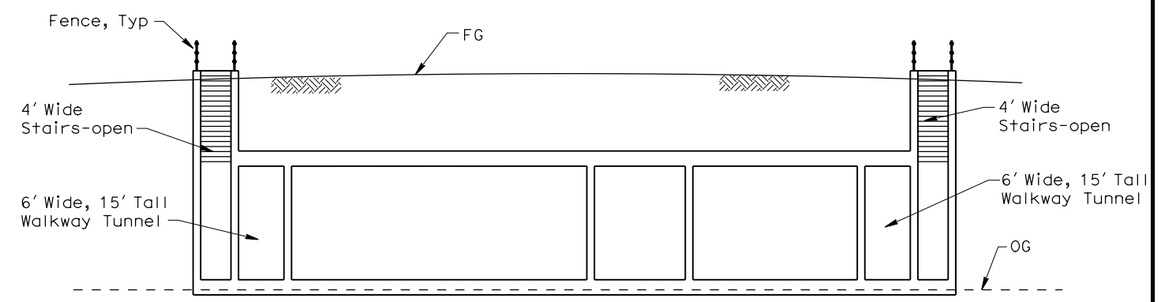

SECTION A-A

Scale: 1"=10'

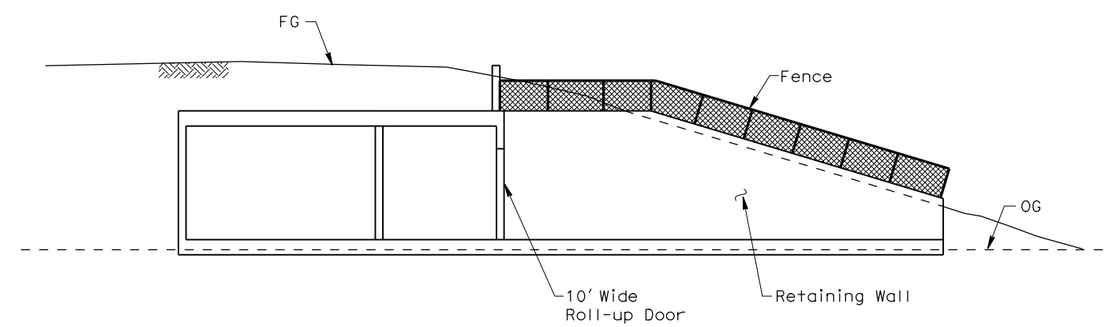

SECTION B-B

Scale: 1"=10'

PRELIMINARY

PRESIDIO PARKWAY P3 PROJECT
GLP PRELIMINARY MASTER ALTERNATIVE

BRIDGE NO. 34-0163L/R

MAIN POST TUNNEL

SUBSTATION

SCALE AS SHOWN

ST-19

DISTRICT	ROUTE	POST MILES	SHEET No.	TOTAL SHEETS
4	101, 1	8.0/9.8 6.8/7.1	125	128

GOLDEN LINK PARTNERS

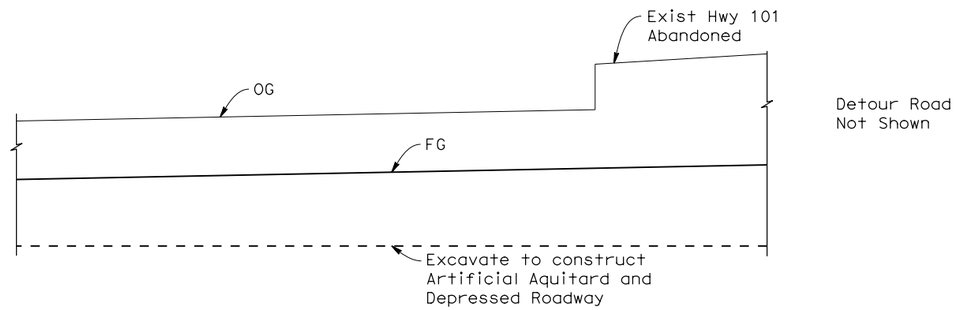

EXISTING CONDITION / STAGE 1

N.T.S.

Existing Condition:
- NB & SB Traffic on detour road

Stage 1 Construction:
- Excavate and construct Artificial Aquitard
- Construct Depressed Girard Road

Stage 2 Construction:
- Construct Br Nos. 34-0165 R & L

Final Condition:
- NB Traffic on Br No 34-0165R
- SB Traffic on Br No 34-0165L

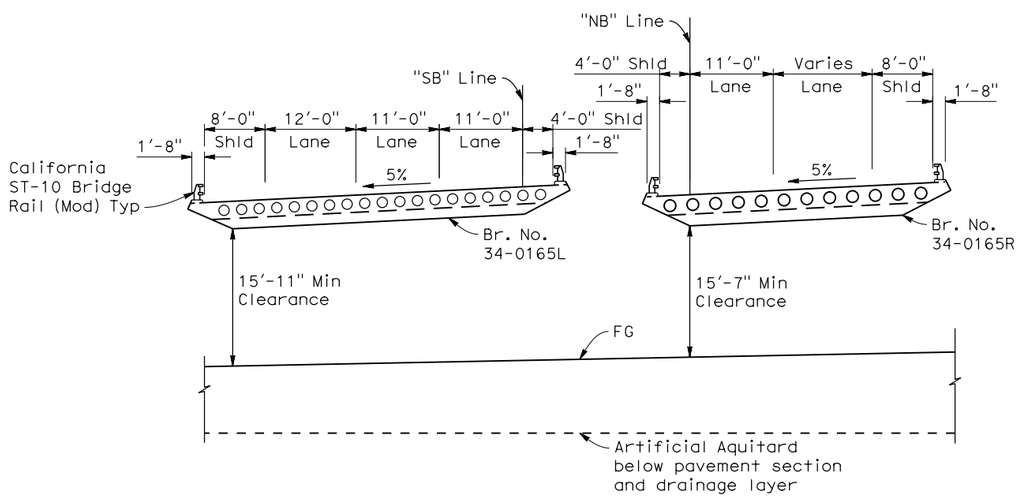

STAGE 2 / FINAL CONDITION

N.T.S.

PRESIDIO PARKWAY P3 PROJECT
GLP PRELIMINARY MASTER ALTERNATIVE

PRELIMINARY

BRIDGE NO. 34-0165 R/L

TYPICAL GIRARD ROAD UC CROSS SECTIONS AT GIRARD ROAD

SCALE AS SHOWN

ST-20

DISTRICT	ROUTE	POST MILES	SHEET No.	TOTAL SHEETS
4	101, 1	8.0/9.8 6.8/7.1	126	128

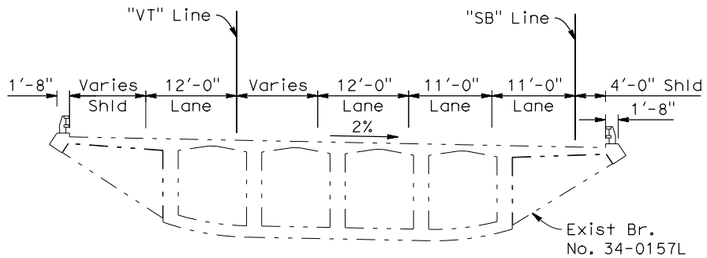

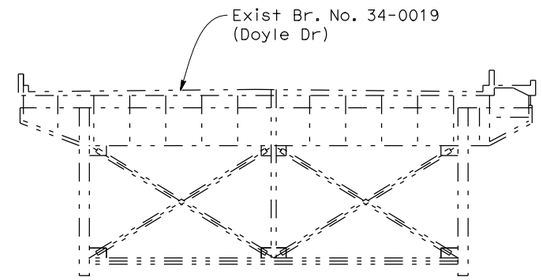

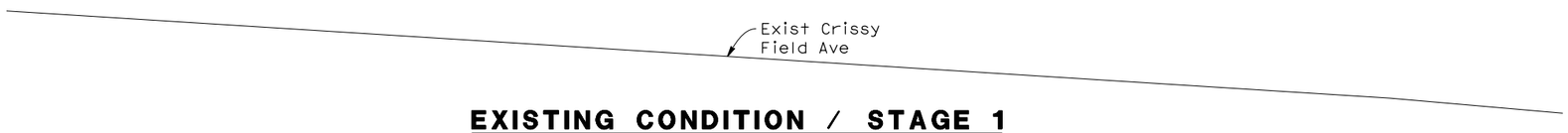

EXISTING CONDITION / STAGE 1

N.T.S.

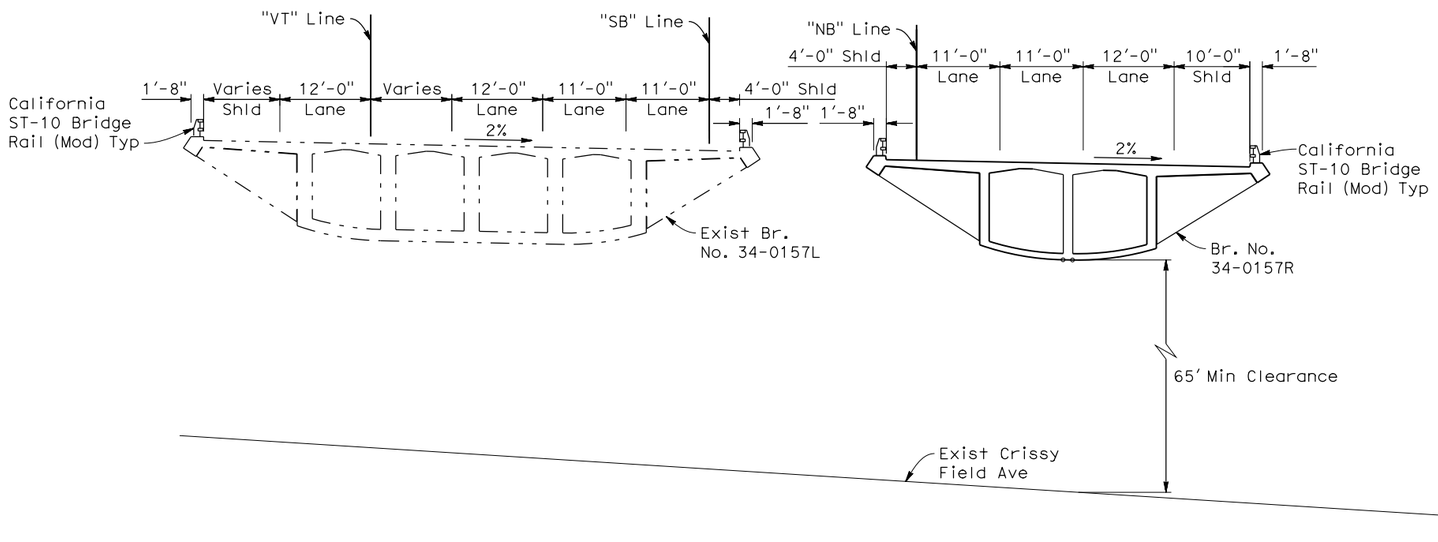

STAGE 2 / FINAL CONDITION

N.T.S.

Existing Condition:
- NB & SB Traffic on Exist Br No 34-0157L (Detour)

Stage 1 Construction:
- Remove existing Br No 34-0019

Stage 2 Construction:
- Construct Br No. 34-0157R

Final Condition:
- NB Traffic on Br No 34-0157R
- SB Traffic on Exist Br No 34-0157L

PRELIMINARY

BRIDGE NO. 34-0157R

TYPICAL NB HIGH VIADUCT CROSS SECTION AT CRISSY FIELD AVENUE

SCALE AS SHOWN

ST-21

PRESIDIO PARKWAY P3 PROJECT
GLP PRELIMINARY MASTER ALTERNATIVE

DISTRICT	ROUTE	POST MILES	SHEET No.	TOTAL SHEETS
4	101, 1	8.0/9.8 6.8/7.1	127	128

GOLDEN LINK PARTNERS

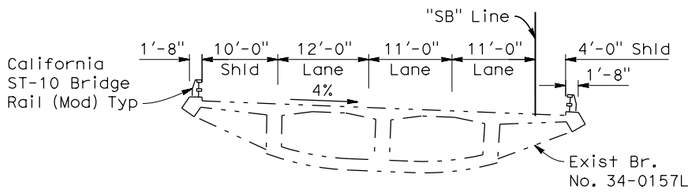

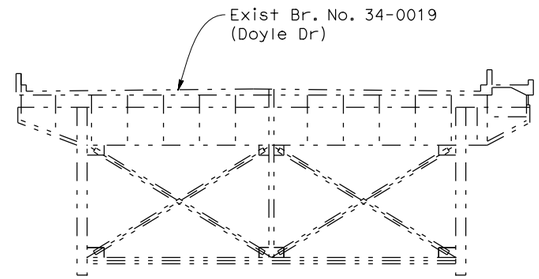

EXISTING CONDITION / STAGE 1

N.T.S.

Existing Condition:
- NB & SB Traffic on Exist Br No 34-0157L (Detour)

Stage 1 Construction:
- Remove existing Br No 34-0019

Stage 2 Construction:
- Construct Br No. 34-0157R

Final Condition:
- NB Traffic on Br No 34-0157R
- SB Traffic on Exist Br No 34-0157L

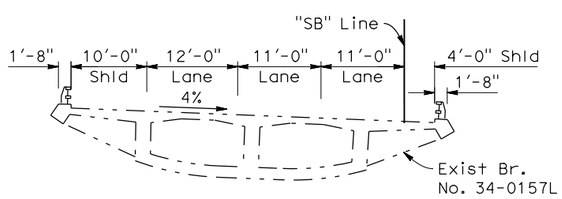

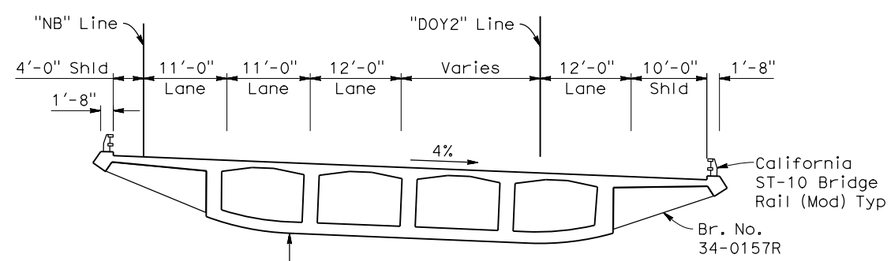

STAGE 2 / FINAL CONDITION

N.T.S.

PRESIDIO PARKWAY P3 PROJECT
GLP PRELIMINARY MASTER ALTERNATIVE

PRELIMINARY

BRIDGE NO. 34-0157R

TYPICAL NB HIGH VIADUCT CROSS SECTION AT LINCOLN BOULEVARD

SCALE AS SHOWN

ST-22

DISTRICT	ROUTE	POST MILES	SHEET No.	TOTAL SHEETS
4	101, 1	8.0/9.8 6.8/7.1	128	128

GOLDEN LINK PARTNERS

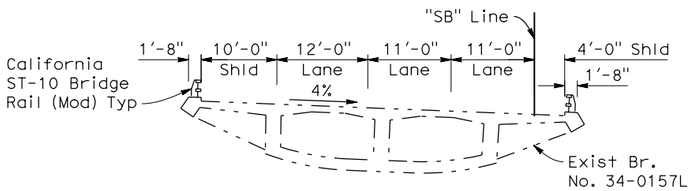

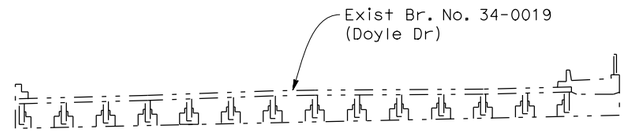

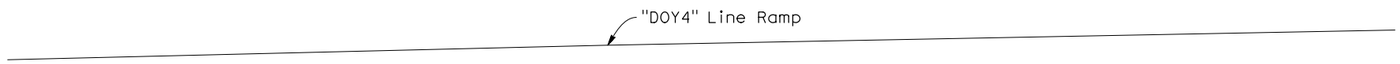

EXISTING CONDITION / STAGE 1

N.T.S.

Existing Condition:
- NB & SB Traffic on Exist Br No 34-0157L (Detour)

Stage 1 Construction:
- Remove existing Br No 34-0019

Stage 2 Construction:
- Construct Brs No. 34-0157R & 34-0159

Final Condition:
- NB Traffic on Br No 34-0157R
- SB Traffic on Exist Br No 34-0157L

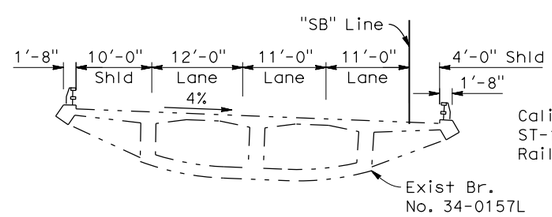

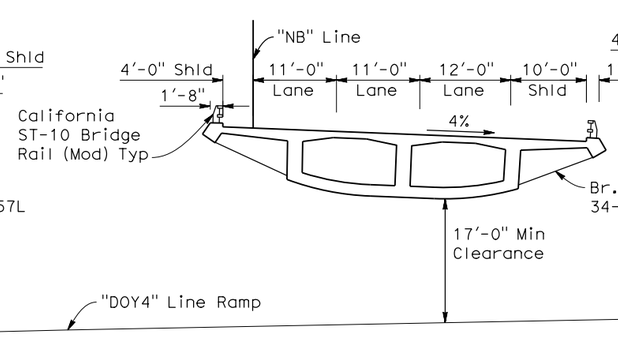

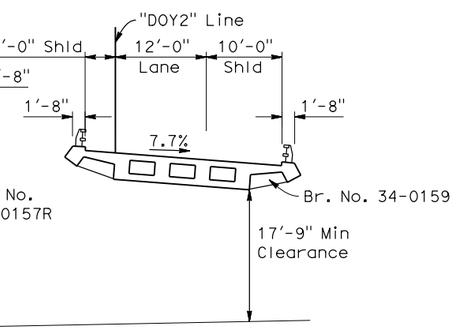

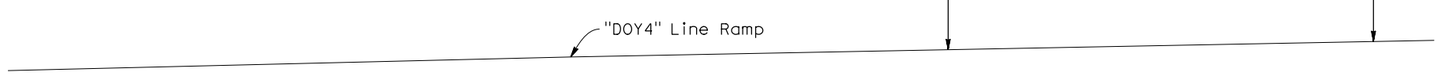

STAGE 2 / FINAL CONDITION

N.T.S.

PRELIMINARY

BRIDGE NO. 34-0157R & 34-0159

TYPICAL NB HIGH VIADUCT & VETERANS OFF RAMP CROSS SECTIONS AT DOY4 LINE RAMP

SCALE AS SHOWN

ST-23

PRESIDIO PARKWAY P3 PROJECT
GLP PRELIMINARY MASTER ALTERNATIVE

DISTRICT	ROUTE	POST MILES	SHEET NO.	TOTAL SHEETS
4	101, 1	6.0/9.4 6.8/7.1		

GOLDEN LINK PARTNERS

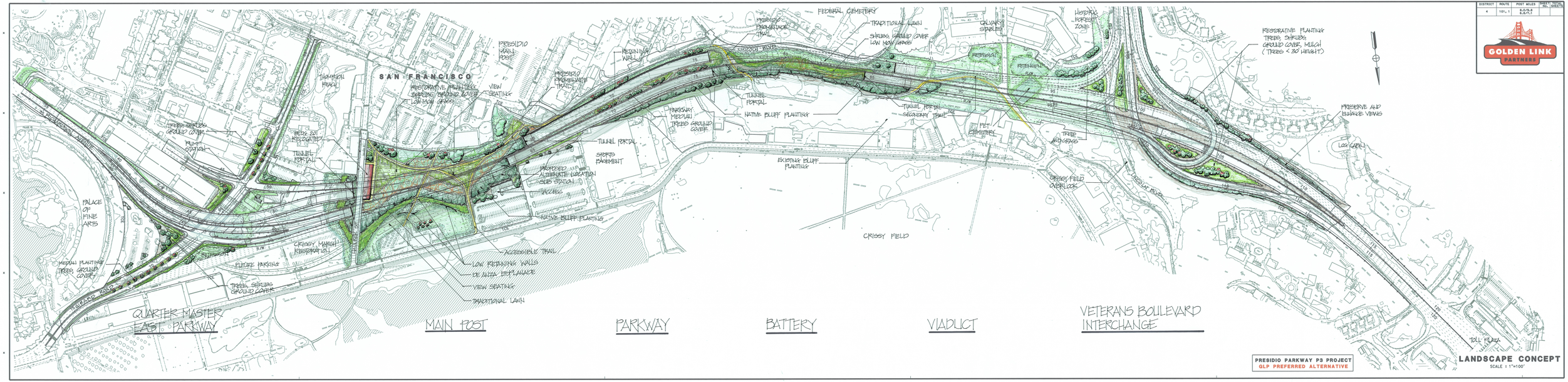

PRESIDIO PARKWAY P3 PROJECT
GLP PREFERRED ALTERNATIVE

LANDSCAPE CONCEPT
SCALE : 1"=100'