Dist	COUNTY	ROUTE	POST MILES TOTAL PROJECT	SHEET No.	TOTAL SHEETS
04	Sol	80	0.0/R28.4	2	509

REGISTERED CIVIL ENGINEER 2-27-12 DATE

5-7-12
PLANS APPROVAL DATE

REGISTERED PROFESSIONAL ENGINEER Yalin Wang No. 57007 Exp. 6-30-13 CIVIL STATE OF CALIFORNIA

THE STATE OF CALIFORNIA OR ITS OFFICERS OR AGENTS SHALL NOT BE RESPONSIBLE FOR THE ACCURACY OR COMPLETENESS OF SCANNED COPIES OF THIS PLAN SHEET.

NOTES:

1. DIMENSIONS OF THE STRUCTURAL SECTIONS ARE SUBJECT TO TOLERANCES SPECIFIED IN THE STANDARD SPECIFICATIONS.
2. SUPERELEVATION AS SHOWN OR AS DIRECTED BY THE ENGINEER.

ABBREVIATIONS:

RHMA	RUBBERIZED HOT MIX ASPHALT
OGFC	OPEN GRADED FRICTION COURSE
HMA	HOT MIX ASPHALT
RAC	RUBBERIZED ASPHALT CONCRETE

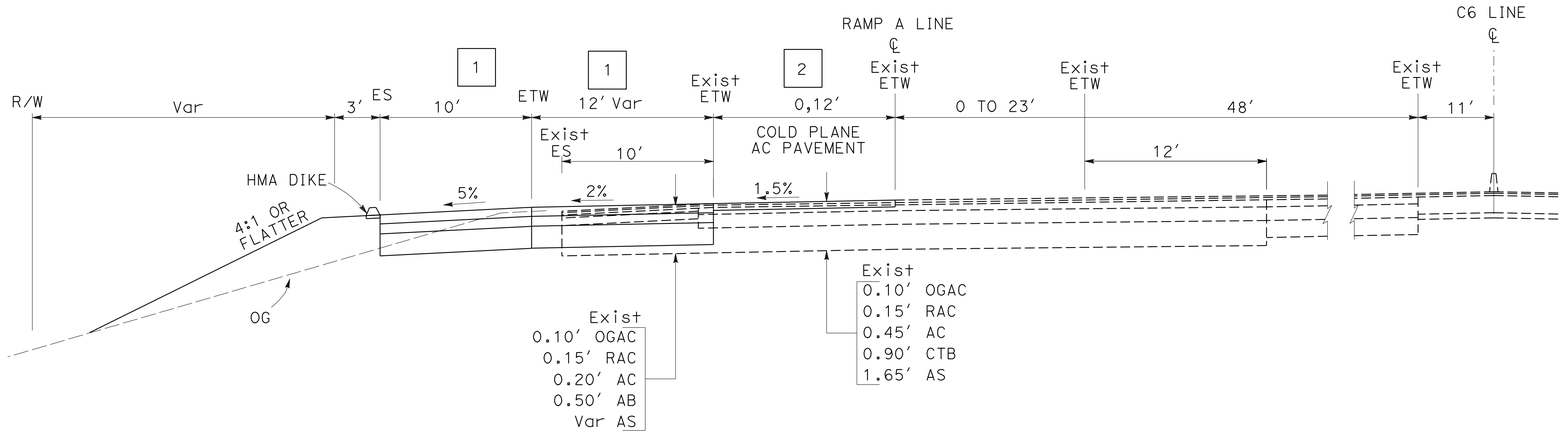

EB-37 CONNECTOR TO WB-80
C6 262+53.13 TO 290+20

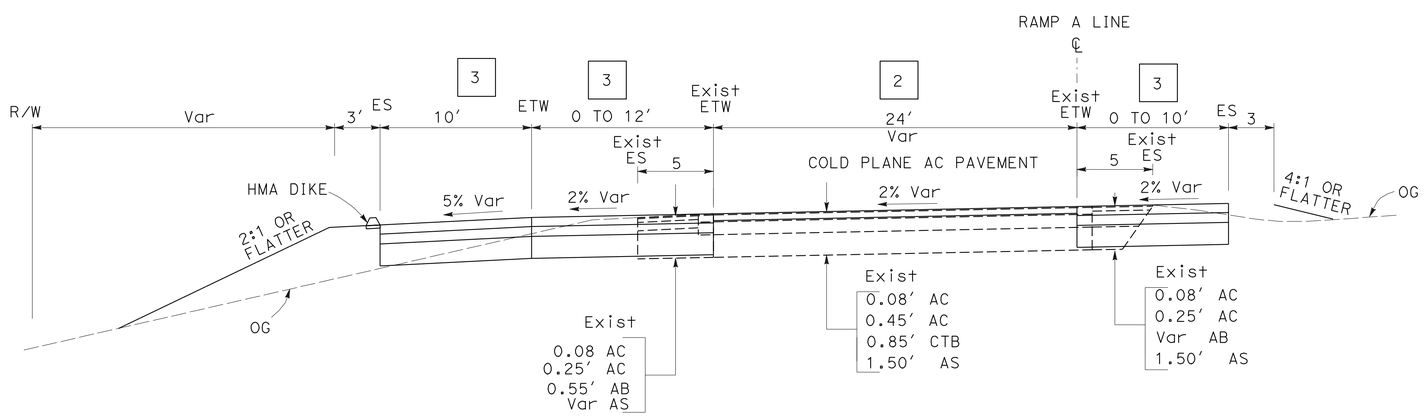

EB-37 CONNECTOR TO WB-80
RAMP A 90+20 TO 99+73.64

TYPICAL STRUCTURAL SECTION

1

1
- 0.10' HMA (OGFC)
- 0.70' HMA (TYPE A)
- 0.75' LCB
- 1.65' AS (4)

2
- 0.30' HMA (TYPE A)

3
- 0.60' HMA (TYPE A)
- 0.65' LCB
- 1.45' AS (4)

4
- 0.20' RHMA(G)
- 0.40' HMA (TYPE A)
- 0.65' LCB
- 1.45' CL AS (4)

5
- 0.20' RHMA(G)
- 0.15' Min HMA (TYPE A)
- GPI
- 0.10' HMA (TYPE A)

6
- 0.50' ~~0.60'~~ HMA (TYPE A)
- 0.95' AB (3)
- 1.30' AS (4)

7
- 0.40'-1.33' HMA (TYPE A)

8
- 0.30' ~~0.40'~~ HMA (TYPE A)

9
- 0.50' HMA (TYPE A)
- 0.85' AB (3)
- 1.10' AS (4)

10
- 0.55' HMA (TYPE A)
- 0.90' AB (3)
- 1.25' AS (4)

11
- 0.20' HMA (TYPE A)

12
- 0.50' PCC
- 0.50' AS (4)

13
- 1.30' HMA (TYPE A)

14
- 0.33' HMA (TYPE A)
- 0.50' AB (3)

1 REVISED PER ADDENDUM No. 1 DATED AUGUST 3, 2012

TYPICAL CROSS SECTIONS
NO SCALE

X-1

REVISED BY	DATE REVISED

CALCULATED-DESIGNED BY	CHECKED BY
YALIN WANG	LITA LEE

FUNCTIONAL SUPERVISOR: KENDALL KITAMURA

STATE OF CALIFORNIA - DEPARTMENT OF TRANSPORTATION
Caltrans
DESIGN

LAST REVISION 03-03-12 | DATE PLOTTED => 01-AUG-2012 | TIME PLOTTED => 13:45

Dist	COUNTY	ROUTE	POST MILES TOTAL PROJECT	SHEET No.	TOTAL SHEETS
04	Sol	80	0.0/R28.4	108	509

REGISTERED CIVIL ENGINEER 2-28-12 DATE

5-7-12
PLANS APPROVAL DATE

REGISTERED PROFESSIONAL ENGINEER Dennis B. Ocampo No. 53523 Exp. 6-30-13 CIVIL STATE OF CALIFORNIA

THE STATE OF CALIFORNIA OR ITS OFFICERS OR AGENTS SHALL NOT BE RESPONSIBLE FOR THE ACCURACY OR COMPLETENESS OF SCANNED COPIES OF THIS PLAN SHEET.

NOTE:

FOR ACCURATE RIGHT OF WAY DATA, CONTACT RIGHT OF WAY ENGINEERING AT THE DISTRICT OFFICE.

LEGEND:

- (No.) DRAINAGE SYSTEM NUMBER
- (a) DRAINAGE UNIT
- RSP

ABBREVIATIONS:

HMAOD = MIXED ASPHALT OVERSIDE DRAIN
TC = TOP OF COVER
TG = TOP OF GRATE
w/ = WITH

NOTES:

1. THE LOCATION OF EXISTING DRAINAGE FACILITIES ARE APPROXIMATE. VERIFY LOCATION AND ELEVATION OF EXISTING DRAINAGE FACILITIES PRIOR TO MODIFYING.
2. ALL TIES TO STORM DRAIN MANHOLES ARE TO BE AT THE CENTER OF THE BASE UNLESS OTHERWISE NOTED.

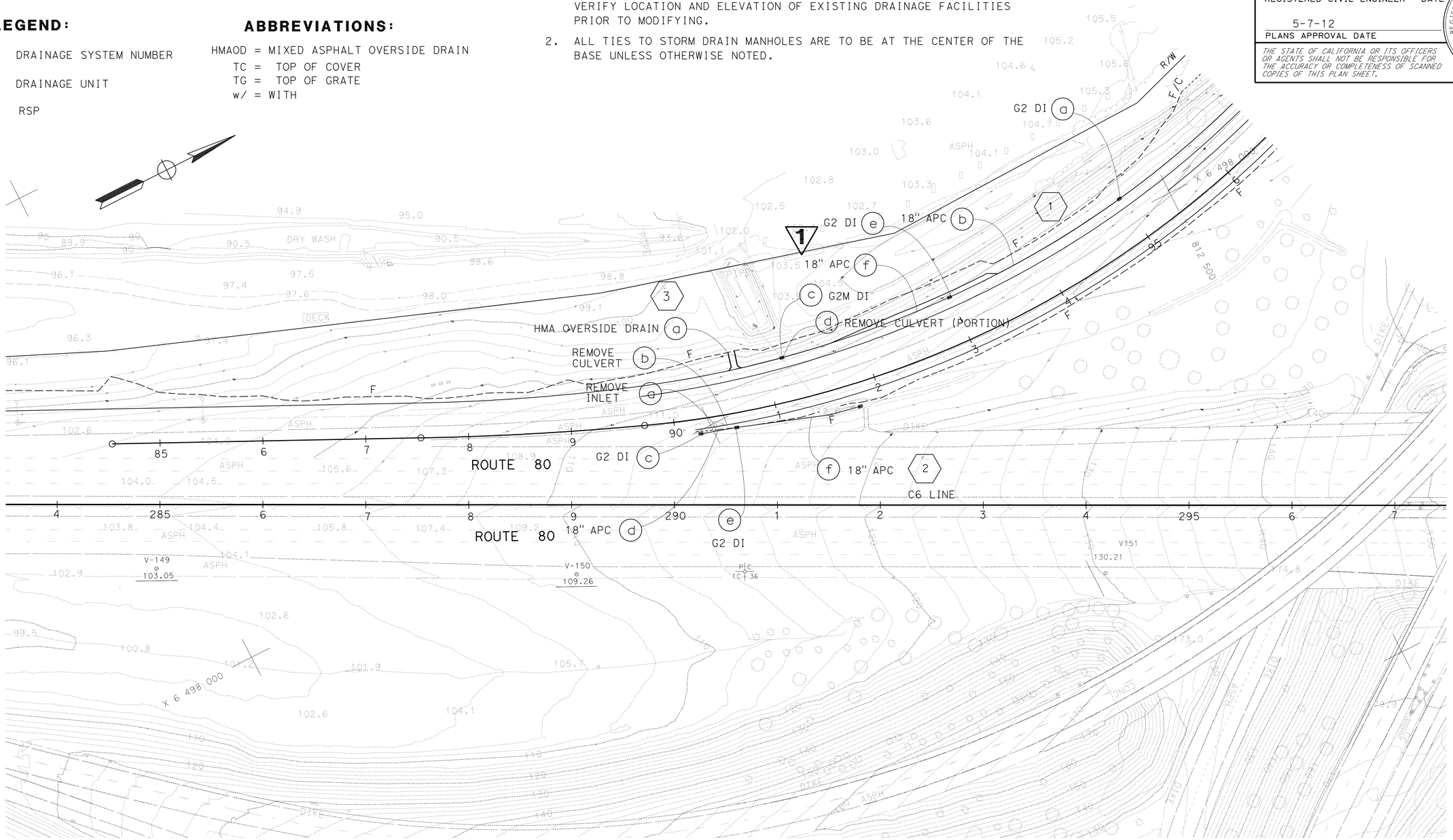

1 REVISED PER ADDENDUM No. 1 DATED AUGUST 3, 2012

APPROVED FOR DRAINAGE WORK ONLY

FOR NOTES, ABBREVIATIONS AND LEGEND, SEE SHEET D-1

DRAINAGE PLAN

SCALE: 1" = 50'

D-1

STATE OF CALIFORNIA - DEPARTMENT OF TRANSPORTATION
Caltrans
DESIGN

FUNCTIONAL SUPERVISOR: VINCE BONNER
CALCULATED-DESIGNED BY: DENNIS OCAMPO
CHECKED BY: JAY FONG
REVISED BY
DATE REVISED

LAST REVISION 03-03-12
DATE PLOTTED => 01-AUG-2012
TIME PLOTTED => 13:31

Dist	COUNTY	ROUTE	POST MILES TOTAL PROJECT	SHEET No.	TOTAL SHEETS
04	Sol	80	0.0/R28.4	109	509

REGISTERED CIVIL ENGINEER DATE 2-28-12

PLANS APPROVAL DATE 5-7-12

REGISTERED PROFESSIONAL ENGINEER Dennis B. Ocampo No. 53523 Exp. 6-30-13 CIVIL STATE OF CALIFORNIA

THE STATE OF CALIFORNIA OR ITS OFFICERS OR AGENTS SHALL NOT BE RESPONSIBLE FOR THE ACCURACY OR COMPLETENESS OF SCANNED COPIES OF THIS PLAN SHEET.

NOTE:

FOR ACCURATE RIGHT OF WAY DATA, CONTACT RIGHT OF WAY ENGINEERING AT THE DISTRICT OFFICE.

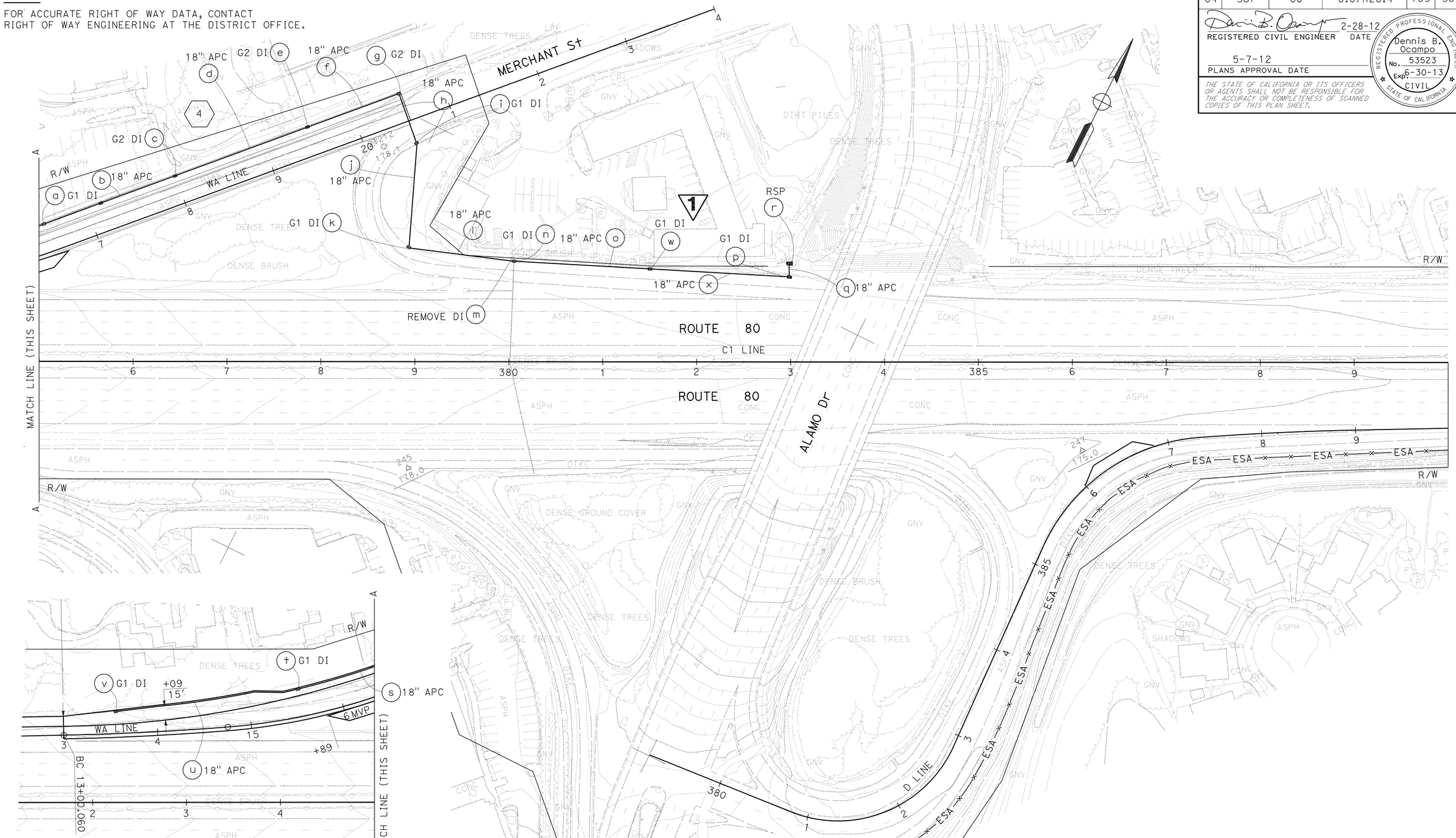

1 REVISED PER ADDENDUM No. 1 DATED AUGUST 3, 2012

APPROVED FOR DRAINAGE WORK ONLY

FOR NOTES, ABBREVIATIONS AND LEGEND, SEE SHEET D-1

DRAINAGE PLAN

SCALE: 1" = 50'

D-2

STATE OF CALIFORNIA - DEPARTMENT OF TRANSPORTATION

Caltrans DESIGN

FUNCTIONAL SUPERVISOR VINCE BONNER

CALCULATED-DESIGNED BY DENNIS OCAMPO

CHECKED BY JAY FONG

REVISED BY

DATE REVISED

LAST REVISION 03-03-12

DATE PLOTTED => 01-AUG-2012

TIME PLOTTED => 13:31

Dist	COUNTY	ROUTE	POST MILES TOTAL PROJECT	SHEET No.	TOTAL SHEETS
04	Sol	80	0.0/R28.4	112	509

REGISTERED CIVIL ENGINEER 2-28-12 DATE

5-7-12
PLANS APPROVAL DATE

REGISTERED PROFESSIONAL ENGINEER Dennis B. Ocampo No. 53523 Exp. 6-30-13 CIVIL STATE OF CALIFORNIA

THE STATE OF CALIFORNIA OR ITS OFFICERS OR AGENTS SHALL NOT BE RESPONSIBLE FOR THE ACCURACY OR COMPLETENESS OF SCANNED COPIES OF THIS PLAN SHEET.

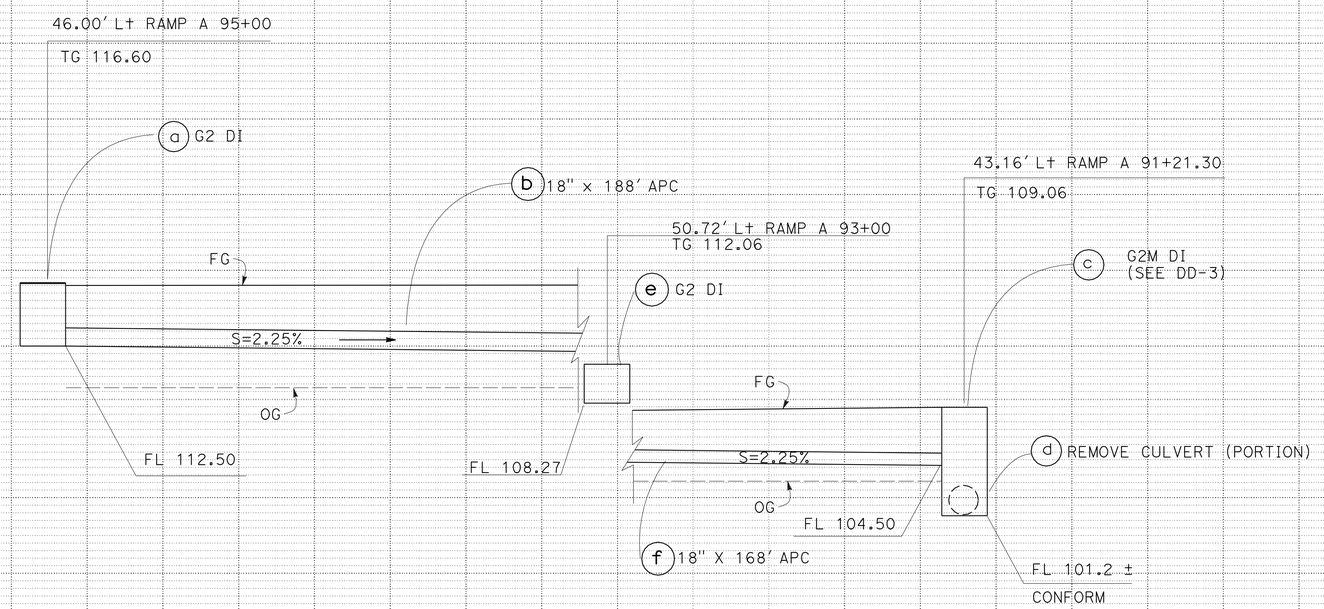

DRAINAGE SYSTEM No. 1 1

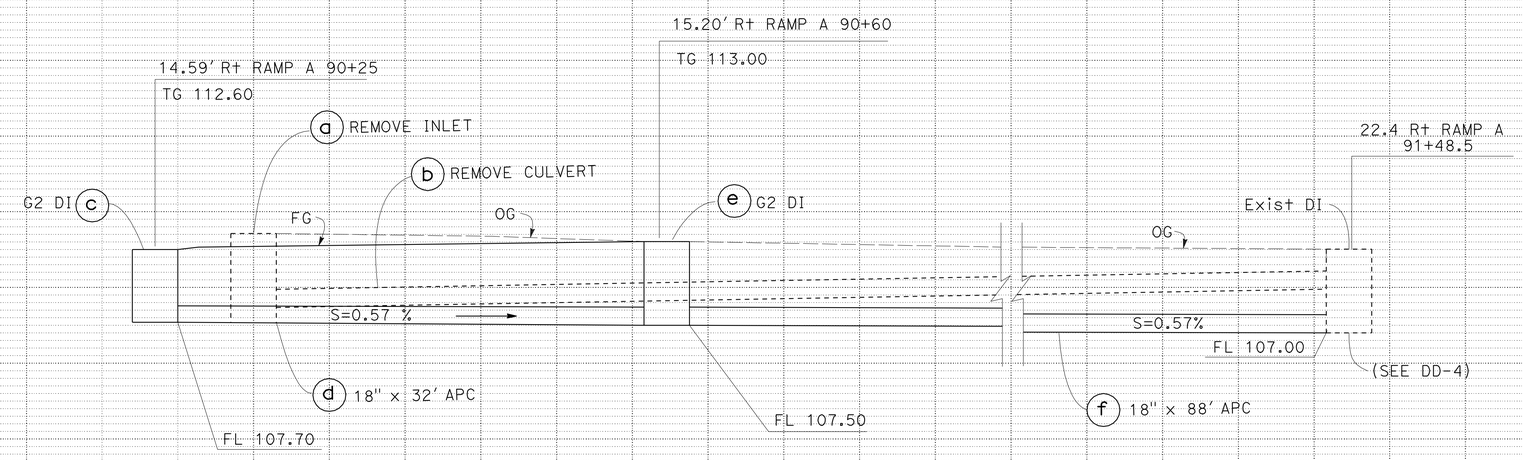

DRAINAGE SYSTEM No. 2

1 **REVISED PER ADDENDUM No. 1 DATED AUGUST 3, 2012**

DRAINAGE PROFILES

SCALE: HORIZ 1" = 5'
VERT 1" = 5'

DP- 1

STATE OF CALIFORNIA - DEPARTMENT OF TRANSPORTATION
Caltrans DESIGN

FUNCTIONAL SUPERVISOR: VINCE BONNER
CALCULATED-DESIGNED BY: DENNIS OCAMPO
CHECKED BY: JAY FONG
REVISED BY / DATE REVISED

LAST REVISION 03-03-12 | DATE PLOTTED => 01-AUG-2012 | TIME PLOTTED => 14:28

Dist	COUNTY	ROUTE	POST MILES TOTAL PROJECT	SHEET No.	TOTAL SHEETS
04	Sol	80	0.0/R28.4	113	509

REGISTERED CIVIL ENGINEER 2-28-12 DATE

5-7-12
PLANS APPROVAL DATE

REGISTERED PROFESSIONAL ENGINEER Dennis B. Ocampo No. 53523 Exp. 6-30-13 CIVIL STATE OF CALIFORNIA

THE STATE OF CALIFORNIA OR ITS OFFICERS OR AGENTS SHALL NOT BE RESPONSIBLE FOR THE ACCURACY OR COMPLETENESS OF SCANNED COPIES OF THIS PLAN SHEET.

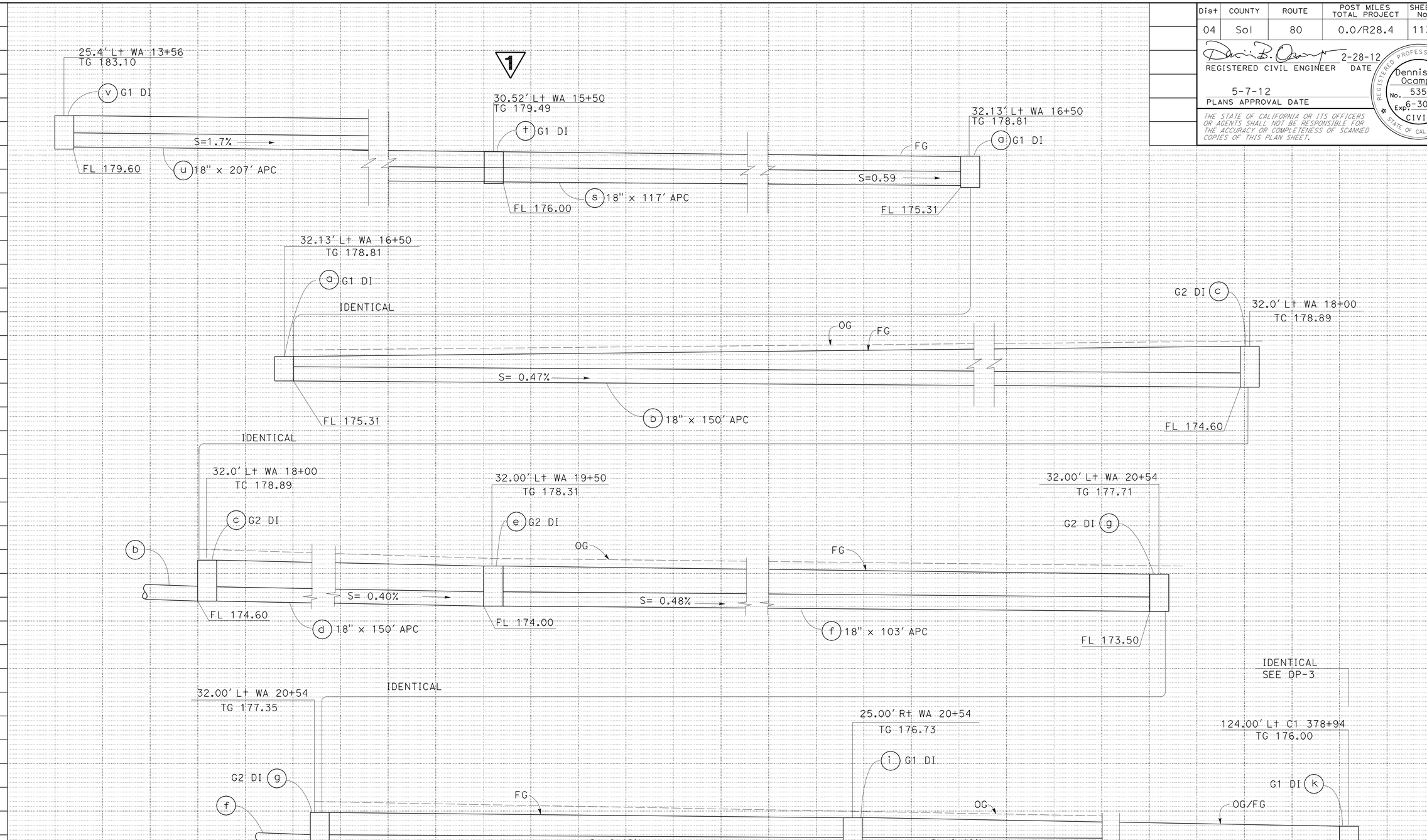

DRAINAGE SYSTEM No. 4

DRAINAGE PROFILES

SCALE: HORIZ 1" = 5'
VERT 1" = 5'

DP-2

1 REVISED PER ADDENDUM No. 1 DATED AUGUST 3, 2012

STATE OF CALIFORNIA - DEPARTMENT OF TRANSPORTATION
Caltrans
HYDRAULICS

FUNCTIONAL SUPERVISOR: VINCE BONNER
CALCULATED-DESIGNED BY: DENNIS OCAMPO
CHECKED BY: JAY FONG
REVISED BY
DATE REVISED

LAST REVISION 03-03-12
DATE PLOTTED => 01-AUG-2012
TIME PLOTTED => 14:56

Dist	COUNTY	ROUTE	POST MILES TOTAL PROJECT	SHEET No.	TOTAL SHEETS
04	Sol	80	0.0/R28.4	114	509

REGISTERED CIVIL ENGINEER 2-28-12 DATE

5-7-12
PLANS APPROVAL DATE

REGISTERED PROFESSIONAL ENGINEER Dennis B. Ocampo No. 53523 Exp. 6-30-13 CIVIL STATE OF CALIFORNIA

THE STATE OF CALIFORNIA OR ITS OFFICERS OR AGENTS SHALL NOT BE RESPONSIBLE FOR THE ACCURACY OR COMPLETENESS OF SCANNED COPIES OF THIS PLAN SHEET.

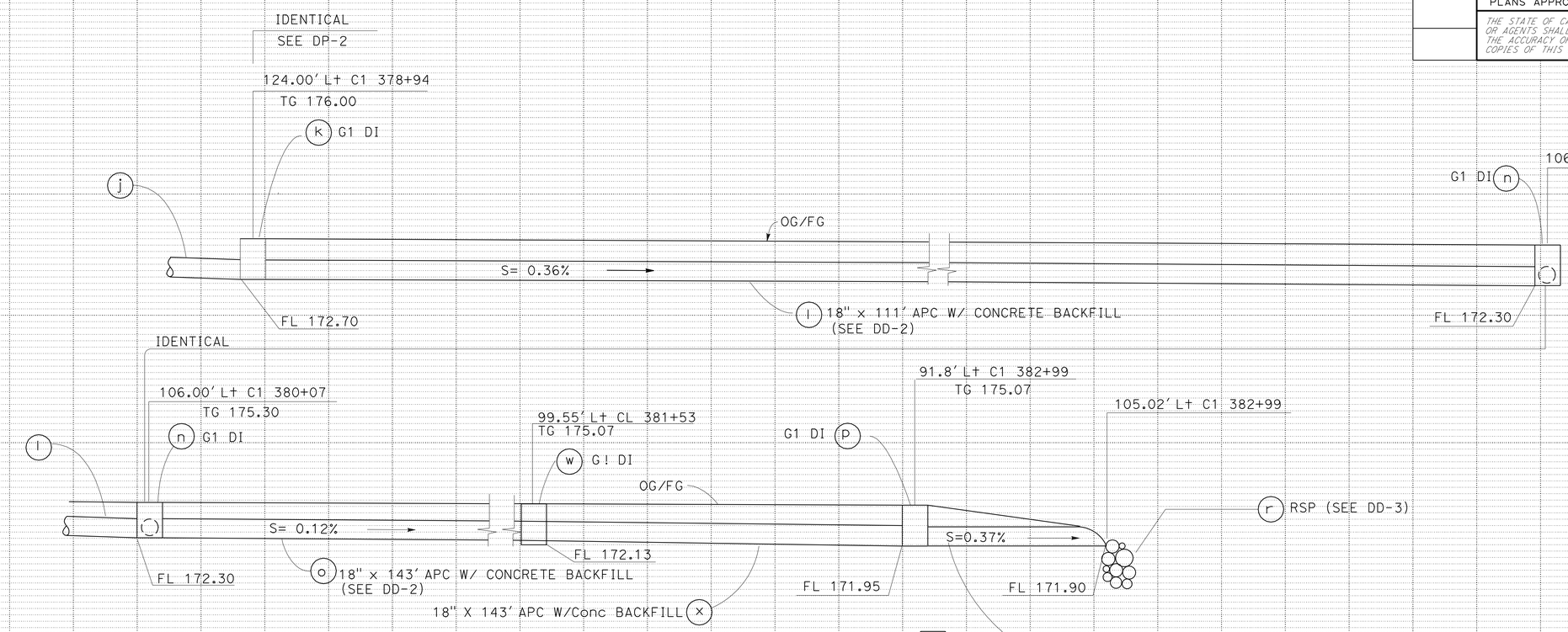

1 DRAINAGE SYSTEM No. 4

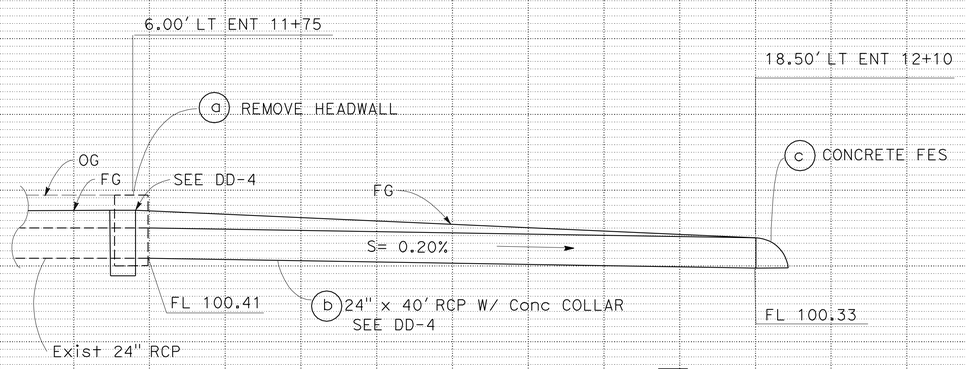

DRAINAGE SYSTEM No. 6

1 REVISED PER ADDENDUM No. 1 DATED AUGUST 3, 2012

DRAINAGE PROFILES

SCALE: HORIZ 1" = 5'
VERT 1" = 5'

DP-3

STATE OF CALIFORNIA - DEPARTMENT OF TRANSPORTATION
Caltrans
HYDRAULICS

FUNCTIONAL SUPERVISOR: VINCE BONNER
CALCULATED-DESIGNED BY: DENNIS OCAMPO
CHECKED BY: JAY FONG
REVISED BY
DATE REVISED

LAST REVISION 03-03-12
DATE PLOTTED => 01-AUG-2012
TIME PLOTTED => 14:34

Dist	COUNTY	ROUTE	POST MILES TOTAL PROJECT	SHEET No.	TOTAL SHEETS
04	Sol	80	0.0/R28.4	119	509

REGISTERED CIVIL ENGINEER 2-28-12 DATE

5-7-12
PLANS APPROVAL DATE

REGISTERED PROFESSIONAL ENGINEER Dennis B. Ocampo No. 53523 Exp. 6-30-13 CIVIL STATE OF CALIFORNIA

THE STATE OF CALIFORNIA OR ITS OFFICERS OR AGENTS SHALL NOT BE RESPONSIBLE FOR THE ACCURACY OR COMPLETENESS OF SCANNED COPIES OF THIS PLAN SHEET.

1

APC ALLOWABLE PIPE MATERIAL AND PROTECTION

DESIGNATION	RCP *	PLASTIC ** (TYPE S)
18" APC	YES	YES

* FOR MINIMUM ALLOWABLE CLASS OF RCP, SEE STD PLAN A62D.
** ALLOWABLE PLASTIC PIPE OPTION SHALL BE SMOOTH INTERIOR WALL TYPES ONLY.

ABBREVIATIONS:

w/	WITH
S	STANDARD JOINT TYPE
P	POSITIVE JOINT TYPE
DD	DOWNDRAIN JOINT

DRAINAGE QUANTITIES

DRAINAGE SYSTEM No.	DRAINAGE UNIT	FRAME, GRATE & COVER (N) 24-12 (EA)	Misc IRON & STEEL (LB)	ROCK SLOPE PROTECTION FRABRIC (SQYD)	ROCK SLOPE PROTECTION (BACKING No.2, METHOD B) (CY)	MINOR CONCRETE BACKFILL (CY)	MINOR CONCRETE MINOR STRUCTURE (CY)	HMA OVERSIDE DRAIN (TON)	PLACE HMA (Misc AREA) (SQYD)	PIPE JOINT CLASSIFICATION (N)	MAXIMUM COVER (N) (LF)	HEIGHT OF INLET (N) (LF)	CONCRETE COLLAR (N) (EA)	CONCRETE BACKFILL FAST SETTING (CY)	APC 18" (LF)	RCP 24" (LF)	24" CONCRETE FES (EA)	REMOVE ASPHALT CONCRETE OVERSIDE DRAIN (EA)	REMOVE INLET (EA)	REMOVE HEADWALL (EA)	REMOVE CULVERT (LF)	DESCRIPTION	STATION	DRAINAGE PLAN SHEET No.	DRAINAGE SYSTEM No.	DRAINAGE UNIT
1	a	1	326				1.61					4.19										G2 DI	46.00′ Lt RAMP A 95+00	D-1	1	a
	b									S					188							18" APC	50.72′ Lt RAMP A 93+00 TO 46.00′ Lt RAMP A 95+00			b
	c	1	326				4.87					7.86										G2M DI	43.16′ Lt RAMP A 91+21.3			c
	d																				3	REMOVE CULVERT (PORTION)	43.16′ Lt RAMP A 91+21.3			d
	e	1	326				1.51					3.79										G2 DI	50.72′ Lt RAMP A 93+00 TO			e
	f														168							18" APC	50.72′ Lt RAMP A 93+00 TO 43.16′ Lt RAMP A 91+21.3			f
2	a																		1			REMOVE INLET	8.30′ Rt RAMP A 90+38	D-1	2	a
	b																				110	REMOVE CULVERT	8.30′ Rt RAMP A 90+38			b
	c	1	326				1.77					4.80										G2 DI	14.59′ Rt RAMP A 90+25			c
	d									S					32							18" APC	14.59′ Rt RAMP A 90+25 TO 14.21′ Rt RAMP A 90+60			d
	e	1	326				1.96					5.53										G2 DI	14.21′ Rt RAMP A 90+60			e
	f									S					88							18" APC	14.21′ Rt RAMP A 90+60 TO 22.4′ Rt RAMP A 91+48.5			f
3	a							0.58	6.28													HMA OVERSIDE DRAIN	43.63′ LT RAMP A 90+65	D-1	3	a
SHEET TOTAL		5	1630				11.72	0.58	6.28						476				1		113					

1 REVISED PER ADDENDUM No. 1 DATED AUGUST 3, 2012

DRAINAGE QUANTITIES DQ-1

STATE OF CALIFORNIA - DEPARTMENT OF TRANSPORTATION
Caltrans

CALCULATED-DESIGNED BY	CHECKED BY	FUNCTIONAL SUPERVISOR	REVISED BY	DATE REVISED
DENNIS OCAMPO	JAY FONG	VINCE BONNER		

LAST REVISION 00-00-00 | DATE PLOTTED => 01-AUG-2012 | TIME PLOTTED => 13:23

Dist	COUNTY	ROUTE	POST MILES TOTAL PROJECT	SHEET No.	TOTAL SHEETS
04	Sol	80	0.0/R28.4	120	509

REGISTERED CIVIL ENGINEER 2-28-12 DATE

5-7-12
PLANS APPROVAL DATE

REGISTERED PROFESSIONAL ENGINEER Dennis B. Ocampo No. 53523 Exp. 6-30-13 CIVIL STATE OF CALIFORNIA

THE STATE OF CALIFORNIA OR ITS OFFICERS OR AGENTS SHALL NOT BE RESPONSIBLE FOR THE ACCURACY OR COMPLETENESS OF SCANNED COPIES OF THIS PLAN SHEET.

DRAINAGE QUANTITIES

1

DRAINAGE SYSTEM No.	DRAINAGE UNIT	FRAME, GRATE & COVER (N) 24-12 (EA)			Misc IRON & STEEL (LB)	ROCK SLOPE PROTECTION FABRIC (SQFT)	ROCK SLOPE PROTECTION (BACKING No.2, METHOD B) (CY)	MINOR CONCRETE BACKFILL (CY)	MINOR CONCRETE MINOR STRUCTURE (CY)		HMA OVERSIDE DRAIN (TON)	PLACE HMA (Misc AREA) (SQYD)	PIPE JOINT CLASSIFICATION (N)	MAXIMUM COVER (N) (LF)	HEIGHT OF INLET (N) (LF)	CONCRETE COLLAR (N) (EA)			CONCRETE BACKFILL FAST SETTING (CY)					APC 18" (LF)						RCP 24" (LF)						24" CONCRETE FES (EA)		REMOVE ASPHALT CONCRETE OVERSIDE DRAIN (EA)	REMOVE INLET (EA)	REMOVE HEADWALL (EA)	REMOVE CULVERT (LF)	DESCRIPTION	STATION	DRAINAGE PLAN SHEET No.	DRAINAGE SYSTEM No.	DRAINAGE UNIT
4	a	1			326				1.06						3.5																											G1 DI	32.13′ L+ WA 16+50	D-2	4	a
	b												S	2.0										150																		18" APC	32.13′ L+ WA 16+30 TO 32.00′ L+ WA 18+00			b
	c	1			326				1.64						4.29																											G2 DI	32.00′ L+ WA 18+00			c
	d												S	2.0										150																		18" APC	32.00′ L+ W 18+00 TO 32.00′ L+ 19+50			d
	e	1			326				1.64						4.31																											G2 DI	32.00′ L+ WA 19+50			e
	f												S	2.0										104																		18" APC	32.00′ L+ WA 19+50 TO 32.00′ L+ WA 20+54			f
	g	1			326				1.62						4.21																											G2 DI	32.00′ L+ WA 20+54			g
	h												S	2.0					17					54																		18" APC	32.00′ L+ WA 20+54 TO 25.00′ R+ WA 20+54			h
	i	1			326				1.06						3.5																											G1 DI	25.00′ R+ WA 20+54			i
	j												S	2.0										110																		18" APC	25.00′ R+ WA 20+54 TO 124.00′ L+ C1 378+94			j
	k	1			326				1.02						3.3																											G1 DI	124.00′ L+ C1 378+94			k
	l							13.2					S	1.5										111																		18" APC W/ Conc BACKFILL	124.00′ L+ C1 378+94 TO 106.00′ L+ C1 308+07			l
	m																																					1			REMOVE INLET	106.00′ L+ C1 380+07			m
	n	1			326				0.95						3.0																											G1 DI	106.00′ L+ C1 380+07			n
	o							45					S	1.5										143																		18" APC W/ Conc BACKFILL	106.00′ L+ C1 380+07 TO 99.55′ L+ C1 381+53			o
	p	1			326				0.98						3.12																											G1 DI	91.8′ L+ C1 382+99			p
	q												S	1.5										14																		18" APC	91.8′ L+ C1 382+99 TO 105.02′ L+ C1 82+99			q
	r					60	6.78																																		RSP	105.02′ L+ C1 382+99			r
	s												S											117																		18" APC	30.52′ L+ WA 15+50 TO 32.13′ L+ WA 16+50			s
	t	1			326			1.06							3.59																											G1 DI	30.52′ L+ WA 15+50			t
	u												S											207																		18" APC	25.54′ L+ WA 13+56 TO 30.52′ L+ WA 15+50			u
	v	1			326			1.06							3.5																											G1 DI	25.4′ L+ WA 13+56			v
	w	1			326			0.95							0.95																											G1 DI	99.55′ L+ C1 381+53			w
	x						45						S	1.5										143																		18" APC W/ Conc BACKFILL	99.55′ L+ C1 381+53 TO 91.8′ L+ C1 382+99			x
5	a										0.39	4.53																														HMA OVERSIDE DRAIN	41.00′ R+ ECD 9+75	D-3	5	a
	b																																					1			REMOVE OVERSIDE DRAIN	24.00′ R+ ECD 9+90			b
	c										0.24	3.14																													HMA OVERSIDE DRAIN	37.00′ R+ ECD 11+00			c
	d																																					1			REMOVE OVERSIDE DRAIN	30.00′ R+ ECD 12+37			d
	e																																					1			REMOVE OVERSIDE DRAIN	41.00′ R+ ECD 9+75			e
6	a																																							1		REMOVE HEADWALL	6.00′ L+ ENT 11+75	D-4	6	a
	b															1												40														24" RCP w/ Conc COLLAR	6.00′ L+ ENT 11+75			b
	c																																	1							24" CONCRETE FES	18.50′ L+ ENT 12+10			c
SHEET TOTAL		11			3586	60	6.78	102.2	13.04		0.63	7.67				1								1303						40				1			3	1	1						
TOTAL		16			5216	60	6.78	102.2	24.76		1.21	13.95				1			17					1779						40				1			3	2	1	113					

(N) NOT A SEPARATE PAY ITEM, FOR INFORMATION ONLY.

1 REVISED PER ADDENDUM No. 1 DATED AUGUST 3, 2012

DRAINAGE QUANTITIES DQ-2

STATE OF CALIFORNIA - DEPARTMENT OF TRANSPORTATION
Caltrans DESIGN

FUNCTIONAL SUPERVISOR: VINCE BONNER
CALCULATED-DESIGNED BY: DENNIS OCAMPO
CHECKED BY: JAY FONG
REVISED BY / DATE REVISED

LAST REVISION 00-00-00
DATE PLOTTED => 01-AUG-2012
TIME PLOTTED => 13:56

Dist	COUNTY	ROUTE	POST MILES TOTAL PROJECT	SHEET No.	TOTAL SHEETS
04	Sol	80	0.0/R28.4	297	509

REGISTERED CIVIL ENGINEER 2-28-12 DATE

5-7-12
PLANS APPROVAL DATE

REGISTERED PROFESSIONAL ENGINEER Dennis B. Ocampo No. 53523 Exp. 6-30-13 CIVIL STATE OF CALIFORNIA

THE STATE OF CALIFORNIA OR ITS OFFICERS OR AGENTS SHALL NOT BE RESPONSIBLE FOR THE ACCURACY OR COMPLETENESS OF SCANNED COPIES OF THIS PLAN SHEET.

TRAFFIC STRIPES, PAVEMENT MARKINGS AND PAVEMENT MARKERS

SHEET No.	STATION	DIRECTION	DETAIL No. OR PAVEMENT MARKING	THERMOPLASTIC TRAFFIC STRIPE					THERMOPLASTIC PAVEMENT MARKING	PAVEMENT MARKER				REMOVE THERMOPLASTIC TRAFFIC STRIPE			REMOVE THERMOPLASTIC PAVEMENT MARKING	REMOVE PAVEMENT MARKER
										RETROREFLECTIVE			NON-REFLECTIVE					
				4" WHITE (ENHANCED WET NIGHT VISIBILITY)	4" WHITE	4" YELLOW	4" BROKEN WHITE (17'-7')	8" WHITE	ALL TYPES	TYPE C	TYPE G	TYPE H	TYPE A	4" WHITE	8" WHITE	4" YELLOW (HAZARDOUS WASTE)	ALL TYPES	ALL TYPES
				LF					SQFT	EA				LF			SQFT	EA
PD-9	WCP 18+20	WB	12" LIMIT LINE						12									
	ECP 21+25	EB	12" LIMIT LINE						12									
PD-10	SV 43+11	EB	12" LIMIT LINE						24									
PD-11	WAC 13+91	WB	12" LIMIT LINE						12									
PD-12	EAC 18+38	EB	12" LIMIT LINE						12									
PD-13	RC 614+90	WB	12" LIMIT LINE						12									
PD-14	RCL1 108+00	WB	12" LIMIT LINE						12									
PD-15	WCG 13+85	WB	12" LIMIT LINE						12									
	ECG 15+75	EB	12" LIMIT LINE						12									
PD-16	WPV 14+18	WB	12" LIMIT LINE						12									
	EPV 14+14	EB	12" LIMIT LINE						12									
1 PD-17	~~WA 16+13~~	~~WB~~	~~12" LIMIT LINE~~						~~24~~									
	~~WA 13+00 TO 16+34~~	~~WB~~	~~27B~~		~~334~~													
	~~WA 16+17 TO 16+34~~	~~WB~~	~~10~~								~~2~~		~~3~~					
	WA 13+00 TO 16+34	WB	25A			~~334~~						~~15~~				334		
PD-18	~~WA 16+34 TO 21+33~~	~~WB~~	~~27B~~		~~499~~													
	~~WA 16+34 TO 21+33~~	~~WB~~	~~10~~								~~12~~		~~63~~					
	WA 16+34 TO 20+30	WB	25A			~~396~~						~~18~~				396		
	D 386+85	EB	12" LIMIT LINE						12									
PD-19	WD 21+20	EB	12" LIMIT LINE						12									
	EDS 13+00	WB	12" LIMIT LINE						12									
PD-20	WM 23+25	WB	12" LIMIT LINE						12									
	ECD 13+90	EB	12" LIMIT LINE						24									
	ECD 9+92 TO 13+90	EB	25A			398						18				398		
	ECD 13+90 TO 15+50	EB	36B					160			8							
	ECD 15+50 TO 16+80	EB	8				130											
	ECD 11+23 TO 13+90	EB	9				267				7							
	ECD 9+92 TO 18+28	EB	27B		836													
PD-21	SAD 10+50 TO 21+43.26	EB	27B		1094													
	C1 482+00 TO 484+85	EB	27B		285													
	SAD 11+73 TO 18+20	EB	38					647			28							
	SAD 11+73 TO 18+20	EB	25A			647						28				647		28
	SAD 18+20	EB	12" LIMIT LINE						28									
SHEET TOTAL					~~3048~~ 2215	~~1775~~ 1045	397	807	~~268~~ 244		43 ~~57~~	46 ~~79~~	~~66~~			1775		28

1 REVISED PER ADDENDUM No. 1 DATED AUGUST 3, 2012

PAVEMENT DELINEATION QUANTITIES
PDQ-2

STATE OF CALIFORNIA - DEPARTMENT OF TRANSPORTATION
Caltrans DESIGN

FUNCTIONAL SUPERVISOR: VINCE BONNER
CALCULATED-DESIGNED BY: DENNIS OCAMPO
CHECKED BY: JAY FONG
REVISED BY / DATE REVISED

LAST REVISION 02-11-12 | DATE PLOTTED => 01-AUG-2012 | TIME PLOTTED => 13:56

Dist	COUNTY	ROUTE	POST MILES TOTAL PROJECT	SHEET No.	TOTAL SHEETS
04	Sol	80	0.0/R28.4	299	509

REGISTERED CIVIL ENGINEER 2-28-12 DATE

5-7-12
PLANS APPROVAL DATE

REGISTERED PROFESSIONAL ENGINEER Dennis B. Ocampo No. 53523 Exp. 6-30-13 CIVIL STATE OF CALIFORNIA

THE STATE OF CALIFORNIA OR ITS OFFICERS OR AGENTS SHALL NOT BE RESPONSIBLE FOR THE ACCURACY OR COMPLETENESS OF SCANNED COPIES OF THIS PLAN SHEET.

1

TRAFFIC STRIPES, PAVEMENT MARKINGS AND PAVEMENT MARKERS

SHEET No.	STATION	DIRECTION	DETAIL No. OR PAVEMENT MARKING	THERMOPLASTIC TRAFFIC STRIPE					THERMOPLASTIC PAVEMENT MARKING	PAVEMENT MARKER				REMOVE THERMOPLASTIC TRAFFIC STRIPE			REMOVE THERMOPLASTIC PAVEMENT MARKING	REMOVE PAVEMENT MARKER
										RETROREFLECTIVE			NON-REFLECTIVE					
				4" WHITE (ENHANCED WET NIGHT VISIBILITY)	4" WHITE	4" YELLOW	4" BROKEN WHITE (17'-7')	8" WHITE	ALL TYPES	TYPE C	TYPE G	TYPE H	TYPE A	4" WHITE	8" WHITE	4" YELLOW (HAZARDOUS WASTE)	ALL TYPES	ALL TYPES
				LF					SQFT	EA				LF			SQFT	EA
PD-24	ENT 10+00 TO 14+50	EB	25A			450						20				450		20
	ENT 10+40 TO 15+45	EB	36A					505			23					505		23
	ENT 10+47 TO 17+20	EB	27B		673													
	ENT 15+45	EB	12" LIMIT LINE						24									
	ENT 10+40 TO 15+45	EB	38A					505										
	ENT 11+00, 12+50, 12+80, 15+20	EB	DIAMOND						44						398			
PD-25	RL 544+50 TO 546+48.48	WB	36					398			20							20
	RL 544+50 TO 552+00	WB	13								17		63					
	RL 544+50 TO 552+00	WB	25A			750						33				750		33
PD-26	ENT 17+20 TO 19+25.802	EB	36A					206			10					206		10
	ENT 19+25.802 TO 21+00	EB	8				175								175			
	ENT 17+20 TO 19+00	EB	27B		180													
SHEET TOTAL					853	1200	175	1614	68		70	53	63		573	1911		106
TOTAL FROM SHEET PDQ-1				2772	3306	2597	1990	3717	173	8	332	114	368		560	2597		69
TOTAL FROM SHEET PDQ-2					2215	1045	397	807	244		43	46				1775		28
TOTAL FROM SHEET PDQ-3					4230	1524	1339	1092	195		97	81	13	2751	503	1524	550	110
SUBTOTAL				2772	10604	6366	3901	7230	680	8	542	294	444	2751	1636	7807	550	313
GRAND TOTAL				2772	16970		3901	7230	680	836			444	4387		7807	550	313

1 REVISED PER ADDENDUM No. 1 DATED AUGUST 3, 2012

PAVEMENT DELINEATION QUANTITIES

PDQ-4

STATE OF CALIFORNIA - DEPARTMENT OF TRANSPORTATION
Caltrans DESIGN

FUNCTIONAL SUPERVISOR: VINCE BONNER
CALCULATED-DESIGNED BY: DENNIS OCAMPO
CHECKED BY: JAY FONG
REVISED BY
DATE REVISED

LAST REVISION 00-00-00
DATE PLOTTED => 01-AUG-2012
TIME PLOTTED => 12:56

DIST	COUNTY	ROUTE	POST MILES TOTAL PROJECT	SHEET No	TOTAL SHEETS
04	Sol	80	0.0/R28.4	347A	509

1

REGISTERED CIVIL ENGINEER 05-09-12

5-7-12
PLANS APPROVAL DATE

REGISTERED PROFESSIONAL ENGINEER Samuel Awad No. 64589 Exp. 6-30-13 CIVIL STATE OF CALIFORNIA

The State of California or its officers or agents shall not be responsible for the accuracy or completeness of electronic copies of this plan sheet.

This LOTB sheet was prepared in accordance with the Caltrans Soil & Rock Logging, Classification, & Presentation Manual (2010 Edition).

NOTE: PP=unconfined compressive strength (tsf) as measured by pocket penetrometer.

(For Boring Location See Plan, LOTB Sheet 2 of 4)

1 ADDED PER ADDENDUM No. 1 DATED AUGUST 3, 2012

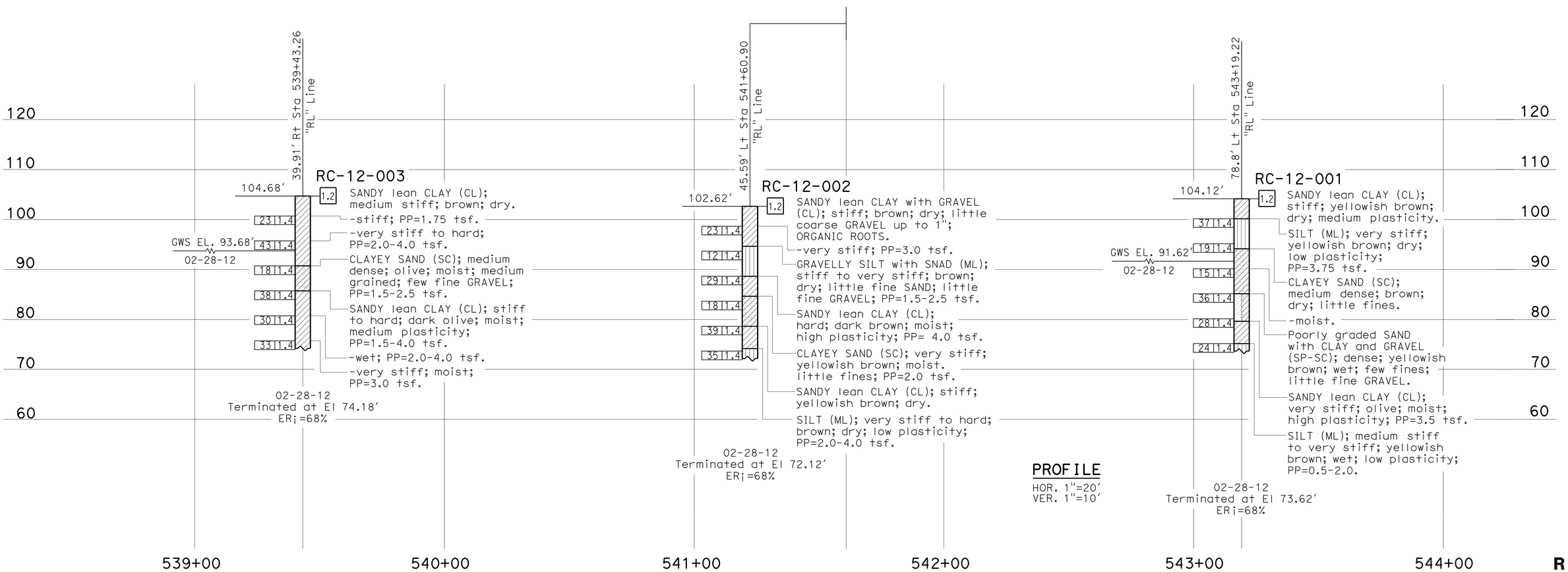

R-1

ENGINEERING SERVICES		GEOTECHNICAL SERVICES	STATE OF CALIFORNIA DEPARTMENT OF TRANSPORTATION	DIVISION OF ENGINEERING SERVICES OFFICE OF GEOTECHNICAL DESIGN BRANCH	BRIDGE NO. / POST MILES 0.0/R28.4	RAMP METERING & TOS LOG OF TEST BORINGS 1 OF 4
FUNCTIONAL SUPERVISOR	DRAWN BY: M. Reynolds 04/12	FIELD INVESTIGATION BY: S. Awad				
NAME: H. Nikoui	CHECKED BY: M. Gaffney					

ORIGINAL SCALE IN INCHES FOR REDUCED PLANS 0 1 2 3

UNIT: 3660
PROJECT NUMBER & PHASE: 04000207391 CONTRACT NO.: 04-153501

DISREGARD PRINTS BEARING EARLIER REVISION DATES → REVISION DATES SHEET OF

FILE => 4153501qa001.add

USERNAME => s114337 DATE PLOTTED => 01-AUG-2012 TIME PLOTTED => 11:23

DIST	COUNTY	ROUTE	POST MILES TOTAL PROJECT	SHEET No	TOTAL SHEETS
04	Sol	80	0.0/R28.4	347B	509

REGISTERED CIVIL ENGINEER 05-09-12

5-7-12
PLANS APPROVAL DATE

REGISTERED PROFESSIONAL ENGINEER Samuel Awad No. 64589 Exp. 6-30-13 CIVIL STATE OF CALIFORNIA

The State of California or its officers or agents shall not be responsible for the accuracy or completeness of electronic copies of this plan sheet.

1

This LOTB sheet was prepared in accordance with the Caltrans Soil & Rock Logging, Classification, & Presentation Manual (2010 Edition).

NOTE: PP=unconfined compressive strength (tsf) as measured by pocket penetrometer.

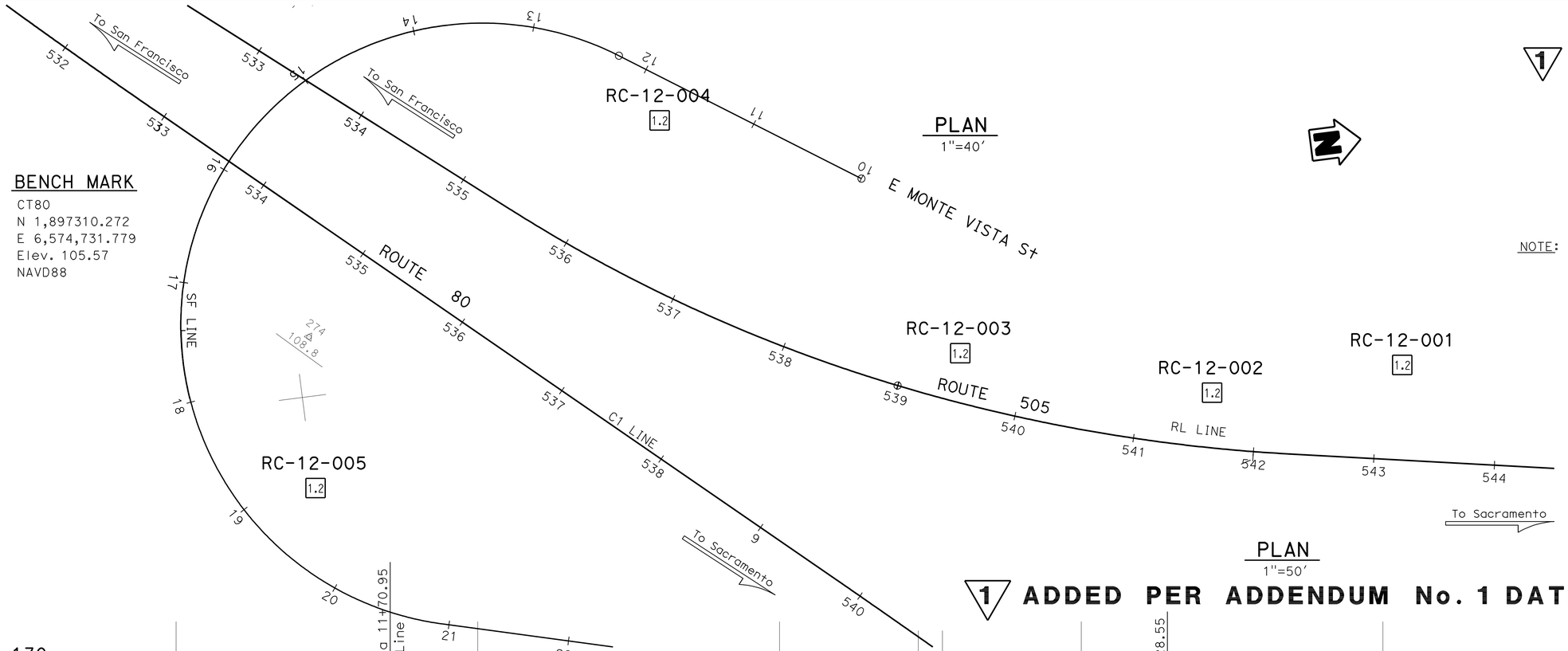

PLAN
1"=40'

PLAN
1"=50'

BENCH MARK
CT80
N 1,897310.272
E 6,574,731.779
Elev. 105.57
NAVD88

1 ADDED PER ADDENDUM No. 1 DATED AUGUST 3, 2012

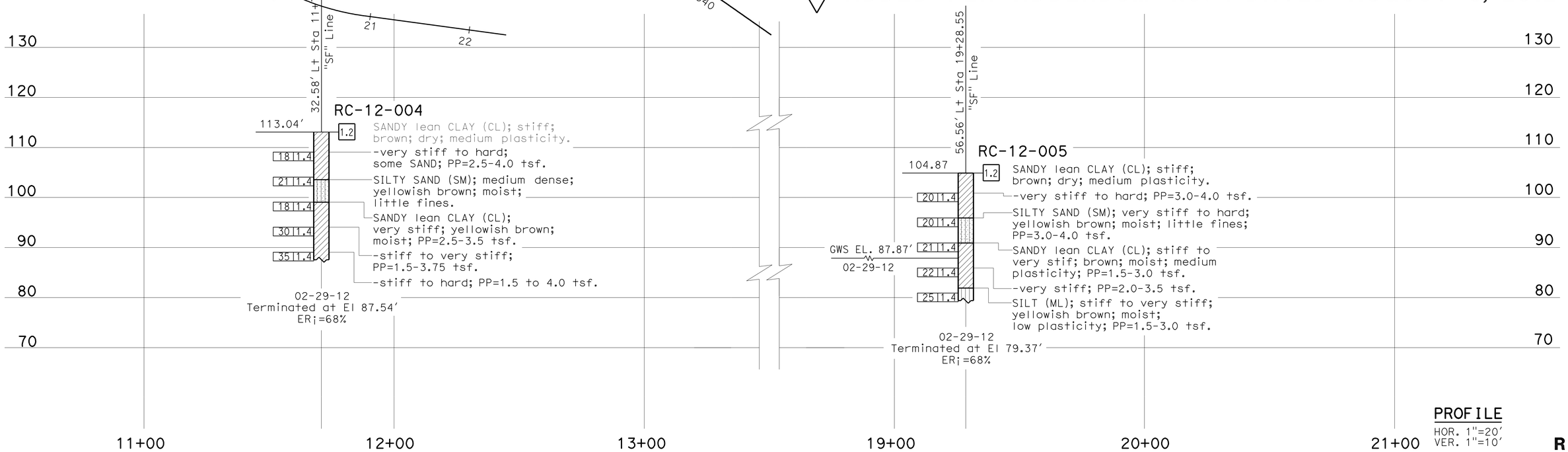

PROFILE
HOR. 1"=20'
VER. 1"=10'

R-2

ENGINEERING SERVICES		GEOTECHNICAL SERVICES	STATE OF CALIFORNIA DEPARTMENT OF TRANSPORTATION	DIVISION OF ENGINEERING SERVICES OFFICE OF GEOTECHNICAL DESIGN BRANCH	BRIDGE NO. / POST MILES 0.0/R28.4	RAMP METERING & TOS LOG OF TEST BORINGS 2 OF 4
FUNCTIONAL SUPERVISOR NAME: H. Nikoui	DRAWN BY: M. Reynolds 04/12 CHECKED BY: M. Gaffney	FIELD INVESTIGATION BY: S. Awad				

ORIGINAL SCALE IN INCHES FOR REDUCED PLANS 0 1 2 3

UNIT: 3660
PROJECT NUMBER & PHASE: 04000207391 CONTRACT NO.: 04-153501

DISREGARD PRINTS BEARING EARLIER REVISION DATES → REVISION DATES SHEET OF

FILE => 4153501qa002.dgn

USERNAME => s114937 DATE PLOTTED => 01-AUG-2012 TIME PLOTTED => 11:23

REFERENCE: CALTRANS SOIL & ROCK LOGGING, CLASSIFICATION, AND PRESENTATION MANUAL (2010)

DIST	COUNTY	ROUTE	POST MILES TOTAL PROJECT	SHEET No	TOTAL SHEETS
04	Sol	80	0.0/R28.4	347C	509

1

REGISTERED CIVIL ENGINEER 05-09-12 DATE

5-7-12
PLANS APPROVAL DATE

REGISTERED PROFESSIONAL ENGINEER Samuel Awad No. 64589 Exp. 6-30-13 CIVIL STATE OF CALIFORNIA

The State of California or its officers or agents shall not be responsible for the accuracy or completeness of electronic copies of this plan sheet.

CEMENTATION

Description	Criteria
Weak	Crumbles or breaks with handling or little finger pressure.
Moderate	Crumbles or breaks with considerable finger pressure.
Strong	Will not crumble or break with finger pressure.

BOREHOLE IDENTIFICATION

Symbol	Hole Type	Description
Size	A	Auger Boring (hollow or solid stem bucket)
Size	R RW RC P	Rotary drilled boring (conventional) Rotary drilled with self-casing wire-line Rotary core with continuously-sampled, self-casing wire-line Rotary percussion boring (air)
Size	R	Rotary drilled diamond core
Size	HD HA	Hand driven (1-inch soil tube) Hand Auger
●	D	Dynamic Cone Penetration Boring
▲	CPT	Cone Penetration Test (ASTM D 5778)
⬚	O	Other (note on LOTB)

Note: Size in inches.

CONSISTENCY OF COHESIVE SOILS

Description	Shear Strength (tsf)	Pocket Penetrometer Measurement, PP, (tsf)	Torvane Measurement, TV, (tsf)	Vane Shear Measurement, VS, (tsf)
Very Soft	Less than 0.12	Less than 0.25	Less than 0.12	Less than 0.12
Soft	0.12 - 0.25	0.25 - 0.5	0.12 - 0.25	0.12 - 0.25
Medium Stiff	0.25 - 0.5	0.5 - 1	0.25 - 0.5	0.25 - 0.5
Stiff	0.5 - 1	1 - 2	0.5 - 1	0.5 - 1
Very Stiff	1 - 2	2 - 4	1 - 2	1 - 2
Hard	Greater than 2	Greater than 4	Greater than 2	Greater than 2

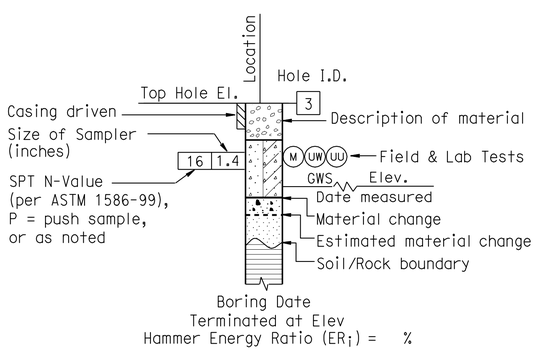

ROTARY BORING

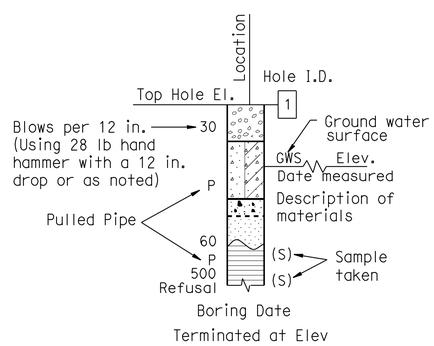

HAND BORING

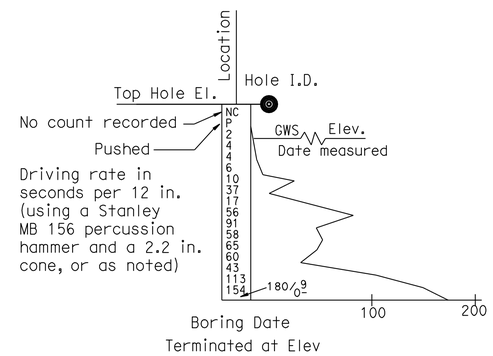

DYNAMIC CONE PENETRATION BORING

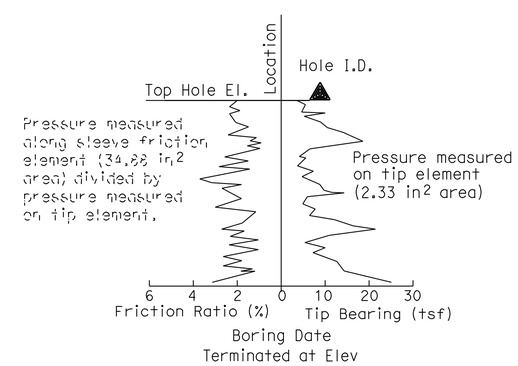

CONE PENETRATION TEST (CPT) BORING

1 **ADDED PER ADDENDUM No. 1 DATED AUGUST 3, 2012**

R-3

ENGINEERING SERVICES	GEOTECHNICAL SERVICES	STATE OF CALIFORNIA DEPARTMENT OF TRANSPORTATION	DIVISION OF ENGINEERING SERVICES OFFICE OF GEOTECHNICAL DESIGN BRANCH	BRIDGE NO. / POST MILE 0.0/R28.4	RAMP METERING & TOS LOG OF TEST BORINGS 3 of 4
	PREPARED BY: M. Reynolds 04/12				

GS LOTB SOIL LEGEND

ORIGINAL SCALE IN INCHES FOR REDUCED PLANS 0 1 2 3

UNIT: 3660
PROJECT NUMBER & PHASE: 04000207391 CONTRACT NO.: 04-153501

DISREGARD PRINTS BEARING EARLIER REVISION DATES

REVISION DATES SHEET OF

FILE => 4153501qa003.add

USERNAME => s114937 DATE PLOTTED => 01-AUG-2012 TIME PLOTTED => 11:23

REFERENCE: CALTRANS SOIL & ROCK LOGGING, CLASSIFICATION, AND PRESENTATION MANUAL (2010)

DIST	COUNTY	ROUTE	POST MILES TOTAL PROJECT	SHEET No	TOTAL SHEETS
04	Sol	80	0.0/R28.4	347D	509

REGISTERED CIVIL ENGINEER 05-09-12 DATE

5-7-12
PLANS APPROVAL DATE

The State of California or its officers or agents shall not be responsible for the accuracy or completeness of electronic copies of this plan sheet.

REGISTERED PROFESSIONAL ENGINEER Samuel Awad No. 64589 Exp. 6-30-13 CIVIL STATE OF CALIFORNIA

1

GROUP SYMBOLS AND NAMES

Graphic/Symbol	Group Names	Graphic/Symbol	Group Names
GW	Well-graded GRAVEL Well-graded GRAVEL with SAND	CL	Lean CLAY Lean CLAY with SAND Lean CLAY with GRAVEL SANDY lean CLAY SANDY lean CLAY with GRAVEL GRAVELLY lean CLAY GRAVELLY lean CLAY with SAND
GP	Poorly-graded GRAVEL Poorly-graded GRAVEL with SAND		
GW-GM	Well-graded GRAVEL with SILT Well-graded GRAVEL with SILT and SAND	CL-ML	SILTY CLAY SILTY CLAY with SAND SILTY CLAY with GRAVEL SANDY SILTY CLAY SANDY SILTY CLAY with GRAVEL GRAVELLY SILTY CLAY GRAVELLY SILTY CLAY with SAND
GW-GC	Well-graded GRAVEL with CLAY (or SILTY CLAY) Well-graded GRAVEL with CLAY and SAND (or SILTY CLAY and SAND)		
GP-GM	Poorly-graded GRAVEL with SILT Poorly-graded GRAVEL with SILT and SAND	ML	SILT SILT with SAND SILT with GRAVEL SANDY SILT SANDY SILT with GRAVEL GRAVELLY SILT GRAVELLY SILT with SAND
GP-GC	Poorly-graded GRAVEL with CLAY (or SILTY CLAY) Poorly-graded GRAVEL with CLAY and SAND (or SILTY CLAY and SAND)		
GM	SILTY GRAVEL SILTY GRAVEL with SAND	OL	ORGANIC lean CLAY ORGANIC lean CLAY with SAND ORGANIC lean CLAY with GRAVEL SANDY ORGANIC lean CLAY SANDY ORGANIC lean CLAY with GRAVEL GRAVELLY ORGANIC lean CLAY GRAVELLY ORGANIC lean CLAY with SAND
GC	CLAYEY GRAVEL CLAYEY GRAVEL with SAND		
GC-GM	SILTY, CLAYEY GRAVEL SILTY, CLAYEY GRAVEL with SAND	OL	ORGANIC SILT ORGANIC SILT with SAND ORGANIC SILT with GRAVEL SANDY ORGANIC SILT SANDY ORGANIC SILT with GRAVEL GRAVELLY ORGANIC SILT GRAVELLY ORGANIC SILT with SAND
SW	Well-graded SAND Well-graded SAND with GRAVEL		
SP	Poorly-graded SAND Poorly-graded SAND with GRAVEL	CH	Fat CLAY Fat CLAY with SAND Fat CLAY with GRAVEL SANDY fat CLAY SANDY fat CLAY with GRAVEL GRAVELLY fat CLAY GRAVELLY fat CLAY with SAND
SW-SM	Well-graded SAND with SILT Well-graded SAND with SILT and GRAVEL		
SW-SC	Well-graded SAND with CLAY (or SILTY CLAY) Well-graded SAND with CLAY and GRAVEL (or SILTY CLAY and GRAVEL)	MH	Elastic SILT Elastic SILT with SAND Elastic SILT with GRAVEL SANDY elastic SILT SANDY elastic SILT with GRAVEL GRAVELLY elastic SILT GRAVELLY elastic SILT with SAND
SP-SM	Poorly-graded SAND with SILT Poorly-graded SAND with SILT and GRAVEL		
SP-SC	Poorly-graded SAND with CLAY (or SILTY CLAY) Poorly-graded SAND with CLAY and GRAVEL (or SILTY CLAY and GRAVEL)	OH	ORGANIC fat CLAY ORGANIC fat CLAY with SAND ORGANIC fat CLAY with GRAVEL SANDY ORGANIC fat CLAY SANDY ORGANIC fat CLAY with GRAVEL GRAVELLY ORGANIC fat CLAY GRAVELLY ORGANIC fat CLAY with SAND
SM	SILTY SAND SILTY SAND with GRAVEL		
SC	CLAYEY SAND CLAYEY SAND with GRAVEL	OH	ORGANIC elastic SILT ORGANIC elastic SILT with SAND ORGANIC elastic SILT with GRAVEL SANDY ORGANIC elastic SILT SANDY ORGANIC elastic SILT with GRAVEL GRAVELLY ORGANIC elastic SILT GRAVELLY ORGANIC elastic SILT with SAND
SC-SM	SILTY, CLAYEY SAND SILTY, CLAYEY SAND with GRAVEL		
PT	PEAT	OL/OH	ORGANIC SOIL ORGANIC SOIL with SAND ORGANIC SOIL with GRAVEL SANDY ORGANIC SOIL SANDY ORGANIC SOIL with GRAVEL GRAVELLY ORGANIC SOIL GRAVELLY ORGANIC SOIL with SAND
	COBBLES COBBLES and BOULDERS BOULDERS		

FIELD AND LABORATORY TESTING

- (C) Consolidation (ASTM D 2435)
- (CL) Collapse Potential (ASTM D 5333)
- (CP) Compaction Curve (CTM 216)
- (CR) Corrosivity Testing (CTM 643, CTM 422, CTM 417)
- (CU) Consolidated Undrained Triaxial (ASTM D 4767)
- (DS) Direct Shear (ASTM D 3080)
- (EI) Expansion Index (ASTM D 4829)
- (M) Moisture Content (ASTM D 2216)
- (OC) Organic Content-% (ASTM D 2974)
- (P) Permeability (CTM 220)
- (PA) Particle Size Analysis (ASTM D 422)
- (PI) Plasticity Index (AASHTO T 90) Liquid Limit (AASHTO T 89)
- (PL) Point Load Index (ASTM D 5731)
- (PM) Pressure Meter
- (R) R-Value (CTM 301)
- (SE) Sand Equivalent (CTM 217)
- (SG) Specific Gravity (AASHTO T 100)
- (SL) Shrinkage Limit (ASTM D 427)
- (SW) Swell Potential (ASTM D 4546)
- (UC) Unconfined Compression-Soil (ASTM D 2166) Unconfined Compression-Rock (ASTM D 2938)
- (UU) Unconsolidated Undrained Triaxial (ASTM D 2850)
- (UW) Unit Weight (ASTM D 4767)

APPARENT DENSITY OF COHESIONLESS SOILS

Description	SPT N_{60} (Blows / 12 in.)
Very Loose	0 - 5
Loose	5 - 10
Medium Dense	10 - 30
Dense	30 - 50
Very Dense	Greater than 50

MOISTURE

Description	Criteria
Dry	No discernable moisture
Moist	Moisture present, but no free water
Wet	Visible free water

PERCENT OR PROPORTION OF SOILS

Description	Criteria
Trace	Particles are present but estimated to be less than 5%
Few	5% - 10%
Little	15% - 25%
Some	30% - 45%
Mostly	50% - 100%

PARTICLE SIZE

Description		Size (in.)
Boulder		Greater than 12
Cobble		3 - 12
Gravel	Coarse	3/4 - 3
	Fine	1/5 - 3/4
Sand	Coarse	1/16 - 1/5
	Medium	1/64 - 1/16
	Fine	1/300 - 1/64
Silt and Clay		Less than 1/300

1 **ADDED PER ADDENDUM No. 1 DATED AUGUST 3, 2012**

R-4

ENGINEERING SERVICES

GEOTECHNICAL SERVICES

PREPARED BY: M. Reynolds 04/12

STATE OF CALIFORNIA DEPARTMENT OF TRANSPORTATION

DIVISION OF ENGINEERING SERVICES OFFICE OF GEOTECHNICAL DESIGN BRANCH

BRIDGE NO.

POST MILE 0.0/R28.4

RAMP METERING & TOS

LOG OF TEST BORINGS 4 of 4

GS LOTB SOIL LEGEND

ORIGINAL SCALE IN INCHES FOR REDUCED PLANS 0 1 2 3

UNIT: 3660
PROJECT NUMBER & PHASE: 04000207391 CONTRACT NO.: 04-153501

DISREGARD PRINTS BEARING EARLIER REVISION DATES

REVISION DATES SHEET OF

FILE => 4153501qa004.add

USERNAME => s128843 DATE PLOTTED => 01-AUG-2012 TIME PLOTTED => 11:35