ACSTP-X085(047)E

Dist	COUNTY	ROUTE	POST MILES TOTAL PROJECT	SHEET No.	TOTAL SHEETS
04	SCI	85,87	Var	1	67

STATE OF CALIFORNIA
DEPARTMENT OF TRANSPORTATION

PROJECT PLANS FOR CONSTRUCTION ON
STATE HIGHWAY

IN SANTA CLARA COUNTY
AT VARIOUS LOCATIONS

TO BE SUPPLEMENTED BY STANDARD PLANS DATED MAY 2006

INDEX OF PLANS

SHEET No.	DESCRIPTION
1	TITLE AND LOCATION MAP
2-3	LAYOUTS
4-16	UTILITY PLANS AND DETAILS
17-19	CONSTRUCTION AREA SIGNS
20-25	TRAFFIC HANDLING PLANS
26	SIGN PLANS, DETAILS AND QUANTITIES
27	SUMMARY OF QUANTITIES
28-50	ELECTRICAL PLANS
51-67	REVISED AND NEW STANDARD PLANS

THE STANDARD PLANS LIST APPLICABLE TO THIS CONTRACT IS INCLUDED IN THE NOTICE TO CONTRACTORS AND SPECIAL PROVISIONS BOOK.

LOCATION MAP

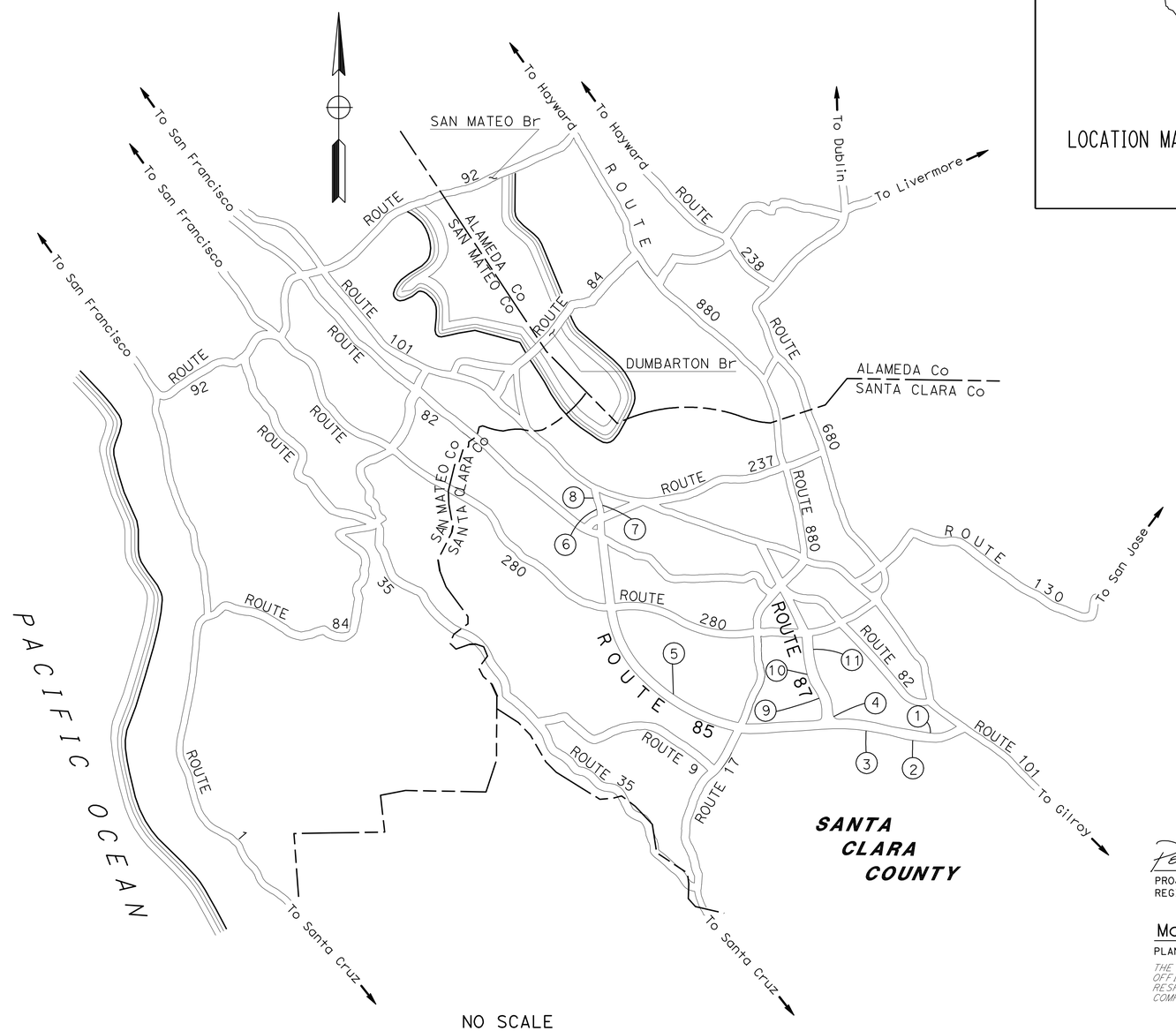

NO SCALE

LOCATIONS OF CONSTRUCTION (SCI 85)

LOCATION	PM	DESCRIPTION		Dir
		INTERCHANGE	RAMP	
1	0.81	GREAT OAKS Blvd	DIAGONAL ON	NB
2	1.73	COTTLE Rd	DIAGONAL ON	SB
3	3.80	BLOSSOM HILL Rd	DIAGONAL ON	SB
4	5.18	SANTA TERESA Blvd	LOOP ON	NB
5	13.47	SARATOGA Ave	DIAGONAL OFF	NB
6	22.49	EVELYN Ave	DIAGONAL ON	SB
7	23.01	CENTRAL Expwy/EASY St	DIAGONAL ON	NB
8	23.48	MOFFETT Blvd	LOOP ON	SB

LOCATIONS OF CONSTRUCTION (SCI 87)

LOCATION	PM	DESCRIPTION		Dir
		INTERCHANGE	RAMP	
9	1.22	CAPITOL Expwy	DIAGONAL ON	SB
10	2.66	CURTNER Ave	DIAGONAL ON	SB
11	4.36	LELONG St	DIAGONAL ON	NB

THE CONTRACTOR SHALL POSSESS THE CLASS (OR CLASSES) OF LICENSE AS SPECIFIED IN THE "NOTICE TO BIDDERS."

PROJECT MANAGER: DINA EL-TAWANSY

DESIGN ENGINEER: PETER AGUILERA

Peter Aguilera 3-20-09
PROJECT ENGINEER DATE
REGISTERED CIVIL ENGINEER

May 26, 2009
PLANS APPROVAL DATE

REGISTERED PROFESSIONAL ENGINEER Peter Aguilera No. 55287 Exp. 12-31-10 CIVIL STATE OF CALIFORNIA

THE STATE OF CALIFORNIA OR ITS OFFICERS OR AGENTS SHALL NOT BE RESPONSIBLE FOR THE ACCURACY OR COMPLETENESS OF SCANNED COPIES OF THIS PLAN SHEET.

LAST REVISION 08-07-08 DATE PLOTTED => 29-OCT-2009 TIME PLOTTED => 05:58

CONTRACT No. 04-151394

Dist	COUNTY	ROUTE	POST MILES TOTAL PROJECT	SHEET No.	TOTAL SHEETS
04	SCI	85,87	Var	2	67

Peter Aguilera 3-20-09
REGISTERED CIVIL ENGINEER DATE

5-26-09
PLANS APPROVAL DATE

REGISTERED PROFESSIONAL ENGINEER
Peter Aguilera
No. 55287
Exp. 12-31-10
CIVIL
STATE OF CALIFORNIA

THE STATE OF CALIFORNIA OR ITS OFFICERS OR AGENTS SHALL NOT BE RESPONSIBLE FOR THE ACCURACY OR COMPLETENESS OF SCANNED COPIES OF THIS PLAN SHEET.

FOR COMPLETE RIGHT OF WAY AND ACCURATE ACCESS DATA, SEE RIGHT OF WAY RECORD MAPS AT DISTRICT OFFICE.

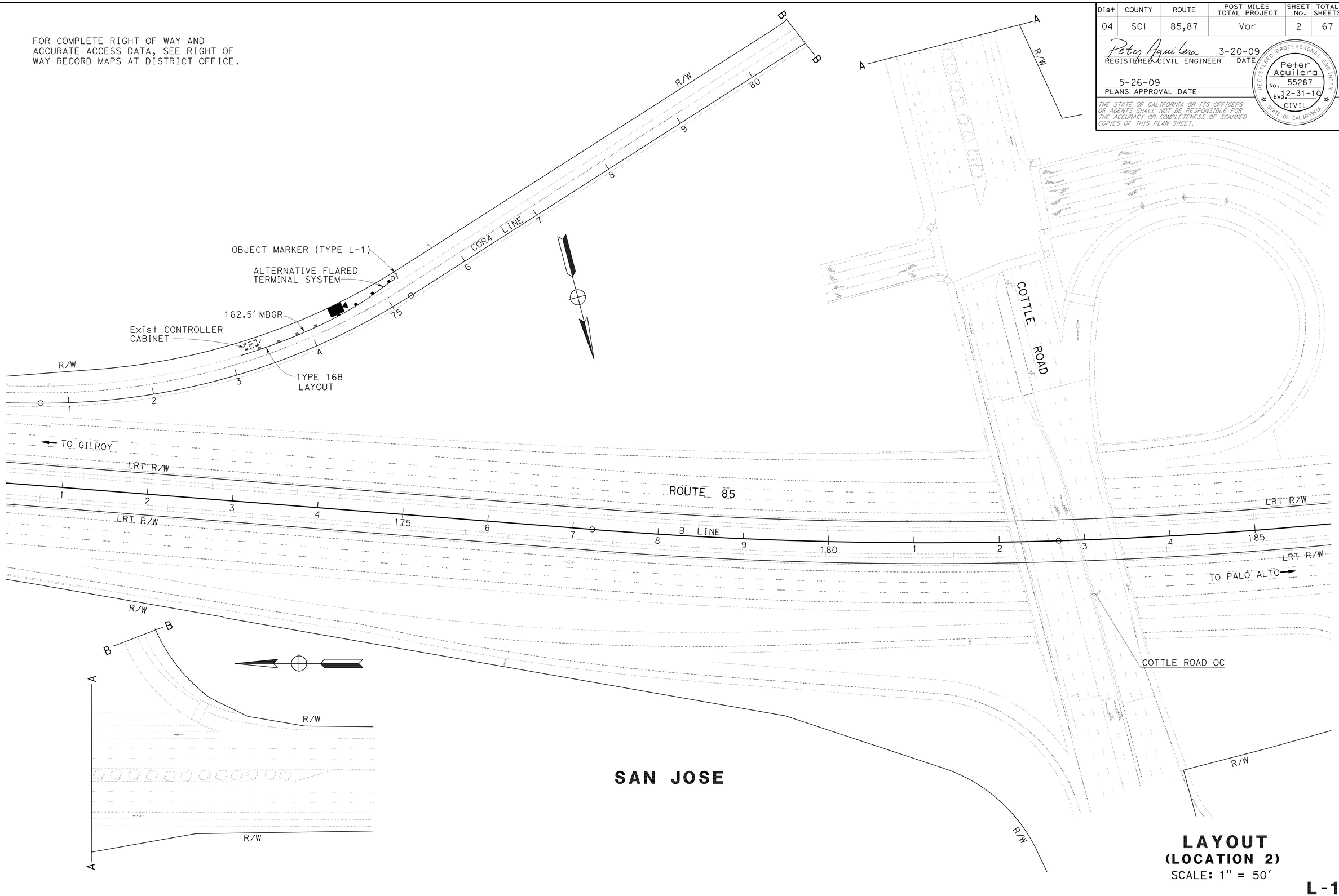

LAYOUT
(LOCATION 2)
SCALE: 1" = 50'

L-1

REVISED BY	DATE REVISED

CALCULATED-DESIGNED BY: SUSANA ONATE
CHECKED BY: JIM LEM

FUNCTIONAL SUPERVISOR: ULDARICO P. PEREZ

STATE OF CALIFORNIA - DEPARTMENT OF TRANSPORTATION
Caltrans
DESIGN

LAST REVISION 10-21-08
DATE PLOTTED => 29-OCT-2009
TIME PLOTTED => 05:58

BORDER LAST REVISED 4/11/2008
RELATIVE BORDER SCALE IS IN INCHES 0 1 2 3
USERNAME => trmikesl
DGN FILE => 415139ea001.dgn
CU 04222
EA 151391

Dist	COUNTY	ROUTE	POST MILES TOTAL PROJECT	SHEET No.	TOTAL SHEETS
04	SCI	85,87	Var	3	67

Peter Aguilera 3-20-09
REGISTERED CIVIL ENGINEER DATE

5-26-09
PLANS APPROVAL DATE

REGISTERED PROFESSIONAL ENGINEER
Peter Aguilera
No. 55287
Exp. 12-31-10
CIVIL
STATE OF CALIFORNIA

THE STATE OF CALIFORNIA OR ITS OFFICERS OR AGENTS SHALL NOT BE RESPONSIBLE FOR THE ACCURACY OR COMPLETENESS OF SCANNED COPIES OF THIS PLAN SHEET.

FOR COMPLETE RIGHT OF WAY AND ACCURATE ACCESS DATA, SEE RIGHT OF WAY RECORD MAPS AT DISTRICT OFFICE.

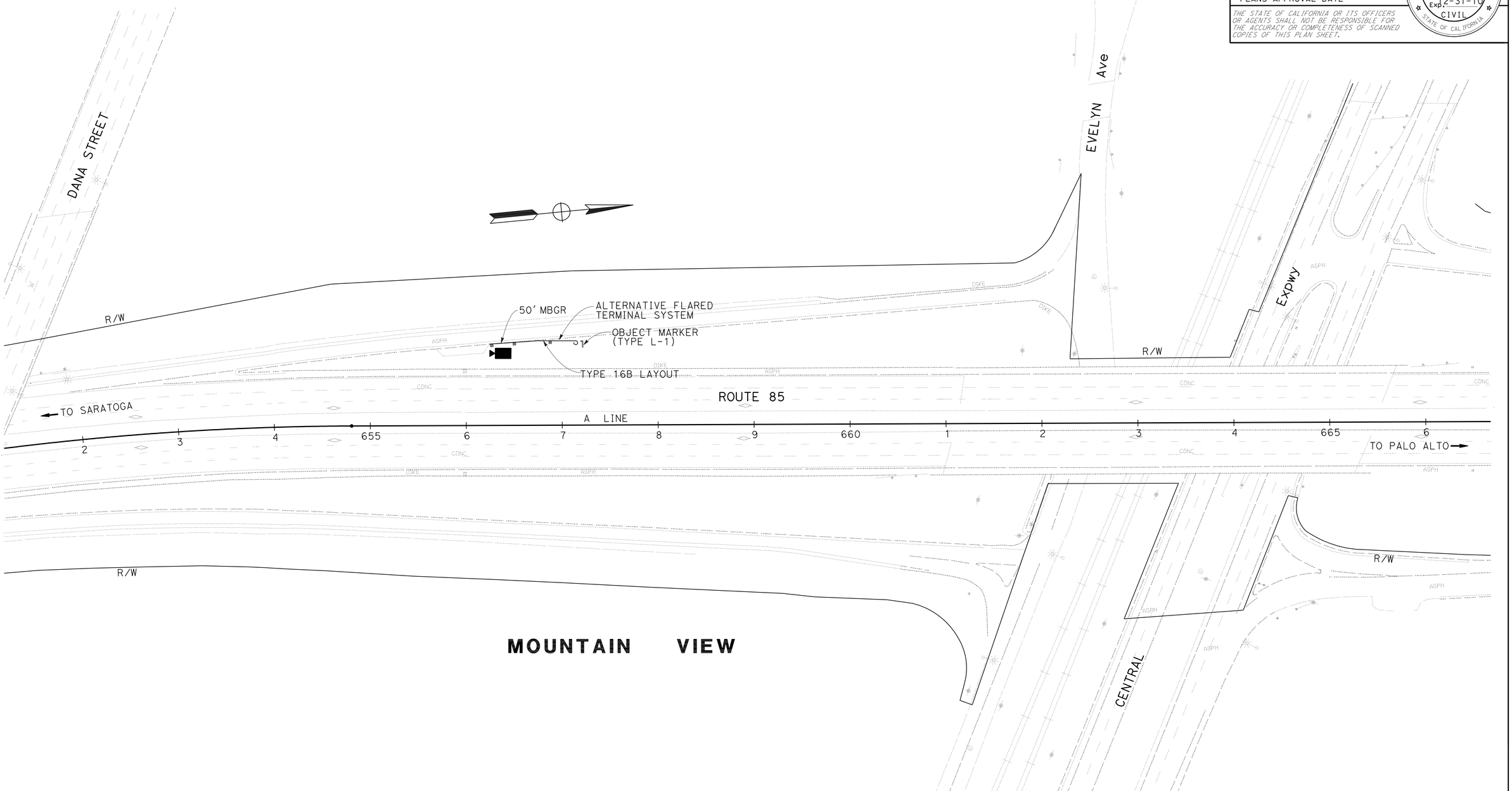

FOR NOTES, ABBREVIATIONS &/OR LEGEND, SEE SHEET L-1

LAYOUT
(LOCATION 6)
SCALE: 1" = 50'

L-2

STATE OF CALIFORNIA - DEPARTMENT OF TRANSPORTATION
DESIGN
Caltrans

FUNCTIONAL SUPERVISOR: ULDARICO P. PEREZ
CALCULATED-DESIGNED BY: SUSANA ONATE
CHECKED BY: JIM LEM
REVISED BY
DATE REVISED

LAST REVISION 05-11-09
DATE PLOTTED => 29-OCT-2009
TIME PLOTTED => 05:58

BORDER LAST REVISED 4/11/2008
RELATIVE BORDER SCALE IS IN INCHES 0 1 2 3
USERNAME => trmikesl
DGN FILE => 415139ea002.dgn
CU 04222
EA 151391

Dist	COUNTY	ROUTE	POST MILES TOTAL PROJECT	SHEET No.	TOTAL SHEETS
04	SCl	85,87	Var	4	67

Peter Aguilera 3-20-09
REGISTERED CIVIL ENGINEER DATE

5-26-09
PLANS APPROVAL DATE

REGISTERED PROFESSIONAL ENGINEER
Peter Aguilera
No. 55287
Exp. 12-31-10
CIVIL
STATE OF CALIFORNIA

THE STATE OF CALIFORNIA OR ITS OFFICERS OR AGENTS SHALL NOT BE RESPONSIBLE FOR THE ACCURACY OR COMPLETENESS OF ELECTRONIC COPIES OF THIS PLAN SHEET.

ABBREVIATIONS:

C-CEM	FIBER CEMENT CONDUIT (TYPE C)
CC	CITY OF CUPERTINO, CITY OF CAMPBELL
CB	CATCH BASIN
CD	CROSS DRAIN
CIPP	CAST IN PLACE PIPE
CM	CITY OF MILPITAS
CS	CITY OF SUNNYVALE
CSC	CITY OF SANTA CLARA
CSD	CUPERTINO SANITATION DISTRICT
CSJ	CITY OF SAN JOSE
DICL	DUCTILE IRON CEMENT LINE
ESA	ENVIRONMENTAL SENSITIVE AREA
FP	FLEX PIPE
HP	HIGH PRESSURE
IC	IRRIGATION CROSSOVER
IP	IRON PIPE
JB	JUNCTION BOX
JT	JOINT TRENCH
LRT	LIGHT RAIL TRANSIT
MCI	MCI WORLDCOM
PBE	PACIFIC BELL
PG&E	PACIFIC GAS & ELECTRIC COMPANY
PKWY	PARKWAY
PL	PLASTIC PIPE
PT&T	PACIFIC TELEPHONE AND TELEGRAPH
SCVWD	SANTA CLARA VALLEY WATER DISTRICT
SCSP	SLOTTED CORRUGATED STEEL PIPE
SJWC	SAN JOSE WATER COMPANY
VCD	VITRIFIED CLAY DUCT
VTA	VALLEY TRANSPORTATION AUTHORITY
WVSD	WEST VALLEY SANITATION DISTRICT

LEGEND:

DI	EXISTING DROP INLET
JB	EXISTING JUNCTION
MH	EXISTING MANHOLE
W	EXISTING WATER LINE CROSSOVER
	ABANDONED

NOTE:

LOCATIONS OF EXISTING UTILITY FACILITIES SHOWN ON THESE PLANS ARE APPROXIMATE AND SHALL BE VERIFIED BY THE CONTRACTOR PRIOR TO CONSTRUCTION.

THIS PLAN ACCURATE FOR UTILITY INFORMATION ONLY.

UTILITY PLAN

U-1

STATE OF CALIFORNIA - DEPARTMENT OF TRANSPORTATION
Caltrans
DESIGN

FUNCTIONAL SUPERVISOR: ULDARICO P. PEREZ
CALCULATED-DESIGNED BY: SUSANA ONATE
CHECKED BY: JIM LEM
REVISED BY
DATE REVISED

LAST REVISION 09-23-08
DATE PLOTTED => 29-OCT-2009
TIME PLOTTED => 05:58

Dist	COUNTY	ROUTE	POST MILES TOTAL PROJECT	SHEET No.	TOTAL SHEETS
04	SCI	85,87	Var	5	67

Peter Aguilera 3-20-09
REGISTERED CIVIL ENGINEER DATE

5-26-09
PLANS APPROVAL DATE

REGISTERED PROFESSIONAL ENGINEER
Peter Aguilera
No. 55287
Exp. 12-31-10
CIVIL
STATE OF CALIFORNIA

THE STATE OF CALIFORNIA OR ITS OFFICERS OR AGENTS SHALL NOT BE RESPONSIBLE FOR THE ACCURACY OR COMPLETENESS OF ELECTRONIC COPIES OF THIS PLAN SHEET.

FOR COMPLETE RIGHT OF WAY AND ACCURATE ACCESS DATA, SEE RIGHT OF WAY RECORD MAPS AT DISTRICT OFFICE.

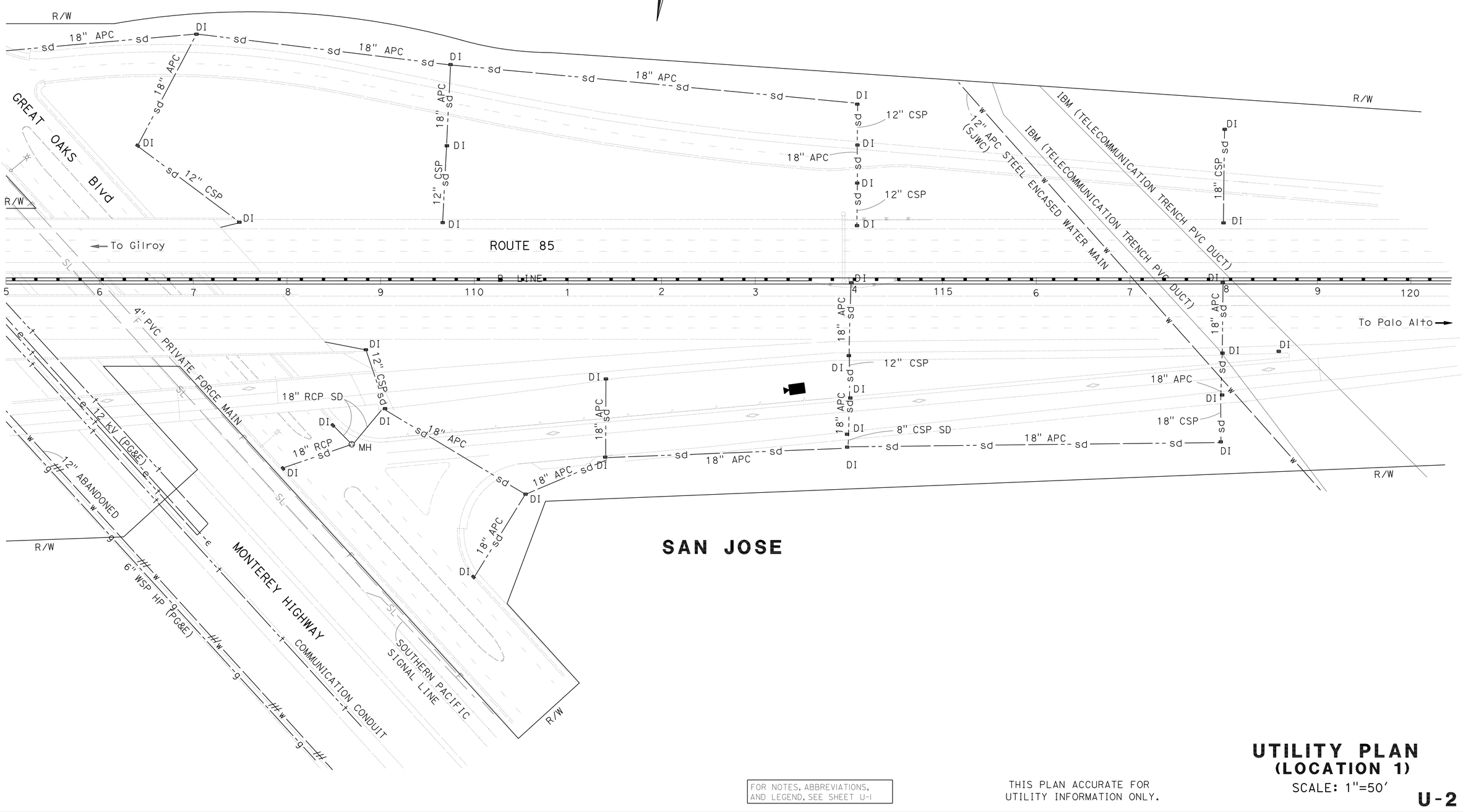

FOR NOTES, ABBREVIATIONS, AND LEGEND, SEE SHEET U-1

THIS PLAN ACCURATE FOR UTILITY INFORMATION ONLY.

UTILITY PLAN
(LOCATION 1)
SCALE: 1"=50'

U-2

STATE OF CALIFORNIA - DEPARTMENT OF TRANSPORTATION
DESIGN
FUNCTIONAL SUPERVISOR: ULDARICO P. PEREZ
CALCULATED-DESIGNED BY: SUSANA ONATE
CHECKED BY: JIM LEM
REVISED BY
DATE REVISED

LAST REVISION 09-09-08
DATE PLOTTED => 29-OCT-2009
TIME PLOTTED => 05:58

BORDER LAST REVISED 3/1/2007
RELATIVE BORDER SCALE IS IN INCHES 0 1 2 3
USERNAME => trmikesl
DGN FILE => 415139ka002.dgn
CU 04222
EA 151391

Dist	COUNTY	ROUTE	POST MILES TOTAL PROJECT	SHEET No.	TOTAL SHEETS
04	SCI	85,87	Var	6	67

Peter Aguilera 3-20-09
REGISTERED CIVIL ENGINEER DATE

5-26-09
PLANS APPROVAL DATE

REGISTERED PROFESSIONAL ENGINEER
Peter Aguilera
No. 55287
Exp. 12-31-10
CIVIL
STATE OF CALIFORNIA

THE STATE OF CALIFORNIA OR ITS OFFICERS OR AGENTS SHALL NOT BE RESPONSIBLE FOR THE ACCURACY OR COMPLETENESS OF ELECTRONIC COPIES OF THIS PLAN SHEET.

FOR COMPLETE RIGHT OF WAY AND ACCURATE ACCESS DATA, SEE RIGHT OF WAY RECORD MAPS AT DISTRICT OFFICE.

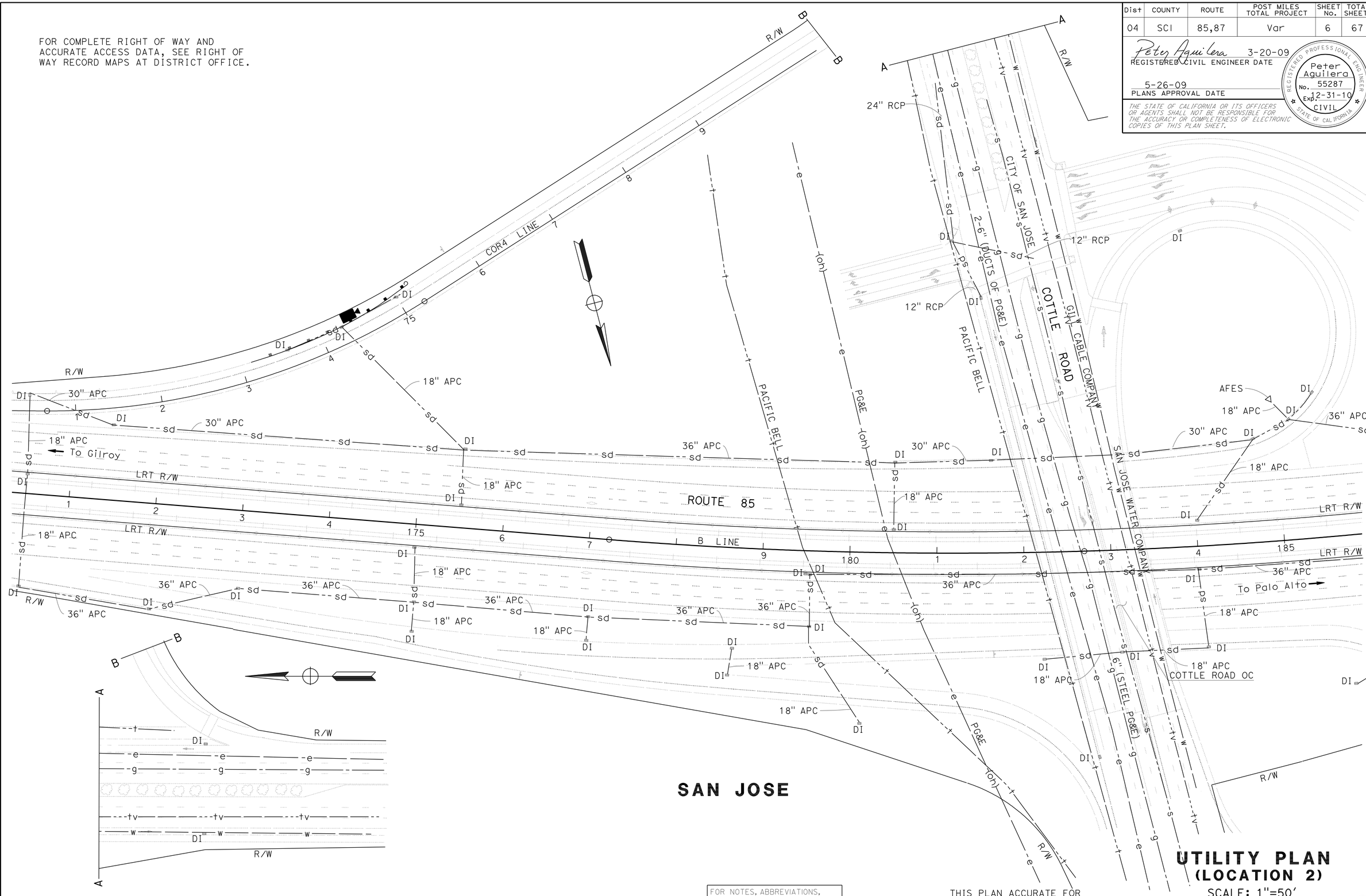

FOR NOTES, ABBREVIATIONS, AND LEGEND, SEE SHEET U-1

THIS PLAN ACCURATE FOR UTILITY INFORMATION ONLY.

UTILITY PLAN (LOCATION 2)

SCALE: 1"=50'

U-3

STATE OF CALIFORNIA - DEPARTMENT OF TRANSPORTATION
Caltrans
DESIGN

FUNCTIONAL SUPERVISOR: ULDARICO P. PEREZ
CALCULATED-DESIGNED BY: JIM LEM
CHECKED BY
REVISED BY: SUSANA ONATE
DATE REVISED

LAST REVISION 02-27-09
DATE PLOTTED => 29-OCT-2009
TIME PLOTTED => 05:58

BORDER LAST REVISED 3/1/2007
RELATIVE BORDER SCALE IS IN INCHES 0 1 2 3
USERNAME => trmikesl
DGN FILE => 415139ka003.dgn
CU 04222
EA 151391

Dist	COUNTY	ROUTE	POST MILES TOTAL PROJECT	SHEET No.	TOTAL SHEETS
04	SCI	85,87	Var	7	67

Peter Aguilera 3-20-09
REGISTERED CIVIL ENGINEER DATE

5-26-09
PLANS APPROVAL DATE

REGISTERED PROFESSIONAL ENGINEER
Peter Aguilera
No. 55287
Exp. 12-31-10
CIVIL
STATE OF CALIFORNIA

THE STATE OF CALIFORNIA OR ITS OFFICERS OR AGENTS SHALL NOT BE RESPONSIBLE FOR THE ACCURACY OR COMPLETENESS OF ELECTRONIC COPIES OF THIS PLAN SHEET.

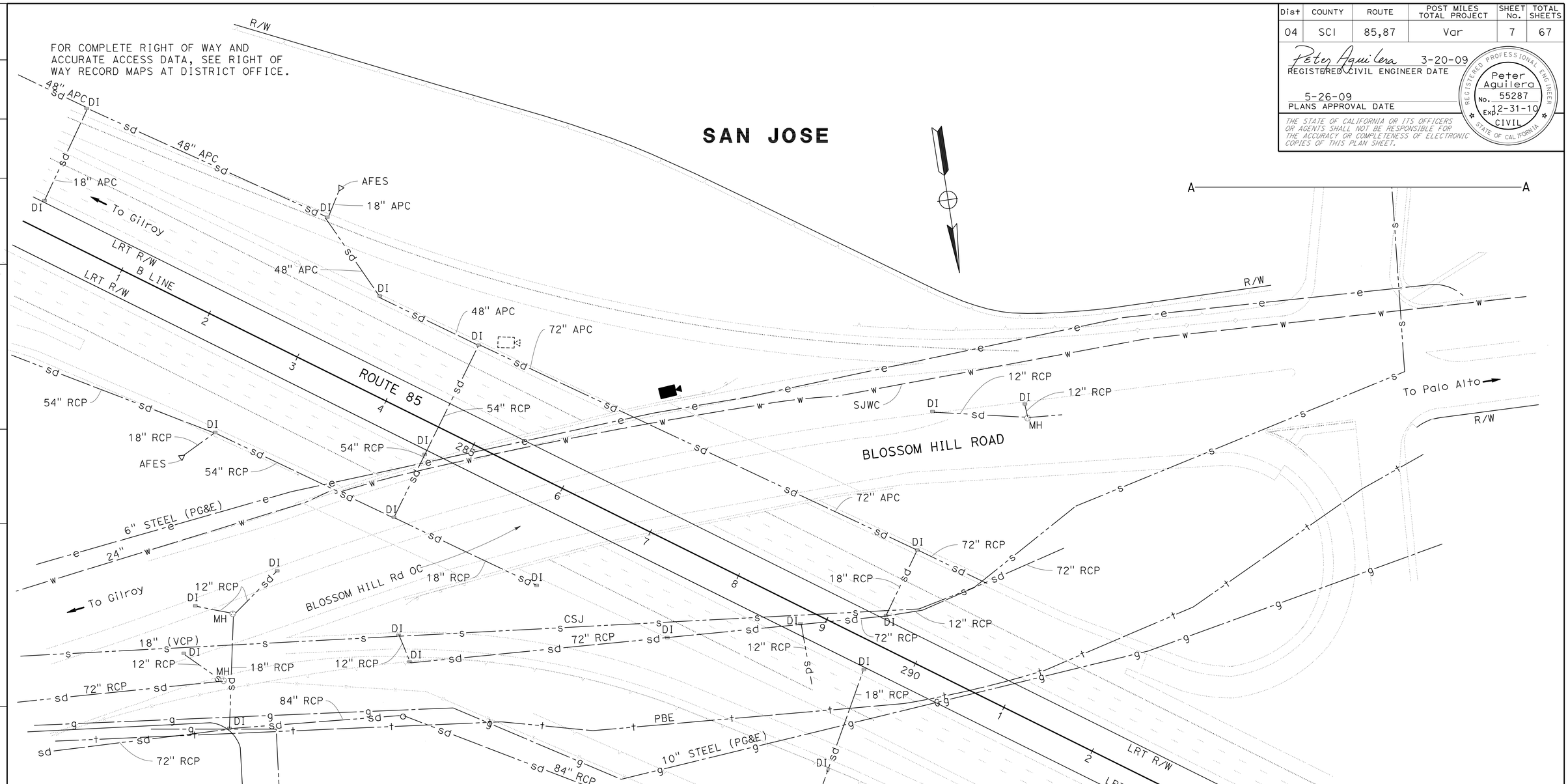

FOR NOTES, ABBREVIATIONS, AND LEGEND, SEE SHEET U-1

THIS PLAN ACCURATE FOR UTILITY INFORMATION ONLY.

UTILITY PLAN
(LOCATION 3)
SCALE: 1"=50'

U-4

STATE OF CALIFORNIA - DEPARTMENT OF TRANSPORTATION
DESIGN
Caltrans

FUNCTIONAL SUPERVISOR: ULDARICO P. PEREZ
CALCULATED-DESIGNED BY: SUSANA ONATE
CHECKED BY: JIM LEM
REVISED BY
DATE REVISED

LAST REVISION 09-09-08
DATE PLOTTED => 29-OCT-2009
TIME PLOTTED => 05:59

Dist	COUNTY	ROUTE	POST MILES TOTAL PROJECT	SHEET No.	TOTAL SHEETS
04	SCI	85,87	Var	8	67

Peter Aguilera 3-20-09
REGISTERED CIVIL ENGINEER DATE

5-26-09
PLANS APPROVAL DATE

REGISTERED PROFESSIONAL ENGINEER
Peter Aguilera
No. 55287
Exp. 12-31-10
CIVIL
STATE OF CALIFORNIA

THE STATE OF CALIFORNIA OR ITS OFFICERS OR AGENTS SHALL NOT BE RESPONSIBLE FOR THE ACCURACY OR COMPLETENESS OF ELECTRONIC COPIES OF THIS PLAN SHEET.

FOR COMPLETE RIGHT OF WAY AND ACCURATE ACCESS DATA, SEE RIGHT OF WAY RECORD MAPS AT DISTRICT OFFICE.

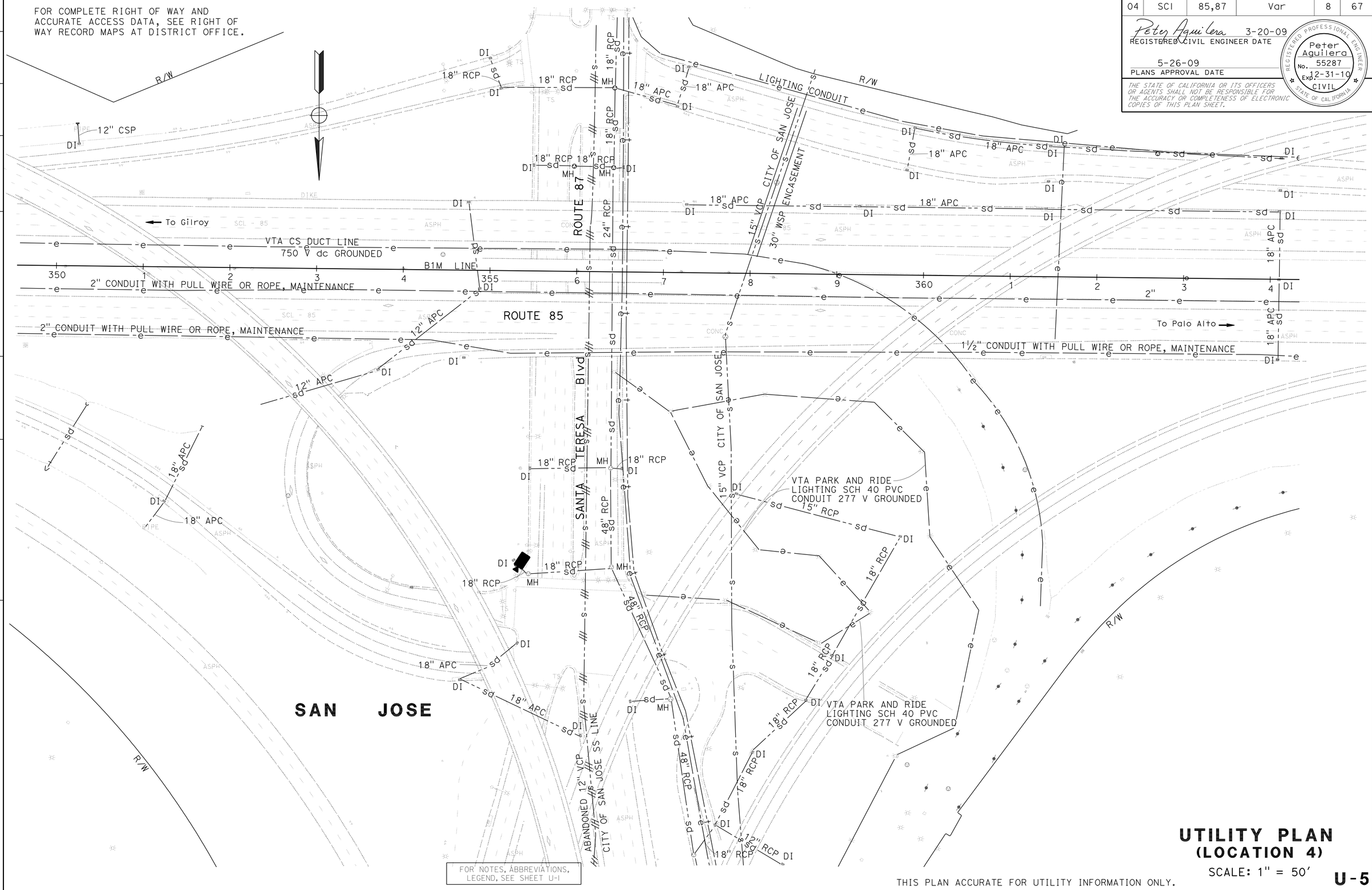

FOR NOTES, ABBREVIATIONS, LEGEND, SEE SHEET U-1

THIS PLAN ACCURATE FOR UTILITY INFORMATION ONLY.

UTILITY PLAN
(LOCATION 4)

SCALE: 1" = 50'

U-5

STATE OF CALIFORNIA - DEPARTMENT OF TRANSPORTATION
Caltrans DESIGN

FUNCTIONAL SUPERVISOR: ULDARICO P. PEREZ
CALCULATED-DESIGNED BY: SUSANA ONATE
CHECKED BY: JIM LEM
REVISED BY
DATE REVISED

LAST REVISION 10-31-08
DATE PLOTTED => 29-OCT-2009
TIME PLOTTED => 05:59

BORDER LAST REVISED 3/1/2007
RELATIVE BORDER SCALE IS IN INCHES 0 1 2 3
USERNAME => trmikesl
DGN FILE => 415139ka005.dgn
CU 04222
EA 151391

Dist	COUNTY	ROUTE	POST MILES TOTAL PROJECT	SHEET No.	TOTAL SHEETS
04	SCI	85,87	Var	9	67

Peter Aguilera 3-20-09
REGISTERED CIVIL ENGINEER DATE

5-26-09
PLANS APPROVAL DATE

REGISTERED PROFESSIONAL ENGINEER
Peter Aguilera
No. 55287
Exp. 12-31-10
CIVIL
STATE OF CALIFORNIA

THE STATE OF CALIFORNIA OR ITS OFFICERS OR AGENTS SHALL NOT BE RESPONSIBLE FOR THE ACCURACY OR COMPLETENESS OF ELECTRONIC COPIES OF THIS PLAN SHEET.

FOR COMPLETE RIGHT OF WAY AND ACCURATE ACCESS DATA, SEE RIGHT OF WAY RECORD MAPS AT DISTRICT OFFICE.

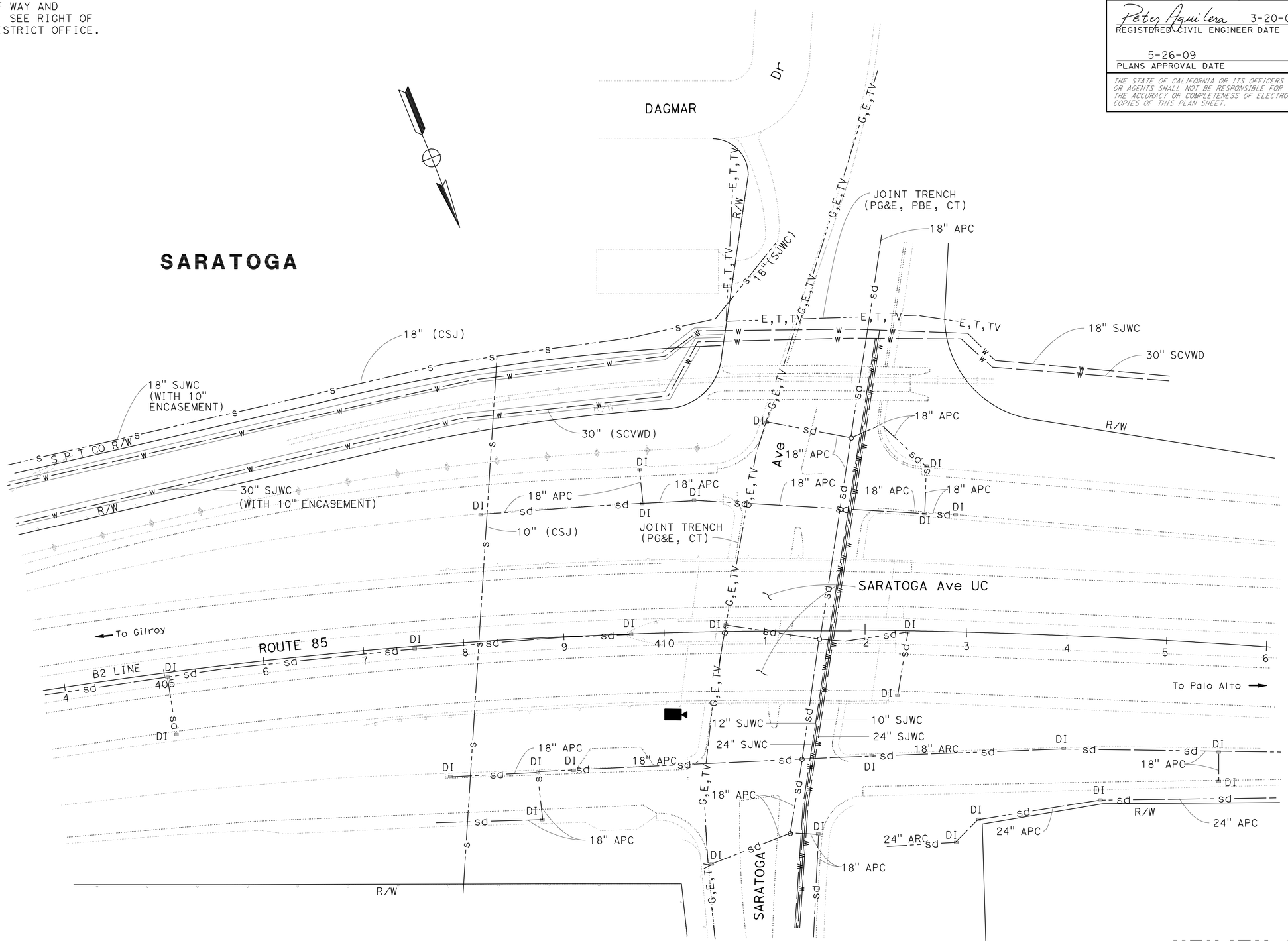

FOR NOTES, ABBREVIATIONS, LEGEND, SEE SHEET U-1

THIS PLAN ACCURATE FOR UTILITY INFORMATION ONLY.

UTILITY PLAN
(LOCATION 5)

SCALE: 1" = 50'

U-6

STATE OF CALIFORNIA - DEPARTMENT OF TRANSPORTATION
Caltrans
DESIGN

FUNCTIONAL SUPERVISOR: ULDARICO P. PEREZ
CALCULATED-DESIGNED BY: SUSANA ONATE
CHECKED BY: JIM LEM
REVISED BY
DATE REVISED

LAST REVISION 08-21-08
DATE PLOTTED => 29-OCT-2009
TIME PLOTTED => 05:59

Dist	COUNTY	ROUTE	POST MILES TOTAL PROJECT	SHEET No.	TOTAL SHEETS
04	SCI	85,87	Var	10	67

Peter Aguilera 3-20-09
REGISTERED CIVIL ENGINEER DATE

5-26-09
PLANS APPROVAL DATE

REGISTERED PROFESSIONAL ENGINEER
Peter Aguilera
No. 55287
Exp. 12-31-10
CIVIL
STATE OF CALIFORNIA

THE STATE OF CALIFORNIA OR ITS OFFICERS OR AGENTS SHALL NOT BE RESPONSIBLE FOR THE ACCURACY OR COMPLETENESS OF ELECTRONIC COPIES OF THIS PLAN SHEET.

FOR COMPLETE RIGHT OF WAY AND ACCURATE ACCESS DATA, SEE RIGHT OF WAY RECORD MAPS AT DISTRICT OFFICE.

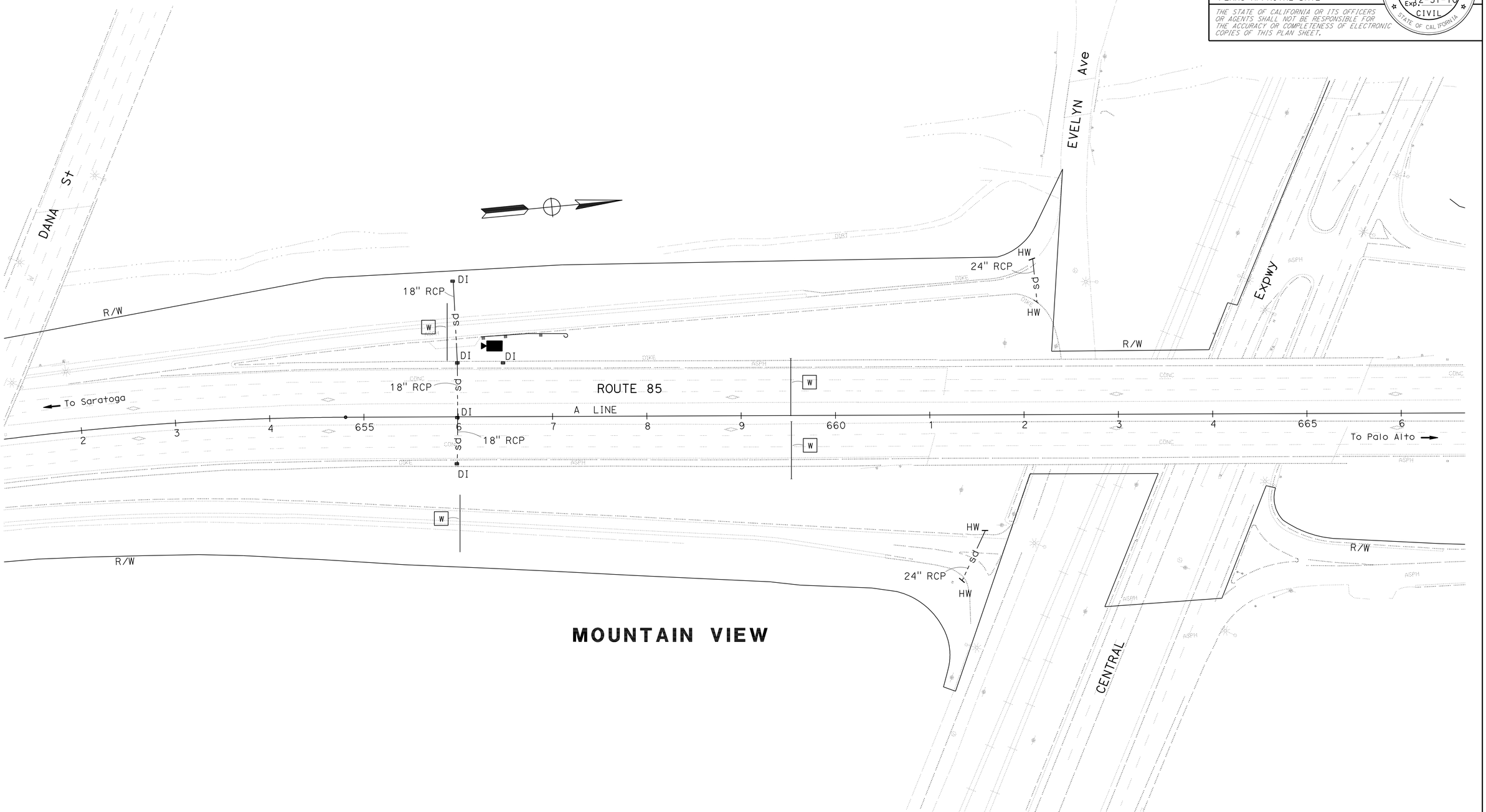

FOR NOTES, ABBREVIATIONS, LEGEND, SEE SHEET U-1

THIS PLAN ACCURATE FOR UTILITY INFORMATION ONLY.

UTILITY PLAN
(LOCATION 6)

SCALE: 1" = 50'

U-7

STATE OF CALIFORNIA - DEPARTMENT OF TRANSPORTATION
Caltrans
DESIGN

FUNCTIONAL SUPERVISOR: ULDARICO P. PEREZ
CALCULATED-DESIGNED BY: SUSANA ONATE
CHECKED BY: JIM LEM
REVISED BY
DATE REVISED

LAST REVISION 07-31-08
DATE PLOTTED => 29-OCT-2009
TIME PLOTTED => 05:59

Dist	COUNTY	ROUTE	POST MILES TOTAL PROJECT	SHEET No.	TOTAL SHEETS
04	SCI	85,87	Var	11	67

Peter Aguilera 3-20-09
REGISTERED CIVIL ENGINEER DATE

5-26-09
PLANS APPROVAL DATE

REGISTERED PROFESSIONAL ENGINEER
Peter Aguilera
No. 55287
Exp. 12-31-10
CIVIL
STATE OF CALIFORNIA

THE STATE OF CALIFORNIA OR ITS OFFICERS OR AGENTS SHALL NOT BE RESPONSIBLE FOR THE ACCURACY OR COMPLETENESS OF ELECTRONIC COPIES OF THIS PLAN SHEET.

FOR COMPLETE RIGHT OF WAY AND ACCURATE ACCESS DATA, SEE RIGHT OF WAY RECORD MAPS AT DISTRICT OFFICE.

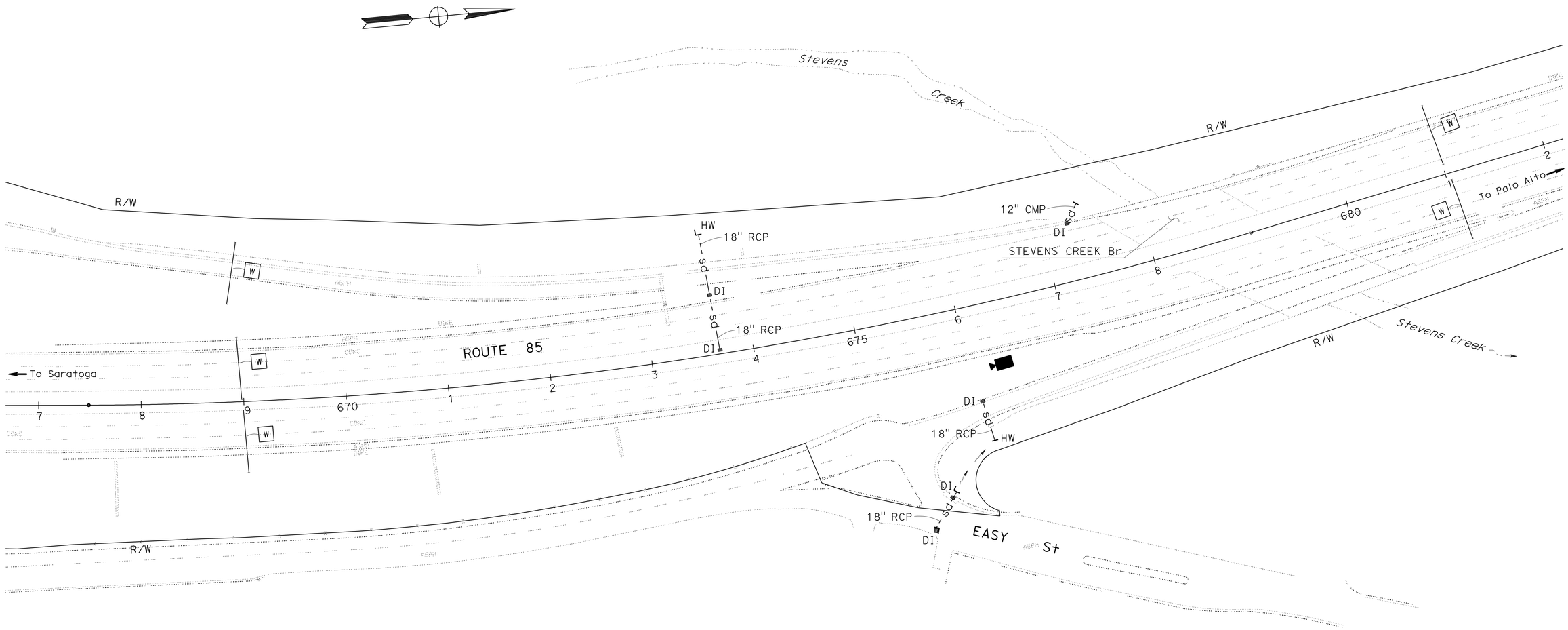

MOUNTAIN VIEW

FOR NOTES, ABBREVIATIONS, LEGEND, SEE SHEET U-1

THIS PLAN ACCURATE FOR UTILITY INFORMATION ONLY.

UTILITY PLAN
(LOCATION 7)
SCALE: 1" = 50'

U-8

STATE OF CALIFORNIA - DEPARTMENT OF TRANSPORTATION
Caltrans
DESIGN

FUNCTIONAL SUPERVISOR: ULDARICO P. PEREZ
CALCULATED-DESIGNED BY: SUSANA ONATE
CHECKED BY: JIM LEM
REVISED BY
DATE REVISED

LAST REVISION 07-31-08
DATE PLOTTED => 29-OCT-2009
TIME PLOTTED => 05:59

Dist	COUNTY	ROUTE	POST MILES TOTAL PROJECT	SHEET No.	TOTAL SHEETS
04	SCI	85,87	Var	12	67

Peter Aguilera 3-20-09
REGISTERED CIVIL ENGINEER DATE

5-26-09
PLANS APPROVAL DATE

REGISTERED PROFESSIONAL ENGINEER
Peter Aguilera
No. 55287
Exp. 12-31-10
CIVIL
STATE OF CALIFORNIA

THE STATE OF CALIFORNIA OR ITS OFFICERS OR AGENTS SHALL NOT BE RESPONSIBLE FOR THE ACCURACY OR COMPLETENESS OF ELECTRONIC COPIES OF THIS PLAN SHEET.

FOR COMPLETE RIGHT OF WAY AND ACCURATE ACCESS DATA, SEE RIGHT OF WAY RECORD MAPS AT DISTRICT OFFICE.

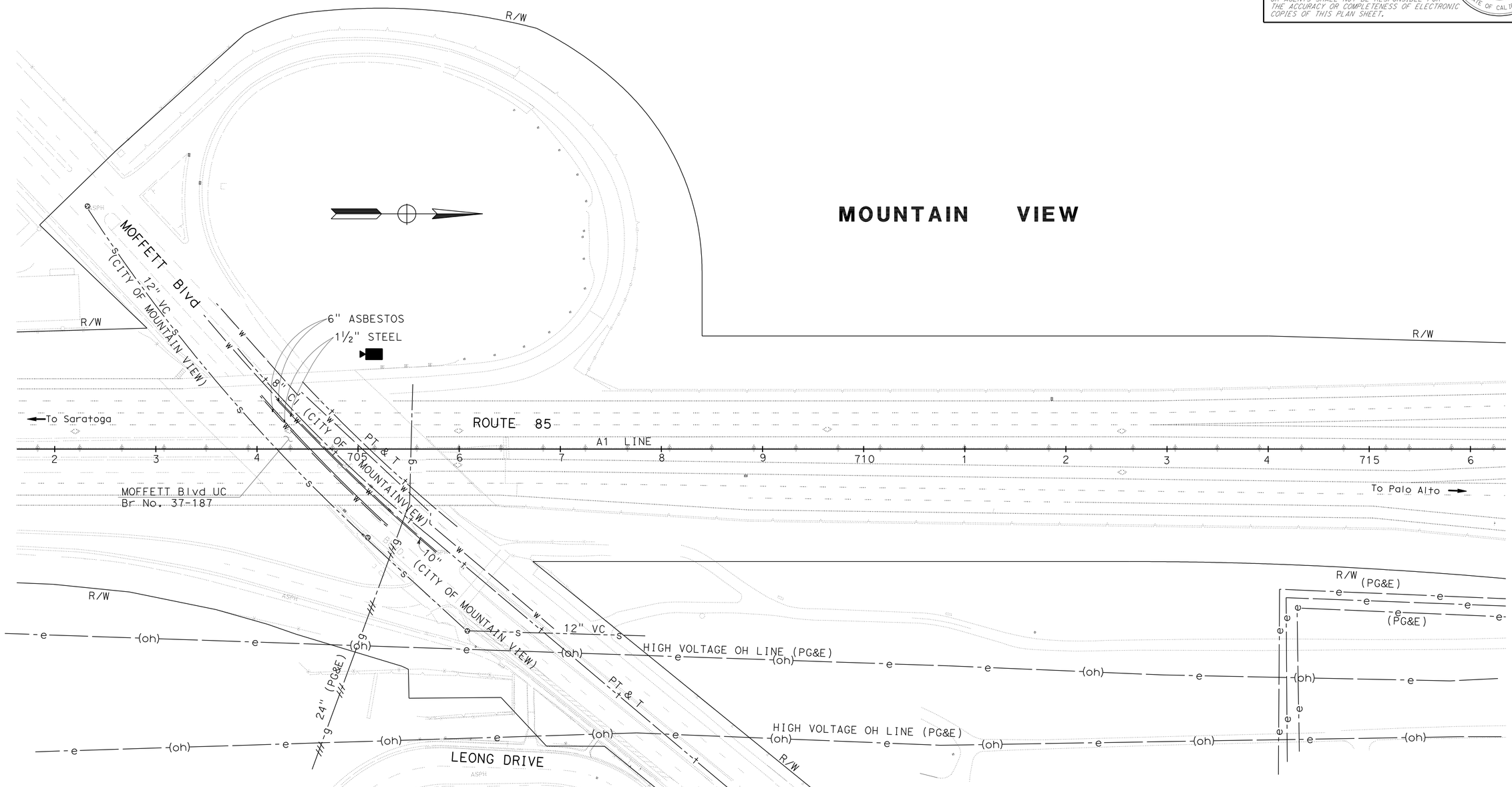

FOR NOTES, ABBREVIATIONS, LEGEND, SEE SHEET U-1

THIS PLAN ACCURATE FOR UTILITY INFORMATION ONLY.

UTILITY PLAN
(LOCATION 8)

SCALE: 1" = 50'

U-9

STATE OF CALIFORNIA - DEPARTMENT OF TRANSPORTATION
Caltrans
DESIGN

FUNCTIONAL SUPERVISOR: ULDARICO P. PEREZ
CALCULATED-DESIGNED BY: JIM LEM
CHECKED BY
REVISED BY: SUSANA ONATE
DATE REVISED

LAST REVISION 09-09-08
DATE PLOTTED => 29-OCT-2009
TIME PLOTTED => 05:59

BORDER LAST REVISED 3/1/2007
RELATIVE BORDER SCALE IS IN INCHES 0 1 2 3
USERNAME => trmikesl
DGN FILE => 415139ka009.dgn
CU 04222
EA 151391

Dist	COUNTY	ROUTE	POST MILES TOTAL PROJECT	SHEET No.	TOTAL SHEETS
04	SCI	85,87	Var	13	67

Peter Aguilera 3-20-09
REGISTERED CIVIL ENGINEER DATE

5-26-09
PLANS APPROVAL DATE

REGISTERED PROFESSIONAL ENGINEER
Peter Aguilera
No. 55287
Exp. 12-31-10
CIVIL
STATE OF CALIFORNIA

THE STATE OF CALIFORNIA OR ITS OFFICERS OR AGENTS SHALL NOT BE RESPONSIBLE FOR THE ACCURACY OR COMPLETENESS OF ELECTRONIC COPIES OF THIS PLAN SHEET.

FOR COMPLETE RIGHT OF WAY AND ACCURATE ACCESS DATA, SEE RIGHT OF WAY RECORD MAPS AT DISTRICT OFFICE.

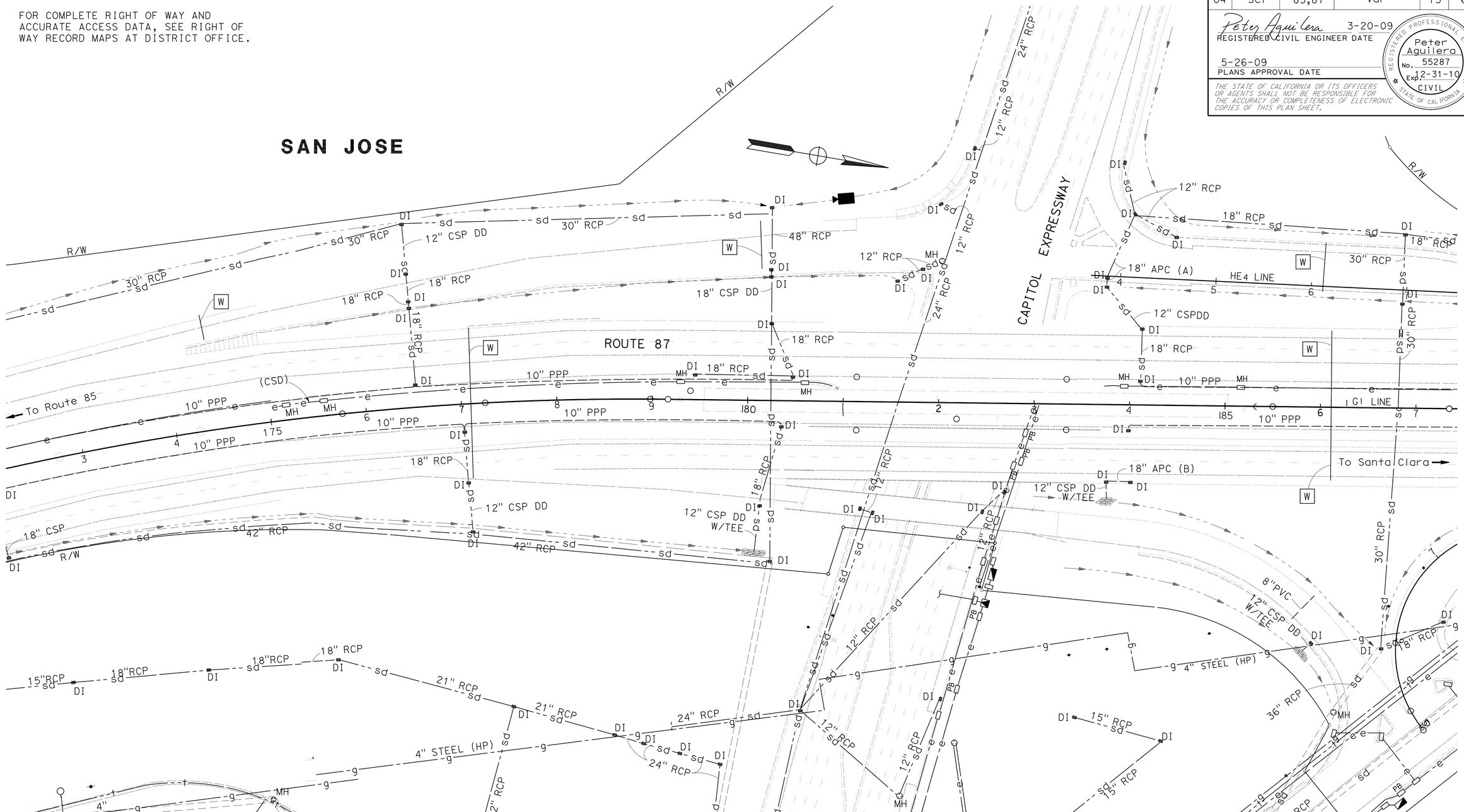

UTILITY PLAN
(LOCATION 9)
SCALE: 1" = 50'

THIS PLAN ACCURATE FOR UTILITY INFORMATION ONLY.

U-10

STATE OF CALIFORNIA - DEPARTMENT OF TRANSPORTATION
Caltrans DESIGN

FUNCTIONAL SUPERVISOR: ULDARICO P. PEREZ
CALCULATED-DESIGNED BY: SUSANA ONATE
CHECKED BY: JIM LEM
REVISED BY
DATE REVISED

LAST REVISION 03-14-09 | DATE PLOTTED => 29-OCT-2009 | TIME PLOTTED => 06:00

Dist	COUNTY	ROUTE	POST MILES TOTAL PROJECT	SHEET No.	TOTAL SHEETS
04	SCI	85,87	Var	14	67

Peter Aguilera 3-20-09
REGISTERED CIVIL ENGINEER DATE

5-26-09
PLANS APPROVAL DATE

REGISTERED PROFESSIONAL ENGINEER Peter Aguilera No. 55287 Exp. 12-31-10 CIVIL STATE OF CALIFORNIA

THE STATE OF CALIFORNIA OR ITS OFFICERS OR AGENTS SHALL NOT BE RESPONSIBLE FOR THE ACCURACY OR COMPLETENESS OF ELECTRONIC COPIES OF THIS PLAN SHEET.

FOR COMPLETE RIGHT OF WAY AND ACCURATE ACCESS DATA, SEE RIGHT OF WAY RECORD MAPS AT DISTRICT OFFICE.

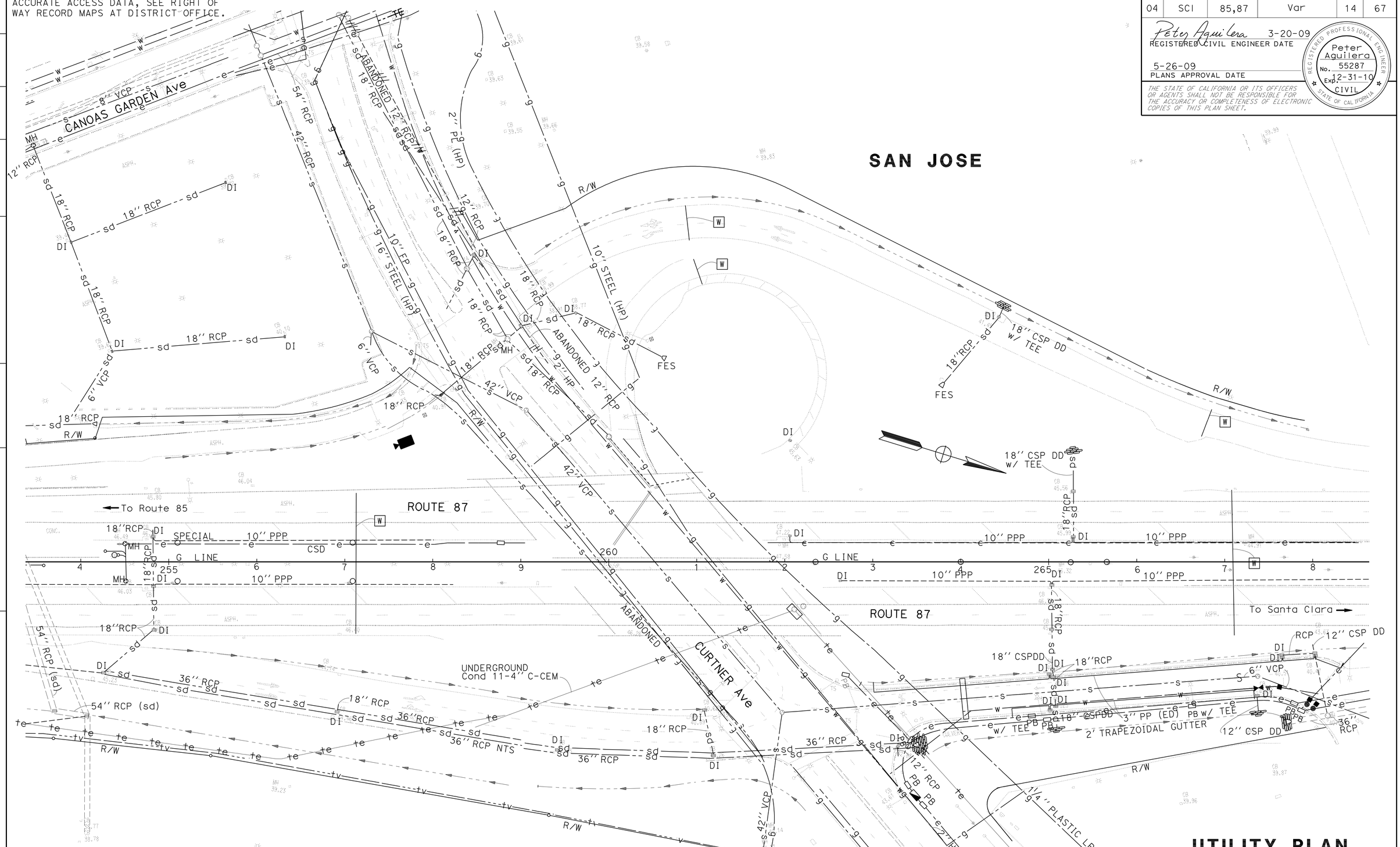

FOR NOTES, ABBREVIATIONS, AND LEGEND, SEE SHEET U-1

THIS PLAN ACCURATE FOR UTILITY INFORMATION ONLY.

UTILITY PLAN
(LOCATION 10)

SCALE: 1" = 50'

U-11

STATE OF CALIFORNIA - DEPARTMENT OF TRANSPORTATION
Caltrans® DESIGN

FUNCTIONAL SUPERVISOR: ULDARICO P. PEREZ
CALCULATED-DESIGNED BY: SUSANA ONATE
CHECKED BY: JIM LEM
REVISED BY
DATE REVISED

LAST REVISION 03-14-09
DATE PLOTTED => 29-OCT-2009
TIME PLOTTED => 06:00

BORDER LAST REVISED 3/1/2007
RELATIVE BORDER SCALE IS IN INCHES 0 1 2 3
USERNAME => trmikesl
DGN FILE => 415139ka011.dgn
CU 04222
EA 151391

Dist	COUNTY	ROUTE	POST MILES TOTAL PROJECT	SHEET No.	TOTAL SHEETS
04	SCI	85,87	Var	15	67

Peter Aguilera 3-20-09
REGISTERED CIVIL ENGINEER DATE

5-26-09
PLANS APPROVAL DATE

REGISTERED PROFESSIONAL ENGINEER Peter Aguilera No. 55287 Exp. 12-31-10 CIVIL STATE OF CALIFORNIA

THE STATE OF CALIFORNIA OR ITS OFFICERS OR AGENTS SHALL NOT BE RESPONSIBLE FOR THE ACCURACY OR COMPLETENESS OF ELECTRONIC COPIES OF THIS PLAN SHEET.

FOR COMPLETE RIGHT OF WAY AND ACCURATE ACCESS DATA, SEE RIGHT OF WAY RECORD MAPS AT DISTRICT OFFICE.

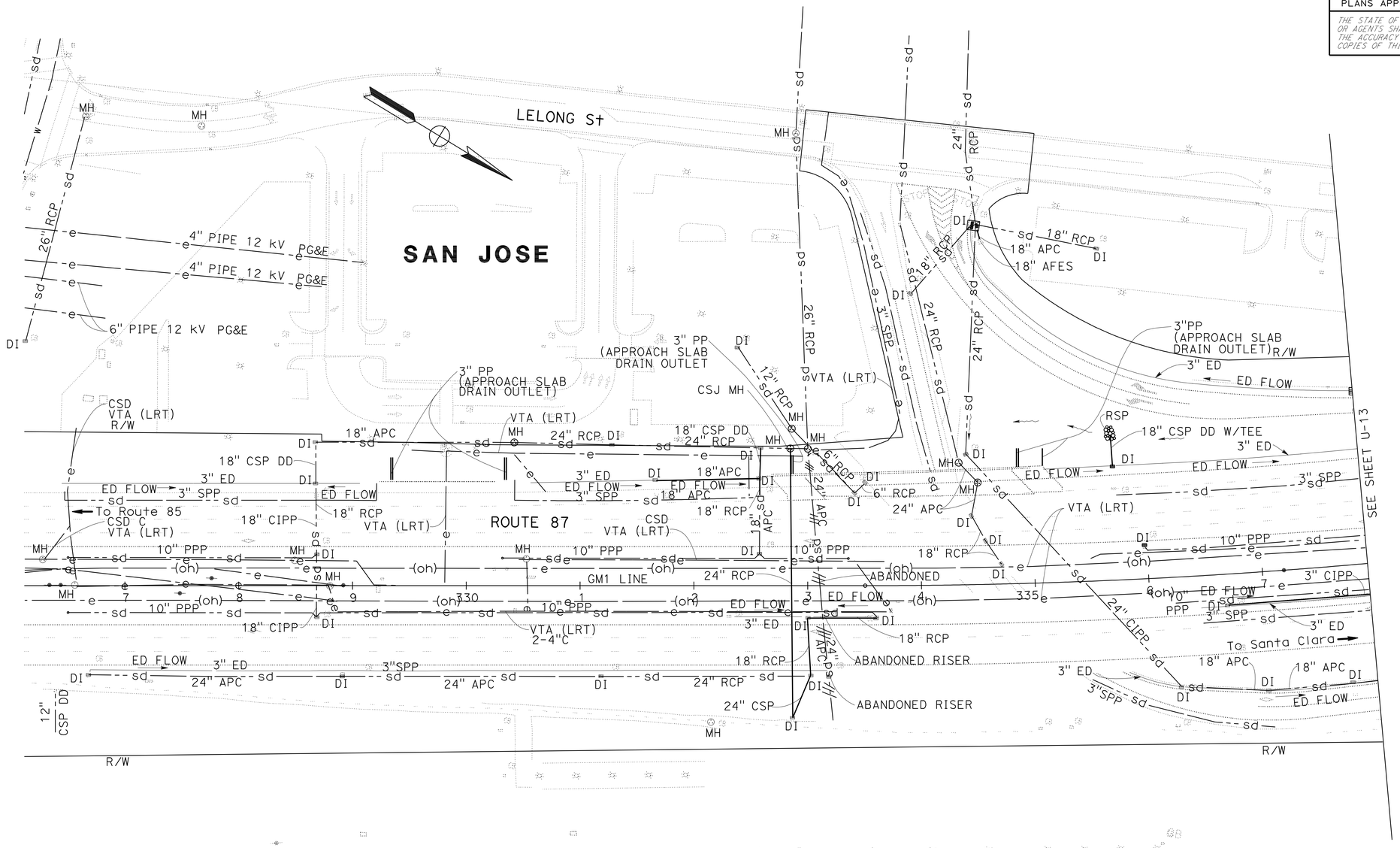

FOR NOTES, ABBREVIATIONS, AND LEGEND, SEE SHEET U-1

THIS PLAN ACCURATE FOR UTILITY INFORMATION ONLY.

UTILITY PLAN (LOCATION 11)

SCALE: 1" = 50'

U-12

STATE OF CALIFORNIA - DEPARTMENT OF TRANSPORTATION
DESIGN
Caltrans

FUNCTIONAL SUPERVISOR: ULDARICO P. PEREZ
CALCULATED-DESIGNED BY: SUSANA ONATE
CHECKED BY: JIM LEM
REVISED BY
DATE REVISED

LAST REVISION 07-31-08
DATE PLOTTED => 29-OCT-2009
TIME PLOTTED => 06:00

BORDER LAST REVISED 3/1/2007
RELATIVE BORDER SCALE IS IN INCHES 0 1 2 3
USERNAME => trmikesl
DGN FILE => 415139ka012.dgn
CU 04222
EA 151391

Dist	COUNTY	ROUTE	POST MILES TOTAL PROJECT	SHEET No.	TOTAL SHEETS
04	SCI	85,87	Var	16	67

Peter Aguilera 3-20-09
REGISTERED CIVIL ENGINEER DATE

5-26-09
PLANS APPROVAL DATE

REGISTERED PROFESSIONAL ENGINEER Peter Aguilera No. 55287 Exp. 12-31-10 CIVIL STATE OF CALIFORNIA

THE STATE OF CALIFORNIA OR ITS OFFICERS OR AGENTS SHALL NOT BE RESPONSIBLE FOR THE ACCURACY OR COMPLETENESS OF ELECTRONIC COPIES OF THIS PLAN SHEET.

FOR COMPLETE RIGHT OF WAY AND ACCURATE ACCESS DATA, SEE RIGHT OF WAY RECORD MAPS AT DISTRICT OFFICE.

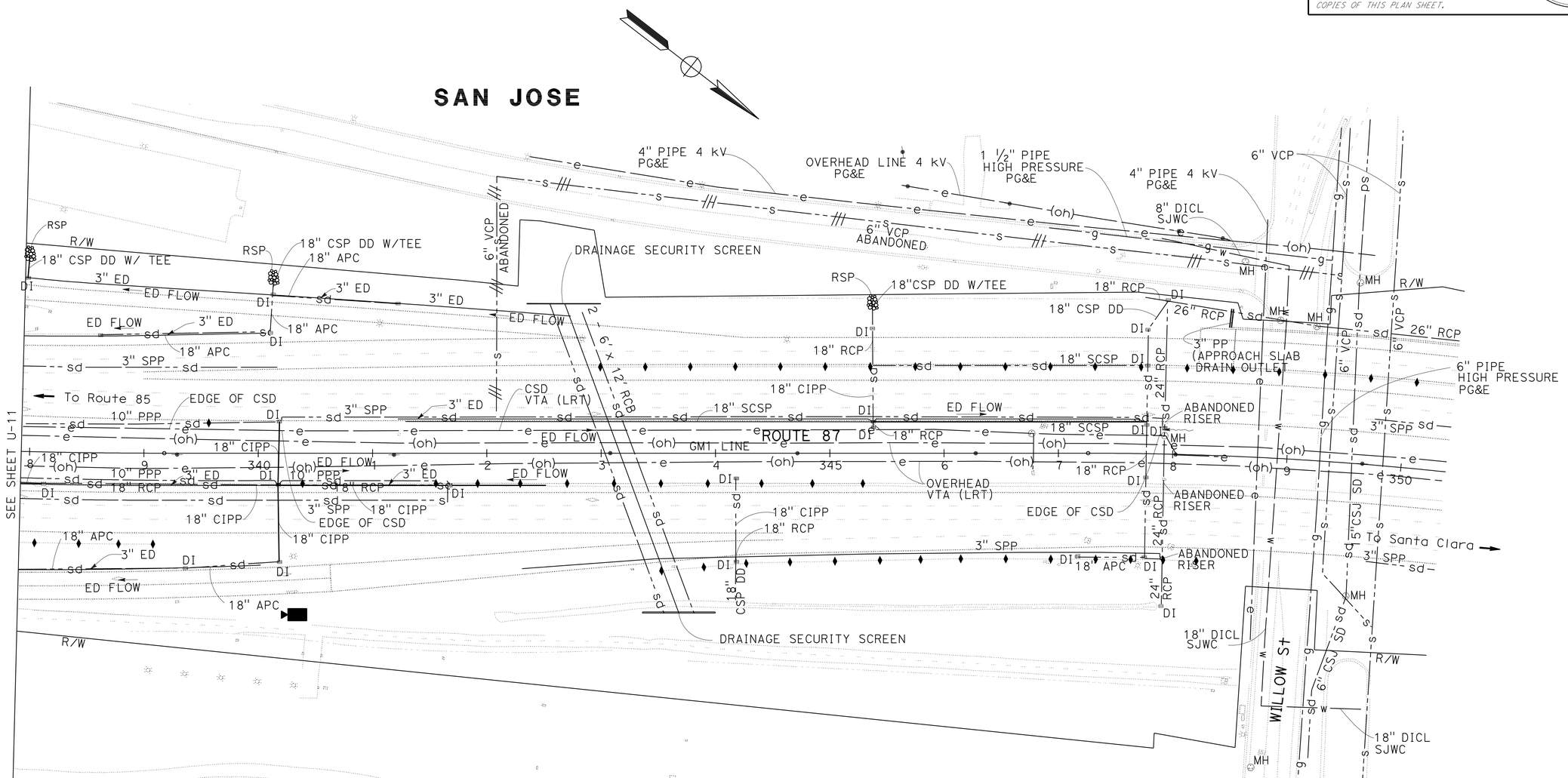

UTILITY PLAN (LOCATION 11)

SCALE: 1" = 50'

FOR NOTES, ABBREVIATIONS, AND LEGEND, SEE SHEET U-1

THIS PLAN ACCURATE FOR UTILITY INFORMATION ONLY.

U-13

STATE OF CALIFORNIA - DEPARTMENT OF TRANSPORTATION
Caltrans DESIGN

FUNCTIONAL SUPERVISOR: ULDARICO P. PEREZ
CALCULATED-DESIGNED BY: SUSANA ONATE
CHECKED BY: JIM LEM
REVISED BY
DATE REVISED

LAST REVISION 07-31-08
DATE PLOTTED => 29-OCT-2009
TIME PLOTTED => 06:00

Dist	COUNTY	ROUTE	POST MILES TOTAL PROJECT	SHEET No.	TOTAL SHEETS
04	SCI	85,87	Var	17	67

REGISTERED CIVIL ENGINEER DATE 3-20-09

PLANS APPROVAL DATE 5-26-09

REGISTERED PROFESSIONAL ENGINEER Jerilyn L. Struven No. 49964 Exp. 12-31-10 CIVIL STATE OF CALIFORNIA

THE STATE OF CALIFORNIA OR ITS OFFICERS OR AGENTS SHALL NOT BE RESPONSIBLE FOR THE ACCURACY OR COMPLETENESS OF SCANNED COPIES OF THIS PLAN SHEET.

LEGENDS:

- CONSTRUCTION AREA SIGN DESIGNATION
- (No.) LOCATION NUMBER
- ● CAMERA INSTALLATION

NOTE:

EXACT SIGN LOCATIONS WILL BE DETERMINED BY THE ENGINEER.

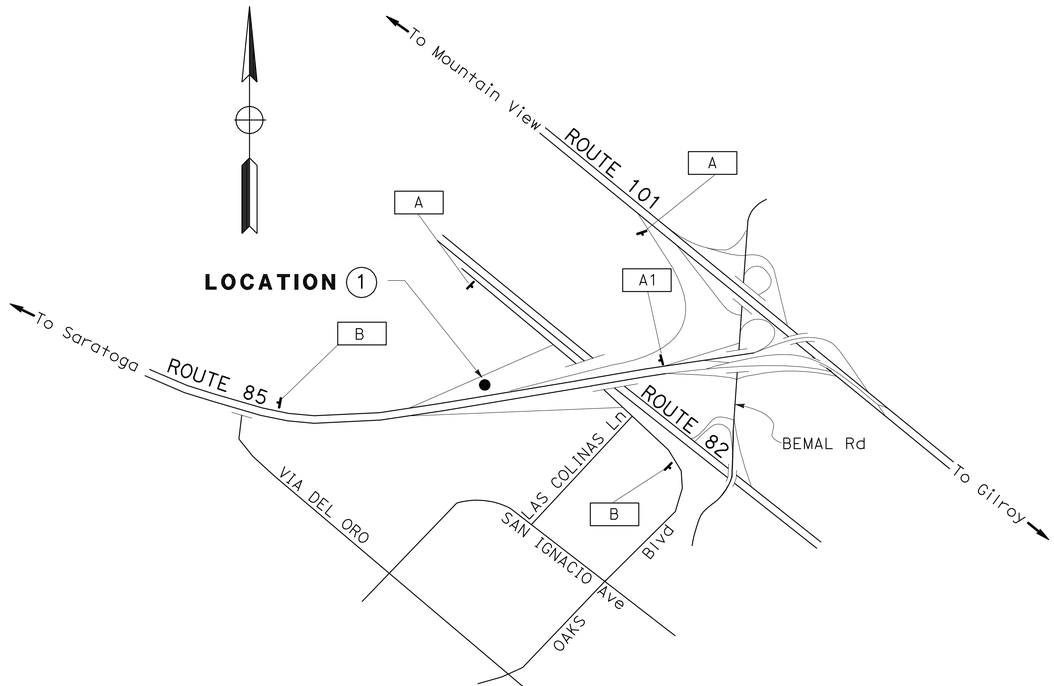

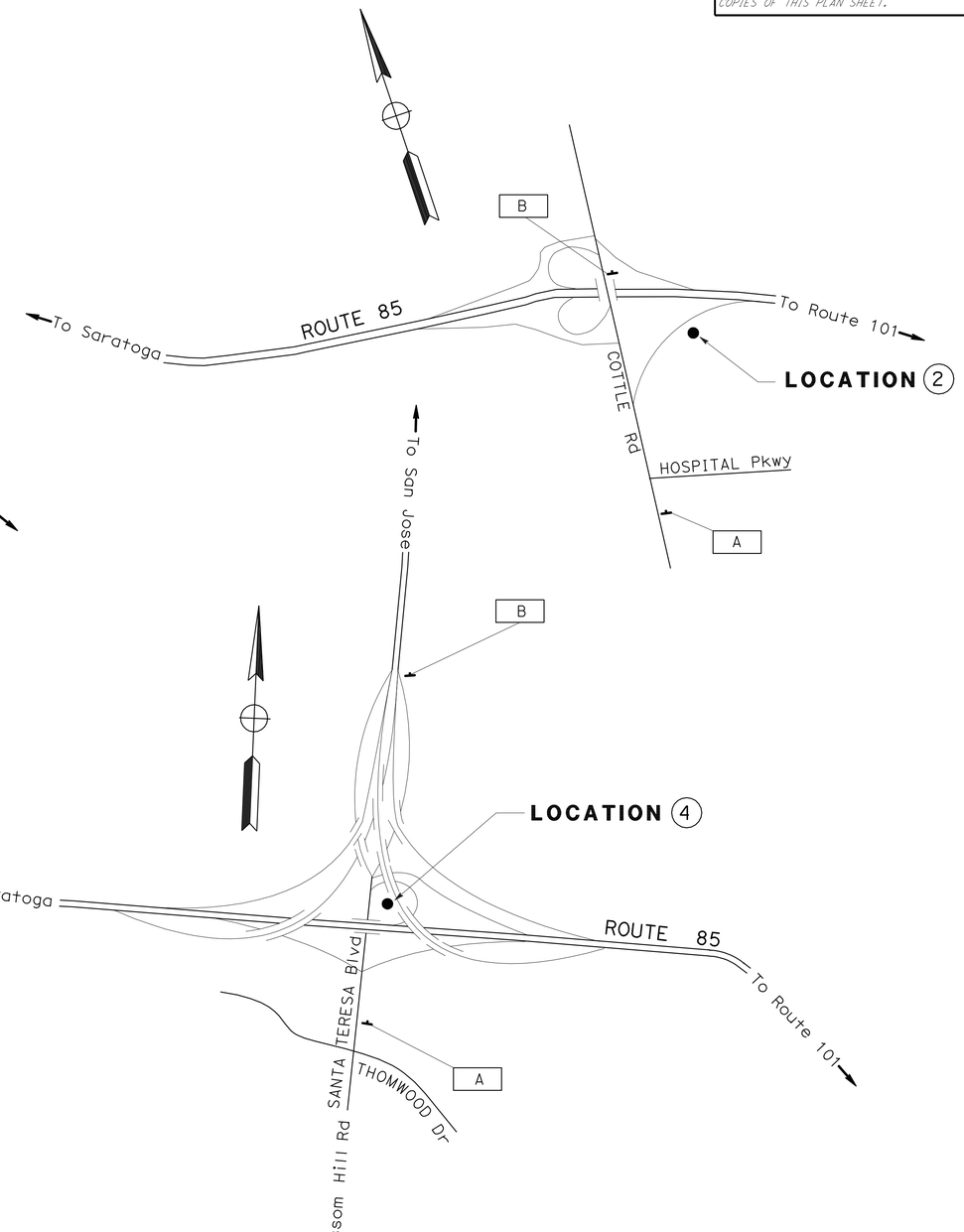

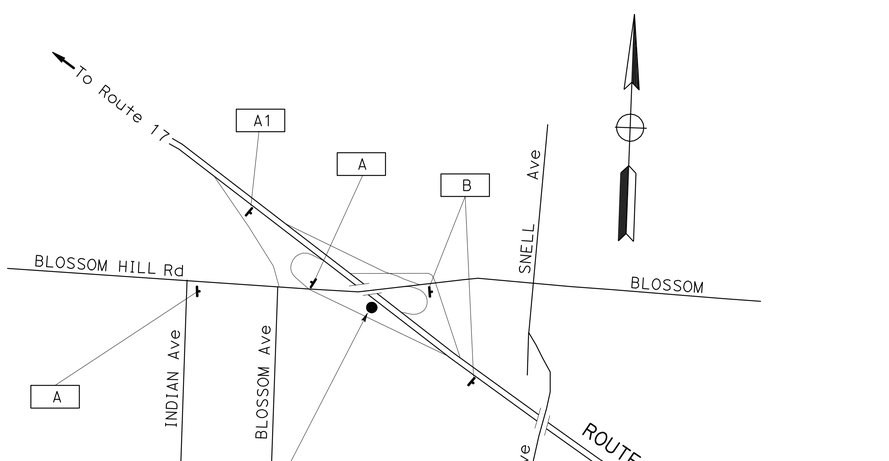

CONSTRUCTION AREA SIGNS

NO SCALE

CS-1

THIS PLAN ACCURATE FOR CONSTRUCTION AREA SIGN WORK ONLY

DUC VO	JERILYN STRUVEN
CALCULATED-DESIGNED BY	CHECKED BY
FUNCTIONAL SUPERVISOR	ROLAND AU-YEUNG
REVISED BY	DATE REVISED

STATE OF CALIFORNIA - DEPARTMENT OF TRANSPORTATION

Caltrans

TRAFFIC

LAST REVISION 05-20-09 | DATE PLOTTED => 29-OCT-2009 | TIME PLOTTED => 06:00

Dist	COUNTY	ROUTE	POST MILES TOTAL PROJECT	SHEET No.	TOTAL SHEETS
04	SCI	85,87	Var	18	67

REGISTERED CIVIL ENGINEER DATE 3-20-09

PLANS APPROVAL DATE 5-26-09

REGISTERED PROFESSIONAL ENGINEER Jerilyn L. Struven No. 49964 Exp. 12-31-10 CIVIL STATE OF CALIFORNIA

THE STATE OF CALIFORNIA OR ITS OFFICERS OR AGENTS SHALL NOT BE RESPONSIBLE FOR THE ACCURACY OR COMPLETENESS OF SCANNED COPIES OF THIS PLAN SHEET.

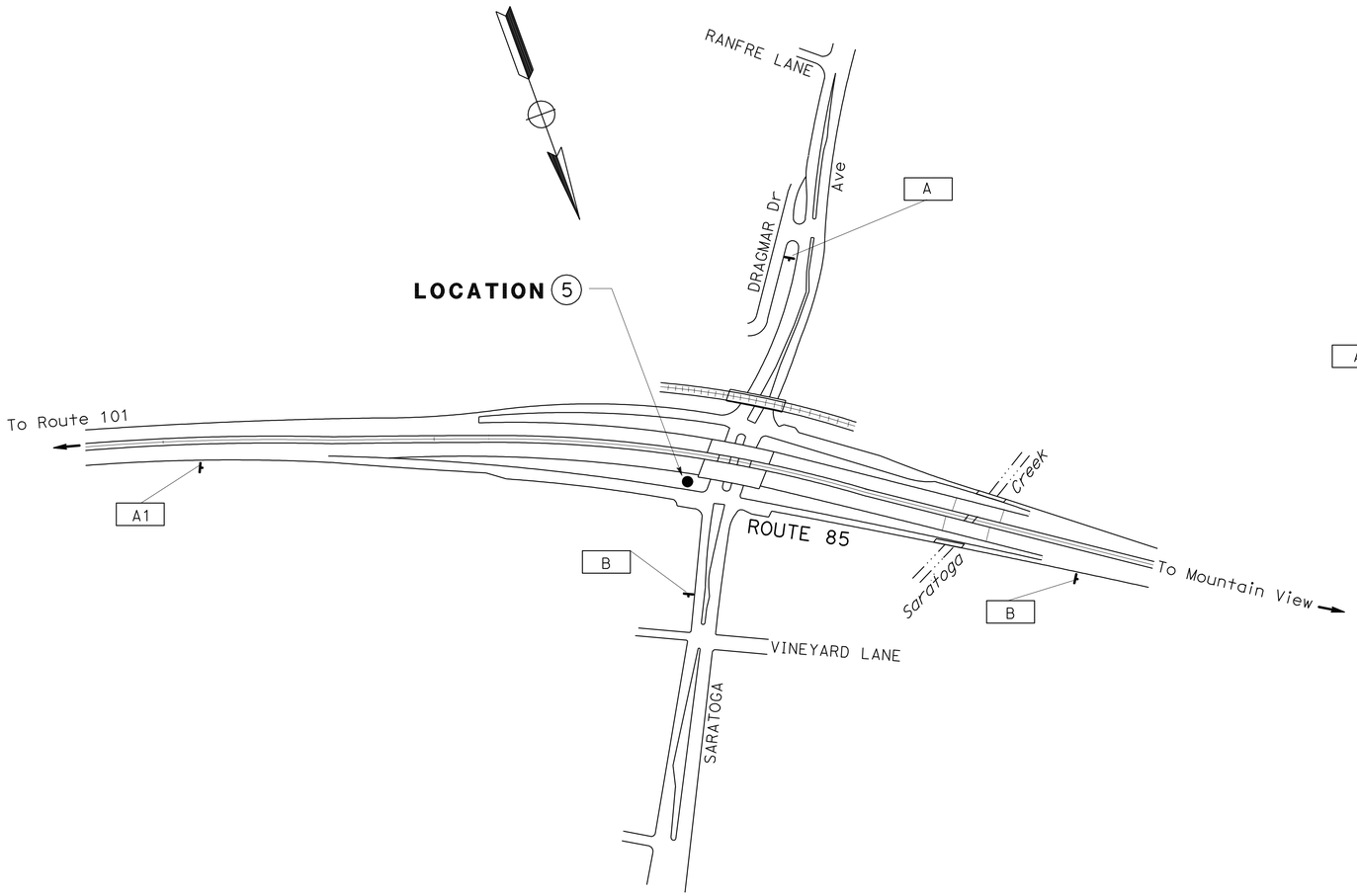

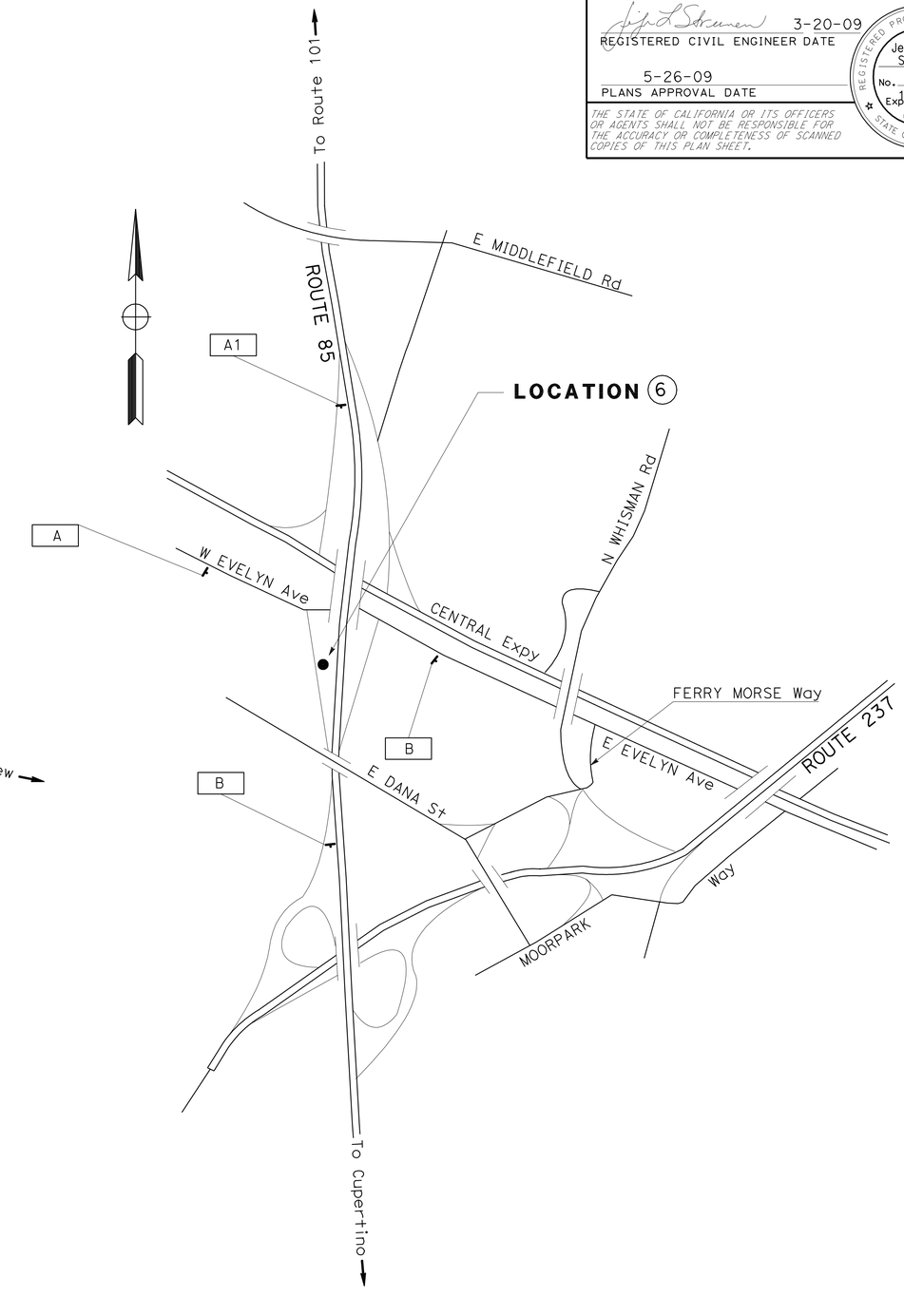

CONSTRUCTION AREA SIGNS

NO SCALE

CS-2

THIS PLAN ACCURATE FOR CONSTRUCTION AREA SIGN WORK ONLY

FOR NOTE AND LEGENDS, SEE SHEET CS-1

STATE OF CALIFORNIA - DEPARTMENT OF TRANSPORTATION

Caltrans

TRAFFIC

FUNCTIONAL SUPERVISOR: ROLAND AU-YEUNG

CALCULATED-DESIGNED BY: DUC VO

CHECKED BY: JERILYN STRUVEN

REVISED BY

DATE REVISED

LAST REVISION 05-20-09

DATE PLOTTED => 29-OCT-2009

TIME PLOTTED => 06:01

Dist	COUNTY	ROUTE	POST MILES TOTAL PROJECT	SHEET No.	TOTAL SHEETS
04	SCI	85,87	Var	19	67

REGISTERED CIVIL ENGINEER DATE 3-20-09

5-26-09
PLANS APPROVAL DATE

REGISTERED PROFESSIONAL ENGINEER Jerilyn L. Struven No. 49964 Exp. 12-31-10 CIVIL STATE OF CALIFORNIA

THE STATE OF CALIFORNIA OR ITS OFFICERS OR AGENTS SHALL NOT BE RESPONSIBLE FOR THE ACCURACY OR COMPLETENESS OF SCANNED COPIES OF THIS PLAN SHEET.

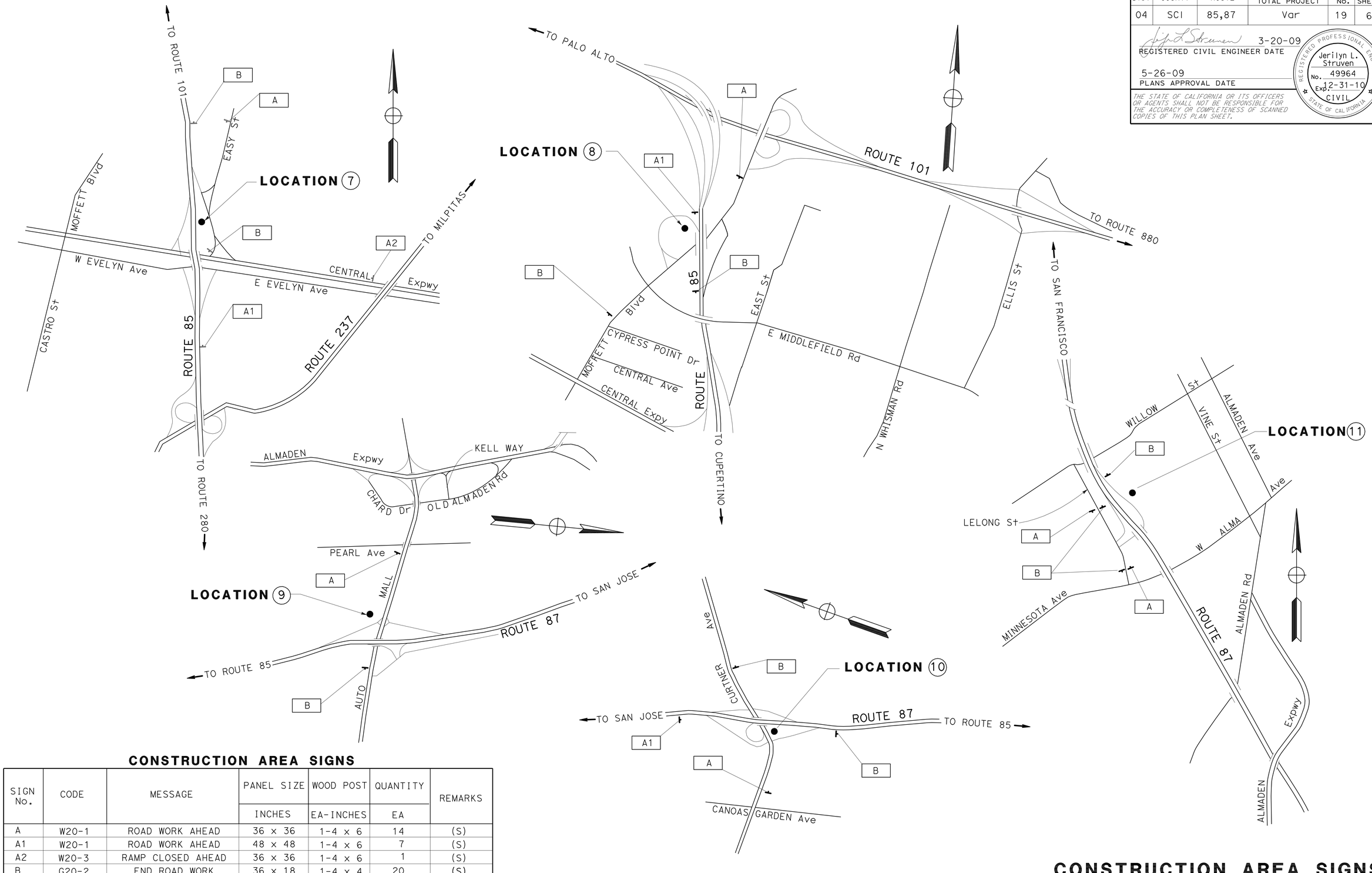

CONSTRUCTION AREA SIGNS

SIGN No.	CODE	MESSAGE	PANEL SIZE	WOOD POST	QUANTITY	REMARKS
			INCHES	EA-INCHES	EA	
A	W20-1	ROAD WORK AHEAD	36 x 36	1-4 x 6	14	(S)
A1	W20-1	ROAD WORK AHEAD	48 x 48	1-4 x 6	7	(S)
A2	W20-3	RAMP CLOSED AHEAD	36 x 36	1-4 x 6	1	(S)
B	G20-2	END ROAD WORK	36 x 18	1-4 x 4	20	(S)
TOTAL					42	

(S) DENOTES STATIONARY MOUNTED SIGN

THIS PLAN ACCURATE FOR CONSTRUCTION AREA SIGN WORK ONLY

FOR NOTE AND LEGENDS, SEE SHEET CS-1

CONSTRUCTION AREA SIGNS

NO SCALE

CS-3

REVISED BY	DATE REVISED
DUC VO	JERILYN STRUVEN
CALCULATED-DESIGNED BY	CHECKED BY
FUNCTIONAL SUPERVISOR	ROLAND AU-YEUNG

STATE OF CALIFORNIA - DEPARTMENT OF TRANSPORTATION

TRAFFIC

Caltrans

LAST REVISION 05-29-09

DATE PLOTTED => 29-OCT-2009
TIME PLOTTED => 06:01

Dist	COUNTY	ROUTE	POST MILES TOTAL PROJECT	SHEET No.	TOTAL SHEETS
04	SCl	85,87	Var	20	67

REGISTERED CIVIL ENGINEER DATE 3-20-09

PLANS APPROVAL DATE 5-26-09

REGISTERED PROFESSIONAL ENGINEER Jerilyn L. Struven No. 49964 Exp. 12-31-10 CIVIL STATE OF CALIFORNIA

THE STATE OF CALIFORNIA OR ITS OFFICERS OR AGENTS SHALL NOT BE RESPONSIBLE FOR THE ACCURACY OR COMPLETENESS OF SCANNED COPIES OF THIS PLAN SHEET.

LEGENDS:

- CONSTRUCTION AREA SIGN DESIGNATION
- (No.) LOCATION NUMBER
- ● CAMERA INSTALLATION
- → DIRECTION OF TRAFFIC
- ✕ RAMP OR CONNECTOR TO BE CLOSED

NOTE:

EXACT SIGN LOCATIONS WILL BE DETERMINED BY THE ENGINEER.

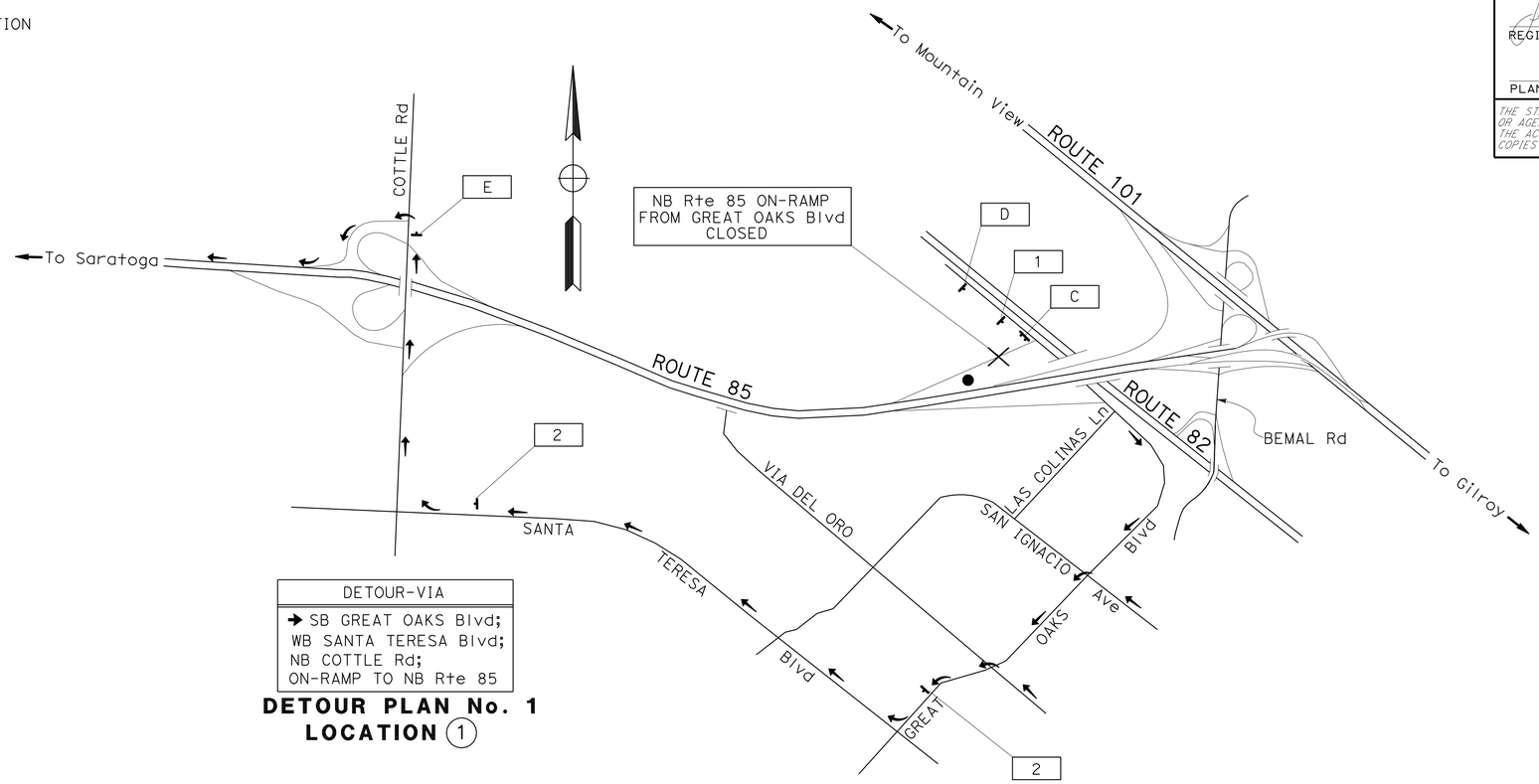

DETOUR-VIA
→ SB GREAT OAKS Blvd; WB SANTA TERESA Blvd; NB COTTLE Rd; ON-RAMP TO NB Rte 85

DETOUR PLAN No. 1
LOCATION (1)

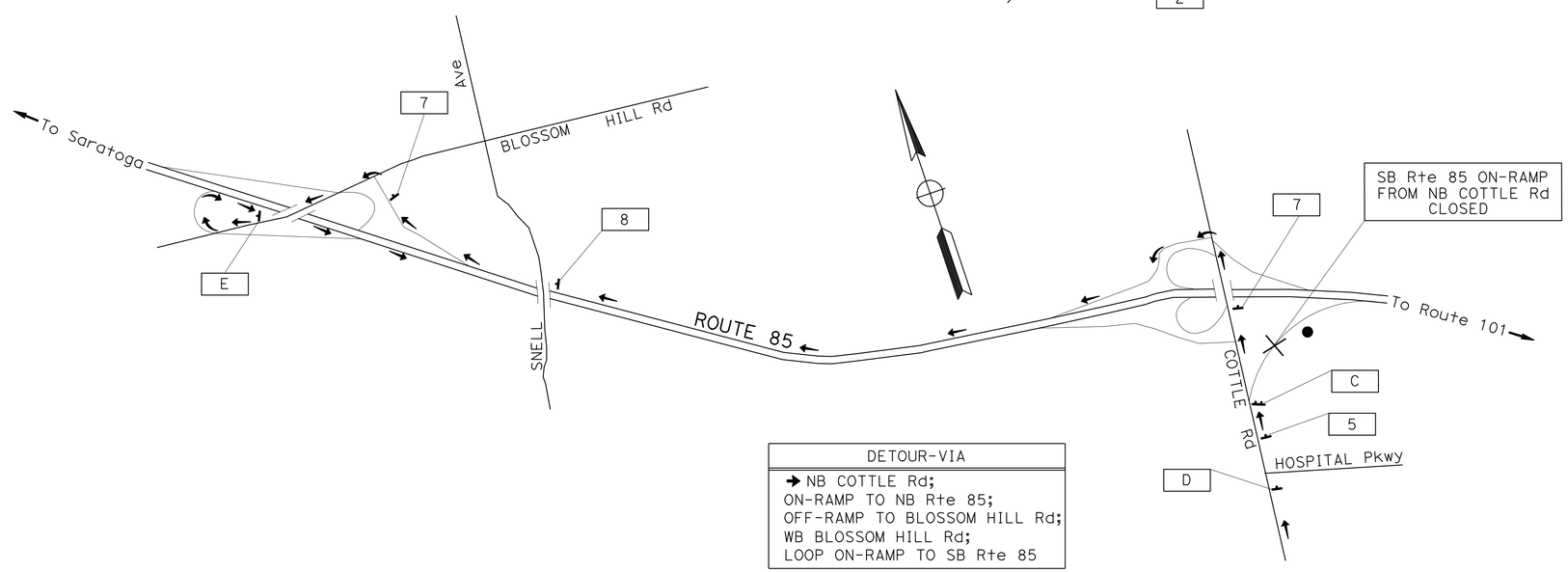

DETOUR-VIA
→ NB COTTLE Rd; ON-RAMP TO NB Rte 85; OFF-RAMP TO BLOSSOM HILL Rd; WB BLOSSOM HILL Rd; LOOP ON-RAMP TO SB Rte 85

DETOUR PLAN No. 2
LOCATION (2)

TRAFFIC HANDLING PLAN

NO SCALE

THIS PLAN ACCURATE FOR TRAFFIC HANDLING WORK ONLY

TH-1

STATE OF CALIFORNIA - DEPARTMENT OF TRANSPORTATION

Caltrans® **DESIGN**

FUNCTIONAL SUPERVISOR: ROLAND AU-YEUNG

CALCULATED-DESIGNED BY: DUC VO | CHECKED BY: JERILYN STRUVEN

REVISED BY | DATE REVISED

LAST REVISION 05-20-09 | DATE PLOTTED => 29-OCT-2009 | TIME PLOTTED => 06:01

BORDER LAST REVISED 4/11/2008 | RELATIVE BORDER SCALE IS IN INCHES 0 1 2 3 | USERNAME => trmikesl | DGN FILE => 415139md001.dgn | CU 04222 | EA 151391

Dist	COUNTY	ROUTE	POST MILES TOTAL PROJECT	SHEET No.	TOTAL SHEETS
04	SCI	85,87	Var	21	67

REGISTERED CIVIL ENGINEER DATE 3-20-09

PLANS APPROVAL DATE 5-26-09

REGISTERED PROFESSIONAL ENGINEER Jerilyn L. Struven No. 49964 Exp. 12-31-10 CIVIL STATE OF CALIFORNIA

THE STATE OF CALIFORNIA OR ITS OFFICERS OR AGENTS SHALL NOT BE RESPONSIBLE FOR THE ACCURACY OR COMPLETENESS OF SCANNED COPIES OF THIS PLAN SHEET.

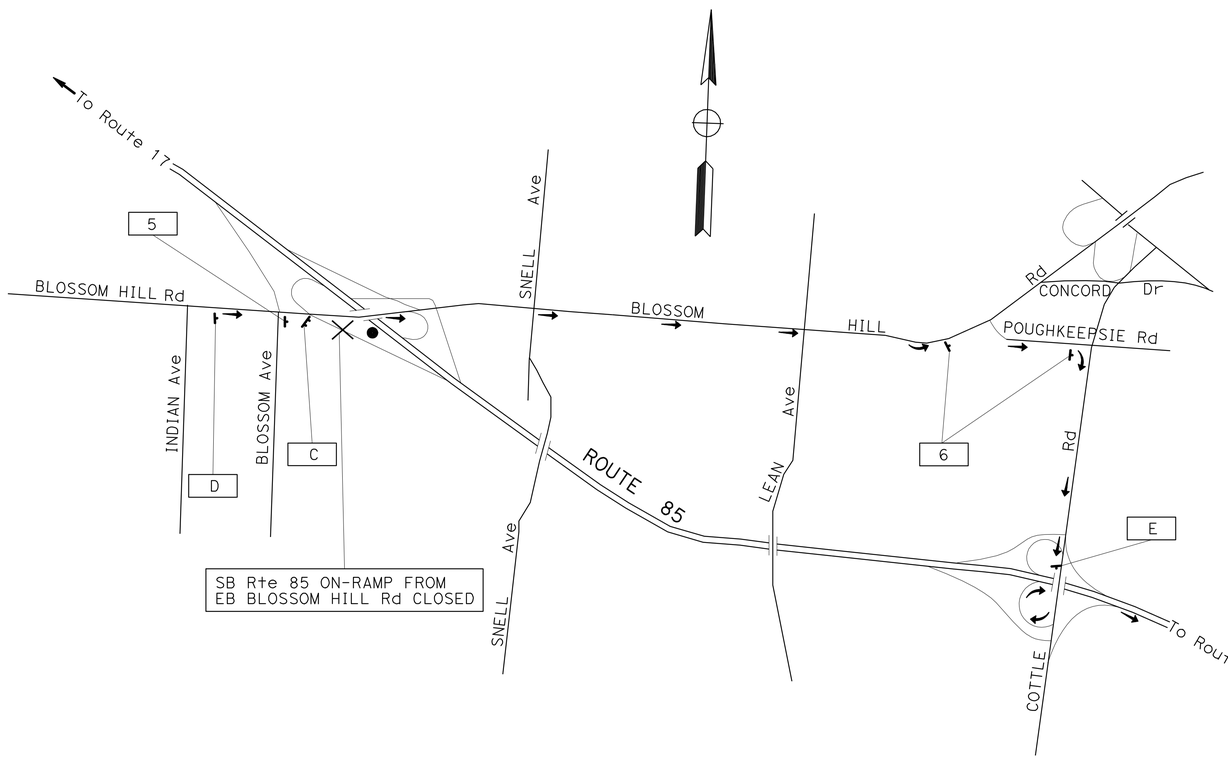

DETOUR-VIA

→ EB BLOSSOM HILL Rd;
EB POUGHKEEPSIE Rd;
SB COTTLE Rd;
LOOP ON-RAMP TO SB ROUTE 85

DETOUR PLAN No. 3
LOCATION (3)

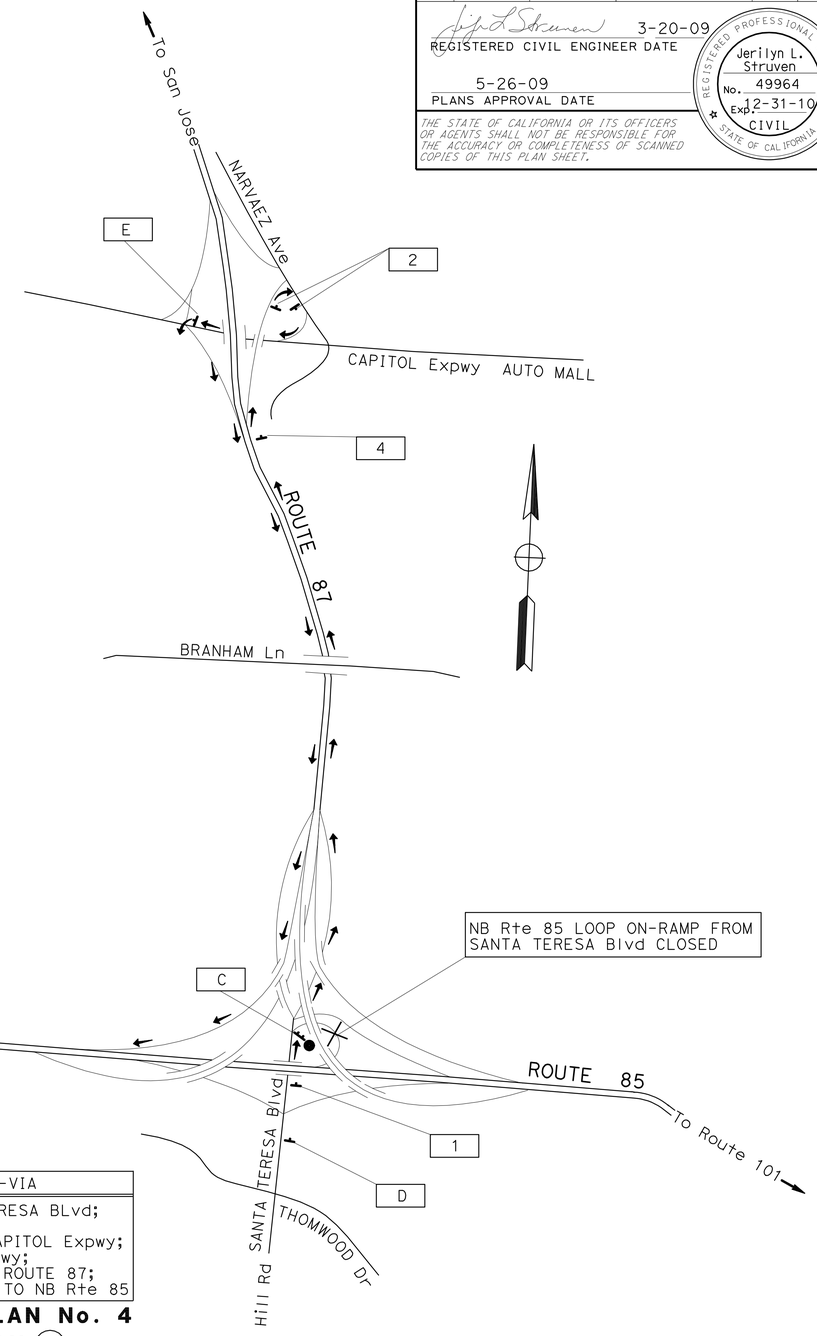

DETOUR-VIA

→ NB SANTA TERESA BLvd;
NB ROUTE 87;
OFF-RAMP TO CAPITOL Expwy;
WB CAPITOL Expwy;
ON-RAMP TO SB ROUTE 87;
CONN OFF-RAMP TO NB Rte 85

DETOUR PLAN No. 4
LOCATION (4)

TRAFFIC HANDLING PLAN

NO SCALE

FOR NOTE AND LEGENDS, SEE SHEET TH-1

THIS PLAN ACCURATE FOR TRAFFIC HANDLING WORK ONLY

TH-2

REVISED BY	DATE REVISED

CALCULATED-DESIGNED BY	CHECKED BY
DUC VO	JERILYN STRUVEN

FUNCTIONAL SUPERVISOR
ROLAND AU-YEUNG

STATE OF CALIFORNIA - DEPARTMENT OF TRANSPORTATION

Caltrans

DESIGN

LAST REVISION 05-20-09 | DATE PLOTTED => 29-OCT-2009 | TIME PLOTTED => 06:01

Dist	COUNTY	ROUTE	POST MILES TOTAL PROJECT	SHEET No.	TOTAL SHEETS
04	SCI	85,87	Var	22	67

REGISTERED CIVIL ENGINEER DATE 3-20-09

PLANS APPROVAL DATE 5-26-09

REGISTERED PROFESSIONAL ENGINEER Jerilyn L. Struven No. 49964 Exp. 12-31-10 CIVIL STATE OF CALIFORNIA

THE STATE OF CALIFORNIA OR ITS OFFICERS OR AGENTS SHALL NOT BE RESPONSIBLE FOR THE ACCURACY OR COMPLETENESS OF SCANNED COPIES OF THIS PLAN SHEET.

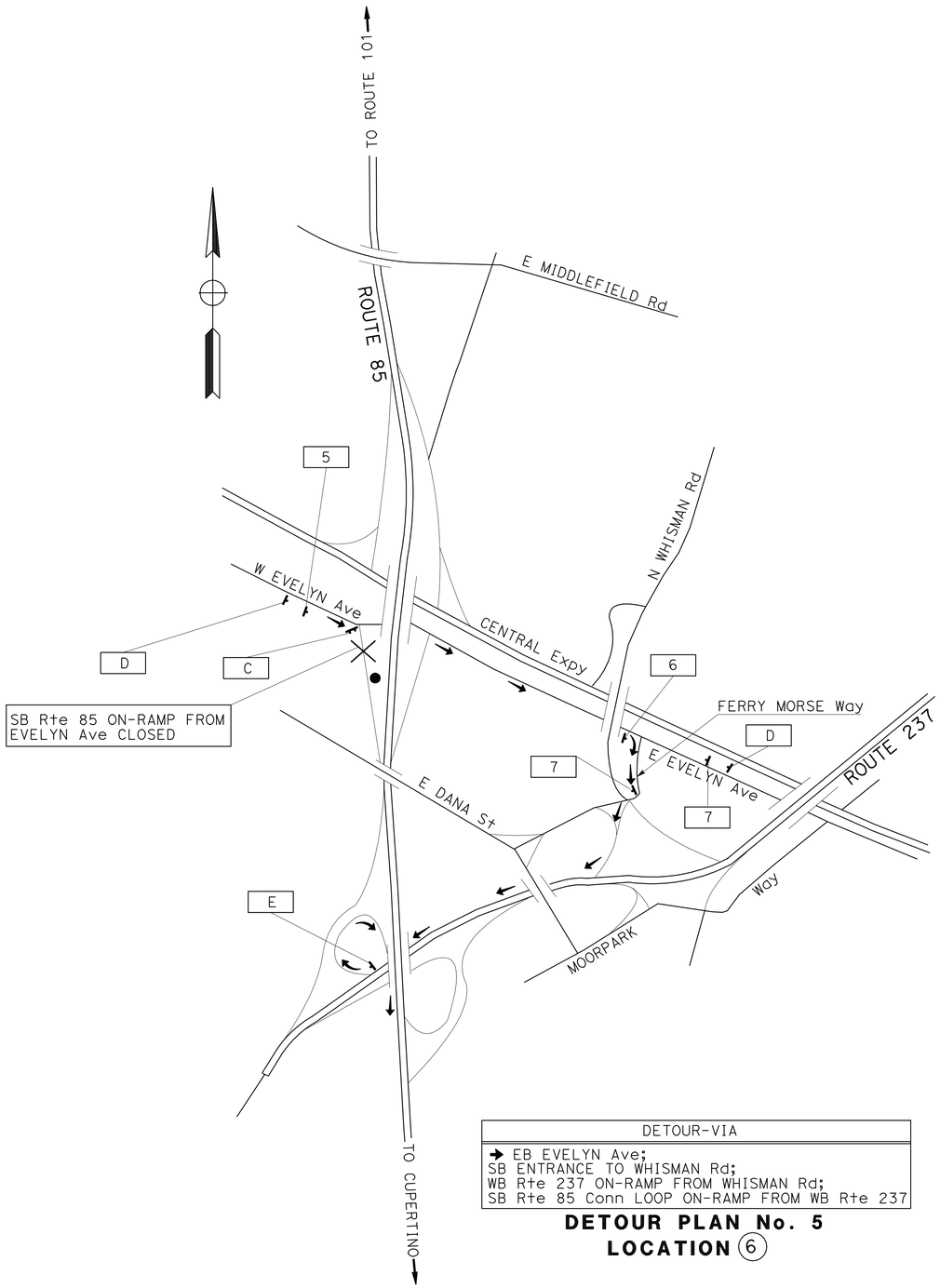

DETOUR-VIA
➔ EB EVELYN Ave; SB ENTRANCE TO WHISMAN Rd; WB Rte 237 ON-RAMP FROM WHISMAN Rd; SB Rte 85 Conn LOOP ON-RAMP FROM WB Rte 237

DETOUR PLAN No. 5
LOCATION (6)

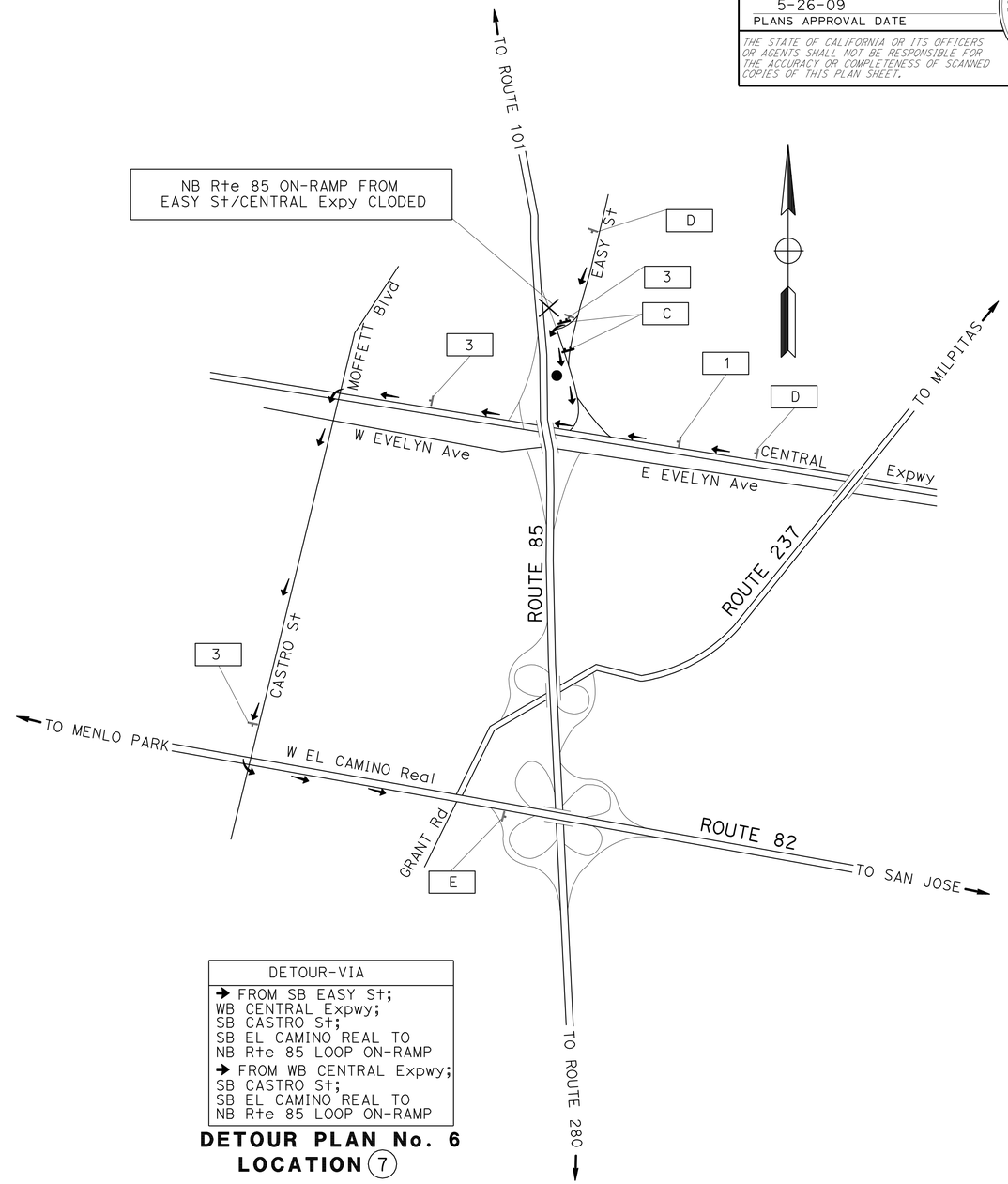

DETOUR-VIA
➔ FROM SB EASY St; WB CENTRAL Expwy; SB CASTRO St; SB EL CAMINO REAL TO NB Rte 85 LOOP ON-RAMP ➔ FROM WB CENTRAL Expwy; SB CASTRO St; SB EL CAMINO REAL TO NB Rte 85 LOOP ON-RAMP

DETOUR PLAN No. 6
LOCATION (7)

FOR NOTE AND LEGEND, SEE SHEET TH-1

THIS PLAN ACCURATE FOR TRAFFIC HANDLING WORK ONLY

TRAFFIC HANDLING PLAN

NO SCALE

TH-3

REVISED BY	DATE REVISED

CALCULATED-DESIGNED BY: DUC VO
CHECKED BY: JERILYN STRUVEN
FUNCTIONAL SUPERVISOR: ROLAND AU-YEUNG

STATE OF CALIFORNIA - DEPARTMENT OF TRANSPORTATION
Caltrans
DESIGN

LAST REVISION 05-20-09
DATE PLOTTED => 29-OCT-2009
TIME PLOTTED => 06:01

Dist	COUNTY	ROUTE	POST MILES TOTAL PROJECT	SHEET No.	TOTAL SHEETS
04	SCl	85,87	Var	23	67

REGISTERED CIVIL ENGINEER DATE 3-20-09

PLANS APPROVAL DATE 5-26-09

REGISTERED PROFESSIONAL ENGINEER Jerilyn L. Struven No. 49964 Exp. 12-31-10 CIVIL STATE OF CALIFORNIA

THE STATE OF CALIFORNIA OR ITS OFFICERS OR AGENTS SHALL NOT BE RESPONSIBLE FOR THE ACCURACY OR COMPLETENESS OF SCANNED COPIES OF THIS PLAN SHEET.

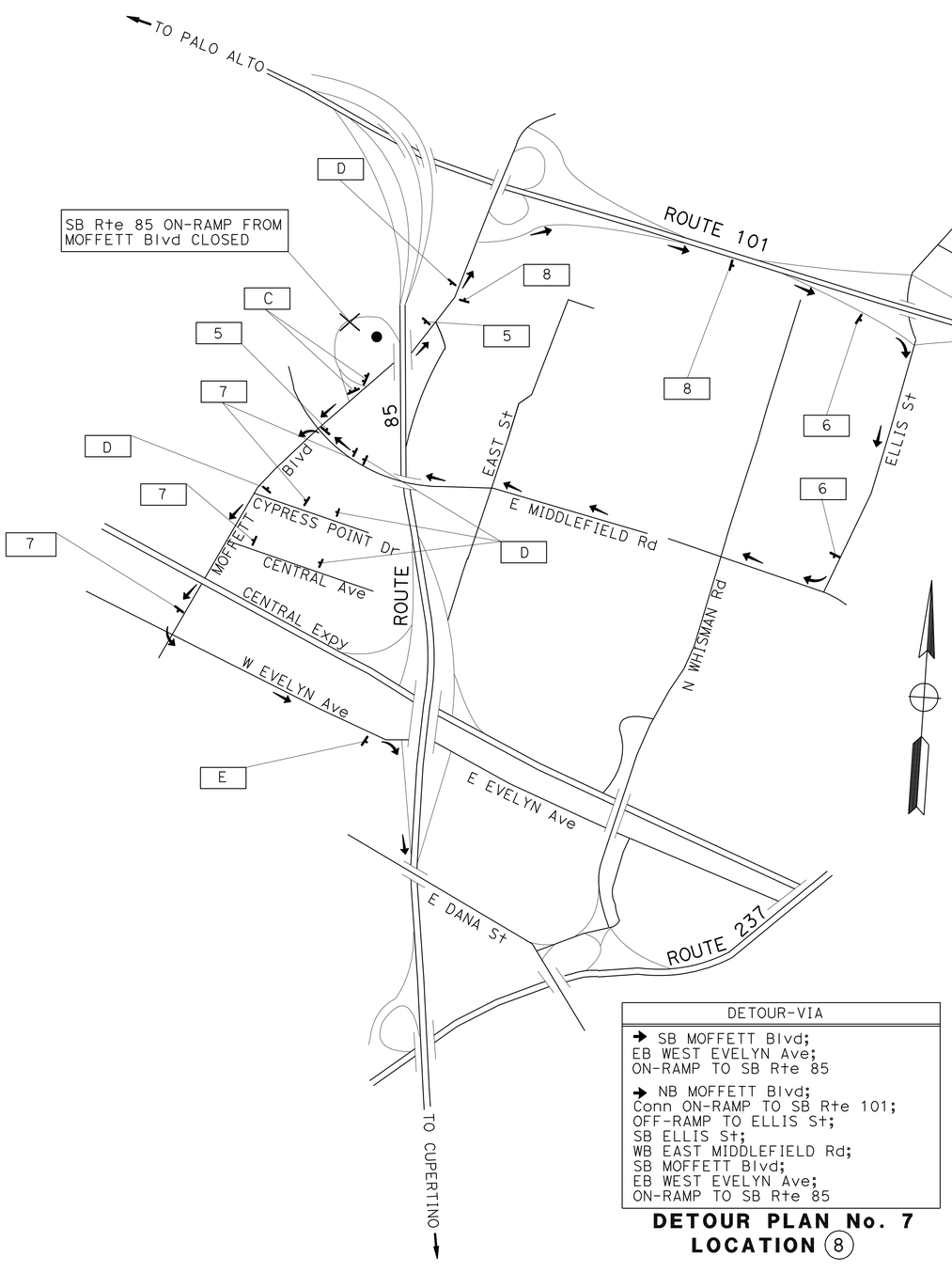

DETOUR-VIA
→ SB MOFFETT Blvd; EB WEST EVELYN Ave; ON-RAMP TO SB Rte 85
→ NB MOFFETT Blvd; Conn ON-RAMP TO SB Rte 101; OFF-RAMP TO ELLIS St; SB ELLIS St; WB EAST MIDDLEFIELD Rd; SB MOFFETT Blvd; EB WEST EVELYN Ave; ON-RAMP TO SB Rte 85

DETOUR PLAN No. 7
LOCATION (8)

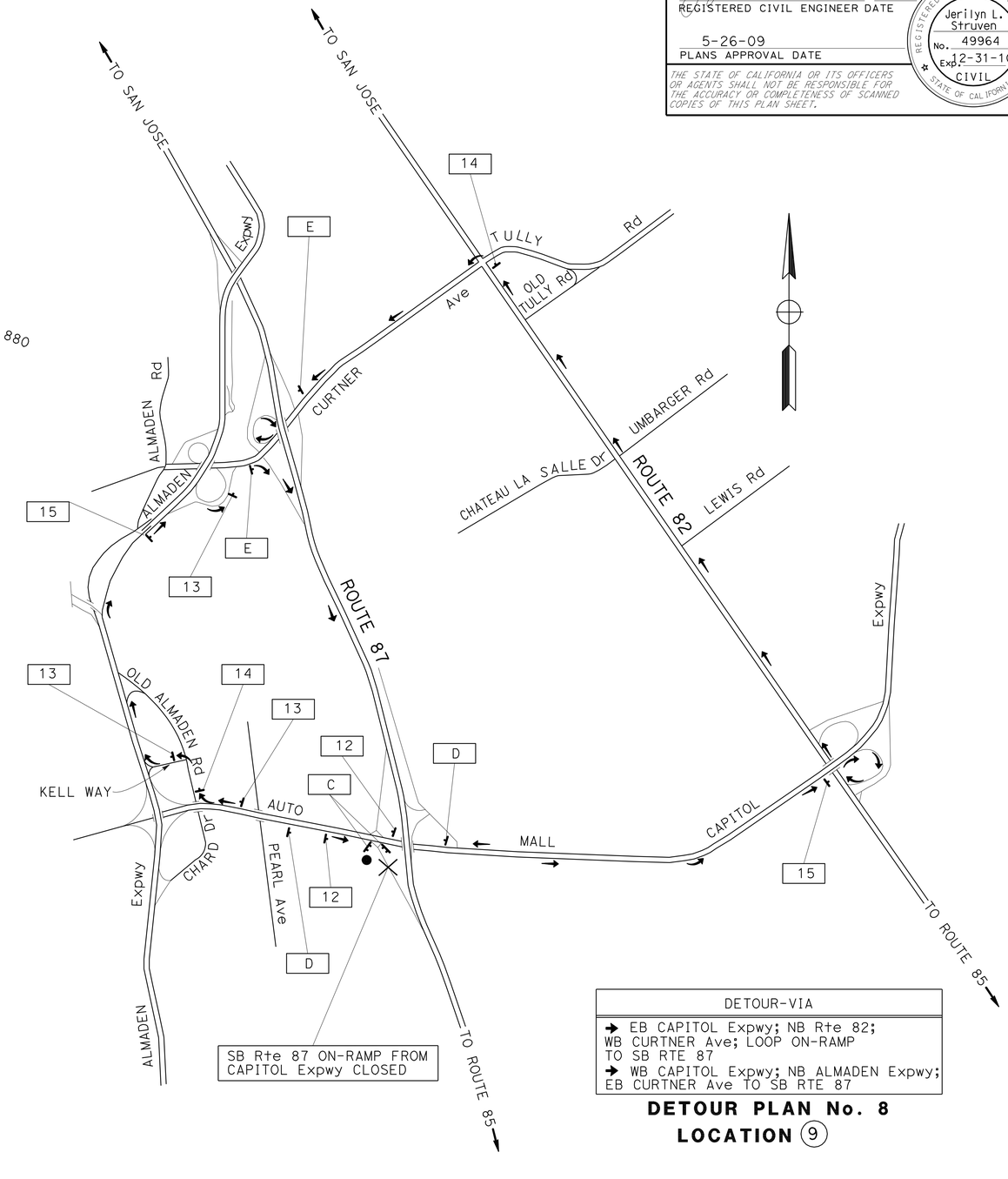

SB Rte 87 ON-RAMP FROM CAPITOL Expwy CLOSED

DETOUR-VIA
→ EB CAPITOL Expwy; NB Rte 82; WB CURTNER Ave; LOOP ON-RAMP TO SB RTE 87
→ WB CAPITOL Expwy; NB ALMADEN Expwy; EB CURTNER Ave TO SB RTE 87

DETOUR PLAN No. 8
LOCATION (9)

TRAFFIC HANDLING PLAN

NO SCALE

FOR NOTE AND LEGEND, SEE SHEET TH-1

THIS PLAN ACCURATE FOR TRAFFIC HANDLING WORK ONLY

TH-4

STATE OF CALIFORNIA - DEPARTMENT OF TRANSPORTATION
Caltrans®
DESIGN

FUNCTIONAL SUPERVISOR: ROLAND AU-YEUNG
CALCULATED-DESIGNED BY: DUC VO
CHECKED BY: JERILYN STRUVEN
REVISED BY
DATE REVISED

LAST REVISION 05-20-09
DATE PLOTTED => 29-OCT-2009
TIME PLOTTED => 06:01

Dist	COUNTY	ROUTE	POST MILES TOTAL PROJECT	SHEET No.	TOTAL SHEETS
04	SCI	85,87	Var	24	67

REGISTERED CIVIL ENGINEER DATE 3-20-09

PLANS APPROVAL DATE 5-26-09

REGISTERED PROFESSIONAL ENGINEER Jerilyn L. Struven No. 49964 Exp. 12-31-10 CIVIL STATE OF CALIFORNIA

THE STATE OF CALIFORNIA OR ITS OFFICERS OR AGENTS SHALL NOT BE RESPONSIBLE FOR THE ACCURACY OR COMPLETENESS OF SCANNED COPIES OF THIS PLAN SHEET.

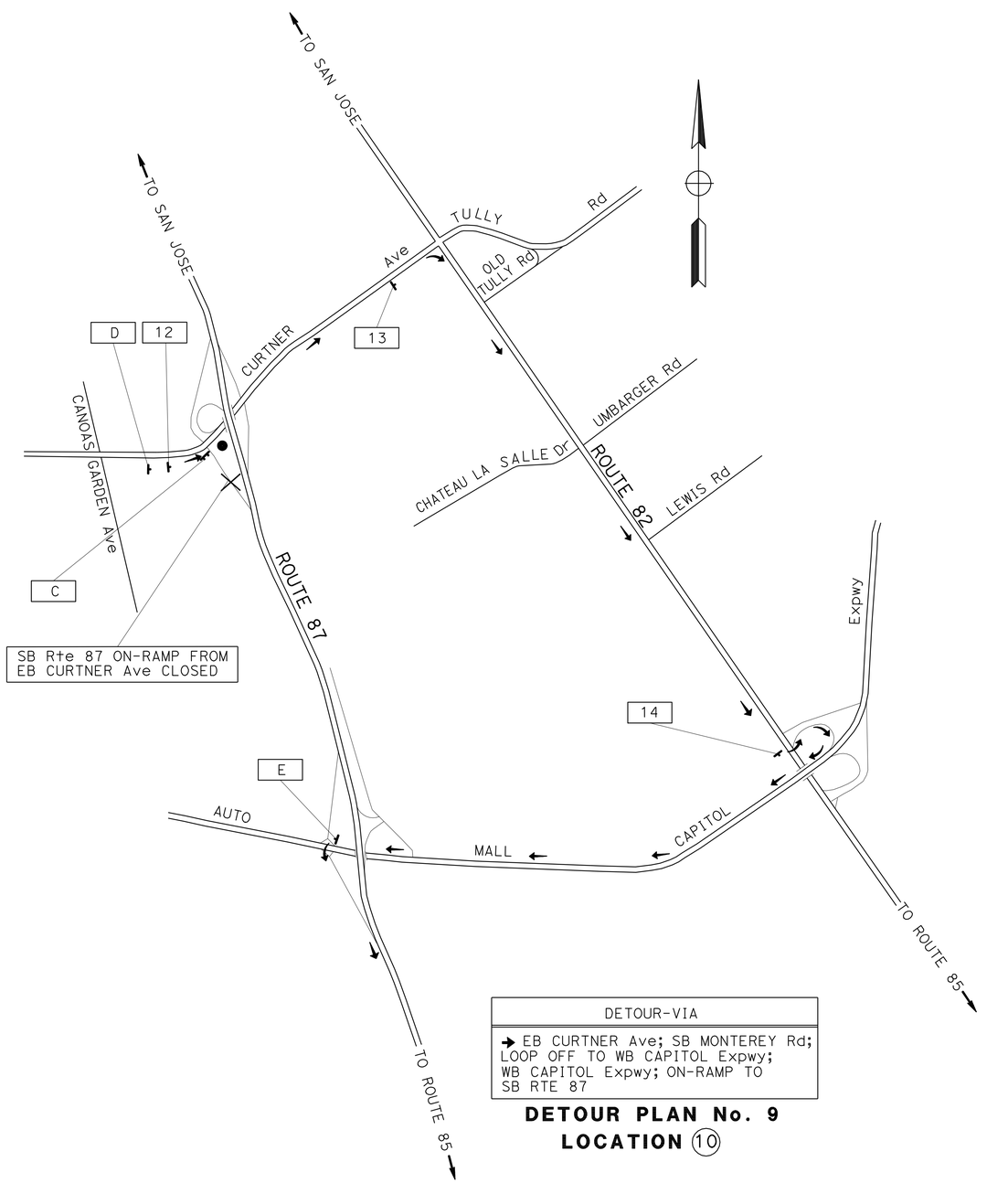

DETOUR-VIA
→ EB CURTNER Ave; SB MONTEREY Rd; LOOP OFF TO WB CAPITOL Expwy; WB CAPITOL Expwy; ON-RAMP TO SB RTE 87

DETOUR PLAN No. 9
LOCATION (10)

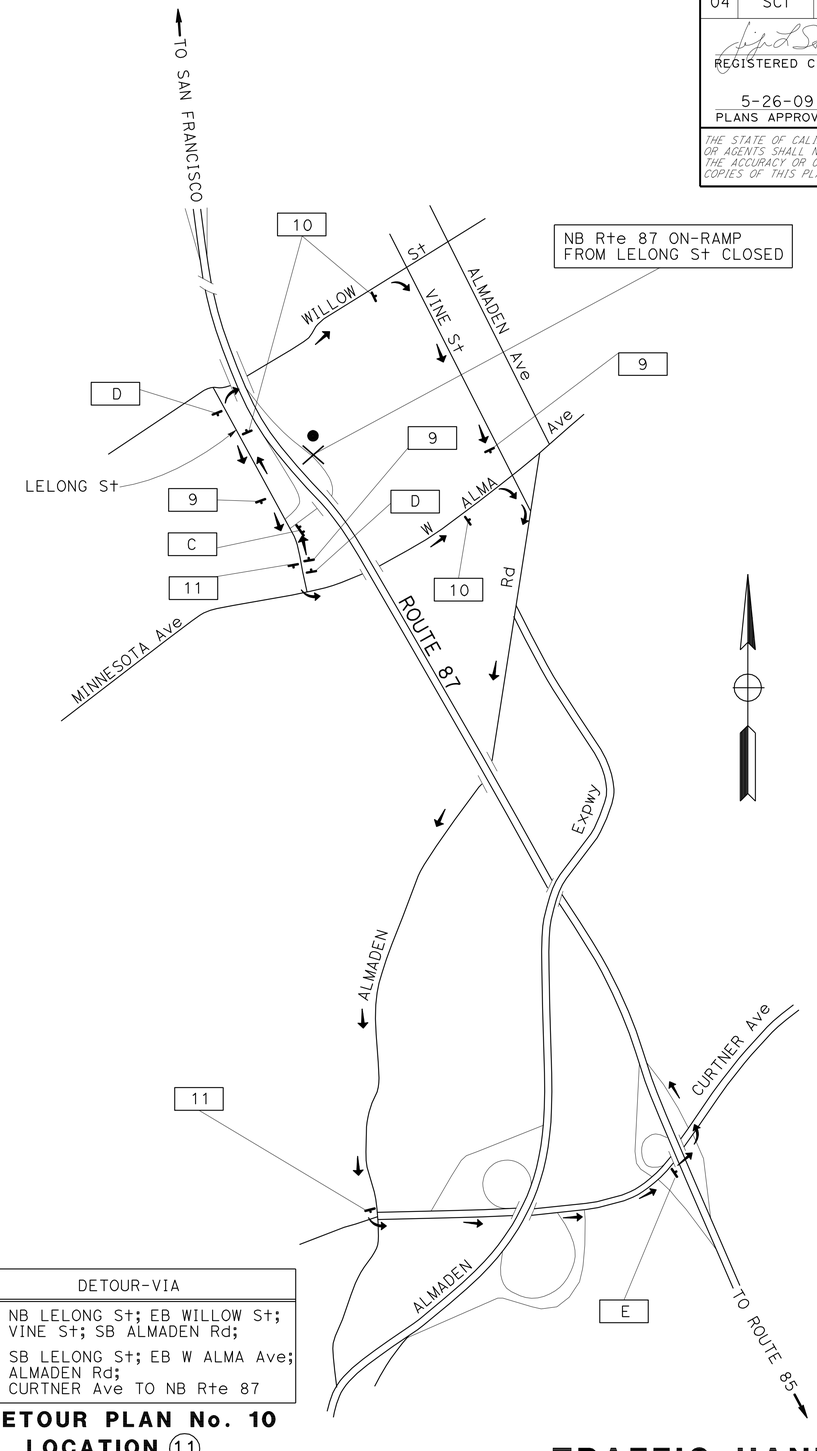

DETOUR-VIA
→ NB LELONG St; EB WILLOW St; SB VINE St; SB ALMADEN Rd;
→ SB LELONG St; EB W ALMA Ave; SB ALMADEN Rd; EB CURTNER Ave TO NB Rte 87

DETOUR PLAN No. 10
LOCATION (11)

FOR NOTE AND LEGEND, SEE SHEET TH-1

THIS PLAN ACCURATE FOR TRAFFIC HANDLING WORK ONLY

TRAFFIC HANDLING PLAN

NO SCALE

TH-5

STATE OF CALIFORNIA - DEPARTMENT OF TRANSPORTATION
Caltrans®
DESIGN

FUNCTIONAL SUPERVISOR: ROLAND AU-YEUNG
CALCULATED-DESIGNED BY: DUC VO
CHECKED BY: JERILYN STRUVEN
REVISED BY
DATE REVISED

LAST REVISION 05-20-09
DATE PLOTTED => 29-OCT-2009
TIME PLOTTED => 06:01

Dist	COUNTY	ROUTE	POST MILES TOTAL PROJECT	SHEET No.	TOTAL SHEETS
04	SCI	85,87	Var	25	67

REGISTERED CIVIL ENGINEER DATE 3-20-09

PLANS APPROVAL DATE 5-26-09

REGISTERED PROFESSIONAL ENGINEER Jerilyn L. Struven No. 49964 Exp. 12-31-10 CIVIL STATE OF CALIFORNIA

THE STATE OF CALIFORNIA OR ITS OFFICERS OR AGENTS SHALL NOT BE RESPONSIBLE FOR THE ACCURACY OR COMPLETENESS OF SCANNED COPIES OF THIS PLAN SHEET.

TRAFFIC HANDLING QUANTITIES

SIGN No.	CODE	MESSAGE	PANEL SIZE INCHES	WOOD POST EA-INCHES	QUANTITY EA	REMARKS
C	SC6-4(CA)	RAMP CLOSED (WITH DATE AND TIME)	60 x 48	2-4 x 6	13	(S)
D	W20-2	DETOUR AHEAD	36 x 36	1-4 x 6	18	(S)
E	M4-8A	END DETOUR	24 x 18	1-4 x 4	11	(S)
1	SC3(CA)	DETOUR (STRAIGHT AHEAD ARROW)	48 x 18	1-4 x 6	3	(S)
	G47(CA)	NORTH	21 x 9			
	G28-2(CA)(85)	ROUTE SHIELD (85)	24 x 25			
2	M4-8	DETOUR	24 x 12	1-4 x 6	4	(S)
	G47(CA)	NORTH	21 x 9			
	G28-2(CA)(85)	ROUTE SHIELD (85)	24 x 25			
	G34(R↑)(CA)	RIGHT ARROW	21 x 15			
3	M4-8	DETOUR	24 x 12	1-4 x 6	3	(S)
	G47(CA)	NORTH	21 x 9			
	G28-2(CA)(85)	ROUTE SHIELD (85)	24 x 25			
	G34(L↑)(CA)	LEFT ARROW	21 x 15			
4	M4-8	DETOUR	24 x 12	1-4 x 6	1	(S)
	G47(CA)	NORTH	21 x 9			
	G28-2(CA)(85)	ROUTE SHIELD (85)	24 x 25			
	G44(↗)(CA)	UPRIGHT DIAGONAL ARROW	21 x 15			
5	SC3(CA)	DETOUR (STRAIGHT AHEAD ARROW)	48 x 18	1-4 x 6	5	(S)
	G48(CA)	SOUTH	21 x 9			
	G28-2(CA)(85)	ROUTE SHIELD (85)	24 x 25			
6	M4-8	DETOUR	24 x 12	1-4 x 6	5	(S)
	G48(CA)	SOUTH	21 x 9			
	G28-2(CA)(85)	ROUTE SHIELD (85)	24 x 25			
	G34(R↑)(CA)	RIGHT ARROW	21 x 15			
7	M4-8	DETOUR	24 x 12	1-4 x 6	8	(S)
	G48(CA)	SOUTH	21 x 9			
	G28-2(CA)(85)	ROUTE SHIELD (85)	24 x 25			
	G34(L↑)(CA)	LEFT ARROW	21 x 15			
8	M4-8	DETOUR	24 x 12	1-4 x 6	3	(S)
	G48(CA)	SOUTH	21 x 9			
	G28-2(CA)(85)	ROUTE SHIELD (85)	24 x 25			
	G44(↗)(CA)	UPRIGHT DIAGONAL ARROW	21 x 15			
9	SC3(CA)	DETOUR (STRAIGHT AHEAD ARROW)	48 x 18	1-4 x 6	3	(S)
	G47(CA)	NORTH	21 x 9			
	G28-2(CA)(87)	ROUTE SHIELD (87)	24 x 25			
10	M4-8	DETOUR	24 x 12	1-4 x 6	3	(S)
	G47(CA)	NORTH	26 x 12			
	G28-2(CA)(87)	ROUTE SHIELD (87)	24 x 25			
	G34(R↑)(CA)	RIGHT ARROW	21 x 15			
11	M4-8	DETOUR	24 x 12	1-4 x 6	2	(S)
	G47(CA)	NORTH	21 x 9			
	G28-2(CA)(87)	ROUTE SHIELD (87)	24 x 25			
	G34(L↑)(CA)	LEFT ARROW	21 x 15			
12	SC3(CA)	DETOUR (STRAIGHT AHEAD ARROW)	48 x 18	1-4 x 6	3	(S)
	G48(CA)	SOUTH	21 x 9			
	G28-2(CA)(87)	ROUTE SHIELD (87)	24 x 25			
13	M4-8	DETOUR	24 x 12	1-4 x 6	4	(S)
	G48(CA)	SOUTH	21 x 9			
	G28-2(CA)(87)	ROUTE SHIELD (87)	24 x 25			
	G34(R↑)(CA)	RIGHT ARROW	21 x 15			
14	M4-8	DETOUR	24 x 12	1-4 x 6	3	(S)
	G48(CA)	SOUTH	21 x 9			
	G28-2(CA)(87)	ROUTE SHIELD (87)	24 x 25			
	G34(L↑)(CA)	LEFT ARROW	21 x 15			
15	M4-8	DETOUR	24 x 12	1-4 x 6	2	(S)
	G48(CA)	SOUTH	21 x 9			
	G28-2(CA)(87)	ROUTE SHIELD (87)	24 x 25			
	G44(↗)(CA)	UPRIGHT DIAGONAL ARROW	21 x 15			
TOTAL					94	

(S) DENOTES STATIONARY MOUNTED SIGN

TRAFFIC HANDLING QUANTITIES

THQ-1

STATE OF CALIFORNIA - DEPARTMENT OF TRANSPORTATION

Caltrans® DESIGN

FUNCTIONAL SUPERVISOR: ROLAND AU-YEUNG

CALCULATED-DESIGNED BY: JERILYN STRUVEN

CHECKED BY: DUC VO

REVISED BY | DATE REVISED

LAST REVISION 05-20-09

DATE PLOTTED => 29-OCT-2009
TIME PLOTTED => 06:02

Dist	COUNTY	ROUTE	POST MILES TOTAL PROJECT	SHEET No.	TOTAL SHEETS
04	SCI	85,87	Var	26	67

REGISTERED CIVIL ENGINEER 3-20-09 DATE

5-26-09
PLANS APPROVAL DATE

REGISTERED PROFESSIONAL ENGINEER Jerilyn L. Struven No. 49964 Exp. 12-31-10 CIVIL STATE OF CALIFORNIA

THE STATE OF CALIFORNIA OR ITS OFFICERS OR AGENTS SHALL NOT BE RESPONSIBLE FOR THE ACCURACY OR COMPLETENESS OF SCANNED COPIES OF THIS PLAN SHEET.

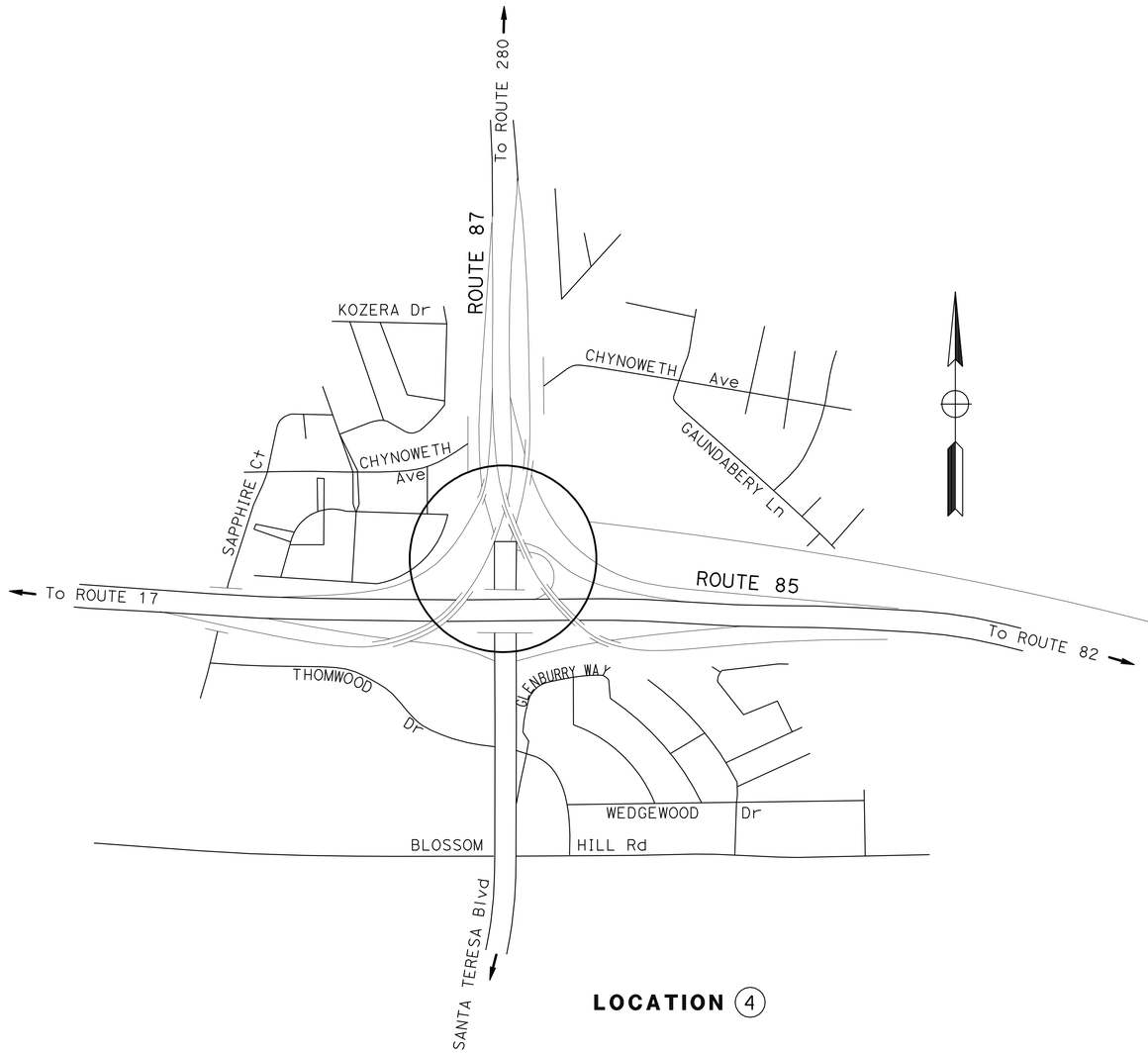

LOCATION (4)

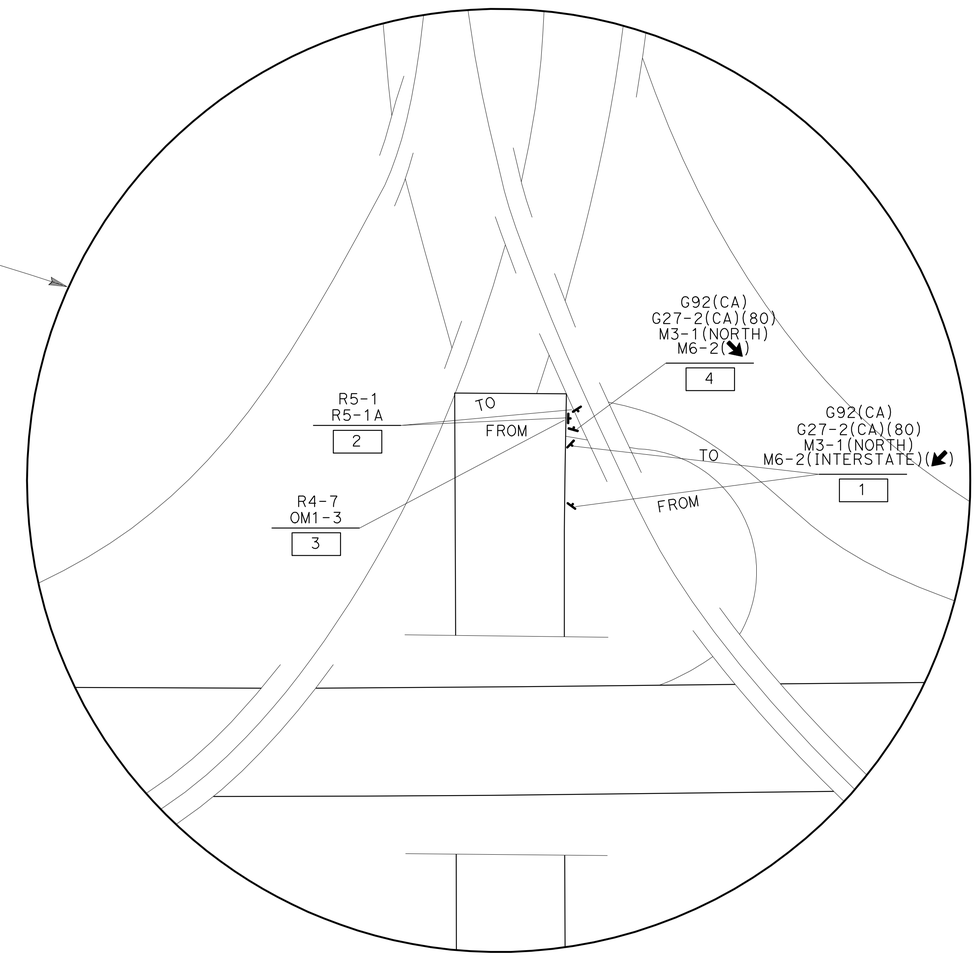

ROADSIDE SIGN QUANTITIES

SIGN No.	CODE	PANEL SIZE (INCHES) (N)	ROADSIDE SIGN RELOCATE EA	INSTALL EA	INSTALL SINGLE SHEET (0.063") SQFT	INSTALL WOOD POST LENGTH (1 POST-4" x 6") (N) FT	REMARKS
1	G92(CA)		1				
	G27-2(CA)(80)						
	M3-1(NORTH)						
	M6-2(↙)						
2	R5-1		1				
	R5-1A						
3	R4-7	24 x 30		1	5	15	SINGLE FACED UNFRAMED ALUMINUM
	OM1-3	18 x 18			2.25		
4	G92(CA)	36 x 14		1	3.5	18	SINGLE FACED UNFRAMED ALUMINUM
	G27-2(CA)(80)	24 x 24			4		
	M3-1(NORTH)	24 x 12			2		
	M6-2(↘)(INTERSTATE)	21 x 15			2.19		
		TOTAL	2	2	18.94		

(N) FOR INFORMATION ONLY, NOT A SEPARATE PAY ITEM.

NOTE:
SEE FIGURE 2E-3a(CA)(P 2E-86, MUTCD 2003) FOR SIGN FACING POSITIONS.

SIGN PLAN
NO SCALE

THIS PLAN ACCURATE FOR SIGN WORK ONLY

S-1

STATE OF CALIFORNIA - DEPARTMENT OF TRANSPORTATION
Caltrans
TRAFFIC

FUNCTIONAL SUPERVISOR: ROLAND AU-YEUNG
CALCULATED-DESIGNED BY: DUC VO
CHECKED BY: JERILYN STRUVEN
REVISED BY
DATE REVISED

LAST REVISION 11-13-08
DATE PLOTTED => 29-OCT-2009
TIME PLOTTED => 06:02

Dist	COUNTY	ROUTE	POST MILES TOTAL PROJECT	SHEET No.	TOTAL SHEETS
04	SCI	85,87	Var	27	67

Peter Aguilera 3-20-09
REGISTERED CIVIL ENGINEER DATE

5-26-09
PLANS APPROVAL DATE

REGISTERED PROFESSIONAL ENGINEER
Peter Aguilera
No. 55287
Exp. 12-31-10
CIVIL
STATE OF CALIFORNIA

THE STATE OF CALIFORNIA OR ITS OFFICERS OR AGENTS SHALL NOT BE RESPONSIBLE FOR THE ACCURACY OR COMPLETENESS OF ELECTRONIC COPIES OF THIS PLAN SHEET.

ROADWAY QUANTITIES

LOCATION	SHEET No.	OBJECT MARKER (TYPE L-1)	MBGR	END ANCHOR ASSSEMBLY (TYPE SFT)	ALTERNATIVE FLARED TERMINAL SYSTEM
		EA	FT	EA	EA
LOCATION 2	L-1	1	162.5	1	1
LOCATION 6	L-2	1	50	1	1
	TOTAL	2	212.5	2	2

SUMMARY OF QUANTITIES

Q-1

STATE OF CALIFORNIA - DEPARTMENT OF TRANSPORTATION
Caltrans
DESIGN

FUNCTIONAL SUPERVISOR
ULDARICO P. PEREZ

CALCULATED-DESIGNED BY
SUSANA ONATE

CHECKED BY
JIM LEM

REVISED BY

DATE REVISED

LAST REVISION 08-12-08
DATE PLOTTED => 29-OCT-2009
TIME PLOTTED => 06:02

Dist	COUNTY	ROUTE	POST MILES TOTAL PROJECT	SHEET No.	TOTAL SHEETS
04	SCI	85,87	Var	28	67

Kenneth Y. Xu 3-20-09
REGISTERED ELECTRICAL ENGINEER DATE

5-26-09
PLANS APPROVAL DATE

REGISTERED PROFESSIONAL ENGINEER Kenneth Y. Xu No. 15219 Exp. 6-30-10 ELECTRICAL STATE OF CALIFORNIA

THE STATE OF CALIFORNIA OR ITS OFFICERS OR AGENTS SHALL NOT BE RESPONSIBLE FOR THE ACCURACY OR COMPLETENESS OF SCANNED COPIES OF THIS PLAN SHEET.

INDEX OF ELECTRICAL PLANS:

SHEET No.	TITLE
E-1	MODIFY TRAFFIC OPERATIONS SYSTEM (ABBREVIATIONS, PROJECT NOTES, INDEX, AND LEGEND)
E-2 THROUGH E-12	MODIFY TRAFFIC OPERATIONS SYSTEM (LOCATION 1 TO LOCATION 11)
E-13	ELECTRICAL DETAILS (SERVICE EQUIPMENT AND TYPICAL WIRING DIAGRAM TYPE III-A SERIES)
E-14 AND E-15	ELECTRICAL DETAILS (TDC WIRING)
E-16 THROUGH E-20	ELECTRICAL DETAILS (CCTV MOUNTING DETAILS)
E-21	ELECTRICAL DETAILS (CCTV REPLACEMENT DETAILS)
E-22	ELECTRICAL DETAILS (FIBER OPTIC LINK INSTALLATION DETAILS)
E-23	ELECTRICAL DETAILS (FIBER OPTIC MARKERS)

GENERAL NOTES:

1. PARTIAL EXISTING ELECTRICAL SYSTEM RELATED TO PROPOSED WORK IS SHOWN ON THE PLANS FOR INFORMATION. LOCATIONS OF EXISTING EQUIPMENT ARE APPROXIMATE.

2. NEW POLES AND CABINETS NOT PROTECTED BY EXISTING OR PROPOSED METAL BEAM GUARD RAIL SHALL BE PLACED A MINIMUM OF 30′ FROM EDGE OF TRAVELED WAY, UNLESS OTHERWISE NOTED.

ABBREVIATIONS AND EQUIPMENT DESIGNATIONS:

(SEE ALSO RSP ES-1A, RSP ES-1B AND RSP ES-1C FOR OTHER SYMBOLS ABBREVIATIONS)

PROPOSED	EXISTING	DESCRIPTION
TC	†c	TELEPHONE CABLE
TVL	†vl	TELEVISION VIDEO CABLE
TVC	†vc	TELEVISION CONTROL CABLE
TVP	†vp	TELEVISION POWER CONDUCTORS
TVCP	†vcp	TELEVISION CONTROL POWER CONDUCTORS
HCC		HYBRID CAMERA CABLE
TOU		TIME-OF-USE
CT ID		CALTRANS IDENTIFICATION NUMBER
DIAG		DIAGONAL

LEGEND:

†sp EXISTING TELEPHONE SERVICE POINT

PROJECT NOTES:

1. INSTALL INTEGRATED CAMERA UNIT WITH TYPE CCTV 40 POLE.
2. RS Exist SERVICE EQUIPMENT ENCLOSURE, INSTALL NEW SERVICE EQUIPMENT ENCLOSURE ON Exist FOUNDATION WITH TOU METER. SEE SERVICE WIRING DIAGRAM ON E-13 (FOR 120/240 V SERVICE).
3. INSTALL CAMERA CONTROL UNIT AND ALL ASSOCIATED EQUIPMENT IN Exist MODEL 334 CONTROLLER CABINET.
4. INSTALL MODEL 334 CABINET. INSTALL ONE SET OF CAMERA CONTROL UNIT AND ALL ASSOCIATED EQUIPMENT IN CABINET.
5. INSTALL 2"C, 1 HCC.
6. INSTALL TELEPHONE DEMARCATION CABINET, TYPE B. FOR WIRING DIAGRAM, SEE SHEET E-14 AND E-15.
7. Exist 1½"C, INSTALL ONE FIBER OPTIC CABLE.
8. Exist 1½"C, 1 †c.
9. INSTALL 2-3"C, 1 HCC, 2#6.
10. INSTALL 1½"C, 2#6 (CCTV CONTROLLER).
11. RC 1 †vl, 1 †vc, 1 †vp, 1 †vcp AND INSTALL 1 HCC.
12. RC 1 †vl, 1 †vc.
13. METAL BEAM GUARD RAILING SEE L-1.
14. INSTALL INTEGRATED CAMERA UNIT WITH TYPE CCTV 80 POLE.
15. Exist ELECTRICAL EQUIPMENT TO REMAIN IN PLACE.
16. Exist 1½"C, INSTALL 1 TC.
17. RS ALL Exist CCTV EQUIPMENT. INSTALL ONE SET OF CAMERA CONTROL UNIT AND ALL ASSOCIATED EQUIPMENT IN Exist MODEL 334 CONTROLLER CABINET.
18. ADD 1 HCC.
19. RS Exist CCTV EQUIPMENT. RL Exist CCTV POLE. INSTALL INTEGRATED CAMERA UNIT.
20. Exist 1½"C, 3#2.
21. Exist 1½"C, 2#6 (240 V, LIGHTING), 2#8 (240 V, SIGN ILLUMINATION), 2#12 (120 V, †dc), 2#12 (120 V, SIGN TEST SWITCH), 5#14 (120 V, PEU), 2#12 (120 V, IRRIGATION), 2#6 (120 V, RM NB LOOP), 2#6 (120 V RM SB DIAG).
22. Exist 1"C, 2#12 (120 V, †dc).
23. Exist 1½"C, 6#6, 2#8, 4#12, 5#14.
24. INSTALL 2"C, 1 TC.
25. INSTALL A PULL ROPE IN EXISTING CONDUIT.
26. Exist 2"C, Exist EQUIPMENT TO REMAIN. INSTALL ONE FIBER OPTIC CABLE IN Exist CONDUIT.
27. INSTALL CAMERA CONTROL UNIT AND ALL ASSOCIATED EQUIPMENT IN Exist MODEL 334 CONTROLLER CABINET. INSTALL ONE FIBER OPTIC TRANSCEIVER IN CABINET, SEE SHEET E-22 FOR INSTALLATION DETAIL.
28. INSTALL ONE FIBER OPTIC RECEIVER IN CABINET, SEE SHEET E-22 FOR INSTALLATION DETAIL.
29. Exist TELEPHONE SERVICE CABLE IN Exist CONDUIT.
30. INSTALL 2"C, TYPE 3, SCHEDULE 80, MT.
31. INSTALL A PULL BOX MARKER AT 1′ AWAY FROM EXISTING PULL BOX, SEE E-23.

MODIFY TRAFFIC OPERATIONS SYSTEM
(ABBREVIATIONS, PROJECT NOTES, INDEX AND LEGEND)

THIS PLAN IS ACCURATE FOR ELECTRICAL WORK ONLY

E-1

REVISED BY | DATE REVISED
HENRY HOANG | DORIS YANG
CALCULATED-DESIGNED BY | CHECKED BY
FUNCTIONAL SUPERVISOR: KENNETH XU

STATE OF CALIFORNIA - DEPARTMENT OF TRANSPORTATION
Caltrans
ELECTRICAL

LAST REVISION 05-18-09 | DATE PLOTTED => 29-OCT-2009 | TIME PLOTTED => 06:02

Dist	COUNTY	ROUTE	POST MILES TOTAL PROJECT	SHEET No.	TOTAL SHEETS
04	SCI	85,87	Var	29	67

Kenneth Y. Xu 3-20-09
REGISTERED ELECTRICAL ENGINEER DATE

5-26-09
PLANS APPROVAL DATE

REGISTERED PROFESSIONAL ENGINEER
Kenneth Y. Xu
No. 15219
Exp. 6-30-10
ELECTRICAL
STATE OF CALIFORNIA

THE STATE OF CALIFORNIA OR ITS OFFICERS OR AGENTS SHALL NOT BE RESPONSIBLE FOR THE ACCURACY OR COMPLETENESS OF SCANNED COPIES OF THIS PLAN SHEET.

FOR COMPLETE RIGHT OF WAY AND ACCURATE ACCESS DATA, SEE RIGHT OF WAY RECORD MAPS AT DISTRICT OFFICE.

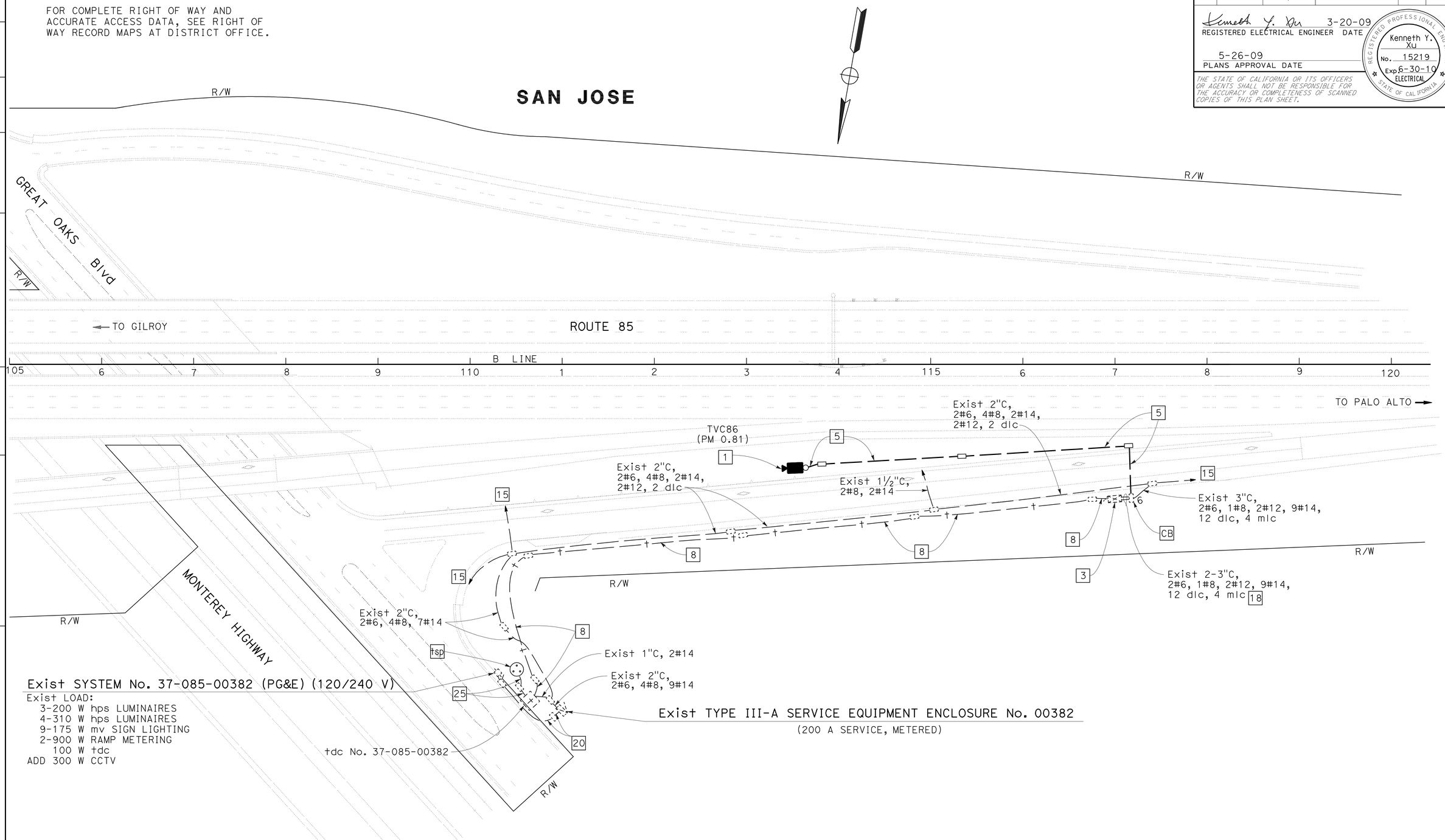

MODIFY TRAFFIC OPERATIONS SYSTEM
(LOCATION 1)

SCALE: 1" = 50'

THIS PLAN IS ACCURATE FOR ELECTRICAL WORK ONLY

FOR NOTES, ABBREVIATIONS AND LEGEND, SEE SHEET E-1

E-2

STATE OF CALIFORNIA - DEPARTMENT OF TRANSPORTATION
Caltrans
ELECTRICAL

FUNCTIONAL SUPERVISOR: KENNETH XU
CALCULATED-DESIGNED BY: HENRY HOANG
CHECKED BY: DORIS YANG
REVISED BY
DATE REVISED

LAST REVISION 05-13-09
DATE PLOTTED => 29-OCT-2009
TIME PLOTTED => 06:02

Dist	COUNTY	ROUTE	POST MILES TOTAL PROJECT	SHEET No.	TOTAL SHEETS
04	SCI	85,87	Var	30	67

REGISTERED ELECTRICAL ENGINEER 3-20-09 DATE

5-26-09
PLANS APPROVAL DATE

REGISTERED PROFESSIONAL ENGINEER Kenneth Y. Xu No. 15219 Exp. 6-30-10 ELECTRICAL STATE OF CALIFORNIA

THE STATE OF CALIFORNIA OR ITS OFFICERS OR AGENTS SHALL NOT BE RESPONSIBLE FOR THE ACCURACY OR COMPLETENESS OF SCANNED COPIES OF THIS PLAN SHEET.

FOR COMPLETE RIGHT OF WAY AND ACCURATE ACCESS DATA, SEE RIGHT OF WAY RECORD MAPS AT DISTRICT OFFICE.

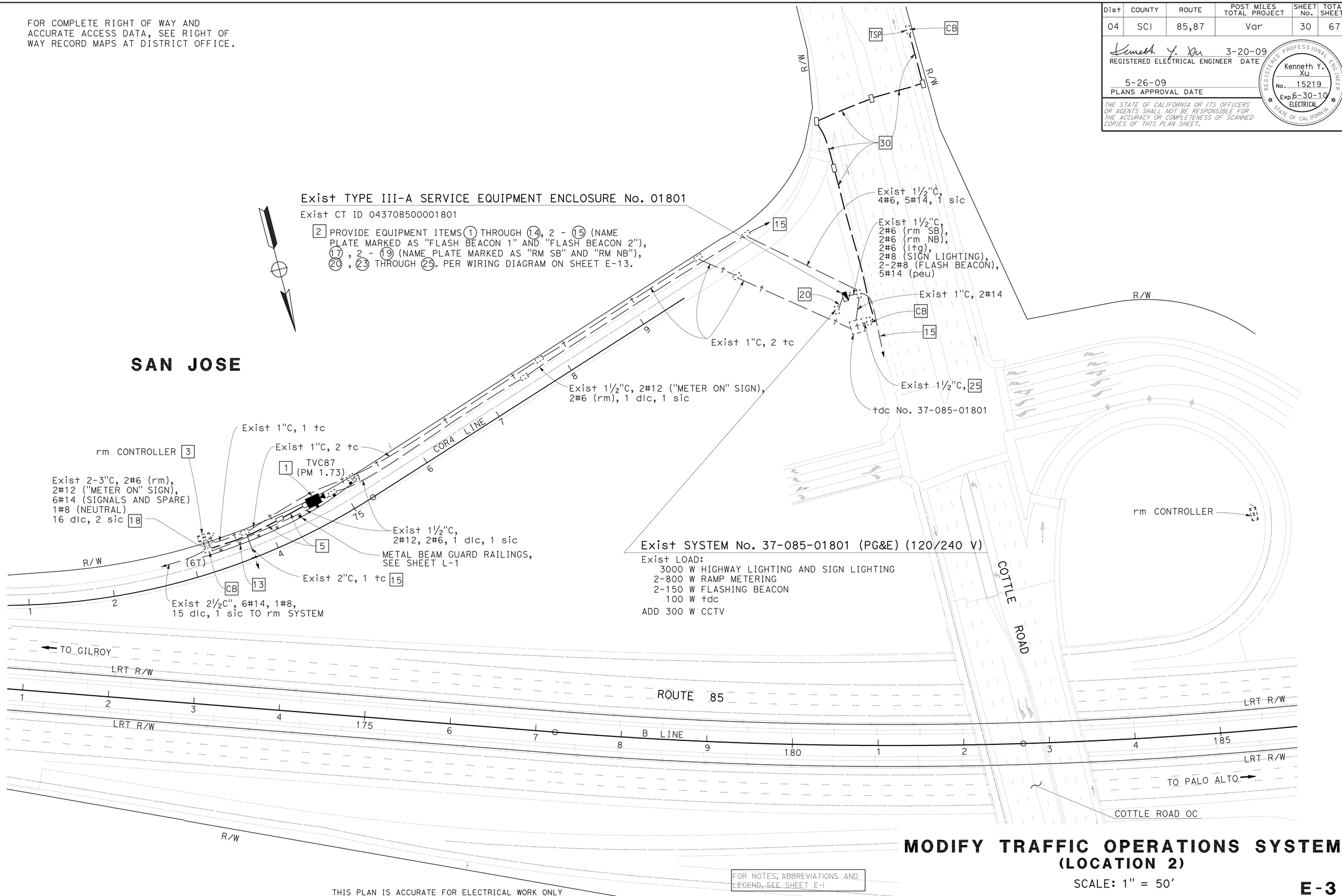

THIS PLAN IS ACCURATE FOR ELECTRICAL WORK ONLY

FOR NOTES, ABBREVIATIONS AND LEGEND, SEE SHEET E-1

MODIFY TRAFFIC OPERATIONS SYSTEM
(LOCATION 2)

SCALE: 1" = 50'

E-3

STATE OF CALIFORNIA - DEPARTMENT OF TRANSPORTATION
Caltrans® ELECTRICAL

FUNCTIONAL SUPERVISOR: ULDARICO P. PEREZ
CALCULATED-DESIGNED BY: HENRY HOANG
CHECKED BY: DORIS YANG
REVISED BY
DATE REVISED

LAST REVISION 05-13-09
DATE PLOTTED => 29-OCT-2009
TIME PLOTTED => 06:02

BORDER LAST REVISED 4/11/2008
RELATIVE BORDER SCALE IS IN INCHES 0 1 2 3
USERNAME => trmikesl
DGN FILE => 415139ua003.dgn
CU 04222
EA 151391

Dist	COUNTY	ROUTE	POST MILES TOTAL PROJECT	SHEET No.	TOTAL SHEETS
04	SCl	85,87	Var	31	67

Kenneth Y. Xu 3-20-09
REGISTERED ELECTRICAL ENGINEER DATE

5-26-09
PLANS APPROVAL DATE

REGISTERED PROFESSIONAL ENGINEER
Kenneth Y. Xu
No. 15219
Exp. 6-30-10
ELECTRICAL
STATE OF CALIFORNIA

THE STATE OF CALIFORNIA OR ITS OFFICERS OR AGENTS SHALL NOT BE RESPONSIBLE FOR THE ACCURACY OR COMPLETENESS OF SCANNED COPIES OF THIS PLAN SHEET.

FOR COMPLETE RIGHT OF WAY AND ACCURATE ACCESS DATA, SEE RIGHT OF WAY RECORD MAPS AT DISTRICT OFFICE.

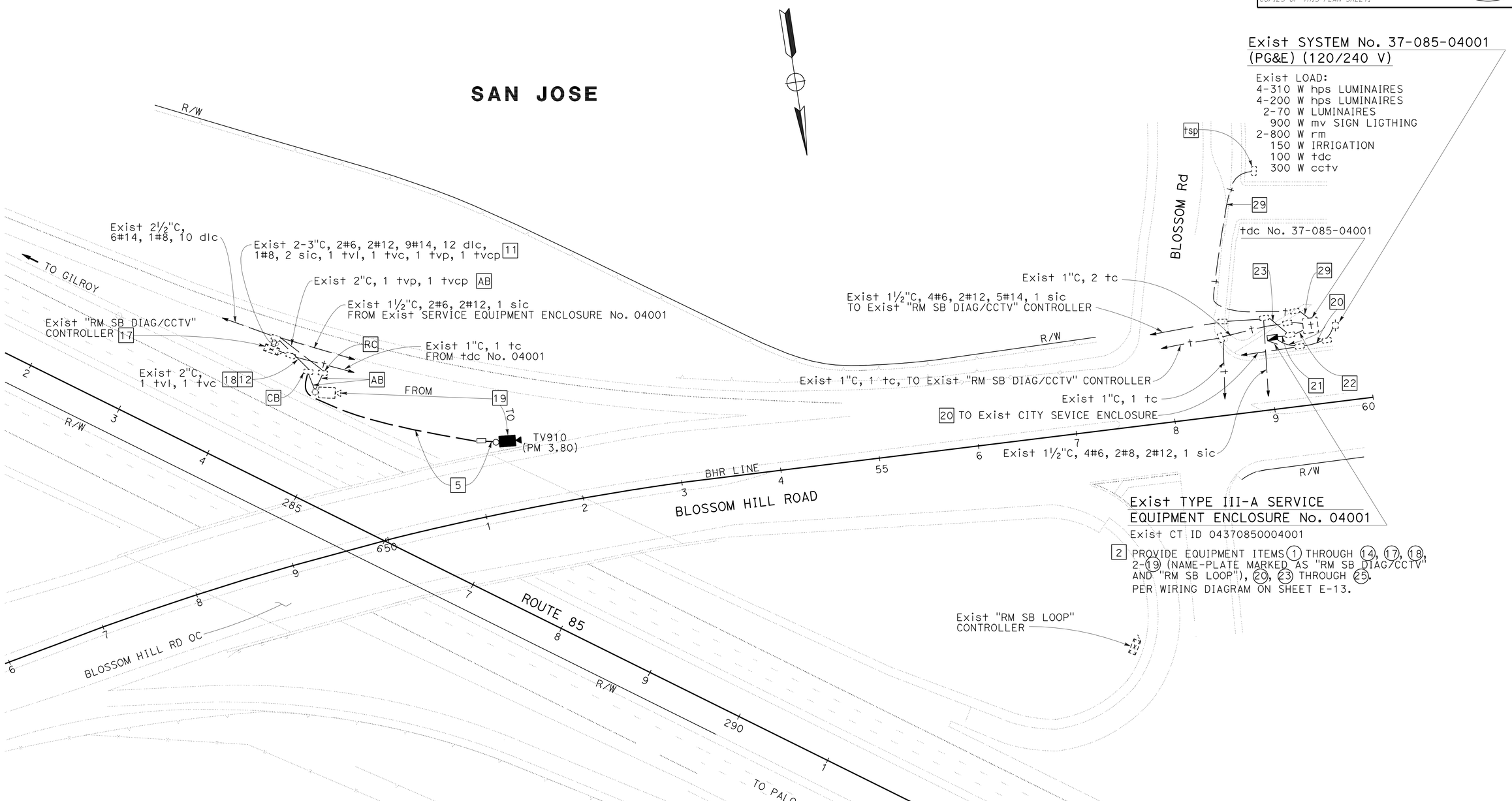

THIS PLAN IS ACCURATE FOR ELECTRICAL WORK ONLY

FOR NOTES, ABBREVIATIONS AND LEGEND, SEE SHEET E-1

MODIFY TRAFFIC OPERATIONS SYSTEM
(LOCATION 3)

SCALE: 1" = 50'

E-4

REVISED BY	DATE REVISED

CALCULATED-DESIGNED BY	CHECKED BY
HENRY HOANG	DORIS YANG

FUNCTIONAL SUPERVISOR: KENNETH XU

STATE OF CALIFORNIA - DEPARTMENT OF TRANSPORTATION
Caltrans
ELECTRICAL

LAST REVISION 05-13-09 | DATE PLOTTED => 29-OCT-2009 | TIME PLOTTED => 06:03

BORDER LAST REVISED 4/11/2008

RELATIVE BORDER SCALE IS IN INCHES 0 1 2 3

USERNAME => trmikesl
DGN FILE => 415139ua004.dgn

CU 04222

EA 151391

Dist	COUNTY	ROUTE	POST MILES TOTAL PROJECT	SHEET No.	TOTAL SHEETS
04	SCI	85,87	Var	32	67

Kenneth Y. Xu 3-20-09
REGISTERED ELECTRICAL ENGINEER DATE

5-26-09
PLANS APPROVAL DATE

REGISTERED PROFESSIONAL ENGINEER
Kenneth Y. Xu
No. 15219
Exp. 6-30-10
ELECTRICAL
STATE OF CALIFORNIA

THE STATE OF CALIFORNIA OR ITS OFFICERS OR AGENTS SHALL NOT BE RESPONSIBLE FOR THE ACCURACY OR COMPLETENESS OF SCANNED COPIES OF THIS PLAN SHEET.

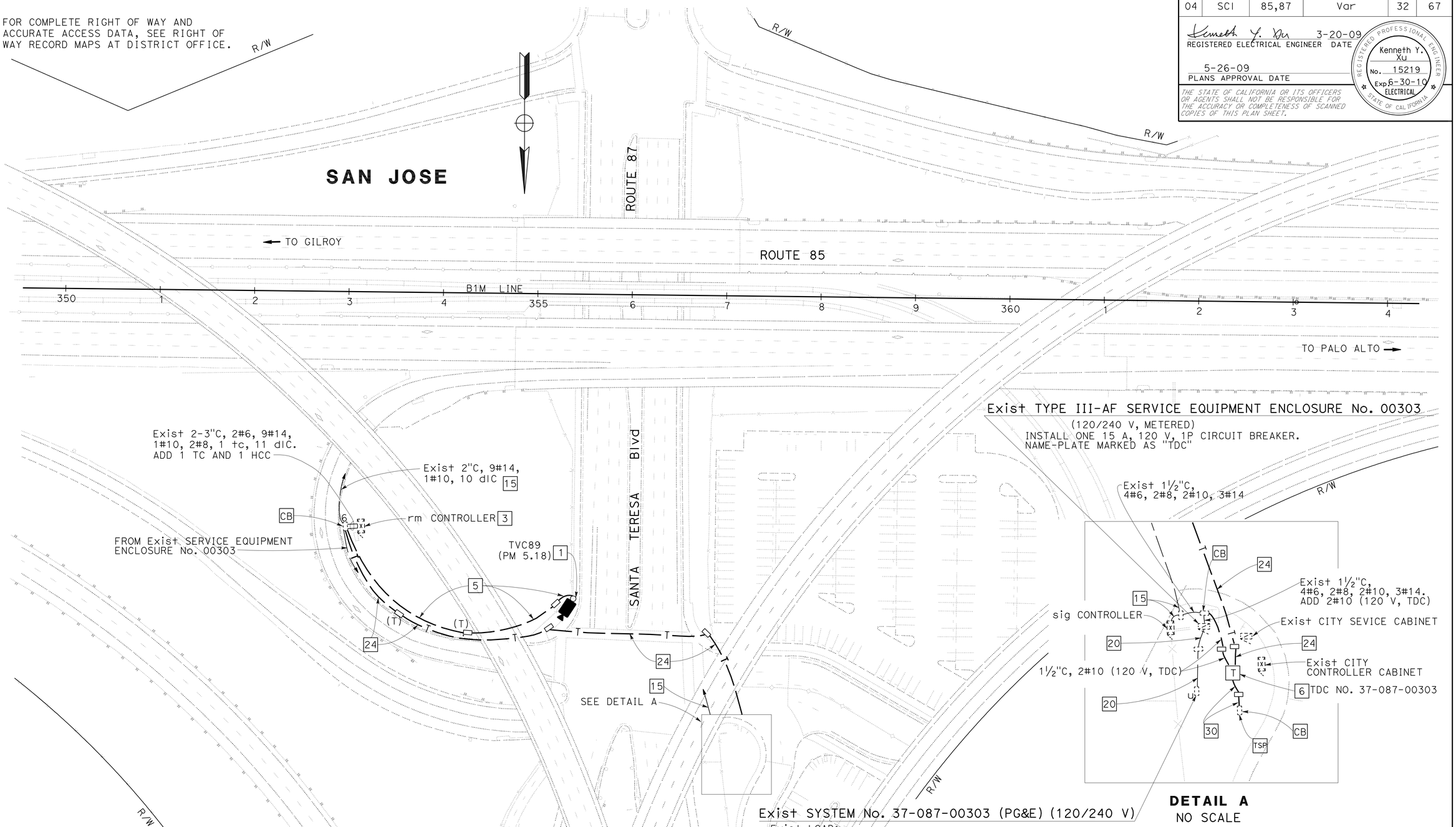

DETAIL A
NO SCALE

MODIFY TRAFFIC OPERATIONS SYSTEM
(LOCATION 4)

SCALE: 1" = 50'

E-5

THIS PLAN IS ACCURATE FOR ELECTRICAL WORK ONLY

FOR NOTES, ABBREVIATIONS AND LEGEND, SEE SHEET E-1

STATE OF CALIFORNIA - DEPARTMENT OF TRANSPORTATION
Caltrans
ELECTRICAL

FUNCTIONAL SUPERVISOR: KENNETH XU
CALCULATED-DESIGNED BY: HENRY HOANG
CHECKED BY: DORIS YANG
REVISED BY
DATE REVISED

LAST REVISION: 05-13-09
DATE PLOTTED => 29-OCT-2009
TIME PLOTTED => 06:03

Dist	COUNTY	ROUTE	POST MILES TOTAL PROJECT	SHEET No.	TOTAL SHEETS
04	SCl	85,87	Var	33	67

Kenneth Y. Xu 3-20-09
REGISTERED ELECTRICAL ENGINEER DATE

5-26-09
PLANS APPROVAL DATE

REGISTERED PROFESSIONAL ENGINEER Kenneth Y. Xu No. 15219 Exp. 6-30-10 ELECTRICAL STATE OF CALIFORNIA

THE STATE OF CALIFORNIA OR ITS OFFICERS OR AGENTS SHALL NOT BE RESPONSIBLE FOR THE ACCURACY OR COMPLETENESS OF SCANNED COPIES OF THIS PLAN SHEET.

FOR COMPLETE RIGHT OF WAY AND ACCURATE ACCESS DATA, SEE RIGHT OF WAY RECORD MAPS AT DISTRICT OFFICE.

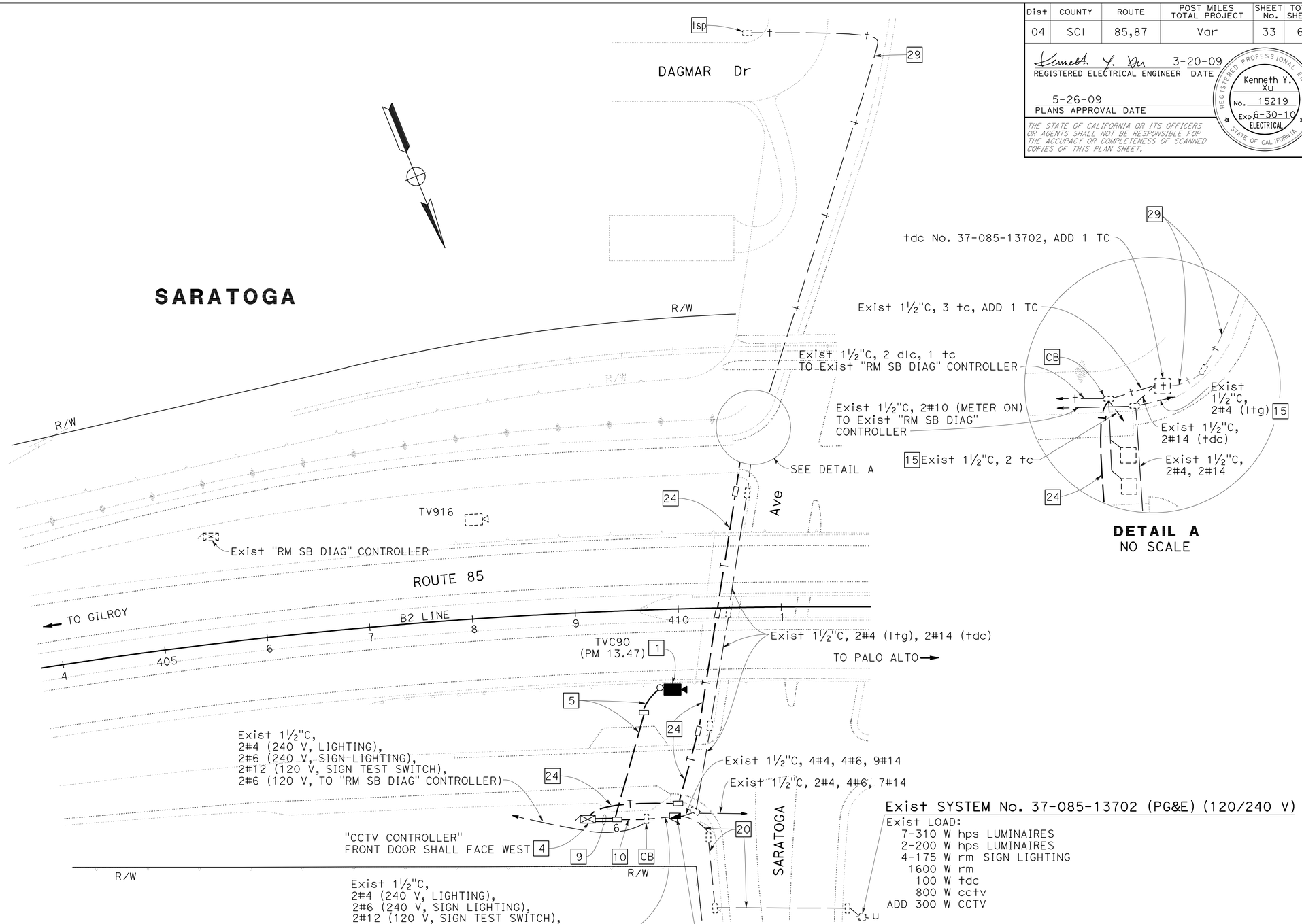

DETAIL A
NO SCALE

MODIFY TRAFFIC OPERATIONS SYSTEM
(LOCATION 5)
SCALE: 1" = 50'

THIS PLAN IS ACCURATE FOR ELECTRICAL WORK ONLY

FOR NOTES, ABBREVIATIONS AND LEGEND, SEE SHEET E-1

E-6

STATE OF CALIFORNIA - DEPARTMENT OF TRANSPORTATION
Caltrans
ELECTRICAL

FUNCTIONAL SUPERVISOR: KENNETH XU
CALCULATED-DESIGNED BY: HENRY HOANG
CHECKED BY: DORIS YANG
REVISED BY
DATE REVISED

LAST REVISION 05-13-09
DATE PLOTTED => 29-OCT-2009
TIME PLOTTED => 06:03

Dist	COUNTY	ROUTE	POST MILES TOTAL PROJECT	SHEET No.	TOTAL SHEETS
04	SCI	85,87	Var	34	67

REGISTERED ELECTRICAL ENGINEER 3-20-09 DATE

5-26-09
PLANS APPROVAL DATE

REGISTERED PROFESSIONAL ENGINEER Kenneth Y. Xu No. 15219 Exp. 6-30-10 ELECTRICAL STATE OF CALIFORNIA

THE STATE OF CALIFORNIA OR ITS OFFICERS OR AGENTS SHALL NOT BE RESPONSIBLE FOR THE ACCURACY OR COMPLETENESS OF SCANNED COPIES OF THIS PLAN SHEET.

FOR COMPLETE RIGHT OF WAY AND ACCURATE ACCESS DATA, SEE RIGHT OF WAY RECORD MAPS AT DISTRICT OFFICE.

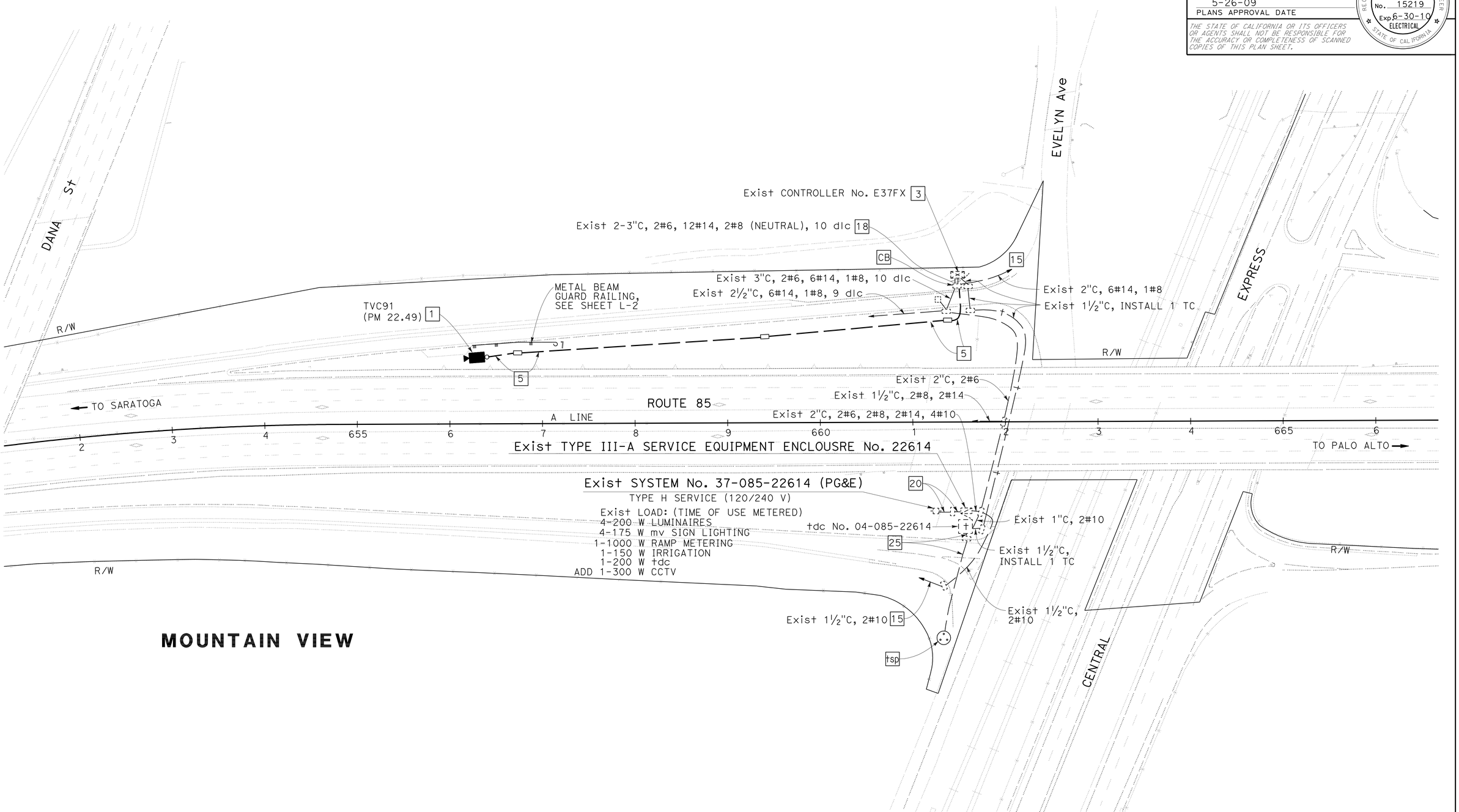

MODIFY TRAFFIC OPERATIONS SYSTEM
(LOCATION 6)

SCALE: 1" = 50'

THIS PLAN IS ACCURATE FOR ELECTRICAL WORK ONLY

FOR NOTES, ABBREVIATIONS AND LEGEND, SEE SHEET E-1

E-7

STATE OF CALIFORNIA - DEPARTMENT OF TRANSPORTATION
ELECTRICAL
FUNCTIONAL SUPERVISOR: KENNETH XU
CALCULATED-DESIGNED BY: HENRY HOANG
CHECKED BY: DORIS YANG
REVISED BY
DATE REVISED

LAST REVISION 05-13-09 DATE PLOTTED => 29-OCT-2009 TIME PLOTTED => 06:03

Dist	COUNTY	ROUTE	POST MILES TOTAL PROJECT	SHEET No.	TOTAL SHEETS
04	SCl	85,87	Var	35	67

Kenneth Y. Xu 3-20-09
REGISTERED ELECTRICAL ENGINEER DATE

5-26-09
PLANS APPROVAL DATE

REGISTERED PROFESSIONAL ENGINEER
Kenneth Y. Xu
No. 15219
Exp. 6-30-10
ELECTRICAL
STATE OF CALIFORNIA

THE STATE OF CALIFORNIA OR ITS OFFICERS OR AGENTS SHALL NOT BE RESPONSIBLE FOR THE ACCURACY OR COMPLETENESS OF SCANNED COPIES OF THIS PLAN SHEET.

FOR COMPLETE RIGHT OF WAY AND ACCURATE ACCESS DATA, SEE RIGHT OF WAY RECORD MAPS AT DISTRICT OFFICE.

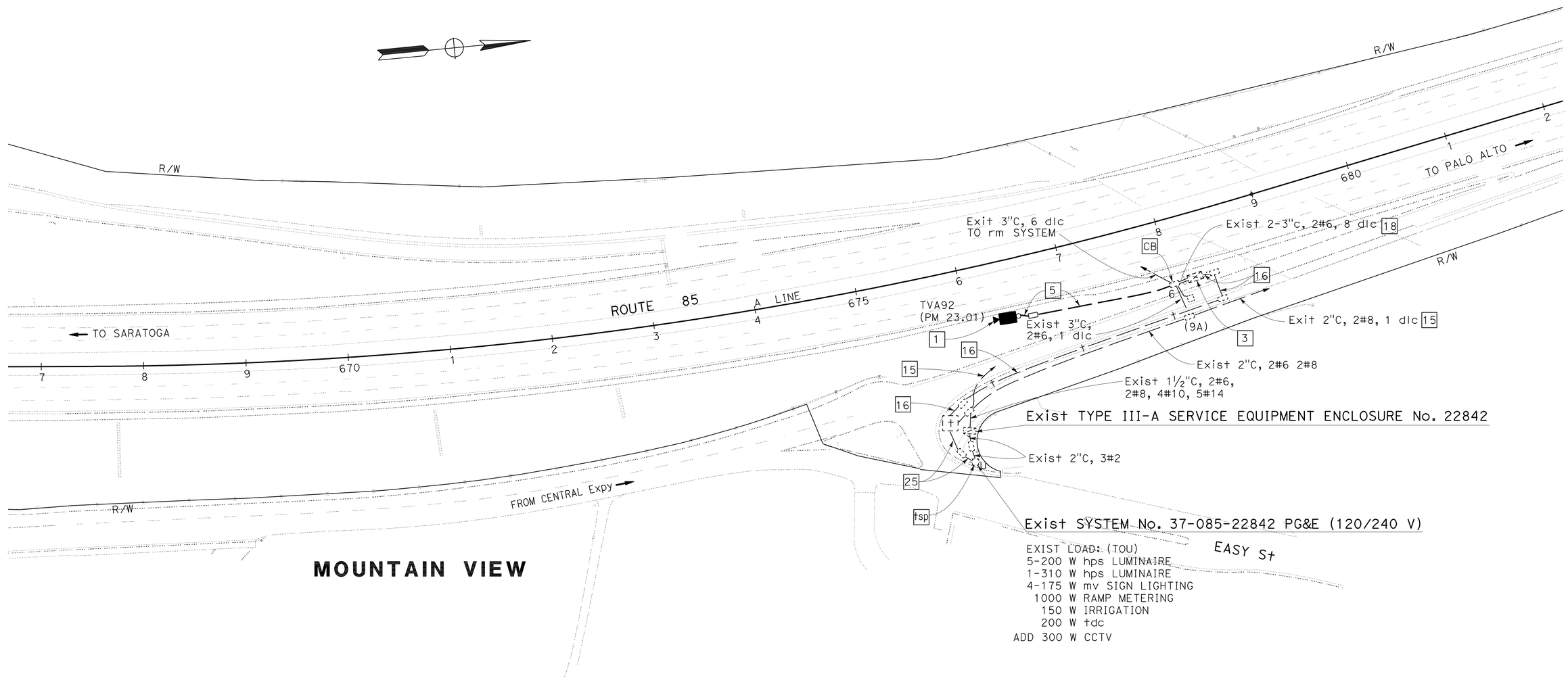

THIS PLAN IS ACCURATE FOR ELECTRICAL WORK ONLY

FOR NOTES, ABBREVIATIONS AND LEGEND, SEE SHEET E-1

MODIFY TRAFFIC OPERATIONS SYSTEM
(LOCATION 7)
SCALE: 1" = 50'

E-8

STATE OF CALIFORNIA - DEPARTMENT OF TRANSPORTATION
Caltrans
ELECTRICAL

FUNCTIONAL SUPERVISOR: KENNETH XU
CALCULATED-DESIGNED BY: HENRY HOANG
CHECKED BY: DORIS YANG
REVISED BY
DATE REVISED

LAST REVISION 05-13-09
DATE PLOTTED => 29-OCT-2009
TIME PLOTTED => 06:03

Dist	COUNTY	ROUTE	POST MILES TOTAL PROJECT	SHEET No.	TOTAL SHEETS
04	SCI	85,87	Var	36	67

Kenneth Y. Xu 3-20-09
REGISTERED ELECTRICAL ENGINEER DATE

5-26-09
PLANS APPROVAL DATE

REGISTERED PROFESSIONAL ENGINEER Kenneth Y. Xu No. 15219 Exp. 6-30-10 ELECTRICAL STATE OF CALIFORNIA

THE STATE OF CALIFORNIA OR ITS OFFICERS OR AGENTS SHALL NOT BE RESPONSIBLE FOR THE ACCURACY OR COMPLETENESS OF SCANNED COPIES OF THIS PLAN SHEET.

FOR COMPLETE RIGHT OF WAY AND ACCURATE ACCESS DATA, SEE RIGHT OF WAY RECORD MAPS AT DISTRICT OFFICE.

MOUNTAIN VIEW

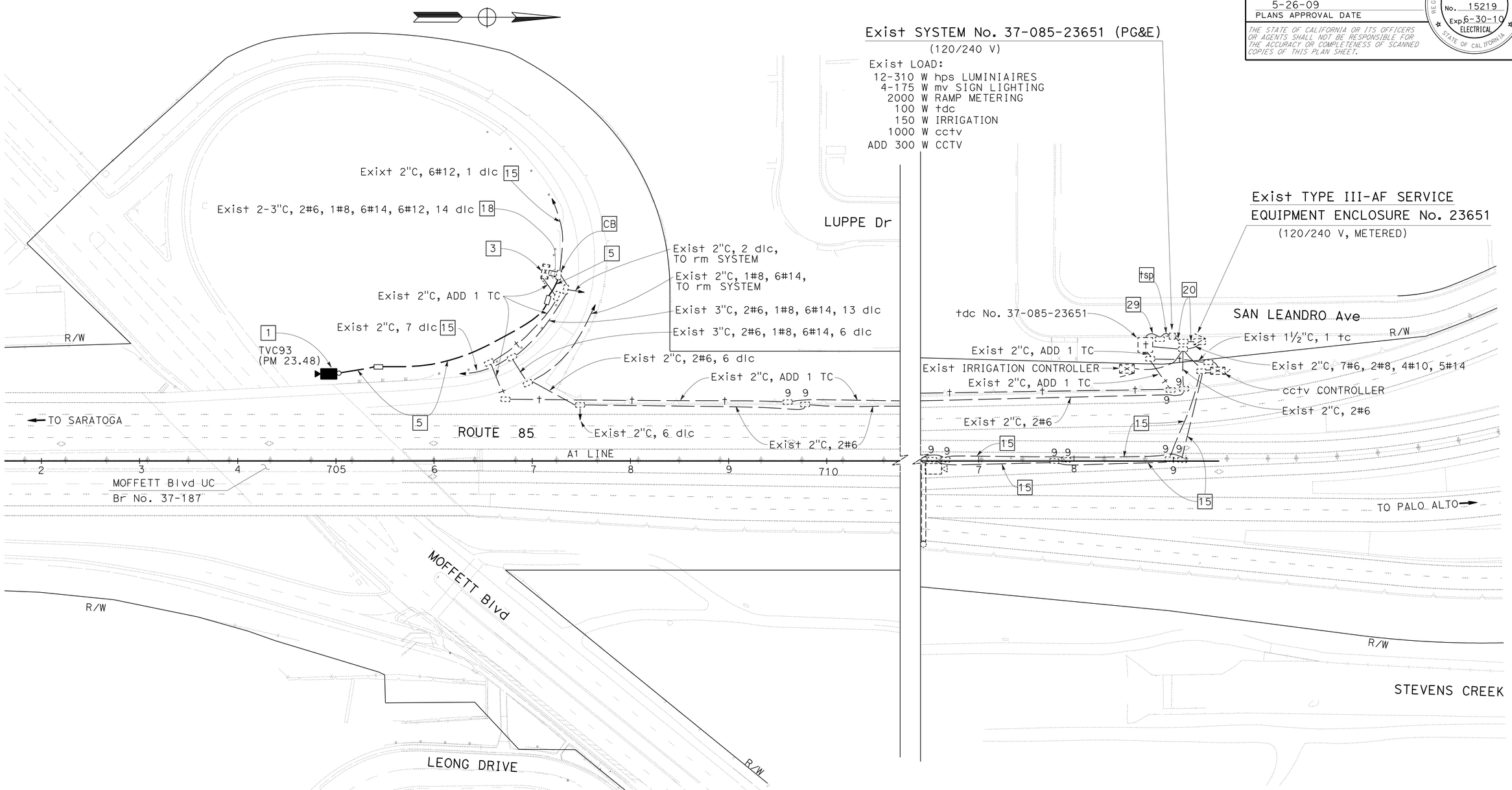

THIS PLAN IS ACCURATE FOR ELECTRICAL WORK ONLY

FOR NOTES, ABBREVIATIONS AND LEGEND, SEE SHEET E-1

MODIFY TRAFFIC OPERATIONS SYSTEM
(LOCATION 8)

SCALE: 1" = 50'

E-9

REVISED BY	DATE REVISED
HENRY HOANG	DORIS YANG
CALCULATED-DESIGNED BY	CHECKED BY
FUNCTIONAL SUPERVISOR	KENNETH XU

STATE OF CALIFORNIA - DEPARTMENT OF TRANSPORTATION
Caltrans
ELECTRICAL

LAST REVISION 05-13-09
DATE PLOTTED => 29-OCT-2009
TIME PLOTTED => 06:03

Dist	COUNTY	ROUTE	POST MILES TOTAL PROJECT	SHEET No.	TOTAL SHEETS
04	SCI	85,87	Var	37	67

REGISTERED ELECTRICAL ENGINEER 3-20-09 DATE

5-26-09
PLANS APPROVAL DATE

REGISTERED PROFESSIONAL ENGINEER Kenneth Y. Xu No. 15219 Exp. 6-30-10 ELECTRICAL STATE OF CALIFORNIA

THE STATE OF CALIFORNIA OR ITS OFFICERS OR AGENTS SHALL NOT BE RESPONSIBLE FOR THE ACCURACY OR COMPLETENESS OF SCANNED COPIES OF THIS PLAN SHEET.

FOR COMPLETE RIGHT OF WAY AND ACCURATE ACCESS DATA, SEE RIGHT OF WAY RECORD MAPS AT DISTRICT OFFICE.

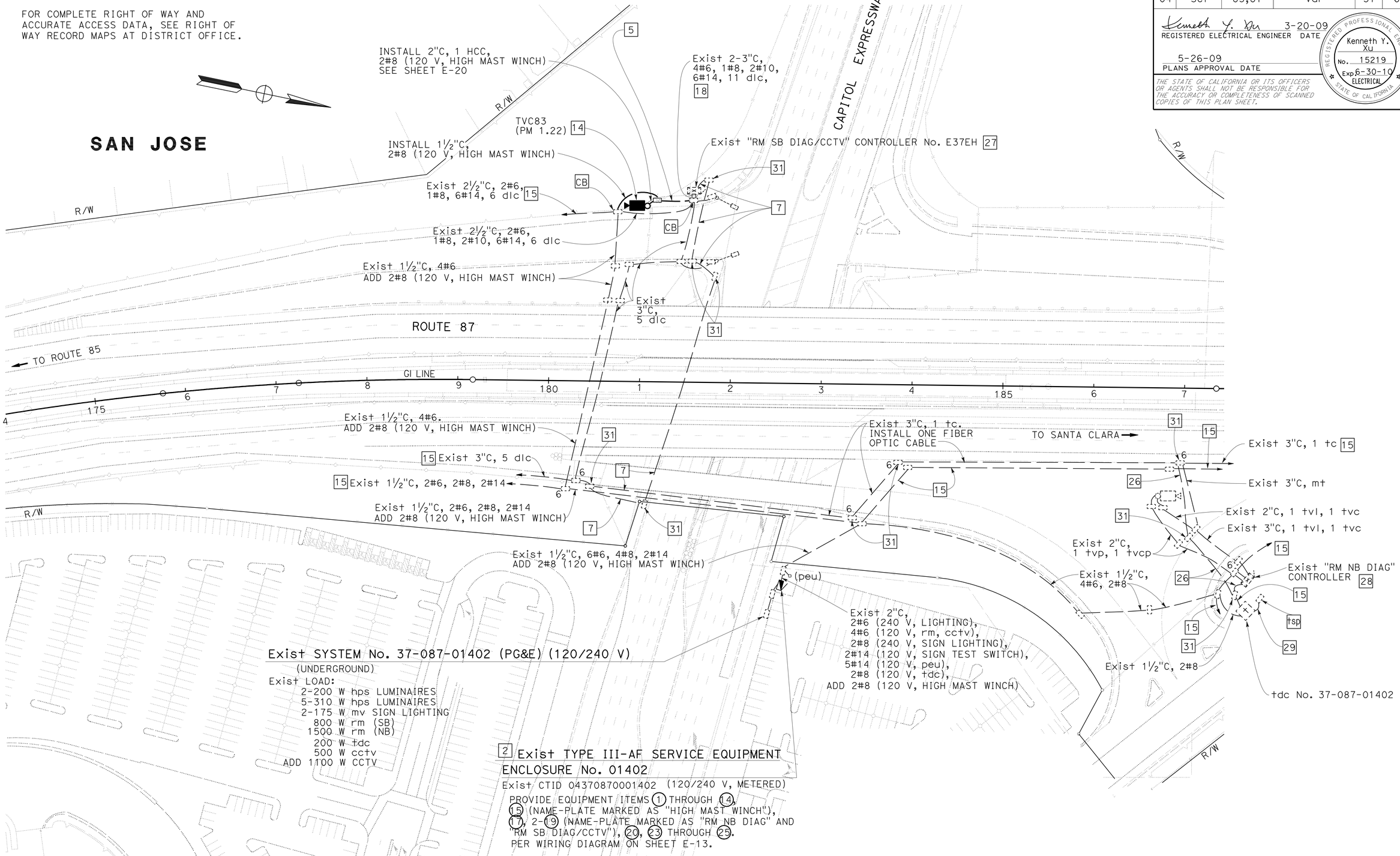

THIS PLAN IS ACCURATE FOR ELECTRICAL WORK ONLY

FOR NOTES, ABBREVIATIONS AND LEGEND, SEE SHEET E-1

MODIFY TRAFFIC OPERATIONS SYSTEM
(LOCATION 9)

SCALE: 1" = 50'

E-10

REVISED BY | DATE REVISED
HENRY HOANG | DORIS YANG
CALCULATED-DESIGNED BY | CHECKED BY
FUNCTIONAL SUPERVISOR: KENNETH XU

STATE OF CALIFORNIA - DEPARTMENT OF TRANSPORTATION
Caltrans
ELECTRICAL

LAST REVISION 05-15-09 | DATE PLOTTED => 29-OCT-2009 | TIME PLOTTED => 06:04

Dist	COUNTY	ROUTE	POST MILES TOTAL PROJECT	SHEET No.	TOTAL SHEETS
04	SCI	85,87	Var	38	67

REGISTERED ELECTRICAL ENGINEER 3-20-09 DATE

5-26-09
PLANS APPROVAL DATE

REGISTERED PROFESSIONAL ENGINEER Kenneth Y. Xu No. 15219 Exp. 6-30-10 ELECTRICAL STATE OF CALIFORNIA

THE STATE OF CALIFORNIA OR ITS OFFICERS OR AGENTS SHALL NOT BE RESPONSIBLE FOR THE ACCURACY OR COMPLETENESS OF SCANNED COPIES OF THIS PLAN SHEET.

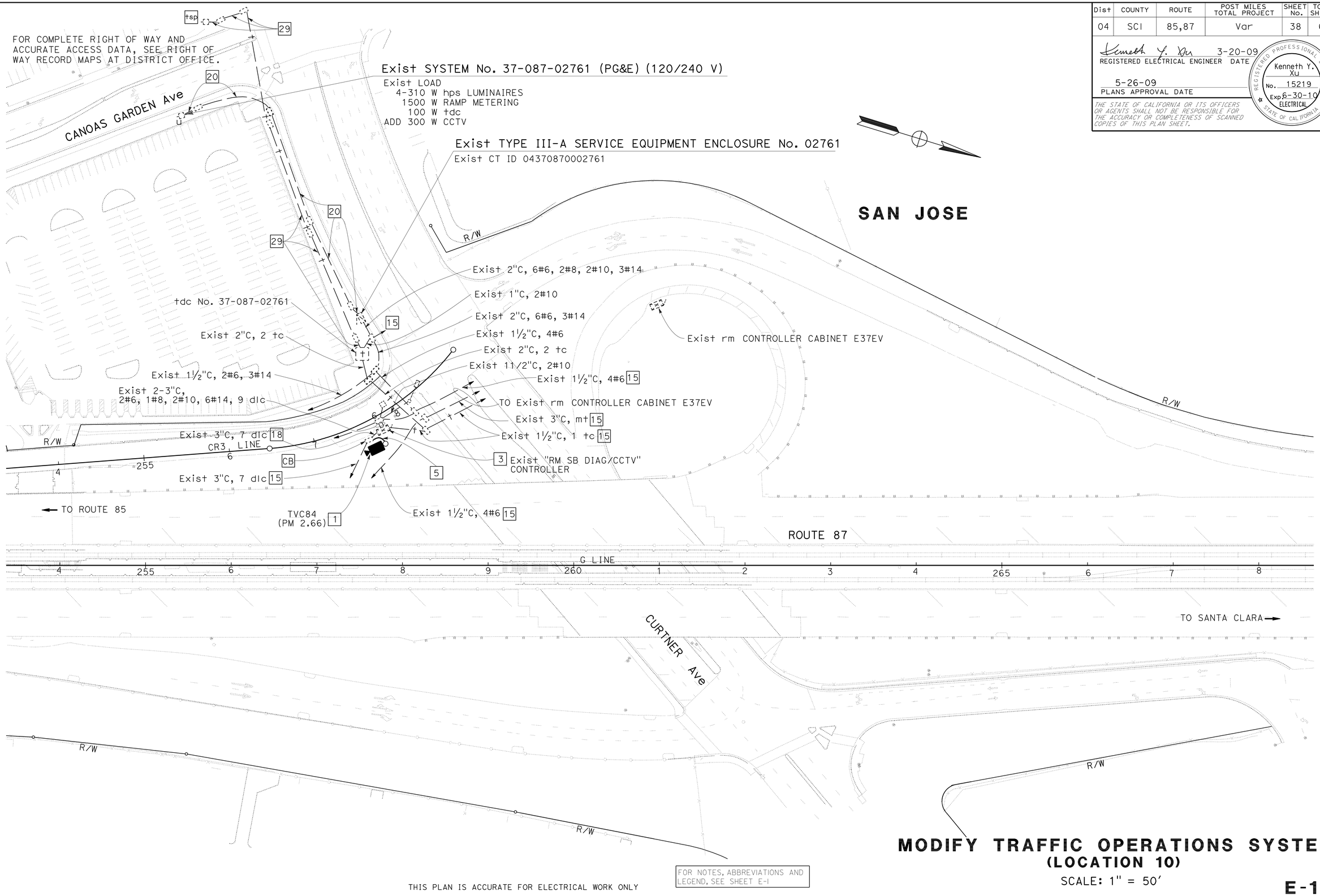

THIS PLAN IS ACCURATE FOR ELECTRICAL WORK ONLY

FOR NOTES, ABBREVIATIONS AND LEGEND, SEE SHEET E-1

MODIFY TRAFFIC OPERATIONS SYSTEM
(LOCATION 10)

SCALE: 1" = 50'

E-11

STATE OF CALIFORNIA - DEPARTMENT OF TRANSPORTATION
Caltrans
ELECTRICAL

FUNCTIONAL SUPERVISOR: KENNETH XU
CALCULATED-DESIGNED BY: HENRY HOANG
CHECKED BY: DORIS YANG
REVISED BY
DATE REVISED

LAST REVISION 05-13-09
DATE PLOTTED => 29-OCT-2009
TIME PLOTTED => 06:04

Dist	COUNTY	ROUTE	POST MILES TOTAL PROJECT	SHEET No.	TOTAL SHEETS
04	SCl	85,87	Var	39	67

REGISTERED ELECTRICAL ENGINEER 3-20-09 DATE

5-26-09
PLANS APPROVAL DATE

REGISTERED PROFESSIONAL ENGINEER Kenneth Y. Xu No. 15219 Exp. 6-30-10 ELECTRICAL STATE OF CALIFORNIA

THE STATE OF CALIFORNIA OR ITS OFFICERS OR AGENTS SHALL NOT BE RESPONSIBLE FOR THE ACCURACY OR COMPLETENESS OF SCANNED COPIES OF THIS PLAN SHEET.

FOR COMPLETE RIGHT OF WAY AND ACCURATE ACCESS DATA, SEE RIGHT OF WAY RECORD MAPS AT DISTRICT OFFICE.

Exist TYPE III-A SERVICE EQUIPMENT ENCLOSURE No. 04233

Exist LOAD (120/240 V, TOU METERED)
3-200 W hps LUMINAIRES
5-70 W hps SOFFIT LUMINAIRES
4-150 W IRRIGATION
200 W tdc
500 W TRAFFIC MONITORING
1000 W RAMP METERING
ADD 300 W CCTV

Exist SYSTEM No. 37-087-04233 (PG&E)
(120/240 V, TOU METERED)

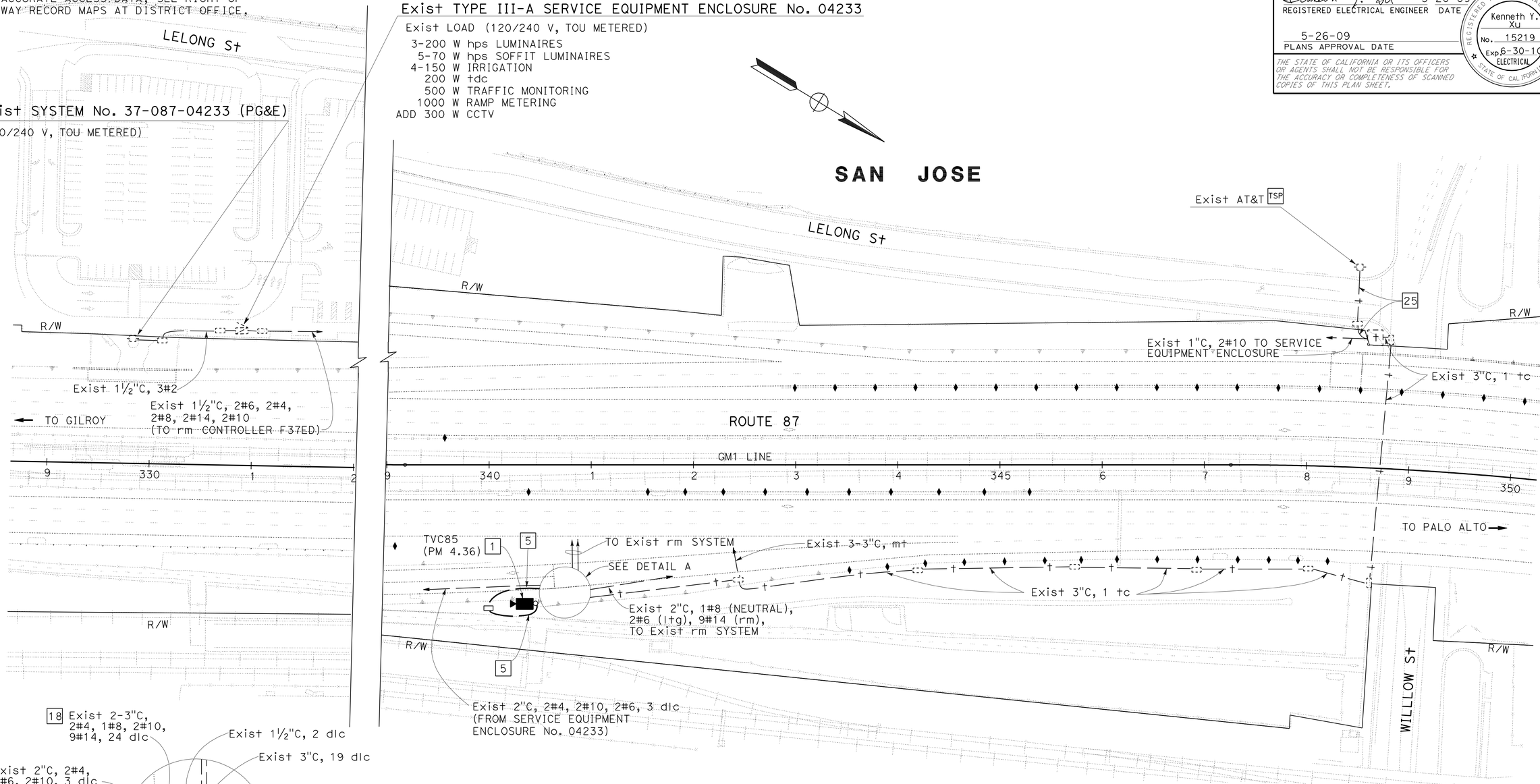

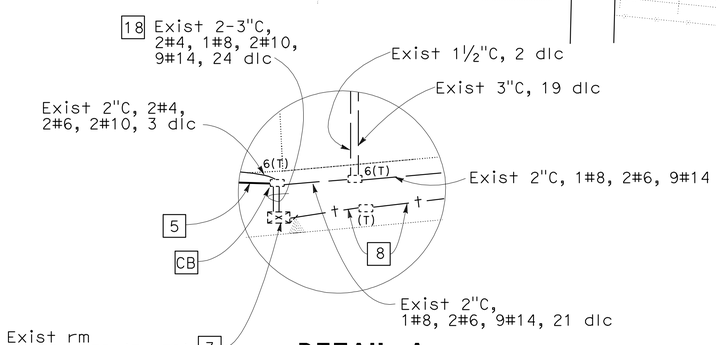

DETAIL A
NO SCALE

THIS PLAN IS ACCURATE FOR ELECTRICAL WORK ONLY

FOR NOTES, ABBREVIATIONS AND LEGEND, SEE SHEET E-1

MODIFY TRAFFIC OPERATIONS SYSTEM
(LOCATION 11)

SCALE: 1" = 50'

E-12

STATE OF CALIFORNIA - DEPARTMENT OF TRANSPORTATION
Caltrans
ELECTRICAL

FUNCTIONAL SUPERVISOR: KENNETH XU
CALCULATED-DESIGNED BY: HENRY HOANG
CHECKED BY: DORIS YANG
REVISED BY
DATE REVISED

LAST REVISION 05-13-09
DATE PLOTTED => 29-OCT-2009
TIME PLOTTED => 06:04

Dist	COUNTY	ROUTE	POST MILES TOTAL PROJECT	SHEET No.	TOTAL SHEETS
04	SCI	85,87	Var	40	67

REGISTERED ELECTRICAL ENGINEER 3-20-09 DATE

5-26-09
PLANS APPROVAL DATE

REGISTERED PROFESSIONAL ENGINEER Kenneth Y. Xu No. 15219 Exp. 6-30-10 ELECTRICAL STATE OF CALIFORNIA

THE STATE OF CALIFORNIA OR ITS OFFICERS OR AGENTS SHALL NOT BE RESPONSIBLE FOR THE ACCURACY OR COMPLETENESS OF SCANNED COPIES OF THIS PLAN SHEET.

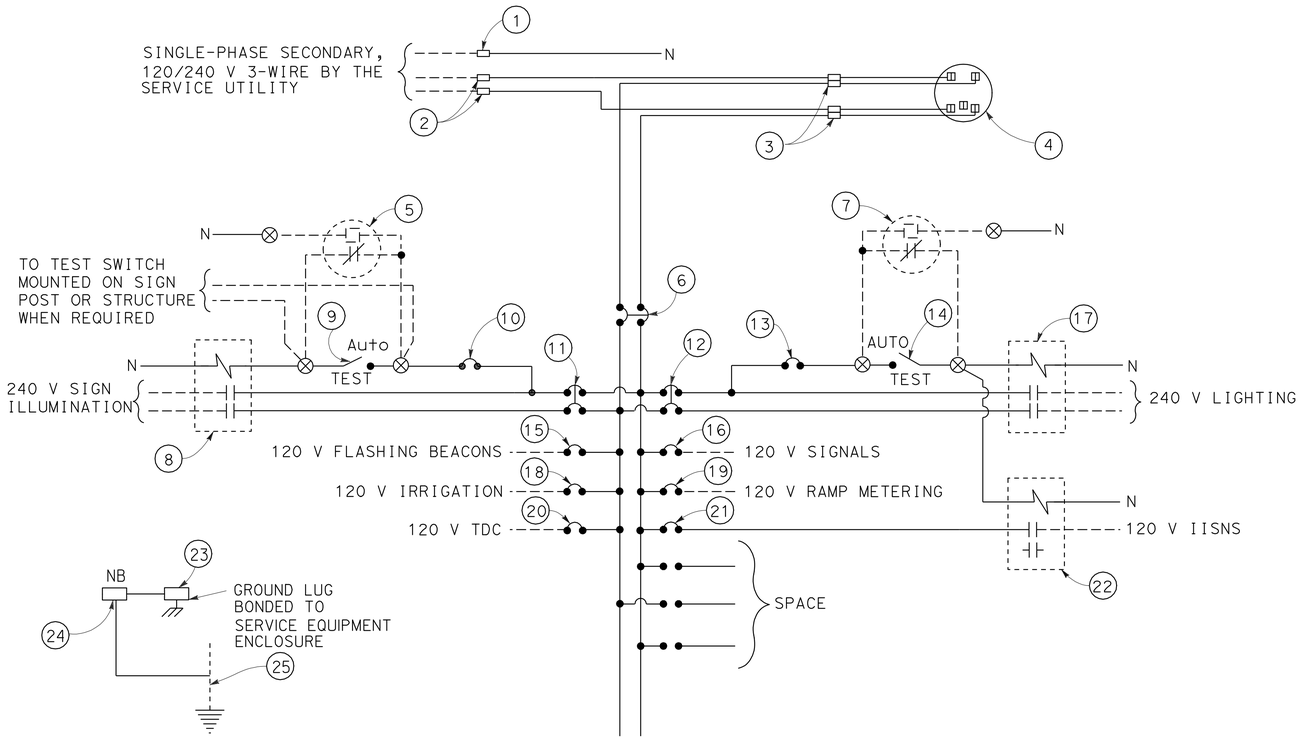

120/240 V SERVICE WIRING DIAGRAM (TYPICAL)

NOTES: (FOR SERVICE EQUIPMENT)

1. VOLTAGE RATINGS OF SERVICE EQUIPMENT SHALL CONFORM TO THE SERVICE VOLTAGES INDICATED ON THE PLANS.
2. UNLESS OTHERWISE INDICATED ON THE PLANS, ALL SERVICE EQUIPMENT ITEMS SHALL BE PROVIDED FOR EACH SERVICE EQUIPMENT ENCLOSURE AS SHOWN.
3. ITEM No. 1 AND 24 SHALL BE ISOLATED FROM THE CABINET.
4. METER SOCKETS SHALL BE 5 CLIP TYPE.
5. PHOTOELECTRIC CONTROL SHALL BE TYPE II.

TYPE III-A SERVICE (120/240 V) EQUIPMENT LEGEND

ITEM No.	COMPONENT	NAMEPLATE DESCRIPTION
1	NEUTRAL LUG	
2	LANDING LUG	
3	TEST BYPASS FACILITY	
4	METER SOCKET AND SUPPORT	
5	PHOTOELECTRIC UNIT	
6	100 A, 240 V, 2P, CB	MAIN BREAKER
7	PHOTOELECTRIC UNIT	
8	30 A, 2PNO, CONTACTOR	SIGN ILLUMINATION
9	15 A, 1P, TEST SWITCH	SIGN ILLUMINATION TEST SWITCH
10	15 A, 120 V, 1P, CB	SIGN ILLUMINATION CONTROL
11	30 A, 240 V, 2P, CB	SIGN ILLUMINATION
12	30 A, 240 V, 2P, CB	LIGHTING
13	15 A, 120 V, 1P, CB	LIGHTING CONTROL

ITEM No.	COMPONENT	NAMEPLATE DESCRIPTION
14	15 A, 1P, TEST SWITCH	LIGHTING CONTROL TEST SWITCH
15	15 A, 120 V, 1P, CB	FLASHING BEACON
16	50 A, 120 V, 1P, CB	SIGNALS
17	30 A, 2PNO, CONTACTOR	LIGHTING
18	20 A, 120 V, 1P, CB	IRRIGATION
19	30 A, 120 V, 1P, CB	RAMP METERING
20	15 A, 120 V, 1P, CB	TELEPHONE DEMARCATION CABINET
21	15 A, 120 V, 1P, CB	IISNS
22	30 A, 2PNO, CONTACTOR	IISNS
23	GROUND LUG	
24	SOLID NEUTRAL TERMINAL STRIP	
25	GROUNDING ELECTRODE	

MODIFY TRAFFIC OPERATIONS SYSTEM
(SERVICE EQUIPMENT AND TYPICAL WIRING DIAGRAM TYPE III-A SERIES)

NO SCALE

THIS PLAN IS ACCURATE FOR ELECTRICAL WORK ONLY

FOR NOTES, ABBREVIATIONS AND LEGEND, SEE SHEET E-1

E-13

REVISED BY | DATE REVISED
HENRY HOANG | DORIS YANG
CALCULATED-DESIGNED BY | CHECKED BY
FUNCTIONAL SUPERVISOR
KENNETH XU

STATE OF CALIFORNIA - DEPARTMENT OF TRANSPORTATION
Caltrans
ELECTRICAL

LAST REVISION 05-15-09 | DATE PLOTTED => 29-OCT-2009 | TIME PLOTTED => 06:04

Dist	COUNTY	ROUTE	POST MILES TOTAL PROJECT	SHEET No.	TOTAL SHEETS
04	SCI	85,87	Var	41	67

REGISTERED ELECTRICAL ENGINEER 3-20-09 DATE

5-26-09
PLANS APPROVAL DATE

REGISTERED PROFESSIONAL ENGINEER Michael P. Lee No. 13435 Exp 9-30-10 ELECTRICAL STATE OF CALIFORNIA

THE STATE OF CALIFORNIA OR ITS OFFICERS OR AGENTS SHALL NOT BE RESPONSIBLE FOR THE ACCURACY OR COMPLETENESS OF SCANNED COPIES OF THIS PLAN SHEET.

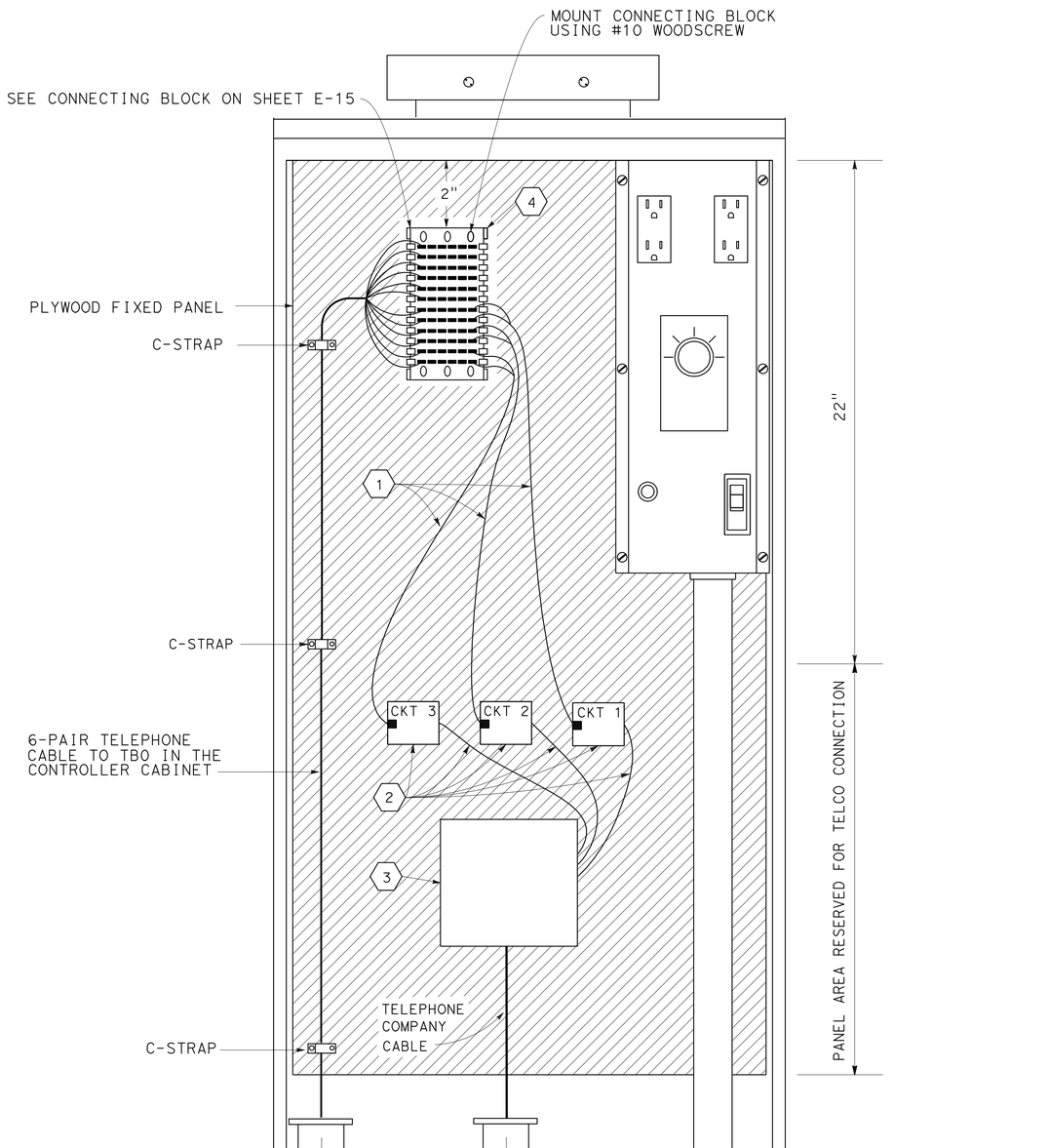

TELEPHONE DEMARCATION CABINET, TYPE B WIRING DETAIL

SEE RSP ES-3E

ABBREVIATIONS (FOR THIS SHEET ONLY)

N/C	NO CONNECTION
TBO	TERMINAL BLOCK OUTPUT
TC	TELEPHONE CABLE

CONDUCTOR LIST FOR DEMARCATION CABINET

CABLE TYPE	FUNCTION	PAIR COLORS	12 ROW PUNCH BLOCK
TC	SPARE	WHITE & BLUE	ROW 1, ROW 2
TC	SPARE	WHITE & ORANGE	ROW 3, ROW 4
TC	SPARE	WHITE & GREEN	ROW 5, ROW 6
TC	CIRCUIT 1	WHITE & BROWN	ROW 7, ROW 8
TC	CIRCUIT 2	WHITE & GRAY	ROW 9, ROW 10
TC	CIRCUIT 3 (DIAL-UP: T/R PAIR)	RED & BLUE	ROW 11, ROW 12

NOTES

(FOR THIS SHEET ONLY)

1. 3' SINGLE ENDED 2-PAIR MODULAR CORD WITH RJ-11 PLUG CONNECTOR. CONDUCTORS SHALL BE 22 AWG, SOLID.
2. SERVICE CORD AND CONNECTION BLOCK FURNISHED AND INSTALLED BY TELEPHONE COMPANY.
3. TELEPHONE COMPANY STANDARD PROTECTOR EQIUPMENT FURNISHED AND INSTALLED BY TELEPHONE COMPANY.
4. CONNECTING BLOCK SHALL BE TYPE SIEMON S66B1-6 OR EQUIVALENT.

THIS PLAN IS ACCURATE FOR ELECTRICAL WORK ONLY

FOR NOTES, ABBREVIATIONS AND LEGEND, SEE SHEET E-1

ELECTRICAL DETAILS
(TDC WIRING)
NO SCALE

E-14

STATE OF CALIFORNIA - DEPARTMENT OF TRANSPORTATION
Caltrans
ELECTRICAL

FUNCTIONAL SUPERVISOR: KENNETH XU
CALCULATED-DESIGNED BY: HENRY HOANG
CHECKED BY: DORIS YANG
REVISED BY
DATE REVISED

LAST REVISION 05-15-09
DATE PLOTTED => 29-OCT-2009
TIME PLOTTED => 06:04

Dist	COUNTY	ROUTE	POST MILES TOTAL PROJECT	SHEET No.	TOTAL SHEETS
04	SCI	85,87	Var	42	67

REGISTERED ELECTRICAL ENGINEER 3-20-09 DATE

5-26-09
PLANS APPROVAL DATE

REGISTERED PROFESSIONAL ENGINEER Michael P. Lee No. 13435 Exp 9-30-10 ELECTRICAL STATE OF CALIFORNIA

THE STATE OF CALIFORNIA OR ITS OFFICERS OR AGENTS SHALL NOT BE RESPONSIBLE FOR THE ACCURACY OR COMPLETENESS OF SCANNED COPIES OF THIS PLAN SHEET.

NOTES

(FOR THIS SHEET ONLY)

1. SINGLE ENDED 2-PAIR MODULAR CORD, 3′ LONG. CONDUCTORS SHALL BE 22 AWG, SOLID.
2. USE PUNCH DOWN IMPACT TOOL TO TERMINAL CONDUCTORS ON THE CLIP. STRIP INSULATION 1/4" FROM THE END OF CONDUCTOR BEFORE TERMINATING TO THE CLIP.
3. TERMINATE EACH CABLE TO A COLUMN OF CLIPS AS SHOWN.
4. USE SAME TWISTED PAIR CONDUCTOR COLOR ARRANGEMENT FOR OTHER CABLES IF REQUIRED.
5. PLUG CONTACTS SHALL BE GRADE A COPPER ALLOY PLATED WITH 50 MICRO INCHES GOLD OVER NICKEL.

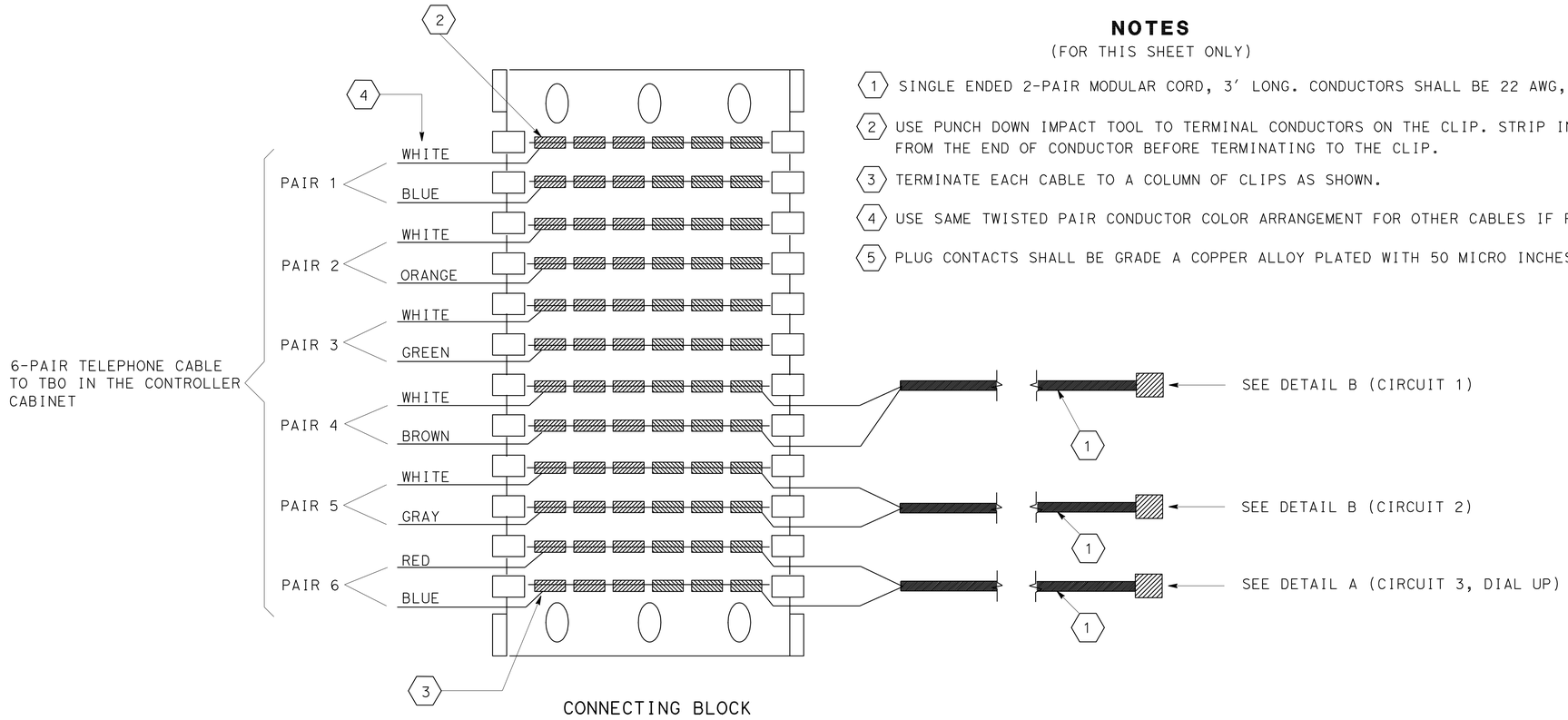

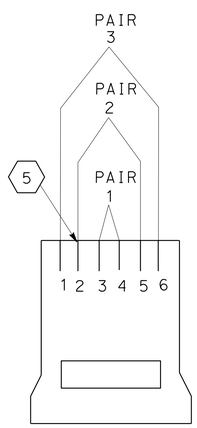

PAIR ID	PIN #	
T1	4	TRANSMIT AND RECEIVE PAIR FOR DIAL-UP CIRCUIT
R1	3	
T2	2	N/C
R2	5	
T3	6	N/C
R3	1	

DETAIL A

RJ-11 6P-4C MODULAR PLUG

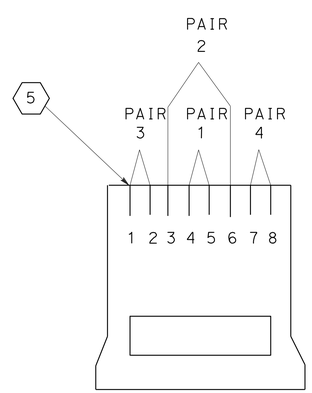

PAIR ID	PIN #	FUNCTION
T1	5	TRANSMIT AND RECEIVE PAIR
R1	4	
T2	3	N/C
R2	6	
T3	1	N/C
R3	2	
T4	7	N/C
R4	8	

DETAIL B

RJ-45 8P-8C MODULAR PLUG

ABBREVIATIONS (FOR THIS SHEET ONLY)

N/C	NO CONNECTION
TBO	TERMINAL BLOCK OUTPUT
TC	TELEPHONE CABLE

TELEPHONE DEMARCATION CABINET, TYPE B WIRING DETAIL

SEE RSP ES-3E

THIS PLAN IS ACCURATE FOR ELECTRICAL WORK ONLY

FOR NOTES, ABBREVIATIONS AND LEGEND, SEE SHEET E-1

ELECTRICAL DETAILS
(TDC WIRING)

NO SCALE

E-15

STATE OF CALIFORNIA - DEPARTMENT OF TRANSPORTATION
Caltrans
ELECTRICAL

FUNCTIONAL SUPERVISOR: KENNETH XU
CALCULATED-DESIGNED BY: HENRY HOANG
CHECKED BY: DORIS YANG
REVISED BY
DATE REVISED

LAST REVISION 05-15-09
DATE PLOTTED => 29-OCT-2009
TIME PLOTTED => 06:05

Dist	COUNTY	ROUTE	POST MILES TOTAL PROJECT	SHEET No.	TOTAL SHEETS
04	SCI	85,87	Var	43	67

REGISTERED ELECTRICAL ENGINEER 3-20-09 DATE

5-26-09
PLANS APPROVAL DATE

REGISTERED PROFESSIONAL ENGINEER Michael P. Lee No. 13435 Exp 9-30-10 ELECTRICAL STATE OF CALIFORNIA

THE STATE OF CALIFORNIA OR ITS OFFICERS OR AGENTS SHALL NOT BE RESPONSIBLE FOR THE ACCURACY OR COMPLETENESS OF SCANNED COPIES OF THIS PLAN SHEET.

8-POSITION CONNECTING BLOCK		No. 18 AWG SOLID CONDUCTOR COLOR	TBO POSITION ASSIGMENT
CIRCUIT 1	GREEN TERMINAL	WHITE	7
	RED TERMINAL	BROWN	8
CIRCUIT 2	GREEN TERMINAL	WHITE	9
	RED TERMINAL	GRAY	10
CIRCUIT 3	GREEN TERMINAL	RED	11
	RED TERMINAL	BLUE	12

NOTE:

1. USE ONE CONNECTING BLOCK FOR EACH REQUIRED CIRCUIT FOR EACH LOCATION.

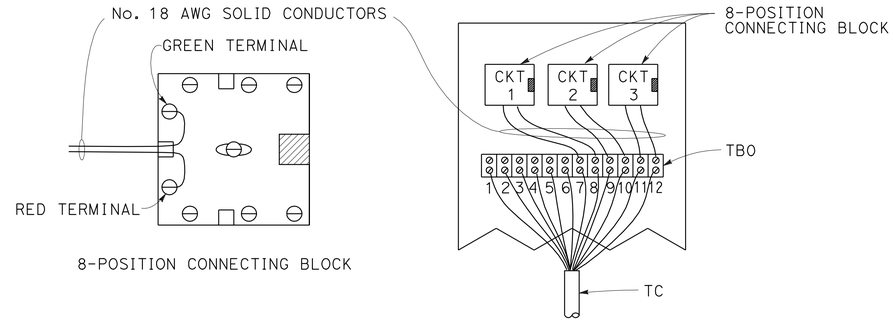

WIRING DETAIL FOR TELEPHONE CABLE INSIDE CONTROLLER CABINET

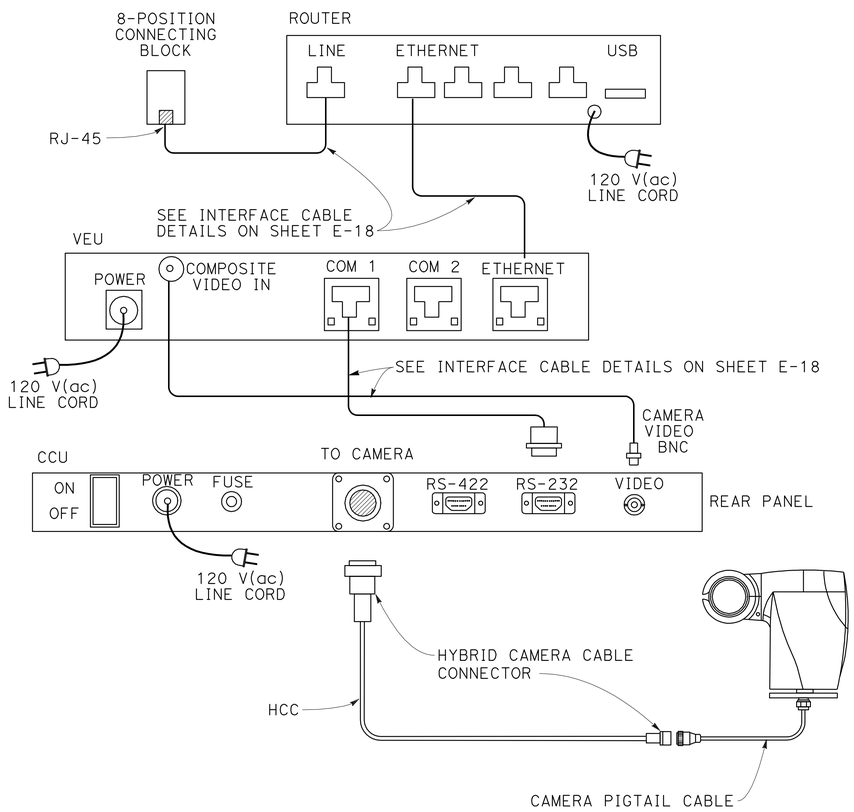

CCTV SYSTEM LAYOUT

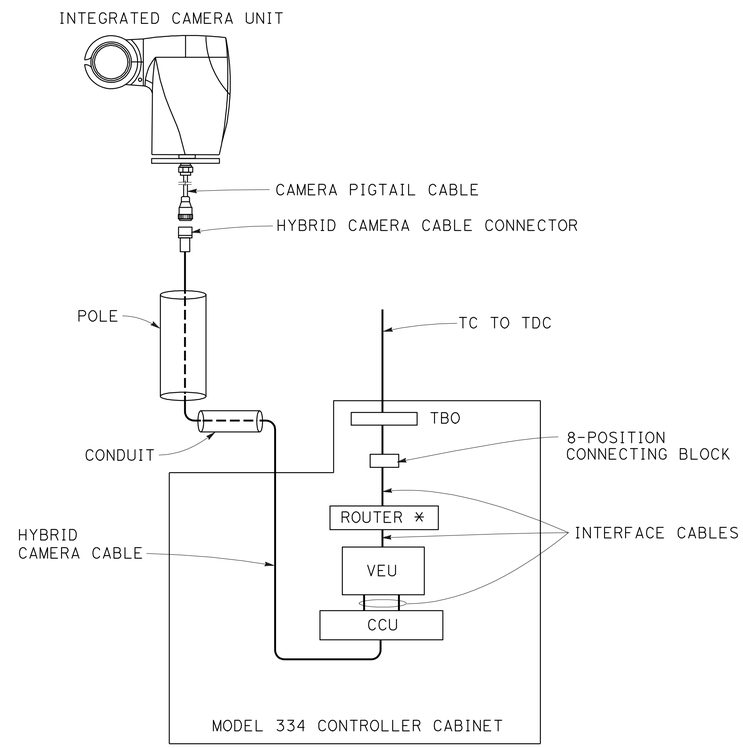

CCTV SYSTEM BLOCK DIAGRAM

TC - TELEPHONE CABLE
HCC - HYBRID CAMERA CABLE
TBO - TERMINAL BLOCK OUTPUT
PDA - POWER DISTRIBUTION ASSEMBLY
CCU - CAMERA CONTROL UNIT
VEU - VIDEO ENCODER UNIT

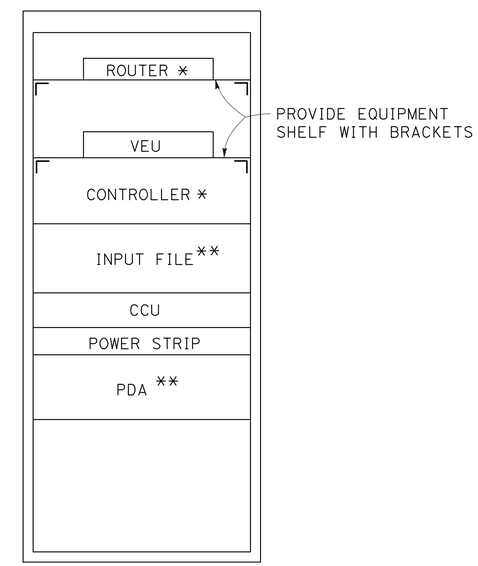

MODEL 334 CONTROLLER CABINET LAYOUT (FRONT VIEW)

* STATE-FURNISHED

** PDA AND INPUT FILE WILL BE INCLUDED ONLY WITH STATE-FURNISHED CONTROLLER CABINET.

THIS PLAN IS ACCURATE FOR ELECTRICAL WORK ONLY

FOR NOTES, ABBREVIATIONS AND LEGEND, SEE SHEET E-1

ELECTRICAL DETAILS (CCTV WITH TELEPHONE SERVICE)

NO SCALE

E-16

STATE OF CALIFORNIA - DEPARTMENT OF TRANSPORTATION
ELECTRICAL
FUNCTIONAL SUPERVISOR: KENNETH XU
CALCULATED-DESIGNED BY: HENRY HOANG
CHECKED BY: DORIS YANG
REVISED BY
DATE REVISED

LAST REVISION 05-15-09
DATE PLOTTED =>
TIME PLOTTED =>

Dist	COUNTY	ROUTE	POST MILES TOTAL PROJECT	SHEET No.	TOTAL SHEETS
04	SCI	85,87	Var	44	67

REGISTERED CIVIL ENGINEER 5-29-09

5-26-09
PLANS APPROVAL DATE

REGISTERED PROFESSIONAL ENGINEER JEFFREY B. WOODY No. C41260 Exp. 3/31/11 CIVIL STATE OF CALIFORNIA

THE STATE OF CALIFORNIA OR ITS OFFICERS OR AGENTS SHALL NOT BE RESPONSIBLE FOR THE ACCURACY OR COMPLETENESS OF ELECTRONIC COPIES OF THIS PLAN SHEET.

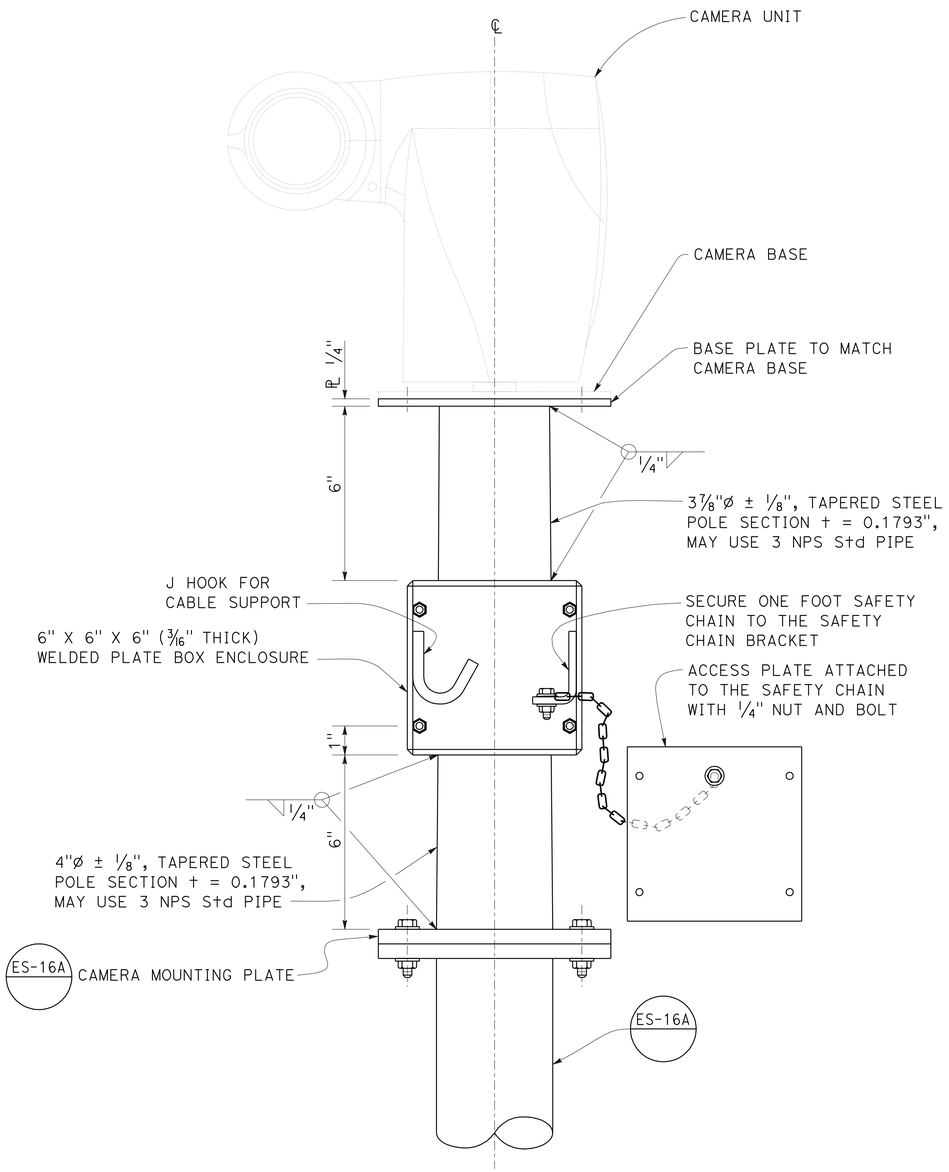

DETAIL A
CCTV POLE MOUNTING WITH ADAPTER

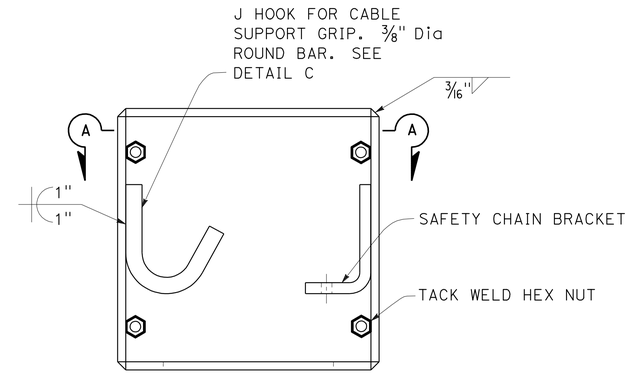

DETAIL B
BOX ENCLOSURE

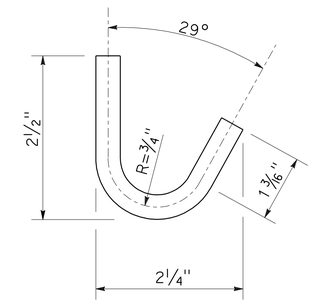

DETAIL C
J HOOK

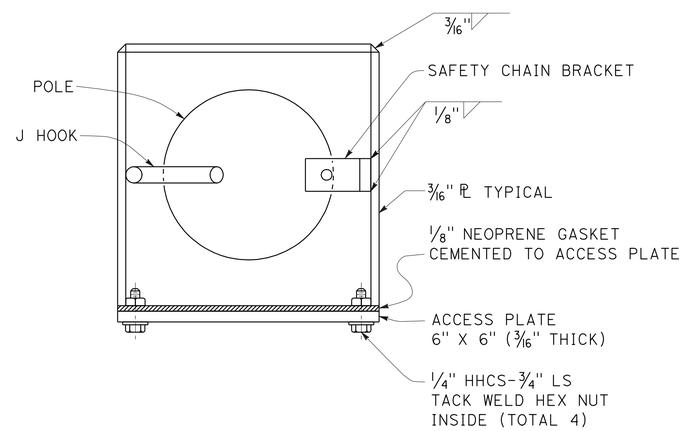

SECTION A-A

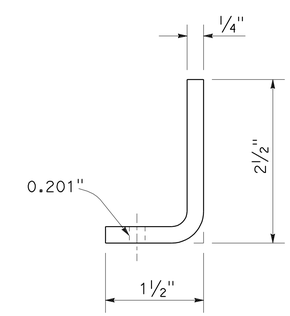

DETAIL D
SAFETY CHAIN BRACKET

THIS PLAN IS ACCURATE FOR ELECTRICAL WORK ONLY.

FOR NOTES, ABBREVIATIONS AND LEGEND, SEE SHEET E-1

ELECTRICAL DETAILS
(CAMERA MOUNTING DETAILS)
NO SCALE

E-17

STATE OF CALIFORNIA - DEPARTMENT OF TRANSPORTATION
Caltrans
ELECTRICAL

FUNCTIONAL SUPERVISOR: KENNETH XU
CALCULATED-DESIGNED BY: JEFF WOODY
CHECKED BY: DORIS YANG
REVISED BY
DATE REVISED

LAST REVISION 03-26-09
DATE PLOTTED => 29-OCT-2009
TIME PLOTTED => 06:05

Dist	COUNTY	ROUTE	POST MILES TOTAL PROJECT	SHEET No.	TOTAL SHEETS
04	SCI	85,87	Var	45	67

REGISTERED ELECTRICAL ENGINEER 3-20-09 DATE

5-26-09
PLANS APPROVAL DATE

REGISTERED PROFESSIONAL ENGINEER Michael P. Lee No. 13435 Exp 9-30-10 ELECTRICAL STATE OF CALIFORNIA

THE STATE OF CALIFORNIA OR ITS OFFICERS OR AGENTS SHALL NOT BE RESPONSIBLE FOR THE ACCURACY OR COMPLETENESS OF SCANNED COPIES OF THIS PLAN SHEET.

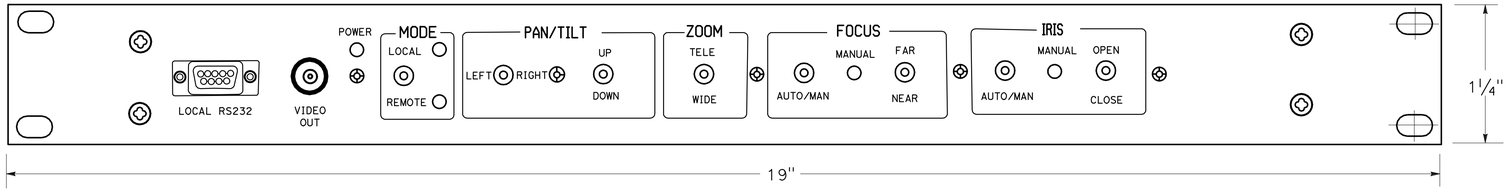

CCU FRONT PANEL LAYOUT

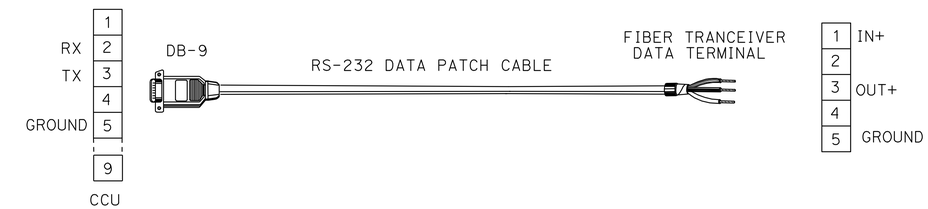

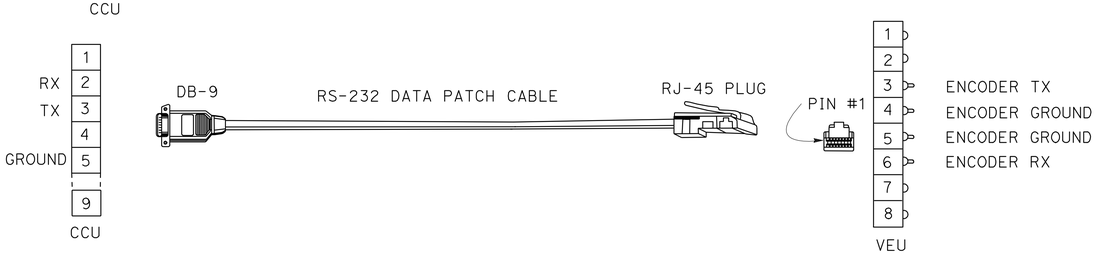

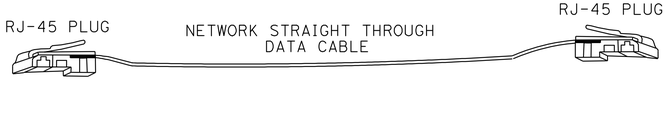

INTERFACE CABLE DETAILS

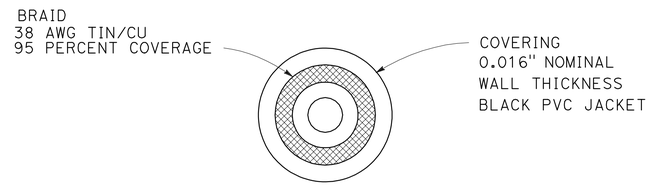

COMPONENT A COAX

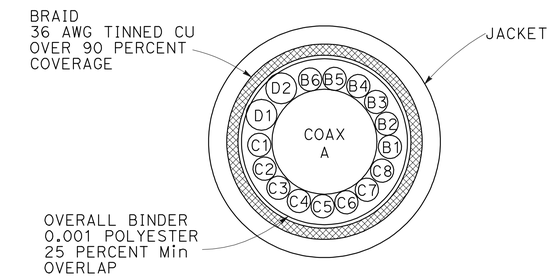

HYBRID CAMERA CABLE CROSS SECTION

COMPONENT A 75 OHM COAX
RG-59/U TYPE STANDARD
ANALOG VIDEO CABLE 0.242"
NOMINAL DIAMETER

COMPONENT B 22 AWG (7X30)TINNED COPPER INSULATED WITH
0.009" NOMINAL WALL OF S-R PVC TO A NOMINAL
OD OF 0.048"
6 CONDUCTORS TOTAL -
COLOR CODED: B1-BLACK, B2-RED, B3-GREEN,
B4-WHITE, B5-BLUE, B6-YELLOW

COMPONENT C 26 AWG (7X34)TINNED COPPER INSULATED WITH
0.009" NOMINAL WALL OF S-R PVC TO A NOMINAL
OD OF 0.037"
8 CONDUCTORS TOTAL -
COLOR CODED: C-1BROWN, C2-BLUE, C3-BLUE,
C3-ORANGE, C4-YELLOW, C5-PURPLE, C6-GRAY,
C7-WHITE/BLACK, C8-RED/GREEN

COMPONENT D 26 AWG (7X34)TINNED COPPER INSULATED WITH
0.009" NOMINAL WALL OF S-R PVC TO A NOMINAL
OD OF 0.037"
2 TWISTED PAIRS TOTAL -
COLOR CODED: D1-BLACK & WHITE, D2-RED & GREEN

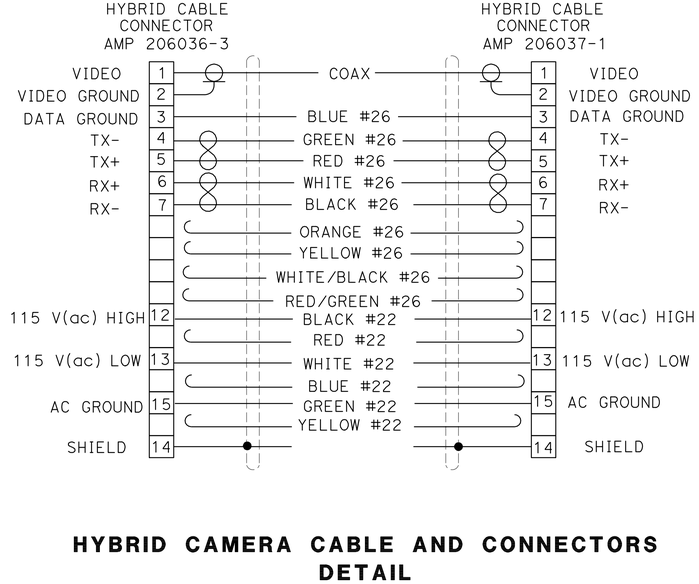

HYBRID CAMERA CABLE AND CONNECTORS DETAIL

THIS PLAN IS ACCURATE FOR ELECTRICAL WORK ONLY

FOR NOTES, ABBREVIATIONS AND LEGEND, SEE SHEET E-1

ELECTRICAL DETAILS
(CCTV MOUNTING DETAILS)
NO SCALE

E-18

REVISED BY | DATE REVISED
HENRY HOANG | DORIS YANG
CALCULATED-DESIGNED BY | CHECKED BY
FUNCTIONAL SUPERVISOR
KENNETH XU

STATE OF CALIFORNIA - DEPARTMENT OF TRANSPORTATION
Caltrans
ELECTRICAL

LAST REVISION 05-15-09
DATE PLOTTED => 29-OCT-2009
TIME PLOTTED => 06:05

Dist	COUNTY	ROUTE	POST MILES TOTAL PROJECT	SHEET No.	TOTAL SHEETS
04	SCI	85,87	Var	46	67

REGISTERED ELECTRICAL ENGINEER 3-20-09 DATE

5-26-09
PLANS APPROVAL DATE

REGISTERED PROFESSIONAL ENGINEER Michael P. Lee No. 13435 Exp 9-30-10 ELECTRICAL STATE OF CALIFORNIA

THE STATE OF CALIFORNIA OR ITS OFFICERS OR AGENTS SHALL NOT BE RESPONSIBLE FOR THE ACCURACY OR COMPLETENESS OF SCANNED COPIES OF THIS PLAN SHEET.

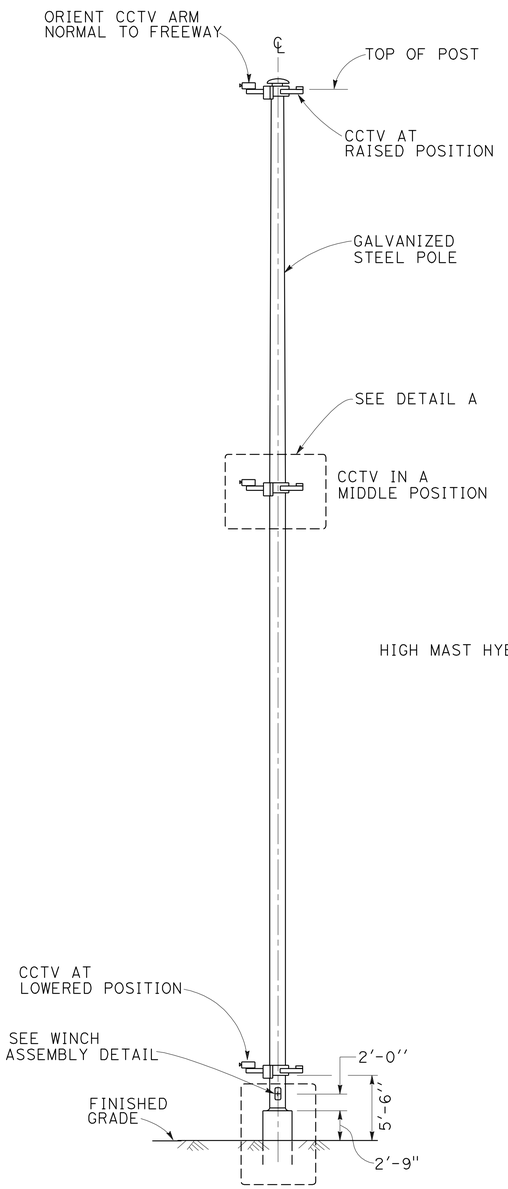

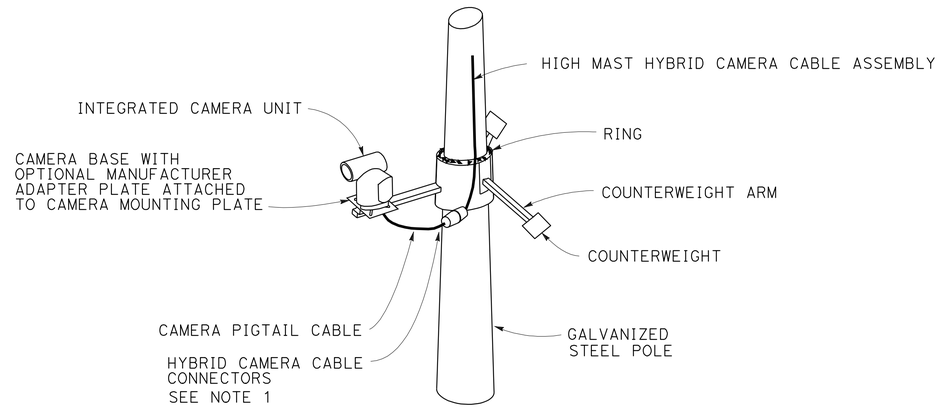

DETAIL A

NOTES:

1. PROVIDE WEATHER PROOF ENCLOSURE TO PROTECT HYBRID CAMERA CABLE CONNECTION.
2. SEE STANDARD PLANS ES-16C FOR OTHER DETAILS.
3. PROVIDE PULL ROPE WITH LENGTH EQUAL TO POLE HEIGHT PLUS 35 FEET. TIE ONE END OF PULL ROPE TO HYBRID CAMERA CABLE CONNECTOR. COIL PULL ROPE INSIDE THE POLE WHEN CAMERA RING IS AT RAISED POSITION.

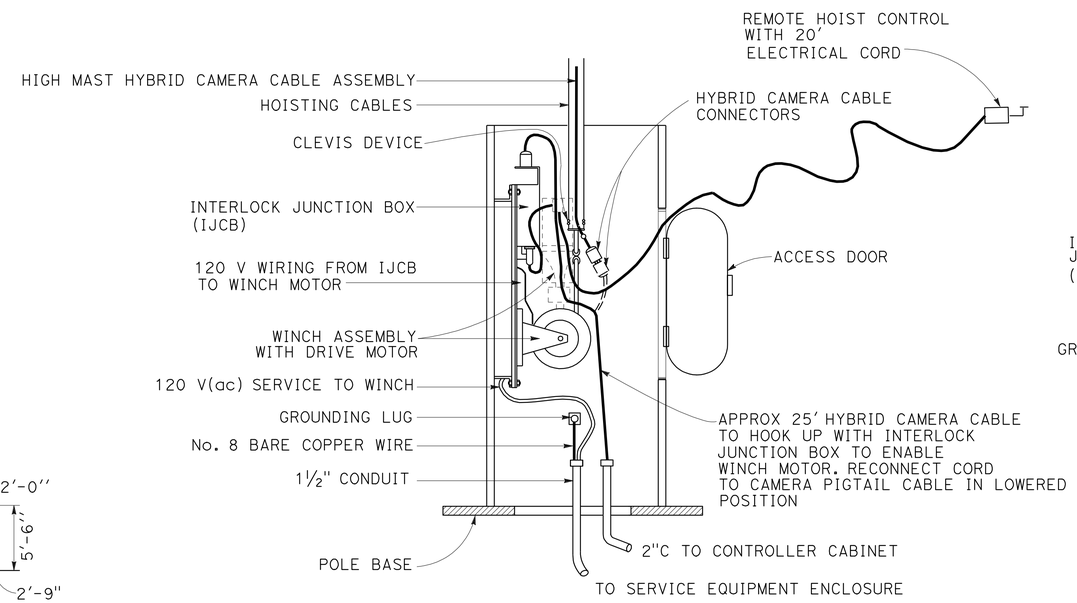

WINCH ASSEMBLY DETAIL

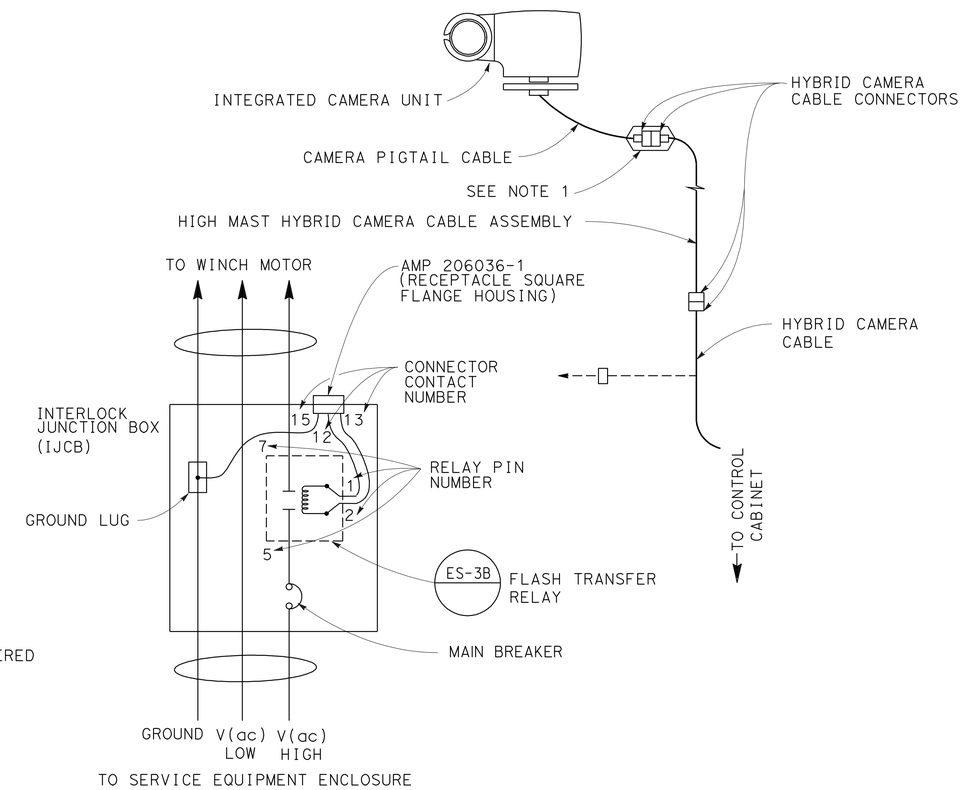

ONE-LINE DIAGRAM

THIS PLAN IS ACCURATE FOR ELECTRICAL WORK ONLY

FOR NOTES, ABBREVIATIONS AND LEGEND, SEE SHEET E-1

ELECTRICAL DETAILS
(HIGH MAST CCTV)
NO SCALE

E-19

REVISED BY	DATE REVISED
HENRY HOANG	DORIS YANG
CALCULATED-DESIGNED BY	CHECKED BY
FUNCTIONAL SUPERVISOR	KENNETH XU

STATE OF CALIFORNIA - DEPARTMENT OF TRANSPORTATION
Caltrans
ELECTRICAL

LAST REVISION 05-15-09 DATE PLOTTED => 29-OCT-2009 TIME PLOTTED => 06:05

Dist	COUNTY	ROUTE	POST MILES TOTAL PROJECT	SHEET No.	TOTAL SHEETS
04	SCI	85,87	Var	47	67

REGISTERED CIVIL ENGINEER 5-29-09 DATE

5-26-09
PLANS APPROVAL DATE

REGISTERED PROFESSIONAL ENGINEER JEFFREY B. WOODY No. C41260 Exp. 3/31/11 CIVIL STATE OF CALIFORNIA

THE STATE OF CALIFORNIA OR ITS OFFICERS OR AGENTS SHALL NOT BE RESPONSIBLE FOR THE ACCURACY OR COMPLETENESS OF SCANNED COPIES OF THIS PLAN SHEET.

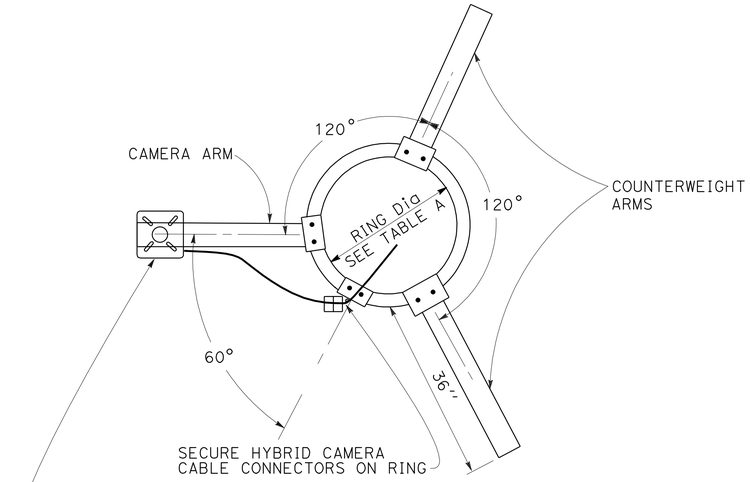

TOP VIEW OF RING AND ARM ASSEMBLIES

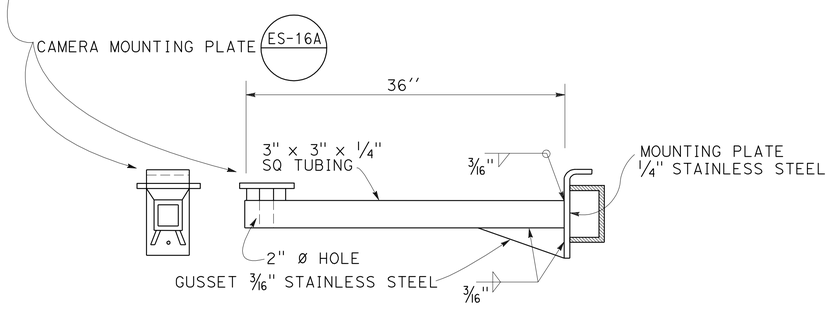

CAMERA ARM

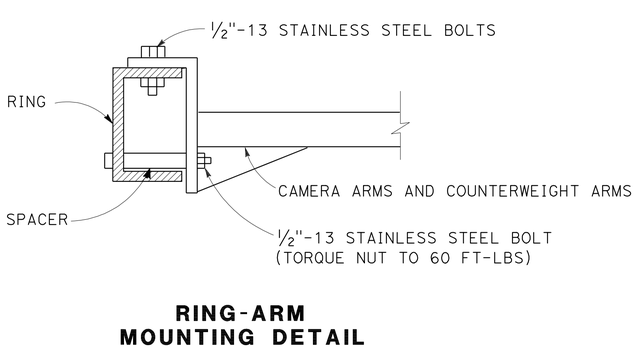

RING-ARM MOUNTING DETAIL

TABLE A

POLE HEIGHT	RING INSIDE DIAMETER (NOMINAL)
60' - 70'	30"
80' - 90'	36"

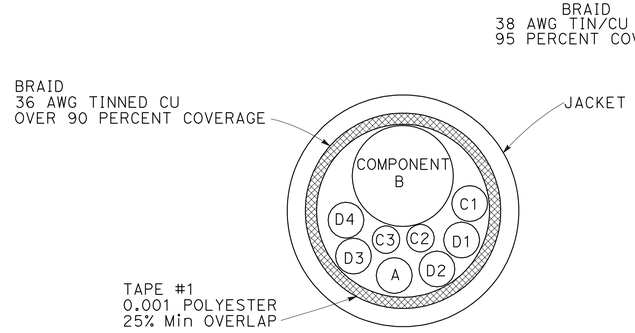

HIGH MAST HYBRID CAMERA CABLE ASSEMBLY CROSS SECTION

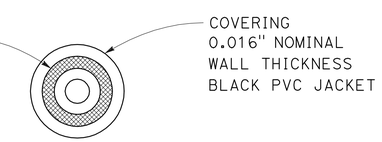

COMPONENT A COAX

COMPONENT A 75 OHM COAX	RG-59/U TYPE STANDARD ANALOG VIDEO CABLE 0.242" NOMINAL DIAMETER
COMPONENT B 4 PAIR CAT 5E	SHIELDED CAT 5E 0.260" NOMINAL DIAMETER
COMPONENT C 3 CONDUCTOR	22 AWG COPPER INSULATED CONDUCTOR 0.062" NOMINAL DIAMETER COLOR CODED: C1-RED, C2-BLUE, C3-ORANGE
COMPONENT D 4 CONDUCTOR	16 AWG COPPER INSULATED CONDUCTOR 0.088" NOMINAL DIAMETER COLOR CODED: D1-BLACK, D2-WHITE, D3-YELLOW, D4-GREEN

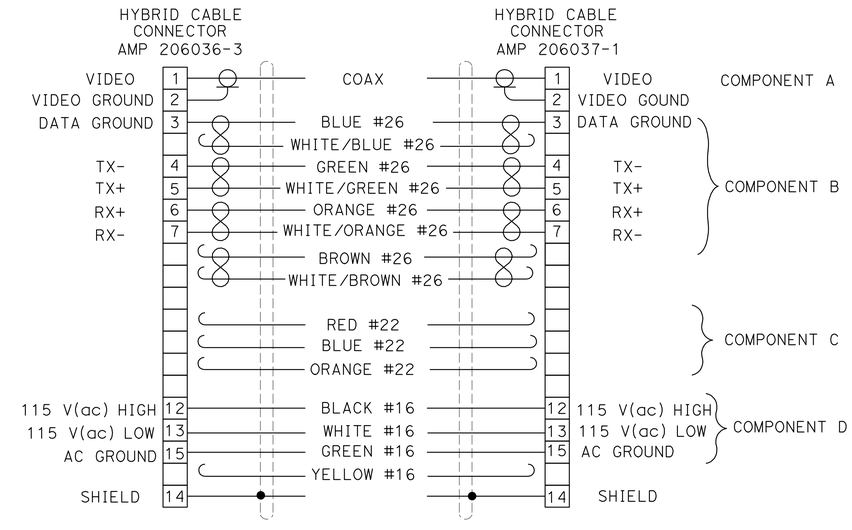

HIGH MAST HYBRID CAMERA CABLE ASSEMBLY DETAIL

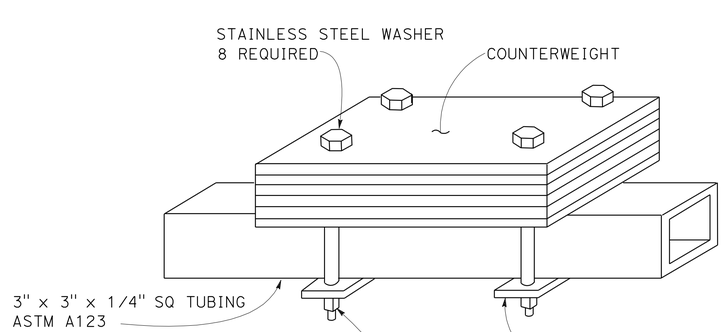

COUNTERWEIGHT DETAIL

NOTES: (FOR THIS SHEET ONLY)

1. ALL MOUNTING PLATE WELDS AND CONNECTIONS BETWEEN RING AND ARMS, ARE SHOWN FOR EXAMPLE. THE CONTRACTOR SHALL SUBMIT ACTUAL MOUNTING DETAILS TO THE ENGINEER FOR APPROVAL PRIOR TO FABRICATION.
2. COUNTERWEIGHT AND CAMERA ARMS SHALL HAVE IDENTICAL MOUNTING ATTACHMENT TO RING.
3. COUNTERWEIGHT DETAIL IS SHOWN FOR EXAMPLE. MODIFY DETAIL TO BALANCE CCTV/RING/ARMS ASSEMBLY ABOUT THE CENTER OF THE RING.
4. EACH COUNTERWEIGHT SHALL HAVE ITS WEIGHT EQUAL TO THE WEIGHT OF INTEGRATED CAMERA UNIT.
5. ALL WELDS ARE METAL-ARC WITH E 6011 ROD WITH 72000 PSI TENSILE STRENGTH AS WELDED.
6. COUNTERWEIGHT AND RELATED HARDWARE SHALL BE GALVANIZED PER ASTM 123.

ELECTRICAL DETAILS (HIGH MAST CCTV)

NO SCALE

THIS PLAN IS ACCURATE FOR ELECTRICAL WORK ONLY

FOR NOTES, ABBREVIATIONS AND LEGEND, SEE SHEET E-1

E-20

REVISED BY | DATE REVISED
HENRY HOANG | DORIS YANG
CALCULATED-DESIGNED BY | CHECKED BY
FUNCTIONAL SUPERVISOR: KENNETH XU

STATE OF CALIFORNIA - DEPARTMENT OF TRANSPORTATION
ELECTRICAL
Caltrans

LAST REVISION 05-15-08 | DATE PLOTTED => 29-OCT-2009 | TIME PLOTTED => 06:06

Dist	COUNTY	ROUTE	POST MILES TOTAL PROJECT	SHEET No.	TOTAL SHEETS
04	SCI	85,87	Var	48	67

REGISTERED CIVIL ENGINEER 5-29-09 DATE

5-26-09
PLANS APPROVAL DATE

REGISTERED PROFESSIONAL ENGINEER JEFFREY B. WOODY No. C41260 Exp. 3/31/11 CIVIL STATE OF CALIFORNIA

THE STATE OF CALIFORNIA OR ITS OFFICERS OR AGENTS SHALL NOT BE RESPONSIBLE FOR THE ACCURACY OR COMPLETENESS OF SCANNED COPIES OF THIS PLAN SHEET.

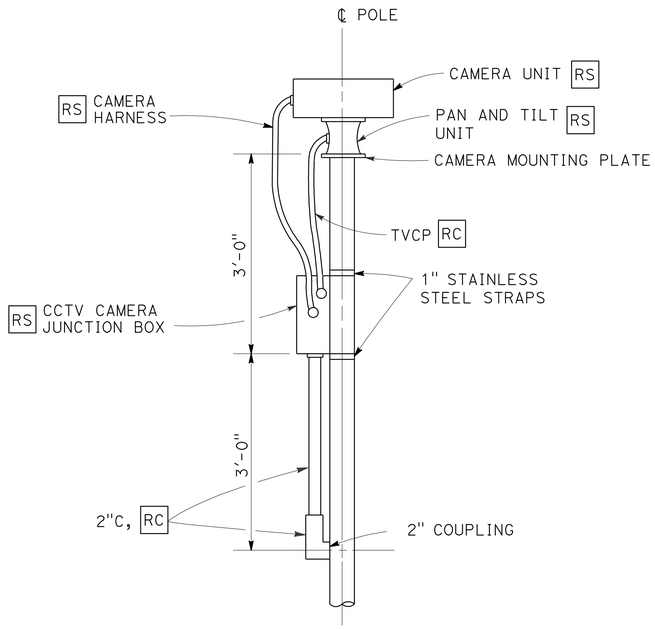

Exist EQUIPMENT REMOVAL DETAIL

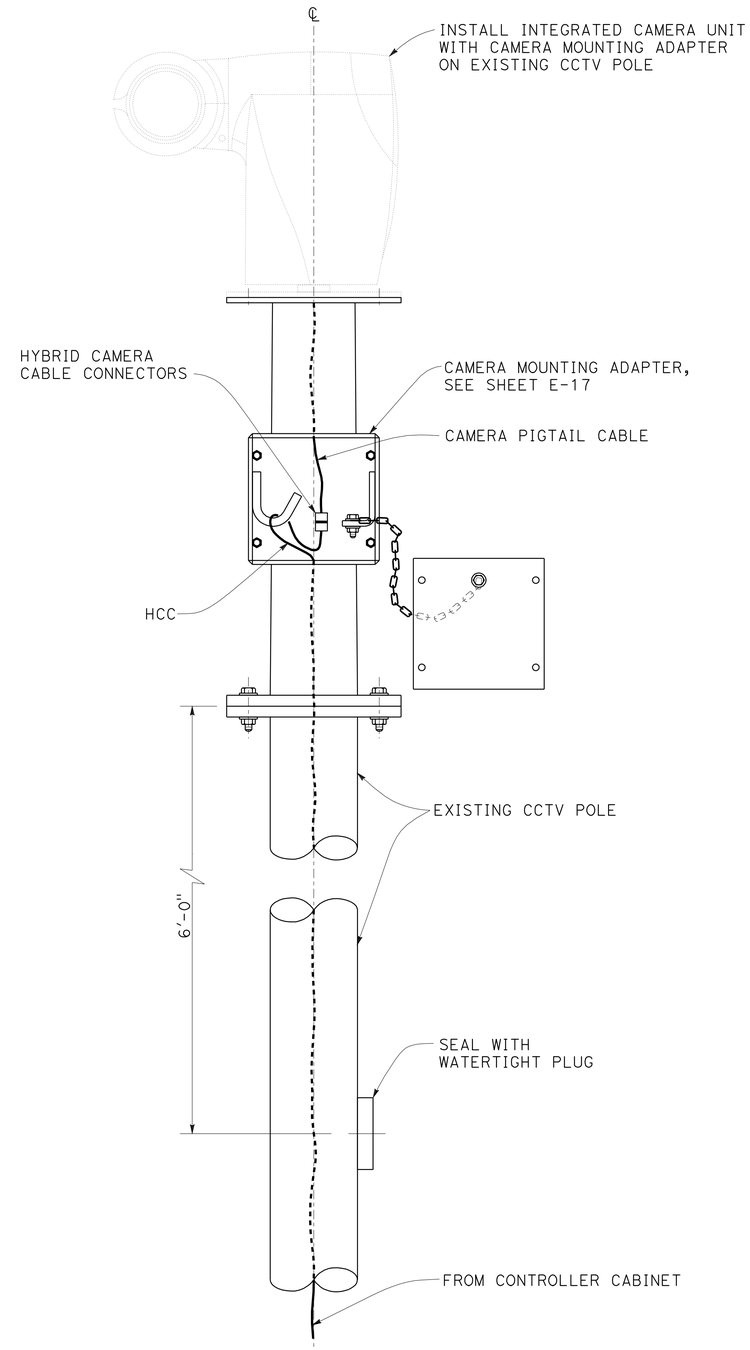

EQUIPMENT INSTALLATION DETAIL

THIS PLAN IS ACCURATE FOR ELECTRICAL WORK ONLY

FOR NOTES, ABBREVIATIONS AND LEGEND, SEE SHEET E-1

ELECTRICAL DETAILS
(CCTV REPLACEMENT DETAILS)
NO SCALE

E-21

STATE OF CALIFORNIA - DEPARTMENT OF TRANSPORTATION
Caltrans
ELECTRICAL

FUNCTIONAL SUPERVISOR: KENNETH XU
CALCULATED-DESIGNED BY: HENRY HOANG
CHECKED BY: DORIS YANG
REVISED BY
DATE REVISED

LAST REVISION 05-15-09
DATE PLOTTED => 29-OCT-2009
TIME PLOTTED => 06:06

Dist	COUNTY	ROUTE	POST MILES TOTAL PROJECT	SHEET No.	TOTAL SHEETS
04	SCI	85,87	Var	49	67

REGISTERED ELECTRICAL ENGINEER 3-20-09 DATE

5-26-09
PLANS APPROVAL DATE

REGISTERED PROFESSIONAL ENGINEER
Michael P. Lee
No. 13435
Exp 9-30-10
ELECTRICAL
STATE OF CALIFORNIA

THE STATE OF CALIFORNIA OR ITS OFFICERS OR AGENTS SHALL NOT BE RESPONSIBLE FOR THE ACCURACY OR COMPLETENESS OF SCANNED COPIES OF THIS PLAN SHEET.

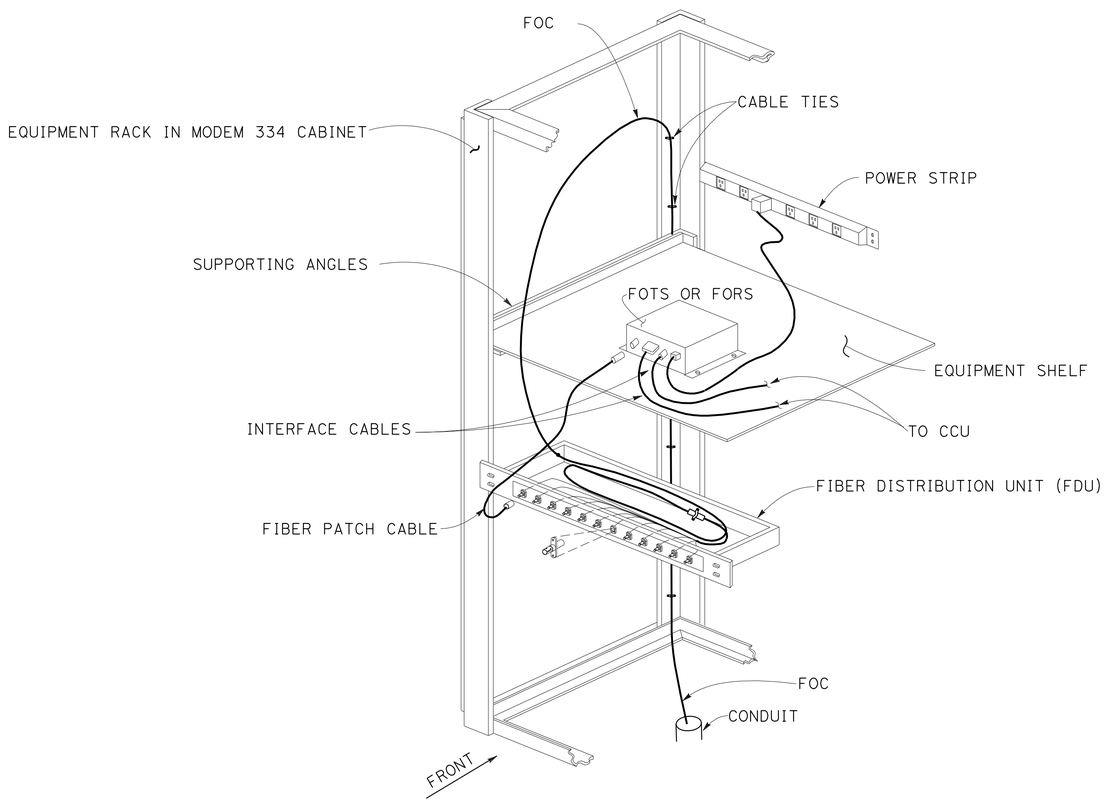

PARTIAL CABINET EQUIPMENT LAYOUT

ABBREVIATIONS:

FOTS - FIBER OPTIC TRANSMITTERS
FORS - FIBER OPTIC RECEIVERS
FDU - FIBER DISTRIBUTION UNIT
FOC - FIBER OPTIC CABLE
CCU - CAMERA CONTROL UNIT
WAN - WIDE AREA NETWORK

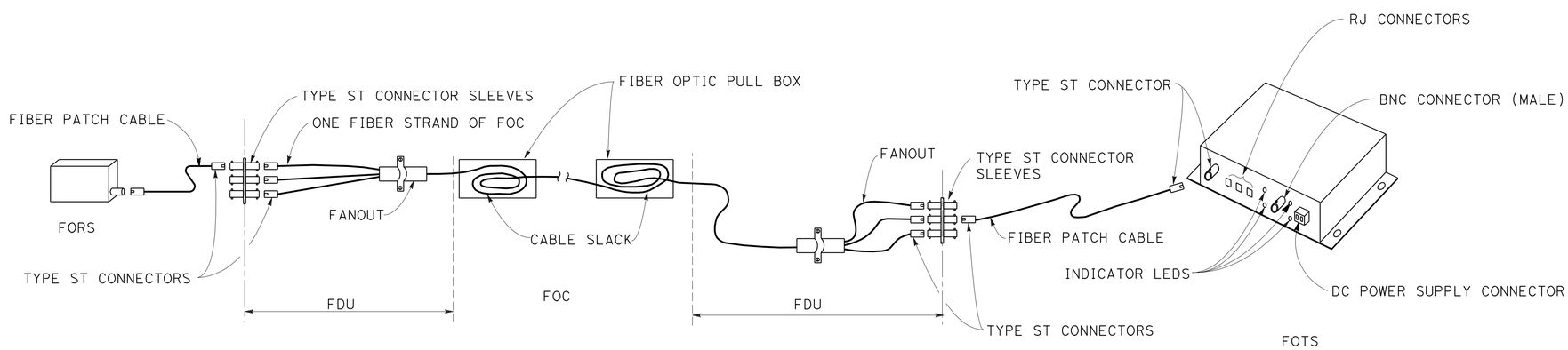

TYPICAL FIBER OPTIC LINK

ELECTRICAL DETAILS
(FIBER OPTIC LINK INSTALLATION DETAILS)
NO SCALE

THIS PLAN IS ACCURATE FOR ELECTRICAL WORK ONLY

FOR NOTES, ABBREVIATIONS AND LEGEND, SEE SHEET E-1

E-22

STATE OF CALIFORNIA - DEPARTMENT OF TRANSPORTATION
ELECTRICAL
Caltrans

FUNCTIONAL SUPERVISOR: KENNETH XU
CALCULATED-DESIGNED BY: HENRY HOANG
CHECKED BY: DORIS YANG
REVISED BY
DATE REVISED

LAST REVISION 05-15-09
DATE PLOTTED => 29-OCT-2009
TIME PLOTTED => 06:06

Dist	COUNTY	ROUTE	POST MILES TOTAL PROJECT	SHEET No.	TOTAL SHEETS
04	SCI	85,87	Var	50	67

REGISTERED ELECTRICAL ENGINEER 3-20-09 DATE

5-26-09
PLANS APPROVAL DATE

REGISTERED PROFESSIONAL ENGINEER Michael P. Lee No. 13435 Exp 9-30-10 ELECTRICAL STATE OF CALIFORNIA

THE STATE OF CALIFORNIA OR ITS OFFICERS OR AGENTS SHALL NOT BE RESPONSIBLE FOR THE ACCURACY OR COMPLETENESS OF SCANNED COPIES OF THIS PLAN SHEET.

CALTRANS STANDARD TYPE K-2 OBJECT MARKER WITH 6"x12" YELLOW REFLECTIVE BACKGROUND (DIAMOND GRADE SHEETING) AND BLACK LETTERS

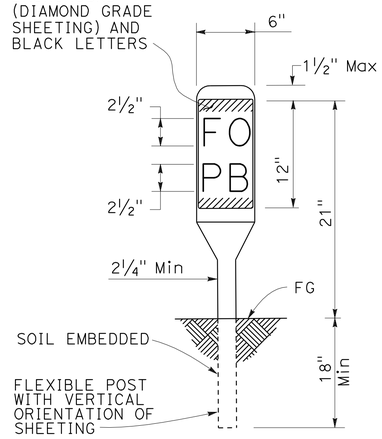

PERMANENT FIBER OPTIC
VAULT OR PULL BOX MARKER

PERMANENT FIBER OPTIC
CABLE MARKER
PAVED AREAS

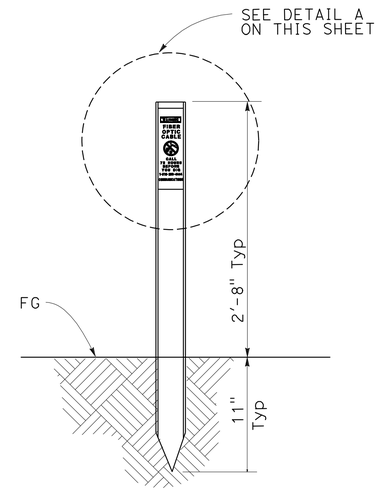

PERMANENT FIBER OPTIC
CABLE MARKER
UNPAVED AREAS

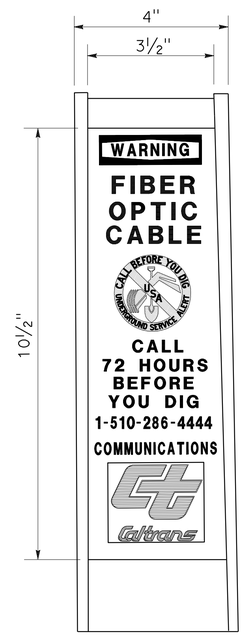

DETAIL A

NOTE: IN UNPAVED AREAS, INSTALL ONE MARKER 1 FOOT AWAY FROM EACH VAULT OR PULL BOX IN WHICH FIBER OPTIC CABLE IS INSTALLED.

ELECTRICAL DETAILS
(FIBER OPTIC MARKER)
NO SCALE

THIS PLAN IS ACCURATE FOR ELECTRICAL WORK ONLY

FOR NOTES, ABBREVIATIONS AND LEGEND, SEE SHEET E-1

E-23

REVISED BY	DATE REVISED
HENRY HOANG	DORIS YANG
CALCULATED-DESIGNED BY	CHECKED BY
FUNCTIONAL SUPERVISOR	KENNETH XU

STATE OF CALIFORNIA - DEPARTMENT OF TRANSPORTATION
Caltrans
ELECTRICAL

LAST REVISION 05-15-09 | DATE PLOTTED => 29-OCT-2009 | TIME PLOTTED => 06:06

DIST	COUNTY	ROUTE	POST MILES TOTAL PROJECT	SHEET NO.	TOTAL SHEETS
04	SCI	85,87	Var	51	67

Randell D. Hiatt
REGISTERED CIVIL ENGINEER

June 6, 2008
PLANS APPROVAL DATE

REGISTERED PROFESSIONAL ENGINEER
Randell D. Hiatt
No. C50200
Exp. 6-30-09
CIVIL
STATE OF CALIFORNIA

The State of California or its officers or agents shall not be responsible for the accuracy or completeness of electronic copies of this plan sheet.

To accompany plans dated 5-26-09

NOTES:

1. When necessary to place dike in front of face of guard railing, only Type C dike may be used. For dike details, see Standard Plan A87B.
2. For standard railing post embedment, see Standard Plans A77C3.
3. Guard railing delineation to be used where shown on the Project Plans.
4. When dike or curb is placed under guard railing, the maximum height of the dike or curb shall be 4". Mountable dike should not be used. For dike and curb details, see Revised Standard Plans RSP A87A and Standard Plan A87B.
5. For details of typical distance between the face of rail and hinge point, see Standard Plan A77C3.

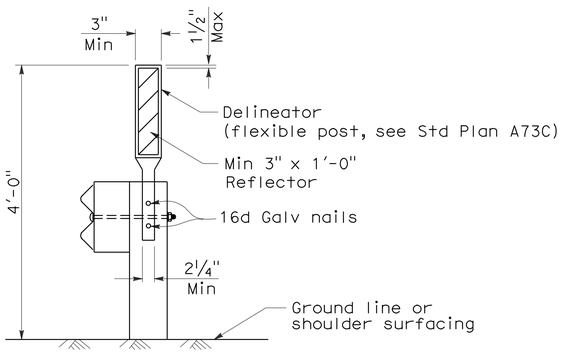

GUARD RAILING DELINEATION

See Note 3

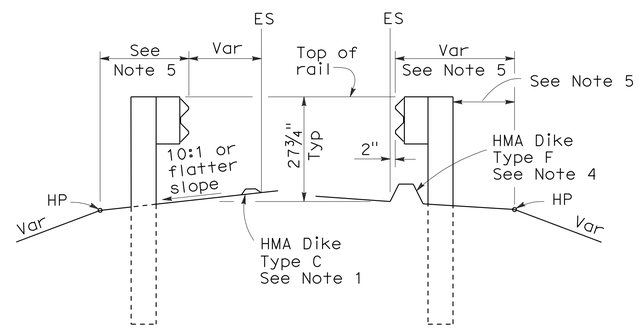

DIKE POSITIONING

See Note 1

STATE OF CALIFORNIA
DEPARTMENT OF TRANSPORTATION

METAL BEAM GUARD RAILING TYPICAL RAILING DELINEATION AND DIKE POSITIONING DETAILS

NO SCALE

RSP A77C4 DATED JUNE 6, 2008 SUPERSEDES STANDARD PLAN A77C4
DATED MAY 1, 2006 - PAGE 47 OF THE STANDARD PLANS BOOK DATED MAY 2006.

REVISED STANDARD PLAN RSP A77C4

2006 REVISED STANDARD PLAN RSP A77C4

12-10-07

DIST	COUNTY	ROUTE	POST MILES TOTAL PROJECT	SHEET NO.	TOTAL SHEETS
04	SCI	85,87	Var	52	67

Randell D. Hiatt
REGISTERED CIVIL ENGINEER

June 6, 2008
PLANS APPROVAL DATE

REGISTERED PROFESSIONAL ENGINEER Randell D. Hiatt No. C50200 Exp. 6-30-09 CIVIL STATE OF CALIFORNIA

The State of California or its officers or agents shall not be responsible for the accuracy or completeness of electronic copies of this plan sheet.

To accompany plans dated 5-26-09

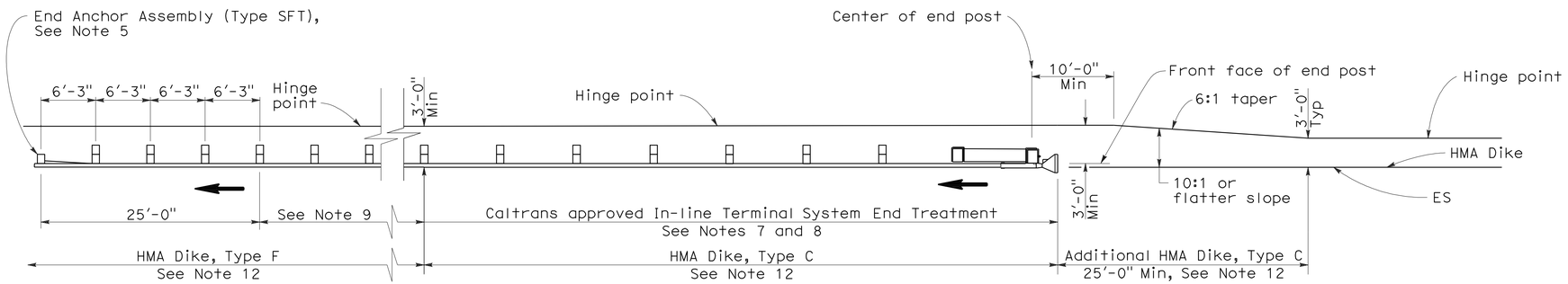

TYPE 11A LAYOUT

(EMBANKMENT GUARD INSTALLATION WITH IN-LINE END TREATMENT AT TRAFFIC APPROACH END OF RAILING)
See Note 6

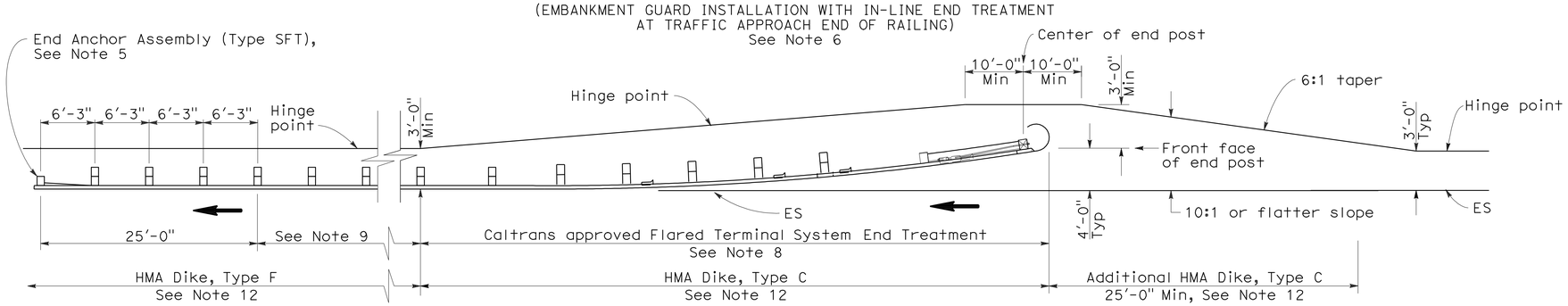

TYPE 11B LAYOUT

(EMBANKMENT GUARD RAILING INSTALLATION WITH FLARED END TREATMENT AT TRAFFIC APPROACH END OF RAILING)
See Note 6

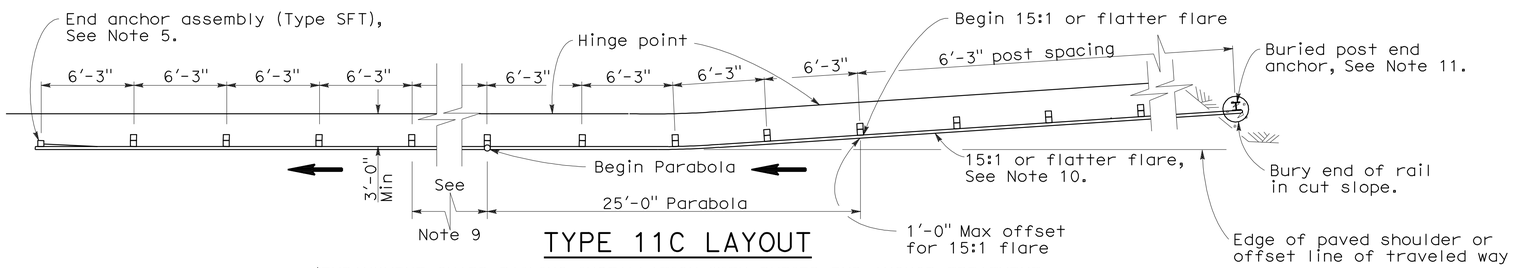

TYPE 11C LAYOUT

(EMBANKMENT GUARD RAILING INSTALLATION WITH BURIED END ANCHOR TREATMENT AT TRAFFIC APPROACH END OF RAILING)
See Notes 6 and 12

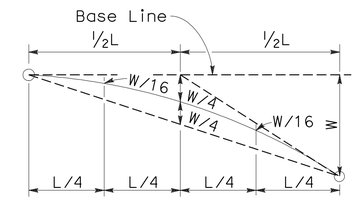

TYPICAL PARABOLIC LAYOUT

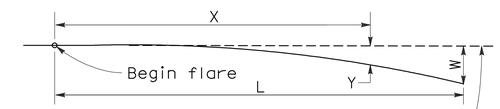

Base Line (Edge of paved shoulder or offset line of edge of traveled way)

$$Y = \frac{WX^2}{L^2}$$

Y = Offset from base line
W = Maximum offset
X = Distance along base line
L = Length of flare

PARABOLIC FLARE OFFSETS

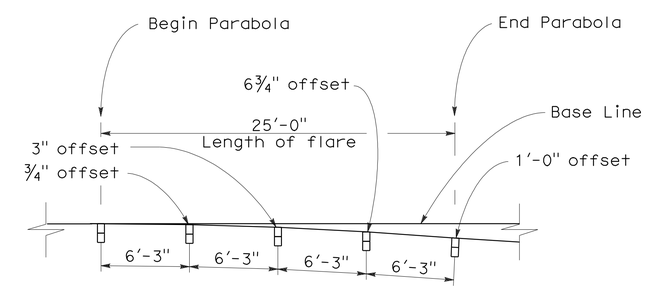

TYPICAL FLARE OFFSETS FOR 1 FOOT MAX END OFFSET

NOTES:

1. Line post, blocks and hardware to be used are shown on Standard Plans A77A1, A77A2, A77B1, A77C1, and A77C2.
2. Guard rail post spacing to be 6'-3" center to center, except as otherwise noted.
3. Except as noted, line posts are 6" x 8" x 6'-0" wood with 6" x 8" x 1'-2" wood blocks. W6 x 9 steel posts, 6'-0" in length, with 6" x 8" x 1'-2" notched wood blocks or recycled plastic blocks may be used for 6" x 8" x 6'-0" wood post with 6" x 8" x 1'-2" wood blocks where applicable and when specified.
4. Direction of adjacent traffic indicated by ⟶.
5. For End Anchor Assembly (Type SFT) details, see Standard Plan A77H1.
6. Layout Types 11A, 11B or 11C are typically used where guard railing is recommended to shield embankment slopes and a crashworthy end treatment is required for only one direction of traffic.
7. In-line Terminal System End Treatments are used where site conditions will not accommodate a flared end treatment.
8. The type of terminal system end treatment to be used will be shown on the Project Plans.
9. Dependent on site conditions (embankment height and side slope), construction of additional guard railing (length equal to multiples of 12'-6" with 6'-3" post spacing) may be advisable.
10. The 15:1 or flatter flare used with buried end anchors is based on the edge of the paved shoulder or offset line of edge of the traveled way. The length of guard railing within the 15:1 or flatter flare is based on site conditions and should be a length equal to multiples of 12'-6".
11. For details of the buried post end anchor used with Type 11C Layout, see Standard Plan A77I2.
12. Where placement of dike is required with guard railing installations, see Revised Standard Plan RSP A77C4 for dike positioning details.

STATE OF CALIFORNIA
DEPARTMENT OF TRANSPORTATION

METAL BEAM GUARD RAILING TYPICAL LAYOUTS FOR EMBANKMENTS

NO SCALE

RSP A77E1 DATED JUNE 6, 2008 SUPERSEDES STANDARD PLAN A77E1 DATED MAY 1, 2006 - PAGE 48 OF THE STANDARD PLANS BOOK DATED MAY 2006.

REVISED STANDARD PLAN RSP A77E1

2006 REVISED STANDARD PLAN RSP A77E1

12-10-07

DIST	COUNTY	ROUTE	POST MILES TOTAL PROJECT	SHEET NO.	TOTAL SHEETS
04	SCI	85,87	Var	53	67

Randell D. Hiatt
REGISTERED CIVIL ENGINEER

June 6, 2008
PLANS APPROVAL DATE

REGISTERED PROFESSIONAL ENGINEER Randell D. Hiatt No. C50200 Exp. 6-30-09 CIVIL STATE OF CALIFORNIA

The State of California or its officers or agents shall not be responsible for the accuracy or completeness of electronic copies of this plan sheet.

To accompany plans dated 5-26-09

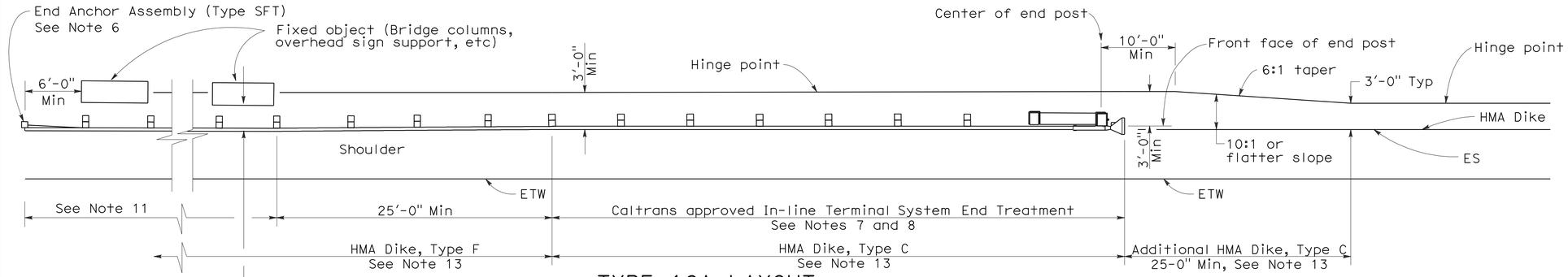

TYPE 16A LAYOUT

(GUARD RAILING INSTALLATION AT ROADSIDE FIXED OBJECT OR OBJECTS WITH AN IN-LINE END TREATMENT AT TRAFFIC APPROACH END OF RAILING)
See Notes 12 and 13

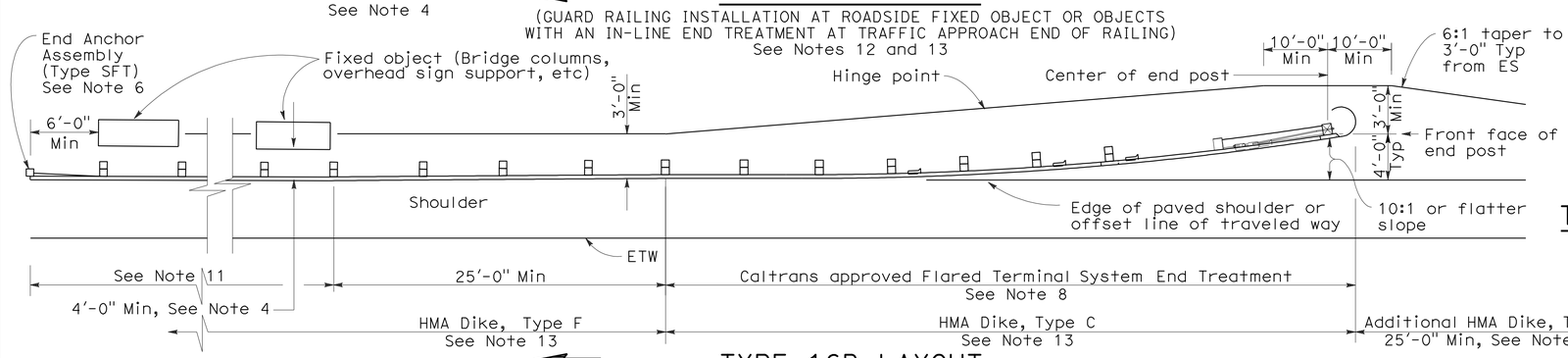

TYPE 16B LAYOUT

(GUARD RAILING INSTALLATION AT ROADSIDE FIXED OBJECT OR OBJECTS WITH A FLARED END TREATMENT AT TRAFFIC APPROACH END OF RAILING)
See Notes 12 and 13

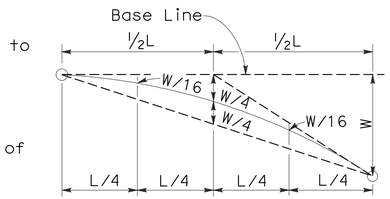

TYPICAL PARABOLIC LAYOUT

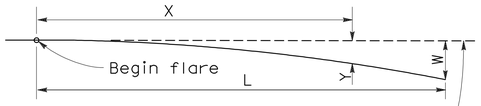

Base Line (Edge of paved shoulder or offset line of edge of traveled way)

$$Y = \frac{WX^2}{L^2}$$

Y = Offset from base line
W = Maximum offset
X = Distance along base line
L = Length of flare

PARABOLIC FLARE OFFSETS

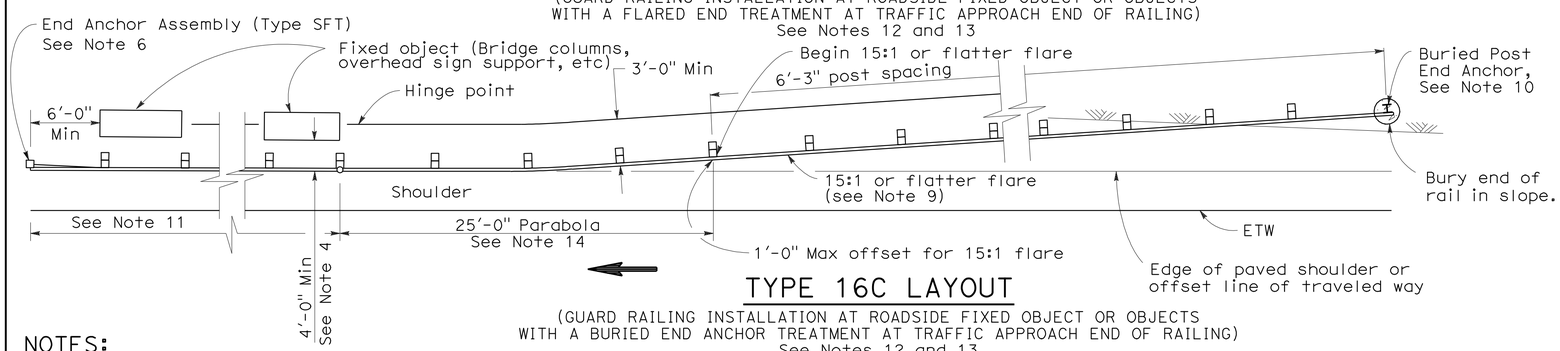

TYPE 16C LAYOUT

(GUARD RAILING INSTALLATION AT ROADSIDE FIXED OBJECT OR OBJECTS WITH A BURIED END ANCHOR TREATMENT AT TRAFFIC APPROACH END OF RAILING)
See Notes 12 and 13

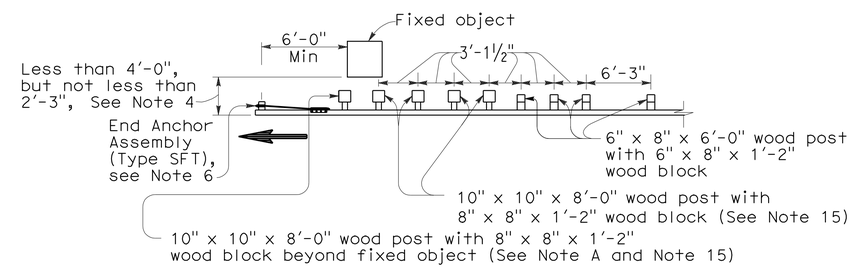

NOTE A: For a series of fixed objects (bridge columns, overhead sign supports, etc.) additional 10" x 10" x 8'-0" wood post with 8" x 8" x 1'-2" wood blocks at 3'-1½" center to center spacing are to be used between fixed objects.

STRENGTHENED RAILING SECTIONS FOR FIXED OBJECT

Use strengthened railing sections with Types 16A, 16B or 16C Layouts where minimum clearance between the face of the guard railing and fixed object(s) is less than 4'-0", but not less than 2'-3". See Note 4

NOTES:

1. Line post, blocks and hardware to be used are shown on Revised Standard Plans A77A1, A77A2, A77B1, A77C1 and A77C2.
2. Guard railing post spacing to be 6'-3" center to center, except as otherwise noted.
3. Except as noted, line posts are 6" x 8" x 6'-0" wood with 6" x 8" x 1'-2" wood blocks. W6 x 9 steel posts, 6'-0" in length, with 6" x 8" x 1'-2" notched wood blocks or notched recycled plastic blocks may be used for 6" x 8" x 6'-0" wood line posts with 6" x 8" x 1'-2" wood blocks where applicable and when specified.
4. A 4'-0" minimum clearance is required between the face of the railing and the face of a fixed object located directly behind standard guard railing sections with post spacing of 6'-3". Construct guard railing as shown in the detail "Strengthened Railing Sections for Fixed Objects" on this plan, where the clearance between the face of the railing and the face of a fixed object is less than 4'-0", but not less than 2'-3". Where the clearance is less than 2'-3", a concrete wall or barrier should be constructed to shield the fixed object(s).
5. Direction of adjacent traffic indicated by ⟶.
6. For End Anchor Assembly (Type SFT) details, see Standard Plan A77H1.
7. In-line Terminal System End Treatments are used where site conditions will not accommodate a flared end treatment.
8. The type of terminal system to be used will be shown on the Project Plans.
9. The 15:1 or flatter flare used with Type 16C Layout is based on the edge of the paved shoulder or offset line of edge of the traveled way. The length of guard railing within the 15:1 or flatter flare is based on site conditions and should be a length equal to multiples of 12'-6".
10. For details of the Buried Post End Anchor used with Type 16C Layout, see Standard Plan A77I2.
11. As site conditions dictate, construct additional guard railing to shield fixed object(s). Additional guard railing length equal to multiples of 12'-6". Post spacing at 6'-3" except as specified in Note 4.
12. Layout Types 16A, 16B or 16C are typically used where guard railing is recommended to shield roadside fixed object(s) and a crashworthy end treatment is required for only one direction of traffic.
13. Where placement of dike is required with guard railing, see Revised Standard Plan RSP A77C4 for dike positioning details.
14. For typical flare offsets for 25'-0" length parabola with maximum offset of 1'-0", see Revised Standard Plan RSP A77E1.
15. W6 x 15 steel post, 8'-0" in length, with 8" x 8" x 1'-2" notched wood block or notched recycled plastic blocks may be used in place of the 10" x 10" x 8'-0" wood post with 8" x 8" x 1'-2" wood block shown in the "Strengthened Railing Sections Detail".

STATE OF CALIFORNIA
DEPARTMENT OF TRANSPORTATION

METAL BEAM GUARD RAILING TYPICAL LAYOUTS FOR ROADSIDE FIXED OBJECTS

NO SCALE

RSP A77G3 DATED JUNE 6, 2008 SUPERSEDES STANDARD PLAN A77G3 DATED MAY 1, 2006 - PAGE 61 OF THE STANDARD PLANS BOOK DATED MAY 2006.

REVISED STANDARD PLAN RSP A77G3

2006 REVISED STANDARD PLAN RSP A77G3

12-10-07

DIST	COUNTY	ROUTE	POST MILES TOTAL PROJECT	SHEET NO.	TOTAL SHEETS
04	SCI	85,87	Var	54	67

Randell D. Hiatt
REGISTERED CIVIL ENGINEER

June 6, 2008
PLANS APPROVAL DATE

REGISTERED PROFESSIONAL ENGINEER
Randell D. Hiatt
No. C50200
Exp. 6-30-09
CIVIL
STATE OF CALIFORNIA

The State of California or its officers or agents shall not be responsible for the accuracy or completeness of electronic copies of this plan sheet.

To accompany plans dated 5-26-09

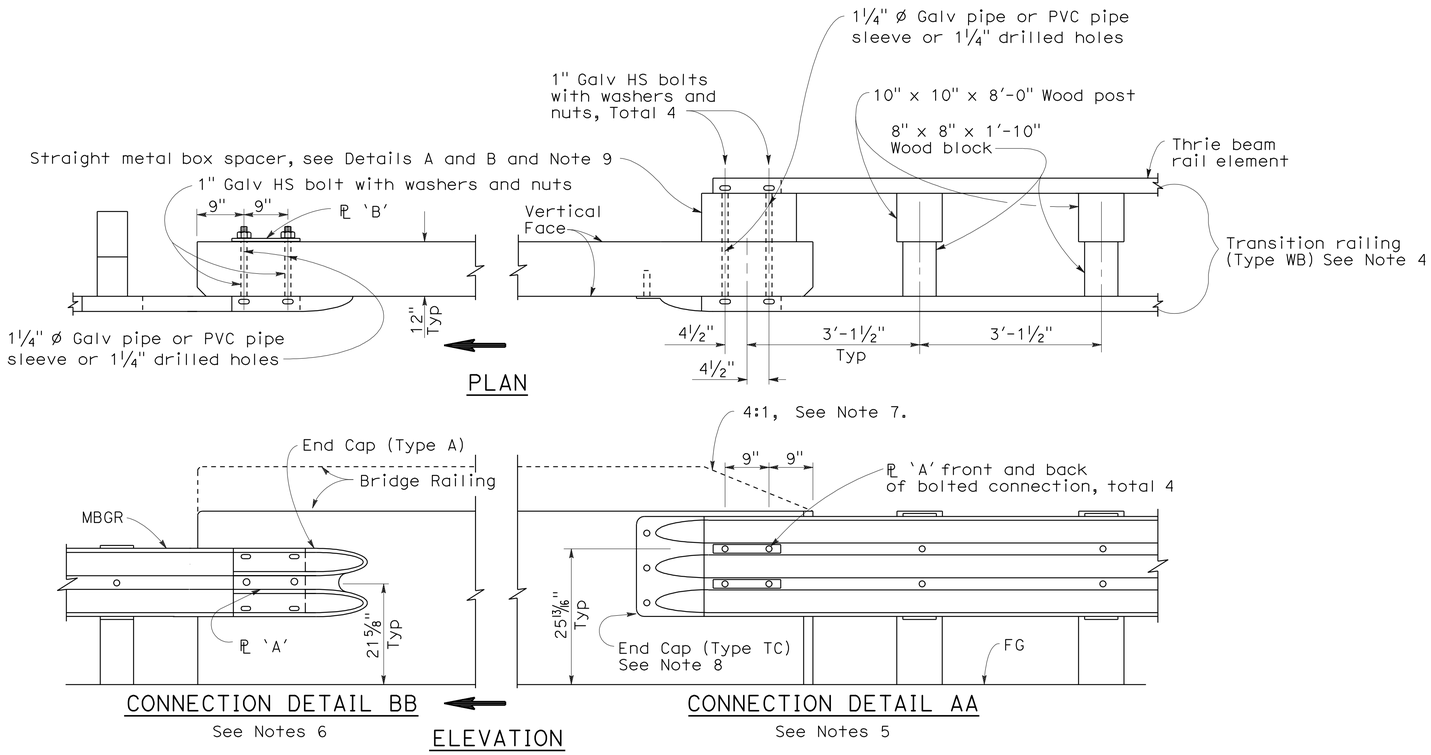

GUARD RAILING CONNECTION TO BRIDGE RAILING WITHOUT SIDEWALK

NOTES:

1. See Revised Standard Plan RSP A77J2 for additional connection details to bridges without sidewalks.
2. Additional details of posts, blocks and hardware are shown on Standard Plan A77B1, A77C1 and A77C2.
3. Direction of adjacent traffic indicated by ➡.
4. For additional details of Transition Railing (Type WB), see Standard Plan A77J4. Transition Railing (Type WB) transitions the 12 gage w-beam standard railing section of guard railing to a heavier gage nested thrie beam railing section which is connected to the concrete bridge railing.
5. For typical use of Connection Detail AA, see Layout Types 12A and 12B on Revised Standard Plan RSP A77F1, Layout Types 12C and 12D on Standard Plan A77F2, and Layout Type 12E on Revised Standard Plan RSP A77F3.
6. For typical use of Connection Detail BB, see Layout Type 12D (structure departure railing connection) on Standard Plan A77F2 and Layout Type 12DD on Standard Plan A77F5.
7. Where the height of the bridge railing exceeds the height of the thrie beam railing by more than 1" at Connection Detail AA, taper the top of the end of the bridge railing at 4:1 to match the top elevation of the thrie beam rail.
8. For details of End Cap (Type TC), see Standard Plan A77J4.
9. See Standard Plan A77J4 for additional details regarding depth dimension for straight metal box spacer.

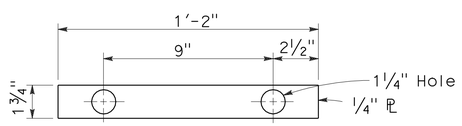

PLATE 'A'

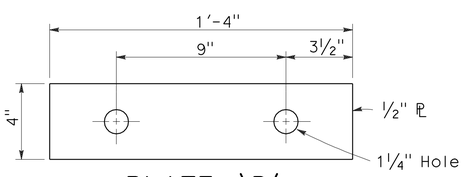

PLATE 'B'
(For backside of connection BB)

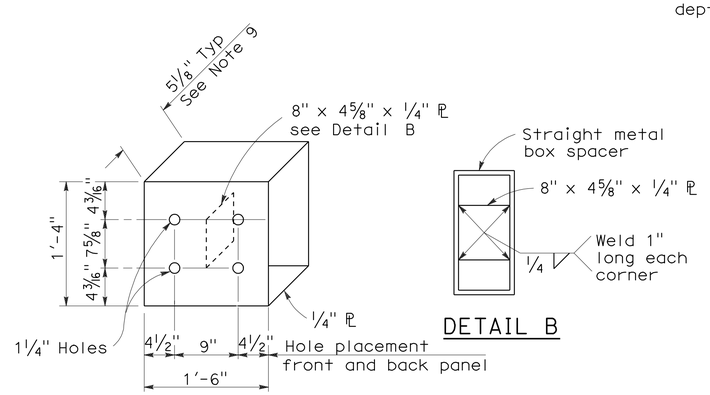

DETAIL A

DETAIL B

STRAIGHT METAL BOX SPACER

STATE OF CALIFORNIA
DEPARTMENT OF TRANSPORTATION

METAL BEAM GUARD RAILING CONNECTIONS TO BRIDGE RAILINGS WITHOUT SIDEWALKS DETAILS No.1

NO SCALE

RSP A77J1 DATED JUNE 6, 2008 SUPERSEDES STANDARD PLAN A77J1 DATED MAY 1, 2006 - PAGE 72 OF THE STANDARD PLANS BOOK DATED MAY 2006.

REVISED STANDARD PLAN RSP A77J1

2006 REVISED STANDARD PLAN RSP A77J1

12-10-07

DIST	COUNTY	ROUTE	POST MILES TOTAL PROJECT	SHEET NO.	TOTAL SHEETS
04	SCI	85,87	Var	55	67

Randell D. Hiatt
REGISTERED CIVIL ENGINEER

June 6, 2008
PLANS APPROVAL DATE

REGISTERED PROFESSIONAL ENGINEER
Randell D. Hiatt
No. C50200
Exp. 6-30-09
CIVIL
STATE OF CALIFORNIA

The State of California or its officers or agents shall not be responsible for the accuracy or completeness of electronic copies of this plan sheet.

To accompany plans dated 5-26-09

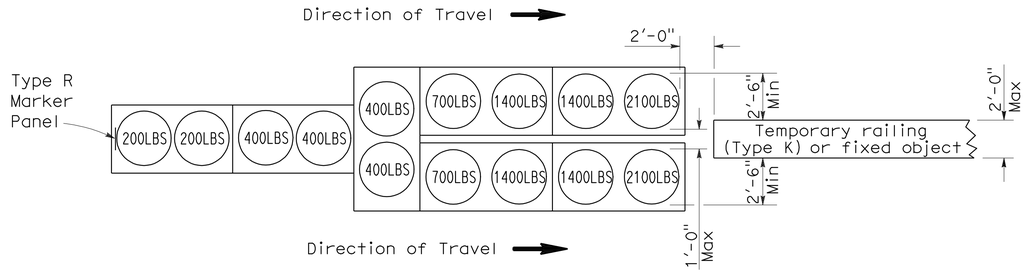

ARRAY 'TU14'

Approach speed 45 mph or more

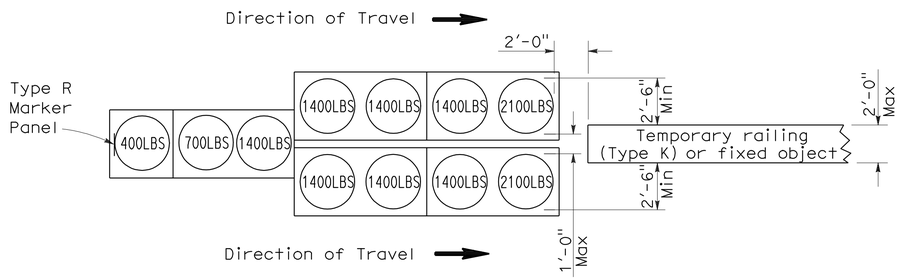

ARRAY 'TU11'

Approach speed less than 45 mph

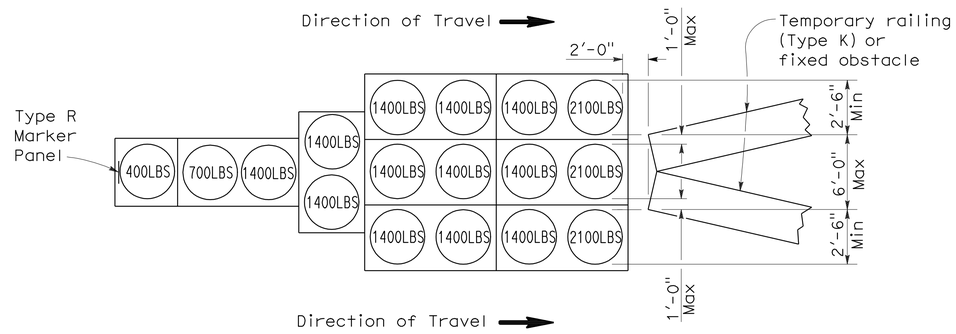

ARRAY 'TU17'

Approach speed less than 45 mph

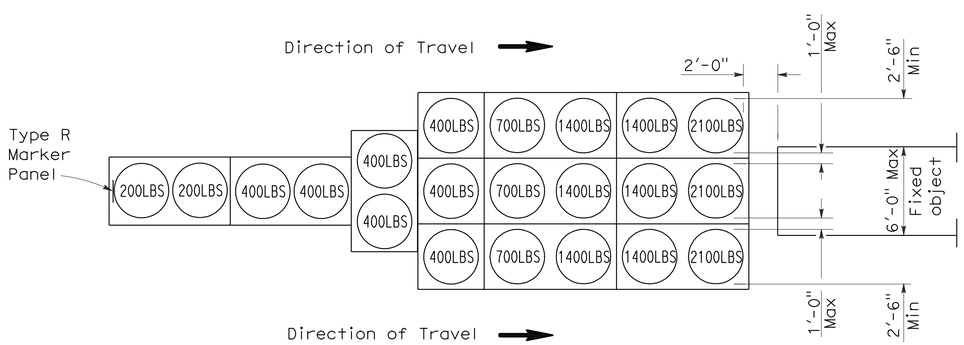

ARRAY 'TU21'

Approach speed 45 mph or more

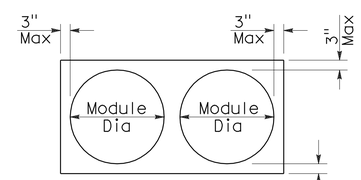

PLAN

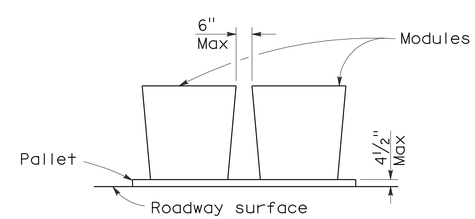

ELEVATION

CRASH CUSHION PALLET DETAIL

See Note 7

NOTES:

1. (XXX) Indicates sand filled module location and weight of sand in pounds for each module. Module spacing is based on the greater diameter of the module.
2. All sand weights are nominal.
3. Temporary crash cushion arrays shall not encroach on the traveled way.
4. Place the top of Type R marker panel 1" below the module lid.
5. Refer to Standard Plan A73B for marker details.
6. Approach speeds indicated conform to NCHRP 350 Report criteria.
7. Use of pallets is optional.

STATE OF CALIFORNIA
DEPARTMENT OF TRANSPORTATION

TEMPORARY CRASH CUSHION, SAND FILLED (UNIDIRECTIONAL)

NO SCALE

RSP T1A DATED JUNE 6, 2008 SUPERSEDES STANDARD PLAN T1A
DATED MAY 1, 2006 - PAGE 211 OF THE STANDARD PLANS BOOK DATED MAY 2006.

REVISED STANDARD PLAN RSP T1A

2006 REVISED STANDARD PLAN RSP T1A

DIST	COUNTY	ROUTE	POST MILES TOTAL PROJECT	SHEET NO.	TOTAL SHEETS
04	SCI	85,87	Var	56	67

Randell D. Hiatt
REGISTERED CIVIL ENGINEER

June 6, 2008
PLANS APPROVAL DATE

REGISTERED PROFESSIONAL ENGINEER
Randell D. Hiatt
No. C50200
Exp. 6-30-09
CIVIL
STATE OF CALIFORNIA

The State of California or its officers or agents shall not be responsible for the accuracy or completeness of electronic copies of this plan sheet.

To accompany plans dated 5-26-09

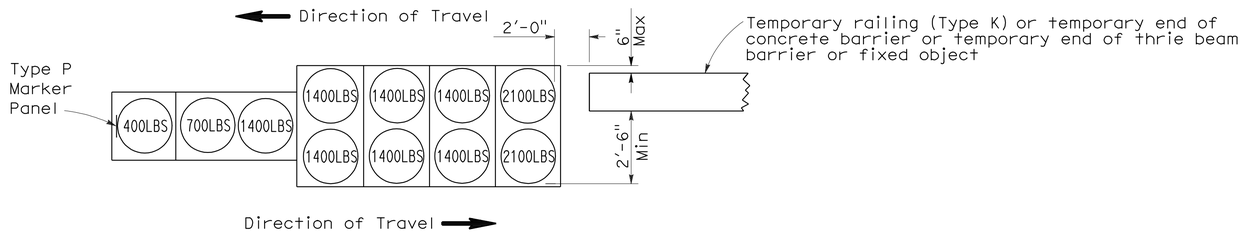

ARRAY 'TB11'

Approach speed less than 45 mph

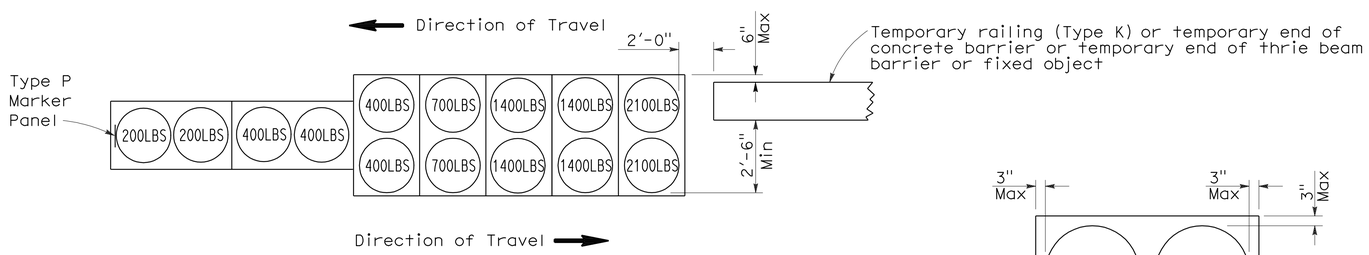

ARRAY 'TB14'

Approach speed 45 mph or more

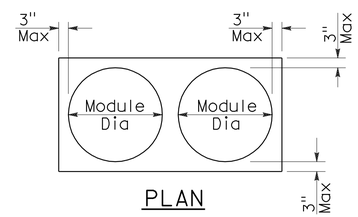

PLAN

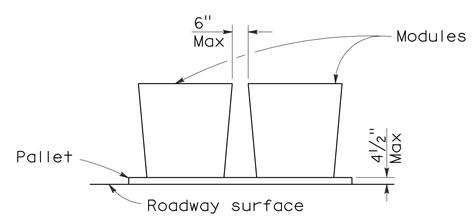

ELEVATION

CRASH CUSHION PALLET DETAIL

See Note 7

NOTES:

1. (XXX) Indicates sand filled module location and weight of sand in pounds for each module. Module spacing is based on the greater diameter of the module.
2. All sand weights are nominal.
3. Temporary crash cushion arrays shall not encroach on the traveled way.
4. Place the Type P marker panel so that the bottom of the panel rests upon the pallet.
5. Refer to Standard Plan A73B for marker details.
6. Approach speeds indicated conform to NCHRP 350 Report criteria.
7. Use of pallets is optional.

STATE OF CALIFORNIA
DEPARTMENT OF TRANSPORTATION

TEMPORARY CRASH CUSHION, SAND FILLED (BIDIRECTIONAL)

NO SCALE

RSP T1B DATED JUNE 6, 2008 SUPERSEDES STANDARD PLAN T1B
DATED MAY 1, 2006 - PAGE 212 OF THE STANDARD PLANS BOOK DATED MAY 2006.

REVISED STANDARD PLAN RSP T1B

2006 REVISED STANDARD PLAN RSP T1B

5-15-08

DIST	COUNTY	ROUTE	POST MILES TOTAL PROJECT	SHEET NO.	TOTAL SHEETS
04	SCI	85,87	Var	57	67

Randell D. Hiatt
REGISTERED CIVIL ENGINEER

June 6, 2008
PLANS APPROVAL DATE

REGISTERED PROFESSIONAL ENGINEER
Randell D. Hiatt
No. C50200
Exp. 6-30-09
CIVIL
STATE OF CALIFORNIA

The State of California or its officers or agents shall not be responsible for the accuracy or completeness of electronic copies of this plan sheet.

To accompany plans dated 5-26-09

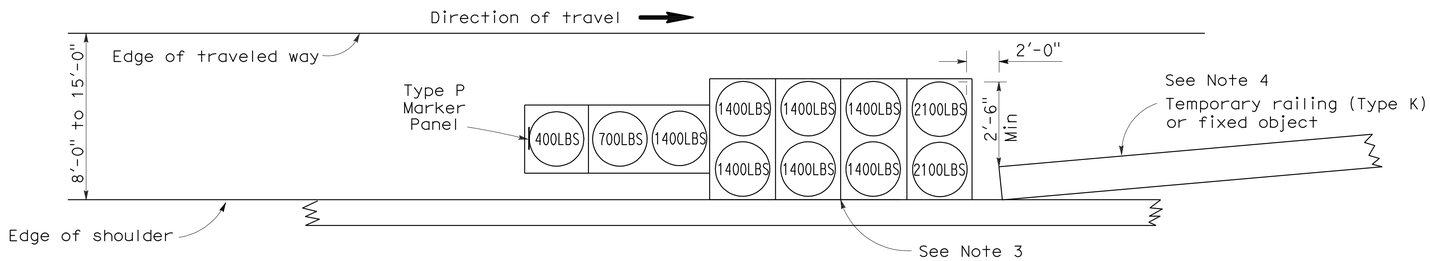

ARRAY 'TS11'

Approach speed less than 45 mph
See Note 9

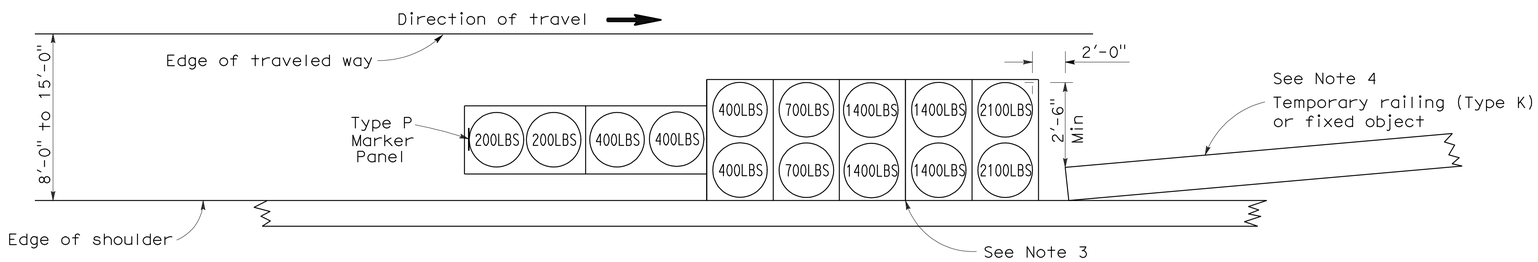

ARRAY 'TS14'

Approach speed 45 mph or more
See Note 9

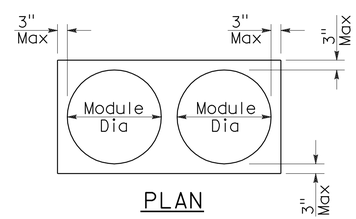

PLAN

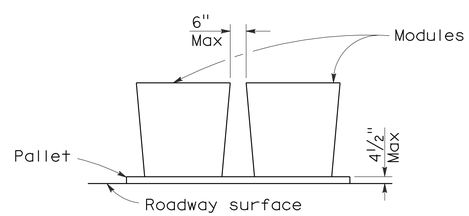

ELEVATION

CRASH CUSHION PALLET DETAIL

See Note 11

NOTES:

1. (XXX) Indicates sand filled module location and weight of sand in pounds for each module. Module spacing is based on the greater diameter of the module.
2. All sand weights are nominal.
3. The temporary crash cushion arrays shown on this plan shall be used only in locations where there will be traffic on one side of the temporary crash cushion array.
4. If the fixed object or approach end of the temporary railing is less than 15'-0" from the edge of traveled way, a temporary crash cushion is required in a construction or work zone.
5. Temporary crash cushion arrays shall not encroach on the traveled way.
6. Arrays for median shoulders shall conform to details shown on this plan for outside shoulders.
7. Place the Type P marker panel so that the bottom of the panel rests upon the pallet and faces traffic.
8. Refer to Standard Plan A73B for marker details.
9. For shoulder widths less than 8'-0", appropriate approved crash cushion protection, other than sand filled modules, shall be provided at fixed objects and at approach ends of temporary railing. The specific type of crash cushion shall be as shown on the project plans or as specified in the Special Provisions, or if not shown on the project plans or specified in the Special Provisions, shall be as approved by the Engineer.
10. Approach speeds indicated conform to NCHRP 350 Report criteria.
11. Use of pallets is optional.

STATE OF CALIFORNIA
DEPARTMENT OF TRANSPORTATION

TEMPORARY CRASH CUSHION, SAND FILLED (SHOULDER INSTALLATIONS)

NO SCALE

RSP T2 DATED JUNE 6, 2008 SUPERSEDES STANDARD PLAN T2
DATED MAY 1, 2006 - PAGE 213 OF THE STANDARD PLANS BOOK DATED MAY 2006.

REVISED STANDARD PLAN RSP T2

2006 REVISED STANDARD PLAN RSP T2

5-15-08

DIST	COUNTY	ROUTE	POST MILES TOTAL PROJECT	SHEET NO.	TOTAL SHEETS
04	SCI	85,87	Var	58	67

Robert B Schott
LICENSED LANDSCAPE ARCHITECT

August 15, 2008
PLANS Approval DATE

LICENSED LANDSCAPE ARCHITECT
Robert B. Schott 3625
Robert B Schott
Signature
11-04-08
Renewal Date
08-11-08
Date
STATE OF CALIFORNIA

The State of California or its officers or agents shall not be responsible for the accuracy or completeness of electronic copies of this plan sheet.

To accompany plans dated 5-26-09

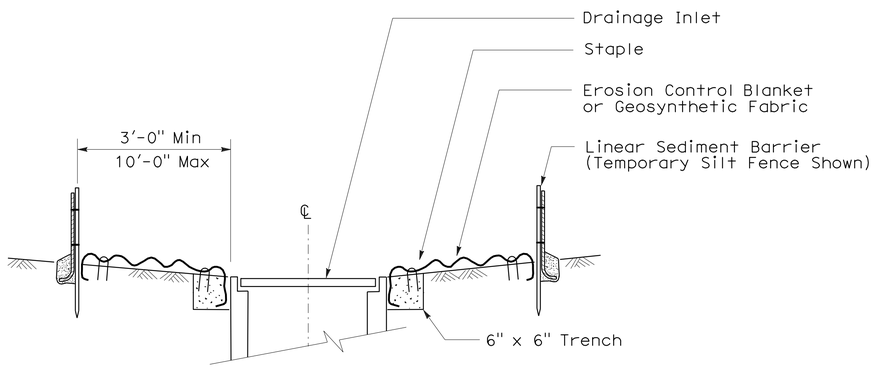

SECTION A-A

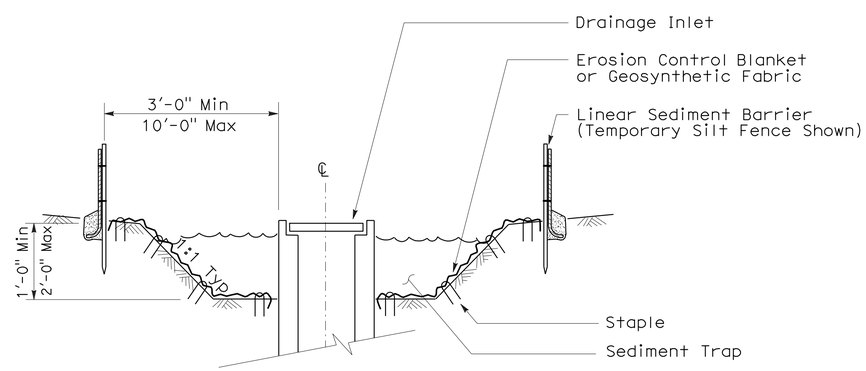

SECTION B-B

NOTES:

1. See Standard Plan T51 for Temporary Silt Fence.
2. Dimensions may vary to fit field conditions.

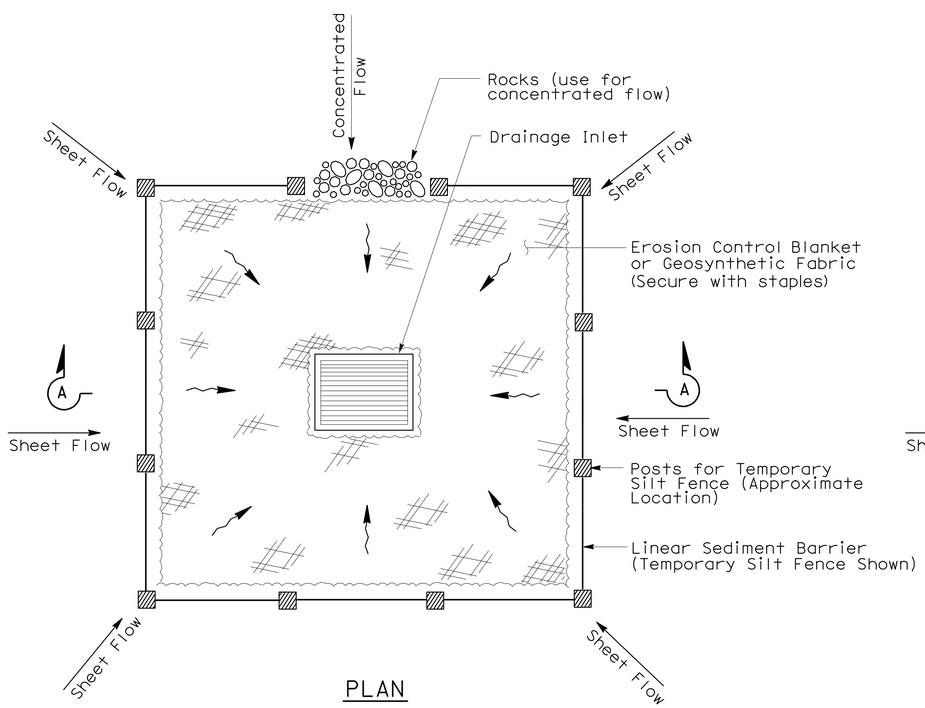

PLAN

TEMPORARY DRAINAGE INLET PROTECTION (TYPE 1)

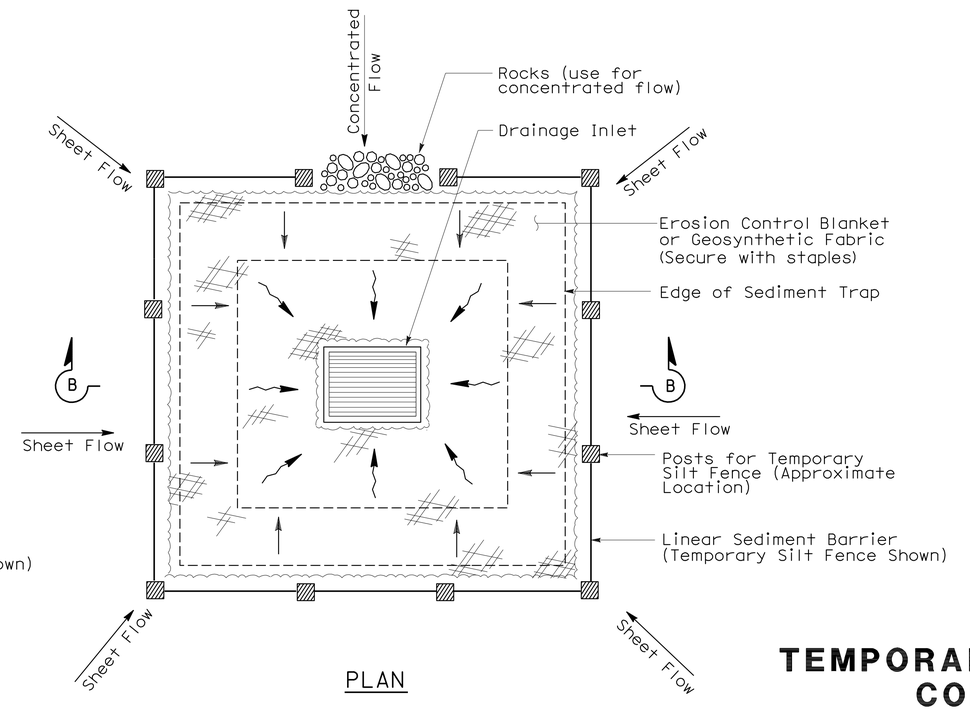

PLAN

TEMPORARY DRAINAGE INLET PROTECTION (TYPE 2) (EXCAVATED SEDIMENT TRAP)

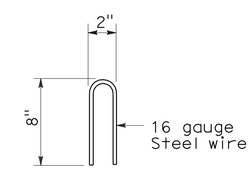

STAPLE DETAIL

STATE OF CALIFORNIA
DEPARTMENT OF TRANSPORTATION

TEMPORARY WATER POLLUTION CONTROL DETAILS (TEMPORARY DRAINAGE INLET PROTECTION)

NO SCALE

NSP T61 DATED AUGUST 15, 2008 SUPPLEMENTS THE STANDARD PLANS BOOK DATED MAY 2006.

NEW STANDARD PLAN NSP T61

2006 NEW STANDARD PLAN NSP T61

7-11-08

DIST	COUNTY	ROUTE	POST MILES TOTAL PROJECT	SHEET NO.	TOTAL SHEETS
04	SCI	85,87	Var	59	67

LICENSED LANDSCAPE ARCHITECT

August 15, 2008
PLANS APPROVAL DATE

The State of California or its officers or agents shall not be responsible for the accuracy or completeness of electronic copies of this plan sheet.

LICENSED LANDSCAPE ARCHITECT — Robert B. Schott — Signature — 11-04-08 Renewal Date — 08-11-08 Date — STATE OF CALIFORNIA

To accompany plans dated 5-26-09

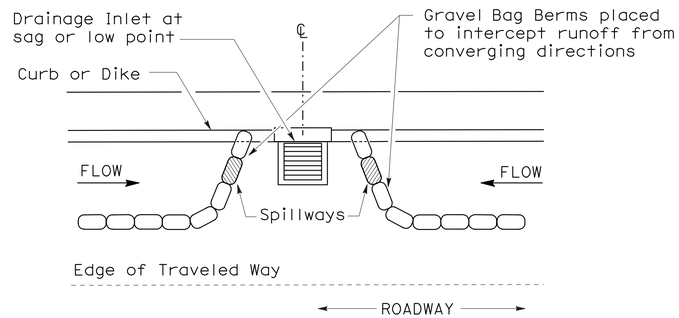

PLAN

CONFIGURATION FOR SAG POINT INLET (GRAVEL BAG BERM)

GRAVEL BAG BERM (TYPE 3A) SPACING TABLE

SLOPE OF ROADWAY (PERCENT)	1 to 3.9	4 to 5.9	6 to 7.9	8 to 10	10+
INTERVAL BETWEEN BERM	100′	75′	50′	25′	12′

For slope of less than 1%, install barriers only if erosion/sediment is prevalent

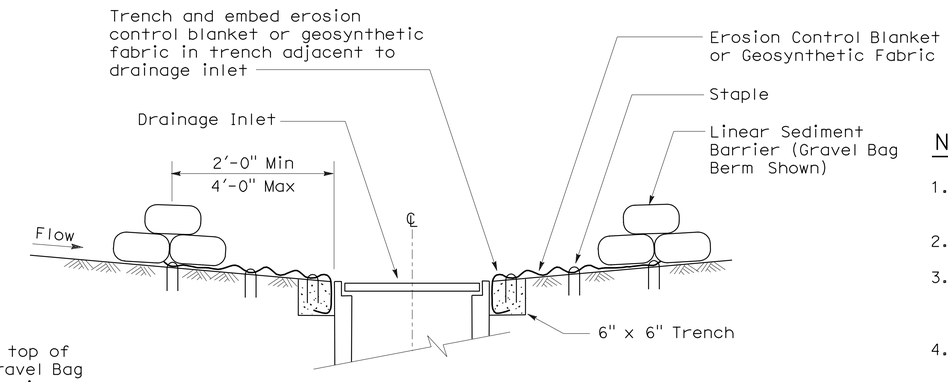

SECTION A-A

NOTES:

1. Place safety cones adjacent to drainage inlet protection.
2. Dimensions may vary to fit field conditions.
3. Install a minimum of 3 gravel bag berms upstream of each drainage inlet to be protected.
4. Position erosion control blanket or geosynthetic fabric at edge of concrete apron and secure in trench.
5. Erosion control blanket or geosynthetic fabric is not required if the area adjacent to the drainage inlet is vegetated or paved.

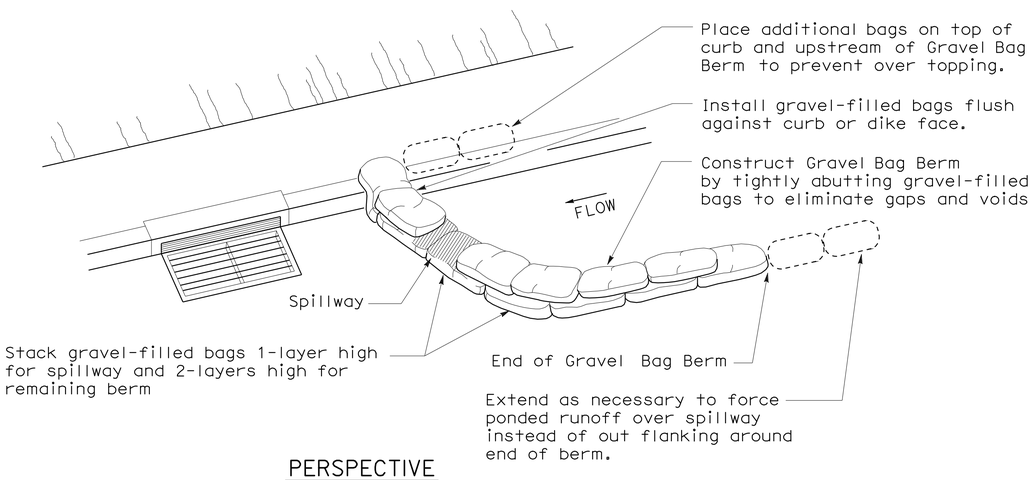

PERSPECTIVE

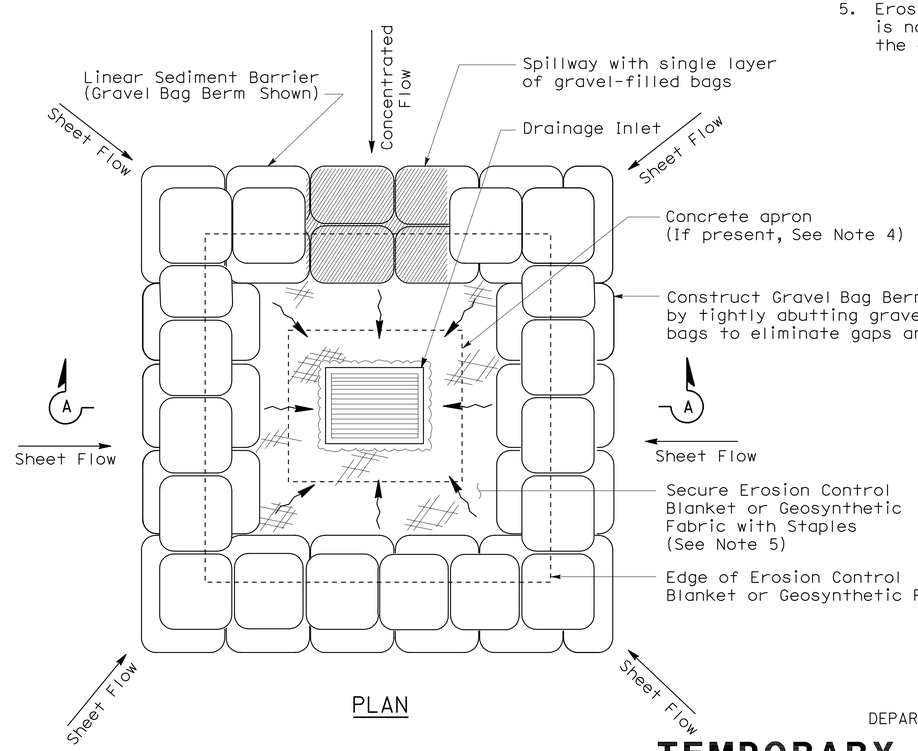

PLAN

TEMPORARY DRAINAGE INLET PROTECTION (TYPE 3B)

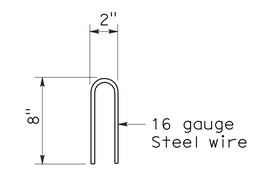

STAPLE DETAIL

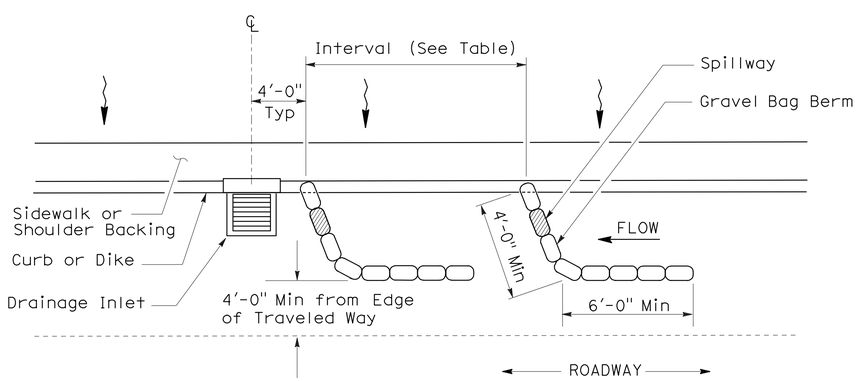

PLAN

TEMPORARY DRAINAGE INLET PROTECTION (TYPE 3A) (GRAVEL BAG BERM)

STATE OF CALIFORNIA
DEPARTMENT OF TRANSPORTATION

TEMPORARY WATER POLLUTION CONTROL DETAILS (TEMPORARY DRAINAGE INLET PROTECTION)

NO SCALE

NSP T62 DATED AUGUST 15, 2008 SUPPLEMENTS THE STANDARD PLANS BOOK DATED MAY 2006.

NEW STANDARD PLAN NSP T62

2006 NEW STANDARD PLAN NSP T62

7-11-08

DIST	COUNTY	ROUTE	POST MILES TOTAL PROJECT	SHEET NO.	TOTAL SHEETS
04	SCI	85,87	Var	60	67

LICENSED LANDSCAPE ARCHITECT

August 15, 2008
PLANS APPROVAL DATE

The State of California or its officers or agents shall not be responsible for the accuracy or completeness of electronic copies of this plan sheet.

LICENSED LANDSCAPE ARCHITECT — Robert B. Schott — Signature — 11-04-08 Renewal Date — 08-11-08 Date — STATE OF CALIFORNIA

To accompany plans dated 5-26-09

FLEXIBLE SEDIMENT BARRIER SPACING TABLE

SLOPE OF ROADWAY (PERCENT)	0 to 0.9	1 to 1.9	2 to 2.9	3 to 4	5+
INTERVAL BETWEEN BARRIERS	50′	35′	30′	25′	20′
ANGLE FROM FACE OF CURB	70°	70°	70°	45°	45°
SUGGESTED BARRIER LENGTH	6′	6′	6′	6′	6′

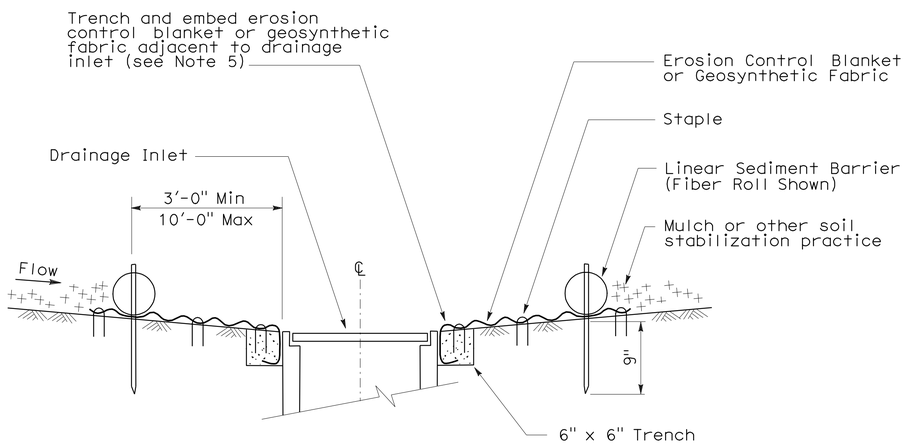

SECTION A-A

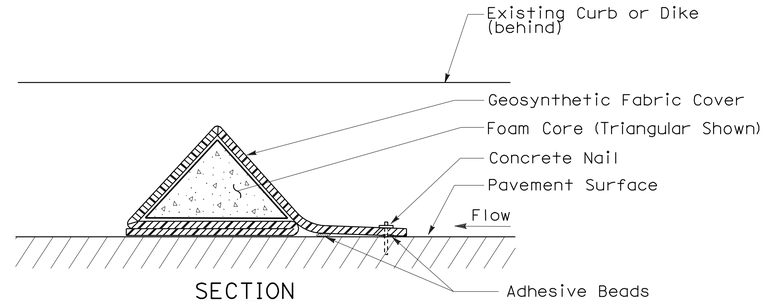

SECTION

FLEXIBLE SEDIMENT BARRIER DETAIL (FOAM BARRIER SHOWN)

NOTES:

1. See Standard Plan T51 for Temporary Silt Fence.
2. Dimensions may vary to fit field conditions.
3. Install a minimum of 3 flexible sediment barriers upstream of each drainage inlet to be protected.
4. Position erosion control blanket or geosynthetic fabric at edge of concrete apron and secure in trench.
5. Erosion control blanket or geosynthetic fabric is not required if the area adjacent to the drainage inlet is vegetated.

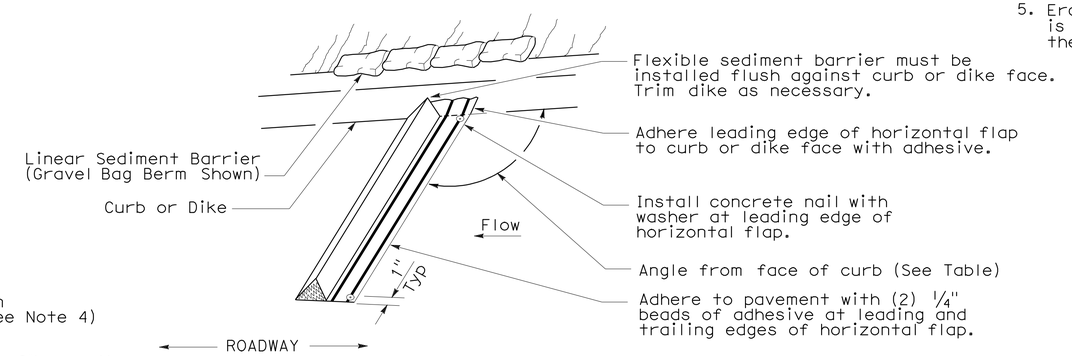

PERSPECTIVE

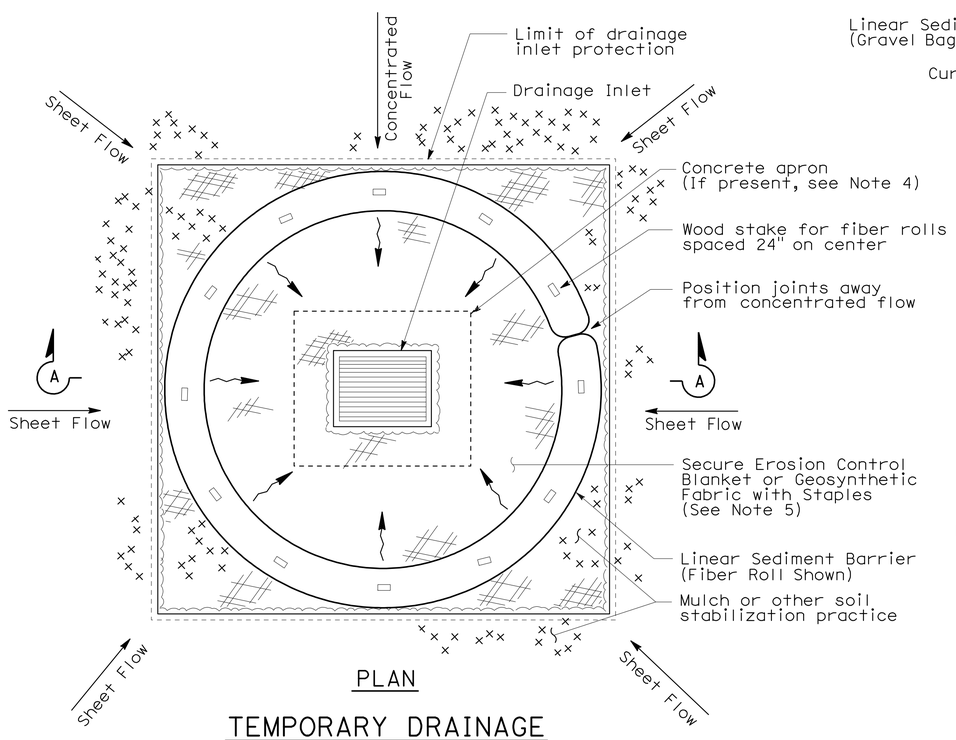

PLAN

TEMPORARY DRAINAGE INLET PROTECTION (TYPE 4A)

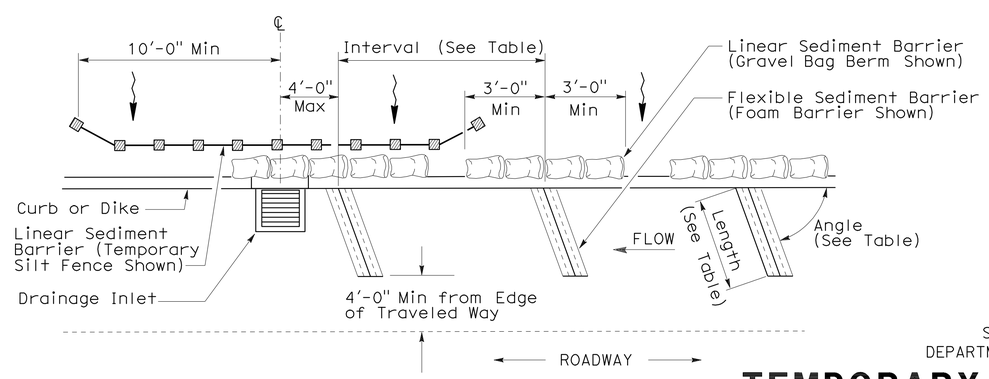

PLAN

TEMPORARY DRAINAGE INLET PROTECTION (TYPE 4B) FLEXIBLE SEDIMENT BARRIER

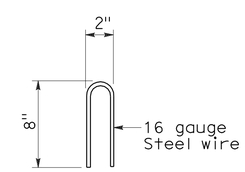

STAPLE DETAIL

STATE OF CALIFORNIA
DEPARTMENT OF TRANSPORTATION

TEMPORARY WATER POLLUTION CONTROL DETAILS (TEMPORARY DRAINAGE INLET PROTECTION)

NO SCALE

NSP T63 DATED AUGUST 15, 2008 SUPPLEMENTS THE STANDARD PLANS BOOK DATED MAY 2006.

NEW STANDARD PLAN NSP T63

2006 NEW STANDARD PLAN NSP T63

DIST	COUNTY	ROUTE	POST MILES TOTAL PROJECT	SHEET NO.	TOTAL SHEETS
04	SCI	85,87	Var	61	67

LICENSED LANDSCAPE ARCHITECT

August 15, 2008
PLANS APPROVAL DATE

The State of California or its officers or agents shall not be responsible for the accuracy or completeness of electronic copies of this plan sheet.

LICENSED LANDSCAPE ARCHITECT — Robert B. Schott — Signature — 11-04-08 Renewal Date — 08-11-08 Date — STATE OF CALIFORNIA

To accompany plans dated 5-26-09

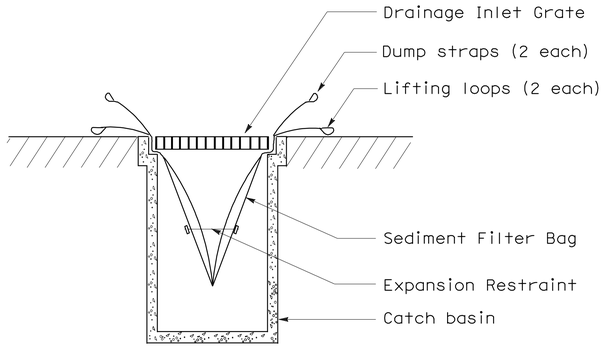

SECTION B-B

SEDIMENT FILTER BAG DETAIL

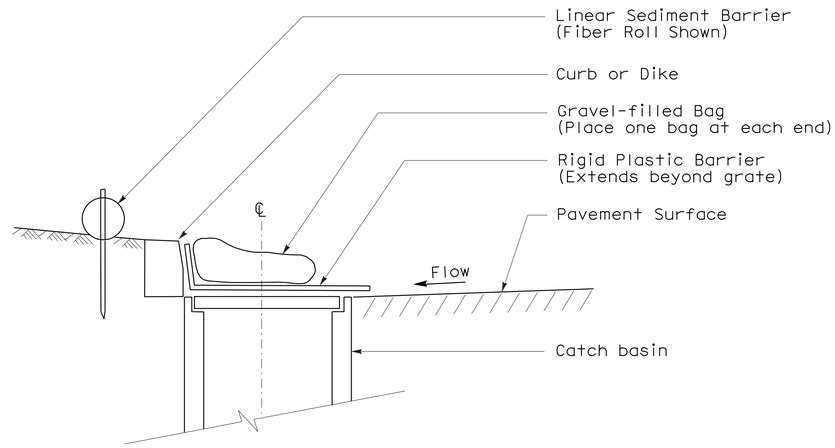

SECTION

TEMPORARY DRAINAGE INLET PROTECTION (TYPE 6A) (CATCH BASIN WITH GRATE)

NOTES:

1. See Standard Plan T51 for Temporary Silt Fence.
2. Dimensions may vary to fit field conditions.

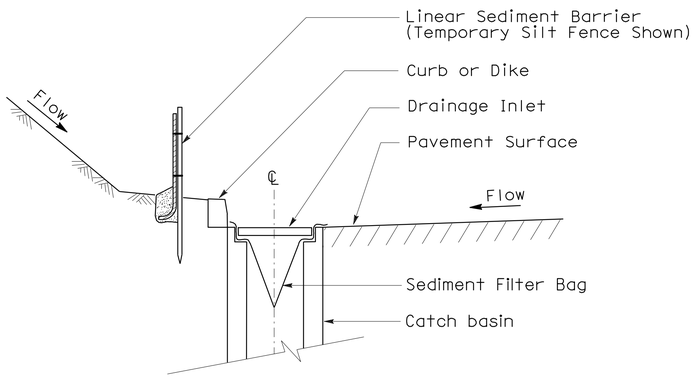

SECTION A-A

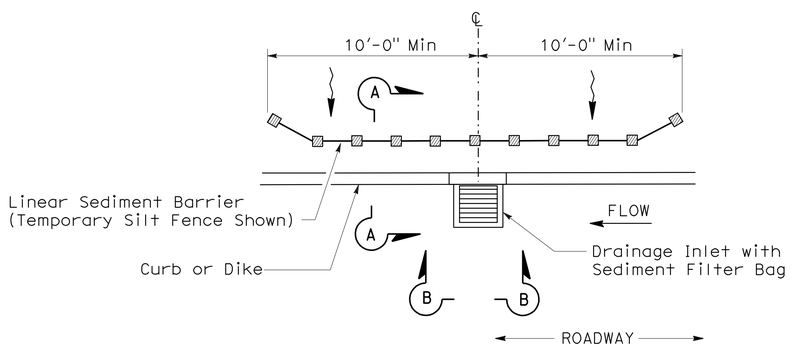

PLAN

TEMPORARY DRAINAGE INLET PROTECTION (TYPE 5) (SEDIMENT FILTER BAG)

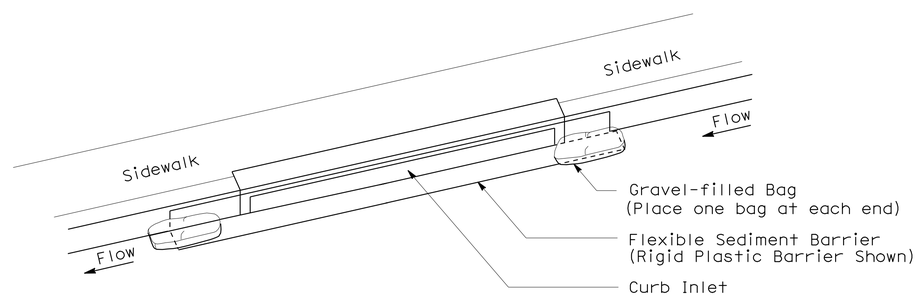

PERSPECTIVE

TEMPORARY DRAINAGE INLET PROTECTION (TYPE 6B) (CURB INLET WITHOUT GRATE)

STATE OF CALIFORNIA
DEPARTMENT OF TRANSPORTATION

TEMPORARY WATER POLLUTION CONTROL DETAILS (TEMPORARY DRAINAGE INLET PROTECTION)

NO SCALE

NSP T64 DATED AUGUST 15, 2008 SUPPLEMENTS THE STANDARD PLANS BOOK DATED MAY 2006.

NEW STANDARD PLAN NSP T64

2006 NEW STANDARD PLAN NSP T64

7-11-08

DIST	COUNTY	ROUTE	POST MILES TOTAL PROJECT	SHEET NO.	TOTAL SHEETS
04	SCI	85,87	Var	62	67

REGISTERED ELECTRICAL ENGINEER

October 5, 2007
PLANS APPROVAL DATE

REGISTERED PROFESSIONAL ENGINEER Jeffery G. McRae No. E14512 Exp. 6-30-08 ELECTRICAL STATE OF CALIFORNIA

The State of California or its officers or agents shall not be responsible for the accuracy or completeness of electronic copies of this plan sheet.

To accompany plans dated 5-26-09

ELECTROLIERS

STANDARD TYPES
15, 15D
15 STRUCTURE
21, 21D STRUCTURE
30
31
32
35
36-20A

High mast light pole

Double Arm lighting standard

Existing electrolier

Electrolier foundation (Future installation)

NOTES:

1. Luminaires shall be 310 W HPS when installed on Type 21, 21D, 30, 31, 32, 35 and 36-20A Standards, unless otherwise specified. Luminaires shall be 200 W HPS when installed on other type standards or poles, unless otherwise specified.
2. Luminaires shall be the cutoff type, ANSI Type III medium cutoff lighting distribution, unless otherwise specified.
3. Variations noted adjacent to symbol on project plans.

Electrolier (see project notes or project plans)

Luminaire on wood pole

STANDARD NOTES:

- AB — Abandon. If applied to conduit, remove conductors.
- BC — Install pull box in existing conduit run.
- BP — Pedestrian barricade, type as indicated on plan.
- CB — Install conduit into existing pull box.
- CC — Connect new and existing conduit. Remove existing conductors and install conductors as indicated.
- CF — Conduit to remain for future use. Remove conductors. Install pull wire or rope.
- DH — Detector handhole.
- FA — Foundation to be abandoned.
- IS — Install sign on signal mast arm.
- NS — No slip base on standard.
- PEC — Photoelectric control.
- PEU — Photoelectric unit.
- RC — Equipment or material to be removed and become the property of the Contractor.
- RE — Remove electrolier, fuses and ballast. Tape ends of conductors.
- RL — Relocate equipment.
- RR — Remove and reuse equipment.
- RS — Remove and salvage equipment.
- SC — Splice new to existing conductors.
- SD — Service disconnect.
- SF — Standard to remain for future use. Remove luminaire, pole conductors, fuses and ballast.
- TSP — Telephone service point.

ABBREVIATIONS AND EQUIPMENT DESIGNATIONS

PROPOSED	EXISTING	
BBS	bbs	Battery backup system
BC	bc	Bolt circle
C	C	Conduit
CCTV	cctv	Closed circuit television
CKT	ckt	Circuit
CMS	cms	Changeable message sign
DLC	dlc	Loop detector lead-in cable
EMS	ems	Extinguishable message sign
EVC	evc	Emergency vehicle cable
EVD	evd	Emergency vehicle detector
FB	fb	Flashing beacon
FBCA	fbca	Flashing beacon control assembly
FBS	fbs	Flashing beacon with slip base
FO	fo	Fiber optic
G	G	Ground (Equipment Grounding Conductor)
GFCI	GFCI	Ground fault circuit interrupt
HAR	har	Highway advisory radio
HEX	hex	Hexagonal
HPS	hps	High pressure sodium
IISNS	iisns	Internally illuminated street name sign
ISL	isl	Induction sign lighting
LED	led	Light emitting diode
LMA	lma	Luminaire mast arm
LPS	lps	Low pressure sodium
LTG	ltg	Lighting
LUM	lum	Luminaire
MAT	mat	Mast arm mounting vehicle signal faces, top attachment
MAS	mas	Mast arm mounting vehicle signal faces, side attachment
MAS-4A	mas-4A	Mast arm mounting vehicle signal faces, side attachment - 4 signal section
MAS-4B	mas-4B	
MAS-4C	mas-4C	
MAS-5A	mas-5A	Mast arm mounting vehicle signal faces, side attachment - 5 signal section
MAS-5B	mas-5B	
MC	mc	Mercury contactor
M/M	m/m	Multiple to multiple transformer
MT	mt	Conduit with pull wire or rope only
MTG	mtg	Mounting
	mv	Mercury vapor lighting fixture
N	N	Neutral (Grounded Conductor)
NC	NC	Normally closed
NO	NO	Normally open
PB	pb	Pull box
PEC	pec	Photoelectric control (Type I, II, III, IV or V as shown)
PED	ped	Pedestrian
PEU	peu	Photoelectric unit
PPB	ppb	Pedestrian push button
RL		Relocated equipment
RM	rm	Ramp metering
SB	sb	Slip base
SIC	sic	Signal interconnect cable
SIG	sig	Signal
SMA	sma	Signal mast arm
SNS	sns	Street name sign
SP	sp	Service point
TDC	tdc	Telephone demarcation cabinet
TMS	tms	Traffic monitoring station
TOS	tos	Traffic Operations System
VEH	veh	Vehicle
XFMR	xfmr	Transformer
COMM	comm	Communication
RWIS	rwis	Roadway weather information system

SOFFIT AND WALL MOUNTED LUMINAIRES

Pendant, 70 W HPS unless otherwise specified.

Flush, 70 W HPS unless otherwise specified.

Wall surface, 70 W HPS unless otherwise specified.

Existing soffit or wall luminaire to remain unmodified.

Existing soffit or wall luminaire to be modified as specified.

NOTE:

Arrow indicates "street side" of luminaire.

STATE OF CALIFORNIA
DEPARTMENT OF TRANSPORTATION

ELECTRICAL SYSTEMS (SYMBOLS AND ABBREVIATIONS)

NO SCALE

RSP ES-1A DATED OCTOBER 5, 2007 SUPERSEDES STANDARD PLAN ES-1A DATED MAY 1, 2006 - PAGE 400 OF THE STANDARD PLANS BOOK DATED MAY 2006.

REVISED STANDARD PLAN RSP ES-1A

2006 REVISED STANDARD PLAN RSP ES-1A

DIST	COUNTY	ROUTE	POST MILES TOTAL PROJECT	SHEET NO.	TOTAL SHEETS
04	SCI	85,87	Var	63	67

REGISTERED ELECTRICAL ENGINEER

October 5, 2007
PLANS APPROVAL DATE

REGISTERED PROFESSIONAL ENGINEER Jeffery G. McRae No. E14512 Exp. 6-30-08 ELECTRICAL STATE OF CALIFORNIA

The State of California or its officers or agents shall not be responsible for the accuracy or completeness of electronic copies of this plan sheet.

To accompany plans dated 5-26-09

CONDUIT

PROPOSED	EXISTING	
		Lighting Conduit, unless otherwise indicated or noted
		Traffic signal conduit
C	c	Communication conduit
T	t	Telephone conduit
F	f	Fire alarm conduit
FO	fo	Fiber optic conduit
		Conduit termination (RSP ES-9A C)
R	r	Conduit riser in/on structure or service pole

SERVICE EQUIPMENT

PROPOSED	EXISTING	
OH	oh	Overhead lines
U	U	Wood pole "U" indicates utility owned
		Pole guy with anchor
		Utility transformer - ground mounted
III		Service equipment enclosure type
		Service equipment enclosure door indicates front of enclosure
T	t	Telephone demarcation cabinet

POLE-MOUNTED SERVICE DESIGNATION

Type of installation

TYPE H SERVICE - 28'-10" ← Pole height above grade

ILLUMINATED OVERHEAD SIGN

PROPOSED	EXISTING	
		Overhead sign - Single post
		Overhead sign - Two post
		Overhead sign - Mounted on structure
		Overhead sign with electrolier

SIGNAL EQUIPMENT

PROPOSED	EXISTING	
		Pedestrian signal face
		Pedestrian push button post
		Pedestrian barricade
		Vehicle signal face (with backplate, 3-Section: red, yellow and green)
		Vehicle signal face with angle visors
PV	PV	Modifications of basic symbols: "L" indicates all non-arrow sections louvered "LG" indicates louvered green section only "PV" indicates 12" programmed visibility sections "8" indicates all 8" sections (only when specified)
		Type 15TS and Vehicle signal face
		Vehicle signal face with red, yellow and green left arrow sections
		Vehicle signal face with red and yellow sections and up green arrow
		Vehicle signal face (5 Section) with red, yellow and green sections and yellow and green right arrows
		Type 1 Standard and attached vehicle signal faces
		Standard with signal mast arm only and attached vehicle signal faces and internally illuminated street name sign
		Type 33 Standard, Left-turn vehicle signal face and sign
		Standard with luminaire and signal mast arms and attached vehicle signal faces
		Cantilever flashing beacon Type 9 Frame, with a sign unless otherwise specified or indicated
		Type 15-FBS Standard with two vehicle signal face sections with lens, backplate and visor with a sign
R	Y	Flashing beacon. One vehicle signal face section with lens, backplate and visor. "R" indicates red indication, "Y" indicates yellow indication
		Controller assembly. Door indicates front of cabinet

SIGNAL EQUIPMENT Cont

PROPOSED	EXISTING	
		Guard post
		Type 1 Standard with "Meter On" sign
		Emergency Vehicle detector

NOTES:

1. All signal sections shall be 12" unless shown otherwise.
2. Signal heads shall be provided with backplates unless shown otherwise.
3. Signal indication shall be LED.

STATE OF CALIFORNIA
DEPARTMENT OF TRANSPORTATION

ELECTRICAL SYSTEMS (SYMBOLS AND ABBREVIATIONS)

NO SCALE

RSP ES-1B DATED OCTOBER 5, 2007 SUPERCEDES STANDARD PLAN ES-1B DATED MAY 1, 2006 - PAGE 401 OF THE STANDARD PLANS BOOK DATED MAY 2006.

REVISED STANDARD PLAN RSP ES-1B

2006 REVISED STANDARD PLAN RSP ES-1B

7-10-07

DIST	COUNTY	ROUTE	POST MILES TOTAL PROJECT	SHEET NO.	TOTAL SHEETS
04	SCI	85,87	Var	64	67

REGISTERED ELECTRICAL ENGINEER

October 5, 2007
PLANS APPROVAL DATE

The State of California or its officers or agents shall not be responsible for the accuracy or completeness of electronic copies of this plan sheet.

REGISTERED PROFESSIONAL ENGINEER Jeffery G. McRae No. E14512 Exp. 6-30-08 ELECTRICAL STATE OF CALIFORNIA

To accompany plans dated 5-26-09

EQUIPMENT IDENTIFICATION

ILLUMINATED SIGN IDENTIFICATION NUMBER:

Sign No. 12345

- Sign number - Place on post or structure

10 ISL SCI 1.0

- Transformer rating (kVA)
- Lighting control type
- Number and type of fixtures

Do NOT place on standard or structure

ELECTROLIER OR EQUIPMENT IDENTIFICATION NUMBER:

12345 - 15'-0"

- Mast arm length, if shown. Do not place on standard or structure.
- Equipment number - Place on standard or structure. Existing equipment numbers are shown in parenthesis

CONDUIT AND CONDUCTOR IDENTIFICATION:

1½"C, 2#10, 15#14, 2 DLC

- Number and size of conductors and cables
- Size of conduit in inches

Ø1, Ø2, Ø2P, etc.	Traffic phase identification for signal faces, detectors and phase diagrams
1 2 3	Project note numbers
A B C	Equipment description, installation or item numbers
1 2 3	Conduit run numbers

SIGNAL AND LIGHTING STANDARD (TYPICAL DESIGNATION):

19A - 3 - 100

- Wind velocity = 100 mph
- Case 3 arm loading
- Standard type
- Standard Plan sheet number
- Detail number or letter

MISCELLANEOUS EQUIPMENT

PROPOSED	EXISTING	
CMS	cms	Changeable message sign
		Closed circuit television camera
		Highway advisory radio pole and antenna
EMS	ems	Extinguishable message sign
M V	m v	Detection device M = Microwave sensor V = Video image sensor

WIRING DIAGRAM LEGEND

P	Pole
CB	Circuit breaker
A	Ampere
V	Volt
M	Metered
UM	Unmetered
NB	Neutral bus
GB	Ground bus
G	Equipment grounding conductor
N	Grounded conductor (Neutral)

- External conductor
- Conductor or bus
- Tie point
- Contactor coil
- Contactor, Contact NO
- Terminal blocks
- Contactor, Contact NC
- Enclosure bond
- Grounding electrode
- Circuit breaker
- Receptacle

PULL BOXES

PROPOSED EXISTING

Pull box-No. 5 unless otherwise indicated or noted.

3 9A(21)

Pull box-Additional designations or descriptions

3	= No. 3½ pull box
5	= No. 5 pull box
6	= No. 6 pull box
7	= No. 7 (Ceiling pull box)
8	= No. 8 (Pendant soffit pull box)
9	= No. 9 pull box
9A	= No. 9A pull box

(C) = Communications pull box
(E) = Pull box with extension
(S) = Sprinkler control pull box
(21) = Anchor bolts and conduit for future installation of Type 21 Standard
(T) = Traffic pull box

VEHICLE DETECTORS

5 J 9 U

- Vehicle detector designation
- U = Upper
- L = Lower
- Slot number in input file
- Input file (I or J)
- Phase

PROPOSED EXISTING

	Type A detector loop. Outline of sawcut shown.
	Type B detector loop. Outline of sawcut shown.
	Type C detector loop. Outline of sawcut shown.
	Type D detector loop. Outline of sawcut shown.
	Type E detector loop. Outline of sawcut shown.
	Type Q detector loop. Outline of sawcut shown.
	Magnetic detector
DH dh	Detector handhole
	Microwave or video detection zone

STATE OF CALIFORNIA
DEPARTMENT OF TRANSPORTATION

ELECTRICAL SYSTEMS (SYMBOLS AND ABBREVIATIONS)

NO SCALE

RSP ES-1C DATED OCTOBER 5, 2007 SUPERCEDES STANDARD PLAN ES-1C DATED MAY 1, 2006 - PAGE 402 OF THE STANDARD PLANS BOOK DATED MAY 2006.

REVISED STANDARD PLAN RSP ES-1C

2006 REVISED STANDARD PLAN RSP ES-1C

7-10-07

DIST	COUNTY	ROUTE	POST MILES TOTAL PROJECT	SHEET NO.	TOTAL SHEETS
04	SCI	85,87	Var	65	67

REGISTERED ELECTRICAL ENGINEER

October 5, 2007
PLANS APPROVAL DATE

REGISTERED PROFESSIONAL ENGINEER
Jeffery G. McRae
No. E14512
Exp. 6-30-08
ELECTRICAL
STATE OF CALIFORNIA

The State of California or its officers or agents shall not be responsible for the accuracy or completeness of electronic copies of this plan sheet.

To accompany plans dated 5-26-09

2006 REVISED STANDARD PLAN RSP ES-2C

NOTES-TYPE III SERVICE EQUIPMENT ENCLOSURES:

1. Service equipment enclosure and metering equipment shall meet the requirements of the service utility. The meter area shall have a sealable, lockable, weathertight cover that can be removed without the use of tools.

2. Service equipment enclosures shall be factory wired and conform to NEMA standards.

3. Dimensions of service equipment enclosures shall meet the requirements of the service utility.

4. The dead front panels on Type III service equipment enclosures shall have a continuous stainless steel or aluminum piano hinge. The panel in front of the breakers shall be secured with a latch or captive screws. No live parts shall be mounted on the dead front panel.

5. The exterior door shall have provisions for padlocking. The padlock hole shall be a minimum diameter of 7/16".

6. Enclosures housing transformers of more than one kVA shall have effective screened ventilation louver of not less than 50 square inches. Screen shall be stainless steel No. 304, with a No. 10 size mesh. Framed screen shall be secured with at least four bolts.

7. Fasteners on the exterior of the enclosure shall be vandal-resistant and shall not be removable from the exterior. Exterior screws, nuts, bolts and washers shall be stainless steel.

8. Landing lugs for incoming service conductors shall be compatible with either copper or aluminum conductors sized to suit the conductors shown on the plan. Landing lugs shall be copper or tin-plated aluminum. Neutral bus shall be rated for 125 A and be suitable for copper or aluminum conductors unless otherwise specified. The terminal shall include but not be limited to:

   a) Incoming terminals (landing lugs)
   b) Neutral lugs
   c) Solid neutral terminal strip

9. At least 6 standard single pole circuit breaker spaces, 3/4" nominal, shall be provided for branch circuits. Circuit breaker interiors shall be copper. Interiors of enclosure shall accept plug-in or cable-in/cable-out circuit breakers.

10. Control wiring shall be 600 V, 14 stranded machine tool wire. Where subject to flexing, 19 strand wire shall be used.

11. Main bus shall be rated for 125 A and shall be tin-plated copper.

12. A plastic laminated wiring diagram shall be provided with brass mounting eyelets and attached to the inside of the enclosure and the wiring diagram shall be affixed to the interior with a UL or ETL approved method.

13. An engraved phenolic nameplate on the dead front panel indicating the function of each circuit or device shall be installed with stainless steel rivets or stainless steel screws:

    a) Adjacent to the breaker or device with character size a minimum of 1/8".

    b) At the top of the exterior door panel indicating State system number, voltage level and number of phases with character size a minimum of 3/16".

14. The plan shows the approximate location of devices within the enclosure. Components may be rearranged, however, the "working" clearances within the service equipment enclosure shall be maintained.

15. In unpaved areas a raised portland cement concrete pad 2'-0" x 4" x width of foundation shall be constructed in front of new service equipment enclosure installation. Pad shall be set to elevation of foundation.

16. Foundation shall extend 2" minimum beyond edge of service equipment enclosure.

17. Internal bus, where shown, is typical only. Alternative design of proposed service equipment enclosure shall be submitted to the Engineer for approval.

18. Plug-in circuit breakers may be mounted in the vertical or horizontal position. Cable-in/cable-out circuit breakers shall be mounted in the vertical position.

19. Type III-AF and Type III-BF service equipment enclosures shall have the meter viewing windows located on the front side of the service equipment enclosures.

20. Type III-AR and Type III-BR service equipment enclosures shall be similarly constructed as Type III-AF and Type III-BF respectively, except the meter viewing windows shall be located on the back side of the service equipment enclosures.

21. Minimum clearance shall be required for front and back of service equipment enclosure per National Electrical Code, Article 110.26, "Spaces About Electric Equipment (600 Volts, Nominal, or Less)."

STATE OF CALIFORNIA
DEPARTMENT OF TRANSPORTATION

ELECTRICAL SYSTEMS (SERVICE EQUIPMENT NOTES TYPE III SERIES)

NO SCALE

RSP ES-2C DATED OCTOBER 5, 2007 SUPERCEDES STANDARD PLAN ES-2C
DATED MAY 1, 2006 - PAGE 405 OF THE STANDARD PLANS BOOK DATED MAY 2006.

REVISED STANDARD PLAN RSP ES-2C

DIST	COUNTY	ROUTE	POST MILES TOTAL PROJECT	SHEET NO.	TOTAL SHEETS
04	SCI	85,87	Var	66	67

REGISTERED ELECTRICAL ENGINEER

October 5, 2007
PLANS APPROVAL DATE

REGISTERED PROFESSIONAL ENGINEER Jeffery G. McRae No. E14512 Exp. 6-30-08 ELECTRICAL STATE OF CALIFORNIA

The State of California or its officers or agents shall not be responsible for the accuracy or completeness of electronic copies of this plan sheet.

To accompany plans dated 5-26-09

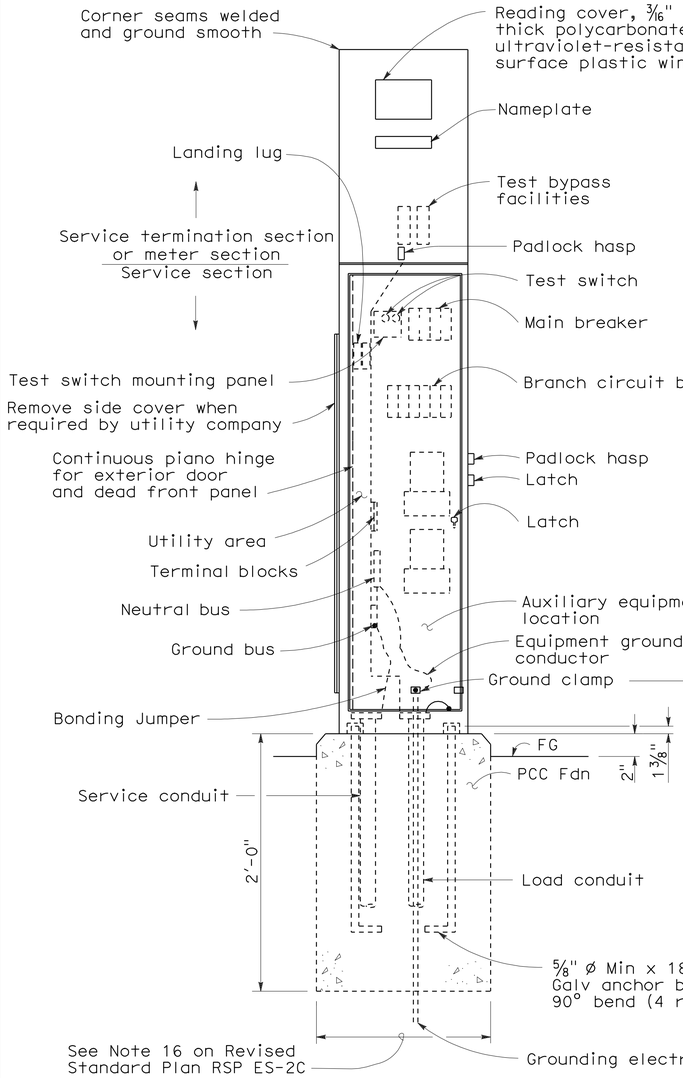

FRONT VIEW

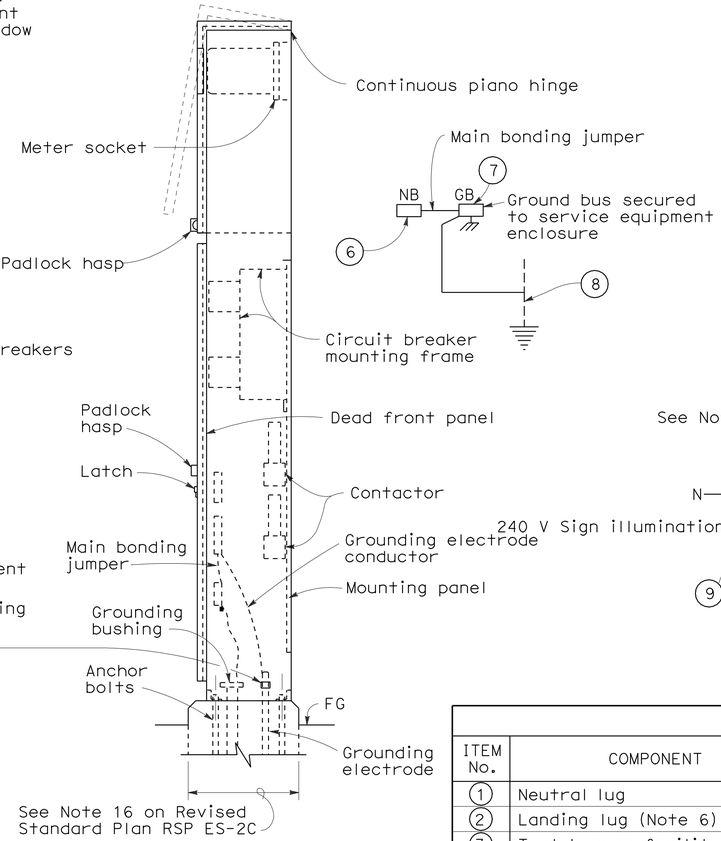

SIDE VIEW

TYPE III-AF SERVICE EQUIPMENT ENCLOSURE (TYPICAL)

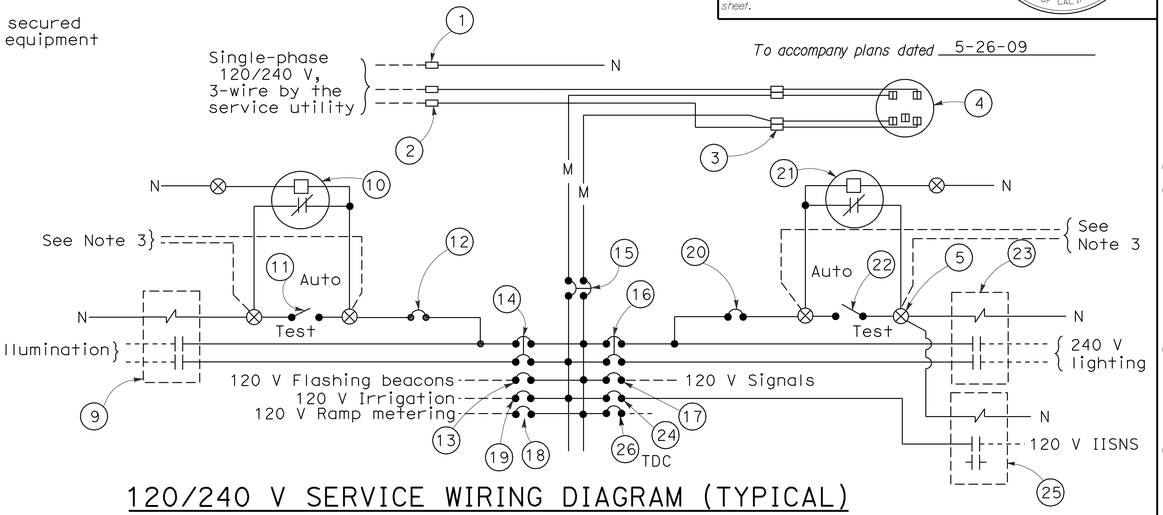

120/240 V SERVICE WIRING DIAGRAM (TYPICAL)

TYPE III-A SERVICE (120/240 V) EQUIPMENT LEGEND

ITEM No.	COMPONENT	NAME PLATE DESCRIPTION	ITEM No.	COMPONENT	NAME PLATE DESCRIPTION
1	Neutral lug		14	30 A, 240 V, 2P, CB	Sign Illumination
2	Landing lug (Note 6)		15	100 A, 240 V, 2P, CB	Main Breaker
3	Test bypass facility		16	30 A, 240 V, 2P, CB	Lighting
4	Meter socket and support		17	50 A, 120 V, 1P, CB	Signals
5	Terminal blocks		18	30 A, 120 V, 1P, CB	Ramp Metering
6	Neutral bus		19	20 A, 120 V, 1P, CB	Irrigation
7	Ground bus		20	15 A, 120 V, 1P, CB	Lighting Control
8	Grounding electrode		21	Photoelectric unit (Note 7)	
9	30 A, 2PNO Contactor	Sign Illumination	22	15 A, 1P, Test switch	Lighting Test Switch
10	Photoelectric unit (Note 7)		23	60 A, 2PNO Contactor	Lighting
11	15 A, 1P, Test switch	Sign Illumination Test Switch	24	15 A, 120 V, 1P, CB	IISNS
12	15 A, 120 V, 1P, CB	Sign Illumination Control	25	30 A, 2PNO Contactor	IISNS
13	15 A, 120 V, 1P, CB	Flashing Beacon	26	20 A, 120 V, 1P, CB	Telephone Demarcation Cabinet

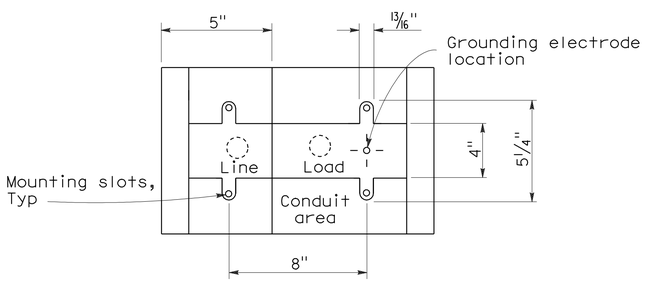

BASE FOR TYPE III-A SERVICE EQUIPMENT ENCLOSURE

NOTES: (FOR SERVICE EQUIPMENT ENCLOSURE)

1. Voltage ratings of service equipment shall conform to the service voltages indicated on the plans.
2. Unless otherwise indicated on the plans, service equipment items shall be provided for each service equipment enclosure as shown.
3. Connect to remote test switch mounted on lighting standards, sign post or structure when required.
4. Items No. 1 and 6 shall be isolated from the service equipment enclosure.
5. Meter sockets shall be 5 clip type.
6. The landing lug shall be suitable for multiple conductors.
7. Type V photoelectric control shall be used unless otherwise indicated on the plans.

STATE OF CALIFORNIA
DEPARTMENT OF TRANSPORTATION

ELECTRICAL SYSTEMS (SERVICE EQUIPMENT AND TYPICAL WIRING DIAGRAM, TYPE III-A SERIES)

NO SCALE

RSP ES-2D DATED OCTOBER 5, 2007 SUPERCEDES STANDARD PLAN ES-2D DATED MAY 1, 2006 - PAGE 406 OF THE STANDARD PLANS BOOK DATED MAY 2006.

REVISED STANDARD PLAN RSP ES-2D

2006 REVISED STANDARD PLAN RSP ES-2D

DIST	COUNTY	ROUTE	POST MILES TOTAL PROJECT	SHEET NO.	TOTAL SHEETS
04	SCI	85,87	Var	67	67

REGISTERED ELECTRICAL ENGINEER

October 5, 2007
PLANS APPROVAL DATE

REGISTERED PROFESSIONAL ENGINEER Jeffery G. McRae No. E14512 Exp. 6-30-08 ELECTRICAL STATE OF CALIFORNIA

The State of California or its officers or agents shall not be responsible for the accuracy or completeness of electronic copies of this plan sheet.

To accompany plans dated 5-26-09

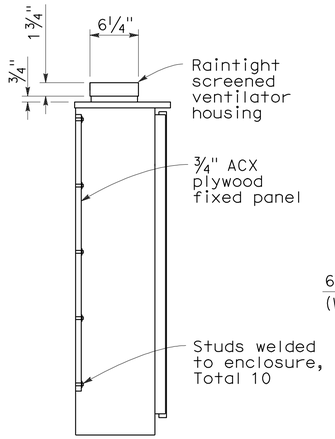

SECTION A-A

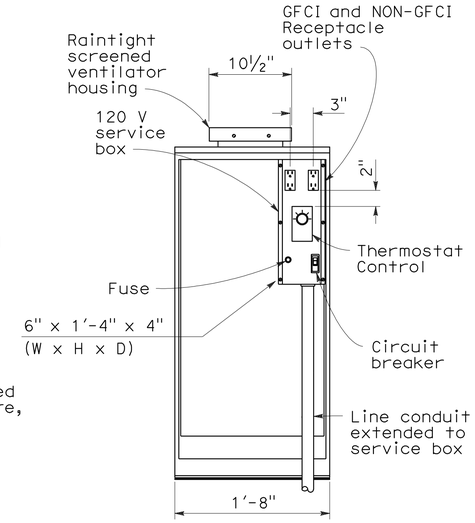

FRONT VIEW

(Exterior door removed for clarity)

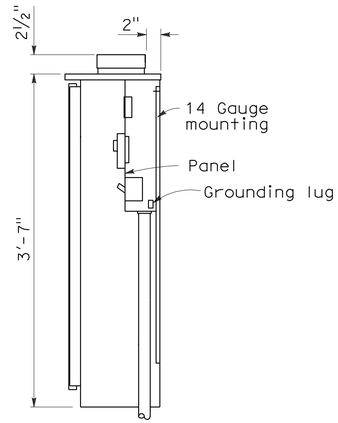

SECTION B-B

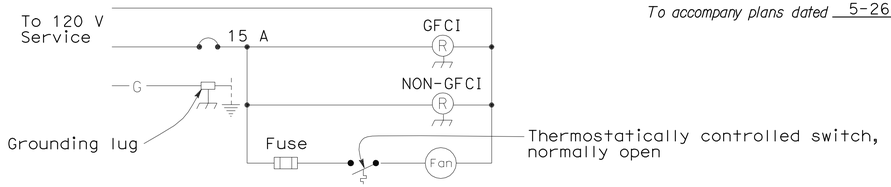

WIRING DIAGRAM

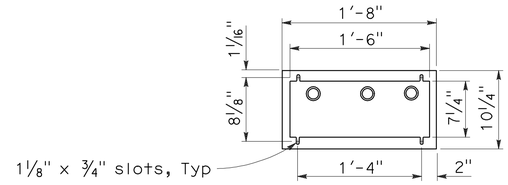

BASE PLAN

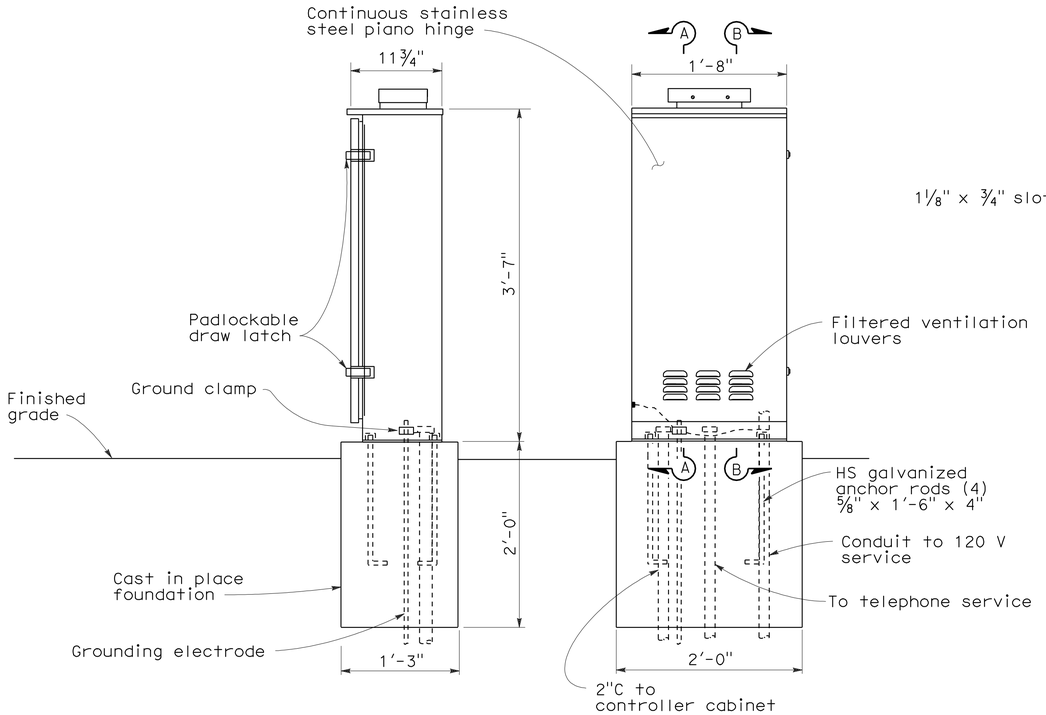

SIDE VIEW

FRONT VIEW

NOTES:

1. Telephone demarcation cabinet shall be furnished with a mounting panel, outlets, circuit breaker and deadfront plates in place. Dimensions are nominal.
2. An approved mastic or caulking compound shall be placed on the foundation prior to placing the cabinet to seal openings between the bottom of the cabinet and the foundation.
3. In unpaved areas, a raised PCC pad shall be placed in front of the telephone demarcation cabinet. Pad shall be 2'-0" x 1'-10" x 4" thick, with 2" above the finished grade.
4. All conduits shall be bonded to the enclosure.
5. Telephone demarcation cabinet:
   a) Material shall be anodized aluminum (⅛" thick).
   b) Fabrication shall conform to the requirements of the Standard Specifications.
   c) The exterior door shall be side hung and secured with a padlockable draw latch, the padlock hole shall be a minimum diameter of 7/16" to receive a padlock.
   d) Ventilation louvers shall be located on the door.
   e) Fan shall be mounted in a ventilator housing.
   f) Fan shall be thermostatically controlled and adjustable to turn on between 80°F and 130°F.
   g) Fan circuit shall be fused at 175 percent of the fan motor capacity.
   h) Fan capacity shall be at least 25 cubic feet per minute.
   i) Fasten fixed mounting panels with nuts, lock and flat washers to 3/16" Ø x 1" studs welded to enclosure.

STATE OF CALIFORNIA
DEPARTMENT OF TRANSPORTATION

ELECTRICAL SYSTEMS (TELEPHONE DEMARCATION CABINET, TYPE B)

NO SCALE

RSP ES-3E DATED OCTOBER 5, 2007 SUPERCEDES STANDARD PLAN ES-3E DATED MAY 1, 2006 - PAGE 414 OF THE STANDARD PLANS BOOK DATED MAY 2006.

REVISED STANDARD PLAN RSP ES-3E

2006 REVISED STANDARD PLAN RSP ES-3E